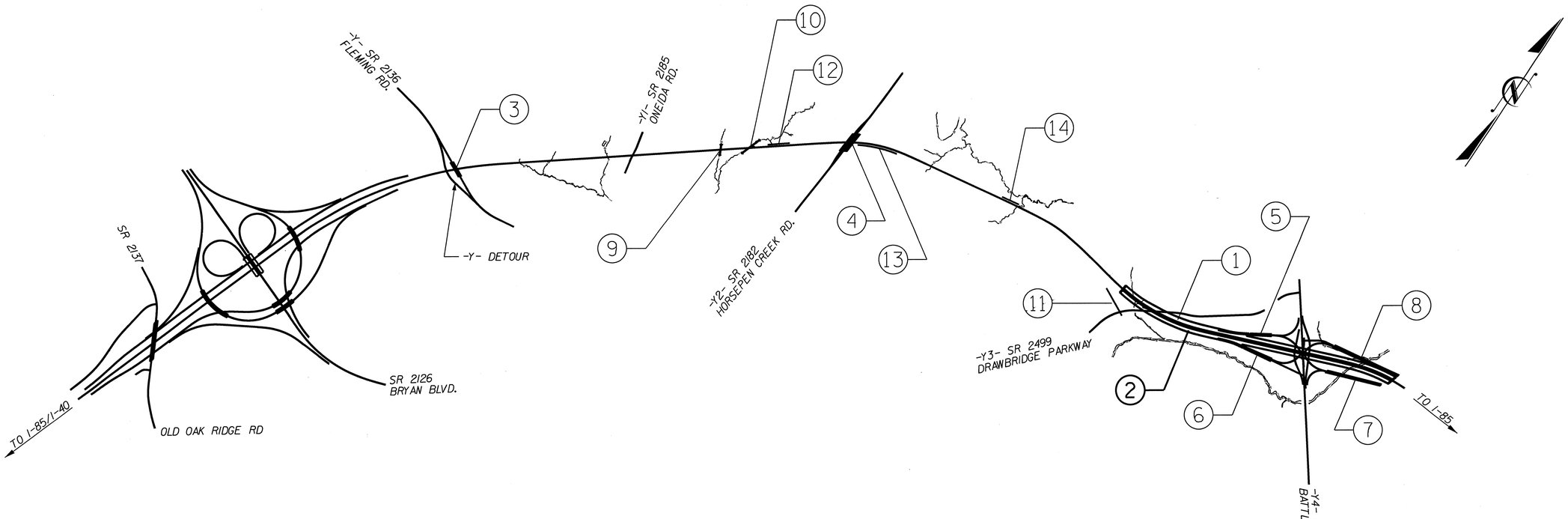

INDEX			
STR.	STATION	DESCRIPTION	SHEETS
1	407+73.35 -L- (LT)	BRIDGE ON I-840 OVER BATTLEGROUND AVE. (LEFT LANE)	S-1 THRU S-247
2	**407+85.82 -L- (RT)**	**BRIDGE ON I-840 OVER BATTLEGROUND AVE. (RIGHT LANE)**	**S-248 THRU S-498**
3	274+26.98 -L-	BRIDGE ON SR 2136 (FLEMING RD.) OVER GWL	S-499 THRU S-535
4	332+65.40 -L-	BRIDGE ON SR 2182 (HORSEPEN CREEK RD.) OVER GWL	S-536 THRU S-585
5	6+01.72 -RPBY4-	BRIDGE ON RAMP B OVER WETLANDS	S-586 THRU S-628
6	6+23.25 -RPCY4-	BRIDGE ON RAMP C OVER WETLANDS	S-629 THRU S-673
7	9+53.33 -RPAY4-	BRIDGE ON RAMP A OVER HORSEPEN CREEK	S-674 THRU S-758
8	9+75.28 -RPDY4-	BRIDGE ON RAMP D OVER HORSEPEN CREEK	S-759 THRU S-836
9	313+42.00 -L-	SINGLE 10 X 7 CONCRETE BOX CULVERT	C-1 THRU C-8
10	317+05.00 -L-	SINGLE 10 X 6 CONCRETE BOX CULVERT	C-9 THRU C-16
11	373+29.30 -L-	SOUND BARRIER WALL	W-1 THRU W-3
12	319+00 -L-	MSE RETAINING WALL	W-4 THRU W-9
13	333+00 -L-	SOIL NAIL WALL	
14	357+25 -L-	MSE RETAINING WALL	

PART 1

PART 2

PART 3

PART 4

PART 2 OF 4

PROJECT NO. U-2524C

GUILFORD COUNTY

STATION:

STATE OF NORTH CAROLINA
DEPARTMENT OF TRANSPORTATION
RALEIGH

INDEX

REVISIONS					
NO.	BY:	DATE:	NO.	BY:	DATE:
1			3		
2			4		

DRAWN BY : W.D. CRUTCHER DATE : 6-13-13
CHECKED BY : D.S. STUTTS DATE : 6-21-13

12-JUL-2013 11:29
S:\PEF\Darrell\u2524c_title_index.dgn
dcrutcher

INDEX OF DRAWINGS

S-248 INDEX OF DRAWINGS
S-249 GENERAL DRAWING PLAN AND ELEVATION, SHEET 1 OF 10
S-250 GENERAL DRAWING PLAN AND ELEVATION, SHEET 2 OF 10
S-251 GENERAL DRAWING PLAN AND ELEVATION, SHEET 3 OF 10
S-252 GENERAL DRAWING PLAN AND ELEVATION, SHEET 4 OF 10
S-253 GENERAL DRAWING PLAN AND ELEVATION, SHEET 5 OF 10
S-254 GENERAL DRAWING PLAN AND ELEVATION, SHEET 6 OF 10
S-255 GENERAL DRAWING PLAN AND ELEVATION, SHEET 7 OF 10
S-256 GENERAL DRAWING PLAN AND ELEVATION, SHEET 8 OF 10
S-257 GENERAL DRAWING PLAN AND ELEVATION, SHEET 9 OF 10
S-258 GENERAL DRAWING PLAN AND ELEVATION, SHEET 10 OF 10
S-259 GENERAL DRAWING FOUNDATION LAYOUT, SHEET 1 OF 5
S-260 GENERAL DRAWING FOUNDATION LAYOUT, SHEET 2 OF 5
S-261 GENERAL DRAWING FOUNDATION LAYOUT, SHEET 3 OF 5
S-262 GENERAL DRAWING FOUNDATION LAYOUT, SHEET 4 OF 5
S-263 GENERAL DRAWING FOUNDATION LAYOUT, SHEET 5 OF 5
S-264 GENERAL DRAWING LONG CHORD LAYOUT, SHEET 1 OF 3
S-265 GENERAL DRAWING LONG CHORD LAYOUT, SHEET 2 OF 3
S-266 GENERAL DRAWING LONG CHORD LAYOUT, SHEET 3 OF 3
S-267 GENERAL DRAWING LOCATION SKETCH
S-268 GENERAL DRAWING GENERAL NOTES
S-269 GENERAL DRAWING TOTAL BILL OF MATERIAL
S-270 GIRDER ERECTION DETAILS SPAN 5, SHEET 1 OF 3
S-271 GIRDER ERECTION DETAILS UNIT G, SHEET 2 OF 3
S-272 GIRDER ERECTION DETAILS UNIT G, SHEET 3 OF 3
S-273 LRFR SUMMARY FOR PRESTRESSED CONCRETE GIRDERS
S-274 LRFR SUMMARY FOR STEEL GIRDERS
S-275 TYPICAL SECTION UNIT A SPANS 1 & 2
S-276 TYPICAL SECTION UNIT B SPANS 3 & 4
S-277 TYPICAL SECTION SPAN 5
S-278 TYPICAL SECTION UNIT C SPANS 6A-7
S-279 TYPICAL SECTION UNIT D SPANS 8-11
S-280 TYPICAL SECTION UNIT E SPANS 12-14
S-281 TYPICAL SECTION SPAN 15
S-282 TYPICAL SECTION SPAN 16
S-283 TYPICAL SECTION UNIT F SPANS 17-20
S-284 TYPICAL SECTION UNIT G & SPAN 24 SPANS 21-24
S-285 TYPICAL SECTION UNIT H SPANS 25 & 26
S-286 TYPICAL SECTION UNIT I SPANS 27-30
S-287 SUPERSTRUCTURE DETAILS, SHEET 1 OF 6
S-288 SUPERSTRUCTURE DETAILS, SHEET 2 OF 6
S-289 SUPERSTRUCTURE DETAILS, SHEET 3 OF 6
S-290 SUPERSTRUCTURE DETAILS, SHEET 4 OF 6
S-291 SUPERSTRUCTURE DETAILS, SHEET 5 OF 6
S-292 SUPERSTRUCTURE DETAILS, SHEET 6 OF 6
S-293 PLAN OF SPANS UNIT A SPANS 1 & 2
S-294 PLAN OF SPANS UNIT B SPANS 3 & 4, SHEET 1 OF 2
S-295 PLAN OF SPANS UNIT B SPANS 3 & 4, SHEET 2 OF 2
S-296 PLAN OF SPANS SPAN 5, SHEET 1 OF 2
S-297 PLAN OF SPANS SPAN 5, SHEET 2 OF 2
S-298 PLAN OF SPANS UNIT C SPANS 6A-7, SHEET 1 OF 3
S-299 PLAN OF SPANS UNIT C SPANS 6A-7, SHEET 2 OF 3
S-300 PLAN OF SPANS UNIT C SPANS 6A-7, SHEET 3 OF 3
S-301 PLAN OF SPANS UNIT D SPANS 8-11, SHEET 1 OF 2
S-302 PLAN OF SPANS UNIT D SPANS 8-11, SHEET 2 OF 2
S-303 PLAN OF SPANS UNIT E SPANS 12-14, SHEET 1 OF 2
S-304 PLAN OF SPANS UNIT E SPANS 12-14, SHEET 2 OF 2
S-305 PLAN OF SPANS SPAN 15
S-306 PLAN OF SPANS SPAN 16, SHEET 1 OF 2
S-307 PLAN OF SPANS SPAN 16, SHEET 2 OF 2
S-308 PLAN OF SPANS UNIT F SPANS 17-20, SHEET 1 OF 2
S-309 PLAN OF SPANS UNIT F SPANS 17-20, SHEET 2 OF 2
S-310 PLAN OF SPANS UNIT G SPANS 21-23, SHEET 1 OF 3
S-311 PLAN OF SPANS UNIT G SPANS 21-23, SHEET 2 OF 3
S-312 PLAN OF SPANS UNIT G SPANS 21-23, SHEET 3 OF 3
S-313 PLAN OF SPANS SPAN 24
S-314 PLAN OF SPANS UNIT H SPANS 25 & 26, SHEET 1 OF 3
S-315 PLAN OF SPANS UNIT H SPANS 25 & 26, SHEET 2 OF 3
S-316 PLAN OF SPANS UNIT H SPANS 25 & 26, SHEET 3 OF 3
S-317 PLAN OF SPANS UNIT I SPANS 27-30, SHEET 1 OF 2
S-318 PLAN OF SPANS UNIT I SPANS 27-30, SHEET 2 OF 2
S-319 STRUCTURE DRAINAGE SYSTEM DETAILS, SHEET 1 OF 11
S-320 STRUCTURE DRAINAGE SYSTEM DETAILS, SHEET 2 OF 11
S-321 STRUCTURE DRAINAGE SYSTEM DETAILS, SHEET 3 OF 11
S-322 STRUCTURE DRAINAGE SYSTEM DETAILS, SHEET 4 OF 11
S-323 STRUCTURE DRAINAGE SYSTEM DETAILS, SHEET 5 OF 11
S-324 STRUCTURE DRAINAGE SYSTEM DETAILS, SHEET 6 OF 11
S-325 STRUCTURE DRAINAGE SYSTEM DETAILS, SHEET 7 OF 11
S-326 STRUCTURE DRAINAGE SYSTEM DETAILS, SHEET 8 OF 11
S-327 STRUCTURE DRAINAGE SYSTEM DETAILS, SHEET 9 OF 11
S-328 STRUCTURE DRAINAGE SYSTEM DETAILS, SHEET 10 OF 11
S-329 STRUCTURE DRAINAGE SYSTEM DETAILS, SHEET 11 OF 11
S-330 SUPERSTRUCTURE DECK POUR DIAGRAMS, SHEET 1 OF 2
S-331 SUPERSTRUCTURE DECK POUR DIAGRAMS, SHEET 2 OF 2
S-332 FRAMING PLAN UNIT A SPANS 1 & 2, SHEET 1 OF 14
S-333 FRAMING PLAN UNIT B SPANS 3 & 4, SHEET 2 OF 14
S-334 FRAMING PLAN SPAN 5, SHEET 3 OF 14
S-335 FRAMING PLAN UNIT C SPANS 6A-7, SHEET 4 OF 14
S-336 FRAMING PLAN UNIT D SPANS 8-11, SHEET 5 OF 14
S-337 FRAMING PLAN UNIT E SPANS 12-14, SHEET 6 OF 14
S-338 FRAMING PLAN SPAN 15, SHEET 7 OF 14
S-339 FRAMING PLAN SPAN 16, SHEET 8 OF 14
S-340 FRAMING PLAN UNIT F SPANS 17-20, SHEET 9 OF 14
S-341 FRAMING PLAN UNIT G SPANS 21-23, SHEET 10 OF 14
S-342 FRAMING PLAN SPAN 24, SHEET 11 OF 14
S-343 FRAMING PLAN UNIT H SPANS 25 & 26, SHEET 12 OF 14
S-344 FRAMING PLAN UNIT H LAYOUT, SHEET 13 OF 14
S-345 FRAMING PLAN UNIT I SPANS 27-30, SHEET 14 OF 14
S-346 PRESTRESSED CONCRETE MODIFIED 72"BULB TEE GIRDER PLAN AND ELEVATION, SHEET 1 OF 12
S-347 PRESTRESSED CONCRETE MODIFIED 72"BULB TEE GIRDER PLAN AND ELEVATION, SHEET 2 OF 12
S-348 PRESTRESSED CONCRETE MODIFIED 72"BULB TEE GIRDER PLAN AND ELEVATION, SHEET 3 OF 12
S-349 PRESTRESSED CONCRETE MODIFIED 74"BULB TEE GIRDER PLAN AND ELEVATION, SHEET 4 OF 12
S-350 PRESTRESSED CONCRETE MODIFIED 74"BULB TEE GIRDER PLAN AND ELEVATION, SHEET 5 OF 12
S-351 PRESTRESSED CONCRETE MODIFIED 72"BULB TEE GIRDER STRAND PATTERNS, SHEET 6 OF 12
S-352 PRESTRESSED CONCRETE MODIFIED 72"/74"BULB TEE GIRDER STRAND PATTERNS, SHEET 7 OF 12
S-353 PRESTRESSED CONCRETE MODIFIED BULB TEE GIRDER DIAPHRAGM DETAILS, SHEET 8 OF 12
S-354 PRESTRESSED CONCRETE MODIFIED BULB TEE GIRDER TABLE, SHEET 9 OF 12
S-355 PRESTRESSED CONCRETE MODIFIED BULB TEE GIRDER TABLE, SHEET 10 OF 12
S-356 PRESTRESSED CONCRETE MODIFIED BULB TEE GIRDER TABLE, SHEET 11 OF 12
S-357 PRESTRESSED CONCRETE MODIFIED BULB TEE GIRDER DETAILS, SHEET 12 OF 12
S-358 INTERMEDIATE STEEL DIAPHRAGM DETAILS FOR PRESTRESSED CONCRETE MODIFIED BULB TEE GIRDERS
S-359 STRUCTURAL STEEL GIRDER ELEVATION SPAN 5, SHEET 1 OF 15
S-360 STRUCTURAL STEEL GIRDER ELEVATION SPAN 5, SHEET 2 OF 15
S-361 STRUCTURAL STEEL GIRDER ELEVATION UNIT G SPAN 21, SHEET 3 OF 15
S-362 STRUCTURAL STEEL GIRDER ELEVATION UNIT G SPAN 22, SHEET 4 OF 15
S-363 STRUCTURAL STEEL GIRDER ELEVATION UNIT G SPAN 23, SHEET 5 OF 15
S-364 STRUCTURAL STEEL GIRDER ELEVATION SPAN 24, SHEET 6 OF 15
S-365 STRUCTURAL STEEL GIRDER ELEVATION UNIT H SPAN 25, SHEET 7 OF 15
S-366 STRUCTURAL STEEL GIRDER ELEVATION UNIT H SPAN 26, SHEET 8 OF 15
S-367 STRUCTURAL STEEL DIAPHRAGM DETAILS, SHEET 9 OF 15
S-368 STRUCTURAL STEEL DETAILS, SHEET 10 OF 15
S-369 STRUCTURAL STEEL DETAILS, SHEET 11 OF 15
S-370 STRUCTURAL STEEL BOLTED FIELD SPLICE SPAN 5, SHEET 12 OF 15
S-371 STRUCTURAL STEEL BOLTED FIELD SPLICE UNIT G SPANS 21-23, SHEET 13 OF 15
S-372 STRUCTURAL STEEL BOLTED FIELD SPLICE UNIT H SPANS 25-26, SHEET 14 OF 15
S-373 STRUCTURAL STEEL LATERAL BRACING, SHEET 15 OF 15
S-374 ELASTOMERIC BEARING DETAILS
S-375 POT BEARINGS, SHEET 1 OF 2
S-376 POT BEARING DETAILS, SHEET 2 OF 2
S-377 PRESTRESSED CONCRETE MODIFIED BULB TEE GIRDER CAMBERS, SHEET 1 OF 7
S-378 PRESTRESSED CONCRETE MODIFIED BULB TEE GIRDER CAMBERS, SHEET 2 OF 7
S-379 PRESTRESSED CONCRETE MODIFIED BULB TEE GIRDER CAMBERS, SHEET 3 OF 7
S-380 PRESTRESSED CONCRETE MODIFIED BULB TEE GIRDER CAMBERS, SHEET 4 OF 7
S-381 PRESTRESSED CONCRETE MODIFIED BULB TEE GIRDER CAMBERS, SHEET 5 OF 7
S-382 PRESTRESSED CONCRETE MODIFIED BULB TEE GIRDER CAMBERS, SHEET 6 OF 7
S-383 PRESTRESSED CONCRETE MODIFIED BULB TEE GIRDER CAMBERS, SHEET 7 OF 7
S-384 STEEL GIRDER CAMBERS SPAN 5, SHEET 1 OF 8
S-385 STEEL GIRDER CAMBERS SPAN 5, SHEET 2 OF 8
S-386 STEEL GIRDER CAMBERS UNIT G SPAN 21, SHEET 3 OF 8
S-387 STEEL GIRDER CAMBERS UNIT G SPAN 22, SHEET 4 OF 8
S-388 STEEL GIRDER CAMBERS UNIT G SPAN 23, SHEET 5 OF 8
S-389 STEEL GIRDER CAMBERS SPAN 24, SHEET 6 OF 8
S-390 STEEL GIRDER CAMBERS UNIT H SPAN 25, SHEET 7 OF 8
S-391 STEEL GIRDER CAMBERS UNIT H SPAN 26, SHEET 8 OF 8
S-392 STEEL GIRDER CAMBERS SCHEMATIC CAMBER ORDINATES UNITS G & H
S-393 CONCRETE BARRIER RAIL, SHEET 1 OF 8
S-394 PLAN OF RAILS CONCRETE BARRIER RAIL UNITS A & B, SHEET 2 OF 8
S-395 PLAN OF RAILS CONCRETE BARRIER RAIL SPAN 5 & UNIT C, SHEET 3 OF 8
S-396 PLAN OF RAILS CONCRETE BARRIER RAIL UNIT D & E, SHEET 4 OF 8
S-397 PLAN OF RAILS CONCRETE BARRIER RAIL SPANS 15, 16 & UNIT F, SHEET 5 OF 8
S-398 PLAN OF RAILS CONCRETE BARRIER RAIL UNIT G & SPAN 24, SHEET 6 OF 8
S-399 PLAN OF RAILS CONCRETE BARRIER RAIL UNITS H & I, SHEET 7 OF 8
S-400 PLAN OF RAILS CONCRETE BARRIER RAIL TRANSITION ZONE DETAILS, SHEET 8 OF 8
S-401 GUARDRAIL ANCHORAGE FOR BARRIER RAIL
S-402 SOUND BARRIER WALL LAYOUT & DETAILS
S-403 TRANSITION ZONE DETAILS, SHEET 1 OF 2
S-404 TRANSITION ZONE DETAILS, SHEET 2 OF 2
S-405 EXPANSION JOINT SEAL DETAILS, SHEET 1 OF 2
S-406 EXPANSION JOINT SEAL DETAILS FOR BARRIER RAIL, SHEET 2 OF 2
S-407 MODULAR EXPANSION JOINT SEAL DETAILS FOR BARRIER RAIL
S-408 PAVEMENT MARKING ALIGNMENT
S-409 SUPERSTRUCTURE BILL OF MATERIALS, SHEET 1 OF 8
S-410 SUPERSTRUCTURE BILL OF MATERIALS, SHEET 2 OF 8
S-411 SUPERSTRUCTURE BILL OF MATERIALS, SHEET 3 OF 8
S-412 SUPERSTRUCTURE BILL OF MATERIALS, SHEET 4 OF 8
S-413 SUPERSTRUCTURE BILL OF MATERIALS, SHEET 5 OF 8
S-414 SUPERSTRUCTURE BILL OF MATERIALS, SHEET 6 OF 8
S-415 SUPERSTRUCTURE BILL OF MATERIALS, SHEET 7 OF 8
S-416 SUPERSTRUCTURE BILL OF MATERIALS, SHEET 8 OF 8
S-417 END BENT 1, SHEET 1 OF 3
S-418 END BENT 1, SHEET 2 OF 3
S-419 END BENT 1, SHEET 3 OF 3
S-420 BENTS 1 & 2 PLAN & ELEVATION, SHEET 1 OF 3
S-421 BENTS 1 & 2 DETAILS, SHEET 2 OF 3
S-422 BENTS 1 & 2 DETAILS & BILL OF MATERIAL, SHEET 3 OF 3
S-423 BENT 3 PLAN & ELEVATION, SHEET 1 OF 3
S-424 BENT 3 DETAILS, SHEET 2 OF 3
S-425 BENT 3 DETAILS & BILL OF MATERIAL, SHEET 3 OF 3
S-426 BENT 4 PLAN & ELEVATION, SHEET 1 OF 3
S-427 BENT 4 DETAILS, SHEET 2 OF 3
S-428 BENT 4 DETAILS & BILL OF MATERIAL, SHEET 3 OF 3
S-429 BENT 5A PLAN & ELEVATION, SHEET 1 OF 3
S-430 BENT 5A DETAILS, SHEET 2 OF 3
S-431 BENT 5A DETAILS & BILL OF MATERIAL, SHEET 3 OF 3
S-432 BENT 5B PLAN & ELEVATION, SHEET 1 OF 3
S-433 BENT 5B DETAILS, SHEET 2 OF 3
S-434 BENT 5B DETAILS & BILL OF MATERIAL, SHEET 3 OF 3
S-435 BENT 6 PLAN & ELEVATION, SHEET 1 OF 3
S-436 BENT 6 DETAILS, SHEET 2 OF 3
S-437 BENT 6 DETAILS & BILL OF MATERIAL, SHEET 3 OF 3
S-438 BENT 7 PLAN & ELEVATION, SHEET 1 OF 3
S-439 BENT 7 DETAILS, SHEET 2 OF 3
S-440 BENT 7 DETAILS & BILL OF MATERIAL, SHEET 3 OF 3
S-441 BENT 8 PLAN & ELEVATION, SHEET 1 OF 3
S-442 BENT 8 DETAILS, SHEET 2 OF 3
S-443 BENT 8 DETAILS & BILL OF MATERIAL, SHEET 3 OF 3
S-444 BENTS 9 & 10 PLAN & ELEVATION, SHEET 1 OF 3
S-445 BENTS 9 & 10 DETAILS, SHEET 2 OF 3
S-446 BENTS 9 & 10 DETAILS & BILL OF MATERIAL, SHEET 3 OF 3
S-447 BENT 11 PLAN & ELEVATION, SHEET 1 OF 3
S-448 BENT 11 DETAILS, SHEET 2 OF 3
S-449 BENT 11 DETAILS & BILL OF MATERIAL, SHEET 3 OF 3
S-450 BENT 12 PLAN & ELEVATION, SHEET 1 OF 3
S-451 BENT 12 DETAILS, SHEET 2 OF 3
S-452 BENT 12 DETAILS & BILL OF MATERIAL, SHEET 3 OF 3
S-453 BENT 13 PLAN & ELEVATION, SHEET 1 OF 3
S-454 BENT 13 DETAILS, SHEET 2 OF 3
S-455 BENT 13 DETAILS & BILL OF MATERIAL, SHEET 3 OF 3
S-456 BENT 14 PLAN & ELEVATION, SHEET 1 OF 3
S-457 BENT 14 DETAILS, SHEET 2 OF 3
S-458 BENT 14 DETAILS & BILL OF MATERIAL, SHEET 3 OF 3
S-459 BENT 15 PLAN & ELEVATION, SHEET 1 OF 3
S-460 BENT 15 DETAILS, SHEET 2 OF 3
S-461 BENT 15 DETAILS & BILL OF MATERIAL, SHEET 3 OF 3
S-462 BENT 16 PLAN & ELEVATION, SHEET 1 OF 3
S-463 BENT 16 DETAILS, SHEET 2 OF 3
S-464 BENT 16 DETAILS & BILL OF MATERIAL, SHEET 3 OF 3
S-465 BENTS 17-19 PLAN & ELEVATION, SHEET 1 OF 3
S-466 BENTS 17-19 DETAILS, SHEET 2 OF 3
S-467 BENTS 17-19 DETAILS & BILL OF MATERIAL, SHEET 3 OF 3
S-468 BENT 20 PLAN & ELEVATION, SHEET 1 OF 3
S-469 BENT 20 DETAILS, SHEET 2 OF 3
S-470 BENT 20 DETAILS & BILL OF MATERIAL, SHEET 3 OF 3
S-471 BENTS 21 & 22 PLAN & ELEVATION, SHEET 1 OF 3
S-472 BENTS 21 & 22 DETAILS, SHEET 2 OF 3
S-473 BENTS 21 & 22 DETAILS & BILL OF MATERIAL, SHEET 3 OF 3
S-474 BENT 23 PLAN & ELEVATION, SHEET 1 OF 3
S-475 BENT 23 DETAILS, SHEET 2 OF 3
S-476 BENT 23 DETAILS & BILL OF MATERIAL, SHEET 3 OF 3
S-477 BENT 24 PLAN & ELEVATION, SHEET 1 OF 3
S-478 BENT 24 DETAILS, SHEET 2 OF 3
S-479 BENT 24 DETAILS & BILL OF MATERIAL, SHEET 3 OF 3
S-480 BENT 25 PLAN & ELEVATION, SHEET 1 OF 3
S-481 BENT 25 DETAILS, SHEET 2 OF 3
S-482 BENT 25 DETAILS & BILL OF MATERIAL, SHEET 3 OF 3
S-483 BENT 26 PLAN & ELEVATION, SHEET 1 OF 3
S-484 BENT 26 DETAILS, SHEET 2 OF 3
S-485 BENT 26 DETAILS & BILL OF MATERIAL, SHEET 3 OF 3
S-486 BENTS 27 & 28 PLAN & ELEVATION, SHEET 1 OF 3
S-487 BENTS 27 & 28 DETAILS, SHEET 2 OF 3
S-488 BENTS 27 & 28 DETAILS & BILL OF MATERIAL, SHEET 3 OF 3
S-489 BENT 29 PLAN & ELEVATION, SHEET 1 OF 3
S-490 BENT 29 DETAILS, SHEET 2 OF 3
S-491 BENT 29 DETAILS & BILL OF MATERIAL, SHEET 3 OF 3
S-492 END BENT 2, SHEET 1 OF 3
S-493 END BENT 2, SHEET 2 OF 3
S-494 END BENT 2, SHEET 3 OF 3
S-495 RIP RAP DETAILS
S-496 BRIDGE APPROACH SLAB, SHEET 1 OF 3
S-497 BRIDGE APPROACH SLAB, SHEET 2 OF 3
S-498 BRIDGE APPROACH SLAB, SHEET 3 OF 3

NORTH CAROLINA PROFESSIONAL ENGINEER SEAL 18165 ENGINEER MARK F. ROBBINS 6-7-13

NORTH CAROLINA PROFESSIONAL ENGINEER SEAL 28479 ENGINEER KEVIN G. BAILEY 6-7-13

PROJECT NO. U-2524C

GUILFORD COUNTY

STATION: POT 407+85.82 -L-
= POT 29+79.72 -Y4-

STATE OF NORTH CAROLINA
DEPARTMENT OF TRANSPORTATION
RALEIGH

INDEX OF DRAWINGS

-RIGHT LANE-

DRAWN BY : VMW DATE : 5-13
CHECKED BY : KGB DATE : 5-13

DESIGN ENGINEER OF RECORD: K. BAILEY DATE : 5-13

STV / Ralph Whitehead Associates, Inc.
1000 West Morehead St., Ste. 200
Charlotte, NC 28208
NC License No. F-0991

REVISIONS						SHEET NO.
NO.	BY:	DATE:	NO.	BY:	DATE:	S-248
1			3			TOTAL SHEETS
2			4			836

6/6/2013 4:38:40 PM R:\Justration\Finals\Index of Sheets.dgn

F.A. PROJ. NO. NHF-0708(62)

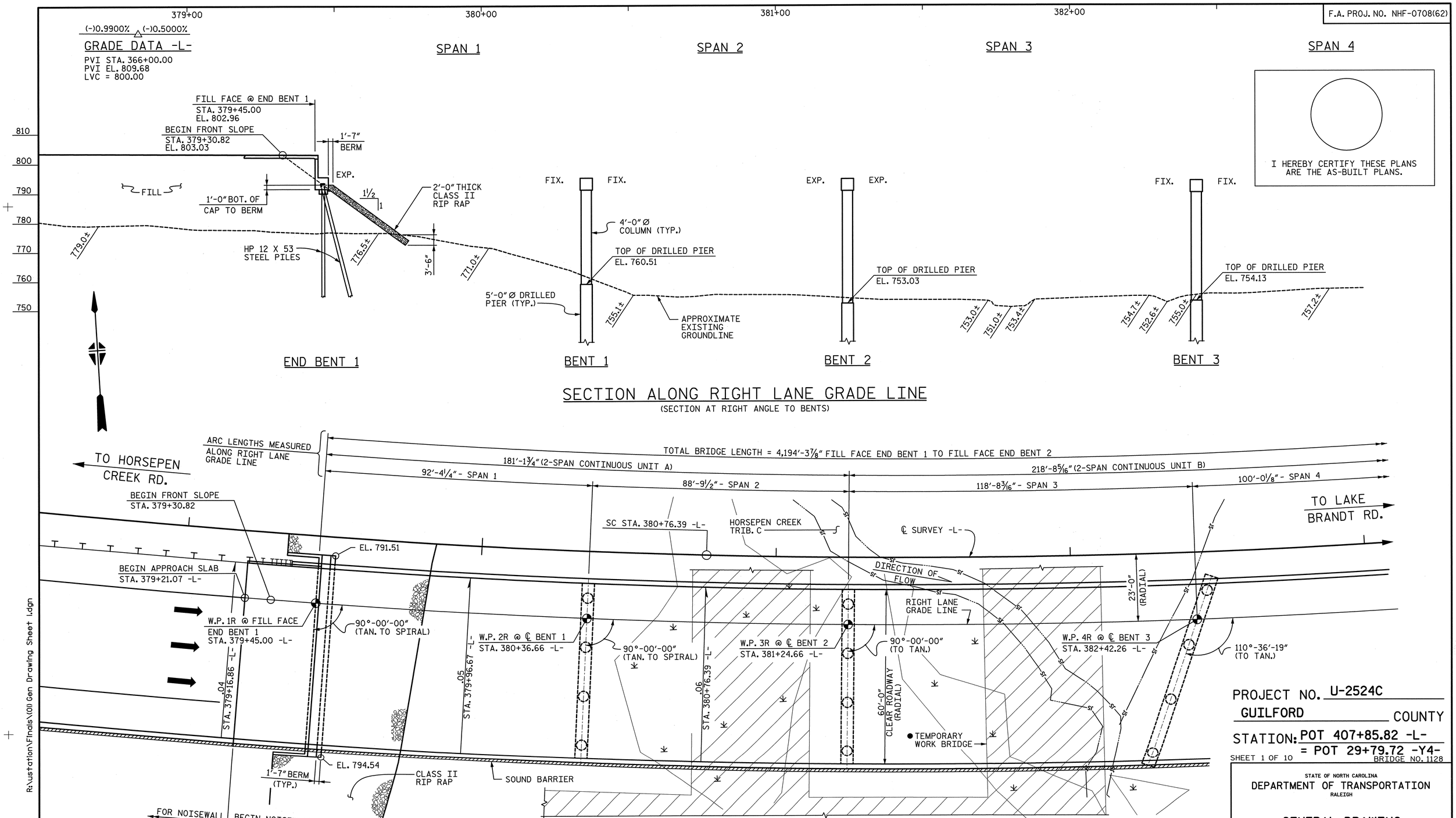

SECTION ALONG RIGHT LANE GRADE LINE

(SECTION AT RIGHT ANGLE TO BENTS)

PLAN

(PILES NOT SHOWN FOR CLARITY.)

● SEE LEFT LANE BRIDGE PLANS FOR TEMPORARY WORK BRIDGE AND PAY ITEM

HORIZ. CURVE DATA -L-

PIs = 379+16.55	PI = 385+42.44	PIs = 391+58.05
θs = 5°30'01.4" (LT.)	Δ = 21°07'10.9" (LT.)	θs = 5°30'01.4" (LT.)
Ls = 480.00'	D = 2°17'30.6"	Ls = 480.00'
LT = 320.15'	L = 921.52'	LT = 320.15'
ST = 160.14'	T = 466.05'	ST = 160.14'
	R = 2,500.00'	

PROJECT NO. U-2524C

GUILFORD COUNTY

STATION: POT 407+85.82 -L-
= POT 29+79.72 -Y4-

SHEET 1 OF 10 BRIDGE NO. 1128

STATE OF NORTH CAROLINA
DEPARTMENT OF TRANSPORTATION
RALEIGH

GENERAL DRAWING
PLAN AND ELEVATION
BRIDGE ON I-840
OVER BATTLEGROUND AVE.
-RIGHT LANE-

NORTH CAROLINA PROFESSIONAL SEAL 18165 ENGINEER MARK F. ROBBINS 6-7-13

NORTH CAROLINA PROFESSIONAL SEAL 28479 ENGINEER KEVIN G. BAILEY 6-7-13

STV / Ralph Whitehead Associates, Inc.
1000 West Morehead St., Ste. 200
Charlotte, NC 28208
NC License No. F-0991

REVISIONS						SHEET NO.
NO.	BY:	DATE:	NO.	BY:	DATE:	S-249
1			3			TOTAL SHEETS
2			4			836

DRAWN BY : CLG	DATE : 4-13	DESIGN ENGINEER OF RECORD: P. KELLY	DATE : 5-13
CHECKED BY : PEK	DATE : 5-13		

6/6/2013 4:38:42 PM R:\ustation\Finals\(01) Gen Drawing Sheet 1.dgn

383+00 384+00 385+00 386+00 387+00

(-)0.9900% △ (-)0.5000%

GRADE DATA -L-

PVI STA. 366+00.00
PVI EL. 809.68
LVC = 800.00

SPAN 4 SPAN 5 SPAN 6A SPAN 6B SPAN 7

810 800 790 780 770 760 750

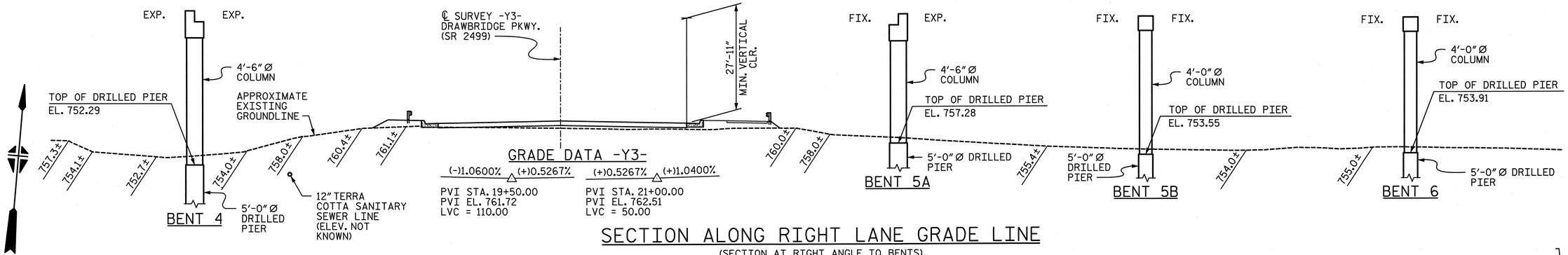

SECTION ALONG RIGHT LANE GRADE LINE

(SECTION AT RIGHT ANGLE TO BENTS)

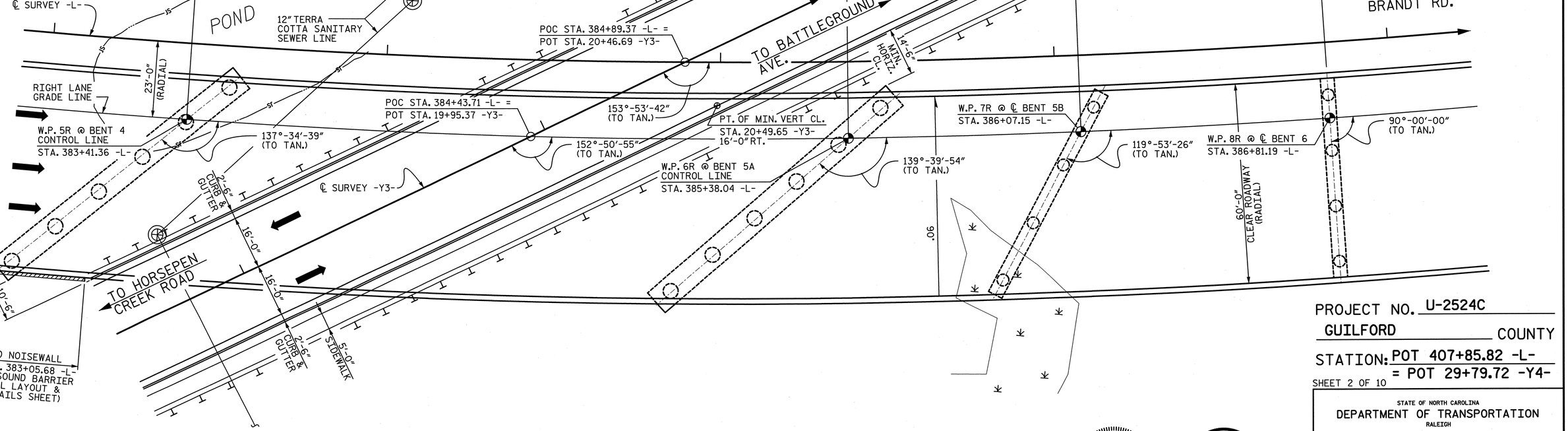

HORIZ. CURVE DATA -L-

PIs = 379+16.55	PI = 385+42.44	PIs = 391+58.05
θs = 5°30'01.4" (LT.)	Δ = 21°07'10.9" (LT.)	θs = 5°30'01.4" (LT.)
Ls = 480.00'	D = 2°17'30.6"	Ls = 480.00'
LT = 320.15'	L = 921.52'	LT = 320.15'
ST = 160.14'	T = 466.05'	ST = 160.14'
	R = 2,500.00'	

PLAN

PROJECT NO. U-2524C

GUILFORD COUNTY

STATION: POT 407+85.82 -L- = POT 29+79.72 -Y4-

SHEET 2 OF 10

STATE OF NORTH CAROLINA
DEPARTMENT OF TRANSPORTATION
RALEIGH

GENERAL DRAWING PLAN AND ELEVATION BRIDGE ON I-840 OVER BATTLEGROUND AVE. -RIGHT LANE-

REVISIONS						SHEET NO.
NO.	BY:	DATE:	NO.	BY:	DATE:	S-250
1			3			TOTAL SHEETS
2			4			836

NORTH CAROLINA PROFESSIONAL ENGINEER SEAL 18165 ENGINEER MARK F. ROBBINS 6-7-13

NORTH CAROLINA PROFESSIONAL ENGINEER SEAL 28479 ENGINEER KEVIN G. BAILEY 6-7-13

STV / Ralph Whitehead Associates, Inc.
1000 West Morehead St. Ste. 200
Charlotte, NC 28208
NC License No. F-0991

DRAWN BY : CLG	DATE : 4-13	DESIGN ENGINEER OF RECORD: P. KELLY	DATE : 5-13
CHECKED BY : PEK	DATE : 5-13		

6/6/2013 5:45:28 PM R:\ustation\Finals\02 Gen Drawing Sheet 2.dgn

388+00 389+00 390+00 391+00 392+00

SPAN 7 | SPAN 8 | SPAN 9 | SPAN 10 | SPAN 11

(-)0.9900% △ (-)0.5000%

GRADE DATA -L-

PVI STA. 366+00.00
PVI EL. 809.68
LVC = 800.00

810 800 790 780 770 760 750

EXP. EXP. FIX. FIX. FIX. FIX. FIX. FIX.

4'-0" Ø COLUMN

4'-6" Ø COLUMN (TYP.)

TOP OF DRILLED SHAFT EL. 751.00

TOP OF DRILLED SHAFT EL. 749.60

TOP OF DRILLED SHAFT EL. 749.36

TOP OF DRILLED SHAFT EL. 749.34

752.2±

APPROXIMATE EXISTING GROUNDLINE

750.9±

5'-0" Ø DRILLED PIER (TYP.)

750.4±

750.4±

BENT 7 BENT 8 BENT 9 BENT 10

SECTION ALONG RIGHT LANE GRADE LINE

(SECTION AT RIGHT ANGLES TO BENT)

ARC LENGTHS MEASURED ALONG RIGHT LANE GRADE LINE

TOTAL BRIDGE LENGTH = 4,194'-3⅞" FILL FACE END BENT 1 TO FILL FACE END BENT 2

252'-2¹³/₁₆" (3-SPAN CONT. UNIT C)

107'-9¼" - SPAN 7

130'-2" - SPAN 8

130'-2" - SPAN 9

519'-9¹⁵/₁₆" (4-SPAN CONT. UNIT D)

129'-10⅞" - SPAN 10

129'-7¹/₁₆" - SPAN 11

TO HORSEPEN CREEK RD.

TO LAKE BRANDT RD.

℄ SURVEY -L-

CS STA. 389+97.91 -L-

RIGHT LANE GRADE LINE

23'-0" (RADIAL)

W.P. 9R @ ℄ BENT 7
STA. 387+87.98 -L-

90°-00'-00" (TO TAN.)

W.P. 10R @ ℄ BENT 8
STA. 389+16.96 -L-

90°-00'-00" (TO TAN.)

VARIES CLEAR ROADWAY (SPANS 8-10, RADIAL)

W.P. 11R @ ℄ BENT 9
STA. 390+45.96 -L-

90°-00'-00" (TAN. TO SPIRAL)

.06 STA. 391+17.91 -L-

W.P. 12R @ ℄ BENT 10
STA. 391+74.96 -L-

90°-00'-00" (TAN. TO SPIRAL)

.05 STA. 391+77.91 -L-

TEMPORARY WORK BRIDGE (TYP.) ●

● SEE LEFT LANE BRIDGE PLANS FOR TEMPORARY WORK BRIDGE AND PAY ITEM

PLAN

HORIZ. CURVE DATA -L-

PIs = 379+16.55	PI = 385+42.44	PIs = 391+58.05
θs = 5°30'01.4" (LT.)	Δ = 21°07'10.9" (LT.)	θs = 5°30'01.4" (LT.)
Ls = 480.00'	D = 2°17'30.6"	Ls = 480.00'
LT = 320.15'	L = 921.52'	LT = 320.15'
ST = 160.14'	T = 466.05'	ST = 160.14'
	R = 2,500.00'	

NORTH CAROLINA PROFESSIONAL ENGINEER SEAL 18165 MARK F. ROBBINS 6-7-13

NORTH CAROLINA PROFESSIONAL ENGINEER SEAL 28479 KEVIN G. BAILEY 6-7-13

PROJECT NO. U-2524C

GUILFORD COUNTY

STATION: POT 407+85.82 -L-
= POT 29+79.72 -Y4-

SHEET 3 OF 10

STATE OF NORTH CAROLINA
DEPARTMENT OF TRANSPORTATION
RALEIGH

GENERAL DRAWING
PLAN AND ELEVATION
BRIDGE ON I-840
OVER BATTLEGROUND AVE.
-RIGHT LANE-

DRAWN BY : CLG	DATE : 4-13	DESIGN ENGINEER OF RECORD: P. KELLY	DATE : 5-13
CHECKED BY : PEK	DATE : 5-13		

STV / Ralph Whitehead Associates, Inc.
1000 West Morehead St., Ste. 200
Charlotte, NC 28208
NC License No. F-0991

REVISIONS						SHEET NO.
NO.	BY:	DATE:	NO.	BY:	DATE:	S-251
1			3			TOTAL SHEETS
2			4			836

6/6/2013 4:38:44 PM R:\ustation\Finals\(03) Gen Drawing Sheet 3.dgn

(-)0.9900% △ (-)0.5000%

GRADE DATA -L-

PVI STA. 366+00.00
PVI EL. 809.68
LVC = 800.00

393+00 394+00 395+00 396+00

SPAN 11 SPAN 12 SPAN 13 SPAN 14

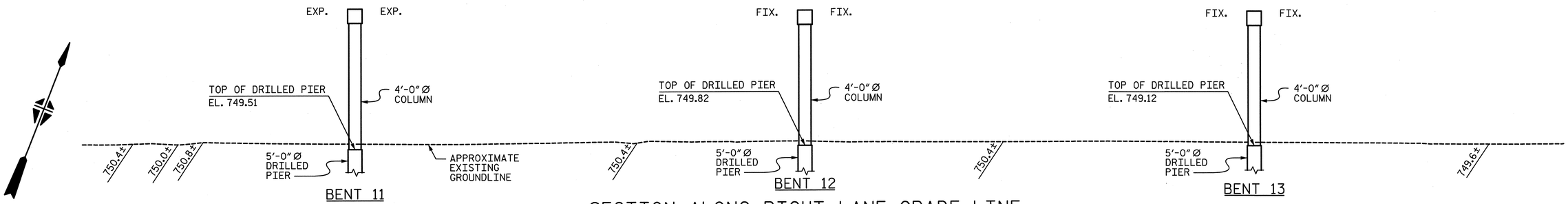

SECTION ALONG RIGHT LANE GRADE LINE

(SECTION AT RIGHT ANGLE TO BENTS)

ARC LENGTHS MEASURED ALONG RIGHT LANE GRADE LINE

TOTAL BRIDGE LENGTH = 4,194'-3⅞" FILL FACE END BENT 1 TO FILL FACE END BENT 2

519'-9 15/16" (4-SPAN CONT. UNIT D)

387'-3½" (3-SPAN CONT. UNIT E)

129'-7 1/16" - SPAN 11

129'-3¼" - SPAN 12

129'-0¼" - SPAN 13

129'-0" - SPAN 14

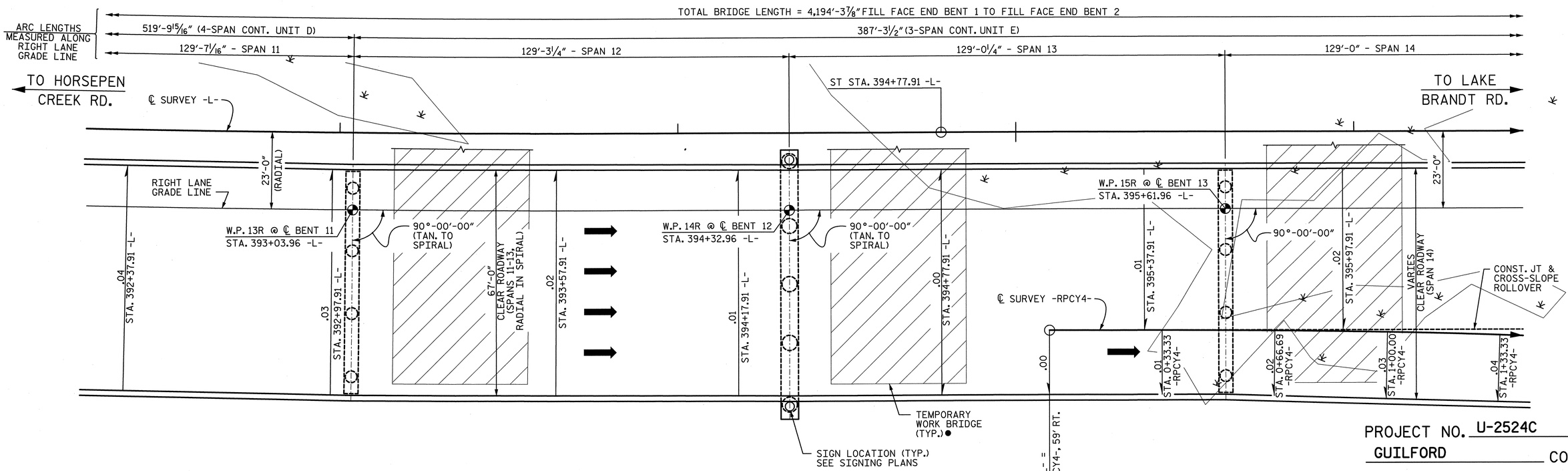

PLAN

● SEE LEFT LANE BRIDGE PLANS FOR TEMPORARY WORK BRIDGE AND PAY ITEM

HORIZ. CURVE DATA -L-

PIs = 379+16.55	PI = 385+42.44	PIs = 391+58.05	
θs = 5°30'01.4" (LT.)	Δ = 21°07'10.9" (LT.)	θs = 5°30'01.4" (LT.)	
Ls = 480.00'	D = 2°17'30.6"	Ls = 480.00'	
LT = 320.15'	L = 921.52'	LT = 320.15'	
ST = 160.14'	T = 466.05'	ST = 160.14'	
	R = 2,500.00'		

HORIZ. CURVE DATA -RPCY4-

PIs = 1+33.38	PI = 2+27.58	PIs = 3+21.85
θs = 4°45'17.4" (RT.)	Δ = 2°37'19.3" (RT.)	θs = 4°45'17.4" (RT.)
Ls = 200.00'	D = 4°45'17.4"	Ls = 200.00'
LT = 133.38'	L = 55.14'	LT = 133.38'
ST = 66.71'	T = 27.58'	ST = 66.71'
	R = 1,205.00'	

DRAWN BY : CLG DATE : 4-13
CHECKED BY : PEK DATE : 5-13

DESIGN ENGINEER OF RECORD: P. KELLY DATE : 5-13

NORTH CAROLINA PROFESSIONAL ENGINEER SEAL 18165 ENGINEER MARK F. ROBBINS 6-7-13

NORTH CAROLINA PROFESSIONAL ENGINEER SEAL 28479 ENGINEER KEVIN G. BAILEY 6-7-13

STV / Ralph Whitehead Associates, Inc.
1000 West Morehead St., Ste. 200
Charlotte, NC 28208
NC License No. F-0991

PROJECT NO. U-2524C

GUILFORD COUNTY

STATION: POT 407+85.82 -L-
= POT 29+79.72 -Y4-

SHEET 4 OF 10

STATE OF NORTH CAROLINA
DEPARTMENT OF TRANSPORTATION
RALEIGH

GENERAL DRAWING
PLAN AND ELEVATION
BRIDGE ON I-840
OVER BATTLEGROUND AVE.
-RIGHT LANE-

REVISIONS						SHEET NO.
NO.	BY:	DATE:	NO.	BY:	DATE:	S-252
1			3			TOTAL SHEETS
2			4			836

6/6/2013 4:38:45 PM R:\ustation\Finals\04 Gen Drawing Sheet 4.dgn

397+00 398+00 399+00 400+00

(-)0.9900% (-)0.5000%

GRADE DATA -L-

PVI STA. 366+00.00
PVI EL. 809.68
LVC = 800.00

SPAN 14 SPAN 15 SPAN 16 SPAN 17 SPAN 18

810 800 790 780 770 760 750

EXP. FIX. EXP. EXP. FIX. EXP. FIX. FIX.

TOP OF DRILLED PIER EL. 748.42

TOP OF DRILLED PIER EL. 748.38

4'-0" Ø COLUMN (TYP.)

TOP OF DRILLED PIER EL. 748.16

TOP OF DRILLED PIER EL. 748.12

749.6± 749.4± 749.4± 749.3± 748.9±

APPROXIMATE EXISTING GROUNDLINE

5'-0" Ø DRILLED PIER (TYP.)

4'-6" Ø DRILLED PIER

10" PVC SANITARY SEWER LINE (ELEV. NOT KNOWN)

BENT 14 BENT 15 BENT 16 BENT 17

SECTION ALONG RIGHT LANE GRADE LINE

(SECTION AT RIGHT ANGLE TO BENTS)

TOTAL BRIDGE LENGTH = 4,194'-3⅞" FILL FACE END BENT 1 TO FILL FACE END BENT 2 (ALONG RIGHT LANE GRADE LINE)

387'-3½" (3-SPAN CONT. UNIT E) | SIMPLE SPAN | SIMPLE SPAN | 480'-0" (4-SPAN CONT. UNIT F)

129'-0" - SPAN 14 | 118'-7⅜" - SPAN 15 | 118'-7 1/16" - SPAN 16 | 120'-0" - SPAN 17 | 120'-0" - SPAN 18

TO HORSEPEN CREEK RD.

℄ SURVEY -L-

TO LAKE BRANDT RD.

23'-0"

RIGHT LANE GRADE LINE

W.P. 16R @ ℄ BENT 14 STA. 396+90.96 -L-

90°-00'-00" (TYP.)

W.P. 17R @ ℄ BENT 15 STA. 398+09.56 -L-

W.P. 18R @ ℄ BENT 16 STA. 399+28.15 -L-

W.P. 19R @ ℄ BENT 17 STA. 400+48.15 -L-

CONST. JT & CROSS-SLOPE ROLLOVER

TEMPORARY WORK BRIDGE (TYP.) ●

VARIES CLEAR ROADWAY

℄ SURVEY -RPCY4-

.05 STA. 1+66.67 -RPCY4-

.06 SC STA. 2+00.00 -RPCY4-

.06 CS STA. 2+55.14 -RPCY4-

.05 STA. 2+88.47 -RPCY4-

.04 STA. 3+21.80 -RPCY4-

.03 STA. 3+55.14 -RPCY4-

.02 STA. 3+88.47 -RPCY4-

W.P. C1 @ ℄ BENT 1 BEGIN RAMP C (FOR DETAILS OF THIS BENT, SEE RAMP C PLANS)

ST STA. 4+55.14 -RPCY4-

SEE RAMP C PLANS FOR DETAILS

10" PVC SANITARY SEWER LINE

PLAN

HORIZ. CURVE DATA -RPCY4-

PIs = 1+33.38
θs = 4°45'17.4" (RT.)
Ls = 200.00'
LT = 133.38'
ST = 66.71'

PI = 2+27.58
Δ = 2°37'19.3" (RT.)
D = 4°45'17.4"
L = 55.14'
T = 27.58'
R = 1,205.00'

PIs = 3+21.85
θs = 4°45'17.4" (RT.)
Ls = 200.00'
LT = 133.38'
ST = 66.71'

GRADE DATA -RPCY4-

(-)1.1000% (-)1.0000% (-)0.6000% (-)0.9920% (-)0.7140% (-)3.6639%

PVI STA. 0+50.00 PVI EL. 794.39
PVI STA. 1+00.00 PVI EL. 793.89
PVI STA. 1+50.00 PVI EL. 793.59
PVI STA. 4+00.00 PVI EL. 791.74 LVC = 450.00

● SEE LEFT LANE BRIDGE PLANS FOR TEMPORARY WORK BRIDGE AND PAY ITEM

STATE OF NORTH CAROLINA SEAL 18165 ENGINEER MARK F. ROBBINS 6-7-13

STATE OF NORTH CAROLINA SEAL 28479 ENGINEER KEVIN G. BAILEY 6-7-13

PROJECT NO. U-2524C

GUILFORD COUNTY

STATION: POT 407+85.82 -L-
= POT 29+79.72 -Y4-

SHEET 5 OF 10

STATE OF NORTH CAROLINA
DEPARTMENT OF TRANSPORTATION
RALEIGH

GENERAL DRAWING PLAN AND ELEVATION BRIDGE ON I-840 OVER BATTLEGROUND AVE. -RIGHT LANE-

REVISIONS						SHEET NO.
NO.	BY:	DATE:	NO.	BY:	DATE:	S-253
1			3			TOTAL SHEETS
2			4			836

STV / Ralph Whitehead Associates, Inc.
1000 West Morehead St., Ste. 200
Charlotte, NC 28208
NC License No. F-0991

DRAWN BY : CLG DATE : 4-13
CHECKED BY : PEK DATE : 5-13
DESIGN ENGINEER OF RECORD: P. KELLY DATE : 5-13

R:\station\Finals\105\Gen Drawing Sheet 5.dgn 8:13:59 AM 6/7/2013

401+00 402+00 403+00 404+00 405+00

(-)0.9900% (-)0.5000%

GRADE DATA -L-

PVI STA. 366+00.00
PVI EL. 809.68
LVC = 800.00

SPAN 18 SPAN 19 SPAN 20 SPAN 21

810 800 790 780 770 760 750

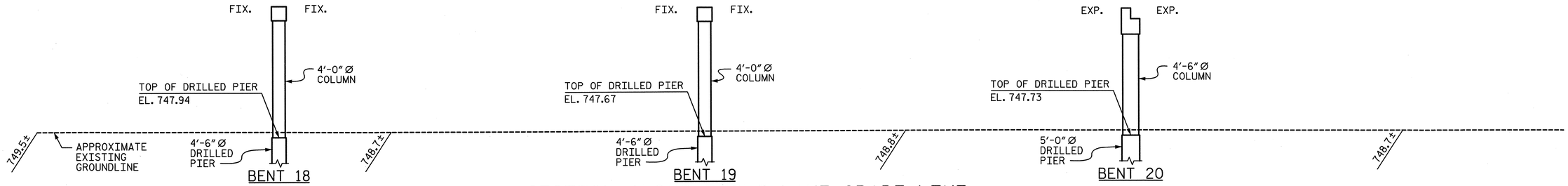

SECTION ALONG RIGHT LANE GRADE LINE

(SECTION AT RIGHT ANGLE TO BENTS)

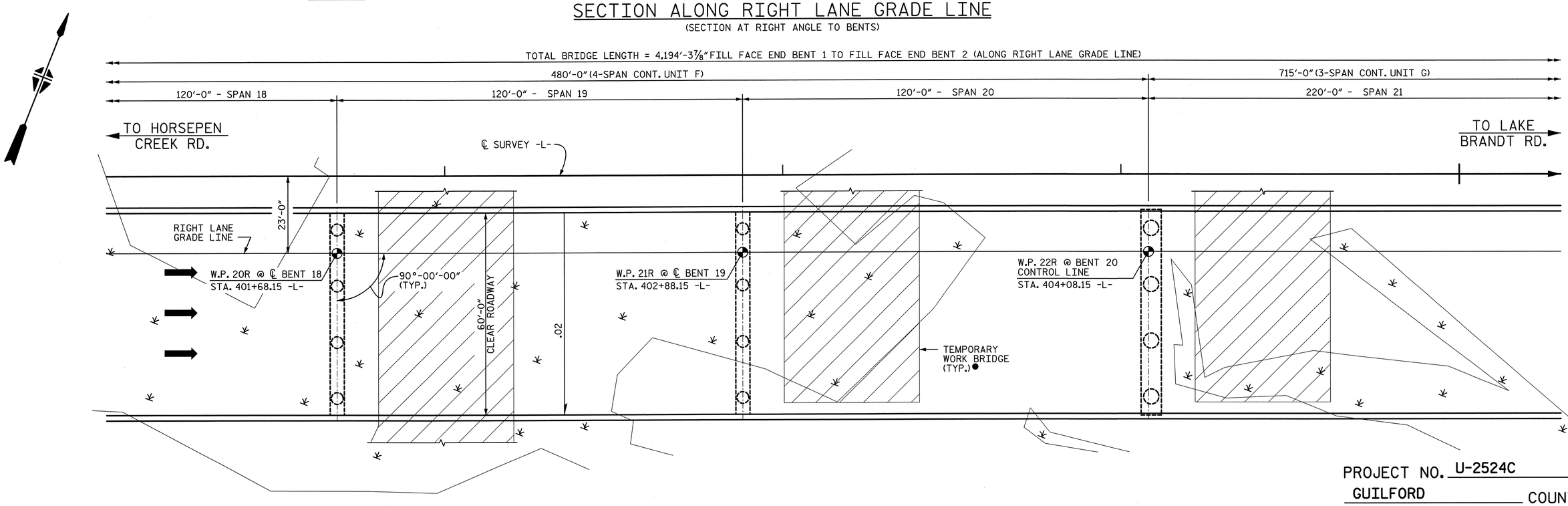

PLAN

● SEE LEFT LANE BRIDGE PLANS FOR TEMPORARY WORK BRIDGE AND PAY ITEM

NORTH CAROLINA PROFESSIONAL SEAL 18165 ENGINEER MARK F. ROBBINS 6-7-13

NORTH CAROLINA PROFESSIONAL SEAL 28479 ENGINEER KEVIN G. BAILEY 6-7-13

PROJECT NO. U-2524C

GUILFORD COUNTY

STATION: POT 407+85.82 -L-
= POT 29+79.72 -Y4-

SHEET 6 OF 10

STATE OF NORTH CAROLINA
DEPARTMENT OF TRANSPORTATION
RALEIGH

GENERAL DRAWING PLAN AND ELEVATION BRIDGE ON I-840 OVER BATTLEGROUND AVE. -RIGHT LANE-

REVISIONS						SHEET NO.
NO.	BY:	DATE:	NO.	BY:	DATE:	S-254
1			3			TOTAL SHEETS
2			4			836

STV / Ralph Whitehead Associates, Inc.
1000 West Morehead St., Ste. 200
Charlotte, NC 28208
NC License No. F-0991

DRAWN BY : CLG DATE : 4-13
CHECKED BY : PEK DATE : 5-13

DESIGN ENGINEER OF RECORD: P. KELLY DATE : 5-13

6/6/2013 4:38:48 PM R:\ustation\Finals\(06) Gen Drawing Sheet 6.dgn

406+00 407+00 408+00 409+00

(-)0.9900% (-)0.5000%

GRADE DATA -L-

PVI STA. 366+00.00
PVI EL. 809.68
LVC = 800.00

800 790 780 770 760 750

SPAN 21 SPAN 22 SPAN 23

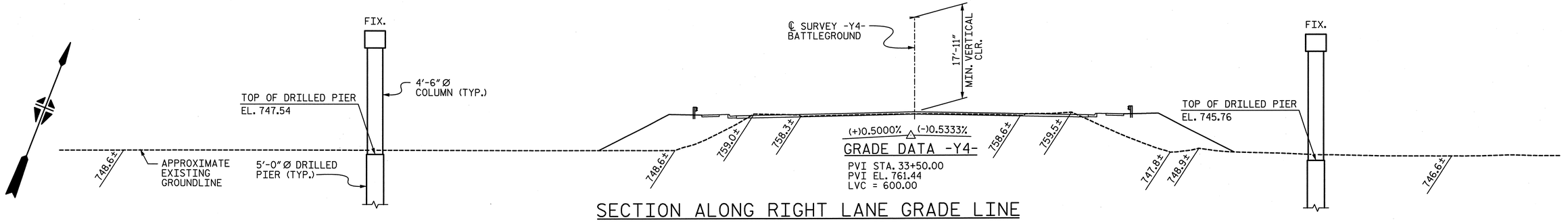

BENT 21 BENT 22

SECTION ALONG RIGHT LANE GRADE LINE

(SECTION AT RIGHT ANGLE TO BENTS)

TOTAL BRIDGE LENGTH = 4,194'-3⅞" FILL FACE END BENT 1 TO FILL FACE END BENT 2 (ALONG RIGHT LANE GRADE LINE)

715'-0" (3-SPAN CONT. UNIT G)

220'-0" - SPAN 21 275'-0" - SPAN 22 220'-0" - SPAN 23

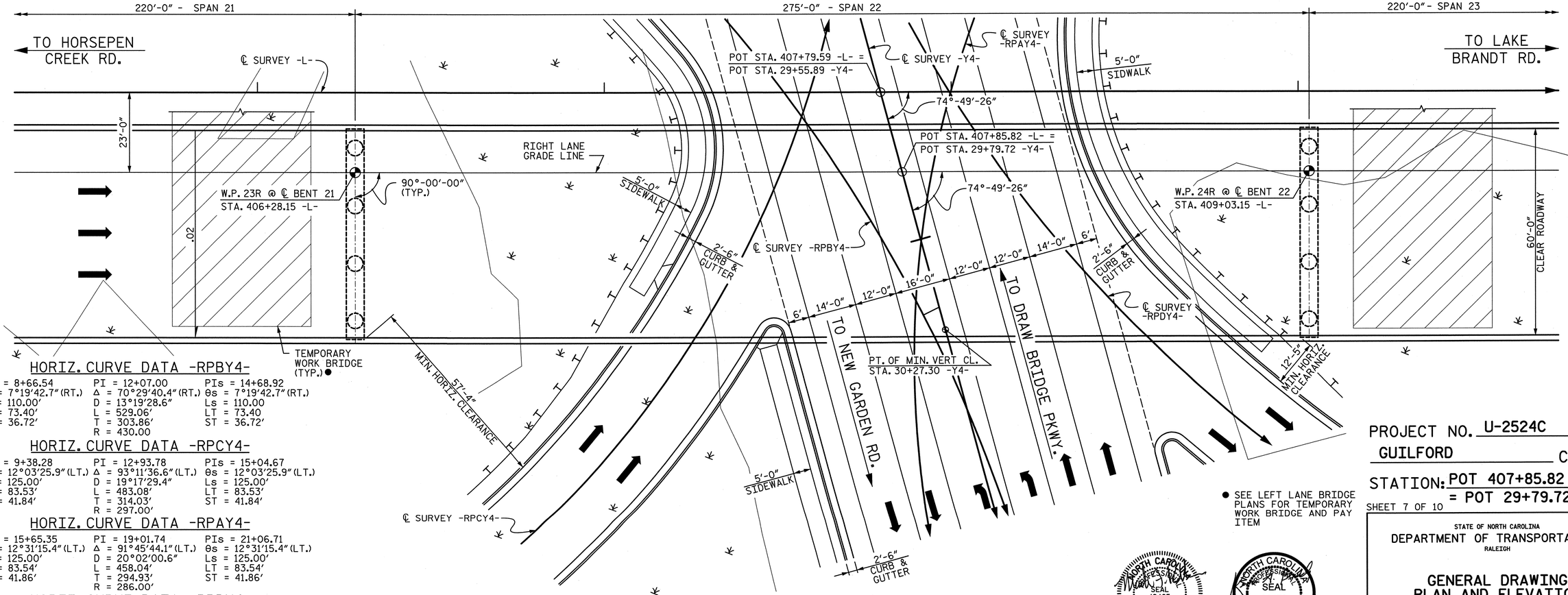

PLAN

● SEE LEFT LANE BRIDGE PLANS FOR TEMPORARY WORK BRIDGE AND PAY ITEM

HORIZ. CURVE DATA -RPBY4-

PIs = 8+66.54	PI = 12+07.00	PIs = 14+68.92
θs = 7°19'42.7" (RT.)	Δ = 70°29'40.4" (RT.)	θs = 7°19'42.7" (RT.)
Ls = 110.00'	D = 13°19'28.6"	Ls = 110.00
LT = 73.40'	L = 529.06'	LT = 73.40
ST = 36.72'	T = 303.86'	ST = 36.72'
	R = 430.00	

HORIZ. CURVE DATA -RPCY4-

PIs = 9+38.28	PI = 12+93.78	PIs = 15+04.67
θs = 12°03'25.9" (LT.)	Δ = 93°11'36.6" (LT.)	θs = 12°03'25.9" (LT.)
Ls = 125.00'	D = 19°17'29.4"	Ls = 125.00'
LT = 83.53'	L = 483.08'	LT = 83.53'
ST = 41.84'	T = 314.03'	ST = 41.84'
	R = 297.00'	

HORIZ. CURVE DATA -RPAY4-

PIs = 15+65.35	PI = 19+01.74	PIs = 21+06.71
θs = 12°31'15.4" (LT.)	Δ = 91°45'44.1" (LT.)	θs = 12°31'15.4" (LT.)
Ls = 125.00'	D = 20°02'00.6"	Ls = 125.00'
LT = 83.54'	L = 458.04'	LT = 83.54'
ST = 41.86'	T = 294.93'	ST = 41.86'
	R = 286.00'	

HORIZ. CURVE DATA -RPDY4-

PIs = 14+64.53	PI = 17+17.33	PIs = 19+33.02
θs = 8°02'20.2" (RT.)	Δ = 57°45'26.9" (RT.)	θs = 8°02'20.2" (RT.)
Ls = 110.00'	D = 14°36'58.6"	Ls = 110.00'
LT = 73.41'	L = 395.16'	LT = 73.41'
ST = 36.74'	T = 216.51'	ST = 36.74'
	R = 392.00'	

DRAWN BY : CLG DATE : 4-13
CHECKED BY : PEK DATE : 5-13

DESIGN ENGINEER OF RECORD: P. KELLY DATE : 5-13

PROJECT NO. U-2524C

GUILFORD COUNTY

STATION: POT 407+85.82 -L- = POT 29+79.72 -Y4-

SHEET 7 OF 10

STATE OF NORTH CAROLINA
DEPARTMENT OF TRANSPORTATION
RALEIGH

GENERAL DRAWING PLAN AND ELEVATION BRIDGE ON I-840 OVER BATTLEGROUND AVE. -RIGHT LANE-

NORTH CAROLINA PROFESSIONAL ENGINEER SEAL 18165 ENGINEER MARK F. ROBBINS 6-7-13

NORTH CAROLINA PROFESSIONAL ENGINEER SEAL 28479 ENGINEER KEVIN G. BAILEY 6-7-13

STV / Ralph Whitehead Associates, Inc.
1000 West Morehead St., Ste. 200
Charlotte, NC 28208
NC License No. F-0991

REVISIONS						SHEET NO.
NO.	BY:	DATE:	NO.	BY:	DATE:	S-255
1			3			TOTAL SHEETS
2			4			836

6/6/2013 5:45:30 PM R:\station\Finals\(07) Gen Drawing Sheet 7.dgn

(-)0.9900% (-)0.5000%

GRADE DATA -L-

PVI STA. 366+00.00
PVI EL. 809.68
LVC = 800.00

410+00 411+00 412+00 413+00 414+00

810 800 790 780 770 760 750 740

SPAN 23 SPAN 24 SPAN 25

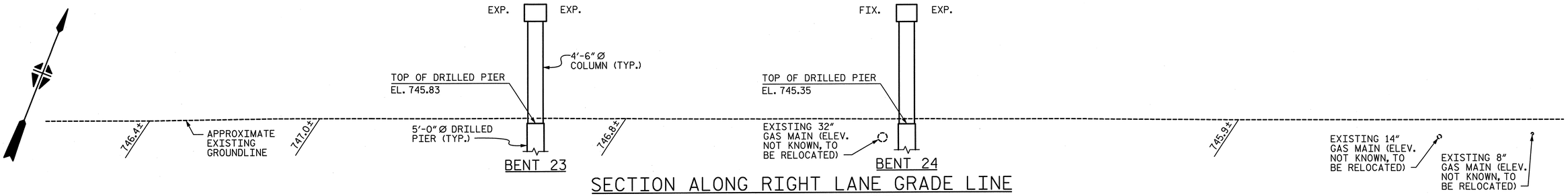

SECTION ALONG RIGHT LANE GRADE LINE

(SECTION AT RIGHT ANGLE TO BENTS)

TOTAL BRIDGE LENGTH = 4,194'-3⅞" FILL FACE END BENT 1 TO FILL FACE END BENT 2

715'-0" (3-SPAN CONT. UNIT G)	SIMPLE SPAN	456'-5 13/16" (2-SPAN CONT. UNIT H)
220'-0" - SPAN 23	109'-1¼" - SPAN 24	227'-4⅜" - SPAN 25

ARC LENGTHS MEASURED ALONG RIGHT LANE GRADE LINE

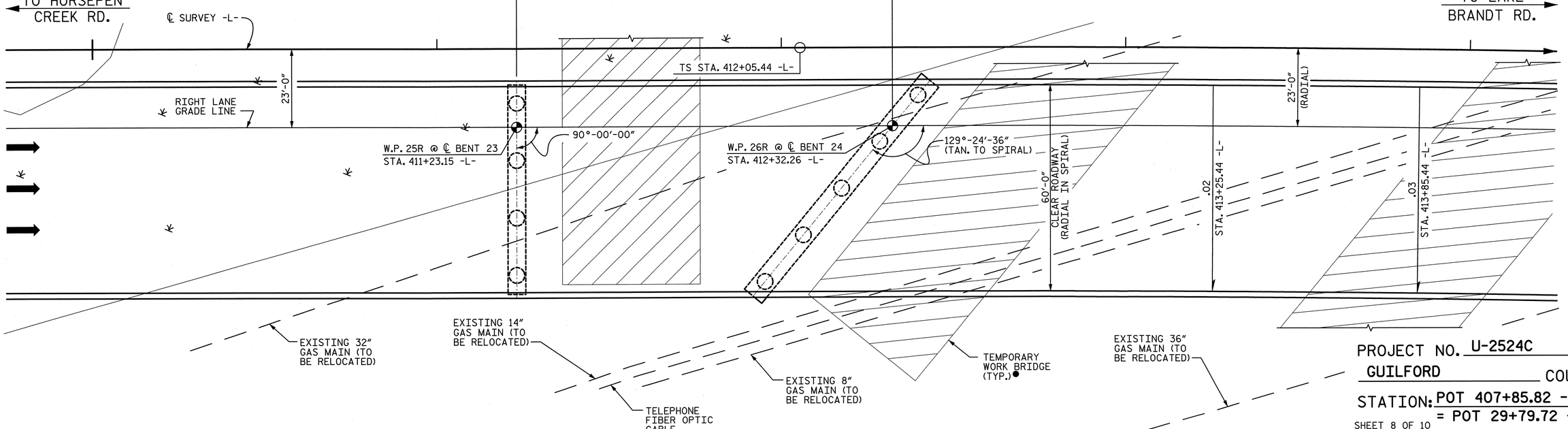

PLAN

HORIZ. CURVE DATA -L-

PIs = 415+25.60	PI = 421+58.62	PIs = 427+80.87
θs = 5°30'01.4" (RT.)	Δ = 21°26'06.8" (RT.)	θs = 5°30'01.4" (RT.)
Ls = 480.00'	D = 2°17'30.6"	Ls = 480.00'
LT = 320.15'	L = 935.29'	LT = 320.15'
ST = 160.14'	T = 473.18'	ST = 160.14'
	R = 2,500.00'	

● SEE LEFT LANE BRIDGE PLANS FOR TEMPORARY WORK BRIDGE AND PAY ITEM

NORTH CAROLINA PROFESSIONAL ENGINEER SEAL 18165 ENGINEER MARK F. ROBBINS 6-7-13

NORTH CAROLINA PROFESSIONAL ENGINEER SEAL 28479 ENGINEER KEVIN G. BAILEY 6-7-13

PROJECT NO. U-2524C

GUILFORD COUNTY

STATION: POT 407+85.82 -L-
= POT 29+79.72 -Y4-

SHEET 8 OF 10

STATE OF NORTH CAROLINA
DEPARTMENT OF TRANSPORTATION
RALEIGH

GENERAL DRAWING PLAN AND ELEVATION BRIDGE ON I-840 OVER BATTLEGROUND AVE. -RIGHT LANE-

REVISIONS						SHEET NO.
NO.	BY:	DATE:	NO.	BY:	DATE:	S-256
1			3			TOTAL SHEETS
2			4			836

DRAWN BY : CLG DATE : 4-13
CHECKED BY : PEK DATE : 5-13
DESIGN ENGINEER OF RECORD: P. KELLY DATE : 5-13

STV / Ralph Whitehead Associates, Inc.
1000 West Morehead St. Ste. 200
Charlotte, NC 28208
NC License No. F-0991

R:\ustation\Finals\108 Gen Drawing Sheet 8.dgn
4:38:51 PM
6/6/2013

415+00 | 416+00 | 417+00 | 418+00

(-)0.9900% △ (-)0.5000%

GRADE DATA -L-

PVI STA. 366+00.00
PVI EL. 809.68
LVC = 800.00

SPAN 25 | SPAN 26 | SPAN 27 | SPAN 28

790
780
770
760
750
740
730

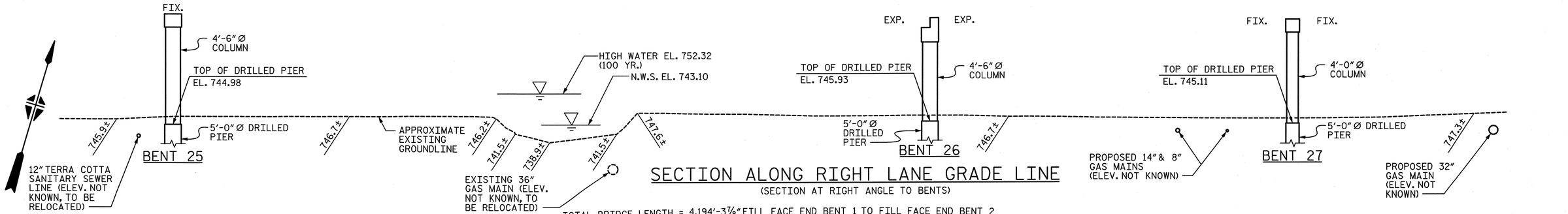

SECTION ALONG RIGHT LANE GRADE LINE

(SECTION AT RIGHT ANGLE TO BENTS)

TOTAL BRIDGE LENGTH = 4,194'-3⅞" FILL FACE END BENT 1 TO FILL FACE END BENT 2

456'-5¹³⁄₁₆" (2-SPAN CONT. UNIT H)
227'-4⅜" - SPAN 25
229'-1⁷⁄₁₆" - SPAN 26
438'-10⅜" (4-SPAN CONT. UNIT I)
109'-8⅞" - SPAN 27
101'-4¹⁄₁₆" - SPAN 28
ARC LENGTHS MEASURED ALONG RIGHT LANE GRADE LINE

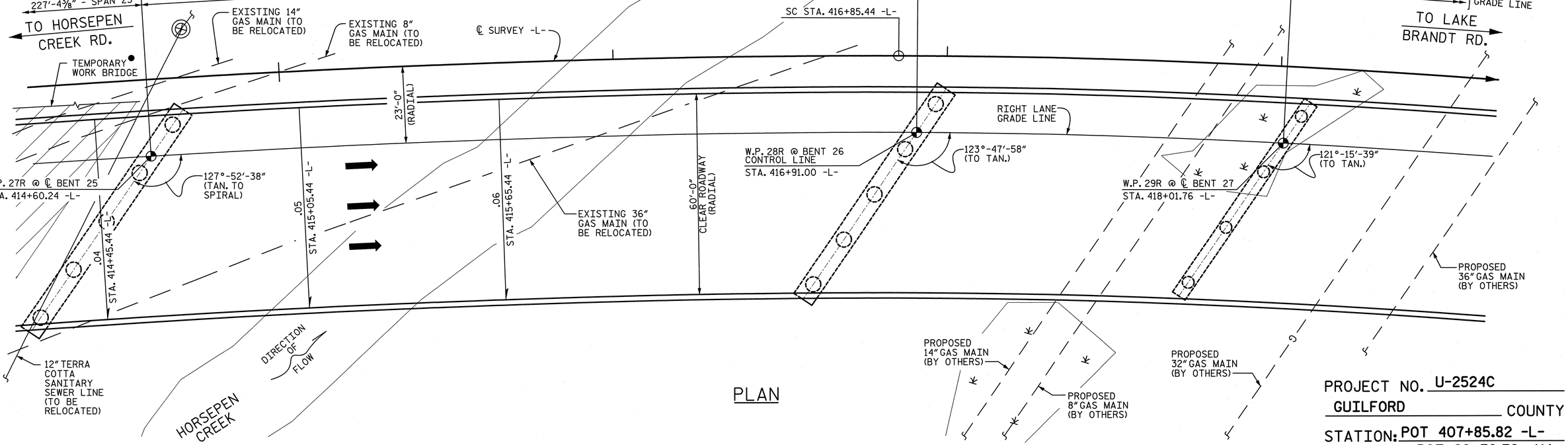

PLAN

HORIZ. CURVE DATA -L-

PIs = 415+25.60	PI = 421+58.62	PIs = 427+80.87
θs = 5°30'01.4" (RT.)	Δ = 21°26'06.8" (RT.)	θs = 5°30'01.4" (RT.)
Ls = 480.00'	D = 2°17'30.6"	Ls = 480.00'
LT = 320.15'	L = 935.29'	LT = 320.15'
ST = 160.14'	T = 473.18'	ST = 160.14'
	R = 2,500.00'	

HYDRAULIC DATA

DESIGN DISCHARGE = 6,223 CFS
FREQUENCY OF DESIGN FLOOD = 50 YRS.
DESIGN HIGH WATER ELEVATION = 751.60 FT.
DRAINAGE AREA = 16.3 SQ. MI.
BASIC DISCHARGE (Q100) = 7,302 CFS
BASIC HIGH WATER ELEVATION = 752.32 FT.

OVERTOPPING FLOOD DATA

OVERTOPPING DISCHARGE = NA CFS
FREQUENCY OF OVERTOPPING FLOOD = >500 YRS.
OVERTOPPING FLOOD ELEVATION = NA FT.

NOTE : BENTS 27 AND 28 HAVE BEEN DESIGNED IN SUCH A MANNER THAT WILL ALLOW THE IN-SITU SOILS TO BE EXCAVATED TO A DEPTH OF 20 FEET BELOW THE EXISTING GROUND SURFACE (APPROX. EL. 747.0) ACROSS THE ENTIRE WIDTH AND ALONG THE ENTIRE LENGTH OF COLONIAL PIPELINE COMPANY'S EASEMENT WITHOUT CAUSING ANY NEGATIVE IMPACTS TO THE STRENGTH, STABILITY OR SERVICEABILITY OF THE BRIDGE OR ITS FOUNDATIONS.

● SEE LEFT LANE BRIDGE PLANS FOR TEMPORARY WORK BRIDGE AND PAY ITEM

NORTH CAROLINA PROFESSIONAL SEAL 18165 ENGINEER MARK F. ROBBINS 6-7-13

NORTH CAROLINA PROFESSIONAL SEAL 28479 ENGINEER KEVIN G. BAILEY 6-7-13

PROJECT NO. U-2524C
GUILFORD COUNTY
STATION: POT 407+85.82 -L-
= POT 29+79.72 -Y4-

SHEET 9 OF 10

STATE OF NORTH CAROLINA
DEPARTMENT OF TRANSPORTATION
RALEIGH

GENERAL DRAWING PLAN AND ELEVATION BRIDGE ON I-840 OVER BATTLEGROUND AVE. -RIGHT LANE-

REVISIONS						SHEET NO.
NO.	BY:	DATE:	NO.	BY:	DATE:	S-257
1			3			TOTAL SHEETS
2			4			9 & 10

STV / Ralph Whitehead Associates, Inc.
1000 West Morehead St., Ste. 200
Charlotte, NC 28208
NC License No. F-0991

DRAWN BY : CLG DATE : 4-13
CHECKED BY : PEK DATE : 5-13
DESIGN ENGINEER OF RECORD: P. KELLY DATE : 5-13

6/7/2013 8:25:56 AM R:\ustation\Finals\09 Gen Drawing Sheet 9.dgn

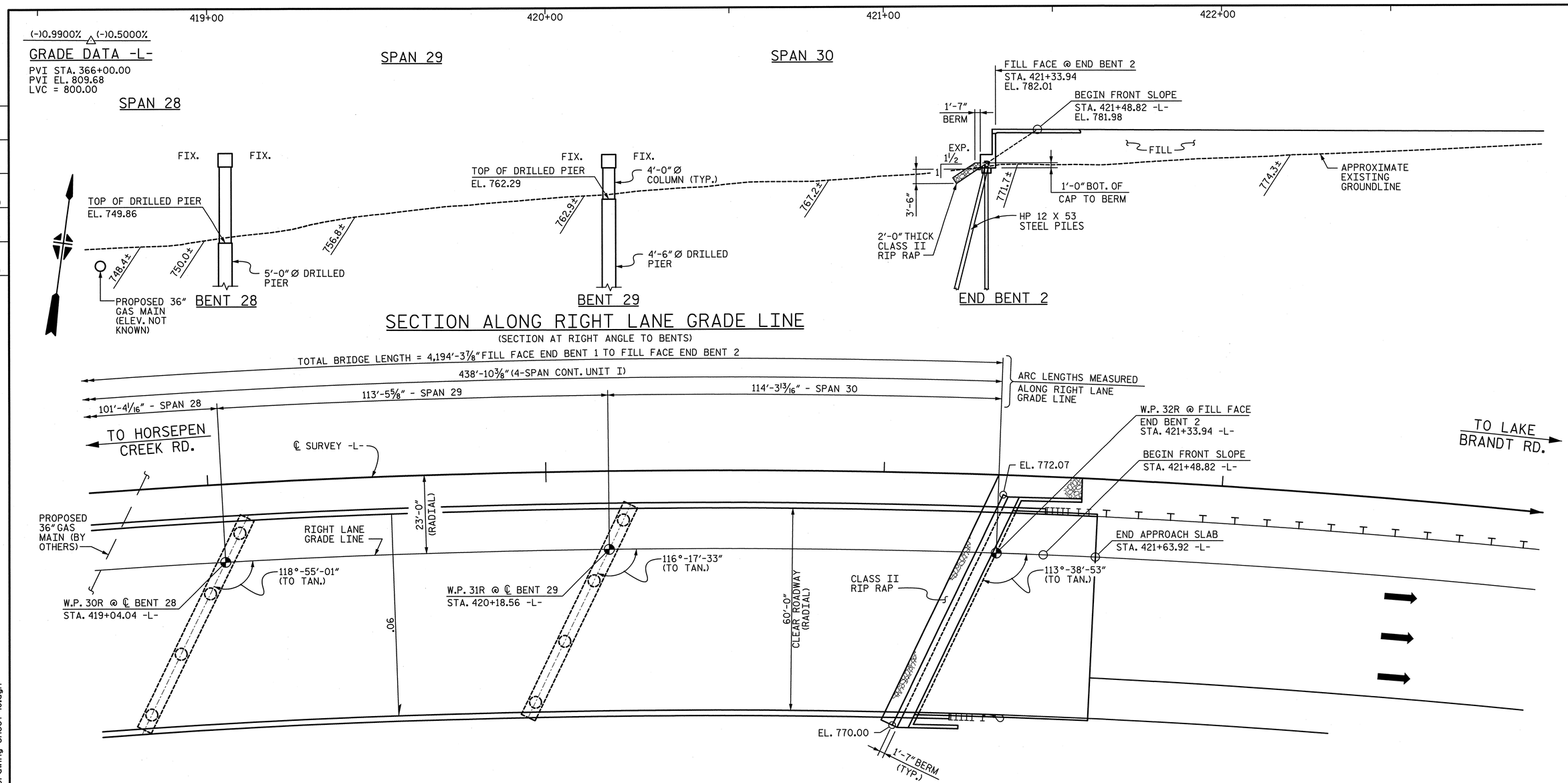

SECTION ALONG RIGHT LANE GRADE LINE

(SECTION AT RIGHT ANGLE TO BENTS)

PLAN

(PILES NOT SHOWN FOR CLARITY.)

HORIZ. CURVE DATA -L-

PIs = 415+25.60	PI = 421+58.62	PIs = 427+80.87
θs = 5°30'01.4" (RT.)	Δ = 21°26'06.8" (RT.)	θs = 5°30'01.4" (RT.)
Ls = 480.00'	D = 2°17'30.6"	Ls = 480.00'
LT = 320.15'	L = 935.29'	LT = 320.15'
ST = 160.14'	T = 473.18'	ST = 160.14'
	R = 2,500.00'	

NOTE : BENTS 27 AND 28 HAVE BEEN DESIGNED IN SUCH A MANNER THAT WILL ALLOW THE IN-SITU SOILS TO BE EXCAVATED TO A DEPTH OF 20 FEET BELOW THE EXISTING GROUND SURFACE (APPROX. EL. 747.0) ACROSS THE ENTIRE WIDTH AND ALONG THE ENTIRE LENGTH OF COLONIAL PIPELINE COMPANY'S EASEMENT WITHOUT CAUSING ANY NEGATIVE IMPACTS TO THE STRENGTH, STABILITY OR SERVICEABILITY OF THE BRIDGE OR ITS FOUNDATIONS.

NORTH CAROLINA PROFESSIONAL SEAL 18165 ENGINEER MARK F. ROBBINS 6-7-13

NORTH CAROLINA PROFESSIONAL SEAL 28479 ENGINEER KEVIN G. BAILEY 6-7-13

PROJECT NO. U-2524C

GUILFORD COUNTY

STATION: POT 407+85.82 -L-
= POT 29+79.72 -Y4-

SHEET 10 OF 10

STATE OF NORTH CAROLINA
DEPARTMENT OF TRANSPORTATION
RALEIGH

GENERAL DRAWING PLAN AND ELEVATION BRIDGE ON I-840 OVER BATTLEGROUND AVE. -RIGHT LANE-

DRAWN BY : CLG	DATE : 4-13	DESIGN ENGINEER OF RECORD: P. KELLY	DATE : 5-13
CHECKED BY : PEK	DATE : 5-13		

STV / Ralph Whitehead Associates, Inc.
1000 West Morehead St., Ste. 200
Charlotte, NC 28208
NC License No. F-0991

REVISIONS						SHEET NO.
NO.	BY:	DATE:	NO.	BY:	DATE:	S-258
1			3			TOTAL SHEETS
2			4			836

6/6/2013 4:38:53 PM R:\ustation\Finals\100 Gen Drawing Sheet 10.dgn

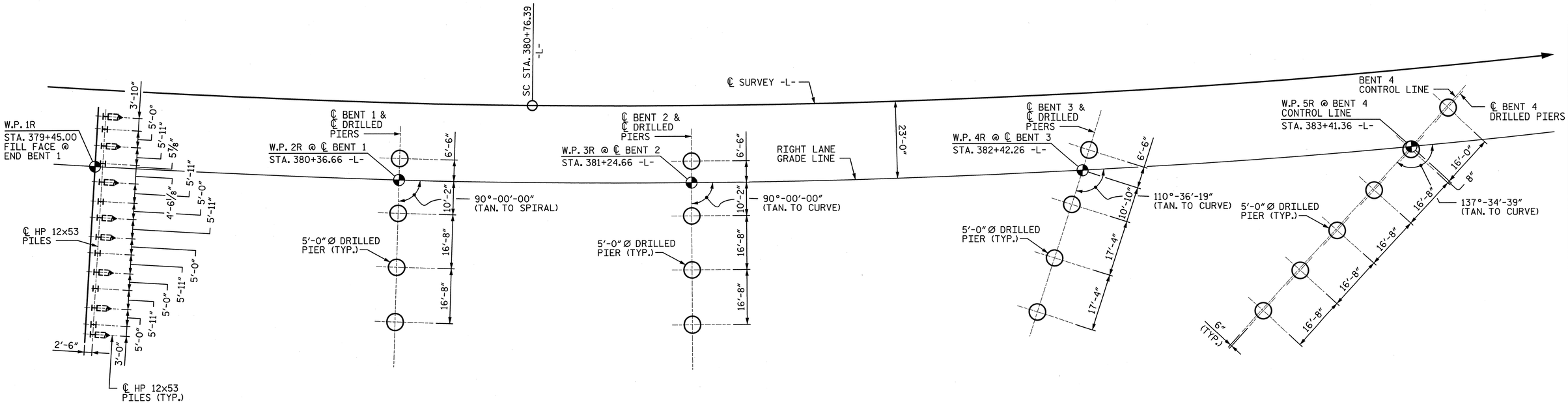

FOUNDATION LAYOUT

(DIMENSIONS TO DRILLED PIERS ARE TO ℄ OF DRILLED PIERS
AND ALONG ℄ BENT OR BENT CONTROL LINE)
(DIMENSIONS TO HP 12x53 PILES ARE TO ℄ HP 12x53 PILES)

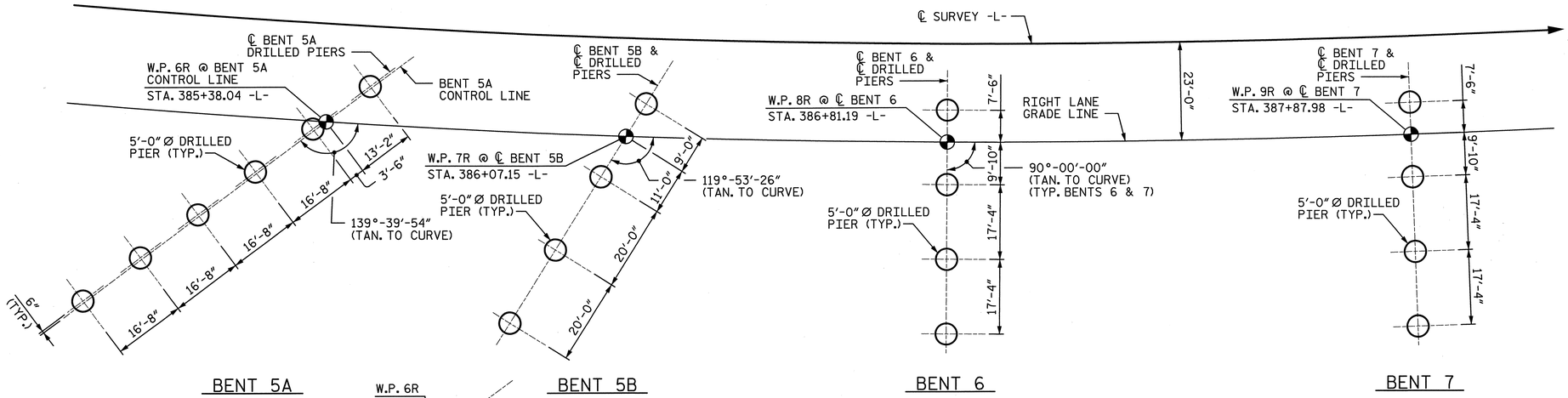

FOUNDATION LAYOUT

(DIMENSIONS TO DRILLED PIERS ARE TO ℄ OF DRILLED PIERS
AND ALONG ℄ BENT OR BENT CONTROL LINE)

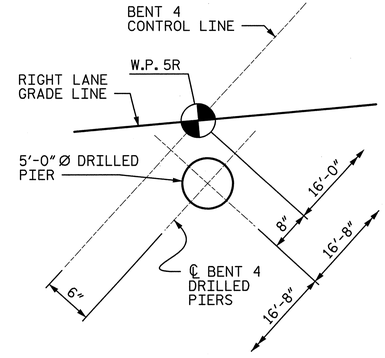

WORKPOINT 5R DETAIL

(N.T.S.)

WORKPOINT 6R DETAIL

(N.T.S.)

NOTES:

1. FOR FOUNDATION NOTES, SEE "GENERAL DRAWING GENERAL NOTES" SHEET.

PROJECT NO. U-2524C

GUILFORD COUNTY

STATION: POT 407+85.82 -L-
= POT 29+79.72 -Y4-

SHEET 1 OF 5

STATE OF NORTH CAROLINA
DEPARTMENT OF TRANSPORTATION
RALEIGH

GENERAL DRAWING
FOUNDATION LAYOUT
BRIDGE ON I-840
OVER BATTLEGROUND AVE.
-RIGHT LANE-

DRAWN BY : VMW	DATE : 3-13	DESIGN ENGINEER OF RECORD: K. BAILEY	DATE : 5-13
CHECKED BY : CLG	DATE : 4-13		

STV / Ralph Whitehead Associates, Inc.
1000 West Morehead St. Ste. 200
Charlotte, NC 28208
NC License No. F-0991

REVISIONS						SHEET NO.
NO.	BY:	DATE:	NO.	BY:	DATE:	S-259
1			3			TOTAL SHEETS
2			4			836

6/6/2013 4:38:54 PM R:\station\Finals\FDN Layout 1of 5.dgn

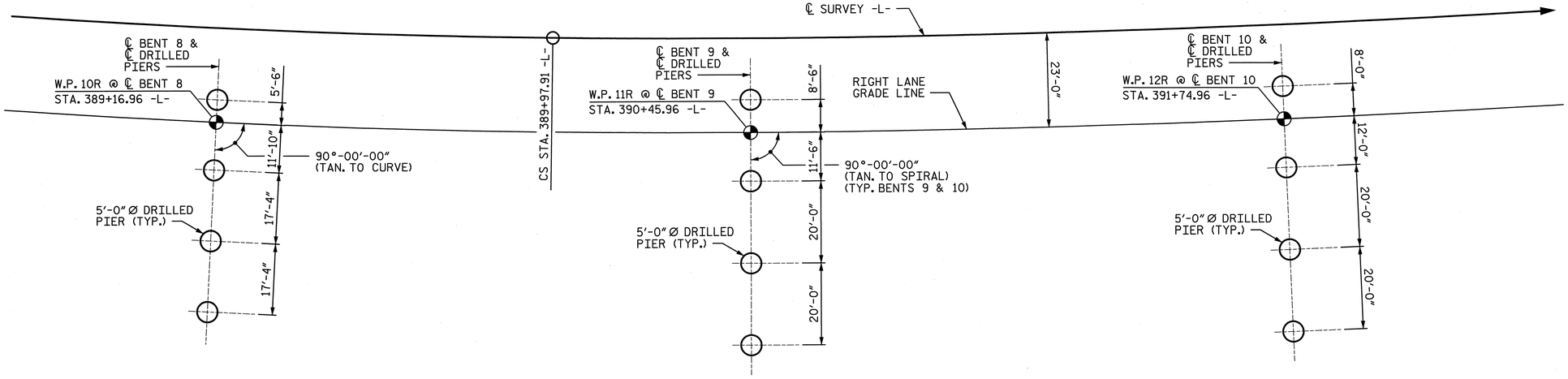

BENT 8 BENT 9 BENT 10

FOUNDATION LAYOUT

(DIMENSIONS TO DRILLED PIERS ARE TO ℄ DRILLED PIERS AND ALONG ℄ BENT OR BENT CONTROL LINE)

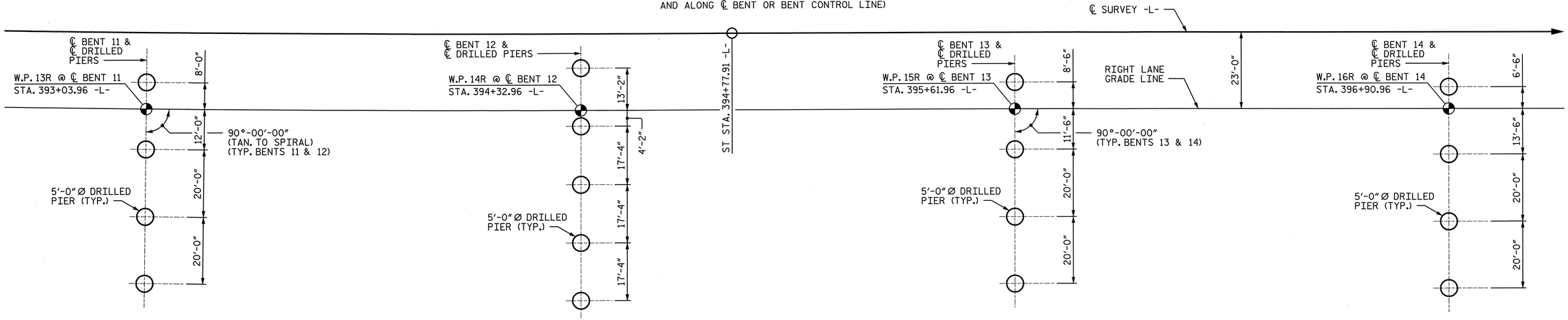

BENT 11 BENT 12 BENT 13 BENT 14

FOUNDATION LAYOUT

(DIMENSIONS TO DRILLED PIERS ARE TO ℄ DRILLED PIERS AND ALONG ℄ BENT OR BENT CONTROL LINE)

NOTES:

1. FOR FOUNDATION NOTES, SEE "GENERAL DRAWING GENERAL NOTES" SHEET.

NORTH CAROLINA PROFESSIONAL ENGINEER SEAL 18165 MARK F. ROBBINS 6-7-13

NORTH CAROLINA PROFESSIONAL ENGINEER SEAL 28479 KEVIN G. BAILEY 6-7-13

PROJECT NO. U-2524C

GUILFORD COUNTY

STATION: POT 407+85.82 -L-
= POT 29+79.72 -Y4-

SHEET 2 OF 5

STATE OF NORTH CAROLINA
DEPARTMENT OF TRANSPORTATION
RALEIGH

GENERAL DRAWING
FOUNDATION LAYOUT
BRIDGE ON I-840
OVER BATTLEGROUND AVE.
-RIGHT LANE-

REVISIONS						SHEET NO.
NO.	BY:	DATE:	NO.	BY:	DATE:	S-260
1			3			TOTAL SHEETS
2			4			836

STV / Ralph Whitehead Associates, Inc.
1000 West Morehead St., Ste. 200
Charlotte, NC 28208
NC License No. F-0991

DRAWN BY : VMW	DATE : 3-13	DESIGN ENGINEER OF RECORD: K. BAILEY	DATE : 5-13
CHECKED BY : CLG	DATE : 4-13		

6/6/2013 4:38:55 PM R:\ustation\Finals\FDN Layout 2 of 5.dgn

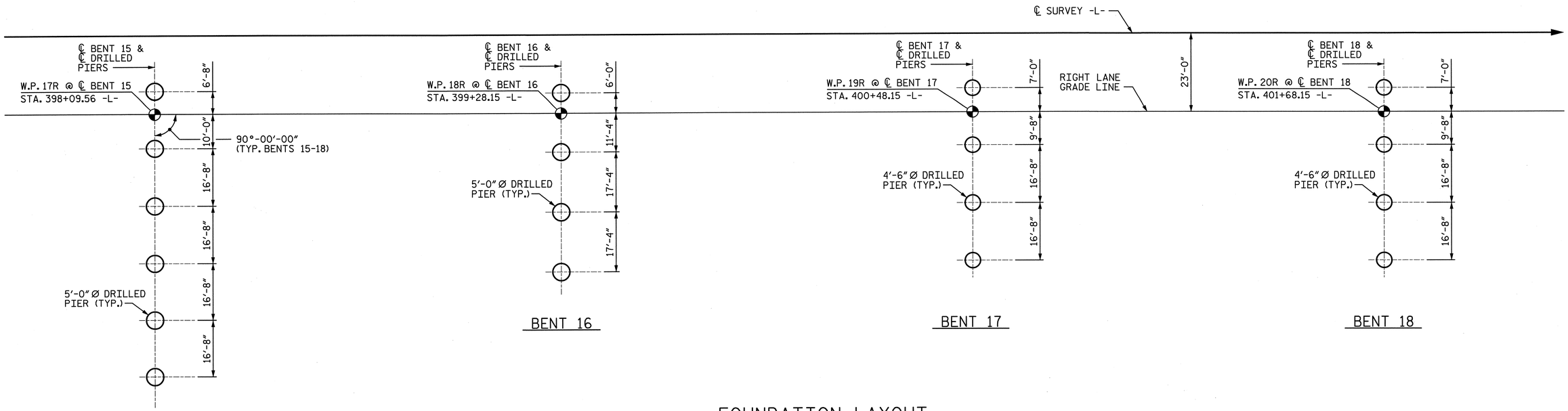

FOUNDATION LAYOUT

(DIMENSIONS TO DRILLED PIERS ARE TO ℄ DRILLED PIERS AND ALONG ℄ BENT OR BENT CONTROL LINE)

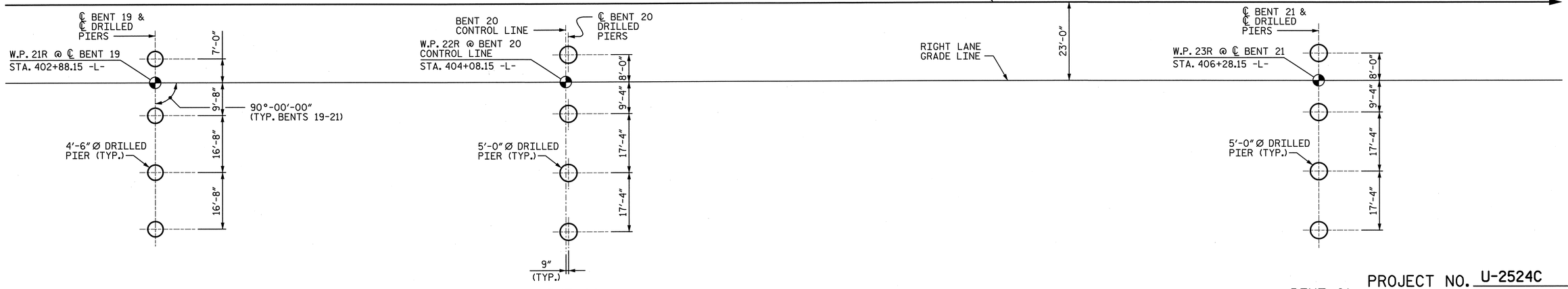

FOUNDATION LAYOUT

(DIMENSIONS TO DRILLED PIERS ARE TO ℄ DRILLED PIERS AND ALONG ℄ BENT OR BENT CONTROL LINE)

PROJECT NO. U-2524C

GUILFORD COUNTY

STATION: POT 407+85.82 -L-
= POT 29+79.72 -Y4-

SHEET 3 OF 5

NOTES:

1. FOR FOUNDATION NOTES, SEE "GENERAL DRAWING GENERAL NOTES" SHEET.

NORTH CAROLINA PROFESSIONAL ENGINEER SEAL 18165 MARK F. ROBBINS 6-7-13

NORTH CAROLINA PROFESSIONAL ENGINEER SEAL 28479 KEVIN G. BAILEY 6-7-13

STATE OF NORTH CAROLINA
DEPARTMENT OF TRANSPORTATION
RALEIGH

GENERAL DRAWING FOUNDATION LAYOUT BRIDGE ON I-840 OVER BATTLEGROUND AVE. -RIGHT LANE-

DRAWN BY : VMW	DATE : 3-13	DESIGN ENGINEER OF RECORD: K. BAILEY	DATE : 5-13
CHECKED BY : CLG	DATE : 4-13		

STV / Ralph Whitehead Associates, Inc.
1000 West Morehead St. Ste. 200
Charlotte, NC 28208
NC License No. F-0991

REVISIONS						SHEET NO.
NO.	BY:	DATE:	NO.	BY:	DATE:	S-261
1			3			TOTAL SHEETS
2			4			836

6/6/2013 4:38:56 PM R:\ustation\Finals\FDN Layout 3 of 5.dgn

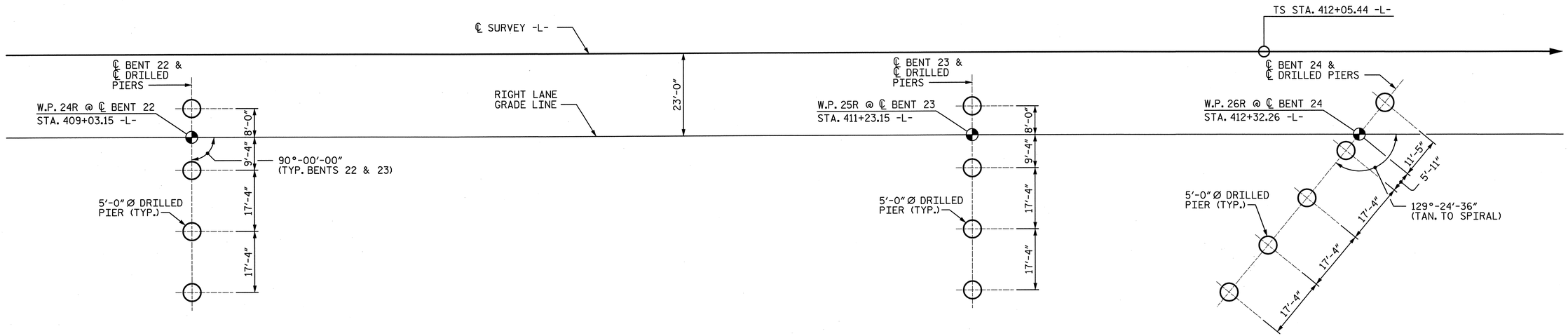

BENT 22

BENT 23

BENT 24

FOUNDATION LAYOUT

(DIMENSIONS TO DRILLED PIERS ARE TO ℄ DRILLED PIERS AND ALONG ℄ BENT OR BENT CONTROL LINE)

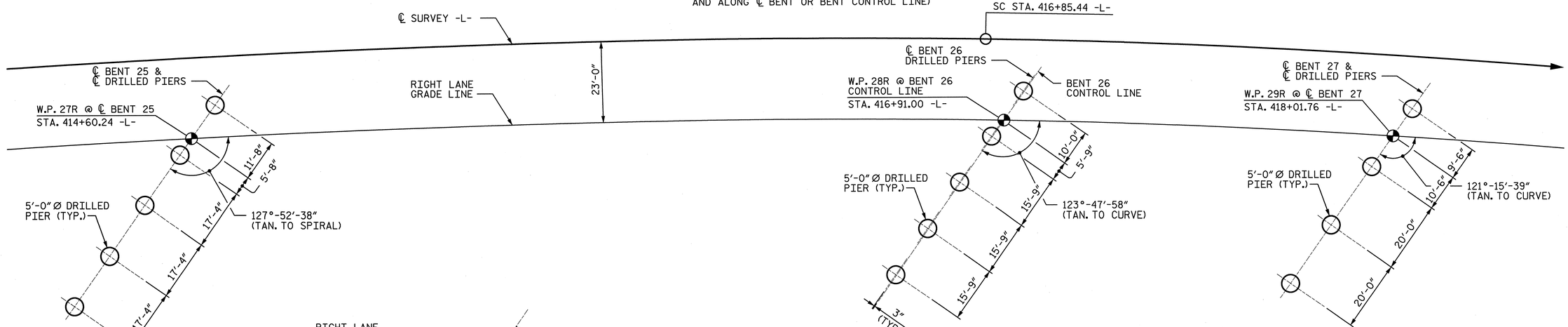

BENT 25

BENT 26

BENT 27

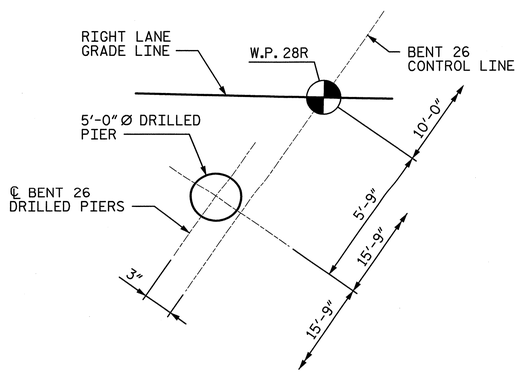

WORKPOINT 28R DETAIL

(N.T.S.)

FOUNDATION LAYOUT

(DIMENSIONS TO DRILLED PIERS ARE TO ℄ DRILLED PIERS AND ALONG ℄ BENT OR BENT CONTROL LINE)

NOTES:

1. FOR FOUNDATION NOTES, SEE "GENERAL DRAWING GENERAL NOTES" SHEET.

NORTH CAROLINA PROFESSIONAL SEAL 18165 ENGINEER MARK F. ROBBINS 6-7-13

NORTH CAROLINA PROFESSIONAL SEAL 28479 ENGINEER KEVIN G. BAILEY 6-7-13

DRAWN BY : VMW	DATE : 3-13	DESIGN ENGINEER OF RECORD: K. BAILEY	DATE : 5-13
CHECKED BY : CLG	DATE : 4-13		

STV / Ralph Whitehead Associates, Inc.
1000 West Morehead St., Ste. 200
Charlotte, NC 28208
NC License No. F-0991

PROJECT NO. U-2524C

GUILFORD COUNTY

STATION: POT 407+85.82 -L- = POT 29+79.72 -Y4-

SHEET 4 OF 5

STATE OF NORTH CAROLINA
DEPARTMENT OF TRANSPORTATION
RALEIGH

GENERAL DRAWING
FOUNDATION LAYOUT
BRIDGE ON I-840
OVER BATTLEGROUND AVE.
-RIGHT LANE-

REVISIONS						SHEET NO.
NO.	BY:	DATE:	NO.	BY:	DATE:	S-262
1			3			TOTAL SHEETS
2			4			836

6/6/2013 4:38:58 PM R:\station\Finals\FDN Layout 4 of 5.dgn

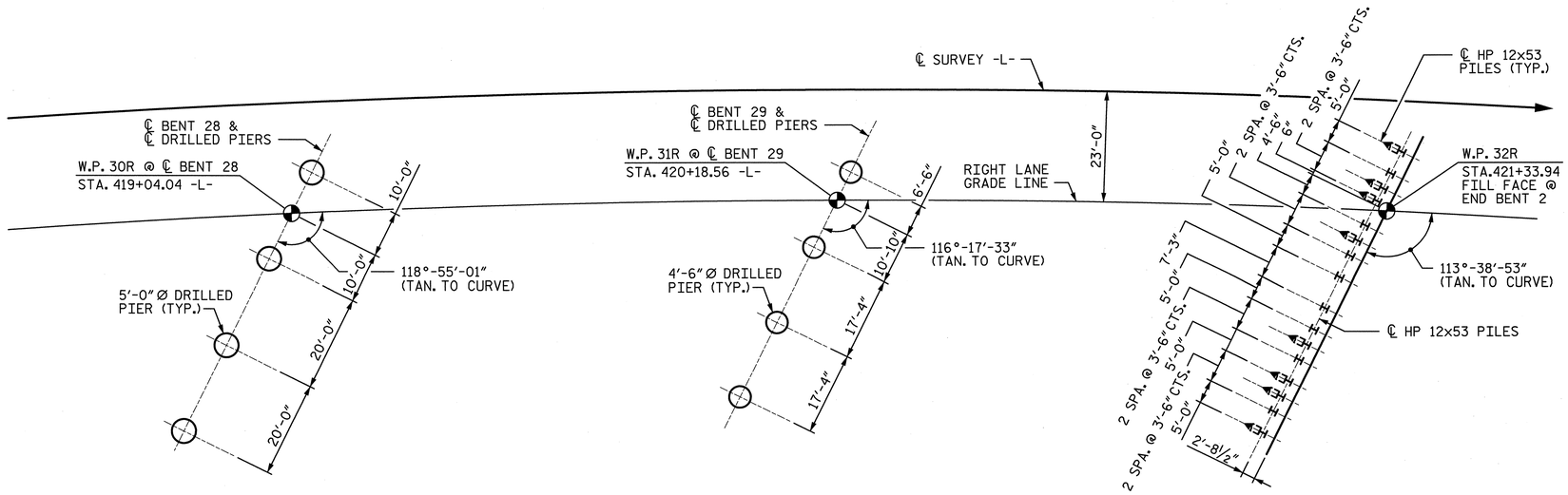

BENT 28 BENT 29 END BENT 2

◀H DENOTES DIRECTION OF 3:12 PILE BATTER.

FOUNDATION LAYOUT

(DIMENSIONS TO DRILLED PIERS ARE TO ℄ OF DRILLED PIERS
AND ALONG ℄ BENT OR BENT CONTROL LINE)
(DIMENSIONS TO HP 12x53 PILES ARE TO ℄ HP 12x53 PILES)

NOTES:

1. FOR FOUNDATION NOTES, SEE "GENERAL DRAWING GENERAL NOTES" SHEET.

NORTH CAROLINA PROFESSIONAL SEAL 18165 ENGINEER MARK F. ROBBINS 6-7-13

NORTH CAROLINA PROFESSIONAL SEAL 28479 ENGINEER KEVIN G. BAILEY 6-7-13

PROJECT NO. U-2524C
GUILFORD COUNTY
STATION: POT 407+85.82 -L-
= POT 29+79.72 -Y4-
SHEET 5 OF 5

STATE OF NORTH CAROLINA
DEPARTMENT OF TRANSPORTATION
RALEIGH

GENERAL DRAWING
FOUNDATION LAYOUT
BRIDGE ON I-840
OVER BATTLEGROUND AVE.
-RIGHT LANE-

DRAWN BY : VMW	DATE : 3-13	DESIGN ENGINEER OF RECORD: K. BAILEY	DATE : 5-13
CHECKED BY : CLG	DATE : 4-13		

STV / Ralph Whitehead Associates, Inc.
1000 West Morehead St., Ste. 200
Charlotte, NC 28208
NC License No. F-0991

REVISIONS						SHEET NO.
NO.	BY:	DATE:	NO.	BY:	DATE:	S-263
1			3			TOTAL SHEETS
2			4			836

6/7/2013 8:25:58 AM R:\ustation\Finals\FDN Layout 5 of 5.dgn

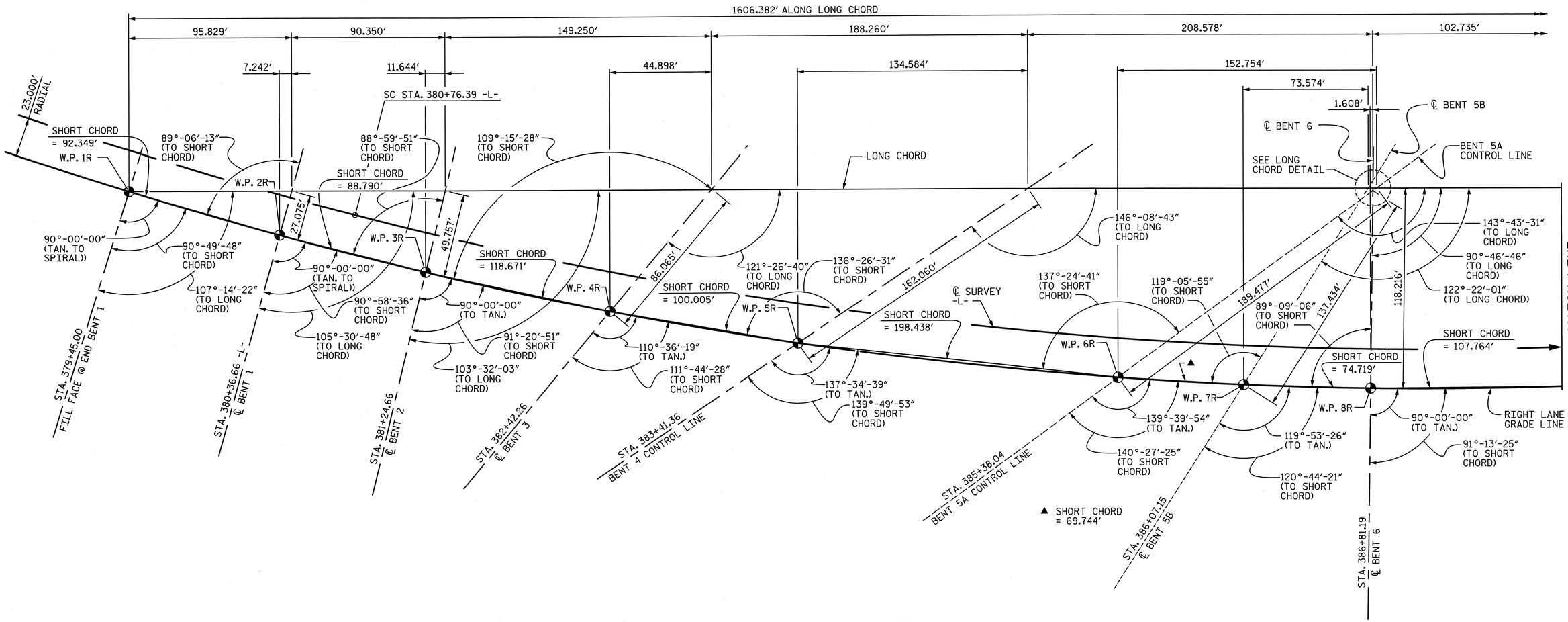

LONG CHORD LAYOUT

(NOTE : END BENTS AND BENTS ARE NOT PARALLEL.)

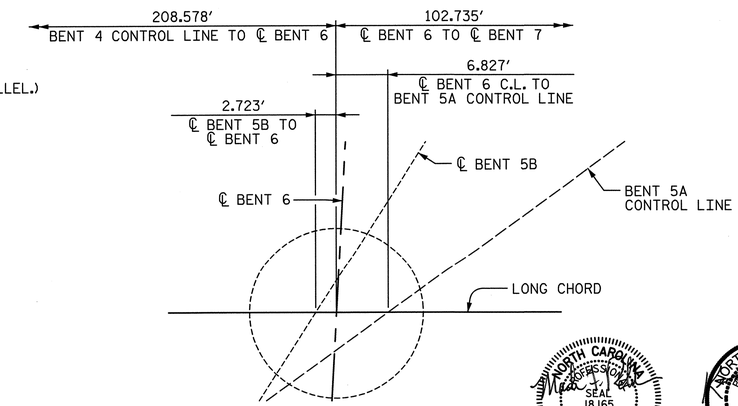

LONG CHORD DETAIL

ALL DISTANCES MEASURED ALONG LONG CHORD

HORIZ. CURVE DATA -L-

PIs = 379+16.55	PI = 385+42.44	PIs = 391+58.05
θs = 5°30′01.4″(LT.)	Δ = 21°07′10.9″(LT.)	θs = 5°30′01.4″(LT.)
Ls = 480.00′	D = 2°17′30.6″	Ls = 480.00′
LT = 320.15′	L = 921.52′	LT = 320.15′
ST = 160.14′	T = 466.05′	ST = 160.14′
	R = 2,500′	

NORTH CAROLINA PROFESSIONAL ENGINEER SEAL 18165 MARK F. ROBBINS 6-7-13

NORTH CAROLINA PROFESSIONAL ENGINEER SEAL 28479 KEVIN G. BAILEY 6-7-13

PROJECT NO. U-2524C

GUILFORD COUNTY

STATION: POT 407+85.82 -L-
= POT 29+79.72 -Y4-

SHEET 1 OF 3

STATE OF NORTH CAROLINA
DEPARTMENT OF TRANSPORTATION
RALEIGH

GENERAL DRAWING LONG CHORD LAYOUT BRIDGE ON I-840 OVER BATTLEGROUND AVE. -RIGHT LANE-

DRAWN BY : LGH	DATE : 3-12	DESIGN ENGINEER OF RECORD: P. KELLY	DATE : 5-13
CHECKED BY : PEK	DATE : 12-12		

STV / Ralph Whitehead Associates, Inc.
1000 West Morehead St., Ste. 200
Charlotte, NC 28208
NC License No. F-0991

REVISIONS						SHEET NO.
NO.	BY:	DATE:	NO.	BY:	DATE:	S-264
1			3			TOTAL SHEETS
2			4			836

6/6/2013 4:39:00 PM R:\ustation\Finals\Long Chord Layout Sheet 1.dgn

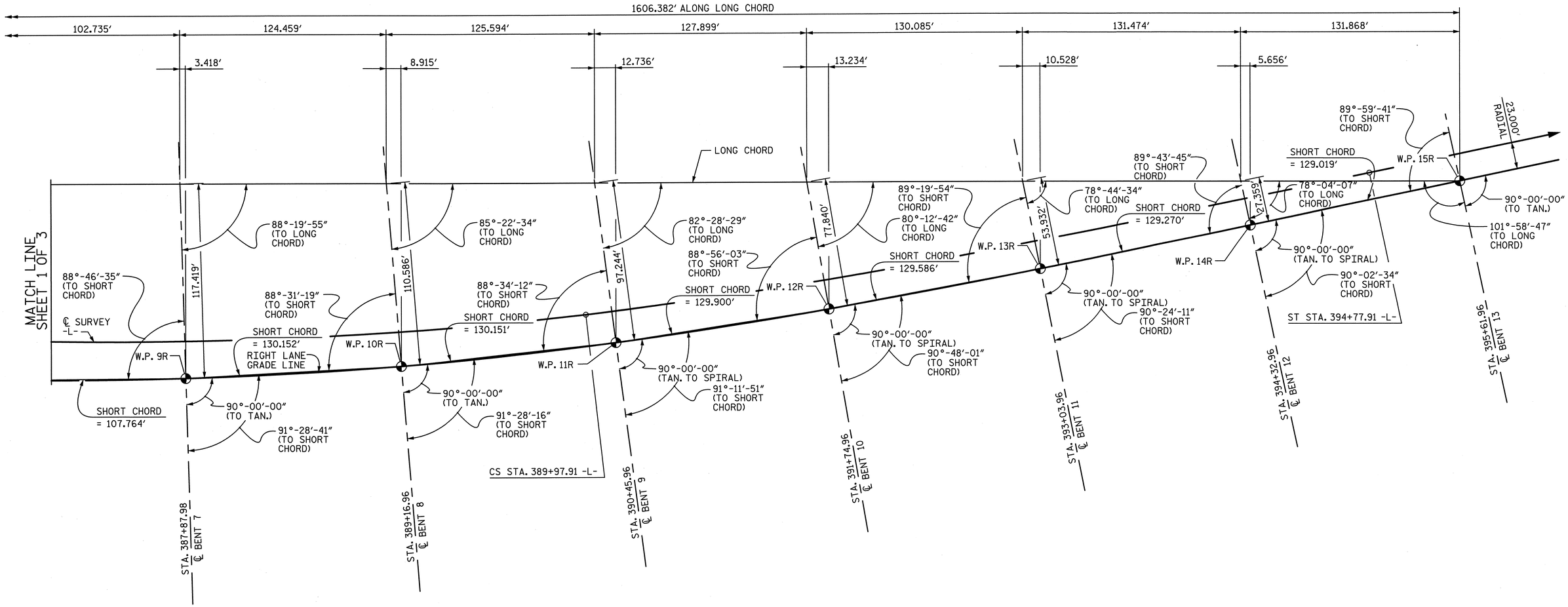

LONG CHORD LAYOUT

(NOTE : END BENTS AND BENTS ARE NOT PARALLEL.)

HORIZ. CURVE DATA -L-

PIs = 379+16.55	PI = 385+42.44	PIs = 391+58.05
θs = 5°30′01.4″(LT.)	Δ = 21°07′10.9″(LT.)	θs = 5°30′01.4″(LT.)
Ls = 480.00′	D = 2°17′30.6″	Ls = 480.00′
LT = 320.15′	L = 921.52′	LT = 320.15′
ST = 160.14′	T = 466.05′	ST = 160.14′
	R = 2,500′	

DRAWN BY : LGH DATE : 3-12
CHECKED BY : PEK DATE : 12-12

DESIGN ENGINEER OF RECORD: P. KELLY DATE : 5-13

NORTH CAROLINA PROFESSIONAL SEAL 18165 ENGINEER MARK F. ROBBINS 6-7-13

NORTH CAROLINA PROFESSIONAL SEAL 28479 ENGINEER KEVIN G. BAILEY 6-7-13

STV / Ralph Whitehead Associates, Inc.
1000 West Morehead St., Ste. 200
Charlotte, NC 28208
NC License No. F-0991

PROJECT NO. U-2524C
GUILFORD COUNTY
STATION: POT 407+85.82 -L-
= POT 29+79.72 -Y4-
SHEET 2 OF 3

STATE OF NORTH CAROLINA
DEPARTMENT OF TRANSPORTATION
RALEIGH

GENERAL DRAWING
LONG CHORD LAYOUT
BRIDGE ON I-840
OVER BATTLEGROUND AVE.
-RIGHT LANE-

REVISIONS						SHEET NO.
NO.	BY:	DATE:	NO.	BY:	DATE:	S-265
1			3			TOTAL SHEETS
2			4			836

6/6/2013 4:39:01PM R:\station\Finals\Long Chord Layout Sheet 2.dgn

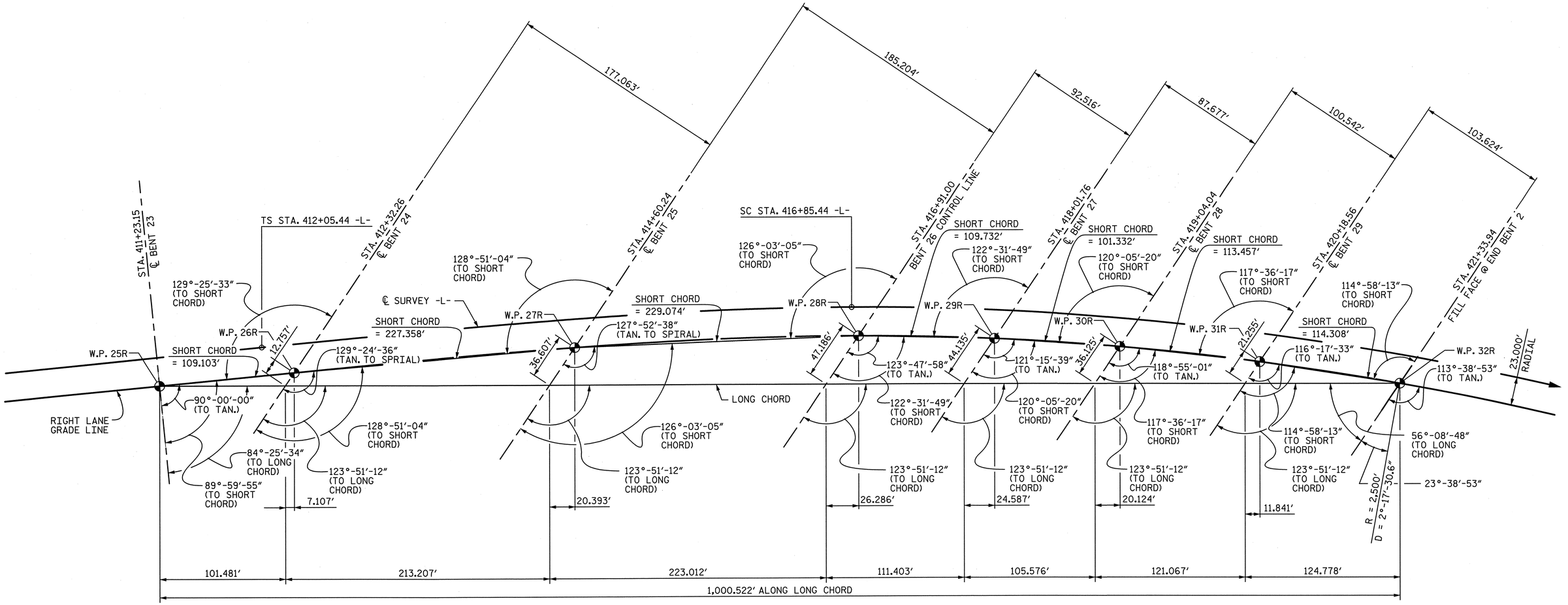

LONG CHORD LAYOUT

(END BENT 2 AND BENT 24-29 ARE PARALLEL.)

HORIZ. CURVE DATA -L-

PIs = 415+25.60	PI = 421+58.62	PIs = 427+80.87
θs = 5°30'01.4" (RT.)	Δ = 21°26'06.8" (RT.)	θs = 5°30'01.4" (RT.)
Ls = 480.00'	D = 2°17'30.6"	Ls = 480.00'
LT = 320.15'	L = 935.29'	LT = 320.15'
ST = 160.14'	T = 473.18'	ST = 160.14'
	R = 2,500'	

DRAWN BY : LGH DATE : 3-12
CHECKED BY : PEK DATE : 12-12
DESIGN ENGINEER OF RECORD: P. KELLY DATE : 5-13

NORTH CAROLINA PROFESSIONAL SEAL 18165 ENGINEER MARK F. ROBBINS 6-7-13

NORTH CAROLINA PROFESSIONAL SEAL 28479 ENGINEER KEVIN G. BAILEY 6-7-13

STV / Ralph Whitehead Associates, Inc.
1000 West Morehead St. Ste. 200
Charlotte, NC 28208
NC License No. F-0991

PROJECT NO. U-2524C
GUILFORD COUNTY
STATION: POT 407+85.82 -L-
= POT 29+79.72 -Y4-
SHEET 3 OF 3

STATE OF NORTH CAROLINA
DEPARTMENT OF TRANSPORTATION
RALEIGH

GENERAL DRAWING LONG CHORD LAYOUT BRIDGE ON I-840 OVER BATTLEGROUND AVE. -RIGHT LANE-

REVISIONS						SHEET NO.
NO.	BY:	DATE:	NO.	BY:	DATE:	S-266
1			3			TOTAL SHEETS
2			4			836

6/6/2013 4:39:02 PM R:\ustation\Finals\Long Chord Layout Sheet 3.dgn

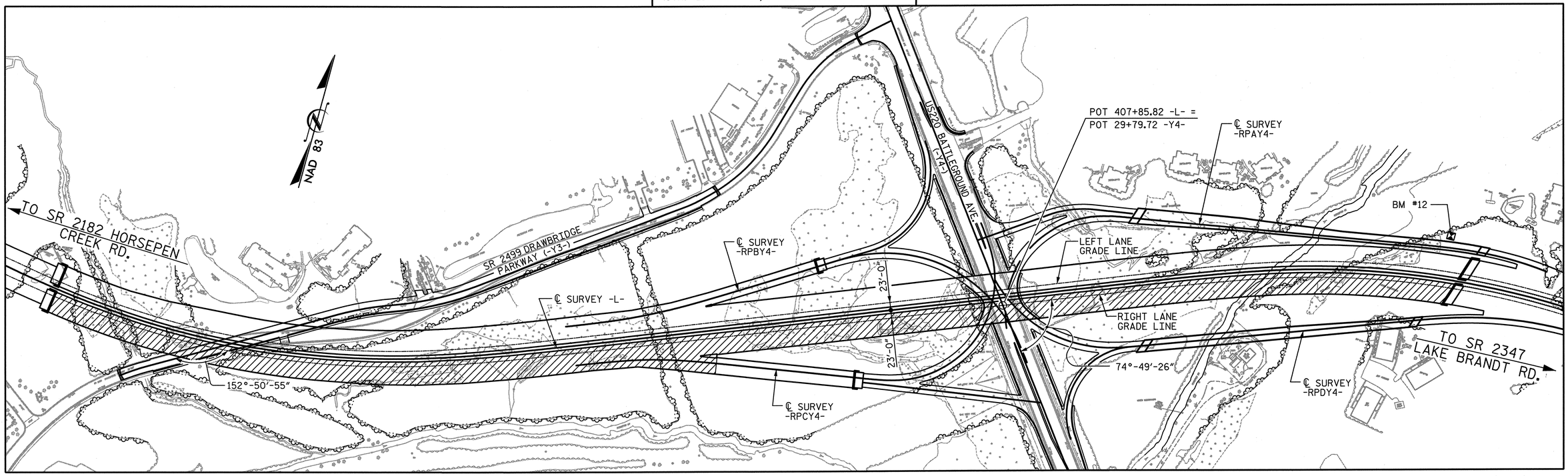

LOCATION SKETCH

PROJECT NO. U-2524C

GUILFORD COUNTY

STATION: POT 407+85.82 -L-
= POT 29+79.72 -Y4-

NORTH CAROLINA PROFESSIONAL SEAL 18165 ENGINEER MARK F. ROBBINS 6-7-13

NORTH CAROLINA PROFESSIONAL SEAL 28479 ENGINEER KEVIN G. BAILEY 6-7-13

STATE OF NORTH CAROLINA
DEPARTMENT OF TRANSPORTATION
RALEIGH

GENERAL DRAWING
LOCATION SKETCH
BRIDGE ON I-840
OVER BATTLEGROUND AVE.
-RIGHT LANE-

DRAWN BY : CLG	DATE : 4-13	DESIGN ENGINEER OF RECORD: K. BAILEY	DATE : 5-13
CHECKED BY : TRL	DATE : 4-13		

STV / Ralph Whitehead Associates, Inc.
1000 West Morehead St., Ste. 200
Charlotte, NC 28208
NC License No. F-0991

REVISIONS					
NO.	BY:	DATE:	NO.	BY:	DATE:
1			3		
2			4		

SHEET NO. S-267

TOTAL SHEETS 836

6/7/2013 8:26:00 AM R:\station\Finals\Location Sketch.dgn

GENERAL NOTES

GENERAL NOTES:

ASSUMED LIVE LOAD = HL-93 OR ALTERNATE LOADING.

FOR OTHER DESIGN DATA AND GENERAL NOTES, SEE SHEET SN.

THIS BRIDGE HAS BEEN DESIGNED IN ACCORDANCE WITH THE AASHTO LRFD BRIDGE DESIGN SPECIFICATIONS.

THIS BRIDGE IS LOCATED IN SEISMIC ZONE 1.

THE CONTRACTOR SHALL PROVIDE INDEPENDENT ASSURANCE SAMPLES OF REINFORCING STEEL AS FOLLOWS: FOR PROJECTS REQUIRING UP TO 400 TONS OF REINFORCING STEEL, ONE 30" SAMPLE OF EACH SIZE BAR USED, AND FOR PROJECTS REQUIRING OVER 400 TONS OF REINFORCING STEEL, TWO 30" SAMPLES OF EACH SIZE BAR USED. THE BARS FROM WHICH THE SAMPLES ARE TAKEN MUST THEN BE SPLICED WITH REPLACEMENT BARS OF THE SIZE AND LENGTH OF THE SAMPLE, PLUS A MINIMUM LAP SPLICE OF THIRTY BAR DIAMETERS. ALL COSTS FOR PROVIDING REINFORCING STEEL SAMPLES SHALL BE CONSIDERED INCIDENTAL AND NO ADDITIONAL PAYMENT WILL BE MADE.

THIS STRUCTURE HAS BEEN DESIGNED IN ACCORDANCE WITH HEC 18-EVALUATING SCOUR AT BRIDGES.

REMOVABLE FORMS MAY BE USED IN LIEU OF METAL STAY-IN-PLACE FORMS IN ACCORDANCE WITH ARTICLE 420-3 OF THE STANDARD SPECIFICATIONS.

NEEDLE BEAMS WILL NOT BE ALLOWED UNLESS OTHERWISE CALLED FOR ON THE PLANS OR APPROVED BY THE ENGINEER.

ALL STRUCTURAL STEEL SHALL BE AASHTO M270 GRADE 50W AND PAINTED IN ACCORDANCE WITH SYSTEM 4 OF ARTICLE 442-8 OF THE STANDARD SPECIFICATIONS UNLESS OTHERWISE NOTED ON THE PLANS.

FOR EROSION CONTROL MEASURES, SEE EROSION CONTROL PLANS.

FOR UTILITY INFORMATION, SEE UTILITY PLANS AND SPECIAL PROVISIONS.

CONTRACTOR SHALL FIELD VERIFY ALL UTILITY INFORMATION NOTED ON THESE PLANS AS UNKNOWN PRIOR TO CONSTRUCTION.

THE CLASS AA CONCRETE IN THE BRIDGE DECK SHALL CONTAIN FLY ASH OR GROUND GRANULATED BLAST FURNACE SLAG AT THE SUBSTITUTION RATE SPECIFIED IN ARTICLE 1024-1 AND IN ACCORDANCE WITH ARTICLES 1024-5 AND 1024-6 OF THE STANDARD SPECIFICATIONS. NO PAYMENT WILL BE MADE FOR THIS SUBSTITUTION AS IT IS CONSIDERED INCIDENTIAL TO THE COST OF THE REINFORCED CONCRETE DECK SLAB.

FOR MAINTENANCE AND PROTECTION OF TRAFFIC BENEATH PROPOSED STRUCTURE, SEE SPECIAL PROVISIONS.

FOR CONSTRUCTION, MAINTENANCE AND REMOVAL OF TEMPORARY ACCESS, SEE LEFT LANE BRIDGE PLANS. NO ADDITIONAL MEASUREMENT OR PAYMENT WILL BE MADE FOR ACCESS TO THE RIGHT LANE BRIDGE.

FOR TEMPORARY BENTS, SEE SPECIAL PROVISIONS.

FOR BRIDGE DECK RIDEABILITY AND GROOVING AT STATION 407+85.82 -L-, SEE SPECIAL PROVISIONS.

FOR PLACING LOAD ON STRUCTURE MEMBERS, SEE SPECIAL PROVISIONS.

FOR STEEL REINFORCED ELASTOMERIC BEARINGS, SEE SPECIAL PROVISIONS.

FOR POT BEARINGS, SEE SPECIAL PROVISIONS.

FOR OPTIONAL DISC BEARINGS, SEE SPECIAL PROVISIONS.

FOR THERMAL SPRAYED COATINGS (METALLIZATION), SEE SPECIAL PROVISIONS.

FOR EXPANSION JOINT SEALS, SEE SPECIAL PROVISIONS.

SPECIAL SNOWPLOW PROTECTION IS REQUIRED. SEE SPECIAL PROVISIONS FOR MODULAR EXPANSION JOINT SEALS.

FOR FALSEWORK AND FORMWORK, SEE SPECIAL PROVISIONS.

FOR SUBMITTAL OF WORKING DRAWINGS, SEE SPECIAL PROVISIONS.

FOR CRANE SAFETY, SEE SPECIAL PROVISIONS.

FOR GROUT FOR STRUCTURES, SEE SPECIAL PROVISIONS.

FOR STRUCTURE DRAINAGE SYSTEM, SEE SPECIAL PROVISIONS.

FOR SOUND BARRIER WALL (BRIDGE MOUNTED), SEE SPECIAL PROVISIONS.

FOUNDATION NOTES:

FOR PILES, SEE SECTION 450 OF THE STANDARD SPECIFICATIONS.

PILES AT END BENT NO. 1 AND END BENT NO. 2 ARE DESIGNED FOR A FACTORED RESISTANCE OF 125 TONS PER PILE.

DRIVE PILES AT END BENT NO. 1 AND END BENT NO. 2 TO A REQUIRED DRIVING RESISTANCE OF 210 TONS PER PILE.

FOR DRILLED PIERS, SEE SECTION 411 OF THE STANDARD SPECIFICATIONS.

DRILLED PIERS AT BENT NO. 1 THROUGH BENT NO. 29 ARE DESIGNED FOR A FACTORED RESISTANCE AS SHOWN IN THE SUMMARY TABLE. CHECK FIELD CONDITIONS FOR THE REQUIRED TIP RESISTANCES AS SHOWN IN THE SUMMARY TABLE.

PERMANENT STEEL CASINGS MAY BE REQUIRED FOR DRILLED PIERS AT BENT NO. 9 THROUGH BENT NO. 11, BENT NO. 17 THROUGH BENT NO. 19, AND BENT NO. 22 THROUGH BENT NO. 25. IF REQUIRED, DO NOT EXTEND PERMANENT CASINGS BELOW ELEVATION AS SHOWN IN THE SUMMARY TABLE WITHOUT PRIOR APPROVAL FROM THE ENGINEER. THE ENGINEER WILL DETERMINE THE NEED FOR PERMANENT CASINGS.

INSTALL PERMANENT STEEL CASINGS AT BENT NO. 9, BENT NO. 10, BENT NO. 11, BENT NO. 17, BENT NO. 18, BENT NO. 19, BENT NO. 22, BENT NO. 23, BENT NO. 24, AND BENT NO. 25, BY VIBRATING, SCREWING OR DRIVING PERMANENT CASINGS BEFORE EXCAVATING OR DISTURBING ANY MATERIAL BELOW ELEVATIONS 743.9 FT, 743.7 FT, 743.7 FT, 742.5 FT, 742.5 FT, 742.5 FT, 743.0 FT, 745.0 FT, 739.8 FT AND 739.8 FT, RESPECTIVELY.

INSTALL DRILLED PIERS AT BENT NO. 1 THROUGH BENT NO. 5, BENT NO. 7 THROUGH BENT NO. 9, BENT NO. 11 THROUGH BENT NO. 17, BENT NO. 19 THROUGH BENT NO. 21 AND BENT NO. 26 THROUGH BENT NO. 29 TO TIP ELEVATIONS NO HIGHER THAN AS SHOWN IN THE SUMMARY TABLE AND WITH THE REQUIRED TIP RESISTANCES.

INSTALL DRILLED PIERS AT BENT NO. 2, BENT NO. 6, BENT NO. 10, BENT NO. 18, BENT NO. 19 AND BENT NO. 22 THROUGH BENT NO. 25 TO TIP ELEVATIONS NO HIGHER THAN AS SHOWN IN THE SUMMARY TABLE AND WITH THE REQUIRED TIP RESISTANCES AND PENETRATION OF AT LEAST 3 FT, 3 FT, 5 FT, 5 FT, 8 FT, 10 FT, 10 FT, 10 FT AND 10 FT, RESPECTIVELY.

THE SCOUR CRITICAL ELEVATIONS FOR BENT NO. 1 THROUGH BENT NO. 29 ARE SHOWN IN THE SUMMARY TABLE. SCOUR CRITICAL ELEVATIONS ARE USED TO MONITOR POSSIBLE SCOUR PROBLEMS DURING THE LIFE OF THE STRUCTURE.

SPT MAY BY REQUIRED FOR DRILLED PIERS AT BENT NO. 1, BENT NO. 3 THROUGH BENT NO. 6, BENT 13 AND BENT NO. 15. THE ENGINEER WILL DETERMINE THE NEED FOR SPT. FOR SPT TESTING, SEE SECTION 411 OF THE STANDARD SPECIFICATIONS.

SID INSPECTIONS MAY BE REQUIRED FOR DRILLED PIERS. THE ENGINEER WILL DETERMINE THE NEED FOR SID INSPECTIONS. FOR SID INSPECTIONS, SEE SECTION 411 OF THE STANDARD SPECIFICATIONS.

CSL TUBES ARE REQUIRED AND CSL TESTING MAY BE REQUIRED FOR DRILLED PIERS. THE ENGINEER WILL DETERMINE THE NEED FOR CSL TESTING. FOR CSL TESTING, SEE SECTION 411 OF THE STANDARD SPECIFICATIONS.

SUMMARY TABLE

BENT NO.	FACTORED RESISTANCE	REQUIRED TIP RESISTANCE	PERMANENT CASING ELEV.	TIP NO HIGHER THAN ELEV.	SCOUR CRITICAL ELEV.
BENT 1	585 TONS	40 TSF	NA	714 FT (LT), 709 FT (RT)	755.0 FT
BENT 2	455 TONS	40 TSF	NA	708 FT (LT), 704 FT (RT)	747.0 FT
BENT 3	595 TONS	25 TSF	NA	711 FT (LT), 707 FT (RT)	NO SCOUR
BENT 4	525 TONS	40 TSF	NA	710 FT	NO SCOUR
BENT 5A	610 TONS	25 TSF	NA	711 FT (LT, CT), 715 FT (RT)	NO SCOUR
BENT 5B	570 TONS	25 TSF	NA	692 FT (LT), 687 FT (RT)	NO SCOUR
BENT 6	590 TONS	40 TSF	NA	697 FT	NO SCOUR
BENT 7	680 TONS	40 TSF	NA	710 FT	747.0 FT
BENT 8	800 TONS	40 TSF	NA	701 FT	741.0 FT
BENT 9	825 TONS	40 TSF	735 FT	701 FT	740.0 FT
BENT 10	845 TONS	40 TSF	735 FT	702 FT (LT), 707 FT (RT)	740.0 FT
BENT 11	860 TONS	40 TSF	735 FT	711 FT	740.0 FT
BENT 12	725 TONS	40 TSF	NA	708 FT	747.0 FT
BENT 13	850 TONS	40 TSF	NA	708 FT (LT), 705 FT (RT)	741.0 FT
BENT 14	855 TONS	40 TSF	NA	707 FT (LT), 711 FT (RT)	740.0 FT
BENT 15	700 TONS	45 TSF	NA	715 FT	740.0 FT
BENT 16	655 TONS	40 TSF	NA	715 FT	740.0 FT
BENT 17	645 TONS	40 TSF	730 FT	720 FT	739.0 FT
BENT 18	610 TONS	40 TSF	735 FT	713 FT (LT), 717 FT (RT)	739.0 FT
BENT 19	635 TONS	40 TSF	728 FT (LT), 735 FT (RT)	716 FT (LT), 724 FT (RT)	739.0 FT
BENT 20	760 TONS	40 TSF	NA	721 FT	NO SCOUR
BENT 21	1125 TONS	40 TSF	NA	726 FT (LT), 728 FT (RT)	NO SCOUR
BENT 22	1120 TONS	40 TSF	739 FT (LT), 728 FT (RT)	728 FT (LT), 717 FT (RT)	NO SCOUR
BENT 23	695 TONS	40 TSF	721 FT	708 FT	NO SCOUR
BENT 24	595 TONS	40 TSF	721 FT	708 FT	736.0 FT
BENT 25	995 TONS	40 TSF	721 FT	708 FT	736.0 FT
BENT 26	610 TONS	40 TSF	NA	705 FT	737.0 FT
BENT 27	635 TONS	40 TSF	NA	712 FT	737.0 FT
BENT 28	660 TONS	40 TSF	NA	717 FT (LT), 719 FT (RT)	747.0 FT
BENT 29	700 TONS	40 TSF	NA	746 FT	NO SCOUR

PROJECT NO. U-2524C

GUILFORD COUNTY

STATION: POT 407+85.82 -L-
= POT 29+79.72 -Y4-

NORTH CAROLINA PROFESSIONAL SEAL 18165 ENGINEER MARK F. ROBBINS 6-7-13

NORTH CAROLINA PROFESSIONAL SEAL 28479 ENGINEER KEVIN G. BAILEY 6-7-13

STATE OF NORTH CAROLINA
DEPARTMENT OF TRANSPORTATION
RALEIGH

GENERAL DRAWING
GENERAL NOTES
BRIDGE ON I-840
OVER BATTLEGROUND AVE.
-RIGHT LANE-

STV / Ralph Whitehead Associates, Inc.
1000 West Morehead St., Ste. 200
Charlotte, NC 28208
NC License No. F-0991

REVISIONS						SHEET NO.
NO.	BY:	DATE:	NO.	BY:	DATE:	S-268
1			3			TOTAL SHEETS
2			4			836

DRAWN BY : CLG DATE : 4-13
CHECKED BY : TRL DATE : 4-13

DESIGN ENGINEER OF RECORD: K. BAILEY DATE : 5-13

6/7/2013 8:26:02 AM R:\Ustation\Finals\GeneralNotes.dgn

TOTAL BILL OF MATERIAL

	4'-6" DIA. DRILLED PIER IN SOIL	5'-0" DIA. DRILLED PIER IN SOIL	4'-6" DIA. DRILLED PIER NOT IN SOIL	5'-0" DIA. DRILLED PIER NOT IN SOIL	PERMANENT STEEL CASING FOR 4'-6" DRILLED PIER	PERMANENT STEEL CASING FOR 5'-0" DRILLED PIER	SID INSPECTIONS	SPT TESTING	CSL TESTING	REINFORCED CONCRETE DECK SLAB	GROOVING BRIDGE FLOORS	CLASS A CONCRETE	BRIDGE APPROACH SLABS, AT 407+85.82 -L-	REINFORCING STEEL	SPIRAL COLUMN REINFORCING STEEL	MODIFIED 72" PRESTRESSED CONCRETE GIRDERS		STRUCTURAL STEEL (APPROX.)	HP12X53 STEEL PILES		CONCRETE BARRIER RAIL
	LIN. FT.	LIN. FT.	LIN. FT.	LIN. FT.	LIN. FT.	LIN. FT.	EACH	EACH	EACH	SQ. FT.	SQ. FT.	CU. YDS.	LUMP SUM	LBS.	LBS.	NO.	LIN. FT.	LBS.	NO.	LIN. FT.	LIN. FT.
SUPERSTRUCTURE										278,243.2	254,826.2		LUMP SUM			111	11,813.7	5,480,800			8,515.7
END BENT 1												72.0		9,922					14	840	
BENT 1		171		26				2				105.1		49,881	11,507						
BENT 2		159		30								118.3		50,149	12,092						
BENT 3		145		36				4				123.1		50,893	11,627						
BENT 4		200		55				6				289.7		81,592	15,636						
BENT 5A		217		54				4				275.0		80,193	14,914						
BENT 5B		230		27				4				124.9		63,863	13,937						
BENT 6		190		38				2				112.2		55,181	12,908						
BENT 7		126		38								117.7		47,051	11,078						
BENT 8		153		42								145.1		53,460	11,579						
BENT 9		153		41		62						147.1		53,750	11,495						
BENT 10		131		49		62						144.9		51,913	10,932						
BENT 11		112		43		63						118.8		49,197	10,624						
BENT 12		156		54								175.8		58,678	12,630						
BENT 13		126		45				2				113.7		51,175	10,950						
BENT 14		112		46								123.7		49,599	10,398						
BENT 15		154		47				3				181.2		68,578	14,148						
BENT 16		97		36								113.7		42,608	9,562						
BENT 17	74		39		77							106.4		34,125	7,204						
BENT 18	92		40		56							105.7		35,601	7,692						
BENT 19	62		49		69							105.1		33,697	7,056						
BENT 20		62		45								152.5		43,303	7,275						
BENT 21		36		47								137.1		39,567	6,292						
BENT 22		43		51		54						138.1		40,911	6,704						
BENT 23		104		48		104						140.5		45,182	8,501						
BENT 24		138		50		127						170.3		55,908	10,545						
BENT 25		132		53		126						157.7		53,997	10,220						
BENT 26		144		61								178.4		57,621	10,541						
BENT 27		82		51								107.5		43,152	8,734						
BENT 28		50		78								97.7		40,838	7,936						
BENT 29	27		39									71.0		23,179	2,818						
END BENT 2												79.0		10,644					16	400	
TOTAL BRIDGE	255	3,423	167	1,191	202	598	15	27	12	278,243.2	254,826.2	4,349.0	LUMP SUM	1,525,408	307,535	111	11,813.7	5,480,800	30	1,240	8,515.7

TOTAL BILL OF MATERIAL CONT'D.

	RIP RAP CLASS II (2'-0" THICK)	GEOTEXTILE FOR DRAINAGE	POT BEARINGS	ELASTOMERIC BEARINGS	EXPANSION JOINT SEALS	MODULAR EXPANSION JOINT SEALS	STRUCTURE DRAINAGE SYSTEM AT STA. 407+85.82 -L-	SOUND BARRIER WALL (BRIDGE MOUNTED)	MODIFIED 74" PRESTRESSED CONCRETE GIRDERS	
	TON	SQ. YD.	LUMP SUM	LUMP SUM	LUMP SUM	LUMP SUM	LUMP SUM	LUMP SUM	NO.	LIN. FT.
SUPERSTRUCTURE			LUMP SUM	LUMP SUM	LUMP SUM	LUMP SUM	LUMP SUM	LUMP SUM	49	6335.4
END BENT 1	615	680								
BENTS										
END BENT 2	75	80								
TOTAL BRIDGE	690	760	LUMP SUM	LUMP SUM	LUMP SUM	LUMP SUM	LUMP SUM	LUMP SUM	49	6,335.4

PROJECT NO. U-2524C

GUILFORD COUNTY

STATION: POT 407+85.82 -L-
= POT 29+79.72 -Y4-

NORTH CAROLINA PROFESSIONAL ENGINEER SEAL 18165 MARK F. ROBBINS 6-7-13

NORTH CAROLINA PROFESSIONAL ENGINEER SEAL 28479 KEVIN G. BAILEY 6-7-13

STATE OF NORTH CAROLINA
DEPARTMENT OF TRANSPORTATION
RALEIGH

GENERAL DRAWING
TOTAL BILL OF MATERIAL
BRIDGE ON I-840
OVER BATTLEGROUND AVE.
-RIGHT LANE-

DRAWN BY : ACA DATE : 5-13
CHECKED BY : AJP DATE : 5-13

DESIGN ENGINEER OF RECORD: A. PETER DATE : 5-13

STV/ Ralph Whitehead Associates, Inc.
1000 West Morehead St., Ste. 200
Charlotte, NC 28208
NC License No. F-0991

REVISIONS						SHEET NO.
NO.	BY:	DATE:	NO.	BY:	DATE:	S-269
1			3			TOTAL SHEETS
2			4			836

6/7/2013 10:39:44 AM R:\ustation\Finals\(060) Gen Dwg TotalBOM.dgn

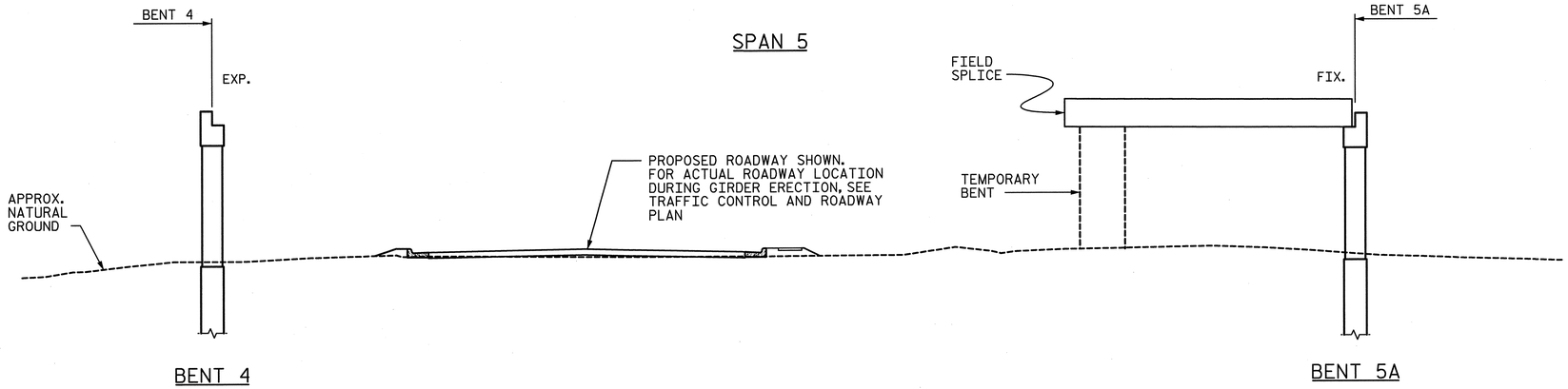

STAGE I GIRDER ERECTION

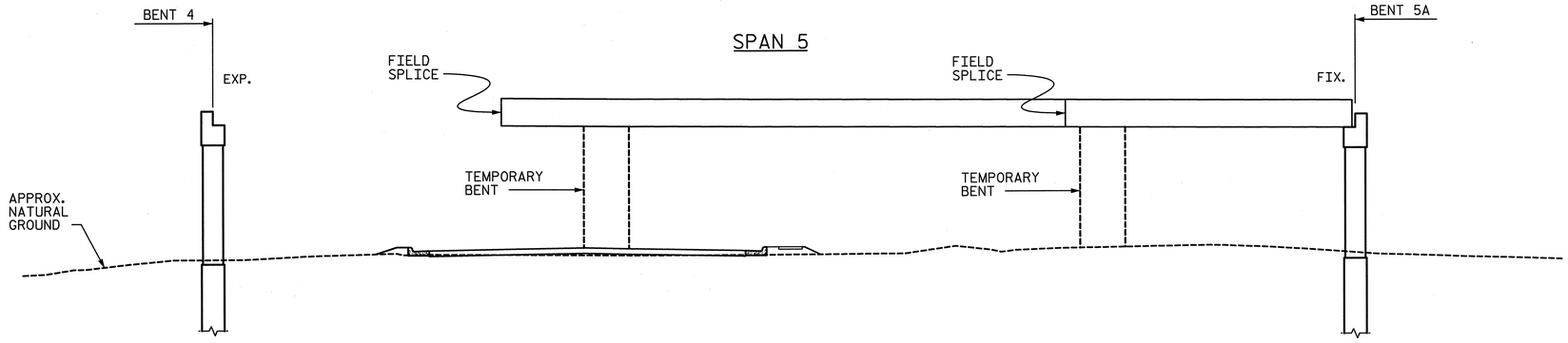

STAGE II GIRDER ERECTION

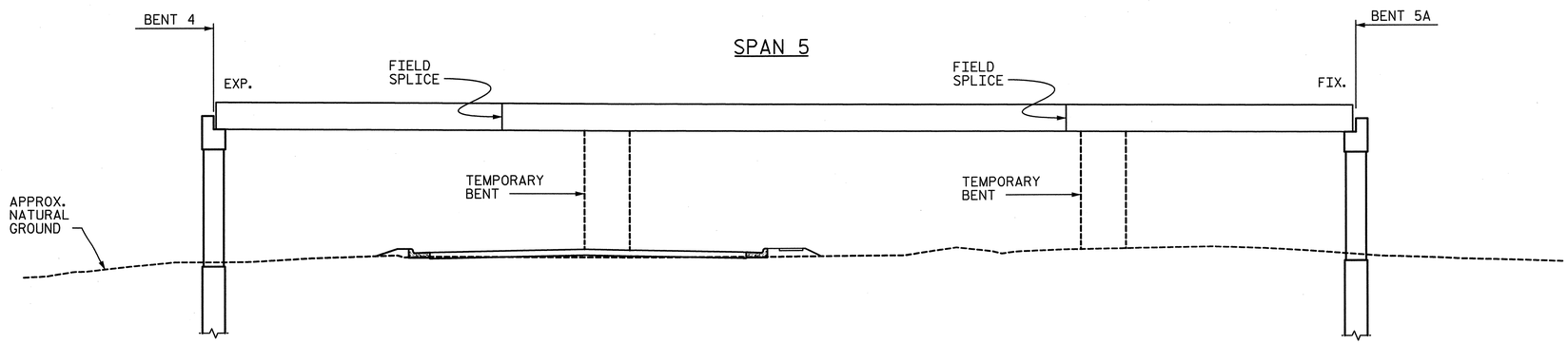

STAGE III GIRDER ERECTION

ERECTION NOTES

1. ERECT EACH SUBSEQUENT GIRDER WITH DIAPHRAGMS/CROSSFRAMES CONNECTING TO THE ADJACENT PREVIOUSLY ERECTED GIRDER AND TIGHTEN ALL BOLTS BEFORE RELEASING THE GIRDER.
2. THE STRUCTURAL STEEL SHALL BE SUPPORTED DURING ERECTION IN ITS CAMBERED POSITION. A MINIMUM OF TWO TEMPORARY BENTS SHALL BE USED.
3. TEMPORARY BENTS SHALL BE OF SUFFICIENT WIDTH/SIZE SUCH THAT ALL GIRDERS IN THE BRIDGE TYPICAL SECTION CAN BE FULLY SUPPORTED THROUGHOUT THE ERECTION OF ALL GIRDER SECTIONS AND FINAL INSTALLATION OF ALL HIGH STRENGTH BOLTS. SEQUENCES OR METHODS WHICH USE A COMBINATION OF PARTIAL WIDTH TEMPORARY BENTS AND CRANES WILL NOT BE PERMITTED.
4. PLACEMENT OF TEMPORARY BENTS SHALL BE COORDINATED WITH TRAFFIC PHASING REQUIREMENTS, SEE TRAFFIC CONTROL PLANS.
5. TEMPORARY BENTS SHALL REMAIN IN PLACE UNTIL ALL DIAPHRAGMS/CROSSFRAMES ARE IN PLACE AND ALL HIGH STRENGTH BOLTS ARE TIGHTENED.
6. TEMPORARY BENTS SHALL PROVIDE BEARING AT CONNECTOR PLATE LOCATIONS. WHEN CONNECTOR PLATES ARE USED AS TEMPORARY BEARING STIFFENER, DIAPHRAGMS MUST BE ATTACHED.
7. THE CONTRACTOR'S ERECTION PLANS SHALL INCLUDE A METHOD OF UNLOADING TEMPORARY BENTS THAT WILL UNIFORMLY TRANSFER THE STRUCTURAL WEIGHT TO THE DIAPHRAGMS/CROSSFRAMES AND THE GIRDERS.
8. PLANS FOR TEMPORARY BENT ERECTION, GIRDER ERECTION, AND TEMPORARY BENT REMOVAL SHALL BE SUBMITTED TO THE ENGINEER FOR REVIEW.
9. THE CONTRACTOR IS RESPONSIBLE FOR DESIGNING THE TEMPORARY BENTS. THE DESIGNS SHALL BE COMPLETED BY A PROFESSIONAL ENGINEER REGISTERED IN THE STATE OF NORTH CAROLINA. THE CONTRACTOR SHALL SUBMIT SIGNED AND SEALED WORKING DRAWINGS AND CALCULATIONS FOR APPROVAL BY THE ENGINEER.
10. DURING THE GIRDER ERECTION PROCEDURE, THE CONTRACTOR IS RESPONSIBLE FOR PROVIDING LATERAL BRACING AND OTHER MEANS OF SUPPORT, AS REQUIRED, TO ENSURE STABILITY OF THE GIRDERS, AVOID UPLIFT OF THE GIRDERS AT THE TEMPORARY BENTS AND ENSURE PLUMBNESS OF THE GIRDERS IN THE PERMANENT CONDITION.
11. NO SEPARATE MEASUREMENT OR PAYMENT WILL BE MADE FOR PROVIDING THE TEMPORARY BENT. THE COST FOR ALL MATERIALS, EQUIPMENT, TOOLS, LABOR AND ANY INCIDENTALS NECESSARY TO PROVIDE THE TEMPORARY BENT AND ERECTION SHALL BE CONSIDERED INCIDENTAL TO THE LUMP SUM BID PRICE FOR STRUCTURAL STEEL.
12. FOR ADDITIONAL NOTES, SEE "GENERAL DRAWING GENERAL NOTES" SHEET.

PROJECT NO. U-2524C

GUILFORD COUNTY

STATION: POT 407+85.82 -L-
= POT 29+79.72 -Y4-

SHEET 1 OF 3

NORTH CAROLINA PROFESSIONAL ENGINEER SEAL 28479 KEVIN G. BAILEY 6-7-13

STATE OF NORTH CAROLINA
DEPARTMENT OF TRANSPORTATION
RALEIGH

GIRDER ERECTION DETAILS SPAN 5

-RIGHT LANE-

DRAWN BY : VMW	DATE : 4-13	DESIGN ENGINEER OF RECORD: K. BAILEY	DATE : 5-13
CHECKED BY : TRL	DATE : 4-13		

STV / Ralph Whitehead Associates, Inc.
1000 West Morehead St. Ste. 200
Charlotte, NC 28208
NC License No. F-0991

REVISIONS						SHEET NO.
NO.	BY:	DATE:	NO.	BY:	DATE:	S-270
1			3			TOTAL SHEETS
2			4			836

6/6/2013 4:39:09 PM R:\ustation\Finals\Girder Erection Span 5 Sheet 1of 3.dgn

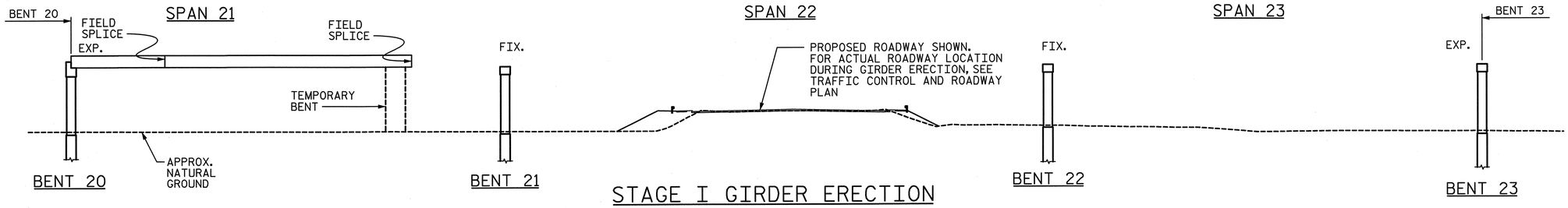

STAGE I GIRDER ERECTION

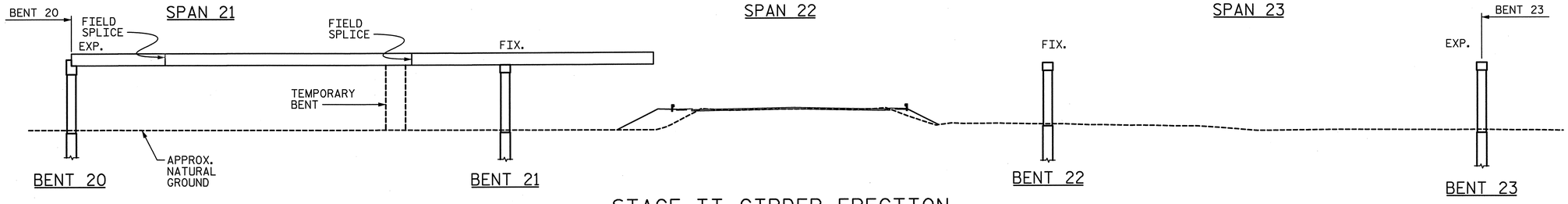

STAGE II GIRDER ERECTION

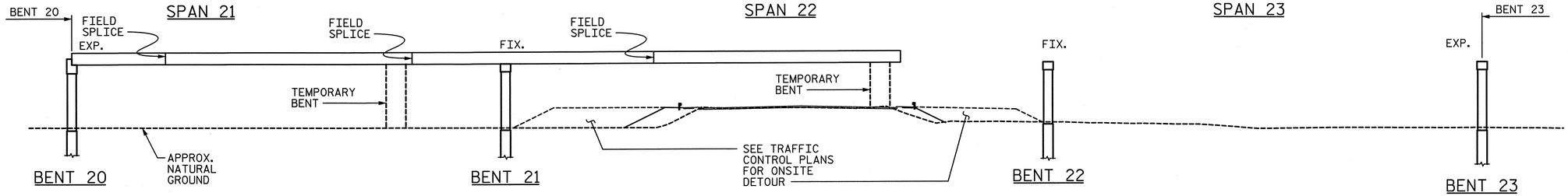

STAGE III GIRDER ERECTION

ERECTION NOTE

1. FOR ADDITIONAL ERECTION NOTES, SEE SHEET TITLED "GIRDER ERECTION DETAILS SPAN 5".
2. TEMPORARY BENT IN SPAN 21 SHALL BE DESIGNED SUCH THAT IT CAN RESIST UPWARD MOVEMENTS AND RETAIN CAMBERED GIRDER POSITION DURING SUBSEQUENT ERECTION STAGES.

PROJECT NO. U-2524C

GUILFORD COUNTY

STATION: POT 407+85.82 -L-
= POT 29+79.72 -Y4-

SHEET 2 OF 3

STATE OF NORTH CAROLINA
DEPARTMENT OF TRANSPORTATION
RALEIGH

GIRDER ERECTION DETAILS UNIT G

-RIGHT LANE-

NORTH CAROLINA PROFESSIONAL ENGINEER SEAL 28479 KEVIN G. BAILEY 6-7-13

STV / Ralph Whitehead Associates, Inc.
1000 West Morehead St., Ste. 200
Charlotte, NC 28208
NC License No. F-0991

REVISIONS						SHEET NO.
NO.	BY:	DATE:	NO.	BY:	DATE:	S-271
1			3			TOTAL SHEETS
2			4			836

DRAWN BY : VMW	DATE : 4-13	DESIGN ENGINEER OF RECORD: K. BAILEY	DATE : 5-13
CHECKED BY : TRL	DATE : 4-13		

6/6/2013 4:39:10 PM R:\station\Finals\Girder Erection Unit G Sheet 2 of 3.dgn

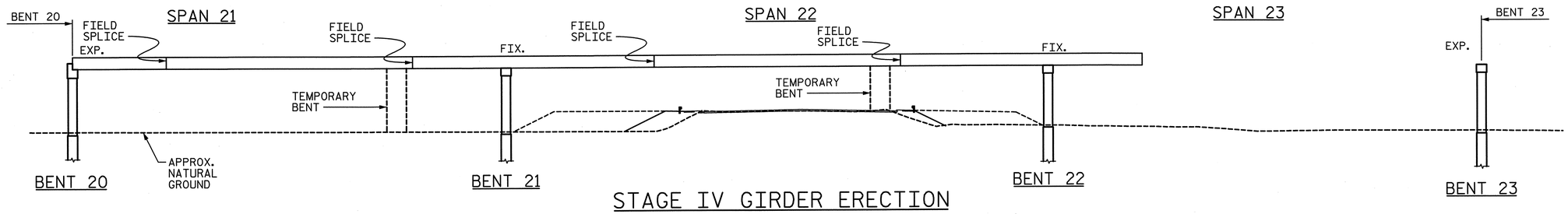

STAGE IV GIRDER ERECTION

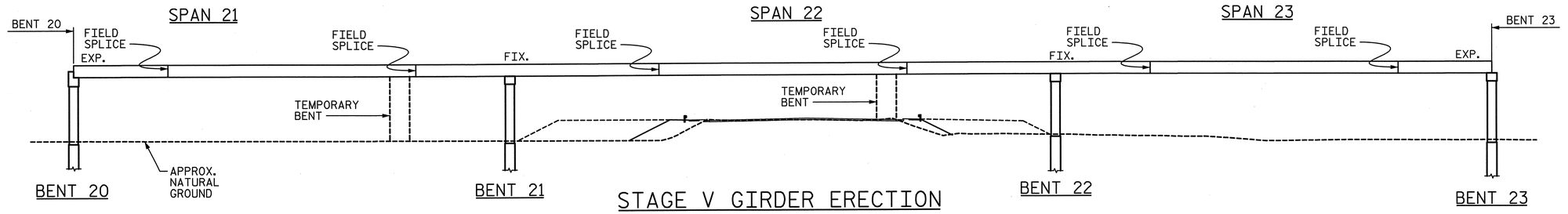

STAGE V GIRDER ERECTION

ERECTION NOTE

1. FOR ADDITIONAL ERECTION NOTES, SEE SHEET TITLED "GIRDER ERECTION DETAILS SPAN 5".
2. SEE TRAFFIC CONTROL PLANS FOR ON SITE DETOUR.

PROJECT NO. U-2524C

GUILFORD COUNTY

STATION: POT 407+85.82 -L-
= POT 29+79.72 -Y4-

SHEET 3 OF 3

STATE OF NORTH CAROLINA
DEPARTMENT OF TRANSPORTATION
RALEIGH

GIRDER ERECTION DETAILS UNIT G

-RIGHT LANE-

NORTH CAROLINA PROFESSIONAL SEAL 28479 ENGINEER KEVIN G. BAILEY
6-7-13

STV / Ralph Whitehead Associates, Inc.
1000 West Morehead St., Ste. 200
Charlotte, NC 28208
NC License No. F-0991

REVISIONS							SHEET NO.
NO.	BY:	DATE:	NO.	BY:	DATE:		S-272
1			3				TOTAL SHEETS
2			4				836

DRAWN BY : VMW DATE : 4-13
CHECKED BY : TRL DATE : 4-13

DESIGN ENGINEER OF RECORD: K. BAILEY DATE : 5-13

6/6/2013 4:39:12 PM R:\ustation\Finals\Girder Erection Unit G Sheet 3 of 3.dgn

LOAD AND RESISTANCE FACTOR RATING (LRFR) SUMMARY FOR PRESTRESSED CONCRETE GIRDERS

LEVEL		VEHICLE	WEIGHT (W) (TONS)	CONTROLLING LOAD RATING (#)	MINIMUM RATING FACTORS (RF)	TONS = W x RF	STRENGTH I LIMIT STATE											SERVICE III LIMIT STATE						COMMENT NUMBER
								MOMENT					SHEAR						MOMENT					
							LIVE-LOAD FACTORS (γ_{LL})	DISTRIBUTION FACTORS (DF)	RATING FACTOR	SPAN	GIRDER LOCATION	DISTANCE FROM LEFT END OF SPAN (ft)	DISTRIBUTION FACTORS (DF)	RATING FACTOR	SPAN	GIRDER LOCATION	DISTANCE FROM LEFT END OF SPAN (ft)	LIVE-LOAD FACTORS (γ_{LL})	DISTRIBUTION FACTORS (DF)	RATING FACTOR	SPAN	GIRDER LOCATION	DISTANCE FROM LEFT END OF SPAN (ft)	
DESIGN LOAD RATING		HL-93 (INVENTORY)	N/A	1	1.04	--	1.75	0.93	1.05	4, 6B	I	40.20	1.11	1.06	29	I	89.20	0.80	0.97	1.04	3	EL	47.60	
		HL-93 (OPERATING)	N/A		1.36	--	1.35	0.93	1.36	4	I	40.20	1.11	1.70	29	I	89.20	N/A	--	--	--	--	--	
		HS-20 (INVENTORY)	36.000	2	1.39	50.040	1.75	0.93	1.39	4	I	40.20	1.18	1.71	4	I	32.00	0.80	0.94	1.47	6A	ER	47.10	
		HS-20 (OPERATING)	36.000		1.81	65.160	1.35	0.93	1.81	4	I	40.20	1.11	2.32	29	I	89.20	N/A	--	--	--	--	--	
LEGAL LOAD RATING	SINGLE VEHICLE (SV)	SH	12.500		3.75	46.875	1.40	0.93	4.35	4	I	40.20	1.11	6.20	29	I	89.20	0.80	0.94	3.75	6A	ER	47.10	
		S3C	21.500		2.19	47.085	1.40	0.93	2.55	4	I	40.20	1.11	3.57	29	I	89.20	0.80	0.94	2.19	6A	ER	47.10	
		S3A	22.750		2.08	47.320	1.40	0.93	2.41	4	I	40.20	1.11	3.38	29	I	89.20	0.80	0.94	2.08	6A	ER	47.10	
		S4A	26.750		1.82	48.685	1.40	0.93	2.13	4	I	40.20	1.11	2.92	29	I	89.20	0.80	0.94	1.82	6A	ER	47.10	
		S5A	30.500		1.61	49.105	1.40	0.93	1.88	4	I	40.20	1.11	2.64	29	I	89.20	0.80	0.94	1.61	6A	ER	47.10	
		S6A	34.500		1.46	50.370	1.40	0.93	1.71	4	I	40.20	1.11	2.36	29	I	89.20	0.80	0.94	1.46	6A	ER	47.10	
		S7B	38.500		1.32	50.820	1.40	0.93	1.56	4	I	40.20	1.11	2.18	29	I	89.20	0.80	0.94	1.32	6A	ER	47.10	
		S7A	40.000	3	1.30	52.000	1.40	0.93	1.55	4	I	40.20	1.11	2.19	29	I	89.20	0.80	0.94	1.30	6A	ER	47.10	
	TRUCK TRACTOR SEMI-TRAILER (TTST)	T4A	28.250		1.79	50.568	1.40	0.97	1.95	4	EL	51.30	1.11	2.80	29	I	89.90	0.80	0.94	1.79	6A	ER	47.10	
		T5B	32.000		1.57	50.240	1.40	0.97	1.72	4	EL	51.30	1.11	2.63	29	I	89.20	0.80	0.94	1.57	6A	ER	47.10	
		T6A	36.000		1.44	51.840	1.40	0.97	1.56	4	EL	51.30	1.11	2.39	29	I	89.20	0.80	0.94	1.44	6A	ER	47.10	
		T7A	40.000		1.33	53.200	1.40	0.97	1.44	4	EL	51.30	1.11	2.19	29	I	89.20	0.80	0.94	1.33	6A	ER	47.10	
		T7B	40.000		1.41	56.400	1.40	0.97	1.52	4	EL	51.30	1.11	1.97	4	EL	40.90	0.80	0.97	1.41	3, 6A	EL, ER	47.60	

LOAD FACTORS:

DESIGN LOAD RATING FACTORS	LIMIT STATE	γ_{DC}	γ_{DW}
	STRENGTH I	1.25	1.50
	SERVICE III	1.00	1.00

NOTES:

1. MINIMUM RATING FACTORS ARE BASED ON THE STRENGTH I AND SERVICE III LIMIT STATES.
2. ALLOWABLE STRESSES FOR SERVICE III LIMIT STATE ARE AS REQUIRED FOR DESIGN.

(#) CONTROLLING LOAD RATING

(1) DESIGN LOAD RATING (HL-93)

(2) DESIGN LOAD RATING (HS-20)

(3) LEGAL LOAD RATING **

** SEE CHART FOR VEHICLE TYPE

GIRDER LOCATION

I - INTERIOR GIRDER
EL - EXTERIOR LEFT GIRDER
ER - EXTERIOR RIGHT GIRDER

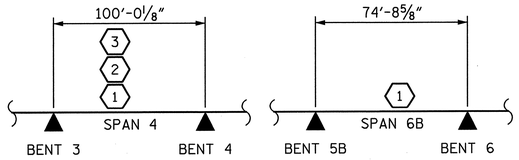

LRFR SUMMARY

(SPAN LENGTHS ARE ALONG GRADELINE)

PROJECT NO. U-2524C

GUILFORD COUNTY

STATION: POT 407+85.82 -L-
= POT 29+79.72 -Y4-

STATE OF NORTH CAROLINA
DEPARTMENT OF TRANSPORTATION
RALEIGH

LRFR SUMMARY FOR PRESTRESSED CONCRETE GIRDERS (INTERSTATE TRAFFIC) -RIGHT LANE-

NORTH CAROLINA PROFESSIONAL ENGINEER SEAL 28479 KEVIN G. BAILEY 6-7-13

STV / Ralph Whitehead Associates, Inc.
1000 West Morehead St., Ste. 200
Charlotte, NC 28208
NC License No. F-0991

REVISIONS						SHEET NO.
NO.	BY:	DATE:	NO.	BY:	DATE:	S-273
1			3			TOTAL SHEETS
2			4			836

DRAWN BY : ACA DATE : 4-13
CHECKED BY : TRL DATE : 4-13

DESIGN ENGINEER OF RECORD: K. BAILEY DATE : 5-13

6/6/2013 4:39:12 PM R:\ustation\Finals\LRFR Conc.dgn

LOAD AND RESISTANCE FACTOR RATING (LRFR) SUMMARY FOR STEEL GIRDERS

LEVEL		VEHICLE	WEIGHT (W) (TONS)	⬡ CONTROLLING LOAD RATING	MINIMUM RATING FACTORS (RF)	TONS = W x RF	STRENGTH I LIMIT STATE										SERVICE II LIMIT STATE						COMMENT NUMBER
							LIVE-LOAD FACTORS (γ_{LL})	MOMENT					SHEAR					LIVE-LOAD FACTORS (γ_{LL})	MOMENT					
								DISTRIBUTION FACTORS (DF)	RATING FACTOR	SPAN	GIRDER LOCATION	DISTANCE FROM LEFT END OF SPAN (ft)	DISTRIBUTION FACTORS (DF)	RATING FACTOR	SPAN	GIRDER LOCATION	DISTANCE FROM LEFT END OF SPAN (ft)		DISTRIBUTION FACTORS (DF)	RATING FACTOR	SPAN	GIRDER LOCATION	DISTANCE FROM LEFT END OF SPAN (ft)	
DESIGN LOAD RATING		HL-93 (INVENTORY)	N/A	⬡1	1.04	--	1.75	0.89	1.04	21	ER	198.25	1.03	1.08	24	I	0.00	1.30	0.76	1.04	21	ER	198.25	
		HL-93 (OPERATING)	N/A		1.34	--	1.35	0.80	1.34	26	I	177.50	1.03	1.40	24	I	0.00	1.00	0.76	1.35	21	ER	198.25	
		HS-20 (INVENTORY)	36.000	⬡2	1.08	38.880	1.75	0.62	1.44	26	ER	174.50	1.03	1.08	24	I	0.00	1.30	0.62	2.22	26	ER	174.5	
		HS-20 (OPERATING)	36.000		1.40	50.400	1.35	0.62	1.86	26	ER	174.50	1.03	1.40	24	I	0.00	1.00	0.62	2.89	26	ER	174.5	
LEGAL LOAD RATING	SINGLE VEHICLE (SV)	SH	12.500		5.02	62.750	1.40	0.80	5.48	26	I	177.50	1.03	5.02	24	I	0.00	1.30	0.80	7.14	26	I	177.5	
		S3C	21.500		2.79	59.985	1.40	0.80	3.23	26	I	177.50	1.03	2.79	24	I	0.00	1.30	0.80	4.21	26	I	177.5	
		S3A	22.750		2.94	66.885	1.40	0.80	3.07	26	I	177.50	1.03	2.94	24	I	0.00	1.30	0.80	4.00	26	I	177.5	
		S4A	26.750		2.41	64.468	1.40	0.80	2.71	26	I	177.50	1.03	2.41	24	I	0.00	1.30	0.80	3.53	26	I	177.5	
		S5A	30.500		2.18	66.490	1.40	0.80	2.39	26	I	177.50	1.03	2.18	24	I	0.00	1.30	0.80	3.11	26	I	177.5	
		S6A	34.500		1.96	67.620	1.40	0.80	2.16	26	I	177.50	1.03	1.96	24	I	0.00	1.30	0.80	2.81	26	I	177.5	
		S7B	38.500		1.81	69.685	1.40	0.80	1.96	26	I	177.50	1.03	1.81	24	I	0.00	1.30	0.80	2.55	26	I	177.5	
		S7A	40.000		1.81	72.400	1.40	0.80	1.92	26	I	177.50	1.03	1.81	24	I	0.00	1.30	0.80	2.50	26	I	177.5	
	TRUCK TRACTOR SEMI-TRAILER (TTST)	T4A	28.250		2.33	65.823	1.40	0.80	2.64	26	I	177.50	1.03	2.33	24	I	0.00	1.30	0.80	3.44	26	I	177.5	
		T5B	32.000		2.16	69.120	1.40	0.80	2.34	26	I	177.50	1.03	2.16	24	I	0.00	1.30	0.80	3.05	26	I	177.5	
		T6A	36.000		1.96	70.560	1.40	0.80	2.13	26	I	177.50	1.03	1.96	24	I	0.00	1.30	0.80	2.77	26	I	177.5	
		T7A	40.000		1.81	72.400	1.40	0.80	1.97	26	I	177.50	1.03	1.81	24	I	0.00	1.30	0.80	2.56	26	I	177.5	
		T7B	40.000	⬡3	1.74	69.600	1.40	0.80	2.00	26	I	177.50	1.03	1.74	24	I	0.00	1.30	0.62	2.51	26	ER	174.5	
FATIGUE		HL-93 (INVENTORY)	γ_{LL}=0.75		1.47																			

LOAD FACTORS:

DESIGN LOAD RATING FACTORS	LIMIT STATE	γ_{DC}	γ_{DW}
	STRENGTH I	1.25	1.50
	SERVICE II	1.00	1.00

NOTES:

1. MINIMUM RATING FACTORS ARE BASED ON THE STRENGTH I AND SERVICE II LIMIT STATES.
2. ALLOWABLE STRESSES FOR SERVICE II LIMIT STATE ARE AS REQUIRED FOR DESIGN.

⬡ CONTROLLING LOAD RATING

⬡1 DESIGN LOAD RATING (HL-93)

⬡2 DESIGN LOAD RATING (HS-20)

⬡3 LEGAL LOAD RATING **

** SEE CHART FOR VEHICLE TYPE

GIRDER LOCATION

I - INTERIOR GIRDER
EL - EXTERIOR LEFT GIRDER
ER - EXTERIOR RIGHT GIRDER

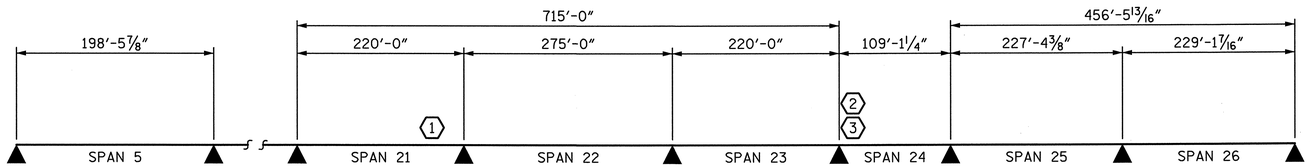

LRFR SUMMARY

(SPAN LENGTHS ARE ALONG GRADELINE)

NORTH CAROLINA PROFESSIONAL SEAL 28479 ENGINEER KEVIN G. BAILEY 6-7-13

PROJECT NO. U-2524C

GUILFORD COUNTY

STATION: POT 407+85.82 -L-
= POT 29+79.72 -Y4-

STATE OF NORTH CAROLINA
DEPARTMENT OF TRANSPORTATION
RALEIGH

LRFR SUMMARY FOR STEEL GIRDERS

(INTERSTATE TRAFFIC)
-RIGHT LANE-

DRAWN BY : VMW	DATE : 5-13	DESIGN ENGINEER OF RECORD: K. BAILEY	DATE : 5-13
CHECKED BY : KGB	DATE : 5-13		

STV / Ralph Whitehead Associates, Inc.
1000 West Morehead St., Ste. 200
Charlotte, NC 28208
NC License No. F-0991

REVISIONS						SHEET NO.
NO.	BY:	DATE:	NO.	BY:	DATE:	S-274
1			3			TOTAL SHEETS
2			4			836

6/7/2013 8:14:01 AM R:\ustation\Finals\LRFR Steel.dgn

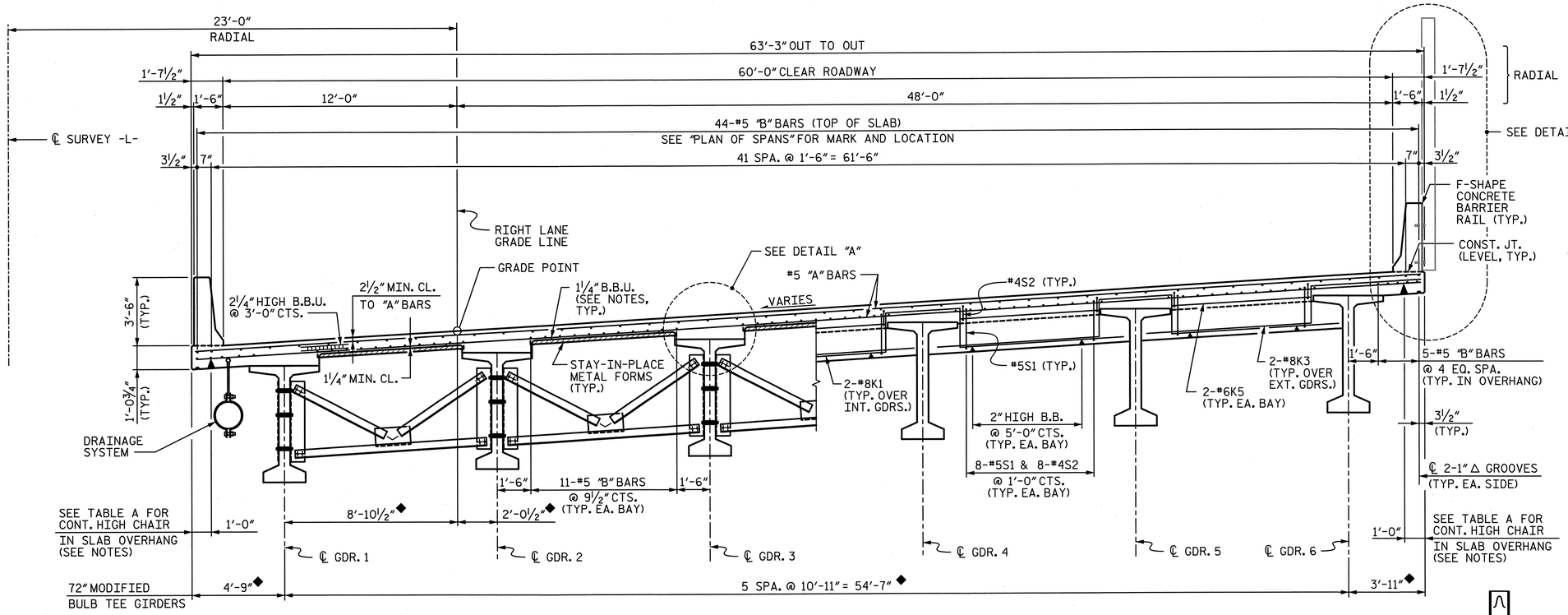

NOTES:

1. PROVIDE A 1¼" HIGH BEAM BOLSTER UPPER AT 4'-0" CTS. ATOP THE METAL STAY-IN-PLACE FORMS TO SUPPORT THE BOTTOM MAT OF "A" BARS. WHEN USING REMOVABLE FORMS, PROVIDE CONTINUOUS HIGH CHAIRS FOR METAL DECK (C.H.C.M.) @ 4'-0" CTS. WITH A HEIGHT TO SUPPORT THE BOTTOM MAT OF "A" BARS A CLEAR DISTANCE OF 2½" ABOVE THE TOP OF THE REMOVABLE FORM.
2. LONGITUDINAL STEEL MAY BE SHIFTED SLIGHTLY, AS NECESSARY, TO AVOID INTERFERENCE WITH STIRRUPS IN PRESTRESSED CONCRETE GIRDERS.
3. BARRIER RAIL IN A CONTINUOUS UNIT SHALL NOT BE CAST UNTIL ALL SLAB CONCRETE HAS BEEN CAST AND HAS REACHED A MINIMUM COMPRESSIVE STRENGTH OF 3000 PSI.
4. PREVIOUSLY CAST CONCRETE IN A CONTINUOUS UNIT SHALL HAVE ATTAINED A MINIMUM COMPRESSIVE STRENGTH OF 3000 PSI BEFORE ADDITIONAL CONCRETE IS CAST IN THE UNIT.
5. FOR INTERMEDIATE DIAPHRAGM DETAILS, SEE "INTERMEDIATE STEEL DIAPHRAGM DETAILS FOR PRESTRESSED CONCRETE MODIFIED BULB TEE GIRDERS" SHEET.
6. FOR END DIAPHRAGM AND CONTINUOUS DIAPHRAGM SECTIONS, SEE CORRESPONDING "SUPERSTRUCTURE DETAILS" SHEET.
7. FOR BARRIER RAIL DETAILS, SEE "PLAN OF CONCRETE BARRIER RAIL" SHEETS.
8. FOR "B" BAR MARKS AND LOCATIONS, SEE CORRESPONDING "PLAN OF SPANS" SHEET.
9. FOR DRAINAGE SYSTEM, SEE "STRUCTURE DRAINAGE SYSTEM" SHEETS.
10. SPAN DESIGNATIONS HAVE BEEN OMITTED FROM BAR CALLOUTS FOR CLARITY. SEE CORRESPONDING "PLAN OF SPANS" FOR COMPLETE BAR CALLOUT. THE COMPLETE BAR CALLOUT IS MARK-X. WHERE "X" IS THE UNIT DESIGNATION FOR CONTINUOUS SPANS AND THE SPAN DESIGNATION FOR SIMPLE SPANS.
11. HEIGHT OF BEAM BOLSTER & CONTINUOUS HIGH CHAIR IS CALCULATED @ ℄ BENT. CONTRACTOR SHALL ADJUST HEIGHTS, AS NECESSARY TO MAINTAIN PROPER CLEARANCE, DUE TO GIRDER CAMBER, SUPERELEVATION CHANGE AND/OR BUILD DOWN AT MODULAR JOINT LOCATIONS.
12. SHIFT "B" BARS AS NECESSARY TO CLEAR DECK DRAINS.

INTERMEDIATE DIAPHRAGMS

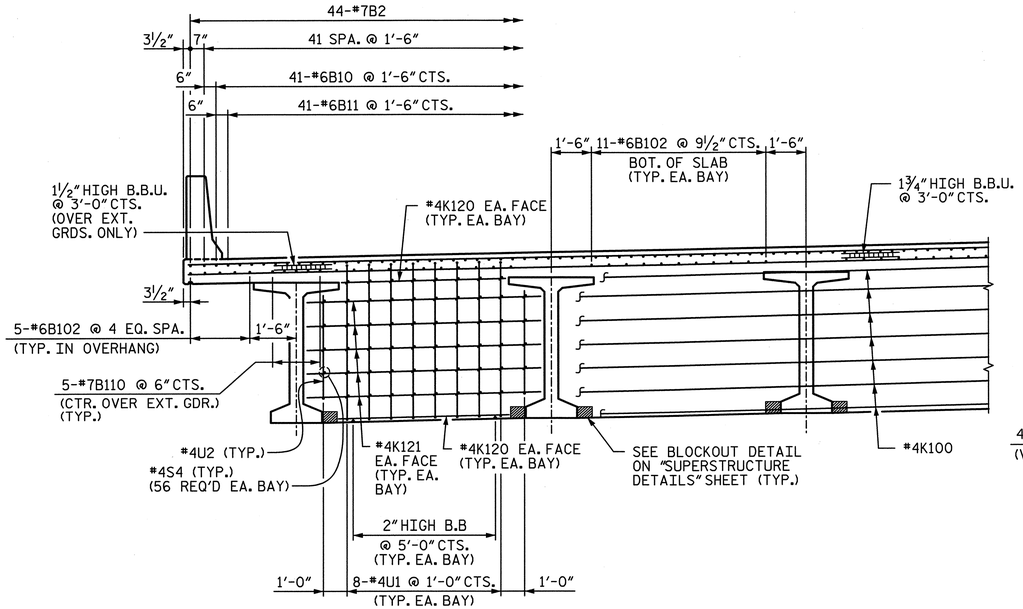

CONTINUOUS DIAPHRAGM

END DIAPHRAGMS

◆ DIMENSIONS SHOWN ARE RADIAL TO CURVES CONCENTRIC WITH ℄ SURVEY -L-. GIRDERS ARE ON CHORDS OF THESE CONCENTRIC CURVES FOR THE SPAN.

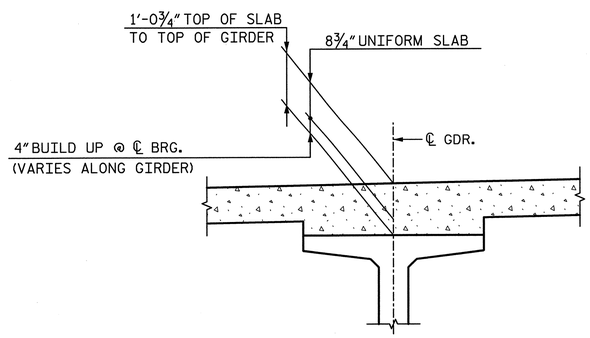

DETAIL "A"

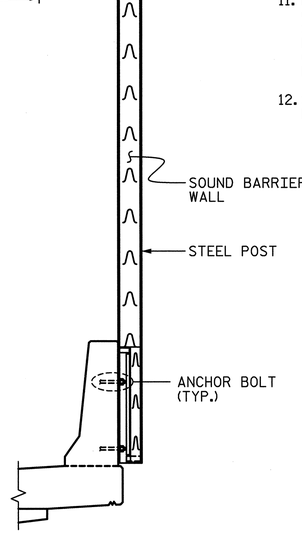

DETAIL "B"

FOR ADDITIONAL DETAILS, SEE "SOUND BARRIER WALL DETAILS" SHEETS.

TYPICAL SECTION - SPANS 1-2

TABLE A		
BENT	LEFT OVERHANG	RIGHT OVERHANG
EB1	4¼"	6¼"
1	4¼"	6¼"
2	4"	6½"

PROJECT NO. U-2524C

GUILFORD COUNTY

STATION: POT 407+85.82 -L-
= POT 29+79.72 -Y4-

STATE OF NORTH CAROLINA
DEPARTMENT OF TRANSPORTATION
RALEIGH

TYPICAL SECTION
UNIT A
SPANS 1 & 2

-RIGHT LANE-

NORTH CAROLINA PROFESSIONAL ENGINEER SEAL 28479 KEVIN G. BAILEY 6-7-13

STV/ Ralph Whitehead Associates, Inc.
1000 West Morehead St., Ste. 200
Charlotte, NC 28208
NC License No. F-0991

REVISIONS						SHEET NO.
NO.	BY:	DATE:	NO.	BY:	DATE:	S-275
1			3			TOTAL SHEETS
2			4			836

DRAWN BY : ACA DATE : 2-13
CHECKED BY : AJP DATE : 3-13
DESIGN ENGINEER OF RECORD: A. PETER DATE : 5-13

6/6/2013 4:39:15 PM R:\Location\Finals\Typ Sect. Spans 1thru 2_rt.dgn

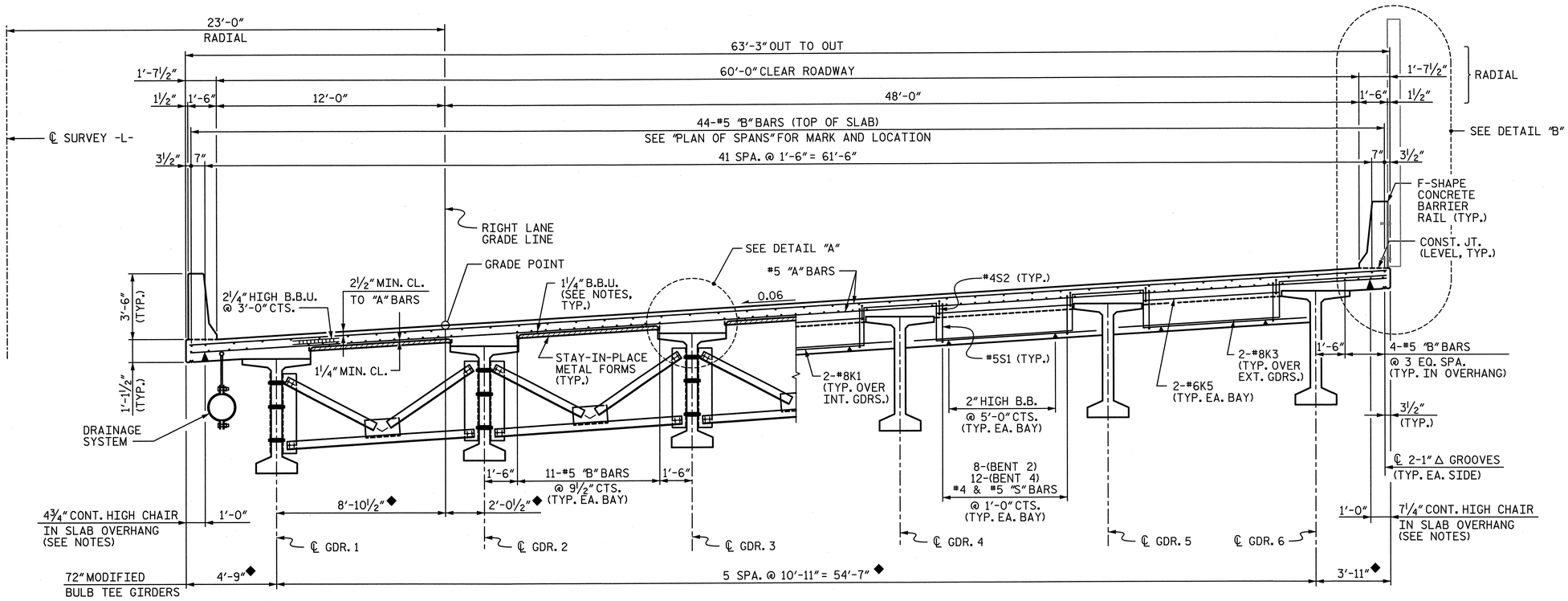

NOTES:

1. FOR TYPICAL SECTION NOTES, SEE "TYPICAL SECTION UNIT A SPANS 1-2".

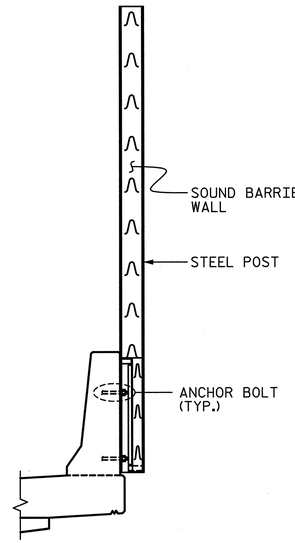

DETAIL "B"

FOR ADDITIONAL DETAILS, SEE "SOUND BARRIER WALL DETAILS" SHEETS.

INTERMEDIATE DIAPHRAGMS

END DIAPHRAGMS

(BENT 2 SHOWN, BENT 4 SIMILAR)

TYPICAL SECTION - SPANS 3-4

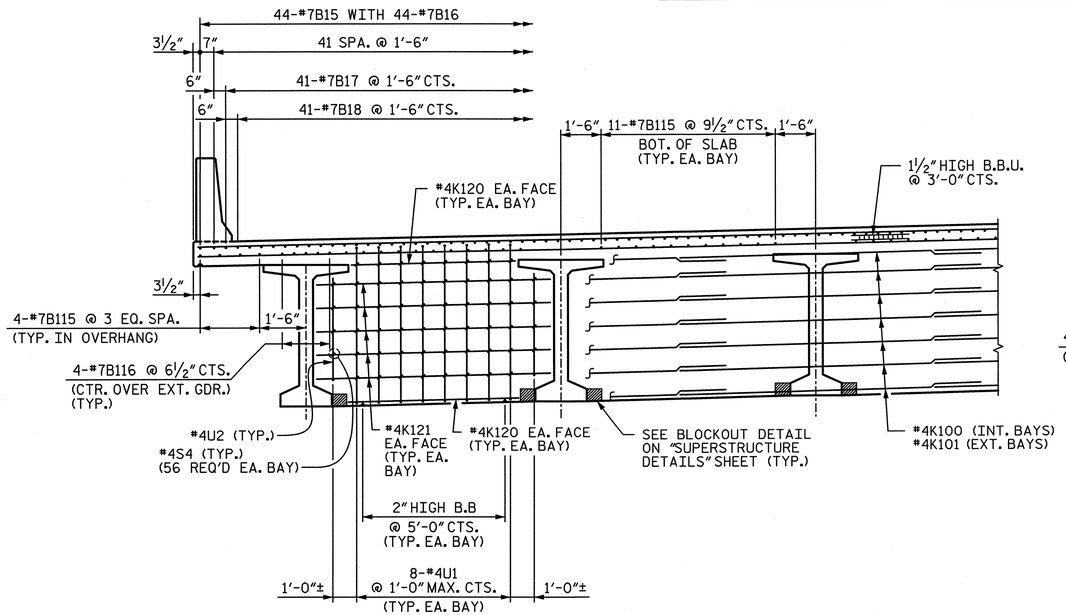

CONTINUUOS DIAPHRAGM

◆ DIMENSIONS SHOWN ARE RADIAL TO CURVES CONCENTRIC WITH ℄ SURVEY -L-. GIRDERS ARE ON CHORDS OF THESE CONCENTRIC CURVES FOR THE SPAN.

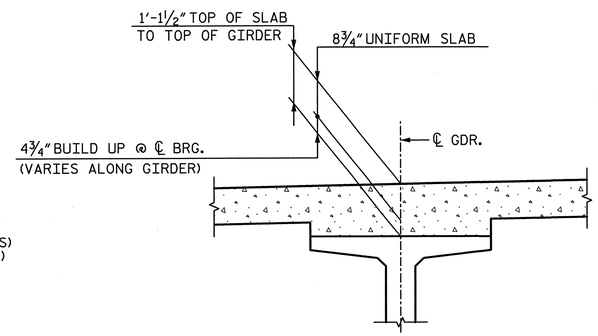

DETAIL "A"

PROJECT NO. U-2524C

GUILFORD COUNTY

STATION: POT 407+85.82 -L-
= POT 29+79.72 -Y4-

STATE OF NORTH CAROLINA
DEPARTMENT OF TRANSPORTATION
RALEIGH

TYPICAL SECTION UNIT B SPANS 3 & 4

-RIGHT LANE-

NORTH CAROLINA PROFESSIONAL ENGINEER SEAL 28479 KEVIN G. BAILEY 6-7-13

STV / Ralph Whitehead Associates, Inc.
1000 West Morehead St., Ste. 200
Charlotte, NC 28208
NC License No. F-0991

DRAWN BY : ACA	DATE : 2-13	DESIGN ENGINEER OF RECORD: A. PETER	DATE : 5-13
CHECKED BY : AJP	DATE : 3-13		

REVISIONS						SHEET NO.
NO.	BY:	DATE:	NO.	BY:	DATE:	S-276
1			3			TOTAL SHEETS
2			4			836

6/6/2013 4:39:16 PM R:\ustation\Finals\Typ Sect. Spans 3 thru 4_rt.dgn

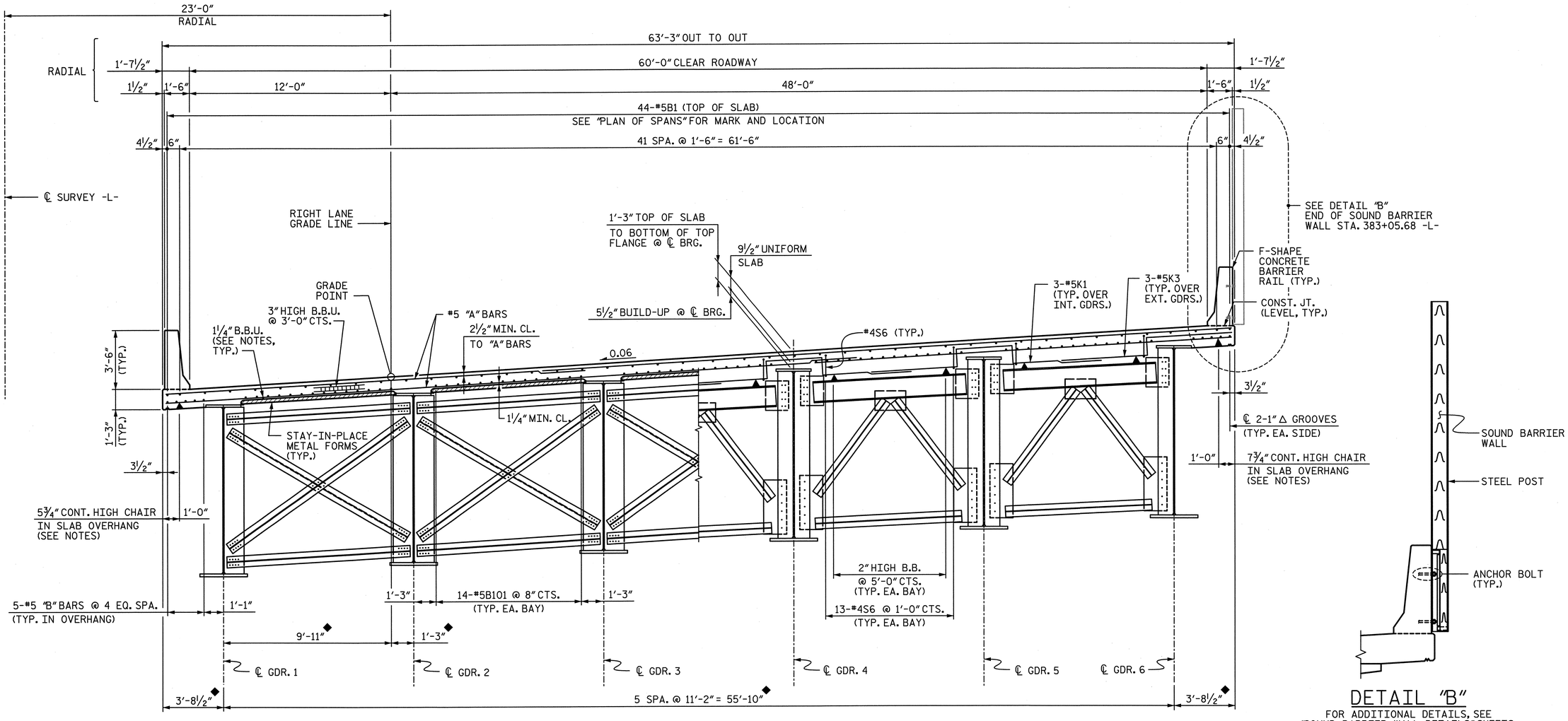

DETAIL "B"

FOR ADDITIONAL DETAILS, SEE "SOUND BARRIER WALL DETAILS" SHEETS.

INTERMEDIATE DIAPHRAGMS

END DIAPHRAGMS

TYPICAL SECTION - SPAN 5

◆ DIMENSIONS SHOWN ARE RADIAL TO CURVES CONCENTRIC WITH ℄ SURVEY -L-.

NOTES:

1. PROVIDE A 1¼" HIGH BEAM BOLSTER UPPER AT 4'-0" CTS. ATOP THE METAL STAY-IN-PLACE FORMS TO SUPPORT THE BOTTOM MAT OF "A" BARS. WHEN USING REMOVABLE FORMS, PROVIDE CONTINUOUS HIGH CHAIRS FOR METAL DECK (C.H.C.M.) @ 4'-0" CTS. WITH A HEIGHT TO SUPPORT THE BOTTOM MAT OF "A" BARS A CLEAR DISTANCE OF 2½" ABOVE THE TOP OF THE REMOVABLE FORM.
2. STRUCTURAL STEEL ERECTION SHALL BE COMPLETE BEFORE FALSEWORK OR FORMS ARE PLACED ON THE SIMPLE SPAN OR CONTINUOUS UNIT.
3. BARRIER RAIL IN A CONTINUOUS UNIT SHALL NOT BE CAST UNTIL ALL SLAB CONCRETE HAS BEEN CAST AND HAS REACHED A MINIMUM COMPRESSIVE STRENGTH OF 3,000 PSI.
4. PREVIOUSLY CAST CONCRETE IN A CONTINUOUS UNIT SHALL HAVE ATTAINED A MINIMUM COMPRESSIVE STRENGTH OF 3,000 PSI BEFORE ADDITIONAL CONCRETE IS CAST IN THE UNIT.
5. FOR END DIAPHRAGM SECTIONS, SEE CORRESPONDING "SUPERSTRUCTURE DETAILS" SHEET.
6. FOR BARRIER RAIL DETAILS, SEE "PLAN OF CONCRETE BARRIER RAIL" SHEETS.
7. FOR "B" BAR MARKS AND LOCATIONS, SEE CORRESPONDING "PLAN OF SPANS" SHEET.
8. FOR DECK DRAINAGE, SEE "STRUCTURE DRAINAGE SYSTEM" SHEETS.
9. SPAN DESIGNATIONS HAVE BEEN OMITTED FROM BAR CALLOUTS FOR CLARITY. SEE CORRESPONDING "PLAN OF SPANS" FOR COMPLETE BAR CALLOUT. THE COMPLETE BAR CALLOUT IS MARK-X. WHERE "X" IS THE UNIT DESIGNATION FOR CONTINUOUS SPANS AND THE SPAN DESIGNATION FOR SIMPLE SPANS.
10. HEIGHT OF BEAM BOLSTER & CONTINUOUS HIGH CHAIR IS CALCULATED @ ℄ BENT. CONTRACTOR SHALL ADJUST HEIGHTS, AS NECESSARY TO MAINTAIN PROPER CLEARANCE, DUE TO GIRDER CAMBER, SUPERELEVATION CHANGE AND/OR BUILD DOWN AT MODULAR JOINT LOCATIONS.
11. SHIFT "B" BARS AS NECESSARY TO CLEAR DECK DRAINS.
12. METAL STAY-IN-PLACE FORMS AND FALSEWORK SHALL NOT BE WELDED TO BEAM OR GIRDER FLANGES IN THE ZONES REQUIRING CHARPY V-NOTCH TEST. SEE "STRUCTURAL STEEL DETAILS" SHEETS.
13. THE CONTRACTOR MAY, WHEN NECESSARY, PROPOSE A SCHEME FOR AVOIDING INTERFERENCE BETWEEN METAL STAY-IN-PLACE FORM SUPPORTS OR FORMS AND GIRDER STIFFENER OR CONNECTOR PLATES. THE PROPOSAL SHALL BE INDICATED, AS APPROPRIATE, ON EITHER THE STEEL WORKING DRAWINGS OR THE METAL STAY-IN-PLACE FORMS WORKING DRAWINGS.
14. THE CONTRACTOR SHALL ADJUST THE GIRDER BUILDUPS AS NECESSARY TO INCORPORATE A MAXIMUM PERMISSIBLE VARIATION IN POT BEARING DEPTH OF ½". SEE SPECIAL PROVISIONS FOR POT BEARINGS.

PROJECT NO. U-2524C

GUILFORD COUNTY

STATION: POT 407+85.82 -L-
= POT 29+79.72 -Y4-

STATE OF NORTH CAROLINA
DEPARTMENT OF TRANSPORTATION
RALEIGH

TYPICAL SECTION
SPAN 5

-RIGHT LANE-

NORTH CAROLINA PROFESSIONAL ENGINEER SEAL 28479 KEVIN G. BAILEY
6-7-13

STV/ Ralph Whitehead Associates, Inc.
1000 West Morehead St., Ste. 200
Charlotte, NC 28208
NC License No. F-0991

DRAWN BY : VMW	DATE : 3-13	DESIGN ENGINEER OF RECORD: A. PETER	DATE : 5-13
CHECKED BY : AJP	DATE : 3-13		

REVISIONS						SHEET NO.
NO.	BY:	DATE:	NO.	BY:	DATE:	S-277
1			3			TOTAL SHEETS
2			4			836

6/6/2013 4:39:17 PM R:\ustation\Finals\Typ Sect. Span 5_rt.dgn

TYPICAL SECTION - SPANS 6A-7

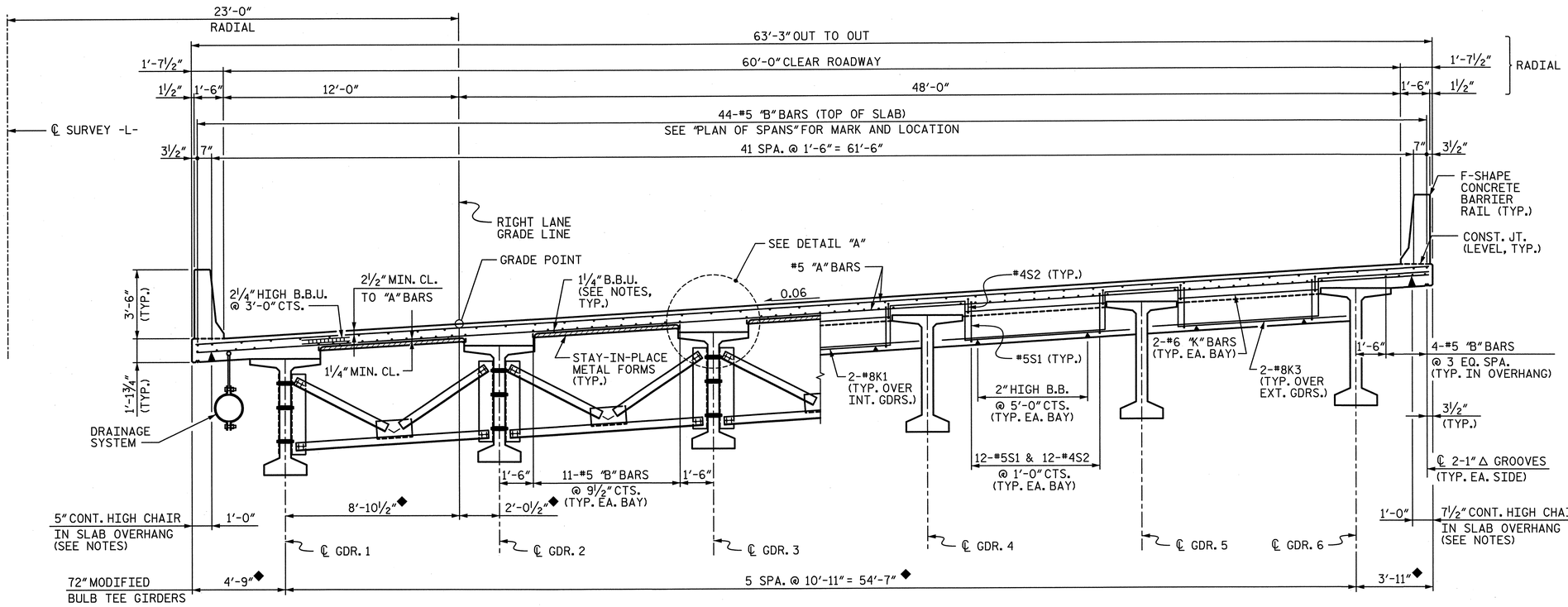

NOTES:

1. FOR TYPICAL SECTION NOTES, SEE "TYPICAL SECTION UNIT A SPANS 1 & 2".

◆ DIMENSIONS SHOWN ARE RADIAL TO CURVES CONCENTRIC WITH ℄ SURVEY -L-. GIRDERS ARE ON CHORDS OF THESE CONCENTRIC CURVES FOR THE SPAN.

INTERMEDIATE DIAPHRAGMS

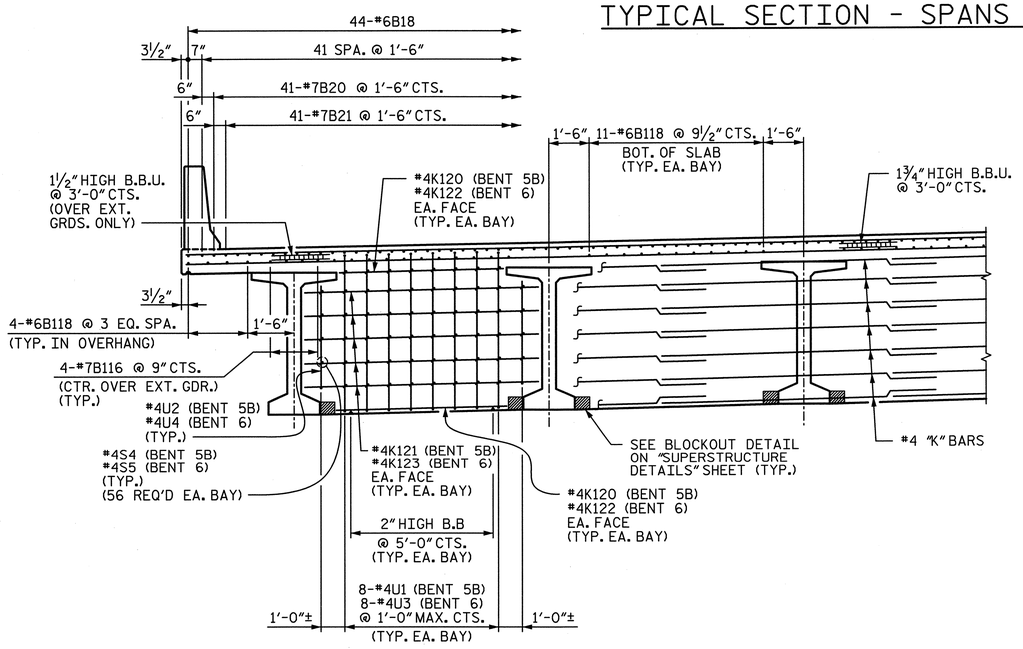

CONTINUOUS DIAPHRAGMS

END DIAPHRAGMS

(BENT 5A SHOWN, BENT 7 SIMILAR)

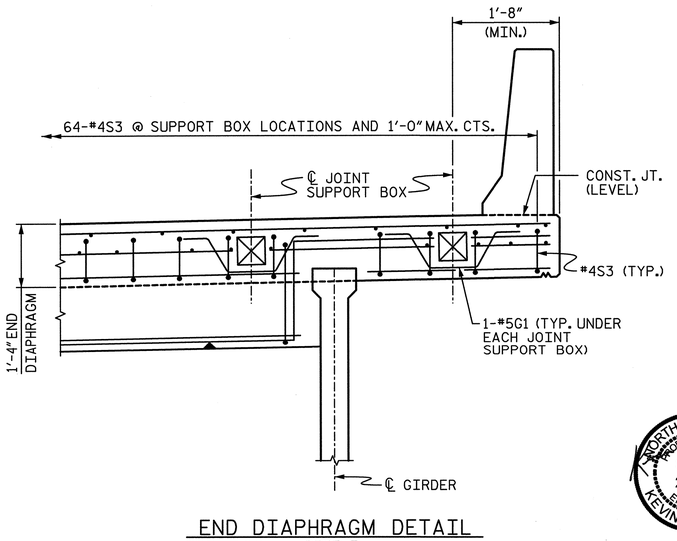

END DIAPHRAGM DETAIL

BENT 7

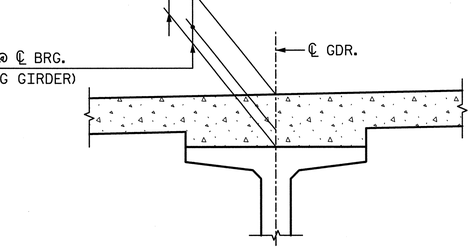

DETAIL "A"

PROJECT NO. U-2524C

GUILFORD COUNTY

STATION: POT 407+85.82 -L-
= POT 29+79.72 -Y4-

STATE OF NORTH CAROLINA
DEPARTMENT OF TRANSPORTATION
RALEIGH

TYPICAL SECTION
UNIT C
SPANS 6A-7

-RIGHT LANE-

NORTH CAROLINA PROFESSIONAL ENGINEER SEAL 28479 KEVIN G. BAILEY 6-7-13

STV / Ralph Whitehead Associates, Inc.
1000 West Morehead St., Ste. 200
Charlotte, NC 28208
NC License No. F-0991

DRAWN BY : ACA	DATE : 2-13	DESIGN ENGINEER OF RECORD: A. PETER	DATE : 5-13
CHECKED BY : AJP	DATE : 3-13		

REVISIONS						SHEET NO.
NO.	BY:	DATE:	NO.	BY:	DATE:	S-278
1			3			TOTAL SHEETS
2			4			836

6/6/2013 4:39:19 PM R:\ustation\Finals\Typ Sect. Spans 6A thru 7_rt.dgn

NOTES:

1. FOR TYPICAL SECTION NOTES, SEE "TYPICAL SECTION UNIT A SPANS 1 & 2".

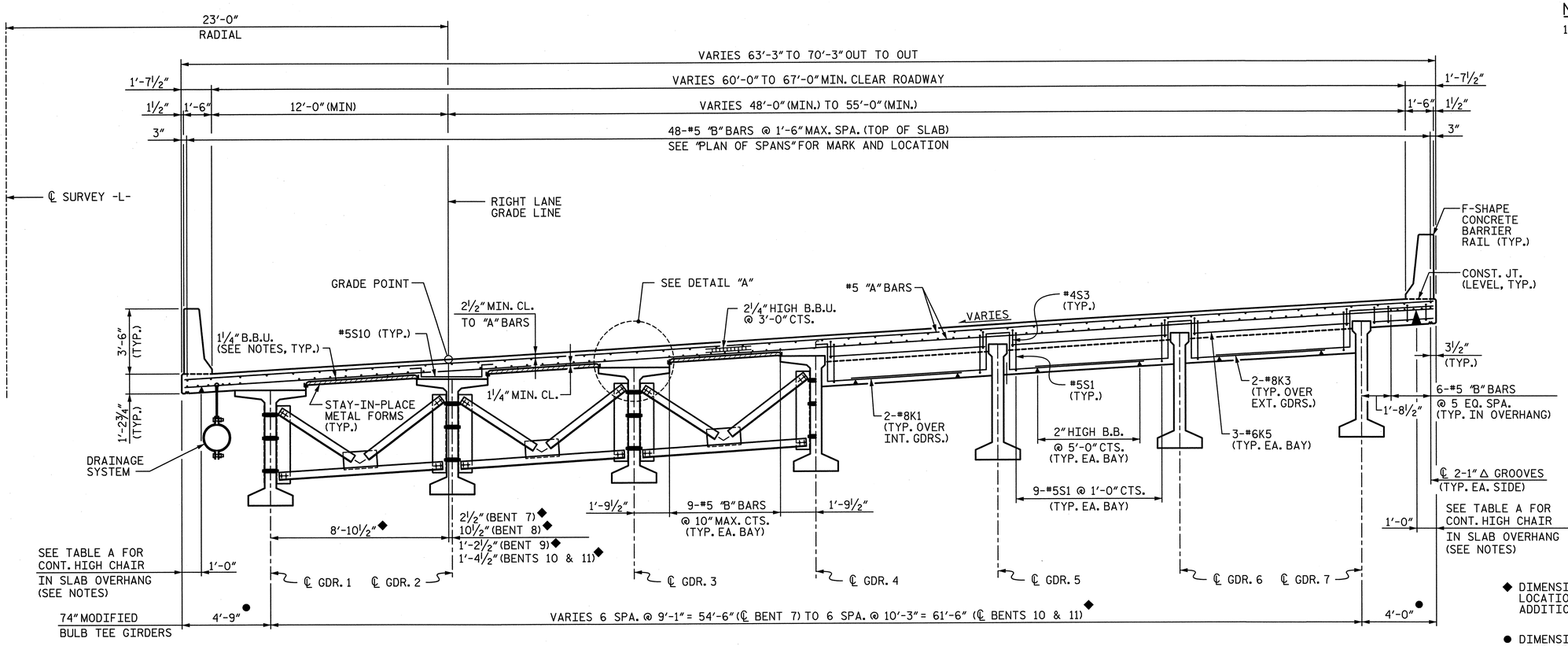

◆ DIMENSIONS SHOWN ARE AT ℄ BENT LOCATIONS. SEE FRAMING PLAN FOR ADDITIONAL INFORMATION.

● DIMENSIONS SHOWN ARE PERPENDICULAR TO EDGE OF DECK.

INTERMEDIATE DIAPHRAGMS

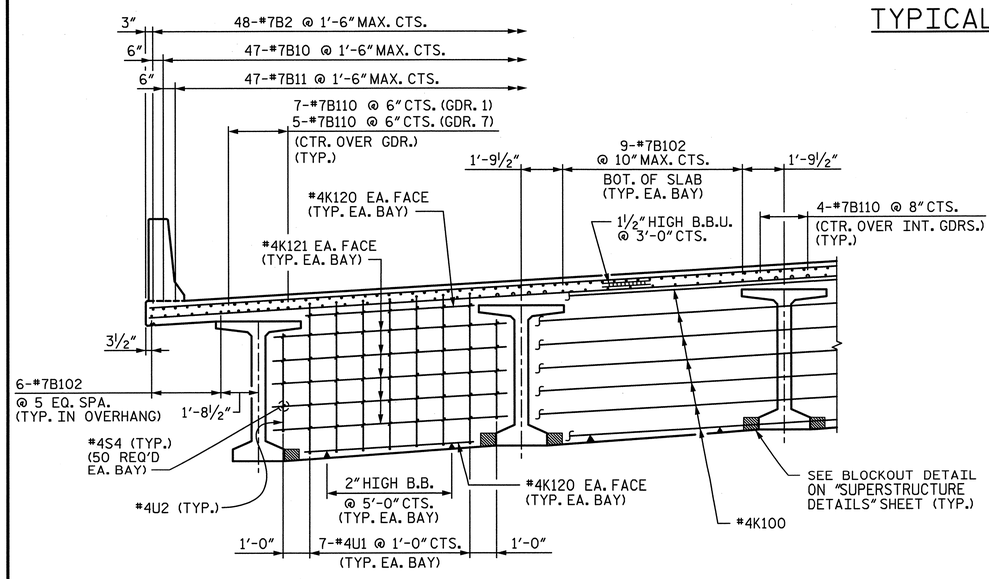

CONTINUOUS DIAPHRAGMS

BENT 8 SHOWN, BENTS 9 & 10 SIMILAR

END DIAPHRAGMS

BENT 7 SHOWN, BENT 11 SIMILAR

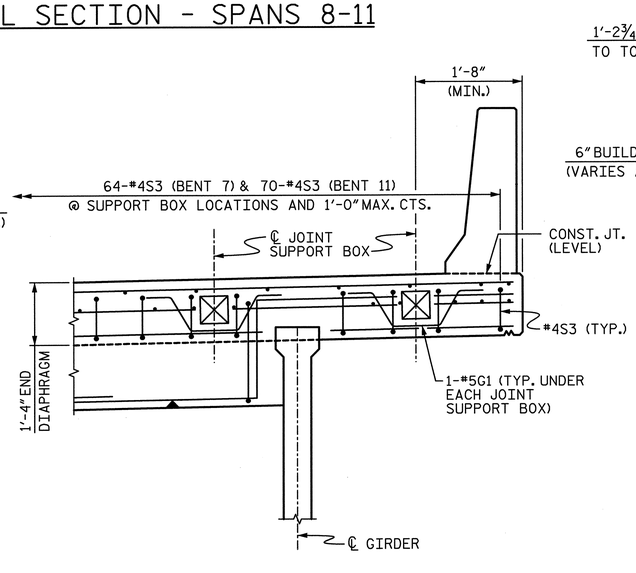

END DIAPHRAGM DETAIL

TYPICAL SECTION - SPANS 8-11

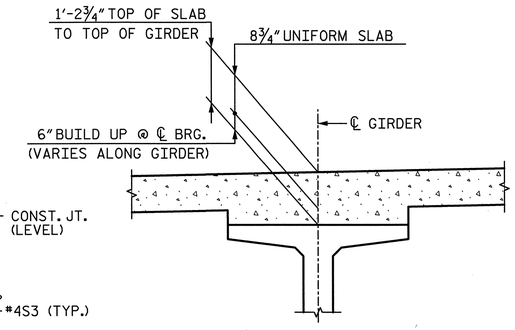

DETAIL "A"

FOR BUILD UP REINFORCING BARS, SEE "SUPERSTRUCTURE DETAILS" SHEET 6 OF 6

TABLE A		
BENT	LEFT OVERHANG	RIGHT OVERHANG
7	6"	8½"
8	6"	8½"
9	6"	8½"
10	6¼"	8¼"
11	6¾"	7¾"

NOTE: HEIGHT OF CONTINUOUS HIGH CHAIR IS CALCULATED AT ℄ BENT. CONTRACTOR SHALL ADJUST HEIGHTS, AS NECESSARY TO MAINTAIN PROPER CLEARANCE, DUE TO GIRDER CAMBER AND/OR SUPERELEVATION CHANGE.

PROJECT NO. U-2524C

GUILFORD COUNTY

STATION: POT 407+85.82 -L-
= POT 29+79.72 -Y4-

NORTH CAROLINA PROFESSIONAL ENGINEER SEAL 28479 KEVIN G. BAILEY 6-7-13

STATE OF NORTH CAROLINA
DEPARTMENT OF TRANSPORTATION
RALEIGH

TYPICAL SECTION UNIT D SPANS 8-11

-RIGHT LANE-

DRAWN BY : ACA	DATE : 7-12	DESIGN ENGINEER OF RECORD: A. PETER	DATE : 5-13
CHECKED BY : AJP	DATE : 3-13		

STV / Ralph Whitehead Associates, Inc.
1000 West Morehead St., Ste. 200
Charlotte, NC 28208
NC License No. F-0991

REVISIONS						SHEET NO.
NO.	BY:	DATE:	NO.	BY:	DATE:	S-279
1			3			TOTAL SHEETS
2			4			836

6/6/2013 4:39:20 PM R:\ustation\Finals\Typ Sect. Spans 8 thru 11_rt.dgn

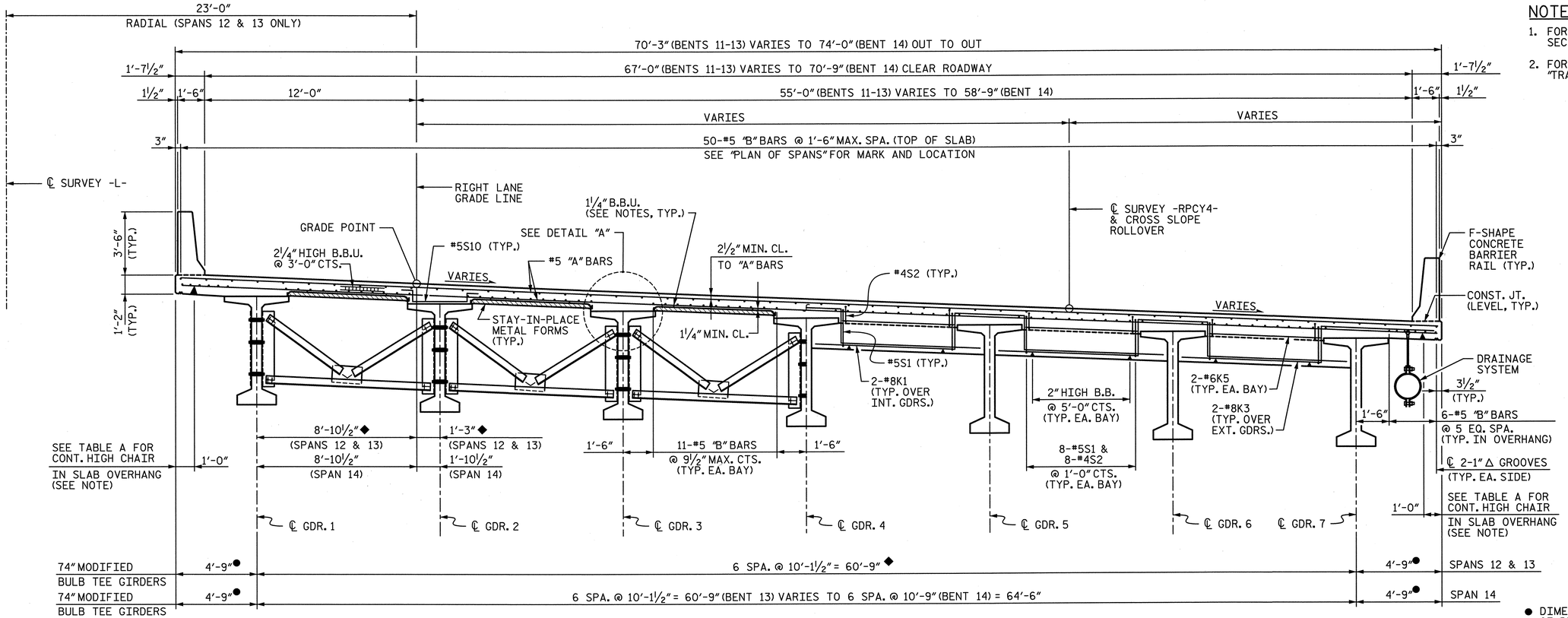

NOTES:

1. FOR TYPICAL SECTION NOTES, SEE "TYPICAL SECTION UNIT A SPANS 1 & 2".
2. FOR ADDITIONAL INFORMATION, SEE "TRANSITION ZONE DETAILS" SHEETS.

● DIMENSIONS ARE PERPENDICULAR TO EDGE OF DECK.

◆ DIMENSIONS SHOWN ARE RADIAL TO CURVES CONCENTRIC WITH ℄ SURVEY -L-. GIRDERS ARE ON CHORDS OF THESE CONCENTRIC CURVES FOR THE SPAN.

TYPICAL SECTION - SPANS 12-14

INTERMEDIATE DIAPHRAGMS

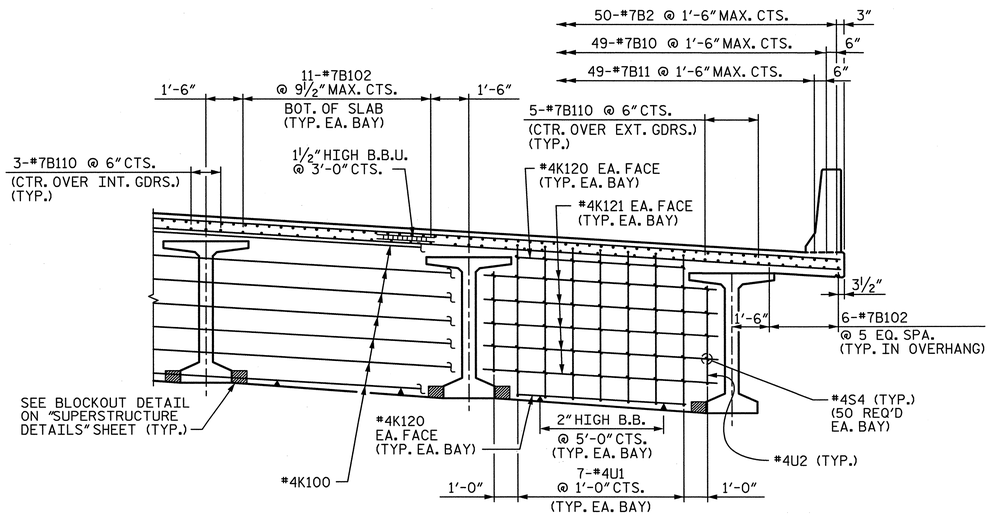

CONTINUOUS DIAPHRAGMS

END DIAPHRAGMS

(BENT 14 SHOWN, BENT 11 SIMILAR)

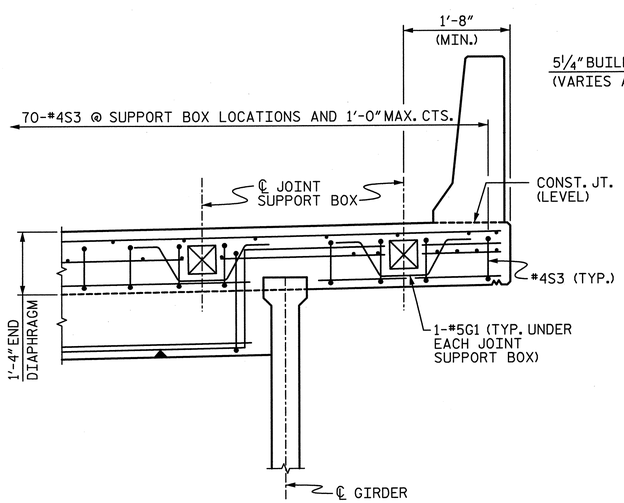

END DIAPHRAGM DETAIL

BENT 11

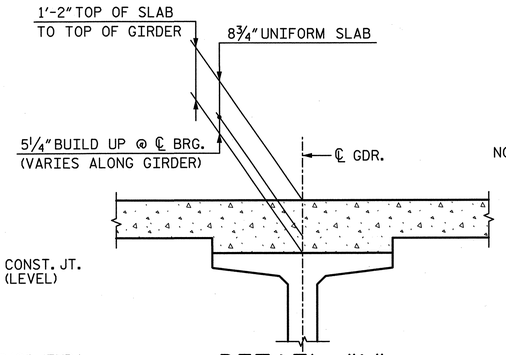

DETAIL "A"

FOR BUILD UP REINFORCING BARS, SEE "SUPERSTRUCTURE DETAILS" SHEET 6 OF 6

TABLE A		
BENT	LEFT OVERHANG	RIGHT OVERHANG
11	6"	7"
12	6¼"	6¾"
13	6¾"	6¼"
14	7"	5½"

NOTE: HEIGHT OF CONTINUOUS HIGH CHAIR IS CALCULATED AT ℄ BENT. CONTRACTOR SHALL ADJUST HEIGHTS, AS NECESSARY TO MAINTAIN PROPER CLEARANCE, DUE TO GIRDER CAMBER OR SUPERELEVATION CHANGE.

PROJECT NO. U-2524C

GUILFORD COUNTY

STATION: POT 407+85.82 -L-
= POT 29+79.72 -Y4-

NORTH CAROLINA PROFESSIONAL SEAL 28479 ENGINEER KEVIN G. BAILEY 6-7-13

STATE OF NORTH CAROLINA
DEPARTMENT OF TRANSPORTATION
RALEIGH

TYPICAL SECTION
UNIT E
SPANS 12-14

-RIGHT LANE-

DRAWN BY : ACA	DATE : 7-12	DESIGN ENGINEER OF RECORD: A. PETER	DATE : 5-13
CHECKED BY : AJP	DATE : 4-13		

STV / Ralph Whitehead Associates, Inc.
1000 West Morehead St., Ste. 200
Charlotte, NC 28208
NC License No. F-0991

REVISIONS						SHEET NO.
NO.	BY:	DATE:	NO.	BY:	DATE:	S-280
1			3			TOTAL SHEETS
2			4			836

6/6/2013 6:52:15 PM R:\ustation\Finals\Typ Sect. Spans 12 thru 14_rt.dgn

NOTES:

1. FOR TYPICAL SECTION NOTES, SEE "TYPICAL SECTION UNIT A SPANS 1 & 2".
2. FOR CROSS SLOPE ROLLOVER AND ADDITIONAL INFORMATION, SEE "TRANSITION ZONE DETAILS" SHEETS.
3. CONTRACTOR IS RESPONSIBLE FOR DETERMINING IF REMOVABLE FORMS ARE NECESSARY AND THE EXTENT REQUIRED TO FORM THE DECK. ALL COSTS ASSOCIATED WITH IMPLEMENTING REMOVABLE FORMS SHALL BE CONSIDERED INCIDENTIAL TO "REINFORCED CONCRETE DECK SLAB" AND NO ADDITIONAL PAYMENT SHALL BE MADE.

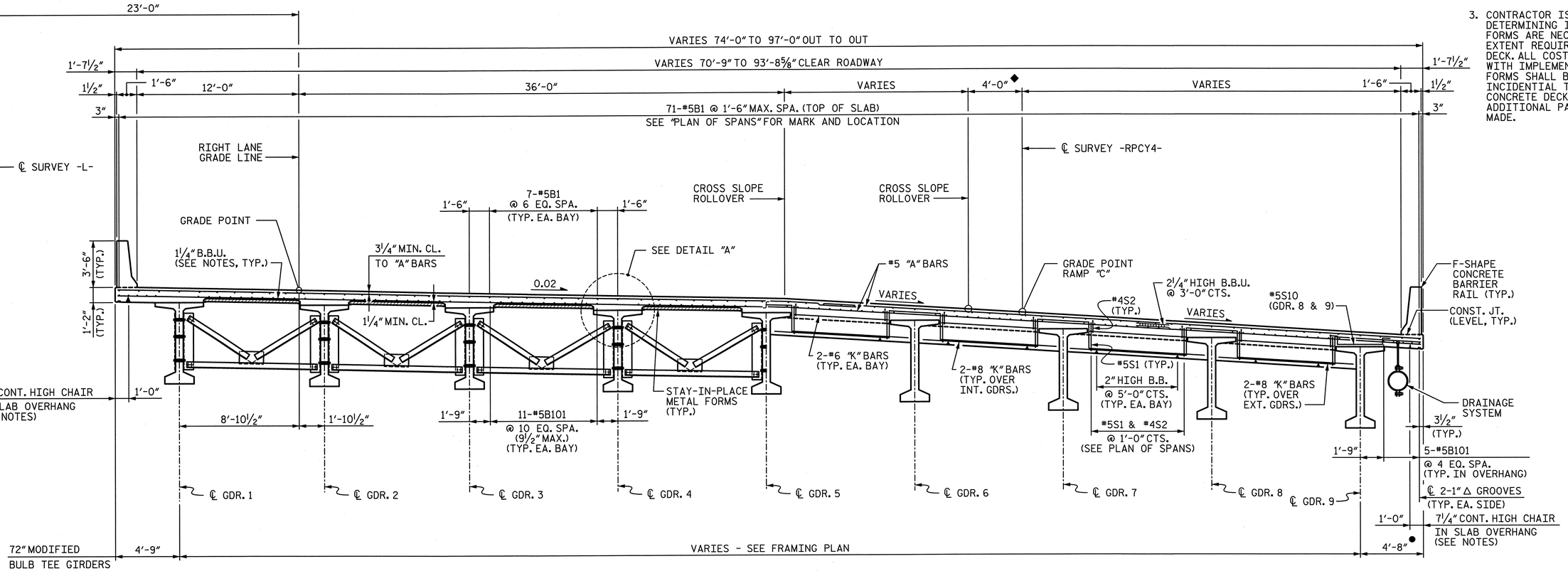

INTERMEDIATE DIAPHRAGMS

END DIAPHRAGMS

TYPICAL SECTION - SPAN 15

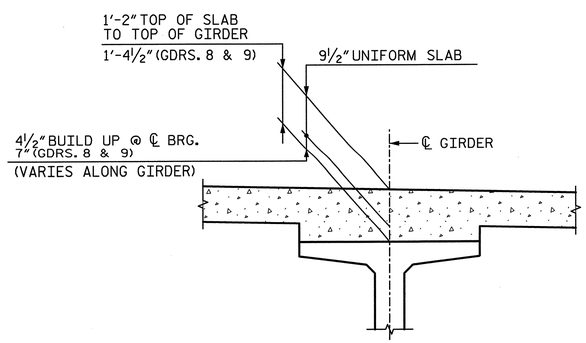

DETAIL "A"

FOR BUILD UP REINFORCING BARS, SEE "SUPERSTRUCTURE DETAILS" SHEET 6 OF 6

AN ADDITIONAL 3/4" DECK THICKNESS IS INCLUDED IN SPAN 15 & 16 TO ACCOUNT FOR RIDEABILITY OPERATIONS IN AREAS OF CROSS SLOPE ROLLOVER. ALL COSTS ASSOCIATED WITH EXTRA DECK THICKNESS SHALL BE CONSIDERED INCIDENTAL TO "REINFORCED CONCRETE DECK SLAB" AND NO ADDITIONAL PAYMENT SHALL BE MADE.

● DIMENSIONS ARE PERPENDICULAR TO RIGHT EDGE OF DECK.

◆ DIMENSIONS SHOWN ARE RADIAL TO ℄ SURVEY -RPCY4-.

PROJECT NO. U-2524C

GUILFORD COUNTY

STATION: POT 407+85.82 -L-
= POT 29+79.72 -Y4-

STATE OF NORTH CAROLINA
DEPARTMENT OF TRANSPORTATION
RALEIGH

TYPICAL SECTION SPAN 15

-RIGHT LANE-

NORTH CAROLINA PROFESSIONAL SEAL 28479 ENGINEER KEVIN G. BAILEY 6-7-13

DRAWN BY : VMW/ACA	DATE : 7-12	DESIGN ENGINEER OF RECORD: A. PETER	DATE : 5-13
CHECKED BY : AJP	DATE : 3-13		

STV / Ralph Whitehead Associates, Inc.
1000 West Morehead St., Ste. 200
Charlotte, NC 28208
NC License No. F-0991

REVISIONS						SHEET NO.
NO.	BY:	DATE:	NO.	BY:	DATE:	S-281
1			3			TOTAL SHEETS
2			4			836

6/6/2013 4:39:22 PM R:\ustation\Finals\Typ Sect. Span 15_rt.dgn

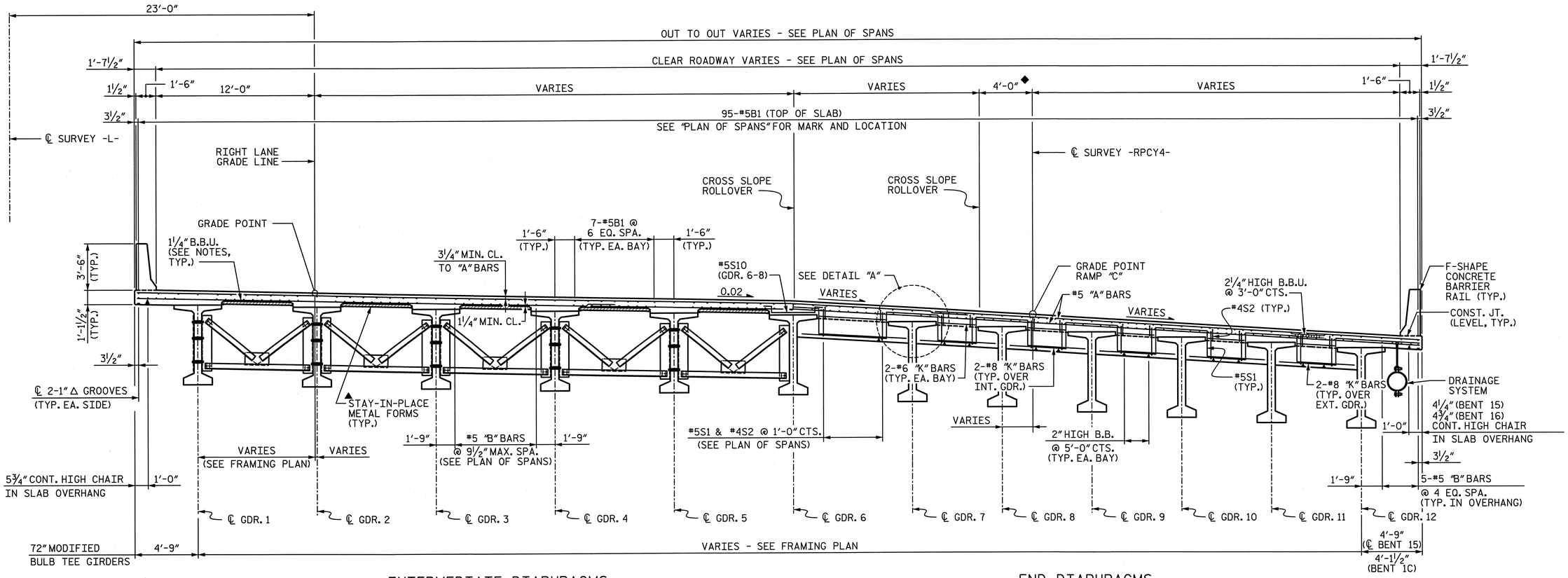

INTERMEDIATE DIAPHRAGMS

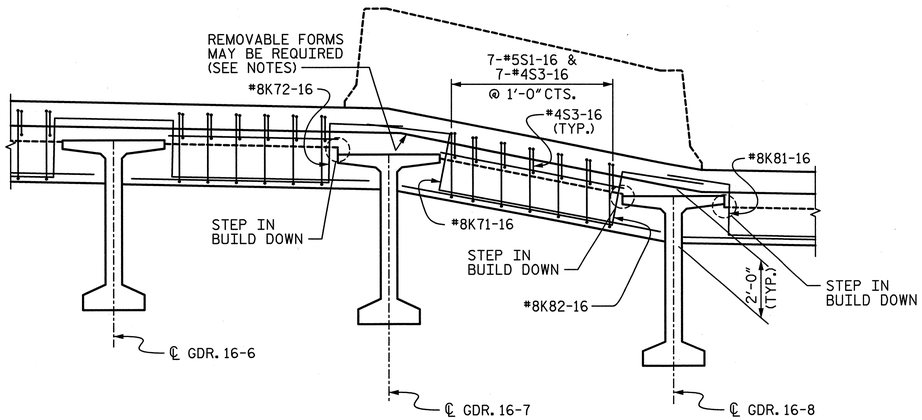

TRANSITION ZONE END DIAPHRAGM

SECTION ALONG DIAPHRAGM @ BENT 16

TYPICAL SECTION - SPAN 16

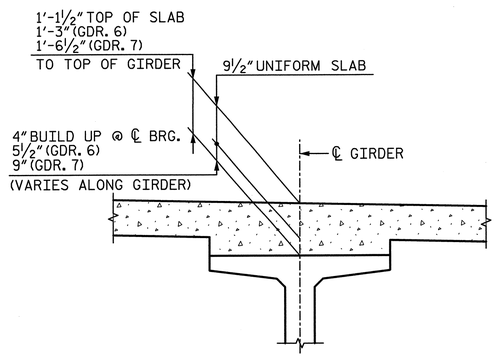

DETAIL "A"

FOR BUILD UP REINFORCING BARS, SEE "SUPERSTRUCTURE DETAILS" SHEET 6 OF 6

END DIAPHRAGMS

BENT 15 SHOWN, BENT 16 SIMILAR

◆ DIMENSIONS SHOWN ARE RADIAL TO ℄ -RPCY4-.

● DIMENSIONS ARE PERPENDICULAR TO RIGHT EDGE OF DECK.

▲ REMOVABLE FORMS MAY BE REQUIRED DUE TO THE TRANSITION ZONE. (SEE NOTES)

AN ADDITIONAL ¾" DECK THICKNESS IS INCLUDED IN SPAN 15 & 16 TO ACCOUNT FOR RIDEABILITY OPERATIONS IN AREAS OF CROSS SLOPE ROLLOVER. ALL COSTS ASSOCIATED WITH EXTRA DECK THICKNESS SHALL BE CONSIDERED INCIDENTAL TO "REINFORCED CONCRETE DECK SLAB" AND NO ADDITIONAL PAYMENT SHALL BE MADE.

NOTES:

1. FOR TYPICAL SECTION NOTES, SEE "TYPICAL SECTION UNIT A SPANS 1 & 2".
2. FOR ADDITIONAL CROSS SLOPE ROLLOVER INFORMATION, SEE "TRANSITION ZONE DETAILS" SHEETS.
3. CONTRACTOR IS RESPONSIBLE FOR DETERMINING IF REMOVABLE FORMS ARE NECESSARY AND THE EXTENT REQUIRED TO FORM THE DECK. ALL COSTS ASSOCIATED WITH IMPLEMENTING REMOVABLE FORMS SHALL BE CONSIDERED INCIDENTAL TO "REINFORCED CONCRETE DECK SLAB" AND NO ADDITIONAL PAYMENT SHALL BE MADE.
4. WHEN USING REMOVABLE FORMS, PROVIDE CONTINUOUS HIGH CHAIRS FOR METAL DECK (C.H.C.M.) @ 4'-0" CTS. WITH A HEIGHT TO SUPPORT THE BOTTOM MAT OF "A" BARS A CLEAR DISTANCE OF 2½" ABOVE THE TOP OF REMOVABLE FORM.

NORTH CAROLINA PROFESSIONAL SEAL 28479 ENGINEER KEVIN G. BAILEY 6-7-13

PROJECT NO. U-2524C

GUILFORD COUNTY

STATION: POT 407+85.82 -L-
= POT 29+79.72 -Y4-

STATE OF NORTH CAROLINA
DEPARTMENT OF TRANSPORTATION
RALEIGH

TYPICAL SECTION SPAN 16

-RIGHT LANE-

DRAWN BY : ACA	DATE : 1-13	DESIGN ENGINEER OF RECORD: A. PETER	DATE : 5-13
CHECKED BY : AJP	DATE : 4-13		

STV / Ralph Whitehead Associates, Inc.
1000 West Morehead St., Ste. 200
Charlotte, NC 28208
NC License No. F-0991

REVISIONS						SHEET NO.
NO.	BY:	DATE:	NO.	BY:	DATE:	S-282
1			3			TOTAL SHEETS
2			4			836

6/6/2013 4:39:24 PM R:\ustation\Finals\Typ Sect. Span 16_rt.dgn

TYPICAL SECTION - SPANS 17-20

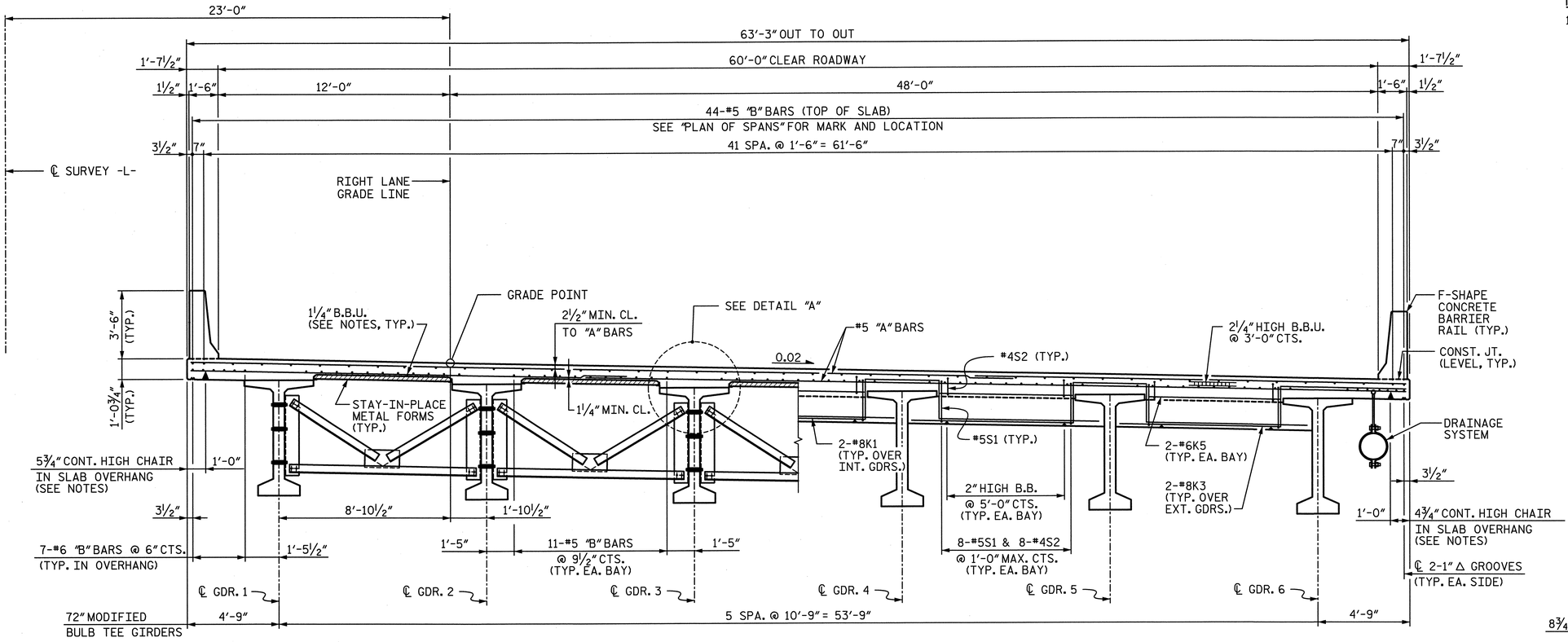

NOTES:

1. FOR TYPICAL SECTION NOTES, SEE "TYPICAL SECTION UNIT A SPANS 1 & 2".

INTERMEDIATE DIAPHRAGMS

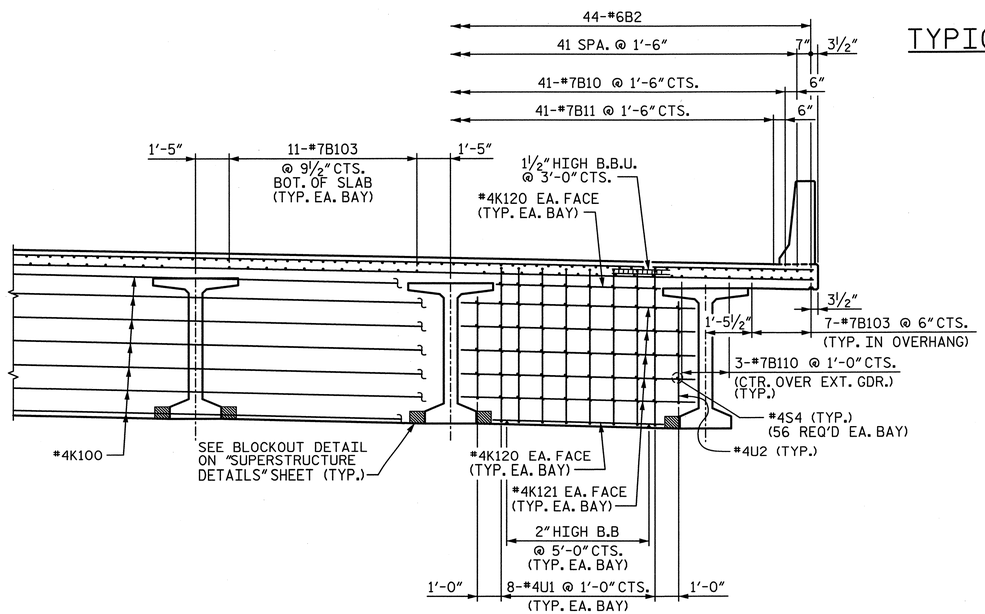

CONTINUOUS DIAPHRAGMS

END DIAPHRAGMS

(BENT 16 SHOWN, BENT 20 SIMILAR)

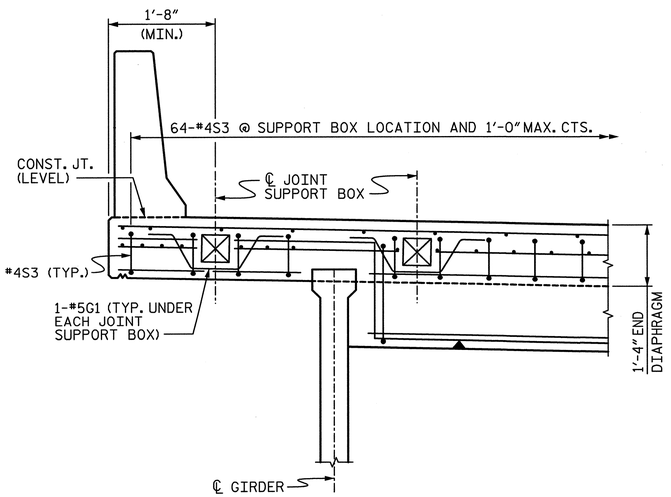

END DIAPHRAGM DETAIL

BENT 20

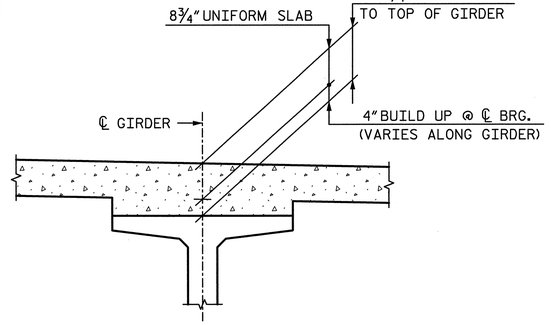

DETAIL "A"

PROJECT NO. U-2524C

GUILFORD COUNTY

STATION: POT 407+85.82 -L- = POT 29+79.72 -Y4-

NORTH CAROLINA PROFESSIONAL ENGINEER SEAL 28479 KEVIN G. BAILEY 6-7-13

STATE OF NORTH CAROLINA
DEPARTMENT OF TRANSPORTATION
RALEIGH

TYPICAL SECTION
UNIT F
SPANS 17-20

-RIGHT LANE-

DRAWN BY : ACA	DATE : 1-13	DESIGN ENGINEER OF RECORD: A. PETER	DATE : 5-13
CHECKED BY : AJP	DATE : 4-13		

STV / Ralph Whitehead Associates, Inc.
1000 West Morehead St., Ste. 200
Charlotte, NC 28208
NC License No. F-0991

REVISIONS						SHEET NO.
NO.	BY:	DATE:	NO.	BY:	DATE:	S-283
1			3			TOTAL SHEETS
2			4			636

6/6/2013 4:39:25 PM R:\station\Finals\Typ Sect. Spans 17 thru 20_rt.dgn

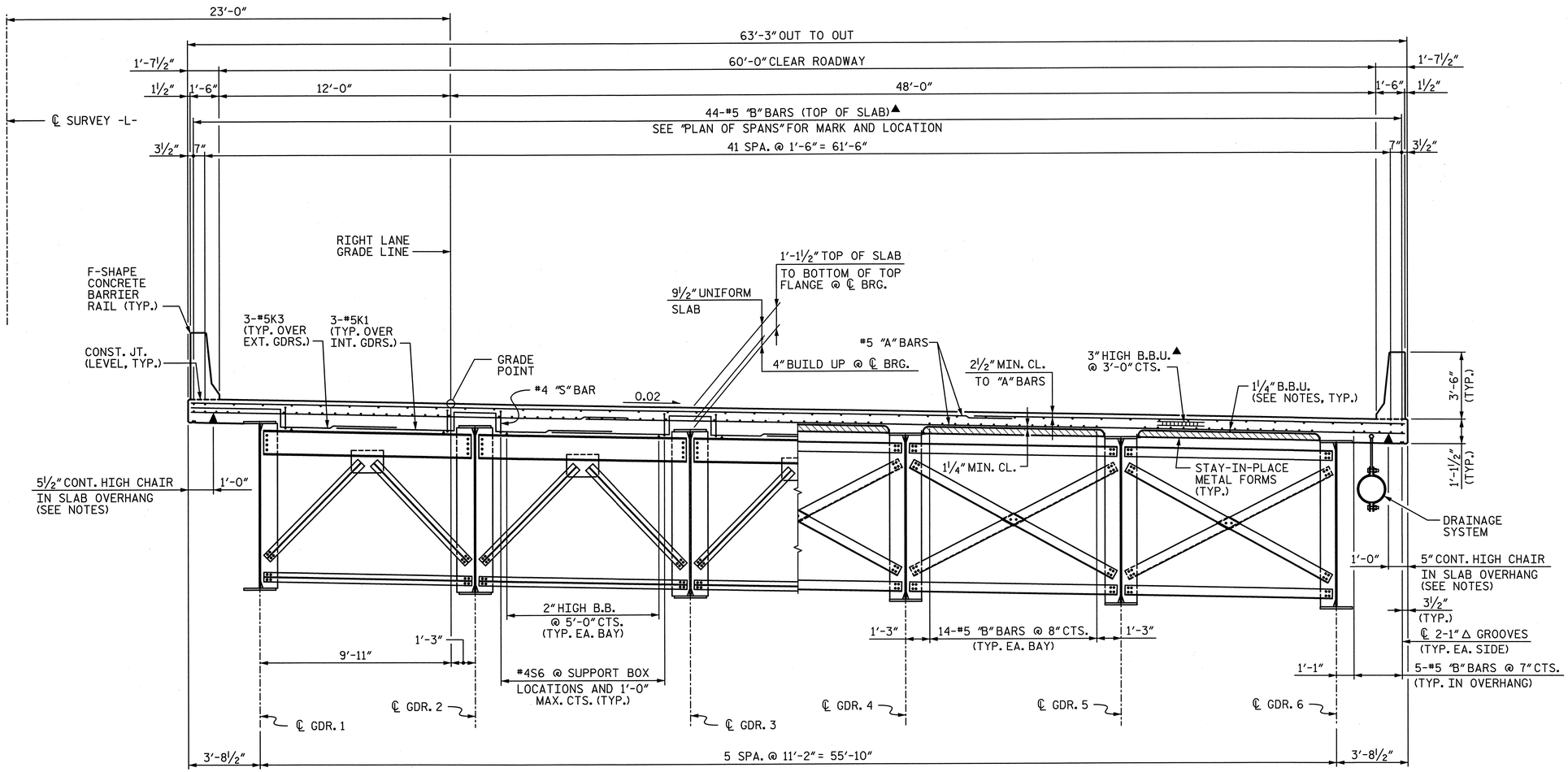

END DIAPHRAGM

BENT 20 SHOWN, BENT 23 & 24 SIMILAR

INTERMEDIATE DIAPHRAGMS

TYPICAL SECTION - SPAN 21-24

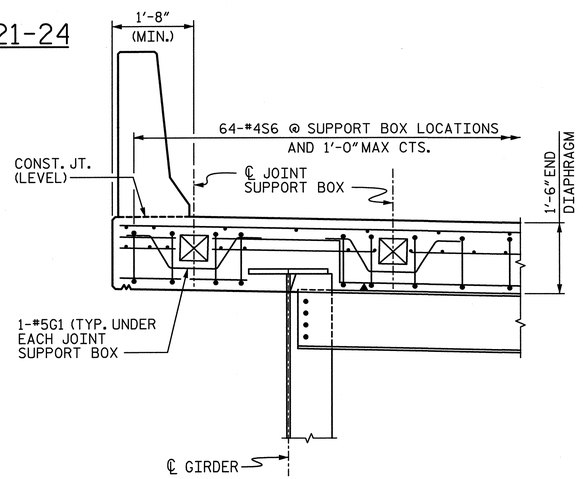

END DIAPHRAGM DETAIL

BENT 20 & 23

NOTES:

1. FOR TYPICAL SECTION NOTES, SEE "TYPICAL SECTION SPAN 5".

▲ FOR TOP "B" BARS AND B.B.U. OVER BENTS, SEE "TOP "B" BAR PLACEMENT DETAIL" ON "PLAN OF SPANS - UNIT G" SHEET 1 OF 3.

PROJECT NO. U-2524C

GUILFORD COUNTY

STATION: POT 407+85.82 -L-
= POT 29+79.72 -Y4-

STATE OF NORTH CAROLINA
DEPARTMENT OF TRANSPORTATION
RALEIGH

TYPICAL SECTION
UNIT G & SPAN 24
SPANS 21-24

-RIGHT LANE-

NORTH CAROLINA PROFESSIONAL ENGINEER SEAL 28479 ENGINEER KEVIN G. BAILEY 6-7-13

DRAWN BY : ACA DATE : 1-13
CHECKED BY : AJP DATE : 4-13

DESIGN ENGINEER OF RECORD: A. PETER DATE : 5-13

STV / Ralph Whitehead Associates, Inc.
1000 West Morehead St., Ste. 200
Charlotte, NC 28208
NC License No. F-0991

REVISIONS						SHEET NO.
NO.	BY:	DATE:	NO.	BY:	DATE:	S-284
1			3			TOTAL SHEETS
2			4			836

6/6/2013 4:39:26 PM R:\station\Finals\Typ Sect. Spans 21thru 24_rt.dgn

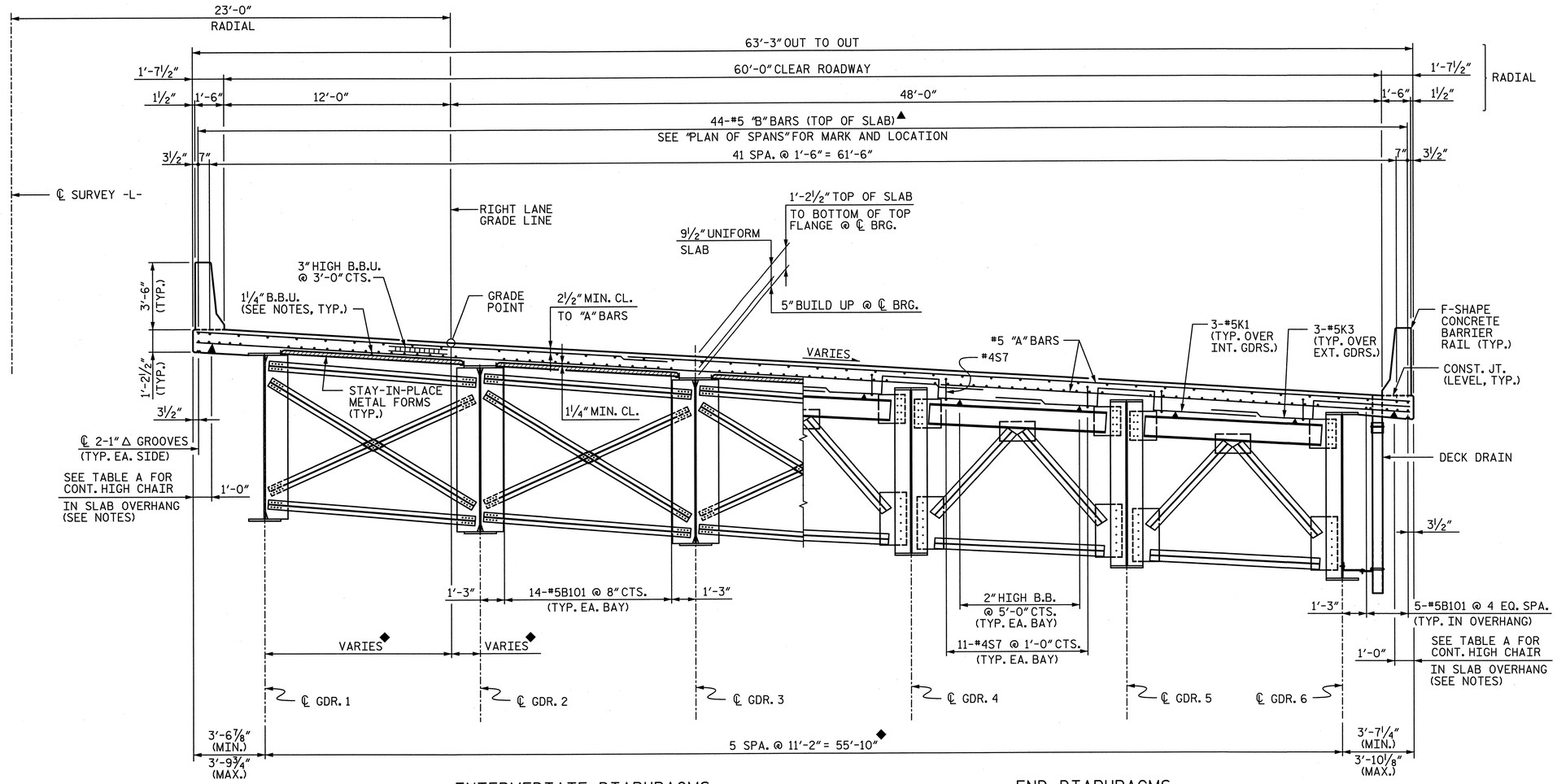

INTERMEDIATE DIAPHRAGMS

END DIAPHRAGMS
BENT 24 SHOWN, BENT 26 SIMILAR

TYPICAL SECTION - SPANS 25-26

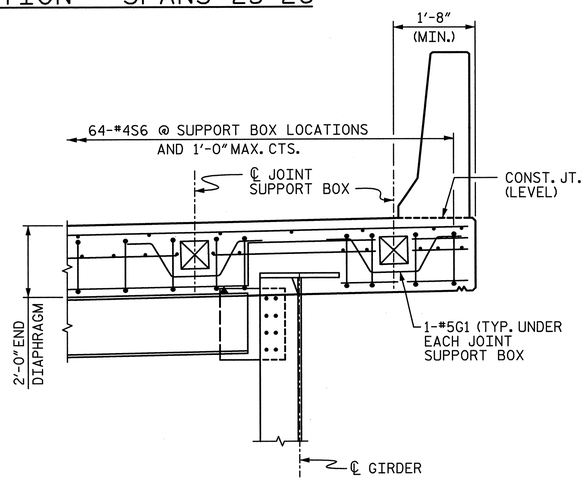

END DIAPHRAGM DETAIL
BENT 26

NOTES:

1. FOR TYPICAL SECTION NOTES, SEE "TYPICAL SECTION SPAN 5".

TABLE A		
BENT	LEFT OVERHANG	RIGHT OVERHANG
24	6½"	6"
25	7"	5¾"
26	7¼"	5¼"

◆ SEE FRAMING PLAN

▲ FOR TOP "B" BARS OVER BENT, SEE "TOP "B" BAR PLACEMENT DETAIL" ON "PLAN OF SPANS UNIT H" SHEET 1 OF 3.

PROJECT NO. U-2524C

GUILFORD COUNTY

STATION: POT 407+85.82 -L-
= POT 29+79.72 -Y4-

STATE OF NORTH CAROLINA
DEPARTMENT OF TRANSPORTATION
RALEIGH

TYPICAL SECTION UNIT H SPANS 25 & 26

-RIGHT LANE-

NORTH CAROLINA PROFESSIONAL SEAL 28479 ENGINEER KEVIN G. BAILEY 6-7-13

DRAWN BY : VMW/ACA	DATE : 7-12	DESIGN ENGINEER OF RECORD: A. PETER	DATE : 5-13
CHECKED BY : AJP	DATE : 4-13		

STV / Ralph Whitehead Associates, Inc.
1000 West Morehead St., Ste. 200
Charlotte, NC 28208
NC License No. F-0991

REVISIONS						SHEET NO.
NO.	BY:	DATE:	NO.	BY:	DATE:	S-285
1			3			TOTAL SHEETS
2			4			836

6/6/2013 4:39:28 PM R:\ustation\Finals\Typ Sect. Spans 25 & 26_rt.dgn

NOTES:

1. FOR TYPICAL SECTION NOTES, SEE "TYPICAL SECTION UNIT A SPANS 1 & 2".

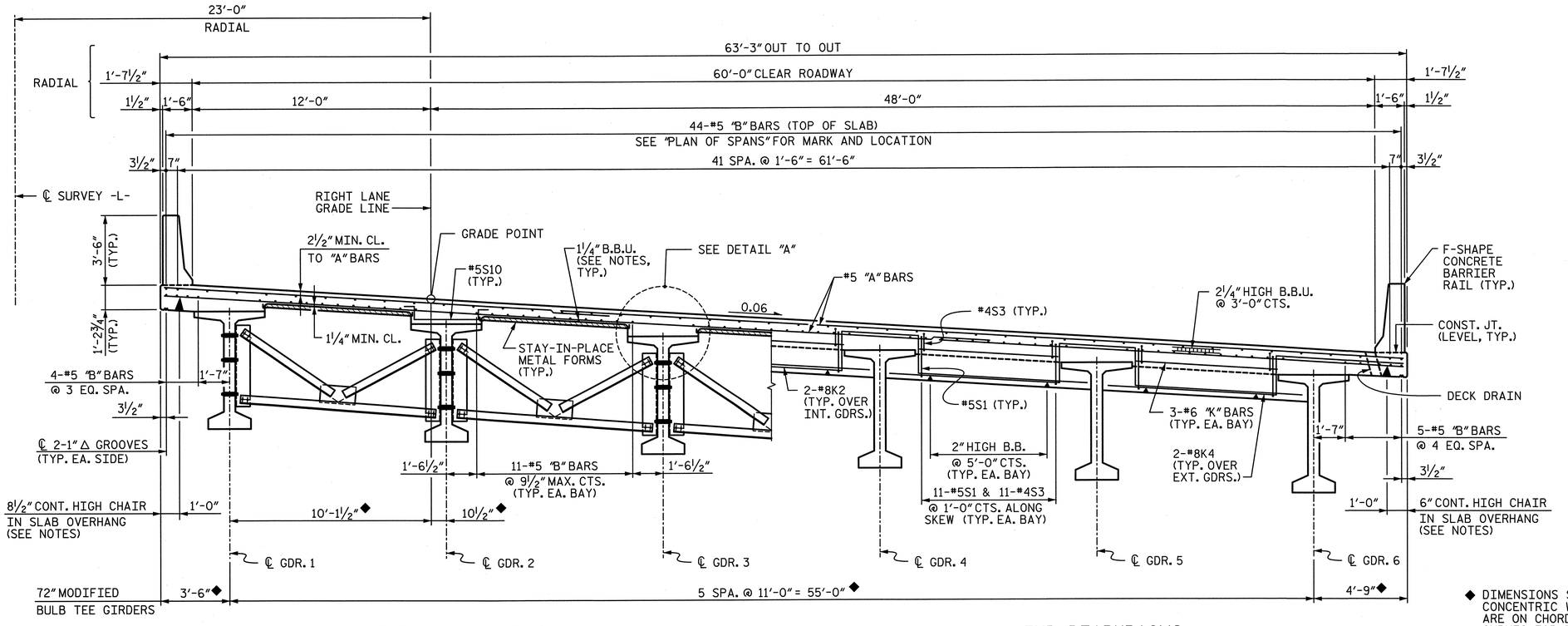

◆ DIMENSIONS SHOWN ARE RADIAL TO CURVES CONCENTRIC WITH ℄ SURVEY -L-. GIRDERS ARE ON CHORDS OF THESE CONCENTRIC CURVES FOR THE SPAN.

INTERMEDIATE DIAPHRAGMS

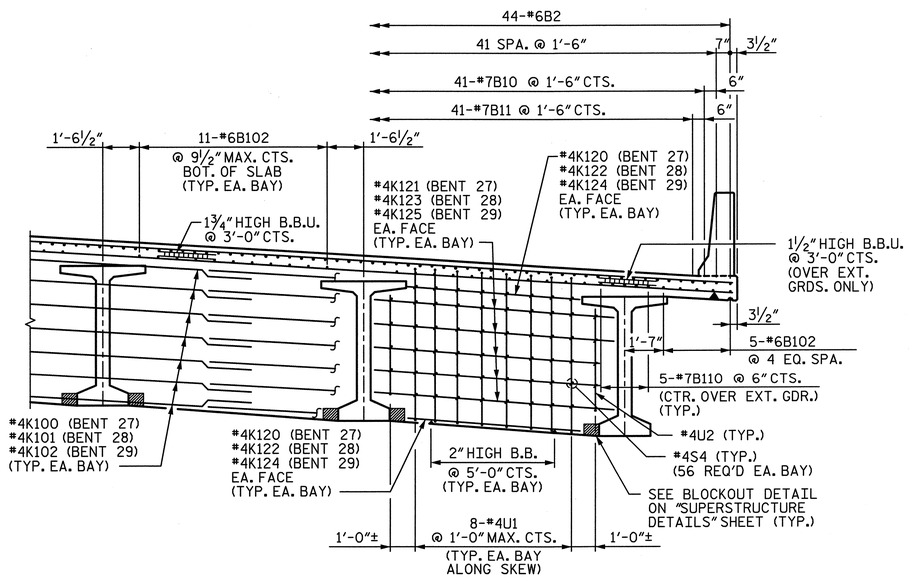

CONTINUOUS DIAPHRAGMS

END DIAPHRAGMS

(END BENT 2 SHOWN, BENT 26 SIMILAR)

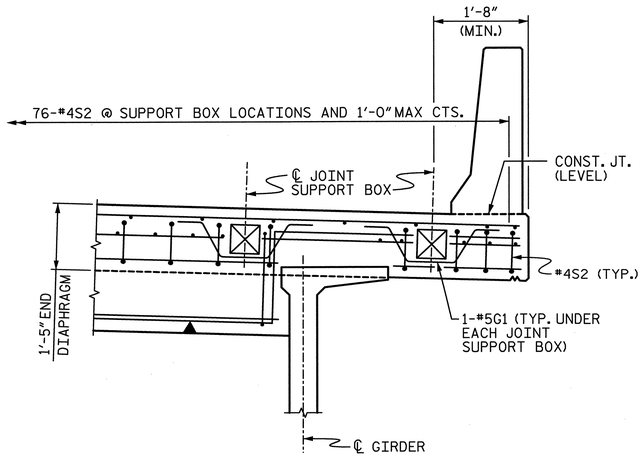

END DIAPHRAGM DETAIL

BENT 26

TYPICAL SECTION - SPANS 27-30

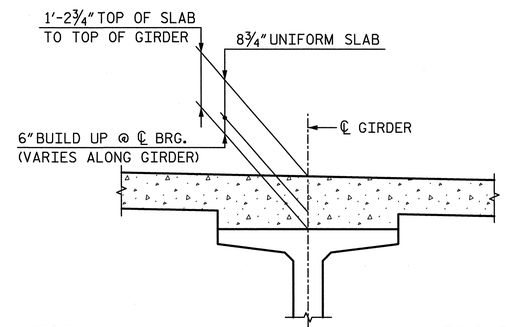

DETAIL "A"

FOR BUILD UP REINFORCING BARS, SEE "SUPERSTRUCTURE DETAILS" SHEET 6 OF 6

PROJECT NO. U-2524C

GUILFORD COUNTY

STATION: POT 407+85.82 -L-
= POT 29+79.72 -Y4-

STATE OF NORTH CAROLINA
DEPARTMENT OF TRANSPORTATION
RALEIGH

TYPICAL SECTION
UNIT I
SPANS 27-30

-RIGHT LANE-

NORTH CAROLINA PROFESSIONAL ENGINEER SEAL 28479 KEVIN G. BAILEY 6-7-13

STV / Ralph Whitehead Associates, Inc.
1000 West Morehead St., Ste. 200
Charlotte, NC 28208
NC License No. F-0991

DRAWN BY : ACA	DATE : 4-13	DESIGN ENGINEER OF RECORD: A. PETER	DATE : 5-13
CHECKED BY : AJP	DATE : 4-13		

REVISIONS						SHEET NO.
NO.	BY:	DATE:	NO.	BY:	DATE:	S-286
1			3			TOTAL SHEETS
2			4			836

6/6/2013 4:39:29 PM R:\ustation\Finals\Typ Sect. Spans 27 thru 30_rt.dgn

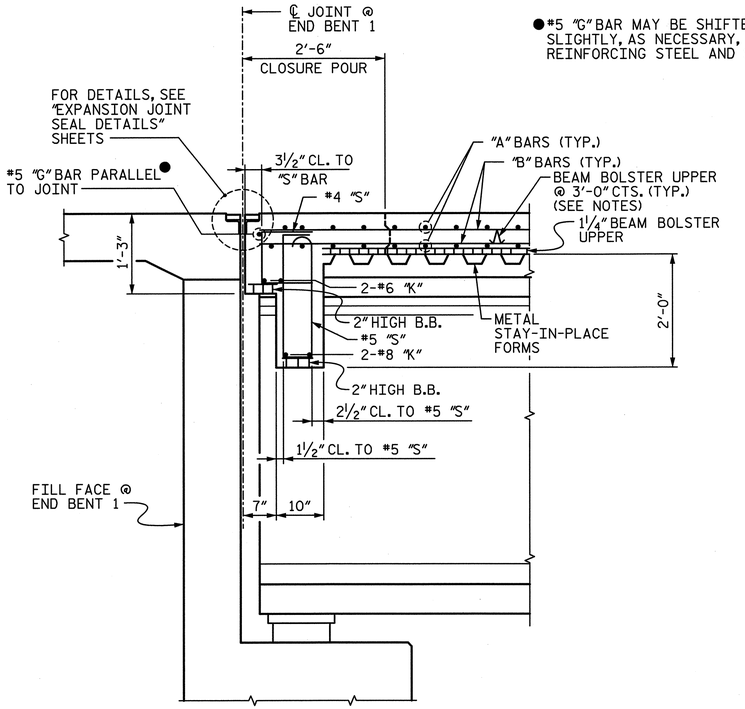

SECTION A-A

END DIAPHRAGM AT END BENT 1
("J" BAR USED WITH STANDARD EXP. JT. NOT SHOWN)

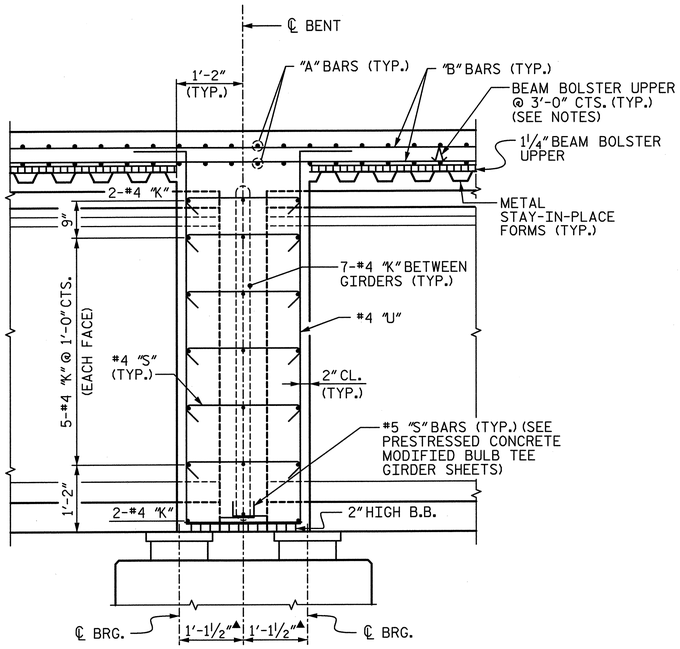

SECTION B-B

CONT. DIAPHRAGM AT BENTS 1, 6, 8-10, 12, 13 & 17-19

NOTES:

1. FOR BEAM BOLSTER UPPER HEIGHT, SEE CORRESPONDING "TYPICAL SECTION" SHEET.

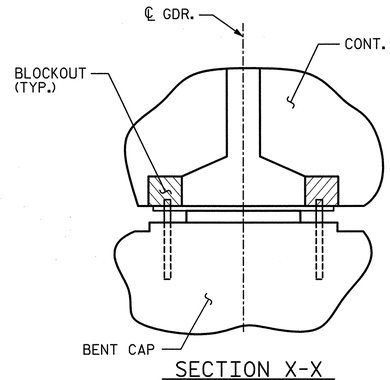

SECTION X-X

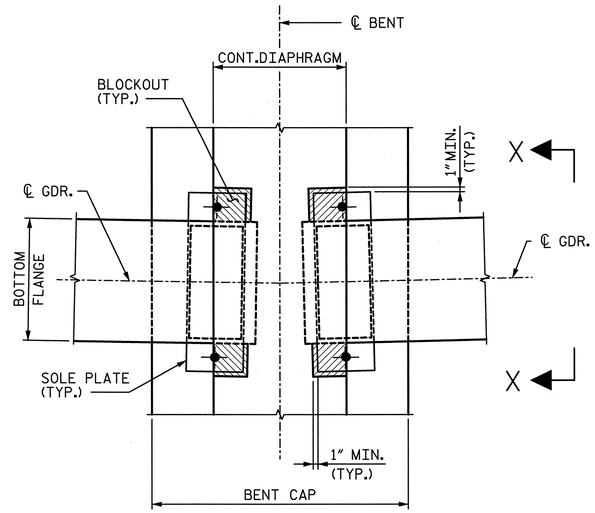

PLAN

CONT. DIAPHRAGM BLOCKOUT DETAILS

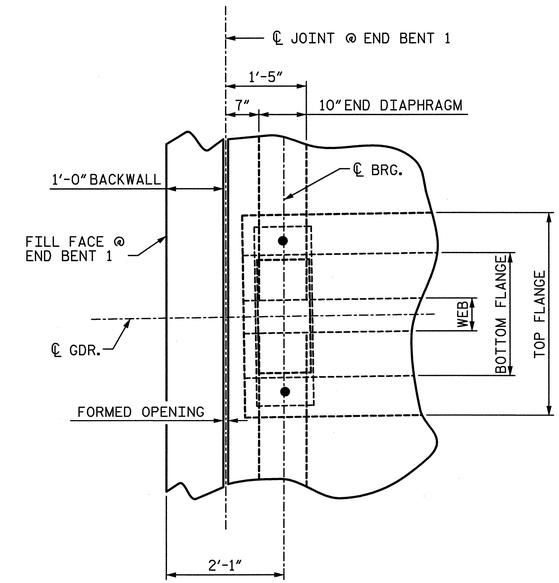

PLAN

(BENT CAP NOT SHOWN FOR CLARITY)

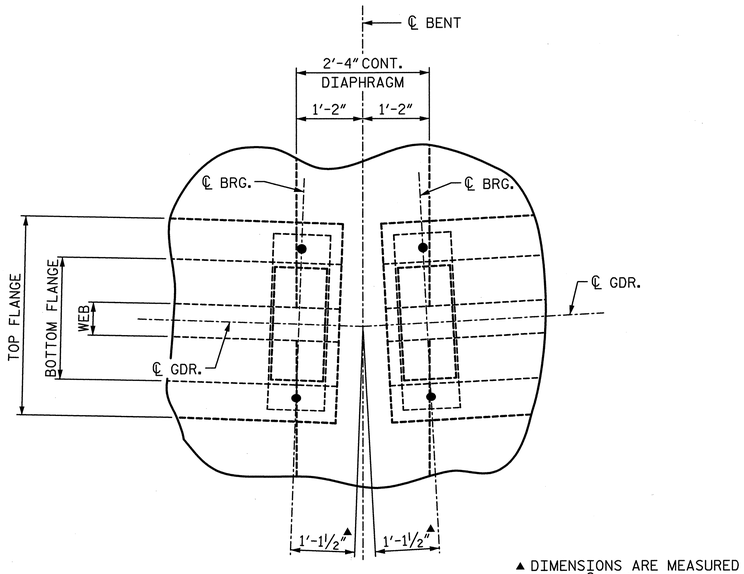

PLAN

(BENT CAP NOT SHOWN FOR CLARITY)

▲ DIMENSIONS ARE MEASURED ALONG ℄ GIRDER.

PROJECT NO. U-2524C

GUILFORD COUNTY

STATION: POT 407+85.82 -L-
= POT 29+79.72 -Y4-

SHEET 1 OF 6

STATE OF NORTH CAROLINA
DEPARTMENT OF TRANSPORTATION
RALEIGH

SUPERSTRUCTURE DETAILS

-RIGHT LANE-

NORTH CAROLINA PROFESSIONAL ENGINEER SEAL 28479 KEVIN G. BAILEY 6-7-13

STV / Ralph Whitehead Associates, Inc.
1000 West Morehead St., Ste. 200
Charlotte, NC 28208
NC License No. F-0991

REVISIONS						SHEET NO.
NO.	BY:	DATE:	NO.	BY:	DATE:	S-287
1			3			TOTAL SHEETS
2			4			836

DRAWN BY : ACA	DATE : 3-13	DESIGN ENGINEER OF RECORD: A. PETER	DATE : 5-13
CHECKED BY : AJP	DATE : 5-13		

6/6/2013 4:39:30 PM R:\ustation\Finals\Super Sect Details Sheet 1of 6.dgn

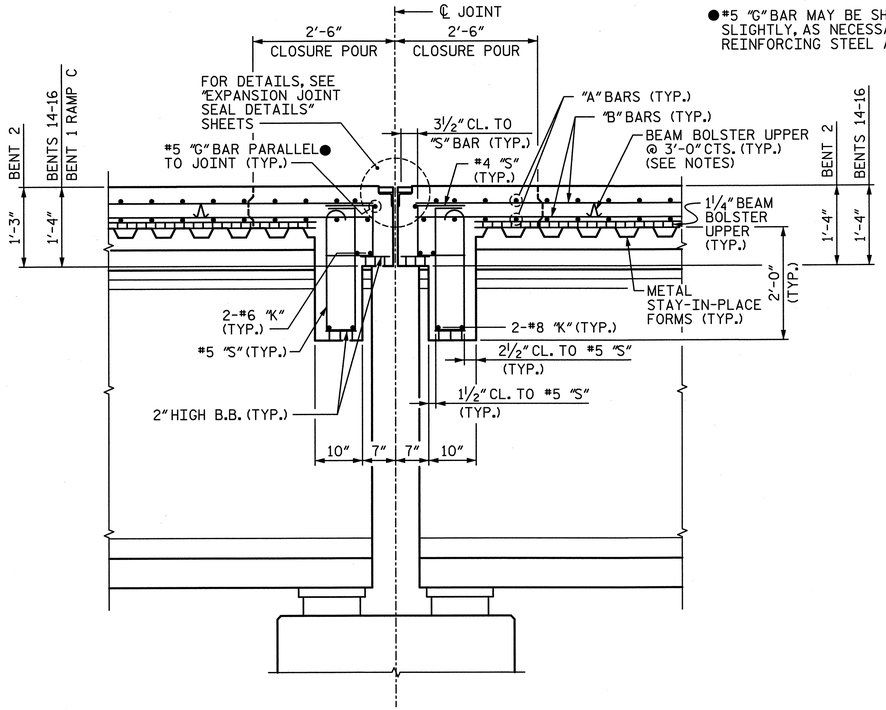

SECTION C-C

END DIAPHRAGMS AT EXPANSION BENTS 2, 14-16 & BENT 1 RAMP C
("J" BAR USED WITH STANDARD EXP. JT. NOT SHOWN)

●#5 "G" BAR MAY BE SHIFTED SLIGHTLY, AS NECESSARY, TO CLEAR REINFORCING STEEL AND STIRRUPS

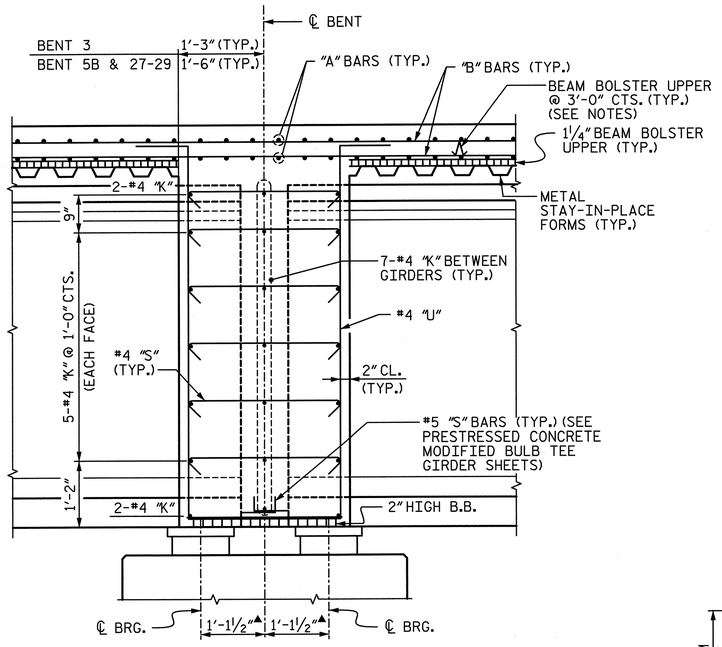

SECTION D-D

CONT. DIAPHRAGM AT BENTS 3, 5B & 27-29

NOTES:

1. FOR BEAM BOLSTER UPPER HEIGHT, SEE CORRESPONDING "TYPICAL SECTION" SHEET.

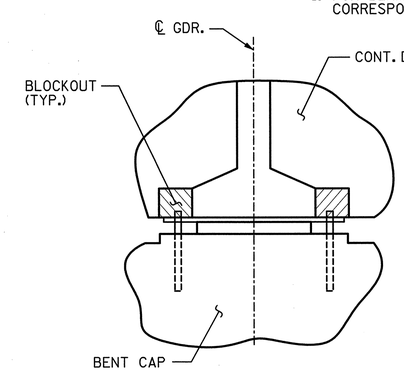

SECTION Y-Y

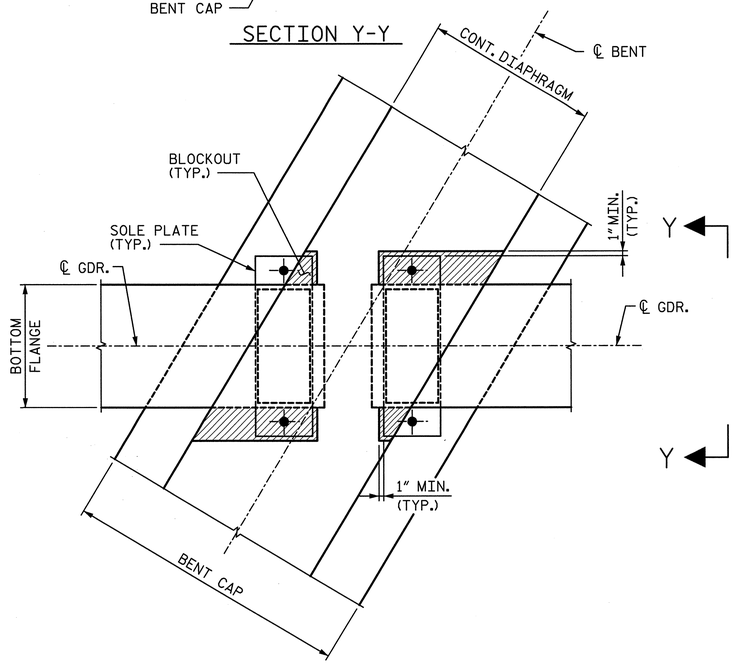

PLAN

CONT. DIAPHRAGM BLOCKOUT DETAILS

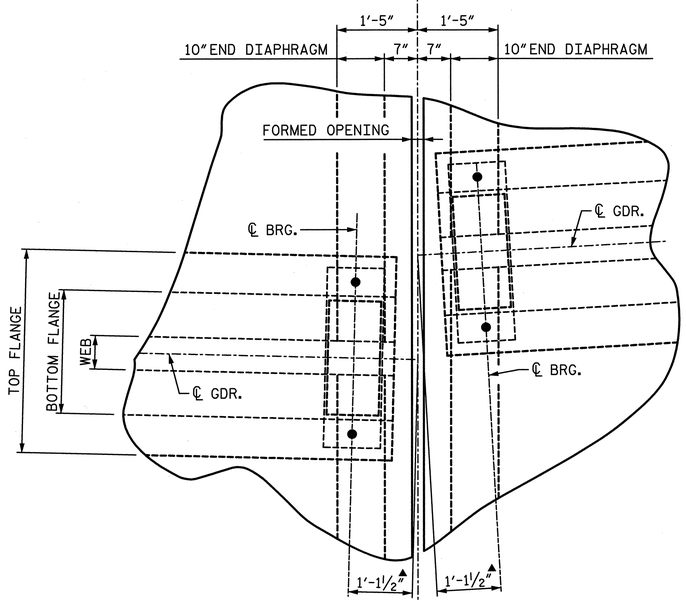

PLAN

(BENT CAP NOT SHOWN FOR CLARITY)

▲ DIMENSIONS ARE MEASURED ALONG ℄ GIRDER.

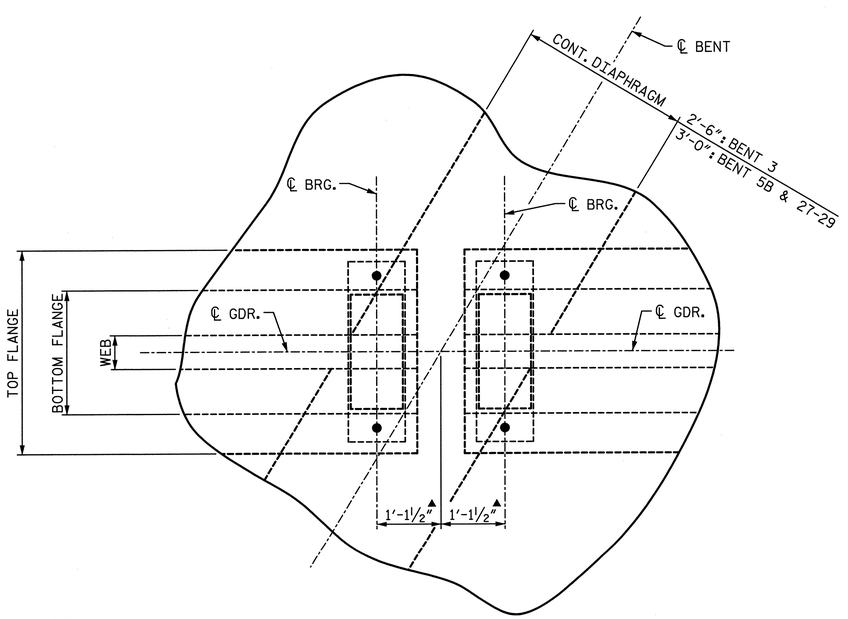

PLAN

(BENT CAP NOT SHOWN FOR CLARITY)

PROJECT NO. U-2524C

GUILFORD COUNTY

STATION: POT 407+85.82 -L-
= POT 29+79.72 -Y4-

SHEET 2 OF 6

STATE OF NORTH CAROLINA
DEPARTMENT OF TRANSPORTATION
RALEIGH

SUPERSTRUCTURE DETAILS

-RIGHT LANE-

NORTH CAROLINA PROFESSIONAL SEAL 28479 ENGINEER KEVIN G. BAILEY 6-7-13

STV / Ralph Whitehead Associates, Inc.
1000 West Morehead St., Ste. 200
Charlotte, NC 28208
NC License No. F-0991

REVISIONS						SHEET NO.
NO.	BY:	DATE:	NO.	BY:	DATE:	S-288
1			3			TOTAL SHEETS
2			4			836

DRAWN BY : ACA	DATE : 3-13	DESIGN ENGINEER OF RECORD: A. PETER	DATE : 5-13
CHECKED BY : AJP	DATE : 5-13		

6/6/2013 4:39:31 PM R:\ustation\Finals\Super Sect Details Sheet 2 of 6.dgn

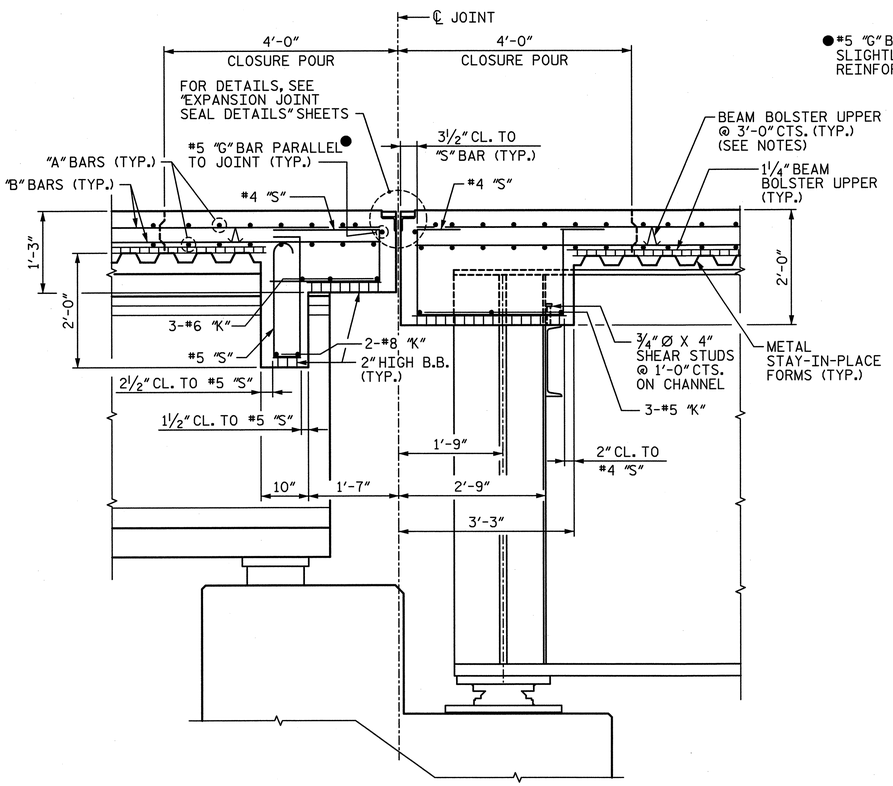

SECTION E-E

END DIAPHRAGMS AT BENT 4
("J" BAR USED WITH STANDARD EXP. JT. NOT SHOWN)

●#5 "G" BAR MAY BE SHIFTED SLIGHTLY, AS NECESSARY, TO CLEAR REINFORCING STEEL AND STIRRUPS

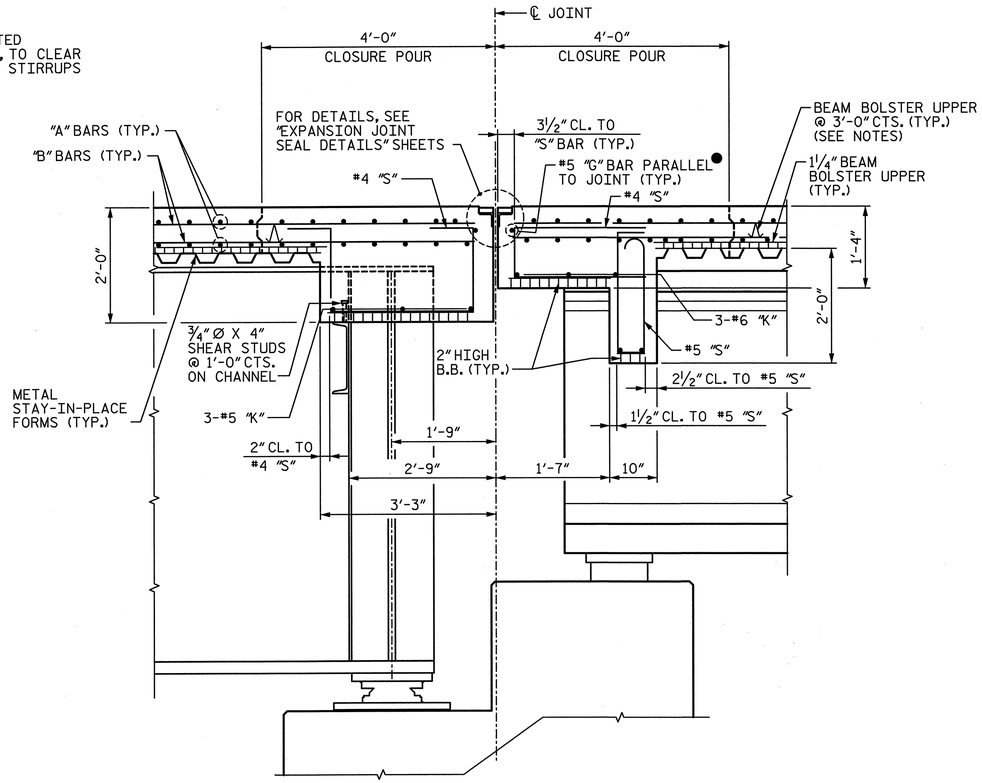

SECTION F-F

END DIAPHRAGMS AT BENT 5A
("J" BAR USED WITH STANDARD EXP. JT. NOT SHOWN)

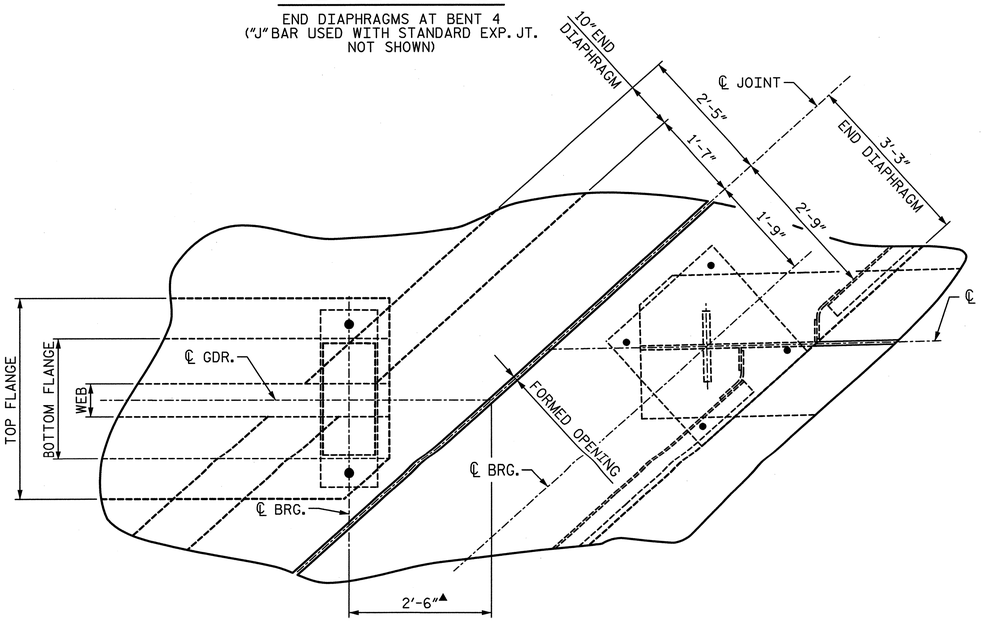

PLAN

(BENT CAP NOT SHOWN FOR CLARITY)

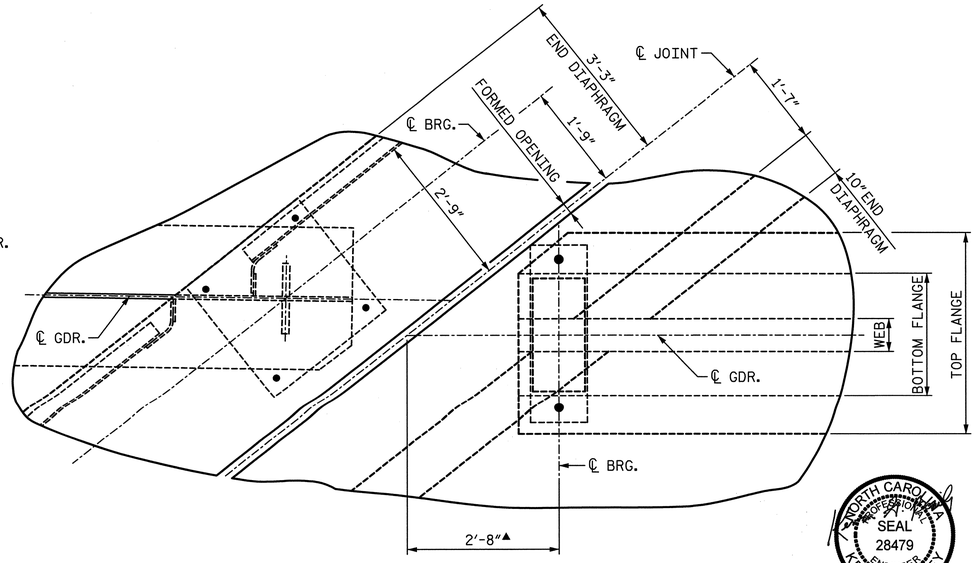

PLAN

(BENT CAP NOT SHOWN FOR CLARITY)

▲ DIMENSIONS ARE MEASURED ALONG ℄ GIRDER.

NOTES:

1. FOR BEAM BOLSTER UPPER HEIGHT, SEE CORRESPONDING "TYPICAL SECTION" SHEET.

NORTH CAROLINA PROFESSIONAL SEAL 28479 ENGINEER KEVIN G. BAILEY 6-7-13

PROJECT NO. U-2524C
GUILFORD COUNTY
STATION: POT 407+85.82 -L-
= POT 29+79.72 -Y4-
SHEET 3 OF 6

STATE OF NORTH CAROLINA
DEPARTMENT OF TRANSPORTATION
RALEIGH

SUPERSTRUCTURE DETAILS

-RIGHT LANE-

DRAWN BY : ACA	DATE : 3-13	DESIGN ENGINEER OF RECORD: A. PETER	DATE : 5-13
CHECKED BY : AJP	DATE : 5-13		

STV / Ralph Whitehead Associates, Inc.
1000 West Morehead St., Ste. 200
Charlotte, NC 28208
NC License No. F-0991

REVISIONS						SHEET NO.
NO.	BY:	DATE:	NO.	BY:	DATE:	S-289
1			3			TOTAL SHEETS
2			4			836

6/6/2013 4:39:32 PM R:\ustation\Finals\Super Sect Details Sheet 3 of 6.dgn

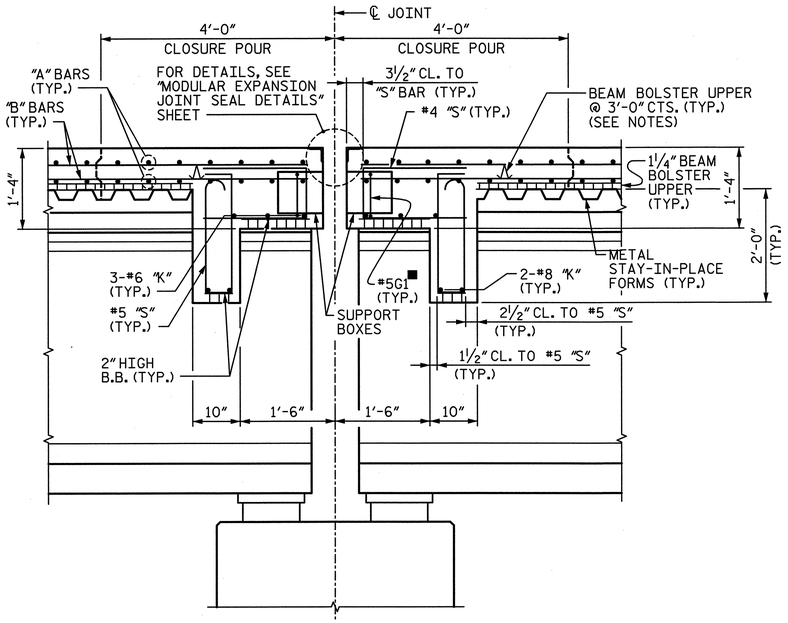

■ SEE CORRESPONDING "TYPICAL SECTION" SHEET FOR DETAILS

SECTION G-G

END DIAPHRAGMS AT BENTS 7 & 11

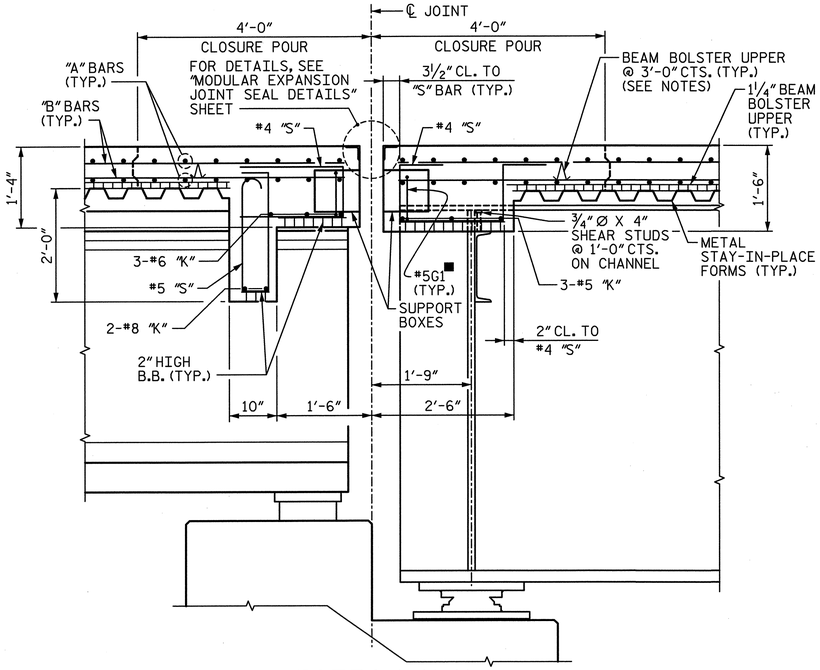

SECTION H-H

END DIAPHRAGMS AT BENT 20

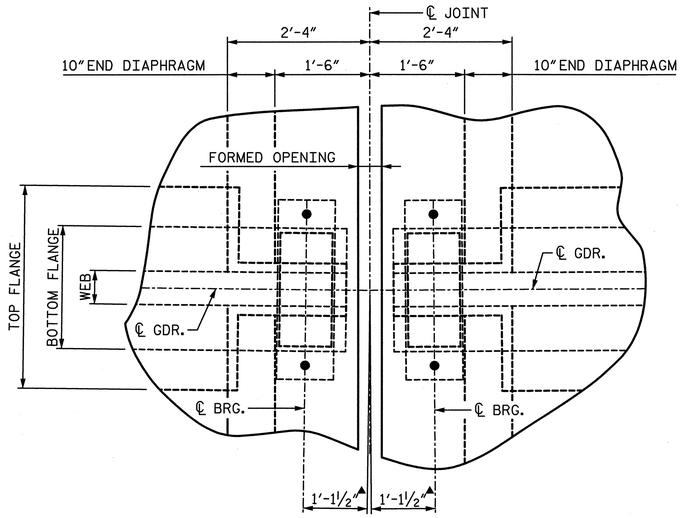

PLAN

(BENT CAP NOT SHOWN FOR CLARITY)

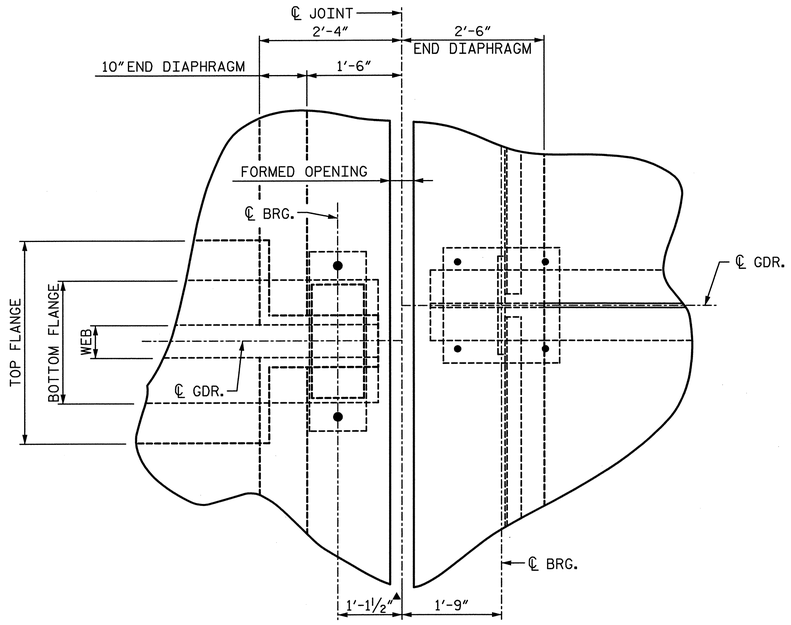

PLAN

(BENT CAP NOT SHOWN FOR CLARITY)

▲ DIMENSIONS ARE MEASURED ALONG ℄ GIRDER.

NOTES:

1. FOR BEAM BOLSTER UPPER HEIGHT, SEE CORRESPONDING "TYPICAL SECTION" SHEET.
2. THE "B" BARS IN THE DECK SLAB MAY BE CUT AS DIRECTED BY THE ENGINEER TO CLEAR THE MODULAR JOINT SUPPORT BOXES.

PROJECT NO. U-2524C

GUILFORD COUNTY

STATION: POT 407+85.82 -L-
= POT 29+79.72 -Y4-

SHEET 4 OF 6

STATE OF NORTH CAROLINA
DEPARTMENT OF TRANSPORTATION
RALEIGH

SUPERSTRUCTURE DETAILS

-RIGHT LANE-

NORTH CAROLINA PROFESSIONAL ENGINEER SEAL 28479 KEVIN G. BAILEY 6-7-13

STV / Ralph Whitehead Associates, Inc.
1000 West Morehead St., Ste. 200
Charlotte, NC 28208
NC License No. F-0991

REVISIONS						SHEET NO.
NO.	BY:	DATE:	NO.	BY:	DATE:	S-290
1			3			TOTAL SHEETS
2			4			836

DRAWN BY : ACA	DATE : 3-13	DESIGN ENGINEER OF RECORD: A. PETER	DATE : 5-13
CHECKED BY : AJP	DATE : 5-13		

6/6/2013 4:39:33 PM R:\ustation\Finals\Super Sect Details Sheet 4 of 6.dgn

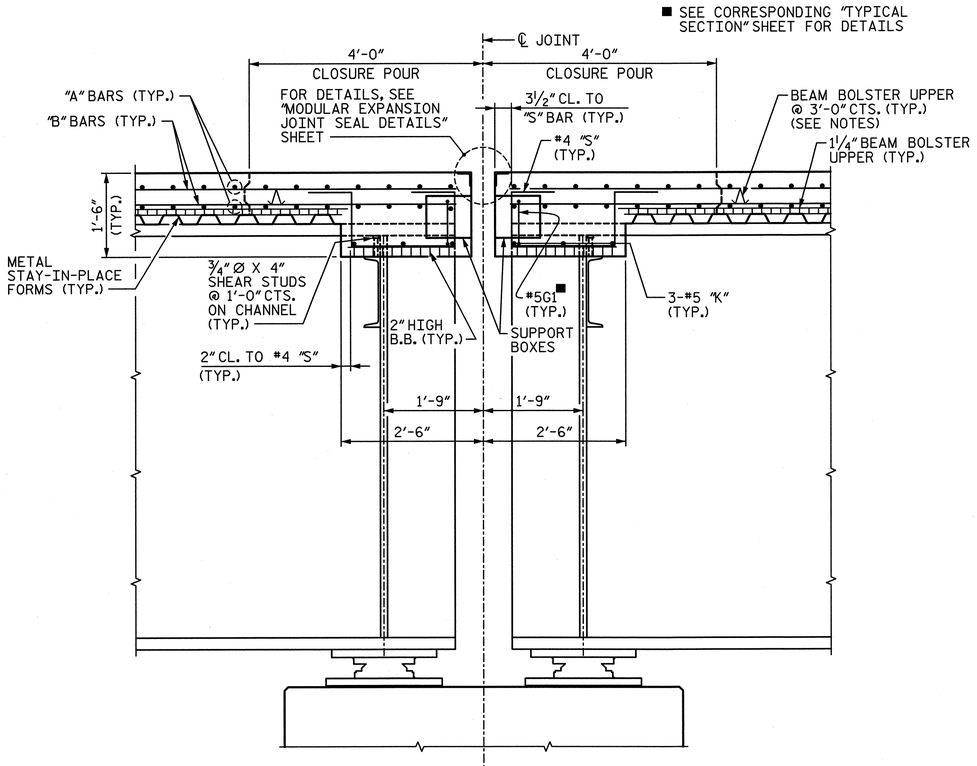

SECTION I-I

END DIAPHRAGMS AT BENT 23

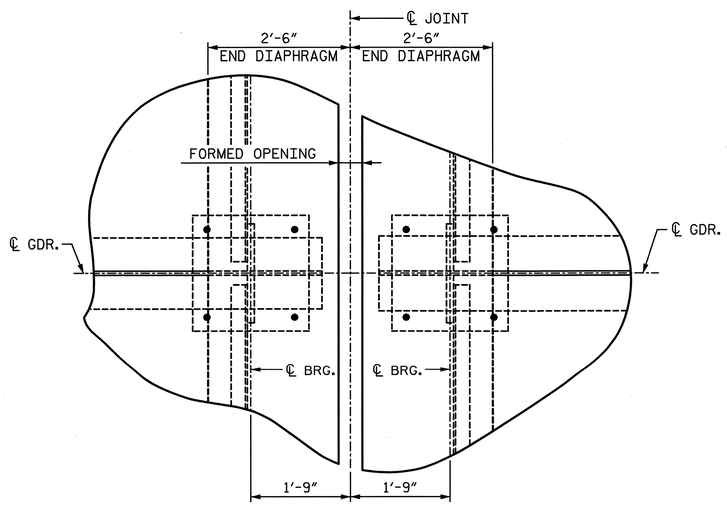

PLAN

(BENT CAP NOT SHOWN FOR CLARITY)

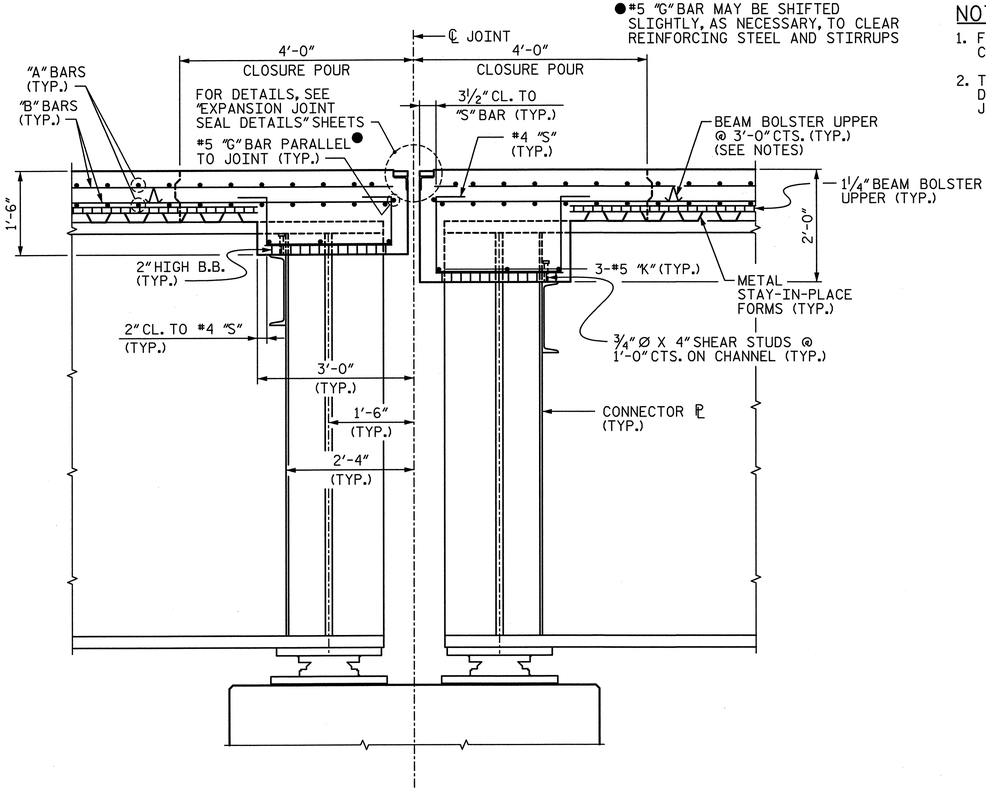

SECTION J-J

END DIAPHRAGMS AT BENT 24
("J" BAR USED WITH STANDARD EXP. JT. NOT SHOWN)

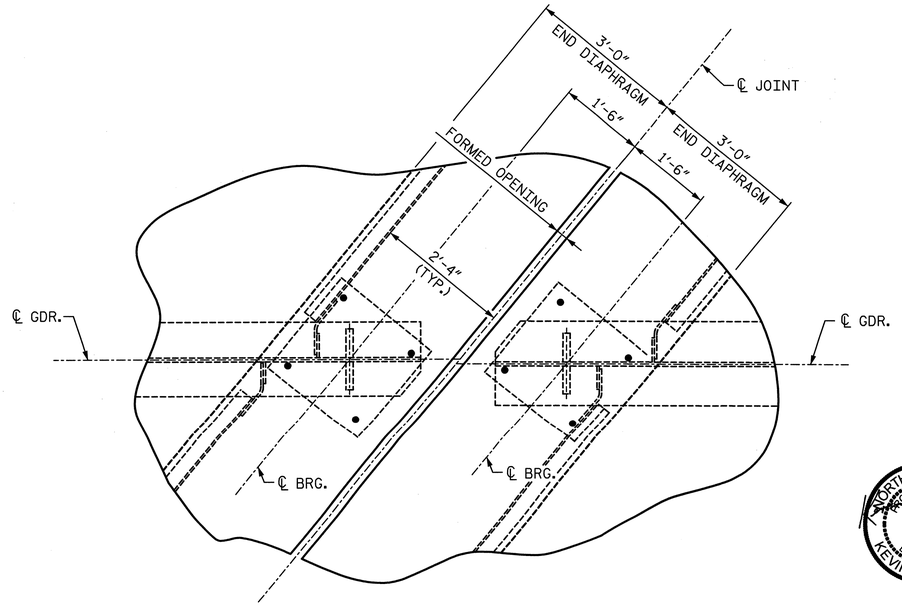

PLAN

(BENT CAP NOT SHOWN FOR CLARITY)

NOTES:

1. FOR BEAM BOLSTER UPPER HEIGHT, SEE CORRESPONDING "TYPICAL SECTION" SHEET.
2. THE "B" BARS IN THE DECK SLAB MAY BE CUT AS DIRECTED BY THE ENGINEER TO CLEAR THE MODULAR JOINT SUPPORT BOXES.

NORTH CAROLINA PROFESSIONAL SEAL 28479 ENGINEER KEVIN G. BAILEY 6-7-13

PROJECT NO. U-2524C

GUILFORD COUNTY

STATION: POT 407+85.82 -L-
= POT 29+79.72 -Y4-

SHEET 5 OF 6

STATE OF NORTH CAROLINA
DEPARTMENT OF TRANSPORTATION
RALEIGH

SUPERSTRUCTURE DETAILS

-RIGHT LANE-

DRAWN BY : ACA	DATE : 3-13	DESIGN ENGINEER OF RECORD: A. PETER	DATE : 5-13
CHECKED BY : AJP	DATE : 5-13		

STV / Ralph Whitehead Associates, Inc.
1000 West Morehead St., Ste. 200
Charlotte, NC 28208
NC License No. F-0991

REVISIONS						SHEET NO.
NO.	BY:	DATE:	NO.	BY:	DATE:	S-291
1			3			TOTAL SHEETS
2			4			836

6/6/2013 4:39:34 PM R:\station\Finals\Super Sect Details Sheet 5 of 6.dgn

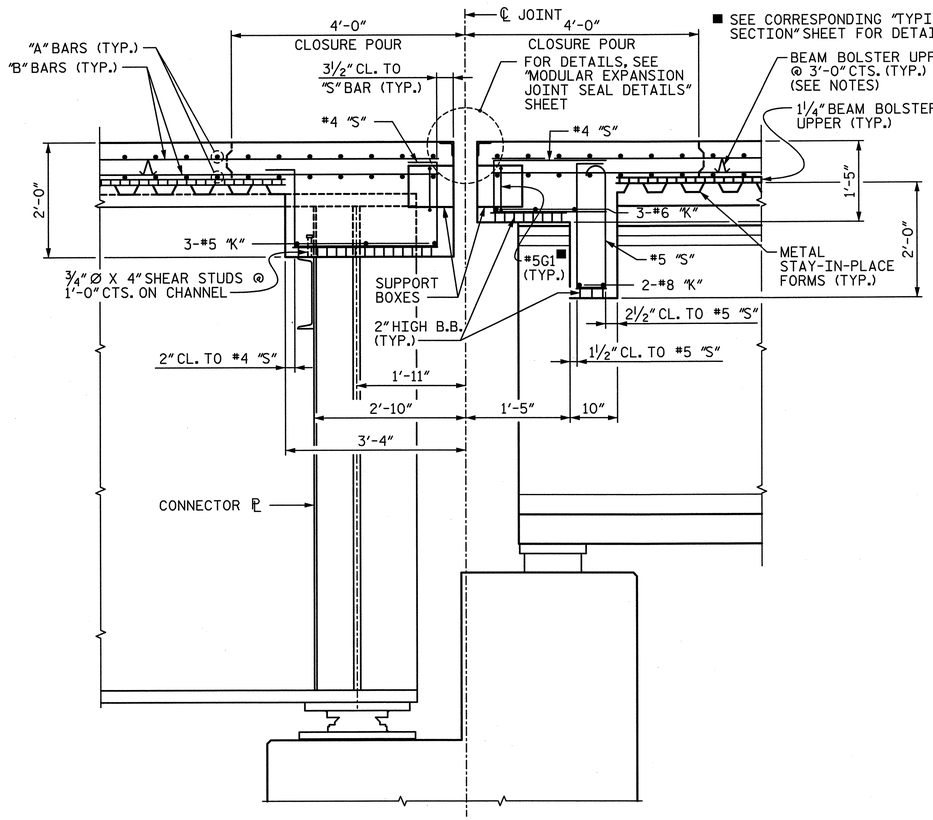

SECTION K-K

END DIAPHRAGMS AT BENT 26

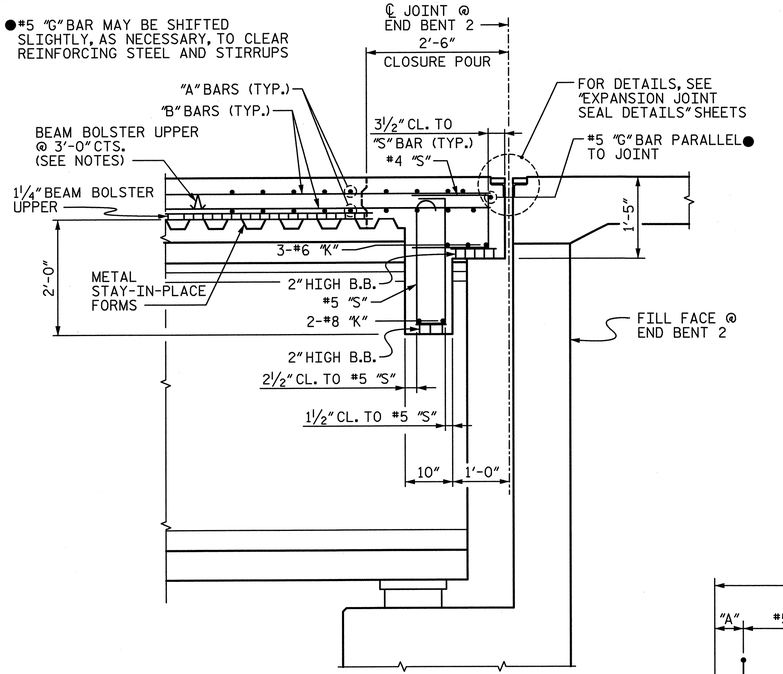

SECTION L-L

END DIAPHRAGM AT END BENT 2
("J" BAR USED WITH STANDARD EXP. JT. NOT SHOWN)

NOTES:

1. FOR BEAM BOLSTER UPPER HEIGHT, SEE CORRESPONDING "TYPICAL SECTION" SHEET.
2. THE "B" BARS IN THE DECK SLAB MAY BE CUT AS DIRECTED BY THE ENGINEER TO CLEAR THE MODULAR JOINT SUPPORT BOXES.

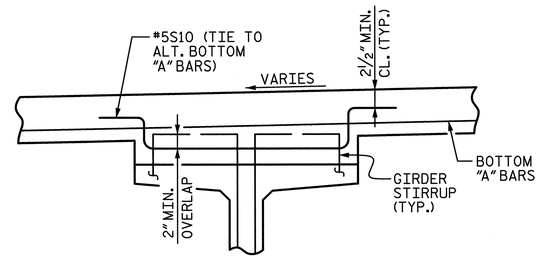

BUILD UP REINFORCING BAR

"B" BARS & TOP "A" BARS IN DECK SLAB NOT SHOWN FOR CLARITY

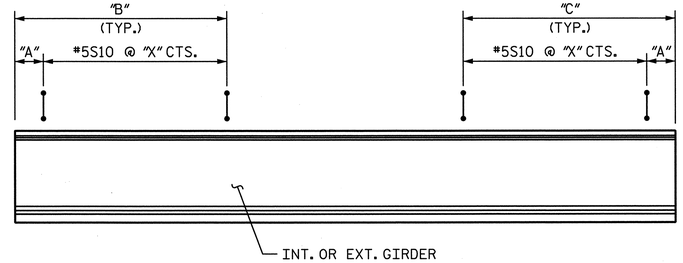

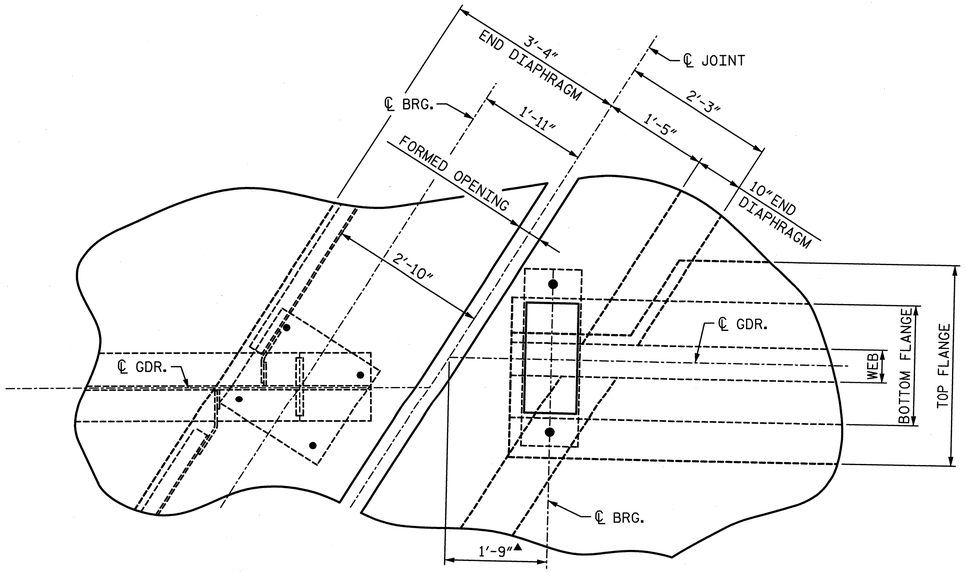

PLAN

(BENT CAP NOT SHOWN FOR CLARITY)

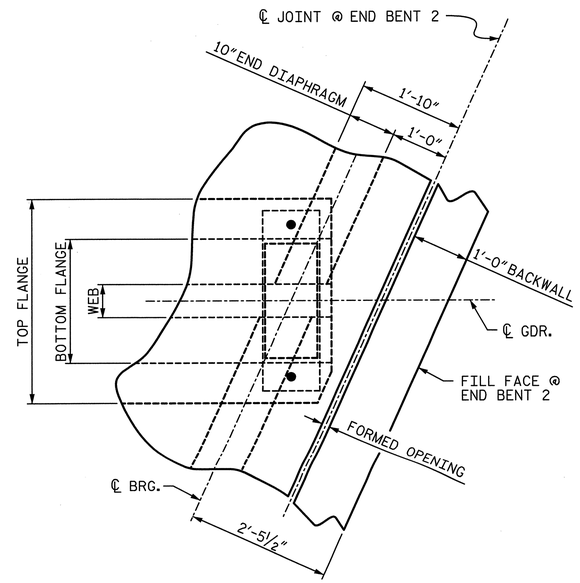

PLAN

(BENT CAP NOT SHOWN FOR CLARITY)

▲ DIMENSIONS ARE MEASURED ALONG ℄ GIRDER.

BUILD UP REINFORCING BAR SPACING

S10 BAR LOCATION

SPAN	GIRDERS	"A"	"B"	"C"	"X"
8	8-1 TO 8-7	11"	34'-9"	34'-9"	1'-2"
9	9-1 TO 9-7	11"	34'-9"	34'-9"	1'-2"
10	10-1 TO 10-3	11"	27'-9"	27'-9"	1'-2"
10	10-4	11"	17'-3"	17'-3"	1'-2"
10	10-5 TO 10-7	11"	10'-3"	10'-3"	1'-2"
11	11-1 TO 11-7	11"	34'-9"	34'-9"	1'-2"
12	12-1 TO 12-7	7"	20'-1"	20'-1"	1'-1"
13	13-1 TO 13-7	7"	20'-1"	20'-1"	1'-1"
14	14-1 TO 14-5	7"	25'-6"	33'-1"	1'-1"
14	14-6 TO 14-7	7"	38'-6"	33'-1"	1'-1"
15	15-8 TO 15-9	7"	39'-7"	39'-7"	1'-1"
16	16-6	1-2"	15'-3"	15'-3"	1'-1"
16	16-7	7"	39'-7"	39'-7"	1'-1"
16	16-8	28'-8"	88'-3"	-	1'-1"
27	27-1 TO 27-6	6"	20'-0"	20'-0"	1'-1"
28	28-1 TO 28-6	6"	20'-0"	20'-0"	1'-1"
29	29-1 TO 29-6	6"	20'-0"	20'-0"	1'-1"
30	30-1 TO 30-6	6"	20'-0"	20'-0"	1'-1"

NORTH CAROLINA PROFESSIONAL ENGINEER SEAL 28479 KEVIN G. BAILEY 6-7-13

PROJECT NO. U-2524C

GUILFORD COUNTY

STATION: POT 407+85.82 -L- = POT 29+79.72 -Y4-

SHEET 6 OF 6

STATE OF NORTH CAROLINA
DEPARTMENT OF TRANSPORTATION
RALEIGH

SUPERSTRUCTURE DETAILS

-RIGHT LANE-

DRAWN BY : ACA	DATE : 3-13	DESIGN ENGINEER OF RECORD: A. PETER	DATE : 5-13
CHECKED BY : AJP	DATE : 5-13		

STV / Ralph Whitehead Associates, Inc.
1000 West Morehead St., Ste. 200
Charlotte, NC 28208
NC License No. F-0991

REVISIONS						SHEET NO.
NO.	BY:	DATE:	NO.	BY:	DATE:	S-292
1			3			TOTAL SHEETS
2			4			836

6/6/2013 4:39:35 PM R:\structure\Finals\Super Sect Details Sheet 6 of 6.dgn

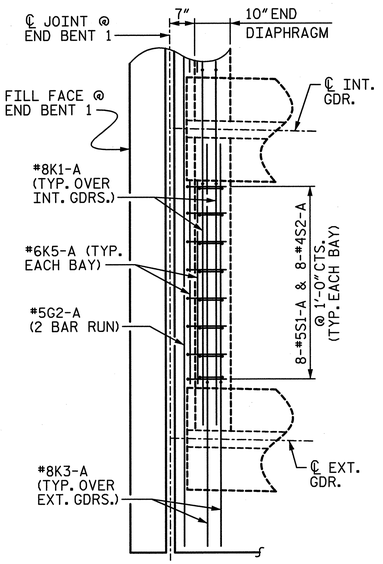

DETAIL "A"

END DIAPHRAGM AT END BENT 1

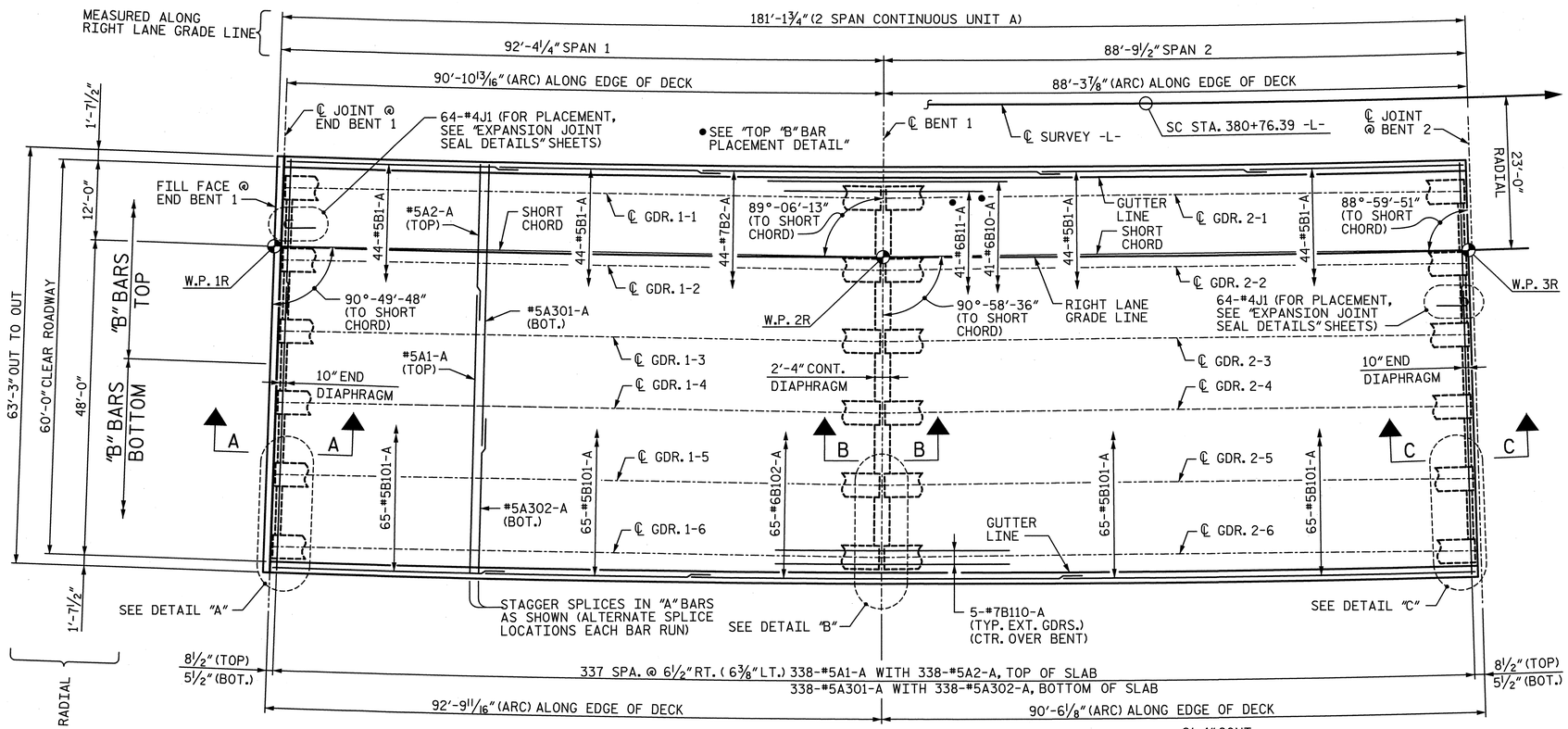

PLAN - UNIT A

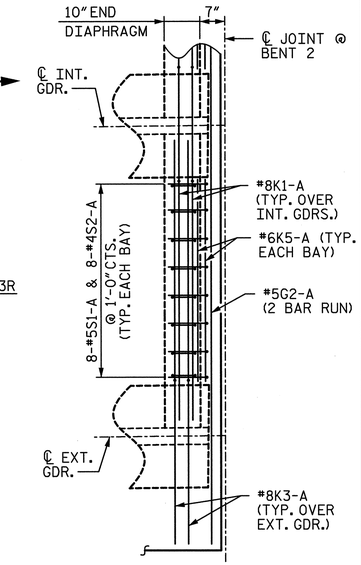

DETAIL "C"

END DIAPHRAGM AT BENT 2

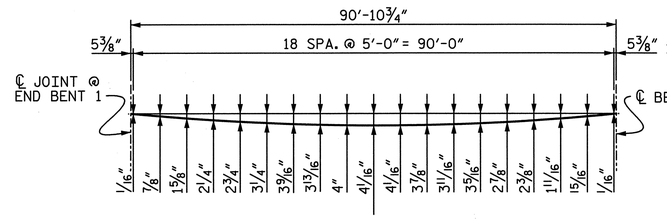

LEFT EDGE OF DECK

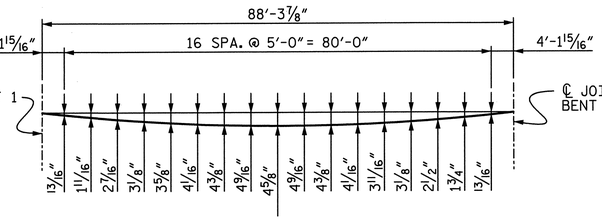

LEFT EDGE OF DECK

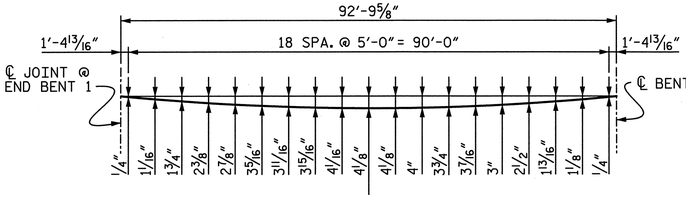

RIGHT EDGE OF DECK

ARC OFFSETS - SPAN 1

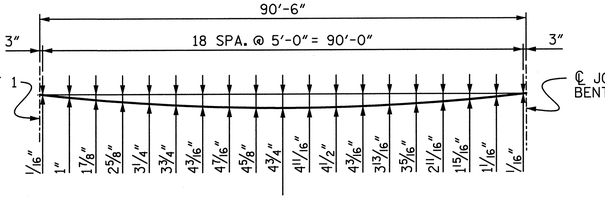

RIGHT EDGE OF DECK

ARC OFFSETS - SPAN 2

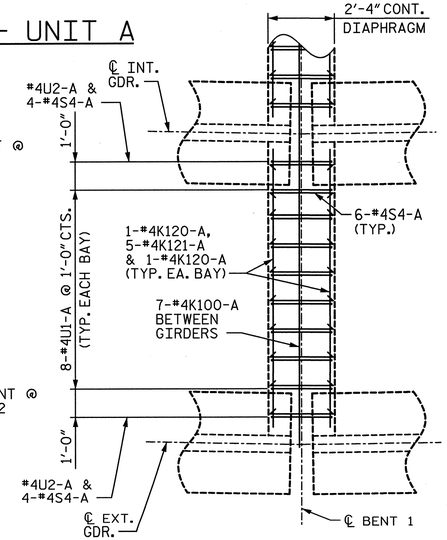

DETAIL "B"

CONTINUOUS DIAPHRAGM AT BENT 1

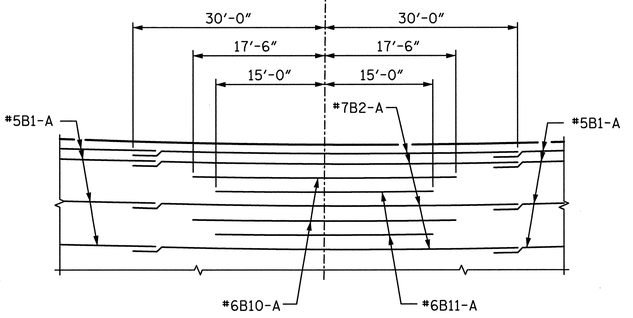

TOP "B" BAR PLACEMENT DETAIL

NOTES:

1. FOR CONCRETE BARRIER RAIL DIMENSIONS, REINFORCEMENT AND JOINT SPACING, SEE "PLAN OF RAILS" SHEETS.
2. FOR POURING SEQUENCE AND TRANSVERSE CONSTRUCTION JOINT IN DECK SLAB, SEE "DECK POUR DIAGRAMS" SHEET.
3. FOR SECTION VIEWS, SEE "SUPERSTRUCTURE DETAILS" SHEETS.
4. FOR "B" BAR SPACING AND LOCATION, SEE CORRESPONDING "TYPICAL SECTION" SHEET.
5. "A" BARS TO BE PLACED RADIALLY.
6. FOR DRAINAGE SYSTEM, SEE "STRUCTURE DRAINAGE SYSTEM DETAILS" SHEETS.
7. FOR MINIMUM SPLICE LENGTHS, SEE "SUPERSTRUCTURE BILL OF MATERIAL".

PROJECT NO. U-2524C

GUILFORD COUNTY

STATION: POT 407+85.82 -L-
= POT 29+79.72 -Y4-

NORTH CAROLINA PROFESSIONAL ENGINEER SEAL 28479 KEVIN G. BAILEY 6-7-13

STATE OF NORTH CAROLINA
DEPARTMENT OF TRANSPORTATION
RALEIGH

PLAN OF SPANS
UNIT A
SPANS 1 & 2

-RIGHT LANE-

DRAWN BY : MM/ACA	DATE : 12-12	DESIGN ENGINEER OF RECORD: A. PETER	DATE : 5-13
CHECKED BY : AJP	DATE : 3-13		

STV / Ralph Whitehead Associates, Inc.
1000 West Morehead St., Ste. 200
Charlotte, NC 28208
NC License No. F-0991

REVISIONS						SHEET NO.
NO.	BY:	DATE:	NO.	BY:	DATE:	S-293
1			3			TOTAL SHEETS
2			4			836

6/6/2013 4:39:37 PM R:\ustation\Finals\Plan of Span 1-2 Sheet 1.dgn

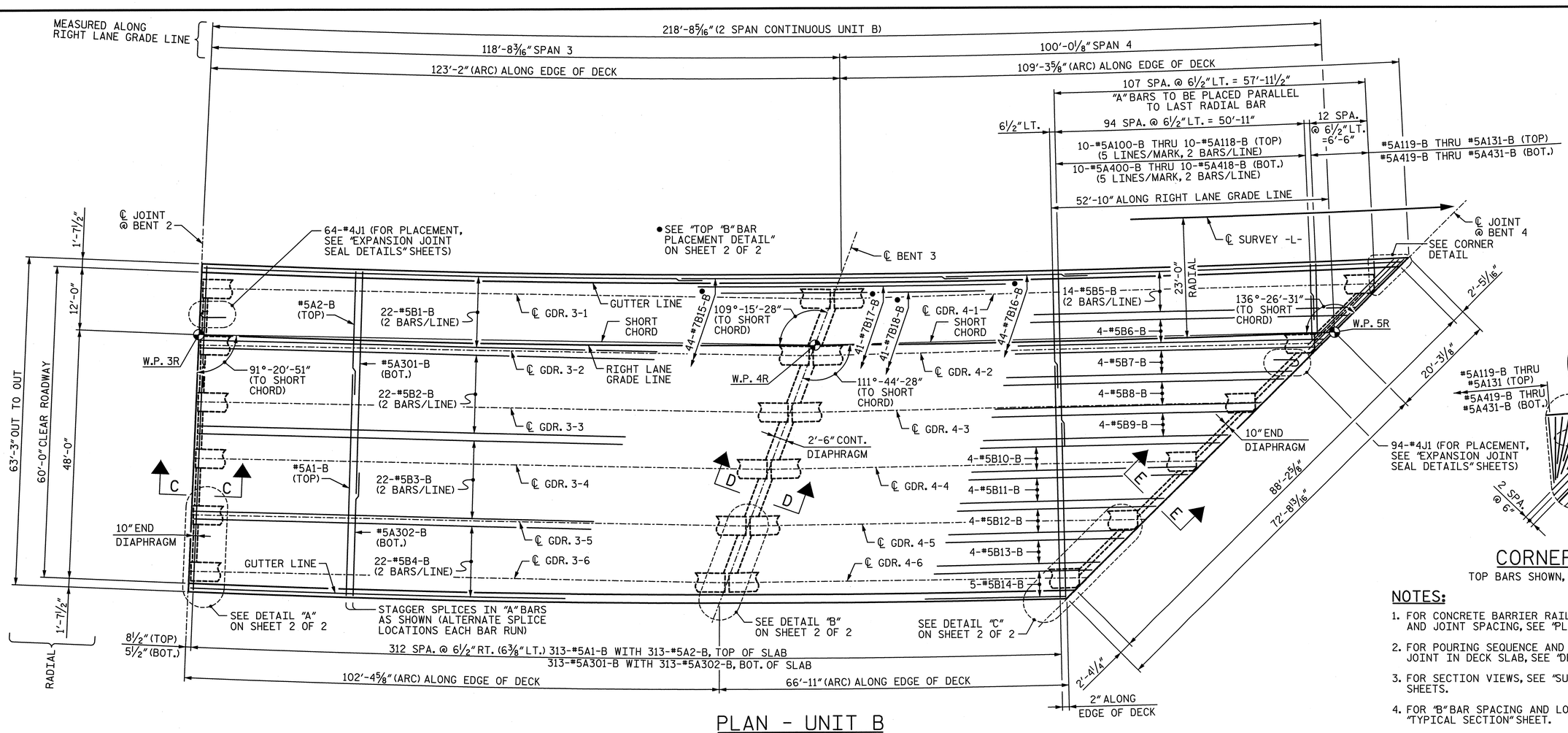

PLAN - UNIT B

FOR BOTTOM "B" BARS, SEE SHEET 2 OF 2

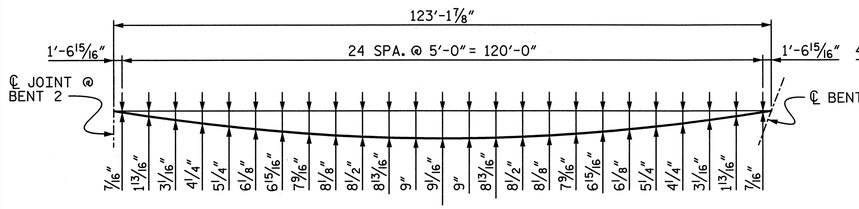

LEFT EDGE OF DECK

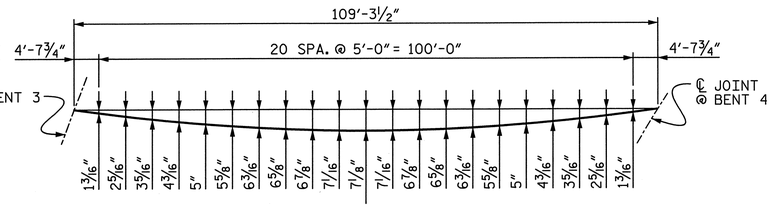

LEFT EDGE OF DECK

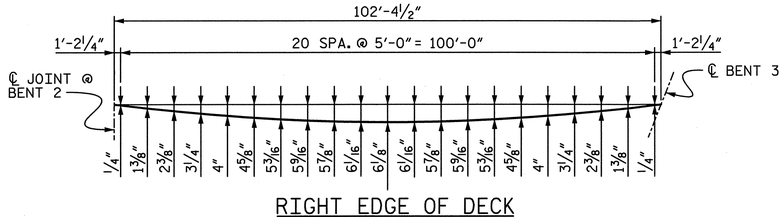

RIGHT EDGE OF DECK

ARC OFFSETS - SPAN 3

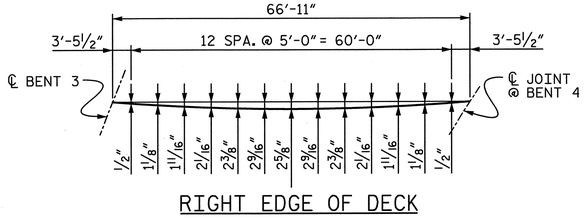

RIGHT EDGE OF DECK

ARC OFFSETS - SPAN 4

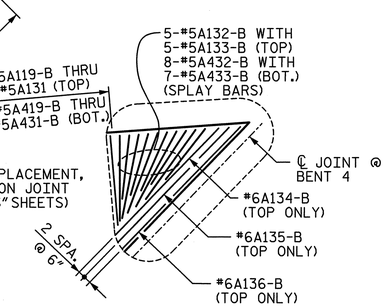

CORNER DETAIL

TOP BARS SHOWN, BOTTOM BARS SIMILAR

NOTES:

1. FOR CONCRETE BARRIER RAIL DIMENSIONS, REINFORCEMENT AND JOINT SPACING, SEE "PLAN OF RAILS" SHEETS.
2. FOR POURING SEQUENCE AND TRANSVERSE CONSTRUCTION JOINT IN DECK SLAB, SEE "DECK POUR DIAGRAMS" SHEET.
3. FOR SECTION VIEWS, SEE "SUPERSTRUCTURE DETAILS" SHEETS.
4. FOR "B" BAR SPACING AND LOCATION, SEE CORRESPONDING "TYPICAL SECTION" SHEET.
5. "A" BARS TO BE PLACED RADIALLY, UNLESS NOTED OTHERWISE.
6. FOR DRAINAGE SYSTEM, SEE "STRUCTURE DRAINAGE SYSTEM DETAILS" SHEETS.
7. FOR MINIMUM SPLICE LENGTHS, SEE "SUPERSTRUCTURE BILL OF MATERIAL".

PROJECT NO. U-2524C

GUILFORD COUNTY

STATION: POT 407+85.82 -L-
= POT 29+79.72 -Y4-

SHEET 1 OF 2

STATE OF NORTH CAROLINA
DEPARTMENT OF TRANSPORTATION
RALEIGH

PLAN OF SPANS UNIT B SPANS 3 & 4

-RIGHT LANE-

NORTH CAROLINA PROFESSIONAL SEAL 28479 ENGINEER KEVIN G. BAILEY 6-7-13

DRAWN BY : MM/ACA	DATE : 12-12	DESIGN ENGINEER OF RECORD: A. PETER	DATE : 5-13
CHECKED BY : AJP	DATE : 3-12		

STV / Ralph Whitehead Associates, Inc.
1000 West Morehead St., Ste. 200
Charlotte, NC 28208
NC License No. F-0991

REVISIONS						SHEET NO.
NO.	BY:	DATE:	NO.	BY:	DATE:	S-294
1			3			TOTAL SHEETS
2			4			836

R:\ustation\Finals\Plan of Span 3-4 Sheet 1of 2.dgn 4:39:38 PM 6/6/2013

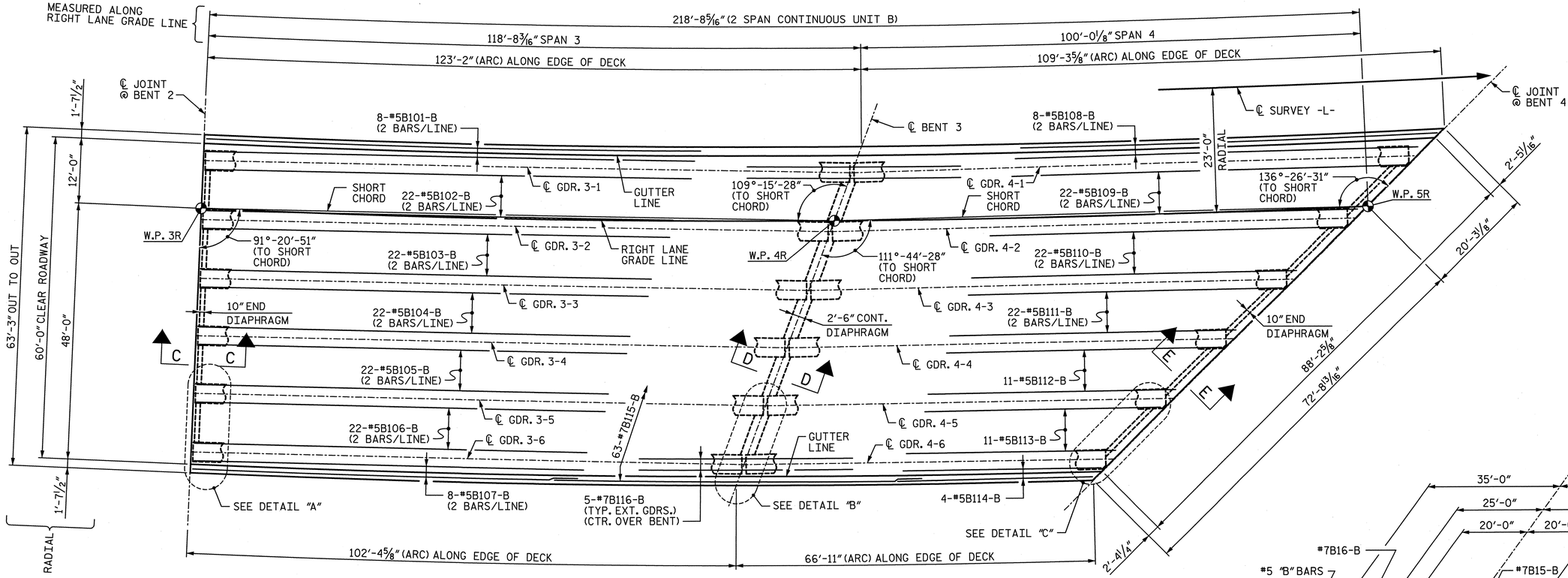

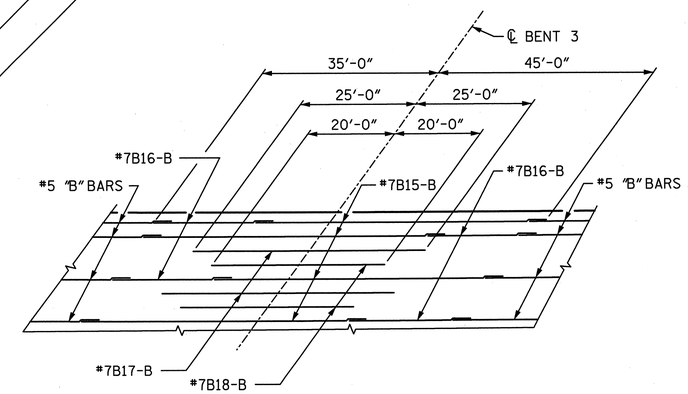

TOP "B" BAR PLACEMENT DETAIL

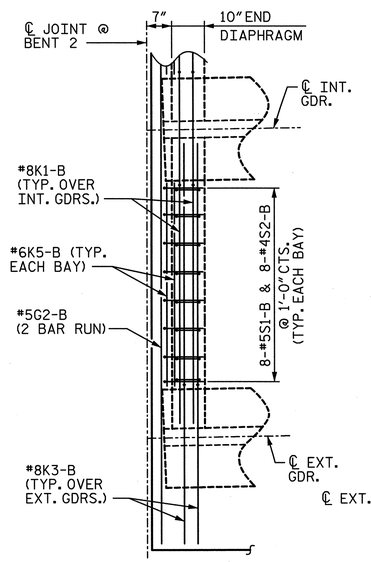

DETAIL "A"

END DIAPHRAGM AT BENT 2

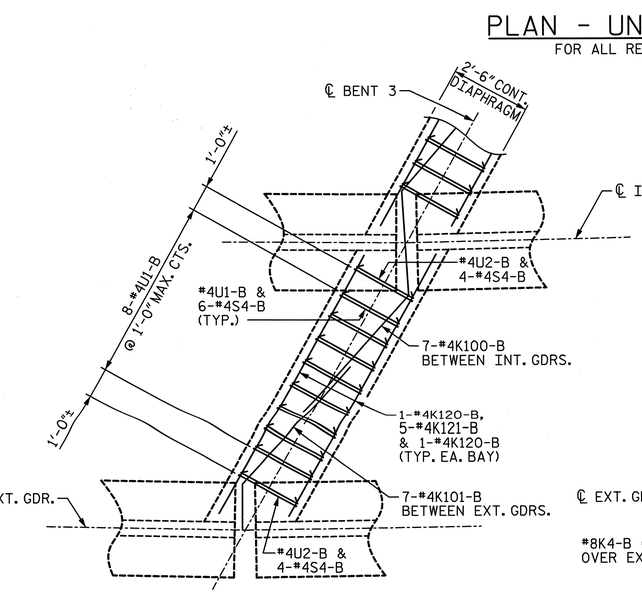

DETAIL "B"

CONTINUOUS DIAPHRAGM AT BENT 3

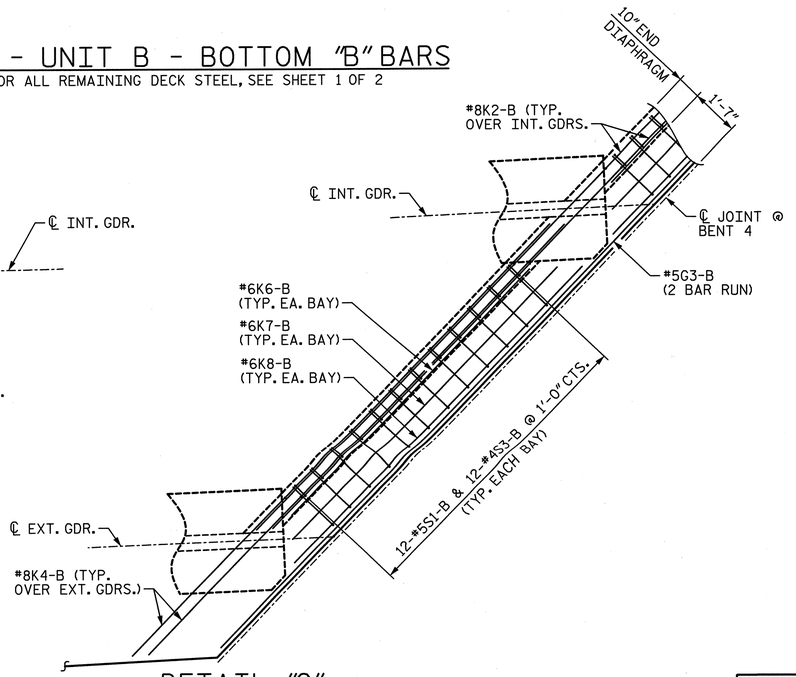

DETAIL "C"

END DIAPHRAGM AT BENT 4

PROJECT NO. U-2524C

GUILFORD COUNTY

STATION: POT 407+85.82 -L-
= POT 29+79.72 -Y4-

SHEET 2 OF 2

STATE OF NORTH CAROLINA
DEPARTMENT OF TRANSPORTATION
RALEIGH

PLAN OF SPANS UNIT B SPANS 3 & 4

-RIGHT LANE-

NORTH CAROLINA PROFESSIONAL SEAL 28479 ENGINEER KEVIN G. BAILEY 6-7-13

DRAWN BY : ACA	DATE : 3-13	DESIGN ENGINEER OF RECORD: A. PETER	DATE : 5-13
CHECKED BY : AJP	DATE : 3-13		

STV / Ralph Whitehead Associates, Inc.
1000 West Morehead St. Ste. 200
Charlotte, NC 28208
NC License No. F-0991

REVISIONS						SHEET NO.
NO.	BY:	DATE:	NO.	BY:	DATE:	S-295
1			3			TOTAL SHEETS
2			4			836

6/6/2013 8:31:16 PM R:\ustation\Finals\Plan of Span 3-4 Sheet 2 of 2.dgn

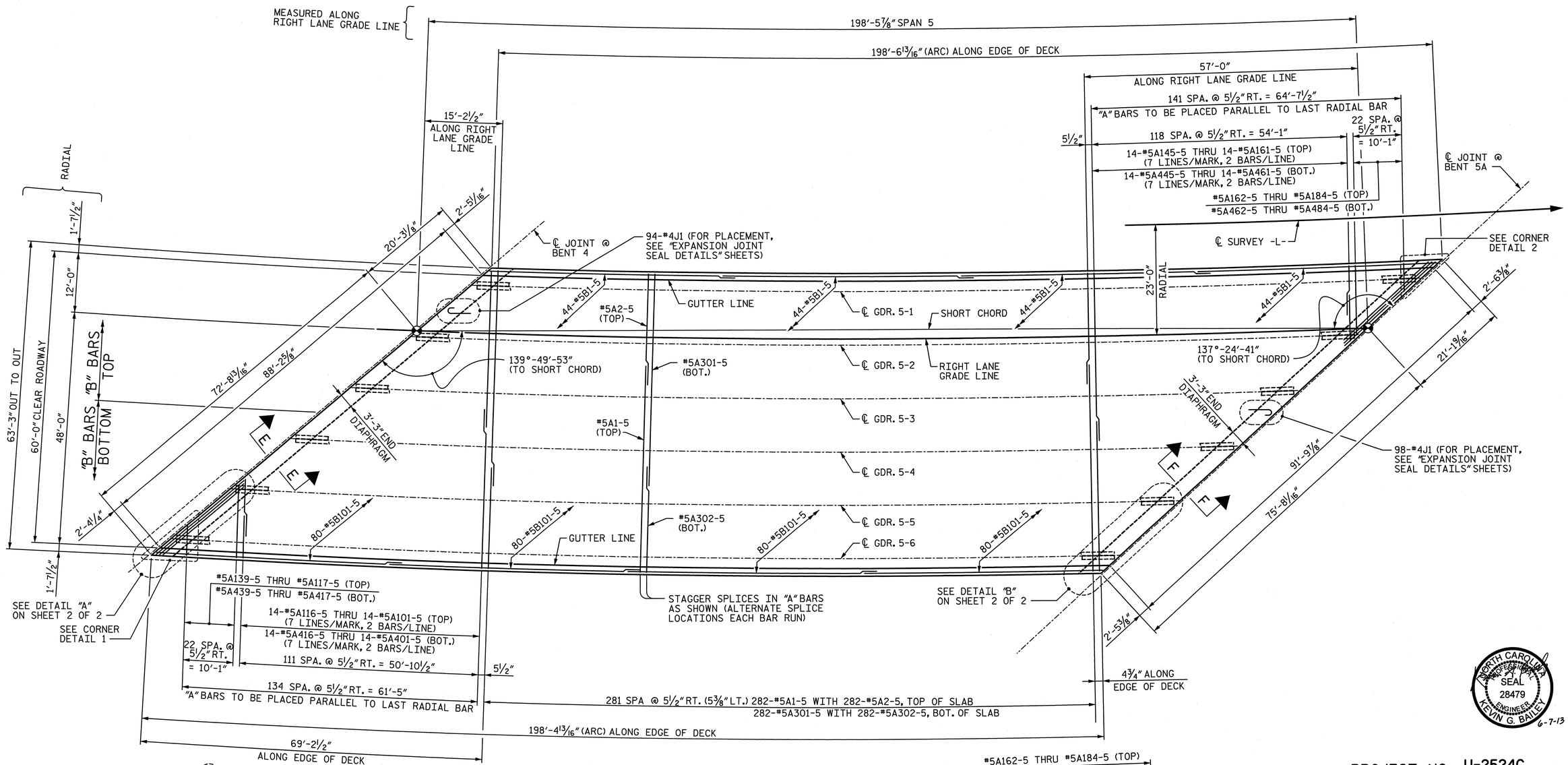

PLAN - SPAN 5

NOTES:

1. FOR CONCRETE BARRIER RAIL DIMENSIONS, REINFORCEMENT AND JOINT SPACING, SEE "PLAN OF RAILS" SHEETS.
2. FOR POURING SEQUENCE AND TRANSVERSE CONSTRUCTION JOINT IN DECK SLAB, SEE "DECK POUR DIAGRAMS" SHEET.
3. FOR SECTION VIEWS, SEE "SUPERSTRUCTURE DETAILS" SHEETS.
4. FOR "B" BAR SPACING AND LOCATION, SEE CORRESPONDING "TYPICAL SECTION" SHEET.
5. "A" BARS TO BE PLACED RADIALLY, UNLESS NOTED OTHERWISE.
6. FOR DRAINAGE SYSTEM, SEE "STRUCTURE DRAINAGE SYSTEM DETAILS" SHEET.
7. FOR MINIMUM SPLICE LENGTHS, SEE "SUPERSTRUCTURE BILL OF MATERIAL".

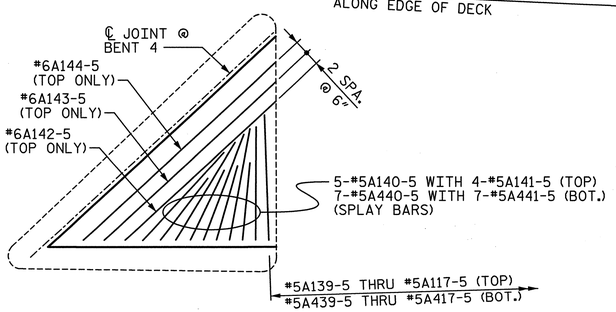

CORNER DETAIL 1

TOP BARS SHOWN, BOTTOM BARS SIMILAR

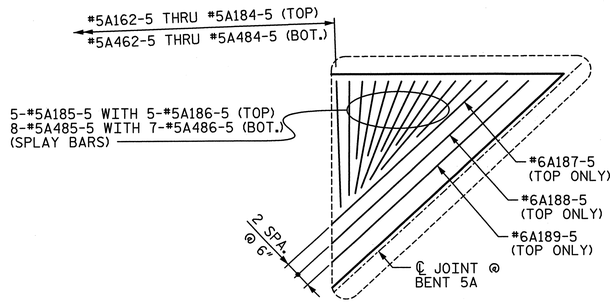

CORNER DETAIL 2

TOP BARS SHOWN, BOTTOM BARS SIMILAR

NORTH CAROLINA PROFESSIONAL ENGINEER SEAL 28479 KEVIN G. BAILEY 6-7-13

PROJECT NO. U-2524C

GUILFORD COUNTY

STATION: POT 407+85.82 -L- = POT 29+79.72 -Y4-

SHEET 1 OF 2

STATE OF NORTH CAROLINA
DEPARTMENT OF TRANSPORTATION
RALEIGH

PLAN OF SPANS
SPAN 5

-RIGHT LANE-

DRAWN BY : VMW	DATE : 3-13	DESIGN ENGINEER OF RECORD: A. PETER	DATE : 5-13
CHECKED BY : AJP	DATE : 3-13		

STV / Ralph Whitehead Associates, Inc.
1000 West Morehead St., Ste. 200
Charlotte, NC 28208
NC License No. F-0991

REVISIONS						SHEET NO.
NO.	BY:	DATE:	NO.	BY:	DATE:	S-296
1			3			TOTAL SHEETS
2			4			836

6/7/2013 10:54:03 AM R:\station\Finals\Plan of Span 5 Sheet 1of 2.dgn

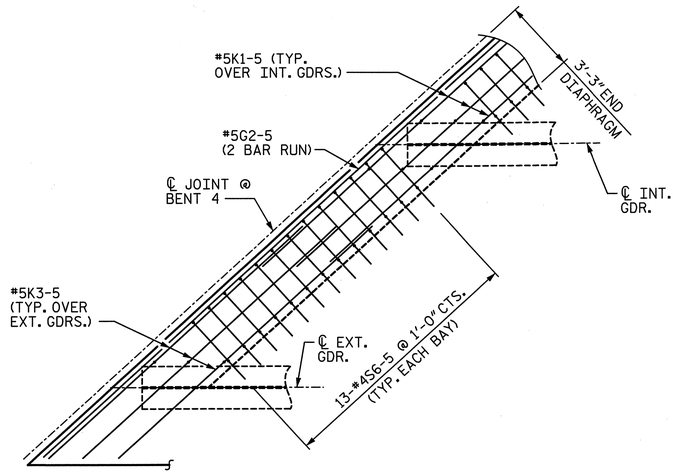

DETAIL "A"

END DIAPHRAGM AT BENT 4

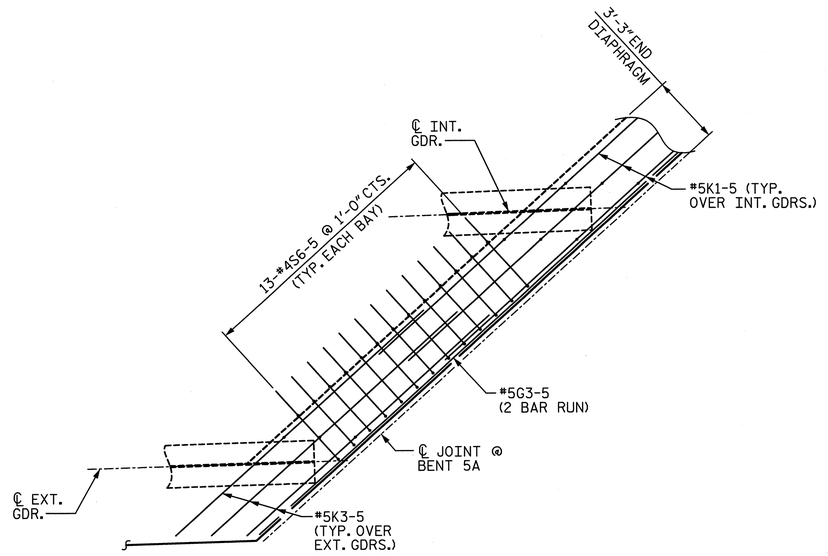

DETAIL "B"

END DIAPHRAGM AT BENT 5A

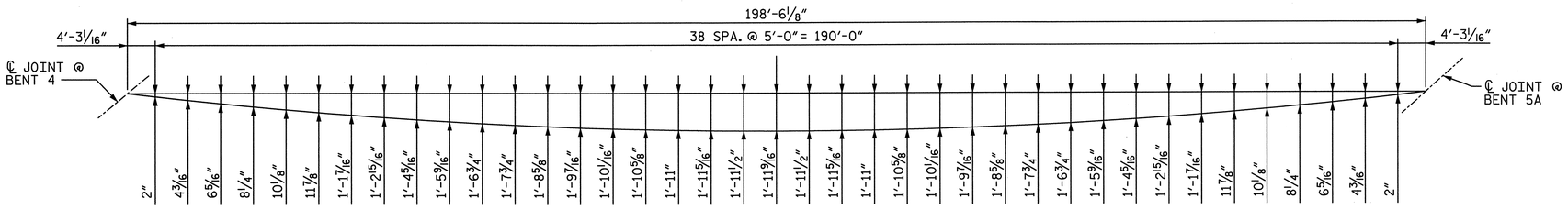

LEFT EDGE OF DECK

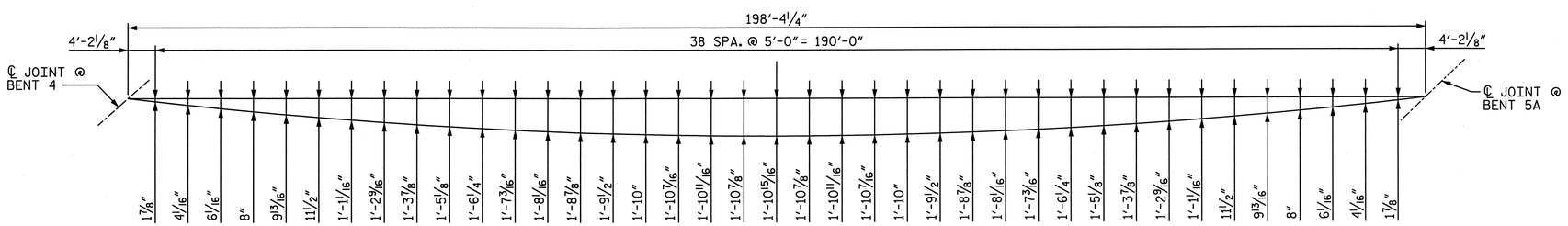

RIGHT EDGE OF DECK

ARC OFFSETS - SPAN 5

NORTH CAROLINA PROFESSIONAL ENGINEER SEAL 28479 KEVIN G. BAILEY 6-7-13

PROJECT NO. U-2524C

GUILFORD COUNTY

STATION: POT 407+85.82 -L-
= POT 29+79.72 -Y4-

SHEET 2 OF 2

STATE OF NORTH CAROLINA
DEPARTMENT OF TRANSPORTATION
RALEIGH

PLAN OF SPANS
SPAN 5

-RIGHT LANE-

REVISIONS						SHEET NO.
NO.	BY:	DATE:	NO.	BY:	DATE:	S-297
1			3			TOTAL SHEETS
2			4			36

DRAWN BY : VMW DATE : 3-13
CHECKED BY : AJP DATE : 3-13

DESIGN ENGINEER OF RECORD: A. PETER DATE : 5-13

STV / Ralph Whitehead Associates, Inc.
1000 West Morehead St., Ste. 200
Charlotte, NC 28208
NC License No. F-0991

6/6/2013 4:39:43 PM R:\ustation\Finals\Plan of Span 5 Sheet 2 of 2.dgn

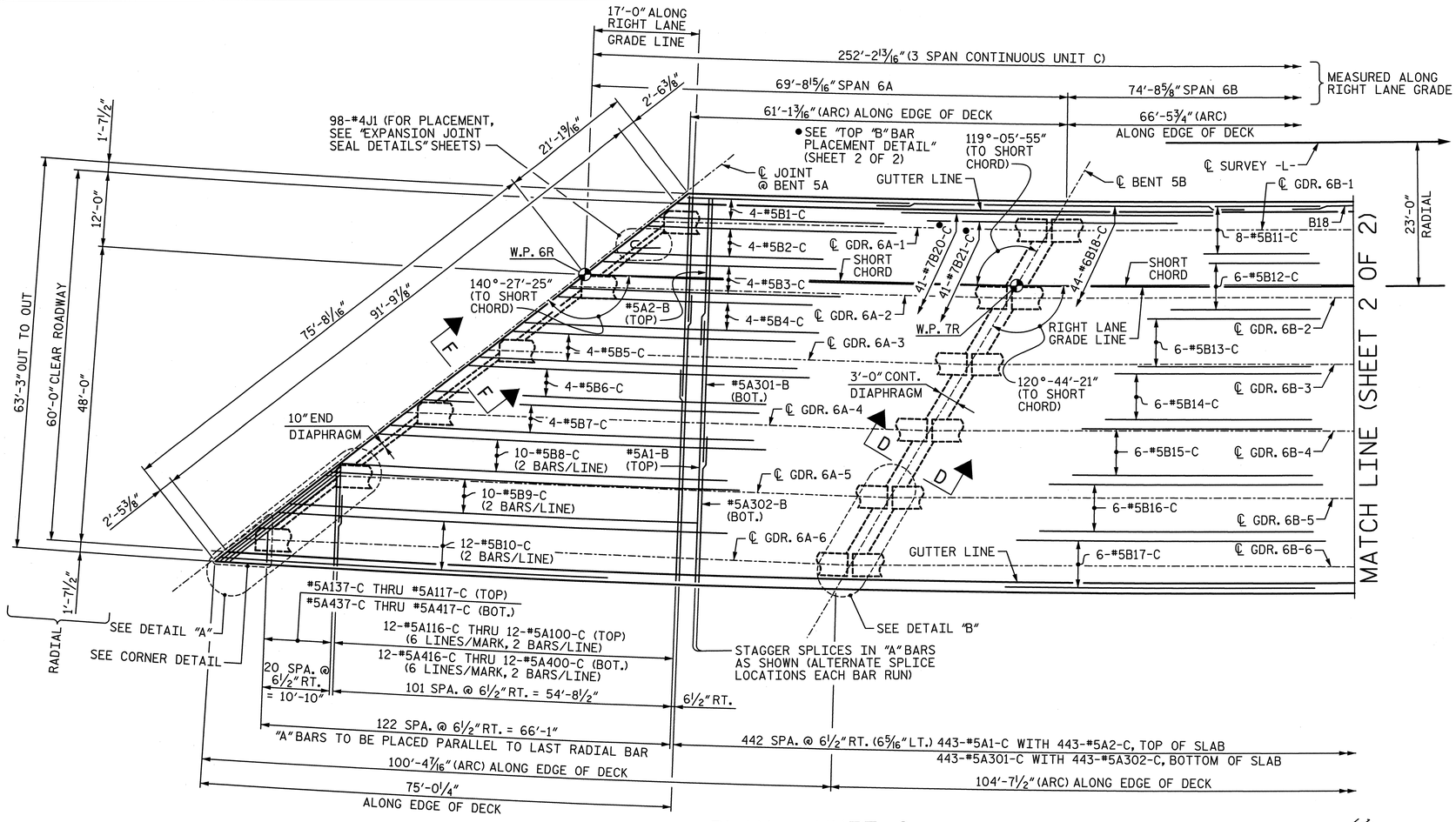

PLAN - UNIT C

FOR BOTTOM "B" BARS, SEE SHEET 3 OF 3

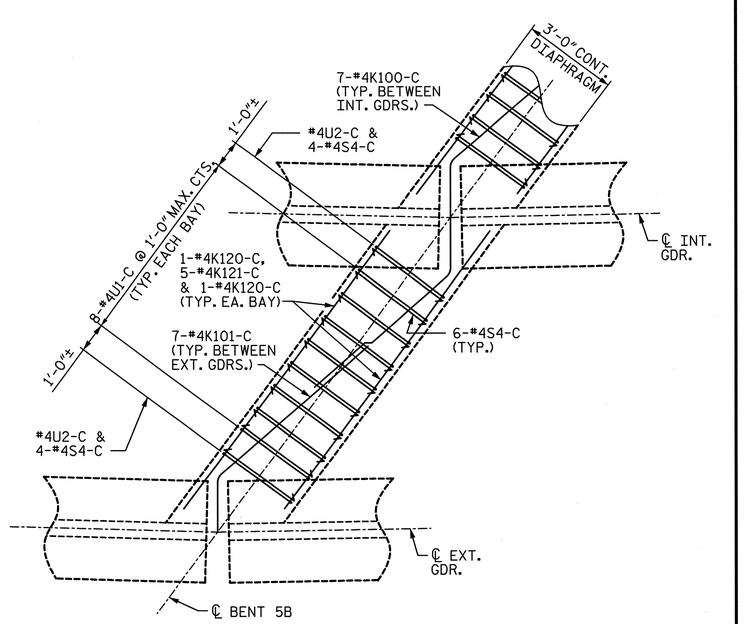

DETAIL "B"

CONTINUOUS DIAPHRAGM AT BENT 5B

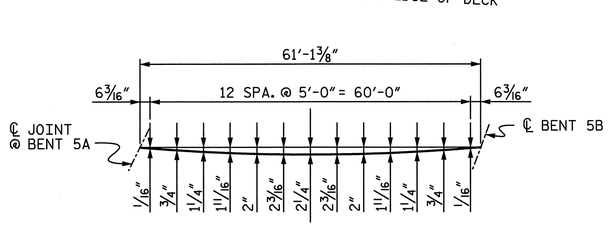

LEFT EDGE OF DECK

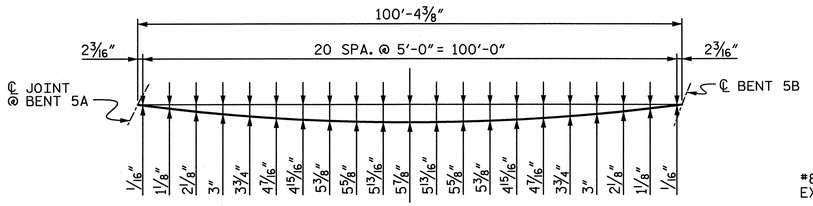

RIGHT EDGE OF DECK

ARC OFFSETS - SPAN 6A

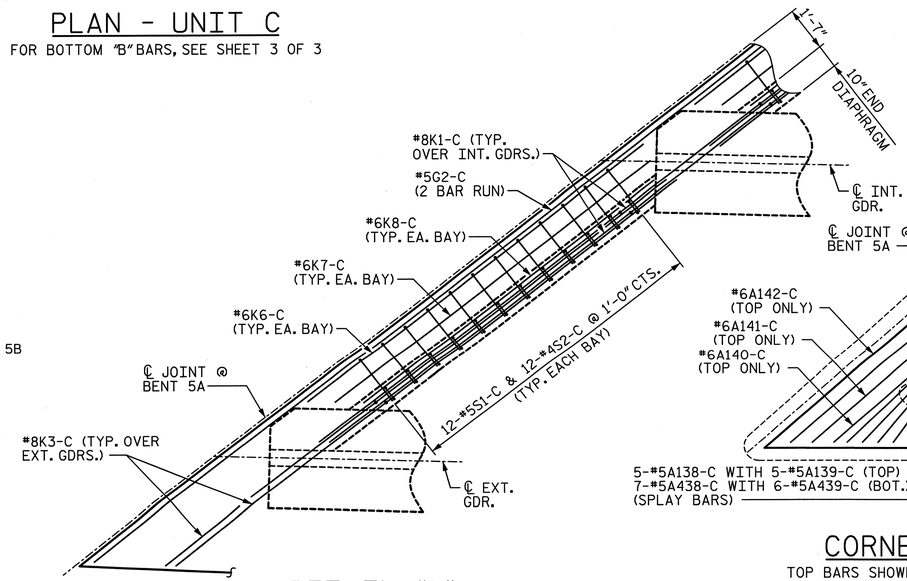

DETAIL "A"

END DIAPHRAGM AT BENT 5A

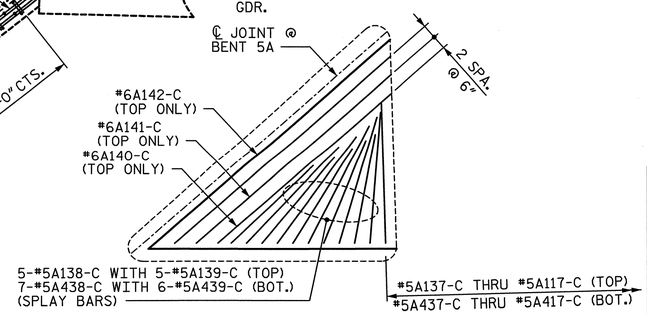

CORNER DETAIL

TOP BARS SHOWN, BOTTOM BARS SIMILAR

NOTES:

1. FOR CONCRETE BARRIER RAIL DIMENSIONS, REINFORCEMENT AND JOINT SPACING, SEE "PLAN OF RAILS" SHEETS.
2. FOR POURING SEQUENCE AND TRANSVERSE CONSTRUCTION JOINT IN DECK SLAB, SEE "DECK POUR DIAGRAMS" SHEET.
3. FOR SECTION VIEWS, SEE "SUPERSTRUCTURE DETAILS" SHEETS.
4. FOR "B" BAR SPACING AND LOCATION, SEE CORRESPONDING "TYPICAL SECTION" SHEET.
5. "A" BARS TO BE PLACED RADIALLY, UNLESS NOTED OTHERWISE.
6. FOR DRAINAGE SYSTEM, SEE "STRUCTURE DRAINAGE SYSTEM DETAILS" SHEETS.
7. FOR MINIMUM SPLICE LENGTHS, SEE "SUPERSTRUCTURE BILL OF MATERIAL".

NORTH CAROLINA PROFESSIONAL SEAL 28479 ENGINEER KEVIN G. BAILEY 6-7-13

PROJECT NO. U-2524C

GUILFORD COUNTY

STATION: POT 407+85.82 -L-
= POT 29+79.72 -Y4-

SHEET 1 OF 3

STATE OF NORTH CAROLINA
DEPARTMENT OF TRANSPORTATION
RALEIGH

PLAN OF SPANS
UNIT C
SPANS 6A-7

-RIGHT LANE-

REVISIONS						SHEET NO.
NO.	BY:	DATE:	NO.	BY:	DATE:	S-298
1			3			TOTAL SHEETS
2			4			836

STV / Ralph Whitehead Associates, Inc.
1000 West Morehead St., Ste. 200
Charlotte, NC 28208
NC License No. F-0991

DRAWN BY : MM/ACA DATE : 12-12
CHECKED BY : AJP DATE : 3-13

DESIGN ENGINEER OF RECORD: A. PETER DATE : 5-13

6/6/2013 4:39:45 PM R:\station\Finals\Plan of Span 6A-7 Sheet 1of 3.dgn

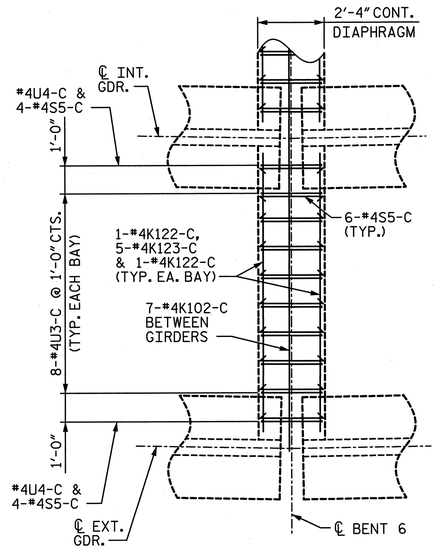

DETAIL "C"

CONTINUOUS DIAPHRAGM AT BENT 6

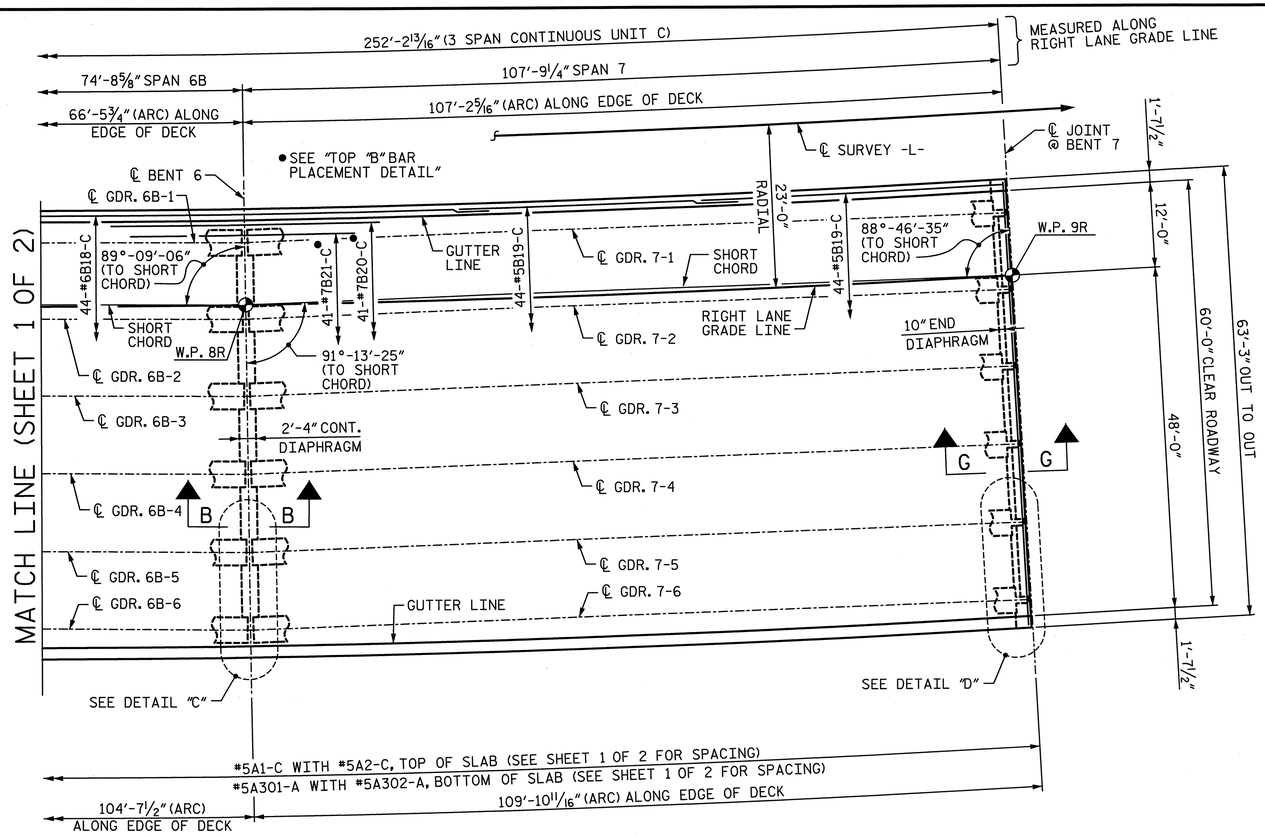

PLAN - UNIT C

FOR BOTTOM "B" BARS, SEE SHEETS 3 OF 3

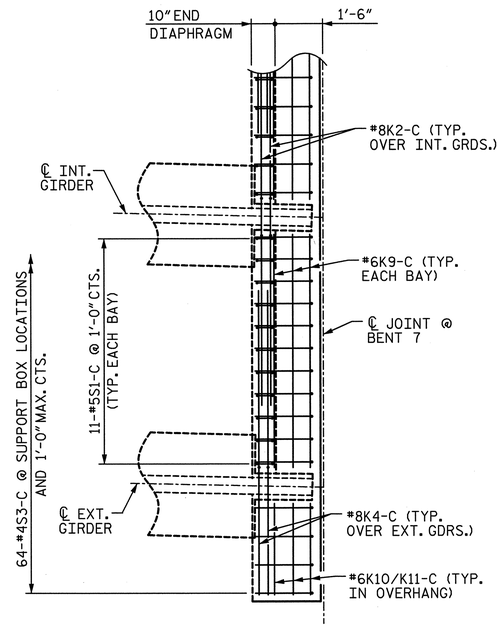

DETAIL "D"

(END DIAPHRAGM AT BENT 7)
(G1 BARS NOT SHOWN FOR CLARITY, SEE CORRESPONDING "TYPICAL SECITON" SHEET FOR PLACEMENT AND LOCATION)

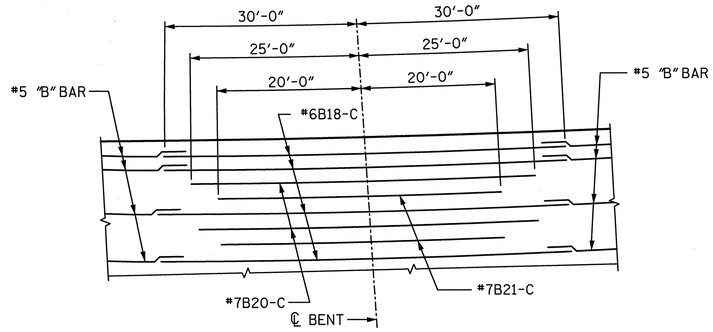

TOP "B" BAR PLACEMENT DETAIL

(BENT 6 SHOWN, BENT 5B SIMILAR)

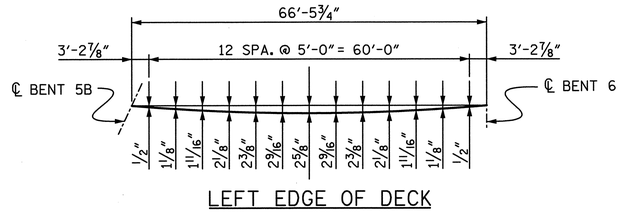

LEFT EDGE OF DECK

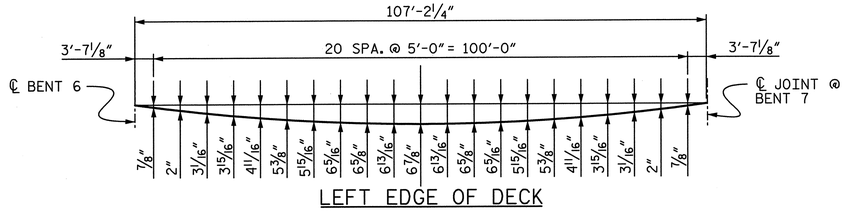

LEFT EDGE OF DECK

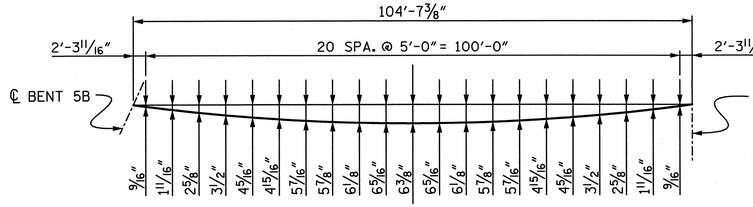

RIGHT EDGE OF DECK

ARC OFFSETS - SPAN 6B

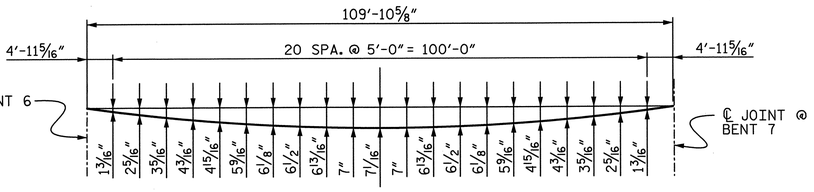

RIGHT EDGE OF DECK

ARC OFFSETS - SPAN 7

PROJECT NO. U-2524C

GUILFORD COUNTY

STATION: POT 407+85.82 -L-
= POT 29+79.72 -Y4-

SHEET 2 OF 3

STATE OF NORTH CAROLINA
DEPARTMENT OF TRANSPORTATION
RALEIGH

PLAN OF SPANS
UNIT C
SPANS 6A-7

-RIGHT LANE-

NORTH CAROLINA PROFESSIONAL SEAL 28479 ENGINEER KEVIN G. BAILEY 6-7-13

STV / Ralph Whitehead Associates, Inc.
1000 West Morehead St., Ste. 200
Charlotte, NC 28208
NC License No. F-0991

REVISIONS						SHEET NO.
NO.	BY:	DATE:	NO.	BY:	DATE:	S-299
1			3			TOTAL SHEETS
2			4			836

DRAWN BY : MM/ACA	DATE : 12-12	DESIGN ENGINEER OF RECORD: A. PETER	DATE : 5-13
CHECKED BY : AJP	DATE : 3-13		

6/6/2013 4:39:47 PM R:\station\Finals\Plan of Span 6A-7 Sheet 2 of 3.dgn

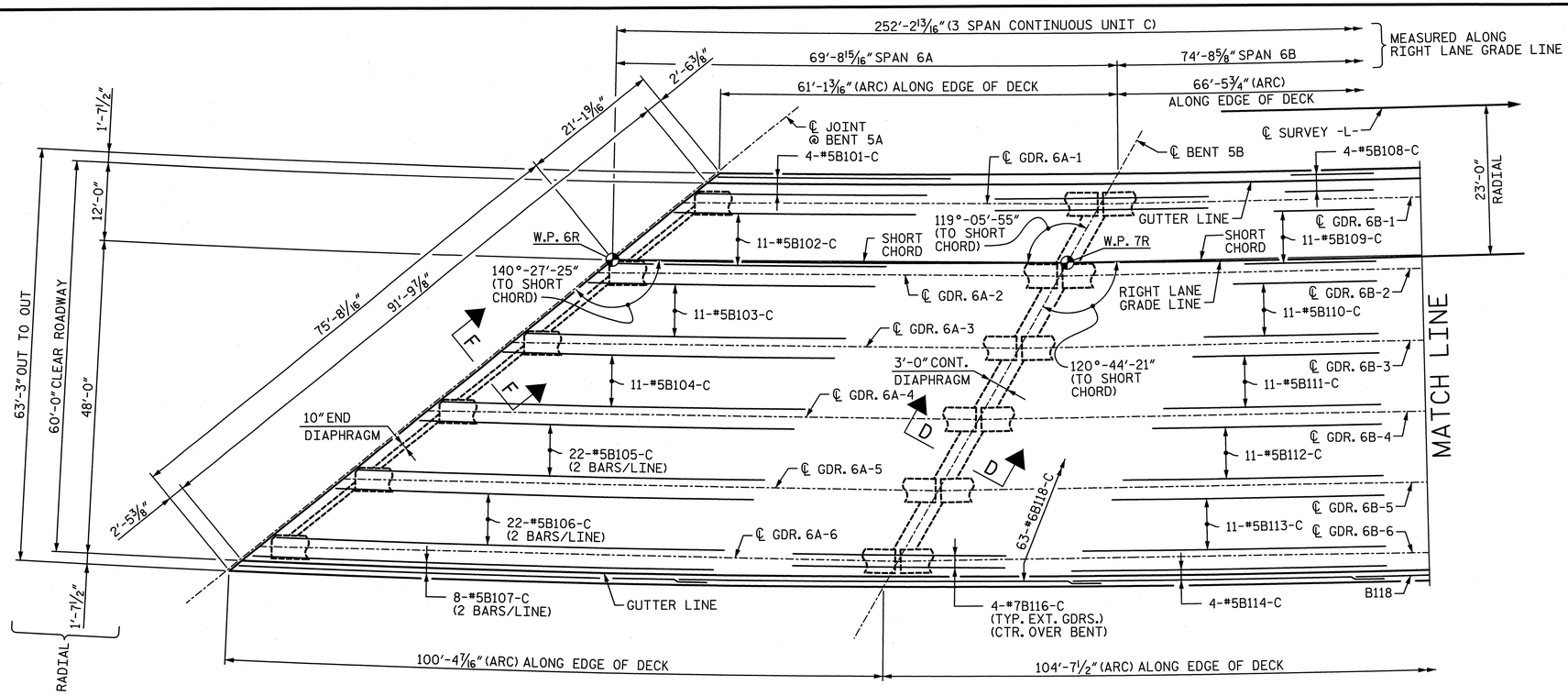

PLAN - UNIT C - BOTTOM "B" BARS

FOR ALL REMAINING STEEL, SEE SHEET 1 & 2 OF 3

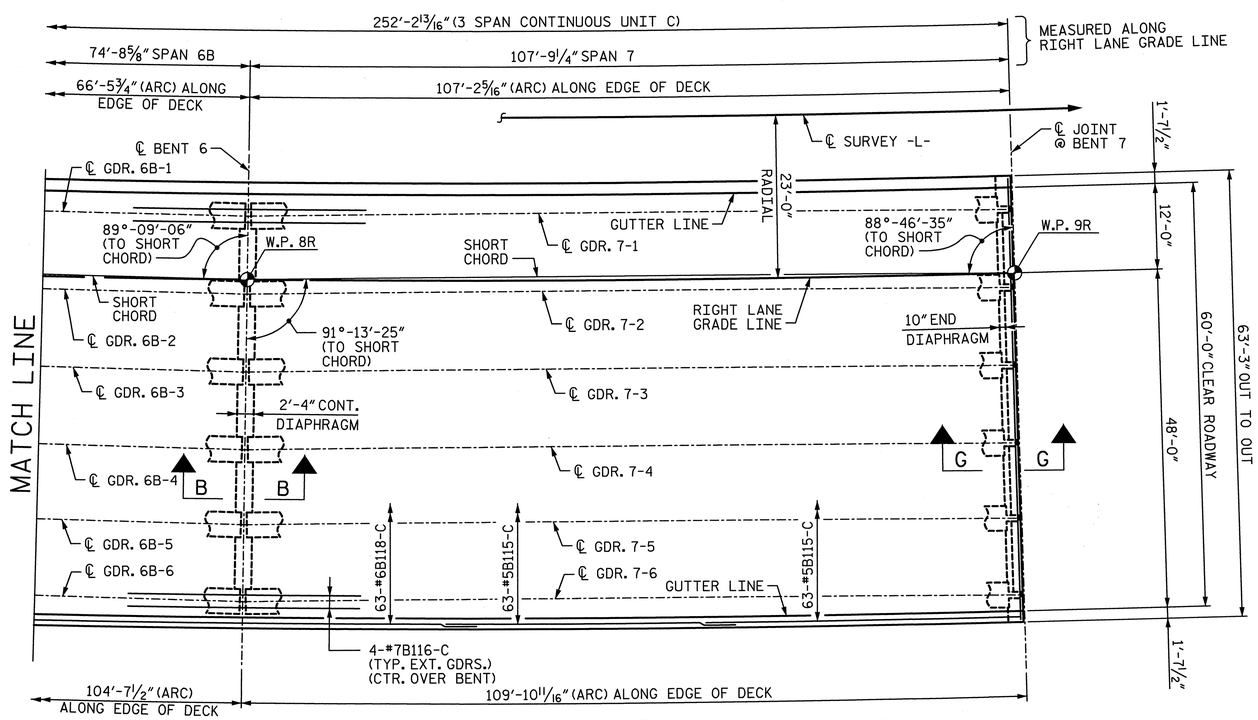

PLAN - UNIT C - BOTTOM "B" BARS

FOR ALL REMAINING STEEL, SEE SHEET 1 & 2 OF 3

NORTH CAROLINA PROFESSIONAL ENGINEER SEAL 28479 KEVIN G. BAILEY 6-7-13

PROJECT NO. U-2524C

GUILFORD COUNTY

STATION: POT 407+85.82 -L-
= POT 29+79.72 -Y4-

SHEET 3 OF 3

STATE OF NORTH CAROLINA
DEPARTMENT OF TRANSPORTATION
RALEIGH

PLAN OF SPANS
UNIT C
SPANS 6A-7

-RIGHT LANE-

DRAWN BY : ACA	DATE : 3-13	DESIGN ENGINEER OF RECORD: A. PETER	DATE : 5-13
CHECKED BY : AJP	DATE : 3-13		

STV / Ralph Whitehead Associates, Inc.
1000 West Morehead St. Ste. 200
Charlotte, NC 28208
NC License No. F-0991

REVISIONS						SHEET NO.
NO.	BY:	DATE:	NO.	BY:	DATE:	S-300
1			3			TOTAL SHEETS
2			4			836

6/6/2013 4:39:48 PM R:\ustation\Finals\Plan of Span 6A-7 Sheet 3 of 3.dgn

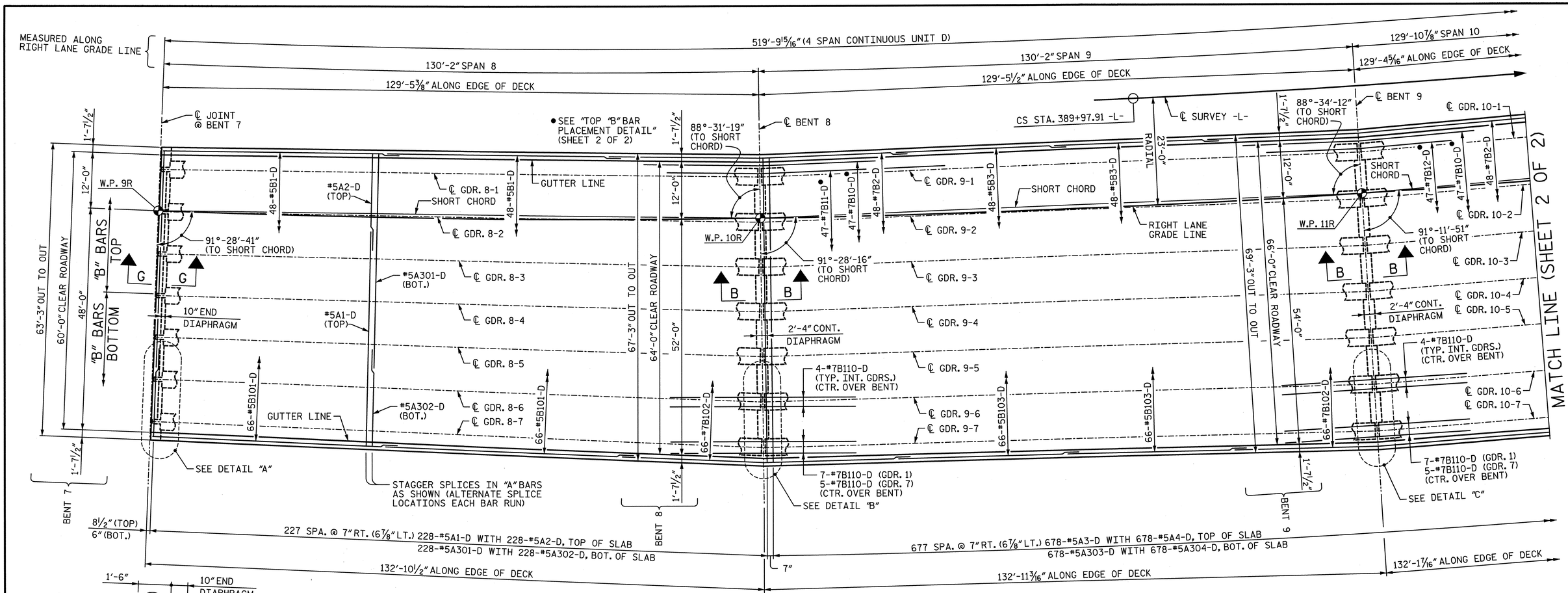

PLAN - UNIT D

NOTE: S10 BARS NOT SHOWN FOR CLARITY, SEE "TYPICAL SECTION" AND "SUPERSTRUCTURE DETAILS" SHEETS FOR DETAILS.

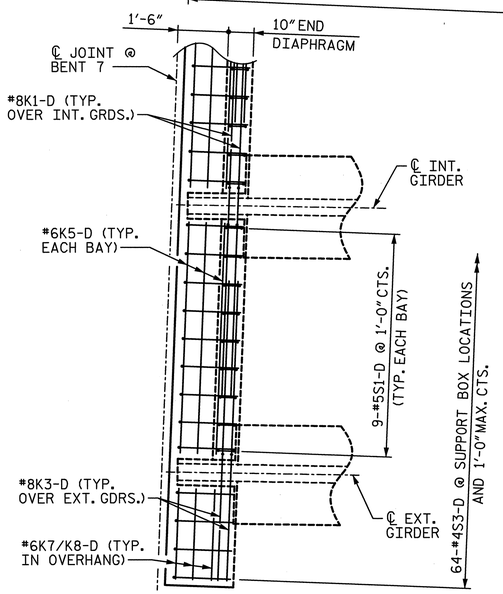

DETAIL "A"

(END DIAPHRAGM AT BENT 7)
(G1 BARS NOT SHOWN FOR CLARITY, SEE CORRESPONDING "TYPICAL SECTION" SHEET FOR PLACEMENT AND LOCATION)

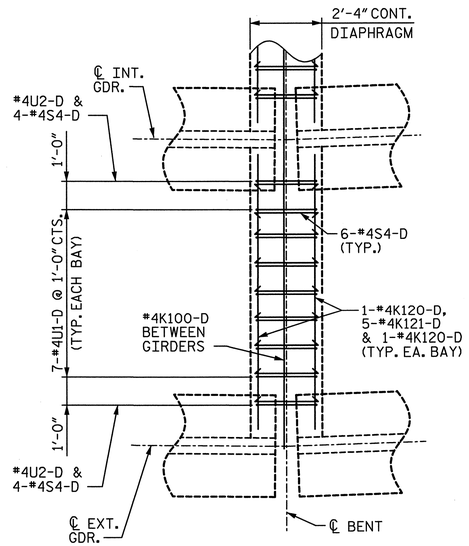

DETAIL "B"

CONTINUOUS DIAPHRAGM AT BENT 8

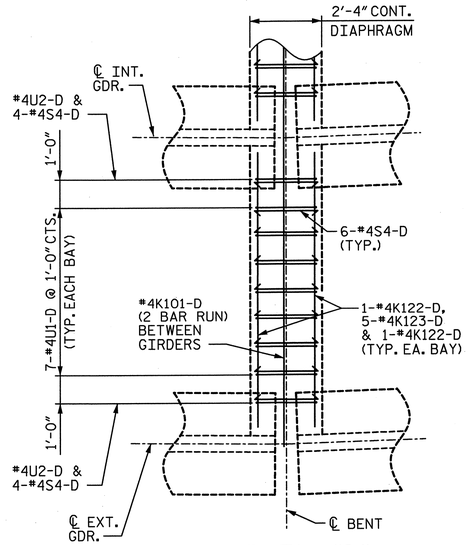

DETAIL "C"

CONTINUOUS DIAPHRAGM AT BENTS 9 & 10

NOTES:

1. FOR CONCRETE BARRIER RAIL DIMENSIONS, REINFORCEMENT AND JOINT SPACING, SEE "PLAN OF RAILS" SHEETS.
2. BARRIER RAIL SHALL BE CAST PARALLEL TO THE OUTSIDE EDGE OF DECK.
3. FOR POURING SEQUENCE AND TRANSVERSE CONSTRUCTION JOINT IN DECK SLAB, SEE "DECK POUR DIAGRAMS" SHEET.
4. FOR SECTION VIEWS, SEE "SUPERSTRUCTURE DETAILS" SHEETS.
5. FOR "B" BAR SPACING AND LOCATION, SEE CORRESPONDING "TYPICAL SECTION" SHEET.
6. FOR DRAINAGE SYSTEM, SEE "STRUCTURE DRAINAGE SYSTEM DETAILS" SHEETS.
7. FOR MINIMUM SPLICE LENGTHS, SEE "SUPERSTRUCTURE BILL OF MATERIAL".

NORTH CAROLINA PROFESSIONAL ENGINEER SEAL 28479 ENGINEER KEVIN G. BAILEY 6-7-13

PROJECT NO. U-2524C

GUILFORD COUNTY

STATION: POT 407+85.82 -L-
= POT 29+79.72 -Y4-

SHEET 1 OF 2

STATE OF NORTH CAROLINA
DEPARTMENT OF TRANSPORTATION
RALEIGH

PLAN OF SPANS
UNIT D
SPANS 8-11

-RIGHT LANE-

DRAWN BY : MM/ACA	DATE : 12-12	DESIGN ENGINEER OF RECORD: A. PETER	DATE : 5-13
CHECKED BY : AJP	DATE : 3-13		

STV / Ralph Whitehead Associates, Inc.
1000 West Morehead St. Ste. 200
Charlotte, NC 28208
NC License No. F-0991

REVISIONS						SHEET NO.
NO.	BY:	DATE:	NO.	BY:	DATE:	S-301
1			3			TOTAL SHEETS
2			4			836

R:\Ustation\Finals\Plan of Span 8-11 Sheet 1 of 2.dgn 10:54:04 AM 6/7/2013

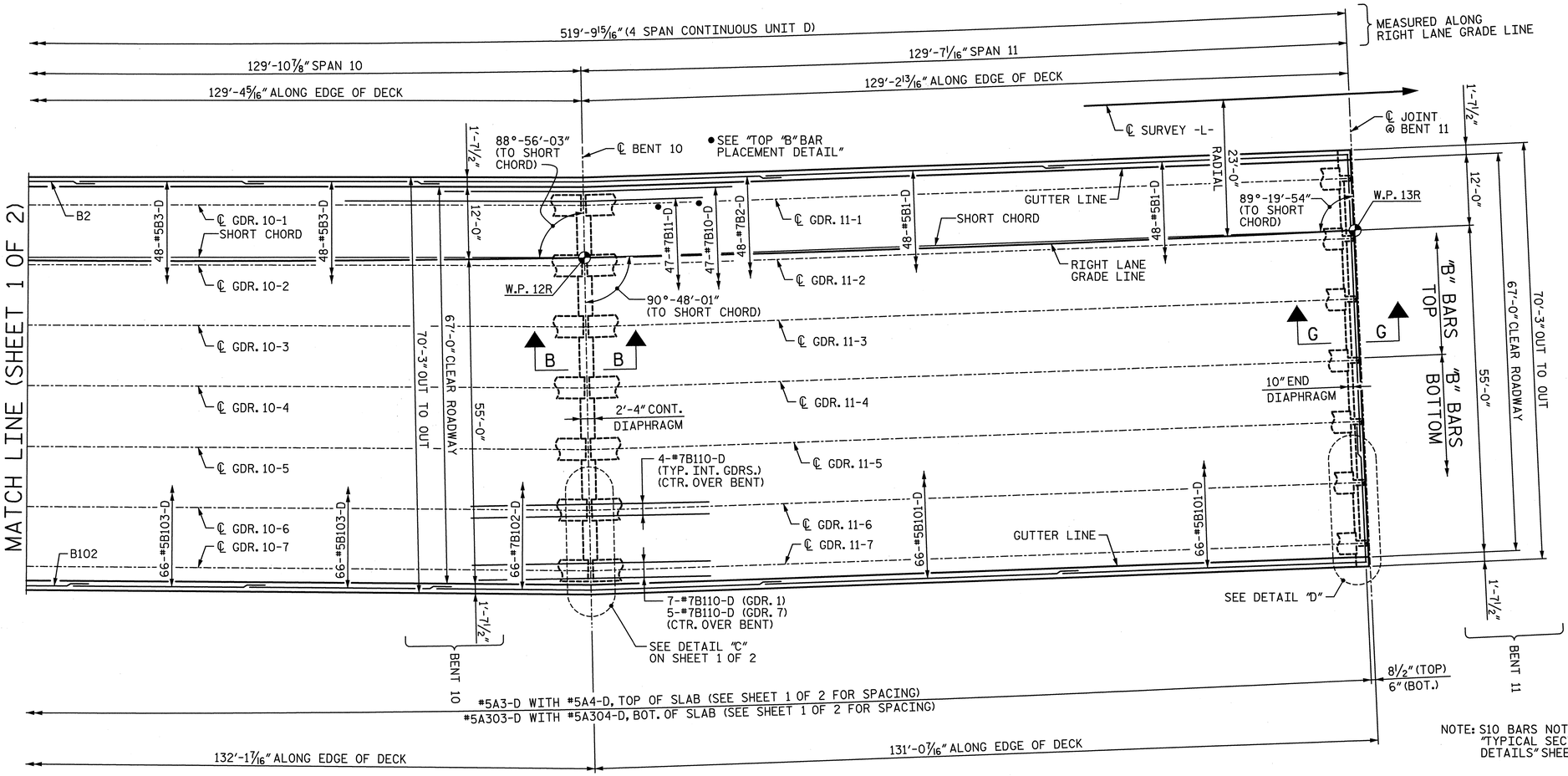

NOTE: S10 BARS NOT SHOWN FOR CLARITY, SEE "TYPICAL SECTION" AND "SUPERSTRUCTURE DETAILS" SHEETS FOR DETAILS.

PLAN - UNIT D

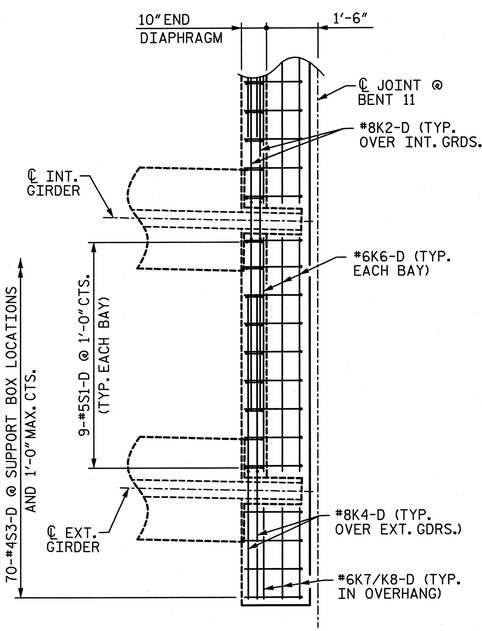

DETAIL "D"

(END DIAPHRAGM AT BENT 11)
(G1 BARS NOT SHOWN FOR CLARITY, SEE CORRESPONDING "TYPICAL SECTION" SHEET FOR PLACEMENT AND LOCATION)

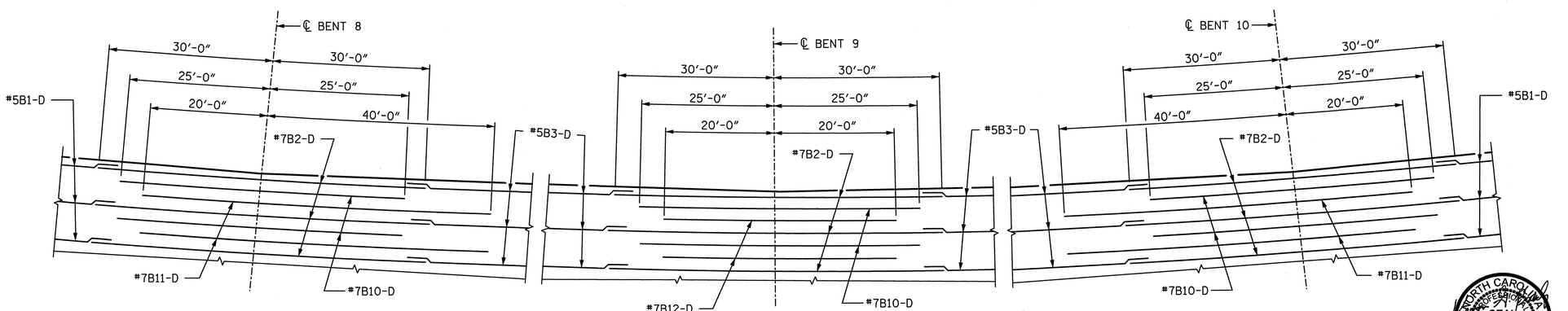

TOP "B" BAR PLACEMENT DETAIL

PROJECT NO. U-2524C

GUILFORD COUNTY

STATION: POT 407+85.82 -L-
= POT 29+79.72 -Y4-

SHEET 2 OF 2

STATE OF NORTH CAROLINA
DEPARTMENT OF TRANSPORTATION
RALEIGH

PLAN OF SPANS
UNIT D
SPANS 8-11

-RIGHT LANE-

NORTH CAROLINA PROFESSIONAL SEAL 28479 ENGINEER KEVIN G. BAILEY 6-7-13

REVISIONS						SHEET NO.
NO.	BY:	DATE:	NO.	BY:	DATE:	S-302
1			3			TOTAL SHEETS
2			4			836

STV / Ralph Whitehead Associates, Inc.
1000 West Morehead St., Ste. 200
Charlotte, NC 28208
NC License No. F-0991

DRAWN BY : MM/ACA DATE : 12-12
CHECKED BY : AJP DATE : 3-13

DESIGN ENGINEER OF RECORD: A. PETER DATE : 5-13

6/7/2013 10:54:06 AM R:\ustation\Finals\Plan of Span 8-11Sheet 2 of 2.dgn

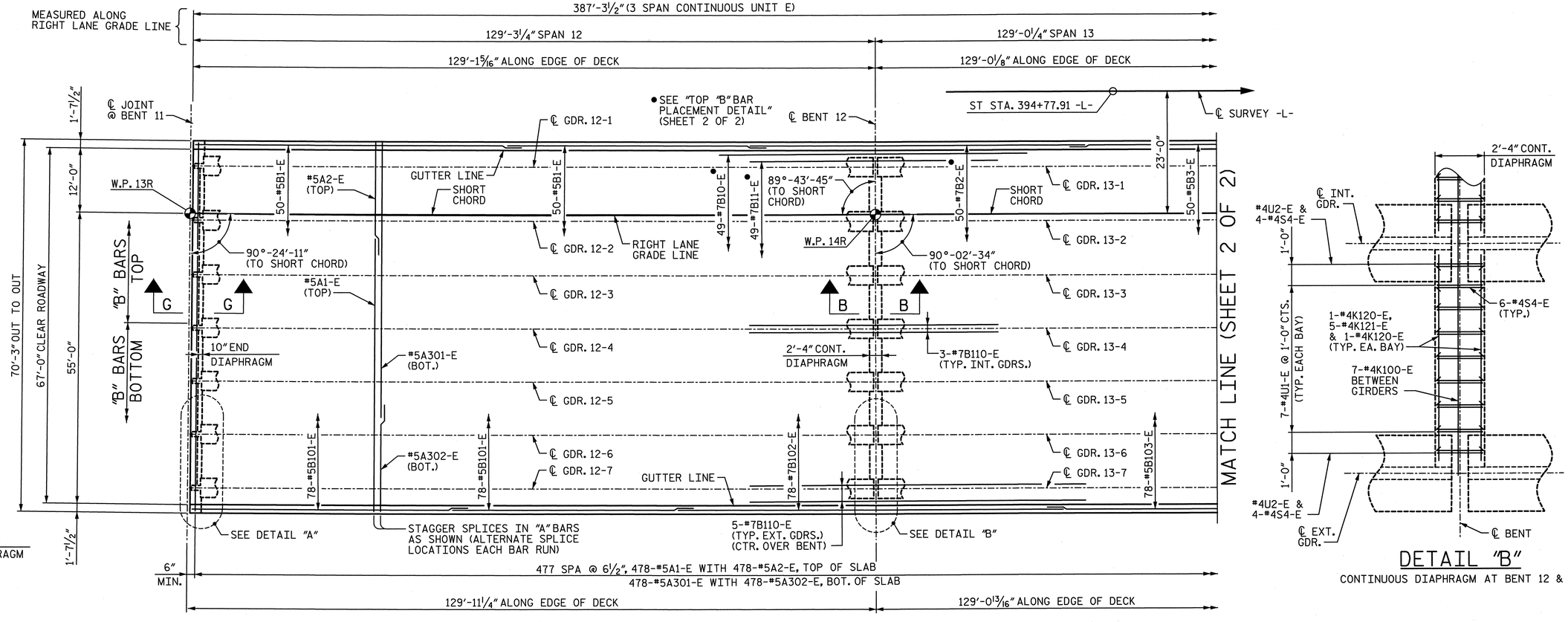

PLAN - UNIT E

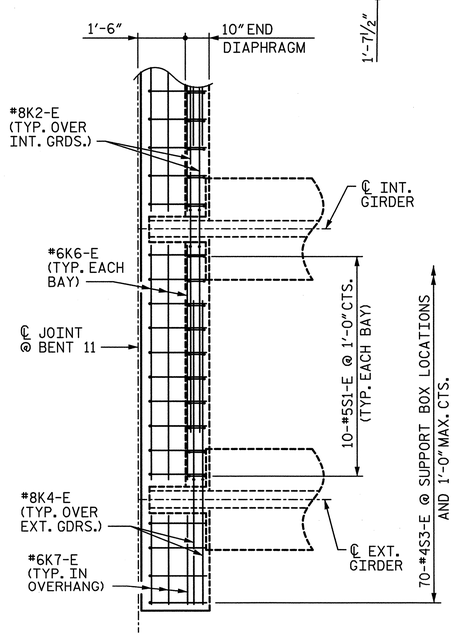

DETAIL "A"

(END DIAPHRAGM AT BENT 11)
(G1 BARS NOT SHOWN FOR CLARITY, SEE CORRESPONDING "TYPICAL SECTION" SHEET FOR PLACEMENT AND LOCATION)

DETAIL "B"

CONTINUOUS DIAPHRAGM AT BENT 12 & 13

NOTE: S10 BARS NOT SHOWN FOR CLARITY, SEE "TYPICAL SECTION" AND "SUPERSTRUCTURE DETAILS" SHEETS FOR DETAILS.

NOTES:

1. FOR CONCRETE BARRIER RAIL DIMENSIONS, REINFORCEMENT AND JOINT SPACING, SEE "PLAN OF RAILS" SHEETS.
2. FOR POURING SEQUENCE AND TRANSVERSE CONSTRUCTION JOINT IN DECK SLAB, SEE "DECK POUR DIAGRAMS" SHEET.
3. FOR SECTION VIEWS, SEE "SUPERSTRUCTURE DETAILS" SHEETS.
4. FOR "B" BAR REINFORCING LAYOUT, SPACING AND LOCATION, SEE CORRESPONDING "TYPICAL SECTION" SHEET.
5. FOR DRAINAGE SYSTEM, SEE "STRUCTURE DRAINAGE SYSTEM DETAILS" SHEETS.
6. FOR MINIMUM SPLICE LENGTHS, SEE "SUPERSTRUCTURE BILL OF MATERIAL".

NORTH CAROLINA PROFESSIONAL ENGINEER SEAL 28479 KEVIN G. BAILEY
6-7-13

PROJECT NO. U-2524C
GUILFORD COUNTY
STATION: POT 407+85.82 -L-
= POT 29+79.72 -Y4-

SHEET 1 OF 2

STATE OF NORTH CAROLINA
DEPARTMENT OF TRANSPORTATION
RALEIGH

PLAN OF SPANS
UNIT E
SPANS 12-14

-RIGHT LANE-

REVISIONS						SHEET NO.
NO.	BY:	DATE:	NO.	BY:	DATE:	S-303
1			3			TOTAL SHEETS
2			4			836

STV / Ralph Whitehead Associates, Inc.
1000 West Morehead St., Ste. 200
Charlotte, NC 28208
NC License No. F-0991

DRAWN BY : MM/ACA	DATE : 12-12	DESIGN ENGINEER OF RECORD: A. PETER	DATE : 5-13
CHECKED BY : AJP	DATE : 4-13		

6/7/2013 10:54:07 AM R:\station\Finals\Plan of Span 12-14 Sheet 1of 2.dgn

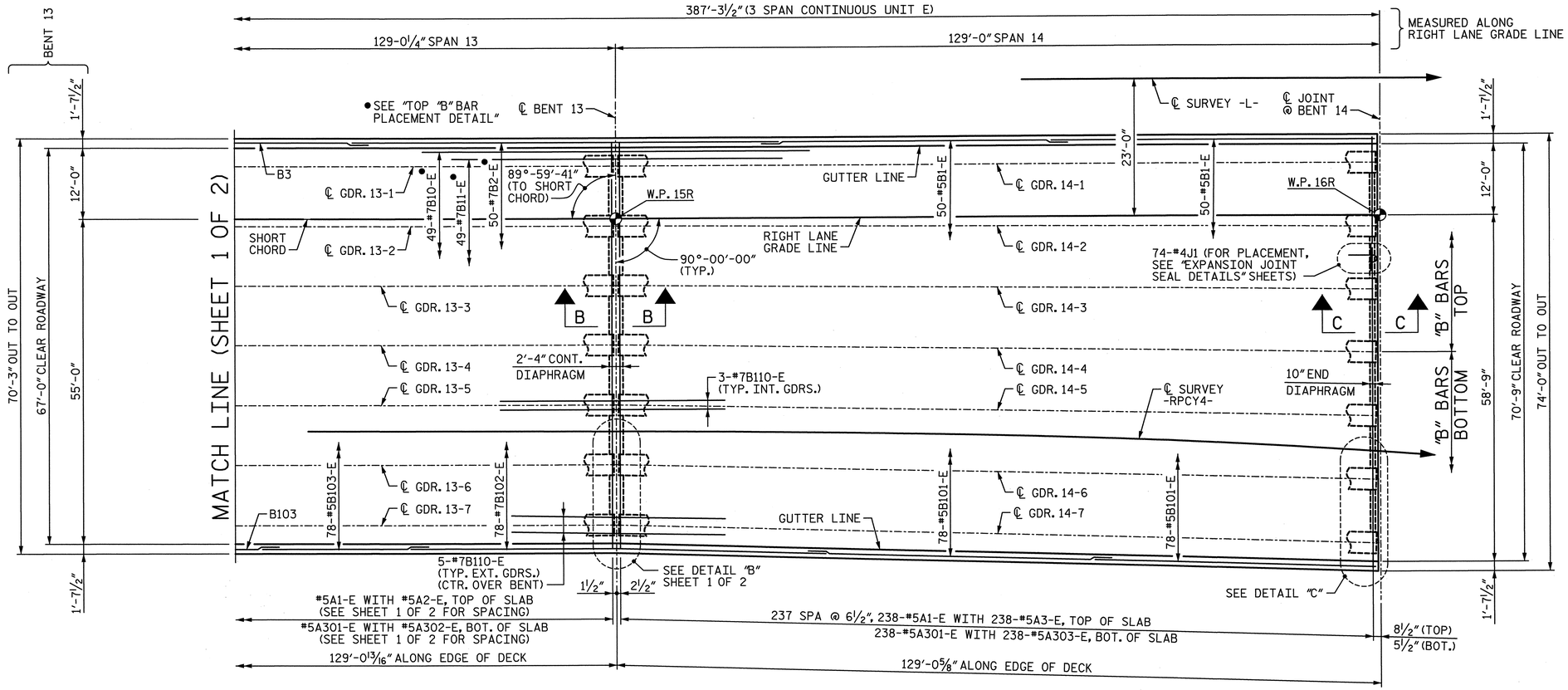

PLAN - UNIT E

NOTE: S10 BARS NOT SHOWN FOR CLARITY, SEE "TYPICAL SECTION" AND "SUPERSTRUCTURE DETAILS" SHEETS FOR DETAILS.

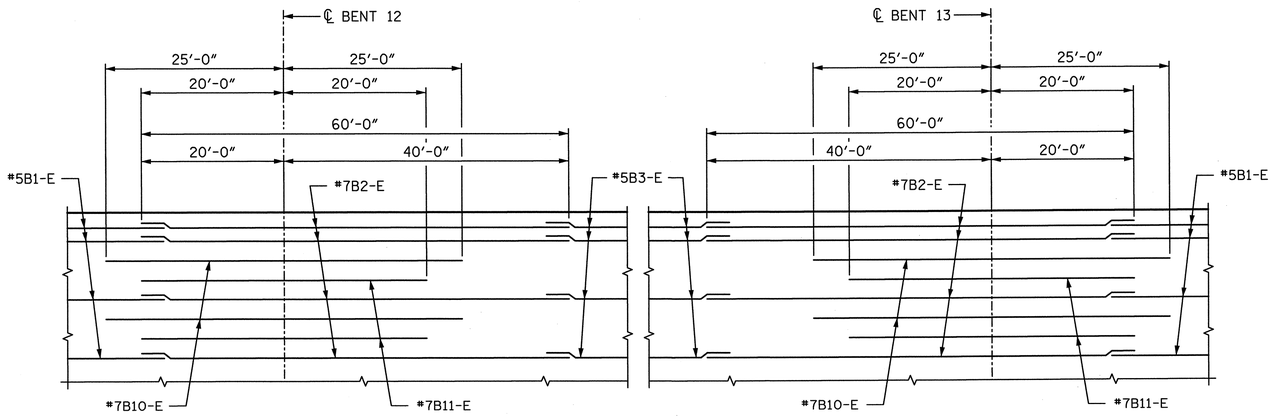

TOP "B" BAR PLACEMENT DETAILS

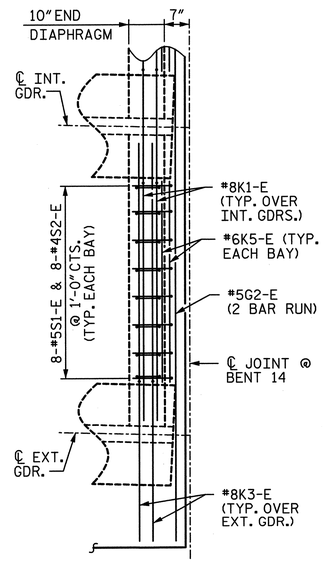

DETAIL "C"

END DIAPHRAGM AT BENT 14

NORTH CAROLINA PROFESSIONAL SEAL 28479 ENGINEER KEVIN G. BAILEY 6-7-13

PROJECT NO. U-2524C

GUILFORD COUNTY

STATION: POT 407+85.82 -L-
= POT 29+79.72 -Y4-

SHEET 2 OF 2

STATE OF NORTH CAROLINA
DEPARTMENT OF TRANSPORTATION
RALEIGH

PLAN OF SPANS
UNIT E
SPANS 12-14

-RIGHT LANE-

REVISIONS						SHEET NO.
NO.	BY:	DATE:	NO.	BY:	DATE:	S-304
1			3			TOTAL SHEETS
2			4			836

STV / Ralph Whitehead Associates, Inc.
1000 West Morehead St., Ste. 200
Charlotte, NC 28208
NC License No. F-0991

DRAWN BY : MM/ACA	DATE : 12-12	DESIGN ENGINEER OF RECORD: A. PETER	DATE : 5-13
CHECKED BY : AJP	DATE : 4-13		

6/7/2013 10:54:09 AM R:\uestation\Finals\Plan of Span 12-14 Sheet 2 of 2.dgn

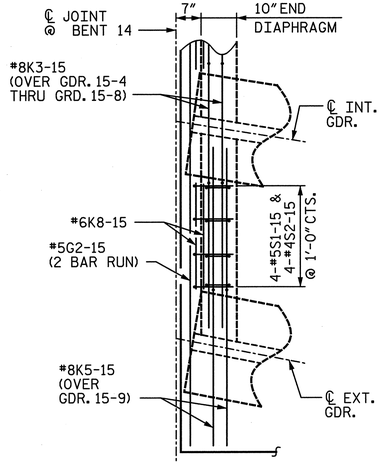

DETAIL "A"

END DIAPHRAGM AT BENT 14

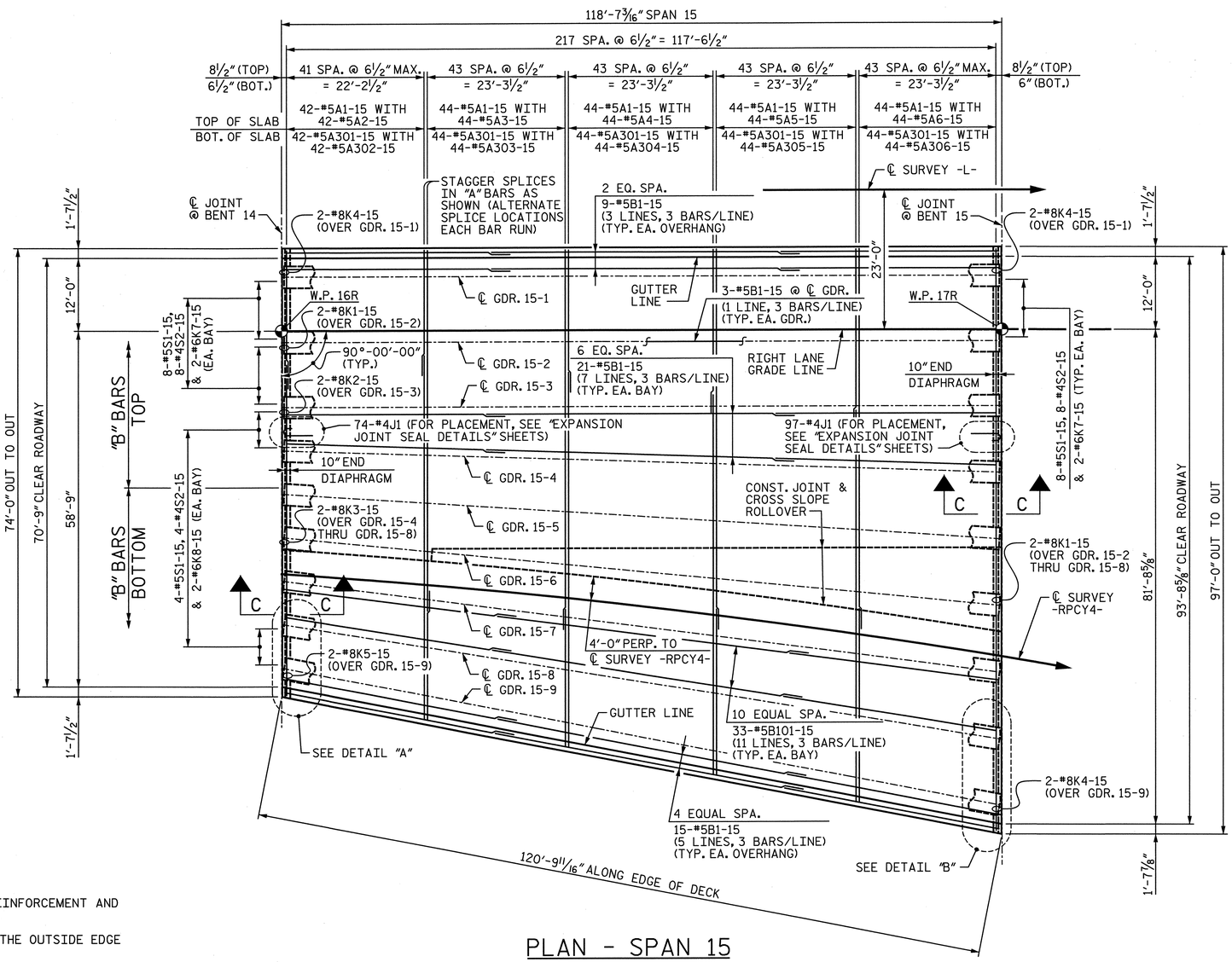

PLAN - SPAN 15

DIAPHRAGM BARS NOT SHOWN FOR CLARITY

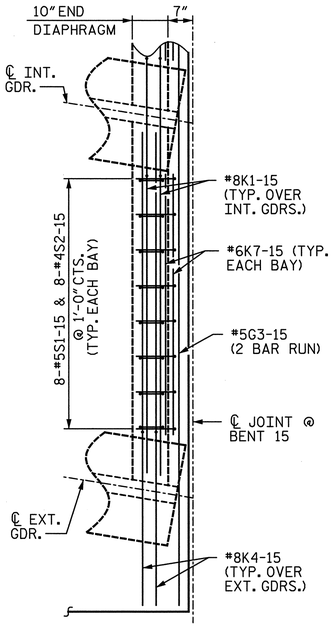

DETAIL "B"

END DIAPHRAGM AT BENT 15

NOTES:

1. FOR CONCRETE BARRIER RAIL DIMENSIONS, REINFORCEMENT AND JOINT SPACING, SEE "PLAN OF RAILS" SHEETS.
2. BARRIER RAIL SHALL BE CAST PARALLEL TO THE OUTSIDE EDGE OF DECK.
3. FOR POURING SEQUENCE AND TRANSVERSE CONSTRUCTION JOINT IN DECK SLAB, SEE "DECK POUR DIAGRAMS" SHEET.
4. FOR SECTION VIEWS, SEE "SUPERSTRUCTURE DETAILS" SHEETS.
5. FOR "B" BAR SPACING AND LOCATION, SEE CORRESPONDING "TYPICAL SECTION" SHEET.
6. FOR CONSTRUCTION JOINT AND POUR LOCATIONS, SEE "TRANSITION ZONE DETAILS" SHEET.
7. FOR DRAINAGE SYSTEM, SEE "STRUCTURE DRAINAGE SYSTEM DETAILS" SHEETS.
8. FOR MINIMUM SPLICE LENGTHS, SEE "SUPERSTRUCTURE BILL OF MATERIAL".

NOTE: S10 BARS NOT SHOWN FOR CLARITY, SEE "TYPICAL SECTION" AND "SUPERSTRUCTURE DETAILS" SHEETS FOR DETAILS.

PROJECT NO. U-2524C

GUILFORD COUNTY

STATION: POT 407+85.82 -L-
= POT 29+79.72 -Y4-

STATE OF NORTH CAROLINA
DEPARTMENT OF TRANSPORTATION
RALEIGH

PLAN OF SPANS
SPAN 15

-RIGHT LANE-

DRAWN BY : MM/ACA	DATE : 1-13	DESIGN ENGINEER OF RECORD: A. PETER	DATE : 5-13
CHECKED BY : AJP	DATE : 3-13		

STV / Ralph Whitehead Associates, Inc.
1000 West Morehead St., Ste. 200
Charlotte, NC 28208
NC License No. F-0991

REVISIONS						SHEET NO.
NO.	BY:	DATE:	NO.	BY:	DATE:	S-305
1			3			TOTAL SHEETS
2			4			836

6/7/2013 11:42:35 AM R:\station\Finals\Plan of Span 15 Sheet 1.dgn

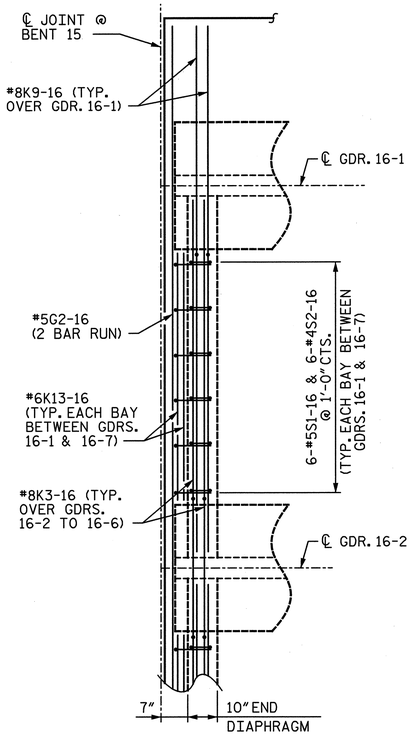

DETAIL "A"

END DIAPHRAGM AT BENT 15
(BENT 16 SIMILAR)

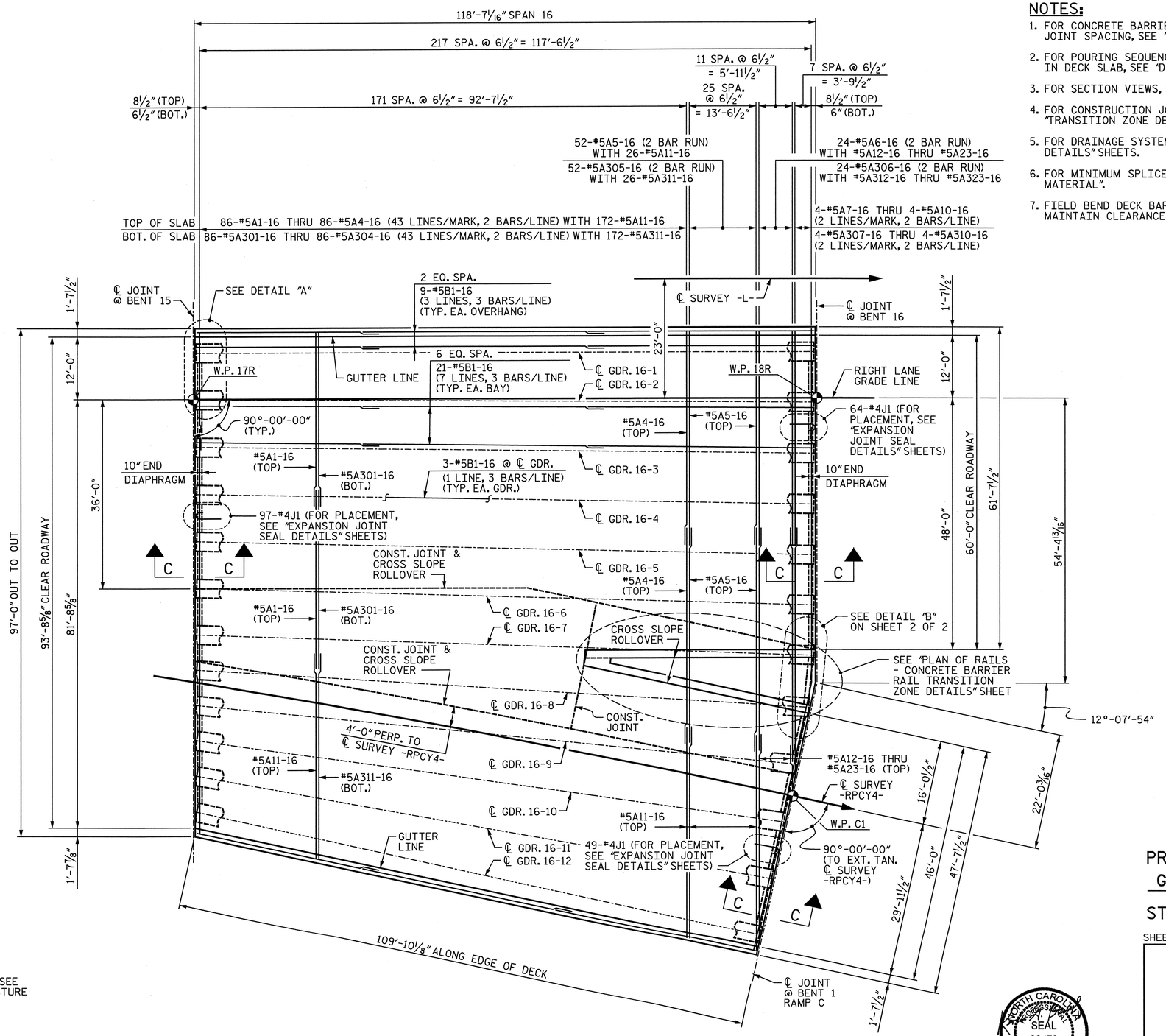

PLAN - SPAN 16

FOR BOTTOM "B" BARS & DIAPHRAGM BARS, SEE SHEET 2 OF 2

NOTE: S10 BARS NOT SHOWN FOR CLARITY, SEE "TYPICAL SECTION" AND "SUPERSTRUCTURE DETAILS" SHEETS FOR DETAILS.

NOTES:

1. FOR CONCRETE BARRIER RAIL DIMENSIONS, REINFORCEMENT AND JOINT SPACING, SEE "PLAN OF RAILS" SHEETS.
2. FOR POURING SEQUENCE AND TRANSVERSE CONSTRUCTION JOINT IN DECK SLAB, SEE "DECK POUR DIAGRAMS" SHEET.
3. FOR SECTION VIEWS, SEE "SUPERSTRUCTURE DETAILS" SHEETS.
4. FOR CONSTRUCTION JOINT AND POUR LOCATIONS, SEE "TRANSITION ZONE DETAILS" SHEET.
5. FOR DRAINAGE SYSTEM, SEE "STRUCTURE DRAINAGE SYSTEM DETAILS" SHEETS.
6. FOR MINIMUM SPLICE LENGTHS, SEE "SUPERSTRUCTURE BILL OF MATERIAL".
7. FIELD BEND DECK BARS IN GORE AREA AS NECESSARY TO MAINTAIN CLEARANCES IN SLAB.

NORTH CAROLINA PROFESSIONAL SEAL 28479 ENGINEER KEVIN G. BAILEY 6-7-13

PROJECT NO. U-2524C
GUILFORD COUNTY
STATION: POT 407+85.82 -L-
= POT 29+79.72 -Y4-

SHEET 1 OF 2

STATE OF NORTH CAROLINA
DEPARTMENT OF TRANSPORTATION
RALEIGH

PLAN OF SPANS
SPAN 16

-RIGHT LANE-

REVISIONS						SHEET NO.
NO.	BY:	DATE:	NO.	BY:	DATE:	S-306
1			3			TOTAL SHEETS
2			4			836

STV / Ralph Whitehead Associates, Inc.
1000 West Morehead St. Ste. 200
Charlotte, NC 28208
NC License No. F-0991

DRAWN BY : MM/ACA	DATE : 1-13	DESIGN ENGINEER OF RECORD: A. PETER	DATE : 5-13
CHECKED BY : AJP	DATE : 4-13		

6/7/2013 11:41:58 AM R:\ustation\Finals\Plan of Span 16 Sheet 1of 2.dgn

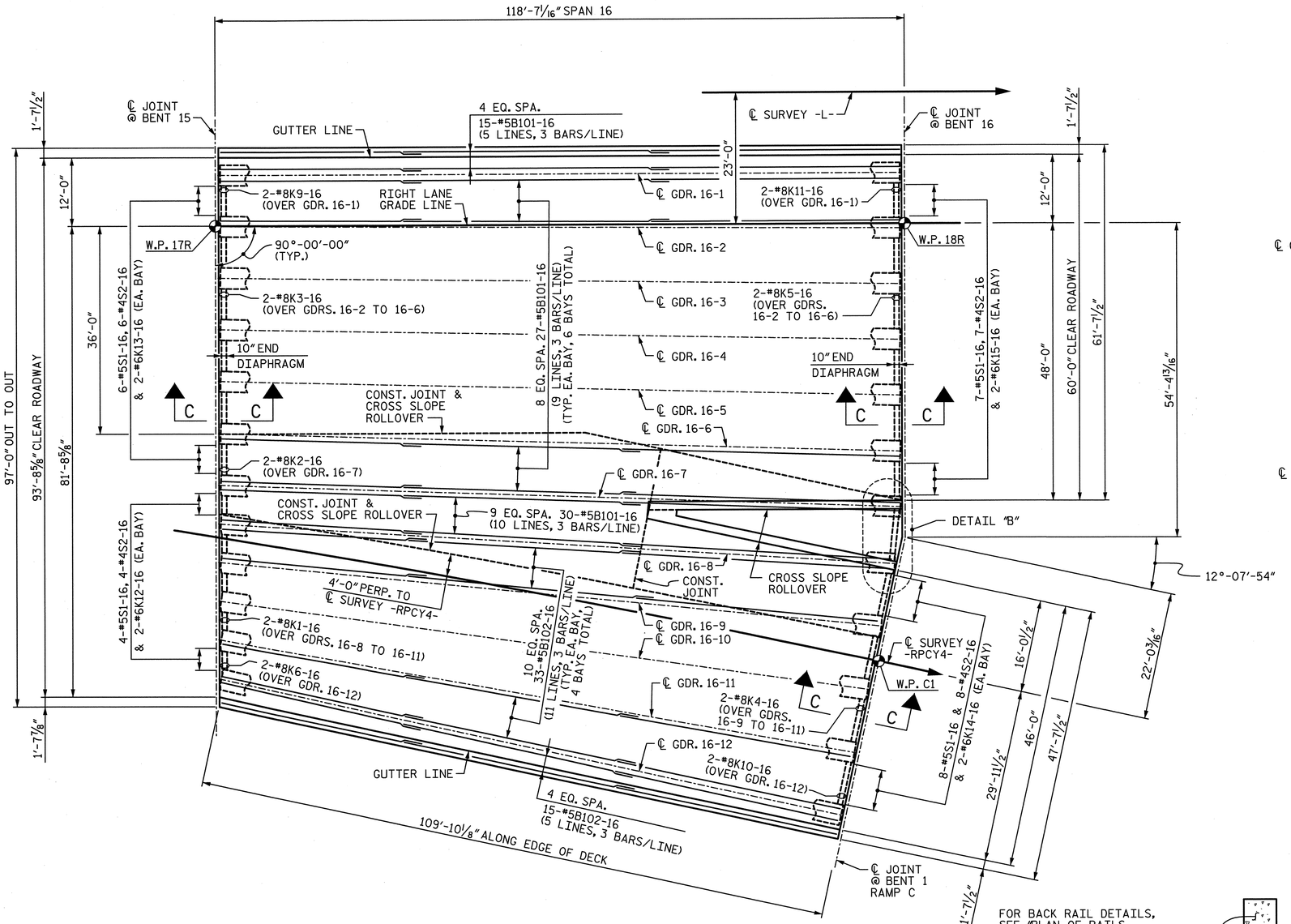

PLAN - SPAN 16 - BOTTOM "B" BARS

FOR ALL REMAINING DECK STEEL, SEE SHEET 1 OF 2
DIAPHRAGM BARS NOT SHOWN FOR CLARITY

NOTES:

1. FOR NOTES, SEE SHEET 1 OF 2.

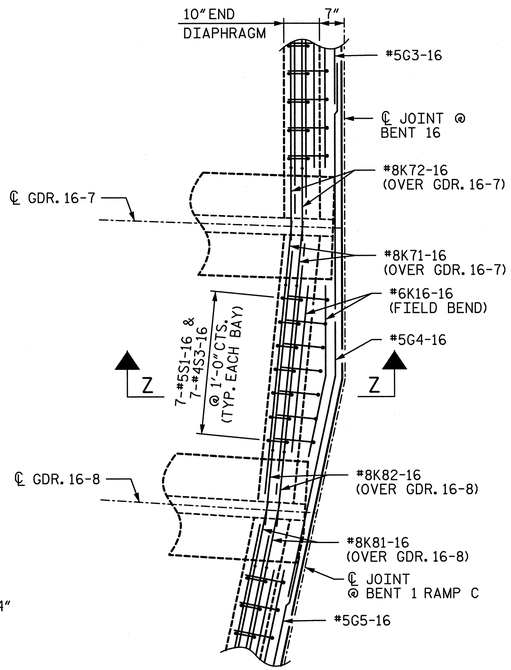

DETAIL "B"

END DIAPHRAGM AT BENT 16
(FOR ADDITIONAL INFORMATION, SEE "TRANSITION ZONE END DIAPHRAGM" DETAIL ON "TYPIAL SECTION SPAN 16")

NORTH CAROLINA PROFESSIONAL SEAL 28479 ENGINEER KEVIN G. BAILEY 6-7-13

FOR BACK RAIL DETAILS, SEE "PLAN OF RAILS CONCRETE BARRIER RAIL TRANSITION ZONE DETAILS", SHEET 8 OF 8.

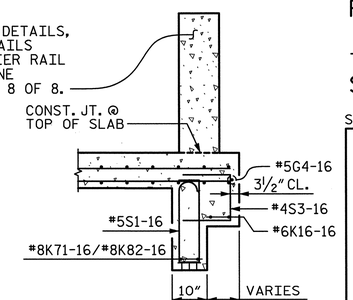

SECTION Z-Z

PROJECT NO. U-2524C

GUILFORD COUNTY

STATION: POT 407+85.82 -L-
= POT 29+79.72 -Y4-

SHEET 2 OF 2

STATE OF NORTH CAROLINA
DEPARTMENT OF TRANSPORTATION
RALEIGH

PLAN OF SPANS
SPAN 16

-RIGHT LANE-

DRAWN BY : ACA	DATE : 1-13	DESIGN ENGINEER OF RECORD: A. PETER	DATE : 5-13
CHECKED BY : AJP	DATE : 4-13		

STV / Ralph Whitehead Associates, Inc.
1000 West Morehead St., Ste. 200
Charlotte, NC 28208
NC License No. F-0991

REVISIONS						SHEET NO.
NO.	BY:	DATE:	NO.	BY:	DATE:	S-307
1			3			TOTAL SHEETS
2			4			836

6/6/2013 4:39:59 PM R:\ustation\Finals\Plan of Span 16 Sheet 2 of 2.dgn

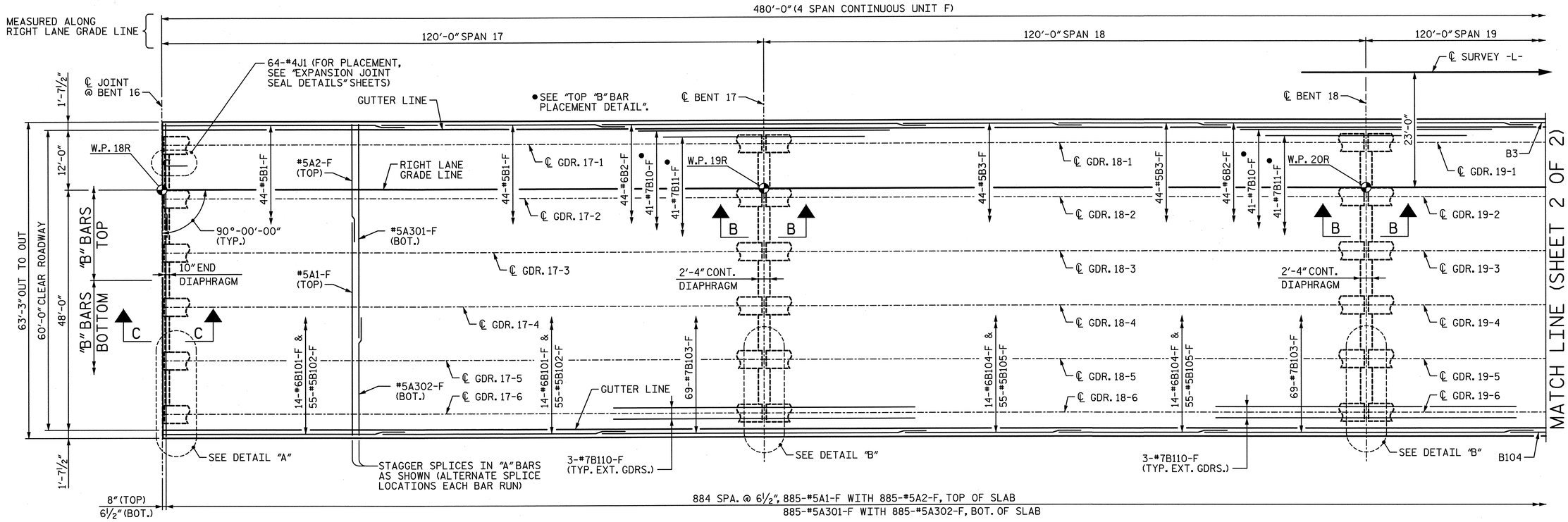

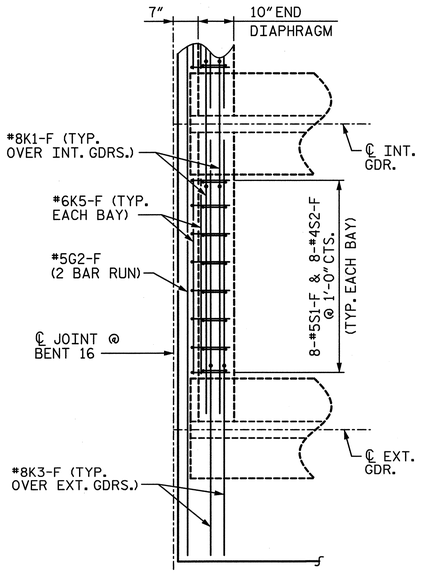

DETAIL "A"

END DIAPHRAGM AT BENT 16

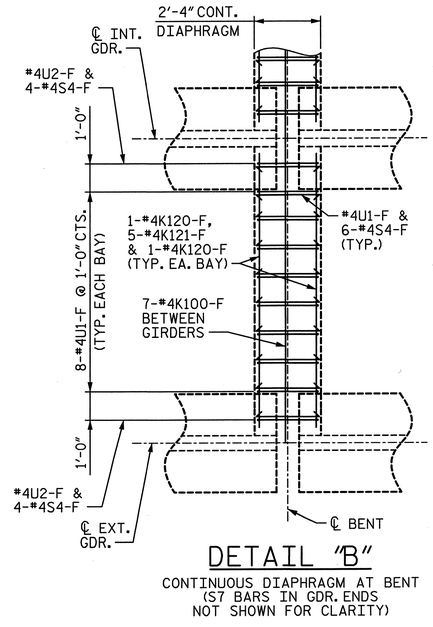

DETAIL "B"

CONTINUOUS DIAPHRAGM AT BENT (S7 BARS IN GDR. ENDS NOT SHOWN FOR CLARITY)

PLAN - UNIT F

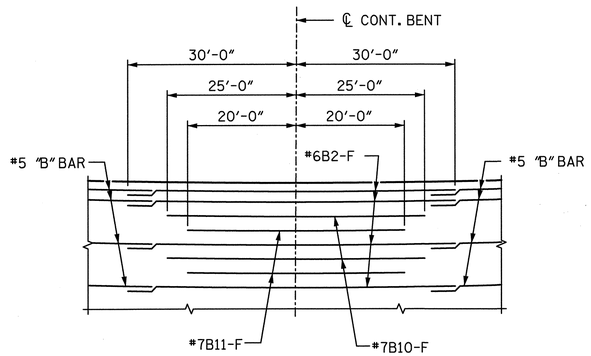

TOP "B" BAR PLACEMENT DETAIL

NOTES:

1. FOR CONCRETE BARRIER RAIL DIMENSIONS, REINFORCEMENT AND JOINT SPACING, SEE "PLAN OF RAILS" SHEETS.
2. FOR POURING SEQUENCE AND TRANSVERSE CONSTRUCTION JOINT IN DECK SLAB, SEE "DECK POUR DIAGRAMS" SHEET.
3. FOR SECTION VIEWS, SEE "SUPERSTRUCTURE DETAILS" SHEETS.
4. FOR "B" BAR SPACING AND LOCATION, SEE CORRESPONDING "TYPICAL SECTION" SHEET.
5. FOR DRAINAGE SYSTEM, SEE "STRUCTURE DRAINAGE SYSTEM DETAILS" SHEET.
6. FOR MINIMUM SPLICE LENGTHS, SEE "SUPERSTRUCTURE BILL OF MATERIAL".

PROJECT NO. U-2524C

GUILFORD COUNTY

STATION: POT 407+85.82 -L-
= POT 29+79.72 -Y4-

SHEET 1 OF 2

STATE OF NORTH CAROLINA
DEPARTMENT OF TRANSPORTATION
RALEIGH

PLAN OF SPANS UNIT F SPANS 17-20

-RIGHT LANE-

NORTH CAROLINA PROFESSIONAL SEAL 28479 ENGINEER KEVIN G. BAILEY 6-7-13

DRAWN BY : MM	DATE : 1-13	DESIGN ENGINEER OF RECORD: A. PETER	DATE : 5-13
CHECKED BY : AJP	DATE : 4-13		

STV / Ralph Whitehead Associates, Inc.
1000 West Morehead St., Ste. 200
Charlotte, NC 28208
NC License No. F-0991

REVISIONS						SHEET NO.
NO.	BY:	DATE:	NO.	BY:	DATE:	S-308
1			3			TOTAL SHEETS
2			4			836

6/6/2013 4:40:00 PM R:\ustation\Finals\Plan of Span 17-20 Sheet 1of 2.dgn

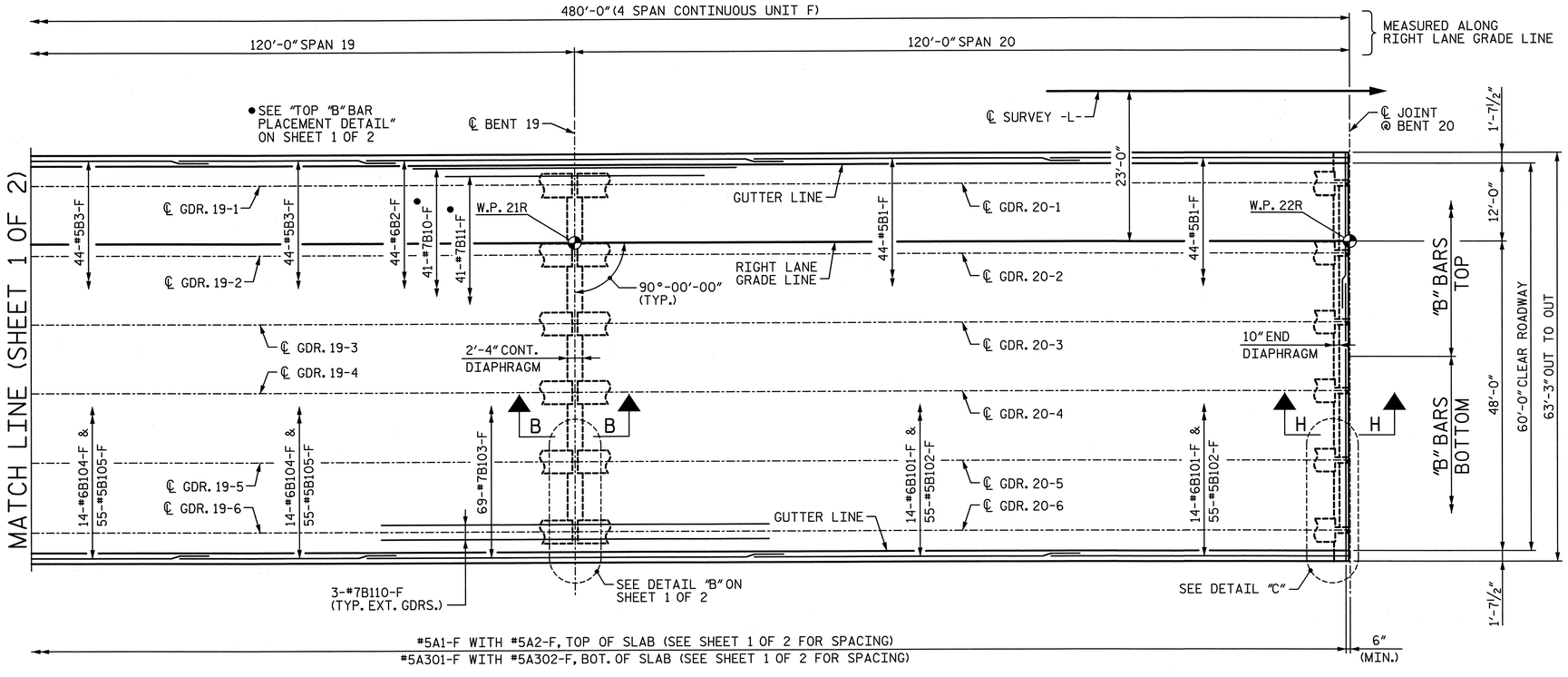

PLAN - UNIT F

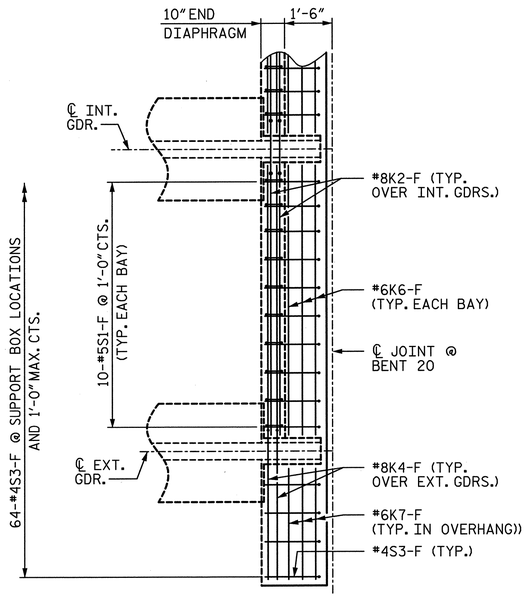

DETAIL "C"

(END DIAPHRAGM AT BENT 20)
(G1 BARS NOT SHOWN FOR CLARITY, SEE CORRESPONDING "TYPICAL SECTION" SHEET FOR PLACEMENT AND LOCATION)

PROJECT NO. U-2524C
GUILFORD COUNTY
STATION: POT 407+85.82 -L-
= POT 29+79.72 -Y4-

SHEET 2 OF 2

STATE OF NORTH CAROLINA
DEPARTMENT OF TRANSPORTATION
RALEIGH

PLAN OF SPANS
UNIT F
SPANS 17-20

-RIGHT LANE-

DRAWN BY : MM	DATE : 1-13	DESIGN ENGINEER OF RECORD: A. PETER	DATE : 5-13
CHECKED BY : AJP	DATE : 4-13		

STV / Ralph Whitehead Associates, Inc.
1000 West Morehead St., Ste. 200
Charlotte, NC 28208
NC License No. F-0991

REVISIONS						SHEET NO.
NO.	BY:	DATE:	NO.	BY:	DATE:	S-309
1			3			TOTAL SHEETS
2			4			836

6/6/2013 4:40:01 PM R:\ustation\Finals\Plan of Span 17-20 Sheet 2 of 2.dgn

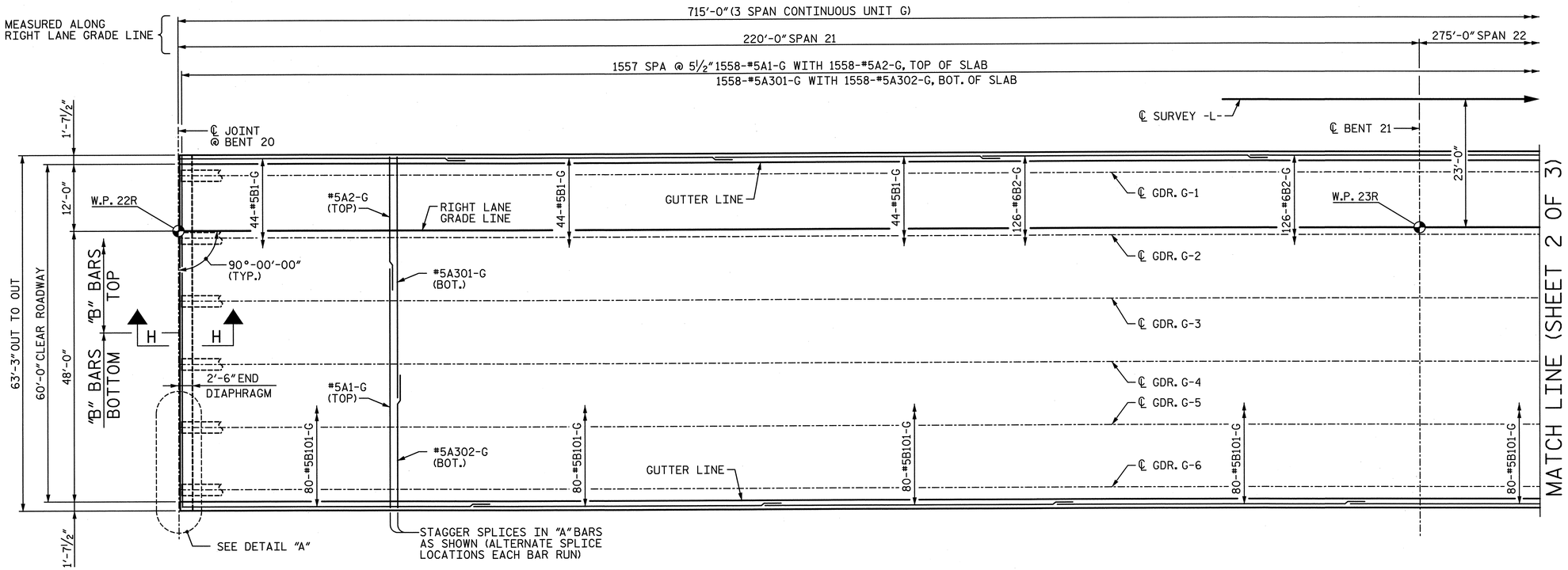

PLAN - UNIT G

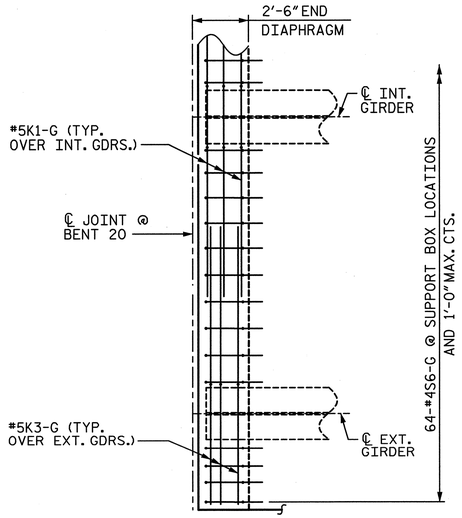

DETAIL "A"

(END DIAPHRAGM AT BENT 20)
(G1 BARS NOT SHOWN FOR CLARITY, SEE CORRESPONDING "TYPICAL SECTION" SHEET FOR PLACEMENT AND LOCATION)

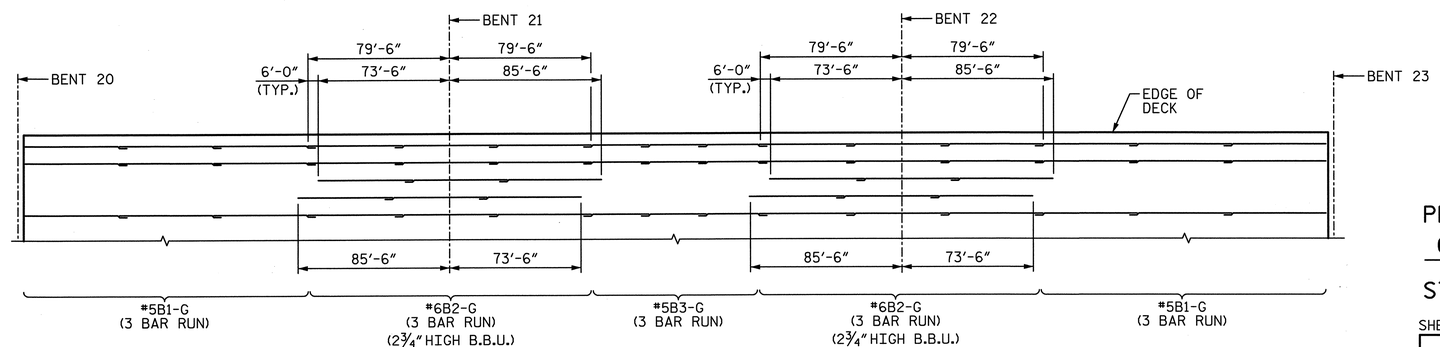

TOP "B" BAR PLACEMENT DETAIL

NOTES:

1. FOR CONCRETE BARRIER RAIL DIMENSIONS, REINFORCEMENT AND JOINT SPACING, SEE "PLAN OF RAILS" SHEETS.
2. FOR POURING SEQUENCE AND TRANSVERSE CONSTRUCTION JOINT IN DECK SLAB, SEE "DECK POUR DIAGRAMS" SHEET.
3. FOR SECTION VIEWS, SEE "SUPERSTRUCTURE DETAILS" SHEETS.
4. FOR DRAINAGE SYSTEM, SEE "STRUCTURE DRAINAGE SYSTEM DETAILS" SHEETS.
5. FOR MINIMUM SPLICE LENGTHS, SEE "SUPERSTRUCTURE BILL OF MATERIAL".
6. FOR "B" BAR SPACING AND LOCATIONS, SEE CORRESPONDING "TYPICAL SECTION" SHEET.

NORTH CAROLINA PROFESSIONAL SEAL 28479 ENGINEER KEVIN G. BAILEY 6-7-13

PROJECT NO. U-2524C
GUILFORD COUNTY
STATION: POT 407+85.82 -L-
= POT 29+79.72 -Y4-
SHEET 1 OF 3

STATE OF NORTH CAROLINA
DEPARTMENT OF TRANSPORTATION
RALEIGH

PLAN OF SPANS
UNIT G
SPANS 21-23

-RIGHT LANE-

REVISIONS						SHEET NO.
NO.	BY:	DATE:	NO.	BY:	DATE:	S-310
1			3			TOTAL SHEETS
2			4			836

STV / Ralph Whitehead Associates, Inc.
1000 West Morehead St., Ste. 200
Charlotte, NC 28208
NC License No. F-0991

DRAWN BY : MM DATE : 1-13
CHECKED BY : AJP DATE : 4-13
DESIGN ENGINEER OF RECORD: A. PETER DATE : 5-13

R:\ustration\Finals\Plan of Span 21-23 Sheet 1of 3.dgn
6/6/2013 4:40:03 PM

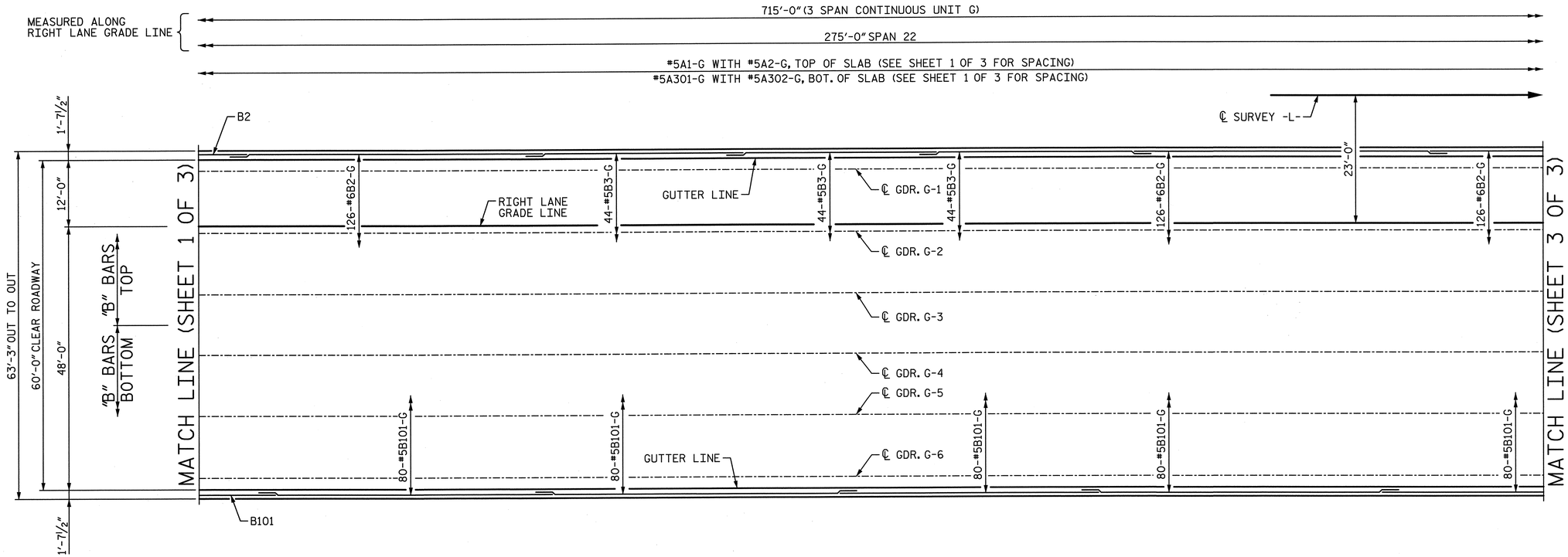

PLAN - UNIT G

PROJECT NO. U-2524C

GUILFORD COUNTY

STATION: POT 407+85.82 -L-
= POT 29+79.72 -Y4-

SHEET 2 OF 3

STATE OF NORTH CAROLINA
DEPARTMENT OF TRANSPORTATION
RALEIGH

PLAN OF SPANS
UNIT G
SPANS 21-23

-RIGHT LANE-

NORTH CAROLINA PROFESSIONAL SEAL 28479 ENGINEER KEVIN G. BAILEY 6-7-13

STV / Ralph Whitehead Associates, Inc.
1000 West Morehead St., Ste. 200
Charlotte, NC 28208
NC License No. F-0991

REVISIONS						SHEET NO.
NO.	BY:	DATE:	NO.	BY:	DATE:	S-311
1			3			TOTAL SHEETS
2			4			836

DRAWN BY : MM DATE : 1-13
CHECKED BY : AJP DATE : 4-13

DESIGN ENGINEER OF RECORD: A. PETER DATE : 5-13

6/6/2013 4:40:04 PM R:\station\Finals\Plan of Span 21-23 Sheet 2 of 3.dgn

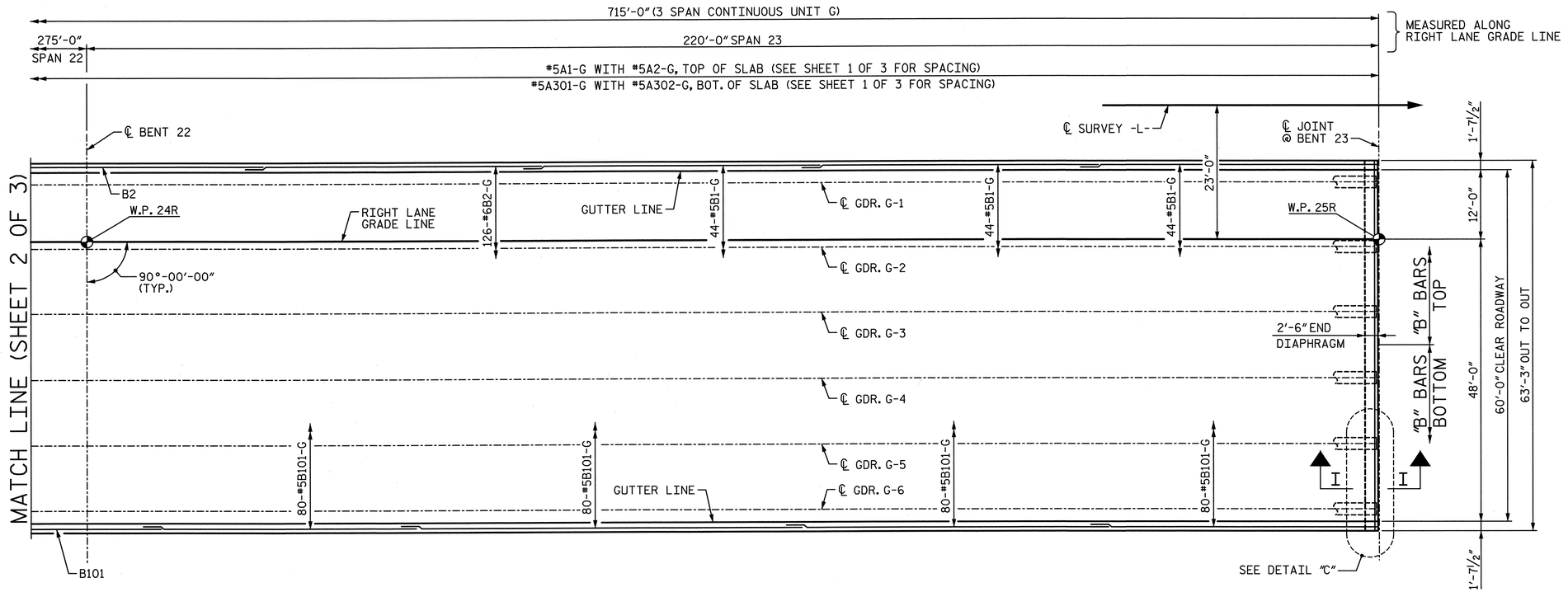

PLAN - UNIT G

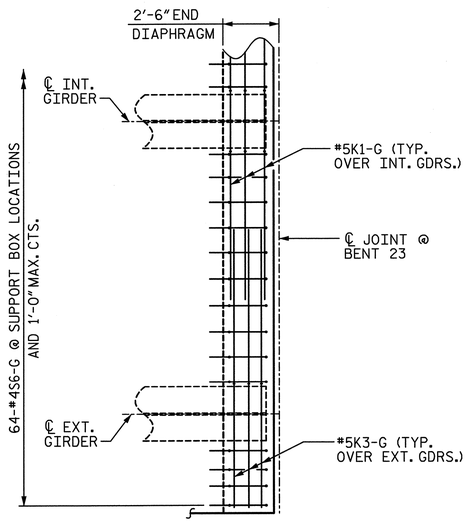

DETAIL "C"

(END DIAPHRAGM AT BENT 23)
(G1 BARS NOT SHOWN FOR CLARITY, SEE CORRESPONDING "TYPICAL SECTION" SHEET FOR PLACEMENT AND LOCATION)

NORTH CAROLINA PROFESSIONAL SEAL 28479 ENGINEER KEVIN G. BAILEY 6-7-13

PROJECT NO. U-2524C
GUILFORD COUNTY
STATION: POT 407+85.82 -L-
= POT 29+79.72 -Y4-
SHEET 3 OF 3

STATE OF NORTH CAROLINA
DEPARTMENT OF TRANSPORTATION
RALEIGH

PLAN OF SPANS
UNIT G
SPANS 21-23

-RIGHT LANE-

DRAWN BY : MM	DATE : 1-13	DESIGN ENGINEER OF RECORD: A. PETER	DATE : 5-13
CHECKED BY : AJP	DATE : 4-13		

STV / Ralph Whitehead Associates, Inc.
1000 West Morehead St., Ste. 200
Charlotte, NC 28208
NC License No. F-0991

REVISIONS						SHEET NO.
NO.	BY:	DATE:	NO.	BY:	DATE:	S-312
1			3			TOTAL SHEETS
2			4			36

6/6/2013 4:40:06 PM R:\ustation\Finals\Plan of Span 21-23 Sheet 3 of 3.dgn

NOTES:

1. FOR CONCRETE BARRIER RAIL DIMENSIONS, REINFORCEMENT AND JOINT SPACING, SEE "PLAN OF RAILS" SHEETS.
2. FOR POURING SEQUENCE AND TRANSVERSE CONSTRUCTION JOINT IN DECK SLAB, SEE "DECK POUR DIAGRAMS" SHEET.
3. FOR SECTION VIEWS, SEE "SUPERSTRUCTURE DETAILS" SHEETS.
4. FOR "B" BAR SPACING AND LOCATION, SEE CORRESPONDING "TYPICAL SECTION" SHEET.
5. FOR DRAINAGE SYSTEM, SEE "STRUCTURE DRAINAGE SYSTEM DETAILS" SHEETS.
6. FOR MINIMUM SPLICE LENGTHS, SEE "SUPERSTRUCTURE BILL OF MATERIAL".
7. ARC OFFSETS ARE NEGLIGIBLE FOR SPAN 24.

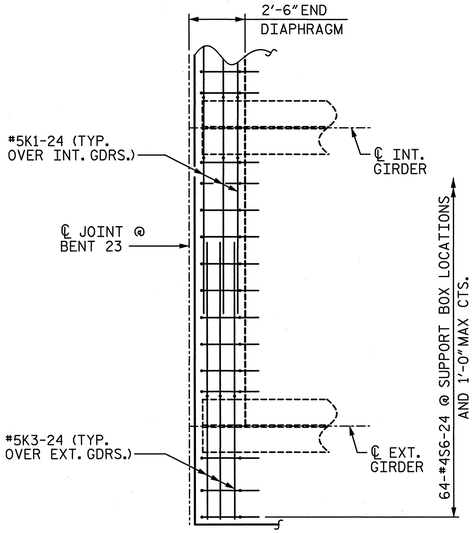

DETAIL "A"
END DIAPHRAGM AT BENT 23

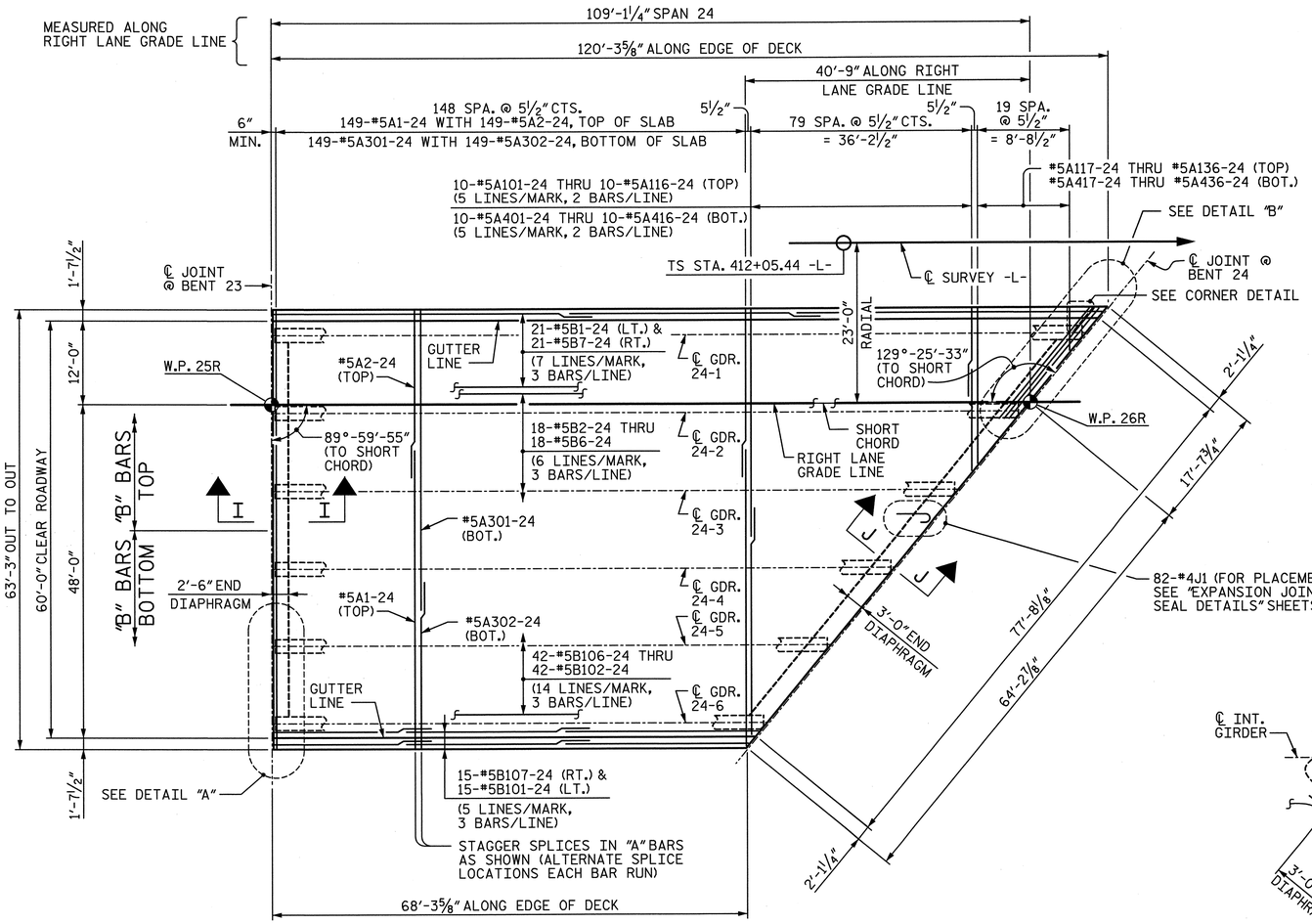

PLAN - SPAN 24

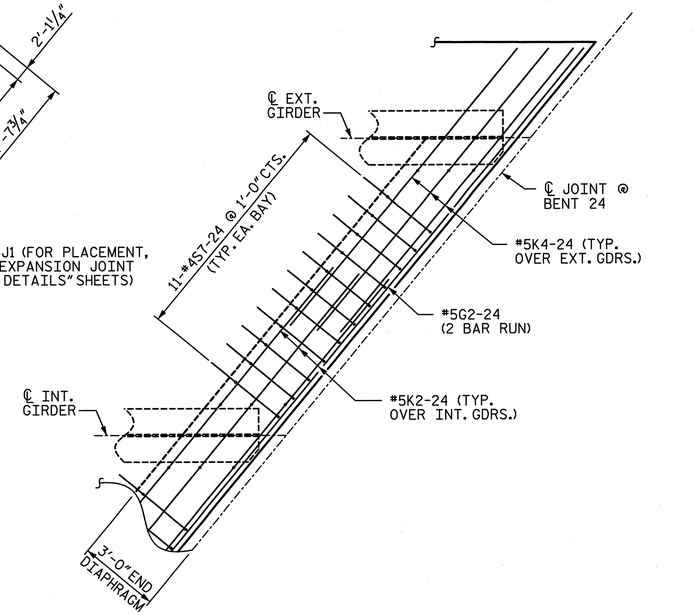

DETAIL "B"
END DIAPHRAGM AT BENT 24

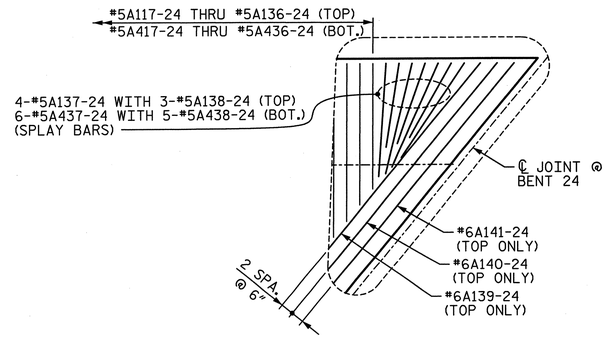

CORNER DETAIL
TOP STEEL SHOWN, BOT. STEEL SIMILAR

PROJECT NO. U-2524C

GUILFORD COUNTY

STATION: POT 407+85.82 -L-
= POT 29+79.72 -Y4-

STATE OF NORTH CAROLINA
DEPARTMENT OF TRANSPORTATION
RALEIGH

PLAN OF SPANS SPAN 24

-RIGHT LANE-

NORTH CAROLINA PROFESSIONAL ENGINEER SEAL 28479 KEVIN G. BAILEY 6-7-13

STV / Ralph Whitehead Associates, Inc.
1000 West Morehead St. Ste. 200
Charlotte, NC 28208
NC License No. F-0991

REVISIONS						SHEET NO.
NO.	BY:	DATE:	NO.	BY:	DATE:	S-313
1			3			TOTAL SHEETS
2			4			836

DRAWN BY : MM/ACA DATE : 1-13
CHECKED BY : AJP DATE : 4-13
DESIGN ENGINEER OF RECORD: A. PETER DATE : 5-13

6/6/2013 7:58:22 PM R:\ustation\Finals\Plan of Span 24 Sheet 1.dgn

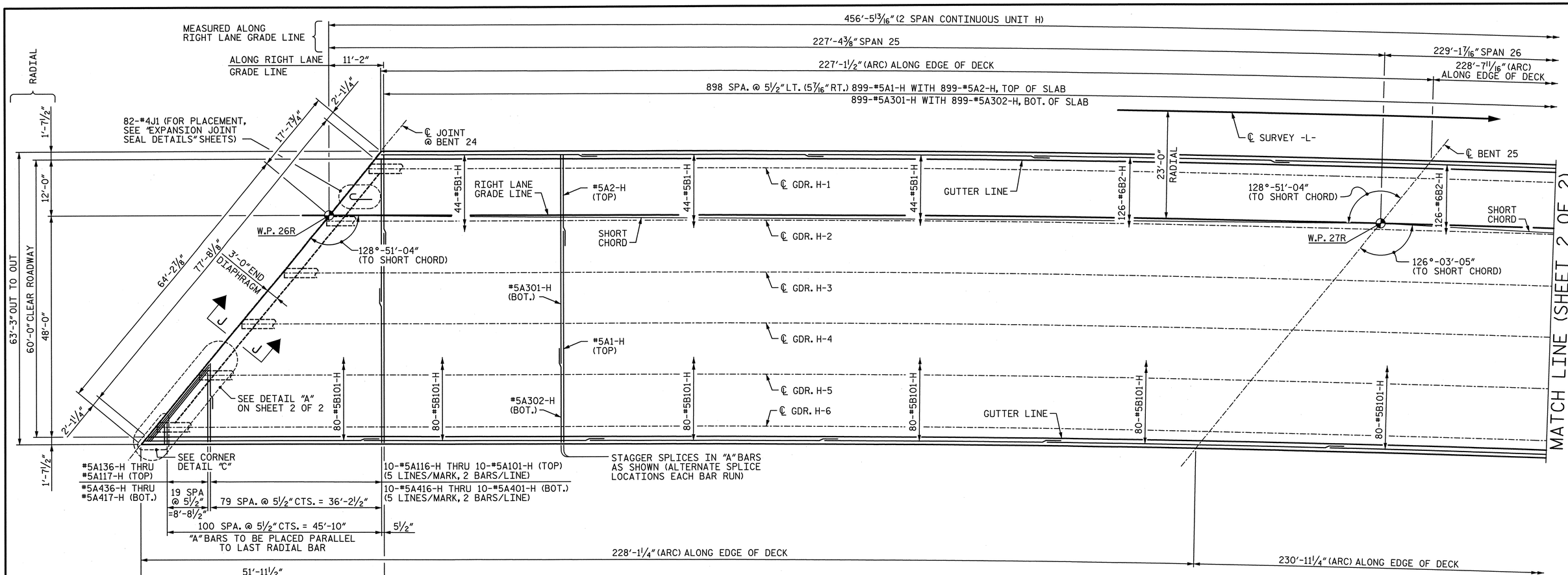

PLAN - UNIT H

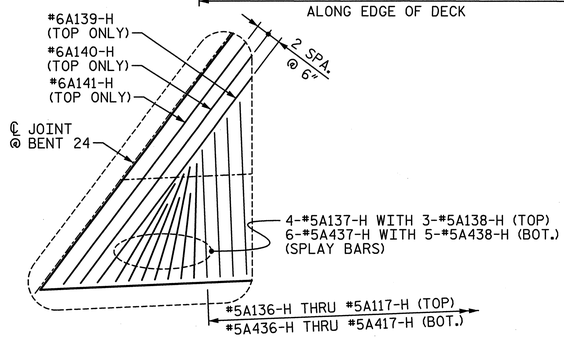

CORNER DETAIL "C"

TOP STEEL SHOWN, BOT. STEEL SIMILAR

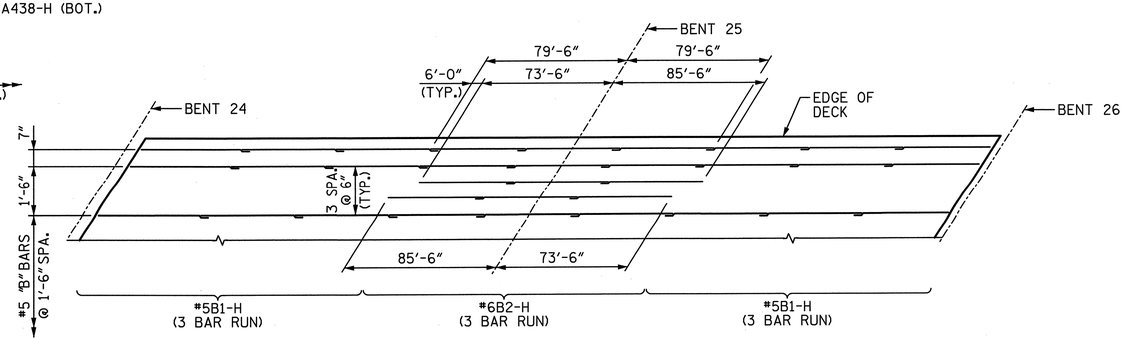

TOP "B" BAR PLACEMENT DETAIL

NOTES:

1. FOR CONCRETE BARRIER RAIL DIMENSIONS, REINFORCEMENT AND JOINT SPACING, SEE "PLAN OF RAILS" SHEETS.
2. FOR POURING SEQUENCE AND TRANSVERSE CONSTRUCTION JOINT IN DECK SLAB, SEE "DECK POUR DIAGRAMS" SHEET.
3. FOR SECTION VIEWS, SEE "SUPERSTRUCTURE DETAILS" SHEETS.
4. FOR "B" BAR SPACING AND LOCATION, SEE CORRESPONDING "TYPICAL SECTION" SHEET.
5. "A" BARS TO BE PLACED RADIALLY, UNLESS NOTED OTHERWISE.
6. FOR DRAINAGE SYSTEM, SEE "STRUCTURE DRAINAGE SYSTEM DETAILS" SHEETS.
7. FOR MINIMUM SPLICE LENGTHS, SEE "SUPERSTRUCTURE BILL OF MATERIAL".

PROJECT NO. U-2524C

GUILFORD COUNTY

STATION: POT 407+85.82 -L-
= POT 29+79.72 -Y4-

SHEET 1 OF 3

STATE OF NORTH CAROLINA
DEPARTMENT OF TRANSPORTATION
RALEIGH

PLAN OF SPANS UNIT H SPAN 25 & 26

-RIGHT LANE-

NORTH CAROLINA PROFESSIONAL SEAL 28479 ENGINEER KEVIN G. BAILEY 6-7-13

STV / Ralph Whitehead Associates, Inc.
1000 West Morehead St., Ste. 200
Charlotte, NC 28208
NC License No. F-0991

REVISIONS						SHEET NO.
NO.	BY:	DATE:	NO.	BY:	DATE:	S-314
1			3			TOTAL SHEETS
2			4			836

DRAWN BY : MM/ACA DATE : 1-13
CHECKED BY : AJP DATE : 4-13
DESIGN ENGINEER OF RECORD: A. PETER DATE : 5-13

6/6/2013 4:40:08 PM R:\ustation\Finals\Plan of Span 25-26 Sheet 1of 3.dgn

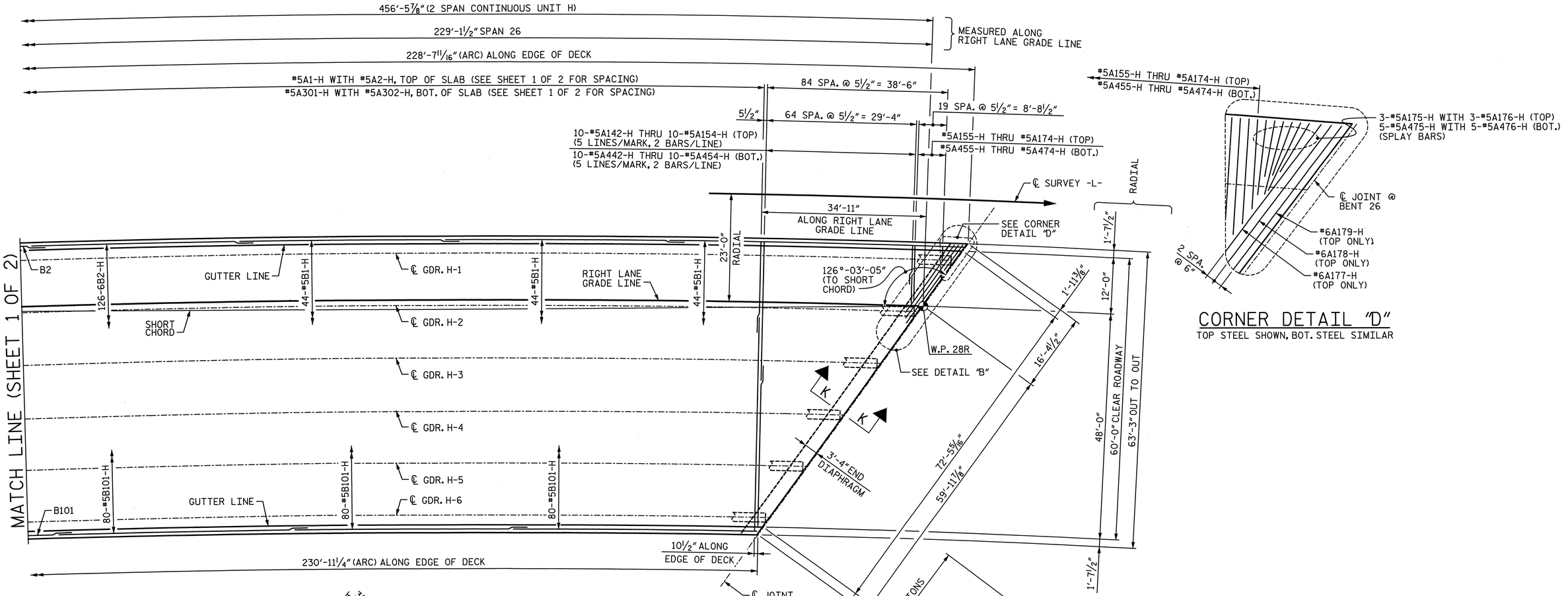

PLAN - UNIT H

CORNER DETAIL "D"

TOP STEEL SHOWN, BOT. STEEL SIMILAR

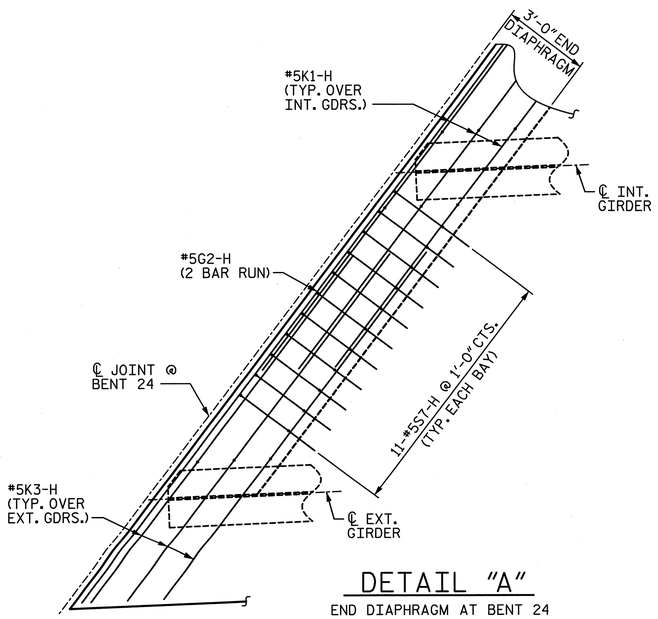

DETAIL "A"

END DIAPHRAGM AT BENT 24

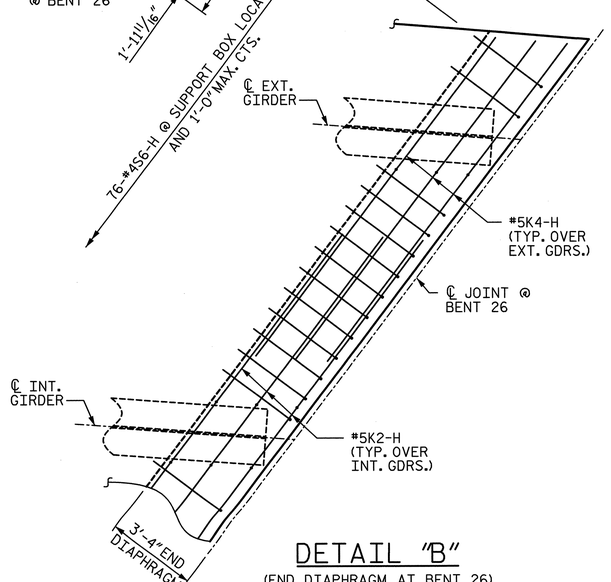

DETAIL "B"

(END DIAPHRAGM AT BENT 26)
(G1 BARS NOT SHOWN FOR CLARITY, SEE CORRESPONDING "TYPICAL SECTION" SHEET FOR PLACEMENT AND LOCATION)

NORTH CAROLINA PROFESSIONAL SEAL 28479 ENGINEER KEVIN G. BAILEY 6-7-13

DRAWN BY : MM/ACA DATE : 1-13
CHECKED BY : AJP DATE : 4-13
DESIGN ENGINEER OF RECORD: A. PETER DATE : 5-13

STV / Ralph Whitehead Associates, Inc.
1000 West Morehead St., Ste. 200
Charlotte, NC 28208
NC License No. F-0991

PROJECT NO. U-2524C
GUILFORD COUNTY
STATION: POT 407+85.82 -L-
= POT 29+79.72 -Y4-
SHEET 2 OF 3

STATE OF NORTH CAROLINA
DEPARTMENT OF TRANSPORTATION
RALEIGH

PLAN OF SPANS
UNIT H
SPANS 25 & 26

-RIGHT LANE-

REVISIONS						SHEET NO.
NO.	BY:	DATE:	NO.	BY:	DATE:	S-315
1			3			TOTAL SHEETS
2			4			836

6/6/2013 4:40:10 PM R:\station\Finals\Plan of Span 25-26 Sheet 2 of 3.dgn

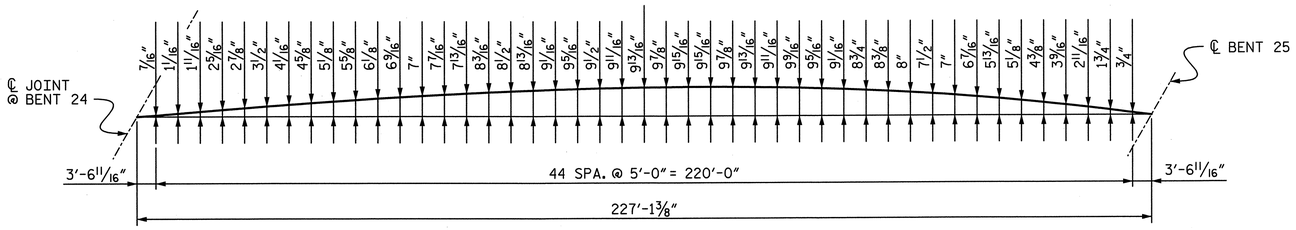

LEFT EDGE OF DECK

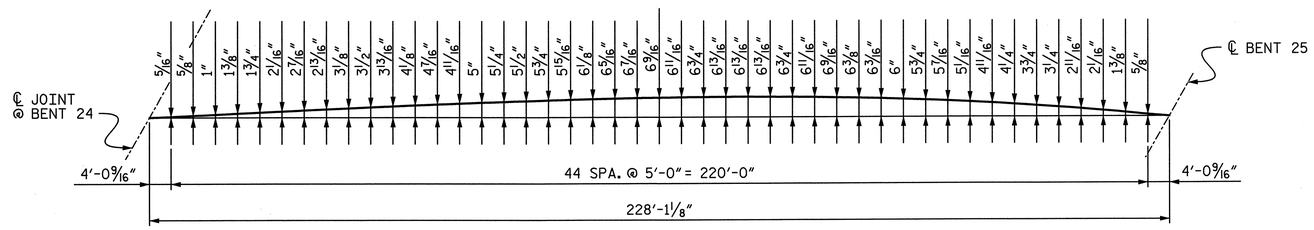

RIGHT EDGE OF DECK

ARC OFFSETS - SPAN 25

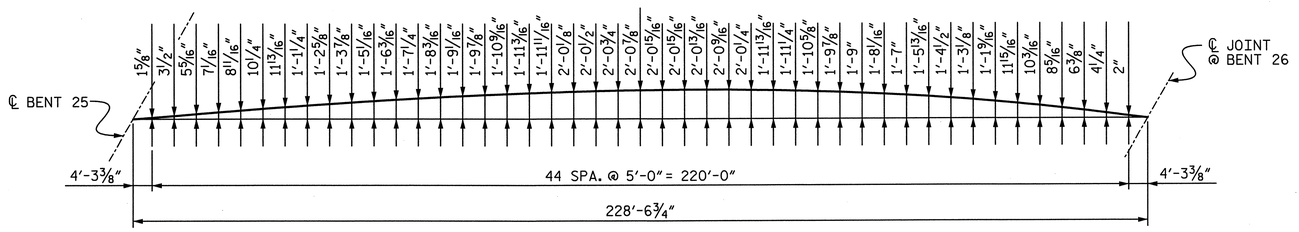

LEFT EDGE OF DECK

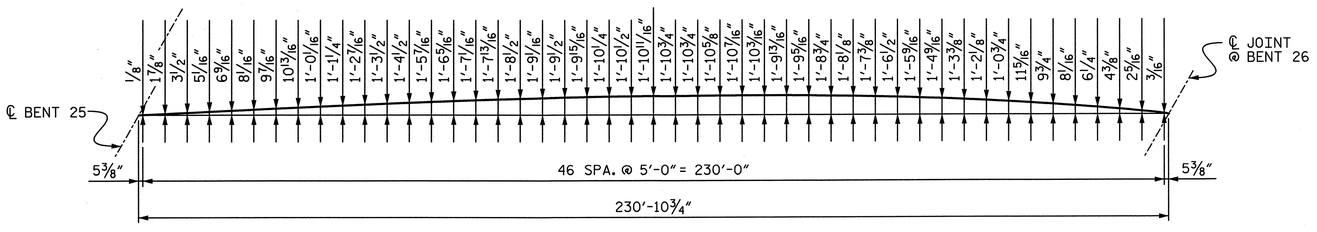

RIGHT EDGE OF DECK

ARC OFFSETS - SPAN 26

PROJECT NO. U-2524C

GUILFORD COUNTY

STATION: POT 407+85.82 -L-
= POT 29+79.72 -Y4-

SHEET 3 OF 3

STATE OF NORTH CAROLINA
DEPARTMENT OF TRANSPORTATION
RALEIGH

PLAN OF SPANS
UNIT H
SPAN 25 & 26

-RIGHT LANE-

NORTH CAROLINA PROFESSIONAL SEAL 28479 ENGINEER KEVIN G. BAILEY
6-7-13

DRAWN BY : ACA	DATE : 1-13	DESIGN ENGINEER OF RECORD: A. PETER	DATE : 5-13
CHECKED BY : AJP	DATE : 4-13		

STV / Ralph Whitehead Associates, Inc.
1000 West Morehead St., Ste. 200
Charlotte, NC 28208
NC License No. F-0991

REVISIONS						SHEET NO.
NO.	BY:	DATE:	NO.	BY:	DATE:	S-316
1			3			TOTAL SHEETS
2			4			836

6/6/2013 4:40:11 PM R:\station\Finals\Plan of Span 25-26 Sheet 3 of 3.dgn

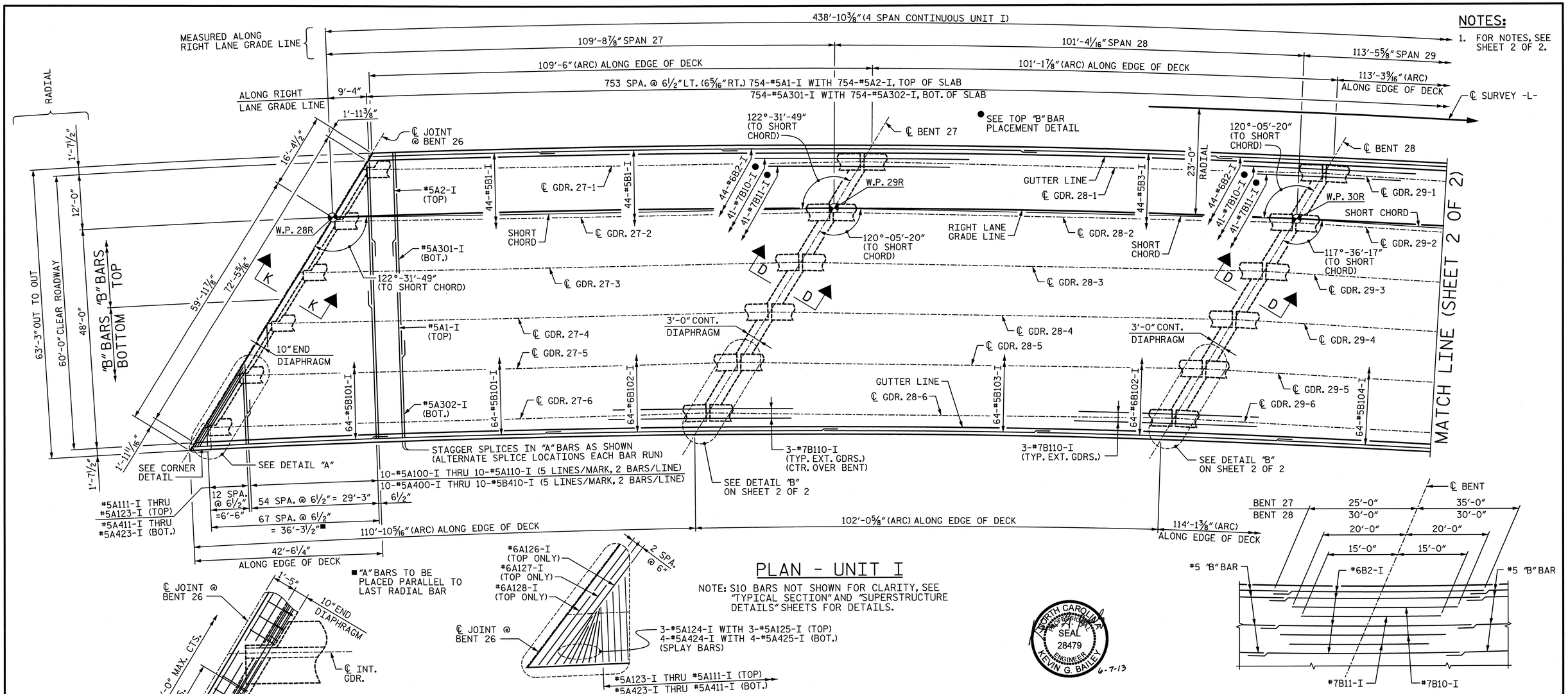

NOTES:

1. FOR NOTES, SEE SHEET 2 OF 2.

■ "A" BARS TO BE PLACED PARALLEL TO LAST RADIAL BAR

PLAN - UNIT I

NOTE: S10 BARS NOT SHOWN FOR CLARITY, SEE "TYPICAL SECTION" AND "SUPERSTRUCTURE DETAILS" SHEETS FOR DETAILS.

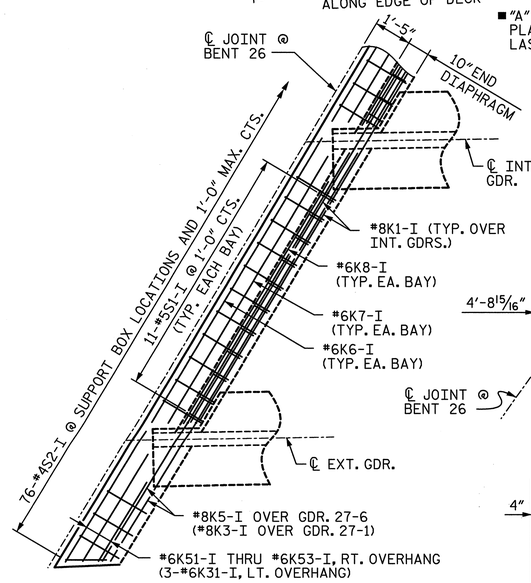

DETAIL "A"

(END DIAPHRAGM AT BENT 26)
(G1 BAR NOT SHOWN FOR CLARITY, SEE CORRESPONDING "TYPICAL SECTION" FOR PLACEMENT AND LOCATION)

CORNER DETAIL

TOP STEEL SHOWN, BOT. STEEL SIMILAR

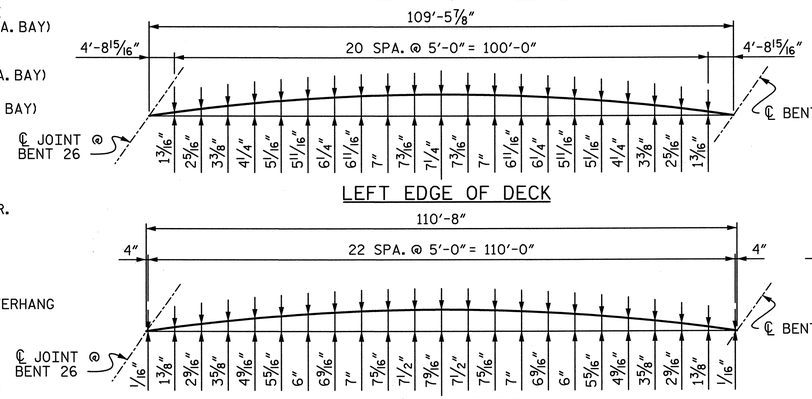

ARC OFFSETS - SPAN 27

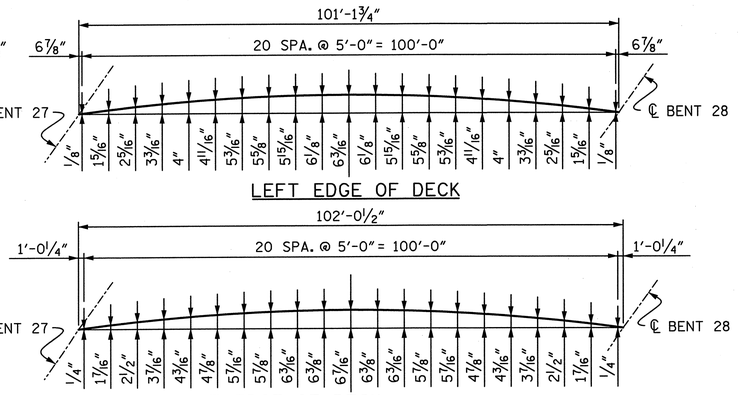

ARC OFFSETS - SPAN 28

TOP "B" BAR PLACEMENT DETAIL

FOR BENT 27 & BENT 28

NORTH CAROLINA PROFESSIONAL SEAL 28479 ENGINEER KEVIN G. BAILEY 6-7-13

PROJECT NO. U-2524C

GUILFORD COUNTY

STATION: POT 407+85.82 -L-
= POT 29+79.72 -Y4-

SHEET 1 OF 2

STATE OF NORTH CAROLINA
DEPARTMENT OF TRANSPORTATION
RALEIGH

PLAN OF SPANS
UNIT I
SPANS 27-30

-RIGHT LANE-

DRAWN BY : MM	DATE : 1-13	DESIGN ENGINEER OF RECORD: A. PETER	DATE : 5-13
CHECKED BY : AJP	DATE : 4-13		

STV / Ralph Whitehead Associates, Inc.
1000 West Morehead St., Ste. 200
Charlotte, NC 28208
NC License No. F-0991

REVISIONS						SHEET NO.
NO.	BY:	DATE:	NO.	BY:	DATE:	S-317
1			3			TOTAL SHEETS
2			4			836

6/7/2013 10:54:14 AM R:\station\Finals\Plan of Span 27-30 Sheet 1of 2.dgn

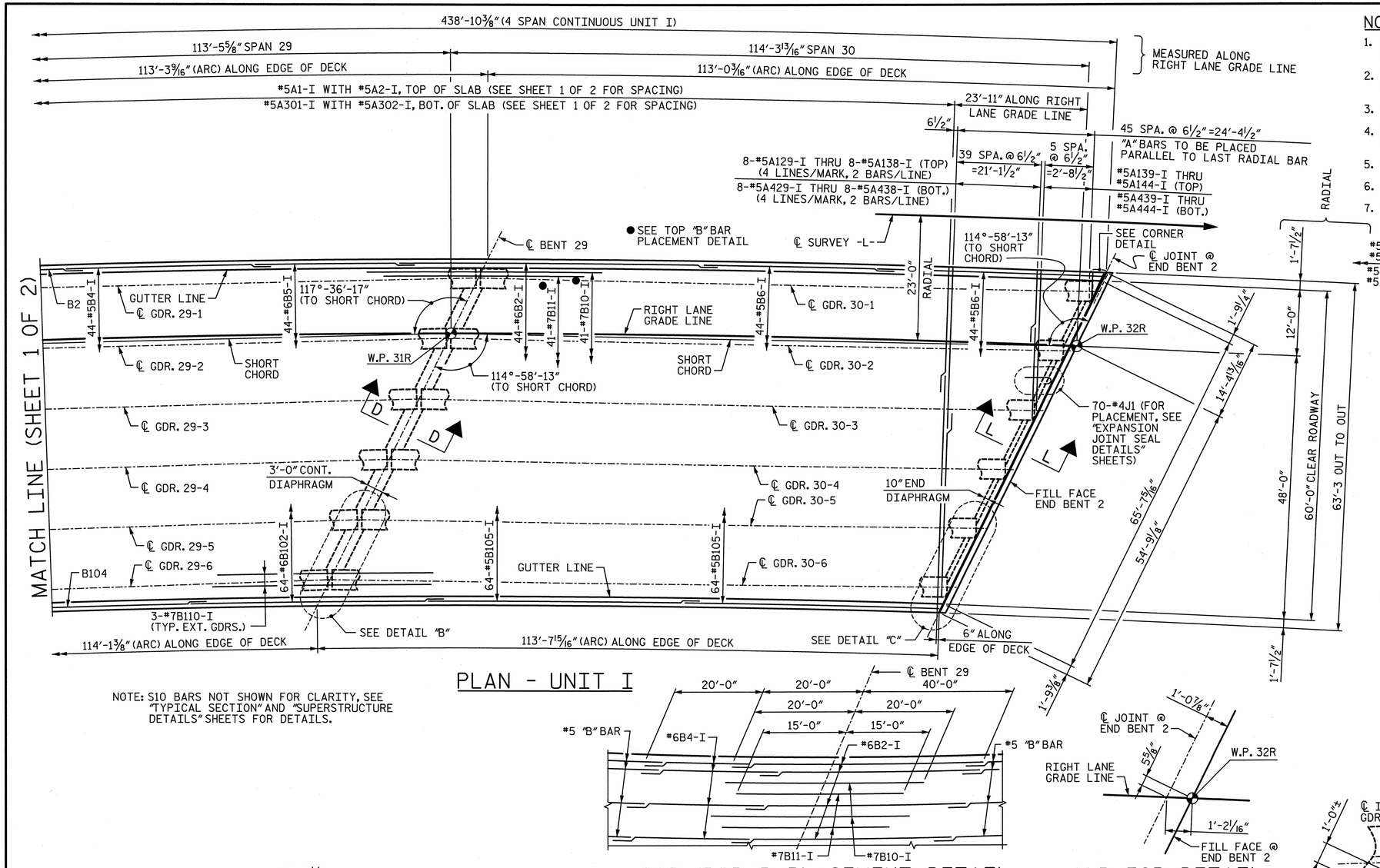

NOTES:

1. FOR CONCRETE BARRIER RAIL DIMENSIONS, REINFORCEMENT AND JOINT SPACING, SEE "PLAN OF RAILS" SHEETS.
2. FOR POURING SEQUENCE AND TRANSVERSE CONSTRUCTION JOINT IN DECK SLAB, SEE "DECK POUR DIAGRAMS" SHEET.
3. FOR SECTION VIEWS, SEE "SUPERSTRUCTURE DETAILS" SHEETS.
4. FOR "B" BAR SPACING AND LOCATION, SEE CORRESPONDING "TYPICAL SECTION" SHEET.
5. "A" BARS TO BE PLACED RADIALLY, UNLESS NOTED OTHERWISE.
6. FOR DRAINAGE SYSTEM, SEE "STRUCTURE DRAINAGE SYSTEM DETAILS" SHEETS.
7. FOR MINIMUM SPLICE LENGTHS, SEE "SUPERSTRUCTURE BILL OF MATERIAL".

PLAN - UNIT I

NOTE: S10 BARS NOT SHOWN FOR CLARITY, SEE "TYPICAL SECTION" AND "SUPERSTRUCTURE DETAILS" SHEETS FOR DETAILS.

CORNER DETAIL

TOP STEEL SHOWN, BOTTOM STEEL SIMILAR

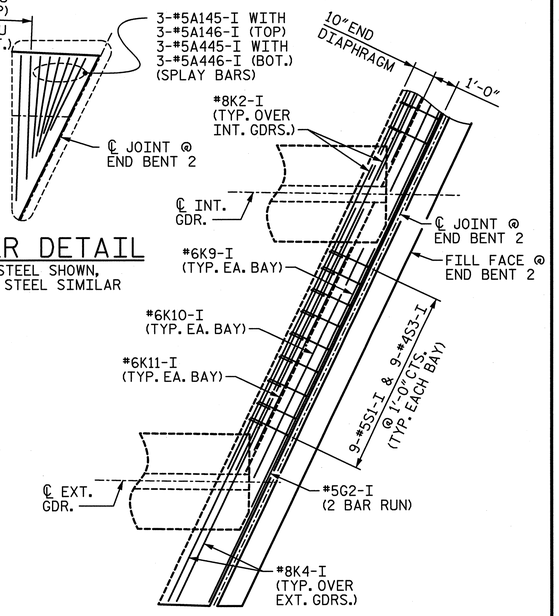

DETAIL "C"

END DIAPHRAGM AT END BENT 2

TOP "B" BAR PLACEMENT DETAIL

FOR BENT 29

W.P. 32R DETAIL

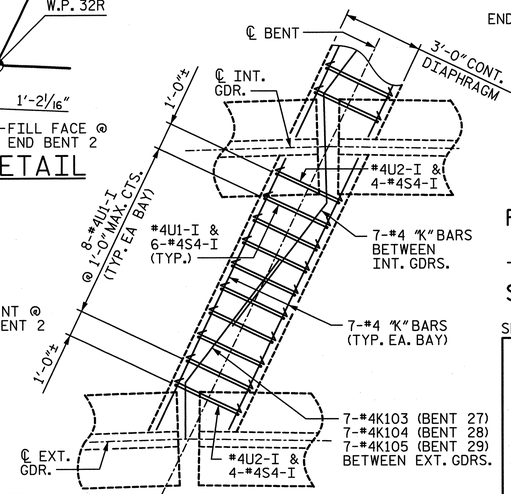

DETAIL "B"

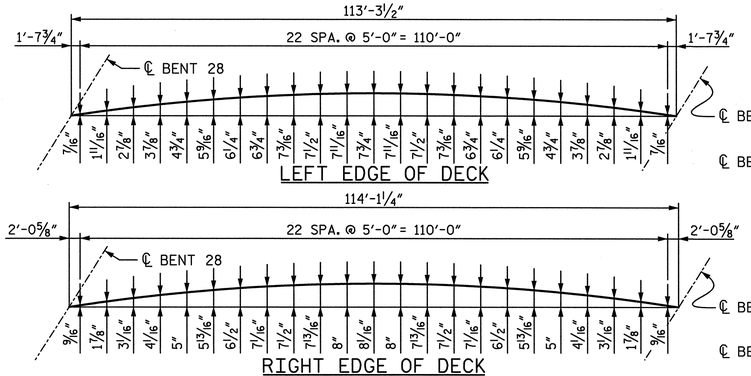

ARC OFFSETS - SPAN 29

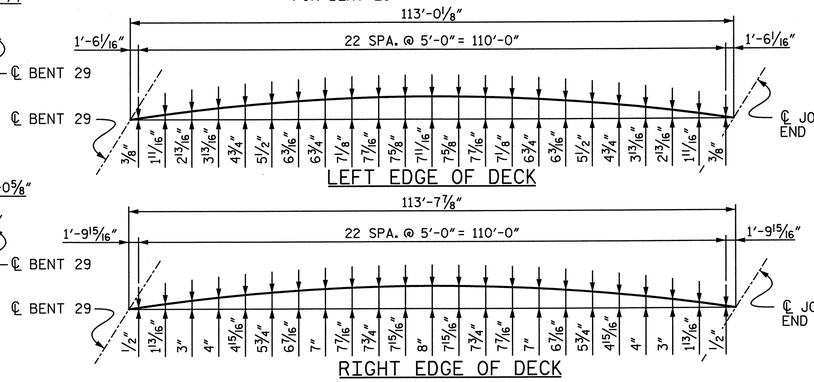

ARC OFFSETS - SPAN 30

PROJECT NO. U-2524C

GUILFORD COUNTY

STATION: POT 407+85.82 -L-
= POT 29+79.72 -Y4-

SHEET 2 OF 2

STATE OF NORTH CAROLINA
DEPARTMENT OF TRANSPORTATION
RALEIGH

PLAN OF SPANS
UNIT I
SPANS 27-30

-RIGHT LANE-

NORTH CAROLINA PROFESSIONAL SEAL 28479 ENGINEER KEVIN G. BAILEY 6-7-13

DRAWN BY : MM	DATE : 1-13	DESIGN ENGINEER OF RECORD: A. PETER	DATE : 5-13
CHECKED BY : AJP	DATE : 4-13		

STV / Ralph Whitehead Associates, Inc.
1000 West Morehead St., Ste. 200
Charlotte, NC 28208
NC License No. F-0991

REVISIONS						SHEET NO.
NO.	BY:	DATE:	NO.	BY:	DATE:	S-318
1			3			TOTAL SHEETS
2			4			836

6/7/2013 10:54:16 AM R:\ustation\Finals\Plan of Span 27-30 Sheet 2 of 2.dgn

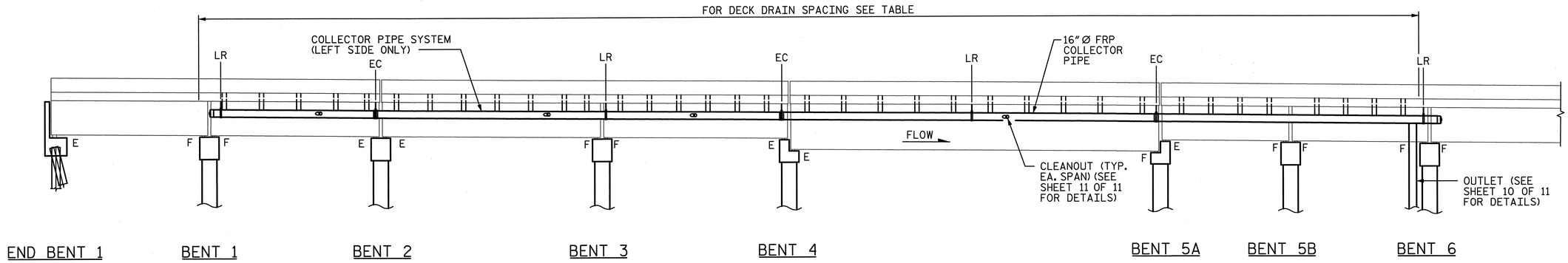

ELEVATION

EC = EXPANSION COUPLER (SEE SHEET 11 OF 11 FOR DETAILS)
LR = LONGITUDINAL RESTRAINT (SEE SHEET 7 OF 11 FOR DETAILS)

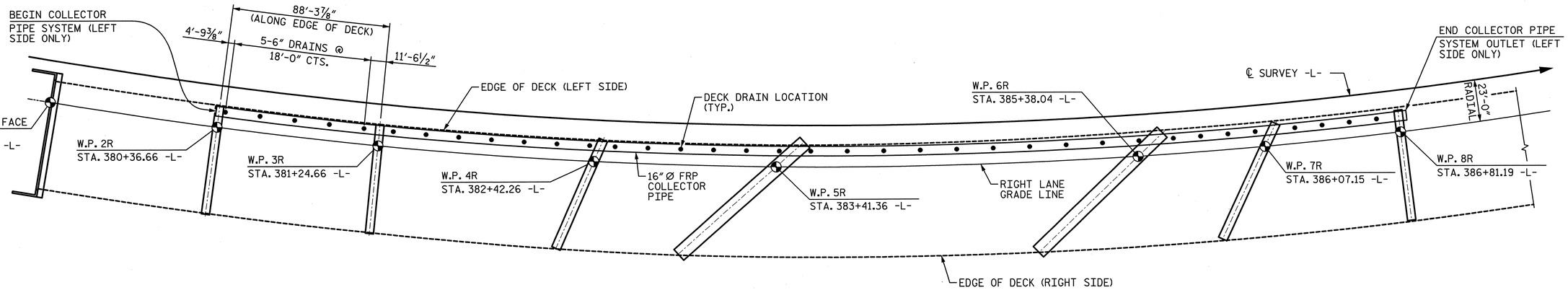

PLAN

(GIRDERS NOT SHOWN FOR CLARITY)

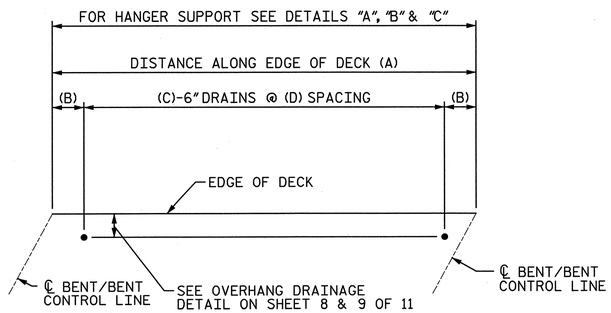

DRAIN LAYOUT DETAIL

(SEE SHEET 7 OF 11 FOR DETAILS)

DECK DRAIN SPACING TABLE				
SPAN	A (FT.)	B (FT.)	C	D (FT.)
2	SEE PLAN			
3	123.17	7.59	7	18.00
4	109.30	9.65	6	18.00
5	198.57	9.29	10	20.00
6A	61.10	8.05	4	15.00
6B	66.48	9.24	4	16.00

NOTES:

1. FOR COLLECTOR PIPE SUPPORTS, SEE SHEET 7 & 8 OF 11.
2. FOR ADDITIONAL NOTES, SEE SHEET 11 OF 11.

NORTH CAROLINA PROFESSIONAL SEAL 28479 ENGINEER KEVIN G. BAILEY 6-7-13

PROJECT NO. U-2524C
GUILFORD COUNTY
STATION: POT 407+85.82 -L-
= POT 29+79.72 -Y4-
SHEET 1 OF 11

STATE OF NORTH CAROLINA
DEPARTMENT OF TRANSPORTATION
RALEIGH

STRUCTURE DRAINAGE SYSTEM DETAILS

-RIGHT LANE-

DRAWN BY : CLG	DATE : 3-13	DESIGN ENGINEER OF RECORD: K. BAILEY	DATE : 5-13
CHECKED BY : TRL	DATE : 4-13		

STV / Ralph Whitehead Associates, Inc.
1000 West Morehead St. Ste. 200
Charlotte, NC 28208
NC License No. F-0991

REVISIONS						SHEET NO.
NO.	BY:	DATE:	NO.	BY:	DATE:	S-319
1			3			TOTAL SHEETS
2			4			836

6/6/2013 4:40:16 PM R:\ustation\Finals\Closed Drainage System Sheet 1 of 11.dgn

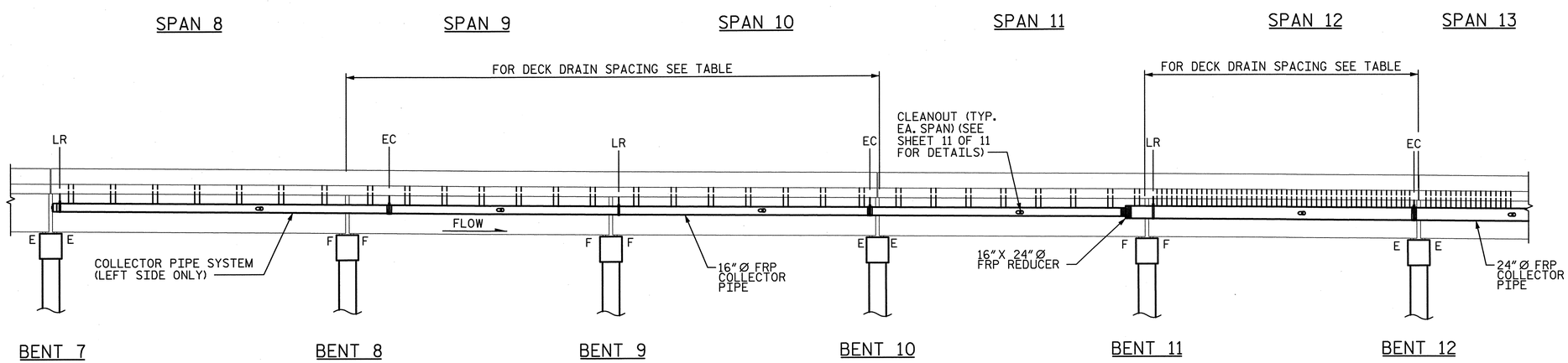

ELEVATION

EC = EXPANSION COUPLER (SEE SHEET 11 OF 11 FOR DETAILS)
LR = LONGITUDINAL RESTRAINT (SEE SHEET 7 OF 11 FOR DETAILS)

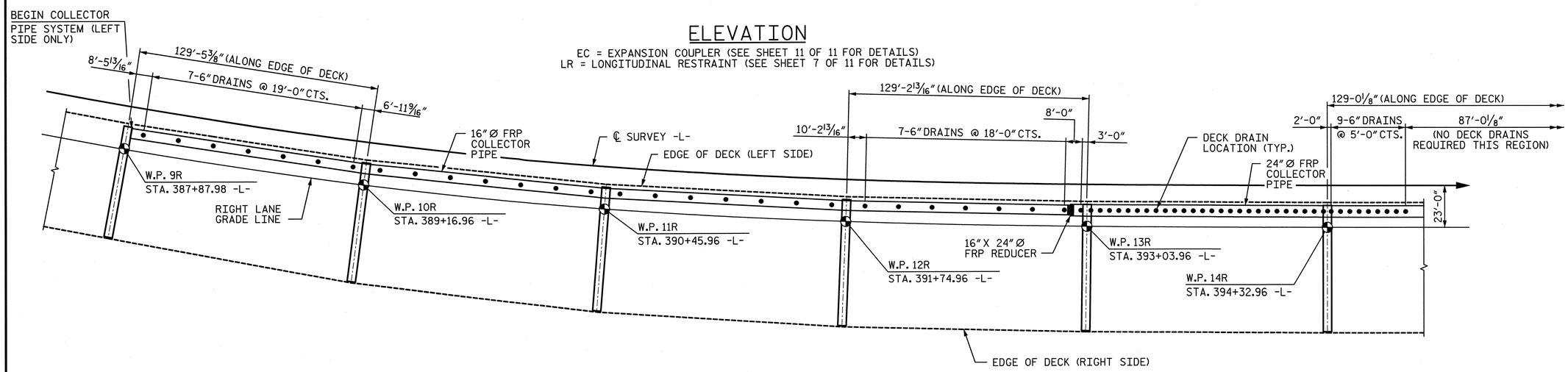

PLAN

(GIRDERS NOT SHOWN FOR CLARITY)

DECK DRAIN SPACING TABLE				
SPAN	A (FT.)	B (FT.)	C	D (FT.)
8	SEE PLAN			
9	129.46	7.73	7	19.00
10	129.36	7.68	7	19.00
11	SEE PLAN			
12	129.11	2.06	26	5.00
13	SEE PLAN			

NOTES:

1. FOR COLLECTOR PIPE SUPPORTS, SEE SHEET 7 & 8 OF 11.
2. FOR ADDITIONAL NOTES, SEE SHEET 11 OF 11.
3. FOR DRAIN LAYOUT DETAIL, SEE SHEET 1 OF 11.

NORTH CAROLINA PROFESSIONAL ENGINEER SEAL 28479 KEVIN G. BAILEY 6-7-13

PROJECT NO. U-2524C
GUILFORD COUNTY
STATION: POT 407+85.82 -L-
= POT 29+79.72 -Y4-
SHEET 2 OF 11

STATE OF NORTH CAROLINA
DEPARTMENT OF TRANSPORTATION
RALEIGH

STRUCTURE DRAINAGE SYSTEM DETAILS

-RIGHT LANE-

REVISIONS						SHEET NO.
NO.	BY:	DATE:	NO.	BY:	DATE:	S-320
1			3			TOTAL SHEETS
2			4			836

DRAWN BY : CLG DATE : 3-13
CHECKED BY : TRL DATE : 4-13
DESIGN ENGINEER OF RECORD: K. BAILEY DATE : 5-13

STV / Ralph Whitehead Associates, Inc.
1000 West Morehead St., Ste. 200
Charlotte, NC 28208
NC License No. F-0991

6/6/2013 4:40:18 PM R:\ustation\Finals\Closed Drainage System Sheet 2 of 11.dgn

SPAN 13 SPAN 14 SPAN 15

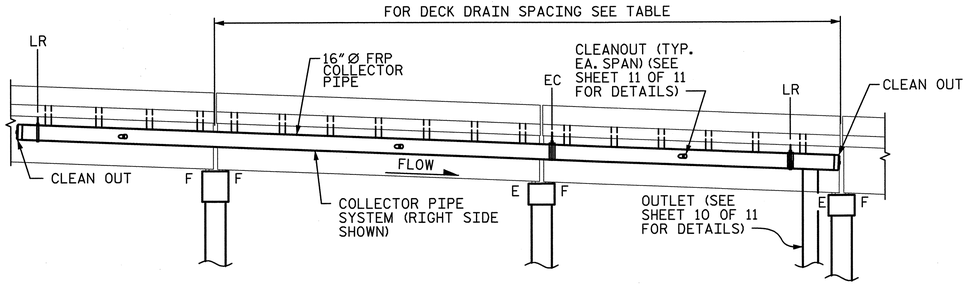

BENT 13 BENT 14 BENT 15

ELEVATION

EC = EXPANSION COUPLER (SEE SHEET 11 OF 11 FOR DETAILS)
LR = LONGITUDINAL RESTRAINT (SEE SHEET 7 OF 11 FOR DETAILS)
(RIGHT SIDE SHOWN, LEFT SIDE SIMILAR. SEE PLAN VIEW AND NOTES FOR ADDITIONAL LEFT SIDE DETAILS)

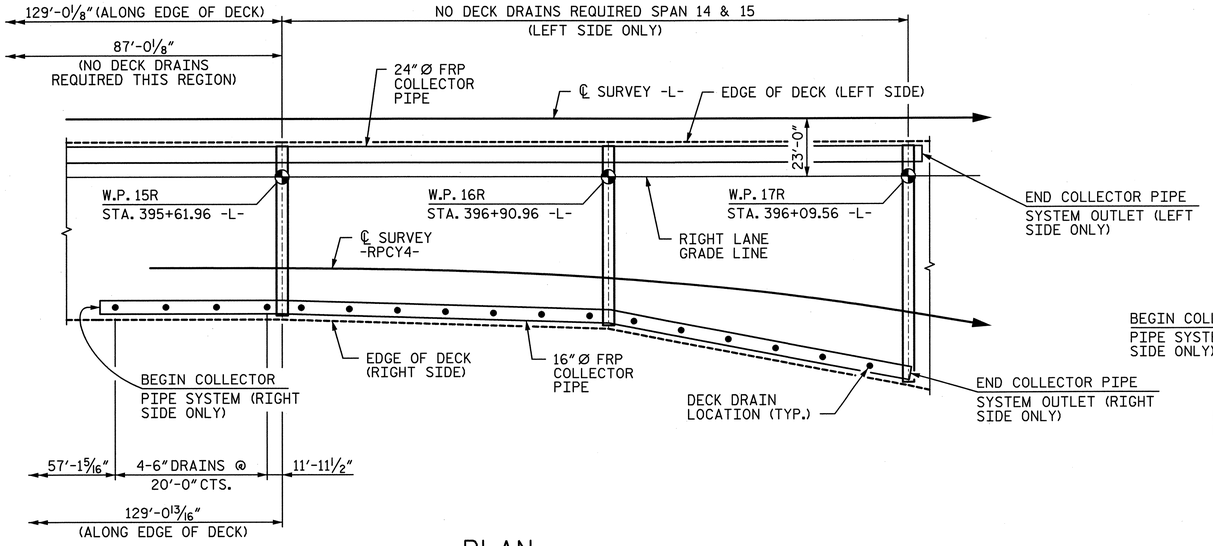

PLAN

(GIRDERS NOT SHOWN FOR CLARITY)

DECK DRAIN SPACING TABLE				
SPAN	A (FT.)	B (FT.)	C	D (FT.)
13	SEE PLAN			
14	129.05	7.53	7	19.00
15	120.81	10.40	6	20.00
16	SEE PLAN			

SPAN 16 RAMP "C" SPAN 1

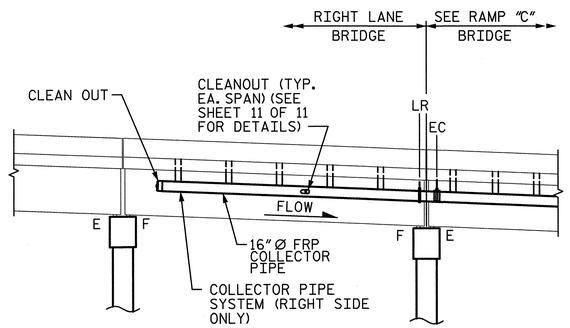

BENT 15 BENT 1
RAMP "C" BRIDGE

ELEVATION

EC = EXPANSION COUPLER (SEE SHEET 11 OF 11 FOR DETAILS)
LR = LONGITUDINAL RESTRAINT (SEE SHEET 7 OF 11 FOR DETAILS)

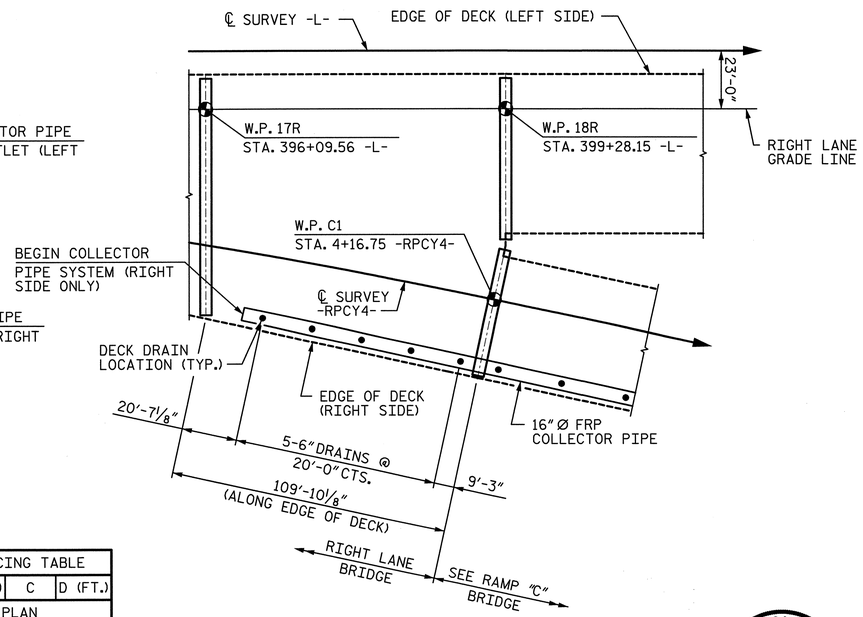

PLAN

(GIRDERS NOT SHOWN FOR CLARITY)

NOTES:

1. FOR COLLECTOR PIPE SUPPORTS, SEE SHEET 7 & 8 OF 11.
2. FOR DRAIN LAYOUT DETAIL, SEE SHEET 1 OF 11.
3. AFTER LAST DECK DRAIN ON LEFT SIDE COLLECTOR PIPE SYSTEM, MAINTAIN 15'-0" MAX. PIPE STANDOFF SPACING. ALTERNATE BETWEEN PIPE STANDOFF (TYPE 1) AND PIPE STANDOFF (TYPE 2).
4. FOR ADDITIONAL NOTES, SEE SHEET 11 OF 11.

NORTH CAROLINA PROFESSIONAL ENGINEER SEAL 28479 KEVIN G. BAILEY 6-7-13

PROJECT NO. U-2524C
GUILFORD COUNTY
STATION: POT 407+85.82 -L-
= POT 29+79.72 -Y4-
SHEET 3 OF 11

STATE OF NORTH CAROLINA
DEPARTMENT OF TRANSPORTATION
RALEIGH

STRUCTURE DRAINAGE SYSTEM DETAILS

-RIGHT LANE-

REVISIONS						SHEET NO.
NO.	BY:	DATE:	NO.	BY:	DATE:	S-321
1			3			TOTAL SHEETS
2			4			36

STV / Ralph Whitehead Associates, Inc.
1000 West Morehead St., Ste. 200
Charlotte, NC 28208
NC License No. F-0991

DRAWN BY : CLG DATE : 3-13
CHECKED BY : TRL DATE : 4-13
DESIGN ENGINEER OF RECORD: K. BAILEY DATE : 5-13

6/6/2013 4:40:19 PM R:\ustation\Finals\Closed Drainage System Sheet 3 of 11.dgn

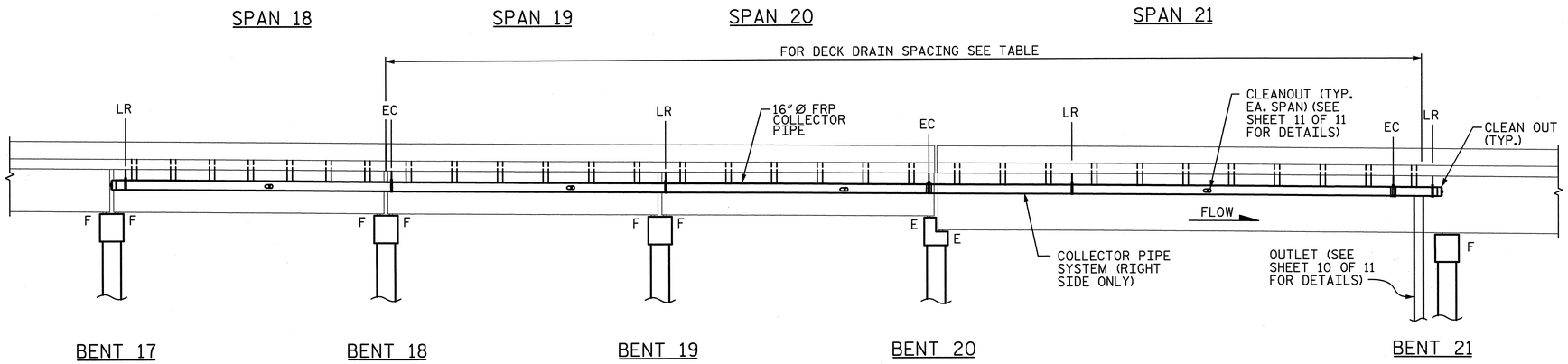

ELEVATION

EC = EXPANSION COUPLER (SEE SHEET 11 OF 11 FOR DETAILS)
LR = LONGITUDINAL RESTRAINT (SEE SHEET 7 OF 11 FOR DETAILS)

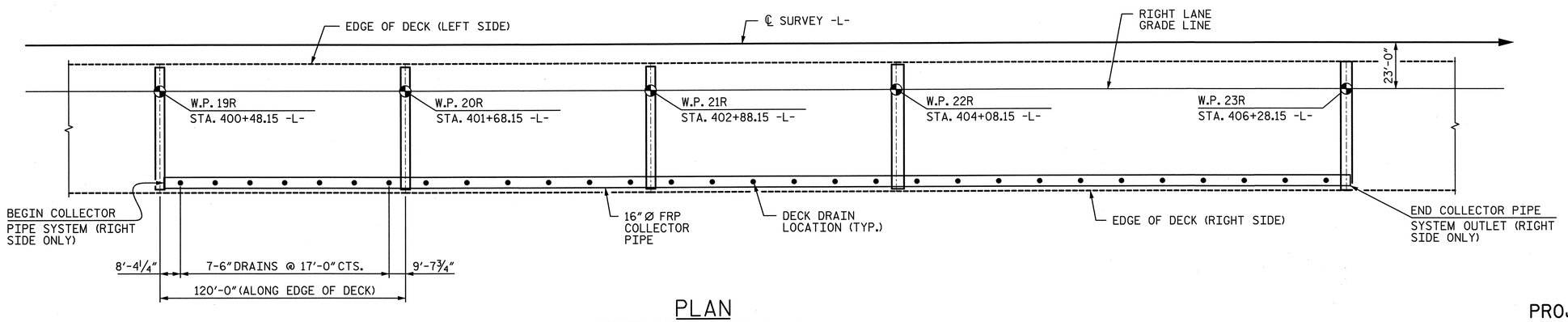

PLAN

(GIRDERS NOT SHOWN FOR CLARITY)

DECK DRAIN SPACING TABLE				
SPAN	A (FT.)	B (FT.)	C	D (FT.)
18	SEE PLAN			
19	120.00	10.00	6	20.00
20	120.00	10.00	6	20.00
21	220.00	10.00	11	20.00

NOTES:

1. FOR COLLECTOR PIPE SUPPORTS, SEE SHEET 7 & 8 OF 11.
2. FOR ADDITIONAL NOTES, SEE SHEET 11 OF 11.
3. FOR DRAIN LAYOUT DETAIL, SEE SHEET 1 OF 11.

NORTH CAROLINA PROFESSIONAL SEAL 28479 ENGINEER KEVIN G. BAILEY 6-7-13

PROJECT NO. U-2524C
GUILFORD COUNTY
STATION: POT 407+85.82 -L-
= POT 29+79.72 -Y4-
SHEET 4 OF 11

STATE OF NORTH CAROLINA
DEPARTMENT OF TRANSPORTATION
RALEIGH

STRUCTURE DRAINAGE SYSTEM DETAILS

-RIGHT LANE-

DRAWN BY : CLG DATE : 3-13
CHECKED BY : TRL DATE : 4-13
DESIGN ENGINEER OF RECORD: K. BAILEY DATE : 5-13

STV / Ralph Whitehead Associates, Inc.
1000 West Morehead St., Ste. 200
Charlotte, NC 28208
NC License No. F-0991

REVISIONS					
NO.	BY:	DATE:	NO.	BY:	DATE:
1			3		
2			4		

SHEET NO. S-322
TOTAL SHEETS 836

6/6/2013 4:40:20 PM R:\ustation\Finals\Closed Drainage System Sheet 4 of 11.dgn

NOTES:

1. FOR DRAIN LAYOUT DETAIL, SEE SHEET 1 OF 11.
2. FOR ADDITIONAL NOTES, SEE SHEET 11 OF 11.
3. FOR OPEN DRAIN DETAILS, SEE SHEET 9 OF 11.

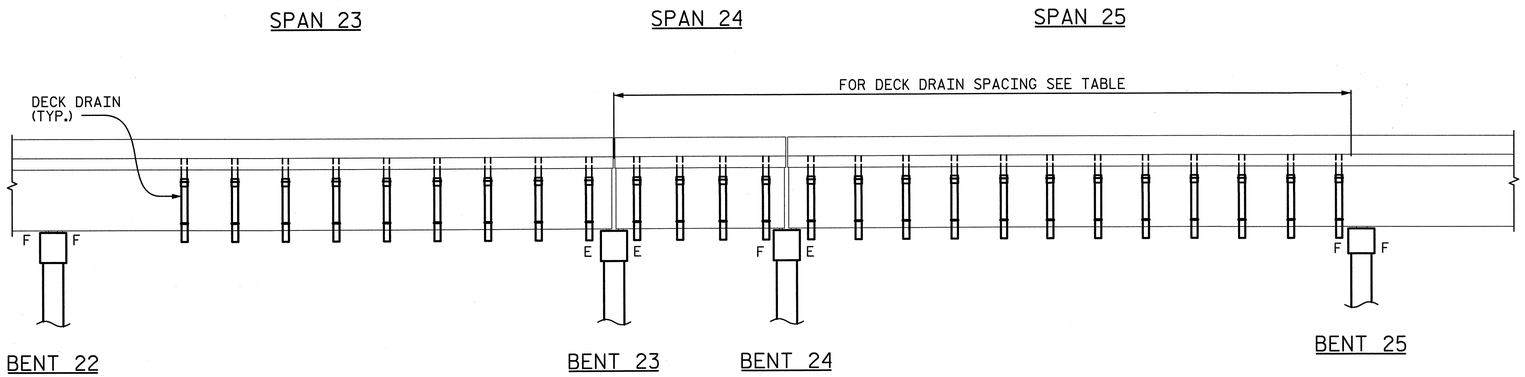

ELEVATION

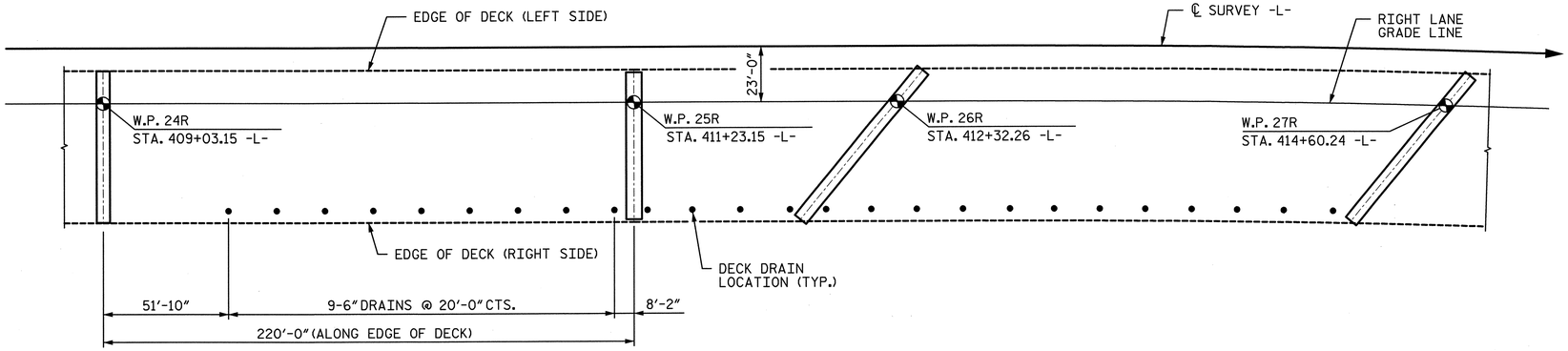

PLAN

(GIRDERS NOT SHOWN FOR CLARITY)

DECK DRAIN SPACING TABLE				
SPAN	A (FT.)	B (FT.)	C	D (FT.)
23	SEE PLAN			
24	68.30	7.15	4	18.00
25	228.10	9.55	12	19.00

NORTH CAROLINA PROFESSIONAL SEAL 28479 ENGINEER KEVIN G. BAILEY 6-7-13

PROJECT NO. U-2524C

GUILFORD COUNTY

STATION: POT 407+85.82 -L-
= POT 29+79.72 -Y4-

SHEET 5 OF 11

STATE OF NORTH CAROLINA
DEPARTMENT OF TRANSPORTATION
RALEIGH

STRUCTURE DRAINAGE SYSTEM DETAILS

-RIGHT LANE-

REVISIONS						SHEET NO.
NO.	BY:	DATE:	NO.	BY:	DATE:	S-323
1			3			TOTAL SHEETS
2			4			836

DRAWN BY : CLG DATE : 3-13
CHECKED BY : TRL DATE : 4-13

DESIGN ENGINEER OF RECORD: K. BAILEY DATE : 5-13

STV/ Ralph Whitehead Associates, Inc.
1000 West Morehead St., Ste. 200
Charlotte, NC 28208
NC License No. F-0991

6/6/2013 4:40:22 PM R:\station\Finals\Closed Drainage System Sheet 5 of 11.dgn

NOTES:

1. FOR DRAIN LAYOUT DETAIL, SEE SHEET 1 OF 11.
2. FOR ADDITIONAL NOTES, SEE SHEET 11 OF 11.
3. FOR OPEN DRAIN DETAILS, SEE SHEET 9 OF 11.

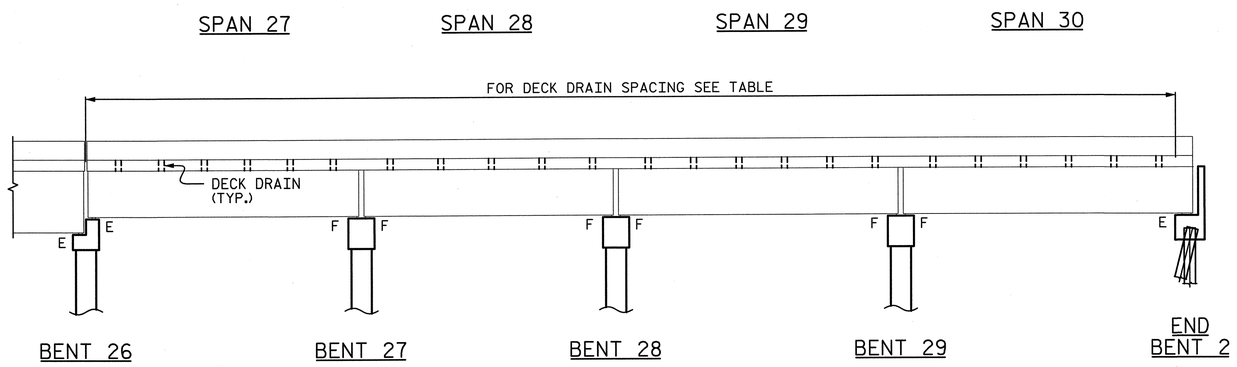

ELEVATION

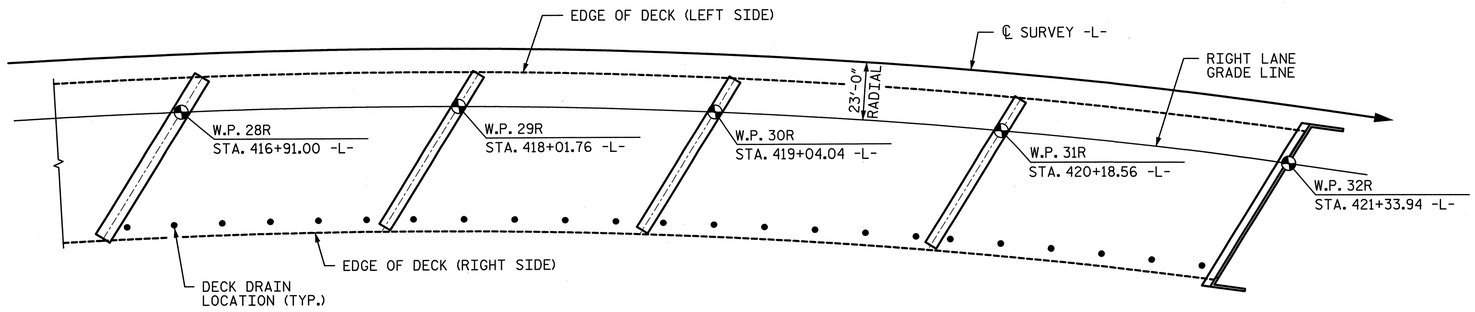

PLAN
(GIRDERS NOT SHOWN FOR CLARITY)

DECK DRAIN SPACING TABLE				
SPAN	A (FT.)	B (FT.)	C	D (FT.)
27	110.86	7.93	6	19.00
28	102.05	11.03	5	20.00
29	114.11	7.06	6	20.00
30	113.66	8.08	6	19.50

NORTH CAROLINA PROFESSIONAL SEAL 28479 ENGINEER KEVIN G. BAILEY 6-7-13

PROJECT NO. U-2524C
GUILFORD COUNTY
STATION: POT 407+85.82 -L-
= POT 29+79.72 -Y4-
SHEET 6 OF 11

STATE OF NORTH CAROLINA
DEPARTMENT OF TRANSPORTATION
RALEIGH

STRUCTURE DRAINAGE SYSTEM DETAILS

-RIGHT LANE-

REVISIONS						SHEET NO.
NO.	BY:	DATE:	NO.	BY:	DATE:	S-324
1			3			TOTAL SHEETS
2			4			336

DRAWN BY : CLG DATE : 3-13
CHECKED BY : TRL DATE : 4-13
DESIGN ENGINEER OF RECORD: K. BAILEY DATE : 5-13

STV / Ralph Whitehead Associates, Inc.
1000 West Morehead St., Ste. 200
Charlotte, NC 28208
NC License No. F-0991

6/6/2013 4:40:23 PM R:\ustation\Finals\Closed Drainage System Sheet 6 of 11.dgn

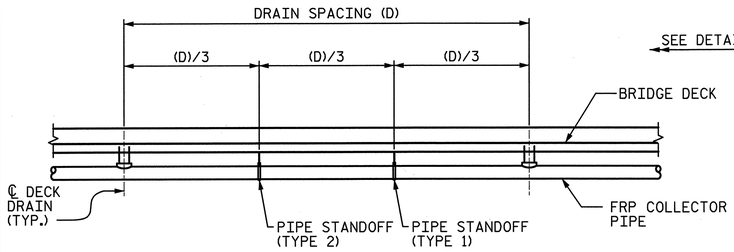

DRAIN SPACING: 15′-0″≤(D)≤20′-0″

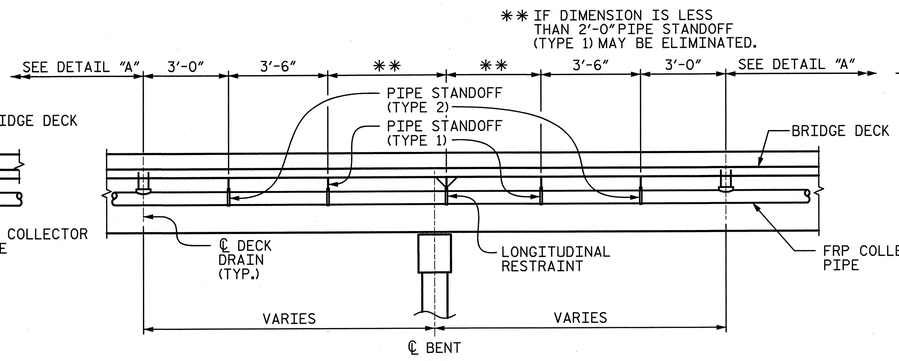

TYPE 1

(B3, B5B, B8, B9, B13 B18, & B19)

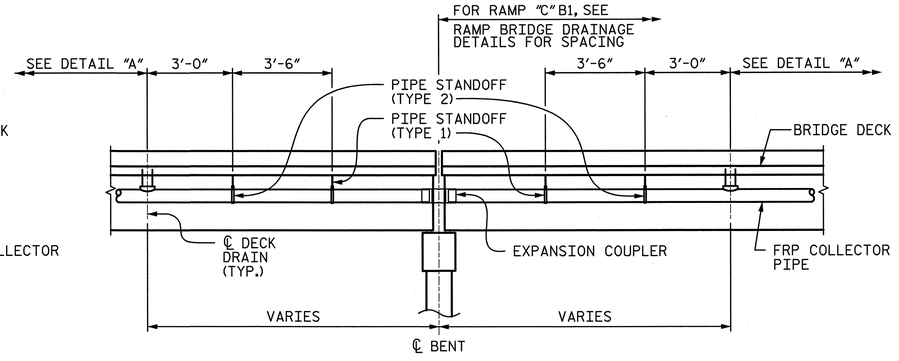

TYPE 1

(B2, B4, B5A, B10, B14, RAMP "C" B1 & B20)

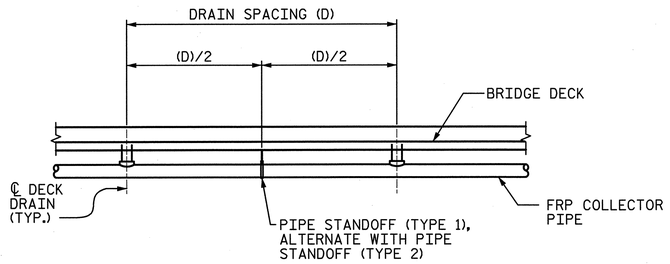

DRAIN SPACING: 6′-0″≤(D)≤10′-0″

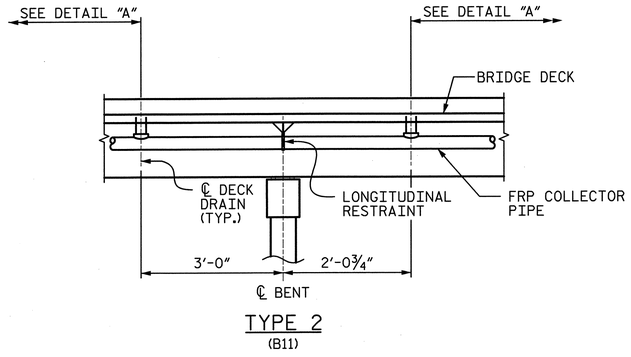

TYPE 2

(B11)

DETAIL "B"

(AT FIXED INTERIOR BENTS)

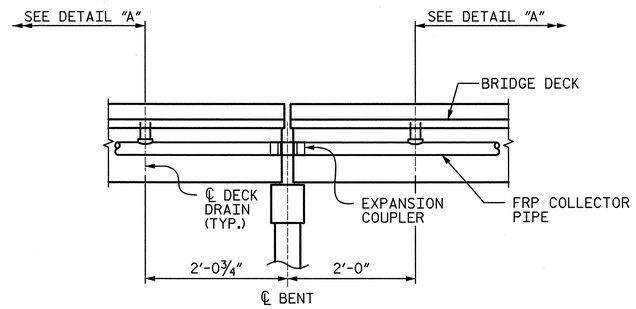

TYPE 2

(B12)

DETAIL "C"

(AT EXPANSION INTERIOR BENTS)

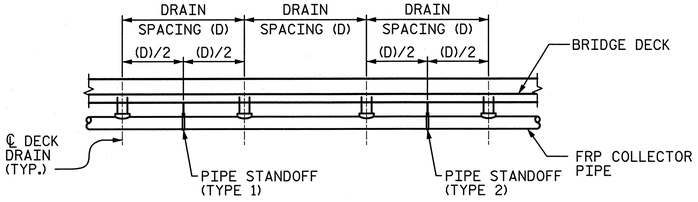

DRAIN SPACING: (D)≤5′-0″

DETAIL "A"

(BETWEEN DECK DRAINS)

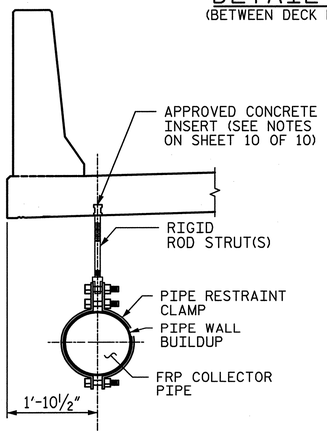

SECTION A-A

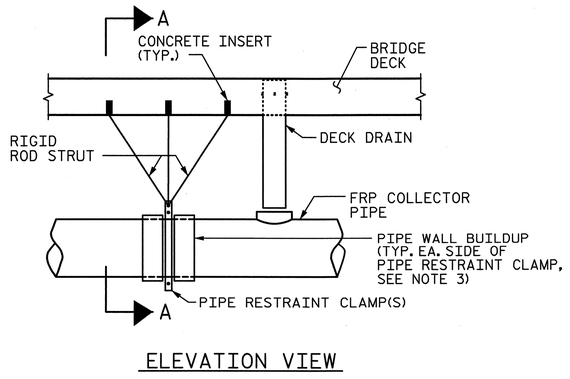

ELEVATION VIEW

LONGITUDINAL RESTRAINT DETAIL

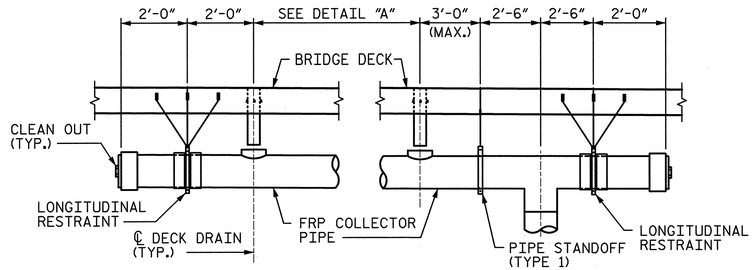

AT START OF SYSTEM AT END OF SYSTEM

SYSTEM ENDS DETAIL

NOTES:

1. FOR NOTES, SEE SHEET 11 OF 11.
2. FOR ADDITIONAL COLLECTOR PIPE SUPPORT DETAILS, SEE SHEET 8 OF 11.
3. CONTRACTOR SHALL ENSURE PIPE WALL BUILDUP IS SUFFICIENT TO ENGAGE PIPE RESTRAINT CLAMP AT LONGITUDINAL RESTRAINT LOCATIONS.

PROJECT NO. U-2524C

GUILFORD COUNTY

STATION: POT 407+85.82 -L-
= POT 29+79.72 -Y4-

SHEET 7 OF 11

NORTH CAROLINA PROFESSIONAL SEAL 28479 ENGINEER KEVIN G. BAILEY 6-7-13

STATE OF NORTH CAROLINA
DEPARTMENT OF TRANSPORTATION
RALEIGH

STRUCTURE DRAINAGE SYSTEM DETAILS

-RIGHT LANE-

DRAWN BY : CLG	DATE : 3-13	DESIGN ENGINEER OF RECORD: K. BAILEY	DATE : 5-13
CHECKED BY : TRL	DATE : 4-13		

STV / Ralph Whitehead Associates, Inc.
1000 West Morehead St., Ste. 200
Charlotte, NC 28208
NC License No. F-0991

REVISIONS						SHEET NO.
NO.	BY:	DATE:	NO.	BY:	DATE:	S-325
1			3			TOTAL SHEETS
2			4			836

6/6/2013 4:40:24 PM R:\ustation\Finals\Closed Drainage System Sheet 7 of 11.dgn

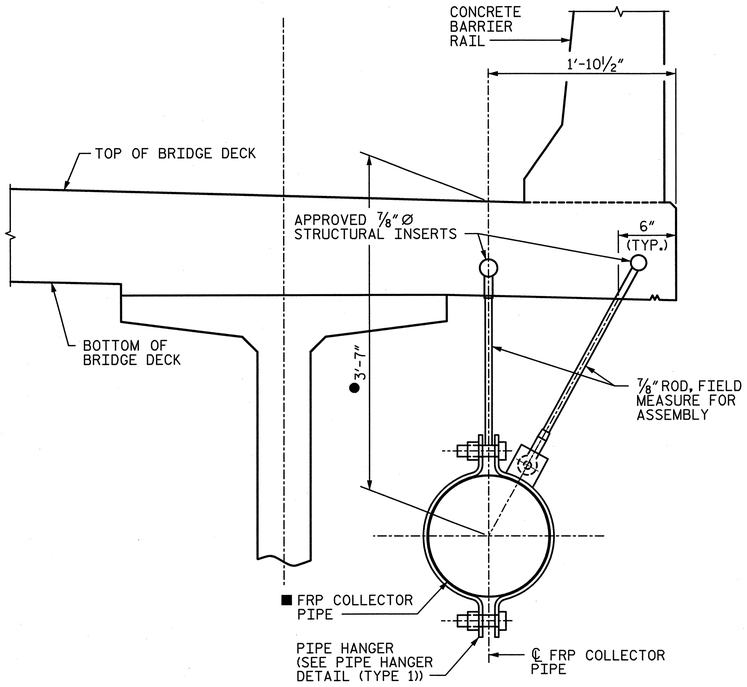

PIPE STANDOFF (TYPE 1)

(RIGHT SIDE SHOWN, LEFT SIDE SIMILAR)
(ALL COMPONENTS SHALL BE GALVANIZED AFTER FABRICATION)
(CONCRETE GIRDER SPAN SHOWN, STEEL SPANS SIMILAR)

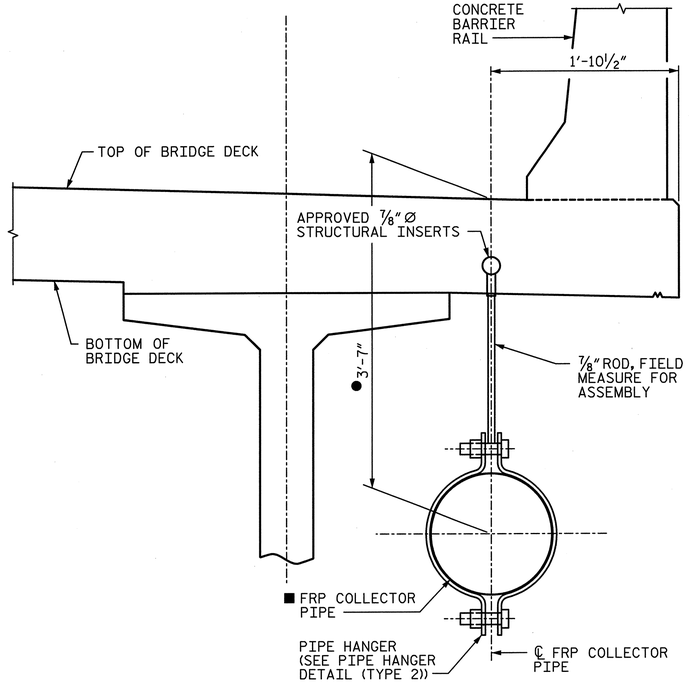

PIPE STANDOFF (TYPE 2)

(RIGHT SIDE SHOWN, LEFT SIDE SIMILAR)
(ALL COMPONENTS SHALL BE GALVANIZED AFTER FABRICATION)
(CONCRETE GIRDER SPAN SHOWN, STEEL SPANS SIMILAR)

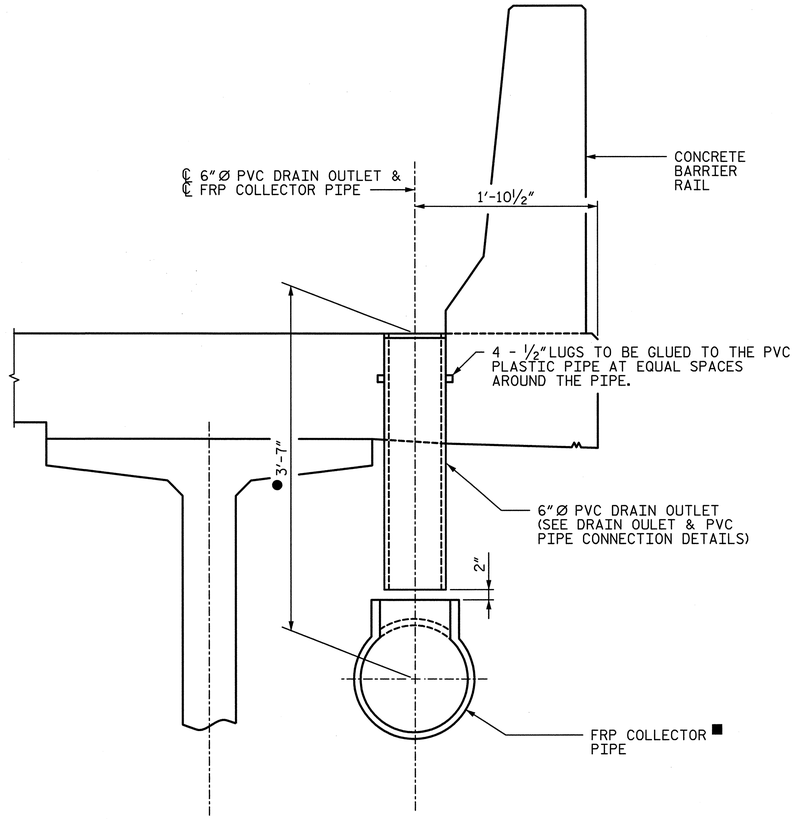

OVERHANG DRAINAGE DETAIL

(RIGHT SIDE SHOWN, LEFT SIDE SIMILAR)
(CONCRETE GIRDER SPAN SHOWN, STEEL GIRDER SPANS SIMILAR)
(CLOSED DRAINAGE SYSTEM)
(151 TOTAL)

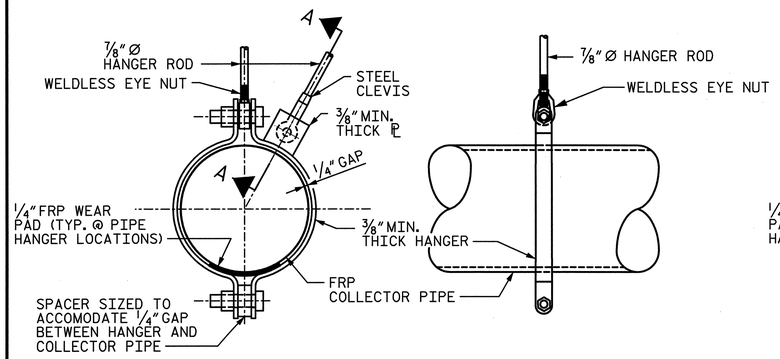

PIPE HANGER DETAIL (TYPE 1)

(ALL COMPONENTS SHALL BE GALVANIZED AFTER FABRICATION)

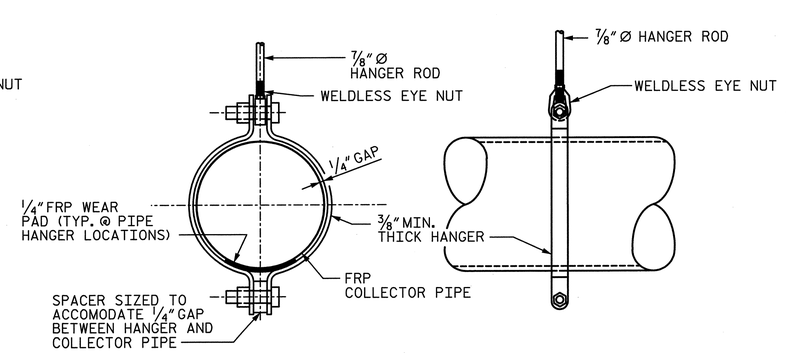

PIPE HANGER DETAIL (TYPE 2)

(ALL COMPONENTS SHALL BE GALVANIZED AFTER FABRICATION)

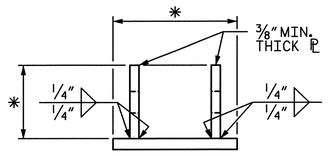

SECTION A-A

(STEEL CLEVIS & ⅞"Ø HANGER ROD NOT SHOWN FOR CLARITY)

*DIMENSIONS TO BE DETERMINED BY MANUFACTURER.

■ SEE SHEETS 1 THROUGH 4 OF 11 FOR FRP COLLECTOR PIPE SIZE.

● DIMENSION SHOWN IS AN APPROXIMATE LOCATION. FABRICATOR/CONTRACTOR SHALL ADJUST DIMENSIONS SUCH THAT PIPE MAINTAINS A MINIMUM SLOPE OF 0.5% TOWARDS THE OUTLETS.

NOTES:

1. FOR ADDITIONAL NOTES, SEE SHEET 11 OF 11.

PROJECT NO. U-2524C
GUILFORD COUNTY
STATION: POT 407+85.82 -L-
= POT 29+79.72 -Y4-
SHEET 8 OF 11

STATE OF NORTH CAROLINA
DEPARTMENT OF TRANSPORTATION
RALEIGH

STRUCTURE DRAINAGE SYSTEM DETAILS

-RIGHT LANE-

NORTH CAROLINA PROFESSIONAL ENGINEER SEAL 28479 ENGINEER KEVIN G. BAILEY
6-7-13

STV / Ralph Whitehead Associates, Inc.
1000 West Morehead St. Ste. 200
Charlotte, NC 28208
NC License No. F-0991

REVISIONS						SHEET NO.
NO.	BY:	DATE:	NO.	BY:	DATE:	S-326
1			3			TOTAL SHEETS
2			4			836

DRAWN BY : CLG	DATE : 3-13	DESIGN ENGINEER OF RECORD: K. BAILEY	DATE : 5-13
CHECKED BY : TRL	DATE : 4-13		

6/6/2013 4:40:26 PM R:\ustation\Finals\Closed Drainage System Sheet 8 of 11.dgn

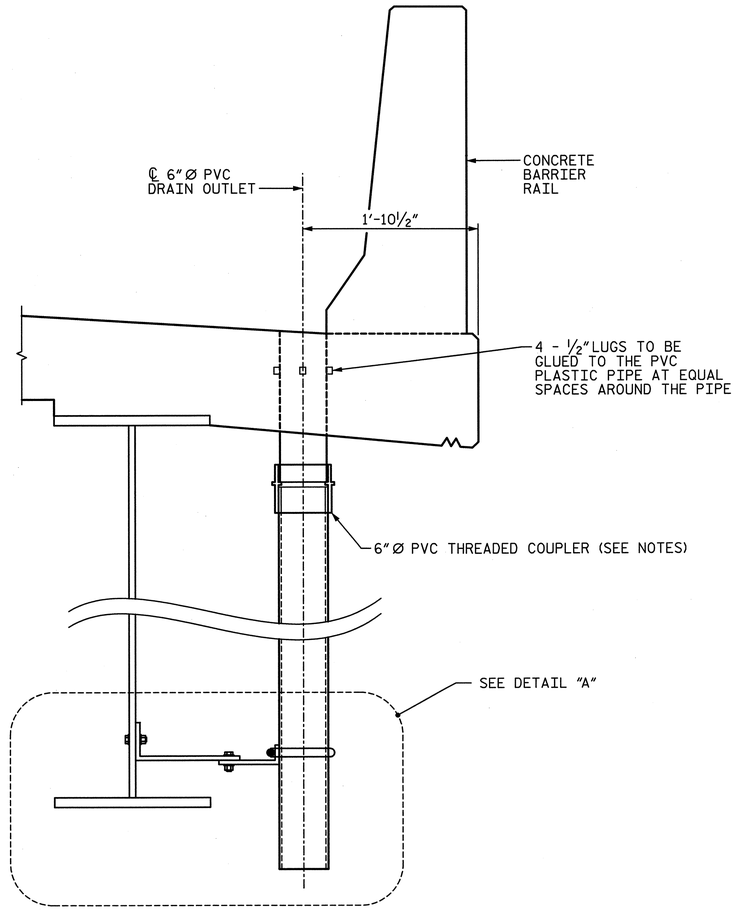

OVERHANG DRAINAGE DETAIL

(SPANS 23, 24 & 25)
(25 TOTAL)

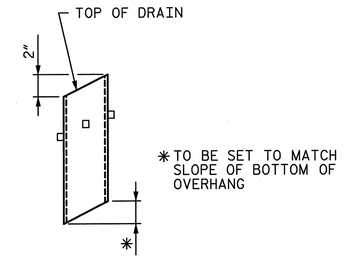

PIPE DETAIL

(23 TOTAL)

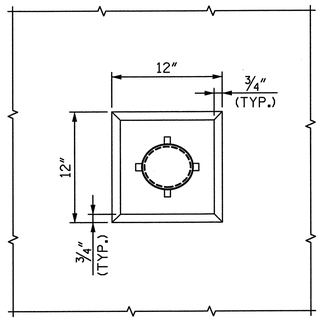

PLAN OF RECESS

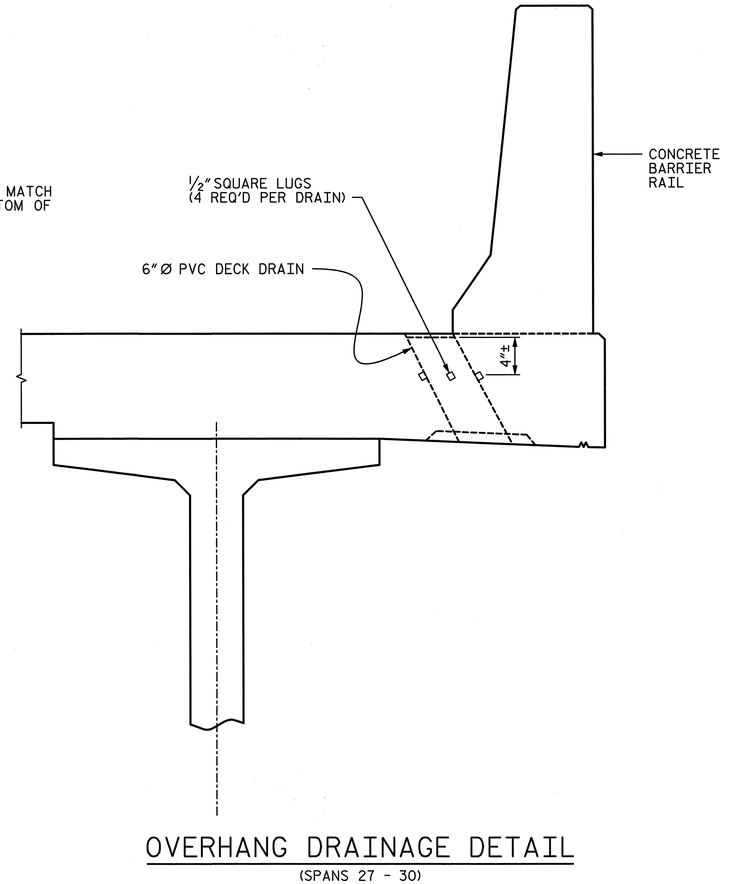

OVERHANG DRAINAGE DETAIL

(SPANS 27 - 30)

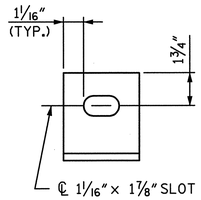

SECTION B-B

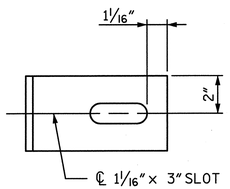

SECTION A-A

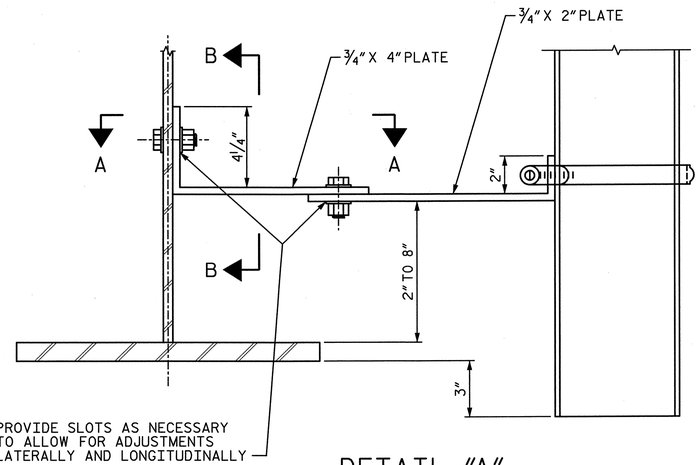

DETAIL "A"

NOTES:

1. TOP OF DECK DRAIN TO BE SET ⅜" BELOW SURFACE OF SLAB.
2. 4 - ½" SQUARE LUGS TO BE GLUED TO THE PVC PLASTIC PIPE AT EQUAL SPACES AROUND THE PIPE DRAIN APPROXIMATELY 4" FROM THE TOP OF PIPE.
3. THE 6"Ø PVC PLASTIC PIPE AND FITTINGS SHALL BE SCHEDULE 40 AND CONFORM TO ASTM D1785.
4. BOLT SIZE TO BE SAME AS DIAPHRAGMS AND CROSS FRAME CONNECTIONS. STAINLESS STEEL WORM DRIVE HOSE CLAMP SHALL BE COMMERCIAL QUALITY.
5. PLATES SHALL CONFORM TO AASHTO M270 GRADE 50 STEEL OR APPROVED EQUAL.
6. SEE SHEETS 5 AND 6 OF 11 FOR DRAIN LOCATIONS.
7. SEE SHEET 11 OF 11 FOR ADDITIONAL NOTES.
8. COUPLING IN DRAIN PIPE WILL BE PERMITTED AS APPROVED BY THE ENGINEER.

PROJECT NO. U-2524C
GUILFORD COUNTY
STATION: POT 407+85.82 -L-
= POT 29+79.72 -Y4-

SHEET 9 OF 11

STATE OF NORTH CAROLINA
DEPARTMENT OF TRANSPORTATION
RALEIGH

STRUCTURE DRAINAGE SYSTEM DETAILS

-RIGHT LANE-

DRAWN BY : CLG	DATE : 4-13	DESIGN ENGINEER OF RECORD: K. BAILEY	DATE : 5-13
CHECKED BY : TRL	DATE : 4-13		

STV / Ralph Whitehead Associates, Inc.
1000 West Morehead St., Ste. 200
Charlotte, NC 28208
NC License No. F-0991

REVISIONS						SHEET NO.
NO.	BY:	DATE:	NO.	BY:	DATE:	S-327
1			3			TOTAL SHEETS
2			4			336

6/6/2013 4:40:27 PM R:\ustation\Finals\Closed Drainage System Sheet 9 of 11.dgn

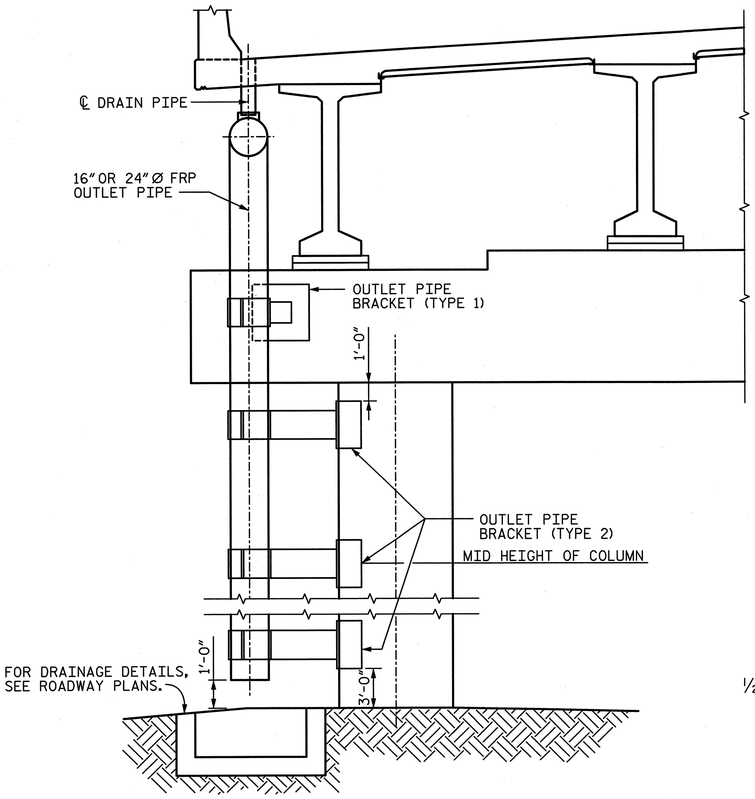

DRAIN PIPE ELEVATION

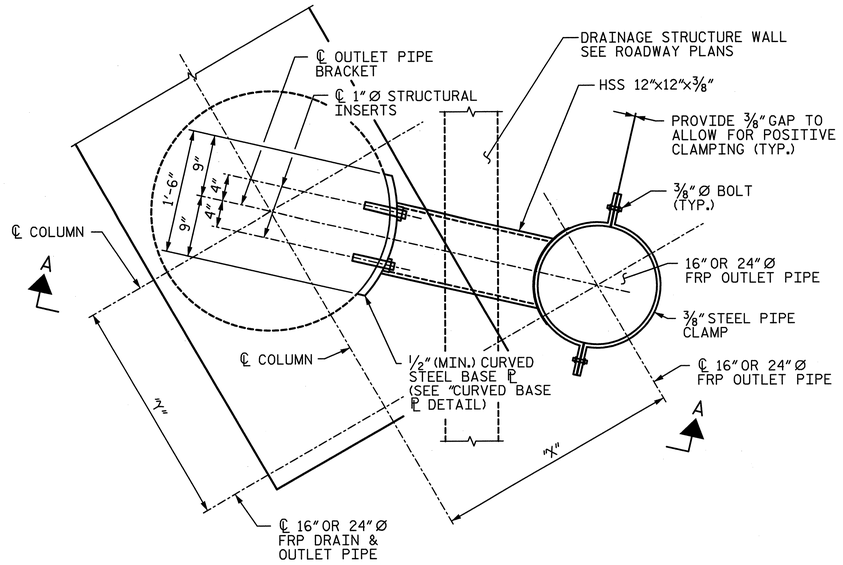

PLAN

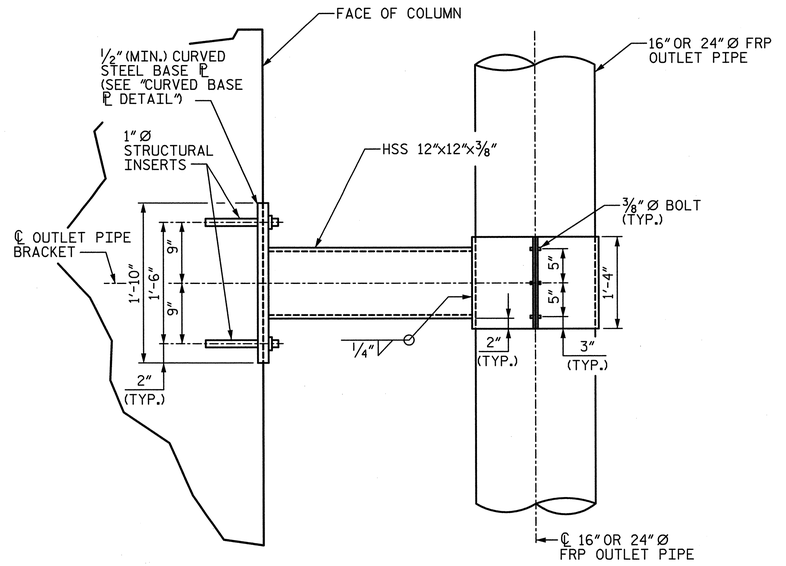

VIEW A-A

OUTLET PIPE BRACKET (TYPE 2)

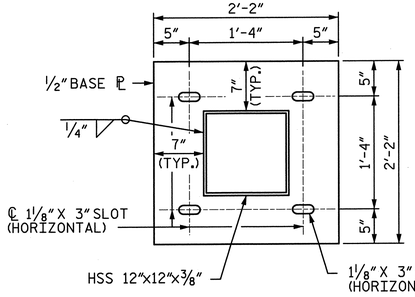

BASE ℙ DETAIL

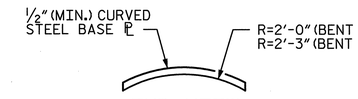

END VIEW

OUTLET PIPE BRACKET TABLE			
BENT	X (FT.)	Y (FT.)	SIDE OF BENT■
6	3.75	5.75	LEFT
15	4.25	5.08	LEFT
15	5.35	3.77	RIGHT
21	5.00	3.75	RIGHT

■LOOKING UPSTATION

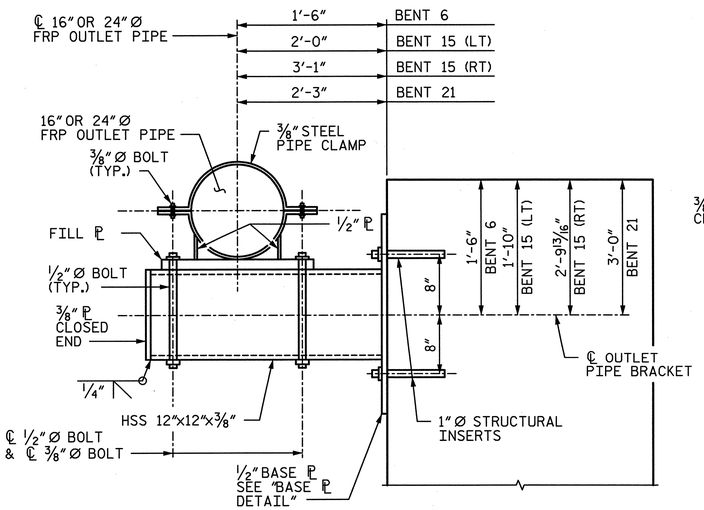

PLAN

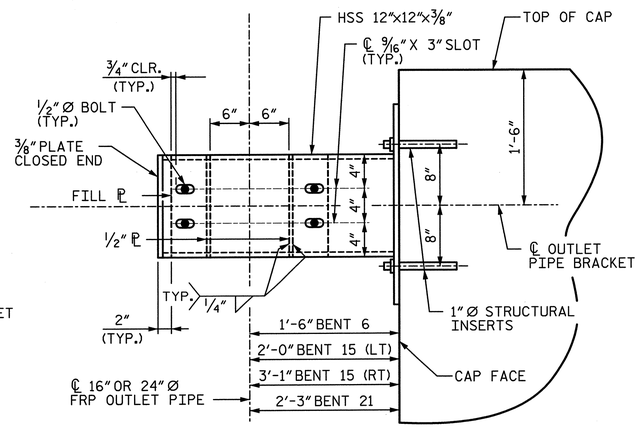

ELEVATION

OUTLET PIPE BRACKET (TYPE 1)

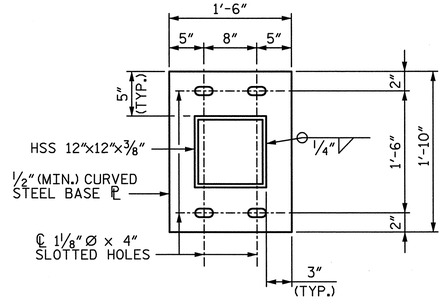

ELEVATION

CURVED BASE ℙ DETAIL

NOTES:

1. FOR NOTES, SEE SHEET 11 OF 11.

PROJECT NO. U-2524C

GUILFORD COUNTY

STATION: POT 407+85.82 -L-
= POT 29+79.72 -Y4-

SHEET 10 OF 11

NORTH CAROLINA PROFESSIONAL SEAL 28479 ENGINEER KEVIN G. BAILEY 6-7-13

STATE OF NORTH CAROLINA
DEPARTMENT OF TRANSPORTATION
RALEIGH

STRUCTURE DRAINAGE SYSTEM DETAILS

-RIGHT LANE-

DRAWN BY : CLG	DATE : 3-13	DESIGN ENGINEER OF RECORD: K. BAILEY	DATE : 5-13
CHECKED BY : TRL	DATE : 4-13		

STV / Ralph Whitehead Associates, Inc.
1000 West Morehead St., Ste. 200
Charlotte, NC 28208
NC License No. F-0991

REVISIONS						SHEET NO.
NO.	BY:	DATE:	NO.	BY:	DATE:	S-328
1			3			TOTAL SHEETS
2			4			836

6/6/2013 4:40:28 PM R:\ustation\Finals\Closed Drainage System Sheet 10 of 11.dgn

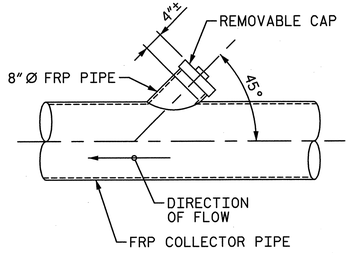

CLEANOUT DETAIL

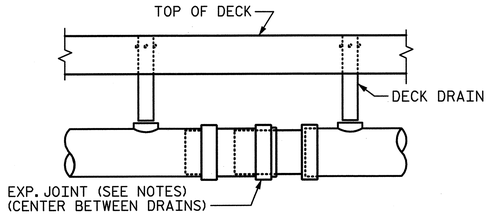

EXPANSION COUPLER

DRAINAGE SYSTEM NOTES

THE ENTIRE COST FOR THE LABOR AND MATERIALS NECESSARY TO FABRICATE AND INSTALL FRP PIPE, PIPE SUPPORT AND PIPE ANCHOR ASSEMBLIES SHALL BE INCLUDED IN THE LUMP SUM PRICE BID FOR THE "STRUCTURE DRAINAGE SYSTEM." SEE SPECIAL PROVISIONS FOR STRUCTURE DRAINAGE SYSTEM.

ALL COLLECTOR PIPES, ELBOWS, COUPLERS, AND TEES SHALL BE FIBERGLASS REINFORCED PLASTIC PIPE MEETING THE SPECIFICATIONS OF ASTM D2996 AND THE ACCELERATED UV WEATHERING PERFORMANCE REQUIREMENTS OF ASTM D4329-05 PER PROCEDURE ASTM G154.

EACH PIPE SECTION SHALL HAVE A MINIMUM OF TWO HANGERS.

COLLECTOR PIPE SHALL BE SUPPORTED FROM THE CONCRETE DECK SLAB. NO ATTACHMENT TO THE GIRDERS WILL BE PERMITTED.

CONTRACTOR SHALL PROVIDE FRP COUPLINGS CAPABLE OF HANDLING THE ANTICIPATED MOVEMENTS. ADDITIONALLY FRP COUPLINGS SHALL PROVIDE HORIZONTAL ALIGNMENT TOLERANCES SUCH THAT THE 16"Ø OR 24"Ø FRP COLLECTOR PIPE AND COUPLINGS CAN CLOSELY FOLLOW THE VERTICAL AND HORIZONTAL CURVE OF THE STRUCTURE.

THE CONTRACTOR SHALL BE RESPONSIBLE FOR DETERMINING THE HORIZONTAL AND VERTICAL ALIGNMENT OF THE DRAINAGE SYSTEM USING NECESSARY FITTINGS, TEES, AND WYES TO PROVIDE A CONTINUOUS DRAINAGE SYSTEM.

CONCRETE INSERTS SHALL HAVE A MINIMUM WORKING LOAD TENSION CAPACITY OF 4.5 KIPS.

CONTRACTOR SHALL VERIFY LOCATION OF CONCRETE INSERTS IN REGARD TO ADJACENT INSERTS AND DECK DRAINS. IF SPACING/LOCATION OF INSERTS RESULTS IN REDUCED INSERT CAPACITY, CONTRACTOR SHALL SUBMIT INSERT SYSTEM WITH APPROPRIATE CAPACITY, GIVEN CONSTRAINTS, OR PROVIDED ALTERNATE CONNECTION/SUPPORT DETAIL FOR REVIEW AND APPROVAL OF THE ENGINEER PRIOR TO INSTALLATION.

DECK DRAIN PIPE SHALL BE ASTM D1785, SCHEDULE 40. ALL PVC FITTINGS SHALL BE MINIMUM ASTM D2665, SCHEDULE 40.

EXPANSION JOINT COUPLERS IN THE COLLECTOR PIPE SHALL HAVE A MINIMUM CAPACITY TO ACCOMMODATE 6-INCHES OF TOTAL MOVEMENT (3-INCHES EXPANSION/3-INCHES CONTRACTION).

AN OPTIONAL DETAIL FOR THE LONGITUDINAL RESTRAINTS AND THE LATERAL GUIDE MAY BE SUBMITTED FOR APPROVAL.

COLLECTOR PIPE SUPPORTS SHALL BE LOCATED WITHIN 12-INCHES, ± 4-INCHES, OF A COLLECTOR PIPE JOINT.

DECK DOWN-DRAIN PIPES SHALL BE CENTERED IN SLOTTED OPENING IN COLLECTOR PIPE REGARDLESS OF TEMPERATURE AT TIME OF INSTALLATION.

HANGER RODS SHALL BE ASTM A193, GRADE B7 OR CARBON STEEL ALL-THREAD HANGER RODS.

NUTS SHALL BE ASTM A194, GRADE 2H, HEAVY HEX NUTS.

THE DETAILS OF ALL PIPING, HARDWARE, OR OTHER MATERIAL SHALL BE PROVIDED BY THE CONTRACTOR AND IS SUBJECT TO THE APPROVAL OF THE ENGINEER.

AT LOCATIONS OF "KINKS" IN THE DRAINAGE SYSTEM AT BENT LOCATIONS DUE TO FLARING OF DECK, FIXED AND/OR EXPANSION COUPLERS SHALL BE DESIGNED FOR THE RESULTING HORIZONTAL ANGLE.

WORKING DRAWINGS FOR THE DRAINAGE SYSTEM AND LAYOUT PLANS INCLUDING, BUT NOT LIMITED TO, PIPE SUPPORT BRACKETS, PIPE ALIGNMENT, PIPE LENGTHS, AND ALL NECESSARY FITTINGS, ELBOWS, WYES, ADAPTERS, GUIDES, RESTRAINTS, WEAR PADS, COUPLERS AND JOINTS SHALL BE DESIGNED AND SEALED BY A PROFESSIONAL ENGINEER LICENSED IN NORTH CAROLINA AND SUBMITTED FOR APPROVAL PRIOR TO ORDERING MATERIALS.

PIPE MANUFACTURER SHALL ENSURE THE PIPE AND THE PIPE SUPPORT BEARING AREA IS DESIGNED IN ACCORDANCE WITH THE HANGER SPACING PROVIDED IN THESE PLANS.

PIPE DESIGN MUST ALLOW VERTICAL FLEXURE FROM THE SUPERSTRUCTURE.

THE COLLECTOR PIPE SHALL CLOSELY FOLLOW THE LONGITUDINAL GRADE OF THE STRUCTURE WHILE MAINTAINING A MINIMUM OF 0.5% SLOPE AT ALL TIMES.

COUPLERS SHALL BE DESIGNED TO ACCOMMODATE A TURN AT EACH BENT IN ORDER TO FOLLOW THE HORIZONTAL AND VERTICAL CURVATURE OF THE BRIDGE OVERHANG.

THE PIPE MANUFACTURER SHALL ENSURE THE FRICTIONAL FORCE REQUIRED TO ACTIVATE THE EXPANSION COUPLERS DOES NOT OVERSTRESS THE COUPLER WALL BUILD-UP, DRAINAGE SYSTEM BRACKETS SUPPORTS OR LATERAL RESTRAINTS.

WASHERS SHALL BE ASTM F436 OR APPROVED EQUIVALENT.

BOLTS, NUTS, AND WASHERS SHALL BE GALVANIZED IN ACCORDANCE WITH THE STANDARD SPECIFICATIONS.

BOLT THREADS SHALL BE BURRED TO PREVENT LOOSENING.

PVC PIPE SHALL BE PAINTED TO MATCH THE FINAL SURFACE FINISH OF THE STRUCTURE WITH TWO COATS OF AN ACRYLIC OR LATEX PAINT THAT IS CHEMICALLY COMPATIBLE WITH PVC PRODUCTS AND MEETS THE REQUIREMENTS OF ARTICLE 1080-12 OF THE STANDARD SPECIFICATIONS. EACH COAT SHALL BE 2 DRY MILS THICK. DECK DRAINS SHALL BE ROUGHENED PRIOR TO PAINTING.

ALL METALLIC COMPONENTS IN THE DRAINAGE SYSTEM, EXCEPT STAINLESS STEEL AND MALLEABLE IRON PARTS, ARE REQUIRED TO BE HOT-DIPPED GALVANIZED PER NCDOT STANDARD SPECIFICATIONS. ELECTRO-PLATE COATING ON STEEL RODS, STEEL YOKE TYPE PIPE ROLLS, BRACKETS, OTHER STEEL HARDWARE IS CONSIDERED BY NCDOT AS TOO THIN FOR OUTDOOR APPLICATIONS.

ALL FRP AND PVC PIPE SHALL BE INSTALLED PER MANUFACTURER'S RECOMMENDATIONS.

ALL STRUCTURAL STEEL SHALL BE ASTM A36 OR APPROVED EQUAL UNLESS NOTED OTHERWISE.

THE GALVANIZED SURFACE SHALL BE CLEANED TO (SSPC SP-1) PRIOR TO COATING.

ALL FABRICATION SHALL CONFORM TO THE APPLICABLE SECTION OF THE NORTH CAROLINA DEPARTMENT OF TRANSPORTATION STANDARD SPECIFICATIONS FOR ROADS AND STRUCTURES.

ALL FRP SHALL BE PIGMENTED TO MATCH THE FINAL SURFACE FINISH OF THE STRUCTURE.

ALL FRP PIPE SIZES ARE SHOWN AS INSIDE DIAMETER SIZES.

FRP = FIBERGLASS REINFORCED PLASTIC

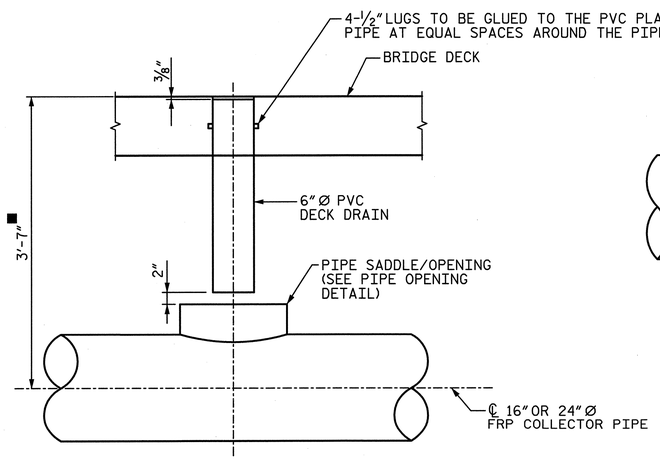

DRAIN OUTLET & PIPE CONNECTION

■ DIMENSION SHOWN IS AN APPROXIMATE LOCATION. FABRICATOR/CONTRACTOR SHALL ADJUST DIMENSIONS SUCH THAT PIPE MAINTAINS A MINIMUM SLOPE OF 0.5% TOWARDS THE OUTLETS.

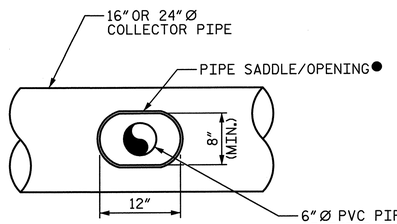

PIPE OPENING DETAIL

● FABRICATOR SHALL DETERMINE PIPE SADDLE/REINFORCEMENT FOR OPENING SIZE INDICATED. FABRICATOR SHALL SUBMIT SHOP DRAWINGS OF PIPE SADDLE/OPENING FOR REVIEW PRIOR TO BEGINNING FABRICATION.

PROJECT NO. U-2524C

GUILFORD COUNTY

STATION: POT 407+85.82 -L-
= POT 29+79.72 -Y4-

SHEET 11 OF 11

NORTH CAROLINA PROFESSIONAL SEAL 28479 ENGINEER KEVIN G. BAILEY 6-7-13

STATE OF NORTH CAROLINA
DEPARTMENT OF TRANSPORTATION
RALEIGH

STRUCTURE DRAINAGE SYSTEM DETAILS

-RIGHT LANE-

REVISIONS						SHEET NO.
NO.	BY:	DATE:	NO.	BY:	DATE:	S-329
1			3			TOTAL SHEETS
2			4			836

STV / Ralph Whitehead Associates, Inc.
1000 West Morehead St., Ste. 200
Charlotte, NC 28208
NC License No. F-0991

DRAWN BY : CLG	DATE : 3-13	DESIGN ENGINEER OF RECORD: K. BAILEY	DATE : 5-13
CHECKED BY : TRL	DATE : 4-13		

6/6/2013 4:40:29 PM R:\ustation\Finals\Closed Drainage System Sheet 11of 11.dgn

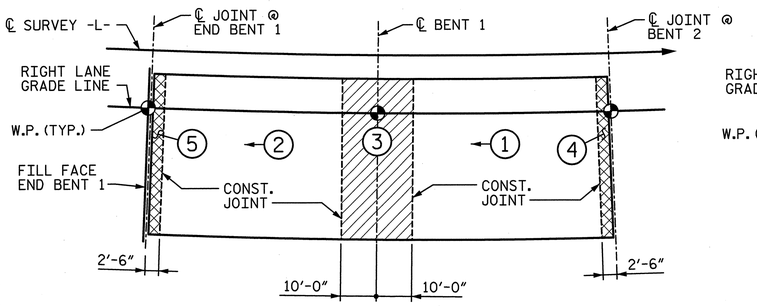

UNIT A (SPANS 1 & 2)

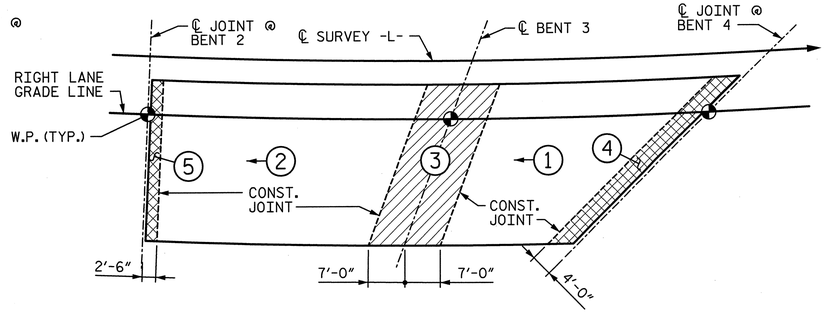

UNIT B (SPANS 3 & 4)

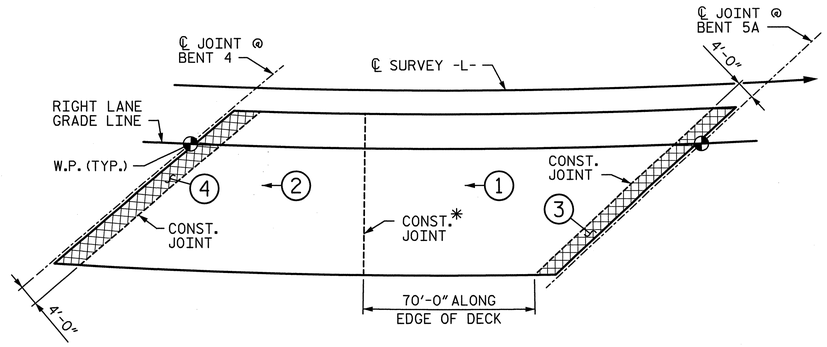

SPAN 5

*CONSTRUCTION JOINT IS RADIAL

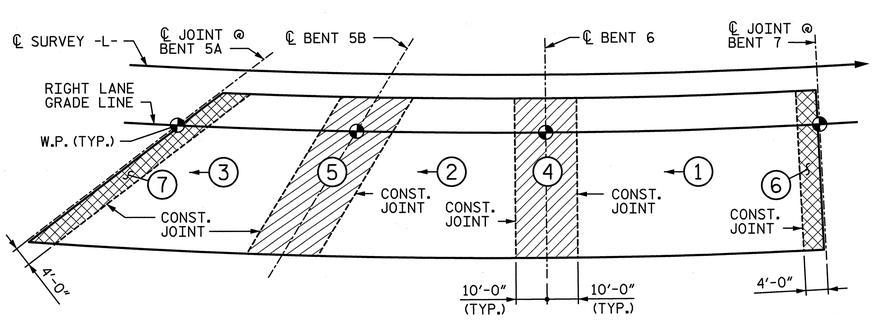

UNIT C (SPANS 6A-7)

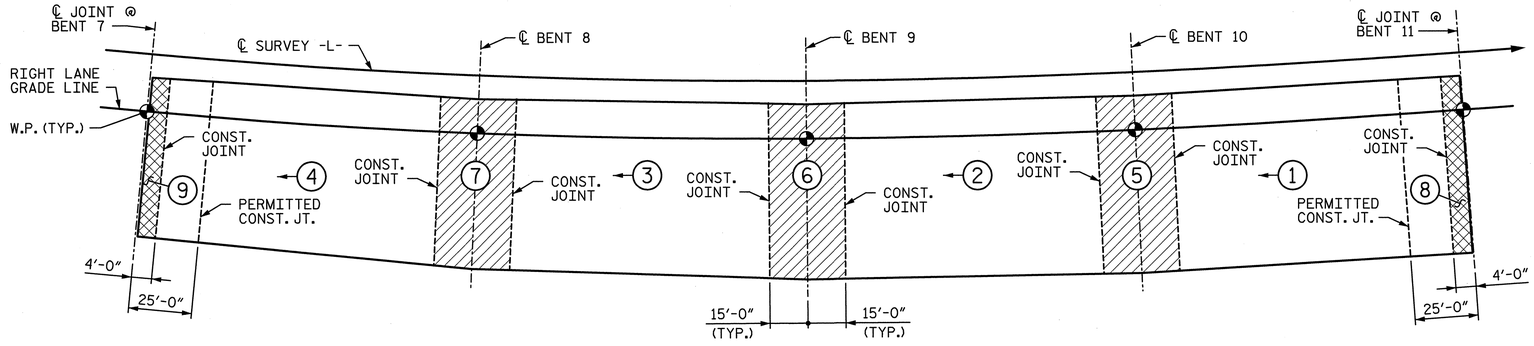

UNIT D (SPANS 8-11)

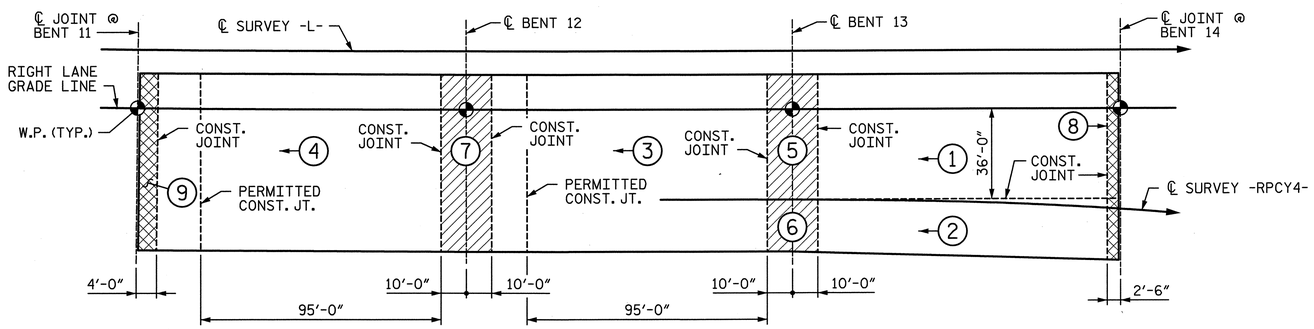

UNIT E (SPANS 12-14)

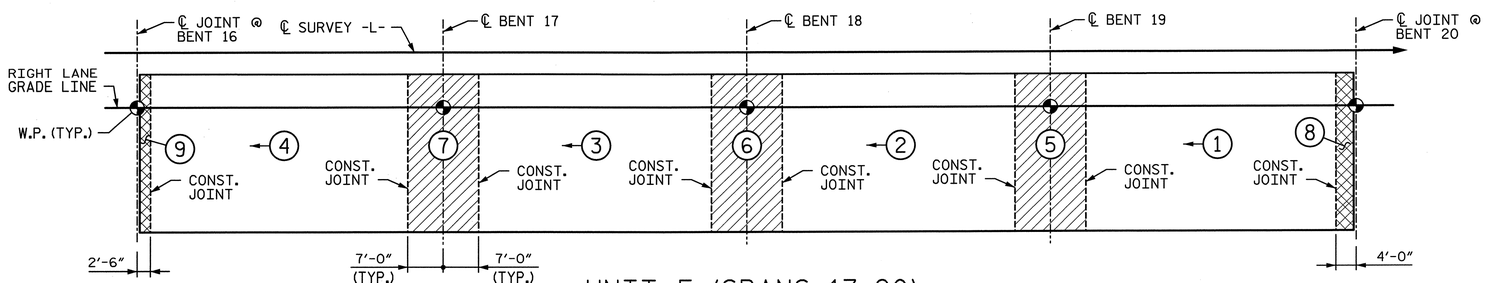

UNIT F (SPANS 17-20)

NOTES:

1. FOR SPAN 15 & SPAN 16 DECK POUR DIAGRAMS, SEE "TRANSITION ZONE DETAILS" SHEET 2 OF 2.
2. FOR DECK POUR CONCRETE QUANTITIES AND CONSTRUCTION JOINT DETAILS, SEE SHEET 2 OF 2.
3. NO CLOSURE POURS SHALL OCCUR UNTIL THE CONCRETE IN ADJACENT SPANS HAVE OBTAINED A STRENGTH OF 3000 PSI.

LEGEND:

DECK CLOSURE POUR AT JOINTS

DECK CLOSURE POUR AT CONTINUOUS BENTS

(1) POUR NUMBER

DIRECTION OF POUR

NORTH CAROLINA PROFESSIONAL SEAL 28479 ENGINEER KEVIN G. BAILEY 6-7-13

PROJECT NO. U-2524C

GUILFORD COUNTY

STATION: POT 407+85.82 -L-
= POT 29+79.72 -Y4-

SHEET 1 OF 2

STATE OF NORTH CAROLINA
DEPARTMENT OF TRANSPORTATION
RALEIGH

SUPERSTRUCTURE DECK POUR DIAGRAMS

-RIGHT LANE-

DRAWN BY : VMW	DATE : 3-13	DESIGN ENGINEER OF RECORD: K. BAILEY	DATE : 5-13
CHECKED BY : CLG	DATE : 4-13		

STV / Ralph Whitehead Associates, Inc.
1000 West Morehead St., Ste. 200
Charlotte, NC 28208
NC License No. F-0991

REVISIONS						SHEET NO.
NO.	BY:	DATE:	NO.	BY:	DATE:	S-330
1			3			TOTAL SHEETS
2			4			836

6/6/2013 4:40:31 PM R:\ustation\Finals\Deck Pour Diagrams Sheet 1 of 2.dgn

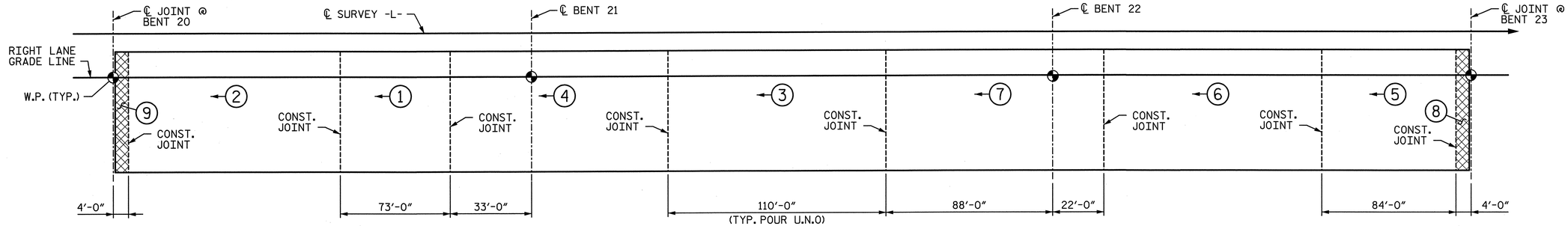

UNIT G (SPANS 21-23)

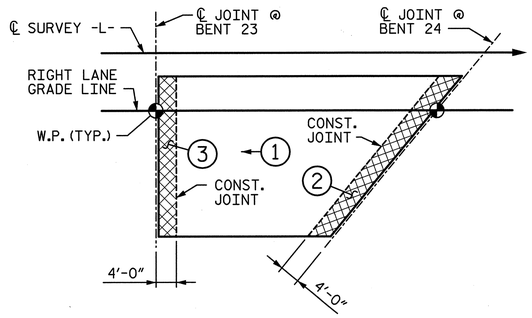

SPAN 24

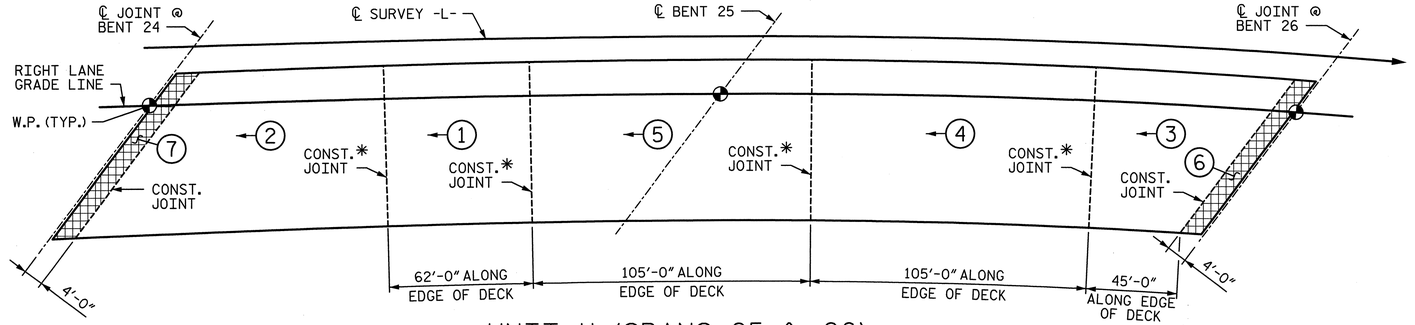

UNIT H (SPANS 25 & 26)

* CONSTRUCTION JOINT IS RADIAL

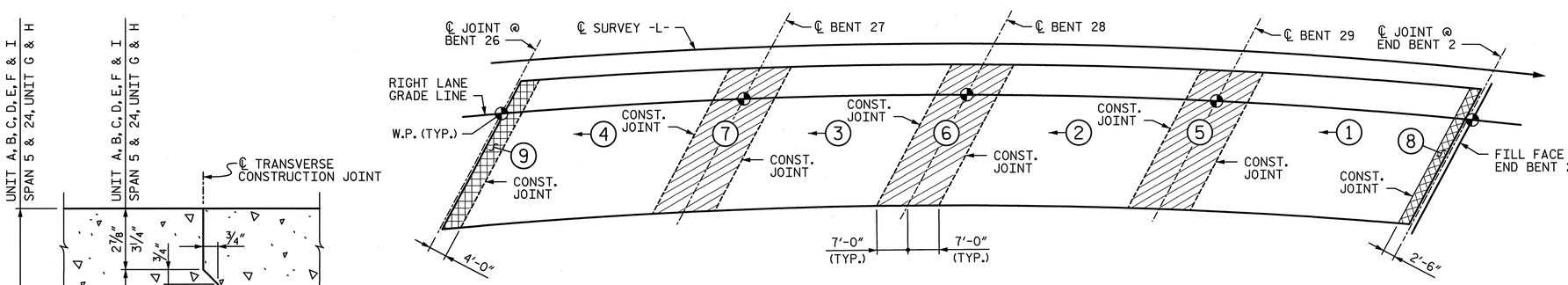

NOTE : REINFORCING STEEL IN SLAB NOT SHOWN. TRANSVERSE & LONGITUDINAL REINFORCING STEEL SHALL BE CONTINUOUS THROUGH JOINT.

CONSTRUCTION JOINT IN DECK SLAB

UNIT I (SPANS 27-30)

DECK POUR CONCRETE QUANTITIES

	POUR QUANTITY (CU. YDS.)									
LOCATION	1	2	3	4	5	6	7	8	9	TOTAL
UNIT A	161.8	166.9	69.6	8.3	8.3					414.9
UNIT B	161.9	222.3	62.0	18.1	8.4					472.7
SPAN 5	243.1	201.7	24.7	23.7						493.2
UNIT C	205.1	141.9	139.9	71.1	84.1	12.5	19.4			674.0
UNIT D	271.2	243.8	240.0	255.8	105.2	103.7	100.6	14.5	12.9	1,347.7
UNIT E	198.5	90.4	263.7	279.9	56.5	23.5	80.0	10.0	14.0	1,016.5
SPAN 15	207.8	125.0	25.5	13.9	10.6					382.8
SPAN 16	208.8	134.4	55.9	35.9	17.4	13.6				466.0
UNIT F	229.6	222.8	222.8	232.4	56.5	56.5	56.5	12.2	8.4	1,097.7
UNIT G	163.1	245.7	245.7	245.7	187.7	245.7	245.7	11.6	11.6	1,602.5
SPAN 24	190.0	15.9	11.6							217.5
UNIT H	141.3	241.1	152.7	240.6	239.9	19.7	19.9			1,055.2
UNIT I	231.1	222.3	195.3	219.9	71.4	72.4	73.4	9.9	15.0	1,110.7
TOTAL CLASS AA CONCRETE (CU. YDS.)										10,351.4

LEGEND:

- DECK CLOSURE POUR AT JOINTS
- DECK CLOSURE POUR AT CONTINUOUS BENTS
- (1) POUR NUMBER
- DIRECTION OF POUR

NOTES:

1. FOR NOTES, SEE SHEET 1 OF 2.

PROJECT NO. U-2524C

GUILFORD COUNTY

STATION: POT 407+85.82 -L-
= POT 29+79.72 -Y4-

SHEET 2 OF 2

STATE OF NORTH CAROLINA
DEPARTMENT OF TRANSPORTATION
RALEIGH

SUPERSTRUCTURE DECK POUR DIAGRAMS

-RIGHT LANE-

NORTH CAROLINA PROFESSIONAL SEAL 28479 ENGINEER KEVIN G. BAILEY 6-7-13

STV/ Ralph Whitehead Associates, Inc.
1000 West Morehead St., Ste. 200
Charlotte, NC 28208
NC License No. F-0991

REVISIONS						SHEET NO.
NO.	BY:	DATE:	NO.	BY:	DATE:	S-331
1			3			TOTAL SHEETS
2			4			836

DRAWN BY : VMW DATE : 3-13
CHECKED BY : CLG DATE : 4-13
DESIGN ENGINEER OF RECORD: K. BAILEY DATE : 5-13

6/6/2013 4:40:33 PM R:\station\Finals\Deck Pour Diagrams Sheet 2 of 2.dgn

NOTES:

1. FOR THE LOCATION OF FORMED HOLES FOR THE INTERMEDIATE STEEL DIAPHRAGMS IN GIRDERS, SEE "PRESTRESSED CONCRETE MODIFIED BULB TEE GIRDER DIAPHRAGM DETAILS" SHEET.

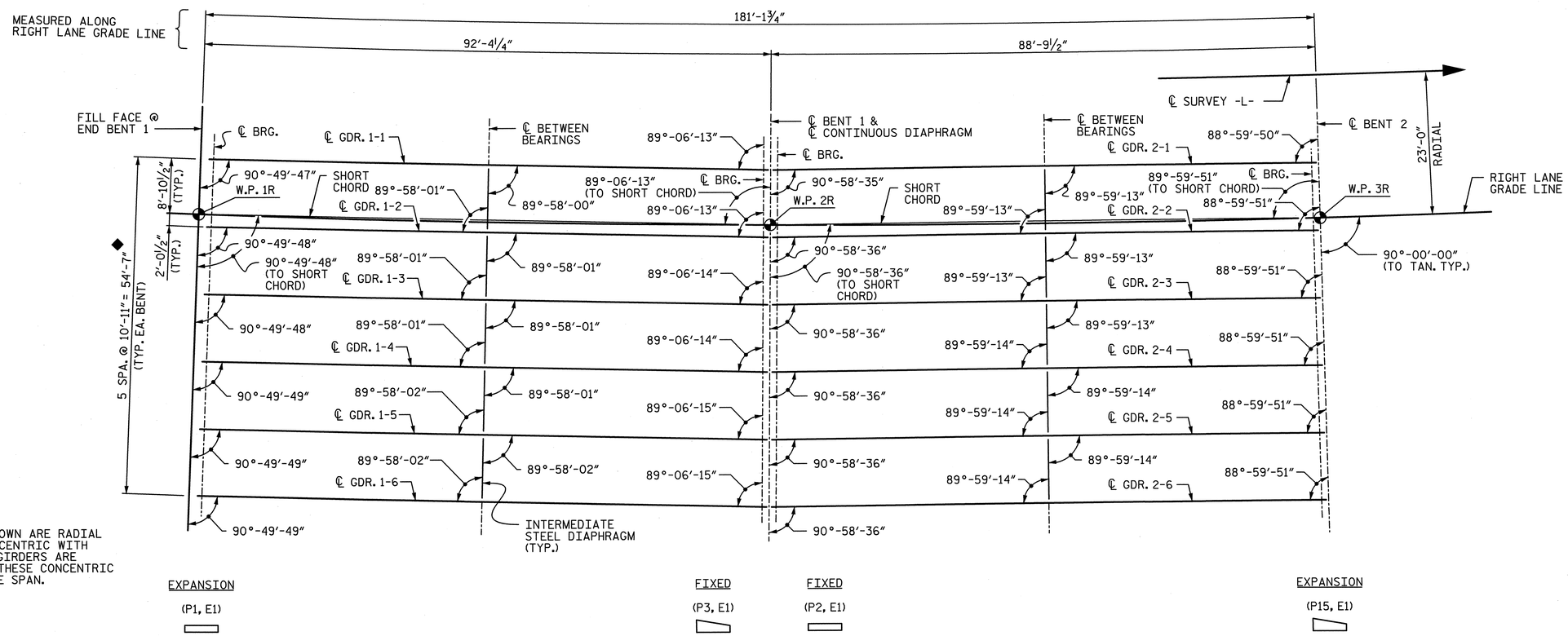

◆ DIMENSIONS SHOWN ARE RADIAL TO CURVES CONCENTRIC WITH ℄ SURVEY -L-. GIRDERS ARE ON CHORDS OF THESE CONCENTRIC CURVES FOR THE SPAN.

SPAN 1 SPAN 2

FRAMING PLAN - UNIT A

PROJECT NO. U-2524C

GUILFORD COUNTY

STATION: POT 407+85.82 -L-
= POT 29+79.72 -Y4-

SHEET 1 OF 14

STATE OF NORTH CAROLINA
DEPARTMENT OF TRANSPORTATION
RALEIGH

FRAMING PLAN
UNIT A SPANS 1 & 2

-RIGHT LANE-

NORTH CAROLINA PROFESSIONAL ENGINEER SEAL 28479 ENGINEER KEVIN G. BAILEY 6-7-13

STV / Ralph Whitehead Associates, Inc.
1000 West Morehead St. Ste. 200
Charlotte, NC 28208
NC License No. F-0991

REVISIONS						SHEET NO.
NO.	BY:	DATE:	NO.	BY:	DATE:	S-332
1			3			TOTAL SHEETS
2			4			836

DRAWN BY : VMW DATE : 1-13
CHECKED BY : TJT DATE : 3-13

DESIGN ENGINEER OF RECORD: T. TOWNSEND DATE : 5-13

6/6/2013 4:40:34 PM R:\ustation\Finals\Framing Plan_Span 1-2 Sheet 1 of 14.dgn

NOTES:

1. FOR THE LOCATION OF FORMED HOLES FOR THE INTERMEDIATE STEEL DIAPHRAGMS IN GIRDERS, SEE "PRESTRESSED CONCRETE MODIFIED BULB TEE GIRDER DIAPHRAGM DETAILS" SHEET.

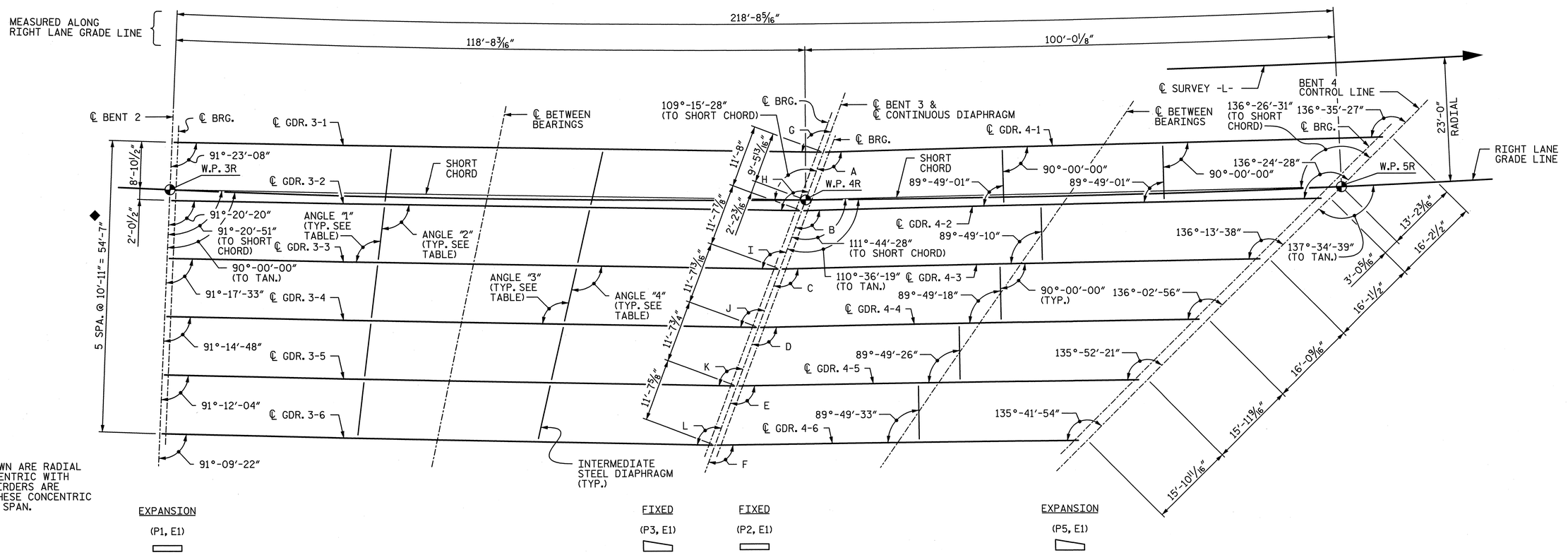

◆ DIMENSIONS SHOWN ARE RADIAL TO CURVES CONCENTRIC WITH ℄ SURVEY -L-. GIRDERS ARE ON CHORDS OF THESE CONCENTRIC CURVES FOR THE SPAN.

FRAMING PLAN - UNIT B

DIAPHRAGM ANGLES					
	DIAPHRAGM	ANGLE "1"	ANGLE "2"	ANGLE "3"	ANGLE "4"
SPAN 3	3-1 TO 3-2	97°-33'-01"	97°-35'-49"	103°-33'-31"	103°-36'-19"
	3-2 TO 3-3	97°-30'-14"	97°-33'-01"	103°-30'-44"	103°-33'-31"
	3-3 TO 3-4	97°-27'-29"	97°-30'-14"	103°-27'-59"	103°-30'-44"
	3-4 TO 3-5	97°-24'-45"	97°-27'-29"	103°-25'-16"	103°-27'-59"
	3-5 TO 3-6	97°-12'-03"	97°-24'-45"	103°-22'-33"	103°-25'-16"

℄ GIRDER TO BENT ANGLES	
A	111°-53'-23"
B	111°-42'-25"
C	111°-31'-34"
D	111°-20'-52"
E	111°-10'-17"
F	111°-59'-51"
G	109°-17'-45"
H	109°-14'-56"
I	109°-12'-10"
J	109°-09'-24"
K	109°-06'-41"
L	109°-03'-59"

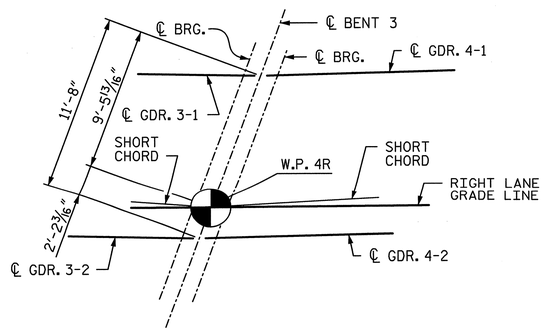

WORKPOINT 4R DETAIL

PROJECT NO. U-2524C

GUILFORD COUNTY

STATION: POT 407+85.82 -L-
= POT 29+79.72 -Y4-

SHEET 2 OF 14

STATE OF NORTH CAROLINA
DEPARTMENT OF TRANSPORTATION
RALEIGH

FRAMING PLAN
UNIT B SPANS 3 & 4

-RIGHT LANE-

NORTH CAROLINA PROFESSIONAL SEAL 28479 ENGINEER KEVIN G. BAILEY 6-7-13

DRAWN BY : VMW	DATE : 1-13	DESIGN ENGINEER OF RECORD: T. TOWNSEND	DATE : 5-13
CHECKED BY : TJT	DATE : 3-13		

STV / Ralph Whitehead Associates, Inc.
1000 West Morehead St., Ste. 200
Charlotte, NC 28208
NC License No. F-0991

REVISIONS						SHEET NO.
NO.	BY:	DATE:	NO.	BY:	DATE:	S-333
1			3			TOTAL SHEETS
2			4			836

6/6/2013 4:40:35 PM R:\ustation\Finals\Framing Plan_Span 3-4 Sheet 2 of 14.dgn

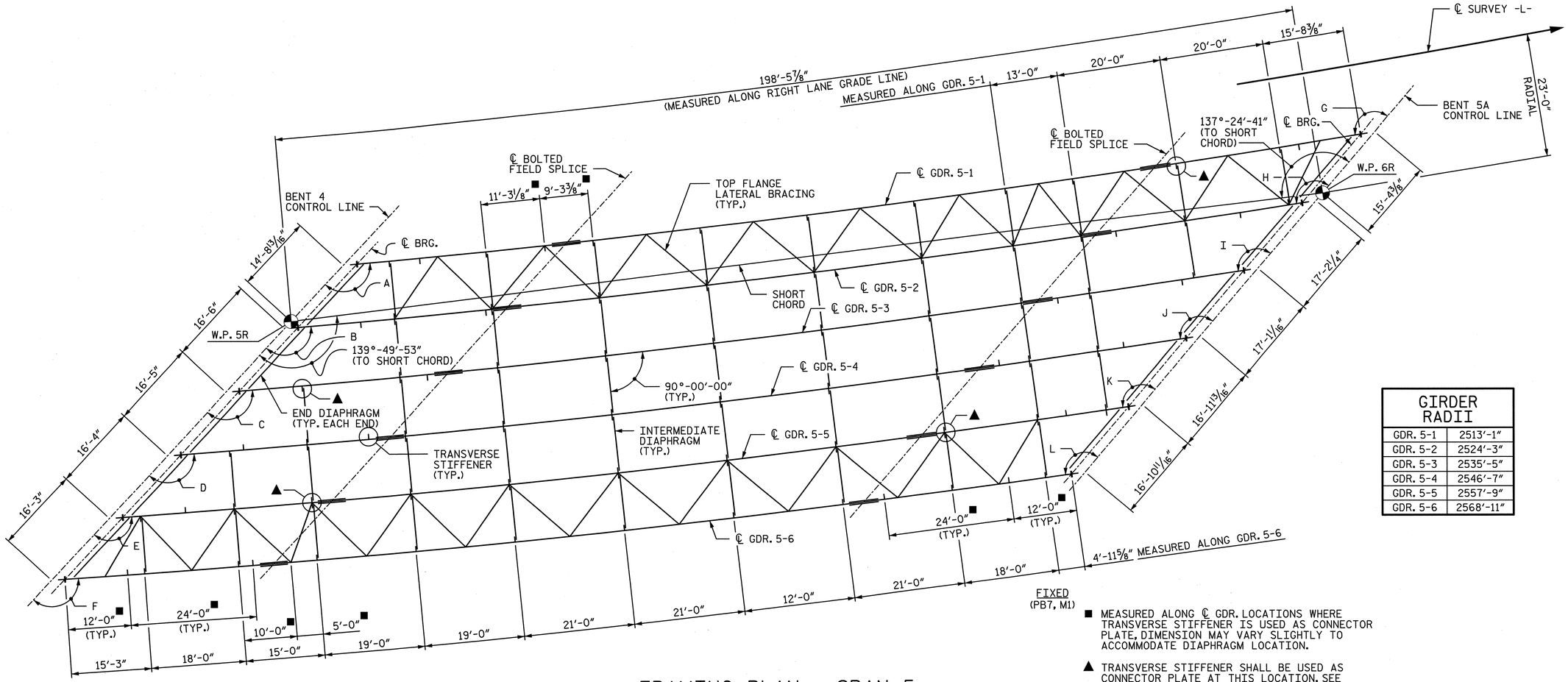

GIRDER RADII	
GDR. 5-1	2513′-1″
GDR. 5-2	2524′-3″
GDR. 5-3	2535′-5″
GDR. 5-4	2546′-7″
GDR. 5-5	2557′-9″
GDR. 5-6	2568′-11″

■ MEASURED ALONG ℄ GDR. LOCATIONS WHERE TRANSVERSE STIFFENER IS USED AS CONNECTOR PLATE, DIMENSION MAY VARY SLIGHTLY TO ACCOMMODATE DIAPHRAGM LOCATION.

▲ TRANSVERSE STIFFENER SHALL BE USED AS CONNECTOR PLATE AT THIS LOCATION. SEE TRANSVERSE STIFFENER DETAILS ON SHEET TITLED "STRUCTURAL STEEL DETAILS".

FRAMING PLAN - SPAN 5

℄ GIRDER TO BENT ANGLES●	
A	137°-49′-32″
B	137°-32′-47″
C	137°-16′-17″
D	137°-00′-00″
E	136°-43′-57″
F	136°-28′-07″
G	139°-55′-55″
H	139°-37′-54″
I	139°-20′-08″
J	139°-02′-39″
K	138°-45′-24″
L	138°-28′-24″

● ANGLES SHOWN ARE TANGENT TO GIRDER OR CURVE

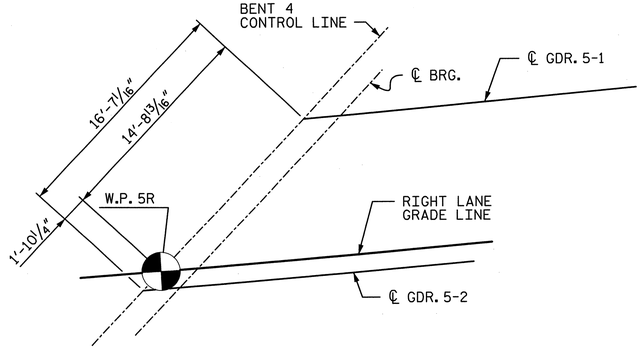

WORKPOINT 5R DETAIL

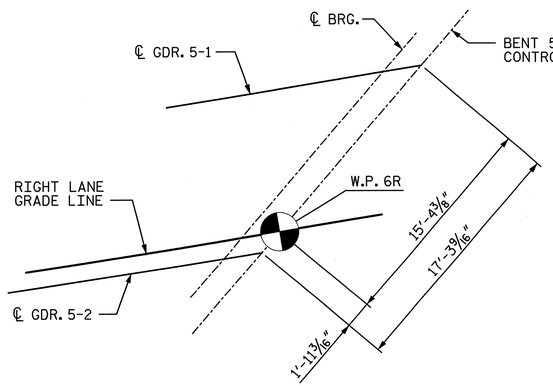

WORKPOINT 6R DETAIL

NORTH CAROLINA PROFESSIONAL SEAL 28479 ENGINEER KEVIN G. BAILEY 6-7-13

PROJECT NO. U-2524C

GUILFORD COUNTY

STATION: POT 407+85.82 -L-
= POT 29+79.72 -Y4-

SHEET 3 OF 14

STATE OF NORTH CAROLINA
DEPARTMENT OF TRANSPORTATION
RALEIGH

FRAMING PLAN
SPAN 5

-RIGHT LANE-

REVISIONS						SHEET NO.
NO.	BY:	DATE:	NO.	BY:	DATE:	S-334
1			3			TOTAL SHEETS
2			4			836

STV / Ralph Whitehead Associates, Inc.
1000 West Morehead St., Ste. 200
Charlotte, NC 28208
NC License No. F-0991

DRAWN BY : VMW DATE : 3-13
CHECKED BY : KGB DATE : 4-13

DESIGN ENGINEER OF RECORD: K. BAILEY DATE : 5-13

6/6/2013 4:40:36 PM R:\station\Finals\Framing Plan_Span 5 Sheet 3 of 14.dgn

NOTES:

1. FOR THE LOCATION OF FORMED HOLES FOR THE INTERMEDIATE STEEL DIAPHRAGMS IN GIRDERS, SEE "PRESTRESSED CONCRETE MODIFIED BULB TEE GIRDER DIAPHRAGM DETAILS" SHEET.

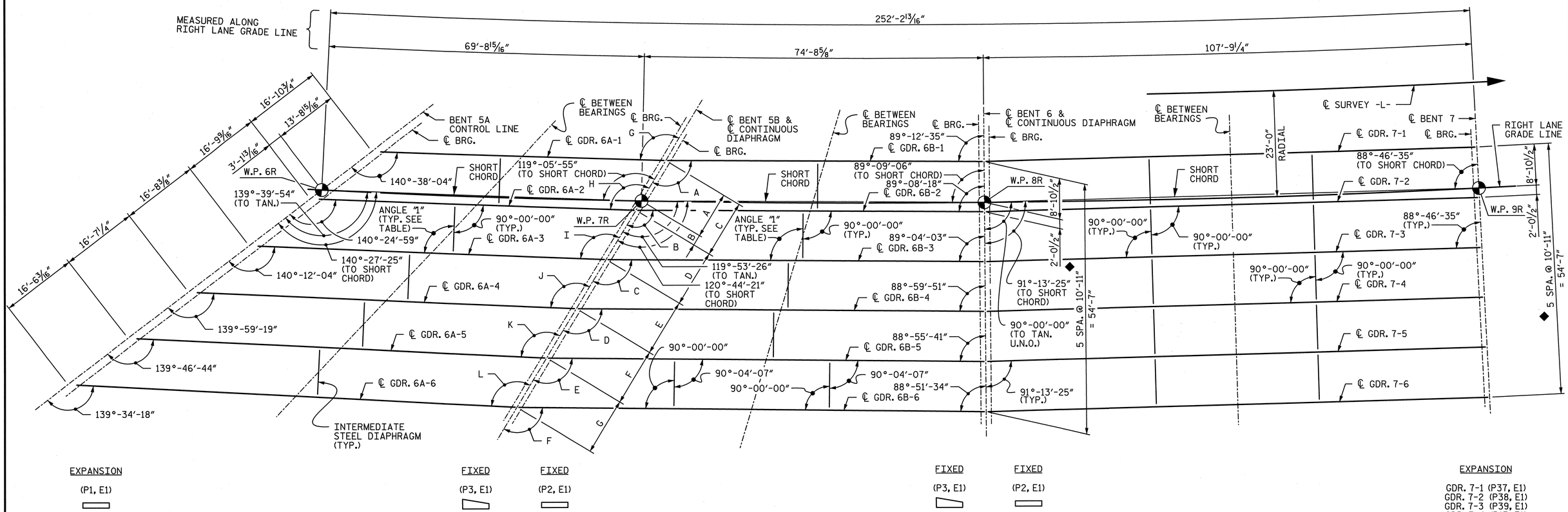

EXPANSION
(P1, E1)

FIXED
(P3, E1)

FIXED
(P2, E1)

FIXED
(P3, E1)

FIXED
(P2, E1)

EXPANSION
GDR. 7-1 (P37, E1)
GDR. 7-2 (P38, E1)
GDR. 7-3 (P39, E1)
GDR. 7-4 (P13, E1)
GDR. 7-5 (P36, E1)
GDR. 7-6 (P37, E1)

SPAN 6A

SPAN 6B

SPAN 7

FRAMING PLAN - UNIT C

◆ DIMENSIONS SHOWN ARE RADIAL TO CURVES CONCENTRIC WITH ℄ SURVEY -L-. GIRDERS ARE ON CHORDS OF THESE CONCENTRIC CURVES FOR THE SPAN.

DIAPHRAGM ANGLES		
	DIAPHRAGM	ANGLE "1"
SPAN 6A	6A-1 TO 6A-2	89°-46'-55"
	6A-2 TO 6A-3	89°-47'-05"
	6A-3 TO 6A-4	89°-47'-15"
	6A-4 TO 6A-5	89°-47'-25"
	6A-5 TO 6A-6	89°-47'-34"
SPAN 6B	6B-1 TO 6B-2	89°-55'-43"
	6B-2 TO 6B-3	89°-55'-45"
	6B-3 TO 6B-4	89°-55'-48"
	6B-4 TO 6B-5	89°-55'-50"

℄ GIRDER TO BENT ANGLES	
A	120°-47'-50"
B	120°-43'-32"
C	120°-39'-18"
D	120°-35'-06"
E	120°-30'-56"
F	120°-26'-49"
G	119°-16'-34"
H	119°-03'-29"
I	118°-50'-34"
J	118°-37'-49"
K	118°-25'-14"
L	118°-12'-48"

DISTANCES ALONG ℄ BENT	
A	10'-2 15/16"
B	2'-4 1/4"
C	12'-7 3/16"
D	12'-6 15/16"
E	12'-6 3/4"
F	12'-6 9/16"
G	12'-6 5/16"

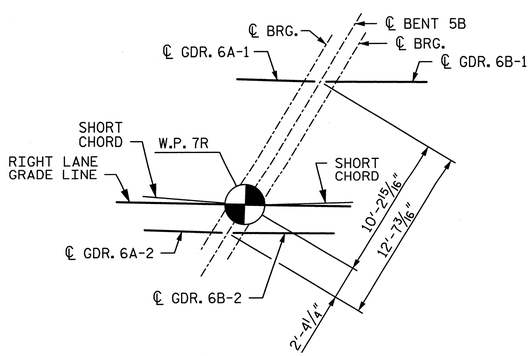

WORKPOINT 7R DETAIL

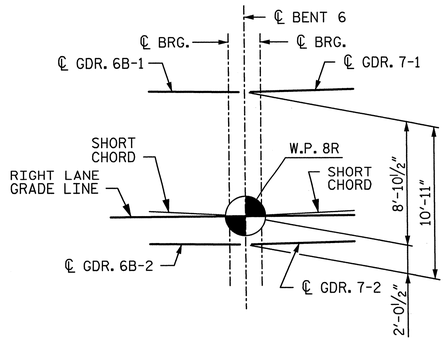

WORKPOINT 8R DETAIL

NORTH CAROLINA PROFESSIONAL SEAL 28479 ENGINEER KEVIN G. BAILEY 6-7-13

PROJECT NO. U-2524C
GUILFORD COUNTY
STATION: POT 407+85.82 -L-
= POT 29+79.72 -Y4-
SHEET 4 OF 14

STATE OF NORTH CAROLINA
DEPARTMENT OF TRANSPORTATION
RALEIGH

FRAMING PLAN
UNIT C SPANS 6A-7

-RIGHT LANE-

REVISIONS						SHEET NO.
NO.	BY:	DATE:	NO.	BY:	DATE:	S-335
1			3			TOTAL SHEETS
2			4			836

DRAWN BY : VMW DATE : 1-13
CHECKED BY : TJT DATE : 3-13
DESIGN ENGINEER OF RECORD: T. TOWNSEND DATE : 5-13

STV / Ralph Whitehead Associates, Inc.
1000 West Morehead St., Ste. 200
Charlotte, NC 28208
NC License No. F-0991

6/6/2013 4:40:38 PM R:\ustation\Finals\Framing Plan_Span 6A-7 Sheet 4 of 14.dgn

NOTES:

1. FOR THE LOCATION OF FORMED HOLES FOR THE INTERMEDIATE STEEL DIAPHRAGMS IN GIRDERS, SEE "PRESTRESSED CONCRETE MODIFIED BULB TEE GIRDER DIAPHRAGM DETAILS" SHEET.

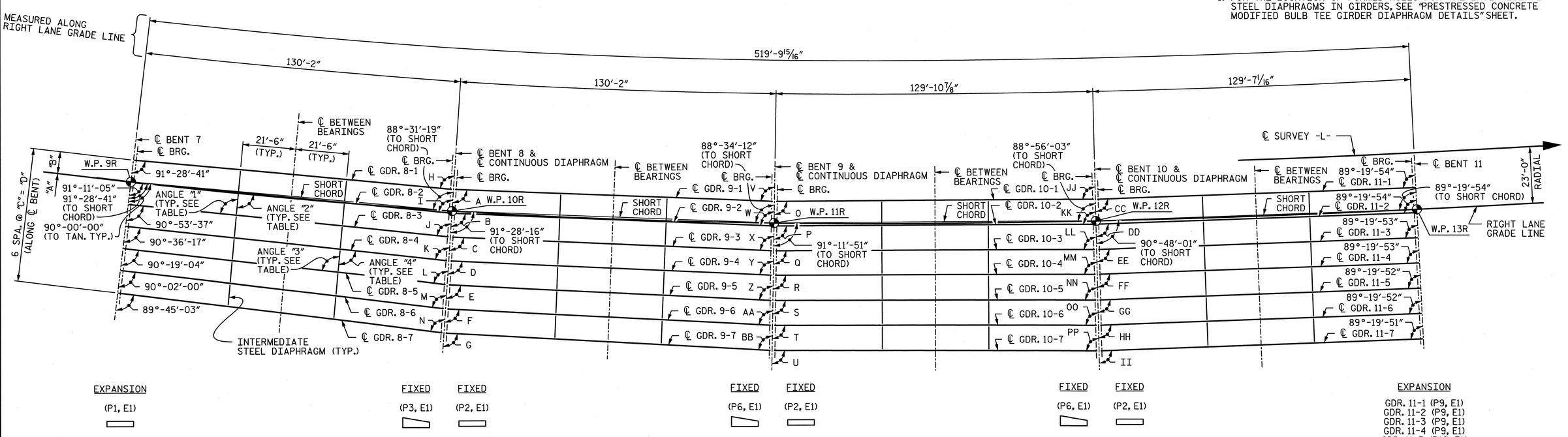

EXPANSION	FIXED	FIXED	FIXED	FIXED	FIXED	FIXED	EXPANSION
(P1, E1)	(P3, E1)	(P2, E1)	(P6, E1)	(P2, E1)	(P6, E1)	(P2, E1)	GDR. 11-1 (P9, E1) GDR. 11-2 (P9, E1) GDR. 11-3 (P9, E1) GDR. 11-4 (P9, E1) GDR. 11-5 (P10, E1) GDR. 11-6 (P10, E1) GDR. 11-7 (P10, E1)
SPAN 8		SPAN 9		SPAN 10		SPAN 11	

FRAMING PLAN - UNIT D

DIAPHRAGM ANGLES

	DIAPHRAGM	ANGLE "1"	ANGLE "2"	ANGLE "3"	ANGLE "4"
SPAN 8	8-1 TO 8-2	89°-38'-37"	89°-56'-13"	89°-39'-53"	89°-57'-29"
	8-2 TO 8-3	89°-21'-09"	89°-38'-37"	89°-22'-25"	89°-39'-53"
	8-3 TO 8-4	89°-03'-49"	89°-21'-09"	89°-05'-05"	89°-22'-25"
	8-4 TO 8-5	88°-46'-37"	89°-03'-49"	88°-47'-53"	89°-05'-05"
	8-5 TO 8-6	88°-29'-32"	88°-46'-37"	88°-30'-48"	88°-47'-53"
	8-6 TO 8-7	88°-12'-36"	88°-29'-32"	88°-13'-51"	88°-30'-48"
SPAN 9	9-1 TO 9-2	89°-50'-50"	89°-59'-38"	89°-51'-07"	89°-59'-55"
	9-2 TO 9-3	89°-42'-06"	89°-50'-50"	89°-42'-23"	89°-51'-07"
	9-3 TO 9-4	89°-33'-26"	89°-42'-06"	89°-33'-43"	89°-42'-23"
	9-4 TO 9-5	89°-24'-50"	89°-33'-26"	89°-25'-07"	89°-33'-43"
	9-5 TO 9-6	89°-16'-18"	89°-24'-50"	89°-16'-35"	89°-25'-07"
	9-6 TO 9-7	89°-07'-49"	89°-16'-18"	89°-08'-07"	89°-16'-35"
SPAN 10	10-1 TO 10-2	89°-58'-58"	90°-03'-23"	89°-59'-01"	90°-03'-26"
	10-2 TO 10-3	89°-54'-34"	89°-58'-58"	89°-54'-37"	89°-59'-01"
	10-3 TO 10-4	89°-50'-12"	89°-54'-34"	89°-50'-15"	89°-54'-37"
	10-4 TO 10-5	89°-45'-52"	89°-50'-12"	89°-45'-55"	89°-50'-15"
	10-5 TO 10-6	89°-41'-33"	89°-45'-52"	89°-41'-36"	89°-45'-55"
	10-6 TO 10-7	89°-37'-16"	89°-41'-33"	89°-37'-19"	89°-41'-36"
SPAN 11	11-1 TO 11-2	90°-03'-57"	90°-03'-58"	90°-03'-57"	90°-03'-58"
	11-2 TO 11-3	90°-03'-57"	90°-03'-57"	90°-03'-57"	90°-03'-57"
	11-3 TO 11-4	90°-03'-56"	90°-03'-57"	90°-03'-56"	90°-03'-57"
	11-4 TO 11-5	90°-03'-56"	90°-03'-56"	90°-03'-56"	90°-03'-56"
	11-5 TO 11-6	90°-03'-55"	90°-03'-56"	90°-03'-55"	90°-03'-56"
	11-6 TO 11-7	90°-03'-55"	90°-03'-55"	90°-03'-55"	90°-03'-55"

℄ GIRDER TO BENT ANGLES

A	91°-28'-17"	Q	91°-03'-03"	GG	90°-47'-59"
B	91°-19'-28"	R	90°-58'-41"	HH	90°-47'-59"
C	91°-10'-44"	S	90°-54'-21"	II	90°-47'-59"
D	91°-02'-04"	T	90°-50'-02"	JJ	88°-56'-04"
E	90°-53'-28"	U	90°-45'-45"	KK	88°-51'-38"
F	90°-44'-56"	V	88°-34'-13"	LL	88°-47'-15"
G	90°-36'-28"	W	88°-25'-25"	MM	88°-42'-53"
H	88°-31'-19"	X	88°-16'-41"	NN	88°-38'-32"
I	88°-13'-43"	Y	88°-08'-00"	OO	88°-34'-14"
J	87°-56'-15"	Z	87°-59'-24"	PP	88°-29'-56"
K	87°-38'-55"	AA	87°-50'-52"		
L	87°-21'-43"	BB	87°-42'-24"		
M	87°-04'-38"	CC	90°-48'-01"		
N	86°-47'-41"	DD	90°-48'-01"		
O	91°-11'-52"	EE	90°-48'-00"		
P	91°-07'-27"	FF	90°-48'-00"		

DISTANCE ALONG ℄ BENT

BENT	"A"	"B"	"C"	"D"
7	2½"	8'-10½"	9'-1"	54'-6"
8	10½"	8'-10½"	9'-9"	58'-6"
9	1'-2½"	8'-10½"	10'-1"	60'-6"
10	1'-4½"	8'-10½"	10'-3"	61'-6"
11	1'-4½"	8'-10½"	10'-3"	61'-6"

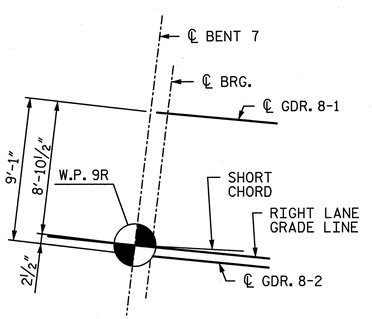

WORKPOINT 9R DETAIL

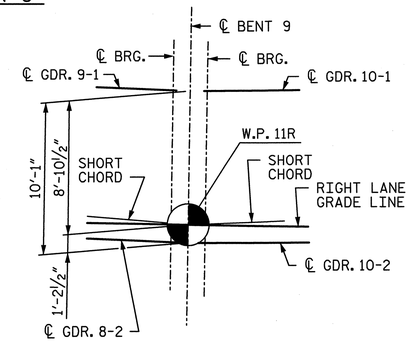

WORKPOINT 11R DETAIL

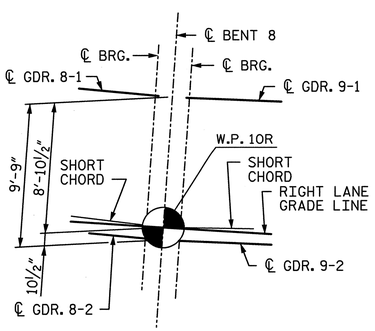

WORKPOINT 10R DETAIL

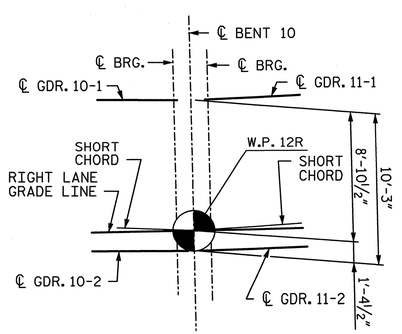

WORKPOINT 12R DETAIL

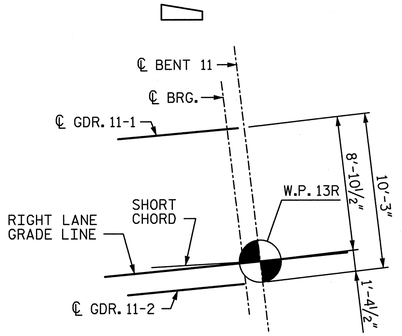

WORKPOINT 13R DETAIL

PROJECT NO. U-2524C

GUILFORD COUNTY

STATION: POT 407+85.82 -L-
= POT 29+79.72 -Y4-

SHEET 5 OF 14

STATE OF NORTH CAROLINA
DEPARTMENT OF TRANSPORTATION
RALEIGH

FRAMING PLAN
UNIT D SPANS 8-11

-RIGHT LANE-

NORTH CAROLINA PROFESSIONAL ENGINEER SEAL 28479 ENGINEER KEVIN G. BAILEY 6-7-13

STV / Ralph Whitehead Associates, Inc.
1000 West Morehead St., Ste. 200
Charlotte, NC 28208
NC License No. F-0991

REVISIONS						SHEET NO.
NO.	BY:	DATE:	NO.	BY:	DATE:	S-336
1			3			TOTAL SHEETS
2			4			836

DRAWN BY : VMW DATE : 1-13
CHECKED BY : TJT DATE : 3-13

DESIGN ENGINEER OF RECORD: T. TOWNSEND DATE : 5-13

6/6/2013 4:40:39 PM R:\station\Finals\Framing Plan_Span 8-11Sheet 5 of 14.dgn

NOTES:

1. FOR THE LOCATION OF FORMED HOLES FOR THE INTERMEDIATE STEEL DIAPHRAGMS IN GIRDERS, SEE "PRESTRESSED CONCRETE MODIFIED BULB TEE GIRDER DIAPHRAGM DETAILS" SHEET.

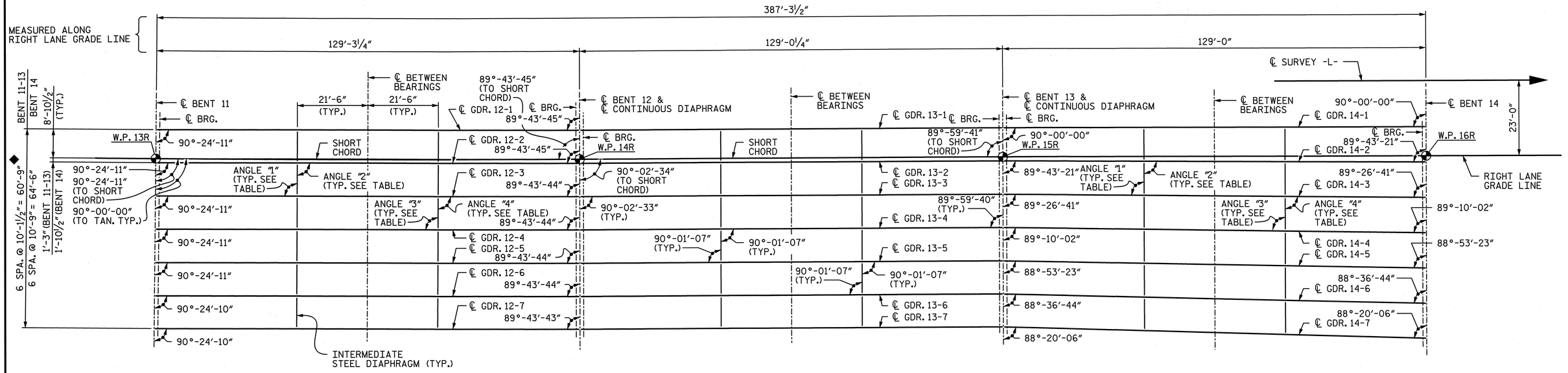

EXPANSION	FIXED	FIXED	FIXED	FIXED	EXPANSION
(P11, E1)	GDR. 12-1 (P4, E1) GDR. 12-2 (P35, E1) GDR. 12-3 (P4, E1) GDR. 12-4 (P35, E1) GDR. 12-5 (P7, E1) GDR. 12-6 (P35, E1) GDR. 12-7 (P40, E1)	GDR. 13-1 (P2, E1) GDR. 13-2 (P34, E1) GDR. 13-3 (P2, E1) GDR. 13-4 (P34, E1) GDR. 13-5 (P2, E1) GDR. 13-6 (P34, E1) GDR. 13-7 (P42, E1)	GDR. 13-1 (P4, E1) GDR. 13-2 (P4, E1) GDR. 13-3 (P4, E1) GDR. 13-4 (P7, E1) GDR. 13-5 (P7, E1) GDR. 13-6 (P7, E1) GDR. 13-7 (P7, E1)	(P2, E1)	GDR. 14-1 (P5, E1) GDR. 14-2 (P5, E1) GDR. 14-3 (P5, E1) GDR. 14-4 (P5, E1) GDR. 14-5 (P5, E1) GDR. 14-6 (P25, E1) GDR. 14-7 (P14, E1)
SPAN 12		SPAN 13		SPAN 14	

FRAMING PLAN - UNIT E

◆ (FOR SPANS 12 & 13 ONLY) DIMENSIONS SHOWN ARE RADIAL TO CURVES CONCENTRIC WITH ℄ SURVEY -L-. GIRDERS ARE ON CHORDS OF THESE CONCENTRIC CURVES FOR THE SPAN.

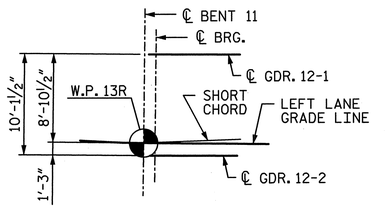

WORKPOINT 13R DETAIL

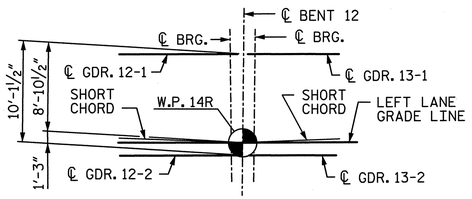

WORKPOINT 14R DETAIL

(WORKPOINT 14R SHOWN, WORKPOINT 15R SIMILAR)

	DIAPHRAGM ANGLES				
	DIAPHRAGM	ANGLE "1"	ANGLE "2"	ANGLE "3"	ANGLE "4"
SPAN 12	12-1 TO 12-2	90°-03'-58"	90°-03'-58"	90°-03'-58"	90°-03'-58"
	12-2 TO 12-3	90°-03'-58"	90°-03'-58"	90°-03'-58"	90°-03'-58"
	12-3 TO 12-4	90°-03'-57"	90°-03'-58"	90°-03'-57"	90°-03'-58"
	12-4 TO 12-5	90°-03'-57"	90°-03'-57"	90°-03'-57"	90°-03'-57"
	12-5 TO 12-6	90°-03'-57"	90°-03'-57"	90°-03'-57"	90°-03'-57"
	12-6 TO 12-7	90°-03'-57"	90°-03'-57"	90°-03'-57"	90°-03'-57"
SPAN 14	14-1 TO 14-2	89°-42'-50"	89°-59'-30"	89°-43'-50"	90°-00'-30"
	14-2 TO 14-3	89°-26'-11"	89°-42'-50"	89°-27'-11"	89°-43'-50"
	14-3 TO 14-4	89°-09'-32"	89°-26'-11"	89°-10'-32"	89°-27'-11"
	14-4 TO 14-5	88°-52'-53"	89°-09'-32"	88°-53'-53"	89°-10'-32"
	14-5 TO 14-6	88°-36'-14"	88°-52'-53"	88°-37'-14"	88°-53'-53"
	14-6 TO 14-7	88°-19'-35"	88°-36'-14"	88°-20'-35"	88°-37'-14"

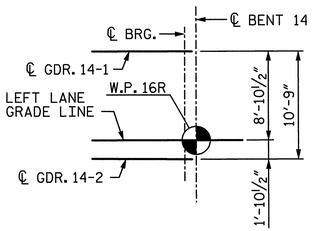

WORKPOINT 16R DETAIL

PROJECT NO. U-2524C

GUILFORD COUNTY

STATION: POT 407+85.82 -L-
= POT 29+79.72 -Y4-

SHEET 6 OF 14

STATE OF NORTH CAROLINA
DEPARTMENT OF TRANSPORTATION
RALEIGH

FRAMING PLAN
UNIT E SPANS 12-14

-RIGHT LANE-

DRAWN BY : VMW	DATE : 1-13	DESIGN ENGINEER OF RECORD: T. TOWNSEND	DATE : 5-13
CHECKED BY : TJT	DATE : 3-13		

STV / Ralph Whitehead Associates, Inc.
1000 West Morehead St., Ste. 200
Charlotte, NC 28208
NC License No. F-0991

REVISIONS						SHEET NO.
NO.	BY:	DATE:	NO.	BY:	DATE:	S-337
1			3			TOTAL SHEETS
2			4			836

6/6/2013 4:40:41 PM R:\ustation\Finals\Framing Plan_Span 12-14 Sheet 6 of 14.dgn

NOTES:

1. FOR THE LOCATION OF FORMED HOLES FOR THE INTERMEDIATE STEEL DIAPHRAGMS IN GIRDERS, SEE "PRESTRESSED CONCRETE MODIFIED BULB TEE GIRDER DIAPHRAGM DETAILS" SHEET.

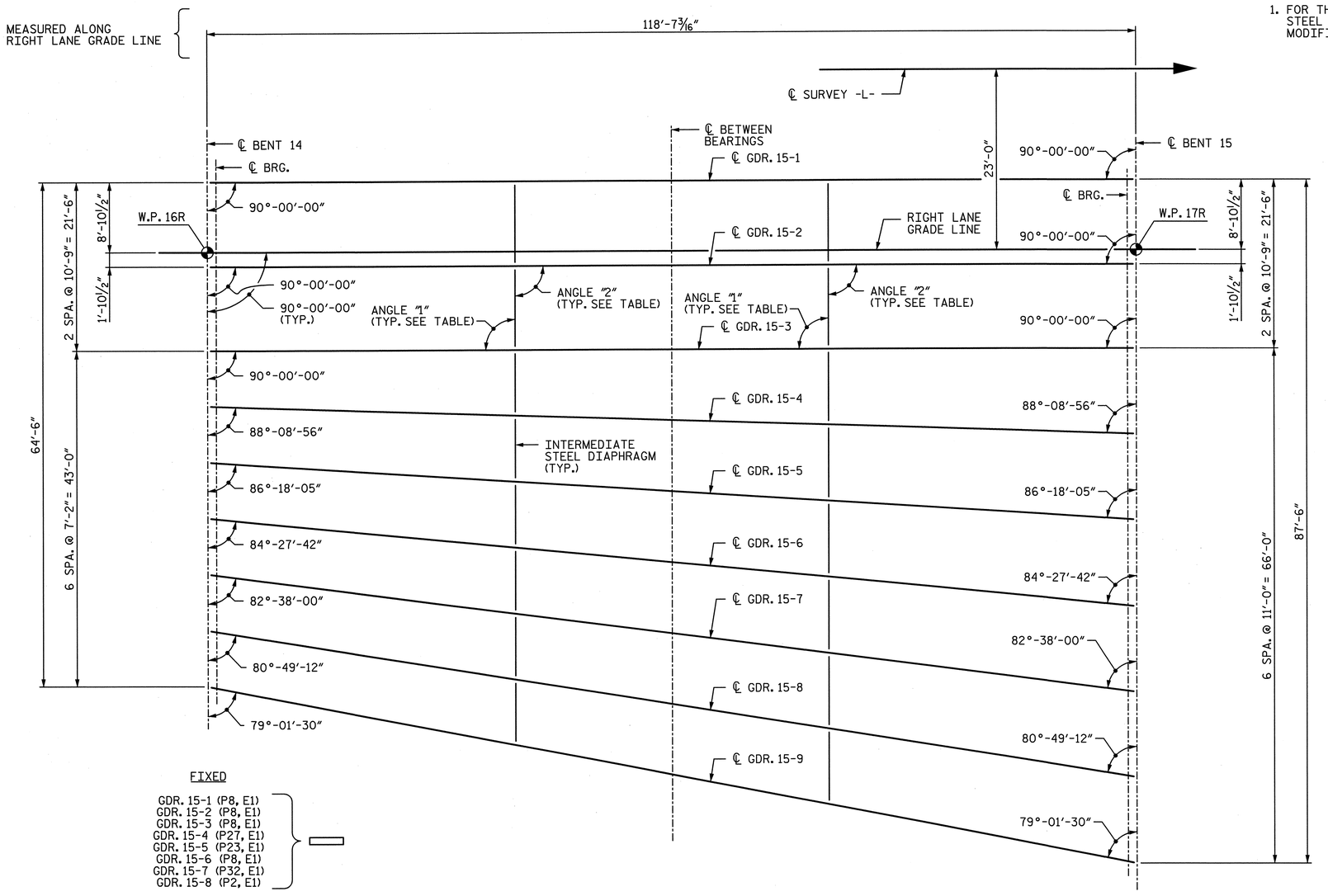

FIXED

GDR. 15-1 (P8, E1)
GDR. 15-2 (P8, E1)
GDR. 15-3 (P8, E1)
GDR. 15-4 (P27, E1)
GDR. 15-5 (P23, E1)
GDR. 15-6 (P8, E1)
GDR. 15-7 (P32, E1)
GDR. 15-8 (P2, E1)

GDR. 15-9 (P3, E1)

EXPANSION

GDR. 15-1 (P5, E1)
GDR. 15-2 (P5, E1)
GDR. 15-3 (P15, E1)
GDR. 15-4 (P13, E1)
GDR. 15-5 (P21, E1)
GDR. 15-6 (P30, E1)
GDR. 15-7 (P14, E1)
GDR. 15-8 (P12, E1)
GDR. 15-9 (P12, E1)

FRAMING PLAN - SPAN 15

DIAPHRAGM ANGLES		
DIAPHRAGM	ANGLE "1"	ANGLE "2"
15-1 TO 15-2	90°-00'-00"	90°-00'-00"
15-2 TO 15-3	90°-00'-00"	90°-00'-00"
15-3 TO 15-4	88°-08'-56"	90°-00'-00"
15-4 TO 15-5	86°-18'-05"	88°-08'-56"
15-5 TO 15-6	84°-27'-42"	86°-18'-05"
15-6 TO 15-7	82°-38'-00"	84°-27'-42"
15-7 TO 15-8	80°-49'-12"	82°-38'-00"
15-8 TO 15-9	79°-01'-30"	80°-49'-12"

NORTH CAROLINA PROFESSIONAL SEAL 28479 ENGINEER KEVIN G. BAILEY 6-7-13

PROJECT NO. U-2524C
GUILFORD COUNTY
STATION: POT 407+85.82 -L-
= POT 29+79.72 -Y4-
SHEET 7 OF 14

STATE OF NORTH CAROLINA
DEPARTMENT OF TRANSPORTATION
RALEIGH

FRAMING PLAN
SPAN 15

-RIGHT LANE-

DRAWN BY : VMW	DATE : 1-13	DESIGN ENGINEER OF RECORD: T. TOWNSEND	DATE : 5-13
CHECKED BY : TJT	DATE : 3-13		

STV / Ralph Whitehead Associates, Inc.
1000 West Morehead St., Ste. 200
Charlotte, NC 28208
NC License No. F-0991

REVISIONS					
NO.	BY:	DATE:	NO.	BY:	DATE:
1			3		
2			4		

SHEET NO. S-338
TOTAL SHEETS 836

6/6/2013 4:40:42 PM R:\station\FInals\Framing Plan_Span 15 Sheet 7 of 14.dgn

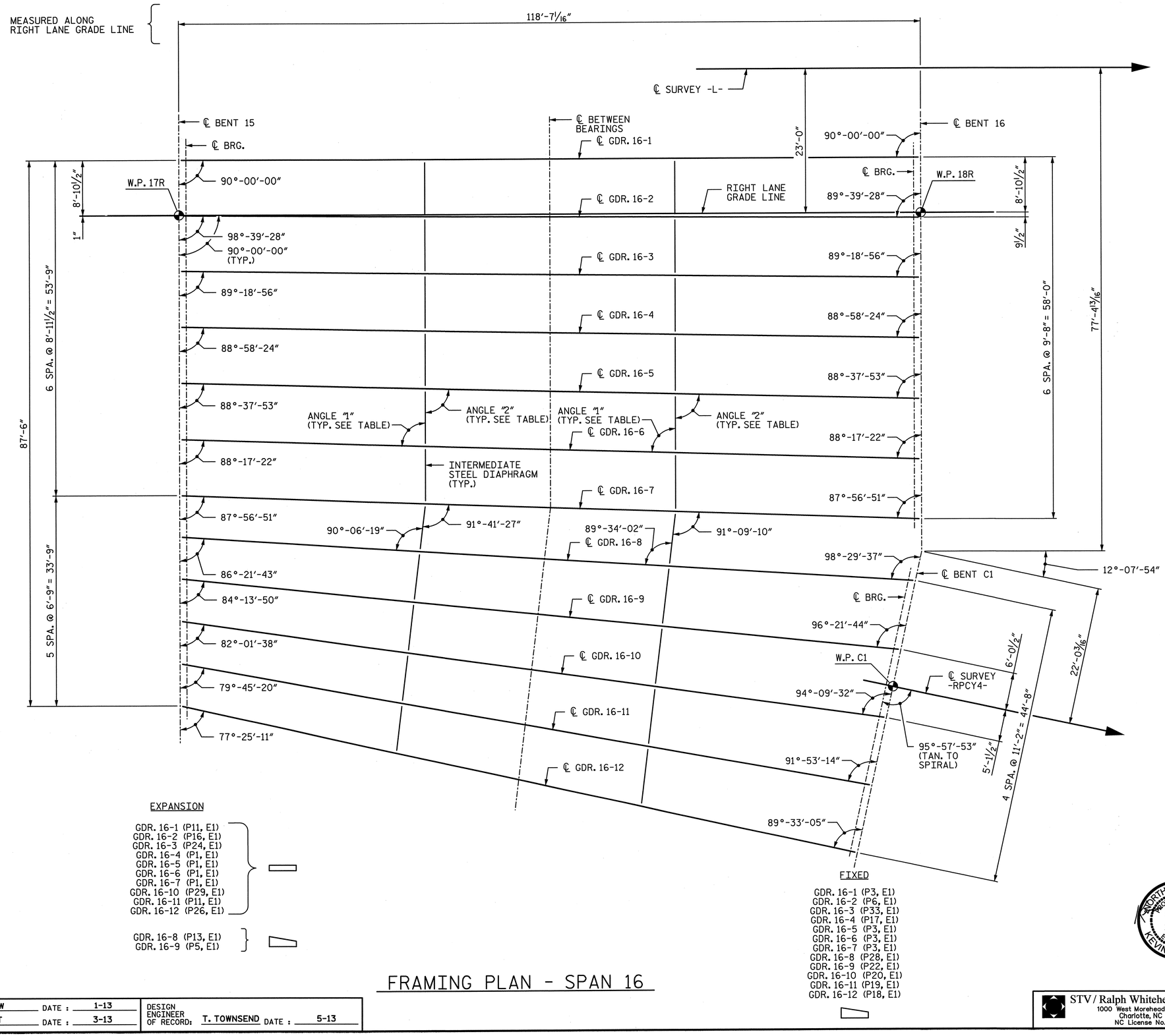

NOTES:

1. FOR THE LOCATION OF FORMED HOLES FOR THE INTERMEDIATE STEEL DIAPHRAGMS IN GIRDERS, SEE "PRESTRESSED CONCRETE MODIFIED BULB TEE GIRDER DIAPHRAGM DETAILS" SHEET.

DIAPHRAGM ANGLES

DIAPHRAGM	ANGLE "1"	ANGLE "2"
16-1 TO 16-2	89°-39'-28"	90°-00'-00"
16-2 TO 16-3	89°-18'-56"	89°-39'-28"
16-3 TO 16-4	88°-58'-24"	89°-18'-56"
16-4 TO 16-5	88°-37'-53"	88°-58'-24"
16-5 TO 16-6	88°-17'-22"	88°-37'-53"
16-6 TO 16-7	87°-56'-51"	88°-17'-22"
16-8 TO 16-9	91°-47'-49"	93°-55'-42"
16-9 TO 16-10	89°-35'-37"	91°-47'-49"
16-10 TO 16-11	87°-19'-19"	89°-35'-37"
16-11 TO 16-12	84°-59'-10"	87°-19'-19"

EXPANSION

GDR. 16-1 (P11, E1)
GDR. 16-2 (P16, E1)
GDR. 16-3 (P24, E1)
GDR. 16-4 (P1, E1)
GDR. 16-5 (P1, E1)
GDR. 16-6 (P1, E1)
GDR. 16-7 (P1, E1)
GDR. 16-10 (P29, E1)
GDR. 16-11 (P11, E1)
GDR. 16-12 (P26, E1)

GDR. 16-8 (P13, E1)
GDR. 16-9 (P5, E1)

FIXED

GDR. 16-1 (P3, E1)
GDR. 16-2 (P6, E1)
GDR. 16-3 (P33, E1)
GDR. 16-4 (P17, E1)
GDR. 16-5 (P3, E1)
GDR. 16-6 (P3, E1)
GDR. 16-7 (P3, E1)
GDR. 16-8 (P28, E1)
GDR. 16-9 (P22, E1)
GDR. 16-10 (P20, E1)
GDR. 16-11 (P19, E1)
GDR. 16-12 (P18, E1)

FRAMING PLAN - SPAN 16

PROJECT NO. U-2524C
GUILFORD COUNTY
STATION: POT 407+85.82 -L-
= POT 29+79.72 -Y4-
SHEET 8 OF 14

STATE OF NORTH CAROLINA
DEPARTMENT OF TRANSPORTATION
RALEIGH

FRAMING PLAN
SPAN 16

-RIGHT LANE-

NORTH CAROLINA PROFESSIONAL SEAL 28479 ENGINEER KEVIN G. BAILEY
6-7-13

STV / Ralph Whitehead Associates, Inc.
1000 West Morehead St., Ste. 200
Charlotte, NC 28208
NC License No. F-0991

DRAWN BY : VMW DATE : 1-13
CHECKED BY : TJT DATE : 3-13
DESIGN ENGINEER OF RECORD: T. TOWNSEND DATE : 5-13

REVISIONS						SHEET NO.
NO.	BY:	DATE:	NO.	BY:	DATE:	S-339
1			3			TOTAL SHEETS
2			4			836

6/6/2013 4:40:44 PM R:\station\Finals\Framing Plan_Span 16 Sheet 8 of 14.dgn

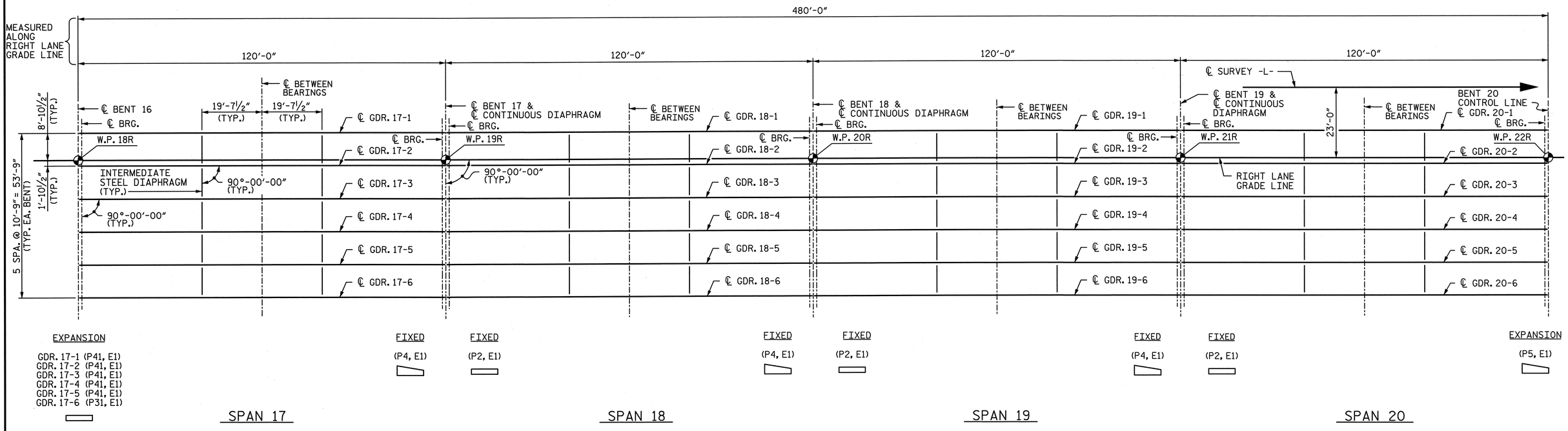

FRAMING PLAN - UNIT F

NOTES:

1. FOR THE LOCATION OF FORMED HOLES FOR THE INTERMEDIATE STEEL DIAPHRAGMS IN GIRDERS, SEE "PRESTRESSED CONCRETE MODIFIED BULB TEE GIRDER DIAPHRAGM DETAILS" SHEET.

PROJECT NO. U-2524C

GUILFORD COUNTY

STATION: POT 407+85.82 -L-
= POT 29+79.72 -Y4-

SHEET 9 OF 14

STATE OF NORTH CAROLINA
DEPARTMENT OF TRANSPORTATION
RALEIGH

FRAMING PLAN
UNIT F SPANS 17-20

-RIGHT LANE-

NORTH CAROLINA PROFESSIONAL ENGINEER SEAL 28479 KEVIN G. BAILEY
6-7-13

STV / Ralph Whitehead Associates, Inc.
1000 West Morehead St., Ste. 200
Charlotte, NC 28208
NC License No. F-0991

REVISIONS						SHEET NO.
NO.	BY:	DATE:	NO.	BY:	DATE:	S-340
1			3			TOTAL SHEETS
2			4			836

DRAWN BY : VMW DATE : 1-13
CHECKED BY : TJT DATE : 3-13

DESIGN ENGINEER OF RECORD: T. TOWNSEND DATE : 5-13

6/6/2013 4:40:45 PM R:\station\Finals\Framing Plan_Span 17-20 Sheet 9 of 14.dgn

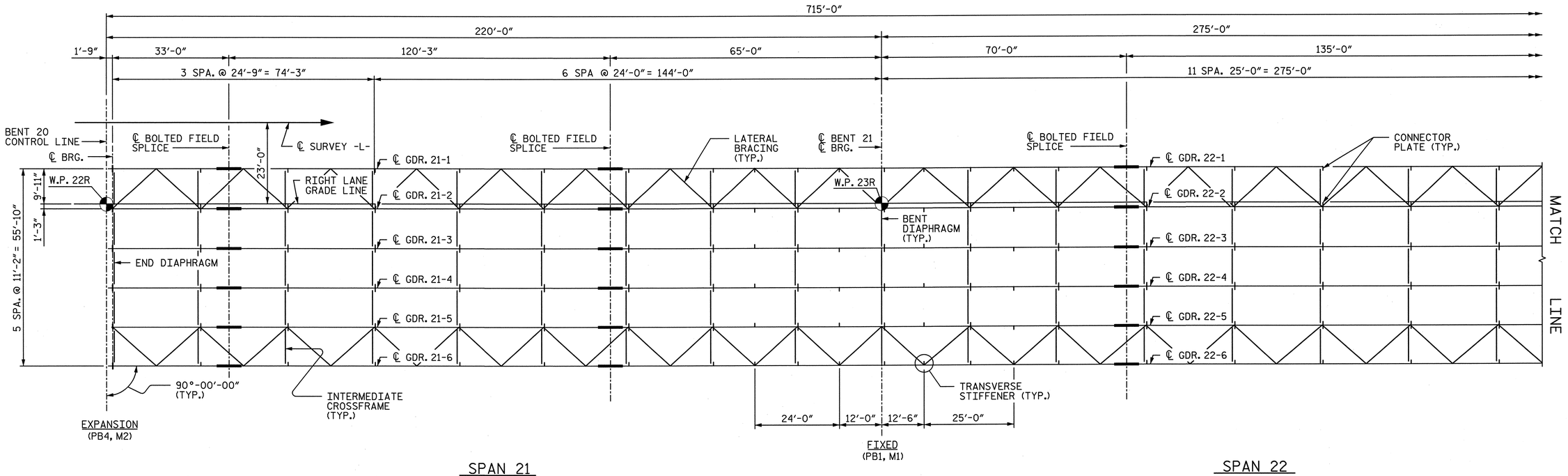

FRAMING PLAN - UNIT G

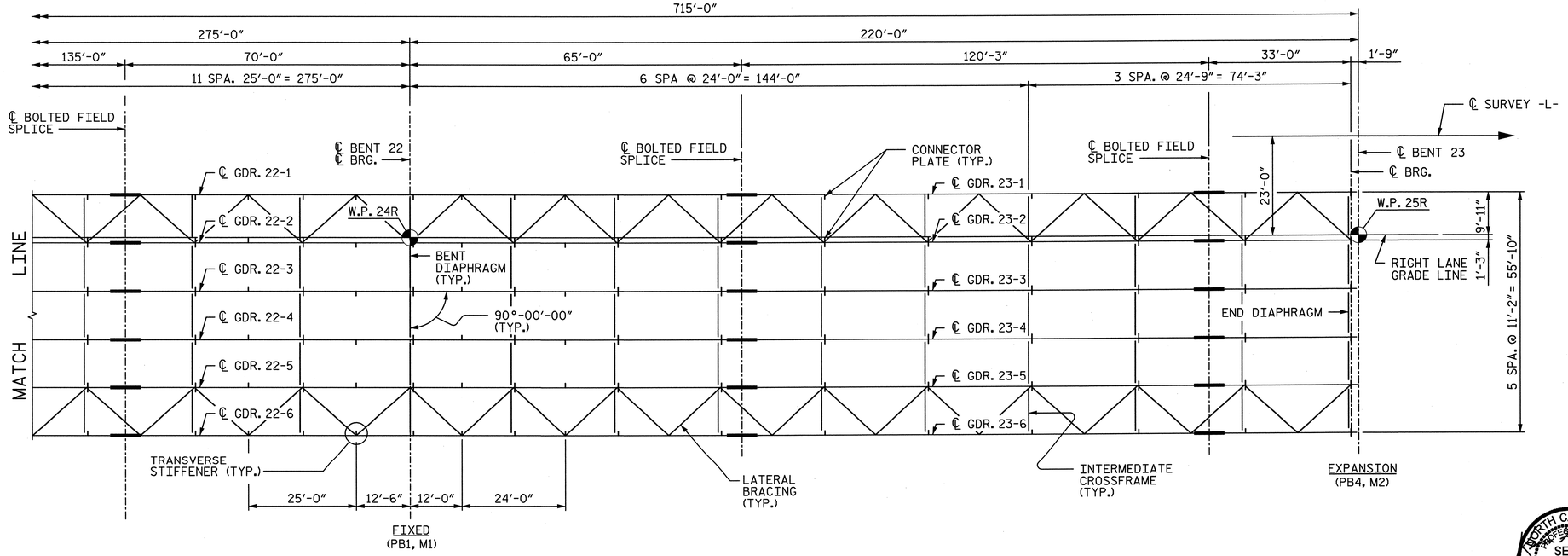

FRAMING PLAN - UNIT G

NORTH CAROLINA PROFESSIONAL SEAL 28479 ENGINEER KEVIN G. BAILEY 6-7-13

PROJECT NO. U-2524C

GUILFORD COUNTY

STATION: POT 407+85.82 -L-
= POT 29+79.72 -Y4-

SHEET 10 OF 14

STATE OF NORTH CAROLINA
DEPARTMENT OF TRANSPORTATION
RALEIGH

FRAMING PLAN
UNIT G SPANS 21-23

-RIGHT LANE-

REVISIONS						SHEET NO.
NO.	BY:	DATE:	NO.	BY:	DATE:	S-341
1			3			TOTAL SHEETS
2			4			836

STV / Ralph Whitehead Associates, Inc.
1000 West Morehead St., Ste. 200
Charlotte, NC 28208
NC License No. F-0991

DRAWN BY : VMW	DATE : 1-13	DESIGN ENGINEER OF RECORD: T. TOWNSEND	DATE : 5-13
CHECKED BY : TJT	DATE : 3-13		

6/6/2013 5:32:00 PM R:\ustation\Finals\Framing Plan_Span 21-23 Sheet 10 of 14.dgn

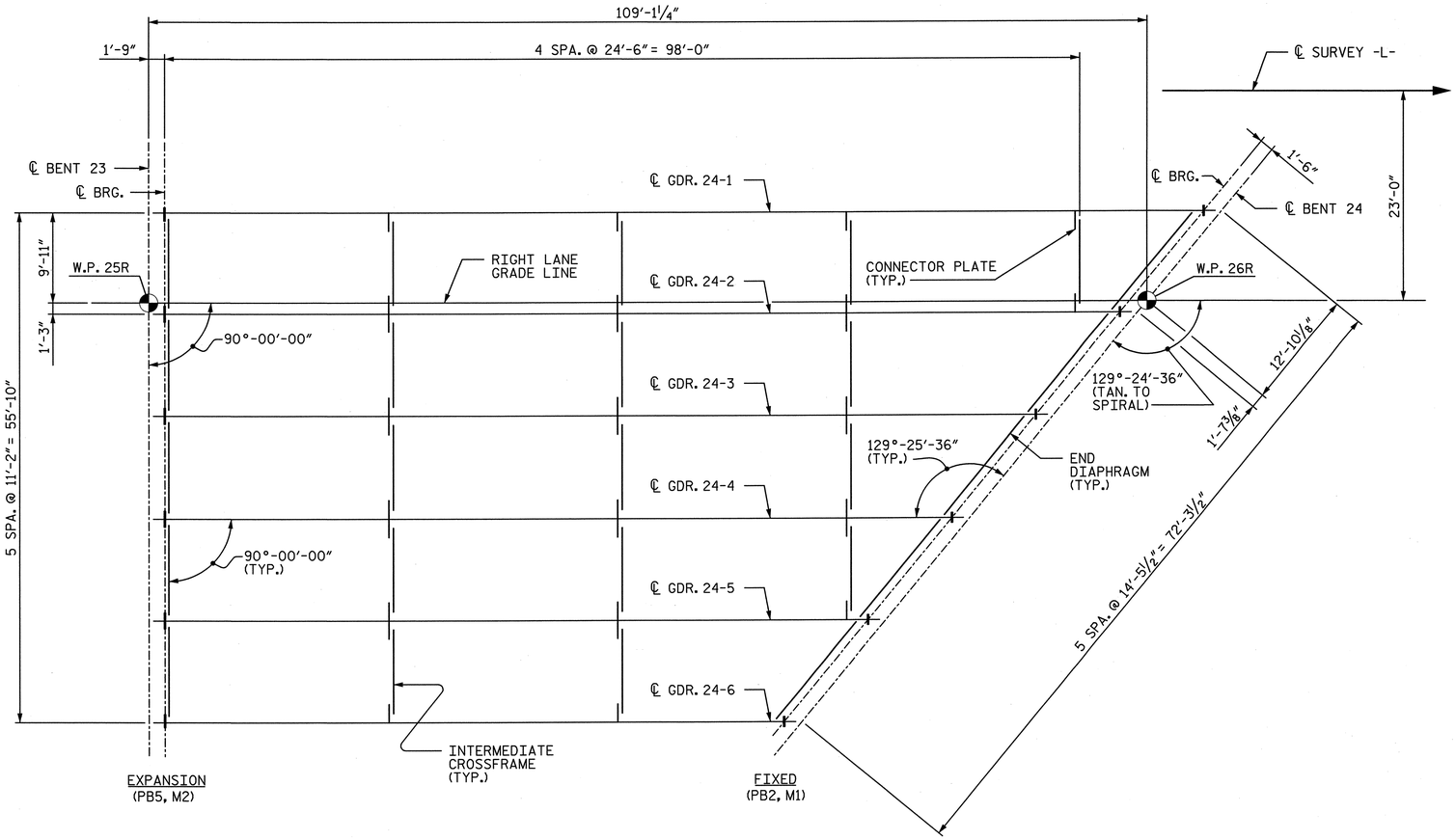

FRAMING PLAN - SPAN 24

PROJECT NO. U-2524C

GUILFORD COUNTY

STATION: POT 407+85.82 -L-
= POT 29+79.72 -Y4-

SHEET 11 OF 14

NORTH CAROLINA PROFESSIONAL SEAL 28479 ENGINEER KEVIN G. BAILEY 6-7-13

STATE OF NORTH CAROLINA
DEPARTMENT OF TRANSPORTATION
RALEIGH

FRAMING PLAN
SPAN 24

-RIGHT LANE-

DRAWN BY : VMW	DATE : 1-13	DESIGN ENGINEER OF RECORD: T. TOWNSEND	DATE : 5-13
CHECKED BY : TRL	DATE : 4-13		

STV / Ralph Whitehead Associates, Inc.
1000 West Morehead St., Ste. 200
Charlotte, NC 28208
NC License No. F-0991

REVISIONS						SHEET NO.
NO.	BY:	DATE:	NO.	BY:	DATE:	S-342
1			3			TOTAL SHEETS
2			4			836

6/6/2013 5:41:54 PM R:\ustation\Finals\Framing Plan_Span 24 Sheet 11 of 14.dgn

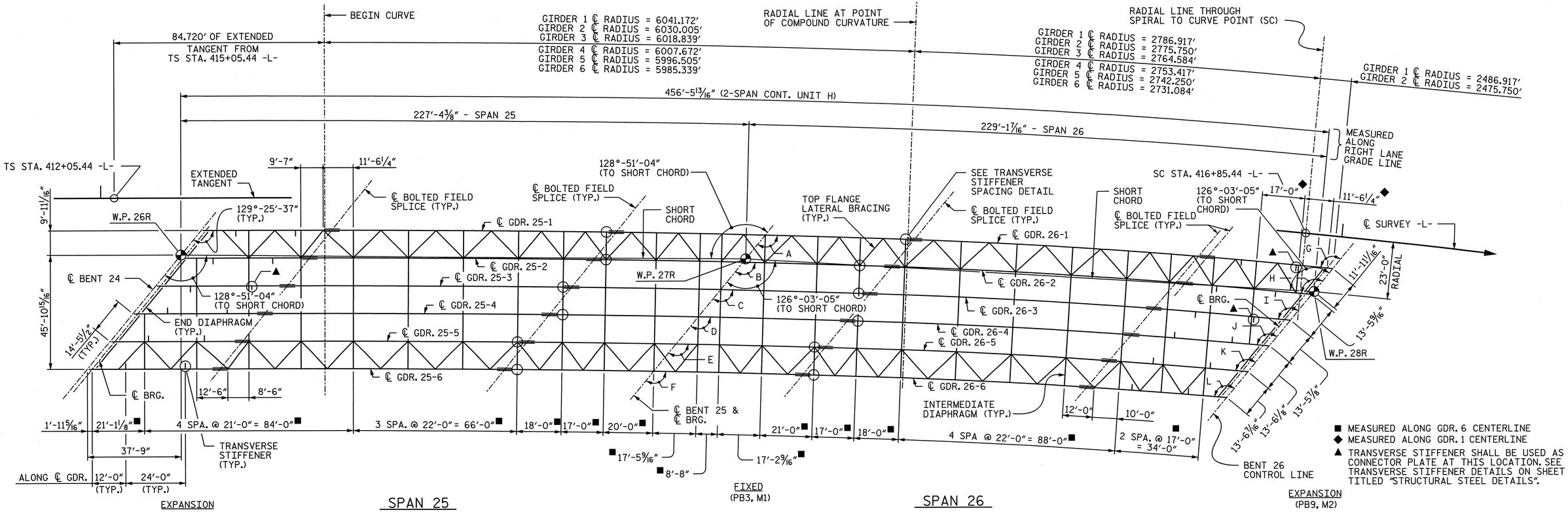

FRAMING PLAN - UNIT H

NOTE: GIRDER CENTERLINES ARE PARALLEL TO GIRDER 1. GIRDERS 2-6 ARE STRAIGHT AND PARALLEL TO GIRDER 1 FROM CENTERLINE BENT 24 TO THE BEGIN CURVE POINT SHOWN IN THE PLAN VIEW.

℄ GIRDER TO BENT ANGLES●	
A	127°-44'-43"
B	127°-49'-38"
C	127°-54'-36"
D	127°-59'-35"
E	128°-04'-35"
F	128°-09'-36"
G	123°-38'-48"
H	123°-49'-08"
I	123°-59'-09"
J	124°-08'-33"
K	124°-18'-03"
L	124°-27'-39"

● ANGLES SHOWN ARE TANGENT TO GIRDER OR CURVE

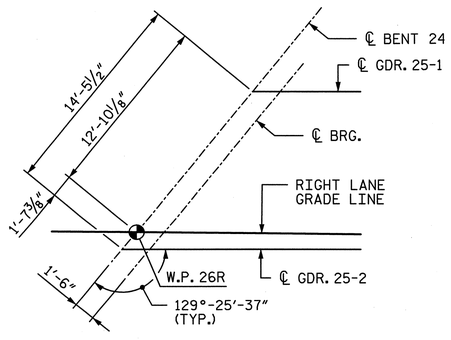

WORKPOINT 26R DETAIL

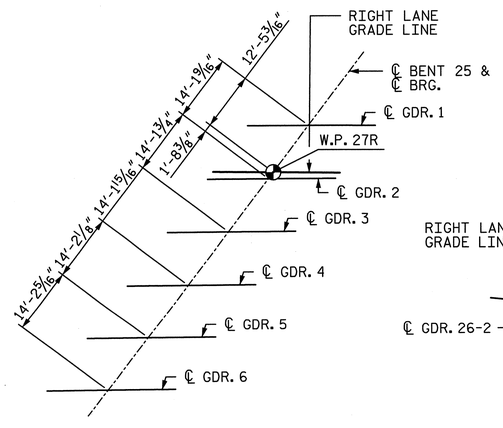

WORKPOINT 27R DETAIL

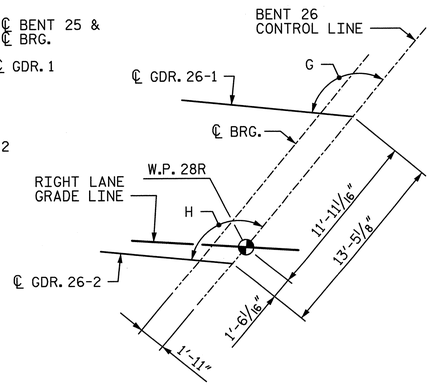

WORKPOINT 28R DETAIL

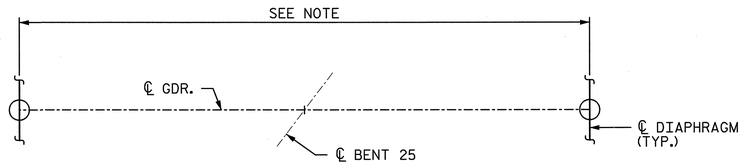

TRANSVERSE STIFFENER SPACING DETAIL

NOTE: ALL CROSSFRAME CONNECTOR PLATES IN THIS REGION SHALL BE INSTALLED AS A COMBINATION CONNECTOR PLATE/TRANSVERSE STIFFENER EXCEPT AT ℄ BRG. A COMBINATION CONNECTOR PLATE/BEARING STIFFENER SHALL BE INSTALLED AT ℄ BRG. SEE BEARING STIFFENER DETAIL AND TRANSVERSE STIFFENER DETAILS ON SHEET TITLED "STRUCTURAL STEEL DETAILS" SHEET 1 OF 2.

PROJECT NO. U-2524C
GUILFORD COUNTY
STATION: POT 407+85.82 -L- = POT 29+79.72 -Y4-
SHEET 12 OF 14

NORTH CAROLINA PROFESSIONAL SEAL 28479 ENGINEER KEVIN G. BAILEY 6-7-13

STATE OF NORTH CAROLINA
DEPARTMENT OF TRANSPORTATION
RALEIGH

FRAMING PLAN
UNIT H SPANS 25 & 26

-RIGHT LANE-

DRAWN BY : TRL	DATE : 3-13	DESIGN ENGINEER OF RECORD: K. BAILEY	DATE : 5-13
CHECKED BY : KGB	DATE : 4-13		

STV / Ralph Whitehead Associates, Inc.
1000 West Morehead St., Ste. 200
Charlotte, NC 28208
NC License No. F-0991

REVISIONS					
NO.	BY:	DATE:	NO.	BY:	DATE:
1			3		
2			4		

SHEET NO. S-343
TOTAL SHEETS 836

6/6/2013 4:40:48 PM R:\station\Finals\Framing Plan_Span 25-26 Sheet 12of 14.dgn

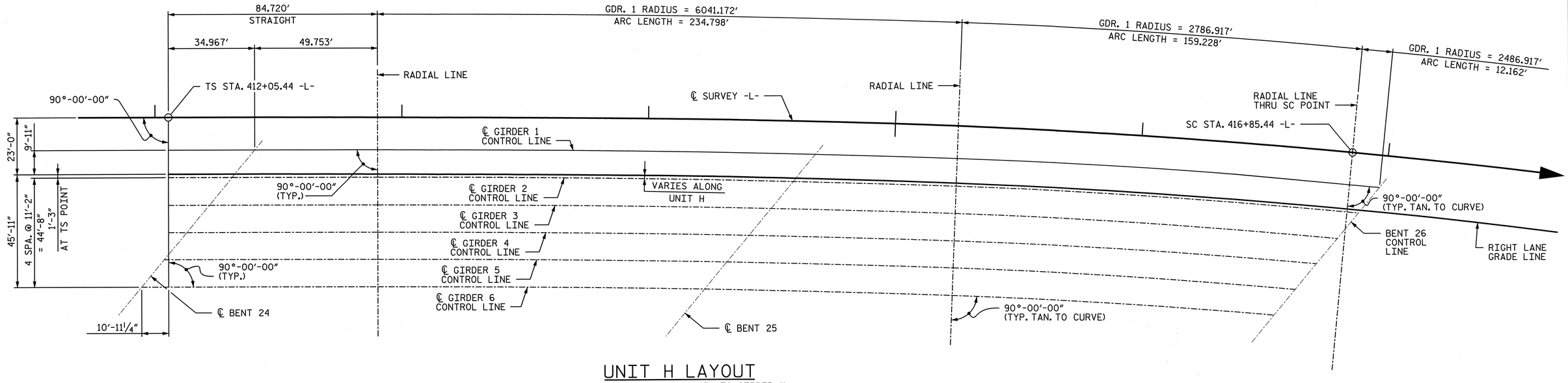

UNIT H LAYOUT

(GIRDERS 2-6 ARE PARALLEL TO GIRDER 1)

PROJECT NO. U-2524C

GUILFORD COUNTY

STATION: POT 407+85.82 -L-
= POT 29+79.72 -Y4-

SHEET 13 OF 14

STATE OF NORTH CAROLINA
DEPARTMENT OF TRANSPORTATION
RALEIGH

FRAMING PLAN
UNIT H LAYOUT

-RIGHT LANE-

NORTH CAROLINA PROFESSIONAL SEAL 28479 ENGINEER KEVIN G. BAILEY
6-7-13

STV/ Ralph Whitehead Associates, Inc.
1000 West Morehead St., Ste. 200
Charlotte, NC 28208
NC License No. F-0991

REVISIONS						SHEET NO.
NO.	BY:	DATE:	NO.	BY:	DATE:	S-344
1			3			TOTAL SHEETS
2			4			836

DRAWN BY : TRL DATE : 2-13
CHECKED BY : KGB DATE : 4-13

DESIGN ENGINEER OF RECORD: K. BAILEY DATE : 5-13

6/6/2013 4:40:50 PM R:\ustation\Finals\Framing Plan_Span 25-26 Sheet 13 of 14.dgn

NOTES:

1. FOR THE LOCATION OF FORMED HOLES FOR THE INTERMEDIATE STEEL DIAPHRAGMS IN GIRDERS, SEE "PRESTRESSED CONCRETE MODIFIED BULB TEE GIRDER DIAPHRAGM DETAILS" SHEET.

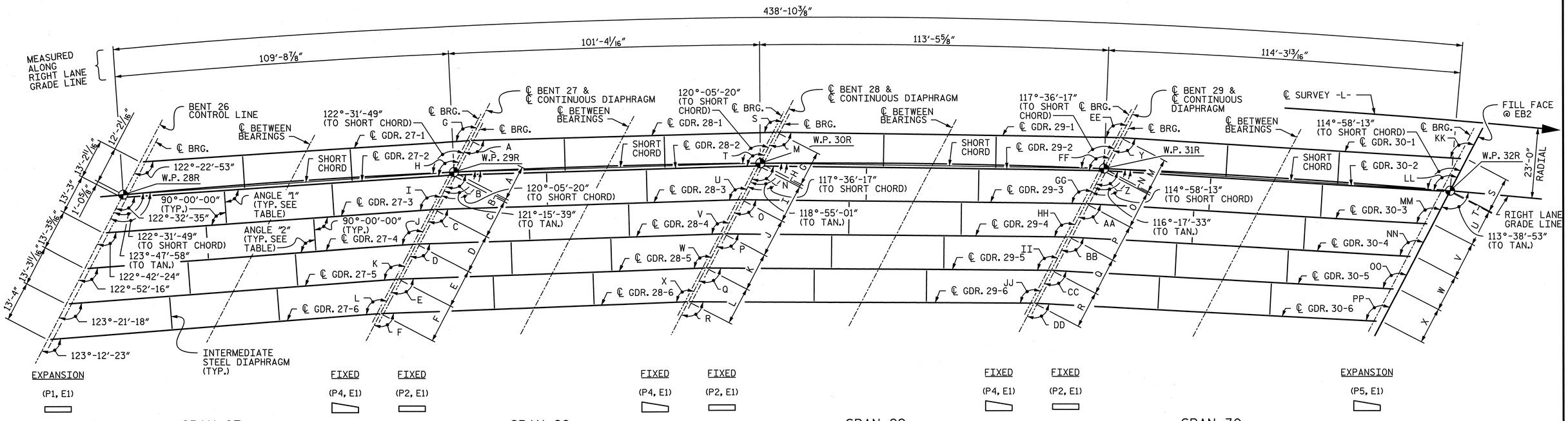

FRAMING PLAN - UNIT I

DIAPHRAGM ANGLES			
	DIAPHRAGM	ANGLE "1"	ANGLE "2"
SPAN 27	27-1 TO 27-2	89°-50'-18"	90°-09'-42"
	27-2 TO 27-3	89°-50'-12"	90°-09'-48"
	27-3 TO 27-4	89°-50'-07"	90°-09'-53"
	27-4 TO 27-5	89°-49'-58"	90°-10'-02"
	27-5 TO 27-6	89°-49'-55"	90°-10'-05"
SPAN 28	28-1 TO 28-2	89°-51'-11"	90°-08'-49"
	28-2 TO 28-3	89°-51'-06"	90°-08'-54"
	28-3 TO 28-4	89°-51'-00"	90°-09'-00"
	28-4 TO 28-5	89°-50'-54"	90°-09'-06"
	28-5 TO 28-6	89°-50'-49"	90°-09'-11"
SPAN 29	29-1 TO 29-2	89°-52'-03"	90°-07'-57"
	29-2 TO 29-3	89°-51'-58"	90°-08'-02"
	29-3 TO 29-4	89°-51'-53"	90°-08'-07"
	29-4 TO 29-5	89°-51'-48"	90°-08'-12"
	29-5 TO 29-6	89°-51'-43"	90°-08'-17"
SPAN 30	30-1 TO 30-2	89°-52'-55"	90°-07'-05"
	30-2 TO 30-3	89°-52'-51"	90°-07'-09"
	30-3 TO 30-4	89°-52'-46"	90°-07'-14"
	30-4 TO 30-5	89°-52'-42"	90°-07'-18"
	30-5 TO 30-6	89°-52'-38"	90°-07'-22"

℄ GIRDER TO BENT ANGLES			
A	119°-57'-13"	AA	115°-05'-56"
B	120°-06'-02"	BB	115°-13'-10"
C	120°-14'-56"	CC	115°-20'-28"
D	120°-23'-56"	DD	115°-27'-50"
E	120°-33'-02"	EE	117°-28'-58"
F	120°-42'-13"	FF	117°-36'-55"
G	122°-22'-53"	GG	117°-44'-58"
H	122°-32'-35"	HH	117°-53'-05"
I	122°-42'-23"	II	118°-01'-17"
J	122°-52'-16"	JJ	118°-09'-34"
K	123°-02'-17"	KK	114°-51'-42"
L	123°-12'-22"	LL	114°-58'-47"
M	117°-28'-58"	MM	115°-05'-56"
N	117°-36'-55"	NN	115°-13'-10"
O	117°-44'-57"	OO	115°-20'-27"
P	117°-53'-04"	PP	115°-27'-50"
Q	118°-01'-16"		
R	118°-09'-33"		
S	119°-57'-14"		
T	120°-06'-03"		
U	120°-14'-57"		
V	120°-23'-57"		
W	120°-33'-02"		
X	120°-42'-14"		
Y	114°-51'-42"		
Z	114°-58'-47"		

DISTANCES ALONG ℄ BENT		
BENT 27	A	11'-10"
	B	1'-0 5/16"
	C	12'-10 9/16"
	D	12'-10 13/16"
	E	12'-11 1/16"
	F	12'-11 3/8"
BENT 28	G	11'-6 11/16"
	H	1'-0"
	I	12'-6 15/16"
	J	12'-7 1/8"
	K	12'-7 5/16"
	L	12'-7 9/16"
BENT 29	M	11'-3 1/2"
	N	11 11/16"
	O	12'-3 5/16"
	P	12'-3 1/2"
	Q	12'-3 5/8"
	R	12'-3 13/16"
END BENT 2	S	11'-0 5/8"
	T	11 7/16"
	U	12'-0 3/16"
	V	12'-0 5/16"
	W	12'-0 7/16"
	X	12'-0 9/16"

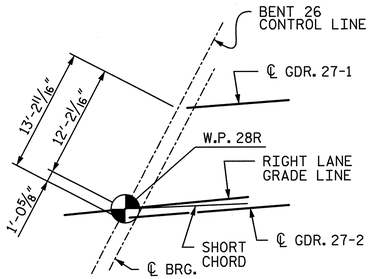

WORKPOINT 28R DETAIL

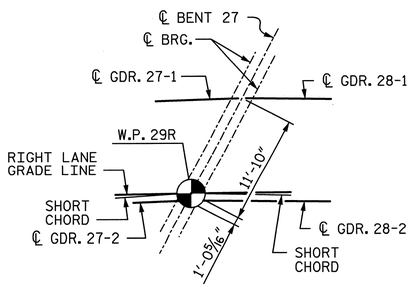

WORKPOINT 29R DETAIL

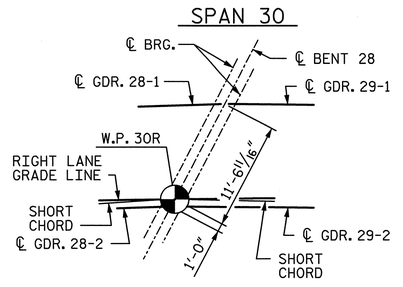

WORKPOINT 30R DETAIL

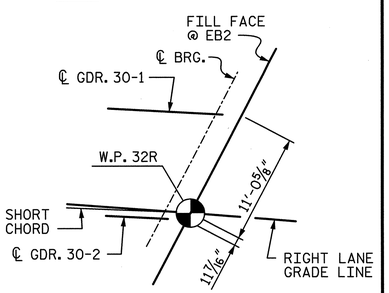

WORKPOINT 32R DETAIL

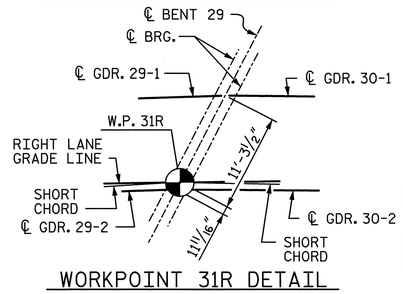

WORKPOINT 31R DETAIL

PROJECT NO. U-2524C

GUILFORD COUNTY

STATION: POT 407+85.82 -L-
= POT 29+79.72 -Y4-

SHEET 14 OF 14

STATE OF NORTH CAROLINA
DEPARTMENT OF TRANSPORTATION
RALEIGH

FRAMING PLAN
UNIT I SPANS 27-30

-RIGHT LANE-

NORTH CAROLINA PROFESSIONAL SEAL 28479 ENGINEER KEVIN G. BAILEY 6-7-13

STV / Ralph Whitehead Associates, Inc.
1000 West Morehead St., Ste. 200
Charlotte, NC 28208
NC License No. F-0991

REVISIONS						SHEET NO.
NO.	BY:	DATE:	NO.	BY:	DATE:	S-345
1			3			TOTAL SHEETS
2			4			836

DRAWN BY : VMW DATE : 1-13
CHECKED BY : TJT DATE : 3-13

DESIGN ENGINEER OF RECORD: T. TOWNSEND DATE : 5-13

R:\Ustation\Finals\Framing Plan_Span 27-30 Sheet 14 of 14.dgn
6/6/2013 4:40:52 PM

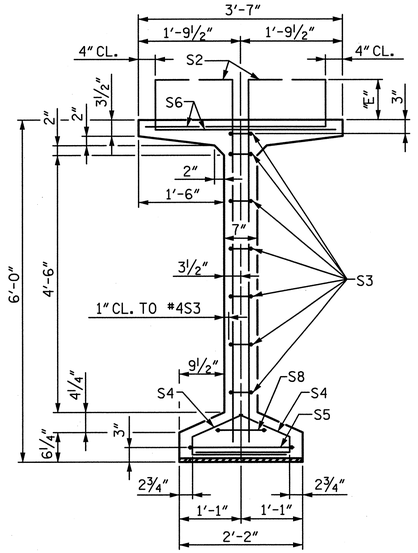

SECTION A-A

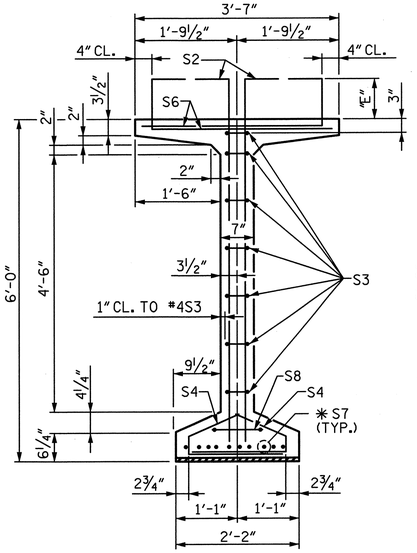

SECTION B-B

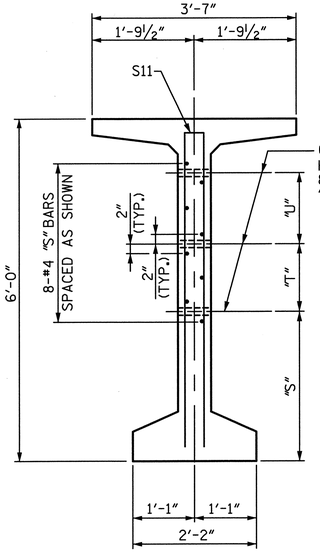

SECTION C-C

(S1 AND S9 BARS NOT SHOWN)
(SEE PARTIAL ELEVATION ON SHEET 8 OF 12)

✱FOR S7 BARS, SEE SECTION D-D ON SHEET 12 OF 12.

NOTES:

1. FOR STRAND LAYOUT, SEE SHEETS 6 & 7 OF 12.
2. FOR DIAPHRAGM HOLE LOCATIONS, SEE SHEET 8 OF 12.
3. SEE SHEETS 9 THROUGH 11 OF 12 FOR VARIABLE DIMENSIONS.
4. FOR GIRDER DETAILS, SEE SHEET 12 OF 12.
5. SEE SHEET 12 OF 12 FOR NOTES.

♦ SEE GIRDER TABLES ON SHEETS 9 THROUGH 11 OF 12 FOR VALUES.

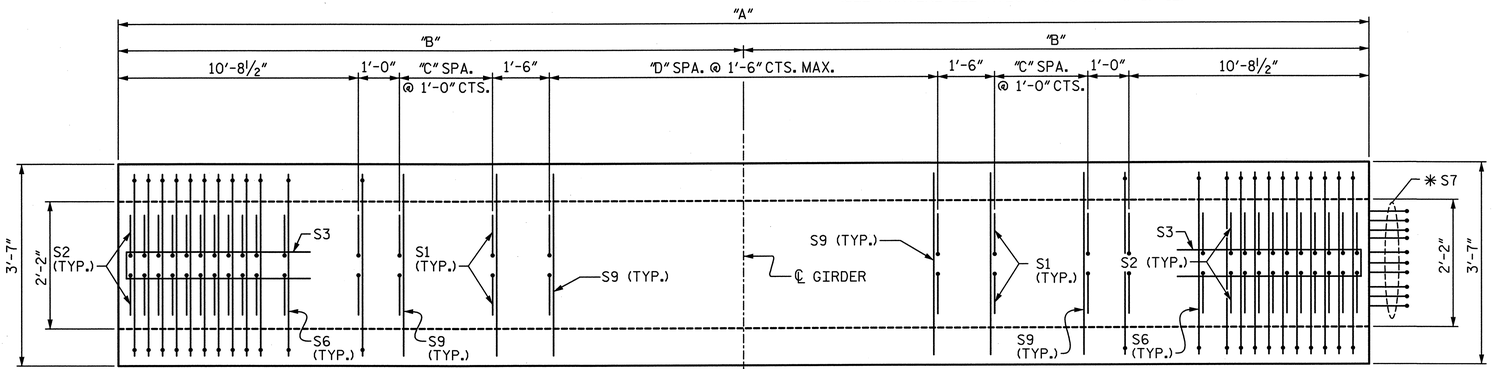

PLAN OF GIRDER

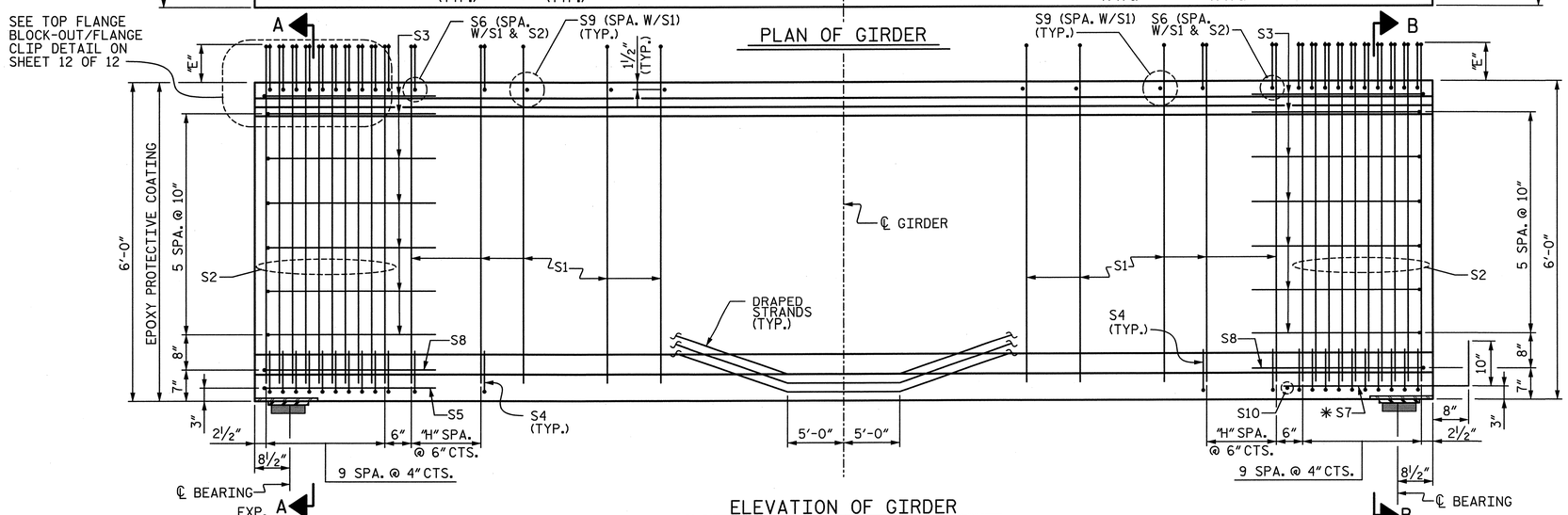

ELEVATION OF GIRDER

(DOWNSTATION EXTERIOR SPAN SHOWN, UPSTATION EXTERIOR SPAN MIRROR)
(GENERIC DRAPED STRANDS SHOWN TO INDICATE HOLD DOWN LOCATIONS)

0.6" Ø L. R. GRADE 270 STRANDS

AREA (SQUARE INCHES)	ULTIMATE STRENGTH (LBS. PER STRAND)	APPLIED PRESTRESS (LBS. PER STRAND)
0.217	58,600	43,950

REINFORCING STEEL FOR ONE GDR

BAR	NUMBER	SIZE	TYPE	LENGTH	WEIGHT
S1	♦	♦	①	♦	♦
S2	40	#6	①	♦	♦
S3	14	#4	②	8'-5"	79
S4	100	#4	③	3'-0"	200
S5	1	#5	②	9'-10"	10
S6	♦	#5	④	♦	♦
✱S7	10	#5	STR.	5'-0"	52
S8	2	#5	②	9'-0"	19
S9	♦	#5	STR.	3'-3"	♦
S10	1	#3	STR.	1'-10"	1
S11	♦	#5	②	11'-8"	♦
S12	♦	#4	STR.	8'-0"	♦
S13	♦	#4	STR.	♦	♦

✱NOTE: S7 BARS SHALL BE BENT BEFORE SHIPMENT. HEAT BENDING SHALL NOT BE ALLOWED.

BAR TYPES

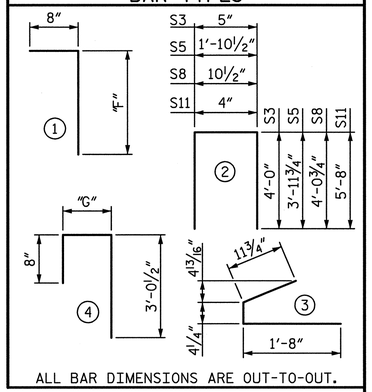

ALL BAR DIMENSIONS ARE OUT-TO-OUT.

PROJECT NO. U-2524C
GUILFORD COUNTY
STATION: POT 407+85.82 -L-
= POT 29+79.72 -Y4-
SHEET 1 OF 12

STATE OF NORTH CAROLINA
DEPARTMENT OF TRANSPORTATION
RALEIGH

PRESTRESSED CONCRETE MODIFIED 72" BULB TEE GIRDER PLAN AND ELEVATION

-RIGHT LANE-

NORTH CAROLINA PROFESSIONAL SEAL 28479 ENGINEER KEVIN G. BAILEY 6-7-13

DRAWN BY : CLG	DATE : 3-13	DESIGN ENGINEER OF RECORD: T. TOWNSEND	DATE : 5-13
CHECKED BY : TJT	DATE : 3-13		

STV / Ralph Whitehead Associates, Inc.
1000 West Morehead St., Ste. 200
Charlotte, NC 28208
NC License No. F-0991

REVISIONS						SHEET NO.
NO.	BY:	DATE:	NO.	BY:	DATE:	S-346
1			3			TOTAL SHEETS
2			4			836

6/6/2013 4:40:53 PM R:\ustation\Finals\PCMBT 1of 12.dgn

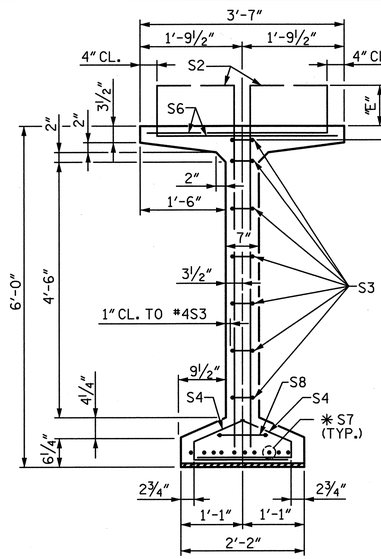

SECTION B-B

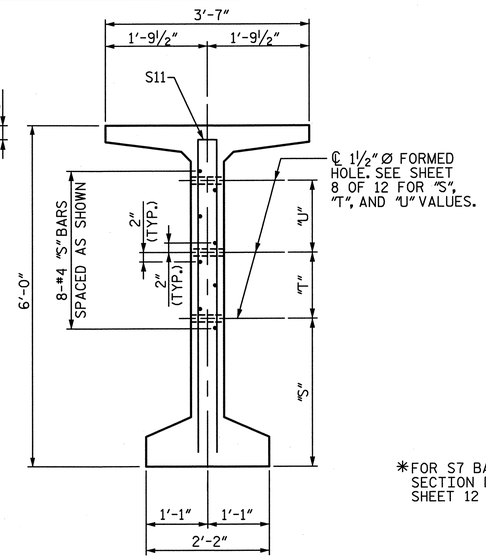

SECTION C-C

(S1 AND S9 BARS NOT SHOWN)
(SEE PARTIAL ELEVATION ON SHEET 8 OF 12)

✱FOR S7 BARS, SEE SECTION D-D ON SHEET 12 OF 12.

NOTES:

1. FOR STRAND LAYOUT, SEE SHEETS 6 & 7 OF 12.
2. FOR DIAPHRAGM HOLE LOCATIONS, SEE SHEET 8 OF 12.
3. SEE SHEETS 9 THROUGH 11 OF 12 FOR VARIABLE DIMENSIONS.
4. FOR GIRDER DETAILS, SEE SHEET 12 OF 12.
5. SEE SHEET 12 OF 12 FOR NOTES.

♦ SEE GIRDER TABLES ON SHEETS 9 THROUGH 11 OF 12 FOR VALUES.

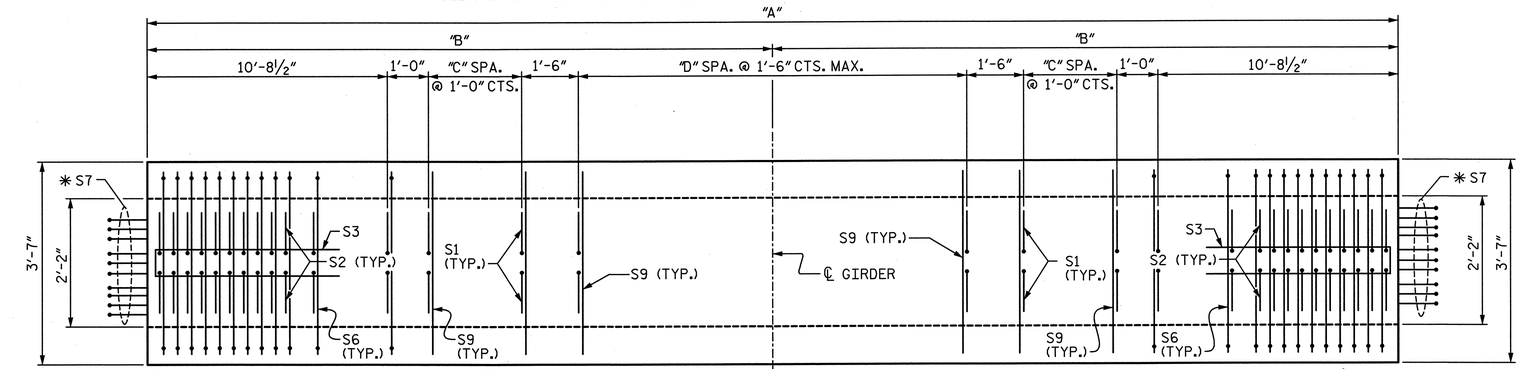

PLAN OF GIRDER

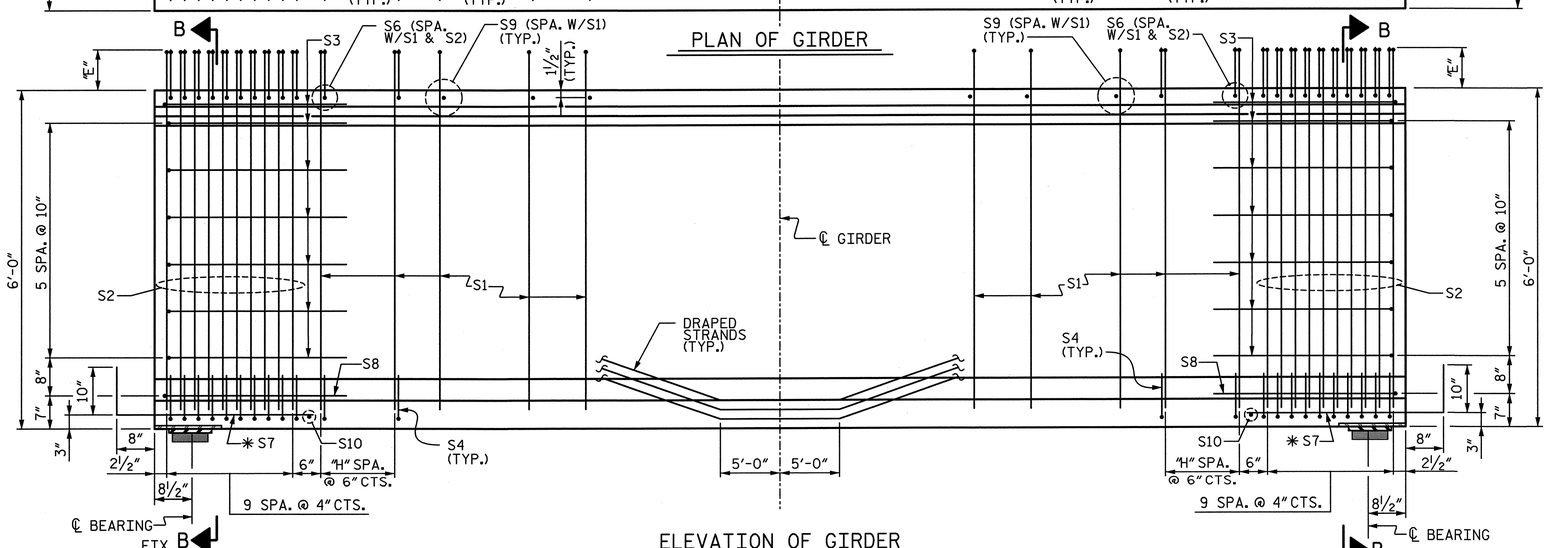

ELEVATION OF GIRDER

(GENERIC DRAPED STRANDS SHOWN TO INDICATE HOLD DOWN LOCATIONS)

0.6" Ø L. R. GRADE 270 STRANDS

AREA (SQUARE INCHES)	ULTIMATE STRENGTH (LBS. PER STRAND)	APPLIED PRESTRESS (LBS. PER STRAND)
0.217	58,600	43,950

REINFORCING STEEL FOR ONE GDR

BAR	NUMBER	SIZE	TYPE	LENGTH	WEIGHT
S1	♦	♦	①	♦	♦
S2	40	#6	①	♦	♦
S3	14	#4	②	8'-5"	79
S4	100	#4	③	3'-0"	200
S6	♦	#5	④	♦	♦
✱S7	20	#5	STR.	5'-0"	104
S8	2	#5	②	9'-0"	19
S9	♦	#5	STR.	3'-3"	♦
S10	2	#3	STR.	1'-10"	1
S11	♦	#5	②	11'-8"	♦
S12	♦	#4	STR.	8'-0"	♦
S13	♦	#4	STR.	♦	♦

✱NOTE: S7 BARS SHALL BE BENT BEFORE SHIPMENT. HEAT BENDING SHALL NOT BE ALLOWED.

BAR TYPES

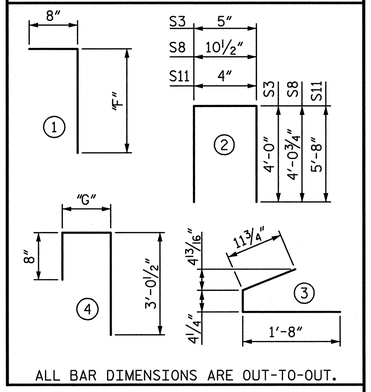

ALL BAR DIMENSIONS ARE OUT-TO-OUT.

PROJECT NO. U-2524C

GUILFORD COUNTY

STATION: POT 407+85.82 -L-
= POT 29+79.72 -Y4-

SHEET 2 OF 12

STATE OF NORTH CAROLINA
DEPARTMENT OF TRANSPORTATION
RALEIGH

PRESTRESSED CONCRETE MODIFIED 72" BULB TEE GIRDER PLAN AND ELEVATION

-RIGHT LANE-

NORTH CAROLINA PROFESSIONAL SEAL 28479 ENGINEER KEVIN G. BAILEY 6-7-13

REVISIONS						SHEET NO.
NO.	BY:	DATE:	NO.	BY:	DATE:	S-347
1			3			TOTAL SHEETS
2			4			836

DRAWN BY : CLG DATE : 3-13
CHECKED BY : TJT DATE : 3-13

DESIGN ENGINEER OF RECORD: T. TOWNSEND DATE : 5-13

STV / Ralph Whitehead Associates, Inc.
1000 West Morehead St., Ste. 200
Charlotte, NC 28208
NC License No. F-0991

6/6/2013 4:40:54 PM R:\station\Finals\PCMBT 2 of 12.dgn

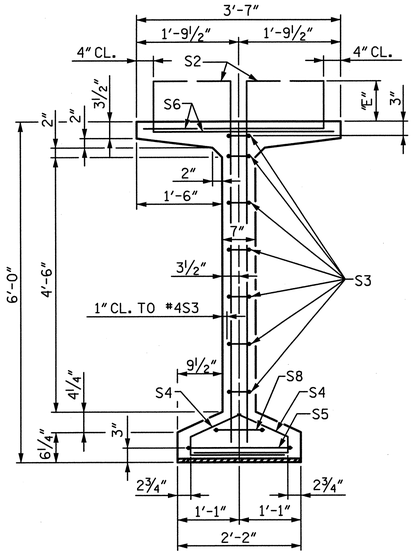

SECTION A-A

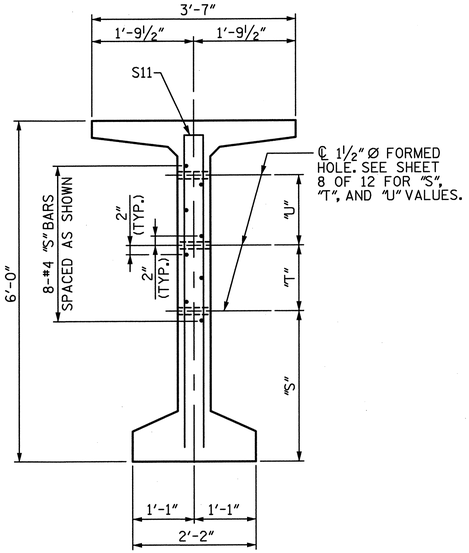

SECTION C-C

(S1 AND S9 BARS NOT SHOWN)
(SEE PARTIAL ELEVATION ON SHEET 8 OF 12)

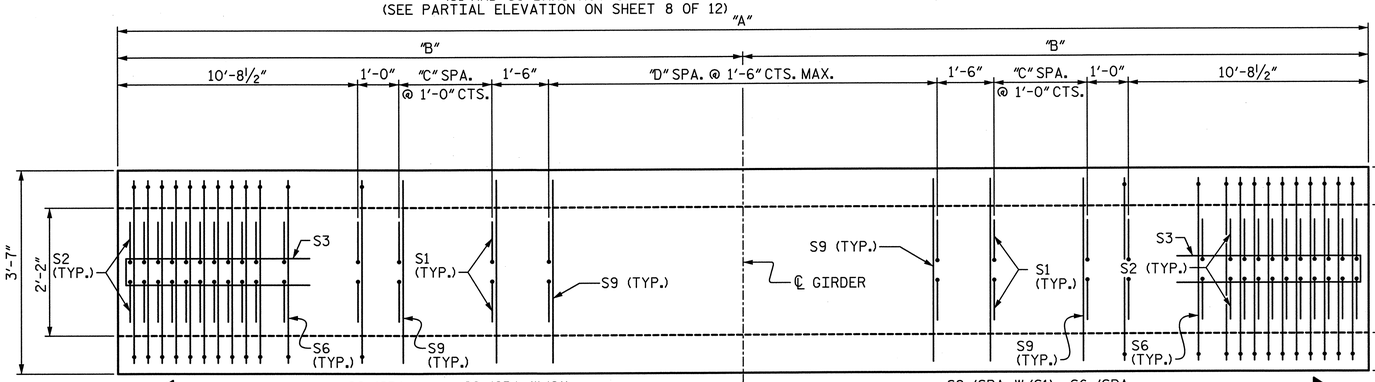

PLAN OF GIRDER

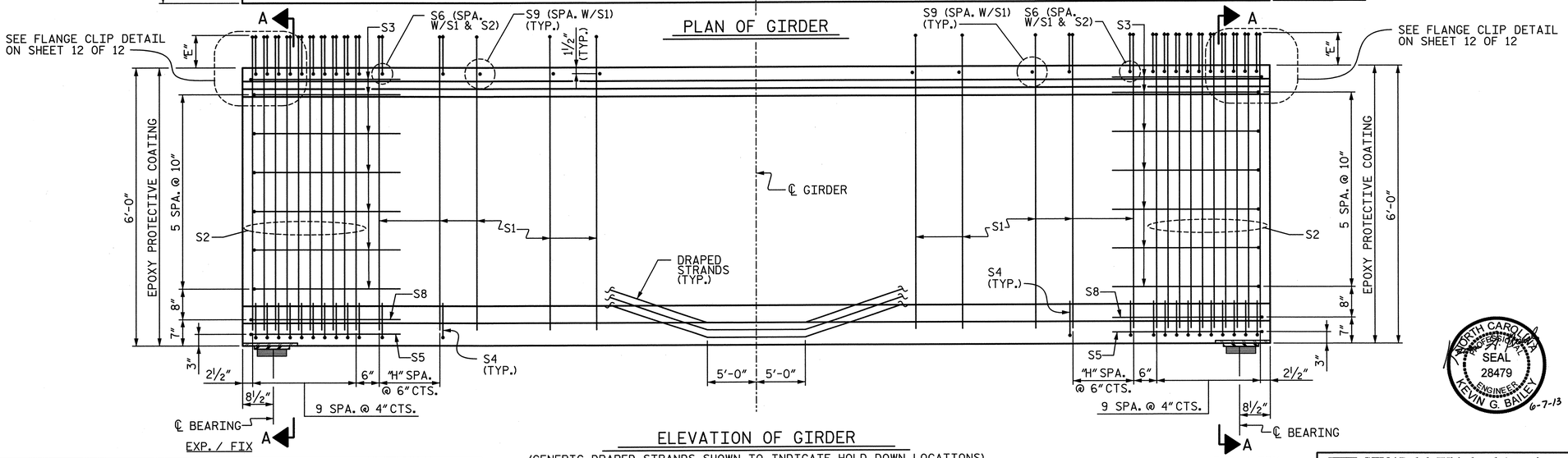

ELEVATION OF GIRDER

(GENERIC DRAPED STRANDS SHOWN TO INDICATE HOLD DOWN LOCATIONS)

NOTES:

1. FOR STRAND LAYOUT, SEE SHEETS 6 & 7 OF 12.
2. FOR DIAPHRAGM HOLE LOCATIONS, SEE SHEET 8 OF 12.
3. SEE SHEETS 9 THROUGH 11 OF 12 FOR VARIABLE DIMENSIONS.
4. FOR GIRDER DETAILS, SEE SHEET 12 OF 12.
5. SEE SHEET 12 OF 12 FOR NOTES.

♦ SEE GIRDER TABLES ON SHEETS 9 THROUGH 11 OF 12 FOR VALUES.

0.6" Ø L. R. GRADE 270 STRANDS		
AREA (SQUARE INCHES)	ULTIMATE STRENGTH (LBS. PER STRAND)	APPLIED PRESTRESS (LBS. PER STRAND)
0.217	58,600	43,950

REINFORCING STEEL FOR ONE GDR

BAR	NUMBER	SIZE	TYPE	LENGTH	WEIGHT
S1	♦	♦	①	♦	♦
S2	40	#6	①	♦	♦
S3	14	#4	②	8'-5"	79
S4	100	#4	③	3'-0"	200
S5	2	#5	②	9'-10"	21
S6	♦	#5	④	♦	♦
S8	2	#5	②	9'-0"	19
S9	♦	#5	STR.	3'-3"	♦
S11	♦	#5	②	11'-8"	♦
S12	♦	#4	STR.	8'-0"	♦
S13	♦	#4	STR.	♦	♦

BAR TYPES

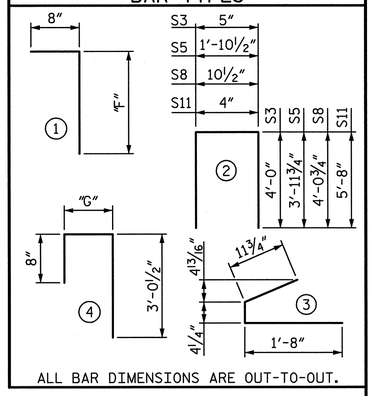

ALL BAR DIMENSIONS ARE OUT-TO-OUT.

PROJECT NO. U-2524C

GUILFORD COUNTY

STATION: POT 407+85.82 -L-
= POT 29+79.72 -Y4-

SHEET 3 OF 12

STATE OF NORTH CAROLINA
DEPARTMENT OF TRANSPORTATION
RALEIGH

PRESTRESSED CONCRETE MODIFIED 72" BULB TEE GIRDER PLAN AND ELEVATION

-RIGHT LANE-

NORTH CAROLINA PROFESSIONAL SEAL 28479 ENGINEER KEVIN G. BAILEY 6-7-13

DRAWN BY : CLG	DATE : 3-13	DESIGN ENGINEER OF RECORD: T. TOWNSEND	DATE : 5-13
CHECKED BY : TJT	DATE : 3-13		

STV / Ralph Whitehead Associates, Inc.
1000 West Morehead St., Ste. 200
Charlotte, NC 28208
NC License No. F-0991

REVISIONS						SHEET NO.
NO.	BY:	DATE:	NO.	BY:	DATE:	S-348
1			3			TOTAL SHEETS
2			4			836

6/6/2013 4:41:02 PM R:\station\Finals\PCMBT 3 of 12.dgn

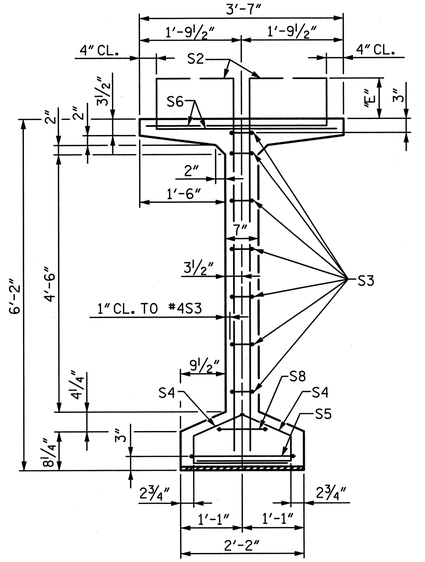

SECTION A-A

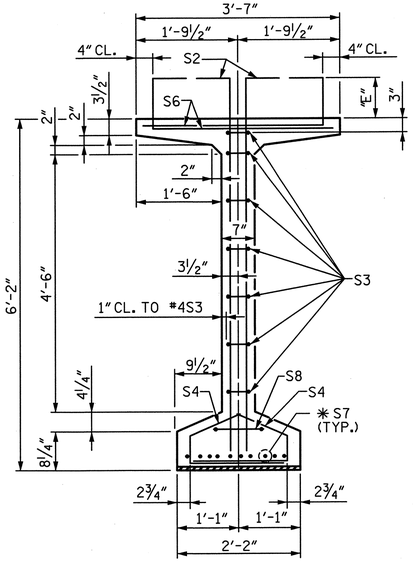

SECTION B-B

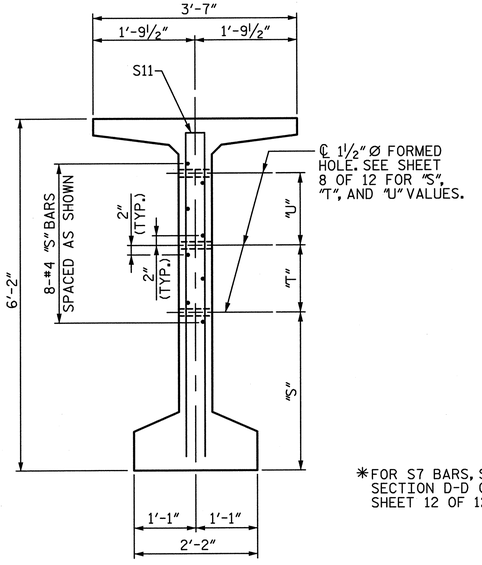

SECTION C-C

(S1 AND S9 BARS NOT SHOWN)
(SEE PARTIAL ELEVATION ON SHEET 8 OF 12)

✱FOR S7 BARS, SEE SECTION D-D ON SHEET 12 OF 12.

NOTES:

1. FOR STRAND LAYOUT, SEE SHEETS 6 & 7 OF 12.
2. FOR DIAPHRAGM HOLE LOCATIONS, SEE SHEET 8 OF 12.
3. SEE SHEETS 9 THROUGH 11 OF 12 FOR VARIABLE DIMENSIONS.
4. FOR GIRDER DETAILS, SEE SHEET 12 OF 12.
5. SEE SHEET 12 OF 12 FOR NOTES.

♦ SEE GIRDER TABLES ON SHEETS 9 THROUGH 11 OF 12 FOR VALUES.

0.6" Ø L. R. GRADE 270 STRANDS		
AREA (SQUARE INCHES)	ULTIMATE STRENGTH (LBS. PER STRAND)	APPLIED PRESTRESS (LBS. PER STRAND)
0.217	58,600	43,950

REINFORCING STEEL FOR ONE GDR

BAR	NUMBER	SIZE	TYPE	LENGTH	WEIGHT
S1	♦	♦	①	♦	♦
S2	40	#6	①	♦	♦
S3	14	#4	②	8'-5"	79
S4	100	#4	③	3'-2"	212
S5	1	#5	②	9'-10"	10
S6	♦	#5	④	♦	♦
✱S7	10	#5	STR.	5'-0"	52
S8	2	#5	②	9'-0"	19
S9	♦	#5	STR.	3'-3"	♦
S10	1	#3	STR.	1'-10"	1
S11	♦	#5	②	12'-0"	♦
S12	♦	#4	STR.	8'-0"	♦
S13	♦	#4	STR.	♦	♦

✱NOTE: S7 BARS SHALL BE BENT BEFORE SHIPMENT. HEAT BENDING SHALL NOT BE ALLOWED.

BAR TYPES

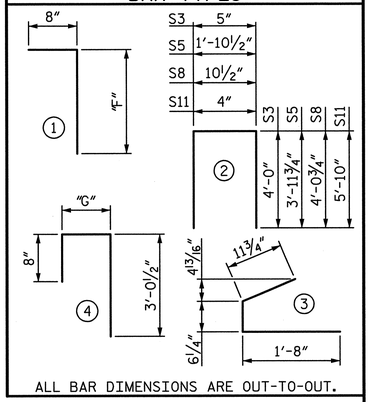

ALL BAR DIMENSIONS ARE OUT-TO-OUT.

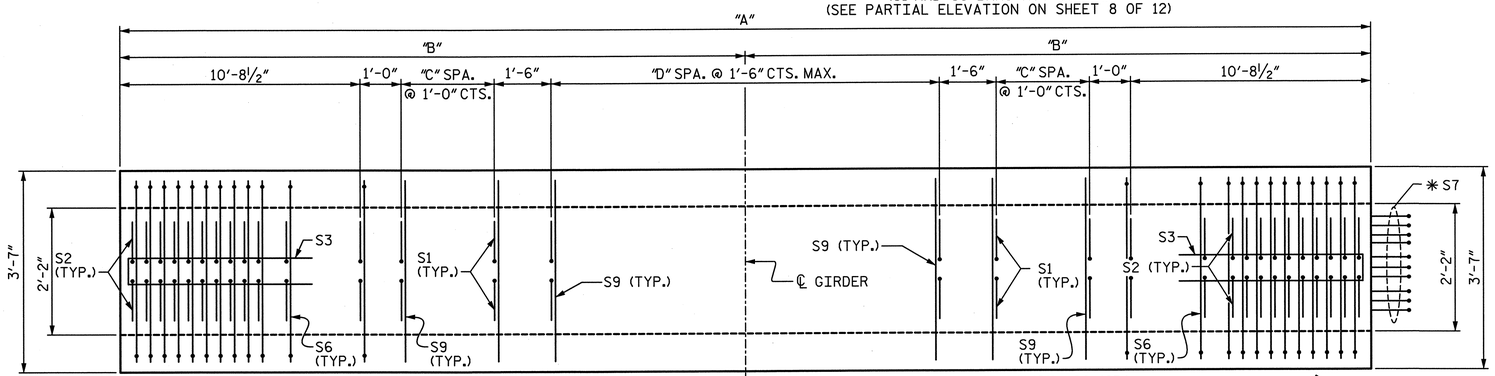

PLAN OF GIRDER

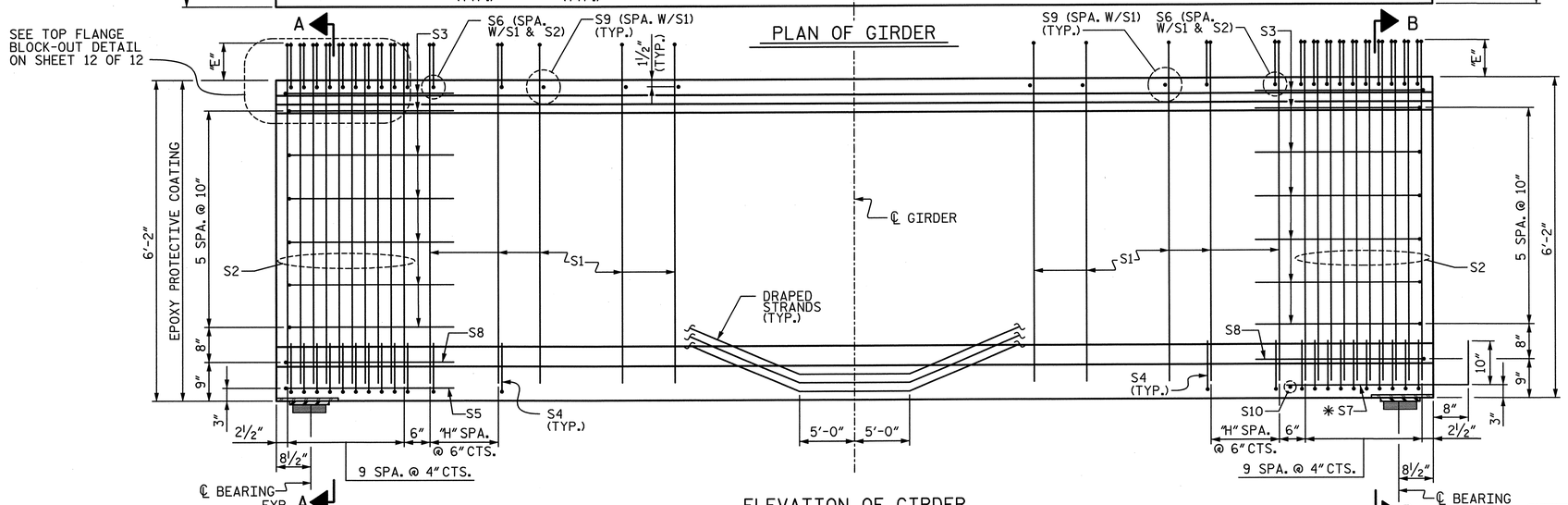

ELEVATION OF GIRDER

(DOWNSTATION EXTERIOR SPAN SHOWN, UPSTATION EXTERIOR SPAN MIRROR)
(GENERIC DRAPED STRANDS SHOWN TO INDICATE HOLD DOWN LOCATIONS)

NORTH CAROLINA PROFESSIONAL SEAL 28479 ENGINEER KEVIN G. BAILEY 6-7-13

PROJECT NO. U-2524C

GUILFORD COUNTY

STATION: POT 407+85.82 -L-
= POT 29+79.72 -Y4-

SHEET 4 OF 12

STATE OF NORTH CAROLINA
DEPARTMENT OF TRANSPORTATION
RALEIGH

PRESTRESSED CONCRETE MODIFIED 74" BULB TEE GIRDER PLAN AND ELEVATION

-RIGHT LANE-

REVISIONS						SHEET NO.
NO.	BY:	DATE:	NO.	BY:	DATE:	S-349
1			3			TOTAL SHEETS
2			4			836

DRAWN BY : CLG DATE : 3-13
CHECKED BY : TJT DATE : 3-13

DESIGN ENGINEER OF RECORD: T. TOWNSEND DATE : 5-13

STV / Ralph Whitehead Associates, Inc.
1000 West Morehead St., Ste. 200
Charlotte, NC 28208
NC License No. F-0991

6/6/2013 4:41:04 PM R:\ustation\Finals\PCMBT 4 of 12.dgn

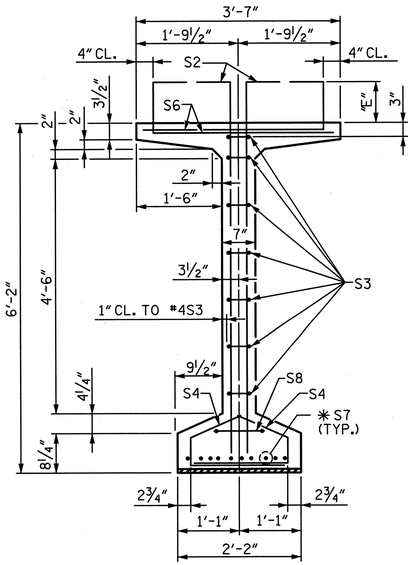

SECTION B-B

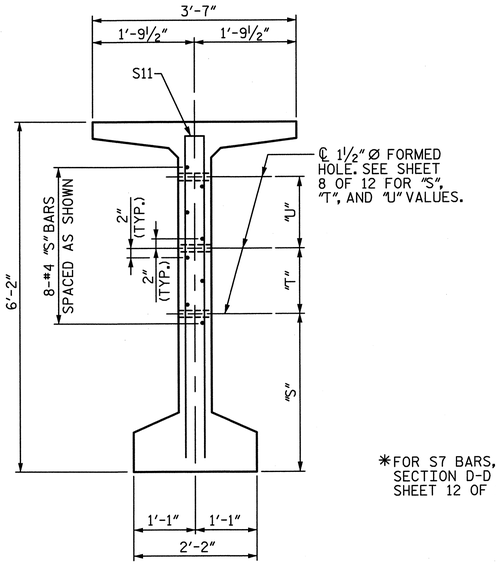

SECTION C-C

(S1 AND S9 BARS NOT SHOWN)
(SEE PARTIAL ELEVATION ON SHEET 8 OF 12)

✱FOR S7 BARS, SEE SECTION D-D ON SHEET 12 OF 12.

NOTES:

1. FOR STRAND LAYOUT, SEE SHEETS 6 & 7 OF 12.
2. FOR DIAPHRAGM HOLE LOCATIONS, SEE SHEET 8 OF 12.
3. SEE SHEETS 9 THROUGH 11 OF 12 FOR VARIABLE DIMENSIONS.
4. FOR GIRDER DETAILS, SEE SHEET 12 OF 12.
5. SEE SHEET 12 OF 12 FOR NOTES.

♦ SEE GIRDER TABLES ON SHEETS 9 THROUGH 11 OF 12 FOR VALUES.

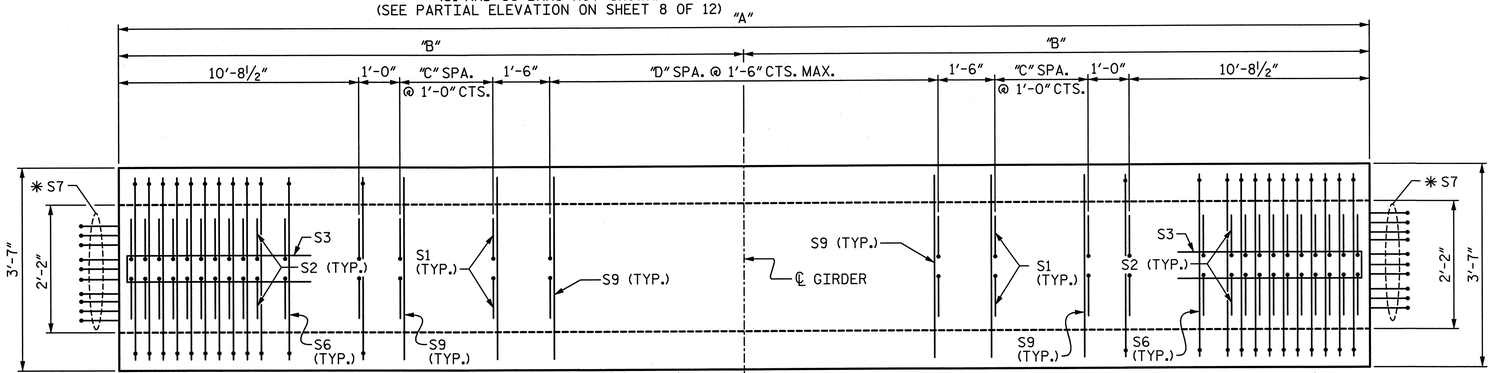

PLAN OF GIRDER

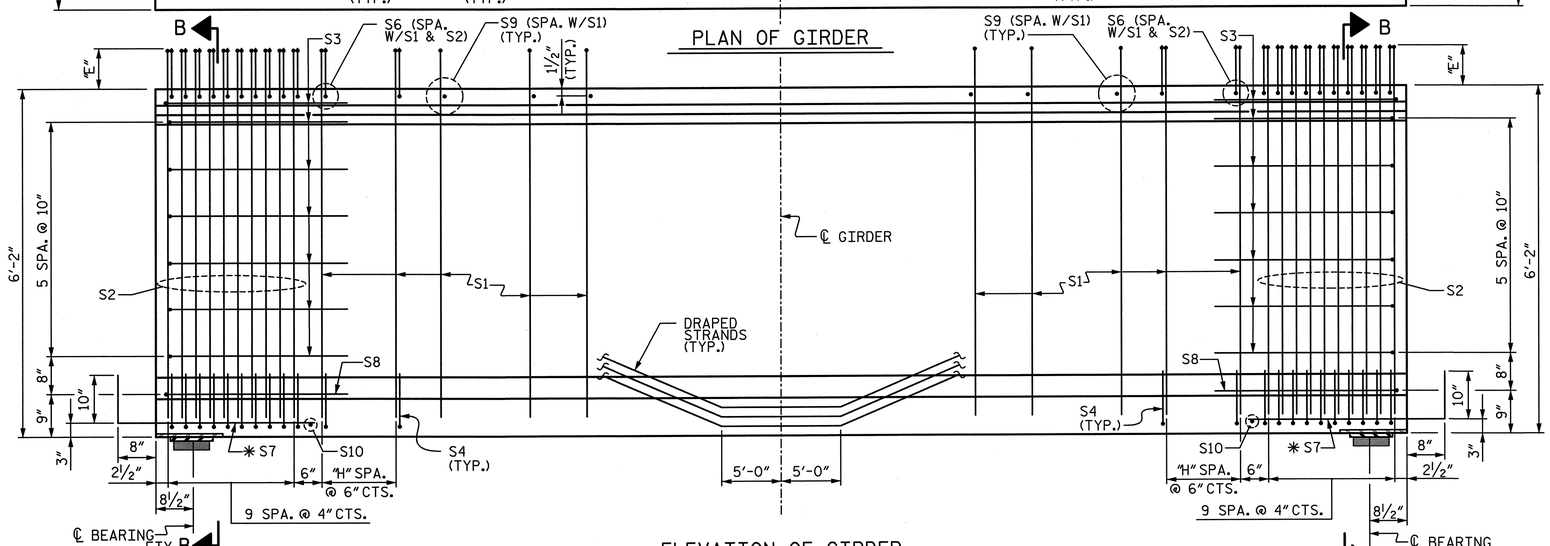

ELEVATION OF GIRDER

(GENERIC DRAPED STRANDS SHOWN TO INDICATE HOLD DOWN LOCATIONS)

0.6" Ø L. R. GRADE 270 STRANDS

AREA (SQUARE INCHES)	ULTIMATE STRENGTH (LBS. PER STRAND)	APPLIED PRESTRESS (LBS. PER STRAND)
0.217	58,600	43,950

REINFORCING STEEL FOR ONE GDR

BAR	NUMBER	SIZE	TYPE	LENGTH	WEIGHT
S1	♦	♦	①	♦	♦
S2	40	#6	①	♦	♦
S3	14	#4	②	8'-5"	79
S4	100	#4	③	3'-2"	212
S6	♦	#5	④	♦	♦
✱S7	20	#5	STR.	5'-0"	104
S8	2	#5	②	9'-0"	19
S9	♦	#5	STR.	3'-3"	♦
S10	2	#3	STR.	1'-10"	1
S11	♦	#5	②	12'-0"	♦
S12	♦	#4	STR.	8'-0"	♦
S13	♦	#4	STR.	♦	♦

✱NOTE: S7 BARS SHALL BE BENT BEFORE SHIPMENT. HEAT BENDING SHALL NOT BE ALLOWED.

BAR TYPES

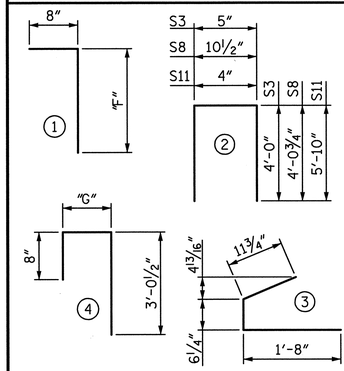

ALL BAR DIMENSIONS ARE OUT-TO-OUT.

PROJECT NO. U-2524C

GUILFORD COUNTY

STATION: POT 407+85.82 -L-
= POT 29+79.72 -Y4-

SHEET 5 OF 12

STATE OF NORTH CAROLINA
DEPARTMENT OF TRANSPORTATION
RALEIGH

PRESTRESSED CONCRETE MODIFIED 74" BULB TEE GIRDER PLAN AND ELEVATION

-RIGHT LANE-

NORTH CAROLINA PROFESSIONAL ENGINEER SEAL 28479 KEVIN G. BAILEY 6-7-13

DRAWN BY : CLG DATE : 3-13
CHECKED BY : TJT DATE : 3-13

DESIGN ENGINEER OF RECORD: T. TOWNSEND DATE : 5-13

STV / Ralph Whitehead Associates, Inc.
1000 West Morehead St., Ste. 200
Charlotte, NC 28208
NC License No. F-0991

REVISIONS						SHEET NO.
NO.	BY:	DATE:	NO.	BY:	DATE:	S-350
1			3			TOTAL SHEETS
2			4			836

6/6/2013 4:41:05 PM R:\station\Finals\PCMBT 5 of 12.dgn

NOTES:

1. SEE SHEET 11 OF 12 FOR HOLD DOWN FORCES.
2. SEE SHEET 12 OF 12 FOR NOTES.

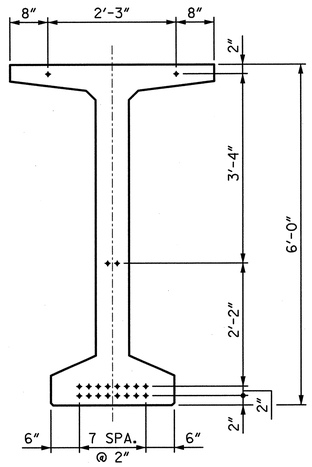

TYPE 1

UNIT B, SPAN 4, GDRS 4-6
UNIT C, SPAN 6A, GDRS 1-4
UNIT C, SPAN 6B, GDRS 1-3

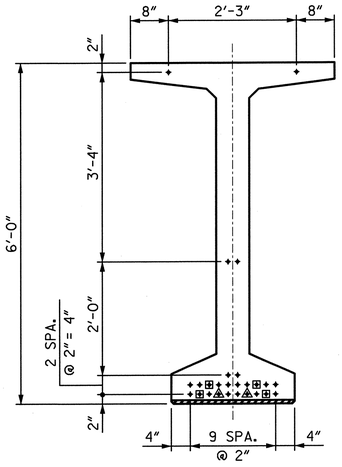

AT END OF GIRDER

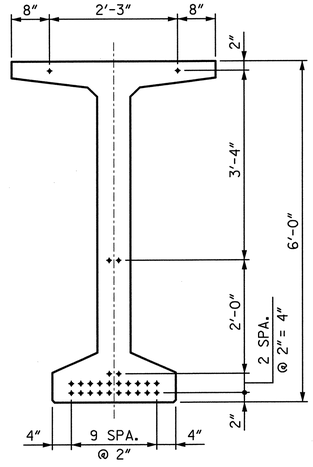

AT ℄ OF GIRDER

TYPE 2

UNIT A, SPAN 1-2, GDRS 1-6
UNIT C, SPAN 6A, GDRS 5-6
UNIT C, SPAN 6B, GDRS 4-5

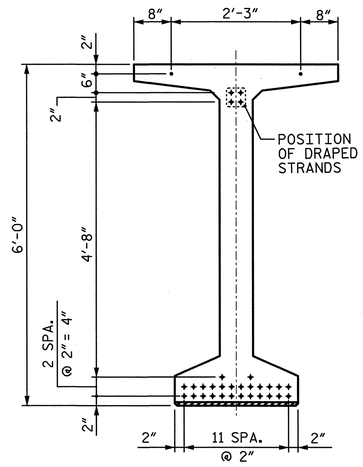

AT END OF GIRDER

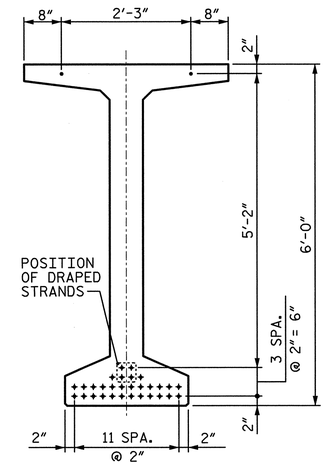

AT ℄ OF GIRDER

TYPE 3

UNIT B, SPAN 3, GDRS 5-6
UNIT B, SPAN 4, GDRS 1-3

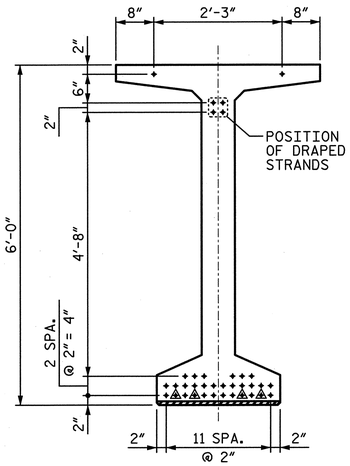

AT END OF GIRDER

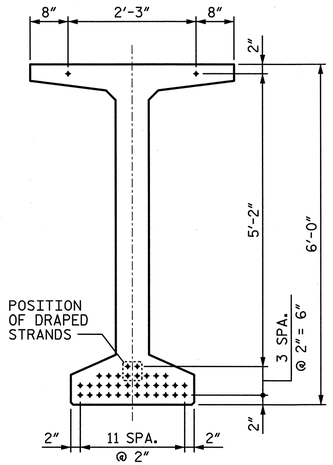

AT ℄ OF GIRDER

TYPE 4

UNIT B, SPAN 3, GDRS 3-4
UNIT C, SPAN 6B, GDR 6
UNIT C, SPAN 7, GDRS 1-6

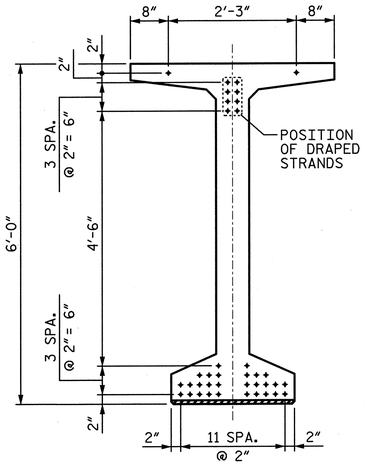

AT END OF GIRDER

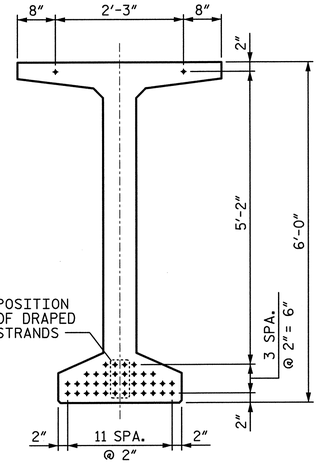

AT ℄ OF GIRDER

TYPE 5

SPAN 16, GDRS 9-12
UNIT I, SPANS 27-30, GDRS 1-6

DEBONDING LEGEND

- • FULLY BONDED STRANDS
- △ STRANDS DEBONDED FOR 4′-0″ FROM END OF GIRDER.
- ▣ STRANDS DEBONDED FOR 10′-0″ FROM END OF GIRDER.

0.6″ Ø LOW RELAXATION STRAND LAYOUT

PROJECT NO. U-2524C
GUILFORD COUNTY
STATION: POT 407+85.82 -L-
= POT 29+79.72 -Y4-
SHEET 6 OF 12

STATE OF NORTH CAROLINA
DEPARTMENT OF TRANSPORTATION
RALEIGH

PRESTRESSED CONCRETE MODIFIED 72″BULB TEE GIRDER STRAND PATTERNS

-RIGHT LANE-

NORTH CAROLINA PROFESSIONAL SEAL 28479 ENGINEER KEVIN G. BAILEY 6-7-13

DRAWN BY : CLG	DATE : 3-13	DESIGN ENGINEER OF RECORD: T. TOWNSEND	DATE : 5-13
CHECKED BY : TJT	DATE : 3-13		

STV / Ralph Whitehead Associates, Inc.
1000 West Morehead St., Ste. 200
Charlotte, NC 28208
NC License No. F-0991

REVISIONS						SHEET NO.
NO.	BY:	DATE:	NO.	BY:	DATE:	S-351
1			3			TOTAL SHEETS
2			4			836

6/6/2013 4:41:06 PM R:\station\Finals\PCMBT 6 of 12.dgn

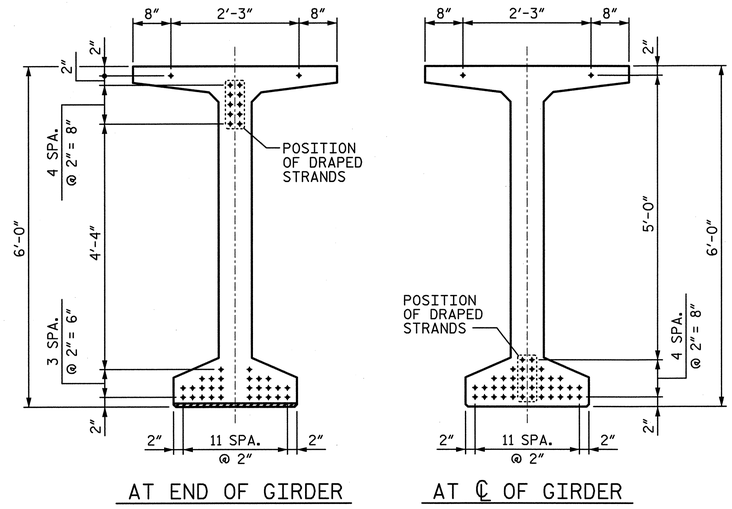

TYPE 6
SPAN 16, GDRS 1-8

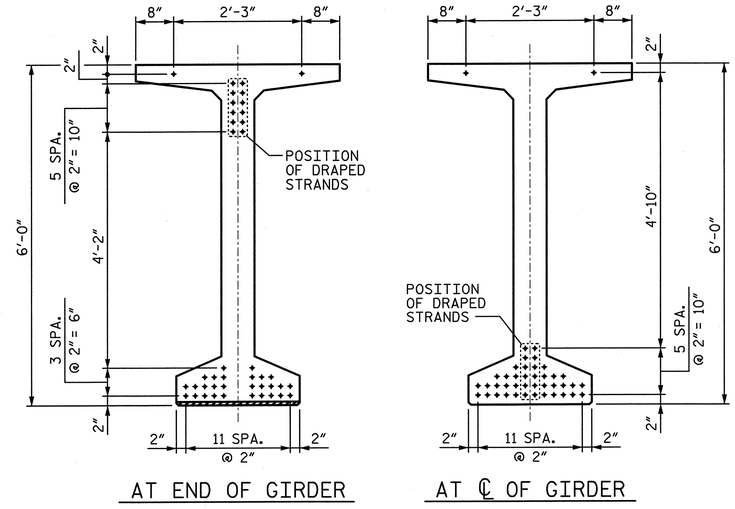

TYPE 7
UNIT B, SPAN 3, GDRS 1-2
SPAN 15, GDRS 1-9

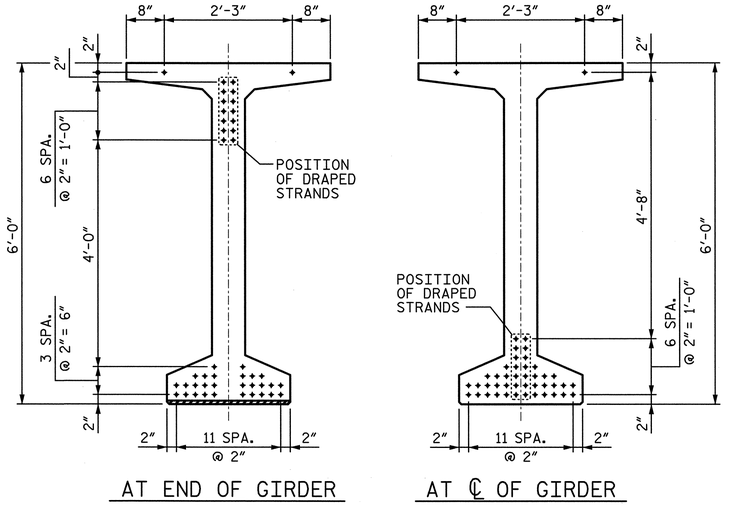

TYPE 8
UNIT F, SPANS 17-20, GDRS 1-6

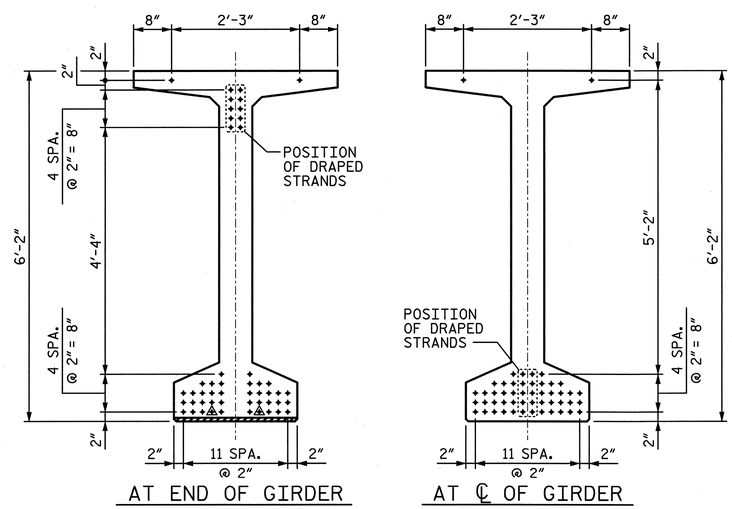

TYPE 9
UNIT E, SPANS 12-14, GDRS 1-7

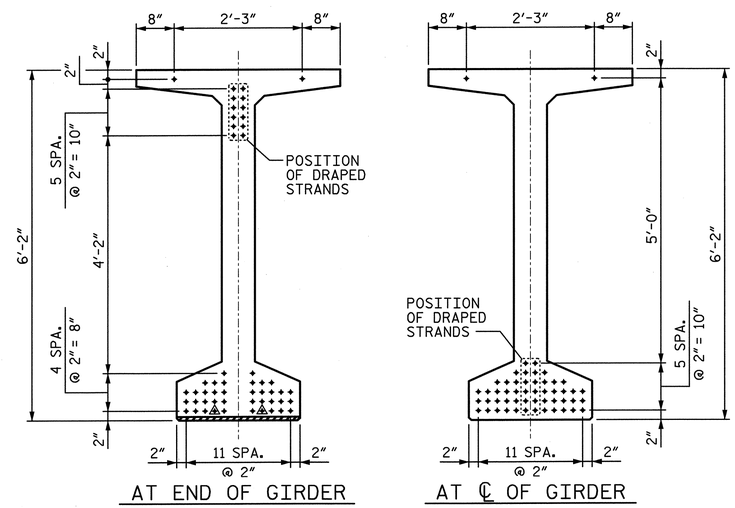

TYPE 10
UNIT D, SPANS 8-11, GDRS 1-7

0.6″ Ø LOW RELAXATION STRAND LAYOUT

DEBONDING LEGEND

- • FULLY BONDED STRANDS
- ⚠ STRANDS DEBONDED FOR 4′-0″ FROM END OF GIRDER.

NOTES:

1. SEE SHEET 11 OF 12 FOR HOLD DOWN FORCES.
2. SEE SHEET 12 OF 12 FOR NOTES.

PROJECT NO. U-2524C
GUILFORD COUNTY
STATION: POT 407+85.82 -L-
= POT 29+79.72 -Y4-
SHEET 7 OF 12

STATE OF NORTH CAROLINA
DEPARTMENT OF TRANSPORTATION
RALEIGH

PRESTRESSED CONCRETE MODIFIED 72″/74″ BULB TEE GIRDER STRAND PATTERNS

-RIGHT LANE-

NORTH CAROLINA PROFESSIONAL SEAL 28479 ENGINEER KEVIN G. BAILEY 6-7-13

DRAWN BY : CLG	DATE : 3-13	DESIGN ENGINEER OF RECORD: T. TOWNSEND	DATE : 5-13
CHECKED BY : TJT	DATE : 3-13		

STV / Ralph Whitehead Associates, Inc.
1000 West Morehead St., Ste. 200
Charlotte, NC 28208
NC License No. F-0991

REVISIONS						SHEET NO.
NO.	BY:	DATE:	NO.	BY:	DATE:	S-352
1			3			TOTAL SHEETS
2			4			836

6/6/2013 4:41:07 PM R:\ustation\Finals\PCMBT 7 of 12.dgn

UNIT	SPAN	GIRDER	CASE	"M"	"N"	"O"	"P"	"S"	"T"	"U"
A	1	1-1 TO 1-6	1	0"	-	-	-	2'-1 3/4"	1'-6"	1'-3"
	2	2-1 TO 2-6	1	0"	-	-	-	2'-1 3/4"	1'-6"	1'-3"
B	3	3-1	2	19'-10 11/16"	19'-10 11/16"	-	-	2'-4 3/4"	1'-3"	1'-3"
		3-2	2	19'-3 1/2"	19'-3 1/2"	-	-	2'-4 3/4"	1'-3"	1'-3"
		3-3	2	18'-8 5/16"	18'-8 5/16"	-	-	2'-4 3/4"	1'-3"	1'-3"
		3-4	2	18'-1 1/8"	18'-1 1/8"	-	-	2'-4 3/4"	1'-3"	1'-3"
		3-5	2	17'-6"	17'-6"	-	-	2'-4 3/4"	1'-3"	1'-3"
		3-6	2	16'-10 13/16"	16'-10 13/16"	-	-	2'-4 3/4"	1'-3"	1'-3"
	4	4-1	2	19'-0"	10'-11 1/4"	-	-	2'-4 3/4"	1'-3"	1'-3"
		4-2	5	10'-11 1/4"	19'-0"	3'-11 15/16"	-	2'-4 3/4"	1'-3"	1'-3"
		4-3	3	3'-11 3/16"	4'-0"	-	-	2'-4 3/4"	1'-3"	1'-3"
		4-4	3	3'-10 3/8"	4'-0"	-	-	2'-1 3/4"	1'-6"	1'-3"
		4-5	3	3'-9 5/8"	4'-0"	-	-	2'-1 3/4"	1'-6"	1'-3"
		4-6	1	+4'-0"	-	-	-	2'-1 3/4"	1'-6"	1'-3"
C	6A	6A-1	1	-4'-9 1/2"	-	-	-	2'-1 3/4"	1'-6"	1'-3"
		6A-2	3	4'-9"	4'-9 13/16"	-	-	2'-1 3/4"	1'-6"	1'-3"
		6A-3	3	4'-8 3/8"	4'-9 5/16"	-	-	2'-1 3/4"	1'-6"	1'-3"
		6A-4	3	4'-8"	4'-9"	-	-	2'-1 3/4"	1'-6"	1'-3"
		6A-5	3	4'-7 7/16"	4'-8 3/8"	-	-	2'-1 3/4"	1'-6"	1'-3"
		6A-6	1	+4'-8"	-	-	-	2'-1 3/4"	1'-6"	1'-3"
	6B	6B-1	1	-1'-7"	-	-	-	2'-1 3/4"	1'-6"	1'-3"
		6B-2	3	1'-6 3/4"	1'-6 13/16"	-	-	2'-1 3/4"	1'-6"	1'-3"
		6B-3	3	1'-6 3/4"	1'-6 7/8"	-	-	2'-1 3/4"	1'-6"	1'-3"
		6B-4	3	1'-6 9/16"	1'-6 5/8"	-	-	2'-1 3/4"	1'-6"	1'-3"
		6B-5	4	19'-11 3/4"	13'-10 1/4"	1'-6 9/16"	-	2'-1 3/4"	1'-6"	1'-3"
		6B-6	2	16'-11"	16'-11"	-	-	2'-3 3/4"	1'-4"	1'-3"
	7	7-1 TO 7-6	2	17'-9"	17'-9"	-	-	2'-3 3/4"	1'-4"	1'-3"
D	8	8-1 TO 8-7	2	21'-6"	21'-6"	-	-	2'-9 3/4"	1'-0"	1'-3"
	9	9-1 TO 9-7	2	21'-6"	21'-6"	-	-	2'-9 3/4"	1'-0"	1'-3"
	10	10-1 TO 10-7	2	21'-6"	21'-6"	-	-	2'-9 3/4"	1'-0"	1'-3"
	11	11-1 TO 11-7	2	21'-6"	21'-6"	-	-	2'-9 3/4"	1'-0"	1'-3"
E	12	12-1 TO 12-7	2	21'-6"	21'-6"	-	-	2'-7 3/4"	1'-2"	1'-3"
	13	13-1 TO 13-7	2	21'-6"	21'-6"	-	-	2'-7 3/4"	1'-2"	1'-3"
	14	14-1 TO 14-7	2	21'-6"	21'-6"	-	-	2'-7 3/4"	1'-2"	1'-3"
	15	15-1 TO 15-3	2	19'-6"	19'-6"	-	-	2'-7 3/4"	1'-0"	1'-3"
		15-4	2	19'-6 1/8"	19'-6 1/8"	-	-	2'-7 3/4"	1'-0"	1'-3"
		15-5	2	19'-6 1/2"	19'-6 1/2"	-	-	2'-7 3/4"	1'-0"	1'-3"
		15-6	2	19'-7 1/8"	19'-7 1/8"	-	-	2'-7 3/4"	1'-0"	1'-3"
		15-7	2	19'-7 15/16"	19'-7 15/16"	-	-	2'-7 3/4"	1'-0"	1'-3"
		15-8	2	19'-9 1/16"	19'-9 1/16"	-	-	2'-7 3/4"	1'-0"	1'-3"
		15-9	2	19'-10 3/8"	19'-10 3/8"	-	-	2'-7 3/4"	1'-0"	1'-3"
	16	16-1 TO 16-3	2	19'-6"	19'-6"	-	-	2'-7 3/4"	1'-0"	1'-3"
		16-4 TO 16-5	2	19'-6 1/16"	19'-6 1/16"	-	-	2'-7 3/4"	1'-0"	1'-3"
		16-6 TO 16-7	2	19'-6 1/8"	19'-6 1/8"	-	-	2'-7 3/4"	1'-0"	1'-3"
		16-8	2	19'-6 9/16"	19'-6 9/16"	-	-	2'-7 3/4"	1'-0"	1'-3"
		16-9	2	19'-6 1/8"	19'-6 1/8"	-	-	2'-7 3/4"	1'-0"	1'-3"
		16-10	2	19'-6"	19'-6"	-	-	2'-7 3/4"	1'-0"	1'-3"
		16-11	2	19'-6 1/4"	19'-6 1/4"	-	-	2'-7 3/4"	1'-0"	1'-3"
		16-12	2	19'-6 7/8"	19'-6 7/8"	-	-	2'-7 3/4"	1'-0"	1'-3"
F	17	17-1 TO 17-6	2	19'-7 1/2"	19'-7 1/2"	-	-	2'-5 3/4"	1'-2"	1'-3"
	18	18-1 TO 18-6	2	19'-7 1/2"	19'-7 1/2"	-	-	2'-5 3/4"	1'-2"	1'-3"
	19	19-1 TO 19-6	2	19'-7 1/2"	19'-7 1/2"	-	-	2'-5 3/4"	1'-2"	1'-3"
	20	20-1 TO 20-6	2	19'-7 1/2"	19'-7 1/2"	-	-	2'-5 3/4"	1'-2"	1'-3"
I	27	27-1	2	21'-4 3/16"	14'-4"	-	-	2'-7 3/4"	1'-0"	1'-3"
		27-2	6	21'-4 3/4"	21'-3 13/16"	14'-4"	14'-4"	2'-7 3/4"	1'-0"	1'-3"
		27-3	6	21'-5 1/4"	21'-4 3/8"	14'-4"	14'-4"	2'-7 3/4"	1'-0"	1'-3"
		27-4	6	21'-5 13/16"	21'-4 7/8"	14'-4"	14'-4"	2'-7 3/4"	1'-0"	1'-3"
		27-5	6	21'-6 3/8"	21'-5 1/16"	14'-4"	14'-4"	2'-7 3/4"	1'-0"	1'-3"
		27-6	2	14'-4"	21'-5 15/16"	-	-	2'-7 3/4"	1'-0"	1'-3"
	28	28-1	2	19'-8 1/2"	13'-4"	-	-	2'-7 3/4"	1'-0"	1'-3"
		28-2	6	19'-8 15/16"	19'-8 1/8"	13'-4"	13'-4"	2'-7 3/4"	1'-0"	1'-3"
		28-3	6	19'-9 1/16"	19'-8 5/8"	13'-4"	13'-4"	2'-7 3/4"	1'-0"	1'-3"
		28-4	6	19'-9 1/8"	19'-9 1/16"	13'-4"	13'-4"	2'-7 3/4"	1'-0"	1'-3"
		28-5	6	19'-10 3/8"	19'-9 1/2"	13'-4"	13'-4"	2'-7 3/4"	1'-0"	1'-3"
		28-6	2	13'-4"	19'-10"	-	-	2'-7 3/4"	1'-0"	1'-3"
	29	29-1	2	21'-5 1/16"	15'-8"	-	-	2'-7 3/4"	1'-0"	1'-3"
		29-2	6	21'-5 7/16"	21'-4 3/4"	15'-8"	15'-8"	2'-7 3/4"	1'-0"	1'-3"
		29-3	6	21'-5 13/16"	21'-5 1/8"	15'-8"	15'-8"	2'-7 3/4"	1'-0"	1'-3"
		29-4	6	21'-6 1/4"	21'-5 1/2"	15'-8"	15'-8"	2'-7 3/4"	1'-0"	1'-3"
		29-5	6	21'-6 5/8"	21'-5 15/16"	15'-8"	15'-8"	2'-7 3/4"	1'-0"	1'-3"
		29-6	2	15'-8"	21'-6 5/16"	-	-	2'-7 3/4"	1'-0"	1'-3"
	30	30-1	2	21'-3 1/2"	16'-2"	-	-	2'-7 3/4"	1'-0"	1'-3"
		30-2	6	21'-3 13/16"	21'-3 1/4"	16'-2"	16'-2"	2'-7 3/4"	1'-0"	1'-3"
		30-3	6	21'-4 3/16"	21'-3 9/16"	16'-2"	16'-2"	2'-7 3/4"	1'-0"	1'-3"
		30-4	6	21'-4 1/2"	21'-3 7/8"	16'-2"	16'-2"	2'-7 3/4"	1'-0"	1'-3"
		30-5	6	21'-4 7/8"	21'-4 1/4"	16'-2"	16'-2"	2'-7 3/4"	1'-0"	1'-3"
		30-6	2	16'-2"	21'-4 9/16"	-	-	2'-7 3/4"	1'-0"	1'-3"

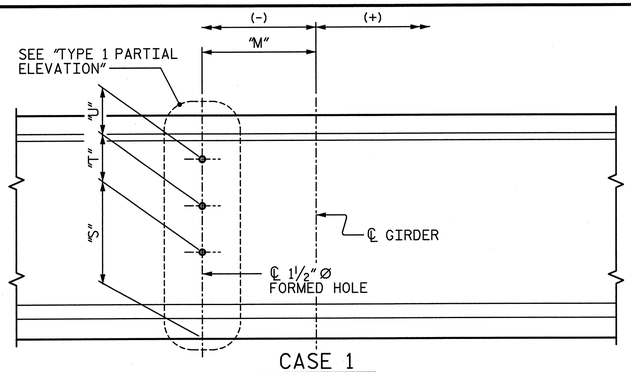

CASE 1

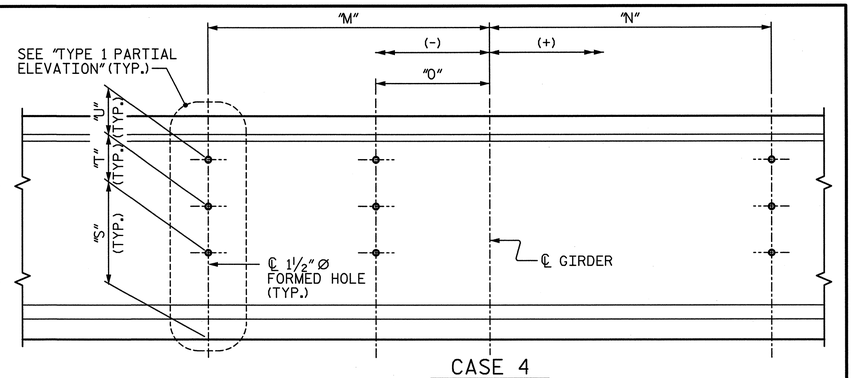

CASE 4

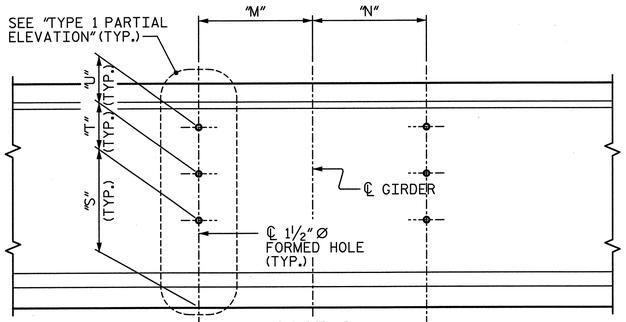

CASE 2

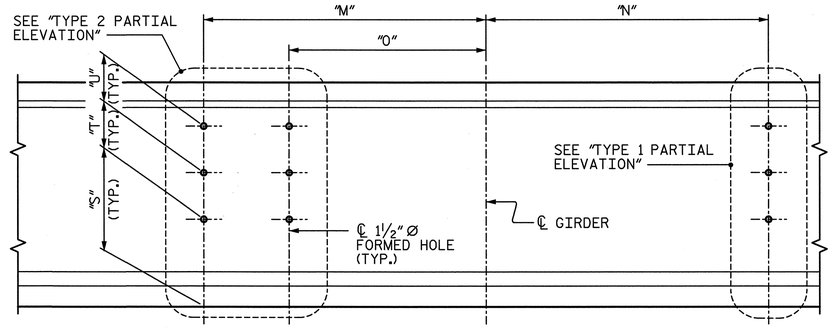

CASE 5

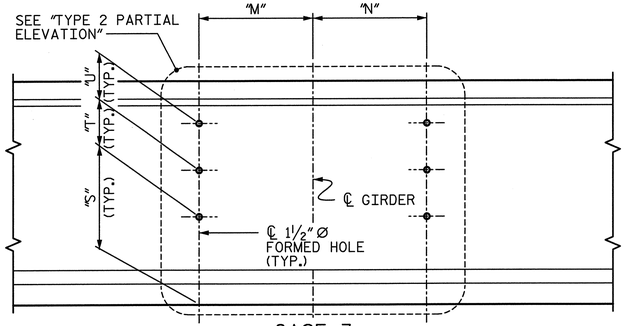

CASE 3

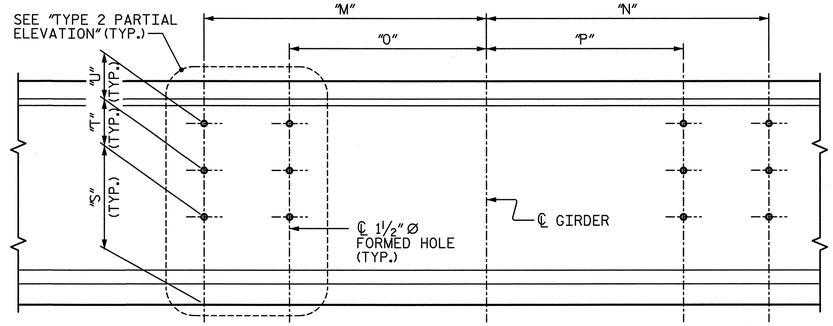

CASE 6

DIAPHRAGM LOCATION

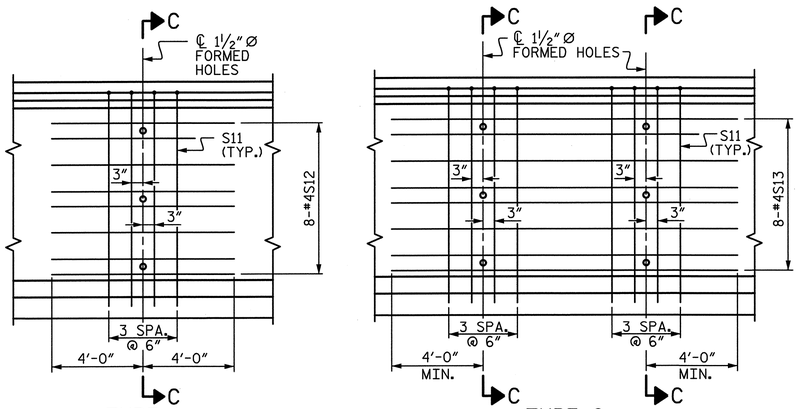

TYPE 1 TYPE 2

PARTIAL ELEVATION

FOR SECTION C-C, SEE CORRESPONDING "PRESTRESSED CONCRETE MODIFIED BULB TEE GIRDER SHEET"

PROJECT NO. U-2524C

GUILFORD COUNTY

STATION: POT 407+85.82 -L-
= POT 29+79.72 -Y4-

SHEET 8 OF 12

STATE OF NORTH CAROLINA
DEPARTMENT OF TRANSPORTATION
RALEIGH

PRESTRESSED CONCRETE MODIFIED BULB TEE GIRDER DIAPHRAGM DETAILS

-RIGHT LANE-

NORTH CAROLINA PROFESSIONAL SEAL 28479 ENGINEER KEVIN G. BAILEY 6-7-13

DRAWN BY : CLG DATE : 3-13
CHECKED BY : TJT DATE : 3-13

DESIGN ENGINEER OF RECORD: T. TOWNSEND DATE : 5-13

STV / Ralph Whitehead Associates, Inc.
1000 West Morehead St., Ste. 200
Charlotte, NC 28208
NC License No. F-0991

REVISIONS						SHEET NO.
NO.	BY:	DATE:	NO.	BY:	DATE:	S-353
1			3			TOTAL SHEETS
2			4			836

6/6/2013 4:41:09 PM R:\ustation\Finals\PCMBT 8 of 12.dgn

GIRDER TABLE

UNIT	SPAN	GDR.	STRAND LAYOUT TYPE	✳ GDR. SHT.	"A"	"B"	"C"	"D"	"E"	"F"	"G"	"H"	S1 BARS NO.	S1 BARS SIZE	S1 BARS LENGTH	S1 BARS WEIGHT (LBS)	S2 BARS LENGTH	S2 BARS WEIGHT (LBS)	S6 BARS NO.	S6 BARS LENGTH	S6 BARS WEIGHT (LBS)	S9 BARS NO.	S9 BARS WEIGHT (LBS)	S11 BARS NO.	S11 BARS WEIGHT (LBS)	S12 BARS NO.	S12 BARS WEIGHT (LBS)	S13 BARS NO.	S13 BARS LENGTH	S13 BARS WEIGHT (LBS)	REINF. STEEL (LBS)	CONCRETE f'c (KSI)	CONCRETE f'ci (KSI)	CONCRETE C.Y.	0.6"Ø L.R. STRANDS NO.	NO. OF GDRS.	TOTAL LENGTH
A	1	1-1	2	1	90'-3½"	45'-1¾"	5	38	7"	6'-3"	8½"	14	162	#4	6'-11"	748	6'-11"	416	100	4'-5"	461	51	173	4	49	8	43	-	-	-	2251	8.0	6.4	19.3	26	1	90'-3½"
		1-2	2	1	90'-7⅜"	45'-3 11/16"	5	38	7"	6'-3"	8½"	14	162	#4	6'-11"	748	6'-11"	416	100	4'-5"	461	51	173	4	49	8	43	-	-	-	2251	8.0	6.4	19.4	26	1	90'-7⅜"
		1-3	2	1	90'-11⅜"	45'-5 11/16"	5	38	7"	6'-3"	8½"	14	162	#4	6'-11"	748	6'-11"	416	100	4'-5"	461	51	173	4	49	8	43	-	-	-	2251	8.0	6.4	19.5	26	1	90'-11⅜"
		1-4	2	1	91'-3⅜"	45'-7 11/16"	5	38	7"	6'-3"	8½"	14	162	#4	6'-11"	748	6'-11"	416	100	4'-5"	461	51	173	4	49	8	43	-	-	-	2251	8.0	6.4	19.6	26	1	91'-3⅜"
		1-5	2	1	91'-7¼"	45'-9⅝"	5	38	7"	6'-3"	8½"	14	162	#4	6'-11"	748	6'-11"	416	100	4'-5"	461	51	173	4	49	8	43	-	-	-	2251	8.0	6.4	19.6	26	1	91'-7¼"
		1-6	2	1	91'-11¼"	45'-11 5/8"	5	38	7"	6'-3"	8½"	14	162	#4	6'-11"	748	6'-11"	416	100	4'-5"	461	51	173	4	49	8	43	-	-	-	2251	8.0	6.4	19.7	26	1	91'-11¼"
	2	2-1	2	1	87'-7¾"	43'-9⅞"	5	37	7"	6'-3"	8½"	14	160	#4	6'-11"	739	6'-11"	416	100	4'-5"	461	50	169	4	49	8	43	-	-	-	2238	8.0	6.4	18.8	26	1	87'-7¾"
		2-2	2	1	88'-0⅜"	44'-0 3/16"	5	37	7"	6'-3"	8½"	14	160	#4	6'-11"	739	6'-11"	416	100	4'-5"	461	50	169	4	49	8	43	-	-	-	2238	8.0	6.4	18.9	26	1	88'-0⅜"
		2-3	2	1	88'-4⅞"	44'-2 7/16"	5	37	7"	6'-3"	8½"	14	160	#4	6'-11"	739	6'-11"	416	100	4'-5"	461	50	169	4	49	8	43	-	-	-	2238	8.0	6.4	18.9	26	1	88'-4⅞"
		2-4	2	1	88'-9⅜"	44'-4 11/16"	5	37	7"	6'-3"	8½"	14	160	#4	6'-11"	739	6'-11"	416	100	4'-5"	461	50	169	4	49	8	43	-	-	-	2238	8.0	6.4	19.0	26	1	88'-9⅜"
		2-5	2	1	89'-1⅞"	44'-6 15/16"	5	37	7"	6'-3"	8½"	14	160	#4	6'-11"	739	6'-11"	416	100	4'-5"	461	50	169	4	49	8	43	-	-	-	2238	8.0	6.4	19.1	26	1	89'-1⅞"
		2-6	2	1	89'-6⅜"	44'-9 7/16"	5	37	7"	6'-3"	8½"	14	160	#4	6'-11"	739	6'-11"	416	100	4'-5"	461	50	169	4	49	8	43	-	-	-	2238	8.0	6.4	19.2	26	1	89'-6⅜"
B	3	3-1	7	1	120'-9⅛"	60'-4 9/16"	25	31	7"	6'-3"	8½"	14	228	#4	6'-11"	1053	6'-11"	416	100	4'-5"	461	88	298	8	97	16	86	-	-	-	2759	9.0	7.2	25.9	42	1	120'-9⅛"
		3-2	7	1	117'-2"	58'-7"	9	50	7"	6'-3"	8½"	14	202	#4	6'-11"	933	6'-11"	416	100	4'-5"	461	74	251	8	97	16	86	-	-	-	2595	9.0	7.2	25.1	42	1	117'-2"
		3-3	4	1	113'-7"	56'-9½"	9	48	7"	6'-3"	8½"	14	198	#4	6'-11"	915	6'-11"	416	100	4'-5"	461	72	244	8	97	16	86	-	-	-	2570	8.0	6.4	24.3	36	1	113'-7"
		3-4	4	1	110'-0"	55'-0"	9	45	7"	6'-3"	8½"	14	192	#4	6'-11"	887	6'-11"	416	100	4'-5"	461	69	234	8	97	16	86	-	-	-	2532	8.0	6.4	23.6	36	1	110'-0"
		3-5	3	1	106'-4⅞"	53'-2 7/16"	9	43	7"	6'-3"	8½"	14	188	#4	6'-11"	869	6'-11"	416	100	4'-5"	461	67	227	8	97	16	86	-	-	-	2507	8.0	6.4	22.8	32	1	106'-4⅞"
		3-6	3	1	102'-10"	51'-5"	9	40	7"	6'-3"	8½"	14	182	#4	6'-11"	841	6'-11"	416	100	4'-5"	461	64	217	8	97	16	86	-	-	-	2469	8.0	6.4	22.0	32	1	102'-10"
	4	4-1	3	1	103'-11⅛"	51'-11 9/16"	17	20	7"	6'-3"	8½"	30	238	#4	6'-11"	1100	6'-11"	416	100	4'-5"	461	65	220	8	97	16	86	-	-	-	2714	8.0	6.4	22.3	32	1	103'-11⅛"
		4-2	3	1	96'-6"	48'-3"	17	15	7"	6'-3"	8½"	30	228	#4	6'-11"	1053	6'-11"	416	100	4'-5"	461	54	183	12	146	8	43	8	15'-0"	80	2736	8.0	6.4	20.7	32	1	96'-6"
		4-3	3	1	89'-1⅝"	44'-6 13/16"	9	25	7"	6'-3"	8½"	24	192	#4	6'-11"	887	6'-11"	416	100	4'-5"	461	50	169	8	97	-	-	8	16'-0"	86	2464	8.0	6.4	19.1	32	1	89'-1⅝"
		4-4	1	1	81'-9⅞"	40'-10 15/16"	15	12	7"	6'-3"	8½"	24	190	#4	6'-11"	878	6'-11"	416	100	4'-5"	461	58	197	8	97	-	-	8	15'-11"	85	2451	8.0	6.4	17.5	20	1	81'-9⅞"
		4-5	1	1	74'-6¾"	37'-3⅜"	9	22	7"	6'-3"	8½"	14	146	#4	6'-11"	675	6'-11"	416	100	4'-5"	461	46	156	8	97	-	-	8	15'-10"	85	2241	8.0	6.4	16.0	20	1	74'-6¾"
		4-6	1	1	67'-4⅜"	33'-8 3/16"	9	17	7"	6'-3"	8½"	14	136	#4	6'-11"	628	6'-11"	416	100	4'-5"	461	41	139	4	49	8	43	-	-	-	2087	8.0	6.4	14.4	20	1	67'-4⅜"
C	6A	6A-1	1	1	61'-9"	30'-10½"	8	14	7"	6'-3"	8½"	14	126	#5	6'-11"	909	6'-11"	416	100	4'-5"	461	33	112	4	49	8	43	-	-	-	2351	8.0	6.4	13.2	20	1	61'-9"
		6A-2	1	1	68'-7⅞"	34'-3 15/16"	8	19	7"	6'-3"	8½"	14	136	#5	6'-11"	981	6'-11"	416	100	4'-5"	461	38	129	8	97	-	-	8	17'-7"	94	2539	8.0	6.4	14.7	20	1	68'-7⅞"
		6A-3	1	1	75'-5⅞"	37'-8 15/16"	8	24	7"	6'-3"	8½"	14	146	#5	6'-11"	1053	6'-11"	416	100	4'-5"	461	43	146	8	97	-	-	8	17'-6"	94	2628	8.0	6.4	16.2	20	1	75'-5⅞"
		6A-4	1	1	82'-3⅛"	41'-1 9/16"	8	29	7"	6'-3"	8½"	14	156	#5	6'-11"	1125	6'-11"	416	100	4'-5"	461	48	163	8	97	-	-	8	17'-5"	93	2716	8.0	6.4	17.6	20	1	82'-3⅛"
		6A-5	2	1	88'-11⅝"	44'-5 13/16"	20	16	7"	6'-3"	8½"	14	178	#5	6'-11"	1284	6'-11"	416	100	4'-5"	461	59	200	8	97	-	-	8	17'-5"	93	2912	8.0	6.4	19.1	26	1	88'-11⅝"
		6A-6	2	1	95'-7⅜"	47'-9 11/16"	20	21	7"	6'-3"	8½"	14	188	#5	6'-11"	1356	6'-11"	416	100	4'-5"	461	64	217	4	49	8	43	-	-	-	2903	8.0	6.4	20.5	26	1	95'-7⅜"
	6B	6B-1	1	2	68'-6¼"	34'-3⅛"	8	19	7"	6'-3"	8½"	14	136	#5	6'-11"	981	6'-11"	416	100	4'-5"	461	38	129	4	49	8	43	-	-	-	2482	8.0	6.4	14.7	20	1	68'-6¼"
		6B-2	1	2	75'-1⅜"	37'-6 1/16"	8	23	7"	6'-3"	8½"	14	144	#5	6'-11"	1039	6'-11"	416	100	4'-5"	461	42	142	8	97	-	-	8	11'-2"	60	2618	8.0	6.4	16.1	20	1	75'-1⅜"
		6B-3	1	2	81'-8½"	40'-10¼"	8	29	7"	6'-3"	8½"	14	156	#5	6'-11"	1125	6'-11"	416	100	4'-5"	461	48	163	8	97	-	-	8	11'-2"	60	2725	8.0	6.4	17.5	20	1	81'-8½"
		6B-4	2	2	88'-3½"	44'-1¾"	8	32	7"	6'-3"	8½"	14	162	#5	6'-11"	1169	6'-11"	416	100	4'-5"	461	51	173	8	97	-	-	8	11'-2"	60	2779	8.0	6.4	18.9	26	1	88'-3½"
		6B-5	2	2	94'-10⅜"	47'-5 1/16"	8	37	7"	6'-3"	8½"	14	172	#5	6'-11"	1241	6'-11"	416	100	4'-5"	461	56	190	12	146	24	128	-	-	-	2985	8.0	6.4	20.3	26	1	94'-10⅜"
		6B-6	4	2	101'-5⅛"	50'-8 9/16"	8	41	7"	6'-3"	8½"	14	180	#5	6'-11"	1299	6'-11"	416	100	4'-5"	461	60	203	8	97	16	86	-	-	-	2965	8.0	6.4	21.7	36	1	101'-5⅛"
	7	7-1	4	1	106'-6⅝"	53'-3 5/16"	8	44	7"	6'-3"	8½"	14	186	#5	6'-11"	1342	6'-11"	416	90	4'-5"	415	63	214	8	97	16	86	-	-	-	2931	8.0	6.4	22.8	36	1	106'-6⅝"
		7-2	4	1	107'-0⅛"	53'-6 1/16"	8	44	7"	6'-3"	8½"	14	186	#5	6'-11"	1342	6'-11"	416	90	4'-5"	415	63	214	8	97	16	86	-	-	-	2931	8.0	6.4	22.9	36	1	107'-0⅛"
		7-3	4	1	107'-5¾"	53'-8⅞"	8	45	7"	6'-3"	8½"	14	188	#5	6'-11"	1356	6'-11"	416	90	4'-5"	415	64	217	8	97	16	86	-	-	-	2948	8.0	6.4	23.0	36	1	107'-5¾"
		7-4	4	1	107'-11⅜"	53'-11 1/16"	8	45	7"	6'-3"	8½"	14	188	#5	6'-11"	1356	6'-11"	416	90	4'-5"	415	64	217	8	97	16	86	-	-	-	2948	8.0	6.4	23.1	36	1	107'-11⅜"
		7-5	4	1	108'-7½"	54'-3¾"	8	46	7"	6'-3"	8½"	14	190	#5	6'-11"	1371	6'-11"	416	90	4'-5"	415	65	220	8	97	16	86	-	-	-	2966	8.0	6.4	23.3	36	1	108'-7½"
		7-6	4	1	108'-10⅝"	54'-5 5/16"	8	46	7"	6'-3"	8½"	14	190	#5	6'-11"	1371	6'-11"	416	90	4'-5"	415	65	220	8	97	16	86	-	-	-	2966	8.0	6.4	23.3	36	1	108'-10⅝"
D	8	8-1	10	4	128'-10⅜"	64'-5 5/16"	20	43	8"	6'-6"	9½"	14	232	#4	7'-2"	1111	7'-2"	431	90	4'-6"	422	86	292	8	100	16	86	-	-	-	2815	9.5	7.6	29.3	52	1	128'-10⅜"
		8-2	10	4	129'-4¼"	64'-8⅛"	20	43	8"	6'-6"	9½"	14	232	#4	7'-2"	1111	7'-2"	431	90	4'-6"	422	86	292	8	100	16	86	-	-	-	2815	9.5	7.6	29.4	52	1	129'-4¼"
		8-3	10	4	129'-10⅛"	64'-11 1/16"	20	44	8"	6'-6"	9½"	14	234	#4	7'-2"	1120	7'-2"	431	90	4'-6"	422	87	295	8	100	16	86	-	-	-	2827	9.5	7.6	29.6	52	1	129'-10⅛"
		8-4	10	4	130'-4⅛"	65'-2 1/16"	20	44	8"	6'-6"	9½"	14	234	#4	7'-2"	1120	7'-2"	431	90	4'-6"	422	87	295	8	100	16	86	-	-	-	2827	9.5	7.6	29.7	52	1	130'-4⅛"
		8-5	10	4	130'-10"	65'-5"	20	44	8"	6'-6"	9½"	14	234	#4	7'-2"	1120	7'-2"	431	90	4'-6"	422	87	295	8	100	16	86	-	-	-	2827	9.5	7.6	29.8	52	1	130'-10"
		8-6	10	4	131'-4"	65'-8"	20	45	8"	6'-6"	9½"	14	236	#4	7'-2"	1130	7'-2"	431	90	4'-6"	422	88	298	8	100	16	86	-	-	-	2840	9.5	7.6	29.9	52	1	131'-4"
		8-7	10	4	131'-10⅛"	65'-11 1/16"	20	45	8"	6'-6"	9½"	14	236	#4	7'-2"	1130	7'-2"	431	90	4'-6"	422	88	298	8	100	16	86	-	-	-	2840	9.5	7.6	30.0	52	1	131'-10⅛"
	9	9-1	10	5	128'-10½"	64'-5¼"	20	43	8"	6'-6"	9½"	14	232	#4	7'-2"	1111	7'-2"	431	100	4'-6"	469	86	292	8	100	16	86	-	-	-	2904	9.5	7.6	29.3	52	1	128'-10½"
		9-2	10	5	129'-4½"	64'-8¼"	20	43	8"	6'-6"	9½"	14	232	#4	7'-2"	1111	7'-2"	431	100	4'-6"	469	86	292	8	100	16	86	-	-	-	2904	9.5	7.6	29.5	52	1	129'-4½"
		9-3	10	5	129'-10½"	64'-11¼"	20	44	8"	6'-6"	9½"	14	234	#4	7'-2"	1120	7'-2"	431	100	4'-6"	469	87	295	8	100	16	86	-	-	-	2916	9.5	7.6	29.6	52	1	129'-10½"
		9-4	10	5	130'-4⅝"	65'-2 5/16"	20	44	8"	6'-6"	9½"	14	234	#4	7'-2"	1120	7'-2"	431	100	4'-6"	469	87	295	8	100	16	86	-	-	-	2916	9.5	7.6	29.7	52	1	130'-4⅝"
		9-5	10	5	130'-10⅝"	65'-5 5/16"	20	44	8"	6'-6"	9½"	14	234	#4	7'-2"	1120	7'-2"	431	100	4'-6"	469	87	295	8	100	16	86	-	-	-	2916	9.5	7.6	29.8	52	1	130'-10⅝"
		9-6	10	5	131'-4¾"	65'-8⅜"	20	45	8"	6'-6"	9½"	14	236	#4	7'-2"	1130	7'-2"	431	100	4'-6"	469	88	298	8	100	16	86	-	-	-	2929	9.5	7.6	29.9	52	1	131'-4¾"
		9-7	10	5	131'-10¾"	65'-11⅜"	20	45	8"	6'-6"	9½"	14	236	#4	7'-2"	1130	7'-2"	431	100	4'-6"	469	88	298	8	100	16	86	-	-	-	2929	9.5	7.6	30.0	52	1	131'-10¾"

✳ GDR. SHT. REFERS TO GIRDER PLAN AND ELEVATION SHEETS 1 OF 12, 2 OF 12, 3 OF 12, 4 OF 12 AND 5 OF 12.

NOTE: REINF. STEEL SHOWN IS TOTAL REINFORCING STEEL FOR GIRDER INDICATED.

PROJECT NO. U-2524C

GUILFORD COUNTY

STATION: POT 407+85.82 -L-
= POT 29+79.72 -Y4-

SHEET 9 OF 12

STATE OF NORTH CAROLINA
DEPARTMENT OF TRANSPORTATION
RALEIGH

PRESTRESSED CONCRETE MODIFIED BULB TEE GIRDER TABLE

-RIGHT LANE-

NORTH CAROLINA PROFESSIONAL ENGINEER SEAL 28479 KEVIN G. BAILEY 6-7-13

STV / Ralph Whitehead Associates, Inc.
1000 West Morehead St., Ste. 200
Charlotte, NC 28208
NC License No. F-0991

REVISIONS						SHEET NO.
NO.	BY:	DATE:	NO.	BY:	DATE:	S-354
1			3			TOTAL SHEETS
2			4			836

DRAWN BY : CLG DATE : 3-13
CHECKED BY : TJT DATE : 3-13

DESIGN ENGINEER OF RECORD: T. TOWNSEND DATE : 5-13

6/6/2013 4:41:10 PM R:\ustation\Finals\PCMBT 9 of 12.dgn

GIRDER TABLE

UNIT	SPAN	GDR.	STRAND LAYOUT TYPE	* GDR. SHT.	"A"	"B"	"C"	"D"	"E"	"F"	"G"	"H"	S1 BARS NO.	S1 BARS SIZE	S1 BARS LENGTH	S1 BARS WEIGHT (LBS)	S2 BARS LENGTH	S2 BARS WEIGHT (LBS)	S6 BARS NO.	S6 BARS LENGTH	S6 BARS WEIGHT (LBS)	S9 BARS NO.	S9 BARS WEIGHT (LBS)	S11 BARS NO.	S11 BARS WEIGHT (LBS)	S12 BARS NO.	S12 BARS WEIGHT (LBS)	S13 BARS NO.	S13 BARS LENGTH	S13 BARS WEIGHT (LBS)	REINF. STEEL (LBS)	CONCRETE f'c (KSI)	CONCRETE f'ci (KSI)	CONCRETE C.Y.	0.6"Ø L.R. STRANDS NO.	NO. OF GDRS.	TOTAL LENGTH
D	10	10-1	10	5	128'-8 5/8"	64'-4 5/16"	20	43	8"	6'-6"	9 1/2"	14	232	#4	7'-2"	1111	7'-2"	431	100	4'-6"	469	86	292	8	100	16	86	-	-	-	2904	9.5	7.6	29.3	52	1	128'-8 5/8"
		10-2	10	5	129'-1 1/2"	64'-6 3/4"	20	43	8"	6'-6"	9 1/2"	14	232	#4	7'-2"	1111	7'-2"	431	100	4'-6"	469	86	292	8	100	16	86	-	-	-	2904	9.5	7.6	29.4	52	1	129'-1 1/2"
		10-3	10	5	129'-6 1/4"	64'-9 1/8"	20	44	8 1/2"	6'-6 1/2"	10"	14	234	#4	7'-2 1/2"	1127	7'-2 1/2"	433	100	4'-6 1/2"	474	87	295	8	100	16	86	-	-	-	2930	9.5	7.6	29.5	52	1	129'-6 1/4"
		10-4	10	5	129'-11 1/8"	64'-11 5/16"	20	44	9"	6'-7"	10 1/2"	14	234	#4	7'-3"	1133	7'-3"	436	100	4'-7"	478	87	295	8	100	16	86	-	-	-	2943	9.5	7.6	29.6	52	1	129'-11 1/8"
		10-5	10	5	130'-4"	65'-2"	20	44	9 1/2"	6'-7 1/2"	11"	14	234	#4	7'-3 1/2"	1140	7'-3 1/2"	438	100	4'-7 1/2"	482	87	295	8	100	16	86	-	-	-	2956	9.5	7.6	29.7	52	1	130'-4"
		10-6	10	5	130'-8 3/4"	65'-4 3/8"	20	44	10"	6'-8"	11 1/2"	14	234	#4	7'-4"	1146	7'-4"	441	100	4'-8"	487	87	295	8	100	16	86	-	-	-	2970	9.5	7.6	29.8	52	1	130'-8 3/4"
		10-7	10	5	131'-1 5/8"	65'-6 13/16"	20	45	10"	6'-8"	11 1/2"	14	236	#4	7'-4"	1156	7'-4"	441	100	4'-8"	487	88	298	8	100	16	86	-	-	-	2983	9.5	7.6	29.9	52	1	131'-1 5/8"
	11	11-1	10	4	128'-6 3/8"	64'-3 3/16"	20	43	8"	6'-6"	9 1/2"	14	232	#4	7'-2"	1111	7'-2"	431	90	4'-6"	422	86	292	8	100	16	86	-	-	-	2815	9.5	7.6	29.3	52	1	128'-6 3/8"
		11-2	10	4	128'-9 1/2"	64'-4 3/4"	20	43	8"	6'-6"	9 1/2"	14	232	#4	7'-2"	1111	7'-2"	431	90	4'-6"	422	86	292	8	100	16	86	-	-	-	2815	9.5	7.6	29.3	52	1	128'-9 1/2"
		11-3	10	4	129'-0 5/8"	64'-6 5/16"	20	43	8"	6'-6"	9 1/2"	14	232	#4	7'-2"	1111	7'-2"	431	90	4'-6"	422	86	292	8	100	16	86	-	-	-	2815	9.5	7.6	29.4	52	1	129'-0 5/8"
		11-4	10	4	129'-3 7/8"	64'-7 15/16"	20	43	8"	6'-6"	9 1/2"	14	232	#4	7'-2"	1111	7'-2"	431	90	4'-6"	422	86	292	8	100	16	86	-	-	-	2815	9.5	7.6	29.4	52	1	129'-3 7/8"
		11-5	10	4	129'-7"	64'-9 1/2"	20	44	8"	6'-6"	9 1/2"	14	234	#4	7'-2"	1120	7'-2"	431	90	4'-6"	422	87	295	8	100	16	86	-	-	-	2827	9.5	7.6	29.5	52	1	129'-7"
		11-6	10	4	129'-10 1/8"	64'-11 1/16"	20	44	8"	6'-6"	9 1/2"	14	234	#4	7'-2"	1120	7'-2"	431	90	4'-6"	422	87	295	8	100	16	86	-	-	-	2827	9.5	7.6	29.6	52	1	129'-10 1/8"
		11-7	10	4	130'-1 1/4"	65'-0 5/8"	20	44	8"	6'-6"	9 1/2"	14	234	#4	7'-2"	1120	7'-2"	431	90	4'-6"	422	87	295	8	100	16	86	-	-	-	2827	9.5	7.6	29.6	52	1	130'-1 1/4"
E	12	12-1	9	4	128'-4"	64'-2"	20	43	7"	6'-5"	8 1/2"	14	232	#4	7'-1"	1098	7'-1"	426	90	4'-5"	415	86	292	8	100	16	86	-	-	-	2790	9.0	7.2	29.2	50	1	128'-4"
		12-2	9	4	128'-5 3/8"	64'-2 11/16"	20	43	7"	6'-5"	8 1/2"	14	232	#4	7'-1"	1098	7'-1"	426	90	4'-5"	415	86	292	8	100	16	86	-	-	-	2790	9.0	7.2	29.2	50	1	128'-5 3/8"
		12-3	9	4	128'-6 7/8"	64'-3 7/16"	20	43	7"	6'-5"	8 1/2"	14	232	#4	7'-1"	1098	7'-1"	426	90	4'-5"	415	86	292	8	100	16	86	-	-	-	2790	9.0	7.2	29.3	50	1	128'-6 7/8"
		12-4	9	4	128'-8 1/4"	64'-4 1/8"	20	43	7"	6'-5"	8 1/2"	14	232	#4	7'-1"	1098	7'-1"	426	90	4'-5"	415	86	292	8	100	16	86	-	-	-	2790	9.0	7.2	29.3	50	1	128'-8 1/4"
		12-5	9	4	128'-9 3/4"	64'-4 7/8"	20	43	7"	6'-5"	8 1/2"	14	232	#4	7'-1"	1098	7'-1"	426	90	4'-5"	415	86	292	8	100	16	86	-	-	-	2790	9.0	7.2	29.3	50	1	128'-9 3/4"
		12-6	9	4	128'-11 1/8"	64'-5 9/16"	20	43	7"	6'-5"	8 1/2"	14	232	#4	7'-1"	1098	7'-1"	426	90	4'-5"	415	86	292	8	100	16	86	-	-	-	2790	9.0	7.2	29.4	50	1	128'-11 1/8"
		12-7	9	4	129'-0 1/2"	64'-6 1/4"	20	43	7"	6'-5"	8 1/2"	14	232	#4	7'-1"	1098	7'-1"	426	90	4'-5"	415	86	292	8	100	16	86	-	-	-	2790	9.0	7.2	29.4	50	1	129'-0 1/2"
	13	13-1	9	5	128'-2 1/8"	64'-1 1/16"	20	43	7"	6'-5"	8 1/2"	14	232	#4	7'-1"	1098	7'-1"	426	100	4'-5"	461	86	292	8	100	16	86	-	-	-	2878	9.0	7.2	29.2	50	1	128'-2 1/8"
		13-2	9	5	128'-2 1/4"	64'-1 1/8"	20	43	7"	6'-5"	8 1/2"	14	232	#4	7'-1"	1098	7'-1"	426	100	4'-5"	461	86	292	8	100	16	86	-	-	-	2878	9.0	7.2	29.2	50	1	128'-2 1/4"
		13-3	9	5	128'-2 3/8"	64'-1 3/16"	20	43	7"	6'-5"	8 1/2"	14	232	#4	7'-1"	1098	7'-1"	426	100	4'-5"	461	86	292	8	100	16	86	-	-	-	2878	9.0	7.2	29.2	50	1	128'-2 3/8"
		13-4 TO 13-5	9	5	128'-2 1/2"	64'-1 1/4"	20	43	7"	6'-5"	8 1/2"	14	232	#4	7'-1"	1098	7'-1"	426	100	4'-5"	461	86	292	8	100	16	86	-	-	-	2878	9.0	7.2	29.2	50	2	256'-5"
		13-6	9	5	128'-2 5/8"	64'-1 5/16"	20	43	7"	6'-5"	8 1/2"	14	232	#4	7'-1"	1098	7'-1"	426	100	4'-5"	461	86	292	8	100	16	86	-	-	-	2878	9.0	7.2	29.2	50	1	128'-2 5/8"
		13-7	9	5	128'-2 3/4"	64'-1 3/8"	20	43	7"	6'-5"	8 1/2"	14	232	#4	7'-1"	1098	7'-1"	426	100	4'-5"	461	86	292	8	100	16	86	-	-	-	2878	9.0	7.2	29.2	50	1	128'-2 3/4"
	14	14-1 TO 14-2	9	4	128'-2"	64'-1"	20	43	7"	6'-5"	8 1/2"	14	232	#4	7'-1"	1098	7'-1"	426	100	4'-5"	461	86	292	8	100	16	86	-	-	-	2836	9.0	7.2	29.2	50	2	256'-4"
		14-3	9	4	128'-2 1/8"	64'-1 1/16"	20	43	7"	6'-5"	8 1/2"	14	232	#4	7'-1"	1098	7'-1"	426	100	4'-5"	461	86	292	8	100	16	86	-	-	-	2836	9.0	7.2	29.2	50	1	128'-2 1/8"
		14-4	9	4	128'-2 1/8"	64'-1 1/16"	20	43	6"	6'-4"	7 1/2"	14	232	#4	7'-0"	1085	7'-0"	421	100	4'-4"	452	86	292	8	100	16	86	-	-	-	2809	9.0	7.2	29.2	50	1	128'-2 1/8"
		14-5	9	4	128'-2 1/4"	64'-1 1/8"	20	43	6"	6'-4"	7 1/2"	14	232	#4	7'-0"	1085	7'-0"	421	100	4'-4"	452	86	292	8	100	16	86	-	-	-	2809	9.0	7.2	29.2	50	1	128'-2 1/4"
		14-6	9	4	128'-2 1/2"	64'-1 1/4"	20	43	6"	6'-4"	7 1/2"	14	232	#4	7'-0"	1085	7'-0"	421	100	4'-4"	452	86	292	8	100	16	86	-	-	-	2809	9.0	7.2	29.2	50	1	128'-2 1/2"
		14-7	9	4	128'-2 5/8"	64'-1 5/16"	20	43	6"	6'-4"	7 1/2"	14	232	#4	7'-0"	1085	7'-0"	421	100	4'-4"	452	86	292	8	100	16	86	-	-	-	2809	9.0	7.2	29.2	50	1	128'-2 5/8"
	15	15-1 TO 15-3	7	3	117'-9 1/4"	58'-10 5/8"	39	10	7"	6'-3"	8 1/2"	14	242	#4	6'-11"	1118	6'-11"	416	100	4'-5"	461	91	308	8	97	16	86	-	-	-	2805	9.0	7.2	25.2	42	3	353'-3 3/4"
		15-4	7	3	117'-10"	58'-11"	39	10	7"	6'-3"	8 1/2"	14	242	#4	6'-11"	1118	6'-11"	416	100	4'-5"	461	91	308	8	97	16	86	-	-	-	2805	9.0	7.2	25.2	42	1	117'-10"
		15-5	7	3	118'-0 1/8"	59'-0 1/16"	39	11	7"	6'-3"	8 1/2"	14	244	#4	6'-11"	1127	6'-11"	416	100	4'-5"	461	92	312	8	97	16	86	-	-	-	2818	9.0	7.2	25.3	42	1	118'-0 1/8"
		15-6	7	3	118'-3 7/8"	59'-1 15/16"	39	11	7"	6'-3"	8 1/2"	14	244	#4	6'-11"	1127	6'-11"	416	100	4'-5"	461	92	312	8	97	16	86	-	-	-	2818	9.0	7.2	25.4	42	1	118'-3 7/8"
		15-7	7	3	118'-9"	59'-4 1/2"	39	11	7"	6'-3"	8 1/2"	14	244	#4	6'-11"	1127	6'-11"	416	100	4'-5"	461	92	312	8	97	16	86	-	-	-	2818	9.0	7.2	25.4	42	1	118'-9"
		15-8	7	3	119'-3 5/8"	59'-7 13/16"	39	11	7"	6'-3"	8 1/2"	14	244	#4	6'-11"	1127	6'-11"	416	100	4'-5"	461	92	312	8	97	16	86	-	-	-	2818	9.0	7.2	25.6	42	1	119'-3 5/8"
		15-9	7	3	119'-11 3/4"	59'-11 7/8"	39	12	7"	6'-3"	8 1/2"	14	246	#4	6'-11"	1137	6'-11"	416	100	4'-5"	461	93	315	8	97	16	86	-	-	-	2831	9.0	7.2	25.7	42	1	119'-11 3/4"
	16	16-1 TO 16-3	6	3	117'-9 3/8"	58'-10 3/16"	30	22	6"	6'-2"	7 1/2"	14	230	#4	6'-10"	1050	6'-10"	411	100	4'-4"	452	85	288	8	97	16	86	-	-	-	2703	8.0	6.4	25.2	40	3	353'-3 3/8"
		16-4	6	3	117'-9 1/4"	58'-10 5/8"	30	22	6"	6'-2"	7 1/2"	14	230	#4	6'-10"	1050	6'-10"	411	100	4'-4"	452	85	288	8	97	16	86	-	-	-	2703	8.0	6.4	25.2	40	1	117'-9 1/4"
		16-5	6	3	117'-9 1/2"	58'-10 3/4"	30	22	6"	6'-2"	7 1/2"	14	230	#4	6'-10"	1050	6'-10"	411	100	4'-4"	452	85	288	8	97	16	86	-	-	-	2703	8.0	6.4	25.2	40	1	117'-9 1/2"
		16-6	6	3	117'-9 3/4"	58'-10 7/8"	30	22	7"	6'-3"	8 1/2"	14	230	#4	6'-11"	1063	6'-11"	416	100	4'-5"	461	85	288	8	97	16	86	-	-	-	2730	8.0	6.4	25.2	40	1	117'-9 3/4"
		16-7	6	3	117'-10"	58'-11"	30	22	7"	6'-3"	8 1/2"	14	230	#4	6'-11"	1063	6'-11"	416	100	4'-5"	461	85	288	8	97	16	86	-	-	-	2730	8.0	6.4	25.2	40	1	117'-10"
		16-8	6	3	116'-11 3/4"	58'-5 7/8"	30	21	7"	6'-3"	8 1/2"	14	228	#4	6'-11"	1053	6'-11"	416	100	4'-5"	461	84	285	8	97	16	86	-	-	-	2717	8.0	6.4	25.1	40	1	116'-11 3/4"
		16-9	5	3	114'-11 7/8"	57'-5 15/16"	30	20	7"	6'-3"	8 1/2"	14	226	#4	6'-11"	1044	6'-11"	416	100	4'-5"	461	83	281	8	97	16	86	-	-	-	2704	8.0	6.4	24.6	38	1	114'-11 7/8"
		16-10	5	3	113'-1 7/8"	56'-6 15/16"	30	18	7"	6'-3"	8 1/2"	14	222	#4	6'-11"	1026	6'-11"	416	100	4'-5"	461	81	275	8	97	16	86	-	-	-	2680	8.0	6.4	24.2	38	1	113'-1 7/8"
		16-11	5	3	111'-6"	55'-9"	30	17	7"	6'-3"	8 1/2"	14	220	#4	6'-11"	1016	6'-11"	416	100	4'-5"	461	80	271	8	97	16	86	-	-	-	2666	8.0	6.4	23.9	38	1	111'-6"
		16-12	5	3	110'-0 1/4"	55'-0 1/8"	30	16	7"	6'-3"	8 1/2"	14	218	#4	6'-11"	1007	6'-11"	416	100	4'-5"	461	79	268	8	97	16	86	-	-	-	2654	8.0	6.4	23.6	38	1	110'-0 1/4"
F	17	17-1 TO 17-6	8	1	119'-2"	59'-7"	20	37	6"	6'-2"	7 1/2"	14	220	#4	6'-10"	1004	6'-10"	411	100	4'-4"	452	80	271	8	97	16	86	-	-	-	2682	9.0	7.2	25.5	44	6	715'-0"
	18	18-1 TO 18-6	8	2	119'-2"	59'-7"	20	37	6"	6'-2"	7 1/2"	14	220	#4	6'-10"	1004	6'-10"	411	100	4'-4"	452	80	271	8	97	16	86	-	-	-	2724	9.0	7.2	25.5	44	6	715'-0"
	19	19-1 TO 19-6	8	2	119'-2"	59'-7"	20	37	6"	6'-2"	7 1/2"	14	220	#4	6'-10"	1004	6'-10"	411	100	4'-4"	452	80	271	8	97	16	86	-	-	-	2724	9.0	7.2	25.5	44	6	715'-0"
	20	20-1 TO 20-6	8	1	119'-2"	59'-7"	20	37	6"	6'-2"	7 1/2"	14	220	#4	6'-10"	1004	6'-10"	411	90	4'-4"	407	80	271	8	97	16	86	-	-	-	2637	9.0	7.2	25.5	44	6	715'-0"

* GDR. SHT. REFERS TO GIRDER PLAN AND ELEVATION SHEETS 1 OF 12, 2 OF 12, 3 OF 12, 4 OF 12 AND 5 OF 12.

NOTE: REINF. STEEL SHOWN IS TOTAL REINFORCING STEEL FOR GIRDER INDICATED.

PROJECT NO. U-2524C

GUILFORD COUNTY

STATION: POT 407+85.82 -L- = POT 29+79.72 -Y4-

SHEET 10 OF 12

STATE OF NORTH CAROLINA
DEPARTMENT OF TRANSPORTATION
RALEIGH

PRESTRESSED CONCRETE MODIFIED BULB TEE GIRDER TABLE

-RIGHT LANE-

NORTH CAROLINA PROFESSIONAL SEAL 28479 ENGINEER KEVIN G. BAILEY 6-7-13

STV / Ralph Whitehead Associates, Inc.
1000 West Morehead St., Ste. 200
Charlotte, NC 28208
NC License No. F-0991

REVISIONS						SHEET NO.
NO.	BY:	DATE:	NO.	BY:	DATE:	S-355
1			3			TOTAL SHEETS
2			4			836

DRAWN BY : CLG DATE : 3-13
CHECKED BY : TJT DATE : 3-13

DESIGN ENGINEER OF RECORD: T. TOWNSEND DATE : 5-13

R:\station\Finals\PCMBT 10 of 12.dgn 6/6/2013 4:41:11 PM

GIRDER TABLE

UNIT	SPAN	GDR.	STRAND LAYOUT TYPE	* GDR. SHT.	"A"	"B"	"C"	"D"	"E"	"F"	"G"	S1 BARS NO.	S1 BARS SIZE	S1 BARS LENGTH	S1 BARS WEIGHT (LBS)	S2 BARS LENGTH	S2 BARS WEIGHT (LBS)	S6 BARS NO.	S6 BARS LENGTH	S6 BARS WEIGHT (LBS)	S9 BARS NO.	S9 BARS WEIGHT (LBS)	S11 BARS NO.	S11 BARS WEIGHT (LBS)	S12 BARS NO.	S12 BARS WEIGHT (LBS)	S13 BARS NO.	S13 BARS LENGTH	S13 BARS WEIGHT (LBS)	REINF. STEEL (LBS)	CONCRETE f'c (KSI)	CONCRETE f'ci (KSI)	CONCRETE C.Y.	0.6" Ø L.R. STRANDS NO.	NO. OF GDRS.	TOTAL LENGTH
I	27	27-1	5	1	108′-1 1/8″	54′-0 9/16″	8	46	6 1/2″	6′-2 1/2″	8″	190	#5	6′-10 1/2″	1362	6′-10 1/2″	413	93	4′-4 1/2″	424	65	220	8	97	16	86	-	-	-	2963	8.0	6.4	23.2	38	1	108′-1 1/8″
		27-2	5	1	108′-3 1/2″	54′-1 3/4″	8	46	6 1/2″	6′-2 1/2″	8″	190	#5	6′-10 1/2″	1362	6′-10 1/2″	413	93	4′-4 1/2″	424	65	220	16	195	-	-	16	15′-1″	161	3136	8.0	6.4	23.2	38	1	108′-3 1/2″
		27-3	5	1	108′-5 7/8″	54′-2 15/16″	8	46	6 1/2″	6′-2 1/2″	8″	190	#5	6′-10 1/2″	1362	6′-10 1/2″	413	93	4′-4 1/2″	424	65	220	16	195	-	-	16	15′-2″	162	3137	8.0	6.4	23.2	38	1	108′-5 7/8″
		27-4	5	1	108′-8 3/8″	54′-4 3/16″	8	46	6 1/2″	6′-2 1/2″	8″	190	#5	6′-10 1/2″	1362	6′-10 1/2″	413	93	4′-4 1/2″	424	65	220	16	195	-	-	16	15′-2″	162	3137	8.0	6.4	23.3	38	1	108′-8 3/8″
		27-5	5	1	108′-10 7/8″	54′-5 7/16″	8	46	6 1/2″	6′-2 1/2″	8″	190	#5	6′-10 1/2″	1362	6′-10 1/2″	413	93	4′-4 1/2″	424	65	220	16	195	-	-	16	15′-3″	163	3138	8.0	6.4	23.3	38	1	108′-10 7/8″
		27-6	5	1	109′-1 3/8″	54′-6 11/16″	8	46	6 1/2″	6′-2 1/2″	8″	190	#5	6′-10 1/2″	1362	6′-10 1/2″	413	93	4′-4 1/2″	424	65	220	8	97	16	86	-	-	-	2963	8.0	6.4	23.4	38	1	109′-1 3/8″
	28	28-1	5	2	100′-4 3/8″	50′-2 3/16″	8	41	6 1/2″	6′-2 1/2″	8″	180	#5	6′-10 1/2″	1291	6′-10 1/2″	413	100	4′-4 1/2″	456	60	203	8	97	16	86	-	-	-	2949	8.0	6.4	21.5	38	1	100′-4 3/8″
		28-2	5	2	100′-6 1/8″	50′-3 1/16″	8	41	6 1/2″	6′-2 1/2″	8″	180	#5	6′-10 1/2″	1291	6′-10 1/2″	413	100	4′-4 1/2″	456	60	203	16	195	-	-	16	14′-5″	154	3115	8.0	6.4	21.5	38	1	100′-6 1/8″
		28-3	5	2	100′-8″	50′-4″	8	41	6 1/2″	6′-2 1/2″	8″	180	#5	6′-10 1/2″	1291	6′-10 1/2″	413	100	4′-4 1/2″	456	60	203	16	195	-	-	16	14′-6″	155	3116	8.0	6.4	21.6	38	1	100′-8″
		28-4	5	2	100′-9 7/8″	50′-4 15/16″	8	41	6 1/2″	6′-2 1/2″	8″	180	#5	6′-10 1/2″	1291	6′-10 1/2″	413	100	4′-4 1/2″	456	60	203	16	195	-	-	16	14′-6″	155	3116	8.0	6.4	21.6	38	1	100′-9 7/8″
		28-5	5	2	100′-11 3/4″	50′-5 7/8″	8	41	6 1/2″	6′-2 1/2″	8″	180	#5	6′-10 1/2″	1291	6′-10 1/2″	413	100	4′-4 1/2″	456	60	203	16	195	-	-	16	14′-7″	156	3117	8.0	6.4	21.6	38	1	100′-11 3/4″
		28-6	5	2	101′-1 3/4″	50′-6 7/8″	8	41	6 1/2″	6′-2 1/2″	8″	180	#5	6′-10 1/2″	1291	6′-10 1/2″	413	100	4′-4 1/2″	456	60	203	8	97	16	86	-	-	-	2949	8.0	6.4	21.7	38	1	101′-1 3/4″
	29	29-1	5	2	112′-6″	56′-3″	8	49	6 1/2″	6′-2 1/2″	8″	196	#5	6′-10 1/2″	1405	6′-10 1/2″	413	100	4′-4 1/2″	456	68	231	8	97	16	86	-	-	-	3091	8.0	6.4	24.1	38	1	112′-6″
		29-2	5	2	112′-7 5/8″	56′-3 13/16″	8	49	6 1/2″	6′-2 1/2″	8″	196	#5	6′-10 1/2″	1405	6′-10 1/2″	413	100	4′-4 1/2″	456	68	231	16	195	-	-	16	13′-10″	148	3251	8.0	6.4	24.1	38	1	112′-7 5/8″
		29-3	5	2	112′-9 1/4″	56′-4 5/8″	8	49	6 1/2″	6′-2 1/2″	8″	196	#5	6′-10 1/2″	1405	6′-10 1/2″	413	100	4′-4 1/2″	456	68	231	16	195	-	-	16	13′-10″	148	3251	8.0	6.4	24.2	38	1	112′-9 1/4″
		29-4	5	2	112′-11″	56′-5 1/2″	8	49	6 1/2″	6′-2 1/2″	8″	196	#5	6′-10 1/2″	1405	6′-10 1/2″	413	100	4′-4 1/2″	456	68	231	16	195	-	-	16	13′-11″	149	3252	8.0	6.4	24.2	38	1	112′-11″
		29-5	5	2	113′-0 3/4″	56′-6 3/8″	8	49	6 1/2″	6′-2 1/2″	8″	196	#5	6′-10 1/2″	1405	6′-10 1/2″	413	100	4′-4 1/2″	456	68	231	16	195	-	-	16	13′-11″	149	3252	8.0	6.4	24.2	38	1	113′-0 3/4″
		29-6	5	2	113′-2 1/2″	56′-7 1/4″	8	49	6 1/2″	6′-2 1/2″	8″	196	#5	6′-10 1/2″	1405	6′-10 1/2″	413	100	4′-4 1/2″	456	68	231	8	97	16	86	-	-	-	3091	8.0	6.4	24.3	38	1	113′-2 1/2″
	30	30-1	5	1	111′-9 1/2″	55′-10 3/4″	8	48	6 1/2″	6′-2 1/2″	8″	194	#5	6′-10 1/2″	1391	6′-10 1/2″	413	100	4′-4 1/2″	456	67	227	8	97	16	86	-	-	-	3031	8.0	6.4	24.0	38	1	111′-9 1/2″
		30-2	5	1	111′-10 3/4″	55′-11 3/8″	8	48	6 1/2″	6′-2 1/2″	8″	194	#5	6′-10 1/2″	1391	6′-10 1/2″	413	100	4′-4 1/2″	456	67	227	16	195	-	-	16	13′-2″	141	3184	8.0	6.4	24.0	38	1	111′-10 3/4″
		30-3	5	1	112′-0 1/8″	56′-0 1/16″	8	48	6 1/2″	6′-2 1/2″	8″	194	#5	6′-10 1/2″	1391	6′-10 1/2″	413	100	4′-4 1/2″	456	67	227	16	195	-	-	16	13′-3″	142	3185	8.0	6.4	24.0	38	1	112′-0 1/8″
		30-4	5	1	112′-1 3/8″	56′-0 11/16″	8	48	6 1/2″	6′-2 1/2″	8″	194	#5	6′-10 1/2″	1391	6′-10 1/2″	413	100	4′-4 1/2″	456	67	227	16	195	-	-	16	13′-3″	142	3185	8.0	6.4	24.0	38	1	112′-1 3/8″
		30-5	5	1	112′-2 3/4″	56′-1 3/8″	8	48	6 1/2″	6′-2 1/2″	8″	194	#5	6′-10 1/2″	1391	6′-10 1/2″	413	100	4′-4 1/2″	456	67	227	16	195	-	-	16	13′-3″	142	3185	8.0	6.4	24.0	38	1	112′-2 3/4″
		30-6	5	1	112′-4 1/8″	56′-2 1/16″	8	48	6 1/2″	6′-2 1/2″	8″	194	#5	6′-10 1/2″	1391	6′-10 1/2″	413	100	4′-4 1/2″	456	67	227	8	97	16	86	-	-	-	3031	8.0	6.4	24.1	38	1	112′-4 1/8″

* GDR. SHT. REFERS TO GIRDER PLAN AND ELEVATION SHEETS 1 OF 12, 2 OF 12, 3 OF 12, 4 OF 12 AND 5 OF 12.

NOTE: REINF. STEEL SHOWN IS TOTAL REINFORCING STEEL FOR GIRDER INDICATED.

HOLD DOWN FORCE

UNIT	SPAN	GDR.	HOLD DOWN FORCE (K)
B	3	3-1 TO 3-2	46
D	8-11	1 TO 7	43
E	12-14	1 TO 7	43
	15	15-1 TO 15-9	46
	16	16-1 TO 16-12	40
F	17-20	1 TO 6	51
I	27-30	1 TO 6	39

(HOLD DOWN FORCES LESS THAN 20 KIPS NOT SHOWN)

PROJECT NO. U-2524C

GUILFORD COUNTY

STATION: POT 407+85.82 -L-
= POT 29+79.72 -Y4-

SHEET 11 OF 12

NORTH CAROLINA PROFESSIONAL SEAL 28479 ENGINEER KEVIN G. BAILEY 6-7-13

STATE OF NORTH CAROLINA
DEPARTMENT OF TRANSPORTATION
RALEIGH

PRESTRESSED CONCRETE MODIFIED BULB TEE GIRDER TABLE

-RIGHT LANE-

REVISIONS						SHEET NO.
NO.	BY:	DATE:	NO.	BY:	DATE:	S-356
1			3			TOTAL SHEETS
2			4			836

STV / Ralph Whitehead Associates, Inc.
1000 West Morehead St., Ste. 200
Charlotte, NC 28208
NC License No. F-0991

DRAWN BY : CLG DATE : 3-13
CHECKED BY : TJT DATE : 3-13

DESIGN ENGINEER OF RECORD: T. TOWNSEND DATE : 5-13

6/6/2013 4:41:13 PM R:\ustation\Finals\PCMBT 11 of 12.dgn

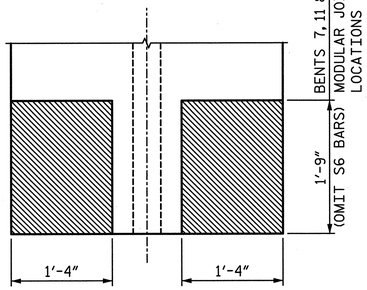

PARTIAL PLAN

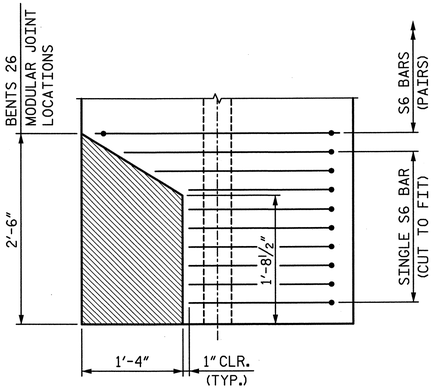

PARTIAL PLAN

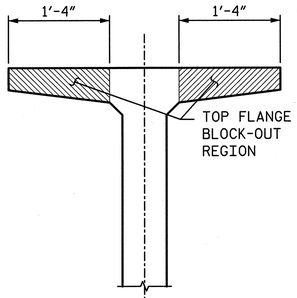

END ELEVATION

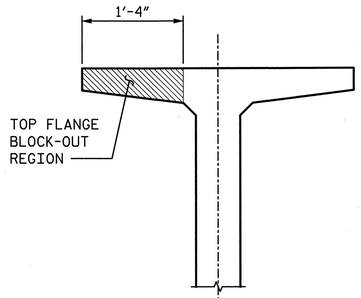

END ELEVATION

TOP FLANGE BLOCK-OUT DETAIL

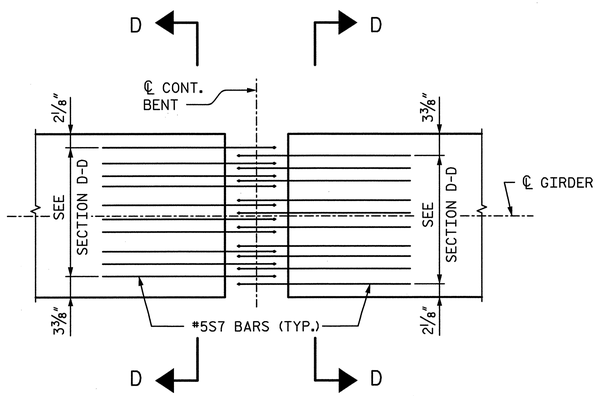

PLAN- BOTTOM FLANGE

EXTERIOR S7 BARS SHOWN, OTHERS OMITTED FOR CLARITY.

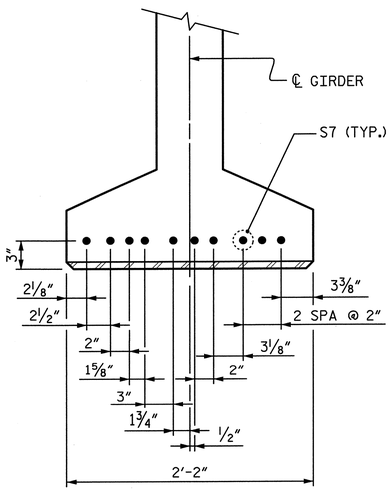

SECTION D-D

FLANGE CLIP DIMENSION						
"X"	"Y"	GIRDER	"A"	"B"	"C"	"D"
3	4	4-1 TO 4-6	-	-	8"	8"
5A	5B	6A-1 TO 6A-6	8"	8"	-	-
14	15	15-6	1'-0"	2"	1'-0"	2"
14	15	15-7 TO 15-9	1'-0"	3"	1'-0"	3"
15	16	16-7	1'-0"	2"	-	-
15	16	16-8 TO 16-10	1'-0"	3"	1'-0"	2"
15	16	16-11 TO 16-12	1'-0"	3"	-	-
29	END BENT 2	30-1 TO 30-6	-	-	10"	5"

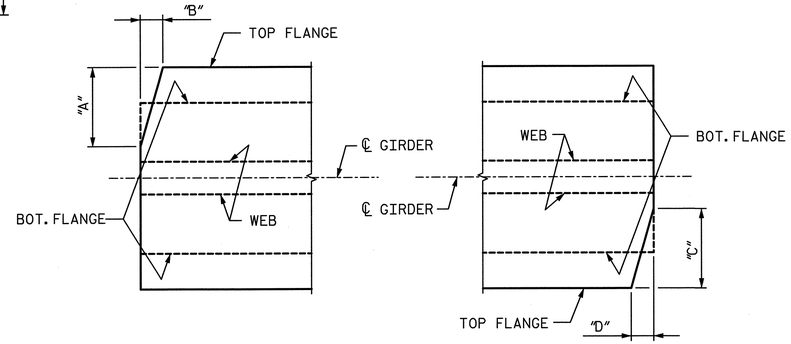

AT BENT "X" AT BENT "Y"

FLANGE CLIP DETAIL

(CLIP FOR SPAN 4, 6A, 15, 16, 30)

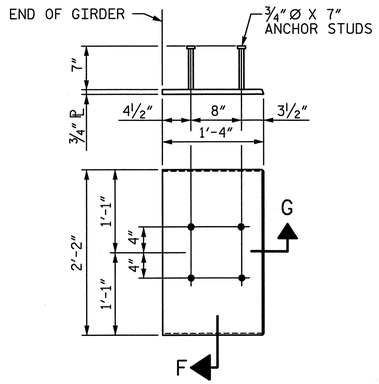

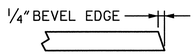

SECTION "G"

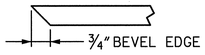

SECTION "F"

(SEE NOTES)

EMBEDDED PLATE "B-1" DETAILS FOR AASHTO 72" & 74" MODIFIED BULB TEES

(2 REQ'D. PER GIRDER)

NOTES

ALL PRESTRESSING STRANDS SHALL BE 7-WIRE LOW-RELAXATION GRADE 270 STRANDS AND SHALL CONFORM TO AASHTO M203 EXCEPT FOR SAMPLING REQUIREMENTS WHICH SHALL BE IN ACCORDANCE WITH THE STANDARD SPECIFICATIONS.

ALL REINFORCING STEEL SHALL BE GRADE 60.

APPLY EPOXY PROTECTIVE COATING TO END OF GIRDER SURFACES INDICATED IN ELEVATION VIEW.

EMBEDDED PLATE "B-1" SHALL BE GALVANIZED IN ACCORDANCE WITH THE STANDARD SPECIFICATIONS. BEVEL EDGES OF PLATE "B-1" TO GIVE CLOSE FIT BUT NOT TIGHT FIT TO STEEL CASTING FORM.

ANCHOR STUDS SHALL CONFORM TO AASHTO M169 GRADES 1010 THROUGH 1020 OR APPROVED EQUAL, AND SHALL MEET THE TYPE "B" REQUIREMENTS OF SUBSECTION 7.3 OF THE ANSI/AASHTO/AWS D1.5 BRIDGE WELDING CODE.

AT ENDS OF GIRDERS TO BE EMBEDDED IN CONCRETE DIAPHRAGMS OR ENDWALLS, PRESTRESSING STRANDS MAY EXTEND A MAXIMUM OF 2" BEYOND THE GIRDER ENDS. OTHERWISE PRESTRESSED STRANDS SHALL BE CUT FLUSH WITH THE GIRDER ENDS.

THE TRANSFER OF LOAD FROM THE ANCHORAGES TO THE GIRDER SHALL BE DONE WHEN CONCRETE HAS REACHED A COMPRESSIVE STRENGTH OF NOT LESS THAN THE VALUES INDICATED ON SHEETS 9 THROUGH 11 OF 12.

DEPENDING ON THE TYPE OF SYSTEM USED TO SUPPORT THE DECK SLAB FORMS, PRESET ANCHORS MAY BE NECESSARY IN THE PRESTRESSED CONCRETE GIRDER.

THE TOP SURFACE OF THE GIRDER, EXCLUDING THE OUTSIDE 4", SHALL BE RAKED TO A DEPTH OF ¼".

WHEN DRAPED STRANDS ARE DETAILED, THE LONGITUDINAL LOCATION OF THE HOLD DOWN DEVICES SHALL BE WITHIN 6" OF THE LOCATION SHOWN AND THE CENTER OF GRAVITY OF THE GROUP OF DRAPED STRANDS SHALL BE LOCATED WITHIN ½" OF THE THEORETICAL LOCATION SHOWN.

A 2" X 2" CHAMFER IS ALLOWED AT THE INTERSECTION OF THE WEB AND THE BOTTOM FLANGE.

THE CONTRACTOR HAS THE OPTION TO PROVIDE, AT NO ADDITIONAL COST TO THE DEPARTMENT, 2 ADDITIONAL STRANDS AT THE TOP OF THE GIRDER TO FACILITATE TYING OF THE REINFORCING STEEL. THESE STRANDS SHALL BE PULLED TO A LOAD OF 5,000 lbs.

PROJECT NO. U-2524C

GUILFORD COUNTY

STATION: POT 407+85.82 -L-
= POT 29+79.72 -Y4-

SHEET 12 OF 12

STATE OF NORTH CAROLINA
DEPARTMENT OF TRANSPORTATION
RALEIGH

PRESTRESSED CONCRETE MODIFIED BULB TEE GIRDER DETAILS

-RIGHT LANE-

NORTH CAROLINA PROFESSIONAL SEAL 28479 ENGINEER KEVIN G. BAILEY 6-7-13

STV / Ralph Whitehead Associates, Inc.
1000 West Morehead St., Ste. 200
Charlotte, NC 28208
NC License No. F-0991

REVISIONS						SHEET NO.
NO.	BY:	DATE:	NO.	BY:	DATE:	S-357
1			3			TOTAL SHEETS
2			4			836

DRAWN BY : CLG DATE : 3-13
CHECKED BY : TJT DATE : 3-13

DESIGN ENGINEER OF RECORD: T. TOWNSEND DATE : 5-13

6/6/2013 4:41:14 PM R:\ustation\Finals\PCMBT 12 of 12.dgn

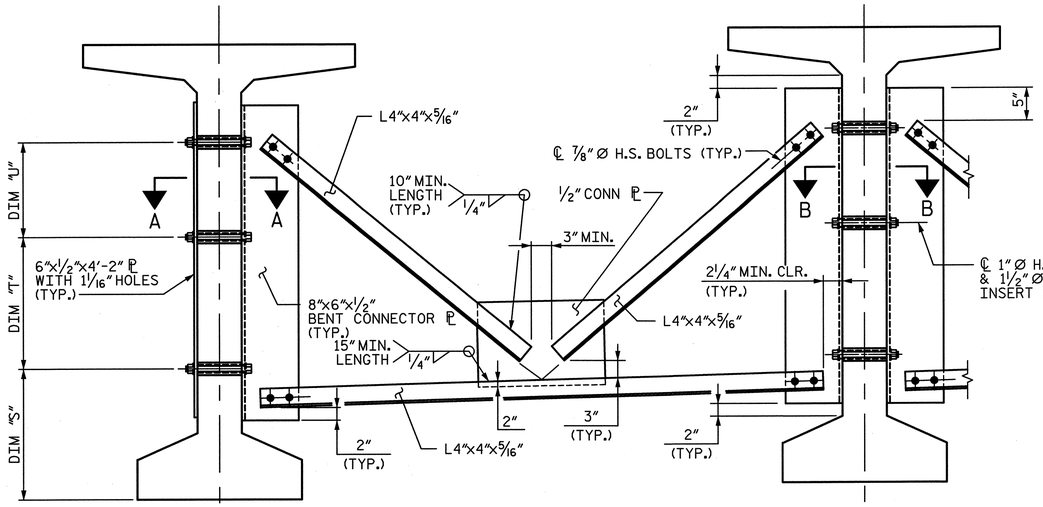

EXTERIOR GIRDER

INTERIOR GIRDER

PART SECTION AT INTERMEDIATE DIAPHRAGM

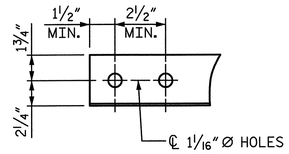

ANGLE END

(L4"x4"x5/16")

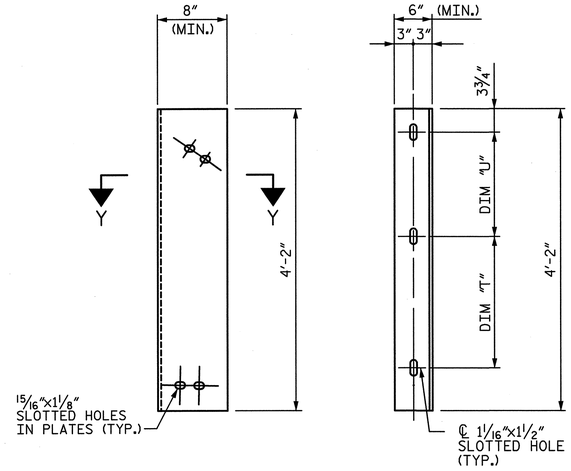

DIAPHRAGM FACE WEB FACE

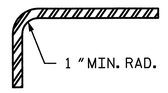

SECTION Y-Y

CONNECTOR PLATE DETAIL

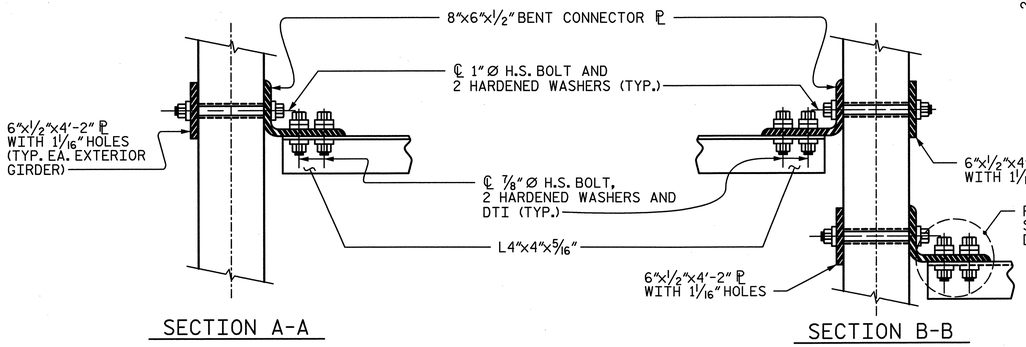

SECTION A-A SECTION B-B

CONNECTION DETAILS

(FOR SKEW > 110° OR SKEW < 70°)

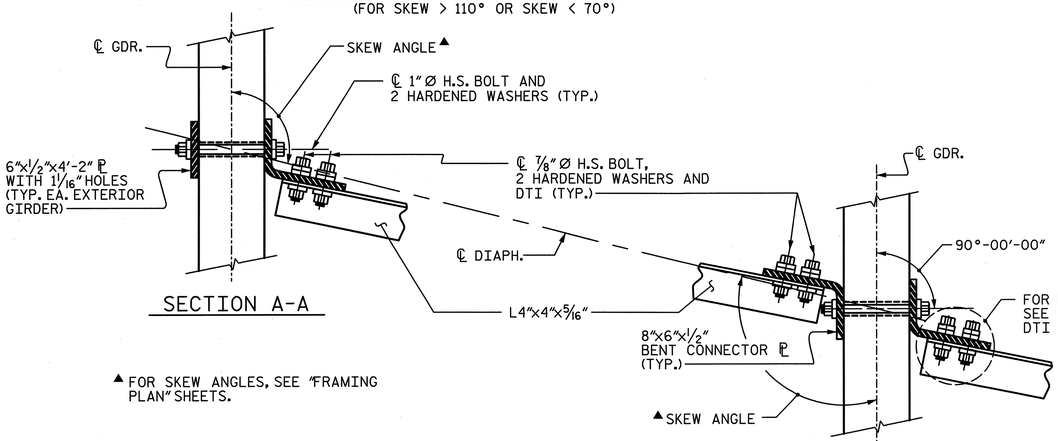

SECTION A-A SECTION B-B

▲ FOR SKEW ANGLES, SEE "FRAMING PLAN" SHEETS.

CONNECTION DETAILS

(FOR 70°< SKEW < 90° OR 90°< SKEW < 110°)

CONNECTION DETAILS

(FOR SKEW = 90°)

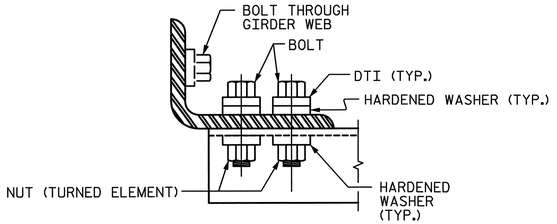

BOLT WITH DTI ASSEMBLY DETAIL

STRUCTURAL STEEL NOTES

ALL INTERMEDIATE DIAPHRAGM STEEL AND CONNECTOR PLATES SHALL BE AASHTO M270 GRADE 50 OR APPROVED EQUAL.

TENSION ON THE ASTM A325 BOLTS THROUGH THE ANGLE MEMBER SHALL BE CALIBRATED USING DIRECT TENSION INDICATOR WASHERS IN ACCORDANCE WITH THE STANDARD SPECIFICATIONS.

TENSION ON THE ASTM A449 BOLTS THROUGH THE GIRDER WEB SHALL BE SNUG TIGHTENED FOLLOWED BY AN ADDITIONAL 1/4 TURN.

THE PLATES, BENT PLATES, AND ANGLES SHALL BE GALVANIZED OR METALLIZED IN ACCORDANCE WITH THE STANDARD SPECIFICATIONS. FOR THERMAL SPRAYED COATINGS (METALLIZATION), SEE SPECIAL PROVISIONS.

FOR METALLIZATION, APPLY AN 8 MIL THICK 99.99 PERCENT ZINC (W-Zn-1) THERMAL SPRAYED COATING WITH A 0.5 MIL THICK SEAL COAT TO ALL STEEL DIAPHRAGM SURFACES IN ACCORDANCE WITH THE THERMAL SPRAYED COATINGS SPECIAL PROVISION AND SECTION 442 OF THE STANDARD SPECIFICATIONS.

GALVANIZE THE HIGH STRENGTH BOLTS, NUTS, WASHERS AND DIRECT TENSION INDICATORS IN ACCORDANCE WITH THE STANDARD SPECIFICATIONS.

USE AN ASTM F436 HARDENED WASHER WITH STANDARD AND SLOTTED HOLES UNDER EACH BOLT HEAD AND NUT.

FOR BOLTS THROUGH THE GIRDER WEB, PROVIDE SUFFICIENT LENGTH OF THREADS ON ALL BOLTS TO ACCOMMODATE WASHERS AND THE THICKNESS OF CONNECTING MEMBER PLUS AT LEAST 1/4" PROJECTION BEYOND THE NUT.

INTERMEDIATE DIAPHRAGM ASSEMBLY SHALL COMPLY WITH SECTION 1072 OF THE STANDARD SPECIFICATIONS.

SUBMIT TWO SETS OF WORKING DRAWINGS FOR THE INTERMEDIATE DIAPHRAGM ASSEMBLY FOR REVIEW, COMMENTS AND ACCEPTANCE. AFTER REVIEW, COMMENTS, AND ACCEPTANCE, SUBMIT SEVEN SETS FOR DISTRIBUTION.

IN THE EXTERIOR BAYS, PLACE TEMPORARY STRUTS BETWEEN PRESTRESSED GIRDERS ADJACENT TO THE STEEL DIAPHRAGMS. STRUTS SHALL REMAIN IN PLACE 3 DAYS AFTER CONCRETE IS PLACED.

THE COST OF THE STEEL DIAPHRAGMS AND ASSEMBLIES SHALL BE INCLUDED IN THE UNIT PRICE BID FOR PRESTRESSED CONCRETE GIRDERS.

FOR DIMENSIONS "S", "T", & "U", SEE "PRESTRESSED CONCRETE MODIFIED BULB TEE GIRDER DIAPHRAGM DETAILS" SHEET.

NORTH CAROLINA PROFESSIONAL ENGINEER SEAL 28479 ENGINEER KEVIN G. BAILEY 6-7-13

PROJECT NO. U-2524C

GUILFORD COUNTY

STATION: POT 407+85.82 -L-
= POT 29+79.72 -Y4-

STATE OF NORTH CAROLINA
DEPARTMENT OF TRANSPORTATION
RALEIGH

INTERMEDIATE STEEL DIAPHRAGM DETAILS FOR PRESTRESSED CONCRETE MODIFIED BULB TEE GIRDERS -RIGHT LANE-

REVISIONS						SHEET NO.
NO.	BY:	DATE:	NO.	BY:	DATE:	S-358
1			3			TOTAL SHEETS
2			4			836

DRAWN BY : CLG DATE : 3-13
CHECKED BY : TJT DATE : 3-13

DESIGN ENGINEER OF RECORD: T. TOWNSEND DATE : 5-13

STV / Ralph Whitehead Associates, Inc.
1000 West Morehead St., Ste. 200
Charlotte, NC 28208
NC License No. F-0991

R:\station\Finals\Int. Steel Diaphragms.dgn 4:41:15 PM 6/6/2013

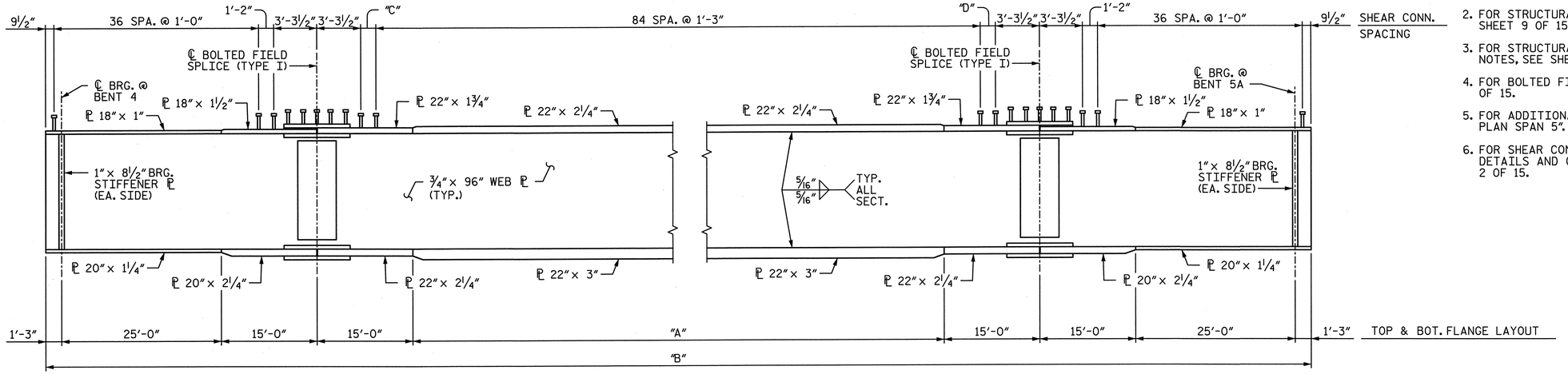

GIRDERS 1-4 ELEVATION

(CONNECTOR PLATES AND COMBINATION CONNECTOR/STIFFENER PLATES NOT SHOWN FOR CLARITY. FOR PLACEMENT, SEE FRAMING PLAN.)

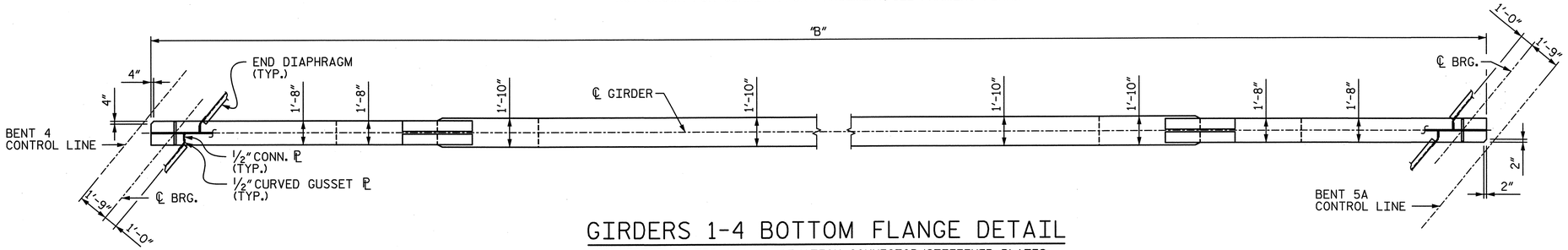

GIRDERS 1-4 BOTTOM FLANGE DETAIL

(CONNECTOR PLATES AND COMBINATION CONNECTOR/STIFFENER PLATES NOT SHOWN FOR CLARITY. FOR PLACEMENT, SEE FRAMING PLAN. BOTTOM FLANGE SHOWN SCHEMATICALLY WITHOUT CURVATURE)

NOTES:

1. FOR CHARPY V-NOTCH TEST, SEE ARTICLE 1072-7 OF THE STANDARD SPECIFICATIONS.
2. FOR STRUCTURAL STEEL DIAPHRAGM DETAILS, SEE SHEET 9 OF 15.
3. FOR STRUCTURAL STEEL DETAILS AND ADDITIONAL NOTES, SEE SHEETS 10 AND 11 OF 15.
4. FOR BOLTED FIELD SPLICE DETAILS, SEE SHEET 12 OF 15.
5. FOR ADDITIONAL GIRDER DETAILS, SEE "FRAMING PLAN SPAN 5".
6. FOR SHEAR CONNECTOR DETAILS, TOP FLANGE CLIP DETAILS AND GIRDER DIMENSIONS, SEE SHEET 2 OF 15.

PROJECT NO. U-2524C

GUILFORD COUNTY

STATION: POT 407+85.82 -L-
= POT 29+79.72 -Y4-

SHEET 1 OF 15

STATE OF NORTH CAROLINA
DEPARTMENT OF TRANSPORTATION
RALEIGH

STRUCTURAL STEEL GIRDER ELEVATION SPAN 5

-RIGHT LANE-

NORTH CAROLINA PROFESSIONAL SEAL 28479 ENGINEER KEVIN G. BAILEY 6-7-13

STV / Ralph Whitehead Associates, Inc.
1000 West Morehead St., Ste. 200
Charlotte, NC 28208
NC License No. F-0991

REVISIONS						SHEET NO.
NO.	BY:	DATE:	NO.	BY:	DATE:	S-359
1			3			TOTAL SHEETS
2			4			836

DRAWN BY : VMW DATE : 3-13
CHECKED BY : KGB DATE : 4-13
DESIGN ENGINEER OF RECORD: K. BAILEY DATE : 5-13

6/6/2013 4:41:16 PM R:\station\Finals\Structural\Steel Girder Elevation Span 5_Sheet 1 of 15.dgn

NOTES:

1. FOR CHARPY V-NOTCH TEST, SEE ARTICLE 1072-7 OF THE STANDARD SPECIFICATIONS.
2. FOR ADDITIONAL NOTES, SEE SHEET 1 OF 15.
3. FABRICATOR SHALL ADJUST TOP FLANGE CLIPS AS NECESSARY TO PROVIDE MINIMUM CLEARANCE AS SHOWN.

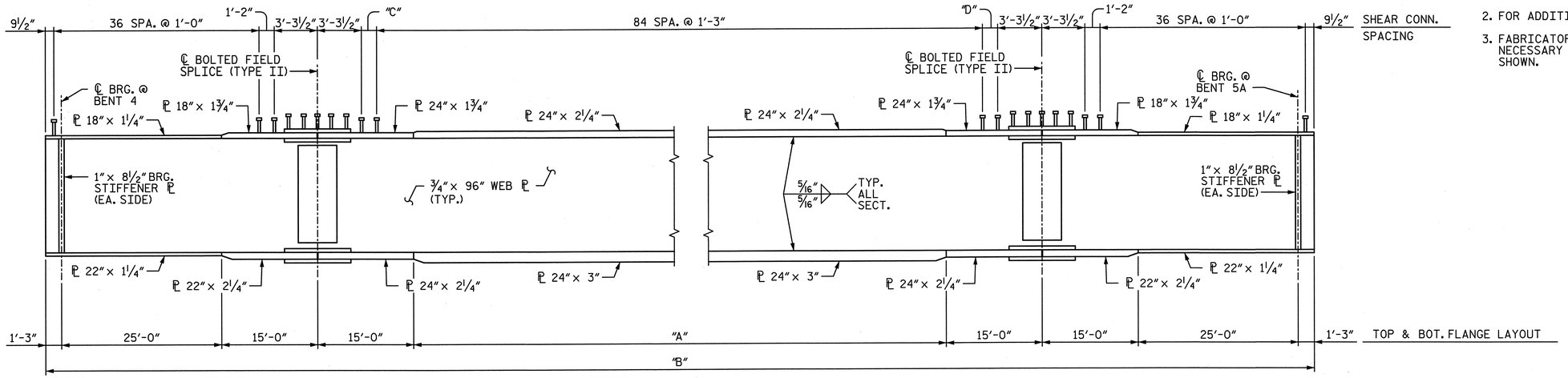

GIRDERS 5 & 6 ELEVATION

(CONNECTOR PLATES AND COMBINATION CONNECTOR/STIFFENER PLATES NOT SHOWN FOR CLARITY. FOR PLACEMENT, SEE FRAMING PLAN.)

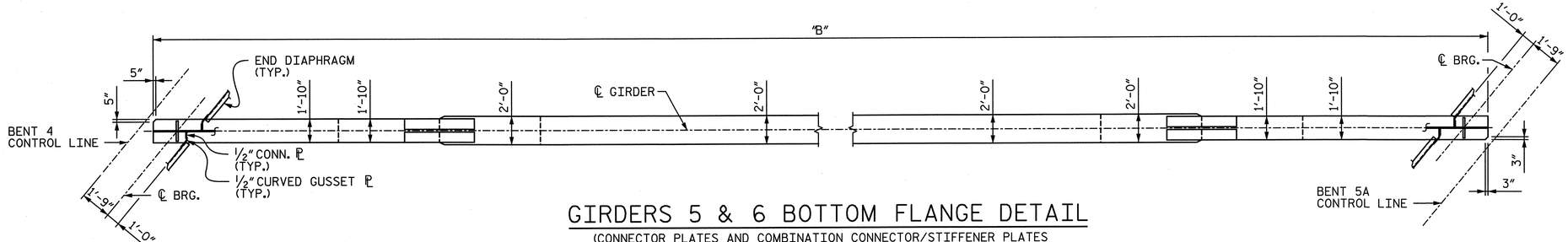

GIRDERS 5 & 6 BOTTOM FLANGE DETAIL

(CONNECTOR PLATES AND COMBINATION CONNECTOR/STIFFENER PLATES NOT SHOWN FOR CLARITY. FOR PLACEMENT, SEE FRAMING PLAN. BOTTOM FLANGE SHOWN SCHEMATICALLY WITHOUT CURVATURE)

GIRDER DIMENSIONS

GDR.	RADIUS	SPAN 5 "A"	SPAN 5 "B"	SPAN 5 ℄ F.S. TO ℄ F.S.	SHEAR CONNECTORS "C"	SHEAR CONNECTORS "D"	SHEAR CONNECTORS NO. OF SHEAR CONN.
1	2513'-1"	83'-2⅝"	195'-8⅝"	113'-2⅝"	9 13/16"	9 13/16"	692
2	2524'-3"	83'-2 5/16"	195'-8 5/16"	113'-2 5/16"	9⅝"	9 11/16"	692
3	2535'-5"	83'-2⅛"	195'-8⅛"	113'-2⅛"	9 9/16"	9 9/16"	692
4	2546'-7"	83'-2⅛"	195'-8⅛"	113'-2⅛"	9 9/16"	9 9/16"	692
5	2557'-9"	83'-2 5/16"	195'-8 5/16"	113'-2 5/16"	9⅝"	9 11/16"	692
6	2568'-11"	83'-2⅝"	195'-8⅝"	113'-2⅝"	9 13/16"	9 13/16"	692

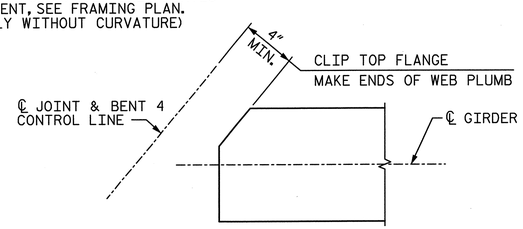

BENT 4
(TYPICAL EA. GIRDER)

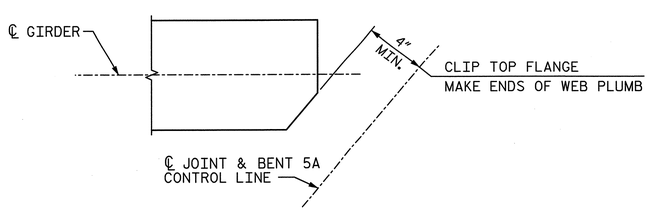

BENT 5A
(TYPICAL EA. GIRDER)

TOP FLANGE CLIP DETAILS

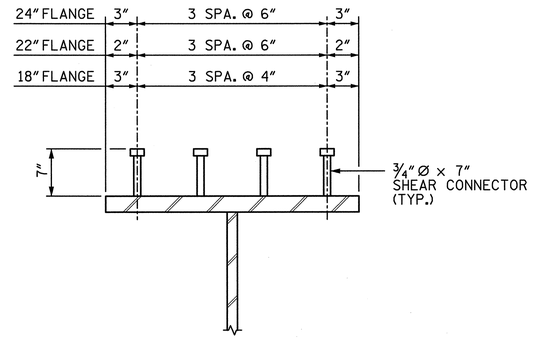

SHEAR CONNECTOR DETAIL

PROJECT NO. U-2524C

GUILFORD COUNTY

STATION: POT 407+85.82 -L-
= POT 29+79.72 -Y4-

SHEET 2 OF 15

STATE OF NORTH CAROLINA
DEPARTMENT OF TRANSPORTATION
RALEIGH

STRUCTURAL STEEL GIRDER ELEVATION SPAN 5

-RIGHT LANE-

NORTH CAROLINA PROFESSIONAL SEAL 28479 ENGINEER KEVIN G. BAILEY 6-7-13

DRAWN BY : VMW DATE : 3-13
CHECKED BY : KGB DATE : 4-13
DESIGN ENGINEER OF RECORD: K. BAILEY DATE : 5-13

STV / Ralph Whitehead Associates, Inc.
1000 West Morehead St., Ste. 200
Charlotte, NC 28208
NC License No. F-0991

REVISIONS NO.	BY:	DATE:	NO.	BY:	DATE:
1			3		
2			4		

SHEET NO. S-360
TOTAL SHEETS 836

6/6/2013 4:41:17 PM R:\station\Finals\Structural\Steel\Girder Elevation Span 5_Sheet 2 of 15.dgn

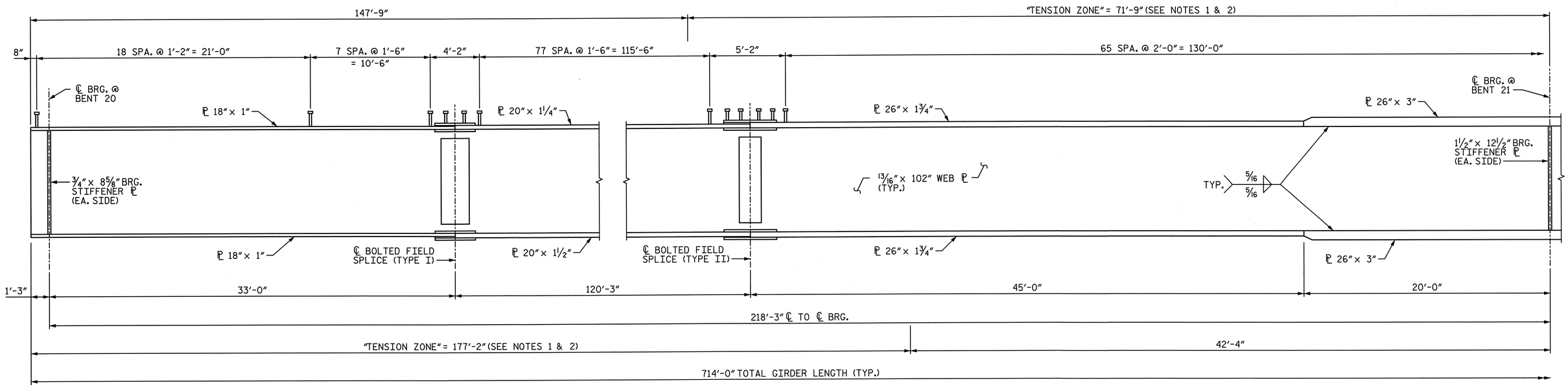

GIRDER ELEVATION

(CONNECTOR PLATES AND TRANSVERSE STIFFENERS NOT SHOWN FOR CLARITY. FOR PLACEMENT, SEE FRAMING PLAN)

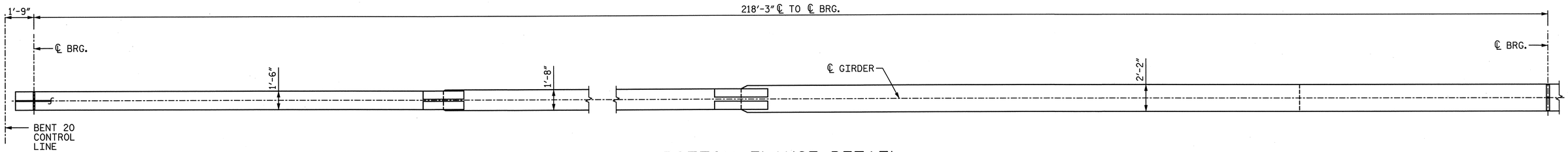

BOTTOM FLANGE DETAIL

(CONNECTOR PLATES AND TRANSVERSE STIFFENERS NOT SHOWN FOR CLARITY. FOR PLACEMENT, SEE FRAMING PLAN)

NOTES:

1. CHARPY V-NOTCH TESTS ARE REQUIRED FOR ALL TOP OR BOTTOM FLANGE PLATES WHICH FALL WITHIN THESE LIMITS, ALL WEB PLATES, AND ALL SPLICE PLATES. IF A PERMITTED SHOP FLANGE SPLICE IS NOT USED, CHARPY V-NOTCH TESTS WILL BE REQUIRED FOR THE ENTIRE FLANGE PLATE. FOR CHARPY V-NOTCH TESTS, SEE ARTICLE 1072-7 OF THE STANDARD SPECIFICATIONS.
2. NO WELDING OF FORMS OR FALSEWORK TO THE TOP FLANGE WILL BE PERMITTED IN THIS REGION.
3. FOR STRUCTURAL STEEL DIAPHRAGM DETAILS, SEE SHEET 9 OF 15.
4. FOR STRUCTURAL STEEL DETAILS AND ADDITIONAL NOTES, SEE SHEETS 10 & 11 OF 15.
5. FOR BOLTED FIELD SPLICE DETAILS, SEE SHEET 13 OF 15.
6. FOR ADDITIONAL INFORMATION, SEE "FRAMING PLAN UNIT G SPANS 21-23".

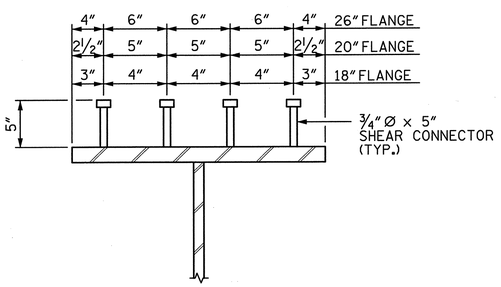

SHEAR CONNECTOR DETAIL

(TYPICAL EXCEPT @ TOP FLANGE SPLICE PLATE, SEE UNIT G BOLTED FIELD SPLICE)

NORTH CAROLINA PROFESSIONAL ENGINEER SEAL 28479 KEVIN G. BAILEY 6-7-13

PROJECT NO. U-2524C
GUILFORD COUNTY
STATION: POT 407+85.82 -L-
= POT 29+79.72 -Y4-
SHEET 3 OF 15

STATE OF NORTH CAROLINA
DEPARTMENT OF TRANSPORTATION
RALEIGH

STRUCTURAL STEEL GIRDER ELEVATION UNIT G SPAN 21 -RIGHT LANE-

DRAWN BY : VMW	DATE : 4-13	DESIGN ENGINEER OF RECORD: K. BAILEY	DATE : 5-13
CHECKED BY : TRL	DATE : 4-13		

STV / Ralph Whitehead Associates, Inc.
1000 West Morehead St., Ste. 200
Charlotte, NC 28208
NC License No. F-0991

REVISIONS						SHEET NO.
NO.	BY:	DATE:	NO.	BY:	DATE:	S-361
1			3			TOTAL SHEETS
2			4			836

6/6/2013 4:41:19 PM R:\station\FInals\Structural Steel\Girder Elevation Unit G_Sheet 3 of 15.dgn

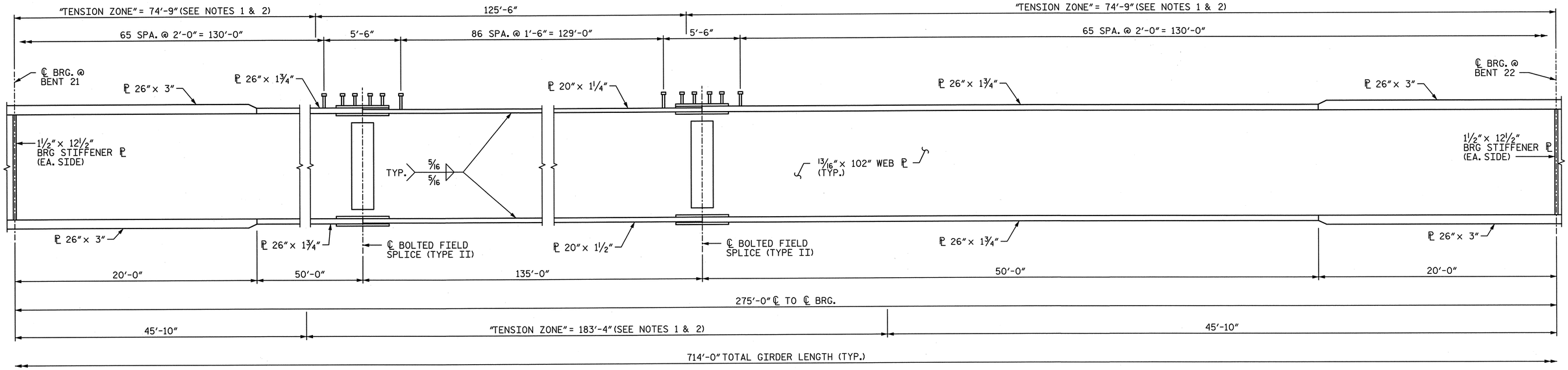

GIRDER ELEVATION

(CONNECTOR PLATES AND TRANSVERSE STIFFENERS NOT SHOWN FOR CLARITY. FOR PLACEMENT, SEE FRAMING PLAN)

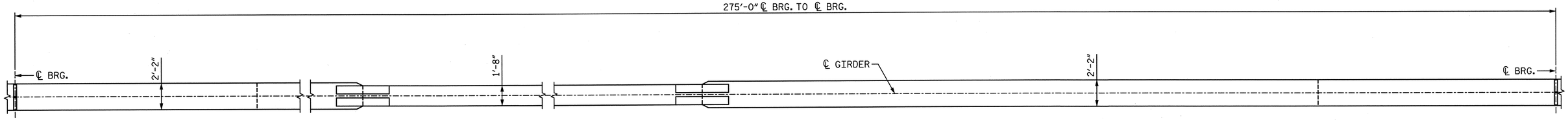

BOTTOM FLANGE DETAIL

(CONNECTOR PLATES AND TRANSVERSE STIFFENERS NOT SHOWN FOR CLARITY. FOR PLACEMENT, SEE FRAMING PLAN)

NOTES:

1. CHARPY V-NOTCH TESTS ARE REQUIRED FOR ALL TOP OR BOTTOM FLANGE PLATES WHICH FALL WITHIN THESE LIMITS, ALL WEB PLATES, AND ALL SPLICE PLATES. IF A PERMITTED SHOP FLANGE SPLICE IS NOT USED, CHARPY V-NOTCH TESTS WILL BE REQUIRED FOR THE ENTIRE FLANGE PLATE. FOR CHARPY V-NOTCH TESTS, SEE ARTICLE 1072-7 OF THE STANDARD SPECIFICATIONS.
2. NO WELDING OF FORMS OR FALSEWORK TO THE TOP FLANGE WILL BE PERMITTED IN THIS REGION.
3. SEE SHEET 3 OF 15 FOR NOTES AND ADDITIONAL INFORMATION.

PROJECT NO. U-2524C

GUILFORD COUNTY

STATION: POT 407+85.82 -L-
= POT 29+79.72 -Y4-

SHEET 4 OF 15

NORTH CAROLINA PROFESSIONAL ENGINEER SEAL 28479 KEVIN G. BAILEY 6-7-13

STATE OF NORTH CAROLINA
DEPARTMENT OF TRANSPORTATION
RALEIGH

STRUCTURAL STEEL GIRDER ELEVATION UNIT G SPAN 22 -RIGHT LANE-

REVISIONS						SHEET NO.
NO.	BY:	DATE:	NO.	BY:	DATE:	S-362
1			3			TOTAL SHEETS
2			4			336

STV / Ralph Whitehead Associates, Inc.
1000 West Morehead St., Ste. 200
Charlotte, NC 28208
NC License No. F-0991

DRAWN BY : VMW DATE : 4-13
CHECKED BY : TRL DATE : 4-13
DESIGN ENGINEER OF RECORD: K. BAILEY DATE : 5-13

6/6/2013 4:41:20 PM R:\ustation\Finals\Structural\Steel Girder Elevation Unit G_Sheet 4 of 15.dgn

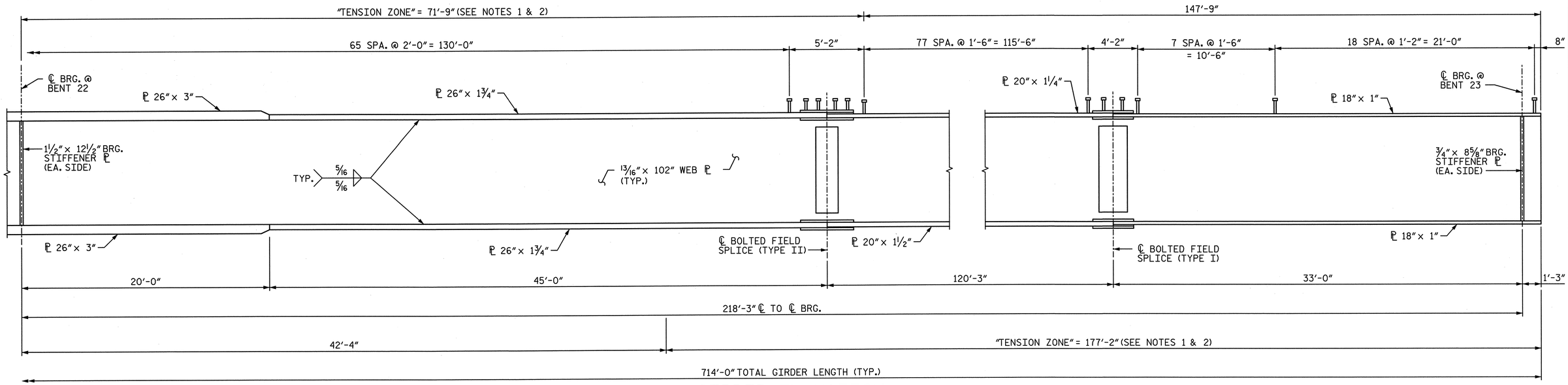

GIRDER ELEVATION

(CONNECTOR PLATES AND TRANSVERSE STIFFENERS NOT SHOWN FOR CLARITY. FOR PLACEMENT, SEE FRAMING PLAN)

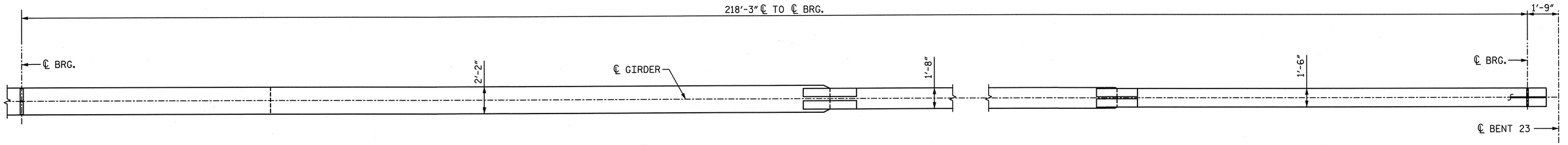

BOTTOM FLANGE DETAIL

(CONNECTOR PLATES AND TRANSVERSE STIFFENERS NOT SHOWN FOR CLARITY. FOR PLACEMENT, SEE FRAMING PLAN)

NOTES:

1. CHARPY V-NOTCH TESTS ARE REQUIRED FOR ALL TOP OR BOTTOM FLANGE PLATES WHICH FALL WITHIN THESE LIMITS, ALL WEB PLATES, AND ALL SPLICE PLATES. IF A PERMITTED SHOP FLANGE SPLICE IS NOT USED, CHARPY V-NOTCH TESTS WILL BE REQUIRED FOR THE ENTIRE FLANGE PLATE. FOR CHARPY V-NOTCH TESTS, SEE ARTICLE 1072-7 OF THE STANDARD SPECIFICATIONS.
2. NO WELDING OF FORMS OR FALSEWORK TO THE TOP FLANGE WILL BE PERMITTED IN THIS REGION.
3. SEE SHEET 3 OF 15 FOR NOTES AND ADDITIONAL INFORMATION.

PROJECT NO. U-2524C

GUILFORD COUNTY

STATION: POT 407+85.82 -L-
= POT 29+79.72 -Y4-

SHEET 5 OF 15

NORTH CAROLINA PROFESSIONAL SEAL 28479 ENGINEER KEVIN G. BAILEY 6-7-13

STATE OF NORTH CAROLINA
DEPARTMENT OF TRANSPORTATION
RALEIGH

STRUCTURAL STEEL GIRDER ELEVATION UNIT G SPAN 23 -RIGHT LANE-

REVISIONS						SHEET NO.
NO.	BY:	DATE:	NO.	BY:	DATE:	S-363
1			3			TOTAL SHEETS
2			4			836

STV / Ralph Whitehead Associates, Inc.
1000 West Morehead St., Ste. 200
Charlotte, NC 28208
NC License No. F-0991

DRAWN BY : VMW DATE : 4-13
CHECKED BY : TRL DATE : 4-13

DESIGN ENGINEER OF RECORD: K. BAILEY DATE : 5-13

R:\station\Finals\Structural Steel Girder Elevation Unit G_Sheet 5 of 15.dgn
6/6/2013 4:41:21 PM

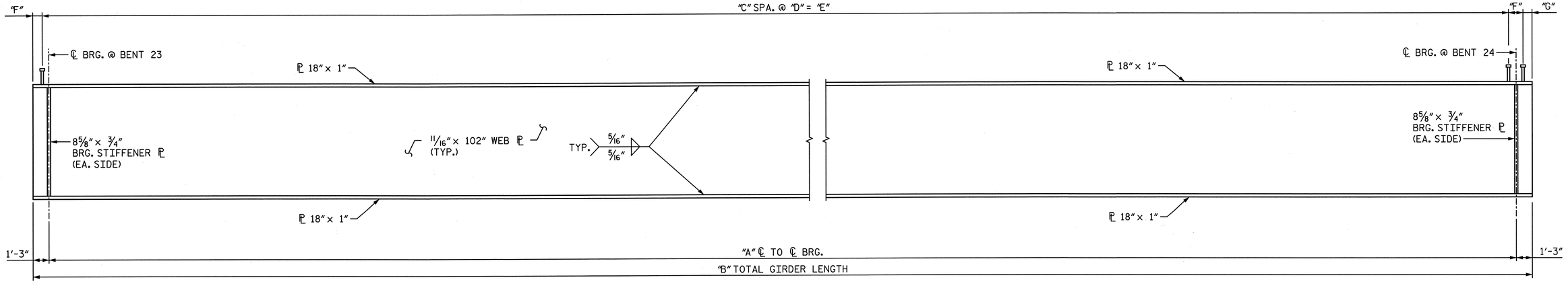

GIRDER ELEVATION

(CONNECTOR PLATES NOT SHOWN FOR CLARITY. FOR PLACEMENT, SEE FRAMING PLAN)

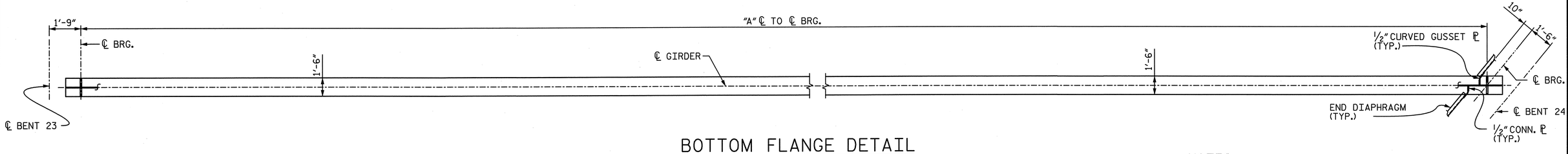

BOTTOM FLANGE DETAIL

(CONNECTOR PLATES NOT SHOWN FOR CLARITY. FOR PLACEMENT, SEE FRAMING PLAN)

TABLE A
GIRDER DIMENSIONS

GDR.	"A"	"B"	"C"	"D"	"E"	"F"	"G"	NO. OF SHEAR CONN.
1	113'-6 13/16"	116'-0 13/16"	114	1'-0"	114'-0"	6"	1'-0 13/16"	464
2	104'-4 5/8"	106'-10 5/8"	105	1'-0"	105'-0"	6"	10 5/8"	428
3	95'-2 7/16"	97'-8 7/16"	96	1'-0"	96'-0"	6"	8 7/16"	392
4	86'-0 1/4"	88'-6 1/4"	104	10"	86'-8"	6"	10 1/4"	424
5	76'-10 1/8"	79'-4 1/8"	104	9"	78'-0"	6"	4 1/8"	424
6	67'-7 15/16"	70'-1 15/16"	92	9"	69'-0"	5"	3 15/16"	376

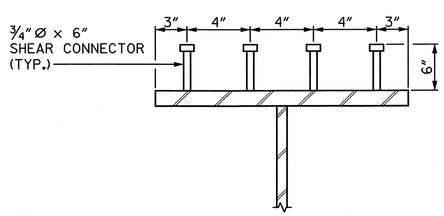

SHEAR CONNECTOR DETAIL

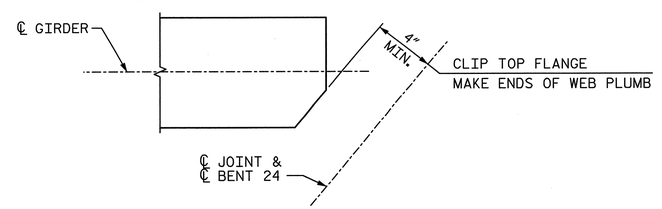

TOP FLANGE CLIP DETAIL

(TYP. EACH GIRDER)

NOTES:

1. A CHARPY V-NOTCH TEST IS REQUIRED FOR WEB PLATES, BOTTOM FLANGE PLATES, BOTTOM FLANGE SPLICE PLATES AND WEB SPLICE PLATES FOR ALL GIRDERS AND IN ACCORDANCE WITH ARTICLE 1072-7 OF THE STANDARD SPECIFICATIONS.
2. FOR STRUCTURAL STEEL DIAPHRAGM DETAILS, SEE SHEET 9 OF 15.
3. FOR STRUCTURAL STEEL DETAILS AND ADDITIONAL NOTES, SEE SHEETS 10 & 11 OF 15.
4. FOR ADDITIONAL INFORMATION, SEE "FRAMING PLAN SPAN 24".
5. FABRICATOR SHALL ADJUST TOP FLANGE CLIPS AS NECESSARY TO PROVIDE MINIMUM CLEARANCE AS SHOWN.

PROJECT NO. U-2524C
GUILFORD COUNTY
STATION: POT 407+85.82 -L-
= POT 29+79.72 -Y4-
SHEET 6 OF 15

NORTH CAROLINA PROFESSIONAL ENGINEER SEAL 28479 KEVIN G. BAILEY 6-7-13

STATE OF NORTH CAROLINA
DEPARTMENT OF TRANSPORTATION
RALEIGH

STRUCTURAL STEEL GIRDER ELEVATION SPAN 24

-RIGHT LANE-

DRAWN BY : VMW	DATE : 4-13	DESIGN ENGINEER OF RECORD: K. BAILEY	DATE : 5-13
CHECKED BY : TRL	DATE : 4-13		

STV / Ralph Whitehead Associates, Inc.
1000 West Morehead St., Ste. 200
Charlotte, NC 28208
NC License No. F-0991

REVISIONS						SHEET NO.
NO.	BY:	DATE:	NO.	BY:	DATE:	S-364
1			3			TOTAL SHEETS
2			4			036

6/6/2013 4:41:22 PM R:\ustation\Finals\Structural\Steel Girder Elevation Span 24_Sheet 6 of 15.dgn

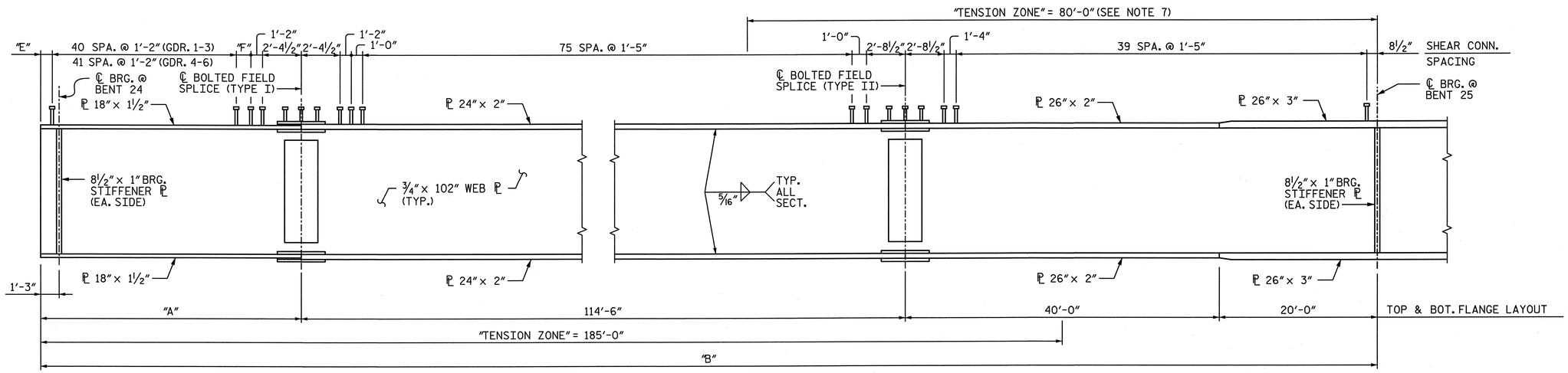

GIRDER ELEVATION

(CONNECTOR PLATES AND COMBINATION CONNECTOR/STIFFENER PLATES NOT SHOWN FOR CLARITY. FOR PLACEMENT, SEE FRAMING PLAN)

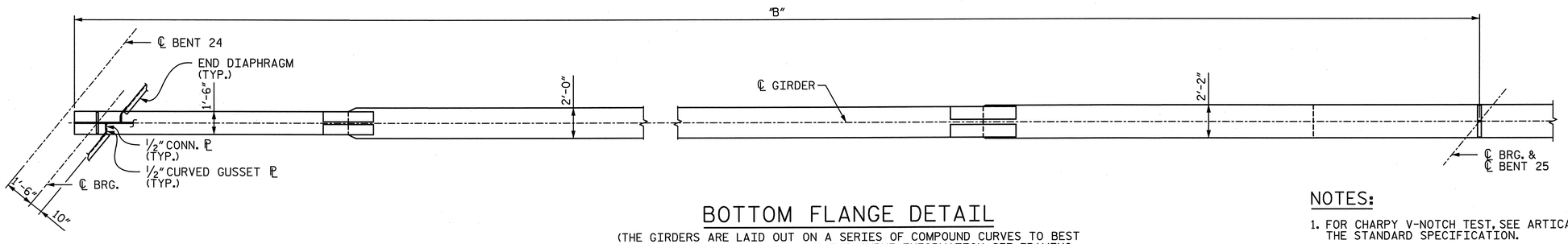

BOTTOM FLANGE DETAIL

(THE GIRDERS ARE LAID OUT ON A SERIES OF COMPOUND CURVES TO BEST FOLLOW THE SPIRAL ALIGNMENT. FOR CURVE INFORMATION, SEE FRAMING PLAN. CONNECTOR PLATES AND COMBINATION CONNECTOR/STIFFENER PLATES NOT SHOWN FOR CLARITY. FOR PLACEMENT, SEE FRAMING PLAN. BOTTOM FLANGE SHOWN SCHEMATICALLY WITHOUT CURVATURE)

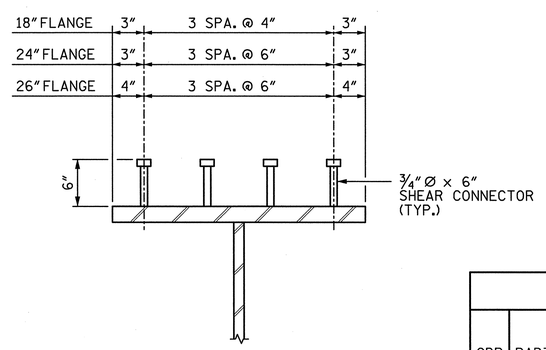

SHEAR CONNECTOR DETAIL

(TYPICAL EXCEPT @ TOP FLANGE SPLICE PLATE, SEE UNIT H BOLTED FIELD SPLICE)

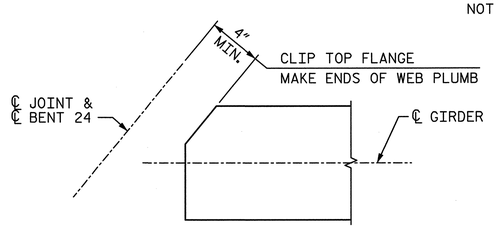

TOP FLANGE CLIP DETAIL

(TYP. EACH GIRDER)

GIRDER DIMENSIONS

GDR.	RADIUS	UNIT H "A"	℄ F.S TO ℄ F.S.	℄ F.S TO ℄ F.S. AT BT 25	℄ F.S. TO ℄ F.S.	UNIT H "C"	SPAN 25 "B"	SPAN 26 "D"	SHEAR CONNECTORS "E"	"F"	"G"	"H"	NO. OF SHEAR CONN.
1	▲	51'-11"	114'-6"	120'-0"	117'-6"	50'-3 5/16"	226'-5"	227'-9 5/16"	10 1/4"	10 1/4"	7 1/16"	7 3/8"	1356
2	▲	52'-1 1/2"	114'-6"	120'-0"	117'-6"	50'-8 3/16"	226'-7 1/2"	228'-2 3/16"	11 1/2"	11 1/2"	9 7/8"	9 13/16"	1356
3	▲	52'-3 13/16"	114'-6"	120'-0"	114'-6"	54'-1"	226'-9 13/16"	228'-7"	1'-0 5/8"	1'-0 11/16"	9 1/4"	9 1/4"	1360
4	▲	52'-6"	114'-6"	120'-0"	114'-6"	54'-5 3/4"	227'-0"	228'-11 3/4"	6 3/4"	6 3/4"	11 5/8"	11 5/8"	1364
5	▲	52'-8 1/8"	114'-6"	120'-0"	114'-6"	54'-10 1/2"	227'-2 1/8"	229'-4 1/2"	7 13/16"	7 13/16"	1'-2"	1'-2"	1364
6	▲	52'-10 1/8"	114'-6"	120'-0"	114'-6"	55'-3 1/8"	227'-4 1/8"	229'-9 1/8"	8 13/16"	8 13/16"	9 5/16"	9 5/16"	1368

▲ RADIUS VARIES ALONG LENGTH OF GIRDER. SEE FRAMING PLAN FOR LIMITS OF HORIZONTAL CURVES & RADII.

NOTES:

1. FOR CHARPY V-NOTCH TEST, SEE ARTICAL 1072-7 OF THE STANDARD SPECIFICATION.
2. FOR STRUCTURAL STEEL DIAPHRAGM DETAILS, SEE SHEET 9 OF 15.
3. FOR STRUCTURAL STEEL DETAILS AND ADDITIONAL NOTES, SEE SHEETS 10 & 11 OF 15.
4. FOR BOLTED FIELD SPLICE DETAILS, SEE SHEET 14 OF 15.
5. FOR ADDITIONAL INFORMATION, SEE "FRAMING PLAN UNIT H" SHEETS.
6. FABRICATOR SHALL ADJUST TOP FLANGE CLIPS AS NECESSARY TO PROVIDE MINIMUM CLEARANCE AS SHOWN.
7. NO WELDING OF FORMS OR FALSEWORK TO THE TOP FLANGE WILL BE PERMITTED IN THIS REGION.

PROJECT NO. U-2524C

GUILFORD COUNTY

STATION: POT 407+85.82 -L-
= POT 29+79.72 -Y4-

SHEET 7 OF 15

NORTH CAROLINA PROFESSIONAL ENGINEER SEAL 28479 KEVIN G. BAILEY 6-7-13

STATE OF NORTH CAROLINA
DEPARTMENT OF TRANSPORTATION
RALEIGH

STRUCTURAL STEEL GIRDER ELEVATION UNIT H SPAN 25 -RIGHT LANE-

REVISIONS						SHEET NO.
NO.	BY:	DATE:	NO.	BY:	DATE:	S-365
1			3			TOTAL SHEETS
2			4			836

DRAWN BY : VMW DATE : 4-13
CHECKED BY : TRL DATE : 4-13

DESIGN ENGINEER OF RECORD: K. BAILEY DATE : 5-13

STV / Ralph Whitehead Associates, Inc.
1000 West Morehead St. Ste. 200
Charlotte, NC 28208
NC License No. F-0991

6/7/2013 8:44:29 AM R:\ustation\Finals\Structural\SteelGirder Elevation Unit H_Sheet 7 of 15.dgn

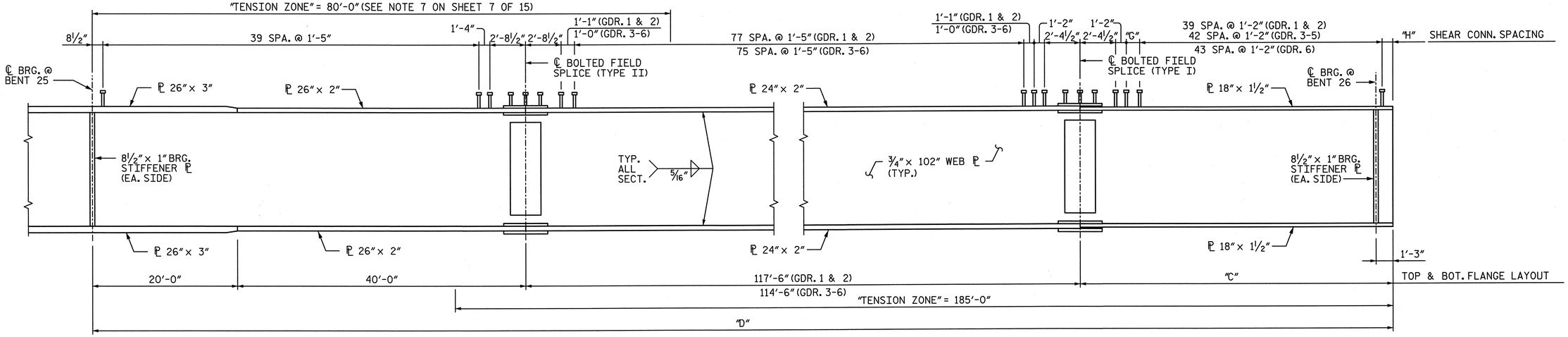

GIRDER ELEVATION

(CONNECTOR PLATES AND COMBINATION CONNECTOR/STIFFENER PLATES NOT SHOWN FOR CLARITY. FOR PLACEMENT, SEE FRAMING PLAN)

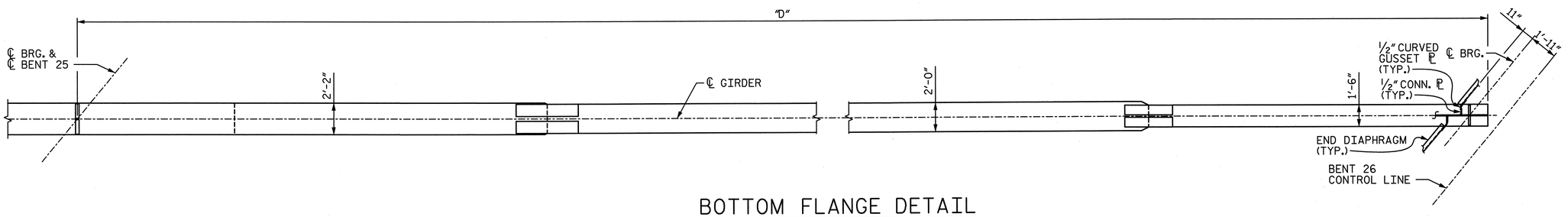

BOTTOM FLANGE DETAIL

(THE GIRDERS ARE LAID OUT ON A SERIES OF COMPOUND CURVES TO BEST FOLLOW THE SPIRAL ALIGNMENT. FOR CURVE INFORMATION, SEE FRAMING PLAN. CONNECTOR PLATES AND COMBINATION CONNECTOR/STIFFENER PLATES NOT SHOWN FOR CLARITY. FOR PLACEMENT, SEE FRAMING PLAN. BOTTOM FLANGE SHOWN SCHEMATICALLY WITHOUT CURVES)

NOTES:

1. FOR CHARPY V-NOTCH TEST, SEE ARTICAL 1072-7 OF THE STANDARDS SPECIFICATION.
2. SEE SHEET 7 OF 15 FOR NOTES AND ADDITIONAL DETAILS.

PROJECT NO. U-2524C

GUILFORD COUNTY

STATION: POT 407+85.82 -L-
= POT 29+79.72 -Y4-

SHEET 8 OF 15

STATE OF NORTH CAROLINA
DEPARTMENT OF TRANSPORTATION
RALEIGH

STRUCTURAL STEEL GIRDER ELEVATION UNIT H SPAN 26 -RIGHT LANE-

NORTH CAROLINA PROFESSIONAL SEAL 28479 ENGINEER KEVIN G. BAILEY 6-7-13

STV / Ralph Whitehead Associates, Inc.
1000 West Morehead St., Ste. 200
Charlotte, NC 28208
NC License No. F-0991

REVISIONS						SHEET NO.
NO.	BY:	DATE:	NO.	BY:	DATE:	S-366
1			3			TOTAL SHEETS
2			4			836

DRAWN BY : VMW DATE : 4-13
CHECKED BY : TRL DATE : 4-13

DESIGN ENGINEER OF RECORD: K. BAILEY DATE : 5-13

6/7/2013 8:35:53 AM R:\ustation\Finals\Structural\Steel\Girder Elevation Unit H_Sheet 8 of 15.dgn

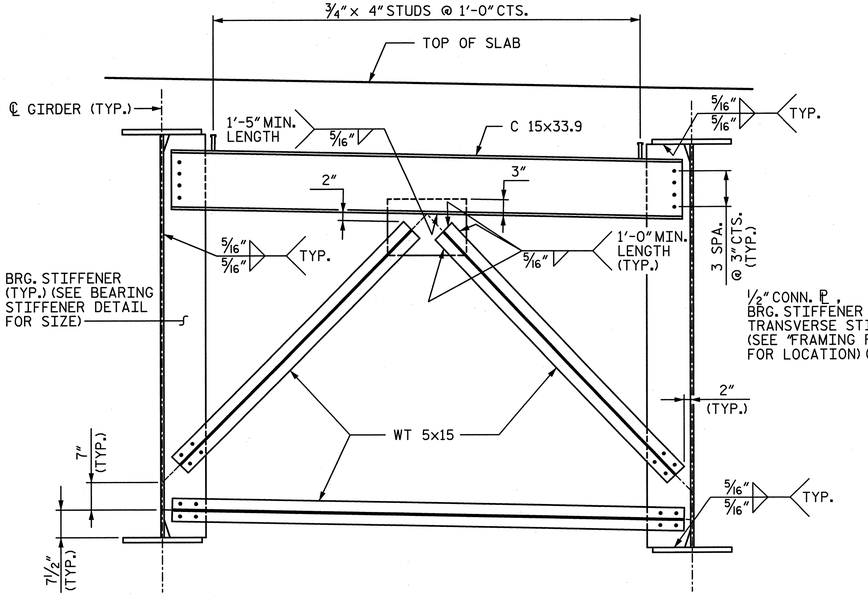

END DIAPHRAGM
(BENTS 20 & 23)

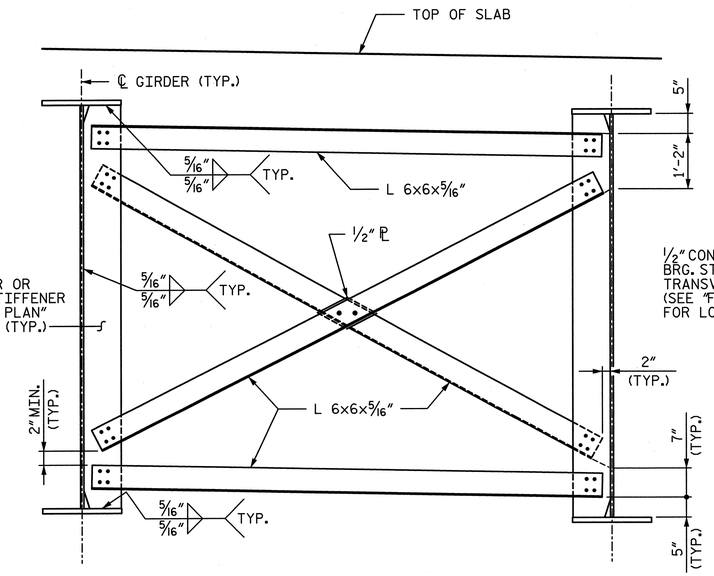

INTERMEDIATE DIAPHRAGM
(SPANS 21-24)
(CONNECTOR PLATES SHOWN, OTHERS SIMILAR)

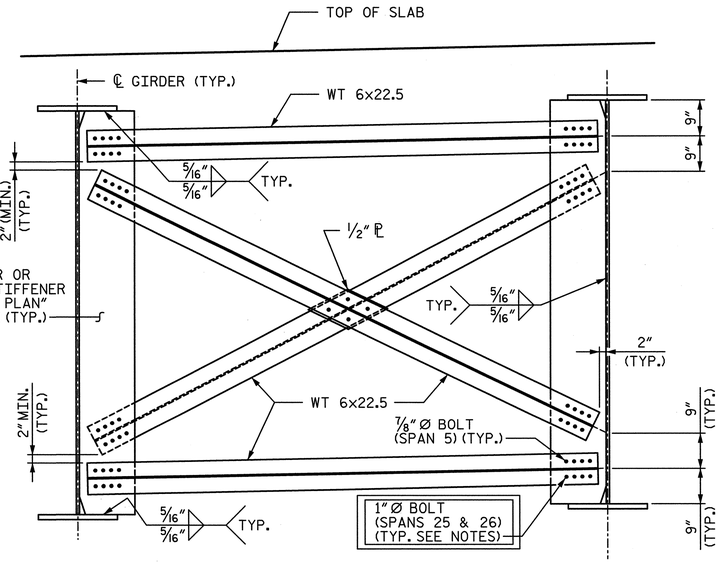

INTERMEDIATE DIAPHRAGM
(SPANS 5, 25, & 26)
(CONNECTOR PLATES SHOWN, OTHERS SIMILAR)

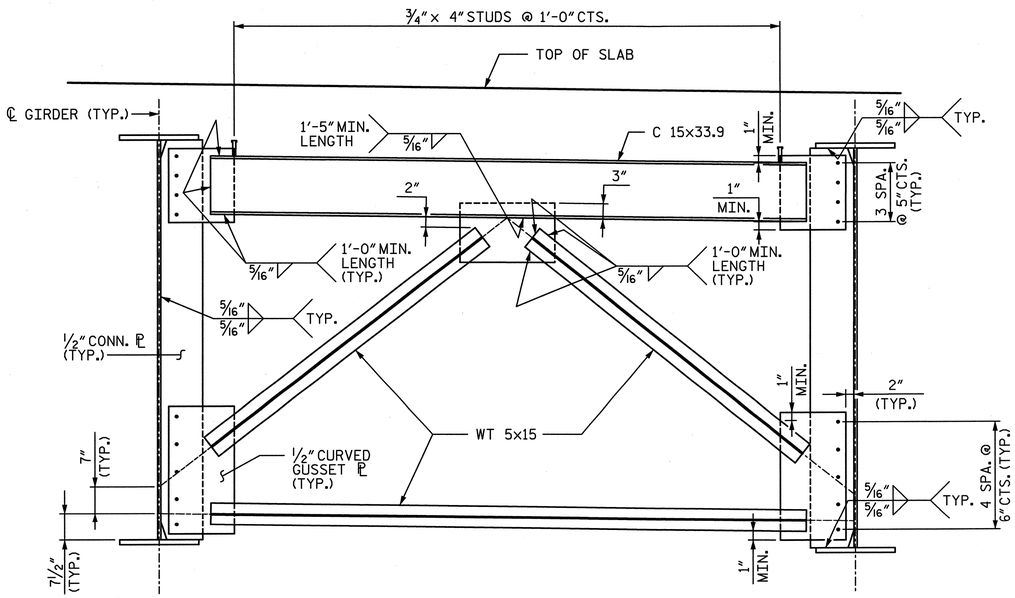

END DIAPHRAGM
(BENT 24, SPAN 24)

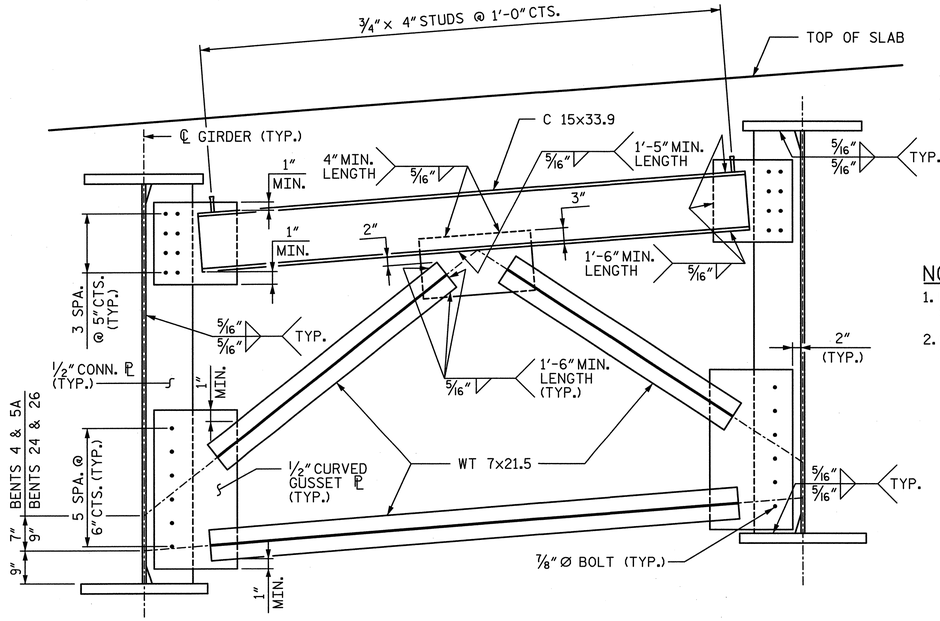

END DIAPHRAGM
(BENTS 4 & 5A)
(BENT 24, SPAN 25 & BENT 26)

NOTES:
1. FOR STRUCTURAL STEEL DETAILS AND NOTES, SEE SHEETS 10 & 11 OF 15.
2. CONTRACTOR'S ATTENTION IS CALLED TO THE 1" Ø BOLT REQUIREMENT FOR SPANS 25 & 26.

NORTH CAROLINA PROFESSIONAL ENGINEER SEAL 28479 ENGINEER KEVIN G. BAILEY 6-7-13

PROJECT NO. U-2524C
GUILFORD COUNTY
STATION: POT 407+85.82 -L-
= POT 29+79.72 -Y4-
SHEET 9 OF 15

STATE OF NORTH CAROLINA
DEPARTMENT OF TRANSPORTATION
RALEIGH

STRUCTURAL STEEL DIAPHRAGM DETAILS

-RIGHT LANE-

DRAWN BY : VMW	DATE : 4-13	DESIGN ENGINEER OF RECORD: K. BAILEY	DATE : 5-13
CHECKED BY : CLG	DATE : 5-13		

STV/ Ralph Whitehead Associates, Inc.
1000 West Morehead St., Ste. 200
Charlotte, NC 28208
NC License No. F-0991

REVISIONS						SHEET NO.
NO.	BY:	DATE:	NO.	BY:	DATE:	S-367
1			3			TOTAL SHEETS
2			4			836

R:\station\Finals\Structural Steel Diaphram Details_Sheet 9 of 15.dgn 6/6/2013 4:41:25 PM

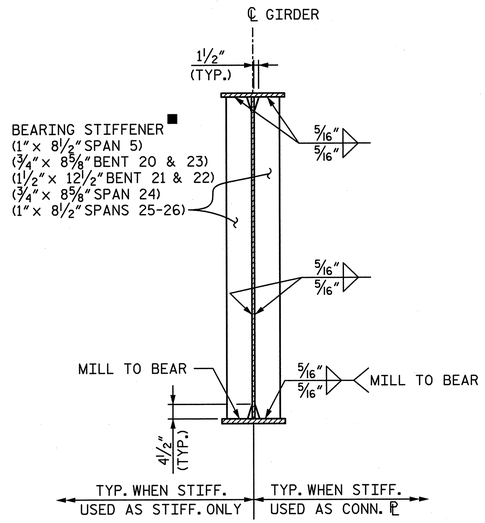

BEARING STIFFENER DETAIL

■ INCREASE BEARING STIFFENER WIDTH AS REQUIRED WHEN USED AS A CONNECTOR PLATE. INCREASE BEARING STIFFENER THICKNESS AS REQUIRED TO MAINTAIN WIDTH TO THICKNESS RATIO NO LARGER THAN 10.5.

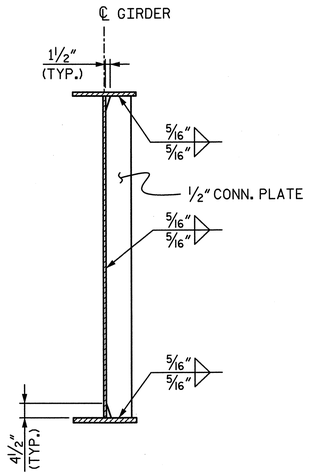

CONNECTOR PLATE DETAIL

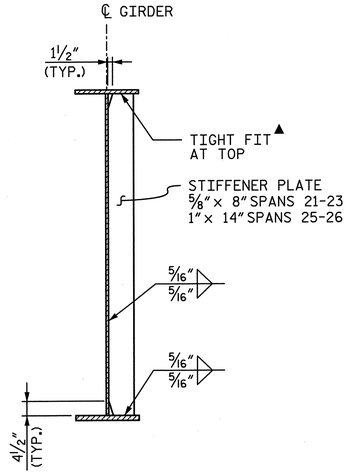

TRANSVERSE STIFFENER PLATE DETAIL

(TOP FLANGE IN TENSION)

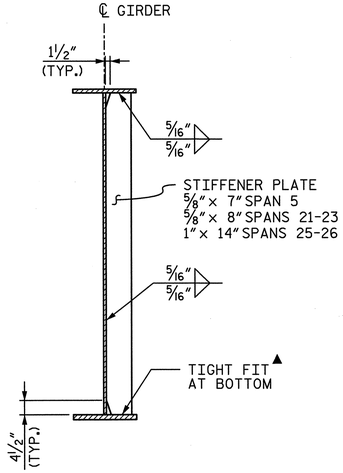

TRANSVERSE STIFFENER PLATE DETAIL

(BOTTOM FLANGE IN TENSION)

▲ IF TRANSVERSE STIFFENERS ARE USED FOR CONNECTOR PLATES, WELD TOP & BOTTOM OF STIFFENERS TO FLANGES. INCREASE STIFFENER WIDTH AS REQUIRED WHEN USED AS A CONNECTOR PLATE. INCREASE STIFFENER THICKNESS AS REQUIRED TO MAINTAIN WIDTH TO THICKNESS RATIO NO LARGER THAN 14.0.

STRUCTURAL STEEL NOTES:

1. ALL STRUCTURAL STEEL SHALL BE AASHTO M270, GRADE 50W AND PAINTED IN ACCORDANCE WITH SYSTEM 4 OF ARTICLE 442-8 OF THE STANDARD SPECIFICATIONS UNLESS OTHERWISE NOTED ON THE PLANS.
2. ALL DIMENSIONS SHOWN ARE HORIZONTAL OR VERTICAL, UNLESS OTHERWISE NOTED.
3. FIELD CONNECTIONS SHALL BE ⅞" DIA. HIGH STRENGTH BOLTS UNLESS OTHERWISE NOTED.
4. FIELD CONNECTIONS FOR INTERMEDIATE DIAPHRAGMS IN SPANS 25 & 26 SHALL BE 1" DIA. HIGH STRENGTH BOLTS. ERECTION SHOP DRAWINGS SHALL CLEARLY DESIGNATE THIS REQUIREMENT.
5. STIFFENERS ARE NOT REQUIRED ON THE OUTSIDE OF EXTERIOR BEAMS.
6. BEARING STIFFENERS ARE TO BE PLACED NORMAL TO THE WEB OF THE GIRDER AND SHALL BE PLUMB.
7. PERMITTED FLANGE AND WEB SHOP SPLICES SHALL NOT BE LOCATED WITHIN 15 FEET OF MAXIMUM DEAD LOAD DEFLECTION (NOR WITHIN 15 FEET OF INTERMEDIATE BEARINGS OF CONTINUOUS UNITS). KEEP 2 FEET MINIMUM BETWEEN WEB AND FLANGE SHOP SPLICES. KEEP 6" MINIMUM BETWEEN CONNECTOR PLATE OR TRANSVERSE STIFFENER WELDS AND WEB OR FLANGE SHOP SPLICES.
8. CONNECTORS ON GIRDERS MAY BE SHIFTED UP TO 1" IF NECESSARY TO CLEAR FLANGE SPLICE WELD.
9. TENSION ON THE AASHTO M164 BOLTS SHALL BE CALIBRATED USING DIRECT TENSION INDICATOR WASHERS IN ACCORDANCE WITH ARTICLE 440-8 OF THE STANDARD SPECIFICATIONS.
10. END OF BEAMS AND GIRDERS SHALL BE PLUMB.
11. BEARING STIFFENER MAY REQUIRE COPING IF WIDER THAN BOTTOM FLANGE.
12. FABRICATORS SHALL DETAIL DIAPHRAGM MEMBERS AND CONNECTIONS FOR FULL DEAD LOAD FIT UP. GIRDERS SHALL BE PLUMB AFTER FULL AMOUNT OF DEAD LOAD IS APPLIED.
13. HEAT CURVING OF THE STEEL GIRDERS IN ACCORDANCE WITH THE STANDARD SPECIFICATIONS IS ALLOWED.

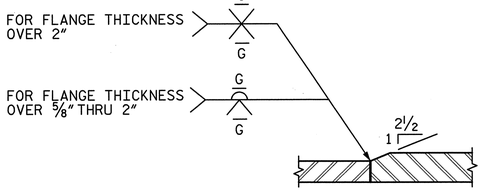

ELEVATION FLANGE

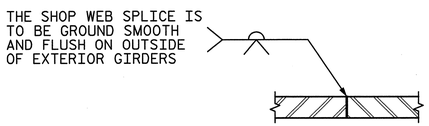

PLAN-WEB

(UNIFORM THICKNESS)

SHOP SPLICE DETAILS

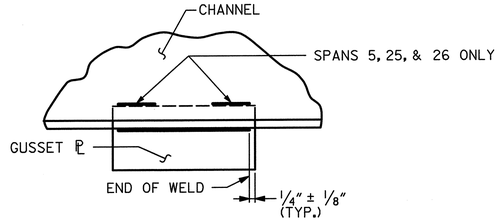

TYPICAL GUESSET PLATE CONNECTION

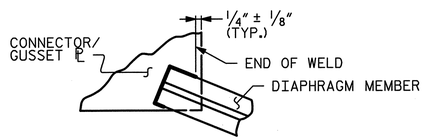

TYPICAL DIAPHRAGM MEMBER CONNECTOR/GUSSET PLATE CONNECTION

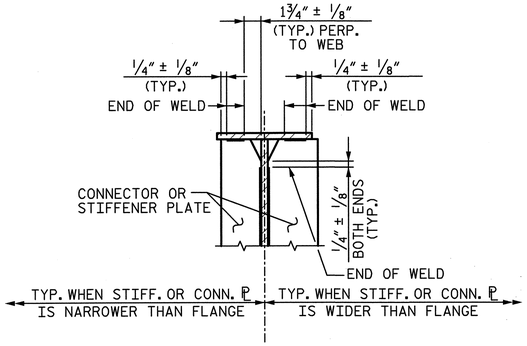

TYPICAL STIFFENER OR CONNECTOR PLATE CONNECTIONS

WELD TERMINATION DETAILS

PROJECT NO. U-2524C
GUILFORD COUNTY
STATION: POT 407+85.82 -L-
= POT 29+79.72 -Y4-
SHEET 10 OF 15

STATE OF NORTH CAROLINA
DEPARTMENT OF TRANSPORTATION
RALEIGH

STRUCTURAL STEEL DETAILS

-RIGHT LANE-

NORTH CAROLINA PROFESSIONAL ENGINEER SEAL 28479 KEVIN G. BAILEY 6-7-13

DRAWN BY : VMW	DATE : 4-13	DESIGN ENGINEER OF RECORD: K. BAILEY	DATE : 5-13
CHECKED BY : TRL	DATE : 4-13		

STV / Ralph Whitehead Associates, Inc.
1000 West Morehead St., Ste. 200
Charlotte, NC 28208
NC License No. F-0991

REVISIONS						SHEET NO.
NO.	BY:	DATE:	NO.	BY:	DATE:	S-368
1			3			TOTAL SHEETS
2			4			836

6/6/2013 4:41:26 PM R:\ustation\Finals\Structural Steel Details_Sheet 10 of 15.dgn

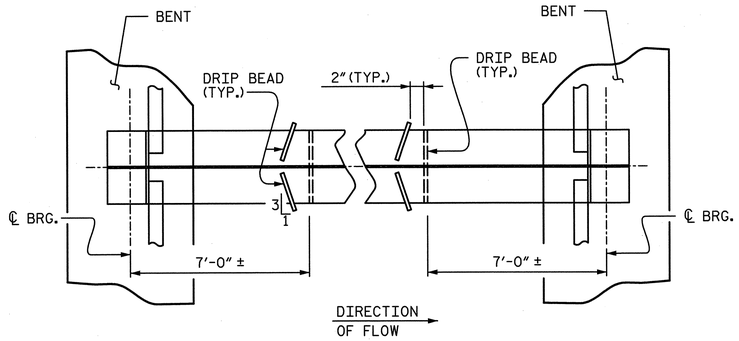

PART PLAN - BOTTOM FLANGE SCHEMATIC

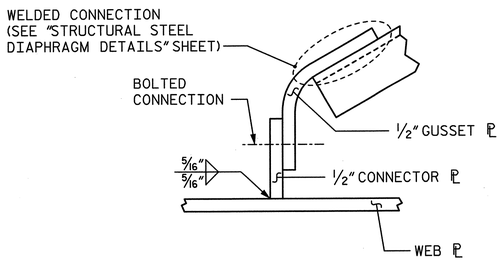

WELD DETAIL FOR CURVED GUSSET ℙ

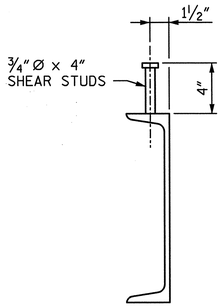

END DIAPHRAGM SHEAR STUD DETAILS

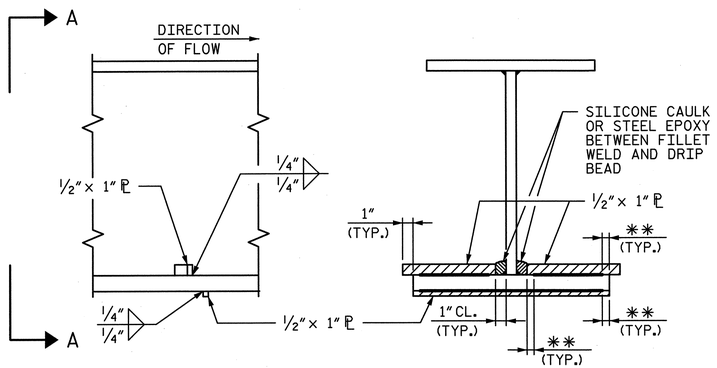

SECTION

VIEW A-A

** SEE "WELD TERMINATION DETAILS" ON SHEET 10 OF 15

DRIP BEAD DETAILS

PROJECT NO. U-2524C

GUILFORD COUNTY

STATION: POT 407+85.82 -L-
= POT 29+79.72 -Y4-

SHEET 11 OF 15

STATE OF NORTH CAROLINA
DEPARTMENT OF TRANSPORTATION
RALEIGH

STRUCTURAL STEEL DETAILS

-RIGHT LANE-

NORTH CAROLINA PROFESSIONAL SEAL 28479 ENGINEER KEVIN G. BAILEY 6-7-13

STV / Ralph Whitehead Associates, Inc.
1000 West Morehead St., Ste. 200
Charlotte, NC 28208
NC License No. F-0991

REVISIONS						SHEET NO.
NO.	BY:	DATE:	NO.	BY:	DATE:	S-369
1			3			TOTAL SHEETS
2			4			836

DRAWN BY : VMW	DATE : 4-13	DESIGN ENGINEER OF RECORD: K. BAILEY	DATE : 5-13
CHECKED BY : TRL	DATE : 4-13		

6/6/2013 4:41:28 PM R:\station\Finals\Structural Steel Details_Sheet 11 of 15.dgn

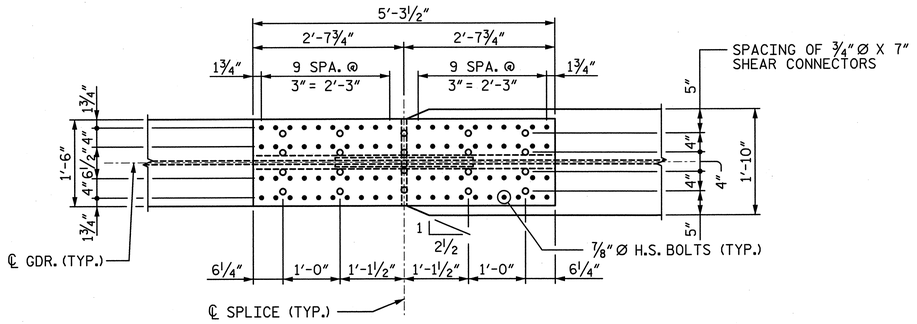

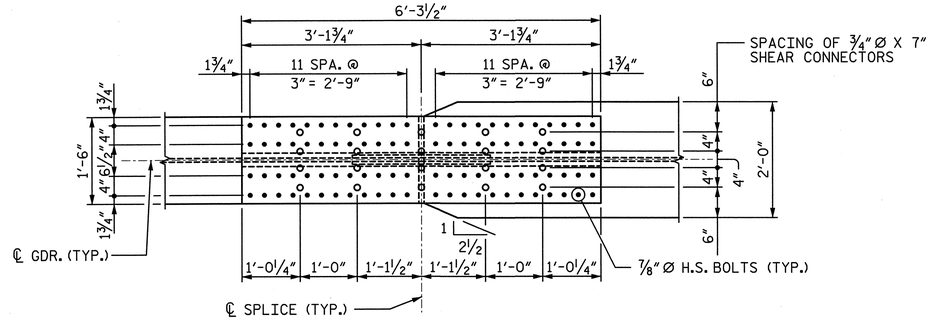

PLAN - TOP FLANGE

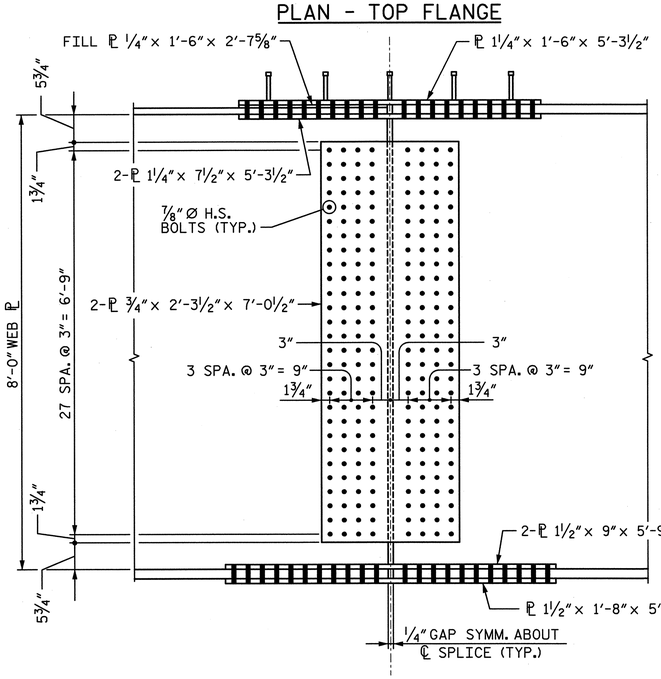

ELEVATION

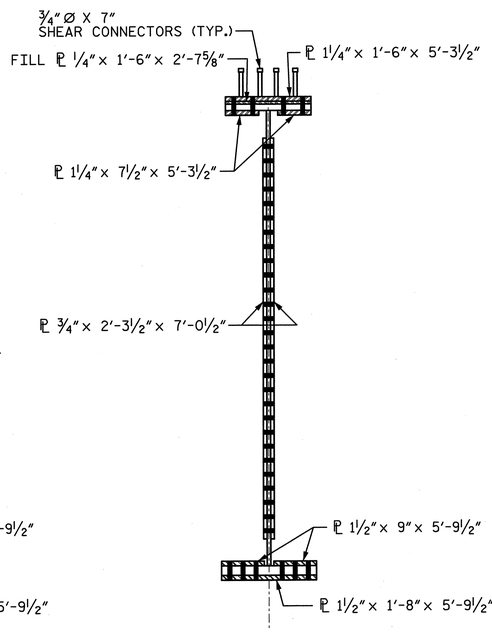

SECTION

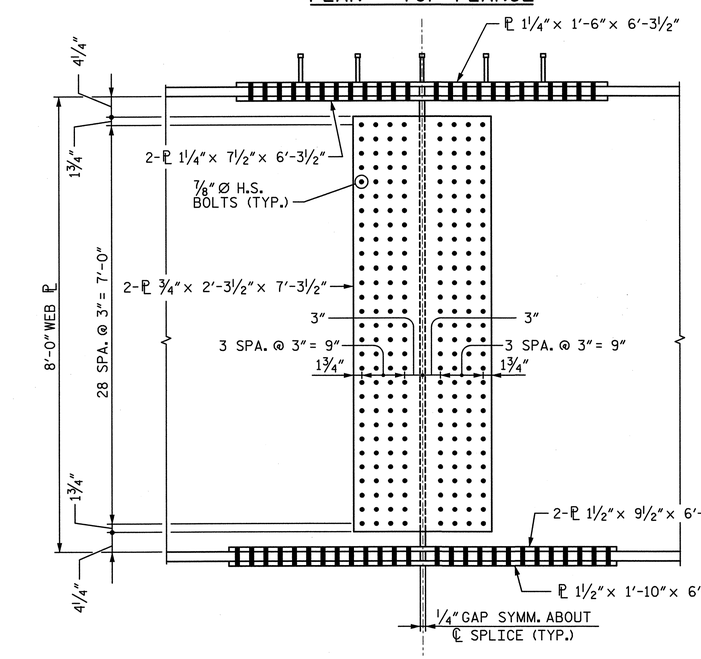

ELEVATION

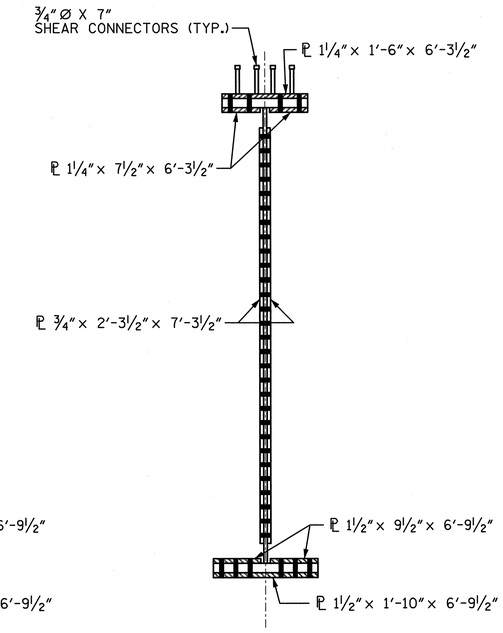

SECTION

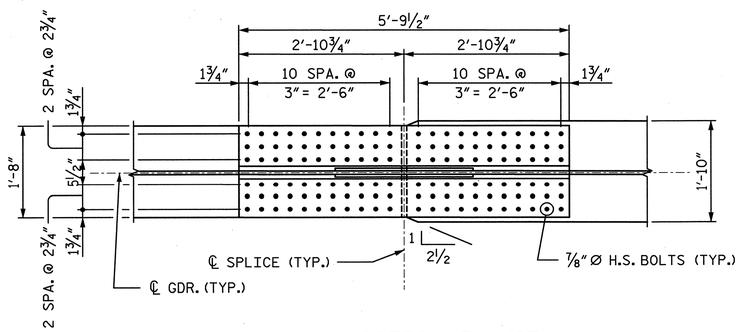

PLAN - BOTTOM FLANGE

BOLTED FIELD SPLICE - TYPE I

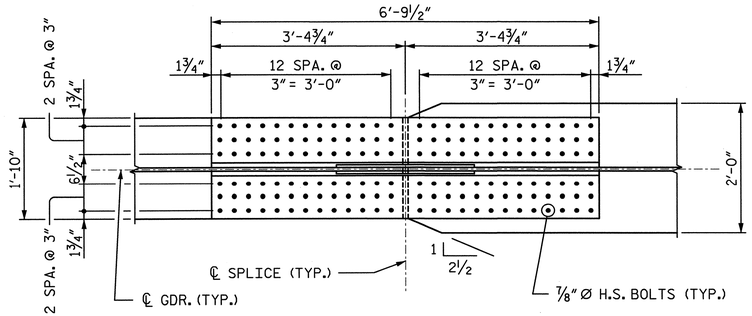

PLAN - BOTTOM FLANGE

BOLTED FIELD SPLICE - TYPE II

NORTH CAROLINA PROFESSIONAL SEAL 28479 ENGINEER KEVIN G. BAILEY 6-7-13

DRAWN BY : VMW	DATE : 3-13	DESIGN ENGINEER OF RECORD: K. BAILEY	DATE : 5-13
CHECKED BY : KGB	DATE : 4-13		

STV / Ralph Whitehead Associates, Inc.
1000 West Morehead St. Ste. 200
Charlotte, NC 28208
NC License No. F-0991

PROJECT NO. U-2524C
GUILFORD COUNTY
STATION: POT 407+85.82 -L-
= POT 29+79.72 -Y4-
SHEET 12 OF 15

STATE OF NORTH CAROLINA
DEPARTMENT OF TRANSPORTATION
RALEIGH

STRUCTURAL STEEL
BOLTED FIELD SPLICE
SPAN 5

-RIGHT LANE-

REVISIONS						SHEET NO.
NO.	BY:	DATE:	NO.	BY:	DATE:	S-370
1			3			TOTAL SHEETS
2			4			836

6/6/2013 4:41:29 PM R:\station\Finals\Structural Steel Bolted Field Splice Span 5_Sheet 12 of 15.dgn

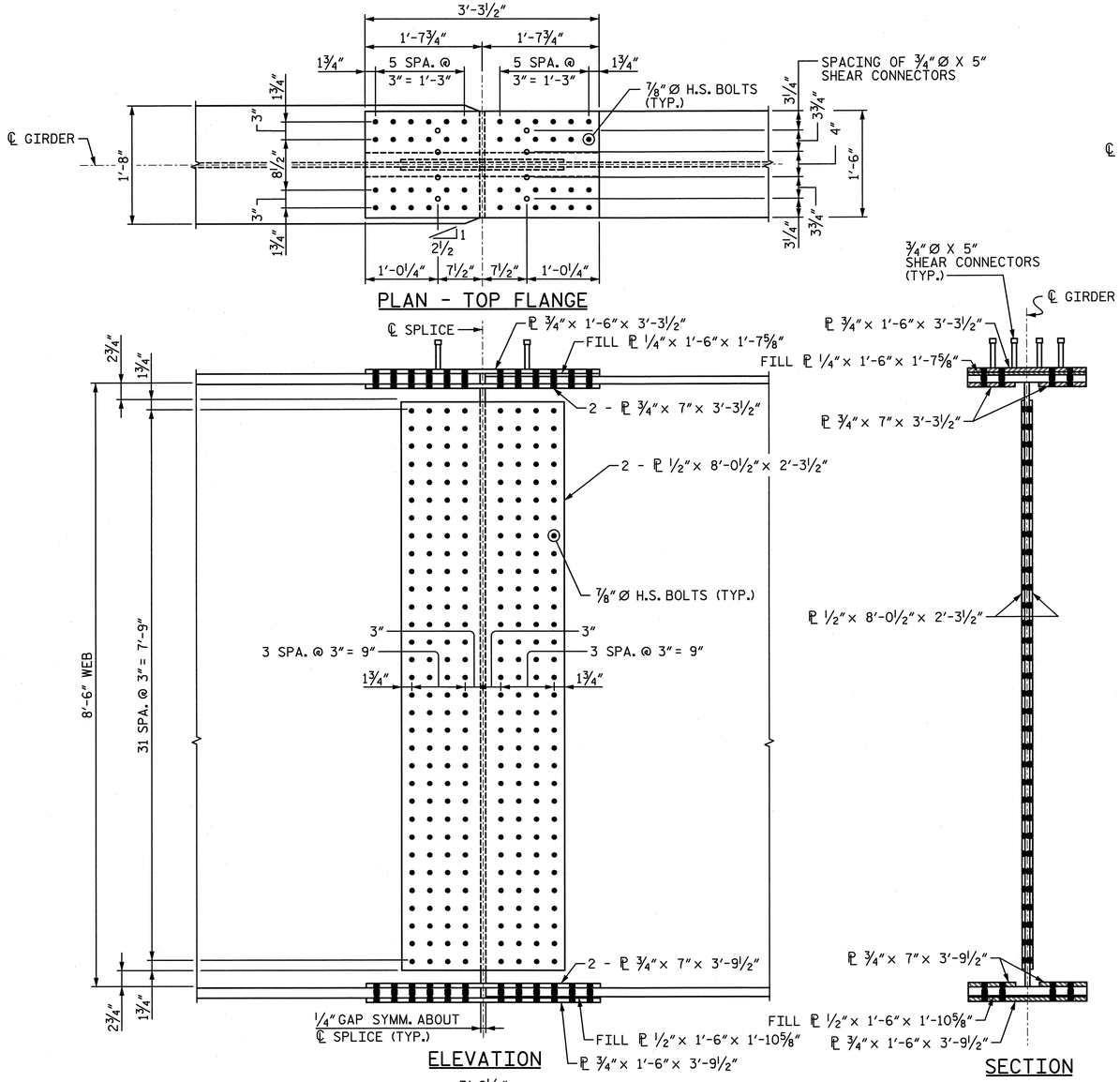

NORTH CAROLINA PROFESSIONAL SEAL 28479 ENGINEER KEVIN G. BAILEY 6-7-13

PROJECT NO. U-2524C

GUILFORD COUNTY

STATION: POT 407+85.82 -L-
= POT 29+79.72 -Y4-

SHEET 13 OF 15

STATE OF NORTH CAROLINA
DEPARTMENT OF TRANSPORTATION
RALEIGH

STRUCTURAL STEEL
BOLTED FIELD SPLICE
UNIT G
SPANS 21-23
-RIGHT LANE-

DRAWN BY : VMW	DATE : 4-13	DESIGN ENGINEER OF RECORD: K. BAILEY	DATE : 5-13
CHECKED BY : TRL	DATE : 4-13		

STV / Ralph Whitehead Associates, Inc.
1000 West Morehead St., Ste. 200
Charlotte, NC 28208
NC License No. F-0991

REVISIONS						SHEET NO.
NO.	BY:	DATE:	NO.	BY:	DATE:	S-371
1			3			TOTAL SHEETS
2			4			836

6/6/2013 4:41:30 PM R:\station\Finals\Structural\Steel\Bolted Field Splice Unit G_Sheet 13 of 15.dgn

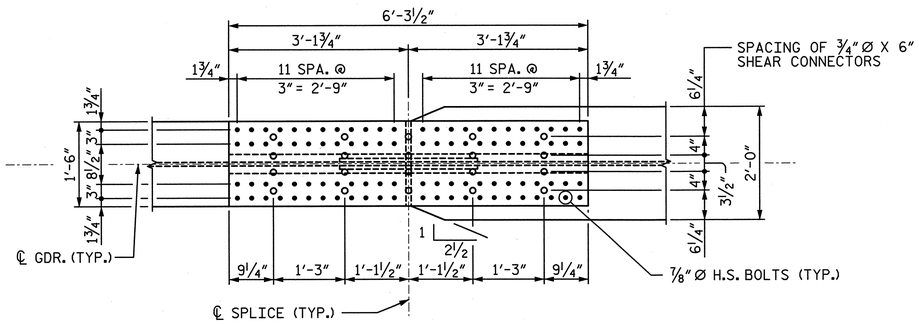

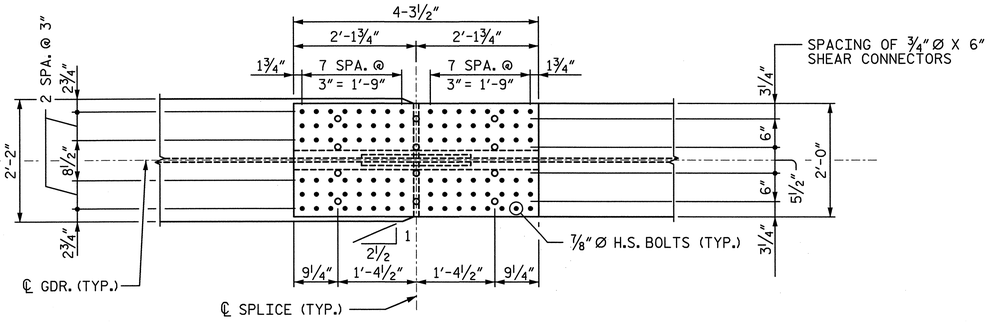

PLAN - TOP FLANGE

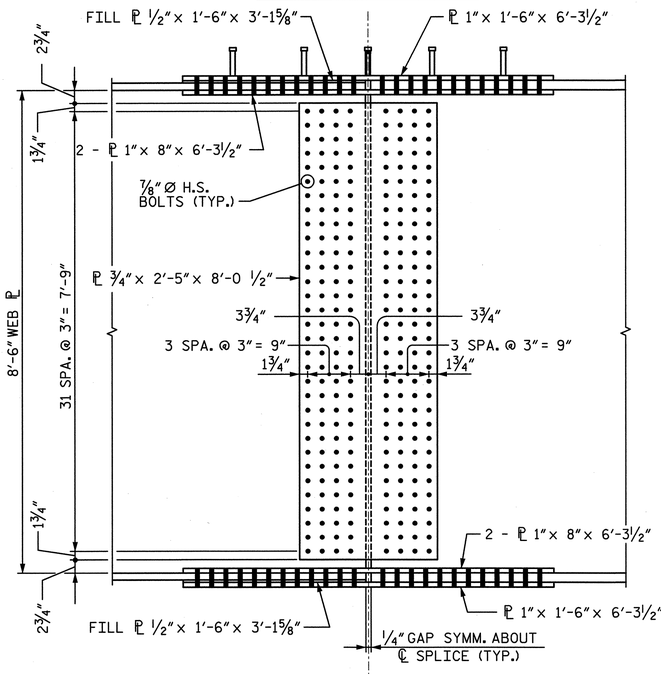

ELEVATION

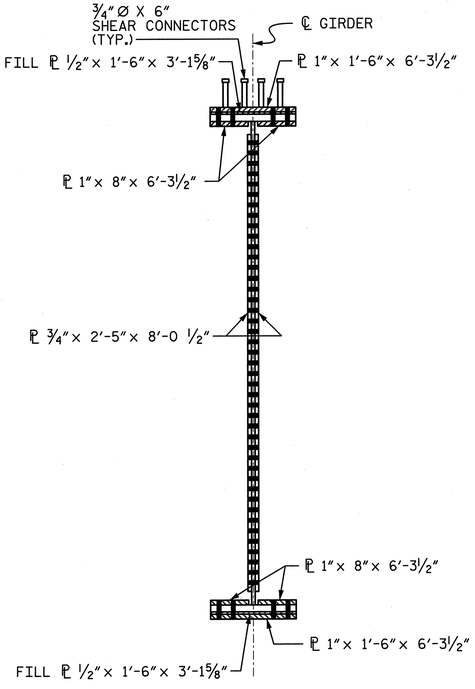

SECTION

PLAN - TOP FLANGE

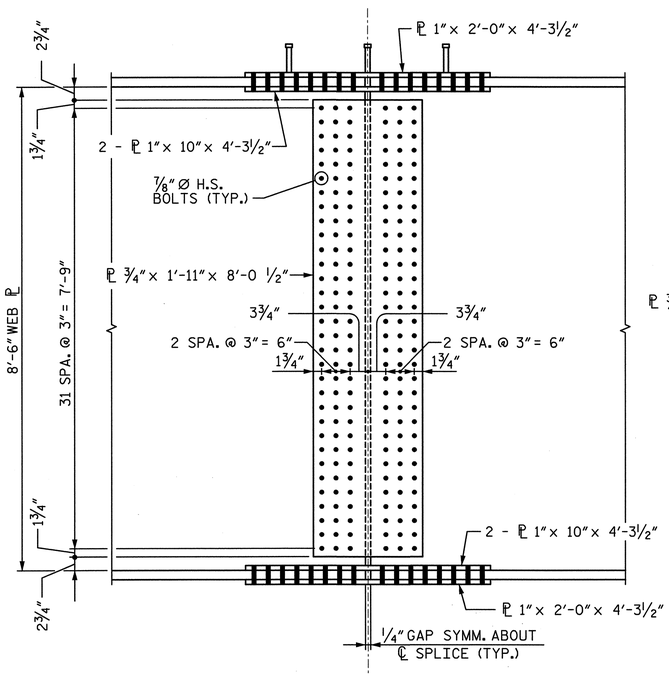

ELEVATION

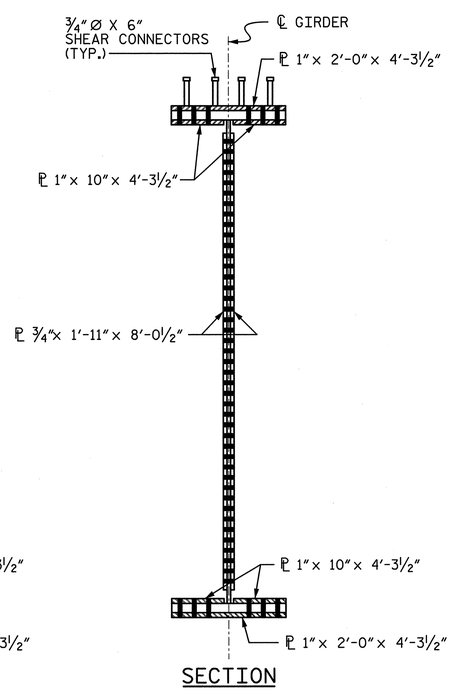

SECTION

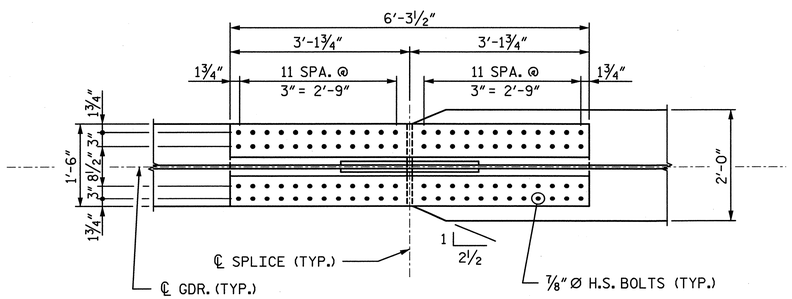

PLAN - BOTTOM FLANGE

BOLTED FIELD SPLICE - TYPE I

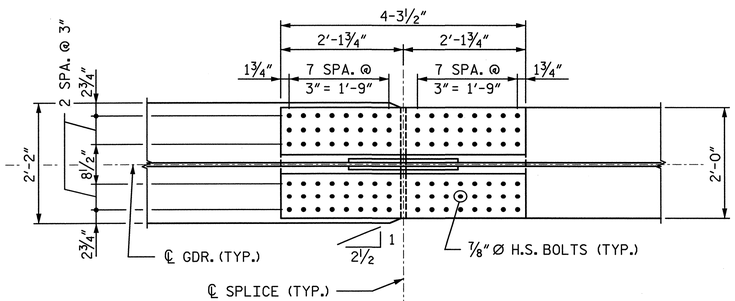

PLAN - BOTTOM FLANGE

BOLTED FIELD SPLICE - TYPE II

NORTH CAROLINA PROFESSIONAL SEAL 28479 ENGINEER KEVIN G. BAILEY 6-7-13

PROJECT NO. U-2524C

GUILFORD COUNTY

STATION: POT 407+85.82 -L-
= POT 29+79.72 -Y4-

SHEET 14 OF 15

STATE OF NORTH CAROLINA
DEPARTMENT OF TRANSPORTATION
RALEIGH

STRUCTURAL STEEL
BOLTED FIELD SPLICE
UNIT H
SPANS 25-26
-RIGHT LANE-

DRAWN BY : VMW	DATE : 4-13	DESIGN ENGINEER OF RECORD: K. BAILEY	DATE : 5-13
CHECKED BY : TRL	DATE : 4-13		

STV / Ralph Whitehead Associates, Inc.
1000 West Morehead St., Ste. 200
Charlotte, NC 28208
NC License No. F-0991

REVISIONS						SHEET NO.
NO.	BY:	DATE:	NO.	BY:	DATE:	S-372
1			3			TOTAL SHEETS
2			4			836

6/6/2013 4:41:31 PM R:\ustation\Finals\Structural\Steel\Bolted Field Splice Unit H_Sheet 14 of 15.dgn

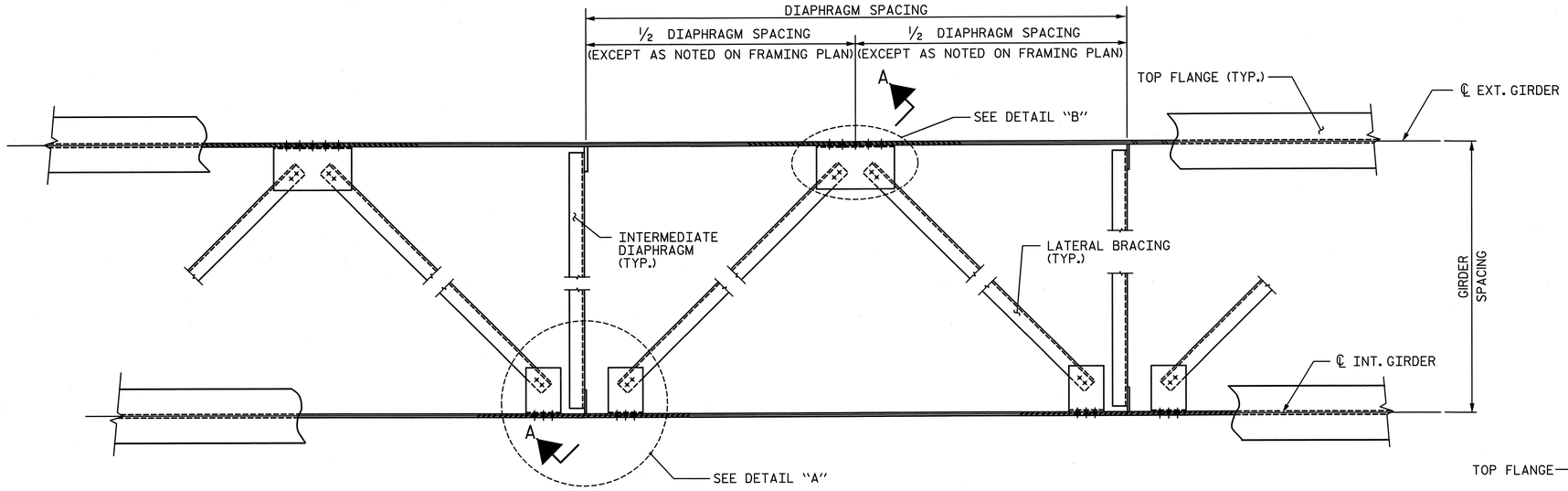

PART PLAN - NEAR TOP FLANGE LATERAL BRACING

(THROUGHOUT EXTERIOR BAYS ONLY)
(SEE FRAMING PLAN FOR LOCATION AND PLACEMENT OF LATERAL BRACING)

NOTES

LATERAL BRACING ASSEMBLY SHALL COMPLY WITH SECTION 1072 OF THE STANDARD SPECIFICATIONS.

ALL STRUCTURAL STEEL SHALL BE AASHTO M270 GRADE 50W OR APPROVED EQUAL.

TENSION ON THE ASTM A325 BOLTS SHALL BE CALIBRATED USING DIRECT TENSION INDICATOR WASHERS IN ACCORDANCE WITH THE STANDARD SPECIFICATIONS.

ALL BOLTED CONNECTIONS SHALL BE ⅞"Ø HIGH STRENGTH BOLTS.

THE CONTRACTOR HAS THE OPTION TO CLIP THE PROTRUDING CORNERS OF THE GUSSET PLATES, AT NO ADDITIONAL COST TO THE DEPARTMENT.

BENT GUSSET PLATES OR ROLLED ANGLE SHAPES MAY BE SUBSTITUTED FOR THE WELDED GUSSET PLATES DETAILED IF APPROVED BY THE ENGINEER, AT NO ADDITIONAL COST TO THE DEPARTMENT.

INSTALL THE LATERAL BRACING AFTER ERECTING THE EXTERIOR GIRDER AND THE ADJACENT INTERIOR GIRDER AND INSTALLING THE INTERMEDIATE DIAPHRAGMS.

TOP FLANGE LATERAL BRACING DETAILED IS PROVIDED TO ASSIST IN LIMITING GIRDER DISPLACEMENT DUE TO WIND FORCES DURING ERECTION. IT SHALL BE INSTALLED IMMEDIATELY AFTER ERECTION OF EACH PAIR OF GIRDER SECTIONS AT END OF SPAN/UNIT BENTS. THE DEPARTMENT ASSUMES NO LIABILITY IN THE ERECTION OR STABILIZATION OF THE GIRDERS.

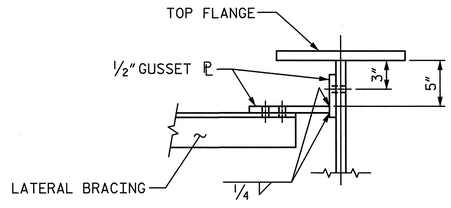

SECTION THRU CONNECTION

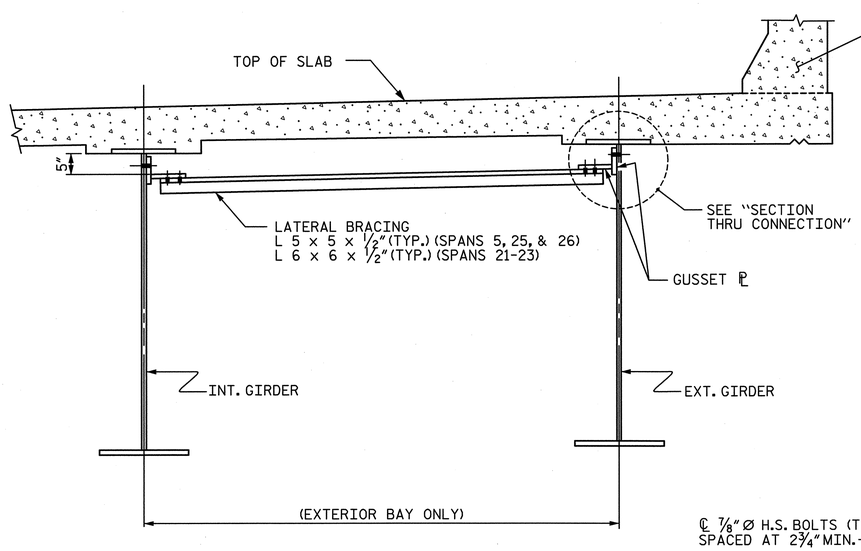

SECTION A-A

(LATERAL BRACING AT TOP FLANGE)

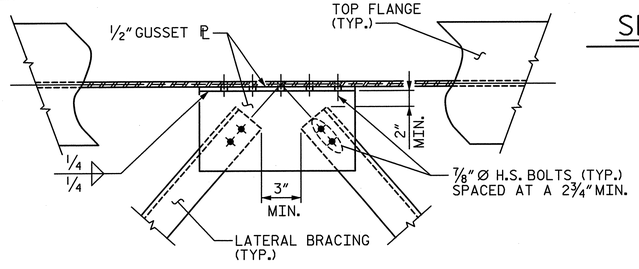

ENSURE BRACING PROJECTION LINES INTERSECT AT ℄ OF WEB

DETAIL "B"

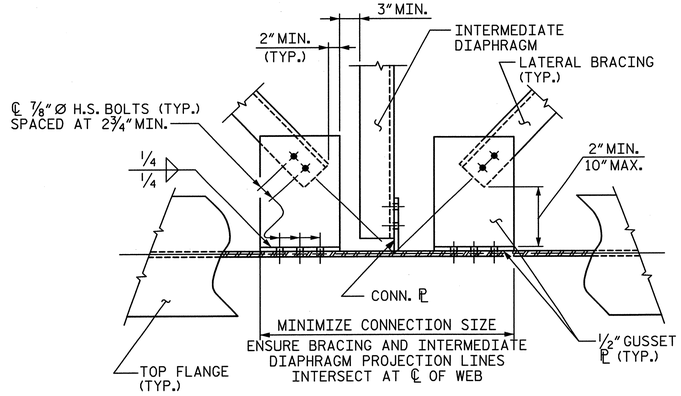

DETAIL "A"

(CONNECTOR PLATE WITH INTERMEDIATE DIAPHRAGM SHOWN, TRANSVERSE STIFFENER LOCATION SIMILAR)

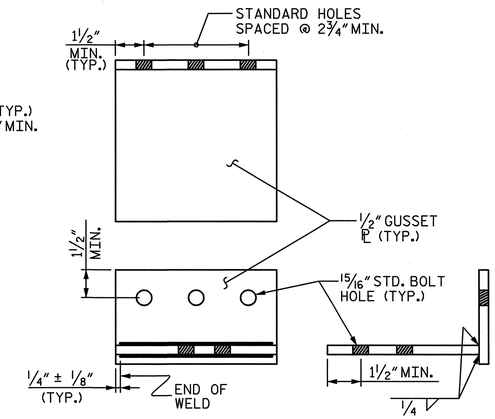

CONNECTION DETAIL

PROJECT NO. U-2524C
GUILFORD COUNTY
STATION: POT 407+85.82 -L-
= POT 29+79.72 -Y4-
SHEET 15 OF 15

STATE OF NORTH CAROLINA
DEPARTMENT OF TRANSPORTATION
RALEIGH

STRUCTURAL STEEL LATERAL BRACING

-RIGHT LANE-

NORTH CAROLINA PROFESSIONAL ENGINEER SEAL 28479 ENGINEER KEVIN G. BAILEY 6-7-13

STV / Ralph Whitehead Associates, Inc.
1000 West Morehead St. Ste. 200
Charlotte, NC 28208
NC License No. F-0991

DRAWN BY : VMW	DATE : 3-13	DESIGN ENGINEER OF RECORD: K. BAILEY	DATE : 5-13
CHECKED BY : KGB	DATE : 4-13		

REVISIONS						SHEET NO.
NO.	BY:	DATE:	NO.	BY:	DATE:	S-373
1			3			TOTAL SHEETS
2			4			836

6/6/2013 4:41:32 PM R:\ustation\Finals\Structural\Steel\Lateral Bracing_Sheet 15 of 15.dgn

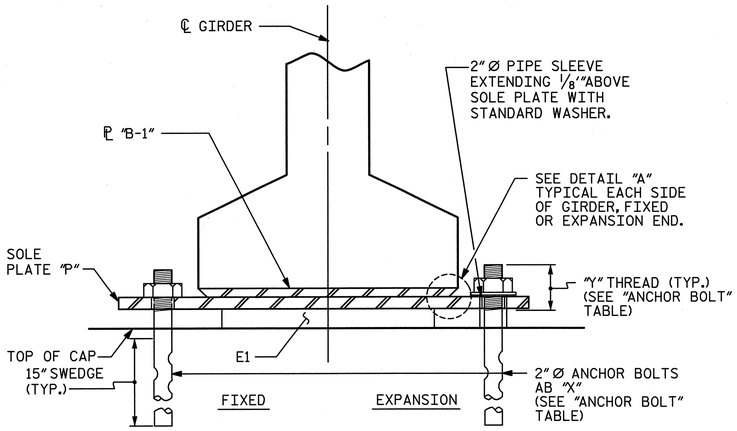

SECTION E-E

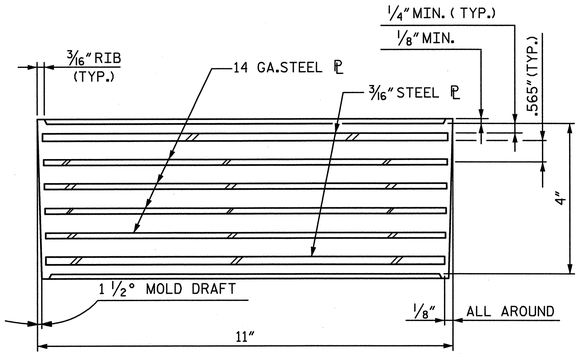

TYPICAL SECTION OF ELASTOMERIC BEARINGS

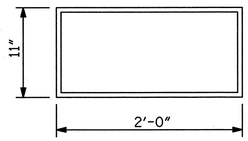

(320 REQ'D)

PLAN VIEW OF ELASTOMERIC BEARING

TYPE E1

MAXIMUM ALLOWABLE SERVICE LOADS	
	MAX.D.L.+ L.L. (NO IMPACT)
TYPE E1	362 K

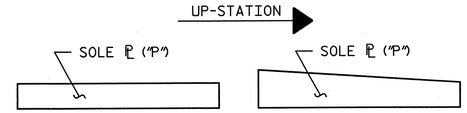

SOLE ℄ PLACEMENT DETAIL (SPAN 1-4, 6A, 6B, 7-12, 14, 17-20, & 27-30)

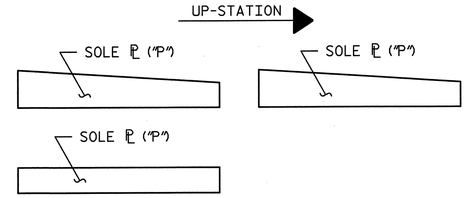

SOLE ℄ PLACEMENT DETAIL (SPAN 13, 15, & 16)

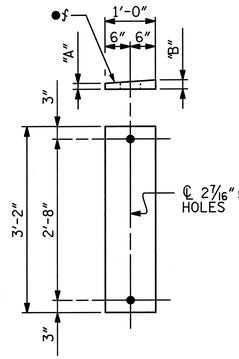

P2-P4, P6-P8, P17-20, P22, P23 ,P27, P28, P32-35, P40
(FIXED)

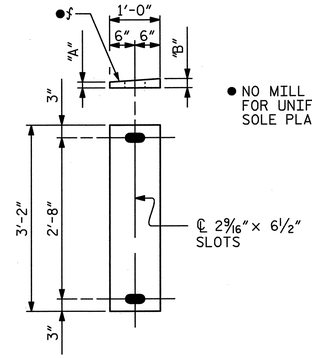

P1, P5, P9-P16, P21, P24-P26, P29-P31, P36-P39
(EXPANSION)

- NO MILL FINISH REQUIRED FOR UNIFORM THICKNESS SOLE PLATES

SOLE PLATE DETAILS ("P")

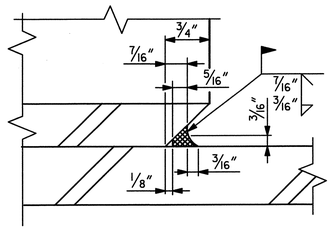

DETAIL "A"

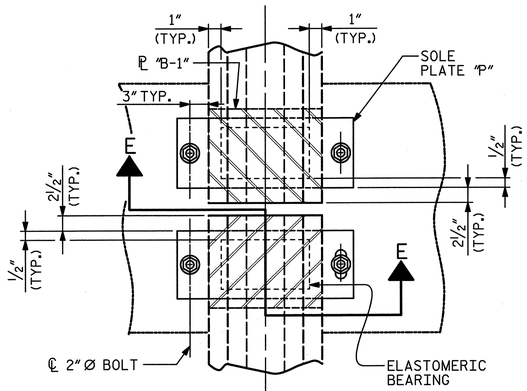

TYPICAL HALF-PLAN (SHOWING CONTINUOUS BENT)

TYPICAL HALF-PLAN (SHOWING SIMPLE SPAN BENT)

ANCHOR BOLT			
ANCHOR BOLT	TOTAL LENGTH	"Y" THREAD	# REQ'D
AB 1	26"	4"	450
AB 2	26 1/2"	4 1/4"	28
AB 3	27"	4 3/4"	26
AB 4	27 1/2"	5 1/4"	14
AB 5	28"	5 3/4"	14
AB 6	29"	6 3/4"	14
AB 7	29 1/2"	7"	10
AB 8	30"	7 3/4"	42
AB 9	31 1/2"	8 3/4"	12
AB 10	32 1/2"	9 1/2"	12
AB 11	33"	10 3/4"	18

NOTE: SEE SUBSTRUCTURE PLANS FOR ANCHOR BOLT PLACEMENT.

SOLE PLATE				
SOLE ℄	"A"	"B"	# REQ'D	TYPE
P1	1 1/4"	1 1/4"	35	EXP.
P2	1 1/4"	1 1/4"	92	FIX.
P3	1 1/4"	1 3/8"	36	FIX.
P4	1 5/16"	1 7/16"	41	FIX.
P5	1 1/4"	1 3/8"	26	EXP.
P6	1 3/8"	1 1/2"	15	FIX.
P7	1 3/8"	1 5/8"	5	FIX.
P8	3 1/2"	3 1/2"	4	FIX.
P9	1 5/16"	1 7/16"	4	EXP.
P10	1 9/16"	1 13/16"	3	EXP.
P11	1 5/8"	1 5/8"	9	EXP.
P12	1 1/4"	1 1/2"	2	EXP.
P13	1 11/16"	1 13/16"	3	EXP.
P14	2"	2 1/4"	2	EXP.
P15	2 1/16"	2 3/16"	7	EXP.
P16	2 1/8"	2 1/8"	1	EXP.
P17	2 3/16"	2 5/16"	1	FIX.
P18	1 1/2"	1 3/4"	1	FIX.
P19	1 3/4"	2"	1	FIX.
P20	1 7/8"	2 1/8"	1	FIX.
P21	2 3/4"	2 7/8"	1	EXP.
P22	2 1/8"	2 3/8"	1	FIX.
P23	2 1/2"	2 1/2"	1	FIX.
P24	3 3/8"	3 3/8"	1	EXP.
P25	4 1/8"	4 3/8"	1	EXP.
P26	4"	4"	1	EXP.
P27	4 1/4"	4 1/4"	1	FIX.
P28	4 1/2"	4 3/4"	1	FIX.
P29	5 1/2"	5 1/2"	1	EXP.
P30	5 3/8"	5 5/8"	1	EXP.
P31	7 3/4"	7 3/4"	1	EXP.
P32	8 1/2"	8 1/2"	1	FIX.
P33	1 3/4"	1 7/8"	1	FIX.
P34	2 3/16"	2 3/16"	3	FIX.
P35	2 1/4"	2 3/8"	3	FIX.
P36	3"	3 1/8"	1	EXP.
P37	4 5/16"	4 7/16"	2	EXP.
P38	5 5/8"	5 3/4"	1	EXP.
P39	6 15/16"	7 1/16"	1	EXP.
P40	3 1/4"	3 1/2"	1	FIX.
P41	2"	2"	5	EXP.
P42	2 7/8"	3 1/8"	1	FIX.

NOTES

AT ALL FIXED POINTS OF SUPPORT, NUTS FOR ANCHOR BOLTS ARE TO BE TIGHTENED FINGER TIGHT AND THEN BACKED OFF 1/2 TURN. THE THREAD OF THE NUT AND BOLT SHALL THEN BE BURRED WITH A SHARP POINTED TOOL.

THE 2" Ø PIPE SLEEVE SHALL BE CUT FROM SCHEDULE 40 PVC PLASTIC PIPE. THE PVC PLASTIC PIPE SHALL MEET THE REQUIREMENTS OF ASTM D1785.

STEEL SOLE PLATES, ANCHOR BOLTS, NUTS, AND WASHERS SHALL BE GALVANIZED IN ACCORDANCE WITH THE STANDARD SPECIFICATIONS.

PRIOR TO WELDING, GRIND THE GALVANIZED SURFACE OF THE PORTION OF THE EMBEDDED PLATE AND SOLE PLATE THAT ARE TO BE WELDED. AFTER WELDING, DAMAGED GALVANIZED SURFACES SHALL BE REPAIRED IN ACCORDANCE WITH THE STANDARD SPECIFICATIONS.

WHEN WELDING THE SOLE PLATE TO THE EMBEDDED PLATE IN THE GIRDER, USE TEMPERATURE INDICATING WAX PENS, OR OTHER SUITABLE MEANS, TO ENSURE THAT THE TEMPERATURE OF THE SOLE PLATE DOES NOT EXCEED 300°F. TEMPERATURES ABOVE THIS MAY DAMAGE THE ELASTOMER.

DUE TO THE THICKNESS OF THE SOLE PLATES, THE CONTRACTOR SHALL DETERMINE IF PREHEATING OF SOLE PLATES, PRIOR TO WELDING, IS REQUIRED ACCORDING TO CURRENT AWS STANDARDS. IF PREHEATING IS NECESSARY, CONTRACTOR SHALL BE PREPARED TO JACK GIRDERS TO CREATE AN AIR GAP BETWEEN THE SOLE PLATE AND THE ELASTOMERIC BEARING TO LIMIT THE BEARING TEMPERATURE TO A MAXIMUM OF 300°F. NO ADDITIONAL MEASUREMENT OR PAYMENT WILL BE MADE FOR PREHEATING SOLE PLATES OR GIRDER JACKING TO LIMIT ELASTOMERIC BEARING TEMPERATURE.

SOLE PLATE "P", BOLTS, NUTS, WASHERS, AND PIPE SLEEVE SHALL BE INCLUDED IN THE PAY ITEM FOR PRESTRESSED CONCRETE GIRDERS.

ANCHOR BOLTS SHALL MEET THE REQUIREMENTS OF ASTM A449. NUTS SHALL MEET THE REQUIREMENTS OF AASHTO M291-DH OR AASHTO M292-2H. WASHERS SHALL MEET THE REQUIREMENTS OF AASHTO M293. NO SHOP DRAWINGS ARE REQUIRED FOR ANCHOR BOLTS, NUTS AND WASHERS. SHOP INSPECTION IS REQUIRED.

ALL SURFACES OF BEARING PLATES SHALL BE SMOOTH AND STRAIGHT.

THE ELASTOMER IN THE STEEL REINFORCED BEARINGS SHALL HAVE A SHEAR MODULUS OF 0.160 ksi, IN ACCORDANCE WITH AASHTO M251.

ALL BEARING PLATES SHALL BE M270 GRADE 50.

FOR STEEL REINFORCED ELASTOMERIC BEARINGS, SEE SPECIAL PREVISIONS.

NORTH CAROLINA PROFESSIONAL SEAL 28479 ENGINEER KEVIN G. BAILEY 6-7-13

PROJECT NO. U-2524C

GUILFORD COUNTY

STATION: POT 407+85.82 -L-
= POT 29+79.72 -Y4-

STATE OF NORTH CAROLINA
DEPARTMENT OF TRANSPORTATION
RALEIGH

ELASTOMERIC BEARING DETAILS

-RIGHT LANE-

DRAWN BY : VMW	DATE : 3-13	DESIGN ENGINEER OF RECORD: K. BAILEY	DATE : 5-13
CHECKED BY : TRL	DATE : 3-13		

STV / Ralph Whitehead Associates, Inc.
1000 West Morehead St., Ste. 200
Charlotte, NC 28208
NC License No. F-0991

REVISIONS						SHEET NO.
NO.	BY:	DATE:	NO.	BY:	DATE:	S-374
1			3			TOTAL SHEETS
2			4			836

6/6/2013 4:41:33 PM R:\Lustation\Finals\Elastomeric Bearing Details.dgn

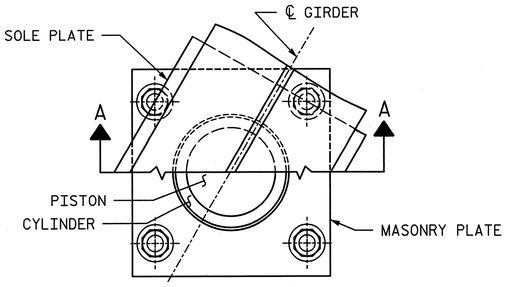

CUT-AWAY PLAN

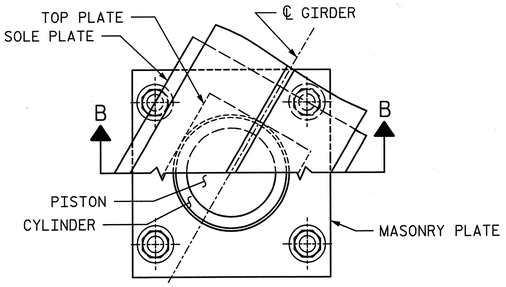

CUT-AWAY PLAN

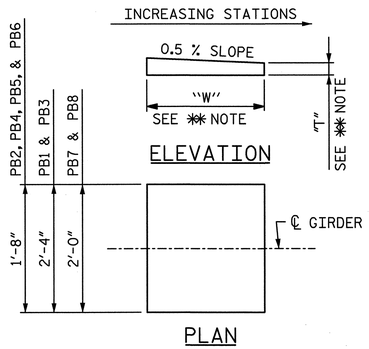

ELEVATION

PLAN

✱✱ NOTE:
DIMENSIONS "W" AND "T" ARE TO BE DETERMINED BY THE MANUFACTURER.

SOLE PLATE DETAILS

NOTES

FOR POT BEARINGS, SEE SPECIAL PROVISIONS.

AT ALL POINTS OF SUPPORT IN SPANS 5 & 21-25, NUTS FOR ANCHOR BOLTS SHALL BE TIGHTENED FINGER TIGHT AND GIVEN AN ADDITIONAL 1/4 TURN. THE THREAD OF THE NUT AND BOLT SHALL THEN BE BURRED WITH A SHARP POINTED TOOL.

WHEN WELDING THE SOLE PLATE TO THE GIRDER, USE TEMPERATURE INDICATING WAX PENS, OR OTHER SUITABLE MEANS, TO ENSURE THAT THE TEMPERATURE OF THE BEARING DOES NOT EXCEED 250°F TEMPERATURES ABOVE THIS MAY DAMAGE THE TFE OR ELASTOMER.

AFTER BEARING ASSEMBLY IS IN PLACE AND ANCHOR BOLTS HAVE BEEN FINALLY POSITIONED. THEY SHALL BE GROUTED IN PLACE AS SHOWN.

THE CLOSURE PLATE, GROUT PIPE AND STANDARD PIPE FOR THIS ASSEMBLY NEED NOT BE GALVANIZED.

SOLE PLATES SHOULD BE WELDED TO BEAM FLANGES AND ANCHOR BOLTS SHOULD BE GROUTED BEFORE FALSEWORK IS PLACED.

ALL SURFACES OF BEARING PLATES SHALL BE SMOOTH AND STRAIGHT.

FOR THERMAL SPRAYED COATINGS (METALLIZATION), SEE SPECIAL PROVISIONS.

THE CONTRACTOR MAY SUBSTITUTE DISC BEARINGS FOR THE POT BEARINGS SHOWN. FOR OPTIONAL DISC BEARINGS, SEE SPECIAL PROVISIONS.

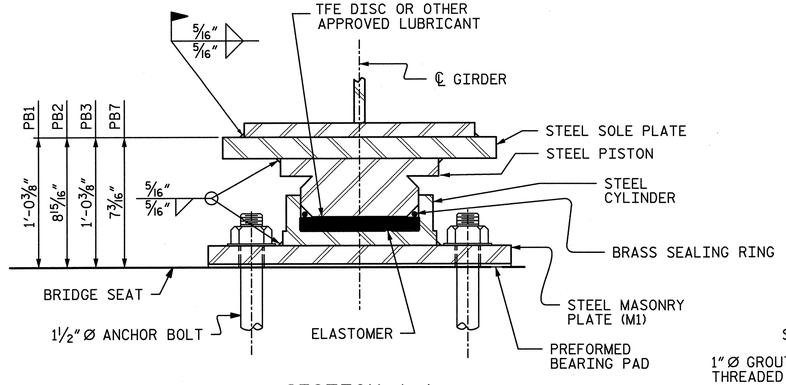

SECTION A-A

(GROUT CANS NOT SHOWN FOR CLARITY. FOR GROUT CANS, SEE SECTION B-B)

FIXED

(PB1 12 REQ'D.)
(PB2 6 REQ'D.)
(PB3 6 REQ'D.)
(PB7 6 REQ'D.)

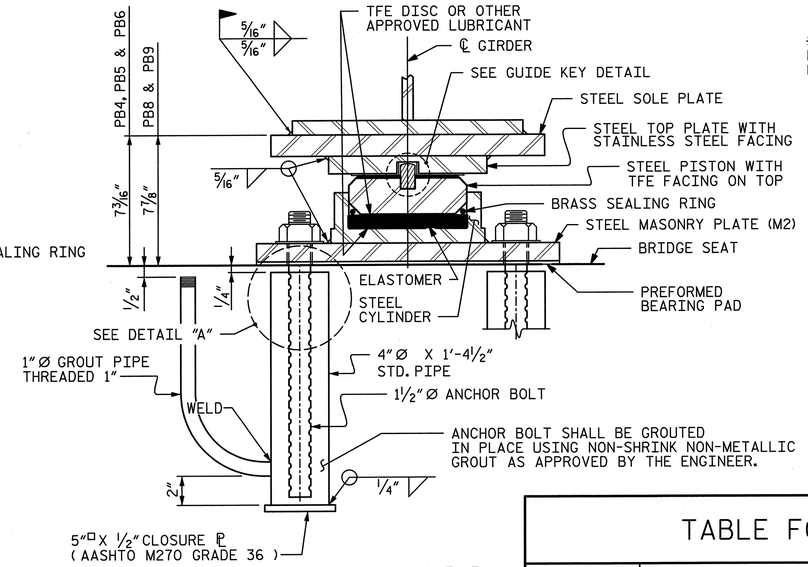

SECTION B-B

EXPANSION

(PB4 12 REQ'D.)
(PB5 6 REQ'D.)
(PB6 6 REQ'D.)
(PB8 6 REQ'D.)
(PB9 6 REQ'D.)

POT BEARING DETAILS

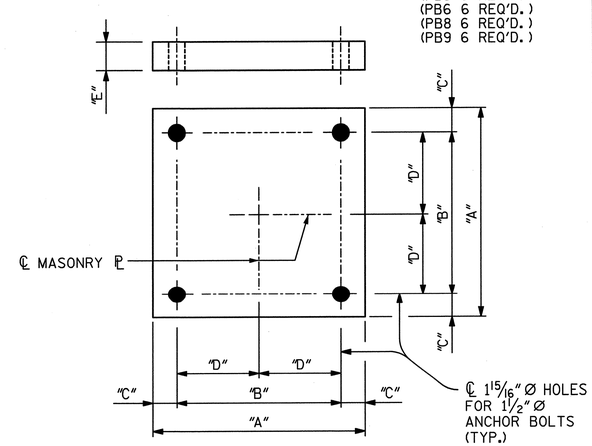

PLAN

M1 (30 REQ'D.) (BENTS 5A, 21, 22, 24, & 25)

M2 (36 REQ'D.) (BENTS 4, 20, 23, 24, & 26)

MASONRY PLATE DETAILS

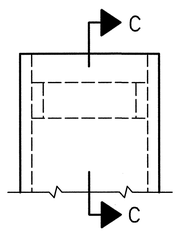

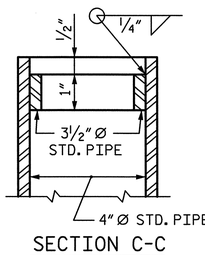

SECTION C-C

DETAIL "A"

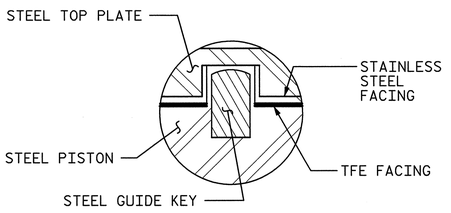

GUIDE KEY DETAIL

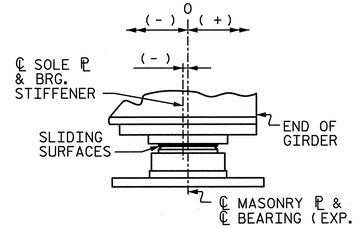

TABLE FOR MASONRY PLATE

BEARING	MASONRY PLATE	"A"	"B"	"C"	"D"	"E"
PB1	M1	3'-0"	2'-5"	3 1/2"	1-2 1/2"	2 1/4"
PB2	M1	1'-8 5/8"	1'-2 5/8"	3"	7 5/16"	1 1/8"
PB3	M1	3'-0"	2'-5"	3 1/2"	1'-2 1/2"	2 1/4"
PB4	M2	1'-8 5/8"	1'-2 5/8"	3"	7 5/16"	1 1/8"
PB5	M2	1'-8 5/8"	1'-2 5/8"	3"	7 5/16"	1 1/8"
PB6	M2	1'-8 5/8"	1'-2 5/8"	3"	7 5/16"	1 1/8"
PB7	M1	2'-0 1/2"	1'-6 1/2"	3"	9 1/4"	1 3/8"
PB8	M2	1'-10 3/8"	1'-4 3/8"	3"	8 3/16"	1 1/4"
PB9	M2	1'-10 3/8"	1'-4 3/8"	3"	8 3/16"	1 1/4"

TABLE FOR LOADS AND MOVEMENT

BEARING	LOCATION	UNFACTORED VERTICAL LOAD (KIPS) DEAD DC	DEAD DW	LIVE LL+IM	UNFACTORED TOTAL	FACTORED LATERAL LOAD (KIPS)	TOTAL MOVEMENT (INCHES)
PB1 (FIXED)	BENTS 21 & 22, UNIT G	689.0	82.9	331.0	1102.9	250	0.00
PB2 (FIXED)	BENT 24, SPAN 24	193.6	29.4	149.8	372.8	71.4	0.00
PB3 (FIXED)	BENT 25, UNIT H	678.8	142.5	288.5	1109.8	241.4	0.00
PB4 (EXP.)	BENTS 20 & 23, UNIT G	190.6	23.9	158.7	373.2	74.0	3.33"
PB5 (EXP.)	BENT 23, SPAN 24	193.6	29.4	149.8	372.8	71.4	1.72"
PB6 (EXP.)	BENT 24, UNIT H	182.4	44.0	167.3	393.7	77.5	1.79"
PB7 (FIXED)	BENT 5A, SPAN 5	314.5	65.4	194.8	574.7	119.3	0.00
PB8 (EXP.)	BENT 4, SPAN 5	242.9	64.2	165.1	472.2	97.4	1.51"
PB9 (EXP.)	BENT 26, UNIT H	235.4	54.5	146.3	436.2	90.8	1.79"

TABLE FOR PLATE SETTING DATA

(EXPANSION POT BEARINGS)

TEMPERATURE AT TIME OF SETTING	45° F	60° F	90° F	✱
PB4 BENTS 20 & 23, UNIT G	-7/16"	0	13/16"	-1 1/8"
PB5 BENT 23, SPAN 24	-3/16"	0	7/16"	-1 1/8"
PB6 BENT 24, UNIT H	-5/16"	0	9/16"	-1 7/16"
PB8 BENT 4, SPAN 5	-1/4"	0	7/16"	-1 3/4"
PB8 BENT 26, UNIT H	-5/16"	0	9/16"	-1 7/16"

✱ CORRECTION FOR END ROTATION DUE TO WEIGHT OF SLAB AND COMPOSITE DEAD LOAD.

TEMPERATURE SETTING DETAIL

NORTH CAROLINA PROFESSIONAL SEAL 28479 ENGINEER KEVIN G. BAILEY 6-7-13

PROJECT NO. U-2524C

GUILFORD COUNTY

STATION: POT 407+85.82 -L-
= POT 29+79.72 -Y4-

SHEET 1 OF 2

STATE OF NORTH CAROLINA
DEPARTMENT OF TRANSPORTATION
RALEIGH

POT BEARINGS

-RIGHT LANE-

REVISIONS NO.	BY:	DATE:	NO.	BY:	DATE:	SHEET NO.
1			3			S-375
2			4			TOTAL SHEETS 836

DRAWN BY : VMW DATE : 3-13
CHECKED BY : TJT DATE : 3-13

DESIGN ENGINEER OF RECORD: T. TOWNSEND DATE : 5-13

STV/Ralph Whitehead Associates, Inc.
1000 West Morehead St., Ste. 200
Charlotte, NC 28208
NC License No. F-0991

R:\ustration\Finals\Pot Bearings - Sheet 1of 2.dgn 6/6/2013 4:41:36 PM

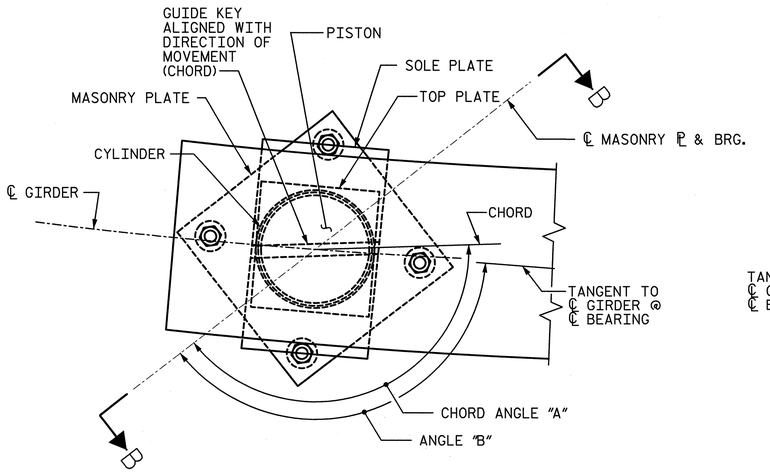

PLAN - BENTS 4

PB7

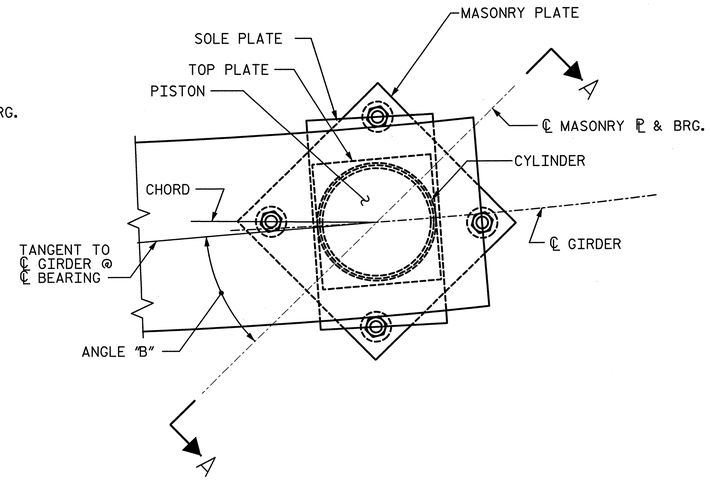

PLAN - BENT 5A

PB8

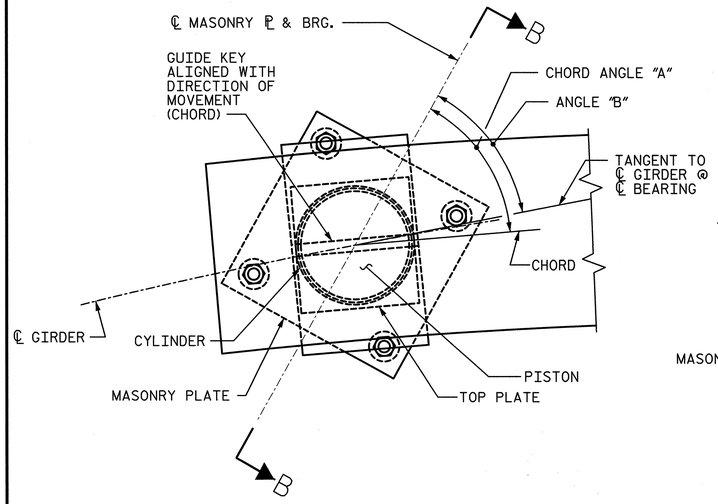

PLAN - BENT 24 SPAN 25

PB6

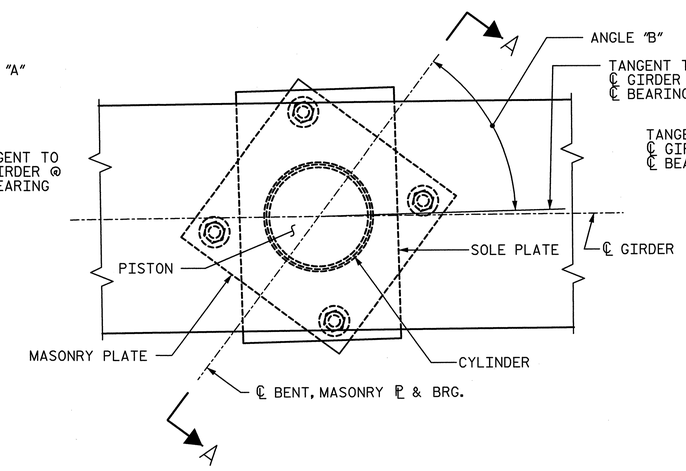

PLAN - BENT 25

PB3

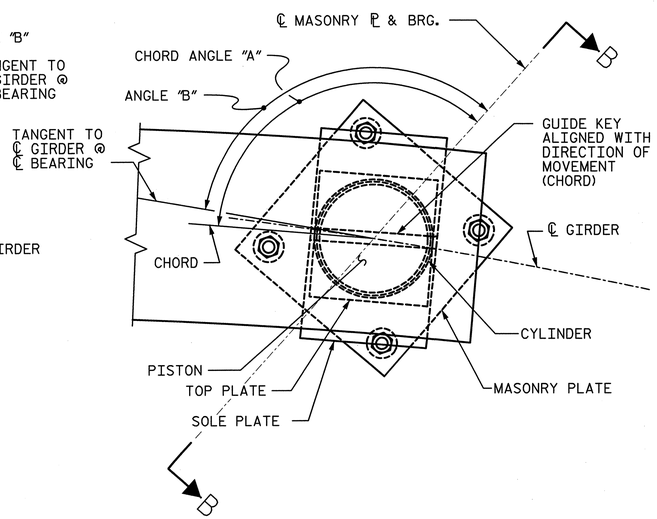

PLAN - BENT 26 SPAN 26

PB9

NOTES:

FOR SECTIONS A-A, B-B, ADDITIONAL NOTES AND ADDITIONAL DETAILS, SEE SHEET 1 OF 2.

CHORD IS FROM EXPANSION BEARING TO ADJACENT FIXED BEARING.

POT BEARING ANGLES (SPANS 5, 25, & 26)

BEARING LOCATION		CHORD ANGLE "A"	ANGLE "B"
BENT	GIRDER		
BENT 4	1	140°-05′-15″	137°-53′-06″
	2	139°-47′-52″	137°-36′-19″
	3	139°-30′-45″	137°-19′-47″
	4	139°-13′-52″	137°-03′-28″
	5	138°-57′-13″	136°-47′-23″
	6	138°-40′-48″	136°-31′-31″
BENT 5A	1	-	40°-07′-48″
	2	-	40°-25′-47″
	3	-	40°-43′-30″
	4	-	41°-00′-57″
	5	-	41°-18′-10″
	6	-	41°-35′-08″
BENT 24 SPAN 25	1	51°-14′-07″	50°-34′-22″
	2	51°-10′-14″	50°-34′-22″
	3	51°-06′-32″	50°-34′-22″
	4	51°-03′-02″	50°-34′-22″
	5	50°-59′-44″	50°-34′-22″
	6	50°-56′-38″	50°-34′-22″
BENT 25	1	-	52°-15′-17″
	2	-	52°-10′-22″
	3	-	52°-05′-24″
	4	-	52°-00′-26″
	5	-	51°-55′-25″
	6	-	51°-50′-24″
BENT 26 SPAN 26	1	125°-58′-19″	123°-43′-27″
	2	126°-06′-48″	123°-52′-41″
	3	126°-15′-09″	124°-02′-01″
	4	126°-23′-21″	124°-11′-27″
	5	126°-31′-25″	124°-20′-58″
	6	126°-39′-21″	124°-30′-35″

PROJECT NO. U-2524C

GUILFORD COUNTY

STATION: POT 407+85.82 -L-
= POT 29+79.72 -Y4-

SHEET 2 OF 2

STATE OF NORTH CAROLINA
DEPARTMENT OF TRANSPORTATION
RALEIGH

POT BEARING DETAILS

-RIGHT LANE-

NORTH CAROLINA PROFESSIONAL SEAL 28479 ENGINEER KEVIN G. BAILEY
6-7-13

STV / Ralph Whitehead Associates, Inc.
1000 West Morehead St., Ste. 200
Charlotte, NC 28208
NC License No. F-0991

REVISIONS						SHEET NO.
NO.	BY:	DATE:	NO.	BY:	DATE:	S-376
1			3			TOTAL SHEETS
2			4			836

DRAWN BY : TRL DATE : 3-13
CHECKED BY : TJT DATE : 3-13

DESIGN ENGINEER OF RECORD: T. TOWNSEND DATE : 5-13

6/7/2013 8:15:14 AM R:\ustation\Finals\Pot Bearings - Sheet 2 of 2.dgn

UNIT A CAMBER AND DEFLECTIONS TABLE

SPAN 1	GIRDER POSITION 1-6										
TENTH POINTS	0.00	0.10	0.20	0.30	0.40	0.50	0.60	0.70	0.80	0.90	1.00
CAMBER (GIRDER ALONE IN PLACE) (FT.)	0.000	0.059	0.104	0.134	0.152	0.158	0.152	0.134	0.104	0.059	0.000
DEFLECTION DUE TO SUPERIMPOSED D.L. (FT.)**	0.000	-0.020	-0.038	-0.053	-0.062	-0.066	-0.062	-0.053	-0.038	-0.020	0.000
FINAL CAMBER (IN.)	0"	7/16"	13/16"	1"	1 1/16"	1 1/8"	1 1/16"	1"	13/16"	7/16"	0"
SPAN 2	GIRDER POSITION 1-6										
TENTH POINTS	0.00	0.10	0.20	0.30	0.40	0.50	0.60	0.70	0.80	0.90	1.00
CAMBER (GIRDER ALONE IN PLACE) (FT.)	0.000	0.057	0.100	0.131	0.148	0.154	0.148	0.131	0.100	0.057	0.000
DEFLECTION DUE TO SUPERIMPOSED D.L. (FT.)**	0.000	-0.018	-0.035	-0.048	-0.056	-0.059	-0.056	-0.048	-0.035	-0.018	0.000
FINAL CAMBER (IN.)	0"	7/16"	13/16"	1"	1 1/8"	1 1/8"	1 1/8"	1"	13/16"	7/16"	0"

UNIT B CAMBER AND DEFLECTIONS TABLE

SPAN 3	GIRDER POSITION 1																				
TWENTIETH POINTS	0.00	0.05	0.10	0.15	0.20	0.25	0.30	0.35	0.40	0.45	0.50	0.55	0.60	0.65	0.70	0.75	0.80	0.85	0.90	0.95	1.00
CAMBER (GIRDER ALONE IN PLACE) (FT.)	0.000	0.059	0.114	0.164	0.208	0.246	0.278	0.303	0.321	0.332	0.336	0.332	0.321	0.303	0.278	0.246	0.208	0.164	0.114	0.059	0.000
DEFLECTION DUE TO SUPERIMPOSED D.L. (FT.)**	0.000	-0.030	-0.060	-0.089	-0.115	-0.139	-0.160	-0.176	-0.188	-0.196	-0.198	-0.196	-0.188	-0.176	-0.160	-0.139	-0.115	-0.089	-0.060	-0.030	0.000
FINAL CAMBER (IN.)	0"	3/8"	5/8"	7/8"	1 1/8"	1 5/16"	1 7/16"	1 1/2"	1 5/8"	1 5/8"	1 11/16"	1 5/8"	1 5/8"	1 1/2"	1 7/16"	1 5/16"	1 1/8"	7/8"	5/8"	3/8"	0"
SPAN 3	GIRDER POSITION 2																				
CAMBER (GIRDER ALONE IN PLACE) (FT.)	0.000	0.058	0.111	0.160	0.203	0.241	0.272	0.296	0.314	0.325	0.329	0.325	0.314	0.296	0.272	0.241	0.203	0.160	0.111	0.058	0.000
DEFLECTION DUE TO SUPERIMPOSED D.L. (FT.)**	0.000	-0.027	-0.054	-0.080	-0.104	-0.126	-0.144	-0.159	-0.170	-0.177	-0.179	-0.177	-0.170	-0.159	-0.144	-0.126	-0.104	-0.080	-0.054	-0.027	0.000
FINAL CAMBER (IN.)	0"	3/8"	11/16"	15/16"	1 3/16"	1 3/8"	1 9/16"	1 5/8"	1 3/4"	1 13/16"	1 13/16"	1 13/16"	1 3/4"	1 5/8"	1 9/16"	1 3/8"	1 3/16"	15/16"	11/16"	3/8"	0"
SPAN 3	GIRDER POSITION 3																				
CAMBER (GIRDER ALONE IN PLACE) (FT.)	0.000	0.064	0.121	0.170	0.212	0.248	0.277	0.299	0.315	0.324	0.327	0.324	0.315	0.299	0.277	0.248	0.212	0.170	0.121	0.064	0.000
DEFLECTION DUE TO SUPERIMPOSED D.L. (FT.)**	0.000	-0.025	-0.049	-0.073	-0.095	-0.115	-0.132	-0.146	-0.156	-0.162	-0.164	-0.162	-0.156	-0.146	-0.132	-0.115	-0.095	-0.073	-0.049	-0.025	0.000
FINAL CAMBER (IN.)	0"	1/2"	7/8"	1 3/16"	1 3/8"	1 9/16"	1 3/4"	1 13/16"	1 15/16"	1 15/16"	1 15/16"	1 15/16"	1 15/16"	1 13/16"	1 3/4"	1 9/16"	1 3/8"	1 3/16"	7/8"	1/2"	0"
SPAN 3	GIRDER POSITION 4																				
CAMBER (GIRDER ALONE IN PLACE) (FT.)	0.000	0.062	0.116	0.164	0.205	0.240	0.268	0.290	0.305	0.314	0.318	0.314	0.305	0.290	0.268	0.240	0.205	0.164	0.116	0.062	0.000
DEFLECTION DUE TO SUPERIMPOSED D.L. (FT.)**	0.000	-0.022	-0.044	-0.065	-0.084	-0.102	-0.117	-0.129	-0.138	-0.144	-0.145	-0.144	-0.138	-0.129	-0.117	-0.102	-0.084	-0.065	-0.044	-0.022	0.000
FINAL CAMBER (IN.)	0"	1/2"	7/8"	1 3/16"	1 7/16"	1 5/8"	1 13/16"	1 15/16"	2"	2 1/16"	2 1/16"	2 1/16"	2"	1 15/16"	1 13/16"	1 5/8"	1 7/16"	1 3/16"	7/8"	1/2"	0"
SPAN 3	GIRDER POSITION 5																				
CAMBER (GIRDER ALONE IN PLACE) (FT.)	0.000	0.050	0.094	0.132	0.165	0.193	0.216	0.233	0.245	0.253	0.255	0.253	0.245	0.233	0.216	0.193	0.165	0.132	0.094	0.050	0.000
DEFLECTION DUE TO SUPERIMPOSED D.L. (FT.)**	0.000	-0.019	-0.039	-0.058	-0.075	-0.091	-0.104	-0.115	-0.123	-0.128	-0.129	-0.128	-0.123	-0.115	-0.104	-0.091	-0.075	-0.058	-0.039	-0.019	0.000
FINAL CAMBER (IN.)	0"	3/8"	11/16"	7/8"	1 1/16"	1 1/4"	1 5/16"	1 7/16"	1 1/2"	1 1/2"	1 1/2"	1 1/2"	1 1/2"	1 7/16"	1 5/16"	1 1/4"	1 1/16"	7/8"	11/16"	3/8"	0"
SPAN 3	GIRDER POSITION 6																				
CAMBER (GIRDER ALONE IN PLACE) (FT.)	0.000	0.048	0.090	0.127	0.159	0.186	0.208	0.225	0.238	0.245	0.247	0.245	0.238	0.225	0.208	0.186	0.159	0.127	0.090	0.048	0.000
DEFLECTION DUE TO SUPERIMPOSED D.L. (FT.)**	0.000	-0.016	-0.032	-0.048	-0.063	-0.076	-0.087	-0.096	-0.102	-0.106	-0.108	-0.106	-0.102	-0.096	-0.087	-0.076	-0.063	-0.048	-0.032	-0.016	0.000
FINAL CAMBER (IN.)	0"	3/8"	11/16"	15/16"	1 3/16"	1 5/16"	1 7/16"	1 9/16"	1 5/8"	1 11/16"	1 11/16"	1 11/16"	1 5/8"	1 9/16"	1 7/16"	1 5/16"	1 3/16"	15/16"	11/16"	3/8"	0"

** INCLUDES FUTURE WEARING SURFACE IN SUPERIMPOSED DEAD LOAD

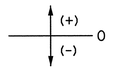

CAMBER SIGN CONVENTION

PROJECT NO. U-2524C

GUILFORD COUNTY

STATION: POT 407+85.82 -L-
= POT 29+79.72 -Y4-

SHEET 1 OF 7

STATE OF NORTH CAROLINA
DEPARTMENT OF TRANSPORTATION
RALEIGH

PRESTRESSED CONCRETE MODIFIED BULB TEE GIRDER CAMBERS

-RIGHT LANE-

REVISIONS						SHEET NO.
NO.	BY:	DATE:	NO.	BY:	DATE:	S-377
1			3			TOTAL SHEETS
2			4			836

STV / Ralph Whitehead Associates, Inc.
1000 West Morehead St., Ste. 200
Charlotte, NC 28208
NC License No. F-0991

DRAWN BY : CLG DATE : 3-13
CHECKED BY : TRL DATE : 5-13

DESIGN ENGINEER OF RECORD: M. ROBBINS DATE : 5-13

6/6/2013 4:41:39 PM R:\ustation\Finals\PCMBT Girder Cambers Sheet 1 of 7.dgn

UNIT B CAMBER AND DEFLECTIONS TABLE

SPAN 4 — GIRDER POSITION 1

TWENTIETH POINTS	0.00	0.05	0.10	0.15	0.20	0.25	0.30	0.35	0.40	0.45	0.50	0.55	0.60	0.65	0.70	0.75	0.80	0.85	0.90	0.95	1.00
CAMBER (GIRDER ALONE IN PLACE) (FT.)	0.000	0.048	0.091	0.129	0.161	0.188	0.211	0.228	0.240	0.247	0.250	0.247	0.240	0.228	0.211	0.188	0.161	0.129	0.091	0.048	0.000
DEFLECTION DUE TO SUPERIMPOSED D.L. (FT.)**	0.000	-0.017	-0.034	-0.051	-0.066	-0.080	-0.092	-0.102	-0.109	-0.113	-0.115	-0.113	-0.109	-0.102	-0.092	-0.080	-0.066	-0.051	-0.034	-0.017	0.000
FINAL CAMBER (IN.)	0″	3/8″	11/16″	15/16″	1 1/8″	1 5/16″	1 7/16″	1 1/2″	1 9/16″	1 5/8″	1 5/8″	1 5/8″	1 9/16″	1 1/2″	1 7/16″	1 5/16″	1 1/8″	15/16″	11/16″	3/8″	0″

SPAN 4 — GIRDER POSITION 2

CAMBER (GIRDER ALONE IN PLACE) (FT.)	0.000	0.044	0.084	0.118	0.148	0.173	0.194	0.210	0.222	0.228	0.231	0.228	0.222	0.210	0.194	0.173	0.148	0.118	0.084	0.044	0.000
DEFLECTION DUE TO SUPERIMPOSED D.L. (FT.)**	0.000	-0.013	-0.026	-0.039	-0.050	-0.061	-0.070	-0.077	-0.083	-0.086	-0.087	-0.086	-0.083	-0.077	-0.070	-0.061	-0.050	-0.039	-0.026	-0.013	0.000
FINAL CAMBER (IN.)	0″	3/8″	11/16″	15/16″	1 3/16″	1 3/8″	1 1/2″	1 9/16″	1 11/16″	1 11/16″	1 3/4″	1 11/16″	1 11/16″	1 9/16″	1 1/2″	1 3/8″	1 3/16″	15/16″	11/16″	3/8″	0″

SPAN 4 — GIRDER POSITION 3

CAMBER (GIRDER ALONE IN PLACE) (FT.)	0.000	0.040	0.075	0.106	0.133	0.156	0.175	0.190	0.200	0.207	0.209	0.207	0.200	0.190	0.175	0.156	0.133	0.106	0.075	0.040	0.000
DEFLECTION DUE TO SUPERIMPOSED D.L. (FT.)**	0.000	-0.009	-0.018	-0.027	-0.036	-0.043	-0.049	-0.055	-0.058	-0.061	-0.062	-0.061	-0.058	-0.055	-0.049	-0.043	-0.036	-0.027	-0.018	-0.009	0.000
FINAL CAMBER (IN.)	0″	3/8″	11/16″	15/16″	1 3/16″	1 3/8″	1 1/2″	1 5/8″	1 11/16″	1 3/4″	1 3/4″	1 3/4″	1 11/16″	1 5/8″	1 1/2″	1 3/8″	1 3/16″	15/16″	11/16″	3/8″	0″

SPAN 4 — GIRDER POSITION 4

CAMBER (GIRDER ALONE IN PLACE) (FT.)	0.000	0.018	0.034	0.048	0.059	0.068	0.076	0.081	0.085	0.088	0.088	0.088	0.085	0.081	0.076	0.068	0.059	0.048	0.034	0.018	0.000
DEFLECTION DUE TO SUPERIMPOSED D.L. (FT.)**	0.000	-0.007	-0.013	-0.020	-0.026	-0.031	-0.036	-0.039	-0.042	-0.044	-0.044	-0.044	-0.042	-0.039	-0.036	-0.031	-0.026	-0.020	-0.013	-0.007	0.000
FINAL CAMBER (IN.)	0″	1/8″	1/4″	5/16″	3/8″	7/16″	1/2″	1/2″	1/2″	1/2″	1/2″	1/2″	1/2″	1/2″	1/2″	7/16″	3/8″	5/16″	1/4″	1/8″	0″

SPAN 4 — GIRDER POSITION 5

CAMBER (GIRDER ALONE IN PLACE) (FT.)	0.000	0.016	0.031	0.043	0.053	0.062	0.069	0.074	0.078	0.080	0.081	0.080	0.078	0.074	0.069	0.062	0.053	0.043	0.031	0.016	0.000
DEFLECTION DUE TO SUPERIMPOSED D.L. (FT.)**	0.000	-0.005	-0.009	-0.014	-0.018	-0.022	-0.025	-0.027	-0.029	-0.031	-0.031	-0.031	-0.029	-0.027	-0.025	-0.022	-0.018	-0.014	-0.009	-0.005	0.000
FINAL CAMBER (IN.)	0″	1/8″	1/4″	3/8″	7/16″	1/2″	1/2″	9/16″	9/16″	9/16″	5/8″	9/16″	9/16″	9/16″	1/2″	1/2″	7/16″	3/8″	1/4″	1/8″	0″

SPAN 4 — GIRDER POSITION 6

CAMBER (GIRDER ALONE IN PLACE) (FT.)	0.000	0.014	0.027	0.037	0.046	0.054	0.060	0.065	0.068	0.070	0.071	0.070	0.068	0.065	0.060	0.054	0.046	0.037	0.027	0.014	0.000
DEFLECTION DUE TO SUPERIMPOSED D.L. (FT.)**	0.000	-0.003	-0.006	-0.009	-0.011	-0.014	-0.016	-0.018	-0.019	-0.020	-0.020	-0.020	-0.019	-0.018	-0.016	-0.014	-0.011	-0.009	-0.006	-0.003	0.000
FINAL CAMBER (IN.)	0″	1/8″	1/4″	5/16″	7/16″	1/2″	9/16″	9/16″	5/8″	5/8″	5/8″	5/8″	5/8″	9/16″	9/16″	1/2″	7/16″	5/16″	1/4″	1/8″	0″

UNIT C CAMBER AND DEFLECTIONS TABLE

SPAN 6A — GIRDER POSITION 1-4

TENTH POINTS	0.00	0.10	0.20	0.30	0.40	0.50	0.60	0.70	0.80	0.90	1.00
CAMBER (GIRDER ALONE IN PLACE) (FT.)	0.000	0.031	0.054	0.070	0.079	0.082	0.079	0.070	0.054	0.031	0.000
DEFLECTION DUE TO SUPERIMPOSED D.L. (FT.)**	0.000	-0.009	-0.019	-0.026	-0.031	-0.032	-0.031	-0.026	-0.019	-0.009	0.000
FINAL CAMBER (IN.)	0″	1/4″	7/16″	1/2″	9/16″	9/16″	9/16″	1/2″	7/16″	1/4″	0″

SPAN 6A — GIRDER POSITION 5 & 6

CAMBER (GIRDER ALONE IN PLACE) (FT.)	0.000	0.057	0.101	0.131	0.148	0.154	0.148	0.131	0.101	0.057	0.000
DEFLECTION DUE TO SUPERIMPOSED D.L. (FT.)**	0.000	-0.019	-0.036	-0.051	-0.060	-0.063	-0.060	-0.051	-0.036	-0.019	0.000
FINAL CAMBER (IN.)	0″	7/16″	3/4″	15/16″	1 1/16″	1 1/16″	1 1/16″	15/16″	3/4″	7/16″	0″

SPAN 6B — GIRDER POSITION 1-3

CAMBER (GIRDER ALONE IN PLACE) (FT.)	0.000	0.031	0.054	0.069	0.078	0.081	0.078	0.069	0.054	0.031	0.000
DEFLECTION DUE TO SUPERIMPOSED D.L. (FT.)**	0.000	-0.009	-0.019	-0.026	-0.031	-0.032	-0.031	-0.026	-0.019	-0.009	0.000
FINAL CAMBER (IN.)	0″	1/4″	7/16″	1/2″	9/16″	9/16″	9/16″	1/2″	7/16″	1/4″	0″

** INCLUDES FUTURE WEARING SURFACE IN SUPERIMPOSED DEAD LOAD

CAMBER SIGN CONVENTION

PROJECT NO. U-2524C

GUILFORD COUNTY

STATION: POT 407+85.82 -L-
= POT 29+79.72 -Y4-

SHEET 2 OF 7

STATE OF NORTH CAROLINA
DEPARTMENT OF TRANSPORTATION
RALEIGH

PRESTRESSED CONCRETE MODIFIED BULB TEE GIRDER CAMBERS

-RIGHT LANE-

NORTH CAROLINA PROFESSIONAL SEAL 28479 ENGINEER KEVIN G. BAILEY 6-7-13

STV / Ralph Whitehead Associates, Inc.
1000 West Morehead St., Ste. 200
Charlotte, NC 28208
NC License No. F-0991

REVISIONS						SHEET NO.
NO.	BY:	DATE:	NO.	BY:	DATE:	S-378
1			3			TOTAL SHEETS
2			4			836

DRAWN BY : CLG DATE : 3-13
CHECKED BY : TRL DATE : 5-13

DESIGN ENGINEER OF RECORD: M. ROBBINS DATE : 5-13

6/6/2013 4:41:40 PM R:\ustation\Finals\PCMBT Girder Cambers Sheet 2 of 7.dgn

UNIT C CAMBER AND DEFLECTIONS TABLE

SPAN 6B — GIRDER POSITION 4 & 5

TENTH POINTS	0.00	0.10	0.20	0.30	0.40	0.50	0.60	0.70	0.80	0.90	1.00
CAMBER (GIRDER ALONE IN PLACE) (FT.)	0.000	0.057	0.100	0.130	0.147	0.152	0.147	0.130	0.100	0.057	0.000
DEFLECTION DUE TO SUPERIMPOSED D.L. (FT.)**	0.000	-0.018	-0.035	-0.048	-0.057	-0.060	-0.057	-0.048	-0.035	-0.018	0.000
FINAL CAMBER (IN.)	0"	1/2"	3/4"	1"	1 1/16"	1 1/8"	1 1/16"	1"	3/4"	1/2"	0"

SPAN 6B — GIRDER POSITION 6

TWENTIETH POINTS	0.00	0.05	0.10	0.15	0.20	0.25	0.30	0.35	0.40	0.45	0.50	0.55	0.60	0.65	0.70	0.75	0.80	0.85	0.90	0.95	1.00
CAMBER (GIRDER ALONE IN PLACE) (FT.)	0.000	0.056	0.106	0.149	0.187	0.219	0.245	0.266	0.280	0.289	0.292	0.289	0.280	0.266	0.245	0.219	0.187	0.149	0.106	0.056	0.000
DEFLECTION DUE TO SUPERIMPOSED D.L. (FT.)**	0.000	-0.015	-0.030	-0.045	-0.059	-0.071	-0.082	-0.091	-0.097	-0.101	-0.102	-0.101	-0.097	-0.091	-0.082	-0.071	-0.059	-0.045	-0.030	-0.015	0.000
FINAL CAMBER (IN.)	0"	1/2"	7/8"	1 1/4"	1 9/16"	1 3/4"	1 15/16"	2 1/8"	2 3/16"	2 1/4"	2 1/4"	2 1/4"	2 3/16"	2 1/8"	1 15/16"	1 3/4"	1 9/16"	1 1/4"	7/8"	1/2"	0"

SPAN 7 — GIRDER POSITION 1-6

CAMBER (GIRDER ALONE IN PLACE) (FT.)	0.000	0.060	0.112	0.159	0.199	0.232	0.260	0.281	0.296	0.305	0.308	0.305	0.296	0.281	0.260	0.232	0.199	0.159	0.112	0.060	0.000
DEFLECTION DUE TO SUPERIMPOSED D.L. (FT.)**	0.000	-0.019	-0.038	-0.057	-0.074	-0.090	-0.103	-0.113	-0.121	-0.126	-0.128	-0.126	-0.121	-0.113	-0.103	-0.090	-0.074	-0.057	-0.038	-0.019	0.000
FINAL CAMBER (IN.)	0"	1/2"	7/8"	1 1/4"	1 1/2"	1 11/16"	1 7/8"	2"	2 1/8"	2 1/8"	2 3/16"	2 1/8"	2 1/8"	2"	1 7/8"	1 11/16"	1 1/2"	1 1/4"	7/8"	1/2"	0"

UNIT D CAMBER AND DEFLECTIONS TABLE

SPAN 8-11 — GIRDER POSITION 1

TWENTIETH POINTS	0.00	0.05	0.10	0.15	0.20	0.25	0.30	0.35	0.40	0.45	0.50	0.55	0.60	0.65	0.70	0.75	0.80	0.85	0.90	0.95	1.00
CAMBER (GIRDER ALONE IN PLACE) (FT.)	0.000	0.080	0.153	0.219	0.276	0.326	0.367	0.399	0.422	0.435	0.440	0.435	0.422	0.399	0.367	0.326	0.276	0.219	0.153	0.080	0.000
DEFLECTION DUE TO SUPERIMPOSED D.L. (FT.)**	0.000	-0.041	-0.081	-0.120	-0.155	-0.187	-0.214	-0.236	-0.252	-0.262	-0.265	-0.262	-0.252	-0.236	-0.214	-0.187	-0.155	-0.120	-0.081	-0.041	0.000
FINAL CAMBER (IN.)	0"	1/2"	7/8"	1 3/16"	1 7/16"	1 11/16"	1 13/16"	1 15/16"	2 1/16"	2 1/16"	2 1/8"	2 1/16"	2 1/16"	1 15/16"	1 13/16"	1 11/16"	1 7/16"	1 3/16"	7/8"	1/2"	0"

SPAN 8-11 — GIRDER POSITION 2, 3 & 5-7

CAMBER (GIRDER ALONE IN PLACE) (FT.)	0.000	0.080	0.153	0.219	0.276	0.326	0.367	0.399	0.422	0.435	0.440	0.435	0.422	0.399	0.367	0.326	0.276	0.219	0.153	0.080	0.000
DEFLECTION DUE TO SUPERIMPOSED D.L. (FT.)**	0.000	-0.037	-0.074	-0.109	-0.141	-0.170	-0.195	-0.215	-0.230	-0.239	-0.242	-0.239	-0.230	-0.215	-0.195	-0.170	-0.141	-0.109	-0.074	-0.037	0.000
FINAL CAMBER (IN.)	0"	1/2"	15/16"	1 5/16"	1 5/8"	1 7/8"	2 1/16"	2 3/16"	2 5/16"	2 3/8"	2 3/8"	2 3/8"	2 5/16"	2 3/16"	2 1/16"	1 7/8"	1 5/8"	1 5/16"	1 5/16"	1/2"	0"

SPAN 8-11 — GIRDER POSITION 4

CAMBER (GIRDER ALONE IN PLACE) (FT.)	0.000	0.080	0.153	0.219	0.276	0.326	0.367	0.399	0.422	0.435	0.440	0.435	0.422	0.399	0.367	0.326	0.276	0.219	0.153	0.080	0.000
DEFLECTION DUE TO SUPERIMPOSED D.L. (FT.)**	0.000	-0.035	-0.069	-0.103	-0.133	-0.161	-0.184	-0.203	-0.217	-0.226	-0.228	-0.226	-0.217	-0.203	-0.184	-0.161	-0.133	-0.103	-0.069	-0.035	0.000
FINAL CAMBER (IN.)	0"	9/16"	1"	1 3/8"	1 11/16"	2"	2 3/16"	2 3/8"	2 7/16"	2 1/2"	2 9/16"	2 1/2"	2 7/16"	2 3/8"	2 3/16"	2"	1 11/16"	1 3/8"	1"	9/16"	0"

** INCLUDES FUTURE WEARING SURFACE IN SUPERIMPOSED DEAD LOAD

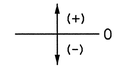

CAMBER SIGN CONVENTION

PROJECT NO. U-2524C

GUILFORD COUNTY

STATION: POT 407+85.82 -L-
= POT 29+79.72 -Y4-

SHEET 3 OF 7

STATE OF NORTH CAROLINA
DEPARTMENT OF TRANSPORTATION
RALEIGH

PRESTRESSED CONCRETE MODIFIED BULB TEE GIRDER CAMBERS

-RIGHT LANE-

REVISIONS						SHEET NO.
NO.	BY:	DATE:	NO.	BY:	DATE:	S-379
1			3			TOTAL SHEETS
2			4			836

STV / Ralph Whitehead Associates, Inc.
1000 West Morehead St., Ste. 200
Charlotte, NC 28208
NC License No. F-0991

DRAWN BY : CLG DATE : 3-13
CHECKED BY : TRL DATE : 5-13

DESIGN ENGINEER OF RECORD: M. ROBBINS DATE : 5-13

6/6/2013 4:41:41 PM R:\ustation\Finals\PCMBT Girder Cambers Sheet 3 of 7.dgn

UNIT E CAMBER AND DEFLECTIONS TABLE

SPANS 12-13 GIRDER POSITION 1 & 7

TWENTIETH	0.00	0.05	0.10	0.15	0.20	0.25	0.30	0.35	0.40	0.45	0.50	0.55	0.60	0.65	0.70	0.75	0.80	0.85	0.90	0.95	1.00
CAMBER (GIRDER ALONE IN PLACE) (FT.)	0.000	0.083	0.159	0.226	0.285	0.335	0.377	0.409	0.432	0.446	0.451	0.446	0.432	0.409	0.377	0.335	0.285	0.226	0.159	0.083	0.000
DEFLECTION DUE TO SUPERIMPOSED D.L. (FT.)**	0.000	-0.037	-0.074	-0.110	-0.143	-0.173	-0.198	-0.218	-0.233	-0.242	-0.245	-0.242	-0.233	-0.218	-0.198	-0.173	-0.143	-0.110	-0.074	-0.037	0.000
FINAL CAMBER (IN.)	0"	9/16"	1"	1 3/8"	1 11/16"	1 15/16"	2 1/8"	2 5/16"	2 3/8"	2 7/16"	2 7/16"	2 7/16"	2 3/8"	2 5/16"	2 1/8"	1 15/16"	1 11/16"	1 3/8"	1"	9/16"	0"

SPANS 12-13 GIRDER POSITION 2 - 6

CAMBER (GIRDER ALONE IN PLACE) (FT.)	0.000	0.083	0.159	0.226	0.285	0.335	0.377	0.409	0.432	0.446	0.451	0.446	0.432	0.409	0.377	0.335	0.285	0.226	0.159	0.083	0.000
DEFLECTION DUE TO SUPERIMPOSED D.L. (FT.)**	0.000	-0.034	-0.068	-0.101	-0.131	-0.158	-0.181	-0.200	-0.213	-0.221	-0.224	-0.221	-0.213	-0.200	-0.181	-0.158	-0.131	-0.101	-0.068	-0.034	0.000
FINAL CAMBER (IN.)	0"	9/16"	1 1/16"	1 1/2"	1 7/8"	2 1/8"	2 3/8"	2 1/2"	2 5/8"	2 11/16"	2 11/16"	2 11/16"	2 5/8"	2 1/2"	2 3/8"	2 1/8"	1 7/8"	1 1/2"	1 1/16"	9/16"	0"

SPAN 14 GIRDER POSITION 1 & 7

CAMBER (GIRDER ALONE IN PLACE) (FT.)	0.000	0.083	0.158	0.225	0.284	0.333	0.375	0.407	0.430	0.444	0.448	0.444	0.430	0.407	0.375	0.333	0.284	0.225	0.158	0.083	0.000
DEFLECTION DUE TO SUPERIMPOSED D.L. (FT.)**	0.000	-0.037	-0.074	-0.109	-0.141	-0.170	-0.195	-0.215	-0.230	-0.239	-0.242	-0.239	-0.230	-0.215	-0.195	-0.170	-0.141	-0.109	-0.074	-0.037	0.000
FINAL CAMBER (IN.)	0"	9/16"	1"	1 3/8"	1 11/16"	1 15/16"	2 1/8"	2 5/16"	2 3/8"	2 7/16"	2 1/2"	2 7/16"	2 3/8"	2 5/16"	2 1/8"	1 15/16"	1 11/16"	1 3/8"	1"	9/16"	0"

SPAN 14 GIRDER POSITION 2 - 6

CAMBER (GIRDER ALONE IN PLACE) (FT.)	0.000	0.083	0.158	0.225	0.284	0.333	0.375	0.407	0.430	0.444	0.448	0.444	0.430	0.407	0.375	0.333	0.284	0.225	0.158	0.083	0.000
DEFLECTION DUE TO SUPERIMPOSED D.L. (FT.)**	0.000	-0.034	-0.068	-0.101	-0.131	-0.158	-0.181	-0.200	-0.213	-0.222	-0.224	-0.222	-0.213	-0.200	-0.181	-0.158	-0.131	-0.101	-0.068	-0.034	0.000
FINAL CAMBER (IN.)	0"	9/16"	1 1/16"	1 1/2"	1 13/16"	2 1/8"	2 5/16"	2 1/2"	2 5/8"	2 11/16"	2 11/16"	2 11/16"	2 5/8"	2 1/2"	2 5/16"	2 1/8"	1 13/16"	1 1/2"	1 1/16"	9/16"	0"

** INCLUDES FUTURE WEARING SURFACE IN SUPERIMPOSED DEAD LOAD

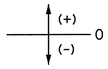

CAMBER SIGN CONVENTION

SPAN 15 CAMBER AND DEFLECTIONS TABLE

SPAN 15 GIRDER POSITION 1

TWENTIETH	0.00	0.05	0.10	0.15	0.20	0.25	0.30	0.35	0.40	0.45	0.50	0.55	0.60	0.65	0.70	0.75	0.80	0.85	0.90	0.95	1.00
CAMBER (GIRDER ALONE IN PLACE) (FT.)	0.000	0.058	0.112	0.160	0.204	0.242	0.273	0.298	0.316	0.326	0.330	0.326	0.316	0.298	0.273	0.242	0.204	0.160	0.112	0.058	0.000
DEFLECTION DUE TO SUPERIMPOSED D.L. (FT.)**	0.000	-0.028	-0.057	-0.084	-0.110	-0.133	-0.153	-0.169	-0.181	-0.188	-0.190	-0.188	-0.181	-0.169	-0.153	-0.133	-0.110	-0.085	-0.057	-0.028	0.000
FINAL CAMBER (IN.)	0"	3/8"	11/16"	15/16"	1 1/8"	1 5/16"	1 7/16"	1 9/16"	1 5/8"	1 5/8"	1 11/16"	1 5/8"	1 5/8"	1 9/16"	1 7/16"	1 5/16"	1 1/8"	7/8"	11/16"	3/8"	0"

SPAN 15 GIRDER POSITION 2

CAMBER (GIRDER ALONE IN PLACE) (FT.)	0.000	0.058	0.112	0.160	0.204	0.242	0.273	0.298	0.316	0.326	0.330	0.326	0.316	0.298	0.273	0.242	0.204	0.160	0.112	0.058	0.000
DEFLECTION DUE TO SUPERIMPOSED D.L. (FT.)**	0.000	-0.027	-0.054	-0.080	-0.105	-0.127	-0.146	-0.161	-0.172	-0.179	-0.181	-0.179	-0.172	-0.161	-0.146	-0.127	-0.105	-0.080	-0.054	-0.027	0.000
FINAL CAMBER (IN.)	0"	3/8"	11/16"	15/16"	1 3/16"	1 3/8"	1 1/2"	1 5/8"	1 3/4"	1 3/4"	1 13/16"	1 3/4"	1 3/4"	1 5/8"	1 1/2"	1 3/8"	1 3/16"	15/16"	11/16"	3/8"	0"

SPAN 15 GIRDER POSITION 3

CAMBER (GIRDER ALONE IN PLACE) (FT.)	0.000	0.058	0.112	0.160	0.204	0.242	0.273	0.298	0.316	0.326	0.330	0.326	0.316	0.298	0.273	0.242	0.204	0.160	0.112	0.058	0.000
DEFLECTION DUE TO SUPERIMPOSED D.L. (FT.)**	0.000	-0.025	-0.049	-0.073	-0.096	-0.116	-0.133	-0.147	-0.158	-0.164	-0.166	-0.164	-0.158	-0.148	-0.134	-0.117	-0.097	-0.074	-0.050	-0.025	0.000
FINAL CAMBER (IN.)	0"	3/8"	3/4"	1 1/16"	1 5/16"	1 1/2"	1 11/16"	1 13/16"	1 7/8"	1 15/16"	1 15/16"	1 15/16"	1 7/8"	1 13/16"	1 11/16"	1 1/2"	1 5/16"	1 1/16"	3/4"	3/8"	0"

SPAN 15 GIRDER POSITION 4

CAMBER (GIRDER ALONE IN PLACE) (FT.)	0.000	0.058	0.112	0.161	0.204	0.242	0.273	0.298	0.316	0.326	0.330	0.326	0.316	0.298	0.273	0.242	0.204	0.160	0.112	0.058	0.000
DEFLECTION DUE TO SUPERIMPOSED D.L. (FT.)**	0.000	-0.022	-0.044	-0.065	-0.085	-0.103	-0.118	-0.131	-0.140	-0.146	-0.148	-0.146	-0.141	-0.132	-0.120	-0.105	-0.087	-0.067	-0.045	-0.022	0.000
FINAL CAMBER (IN.)	0"	7/16"	13/16"	1 1/8"	1 7/16"	1 11/16"	1 7/8"	2"	2 1/8"	2 3/16"	2 3/16"	2 3/16"	2 1/8"	2"	1 13/16"	1 5/8"	1 3/8"	1 1/8"	13/16"	7/16"	0"

SPAN 15 GIRDER POSITION 5

CAMBER (GIRDER ALONE IN PLACE) (FT.)	0.000	0.058	0.112	0.161	0.204	0.242	0.273	0.298	0.316	0.327	0.331	0.327	0.316	0.298	0.273	0.242	0.204	0.161	0.112	0.058	0.000
DEFLECTION DUE TO SUPERIMPOSED D.L. (FT.)**	0.000	-0.022	-0.044	-0.065	-0.085	-0.103	-0.119	-0.131	-0.141	-0.147	-0.149	-0.147	-0.142	-0.133	-0.121	-0.105	-0.087	-0.067	-0.045	-0.023	0.000
FINAL CAMBER (IN.)	0"	7/16"	13/16"	1 1/8"	1 7/16"	1 11/16"	1 7/8"	2"	2 1/8"	2 3/16"	2 3/16"	2 3/16"	2 1/16"	2"	1 13/16"	1 5/8"	1 3/8"	1 1/8"	13/16"	7/16"	0"

NORTH CAROLINA PROFESSIONAL ENGINEER SEAL 28479 ENGINEER KEVIN G. BAILEY 6-7-13

PROJECT NO. U-2524C

GUILFORD COUNTY

STATION: POT 407+85.82 -L-
= POT 29+79.72 -Y4-

SHEET 4 OF 7

STATE OF NORTH CAROLINA
DEPARTMENT OF TRANSPORTATION
RALEIGH

PRESTRESSED CONCRETE MODIFIED BULB TEE GIRDER CAMBERS

-RIGHT LANE-

REVISIONS						SHEET NO.
NO.	BY:	DATE:	NO.	BY:	DATE:	S-380
1			3			TOTAL SHEETS
2			4			836

DRAWN BY : CLG DATE : 3-13
CHECKED BY : TRL DATE : 5-13

DESIGN ENGINEER OF RECORD: M. ROBBINS DATE : 5-13

STV/ Ralph Whitehead Associates, Inc.
1000 West Morehead St., Ste. 200
Charlotte, NC 28208
NC License No. F-0991

6/6/2013 10:45:29 PM R:\ustation\Finals\PCMBT Girder Cambers Sheet 4 of 7.dgn

SPAN 15 CAMBER AND DEFLECTIONS TABLE

SPAN 15	GIRDER POSITION 6																				
TWENTIETH	0.00	0.05	0.10	0.15	0.20	0.25	0.30	0.35	0.40	0.45	0.50	0.55	0.60	0.65	0.70	0.75	0.80	0.85	0.90	0.95	1.00
CAMBER (GIRDER ALONE IN PLACE) (FT.)	0.000	0.058	0.112	0.161	0.205	0.242	0.274	0.299	0.317	0.328	0.331	0.328	0.317	0.299	0.274	0.242	0.205	0.161	0.112	0.058	0.000
DEFLECTION DUE TO SUPERIMPOSED D.L. (FT.)**	0.000	-0.022	-0.045	-0.067	-0.087	-0.105	-0.121	-0.134	-0.143	-0.149	-0.152	-0.150	-0.144	-0.135	-0.123	-0.107	-0.089	-0.068	-0.046	-0.023	0.000
FINAL CAMBER (IN.)	0"	7/16"	13/16"	1 1/8"	1 7/16"	1 5/8"	1 13/16"	2"	2 1/16"	2 1/8"	2 1/8"	2 1/8"	2 1/16"	1 15/16"	1 13/16"	1 5/8"	1 3/8"	1 1/8"	13/16"	7/16"	0"
SPAN 15	GIRDER POSITION 7																				
CAMBER (GIRDER ALONE IN PLACE) (FT.)	0.000	0.058	0.112	0.162	0.205	0.243	0.275	0.300	0.318	0.328	0.332	0.328	0.318	0.300	0.275	0.243	0.205	0.161	0.112	0.058	0.000
DEFLECTION DUE TO SUPERIMPOSED D.L. (FT.)**	0.000	-0.023	-0.047	-0.070	-0.091	-0.110	-0.127	-0.141	-0.150	-0.157	-0.159	-0.157	-0.151	-0.142	-0.129	-0.112	-0.093	-0.071	-0.048	-0.024	0.000
FINAL CAMBER (IN.)	0"	7/16"	3/4"	1 1/8"	1 3/8"	1 5/8"	1 3/4"	1 15/16"	2"	2 1/16"	2 1/16"	2 1/16"	2"	1 7/8"	1 3/4"	1 9/16"	1 3/8"	1 1/16"	3/4"	7/16"	0"
SPAN 15	GIRDER POSITION 8																				
CAMBER (GIRDER ALONE IN PLACE) (FT.)	0.000	0.059	0.113	0.162	0.206	0.244	0.276	0.301	0.319	0.330	0.333	0.330	0.319	0.301	0.276	0.244	0.206	0.162	0.113	0.059	0.000
DEFLECTION DUE TO SUPERIMPOSED D.L. (FT.)**	0.000	-0.026	-0.052	-0.077	-0.101	-0.122	-0.140	-0.155	-0.166	-0.173	-0.175	-0.173	-0.167	-0.156	-0.142	-0.124	-0.102	-0.078	-0.053	-0.026	0.000
FINAL CAMBER (IN.)	0"	3/8"	3/4"	1"	1 1/4"	1 7/16"	1 5/8"	1 3/4"	1 13/16"	1 7/8"	1 7/8"	1 7/8"	1 13/16"	1 3/4"	1 5/8"	1 7/16"	1 1/4"	1"	3/4"	3/8"	0"
SPAN 15	GIRDER POSITION 9																				
CAMBER (GIRDER ALONE IN PLACE) (FT.)	0.000	0.059	0.113	0.163	0.207	0.245	0.277	0.302	0.320	0.331	0.335	0.331	0.320	0.302	0.277	0.245	0.207	0.163	0.113	0.059	0.000
DEFLECTION DUE TO SUPERIMPOSED D.L. (FT.)**	0.000	-0.029	-0.058	-0.086	-0.112	-0.136	-0.156	-0.172	-0.184	-0.192	-0.194	-0.192	-0.185	-0.173	-0.157	-0.137	-0.113	-0.087	-0.059	-0.029	0.000
FINAL CAMBER (IN.)	0"	3/8"	11/16"	15/16"	1 1/8"	1 5/16"	1 7/16"	1 9/16"	1 5/8"	1 11/16"	1 11/16"	1 11/16"	1 5/8"	1 9/16"	1 7/16"	1 5/16"	1 1/8"	15/16"	5/8"	3/8"	0"

** INCLUDES FUTURE WEARING SURFACE IN SUPERIMPOSED DEAD LOAD

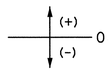

CAMBER SIGN CONVENTION

SPAN 16 CAMBER AND DEFLECTIONS TABLE

SPAN 16	GIRDER POSITION 1																				
TWENTIETH	0.00	0.05	0.10	0.15	0.20	0.25	0.30	0.35	0.40	0.45	0.50	0.55	0.60	0.65	0.70	0.75	0.80	0.85	0.90	0.95	1.00
CAMBER (GIRDER ALONE IN PLACE) (FT.)	0.000	0.060	0.116	0.166	0.210	0.248	0.280	0.304	0.322	0.333	0.337	0.333	0.322	0.304	0.280	0.248	0.210	0.166	0.116	0.061	0.000
DEFLECTION DUE TO SUPERIMPOSED D.L. (FT.)**	0.000	-0.027	-0.054	-0.080	-0.104	-0.126	-0.144	-0.159	-0.171	-0.177	-0.180	-0.177	-0.171	-0.160	-0.145	-0.126	-0.104	-0.080	-0.054	-0.027	0.000
FINAL CAMBER (IN.)	0"	3/8"	3/4"	1 1/16"	1 1/4"	1 7/16"	1 5/8"	1 3/4"	1 13/16"	1 7/8"	1 7/8"	1 7/8"	1 13/16"	1 3/4"	1 5/8"	1 7/16"	1 1/4"	1 1/16"	3/4"	3/8"	0"
SPAN 16	GIRDER POSITION 2																				
CAMBER (GIRDER ALONE IN PLACE) (FT.)	0.000	0.060	0.116	0.166	0.210	0.248	0.280	0.304	0.322	0.333	0.337	0.333	0.322	0.304	0.280	0.248	0.210	0.166	0.116	0.061	0.000
DEFLECTION DUE TO SUPERIMPOSED D.L. (FT.)**	0.000	-0.024	-0.049	-0.073	-0.095	-0.115	-0.132	-0.146	-0.156	-0.162	-0.164	-0.162	-0.156	-0.146	-0.132	-0.115	-0.095	-0.073	-0.049	-0.025	0.000
FINAL CAMBER (IN.)	0"	7/16"	13/16"	1 1/8"	1 3/8"	1 5/8"	1 3/4"	1 7/8"	2"	2 1/16"	2 1/16"	2 1/16"	2"	1 7/8"	1 3/4"	1 9/16"	1 3/8"	1 1/8"	13/16"	7/16"	0"
SPAN 16	GIRDER POSITION 3																				
CAMBER (GIRDER ALONE IN PLACE) (FT.)	0.000	0.060	0.116	0.166	0.210	0.248	0.280	0.304	0.322	0.333	0.337	0.333	0.322	0.304	0.280	0.248	0.210	0.166	0.116	0.061	0.000
DEFLECTION DUE TO SUPERIMPOSED D.L. (FT.)**	0.000	-0.024	-0.048	-0.071	-0.093	-0.113	-0.130	-0.143	-0.153	-0.159	-0.161	-0.159	-0.153	-0.143	-0.130	-0.113	-0.094	-0.072	-0.049	-0.024	0.000
FINAL CAMBER (IN.)	0"	7/16"	13/16"	1 1/8"	1 3/8"	1 5/8"	1 13/16"	1 15/16"	2"	2 1/16"	2 1/8"	2 1/16"	2"	1 15/16"	1 13/16"	1 5/8"	1 3/8"	1 1/8"	13/16"	7/16"	0"
SPAN 16	GIRDER POSITION 4																				
CAMBER (GIRDER ALONE IN PLACE) (FT.)	0.000	0.060	0.116	0.166	0.210	0.248	0.280	0.304	0.322	0.333	0.337	0.333	0.322	0.304	0.280	0.248	0.210	0.166	0.116	0.061	0.000
DEFLECTION DUE TO SUPERIMPOSED D.L. (FT.)**	0.000	-0.023	-0.046	-0.068	-0.089	-0.108	-0.124	-0.137	-0.146	-0.152	-0.154	-0.152	-0.147	-0.137	-0.124	-0.108	-0.090	-0.069	-0.046	-0.023	0.000
FINAL CAMBER (IN.)	0"	7/16"	13/16"	1 3/16"	1 7/16"	1 11/16"	1 7/8"	2"	2 1/8"	2 3/16"	2 3/16"	2 3/16"	2 1/8"	2"	1 7/8"	1 11/16"	1 7/16"	1 3/16"	13/16"	7/16"	0"

PROJECT NO. U-2524C

GUILFORD COUNTY

STATION: POT 407+85.82 -L-
= POT 29+79.72 -Y4-

SHEET 5 OF 7

STATE OF NORTH CAROLINA
DEPARTMENT OF TRANSPORTATION
RALEIGH

PRESTRESSED CONCRETE MODIFIED BULB TEE GIRDER CAMBERS

-RIGHT LANE-

DRAWN BY : CLG	DATE : 3-13	DESIGN ENGINEER OF RECORD: M. ROBBINS	DATE : 5-13
CHECKED BY : TRL	DATE : 5-13		

STV / Ralph Whitehead Associates, Inc.
1000 West Morehead St., Ste. 200
Charlotte, NC 28208
NC License No. F-0991

REVISIONS					
NO.	BY:	DATE:	NO.	BY:	DATE:
1			3		
2			4		

SHEET NO. S-381

TOTAL SHEETS 836

6/6/2013 4:41:44 PM R:\ustation\Finals\PCMBT Girder Cambers Sheet 5 of 7.dgn

SPAN 16 CAMBER AND DEFLECTIONS TABLE

SPAN 16 GIRDER POSITION 5

TWENTIETH	0.00	0.05	0.10	0.15	0.20	0.25	0.30	0.35	0.40	0.45	0.50	0.55	0.60	0.65	0.70	0.75	0.80	0.85	0.90	0.95	1.00
CAMBER (GIRDER ALONE IN PLACE) (FT.)	0.000	0.060	0.116	0.166	0.210	0.248	0.280	0.304	0.322	0.333	0.337	0.333	0.322	0.304	0.280	0.248	0.210	0.166	0.116	0.061	0.000
DEFLECTION DUE TO SUPERIMPOSED D.L. (FT.)**	0.000	-0.023	-0.046	-0.069	-0.089	-0.108	-0.124	-0.137	-0.146	-0.152	-0.154	-0.152	-0.147	-0.137	-0.124	-0.108	-0.090	-0.069	-0.046	-0.023	0.000
FINAL CAMBER (IN.)	0"	7/16"	13/16"	1 3/16"	1 7/16"	1 11/16"	1 7/8"	2"	2 1/8"	2 3/16"	2 3/16"	2 3/16"	2 1/8"	2"	1 7/8"	1 11/16"	1 7/16"	1 3/16"	13/16"	7/16"	0"

SPAN 16 GIRDER POSITION 6

CAMBER (GIRDER ALONE IN PLACE) (FT.)	0.000	0.060	0.116	0.166	0.210	0.248	0.280	0.304	0.322	0.333	0.337	0.333	0.322	0.304	0.280	0.248	0.210	0.166	0.116	0.060	0.000
DEFLECTION DUE TO SUPERIMPOSED D.L. (FT.)**	0.000	-0.024	-0.048	-0.071	-0.092	-0.111	-0.128	-0.141	-0.151	-0.157	-0.159	-0.157	-0.151	-0.141	-0.128	-0.112	-0.092	-0.071	-0.048	-0.024	0.000
FINAL CAMBER (IN.)	0"	7/16"	13/16"	1 1/8"	1 7/16"	1 5/8"	1 13/16"	1 15/16"	2 1/16"	2 1/8"	2 1/8"	2 1/8"	2 1/16"	1 15/16"	1 13/16"	1 5/8"	1 7/16"	1 1/8"	13/16"	7/16"	0"

SPAN 16 GIRDER POSITION 7

CAMBER (GIRDER ALONE IN PLACE) (FT.)	0.000	0.060	0.116	0.166	0.210	0.248	0.280	0.304	0.322	0.333	0.337	0.333	0.322	0.305	0.280	0.248	0.210	0.166	0.116	0.061	0.000
DEFLECTION DUE TO SUPERIMPOSED D.L. (FT.)**	0.000	-0.025	-0.050	-0.075	-0.098	-0.118	-0.136	-0.151	-0.162	-0.168	-0.171	-0.169	-0.163	-0.153	-0.139	-0.122	-0.101	-0.077	-0.052	-0.026	0.000
FINAL CAMBER (IN.)	0"	7/16"	13/16"	1 1/16"	1 3/8"	1 9/16"	1 3/4"	1 7/8"	1 15/16"	2"	2"	1 15/16"	1 15/16"	1 13/16"	1 11/16"	1 1/2"	1 5/16"	1 1/16"	3/4"	7/16"	0"

SPAN 16 GIRDER POSITION 8

CAMBER (GIRDER ALONE IN PLACE) (FT.)	0.000	0.060	0.115	0.165	0.209	0.247	0.278	0.303	0.321	0.331	0.335	0.331	0.321	0.303	0.278	0.247	0.209	0.165	0.115	0.060	0.000
DEFLECTION DUE TO SUPERIMPOSED D.L. (FT.)**	0.000	-0.023	-0.046	-0.069	-0.090	-0.109	-0.126	-0.139	-0.149	-0.156	-0.158	-0.157	-0.151	-0.142	-0.129	-0.113	-0.093	-0.072	-0.048	-0.024	0.000
FINAL CAMBER (IN.)	0"	7/16"	13/16"	1 1/8"	1 7/16"	1 5/8"	1 13/16"	1 15/16"	2 1/16"	2 1/8"	2 1/8"	2 1/8"	2 1/16"	1 15/16"	1 13/16"	1 5/8"	1 3/8"	1 1/8"	13/16"	7/16"	0"

SPAN 16 GIRDER POSITION 9

CAMBER (GIRDER ALONE IN PLACE) (FT.)	0.000	0.059	0.112	0.160	0.202	0.237	0.267	0.290	0.306	0.316	0.320	0.316	0.306	0.290	0.267	0.237	0.202	0.160	0.112	0.059	0.000
DEFLECTION DUE TO SUPERIMPOSED D.L. (FT.)**	0.000	-0.021	-0.041	-0.061	-0.080	-0.097	-0.112	-0.124	-0.132	-0.138	-0.140	-0.138	-0.133	-0.125	-0.114	-0.099	-0.082	-0.063	-0.043	-0.021	0.000
FINAL CAMBER (IN.)	0"	7/16"	7/8"	1 3/16"	1 7/16"	1 11/16"	1 7/8"	2"	2 1/16"	2 1/8"	2 3/16"	2 1/8"	2 1/16"	2"	1 13/16"	1 11/16"	1 7/16"	1 3/16"	13/16"	7/16"	0"

SPAN 16 GIRDER POSITION 10

CAMBER (GIRDER ALONE IN PLACE) (FT.)	0.000	0.058	0.110	0.157	0.199	0.234	0.263	0.286	0.302	0.312	0.316	0.312	0.302	0.286	0.263	0.234	0.199	0.157	0.110	0.058	0.000
DEFLECTION DUE TO SUPERIMPOSED D.L. (FT.)**	0.000	-0.020	-0.041	-0.060	-0.079	-0.096	-0.110	-0.122	-0.130	-0.136	-0.138	-0.136	-0.131	-0.123	-0.112	-0.097	-0.081	-0.062	-0.042	-0.021	0.000
FINAL CAMBER (IN.)	0"	7/16"	13/16"	1 3/16"	1 7/16"	1 11/16"	1 13/16"	2"	2 1/16"	2 1/8"	2 1/8"	2 1/8"	2 1/16"	1 15/16"	1 13/16"	1 5/8"	1 7/16"	1 1/8"	13/16"	7/16"	0"

SPAN 16 GIRDER POSITION 11

CAMBER (GIRDER ALONE IN PLACE) (FT.)	0.000	0.057	0.109	0.155	0.196	0.231	0.260	0.282	0.298	0.308	0.311	0.308	0.298	0.282	0.260	0.231	0.196	0.155	0.109	0.057	0.000
DEFLECTION DUE TO SUPERIMPOSED D.L. (FT.)**	0.000	-0.019	-0.039	-0.058	-0.076	-0.092	-0.106	-0.117	-0.125	-0.131	-0.133	-0.131	-0.126	-0.118	-0.107	-0.094	-0.077	-0.059	-0.040	-0.020	0.000
FINAL CAMBER (IN.)	0"	7/16"	13/16"	1 3/16"	1 7/16"	1 11/16"	1 7/8"	2"	2 1/16"	2 1/8"	2 1/8"	2 1/8"	2 1/16"	1 15/16"	1 13/16"	1 5/8"	1 7/16"	1 1/8"	13/16"	7/16"	0"

SPAN 16 GIRDER POSITION 12

CAMBER (GIRDER ALONE IN PLACE) (FT.)	0.000	0.060	0.116	0.166	0.210	0.248	0.280	0.304	0.322	0.333	0.337	0.333	0.322	0.304	0.280	0.248	0.210	0.166	0.116	0.061	0.000
DEFLECTION DUE TO SUPERIMPOSED D.L. (FT.)**	0.000	-0.029	-0.058	-0.086	-0.113	-0.136	-0.156	-0.173	-0.185	-0.192	-0.194	-0.192	-0.185	-0.173	-0.156	-0.136	-0.113	-0.086	-0.058	-0.029	0.000
FINAL CAMBER (IN.)	0"	3/8"	11/16"	15/16"	1 3/16"	1 3/8"	1 1/2"	1 9/16"	1 5/8"	1 11/16"	1 11/16"	1 11/16"	1 5/8"	1 9/16"	1 1/2"	1 5/16"	1 3/16"	15/16"	11/16"	3/8"	0"

** INCLUDES FUTURE WEARING SURFACE IN SUPERIMPOSED DEAD LOAD

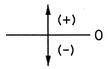

CAMBER SIGN CONVENTION

PROJECT NO. U-2524C

GUILFORD COUNTY

STATION: POT 407+85.82 -L-
= POT 29+79.72 -Y4-

SHEET 6 OF 7

STATE OF NORTH CAROLINA
DEPARTMENT OF TRANSPORTATION
RALEIGH

PRESTRESSED CONCRETE MODIFIED BULB TEE GIRDER CAMBERS

-RIGHT LANE-

NORTH CAROLINA PROFESSIONAL ENGINEER SEAL 28479 ENGINEER KEVIN G. BAILEY 6-7-13

STV/ Ralph Whitehead Associates, Inc.
1000 West Morehead St. Ste. 200
Charlotte, NC 28208
NC License No. F-0991

REVISIONS						SHEET NO.
NO.	BY:	DATE:	NO.	BY:	DATE:	S-382
1			3			TOTAL SHEETS
2			4			836

DRAWN BY : CLG DATE : 3-13
CHECKED BY : TRL DATE : 5-13

DESIGN ENGINEER OF RECORD: M. ROBBINS DATE : 5-13

6/6/2013 4:41:45 PM R:\ustation\Finals\PCMBT Girder Cambers Sheet 6 of 7.dgn

UNIT F CAMBER AND DEFLECTIONS TABLE

SPANS 17-20 GIRDER POSITION 1-6

TWENTIETH	0.00	0.05	0.10	0.15	0.20	0.25	0.30	0.35	0.40	0.45	0.50	0.55	0.60	0.65	0.70	0.75	0.80	0.85	0.90	0.95	1.00
CAMBER (GIRDER ALONE IN PLACE) (FT.)	0.000	0.059	0.114	0.165	0.210	0.250	0.283	0.309	0.328	0.339	0.343	0.339	0.328	0.309	0.283	0.250	0.210	0.165	0.114	0.059	0.000
DEFLECTION DUE TO SUPERIMPOSED D.L. (FT.)**	0.000	-0.029	-0.058	-0.085	-0.111	-0.134	-0.153	-0.169	-0.181	-0.188"	-0.190	-0.188"	-0.181	-0.169	-0.153	-0.134	-0.111	-0.085	-0.058	-0.029	0.000
FINAL CAMBER (IN.)	0"	3/8"	11/16"	15/16"	1 3/16"	1 3/8"	1 9/16"	1 11/16"	1 3/4"	1 13/16"	1 13/16"	1 13/16"	1 3/4"	1 11/16"	1 9/16"	1 3/8"	1 3/16"	15/16"	11/16"	3/8"	0"

** INCLUDES FUTURE WEARING SURFACE IN SUPERIMPOSED DEAD LOAD

CAMBER SIGN CONVENTION

UNIT I CAMBER AND DEFLECTIONS TABLE

SPAN 27 GIRDER POSITION 1-6

TWENTIETH	0.00	0.05	0.10	0.15	0.20	0.25	0.30	0.35	0.40	0.45	0.50	0.55	0.60	0.65	0.70	0.75	0.80	0.85	0.90	0.95	1.00
CAMBER (GIRDER ALONE IN PLACE) (FT.)	0.000	0.058	0.108	0.157	0.193	0.231	0.256	0.280	0.295	0.304	0.309	0.304	0.295	0.280	0.256	0.231	0.193	0.157	0.108	0.058	0.000
DEFLECTION DUE TO SUPERIMPOSED D.L. (FT.)**	0.000	-0.022	-0.043	-0.064	-0.084	-0.101	-0.116	-0.127	-0.136	-0.141	-0.143	-0.141	-0.136	-0.127	-0.116	-0.101	-0.084	-0.064	-0.043	-0.022	0.000
FINAL CAMBER (IN.)	0"	7/16"	3/4"	1 1/8"	1 5/16"	1 9/16"	1 11/16"	1 13/16"	1 15/16"	1 15/16"	2"	1 15/16"	1 15/16"	1 13/16"	1 11/16"	1 9/16"	1 5/16"	1 1/8"	3/4"	7/16"	0"

SPAN 28 GIRDER POSITION 1-6

CAMBER (GIRDER ALONE IN PLACE) (FT.)	0.000	0.054	0.102	0.144	0.181	0.212	0.238	0.257	0.272	0.280	0.283	0.280	0.272	0.257	0.238	0.212	0.181	0.144	0.102	0.054	0.000
DEFLECTION DUE TO SUPERIMPOSED D.L. (FT.)**	0.000	-0.016	-0.032	-0.047	-0.061	-0.074	-0.085	-0.094	-0.100	-0.104	-0.105	-0.104	-0.100	-0.094	-0.085	-0.074	-0.061	-0.047	-0.032	-0.016	0.000
FINAL CAMBER (IN.)	0"	7/16"	13/16"	1 3/16"	1 7/16"	1 5/8"	1 13/16"	1 15/16"	2 1/16"	2 1/8"	2 1/8"	2 1/8"	2 1/16"	1 15/16"	1 13/16"	1 5/8"	1 7/16"	1 3/16"	13/16"	7/16"	0"

SPAN 29 GIRDER POSITION 1-6

CAMBER (GIRDER ALONE IN PLACE) (FT.)	0.000	0.060	0.115	0.162	0.204	0.239	0.267	0.290	0.306	0.315	0.318	0.315	0.306	0.290	0.267	0.239	0.204	0.162	0.115	0.060	0.000
DEFLECTION DUE TO SUPERIMPOSED D.L. (FT.)**	0.000	-0.025	-0.050	-0.075	-0.097	-0.117	-0.134	-0.148	-0.158	-0.164	-0.166	-0.164	-0.158	-0.148	-0.134	-0.117	-0.097	-0.075	-0.050	-0.025	0.000
FINAL CAMBER (IN.)	0"	7/16"	3/4"	1 1/16"	1 1/4"	1 7/16"	1 5/8"	1 11/16"	1 3/4"	1 13/16"	1 13/16"	1 13/16"	1 3/4"	1 11/16"	1 5/8"	1 7/16"	1 1/4"	1 1/16"	3/4"	7/16"	0"

SPAN 30 GIRDER POSITION 1-6

CAMBER (GIRDER ALONE IN PLACE) (FT.)	0.000	0.060	0.114	0.161	0.202	0.237	0.265	0.288	0.303	0.313	0.316	0.313	0.303	0.288	0.265	0.237	0.202	0.161	0.114	0.060	0.000
DEFLECTION DUE TO SUPERIMPOSED D.L. (FT.)**	0.000	-0.025	-0.049	-0.072	-0.094	-0.113	-0.129	-0.143	-0.152	-0.158	-0.160	-0.158	-0.152	-0.143	-0.129	-0.113	-0.094	-0.072	-0.049	-0.025	0.000
FINAL CAMBER (IN.)	0"	7/16"	3/4"	1 1/16"	1 5/16"	1 1/2"	1 5/8"	1 3/4"	1 13/16"	1 7/8"	1 7/8"	1 7/8"	1 13/16"	1 3/4"	1 5/8"	1 1/2"	1 5/16"	1 1/16"	3/4"	7/16"	0"

PROJECT NO. U-2524C

GUILFORD COUNTY

STATION: POT 407+85.82 -L-
= POT 29+79.72 -Y4-

SHEET 7 OF 7

STATE OF NORTH CAROLINA
DEPARTMENT OF TRANSPORTATION
RALEIGH

PRESTRESSED CONCRETE
MODIFIED BULB TEE
GIRDER CAMBERS

-RIGHT LANE-

NORTH CAROLINA PROFESSIONAL SEAL 28479 ENGINEER KEVIN G. BAILEY
6-7-13

STV / Ralph Whitehead Associates, Inc.
1000 West Morehead St., Ste. 200
Charlotte, NC 28208
NC License No. F-0991

REVISIONS						SHEET NO.
NO.	BY:	DATE:	NO.	BY:	DATE:	S-383
1			3			TOTAL SHEETS
2			4			836

DRAWN BY : CLG DATE : 3-13
CHECKED BY : TRL DATE : 5-13

DESIGN ENGINEER OF RECORD: M. ROBBINS DATE : 5-13

6/6/2013 4:41:46 PM R:\ustation\FInals\PCMBT Girder Cambers Sheet 7 of 7.dgn

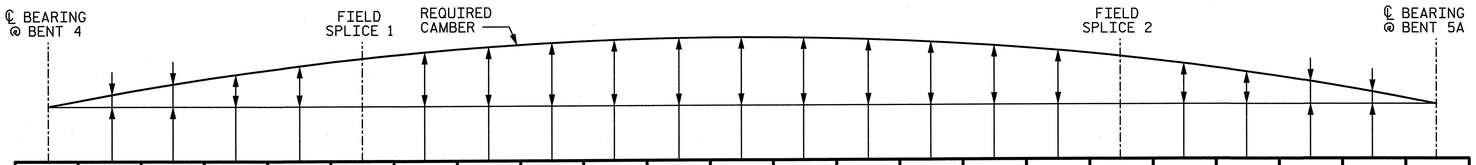

		1.00	1.01	1.02	1.03	1.04	F.S.	1.05	1.06	1.07	1.08	1.09	1.10	1.11	1.12	1.13	1.14	1.15	F.S.	1.16	1.17	1.18	1.19	1.20
GIRDER 1	DEFLECTION DUE TO WT. OF STEEL	0.000	-0.034	-0.035	-0.094	-0.119	-0.123	-0.141	-0.159	-0.173	-0.183	-0.189	-0.191	-0.189	-0.183	-0.172	-0.158	-0.140	-0.121	-0.118	-0.093	-0.064	-0.033	0.000
	DEFLECTION DUE TO WT. OF SLAB ▲	0.000	-0.082	-0.085	-0.229	-0.290	-0.298	-0.341	-0.383	-0.416	-0.440	-0.455	-0.459	-0.454	-0.438	-0.414	-0.380	-0.337	-0.292	-0.285	-0.224	-0.155	-0.080	0.000
	DEFL. DUE TO WT. OF BARRIER RAIL	0.000	-0.009	-0.009	-0.024	-0.031	-0.032	-0.037	-0.041	-0.045	-0.047	-0.049	-0.049	-0.049	-0.047	-0.044	-0.040	-0.036	-0.031	-0.030	-0.023	-0.016	-0.008	0.000
	TOTAL DEAD LOAD DEFLECTION	0.000	-0.124	-0.129	-0.348	-0.440	-0.452	-0.519	-0.583	-0.634	-0.671	-0.693	-0.700	-0.691	-0.668	-0.630	-0.578	-0.512	-0.445	-0.433	-0.340	-0.235	-0.121	0.000
	VERTICAL CURVE ORDINATE	0.000	0.000	0.000	0.000	0.000	0.000	0.000	0.000	0.000	0.000	0.000	0.000	0.000	0.000	0.000	0.000	0.000	0.000	0.000	0.000	0.000	0.000	0.000
	SUPERELEVATION ORDINATE	0.000	0.000	0.000	0.000	0.000	0.000	0.000	0.000	0.000	0.000	0.000	0.000	0.000	0.000	0.000	0.000	0.000	0.000	0.000	0.000	0.000	0.000	0.000
	REQUIRED CAMBER	0"	1 1/2"	1 9/16"	4 3/16"	5 5/16"	5 7/16"	6 1/4"	7"	7 5/8"	8 1/16"	8 5/16"	8 3/8"	8 5/16"	8"	7 9/16"	6 15/16"	6 1/8"	5 5/16"	5 3/16"	4 1/16"	2 13/16"	1 7/16"	0"

		1.00	1.01	1.02	1.03	1.04	F.S.	1.05	1.06	1.07	1.08	1.09	1.10	1.11	1.12	1.13	1.14	1.15	F.S.	1.16	1.17	1.18	1.19	1.20
GIRDER 2	DEFLECTION DUE TO WT. OF STEEL	0.000	-0.032	-0.062	-0.089	-0.113	-0.116	-0.134	-0.151	-0.164	-0.174	-0.180	-0.182	-0.180	-0.174	-0.164	-0.151	-0.134	-0.116	-0.113	-0.089	-0.061	-0.031	0.000
	DEFLECTION DUE TO WT. OF SLAB ▲	0.000	-0.077	-0.150	-0.216	-0.274	-0.281	-0.322	-0.363	-0.395	-0.418	-0.432	-0.437	-0.432	-0.418	-0.395	-0.363	-0.322	-0.280	-0.272	-0.214	-0.149	-0.076	0.000
	DEFL. DUE TO WT. OF BARRIER RAIL	0.000	-0.007	-0.014	-0.021	-0.027	-0.028	-0.032	-0.036	-0.040	-0.042	-0.044	-0.044	-0.044	-0.043	-0.040	-0.037	-0.033	-0.028	-0.028	-0.022	-0.015	-0.008	0.000
	TOTAL DEAD LOAD DEFLECTION	0.000	-0.116	-0.226	-0.327	-0.414	-0.425	-0.488	-0.549	-0.598	-0.634	-0.655	-0.663	-0.656	-0.635	-0.599	-0.550	-0.489	-0.424	-0.413	-0.325	-0.225	-0.115	0.000
	VERTICAL CURVE ORDINATE	0.000	0.000	0.000	0.000	0.000	0.000	0.000	0.000	0.000	0.000	0.000	0.000	0.000	0.000	0.000	0.000	0.000	0.000	0.000	0.000	0.000	0.000	0.000
	SUPERELEVATION ORDINATE	0.000	0.000	0.000	0.000	0.000	0.000	0.000	0.000	0.000	0.000	0.000	0.000	0.000	0.000	0.000	0.000	0.000	0.000	0.000	0.000	0.000	0.000	0.000
	REQUIRED CAMBER	0"	1 3/8"	2 11/16"	3 15/16"	4 15/16"	5 1/8"	5 7/8"	6 9/16"	7 3/16"	7 5/8"	7 7/8"	7 15/16"	7 7/8"	7 5/8"	7 3/16"	6 5/8"	5 7/8"	5 1/16"	4 15/16"	3 7/8"	2 11/16"	1 3/8"	0"

		1.00	1.01	1.02	1.03	1.04	F.S.	1.05	1.06	1.07	1.08	1.09	1.10	1.11	1.12	1.13	1.14	1.15	F.S.	1.16	1.17	1.18	1.19	1.20
GIRDER 3	DEFLECTION DUE TO WT. OF STEEL	0.000	-0.032	-0.062	-0.089	-0.113	-0.116	-0.133	-0.150	-0.163	-0.172	-0.178	-0.179	-0.177	-0.171	-0.161	-0.148	-0.131	-0.114	-0.111	-0.087	-0.060	-0.031	0.000
	DEFLECTION DUE TO WT. OF SLAB ▲	0.000	-0.077	-0.150	-0.216	-0.272	-0.279	-0.320	-0.359	-0.390	-0.412	-0.425	-0.429	-0.424	-0.410	-0.386	-0.354	-0.315	-0.273	-0.266	-0.210	-0.146	-0.075	0.000
	DEFL. DUE TO WT. OF BARRIER RAIL	0.000	-0.007	-0.014	-0.020	-0.025	-0.026	-0.030	-0.034	-0.037	-0.039	-0.040	-0.041	-0.041	-0.039	-0.037	-0.034	-0.030	-0.026	-0.025	-0.020	-0.014	-0.007	0.000
	TOTAL DEAD LOAD DEFLECTION	0.000	-0.116	-0.226	-0.325	-0.410	-0.421	-0.483	-0.543	-0.590	-0.623	-0.643	-0.650	-0.642	-0.620	-0.585	-0.536	-0.476	-0.413	-0.402	-0.316	-0.220	-0.112	0.000
	VERTICAL CURVE ORDINATE	0.000	0.000	0.000	0.000	0.000	0.000	0.000	0.000	0.000	0.000	0.000	0.000	0.000	0.000	0.000	0.000	0.000	0.000	0.000	0.000	0.000	0.000	0.000
	SUPERELEVATION ORDINATE	0.000	0.000	0.000	0.000	0.000	0.000	0.000	0.000	0.000	0.000	0.000	0.000	0.000	0.000	0.000	0.000	0.000	0.000	0.000	0.000	0.000	0.000	0.000
	REQUIRED CAMBER	0"	1 3/8"	2 11/16"	3 3/8"	4 15/16"	5 1/16"	5 13/16"	6 1/2"	7 1/16"	7 1/2"	7 3/4"	7 13/16"	7 11/16"	7 7/16"	7"	6 7/16"	5 11/16"	4 15/16"	4 13/16"	3 13/16"	2 5/8"	1 3/8"	0"

▲ INCLUDES SLAB, BUILDUP AND STAY-IN-PLACE FORMS

NOTES:

1. VALUES ARE SHOWN IN FEET (DECIMAL FORMAT), EXCEPT "REQUIRED CAMBER" WHICH IS GIVEN IN INCHES.
2. FOR GIRDER DESIGNATIONS, SEE FRAMING PLAN AND GIRDER DETAILS SHEETS.
3. DEFLECTIONS IN THE DOWNWARD DIRECTION ARE NEGATIVE. A REQUIRED CAMBER IN THE UPWARD DIRECTION IS POSITIVE. SIGN CONVENTION FOR DEAD LOAD DEFLECTION.

4. SLOPE FOR THE ZERO CAMBER BASE LINE VARIES.
5. CAMBER DUE TO DISSIPATION RESULTING FROM HEAT CURVING IS NOT REQUIRED.

SCHEMATIC CAMBER ORDINATES - SPAN 5

PROJECT NO. U-2524C
GUILFORD COUNTY
STATION: POT 407+85.82 -L-
= POT 29+79.72 -Y4-

SHEET 1 OF 8

STATE OF NORTH CAROLINA
DEPARTMENT OF TRANSPORTATION
RALEIGH

STEEL GIRDER CAMBERS
SPAN 5

-RIGHT LANE-

REVISIONS							SHEET NO.
NO.	BY:	DATE:	NO.	BY:	DATE:		S-384
1			3				TOTAL SHEETS
2			4				836

DRAWN BY : VMW DATE : 3-13
CHECKED BY : KGB DATE : 4-13

DESIGN ENGINEER OF RECORD: K. BAILEY DATE : 5-13

STV / Ralph Whitehead Associates, Inc.
1000 West Morehead St., Ste. 200
Charlotte, NC 28208
NC License No. F-0991

6/6/2013 4:41:47 PM R:\ustation\Finals\Span 5 - Camber Sheet 1of 2.dgn

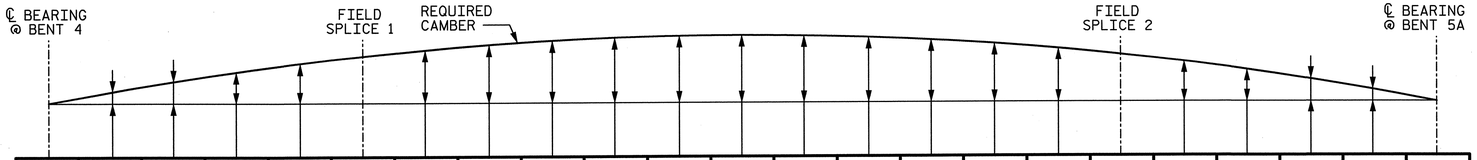

		1.00	1.01	1.02	1.03	1.04	F.S.	1.05	1.06	1.07	1.08	1.09	1.10	1.11	1.12	1.13	1.14	1.15	F.S.	1.16	1.17	1.18	1.19	1.20
GIRDER 4	DEFLECTION DUE TO WT. OF STEEL	0.000	-0.033	-0.064	-0.093	-0.117	-0.121	-0.138	-0.155	-0.168	-0.178	-0.183	-0.184	-0.181	-0.175	-0.164	-0.150	-0.132	-0.114	-0.111	-0.087	-0.060	-0.031	0.000
	DEFLECTION DUE TO WT. OF SLAB ▲	0.000	-0.079	-0.154	-0.221	-0.280	-0.287	-0.329	-0.369	-0.401	-0.422	-0.435	-0.438	-0.431	-0.416	-0.391	-0.358	-0.316	-0.274	-0.267	-0.209	-0.145	-0.074	0.000
	DEFL. DUE TO WT. OF BARRIER RAIL	0.000	-0.007	-0.013	-0.019	-0.025	-0.026	-0.029	-0.033	-0.036	-0.038	-0.039	-0.040	-0.039	-0.038	-0.036	-0.033	-0.029	-0.025	-0.024	-0.019	-0.013	-0.007	0.000
	TOTAL DEAD LOAD DEFLECTION	0.000	-0.119	-0.232	-0.333	-0.422	-0.433	-0.497	-0.558	-0.605	-0.638	-0.657	-0.662	-0.652	-0.628	-0.590	-0.540	-0.477	-0.414	-0.402	-0.315	-0.218	-0.112	0.000
	VERTICAL CURVE ORDINATE	0.000	0.000	0.000	0.000	0.000	0.000	0.000	0.000	0.000	0.000	0.000	0.000	0.000	0.000	0.000	0.000	0.000	0.000	0.000	0.000	0.000	0.000	0.000
	SUPERELEVATION ORDINATE	0.000	0.000	0.000	0.000	0.000	0.000	0.000	0.000	0.000	0.000	0.000	0.000	0.000	0.000	0.000	0.000	0.000	0.000	0.000	0.000	0.000	0.000	0.000
	REQUIRED CAMBER	0"	1 7/16"	2 13/16"	4"	5 1/16"	5 3/16"	5 15/16"	6 11/16"	7 1/4"	7 11/16"	7 7/8"	7 15/16"	7 13/16"	7 9/16"	7 1/16"	6 1/2"	5 3/4"	4 15/16"	4 13/16"	3 13/16"	2 5/8"	1 5/16"	0"

		1.00	1.01	1.02	1.03	1.04	F.S.	1.05	1.06	1.07	1.08	1.09	1.10	1.11	1.12	1.13	1.14	1.15	F.S.	1.16	1.17	1.18	1.19	1.20
GIRDER 5	DEFLECTION DUE TO WT. OF STEEL	0.000	-0.035	-0.068	-0.098	-0.125	-0.128	-0.128	-0.165	-0.180	-0.190	-0.195	-0.197	-0.194	-0.186	-0.175	-0.159	-0.140	-0.121	-0.118	-0.092	-0.063	-0.032	0.000
	DEFLECTION DUE TO WT. OF SLAB ▲	0.000	-0.084	-0.162	-0.232	-0.294	-0.302	-0.302	-0.390	-0.423	-0.446	-0.460	-0.463	-0.456	-0.439	-0.413	-0.377	-0.332	-0.287	-0.279	-0.218	-0.150	-0.077	0.000
	DEFL. DUE TO WT. OF BARRIER RAIL	0.000	-0.007	-0.014	-0.020	-0.026	-0.027	-0.027	-0.035	-0.038	-0.040	-0.041	-0.041	-0.041	-0.039	-0.037	-0.033	-0.029	-0.025	-0.025	-0.019	-0.013	-0.007	0.000
	TOTAL DEAD LOAD DEFLECTION	0.000	-0.126	-0.244	-0.351	-0.445	-0.457	-0.457	-0.590	-0.640	-0.676	-0.696	-0.701	-0.691	-0.665	-0.624	-0.570	-0.502	-0.434	-0.422	-0.329	-0.227	-0.115	0.000
	VERTICAL CURVE ORDINATE	0.000	0.000	0.000	0.000	0.000	0.000	0.000	0.000	0.000	0.000	0.000	0.000	0.000	0.000	0.000	0.000	0.000	0.000	0.000	0.000	0.000	0.000	0.000
	SUPERELEVATION ORDINATE	0.000	0.000	0.000	0.000	0.000	0.000	0.000	0.000	0.000	0.000	0.000	0.000	0.000	0.000	0.000	0.000	0.000	0.000	0.000	0.000	0.000	0.000	0.000
	REQUIRED CAMBER	0"	1 1/2"	2 15/16"	4 3/16"	5 5/16"	5 1/2"	5 1/2"	7 1/16"	7 11/16"	8 1/8"	8 3/8"	8 7/16"	8 5/16"	8"	7 1/2"	6 13/16"	6"	5 3/16"	5 1/16"	3 15/16"	2 11/16"	1 3/8"	0"

		1.00	1.01	1.02	1.03	1.04	F.S.	1.05	1.06	1.07	1.08	1.09	1.10	1.11	1.12	1.13	1.14	1.15	F.S.	1.16	1.17	1.18	1.19	1.20
GIRDER 6	DEFLECTION DUE TO WT. OF STEEL	0.000	-0.037	-0.073	-0.105	-0.134	-0.137	-0.158	-0.178	-0.194	-0.206	-0.213	-0.216	-0.213	-0.206	-0.195	-0.179	-0.158	-0.138	-0.134	-0.105	-0.073	-0.037	0.000
	DEFLECTION DUE TO WT. OF SLAB ▲	0.000	-0.088	-0.171	-0.247	-0.313	-0.322	-0.371	-0.418	-0.455	-0.482	-0.498	-0.503	-0.498	-0.482	-0.454	-0.417	-0.370	-0.322	-0.313	-0.247	-0.171	-0.087	0.000
	DEFL. DUE TO WT. OF BARRIER RAIL	0.000	-0.008	-0.015	-0.022	-0.028	-0.029	-0.033	-0.037	-0.041	-0.043	-0.044	-0.045	-0.044	-0.043	-0.040	-0.037	-0.032	-0.028	-0.027	-0.021	-0.015	-0.007	0.000
	TOTAL DEAD LOAD DEFLECTION	0.000	-0.133	-0.259	-0.373	-0.475	-0.488	-0.562	-0.633	-0.689	-0.731	-0.756	-0.764	-0.755	-0.731	-0.689	-0.633	-0.561	-0.488	-0.475	-0.373	-0.258	-0.132	0.000
	VERTICAL CURVE ORDINATE	0.000	0.000	0.000	0.000	0.000	0.000	0.000	0.000	0.000	0.000	0.000	0.000	0.000	0.000	0.000	0.000	0.000	0.000	0.000	0.000	0.000	0.000	0.000
	SUPERELEVATION ORDINATE	0.000	0.000	0.000	0.000	0.000	0.000	0.000	0.000	0.000	0.000	0.000	0.000	0.000	0.000	0.000	0.000	0.000	0.000	0.000	0.000	0.000	0.000	0.000
	REQUIRED CAMBER	0"	1 5/8"	3 1/8"	4 1/2"	5 11/16"	5 7/8"	6 3/4"	7 5/8"	8 1/4"	8 3/4"	9 1/16"	9 3/16"	9 1/16"	8 3/4"	8 1/4"	7 5/16"	6 3/4"	5 7/8"	5 11/16"	4 1/2"	3 1/8"	1 9/16"	0"

▲ INCLUDES SLAB, BUILDUP AND STAY-IN-PLACE FORMS

NOTES:

1. VALUES ARE SHOWN IN FEET (DECIMAL FORMAT), EXCEPT "REQUIRED CAMBER" WHICH IS GIVEN IN INCHES.
2. FOR GIRDER DESIGNATIONS, SEE FRAMING PLAN AND GIRDER DETAILS SHEETS.
3. DEFLECTIONS IN THE DOWNWARD DIRECTION ARE NEGATIVE. A REQUIRED CAMBER IN THE UPWARD DIRECTION IS POSITIVE. SIGN CONVENTION FOR DEAD LOAD DEFLECTION.

4. SLOPE FOR THE ZERO CAMBER BASE LINE VARIES.
5. CAMBER DUE TO DISSIPATION RESULTING FROM HEAT CURVING IS NOT REQUIRED.

SCHEMATIC CAMBER ORDINATES - SPAN 5

PROJECT NO. U-2524C

GUILFORD COUNTY

STATION: POT 407+85.82 -L-
= POT 29+79.72 -Y4-

SHEET 2 OF 8

STATE OF NORTH CAROLINA
DEPARTMENT OF TRANSPORTATION
RALEIGH

STEEL GIRDER CAMBERS SPAN 5

-RIGHT LANE-

REVISIONS						SHEET NO.
NO.	BY:	DATE:	NO.	BY:	DATE:	S-385
1			3			TOTAL SHEETS
2			4			836

DRAWN BY : VMW DATE : 3-13
CHECKED BY : KGB DATE : 4-13

DESIGN ENGINEER OF RECORD: K. BAILEY DATE : 5-13

STV / Ralph Whitehead Associates, Inc.
1000 West Morehead St., Ste. 200
Charlotte, NC 28208
NC License No. F-0991

6/6/2013 4:41:48 PM R:\ustation\Finals\Span 5 - Camber Sheet 2 of 2.dgn

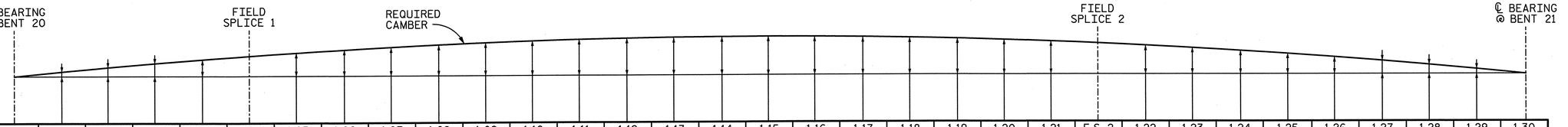

		1.00	1.01	1.02	1.03	1.04	F.S. 1	1.05	1.06	1.07	1.08	1.09	1.10	1.11	1.12	1.13	1.14	1.15	1.16	1.17	1.18	1.19	1.20	1.21	F.S. 2	1.22	1.23	1.24	1.25	1.26	1.27	1.28	1.29	1.30
GIRDER 1	DEFLECTION DUE TO WT. OF STEEL	0.000	-0.016	-0.031	-0.047	-0.059	-0.066	-0.071	-0.084	-0.092	-0.100	-0.108	-0.110	-0.113	-0.116	-0.114	-0.111	-0.109	-0.102	-0.095	-0.088	-0.079	-0.069	-0.059	-0.059	-0.050	-0.040	-0.030	-0.023	-0.015	-0.008	-0.005	-0.003	0.000
	DEFLECTION DUE TO WT. OF SLAB ▲	0.000	-0.043	-0.086	-0.129	-0.163	-0.181	-0.197	-0.231	-0.253	-0.275	-0.296	-0.304	-0.312	-0.319	-0.312	-0.306	-0.299	-0.280	-0.262	-0.243	-0.217	-0.191	-0.165	-0.163	-0.138	-0.112	-0.085	-0.065	-0.045	-0.024	-0.016	-0.008	0.000
	DEFL. DUE TO WT. OF BARRIER RAIL	0.000	-0.013	-0.026	-0.038	-0.049	-0.054	-0.059	-0.069	-0.076	-0.083	-0.090	-0.092	-0.095	-0.097	-0.096	-0.094	-0.092	-0.087	-0.081	-0.076	-0.068	-0.060	-0.052	-0.051	-0.043	-0.035	-0.026	-0.019	-0.013	-0.006	-0.004	-0.002	0.000
	TOTAL DEAD LOAD DEFLECTION	0.000	-0.071	-0.143	-0.214	-0.271	-0.301	-0.327	-0.384	-0.421	-0.457	-0.494	-0.507	-0.520	-0.533	-0.522	-0.511	-0.500	-0.469	-0.438	-0.407	-0.363	-0.320	-0.276	-0.273	-0.231	-0.186	-0.141	-0.107	-0.073	-0.039	-0.026	-0.013	0.000
	VERTICAL CURVE ORDINATE	0.000	0.000	0.000	0.000	0.000	0.000	0.000	0.000	0.000	0.000	0.000	0.000	0.000	0.000	0.000	0.000	0.000	0.000	0.000	0.000	0.000	0.000	0.000	0.000	0.000	0.000	0.000	0.000	0.000	0.000	0.000	0.000	0.000
	REQUIRED CAMBER	0″	7/8″	1 11/16″	2 9/16″	3 1/4″	3 5/8″	3 15/16″	4 5/8″	5 1/16″	5 1/2″	5 15/16″	6 1/16″	6 1/4″	6 3/8″	6 1/4″	6 1/8″	6″	5 5/8″	5 1/4″	4 7/8″	4 3/8″	3 13/16″	3 5/16″	3 1/4″	2 3/4″	2 1/4″	1 11/16″	1 5/16″	7/8″	7/16″	5/16″	1/8″	0″
GIRDER 2	DEFLECTION DUE TO WT. OF STEEL	0.000	-0.016	-0.033	-0.049	-0.062	-0.069	-0.075	-0.088	-0.096	-0.104	-0.113	-0.115	-0.118	-0.121	-0.119	-0.116	-0.114	-0.106	-0.099	-0.092	-0.082	-0.072	-0.062	-0.061	-0.052	-0.042	-0.031	-0.024	-0.016	-0.008	-0.006	-0.003	0.000
	DEFLECTION DUE TO WT. OF SLAB ▲	0.000	-0.043	-0.086	-0.129	-0.163	-0.181	-0.197	-0.231	-0.253	-0.275	-0.296	-0.304	-0.312	-0.319	-0.312	-0.306	-0.299	-0.280	-0.262	-0.243	-0.217	-0.191	-0.165	-0.163	-0.138	-0.112	-0.085	-0.065	-0.045	-0.024	-0.016	-0.008	0.000
	DEFL. DUE TO WT. OF BARRIER RAIL	0.000	-0.011	-0.022	-0.032	-0.041	-0.046	-0.050	-0.058	-0.064	-0.070	-0.076	-0.078	-0.080	-0.082	-0.081	-0.079	-0.078	-0.073	-0.069	-0.064	-0.057	-0.051	-0.044	-0.043	-0.037	-0.029	-0.022	-0.016	-0.011	-0.005	-0.004	-0.002	0.000
	TOTAL DEAD LOAD DEFLECTION	0.000	-0.070	-0.140	-0.210	-0.266	-0.295	-0.321	-0.377	-0.413	-0.449	-0.485	-0.497	-0.510	-0.523	-0.512	-0.501	-0.490	-0.460	-0.430	-0.399	-0.356	-0.314	-0.271	-0.268	-0.227	-0.182	-0.138	-0.105	-0.071	-0.038	-0.025	-0.013	0.000
	VERTICAL CURVE ORDINATE	0.000	0.000	0.000	0.000	0.000	0.000	0.000	0.000	0.000	0.000	0.000	0.000	0.000	0.000	0.000	0.000	0.000	0.000	0.000	0.000	0.000	0.000	0.000	0.000	0.000	0.000	0.000	0.000	0.000	0.000	0.000	0.000	0.000
	REQUIRED CAMBER	0″	13/16″	1 11/16″	2 1/2″	3 3/16″	3 9/16″	3 7/8″	4 1/2″	4 15/16″	5 3/8″	5 13/16″	5 15/16″	6 1/8″	6 1/4″	6 1/8″	6″	5 7/8″	5 1/2″	5 1/8″	4 13/16″	4 1/4″	3 3/4″	3 1/4″	3 3/16″	2 3/4″	2 3/16″	1 11/16″	1 1/4″	7/8″	7/16″	5/16″	1/8″	0″
GIRDER 3	DEFLECTION DUE TO WT. OF STEEL	0.000	-0.016	-0.033	-0.049	-0.062	-0.069	-0.075	-0.088	-0.096	-0.104	-0.113	-0.115	-0.118	-0.121	-0.119	-0.116	-0.114	-0.106	-0.099	-0.092	-0.082	-0.072	-0.062	-0.061	-0.052	-0.042	-0.031	-0.024	-0.016	-0.008	-0.006	-0.003	0.000
	DEFLECTION DUE TO WT. OF SLAB ▲	0.000	-0.043	-0.086	-0.129	-0.163	-0.181	-0.197	-0.231	-0.253	-0.275	-0.296	-0.304	-0.312	-0.319	-0.312	-0.306	-0.299	-0.280	-0.262	-0.243	-0.217	-0.191	-0.165	-0.163	-0.138	-0.112	-0.085	-0.065	-0.045	-0.024	-0.016	-0.008	0.000
	DEFL. DUE TO WT. OF BARRIER RAIL	0.000	-0.009	-0.019	-0.028	-0.036	-0.040	-0.043	-0.051	-0.056	-0.061	-0.066	-0.068	-0.070	-0.071	-0.070	-0.069	-0.068	-0.064	-0.060	-0.056	-0.050	-0.044	-0.038	-0.038	-0.032	-0.025	-0.019	-0.014	-0.009	-0.005	-0.003	-0.002	0.000
	TOTAL DEAD LOAD DEFLECTION	0.000	-0.069	-0.137	-0.206	-0.260	-0.289	-0.315	-0.369	-0.404	-0.440	-0.475	-0.487	-0.499	-0.512	-0.501	-0.491	-0.480	-0.450	-0.421	-0.391	-0.349	-0.307	-0.265	-0.262	-0.222	-0.179	-0.135	-0.103	-0.070	-0.037	-0.025	-0.016	0.000
	VERTICAL CURVE ORDINATE	0.000	0.000	0.000	0.000	0.000	0.000	0.000	0.000	0.000	0.000	0.000	0.000	0.000	0.000	0.000	0.000	0.000	0.000	0.000	0.000	0.000	0.000	0.000	0.000	0.000	0.000	0.000	0.000	0.000	0.000	0.000	0.000	0.000
	REQUIRED CAMBER	0″	13/16″	1 5/8″	2 1/2″	3 1/8″	3 1/2″	3 3/4″	4 7/16″	4 7/8″	5 1/4″	5 11/16″	5 7/8″	6″	6 1/8″	6″	5 7/8″	5 3/4″	5 3/8″	5 1/16″	4 11/16″	4 3/16″	3 11/16″	3 3/16″	3 1/8″	2 11/16″	2 1/8″	1 5/8″	1 1/4″	13/16″	7/16″	5/16″	1/8″	0″
GIRDER 4	DEFLECTION DUE TO WT. OF STEEL	0.000	-0.016	-0.033	-0.049	-0.062	-0.069	-0.075	-0.088	-0.096	-0.104	-0.113	-0.115	-0.118	-0.121	-0.119	-0.116	-0.114	-0.106	-0.099	-0.092	-0.082	-0.072	-0.062	-0.061	-0.052	-0.042	-0.031	-0.024	-0.016	-0.008	-0.006	-0.003	0.000
	DEFLECTION DUE TO WT. OF SLAB ▲	0.000	-0.043	-0.086	-0.129	-0.163	-0.181	-0.197	-0.231	-0.253	-0.275	-0.296	-0.304	-0.312	-0.319	-0.312	-0.306	-0.299	-0.280	-0.262	-0.243	-0.217	-0.191	-0.165	-0.163	-0.138	-0.112	-0.085	-0.065	-0.045	-0.024	-0.016	-0.008	0.000
	DEFL. DUE TO WT. OF BARRIER RAIL	0.000	-0.009	-0.019	-0.028	-0.036	-0.040	-0.043	-0.051	-0.056	-0.061	-0.066	-0.068	-0.070	-0.071	-0.070	-0.069	-0.068	-0.064	-0.060	-0.056	-0.050	-0.044	-0.038	-0.038	-0.032	-0.025	-0.019	-0.014	-0.009	-0.005	-0.003	-0.002	0.000
	TOTAL DEAD LOAD DEFLECTION	0.000	-0.069	-0.137	-0.206	-0.260	-0.289	-0.315	-0.369	-0.404	-0.440	-0.475	-0.487	-0.499	-0.512	-0.501	-0.491	-0.480	-0.450	-0.421	-0.391	-0.349	-0.307	-0.265	-0.262	-0.222	-0.179	-0.135	-0.103	-0.070	-0.037	-0.025	-0.016	0.000
	VERTICAL CURVE ORDINATE	0.000	0.000	0.000	0.000	0.000	0.000	0.000	0.000	0.000	0.000	0.000	0.000	0.000	0.000	0.000	0.000	0.000	0.000	0.000	0.000	0.000	0.000	0.000	0.000	0.000	0.000	0.000	0.000	0.000	0.000	0.000	0.000	0.000
	REQUIRED CAMBER	0″	13/16″	1 5/8″	2 1/2″	3 1/8″	3 1/2″	3 3/4″	4 7/16″	4 7/8″	5 1/4″	5 11/16″	5 7/8″	6″	6 1/8″	6″	5 7/8″	5 3/4″	5 3/8″	5 1/16″	4 11/16″	4 3/16″	3 11/16″	3 3/16″	3 1/8″	2 11/16″	2 1/8″	1 5/8″	1 1/4″	13/16″	7/16″	5/16″	1/8″	0″
GIRDER 5	DEFLECTION DUE TO WT. OF STEEL	0.000	-0.016	-0.033	-0.049	-0.062	-0.069	-0.075	-0.088	-0.096	-0.104	-0.113	-0.115	-0.118	-0.121	-0.119	-0.116	-0.114	-0.106	-0.099	-0.092	-0.082	-0.072	-0.062	-0.061	-0.052	-0.042	-0.031	-0.024	-0.016	-0.008	-0.006	-0.003	0.000
	DEFLECTION DUE TO WT. OF SLAB ▲	0.000	-0.043	-0.086	-0.129	-0.163	-0.181	-0.197	-0.231	-0.253	-0.275	-0.296	-0.304	-0.312	-0.319	-0.312	-0.306	-0.299	-0.280	-0.262	-0.243	-0.217	-0.191	-0.165	-0.163	-0.138	-0.112	-0.085	-0.065	-0.045	-0.024	-0.016	-0.008	0.000
	DEFL. DUE TO WT. OF BARRIER RAIL	0.000	-0.011	-0.022	-0.032	-0.041	-0.046	-0.050	-0.058	-0.064	-0.070	-0.076	-0.078	-0.080	-0.082	-0.081	-0.079	-0.078	-0.073	-0.069	-0.064	-0.057	-0.051	-0.044	-0.043	-0.037	-0.029	-0.022	-0.016	-0.011	-0.005	-0.004	-0.002	0.000
	TOTAL DEAD LOAD DEFLECTION	0.000	-0.070	-0.140	-0.210	-0.266	-0.295	-0.321	-0.377	-0.413	-0.449	-0.485	-0.497	-0.510	-0.523	-0.512	-0.501	-0.490	-0.460	-0.430	-0.399	-0.356	-0.314	-0.271	-0.268	-0.227	-0.182	-0.138	-0.105	-0.071	-0.038	-0.025	-0.013	0.000
	VERTICAL CURVE ORDINATE	0.000	0.000	0.000	0.000	0.000	0.000	0.000	0.000	0.000	0.000	0.000	0.000	0.000	0.000	0.000	0.000	0.000	0.000	0.000	0.000	0.000	0.000	0.000	0.000	0.000	0.000	0.000	0.000	0.000	0.000	0.000	0.000	0.000
	REQUIRED CAMBER	0″	13/16″	1 11/16″	2 1/2″	3 3/16″	3 9/16″	3 7/8″	4 1/2″	4 15/16″	5 3/8″	5 13/16″	5 15/16″	6 1/8″	6 1/4″	6 1/8″	6″	5 7/8″	5 1/2″	5 1/8″	4 13/16″	4 1/4″	3 3/4″	3 1/4″	3 3/16″	2 3/4″	2 3/16″	1 11/16″	1 1/4″	7/8″	7/16″	5/16″	1/8″	0″
GIRDER 6	DEFLECTION DUE TO WT. OF STEEL	0.000	-0.016	-0.031	-0.047	-0.059	-0.066	-0.071	-0.084	-0.092	-0.100	-0.108	-0.110	-0.113	-0.116	-0.114	-0.111	-0.109	-0.102	-0.095	-0.088	-0.079	-0.069	-0.059	-0.059	-0.050	-0.040	-0.030	-0.023	-0.015	-0.008	-0.005	-0.003	0.000
	DEFLECTION DUE TO WT. OF SLAB ▲	0.000	-0.043	-0.086	-0.129	-0.163	-0.181	-0.197	-0.231	-0.253	-0.275	-0.296	-0.304	-0.312	-0.319	-0.312	-0.306	-0.299	-0.280	-0.262	-0.243	-0.217	-0.191	-0.165	-0.163	-0.138	-0.112	-0.085	-0.065	-0.045	-0.024	-0.016	-0.008	0.000
	DEFL. DUE TO WT. OF BARRIER RAIL	0.000	-0.013	-0.026	-0.038	-0.049	-0.054	-0.059	-0.069	-0.076	-0.083	-0.090	-0.092	-0.095	-0.097	-0.096	-0.094	-0.092	-0.087	-0.081	-0.076	-0.068	-0.060	-0.052	-0.051	-0.043	-0.035	-0.026	-0.019	-0.013	-0.006	-0.004	-0.002	0.000
	TOTAL DEAD LOAD DEFLECTION	0.000	-0.071	-0.143	-0.214	-0.271	-0.301	-0.327	-0.384	-0.421	-0.457	-0.494	-0.507	-0.520	-0.533	-0.522	-0.511	-0.500	-0.469	-0.438	-0.407	-0.363	-0.320	-0.276	-0.273	-0.231	-0.186	-0.141	-0.107	-0.073	-0.039	-0.026	-0.013	0.000
	VERTICAL CURVE ORDINATE	0.000	0.000	0.000	0.000	0.000	0.000	0.000	0.000	0.000	0.000	0.000	0.000	0.000	0.000	0.000	0.000	0.000	0.000	0.000	0.000	0.000	0.000	0.000	0.000	0.000	0.000	0.000	0.000	0.000	0.000	0.000	0.000	0.000
	REQUIRED CAMBER	0″	7/8″	1 11/16″	2 9/16″	3 1/4″	3 5/8″	3 15/16″	4 5/8″	5 1/16″	5 1/2″	5 15/16″	6 1/16″	6 1/4″	6 3/8″	6 1/4″	6 1/8″	6″	5 5/8″	5 1/4″	4 7/8″	4 3/8″	3 13/16″	3 5/16″	3 1/4″	2 3/4″	2 1/4″	1 11/16″	1 5/16″	7/8″	7/16″	5/16″	1/8″	0″

SCHEMATIC CAMBER ORDINATES - SPAN 21

▲ INCLUDES SLAB, BUILDUP AND STAY-IN-PLACE FORMS

NOTES:

1. VALUES ARE SHOWN IN FEET (DECIMAL FORMAT), EXCEPT "REQUIRED CAMBER" WHICH IS GIVEN IN INCHES.
2. FOR GIRDER DESIGNATIONS, SEE FRAMING PLAN AND GIRDER DETAILS SHEETS.
3. DEFLECTIONS IN THE DOWNWARD DIRECTION ARE NEGATIVE. A REQUIRED CAMBER IN THE UPWARD DIRECTION IS POSITIVE. SIGN CONVENTION FOR DEAD LOAD DEFLECTION.

4. SLOPE FOR THE ZERO CAMBER BASE LINE VARIES.

PROJECT NO. U-2524C

GUILFORD COUNTY

STATION: POT 407+85.82 -L-
= POT 29+79.72 -Y4-

SHEET 3 OF 8

STATE OF NORTH CAROLINA
DEPARTMENT OF TRANSPORTATION
RALEIGH

STEEL GIRDER CAMBERS
UNIT G
SPAN 21

-RIGHT LANE-

REVISIONS							SHEET NO.
NO.	BY:	DATE:	NO.	BY:	DATE:		S-386
1			3				TOTAL SHEETS
2			4				836

DRAWN BY : VMW DATE : 4-13
CHECKED BY : TRL DATE : 4-13

DESIGN ENGINEER OF RECORD: K. BAILEY DATE : 5-13

STV / Ralph Whitehead Associates, Inc.
1000 West Morehead St., Ste. 200
Charlotte, NC 28208
NC License No. F-0991

6/6/2013 4:41:49 PM R:\ustation\Finals\Unit G - Camber Span 21.dgn

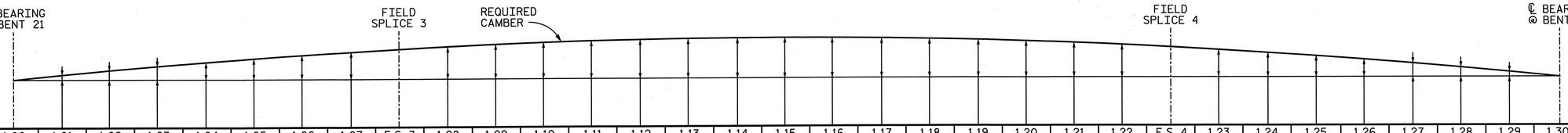

		1.00	1.01	1.02	1.03	1.04	1.05	1.06	1.07	F.S. 3	1.08	1.09	1.10	1.11	1.12	1.13	1.14	1.15	1.16	1.17	1.18	1.19	1.20	1.21	1.22	F.S. 4	1.23	1.24	1.25	1.26	1.27	1.28	1.29	1.30
GIRDER 1	DEFLECTION DUE TO WT. OF STEEL	0.000	-0.004	-0.008	-0.013	-0.023	-0.034	-0.045	-0.058	-0.066	-0.071	-0.084	-0.094	-0.103	-0.113	-0.117	-0.121	-0.124	-0.121	-0.117	-0.113	-0.103	-0.094	-0.084	-0.071	-0.066	-0.058	-0.045	-0.034	-0.023	-0.013	-0.008	-0.004	0.000
	DEFLECTION DUE TO WT. OF SLAB ▲	0.000	-0.009	-0.018	-0.027	-0.053	-0.080	-0.106	-0.138	-0.159	-0.171	-0.203	-0.228	-0.253	-0.279	-0.288	-0.298	-0.307	-0.298	-0.288	-0.279	-0.253	-0.228	-0.203	-0.171	-0.159	-0.138	-0.106	-0.080	-0.053	-0.027	-0.018	-0.009	0.000
	DEFL. DUE TO WT. OF BARRIER RAIL	0.000	-0.005	-0.009	-0.014	-0.025	-0.036	-0.047	-0.059	-0.066	-0.071	-0.083	-0.092	-0.101	-0.109	-0.113	-0.116	-0.119	-0.116	-0.113	-0.109	-0.101	-0.092	-0.083	-0.071	-0.066	-0.059	-0.047	-0.036	-0.025	-0.014	-0.009	-0.005	0.000
	TOTAL DEAD LOAD DEFLECTION	0.000	-0.018	-0.035	-0.053	-0.101	-0.150	-0.198	-0.255	-0.291	-0.312	-0.369	-0.413	-0.457	-0.501	-0.518	-0.534	-0.550	-0.534	-0.518	-0.501	-0.457	-0.413	-0.369	-0.312	-0.291	-0.255	-0.198	-0.150	-0.101	-0.053	-0.035	-0.018	0.000
	VERTICAL CURVE ORDINATE	0.000	0.000	0.000	0.000	0.000	0.000	0.000	0.000	0.000	0.000	0.000	0.000	0.000	0.000	0.000	0.000	0.000	0.000	0.000	0.000	0.000	0.000	0.000	0.000	0.000	0.000	0.000	0.000	0.000	0.000	0.000	0.000	0.000
	REQUIRED CAMBER	0"	3/16"	7/16"	5/8"	1 3/16"	1 13/16"	2 3/8"	3 1/16"	3 1/2"	3 3/4"	4 1/16"	4 15/16"	5 1/2"	6"	6 3/16"	6 7/16"	6 5/8"	6 7/16"	6 3/16"	6"	5 1/2"	4 15/16"	4 7/16"	3 3/4"	3 1/2"	3 1/16"	2 3/8"	1 13/16"	1 3/16"	5/8"	7/16"	3/16"	0"
GIRDER 2	DEFLECTION DUE TO WT. OF STEEL	0.000	-0.004	-0.009	-0.013	-0.024	-0.036	-0.047	-0.061	-0.069	-0.074	-0.087	-0.098	-0.108	-0.118	-0.122	-0.126	-0.130	-0.126	-0.122	-0.118	-0.108	-0.098	-0.087	-0.074	-0.069	-0.061	-0.047	-0.036	-0.024	-0.013	-0.009	-0.004	0.000
	DEFLECTION DUE TO WT. OF SLAB ▲	0.000	-0.009	-0.018	-0.027	-0.053	-0.080	-0.106	-0.138	-0.159	-0.171	-0.203	-0.228	-0.253	-0.279	-0.288	-0.298	-0.307	-0.298	-0.288	-0.279	-0.253	-0.228	-0.203	-0.171	-0.159	-0.138	-0.106	-0.080	-0.053	-0.027	-0.018	-0.009	0.000
	DEFL. DUE TO WT. OF BARRIER RAIL	0.000	-0.004	-0.008	-0.012	-0.022	-0.031	-0.041	-0.051	-0.058	-0.062	-0.072	-0.080	-0.087	-0.095	-0.097	-0.100	-0.103	-0.100	-0.097	-0.095	-0.087	-0.080	-0.072	-0.062	-0.058	-0.051	-0.041	-0.031	-0.022	-0.012	-0.008	-0.004	0.000
	TOTAL DEAD LOAD DEFLECTION	0.000	-0.017	-0.035	-0.052	-0.099	-0.147	-0.194	-0.250	-0.286	-0.306	-0.362	-0.405	-0.449	-0.492	-0.508	-0.524	-0.540	-0.524	-0.508	-0.492	-0.449	-0.405	-0.362	-0.306	-0.286	-0.250	-0.194	-0.147	-0.099	-0.052	-0.035	-0.017	0.000
	VERTICAL CURVE ORDINATE	0.000	0.000	0.000	0.000	0.000	0.000	0.000	0.000	0.000	0.000	0.000	0.000	0.000	0.000	0.000	0.000	0.000	0.000	0.000	0.000	0.000	0.000	0.000	0.000	0.000	0.000	0.000	0.000	0.000	0.000	0.000	0.000	0.000
	REQUIRED CAMBER	0"	3/16"	7/16"	5/8"	1 3/16"	1 1/4"	2 5/16"	3"	3 7/16"	3 11/16"	4 3/8"	4 7/8"	5 3/8"	5 7/8"	6 1/16"	6 5/16"	6 1/2"	6 5/16"	6 1/16"	5 7/8"	5 3/8"	4 7/8"	4 3/8"	3 11/16"	3 7/16"	3"	2 5/16"	1 3/4"	1 3/16"	5/8"	7/16"	3/16"	0"
GIRDER 3	DEFLECTION DUE TO WT. OF STEEL	0.000	-0.004	-0.009	-0.013	-0.024	-0.036	-0.047	-0.061	-0.069	-0.074	-0.087	-0.098	-0.108	-0.118	-0.122	-0.126	-0.130	-0.126	-0.122	-0.118	-0.108	-0.098	-0.087	-0.074	-0.069	-0.061	-0.047	-0.036	-0.024	-0.013	-0.009	-0.004	0.000
	DEFLECTION DUE TO WT. OF SLAB ▲	0.000	-0.009	-0.018	-0.027	-0.053	-0.080	-0.106	-0.138	-0.159	-0.171	-0.203	-0.228	-0.253	-0.279	-0.288	-0.298	-0.307	-0.298	-0.288	-0.279	-0.253	-0.228	-0.203	-0.171	-0.159	-0.138	-0.106	-0.080	-0.053	-0.027	-0.018	-0.009	0.000
	DEFL. DUE TO WT. OF BARRIER RAIL	0.000	-0.004	-0.007	-0.011	-0.019	-0.027	-0.036	-0.045	-0.050	-0.054	-0.063	-0.069	-0.076	-0.082	-0.085	-0.087	-0.090	-0.087	-0.085	-0.082	-0.076	-0.069	-0.063	-0.054	-0.050	-0.045	-0.036	-0.027	-0.019	-0.011	-0.007	-0.004	0.000
	TOTAL DEAD LOAD DEFLECTION	0.000	-0.017	-0.034	-0.050	-0.097	-0.143	-0.189	-0.244	-0.278	-0.298	-0.353	-0.395	-0.437	-0.480	-0.495	-0.511	-0.527	-0.511	-0.495	-0.480	-0.437	-0.395	-0.353	-0.298	-0.278	-0.244	-0.189	-0.143	-0.097	-0.050	-0.034	-0.017	0.000
	VERTICAL CURVE ORDINATE	0.000	0.000	0.000	0.000	0.000	0.000	0.000	0.000	0.000	0.000	0.000	0.000	0.000	0.000	0.000	0.000	0.000	0.000	0.000	0.000	0.000	0.000	0.000	0.000	0.000	0.000	0.000	0.000	0.000	0.000	0.000	0.000	0.000
	REQUIRED CAMBER	0"	3/16"	3/8"	5/8"	1 3/16"	1 11/16"	2 1/4"	2 15/16"	3 5/16"	3 9/16"	4 1/4"	4 3/4"	5 1/4"	5 3/4"	5 15/16"	6 1/8"	6 5/16"	6 1/8"	5 15/16"	5 3/4"	5 1/4"	4 3/4"	4 1/4"	3 9/16"	3 5/16"	2 15/16"	2 1/4"	1 11/16"	1 3/16"	5/8"	3/8"	3/16"	0"
GIRDER 4	DEFLECTION DUE TO WT. OF STEEL	0.000	-0.004	-0.009	-0.013	-0.024	-0.036	-0.047	-0.061	-0.069	-0.074	-0.087	-0.098	-0.108	-0.118	-0.122	-0.126	-0.130	-0.126	-0.122	-0.118	-0.108	-0.098	-0.087	-0.074	-0.069	-0.061	-0.047	-0.036	-0.024	-0.013	-0.009	-0.004	0.000
	DEFLECTION DUE TO WT. OF SLAB ▲	0.000	-0.009	-0.018	-0.027	-0.053	-0.080	-0.106	-0.138	-0.159	-0.171	-0.203	-0.228	-0.253	-0.279	-0.288	-0.298	-0.307	-0.298	-0.288	-0.279	-0.253	-0.228	-0.203	-0.171	-0.159	-0.138	-0.106	-0.080	-0.053	-0.027	-0.018	-0.009	0.000
	DEFL. DUE TO WT. OF BARRIER RAIL	0.000	-0.004	-0.007	-0.011	-0.019	-0.027	-0.036	-0.045	-0.050	-0.054	-0.063	-0.069	-0.076	-0.082	-0.085	-0.087	-0.090	-0.087	-0.085	-0.082	-0.076	-0.069	-0.063	-0.054	-0.050	-0.045	-0.036	-0.027	-0.019	-0.011	-0.007	-0.004	0.000
	TOTAL DEAD LOAD DEFLECTION	0.000	-0.017	-0.034	-0.050	-0.097	-0.143	-0.189	-0.244	-0.278	-0.298	-0.353	-0.395	-0.437	-0.480	-0.495	-0.511	-0.527	-0.511	-0.495	-0.480	-0.437	-0.395	-0.353	-0.298	-0.278	-0.244	-0.189	-0.143	-0.097	-0.050	-0.034	-0.017	0.000
	VERTICAL CURVE ORDINATE	0.000	0.000	0.000	0.000	0.000	0.000	0.000	0.000	0.000	0.000	0.000	0.000	0.000	0.000	0.000	0.000	0.000	0.000	0.000	0.000	0.000	0.000	0.000	0.000	0.000	0.000	0.000	0.000	0.000	0.000	0.000	0.000	0.000
	REQUIRED CAMBER	0"	3/16"	3/8"	5/8"	1 3/16"	1 11/16"	2 1/4"	2 15/16"	3 5/16"	3 9/16"	4 1/4"	4 3/4"	5 1/4"	5 3/4"	5 15/16"	6 1/8"	6 5/16"	6 1/8"	5 15/16"	5 3/4"	5 1/4"	4 3/4"	4 1/4"	3 9/16"	3 5/16"	2 15/16"	2 1/4"	1 11/16"	1 3/16"	5/8"	3/8"	3/16"	0"
GIRDER 5	DEFLECTION DUE TO WT. OF STEEL	0.000	-0.004	-0.009	-0.013	-0.024	-0.036	-0.047	-0.061	-0.069	-0.074	-0.087	-0.098	-0.108	-0.118	-0.122	-0.126	-0.130	-0.126	-0.122	-0.118	-0.108	-0.098	-0.087	-0.074	-0.069	-0.061	-0.047	-0.036	-0.024	-0.013	-0.009	-0.004	0.000
	DEFLECTION DUE TO WT. OF SLAB ▲	0.000	-0.009	-0.018	-0.027	-0.053	-0.080	-0.106	-0.138	-0.159	-0.171	-0.203	-0.228	-0.253	-0.279	-0.288	-0.298	-0.307	-0.298	-0.288	-0.279	-0.253	-0.228	-0.203	-0.171	-0.159	-0.138	-0.106	-0.080	-0.053	-0.027	-0.018	-0.009	0.000
	DEFL. DUE TO WT. OF BARRIER RAIL	0.000	-0.004	-0.008	-0.012	-0.022	-0.031	-0.041	-0.051	-0.058	-0.062	-0.072	-0.080	-0.087	-0.095	-0.097	-0.100	-0.103	-0.100	-0.097	-0.095	-0.087	-0.080	-0.072	-0.062	-0.058	-0.051	-0.041	-0.031	-0.022	-0.012	-0.008	-0.004	0.000
	TOTAL DEAD LOAD DEFLECTION	0.000	-0.017	-0.035	-0.052	-0.099	-0.147	-0.194	-0.250	-0.286	-0.306	-0.362	-0.405	-0.449	-0.492	-0.508	-0.524	-0.540	-0.524	-0.508	-0.492	-0.449	-0.405	-0.362	-0.306	-0.286	-0.250	-0.194	-0.147	-0.099	-0.052	-0.035	-0.017	0.000
	VERTICAL CURVE ORDINATE	0.000	0.000	0.000	0.000	0.000	0.000	0.000	0.000	0.000	0.000	0.000	0.000	0.000	0.000	0.000	0.000	0.000	0.000	0.000	0.000	0.000	0.000	0.000	0.000	0.000	0.000	0.000	0.000	0.000	0.000	0.000	0.000	0.000
	REQUIRED CAMBER	0"	3/16"	7/16"	5/8"	1 3/16"	1 1/4"	2 5/16"	3"	3 7/16"	3 11/16"	4 3/8"	4 7/8"	5 3/8"	5 7/8"	6 1/16"	6 5/16"	6 1/2"	6 5/16"	6 1/16"	5 7/8"	5 3/8"	4 7/8"	4 3/8"	3 11/16"	3 7/16"	3"	2 5/16"	1 3/4"	1 3/16"	5/8"	7/16"	3/16"	0"
GIRDER 6	DEFLECTION DUE TO WT. OF STEEL	0.000	-0.004	-0.008	-0.013	-0.023	-0.034	-0.045	-0.058	-0.066	-0.071	-0.084	-0.094	-0.103	-0.113	-0.117	-0.121	-0.124	-0.121	-0.117	-0.113	-0.103	-0.094	-0.084	-0.071	-0.066	-0.058	-0.045	-0.034	-0.023	-0.013	-0.008	-0.004	0.000
	DEFLECTION DUE TO WT. OF SLAB ▲	0.000	-0.009	-0.018	-0.027	-0.053	-0.080	-0.106	-0.138	-0.159	-0.171	-0.203	-0.228	-0.253	-0.279	-0.288	-0.298	-0.307	-0.298	-0.288	-0.279	-0.253	-0.228	-0.203	-0.171	-0.159	-0.138	-0.106	-0.080	-0.053	-0.027	-0.018	-0.009	0.000
	DEFL. DUE TO WT. OF BARRIER RAIL	0.000	-0.005	-0.009	-0.014	-0.025	-0.036	-0.047	-0.059	-0.066	-0.071	-0.083	-0.092	-0.101	-0.109	-0.113	-0.116	-0.119	-0.116	-0.113	-0.109	-0.101	-0.092	-0.083	-0.071	-0.066	-0.059	-0.047	-0.036	-0.025	-0.014	-0.009	-0.005	0.000
	TOTAL DEAD LOAD DEFLECTION	0.000	-0.018	-0.035	-0.053	-0.101	-0.150	-0.198	-0.255	-0.291	-0.312	-0.369	-0.413	-0.457	-0.501	-0.518	-0.534	-0.550	-0.534	-0.518	-0.501	-0.457	-0.413	-0.369	-0.312	-0.291	-0.255	-0.198	-0.150	-0.101	-0.053	-0.035	-0.018	0.000
	VERTICAL CURVE ORDINATE	0.000	0.000	0.000	0.000	0.000	0.000	0.000	0.000	0.000	0.000	0.000	0.000	0.000	0.000	0.000	0.000	0.000	0.000	0.000	0.000	0.000	0.000	0.000	0.000	0.000	0.000	0.000	0.000	0.000	0.000	0.000	0.000	0.000
	REQUIRED CAMBER	0"	3/16"	7/16"	5/8"	1 3/16"	1 13/16"	2 3/8"	3 1/16"	3 1/2"	3 3/4"	4 1/16"	4 15/16"	5 1/2"	6"	6 3/16"	6 7/16"	6 5/8"	6 7/16"	6 3/16"	6"	5 1/2"	4 15/16"	4 7/16"	3 3/4"	3 1/2"	3 1/16"	2 3/8"	1 13/16"	1 3/16"	5/8"	7/16"	3/16"	0"

SCHEMATIC CAMBER ORDINATES - SPAN 22

▲ INCLUDES SLAB, BUILDUP AND STAY-IN-PLACE FORMS

NOTES:

1. VALUES ARE SHOWN IN FEET (DECIMAL FORMAT), EXCEPT "REQUIRED CAMBER" WHICH IS GIVEN IN INCHES.
2. FOR GIRDER DESIGNATIONS, SEE FRAMING PLAN AND GIRDER DETAILS SHEETS.
3. DEFLECTIONS IN THE DOWNWARD DIRECTION ARE NEGATIVE. A REQUIRED CAMBER IN THE UPWARD DIRECTION IS POSITIVE. SIGN CONVENTION FOR DEAD LOAD DEFLECTION.

4. SLOPE FOR THE ZERO CAMBER BASE LINE VARIES.

PROJECT NO. U-2524C

GUILFORD COUNTY

STATION: POT 407+85.82 -L-
= POT 29+79.72 -Y4-

SHEET 4 OF 8

NORTH CAROLINA PROFESSIONAL ENGINEER SEAL 28479 ENGINEER KEVIN G. BAILEY 6-7-13

STATE OF NORTH CAROLINA
DEPARTMENT OF TRANSPORTATION
RALEIGH

STEEL GIRDER CAMBERS
UNIT G
SPAN 22

-RIGHT LANE-

DRAWN BY : VMW	DATE : 4-13	DESIGN ENGINEER OF RECORD: K. BAILEY	DATE : 5-13
CHECKED BY : TRL	DATE : 4-13		

STV / Ralph Whitehead Associates, Inc.
1000 West Morehead St., Ste. 200
Charlotte, NC 28208
NC License No. F-0991

REVISIONS						SHEET NO.
NO.	BY:	DATE:	NO.	BY:	DATE:	S-387
1			3			TOTAL SHEETS
2			4			836

6/6/2013 4:41:50 PM R:\ustation\Finals\Unit 6 - Camber Span 22.dgn

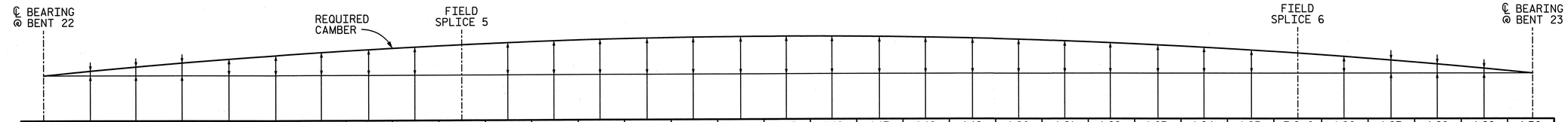

		1.00	1.01	1.02	1.03	1.04	1.05	1.06	1.07	1.08	F.S. 5	1.09	1.10	1.11	1.12	1.13	1.14	1.15	1.16	1.17	1.18	1.19	1.20	1.21	1.22	1.23	1.24	1.25	F.S. 6	1.26	1.27	1.28	1.29	1.30
GIRDER 1	DEFLECTION DUE TO WT. OF STEEL	0.000	-0.003	-0.005	-0.008	-0.015	-0.023	-0.030	-0.040	-0.050	-0.059	-0.059	-0.069	-0.079	-0.088	-0.095	-0.102	-0.109	-0.111	-0.114	-0.116	-0.113	-0.110	-0.108	-0.100	-0.092	-0.084	-0.071	-0.066	-0.059	-0.047	-0.031	-0.016	0.000
	DEFLECTION DUE TO WT. OF SLAB ▲	0.000	-0.008	-0.016	-0.024	-0.045	-0.065	-0.085	-0.112	-0.138	-0.163	-0.165	-0.191	-0.217	-0.243	-0.262	-0.280	-0.299	-0.306	-0.312	-0.319	-0.312	-0.304	-0.296	-0.275	-0.253	-0.231	-0.197	-0.181	-0.163	-0.129	-0.086	-0.043	0.000
	DEFL. DUE TO WT. OF BARRIER RAIL	0.000	-0.002	-0.004	-0.006	-0.013	-0.019	-0.026	-0.035	-0.043	-0.051	-0.052	-0.060	-0.068	-0.076	-0.081	-0.087	-0.092	-0.094	-0.096	-0.097	-0.095	-0.092	-0.090	-0.083	-0.076	-0.069	-0.059	-0.054	-0.049	-0.038	-0.026	-0.013	0.000
	TOTAL DEAD LOAD DEFLECTION	0.000	-0.013	-0.026	-0.039	-0.073	-0.107	-0.141	-0.186	-0.231	-0.273	-0.276	-0.320	-0.363	-0.407	-0.438	-0.469	-0.500	-0.511	-0.522	-0.533	-0.520	-0.507	-0.494	-0.457	-0.421	-0.384	-0.327	-0.301	-0.271	-0.214	-0.143	-0.071	0.000
	VERTICAL CURVE ORDINATE	0.000	0.000	0.000	0.000	0.000	0.000	0.000	0.000	0.000	0.000	0.000	0.000	0.000	0.000	0.000	0.000	0.000	0.000	0.000	0.000	0.000	0.000	0.000	0.000	0.000	0.000	0.000	0.000	0.000	0.000	0.000	0.000	0.000
	REQUIRED CAMBER	0″	1/8″	5/16″	7/16″	7/8″	1 5/16″	1 11/16″	2 1/4″	2 3/4″	3 1/4″	3 5/16″	3 13/16″	4 3/8″	4 7/8″	5 1/4″	5 5/8″	6″	6 1/8″	6 1/4″	6 3/8″	6 1/4″	6 1/16″	5 15/16″	5 1/2″	5 1/16″	4 5/8″	3 15/16″	3 5/8″	3 1/4″	2 9/16″	1 11/16″	7/8″	0″

		1.00	1.01	1.02	1.03	1.04	1.05	1.06	1.07	1.08	F.S. 5	1.09	1.10	1.11	1.12	1.13	1.14	1.15	1.16	1.17	1.18	1.19	1.20	1.21	1.22	1.23	1.24	1.25	F.S. 6	1.26	1.27	1.28	1.29	1.30
GIRDER 2	DEFLECTION DUE TO WT. OF STEEL	0.000	-0.003	-0.006	-0.008	-0.016	-0.024	-0.031	-0.042	-0.052	-0.061	-0.062	-0.072	-0.082	-0.092	-0.099	-0.106	-0.114	-0.116	-0.119	-0.121	-0.118	-0.115	-0.113	-0.104	-0.096	-0.088	-0.075	-0.069	-0.062	-0.049	-0.033	-0.016	0.000
	DEFLECTION DUE TO WT. OF SLAB ▲	0.000	-0.008	-0.016	-0.024	-0.045	-0.065	-0.085	-0.112	-0.138	-0.163	-0.165	-0.191	-0.217	-0.243	-0.262	-0.280	-0.299	-0.306	-0.312	-0.319	-0.312	-0.304	-0.296	-0.275	-0.253	-0.231	-0.197	-0.181	-0.163	-0.129	-0.086	-0.043	0.000
	DEFL. DUE TO WT. OF BARRIER RAIL	0.000	-0.002	-0.004	-0.005	-0.011	-0.016	-0.022	-0.029	-0.037	-0.043	-0.044	-0.051	-0.057	-0.064	-0.069	-0.073	-0.078	-0.079	-0.081	-0.082	-0.080	-0.078	-0.076	-0.070	-0.064	-0.058	-0.050	-0.046	-0.041	-0.032	-0.022	-0.011	0.000
	TOTAL DEAD LOAD DEFLECTION	0.000	-0.013	-0.025	-0.038	-0.071	-0.105	-0.138	-0.182	-0.227	-0.268	-0.271	-0.314	-0.356	-0.399	-0.430	-0.460	-0.490	-0.501	-0.512	-0.523	-0.510	-0.497	-0.485	-0.449	-0.413	-0.377	-0.321	-0.295	-0.266	-0.210	-0.140	-0.070	0.000
	VERTICAL CURVE ORDINATE	0.000	0.000	0.000	0.000	0.000	0.000	0.000	0.000	0.000	0.000	0.000	0.000	0.000	0.000	0.000	0.000	0.000	0.000	0.000	0.000	0.000	0.000	0.000	0.000	0.000	0.000	0.000	0.000	0.000	0.000	0.000	0.000	0.000
	REQUIRED CAMBER	0″	1/8″	5/16″	7/16″	7/8″	1 1/4″	1 11/16″	2 3/16″	2 3/4″	3 3/16″	3 1/4″	3 3/4″	4 1/4″	4 13/16″	5 1/8″	5 1/2″	5 7/8″	6″	6 1/8″	6 1/4″	6 1/8″	5 15/16″	5 13/16″	5 3/8″	4 15/16″	4 1/2″	3 7/8″	3 9/16″	3 3/16″	2 1/2″	1 11/16″	13/16″	0″

		1.00	1.01	1.02	1.03	1.04	1.05	1.06	1.07	1.08	F.S. 5	1.09	1.10	1.11	1.12	1.13	1.14	1.15	1.16	1.17	1.18	1.19	1.20	1.21	1.22	1.23	1.24	1.25	F.S. 6	1.26	1.27	1.28	1.29	1.30
GIRDER 3	DEFLECTION DUE TO WT. OF STEEL	0.000	-0.003	-0.006	-0.008	-0.016	-0.024	-0.031	-0.042	-0.052	-0.061	-0.062	-0.072	-0.082	-0.092	-0.099	-0.106	-0.114	-0.116	-0.119	-0.121	-0.118	-0.115	-0.113	-0.104	-0.096	-0.088	-0.075	-0.069	-0.062	-0.049	-0.033	-0.016	0.000
	DEFLECTION DUE TO WT. OF SLAB ▲	0.000	-0.008	-0.016	-0.024	-0.045	-0.065	-0.085	-0.112	-0.138	-0.163	-0.165	-0.191	-0.217	-0.243	-0.262	-0.280	-0.299	-0.306	-0.312	-0.319	-0.312	-0.304	-0.296	-0.275	-0.253	-0.231	-0.197	-0.181	-0.163	-0.129	-0.086	-0.043	0.000
	DEFL. DUE TO WT. OF BARRIER RAIL	0.000	-0.002	-0.003	-0.005	-0.009	-0.014	-0.019	-0.025	-0.032	-0.038	-0.038	-0.044	-0.050	-0.056	-0.060	-0.064	-0.068	-0.069	-0.070	-0.071	-0.070	-0.068	-0.066	-0.061	-0.056	-0.051	-0.043	-0.040	-0.036	-0.028	-0.019	-0.009	0.000
	TOTAL DEAD LOAD DEFLECTION	0.000	-0.012	-0.025	-0.037	-0.070	-0.103	-0.135	-0.179	-0.222	-0.262	-0.265	-0.307	-0.349	-0.391	-0.421	-0.450	-0.480	-0.491	-0.501	-0.512	-0.499	-0.487	-0.475	-0.440	-0.404	-0.369	-0.315	-0.289	-0.260	-0.206	-0.137	-0.069	0.000
	VERTICAL CURVE ORDINATE	0.000	0.000	0.000	0.000	0.000	0.000	0.000	0.000	0.000	0.000	0.000	0.000	0.000	0.000	0.000	0.000	0.000	0.000	0.000	0.000	0.000	0.000	0.000	0.000	0.000	0.000	0.000	0.000	0.000	0.000	0.000	0.000	0.000
	REQUIRED CAMBER	0″	1/8″	5/16″	7/16″	13/16″	1 1/4″	1 5/8″	2 1/8″	2 11/16″	3 1/8″	3 3/16″	3 11/16″	4 3/16″	4 11/16″	5 1/16″	5 3/8″	5 3/4″	5 7/8″	6″	6 1/8″	6″	5 7/8″	5 11/16″	5 1/4″	4 7/8″	4 7/16″	3 3/4″	3 1/2″	3 1/8″	2 1/2″	1 5/8″	13/16″	0″

		1.00	1.01	1.02	1.03	1.04	1.05	1.06	1.07	1.08	F.S. 5	1.09	1.10	1.11	1.12	1.13	1.14	1.15	1.16	1.17	1.18	1.19	1.20	1.21	1.22	1.23	1.24	1.25	F.S. 6	1.26	1.27	1.28	1.29	1.30
GIRDER 4	DEFLECTION DUE TO WT. OF STEEL	0.000	-0.003	-0.006	-0.008	-0.016	-0.024	-0.031	-0.042	-0.052	-0.061	-0.062	-0.072	-0.082	-0.092	-0.099	-0.106	-0.114	-0.116	-0.119	-0.121	-0.118	-0.115	-0.113	-0.104	-0.096	-0.088	-0.075	-0.069	-0.062	-0.049	-0.033	-0.016	0.000
	DEFLECTION DUE TO WT. OF SLAB ▲	0.000	-0.008	-0.016	-0.024	-0.045	-0.065	-0.085	-0.112	-0.138	-0.163	-0.165	-0.191	-0.217	-0.243	-0.262	-0.280	-0.299	-0.306	-0.312	-0.319	-0.312	-0.304	-0.296	-0.275	-0.253	-0.231	-0.197	-0.181	-0.163	-0.129	-0.086	-0.043	0.000
	DEFL. DUE TO WT. OF BARRIER RAIL	0.000	-0.002	-0.003	-0.005	-0.009	-0.014	-0.019	-0.025	-0.032	-0.038	-0.038	-0.044	-0.050	-0.056	-0.060	-0.064	-0.068	-0.069	-0.070	-0.071	-0.070	-0.068	-0.066	-0.061	-0.056	-0.051	-0.043	-0.040	-0.036	-0.028	-0.019	-0.009	0.000
	TOTAL DEAD LOAD DEFLECTION	0.000	-0.012	-0.025	-0.037	-0.070	-0.103	-0.135	-0.179	-0.222	-0.262	-0.265	-0.307	-0.349	-0.391	-0.421	-0.450	-0.480	-0.491	-0.501	-0.512	-0.499	-0.487	-0.475	-0.440	-0.404	-0.369	-0.315	-0.289	-0.260	-0.206	-0.137	-0.069	0.000
	VERTICAL CURVE ORDINATE	0.000	0.000	0.000	0.000	0.000	0.000	0.000	0.000	0.000	0.000	0.000	0.000	0.000	0.000	0.000	0.000	0.000	0.000	0.000	0.000	0.000	0.000	0.000	0.000	0.000	0.000	0.000	0.000	0.000	0.000	0.000	0.000	0.000
	REQUIRED CAMBER	0″	1/8″	5/16″	7/16″	13/16″	1 1/4″	1 5/8″	2 1/8″	2 11/16″	3 1/8″	3 3/16″	3 11/16″	4 3/16″	4 11/16″	5 1/16″	5 3/8″	5 3/4″	5 7/8″	6″	6 1/8″	6″	5 7/8″	5 11/16″	5 1/4″	4 7/8″	4 7/16″	3 3/4″	3 1/2″	3 1/8″	2 1/2″	1 5/8″	13/16″	0″

		1.00	1.01	1.02	1.03	1.04	1.05	1.06	1.07	1.08	F.S. 5	1.09	1.10	1.11	1.12	1.13	1.14	1.15	1.16	1.17	1.18	1.19	1.20	1.21	1.22	1.23	1.24	1.25	F.S. 6	1.26	1.27	1.28	1.29	1.30
GIRDER 5	DEFLECTION DUE TO WT. OF STEEL	0.000	-0.003	-0.006	-0.008	-0.016	-0.024	-0.031	-0.042	-0.052	-0.061	-0.062	-0.072	-0.082	-0.092	-0.099	-0.106	-0.114	-0.116	-0.119	-0.121	-0.118	-0.115	-0.113	-0.104	-0.096	-0.088	-0.075	-0.069	-0.062	-0.049	-0.033	-0.016	0.000
	DEFLECTION DUE TO WT. OF SLAB ▲	0.000	-0.008	-0.016	-0.024	-0.045	-0.065	-0.085	-0.112	-0.138	-0.163	-0.165	-0.191	-0.217	-0.243	-0.262	-0.280	-0.299	-0.306	-0.312	-0.319	-0.312	-0.304	-0.296	-0.275	-0.253	-0.231	-0.197	-0.181	-0.163	-0.129	-0.086	-0.043	0.000
	DEFL. DUE TO WT. OF BARRIER RAIL	0.000	-0.002	-0.004	-0.005	-0.011	-0.016	-0.022	-0.029	-0.037	-0.043	-0.044	-0.051	-0.057	-0.064	-0.069	-0.073	-0.078	-0.079	-0.081	-0.082	-0.080	-0.078	-0.076	-0.070	-0.064	-0.058	-0.050	-0.046	-0.041	-0.032	-0.022	-0.011	0.000
	TOTAL DEAD LOAD DEFLECTION	0.000	-0.013	-0.025	-0.038	-0.071	-0.105	-0.138	-0.182	-0.227	-0.268	-0.271	-0.314	-0.356	-0.399	-0.430	-0.460	-0.490	-0.501	-0.512	-0.523	-0.510	-0.497	-0.485	-0.449	-0.413	-0.377	-0.321	-0.295	-0.266	-0.210	-0.140	-0.070	0.000
	VERTICAL CURVE ORDINATE	0.000	0.000	0.000	0.000	0.000	0.000	0.000	0.000	0.000	0.000	0.000	0.000	0.000	0.000	0.000	0.000	0.000	0.000	0.000	0.000	0.000	0.000	0.000	0.000	0.000	0.000	0.000	0.000	0.000	0.000	0.000	0.000	0.000
	REQUIRED CAMBER	0″	1/8″	5/16″	7/16″	7/8″	1 1/4″	1 11/16″	2 3/16″	2 3/4″	3 3/16″	3 1/4″	3 3/4″	4 1/4″	4 13/16″	5 1/8″	5 1/2″	5 7/8″	6″	6 1/8″	6 1/4″	6 1/8″	5 15/16″	5 13/16″	5 3/8″	4 15/16″	4 1/2″	3 7/8″	3 9/16″	3 3/16″	2 1/2″	1 11/16″	13/16″	0″

		1.00	1.01	1.02	1.03	1.04	1.05	1.06	1.07	1.08	F.S. 5	1.09	1.10	1.11	1.12	1.13	1.14	1.15	1.16	1.17	1.18	1.19	1.20	1.21	1.22	1.23	1.24	1.25	F.S. 6	1.26	1.27	1.28	1.29	1.30
GIRDER 6	DEFLECTION DUE TO WT. OF STEEL	0.000	-0.003	-0.005	-0.008	-0.015	-0.023	-0.030	-0.040	-0.050	-0.059	-0.059	-0.069	-0.079	-0.088	-0.095	-0.102	-0.109	-0.111	-0.114	-0.116	-0.113	-0.110	-0.108	-0.100	-0.092	-0.084	-0.071	-0.066	-0.059	-0.047	-0.031	-0.016	0.000
	DEFLECTION DUE TO WT. OF SLAB ▲	0.000	-0.008	-0.016	-0.024	-0.045	-0.065	-0.085	-0.112	-0.138	-0.163	-0.165	-0.191	-0.217	-0.243	-0.262	-0.280	-0.299	-0.306	-0.312	-0.319	-0.312	-0.304	-0.296	-0.275	-0.253	-0.231	-0.197	-0.181	-0.163	-0.129	-0.086	-0.043	0.000
	DEFL. DUE TO WT. OF BARRIER RAIL	0.000	-0.002	-0.004	-0.006	-0.013	-0.019	-0.026	-0.035	-0.043	-0.051	-0.052	-0.060	-0.068	-0.076	-0.081	-0.087	-0.092	-0.094	-0.096	-0.097	-0.095	-0.092	-0.090	-0.083	-0.076	-0.069	-0.059	-0.054	-0.049	-0.038	-0.026	-0.013	0.000
	TOTAL DEAD LOAD DEFLECTION	0.000	-0.013	-0.026	-0.039	-0.073	-0.107	-0.141	-0.186	-0.231	-0.273	-0.276	-0.320	-0.363	-0.407	-0.438	-0.469	-0.500	-0.511	-0.522	-0.533	-0.520	-0.507	-0.494	-0.457	-0.421	-0.384	-0.327	-0.301	-0.271	-0.214	-0.143	-0.071	0.000
	VERTICAL CURVE ORDINATE	0.000	0.000	0.000	0.000	0.000	0.000	0.000	0.000	0.000	0.000	0.000	0.000	0.000	0.000	0.000	0.000	0.000	0.000	0.000	0.000	0.000	0.000	0.000	0.000	0.000	0.000	0.000	0.000	0.000	0.000	0.000	0.000	0.000
	REQUIRED CAMBER	0″	1/8″	5/16″	7/16″	7/8″	1 5/16″	1 11/16″	2 1/4″	2 3/4″	3 1/4″	3 5/16″	3 13/16″	4 3/8″	4 7/8″	5 1/4″	5 5/8″	6″	6 1/8″	6 1/4″	6 3/8″	6 1/4″	6 1/16″	5 15/16″	5 1/2″	5 1/16″	4 5/8″	3 15/16″	3 5/8″	3 1/4″	2 9/16″	1 11/16″	7/8″	0″

▲ INCLUDES SLAB, BUILDUP AND STAY-IN-PLACE FORMS

SCHEMATIC CAMBER ORDINATES - SPAN 23

NOTES:

1. VALUES ARE SHOWN IN FEET (DECIMAL FORMAT), EXCEPT "REQUIRED CAMBER" WHICH IS GIVEN IN INCHES.
2. FOR GIRDER DESIGNATIONS, SEE FRAMING PLAN AND GIRDER DETAILS SHEETS.
3. DEFLECTIONS IN THE DOWNWARD DIRECTION ARE NEGATIVE. A REQUIRED CAMBER IN THE UPWARD DIRECTION IS POSITIVE. SIGN CONVENTION FOR DEAD LOAD DEFLECTION.

4. SLOPE FOR THE ZERO CAMBER BASE LINE VARIES.

PROJECT NO. U-2524C

GUILFORD COUNTY

STATION: POT 407+85.82 -L-
= POT 29+79.72 -Y4-

SHEET 5 OF 8

STATE OF NORTH CAROLINA
DEPARTMENT OF TRANSPORTATION
RALEIGH

STEEL GIRDER CAMBERS
UNIT G
SPAN 23

-RIGHT LANE-

NORTH CAROLINA PROFESSIONAL ENGINEER SEAL 28479 ENGINEER KEVIN G. BAILEY 6-7-13

STV / Ralph Whitehead Associates, Inc.
1000 West Morehead St. Ste. 200
Charlotte, NC 28208
NC License No. F-0991

REVISIONS						SHEET NO.
NO.	BY:	DATE:	NO.	BY:	DATE:	S-388
1			3			TOTAL SHEETS
2			4			836

DRAWN BY : VMW DATE : 4-13
CHECKED BY : TRL DATE : 4-13

DESIGN ENGINEER OF RECORD: K. BAILEY DATE : 5-13

6/6/2013 4:41:52 PM R:\ustation\Finals\Unit G - Camber Span 23.dgn

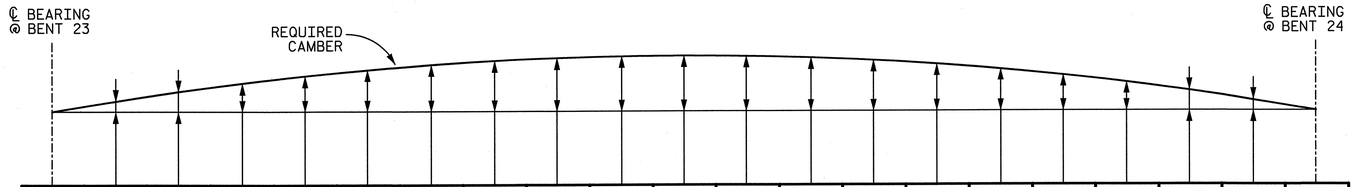

		1.00	1.01	1.02	1.03	1.04	1.05	1.06	1.07	1.08	1.09	1.10	1.11	1.12	1.13	1.14	1.15	1.16	1.17	1.18	1.19	1.20
GIRDER 1	DEFLECTION DUE TO WT. OF STEEL	0.000	-0.004	-0.007	-0.010	-0.013	-0.016	-0.018	-0.020	-0.021	-0.021	-0.022	-0.021	-0.021	-0.019	-0.017	-0.015	-0.013	-0.010	-0.007	-0.003	0.000
	DEFLECTION DUE TO WT. OF SLAB ▲	0.000	-0.014	-0.028	-0.041	-0.053	-0.064	-0.073	-0.080	-0.085	-0.088	-0.088	-0.087	-0.084	-0.078	-0.071	-0.062	-0.051	-0.039	-0.027	-0.014	0.000
	DEFL. DUE TO WT. OF BARRIER RAIL	0.000	-0.001	-0.002	-0.003	-0.004	-0.004	-0.005	-0.006	-0.006	-0.007	-0.007	-0.007	-0.007	-0.006	-0.006	-0.005	-0.004	-0.003	-0.002	-0.001	0.000
	TOTAL DEAD LOAD DEFLECTION	0.000	-0.019	-0.037	-0.054	-0.070	-0.084	-0.096	-0.105	-0.112	-0.116	-0.117	-0.115	-0.111	-0.104	-0.094	-0.082	-0.068	-0.053	-0.036	-0.018	0.000
	VERTICAL CURVE ORDINATE	0.000	0.000	0.000	0.000	0.000	0.000	0.000	0.000	0.000	0.000	0.000	0.000	0.000	0.000	0.000	0.000	0.000	0.000	0.000	0.000	0.000
	REQUIRED CAMBER	0″	1/4″	1/2″	5/8″	7/8″	1″	1 1/8″	1 1/4″	1 3/8″	1 3/8″	1 3/8″	1 3/8″	1 3/8″	1 1/4″	1 1/8″	1″	7/8″	5/8″	3/8″	1/4″	0″

		1.00	1.01	1.02	1.03	1.04	1.05	1.06	1.07	1.08	1.09	1.10	1.11	1.12	1.13	1.14	1.15	1.16	1.17	1.18	1.19	1.20
GIRDER 2	DEFLECTION DUE TO WT. OF STEEL	0.000	-0.003	-0.005	-0.008	-0.010	-0.012	-0.014	-0.015	-0.016	-0.016	-0.016	-0.016	-0.016	-0.015	-0.013	-0.011	-0.010	-0.007	-0.005	-0.002	0.000
	DEFLECTION DUE TO WT. OF SLAB ▲	0.000	-0.011	-0.022	-0.032	-0.042	-0.050	-0.057	-0.062	-0.066	-0.068	-0.069	-0.068	-0.065	-0.061	-0.055	-0.048	-0.040	-0.031	-0.021	-0.010	0.000
	DEFL. DUE TO WT. OF BARRIER RAIL	0.000	0.000	-0.001	-0.001	-0.002	-0.002	-0.003	-0.003	-0.003	-0.003	-0.004	-0.004	-0.003	-0.003	-0.003	-0.003	-0.002	-0.002	-0.001	-0.001	0.000
	TOTAL DEAD LOAD DEFLECTION	0.000	-0.014	-0.028	-0.041	-0.053	-0.064	-0.073	-0.080	-0.085	-0.088	-0.089	-0.088	-0.084	-0.079	-0.071	-0.062	-0.051	-0.040	-0.027	-0.013	0.000
	VERTICAL CURVE ORDINATE	0.000	0.000	0.000	0.000	0.000	0.000	0.000	0.000	0.000	0.000	0.000	0.000	0.000	0.000	0.000	0.000	0.000	0.000	0.000	0.000	0.000
	REQUIRED CAMBER	0″	1/8″	3/8″	1/2″	5/8″	3/4″	7/8″	1″	1″	1″	1 1/8″	1″	1″	1″	7/8″	3/4″	5/8″	1/2″	3/8″	1/8″	0″

		1.00	1.01	1.02	1.03	1.04	1.05	1.06	1.07	1.08	1.09	1.10	1.11	1.12	1.13	1.14	1.15	1.16	1.17	1.18	1.19	1.20
GIRDER 3	DEFLECTION DUE TO WT. OF STEEL	0.000	-0.002	-0.004	-0.006	-0.007	-0.009	-0.010	-0.011	-0.011	-0.012	-0.012	-0.011	-0.010	-0.009	-0.008	-0.007	-0.005	-0.004	-0.002	0.000	
	DEFLECTION DUE TO WT. OF SLAB ▲	0.000	-0.008	-0.016	-0.024	-0.031	-0.037	-0.042	-0.046	-0.049	-0.050	-0.051	-0.050	-0.048	-0.045	-0.041	-0.036	-0.029	-0.023	-0.015	-0.008	0.000
	DEFL. DUE TO WT. OF BARRIER RAIL	0.000	0.000	-0.001	-0.001	-0.001	-0.001	-0.002	-0.002	-0.002	-0.002	-0.002	-0.002	-0.002	-0.002	-0.001	-0.001	-0.001	-0.001	-0.001	0.000	0.000
	TOTAL DEAD LOAD DEFLECTION	0.000	-0.010	-0.021	-0.030	-0.039	-0.046	-0.053	-0.058	-0.062	-0.064	-0.064	-0.063	-0.061	-0.057	-0.052	-0.045	-0.037	-0.029	-0.020	-0.010	0.000
	VERTICAL CURVE ORDINATE	0.000	0.000	0.000	0.000	0.000	0.000	0.000	0.000	0.000	0.000	0.000	0.000	0.000	0.000	0.000	0.000	0.000	0.000	0.000	0.000	0.000
	REQUIRED CAMBER	0″	1/8″	1/4″	3/8″	1/2″	1/2″	5/8″	3/4″	3/4″	3/4″	3/4″	3/4″	3/4″	5/8″	5/8″	1/2″	1/2″	3/8″	1/4″	1/8″	0″

		1.00	1.01	1.02	1.03	1.04	1.05	1.06	1.07	1.08	1.09	1.10	1.11	1.12	1.13	1.14	1.15	1.16	1.17	1.18	1.19	1.20
GIRDER 4	DEFLECTION DUE TO WT. OF STEEL	0.000	-0.001	-0.003	-0.004	-0.005	-0.006	-0.007	-0.007	-0.008	-0.008	-0.008	-0.008	-0.008	-0.007	-0.006	-0.006	-0.005	-0.003	-0.002	-0.001	0.000
	DEFLECTION DUE TO WT. OF SLAB ▲	0.000	-0.006	-0.011	-0.016	-0.021	-0.025	-0.029	-0.032	-0.034	-0.035	-0.035	-0.035	-0.033	-0.031	-0.029	-0.025	-0.021	-0.017	-0.012	-0.007	0.000
	DEFL. DUE TO WT. OF BARRIER RAIL	0.000	0.000	-0.000	-0.001	-0.001	-0.001	-0.001	-0.001	-0.001	-0.001	-0.001	-0.001	-0.001	-0.001	-0.001	-0.001	0.000	0.000	0.000	0.000	0.000
	TOTAL DEAD LOAD DEFLECTION	0.000	-0.007	-0.014	-0.021	-0.027	-0.032	-0.037	-0.040	-0.042	-0.044	-0.044	-0.044	-0.042	-0.039	-0.036	-0.031	-0.026	-0.020	-0.014	-0.008	0.000
	VERTICAL CURVE ORDINATE	0.000	0.000	0.000	0.000	0.000	0.000	0.000	0.000	0.000	0.000	0.000	0.000	0.000	0.000	0.000	0.000	0.000	0.000	0.000	0.000	0.000
	REQUIRED CAMBER	0″	1/8″	1/8″	1/4″	3/8″	3/8″	1/2″	1/2″	1/2″	1/2″	1/2″	1/2″	1/2″	1/2″	3/8″	3/8″	3/8″	1/4″	1/8″	1/8″	0″

		1.00	1.01	1.02	1.03	1.04	1.05	1.06	1.07	1.08	1.09	1.10	1.11	1.12	1.13	1.14	1.15	1.16	1.17	1.18	1.19	1.20
GIRDER 5	DEFLECTION DUE TO WT. OF STEEL	0.000	-0.001	-0.002	-0.002	-0.003	-0.004	-0.004	-0.005	-0.005	-0.005	-0.005	-0.005	-0.005	-0.005	-0.004	-0.004	-0.003	-0.002	-0.002	-0.001	0.000
	DEFLECTION DUE TO WT. OF SLAB ▲	0.000	-0.004	-0.007	-0.010	-0.013	-0.016	-0.018	-0.020	-0.021	-0.022	-0.022	-0.022	-0.021	-0.020	-0.018	-0.016	-0.013	-0.010	-0.007	-0.003	0.000
	DEFL. DUE TO WT. OF BARRIER RAIL	0.000	0.000	0.000	-0.001	-0.001	-0.001	-0.001	-0.001	-0.001	-0.001	-0.001	-0.001	-0.001	-0.001	-0.001	-0.001	-0.001	0.000	0.000	0.000	0.000
	TOTAL DEAD LOAD DEFLECTION	0.000	-0.005	-0.009	-0.014	-0.017	-0.021	-0.024	-0.026	-0.028	-0.028	-0.029	-0.028	-0.027	-0.025	-0.023	-0.020	-0.017	-0.013	-0.009	-0.004	0.000
	VERTICAL CURVE ORDINATE	0.000	0.000	0.000	0.000	0.000	0.000	0.000	0.000	0.000	0.000	0.000	0.000	0.000	0.000	0.000	0.000	0.000	0.000	0.000	0.000	0.000
	REQUIRED CAMBER	0″	0″	1/8″	1/8″	1/4″	1/4″	1/4″	1/4″	3/8″	3/8″	3/8″	3/8″	3/8″	1/4″	1/4″	1/4″	1/4″	1/8″	1/8″	0″	0″

		1.00	1.01	1.02	1.03	1.04	1.05	1.06	1.07	1.08	1.09	1.10	1.11	1.12	1.13	1.14	1.15	1.16	1.17	1.18	1.19	1.20
GIRDER 6	DEFLECTION DUE TO WT. OF STEEL	0.000	0.000	-0.001	-0.001	-0.002	-0.002	-0.002	-0.003	-0.003	-0.003	-0.003	-0.003	-0.003	-0.003	-0.002	-0.002	-0.002	-0.001	-0.001	0.000	0.000
	DEFLECTION DUE TO WT. OF SLAB ▲	0.000	-0.002	-0.004	-0.006	-0.007	-0.009	-0.010	-0.011	-0.012	-0.012	-0.012	-0.012	-0.011	-0.011	-0.010	-0.008	-0.007	-0.005	-0.004	-0.002	0.000
	DEFL. DUE TO WT. OF BARRIER RAIL	0.004	0.001	-0.001	-0.002	-0.002	-0.002	-0.002	-0.003	-0.003	-0.003	-0.003	-0.003	-0.003	-0.003	-0.002	-0.002	-0.002	-0.001	-0.001	-0.001	0.000
	TOTAL DEAD LOAD DEFLECTION	0.004	-0.003	-0.006	-0.009	-0.011	-0.013	-0.015	-0.016	-0.017	-0.018	-0.018	-0.018	-0.017	-0.016	-0.014	-0.013	-0.011	-0.008	-0.006	-0.003	0.000
	VERTICAL CURVE ORDINATE	0.000	0.000	0.000	0.000	0.000	0.000	0.000	0.000	0.000	0.000	0.000	0.000	0.000	0.000	0.000	0.000	0.000	0.000	0.000	0.000	0.000
	REQUIRED CAMBER	0″	0″	1/8″	1/8″	1/8″	1/8″	1/8″	1/4″	1/4″	1/4″	1/4″	1/4″	1/4″	1/4″	1/8″	1/8″	1/8″	1/8″	1/8″	0″	0″

▲ INCLUDES SLAB, BUILDUP AND STAY-IN-PLACE FORMS

NOTES:

1. VALUES ARE SHOWN IN FEET (DECIMAL FORMAT), EXCEPT "REQUIRED CAMBER" WHICH IS GIVEN IN INCHES.
2. FOR GIRDER DESIGNATIONS, SEE FRAMING PLAN AND GIRDER DETAILS SHEETS.
3. DEFLECTIONS IN THE DOWNWARD DIRECTION ARE NEGATIVE. A REQUIRED CAMBER IN THE UPWARD DIRECTION IS POSITIVE. SIGN CONVENTION FOR DEAD LOAD DEFLECTION.

4. SLOPE FOR THE ZERO CAMBER BASE LINE VARIES.

SCHEMATIC CAMBER ORDINATES - SPAN 24

PROJECT NO. U-2524C

GUILFORD COUNTY

STATION: POT 407+85.82 -L-
= POT 29+79.72 -Y4-

SHEET 6 OF 8

STATE OF NORTH CAROLINA
DEPARTMENT OF TRANSPORTATION
RALEIGH

STEEL GIRDER CAMBERS
SPAN 24

-RIGHT LANE-

REVISIONS						SHEET NO.
NO.	BY:	DATE:	NO.	BY:	DATE:	S-389
1			3			TOTAL SHEETS
2			4			836

DRAWN BY : CLG DATE : 4-13
CHECKED BY : TRL DATE : 4-13
DESIGN ENGINEER OF RECORD: K. BAILEY DATE : 5-13

STV / Ralph Whitehead Associates, Inc.
1000 West Morehead St., Ste. 200
Charlotte, NC 28208
NC License No. F-0991

6/6/2013 4:41:53 PM R:\ustation\Finals\Span 24 - Camber.dgn

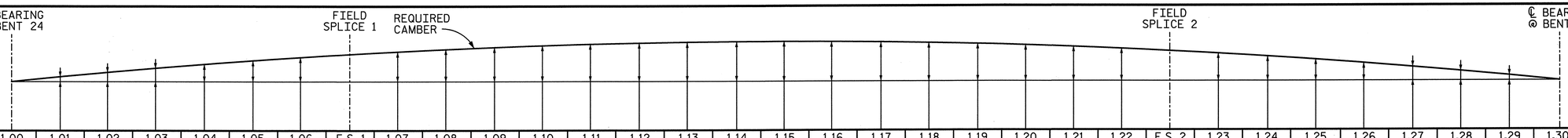

		1.00	1.01	1.02	1.03	1.04	1.05	1.06	F.S. 1	1.07	1.08	1.09	1.10	1.11	1.12	1.13	1.14	1.15	1.16	1.17	1.18	1.19	1.20	1.21	1.22	F.S. 2	1.23	1.24	1.25	1.26	1.27	1.28	1.29	1.30
GIRDER 1	DEFLECTION DUE TO WT. OF STEEL	0.000	-0.018	-0.036	-0.052	-0.067	-0.080	-0.092	-0.099	-0.101	-0.109	-0.115	-0.119	-0.121	-0.121	-0.120	-0.117	-0.112	-0.105	-0.098	-0.089	-0.079	-0.069	-0.058	-0.047	-0.047	-0.037	-0.027	-0.017	-0.010	-0.004	0.000	0.000	0.000
	DEFLECTION DUE TO WT. OF SLAB ▲	0.000	-0.045	-0.087	-0.126	-0.162	-0.193	-0.220	-0.238	-0.243	-0.261	-0.275	-0.283	-0.288	-0.288	-0.283	-0.275	-0.263	-0.247	-0.229	-0.208	-0.185	-0.160	-0.135	-0.109	-0.109	-0.084	-0.061	-0.040	-0.022	-0.008	0.001	-0.001	0.000
	DEFL. DUE TO WT. OF BARRIER RAIL	0.000	-0.004	-0.008	-0.012	-0.016	-0.019	-0.021	-0.023	-0.024	-0.026	-0.027	-0.029	-0.029	-0.029	-0.029	-0.029	-0.028	-0.026	-0.024	-0.022	-0.020	-0.018	-0.015	-0.013	-0.013	-0.010	-0.007	-0.005	-0.003	-0.001	0.000	0.000	0.000
	TOTAL DEAD LOAD DEFLECTION	0.000	-0.067	-0.131	-0.191	-0.244	-0.292	-0.333	-0.360	-0.368	-0.396	-0.417	-0.431	-0.438	-0.439	-0.432	-0.420	-0.402	-0.379	-0.351	-0.319	-0.284	-0.247	-0.208	-0.169	-0.169	-0.131	-0.095	-0.062	-0.034	-0.013	0.001	-0.001	0.000
	VERTICAL CURVE ORDINATE	0.000	0.000	0.000	0.000	0.000	0.000	0.000	0.000	0.000	0.000	0.000	0.000	0.000	0.000	0.000	0.000	0.000	0.000	0.000	0.000	0.000	0.000	0.000	0.000	0.000	0.000	0.000	0.000	0.000	0.000	0.000	0.000	0.000
	SUPERELEVATION ORDINATE	0.000	-0.007	-0.015	-0.022	-0.030	-0.038	-0.045	-0.050	-0.052	-0.059	-0.067	-0.074	-0.082	-0.078	-0.073	-0.069	-0.064	-0.059	-0.054	-0.050	-0.046	-0.042	-0.038	-0.033	-0.034	-0.029	-0.026	-0.021	-0.017	-0.014	-0.009	-0.005	0.000
	REQUIRED CAMBER	0″	3/4″	1 3/8″	2″	2 9/16″	3 1/16″	3 7/16″	3 3/4″	3 13/16″	4 1/16″	4 3/16″	4 5/16″	4 1/4″	4 5/16″	4 5/16″	4 3/16″	4 1/16″	3 13/16″	3 9/16″	3 1/4″	2 7/8″	2 7/16″	2 1/16″	1 5/8″	1 5/8″	1 3/16″	13/16″	1/2″	3/16″	0″	-1/8″	-1/16″	0″
GIRDER 2	DEFLECTION DUE TO WT. OF STEEL	0.000	-0.018	-0.035	-0.051	-0.066	-0.079	-0.090	-0.098	-0.100	-0.108	-0.114	-0.118	-0.121	-0.121	-0.120	-0.117	-0.113	-0.107	-0.100	-0.091	-0.082	-0.072	-0.062	-0.051	-0.051	-0.040	-0.030	-0.021	-0.013	-0.006	-0.002	0.000	0.000
	DEFLECTION DUE TO WT. OF SLAB ▲	0.000	-0.044	-0.086	-0.124	-0.159	-0.191	-0.218	-0.236	-0.241	-0.260	-0.274	-0.283	-0.289	-0.290	-0.286	-0.279	-0.268	-0.253	-0.236	-0.215	-0.193	-0.169	-0.144	-0.119	-0.119	-0.094	-0.070	-0.048	-0.029	-0.014	-0.003	0.001	0.000
	DEFL. DUE TO WT. OF BARRIER RAIL	0.000	-0.004	-0.008	-0.011	-0.014	-0.017	-0.020	-0.022	-0.022	-0.024	-0.026	-0.027	-0.028	-0.028	-0.028	-0.027	-0.027	-0.025	-0.024	-0.022	-0.020	-0.018	-0.015	-0.013	-0.013	-0.010	-0.008	-0.006	-0.004	-0.002	-0.001	0.000	0.000
	TOTAL DEAD LOAD DEFLECTION	0.000	-0.066	-0.129	-0.187	-0.240	-0.287	-0.328	-0.356	-0.363	-0.392	-0.414	-0.429	-0.437	-0.439	-0.434	-0.424	-0.407	-0.386	-0.359	-0.329	-0.295	-0.259	-0.221	-0.182	-0.182	-0.144	-0.108	-0.075	-0.046	-0.022	-0.006	0.002	0.000
	VERTICAL CURVE ORDINATE	0.000	0.000	0.000	0.000	0.000	0.000	0.000	0.000	0.000	0.000	0.000	0.000	0.000	0.000	0.000	0.000	0.000	0.000	0.000	0.000	0.000	0.000	0.000	0.000	0.000	0.000	0.000	0.000	0.000	0.000	0.000	0.000	0.000
	SUPERELEVATION ORDINATE	0.000	0.002	0.002	0.003	0.005	0.006	0.008	0.008	0.009	0.010	0.012	0.013	0.014	0.016	0.015	0.015	0.015	0.014	0.013	0.013	0.012	0.011	0.010	0.009	0.009	0.008	0.006	0.006	0.004	0.003	0.003	0.001	0.000
	REQUIRED CAMBER	0″	13/16″	1 9/16″	2 1/4″	2 15/16″	3 1/2″	4 1/16″	4 3/8″	4 7/16″	4 13/16″	5 1/8″	5 5/16″	5 7/16″	5 7/16″	5 3/8″	5 1/4″	5 1/16″	4 13/16″	4 7/16″	4 1/8″	3 11/16″	3 1/4″	2 3/4″	2 5/16″	2 5/16″	1 13/16″	1 3/8″	15/16″	5/8″	5/16″	1/8″	0″	0″
GIRDER 3	DEFLECTION DUE TO WT. OF STEEL	0.000	-0.018	-0.035	-0.051	-0.066	-0.079	-0.091	-0.099	-0.101	-0.109	-0.115	-0.120	-0.123	-0.123	-0.122	-0.120	-0.116	-0.110	-0.103	-0.094	-0.085	-0.075	-0.065	-0.054	-0.054	-0.043	-0.033	-0.023	-0.015	-0.008	-0.003	0.000	0.000
	DEFLECTION DUE TO WT. OF SLAB ▲	0.000	-0.044	-0.086	-0.125	-0.161	-0.193	-0.220	-0.239	-0.244	-0.263	-0.278	-0.288	-0.294	-0.295	-0.293	-0.286	-0.275	-0.261	-0.244	-0.224	-0.201	-0.178	-0.153	-0.127	-0.126	-0.102	-0.077	-0.055	-0.035	-0.018	-0.007	0.000	0.000
	DEFL. DUE TO WT. OF BARRIER RAIL	0.000	-0.004	-0.008	-0.011	-0.014	-0.017	-0.020	-0.022	-0.022	-0.024	-0.025	-0.027	-0.027	-0.028	-0.027	-0.027	-0.026	-0.025	-0.023	-0.022	-0.020	-0.017	-0.015	-0.013	-0.013	-0.010	-0.008	-0.006	-0.004	-0.002	-0.001	0.000	0.000
	TOTAL DEAD LOAD DEFLECTION	0.000	-0.066	-0.129	-0.188	-0.241	-0.289	-0.331	-0.360	-0.367	-0.396	-0.419	-0.435	-0.444	-0.446	-0.442	-0.432	-0.417	-0.396	-0.370	-0.340	-0.306	-0.270	-0.232	-0.194	-0.193	-0.155	-0.118	-0.084	-0.054	-0.029	-0.010	-0.001	0.000
	VERTICAL CURVE ORDINATE	0.000	0.000	0.000	0.000	0.000	0.000	0.000	0.000	0.000	0.000	0.000	0.000	0.000	0.000	0.000	0.000	0.000	0.000	0.000	0.000	0.000	0.000	0.000	0.000	0.000	0.000	0.000	0.000	0.000	0.000	0.000	0.000	0.000
	SUPERELEVATION ORDINATE	0.000	0.008	0.018	0.026	0.035	0.044	0.053	0.059	0.062	0.071	0.080	0.088	0.098	0.107	0.115	0.116	0.109	0.102	0.095	0.088	0.081	0.074	0.066	0.059	0.059	0.052	0.044	0.036	0.029	0.021	0.014	0.006	0.000
	REQUIRED CAMBER	0″	1/8″	1 3/4″	2 9/16″	3 5/16″	4″	4 5/8″	5 1/16″	5 1/8″	5 5/8″	6″	6 1/4″	6 1/2″	6 5/8″	6 11/16″	6 9/16″	6 5/16″	6″	5 9/16″	5 1/8″	4 5/8″	4 1/8″	3 9/16″	3″	3″	2 1/2″	1 15/16″	1 7/16″	1″	9/16″	5/16″	1/16″	0″
GIRDER 4	DEFLECTION DUE TO WT. OF STEEL	0.000	-0.019	-0.036	-0.053	-0.068	-0.082	-0.094	-0.102	-0.104	-0.112	-0.119	-0.124	-0.126	-0.127	-0.126	-0.124	-0.120	-0.114	-0.107	-0.099	-0.089	-0.079	-0.068	-0.058	-0.057	-0.047	-0.036	-0.026	-0.017	-0.010	-0.004	-0.001	0.000
	DEFLECTION DUE TO WT. OF SLAB ▲	0.000	-0.045	-0.089	-0.129	-0.165	-0.198	-0.226	-0.246	-0.251	-0.270	-0.286	-0.297	-0.303	-0.305	-0.302	-0.296	-0.285	-0.271	-0.254	-0.234	-0.211	-0.187	-0.162	-0.136	-0.135	-0.110	-0.085	-0.061	-0.040	-0.023	-0.010	-0.002	0.000
	DEFL. DUE TO WT. OF BARRIER RAIL	0.000	-0.004	-0.008	-0.011	-0.015	-0.018	-0.020	-0.022	-0.023	-0.025	-0.026	-0.027	-0.028	-0.028	-0.028	-0.028	-0.027	-0.026	-0.024	-0.022	-0.020	-0.018	-0.016	-0.013	-0.013	-0.011	-0.008	-0.006	-0.004	-0.002	-0.001	0.000	0.000
	TOTAL DEAD LOAD DEFLECTION	0.000	-0.068	-0.133	-0.193	-0.248	-0.297	-0.340	-0.371	-0.377	-0.407	-0.431	-0.447	-0.457	-0.460	-0.457	-0.447	-0.432	-0.411	-0.385	-0.355	-0.321	-0.284	-0.246	-0.207	-0.206	-0.167	-0.129	-0.094	-0.062	-0.035	-0.015	-0.003	0.000
	VERTICAL CURVE ORDINATE	0.000	0.000	0.000	0.000	0.000	0.000	0.000	0.000	0.000	0.000	0.000	0.000	0.000	0.000	0.000	0.000	0.000	0.000	0.000	0.000	0.000	0.000	0.000	0.000	0.000	0.000	0.000	0.000	0.000	0.000	0.000	0.000	0.000
	SUPERELEVATION ORDINATE	0.000	0.015	0.031	0.046	0.061	0.077	0.092	0.104	0.107	0.123	0.139	0.154	0.170	0.186	0.201	0.216	0.222	0.207	0.194	0.179	0.164	0.150	0.135	0.120	0.119	0.105	0.090	0.076	0.061	0.045	0.030	0.015	0.000
	REQUIRED CAMBER	0″	1″	1 15/16″	2 7/8″	3 11/16″	4 1/2″	5 3/16″	5 11/16″	5 13/16″	6 3/8″	6 13/16″	7 1/4″	7 1/2″	7 3/4″	7 7/8″	7 15/16″	7 13/16″	7 7/16″	6 15/16″	6 3/8″	5 13/16″	5 3/16″	4 9/16″	3 15/16″	3 7/8″	3 1/4″	2 5/8″	2 1/16″	1 7/16″	15/16″	9/16″	3/16″	0″
GIRDER 5	DEFLECTION DUE TO WT. OF STEEL	0.000	-0.019	-0.038	-0.055	-0.071	-0.085	-0.097	-0.106	-0.108	-0.117	-0.124	-0.129	-0.132	-0.133	-0.132	-0.130	-0.126	-0.120	-0.113	-0.104	-0.095	-0.084	-0.073	-0.062	-0.061	-0.050	-0.039	-0.029	-0.020	-0.011	-0.005	-0.001	0.000
	DEFLECTION DUE TO WT. OF SLAB ▲	0.000	-0.047	-0.092	-0.133	-0.171	-0.205	-0.235	-0.256	-0.260	-0.281	-0.297	-0.309	-0.316	-0.318	-0.316	-0.309	-0.299	-0.285	-0.267	-0.247	-0.224	-0.199	-0.173	-0.146	-0.145	-0.119	-0.093	-0.068	-0.046	-0.027	-0.012	-0.003	0.000
	DEFL. DUE TO WT. OF BARRIER RAIL	0.000	-0.004	-0.008	-0.011	-0.016	-0.019	-0.022	-0.024	-0.024	-0.026	-0.028	-0.029	-0.030	-0.030	-0.030	-0.030	-0.029	-0.027	-0.026	-0.024	-0.022	-0.020	-0.017	-0.014	-0.014	-0.012	-0.009	-0.007	-0.005	-0.003	-0.001	0.000	0.000
	TOTAL DEAD LOAD DEFLECTION	0.000	-0.070	-0.138	-0.200	-0.257	-0.309	-0.354	-0.386	-0.392	-0.424	-0.449	-0.467	-0.477	-0.481	-0.478	-0.469	-0.453	-0.432	-0.406	-0.375	-0.340	-0.303	-0.263	-0.222	-0.221	-0.181	-0.141	-0.104	-0.070	-0.041	-0.019	-0.005	0.000
	VERTICAL CURVE ORDINATE	0.000	0.000	0.000	0.000	0.000	0.000	0.000	0.000	0.000	0.000	0.000	0.000	0.000	0.000	0.000	0.000	0.000	0.000	0.000	0.000	0.000	0.000	0.000	0.000	0.000	0.000	0.000	0.000	0.000	0.000	0.000	0.000	0.000
	SUPERELEVATION ORDINATE	0.000	0.020	0.042	0.062	0.083	0.103	0.125	0.141	0.145	0.166	0.187	0.209	0.230	0.250	0.271	0.292	0.314	0.329	0.306	0.283	0.259	0.236	0.213	0.189	0.189	0.166	0.142	0.119	0.095	0.071	0.048	0.024	0.000
	REQUIRED CAMBER	0″	1 1/16″	2 1/8″	3 1/8″	4 1/16″	4 15/16″	5 3/4″	6 5/16″	6 7/16″	7 1/16″	7 5/8″	8 1/8″	8 1/2″	8 3/4″	9″	9 1/8″	9 3/16″	9 1/8″	8 9/16″	7 7/8″	7 3/16″	6 7/16″	5 11/16″	4 15/16″	4 15/16″	4 3/16″	3 3/8″	2 11/16″	2″	1 3/8″	13/16″	3/8″	0″
GIRDER 6	DEFLECTION DUE TO WT. OF STEEL	0.000	-0.020	-0.039	-0.057	-0.074	-0.089	-0.102	-0.112	-0.113	-0.123	-0.131	-0.136	-0.140	-0.141	-0.141	-0.138	-0.134	-0.128	-0.121	-0.112	-0.102	-0.091	-0.080	-0.068	-0.067	-0.056	-0.044	-0.033	-0.022	-0.014	-0.007	-0.002	0.000
	DEFLECTION DUE TO WT. OF SLAB ▲	0.000	-0.049	-0.095	-0.139	-0.178	-0.214	-0.245	-0.268	-0.272	-0.294	-0.312	-0.324	-0.332	-0.335	-0.333	-0.327	-0.317	-0.302	-0.284	-0.263	-0.240	-0.214	-0.186	-0.158	-0.157	-0.130	-0.102	-0.076	-0.052	-0.032	-0.015	-0.005	0.000
	DEFL. DUE TO WT. OF BARRIER RAIL	0.000	-0.005	-0.009	-0.013	-0.017	-0.020	-0.023	-0.026	-0.026	-0.028	-0.030	-0.032	-0.032	-0.033	-0.033	-0.032	-0.032	-0.031	-0.030	-0.029	-0.027	-0.024	-0.022	-0.019	-0.016	-0.016	-0.013	-0.011	-0.008	-0.006	-0.003	-0.002	0.000
	TOTAL DEAD LOAD DEFLECTION	0.000	-0.074	-0.144	-0.209	-0.269	-0.323	-0.371	-0.406	-0.412	-0.446	-0.473	-0.492	-0.504	-0.509	-0.507	-0.498	-0.482	-0.461	-0.434	-0.402	-0.366	-0.327	-0.285	-0.242	-0.240	-0.199	-0.157	-0.117	-0.080	-0.049	-0.024	-0.007	0.000
	VERTICAL CURVE ORDINATE	0.000	0.000	0.000	0.000	0.000	0.000	0.000	0.000	0.000	0.000	0.000	0.000	0.000	0.000	0.000	0.000	0.000	0.000	0.000	0.000	0.000	0.000	0.000	0.000	0.000	0.000	0.000	0.000	0.000	0.000	0.000	0.000	0.000
	SUPERELEVATION ORDINATE	0.000	0.025	0.049	0.075	0.100	0.125	0.151	0.172	0.175	0.200	0.225	0.251	0.277	0.302	0.328	0.353	0.378	0.403	0.429	0.399	0.367	0.334	0.301	0.267	0.267	0.234	0.201	0.168	0.134	0.101	0.067	0.034	0.000
	REQUIRED CAMBER	0″	1 3/16″	2 5/16″	3 7/16″	4 7/16″	5 3/8″	6 1/4″	6 15/16″	7 1/16″	7 3/4″	8 3/8″	8 15/16″	9 3/8″	9 3/4″	10″	10 3/16″	10 5/16″	10 3/8″	10 3/8″	9 5/8″	8 13/16″	7 15/16″	7″	6 1/8″	6 1/16″	5 3/16″	4 5/16″	3 7/16″	2 9/16″	1 13/16″	1 1/16″	1/2″	0″

SCHEMATIC CAMBER ORDINATES - SPAN 25

▲ INCLUDES SLAB, BUILDUP AND STAY-IN-PLACE FORMS

NOTES:

1. VALUES ARE SHOWN IN FEET (DECIMAL FORMAT), EXCEPT "REQUIRED CAMBER" WHICH IS GIVEN IN INCHES.
2. FOR GIRDER DESIGNATIONS, SEE FRAMING PLAN AND GIRDER DETAILS SHEETS.
3. DEFLECTIONS IN THE DOWNWARD DIRECTION ARE NEGATIVE. A REQUIRED CAMBER IN THE UPWARD DIRECTION IS POSITIVE. SIGN CONVENTION FOR DEAD LOAD DEFLECTION.

4. SLOPE FOR THE ZERO CAMBER BASE LINE VARIES.
5. CAMBER DUE TO DISSIPATION RESULTING FROM HEAT CURVING IS NOT REQUIRED.

PROJECT NO. U-2524C

GUILFORD COUNTY

STATION: POT 407+85.82 -L-
= POT 29+79.72 -Y4-

SHEET 7 OF 8

STATE OF NORTH CAROLINA
DEPARTMENT OF TRANSPORTATION
RALEIGH

STEEL GIRDER CAMBERS
UNIT H
SPAN 25

-RIGHT LANE-

REVISIONS						SHEET NO.
NO.	BY:	DATE:	NO.	BY:	DATE:	S-390
1			3			TOTAL SHEETS
2			4			836

DRAWN BY : CLG DATE : 5-13
CHECKED BY : TRL DATE : 5-13

DESIGN ENGINEER OF RECORD: K. BAILEY DATE : 5-13

STV / Ralph Whitehead Associates, Inc.
1000 West Morehead St., Ste. 200
Charlotte, NC 28208
NC License No. F-0991

6/6/2013 11:00:26 PM R:\station\Finals\Unit H - Camber Span 25.dgn

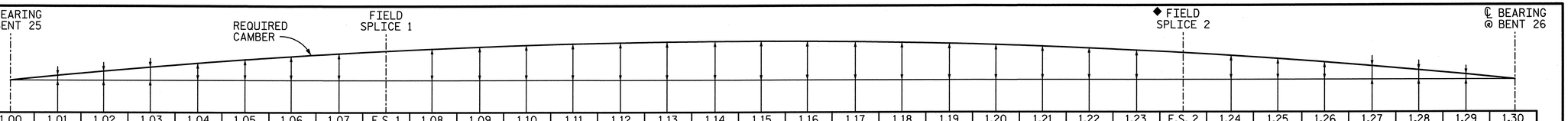

		1.00	1.01	1.02	1.03	1.04	1.05	1.06	1.07	F.S. 1	1.08	1.09	1.10	1.11	1.12	1.13	1.14	1.15	1.16	1.17	1.18	1.19	1.20	1.21	1.22	1.23	F.S. 2	1.24	1.25	1.26	1.27	1.28	1.29	1.30
GIRDER 1	DEFLECTION DUE TO WT. OF STEEL	0.000	-0.003	-0.009	-0.017	-0.027	-0.039	-0.051	-0.064	-0.077	-0.078	-0.091	-0.104	-0.116	-0.126	-0.136	-0.144	-0.150	-0.154	-0.157	-0.157	-0.155	-0.151	-0.144	-0.136	-0.125	-0.119	-0.112	-0.097	-0.081	-0.062	-0.043	-0.022	0.000
	DEFLECTION DUE TO WT. OF SLAB ▲	0.000	-0.007	-0.020	-0.039	-0.063	-0.090	-0.119	-0.150	-0.180	-0.181	-0.212	-0.242	-0.270	-0.296	-0.318	-0.337	-0.352	-0.363	-0.369	-0.370	-0.366	-0.357	-0.342	-0.322	-0.297	-0.282	-0.267	-0.232	-0.193	-0.150	-0.103	-0.052	0.000
	DEFL. DUE TO WT. OF BARRIER RAIL	0.000	-0.001	-0.002	-0.004	-0.007	-0.009	-0.012	-0.016	-0.019	-0.019	-0.022	-0.025	-0.027	-0.030	-0.032	-0.034	-0.035	-0.036	-0.037	-0.037	-0.036	-0.035	-0.033	-0.031	-0.029	-0.027	-0.026	-0.022	-0.018	-0.014	-0.010	-0.005	0.000
	TOTAL DEAD LOAD DEFLECTION	0.000	-0.011	-0.031	-0.061	-0.097	-0.138	-0.183	-0.230	-0.275	-0.278	-0.325	-0.371	-0.413	-0.452	-0.486	-0.515	-0.538	-0.553	-0.562	-0.563	-0.557	-0.542	-0.519	-0.489	-0.451	-0.428	-0.405	-0.352	-0.292	-0.226	-0.155	-0.079	0.000
	VERTICAL CURVE ORDINATE	0.000	0.000	0.000	0.000	0.000	0.000	0.000	0.000	0.000	0.000	0.000	0.000	0.000	0.000	0.000	0.000	0.000	0.000	0.000	0.000	0.000	0.000	0.000	0.000	0.000	0.000	0.000	0.000	0.000	0.000	0.000	0.000	0.000
	SUPERELEVATION ORDINATE	0.000	0.007	0.013	0.020	0.028	0.035	0.043	0.051	0.060	0.060	0.068	0.076	0.084	0.092	0.098	0.092	0.087	0.081	0.076	0.071	0.065	0.059	0.053	0.047	0.041	0.040	0.034	0.028	0.023	0.017	0.011	0.005	0.000
	REQUIRED CAMBER	0″	3/16″	9/16″	1″	1 1/2″	2 1/16″	2 11/16″	3 3/8″	4″	4 1/16″	4 3/4″	5 3/8″	6″	6 1/2″	7″	7 5/16″	7 1/2″	7 5/8″	7 5/8″	7 5/8″	7 7/16″	7 3/16″	6 7/8″	6 7/16″	5 7/8″	5 5/8″	5 1/4″	4 9/16″	3 3/4″	2 15/16″	2″	1″	0″
GIRDER 2	DEFLECTION DUE TO WT. OF STEEL	0.000	-0.002	-0.007	-0.014	-0.023	-0.034	-0.046	-0.058	-0.069	-0.070	-0.083	-0.095	-0.106	-0.116	-0.126	-0.133	-0.140	-0.144	-0.147	-0.148	-0.146	-0.143	-0.137	-0.129	-0.120	-0.114	-0.108	-0.094	-0.078	-0.061	-0.042	-0.022	0.000
	DEFLECTION DUE TO WT. OF SLAB ▲	0.000	-0.005	-0.017	-0.034	-0.055	-0.080	-0.107	-0.136	-0.163	-0.165	-0.195	-0.223	-0.250	-0.275	-0.297	-0.316	-0.331	-0.342	-0.349	-0.351	-0.348	-0.340	-0.327	-0.310	-0.287	-0.274	-0.259	-0.226	-0.189	-0.147	-0.101	-0.052	0.000
	DEFL. DUE TO WT. OF BARRIER RAIL	0.000	0.000	-0.002	-0.003	-0.006	-0.008	-0.011	-0.013	-0.016	-0.016	-0.019	-0.022	-0.024	-0.027	-0.029	-0.031	-0.032	-0.033	-0.033	-0.033	-0.033	-0.032	-0.031	-0.029	-0.027	-0.026	-0.024	-0.021	-0.017	-0.014	-0.009	-0.005	0.000
	TOTAL DEAD LOAD DEFLECTION	0.000	-0.008	-0.025	-0.051	-0.084	-0.122	-0.163	-0.207	-0.249	-0.252	-0.297	-0.340	-0.381	-0.418	-0.452	-0.480	-0.503	-0.519	-0.529	-0.532	-0.527	-0.515	-0.496	-0.468	-0.433	-0.414	-0.391	-0.341	-0.284	-0.221	-0.152	-0.078	0.000
	VERTICAL CURVE ORDINATE	0.000	0.000	0.000	0.000	0.000	0.000	0.000	0.000	0.000	0.000	0.000	0.000	0.000	0.000	0.000	0.000	0.000	0.000	0.000	0.000	0.000	0.000	0.000	0.000	0.000	0.000	0.000	0.000	0.000	0.000	0.000	0.000	0.000
	SUPERELEVATION ORDINATE	0.000	-0.001	-0.003	-0.004	-0.005	-0.005	-0.006	-0.006	-0.007	-0.006	-0.005	-0.005	-0.005	-0.005	-0.006	-0.006	-0.005	-0.004	-0.003	-0.003	-0.002	-0.002	-0.003	-0.002	-0.002	-0.002	-0.002	-0.002	-0.001	-0.002	-0.001	-0.001	0.000
	REQUIRED CAMBER	0″	1/16″	1/4″	5/16″	15/16″	1 3/8″	1 7/8″	2 7/16″	2 15/16″	2 15/16″	3 1/2″	4″	4 1/2″	4 15/16″	5 3/8″	5 11/16″	6″	6 3/16″	6 5/16″	6 3/8″	6 5/16″	6 3/16″	5 15/16″	5 9/16″	5 3/16″	4 15/16″	4 11/16″	4 1/16″	3 3/8″	2 5/8″	1 13/16″	15/16″	0″
GIRDER 3	DEFLECTION DUE TO WT. OF STEEL	0.000	-0.001	-0.005	-0.012	-0.020	-0.030	-0.041	-0.052	-0.063	-0.064	-0.076	-0.088	-0.098	-0.108	-0.117	-0.125	-0.131	-0.135	-0.138	-0.139	-0.137	-0.134	-0.129	-0.122	-0.112	-0.112	-0.101	-0.088	-0.073	-0.057	-0.039	-0.020	0.000
	DEFLECTION DUE TO WT. OF SLAB ▲	0.000	-0.002	-0.012	-0.028	-0.048	-0.071	-0.097	-0.124	-0.150	-0.152	-0.180	-0.208	-0.234	-0.257	-0.279	-0.297	-0.312	-0.323	-0.329	-0.332	-0.329	-0.322	-0.310	-0.293	-0.272	-0.271	-0.245	-0.214	-0.178	-0.138	-0.095	-0.048	0.000
	DEFL. DUE TO WT. OF BARRIER RAIL	0.000	0.000	-0.001	-0.003	-0.005	-0.007	-0.010	-0.012	-0.015	-0.015	-0.017	-0.020	-0.022	-0.025	-0.027	-0.028	-0.029	-0.030	-0.031	-0.031	-0.031	-0.030	-0.029	-0.027	-0.025	-0.025	-0.022	-0.019	-0.016	-0.012	-0.009	-0.004	0.000
	TOTAL DEAD LOAD DEFLECTION	0.000	-0.004	-0.019	-0.042	-0.073	-0.108	-0.147	-0.189	-0.228	-0.231	-0.274	-0.315	-0.354	-0.390	-0.423	-0.450	-0.472	-0.488	-0.498	-0.501	-0.497	-0.486	-0.468	-0.442	-0.409	-0.408	-0.368	-0.321	-0.268	-0.208	-0.142	-0.072	0.000
	VERTICAL CURVE ORDINATE	0.000	0.000	0.000	0.000	0.000	0.000	0.000	0.000	0.000	0.000	0.000	0.000	0.000	0.000	0.000	0.000	0.000	0.000	0.000	0.000	0.000	0.000	0.000	0.000	0.000	0.000	0.000	0.000	0.000	0.000	0.000	0.000	0.000
	SUPERELEVATION ORDINATE	0.000	-0.008	-0.018	-0.026	-0.034	-0.041	-0.049	-0.057	-0.064	-0.064	-0.071	-0.078	-0.085	-0.091	-0.098	-0.105	-0.113	-0.106	-0.097	-0.090	-0.082	-0.074	-0.067	-0.060	-0.052	-0.052	-0.045	-0.038	-0.030	-0.023	-0.015	-0.008	0.000
	REQUIRED CAMBER	0″	-1/16″	0″	3/16″	7/16″	13/16″	1 3/16″	1 9/16″	1 15/16″	2″	2 7/16″	2 7/8″	3 1/4″	3 9/16″	3 7/8″	4 1/8″	4 5/16″	4 9/16″	4 13/16″	4 15/16″	5″	4 15/16″	4 13/16″	4 9/16″	4 5/16″	4 1/4″	3 7/8″	3 3/8″	2 7/8″	2 3/16″	1 1/2″	3/4″	0″

		1.00	1.01	1.02	1.03	1.04	1.05	1.06	1.07	F.S. 1	1.08	1.09	1.10	1.11	1.12	1.13	1.14	1.15	1.16	1.17	1.18	1.19	1.20	1.21	1.22	F.S. 2	1.23	1.24	1.25	1.26	1.27	1.28	1.29	1.30
GIRDER 4	DEFLECTION DUE TO WT. OF STEEL	0.000	-0.004	-0.007	-0.013	-0.021	-0.030	-0.041	-0.052	-0.062	-0.063	-0.074	-0.085	-0.096	-0.106	-0.114	-0.122	-0.128	-0.132	-0.135	-0.136	-0.135	-0.132	-0.127	-0.120	-0.112	-0.111	-0.101	-0.088	-0.074	-0.058	-0.041	-0.022	0.000
	DEFLECTION DUE TO WT. OF SLAB ▲	0.000	-0.002	-0.011	-0.025	-0.043	-0.065	-0.089	-0.116	-0.140	-0.143	-0.170	-0.196	-0.222	-0.245	-0.266	-0.284	-0.299	-0.310	-0.317	-0.320	-0.318	-0.311	-0.300	-0.284	-0.264	-0.264	-0.238	-0.208	-0.174	-0.136	-0.094	-0.048	0.000
	DEFL. DUE TO WT. OF BARRIER RAIL	0.000	0.000	-0.001	-0.003	-0.005	-0.007	-0.009	-0.012	-0.014	-0.014	-0.017	-0.019	-0.021	-0.023	-0.025	-0.027	-0.028	-0.029	-0.029	-0.030	-0.029	-0.028	-0.027	-0.026	-0.024	-0.024	-0.021	-0.018	-0.015	-0.012	-0.008	-0.004	0.000
	TOTAL DEAD LOAD DEFLECTION	0.000	-0.006	-0.019	-0.040	-0.068	-0.102	-0.139	-0.179	-0.216	-0.220	-0.261	-0.301	-0.339	-0.374	-0.406	-0.433	-0.455	-0.471	-0.481	-0.485	-0.482	-0.472	-0.455	-0.430	-0.399	-0.399	-0.360	-0.315	-0.263	-0.206	-0.143	-0.074	0.000
	VERTICAL CURVE ORDINATE	0.000	0.000	0.000	0.000	0.000	0.000	0.000	0.000	0.000	0.000	0.000	0.000	0.000	0.000	0.000	0.000	0.000	0.000	0.000	0.000	0.000	0.000	0.000	0.000	0.000	0.000	0.000	0.000	0.000	0.000	0.000	0.000	0.000
	SUPERELEVATION ORDINATE	0.000	-0.014	-0.030	-0.044	-0.058	-0.073	-0.086	-0.101	-0.113	-0.114	-0.127	-0.141	-0.153	-0.166	-0.179	-0.192	-0.205	-0.219	-0.206	-0.190	-0.173	-0.158	-0.141	-0.126	-0.110	-0.110	-0.094	-0.078	-0.063	-0.047	-0.031	-0.016	0.000
	REQUIRED CAMBER	0″	-1/8″	-1/8″	-1/16″	1/8″	3/8″	5/8″	15/16″	1 1/4″	1 1/4″	1 5/8″	1 15/16″	2 1/4″	2 1/2″	2 3/4″	2 7/8″	3″	3″	3 5/16″	3 3/16″	3 11/16″	3 3/4″	3 3/4″	3 5/8″	3 1/2″	3 7/16″	3 3/16″	2 13/16″	2 7/16″	1 7/8″	1 5/16″	11/16″	0″

		1.00	1.01	1.02	1.03	1.04	1.05	1.06	1.07	F.S. 1	1.08	1.09	1.10	1.11	1.12	1.13	1.14	1.15	1.16	1.17	1.18	1.19	1.20	1.21	1.22	F.S. 2	1.23	1.24	1.25	1.26	1.27	1.28	1.29	1.30
GIRDER 5	DEFLECTION DUE TO WT. OF STEEL	0.000	0.000	-0.003	-0.009	-0.016	-0.025	-0.035	-0.045	-0.055	-0.056	-0.067	-0.078	-0.089	-0.098	-0.107	-0.114	-0.120	-0.125	-0.127	-0.129	-0.128	-0.125	-0.120	-0.114	-0.106	-0.105	-0.095	-0.083	-0.069	-0.054	-0.037	-0.019	0.000
	DEFLECTION DUE TO WT. OF SLAB ▲	0.000	-0.001	-0.008	-0.020	-0.037	-0.058	-0.081	-0.106	-0.130	-0.133	-0.159	-0.185	-0.210	-0.233	-0.254	-0.272	-0.287	-0.298	-0.305	-0.309	-0.307	-0.301	-0.291	-0.276	-0.257	-0.256	-0.231	-0.203	-0.169	-0.132	-0.091	-0.047	0.000
	DEFL. DUE TO WT. OF BARRIER RAIL	0.000	0.000	-0.001	-0.002	-0.004	-0.006	-0.009	-0.011	-0.013	-0.014	-0.016	-0.019	-0.021	-0.025	-0.025	-0.027	-0.028	-0.029	-0.029	-0.029	-0.029	-0.028	-0.027	-0.025	-0.024	-0.023	-0.021	-0.018	-0.015	-0.012	-0.008	-0.004	0.000
	TOTAL DEAD LOAD DEFLECTION	0.000	-0.001	-0.012	-0.031	-0.057	-0.089	-0.124	-0.163	-0.198	-0.203	-0.243	-0.282	-0.320	-0.355	-0.386	-0.413	-0.435	-0.452	-0.462	-0.466	-0.464	-0.455	-0.438	-0.415	-0.387	-0.385	-0.348	-0.304	-0.254	-0.198	-0.136	-0.070	0.000
	VERTICAL CURVE ORDINATE	0.000	0.000	0.000	0.000	0.000	0.000	0.000	0.000	0.000	0.000	0.000	0.000	0.000	0.000	0.000	0.000	0.000	0.000	0.000	0.000	0.000	0.000	0.000	0.000	0.000	0.000	0.000	0.000	0.000	0.000	0.000	0.000	0.000
	SUPERELEVATION ORDINATE	0.000	-0.019	-0.040	-0.059	-0.079	-0.098	-0.118	-0.137	-0.154	-0.156	-0.175	-0.193	-0.212	-0.229	-0.255	-0.266	-0.283	-0.302	-0.321	-0.303	-0.278	-0.252	-0.226	-0.201	-0.176	-0.177	-0.151	-0.126	-0.100	-0.075	-0.050	-0.025	0.000
	REQUIRED CAMBER	0″	-3/16″	-5/16″	-5/16″	-1/4″	-1/8″	1/16″	5/16″	1/2″	9/16″	13/16″	1 1/16″	1 5/16″	1 1/2″	1 9/16″	1 3/4″	1 13/16″	1 13/16″	1 11/16″	1 15/16″	2 1/4″	2 7/16″	2 9/16″	2 9/16″	2 1/2″	2 1/2″	2 3/8″	2 1/8″	1 13/16″	1 1/2″	1″	9/16″	0″
GIRDER 6	DEFLECTION DUE TO WT. OF STEEL	0.000	0.000	-0.002	-0.007	-0.013	-0.022	-0.031	-0.042	-0.051	-0.053	-0.064	-0.074	-0.085	-0.094	-0.103	-0.110	-0.117	-0.121	-0.124	-0.125	-0.125	-0.122	-0.118	-0.112	-0.104	-0.103	-0.093	-0.082	-0.068	-0.053	-0.036	-0.019	0.000
	DEFLECTION DUE TO WT. OF SLAB ▲	0.000	0.001	-0.004	-0.015	-0.030	-0.050	-0.073	-0.097	-0.120	-0.123	-0.149	-0.175	-0.200	-0.223	-0.244	-0.262	-0.277	-0.289	-0.296	-0.300	-0.299	-0.294	-0.284	-0.270	-0.252	-0.250	-0.227	-0.199	-0.166	-0.130	-0.089	-0.046	0.000
	DEFL. DUE TO WT. OF BARRIER RAIL	0.000	0.000	-0.001	-0.002	-0.004	-0.006	-0.008	-0.011	-0.013	-0.014	-0.016	-0.019	-0.021	-0.023	-0.025	-0.027	-0.028	-0.029	-0.030	-0.030	-0.030	-0.029	-0.028	-0.026	-0.024	-0.024	-0.022	-0.019	-0.016	-0.012	-0.008	-0.004	0.000
	TOTAL DEAD LOAD DEFLECTION	0.000	0.002	-0.006	-0.023	-0.048	-0.078	-0.112	-0.150	-0.184	-0.189	-0.229	-0.268	-0.305	-0.340	-0.372	-0.399	-0.422	-0.439	-0.450	-0.455	-0.454	-0.445	-0.430	-0.407	-0.381	-0.378	-0.342	-0.299	-0.250	-0.195	-0.134	-0.069	0.000
	VERTICAL CURVE ORDINATE	0.000	0.000	0.000	0.000	0.000	0.000	0.000	0.000	0.000	0.000	0.000	0.000	0.000	0.000	0.000	0.000	0.000	0.000	0.000	0.000	0.000	0.000	0.000	0.000	0.000	0.000	0.000	0.000	0.000	0.000	0.000	0.000	0.000
	SUPERELEVATION ORDINATE	0.000	-0.024	-0.049	-0.072	-0.096	-0.120	-0.143	-0.167	-0.188	-0.191	-0.213	-0.236	-0.259	-0.282	-0.303	-0.325	-0.348	-0.370	-0.393	-0.416	-0.395	-0.358	-0.322	-0.286	-0.251	-0.254	-0.215	-0.179	-0.143	-0.108	-0.072	-0.036	0.000
	REQUIRED CAMBER	0″	-5/16″	-1/2″	-9/16″	-9/16″	-1/2″	-3/8″	-3/16″	-1/16″	0″	3/16″	3/8″	9/16″	11/16″	13/16″	7/8″	7/8″	13/16″	11/16″	1/2″	11/16″	1 1/16″	1 5/16″	1 7/16″	1 9/16″	1 1/2″	1 1/2″	1 7/16″	1 1/4″	1 1/16″	3/4″	3/8″	0

▲ INCLUDES SLAB, BUILDUP AND STAY-IN-PLACE FORMS

◆ FOR GIRDERS 1-3, FIELD SPLICE IS LOCATED BETWEEN POINTS 1.23 AND 1.24.

FOR GIRDERS 3 - 6, FIELD SPLICE IS LOCATED BETWEEN POINTS 1.22 AND 1.23.

SCHEMATIC CAMBER ORDINATES - SPAN 26

NOTES:

1. VALUES ARE SHOWN IN FEET (DECIMAL FORMAT), EXCEPT "REQUIRED CAMBER" WHICH IS GIVEN IN INCHES.
2. FOR GIRDER DESIGNATIONS, SEE FRAMING PLAN AND GIRDER DETAILS SHEETS.
3. DEFLECTIONS IN THE DOWNWARD DIRECTION ARE NEGATIVE. A REQUIRED CAMBER IN THE UPWARD DIRECTION IS POSITIVE. SIGN CONVENTION FOR DEAD LOAD DEFLECTION.

(+) / (-) 0

4. SLOPE FOR ZERO CAMBER BASE VARIES.
4. CAMBER DUE TO DISSIPATION RESULTING FROM HEAT CURVING IS NOT REQUIRED.

NORTH CAROLINA PROFESSIONAL ENGINEER SEAL 28479 KEVIN G. BAILEY 6-7-13

STV / Ralph Whitehead Associates, Inc.
1000 West Morehead St., Ste. 200
Charlotte, NC 28208
NC License No. F-0991

PROJECT NO. U-2524C

GUILFORD COUNTY

STATION: POT 407+85.82 -L-
= POT 29+79.72 -Y4-

SHEET 8 OF 8

STATE OF NORTH CAROLINA
DEPARTMENT OF TRANSPORTATION
RALEIGH

STEEL GIRDER CAMBERS
UNIT H
SPAN 26

-RIGHT LANE-

REVISIONS						SHEET NO.
NO.	BY:	DATE:	NO.	BY:	DATE:	S-391
1			3			TOTAL SHEETS
2			4			836

DRAWN BY : CLG DATE : 5-13
CHECKED BY : TRL DATE : 5-13

DESIGN ENGINEER OF RECORD: K. BAILEY DATE : 5-13

6/6/2013 11:00:28 PM R:\ustation\Finals\Unit H - Camber Span 26.dgn

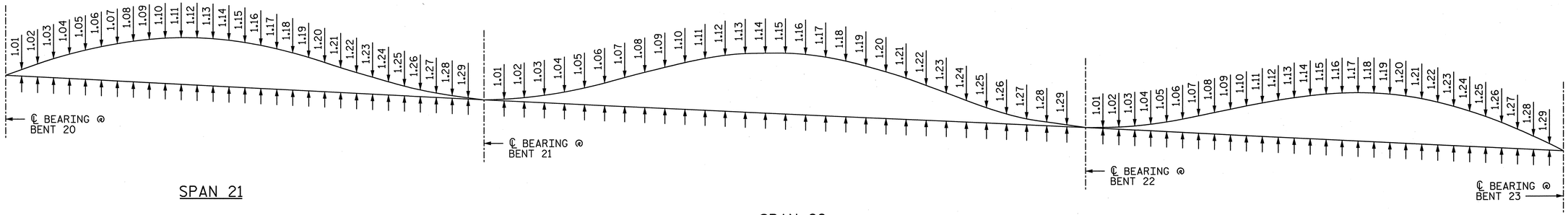

SPAN 21

SPAN 22

SPAN 23

UNIT G GIRDERS 1-6 SCHEMATIC CAMBER ORDINATES

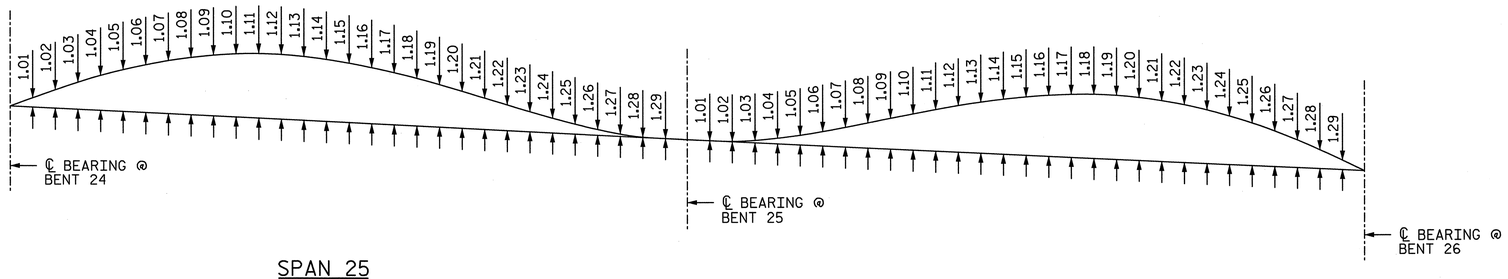

SPAN 25

SPAN 26

UNIT H GIRDERS 1-6 SCHEMATIC CAMBER ORDINATES

NOTE:
FOR ACTUAL GIRDER CAMBERS, SEE CORRESPONDING GIRDER CAMBERS SHEET.

PROJECT NO. U-2524C

GUILFORD COUNTY

STATION: POT 407+85.82 -L-
= POT 29+79.72 -Y4-

NORTH CAROLINA PROFESSIONAL SEAL 28479 ENGINEER KEVIN G. BAILEY
6-7-13

STATE OF NORTH CAROLINA
DEPARTMENT OF TRANSPORTATION
RALEIGH

STEEL GIRDER CAMBERS
SCHEMATIC CAMBER ORDINATES
UNITS G & H

-RIGHT LANE-

REVISIONS						SHEET NO.
NO.	BY:	DATE:	NO.	BY:	DATE:	S-392
1			3			TOTAL SHEETS
2			4			836

STV / Ralph Whitehead Associates, Inc.
1000 West Morehead St., Ste. 200
Charlotte, NC 28208
NC License No. F-0991

DRAWN BY : VMW	DATE : 2-13	DESIGN ENGINEER OF RECORD: M. ROBBINS	DATE : 5-13
CHECKED BY : MFR	DATE : 2-13		

6/6/2013 11:00:29 PM R:\ustation\Finals\Unit G & H - Schematic Camber Ordinates.dgn

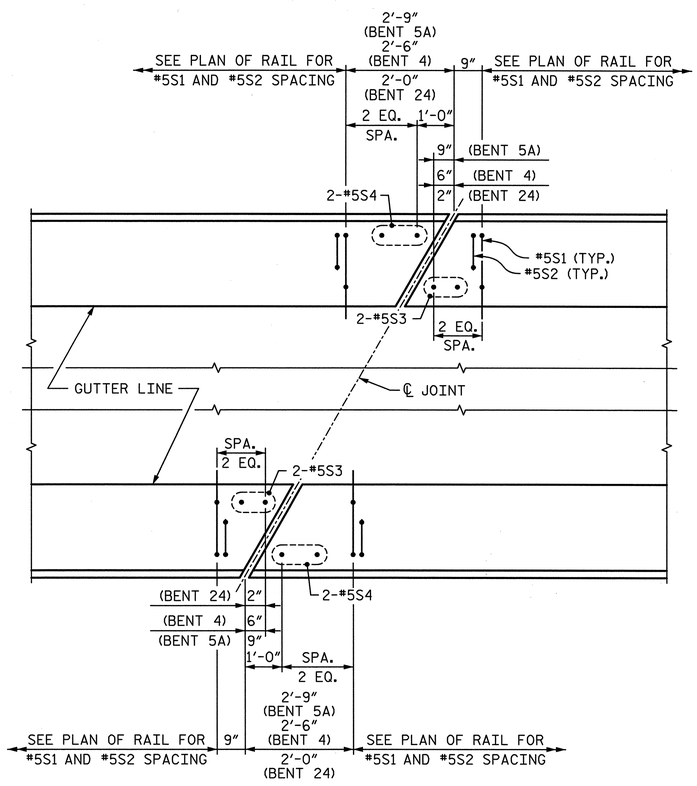

PLAN AT JOINTS, BENTS 4, 5A & 24

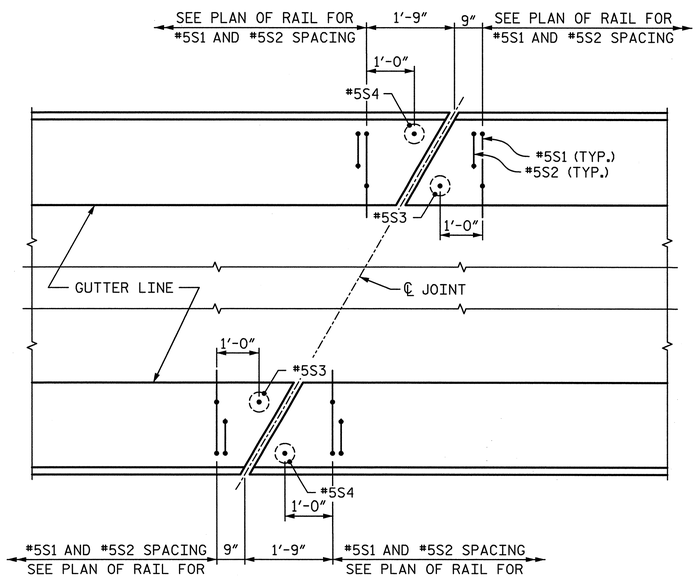

PLAN AT JOINTS, BENT 26 & END BENT 2
(BENT 26 SHOWN, END BENT 2 SIMILAR)

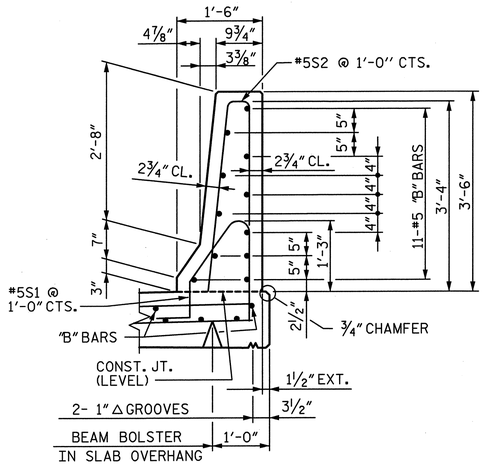

TYPICAL SECTION THRU RAIL

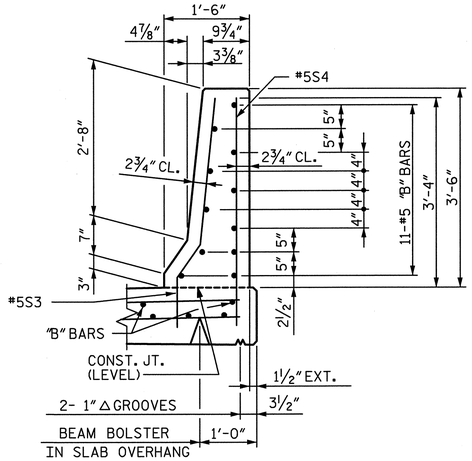

TYPICAL SECTION AT JOINT
(AT BENTS 4, 5A, 24, 26 AND END BENT 2)

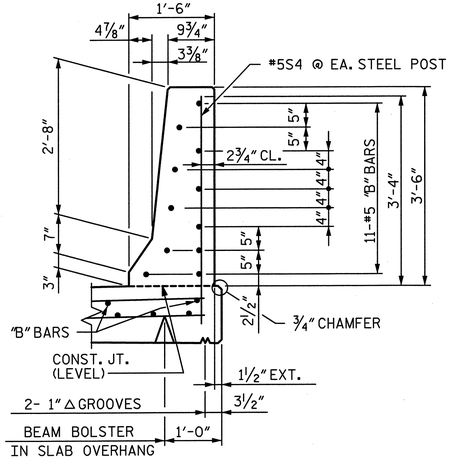

SECTION AT SOUND WALL STEEL POST

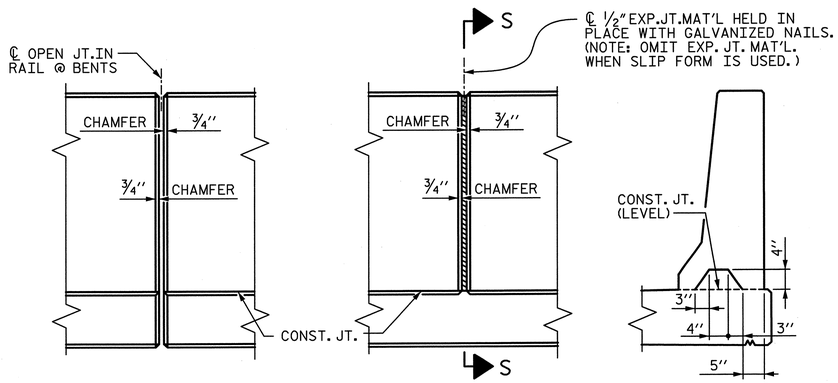

ELEVATION AT EXPANSION JOINTS

SECTION S-S
AT DAM IN OPEN JOINT
(THIS IS TO BE USED ONLY WHEN SLIP FORM IS USED)

BARRIER RAIL DETAILS

NOTES

THE BARRIER RAIL IN EACH SPAN SHALL NOT BE CAST UNTIL ALL SLAB CONCRETE IN THAT SPAN HAS BEEN CAST AND HAS REACHED A MINIMUM COMPRESSIVE STRENGTH OF 3,000 PSI.

ALL REINFORCING STEEL IN BARRIER RAILS SHALL BE EPOXY COATED.

GROOVED CONTRACTION JOINTS, ½" IN DEPTH, SHALL BE TOOLED IN ALL EXPOSED FACES OF THE BARRIER RAIL AND IN ACCORDANCE WITH ARTICLE 825-10(B) OF THE STANDARD SPECIFICATIONS. THE CONTRACTION JOINT SHALL BE LOCATED AT EACH THIRD POINT BETWEEN BARRIER RAIL EXPANSION JOINTS. ONLY ONE CONTRACTION JOINT IS REQUIRED AT MIDPOINT OF BARRIER RAIL SEGMENTS LESS THAN 20 FEET IN LENGTH AND NO CONTRACTION JOINTS ARE REQUIRED FOR THOSE SEGMENTS LESS THAN 10 FEET IN LENGTH.

TRANSITION ZONE BARRIER RAIL LENGTH AND QUANTITIES NOT INCLUDED. SEE SHEET 8 OF 8 FOR TRANSITION ZONE BARRIER RAIL.

CONCRETE BARRIER RAIL ON APPROACH SLABS, LENGTH AND QUANTITIES, NOT INCLUDED. SEE "BRIDGE APPROACH SLAB" SHEETS.

THE #5S3 & #5S4 BARS SHALL BE INSTALLED, USING AN ADHESIVE ANCHORING SYSTEM. THE YIELD LOAD FOR THE #5S3 & #5S4 BARS IS 18.6 KIPS. FIELD TESTING FOR THE ADHESIVE BONDING SYSTEM IS NOT REQUIRED.

BAR TYPES

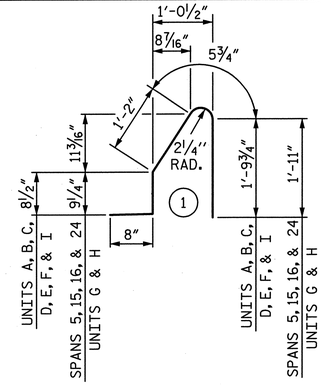

ALL BAR DIMENSIONS ARE OUT TO OUT

BILL OF MATERIAL

FOR CONCRETE BARRIER RAIL ONLY

	BAR	NO.	SIZE	TYPE	LENGTH	WEIGHT
	✱ B1	1,012	#5	STR	29'-6"	31,138
	✱ B2	462	#5	STR	27'-6"	13,251
	✱ B3	561	#5	STR	25'-6"	14,921
	✱ B4	154	#5	STR	23'-6"	3,775
	✱ B5	308	#5	STR	16'-4"	5,247
	✱ B6	1,100	#5	STR	14'-11"	17,114
	✱ B7	440	#5	STR	14'-1"	6,463
	✱ B8	462	#5	STR	12'-9"	6,144
	✱ B9	154	#5	STR	11'-9"	1,887
UNITS A, B, C, D, E, F, & I	✱ S1	4,972	#5	①	4'-10"	25,065
SPANS 5, 15, 16, & 24, UNITS G & H	✱ S1	3,395	#5	①	5'-0"	17,705
	✱ S2	8,367	#5	②	7'-0"	61,087
	✱ S3	15	#5	③	4'-2"	65
	✱ S4	42	#5	STR	4'-0"	175

✱ EPOXY COATED REINFORCING STEEL 204,037 LBS.
CLASS AA CONCRETE 1,137.7 CU. YDS.
CONCRETE BARRIER RAIL 8,371.5 LIN. FT.

PROJECT NO. U-2524C
GUILFORD COUNTY
STATION: POT 407+85.82 -L-
= POT 29+79.72 -Y4-
SHEET 1 OF 8

STATE OF NORTH CAROLINA
DEPARTMENT OF TRANSPORTATION
RALEIGH

CONCRETE BARRIER RAIL

-RIGHT LANE-

NORTH CAROLINA PROFESSIONAL SEAL 28479 ENGINEER KEVIN G. BAILEY 6-7-13

STV / Ralph Whitehead Associates, Inc.
1000 West Morehead St., Ste. 200
Charlotte, NC 28208
NC License No. F-0991

REVISIONS						SHEET NO.
NO.	BY:	DATE:	NO.	BY:	DATE:	S-393
1			3			TOTAL SHEETS
2			4			836

DRAWN BY : VMW	DATE : 4-13	DESIGN ENGINEER OF RECORD: P. KELLY	DATE : 5-13
CHECKED BY : PEK	DATE : 4-13		

6/6/2013 10:45:30 PM R:\ustation\Finals\Plan of Rails Sheet 1of 8.dgn

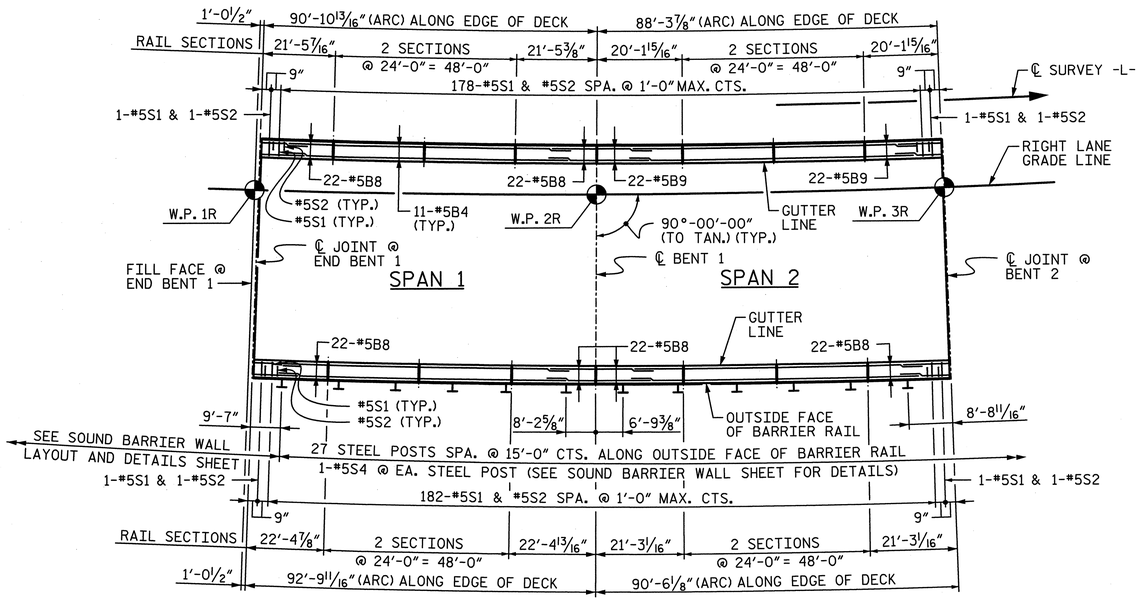

PLAN - UNIT A

(SPANS 1 & 2)

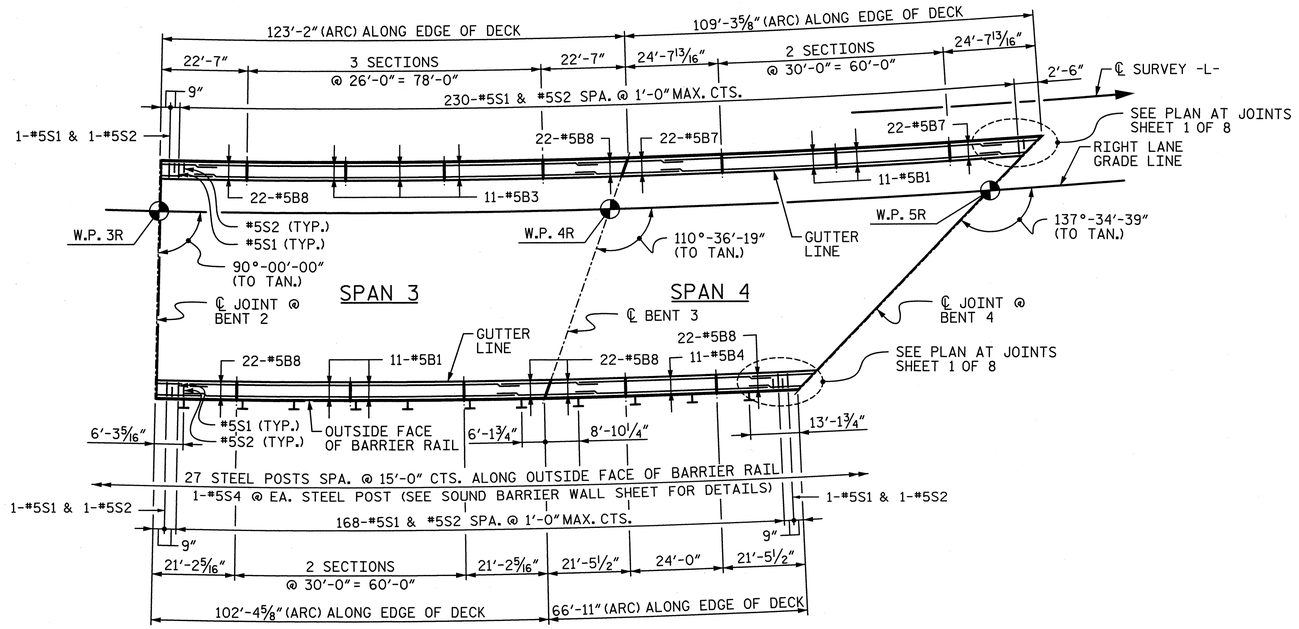

PLAN - UNIT B

(SPANS 3 & 4)

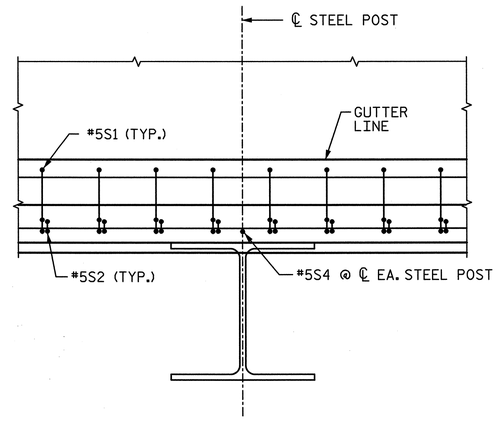

STEEL POST DETAIL

(FOR SOUND WALL CONNECTION DETAILS, SEE SOUND BARRIER WALL LAYOUT & DETAILS SHEET)

PROJECT NO. U-2524C

GUILFORD COUNTY

STATION: POT 407+85.82 -L-
= POT 29+79.72 -Y4-

SHEET 2 OF 8

STATE OF NORTH CAROLINA
DEPARTMENT OF TRANSPORTATION
RALEIGH

PLAN OF RAILS CONCRETE BARRIER RAIL UNITS A & B

-RIGHT LANE-

NORTH CAROLINA PROFESSIONAL SEAL 28479 ENGINEER KEVIN G. BAILEY
6-7-13

STV/ Ralph Whitehead Associates, Inc.
1000 West Morehead St., Ste. 200
Charlotte, NC 28208
NC License No. F-0991

REVISIONS						SHEET NO.
NO.	BY:	DATE:	NO.	BY:	DATE:	S-394
1			3			TOTAL SHEETS
2			4			836

DRAWN BY : VMW DATE : 4-13
CHECKED BY : PEK DATE : 4-13

DESIGN ENGINEER OF RECORD: P. KELLY DATE : 5-13

6/6/2013 4:41:59 PM R:\ustation\Finals\Plan of Rails Sheet 2 of 8.dgn

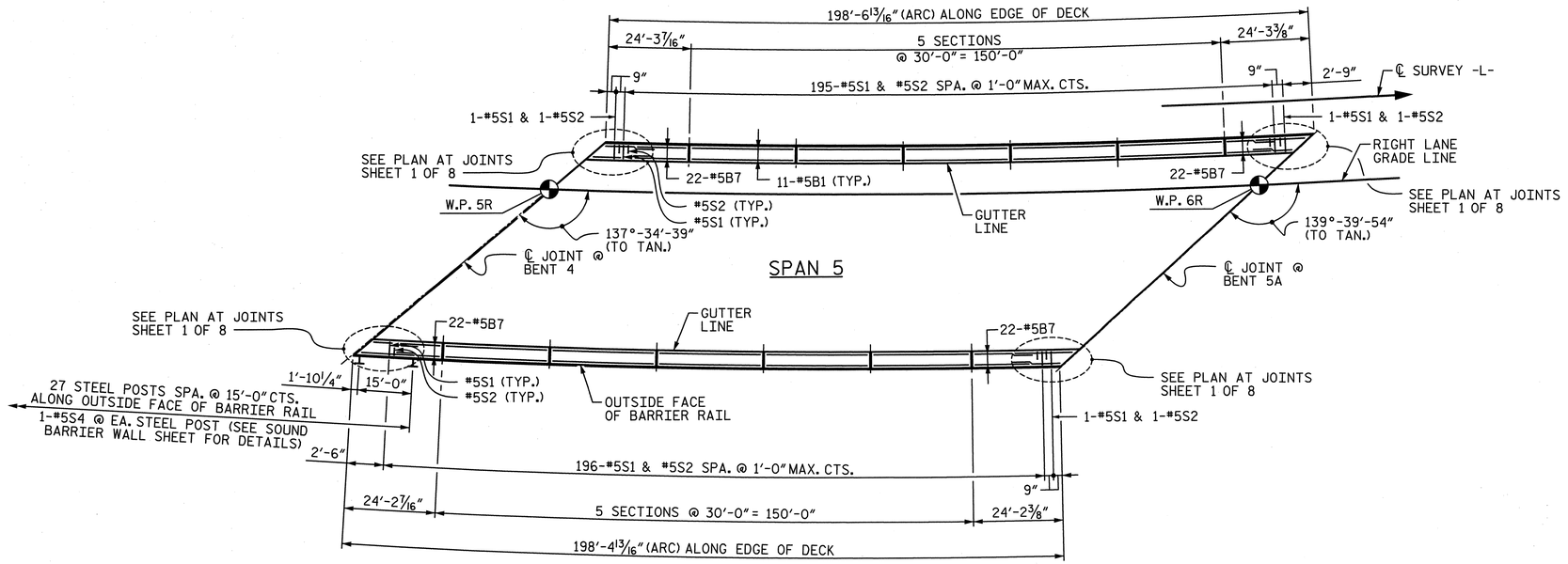

PLAN - SPAN 5

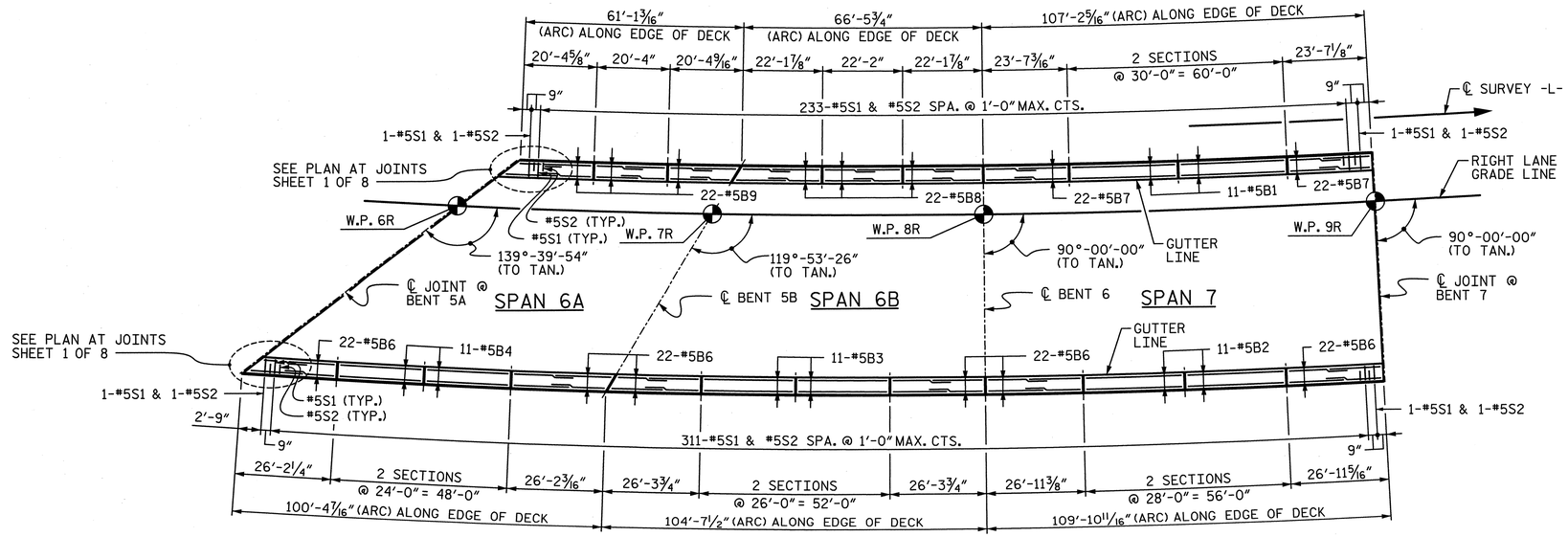

PLAN - UNIT C

(SPANS 6A, 6B, & 7)

PROJECT NO. U-2524C

GUILFORD COUNTY

STATION: POT 407+85.82 -L-
= POT 29+79.72 -Y4-

SHEET 3 OF 8

STATE OF NORTH CAROLINA
DEPARTMENT OF TRANSPORTATION
RALEIGH

PLAN OF RAILS CONCRETE BARRIER RAIL SPAN 5 & UNIT C

-RIGHT LANE-

NORTH CAROLINA PROFESSIONAL SEAL 28479 ENGINEER KEVIN G. BAILEY 6-7-13

STV / Ralph Whitehead Associates, Inc.
1000 West Morehead St., Ste. 200
Charlotte, NC 28208
NC License No. F-0991

REVISIONS						SHEET NO.
NO.	BY:	DATE:	NO.	BY:	DATE:	S-395
1			3			TOTAL SHEETS
2			4			836

DRAWN BY : VMW	DATE : 4-13	DESIGN ENGINEER OF RECORD: P. KELLY	DATE : 5-13
CHECKED BY : PEK	DATE : 4-13		

6/6/2013 4:42:01 PM R:\ustation\Finals\Plan of Rails Sheet 3 of 8.dgn

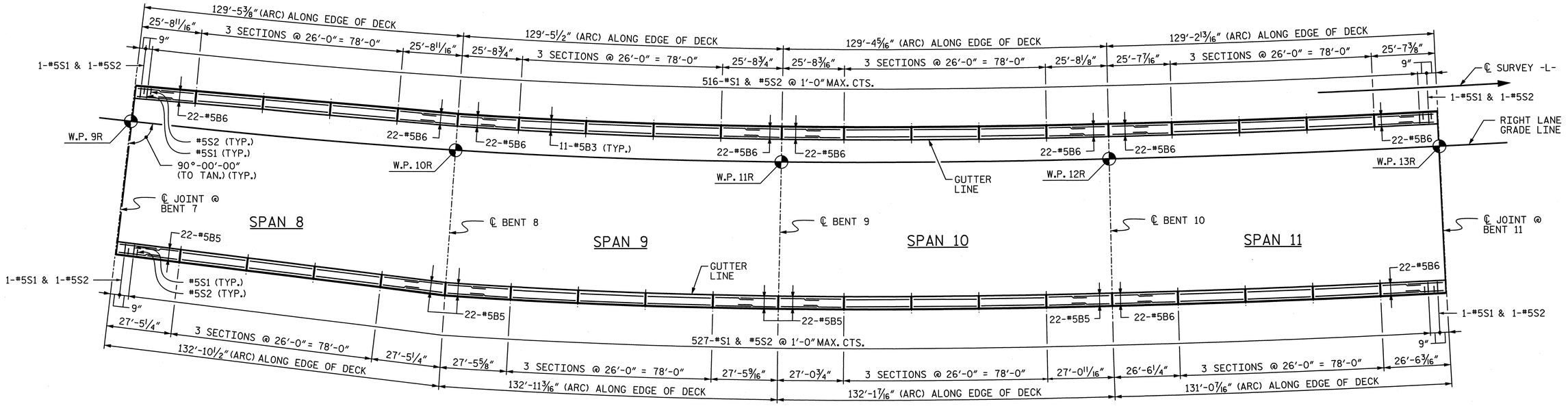

PLAN - UNIT D
(SPANS 8, 9, 10 & 11)

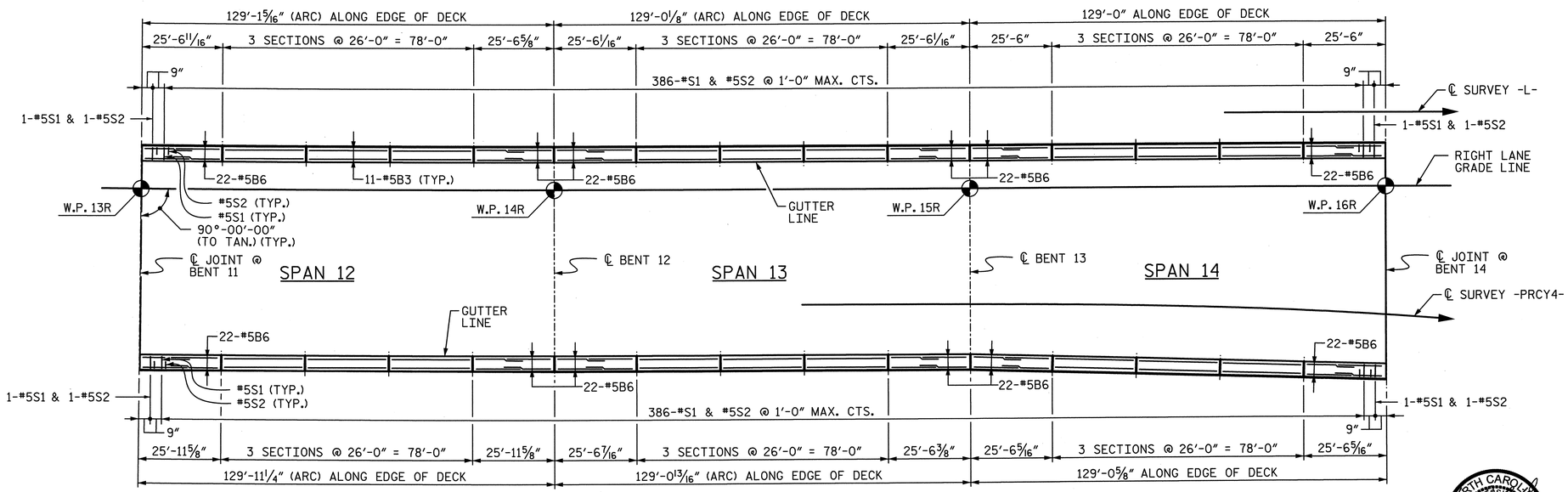

PLAN - UNIT E
(SPANS 12, 13 & 14)

PROJECT NO. U-2524C

GUILFORD COUNTY

STATION: POT 407+85.82 -L-
= POT 29+79.72 -Y4-

SHEET 4 OF 8

STATE OF NORTH CAROLINA
DEPARTMENT OF TRANSPORTATION
RALEIGH

PLAN OF RAILS
CONCRETE BARRIER RAIL
UNITS D & E

-RIGHT LANE-

NORTH CAROLINA PROFESSIONAL SEAL 28479 ENGINEER KEVIN G. BAILEY

DRAWN BY : VMW	DATE : 4-13	DESIGN ENGINEER OF RECORD: P. KELLY	DATE : 5-13
CHECKED BY : PEK	DATE : 4-13		

STV / Ralph Whitehead Associates, Inc.
1000 West Morehead St., Ste. 200
Charlotte, NC 28208
NC License No. F-0991

REVISIONS						SHEET NO.
NO.	BY:	DATE:	NO.	BY:	DATE:	S-396
1			3			TOTAL SHEETS
2			4			836

6/6/2013 4:42:03 PM R:\ustation\Finals\Plan of Rails Sheet 4 of 8.dgn

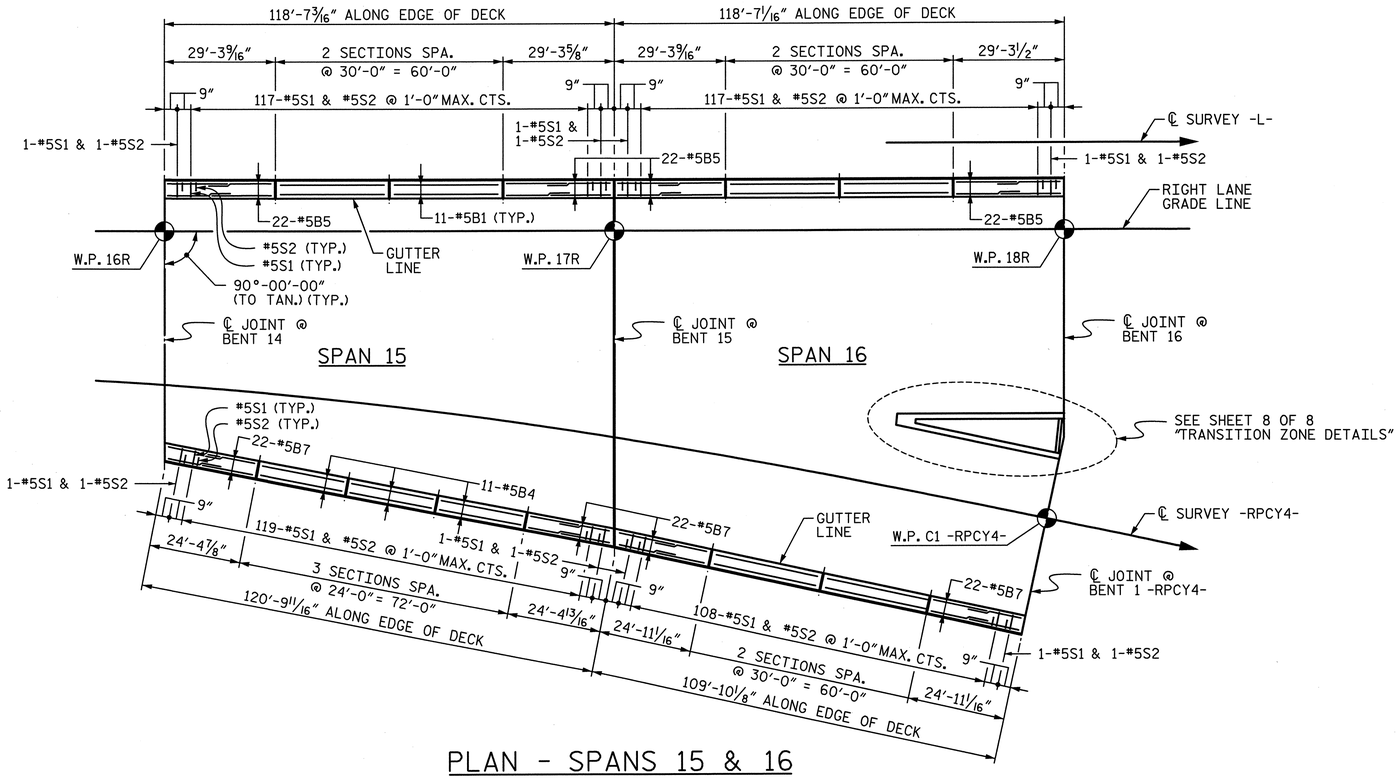

PLAN - SPANS 15 & 16

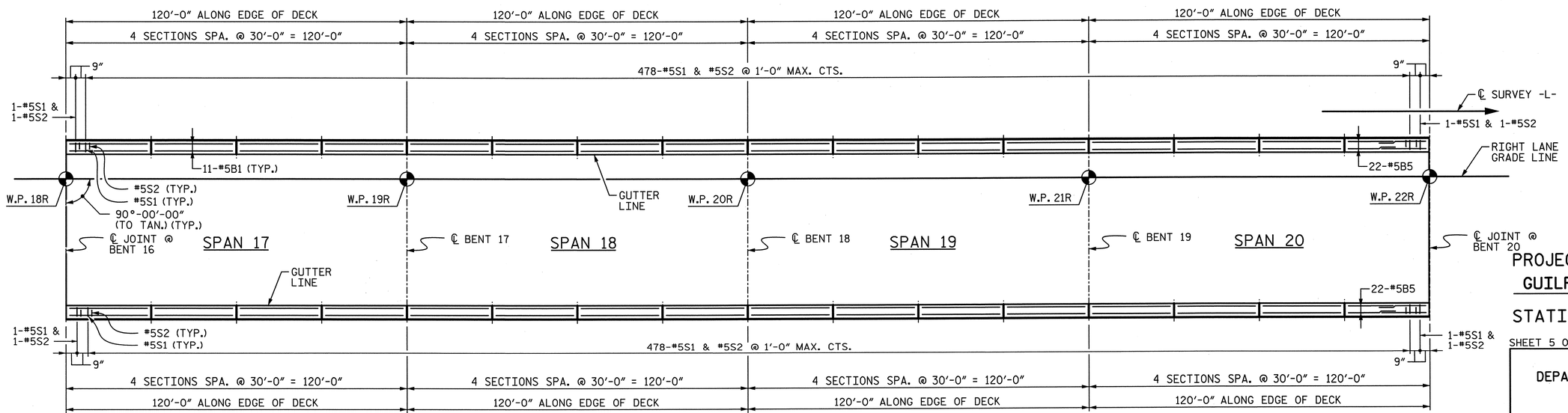

PLAN - UNIT F

(SPANS 17, 18, 19 & 20)

NORTH CAROLINA PROFESSIONAL ENGINEER SEAL 28479 KEVIN G. BAILEY 6-7-13

PROJECT NO. U-2524C

GUILFORD COUNTY

STATION: POT 407+85.82 -L-
= POT 29+79.72 -Y4-

SHEET 5 OF 8

STATE OF NORTH CAROLINA
DEPARTMENT OF TRANSPORTATION
RALEIGH

PLAN OF RAILS CONCRETE BARRIER RAIL SPANS 15, 16 & UNIT F

-RIGHT LANE-

DRAWN BY : VMW	DATE : 4-13	DESIGN ENGINEER OF RECORD: P. KELLY	DATE : 5-13
CHECKED BY : PEK	DATE : 4-13		

STV / Ralph Whitehead Associates, Inc.
1000 West Morehead St., Ste. 200
Charlotte, NC 28208
NC License No. F-0991

REVISIONS						SHEET NO.
NO.	BY:	DATE:	NO.	BY:	DATE:	S-397
1			3			TOTAL SHEETS
2			4			836

6/6/2013 4:42:05 PM R:\station\Finals\Plan of Rails Sheet 5 of 8.dgn

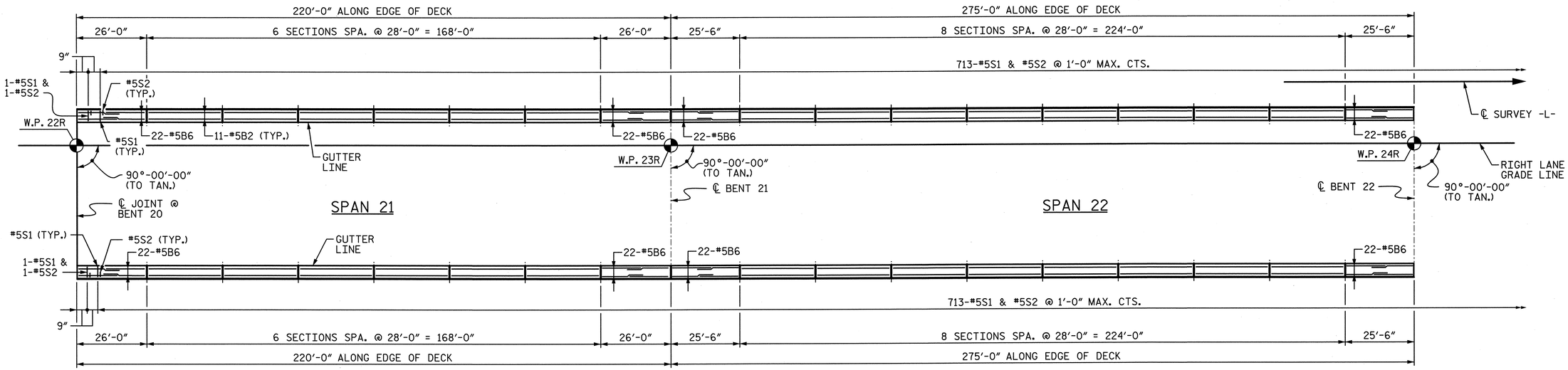

PLAN - UNIT G
(SPANS 21 & 22)

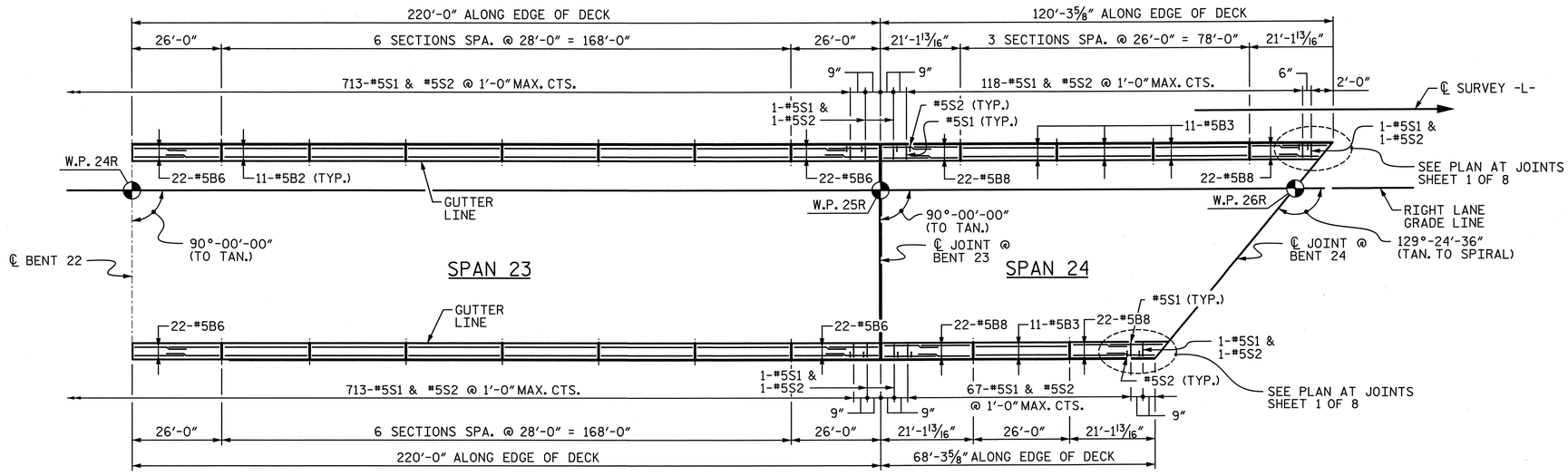

PLAN - UNIT G & SPAN 24
(SPANS 23 & 24)

PROJECT NO. U-2524C
GUILFORD COUNTY
STATION: POT 407+85.82 -L-
= POT 29+79.72 -Y4-
SHEET 6 OF 8

STATE OF NORTH CAROLINA
DEPARTMENT OF TRANSPORTATION
RALEIGH

PLAN OF RAILS
CONCRETE BARRIER RAIL
UNIT G & SPAN 24

-RIGHT LANE-

NORTH CAROLINA PROFESSIONAL ENGINEER SEAL 28479 ENGINEER KEVIN G. BAILEY 6-7-13

STV/ Ralph Whitehead Associates, Inc.
1000 West Morehead St., Ste. 200
Charlotte, NC 28208
NC License No. F-0991

REVISIONS						SHEET NO.
NO.	BY:	DATE:	NO.	BY:	DATE:	S-398
1			3			TOTAL SHEETS
2			4			836

DRAWN BY : ACA/VMW	DATE : 4-13	DESIGN ENGINEER OF RECORD: P. KELLY	DATE : 5-13
CHECKED BY : PEK	DATE : 4-13		

6/6/2013 4:42:06 PM R:\station\Finals\Plan of Rails Sheet 6 of 8.dgn

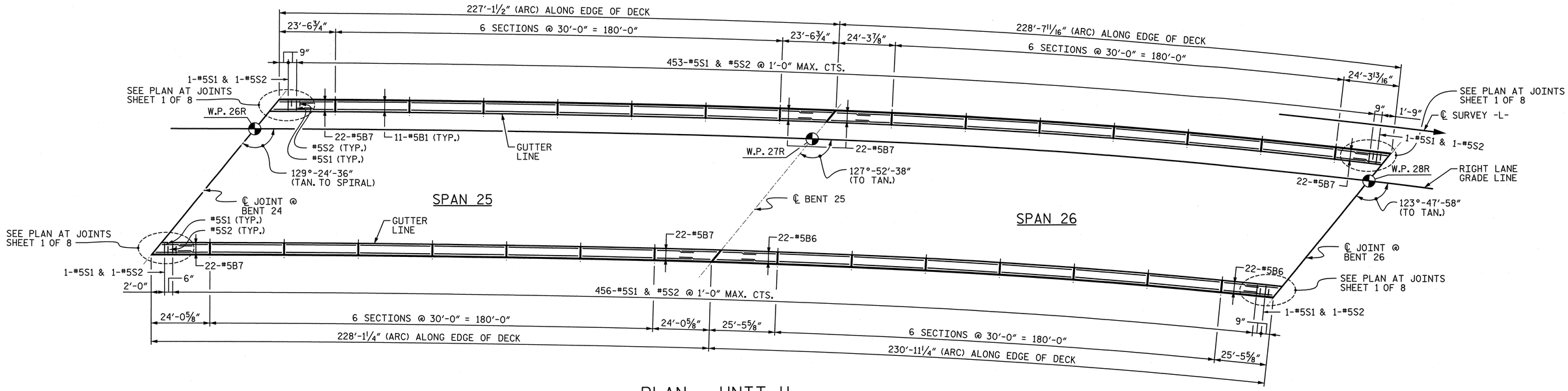

PLAN - UNIT H

(SPANS 25 & 26)

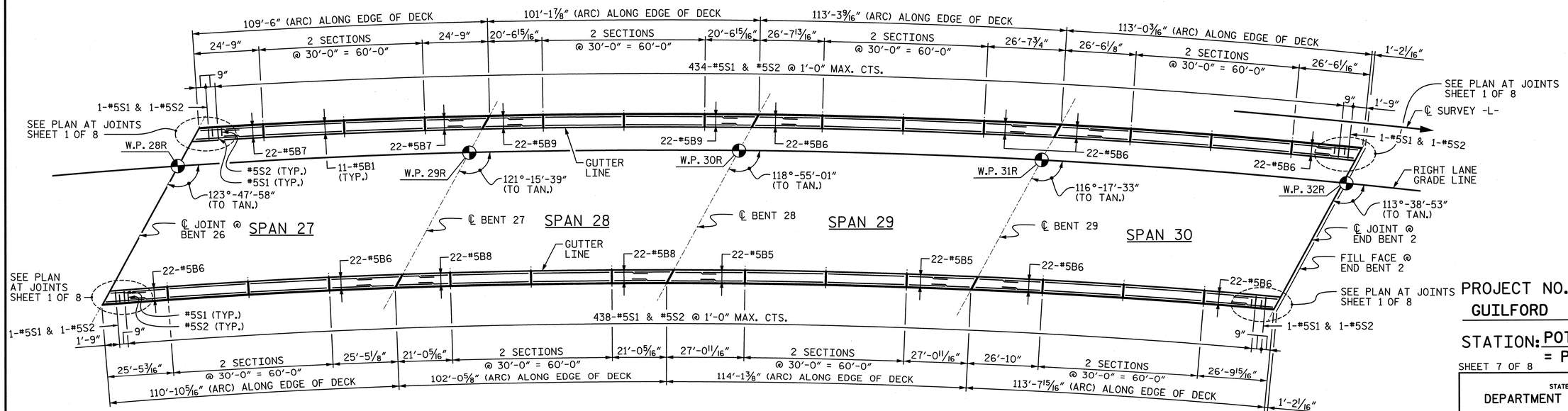

PLAN - UNIT I

(SPANS 27, 28, 29 & 30)

NORTH CAROLINA PROFESSIONAL SEAL 28479 ENGINEER KEVIN G. BAILEY 6-7-13

PROJECT NO. U-2524C

GUILFORD COUNTY

STATION: POT 407+85.82 -L-
= POT 29+79.72 -Y4-

SHEET 7 OF 8

STATE OF NORTH CAROLINA
DEPARTMENT OF TRANSPORTATION
RALEIGH

PLAN OF RAILS
CONCRETE BARRIER RAIL
UNITS H & I

-RIGHT LANE-

REVISIONS						SHEET NO.
NO.	BY:	DATE:	NO.	BY:	DATE:	S-399
1			3			TOTAL SHEETS
2			4			836

DRAWN BY : ACA/VMW DATE : 4-13
CHECKED BY : PEK DATE : 4-13

DESIGN ENGINEER OF RECORD: P. KELLY DATE : 5-13

STV / Ralph Whitehead Associates, Inc.
1000 West Morehead St. Ste. 200
Charlotte, NC 28208
NC License No. F-0991

6/6/2013 4:42:07 PM R:\ustation\Finals\Plan of Rails Sheet 7 of 8.dgn

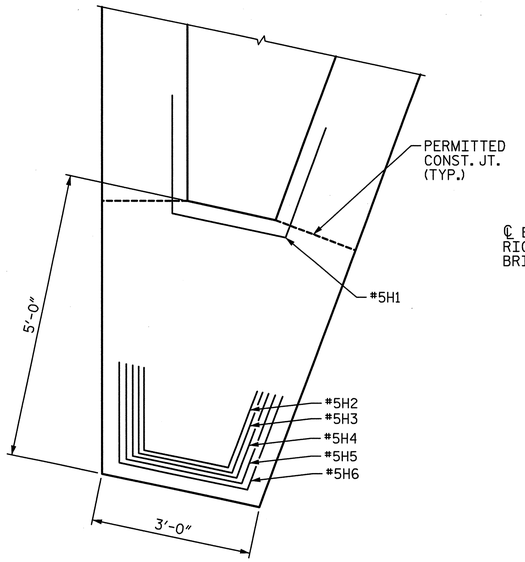

PLAN OF NOSEWALL

(H11 BARS AND "V" BARS NOT SHOWN FOR CLARITY.)

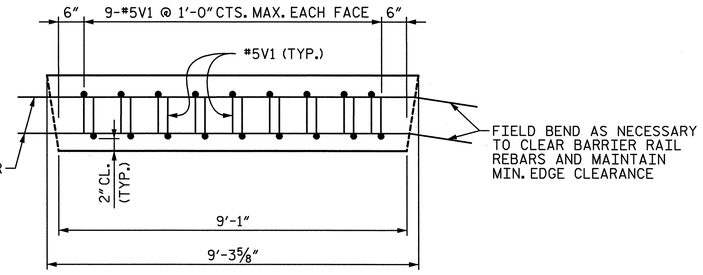

PLAN OF BACK RAIL

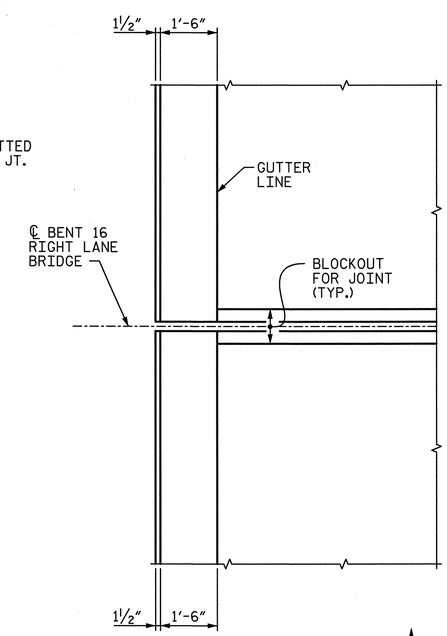

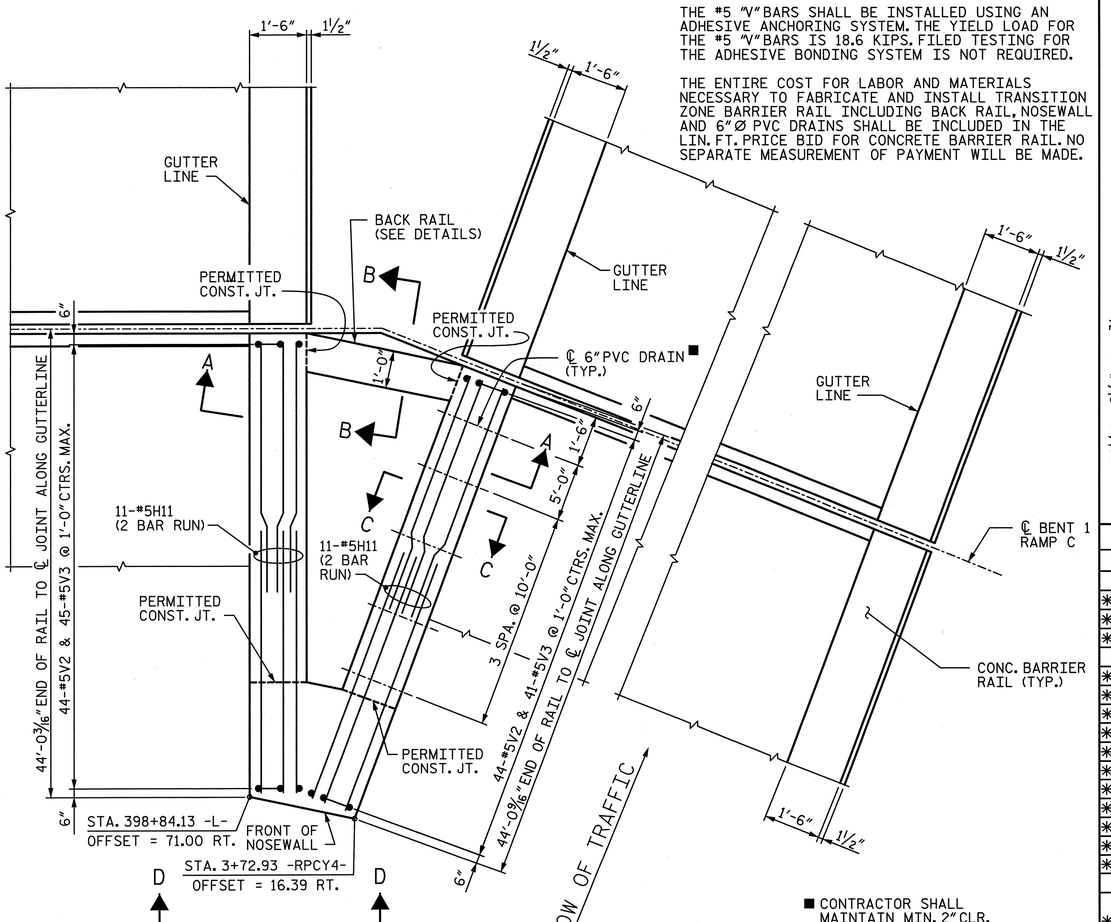

BARRIER RAIL PLAN AT TRANSITION ZONE

■ CONTRACTOR SHALL MAINTAIN MIN. 2" CLR. BETWEEN 6" PVC DRAIN AND "V" BARS IN BARRIER RAIL

NOTES:

THE #5 "V" BARS SHALL BE INSTALLED USING AN ADHESIVE ANCHORING SYSTEM. THE YIELD LOAD FOR THE #5 "V" BARS IS 18.6 KIPS. FILED TESTING FOR THE ADHESIVE BONDING SYSTEM IS NOT REQUIRED.

THE ENTIRE COST FOR LABOR AND MATERIALS NECESSARY TO FABRICATE AND INSTALL TRANSITION ZONE BARRIER RAIL INCLUDING BACK RAIL, NOSEWALL AND 6"Ø PVC DRAINS SHALL BE INCLUDED IN THE LIN. FT. PRICE BID FOR CONCRETE BARRIER RAIL. NO SEPARATE MEASUREMENT OF PAYMENT WILL BE MADE.

BAR TYPES

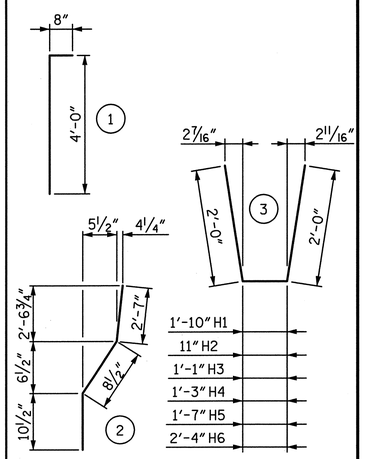

ALL BAR DIMENSIONS ARE OUT TO OUT

BILL OF MATERIAL

FOR TRANSITION ZONE ONLY

BAR	NO.	SIZE	TYPE	LENGTH	WEIGHT
* V1	18	#5	①	4'-8"	88
* V2	88	#5	②	4'-2"	382
* V3	88	#5	STR	4'-0"	367
* H1	6	#5	③	5'-10"	37
* H2	1	#5	③	4'-11"	5
* H3	1	#5	③	5'-1"	5
* H4	1	#5	③	5'-3"	5
* H5	1	#5	③	5'-7"	6
* H6	1	#5	③	6'-4"	7
* H7	2	#5	STR	10'-2"	21
* H8	2	#5	STR	10'-5"	22
* H9	2	#5	STR	10'-8"	22
* H10	2	#5	STR	11'-7"	24
* H11	44	#5	STR	23'-7"	1082

* EPOXY COATED REINFORCING STEEL	2,073 LBS.
CLASS AA CONCRETE	13.6 CU. YDS.
CONCRETE BARRIER RAIL	88.1 LIN. FT.

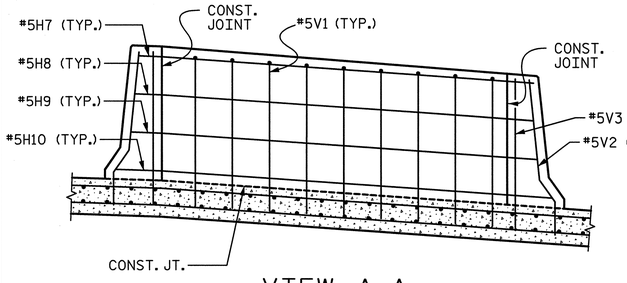

VIEW A-A

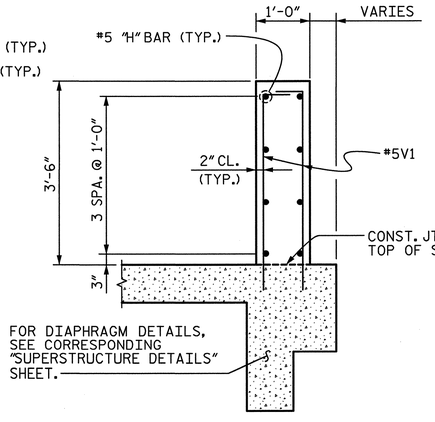

SECTION B-B

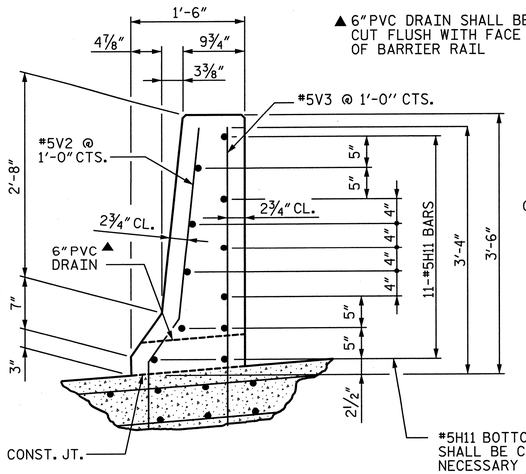

SECTION C-C

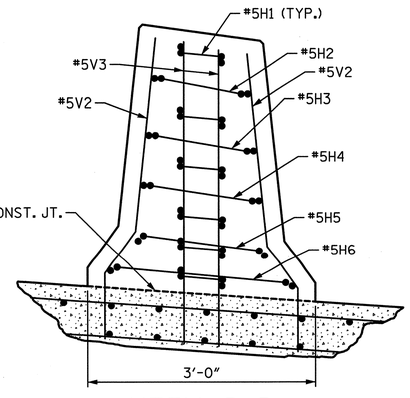

VIEW D-D

("H" BARS NOT LABELED FOR CLARITY, SEE SECTION C-C.)

PROJECT NO. U-2524C

GUILFORD COUNTY

STATION: POT 407+85.82 -L-
= POT 29+79.72 -Y4-

SHEET 8 OF 8

STATE OF NORTH CAROLINA
DEPARTMENT OF TRANSPORTATION
RALEIGH

PLAN OF RAILS CONCRETE BARRIER RAIL TRANSITION ZONE DETAILS

-RIGHT LANE-

DRAWN BY : VMW DATE : 2-13
CHECKED BY : PEK DATE : 4-13
DESIGN ENGINEER OF RECORD: P. KELLY DATE : 5-13

STV / Ralph Whitehead Associates, Inc.
1000 West Morehead St., Ste. 200
Charlotte, NC 28208
NC License No. F-0991

REVISIONS						SHEET NO.
NO.	BY:	DATE:	NO.	BY:	DATE:	S-400
1			3			TOTAL SHEETS
2			4			836

6/6/2013 5:13:41 PM R:\ustation\Finals\Plan of Rails Sheet 8 of 8.dgn

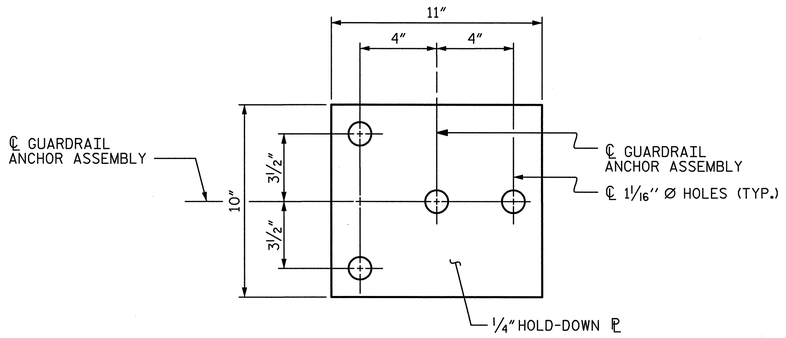

PLAN

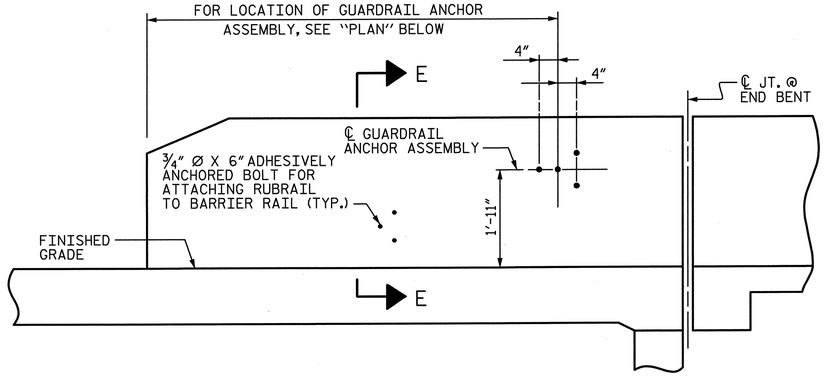

ELEVATION

(END BENT 1 (LEFT SIDE ONLY) SHOWN, END BENT 2 SIMILAR)

NOTES

THE GUARDRAIL ANCHOR ASSEMBLY SHALL CONSIST OF A ¼″ HOLD-DOWN PLATE AND 4 - ⅞″ Ø BOLTS WITH NUTS AND WASHERS, RUBRAIL, AND ADHESIVELY ANCHORED BOLTS.

THE HOLD-DOWN PLATE SHALL CONFORM TO AASHTO M270 GRADE 36. AFTER FABRICATION, THE HOLD-DOWN PLATE SHALL BE HOT-DIP GALVANIZED IN ACCORDANCE WITH AASHTO M111.

BOLTS SHALL CONFORM TO THE REQUIREMENTS OF ASTM A307 AND NUTS SHALL CONFORM TO THE REQUIREMENTS OF AASHTO M291. BOLTS, NUTS AND WASHERS SHALL BE GALVANIZED. (AT THE CONTRACTOR'S OPTION, STAINLESS STEEL BOLTS, NUTS AND WASHERS MAY BE USED AS AN ALTERNATE FOR THE ⅞″ Ø GALVANIZED BOLTS, NUTS AND WASHERS. THEY SHALL CONFORM TO OR EXCEED THE MECHANICAL REQUIREMENTS OF ASTM A307. THE USE OF THIS ALTERNATE SHALL BE APPROVED BY THE ENGINEER.)

THE GUARDRAIL ANCHOR ASSEMBLY IS REQUIRED AT ALL POINTS WHERE APPROACH GUARDRAIL IS TO BE ATTACHED TO THE END OF BARRIER RAIL. FOR POINTS OF ATTACHMENT, SEE SKETCH.

AFTER INSTALLATION, THE EXPOSED THREAD OF THE BOLT SHALL BE BURRED WITH A SHARP POINTED TOOL.

THE COST OF THE GUARDRAIL ANCHOR ASSEMBLY SHALL BE INCLUDED IN THE UNIT CONTRACT PRICE BID FOR CONCRETE BARRIER RAIL.

THE 1¼″ Ø HOLES SHALL BE FORMED OR DRILLED WITH A CORE BIT. IMPACT TOOLS WILL NOT BE PERMITTED. ANY CONCRETE DAMAGED BY THIS WORK SHALL BE REPAIRED TO THE SATISFACTION OF THE ENGINEER.

THE C6 X 8.2 RUBRAIL IS TO BE ADHESIVELY ANCHORED TO THE RAIL USING THREE ¾″ Ø X 6″ BOLTS WITH WASHERS. LEVEL ONE FIELD TESTING IS REQUIRED, AND THE YIELD LOAD OF THE ¾″ Ø BOLT IS 12 KIPS. FOR ADHESIVELY ANCHORED ANCHOR BOLTS OR DOWELS, SEE STANDARD SPECIFICATIONS. SEE ROADWAY STANDARD 862.03 FOR DETAILS AND LOCATION OF THE RUBRAIL.

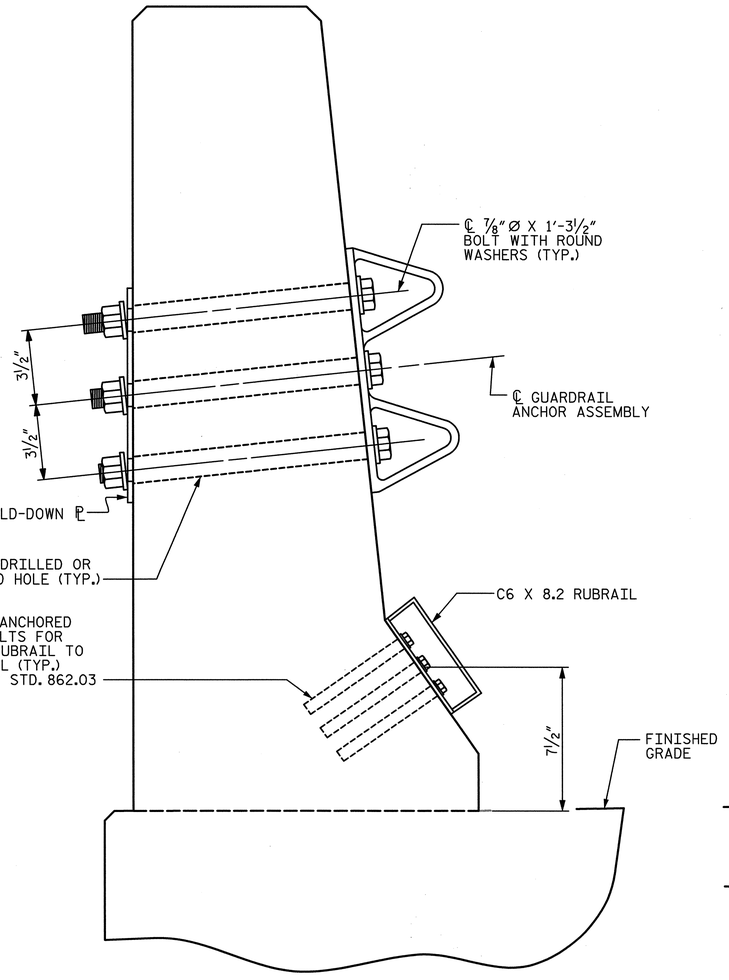

SECTION E-E

GUARDRAIL ANCHOR ASSEMBLY DETAILS

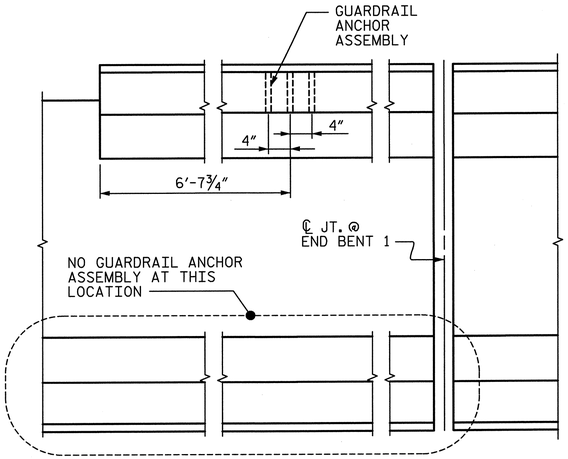

PLAN END BENT 1

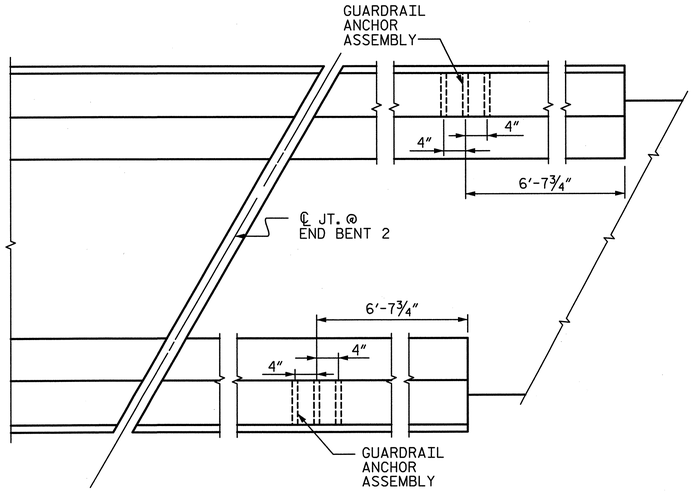

PLAN END BENT 2

LOCATION OF ANCHORS FOR GUARDRAIL

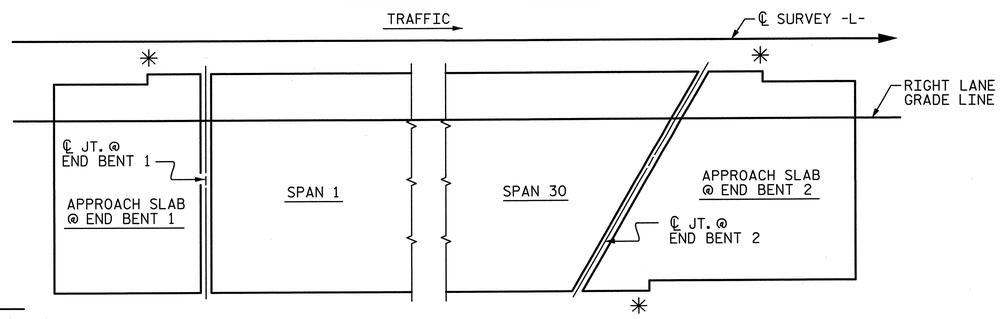

SKETCH SHOWING POINTS OF ATTACHMENTS

✳ DENOTES GUARDRAIL ANCHOR ASSEMBLY

NORTH CAROLINA PROFESSIONAL SEAL 28479 ENGINEER KEVIN G. BAILEY 6-7-13

PROJECT NO. U-2524C

GUILFORD COUNTY

STATION: POT 407+85.82 -L-
= POT 29+79.72 -Y4-

STATE OF NORTH CAROLINA
DEPARTMENT OF TRANSPORTATION
RALEIGH

GUARDRAIL ANCHORAGE FOR BARRIER RAIL

-RIGHT LANE-

DRAWN BY : VMW	DATE : 3-13	DESIGN ENGINEER OF RECORD: K. BAILEY	DATE : 5-13
CHECKED BY : CLG	DATE : 4-13		

STV / Ralph Whitehead Associates, Inc.
1000 West Morehead St., Ste. 200
Charlotte, NC 28208
NC License No. F-0991

REVISIONS						SHEET NO.
NO.	BY:	DATE:	NO.	BY:	DATE:	S-401
1			3			TOTAL SHEETS
2			4			836

6/6/2013 4:42:10 PM R:\station\Finals\Guardrail Attachment.dgn

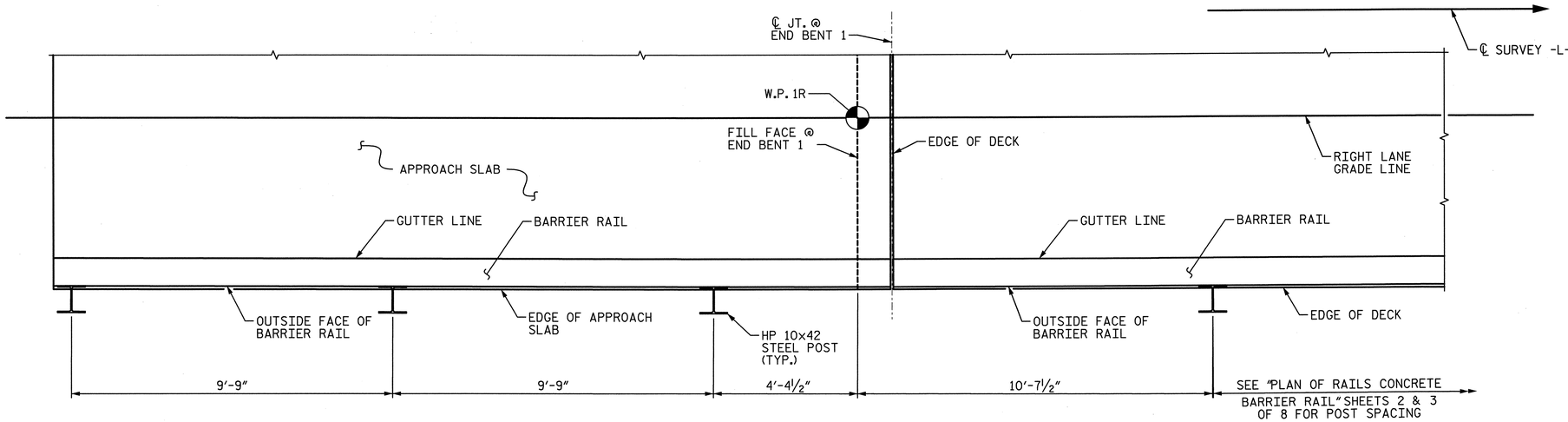

PLAN OF SOUND BARRIER WALL LAYOUT

(RIGHT SIDE ONLY, PANEL NOT SHOWN FOR CLARITY)

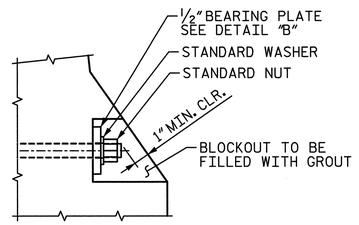

DETAIL "A"

(GROUT SHALL BE IN ACCORDANCE WITH STANDARD SPECIFICATIONS) (LOWER BLOCKOUT SHOWN, UPPER BLOCKOUT SIMILAR)

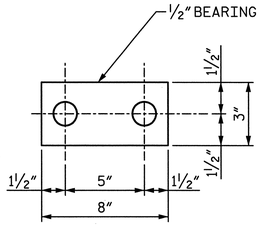

DETAIL "B"

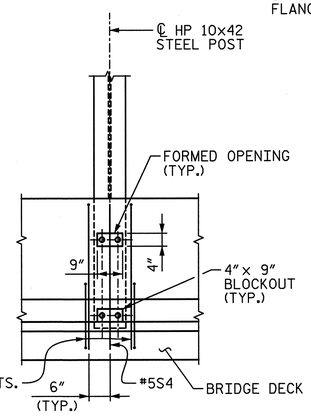

VIEW A-A

(ADJUST #5S1 & #5S2 BARS SPACING AS NECESSARY TO ACCOMMODATE POSTS)

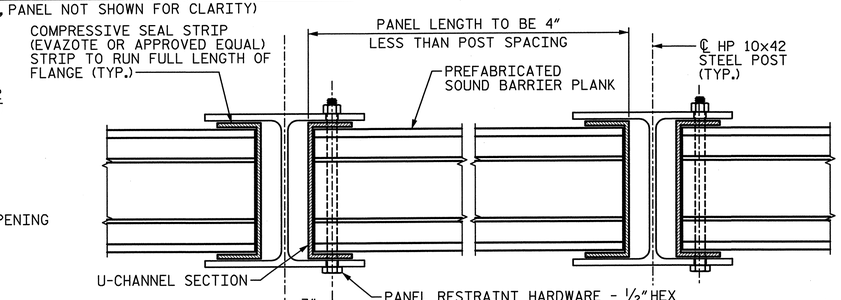

MOUNTING DETAIL - PANEL TYPE 1

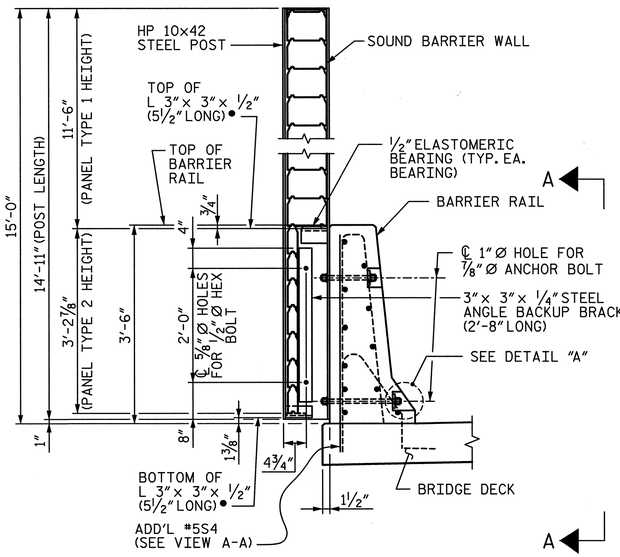

POST ELEVATION

● SEE "SECTION THRU POST" FOR WELD.

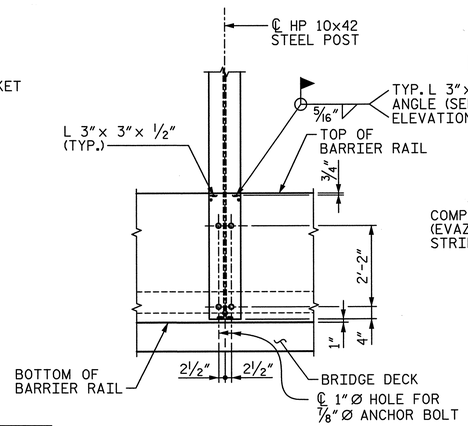

SECTION THRU POST

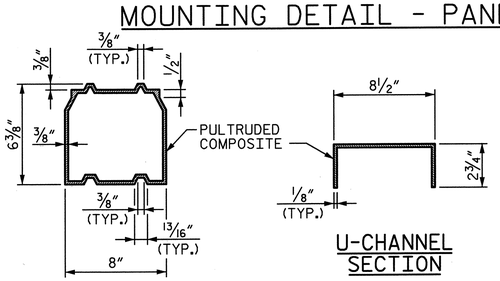

PANEL TYPE 1

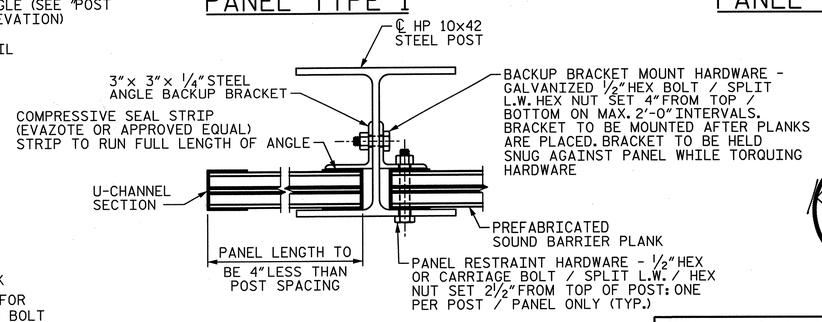

PANEL TYPE 2

MOUNTING DETAIL - PANEL TYPE 2

NOTES

WALL SUPPORT SYSTEM

POSTS SHALL BE AASHTO 270 GRADE 36 STRUCTURAL STEEL - GALVANIZED TO AASHTO M111 AND IN ACCORDANCE TO SECTION 1076 OF THE STANDARD SPECIFICATIONS.

BEARING PLATES, BOLTS, NUTS AND WASHERS (EXCLUDING ⅞" Ø ANCHOR BOLTS) SHALL CONFORM TO THE REQUIREMENTS OF ASTM A325 AND SHALL BE GALVANIZED IN ACCORDANCE TO AASHTO M111.

ALL POSTS SHALL BE PLUMB.

SOUND BARRIER WALL

COLOR TO THE SOUND BARRIER WALL PANEL SHALL BE UNIFORM THROUGHOUT THE PULTRUDED COMPOSITE AND IS TO BE APPROVED BY THE ENGINEER.

SOUND BARRIER WALL SHALL BE DESIGNED TO WITHSTAND A MINIMUM WIND VELOCITY OF 100 MPH AND A MINIMUM WIND PRESSURE OF 0.04 KSF.

WEIGHT OF SOUND BARRIER WALL SHALL NOT EXCEED 300 LBS/FT.

SOUND BARRIER WALL SHALL CONSIST OF STACKED TONGUE AND GROOVE STRUCTURAL PLANKS AS DETAILED ON PLANS. THE PLANKS SHALL BE COMPRISED OF A PULTRUDED GLASS REINFORCED THERMOSET COMPOSITE STRUCTURAL BOX FILLED WITH RECYCLED TIRE RUBBER OR ANOTHER SUBSTANCE OF COMPARABLE DENSITY AND NOISE REDUCTION CAPABILITY. ENDS SHALL BE CAPPED SO NOT ALLOW FILL MATERIAL TO FALL OUT.

LENGTH OF PLANKS SHALL BE CUT TO A LENGTH NO LESS THAN 4" LESS THAN THE CLEAR SPACING PROVIDED BETWEEN SUPPORT POSTS, NOR SHALL THE LENGTH BE GREATER THAN 3" LESS THAN THE CLEAR SPACING PROVIDED BETWEEN SUPPORT POSTS.

PLANKS SHALL BE CUT SO THAT THE ENDS ARE SMOOTH AND PERPENDICULAR TO EACH PLANKS BASE AND SHALL BE APPROVED BY THE ENGINEER.

EACH PANEL SHALL BE PLACED SO THAT THE TOP OF THE FINISHED PANEL MEETS FLUSH WITH THE TOP OF EACH SUPPORT POST.

FOR ELASTOMERIC BEARING, SEE SECTION 1079 OF THE STANDARD SPECIFICATIONS.

FOR SOUND BARRIER WALL, SEE SPECIAL PROVISION.

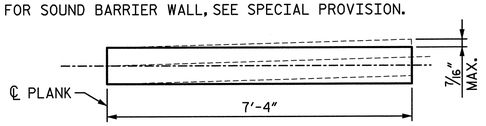

PLANK BOW TOLERANCE

PROJECT NO. U-2524C

GUILFORD COUNTY

STATION: POT 407+85.82 -L-
= POT 29+79.72 -Y4-

STATE OF NORTH CAROLINA
DEPARTMENT OF TRANSPORTATION
RALEIGH

SOUND BARRIER WALL LAYOUT & DETAILS

-RIGHT LANE-

NORTH CAROLINA PROFESSIONAL ENGINEER SEAL 28479 ENGINEER KEVIN G. BAILEY 6-7-13

DRAWN BY : VMW	DATE : 4-13	DESIGN ENGINEER OF RECORD: T. TOWNSEND	DATE : 5-13
CHECKED BY : TJT	DATE : 5-13		

STV / Ralph Whitehead Associates, Inc.
1000 West Morehead St., Ste. 200
Charlotte, NC 28208
NC License No. F-0991

REVISIONS						SHEET NO.
NO.	BY:	DATE:	NO.	BY:	DATE:	S-402
1			3			TOTAL SHEETS
2			4			836

R:\ustation\Finals\Sound Barrier Wall.dgn 6/6/2013 4:42:11 PM

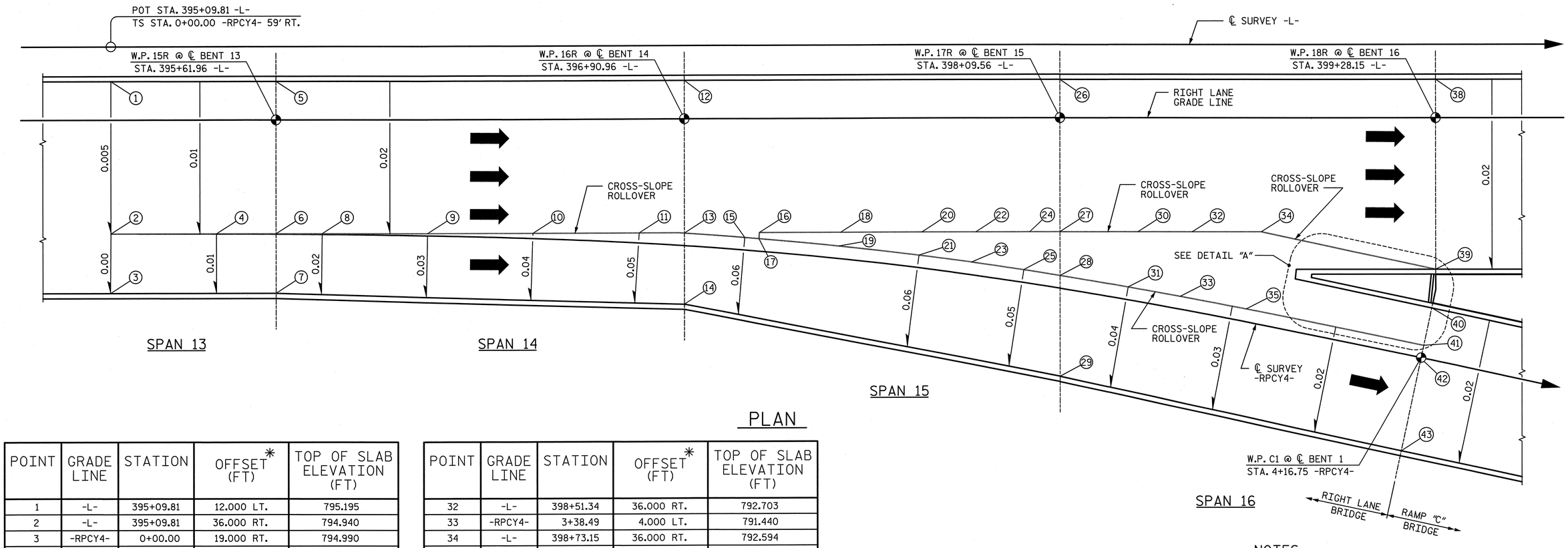

PLAN

POINT	GRADE LINE	STATION	OFFSET* (FT)	TOP OF SLAB ELEVATION (FT)
1	-L-	395+09.81	12.000 LT.	795.195
2	-L-	395+09.81	36.000 RT.	794.940
3	-RPCY4-	0+00.00	19.000 RT.	794.990
4	-L-	395+43.13	36.000 RT.	794.573
5	-L-	395+61.96	12.000 LT.	795.038
6	-L-	395+61.96	36.000 RT.	794.366
7	-RPCY4-	0+52.25	18.900 RT.	794.065
8	-L-	395+76.51	36.000 RT.	794.205
9	-L-	396+09.83	36.000 RT.	793.911
10	-L-	396+43.11	36.000 RT.	793.744
11	-L-	396+76.68	36.000 RT.	793.577
12	-L-	396+90.96	12.000 LT.	794.465
13	-L-	396+90.96	36.000 RT.	793.503
14	-RPCY4-	1+82.51	18.564 RT.	792.271
15	-L-	397+10.01	37.544 RT.	793.379
16	-L-	397+14.63	36.000 RT.	793.387
17	-RPCY4-	2+04.46	4.000 LT.	793.343
18	-L-	397+40.31	36.000 RT.	793.258
19	-RPCY4-	2+29.86	4.000 LT.	793.091
20	-L-	397+65.99	36.000 RT.	793.130
21	-RPCY4-	2+55.14	4.000 LT.	792.799
22	-L-	397+83.00	36.000 RT.	793.045
23	-RPCY4-	2+71.85	4.000 LT.	792.563
24	-L-	398+00.00	36.000 RT.	792.960
25	-RPCY4-	2+88.47	4.000 LT.	792.309
26	-L-	398+09.56	12.000 LT.	793.872
27	-L-	398+09.56	36.000 RT.	792.912
28	-RPCY4-	3+00.03	4.000 LT.	792.122
29	-RPCY4-	3+05.24	27.361 RT.	790.630
30	-L-	398+34.18	36.000 RT.	792.789
31	-RPCY4-	3+21.80	4.000 LT.	791.747

✳ OFFSET FROM GRADE LINE

POINT	GRADE LINE	STATION	OFFSET* (FT)	TOP OF SLAB ELEVATION (FT)
32	-L-	398+51.34	36.000 RT.	792.703
33	-RPCY4-	3+38.49	4.000 LT.	791.440
34	-L-	398+73.15	36.000 RT.	792.594
35	-RPCY4-	3+59.66	4.000 LT.	791.024
36A	-L-	398+86.26	38.861 RT.	792.472
36B	-L-	398+94.77	40.717 RT.	792.392
36C	-L-	399+03.42	42.604 RT.	792.311
36D	-L-	399+12.05	44.487 RT.	792.230
36E	-L-	399+20.68	46.370 RT.	792.150
36F	-L-	399+28.15	48.000 RT.	792.079
36G	-L-	N/A	49.500 RT.	791.712
36H	-L-	N/A	49.500 RT.	791.854
36I	-L-	N/A	49.500 RT.	791.959
36J	-L-	N/A	49.500 RT.	792.025
36K	-L-	N/A	49.500 RT.	792.054
36L	-L-	N/A	49.500 RT.	792.046
37A	-RPCY4-	3+72.93	4.000 LT.	790.743
37B	-RPCY4-	3+81.56	4.000 LT.	790.556
37C	-RPCY4-	3+90.34	4.000 LT.	790.364
37D	-RPCY4-	3+99.11	4.000 LT.	790.175
37E	-RPCY4-	4+07.89	4.000 LT.	789.981
37F	-RPCY4-	4+15.46	4.000 LT.	789.809
37G	-RPCY4-	3+72.93	16.386 LT.	791.610
37H	-RPCY4-	3+81.56	16.277 LT.	791.293
37I	-RPCY4-	3+90.34	16.189 LT.	790.973
37J	-RPCY4-	3+99.11	16.122 LT.	790.660
37K	-RPCY4-	4+07.89	16.074 LT.	790.343
37L	-RPCY4-	4+15.46	16.044 LT.	790.068
38	-L-	399+28.15	12.000 LT.	793.279
39	-L-	399+28.15	48.000 RT.	792.079
40	-RPCY4-	4+16.80	16.040 LT.	790.020
41	-RPCY4-	4+16.76	4.000 LT.	789.780
42	-RPCY4-	4+16.75	0.000	789.700
43	-RPCY4-	4+16.66	29.960 RT.	789.103

✳ OFFSET FROM GRADE LINE

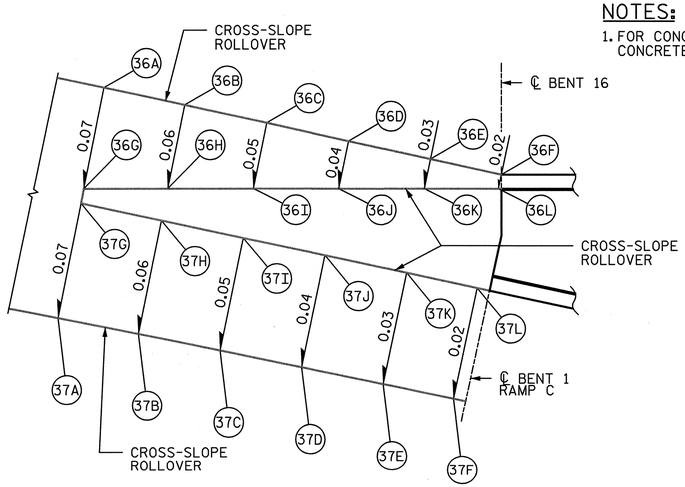

DETAIL "A"
(BARRIER RAIL NOT SHOWN FOR CLARITY)

NOTES:

1. FOR CONCRETE BARRIER RAIL, SEE "PLAN OF RAILS CONCRETE BARRIER RAIL TRANSITION ZONE DETAILS" SHEET.

PROJECT NO. U-2524C
GUILFORD COUNTY
STATION: POT 407+85.82 -L-
= POT 29+79.72 -Y4-
SHEET 1 OF 2

STATE OF NORTH CAROLINA
DEPARTMENT OF TRANSPORTATION
RALEIGH

TRANSITION ZONE DETAILS

-RIGHT LANE-

NORTH CAROLINA PROFESSIONAL SEAL 34955 ENGINEER TIMOTHY J. TOWNSEND 6/12/13

STV / Ralph Whitehead Associates, Inc.
1000 West Morehead St., Ste. 200
Charlotte, NC 28208
NC License No. F-0991

REVISIONS						SHEET NO.
NO.	BY:	DATE:	NO.	BY:	DATE:	S-403
1			3			TOTAL SHEETS
2			4			836

DRAWN BY : VMW DATE : 11-12
CHECKED BY : PEK DATE : 4-13
DESIGN ENGINEER OF RECORD: P. KELLY DATE : 5-13

6/12/2013 4:34:12 PM I:\Projects\25155I2\25155I2_000I\50_Deliverables & Submittals\U-2524C\Structures\Str 2 RL\ustation\Finals\Transition Zone Details Sheet 1of 2.dgn

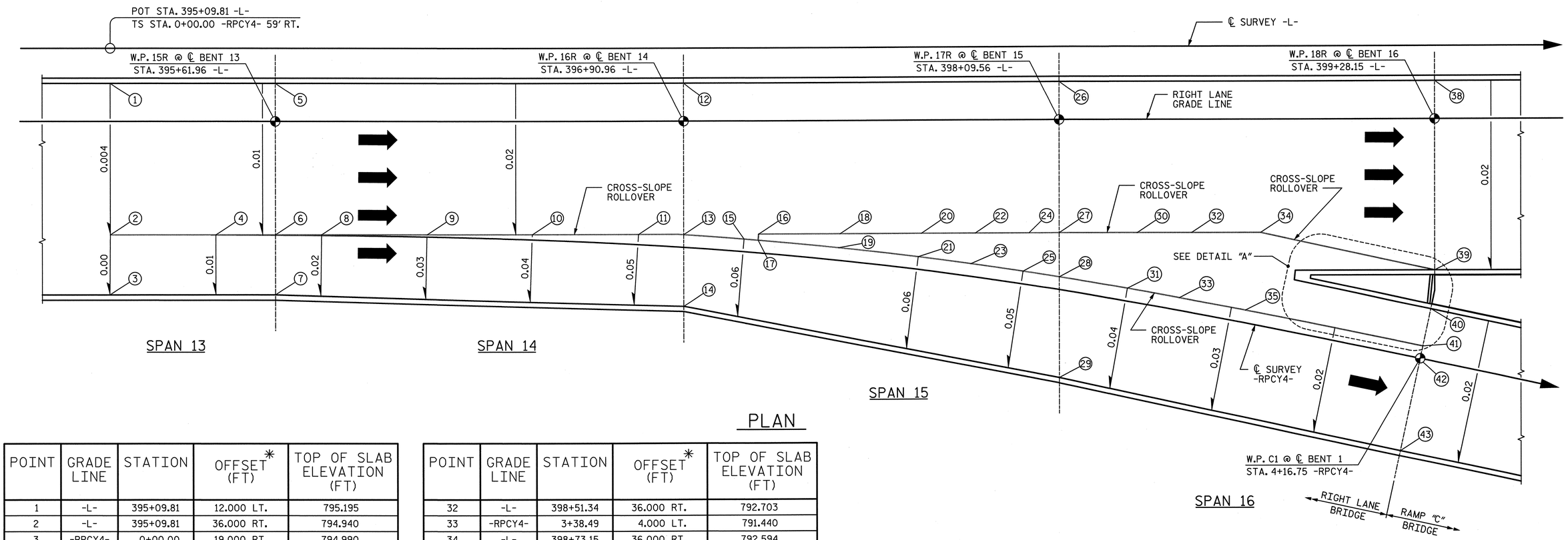

PLAN

POINT	GRADE LINE	STATION	OFFSET* (FT)	TOP OF SLAB ELEVATION (FT)
1	-L-	395+09.81	12.000 LT.	795.195
2	-L-	395+09.81	36.000 RT.	794.940
3	-RPCY4-	0+00.00	19.000 RT.	794.990
4	-L-	395+43.13	36.000 RT.	794.573
5	-L-	395+61.96	12.000 LT.	795.038
6	-L-	395+61.96	36.000 RT.	794.366
7	-RPCY4-	0+52.25	18.900 RT.	794.065
8	-L-	395+76.51	36.000 RT.	794.205
9	-L-	396+09.83	36.000 RT.	793.911
10	-L-	396+43.11	36.000 RT.	793.744
11	-L-	396+76.68	36.000 RT.	793.577
12	-L-	396+90.96	12.000 LT.	794.465
13	-L-	396+90.96	36.000 RT.	793.503
14	-RPCY4-	1+82.51	18.564 RT.	792.271
15	-L-	397+10.01	37.544 RT.	793.379
16	-L-	397+14.63	36.000 RT.	793.387
17	-RPCY4-	2+04.46	4.000 LT.	793.343
18	-L-	397+40.31	36.000 RT.	793.258
19	-RPCY4-	2+29.86	4.000 LT.	793.091
20	-L-	397+65.99	36.000 RT.	793.130
21	-RPCY4-	2+55.14	4.000 LT.	792.799
22	-L-	397+83.00	36.000 RT.	793.045
23	-RPCY4-	2+71.85	4.000 LT.	792.563
24	-L-	398+00.00	36.000 RT.	792.960
25	-RPCY4-	2+88.47	4.000 LT.	792.309
26	-L-	398+09.56	12.000 LT.	793.872
27	-L-	398+09.56	36.000 RT.	792.912
28	-RPCY4-	3+00.03	4.000 LT.	792.122
29	-RPCY4-	3+05.24	27.361 RT.	790.630
30	-L-	398+34.18	36.000 RT.	792.789
31	-RPCY4-	3+21.80	4.000 LT.	791.747

✳ OFFSET FROM GRADE LINE

POINT	GRADE LINE	STATION	OFFSET* (FT)	TOP OF SLAB ELEVATION (FT)
32	-L-	398+51.34	36.000 RT.	792.703
33	-RPCY4-	3+38.49	4.000 LT.	791.440
34	-L-	398+73.15	36.000 RT.	792.594
35	-RPCY4-	3+59.66	4.000 LT.	791.024
36A	-L-	398+86.26	38.861 RT.	792.472
36B	-L-	398+94.77	40.717 RT.	792.392
36C	-L-	399+03.42	42.604 RT.	792.311
36D	-L-	399+12.05	44.487 RT.	792.230
36E	-L-	399+20.68	46.370 RT.	792.150
36F	-L-	399+28.15	48.000 RT.	792.079
36G	-L-	N/A	49.500 RT.	791.712
36H	-L-	N/A	49.500 RT.	791.854
36I	-L-	N/A	49.500 RT.	791.959
36J	-L-	N/A	49.500 RT.	792.025
36K	-L-	N/A	49.500 RT.	792.054
36L	-L-	N/A	49.500 RT.	792.046
37A	-RPCY4-	3+72.93	4.000 LT.	790.743
37B	-RPCY4-	3+81.56	4.000 LT.	790.556
37C	-RPCY4-	3+90.34	4.000 LT.	790.364
37D	-RPCY4-	3+99.11	4.000 LT.	790.175
37E	-RPCY4-	4+07.89	4.000 LT.	789.981
37F	-RPCY4-	4+15.46	4.000 LT.	789.809
37G	-RPCY4-	3+72.93	16.386 LT.	791.610
37H	-RPCY4-	3+81.56	16.277 LT.	791.293
37I	-RPCY4-	3+90.34	16.189 LT.	790.973
37J	-RPCY4-	3+99.11	16.122 LT.	790.660
37K	-RPCY4-	4+07.89	16.074 LT.	790.343
37L	-RPCY4-	4+15.46	16.044 LT.	790.068
38	-L-	399+28.15	12.000 LT.	793.279
39	-L-	399+28.15	48.000 RT.	792.079
40	-RPCY4-	4+16.80	16.040 LT.	790.020
41	-RPCY4-	4+16.76	4.000 LT.	789.780
42	-RPCY4-	4+16.75	0.000	789.700
43	-RPCY4-	4+16.66	29.960 RT.	789.103

✳ OFFSET FROM GRADE LINE

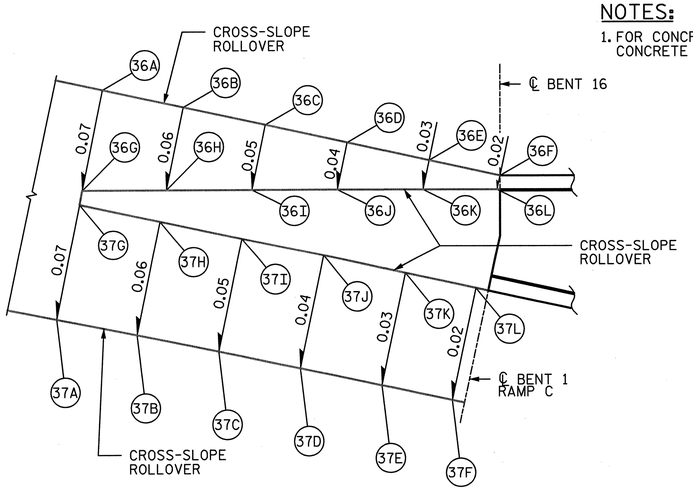

DETAIL "A"
(BARRIER RAIL NOT SHOWN FOR CLARITY)

NOTES:

1. FOR CONCRETE BARRIER RAIL, SEE "PLAN OF RAILS CONCRETE BARRIER RAIL TRANSITION ZONE DETAILS" SHEET.

PROJECT NO. U-2524C

GUILFORD COUNTY

STATION: POT 407+85.82 -L-
= POT 29+79.72 -Y4-

SHEET 1 OF 2

STATE OF NORTH CAROLINA
DEPARTMENT OF TRANSPORTATION
RALEIGH

TRANSITION ZONE DETAILS

-RIGHT LANE-

NORTH CAROLINA PROFESSIONAL ENGINEER SEAL 28479 KEVIN G. BAILEY 6-7-13

DRAWN BY : VMW DATE : 11-12
CHECKED BY : PEK DATE : 4-13

DESIGN ENGINEER OF RECORD: P. KELLY DATE : 5-13

STV / Ralph Whitehead Associates, Inc.
1000 West Morehead St., Ste. 200
Charlotte, NC 28208
NC License No. F-0991

REVISIONS						SHEET NO.
NO.	BY:	DATE:	NO.	BY:	DATE:	S-403
1			3			TOTAL SHEETS
2			4			836

6/6/2013 4:42:13 PM R:\ustation\Finals\Transition Zone Details Sheet 1 of 2.dgn

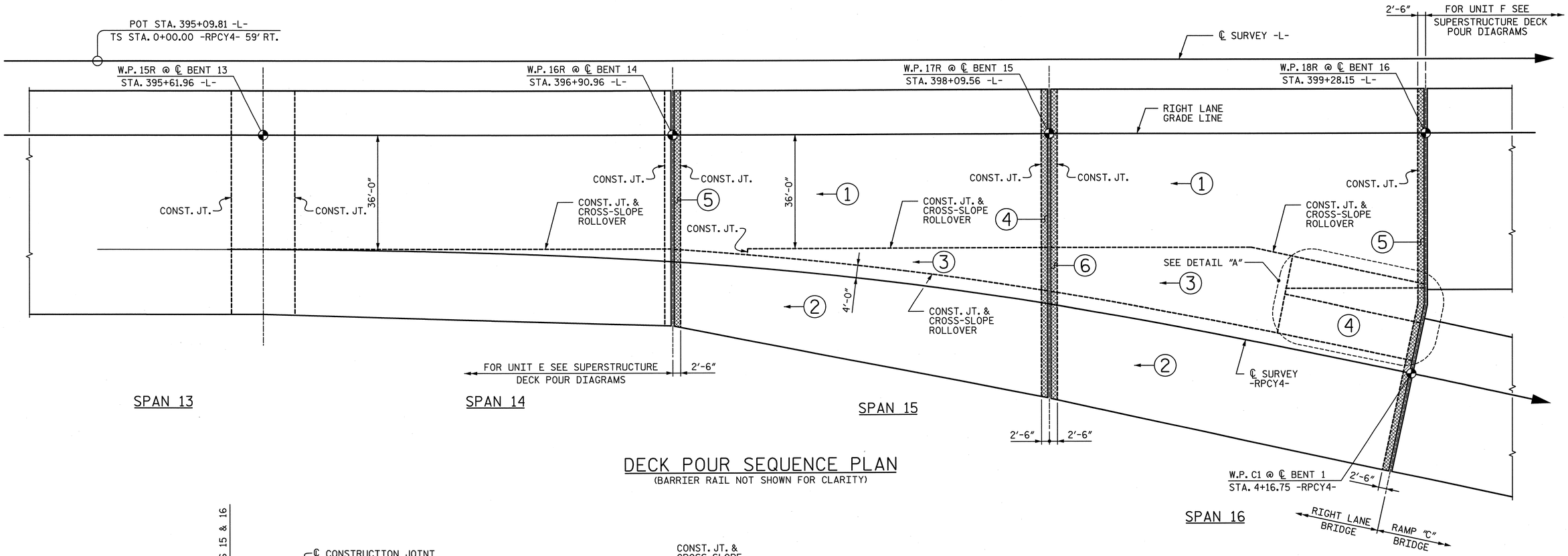

DECK POUR SEQUENCE PLAN

(BARRIER RAIL NOT SHOWN FOR CLARITY)

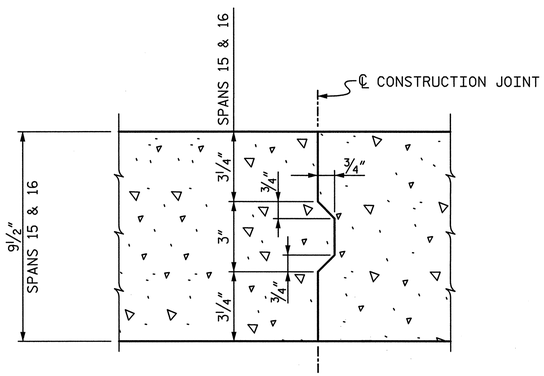

NOTE: REINFORCING STEEL IN SLAB NOT SHOWN. REINFORCING STEEL SHALL BE CONTINUOUS THROUGH JOINT.

CONSTRUCTION JOINT DETAIL

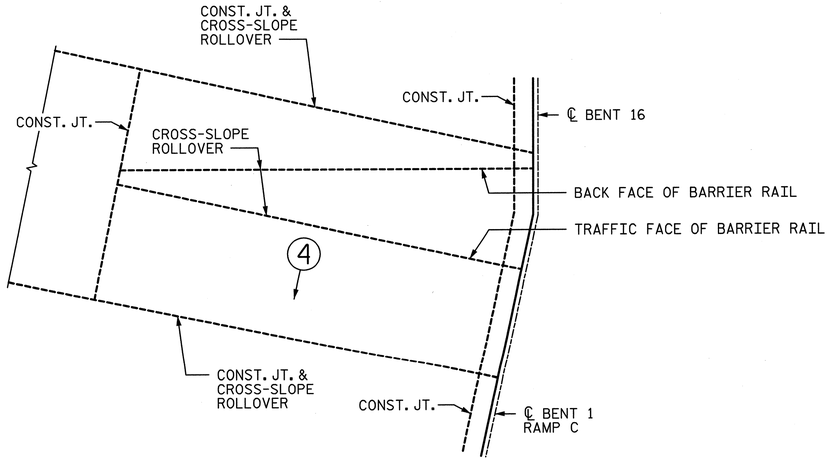

DETAIL "A"

NOTES:

1. FOR NOTES AND POUR CONCRETE QUANTITIES, SEE "SUPERSTRUCTURE DECK POUR DIAGRAMS" SHEETS.
2. SPAN 16 POUR 4 SHALL BE HAND SCREEDED.

LEGEND:

DECK CLOSURE POUR AT JOINTS

(1) POUR NUMBER

DIRECTION OF POUR

PROJECT NO. U-2524C

GUILFORD COUNTY

STATION: POT 407+85.82 -L-
= POT 29+79.72 -Y4-

SHEET 2 OF 2

NORTH CAROLINA PROFESSIONAL ENGINEER SEAL 28479 ENGINEER KEVIN G. BAILEY 6-7-13

STATE OF NORTH CAROLINA
DEPARTMENT OF TRANSPORTATION
RALEIGH

TRANSITION ZONE DETAILS

-RIGHT LANE-

DRAWN BY : VMW	DATE : 11-12	DESIGN ENGINEER OF RECORD: P. KELLY	DATE : 5-13
CHECKED BY : PEK	DATE : 4-13		

STV / Ralph Whitehead Associates, Inc.
1000 West Morehead St., Ste. 200
Charlotte, NC 28208
NC License No. F-0991

REVISIONS						SHEET NO.
NO.	BY:	DATE:	NO.	BY:	DATE:	S-404
1			3			TOTAL SHEETS
2			4			836

6/6/2013 4:42:14 PM R:\station\Finals\Transition Zone Details Sheet 2 of 2.dgn

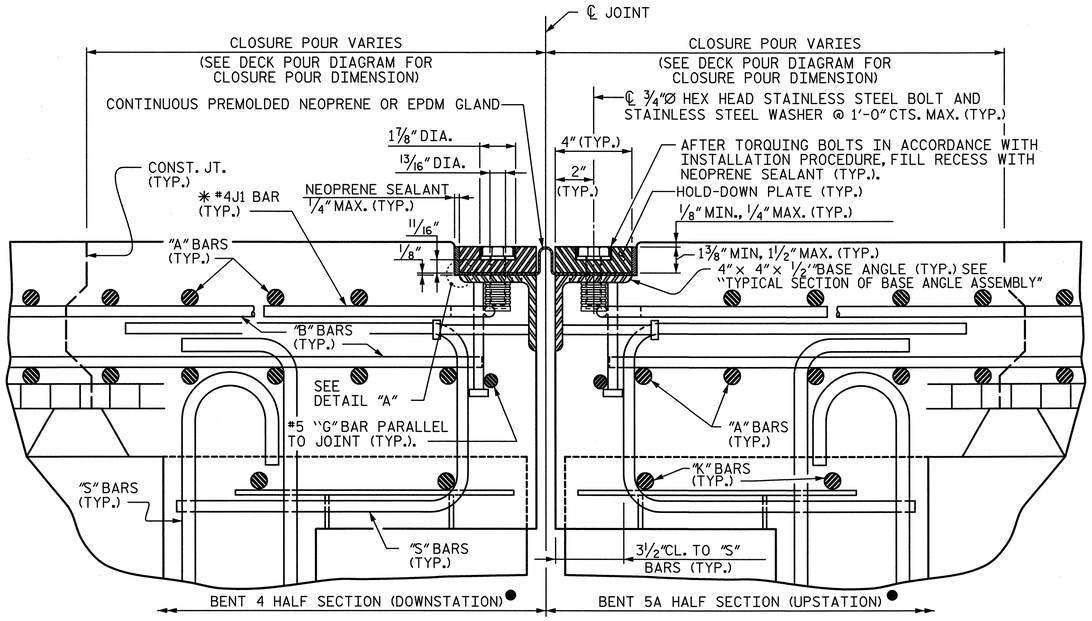

EXPANSION JOINT DETAILS

(DETAILS SHOWN FOR END BENT 1, BENTS 2, 14, 15, 16 AND END BENT 2)
(SECTION NORMAL TO JOINT -- PRESTRESSED GIRDER SUPERSTRUCTURE)

* THE QUANTITY OF #4J1 BARS ON THE BILL OF MATERIAL IS BASED ON 1'-0" CENTERS. J1 BARS SHALL BE PLACED AT EACH VERTICAL STUD ANCHOR BOLT. IN THE EVENT THAT THE NUMBER OF VERTICAL STUD ANCHORS EXCEEDS THE NUMBER OF J1 BARS SPECIFIED, ADDITIONAL J1 BARS WILL NOT BE REQUIRED.

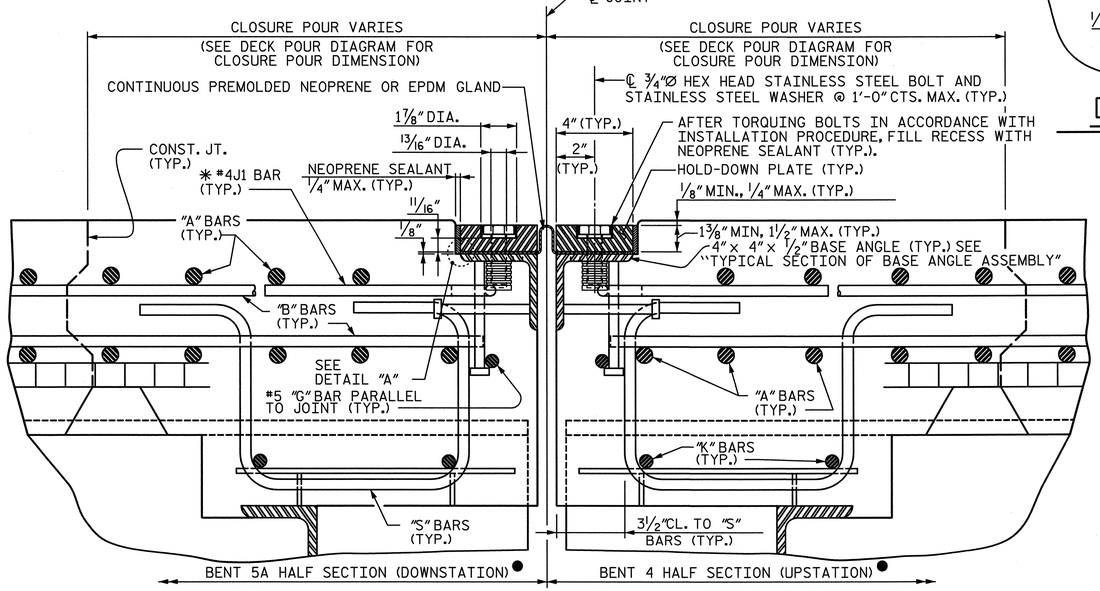

EXPANSION JOINT DETAILS

(DETAILS SHOWN FOR BENT 24)
(SECTION NORMAL TO JOINT -- STEEL SUPERSTRUCTURE)

* THE QUANTITY OF #4J1 BARS ON THE BILL OF MATERIAL IS BASED ON 1'-0" CENTERS. J1 BARS SHALL BE PLACED AT EACH VERTICAL STUD ANCHOR BOLT. IN THE EVENT THAT THE NUMBER OF VERTICAL STUD ANCHORS EXCEEDS THE NUMBER OF J1 BARS SPECIFIED, ADDITIONAL J1 BARS WILL NOT BE REQUIRED.

● AT BENTS 4 AND 5A, A COMBINATION OF THE PRESTRESS GIRDER SUPERSTRUCTURE AND STEEL SUPERSTRUCTURE WILL BE USED.

INSTALLATION PROCEDURE

1. A TEMPLATE OR OTHER SUITABLE DEVICE SHALL BE USED TO FORM THE TOP OF THE EXPANSION JOINT SEAL BLOCKOUT TO THE PROPER DEPTH AND WIDTH. THE TEMPLATE SHALL BE 4⅛" TO 4¼" WIDE AND OF SUCH THICKNESS AS TO PROVIDE FOR CORRECT FINAL ELEVATION OF TOP OF HOLD-DOWN PLATES. THE TEMPLATE SHALL BE ATTACHED TO THE BASE ANGLE ASSEMBLY WITH THE ¾" Ø HEX HEAD BOLTS PROVIDED FOR THE HOLD-DOWN PLATES. A 1" Ø HOLE SHALL BE PROVIDED IN THE TEMPLATE CENTERED OVER EACH WEEP HOLE IN THE 4" X 4" X ½" BASE ANGLE. OTHER METHODS OF INSURING DRAINAGE THROUGH WEEP HOLES MAY BE EMPLOYED SUBJECT TO ENGINEER'S APPROVAL.
2. AFTER THE CONCRETE HAS BEEN CAST ON BOTH SIDES OF THE JOINT, REMOVE THE TEMPLATE. THOROUGHLY CLEAN THE BOLT HOLES AND THE ANGLE PLATE. REMOVE ANY EXCESS CONCRETE THAT COMES OUT OF THE WEEP HOLES. ANY DAMAGED STEEL SHALL BE COATED WITH A MINIMUM THICKNESS OF 4 DRY MILS OF ZINC-RICH PAINT IN ACCORDANCE WITH THE STANDARD SPECIFICATIONS.
3. LAY THE GLAND ON THE BASE ANGLE AND FIELD MARK THE GLAND FOR THE BOLT HOLES. HOLES IN THE GLAND SHALL BE PUNCHED ⅛" IN DIAMETER WITH A HAND PUNCH.
4. IN ORDER TO CHECK FOR PROPER ALIGNMENT, PLACE THE GLAND AND HOLD-DOWN PLATES ON THE BASE ANGLE. DO NOT APPLY NEOPRENE SEALANT. BOLT THE HOLD-DOWN PLATES TO THE BASE ANGLE BUT DO NOT TIGHTEN. THE ENGINEER SHALL INSPECT THE JOINT SEAL DEVICE FOR PROPER ALIGNMENT.
5. AFTER INSPECTION, REMOVE THE HOLD-DOWN PLATES AND GLAND. APPLY NEOPRENE SEALANT TO THE BASE ANGLE IN ACCORDANCE WITH THE "INSTALLATION SKETCH". PLACE GLAND AND HOLD-DOWN PLATES ON THE BASE ANGLE. BOLT THE HOLD-DOWN PLATES TO THE BASE ANGLE ASSEMBLY AND TORQUE THE BOLTS TO 88 FT-LBS WITH A TORQUE WRENCH. CHECK THE TORQUE AFTER THREE (3) HOURS AND, IF NECESSARY, RETIGHTEN TO 88 FT-LBS. A FINAL CHECK SHALL BE MADE AT SEVEN (7) DAYS. TORQUE SHALL NOT BE LESS THAN 80 FT-LBS AFTER SEVEN (7) DAYS.
6. AFTER PROPER TORQUING, CLEAN THE BOLT HOLE RECESSES AND THE RECESS BETWEEN THE JOINT SEAL DEVICE AND CONCRETE, COMPLETELY FILL THESE RECESSES WITH NEOPRENE SEALANT.

NOTES:

1. FOR EXPANSION JOINT SEALS, SEE SPECIAL PROVISIONS.
2. ALL PLATES AND ANGLES SHALL CONFORM TO AASHTO M270 GRADE 36 STEEL OR APPROVED EQUAL. ALL HOLD-DOWN BOLTS SHALL CONFORM TO ASTM F593 ALLOY 304 STAINLESS STEEL AND WASHERS SHALL CONFORM TO ASTM F844 EXCEPT THEY SHALL BE MADE FROM ALLOY 304 STAINLESS STEEL. ALL STUD ANCHORS SHALL CONFORM TO AASHTO M169, GRADES 1010 THRU 1020 OR APPROVED EQUAL. ALL CONCRETE INSERTS SHALL BE CLOSED END AND SHALL CONFORM TO AASHTO M169, GRADE 12L14. TENSILE CAPACITY SHALL BE 3000 LBS. MIN.
3. A PREMOLDED CORRUGATED OR NON-CORRUGATED GLAND SHALL BE USED FOR JOINTS SKEWED BETWEEN 50° THRU 130°. FOR JOINTS SKEWED LESS THAN 50° OR MORE THAN 130°, ONLY A CORRUGATED GLAND SHALL BE USED.
4. CLOSED END FERRULES AND STUD ANCHORS SHALL BE SHOP WELDED AND ALL HOLES SHALL BE SHOP DRILLED AS SHOWN ON PLANS. STUD ANCHORS SHALL BE ELECTRIC ARC END WELDED WITH COMPLETE FUSION.
5. SURFACES COMING IN CONTACT WITH NEOPRENE SHALL BE GROUND SMOOTH PRIOR TO METALLIZING.
6. UPON COMPLETION OF SHOP FABRICATION, THE HOLD DOWN PLATE AND BASE ANGLE ASSEMBLY, AS SHOWN IN THE " TYPICAL SECTION OF BASE ANGLE ASSEMBLY", SHALL BE METALLIZED. SEE SPECIAL PROVISION FOR THERMAL SPRAYED COATINGS (METALLIZATION).
7. BASE ANGLE ASSEMBLY SHALL BE CONTINUOUS FOR THE LENGTH OF THE JOINT. AT CROWN BREAKS, THE ENDS OF THE BASE ANGLE ASSEMBLY SHALL BE CUT PARALLEL TO THE BRIDGE CENTERLINE FOR SKEWS LESS THAN 80° AND GREATER THAN 100°. FINISHED WELD SHALL BE GROUND SMOOTH AND COATED WITH A MINIMUM THICKNESS OF 4 DRY MILS OF ZINC-RICH PAINT IN ACCORDANCE WITH THE STANDARD SPECIFICATIONS.
8. FIELD SPLICES OF HOLD-DOWN PLATES SHALL BE KEPT TO A MINIMUM. CONTRACTOR SHALL FURNISH DETAILED PLANS SHOWING PROPOSED SPLICE LOCATIONS FOR APPROVAL. HOLD-DOWN PLATES SHALL NOT EXCEED 20' LENGTHS UNLESS APPROVED BY THE ENGINEER.
9. NO ALTERNATE JOINT DETAILS SHALL BE PERMITTED IN LIEU OF THOSE SHOWN ON THESE PLANS.
10. THE CONTRACTOR MAY, AT HIS OPTION, USE ADHESIVELY ANCHORED ANCHOR BOLTS IN PLACE OF CONCRETE INSERTS FOR COVER PLATES. THE YIELD LOAD OF THE ¾" Ø BOLT IS 10 KIPS. FIELD TESTING OF THE ADHESIVE BONDING SYSTEM IS NOT REQUIRED.

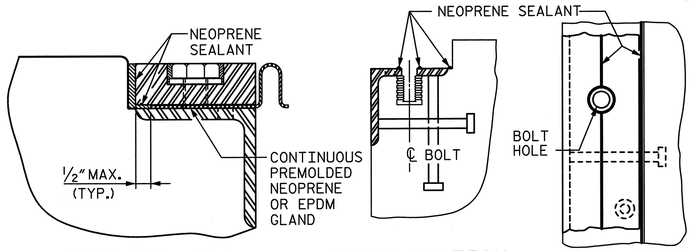

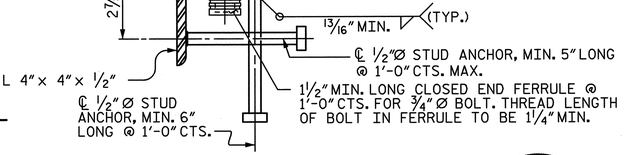

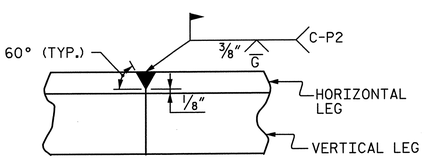

NORTH CAROLINA PROFESSIONAL SEAL 28479 ENGINEER KEVIN G. BAILEY 6-7-13

MOVEMENT AND SETTING AT JOINT

BENT NO.	SKEW ANGLE	TOTAL MOVEMENT (ALONG ℄ RDWY.)	PERPENDICULAR JOINT OPENING AT 45°F	PERPENDICULAR JOINT OPENING AT 60°F	PERPENDICULAR JOINT OPENING AT 90°F
EB1	90°-00'-00"	9/16"	1⅜"	1 5/16"	1⅛"
B2	90°-00'-00"	1¼"	1⅞"	1 11/16"	1¼"
B4	137°-34'-39"	1½"	2"	1¾"	1 5/16"
B5A	139°-39'-54"	⅝"	1 7/16"	1 5/16"	1⅛"
B14	90°-00'-00"	1⅜"	1 13/16"	1⅝"	1⅜"
B15	90°-00'-00"	1½"	2 1/16'	1¾"	1¼"
B16	90°-00'-00"	1½"	2 1/16"	1¾"	1¼"
B24	129°-24'-36"	1⅜"	1⅞"	1 11/16"	1¼"
EB2	113°-38'-53"	1¼"	1⅞"	1⅝"	1 3/16"

PROJECT NO. U-2524C
GUILFORD COUNTY
STATION: POT 407+85.82 -L-
= POT 29+79.72 -Y4-
SHEET 1 OF 2

STATE OF NORTH CAROLINA
DEPARTMENT OF TRANSPORTATION
RALEIGH

EXPANSION JOINT SEAL DETAILS

-RIGHT LANE-

DRAWN BY : TRL DATE : 5-13
CHECKED BY : TJT DATE : 5-13
DESIGN ENGINEER OF RECORD: T. TOWNSEND DATE : 5-13

STV / Ralph Whitehead Associates, Inc.
1000 West Morehead St., Ste. 200
Charlotte, NC 28208
NC License No. F-0991

REVISIONS						SHEET NO.
NO.	BY:	DATE:	NO.	BY:	DATE:	S-405
1			3			TOTAL SHEETS
2			4			836

6/6/2013 4:42:15 PM R:\ustation\Finals\Expansion Joint Details 1of 2.dgn

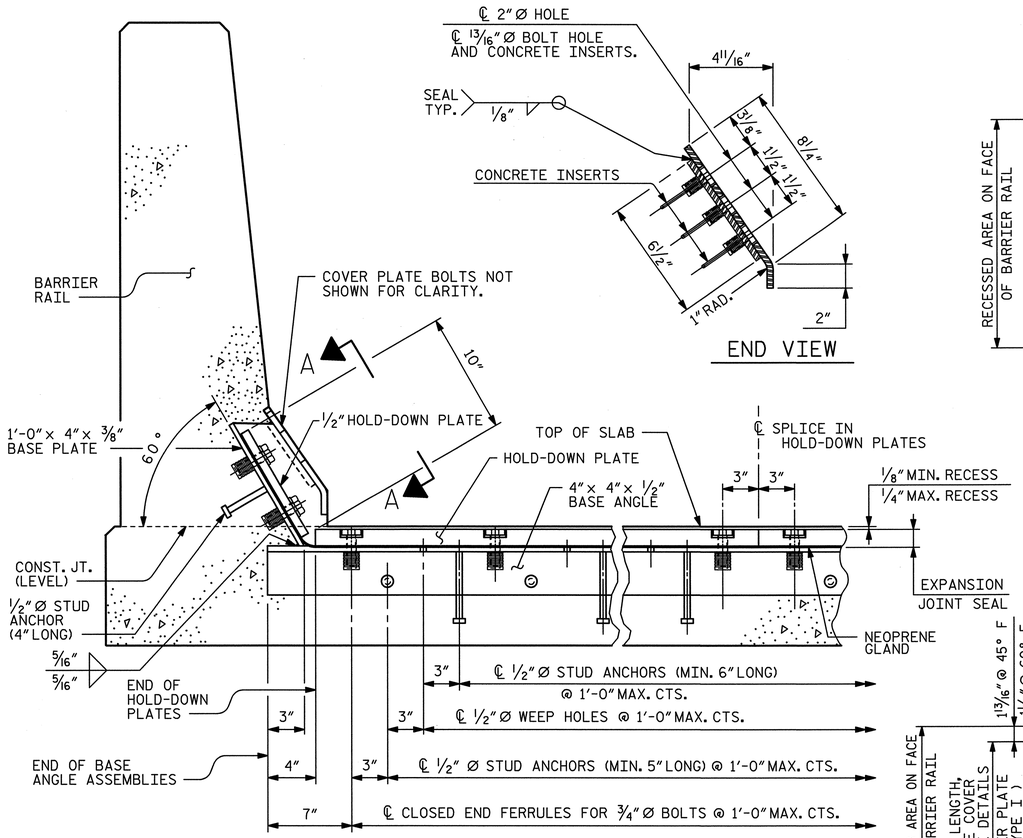

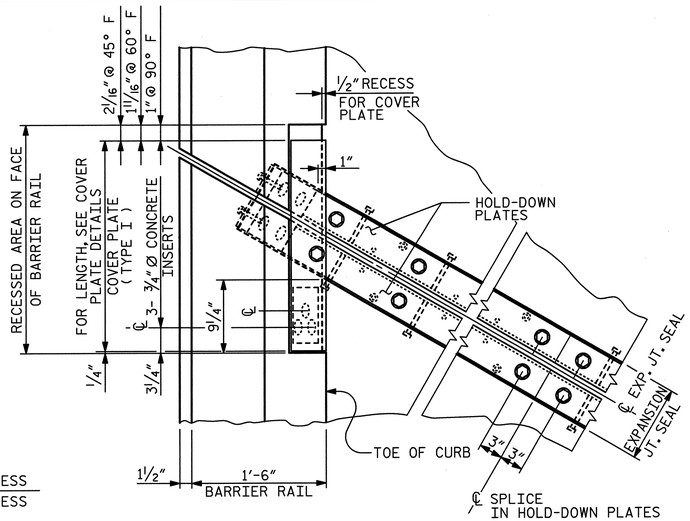

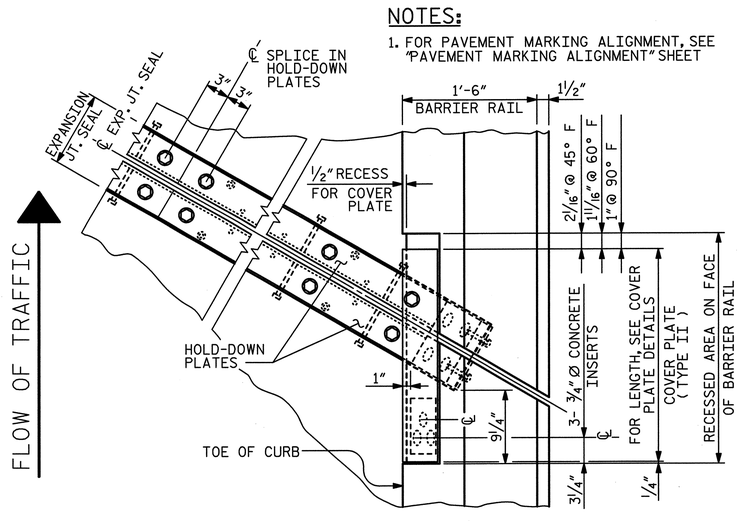

PLAN OF EXPANSION JOINT SEAL

(FOR BENTS 4, 5A, 24 AND END BENT 2)

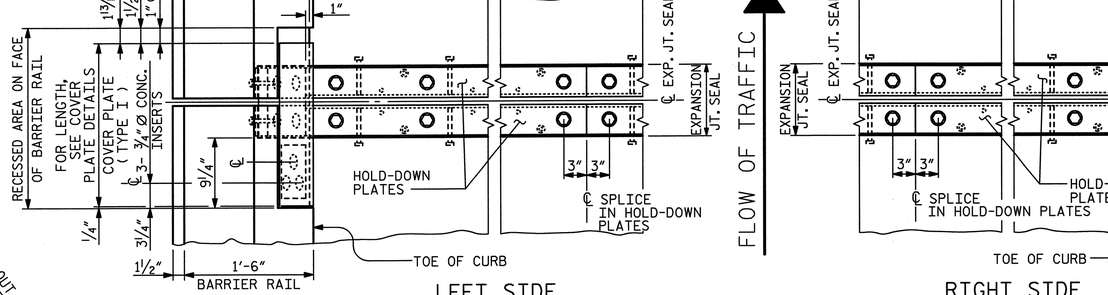

PLAN OF EXPANSION JOINT SEAL

(FOR END BENT 1 AND BENTS 2, 14, 15 & 16)

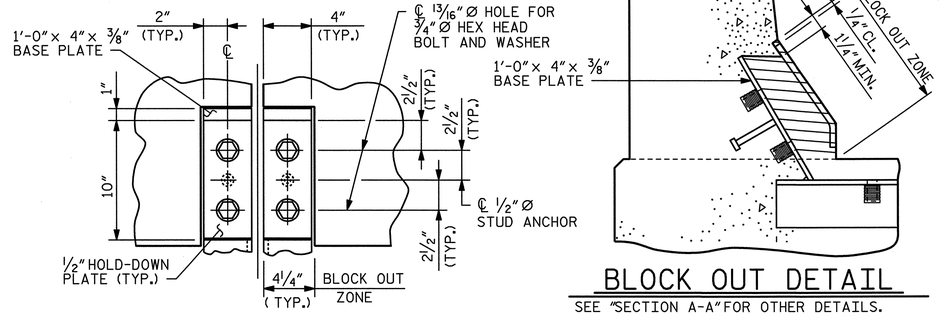

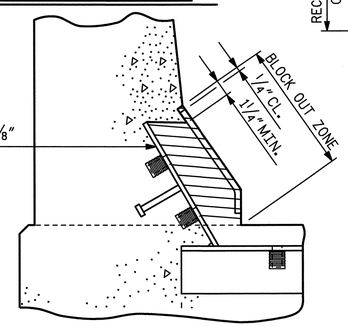

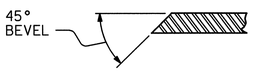

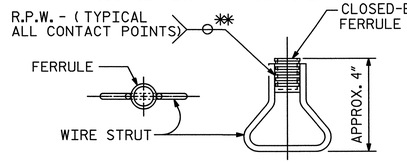

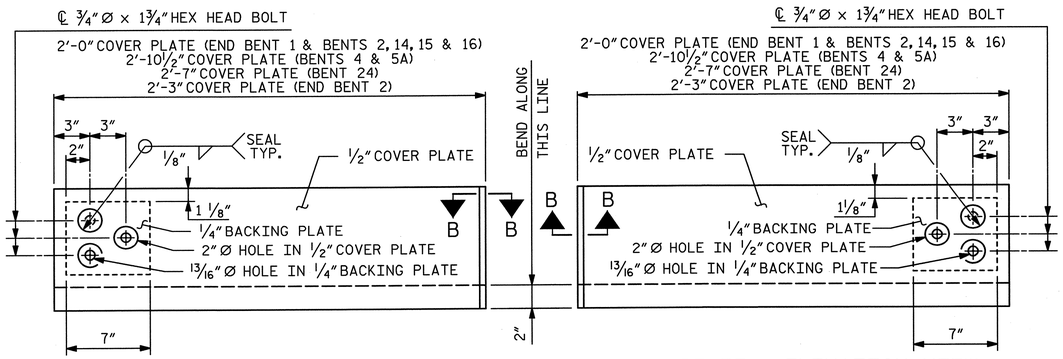

COVER PLATE DETAILS

NORTH CAROLINA PROFESSIONAL SEAL 28479 ENGINEER KEVIN G. BAILEY 6-7-13

PROJECT NO. U-2524C

GUILFORD COUNTY

STATION: POT 407+85.82 -L-
= POT 29+79.72 -Y4-

SHEET 2 OF 2

STATE OF NORTH CAROLINA
DEPARTMENT OF TRANSPORTATION
RALEIGH

EXPANSION JOINT SEAL DETAILS FOR BARRIER RAIL

-RIGHT LANE-

REVISIONS						SHEET NO.
NO.	BY:	DATE:	NO.	BY:	DATE:	S-406
1			3			TOTAL SHEETS
2			4			836

STV / Ralph Whitehead Associates, Inc.
1000 West Morehead St., Ste. 200
Charlotte, NC 28208
NC License No. F-0991

DRAWN BY : TRL	DATE : 5-13	DESIGN ENGINEER OF RECORD: T. TOWNSEND	DATE : 5-13
CHECKED BY : TJT	DATE : 5-13		

6/6/2013 4:42:17 PM R:\ustation\Finals\Expansion Joint Details 2 of 2.dgn

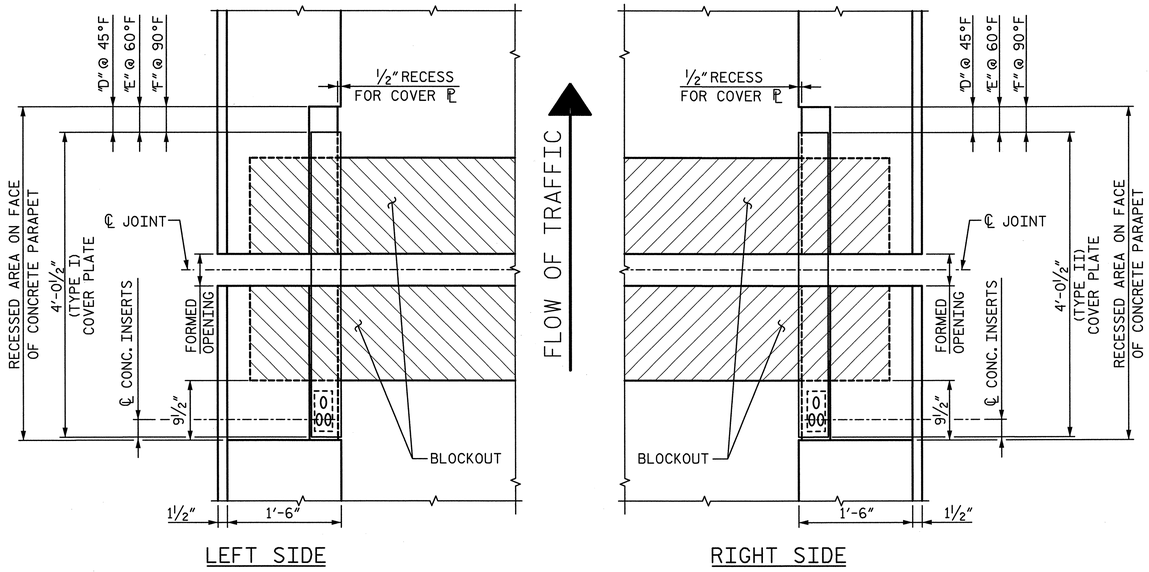

LEFT SIDE

RIGHT SIDE

PLAN OF MODULAR EXPANSION JOINT SEAL - BENTS 7, 11, 20, & 23

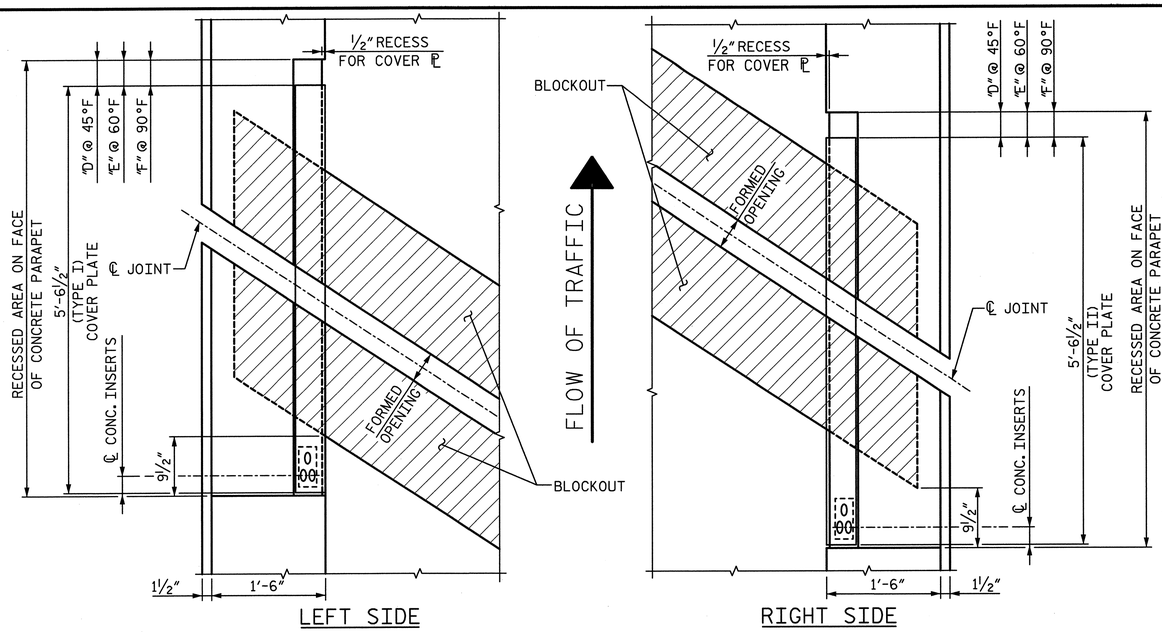

LEFT SIDE

RIGHT SIDE

PLAN OF MODULAR EXPANSION JOINT SEAL - BENT 26

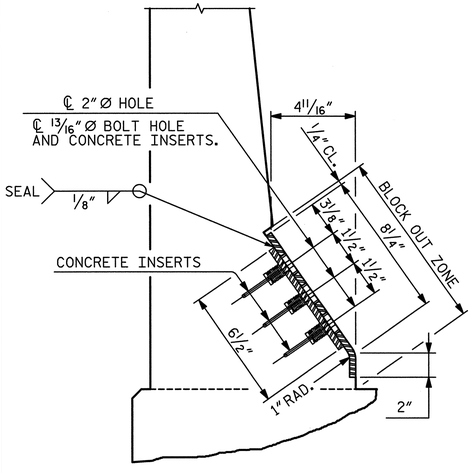

END VIEW

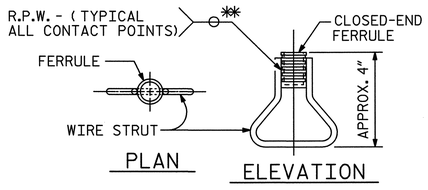

CONCRETE INSERT

** EACH WELDED ATTACHMENT OF WIRE TO FERRULE SHALL DEVELOP THE TENSILE STRENGTH OF THE WIRE.

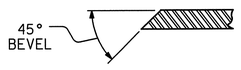

SECTION B-B

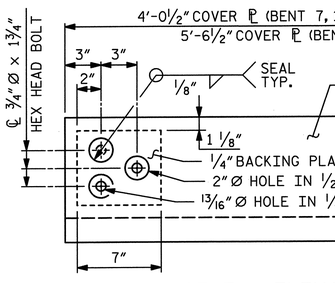

TYPE I - ELEVATION VIEW

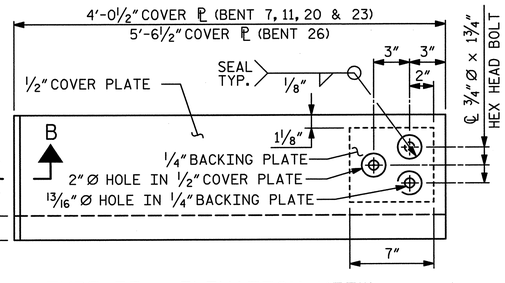

TYPE II - ELEVATION VIEW

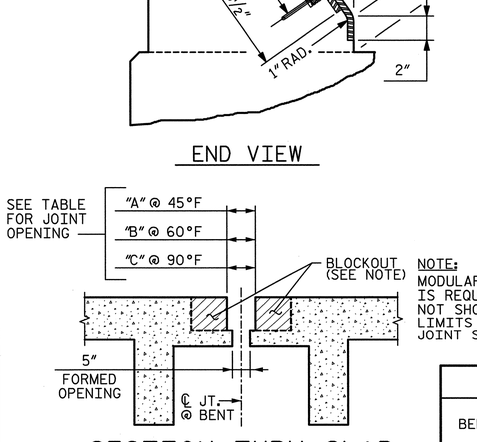

SECTION THRU SLAB

(NORMAL TO JOINT)

NOTE: MODULAR EXPANSION JOINT SEAL IS REQUIRED AT THIS JOINT BUT NOT SHOWN, SEE SKETCH SHOWING LIMITS OF MODULAR EXPANSION JOINT SEAL-PARAPET.

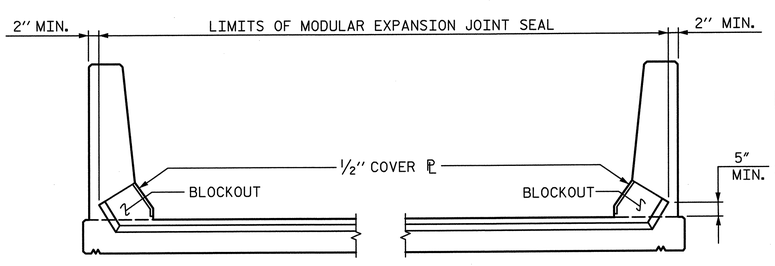

SKETCH SHOWING LIMITS OF MODULAR EXPANSION JOINT SEAL-BARRIER RAIL

COVER PLATE DETAILS

NOTES:

1. FOR MODULAR EXPANSION JOINT SEALS, SEE SPECIAL PROVISIONS.
2. THE STEEL PLATES SHALL CONFORM TO AASHTO M270 GRADE 36 OR APPROVED EQUAL AND BE PAINTED IN ACCORDANCE WITH THE STANDARD SPECIFICATIONS. AT THE CONTRACTOR'S OPTION, THE PLATES MAY BE METALLIZED AFTER FABRICATION. SEE SPECIAL PROVISIONS FOR THERMAL SPRAYED COATINGS (METALLIZATION).
3. THE ¾" Ø HEX HEAD BOLTS SHALL CONFORM TO ASTM F593 ALLOY 304 STAINLESS STEEL.
4. THE ¾" CONCRETE INSERTS SHALL BE CLOSED-END FERRULES WITH LOOPED WIRE STRUTS ATTACHED TO THEM. THE INSERTS SHALL CONFORM TO AASHTO M169, GRADE 12L14 AND SHALL HAVE A TENSILE WORKING LOAD CAPACITY OF 3000 LBS.
5. NO SEPARATE PAYMENT WILL BE MADE FOR FURNISHING AND INSTALLING THE COVER PLATE. THE ENTIRE COST OF THIS WORK SHALL BE INCLUDED IN THE LUMP SUM PRICE FOR "MODULAR EXPANSION JOINT SEALS".
6. COVER PLATE LENGTH IS BASED ON A BLOCKOUT WIDTH OF 1'-3". CONTRACTOR SHALL ADJUST PLATE LENGTH FOR ACTUAL BLOCKOUT LENGTH USED.

NORTH CAROLINA PROFESSIONAL SEAL 28479 ENGINEER KEVIN G. BAILEY 6-7-13

MOVEMENT AND SETTING AT JOINT

BENT NO.	*SKEW ANGLE	TOTAL MOVEMENT (ALONG ℄ RDWY.)	PERPENDICULAR JOINT OPENING AT 45°F ("A")	PERPENDICULAR JOINT OPENING AT 60°F ("B")	PERPENDICULAR JOINT OPENING AT 90°F ("C")	COVER PLATE OPENING AT 45°F ("D")	COVER PLATE OPENING AT 60°F ("E")	COVER PLATE OPENING AT 90°F ("F")
B7	90°-00'-00"	2 3/16"	8 9/16"	8 1/8"	7 1/4"	3 9/16"	3 1/8"	2 1/4"
B11	90°-00'-00"	2 13/16"	8 5/8"	8 1/8"	7 1/8"	3 5/8"	3 1/8"	2 1/8"
B20	90°-00'-00"	4 1/4"	8 13/16"	8 1/8"	6 3/4"	3 13/16"	3 1/8"	1 3/4"
B23	90°-00'-00"	3 11/16"	8 11/16"	8 1/8"	7"	3 11/16"	3 1/8"	2"
B26	123°-47'-58"	2 9/16"	8 9/16"	8 1/8"	7 5/16"	3 5/8"	3 1/8"	2 1/8"

*SKEW ANGLE AT BENTS IN HORIZONTAL CURVES ARE GIVEN TANGENT TO THE CURVE

PROJECT NO. U-2524C

GUILFORD COUNTY

STATION: POT 407+85.82 -L-
= POT 29+79.72 -Y4-

STATE OF NORTH CAROLINA
DEPARTMENT OF TRANSPORTATION
RALEIGH

MODULAR EXPANSION JOINT SEAL DETAILS FOR BARRIER RAIL

-RIGHT LANE-

DRAWN BY : ACA DATE : 3-13
CHECKED BY : TRL DATE : 5-13

DESIGN ENGINEER OF RECORD: K. BAILEY DATE : 5-13

STV / Ralph Whitehead Associates, Inc.
1000 West Morehead St., Ste. 200
Charlotte, NC 28208
NC License No. F-0991

REVISIONS						SHEET NO.
NO.	BY:	DATE:	NO.	BY:	DATE:	S-407
1			3			TOTAL SHEETS
2			4			836

6/6/2013 4:42:18 PM R:\ustration\Finals\Modular Joint Details.dgn

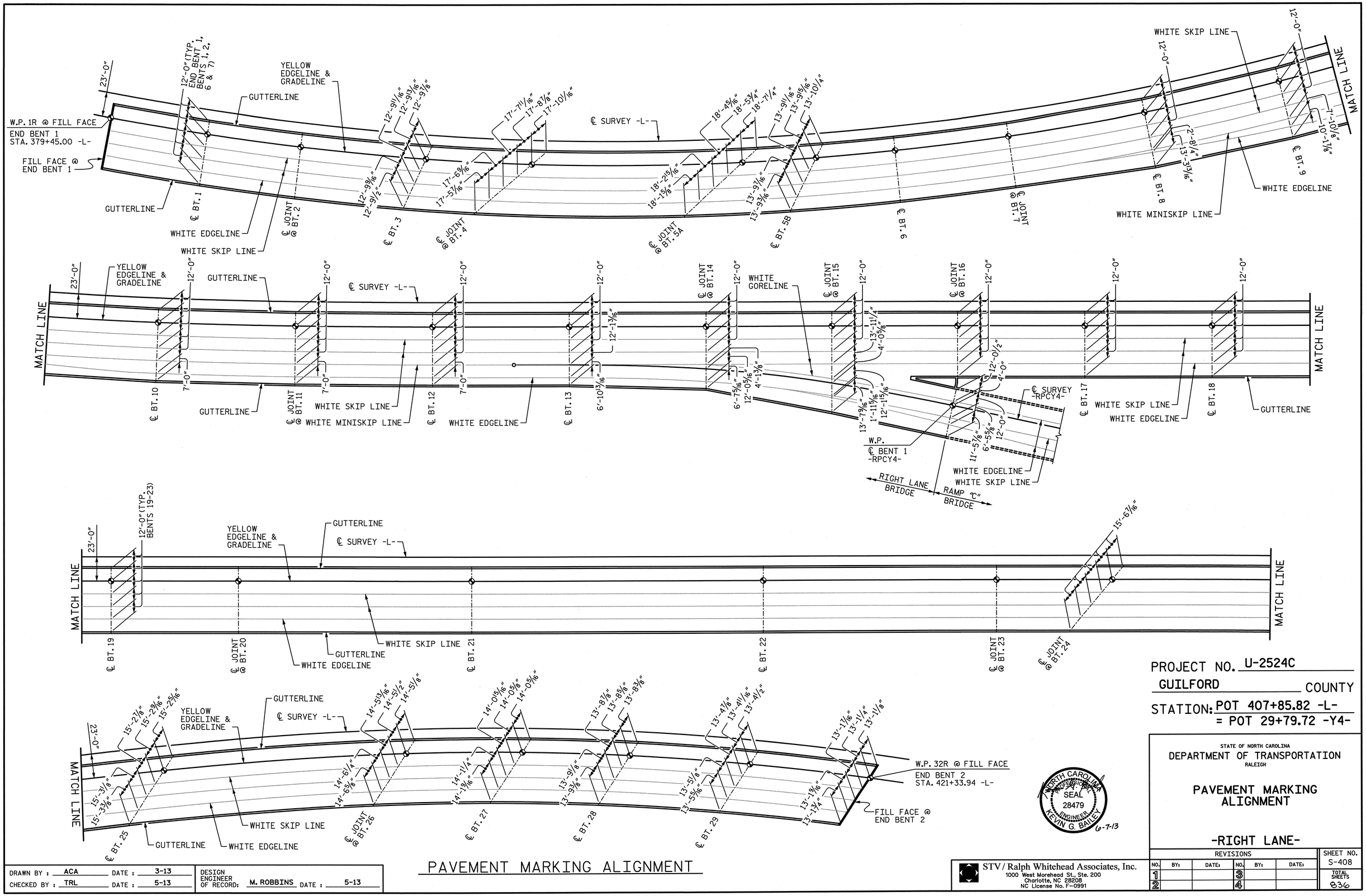

PAVEMENT MARKING ALIGNMENT

PROJECT NO. U-2524C

GUILFORD COUNTY

STATION: POT 407+85.82 -L-
= POT 29+79.72 -Y4-

STATE OF NORTH CAROLINA
DEPARTMENT OF TRANSPORTATION
RALEIGH

PAVEMENT MARKING ALIGNMENT

-RIGHT LANE-

NORTH CAROLINA PROFESSIONAL SEAL 28479 ENGINEER KEVIN G. BAILEY 6-7-13

DRAWN BY : ACA	DATE : 3-13	DESIGN ENGINEER OF RECORD: M. ROBBINS	DATE : 5-13
CHECKED BY : TRL	DATE : 5-13		

STV / Ralph Whitehead Associates, Inc.
1000 West Morehead St., Ste. 200
Charlotte, NC 28208
NC License No. F-0991

REVISIONS						SHEET NO.
NO.	BY:	DATE:	NO.	BY:	DATE:	S-408
1			3			TOTAL SHEETS
2			4			836

6/6/2013 4:42:19 PM R:\ustation\Finals\Pavement Marking Alignment.dgn

REINFORCING BAR SCHEDULE
UNIT A - SPANS 1 & 2

MARK	NO.	SIZE	TYPE	LENGTH	WEIGHT
✳A1-A	338	#5	STR.	43′-0″	15,159
✳A2-A	338	#5	STR.	22′-6″	7,932
A301-A	338	#5	STR.	43′-0″	15,159
A302-A	338	#5	STR.	22′-2″	7,815
✳B1-A	176	#5	STR.	34′-0″	6,241
✳B2-A	44	#7	STR.	60′-0″	5,396
✳B10-A	41	#6	STR.	35′-0″	2,155
✳B11-A	41	#6	STR.	30′-0″	1,847
B101-A	260	#5	STR.	33′-6″	9,085
B102-A	65	#6	STR.	60′-0″	5,858
B110-A	10	#7	STR.	30′-0″	613
✳G2-A	4	#5	STR.	32′-9″	137
✳J1-A	128	#4	⑫	1′-5″	121
✳K1-A	16	#8	①	25′-3″	1,079
✳K3-A	8	#8	②	16′-3″	347
✳K5-A	20	#6	STR.	7′-0″	210
K100-A	7	#4	STR.	54′-6″	255
K120-A	20	#4	STR.	7′-0″	94
K121-A	50	#4	STR.	10′-0″	334
✳S1-A	80	#5	③	6′-0″	501
✳S2-A	80	#4	④	2′-5″	129
S4-A	280	#4	⑤	2′-9″	514
U1-A	40	#4	⑨	16′-6″	441
U2-A	10	#4	④	11′-0″	73
✳EPOXY COATED REINF. STEEL (LBS.)					41,254
REINF. STEEL (LBS.)					40,241

REINFORCING BAR SCHEDULE
UNIT B - SPANS 3 & 4

MARK	NO.	SIZE	TYPE	LENGTH	WEIGHT	MARK	NO.	SIZE	TYPE	LENGTH	WEIGHT	MARK	NO.	SIZE	TYPE	LENGTH	WEIGHT	MARK	NO.	SIZE	TYPE	LENGTH	WEIGHT
✳A1-B	313	#5	STR.	43′-0″	14,038	A301-B	313	#5	STR.	43′-0″	14,038	✳B1-B	22	#5	STR.	46′-4″	1,063	✳G2-B	2	#5	STR.	32′-9″	68
✳A2-B	313	#5	STR.	22′-6″	7,345	A302-B	313	#5	STR.	22′-2″	7,237	✳B2-B	22	#5	STR.	43′-9″	1,004	✳G3-B	2	#5	STR.	47′-7″	99
												✳B3-B	22	#5	STR.	41′-2″	945						
✳A100-B	10	#5	STR.	32′-4″	337	A400-B	10	#5	STR.	32′-5″	338	✳B4-B	22	#5	STR.	38′-5″	882	✳J1-B	158	#4	⑫	1′-5″	150
✳A101-B	10	#5	STR.	31′-0″	323	A401-B	10	#5	STR.	31′-1″	324	✳B5-B	14	#5	STR.	34′-3″	500						
✳A102-B	10	#5	STR.	29′-9″	310	A402-B	10	#5	STR.	29′-10″	311	✳B6-B	4	#5	STR.	59′-4″	248	✳K1-B	8	#8	①	25′-3″	539
✳A103-B	10	#5	STR.	28′-5″	296	A403-B	10	#5	STR.	28′-6″	297	✳B7-B	4	#5	STR.	55′-2″	230	✳K2-B	8	#8	①	34′-7″	739
✳A104-B	10	#5	STR.	27′-2″	283	A404-B	10	#5	STR.	27′-3″	284	✳B8-B	4	#5	STR.	51′-3″	214	✳K3-B	4	#8	②	16′-3″	174
✳A105-B	10	#5	STR.	25′-10″	269	A405-B	10	#5	STR.	25′-11″	270	✳B9-B	4	#5	STR.	47′-4″	197	✳K4-B	4	#8	②	22′-3″	238
✳A106-B	10	#5	STR.	24′-7″	256	A406-B	10	#5	STR.	24′-8″	257	✳B10-B	4	#5	STR.	43′-5″	181	✳K5-B	10	#6	STR.	7′-0″	105
✳A107-B	10	#5	STR.	23′-4″	243	A407-B	10	#5	STR.	23′-5″	244	✳B11-B	4	#5	STR.	39′-6″	165	✳K6-B	5	#6	STR.	12′-0″	90
✳A108-B	10	#5	STR.	22′-0″	229	A408-B	10	#5	STR.	22′-1″	230	✳B12-B	4	#5	STR.	35′-7″	148	✳K7-B	5	#6	STR.	13′-3″	100
✳A109-B	10	#5	STR.	20′-9″	216	A409-B	10	#5	STR.	20′-10″	217	✳B13-B	4	#5	STR.	31′-8″	132	✳K8-B	5	#6	STR.	14′-6″	109
✳A110-B	10	#5	STR.	19′-6″	203	A410-B	10	#5	STR.	19′-7″	204	✳B14-B	5	#5	STR.	27′-8″	144	K100-B	28	#4	⑧	14′-6″	271
✳A111-B	10	#5	STR.	18′-2″	189	A411-B	10	#5	STR.	18′-3″	190	✳B15-B	44	#7	STR.	56′-9″	5,104	K101-B	14	#4	⑩	7′-3″	68
✳A112-B	10	#5	STR.	16′-11″	176	A412-B	10	#5	STR.	17′-0″	177	✳B16-B	44	#7	STR.	28′-6″	2,563	K120-B	20	#4	STR.	7′-6″	100
✳A113-B	10	#5	STR.	15′-8″	163	A413-B	10	#5	STR.	15′-9″	164	✳B17-B	41	#7	STR.	50′-0″	4,190	K121-B	50	#4	STR.	10′-8″	356
✳A114-B	10	#5	STR.	14′-5″	150	A414-B	10	#5	STR.	14′-6″	151	✳B18-B	41	#7	STR.	40′-0″	3,352						
✳A115-B	10	#5	STR.	13′-2″	137	A415-B	10	#5	STR.	13′-3″	138							✳S1-B	100	#5	③	6′-0″	626
✳A116-B	10	#5	STR.	11′-10″	123	A416-B	10	#5	STR.	11′-11″	124	B101-B	8	#5	STR.	48′-11″	408	✳S2-B	40	#4	④	2′-5″	65
✳A117-B	10	#5	STR.	9′-9″	102	A417-B	10	#5	STR.	11′-5″	119	B102-B	22	#5	STR.	48′-1″	1,103	✳S3-B	60	#4	④	4′-3″	170
✳A118-B	10	#5	STR.	8′-6″	89	A418-B	10	#5	STR.	10′-2″	106	B103-B	22	#5	STR.	46′-3″	1,061	S5-B	280	#4	⑤	2′-11″	546
✳A119-B	1	#5	STR.	11′-10″	12	A419-B	1	#5	STR.	13′-10″	14	B104-B	22	#5	STR.	44′-6″	1,021						
✳A120-B	1	#5	STR.	11′-4″	12	A420-B	1	#5	STR.	13′-4″	14	B105-B	22	#5	STR.	42′-8″	979	U1-B	40	#4	⑨	16′-8″	445
✳A121-B	1	#5	STR.	10′-10″	11	A421-B	1	#5	STR.	12′-10″	13	B106-B	22	#5	STR.	40′-11″	939	U2-B	10	#4	④	11′-2″	75
✳A122-B	1	#5	STR.	10′-4″	11	A422-B	1	#5	STR.	12′-4″	13	B107-B	8	#5	STR.	39′-1″	326						
✳A123-B	1	#5	STR.	9′-10″	10	A423-B	1	#5	STR.	11′-10″	12	B108-B	8	#5	STR.	42′-1″	351						
✳A124-B	1	#5	STR.	9′-4″	10	A424-B	1	#5	STR.	11′-4″	12	B109-B	22	#5	STR.	39′-10″	914						
✳A125-B	1	#5	STR.	8′-10″	9	A425-B	1	#5	STR.	10′-10″	11	B110-B	22	#5	STR.	36′-2″	830						
✳A126-B	1	#5	STR.	8′-4″	9	A426-B	1	#5	STR.	10′-4″	11	B111-B	22	#5	STR.	32′-6″	746						
✳A127-B	1	#5	STR.	7′-10″	8	A427-B	1	#5	STR.	9′-10″	10	B112-B	11	#5	STR.	55′-3″	634						
✳A128-B	1	#5	STR.	7′-4″	8	A428-B	1	#5	STR.	9′-4″	10	B113-B	11	#5	STR.	48′-0″	551						
✳A129-B	1	#5	STR.	6′-10″	7	A429-B	1	#5	STR.	8′-10″	9	B114-B	4	#5	STR.	40′-9″	170						
✳A130-B	1	#5	STR.	6′-4″	7	A430-B	1	#5	STR.	8′-4″	9	B115-B	63	#7	STR.	60′-0″	7,726						
✳A131-B	1	#5	STR.	5′-10″	6	A431-B	1	#5	STR.	7′-10″	8	B116-B	10	#7	STR.	30′-0″	613						
✳A132-B	5	#5	STR.	5′-0″	26	A432-B	8	#5	STR.	7′-0″	58												
✳A133-B	5	#5	STR.	4′-0″	21	A433-B	7	#5	STR.	6′-0″	44												
✳A134-B	1	#6	STR.	25′-3″	38																		
✳A135-B	1	#6	STR.	26′-3″	39																		
✳A136-B	1	#6	STR.	27′-3″	41																		
																		✳EPOXY COATED REINF. STEEL (LBS.)					50,296
																		REINF. STEEL (LBS.)					45,901

PROJECT NO. U-2524C

GUILFORD COUNTY

STATION: POT 407+85.82 -L-
= POT 29+79.72 -Y4-

SHEET 1 OF 8

STATE OF NORTH CAROLINA
DEPARTMENT OF TRANSPORTATION
RALEIGH

SUPERSTRUCTURE BILL OF MATERIALS

-RIGHT LANE-

NORTH CAROLINA PROFESSIONAL ENGINEER SEAL 28479 ENGINEER KEVIN G. BAILEY 6-7-13

STV / Ralph Whitehead Associates, Inc.
1000 West Morehead St., Ste. 200
Charlotte, NC 28208
NC License No. F-0991

REVISIONS					
NO.	BY:	DATE:	NO.	BY:	DATE:
1			3		
2			4		

SHEET NO. S-409

TOTAL SHEETS 836

DRAWN BY : ACA DATE : 3-13
CHECKED BY : AJP DATE : 5-13

DESIGN ENGINEER OF RECORD: A. PETER DATE : 5-13

6/6/2013 4:42:20 PM R:\ustation\Finals\Super Bill of Mats Sheet 1 of 8.dgn

REINFORCING BAR SCHEDULE
SPAN 5

MARK	NO.	SIZE	TYPE	LENGTH	WEIGHT	MARK	NO.	SIZE	TYPE	LENGTH	WEIGHT	MARK	NO.	SIZE	TYPE	LENGTH	WEIGHT	MARK	NO.	SIZE	TYPE	LENGTH	WEIGHT
✳ A1-5	282	#5	STR.	43′-0″	12,647	✳ A145-5	14	#5	STR.	32′-5″	473	A301-5	282	#5	STR.	43′-0″	12,647	A445-5	14	#5	STR.	32′-5″	473
✳ A2-5	282	#5	STR.	22′-6″	6,618	✳ A146-5	14	#5	STR.	31′-0″	453	A302-5	282	#5	STR.	22′-2″	6,520	A446-5	14	#5	STR.	31′-0″	453
						✳ A147-5	14	#5	STR.	29′-7″	432							A447-5	14	#5	STR.	29′-7″	432
✳ A101-5	14	#5	STR.	32′-8″	477	✳ A148-5	14	#5	STR.	28′-2″	411	A401-5	14	#5	STR.	32′-8″	477	A448-5	14	#5	STR.	28′-2″	411
✳ A102-5	14	#5	STR.	31′-3″	456	✳ A149-5	14	#5	STR.	26′-9″	391	A402-5	14	#5	STR.	31′-3″	456	A449-5	14	#5	STR.	26′-9″	391
✳ A103-5	14	#5	STR.	29′-8″	433	✳ A150-5	14	#5	STR.	25′-4″	370	A403-5	14	#5	STR.	29′-8″	433	A450-5	14	#5	STR.	25′-4″	370
✳ A104-5	14	#5	STR.	28′-3″	413	✳ A151-5	14	#5	STR.	24′-0″	350	A404-5	14	#5	STR.	28′-3″	413	A451-5	14	#5	STR.	24′-0″	350
✳ A105-5	14	#5	STR.	26′-10″	392	✳ A152-5	14	#5	STR.	22′-7″	330	A405-5	14	#5	STR.	26′-10″	392	A452-5	14	#5	STR.	22′-7″	330
✳ A106-5	14	#5	STR.	25′-5″	371	✳ A153-5	14	#5	STR.	21′-2″	309	A406-5	14	#5	STR.	25′-5″	371	A453-5	14	#5	STR.	21′-2″	309
✳ A107-5	14	#5	STR.	23′-10″	348	✳ A154-5	14	#5	STR.	19′-9″	288	A407-5	14	#5	STR.	23′-10″	348	A454-5	14	#5	STR.	19′-9″	288
✳ A108-5	14	#5	STR.	22′-5″	327	✳ A155-5	14	#5	STR.	18′-4″	268	A408-5	14	#5	STR.	22′-5″	327	A455-5	14	#5	STR.	18′-4″	268
✳ A109-5	14	#5	STR.	21′-0″	307	✳ A156-5	14	#5	STR.	17′-0″	248	A409-5	14	#5	STR.	21′-0″	307	A456-5	14	#5	STR.	17′-0″	248
✳ A110-5	14	#5	STR.	19′-6″	285	✳ A157-5	14	#5	STR.	15′-7″	228	A410-5	14	#5	STR.	19′-6″	285	A457-5	14	#5	STR.	15′-7″	228
✳ A111-5	14	#5	STR.	18′-0″	263	✳ A158-5	14	#5	STR.	14′-2″	207	A411-5	14	#5	STR.	18′-0″	263	A458-5	14	#5	STR.	14′-2″	207
✳ A112-5	14	#5	STR.	16′-5″	241	✳ A159-5	14	#5	STR.	12′-9″	186	A412-5	14	#5	STR.	16′-6″	241	A459-5	14	#5	STR.	12′-9″	186
✳ A113-5	14	#5	STR.	15′-1″	220	✳ A160-5	14	#5	STR.	11′-4″	165	A413-5	14	#5	STR.	15′-1″	220	A460-5	14	#5	STR.	11′-4″	165
✳ A114-5	14	#5	STR.	13′-8″	200	✳ A161-5	14	#5	STR.	10′-0″	146	A414-5	14	#5	STR.	13′-8″	200	A461-5	14	#5	STR.	10′-0″	146
✳ A115-5	14	#5	STR.	12′-1″	176	✳ A162-5	1	#5	STR.	12′-11″	13	A415-5	14	#5	STR.	12′-1″	176	A462-5	1	#5	STR.	14′-11″	16
✳ A116-5	14	#5	STR.	10′-8″	156	✳ A163-5	1	#5	STR.	12′-6″	13	A416-5	14	#5	STR.	10′-8″	156	A463-5	1	#5	STR.	14′-6″	15
✳ A117-5	1	#5	STR.	13′-8″	14	✳ A164-5	1	#5	STR.	12′-2″	13	A417-5	1	#5	STR.	15′-8″	16	A464-5	1	#5	STR.	14′-2″	15
✳ A118-5	1	#5	STR.	13′-3″	14	✳ A165-5	1	#5	STR.	11′-9″	12	A418-5	1	#5	STR.	15′-3″	16	A465-5	1	#5	STR.	13′-9″	14
✳ A119-5	1	#5	STR.	12′-10″	13	✳ A166-5	1	#5	STR.	11′-4″	12	A419-5	1	#5	STR.	14′-10″	15	A466-5	1	#5	STR.	13′-4″	14
✳ A120-5	1	#5	STR.	12′-5″	13	✳ A167-5	1	#5	STR.	11′-0″	11	A420-5	1	#5	STR.	14′-5″	15	A467-5	1	#5	STR.	13′-0″	14
✳ A121-5	1	#5	STR.	11′-11″	12	✳ A168-5	1	#5	STR.	10′-7″	11	A421-5	1	#5	STR.	13′-11″	15	A468-5	1	#5	STR.	12′-7″	13
✳ A122-5	1	#5	STR.	11′-6″	12	✳ A169-5	1	#5	STR.	10′-2″	11	A422-5	1	#5	STR.	13′-6″	14	A469-5	1	#5	STR.	12′-2″	13
✳ A123-5	1	#5	STR.	11′-1″	12	✳ A170-5	1	#5	STR.	9′-9″	10	A423-5	1	#5	STR.	13′-1″	14	A470-5	1	#5	STR.	11′-9″	12
✳ A124-5	1	#5	STR.	10′-8″	11	✳ A171-5	1	#5	STR.	9′-4″	10	A424-5	1	#5	STR.	12′-8″	13	A471-5	1	#5	STR.	11′-4″	12
✳ A125-5	1	#5	STR.	10′-3″	11	✳ A172-5	1	#5	STR.	9′-0″	9	A425-5	1	#5	STR.	12′-3″	13	A472-5	1	#5	STR.	11′-0″	11
✳ A126-5	1	#5	STR.	9′-10″	10	✳ A173-5	1	#5	STR.	8′-7″	9	A426-5	1	#5	STR.	11′-10″	12	A473-5	1	#5	STR.	10′-7″	11
✳ A127-5	1	#5	STR.	9′-4″	10	✳ A174-5	1	#5	STR.	8′-2″	9	A427-5	1	#5	STR.	11′-4″	12	A474-5	1	#5	STR.	10′-2″	11
✳ A128-5	1	#5	STR.	9′-0″	9	✳ A175-5	1	#5	STR.	7′-9″	8	A428-5	1	#5	STR.	11′-0″	11	A475-5	1	#5	STR.	9′-9″	10
✳ A129-5	1	#5	STR.	8′-7″	9	✳ A176-5	1	#5	STR.	7′-4″	8	A429-5	1	#5	STR.	10′-7″	11	A476-5	1	#5	STR.	9′-4″	10
✳ A130-5	1	#5	STR.	8′-2″	9	✳ A177-5	1	#5	STR.	7′-0″	7	A430-5	1	#5	STR.	10′-2″	11	A477-5	1	#5	STR.	9′-0″	9
✳ A131-5	1	#5	STR.	7′-9″	8	✳ A178-5	1	#5	STR.	6′-7″	7	A431-5	1	#5	STR.	9′-9″	10	A478-5	1	#5	STR.	8′-7″	9
✳ A132-5	1	#5	STR.	7′-3″	8	✳ A179-5	1	#5	STR.	6′-2″	6	A432-5	1	#5	STR.	9′-3″	10	A479-5	1	#5	STR.	8′-2″	9
✳ A133-5	1	#5	STR.	6′-10″	7	✳ A180-5	1	#5	STR.	5′-9″	6	A433-5	1	#5	STR.	8′-10″	9	A480-5	1	#5	STR.	7′-9″	8
✳ A134-5	1	#5	STR.	6′-5″	7	✳ A181-5	1	#5	STR.	5′-5″	6	A434-5	1	#5	STR.	8′-5″	9	A481-5	1	#5	STR.	7′-5″	8
✳ A135-5	1	#5	STR.	6′-0″	6	✳ A182-5	1	#5	STR.	5′-0″	5	A435-5	1	#5	STR.	8′-0″	8	A482-5	1	#5	STR.	7′-0″	7
✳ A136-5	1	#5	STR.	5′-7″	6	✳ A183-5	1	#5	STR.	4′-6″	5	A436-5	1	#5	STR.	7′-7″	8	A483-5	1	#5	STR.	6′-6″	7
✳ A137-5	1	#5	STR.	5′-2″	5	✳ A184-5	1	#5	STR.	4′-3″	4	A437-5	1	#5	STR.	7′-2″	7	A484-5	1	#5	STR.	6′-3″	7
✳ A138-5	1	#5	STR.	4′-9″	5	✳ A185-5	5	#5	STR.	4′-0″	21	A438-5	1	#5	STR.	6′-9″	7	A485-5	8	#5	STR.	5′-9″	48
✳ A139-5	1	#5	STR.	4′-5″	5	✳ A186-5	5	#5	STR.	3′-0″	16	A439-5	1	#5	STR.	6′-5″	7	A486-5	7	#5	STR.	5′-0″	37
✳ A140-5	5	#5	STR.	4′-0″	21	✳ A187-5	1	#6	STR.	24′-0″	36	A440-5	7	#5	STR.	6′-0″	44						
✳ A141-5	4	#5	STR.	3′-0″	13	✳ A188-5	1	#6	STR.	25′-0″	38	A441-5	7	#5	STR.	4′-0″	29	✳ B1-5	176	#5	STR.	51′-7″	9,469
✳ A142-5	1	#6	STR.	22′-0″	33	✳ A189-5	1	#6	STR.	26′-0″	39												
✳ A143-5	1	#6	STR.	23′-0″	35													B101-5	320	#5	STR.	51′-4″	17,133
✳ A144-5	1	#6	STR.	24′-0″	36																		
																		✳ G2-5	2	#5	STR.	47′-9″	100
																		✳ G3-5	2	#5	STR.	49′-8″	104
																		✳ J1-5	192	#4	⑫	1′-5″	182
																		✳ K1-5	24	#5	①	22′-7″	565
																		✳ K3-5	12	#5	②	16′-5″	205
																		✳ S6-5	130	#5	⑥	6′-7″	893
																		✳ EPOXY COATED REINF. STEEL (LBS.)					41,812
																		REINF. STEEL (LBS.)					47,296

PROJECT NO. U-2524C

GUILFORD COUNTY

STATION: POT 407+85.82 -L-
= POT 29+79.72 -Y4-

SHEET 2 OF 8

NORTH CAROLINA PROFESSIONAL SEAL 28479 ENGINEER KEVIN G. BAILEY 6-7-13

STATE OF NORTH CAROLINA
DEPARTMENT OF TRANSPORTATION
RALEIGH

SUPERSTRUCTURE
BILL OF MATERIALS

-RIGHT LANE-

REVISIONS						SHEET NO.
NO.	BY:	DATE:	NO.	BY:	DATE:	S-410
1			3			TOTAL SHEETS
2			4			236

STV / Ralph Whitehead Associates, Inc.
1000 West Morehead St., Ste. 200
Charlotte, NC 28208
NC License No. F-0991

DRAWN BY : ACA DATE : 1-13
CHECKED BY : AJP DATE : 5-13

DESIGN ENGINEER OF RECORD: A. PETER DATE : 5-13

6/6/2013 4:42:21 PM R:\ustation\Finals\Super Bill of Mats Sheet 2 of 8.dgn

REINFORCING BAR SCHEDULE
UNIT C - SPANS 6A-7

MARK	NO.	SIZE	TYPE	LENGTH	WEIGHT	MARK	NO.	SIZE	TYPE	LENGTH	WEIGHT	MARK	NO.	SIZE	TYPE	LENGTH	WEIGHT	MARK	NO.	SIZE	TYPE	LENGTH	WEIGHT
✳A1-C	443	#5	STR.	43′-0″	19,868	A301-C	443	#5	STR.	43′-0″	19,868	✳B1-C	4	#5	STR.	36′-0″	150	✳G1-C	18	#5	⑦	3′-8″	69
✳A2-C	443	#5	STR.	22′-6″	10,396	A302-C	443	#5	STR.	22′-2″	10,242	✳B2-C	4	#5	STR.	39′-9″	166	✳G2-C	2	#5	STR.	49′-6″	103
												✳B3-C	4	#5	STR.	43′-6″	181						
✳A100-C	12	#5	STR.	32′-7″	408	A400-C	12	#5	STR.	32′-7″	408	✳B4-C	4	#5	STR.	47′-4″	197	✳J1-C	98	#4	⑫	1′-5″	93
✳A101-C	12	#5	STR.	31′-3″	391	A401-C	12	#5	STR.	31′-3″	391	✳B5-C	4	#5	STR.	51′-2″	213						
✳A102-C	12	#5	STR.	29′-10″	373	A402-C	12	#5	STR.	29′-10″	373	✳B6-C	4	#5	STR.	54′-10″	229	✳K1-C	8	#8	①	35′-5″	756
✳A103-C	12	#5	STR.	28′-6″	357	A403-C	12	#5	STR.	28′-6″	357	✳B7-C	4	#5	STR.	58′-6″	244	✳K2-C	8	#8	①	22′-4″	477
✳A104-C	12	#5	STR.	27′-2″	340	A404-C	12	#5	STR.	27′-2″	340	✳B8-C	10	#5	STR.	32′-10″	342	✳K3-C	4	#8	②	23′-9″	254
✳A105-C	12	#5	STR.	25′-9″	322	A405-C	12	#5	STR.	25′-9″	322	✳B9-C	10	#5	STR.	35′-1″	366	✳K4-C	4	#8	②	14′-9″	158
✳A106-C	12	#5	STR.	24′-5″	306	A406-C	12	#5	STR.	24′-5″	306	✳B10-C	12	#5	STR.	37′-7″	470	✳K6-C	5	#6	STR.	15′-0″	113
✳A107-C	12	#5	STR.	23′-0″	288	A407-C	12	#5	STR.	23′-0″	288	✳B11-C	8	#5	STR.	17′-6″	146	✳K7-C	5	#6	STR.	13′-9″	103
✳A108-C	12	#5	STR.	21′-8″	271	A408-C	12	#5	STR.	21′-8″	271	✳B12-C	6	#5	STR.	22′-11″	143	✳K8-C	5	#6	STR.	12′-6″	94
✳A109-C	12	#5	STR.	20′-3″	253	A409-C	12	#5	STR.	20′-3″	253	✳B13-C	6	#5	STR.	28′-4″	177	✳K9-C	15	#6	STR.	9′-8″	218
✳A110-C	12	#5	STR.	18′-10″	236	A410-C	12	#5	STR.	18′-10″	236	✳B14-C	6	#5	STR.	33′-10″	212	✳K10-C	3	#6	STR.	3′-0″	14
✳A111-C	12	#5	STR.	17′-6″	219	A411-C	12	#5	STR.	17′-6″	219	✳B15-C	6	#5	STR.	39′-3″	246	✳K11-C	3	#6	STR.	3′-8″	17
✳A112-C	12	#5	STR.	16′-1″	201	A412-C	12	#5	STR.	16′-1″	201	✳B16-C	6	#5	STR.	44′-8″	280						
✳A113-C	12	#5	STR.	14′-9″	185	A413-C	12	#5	STR.	14′-9″	185	✳B17-C	6	#5	STR.	49′-6″	310	K100-C	28	#4	⑧	15′-4″	287
✳A114-C	12	#5	STR.	13′-4″	167	A414-C	12	#5	STR.	13′-4″	167	✳B18-C	88	#6	STR.	60′-0″	7,931	K101-C	14	#4	⑩	7′-8″	72
✳A115-C	12	#5	STR.	11′-11″	149	A415-C	12	#5	STR.	11′-11″	149	✳B19-C	88	#5	STR.	42′-4″	3,886	K102-C	7	#4	STR.	54′-6″	255
✳A116-C	12	#5	STR.	10′-6″	131	A416-C	12	#5	STR.	10′-6″	131	✳B20-C	82	#7	STR.	50′-0″	8,380	K120-C	20	#4	STR.	8′-0″	107
✳A117-C	1	#5	STR.	14′-5″	15	A417-C	1	#5	STR.	16′-0″	17	✳B21-C	82	#7	STR.	40′-0″	6,704	K121-C	50	#4	STR.	11′-5″	381
✳A118-C	1	#5	STR.	13′-11″	15	A418-C	1	#5	STR.	15′-6″	16							K122-C	20	#4	STR.	7′-0″	94
✳A119-C	1	#5	STR.	13′-5″	14	A419-C	1	#5	STR.	15′-0″	16	B101-C	4	#5	STR.	35′-6″	148	K123-C	50	#4	STR.	9′-8″	323
✳A120-C	1	#5	STR.	13′-0″	14	A420-C	1	#5	STR.	14′-7″	15	B102-C	11	#5	STR.	42′-4″	486						
✳A121-C	1	#5	STR.	12′-6″	13	A421-C	1	#5	STR.	14′-1″	15	B103-C	11	#5	STR.	49′-3″	565	✳S1-C	100	#5	③	6′-0″	626
✳A122-C	1	#5	STR.	12′-1″	13	A422-C	1	#5	STR.	13′-8″	14	B104-C	11	#5	STR.	56′-0″	642	✳S2-C	60	#4	④	4′-4″	174
✳A123-C	1	#5	STR.	11′-7″	12	A423-C	1	#5	STR.	13′-2″	14	B105-C	22	#5	STR.	32′-8″	750	✳S3-C	64	#4	④	2′-6″	107
✳A124-C	1	#5	STR.	11′-1″	12	A424-C	1	#5	STR.	12′-8″	13	B106-C	22	#5	STR.	36′-0″	826	S4-C	280	#4	⑤	2′-9″	514
✳A125-C	1	#5	STR.	10′-8″	11	A425-C	1	#5	STR.	12′-3″	13	B107-C	8	#5	STR.	37′-6″	313	S5-C	280	#4	⑤	3′-5″	639
✳A126-C	1	#5	STR.	10′-2″	11	A426-C	1	#5	STR.	11′-9″	12	B108-C	4	#5	STR.	13′-6″	56						
✳A127-C	1	#5	STR.	9′-9″	10	A427-C	1	#5	STR.	11′-4″	12	B109-C	11	#5	STR.	20′-1″	230	U1-C	40	#4	⑨	17′-4″	463
✳A128-C	1	#5	STR.	9′-3″	10	A428-C	1	#5	STR.	10′-10″	11	B110-C	11	#5	STR.	26′-8″	306	U2-C	10	#4	④	11′-8″	78
✳A129-C	1	#5	STR.	8′-9″	9	A429-C	1	#5	STR.	10′-4″	11	B111-C	11	#5	STR.	33′-3″	381	U3-C	40	#4	⑨	16′-8″	445
✳A130-C	1	#5	STR.	8′-4″	9	A430-C	1	#5	STR.	9′-11″	10	B112-C	11	#5	STR.	39′-10″	457	U4-C	10	#4	④	11′-0″	73
✳A131-C	1	#5	STR.	7′-10″	8	A431-C	1	#5	STR.	9′-5″	10	B113-C	11	#5	STR.	46′-5″	533						
✳A132-C	1	#5	STR.	7′-5″	8	A432-C	1	#5	STR.	9′-0″	9	B114-C	4	#5	STR.	49′-6″	207						
✳A133-C	1	#5	STR.	6′-11″	7	A433-C	1	#5	STR.	8′-6″	9	B115-C	126	#5	STR.	42′-6″	5,585						
✳A134-C	1	#5	STR.	6′-5″	7	A434-C	1	#5	STR.	8′-0″	8	B116-C	16	#7	STR.	30′-0″	981						
✳A135-C	1	#5	STR.	6′-0″	6	A435-C	1	#5	STR.	7′-7″	8	B118-C	126	#6	STR.	60′-0″	11,355						
✳A136-C	1	#5	STR.	5′-6″	6	A436-C	1	#5	STR.	7′-1″	7												
✳A137-C	1	#5	STR.	5′-1″	5	A437-C	1	#5	STR.	6′-8″	7												
✳A138-C	5	#5	STR.	4′-9″	25	A438-C	7	#5	STR.	6′-4″	46												
✳A139-C	5	#5	STR.	4′-0″	21	A439-C	6	#5	STR.	5′-4″	33												
✳A140-C	1	#6	STR.	22′-6″	34																		
✳A141-C	1	#6	STR.	23′-6″	35																		
✳A142-C	1	#6	STR.	24′-6″	37																		

✳EPOXY COATED REINF. STEEL (LBS.)	69,577
REINF. STEEL (LBS.)	62,585

REINFORCING BAR SCHEDULE
UNIT D - SPANS 8-11

MARK	NO.	SIZE	TYPE	LENGTH	WEIGHT
✳A1-D	228	#5	STR.	46′-6″	11,058
✳A2-D	228	#5	STR.	23′-3″	5,529
✳A3-D	678	#5	STR.	48′-6″	34,297
✳A4-D	678	#5	STR.	24′-3″	17,148
A301-D	228	#5	STR.	46′-6″	11,058
A302-D	228	#5	STR.	23′-0″	5,469
A303-D	678	#5	STR.	48′-6″	34,297
A304-D	678	#5	STR.	24′-0″	16,972
✳B1-D	192	#5	STR.	53′-9″	10,764
✳B2-D	144	#7	STR.	60′-0″	17,660
✳B3-D	192	#5	STR.	40′-3″	8,060
✳B10-D	141	#7	STR.	50′-0″	14,410
✳B11-D	94	#7	STR.	60′-0″	11,528
✳B12-D	47	#7	STR.	40′-0″	3,843
B101-D	264	#5	STR.	53′-5″	14,708
B102-D	198	#7	STR.	60′-0″	24,283
B103-D	264	#5	STR.	40′-0″	11,014
B110-D	96	#7	STR.	40′-0″	7,849
✳G1-D	36	#5	⑦	3′-8″	138
✳K1-D	10	#8	①	20′-8″	552
✳K2-D	10	#8	①	21′-8″	579
✳K3-D	4	#8	②	14′-0″	150
✳K4-D	4	#8	②	14′-6″	155
✳K5-D	18	#6	STR.	7′-10″	212
✳K6-D	18	#6	STR.	9′-0″	243
✳K7-D	6	#6	STR.	3′-1″	28
✳K8-D	6	#6	STR.	3′-10″	35
K100-D	7	#4	STR.	58′-6″	274
K101-D	28	#4	STR.	31′-8″	592
K120-D	24	#4	STR.	5′-10″	94
K121-D	60	#4	STR.	8′-10″	354
K122-D	48	#4	STR.	6′-4″	203
K123-D	120	#4	STR.	9′-4″	748
✳S1-D	108	#5	③	6′-0″	676
✳S3-D	134	#4	④	4′-3″	380
S4-D	900	#4	⑤	2′-9″	1,653
✳S10-D	1488	#5	⑪	5′-5″	8,407
U1-D	126	#4	⑨	17′-4″	1,459
U2-D	36	#4	④	11′-0″	265
✳EPOXY COATED REINF. STEEL (LBS.)					145,852
REINF. STEEL (LBS.)					131,292

REINFORCING BAR SCHEDULE
UNIT E - SPANS 12-14

MARK	NO.	SIZE	TYPE	LENGTH	WEIGHT
✳A1-E	716	#5	STR.	60′-0″	44,807
✳A2-E	478	#5	STR.	12′-6″	6,232
✳A3-E	238	#5	STR.	16′-3″	4,034
A301-E	716	#5	STR.	60′-0″	44,807
A302-E	478	#5	STR.	12′-2″	6,066
A303-E	238	#5	STR.	15′-11″	3,951
✳B1-E	200	#5	STR.	57′-6″	11,995
✳B2-E	100	#7	STR.	60′-0″	12,264
✳B3-E	50	#5	STR.	54′-3″	2,829
✳B10-E	98	#7	STR.	50′-0″	10,016
✳B11-E	98	#7	STR.	40′-0″	8,012
B101-E	312	#5	STR.	52′-2″	16,976
B102-E	156	#7	STR.	60′-0″	19,132
B103-E	156	#5	STR.	37′-10″	6,156
B110-E	50	#7	STR.	40′-0″	4,088
✳G1-E	20	#5	⑦	3′-8″	76
✳G2-E	2	#5	STR.	38′-3″	80
✳J1-E	74	#4	⑫	1′-5″	70
✳K1-E	10	#8	①	24′-9″	661
✳K2-E	10	#8	①	21′-6″	574
✳K3-E	4	#8	②	16′-11″	181
✳K4-E	4	#8	②	15′-4″	164
✳K5-E	12	#6	STR.	6′-10″	123
✳K6-E	18	#6	STR.	8′-10″	239
✳K7-E	6	#6	STR.	3′-11″	35
K100-E	28	#4	STR.	31′-3″	585
K120-E	48	#4	STR.	9′-2″	294
K121-E	120	#4	STR.	6′-2″	494
✳S1-E	108	#5	③	6′-0″	676
✳S2-E	48	#4	④	2′-6″	80
✳S3-E	70	#4	④	4′-4″	203
S4-E	600	#4	⑤	2′-9″	1,102
✳S10-E	941	#5	⑪	5′-5″	5,316
U1-E	84	#4	⑨	17′-0″	954
U2-E	24	#4	④	11′-0″	176
✳EPOXY COATED REINF. STEEL (LBS.)					108,667
REINF. STEEL (LBS.)					104,781

PROJECT NO. U-2524C

GUILFORD COUNTY

STATION: POT 407+85.82 -L-
= POT 29+79.72 -Y4-

SHEET 3 OF 8

STATE OF NORTH CAROLINA
DEPARTMENT OF TRANSPORTATION
RALEIGH

SUPERSTRUCTURE BILL OF MATERIALS

-RIGHT LANE-

NORTH CAROLINA PROFESSIONAL ENGINEER SEAL 28479 ENGINEER KEVIN G. BAILEY 6-7-13

STV / Ralph Whitehead Associates, Inc.
1000 West Morehead St., Ste. 200
Charlotte, NC 28208
NC License No. F-0991

REVISIONS						SHEET NO.
NO.	BY:	DATE:	NO.	BY:	DATE:	S-411
1			3			TOTAL SHEETS
2			4			836

DRAWN BY : VMW DATE : 3-13
CHECKED BY : AJP DATE : 5-13

DESIGN ENGINEER OF RECORD: A. PETER DATE : 5-13

6/6/2013 4:42:23 PM R:\ustation\Finals\Super Bill of Mats Sheet 3 of 8.dgn

REINFORCING BAR SCHEDULE
SPAN 15

MARK	NO.	SIZE	TYPE	LENGTH	WEIGHT
✳A1-15	218	#5	STR.	60′-0″	13,642
✳A2-15	42	#5	STR.	21′-0″	920
✳A3-15	44	#5	STR.	25′-7″	1,174
✳A4-15	44	#5	STR.	30′-3″	1,388
✳A5-15	44	#5	STR.	34′-10″	1,599
✳A6-15	44	#5	STR.	39′-5″	1,809
A301-15	218	#5	STR.	60′-0″	13,642
A302-15	42	#5	STR.	20′-8″	905
A303-15	44	#5	STR.	25′-3″	1,159
A304-15	44	#5	STR.	29′-11″	1,373
A305-15	44	#5	STR.	34′-6″	1,583
A306-15	44	#5	STR.	39′-2″	1,797
✳B1-15	213	#5	STR.	41′-11″	9,312
B101-15	294	#5	STR.	41′-9″	12,802
✳G2-15	2	#5	STR.	38′-3″	80
✳G3-15	2	#5	STR.	49′-9″	104
✳J1-15	171	#4	⑫	1′-5″	162
✳K1-15	16	#8	①	24′-8″	1,054
✳K2-15	2	#8	①	21′-2″	113
✳K3-15	10	#8	①	17′-8″	472
✳K4-15	6	#8	②	16′-8″	267
✳K5-15	2	#8	②	13′-2″	70
✳K7-15	20	#6	STR.	6′-11″	208
✳K8-15	12	#6	STR.	3′-3″	59
✳S1-15	104	#5	③	6′-0″	651
✳S2-15	104	#4	④	2′-6″	174
✳S10-15	148	#5	⑪	5′-5″	836
✳EPOXY COATED REINF. STEEL (LBS.)					34,094
REINF. STEEL (LBS.)					33,261

REINFORCING BAR SCHEDULE
SPAN 16

MARK	NO.	SIZE	TYPE	LENGTH	WEIGHT	MARK	NO.	SIZE	TYPE	LENGTH	WEIGHT
✳A1-16	86	#5	STR.	33′-1″	2,968	✳B1-16	285	#5	STR.	41′-0″	12,187
✳A2-16	86	#5	STR.	35′-7″	3,192						
✳A3-16	86	#5	STR.	38′-2″	3,423	B101-16	207	#5	STR.	40′-9″	8,798
✳A4-16	86	#5	STR.	40′-8″	3,648	B102-16	147	#5	STR.	40′-3″	6,171
✳A5-16	52	#5	STR.	41′-0″	2,224						
✳A6-16	24	#5	STR.	43′-0″	1,076	✳G2-16	2	#5	STR.	49′-8″	104
✳A7-16	4	#5	STR.	44′-7″	186	✳G3-16	1	#5	STR.	60′-0″	63
✳A8-16	4	#5	STR.	42′-1″	176	✳G4-16	1	#5	⑩	17′-2″	18
✳A9-16	4	#5	STR.	39′-6″	165	✳G5-16	1	#5	STR.	50′-0″	52
✳A10-16	4	#5	STR.	37′-0″	154						
✳A11-16	198	#5	STR.	40′-10″	8,433	✳J1-16	210	#4	⑫	1′-5″	199
✳A12-16	1	#5	STR.	37′-0″	39						
✳A13-16	1	#5	STR.	34′-5″	36	✳K1-16	8	#8	①	17′-0″	363
✳A14-16	1	#5	STR.	31′-9″	33	✳K2-16	2	#8	①	19′-2″	102
✳A15-16	1	#5	STR.	29′-2″	30	✳K3-16	10	#8	①	21′-4″	570
✳A16-16	1	#5	STR.	26′-6″	28	✳K4-16	6	#8	①	25′-4″	406
✳A17-16	1	#5	STR.	23′-10″	25	✳K5-16	10	#8	①	22′-4″	596
✳A18-16	1	#5	STR.	21′-3″	22	✳K6-16	2	#8	②	13′-1″	70
✳A19-16	1	#5	STR.	18′-7″	19	✳K71-16	2	#8	②	12′-5″	66
✳A20-16	1	#5	STR.	15′-11″	17	✳K72-16	2	#8	②	12′-4″	66
✳A21-16	1	#5	STR.	13′-4″	14	✳K81-16	2	#8	②	12′-5″	66
✳A22-16	1	#5	STR.	10′-8″	11	✳K82-16	2	#8	②	12′-5″	66
✳A23-16	1	#5	STR.	8′-0″	8	✳K9-16	2	#8	②	15′-3″	81
						✳K10-16	2	#8	②	16′-7″	89
A301-16	86	#5	STR.	32′-9″	2,938	✳K11-16	2	#8	②	15′-8″	84
A302-16	86	#5	STR.	35′-3″	3,162	✳K12-16	10	#6	STR.	2′-10″	43
A303-16	86	#5	STR.	37′-10″	3,394	✳K13-16	12	#6	STR.	5′-0″	90
A304-16	86	#5	STR.	40′-4″	3,618	✳K14-16	8	#6	STR.	7′-3″	87
A305-16	52	#5	STR.	40′-8″	2,206	✳K15-16	12	#6	STR.	5′-9″	104
A306-16	24	#5	STR.	42′-8″	1,068	✳K16-16	2	#6	STR.	6′-0″	18
A307-16	4	#5	STR.	44′-5″	185						
A308-16	4	#5	STR.	41′-11″	175	✳S1-16	137	#5	③	6′-0″	857
A309-16	4	#5	STR.	39′-4″	164	✳S2-16	130	#4	④	2′-6″	217
A310-16	4	#5	STR.	36′-10″	154	✳S3-16	7	#4	④	3′-0″	14
A311-16	198	#5	STR.	40′-10″	8,433	✳S10-16	158	#5	⑪	5′-5″	893
A312-16	1	#5	STR.	37′-0″	39						
A313-16	1	#5	STR.	34′-5″	36						
A314-16	1	#5	STR.	31′-9″	33						
A315-16	1	#5	STR.	29′-2″	30						
A316-16	1	#5	STR.	26′-6″	28						
A317-16	1	#5	STR.	23′-10″	25						
A318-16	1	#5	STR.	21′-3″	22						
A319-16	1	#5	STR.	18′-7″	19						
A320-16	1	#5	STR.	15′-11″	17						
A321-16	1	#5	STR.	13′-4″	14						
A322-16	1	#5	STR.	10′-8″	11	✳EPOXY COATED REINF. STEEL (LBS.)					43,498
A323-16	1	#5	STR.	8′-0″	8	REINF. STEEL (LBS.)					40,748

REINFORCING BAR SCHEDULE
UNIT F - SPANS 17-20

MARK	NO.	SIZE	TYPE	LENGTH	WEIGHT
✳A1-F	885	#5	STR.	43′-0″	39,691
✳A2-F	885	#5	STR.	22′-6″	20,769
A301-F	885	#5	STR.	43′-0″	39,691
A302-F	885	#5	STR.	22′-2″	20,461
✳B1-F	176	#5	STR.	47′-5″	8,704
✳B2-F	132	#6	STR.	60′-0″	11,896
✳B3-F	176	#5	STR.	33′-9″	6,195
✳B10-F	123	#7	STR.	50′-0″	12,571
✳B11-F	123	#7	STR.	40′-0″	10,056
B101-F	56	#6	STR.	47′-6″	3,995
B102-F	220	#5	STR.	47′-1″	10,804
B103-F	207	#7	STR.	60′-0″	25,386
B104-F	56	#6	STR.	33′-11″	2,853
B105-F	220	#5	STR.	33′-3″	7,630
B110-F	18	#7	STR.	60′-0″	2,208
✳G1-F	17	#5	⑦	3′-8″	65
✳G2-F	2	#5	STR.	32′-9″	68
✳J1-F	64	#4	⑫	1′-5″	61
✳K1-F	8	#8	①	24′-10″	530
✳K2-F	8	#8	①	24′-10″	530
✳K3-F	4	#8	②	17′-0″	182
✳K4-F	4	#8	②	16′-10″	180
✳K5-F	10	#6	STR.	6′-10″	103
✳K6-F	15	#6	STR.	9′-6″	214
✳K7-F	6	#6	STR.	3′-11″	35
K100-F	21	#4	STR.	53′-9″	754
K120-F	60	#4	STR.	6′-10″	274
K121-F	150	#4	STR.	9′-10″	985
✳S1-F	80	#5	③	6′-0″	501
✳S2-F	48	#4	④	2′-6″	80
✳S3-F	64	#4	④	3′-10″	164
S4-F	840	#4	⑤	2′-9″	1,543
U1-F	120	#4	⑨	16′-4″	1,309
U2-F	30	#4	④	10′-4″	207
✳EPOXY COATED REINF. STEEL (LBS.)					112,595
REINF. STEEL (LBS.)					118,100

REINFORCING BAR SCHEDULE
UNIT G - SPANS 21-23

MARK	NO.	SIZE	TYPE	LENGTH	WEIGHT
✳A1-G	1558	#5	STR.	43′-0″	69,875
✳A2-G	1558	#5	STR.	22′-6″	36,562
A301-G	1558	#5	STR.	43′-0″	69,875
A302-G	1558	#5	STR.	22′-2″	36,021
✳B1-G	264	#5	STR.	49′-4″	13,584
✳B2-G	756	#6	STR.	55′-0″	62,453
✳B3-G	132	#5	STR.	42′-0″	5,782
B101-G	1120	#5	STR.	53′-1″	62,010
✳G1-G	32	#5	⑦	3′-8″	122
✳K1-G	24	#5	①	15′-10″	396
✳K3-G	12	#5	②	11′-2″	140
✳S6-G	128	#4	⑥	5′-0″	428
✳EPOXY COATED REINF. STEEL (LBS.)					189,342
REINF. STEEL (LBS.)					167,906

R:\ustation\Finals\Super Bill of Mats Sheet 4 of 8.dgn
6/6/2013 4:42:24 PM

DRAWN BY : ACA DATE : 4-13
CHECKED BY : AJP DATE : 5-13

DESIGN ENGINEER OF RECORD: A. PETER DATE : 5-13

STV / Ralph Whitehead Associates, Inc.
1000 West Morehead St., Ste. 200
Charlotte, NC 28208
NC License No. F-0991

NORTH CAROLINA PROFESSIONAL ENGINEER SEAL 28479 ENGINEER KEVIN G. BAILEY 6-7-13

PROJECT NO. U-2524C
GUILFORD COUNTY
STATION: POT 407+85.82 -L-
= POT 29+79.72 -Y4-
SHEET 4 OF 8

STATE OF NORTH CAROLINA
DEPARTMENT OF TRANSPORTATION
RALEIGH

SUPERSTRUCTURE BILL OF MATERIALS

-RIGHT LANE-

REVISIONS						SHEET NO.
NO.	BY:	DATE:	NO.	BY:	DATE:	S-412
1			3			TOTAL SHEETS
2			4			836

REINFORCING BAR SCHEDULE
SPAN 24

MARK	NO.	SIZE	TYPE	LENGTH	WEIGHT	MARK	NO.	SIZE	TYPE	LENGTH	WEIGHT
✳A1-24	149	#5	STR.	43'-0"	6,683	A417-24	1	#5	STR.	17'-2"	18
✳A2-24	149	#5	STR.	22'-6"	3,497	A418-24	1	#5	STR.	16'-7"	17
						A419-24	1	#5	STR.	16'-1"	17
✳A101-24	10	#5	STR.	32'-2"	335	A420-24	1	#5	STR.	15'-6"	16
✳A102-24	10	#5	STR.	30'-9"	321	A421-24	1	#5	STR.	14'-11"	16
✳A103-24	10	#5	STR.	29'-4"	306	A422-24	1	#5	STR.	14'-5"	15
✳A104-24	10	#5	STR.	28'-0"	292	A423-24	1	#5	STR.	13'-10"	14
✳A105-24	10	#5	STR.	26'-7"	277	A424-24	1	#5	STR.	13'-3"	14
✳A106-24	10	#5	STR.	25'-2"	262	A425-24	1	#5	STR.	12'-8"	13
✳A107-24	10	#5	STR.	23'-9"	248	A426-24	1	#5	STR.	12'-2"	13
✳A108-24	10	#5	STR.	22'-4"	233	A427-24	1	#5	STR.	11'-7"	12
✳A109-24	10	#5	STR.	21'-0"	219	A428-24	1	#5	STR.	11'-0"	11
✳A110-24	10	#5	STR.	19'-7"	204	A429-24	1	#5	STR.	10'-6"	11
✳A111-24	10	#5	STR.	18'-2"	189	A430-24	1	#5	STR.	9'-11"	10
✳A112-24	10	#5	STR.	16'-9"	175	A431-24	1	#5	STR.	9'-4"	10
✳A113-24	10	#5	STR.	15'-4"	160	A432-24	1	#5	STR.	8'-10"	9
✳A114-24	10	#5	STR.	14'-0"	146	A433-24	1	#5	STR.	8'-3"	9
✳A115-24	10	#5	STR.	12'-7"	131	A434-24	1	#5	STR.	7'-8"	8
✳A116-24	10	#5	STR.	11'-2"	116	A435-24	1	#5	STR.	7'-2"	7
✳A117-24	1	#5	STR.	15'-0"	16	A436-24	1	#5	STR.	6'-7"	7
✳A118-24	1	#5	STR.	14'-5"	15	A437-24	6	#5	STR.	6'-2"	39
✳A119-24	1	#5	STR.	13'-11"	15	A438-24	5	#5	STR.	5'-2"	27
✳A120-24	1	#5	STR.	13'-4"	14						
✳A121-24	1	#5	STR.	12'-9"	13	✳B1-24	21	#5	STR.	42'-0"	920
✳A122-24	1	#5	STR.	12'-3"	13	✳B2-24	18	#5	STR.	39'-1"	734
✳A123-24	1	#5	STR.	11'-8"	12	✳B3-24	18	#5	STR.	36'-8"	688
✳A124-24	1	#5	STR.	11'-1"	12	✳B4-24	18	#5	STR.	34'-2"	641
✳A125-24	1	#5	STR.	10'-6"	11	✳B5-24	18	#5	STR.	31'-8"	595
✳A126-24	1	#5	STR.	10'-0"	10	✳B6-24	18	#5	STR.	29'-3"	549
✳A127-24	1	#5	STR.	9'-5"	10	✳B7-24	21	#5	STR.	26'-9"	586
✳A128-24	1	#5	STR.	8'-10"	9						
✳A129-24	1	#5	STR.	8'-4"	9	B101-24	15	#5	STR.	41'-6"	649
✳A130-24	1	#5	STR.	7'-9"	8	B102-24	42	#5	STR.	40'-3"	1,763
✳A131-24	1	#5	STR.	7'-2"	7	B103-24	42	#5	STR.	37'-2"	1,628
✳A132-24	1	#5	STR.	6'-8"	7	B104-24	42	#5	STR.	34'-1"	1,493
✳A133-24	1	#5	STR.	6'-1"	6	B105-24	42	#5	STR.	31'-1"	1,362
✳A134-24	1	#5	STR.	5'-6"	6	B106-24	42	#5	STR.	28'-0"	1,227
✳A135-24	1	#5	STR.	5'-0"	5	B107-24	15	#5	STR.	25'-0"	391
✳A136-24	1	#5	STR.	4'-5"	5						
✳A137-24	4	#5	STR.	4'-0"	17	✳G1-24	17	#5	⑦	3'-8"	65
✳A138-24	3	#5	STR.	3'-0"	9	✳G2-24	2	#5	STR.	42'-0"	88
✳A139-24	1	#6	STR.	20'-3"	30						
✳A140-24	1	#6	STR.	21'-3"	32	✳J1-24	82	#4	⑫	1'-5"	78
✳A141-24	1	#6	STR.	22'-3"	33						
						✳K1-24	12	#5	①	15'-10"	198
A301-24	149	#5	STR.	43'-0"	6,683	✳K2-24	12	#5	①	20'-0"	250
A302-24	149	#5	STR.	22'-2"	3,445	✳K3-24	6	#5	②	11'-2"	70
						✳K4-24	6	#5	②	12'-0"	75
A401-24	10	#5	STR.	32'-4"	337						
A402-24	10	#5	STR.	30'-11"	322	✳S6-24	64	#4	⑥	5'-0"	214
A403-24	10	#5	STR.	29'-6"	308	✳S7-24	55	#4	⑥	5'-6"	202
A404-24	10	#5	STR.	28'-2"	294						
A405-24	10	#5	STR.	26'-9"	279						
A406-24	10	#5	STR.	25'-4"	264						
A407-24	10	#5	STR.	23'-11"	249						
A408-24	10	#5	STR.	22'-6"	235						
A409-24	10	#5	STR.	21'-2"	221						
A410-24	10	#5	STR.	19'-9"	206						
A411-24	10	#5	STR.	18'-4"	191						
A412-24	10	#5	STR.	16'-11"	176						
A413-24	10	#5	STR.	15'-6"	162						
A414-24	10	#5	STR.	14'-2"	148						
A415-24	10	#5	STR.	12'-9"	133	✳EPOXY COATED REINF. STEEL (LBS.)					20,071
A416-24	10	#5	STR.	11'-4"	118	REINF. STEEL (LBS.)					22,597

REINFORCING BAR SCHEDULE
UNIT H - SPANS 25 & 26

MARK	NO.	SIZE	TYPE	LENGTH	WEIGHT	MARK	NO.	SIZE	TYPE	LENGTH	WEIGHT	MARK	NO.	SIZE	TYPE	LENGTH	WEIGHT	MARK	NO.	SIZE	TYPE	LENGTH	WEIGHT
✳A1-H	899	#5	STR.	43'-0"	40,319	✳A142-H	10	#5	STR.	32'-7"	340	A301-H	899	#5	STR.	43'-0"	40,319	A442-H	10	#5	STR.	32'-9"	342
✳A2-H	899	#5	STR.	22'-6"	21,097	✳A143-H	10	#5	STR.	30'-11"	322	A302-H	899	#5	STR.	22'-2"	20,785	A443-H	10	#5	STR.	31'-1"	324
						✳A144-H	10	#5	STR.	29'-3"	305							A444-H	10	#5	STR.	29'-5"	307
✳A101-H	10	#5	STR.	32'-2"	335	✳A145-H	10	#5	STR.	27'-7"	288	A401-H	10	#5	STR.	32'-4"	337	A445-H	10	#5	STR.	27'-9"	289
✳A102-H	10	#5	STR.	30'-9"	321	✳A146-H	10	#5	STR.	25'-11"	270	A402-H	10	#5	STR.	30'-11"	322	A446-H	10	#5	STR.	26'-1"	272
✳A103-H	10	#5	STR.	29'-4"	306	✳A147-H	10	#5	STR.	24'-3"	253	A403-H	10	#5	STR.	29'-6"	308	A447-H	10	#5	STR.	24'-5"	255
✳A104-H	10	#5	STR.	28'-0"	292	✳A148-H	10	#5	STR.	22'-7"	236	A404-H	10	#5	STR.	28'-2"	294	A448-H	10	#5	STR.	22'-9"	237
✳A105-H	10	#5	STR.	26'-7"	277	✳A149-H	10	#5	STR.	20'-11"	218	A405-H	10	#5	STR.	26'-9"	279	A449-H	10	#5	STR.	21'-1"	220
✳A106-H	10	#5	STR.	25'-2"	262	✳A150-H	10	#5	STR.	19'-3"	201	A406-H	10	#5	STR.	25'-4"	264	A450-H	10	#5	STR.	19'-5"	203
✳A107-H	10	#5	STR.	23'-9"	248	✳A151-H	10	#5	STR.	17'-7"	183	A407-H	10	#5	STR.	23'-11"	249	A451-H	10	#5	STR.	17'-9"	185
✳A108-H	10	#5	STR.	22'-4"	233	✳A152-H	10	#5	STR.	15'-11"	166	A408-H	10	#5	STR.	22'-6"	235	A452-H	10	#5	STR.	16'-1"	168
✳A109-H	10	#5	STR.	21'-0"	219	✳A153-H	10	#5	STR.	14'-3"	149	A409-H	10	#5	STR.	21'-2"	221	A453-H	10	#5	STR.	14'-5"	150
✳A110-H	10	#5	STR.	19'-7"	204	✳A154-H	10	#5	STR.	12'-7"	131	A410-H	10	#5	STR.	19'-9"	206	A454-H	10	#5	STR.	12'-9"	133
✳A111-H	10	#5	STR.	18'-2"	189	✳A155-H	1	#5	STR.	19'-2"	20	A411-H	10	#5	STR.	18'-4"	191	A455-H	1	#5	STR.	19'-4"	20
✳A112-H	10	#5	STR.	16'-9"	175	✳A156-H	1	#5	STR.	18'-6"	19	A412-H	10	#5	STR.	16'-11"	176	A456-H	1	#5	STR.	18'-8"	19
✳A113-H	10	#5	STR.	15'-4"	160	✳A157-H	1	#5	STR.	17'-10"	19	A413-H	10	#5	STR.	15'-6"	162	A457-H	1	#5	STR.	18'-0"	19
✳A114-H	10	#5	STR.	14'-0"	146	✳A158-H	1	#5	STR.	17'-2"	18	A414-H	10	#5	STR.	14'-2"	148	A458-H	1	#5	STR.	17'-4"	18
✳A115-H	10	#5	STR.	12'-7"	131	✳A159-H	1	#5	STR.	14'-9"	15	A415-H	10	#5	STR.	12'-9"	133	A459-H	1	#5	STR.	16'-9"	17
✳A116-H	10	#5	STR.	11'-2"	116	✳A160-H	1	#5	STR.	14'-1"	15	A416-H	10	#5	STR.	11'-4"	118	A460-H	1	#5	STR.	16'-1"	17
✳A117-H	1	#5	STR.	15'-0"	16	✳A161-H	1	#5	STR.	13'-5"	14	A417-H	1	#5	STR.	17'-2"	18	A461-H	1	#5	STR.	15'-5"	16
✳A118-H	1	#5	STR.	14'-5"	15	✳A162-H	1	#5	STR.	12'-9"	13	A418-H	1	#5	STR.	16'-7"	17	A462-H	1	#5	STR.	14'-9"	15
✳A119-H	1	#5	STR.	13'-11"	15	✳A163-H	1	#5	STR.	12'-0"	13	A419-H	1	#5	STR.	16'-1"	17	A463-H	1	#5	STR.	14'-0"	15
✳A120-H	1	#5	STR.	13'-4"	14	✳A164-H	1	#5	STR.	11'-4"	12	A420-H	1	#5	STR.	15'-6"	16	A464-H	1	#5	STR.	13'-4"	14
✳A121-H	1	#5	STR.	12'-9"	13	✳A165-H	1	#5	STR.	10'-9"	11	A421-H	1	#5	STR.	14'-11"	16	A465-H	1	#5	STR.	12'-9"	13
✳A122-H	1	#5	STR.	12'-3"	13	✳A166-H	1	#5	STR.	10'-0"	10	A422-H	1	#5	STR.	14'-5"	15	A466-H	1	#5	STR.	12'-0"	13
✳A123-H	1	#5	STR.	11'-8"	12	✳A167-H	1	#5	STR.	9'-4"	10	A423-H	1	#5	STR.	13'-10"	14	A467-H	1	#5	STR.	11'-4"	12
✳A124-H	1	#5	STR.	11'-1"	12	✳A168-H	1	#5	STR.	8'-8"	9	A424-H	1	#5	STR.	13'-3"	14	A468-H	1	#5	STR.	10'-8"	11
✳A125-H	1	#5	STR.	10'-6"	11	✳A169-H	1	#5	STR.	8'-0"	8	A425-H	1	#5	STR.	12'-8"	13	A469-H	1	#5	STR.	10'-0"	10
✳A126-H	1	#5	STR.	10'-0"	10	✳A170-H	1	#5	STR.	7'-4"	8	A426-H	1	#5	STR.	12'-2"	13	A470-H	1	#5	STR.	9'-4"	10
✳A127-H	1	#5	STR.	9'-5"	10	✳A171-H	1	#5	STR.	6'-8"	7	A427-H	1	#5	STR.	11'-7"	12	A471-H	1	#5	STR.	8'-8"	9
✳A128-H	1	#5	STR.	8'-10"	9	✳A172-H	1	#5	STR.	6'-0"	6	A428-H	1	#5	STR.	11'-0"	11	A472-H	1	#5	STR.	8'-0"	8
✳A129-H	1	#5	STR.	8'-4"	9	✳A173-H	1	#5	STR.	5'-4"	6	A429-H	1	#5	STR.	10'-6"	11	A473-H	1	#5	STR.	7'-4"	8
✳A130-H	1	#5	STR.	7'-9"	8	✳A174-H	1	#5	STR.	4'-8"	5	A430-H	1	#5	STR.	9'-11"	10	A474-H	1	#5	STR.	6'-8"	7
✳A131-H	1	#5	STR.	7'-2"	7	✳A175-H	3	#5	STR.	4'-0"	13	A431-H	1	#5	STR.	9'-4"	10	A475-H	5	#5	STR.	6'-0"	31
✳A132-H	1	#5	STR.	6'-8"	7	✳A176-H	3	#5	STR.	3'-0"	9	A432-H	1	#5	STR.	8'-10"	9	A476-H	5	#5	STR.	5'-0"	26
✳A133-H	1	#5	STR.	6'-1"	6	✳A177-H	1	#6	STR.	18'-4"	28	A433-H	1	#5	STR.	8'-3"	9						
✳A134-H	1	#5	STR.	5'-6"	6	✳A178-H	1	#6	STR.	19'-5"	29	A434-H	1	#5	STR.	7'-8"	8	✳B1-H	264	#5	STR.	53'-0"	14,594
✳A135-H	1	#5	STR.	5'-0"	5	✳A179-H	1	#6	STR.	20'-6"	31	A435-H	1	#5	STR.	7'-2"	7	✳B2-H	378	#6	STR.	55'-0"	31,227
✳A136-H	1	#5	STR.	4'-5"	5							A436-H	1	#5	STR.	6'-7"	7						
✳A137-H	4	#5	STR.	4'-0"	17							A437-H	6	#5	STR.	6'-2"	39	B101-H	720	#5	STR.	53'-0"	39,801
✳A138-H	3	#5	STR.	3'-0"	9							A438-H	5	#5	STR.	5'-2"	27						
✳A139-H	1	#6	STR.	20'-3"	30													✳G1-H	18	#5	⑦	4'-0"	75
✳A140-H	1	#6	STR.	21'-3"	32													✳G2-H	2	#5	STR.	43'-0"	90
✳A141-H	1	#6	STR.	22'-3"	33																		
																		✳J1-H	82	#4	12	1'-5"	78
																		✳K1-H	12	#5	①	20'-3"	253
																		✳K2-H	12	#5	①	19'-1"	239
																		✳K3-H	6	#5	②	14'-4"	90
																		✳K4-H	6	#5	②	13'-7"	85
																		✳S6-H	76	#4	⑥	6'-7"	334
																		✳S7-H	55	#4	⑥	6'-4"	233
																		✳EPOXY COATED REINF. STEEL (LBS.)					116,062
																		REINF. STEEL (LBS.)					108,274

PROJECT NO. U-2524C

GUILFORD COUNTY

STATION: POT 407+85.82 -L-
= POT 29+79.72 -Y4-

SHEET 5 OF 8

STATE OF NORTH CAROLINA
DEPARTMENT OF TRANSPORTATION
RALEIGH

SUPERSTRUCTURE BILL OF MATERIALS

-RIGHT LANE-

NORTH CAROLINA PROFESSIONAL SEAL 28479 ENGINEER KEVIN G. BAILEY 6-7-13

DRAWN BY : ACA DATE : 4-13
CHECKED BY : AJP DATE : 5-13

DESIGN ENGINEER OF RECORD: A. PETER DATE : 5-13

STV / Ralph Whitehead Associates, Inc.
1000 West Morehead St., Ste. 200
Charlotte, NC 28208
NC License No. F-0991

REVISIONS						SHEET NO.
NO.	BY:	DATE:	NO.	BY:	DATE:	S-413
1			3			TOTAL SHEETS
2			4			836

6/6/2013 4:42:25 PM R:\ustation\Finals\Super Bill of Mats Sheet 5 of 8.dgn

REINFORCING BAR SCHEDULE
UNIT I - SPANS 27-30

MARK	NO.	SIZE	TYPE	LENGTH	WEIGHT
✳A1-I	754	#5	STR.	43′-0″	33,816
✳A2-I	754	#5	STR.	22′-6″	17,694
✳A100-I	10	#5	STR.	32′-4″	337
✳A101-I	10	#5	STR.	30′-4″	316
✳A102-I	10	#5	STR.	28′-4″	296
✳A103-I	10	#5	STR.	26′-4″	275
✳A104-I	10	#5	STR.	24′-4″	254
✳A105-I	10	#5	STR.	22′-4″	233
✳A106-I	10	#5	STR.	20′-4″	212
✳A107-I	10	#5	STR.	18′-4″	191
✳A108-I	10	#5	STR.	16′-4″	170
✳A109-I	10	#5	STR.	14′-4″	149
✳A110-I	10	#5	STR.	12′-4″	129
✳A111-I	1	#5	STR.	15′-3″	16
✳A112-I	1	#5	STR.	14′-5″	15
✳A113-I	1	#5	STR.	13′-8″	14
✳A114-I	1	#5	STR.	12′-10″	13
✳A115-I	1	#5	STR.	12′-0″	13
✳A116-I	1	#5	STR.	11′-2″	12
✳A117-I	1	#5	STR.	10′-3″	11
✳A118-I	1	#5	STR.	9′-7″	10
✳A119-I	1	#5	STR.	8′-9″	9
✳A120-I	1	#5	STR.	8′-0″	8
✳A121-I	1	#5	STR.	7′-2″	7
✳A122-I	1	#5	STR.	6′-4″	7
✳A123-I	1	#5	STR.	5′-6″	6
✳A124-I	3	#5	STR.	4′-9″	15
✳A125-I	3	#5	STR.	4′-0″	13
✳A126-I	1	#6	STR.	19′-3″	29
✳A127-I	1	#6	STR.	20′-3″	30
✳A128-I	1	#6	STR.	21′-3″	32
✳A129-I	8	#5	STR.	32′-0″	267
✳A130-I	8	#5	STR.	29′-6″	246
✳A131-I	8	#5	STR.	27′-1″	226
✳A132-I	8	#5	STR.	24′-9″	207
✳A133-I	8	#5	STR.	22′-4″	186
✳A134-I	8	#5	STR.	19′-11″	166
✳A135-I	8	#5	STR.	17′-7″	147
✳A136-I	8	#5	STR.	15′-2″	127
✳A137-I	8	#5	STR.	12′-7″	105
✳A138-I	8	#5	STR.	10′-2″	85
✳A139-I	1	#5	STR.	13′-0″	14
✳A140-I	1	#5	STR.	11′-9″	12
✳A141-I	1	#5	STR.	10′-6″	11
✳A142-I	1	#5	STR.	9′-3″	10
✳A143-I	1	#5	STR.	8′-0″	8
✳A144-I	1	#5	STR.	6′-9″	7
✳A145-I	3	#5	STR.	5′-9″	18
✳A146-I	3	#5	STR.	4′-6″	14

MARK	NO.	SIZE	TYPE	LENGTH	WEIGHT
A301-I	754	#5	STR.	43′-0″	33,816
A302-I	754	#5	STR.	22′-2″	17,432
A400-I	10	#5	STR.	32′-2″	335
A401-I	10	#5	STR.	30′-2″	315
A402-I	10	#5	STR.	28′-2″	294
A403-I	10	#5	STR.	26′-2″	273
A404-I	10	#5	STR.	24′-2″	252
A405-I	10	#5	STR.	22′-2″	231
A406-I	10	#5	STR.	20′-2″	210
A407-I	10	#5	STR.	18′-2″	189
A408-I	10	#5	STR.	16′-2″	169
A409-I	10	#5	STR.	14′-2″	148
A410-I	10	#5	STR.	12′-2″	127
A411-I	1	#5	STR.	17′-2″	18
A412-I	1	#5	STR.	16′-4″	17
A413-I	1	#5	STR.	15′-6″	16
A414-I	1	#5	STR.	14′-8″	15
A415-I	1	#5	STR.	13′-10″	14
A416-I	1	#5	STR.	13′-0″	14
A417-I	1	#5	STR.	12′-1″	13
A418-I	1	#5	STR.	11′-5″	12
A419-I	1	#5	STR.	10′-7″	11
A420-I	1	#5	STR.	9′-10″	10
A421-I	1	#5	STR.	9′-0″	9
A422-I	1	#5	STR.	8′-3″	9
A423-I	1	#5	STR.	7′-5″	8
A424-I	4	#5	STR.	6′-6″	27
A425-I	4	#5	STR.	5′-6″	23
A429-I	8	#5	STR.	32′-4″	270
A430-I	8	#5	STR.	29′-10″	249
A431-I	8	#5	STR.	27′-5″	229
A432-I	8	#5	STR.	25′-1″	209
A433-I	8	#5	STR.	22′-8″	189
A434-I	8	#5	STR.	20′-3″	169
A435-I	8	#5	STR.	17′-11″	149
A436-I	8	#5	STR.	15′-6″	129
A437-I	8	#5	STR.	12′-11″	108
A438-I	8	#5	STR.	10′-6″	88
A439-I	1	#5	STR.	13′-10″	14
A440-I	1	#5	STR.	12′-8″	13
A441-I	1	#5	STR.	11′-5″	12
A442-I	1	#5	STR.	10′-2″	11
A443-I	1	#5	STR.	9′-0″	9
A444-I	1	#5	STR.	7′-9″	8
A445-I	3	#5	STR.	6′-0″	19
A446-I	3	#5	STR.	5′-0″	16

MARK	NO.	SIZE	TYPE	LENGTH	WEIGHT
✳B1-I	88	#5	STR.	45′-6″	4,176
✳B2-I	132	#6	STR.	60′-0″	11,896
✳B3-I	44	#5	STR.	42′-1″	1,931
✳B4-I	44	#5	STR.	49′-2″	2,256
✳B5-I	44	#6	STR.	23′-0″	1,520
✳B6-I	88	#5	STR.	39′-4″	3,610
✳B10-I	123	#7	STR.	40′-0″	10,056
✳B11-I	123	#7	STR.	30′-0″	7,542
B101-I	128	#5	STR.	42′-8″	5,696
B102-I	192	#6	STR.	60′-0″	17,303
B103-I	64	#5	STR.	46′-5″	3,098
B104-I	64	#5	STR.	58′-6″	3,905
B105-I	128	#5	STR.	44′-0″	5,874
B110-I	18	#7	STR.	50′-0″	1,840
✳G1-I	20	#5	⑦	4′-0″	83
✳G2-I	2	#5	STR.	35′-8″	74
✳J1-I	70	#4	⑫	1′-5″	66
✳K1-I	8	#8	①	29′-3″	625
✳K2-I	8	#8	①	26′-10″	573
✳K3-I	2	#8	②	18′-3″	97
✳K4-I	4	#8	②	17′-2″	183
✳K5-I	2	#8	②	19′-9″	105
✳K6-I	5	#6	STR.	12′-3″	92
✳K7-I	5	#6	STR.	11′-2″	84
✳K8-I	5	#6	STR.	10′-1″	76
✳K9-I	5	#6	STR.	10′-3″	77
✳K10-I	5	#6	STR.	9′-4″	70
✳K11-I	5	#6	STR.	8′-5″	63
✳K31-I	3	#6	STR.	3′-3″	15
✳K51-I	1	#6	STR.	4′-0″	6
✳K52-I	1	#6	STR.	5′-0″	8
✳K53-I	1	#6	STR.	6′-0″	9
K100-I	28	#4	⑧	15′-9″	295
K101-I	28	#4	⑧	15′-5″	288
K102-I	28	#4	⑧	15′-1″	282
K103-I	14	#4	⑩	7′-11″	74
K104-I	14	#4	⑩	7′-9″	72
K105-I	14	#4	⑩	7′-7″	71
K120-I	20	#4	STR.	8′-2″	109
K121-I	50	#4	STR.	11′-9″	392
K122-I	20	#4	STR.	8′-0″	107
K123-I	50	#4	STR.	11′-6″	384
K124-I	20	#4	STR.	7′-10″	105
K125-I	50	#4	STR.	11′-3″	376
✳S1-I	100	#5	③	7′-8″	800
✳S2-I	76	#4	④	4′-0″	203
✳S3-I	45	#4	④	3′-4″	100
S4-I	840	#4	⑤	3′-5″	1,917
✳S10-I	912	#5	⑪	5′-5″	5,152
U1-I	120	#4	⑨	19′-4″	1,550
U2-I	30	#4	④	11′-2″	224

✳EPOXY COATED REINF. STEEL (LBS.)	107,736
REINF. STEEL (LBS.)	99,860

PROJECT NO. U-2524C

GUILFORD COUNTY

STATION: POT 407+85.82 -L-
= POT 29+79.72 -Y4-

SHEET 6 OF 8

NORTH CAROLINA PROFESSIONAL SEAL 28479 ENGINEER KEVIN G. BAILEY
6-7-13

STATE OF NORTH CAROLINA
DEPARTMENT OF TRANSPORTATION
RALEIGH

SUPERSTRUCTURE
BILL OF MATERIALS

-RIGHT LANE-

DRAWN BY : ACA DATE : 4-13
CHECKED BY : AJP DATE : 5-13

DESIGN ENGINEER OF RECORD: A. PETER DATE : 5-13

STV / Ralph Whitehead Associates, Inc.
1000 West Morehead St., Ste. 200
Charlotte, NC 28208
NC License No. F-0991

REVISIONS						SHEET NO.
NO.	BY:	DATE:	NO.	BY:	DATE:	S-414
1			3			TOTAL SHEETS
2			4			836

6/6/2013 4:42:26 PM R:\station\Finals\Super Bill of Mats Sheet 6 of 8.dgn

BAR BENDING DIMENSIONS

MARK	TYPE	A	B	C	D	E
K1-A	①	8′-4″	4′-3″	8′-4″		
K1-B	①	8′-4″	4′-3″	8′-4″		
K2-B	①	12′-11″	5′-2″	12′-2″		
K1-5	①	8′-3″	3′-3″	8′-3″		
K1-C	①	13′-1″	5′-6″	12′-6″		
K2-C	①	8′-4″	1′-4″	8′-4″		
K1-D	①	7′-6″	1′-4″	7′-6″		
K2-D	①	8′-0″	1′-4″	8′-0″		
K1-E	①	8′-1″	4′-3″	8′-1″		
K2-E	①	7′-11″	1′-4″	7′-11″		
K1-15	①	8′-0″	4′-4″	8′-0″		
K2-15	①	8′-0″	4′-4″	4′-6″		
K3-15	①	4′-6″	4′-4″	4′-6″		
K1-16	①	4′-2″	4′-4″	4′-2″		
K2-16	①	6′-4″	4′-4″	4′-2″		
K3-16	①	6′-4″	4′-4″	6′-4″		
K4-16	①	8′-5″	4′-2″	8′-5″		
K5-16	①	6′-11″	4′-2″	6′-11″		
K1-F	①	8′-2″	4′-2″	8′-2″		
K2-F	①	9′-5″	1′-8″	9′-5″		
K1-G	①	6′-0″	2′-0″	6′-0″		
K1-24	①	6′-0″	2′-0″	6′-0″		
K2-24	①	7′-11″	2′-4″	7′-11″		
K1-H	①	7′-5″	2′-7″	7′-5″		
K2-H	①	6′-10″	2′-7″	6′-10″		
K1-I	①	10′-1″	3′-3″	11′-7″		
K2-I	①	9′-0″	4′-6″	9′-0″		
K3-A	②				8′-4″	5′-9″
K3-B	②				5′-9″	8′-4″
K4-B	②				7′-7″	12′-6″
K3-5	②				8′-3″	6′-9″
K3-C	②				8′-6″	13′-1″
K4-C	②				8′-4″	4′-3″
K3-D	②				7′-6″	4′-4″
K4-D	②				8′-0″	4′-4″
K3-E	②				8′-1″	6′-8″
K4-E	②				7′-11″	5′-3″
K4-15	②				8′-0″	6′-6″
K5-15	②				4′-6″	6′-6″
K6-16	②				6′-9″	4′-2″
K71-16	②				7′-7″	2′-8″
K72-16	②				6′-11″	3′-3″
K81-16	②				8′-5″	2′-0″
K82-16	②				7′-2″	3′-1″
K9-16	②				6′-9″	6′-4″
K10-16	②				8′-5″	6′-0″
K11-16	②				6′-11″	6′-7″
K3-F	②				8′-2″	6′-8″
K4-F	②				9′-5″	5′-3″
K3-G	②				6′-0″	4′-3″
K3-24	②				6′-0″	4′-3″
K4-24	②				7′-11″	3′-2″
K3-H	②				7′-5″	5′-6″
K4-H	②				6′-10″	5′-4″
K3-I	②				10′-1″	6′-0″
K4-I	②				9′-0″	6′-0″
K5-I	②				11′-7″	6′-0″

BAR BENDING DIMENSIONS

MARK	TYPE	F	G	H	I	J	K	L	M	N	O	P
S2-A	④	10″	9″									
U2-A	④	4′-6″	2′-0″									
S2-B	④	10″	9″									
S3-B	④	1′-9″	9″									
U2-B	④	4′-6″	2′-2″									
S2-C	④	1′-9″	10″									
S3-C	④	10″	10″									
U2-C	④	4′-6″	2′-8″									
U4-C	④	4′-6″	2′-0″									
S3-D	④	1′-8″	11″									
U2-D	④	4′-6″	2′-0″									
S2-E	④	10″	10″									
S3-E	④	1′-9″	10″									
U2-E	④	4′-6″	2′-0″									
S2-15	④	10″	10″									
S2-16	④	10″	10″									
S3-16	④	1′-1″	10″									
S2-F	④	10″	10″									
S3-F	④	1′-6″	10″									
U2-F	④	4′-2″	2′-0″									
S2-I	④	1′-7″	10″									
S3-I	④	1′-3″	10″									
U2-I	④	4′-3″	2′-8″									
K100-B	⑧			5′-3″	4′-0″	5′-3″	2′-0″					
K100-C	⑧			5′-8″	4′-0″	5′-8″	2′-8″					
K100-I	⑧			6′-0″	3′-9″	6′-0″	2′-7″					
K101-I	⑧			5′-10″	3′-9″	5′-10″	2′-5″					
K102-I	⑧			5′-8″	3′-9″	5′-8″	2′-3″					
U1-A	⑨							6′-7″	2′-0″			
U1-B	⑨							6′-7″	2′-2″			
U1-C	⑨							6′-8″	2′-8″			
U3-C	⑨							6′-8″	2′-0″			
U1-D	⑨							7′-0″	2′-0″			
U1-E	⑨							6′-10″	2′-0″			
U1-F	⑨							6′-6″	2′-0″			
U1-I	⑨							6′-8″	2′-8″			
K101-B	⑩									5′-3″	2′-0″	1′-0″
K101-C	⑩									5′-8″	2′-0″	1′-4″
G4-16	⑩									11′-0″	6′-2″	1′-3½″
K103-I	⑩									6′-0″	1′-11″	1′-4″
K104-I	⑩									5′-10″	1′-11″	1′-3″
K105-I	⑩									5′-8″	1′-11″	1′-2″

SUPERSTRUCTURE REINFORCING STEEL LENGTHS ARE BASED ON THE FOLLOWING MINIMUM SPLICE LENGTHS

BAR SIZE	SUPERSTRUCTURE EXCEPT APPROACH SLABS, PARAPET, AND BARRIER RAIL		APPROACH SLABS		PARAPET AND BARRIER RAIL
	EPOXY COATED	UNCOATED	EPOXY COATED	UNCOATED	
#4	2′-0″	1′-9″	2′-0″	1′-9″	2′-9″
#5	2′-6″	2′-2″	2′-6″	2′-2″	3′-5″
#6	3′-0″	2′-7″	3′-10″	2′-7″	4′-4″
#7	5′-3″	3′-6″			
#8	6′-10″	4′-7″			

BAR TYPES

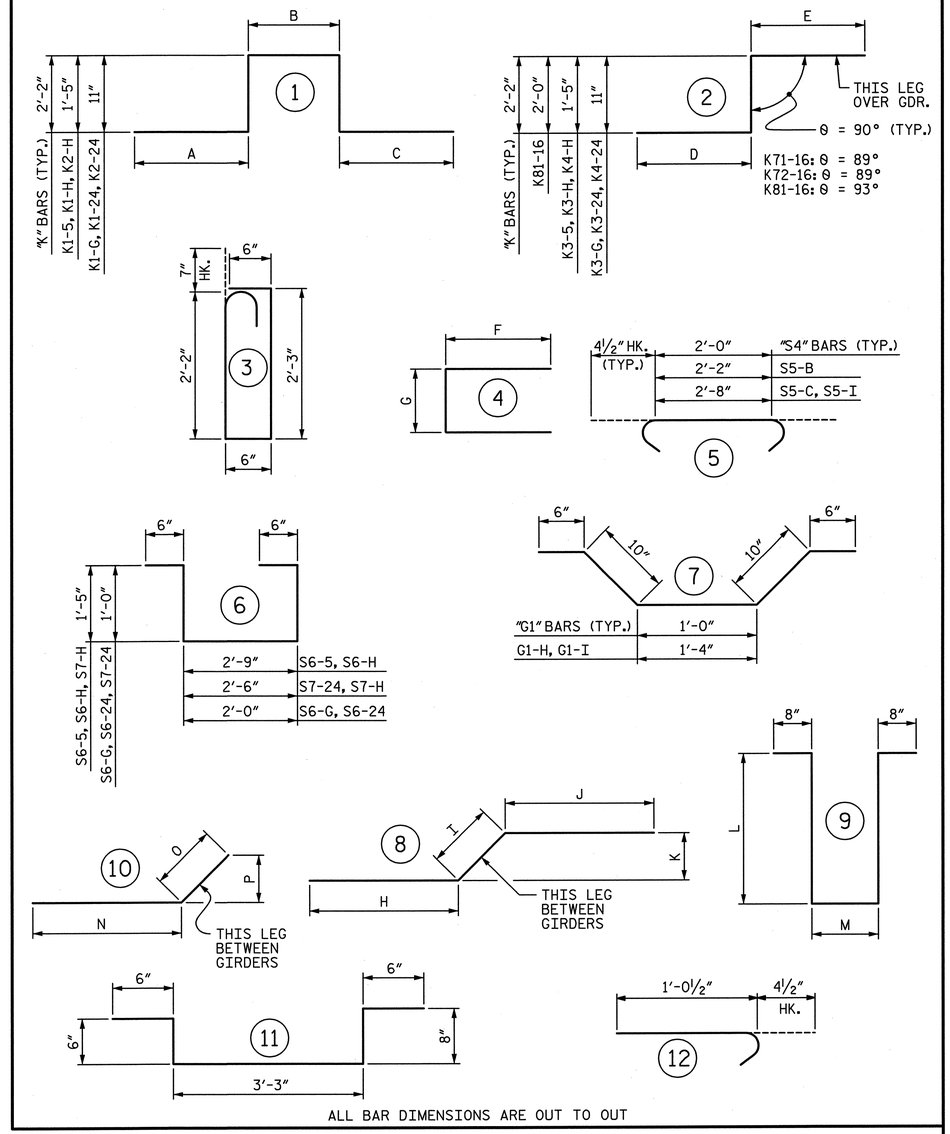

ALL BAR DIMENSIONS ARE OUT TO OUT

PROJECT NO. U-2524C

GUILFORD COUNTY

STATION: POT 407+85.82 -L-
= POT 29+79.72 -Y4-

SHEET 7 OF 8

STATE OF NORTH CAROLINA
DEPARTMENT OF TRANSPORTATION
RALEIGH

SUPERSTRUCTURE BILL OF MATERIALS

-RIGHT LANE-

NORTH CAROLINA PROFESSIONAL SEAL 28479 ENGINEER KEVIN G. BAILEY 6-7-13

STV / Ralph Whitehead Associates, Inc.
1000 West Morehead St., Ste. 200
Charlotte, NC 28208
NC License No. F-0991

REVISIONS						SHEET NO.
NO.	BY:	DATE:	NO.	BY:	DATE:	S-415
1			3			TOTAL SHEETS
2			4			836

DRAWN BY : ACA DATE : 4-13
CHECKED BY : AJP DATE : 5-13

DESIGN ENGINEER OF RECORD: A. PETER DATE : 5-13

6/6/2013 4:42:28 PM R:\station\Finals\Super Bill of Mats Sheet 7 of 8.dgn

SUPERSTRUCTURE BILL OF MATERIAL

UNIT/ SPAN	CLASS AA CONCRETE (CU. YDS.)	EPOXY COATED STEEL REINFORCING (LBS.)	STEEL REINFORCING (LBS.)	REINF. CONCRETE DECK SLAB (SQ. FT.)	GROOVING BRIDGE FLOORS (SQ. FT.)
A	414.9	41,254	40,241	11,459.4	10,308.6
B	472.7	50,296	45,901	12,689.1	11,410.9
5	493.1	41,812	47,296	12,543.7	11,275.5
C	674.0	69,577	62,585	17,378.6	15,638.4
D	1,347.6	145,852	131,292	35,735.1	32,447.3
E	1,016.5	108,667	104,781	27,433.5	24,991.4
15	383.3	34,094	33,261	10,140.4	9,359.3
16	465.3	43,498	40,748	12,725.5	11,334.4
F	1,097.6	112,595	118,100	30,345.5	27,326.8
G	1,602.6	189,342	167,906	45,197.4	40,712.3
24	217.3	20,071	22,597	5,951.7	5,338.7
H	1,055.2	116,062	108,274	28,914.2	26,020.5
I	1,110.7	107,736	99,860	27,729.1	24,968.1
TOTAL*	10,350.9	1,080,858	1,022,842	278,243.2	251,132.2

*QUANTITIES FOR CONCRETE BARRIER RAIL ARE NOT INCLUDED

GROOVING BRIDGE FLOORS

APPROACH SLABS	3,694.0 SQ.FT.
BRIDGE DECK	251,132.2 SQ.FT.
TOTAL	254,826.2 SQ.FT.

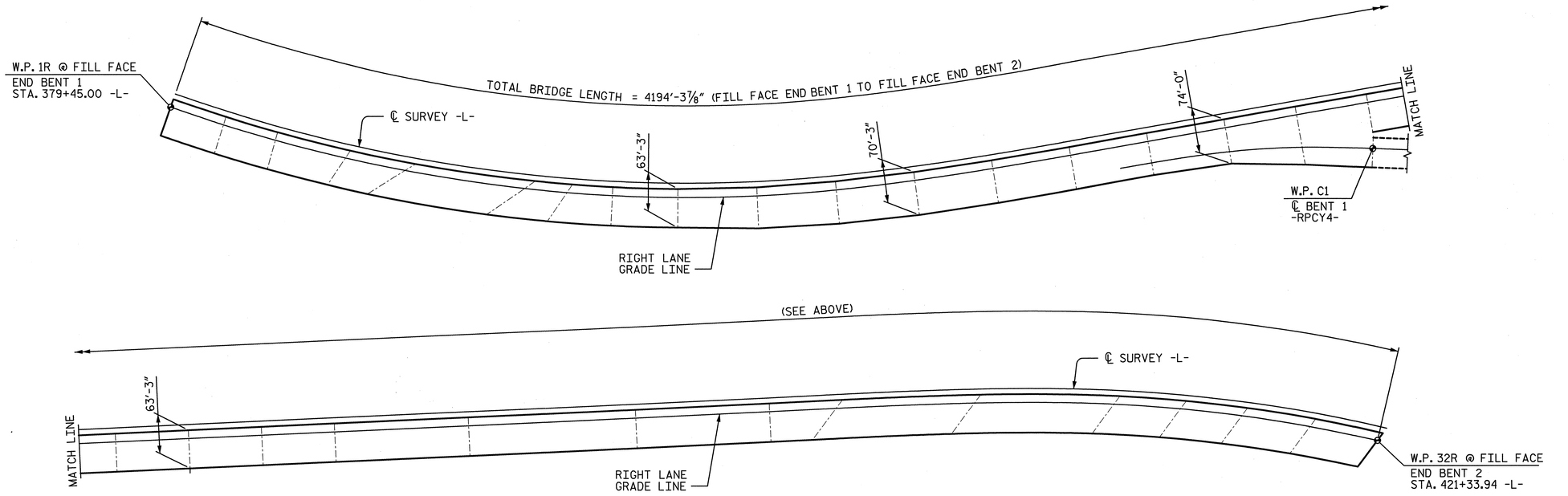

LAYOUT FOR COMPUTING AREA OF REINFORCED CONCRETE DECK SLAB

(SQ. FT. = 278,243.2)

PROJECT NO. U-2524C

GUILFORD COUNTY

STATION: POT 407+85.82 -L-
= POT 29+79.72 -Y4-

SHEET 8 OF 8

STATE OF NORTH CAROLINA
DEPARTMENT OF TRANSPORTATION
RALEIGH

SUPERSTRUCTURE
BILL OF MATERIALS

-RIGHT LANE-

NORTH CAROLINA PROFESSIONAL ENGINEER SEAL 28479 ENGINEER KEVIN G. BAILEY 6-7-13

STV/ Ralph Whitehead Associates, Inc.
1000 West Morehead St., Ste. 200
Charlotte, NC 28208
NC License No. F-0991

REVISIONS						SHEET NO.
NO.	BY:	DATE:	NO.	BY:	DATE:	S-416
1			3			TOTAL SHEETS
2			4			836

DRAWN BY : ACA DATE : 4-13
CHECKED BY : AJP DATE : 5-13

DESIGN ENGINEER OF RECORD: A. PETER DATE : 5-13

6/6/2013 11:00:33 PM R:\ustation\Finals\Super Bill of Mats Sheet 8 of 8.dgn

NOTES:

SEE SHEET 3 OF 3 FOR NOTES.

SEE SHEET 3 OF 3 FOR SECTIONS A-A AND B-B.

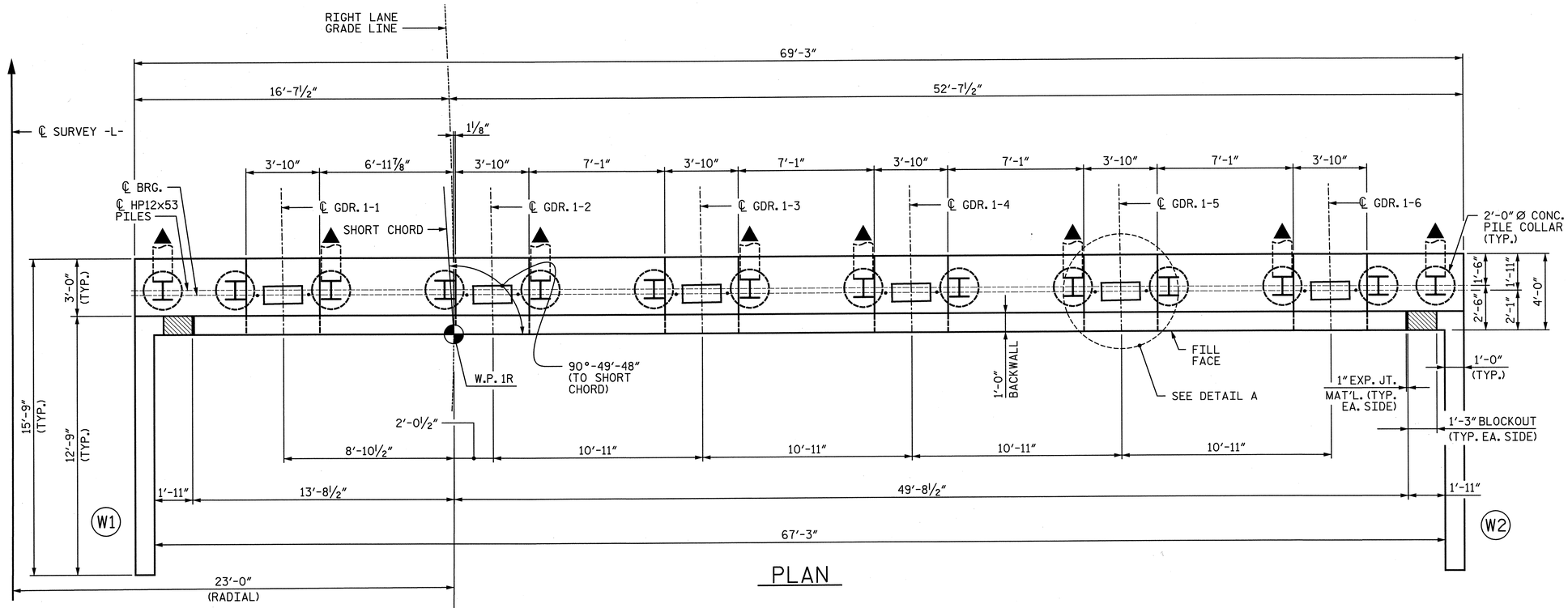

PLAN

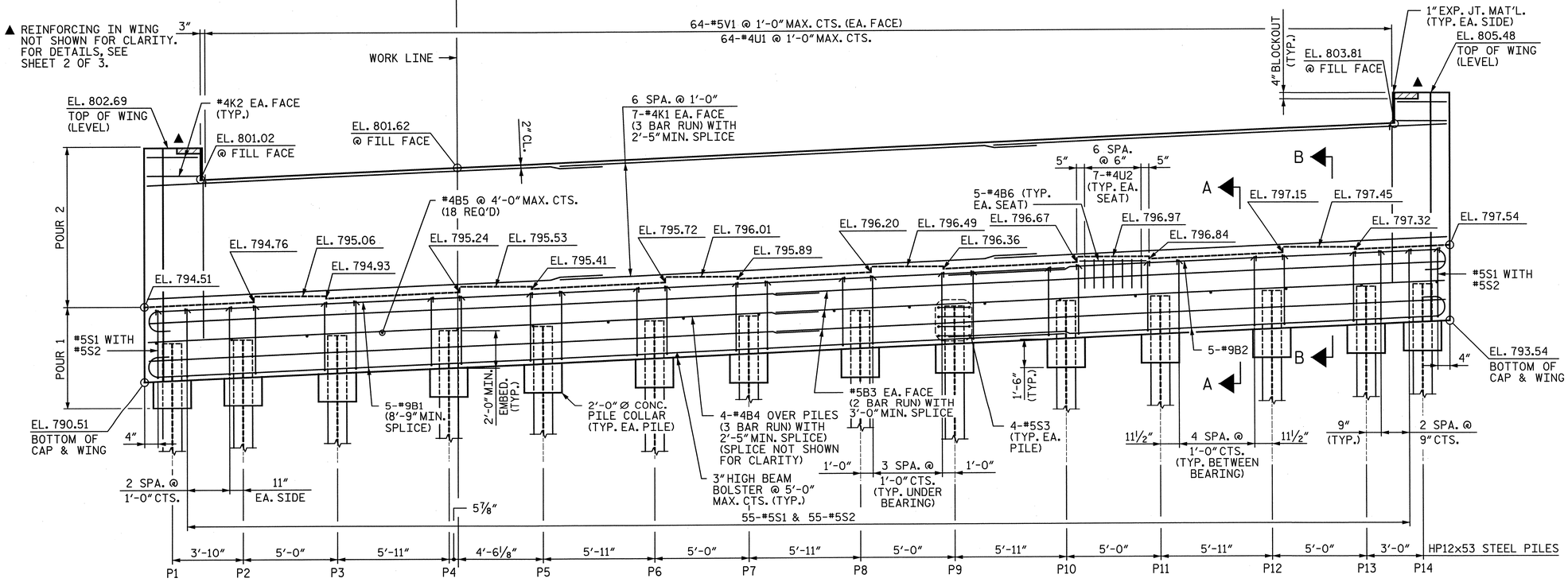

ELEVATION

(LOOKING IN THE DIRECTION OF STATIONING)

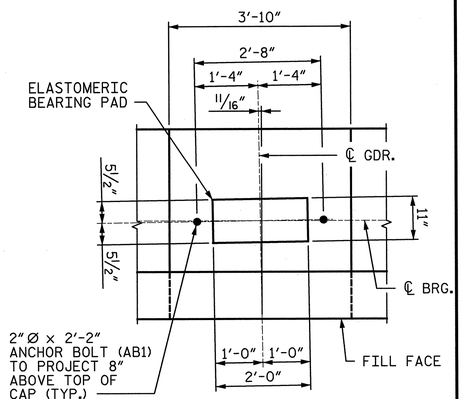

DETAIL A

(TYP. EA. GIRDER)

TOP OF PILE ELEVATIONS
(BASED ON 2'-0" EMBEDMENT)

PILE	ELEVATION
P1	792.57
P2	792.74
P3	792.96
P4	793.21
P5	793.43
P6	793.69
P7	793.91
P8	794.17
P9	794.39
P10	794.65
P11	794.87
P12	795.13
P13	795.35
P14	795.48

NORTH CAROLINA PROFESSIONAL ENGINEER SEAL 28479 ENGINEER KEVIN G. BAILEY 6-7-13

PROJECT NO. U-2524C

GUILFORD COUNTY

STATION: POT 407+85.82 -L-
= POT 29+79.72 -Y4-

SHEET 1 OF 3

STATE OF NORTH CAROLINA
DEPARTMENT OF TRANSPORTATION
RALEIGH

SUBSTRUCTURE
END BENT 1

-RIGHT LANE-

REVISIONS						SHEET NO.
NO.	BY:	DATE:	NO.	BY:	DATE:	S-417
1			3			TOTAL SHEETS
2			4			836

DRAWN BY : CLG DATE : 2-13
CHECKED BY : KGB DATE : 2-13

DESIGN ENGINEER OF RECORD: K. BAILEY DATE : 5-13

STV / Ralph Whitehead Associates, Inc.
1000 West Morehead St., Ste. 200
Charlotte, NC 28208
NC License No. F-0991

R:\ustation\Finals\End Bent 1- Sheet 1of 3.dgn
6:13:46 AM
6/7/2013

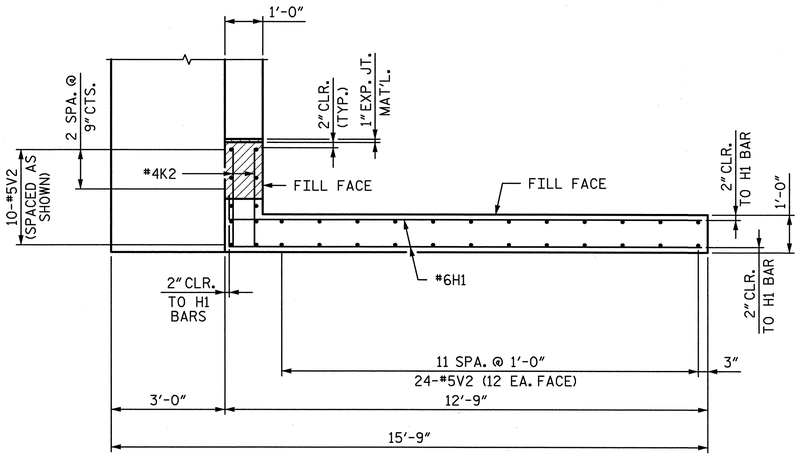

PLAN (W1)

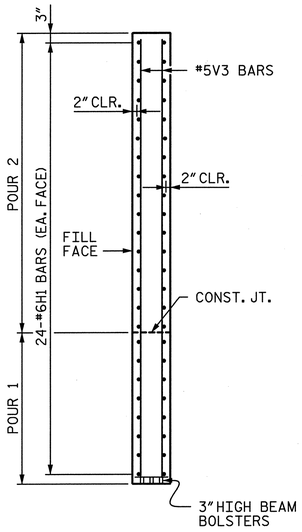

SECTION D-D

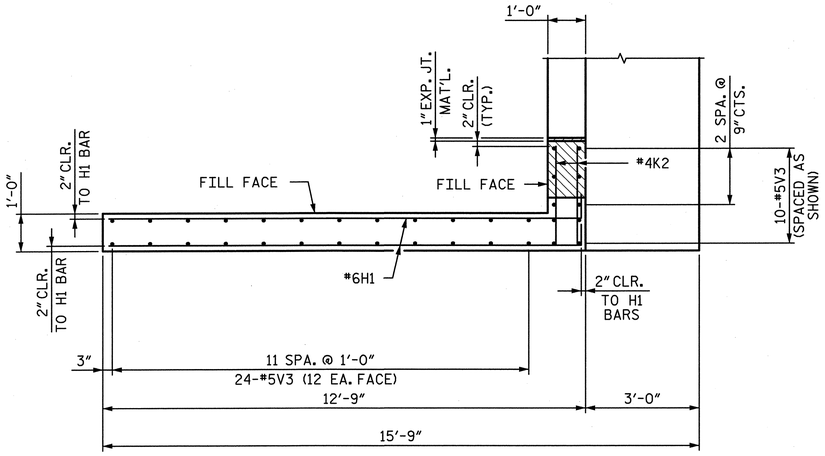

PLAN (W2)

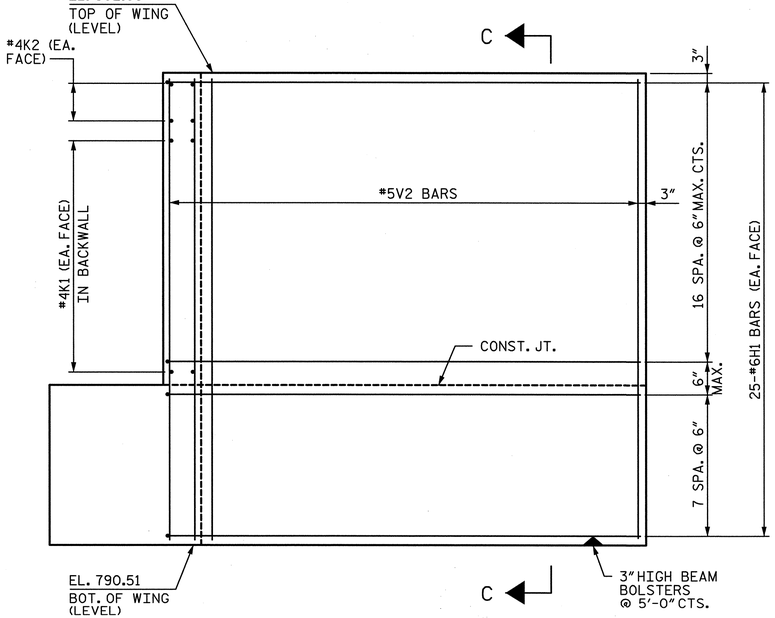

ELEVATION (W1)

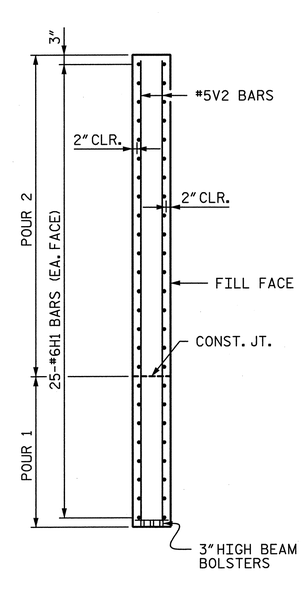

SECTION C-C

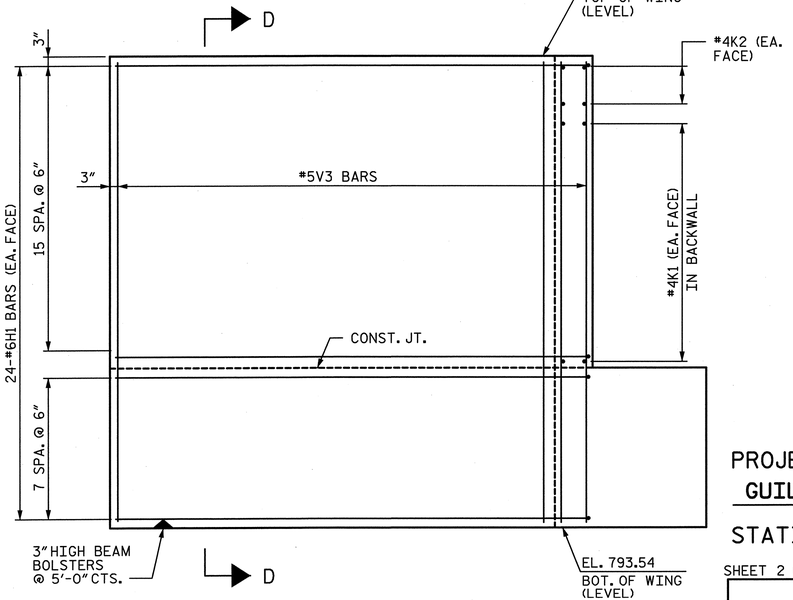

ELEVATION (W2)

NORTH CAROLINA PROFESSIONAL ENGINEER SEAL 28479 ENGINEER KEVIN G. BAILEY 6-7-13

PROJECT NO. U-2524C

GUILFORD COUNTY

STATION: POT 407+85.82 -L-
= POT 29+79.72 -Y4-

SHEET 2 OF 3

STATE OF NORTH CAROLINA
DEPARTMENT OF TRANSPORTATION
RALEIGH

SUBSTRUCTURE
END BENT 1

-RIGHT LANE-

REVISIONS						SHEET NO.
NO.	BY:	DATE:	NO.	BY:	DATE:	S-418
1			3			TOTAL SHEETS
2			4			836

STV / Ralph Whitehead Associates, Inc.
1000 West Morehead St., Ste. 200
Charlotte, NC 28208
NC License No. F-0991

DRAWN BY : CLG DATE : 2-13
CHECKED BY : KGB DATE : 2-13

DESIGN ENGINEER OF RECORD: K. BAILEY DATE : 5-13

6/6/2013 8:59:15 PM R:\Station\Finals\End Bent 1- Sheet 2 of 3.dgn

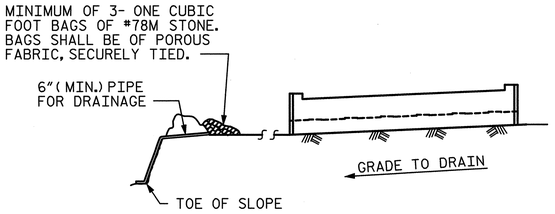

BAGGED STONE AND PIPE SHALL BE PLACED IMMEDIATELY AFTER COMPLETION OF END BENT EXCAVATION. PIPE MAY BE EITHER CONCRETE, CORRUGATED STEEL, CORRUGATED ALUMINUM ALLOY, OR CORRUGATED PLASTIC. PERFORATED PIPE WILL NOT BE ALLOWED.

BAGGED STONE SHALL REMAIN IN PLACE UNTIL THE ENGINEER DIRECTS THAT IT BE REMOVED. THE CONTRACTOR SHALL REMOVE AND DISPOSE OF SILT ACCUMULATIONS AT BAGGED STONE WHEN SO DIRECTED BY THE ENGINEER. BAGS SHALL BE REMOVED AND REPLACED WHENEVER THE ENGINEER DETERMINES THAT THEY HAVE DETERIORATED AND LOST THEIR EFFECTIVENESS.

NO SEPARATE PAYMENT WILL BE MADE FOR THIS WORK AND THE ENTIRE COST OF THIS WORK SHALL BE INCLUDED IN THE UNIT CONTRACT PRICE BID FOR THE SEVERAL PAY ITEMS.

TEMPORARY DRAINAGE AT END BENT

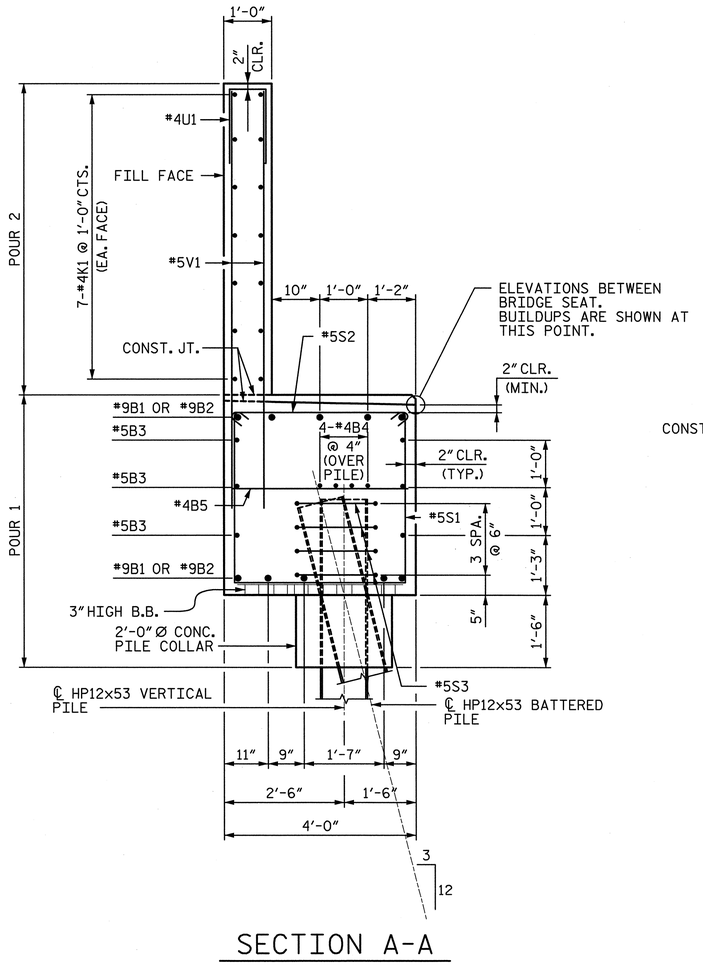

SECTION A-A

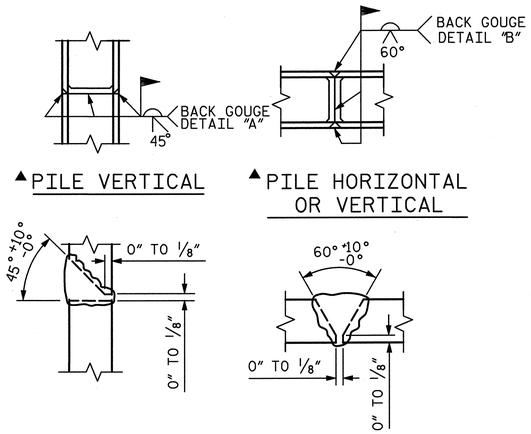

▲ POSITION OF PILE DURING WELDING.

PILE SPLICE DETAILS

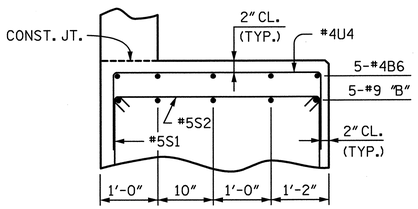

PARTIAL SECTION B

(TYP. AT EACH BRIDGE SEAT)
(ANCHOR BOLTS NOT SHOWN FOR CLARITY)

BAR TYPES

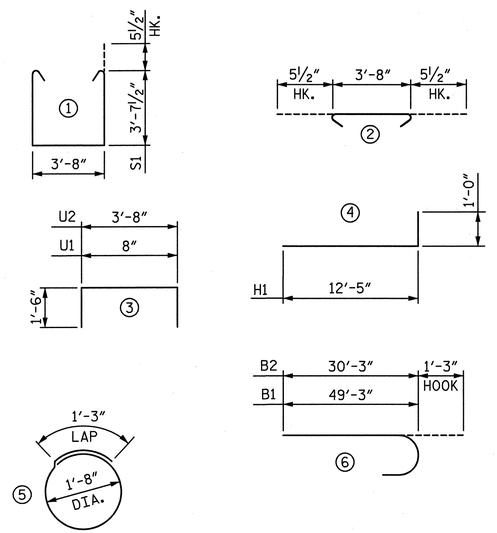

ALL BAR DIMENSIONS ARE OUT TO OUT.

REINFORCING BAR SCHEDULE

BAR	NO.	SIZE	TYPE	LENGTH	WEIGHT
B1	10	#9	⑥	50'-6"	1,717
B2	10	#9	⑥	31'-6"	1,071
B3	12	#5	STR	36'-0"	451
B4	12	#4	STR	24'-8"	198
B5	18	#4	STR	3'-8"	44
B6	30	#4	STR	3'-6"	70
H1	98	#6	④	13'-5"	1,975
K1	42	#4	STR	24'-8"	692
K2	8	#4	STR	2'-7"	14
V1	128	#5	STR	8'-9"	1,168
V2	34	#5	STR	11'-9"	417
V3	34	#5	STR	11'-5"	405
S1	57	#5	①	11'-10"	704
S2	57	#5	②	4'-7"	272
S3	56	#5	⑤	6'-6"	380
U1	64	#4	③	3'-8"	157
U2	42	#4	③	6'-8"	187

QUANTITIES

	END BENT 1
REINFORCING STEEL LBS.	9,922
CLASS A CONCRETE	
POUR 1 (CAP, PILE COLLAR & LOWER WING) : CU. YARDS	48.0
POUR 2 (BACKWALL & UPPER WING) : CU. YARDS	24.0
TOTAL : CU. YARDS	72.0
HP12x53 STEEL PILES NO.	14
HP12x53 STEEL PILES LIN. FEET	840

NOTES:

STIRRUPS IN CAP MAY BE SHIFTED SLIGHTLY AS NECESSARY TO CLEAR ANCHOR BOLTS.

BACKWALL SHALL BE PLACED BEFORE APPLYING THE EPOXY PROTECTIVE COATING.

THE TOP SURFACE AREAS OF THE END BENT CAP SHALL BE CURED IN ACCORDANCE WITH THE STANDARD SPECIFICATIONS EXCEPT THAT THE MEMBRANE CURING COMPOUND METHOD SHALL NOT BE USED.

THE TOP SURFACE OF THE CAP EXCEPT THE BRIDGE SEAT BUILDUPS SHALL BE SLOPED TRANSVERSELY FROM THE FILL FACE TO THE OUTSIDE FACE AT THE RATE OF 2%.

"U" BARS IN BRIDGE SEATS MAY BE SHIFTED TO CLEAR OTHER REINFORCING.

DIMENSIONS LOCATING PILES ARE SHOWN TO THE CENTERLINE OF THE PILE AT THE BOTTOM OF THE END BENT CAP.

THE CONCRETE IN THE SHADED AREA OF THE WING SHALL BE POURED AFTER THE BARRIER RAIL ARE CAST IF SLIP FORMING IS USED.

SEE "ELASTOMERIC BEARING DETAILS" SHEET FOR 2" Ø ANCHOR BOLT DETAILS.

INSTALL THE 4" Ø DRAIN PIPE THROUGH THE WING WALL AS REQUIRED FOR THE REINFORCED BRIDGE APPROACH SLABS, SEE ROADWAY PLANS. REINFORCING STEEL IN THE WING WALL MAY BE SHIFTED SLIGHTLY AS NECESSARY TO CLEAR THE DRAIN PIPE.

PROJECT NO. U-2524C

GUILFORD COUNTY

STATION: POT 407+85.82 -L-
= POT 29+79.72 -Y4-

SHEET 3 OF 3

STATE OF NORTH CAROLINA
DEPARTMENT OF TRANSPORTATION
RALEIGH

SUBSTRUCTURE END BENT 1

-RIGHT LANE-

DRAWN BY : CLG DATE : 2-13
CHECKED BY : KGB DATE : 2-13
DESIGN ENGINEER OF RECORD: K. BAILEY DATE : 5-13

STV / Ralph Whitehead Associates, Inc.
1000 West Morehead St. Ste. 200
Charlotte, NC 28208
NC License No. F-0991

REVISIONS						SHEET NO.
NO.	BY:	DATE:	NO.	BY:	DATE:	S-419
1			3			TOTAL SHEETS
2			4			836

6/6/2013 8:59:16 PM R:\ustation\Finals\End Bent 1- Sheet 3 of 3.dgn

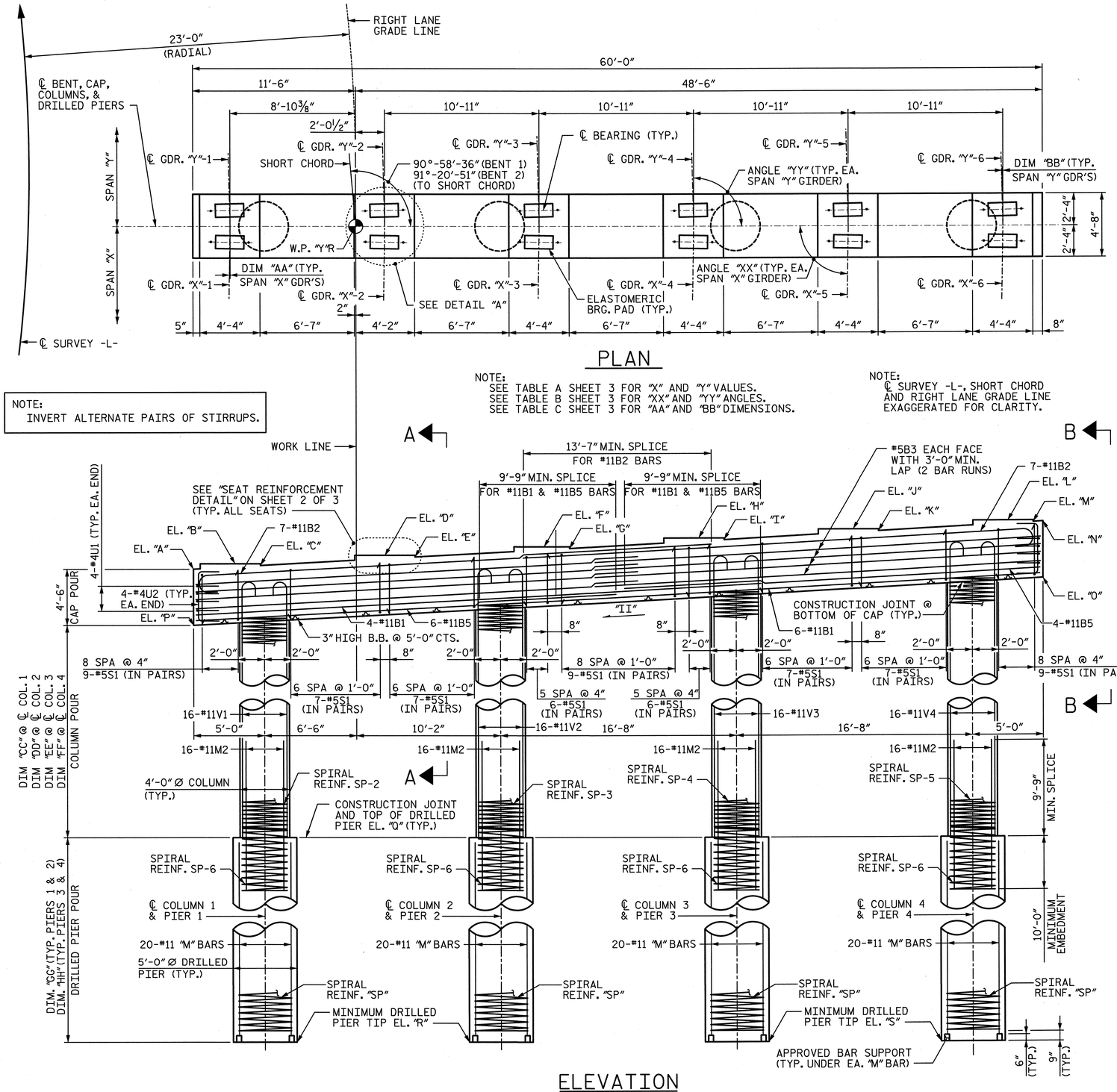

PLAN

NOTE:
SEE TABLE A SHEET 3 FOR "X" AND "Y" VALUES.
SEE TABLE B SHEET 3 FOR "XX" AND "YY" ANGLES.
SEE TABLE C SHEET 3 FOR "AA" AND "BB" DIMENSIONS.

NOTE:
℄ SURVEY -L-, SHORT CHORD AND RIGHT LANE GRADE LINE EXAGGERATED FOR CLARITY.

NOTE:
INVERT ALTERNATE PAIRS OF STIRRUPS.

ELEVATION

NOTE:
SEE TABLE D SHEET 3 FOR "A" THROUGH "S" ELEVATIONS.
SEE TABLE E SHEET 3 FOR "CC" THROUGH "II" VALUES.

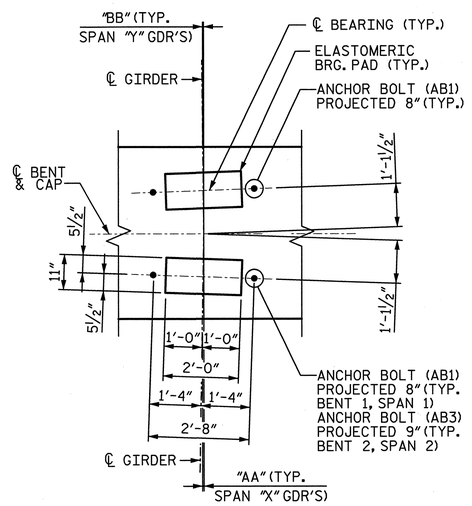

DETAIL "A"

(TYP. AT EACH BRIDGE SEAT)

NOTE:
SEE TABLE C SHEET 3 FOR "AA" AND "BB" DIMENSIONS.

NOTES:

1. ALL REINFORCING STEEL IN THE DRILLED PIERS IS INCLUDED IN THE PAY ITEMS FOR "REINFORCING STEEL" AND "SPIRAL COLUMN REINFORCING STEEL".
2. THE LOCATION OF THE CONSTRUCTION JOINT IN THE DRILLED PIERS IS BASED ON AN APPROXIMATE GROUND LINE ELEVATION. IF THE CONSTRUCTION JOINT IS ABOVE THE ACTUAL GROUND ELEVATION, THE CONTRACTOR SHALL PLACE THE CONSTRUCTION JOINT 1 FOOT BELOW THE GROUND LINE.
3. STIRRUPS AND "U BARS" IN CAP MAY BE SHIFTED SLIGHTLY AS NECESSARY TO CLEAR ANCHOR BOLTS.
4. HOOKS ON BARS MAY BE TURNED AS NECESSARY FOR PLACING REINFORCING STEEL.
5. A CONSTRUCTION JOINT AT MID-HEIGHT OF COLUMN IS PERMITTED.
6. FOR "AB1" AND "AB3" ANCHOR BOLTS, SEE "ELASTOMERIC BEARING DETAILS" SHEET.
7. SEE "GENERAL DRAWING GENERAL NOTES" SHEET FOR ADDITIONAL NOTES.
8. SEE SHEET 2 OF 3 FOR SECTIONS CALLED OUT ON ELEVATION VIEW.
9. THE TOP SURFACE AREAS OF BENT 2 CAP SHALL BE CURED IN ACCORDANCE WITH THE STANDARD SPECIFICATIONS EXCEPT THE MEMBRANE CURING COMPOUND METHOD SHALL NOT BE USED.

SIDE VIEW

NORTH CAROLINA PROFESSIONAL ENGINEER SEAL 28479 KEVIN G. BAILEY 6-7-13

PROJECT NO. U-2524C
GUILFORD COUNTY
STATION: POT 407+85.82 -L-
= POT 29+79.72 -Y4-

SHEET 1 OF 3

STATE OF NORTH CAROLINA
DEPARTMENT OF TRANSPORTATION
RALEIGH

SUBSTRUCTURE BENTS 1 & 2 PLAN & ELEVATION

-RIGHT LANE-

REVISIONS						SHEET NO.
NO.	BY:	DATE:	NO.	BY:	DATE:	S-420
1			3			TOTAL SHEETS
2			4			836

STV / Ralph Whitehead Associates, Inc.
1000 West Morehead St., Ste. 200
Charlotte, NC 28208
NC License No. F-0991

DRAWN BY : JMP	DATE : 3-13	DESIGN ENGINEER OF RECORD: K. BAILEY	DATE : 5-13
CHECKED BY : KDH	DATE : 3-13		

6/6/2013 8:59:17 PM R:\ustation\Finals\Bent 01-02 - 1of 3.dgn

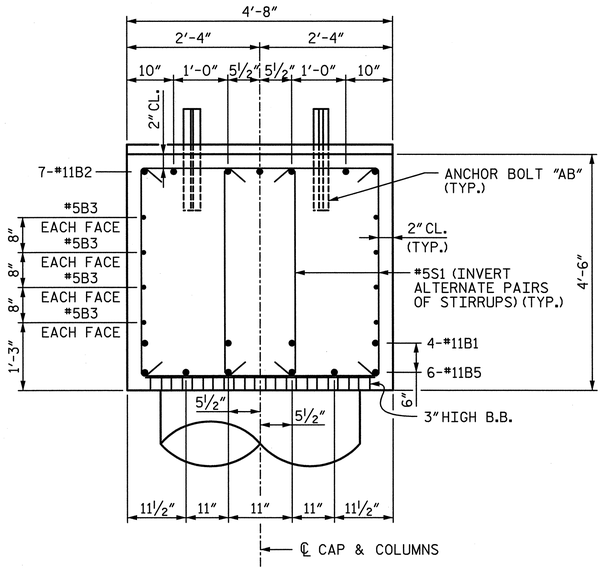

SECTION A-A

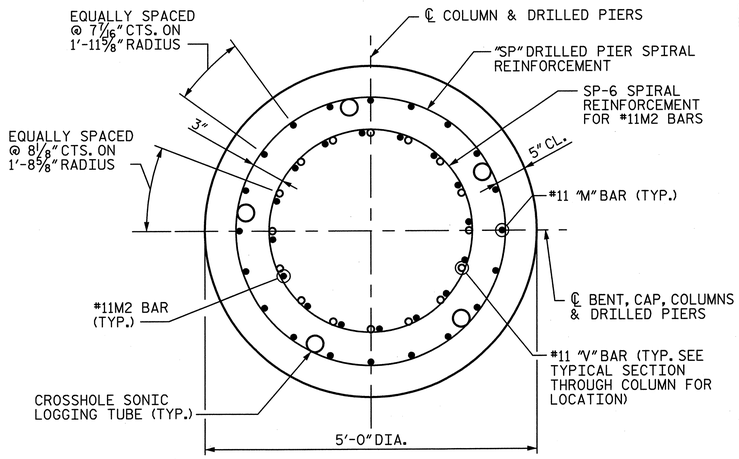

TYPICAL SECTION THROUGH DRILLED PIER

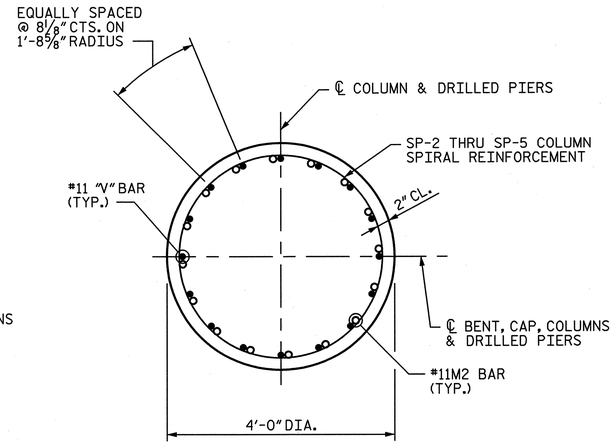

TYPICAL SECTION THROUGH COLUMN

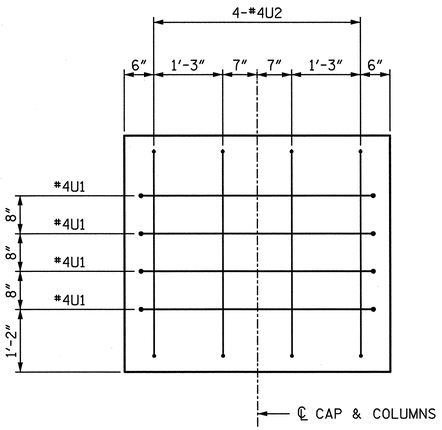

END VIEW B-B

(RIGHT END SHOWN, LEFT END SIMILAR)

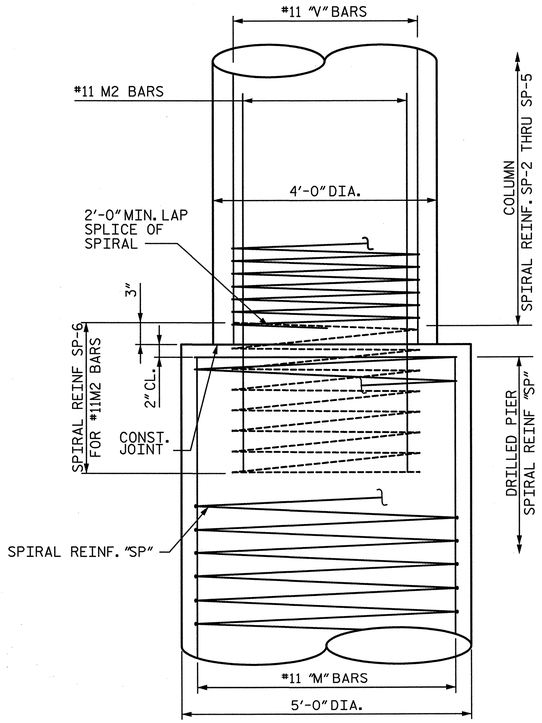

CONSTRUCTION JOINT DETAIL

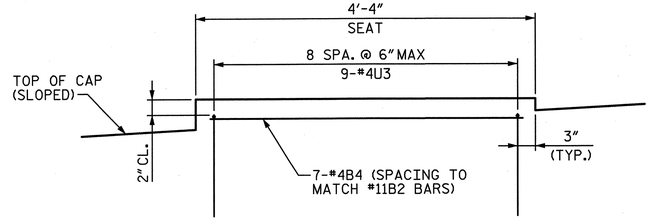

SEAT REINFORCEMENT DETAIL

(TYPICAL AT EACH BEARING SEAT)

NORTH CAROLINA PROFESSIONAL SEAL 28479 ENGINEER KEVIN G. BAILEY 6-7-13

PROJECT NO. U-2524C

GUILFORD COUNTY

STATION: POT 407+85.82 -L-
= POT 29+79.72 -Y4-

SHEET 2 OF 3

STATE OF NORTH CAROLINA
DEPARTMENT OF TRANSPORTATION
RALEIGH

SUBSTRUCTURE BENTS 1 & 2 DETAILS

-RIGHT LANE-

REVISIONS						SHEET NO.
NO.	BY:	DATE:	NO.	BY:	DATE:	S-421
1			3			TOTAL SHEETS
2			4			836

DRAWN BY : JMP	DATE : 3-13	DESIGN ENGINEER OF RECORD: K. BAILEY	DATE : 5-13
CHECKED BY : KDH	DATE : 3-13		

STV / Ralph Whitehead Associates, Inc.
1000 West Morehead St., Ste. 200
Charlotte, NC 28208
NC License No. F-0991

6/6/2013 8:59:19 PM R:\ustation\Finals\Bent 01-02- 2 of 3.dgn

TABLE A		
PLAN VIEW INFORMATION		
	BENT 1	BENT 2
"X"	1	2
"Y"	2	3

TABLE B		
PLAN VIEW ANGLES		
	ANGLE "XX"	
GDR.	BENT 1	BENT 2
"X"-1	89°-06'-13"	88°-59'-50"
"X"-2	89°-06'-13"	88°-59'-51"
"X"-3	89°-06'-14"	88°-59'-51"
"X"-4	89°-06'-14"	88°-59'-51"
"X"-5	89°-06'-15"	88°-59'-51"
"X"-6	89°-06'-15"	88°-59'-52"
	ANGLE "YY"	
GDR.	BENT 1	BENT 2
"Y"-1	90°-58'-35"	91°-23'-08"
"Y"-2	90°-58'-36"	91°-20'-20"
"Y"-3	90°-58'-36"	91°-17'-33"
"Y"-4	90°-58'-36"	91°-14'-48"
"Y"-5	90°-58'-36"	91°-12'-04"
"Y"-6	90°-58'-36"	91°-09'-22"

TABLE C		
PLAN VIEW DIMENSIONS		
	DIMENSION "AA"	
	BENT 1	BENT 2
"X"-1	7/16"	1/2"
"X"-2	7/16"	1/2"
"X"-3	7/16"	1/2"
"X"-4	7/16"	1/2"
"X"-5	7/16"	1/2"
"X"-6	7/16"	1/2"
	DIMENSION "BB"	
"Y"-1	7/16"	5/8"
"Y"-2	7/16"	5/8"
"Y"-3	7/16"	5/8"
"Y"-4	7/16"	9/16"
"Y"-5	7/16"	9/16"
"Y"-6	7/16"	9/16"

TABLE D		
ELEVATION VIEW DIMENSIONS		
	BENT 1	BENT 2
"CC"	29'-4 5/8"	36'-3 7/8"
"DD"	30'-3 5/8"	37'-3 7/8"
"EE"	31'-2 5/8"	38'-3 7/8"
"FF"	32'-1 3/4"	39'-3 7/8"
"GG"	46'-9"	45'-3"
"HH"	51'-9"	49'-3"
"II"	0.0552	0.0600

TABLE E		
ELEVATIONS		
	BENT 1	BENT 2
"A"	794.11	793.54
"B"	794.50	793.95
"C"	794.38	793.83
"D"	795.10	794.61
"E"	794.98	794.48
"F"	795.70	795.26
"G"	795.58	795.14
"H"	796.31	795.92
"I"	796.18	795.79
"J"	796.91	796.57
"K"	796.78	796.45
"L"	797.50	797.23
"M"	797.38	797.10
"N"	797.42	797.14
"O"	793.42	793.14
"P"	790.11	789.54
"Q"	760.51	753.03
"R"	713.76	707.78
"S"	708.76	703.78

THE CONTRACTOR'S ATTENTION IS CALLED TO THE FACT THAT THE LONGITUDINAL REINFORCEMENT FOR BENT 1 DRILLED PIERS IS DETAILED WITH 3 FEET OF EXTRA LENGTH.

TABLE F

BENT 1 COLUMNS & DRILLED PIERS REINFORCING BILL OF MATERIAL

COLUMN/ DRILLED PIER	BAR	NO.	SIZE	TYPE	●	LENGTH	WEIGHT	DRILLED PIER LENGTH
1	M11	20	#11	STR.		49'-1"	5,216	46'-9"
	M2	16	#11	STR.		19'-9"	1,679	
	V1	16	#11	①	32'-8"	34'-3"	2,912	
	SP-2	1	✳	⑤	29'-8"	1,369'-1"	915	
	SP-11	1	✳✳	④	45'-10"	1,461'-6"	1,524	
	SP-6	1	✳✳	④	10'-3"	298'-7"	311	
2	M11	20	#11	STR.		49'-1"	5,216	46'-9"
	M2	16	#11	STR.		19'-9"	1,679	
	V2	16	#11	①	33'-7"	35'-2"	2,989	
	SP-3	1	✳	⑤	30'-7"	1,411'-0"	943	
	SP-11	1	✳✳	④	45'-10"	1,461'-6"	1,524	
	SP-6	1	✳✳	④	10'-3"	298'-7"	311	
3	M12	20	#11	STR.		54'-1"	5,747	51'-9"
	M2	16	#11	STR.		19'-9"	1,679	
	V3	16	#11	①	34'-6"	36'-1"	3,067	
	SP-4	1	✳	⑤	31'-6"	1,452'-10"	970	
	SP-12	1	✳✳	④	50'-10"	1,616'-8"	1,686	
	SP-6	1	✳✳	④	10'-3"	298'-7"	311	
4	M12	20	#11	STR.		54'-1"	5,747	51'-9"
	M2	16	#11	STR.		19'-9"	1,679	
	V4	16	#11	①	35'-5"	37'-0"	3,145	
	SP-5	1	✳	⑤	32'-5"	1,518'-11"	1,015	
	SP-12	1	✳✳	④	50'-10"	1,616'-8"	1,686	
	SP-6	1	✳✳	④	10'-3"	298'-7"	311	

TABLE F

BENT 2 COLUMNS & DRILLED PIERS REINFORCING BILL OF MATERIAL

COLUMN/ DRILLED PIER	BAR	NO.	SIZE	TYPE	●	LENGTH	WEIGHT	DRILLED PIER LENGTH
1	M11	20	#11	STR.		44'-7"	4,737	45'-3"
	M2	16	#11	STR.		19'-9"	1,679	
	V1	16	#11	①	39'-7"	41'-2"	3,499	
	SP-2	1	✳	⑤	36'-7"	1,685'-2"	1,126	
	SP-11	1	✳✳	④	44'-4"	1,414'-11"	1,476	
	SP-6	1	✳✳	④	10'-3"	298'-7"	311	
2	M11	20	#11	STR.		44'-7"	4,737	45'-3"
	M2	16	#11	STR.		19'-9"	1,679	
	V2	16	#11	①	40'-7"	42'-2"	3,585	
	SP-3	1	✳	⑤	37'-7"	1,730'-8"	1,156	
	SP-11	1	✳✳	④	44'-4"	1,414'-11"	1,476	
	SP-6	1	✳✳	④	10'-3"	298'-7"	311	
3	M12	20	#11	STR.		48'-7"	5,162	49'-3"
	M2	16	#11	STR.		19'-9"	1,679	
	V3	16	#11	①	41'-7"	43'-2"	3,670	
	SP-4	1	✳	⑤	38'-7"	1,776'-4"	1,187	
	SP-12	1	✳✳	④	48'-4"	1,539'-1"	1,605	
	SP-6	1	✳✳	④	10'-3"	298'-7"	311	
4	M12	20	#11	STR.		48'-7"	5,162	49'-3"
	M2	16	#11	STR.		19'-9"	1,679	
	V4	16	#11	①	42'-7"	44'-2"	3,755	
	SP-5	1	✳	⑤	39'-7"	1,821'-10"	1,217	
	SP-12	1	✳✳	④	48'-4"	1,539'-1"	1,605	
	SP-6	1	✳✳	④	10'-3"	298'-7"	311	

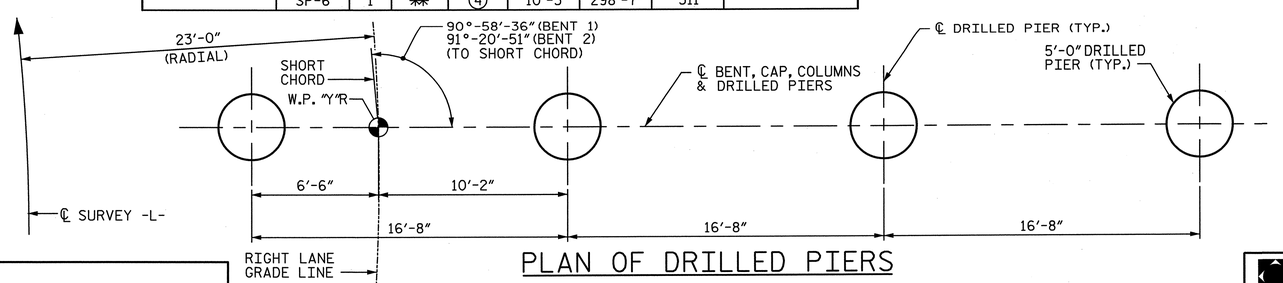

PLAN OF DRILLED PIERS

BAR TYPES

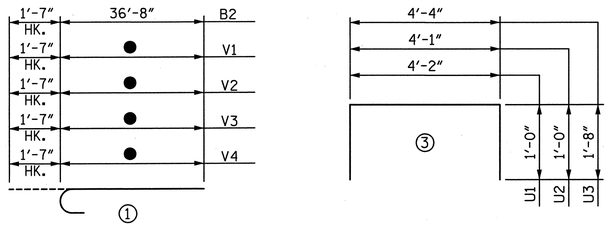

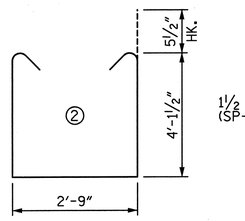

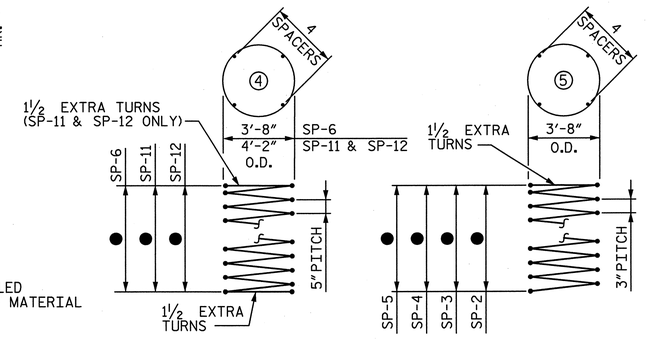

NOTE:
FOR ● AND COLUMNS & DRILLED PIERS REINFORCING BILL OF MATERIAL SEE TABLE F THIS SHEET.

ALL BAR DIMENSIONS ARE OUT TO OUT

BILL OF MATERIAL
FOR ONE BENT (2 REQUIRED)

BAR	NO.	SIZE	TYPE	LENGTH	WEIGHT
B1	10	#11	STR.	40'-2"	2,134
B2	14	#11	①	38'-3"	2,845
B3	16	#5	STR.	31'-4"	523
B4	42	#4	STR.	4'-0"	112
B5	10	#11	STR.	29'-3"	1,554
S1	130	#5	②	11'-11"	1,616
U1	8	#4	③	6'-2"	33
U2	8	#4	③	6'-0"	32
U3	54	#4	③	7'-8"	277

QUANTITIES

		BENT 1	BENT 2
REINFORCING STEEL	LBS.	49,881	50,149
SPIRAL REINFORCING STEEL	LBS.	11,507	12,092
CLASS A CONCRETE : POUR 2 - COLUMNS	CU. YDS.	57.3	70.4
POUR 3 - CAP	CU. YDS.	47.8	47.9
TOTAL	CU. YDS.	105.1	118.3
5'-0" Ø DRILLED PIERS IN SOIL	L.F.	171	159
5'-0" Ø DRILLED PIERS NOT IN SOIL	L.F.	26	30
TOTAL 5'-0" Ø DRILLED PIERS	L.F.	197	189
DRILLED PIER CONCRETE : POUR 1	CU. YDS.	143.3	137.4
CSL TUBES	L.F.	1,015	975

✳ THE SP-2 THROUGH SP-5 SPIRAL REINFORCING SHALL BE W20 OR D-20 COLD DRAWN WIRE OR #4 PLAIN OR DEFORMED BAR WITH A 3" PITCH.

✳✳ THE SP-11, SP-12 AND SP-6 SPIRAL REINFORCING STEEL SHALL BE W31 OR D-31 COLD DRAWN WIRE OR #5 PLAIN OR DEFORMED BAR WITH A 5" PITCH.

NORTH CAROLINA PROFESSIONAL ENGINEER SEAL 28479 KEVIN G. BAILEY 6-7-13

PROJECT NO. U-2524C
GUILFORD COUNTY
STATION: POT 407+85.82 -L-
= POT 29+79.72 -Y4-
SHEET 3 OF 3

STATE OF NORTH CAROLINA
DEPARTMENT OF TRANSPORTATION
RALEIGH

SUBSTRUCTURE BENTS 1 & 2 DETAILS & BILL OF MATERIAL

-RIGHT LANE-

DRAWN BY : JMP DATE : 3-13
CHECKED BY : KDH DATE : 3-13
DESIGN ENGINEER OF RECORD: K. BAILEY DATE : 5-13

STV / Ralph Whitehead Associates, Inc.
1000 West Morehead St., Ste. 200
Charlotte, NC 28208
NC License No. F-0991

REVISIONS						SHEET NO.
NO.	BY:	DATE:	NO.	BY:	DATE:	S-422
1			3			TOTAL SHEETS
2			4			836

6/6/2013 8:59:20 PM R:\ustation\Finals\Bent 01-02- 3 of 3.dgn

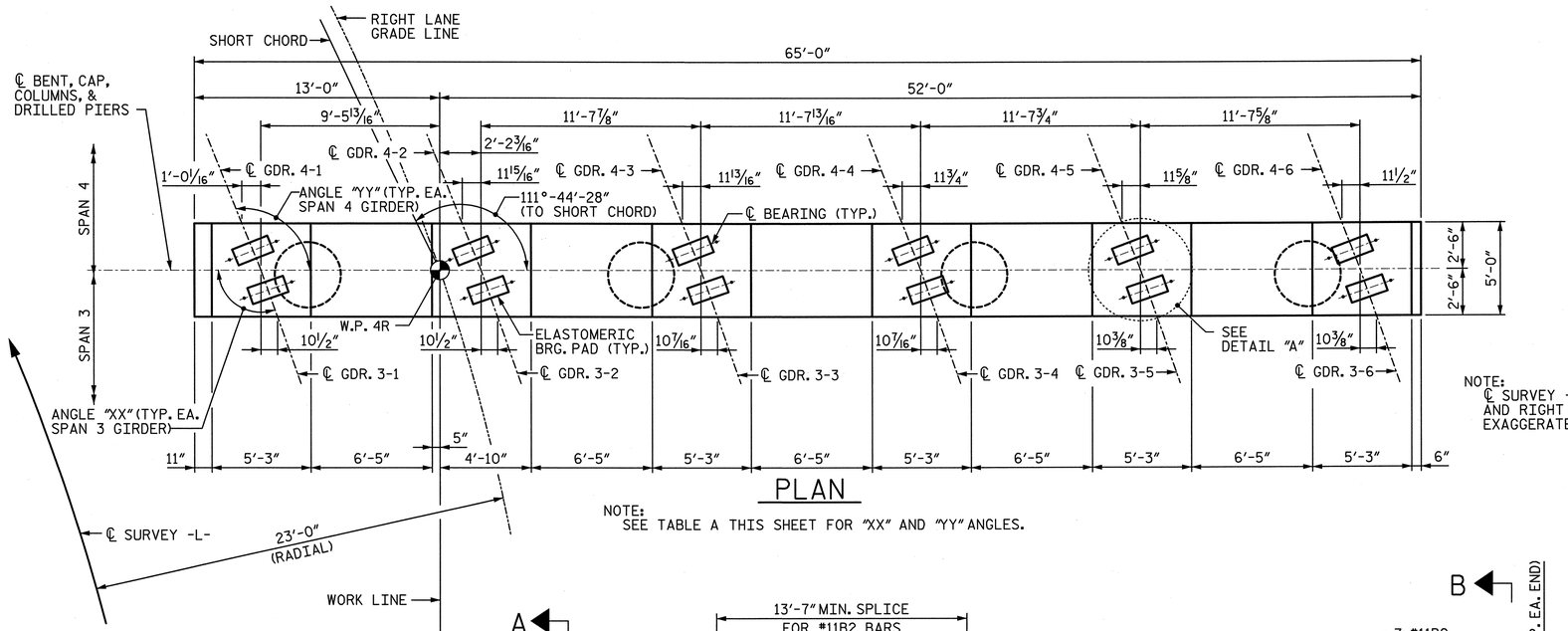

PLAN

NOTE:
SEE TABLE A THIS SHEET FOR "XX" AND "YY" ANGLES.

NOTE:
℄ SURVEY -L-, SHORT CHORD AND RIGHT LANE GRADE LINE EXAGGERATED FOR CLARITY.

TABLE A	
PLAN VIEW ANGLES	
GDR.	ANGLE "XX"
3-1	109°-17'-45"
3-2	109°-14'-56"
3-3	109°-12'-10"
3-4	109°-09'-24"
3-5	109°-06'-41"
3-6	109°-03'-59"
	ANGLE "YY"
4-1	111°-53'-23"
4-2	111°-42'-24"
4-3	111°-31'-34"
4-4	111°-20'-52"
4-5	111°-10'-17"
4-6	110°-59'-51"

NOTES:

1. ALL REINFORCING STEEL IN THE DRILLED PIERS IS INCLUDED IN THE PAY ITEMS FOR "REINFORCING STEEL" AND "SPIRAL COLUMN REINFORCING STEEL".
2. THE LOCATION OF THE CONSTRUCTION JOINT IN THE DRILLED PIERS IS BASED ON AN APPROXIMATE GROUND LINE ELEVATION. IF THE CONSTRUCTION JOINT IS ABOVE THE ACTUAL GROUND ELEVATION, THE CONTRACTOR SHALL PLACE THE CONSTRUCTION JOINT 1 FOOT BELOW THE GROUND LINE.
3. STIRRUPS AND "U BARS" IN CAP MAY BE SHIFTED SLIGHTLY AS NECESSARY TO CLEAR ANCHOR BOLTS.
4. HOOKS ON BARS MAY BE TURNED AS NECESSARY FOR PLACING REINFORCING STEEL.
5. A CONSTRUCTION JOINT AT MID-HEIGHT OF COLUMN IS PERMITTED.
6. FOR "AB1" ANCHOR BOLTS, SEE "ELASTOMERIC BEARING DETAILS" SHEET.
7. SEE "GENERAL DRAWING GENERAL NOTES" SHEET FOR ADDITIONAL NOTES.
8. SEE SHEET 2 OF 3 FOR SECTIONS CALLED OUT ON ELEVATION VIEW.

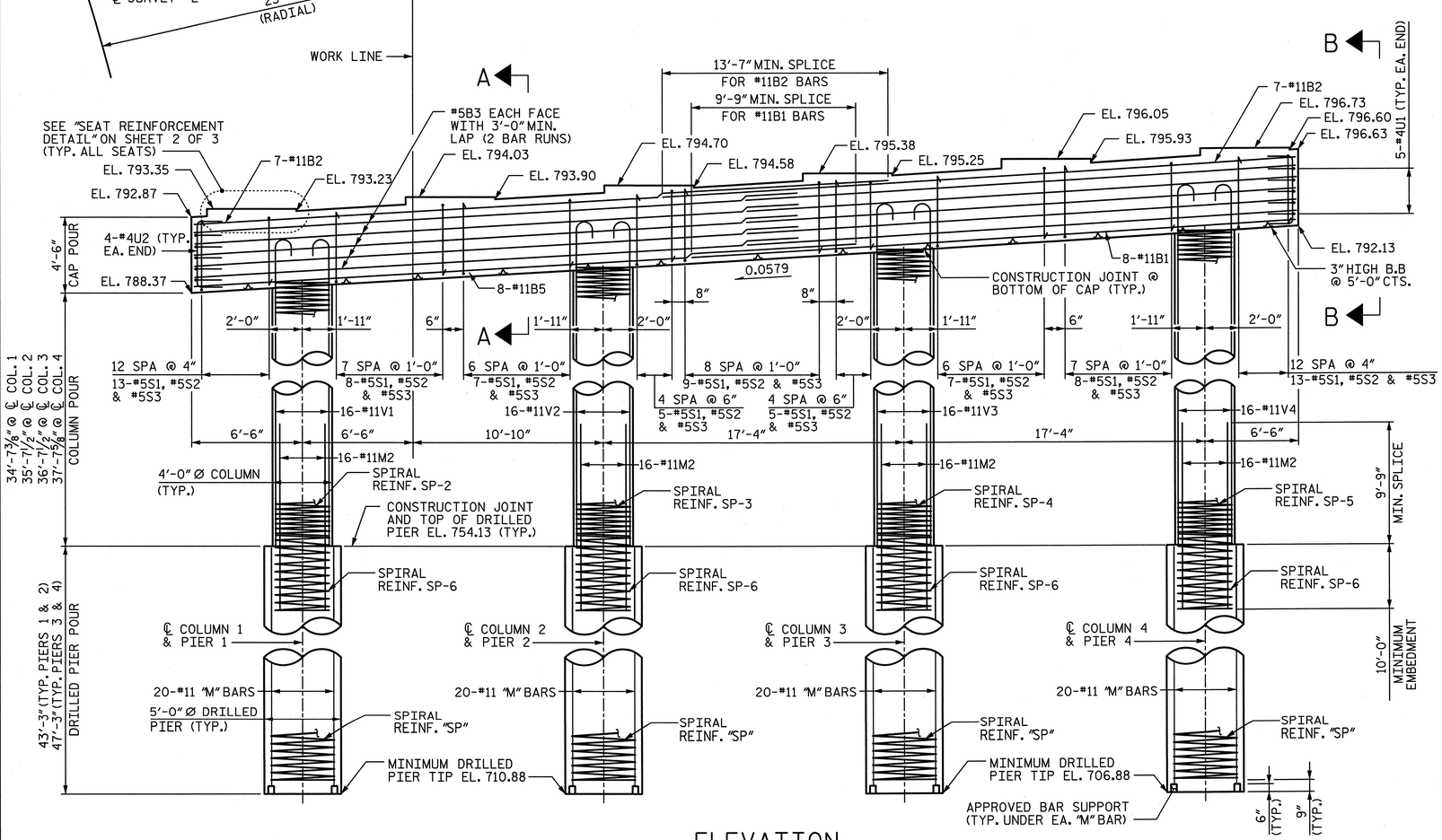

ELEVATION

NOTE:
SEE TABLE B SHEET 3 FOR COLUMN AND DRILLED PIER REINFORCING.

NOTE:
INVERT ALTERNATE #5S1, #5S2 AND #5S3 BARS.

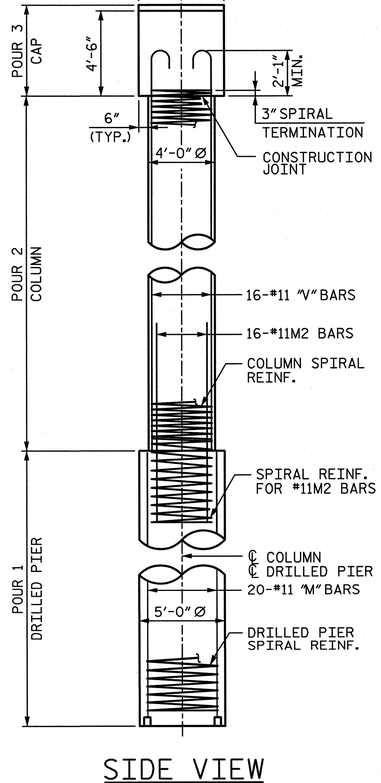

SIDE VIEW

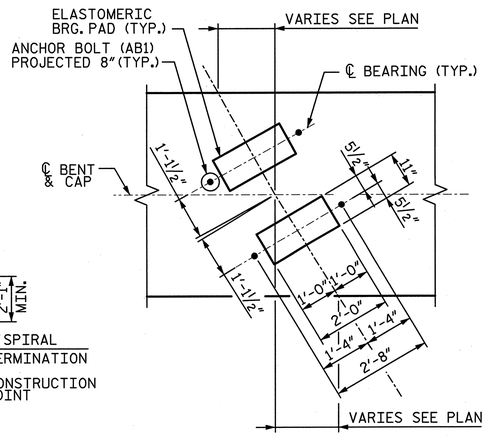

DETAIL "A"
(TYP. AT EACH BRIDGE SEAT)

NORTH CAROLINA PROFESSIONAL SEAL 28479 ENGINEER KEVIN G. BAILEY 6-7-13

PROJECT NO. U-2524C
GUILFORD COUNTY
STATION: POT 407+85.82 -L-
= POT 29+79.72 -Y4-
SHEET 1 OF 3

STATE OF NORTH CAROLINA
DEPARTMENT OF TRANSPORTATION
RALEIGH

SUBSTRUCTURE
BENT 3
PLAN & ELEVATION

-RIGHT LANE-

DRAWN BY : JMP	DATE : 3-13	DESIGN ENGINEER OF RECORD: K. BAILEY	DATE : 5-13
CHECKED BY : KDH	DATE : 3-13		

STV / Ralph Whitehead Associates, Inc.
1000 West Morehead St. Ste. 200
Charlotte, NC 28208
NC License No. F-0991

REVISIONS						SHEET NO.
NO.	BY:	DATE:	NO.	BY:	DATE:	S-423
1			3			TOTAL SHEETS
2			4			836

6/6/2013 8:59:21 PM R:\structure\Finals\Bent 03 - 1of 3.dgn

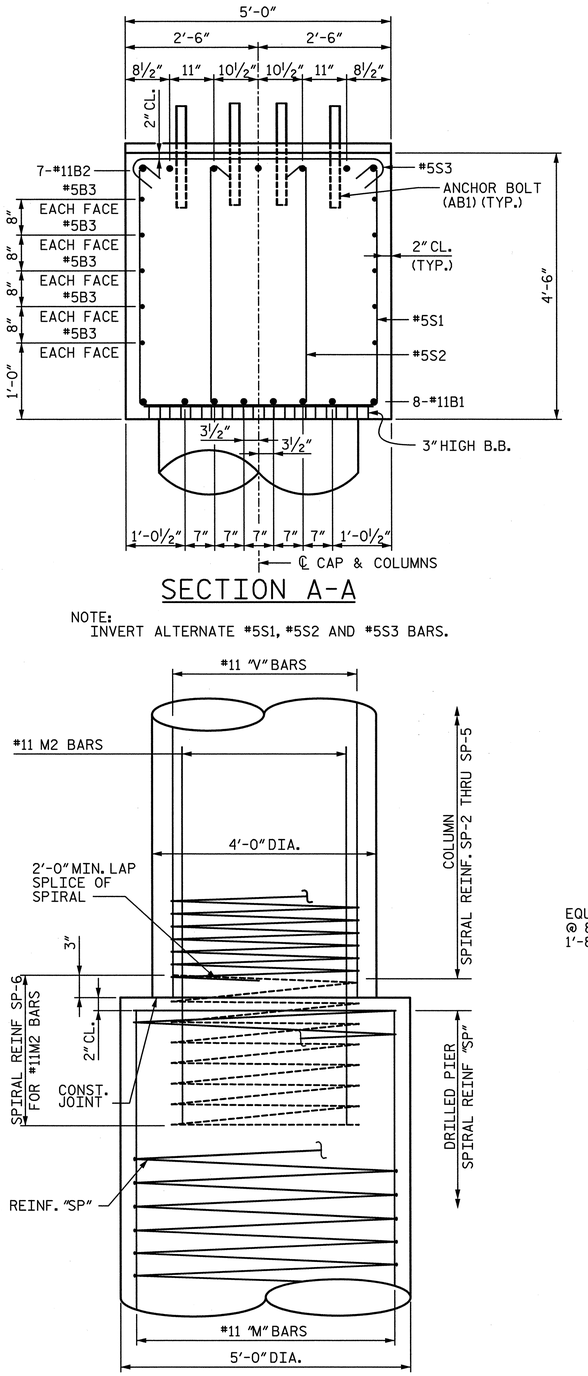

SECTION A-A

NOTE:
INVERT ALTERNATE #5S1, #5S2 AND #5S3 BARS.

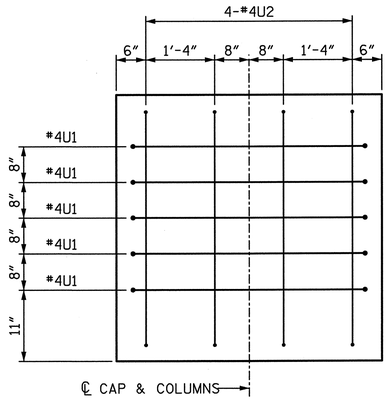

END VIEW B-B

(RIGHT END SHOWN, LEFT END SIMILAR)

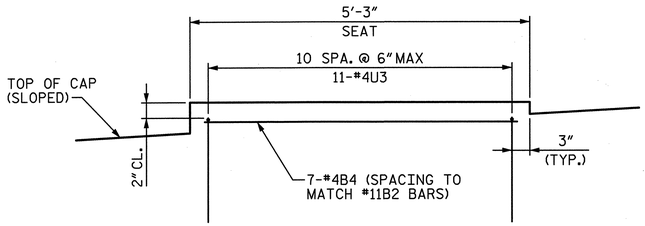

SEAT REINFORCEMENT DETAIL

(TYPICAL AT EACH BEARING SEAT)

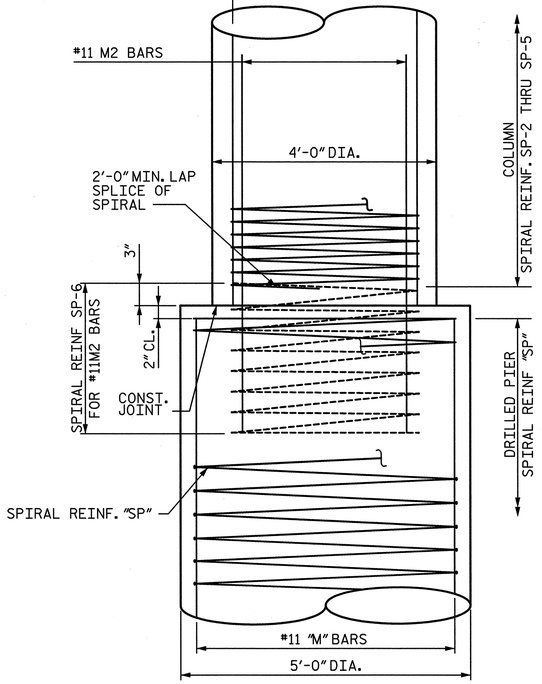

CONSTRUCTION JOINT DETAIL

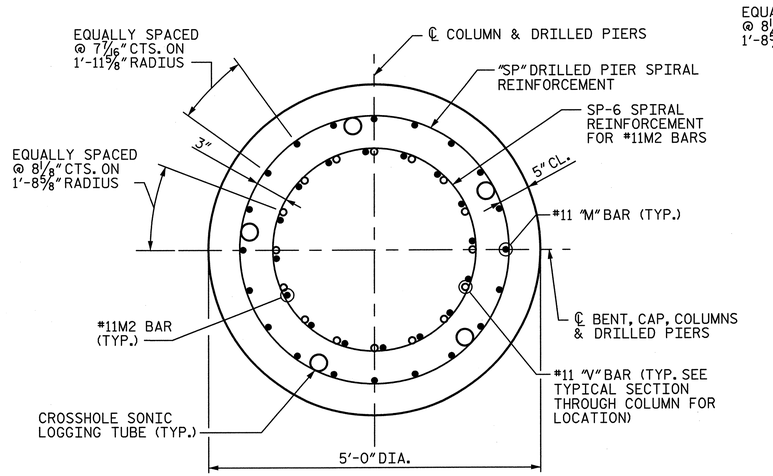

TYPICAL SECTION THROUGH DRILLED PIER

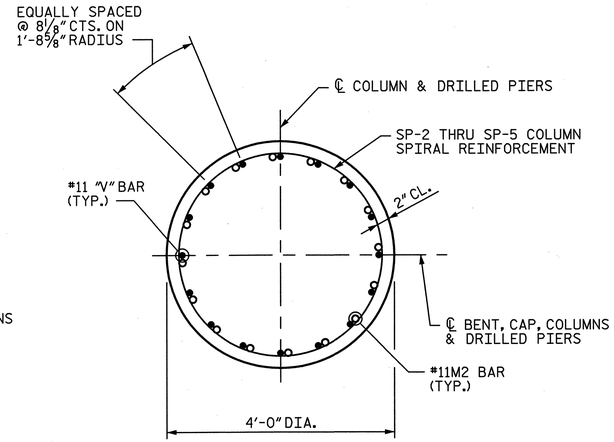

TYPICAL SECTION THROUGH COLUMN

PROJECT NO. U-2524C
GUILFORD COUNTY
STATION: POT 407+85.82 -L-
= POT 29+79.72 -Y4-
SHEET 2 OF 3

STATE OF NORTH CAROLINA
DEPARTMENT OF TRANSPORTATION
RALEIGH

SUBSTRUCTURE BENT 3 DETAILS

-RIGHT LANE-

NORTH CAROLINA PROFESSIONAL ENGINEER SEAL 28479 ENGINEER KEVIN G. BAILEY 6-7-13

DRAWN BY : JMP DATE : 3-13
CHECKED BY : KDH DATE : 3-13
DESIGN ENGINEER OF RECORD: K. BAILEY DATE : 5-13

STV / Ralph Whitehead Associates, Inc.
1000 West Morehead St., Ste. 200
Charlotte, NC 28208
NC License No. F-0891

REVISIONS						SHEET NO.
NO.	BY:	DATE:	NO.	BY:	DATE:	S-424
1			3			TOTAL SHEETS
2			4			836

6/6/2013 8:59:23 PM R:\ustation\Finals\Bent 03- 2 of 3.dgn

THE CONTRACTOR'S ATTENTION IS CALLED TO THE FACT THAT THE LONGITUDINAL REINFORCEMENT FOR THE DRILLED PIERS IS DETAILED WITH 3 FEET OF EXTRA LENGTH.

✻✻ THE SP-11, SP-12 AND SP-6 SPIRAL REINFORCING STEEL SHALL BE W31 OR D-31 COLD DRAWN WIRE OR #5 PLAIN OR DEFORMED BAR WITH A 5" PITCH.

✻ THE SP-2 THROUGH SP-5 SPIRAL REINFORCING SHALL BE W20 OR D-20 COLD DRAWN WIRE OR #4 PLAIN OR DEFORMED BAR WITH A 3" PITCH.

TABLE B

BENT 3 COLUMNS & DRILLED PIERS REINFORCING BILL OF MATERIAL

COLUMN/ DRILLED PIER	BAR	NO.	SIZE	TYPE	●	LENGTH	WEIGHT	DRILLED PIER LENGTH
1	M11	20	#11	STR.		45'-7"	4,844	43'-3"
	M2	16	#11	STR.		19'-9"	1,679	
	V1	16	#11	①	38'-5"	40'-0"	3,400	
	SP-2	1	✻	⑤	34'-11"	1,607'-8"	1,074	
	SP-11	1	✻✻	④	42'-4"	1,352'-10"	1,411	
	SP-6	1	✻✻	④	10'-3"	298'-7"	311	
2	M11	20	#11	STR.		45'-7"	4,844	43'-3"
	M2	16	#11	STR.		19'-9"	1,679	
	V2	16	#11	①	39'-5"	41'-0"	3,485	
	SP-3	1	✻	⑤	35'-11"	1,653'-5"	1,104	
	SP-11	1	✻✻	④	42'-4"	1,352'-10"	1,411	
	SP-6	1	✻✻	④	10'-3"	298'-7"	311	
3	M12	20	#11	STR.		49'-7"	5,269	47'-3"
	M2	16	#11	STR.		19'-9"	1,679	
	V3	16	#11	①	40'-5"	42'-0"	3,570	
	SP-4	1	✻	⑤	36'-11"	1,699'-2"	1,135	
	SP-12	1	✻✻	④	46'-4"	1,477'-0"	1,541	
	SP-6	1	✻✻	④	10'-3"	298'-7"	311	
4	M12	20	#11	STR.		49'-7"	5,269	47'-3"
	M2	16	#11	STR.		19'-9"	1,679	
	V4	16	#11	①	41'-5"	43'-0"	3,655	
	SP-5	1	✻	⑤	37'-11"	1,744'-11"	1,166	
	SP-12	1	✻✻	④	46'-4"	1,477'-0"	1,541	
	SP-6	1	✻✻	④	10'-3"	298'-7"	311	

QUANTITIES

REINFORCING STEEL	LBS.	50,893
SPIRAL REINFORCING STEEL	LBS.	11,627
CLASS A CONCRETE : POUR 2 - COLUMNS	CU. YDS.	67.2
POUR 3 - CAP	CU. YDS.	55.9
TOTAL	CU. YDS.	123.1
5'-0"Ø DRILLED PIERS IN SOIL	L.F.	145
5'-0"Ø DRILLED PIERS NOT IN SOIL	L.F.	36
TOTAL 5'-0"Ø DRILLED PIERS	L.F.	181
DRILLED PIER CONCRETE : POUR 1	CU. YDS.	131.6
CSL TUBES	L.F.	935

BAR TYPES

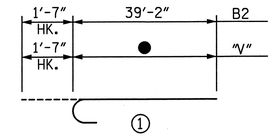

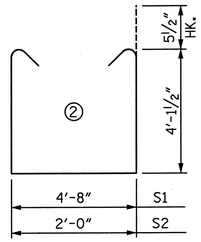

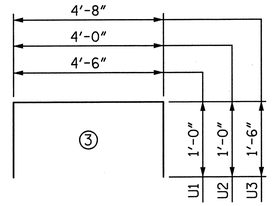

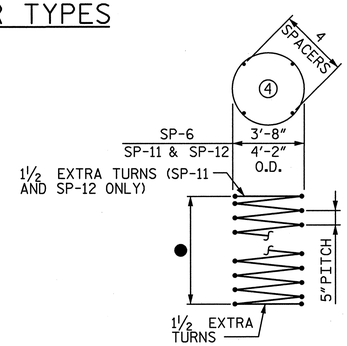

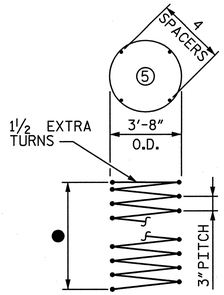

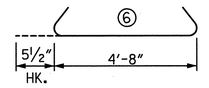

ALL BAR DIMENSIONS ARE OUT TO OUT

BILL OF MATERIAL

BAR	NO.	SIZE	TYPE	LENGTH	WEIGHT
B1	16	#11	STR.	37'-3"	3,167
B2	14	#11	①	40'-9"	3,031
B3	20	#5	STR.	33'-10"	706
B4	42	#4	STR.	4'-11"	138
S1	75	#5	②	13'-10"	1,082
S2	75	#5	②	11'-1"	867
S3	75	#5	⑥	5'-7"	437
U1	10	#4	③	6'-6"	43
U2	8	#4	③	6'-0"	32
U3	66	#4	③	7'-8"	338

NOTE:

FOR ● AND COLUMNS & DRILLED PIERS REINFORCING BILL OF MATERIAL SEE TABLE B THIS SHEET.

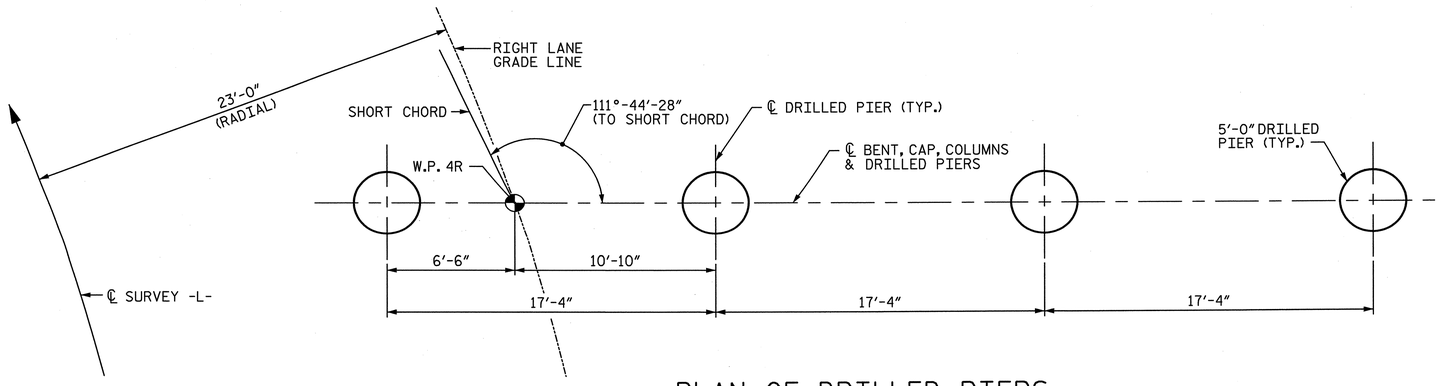

PLAN OF DRILLED PIERS

PROJECT NO. U-2524C

GUILFORD COUNTY

STATION: POT 407+85.82 -L-
= POT 29+79.72 -Y4-

SHEET 3 OF 3

STATE OF NORTH CAROLINA
DEPARTMENT OF TRANSPORTATION
RALEIGH

SUBSTRUCTURE BENT 3 DETAILS & BILL OF MATERIAL

-RIGHT LANE-

NORTH CAROLINA PROFESSIONAL SEAL 28479 ENGINEER KEVIN G. BAILEY 6-7-13

DRAWN BY : JMP	DATE : 3-13	DESIGN ENGINEER OF RECORD: K. BAILEY	DATE : 5-13
CHECKED BY : KDH	DATE : 3-13		

STV / Ralph Whitehead Associates, Inc.
1000 West Morehead St., Ste. 200
Charlotte, NC 28208
NC License No. F-0991

REVISIONS						SHEET NO.
NO.	BY:	DATE:	NO.	BY:	DATE:	S-425
1			3			TOTAL SHEETS
2			4			836

6/6/2013 8:59:24 PM R:\ustation\Finals\Bent 03- 3 of 3.dgn

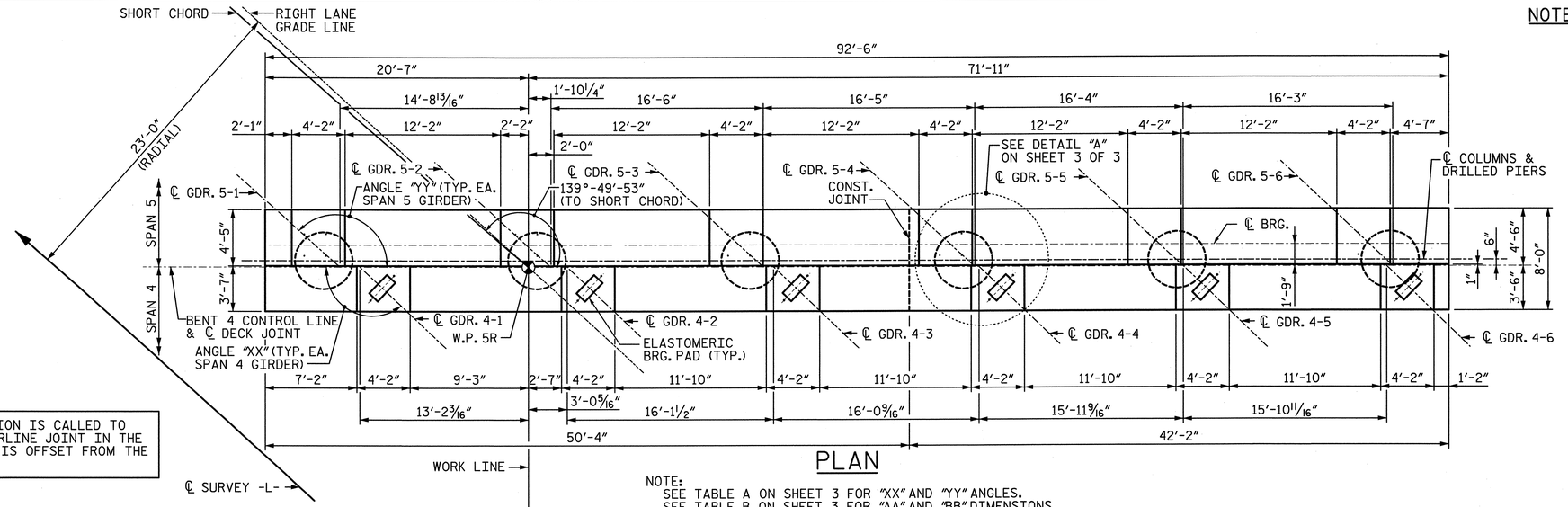

PLAN

NOTE:
SEE TABLE A ON SHEET 3 FOR "XX" AND "YY" ANGLES.
SEE TABLE B ON SHEET 3 FOR "AA" AND "BB" DIMENSIONS.

THE CONTRACTOR'S ATTENTION IS CALLED TO THE FACT THAT THE CENTERLINE JOINT IN THE DECK SLAB (CONTROL LINE) IS OFFSET FROM THE CENTERLINE BENT.

NOTE:
INVERT ALTERNATE #5S1, #5S2 & #5S3 BARS.

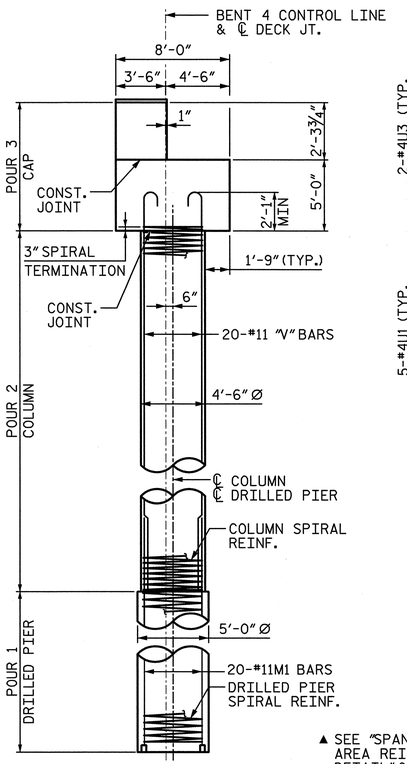

SIDE VIEW

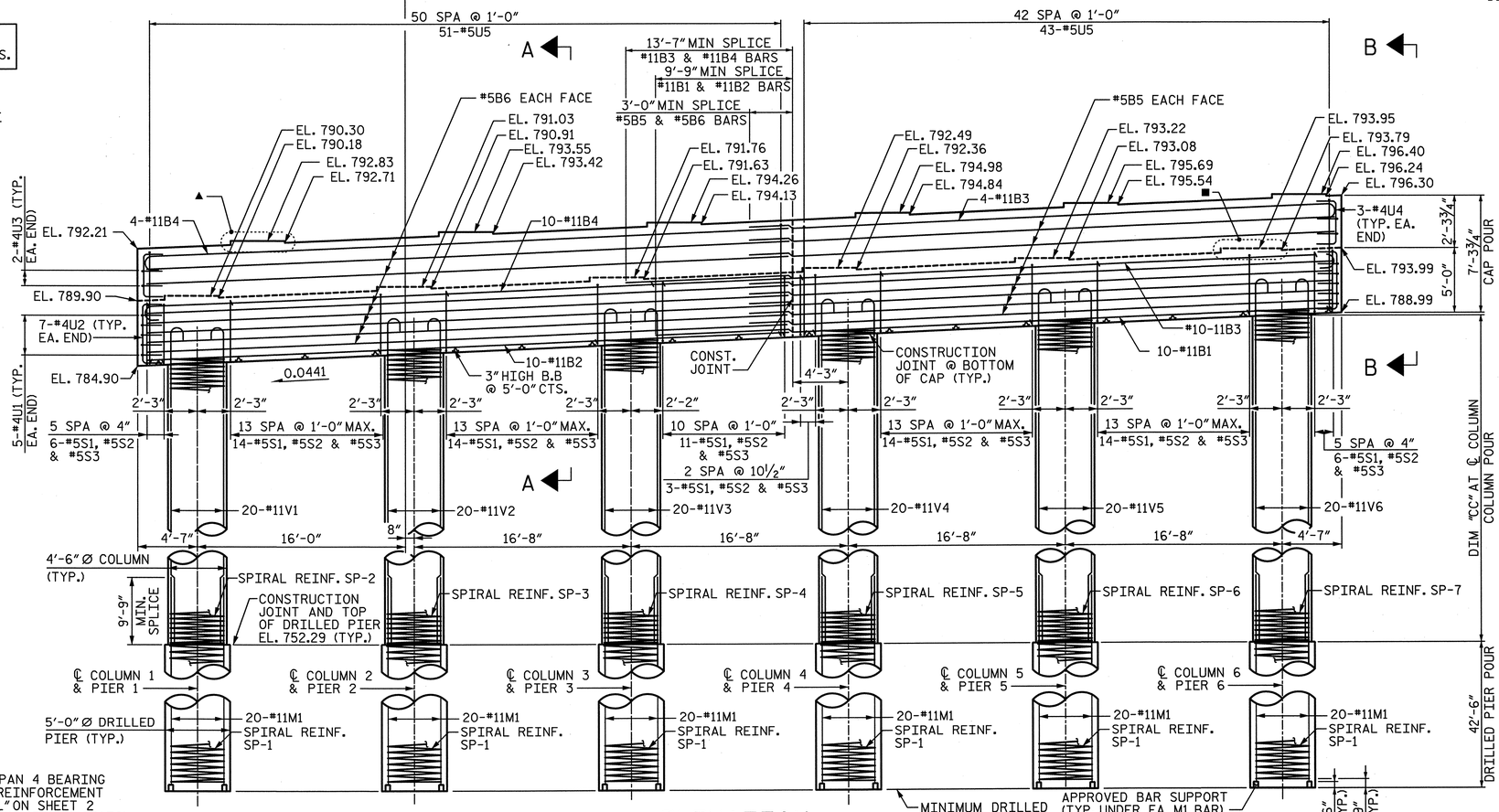

▲ SEE "SPAN 4 BEARING AREA REINFORCEMENT DETAIL" ON SHEET 2 (TYP. ALL SPAN 4 SEATS)

■ SEE "SPAN 5 BEARING AREA REINFORCEMENT DETAIL" ON SHEET 2 (TYP. ALL SPAN 5 SEATS)

ELEVATION

NOTE:
SEE TABLE C ON SHEET 3 FOR DIMENSION "CC".

NOTES:

1. ALL REINFORCING STEEL IN THE DRILLED PIERS IS INCLUDED IN THE PAY ITEMS FOR "REINFORCING STEEL" AND "SPIRAL COLUMN REINFORCING STEEL".
2. THE LOCATION OF THE CONSTRUCTION JOINT IN THE DRILLED PIERS IS BASED ON AN APPROXIMATE GROUND LINE ELEVATION. IF THE CONSTRUCTION JOINT IS ABOVE THE ACTUAL GROUND ELEVATION, THE CONTRACTOR SHALL PLACE THE CONSTRUCTION JOINT 1 FOOT BELOW THE GROUND LINE.
3. STIRRUPS AND "U BARS" IN CAP MAY BE SHIFTED SLIGHTLY AS NECESSARY TO CLEAR ANCHOR BOLTS.
4. HOOKS ON BARS MAY BE TURNED AS NECESSARY FOR PLACING REINFORCING STEEL.
5. A CONSTRUCTION JOINT AT MID-HEIGHT OF COLUMN IS PERMITTED.
6. FOR "AB1" ANCHOR BOLTS, SEE "ELASTOMERIC BEARING DETAILS" SHEET.
7. FOR 1½" ANCHOR BOLTS, SEE "POT BEARING DETAILS" SHEET.
8. SEE "GENERAL DRAWING GENERAL NOTES" SHEET FOR ADDITIONAL NOTES.
9. SEE SHEET 2 OF 3 FOR SECTIONS CALLED OUT ON ELEVATION VIEW.
10. THE TOP SURFACE AREAS OF THE BENT CAPS SHALL BE CURED IN ACCORDANCE WITH THE STANDARD SPECIFICATIONS EXCEPT THE MEMBRANE CURING COMPOUND METHOD SHALL NOT BE USED.
11. FOR PIPE INSERT DETAILS, SEE "POT BEARING DETAILS" SHEETS.

NORTH CAROLINA PROFESSIONAL SEAL 28479 ENGINEER KEVIN G. BAILEY 6-7-13

PROJECT NO. U-2524C

GUILFORD COUNTY

STATION: POT 407+85.82 -L-
= POT 29+79.72 -Y4-

SHEET 1 OF 3

STATE OF NORTH CAROLINA
DEPARTMENT OF TRANSPORTATION
RALEIGH

SUBSTRUCTURE BENT 4 PLAN & ELEVATION

-RIGHT LANE-

REVISIONS						SHEET NO.
NO.	BY:	DATE:	NO.	BY:	DATE:	S-426
1			3			TOTAL SHEETS
2			4			936

STV / Ralph Whitehead Associates, Inc.
1000 West Morehead St., Ste. 200
Charlotte, NC 28208
NC License No. F-0991

DRAWN BY : JMP	DATE : 3-13	DESIGN ENGINEER OF RECORD: K. BAILEY	DATE : 5-13
CHECKED BY : KDH	DATE : 3-13		

6/6/2013 10:45:32 PM R:\station\Finals\Bent 04 - 1of 3.dgn

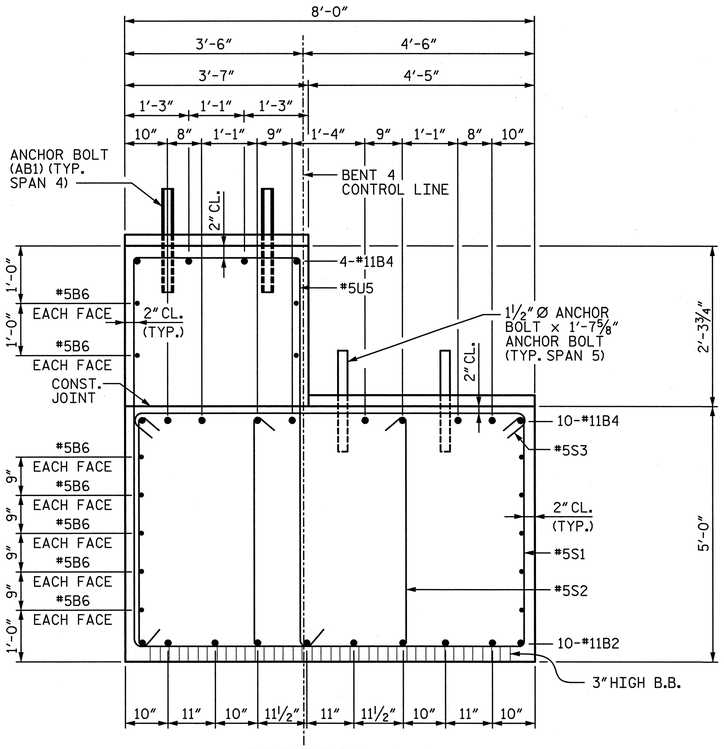

SECTION A-A

NOTE:
INVERT ALTERNATE #5S1, #5S2 AND #5S3 BARS.

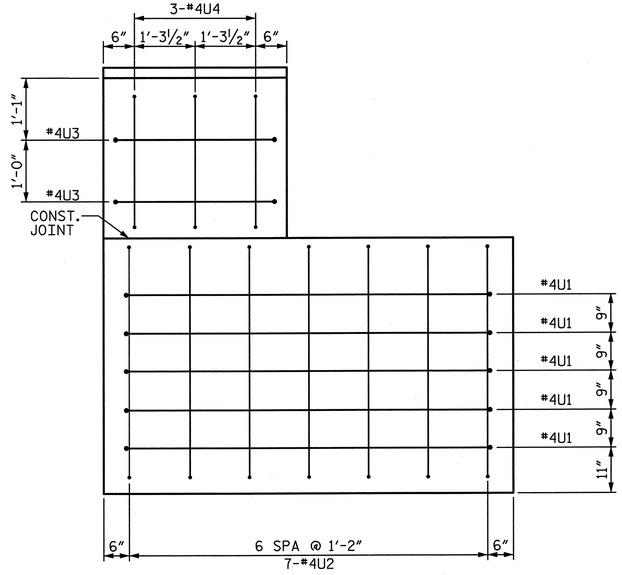

END VIEW B-B

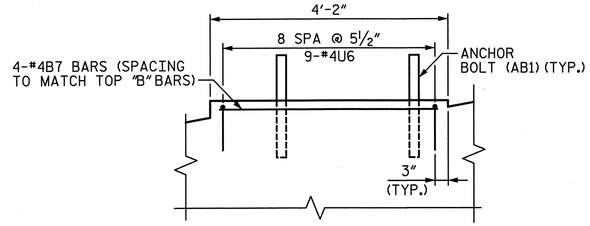

SPAN 4 BEARING AREA REINFORCEMENT DETAIL

(TYP. AT EACH BRIDGE SEAT)

C

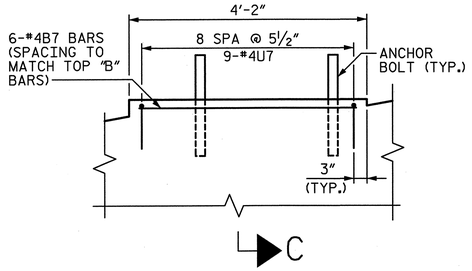

C

SPAN 5 BEARING AREA REINFORCEMENT DETAIL

(TYP. AT EACH BRIDGE SEAT)

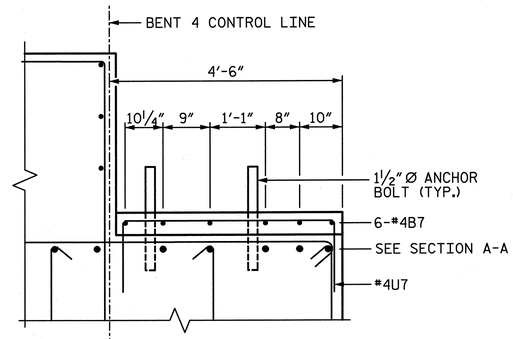

SECTION C-C

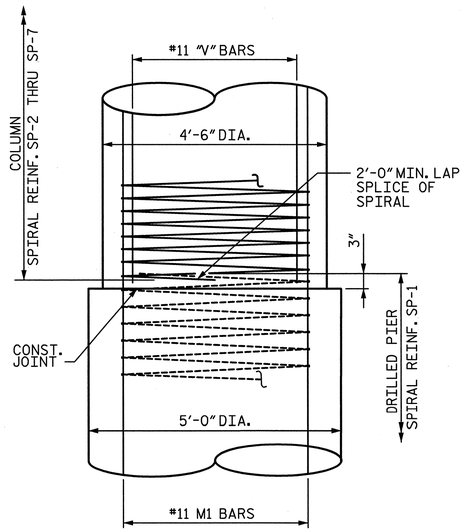

CONSTRUCTION JOINT DETAIL

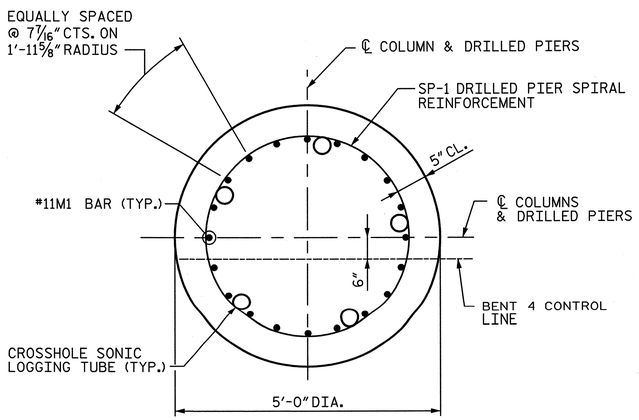

TYPICAL SECTION THROUGH DRILLED PIER

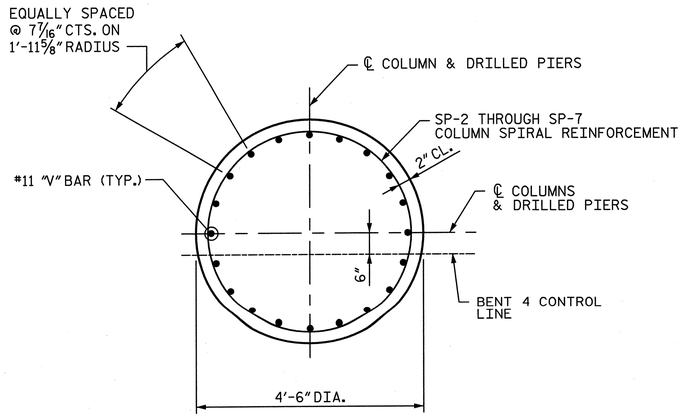

TYPICAL SECTION THROUGH COLUMN

PROJECT NO. U-2524C

GUILFORD COUNTY

STATION: POT 407+85.82 -L-
= POT 29+79.72 -Y4-

SHEET 2 OF 3

STATE OF NORTH CAROLINA
DEPARTMENT OF TRANSPORTATION
RALEIGH

SUBSTRUCTURE BENT 4 DETAILS

-RIGHT LANE-

NORTH CAROLINA PROFESSIONAL SEAL 28479 ENGINEER KEVIN G. BAILEY
6-7-13

DRAWN BY : JMP	DATE : 3-13	DESIGN ENGINEER OF RECORD: K. BAILEY	DATE : 5-13
CHECKED BY : KDH	DATE : 3-13		

STV / Ralph Whitehead Associates, Inc.
1000 West Morehead St., Ste. 200
Charlotte, NC 28208
NC License No. F-0991

REVISIONS						SHEET NO.
NO.	BY:	DATE:	NO.	BY:	DATE:	S-427
1			3			TOTAL SHEETS
2			4			836

6/6/2013 8:59:27 PM R:\ustation\Finals\Bent 04 - 2 of 3.dgn

TABLE A	
PLAN VIEW ANGLES	
	ANGLE "XX"
4-1	136°-35'-27"
4-2	136°-24'-28"
4-3	136°-13'-38"
4-4	136°-02'-56"
4-5	135°-52'-21"
4-6	135°-41'-55"
	ANGLE "YY"
5-1	137°-49'-32"
5-2	137°-32'-47"
5-3	137°-16'-17"
5-4	137°-00'-00"
5-5	136°-43'-57"
5-6	136°-28'-07"

TABLE B	
PLAN VIEW DIMENSIONS	
	DIMENSION "AA"
4-1	3'-8 3/8"
4-2	3'-8 1/8"
4-3	3'-7 13/16"
4-4	3'-7 9/16"
4-5	3'-7 5/16"
4-6	3'-7 1/16"
	DIMENSION "BB"
5-1	1'-11 3/16"
5-2	1'-11"
5-3	1'-10 3/4"
5-4	1'-10 9/16"
5-5	1'-10 5/16"
5-6	1'-10 1/8"

TABLE C	
ELEVATION VIEW DIMENSIONS	
COL	DIMENSION "CC"
1	32'-9 7/8"
2	33'-6 5/8"
3	34'-3 1/2"
4	35'-0 1/4"
5	35'-9 1/8"
6	36'-5 7/8"

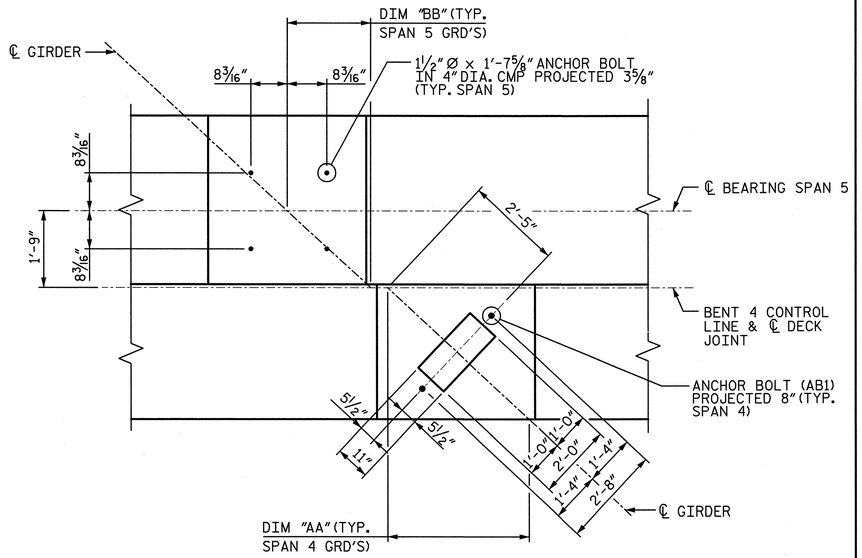

DETAIL "A"

(TYP. AT EACH BRIDGE SEAT)

NOTE:
SEE TABLE B THIS SHEET FOR "AA" AND "BB" DIMENSIONS.

QUANTITIES			
REINFORCING STEEL		LBS.	81,592
SPIRAL REINFORCING STEEL		LBS.	15,636
CLASS A CONCRETE :	POUR 2 - COLUMNS	CU. YDS.	122.5
	POUR 3 - CAP	CU. YDS.	167.2
	TOTAL	CU. YDS.	289.7
5'-0" Ø DRILLED PIERS IN SOIL		L.F.	200
5'-0" Ø DRILLED PIERS NOT IN SOIL		L.F.	55
TOTAL 5'-0" Ø DRILLED PIERS		L.F.	255
DRILLED PIER CONCRETE :	POUR 1	CU. YDS.	185.4
CSL TUBES		L.F.	1,320

BAR TYPES

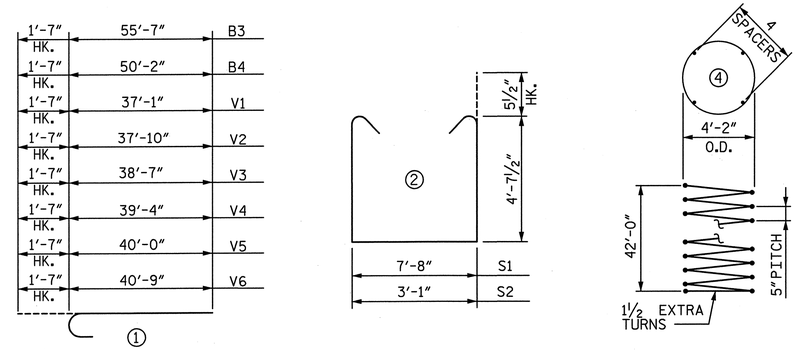

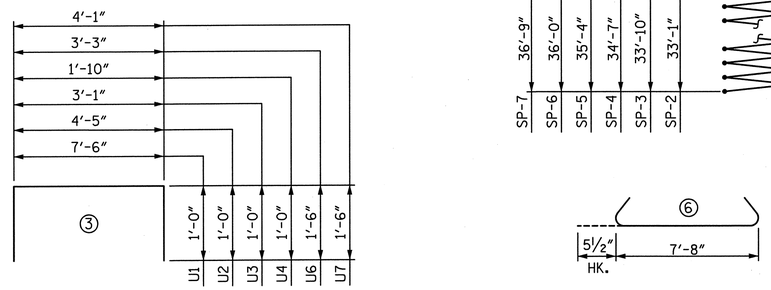

ALL BAR DIMENSIONS ARE OUT TO OUT

BILL OF MATERIAL

BAR	NO.	SIZE	TYPE	LENGTH	WEIGHT
B1	10	#11	STR.	51'-9"	2,749
B2	10	#11	STR.	50'-2"	2,665
B3	14	#11	①	57'-2"	4,252
B4	14	#11	①	51'-9"	3,849
B5	14	#5	STR.	45'-0"	657
B6	14	#5	STR.	50'-2"	733
B7	60	#4	STR.	3'-10"	154
M1	120	#11	STR.	54'-9"	34,906
S1	82	#5	②	17'-11"	1,532
S2	82	#5	②	13'-3"	1,133
S3	82	#5	⑥	8'-7"	734
U1	10	#4	③	9'-6"	63
U2	14	#4	③	6'-5"	60
U3	4	#4	③	5'-1"	14
U4	6	#4	③	3'-10"	15
U5	94	#5	⑦	18'-0"	1,765
U6	54	#4	③	6'-3"	225
U7	54	#4	③	7'-1"	256
V1	20	#11	①	38'-8"	4,109
V2	20	#11	①	39'-5"	4,188
V3	20	#11	①	40'-2"	4,268
V4	20	#11	①	40'-11"	4,348
V5	20	#11	①	41'-7"	4,419
V6	20	#11	①	42'-4"	4,498
SP-1	6	✻✻	④	1,325'-1"	8,292
SP-2	1	✻	⑤	1,736'-9"	1,160
SP-3	1	✻	⑤	1,775'-7"	1,186
SP-4	1	✻	⑤	1,814'-6"	1,212
SP-5	1	✻	⑤	1,853'-4"	1,238
SP-6	1	✻	⑤	1,887'-11"	1,261
SP-7	1	✻	⑤	1,926'-10"	1,287

✻✻ THE SP-1 SPIRAL REINFORCING STEEL SHALL BE W31 OR D-31 COLD DRAWN WIRE OR #5 PLAIN OR DEFORMED BAR WITH A 5" PITCH.

✻ THE SP-2 THROUGH SP-7 SPIRAL REINFORCING SHALL BE W20 OR D-20 COLD DRAWN WIRE OR #4 PLAIN OR DEFORMED BAR WITH A 3" PITCH.

THE CONTRACTOR'S ATTENTION IS CALLED TO THE FACT THAT THE LONGITUDINAL REINFORCEMENT FOR THE DRILLED PIERS IS DETAILED WITH 3 FEET OF EXTRA LENGTH.

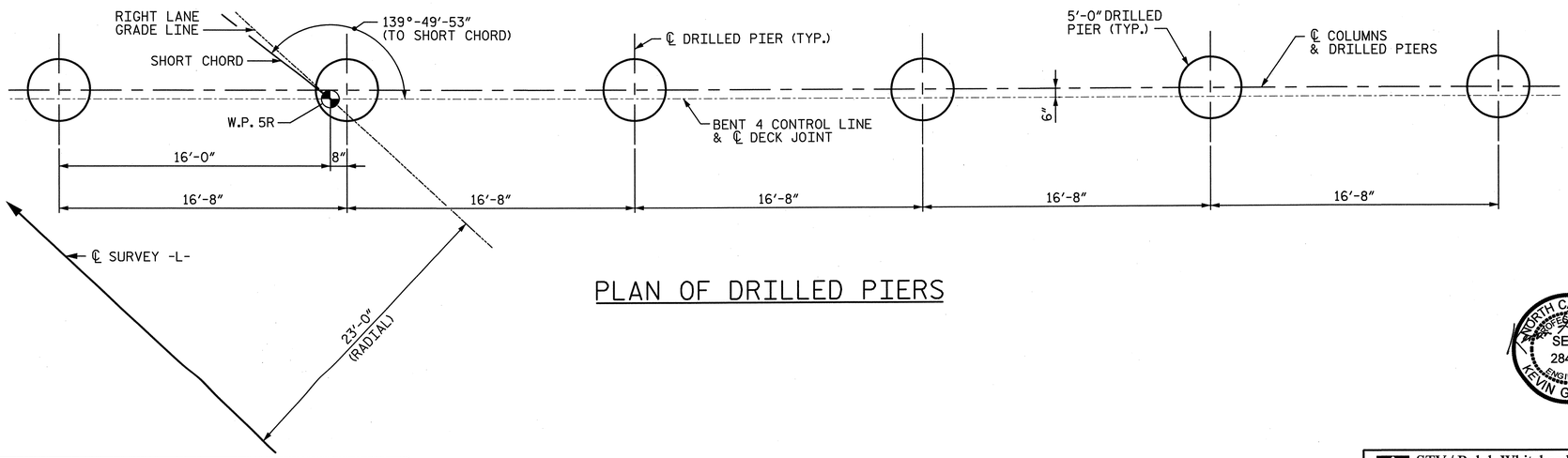

PLAN OF DRILLED PIERS

PROJECT NO. U-2524C
GUILFORD COUNTY
STATION: POT 407+85.82 -L-
= POT 29+79.72 -Y4-

SHEET 3 OF 3

STATE OF NORTH CAROLINA
DEPARTMENT OF TRANSPORTATION
RALEIGH

SUBSTRUCTURE
BENT 4
DETAILS & BILL OF MATERIAL

-RIGHT LANE-

NORTH CAROLINA PROFESSIONAL SEAL 28479 ENGINEER KEVIN G. BAILEY
6-7-13

DRAWN BY : JMP	DATE : 3-13	DESIGN ENGINEER OF RECORD: K. BAILEY	DATE : 5-13
CHECKED BY : KDH	DATE : 3-13		

STV / Ralph Whitehead Associates, Inc.
1000 West Morehead St., Ste. 200
Charlotte, NC 28208
NC License No. F-0991

REVISIONS						SHEET NO.
NO.	BY:	DATE:	NO.	BY:	DATE:	S-428
1			3			TOTAL SHEETS
2			4			836

6/6/2013 8:59:28 PM R:\ustation\Finals\Bent 04- 3 of 3.dgn

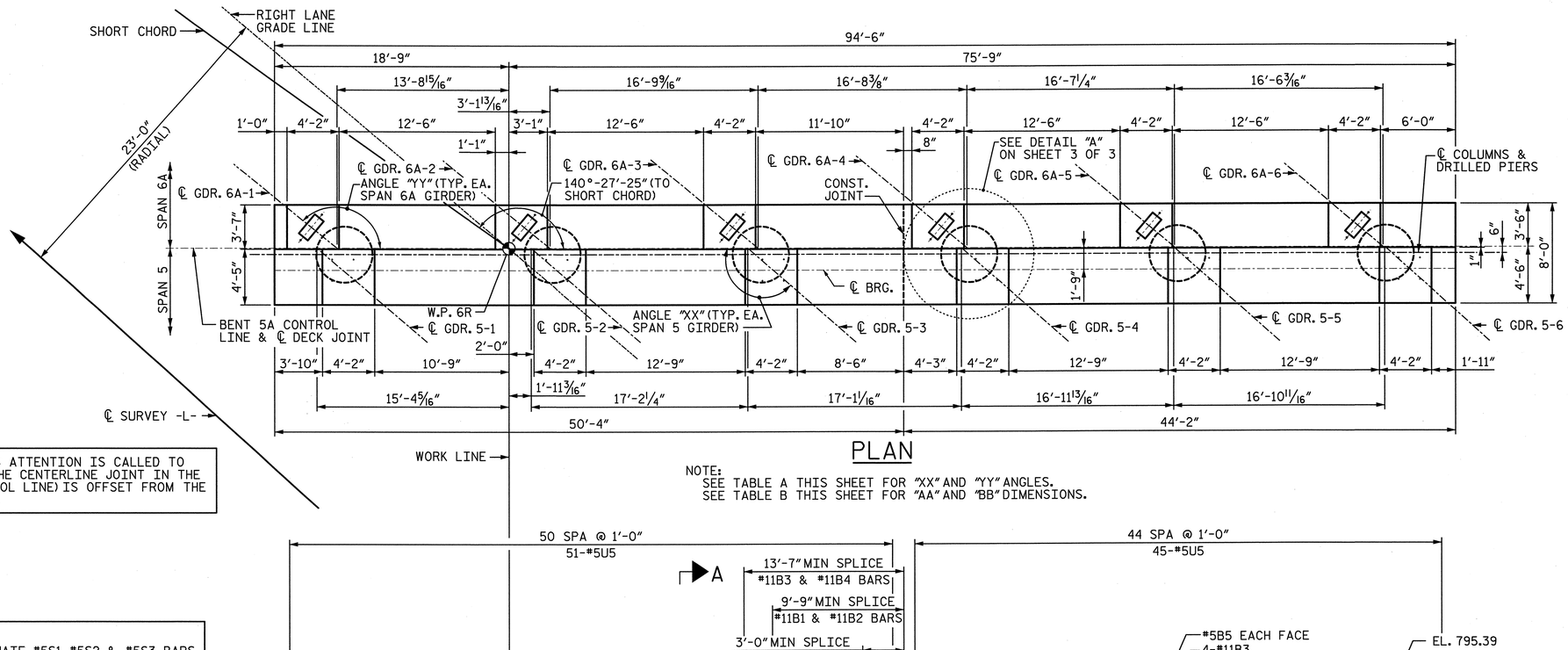

PLAN

THE CONTRACTOR'S ATTENTION IS CALLED TO THE FACT THAT THE CENTERLINE JOINT IN THE DECK SLAB (CONTROL LINE) IS OFFSET FROM THE CENTERLINE BENT.

NOTE:
SEE TABLE A THIS SHEET FOR "XX" AND "YY" ANGLES.
SEE TABLE B THIS SHEET FOR "AA" AND "BB" DIMENSIONS.

NOTES:

1. ALL REINFORCING STEEL IN THE DRILLED PIERS IS INCLUDED IN THE PAY ITEMS FOR "REINFORCING STEEL" AND "SPIRAL COLUMN REINFORCING STEEL".
2. THE LOCATION OF THE CONSTRUCTION JOINT IN THE DRILLED PIERS IS BASED ON AN APPROXIMATE GROUND LINE ELEVATION. IF THE CONSTRUCTION JOINT IS ABOVE THE ACTUAL GROUND ELEVATION, THE CONTRACTOR SHALL PLACE THE CONSTRUCTION JOINT 1 FOOT BELOW THE GROUND LINE.
3. STIRRUPS AND "U BARS" IN CAP MAY BE SHIFTED SLIGHTLY AS NECESSARY TO CLEAR ANCHOR BOLTS.
4. HOOKS ON BARS MAY BE TURNED AS NECESSARY FOR PLACING REINFORCING STEEL.
5. A CONSTRUCTION JOINT AT MID-HEIGHT OF COLUMN IS PERMITTED.
6. FOR "AB1" ANCHOR BOLTS, SEE "ELASTOMERIC BEARING DETAILS" SHEET.
7. FOR 1½" ANCHOR BOLTS, SEE "POT BEARING DETAILS" SHEET.
8. SEE "GENERAL DRAWING GENERAL NOTES" SHEET FOR ADDITIONAL NOTES.
9. SEE SHEET 2 OF 3 FOR SECTIONS CALLED OUT ON ELEVATION VIEW.
10. THE TOP SURFACE AREAS OF THE BENT CAPS SHALL BE CURED IN ACCORDANCE WITH THE STANDARD SPECIFICATIONS EXCEPT THE MEMBRANE CURING COMPOUND METHOD SHALL NOT BE USED.
11. FOR PIPE INSERT DETAILS, SEE "POT BEARING DETAILS" SHEETS.

TABLE A	
PLAN VIEW ANGLES	
	ANGLE "XX"
5-1	139°-55'-55"
5-2	139°-37'-54"
5-3	139°-20'-08"
5-4	139°-02'-39"
5-5	138°-45'-24"
5-6	138°-28'-24"
	ANGLE "YY"
6A-1	140°-38'-04"
6A-2	140°-24'-59"
6A-3	140°-12'-04"
6A-4	139°-59'-19"
6A-5	139°-46'-44"
6A-6	139°-34'-18"

TABLE B	
PLAN VIEW DIMENSIONS	
	DIMENSION "AA"
5-1	2'-0 5/16"
5-2	2'-0 1/16"
5-3	2'-0 1/16"
5-4	2'-0 3/16"
5-5	1'-11 5/16"
5-6	1'-11 1/16"
	DIMENSION "BB"
6A-1	4'-3 3/16"
6A-2	4'-2 13/16"
6A-3	4'-2 7/16"
6A-4	4'-2 1/16"
6A-5	4'-1 1/16"
6A-6	4'-1 5/16"

NOTE:
INVERT ALTERNATE #5S1, #5S2 & #5S3 BARS.

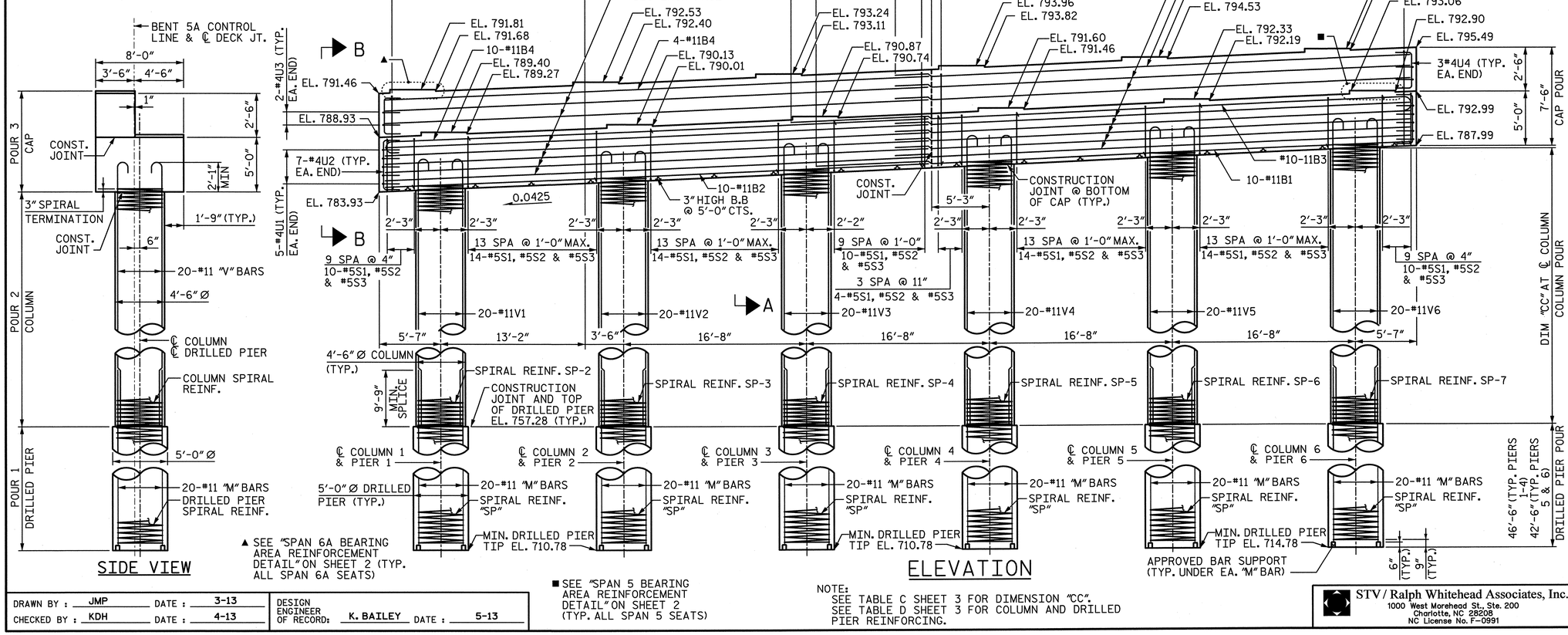

SIDE VIEW

ELEVATION

▲ SEE "SPAN 6A BEARING AREA REINFORCEMENT DETAIL" ON SHEET 2 (TYP. ALL SPAN 6A SEATS)

■ SEE "SPAN 5 BEARING AREA REINFORCEMENT DETAIL" ON SHEET 2 (TYP. ALL SPAN 5 SEATS)

NOTE:
SEE TABLE C SHEET 3 FOR DIMENSION "CC".
SEE TABLE D SHEET 3 FOR COLUMN AND DRILLED PIER REINFORCING.

NORTH CAROLINA PROFESSIONAL SEAL 28479 ENGINEER KEVIN G. BAILEY 6-7-13

PROJECT NO. U-2524C
GUILFORD COUNTY
STATION: POT 407+85.82 -L-
= POT 29+79.72 -Y4-

SHEET 1 OF 3

STATE OF NORTH CAROLINA
DEPARTMENT OF TRANSPORTATION
RALEIGH

SUBSTRUCTURE BENT 5A PLAN & ELEVATION

-RIGHT LANE-

DRAWN BY : JMP DATE : 3-13
CHECKED BY : KDH DATE : 4-13
DESIGN ENGINEER OF RECORD: K. BAILEY DATE : 5-13

STV / Ralph Whitehead Associates, Inc.
1000 West Morehead St., Ste. 200
Charlotte, NC 28208
NC License No. F-0991

REVISIONS						SHEET NO.
NO.	BY:	DATE:	NO.	BY:	DATE:	S-429
1			3			TOTAL SHEETS
2			4			836

6/6/2013 8:59:30 PM R:\ustation\Finals\Bent 05A - 1of 3.dgn

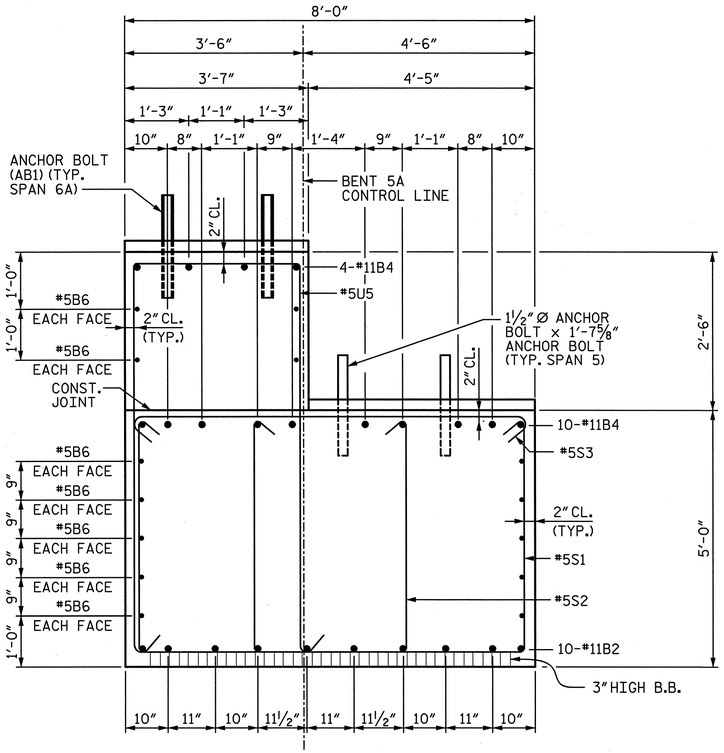

SECTION A-A

NOTE:
INVERT ALTERNATE #5S1, #5S2 AND #5S3 BARS.

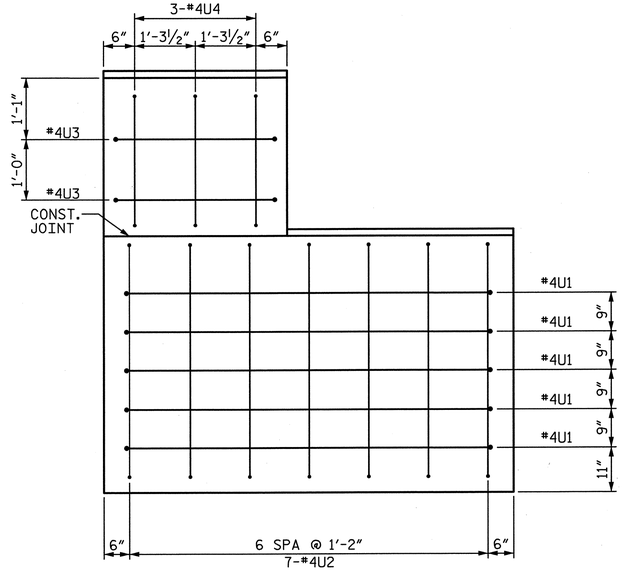

END VIEW B-B

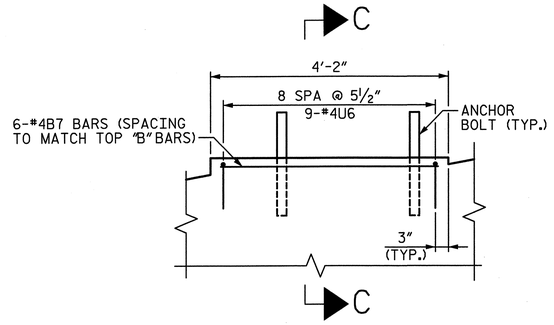

SPAN 5 BEARING AREA REINFORCEMENT DETAIL

(TYP. AT EACH BRIDGE SEAT)

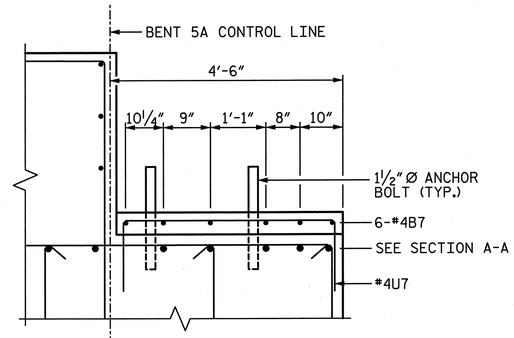

SECTION C-C

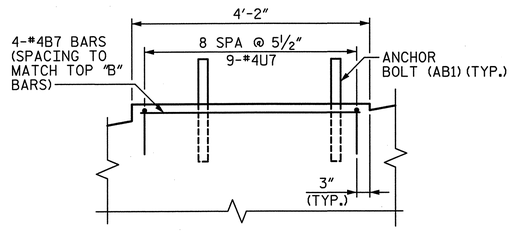

SPAN 6A BEARING AREA REINFORCEMENT DETAIL

(TYP. AT EACH BRIDGE SEAT)

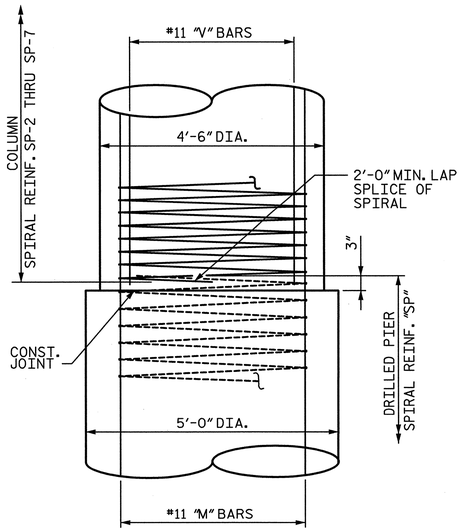

CONSTRUCTION JOINT DETAIL

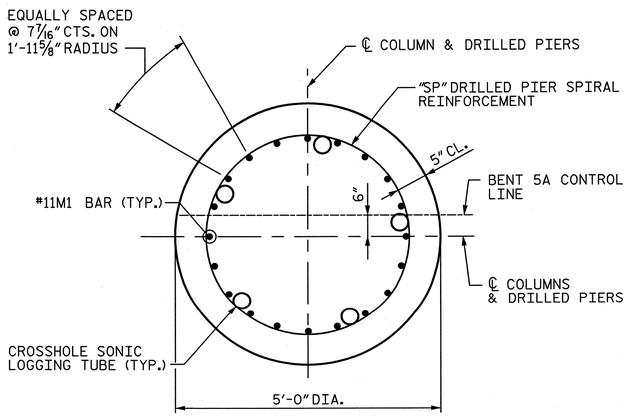

TYPICAL SECTION THROUGH DRILLED PIER

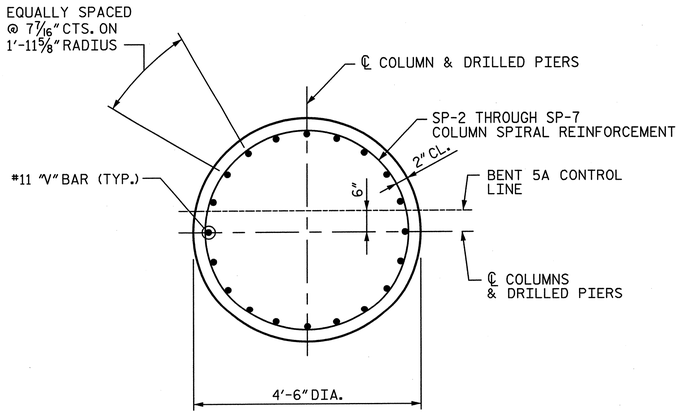

TYPICAL SECTION THROUGH COLUMN

NORTH CAROLINA PROFESSIONAL SEAL 28479 ENGINEER KEVIN G. BAILEY
6-7-13

PROJECT NO. U-2524C
GUILFORD COUNTY
STATION: POT 407+85.82 -L-
= POT 29+79.72 -Y4-
SHEET 2 OF 3

STATE OF NORTH CAROLINA
DEPARTMENT OF TRANSPORTATION
RALEIGH

SUBSTRUCTURE BENT 5A DETAILS

-RIGHT LANE-

DRAWN BY : JMP	DATE : 3-13	DESIGN ENGINEER OF RECORD: K. BAILEY	DATE : 5-13
CHECKED BY : KDH	DATE : 4-13		

STV / Ralph Whitehead Associates, Inc.
1000 West Morehead St., Ste. 200
Charlotte, NC 28208
NC License No. F-0991

REVISIONS						SHEET NO.
NO.	BY:	DATE:	NO.	BY:	DATE:	S-430
1			3			TOTAL SHEETS
2			4			836

6/6/2013 8:59:31 PM R:\structon\Finals\Bent 05A - 2 of 3.dgn

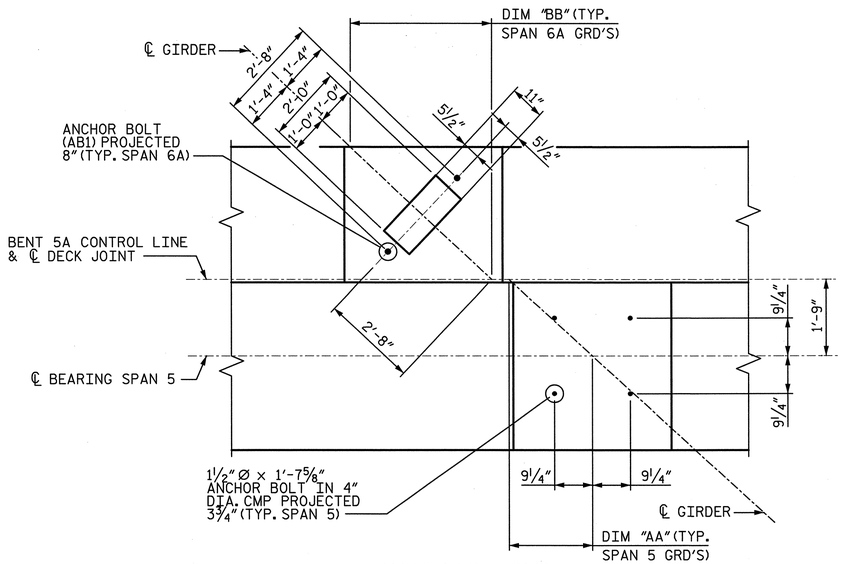

DETAIL "A"

(TYP. AT EACH BRIDGE SEAT)

NOTE:
SEE TABLE B SHEET 1
FOR "AA" AND "BB" DIMENSIONS.

BAR TYPES

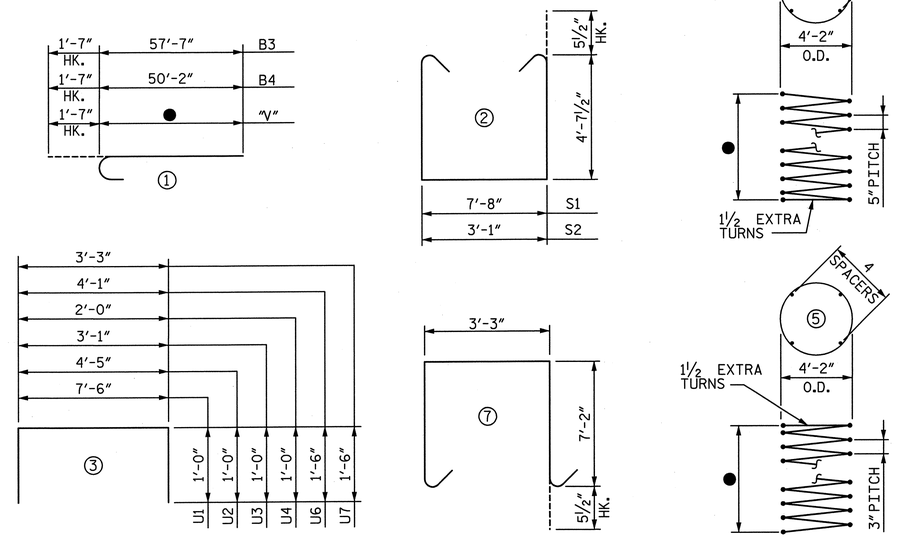

ALL BAR DIMENSIONS ARE OUT TO OUT

BILL OF MATERIAL

BAR	NO.	SIZE	TYPE	LENGTH	WEIGHT
B1	10	#11	STR.	53'-9"	2,856
B2	10	#11	STR.	50'-2"	2,665
B3	14	#11	①	59'-2"	4,401
B4	14	#11	①	51'-9"	3,849
B5	14	#5	STR.	47'-0"	686
B6	14	#5	STR.	50'-2"	733
B7	60	#4	STR.	3'-10"	154
S1	90	#5	②	17'-11"	1,682
S2	90	#5	②	13'-3"	1,244
S3	90	#5	⑥	8'-7"	806
U1	10	#4	③	9'-6"	63
U2	14	#4	③	6'-5"	60
U3	4	#4	③	5'-1"	14
U4	6	#4	③	4'-0'	16
U5	96	#5	⑦	18'-6"	1,852
U6	54	#4	③	7'-1"	256
U7	54	#4	③	6'-3"	225

NOTE:
FOR ● AND COLUMNS & DRILLED PIERS REINFORCING BILL OF MATERIAL SEE TABLE D THIS SHEET.

TABLE C

ELEVATION VIEW DIMENSIONS

COL	DIMENSION "CC"
1	26'-10¾"
2	27'-7¼"
3	28'-3¾"
4	29'-0¼"
5	29'-8¾"
6	30'-5¼"

TABLE D

COLUMNS & DRILLED PIERS REINFORCING BILL OF MATERIAL

COLUMN/ DRILLED PIER	BAR	NO.	SIZE	TYPE	●	LENGTH	WEIGHT	DRILLED PIER LENGTH
1	M11	20	#11	STR.		58'-9"	6,243	46'-6"
	V1	20	#11	①	31'-2"	32'-9"	3,480	
	SP-2	1	✳	⑤	27'-2"	1,430'-0"	955	
	SP-11	1	✳✳	④	46'-0"	1,449'-3"	1,512	
2	M11	20	#11	STR.		58'-9"	6,243	46'-6"
	V2	20	#11	①	31'-11"	33'-6"	3,560	
	SP-3	1	✳	⑤	27'-11"	1,468'-10"	981	
	SP-11	1	✳✳	④	46'-0"	1,449'-3"	1,512	
3	M11	20	#11	STR.		58'-9"	6,243	46'-6"
	V3	20	#11	①	32'-7"	34'-2"	3,631	
	SP-4	1	✳	⑤	28'-7"	1,503'-5"	1,004	
	SP-11	1	✳✳	④	46'-0"	1,449'-3"	1,512	
4	M11	20	#11	STR.		58'-9"	6,243	46'-6"
	V4	20	#11	①	33'-4"	34'-11"	3,710	
	SP-5	1	✳	⑤	29'-4"	1,542'-4"	1,030	
	SP-11	1	✳✳	④	46'-0"	1,449'-3"	1,512	
5	M12	20	#11	STR.		54'-9"	5,818	42'-6"
	V5	20	#11	①	34'-0"	35'-7"	3,781	
	SP-6	1	✳	⑤	30'-0"	1,576'-10"	1,053	
	SP-12	1	✳✳	④	42'-0"	1,325'-1"	1,382	
6	M12	20	#11	STR.		54'-9"	5,818	42'-6"
	V6	20	#11	①	34'-9"	36'-4"	3,861	
	SP-7	1	✳	⑤	30'-9"	1,615'-9"	1,079	
	SP-12	1	✳✳	④	42'-0"	1,325'-1"	1,382	

THE CONTRACTOR'S ATTENTION IS CALLED TO THE FACT THAT THE LONGITUDINAL REINFORCEMENT FOR THE DRILLED PIERS IS DETAILED WITH 3 FEET OF EXTRA LENGTH.

✳✳ THE SP-11 AND SP-12 SPIRAL REINFORCING STEEL SHALL BE W31 OR D-31 COLD DRAWN WIRE OR #5 PLAIN OR DEFORMED BAR WITH A 5" PITCH.

✳ THE SP-2 THROUGH SP-7 SPIRAL REINFORCING SHALL BE W20 OR D-20 COLD DRAWN WIRE OR #4 PLAIN OR DEFORMED BAR WITH A 3" PITCH.

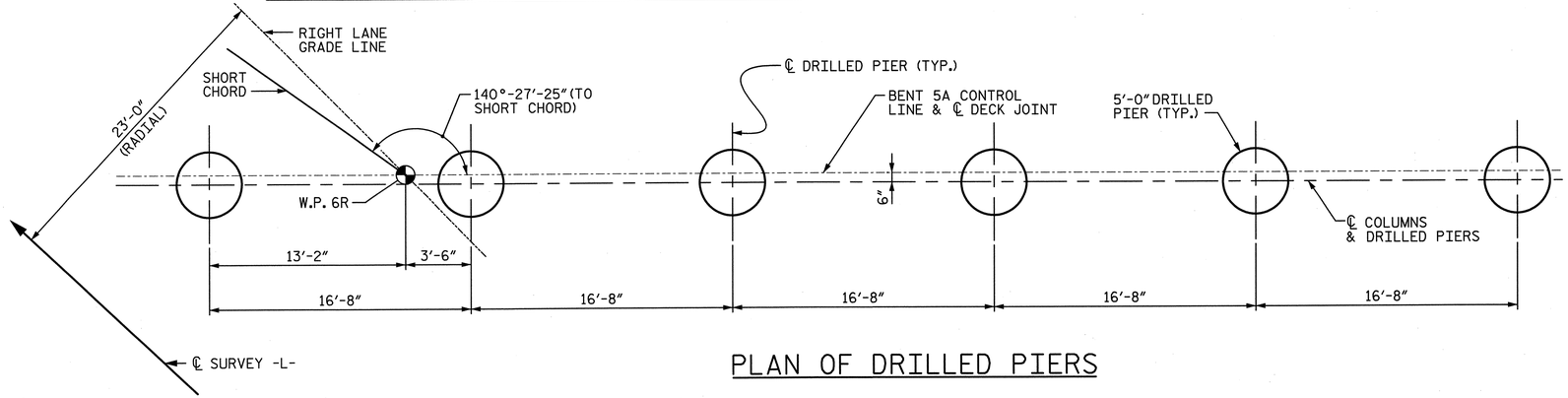

PLAN OF DRILLED PIERS

QUANTITIES

REINFORCING STEEL		LBS.	80,193
SPIRAL REINFORCING STEEL		LBS.	14,914
CLASS A CONCRETE :	POUR 2 - COLUMNS	CU. YDS.	101.4
	POUR 3 - CAP	CU. YDS.	173.6
	TOTAL	CU. YDS.	275.0
5'-0" Ø DRILLED PIERS IN SOIL		L.F.	217
5'-0" Ø DRILLED PIERS NOT IN SOIL		L.F.	54
TOTAL 5'-0" Ø DRILLED PIERS		L.F.	271
DRILLED PIER CONCRETE :	POUR 1	CU. YDS.	197.1
CSL TUBES		L.F.	1,400

NORTH CAROLINA PROFESSIONAL ENGINEER SEAL 28479 KEVIN G. BAILEY 6-7-13

PROJECT NO. U-2524C
GUILFORD COUNTY
STATION: POT 407+85.82 -L-
= POT 29+79.72 -Y4-
SHEET 3 OF 3

STATE OF NORTH CAROLINA
DEPARTMENT OF TRANSPORTATION
RALEIGH

SUBSTRUCTURE
BENT 5A
DETAILS & BILL OF MATERIAL

-RIGHT LANE-

DRAWN BY : JMP DATE : 3-13
CHECKED BY : KDH DATE : 4-13
DESIGN ENGINEER OF RECORD: K. BAILEY DATE : 5-13

STV / Ralph Whitehead Associates, Inc.
1000 West Morehead St., Ste. 200
Charlotte, NC 28208
NC License No. F-0991

REVISIONS						SHEET NO.
NO.	BY:	DATE:	NO.	BY:	DATE:	S-431
1			3			TOTAL SHEETS
2			4			836

6/6/2013 8:59:33 PM R:\ustation\Finals\Bent 05A- 3 of 3.dgn

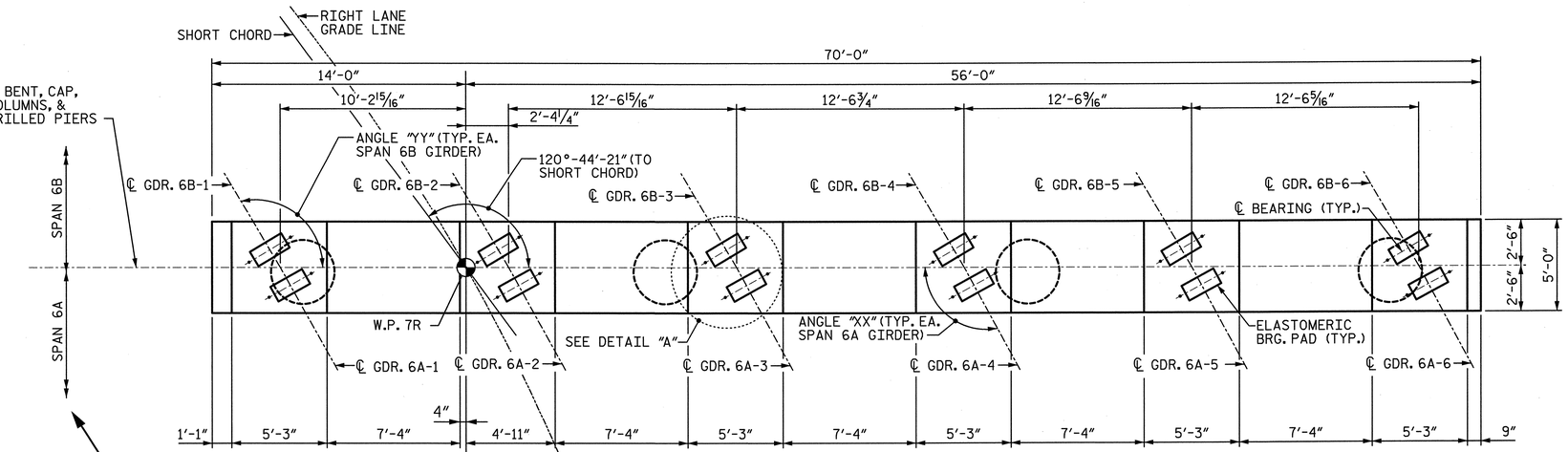

PLAN

NOTE:
SEE TABLE A THIS SHEET FOR "XX" AND "YY" ANGLES.
SEE TABLE B THIS SHEET FOR "AA" AND "BB" DIMENSIONS.

NOTE:
℄ SURVEY -L-, SHORT CHORD AND RIGHT LANE GRADE LINE EXAGGERATED FOR CLARITY.

TABLE A	
PLAN VIEW ANGLES	
GDR.	ANGLE "XX"
6A-1	119°-16'-34"
6A-2	119°-03'-29"
6A-3	118°-50'-34"
6A-4	118°-37'-49"
6A-5	118°-25'-14"
6A-6	118°-12'-48"
	ANGLE "YY"
6B-1	120°-47'-50"
6B-2	120°-43'-32"
6B-3	120°-39'-18"
6B-4	120°-35'-06"
6B-5	120°-30'-56"
6B-6	120°-26'-49"

TABLE B	
PLAN VIEW DIMENSIONS	
GDR.	DIM "AA"
6A-1	1'-4 13/16"
6A-2	1'-4 11/16"
6A-3	1'-4 1/2"
6A-4	1'-4 3/8"
6A-5	1'-4 1/4"
6A-6	1'-4 1/8"
	DIM "BB"
6B-1	1'-5 1/8"
6B-2	1'-5 3/16"
6B-3	1'-5 3/4"
6B-4	1'-5 7/8"
6B-5	1'-5 11/16"
6B-6	1'-5 5/8"

NOTES:
1. ALL REINFORCING STEEL IN THE DRILLED PIERS IS INCLUDED IN THE PAY ITEMS FOR "REINFORCING STEEL" AND "SPIRAL COLUMN REINFORCING STEEL".
2. THE LOCATION OF THE CONSTRUCTION JOINT IN THE DRILLED PIERS IS BASED ON AN APPROXIMATE GROUND LINE ELEVATION. IF THE CONSTRUCTION JOINT IS ABOVE THE ACTUAL GROUND ELEVATION, THE CONTRACTOR SHALL PLACE THE CONSTRUCTION JOINT 1 FOOT BELOW THE GROUND LINE.
3. STIRRUPS AND "U BARS" IN CAP MAY BE SHIFTED SLIGHTLY AS NECESSARY TO CLEAR ANCHOR BOLTS.
4. HOOKS ON BARS MAY BE TURNED AS NECESSARY FOR PLACING REINFORCING STEEL.
5. A CONSTRUCTION JOINT AT MID-HEIGHT OF COLUMN IS PERMITTED.
6. FOR "AB1" ANCHOR BOLTS, SEE "ELASTOMERIC BEARING DETAILS" SHEET.
7. SEE "GENERAL DRAWING GENERAL NOTES" SHEET FOR ADDITIONAL NOTES.
8. SEE SHEET 2 OF 3 FOR SECTIONS CALLED OUT ON ELEVATION VIEW.

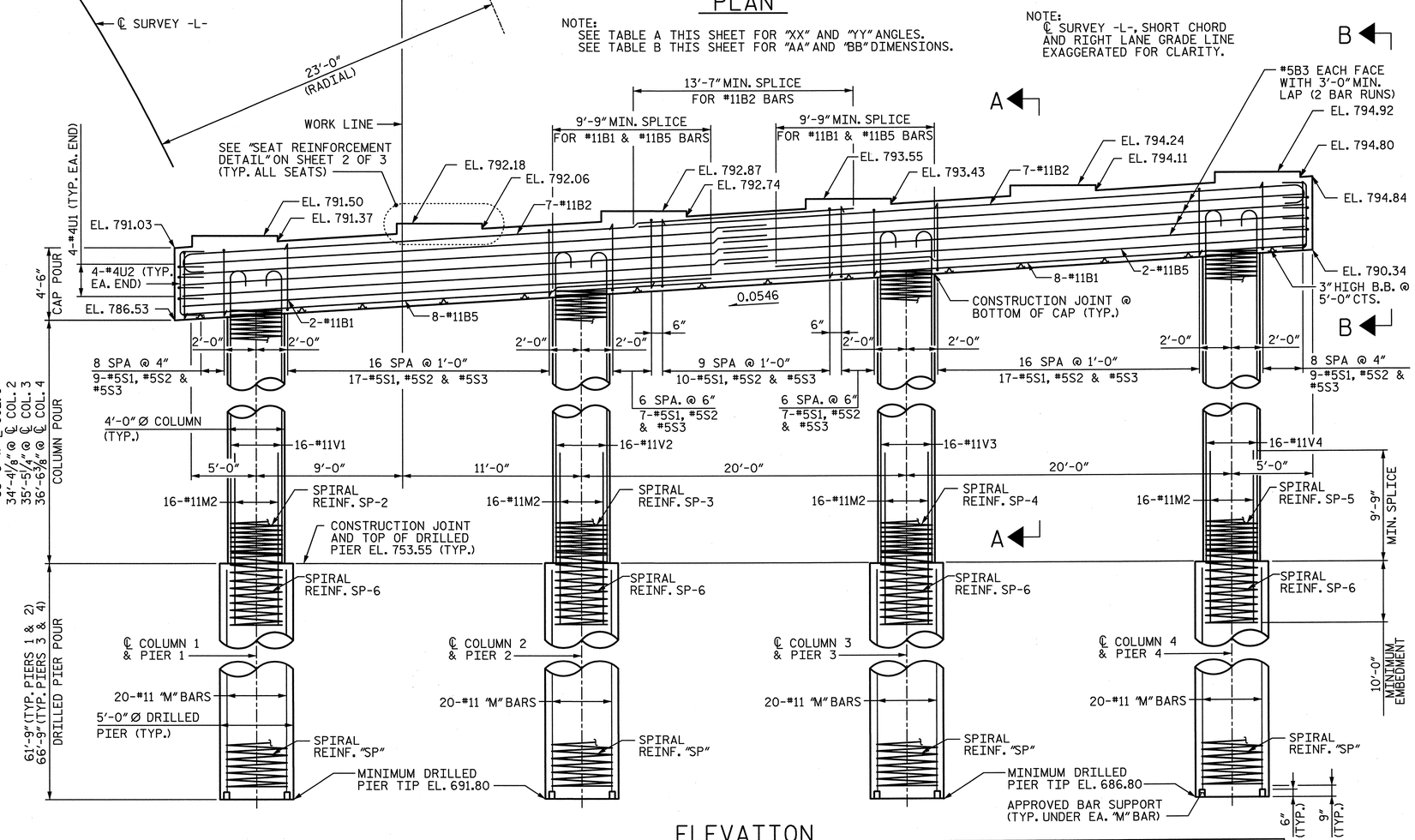

ELEVATION

NOTE:
SEE TABLE C SHEET 3 FOR COLUMN AND DRILLED PIER REINFORCING.

NOTE:
INVERT ALTERNATE #5S1, #5S2 AND #5S3 BARS.

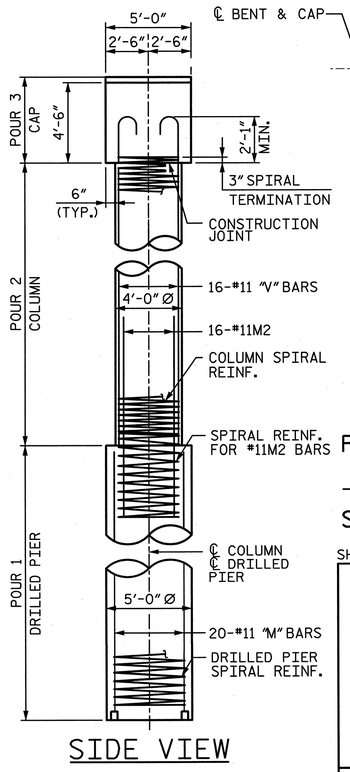

SIDE VIEW

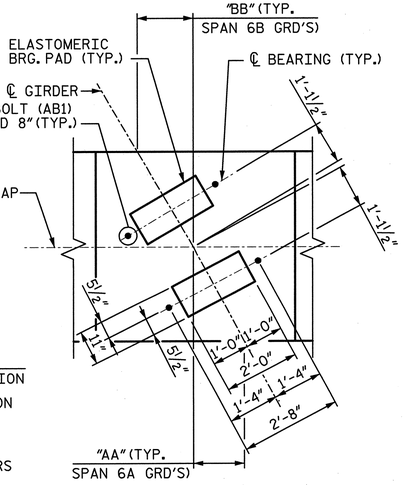

DETAIL "A"

(TYP. AT EACH BRIDGE SEAT)

NOTE:
SEE TABLE B THIS SHEET FOR "AA" AND "BB" DIMENSIONS.

NORTH CAROLINA PROFESSIONAL SEAL 28479 ENGINEER KEVIN G. BAILEY 6-7-13

PROJECT NO. U-2524C
GUILFORD COUNTY
STATION: POT 407+85.82 -L-
= POT 29+79.72 -Y4-
SHEET 1 OF 3

STATE OF NORTH CAROLINA
DEPARTMENT OF TRANSPORTATION
RALEIGH

SUBSTRUCTURE
BENT 5B
PLAN & ELEVATION

-RIGHT LANE-

DRAWN BY : JMP	DATE : 3-13	DESIGN ENGINEER OF RECORD: K. BAILEY	DATE : 5-13
CHECKED BY : SB	DATE : 3-13		

STV / Ralph Whitehead Associates, Inc.
1000 West Morehead St., Ste. 200
Charlotte, NC 28208
NC License No. F-0991

REVISIONS						SHEET NO.
NO.	BY:	DATE:	NO.	BY:	DATE:	S-432
1			3			TOTAL SHEETS
2			4			836

6/6/2013 8:59:34 PM R:\ustation\Finals\Bent 05B - 1of 3.dgn

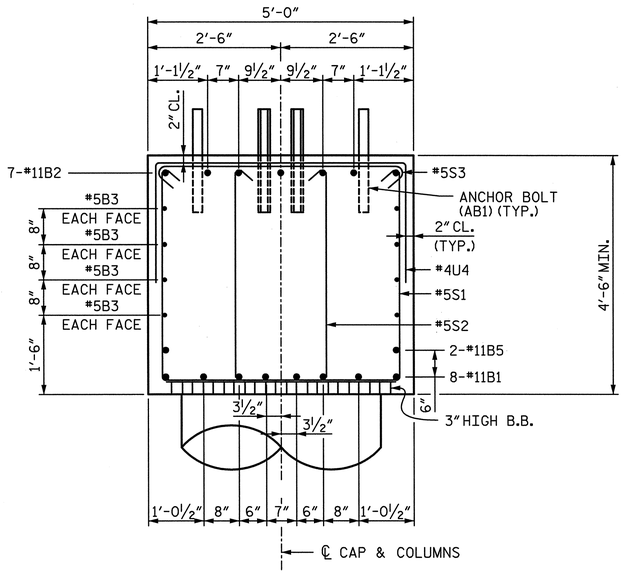

SECTION A-A

NOTE:
INVERT ALTERNATE #5S1, #5S2 AND #5S3 BARS.

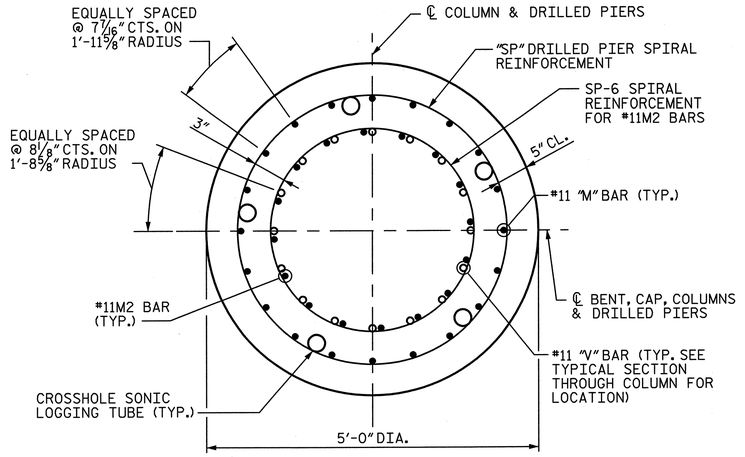

TYPICAL SECTION THROUGH DRILLED PIER

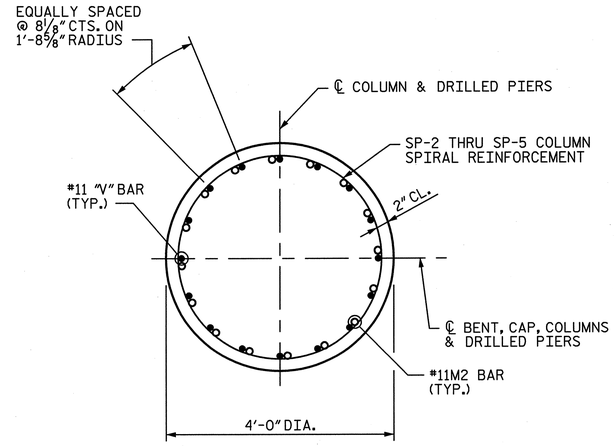

TYPICAL SECTION THROUGH COLUMN

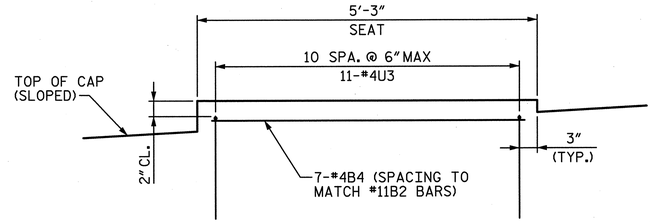

SEAT REINFORCEMENT DETAIL

(TYPICAL AT EACH BEARING SEAT)

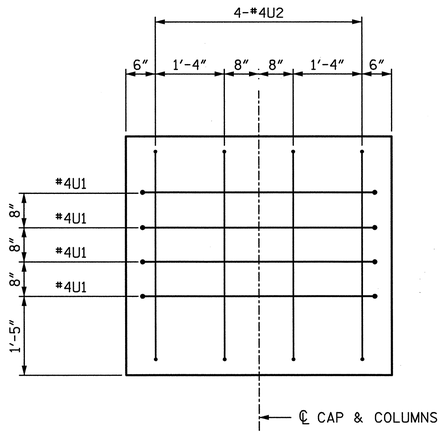

END VIEW B-B

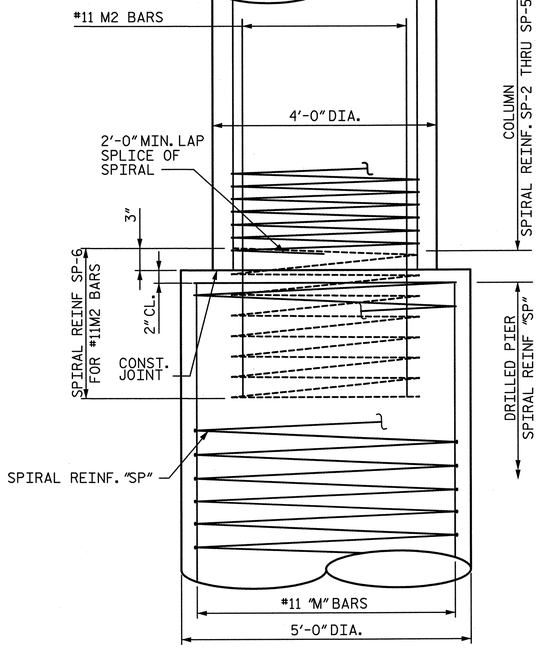

CONSTRUCTION JOINT DETAIL

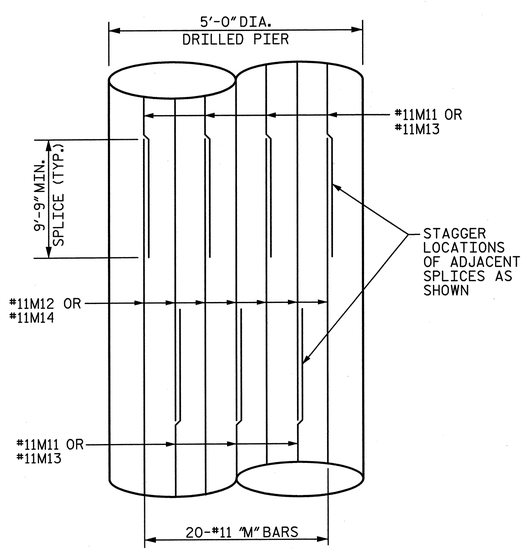

SPLICE DETAIL

PROJECT NO. U-2524C
GUILFORD COUNTY
STATION: POT 407+85.82 -L-
= POT 29+79.72 -Y4-

SHEET 2 OF 3

STATE OF NORTH CAROLINA
DEPARTMENT OF TRANSPORTATION
RALEIGH

SUBSTRUCTURE BENT 5B DETAILS

-RIGHT LANE-

NORTH CAROLINA PROFESSIONAL ENGINEER SEAL 28479 KEVIN G. BAILEY
6-7-13

STV / Ralph Whitehead Associates, Inc.
1000 West Morehead St., Ste. 200
Charlotte, NC 28208
NC License No. F-0991

DRAWN BY : JMP	DATE : 3-13	DESIGN ENGINEER OF RECORD: K. BAILEY	DATE : 5-13
CHECKED BY : SB	DATE : 3-13		

REVISIONS						SHEET NO.
NO.	BY:	DATE:	NO.	BY:	DATE:	S-433
1			3			TOTAL SHEETS
2			4			836

6/6/2013 8:59:35 PM R:\ustation\Finals\Bent 05B - 2 of 3.dgn

TABLE C

COLUMNS & DRILLED PIERS REINFORCING BILL OF MATERIAL

COLUMN/ DRILLED PIER	BAR	NO.	SIZE	TYPE	●	LENGTH	WEIGHT	DRILLED PIER LENGTH
1	M11	20	#11	STR.		30'-0"	3,188	61'-9"
	M12	20	#11	STR.		43'-10"	4,658	
	M2	16	#11	STR.		19'-9"	1,679	
	V1	16	#11	①	37'-0"	38'-7"	3,280	
	SP-2	1	✳	⑤	33'-6"	1,545'-4"	1,032	
	SP-11	1	✳✳	④	60'-10"	1,927'-1"	2,010	
	SP-6	1	✳✳	④	10'-3"	298'-7"	311	
2	M11	20	#11	STR.		30'-0"	3,188	61'-9"
	M12	20	#11	STR.		43'-10"	4,658	
	M2	16	#11	STR.		19'-9"	1,679	
	V2	16	#11	①	38'-2"	39'-9"	3,379	
	SP-3	1	✳	⑤	34'-8"	1,595'-1"	1,066	
	SP-11	1	✳✳	④	60'-10"	1,927'-1"	2,010	
	SP-6	1	✳✳	④	10'-3"	298'-7"	311	
3	M13	20	#11	STR.		30'-0"	3,188	66'-9"
	M14	20	#11	STR.		48'-10"	5,189	
	M2	16	#11	STR.		19'-9"	1,679	
	V3	16	#11	①	39'-3"	40'-10"	3,471	
	SP-4	1	✳	⑤	35'-9"	1,644'-10"	1,099	
	SP-12	1	✳✳	④	65'-10"	2,082'-3"	2,172	
	SP-6	1	✳✳	④	10'-3"	298'-7"	311	
4	M13	20	#11	STR.		30'-0"	3,188	66'-9"
	M14	20	#11	STR.		48'-10"	5,189	
	M2	16	#11	STR.		19'-9"	1,679	
	V4	16	#11	①	40'-4"	41'-11"	3,563	
	SP-5	1	✳	⑤	36'-10"	1,694'-7"	1,132	
	SP-12	1	✳✳	④	65'-10"	2,082'-3"	2,172	
	SP-6	1	✳✳	④	10'-3"	298'-7"	311	

THE CONTRACTOR'S ATTENTION IS CALLED TO THE FACT THAT THE LONGITUDINAL REINFORCEMENT FOR THE DRILLED PIERS IS DETAILED WITH 3 FEET OF EXTRA LENGTH.

SEE SPLICE DETAIL ON SHEET 2 FOR M11, M12 AND M13, M14 DETAILS.

✳✳ THE SP-11, SP-12 AND SP-6 SPIRAL REINFORCING STEEL SHALL BE W31 OR D-31 COLD DRAWN WIRE OR #5 PLAIN OR DEFORMED BAR WITH A 5"PITCH.

✳ THE SP-2 THRU SP-5 SPIRAL REINFORCING SHALL BE W20 OR D-20 COLD DRAWN WIRE OR #4 PLAIN OR DEFORMED BAR WITH A 3"PITCH.

QUANTITIES

REINFORCING STEEL	LBS.	63,863
SPIRAL REINFORCING STEEL	LBS.	13,937
CLASS A CONCRETE : POUR 2 - COLUMNS	CU. YDS.	64.9
POUR 3 - CAP	CU. YDS.	60
TOTAL	CU. YDS.	124.9
5'-0"Ø DRILLED PIERS IN SOIL	L.F.	230
5'-0"Ø DRILLED PIERS NOT IN SOIL	L.F.	27
TOTAL 5'-0"Ø DRILLED PIERS	L.F.	257
DRILLED PIER CONCRETE : POUR 1	CU. YDS.	186.9
CSL TUBES	L.F.	1,315

BAR TYPES

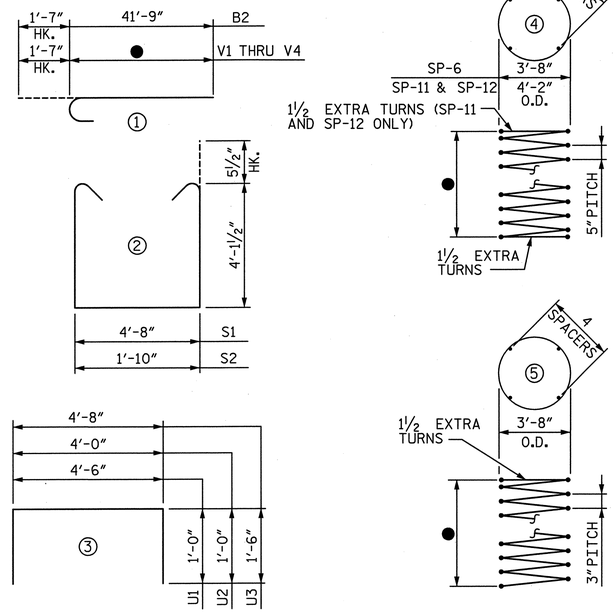

ALL BAR DIMENSIONS ARE OUT TO OUT

BILL OF MATERIAL

BAR	NO.	SIZE	TYPE	LENGTH	WEIGHT
B1	10	#11	STR.	46'-11"	2,493
B2	14	#11	①	43'-4"	3,223
B3	16	#5	STR.	36'-5"	608
B4	42	#4	STR.	4'-11"	138
B5	10	#11	STR.	32'-8"	1,736
S1	76	#5	②	13'-10"	1,097
S2	76	#5	②	10'-11"	865
S3	76	#5	⑥	5'-7"	443
U1	8	#4	③	6'-6"	35
U2	8	#4	③	6'-0"	32
U3	66	#4	③	7'-8"	338

NOTE:

FOR ● AND COLUMNS & DRILLED PIERS REINFORCING BILL OF MATERIAL SEE TABLE C THIS SHEET.

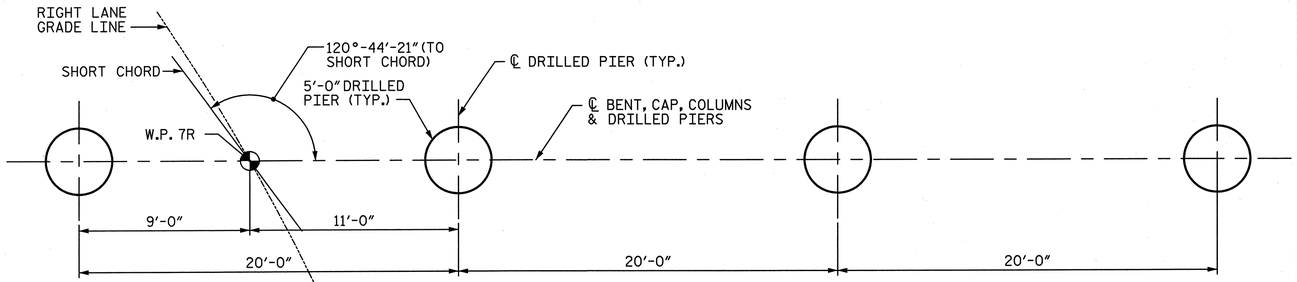

PLAN OF DRILLED PIERS

PROJECT NO. U-2524C

GUILFORD COUNTY

STATION: POT 407+85.82 -L-
= POT 29+79.72 -Y4-

SHEET 3 OF 3

STATE OF NORTH CAROLINA
DEPARTMENT OF TRANSPORTATION
RALEIGH

SUBSTRUCTURE BENT 5B DETAILS & BILL OF MATERIAL

-RIGHT LANE-

NORTH CAROLINA PROFESSIONAL ENGINEER SEAL 28479 KEVIN G. BAILEY 6-7-13

STV/ Ralph Whitehead Associates, Inc.
1000 West Morehead St., Ste. 200
Charlotte, NC 28208
NC License No. F-0991

REVISIONS						SHEET NO.
NO.	BY:	DATE:	NO.	BY:	DATE:	S-434
1			3			TOTAL SHEETS
2			4			836

DRAWN BY : JMP DATE : 3-13
CHECKED BY : SB DATE : 3-13

DESIGN ENGINEER OF RECORD: K. BAILEY DATE : 5-13

6/6/2013 10:45:33 PM R:\station\Finals\Bent 05B - 3 of 3.dgn

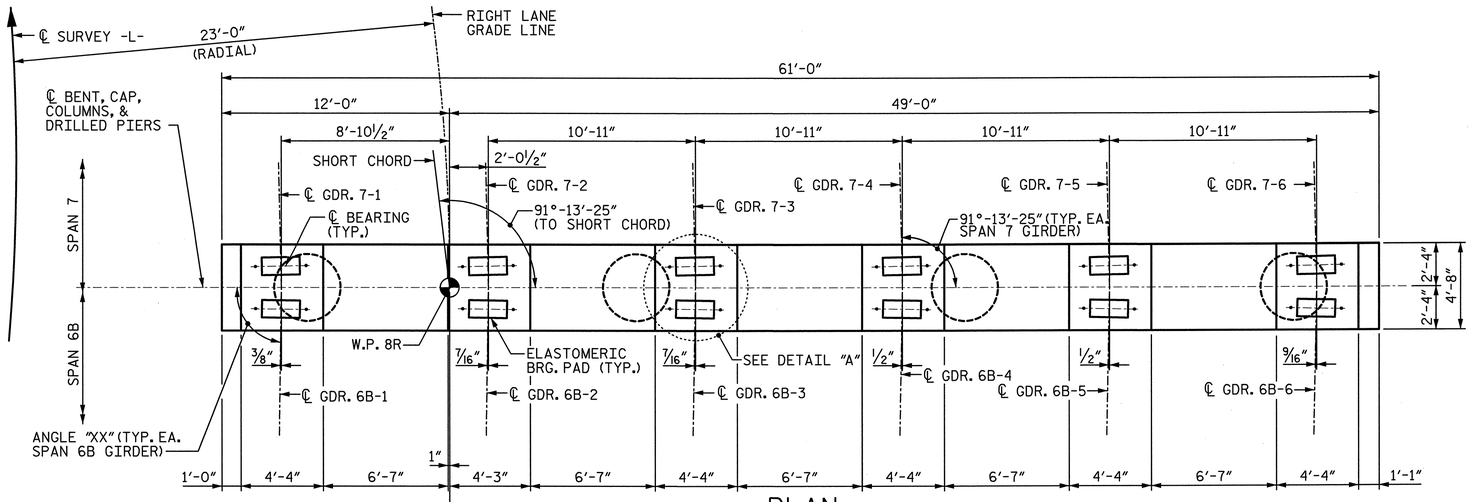

PLAN

WORK LINE

NOTE:
SEE TABLE A THIS SHEET FOR "XX" ANGLES.

NOTE:
℄ SURVEY -L-, SHORT CHORD AND RIGHT LANE GRADE LINE EXAGGERATED FOR CLARITY.

NOTE:
INVERT ALTERNATE #5S1, #5S2 AND #5S3 BARS.

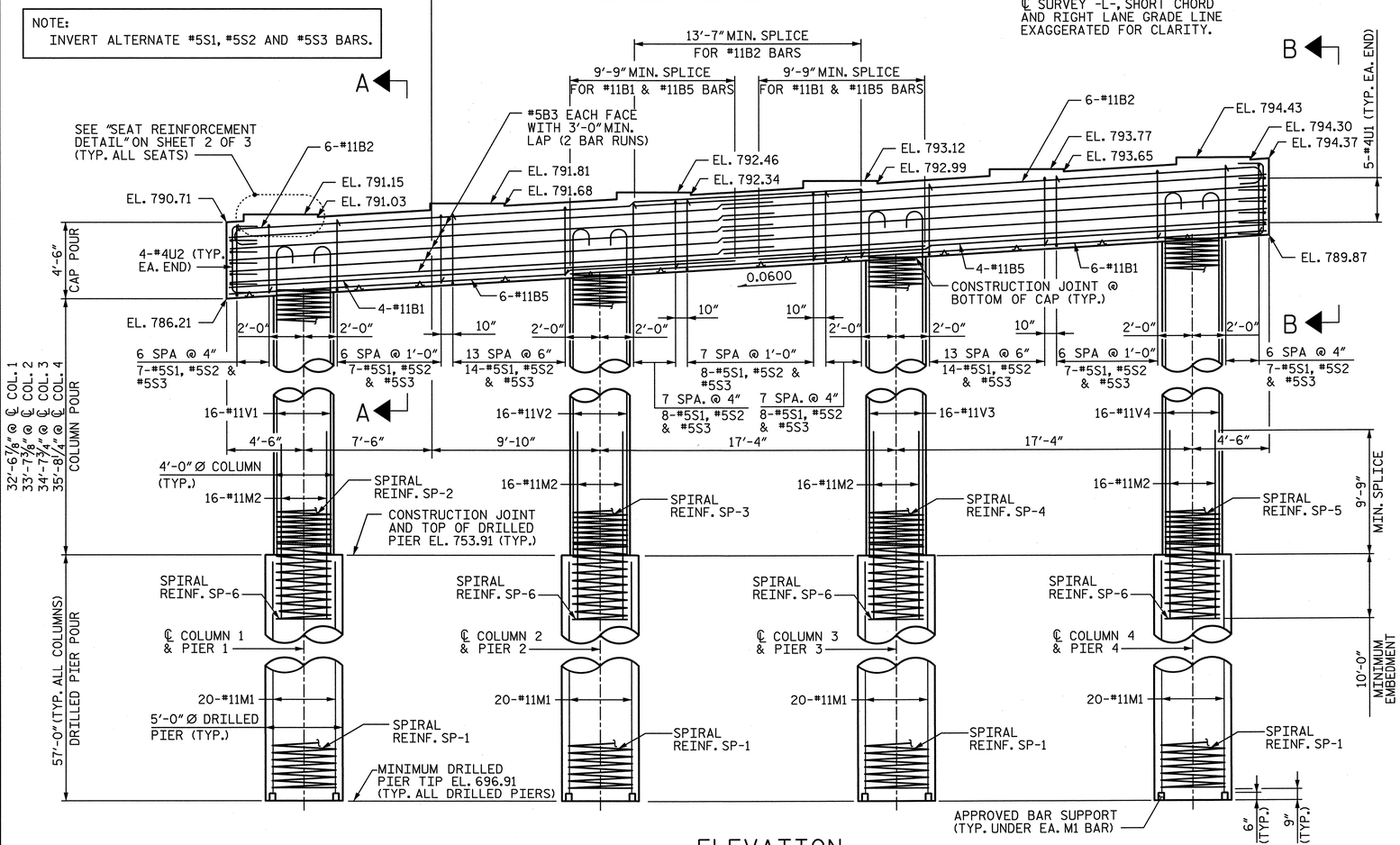

ELEVATION

TABLE A
PLAN VIEW ANGLES

GDR.	ANGLE "XX"
6B-1	89°-12'-35"
6B-2	89°-08'-18"
6B-3	89°-04'-03"
6B-4	88°-59'-51"
6B-5	88°-55'-41"
6B-6	88°-51'-34"

NOTES:

1. ALL REINFORCING STEEL IN THE DRILLED PIERS IS INCLUDED IN THE PAY ITEMS FOR "REINFORCING STEEL" AND "SPIRAL COLUMN REINFORCING STEEL".
2. THE LOCATION OF THE CONSTRUCTION JOINT IN THE DRILLED PIERS IS BASED ON AN APPROXIMATE GROUND LINE ELEVATION. IF THE CONSTRUCTION JOINT IS ABOVE THE ACTUAL GROUND ELEVATION, THE CONTRACTOR SHALL PLACE THE CONSTRUCTION JOINT 1 FOOT BELOW THE GROUND LINE.
3. STIRRUPS AND "U BARS" IN CAP MAY BE SHIFTED SLIGHTLY AS NECESSARY TO CLEAR ANCHOR BOLTS.
4. HOOKS ON BARS MAY BE TURNED AS NECESSARY FOR PLACING REINFORCING STEEL.
5. A CONSTRUCTION JOINT AT MID-HEIGHT OF COLUMN IS PERMITTED.
6. FOR "AB1" ANCHOR BOLTS, SEE "ELASTOMERIC BEARING DETAILS" SHEET.
7. SEE "GENERAL DRAWING GENERAL NOTES" SHEET FOR ADDITIONAL NOTES.
8. SEE SHEET 2 OF 3 FOR SECTIONS CALLED OUT ON ELEVATION VIEW.

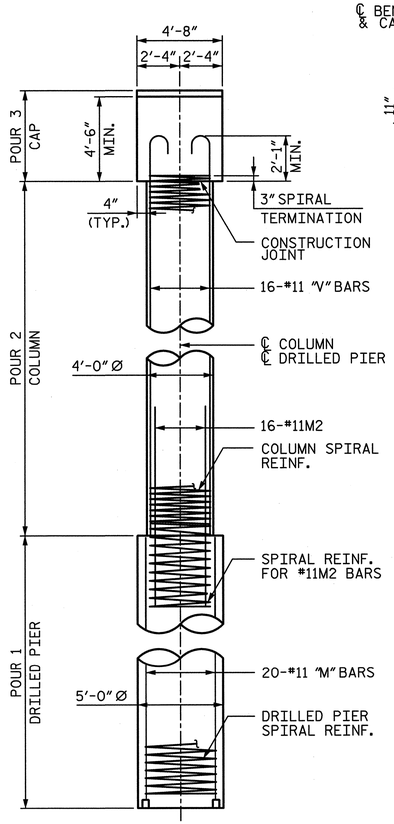

SIDE VIEW

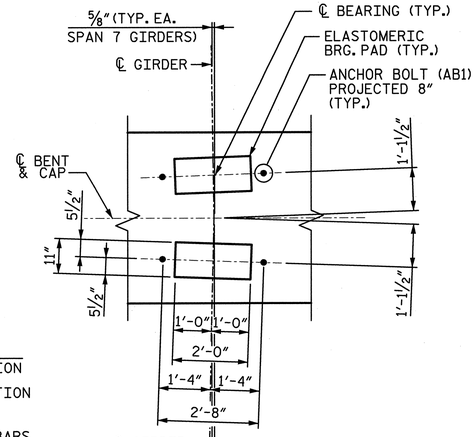

DETAIL "A"

(TYP. AT EACH BRIDGE SEAT)

NORTH CAROLINA PROFESSIONAL ENGINEER SEAL 28479 KEVIN G. BAILEY 6-7-13

PROJECT NO. U-2524C

GUILFORD COUNTY

STATION: POT 407+85.82 -L-
= POT 29+79.72 -Y4-

SHEET 1 OF 3

STATE OF NORTH CAROLINA
DEPARTMENT OF TRANSPORTATION
RALEIGH

SUBSTRUCTURE BENT 6 PLAN & ELEVATION

-RIGHT LANE-

REVISIONS						SHEET NO.
NO.	BY:	DATE:	NO.	BY:	DATE:	S-435
1			3			TOTAL SHEETS
2			4			836

DRAWN BY : JMP DATE : 3-13
CHECKED BY : SB DATE : 3-13
DESIGN ENGINEER OF RECORD: K. BAILEY DATE : 5-13

STV / Ralph Whitehead Associates, Inc.
1000 West Morehead St., Ste. 200
Charlotte, NC 28208
NC License No. F-0991

6/6/2013 8:59:38 PM R:\ustation\Finals\Bent 06 - 1of 3.dgn

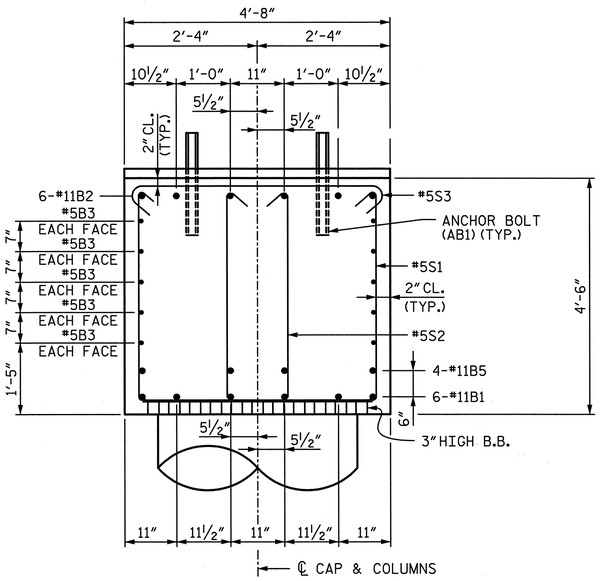

SECTION A-A

NOTE:
INVERT ALTERNATE #5S1, #5S2 AND #5S3 BARS.

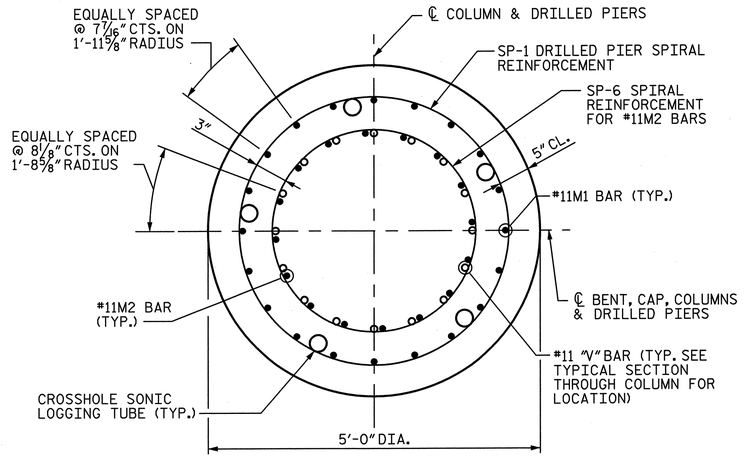

TYPICAL SECTION THROUGH DRILLED PIER

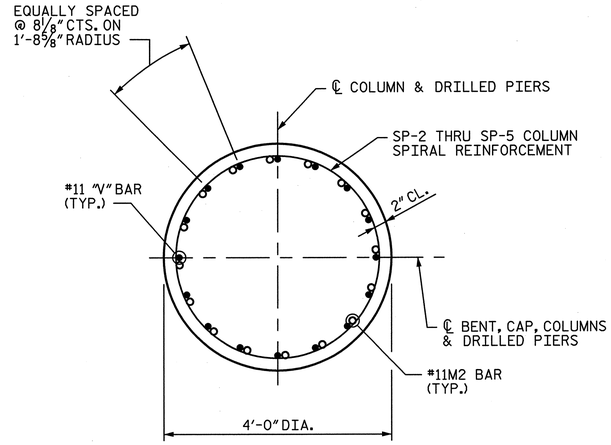

TYPICAL SECTION THROUGH COLUMN

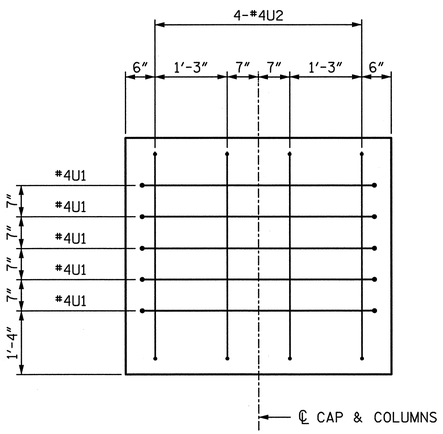

END VIEW B-B

(RIGHT END SHOWN, LEFT END SIMILAR)

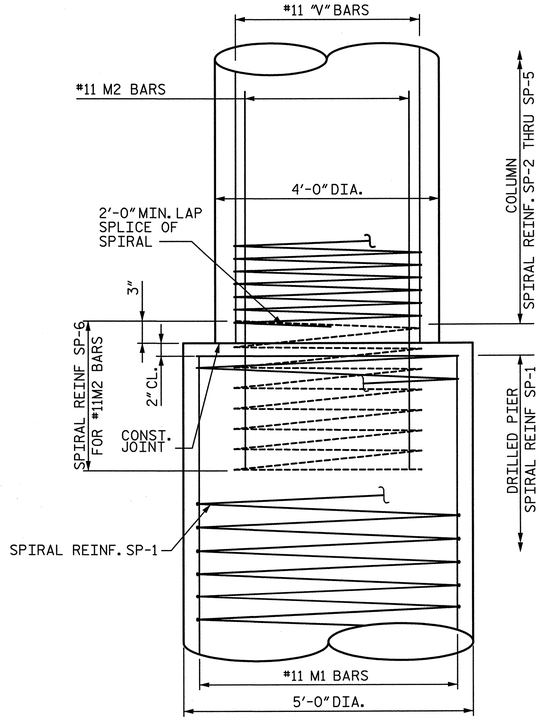

CONSTRUCTION JOINT DETAIL

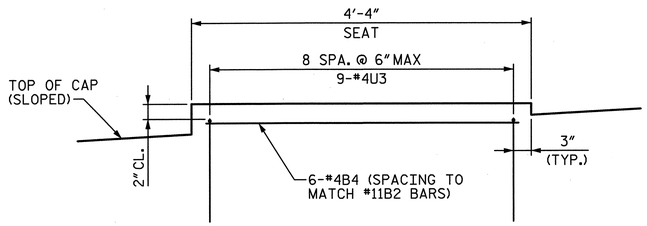

SEAT REINFORCEMENT DETAIL

(TYPICAL AT EACH BEARING SEAT)

NORTH CAROLINA PROFESSIONAL ENGINEER SEAL 28479 KEVIN G. BAILEY
6-7-13

PROJECT NO. U-2524C
GUILFORD COUNTY
STATION: POT 407+85.82 -L-
= POT 29+79.72 -Y4-
SHEET 2 OF 3

STATE OF NORTH CAROLINA
DEPARTMENT OF TRANSPORTATION
RALEIGH

SUBSTRUCTURE BENT 6 DETAILS

-RIGHT LANE-

DRAWN BY : JMP	DATE : 3-13	DESIGN ENGINEER OF RECORD: K. BAILEY	DATE : 5-13
CHECKED BY : SB	DATE : 3-13		

STV / Ralph Whitehead Associates, Inc.
1000 West Morehead St., Ste. 200
Charlotte, NC 28208
NC License No. F-0991

REVISIONS						SHEET NO.
NO.	BY:	DATE:	NO.	BY:	DATE:	S-436
1			3			TOTAL SHEETS
2			4			836

6/6/2013 8:59:39 PM R:\station\Finals\Bent 06 - 2 of 3.dgn

QUANTITIES

REINFORCING STEEL		LBS.	55,181
SPIRAL REINFORCING STEEL		LBS.	12,908
CLASS A CONCRETE :	POUR 2 - COLUMNS	CU. YDS.	63.5
	POUR 3 - CAP	CU. YDS.	48.7
	TOTAL	CU. YDS.	112.2
5'-0" Ø DRILLED PIERS IN SOIL		L.F.	190
5'-0" Ø DRILLED PIERS NOT IN SOIL		L.F.	38
TOTAL 5'-0" Ø DRILLED PIERS		L.F.	228
DRILLED PIER CONCRETE :	POUR 1	CU. YDS.	165.8
CSL TUBES		L.F.	1,170

BAR TYPES

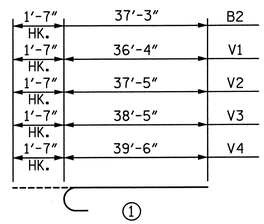

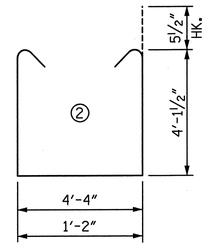

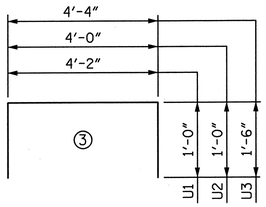

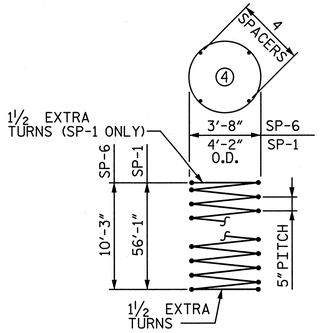

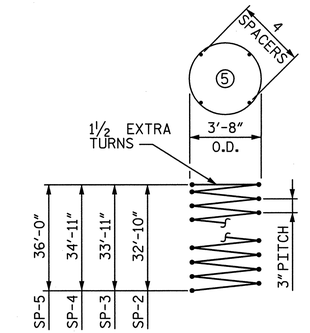

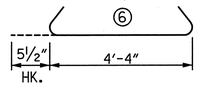

ALL BAR DIMENSIONS ARE OUT TO OUT

BILL OF MATERIAL

BAR	NO.	SIZE	TYPE	LENGTH	WEIGHT
B1	10	#11	STR.	41'-1"	2,183
B2	12	#11	①	38'-10"	2,476
B3	20	#5	STR.	31'-11"	666
B4	36	#4	STR.	4'-0"	96
B5	10	#11	STR.	29'-6"	1,567
M1	80	#11	STR.	59'-6"	25,290
M2	64	#11	STR.	19'-9"	6,716
S1	80	#5	②	13'-6"	1,126
S2	80	#5	②	10'-3"	855
S3	80	#5	⑥	5'-3"	438
U1	10	#4	③	6'-2"	41
U2	8	#4	③	6'-0"	32
U3	54	#4	③	7'-4"	265
V1	16	#11	①	37'-11"	3,223
V2	16	#11	①	39'-0"	3,315
V3	16	#11	①	40'-0"	3,400
V4	16	#11	①	41'-1"	3,492
SP-1	4	✻✻	④	1,779'-8"	7,425
SP-2	1	✻	⑤	1,514'-4"	1,012
SP-3	1	✻	⑤	1,561'-8"	1,043
SP-4	1	✻	⑤	1,609'-1"	1,075
SP-5	1	✻	⑤	1,656'-6"	1,107
SP-6	4	✻✻	④	298'-7"	1,246

THE CONTRACTOR'S ATTENTION IS CALLED TO THE FACT THAT THE LONGITUDINAL REINFORCEMENT FOR THE DRILLED PIERS IS DETAILED WITH 3 FEET OF EXTRA LENGTH.

✻✻ THE SP-1 AND SP-6 SPIRAL REINFORCING STEEL SHALL BE W31 OR D-31 COLD DRAWN WIRE OR #5 PLAIN OR DEFORMED BAR WITH A 5"PITCH.

✻ THE SP-2 THRU SP-5 SPIRAL REINFORCING SHALL BE W20 OR D-20 COLD DRAWN WIRE OR #4 PLAIN OR DEFORMED BAR WITH A 3"PITCH.

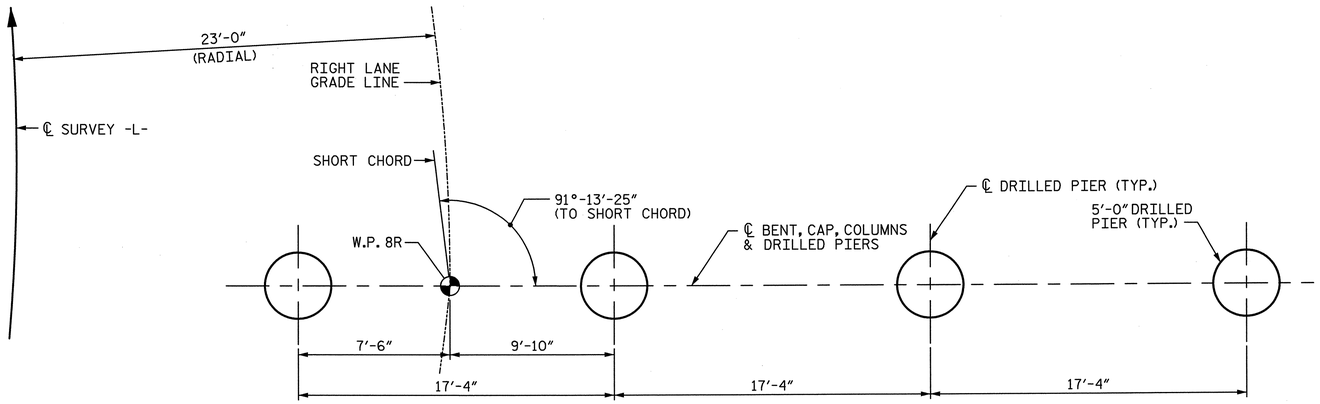

PLAN OF DRILLED PIERS

PROJECT NO. U-2524C

GUILFORD COUNTY

STATION: POT 407+85.82 -L-
= POT 29+79.72 -Y4-

SHEET 3 OF 3

NORTH CAROLINA PROFESSIONAL SEAL 28479 ENGINEER KEVIN G. BAILEY 6-7-13

STATE OF NORTH CAROLINA
DEPARTMENT OF TRANSPORTATION
RALEIGH

SUBSTRUCTURE
BENT 6
DETAILS & BILL OF MATERIAL

-RIGHT LANE-

DRAWN BY : JMP	DATE : 3-13	DESIGN ENGINEER OF RECORD: K. BAILEY	DATE : 5-13
CHECKED BY : SB	DATE : 3-13		

STV / Ralph Whitehead Associates, Inc.
1000 West Morehead St., Ste. 200
Charlotte, NC 28208
NC License No. F-0991

REVISIONS						SHEET NO.
NO.	BY:	DATE:	NO.	BY:	DATE:	S-437
1			3			TOTAL SHEETS
2			4			836

6/6/2013 8:59:40 PM R:\ustation\Finals\Bent 06 - 3 of 3.dgn

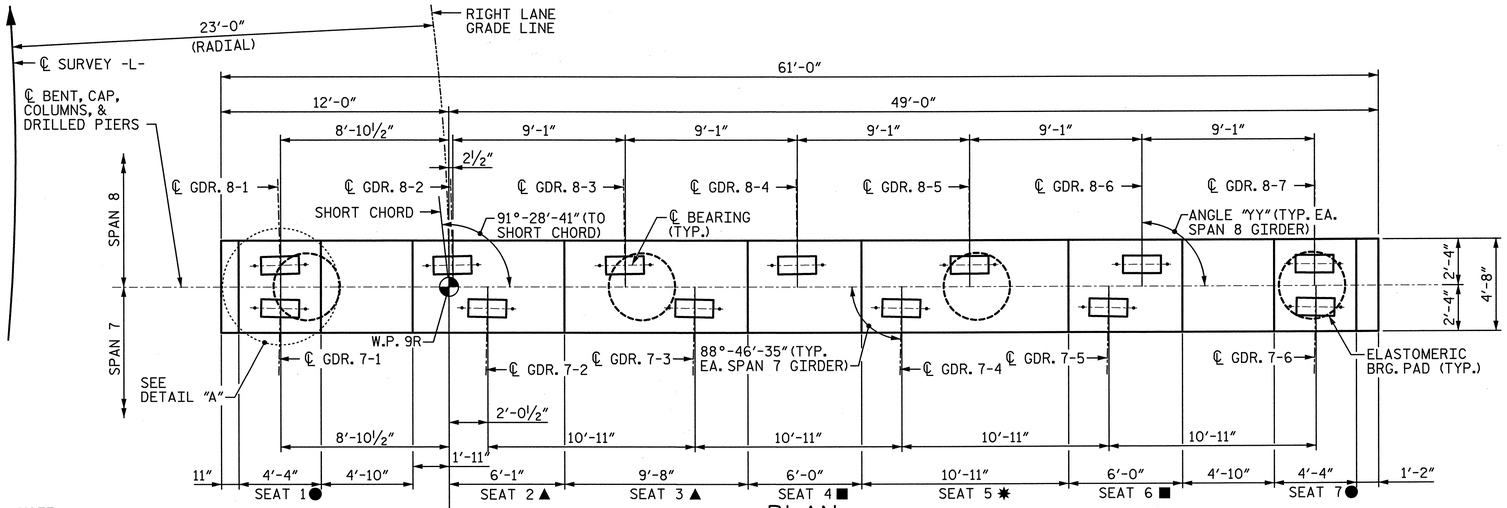

NOTE:
℄ SURVEY -L-, SHORT CHORD AND RIGHT LANE GRADE LINE EXAGGERATED FOR CLARITY.

PLAN

NOTE:
SEE TABLE A THIS SHEET FOR "YY" ANGLES.
SEE TABLE B THIS SHEET FOR "BB" DIMENSIONS.

● SEE "SEAT REINFORCEMENT DETAIL A" ON SHEET 2 FOR SEAT REINFORCEMENT DETAILS.
■ SEE "SEAT REINFORCEMENT DETAIL B" ON SHEET 2 FOR SEAT REINFORCEMENT DETAILS.
▲ SEE "SEAT REINFORCEMENT DETAIL C" ON SHEET 2 FOR SEAT REINFORCEMENT DETAILS.
✱ SEE "SEAT REINFORCEMENT DETAIL D" ON SHEET 2 FOR SEAT REINFORCEMENT DETAILS.

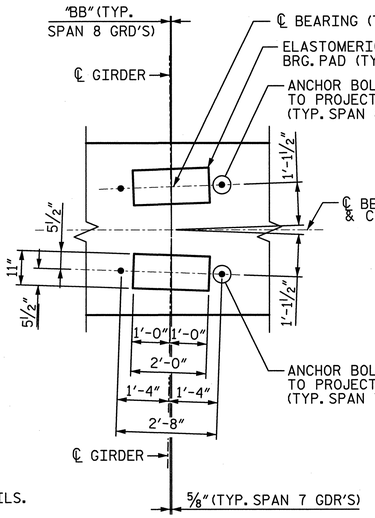

DETAIL "A"

(TYP. AT EACH BRIDGE SEAT)

NOTE:
SEE TABLE B THIS SHEET FOR "BB" DIMENSION.

NOTES:

1. ALL REINFORCING STEEL IN THE DRILLED PIERS IS INCLUDED IN THE PAY ITEMS FOR "REINFORCING STEEL" AND "SPIRAL COLUMN REINFORCING STEEL".
2. THE LOCATION OF THE CONSTRUCTION JOINT IN THE DRILLED PIERS IS BASED ON AN APPROXIMATE GROUND LINE ELEVATION. IF THE CONSTRUCTION JOINT IS ABOVE THE ACTUAL GROUND ELEVATION, THE CONTRACTOR SHALL PLACE THE CONSTRUCTION JOINT 1 FOOT BELOW THE GROUND LINE.
3. STIRRUPS AND "U BARS" IN CAP MAY BE SHIFTED SLIGHTLY AS NECESSARY TO CLEAR ANCHOR BOLTS.
4. HOOKS ON BARS MAY BE TURNED AS NECESSARY FOR PLACING REINFORCING STEEL.
5. A CONSTRUCTION JOINT AT MID-HEIGHT OF COLUMN IS PERMITTED.
6. FOR "AB1" AND "AB9" ANCHOR BOLTS, SEE "ELASTOMERIC BEARING DETAILS" SHEET.
7. SEE "GENERAL SHEETS GENERAL NOTES" SHEET FOR ADDITIONAL NOTES.
8. SEE SHEET 2 OF 3 FOR SECTIONS CALLED OUT ON ELEVATION VIEW.
9. THE TOP SURFACE AREAS OF THE BENT CAPS SHALL BE CURED IN ACCORDANCE WITH THE STANDARDSPECIFICATIONS EXCEPT THE MEMBRANE CURING COMPOUND METHOD SHALL NOT BE USED.

TABLE A	
PLAN VIEW ANGLES	
GDR.	ANGLE "YY"
8-1	91°-28'-41"
8-2	91°-11'-05"
8-3	90°-53'-37"
8-4	90°-36'-17"
8-5	90°-19'-04"
8-6	90°-02'-00"
8-7	89°-45'-03"

TABLE B	
PLAN VIEW DIMENSIONS	
GDR.	DIM "BB"
8-1	¾"
8-2	9/16"
8-3	7/16"
8-4	5/16"
8-5	⅛"
8-6	0"
8-7	⅛"

NOTE:
INVERT ALTERNATE #5S1, #5S2 AND #5S3 BARS.

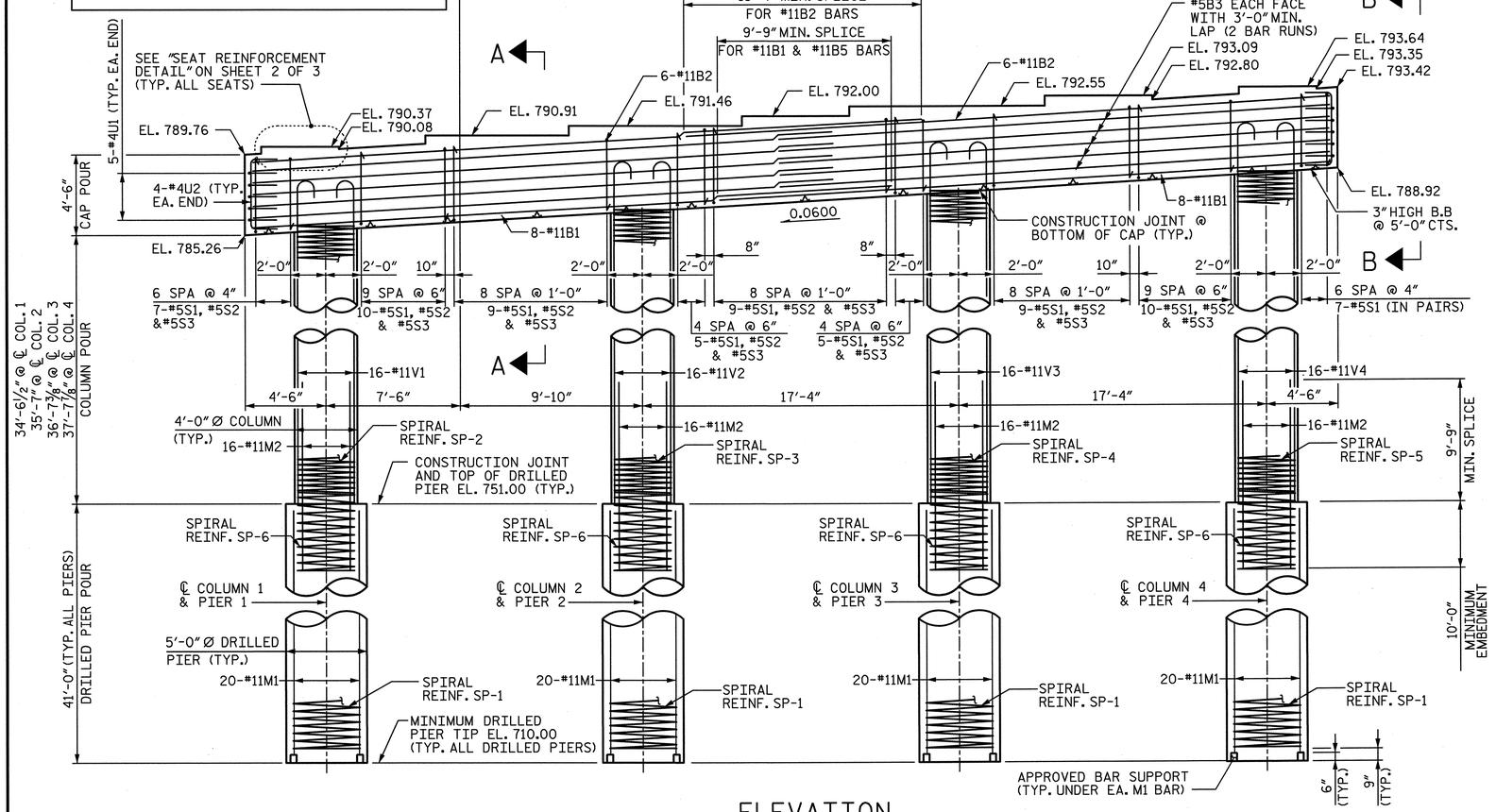

ELEVATION

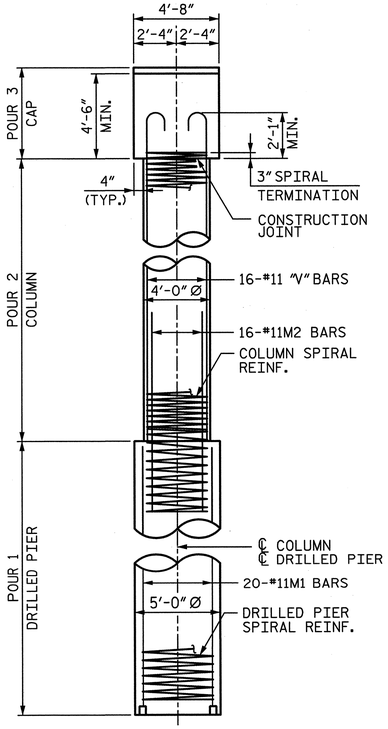

SIDE VIEW

NORTH CAROLINA PROFESSIONAL SEAL 28479 ENGINEER KEVIN G. BAILEY 6-7-13

PROJECT NO. U-2524C
GUILFORD COUNTY
STATION: POT 407+85.82 -L-
= POT 29+79.72 -Y4-

SHEET 1 OF 3

STATE OF NORTH CAROLINA
DEPARTMENT OF TRANSPORTATION
RALEIGH

SUBSTRUCTURE BENT 7 PLAN & ELEVATION

-RIGHT LANE-

DRAWN BY : JMP DATE : 3-13
CHECKED BY : SB DATE : 3-13
DESIGN ENGINEER OF RECORD: K. BAILEY DATE : 5-13

STV / Ralph Whitehead Associates, Inc.
1000 West Morehead St., Ste. 200
Charlotte, NC 28208
NC License No. F-0991

REVISIONS						SHEET NO.
NO.	BY:	DATE:	NO.	BY:	DATE:	S-438
1			3			TOTAL SHEETS
2			4			836

6/6/2013 8:59:42 PM R:\ustation\Finals\Bent 07 - 1of 3.dgn

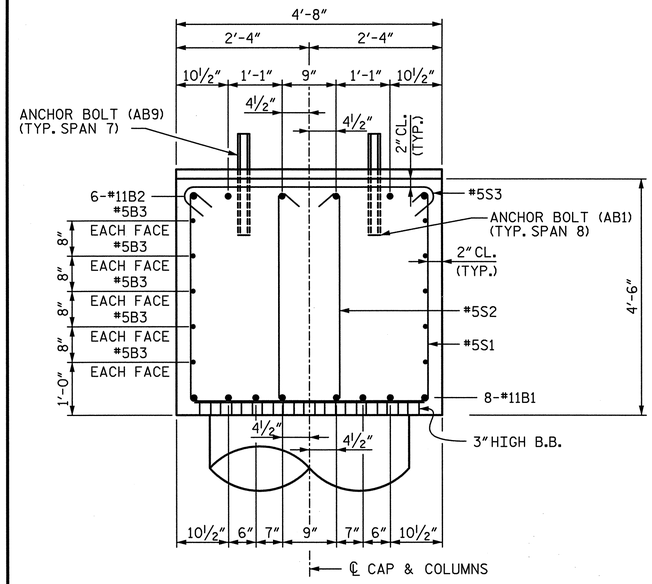

SECTION A-A

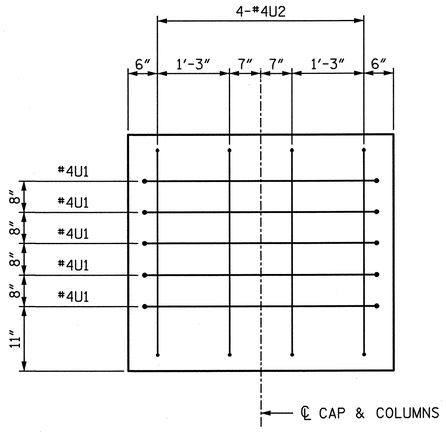

END VIEW B-B

(RIGHT END SHOWN, LEFT END SIMILAR)

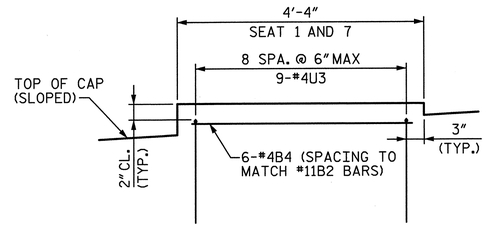

SEAT REINFORCEMENT DETAIL "A"

(TYPICAL AT SEATS 1 AND 7)

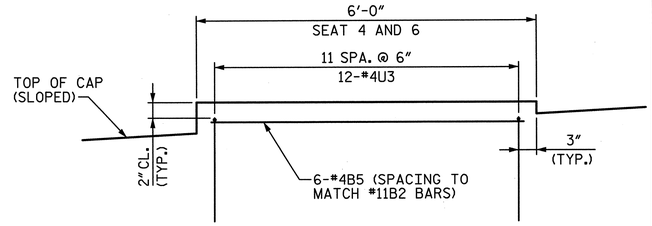

SEAT REINFORCEMENT DETAIL "B"

(TYPICAL AT SEATS 4 AND 6)

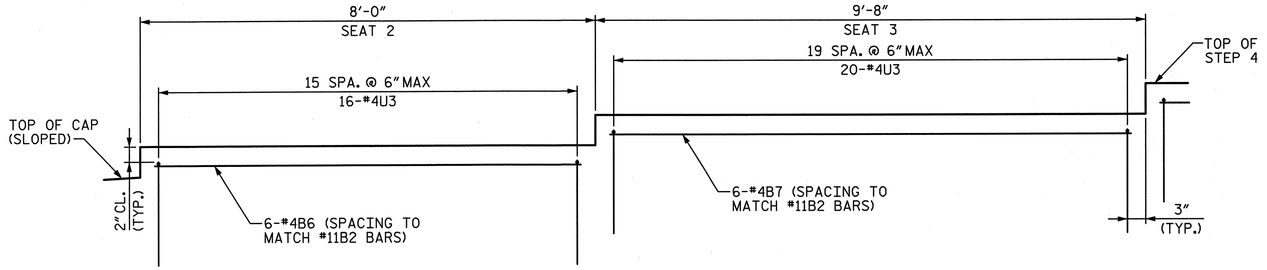

SEAT REINFORCEMENT DETAIL "C"

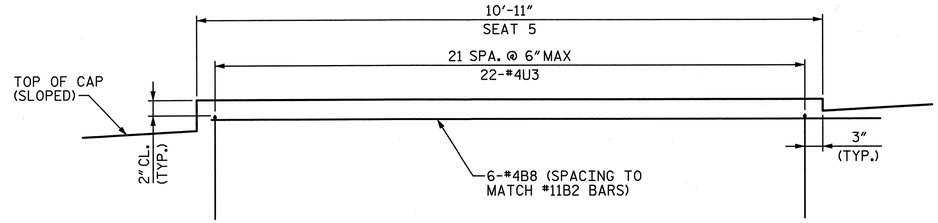

SEAT REINFORCEMENT DETAIL "D"

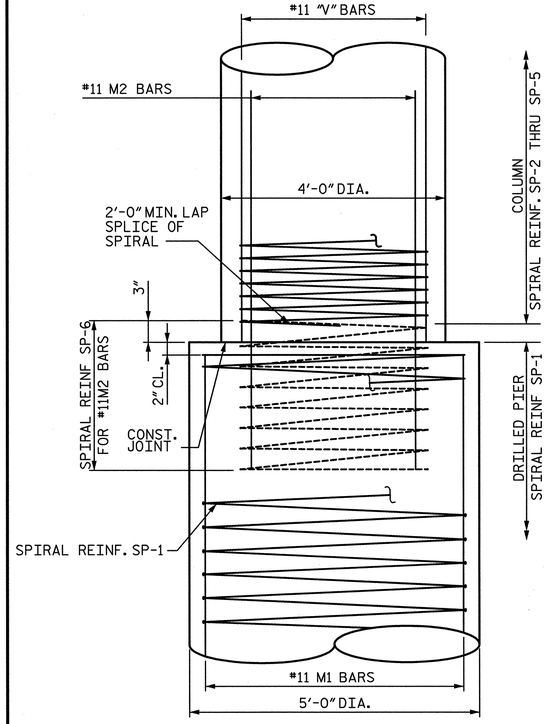

CONSTRUCTION JOINT DETAIL

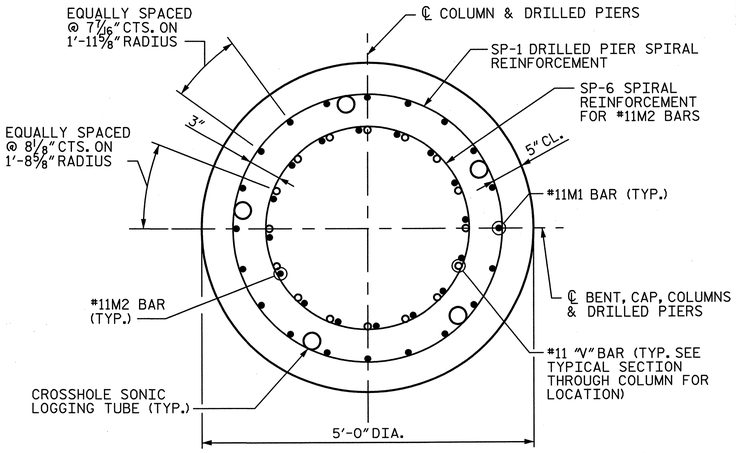

TYPICAL SECTION THROUGH DRILLED PIER

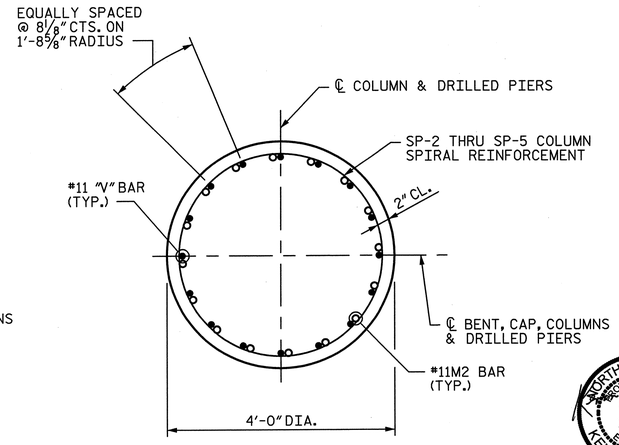

TYPICAL SECTION THROUGH COLUMN

PROJECT NO. U-2524C

GUILFORD COUNTY

STATION: POT 407+85.82 -L-
= POT 29+79.72 -Y4-

SHEET 2 OF 3

STATE OF NORTH CAROLINA
DEPARTMENT OF TRANSPORTATION
RALEIGH

SUBSTRUCTURE BENT 7 DETAILS

-RIGHT LANE-

DRAWN BY : JMP	DATE : 3-13	DESIGN ENGINEER OF RECORD: K. BAILEY	DATE : 5-13
CHECKED BY : SB	DATE : 3-13		

STV / Ralph Whitehead Associates, Inc.
1000 West Morehead St., Ste. 200
Charlotte, NC 28208
NC License No. F-0991

REVISIONS						SHEET NO.
NO.	BY:	DATE:	NO.	BY:	DATE:	S-439
1			3			TOTAL SHEETS
2			4			836

6/6/2013 8:59:43 PM R:\ustation\Finals\Bent 07 - 2 of 3.dgn

QUANTITIES

REINFORCING STEEL	LBS.	47,051
SPIRAL REINFORCING STEEL	LBS.	11,078
CLASS A CONCRETE : POUR 2 - COLUMNS	CU. YDS.	67.2
POUR 3 - CAP	CU. YDS.	50.5
TOTAL	CU. YDS.	117.7
5'-0" Ø DRILLED PIERS IN SOIL	L.F.	126
5'-0" Ø DRILLED PIERS NOT IN SOIL	L.F.	38
TOTAL 5'-0" Ø DRILLED PIERS	L.F.	164
DRILLED PIER CONCRETE : POUR 1	CU. YDS.	119.3
CSL TUBES	L.F.	850

BAR TYPES

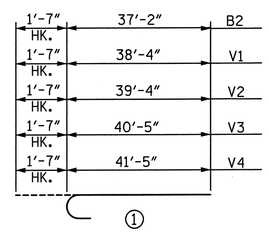

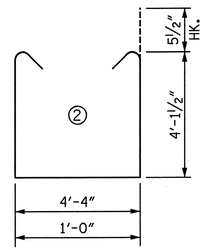

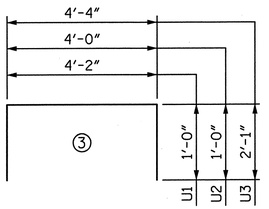

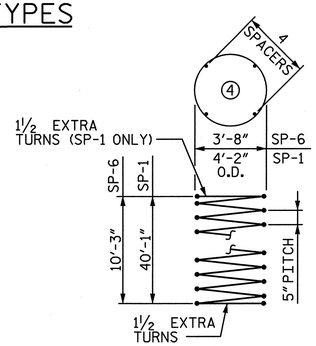

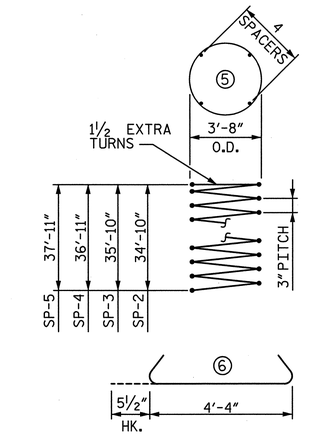

BAR	NO.	SIZE	TYPE	LENGTH	WEIGHT
B1	16	#11	STR.	35'-3"	2,997
B2	12	#11	①	38'-9"	2,471
B3	20	#5	STR.	31'-10"	664
B4	12	#4	STR.	4'-0"	32
B5	12	#4	STR.	5'-8"	45
B6	6	#4	STR.	7'-8"	31
B7	6	#4	STR.	9'-4"	37
B8	6	#4	STR.	10'-7"	42
M1	80	#11	STR.	40'-4"	17,143
M2	64	#11	STR.	19'-9"	6,716
S1	71	#5	②	13'-6"	1,000
S2	71	#5	②	10'-1"	747
S3	71	#5	⑥	5'-3"	389
U1	10	#4	③	6'-2"	41
U2	8	#4	③	6'-0"	32
U3	100	#4	③	8'-6"	568
V1	16	#11	①	39'-11"	3,393
V2	16	#11	①	40'-11"	3,478
V3	16	#11	①	42'-0"	3,570
V4	16	#11	①	43'-0"	3,655
SP-1	4	**	④	1,283'-0"	5,353
SP-2	1	*	⑤	1,606'-3"	1,073
SP-3	1	*	⑤	1,651'-10"	1,103
SP-4	1	*	⑤	1,701'-2"	1,136
SP-5	1	*	⑤	1,746'-9"	1,167
SP-6	4	**	④	298'-7"	1,246

BILL OF MATERIAL

ALL BAR DIMENSIONS ARE OUT TO OUT

* THE SP-2 THROUGH SP-5 SPIRAL REINFORCING SHALL BE W20 OR D-20 COLD DRAWN WIRE OR #4 PLAIN OR DEFORMED BAR WITH A 3" PITCH.

** THE SP-1 AND SP-6 SPIRAL REINFORCING STEEL SHALL BE W31 OR D-31 COLD DRAWN WIRE OR #5 PLAIN OR DEFORMED BAR WITH A 5" PITCH.

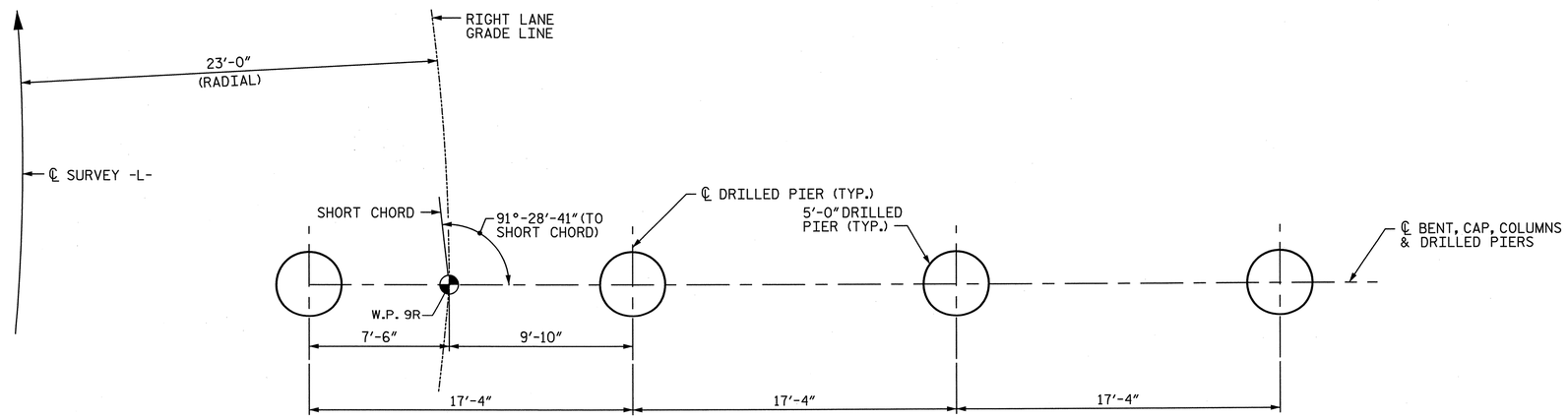

PLAN OF DRILLED PIERS

PROJECT NO. U-2524C

GUILFORD COUNTY

STATION: POT 407+85.82 -L-
= POT 29+79.72 -Y4-

SHEET 3 OF 3

STATE OF NORTH CAROLINA
DEPARTMENT OF TRANSPORTATION
RALEIGH

SUBSTRUCTURE BENT 7 DETAILS & BILL OF MATERIAL

-RIGHT LANE-

NORTH CAROLINA PROFESSIONAL SEAL 28479 ENGINEER KEVIN G. BAILEY 6-7-13

STV / Ralph Whitehead Associates, Inc.
1000 West Morehead St., Ste. 200
Charlotte, NC 28208
NC License No. F-0991

REVISIONS						SHEET NO.
NO.	BY:	DATE:	NO.	BY:	DATE:	S-440
1			3			TOTAL SHEETS
2			4			836

DRAWN BY : JMP DATE : 3-13
CHECKED BY : SB DATE : 3-13

DESIGN ENGINEER OF RECORD: K. BAILEY DATE : 5-13

6/6/2013 8:59:44 PM R:\station\Finals\Bent 07- 3 of 3.dgn

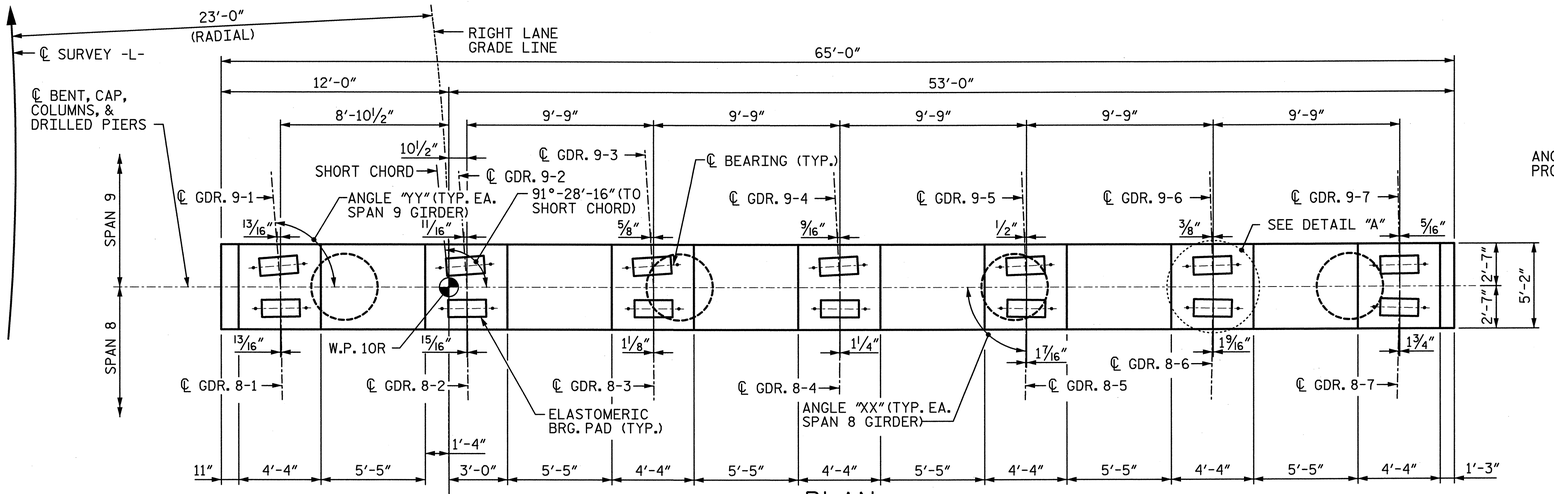

PLAN

NOTE:
SEE TABLE A THIS SHEET FOR "XX" AND "YY" ANGLES.

NOTE:
℄ SURVEY -L-, SHORT CHORD AND RIGHT LANE GRADE LINE EXAGGERATED FOR CLARITY.

NOTE:
INVERT ALTERNATE PAIRS OF STIRRUPS.

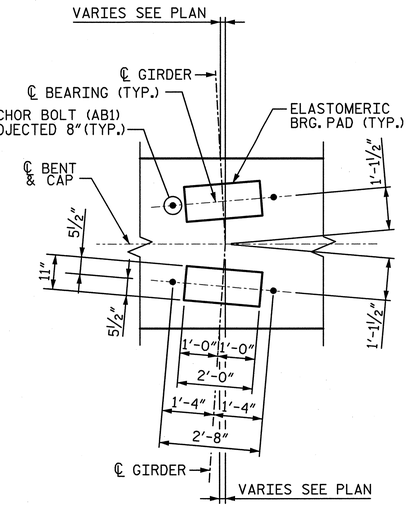

DETAIL "A"

(TYP. AT EACH BRIDGE SEAT)

NOTES:

1. ALL REINFORCING STEEL IN THE DRILLED PIERS IS INCLUDED IN THE PAY ITEMS FOR "REINFORCING STEEL" AND "SPIRAL COLUMN REINFORCING STEEL".
2. THE LOCATION OF THE CONSTRUCTION JOINT IN THE DRILLED PIERS IS BASED ON AN APPROXIMATE GROUND LINE ELEVATION. IF THE CONSTRUCTION JOINT IS ABOVE THE ACTUAL GROUND ELEVATION, THE CONTRACTOR SHALL PLACE THE CONSTRUCTION JOINT 1 FOOT BELOW THE GROUND LINE.
3. STIRRUPS AND "U BARS" IN CAP MAY BE SHIFTED SLIGHTLY AS NECESSARY TO CLEAR ANCHOR BOLTS.
4. HOOKS ON BARS MAY BE TURNED AS NECESSARY FOR PLACING REINFORCING STEEL.
5. A CONSTRUCTION JOINT AT MID-HEIGHT OF COLUMN IS PERMITTED.
6. FOR "AB1" ANCHOR BOLTS, SEE "ELASTOMERIC BEARING DETAILS" SHEET.
7. SEE "GENERAL DRAWING GENERAL NOTES" SHEET FOR ADDITIONAL NOTES.
8. SEE SHEET 2 OF 3 FOR SECTIONS CALLED OUT ON ELEVATION VIEW.

TABLE A

PLAN VIEW ANGLES

GDR.	ANGLE "XX"
8-1	88°-31'-19"
8-2	88°-31'-43"
8-3	87°-56'-15"
8-4	87°-38'-55"
8-5	87°-21'-43"
8-6	87°-04'-38"
8-7	86°-47'-41"
	ANGLE "YY"
9-1	91°-28'-17"
9-2	91°-19'-28"
9-3	91°-10'-44"
9-4	91°-02'-04"
9-5	90°-53'-28"
9-6	90°-44'-56"
9-7	90°-36'-28"

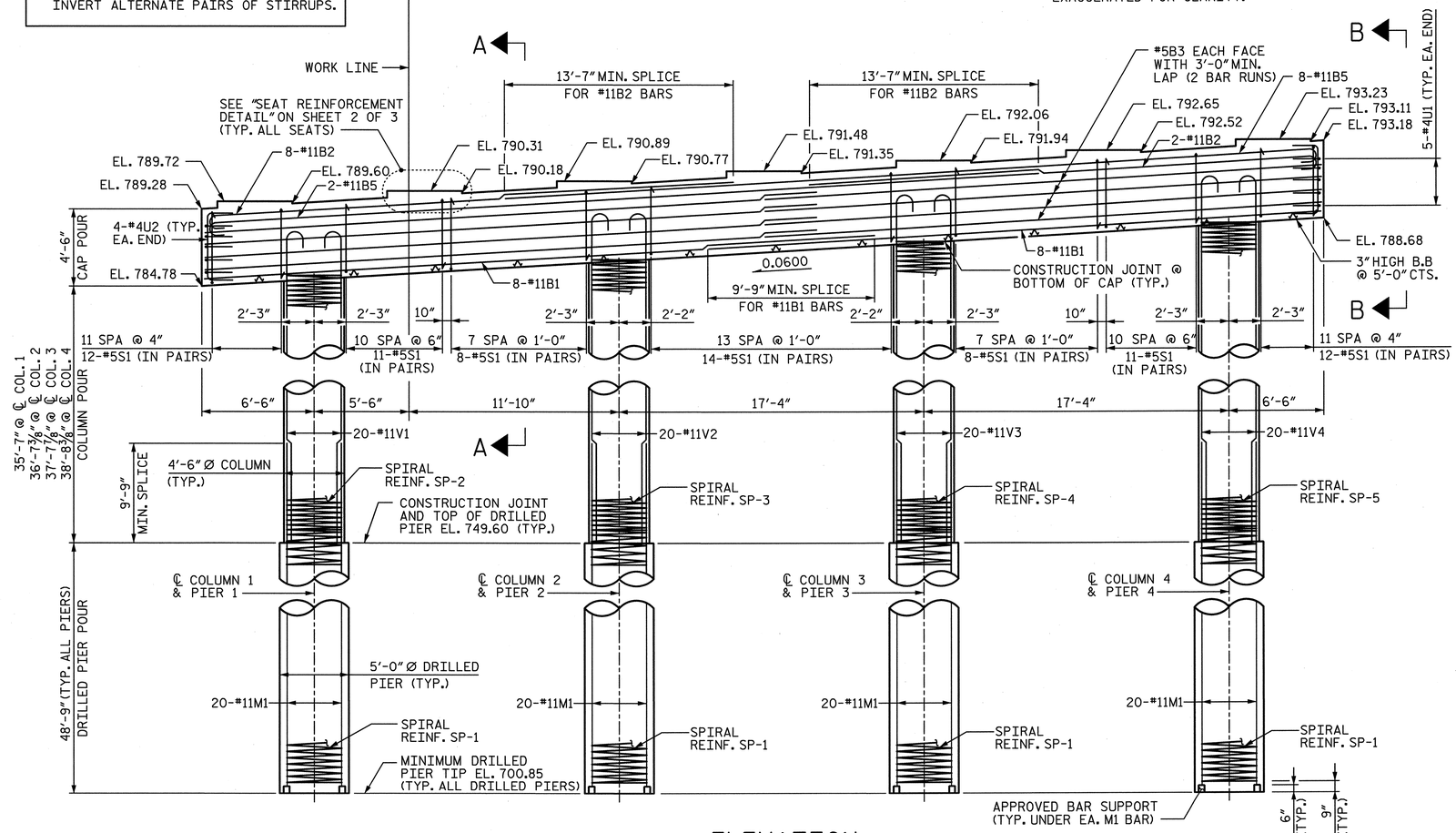

ELEVATION

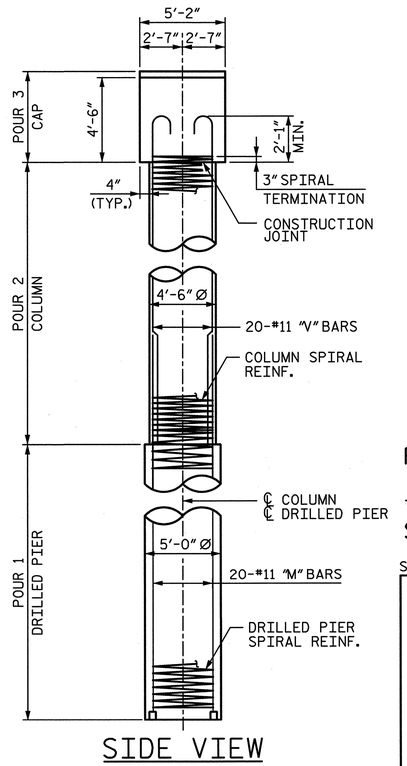

SIDE VIEW

NORTH CAROLINA PROFESSIONAL ENGINEER SEAL 28479 KEVIN G. BAILEY 6-7-13

PROJECT NO. U-2524C

GUILFORD COUNTY

STATION: POT 407+85.82 -L-
= POT 29+79.72 -Y4-

SHEET 1 OF 3

STATE OF NORTH CAROLINA
DEPARTMENT OF TRANSPORTATION
RALEIGH

SUBSTRUCTURE BENT 8 PLAN & ELEVATION

-RIGHT LANE-

DRAWN BY : JMP	DATE : 2-13	DESIGN ENGINEER OF RECORD: K. BAILEY	DATE : 5-13
CHECKED BY : SB	DATE : 3-13		

STV / Ralph Whitehead Associates, Inc.
1000 West Morehead St., Ste. 200
Charlotte, NC 28208
NC License No. F-0991

REVISIONS						SHEET NO.
NO.	BY:	DATE:	NO.	BY:	DATE:	S-441
1			3			TOTAL SHEETS
2			4			836

6/6/2013 10:45:34 PM R:\ustation\Finals\Bent 08 - 1of 3.dgn

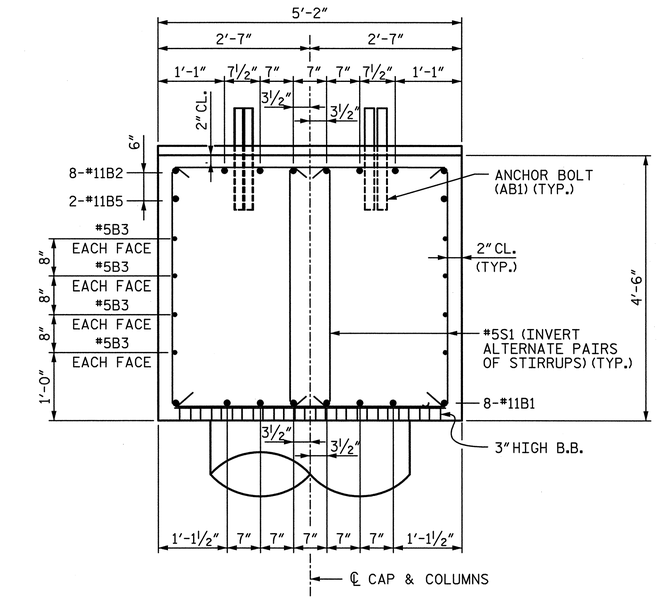

SECTION A-A

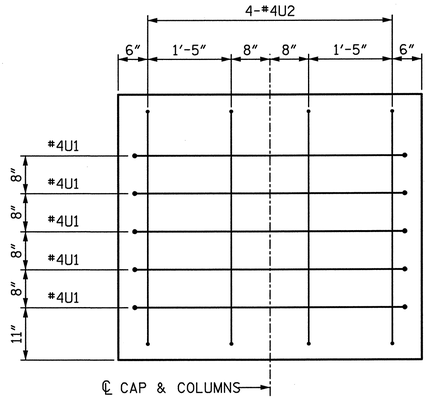

END VIEW B-B

(RIGHT END SHOWN, LEFT END SIMILAR)

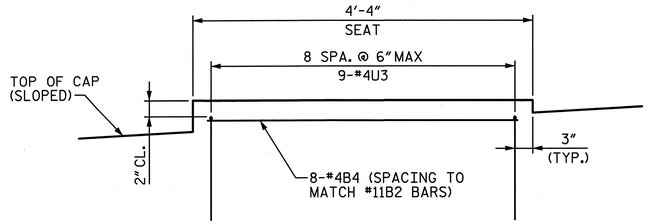

SEAT REINFORCEMENT DETAIL

(TYPICAL AT EACH BEARING SEAT)

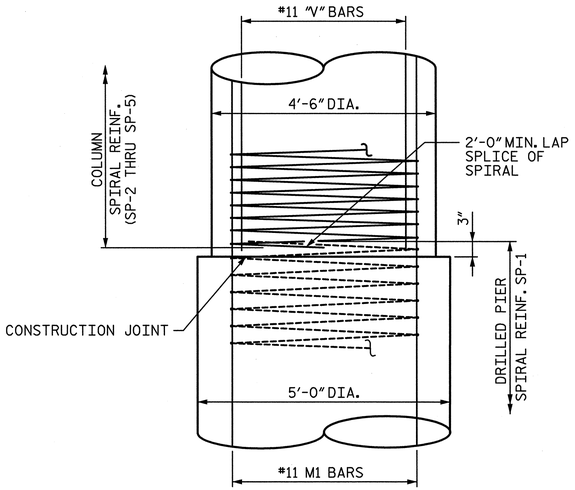

CONSTRUCTION JOINT DETAIL

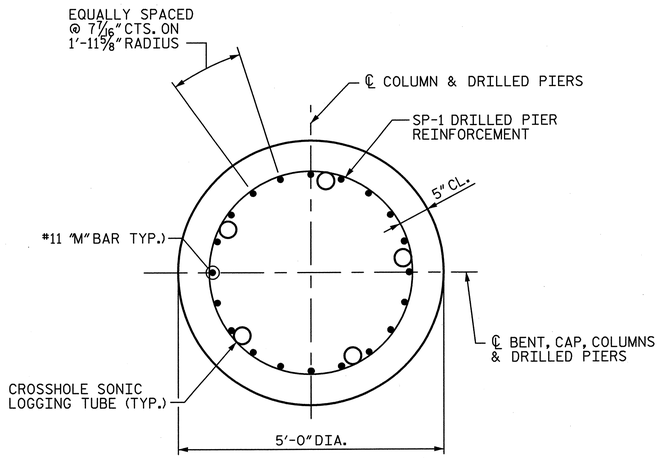

TYPICAL SECTION THROUGH DRILLED PIER

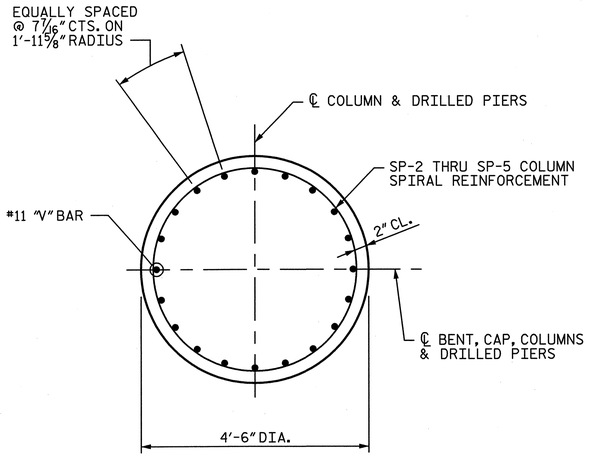

TYPICAL SECTION THROUGH COLUMN

NORTH CAROLINA PROFESSIONAL SEAL 28479 ENGINEER KEVIN G. BAILEY 6-7-13

PROJECT NO. U-2524C

GUILFORD COUNTY

STATION: POT 407+85.82 -L-

= POT 29+79.72 -Y4-

SHEET 2 OF 3

STATE OF NORTH CAROLINA
DEPARTMENT OF TRANSPORTATION
RALEIGH

SUBSTRUCTURE BENT 8 DETAILS

-RIGHT LANE-

DRAWN BY : JMP	DATE : 2-13	DESIGN ENGINEER OF RECORD: K. BAILEY	DATE : 5-13
CHECKED BY : SB	DATE : 3-13		

STV / Ralph Whitehead Associates, Inc.
1000 West Morehead St., Ste. 200
Charlotte, NC 28208
NC License No. F-0991

REVISIONS						SHEET NO.
NO.	BY:	DATE:	NO.	BY:	DATE:	S-442
1			3			TOTAL SHEETS
2			4			836

6/6/2013 8:59:47 PM R:\ustation\Finals\Bent 08- 2 of 3.dgn

QUANTITIES

REINFORCING STEEL		LBS.	53,460
SPIRAL REINFORCING STEEL		LBS.	11,579
CLASS A CONCRETE :	POUR 2 - COLUMNS	CU. YDS.	87.5
	POUR 3 - CAP	CU. YDS.	57.6
	TOTAL	CU. YDS.	145.1
5'-0" Ø DRILLED PIERS IN SOIL		L.F.	153
5'-0" Ø DRILLED PIERS NOT IN SOIL		L.F.	42
TOTAL 5'-0" Ø DRILLED PIERS		L.F.	195
DRILLED PIER CONCRETE :	POUR 1	CU. YDS.	141.8
CSL TUBES		L.F.	1,005

BAR TYPES

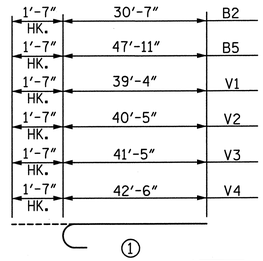

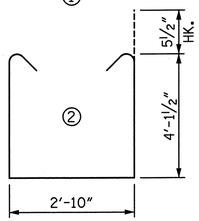

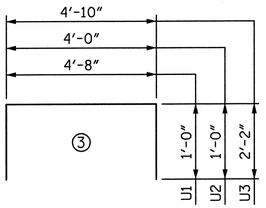

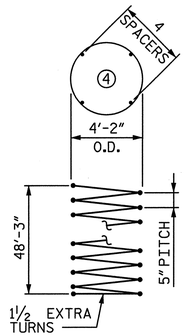

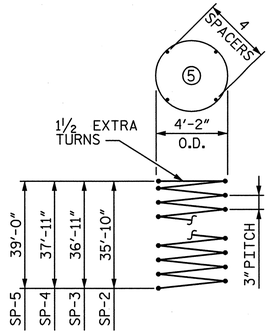

ALL BAR DIMENSIONS ARE OUT TO OUT

BILL OF MATERIAL

BAR	NO.	SIZE	TYPE	LENGTH	WEIGHT
B1	16	#11	STR.	37'-4"	3,174
B2	10	#11	①	32'-2"	1,709
B3	20	#5	STR.	33'-11"	708
B4	56	#4	STR.	4'-0"	150
B5	10	#11	①	49'-6"	2,630
M1	80	#11	STR.	58'-0"	24,652
S1	152	#5	②	12'-0"	1,902
U1	10	#4	③	6'-8"	45
U2	10	#4	③	6'-0"	40
U3	63	#4	③	9'-2"	386
V1	20	#11	①	40'-11"	4,348
V2	20	#11	①	42'-0"	4,463
V3	20	#11	①	43'-0"	4,569
V4	20	#11	①	44'-1"	4,684
SP-1	4	✻✻	④	1,519'-1"	6,338
SP-2	1	✻	⑤	1,879'-3"	1,255
SP-3	1	✻	⑤	1,935'-5"	1,293
SP-4	1	✻	⑤	1,987'-4"	1,328
SP-5	1	✻	⑤	2,043'-6"	1,365

✻✻ THE SP-1 SPIRAL REINFORCING STEEL SHALL BE W31 OR D-31 COLD DRAWN WIRE OR #5 PLAIN OR DEFORMED BAR WITH A 5" PITCH.

✻ THE SP-2 THROUGH SP-5 SPIRAL REINFORCING SHALL BE W20 OR D-20 COLD DRAWN WIRE OR #4 PLAIN OR DEFORMED BAR WITH A 3" PITCH.

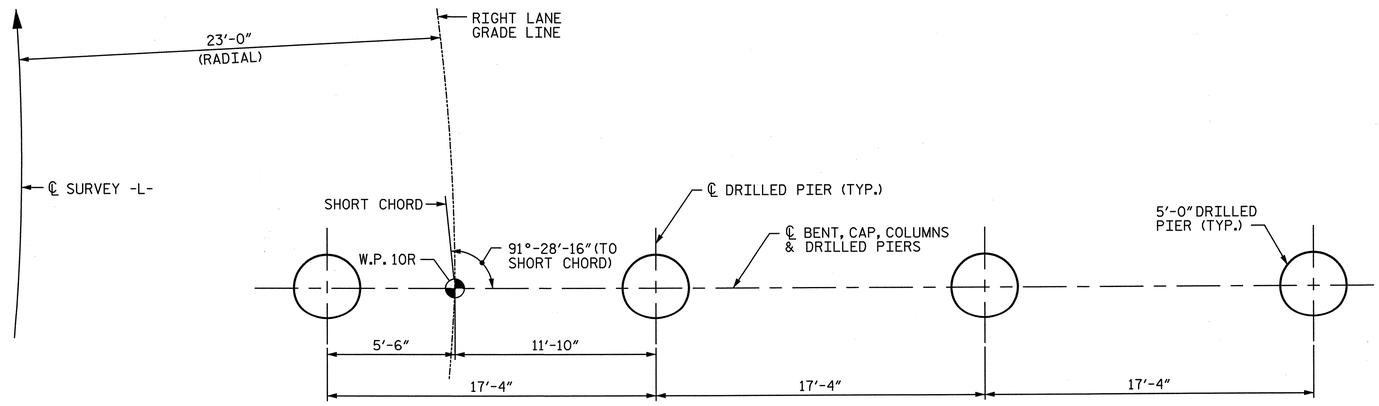

PLAN OF DRILLED PIERS

NORTH CAROLINA PROFESSIONAL SEAL 28479 ENGINEER KEVIN G. BAILEY 6-7-13

PROJECT NO. U-2524C

GUILFORD COUNTY

STATION: POT 407+85.82 -L-
= POT 29+79.72 -Y4-

SHEET 3 OF 3

STATE OF NORTH CAROLINA
DEPARTMENT OF TRANSPORTATION
RALEIGH

SUBSTRUCTURE BENT 8 DETAILS & BILL OF MATERIAL

-RIGHT LANE-

REVISIONS						SHEET NO.
NO.	BY:	DATE:	NO.	BY:	DATE:	S-443
1			3			TOTAL SHEETS
2			4			836

DRAWN BY : JMP DATE : 3-13
CHECKED BY : SB DATE : 3-13

DESIGN ENGINEER OF RECORD: K. BAILEY DATE : 5-13

STV / Ralph Whitehead Associates, Inc.
1000 West Morehead St., Ste. 200
Charlotte, NC 28208
NC License No. F-0991

6/6/2013 8:59:48 PM R:\ustation\Finals\Bent 08- 3 of 3.dgn

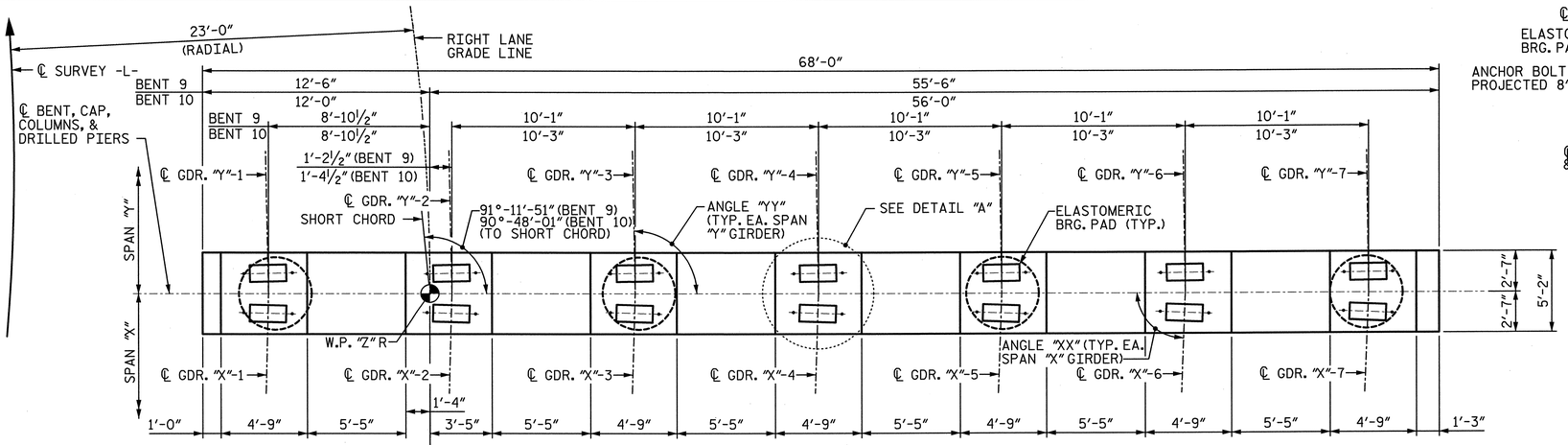

PLAN

NOTE:
SEE TABLE A SHEET 3 FOR "X", "Y" AND "Z" VALUES.
SEE TABLE B SHEET 3 FOR "XX" AND "YY" ANGLES.
SEE TABLE C SHEET 3 FOR "AA" AND "BB" DIMENSIONS.

NOTE:
℄ SURVEY -L-, SHORT CHORD AND RIGHT LANE GRADE LINE EXAGGERATED FOR CLARITY.

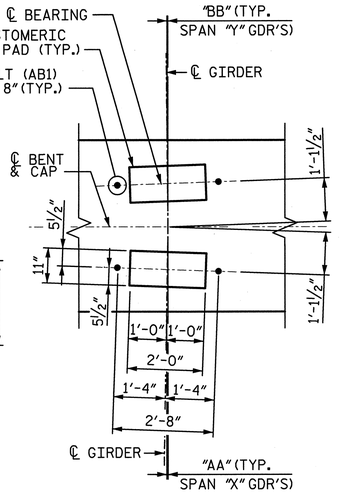

DETAIL "A"

(TYP. AT EACH BRIDGE SEAT)

NOTE:
SEE TABLE A SHEET 3 FOR "X" AND "Y".
SEE TABLE C SHEET 3 FOR "AA" AND "BB" DIMENSIONS.

NOTES:

1. ALL REINFORCING STEEL IN THE DRILLED PIERS IS INCLUDED IN THE PAY ITEMS FOR "REINFORCING STEEL" AND "SPIRAL COLUMN REINFORCING STEEL".
2. THE LOCATION OF THE CONSTRUCTION JOINT IN THE DRILLED PIERS IS BASED ON AN APPROXIMATE GROUND LINE ELEVATION. IF THE CONSTRUCTION JOINT IS ABOVE THE ACTUAL GROUND ELEVATION, THE CONTRACTOR SHALL PLACE THE CONSTRUCTION JOINT 1 FOOT BELOW THE GROUND LINE.
3. STIRRUPS AND "U BARS" IN CAP MAY BE SHIFTED SLIGHTLY AS NECESSARY TO CLEAR ANCHOR BOLTS.
4. HOOKS ON BARS MAY BE TURNED AS NECESSARY FOR PLACING REINFORCING STEEL.
5. A CONSTRUCTION JOINT AT MID-HEIGHT OF COLUMN IS PERMITTED.
6. FOR "AB1" ANCHOR BOLTS, SEE "ELASTOMERIC BEARING DETAILS" SHEET.
7. SEE "GENERAL DRAWING GENERAL NOTES" SHEET FOR ADDITIONAL NOTES.
8. SEE SHEET 2 OF 3 FOR SECTIONS CALLED OUT ON ELEVATION VIEW.

NOTE:
INVERT ALTERNATE PAIRS OF STIRRUPS.

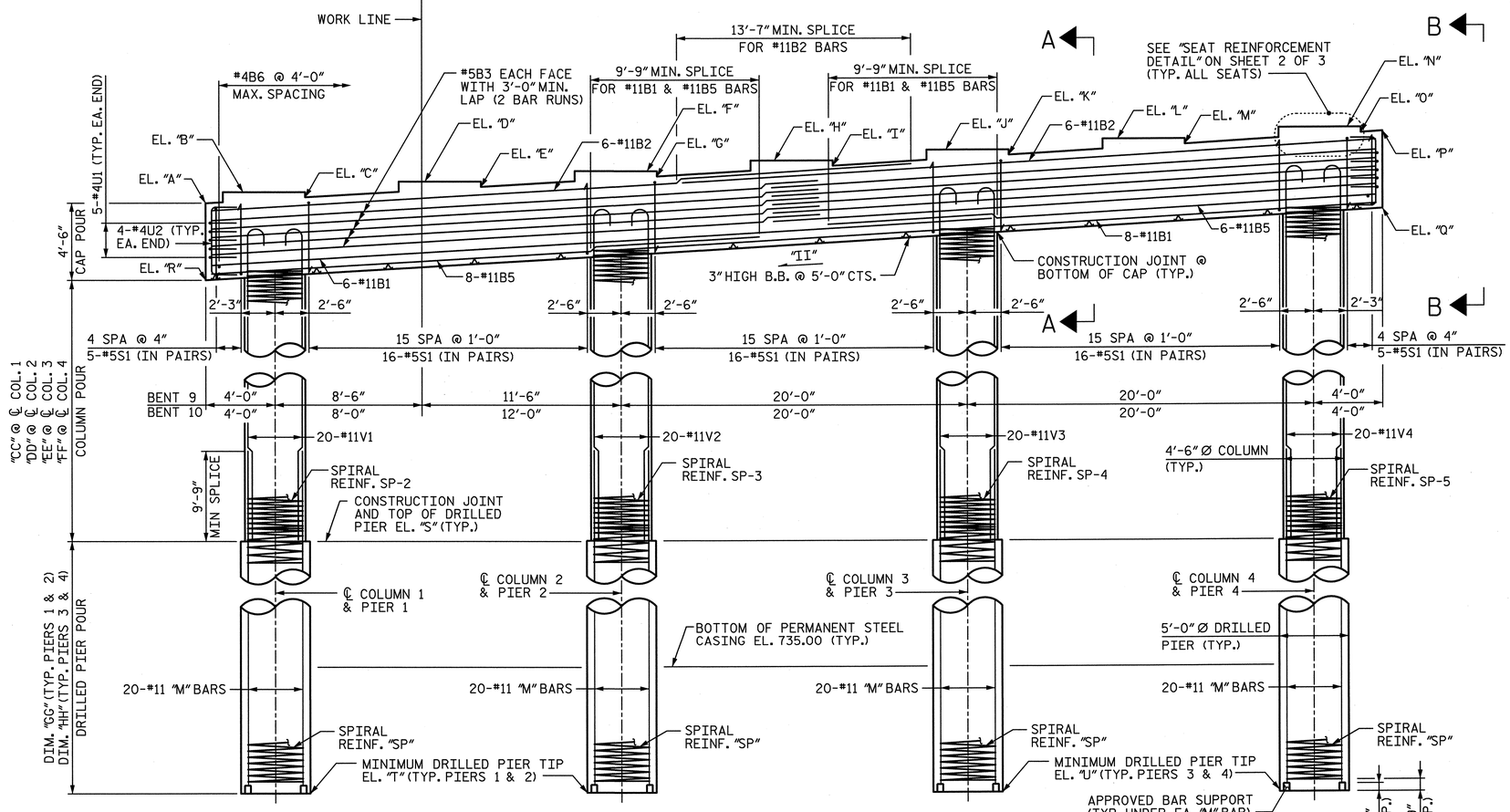

ELEVATION

NOTE:
SEE TABLE D SHEET 3 FOR "A" THROUGH "T" ELEVATIONS.
SEE TABLE E SHEET 3 FOR "CC" THROUGH "II" VALUES.

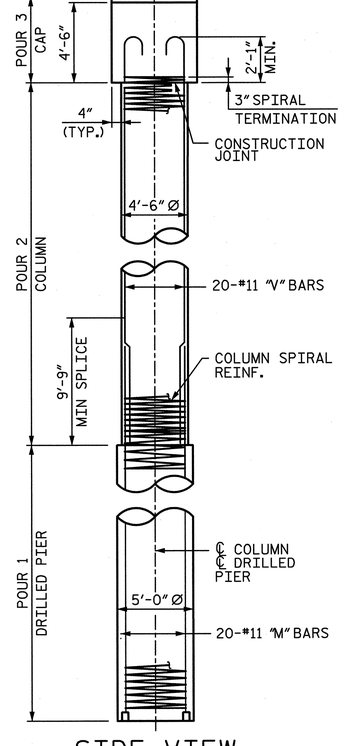

SIDE VIEW

NORTH CAROLINA PROFESSIONAL ENGINEER SEAL 28479 KEVIN G. BAILEY 6-7-13

PROJECT NO. U-2524C
GUILFORD COUNTY
STATION: POT 407+85.82 -L-
= POT 29+79.72 -Y4-
SHEET 1 OF 3

STATE OF NORTH CAROLINA
DEPARTMENT OF TRANSPORTATION
RALEIGH

SUBSTRUCTURE BENTS 9 & 10 PLAN & ELEVATION

-RIGHT LANE-

DRAWN BY : JMP	DATE : 2-13	DESIGN ENGINEER OF RECORD: K. BAILEY	DATE : 5-13
CHECKED BY : MJK	DATE : 4-13		

STV / Ralph Whitehead Associates, Inc.
1000 West Morehead St. Ste. 200
Charlotte, NC 28208
NC License No. F-0991

REVISIONS						SHEET NO.
NO.	BY:	DATE:	NO.	BY:	DATE:	S-444
1			3			TOTAL SHEETS
2			4			836

6/6/2013 8:59:49 PM R:\ustation\Finals\Bent 09-10 - 1of 3.dgn

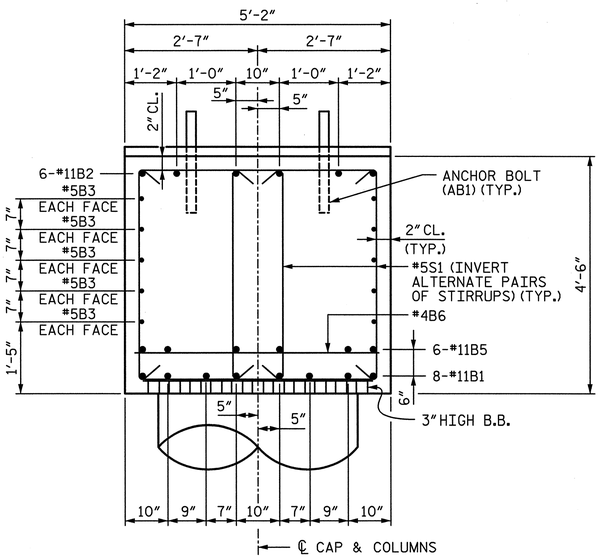

SECTION A-A

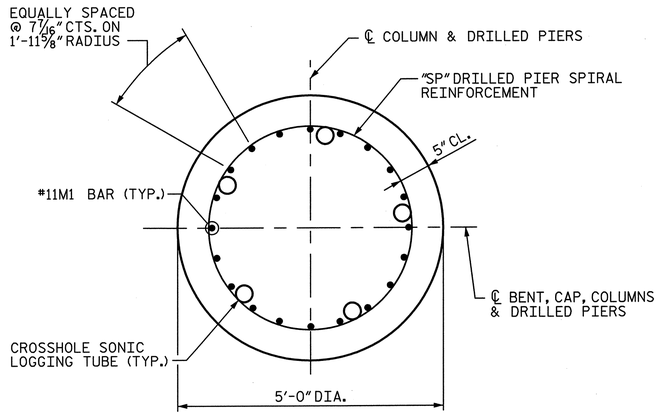

TYPICAL SECTION THROUGH DRILLED PIER

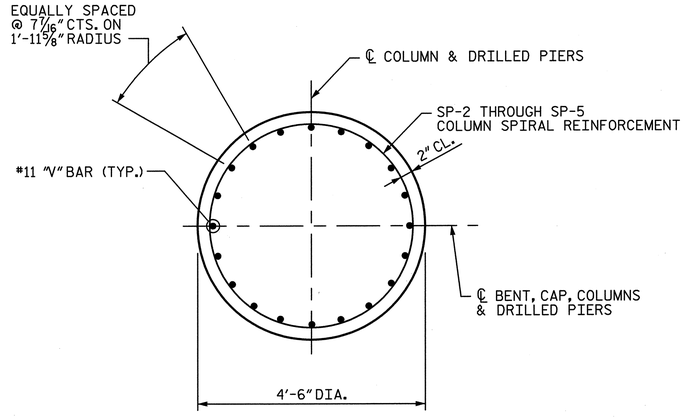

TYPICAL SECTION THROUGH COLUMN

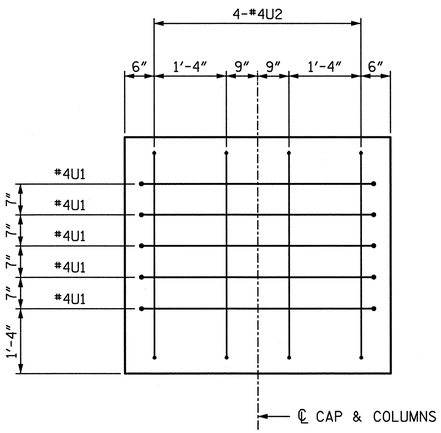

END VIEW B-B
(RIGHT END SHOWN, LEFT END SIMILAR)

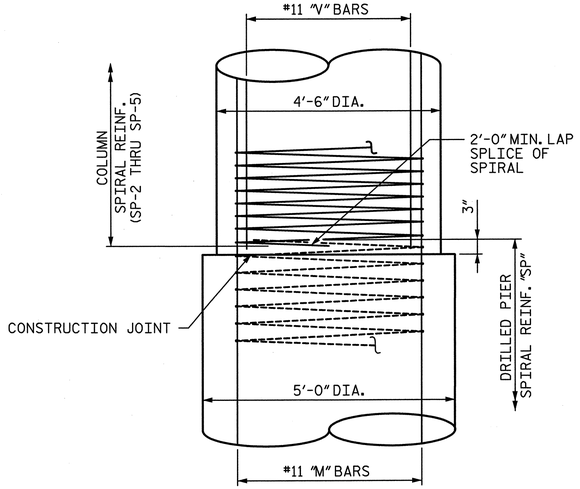

CONSTRUCTION JOINT DETAIL

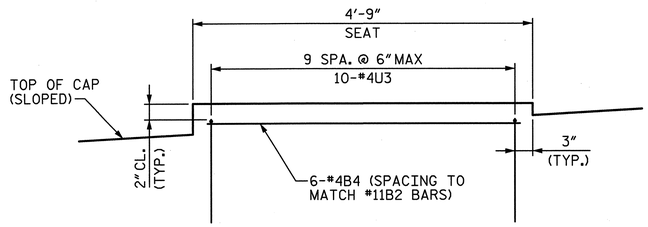

SEAT REINFORCEMENT DETAIL
(TYPICAL AT EACH BEARING SEAT)

NORTH CAROLINA PROFESSIONAL SEAL 28479 ENGINEER KEVIN G. BAILEY
6-7-13

PROJECT NO. U-2524C
GUILFORD COUNTY
STATION: POT 407+85.82 -L-
= POT 29+79.72 -Y4-
SHEET 2 OF 3

STATE OF NORTH CAROLINA
DEPARTMENT OF TRANSPORTATION
RALEIGH

SUBSTRUCTURE
BENTS 9 & 10
DETAILS

-RIGHT LANE-

REVISIONS						SHEET NO.
NO.	BY:	DATE:	NO.	BY:	DATE:	S-445
1			3			TOTAL SHEETS
2			4			836

STV / Ralph Whitehead Associates, Inc.
1000 West Morehead St., Ste. 200
Charlotte, NC 28208
NC License No. F-0991

DRAWN BY : JMP DATE : 2-13
CHECKED BY : MJK DATE : 4-13
DESIGN ENGINEER OF RECORD: K. BAILEY DATE : 5-13

6/6/2013 8:59:50 PM R:\station\Finals\Bent 9-10 - 2 of 3.dgn

TABLE A		
PLAN VIEW INFORMATION		
	BENT 9	BENT 10
"X"	9	10
"Y"	10	11
"Z"	11	12

TABLE B		
PLAN VIEW ANGLES		
	ANGLE "XX"	
GDR.	BENT 9	BENT 10
"X"-1	88°-34'-13"	88°-56'-04"
"X"-2	88°-25'-25"	88°-51'-38"
"X"-3	88°-16'-41"	88°-47'-15"
"X"-4	88°-08'-00"	88°-42'-53"
"X"-5	87°-59'-24"	88°-38'-32"
"X"-6	87°-50'-52"	88°-34'-14"
"X"-7	87°-42'-24"	88°-29'-56"
	ANGLE "YY"	
	BENT 9	BENT 10
"Y"-1	91°-11'-52"	90°-48'-01"
"Y"-2	91°-07'-27"	90°-48'-01"
"Y"-3	91°-03'-03"	90°-48'-00"
"Y"-4	90°-58'-41"	90°-48'-00"
"Y"-5	90°-54'-21"	90°-48'-00"
"Y"-6	90°-50'-02"	90°-47'-59"
"Y"-7	90°-45'-45"	90°-47'-59"

TABLE C		
PLAN VIEW DIMENSIONS		
	DIMENSION "AA"	
GDR.	BENT 9	BENT 10
"X"-1	3/4"	9/16"
"X"-2	7/8"	5/8"
"X"-3	15/16"	5/8"
"X"-4	1"	11/16"
"X"-5	1 1/16"	3/4"
"X"-6	1 3/16"	3/4"
"X"-7	1 1/4"	13/16"
	DIMENSION "BB"	
	BENT 9	BENT 10
"Y"-1	5/8"	1/16"
"Y"-2	5/8"	1/16"
"Y"-3	9/16"	1/16"
"Y"-4	1/2"	1/16"
"Y"-5	1/2"	1/16"
"Y"-6	1/16"	1/16"
"Y"-7	1/16"	1/16"

TABLE D		
ELEVATIONS		
	BENT 9	BENT 10
"A"	788.60	788.10
"B"	789.07	788.51
"C"	788.95	788.39
"D"	789.68	789.03
"E"	789.55	788.91
"F"	790.28	789.55
"G"	790.16	789.42
"H"	790.89	790.07
"I"	790.76	789.94
"J"	791.49	790.58
"K"	791.37	790.46
"L"	792.10	791.10
"M"	791.97	790.97
"N"	792.70	791.61
"O"	792.58	791.49
"P"	792.65	791.55
"Q"	788.15	787.05
"R"	784.10	783.60
"S"	749.36	749.34
"T"	700.86	701.84
"U"	700.86	706.84

TABLE E		
ELEVATION VIEW DIMENSIONS		
	BENT 9	BENT 10
"CC"	34'-11 1/8"	34'-5 1/2"
"DD"	36'-2 1/4"	35'-5 5/8"
"EE"	37'-4 5/8"	36'-5 5/8"
"FF"	38'-7"	37'-5 3/4"
"GG"	48'-6"	47'-6"
"HH"	48'-6"	42'-6"
"II"	0.0600	0.0503

TABLE F
BENT 9 COLUMNS & DRILLED PIERS REINFORCING BILL OF MATERIAL

COLUMN/ DRILLED PIER	BAR	NO.	SIZE	TYPE	●	LENGTH	WEIGHT	DRILLED PIER LENGTH
1	M11	20	#11	STR.		57'-9"	6,137	48'-6"
	V1	20	#11	①	38'-9"	40'-4"	4,286	
	SP-2	1	✳	⑤	35'-3"	1,849'-1"	1,235	
	SP-11	1	✳✳	④	48'-0"	1,511'-4"	1,576	
2	M11	20	#11	STR.		57'-9"	6,137	48'-6"
	V2	20	#11	①	40'-0"	41'-7"	4,419	
	SP-3	1	✳	⑤	36'-6"	1,913'-10"	1,278	
	SP-11	1	✳✳	④	48'-0"	1,511'-4"	1,576	
3	M11	20	#11	STR.		57'-9"	6,137	48'-6"
	V3	20	#11	①	41'-2"	42'-9"	4,543	
	SP-4	1	✳	⑤	37'-8"	1,974'-4"	1,319	
	SP-11	1	✳✳	④	48'-0"	1,511'-4"	1,576	
4	M11	20	#11	STR.		57'-9"	6,137	48'-6"
	V4	20	#11	①	42'-4"	43'-11"	4,667	
	SP-5	1	✳	⑤	38'-10"	2,034'-10"	1,359	
	SP-11	1	✳✳	④	48'-0"	1,511'-4"	1,576	

TABLE F
BENT 10 COLUMNS & DRILLED PIERS REINFORCING BILL OF MATERIAL

COLUMN/ DRILLED PIER	BAR	NO.	SIZE	TYPE	●	LENGTH	WEIGHT	DRILLED PIER LENGTH
1	M11	20	#11	STR.		56'-9"	6,030	47'-6"
	V1	20	#11	①	38'-3"	39'-10"	4,233	
	SP-2	1	✳	⑤	34'-9"	1,823'-2"	1,218	
	SP-11	1	✳✳	④	47'-0"	1,480'-3"	1,544	
2	M11	20	#11	STR.		56'-9"	6,030	47'-6"
	V2	20	#11	①	39'-3"	40'-10"	4,339	
	SP-3	1	✳	⑤	35'-9"	1,875'-0"	1,253	
	SP-11	1	✳✳	④	47'-0"	1,480'-3"	1,544	
3	M12	20	#11	STR.		51'-9"	5,499	42'-6"
	V3	20	#11	①	40'-3"	41'-10"	4,339	
	SP-4	1	✳	⑤	36'-9"	1,926'-10"	1,287	
	SP-12	1	✳✳	④	42'-0"	1,325'-1"	1,382	
4	M12	20	#11	STR.		51'-9"	5,499	42'-6"
	V4	20	#11	①	41'-3"	42'-10"	4,551	
	SP-5	1	✳	⑤	37'-9"	1,978'-8"	1,322	
	SP-12	1	✳✳	④	42'-0"	1,325'-1"	1,382	

✳ THE SP-2 THROUGH SP-5 SPIRAL REINFORCING SHALL BE W20 OR D-20 COLD DRAWN WIRE OR #4 PLAIN OR DEFORMED BAR WITH A 3" PITCH.

✳✳ THE SP-11 AND SP-12 SPIRAL REINFORCING STEEL SHALL BE W31 OR D-31 COLD DRAWN WIRE OR #5 PLAIN OR DEFORMED BAR WITH A 5" PITCH.

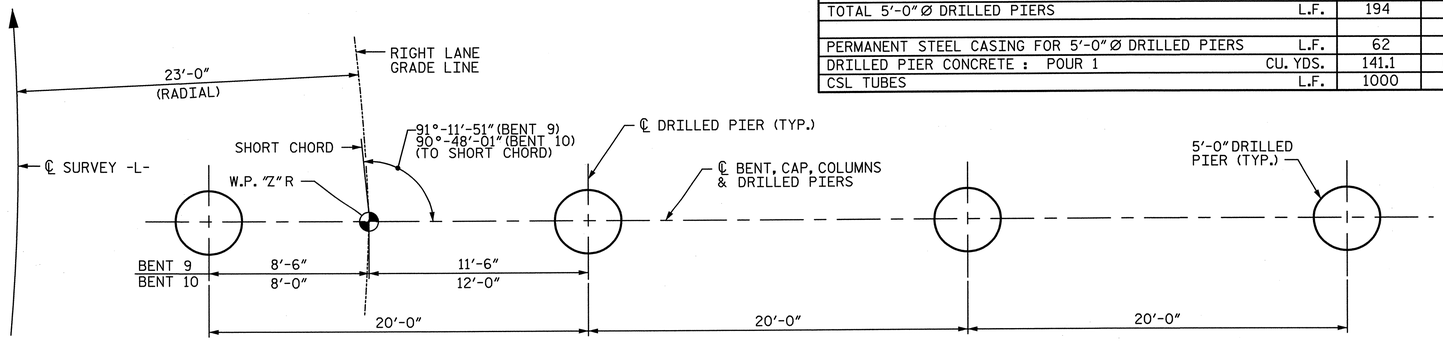

PLAN OF DRILLED PIERS

NOTE:
SEE TABLE A THIS SHEET FOR "Z".

BAR TYPES

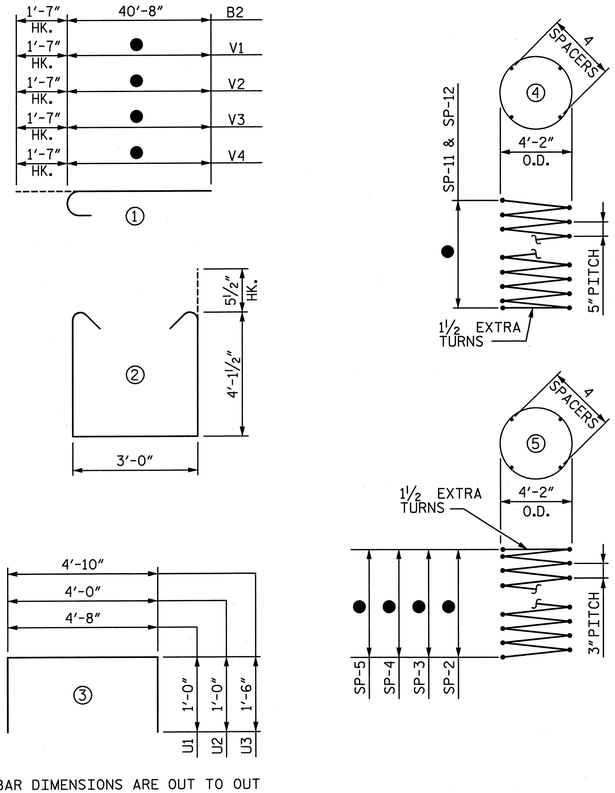

ALL BAR DIMENSIONS ARE OUT TO OUT

BILL OF MATERIAL FOR ONE BENT (2 REQUIRED)

BAR	NO.	SIZE	TYPE	LENGTH	WEIGHT
B1	14	#11	STR.	46'-1"	3,428
B2	12	#11	①	42'-3"	2,694
B3	20	#5	STR.	35'-4"	737
B4	42	#4	STR.	4'-5"	124
B5	14	#11	STR.	31'-4"	2,331
B6	18	#4	STR.	4'-10"	58
S1	116	#5	②	12'-2"	1,472
U1	10	#4	③	6'-8"	45
U2	8	#4	③	6'-0"	32
U3	70	#4	③	7'-10"	366

NOTE:
FOR ● AND COLUMNS & DRILLED PIERS REINFORCING BILL OF MATERIAL SEE TABLE F THIS SHEET.

QUANTITIES				
			BENT 9	BENT 10
REINFORCING STEEL		LBS.	53,750	51,913
SPIRAL REINFORCING STEEL		LBS.	11,495	10,932
CLASS A CONCRETE :	POUR 2 - COLUMNS	CU. YDS.	86.7	84.7
	POUR 3 - CAP	CU. YDS.	60.4	60.2
	TOTAL	CU. YDS.	147.1	144.9
5'-0" Ø DRILLED PIERS IN SOIL		L.F.	153	131
5'-0" Ø DRILLED PIERS NOT IN SOIL		L.F.	41	49
TOTAL 5'-0" Ø DRILLED PIERS		L.F.	194	180
PERMANENT STEEL CASING FOR 5'-0" Ø DRILLED PIERS		L.F.	62	62
DRILLED PIER CONCRETE : POUR 1		CU. YDS.	141.1	130.9
CSL TUBES		L.F.	1000	930

NORTH CAROLINA PROFESSIONAL ENGINEER SEAL 28479 KEVIN G. BAILEY
6-7-13

PROJECT NO. U-2524C

GUILFORD COUNTY

STATION: POT 407+85.82 -L-
= POT 29+79.72 -Y4-

SHEET 3 OF 3

STATE OF NORTH CAROLINA
DEPARTMENT OF TRANSPORTATION
RALEIGH

SUBSTRUCTURE BENTS 9 & 10 DETAILS & BILL OF MATERIAL

-RIGHT LANE-

REVISIONS						SHEET NO.
NO.	BY:	DATE:	NO.	BY:	DATE:	S-446
1			3			TOTAL SHEETS
2			4			836

DRAWN BY : JMP DATE : 2-13
CHECKED BY : MJK DATE : 4-13
DESIGN ENGINEER OF RECORD: K. BAILEY DATE : 5-13

STV / Ralph Whitehead Associates, Inc.
1000 West Morehead St., Ste. 200
Charlotte, NC 28208
NC License No. F-0991

6/6/2013 8:59:51 PM R:\ustation\Finals\Bent 9-10- 3 of 3.dgn

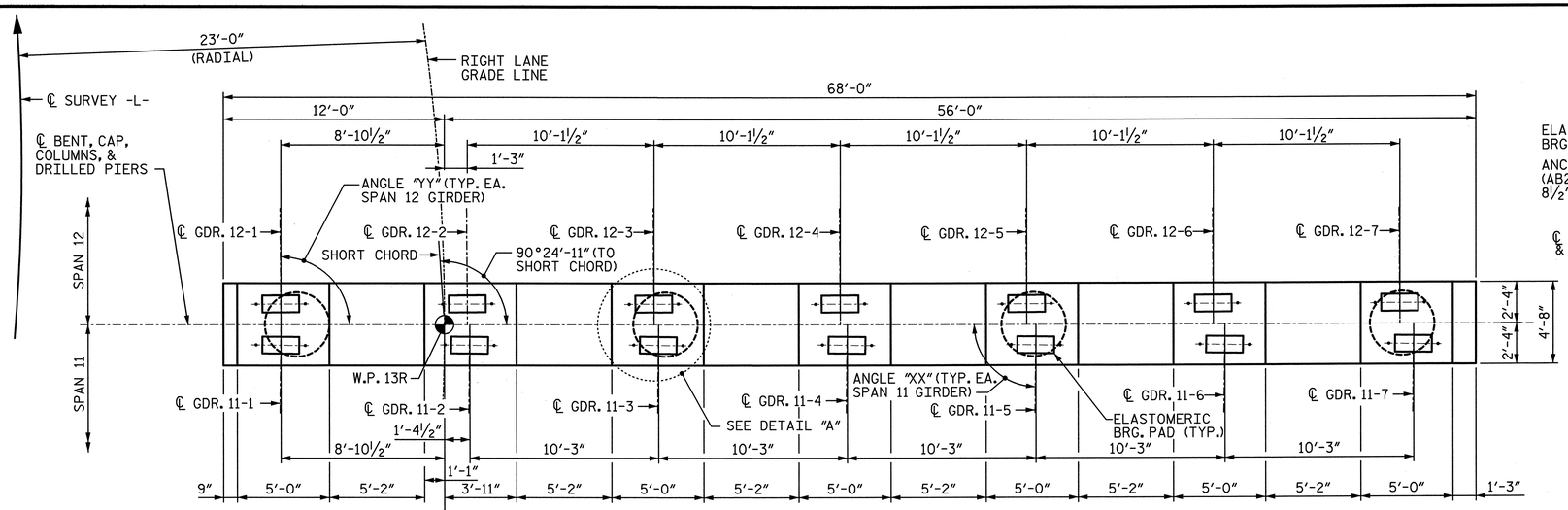

PLAN

NOTE:
SEE TABLE A THIS SHEET FOR "XX" AND "YY" ANGLES.

NOTE:
℄ SURVEY -L-, SHORT CHORD AND RIGHT LANE GRADE LINE EXAGGERATED FOR CLARITY.

NOTE:
INVERT ALTERNATE PAIRS OF STIRRUPS.

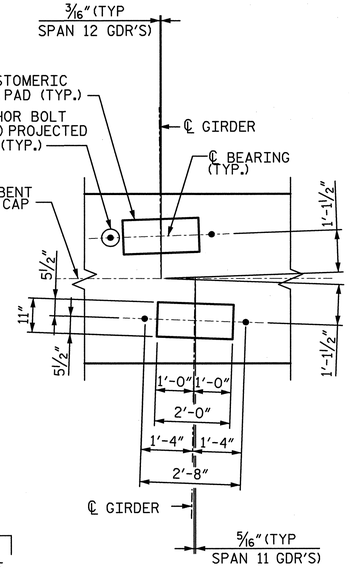

DETAIL "A"

(TYP. AT EACH BRIDGE SEAT)

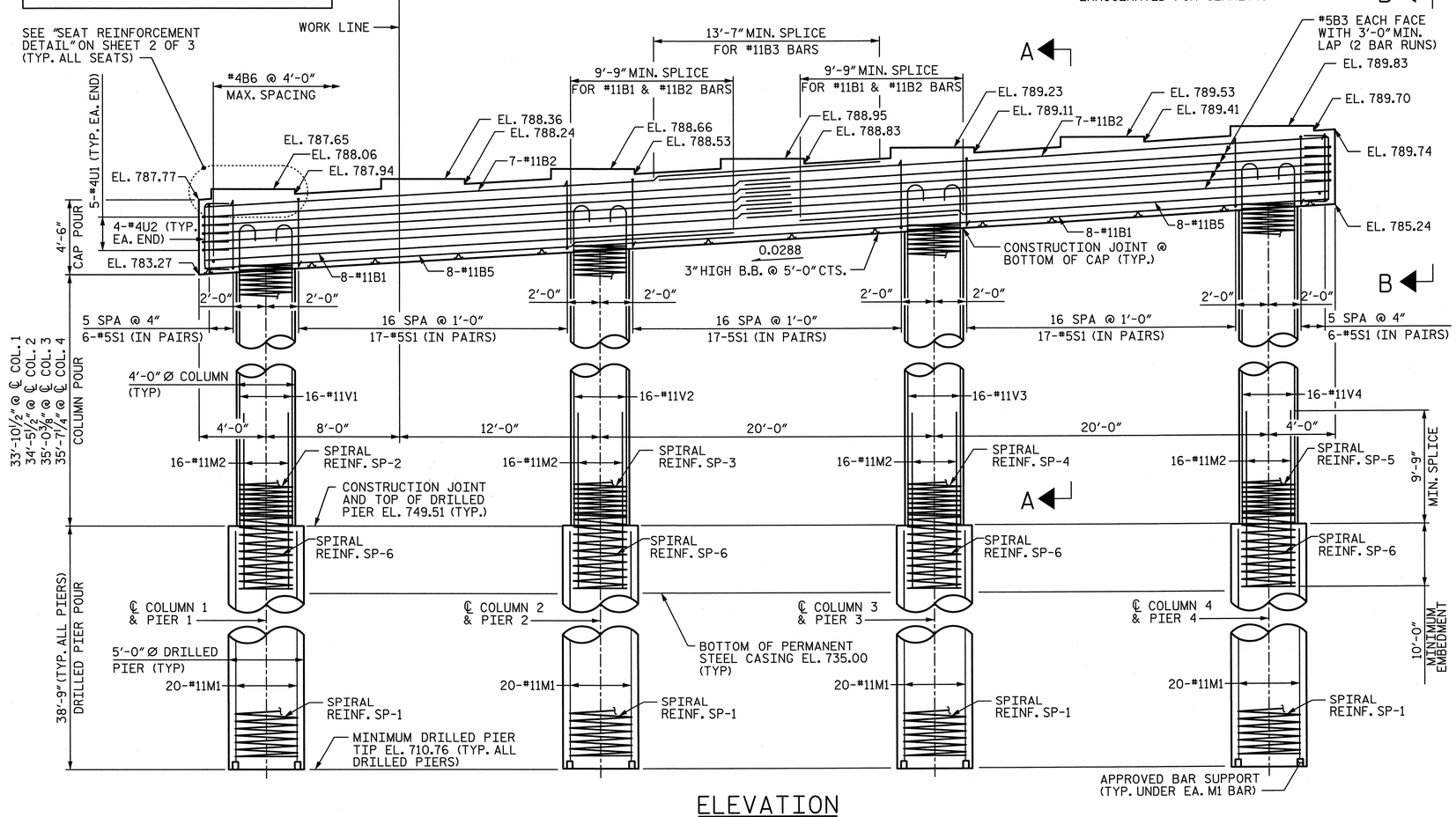

ELEVATION

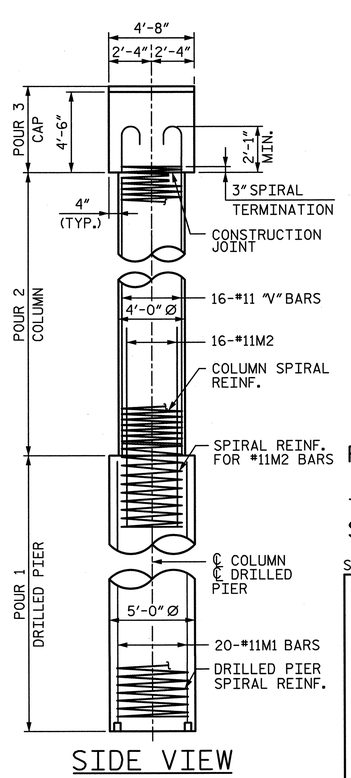

SIDE VIEW

NOTES:

1. ALL REINFORCING STEEL IN THE DRILLED PIERS IS INCLUDED IN THE PAY ITEMS FOR "REINFORCING STEEL" AND "SPIRAL COLUMN REINFORCING STEEL".
2. THE LOCATION OF THE CONSTRUCTION JOINT IN THE DRILLED PIERS IS BASED ON AN APPROXIMATE GROUND LINE ELEVATION. IF THE CONSTRUCTION JOINT IS ABOVE THE ACTUAL GROUND ELEVATION, THE CONTRACTOR SHALL PLACE THE CONSTRUCTION JOINT 1 FOOT BELOW THE GROUND LINE.
3. STIRRUPS AND "U BARS" IN CAP MAY BE SHIFTED SLIGHTLY AS NECESSARY TO CLEAR ANCHOR BOLTS.
4. HOOKS ON BARS MAY BE TURNED AS NECESSARY FOR PLACING REINFORCING STEEL.
5. A CONSTRUCTION JOINT AT MID-HEIGHT OF COLUMN IS PERMITTED.
6. FOR "AB2" ANCHOR BOLTS, SEE "ELASTOMERIC BEARING DETAILS" SHEET.
7. SEE "GENERAL DRAWING GENERAL NOTES" SHEET FOR ADDITIONAL NOTES.
8. SEE SHEET 2 OF 3 FOR SECTIONS CALLED OUT ON ELEVATION VIEW.

TABLE A

PLAN VIEW ANGLES

GDR.	ANGLE "XX"
11-1	89°-19'-54"
11-2	89°-19'-54"
11-3	89°-19'-53"
11-4	89°-19'-53"
11-5	89°-19'-52"
11-6	89°-19'-52"
11-7	89°-19'-51"

GDR.	ANGLE "YY"
12-1	90°-24'-12"
12-2	90°-24'-11"
12-3	90°-24'-11"
12-4	90°-24'-11"
12-5	90°-24'-11"
12-6	90°-24'-10"
12-7	90°-24'-10"

NORTH CAROLINA PROFESSIONAL ENGINEER SEAL 28479 ENGINEER KEVIN G. BAILEY 6-7-13

PROJECT NO. U-2524C

GUILFORD COUNTY

STATION: POT 407+85.82 -L-
= POT 29+79.72 -Y4-

SHEET 1 OF 3

STATE OF NORTH CAROLINA
DEPARTMENT OF TRANSPORTATION
RALEIGH

SUBSTRUCTURE
BENT 11
PLAN & ELEVATION

-RIGHT LANE-

REVISIONS						SHEET NO.
NO.	BY:	DATE:	NO.	BY:	DATE:	S-447
1			3			TOTAL SHEETS
2			4			836

DRAWN BY : JMP DATE : 2-13
CHECKED BY : JAN DATE : 2-13

DESIGN ENGINEER OF RECORD: K. BAILEY DATE : 5-13

STV / Ralph Whitehead Associates, Inc.
1000 West Morehead St., Ste. 200
Charlotte, NC 28208
NC License No. F-0991

6/6/2013 8:59:52 PM R:\ustation\Finals\Bent 11- 1of 3.dgn

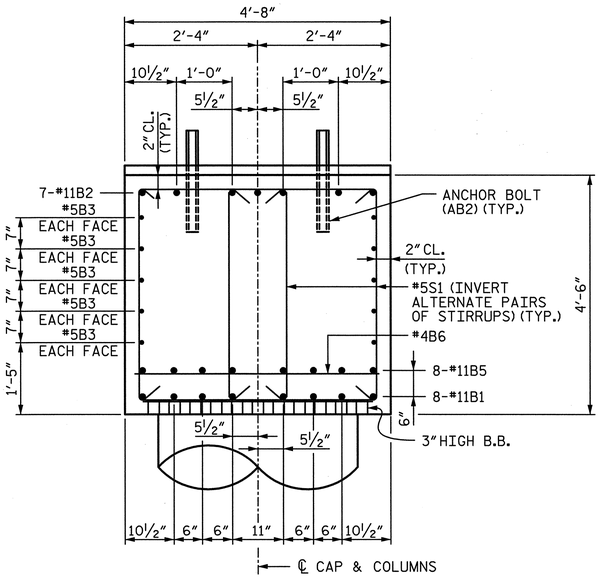

SECTION A-A

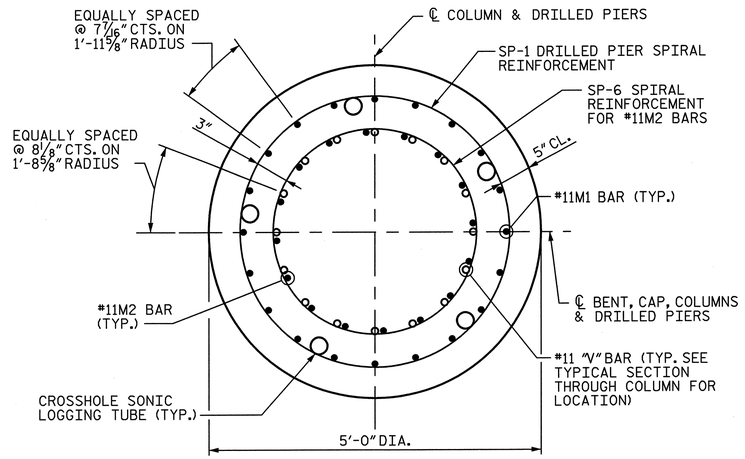

TYPICAL SECTION THROUGH DRILLED PIER

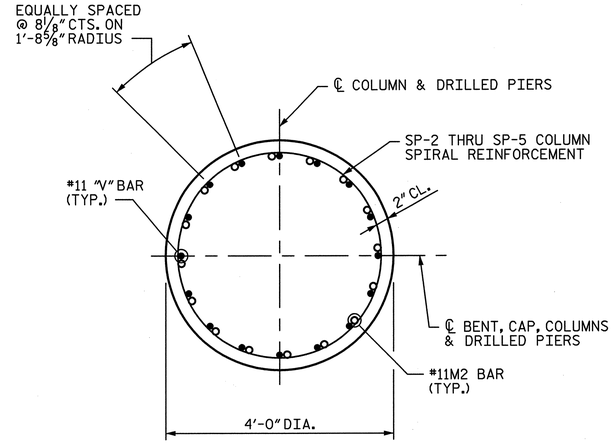

TYPICAL SECTION THROUGH COLUMN

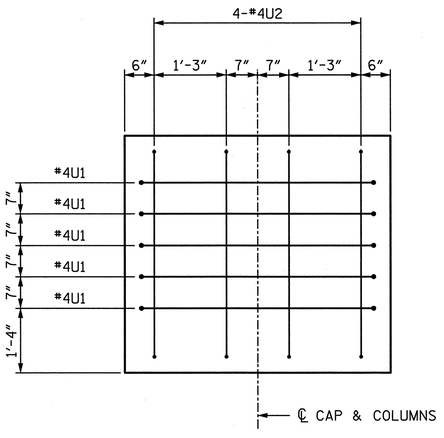

END VIEW B-B
(RIGHT END SHOWN, LEFT END SIMILAR)

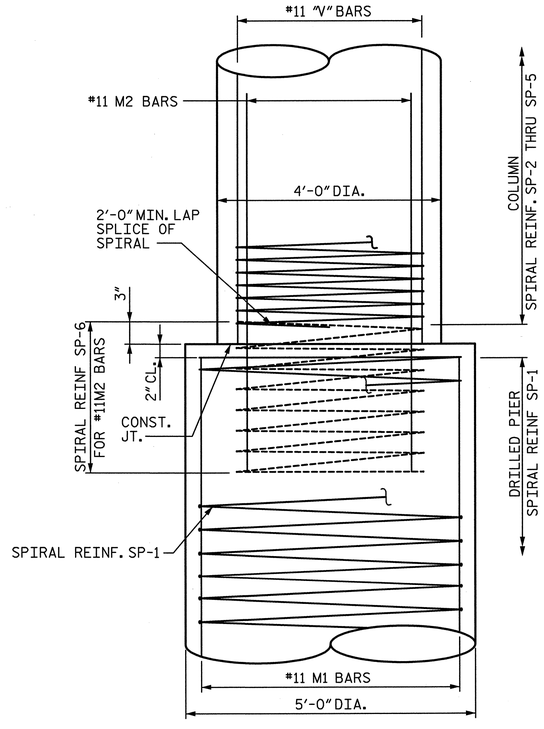

CONSTRUCTION JOINT DETAIL

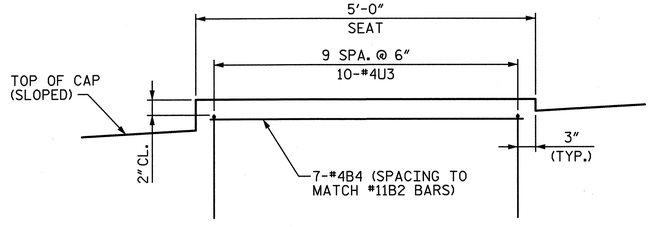

SEAT REINFORCEMENT DETAIL
(TYPICAL AT EACH BEARING SEAT)

NORTH CAROLINA PROFESSIONAL SEAL 28479 ENGINEER KEVIN G. BAILEY
6-7-13

PROJECT NO. U-2524C
GUILFORD COUNTY
STATION: POT 407+85.82 -L-
= POT 29+79.72 -Y4-
SHEET 2 OF 3

STATE OF NORTH CAROLINA
DEPARTMENT OF TRANSPORTATION
RALEIGH

SUBSTRUCTURE
BENT 11
DETAILS

-RIGHT LANE-

REVISIONS						SHEET NO.
NO.	BY:	DATE:	NO.	BY:	DATE:	S-448
1			3			TOTAL SHEETS
2			4			836

DRAWN BY : JMP	DATE : 2-13	DESIGN ENGINEER OF RECORD: K. BAILEY	DATE : 5-13
CHECKED BY : JAN	DATE : 2-13		

STV / Ralph Whitehead Associates, Inc.
1000 West Morehead St., Ste. 200
Charlotte, NC 28208
NC License No. F-0991

6/6/2013 8:59:53 PM R:\ustation\Finals\Bent II- 2 of 3.dgn

QUANTITIES

REINFORCING STEEL		LBS.	49,197
SPIRAL REINFORCING STEEL		LBS.	10,624
CLASS A CONCRETE :	POUR 2 - COLUMNS	CU. YDS.	64.7
	POUR 3 - CAP	CU. YDS.	54.1
	TOTAL	CU. YDS.	118.8
5'-0" Ø DRILLED PIERS IN SOIL		L.F.	112
5'-0" Ø DRILLED PIERS NOT IN SOIL		L.F.	43
TOTAL 5'-0" Ø DRILLED PIERS		L.F.	155
PERMANENT STEEL CASING FOR 5'-0" Ø DRILLED PIERS		L.F.	63
DRILLED PIER CONCRETE :	POUR 1	CU. YDS.	112.7
CSL TUBES		L.F.	805

BAR TYPES

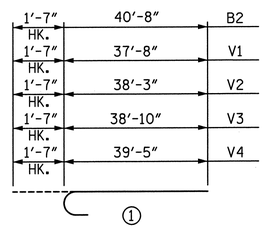

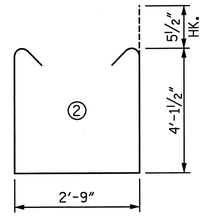

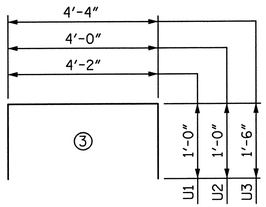

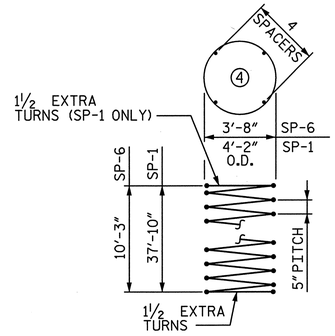

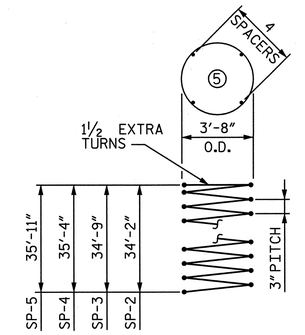

ALL BAR DIMENSIONS ARE OUT TO OUT

BILL OF MATERIAL

BAR	NO.	SIZE	TYPE	LENGTH	WEIGHT
B1	16	#11	STR.	45'-10"	3,896
B2	14	#11	①	42'-3"	3,143
B3	20	#5	STR.	35'-4"	737
B4	49	#4	STR.	4'-8"	153
B5	16	#11	STR.	31'-7"	2,685
B6	18	#4	STR.	4'-4"	52
M1	80	#11	STR.	38'-1"	16,187
M2	64	#11	STR.	19'-9"	6,716
S1	126	#5	②	11'-11"	1,566
U1	10	#4	③	6'-3"	42
U2	8	#4	③	6'-1"	33
U3	70	#4	③	7'-4"	343
V1	16	#11	①	39'-3"	3,337
V2	16	#11	①	39'-10"	3,386
V3	16	#11	①	40'-5"	3,436
V4	16	#11	①	41'-0"	3,485
SP-1	4	✱✱	④	1,213'-2"	5,061
SP-2	1	✱	⑤	1,575'-11"	1,053
SP-3	1	✱	⑤	1,602'-6"	1,070
SP-4	1	✱	⑤	1,629'-1"	1,088
SP-5	1	✱	⑤	1,655'-8"	1,106
SP-6	4	✱✱	④	298'-7"	1,246

✱✱ THE SP-1 AND SP-6 SPIRAL REINFORCING STEEL SHALL BE W31 OR D-31 COLD DRAWN WIRE OR #5 PLAIN OR DEFORMED BAR WITH A 5" PITCH.

✱ THE SP-2 THRU SP-5 SPIRAL REINFORCING SHALL BE W20 OR D-20 COLD DRAWN WIRE OR #4 PLAIN OR DEFORMED BAR WITH A 3" PITCH.

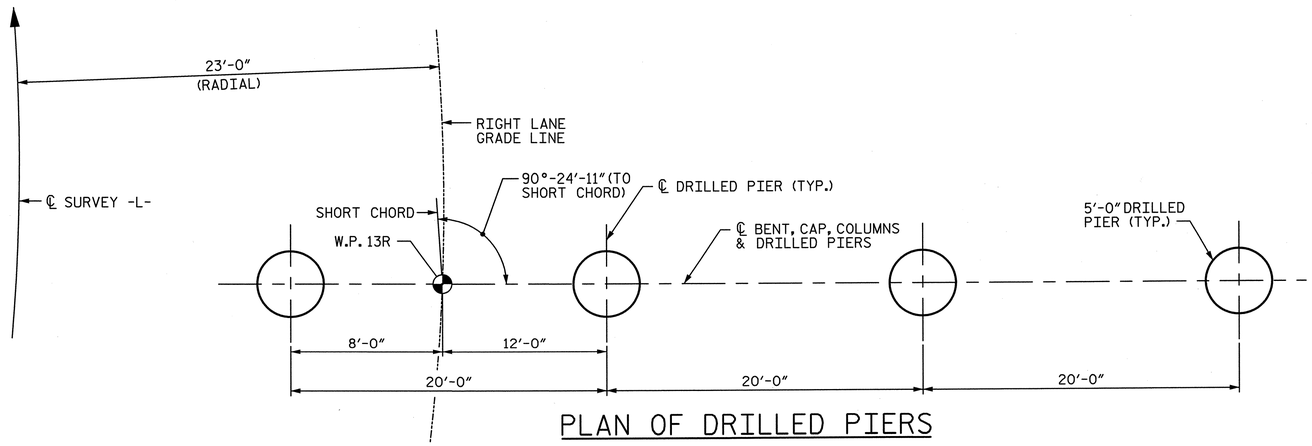

PLAN OF DRILLED PIERS

PROJECT NO. U-2524C

GUILFORD COUNTY

STATION: POT 407+85.82 -L-
= POT 29+79.72 -Y4-

SHEET 3 OF 3

STATE OF NORTH CAROLINA
DEPARTMENT OF TRANSPORTATION
RALEIGH

SUBSTRUCTURE BENT 11 DETAILS & BILL OF MATERIAL

-RIGHT LANE-

NORTH CAROLINA PROFESSIONAL SEAL 28479 ENGINEER KEVIN G. BAILEY 6-7-13

STV / Ralph Whitehead Associates, Inc.
1000 West Morehead St., Ste. 200
Charlotte, NC 28208
NC License No. F-0991

REVISIONS						SHEET NO.
NO.	BY:	DATE:	NO.	BY:	DATE:	S-449
1			3			TOTAL SHEETS
2			4			636

DRAWN BY : JMP DATE : 2-13
CHECKED BY : JAN DATE : 2-13

DESIGN ENGINEER OF RECORD: K. BAILEY DATE : 5-13

6/6/2013 8:59:54 PM R:\ustation\Finals\Bent II- 3 of 3.dgn

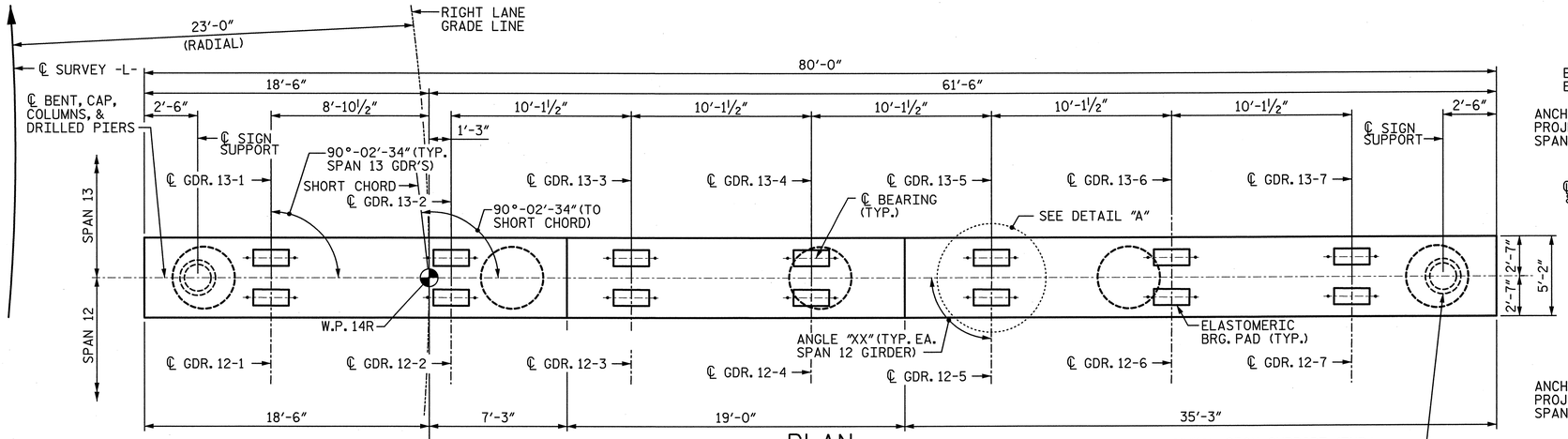

PLAN

NOTES:
SEE TABLE A THIS SHEET FOR "XX" ANGLES.

METAL SIGN SUPPORT (TYP.)
CAUTION: ANCHOR BOLTS FOR METAL SIGN SUPPORT SHALL BE IN PLACE WHEN CAP IS POURED.

NOTE:
℄ SURVEY -L-, SHORT CHORD AND RIGHT LANE GRADE LINE EXAGGERATED FOR CLARITY.

NOTE:
INVERT ALTERNATE #5S1, #5S2 AND #5S3 BARS.

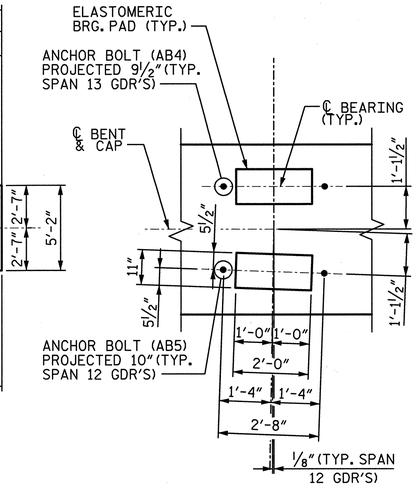

DETAIL "A"

(TYP. AT EACH BRIDGE SEAT)

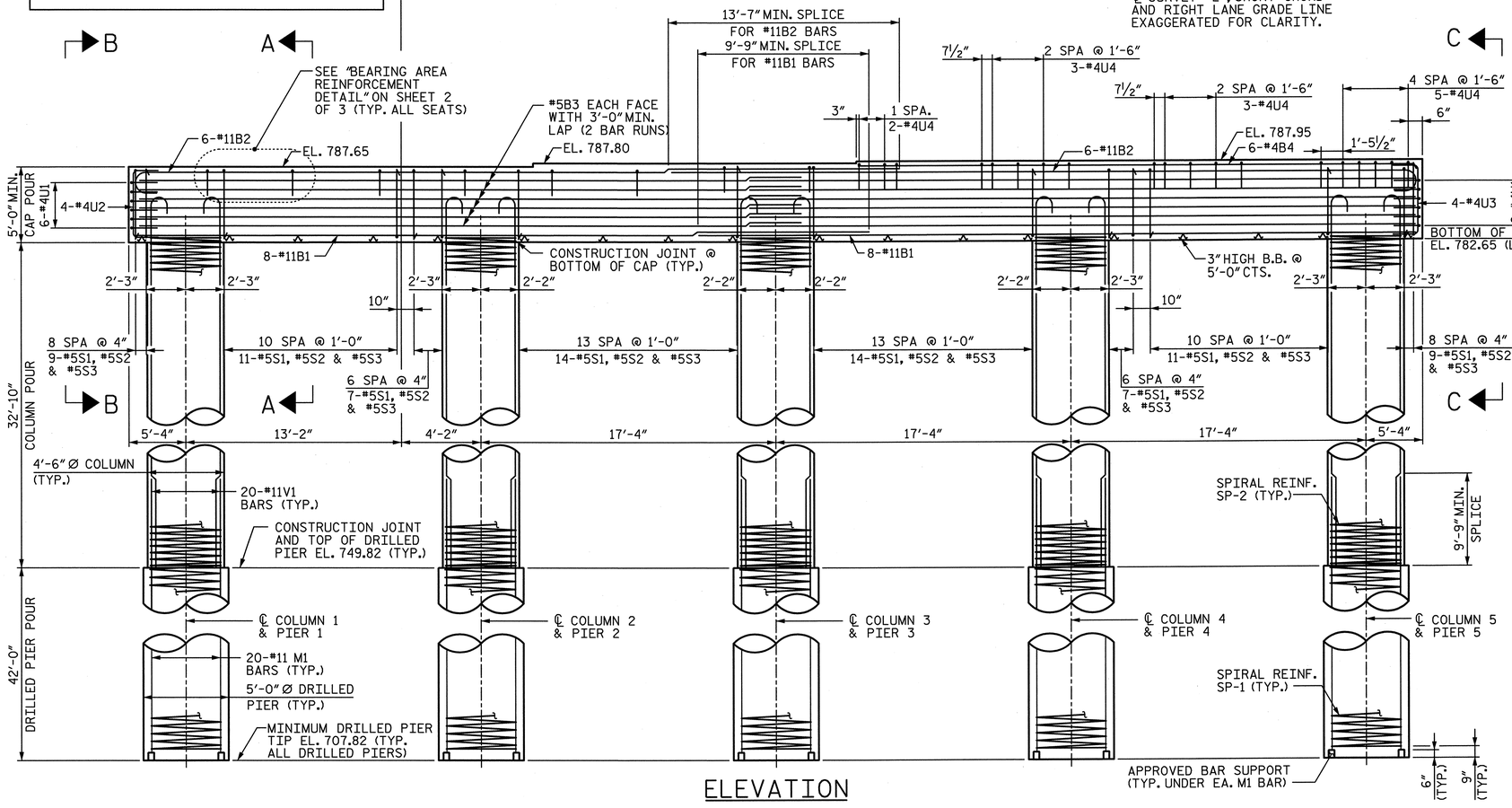

ELEVATION

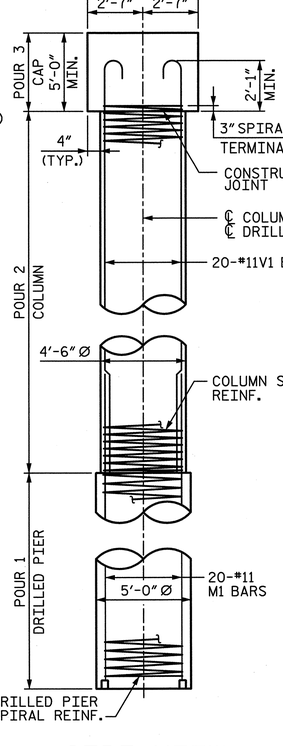

SIDE VIEW

NOTES:

1. ALL REINFORCING STEEL IN THE DRILLED PIERS IS INCLUDED IN THE PAY ITEMS FOR "REINFORCING STEEL" AND "SPIRAL COLUMN REINFORCING STEEL".
2. THE LOCATION OF THE CONSTRUCTION JOINT IN THE DRILLED PIERS IS BASED ON AN APPROXIMATE GROUND LINE ELEVATION. IF THE CONSTRUCTION JOINT IS ABOVE THE ACTUAL GROUND ELEVATION, THE CONTRACTOR SHALL PLACE THE CONSTRUCTION JOINT 1 FOOT BELOW THE GROUND LINE.
3. STIRRUPS AND "U BARS" IN CAP MAY BE SHIFTED SLIGHTLY AS NECESSARY TO CLEAR ANCHOR BOLTS.
4. HOOKS ON BARS MAY BE TURNED AS NECESSARY FOR PLACING REINFORCING STEEL.
5. A CONSTRUCTION JOINT AT MID-HEIGHT OF COLUMN IS PERMITTED.
6. FOR "AB4" AND "AB5" ANCHOR BOLTS, SEE "ELASTOMERIC BEARING DETAILS" SHEET.
7. SEE "GENERAL DRAWING GENERAL NOTES" SHEET FOR ADDITIONAL NOTES.
8. SEE SHEET 2 OF 3 FOR SECTIONS CALLED OUT ON ELEVATION VIEW.
9. FOR OVERHEAD SIGN (ROADWAY DETAIL AND PAY ITEM) DETAILS AND INFORMATION, SEE ROADWAY AND/OR SIGNING PLANS.
10. THE CONTRACTOR IS RESPONSIBLE FOR DESIGN, FABRICATION AND INSTALLATION OF OVERHEAD SIGN AND ANCHOR BOLTS LOCATED ON THE BENT. FOR DETAILS AND DESIGN INFORMATION SEE SIGNING PLANS.
11. THE CONTRACTOR'S ATTENTION IS CALLED TO THE FACT THAT THE NUMBER, SIZE AND LAYOUT OF THE ANCHOR BOLTS FOR THE OVERHEAD SIGN SHALL BE APPROVED PRIOR TO CASTING THE BENT CAP. FURTHERMORE THE ANCHOR BOLT ASSEMBLY SHALL NOT INTERFERE WITH THE BENT CAP REINFORCING STEEL. ALL COST ASSOCIATED WITH THE FABRICATION AND INSTALLATION OF THE ANCHOR BOLTS SHALL BE CONSIDERED INCIDENTAL TO THE VARIOUS CONTRACT PAY ITEMS. NO SEPARATE MEASUREMENT OR PAYMENT WILL BE MADE.

TABLE A
PLAN VIEW ANGLES

GDR.	ANGLE "XX"
12-1	89°-43'-45"
12-2	89°-43'-44"
12-3	89°-43'-44"
12-4	89°-43'-44"
12-5	89°-43'-44"
12-6	89°-43'-44"
12-7	89°-43'-43"

NORTH CAROLINA PROFESSIONAL ENGINEER SEAL 28479 KEVIN G. BAILEY 6-7-13

PROJECT NO. U-2524C
GUILFORD COUNTY
STATION: POT 407+85.82 -L-
= POT 29+79.72 -Y4-

SHEET 1 OF 3

STATE OF NORTH CAROLINA
DEPARTMENT OF TRANSPORTATION
RALEIGH

SUBSTRUCTURE BENT 12 PLAN & ELEVATION

-RIGHT LANE-

REVISIONS						SHEET NO.
NO.	BY:	DATE:	NO.	BY:	DATE:	S-450
1			3			TOTAL SHEETS
2			4			836

STV / Ralph Whitehead Associates, Inc.
1000 West Morehead St., Ste. 200
Charlotte, NC 28208
NC License No. F-0991

DRAWN BY : JMP	DATE : 3-13	DESIGN ENGINEER OF RECORD: K. BAILEY	DATE : 5-13
CHECKED BY : JAN	DATE : 4-13		

6/6/2013 10:45:35 PM R:\ustation\Finals\Bent 12 - 1of 3.dgn

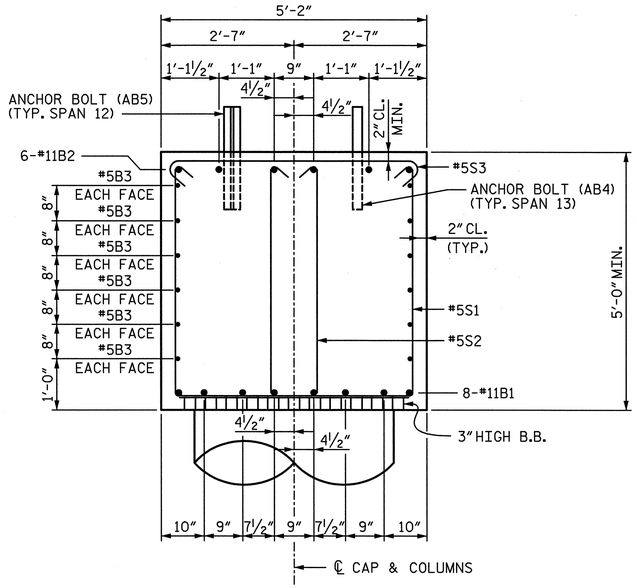

SECTION A-A

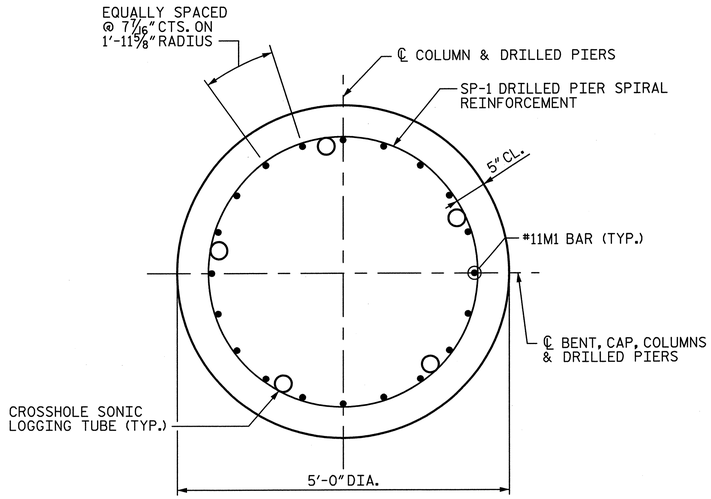

TYPICAL SECTION THROUGH DRILLED PIER

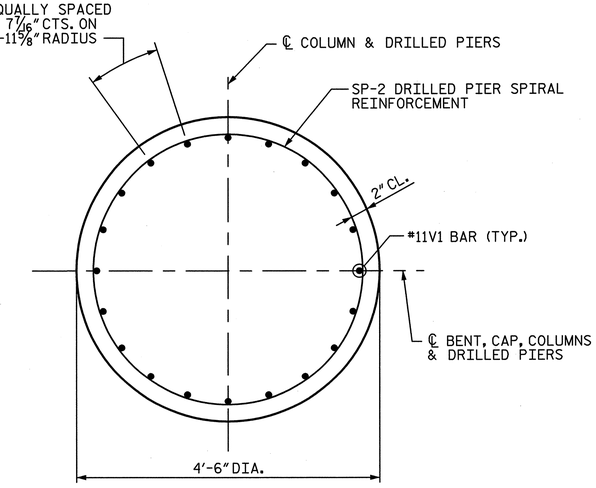

TYPICAL SECTION THROUGH COLUMN

NOTE:
INVERT ALTERNATE #5S1, #5S2 AND #5S3 BARS.

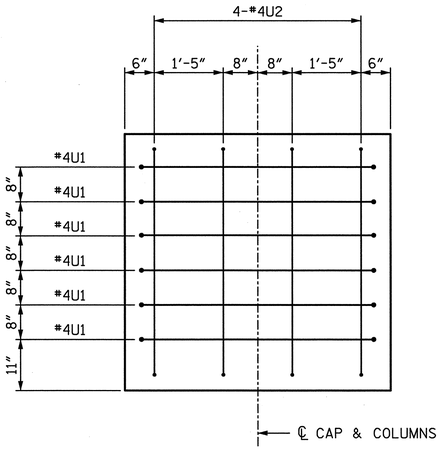

END VIEW B-B

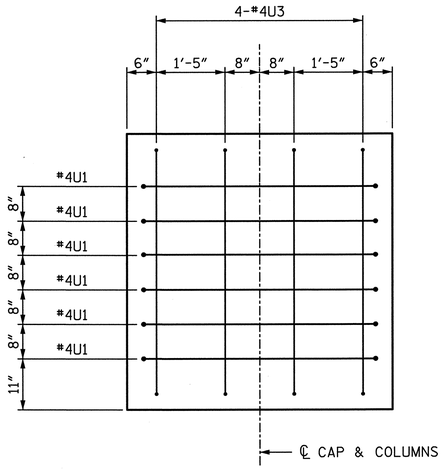

END VIEW C-C

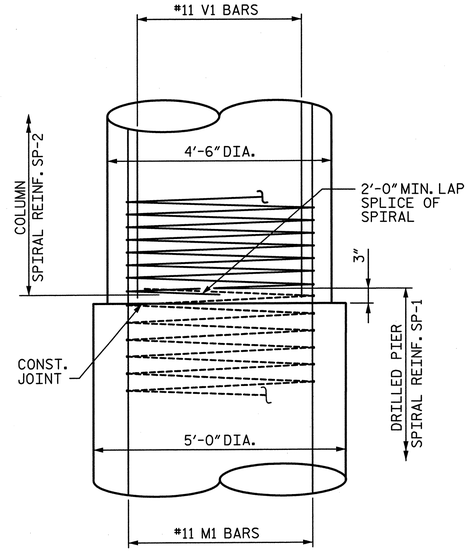

CONSTRUCTION JOINT DETAIL

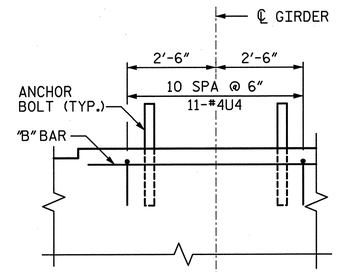

BEARING AREA REINFORCEMENT DETAIL

(TYP. AT EACH BRIDGE SEAT)

PROJECT NO. U-2524C

GUILFORD COUNTY

STATION: POT 407+85.82 -L-
= POT 29+79.72 -Y4-

SHEET 2 OF 3

STATE OF NORTH CAROLINA
DEPARTMENT OF TRANSPORTATION
RALEIGH

SUBSTRUCTURE BENT 12 DETAILS

-RIGHT LANE-

NORTH CAROLINA PROFESSIONAL SEAL 28479 ENGINEER KEVIN G. BAILEY 6-7-13

DRAWN BY : JMP	DATE : 3-13	DESIGN ENGINEER OF RECORD: K. BAILEY	DATE : 5-13
CHECKED BY : JAN	DATE : 4-13		

STV / Ralph Whitehead Associates, Inc.
1000 West Morehead St., Ste. 200
Charlotte, NC 28208
NC License No. F-0991

REVISIONS						SHEET NO.
NO.	BY:	DATE:	NO.	BY:	DATE:	S-451
1			3			TOTAL SHEETS
2			4			836

6/6/2013 8:59:57 PM R:\ustation\Finals\Bent 12 - 2 of 3.dgn

QUANTITIES

REINFORCING STEEL		LBS.	58,678
SPIRAL REINFORCING STEEL		LBS.	12,630
CLASS A CONCRETE :	POUR 2 - COLUMNS	CU. YDS.	96.7
	POUR 3 - CAP	CU. YDS.	79.1
	TOTAL	CU. YDS.	175.8
5'-0" Ø DRILLED PIERS IN SOIL		L.F.	156
5'-0" Ø DRILLED PIERS NOT IN SOIL		L.F.	54
TOTAL 5'-0" Ø DRILLED PIERS		L.F.	210
DRILLED PIER CONCRETE :	POUR 1	CU. YDS.	152.7
CSL TUBES		L.F.	1,088

BAR TYPES

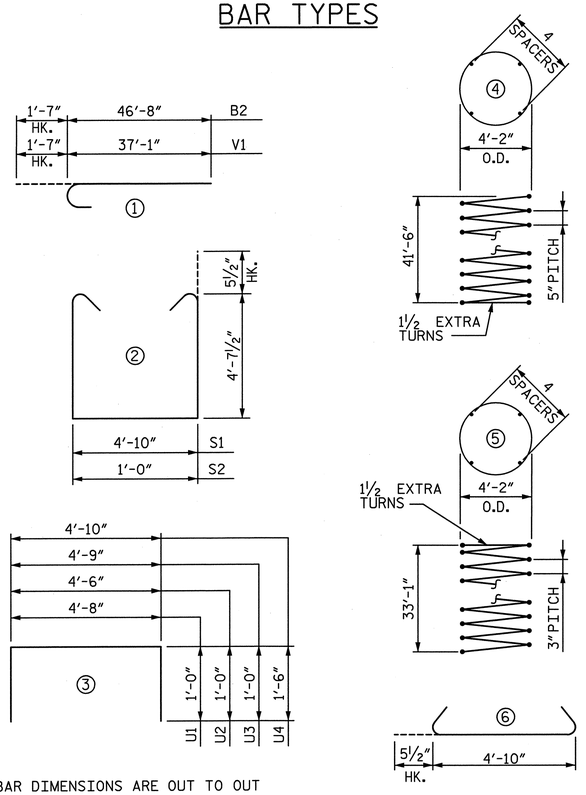

ALL BAR DIMENSIONS ARE OUT TO OUT

BILL OF MATERIAL

BAR	NO.	SIZE	TYPE	LENGTH	WEIGHT
B1	16	#11	STR.	44'-9"	3,804
B2	12	#11	①	48'-3"	3,076
B3	12	#5	STR.	41'-4"	517
B4	6	#5	STR.	34'-11"	219
M1	100	#11	STR.	51'-3"	27,229
S1	82	#5	②	15'-0"	1,283
S2	82	#5	②	11'-2"	955
S3	82	#5	⑥	5'-9"	492
U1	12	#4	③	6'-8"	53
U2	4	#4	③	6'-6"	17
U3	4	#4	③	6'-9"	18
U4	90	#4	③	7'-10"	471
V1	100	#11	①	38'-8"	20,544
SP-1	5	**	④	1,309'-7"	6,829
SP-2	5	*	⑤	1,736'-9"	5,801

** THE SP-1 SPIRAL REINFORCING STEEL SHALL BE W31 OR D-31 COLD DRAWN WIRE OR #5 PLAIN OR DEFORMED BAR WITH A 5"PITCH.

* THE SP-2 SPIRAL REINFORCING SHALL BE W20 OR D-20 COLD DRAWN WIRE OR #4 PLAIN OR DEFORMED BAR WITH A 3"PITCH.

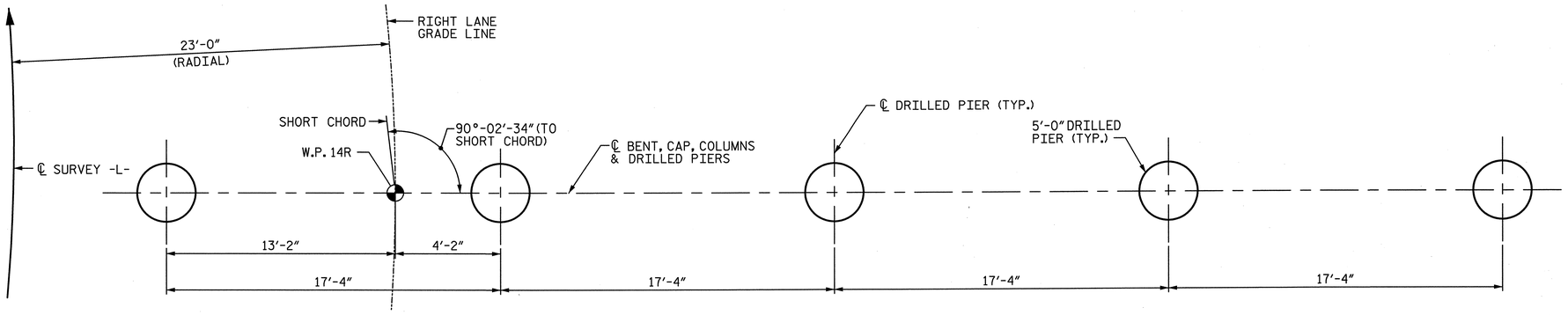

PLAN OF DRILLED PIERS

NORTH CAROLINA PROFESSIONAL ENGINEER SEAL 28479 KEVIN G. BAILEY 6-7-13

PROJECT NO. U-2524C

GUILFORD COUNTY

STATION: POT 407+85.82 -L-
= POT 29+79.72 -Y4-

SHEET 3 OF 3

STATE OF NORTH CAROLINA
DEPARTMENT OF TRANSPORTATION
RALEIGH

SUBSTRUCTURE
BENT 12
DETAILS & BILL OF MATERIAL

-RIGHT LANE-

DRAWN BY : JMP	DATE : 3-13	DESIGN ENGINEER OF RECORD: K. BAILEY	DATE : 5-13
CHECKED BY : JAN	DATE : 4-13		

STV / Ralph Whitehead Associates, Inc.
1000 West Morehead St., Ste. 200
Charlotte, NC 28208
NC License No. F-0991

REVISIONS						SHEET NO.
NO.	BY:	DATE:	NO.	BY:	DATE:	S-452
1			3			TOTAL SHEETS
2			4			836

6/6/2013 8:59:59 PM R:\ustation\Finals\Bent 12 - 3 of 3.dgn

TABLE A PLAN VIEW ANGLES	
	ANGLE "YY"
14-1	90°-00'-00"
14-2	89°-43'-21"
14-3	89°-26'-41"
14-4	89°-10'-02"
14-5	88°-53'-23"
14-6	88°-36'-44"
14-7	88°-20'-06"

TABLE B PLAN VIEW DIMENSIONS	
	DIM. "BB"
14-1	0"
14-2	1/8"
14-3	1/4"
14-4	7/16"
14-5	9/16"
14-6	11/16"
14-7	13/16"

NOTE:
INVERT ALTERNATE PAIRS OF STIRRUPS.

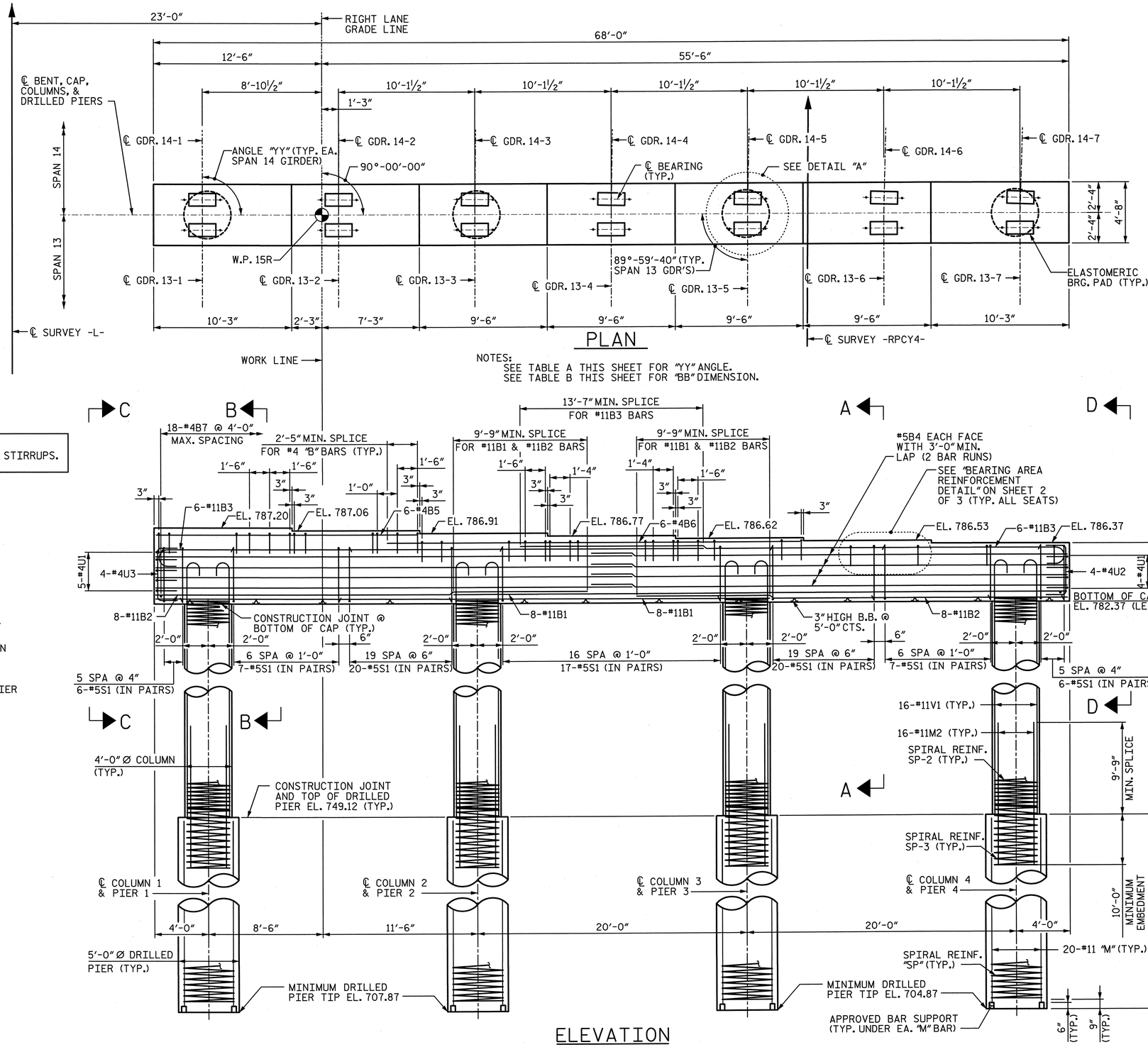

PLAN

NOTES:
SEE TABLE A THIS SHEET FOR "YY" ANGLE.
SEE TABLE B THIS SHEET FOR "BB" DIMENSION.

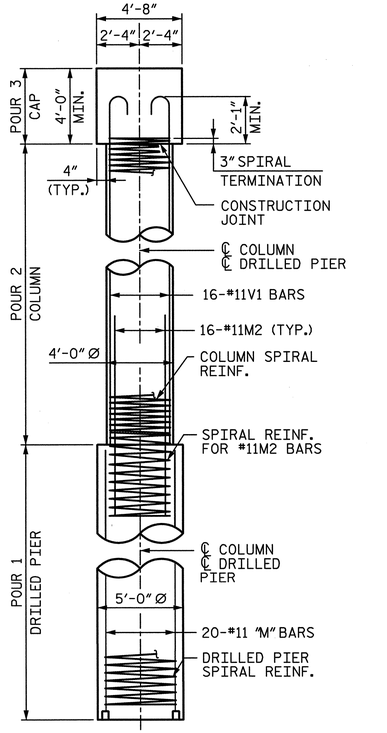

SIDE VIEW

ELEVATION

NOTES:

1. ALL REINFORCING STEEL IN THE DRILLED PIERS IS INCLUDED IN THE PAY ITEMS FOR "REINFORCING STEEL" AND "SPIRAL COLUMN REINFORCING STEEL".
2. THE LOCATION OF THE CONSTRUCTION JOINT IN THE DRILLED PIERS IS BASED ON AN APPROXIMATE GROUND LINE ELEVATION. IF THE CONSTRUCTION JOINT IS ABOVE THE ACTUAL GROUND ELEVATION, THE CONTRACTOR SHALL PLACE THE CONSTRUCTION JOINT 1 FOOT BELOW THE GROUND LINE.
3. STIRRUPS AND "U BARS" IN CAP MAY BE SHIFTED SLIGHTLY AS NECESSARY TO CLEAR ANCHOR BOLTS.
4. HOOKS ON BARS MAY BE TURNED AS NECESSARY FOR PLACING REINFORCING STEEL.
5. A CONSTRUCTION JOINT AT MID-HEIGHT OF COLUMN IS PERMITTED.
6. FOR "AB1" ANCHOR BOLTS, SEE "ELASTOMERIC BEARING DETAILS" SHEET.
7. SEE "GENERAL DRAWING GENERAL NOTES" SHEET FOR ADDITIONAL NOTES.
8. SEE SHEET 2 OF 3 FOR SECTIONS CALLED OUT ON ELEVATION VIEW.

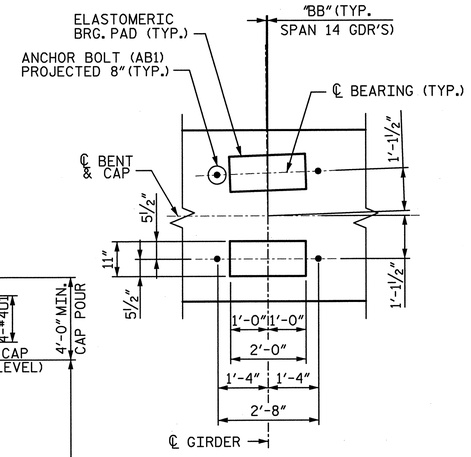

DETAIL "A"

(TYP. AT EACH BRIDGE SEAT)

NORTH CAROLINA PROFESSIONAL ENGINEER SEAL 28479 KEVIN G. BAILEY 6-7-13

PROJECT NO. U-2524C
GUILFORD COUNTY
STATION: POT 407+85.82 -L-
= POT 29+79.72 -Y4-
SHEET 1 OF 3

STATE OF NORTH CAROLINA
DEPARTMENT OF TRANSPORTATION
RALEIGH

SUBSTRUCTURE BENT 13 PLAN & ELEVATION

-RIGHT LANE-

REVISIONS						SHEET NO.
NO.	BY:	DATE:	NO.	BY:	DATE:	S-453
1			3			TOTAL SHEETS
2			4			836

DRAWN BY : JMP DATE : 3-13
CHECKED BY : KDH DATE : 3-13
DESIGN ENGINEER OF RECORD: K. BAILEY DATE : 5-13

STV / Ralph Whitehead Associates, Inc.
1000 West Morehead St., Ste. 200
Charlotte, NC 28208
NC License No. F-0991

6/6/2013 9:00:00 PM R:\Ustation\Finals\Bent 13 - 1of 3.dgn

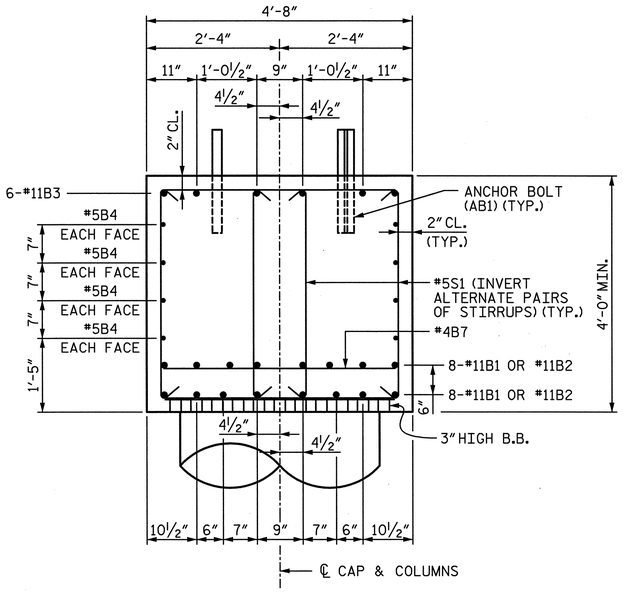

SECTION A-A

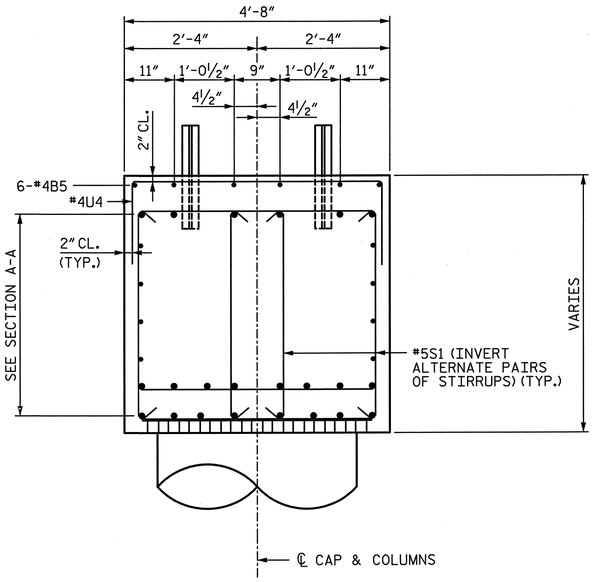

SECTION B-B

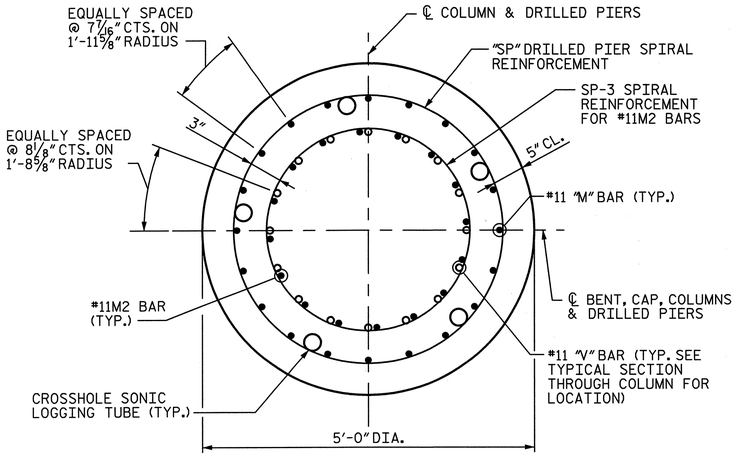

TYPICAL SECTION THROUGH DRILLED PIER

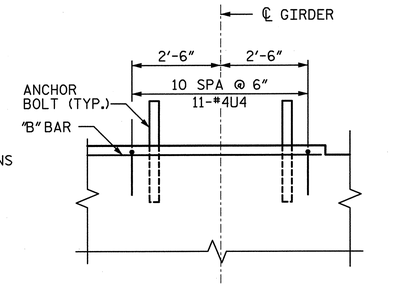

BEARING AREA REINFORCEMENT DETAIL

(TYP. AT EACH BRIDGE SEAT)

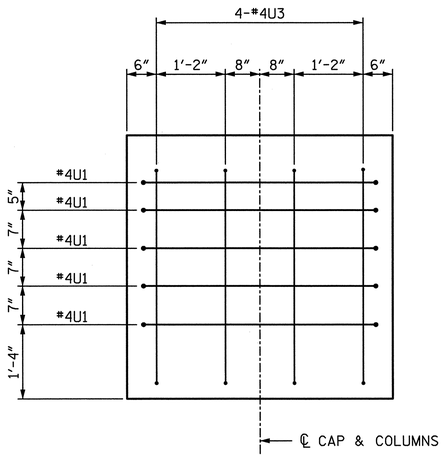

END VIEW C-C

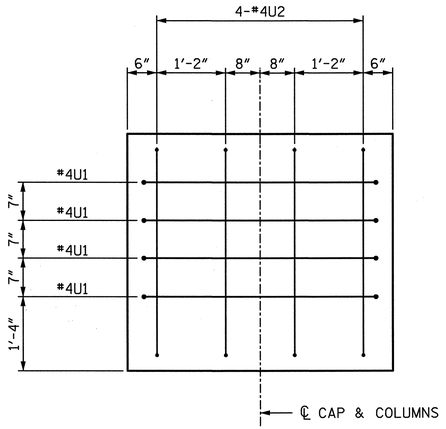

END VIEW D-D

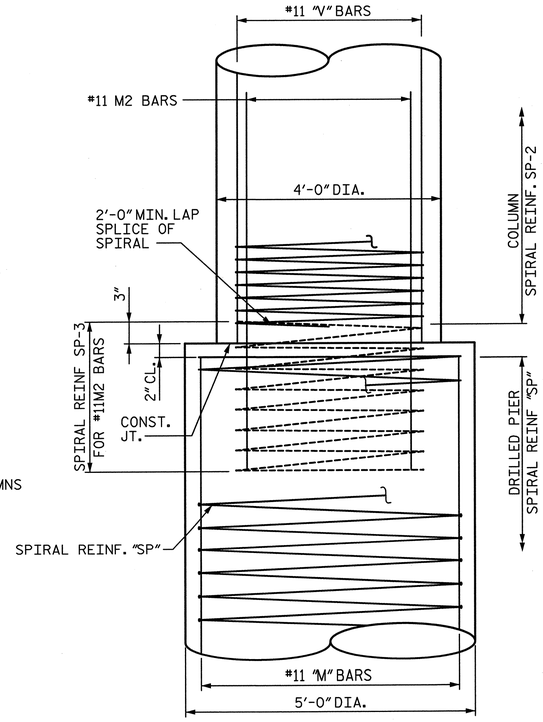

CONSTRUCTION JOINT DETAIL

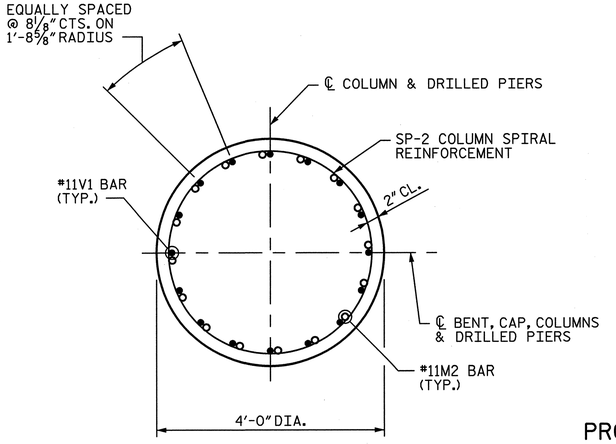

TYPICAL SECTION THROUGH COLUMN

PROJECT NO. U-2524C

GUILFORD COUNTY

STATION: POT 407+85.82 -L-
= POT 29+79.72 -Y4-

SHEET 2 OF 3

STATE OF NORTH CAROLINA
DEPARTMENT OF TRANSPORTATION
RALEIGH

SUBSTRUCTURE BENT 13 DETAILS

-RIGHT LANE-

NORTH CAROLINA PROFESSIONAL SEAL 28479 ENGINEER KEVIN G. BAILEY
6-7-13

DRAWN BY : JMP	DATE : 3-13	DESIGN ENGINEER OF RECORD: K. BAILEY	DATE : 5-13
CHECKED BY : KDH	DATE : 3-13		

STV / Ralph Whitehead Associates, Inc.
1000 West Morehead St., Ste. 200
Charlotte, NC 28208
NC License No. F-0991

REVISIONS						SHEET NO.
NO.	BY:	DATE:	NO.	BY:	DATE:	S-454
1			3			TOTAL SHEETS
2			4			836

6/6/2013 9:00:01 PM R:\ustation\Finals\Bent 13 - 2 of 3.dgn

THE CONTRACTOR'S ATTENTION IS CALLED TO THE FACT THAT THE LONGITUDINAL REINFORCEMENT FOR THE DRILLED PIERS IS DETAILED WITH 3 FEET OF EXTRA LENGTH.

✻✻ THE SP-11, SP-12 AND SP-3 SPIRAL REINFORCING STEEL SHALL BE W31 OR D-31 COLD DRAWN WIRE OR #5 PLAIN OR DEFORMED BAR WITH A 5"PITCH.

✻ THE SP-2 SPIRAL REINFORCING SHALL BE W20 OR D-20 COLD DRAWN WIRE OR #4 PLAIN OR DEFORMED BAR WITH A 3"PITCH.

TABLE A

BENT 13 COLUMNS & DRILLED PIERS REINFORCING BILL OF MATERIAL

COLUMN/ DRILLED PIER	BAR	NO.	SIZE	TYPE	●	LENGTH	WEIGHT	DRILLED PIER LENGTH
1 & 2 (1 SHOWN, 2 REQ'D)	M11	20	#11	STR.		43'-7"	4,631	41'-3"
	M2	16	#11	STR.		19'-9"	1,679	
	V1	16	#11	①	36'-6"	38'-1"	3,237	
	SP-11	1	✻✻	④	40'-4"	1,290'-9"	1,346	
	SP-2	1	✻	⑤	33'-6"	1,545'-6"	1,032	
	SP-3	1	✻✻	④	10'-3"	298'-7"	311	
3 & 4 (1 SHOWN, 2 REQ'D)	M12	20	#11	STR.		46'-7"	4,950	44'-3'
	M2	16	#11	STR.		19'-9"	1,679	
	V1	16	#11	①	36'-6"	38'-1"	3,237	
	SP-12	1	✻✻	④	43'-4"	1,383'-11"	1,443	
	SP-2	1	✻	⑤	33'-6"	1,545'-6"	1,032	
	SP-3	1	✻✻	④	10'-3"	298'-7"	311	

QUANTITIES

REINFORCING STEEL	LBS.	51,175
SPIRAL REINFORCING STEEL	LBS.	10,950
CLASS A CONCRETE : POUR 2 - COLUMNS	CU. YDS.	61.9
POUR 3 - CAP	CU. YDS.	51.8
TOTAL	CU. YDS.	113.7
5'-0"Ø DRILLED PIERS IN SOIL	L.F.	126
5'-0"Ø DRILLED PIERS NOT IN SOIL	L.F.	45
TOTAL 5'-0"Ø DRILLED PIERS	L.F.	171
DRILLED PIER CONCRETE : POUR 1	CU. YDS.	124.4
CSL TUBES	L.F.	885

BAR TYPES

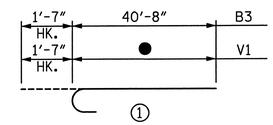

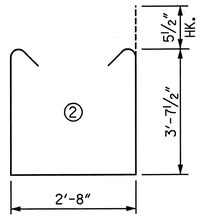

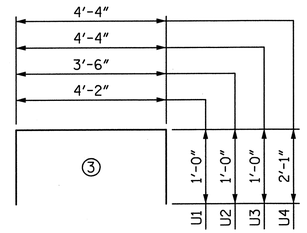

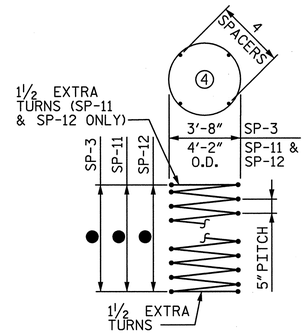

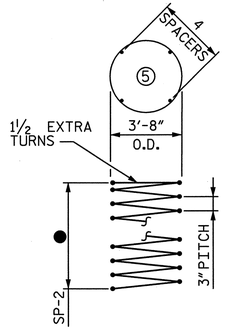

ALL BAR DIMENSIONS ARE OUT TO OUT

BILL OF MATERIAL

BAR	NO.	SIZE	TYPE	LENGTH	WEIGHT
B1	16	#11	STR.	45'-10"	3,896
B2	16	#11	STR.	31'-7"	2,685
B3	12	#11	①	42'-3"	2,694
B4	8	#5	STR.	35'-4"	295
B5	6	#4	STR.	19'-5"	78
B6	8	#4	STR.	30'-11"	165
B7	18	#4	STR.	4'-4"	52
S1	166	#5	②	10'-10"	1,876
U1	9	#4	③	6'-2"	37
U2	4	#4	③	5'-6"	15
U3	4	#4	③	6'-4"	17
U4	95	#4	③	8'-6"	539

NOTE:

FOR ● AND COLUMNS/DRILLED PIERS REINFORCING BILL OF MATERIAL, SEE TABLE A THIS SHEET.

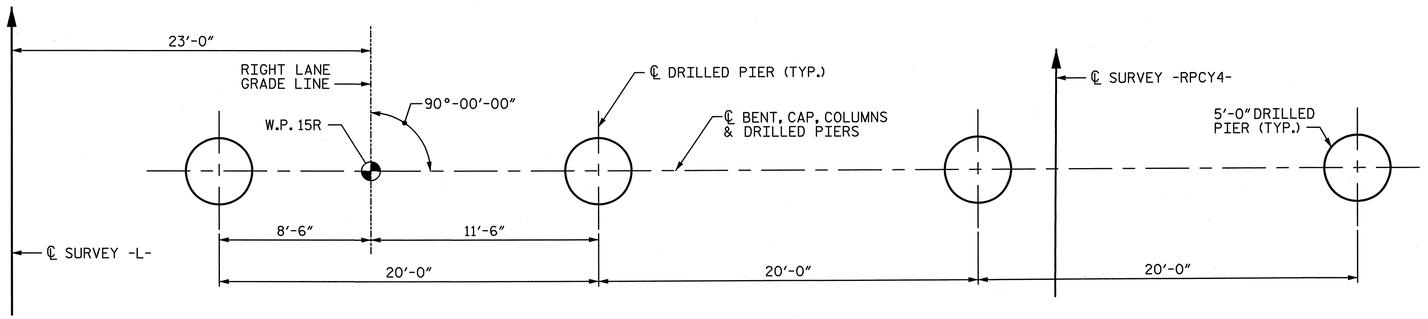

PLAN OF DRILLED PIERS

NORTH CAROLINA PROFESSIONAL SEAL 28479 ENGINEER KEVIN G. BAILEY 6-7-13

PROJECT NO. U-2524C

GUILFORD COUNTY

STATION: POT 407+85.82 -L-
= POT 29+79.72 -Y4-

SHEET 3 OF 3

STATE OF NORTH CAROLINA
DEPARTMENT OF TRANSPORTATION
RALEIGH

SUBSTRUCTURE
BENT 13
DETAILS & BILL OF MATERIAL

-RIGHT LANE-

DRAWN BY : JMP	DATE : 3-13	DESIGN ENGINEER OF RECORD: K. BAILEY	DATE : 5-13
CHECKED BY : KDH	DATE : 3-13		

STV / Ralph Whitehead Associates, Inc.
1000 West Morehead St. Ste. 200
Charlotte, NC 28208
NC License No. F-0991

REVISIONS					
NO.	BY:	DATE:	NO.	BY:	DATE:
1			3		
2			4		

SHEET NO. S-455

TOTAL SHEETS 836

6/6/2013 9:00:02 PM R:\ustation\Finals\Bent 13 - 3 of 3.dgn

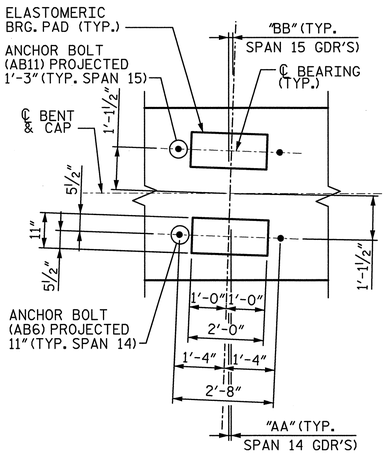

DETAIL "A"

(TYP. AT EACH BRIDGE SEAT)

NOTE:
SEE TABLE B SHEET 3 FOR "AA" AND "BB" DIMENSIONS.

NOTE:
INVERT ALTERNATE #5S1 THROUGH #5S9 BARS.

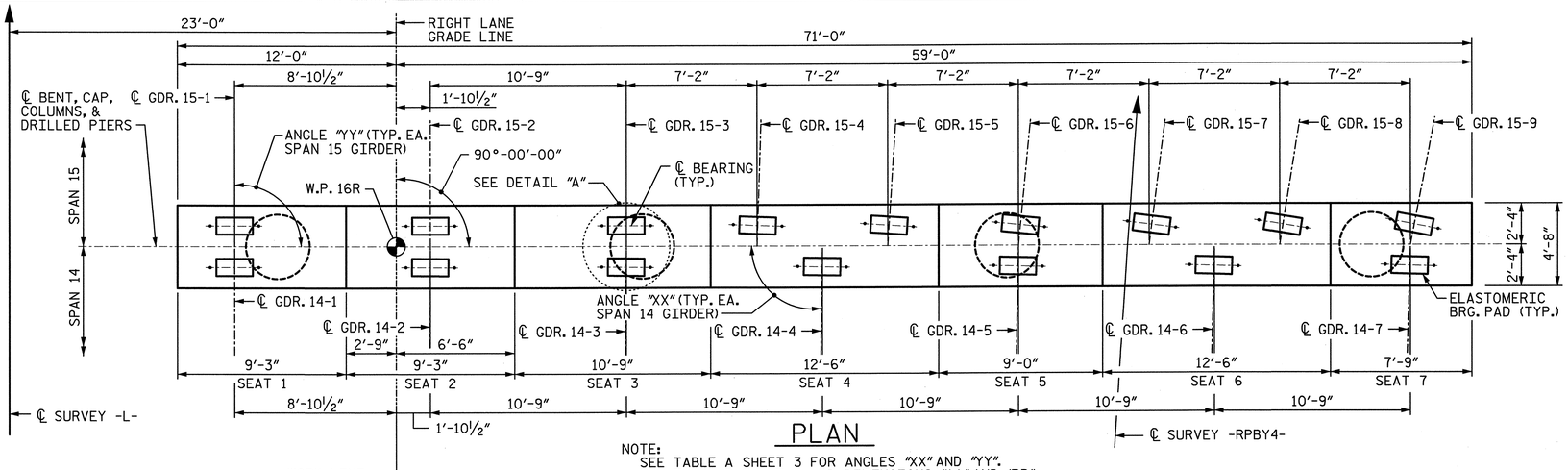

PLAN

NOTE:
SEE TABLE A SHEET 3 FOR ANGLES "XX" AND "YY".
SEE TABLE B SHEET 3 FOR DIMENSIONS "AA" AND "BB".

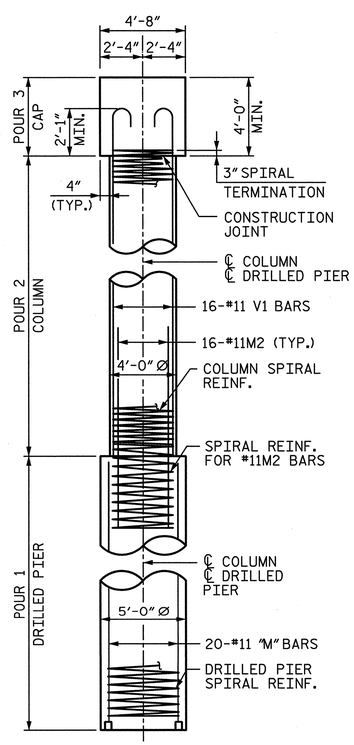

SIDE VIEW

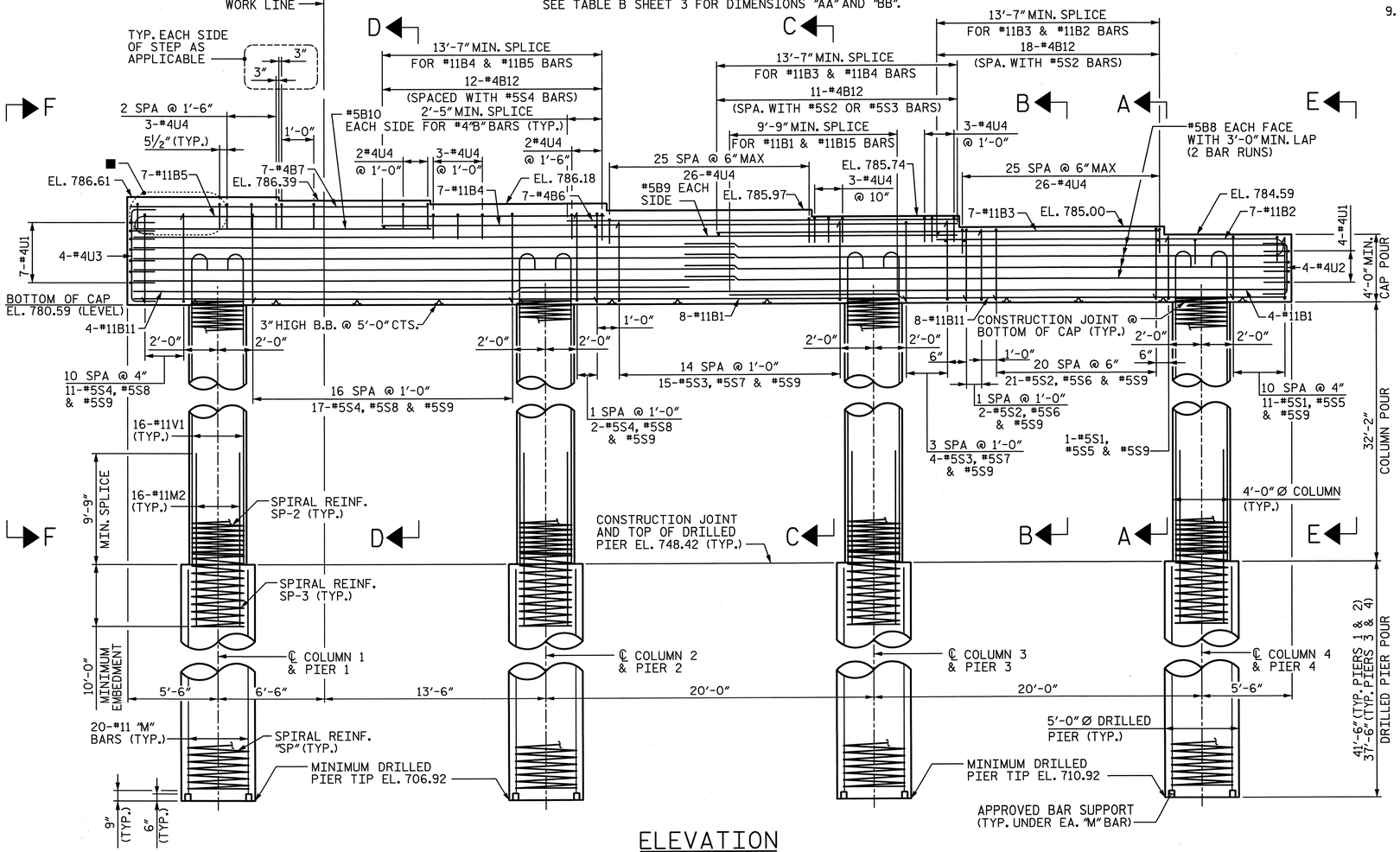

ELEVATION

■ SEE "BEARING AREA REINFORCEMENT DETAIL" ON SHEET 2 OF 3 (TYP. SEATS 1,2,3,5 AND 7)

NOTES:

1. ALL REINFORCING STEEL IN THE DRILLED PIERS IS INCLUDED IN THE PAY ITEMS FOR "REINFORCING STEEL" AND "SPIRAL COLUMN REINFORCING STEEL".
2. THE LOCATION OF THE CONSTRUCTION JOINT IN THE DRILLED PIERS IS BASED ON AN APPROXIMATE GROUND LINE ELEVATION. IF THE CONSTRUCTION JOINT IS ABOVE THE ACTUAL GROUND ELEVATION, THE CONTRACTOR SHALL PLACE THE CONSTRUCTION JOINT 1 FOOT BELOW THE GROUND LINE.
3. STIRRUPS AND "U BARS" IN CAP MAY BE SHIFTED SLIGHTLY AS NECESSARY TO CLEAR ANCHOR BOLTS.
4. HOOKS ON BARS MAY BE TURNED AS NECESSARY FOR PLACING REINFORCING STEEL.
5. A CONSTRUCTION JOINT AT MID-HEIGHT OF COLUMN IS PERMITTED.
6. FOR "AB6" AND "AB11" ANCHOR BOLTS, SEE "ELASTOMERIC BEARING DETAILS" SHEET.
7. SEE "GENERAL DRAWING GENERAL NOTES" SHEET FOR ADDITIONAL NOTES.
8. SEE SHEET 2 OF 3 FOR SECTIONS CALLED OUT ON ELEVATION VIEW.
9. THE TOP SURFACE AREAS OF THE BENT CAPS SHALL BE CURED IN ACCORDANCE WITH THE STANDARD SPECIFICATIONS EXCEPT THE MEMBRANE CURING COMPOUND METHOD SHALL NOT BE USED.

NORTH CAROLINA PROFESSIONAL SEAL 28479 ENGINEER KEVIN G. BAILEY 6-7-13

PROJECT NO. U-2524C
GUILFORD COUNTY
STATION: POT 407+85.82 -L-
= POT 29+79.72 -Y4-
SHEET 1 OF 3

STATE OF NORTH CAROLINA
DEPARTMENT OF TRANSPORTATION
RALEIGH

SUBSTRUCTURE BENT 14 PLAN & ELEVATION

-RIGHT LANE-

REVISIONS						SHEET NO.
NO.	BY:	DATE:	NO.	BY:	DATE:	S-456
1			3			TOTAL SHEETS
2			4			836

DRAWN BY : JMP DATE : 3-13
CHECKED BY : JAN DATE : 3-13
DESIGN ENGINEER OF RECORD: K. BAILEY DATE : 5-13

STV / Ralph Whitehead Associates, Inc.
1000 West Morehead St., Ste. 200
Charlotte, NC 28208
NC License No. F-0991

6/6/2013 9:00:04 PM R:\ustation\Finals\Bent 14 - 1of 3.dgn

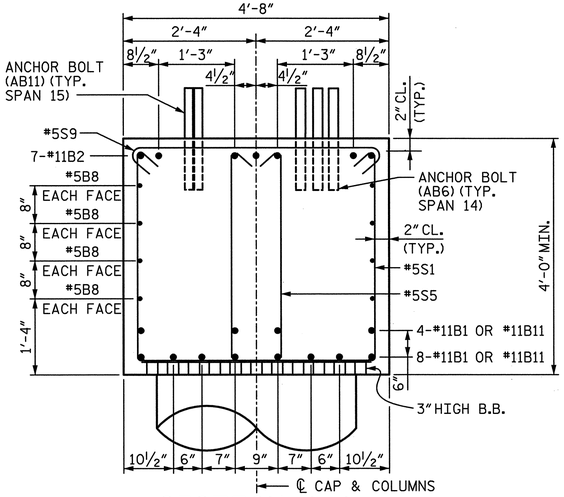

SECTION A-A

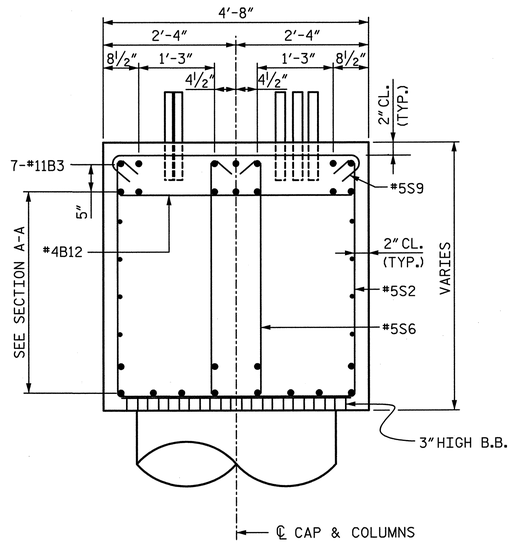

SECTION B-B

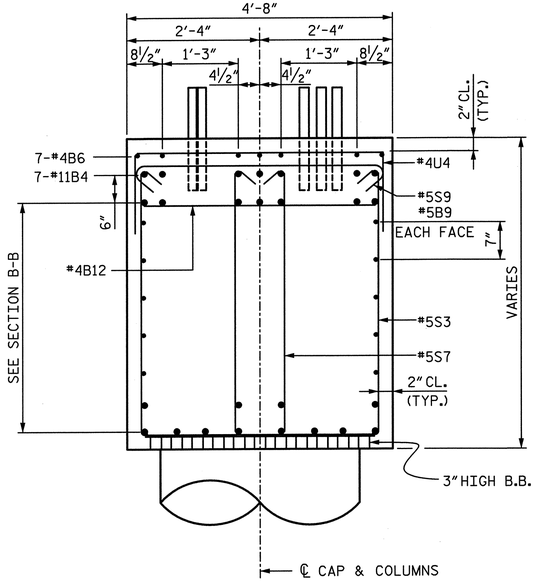

SECTION C-C

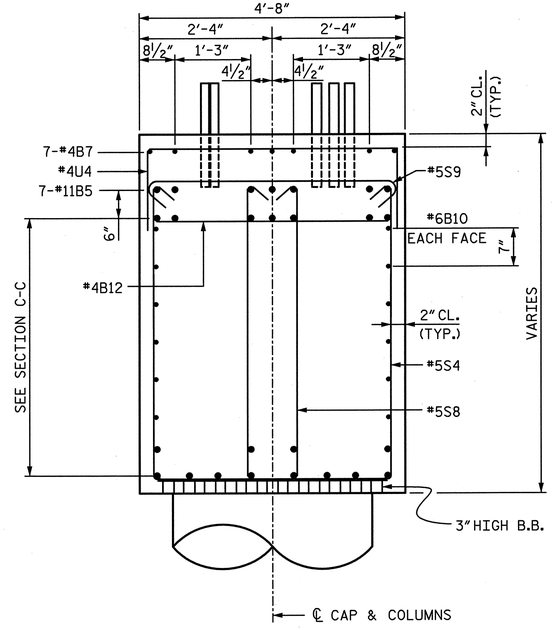

SECTION D-D

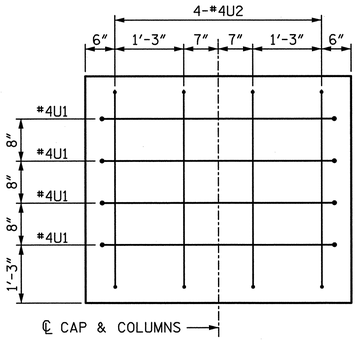

END VIEW D-D

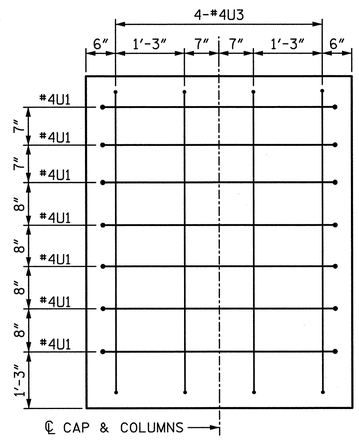

END VIEW E-E

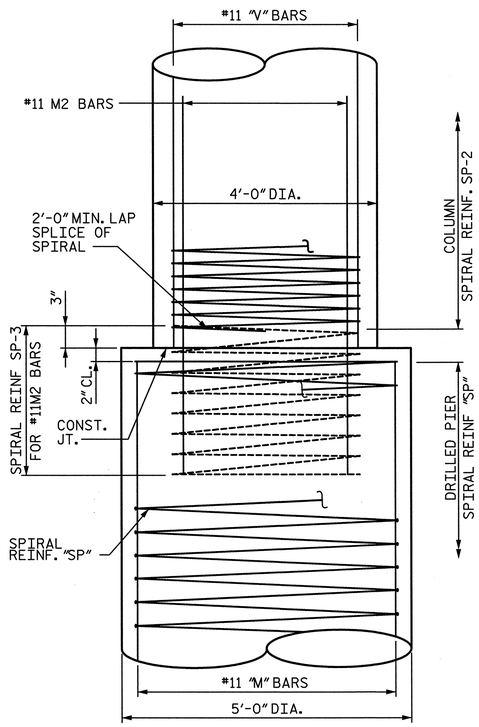

CONSTRUCTION JOINT DETAIL

NOTE:
INVERT ALTERNATE #5S1 THROUGH #5S9 BARS.

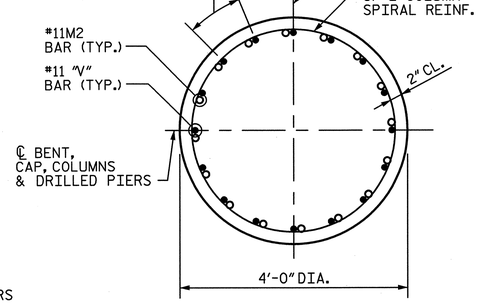

TYPICAL SECTION THROUGH COLUMN

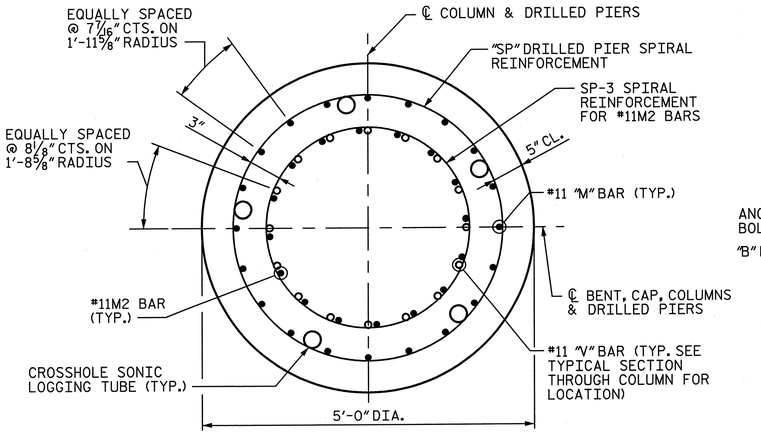

TYPICAL SECTION THROUGH DRILLED PIER

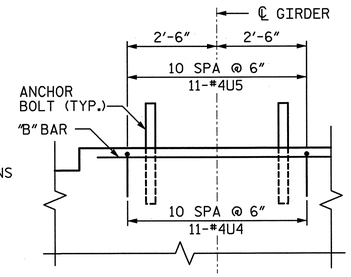

BEARING AREA REINFORCEMENT DETAIL

(TYP. SEATS 1,2,3,5 AND 7)

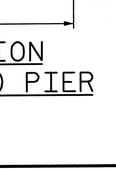

PROJECT NO. U-2524C

GUILFORD COUNTY

STATION: POT 407+85.82 -L-
= POT 29+79.72 -Y4-

SHEET 2 OF 3

STATE OF NORTH CAROLINA
DEPARTMENT OF TRANSPORTATION
RALEIGH

SUBSTRUCTURE BENT 14 DETAILS

-RIGHT LANE-

REVISIONS						SHEET NO.
NO.	BY:	DATE:	NO.	BY:	DATE:	S-457
1			3			TOTAL SHEETS
2			4			836

STV / Ralph Whitehead Associates, Inc.
1000 West Morehead St., Ste. 200
Charlotte, NC 28208
NC License No. F-0991

DRAWN BY : JMP	DATE : 3-13	DESIGN ENGINEER OF RECORD: K. BAILEY	DATE : 5-13
CHECKED BY : JAN	DATE : 3-13		

6/6/2013 9:00:05 PM R:\Lustation\Finals\Bent 14 - 2 of 3.dgn

TABLE A	
PLAN VIEW ANGLES	
GDR.	ANGLE "XX"
14-1	90°-00'-00"
14-2	89°-43'-21"
14-3	89°-26'-41"
14-4	89°-10'-02"
14-5	88°-53'-23"
14-6	88°-36'-44"
14-7	88°-20'-06"
	ANGLE "YY"
15-1	90°-00'-00"
15-2	90°-00'-00"
15-3	90°-00'-00"
15-4	88°-08'-56"
15-5	86°-18'-05"
15-6	84°-27'-42"
15-7	82°-38'-00"
15-8	80°-49'-12"
15-9	79°-01'-30"

TABLE B	
PLAN VIEW DIMENSIONS	
GDR.	DIMENSION "AA"
14-1	0"
14-2	1/8"
14-3	1/4"
14-4	7/16"
14-5	9/16"
14-6	11/16"
14-7	13/16"
	DIMENSION "BB"
15-1	0"
15-2	0"
15-3	0"
15-4	7/8"
15-5	1 13/16"
15-6	2 11/16"
15-7	3 5/8"
15-8	4 1/2"
15-9	5 7/16"

TABLE C

BENT 14 COLUMNS & DRILLED PIERS REINFORCING BILL OF MATERIAL

COLUMN/ DRILLED PIER	BAR	NO.	SIZE	TYPE	●	LENGTH	WEIGHT	DRILLED PIER LENGTH
1 & 2 (1 SHOWN, 2 REQ'D)	M11	20	#11	STR.		40'-10"	4,339	41'-6"
	M2	16	#11	STR.		19'-9"	1,679	
	V1	16	#11	①	35'-5"	37'-0"	3,145	
	SP-11	1	✻✻	④		40'-7"	1,298'-6"	1,354
	SP-2	1	✳	⑤		32'-5"	1,496'-2"	999
	SP-3	1	✻✻	④		10'-3"	298'-7"	311
3 & 4 (1 SHOWN, 2 REQ'D)	M12	20	#11	STR.		36'-10"	3,914	37'-6"
	M2	16	#11	STR.		19'-9"	1,679	
	V1	16	#11	①	35'-5"	37'-0"	3,145	
	SP-12	1	✻✻	④		36'-7"	1,174'-4"	1,225
	SP-2	1	✳	⑤		32'-5"	1,496'-2"	999
	SP-3	1	✻✻	④		10'-3"	298'-7"	311

✻✻ THE SP-11, SP-12 AND SP-3 SPIRAL REINFORCING STEEL SHALL BE W31 OR D-31 COLD DRAWN WIRE OR #5 PLAIN OR DEFORMED BAR WITH A 5"PITCH.

✳ THE SP-2 SPIRAL REINFORCING SHALL BE W20 OR D-20 COLD DRAWN WIRE OR #4 PLAIN OR DEFORMED BAR WITH A 3"PITCH.

QUANTITIES

REINFORCING STEEL	LBS.	49,599
SPIRAL REINFORCING STEEL	LBS.	10,398
CLASS A CONCRETE : POUR 2 - COLUMNS	CU. YDS.	59.9
POUR 3 - CAP	CU. YDS.	63.8
TOTAL	CU. YDS.	123.7
5'-0" Ø DRILLED PIERS IN SOIL	L.F.	112
5'-0" Ø DRILLED PIERS NOT IN SOIL	L.F.	46
TOTAL 5'-0" Ø DRILLED PIERS	L.F.	158
DRILLED PIER CONCRETE : POUR 1	CU. YDS.	114.9
CSL TUBES	L.F.	820

BAR TYPES

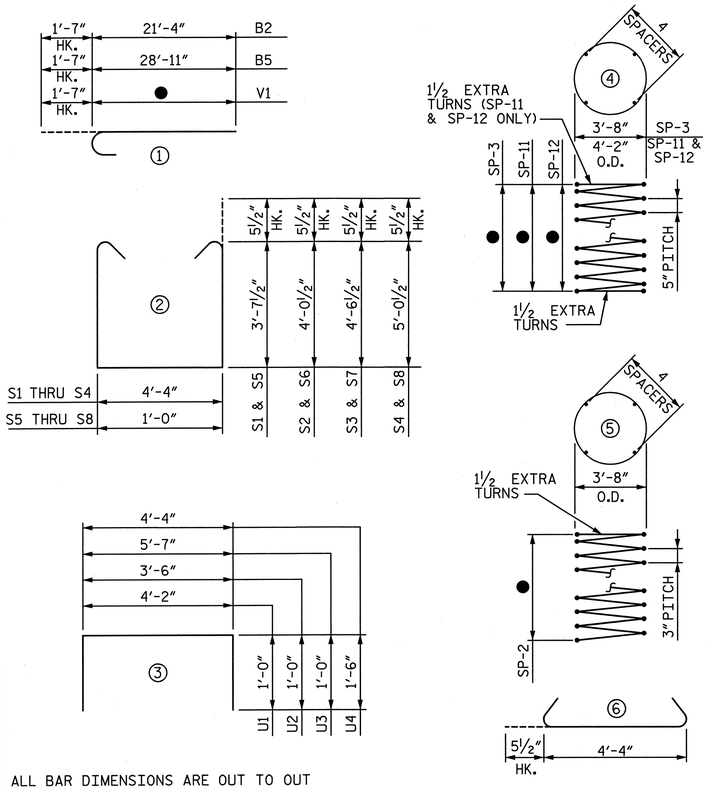

ALL BAR DIMENSIONS ARE OUT TO OUT

BILL OF MATERIAL

BAR	NO.	SIZE	TYPE	LENGTH	WEIGHT
B1	12	#11	STR.	47'-4"	3,018
B2	7	#11	①	22'-11"	852
B3	7	#11	STR.	26'-1"	970
B4	7	#11	STR.	35'-1"	1,305
B5	7	#11	①	30'-6"	1,134
B6	7	#4	STR.	23'-11"	112
B7	7	#4	STR.	18'-2"	85
B8	16	#5	STR.	36'-10"	615
B9	2	#5	STR.	50'-5"	105
B10	2	#5	STR.	18'-2"	38
B11	12	#11	STR.	33'-1"	2,109
B12	41	#4	STR.	4'-4"	119
S1	12	#5	②	12'-6"	156
S2	23	#5	②	13'-4"	320
S3	19	#5	②	14'-4"	284
S4	30	#5	②	15'-4"	480
S5	12	#5	②	9'-2"	115
S6	23	#5	②	10'-0"	240
S7	19	#5	②	11'-0"	218
S8	30	#5	②	12'-0"	375
S9	84	#5	⑥	5'-3"	460
U1	11	#4	③	6'-2"	45
U2	4	#4	③	5'-6"	15
U3	4	#4	③	7'-7"	20
U4	124	#4	③	7'-4"	607

NOTE:

FOR ● AND COLUMNS/DRILLED PIERS REINFORCING BILL OF MATERIAL, SEE TABLE C THIS SHEET.

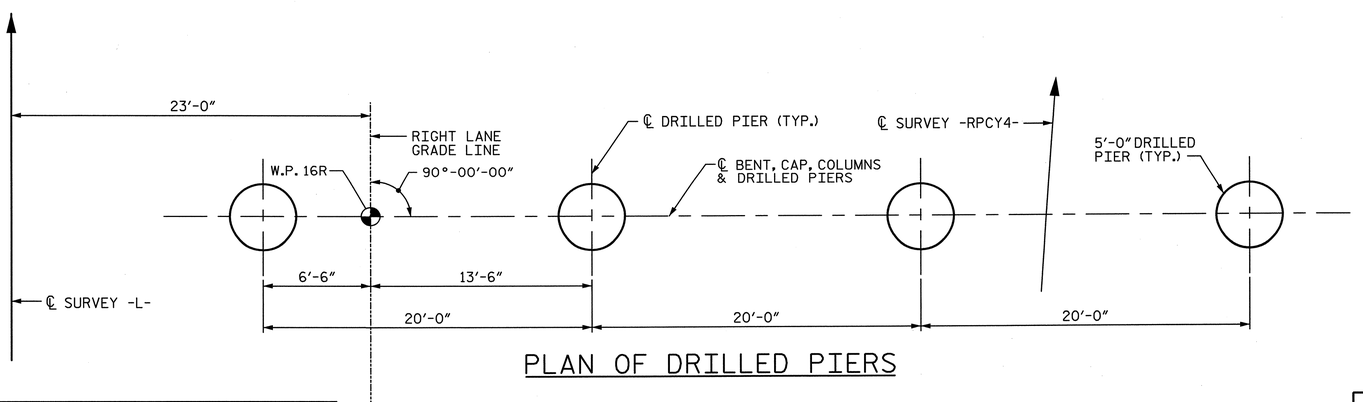

PLAN OF DRILLED PIERS

PROJECT NO. U-2524C

GUILFORD COUNTY

STATION: POT 407+85.82 -L-
= POT 29+79.72 -Y4-

SHEET 3 OF 3

STATE OF NORTH CAROLINA
DEPARTMENT OF TRANSPORTATION
RALEIGH

SUBSTRUCTURE
BENT 14
DETAILS & BILL OF MATERIAL

-RIGHT LANE-

NORTH CAROLINA PROFESSIONAL ENGINEER SEAL 28479 KEVIN G. BAILEY 6-7-13

STV / Ralph Whitehead Associates, Inc.
1000 West Morehead St., Ste. 200
Charlotte, NC 28208
NC License No. F-0991

REVISIONS						SHEET NO.
NO.	BY:	DATE:	NO.	BY:	DATE:	S-458
1			3			TOTAL SHEETS
2			4			836

DRAWN BY : JMP DATE : 3-13
CHECKED BY : JAN DATE : 3-13

DESIGN ENGINEER OF RECORD: K. BAILEY DATE : 5-13

6/6/2013 9:00:06 PM R:\ustation\Finals\Bent 14 - 3 of 3.dgn

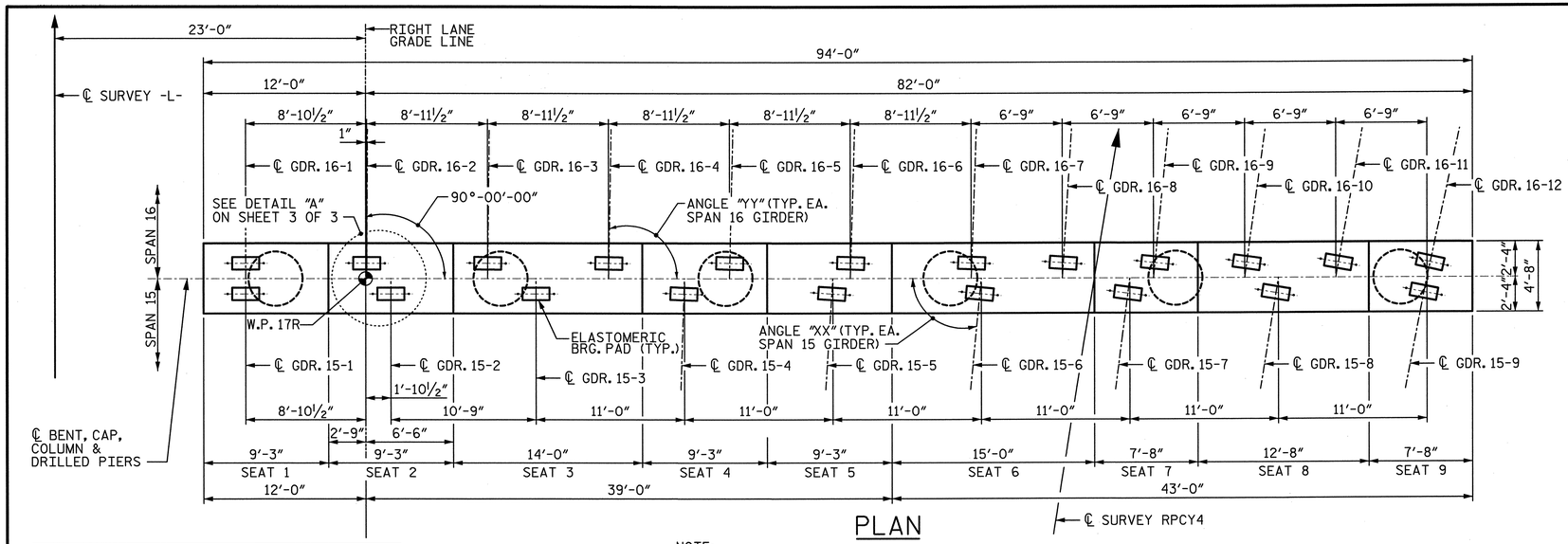

PLAN

NOTE:
SEE TABLE A SHEET 3 OF 3 FOR "XX" AND "YY" ANGLES.
SEE TABLE B SHEET 3 OF 3 FOR "AA" AND "BB" DIMENSIONS.

NOTE:
INVERT ALTERNATE #5S1 THROUGH #5S13 BARS.

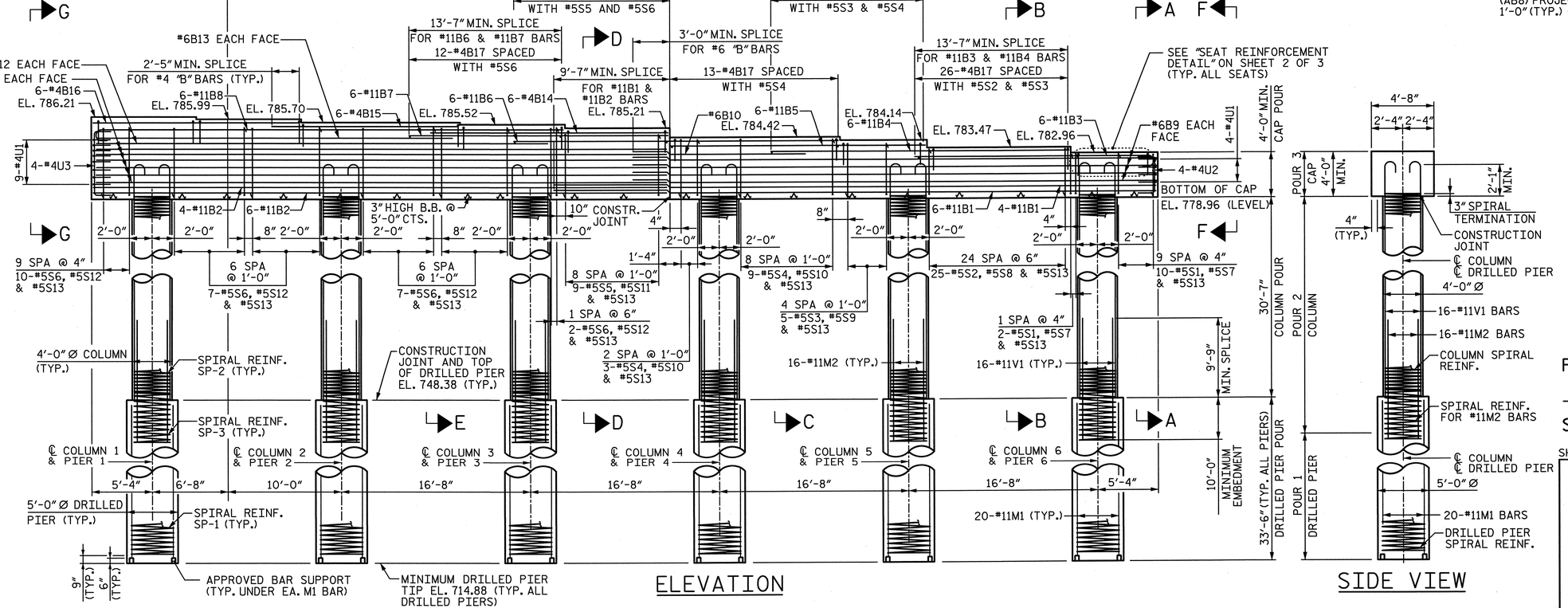

ELEVATION

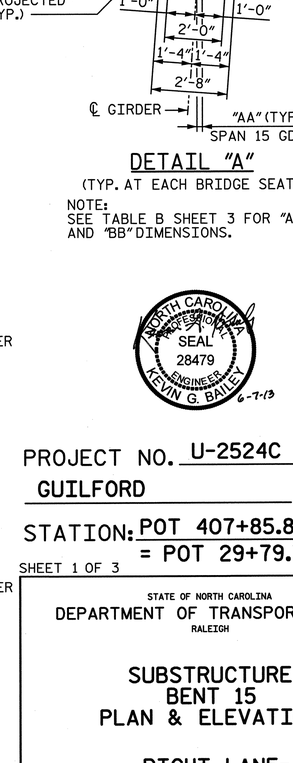

SIDE VIEW

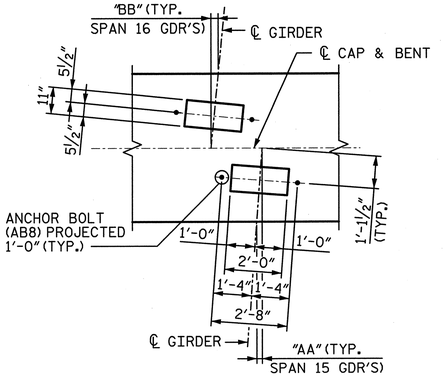

DETAIL "A"

(TYP. AT EACH BRIDGE SEAT)

NOTE:
SEE TABLE B SHEET 3 FOR "AA" AND "BB" DIMENSIONS.

NOTES:

1. ALL REINFORCING STEEL IN THE DRILLED PIERS IS INCLUDED IN THE PAY ITEMS FOR "REINFORCING STEEL" AND "SPIRAL COLUMN REINFORCING STEEL".
2. THE LOCATION OF THE CONSTRUCTION JOINT IN THE DRILLED PIERS IS BASED ON AN APPROXIMATE GROUND LINE ELEVATION. IF THE CONSTRUCTION JOINT IS ABOVE THE ACTUAL GROUND ELEVATION, THE CONTRACTOR SHALL PLACE THE CONSTRUCTION JOINT 1 FOOT BELOW THE GROUND LINE.
3. STIRRUPS AND "U BARS" IN CAP MAY BE SHIFTED SLIGHTLY AS NECESSARY TO CLEAR ANCHOR BOLTS.
4. HOOKS ON BARS MAY BE TURNED AS NECESSARY FOR PLACING REINFORCING STEEL.
5. A CONSTRUCTION JOINT AT MID-HEIGHT OF COLUMN IS PERMITTED.
6. FOR "AB8" ANCHOR BOLTS, SEE "ELASTOMERIC BEARING DETAILS" SHEET.
7. SEE "GENERAL DRAWING GENERAL NOTES" SHEET FOR ADDITIONAL NOTES.
8. SEE SHEET 2 & 3 OF 3 FOR SECTIONS CALLED OUT ON ELEVATION VIEW.
9. THE TOP SURFACE AREAS OF THE BENT CAPS SHALL BE CURED IN ACCORDANCE WITH THE STANDARD SPECIFICATIONS EXCEPT THAT MEMBRANE CURING COMPOUND METHOD SHALL NOT BE USED.

NORTH CAROLINA PROFESSIONAL SEAL 28479 ENGINEER KEVIN G. BAILEY 6-7-13

PROJECT NO. U-2524C

GUILFORD COUNTY

STATION: POT 407+85.82 -L-
= POT 29+79.72 -Y4-

SHEET 1 OF 3

STATE OF NORTH CAROLINA
DEPARTMENT OF TRANSPORTATION
RALEIGH

SUBSTRUCTURE BENT 15 PLAN & ELEVATION

-RIGHT LANE-

REVISIONS						SHEET NO.
NO.	BY:	DATE:	NO.	BY:	DATE:	S-459
1			3			TOTAL SHEETS
2			4			836

DRAWN BY : JMP DATE : 3-13
CHECKED BY : JAN DATE : 4-13
DESIGN ENGINEER OF RECORD: K. BAILEY DATE : 5-13

STV / Ralph Whitehead Associates, Inc.
1000 West Morehead St., Ste. 200
Charlotte, NC 28208
NC License No. F-0991

6/6/2013 9:00:08 PM R:\station\Finals\Bent 15 - 1of 3.dgn

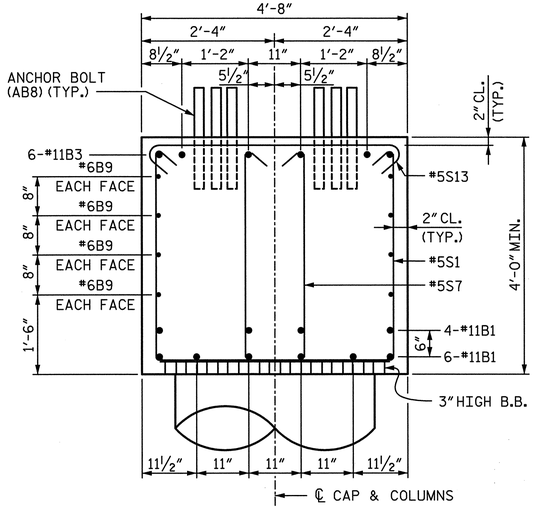

SECTION A-A

NOTE:
INVERT ALTERNATE #5S1 THROUGH #5S13 BARS.

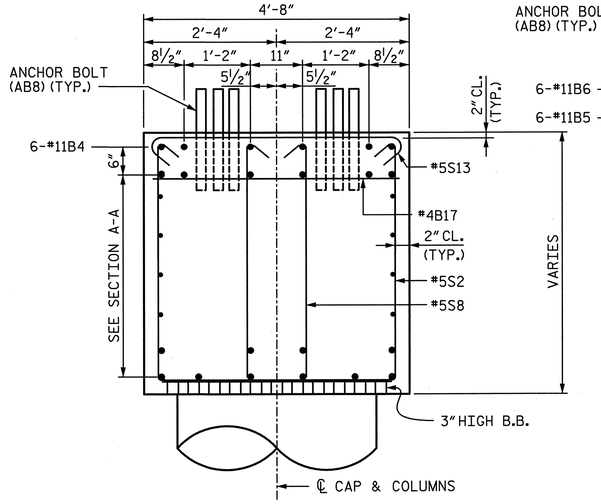

SECTION B-B

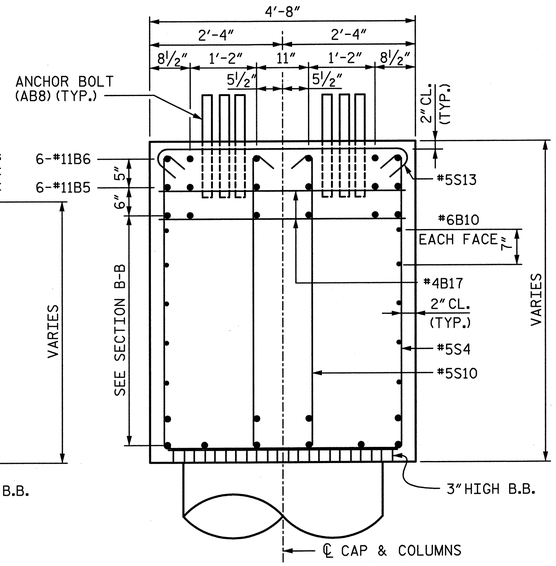

SECTION C-C

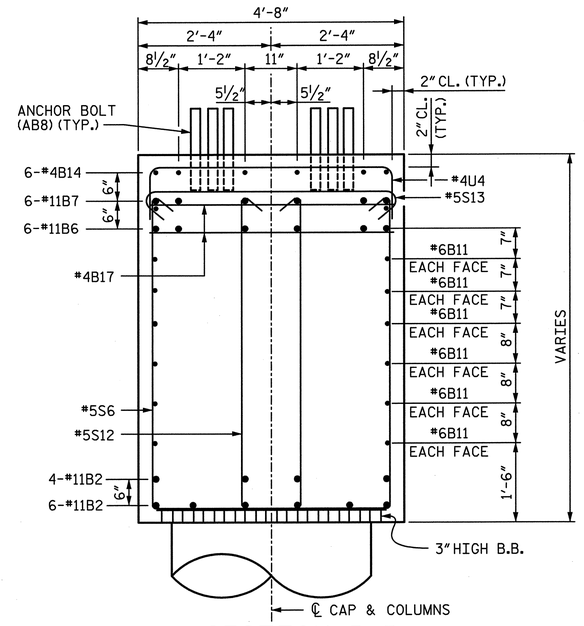

SECTION D-D

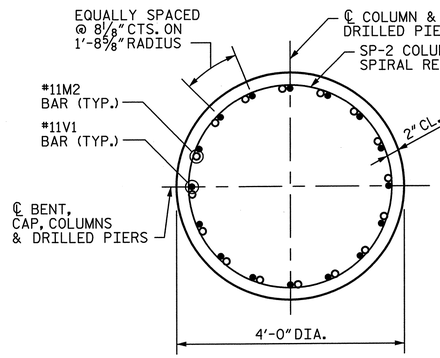

TYPICAL SECTION THROUGH COLUMN

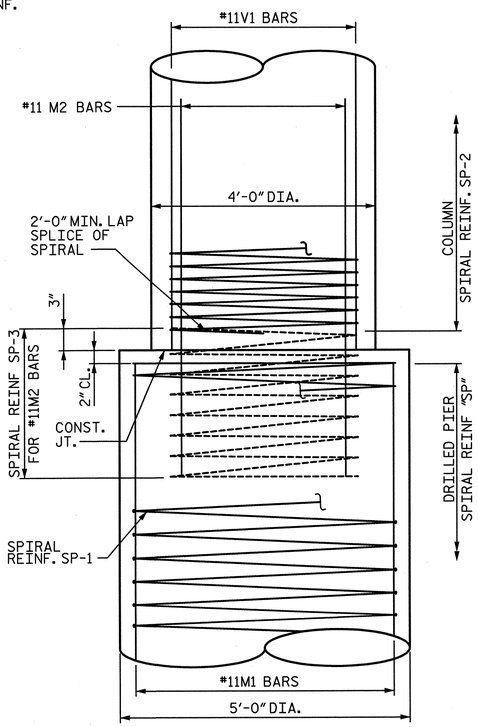

CONSTRUCTION JOINT DETAIL

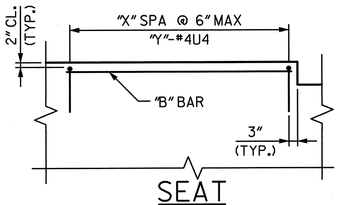

SEAT REINFORCEMENT DETAIL

(TYP. ALL BRIDGE SEATS)

NOTE:
SEE TABLE C SHEET 3 FOR "X" AND "Y" VALUES.

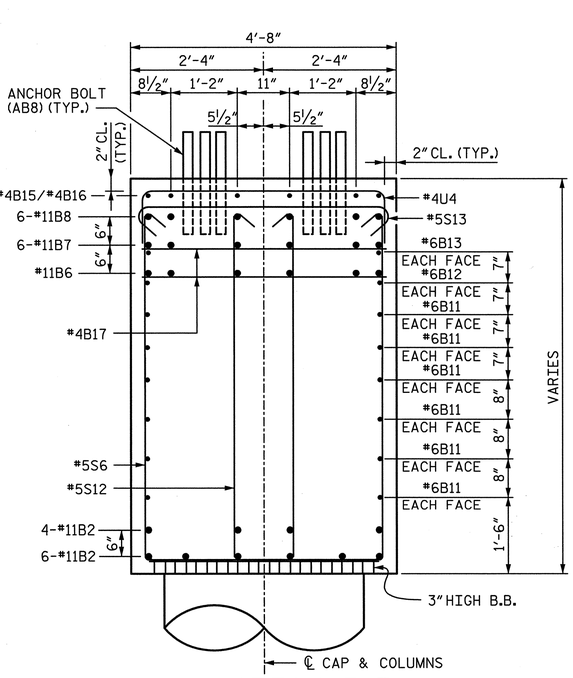

SECTION E-E

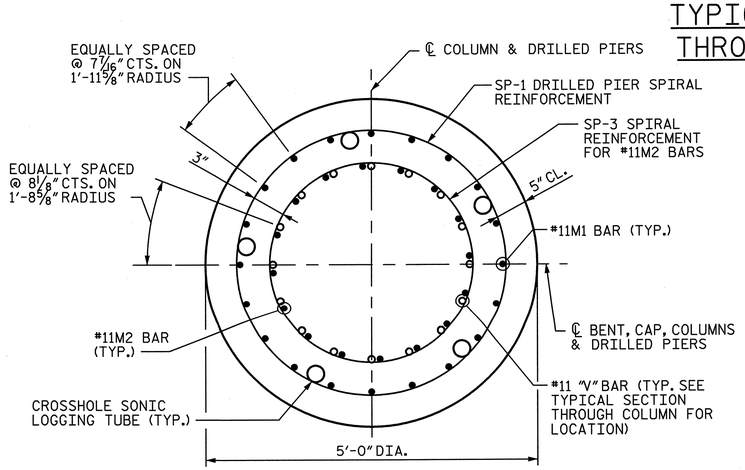

TYPICAL SECTION THROUGH DRILLED PIER

STATE OF NORTH CAROLINA
PROFESSIONAL ENGINEER SEAL 28479 ENGINEER KEVIN G. BAILEY
6-7-13

PROJECT NO. U-2524C

GUILFORD COUNTY

STATION: POT 407+85.82 -L-
= POT 29+79.72 -Y4-

SHEET 2 OF 3

STATE OF NORTH CAROLINA
DEPARTMENT OF TRANSPORTATION
RALEIGH

SUBSTRUCTURE BENT 15 DETAILS

-RIGHT LANE-

DRAWN BY : JMP	DATE : 3-13	DESIGN ENGINEER OF RECORD: K. BAILEY	DATE : 5-13
CHECKED BY : JAN	DATE : 4-13		

STV / Ralph Whitehead Associates, Inc.
1000 West Morehead St., Ste. 200
Charlotte, NC 28208
NC License No. F-0991

REVISIONS					
NO.	BY:	DATE:	NO.	BY:	DATE:
1			3		
2			4		

SHEET NO. S-460
TOTAL SHEETS 836

6/6/2013 9:00:09 PM R:\station\Finals\Bent 15 - 2 of 3.dgn

TABLE A	
PLAN VIEW ANGLES	
GDR.	ANGLE "XX"
15-1	90°-00'-00"
15-2	90°-00'-00"
15-3	90°-00'-00"
15-4	88°-08'-56"
15-5	86°-18'-05"
15-6	84°-27'-42"
15-7	82°-38'-00"
15-8	80°-49'-12"
15-9	79°-01'-30"
	ANGLE "YY"
16-1	90°-00'-00"
16-2	89°-39'-28"
16-3	89°-18'-56"
16-4	88°-58'-24"
16-5	88°-37'-53"
16-6	88°-17'-22"
16-7	87°-56'-51"
16-8	86°-21'-43"
16-9	84°-13'-50"
16-10	82°-01'-38"
16-11	79°-45'-20"
16-12	77°-25'-11"

TABLE C		
SEAT REINFORCEMENT DETAIL INFORMATION		
SEAT	"X"	"Y"
1	18	19
2	18	19
3	27	28
4	18	19
5	18	19
6	29	30
7	15	16
8	25	26
9	15	16

QUANTITIES			
REINFORCING STEEL		LBS.	68,578
SPIRAL REINFORCING STEEL		LBS.	14,148
CLASS A CONCRETE :	POUR 2 - COLUMNS	CU. YDS.	85.4
	POUR 3 - CAP	CU. YDS.	95.8
	TOTAL	CU. YDS.	181.2
5'-0" Ø DRILLED PIERS IN SOIL		L.F.	154
5'-0" Ø DRILLED PIERS NOT IN SOIL		L.F.	47
TOTAL 5'-0" Ø DRILLED PIERS		L.F.	201
DRILLED PIER CONCRETE : POUR 1		CU. YDS.	146.2
CSL TUBES		L.F.	1,050

TABLE B	
PLAN VIEW DIMENSIONS	
GDR.	DIMENSION "AA"
15-1	0"
15-2	0"
15-3	0"
15-4	7/8"
15-5	1 13/16"
15-6	2 11/16"
15-7	3 5/8"
15-8	4 1/2"
15-9	5 7/16"
	DIMENSION "BB"
16-1	0"
16-2	3/16"
16-3	5/16"
16-4	1/2"
16-5	11/16"
16-6	13/16"
16-7	1"
16-8	1 3/4"
16-9	2 13/16"
16-10	3 15/16"
16-11	5 1/16"
16-12	6 1/4"

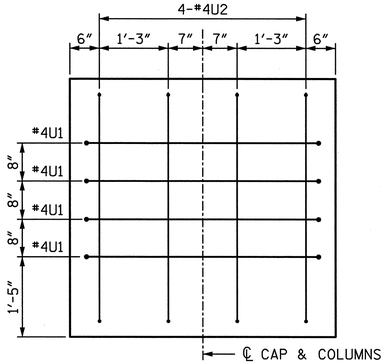

END VIEW F-F

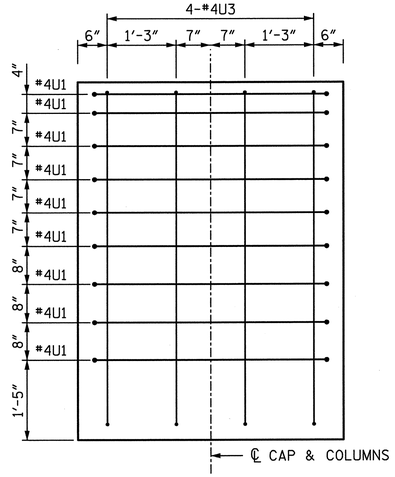

END VIEW G-G

BAR TYPES

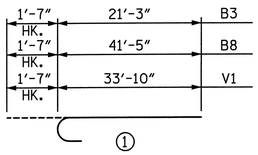

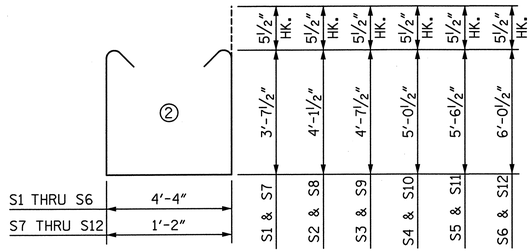

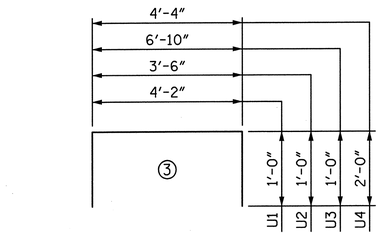

THE CONTRACTOR'S ATTENTION IS CALLED TO THE FACT THAT THE LONGITUDINAL REINFORCEMENT FOR THE DRILLED PIERS IS DETAILED WITH 3 FEET OF EXTRA LENGTH.

ALL BAR DIMENSIONS ARE OUT TO OUT

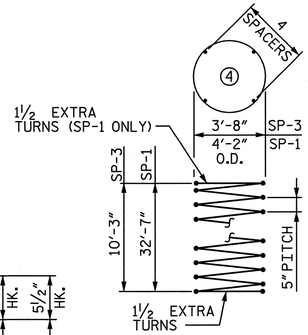

✳ THE SP-2 SPIRAL REINFORCING SHALL BE W20 OR D-20 COLD DRAWN WIRE OR #4 PLAIN OR DEFORMED BAR WITH A 3" PITCH.

✳✳ THE SP-1 & SP-3 SPIRAL REINFORCING STEEL SHALL BE W31 OR D-31 COLD DRAWN WIRE OR #5 PLAIN OR DEFORMED BAR WITH A 5" PITCH.

BILL OF MATERIAL

BAR	NO.	SIZE	TYPE	LENGTH	WEIGHT
B1	10	#11	STR.	52'-7"	2,794
B2	10	#11	①	50'-10"	2,701
B3	6	#11	STR.	22'-10"	728
B4	6	#11	STR.	26'-3"	837
B5	6	#11	①	22'-4"	712
B6	6	#11	STR.	28'-7"	911
B7	6	#11	STR.	22'-10"	728
B8	6	#11	STR.	43'-0"	1,371
B9	8	#6	STR.	45'-10"	551
B10	2	#6	STR.	15'-1"	45
B11	12	#6	STR.	50'-8"	913
B12	2	#6	STR.	40'-3"	121
B13	2	#6	STR.	31'-0"	93
B14	6	#4	STR.	20'-11"	84
B15	6	#4	STR.	16'-5"	66
B16	6	#4	STR.	18'-2"	73
B17	61	#4	STR.	4'-4"	177
M1	120	#11	STR.	35'-10"	22,846
M2	96	#11	STR.	19'-9"	10,073
S1	12	#5	②	12'-6"	156
S2	25	#5	②	13'-6"	352
S3	5	#5	②	14'-6"	76
S4	12	#5	②	15'-4"	192
S5	9	#5	②	16'-4"	153
S6	40	#5	②	17'-4"	723
S7	12	#5	②	9'-4"	117
S8	25	#5	②	10'-4"	269
S9	5	#5	②	11'-4"	59
S10	12	#5	②	12'-2"	152
S11	9	#5	②	13'-2"	124
S12	40	#5	②	14'-2"	591
S13	103	#5	⑥	5'-3"	564
U1	13	#4	③	6'-2"	54
U2	4	#4	③	5'-6"	15
U3	4	#4	③	8'-10"	24
U4	192	#4	③	8'-4"	1,069
V1	96	#11	①	35'-5"	18,064
SP-1	6	✳✳	④	1,050'-2"	6,572
SP-2	6	✳	⑤	1,424'-0"	5,707
SP-3	6	✳✳	④	298'-7"	1,869

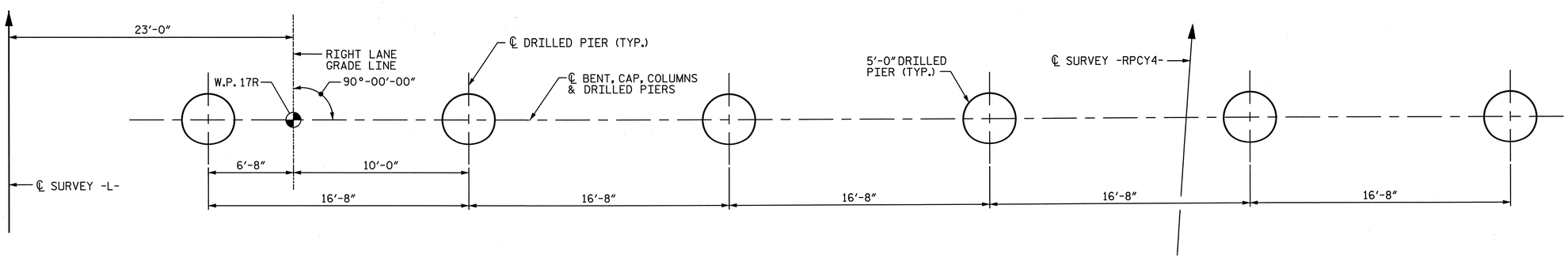

PLAN OF DRILLED PIERS

NORTH CAROLINA PROFESSIONAL SEAL 28479 ENGINEER KEVIN G. BAILEY 6-7-13

PROJECT NO. U-2524C

GUILFORD COUNTY

STATION: POT 407+85.82 -L-
= POT 29+79.72 -Y4-

SHEET 3 OF 3

STATE OF NORTH CAROLINA
DEPARTMENT OF TRANSPORTATION
RALEIGH

SUBSTRUCTURE BENT 15 DETAILS & BILL OF MATERIAL

-RIGHT LANE-

DRAWN BY : JMP	DATE : 3-13	DESIGN ENGINEER OF RECORD: K. BAILEY	DATE : 5-13
CHECKED BY : JAN	DATE : 4-13		

STV / Ralph Whitehead Associates, Inc.
1000 West Morehead St., Ste. 200
Charlotte, NC 28208
NC License No. F-0991

REVISIONS					
NO.	BY:	DATE:	NO.	BY:	DATE:
1			3		
2			4		

SHEET NO. S-461

TOTAL SHEETS 836

R:\ustation\Finals\Bent 15 - 3 of 3.dgn
6/6/2013 9:00:11 PM

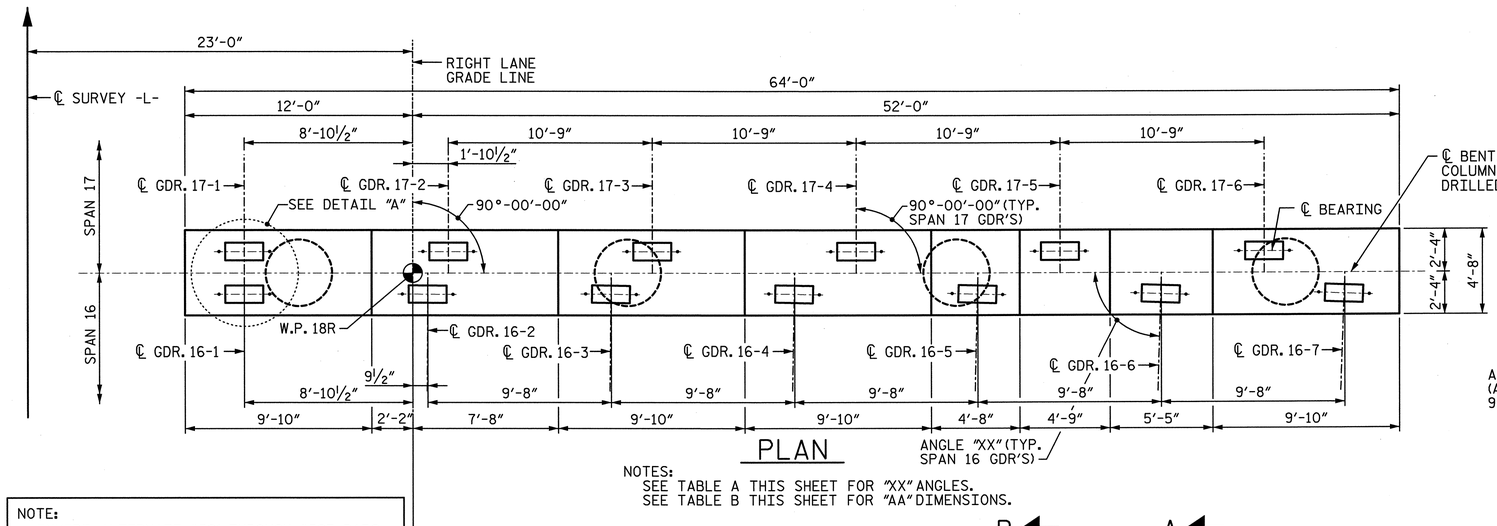

PLAN

NOTES:
SEE TABLE A THIS SHEET FOR "XX" ANGLES.
SEE TABLE B THIS SHEET FOR "AA" DIMENSIONS.

NOTE:
INVERT ALTERNATE #5S1 THROUGH #5S7 BARS.

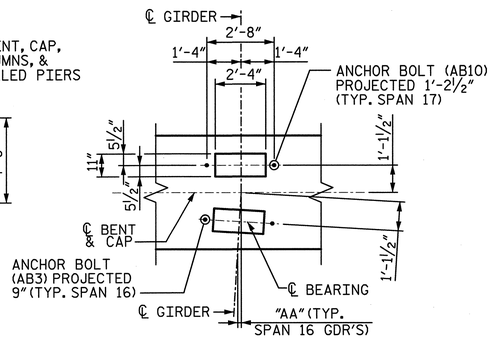

DETAIL "A"

(TYP. AT EACH BRIDGE SEAT)

NOTE:
SEE TABLE B THIS SHEET FOR "AA" DIMENSIONS.

NOTES:

1. ALL REINFORCING STEEL IN THE DRILLED PIERS IS INCLUDED IN THE PAY ITEMS FOR "REINFORCING STEEL" AND "SPIRAL COLUMN REINFORCING STEEL".
2. THE LOCATION OF THE CONSTRUCTION JOINT IN THE DRILLED PIERS IS BASED ON AN APPROXIMATE GROUND LINE ELEVATION. IF THE CONSTRUCTION JOINT IS ABOVE THE ACTUAL GROUND ELEVATION, THE CONTRACTOR SHALL PLACE THE CONSTRUCTION JOINT 1 FOOT BELOW THE GROUND LINE.
3. STIRRUPS AND "U BARS" IN CAP MAY BE SHIFTED SLIGHTLY AS NECESSARY TO CLEAR ANCHOR BOLTS.
4. HOOKS ON BARS MAY BE TURNED AS NECESSARY FOR PLACING REINFORCING STEEL.
5. A CONSTRUCTION JOINT AT MID-HEIGHT OF COLUMN IS PERMITTED.
6. FOR "AB3" AND "AB10" ANCHOR BOLTS, SEE "ELASTOMERIC BEARING DETAILS" SHEET.
7. SEE "GENERAL DRAWING GENERAL NOTES" SHEET FOR ADDITIONAL NOTES.
8. SEE SHEET 2 OF 3 FOR SECTIONS CALLED OUT ON ELEVATION VIEW.
9. THE TOP SURFACE AREAS OF THE BENT CAPS SHALL BE CURED IN ACCORDANCE WITH THE STANDARD SPECIFICATIONS EXCEPT THE MEMBRANE CURING COMPOUND METHOD SHALL NOT BE USED.

TABLE A PLAN VIEW ANGLES	
GDR.	ANGLE "XX"
16-1	90°-00'-00"
16-2	89°-39'-28"
16-3	89°-18'-56"
16-4	88°-58'-24"
16-5	88°-37'-53"
16-6	88°-17'-22"
16-7	87°-56'-51"

TABLE B PLAN VIEW DIMENSIONS	
GDR.	DIM "AA"
16-1	0"
16-2	3/16"
16-3	5/16"
16-4	1/2"
16-5	11/16"
16-6	13/16"
16-7	1"

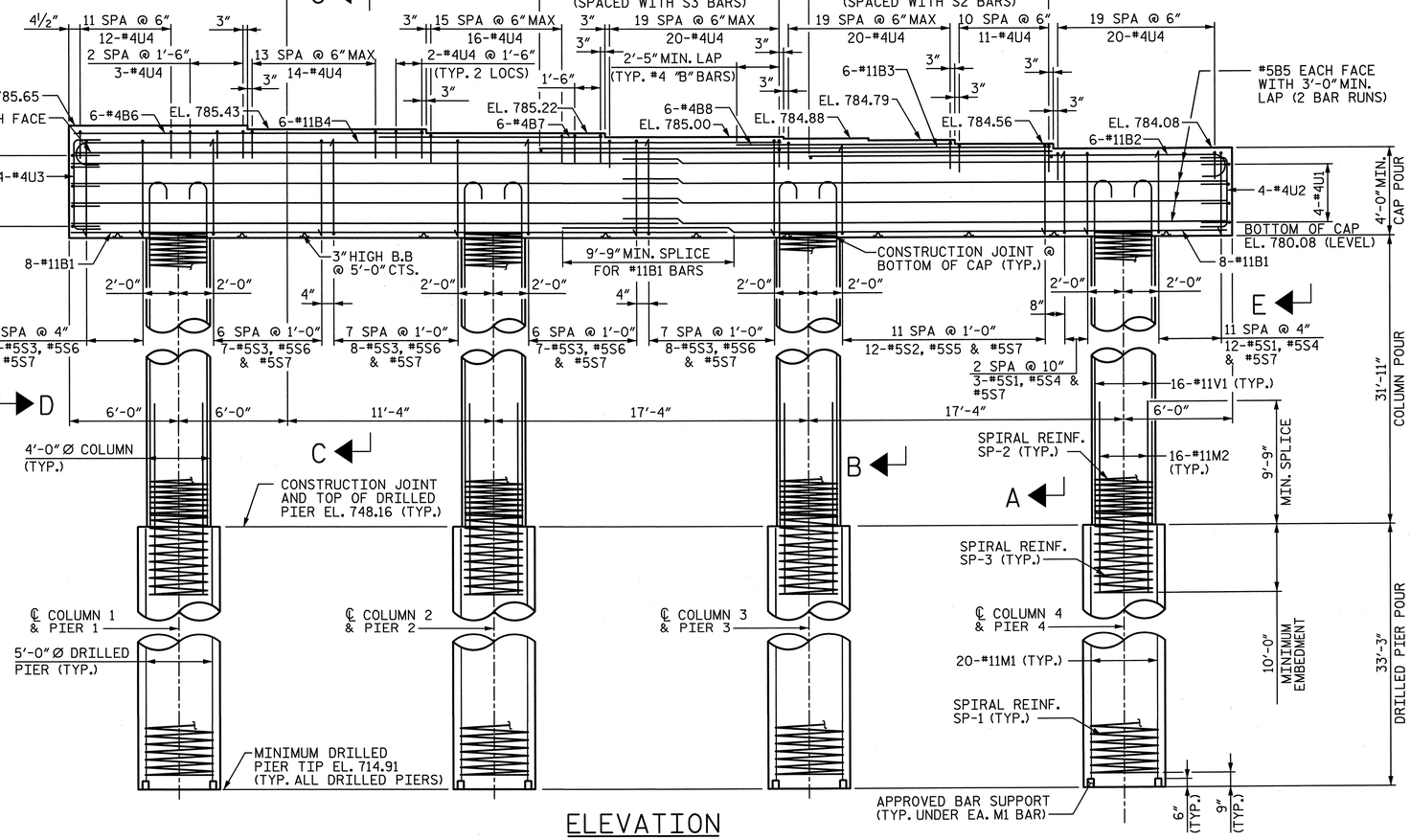

ELEVATION

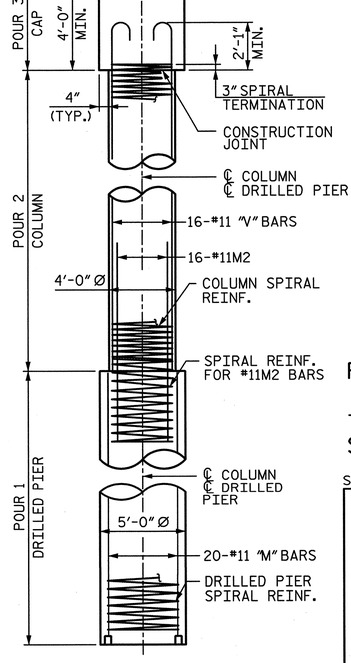

SIDE VIEW

NORTH CAROLINA PROFESSIONAL ENGINEER SEAL 28479 KEVIN G. BAILEY 6-7-13

PROJECT NO. U-2524C

GUILFORD COUNTY

STATION: POT 407+85.82 -L-
= POT 29+79.72 -Y4-

SHEET 1 OF 3

STATE OF NORTH CAROLINA
DEPARTMENT OF TRANSPORTATION
RALEIGH

SUBSTRUCTURE BENT 16 PLAN & ELEVATION

-RIGHT LANE-

REVISIONS						SHEET NO.
NO.	BY:	DATE:	NO.	BY:	DATE:	S-462
1			3			TOTAL SHEETS
2			4			836

STV / Ralph Whitehead Associates, Inc.
1000 West Morehead St. Ste. 200
Charlotte, NC 28208
NC License No. F-0991

DRAWN BY : JMP	DATE : 1-13	DESIGN ENGINEER OF RECORD: K. BAILEY	DATE : 5-13
CHECKED BY : SB	DATE : 4-13		

6/6/2013 9:00:12 PM R:\Substation\Finals\Bent 16 - 1of 3.dgn

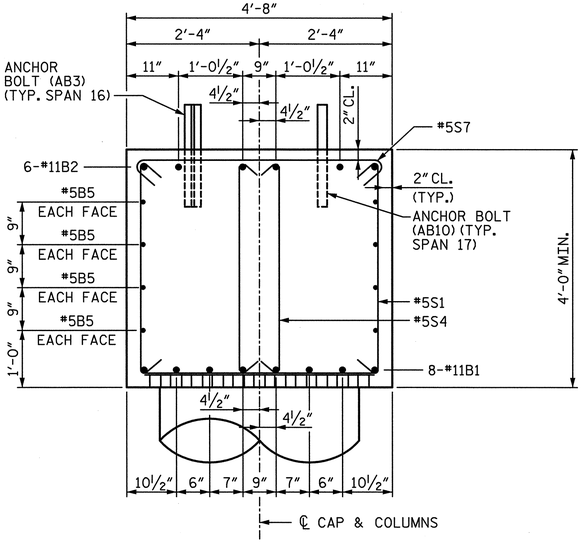

SECTION A-A

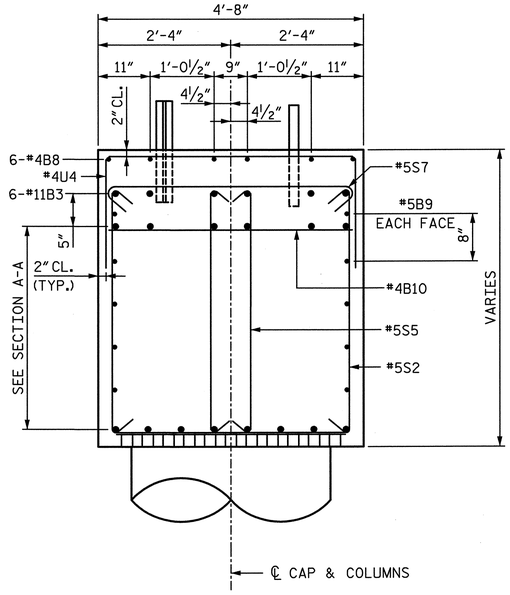

SECTION B-B

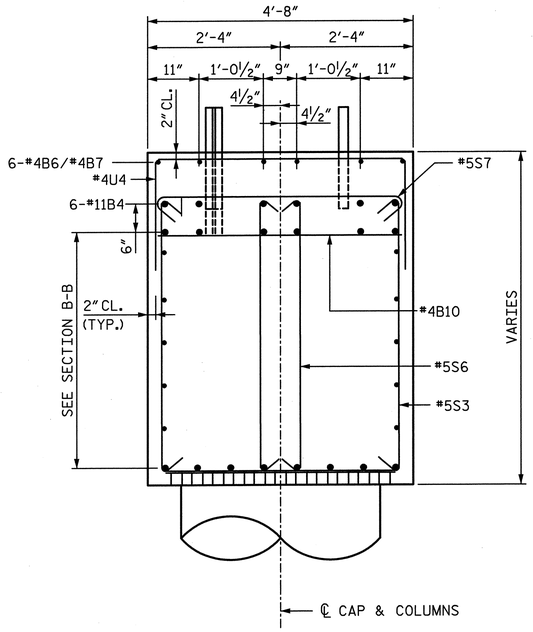

SECTION C-C

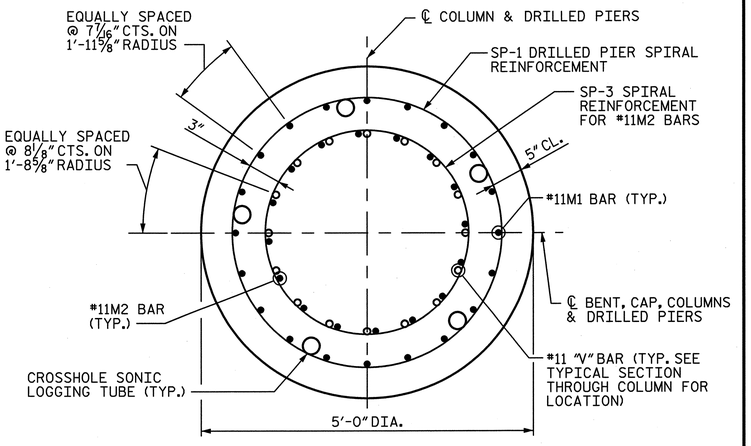

TYPICAL SECTION THROUGH DRILLED PIER

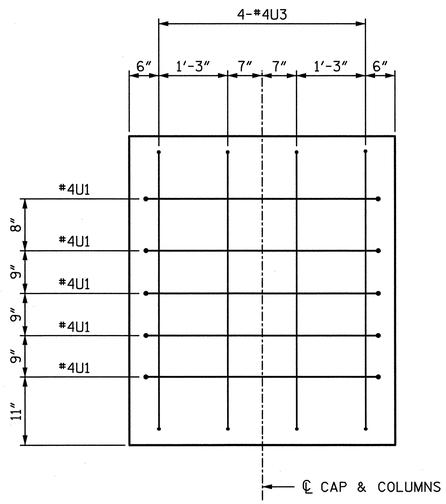

END VIEW D-D

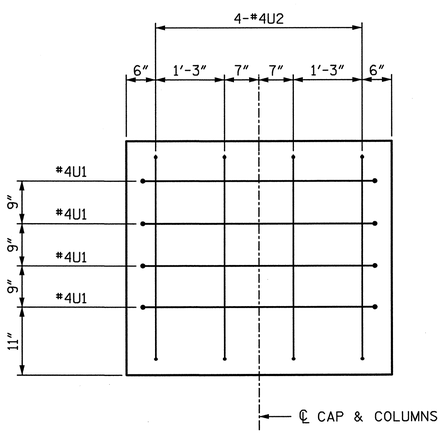

END VIEW E-E

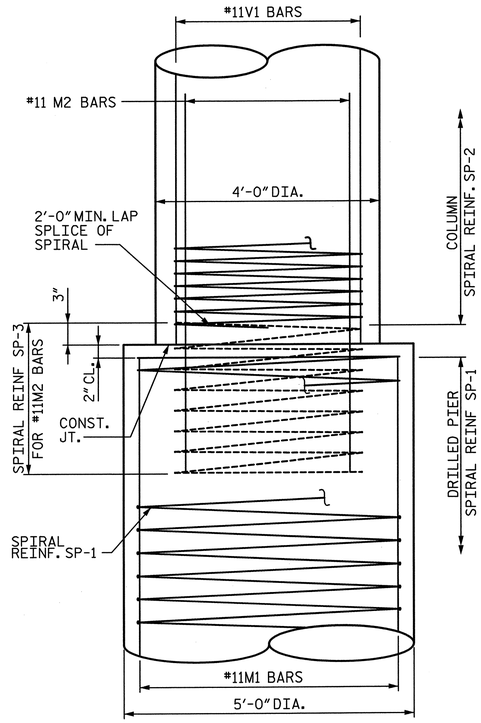

CONSTRUCTION JOINT DETAIL

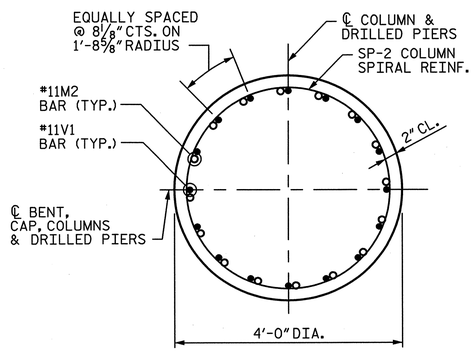

TYPICAL SECTION THROUGH COLUMN

NORTH CAROLINA PROFESSIONAL SEAL 28479 ENGINEER KEVIN G. BAILEY 6-7-13

PROJECT NO. U-2524C

GUILFORD COUNTY

STATION: POT 407+85.82 -L-
= POT 29+79.72 -Y4-

SHEET 2 OF 3

STATE OF NORTH CAROLINA
DEPARTMENT OF TRANSPORTATION
RALEIGH

SUBSTRUCTURE BENT 16 DETAILS

-RIGHT LANE-

REVISIONS						SHEET NO.
NO.	BY:	DATE:	NO.	BY:	DATE:	S-463
1			3			TOTAL SHEETS
2			4			836

DRAWN BY : JMP DATE : 1-13
CHECKED BY : SB DATE : 4-13
DESIGN ENGINEER OF RECORD: K. BAILEY DATE : 5-13

STV / Ralph Whitehead Associates, Inc.
1000 West Morehead St., Ste. 200
Charlotte, NC 28208
NC License No. F-0991

6/6/2013 9:00:14 PM R:\station\Finals\Bent 16 - 2 of 3.dgn

QUANTITIES

REINFORCING STEEL		LBS.	42,608
SPIRAL REINFORCING STEEL		LBS.	9,562
CLASS A CONCRETE :	POUR 2 - COLUMNS	CU. YDS.	59.4
	POUR 3 - CAP	CU. YDS.	54.3
	TOTAL	CU. YDS.	113.7
5'-0" Ø DRILLED PIERS IN SOIL		L.F.	97
5'-0" Ø DRILLED PIERS NOT IN SOIL		L.F.	36
TOTAL 5'-0" Ø DRILLED PIERS		L.F.	133
DRILLED PIER CONCRETE :	POUR 1	CU. YDS.	96.7
CSL TUBES		L.F.	695

BAR TYPES

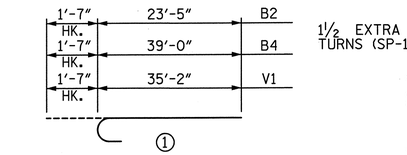

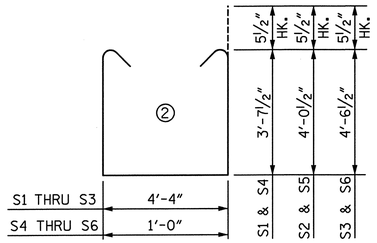

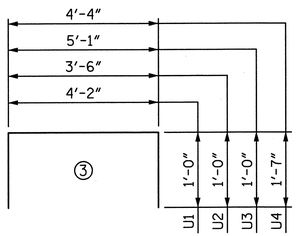

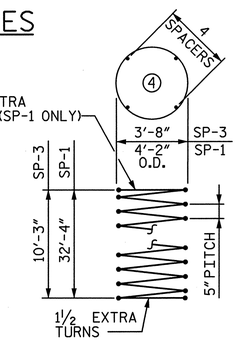

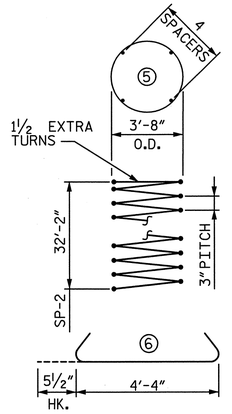

ALL BAR DIMENSIONS ARE OUT TO OUT

✱ THE SP-2 SPIRAL REINFORCING SHALL BE W20 OR D-20 COLD DRAWN WIRE OR #4 PLAIN OR DEFORMED BAR WITH A 3" PITCH.

✱✱ THE SP-1 AND SP-3 SPIRAL REINFORCING STEEL SHALL BE W31 OR D-31 COLD DRAWN WIRE OR #5 PLAIN OR DEFORMED BAR WITH A 5" PITCH.

BILL OF MATERIAL

BAR	NO.	SIZE	TYPE	LENGTH	WEIGHT
B1	16	#11	STR.	36'-9"	3,124
B2	6	#11	①	25'-0"	797
B3	6	#11	STR.	28'-5"	906
B4	6	#11	①	40'-7"	1,294
B5	8	#5	STR.	33'-4"	278
B6	6	#4	STR.	19'-4"	77
B7	6	#4	STR.	12'-3"	49
B8	6	#4	STR.	11'-10"	47
B9	2	#5	STR.	53'-10"	112
B10	25	#4	STR.	4'-4"	72
M1	80	#11	STR.	32'-7"	13,849
M2	64	#11	STR.	19'-9"	6,716
S1	15	#5	②	12'-6"	196
S2	12	#5	②	13'-4"	167
S3	42	#5	②	14'-4"	628
S4	15	#5	②	9'-2"	143
S5	12	#5	②	10'-0"	125
S6	42	#5	②	11'-0'	482
S7	69	#5	②	5'-3"	378
U1	9	#4	③	6'-2"	37
U2	4	#4	③	5'-6"	15
U3	4	#4	③	7'-1"	19
U4	120	#4	③	7'-6"	601
V1	64	#11	①	36'-9"	12,496
SP-1	4	✱✱	④	1,042'-5"	4,349
SP-2	4	✱	⑤	1,484'-9"	3,967
SP-3	4	✱✱	④	298'-7"	1,246

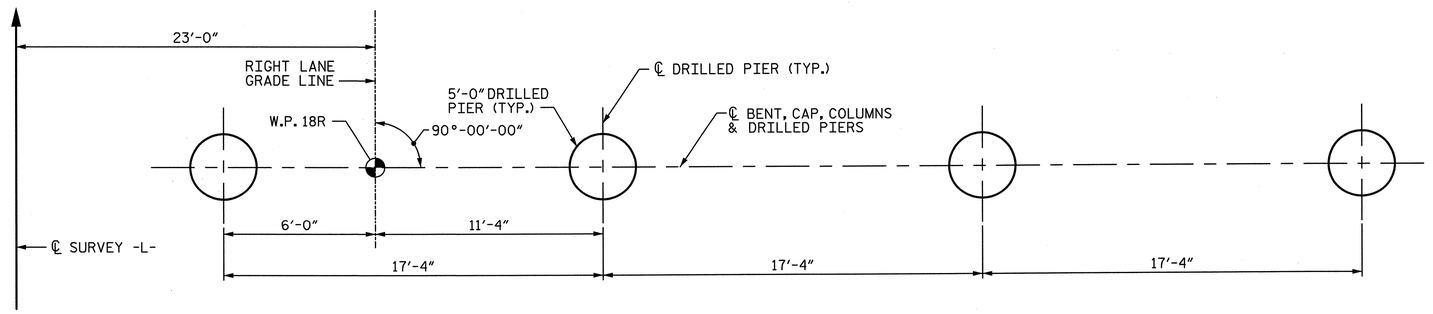

PLAN OF DRILLED PIERS

PROJECT NO. U-2524C

GUILFORD COUNTY

STATION: POT 407+85.82 -L-
= POT 29+79.72 -Y4-

SHEET 3 OF 3

STATE OF NORTH CAROLINA
DEPARTMENT OF TRANSPORTATION
RALEIGH

SUBSTRUCTURE
BENT 16
DETAILS & BILL OF MATERIAL

-RIGHT LANE-

NORTH CAROLINA PROFESSIONAL SEAL 28479 ENGINEER KEVIN G. BAILEY 6-7-13

STV / Ralph Whitehead Associates, Inc.
1000 West Morehead St., Ste. 200
Charlotte, NC 28208
NC License No. F-0991

REVISIONS						SHEET NO.
NO.	BY:	DATE:	NO.	BY:	DATE:	S-464
1			3			TOTAL SHEETS
2			4			836

DRAWN BY : JMP DATE : 1-13
CHECKED BY : SB DATE : 4-13

DESIGN ENGINEER OF RECORD: K. BAILEY DATE : 5-13

6/6/2013 9:00:16 PM R:\ustation\Finals\Bent 16 - 3 of 3.dgn

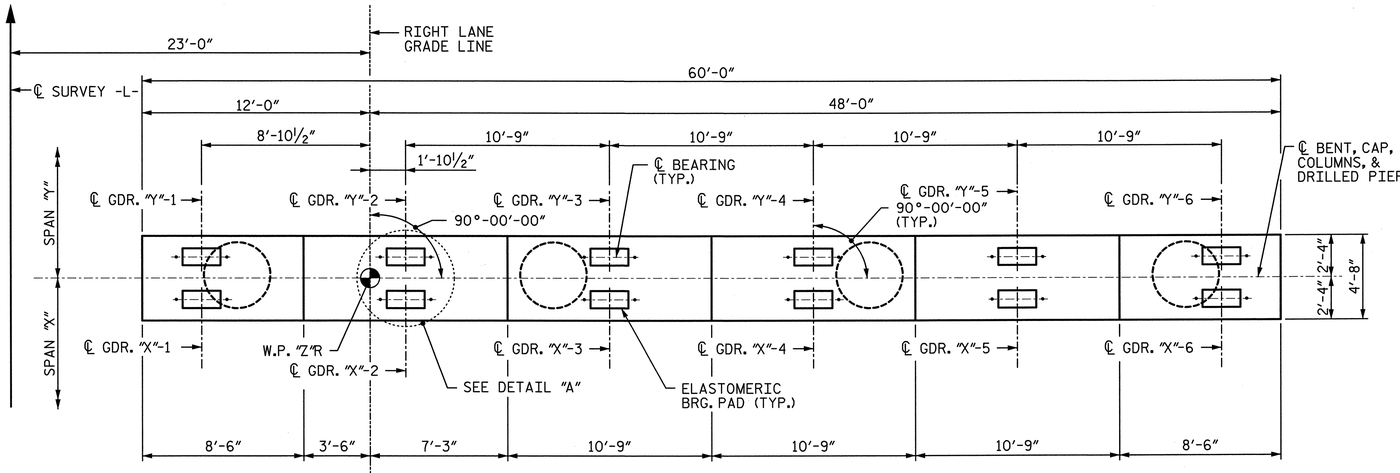

PLAN

NOTES:
SEE TABLE A THIS SHEET FOR "X" THRU "Z".

NOTE:
INVERT ALTERNATE PAIRS OF STIRRUPS.

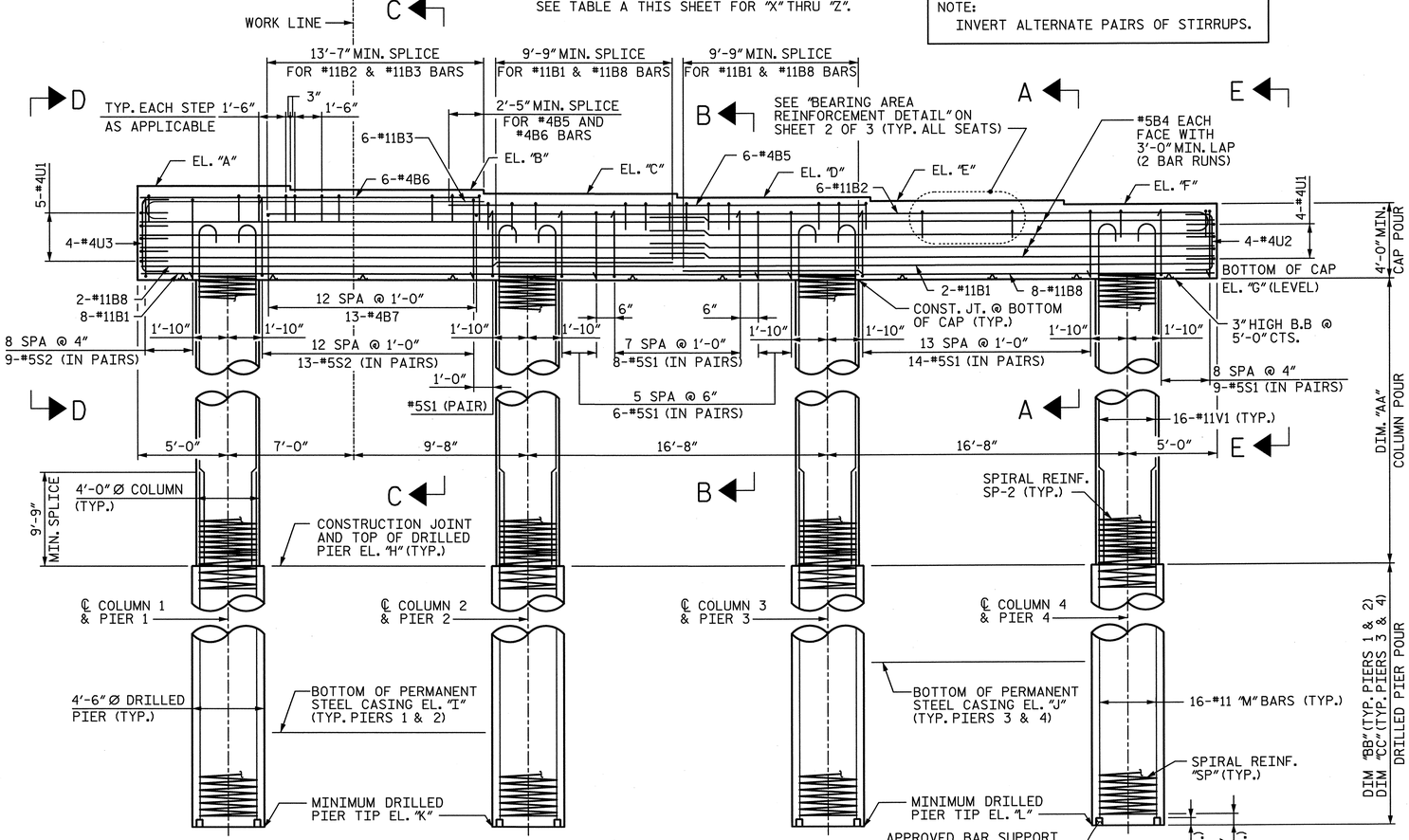

ELEVATION

NOTES:
SEE TABLE B THIS SHEET FOR "A" THRU "I" ELEVATIONS.
SEE TABLE C THIS SHEET FOR "AA" AND "BB" DIMENSIONS.
SEE TABLE D SHEET 3 FOR COLUMN AND DRILLED PIER REINFORCING.

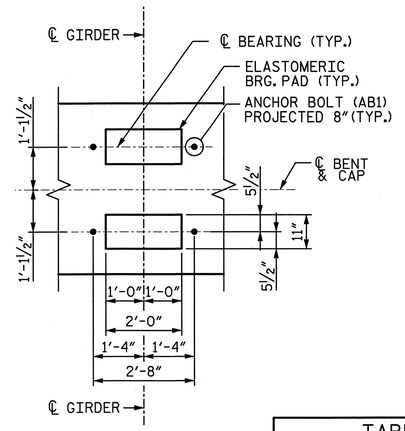

DETAIL "A"

(TYP. AT EACH BRIDGE SEAT)

NOTES:

1. ALL REINFORCING STEEL IN THE DRILLED PIERS IS INCLUDED IN THE PAY ITEMS FOR "REINFORCING STEEL" AND "SPIRAL COLUMN REINFORCING STEEL".
2. THE LOCATION OF THE CONSTRUCTION JOINT IN THE DRILLED PIERS IS BASED ON AN APPROXIMATE GROUND LINE ELEVATION. IF THE CONSTRUCTION JOINT IS ABOVE THE ACTUAL GROUND ELEVATION, THE CONTRACTOR SHALL PLACE THE CONSTRUCTION JOINT 1 FOOT BELOW THE GROUND LINE.
3. STIRRUPS AND "U BARS" IN CAP MAY BE SHIFTED SLIGHTLY AS NECESSARY TO CLEAR ANCHOR BOLTS.
4. HOOKS ON BARS MAY BE TURNED AS NECESSARY FOR PLACING REINFORCING STEEL.
5. A CONSTRUCTION JOINT AT MID-HEIGHT OF COLUMN IS PERMITTED.
6. FOR "AB1" ANCHOR BOLTS, SEE "ELASTOMERIC BEARING DETAILS" SHEET.
7. SEE "GENERAL DRAWING GENERAL NOTES" SHEET FOR ADDITIONAL NOTES.
8. SEE SHEET 2 OF 3 FOR SECTIONS CALLED OUT ON ELEVATION VIEW.

TABLE A
PLAN VIEW INFORMATION

	BENT 17	BENT 18	BENT 19
"X"	17	18	19
"Y"	18	19	20
"Z"	19	20	21

TABLE B
ELEVATIONS

	BENT 17	BENT 18	BENT 19
"A"	785.11	784.51	783.91
"B"	784.90	784.30	783.70
"C"	784.68	784.08	783.48
"D"	784.47	783.87	783.27
"E"	784.25	783.65	783.05
"F"	784.04	783.44	782.84
"G"	780.04	779.44	778.84
"H"	748.12	747.94	747.67
"I"	730.00	735.00	728.00
"J"	730.00	735.00	735.00
"K"	719.87	712.94	715.92
"L"	719.87	716.94	723.92

TABLE C
ELEVATION VIEW DIMENSIONS

	BENT 17	BENT 18	BENT 19
"AA"	31'-11"	31'-6"	31'-2"
"BB"	28'-3"	35'-0"	31'-9"
"CC"	28'-3"	31'-0"	23'-9"

SIDE VIEW

NORTH CAROLINA PROFESSIONAL SEAL 28479 ENGINEER KEVIN G. BAILEY 6-7-13

PROJECT NO. U-2524C
GUILFORD COUNTY
STATION: POT 407+85.82 -L-
= POT 29+79.72 -Y4-

SHEET 1 OF 3

STATE OF NORTH CAROLINA
DEPARTMENT OF TRANSPORTATION
RALEIGH

SUBSTRUCTURE BENTS 17-19 PLAN & ELEVATION

-RIGHT LANE-

DRAWN BY : JMP DATE : 1-13
CHECKED BY : JAN DATE : 1-13
DESIGN ENGINEER OF RECORD: K. BAILEY DATE : 5-13

STV / Ralph Whitehead Associates, Inc.
1000 West Morehead St., Ste. 200
Charlotte, NC 28208
NC License No. F-0991

REVISIONS						SHEET NO.
NO.	BY:	DATE:	NO.	BY:	DATE:	S-465
1			3			TOTAL SHEETS
2			4			836

6/6/2013 9:00:17 PM R:\Isstation\Finals\Bent 17-19 - 1of 3.dgn

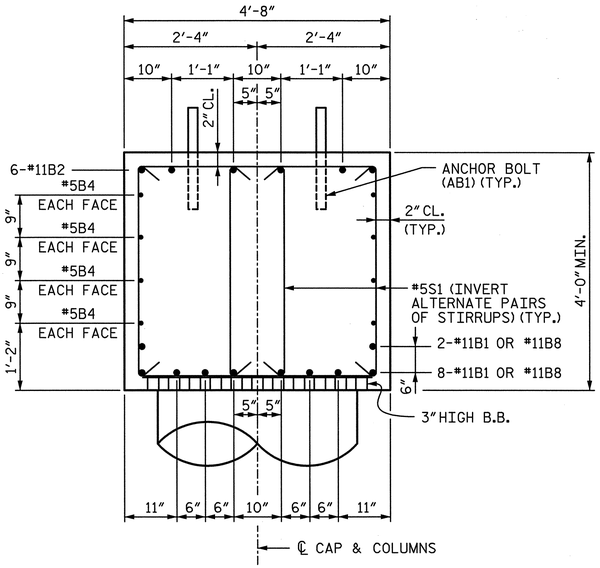

SECTION A-A

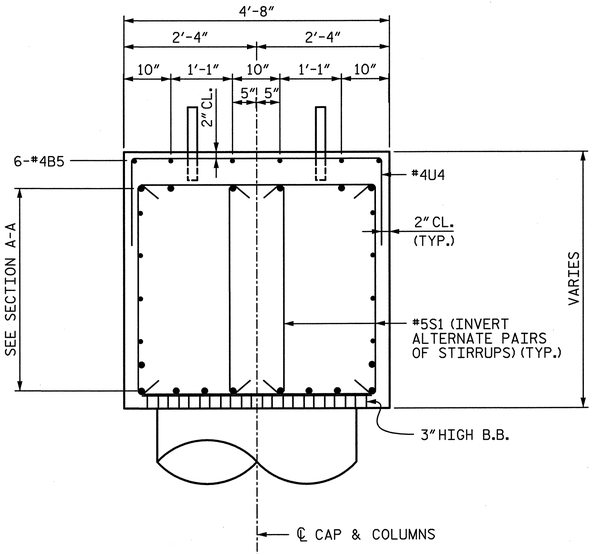

SECTION B-B

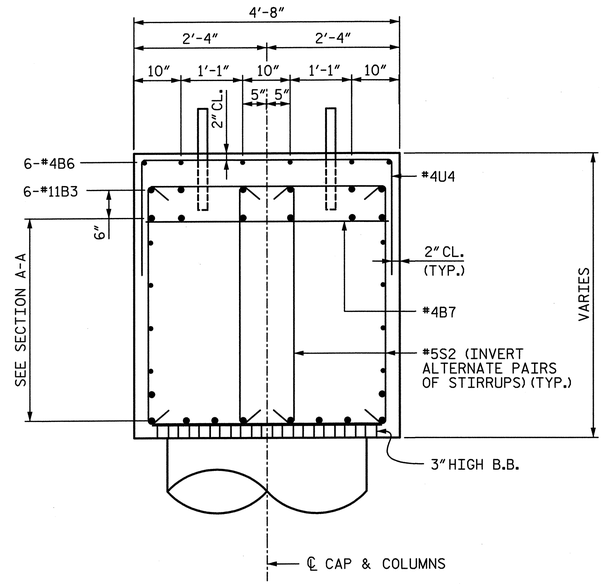

SECTION C-C

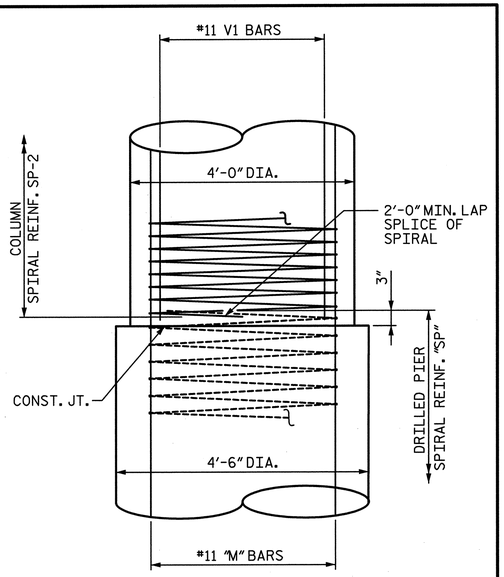

CONSTRUCTION JOINT DETAIL

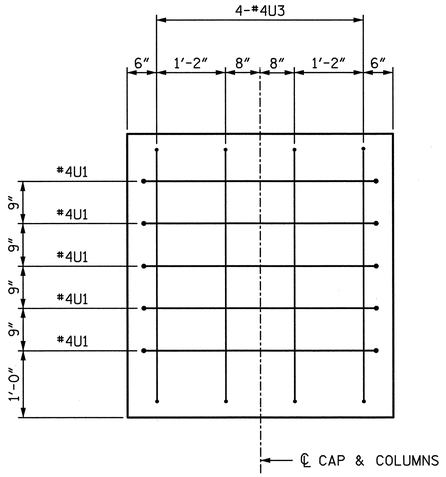

END VIEW D-D

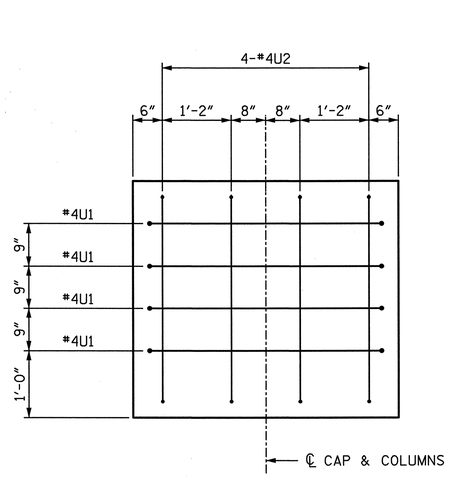

END VIEW E-E

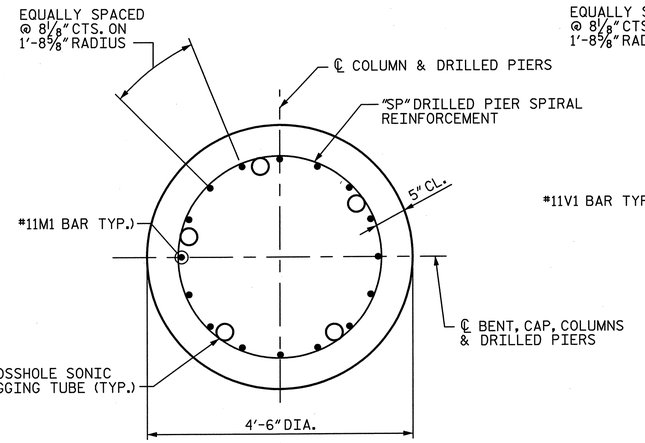

TYPICAL SECTION THROUGH DRILLED PIER

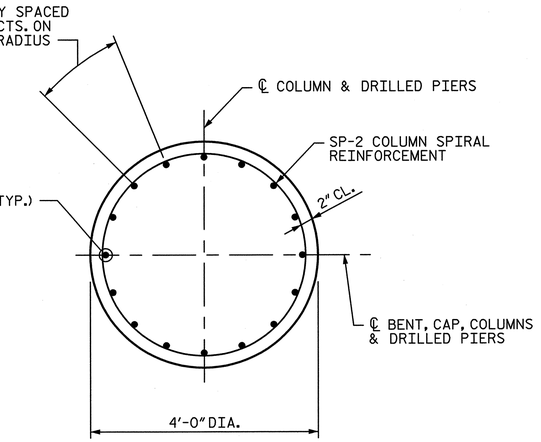

TYPICAL SECTION THROUGH COLUMN

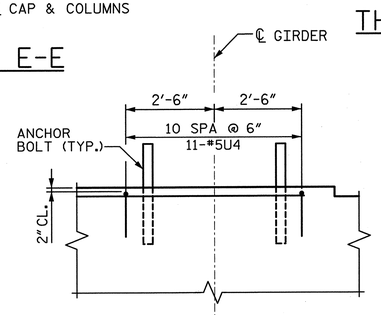

BEARING AREA REINFORCEMENT DETAIL

(TYP. AT EACH BRIDGE SEAT)

PROJECT NO. U-2524C

GUILFORD COUNTY

STATION: POT 407+85.82 -L-
= POT 29+79.72 -Y4-

SHEET 2 OF 3

STATE OF NORTH CAROLINA
DEPARTMENT OF TRANSPORTATION
RALEIGH

SUBSTRUCTURE BENTS 17-19 DETAILS

-RIGHT LANE-

NORTH CAROLINA PROFESSIONAL SEAL 28479 ENGINEER KEVIN G. BAILEY 6-7-13

STV/ Ralph Whitehead Associates, Inc.
1000 West Morehead St., Ste. 200
Charlotte, NC 28208
NC License No. F-0991

REVISIONS						SHEET NO.
NO.	BY:	DATE:	NO.	BY:	DATE:	S-466
1			3			TOTAL SHEETS
2			4			836

DRAWN BY : JMP DATE : 1-13
CHECKED BY : JAN DATE : 1-13
DESIGN ENGINEER OF RECORD: K. BAILEY DATE : 5-13

6/6/2013 9:00:19 PM R:\ustation\Finals\Bent 17-19 - 2 of 3.dgn

TABLE D								
BENT 17 COLUMNS & DRILLED PIERS REINFORCING BILL OF MATERIAL								
COLUMN/ DRILLED PIER	BAR	NO.	SIZE	TYPE	●	LENGTH	WEIGHT	DRILLED PIER LENGTH
1 THRU 4 (1 SHOWN, 4 REQ'D)	M11	16	#11	STR.		37'-6"	3,188	28'-3"
	V1	16	#11	①	35'-2"	36'-9"	3,124	
	SP-11	1	**	④	27'-9"	775'-10"	809	
	SP-2	1	*	⑤	32'-2"	1,484'-9"	992	

TABLE D								
BENT 18 COLUMNS & DRILLED PIERS REINFORCING BILL OF MATERIAL								
COLUMN/ DRILLED PIER	BAR	NO.	SIZE	TYPE	●	LENGTH	WEIGHT	DRILLED PIER LENGTH
1 & 2 (1 SHOWN, 2 REQ'D)	M11	16	#11	STR.		44'-3"	3,762	35'-0"
	V1	16	#11	①	34'-9"	36'-4"	3,089	
	SP-11	1	**	④	32'-3"	959'-11"	1,001	
	SP-2	1	*	⑤	31'-9"	1,465'-9"	979	
3 & 4 (1 SHOWN, 2 REQ'D)	M12	16	#11	STR.		40'-3"	3,422	31'-0"
	V1	16	#11	①	34'-9"	36'-4"	3,089	
	SP-12	1	**	④	28'-3"	850'-10"	887	
	SP-2	1	*	⑤	31'-9"	1,465'-9"	979	

TABLE D								
BENT 19 COLUMNS & DRILLED PIERS REINFORCING BILL OF MATERIAL								
COLUMN/ DRILLED PIER	BAR	NO.	SIZE	TYPE	●	LENGTH	WEIGHT	DRILLED PIER LENGTH
1 & 2 (1 SHOWN, 2 REQ'D)	M11	16	#11	STR.		41'-0"	3,485	31'-9"
	V1	16	#11	①	34'-5"	36'-0"	3,060	
	SP-11	1	**	④	31'-3"	871'-4"	909	
	SP-2	1	*	⑤	31'-5"	1,450'-7"	969	
3 & 4 (1 SHOWN, 2 REQ'D)	M12	16	#11	STR.		33'-0"	2,805	23'-9"
	V1	16	#11	①	34'-5"	36'-0"	3,060	
	SP-12	1	**	④	23'-3"	653'-2"	681	
	SP-2	1	*	⑤	31'-5"	1,450'-7"	969	

** THE SP-11 AND SP-12 SPIRAL REINFORCING STEEL SHALL BE W31 OR D-31 COLD DRAWN WIRE OR #5 PLAIN OR DEFORMED BAR WITH A 5" PITCH.

* THE SP-2 SPIRAL REINFORCING SHALL BE W20 OR D-20 COLD DRAWN WIRE OR #4 PLAIN OR DEFORMED BAR WITH A 3" PITCH.

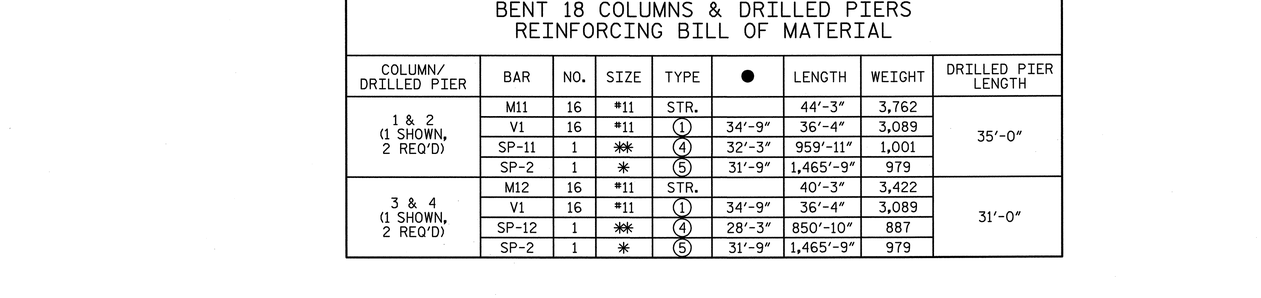

PLAN OF DRILLED PIERS

NOTE:
SEE TABLE "A" SHEET 1 FOR "Z"

BAR TYPES

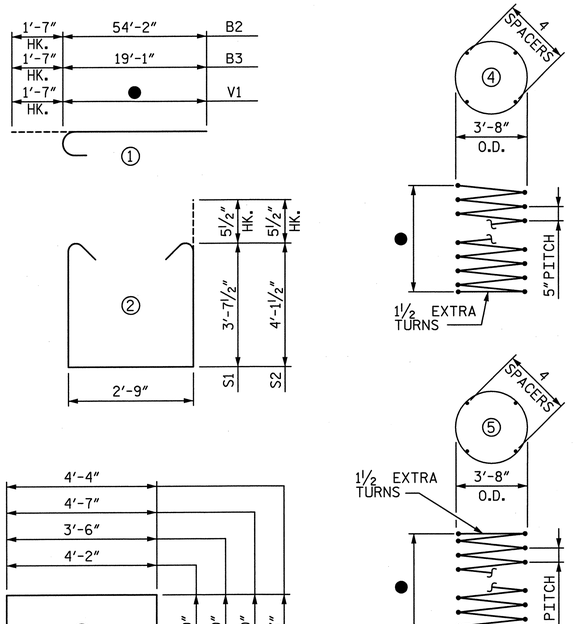

ALL BAR DIMENSIONS ARE OUT TO OUT

BILL OF MATERIAL FOR ONE BENT (3 REQUIRED)

BAR	NO.	SIZE	TYPE	LENGTH	WEIGHT
B1	10	#11	STR.	40'-2"	2,134
B2	6	#11	①	55'-9"	1,777
B3	6	#11	①	20'-8"	659
B4	16	#5	STR.	31'-4"	523
B5	6	#4	STR.	23'-11"	96
B6	6	#4	STR.	18'-11"	76
B7	13	#4	STR.	4'-4"	38
B8	10	#11	STR.	29'-3"	1,554
S1	88	#5	②	10'-11"	1,002
S2	44	#5	②	11'-11"	547
U1	9	#4	③	6'-2"	37
U2	4	#4	③	5'-6"	15
U3	4	#4	③	6'-7"	18
U4	80	#4	③	7'-6"	401

NOTE:
FOR ● AND COLUMNS & DRILLED PIERS REINFORCING BILL OF MATERIAL SEE TABLE D THIS SHEET.

QUANTITIES

		BENT 17	BENT 18	BENT 19
REINFORCING STEEL	LBS.	34,125	35,601	33,697
SPIRAL REINFORCING STEEL	LBS.	7,204	7,692	7,056
CLASS A CONCRETE : POUR 2 - COLUMNS	CU. YDS.	59.4	58.7	58.1
POUR 3 - CAP	CU. YDS.	47.0	47.0	47.0
TOTAL	CU. YDS.	106.4	105.7	105.1
4'-6" Ø DRILLED PIERS IN SOIL	L.F.	74	92	62
4'-6" Ø DRILLED PIERS NOT IN SOIL	L.F.	39	40	49
TOTAL 4'-6" Ø DRILLED PIERS	L.F.	113	132	111
PERMANENT STEEL CASING FOR 4'-6" Ø DRILLED PIERS	L.F.	77	56	69
DRILLED PIER CONCRETE : POUR 1	CU. YDS.	66.6	77.8	65.4
CSL TUBES	L.F.	595	690	585

PROJECT NO. U-2524C

GUILFORD COUNTY

STATION: POT 407+85.82 -L-
= POT 29+79.72 -Y4-

SHEET 3 OF 3

NORTH CAROLINA PROFESSIONAL SEAL 28479 ENGINEER KEVIN G. BAILEY 6-7-13

STATE OF NORTH CAROLINA
DEPARTMENT OF TRANSPORTATION
RALEIGH

SUBSTRUCTURE BENTS 17-19 DETAILS & BILL OF MATERIAL

-RIGHT LANE-

DRAWN BY : JMP	DATE : 1-13	DESIGN ENGINEER OF RECORD: K. BAILEY	DATE : 5-13
CHECKED BY : JAN	DATE : 1-13		

STV / Ralph Whitehead Associates, Inc.
1000 West Morehead St., Ste. 200
Charlotte, NC 28208
NC License No. F-0991

REVISIONS						SHEET NO.
NO.	BY:	DATE:	NO.	BY:	DATE:	S-467
1			3			TOTAL SHEETS
2			4			836

6/6/2013 9:00:20 PM R:\station\Finals\Bent 17-19 - 3 of 3.dgn

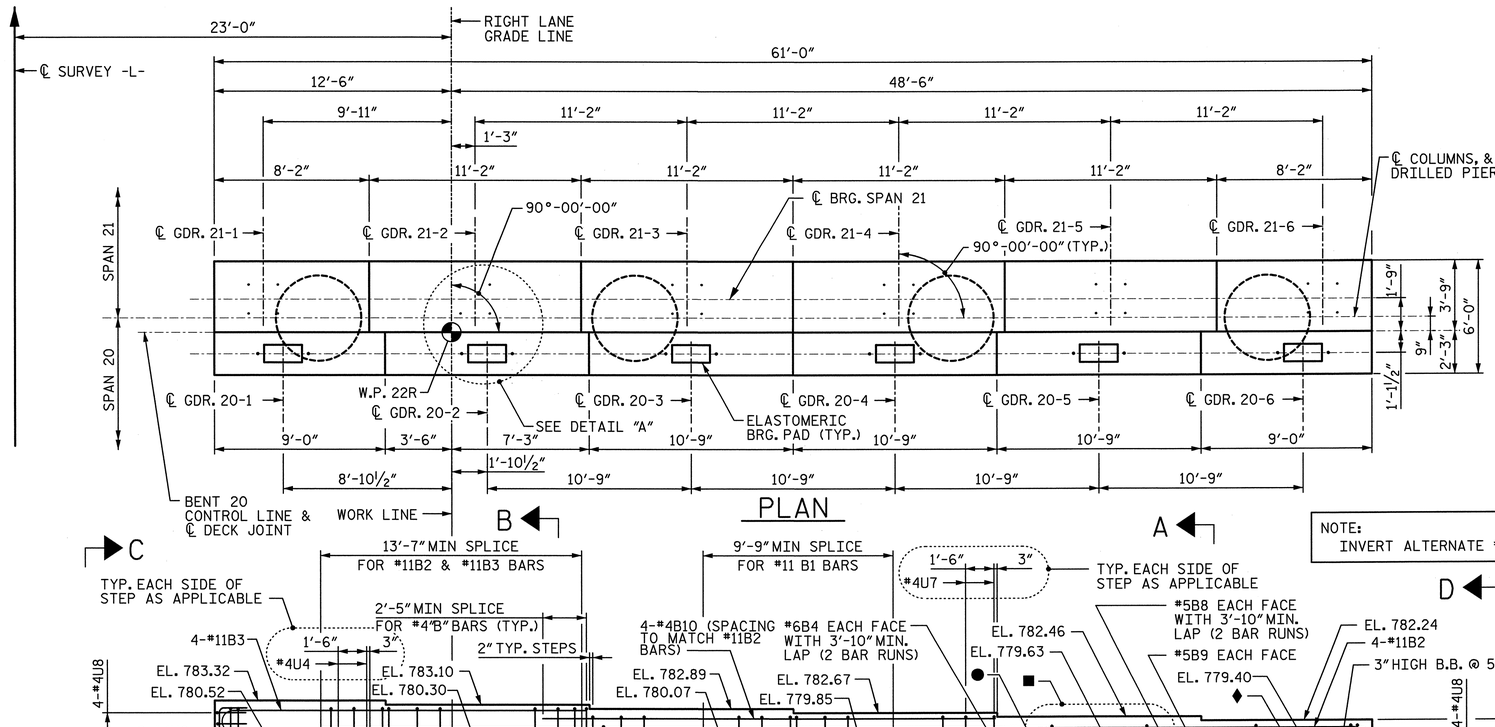

PLAN

THE CONTRACTOR'S ATTENTION IS CALLED TO THE FACT THAT THE CENTERLINE JOINT IN THE DECK SLAB (CONTROL LINE) IS OFFSET FROM THE CENTERLINE BENT.

NOTES:

1. ALL REINFORCING STEEL IN THE DRILLED PIERS IS INCLUDED IN THE PAY ITEMS FOR "REINFORCING STEEL" AND "SPIRAL COLUMN REINFORCING STEEL".
2. THE LOCATION OF THE CONSTRUCTION JOINT IN THE DRILLED PIERS IS BASED ON AN APPROXIMATE GROUND LINE ELEVATION. IF THE CONSTRUCTION JOINT IS ABOVE THE ACTUAL GROUND ELEVATION, THE CONTRACTOR SHALL PLACE THE CONSTRUCTION JOINT 1 FOOT BELOW THE GROUND LINE.
3. STIRRUPS AND "U BARS" IN CAP MAY BE SHIFTED SLIGHTLY AS NECESSARY TO CLEAR ANCHOR BOLTS.
4. HOOKS ON BARS MAY BE TURNED AS NECESSARY FOR PLACING REINFORCING STEEL.
5. A CONSTRUCTION JOINT AT MID-HEIGHT OF COLUMN IS PERMITTED.
6. FOR "AB1" ANCHOR BOLTS, SEE "ELASTOMERIC BEARING DETAILS" SHEET.
7. FOR 1½" ANCHOR BOLTS, SEE "POT BEARING DETAILS" SHEET.
8. SEE "GENERAL DRAWING GENERAL NOTES" SHEET FOR ADDITIONAL NOTES.
9. SEE SHEET 2 OF 3 FOR SECTIONS CALLED OUT ON ELEVATION VIEW.
10. THE TOP SURFACE AREAS OF THE BENT CAPS SHALL BE CURED IN ACCORDANCE WITH THE STANDARD SPECIFICATIONS EXCEPT THE MEMBRANE CURING COMPOUND METHOD SHALL NOT BE USED.
11. FOR PIPE INSERT DETAILS, SEE "POT BEARING DETAILS" SHEETS.

NOTE:
INVERT ALTERNATE #5S1, #5S2 & #5S3 BARS.

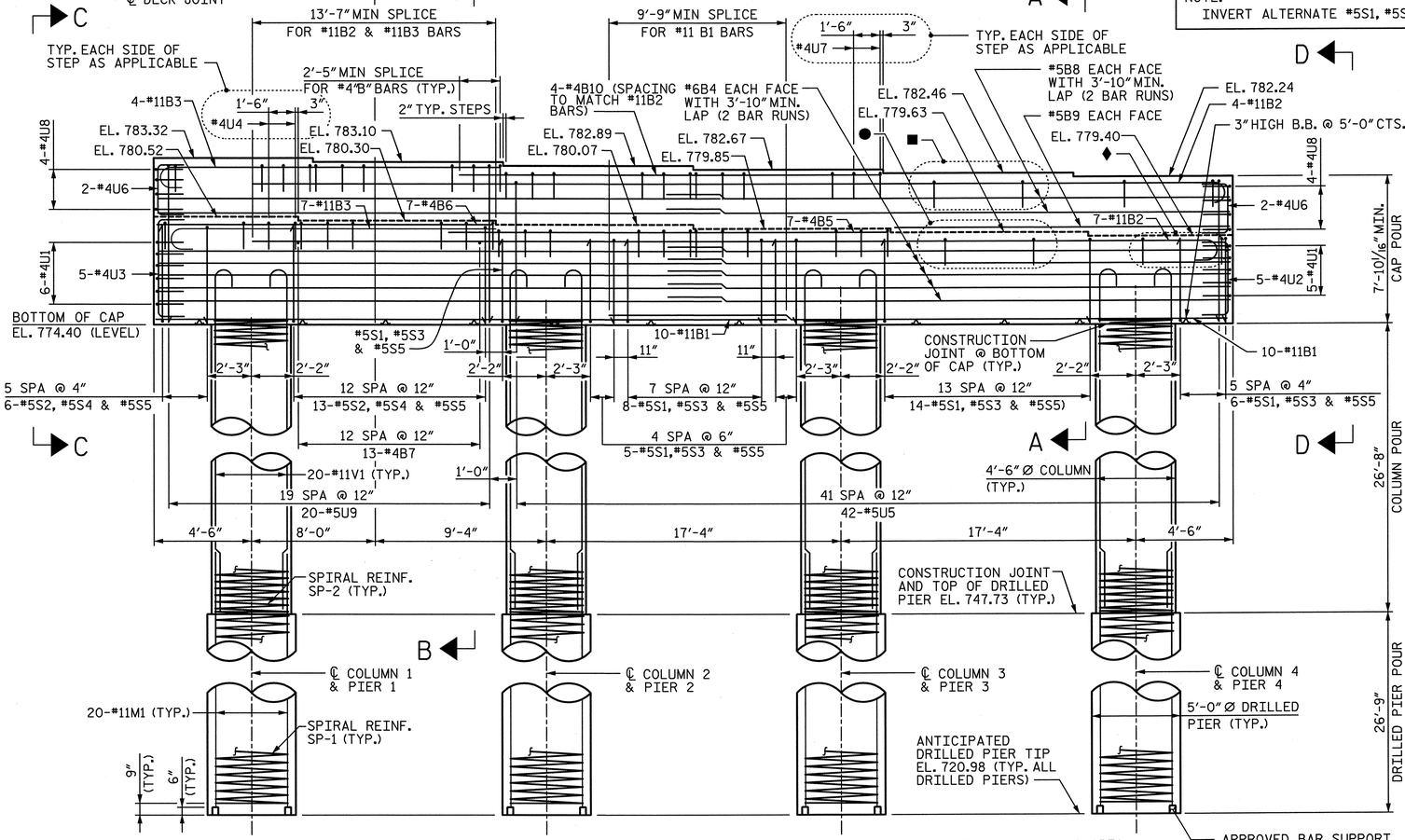

ELEVATION

■ SEE "SPAN 20 BEARING AREA REINFORCEMENT DETAIL" ON SHEET 3 OF 3 (TYP. ALL SPAN 20 SEATS)

♦ SEE "SPAN 21 EXTERIOR BEARING AREA REINFORCEMENT DETAIL" ON SHEET 3 OF 3 (TYP. ALL EXTERIOR SPAN 21 SEATS)

● SEE "SPAN 21 INTERIOR BEARING AREA REINFORCEMENT DETAIL" ON SHEET 3 OF 3 (TYP. ALL INTERIOR SPAN 21 SEATS)

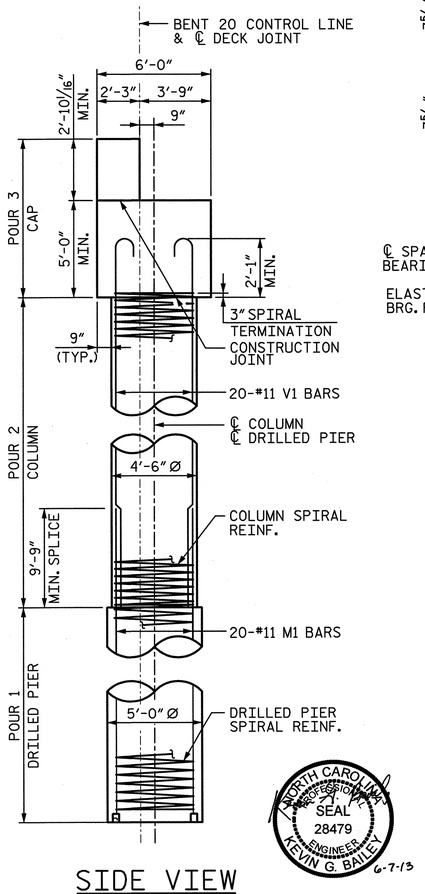

SIDE VIEW

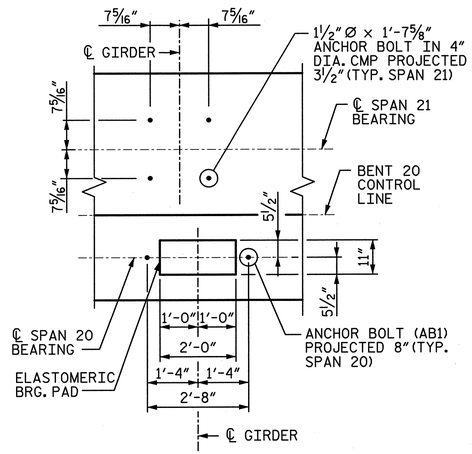

DETAIL "A"
(TYP. EACH BRIDGE SEAT)

PROJECT NO. U-2524C
GUILFORD COUNTY
STATION: POT 407+85.82 -L-
= POT 29+79.72 -Y4-
SHEET 1 OF 3

STATE OF NORTH CAROLINA
DEPARTMENT OF TRANSPORTATION
RALEIGH

SUBSTRUCTURE BENT 20 PLAN & ELEVATION

-RIGHT LANE-

NORTH CAROLINA PROFESSIONAL SEAL 28479 ENGINEER KEVIN G. BAILEY 6-7-13

DRAWN BY : JMP	DATE : 1-13	DESIGN ENGINEER OF RECORD: K. BAILEY	DATE : 5-13
CHECKED BY : JAN	DATE : 1-13		

STV / Ralph Whitehead Associates, Inc.
1000 West Morehead St., Ste. 200
Charlotte, NC 28208
NC License No. F-0991

REVISIONS						SHEET NO.
NO.	BY:	DATE:	NO.	BY:	DATE:	S-468
1			3			TOTAL SHEETS
2			4			836

6/6/2013 9:00:21 PM R:\ustation\Finals\Bent 20 - 1of 3.dgn

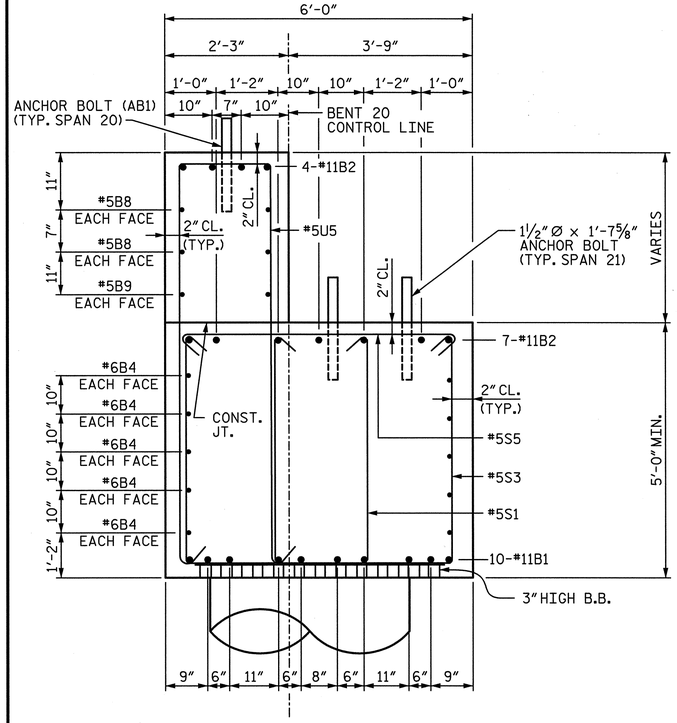

SECTION A-A

NOTE:
INVERT ALTERNATE #5S1, #5S3 & #5S5 BARS.

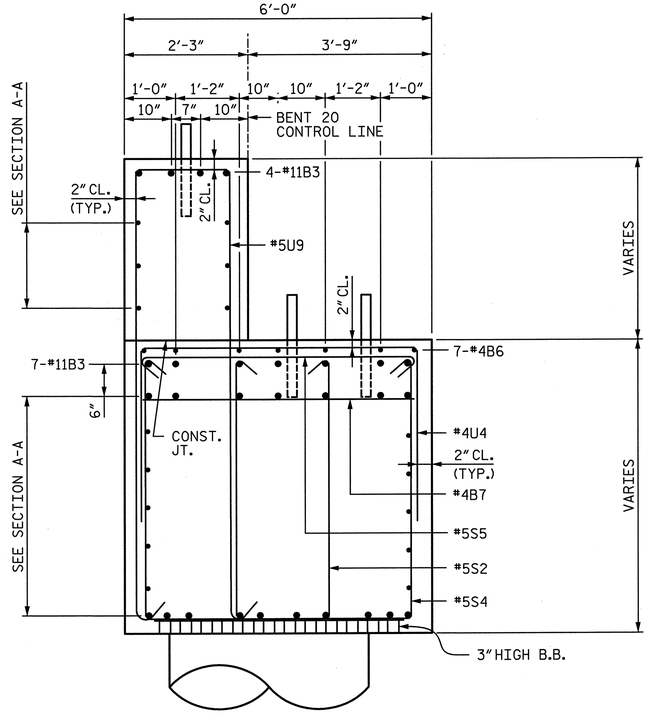

SECTION B-B

NOTE:
INVERT ALTERNATE #5S2, #5S4 & #5S5 BARS.

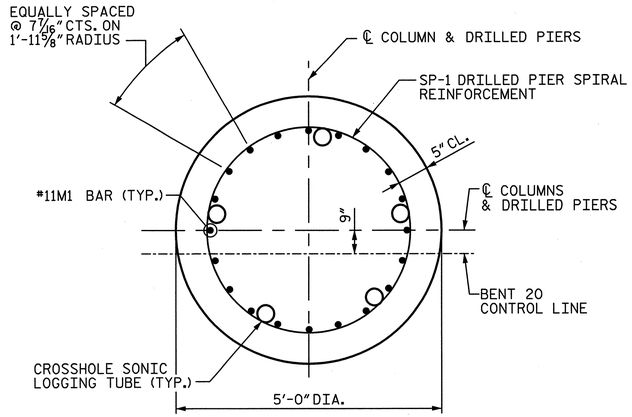

TYPICAL SECTION THROUGH DRILLED PIER

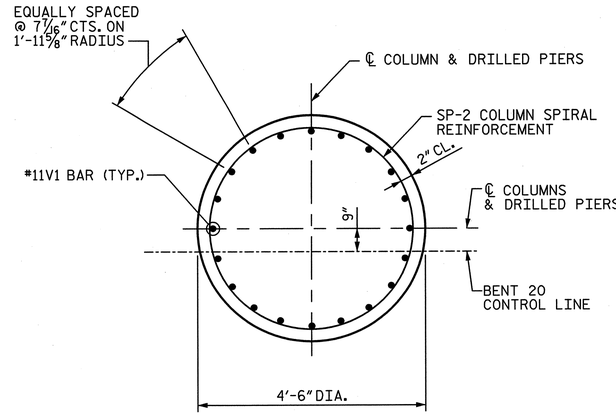

TYPICAL SECTION THROUGH COLUMN

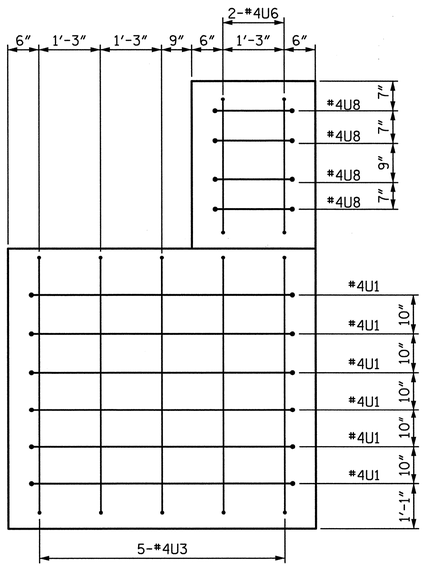

END VIEW C-C

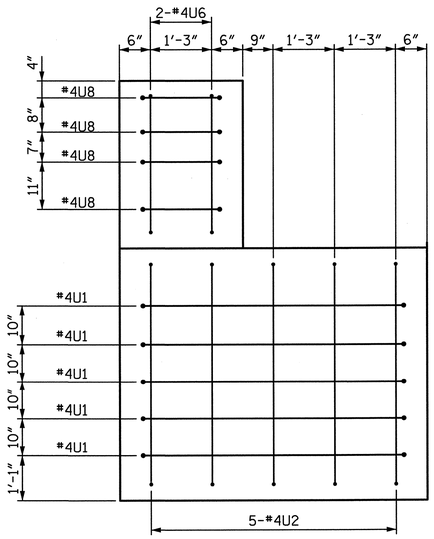

END VIEW D-D

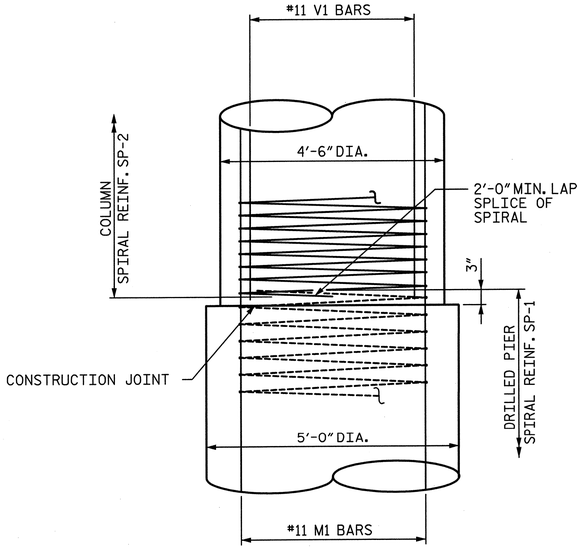

CONSTRUCTION JOINT DETAIL

PROJECT NO. U-2524C

GUILFORD COUNTY

STATION: POT 407+85.82 -L-
= POT 29+79.72 -Y4-

SHEET 2 OF 3

STATE OF NORTH CAROLINA
DEPARTMENT OF TRANSPORTATION
RALEIGH

SUBSTRUCTURE BENT 20 DETAILS

-RIGHT LANE-

NORTH CAROLINA PROFESSIONAL SEAL 28479 ENGINEER KEVIN G. BAILEY 6-7-13

DRAWN BY : JMP	DATE : 1-13	DESIGN ENGINEER OF RECORD: K. BAILEY	DATE : 5-13
CHECKED BY : JAN	DATE : 1-13		

STV / Ralph Whitehead Associates, Inc.
1000 West Morehead St., Ste. 200
Charlotte, NC 28208
NC License No. F-0991

REVISIONS						SHEET NO.
NO.	BY:	DATE:	NO.	BY:	DATE:	S-469
1			3			TOTAL SHEETS
2			4			836

6/6/2013 9:00:23 PM R:\ustation\Finals\Bent 20 - 2 of 3.dgn

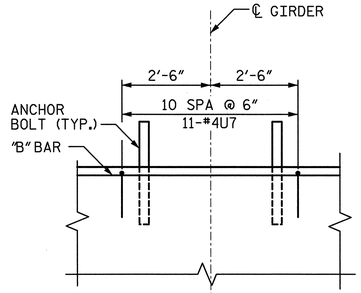

SPAN 20 BEARING AREA REINFORCEMENT DETAIL

(TYP. AT EACH BRIDGE SEAT)

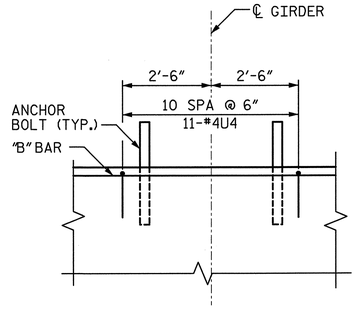

SPAN 21 INTERIOR BEARING AREA REINFORCEMENT DETAIL

(TYP. AT EACH INTERIOR BRIDGE SEAT)

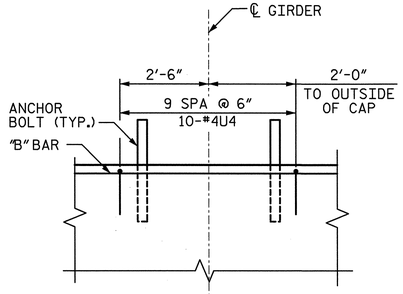

SPAN 21 EXTERIOR BEARING AREA REINFORCEMENT DETAIL

(TYP. AT EACH EXTERIOR BRIDGE SEAT)

BAR TYPES

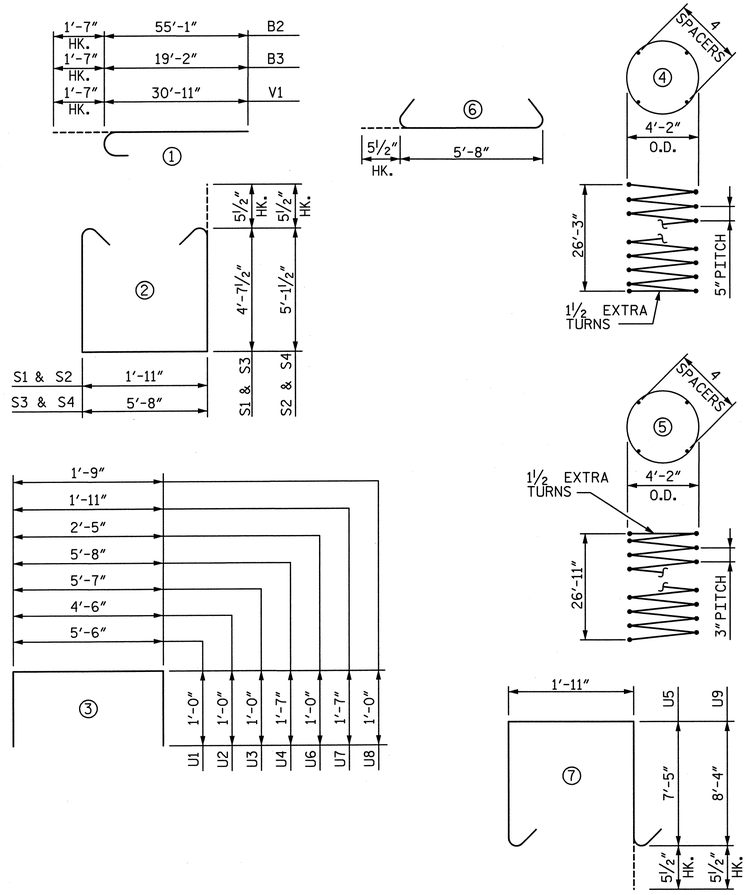

ALL BAR DIMENSIONS ARE OUT TO OUT

BILL OF MATERIAL

BAR	NO.	SIZE	TYPE	LENGTH	WEIGHT
B1	20	#11	STR.	35'-3"	3,746
B2	11	#11	①	56'-8"	3,312
B3	11	#11	①	20'-9"	1,213
B4	20	#6	STR.	32'-3"	969
B5	7	#4	STR.	24'-9"	116
B6	7	#4	STR.	19'-0"	89
B7	13	#4	STR.	5'-8"	49
B8	12	#5	STR.	32'-3"	404
B9	2	#5	STR.	19'-0"	40
B10	4	#4	STR.	23'-11"	64
M1	80	#11	STR.	36'-0"	15,301
S1	39	#5	②	12'-1"	492
S2	19	#5	②	13'-1"	259
S3	39	#5	②	15'-10"	644
S4	19	#5	②	16'-10"	334
S5	58	#5	⑥	6'-7"	398
U1	11	#4	③	7'-6"	55
U2	5	#4	③	6'-6"	22
U3	5	#4	③	7'-7"	25
U4	80	#4	③	8'-10"	472
U5	42	#5	⑦	17'-8"	774
U6	4	#4	③	4'-5"	12
U7	80	#4	③	5'-1"	272
U8	8	#4	③	3'-9"	20
U9	20	#5	⑦	19'-6"	407
V1	80	#11	①	32'-6"	13,814
SP-1	4	**	④	836'-3"	3,489
SP-2	4	*	⑤	1,417'-0"	3,786

** THE SP-1 SPIRAL REINFORCING STEEL SHALL BE W31 OR D-31 COLD DRAWN WIRE OR #5 PLAIN OR DEFORMED BAR WITH A 5" PITCH.

* THE SP-2 SPIRAL REINFORCING SHALL BE W20 OR D-20 COLD DRAWN WIRE OR #4 PLAIN OR DEFORMED BAR WITH A 3" PITCH.

QUANTITIES

REINFORCING STEEL		LBS.	43,303
SPIRAL REINFORCING STEEL		LBS.	7,275
CLASS A CONCRETE :	POUR 2 - COLUMNS	CU. YDS.	62.8
	POUR 3 - CAP	CU. YDS.	89.7
	TOTAL	CU. YDS.	152.5
5'-0" Ø DRILLED PIERS IN SOIL		L.F.	62
5'-0" Ø DRILLED PIERS NOT IN SOIL		L.F.	45
TOTAL 5'-0" Ø DRILLED PIERS		L.F.	107
DRILLED PIER CONCRETE :	POUR 1	CU. YDS.	77.8
CSL TUBES		L.F.	565

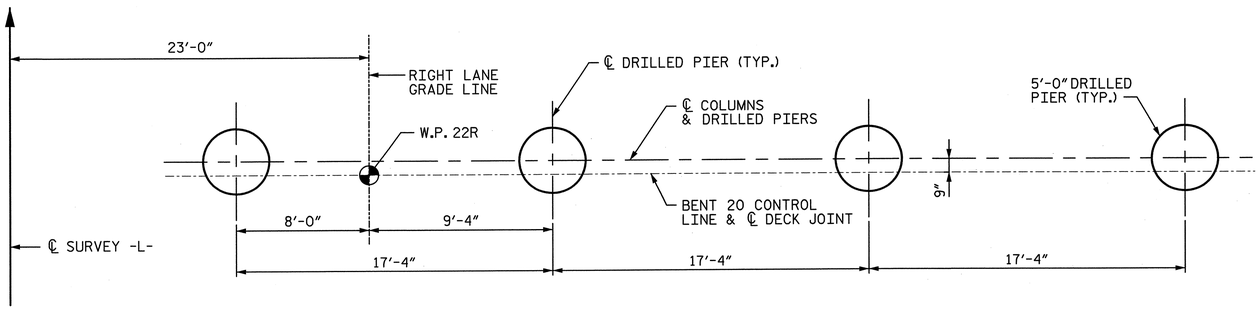

PLAN OF DRILLED PIERS

PROJECT NO. U-2524C

GUILFORD COUNTY

STATION: POT 407+85.82 -L-
= POT 29+79.72 -Y4-

SHEET 3 OF 3

STATE OF NORTH CAROLINA
DEPARTMENT OF TRANSPORTATION
RALEIGH

SUBSTRUCTURE BENT 20 DETAILS & BILL OF MATERIAL

-RIGHT LANE-

NORTH CAROLINA PROFESSIONAL SEAL 28479 ENGINEER KEVIN G. BAILEY
6-7-13

STV / Ralph Whitehead Associates, Inc.
1000 West Morehead St., Ste. 200
Charlotte, NC 28208
NC License No. F-0991

REVISIONS					
NO.	BY:	DATE:	NO.	BY:	DATE:
1			3		
2			4		

SHEET NO. S-470

TOTAL SHEETS 836

DRAWN BY : JMP DATE : 1-13
CHECKED BY : JAN DATE : 1-13

DESIGN ENGINEER OF RECORD: K. BAILEY DATE : 5-13

6/6/2013 9:00:24 PM R:\station\Finals\Bent 20 - 3 of 3.dgn

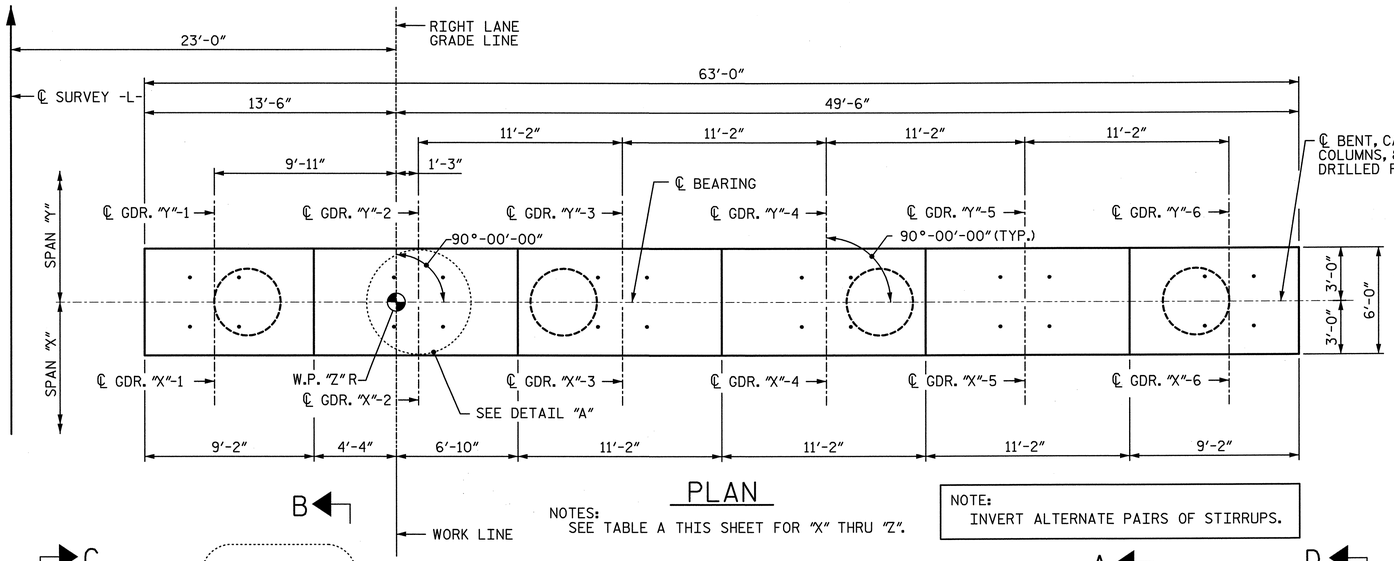

PLAN

NOTES:
SEE TABLE A THIS SHEET FOR "X" THRU "Z".

NOTE:
INVERT ALTERNATE PAIRS OF STIRRUPS.

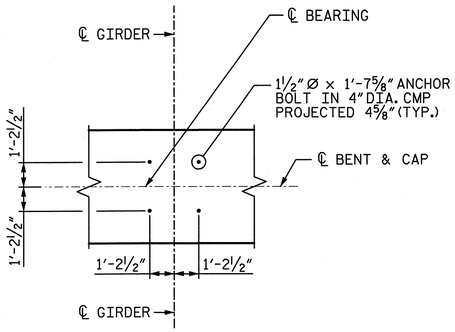

DETAIL "A"

(TYP. AT EACH BRIDGE SEAT)

NOTES:

1. ALL REINFORCING STEEL IN THE DRILLED PIERS IS INCLUDED IN THE PAY ITEMS FOR "REINFORCING STEEL" AND "SPIRAL COLUMN REINFORCING STEEL".
2. THE LOCATION OF THE CONSTRUCTION JOINT IN THE DRILLED PIERS IS BASED ON AN APPROXIMATE GROUND LINE ELEVATION. IF THE CONSTRUCTION JOINT IS ABOVE THE ACTUAL GROUND ELEVATION, THE CONTRACTOR SHALL PLACE THE CONSTRUCTION JOINT 1 FOOT BELOW THE GROUND LINE.
3. STIRRUPS AND "U BARS" IN CAP MAY BE SHIFTED SLIGHTLY AS NECESSARY TO CLEAR ANCHOR BOLTS.
4. HOOKS ON BARS MAY BE TURNED AS NECESSARY FOR PLACING REINFORCING STEEL.
5. A CONSTRUCTION JOINT AT MID-HEIGHT OF COLUMN IS PERMITTED.
6. FOR 1½" Ø ANCHOR BOLTS, SEE "POT BEARING DETAILS" SHEET.
7. SEE "GENERAL DRAWING GENERAL NOTES" SHEET FOR ADDITIONAL NOTES.
8. SEE SHEET 2 OF 3 FOR SECTIONS CALLED OUT ON ELEVATION VIEW.
9. FOR PIPE INSERT DETAILS, SEE "POT BEAIRNG DETAILS" SHEET.

TABLE A PLAN VIEW INFORMATION		
	BENT 21	BENT 22
"X"	21	22
"Y"	22	23
"Z"	23	24

TABLE B ELEVATIONS		
	BENT 21	BENT 22
"A"	778.83	777.46
"B"	778.61	777.23
"C"	778.38	777.01
"D"	778.16	776.79
"E"	777.94	776.56
"F"	777.71	776.34
"G"	772.71	771.34
"H"	747.54	745.76
"I"	725.79	727.76
"J"	727.79	716.76

TABLE C ELEVATION VIEW DIMENSIONS		
	BENT 21	BENT 22
"AA"	25'-2"	25'-7"
"BB"	21'-9"	18'-0"
"CC"	19'-9"	29'-0"

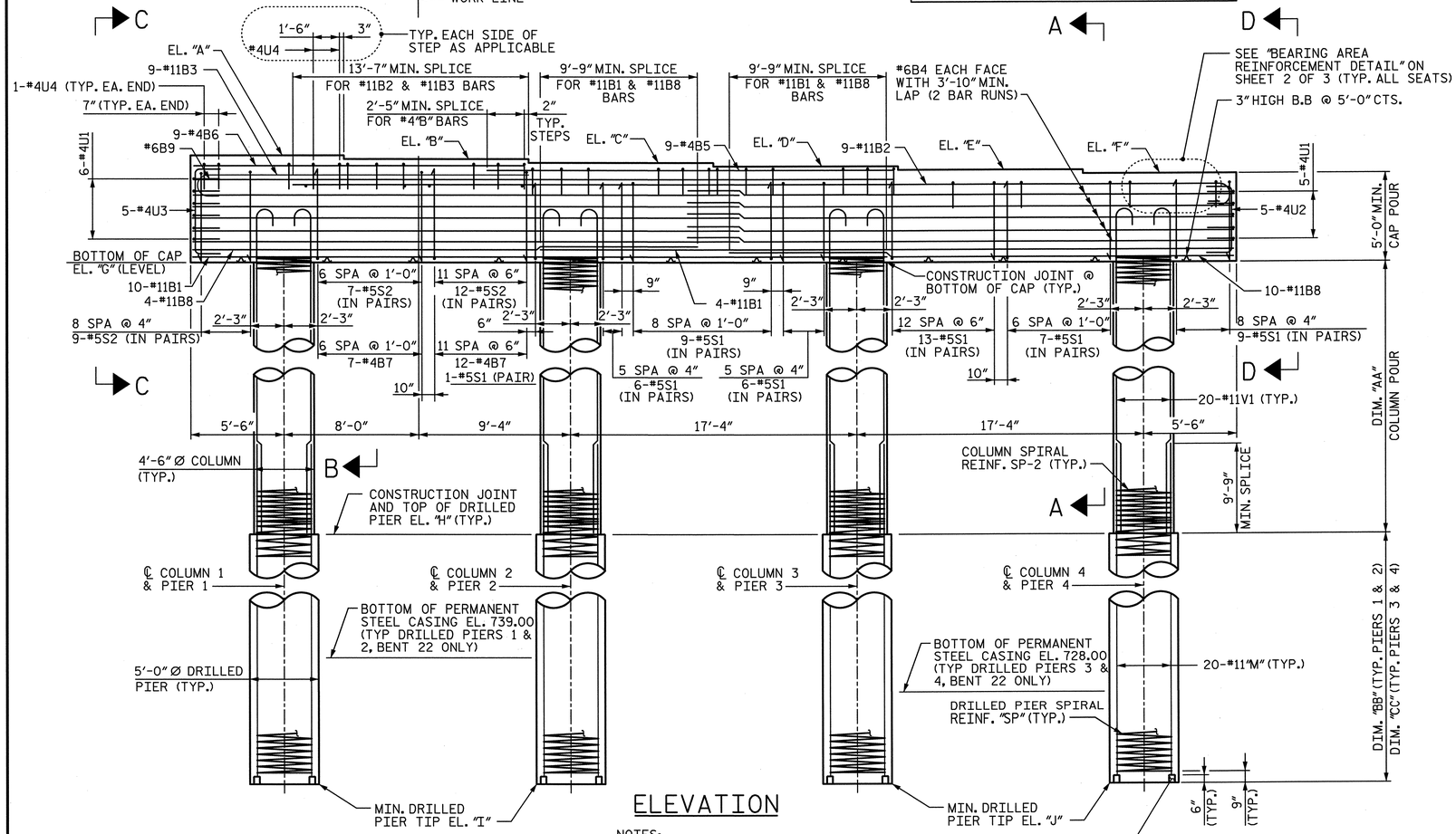

ELEVATION

NOTES:
SEE TABLE B THIS SHEET FOR "A" THRU "J" ELEVATIONS.
SEE TABLE C THIS SHEET FOR "AA," "BB" AND "CC" DIMENSIONS.
SEE TABLE D SHEET 3 FOR COLUMN AND SHAFT REINFORCEMENT.

SIDE VIEW

NORTH CAROLINA PROFESSIONAL ENGINEER SEAL 28479 KEVIN G. BAILEY ENGINEER 6-7-13

PROJECT NO. U-2524C

GUILFORD COUNTY

STATION: POT 407+85.82 -L-
= POT 29+79.72 -Y4-

SHEET 1 OF 3

STATE OF NORTH CAROLINA
DEPARTMENT OF TRANSPORTATION
RALEIGH

SUBSTRUCTURE BENTS 21 & 22 PLAN & ELEVATION

-RIGHT LANE-

REVISIONS						SHEET NO.
NO.	BY:	DATE:	NO.	BY:	DATE:	S-471
1			3			TOTAL SHEETS
2			4			836

STV / Ralph Whitehead Associates, Inc.
1000 West Morehead St., Ste. 200
Charlotte, NC 28208
NC License No. F-0991

DRAWN BY : JMP DATE : 1-13
CHECKED BY : JAN DATE : 1-13

DESIGN ENGINEER OF RECORD: K. BAILEY DATE : 5-13

6/6/2013 9:00:25 PM R:\ustation\Finals\Bent 21-22 - 1of 3.dgn

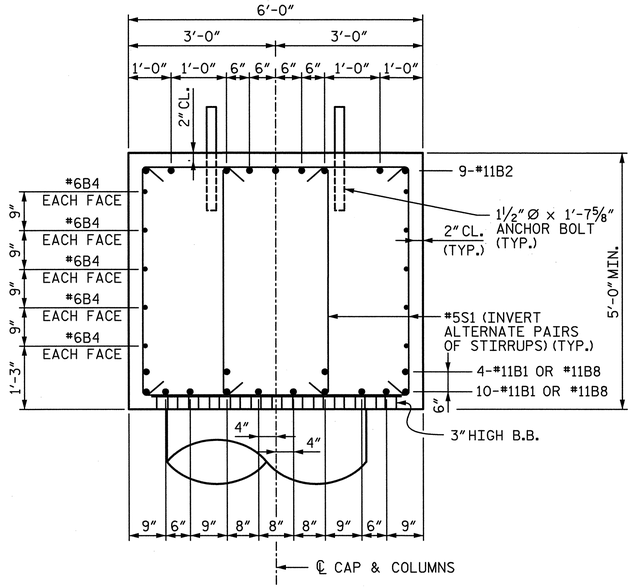

SECTION A-A

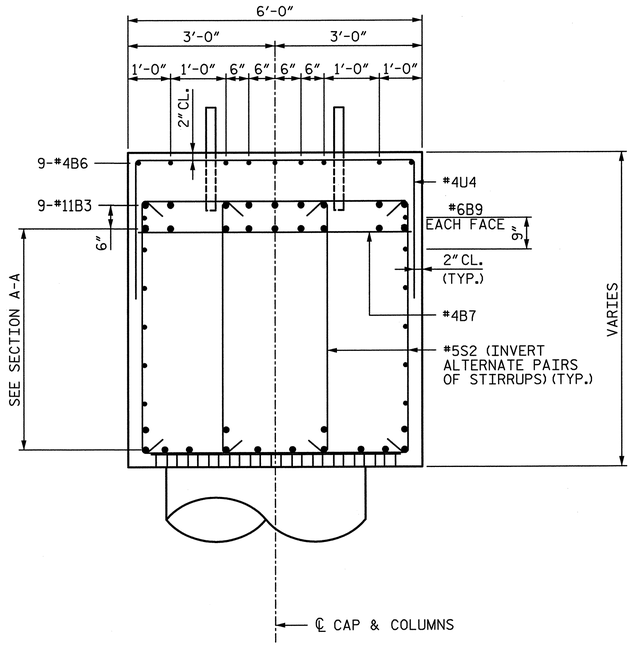

SECTION B-B

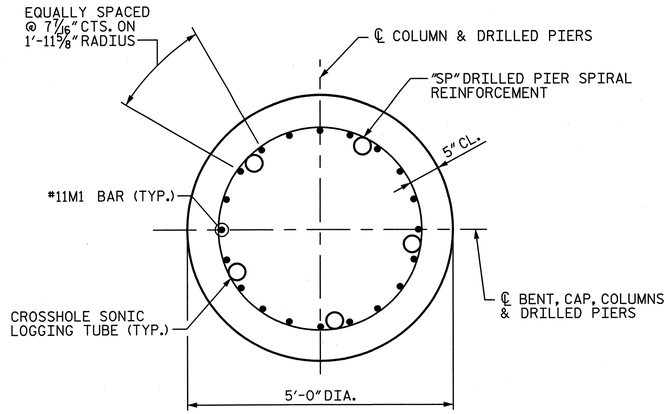

TYPICAL SECTION THROUGH DRILLED PIER

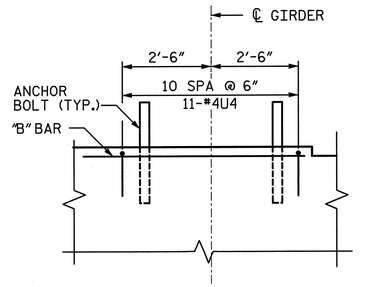

BEARING AREA REINFORCEMENT DETAIL

(TYP. AT EACH BRIDGE SEAT)

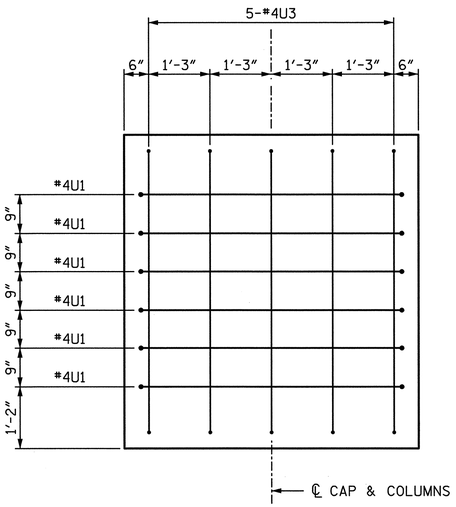

END VIEW C-C

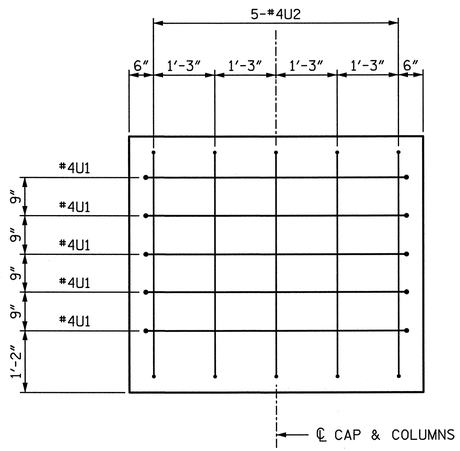

END VIEW D-D

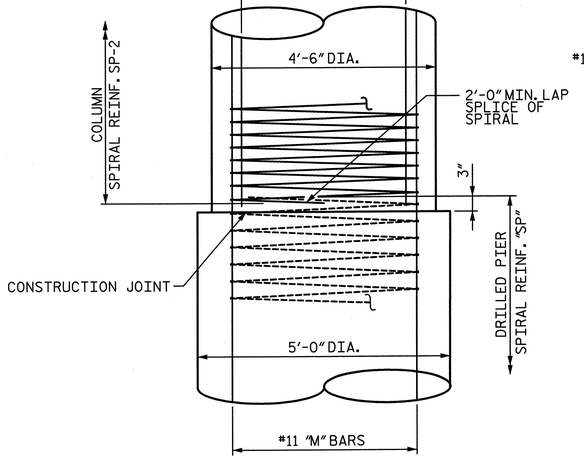

CONSTRUCTION JOINT DETAIL

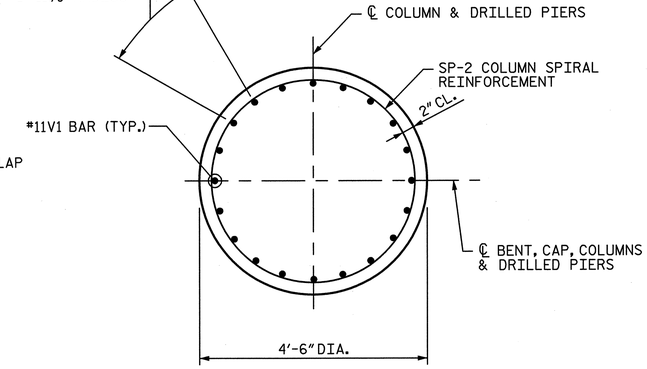

TYPICAL SECTION THROUGH COLUMN

PROJECT NO. U-2524C

GUILFORD COUNTY

STATION: POT 407+85.82 -L-
= POT 29+79.72 -Y4-

SHEET 2 OF 3

STATE OF NORTH CAROLINA
DEPARTMENT OF TRANSPORTATION
RALEIGH

SUBSTRUCTURE BENTS 21 & 22 DETAILS

-RIGHT LANE-

NORTH CAROLINA PROFESSIONAL SEAL 28479 ENGINEER KEVIN G. BAILEY 6-7-13

STV / Ralph Whitehead Associates, Inc.
1000 West Morehead St., Ste. 200
Charlotte, NC 28208
NC License No. F-0991

REVISIONS						SHEET NO.
NO.	BY:	DATE:	NO.	BY:	DATE:	S-472
1			3			TOTAL SHEETS
2			4			836

DRAWN BY : JMP DATE : 1-13
CHECKED BY : JAN DATE : 1-13
DESIGN ENGINEER OF RECORD: K. BAILEY DATE : 5-13

6/6/2013 9:00:26 PM R:\ustation\Finals\Bent 21-22 - 2 of 3.dgn

TABLE D

BENT 21 COLUMNS & DRILLED PIERS REINFORCING BILL OF MATERIAL

COLUMN/ DRILLED PIER	BAR	NO.	SIZE	TYPE	●	LENGTH	WEIGHT	DRILLED PIER LENGTH
1 & 2 (1 SHOWN, 2 REQ'D)	M11	20	#11	STR.		31'-0"	3,294	21'-9"
	V1	20	#11	①	29'-5"	31'-0"	3,294	
	SP-11	1	✻✻	④	21'-3"	681'-0"	710	
	SP-2	1	✻	⑤	25'-5"	1,339'-3"	895	
3 & 4 (1 SHOWN, 2 REQ'D)	M12	20	#11	STR.		29'-0"	3,082	19'-9"
	V1	20	#11	①	29'-5"	31'-0"	3,294	
	SP-12	1	✻✻	④	19'-3"	618'-11"	646	
	SP-2	1	✻	⑤	25'-5"	1,339'-3"	895	

TABLE D

BENT 22 COLUMNS & DRILLED PIERS REINFORCING BILL OF MATERIAL

COLUMN/ DRILLED PIER	BAR	NO.	SIZE	TYPE	●	LENGTH	WEIGHT	DRILLED PIER LENGTH
1 & 2 (1 SHOWN, 2 REQ'D)	M11	20	#11	STR.		27'-3"	2,896	18'-0"
	V1	20	#11	①	29'-10"	31'-5"	3,338	
	SP-11	1	✻✻	④	17'-6"	564'-8"	589	
	SP-2	1	✻	⑤	25'-10"	1,360'-10"	909	
3 & 4 (1 SHOWN, 2 REQ'D)	M12	20	#11	STR.		38'-3"	4,064	29'-0"
	V1	20	#11	①	29'-10"	31'-5"	3,338	
	SP-12	1	✻✻	④	28'-6"	906'-1"	945	
	SP-2	1	✻	⑤	25'-10"	1,360'-10"	909	

✻✻ THE SP-11 AND SP-12 SPIRAL REINFORCING STEEL SHALL BE W31 OR D-31 COLD DRAWN WIRE OR #5 PLAIN OR DEFORMED BAR WITH A 5" PITCH.

✻ THE SP-2 SPIRAL REINFORCING SHALL BE W20 OR D-20 COLD DRAWN WIRE OR #4 PLAIN OR DEFORMED BAR WITH A 3" PITCH.

QUANTITIES

			BENT 21	BENT 22
REINFORCING STEEL		LBS.	39,567	40,911
SPIRAL REINFORCING STEEL		LBS.	6,292	6,704
CLASS A CONCRETE :	POUR 2 - COLUMNS	CU. YDS.	59.3	60.3
	POUR 3 - CAP	CU. YDS.	77.8	77.8
	TOTAL	CU. YDS.	137.1	138.1
5'-0" Ø DRILLED PIERS IN SOIL		L.F.	36	43
5'-0" Ø DRILLED PIERS NOT IN SOIL		L.F.	47	51
TOTAL 5'-0" Ø DRILLED PIERS		L.F.	83	94
PERMANENT STEEL CASING FOR 5'-0" Ø DRILLED PIERS		L.F.	0	54
DRILLED PIER CONCRETE :	POUR 1	CU. YDS.	60.4	68.4
CSL TUBES		L.F.	445	500

BAR TYPES

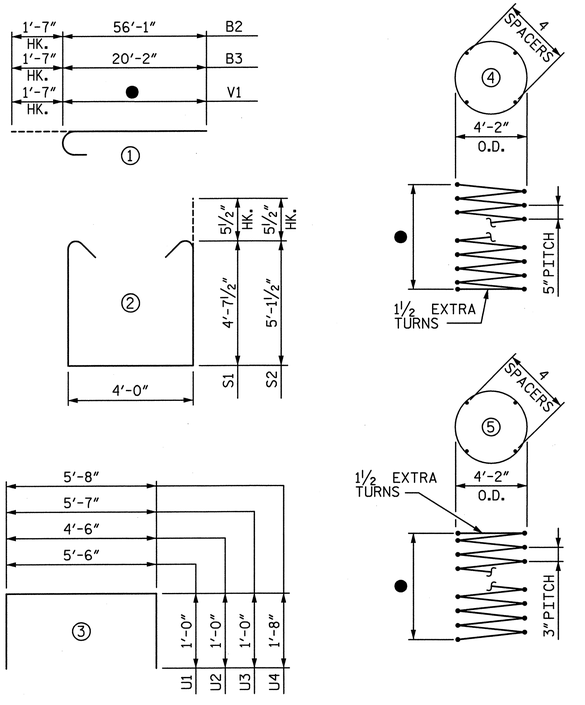

ALL BAR DIMENSIONS ARE OUT TO OUT

CAP REINFORCING BILL OF MATERIAL FOR ONE BENT (2 REQUIRED)

BAR	NO.	SIZE	TYPE	LENGTH	WEIGHT
B1	14	#11	STR.	42'-3"	3,143
B2	9	#11	①	57'-8"	2,757
B3	9	#11	①	21'-9"	1,040
B4	20	#6	STR.	33'-3"	999
B5	9	#4	STR.	24'-9"	149
B6	9	#4	STR.	20'-0"	120
B7	20	#4	STR.	5'-8"	76
B8	14	#11	STR.	30'-2"	2,244
B9	2	#6	STR.	42'-4"	127
S1	102	#5	②	14'-2"	1,507
S2	56	#5	②	15'-2"	886
U1	11	#4	③	7'-7"	56
U2	5	#4	③	6'-7"	22
U3	5	#4	③	7'-8"	26
U4	81	#4	③	9'-0"	487

NOTE:
FOR ● AND COLUMNS & DRILLED PIERS REINFORCING BILL OF MATERIAL SEE TABLE D THIS SHEET.

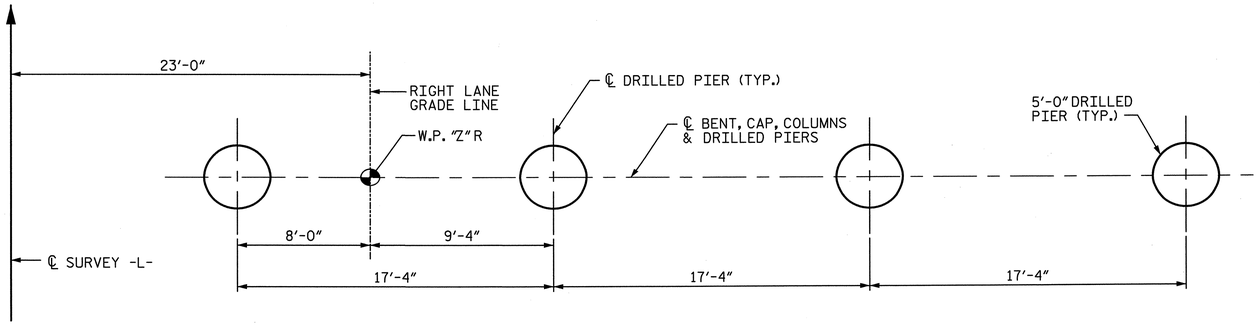

PLAN OF DRILLED PIERS

NOTE:
SEE TABLE A SHEET 1 FOR "Z".

NORTH CAROLINA PROFESSIONAL SEAL 28479 ENGINEER KEVIN G. BAILEY 6-7-13

PROJECT NO. U-2524C
GUILFORD COUNTY
STATION: POT 407+85.82 -L-
= POT 29+79.72 -Y4-
SHEET 3 OF 3

STATE OF NORTH CAROLINA
DEPARTMENT OF TRANSPORTATION
RALEIGH

SUBSTRUCTURE BENTS 21 & 22 DETAILS & BILL OF MATERIAL

-RIGHT LANE-

REVISIONS						SHEET NO.
NO.	BY:	DATE:	NO.	BY:	DATE:	S-473
1			3			TOTAL SHEETS
2			4			836

DRAWN BY : JMP DATE : 1-13
CHECKED BY : JAN DATE : 1-13
DESIGN ENGINEER OF RECORD: K. BAILEY DATE : 5-13

STV / Ralph Whitehead Associates, Inc.
1000 West Morehead St., Ste. 200
Charlotte, NC 28208
NC License No. F-0991

6/6/2013 9:00:27 PM R:\ustation\Finals\Bent 21-22 - 3 of 3.dgn

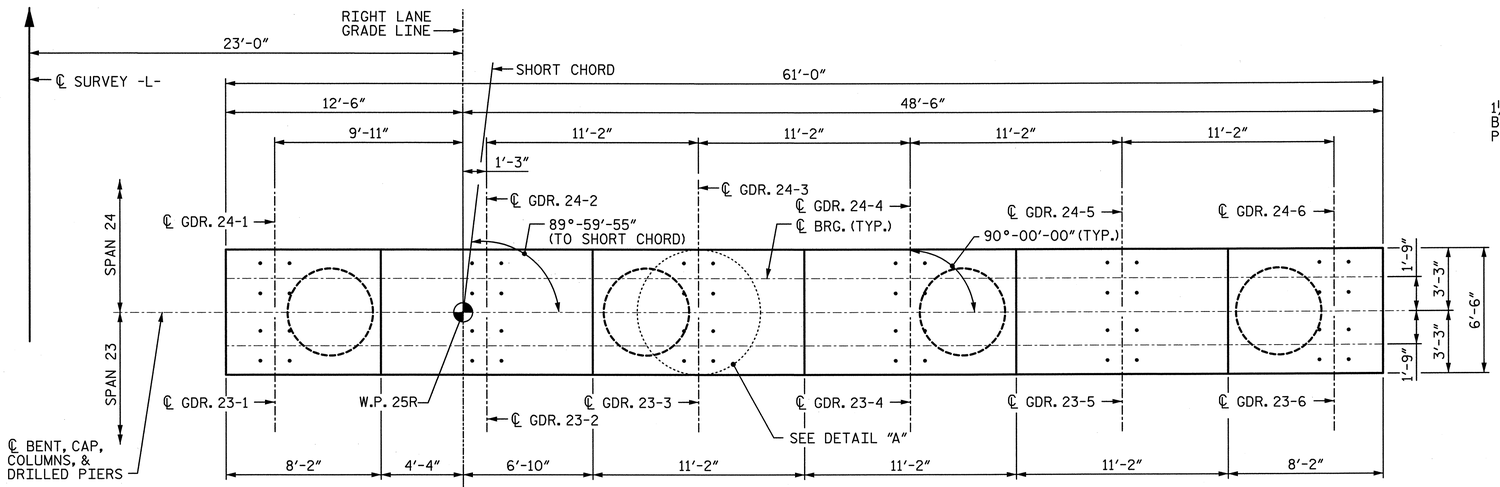

PLAN

NOTE:
℄ SURVEY -L-, SHORT CHORD AND RIGHT LANE GRADE LINE EXAGGERATED FOR CLARITY.

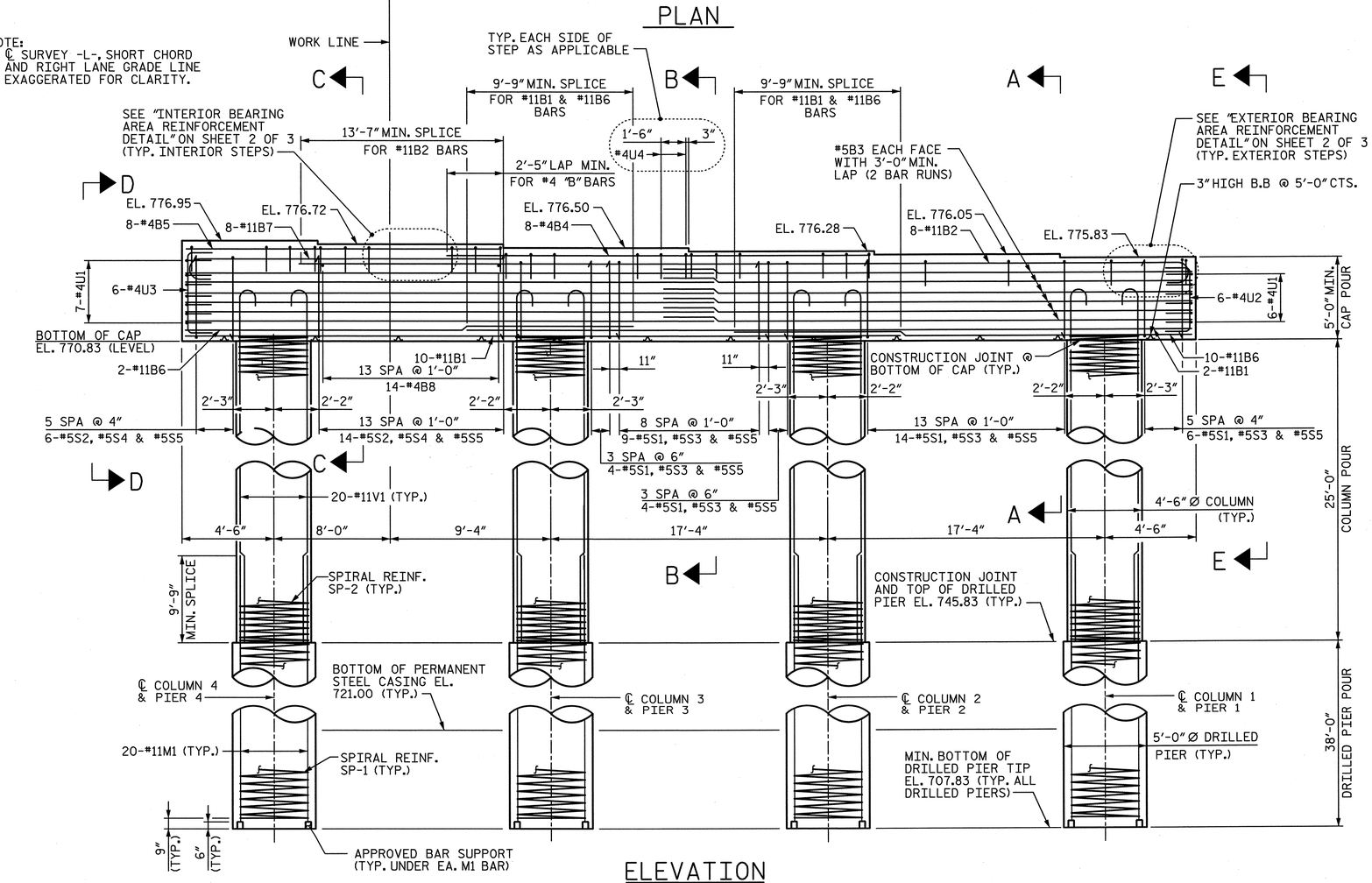

ELEVATION

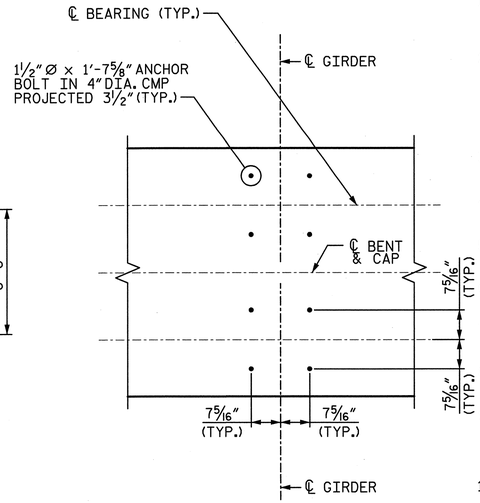

DETAIL "A"

(TYP. AT EACH BRIDGE SEAT)

NOTE:
INVERT ALTERNATE #5S1 THROUGH #5S5 BARS.

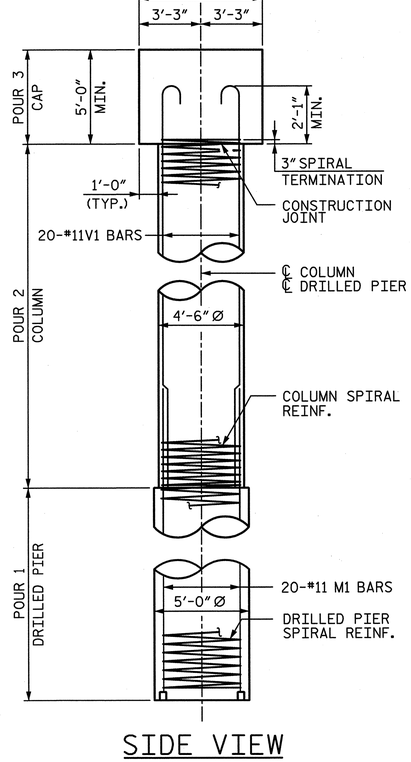

SIDE VIEW

NOTES:

1. ALL REINFORCING STEEL IN THE DRILLED PIERS IS INCLUDED IN THE PAY ITEMS FOR "REINFORCING STEEL" AND "SPIRAL COLUMN REINFORCING STEEL".
2. THE LOCATION OF THE CONSTRUCTION JOINT IN THE DRILLED PIERS IS BASED ON AN APPROXIMATE GROUND LINE ELEVATION. IF THE CONSTRUCTION JOINT IS ABOVE THE ACTUAL GROUND ELEVATION, THE CONTRACTOR SHALL PLACE THE CONSTRUCTION JOINT 1 FOOT BELOW THE GROUND LINE.
3. STIRRUPS AND "U BARS" IN CAP MAY BE SHIFTED SLIGHTLY AS NECESSARY TO CLEAR ANCHOR BOLTS.
4. HOOKS ON BARS MAY BE TURNED AS NECESSARY FOR PLACING REINFORCING STEEL.
5. A CONSTRUCTION JOINT AT MID-HEIGHT OF COLUMN IS PERMITTED.
6. FOR 1½"Ø ANCHOR BOLTS, SEE "POT BEARING DETAILS" SHEET.
7. SEE "GENERAL DRAWING GENERAL NOTES" SHEET FOR ADDITIONAL NOTES.
8. SEE SHEET 2 OF 3 FOR SECTIONS CALLED OUT ON ELEVATION VIEW.
9. THE TOP SURFACE AREAS OF THE BENT CAPS SHALL BE CURED IN ACCORDANCE WITH THE STANDARD SPECIFICATIONS EXCEPT THE MEMBRANE CURING COMPOUND METHOD SHALL NOT BE USED.
10. FOR PIPE INSERT DETAILS, SEE "POT BEARING DETAILS" SHEETS.

NORTH CAROLINA PROFESSIONAL ENGINEER SEAL 28479 KEVIN G. BAILEY 6-7-13

PROJECT NO. U-2524C
GUILFORD COUNTY
STATION: POT 407+85.82 -L-
= POT 29+79.72 -Y4-
SHEET 1 OF 3

STATE OF NORTH CAROLINA
DEPARTMENT OF TRANSPORTATION
RALEIGH

SUBSTRUCTURE BENT 23 PLAN & ELEVATION

-RIGHT LANE-

DRAWN BY : JMP	DATE : 1-13	DESIGN ENGINEER OF RECORD: K. BAILEY	DATE : 5-13
CHECKED BY : JAN	DATE : 2-13		

STV / Ralph Whitehead Associates, Inc.
1000 West Morehead St., Ste. 200
Charlotte, NC 28208
NC License No. F-0991

REVISIONS						SHEET NO.
NO.	BY:	DATE:	NO.	BY:	DATE:	S-474
1			3			TOTAL SHEETS
2			4			836

6/6/2013 10:45:36 PM R:\ustation\Finals\Bent 23 - 1of 3.dgn

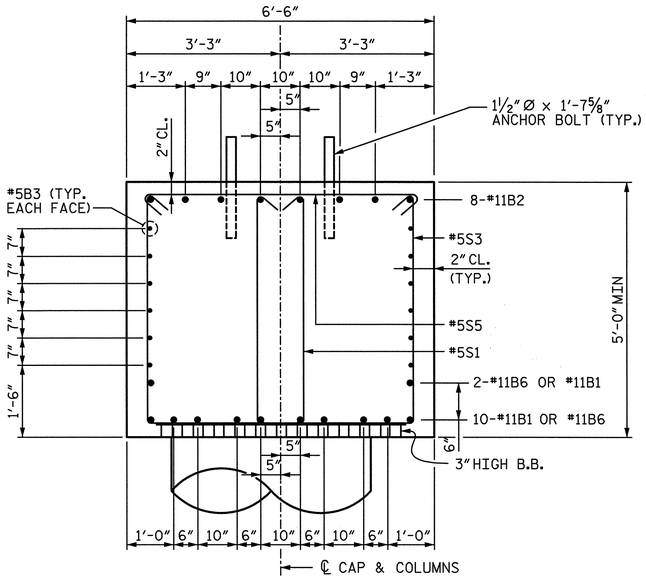

SECTION A-A

NOTE:
INVERT ALTERNATE #5S1, #5S3 & #5S5 BARS.

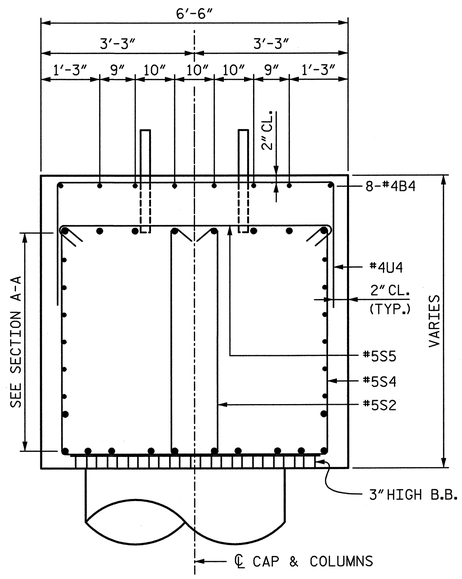

SECTION B-B

NOTE:
INVERT ALTERNATE #5S2, #5S4 & #5S5 BARS.

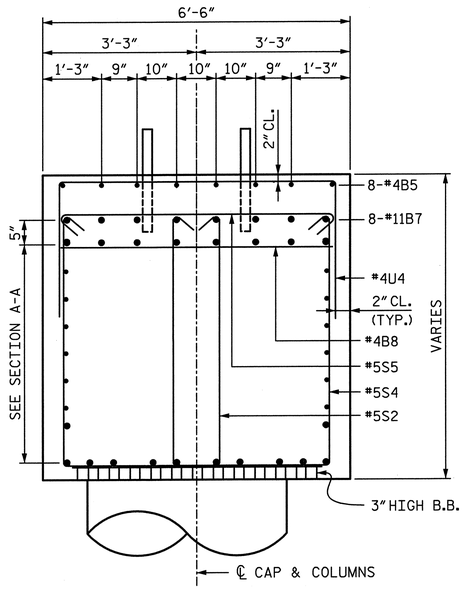

SECTION C-C

NOTE:
INVERT ALTERNATE #5S2, #5S4 & #5S5 BARS.

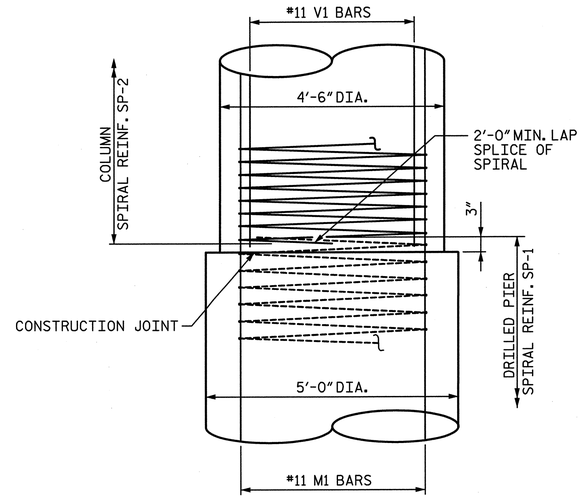

CONSTRUCTION JOINT DETAIL

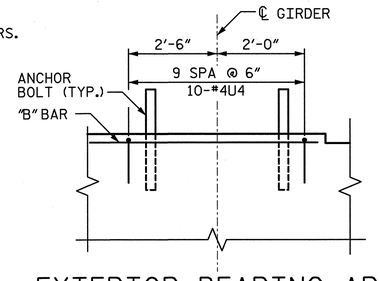

EXTERIOR BEARING AREA REINFORCEMENT DETAIL

(TYP. AT EACH EXTERIOR BRIDGE SEAT)

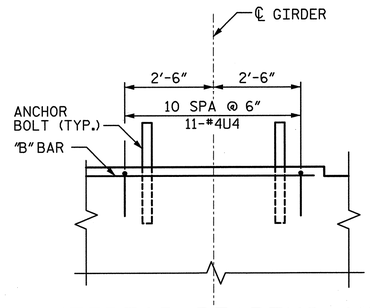

INTERIOR BEARING AREA REINFORCEMENT DETAIL

(TYP. AT EACH INTERIOR BRIDGE SEAT)

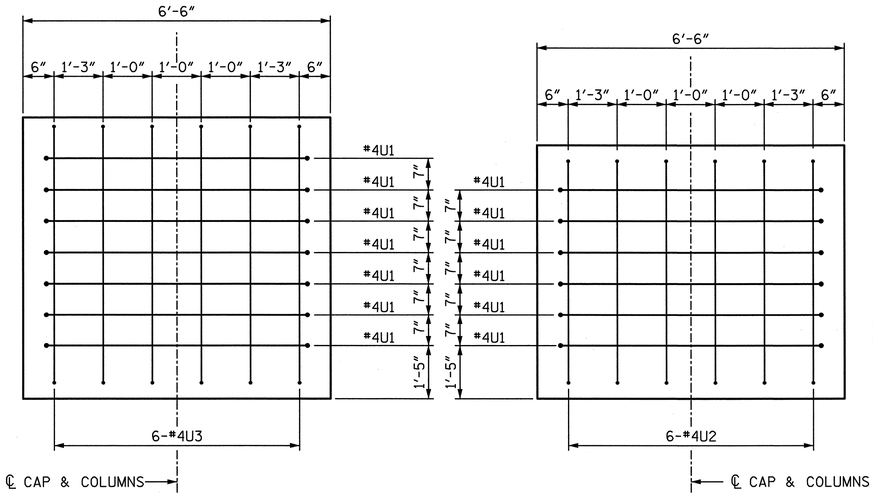

END VIEW D-D

END VIEW E-E

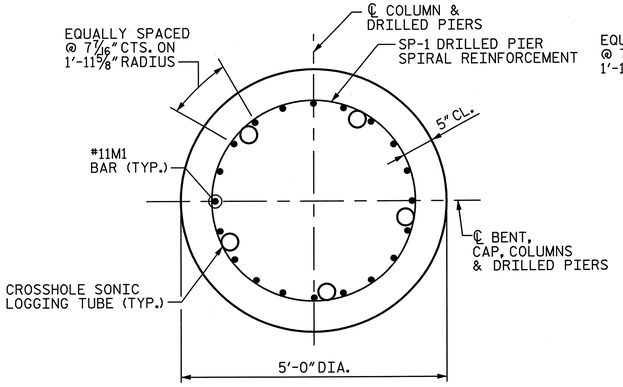

TYPICAL SECTION THROUGH DRILLED PIER

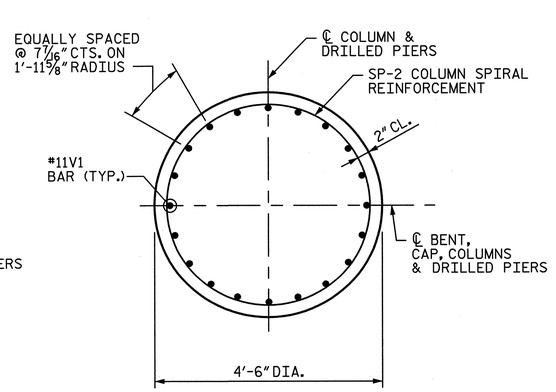

TYPICAL SECTION THROUGH COLUMN

NORTH CAROLINA PROFESSIONAL ENGINEER SEAL 28479 KEVIN G. BAILEY 6-7-13

PROJECT NO. U-2524C

GUILFORD COUNTY

STATION: POT 407+85.82 -L-
= POT 29+79.72 -Y4-

SHEET 2 OF 3

STATE OF NORTH CAROLINA
DEPARTMENT OF TRANSPORTATION
RALEIGH

SUBSTRUCTURE BENT 23 DETAILS

-RIGHT LANE-

REVISIONS						SHEET NO.
NO.	BY:	DATE:	NO.	BY:	DATE:	S-475
1			3			TOTAL SHEETS
2			4			836

STV / Ralph Whitehead Associates, Inc.
1000 West Morehead St., Ste. 200
Charlotte, NC 28208
NC License No. F-0991

DRAWN BY : JMP DATE : 1-13
CHECKED BY : JAN DATE : 2-13

DESIGN ENGINEER OF RECORD: K. BAILEY DATE : 5-13

6/6/2013 9:00:30 PM R:\station\Finals\Bent 23 - 2 of 3.dgn

QUANTITIES

REINFORCING STEEL		LBS.	45,182
SPIRAL REINFORCING STEEL		LBS.	8,501
CLASS A CONCRETE :	POUR 2 - COLUMNS	CU. YDS.	58.9
	POUR 3 - CAP	CU. YDS.	81.6
	TOTAL	CU. YDS.	140.5
5'-0"Ø DRILLED PIERS IN SOIL		L.F.	104
5'-0"Ø DRILLED PIERS NOT IN SOIL		L.F.	48
TOTAL 5'-0"Ø DRILLED PIERS		L.F.	152
PERMANENT STEEL CASING FOR 5'-0"Ø DRILLED PIERS		L.F.	104
DRILLED PIER CONCRETE : POUR 1		CU. YDS.	110.5
CSL TUBES		L.F.	790

BAR TYPES

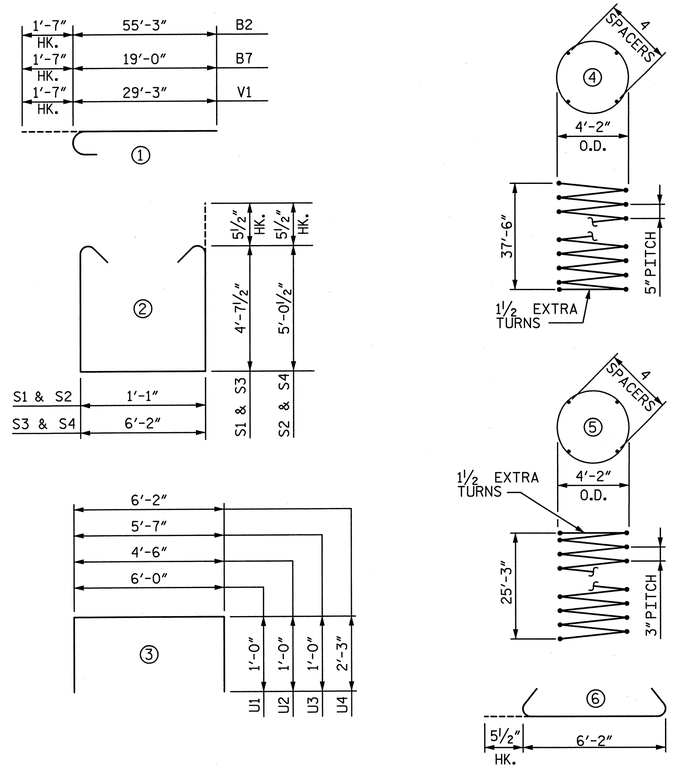

ALL BAR DIMENSIONS ARE OUT TO OUT

BILL OF MATERIAL

BAR	NO.	SIZE	TYPE	LENGTH	WEIGHT
B1	12	#11	STR.	43'-11"	2,800
B2	8	#11	①	56'-10"	2,416
B3	24	#5	STR.	31'-10"	797
B4	8	#4	STR.	24'-9"	132
B5	8	#4	STR.	19'-0"	102
B6	12	#11	STR.	26'-7"	1,695
B7	8	#11	①	20'-7"	875
B8	14	#4	STR.	6'-2"	58
M1	80	#11	STR.	47'-3"	20,083
S1	37	#5	②	11'-3"	434
S2	20	#5	②	12'-1"	252
S3	37	#5	②	16'-5"	634
S4	20	#5	②	17'-3"	360
S5	57	#5	⑥	12'-10"	763
U1	13	#4	③	8'-0"	69
U2	6	#4	③	6'-6"	26
U3	6	#4	③	7'-7"	30
U4	78	#4	③	10'-7"	551
V1	80	#11	①	30'-10"	13,105
SP-1	4	**	④	1,185'-5"	4,946
SP-2	4	*	⑤	1,330'-7"	3,555

** THE SP-1 SPIRAL REINFORCING STEEL SHALL BE W31 OR D-31 COLD DRAWN WIRE OR #5 PLAIN OR DEFORMED BAR WITH A 5" PITCH.

* THE SP-2 SPIRAL REINFORCING SHALL BE W20 OR D-20 COLD DRAWN WIRE OR #4 PLAIN OR DEFORMED BAR WITH A 3" PITCH.

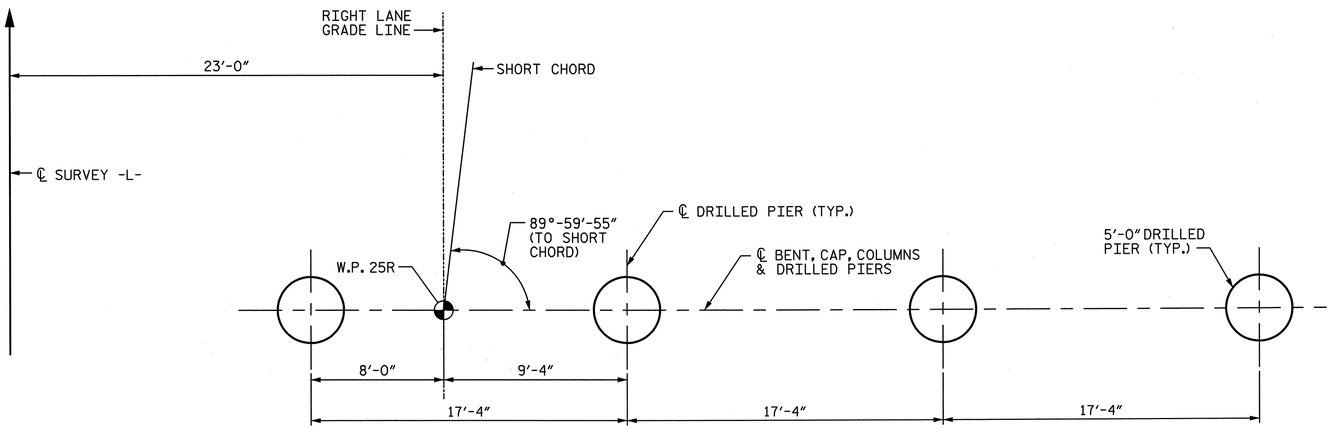

PLAN OF DRILLED PIERS

PROJECT NO. U-2524C

GUILFORD COUNTY

STATION: POT 407+85.82 -L-
= POT 29+79.72 -Y4-

SHEET 3 OF 3

STATE OF NORTH CAROLINA
DEPARTMENT OF TRANSPORTATION
RALEIGH

SUBSTRUCTURE
BENT 23
DETAILS & BILL OF MATERIAL

-RIGHT LANE-

NORTH CAROLINA PROFESSIONAL ENGINEER SEAL 28479 ENGINEER KEVIN G. BAILEY 6-7-13

STV / Ralph Whitehead Associates, Inc.
1000 West Morehead St., Ste. 200
Charlotte, NC 28208
NC License No. F-0991

REVISIONS						SHEET NO.
NO.	BY:	DATE:	NO.	BY:	DATE:	S-476
1			3			TOTAL SHEETS
2			4			836

DRAWN BY : JMP DATE : 1-13
CHECKED BY : JAN DATE : 2-13

DESIGN ENGINEER OF RECORD: K. BAILEY DATE : 5-13

6/6/2013 10:45:38 PM R:\ustation\Finals\Bent 23 - 3 of 3.dgn

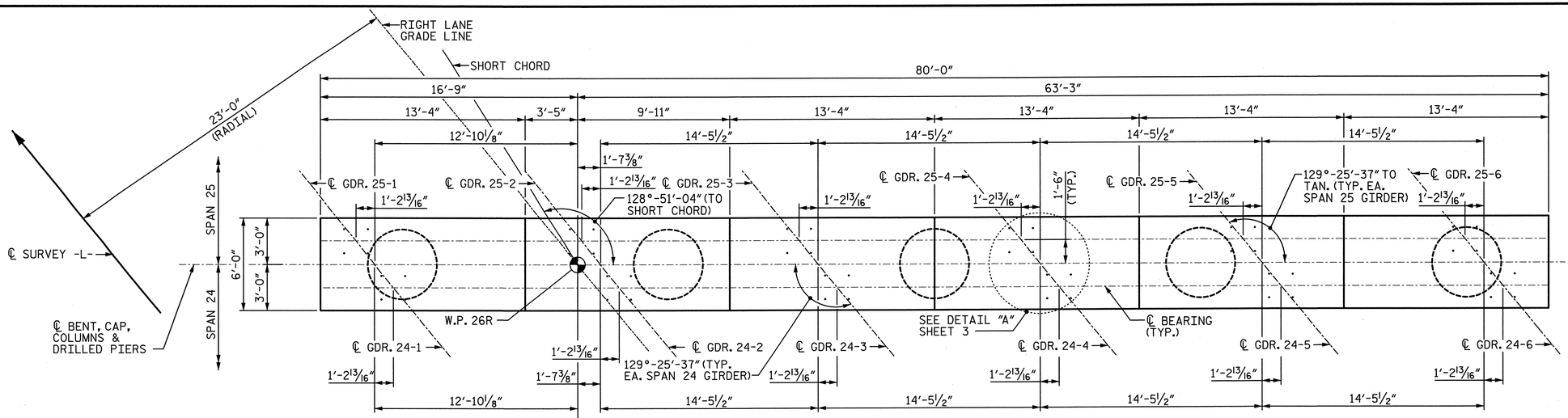

PLAN

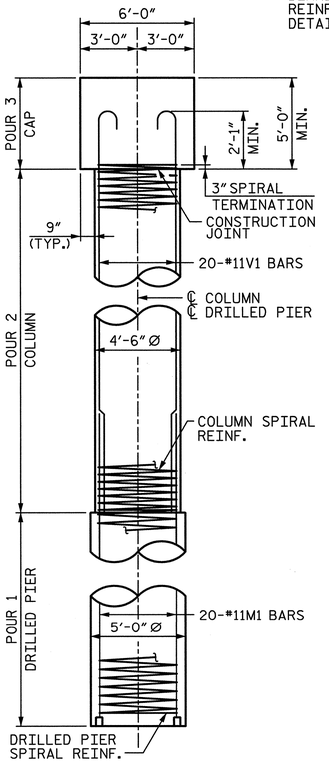

SIDE VIEW

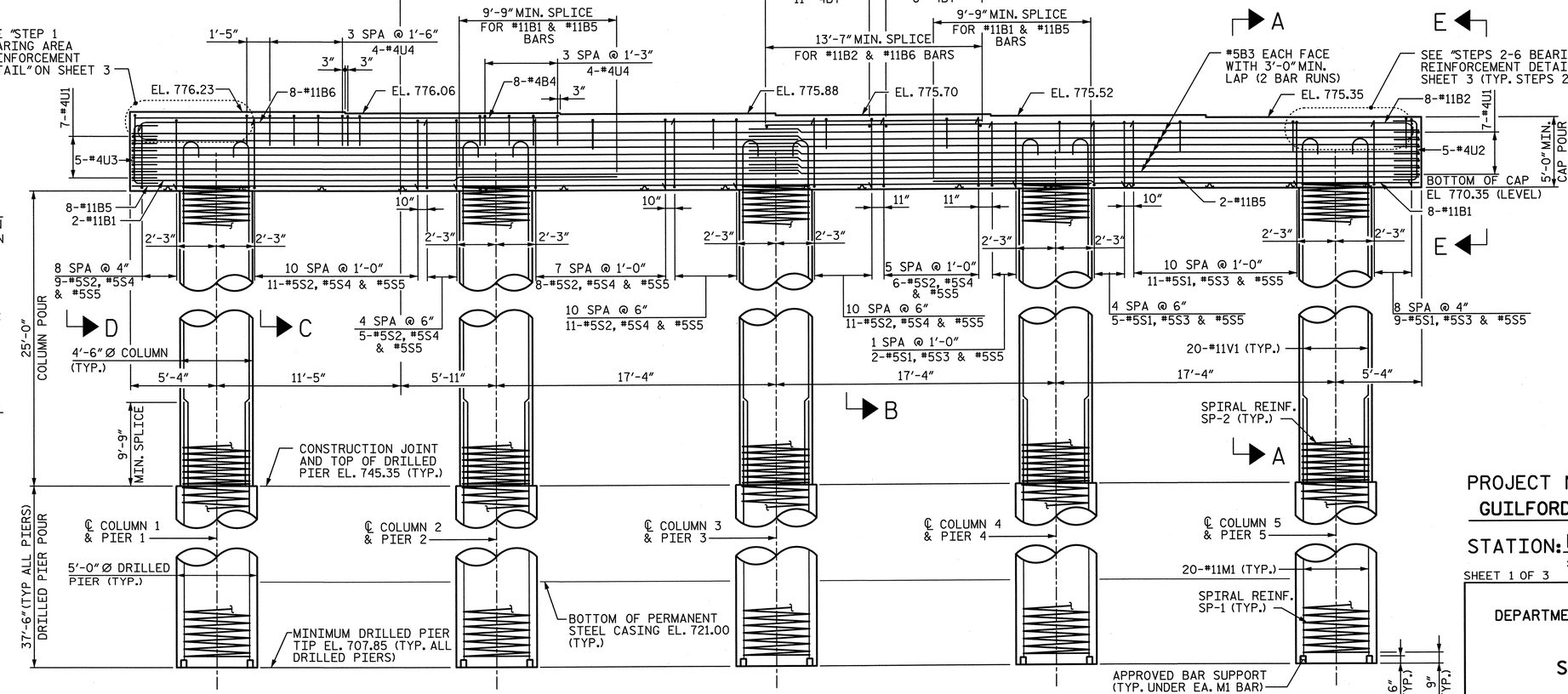

ELEVATION

NOTES:
SEE TABLE A ON SHEET 3 FOR "A" AND "B" DIMENSIONS.
SEE TABLE B ON SHEET 3 FOR "C", "D", "E", AND "F" QUANTITIES.

NOTE:
INVERT ALTERNATE #5S1 THROUGH #5S5 BARS.

NOTES:

1. ALL REINFORCING STEEL IN THE DRILLED PIERS IS INCLUDED IN THE PAY ITEMS FOR "REINFORCING STEEL" AND "SPIRAL COLUMN REINFORCING STEEL".
2. THE LOCATION OF THE CONSTRUCTION JOINT IN THE DRILLED PIERS IS BASED ON AN APPROXIMATE GROUND LINE ELEVATION. IF THE CONSTRUCTION JOINT IS ABOVE THE ACTUAL GROUND ELEVATION, THE CONTRACTOR SHALL PLACE THE CONSTRUCTION JOINT 1 FOOT BELOW THE GROUND LINE.
3. STIRRUPS AND "U BARS" IN CAP MAY BE SHIFTED SLIGHTLY AS NECESSARY TO CLEAR ANCHOR BOLTS.
4. HOOKS ON BARS MAY BE TURNED AS NECESSARY FOR PLACING REINFORCING STEEL.
5. A CONSTRUCTION JOINT AT MID-HEIGHT OF COLUMN IS PERMITTED.
6. FOR 1½" Ø ANCHOR BOLTS, SEE "POT BEARING DETAILS" SHEET.
7. SEE "GENERAL DRAWING GENERAL NOTES" SHEET FOR ADDITIONAL NOTES.
8. SEE SHEET 2 OF 3 FOR SECTIONS CALLED OUT ON ELEVATION VIEW.
9. FOR PIPE INSERT DETAILS, SEE "POT BEARING DETAILS" SHEETS.
10. THE TOP SURFACE AREAS OF THE BENT CAPS SHALL BE CURED IN ACCORDANCE WITH THE STANDARD SPECIFICATIONS EXCEPT THE MEMBRANE CURING COMPOUND METHOD SHALL NOT BE USED.

NORTH CAROLINA PROFESSIONAL SEAL 28479 ENGINEER KEVIN G. BAILEY 6-7-13

PROJECT NO. U-2524C
GUILFORD COUNTY
STATION: POT 407+85.82 -L-
= POT 29+79.72 -Y4-

SHEET 1 OF 3

STATE OF NORTH CAROLINA
DEPARTMENT OF TRANSPORTATION
RALEIGH

SUBSTRUCTURE BENT 24 PLAN & ELEVATION

-RIGHT LANE-

REVISIONS						SHEET NO.
NO.	BY:	DATE:	NO.	BY:	DATE:	S-477
1			3			TOTAL SHEETS
2			4			836

STV / Ralph Whitehead Associates, Inc.
1000 West Morehead St., Ste. 200
Charlotte, NC 28208
NC License No. F-0991

DRAWN BY : JMP DATE : 1-13
CHECKED BY : JAN DATE : 2-13
DESIGN ENGINEER OF RECORD: K. BAILEY DATE : 5-13

6/6/2013 9:00:33 PM R:\ustation\Finals\Bent 24 - 1of 3.dgn

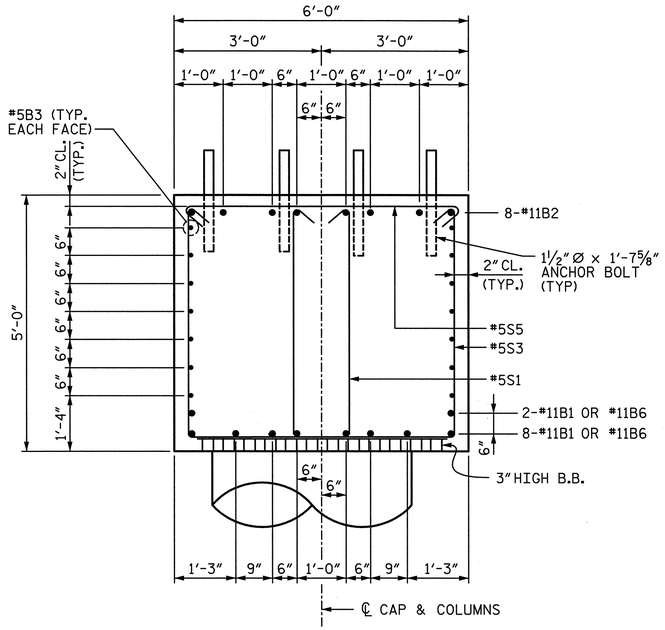

SECTION A-A

NOTE:
INVERT ALTERNATE #5S1, #5S3 & #5S5 BARS.

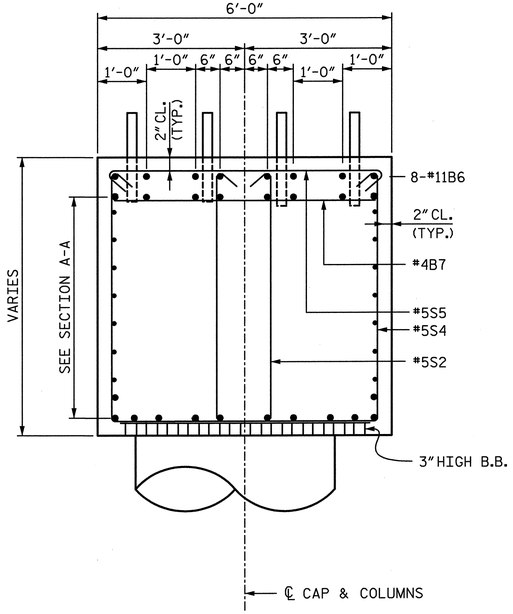

SECTION B-B

NOTE:
INVERT ALTERNATE #5S2, #5S4 & #5S5 BARS.

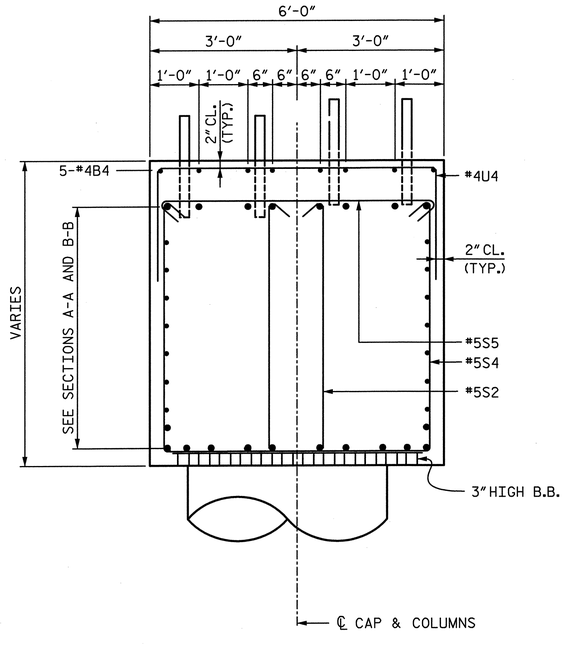

SECTION C-C

NOTE:
INVERT ALTERNATE #5S2, #5S4 & #5S5 BARS.

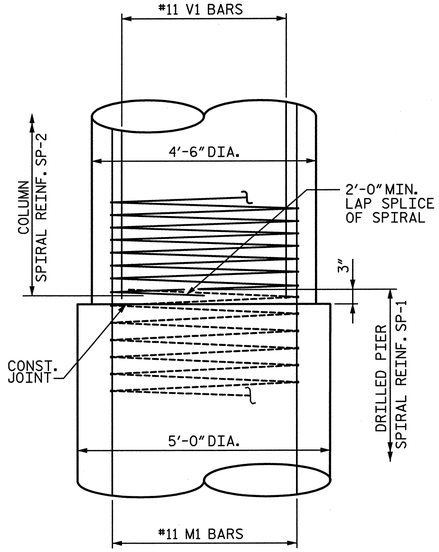

CONSTRUCTION JOINT DETAIL

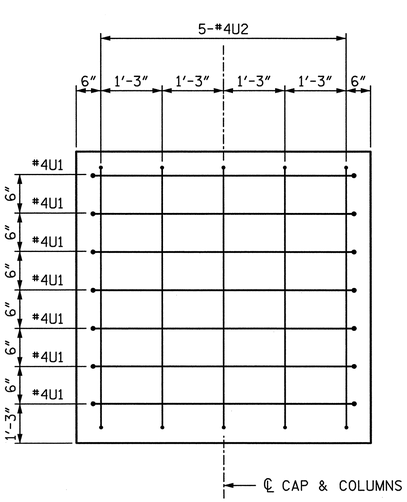

END VIEW E-E

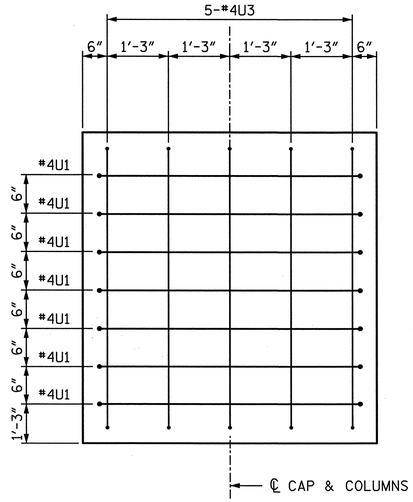

END VIEW D-D

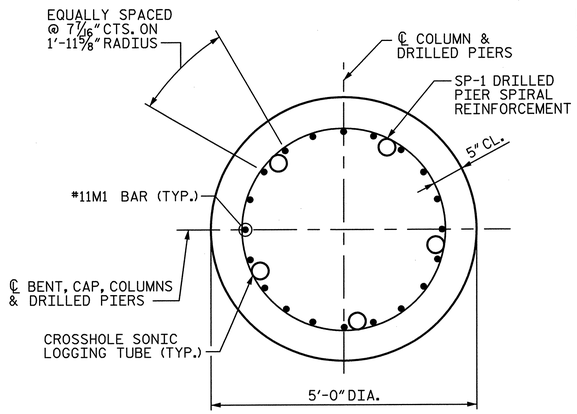

TYPICAL SECTION THROUGH DRILLED PIER

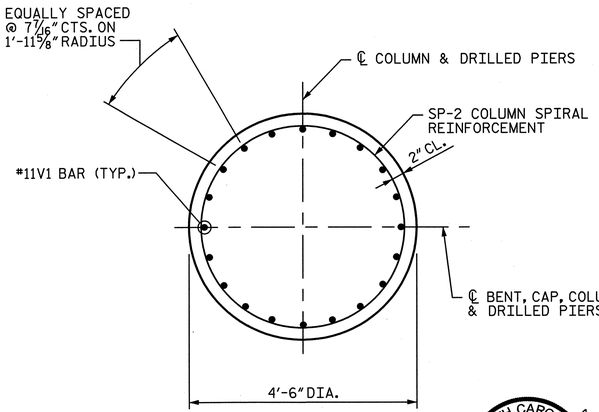

TYPICAL SECTION THROUGH COLUMN

NORTH CAROLINA PROFESSIONAL SEAL 28479 ENGINEER KEVIN G. BAILEY
6-7-13

PROJECT NO. U-2524C
GUILFORD COUNTY
STATION: POT 407+85.82 -L-
= POT 29+79.72 -Y4-
SHEET 2 OF 3

STATE OF NORTH CAROLINA
DEPARTMENT OF TRANSPORTATION
RALEIGH

SUBSTRUCTURE BENT 24 DETAILS

-RIGHT LANE-

DRAWN BY : JMP	DATE : 1-13	DESIGN ENGINEER OF RECORD: K. BAILEY	DATE : 5-13
CHECKED BY : JAN	DATE : 2-13		

STV / Ralph Whitehead Associates, Inc.
1000 West Morehead St., Ste. 200
Charlotte, NC 28208
NC License No. F-0991

REVISIONS					
NO.	BY:	DATE:	NO.	BY:	DATE:
1			3		
2			4		

SHEET NO. S-478
TOTAL SHEETS 836

R:\station\Finals\Bent 24 - 2 of 3.dgn 9:00:35 PM 6/6/2013

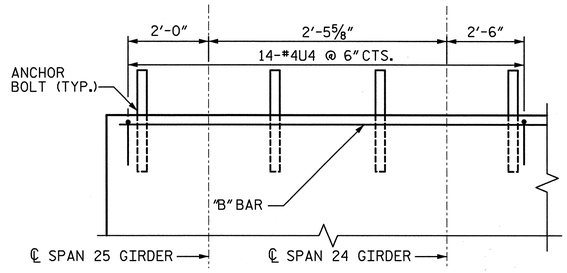

STEP 1 BEARING AREA REINFORCEMENT DETAIL

(AT BRIDGE SEAT 1)

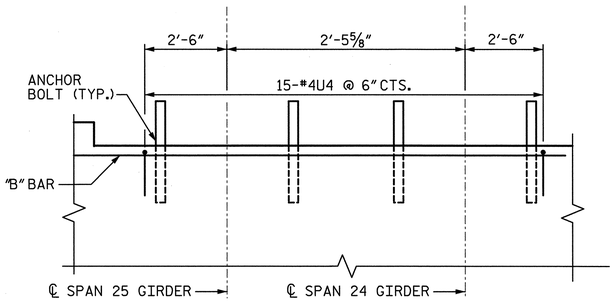

STEPS 2-6 BEARING AREA REINFORCEMENT DETAIL

(TYP. AT BRIDGE SEATS 2-6)

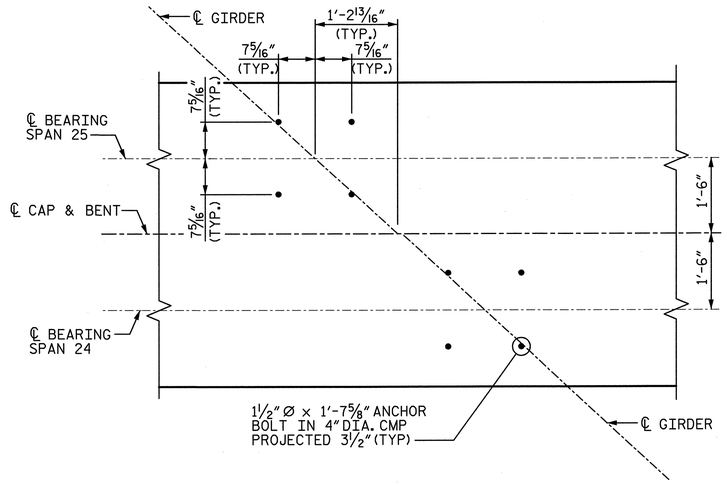

DETAIL "A"

(TYP. AT EACH BRIDGE SEAT)

QUANTITIES

REINFORCING STEEL		LBS.	55,908
SPIRAL REINFORCING STEEL		LBS.	10,545
CLASS A CONCRETE :	POUR 2 - COLUMNS	CU. YDS.	73.6
	POUR 3 - CAP	CU. YDS.	96.7
	TOTAL	CU. YDS.	170.3
5'-0"Ø DRILLED PIERS IN SOIL		L.F.	138
5'-0"Ø DRILLED PIERS NOT IN SOIL		L.F.	50
TOTAL 5'-0"Ø DRILLED PIERS		L.F.	188
PERMANENT STEEL CASING FOR 5'-0"Ø DRILLED PIERS		L.F.	127
DRILLED PIER CONCRETE : POUR 1		CU. YDS.	136.4
CSL TUBES		L.F.	975

BAR TYPES

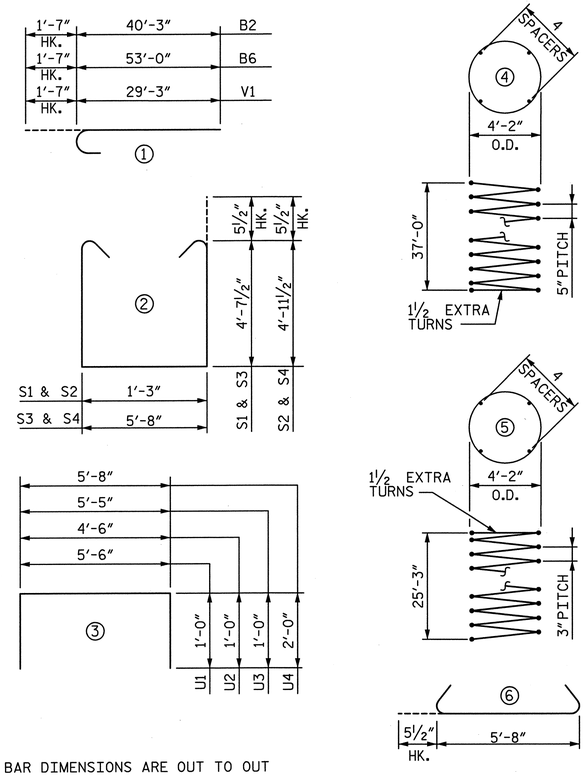

ALL BAR DIMENSIONS ARE OUT TO OUT

BILL OF MATERIAL

BAR	NO.	SIZE	TYPE	LENGTH	WEIGHT
B1	10	#11	STR.	30'-0"	1,594
B2	8	#11	①	41'-10"	1,778
B3	28	#5	STR.	41'-4"	1,207
B4	8	#4	STR.	26'-4"	141
B5	10	#11	STR.	59'-5"	3,157
B6	8	#11	①	54'-7"	2,320
B7	17	#4	STR.	5'-8"	64
M1	100	#11	STR.	46'-9"	24,838
S1	27	#5	②	11'-5"	322
S2	60	#5	②	12'-1"	756
S3	27	#5	②	15-11"	448
S4	60	#5	②	16'-7"	1,038
S5	87	#5	⑥	11'-10"	1,074
U1	14	#4	③	7'-6"	70
U2	5	#4	③	6'-6"	22
U3	5	#4	③	7'-5"	25
U4	104	#4	③	9'-8"	672
V1	100	#11	①	30'-10"	16,382
SP-1	5	**	④	1,169'-11"	6,101
SP-2	5	*	⑤	1,330'-7"	4,444

** THE SP-1 SPIRAL REINFORCING STEEL SHALL BE W31 OR D-31 COLD DRAWN WIRE OR #5 PLAIN OR DEFORMED BAR WITH A 5"PITCH.

* THE SP-2 SPIRAL REINFORCING SHALL BE W20 OR D-20 COLD DRAWN WIRE OR #4 PLAIN OR DEFORMED BAR WITH A 3"PITCH.

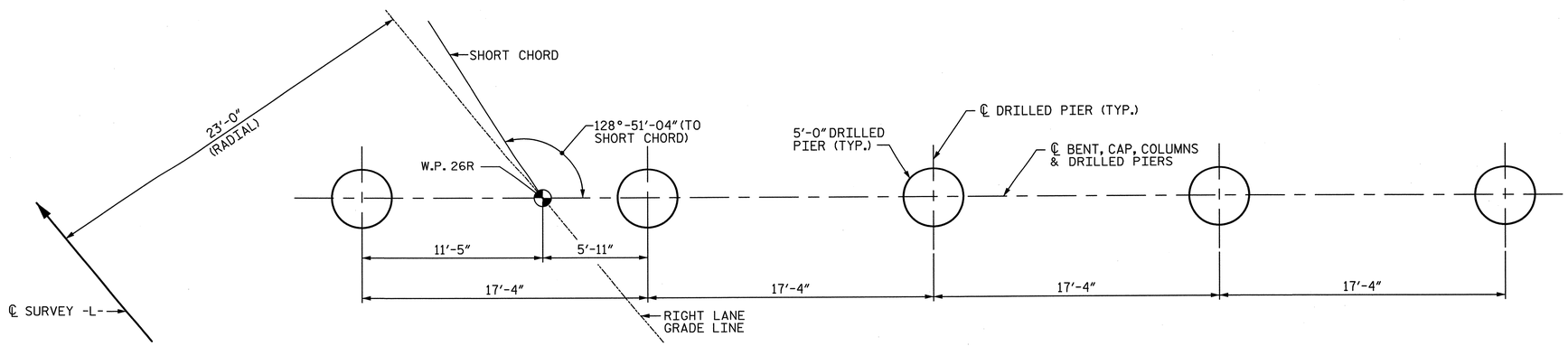

PLAN OF DRILLED PIERS

NORTH CAROLINA PROFESSIONAL ENGINEER SEAL 28479 ENGINEER KEVIN G. BAILEY 6-7-13

PROJECT NO. U-2524C

GUILFORD COUNTY

STATION: POT 407+85.82 -L-
= POT 29+79.72 -Y4-

SHEET 3 OF 3

STATE OF NORTH CAROLINA
DEPARTMENT OF TRANSPORTATION
RALEIGH

SUBSTRUCTURE
BENT 24
DETAILS & BILL OF MATERIAL

-RIGHT LANE-

REVISIONS						SHEET NO.
NO.	BY:	DATE:	NO.	BY:	DATE:	S-479
1			3			TOTAL SHEETS
2			4			836

STV/ Ralph Whitehead Associates, Inc.
1000 West Morehead St., Ste. 200
Charlotte, NC 28208
NC License No. F-0991

DRAWN BY : JMP DATE : 1-13
CHECKED BY : JAN DATE : 2-13
DESIGN ENGINEER OF RECORD: K. BAILEY DATE : 5-13

6/6/2013 9:00:36 PM R:\ustation\Finals\Bent 24 - 3 of 3.dgn

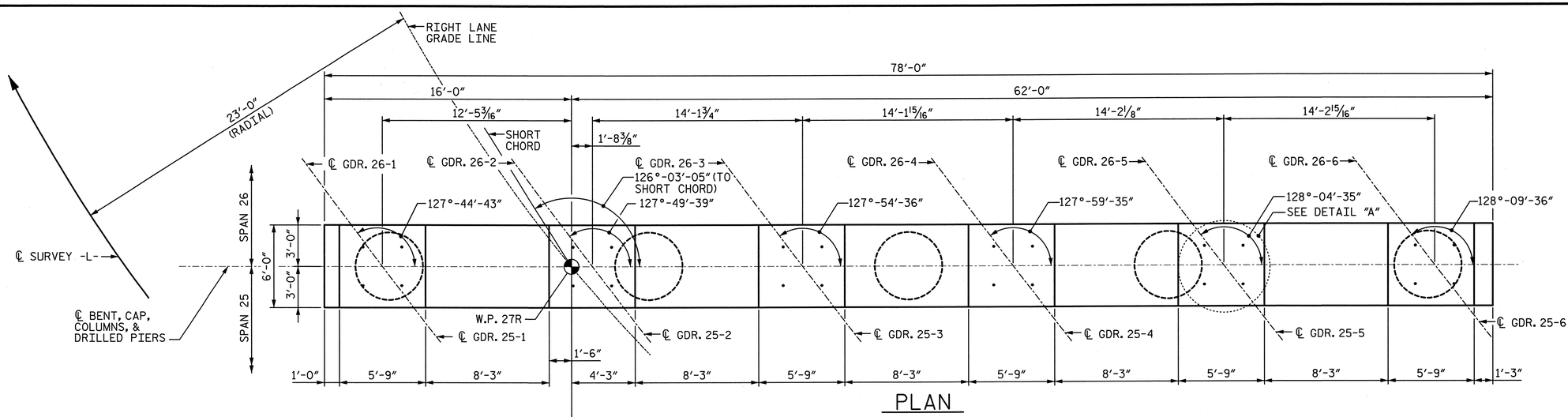

PLAN

NOTE:
ANGLES SHOWN ARE MEASURED TO TANGENT.

TABLE A	
ELEVATION VIEW DIMENSIONS	
COL.	DIMENSION "AA"
1	24'-6"
2	24'-0 1/2"
3	23'-6 3/4"
4	23'-1 1/8"
5	22'-7 1/2"

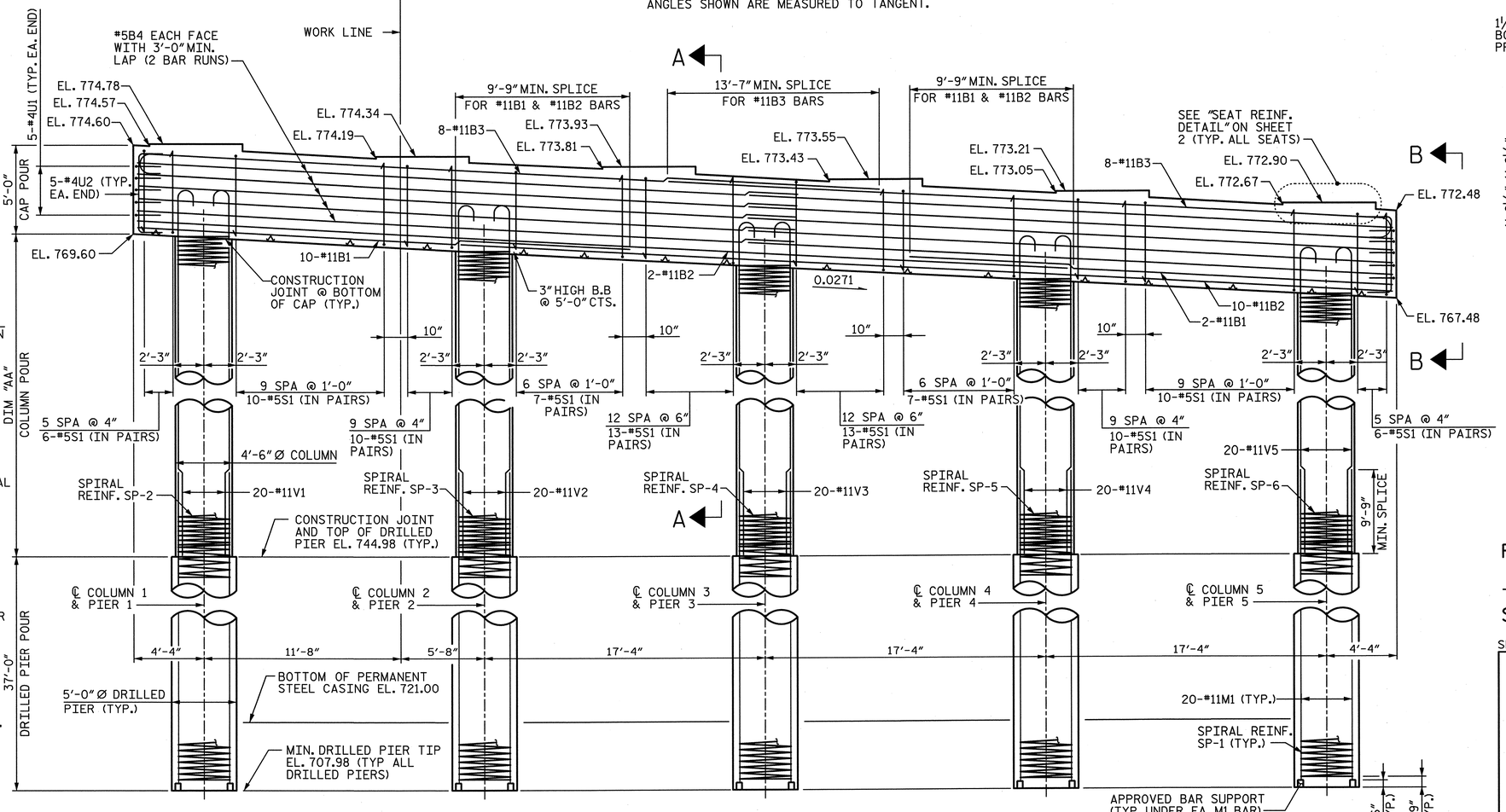

SIDE VIEW

ELEVATION

NOTE:
INVERT ALTERNATE PAIRS OF STIRRUPS.

NOTE:
SEE TABLE A THIS SHEET FOR "AA" DIMENSION.

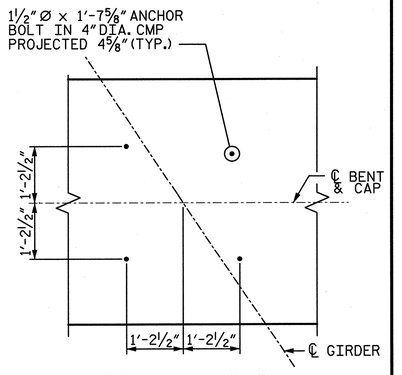

DETAIL "A"

(TYP. AT EACH BRIDGE SEAT)

NOTES:

1. ALL REINFORCING STEEL IN THE DRILLED PIERS IS INCLUDED IN THE PAY ITEMS FOR "REINFORCING STEEL" AND "SPIRAL COLUMN REINFORCING STEEL".
2. THE LOCATION OF THE CONSTRUCTION JOINT IN THE DRILLED PIERS IS BASED ON AN APPROXIMATE GROUND LINE ELEVATION. IF THE CONSTRUCTION JOINT IS ABOVE THE ACTUAL GROUND ELEVATION, THE CONTRACTOR SHALL PLACE THE CONSTRUCTION JOINT 1 FOOT BELOW THE GROUND LINE.
3. STIRRUPS AND "U BARS" IN CAP MAY BE SHIFTED SLIGHTLY AS NECESSARY TO CLEAR ANCHOR BOLTS.
4. HOOKS ON BARS MAY BE TURNED AS NECESSARY FOR PLACING REINFORCING STEEL.
5. A CONSTRUCTION JOINT AT MID-HEIGHT OF COLUMN IS PERMITTED.
6. FOR 1 1/2" Ø ANCHOR BOLTS, SEE "POT BEARING DETAILS" SHEET.
7. SEE "GENERAL DRAWING GENERAL NOTES" SHEET FOR ADDITIONAL NOTES.
8. SEE SHEET 2 OF 3 FOR SECTIONS CALLED OUT ON ELEVATION VIEW.
9. FOR PIPE INSERT DETAILS, SEE "POT BEARING DETAILS" SHEETS.

NORTH CAROLINA PROFESSIONAL SEAL 28479 ENGINEER KEVIN G. BAILEY 6-7-13

PROJECT NO. U-2524C

GUILFORD COUNTY

STATION: POT 407+85.82 -L-
= POT 29+79.72 -Y4-

SHEET 1 OF 3

STATE OF NORTH CAROLINA
DEPARTMENT OF TRANSPORTATION
RALEIGH

SUBSTRUCTURE BENT 25 PLAN & ELEVATION

-RIGHT LANE-

DRAWN BY : JMP	DATE : 1-13	DESIGN ENGINEER OF RECORD: K. BAILEY	DATE : 5-13
CHECKED BY : JAN	DATE : 2-13		

STV / Ralph Whitehead Associates, Inc.
1000 West Morehead St., Ste. 200
Charlotte, NC 28208
NC License No. F-0991

REVISIONS						SHEET NO.
NO.	BY:	DATE:	NO.	BY:	DATE:	S-480
1			3			TOTAL SHEETS
2			4			836

6/6/2013 9:00:38 PM R:\ustation\Finals\Bent 25 - 1of 3.dgn

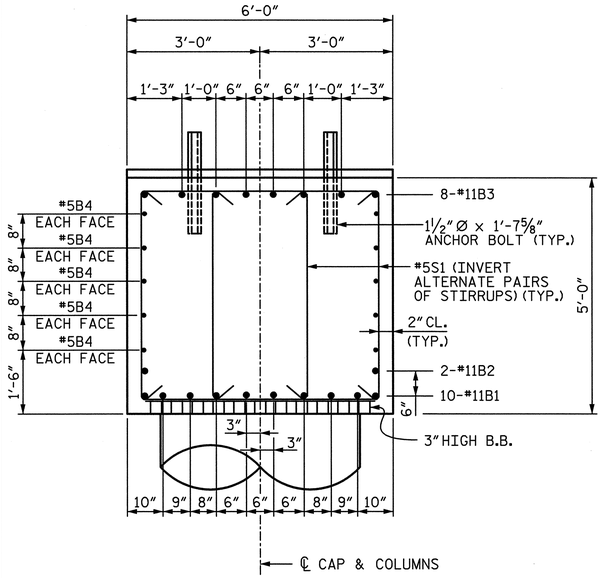

SECTION A-A

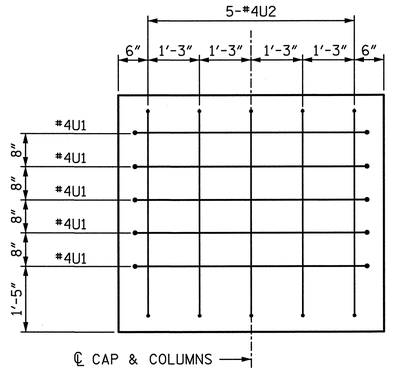

END VIEW B-B

(RIGHT END SHOWN, LEFT END SIMILAR)

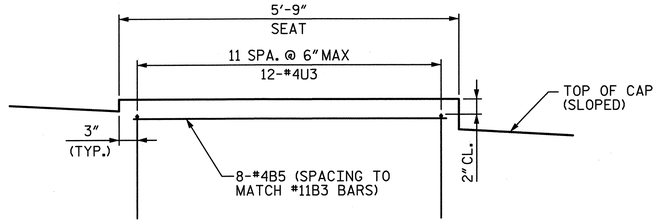

SEAT REINFORCEMENT DETAIL

(TYPICAL AT EACH BEARING SEAT)

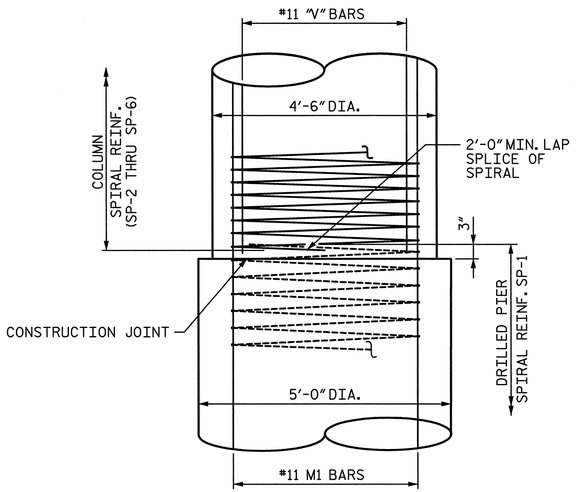

CONSTRUCTION JOINT DETAIL

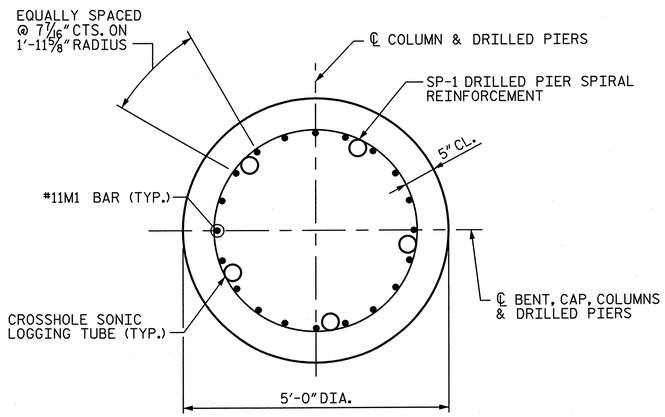

TYPICAL SECTION THROUGH DRILLED PIER

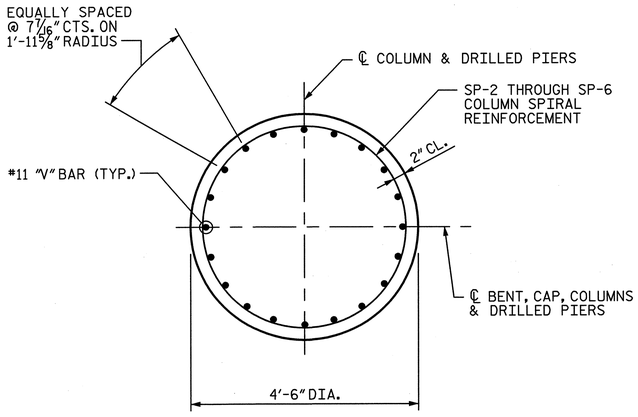

TYPICAL SECTION THROUGH COLUMN

NORTH CAROLINA PROFESSIONAL SEAL 28479 ENGINEER KEVIN G. BAILEY 6-7-13

PROJECT NO. U-2524C

GUILFORD COUNTY

STATION: POT 407+85.82 -L-

= POT 29+79.72 -Y4-

SHEET 2 OF 3

STATE OF NORTH CAROLINA
DEPARTMENT OF TRANSPORTATION
RALEIGH

SUBSTRUCTURE
BENT 25
DETAILS

-RIGHT LANE-

DRAWN BY : JMP	DATE : 1-13	DESIGN ENGINEER OF RECORD: K. BAILEY	DATE : 5-13
CHECKED BY : JAN	DATE : 2-13		

STV / Ralph Whitehead Associates, Inc.
1000 West Morehead St., Ste. 200
Charlotte, NC 28208
NC License No. F-0991

REVISIONS						SHEET NO.
NO.	BY:	DATE:	NO.	BY:	DATE:	S-481
1			3			TOTAL SHEETS
2			4			836

6/6/2013 9:00:39 PM R:\ustation\Finals\Bent 25 - 2 of 3.dgn

QUANTITIES

REINFORCING STEEL		LBS.	53,997
SPIRAL REINFORCING STEEL		LBS.	10,220
CLASS A CONCRETE :	POUR 2 - COLUMNS	CU. YDS.	69.5
	POUR 3 - CAP	CU. YDS.	88.2
	TOTAL	CU. YDS.	157.7
5'-0" Ø DRILLED PIERS IN SOIL		L.F.	132
5'-0" Ø DRILLED PIERS NOT IN SOIL		L.F.	53
TOTAL 5'-0" Ø DRILLED PIERS		L.F.	185
PERMANENT STEEL CASING FOR 5'-0" Ø DRILLED PIERS		L.F.	126
DRILLED PIER CONCRETE : POUR 1		CU. YDS.	134.5
CSL TUBES		L.F.	963

BAR TYPES

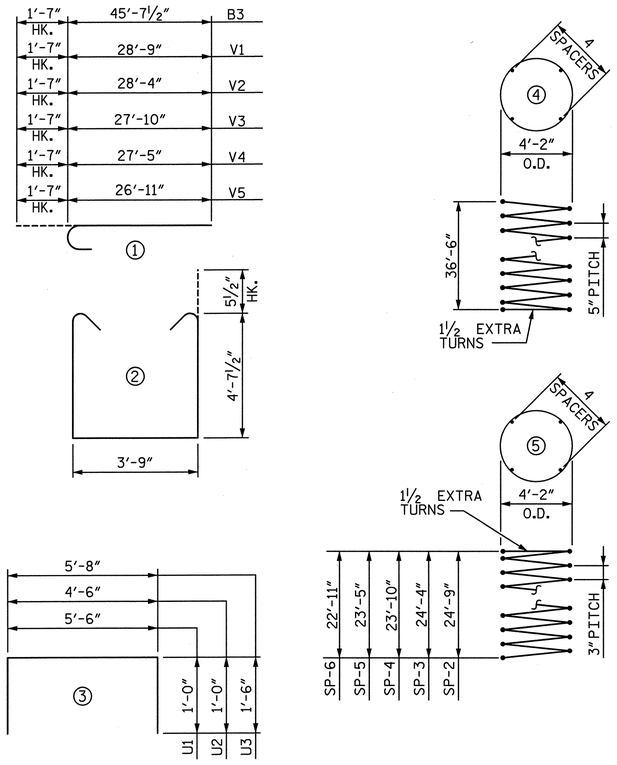

ALL BAR DIMENSIONS ARE OUT TO OUT

BILL OF MATERIAL

BAR	NO.	SIZE	TYPE	LENGTH	WEIGHT
B1	12	#11	STR.	29'-0"	1,849
B2	12	#11	STR.	58'-5"	3,724
B3	16	#11	①	47'-3"	4,017
B4	20	#5	STR.	40'-4"	841
B5	48	#4	STR.	5'-5"	174
M1	100	#11	STR.	46'-3"	24,573
S1	184	#5	②	13'-11"	2,671
U1	10	#4	③	7'-6"	50
U2	10	#4	③	6'-6"	43
U3	72	#4	③	8'-8"	417
V1	20	#11	①	30'-4"	3,223
V2	20	#11	①	29'-11"	3,179
V3	20	#11	①	29'-5"	3,126
V4	20	#11	①	29'-0"	3,082
V5	20	#11	①	28'-6"	3,028
SP-1	5	**	④	1,154'-5"	6,020
SP-2	1	*	⑤	1,304'-8"	872
SP-3	1	*	⑤	1,280'-10"	856
SP-4	1	*	⑤	1,257'-2"	840
SP-5	1	*	⑤	1,233'-1"	824
SP-6	1	*	⑤	1,209'-3"	808

** THE SP-1 SPIRAL REINFORCING STEEL SHALL BE W31 OR D-31 COLD DRAWN WIRE OR #5 PLAIN OR DEFORMED BAR WITH A 5" PITCH.

* THE SP-2 THROUGH SP-6 SPIRAL REINFORCING SHALL BE W20 OR D-20 COLD DRAWN WIRE OR #4 PLAIN OR DEFORMED BAR WITH A 3" PITCH.

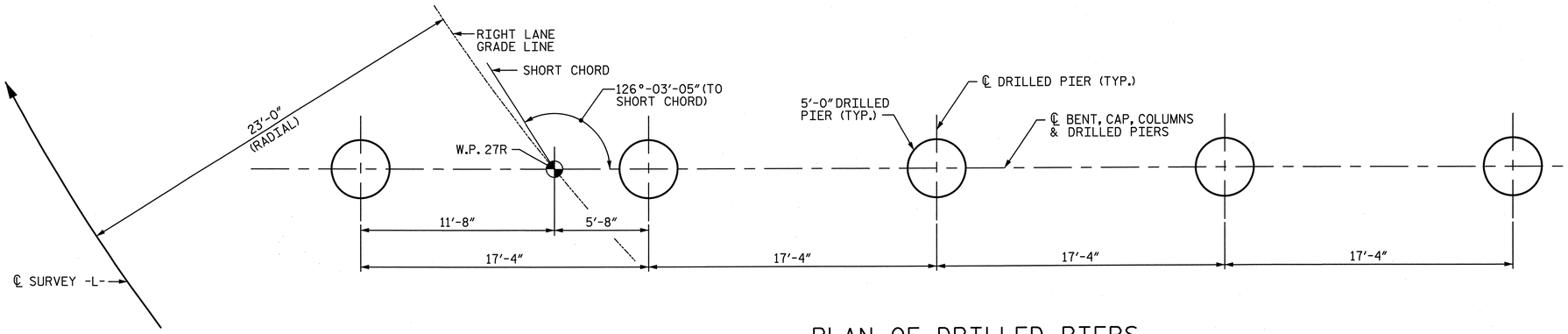

PLAN OF DRILLED PIERS

PROJECT NO. U-2524C

GUILFORD COUNTY

STATION: POT 407+85.82 -L-
= POT 29+79.72 -Y4-

SHEET 3 OF 3

STATE OF NORTH CAROLINA
DEPARTMENT OF TRANSPORTATION
RALEIGH

SUBSTRUCTURE
BENT 25
DETAILS & BILL OF MATERIAL

-RIGHT LANE-

NORTH CAROLINA PROFESSIONAL SEAL 28479 ENGINEER KEVIN G. BAILEY 6-7-13

DRAWN BY : JMP	DATE : 1-13	DESIGN ENGINEER OF RECORD: K. BAILEY	DATE : 5-13
CHECKED BY : JAN	DATE : 2-13		

STV / Ralph Whitehead Associates, Inc.
1000 West Morehead St., Ste. 200
Charlotte, NC 28208
NC License No. F-0991

REVISIONS						SHEET NO.
NO.	BY:	DATE:	NO.	BY:	DATE:	S-482
1			3			TOTAL SHEETS
2			4			836

6/6/2013 9:00:41 PM R:\ustation\Finals\Bent 25- 3 of 3.dgn

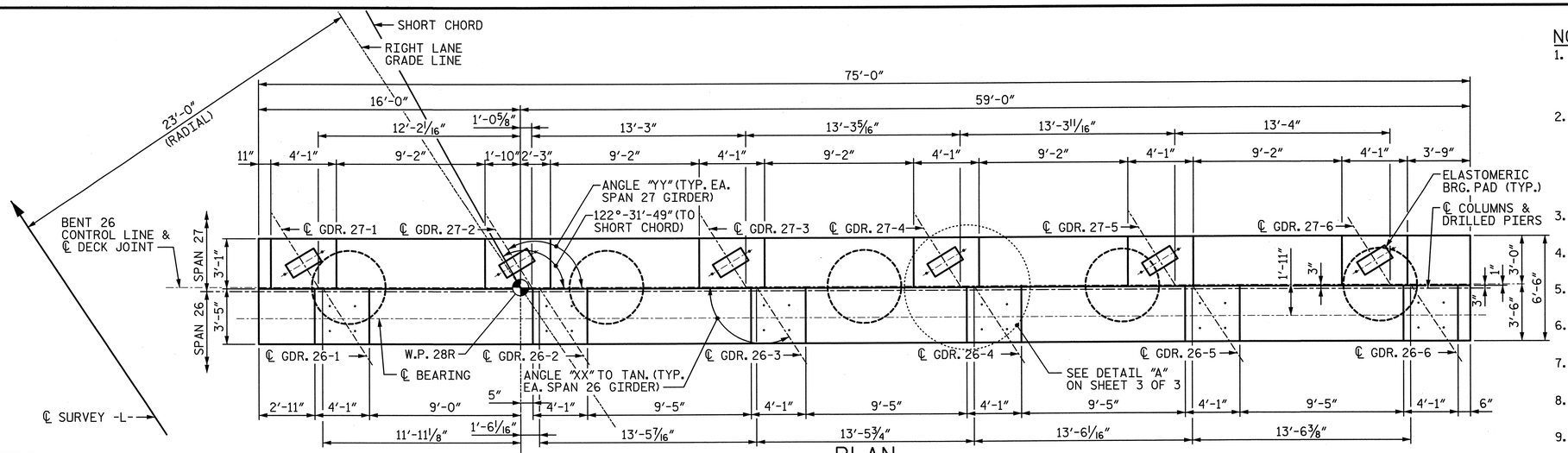

PLAN

NOTE:
SEE TABLE A THIS SHEET FOR "XX" AND "YY" ANGLES.
SEE TABLE B THIS SHEET FOR "AA" AND "BB" DIMENSIONS.

THE CONTRACTOR'S ATTENTION IS CALLED TO THE FACT THAT THE CENTERLINE JOINT IN THE DECK SLAB (CONTROL LINE) IS OFFSET FROM THE CENTERLINE BENT.

NOTE:
INVERT ALTERNATE #5S1, #5S2 & #5S3 BARS.

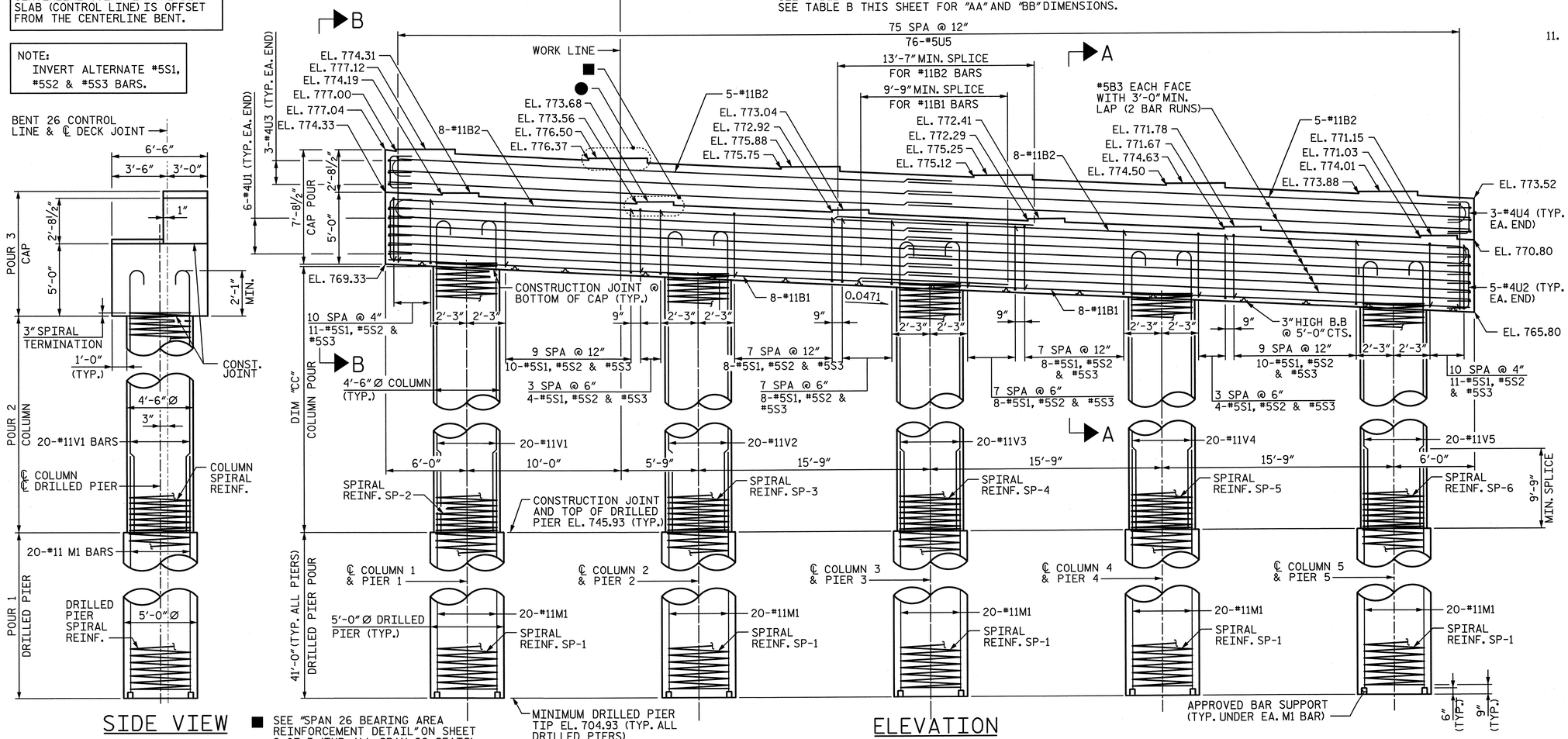

ELEVATION

NOTE:
SEE TABLE A SHEET 3 FOR DIMENSION "CC".

SIDE VIEW

■ SEE "SPAN 26 BEARING AREA REINFORCEMENT DETAIL" ON SHEET 2 OF 3 (TYP. ALL SPAN 26 SEATS)

● SEE "SPAN 27 BEARING AREA REINFORCEMENT DETAIL" ON SHEET 2 OF 3 (TYP. ALL SPAN 27 SEATS)

NOTES:

1. ALL REINFORCING STEEL IN THE DRILLED PIERS IS INCLUDED IN THE PAY ITEMS FOR "REINFORCING STEEL" AND "SPIRAL COLUMN REINFORCING STEEL".
2. THE LOCATION OF THE CONSTRUCTION JOINT IN THE DRILLED PIERS IS BASED ON AN APPROXIMATE GROUND LINE ELEVATION. IF THE CONSTRUCTION JOINT IS ABOVE THE ACTUAL GROUND ELEVATION, THE CONTRACTOR SHALL PLACE THE CONSTRUCTION JOINT 1 FOOT BELOW THE GROUND LINE.
3. STIRRUPS AND "U BARS" IN CAP MAY BE SHIFTED SLIGHTLY AS NECESSARY TO CLEAR ANCHOR BOLTS.
4. HOOKS ON BARS MAY BE TURNED AS NECESSARY FOR PLACING REINFORCING STEEL.
5. A CONSTRUCTION JOINT AT MID-HEIGHT OF COLUMN IS PERMITTED.
6. FOR "AB1" ANCHOR BOLTS, SEE "ELASTOMERIC BEARING DETAILS" SHEET.
7. FOR 1½" Ø ANCHOR BOLTS, SEE "POT BEARING DETAILS" SHEET.
8. SEE "GENERAL DRAWING GENERAL NOTES" SHEET FOR ADDITIONAL NOTES.
9. SEE SHEET 2 OF 3 FOR SECTIONS CALLED OUT ON ELEVATION VIEW.
10. THE TOP SURFACE AREAS OF THE BENT CAPS SHALL BE CURED IN ACCORDANCE WITH THE STANDARD SPECIFICATIONS EXCEPT THE MEMBRANE CURING COMPOUND METHOD SHALL NOT BE USED.
11. FOR PIPE INSERT DETAILS, SEE "POT BEARING DETAILS" SHEETS.

TABLE A
PLAN VIEW ANGLES

GDR.	ANGLE "XX"
26-1	123°-40'-36"
26-2	123°-49'-50"
26-3	123°-59'-09"
26-4	124°-08'-33"
26-5	124°-18'-03"
26-6	124°-27'-39"
	ANGLE "YY"
27-1	122°-22'-53"
27-2	122°-32'-35"
27-3	122°-42'-24"
27-4	122°-52'-16"
27-5	123°-02'-18"
27-6	123°-12'-23"

TABLE B
PLAN VIEW DIMENSIONS

GDR.	DIM. "AA"
26-1	1'-3 5/16"
26-2	1'-3 1/16"
26-3	1'-3 1/2"
26-4	1'-3 5/8"
26-5	1'-3 11/16"
26-6	1'-3 13/16"
	DIM. "BB"
27-1	1'-10 13/16"
27-2	1'-11"
27-3	1'-11 1/8"
27-4	1'-11 1/4"
27-5	1'-11 3/16"
27-6	1'-11 1/16"

NORTH CAROLINA PROFESSIONAL SEAL 28479 ENGINEER KEVIN G. BAILEY 6-7-13

PROJECT NO. U-2524C
GUILFORD COUNTY
STATION: POT 407+85.82 -L-
= POT 29+79.72 -Y4-
SHEET 1 OF 3

STATE OF NORTH CAROLINA
DEPARTMENT OF TRANSPORTATION
RALEIGH

SUBSTRUCTURE BENT 26 PLAN & ELEVATION

-RIGHT LANE-

DRAWN BY : JMP DATE : 1-13
CHECKED BY : JAN DATE : 2-13
DESIGN ENGINEER OF RECORD: K. BAILEY DATE : 5-13

STV / Ralph Whitehead Associates, Inc.
1000 West Morehead St., Ste. 200
Charlotte, NC 28208
NC License No. F-0991

REVISIONS						SHEET NO.
NO.	BY:	DATE:	NO.	BY:	DATE:	S-483
1			3			TOTAL SHEETS
2			4			836

6/6/2013 9:00:42 PM R:\ustation\Finals\Bent 26 - 1of 3.dgn

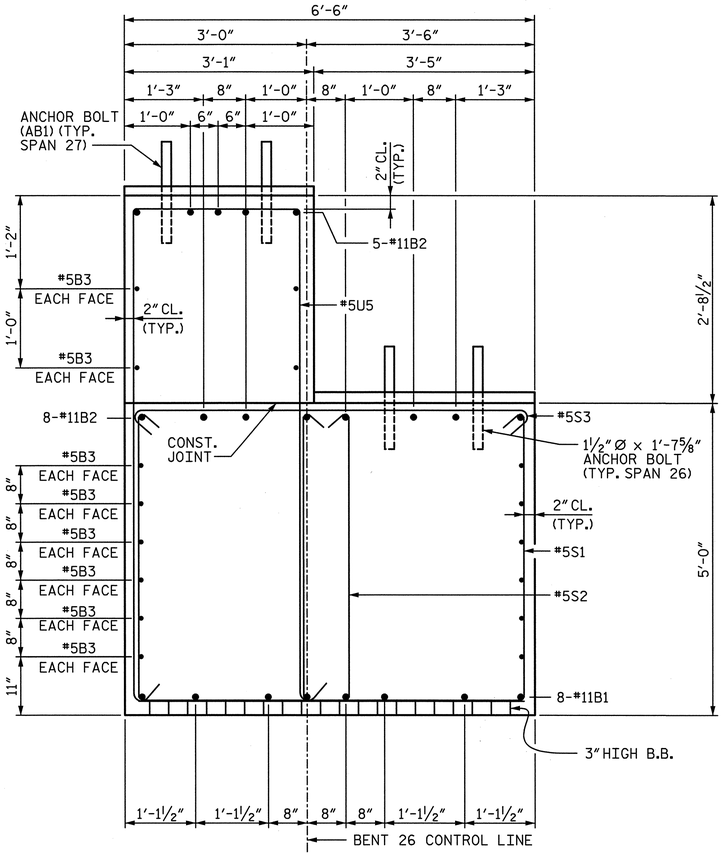

SECTION A-A

NOTE:
INVERT ALTERNATE #5S1, #5S2 AND #5S3 BARS.

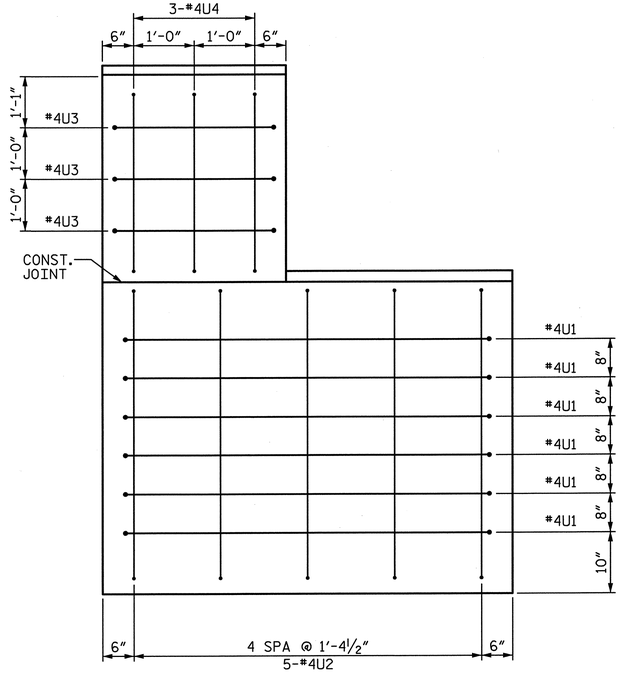

END VIEW B-B

(LEFT END SHOWN. RIGHT END SIMILAR)

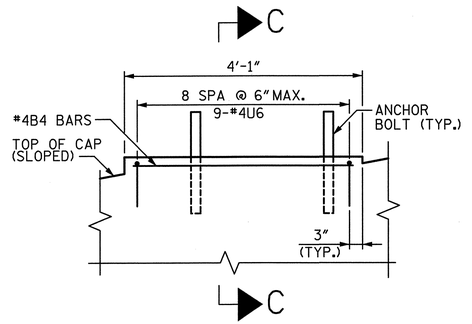

SPAN 26 BEARING AREA REINFORCEMENT DETAIL

(TYP. AT EACH BRIDGE SEAT)

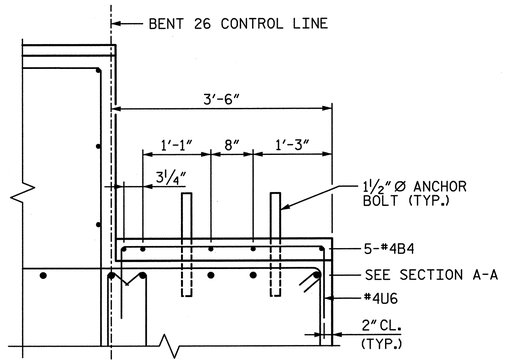

SECTION C-C

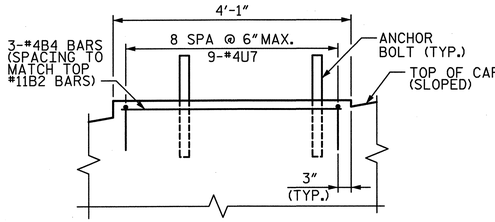

SPAN 27 BEARING AREA REINFORCEMENT DETAIL

(TYP. AT EACH BRIDGE SEAT)

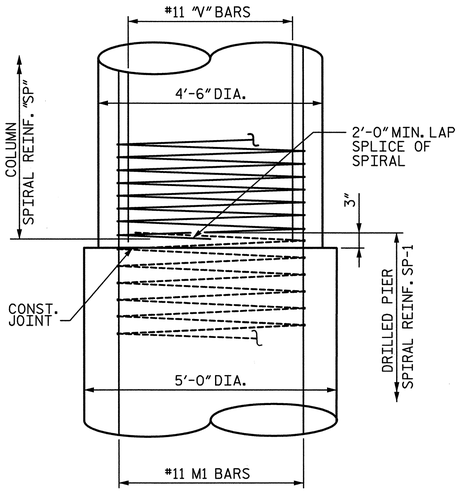

CONSTRUCTION JOINT DETAIL

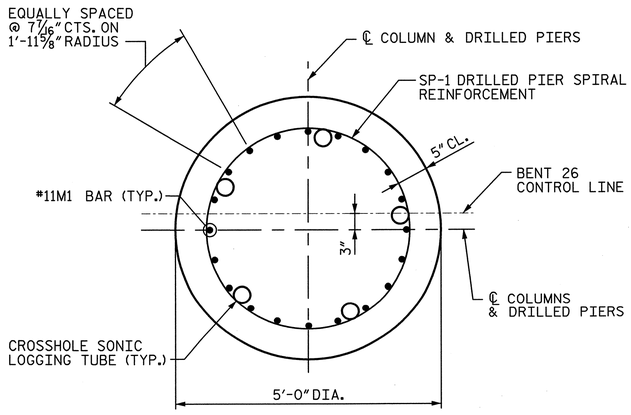

TYPICAL SECTION THROUGH DRILLED PIER

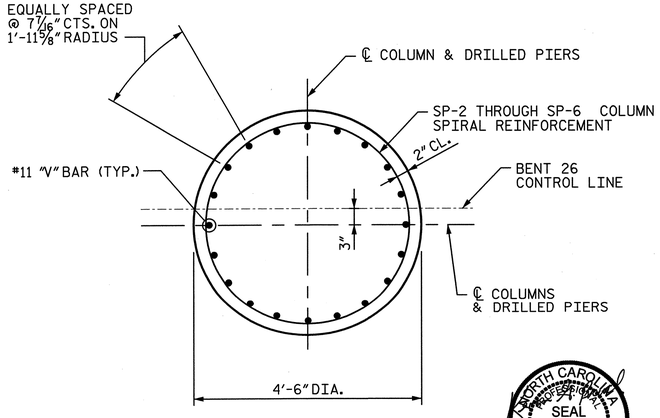

TYPICAL SECTION THROUGH COLUMN

NORTH CAROLINA PROFESSIONAL ENGINEER SEAL 28479 KEVIN G. BAILEY 6-7-13

PROJECT NO. U-2524C
GUILFORD COUNTY
STATION: POT 407+85.82 -L-
= POT 29+79.72 -Y4-
SHEET 2 OF 3

STATE OF NORTH CAROLINA
DEPARTMENT OF TRANSPORTATION
RALEIGH

SUBSTRUCTURE
BENT 26
DETAILS

-RIGHT LANE-

REVISIONS						SHEET NO.
NO.	BY:	DATE:	NO.	BY:	DATE:	S-484
1			3			TOTAL SHEETS
2			4			036

DRAWN BY : JMP DATE : 1-13
CHECKED BY : JAN DATE : 2-13
DESIGN ENGINEER OF RECORD: K. BAILEY DATE : 5-13

STV / Ralph Whitehead Associates, Inc.
1000 West Morehead St. Ste. 200
Charlotte, NC 28208
NC License No. F-0991

6/6/2013 9:00:44 PM R:\ustation\Finals\Bent 26 - 2 of 3.dgn

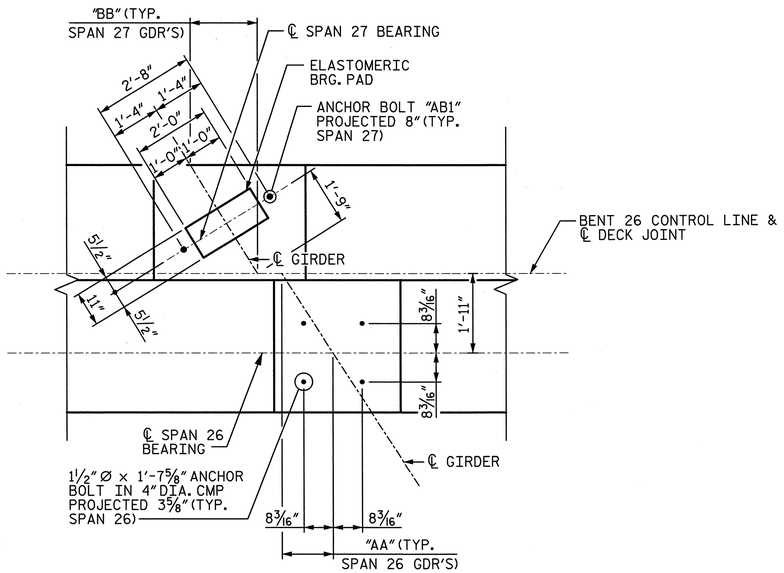

DETAIL "A"

NOTE:
SEE TABLE B SHEET 1 FOR "AA" AND "BB" DIMENSIONS.

TABLE A ELEVATION DIMENSIONS	
COL	DIM "CC"
1	23'-1⅜"
2	22'-4½"
3	21'-7⅝"
4	20'-10¾"
5	20'-1¾"

QUANTITIES		
REINFORCING STEEL	LBS.	57,621
SPIRAL REINFORCING STEEL	LBS.	10,541
CLASS A CONCRETE : POUR 2 - COLUMNS	CU. YDS.	63.9
POUR 3 - CAP	CU. YDS.	114.5
TOTAL	CU. YDS.	178.4
5'-0" Ø DRILLED PIERS IN SOIL	L.F.	144
5'-0" Ø DRILLED PIERS NOT IN SOIL	L.F.	61
TOTAL 5'-0" Ø DRILLED PIERS	L.F.	205
DRILLED PIER CONCRETE : POUR 1	CU. YDS.	149.1
CSL TUBES	L.F.	1,063

BAR TYPES

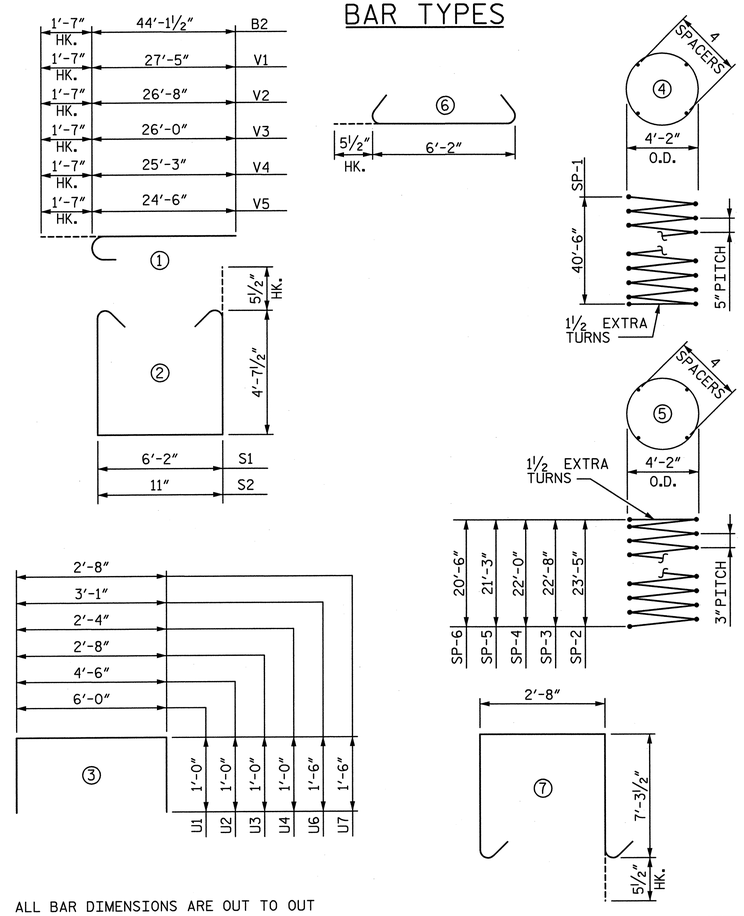

ALL BAR DIMENSIONS ARE OUT TO OUT

BILL OF MATERIAL

BAR	NO.	SIZE	TYPE	LENGTH	WEIGHT
B1	16	#11	STR.	42'-3"	3,592
B2	26	#11	①	45'-9"	6,320
B3	32	#5	STR.	38'-10"	1,296
B4	48	#4	STR.	3'-9"	120
M1	100	#11	STR.	50'-3"	26,698
S1	82	#5	②	16'-4"	1,397
S2	82	#5	②	11'-1"	948
S3	82	#5	⑥	7'-1"	606
U1	12	#4	③	8'-0"	64
U2	10	#4	③	6'-6"	43
U3	6	#4	③	4'-8"	19
U4	6	#4	③	4'-4"	17
U5	76	#5	⑦	18'-2"	1,440
U6	54	#4	③	6'-1"	219
U7	54	#4	③	5'-8"	204
V1	20	#11	①	29'-0"	3,082
V2	20	#11	①	28'-3"	3,002
V3	20	#11	①	27'-7"	2,931
V4	20	#11	①	26'-10"	2,851
V5	20	#11	①	26'-1"	2,772
SP-1	5	**	④	1,278'-6"	6,667
SP-2	1	*	⑤	1,235'-6"	825
SP-3	1	*	⑤	1,196'-8"	799
SP-4	1	*	⑤	1,162'-1"	776
SP-5	1	*	⑤	1,123'-2"	750
SP-6	1	*	⑤	1,084'-4"	724

** THE SP-1 SPIRAL REINFORCING STEEL SHALL BE W31 OR D-31 COLD DRAWN WIRE OR #5 PLAIN OR DEFORMED BAR WITH A 5" PITCH.

* THE SP-2 THROUGH SP-6 SPIRAL REINFORCING SHALL BE W20 OR D-20 COLD DRAWN WIRE OR #4 PLAIN OR DEFORMED BAR WITH A 3" PITCH.

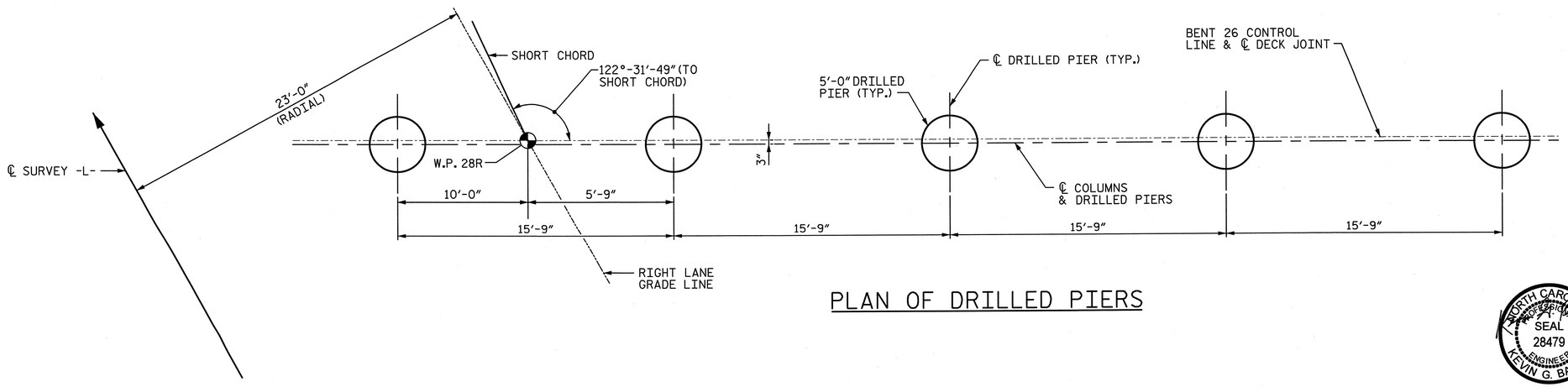

PLAN OF DRILLED PIERS

PROJECT NO. U-2524C
GUILFORD COUNTY
STATION: POT 407+85.82 -L-
= POT 29+79.72 -Y4-
SHEET 3 OF 3

STATE OF NORTH CAROLINA
DEPARTMENT OF TRANSPORTATION
RALEIGH

SUBSTRUCTURE BENT 26 DETAILS & BILL OF MATERIAL

-RIGHT LANE-

NORTH CAROLINA PROFESSIONAL SEAL 28479 ENGINEER KEVIN G. BAILEY 6-7-13

DRAWN BY : JMP	DATE : 1-13	DESIGN ENGINEER OF RECORD: K. BAILEY	DATE : 5-13
CHECKED BY : JAN	DATE : 2-13		

STV / Ralph Whitehead Associates, Inc.
1000 West Morehead St., Ste. 200
Charlotte, NC 28208
NC License No. F-0991

REVISIONS						SHEET NO.
NO.	BY:	DATE:	NO.	BY:	DATE:	S-485
1			3			TOTAL SHEETS
2			4			836

6/6/2013 10:45:39 PM R:\ustration\Finals\Bent 26- 3 of 3.dgn

NOTES:

1. ALL REINFORCING STEEL IN THE DRILLED PIERS IS INCLUDED IN THE PAY ITEMS FOR "REINFORCING STEEL" AND "SPIRAL COLUMN REINFORCING STEEL".
2. THE LOCATION OF THE CONSTRUCTION JOINT IN THE DRILLED PIERS IS BASED ON AN APPROXIMATE GROUND LINE ELEVATION. IF THE CONSTRUCTION JOINT IS ABOVE THE ACTUAL GROUND ELEVATION, THE CONTRACTOR SHALL PLACE THE CONSTRUCTION JOINT 1 FOOT BELOW THE GROUND LINE.
3. STIRRUPS AND "U BARS" IN CAP MAY BE SHIFTED SLIGHTLY AS NECESSARY TO CLEAR ANCHOR BOLTS.
4. HOOKS ON BARS MAY BE TURNED AS NECESSARY FOR PLACING REINFORCING STEEL.
5. A CONSTRUCTION JOINT AT MID-HEIGHT OF COLUMN IS PERMITTED.
6. FOR "AB1" ANCHOR BOLTS, SEE "ELASTOMERIC BEARING DETAILS" SHEET.
7. SEE "GENERAL DRAWING GENERAL NOTES" SHEET FOR ADDITIONAL NOTES.
8. SEE SHEET 2 OF 3 FOR SECTIONS CALLED OUT ON ELEVATION VIEW.

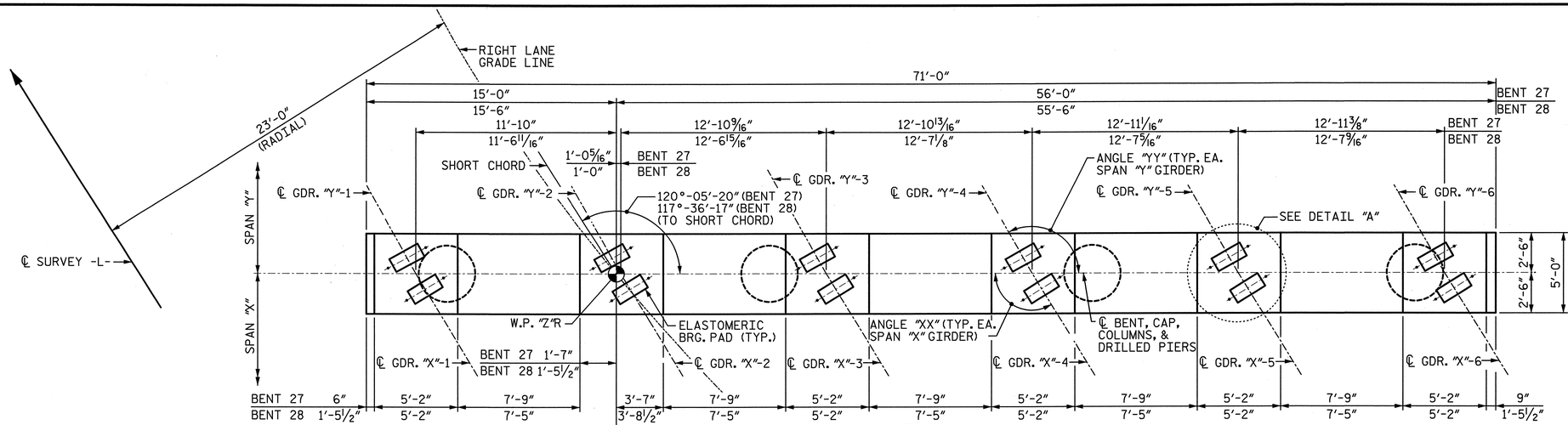

PLAN

NOTE:
SEE TABLE A SHEET 3 FOR "X" THRU "Z" VALUES.
SEE TABLE B SHEET 3 FOR "XX" AND "YY" ANGLES.
SEE TABLE C SHEET 3 FOR "AA" AND "BB" DIMENSIONS.

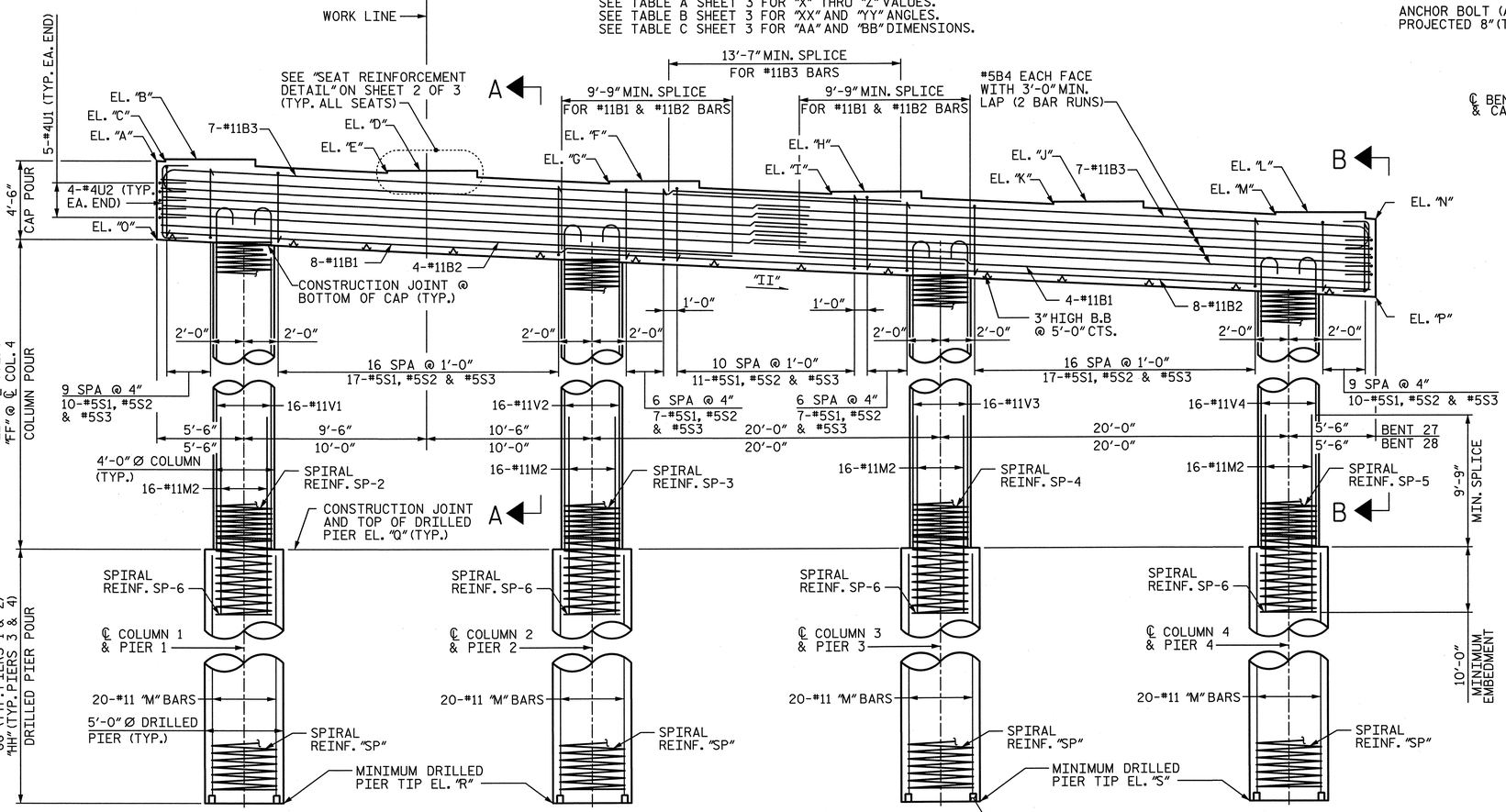

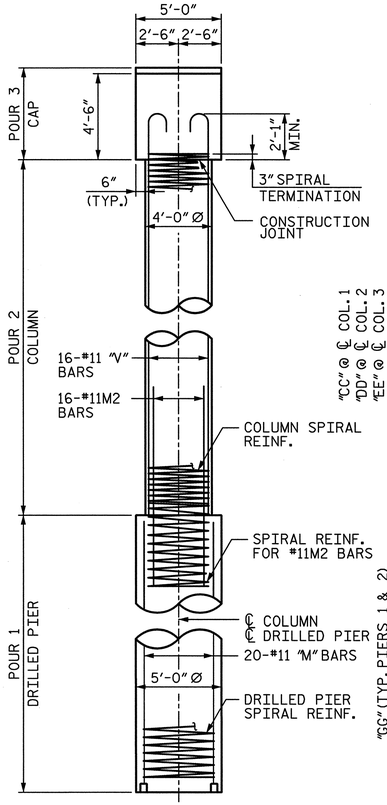

SIDE VIEW

NOTE:
INVERT ALTERNATE PAIRS #5S1, #5S2 AND #5S3 BARS.

ELEVATION

NOTE:
SEE TABLE D FOR ELEVATIONS "A" THROUGH "R".
SEE TABLE E ON SHEET 3 OF 3 FOR "CC" THROUGH "II" VALUES.
SEE TABLE F SHEET 3 FOR COLUMN AND DRILLED PIER REINFORCING.

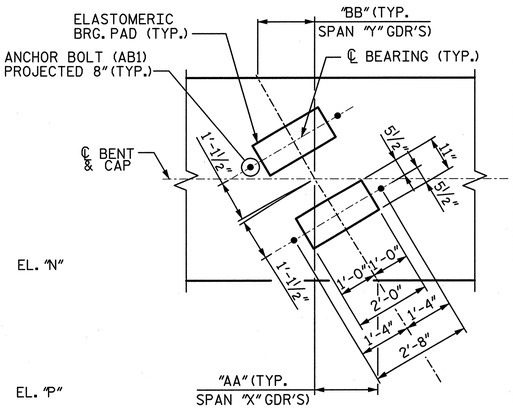

DETAIL "A"

(TYP. AT EACH BRIDGE SEAT)

NOTE:
SEE TABLE B SHEET 3 FOR "AA" AND "BB" DIMENSIONS.

NORTH CAROLINA PROFESSIONAL SEAL 28479 ENGINEER KEVIN G. BAILEY 6-7-13

PROJECT NO. U-2524C
GUILFORD COUNTY
STATION: POT 407+85.82 -L-
= POT 29+79.72 -Y4-

SHEET 1 OF 3

STATE OF NORTH CAROLINA
DEPARTMENT OF TRANSPORTATION
RALEIGH

SUBSTRUCTURE BENTS 27 & 28 PLAN & ELEVATION

-RIGHT LANE-

REVISIONS						SHEET NO.
NO.	BY:	DATE:	NO.	BY:	DATE:	S-486
1			3			TOTAL SHEETS
2			4			836

DRAWN BY : JMP DATE : 1-13
CHECKED BY : JAN DATE : 2-13
DESIGN ENGINEER OF RECORD: K. BAILEY DATE : 5-13

STV / Ralph Whitehead Associates, Inc.
1000 West Morehead St., Ste. 200
Charlotte, NC 28208
NC License No. F-0991

6/6/2013 9:00:46 PM R:\ustation\Finals\Bent 27-28 - 1of 3.dgn

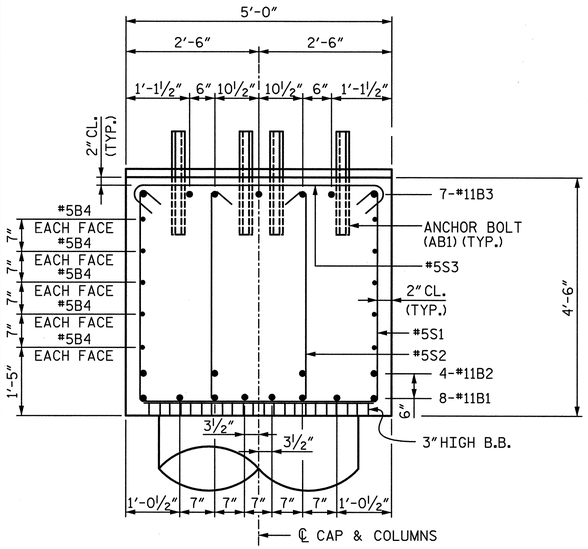

SECTION A-A

NOTE:
INVERT ALTERNATE *5S1, *5S2 AND *5S3 BARS.

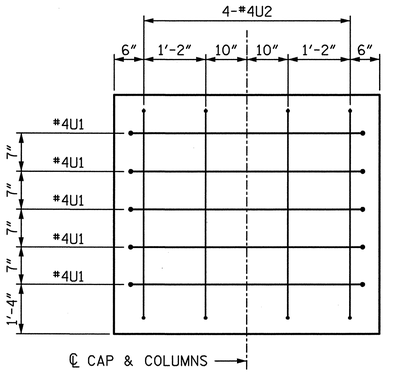

END VIEW B-B

(RIGHT END SHOWN, LEFT END SIMILAR)

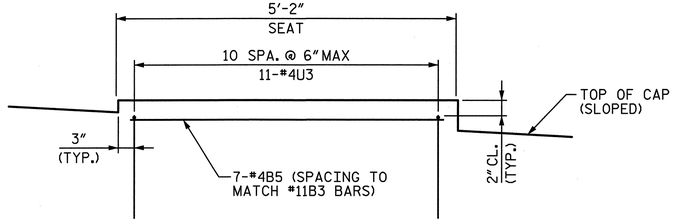

SEAT REINFORCEMENT DETAIL

(TYPICAL AT EACH BEARING SEAT)

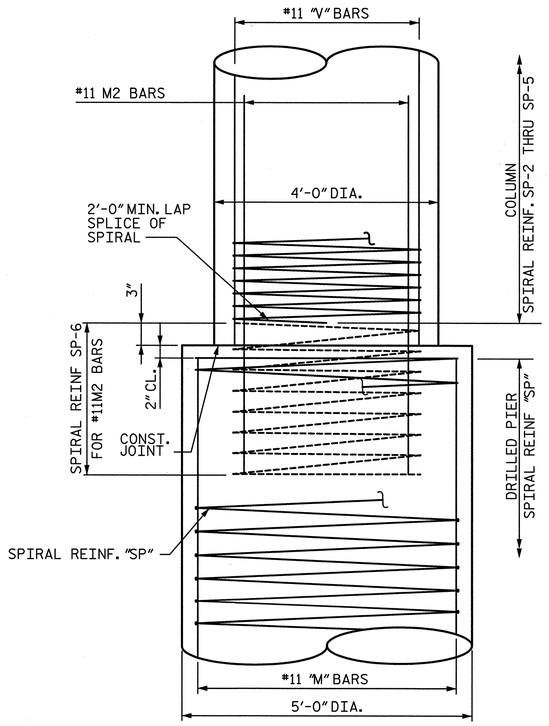

CONSTRUCTION JOINT DETAIL

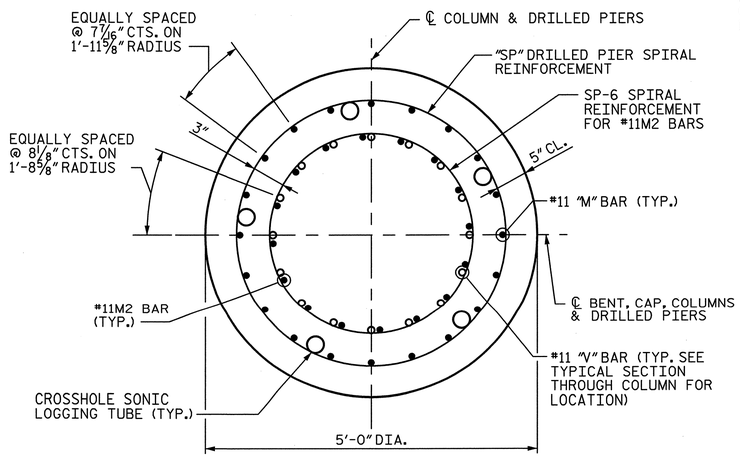

TYPICAL SECTION THROUGH DRILLED PIER

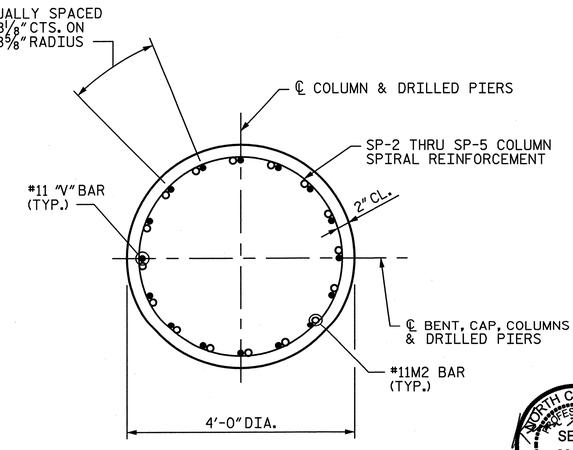

TYPICAL SECTION THROUGH COLUMN

NORTH CAROLINA PROFESSIONAL SEAL 28479 ENGINEER KEVIN G. BAILEY 6-7-13

PROJECT NO. U-2524C
GUILFORD COUNTY
STATION: POT 407+85.82 -L-
= POT 29+79.72 -Y4-
SHEET 2 OF 3

STATE OF NORTH CAROLINA
DEPARTMENT OF TRANSPORTATION
RALEIGH

SUBSTRUCTURE BENTS 27 & 28 DETAILS

-RIGHT LANE-

DRAWN BY : JMP	DATE : 1-13	DESIGN ENGINEER OF RECORD: K. BAILEY	DATE : 5-13
CHECKED BY : JAN	DATE : 2-13		

STV / Ralph Whitehead Associates, Inc.
1000 West Morehead St., Ste. 200
Charlotte, NC 28208
NC License No. F-0991

REVISIONS						SHEET NO.
NO.	BY:	DATE:	NO.	BY:	DATE:	S-487
1			3			TOTAL SHEETS
2			4			836

6/6/2013 9:00:47 PM R:\station\Finals\Bent 27-28- 2 of 3.dgn

TABLE A		
PLAN VIEW INFORMATION		
	BENT 27	BENT 28
"X"	27	28
"Y"	28	29
"Z"	29	30

TABLE B		
PLAN VIEW ANGLES		
	ANGLE "XX"	
GDR.	BENT 27	BENT 28
"X"-1	122°-22'-53"	119°-57'-14"
"X"-2	122°-32'-35"	120°-06'-03"
"X"-3	122°-42'-23"	120°-14'-57"
"X"-4	122°-52'-16"	120°-23'-57"
"X"-5	123°-02'-17"	120°-33'-02"
"X"-6	123°-12'-22"	120°-42'-14"
	ANGLE "YY"	
	BENT 27	BENT 28
"Y"-1	119°-57'-13"	117°-28'-58"
"Y"-2	120°-06'-02"	117°-36'-55"
"Y"-3	120°-14'-56"	117°-44'-57"
"Y"-4	120°-23'-56"	117°-53'-04"
"Y"-5	120°-33'-02"	118°-01'-16"
"Y"-6	120°-42'-13"	118°-09'-33"

TABLE C		
PLAN VIEW DIMENSIONS		
	DIMENSION "AA"	
GDR.	BENT 27	BENT 28
"X"-1	1'-7"	1'-5 5/16"
"X"-2	1'-7 1/8"	1'-5 3/8"
"X"-3	1'-7 1/4"	1'-5 1/2"
"X"-4	1'-7 3/8"	1'-5 5/8"
"X"-5	1'-7 1/2"	1'-5 11/16"
"X"-6	1'-7 5/8"	1'-5 13/16"
	DIMENSION "BB"	
	BENT 27	BENT 28
"Y"-1	1'-5 5/16"	1'-3 5/8"
"Y"-2	1'-5 3/8"	1'-3 11/16"
"Y"-3	1'-5 1/2"	1'-3 13/16"
"Y"-4	1'-5 5/8"	1'-3 7/8"
"Y"-5	1'-5 11/16"	1'-3 15/16"
"Y"-6	1'-5 13/16"	1'-4 1/16"

TABLE D		
ELEVATIONS		
	BENT 27	BENT 28
"A"	776.47	775.99
"B"	776.57	776.07
"C"	776.45	775.94
"D"	775.95	775.44
"E"	775.82	775.31
"F"	775.32	774.81
"G"	775.20	774.68
"H"	774.70	774.18
"I"	774.57	774.05
"J"	774.07	773.55
"K"	773.95	773.42
"L"	773.45	772.92
"M"	773.32	772.80
"N"	773.03	772.49
"O"	771.97	771.49
"P"	768.53	767.99
"Q"	745.11	749.86
"R"	711.86	716.86
"S"	711.86	718.86

TABLE E		
ELEVATION VIEW DIMENSIONS		
	BENT 27	BENT 28
"CC"	26'-7 1/4"	21'-4 1/4"
"DD"	25'-7 5/8"	20'-4 1/4"
"EE"	24'-8"	19'-4 3/8"
"FF"	23'-8 3/8"	18'-4 3/8"
"GG"	33'-3"	33'-0"
"HH"	33'-3"	31'-0"
"II"	0.0485	0.0499

✻✻ THE SP-6, SP-11 & SP-12 SPIRAL REINFORCING STEEL SHALL BE W31 OR D-31 COLD DRAWN WIRE OR #5 PLAIN OR DEFORMED BAR WITH A 5"PITCH.

✻ THE SP-2 THROUGH SP-5 SPIRAL REINFORCING SHALL BE W20 OR D-20 COLD DRAWN WIRE OR #4 PLAIN OR DEFORMED BAR WITH A 3"PITCH.

TABLE F — BENT 27 COLUMNS & DRILLED PIERS REINFORCING BILL OF MATERIAL								
COLUMN/ DRILLED PIER	BAR	NO.	SIZE	TYPE	●	LENGTH	WEIGHT	DRILLED PIER LENGTH
1	M11	20	#11	STR.		32'-7"	3,462	33'-3"
	M2	16	#11	STR.		19'-9"	1,679	
	V1	16	#11	①	30'-5"	32'-0"	2,720	
	SP-2	1	✻	⑤	26'-11"	1,245'-7"	832	
	SP-11	1	✻✻	④	32'-4"	1,042'-5"	1,087	
	SP-6	1	✻✻	④	10'-3"	298'-7"	311	
2	M11	20	#11	STR.		32'-7"	3,462	33'-3"
	M2	16	#11	STR.		19'-9"	1,679	
	V2	16	#11	①	29'-5"	31'-0"	2,635	
	SP-3	1	✻	⑤	25'-11"	1,200'-0"	802	
	SP-11	1	✻✻	④	32'-4"	1,042'-5"	1,087	
	SP-6	1	✻✻	④	10'-3"	298'-7"	311	
3	M11	20	#11	STR.		32'-7"	3,462	33'-3"
	M2	16	#11	STR.		19'-9"	1,679	
	V3	16	#11	①	28'-5"	30'-0"	2,550	
	SP-4	1	✻	⑤	24'-11"	1,154'-5"	771	
	SP-11	1	✻✻	④	32'-4"	1,042'-5"	1,087	
	SP-6	1	✻✻	④	10'-3"	298'-7"	311	
4	M11	20	#11	STR.		32'-7"	3,462	33'-3"
	M2	16	#11	STR.		19'-9"	1,679	
	V4	16	#11	①	27'-6"	29'-1"	2,472	
	SP-5	1	✻	⑤	24'-0"	1,112'-8"	743	
	SP-11	1	✻✻	④	32'-4"	1,042'-5"	1,087	
	SP-6	1	✻✻	④	10'-3"	298'-7"	311	

TABLE F — BENT 28 COLUMNS & DRILLED PIERS REINFORCING BILL OF MATERIAL								
COLUMN/ DRILLED PIER	BAR	NO.	SIZE	TYPE	●	LENGTH	WEIGHT	DRILLED PIER LENGTH
1	M11	20	#11	STR.		32'-4"	3,436	33'-0"
	M2	16	#11	STR.		19'-9"	1,679	
	V1	16	#11	①	25'-2"	26'-9"	2,274	
	SP-2	1	✻	⑤	21'-8"	1,006'-4"	672	
	SP-11	1	✻✻	④	32'-1"	1,034'-8"	1,079	
	SP-6	1	✻✻	④	10'-3"	298'-7"	311	
2	M11	20	#11	STR.		32'-4"	3,436	33'-0"
	M2	16	#11	STR.		19'-9"	1,679	
	V2	16	#11	①	24'-2"	25'-9"	2,189	
	SP-3	1	✻	⑤	20'-8"	960'-9"	642	
	SP-11	1	✻✻	④	32'-1"	1,034'-8"	1,079	
	SP-6	1	✻✻	④	10'-3"	298'-7"	311	
3	M12	20	#11	STR.		30'-4"	3,223	31'-0"
	M2	16	#11	STR.		19'-9"	1,679	
	V3	16	#11	①	23'-2"	24'-9"	2,104	
	SP-4	1	✻	⑤	19'-8"	915'-3"	611	
	SP-12	1	✻✻	④	30'-1"	972'-7"	1,014	
	SP-6	1	✻✻	④	10'-3"	298'-7"	311	
4	M12	20	#11	STR.		30'-4"	3,223	31'-0"
	M2	16	#11	STR.		19'-9"	1,679	
	V4	16	#11	①	22'-2"	23'-9"	2,019	
	SP-5	1	✻	⑤	18'-8"	869'-8"	581	
	SP-12	1	✻✻	④	30'-1"	972'-7"	1,014	
	SP-6	1	✻✻	④	10'-3"	298'-7"	311	

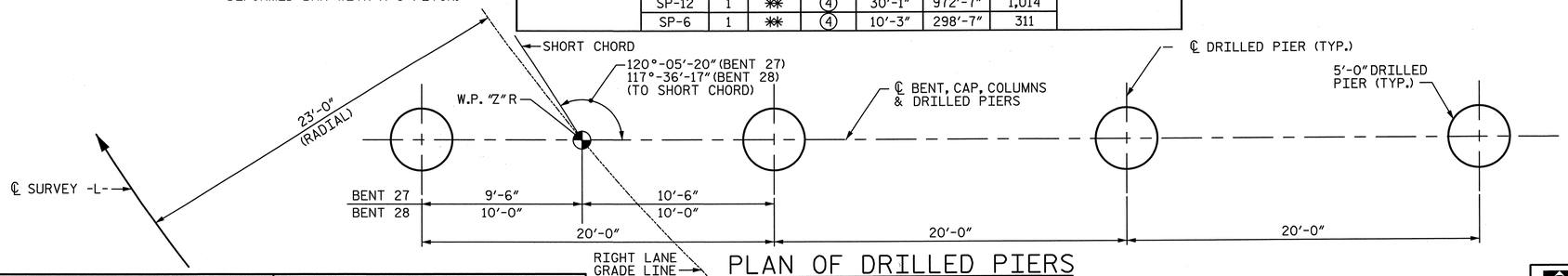

PLAN OF DRILLED PIERS

NOTE:
SEE TABLE A THIS SHEET FOR "Z".

BAR TYPES

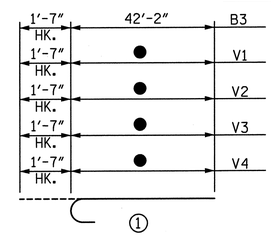

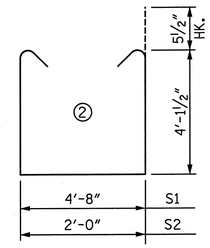

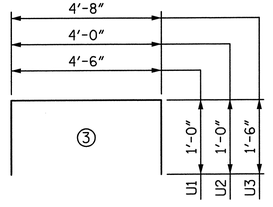

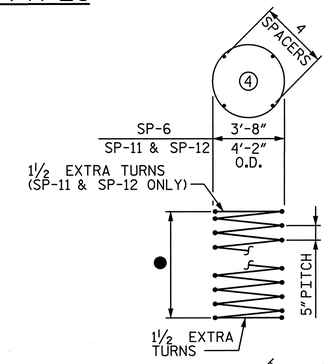

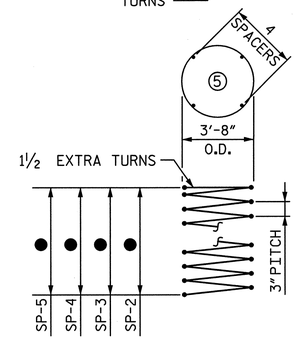

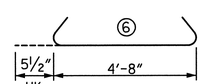

ALL BAR DIMENSIONS ARE OUT TO OUT

NOTE:
FOR ● AND COLUMN/DRILLED PIER REINFORCING BILL OF MATERIAL SEE TABLE F THIS SHEET.

BILL OF MATERIAL FOR ONE BENT (2 REQUIRED)					
BAR	NO.	SIZE	TYPE	LENGTH	WEIGHT
B1	12	#11	STR.	33'-1"	2,109
B2	12	#11	STR.	47'-4"	3,018
B3	14	#11	①	43'-9"	3,254
B4	20	#5	STR.	36'-10"	768
B5	42	#4	STR.	4'-10"	136
S1	79	#5	②	13'-10"	1,140
S2	79	#5	②	11'-2"	920
S3	79	#5	⑥	5'-7"	460
U1	10	#4	③	6'-6"	43
U2	8	#4	③	6'-0"	32
U3	66	#4	③	7'-8"	338

QUANTITIES			
		BENT 27	BENT 28
REINFORCING STEEL	LBS.	43,152	40,838
SPIRAL REINFORCING STEEL	LBS.	8,734	7,936
CLASS A CONCRETE : POUR 2 - COLUMNS	CU. YDS.	46.8	37.0
POUR 3 - CAP	CU. YDS.	60.7	60.7
TOTAL	CU. YDS.	107.5	97.7
5'-0" Ø DRILLED PIERS IN SOIL	L.F.	82	50
5'-0" Ø DRILLED PIERS NOT IN SOIL	L.F.	51	78
TOTAL 4'-0" Ø DRILLED PIERS	L.F.	133	128
DRILLED PIER CONCRETE : POUR 1	CU. YDS.	96.7	93.1
CSL TUBES	L.F.	695	670

PROJECT NO. U-2524C
GUILFORD COUNTY
STATION: POT 407+85.82 -L-
= POT 29+79.72 -Y4-
SHEET 3 OF 3

STATE OF NORTH CAROLINA
DEPARTMENT OF TRANSPORTATION
RALEIGH

SUBSTRUCTURE BENTS 27 & 28 DETAILS & BILL OF MATERIAL

-RIGHT LANE-

NORTH CAROLINA PROFESSIONAL SEAL 28479 ENGINEER KEVIN G. BAILEY 6-7-13

STV/ Ralph Whitehead Associates, Inc.
1000 West Morehead St., Ste. 200
Charlotte, NC 28208
NC License No. F-0991

REVISIONS						SHEET NO.
NO.	BY:	DATE:	NO.	BY:	DATE:	S-488
1			3			TOTAL SHEETS
2			4			836

DRAWN BY : JMP DATE : 1-13
CHECKED BY : JAN DATE : 2-13
DESIGN ENGINEER OF RECORD: K. BAILEY DATE : 5-13

6/6/2013 9:00:48 PM R:\ustation\Finals\Bent 27-28- 3 of 3.dgn

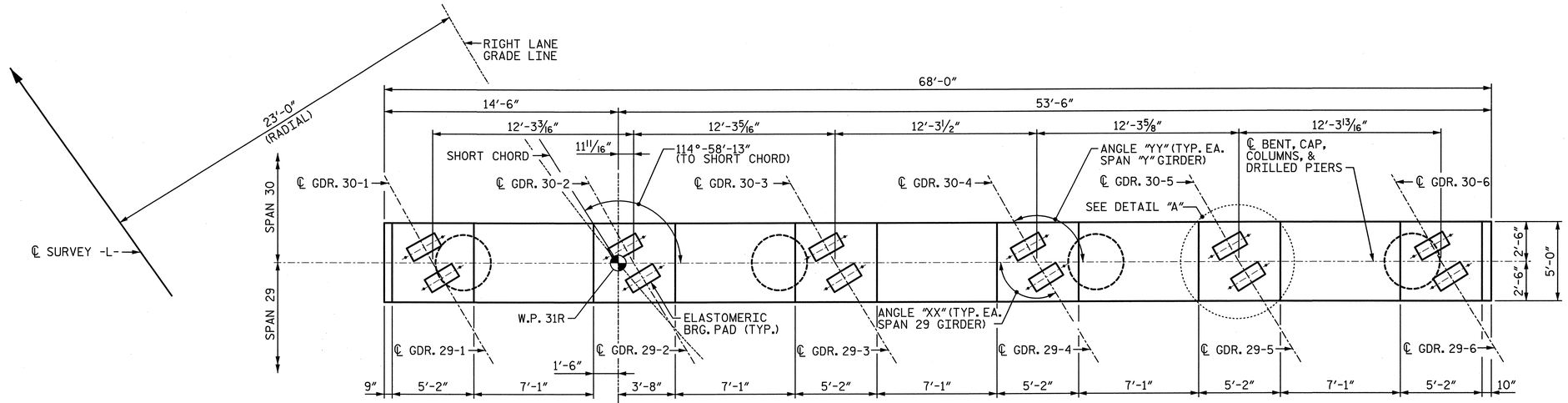

PLAN

NOTE:
SEE TABLE A SHEET 3 FOR "XX" AND "YY" ANGLES.
SEE TABLE B SHEET 3 FOR "AA" AND "BB" DIMENSIONS.

NOTE:
INVERT ALTERNATE PAIRS #5S1, #5S2 AND #5S3 BARS.

NOTES:

1. ALL REINFORCING STEEL IN THE DRILLED PIERS IS INCLUDED IN THE PAY ITEMS FOR "REINFORCING STEEL" AND "SPIRAL COLUMN REINFORCING STEEL".
2. THE LOCATION OF THE CONSTRUCTION JOINT IN THE DRILLED PIERS IS BASED ON AN APPROXIMATE GROUND LINE ELEVATION. IF THE CONSTRUCTION JOINT IS ABOVE THE ACTUAL GROUND ELEVATION, THE CONTRACTOR SHALL PLACE THE CONSTRUCTION JOINT 1 FOOT BELOW THE GROUND LINE.
3. STIRRUPS AND "U BARS" IN CAP MAY BE SHIFTED SLIGHTLY AS NECESSARY TO CLEAR ANCHOR BOLTS.
4. HOOKS ON BARS MAY BE TURNED AS NECESSARY FOR PLACING REINFORCING STEEL.
5. FOR "AB1" ANCHOR BOLTS, SEE "ELASTOMERIC BEARING DETAILS" SHEET.
6. SEE "GENERAL DRAWING GENERAL NOTES" SHEET FOR ADDITIONAL NOTES.
7. SEE SHEET 2 OF 3 FOR SECTIONS CALLED OUT ON ELEVATION VIEW.

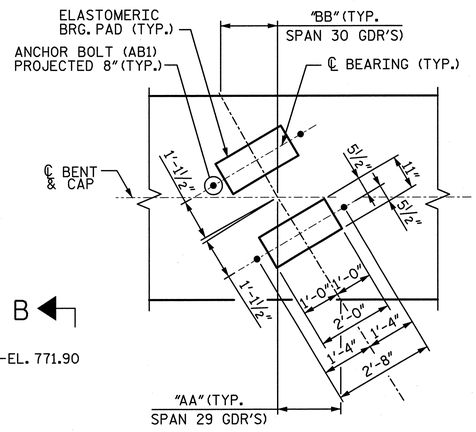

DETAIL "A"

(TYP. AT EACH BRIDGE SEAT)
NOTE:
SEE TABLE B SHEET 3 FOR "AA" AND "BB" DIMENSIONS.

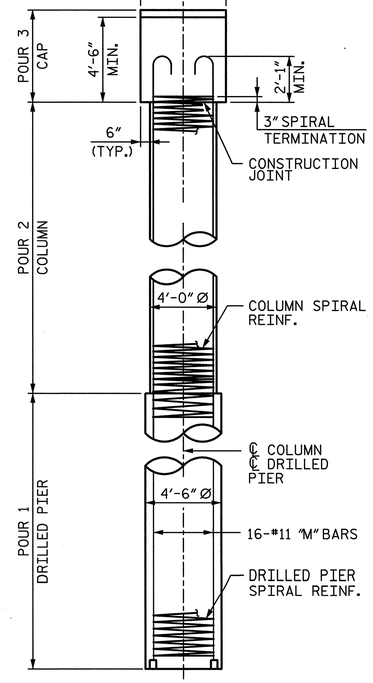

SIDE VIEW

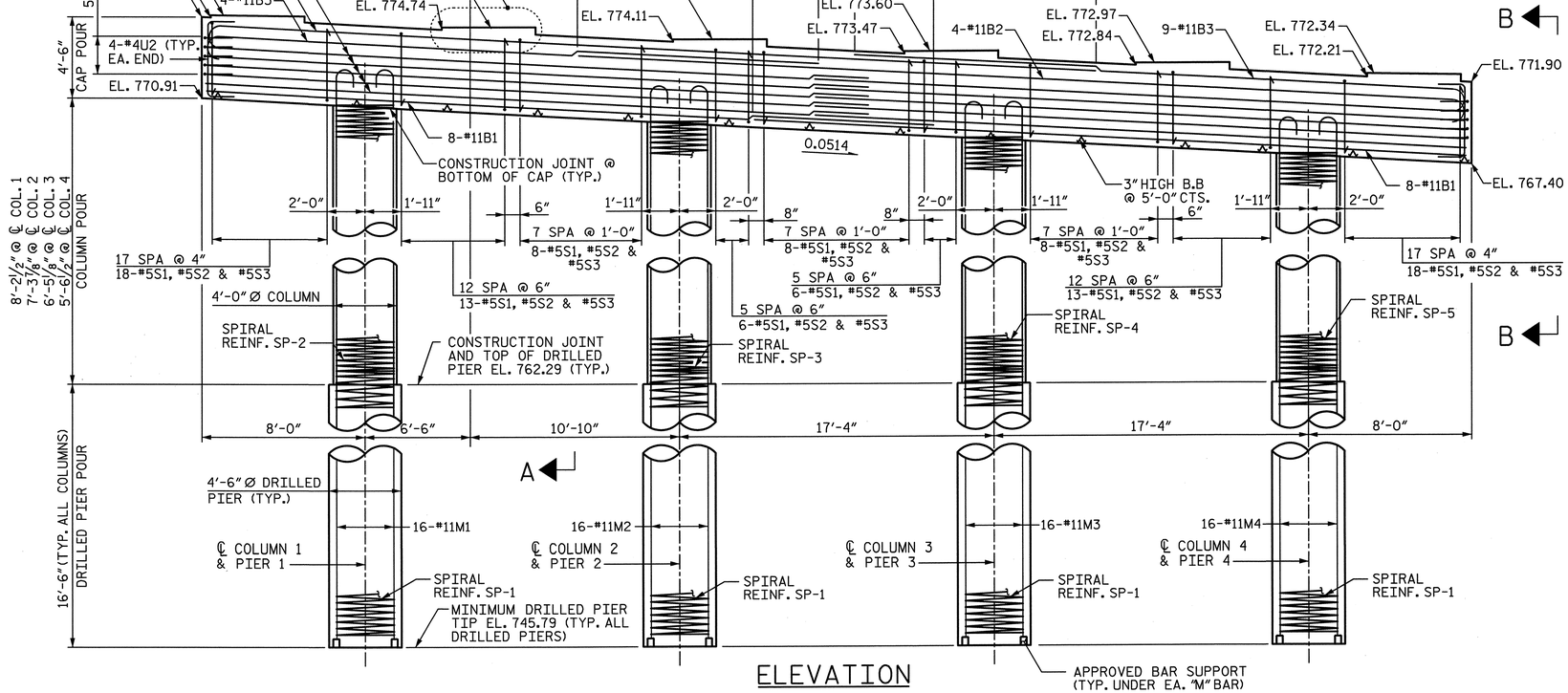

ELEVATION

NORTH CAROLINA PROFESSIONAL ENGINEER SEAL 28479 ENGINEER KEVIN G. BAILEY 6-7-13

PROJECT NO. U-2524C
GUILFORD COUNTY
STATION: POT 407+85.82 -L-
= POT 29+79.72 -Y4-

SHEET 1 OF 3

STATE OF NORTH CAROLINA
DEPARTMENT OF TRANSPORTATION
RALEIGH

SUBSTRUCTURE BENT 29 PLAN & ELEVATION

-RIGHT LANE-

REVISIONS						SHEET NO.
NO.	BY:	DATE:	NO.	BY:	DATE:	S-489
1			3			TOTAL SHEETS
2			4			836

DRAWN BY : JMP DATE : 1-13
CHECKED BY : JAN DATE : 3-13
DESIGN ENGINEER OF RECORD: K. BAILEY DATE : 5-13

STV / Ralph Whitehead Associates, Inc.
1000 West Morehead St., Ste. 200
Charlotte, NC 28208
NC License No. F-0991

6/6/2013 9:00:49 PM R:\ustation\Finals\Bent 29 - 1of 3.dgn

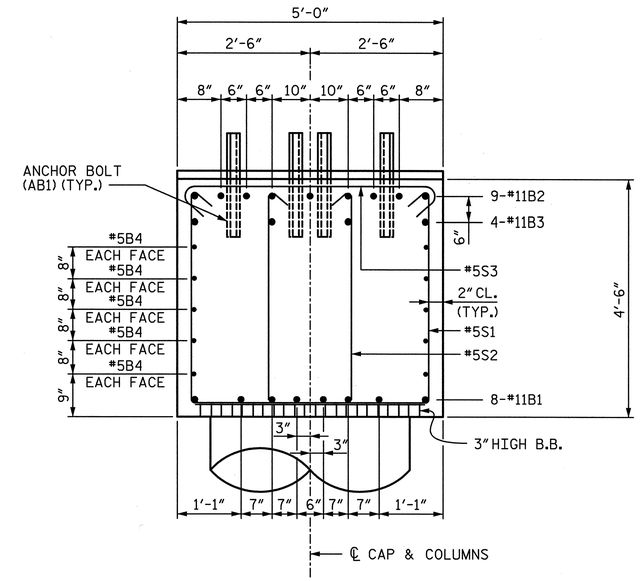

SECTION A-A

NOTE:
INVERT ALTERNATE #5S1, #5S2 AND #5S3 BARS.

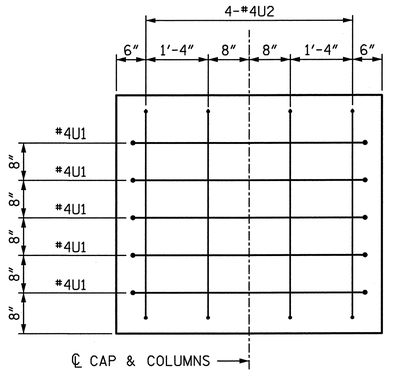

END VIEW B-B

(RIGHT END SHOWN, LEFT END SIMILAR)

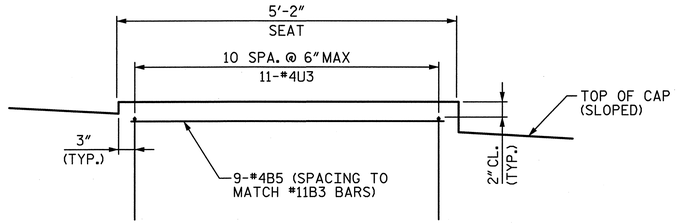

SEAT REINFORCEMENT DETAIL

(TYPICAL AT EACH BEARING SEAT)

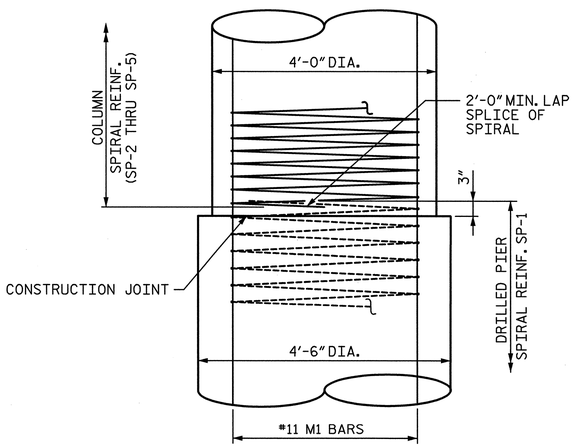

CONSTRUCTION JOINT DETAIL

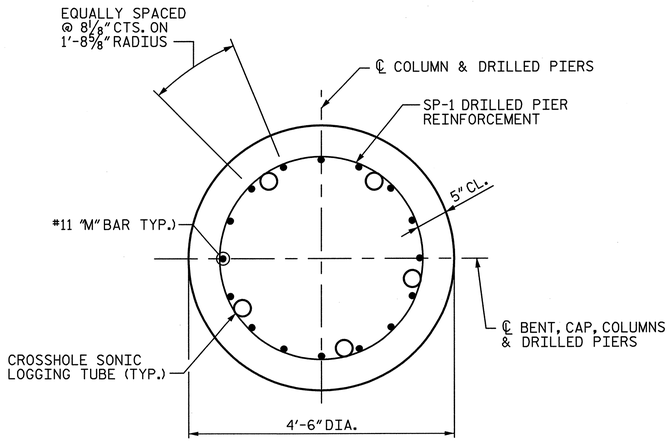

TYPICAL SECTION THROUGH DRILLED PIER

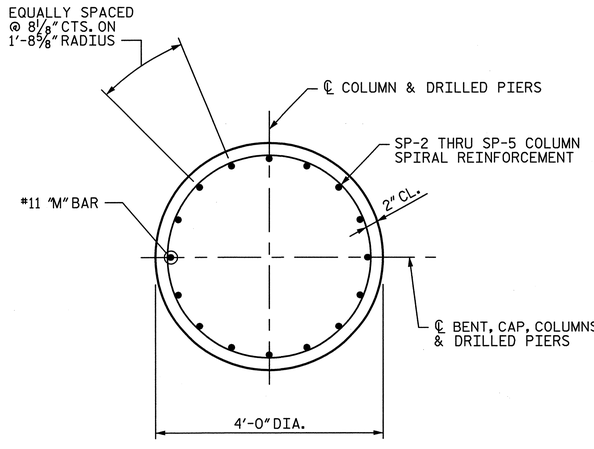

TYPICAL SECTION THROUGH COLUMN

NORTH CAROLINA PROFESSIONAL SEAL 28479 ENGINEER KEVIN G. BAILEY 6-7-13

PROJECT NO. U-2524C
GUILFORD COUNTY
STATION: POT 407+85.82 -L-
= POT 29+79.72 -Y4-
SHEET 2 OF 3

STATE OF NORTH CAROLINA
DEPARTMENT OF TRANSPORTATION
RALEIGH

SUBSTRUCTURE BENT 29 DETAILS

-RIGHT LANE-

DRAWN BY : JMP	DATE : 2-13	DESIGN ENGINEER OF RECORD: K. BAILEY	DATE : 5-13
CHECKED BY : JAN	DATE : 3-13		

STV / Ralph Whitehead Associates, Inc.
1000 West Morehead St., Ste. 200
Charlotte, NC 28208
NC License No. F-0991

REVISIONS						SHEET NO.
NO.	BY:	DATE:	NO.	BY:	DATE:	S-490
1			3			TOTAL SHEETS
2			4			836

6/6/2013 9:00:51 PM R:\ustation\Finals\Bent 29 - 2 of 3.dgn

TABLE A	
PLAN VIEW ANGLES	
GDR.	ANGLE "XX"
29-1	117°-28′-58″
29-2	117°-36′-55″
29-3	117°-44′-58″
29-4	117°-53′-05″
29-5	118°-01′-17″
29-6	118°-09′-34″
	ANGLE "YY"
30-1	114°-51′-42″
30-2	114°-58′-47″
30-3	115°-05′-57″
30-4	115°-13′-10″
30-5	115°-20′-28″
30-6	115°-27′-50″

TABLE B	
PLAN VIEW DIMENSIONS	
	DIMENSION "AA"
29-1	1′-3 5/8″
29-2	1′-3 11/16″
29-3	1′-3 13/16″
29-4	1′-3 7/8″
29-5	1′-3 15/16″
29-6	1′-4 1/16″
	DIMENSION "BB"
30-1	1′-1 7/8″
30-2	1′-2″
30-3	1′-2 1/16″
30-4	1′-2 1/8″
30-5	1′-2 3/16″
30-6	1′-2 5/16″

QUANTITIES		
REINFORCING STEEL	LBS.	23,179
SPIRAL REINFORCING STEEL	LBS.	2,818
CLASS A CONCRETE : POUR 2 - COLUMNS	CU. YDS.	12.8
POUR 3 - CAP	CU. YDS.	58.2
TOTAL	CU. YDS.	71.0
4′-6″ Ø DRILLED PIERS IN SOIL	L.F.	27
4′-6″ Ø DRILLED PIERS NOT IN SOIL	L.F.	39
TOTAL 4′-6″ Ø DRILLED PIERS	L.F.	66
DRILLED PIER CONCRETE : POUR 1	CU. YDS.	38.9
CSL TUBES	L.F.	360

BAR TYPES

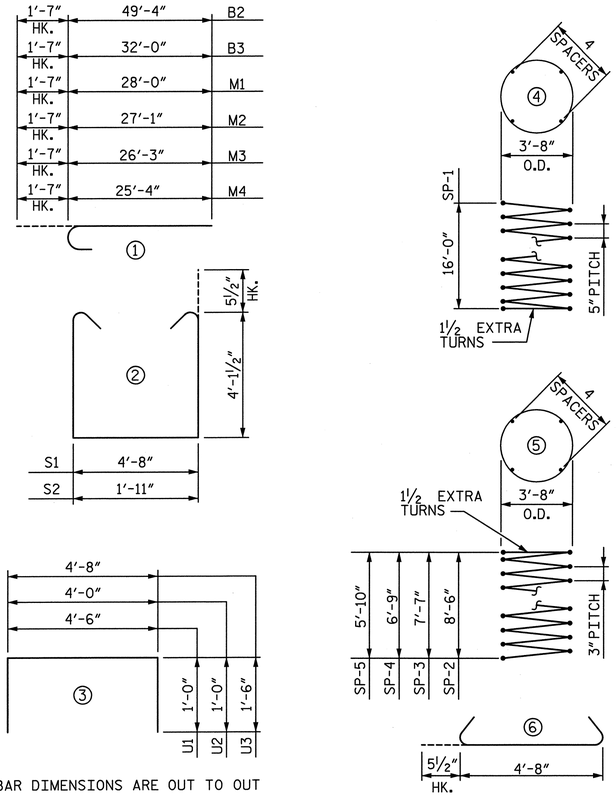

ALL BAR DIMENSIONS ARE OUT TO OUT

BILL OF MATERIAL

BAR	NO.	SIZE	TYPE	LENGTH	WEIGHT
B1	16	#11	STR.	38′-9″	3,294
B2	13	#11	①	50′-11″	3,517
B3	13	#11	①	33′-7″	2,320
B4	20	#5	STR.	35′-4″	737
B5	54	#4	STR.	4′-10″	174
S1	98	#5	②	13′-10″	1,414
S2	98	#5	②	11′-1″	1,133
S3	98	#5	⑥	5′-7″	571
U1	10	#4	③	6′-6″	43
U2	8	#4	③	6′-0″	32
U3	66	#4	③	7′-8″	338
M1	16	#11	①	29′-7″	2,515
M2	16	#11	①	28′-8″	2,437
M3	16	#11	①	27′-10″	2,366
M4	16	#11	①	26′-11″	2,288
SP-1	4	✱✱	④	455′-5″	1,900
SP-2	1	✱	⑤	404′-6″	270
SP-3	1	✱	⑤	363′-10″	243
SP-4	1	✱	⑤	323′-3″	216
SP-5	1	✱	⑤	282′-7″	189

✱✱ THE SP-1 SPIRAL REINFORCING STEEL SHALL BE W31 OR D-31 COLD DRAWN WIRE OR #5 PLAIN OR DEFORMED BAR WITH A 5″PITCH.

✱ THE SP-2 THROUGH SP-5 SPIRAL REINFORCING SHALL BE W20 OR D-20 COLD DRAWN WIRE OR #4 PLAIN OR DEFORMED BAR WITH A 3″PITCH.

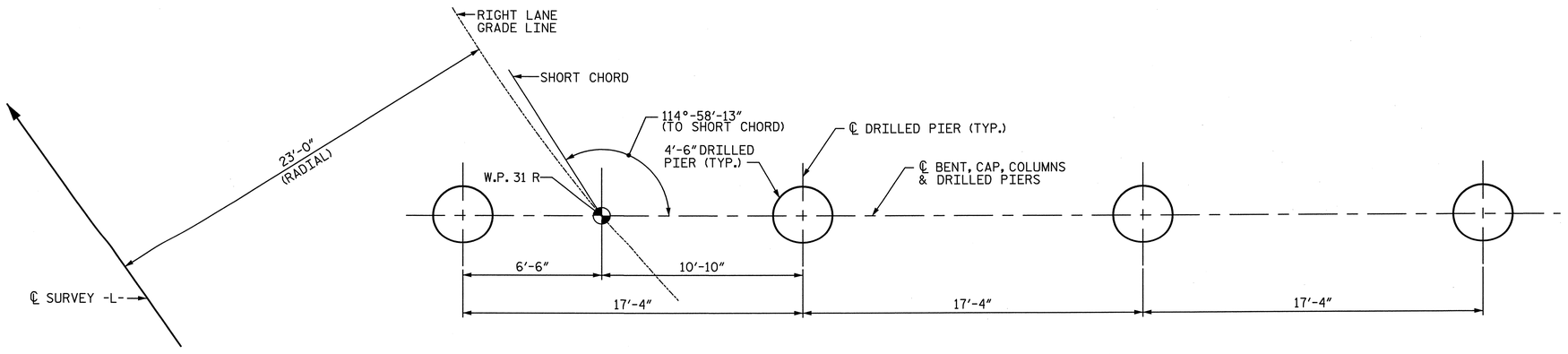

PLAN OF DRILLED PIERS

PROJECT NO. U-2524C

GUILFORD COUNTY

STATION: POT 407+85.82 -L-
= POT 29+79.72 -Y4-

SHEET 3 OF 3

STATE OF NORTH CAROLINA
DEPARTMENT OF TRANSPORTATION
RALEIGH

SUBSTRUCTURE BENT 29 DETAILS & BILL OF MATERIAL

-RIGHT LANE-

NORTH CAROLINA PROFESSIONAL SEAL 28479 ENGINEER KEVIN G. BAILEY 6-7-13

DRAWN BY : JMP	DATE : 2-13	DESIGN ENGINEER OF RECORD: K. BAILEY	DATE : 5-13
CHECKED BY : JAN	DATE : 3-13		

STV / Ralph Whitehead Associates, Inc.
1000 West Morehead St., Ste. 200
Charlotte, NC 28208
NC License No. F-0991

REVISIONS						SHEET NO.
NO.	BY:	DATE:	NO.	BY:	DATE:	S-491
1			3			TOTAL SHEETS
2			4			036

6/6/2013 9:00:52 PM R:\ustation\Finals\Bent 29 - 3 of 3.dgn

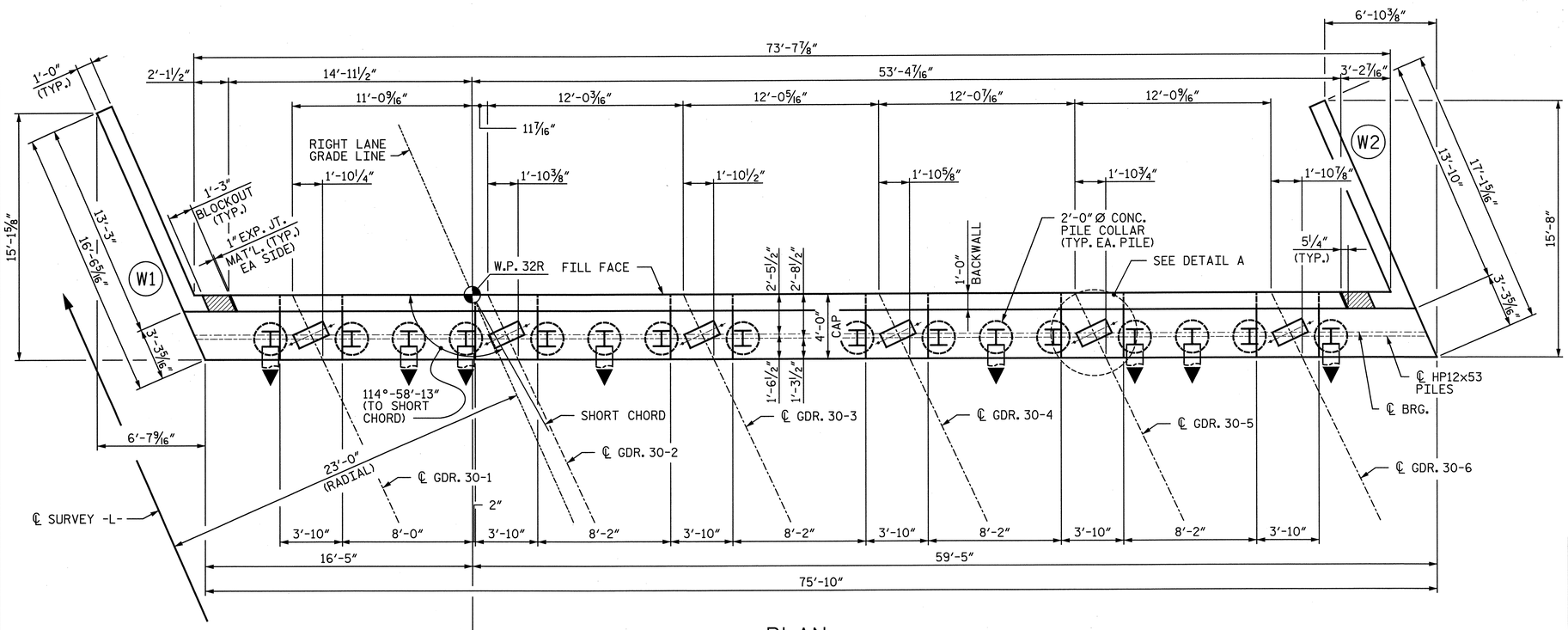

PLAN

▲ REINFORCING IN WING NOT SHOWN FOR CLARITY. FOR DETAILS, SEE SHEET 2 OF 3.

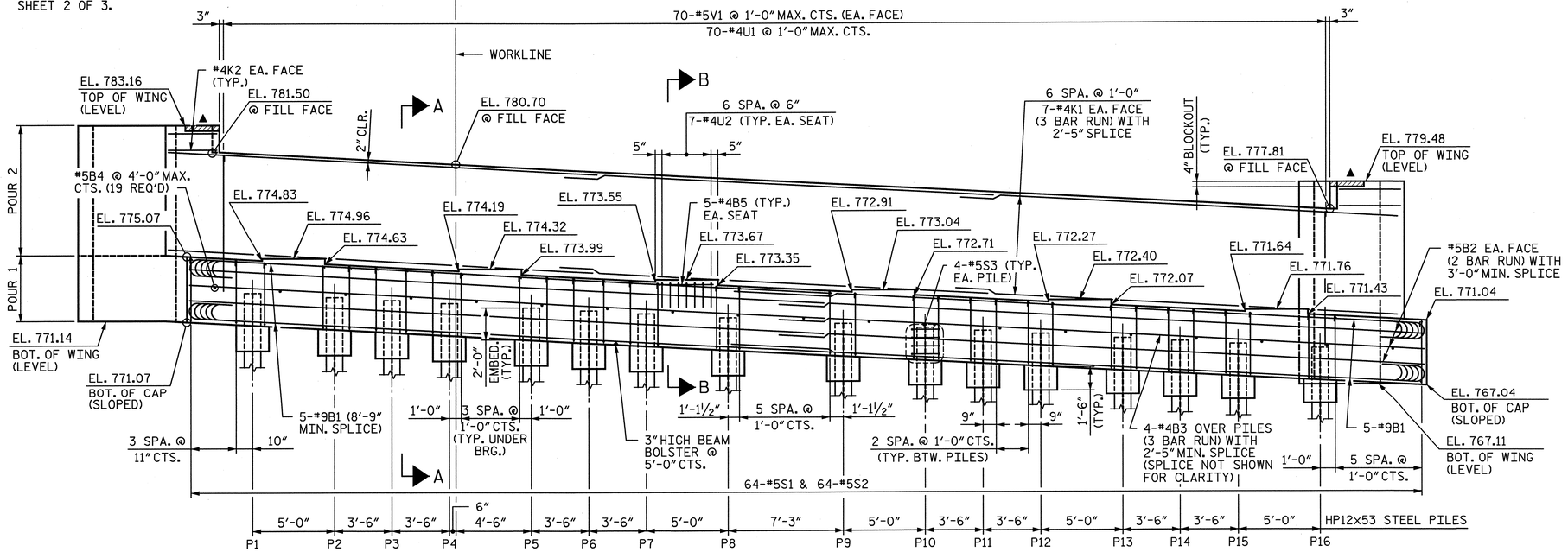

ELEVATION

(LOOKING IN THE DIRECTION OF STATIONING)

NOTES:

1. SEE SHEET 3 OF 3 FOR NOTES.
2. SEE SHEET 3 OF 3 FOR SECTIONS A-A AND B-B.

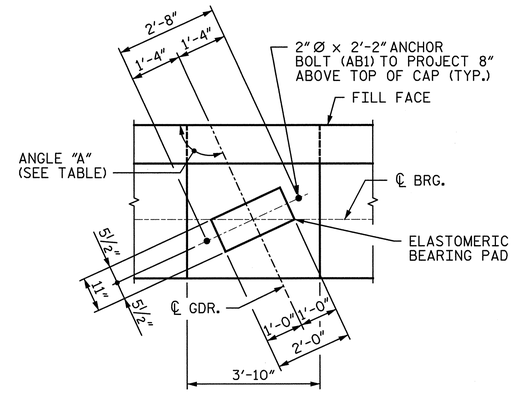

DETAIL A

(ELASTOMERIC BEARING PAD AND ANCHOR BOLT DIMENSIONS ARE TYPICAL FOR EACH GIRDER)

GIRDER	ANGLE "A"
30-1	114°-51'-42"
30-2	114°-58'-47"
30-3	115°-05'-56"
30-4	115°-13'-10"
30-5	115°-20'-27"
30-6	115°-27'-50"

TOP OF PILE ELEVATIONS
(BASED ON 2'-0" EMBEDMENT)

PILE	ELEVATION
P1	772.87
P2	772.60
P3	772.42
P4	772.23
P5	771.96
P6	771.77
P7	771.58
P8	771.32
P9	770.93
P10	770.67
P11	770.48
P12	770.29
P13	770.03
P14	769.84
P15	769.65
P16	769.39

PROJECT NO. U-2524C

GUILFORD COUNTY

STATION: POT 407+85.82 -L-
= POT 29+79.72 -Y4-

SHEET 1 OF 3

STATE OF NORTH CAROLINA
DEPARTMENT OF TRANSPORTATION
RALEIGH

SUBSTRUCTURE
END BENT 2

-RIGHT LANE-

NORTH CAROLINA PROFESSIONAL ENGINEER SEAL 28479 KEVIN G. BAILEY 6-7-13

REVISIONS						SHEET NO.
NO.	BY:	DATE:	NO.	BY:	DATE:	S-492
1			3			TOTAL SHEETS
2			4			836

DRAWN BY : CLG DATE : 2-13
CHECKED BY : KGB DATE : 2-13

DESIGN ENGINEER OF RECORD: K. BAILEY DATE : 5-13

STV / Ralph Whitehead Associates, Inc.
1000 West Morehead St. Ste. 200
Charlotte, NC 28208
NC License No. F-0991

6/7/2013 6:38:11 AM R:\ustation\Finals\End Bent 2 - Sheet 1of 3.dgn

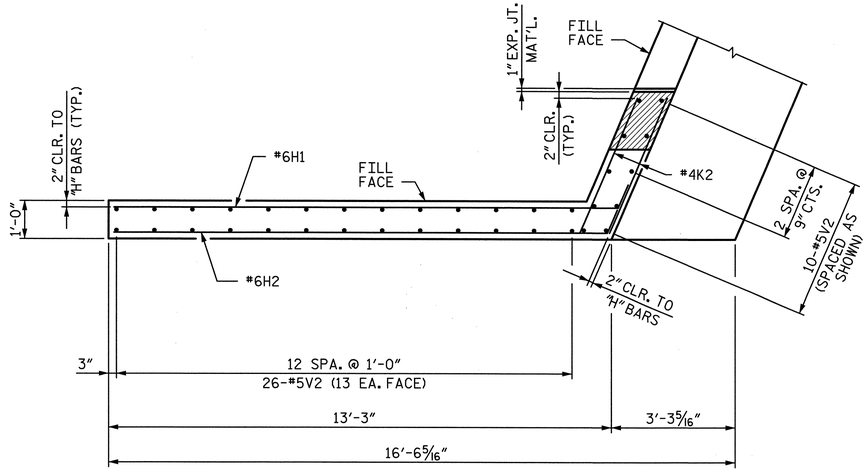

PLAN (W1)

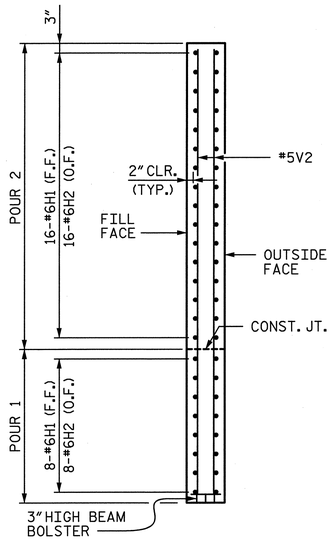

SECTION C-C

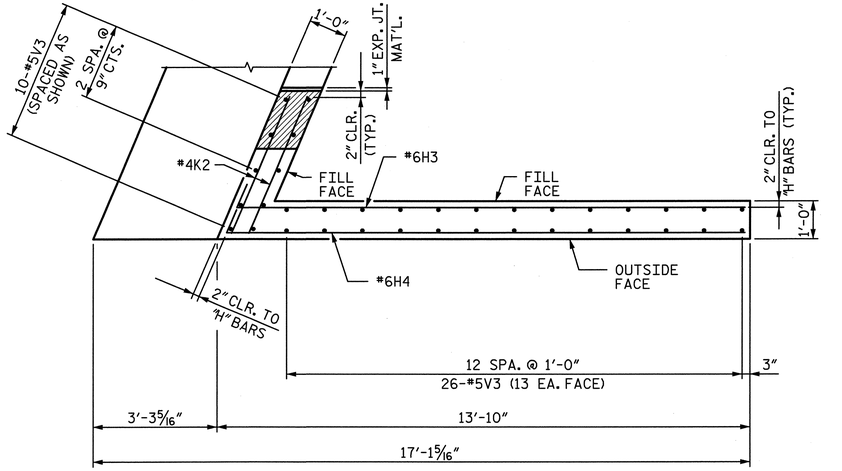

PLAN (W2)

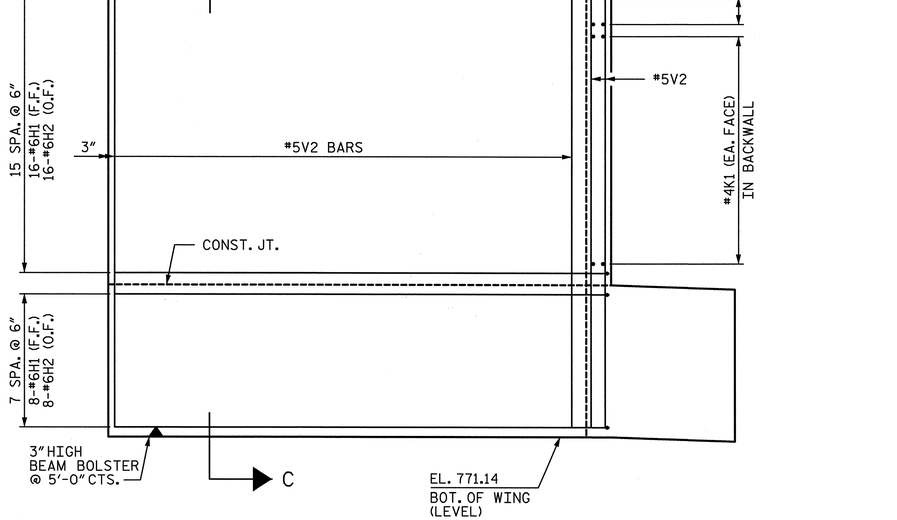

ELEVATION (W1)

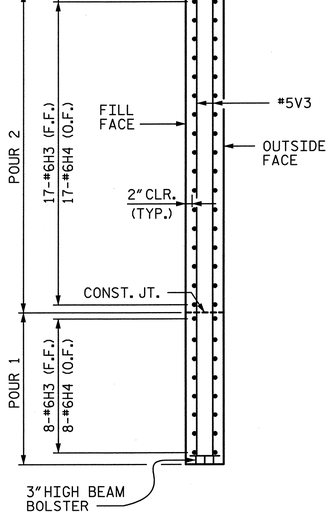

SECTION D-D

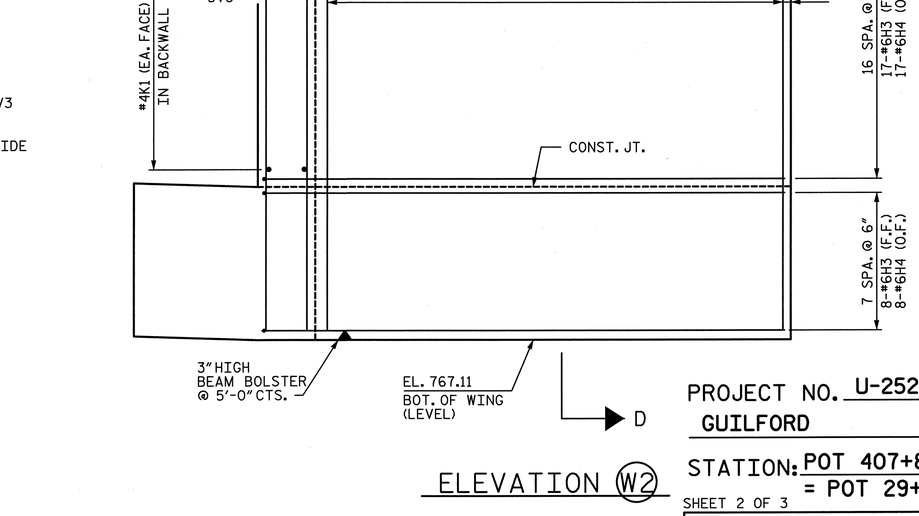

ELEVATION (W2)

PROJECT NO. U-2524C

GUILFORD COUNTY

STATION: POT 407+85.82 -L-
= POT 29+79.72 -Y4-

SHEET 2 OF 3

STATE OF NORTH CAROLINA
DEPARTMENT OF TRANSPORTATION
RALEIGH

SUBSTRUCTURE END BENT 2

-RIGHT LANE-

NORTH CAROLINA PROFESSIONAL SEAL 28479 ENGINEER KEVIN G. BAILEY
6-7-13

DRAWN BY : CLG	DATE : 2-13	DESIGN ENGINEER OF RECORD: K. BAILEY	DATE : 5-13
CHECKED BY : KGB	DATE : 2-13		

STV / Ralph Whitehead Associates, Inc.
1000 West Morehead St., Ste. 200
Charlotte, NC 28208
NC License No. F-0991

REVISIONS						SHEET NO.
NO.	BY:	DATE:	NO.	BY:	DATE:	S-493
1			3			TOTAL SHEETS
2			4			836

6/6/2013 9:00:54 PM R:\ustation\Finals\End Bent 2 - Sheet 2 of 3.dgn

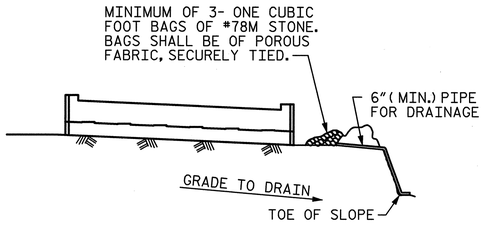

BAGGED STONE AND PIPE SHALL BE PLACED IMMEDIATELY AFTER COMPLETION OF END BENT EXCAVATION. PIPE MAY BE EITHER CONCRETE, CORRUGATED STEEL, CORRUGATED ALUMINUM ALLOY, OR CORRUGATED PLASTIC. PERFORATED PIPE WILL NOT BE ALLOWED.

BAGGED STONE SHALL REMAIN IN PLACE UNTIL THE ENGINEER DIRECTS THAT IT BE REMOVED. THE CONTRACTOR SHALL REMOVE AND DISPOSE OF SILT ACCUMULATIONS AT BAGGED STONE WHEN SO DIRECTED BY THE ENGINEER. BAGS SHALL BE REMOVED AND REPLACED WHENEVER THE ENGINEER DETERMINES THAT THEY HAVE DETERIORATED AND LOST THEIR EFFECTIVENESS.

NO SEPARATE PAYMENT WILL BE MADE FOR THIS WORK AND THE ENTIRE COST OF THIS WORK SHALL BE INCLUDED IN THE UNIT CONTRACT PRICE BID FOR THE SEVERAL PAY ITEMS.

TEMPORARY DRAINAGE AT END BENT

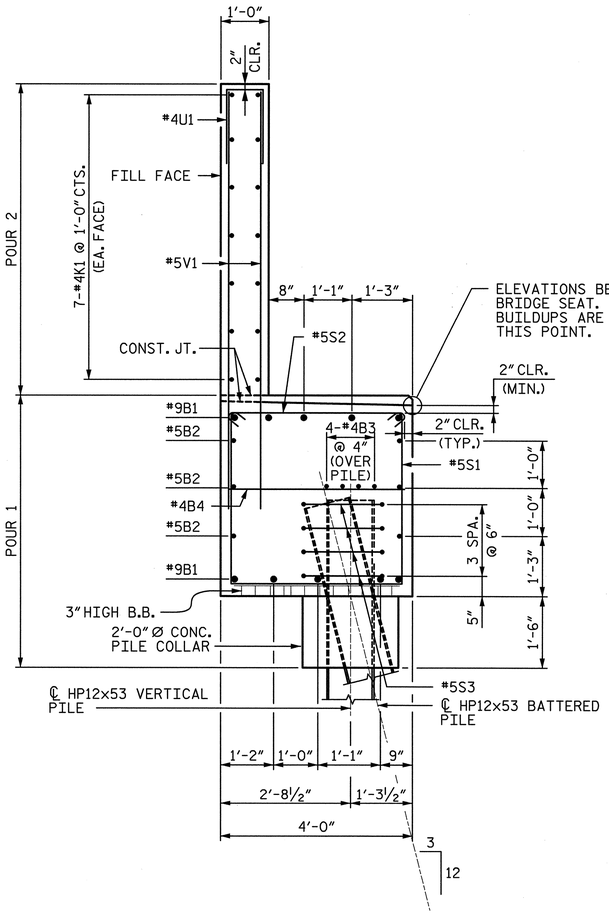

SECTION A-A

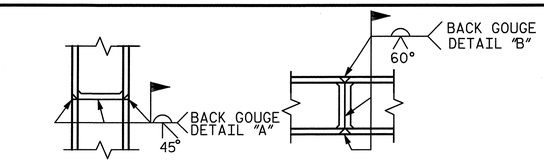

▲ PILE VERTICAL

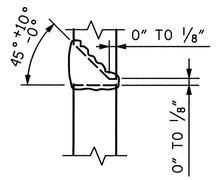

DETAIL "A"

▲ PILE HORIZONTAL OR VERTICAL

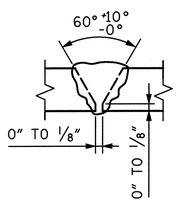

DETAIL "B"

▲ POSITION OF PILE DURING WELDING.

PILE SPLICE DETAILS

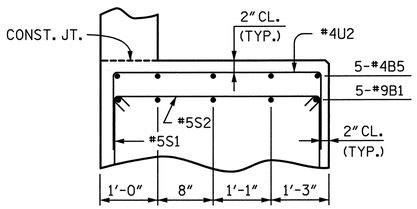

PARTIAL SECTION B

(TYP. AT EACH BRIDGE SEAT)
(ANCHOR BOLTS NOT SHOWN FOR CLARITY)

BAR TYPES

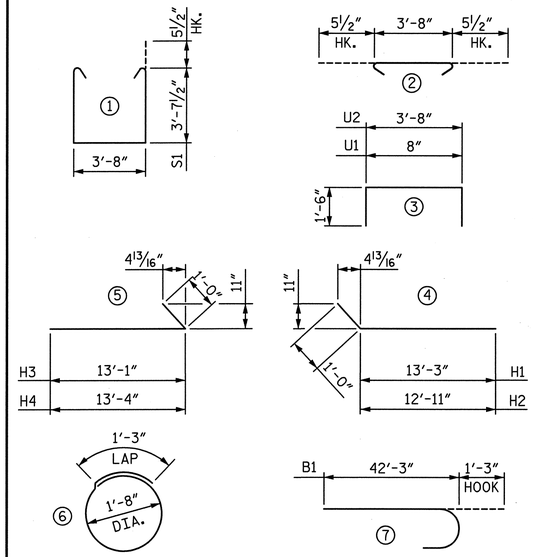

ALL BAR DIMENSIONS ARE OUT TO OUT.

REINFORCING BAR SCHEDULE

BAR	NO.	SIZE	TYPE	LENGTH	WEIGHT
B1	20	#9	⑦	43'-6"	2,958
B2	12	#5	STR	39'-3"	491
B3	12	#4	STR	26'-10"	215
B4	19	#4	STR	3'-8"	47
B5	30	#4	STR	3'-6"	70
H1	24	#6	④	14'-3"	514
H2	24	#6	④	13'-11"	502
H3	25	#6	⑤	14'-1"	529
H4	25	#6	⑤	14'-4"	538
K1	42	#4	STR	26'-10"	753
K2	8	#4	STR	2'-9"	15
V1	140	#5	STR	8'-6"	1,241
V2	36	#5	STR	11'-6"	432
V3	36	#5	STR	12'-0"	451
S1	64	#5	①	11'-10"	790
S2	64	#5	②	4'-7"	306
S3	64	#5	⑥	6'-6"	434
U1	70	#4	③	3'-8"	171
U2	42	#4	③	6'-8"	187

QUANTITIES

		END BENT 2
REINFORCING STEEL	LBS.	10,644
CLASS A CONCRETE		
POUR 1 (CAP, PILE COLLAR & LOWER WING)	: CU. YARDS	52.6
POUR 2 (BACKWALL & UPPER WING)	: CU. YARDS	26.4
	TOTAL : CU. YARDS	79.0
HP12x53 STEEL PILES	NO.	16
HP12x53 STEEL PILES	LIN. FEET	400

NOTES:

STIRRUPS IN CAP MAY BE SHIFTED SLIGHTLY AS NECESSARY TO CLEAR ANCHOR BOLTS.

BACKWALL SHALL BE PLACED BEFORE APPLYING THE EPOXY PROTECTIVE COATING.

THE TOP SURFACE AREAS OF THE END BENT CAP SHALL BE CURED IN ACCORDANCE WITH THE STANDARD SPECIFICATIONS EXCEPT THAT THE MEMBRANE CURING COMPOUND METHOD SHALL NOT BE USED.

THE TOP SURFACE OF THE CAP EXCEPT THE BRIDGE SEAT BUILDUPS SHALL BE SLOPED TRANSVERSELY FROM THE FILL FACE TO THE OUTSIDE FACE AT THE RATE OF 2%.

"U" BARS IN BRIDGE SEATS MAY BE SHIFTED TO CLEAR OTHER REINFORCING.

DIMENSIONS LOCATING PILES ARE SHOWN TO THE CENTERLINE OF THE PILE AT THE BOTTOM OF THE END BENT CAP.

THE CONCRETE IN THE SHADED AREA OF THE WING SHALL BE POURED AFTER THE BARRIER RAIL ARE CAST IF SLIP FORMING IS USED.

SEE "ELASTOMERIC BEARING DETAILS" SHEET FOR 2" Ø ANCHOR BOLT DETAILS.

INSTALL THE 4" Ø DRAIN PIPE THROUGH THE WING WALL AS REQUIRED FOR THE REINFORCED BRIDGE APPROACH SLABS, SEE ROADWAY PLANS. REINFORCING STEEL IN THE WING WALL MAY BE SHIFTED SLIGHTLY AS NECESSARY TO CLEAR THE DRAIN PIPE.

PROJECT NO. U-2524C

GUILFORD COUNTY

STATION: POT 407+85.82 -L-
= POT 29+79.72 -Y4-

SHEET 3 OF 3

STATE OF NORTH CAROLINA
DEPARTMENT OF TRANSPORTATION
RALEIGH

SUBSTRUCTURE
END BENT 2

-RIGHT LANE-

DRAWN BY : CLG	DATE : 2-13	DESIGN ENGINEER OF RECORD: K. BAILEY	DATE : 5-13
CHECKED BY : KGB	DATE : 2-13		

STV / Ralph Whitehead Associates, Inc.
1000 West Morehead St., Ste. 200
Charlotte, NC 28208
NC License No. F-0991

REVISIONS						SHEET NO.
NO.	BY:	DATE:	NO.	BY:	DATE:	S-494
1			3			TOTAL SHEETS
2			4			836

6/6/2013 9:00:56 PM R:\ustation\Finals\End Bent 2 - Sheet 3 of 3.dgn

NOTES :

FOR BERM WIDTH DIMENSIONS, SEE GENERAL DRAWING.

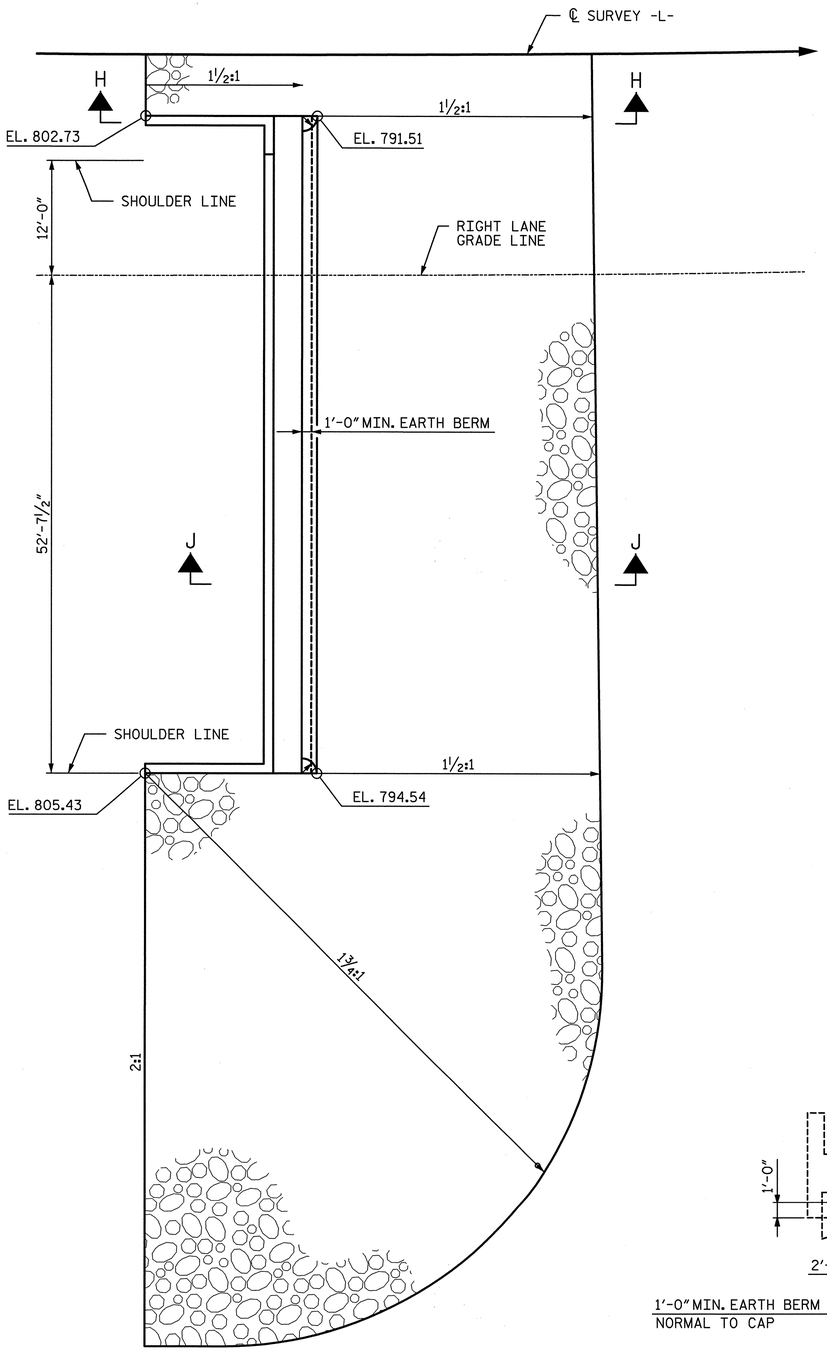

END BENT 1

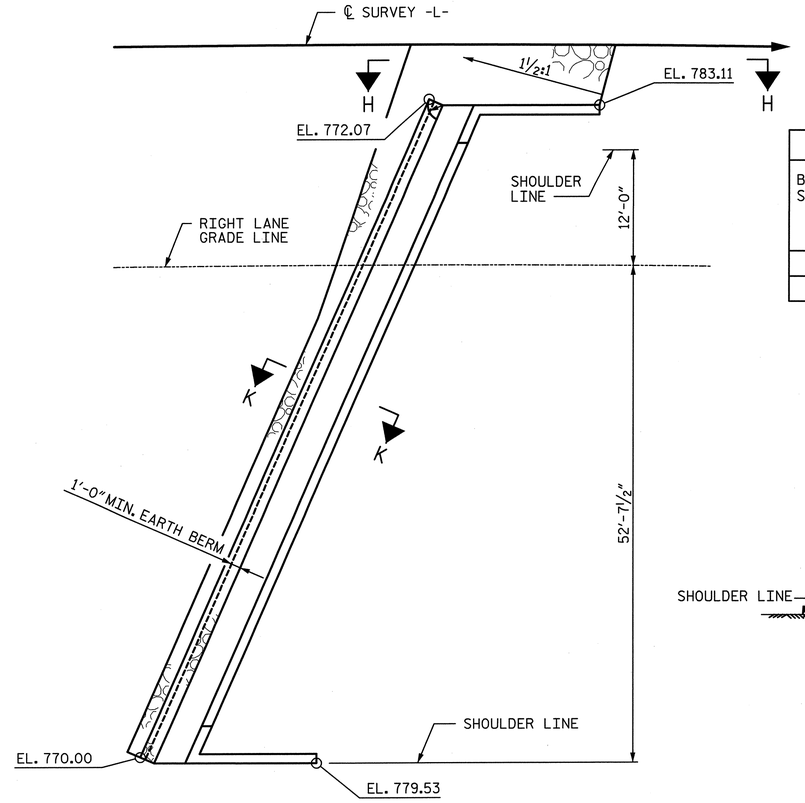

END BENT 2

ESTIMATED QUANTITIES		
BRIDGE @ STA. 407+85.82 -L-	RIP RAP CLASS II (2'-0" THICK)	GEOTEXTILE FOR DRAINAGE
	TONS	SQUARE YARDS
END BENT 1	615	680
END BENT 2	75	80

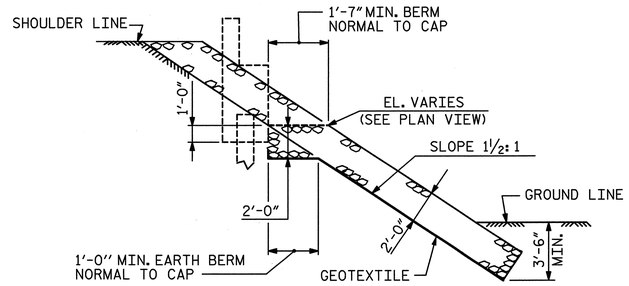

SECTION H-H

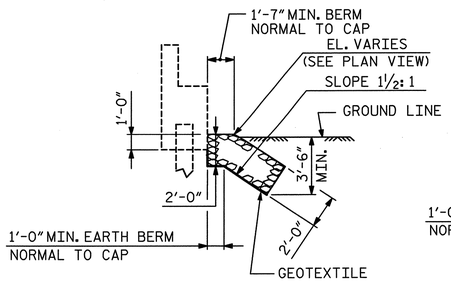

SECTION K-K

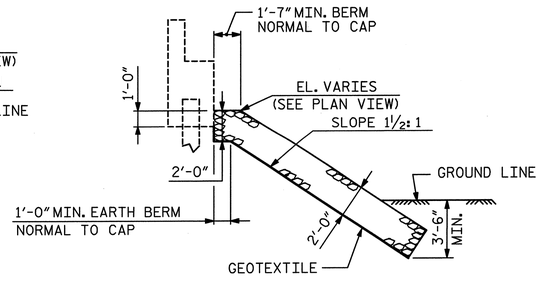

SECTION J-J

NORTH CAROLINA PROFESSIONAL SEAL 28479 ENGINEER KEVIN G. BAILEY 6-7-13

PROJECT NO. U-2524C

GUILFORD COUNTY

STATION: POT 407+85.82 -L-
= POT 29+79.72 -Y4-

STATE OF NORTH CAROLINA
DEPARTMENT OF TRANSPORTATION
RALEIGH

RIP RAP DETAILS

-RIGHT LANE-

DRAWN BY : CLG	DATE : 2-13	DESIGN ENGINEER OF RECORD: P. KELLY	DATE : 5-13
CHECKED BY : PEK	DATE : 3-13		

STV / Ralph Whitehead Associates, Inc.
1000 West Morehead St., Ste. 200
Charlotte, NC 28208
NC License No. F-0991

REVISIONS						SHEET NO.
NO.	BY:	DATE:	NO.	BY:	DATE:	S-495
1			3			TOTAL SHEETS
2			4			836

6/6/2013 9:00:58 PM R:\Ustation\Finals\Rip Rap.dgn

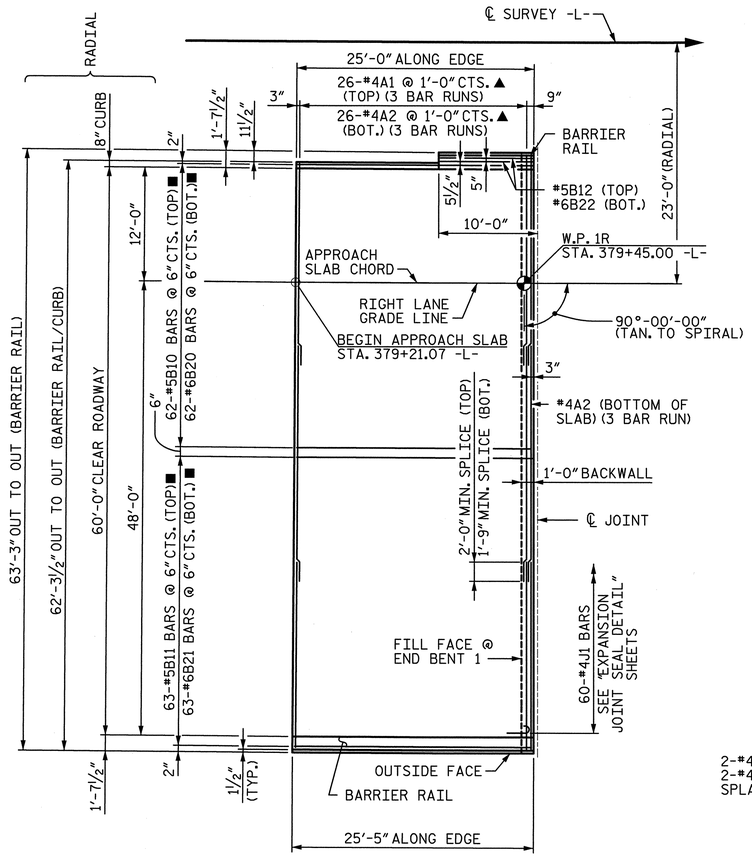

PLAN @ END BENT 1

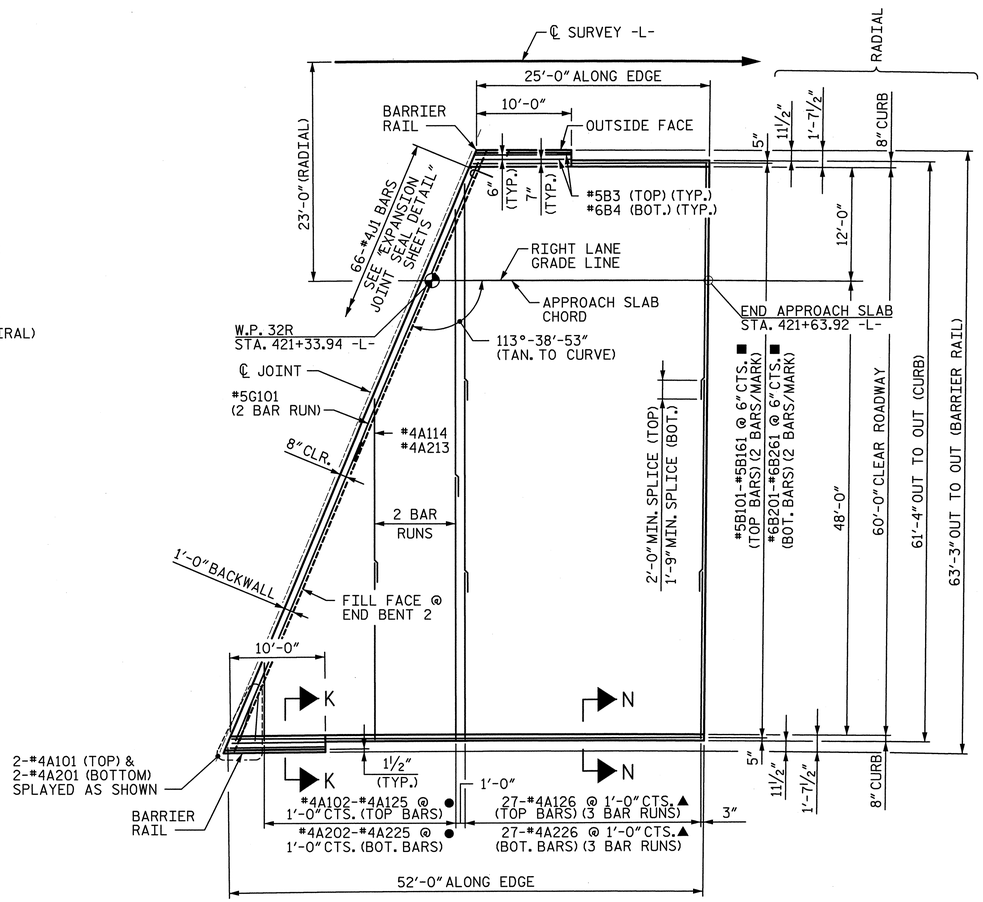

PLAN @ END BENT 2

- ● "A" BARS ARE PARALLEL TO FIRST A126/A226 BAR
- ▲ "A" BARS ARE SPACED RADIALLY AS MEASURED ON THE OUTSIDE FACE.
- ■ ALL 'B' BARS ARE PARALLEL TO APPROACH SLAB CHORD.

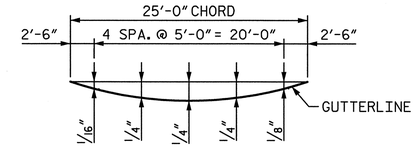

LEFT SIDE - EDGE OF APPROACH SLAB @ END BENT 1

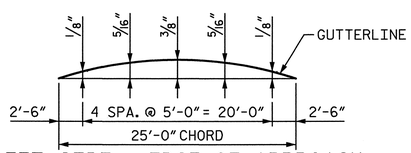

LEFT SIDE - EDGE OF APPROACH SLAB @ END BENT 2

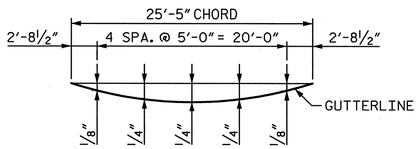

RIGHT SIDE - EDGE OF APPROACH SLAB @ END BENT 1

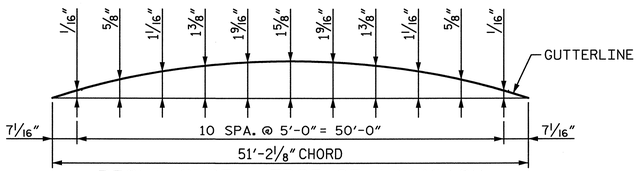

RIGHT SIDE - EDGE OF APPROACH SLAB @ END BENT 2

ARC OFFSETS

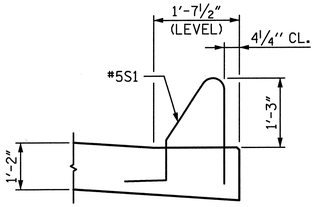

SECTION K-K

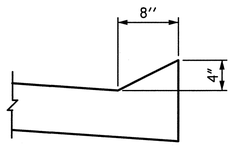

SECTION N-N

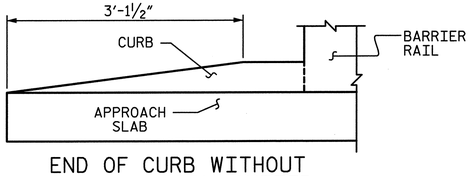

END OF CURB WITHOUT SHOULDER BERM GUTTER

CURB DETAILS

NOTES:

1. FOR NOTES, SEE SHEET 2 OF 3.
2. FOR CONCRETE BARRIER RAIL DETAILS, SEE SHEET 2 OF 3.

PROJECT NO. U-2524C

GUILFORD COUNTY

STATION: POT 407+85.82 -L- = POT 29+79.72 -Y4-

SHEET 1 OF 3

STATE OF NORTH CAROLINA
DEPARTMENT OF TRANSPORTATION
RALEIGH

BRIDGE APPROACH SLAB DETAILS

-RIGHT LANE-

NORTH CAROLINA PROFESSIONAL ENGINEER SEAL 28479 ENGINEER KEVIN G. BAILEY 6-7-13

STV / Ralph Whitehead Associates, Inc.
1000 West Morehead St., Ste. 200
Charlotte, NC 28208
NC License No. F-0991

REVISIONS						SHEET NO.
NO.	BY:	DATE:	NO.	BY:	DATE:	S-496
1			3			TOTAL SHEETS
2			4			836

DRAWN BY : CLG	DATE : 2-13	DESIGN ENGINEER OF RECORD: P. KELLY	DATE : 5-13
CHECKED BY : PEK	DATE : 4-13		

6/6/2013 9:00:59 PM R:\Ustation\Finals\App Slab Sheet 1 of 3.dgn

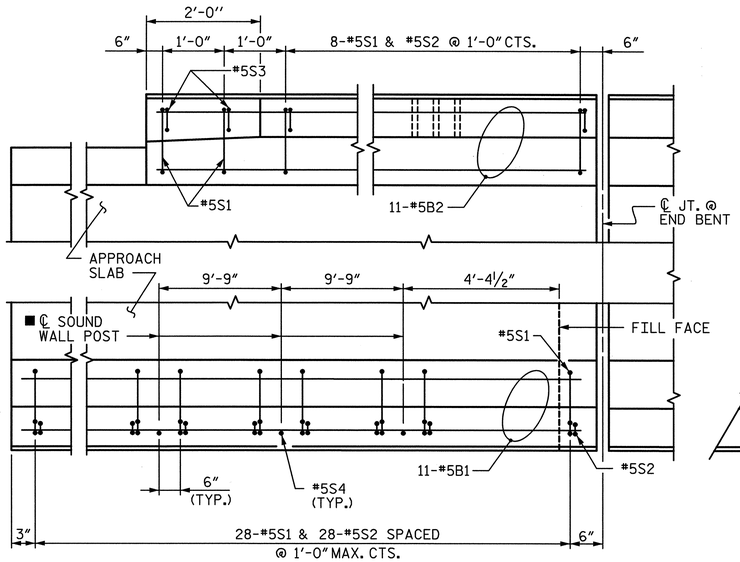

END BENT #1

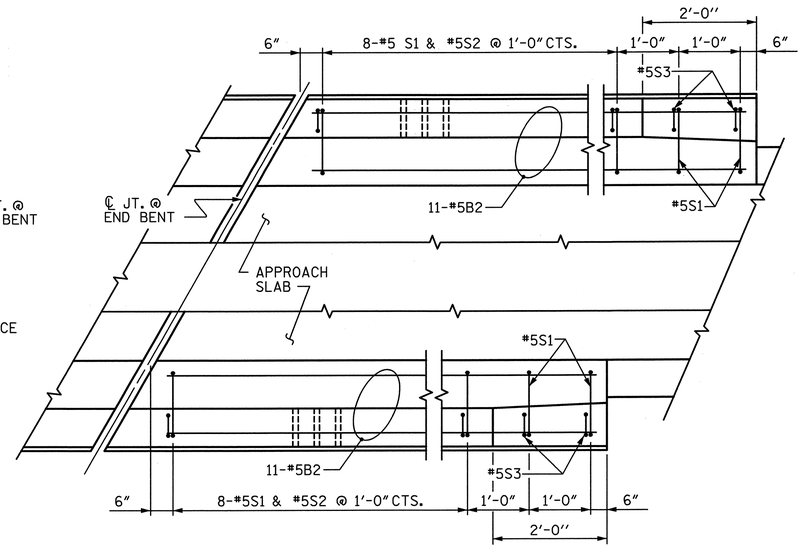

END BENT #2

PLAN OF BARRIER RAIL

■ FOR SOUND WALL CONNECTION DETAILS SEE SOUND BARRIER WALL LAYOUT & DETAILS SHEET.

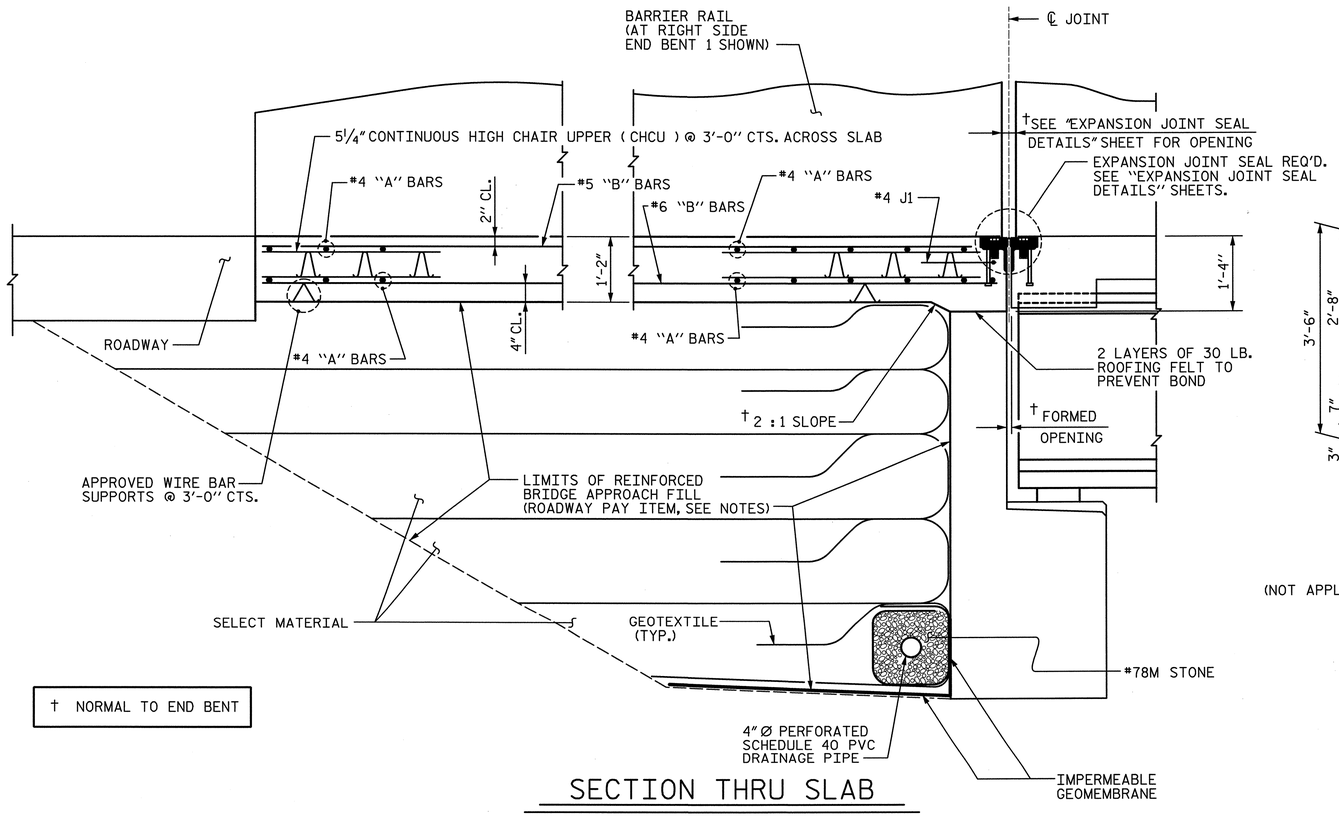

† NORMAL TO END BENT

SECTION THRU SLAB

NOTES

APPROACH SLAB SHALL NOT BE CONSTRUCTED PRIOR TO COMPLETION OF THE BRIDGE DECK.

FOR REINFORCED BRIDGE APPROACH FILL INCLUDING GEOTEXTILE, IMPERMEABLE GEOMEMBRANE, 4" Ø DRAINAGE PIPE, #78M STONE, AND SELECT MATERIAL, SEE ROADWAY PLANS.

AREA BETWEEN THE WINGWALL AND APPROACH SLAB SHALL BE GRADED TO DRAIN THE WATER AWAY FROM THE FILL FACE OF THE BRIDGE AND SHALL BE PAVED. SEE ROADWAY PLANS.

FOR EXPANSION JOINT SEALS, SEE SPECIAL PROVISIONS.

THE COST OF BARRIER RAIL ON THE APPROACH SLAB SHALL BE INCLUDED IN THE LINEAR FOOT CONTRACT BID PRICE FOR "CONCRETE BARRIER RAIL."

THE BARRIER RAIL IN EACH APPROACH SLAB SHALL NOT BE CAST UNTIL ALL APPROACH SLAB CONCRETE HAS BEEN CAST AND HAS REACHED A MINIMUM COMPRESSIVE STRENGTH OF 3,000 PSI.

ALL REINFORCING IN THE BARRIER RAIL SHALL BE EPOXY COATED.

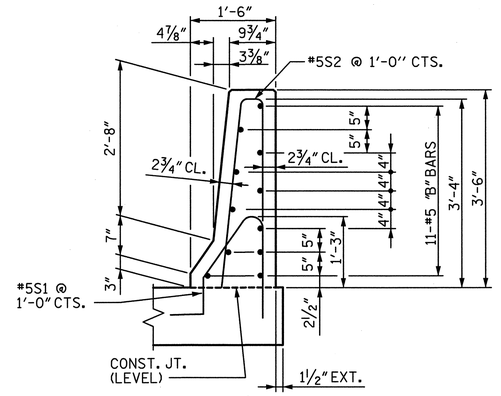

TYPICAL SECTION THRU RAIL

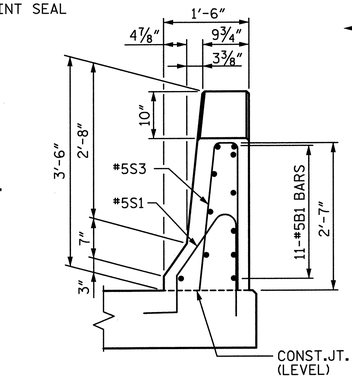

END VIEW

(NOT APPLICABLE TO END BENT 1 RIGHT SIDE)

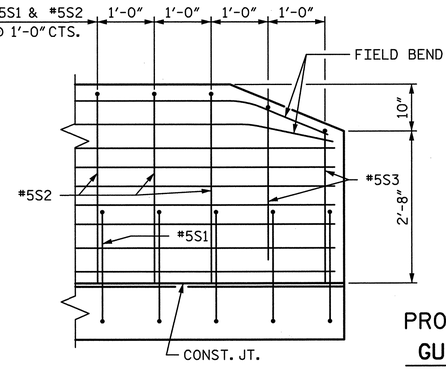

SIDE VIEW

(NOT APPLICABLE TO END BENT 1 RIGHT SIDE)

END OF RAIL DETAILS

BAR TYPES

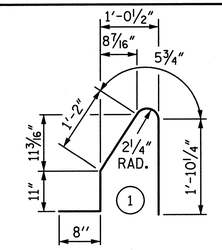

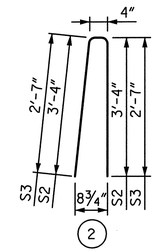

ALL BAR DIMENSIONS ARE OUT TO OUT

BILL OF MATERIAL

BARRIER RAIL ONLY

BAR	NO.	SIZE	TYPE	LENGTH	WEIGHT
✳B1	11	#5	STR	25'-1"	288
✳B2	33	#5	STR	9'-8"	333
✳S1	58	#5	①	5'-1"	308
✳S2	52	#5	②	7'-0"	380
✳S3	6	#5	②	5'-6"	34
✳EPOXY COATED REINFORCING STEEL				LBS.	1,343
CLASS AA CONCRETE				CU. YDS.	7.6
CONCRETE BARRIER RAIL				56.1	LIN. FT.

PROJECT NO. U-2524C

GUILFORD COUNTY

STATION: POT 407+85.82 -L-
= POT 29+79.72 -Y4-

SHEET 2 OF 3

STATE OF NORTH CAROLINA
DEPARTMENT OF TRANSPORTATION
RALEIGH

BRIDGE APPROACH SLAB DETAILS

-RIGHT LANE-

NORTH CAROLINA PROFESSIONAL SEAL 28479 ENGINEER KEVIN G. BAILEY
6-7-13

DRAWN BY : CLG	DATE : 2-13	DESIGN ENGINEER OF RECORD: P. KELLY	DATE : 5-13
CHECKED BY : PEK	DATE : 4-13		

STV / Ralph Whitehead Associates, Inc.
1000 West Morehead St., Ste. 200
Charlotte, NC 28208
NC License No. F-0991

REVISIONS						SHEET NO.
NO.	BY:	DATE:	NO.	BY:	DATE:	S-497
1			3			TOTAL SHEETS
2			4			836

6/7/2013 8:02:55 AM R:\ustation\Finals\App Slab Sheet 2 of 3.dgn

BILL OF MATERIAL

APPROACH SLAB AT E.B. 1

BAR	NO.	SIZE	TYPE	LENGTH	WEIGHT
✳A1	78	#4	STR	22′-8″	1,181
A2	81	#4	STR	22′-6″	1,217
✳B10	62	#5	STR	24′-2″	1,563
✳B11	63	#5	STR	24′-4″	1,599
✳B12	2	#5	STR	9′-7″	20
B20	62	#6	STR	24′-8″	2,297
B21	63	#6	STR	24′-10″	2,350
B22	2	#6	STR	9′-7″	29
✳J1	60	#4	④	1′-5″	57

REINFORCING STEEL ✳✳	LBS.	5,893
✳EPOXY COATED REINFORCING STEEL ✳✳	LBS.	4,420
CLASS AA CONCRETE ◆✳✳	C. Y.	68.8

BAR TYPE

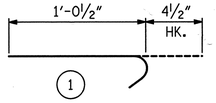

ALL BAR DIMENSIONS ARE OUT TO OUT

✳✳ QUANTITIES FOR BARRIER RAIL ARE NOT INCLUDED. SEE SHEET 2 OF 3.

THE QUANTITY OF #4 J1 BARS ON THE BILL OF MATERIAL IS BASED ON 1′-0″ CENTERS. J1 BARS SHALL BE PLACED AT EACH VERTICAL STUD ANCHOR BOLT. IN THE EVENT THAT THE NUMBER OF VERTICAL STUD ANCHORS EXCEEDS THE NUMBER OF J1 BARS SPECIFIED, ADDITIONAL J1 BARS WILL NOT BE REQUIRED.

◆INCLUDES 1 CURB

BILL OF MATERIAL

APPROACH SLAB AT END BENT 2

BAR	NO.	SIZE	TYPE	LENGTH	WEIGHT
✳A101	2	#4	STR	2′-0″	3
✳A102	1	#4	STR	4′-1″	3
✳A103	1	#4	STR	6′-4″	4
✳A104	1	#4	STR	8′-7″	6
✳A105	1	#4	STR	10′-11″	7
✳A106	1	#4	STR	13′-3″	9
✳A107	1	#4	STR	15′-6″	10
✳A108	1	#4	STR	17′-9″	12
✳A109	1	#4	STR	20′-1″	13
✳A110	1	#4	STR	22′-4″	15
✳A111	1	#4	STR	24′-8″	16
✳A112	1	#4	STR	26′-11″	18
✳A113	1	#4	STR	29′-2″	19
✳A114	2	#4	STR	16′-11″	23
✳A115	2	#4	STR	18′-0″	24
✳A116	2	#4	STR	19′-2″	26
✳A117	2	#4	STR	20′-3″	27
✳A118	2	#4	STR	21′-5″	29
✳A119	2	#4	STR	22′-6″	30
✳A120	2	#4	STR	23′-8″	32
✳A121	2	#4	STR	24′-10″	33
✳A122	2	#4	STR	25′-11″	35
✳A123	2	#4	STR	27′-1″	36
✳A124	2	#4	STR	28′-3″	38
✳A125	2	#4	STR	29′-4″	39
✳A126	81	#4	STR	22′-1″	1,195
A201	2	#4	STR	2′-11″	4
A202	1	#4	STR	5′-2″	3
A203	1	#4	STR	7′-6″	5
A204	1	#4	STR	9′-9″	7
A205	1	#4	STR	12′-1″	8
A206	1	#4	STR	14′-4″	10
A207	1	#4	STR	16′-8″	11
A208	1	#4	STR	18′-11″	13
A209	1	#4	STR	21′-2″	14
A210	1	#4	STR	23′-6″	16
A211	1	#4	STR	25′-9″	17
A212	1	#4	STR	28′-1″	19
A213	2	#4	STR	16′-3″	22
A214	2	#4	STR	17′-4″	23
A215	2	#4	STR	18′-6″	25
A216	2	#4	STR	19′-7″	26
A217	2	#4	STR	20′-9″	28
A218	2	#4	STR	21′-10″	29
A219	2	#4	STR	23′-0″	31
A220	2	#4	STR	24′-2″	32
A221	2	#4	STR	25′-3″	34
A222	2	#4	STR	26′-5″	35
A223	2	#4	STR	27′-6″	37
A224	2	#4	STR	28′-8″	38
A225	2	#4	STR	29′-10″	40
A226	81	#4	STR	21′-11″	1,186
✳B3	4	#5	STR	9′-7″	40
✳B101	2	#5	STR	49′-10″	104
✳B102	2	#5	STR	49′-4″	103
✳B103	2	#5	STR	48′-11″	102
✳B104	2	#5	STR	48′-6″	101
✳B105	2	#5	STR	48′-1″	100
✳B106	2	#5	STR	47′-8″	99
✳B107	2	#5	STR	47′-3″	99
✳B108	2	#5	STR	46′-10″	98
✳B109	2	#5	STR	46′-4″	97
✳B110	2	#5	STR	46′-0″	96
✳B111	2	#5	STR	45′-7″	95
✳B112	2	#5	STR	45′-1″	94
✳B113	2	#5	STR	44′-8″	93
✳B114	2	#5	STR	44′-3″	92
✳B115	2	#5	STR	43′-10″	91
✳B116	2	#5	STR	43′-5″	91
✳B117	2	#5	STR	43′-0″	90
✳B118	2	#5	STR	42′-6″	89
✳B119	2	#5	STR	42′-2″	88
✳B120	2	#5	STR	41′-9″	87
✳B121	2	#5	STR	41′-4″	86
✳B122	2	#5	STR	40′-10″	85
✳B123	2	#5	STR	40′-5″	84
✳B124	2	#5	STR	40′-0″	83
✳B125	2	#5	STR	39′-7″	83
✳B126	2	#5	STR	39′-2″	82
✳B127	2	#5	STR	38′-9″	81
✳B128	2	#5	STR	38′-4″	80
✳B129	2	#5	STR	37′-11″	79
✳B130	2	#5	STR	37′-6″	78
✳B131	2	#5	STR	37′-1″	77
✳B132	2	#5	STR	36′-7″	76
✳B133	2	#5	STR	36′-2″	75
✳B134	2	#5	STR	35′-9″	75
✳B135	2	#5	STR	35′-4″	74
✳B136	2	#5	STR	34′-11″	73
✳B137	2	#5	STR	34′-6″	72
✳B138	2	#5	STR	34′-1″	71
✳B139	2	#5	STR	33′-7″	70
✳B140	2	#5	STR	33′-3″	69
✳B141	2	#5	STR	32′-10″	68
✳B142	2	#5	STR	32′-4″	67
✳B143	2	#5	STR	31′-11″	67
✳B144	2	#5	STR	31′-6″	66
✳B145	2	#5	STR	31′-1″	65
✳B146	2	#5	STR	30′-8″	64
✳B147	2	#5	STR	30′-3″	63
✳B148	2	#5	STR	29′-10″	62
✳B149	2	#5	STR	29′-5″	61
✳B150	2	#5	STR	29′-0″	60
✳B151	2	#5	STR	28′-7″	60
✳B152	2	#5	STR	28′-1″	59
✳B153	2	#5	STR	27′-8″	58
✳B154	2	#5	STR	27′-3″	57
✳B155	2	#5	STR	26′-10″	56
✳B156	2	#5	STR	26′-5″	55
✳B157	2	#5	STR	26′-0″	54
✳B158	2	#5	STR	25′-7″	53
✳B159	2	#5	STR	25′-2″	52
✳B160	2	#5	STR	24′-9″	52
✳B161	2	#5	STR	24′-4″	51
B4	4	#6	STR	9′-7″	58
B201	2	#6	STR	50′-4″	151
B202	2	#6	STR	49′-10″	150
B203	2	#6	STR	49′-5″	148
B204	2	#6	STR	49′-0″	147
B205	2	#6	STR	48′-7″	146
B206	2	#6	STR	48′-2″	145
B207	2	#6	STR	47′-9″	143
B208	2	#6	STR	47′-4″	142
B209	2	#6	STR	46′-10″	141
B210	2	#6	STR	46′-6″	140
B211	2	#6	STR	46′-1″	138
B212	2	#6	STR	45′-7″	137
B213	2	#6	STR	45′-2″	136
B214	2	#6	STR	44′-9″	134
B215	2	#6	STR	44′-4″	133
B216	2	#6	STR	43′-11″	132
B217	2	#6	STR	43′-6″	131
B218	2	#6	STR	43′-0″	129
B219	2	#6	STR	42′-8″	128
B220	2	#6	STR	42′-3″	127
B221	2	#6	STR	41′-10″	126
B222	2	#6	STR	41′-4″	124
B223	2	#6	STR	40′-11″	123
B224	2	#6	STR	40′-6″	122
B225	2	#6	STR	40′-1″	120
B226	2	#6	STR	39′-8″	119
B227	2	#6	STR	39′-3″	118
B228	2	#6	STR	38′-10″	117
B229	2	#6	STR	38′-5″	115
B230	2	#6	STR	38′-0″	114
B231	2	#6	STR	37′-7″	113
B232	2	#6	STR	37′-1″	111
B233	2	#6	STR	36′-8″	110
B234	2	#6	STR	36′-3″	109
B235	2	#6	STR	35′-10″	108
B236	2	#6	STR	35′-5″	106
B237	2	#6	STR	35′-0″	105
B238	2	#6	STR	34′-7″	104
B239	2	#6	STR	34′-1″	102
B240	2	#6	STR	33′-9″	101
B241	2	#6	STR	33′-4″	100
B242	2	#6	STR	32′-10″	99
B243	2	#6	STR	32′-5″	97
B244	2	#6	STR	32′-0″	96
B245	2	#6	STR	31′-7″	95
B246	2	#6	STR	31′-2″	94
B247	2	#6	STR	30′-9″	92
B248	2	#6	STR	30′-4″	91
B249	2	#6	STR	29′-11″	90
B250	2	#6	STR	29′-6″	89
B251	2	#6	STR	29′-1″	87
B252	2	#6	STR	28′-7″	86
B253	2	#6	STR	28′-2″	85
B254	2	#6	STR	27′-9″	83
B255	2	#6	STR	27′-4″	82
B256	2	#6	STR	26′-11″	81
B257	2	#6	STR	26′-6″	80
B258	2	#6	STR	26′-1″	78
B259	2	#6	STR	25′-8″	77
B260	2	#6	STR	25′-3″	76
B261	2	#6	STR	24′-10″	75
✳G101	2	#5	STR	34′-7″	72
✳J1	66	#4	STR	1′-5″	62

REINFORCING STEEL ✳✳	LBS.	8,649
✳EPOXY COATED REINFORCING STEEL ✳✳	LBS.	6,588
CLASS AA CONCRETE ◆◆ ✳✳	C. Y.	102.9

◆◆ INCLUDES 2 CURBS

✳✳ QUANTITIES FOR BARRIER RAIL ARE NOT INCLUDED. SEE SHEET 2 OF 3.

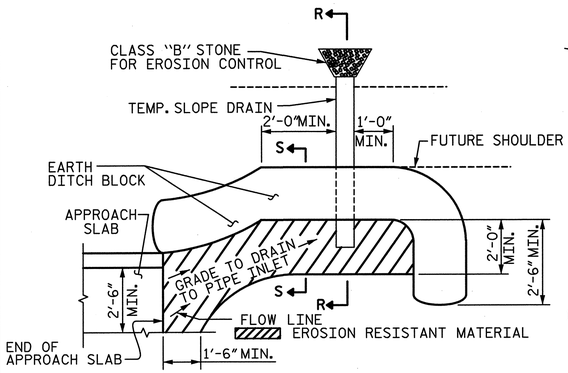

NOTE: IMMEDIATELY AFTER THE CONSTRUCTION OF THE APPROACH SLAB, THE CONTRACTOR SHALL PROVIDE TEMPORARY BERM AND SLOPE DRAIN. CONTRACTOR SHALL GRADE TO PIPE INLET AND PROVIDE EROSION RESISTANT MATERIAL AS SHOWN. THE EROSION RESISTANT MATERIAL SHALL BE EITHER 1) ASPHALT PLANT MIX, TYPE 1 OR TYPE 2, MIN. 2″ DEPTH, 2) EROSION CONTROL MAT, OR 3) CONCRETE, AS DIRECTED BY THE ENGINEER. THE SLOPE DRAIN SHALL CONSIST OF A NON-PERFORATED TEMPORARY DRAINAGE PIPE, 12 INCHES IN DIAMETER.

PLAN VIEW

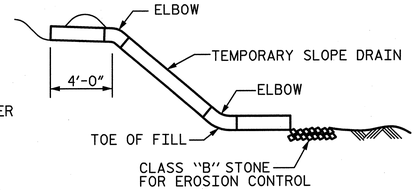

SECTION R-R

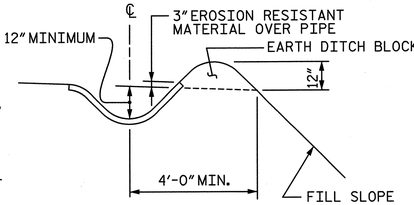

SECTION S-S

TEMPORARY BERM AND SLOPE DRAIN DETAILS

(TO BE USED WHEN SHOULDER BERM GUTTER IS REQUIRED)

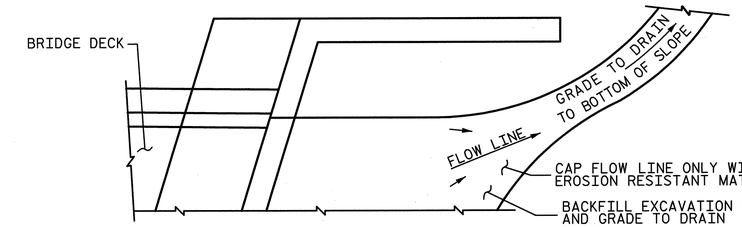

NOTE: IF THE APPROACH SLAB IS NOT CONSTRUCTED IMMEDIATELY AFTER THE BACKFILLING OF THE END BENT EXCAVATION, GRADE TO DRAIN TO THE BOTTOM OF THE SLOPE AND PROVIDE EROSION RESISTANT MATERIAL, SUCH AS FIBERGLASS ROVING OR AS DIRECTED BY THE ENGINEER TO PREVENT SOIL EROSION AND TO PROTECT THE AREA ADJACENT TO THE STRUCTURE. THE CONTRACTOR WILL BE REQUIRED TO REMOVE THESE MATERIALS PRIOR TO CONSTRUCTION OF THE APPROACH SLAB.

TEMPORARY DRAINAGE DETAIL

PROJECT NO. U-2524C

GUILFORD COUNTY

STATION: POT 407+85.82 -L-
= POT 29+79.72 -Y4-

SHEET 3 OF 3

STATE OF NORTH CAROLINA
DEPARTMENT OF TRANSPORTATION
RALEIGH

BRIDGE APPROACH SLAB DETAILS

-RIGHT LANE-

NORTH CAROLINA PROFESSIONAL ENGINEER SEAL 28479 ENGINEER KEVIN G. BAILEY
6-7-13

STV / Ralph Whitehead Associates, Inc.
1000 West Morehead St. Ste. 200
Charlotte, NC 28208
NC License No. F-0991

REVISIONS						SHEET NO.
NO.	BY:	DATE:	NO.	BY:	DATE:	S-498
1			3			TOTAL SHEETS
2			4			836

DRAWN BY : CLG DATE : 2-13
CHECKED BY : PEK DATE : 4-13

DESIGN ENGINEER OF RECORD: P. KELLY DATE : 5-13

6/6/2013 10:45:42 PM R:\station\Finals\App Slab Sheet 3 of 3.dgn