09/08/99

TIP PROJECT: R-2303C

CONTRACT: C203161

STATE OF NORTH CAROLINA
DIVISION OF HIGHWAYS

SAMPSON COUNTY

STATE	STATE PROJECT REFERENCE NO.	SHEET NO.	TOTAL SHEETS
N.C.	R-2303C		

STATE PROJ. NO.	F.A. PROJ. NO.	DESCRIPTION
34416.1.1	STPNHF-F-8-2(17)	PE
34416.2.4		ROW & UTL.
34416.2.4		CONST.

LOCATION: NC 24 FROM SR 1404 (DOWDY ROAD) TO SR 1303 (MITCHELL LOOP ROAD)

TYPE OF WORK: GRADING, DRAINAGE, PAVING AND STRUCTURES

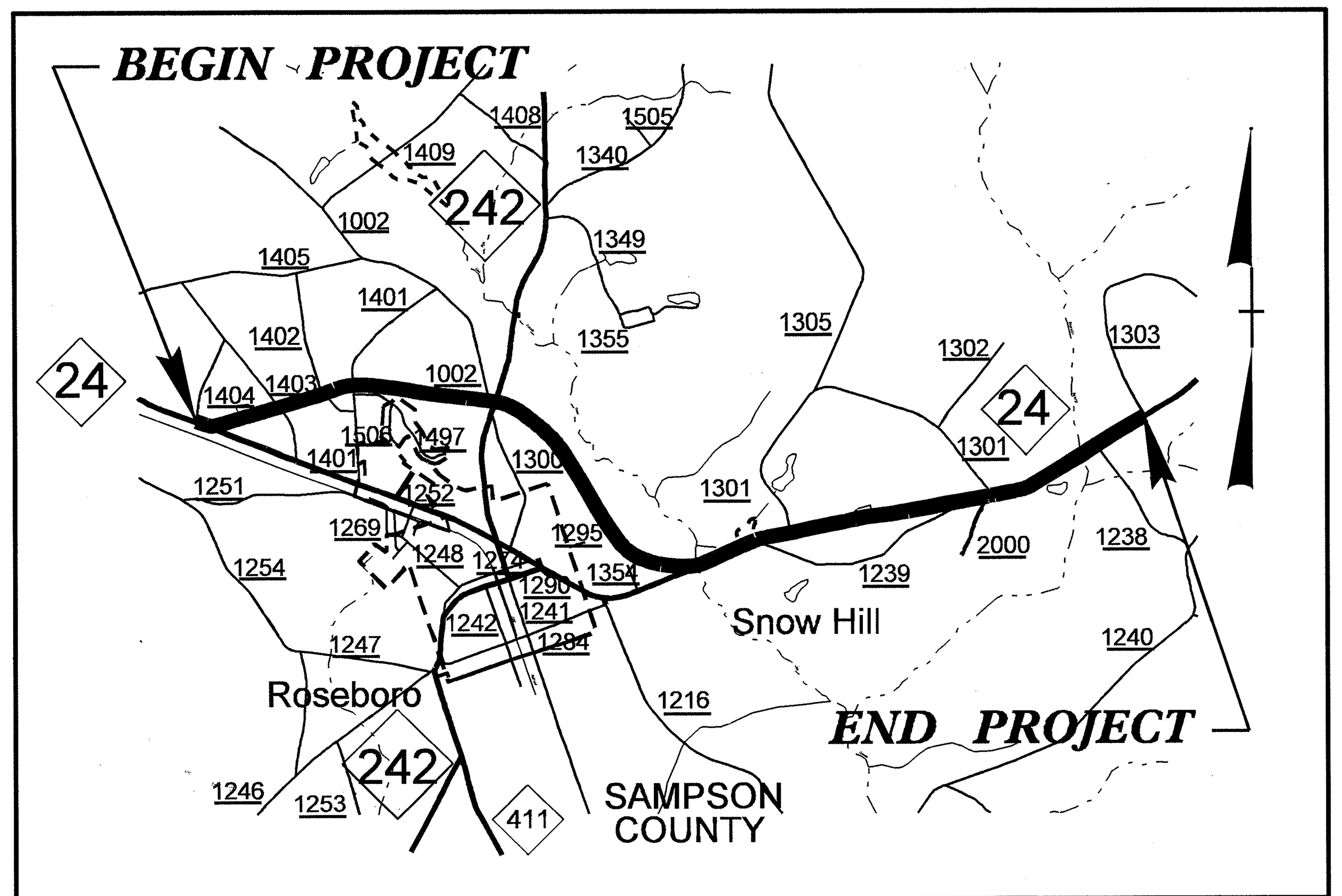

VICINITY MAP

NAD 83/95

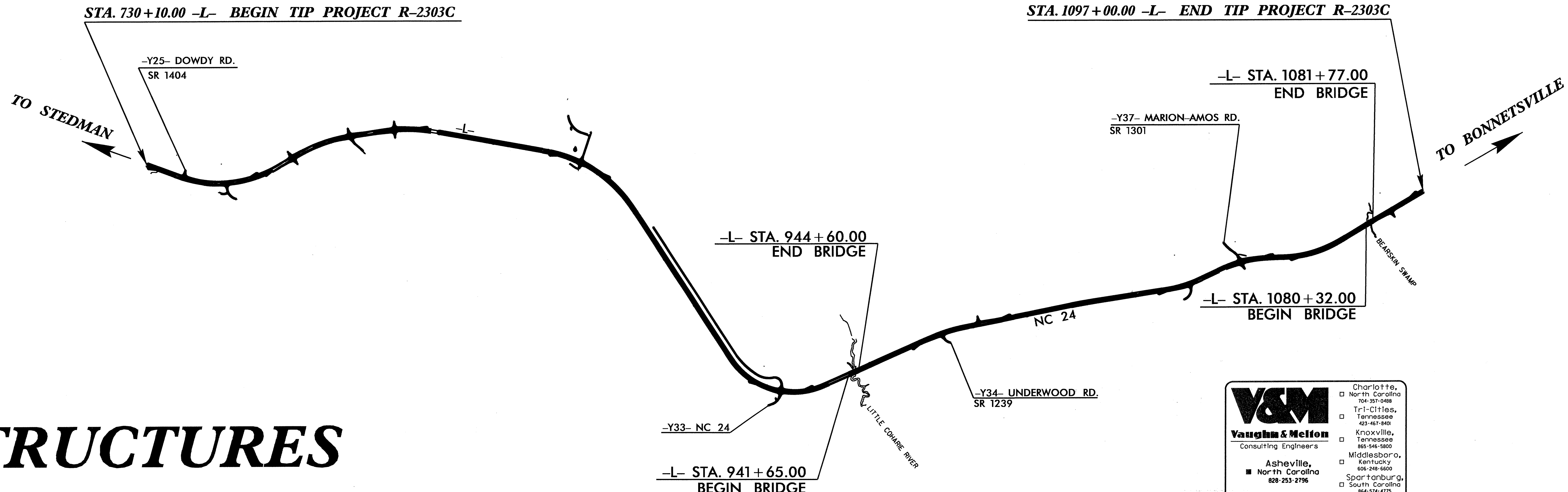

STRUCTURES

Vaughn & Melton
Consulting Engineers
Asheville, North Carolina 828-253-2796
Charlotte, North Carolina 704-357-0488
Tri-Cities, Tennessee 423-467-8401
Knoxville, Tennessee 865-546-5800
Middlesboro, Kentucky 606-248-6600
Spartanburg, South Carolina 864-574-4775
Copyright © 2006 Vaughn & Melton, Inc. All Rights Reserved

DESIGN DATA

ADT 2013 = 13,296
ADT 2033 = 19,536
DHV = 11 %
D ≐ 55 %
T = 8 % *
V = 60 MPH
FUNC CLASS = ARTERIAL
* (TTST 5% + DUAL 3%)
CLASS = STATEWIDE TIER

PROJECT LENGTH

LENGTH ROADWAY TIP PROJECT R-2303C = 6.866 MILES
LENGTH STRUCTURES TIP PROJECT R-2303C = 0.083 MILES
TOTAL LENGTH TIP PROJECT R-2303C = 6.949 MILES

Prepared for the Office of:
DIVISION OF HIGHWAYS
1000 Birch Ridge Dr., Raleigh NC, 27610

2012 STANDARD SPECIFICATIONS

LETTING DATE:
SEPTEMBER 17, 2013

DIVISION OF HIGHWAYS
STATE OF NORTH CAROLINA

P.E.
STATE HIGHWAY DESIGN ENGINEER

30-NOV-2012 10:59
$$$$$$$$$$$$$$DGN$$$$$$$$$$$$$$$$$
dcrutcher

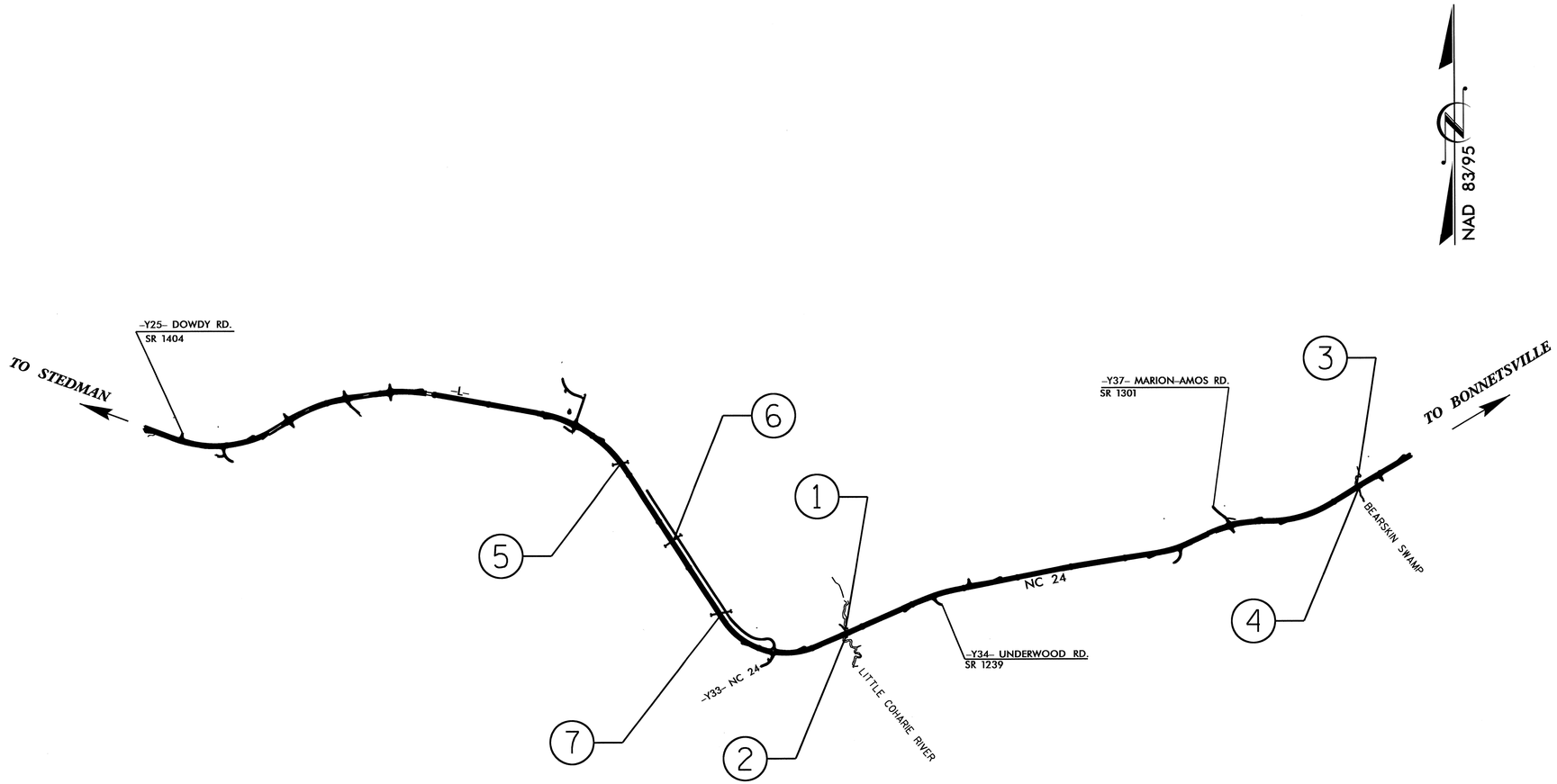

INDEX

STR.	STATION	DESCRIPTION	SHEETS
1	943+12.50 -L-	BRIDGE ON SR24 OVER LITTLE COHARIE CREEK (LEFT LANE)	S-1 THRU S-36
2	943+12.50 -L-	BRIDGE ON SR24 OVER LITTLE COHARIE CREEK (RIGHT LANE)	S-37 THRU S-72
3	1081+04.50 -L-	BRIDGE ON NC24 OVER BEARSKIN SWAMP (LEFT LANE)	S-73 THRU S-105
4	1081+04.50 -L-	BRIDGE ON NC24 OVER BEARSKIN SWAMP (RIGHT LANE)	S-106 THRU S-138
5	863+15.00 -L-	SINGLE 10 X 10 CONCRETE BOX CULVERT	C-1 THRU C-4
6	888+67.00 -L-	SINGLE 7 X 7 CONCRETE BOX CULVERT	C-5 THRU C-8
7	906+61.00 -L-	SINGLE 8 X 9 CONCRETE BOX CULVERT	C-9 THRU C-12

PROJECT NO. R-2303C
SAMPSON COUNTY
STATION:

STATE OF NORTH CAROLINA
DEPARTMENT OF TRANSPORTATION
RALEIGH

INDEX

REVISIONS					
NO.	BY:	DATE:	NO.	BY:	DATE:
1			3		
2			4		

DRAWN BY : W.D. CRUTCHER DATE : 6-26-13
CHECKED BY : D.S. STUTTS DATE : 6-26-13

26-JUN-2013 12:20
S:\PEF\Darrell\R2303C_title.dgn
dcrutcher

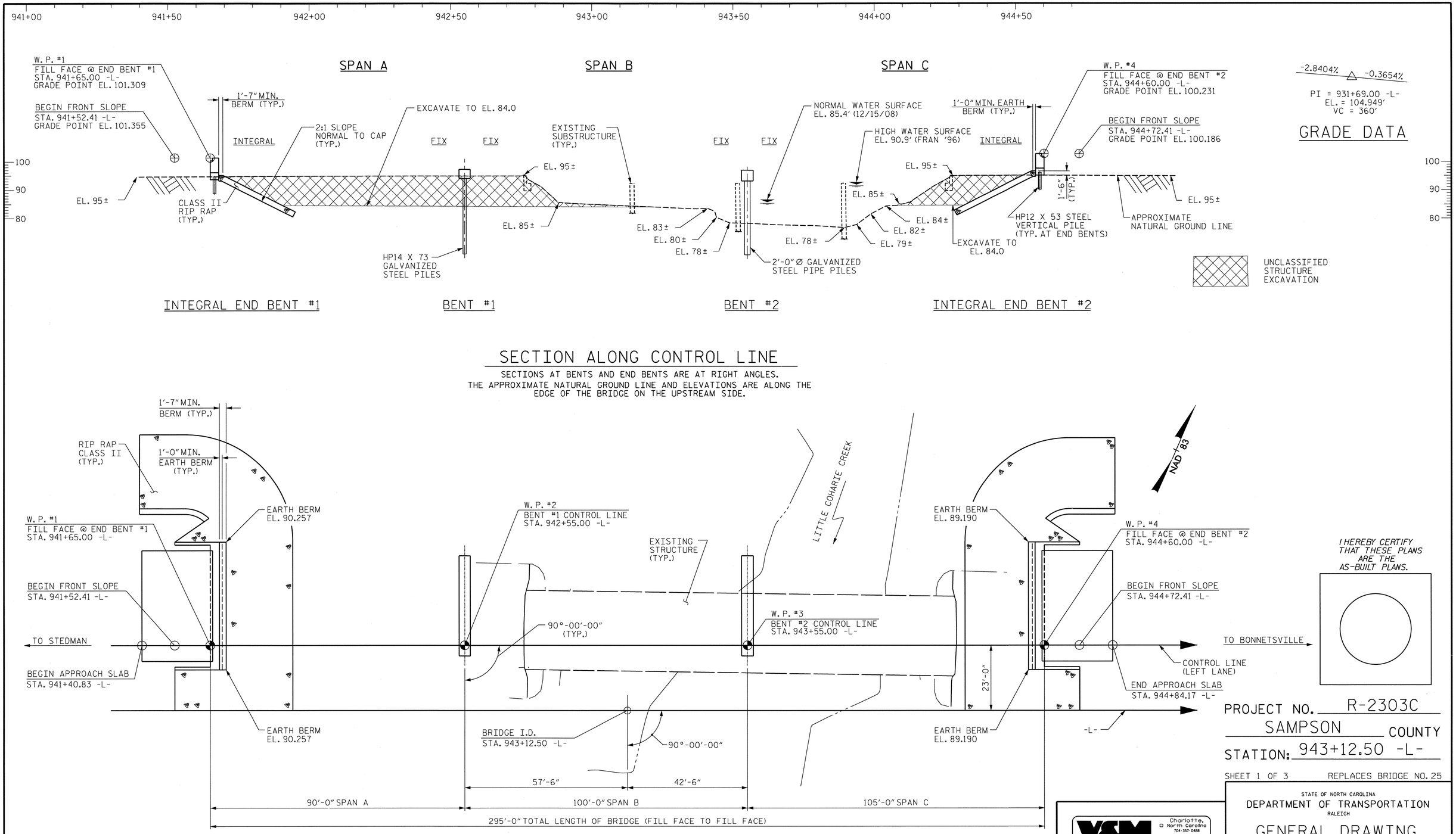

SECTION ALONG CONTROL LINE

SECTIONS AT BENTS AND END BENTS ARE AT RIGHT ANGLES.
THE APPROXIMATE NATURAL GROUND LINE AND ELEVATIONS ARE ALONG THE EDGE OF THE BRIDGE ON THE UPSTREAM SIDE.

PLAN

PILES NOT SHOWN FOR CLARITY.

I HEREBY CERTIFY THAT THESE PLANS ARE THE AS-BUILT PLANS.

PROJECT NO. R-2303C

SAMPSON COUNTY

STATION: 943+12.50 -L-

SHEET 1 OF 3 REPLACES BRIDGE NO. 25

NORTH CAROLINA PROFESSIONAL SEAL 20777 ENGINEER HARDY L. WILLIS 12/7/12

Vaughn & Melton Consulting Engineers
Asheville, North Carolina 828-253-2796
Charlotte, North Carolina 704-357-0488
Tri-Cities, Tennessee 423-467-8401
Knoxville, Tennessee 865-546-5800
Middlesboro, Kentucky 606-248-6600
Spartanburg, South Carolina 864-574-4775

Copyright © 2006 Vaughn & Melton, Inc. All Rights Reserved

STATE OF NORTH CAROLINA
DEPARTMENT OF TRANSPORTATION
RALEIGH

GENERAL DRAWING
FOR BRIDGE OVER LITTLE COHARIE CREEK ON SR 24 BETWEEN NC 242 AND SR 1240 (LEFT LANE)

REVISIONS						SHEET NO.
NO.	BY:	DATE:	NO.	BY:	DATE:	S-1
1			3			TOTAL SHEETS
2			4			138

DWN. BY: PP/MAF DATE: SEPT. 2012
CHKD. BY: HLW DATE: SEPT. 2012

STR. #1

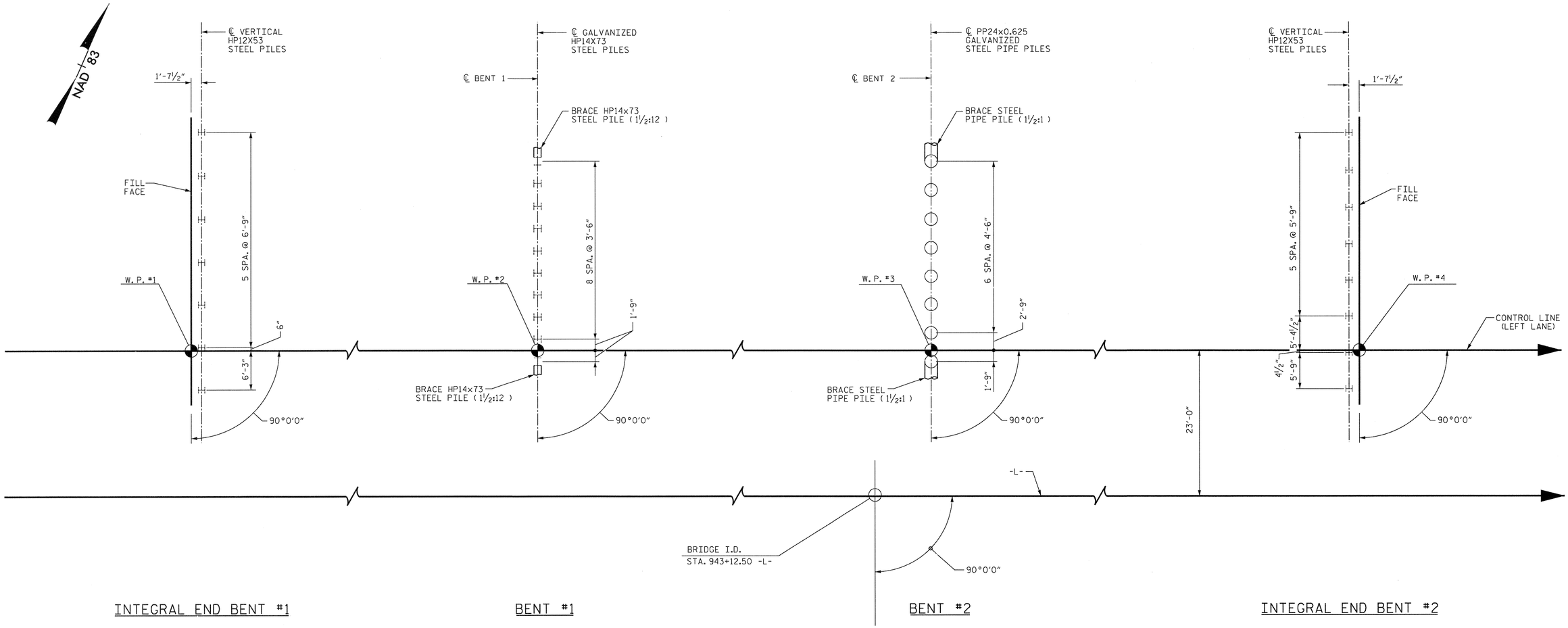

FOUNDATION LAYOUT

DIMENSIONS LOCATING PILES ARE TO PILE CENTERLINE AT THE BOTTOM OF CAP.

LEGEND

- H — VERTICAL H-PILE
- BRACE GALVANIZED H-PILE
- VERTICAL 2'-0" Ø GALVANIZED STEEL PIPE PILE (PP24x0.625)
- BRACE 2'-0" Ø GALVANIZED STEEL PIPE PILE (PP24x0.625)

FOUNDATION NOTES

FOR PILES, SEE SECTION 450 OF THE STANDARD SPECIFICATIONS.

PILES AT END BENT NO. 1, BENT NO. 1, BENT NO. 2 AND END BENT NO. 2 ARE DESIGNED FOR A FACTORED RESISTANCE OF 115, 130, 175 AND 110 TONS PER PILE, RESPECTIVELY.

DRIVE PILES AT END BENT NO. 1, BENT NO. 1, BENT NO. 2 AND END BENT NO. 2 TO A REQUIRED DRIVING RESISTANCE OF 195, 265, 350 AND 185 TONS PER PILE, RESPECTIVELY.

INSTALL PILES AT BENT NO. 1 AND BENT NO. 2 TO A TIP ELEVATION NO HIGHER THAN 61.0 FT. AND 38.0 FT., RESPECTIVELY.

THE SCOUR CRITICAL ELEVATIONS FOR BENT NO. 1 AND BENT NO. 2 ARE ELEVATION 79.0 FT. AND 59.0 FT., RESPECTIVELY. SCOUR CRITICAL ELEVATIONS ARE USED TO MONITOR POSSIBLE SCOUR PROBLEMS DURING THE LIFE OF THE STRUCTURE.

IT HAS BEEN ESTIMATED THAT A HAMMER WITH THE EQUIVALENT RATED ENERGY IN THE RANGE OF 85-155 FT-KIPS PER BLOW WILL BE REQUIRED TO DRIVE PILES AT BENT NO. 1 AND BENT NO. 2. THIS ESTIMATED ENERGY RANGE DOES NOT RELEASE THE CONTRACTOR FROM PROVIDING DRIVING EQUIPMENT IN ACCORDANCE WITH SUBARTICLE 450-3(D)(2) OF THE STANDARD SPECIFICATIONS.

PIPE PILE PLATES ARE REQUIRED FOR STEEL PIPE PILES AT BENT NO. 2. USE PIPE PILE PLATES WITH A DIAMETER EQUAL TO THE PIPE PILE DIAMETER. FOR STEEL PIPE PILE PLATES, SEE SECTION 450 OF THE STANDARD SPECIFICATIONS.

NORTH CAROLINA PROFESSIONAL SEAL 20777 ENGINEER HARDY L. WILLIS 11/21/12

PROJECT NO. R-2303C
SAMPSON COUNTY
STATION: 943+12.50 -L-

SHEET 2 OF 3

V&M Vaughn & Melton Consulting Engineers
Asheville, North Carolina 828-253-2796
Charlotte, North Carolina 704-357-0488
Tri-Cities, Tennessee 423-467-8401
Knoxville, Tennessee 865-546-5800
Middlesboro, Kentucky 606-248-6600
Spartanburg, South Carolina 864-574-4775

Copyright © 2006 Vaughn & Melton, Inc. All Rights Reserved

STATE OF NORTH CAROLINA
DEPARTMENT OF TRANSPORTATION
RALEIGH

FOUNDATION LAYOUT

(LEFT LANE)

REVISIONS						
NO.	BY:	DATE:	NO.	BY:	DATE:	
1			3			
2			4			

SHEET NO. S-2
TOTAL SHEETS 138

DWN. BY: MAF DATE: SEPT. 2012
CHKD. BY: HLW DATE: SEPT. 2012

STR. #1

BM: NCGS SA20 ON SE WINGWALL OF EXISTING NC 24 BRIDGE
OVER LITTLE COHARIE CREEK, ELEV. 94.76', NAVD 88.

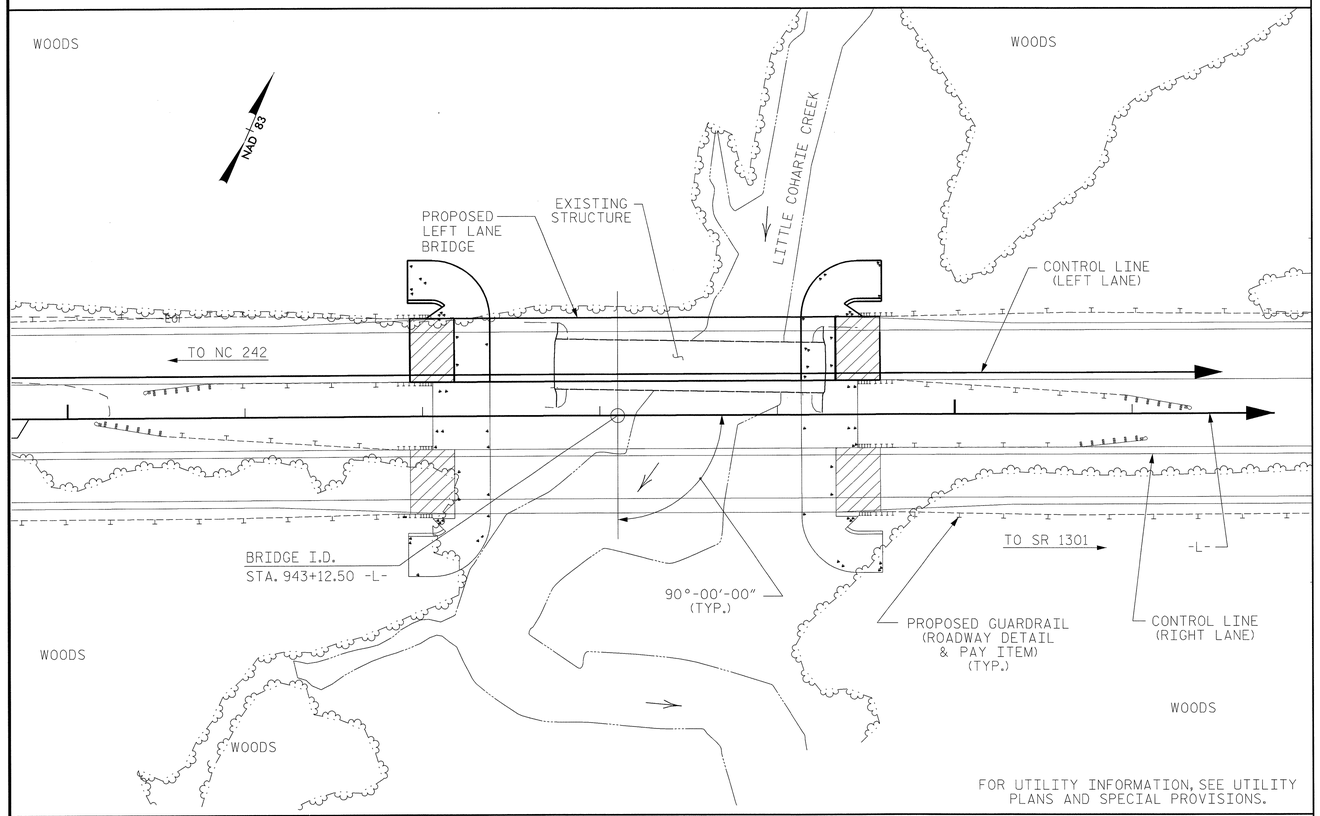

LOCATION SKETCH

GENERAL NOTES:

ASSUMED LIVE LOAD = HL-93 OR ALTERNATE LOADING.

THIS BRIDGE HAS BEEN DESIGNED IN ACCORDANCE WITH THE AASHTO LRFD BRIDGE DESIGN SPECIFICATIONS.

THIS BRIDGE IS LOCATED IN SEISMIC ZONE 1.

THIS STRUCTURE HAS BEEN DESIGNED IN ACCORDANCE WITH "HEC 18 - EVALUATING SCOUR AT BRIDGES."

FOR OTHER DESIGN DATA AND GENERAL NOTES, SEE STANDARD SHEET SN.

FOR FALSEWORK AND FORMWORK, SEE SPECIAL PROVISIONS.

FOR SUBMITTAL OF WORKING DRAWINGS, SEE SPECIAL PROVISIONS.

FOR INTERIOR BENTS 1 AND 2, ONLY PARTIAL GALVANIZING OF THE PILES IS REQUIRED. SEE INTERIOR BENT SHEETS FOR REQUIRED GALVANIZED LENGTHS. PAYMENT FOR PARTIALLY GALVANIZED PILES WILL BE MADE UNDER THE CONTRACT UNIT PRICE FOR GALVANIZED STEEL PILES.

FOR CRANE SAFETY, SEE SPECIAL PROVISIONS.

FOR GROUT FOR STRUCTURES, SEE SPECIAL PROVISIONS.

FOR PLACING LOAD ON STRUCTURE MEMBERS, SEE SPECIAL PROVISIONS.

PRESTRESSED CONCRETE DECK PANELS MAY BE USED IN LIEU OF METAL STAY-IN-PLACE FORMS IN ACCORDANCE WITH ARTICLE 420-3 OF THE STANDARD SPECIFICATIONS.

REMOVABLE FORMS MAY BE USED IN LIEU OF METAL STAY-IN-PLACE FORMS IN ACCORDANCE WITH ARTICLE 420-3 OF THE STANDARD SPECIFICATIONS.

THE MATERIAL SHOWN IN THE CROSS-HATCHED AREA SHALL BE EXCAVATED FOR A DISTANCE OF 75 FT. LEFT OF CENTERLINE ROADWAY (-L-) AS DIRECTED BY THE ENGINEER. THIS WORK WILL BE PAID FOR AT THE CONTRACT LUMP SUM PRICE FOR UNCLASSIFIED STRUCTURE EXCAVATION. SEE SECTION 412 OF THE STANDARD SPECIFICATIONS.

AFTER SERVING AS A TEMPORARY STRUCTURE, THE EXISTING STRUCTURE CONSISTING OF FOUR 37.5-FOOT LONG, CONCRETE DECK ON CONCRETE GIRDER SPANS ON CONCRETE BENTS AND ABUTMENTS, WITH A CLEAR ROADWAY WIDTH OF 25 FEET AND LOCATED AT THE STRUCTURE SHALL BE REMOVED. THE EXISTING BRIDGE IS PRESENTLY NOT POSTED FOR LOAD LIMIT. SHOULD THE STRUCTURAL INTEGRITY OF THE BRIDGE DETERIORATE DURING CONSTRUCTION OF THE PROPOSED BRIDGE, A LOAD LIMIT MAY BE POSTED AND MAY BE REDUCED AS FOUND NECESSARY DURING THE LIFE OF THE PROJECT.

THE SUBSTRUCTURE OF THE EXISTING BRIDGE INDICATED ON THE PLANS IS FROM THE BEST INFORMATION AVAILABLE. THIS INFORMATION IS SHOWN FOR THE CONVENIENCE OF THE CONTRACTOR. THE CONTRACTOR SHALL HAVE NO CLAIM WHATSOEVER AGAINST THE DEPARTMENT OF TRANSPORTATION FOR ANY DELAYS OR ADDITIONAL COST INCURRED BASED ON DIFFERENCES BETWEEN THE EXISTING BRIDGE SUBSTRUCTURE SHOWN ON THE PLANS AND THE ACTUAL CONDITIONS AT THE PROJECT SITE.

REMOVAL OF THE EXISTING BRIDGE SHALL BE PERFORMED SO AS NOT TO ALLOW DEBRIS TO FALL INTO THE WATER. THE CONTRACTOR SHALL REMOVE THE BRIDGE AND SUBMIT PLANS FOR DEMOLITION IN ACCORDANCE WITH ARTICLE 402-2 OF THE STANDARD SPECIFICATIONS.

NEEDLE BEAMS WILL NOT BE ALLOWED UNLESS OTHERWISE CALLED FOR ON THE PLANS OR APPROVED BY THE ENGINEER.

FOR EROSION CONTROL MEASURES, SEE EROSION CONTROL PLANS.

TOTAL BILL OF MATERIAL

	REMOVAL OF EXISTING STRUCTURE	UNCLASSIFIED STRUCTURE EXCAVATION	REINFORCED CONCRETE DECK SLAB	GROOVING BRIDGE FLOORS	CLASS A CONCRETE	BRIDGE APPROACH SLABS	REINFORCING STEEL	MODIFIED 63" PRESTRESSED CONCRETE GIRDERS		HP 12 X 53 STEEL PILES		HP 14 X 73 GALVANIZED STEEL PILES		PP24 X 0.625 GALVANIZED STEEL PILES		PILE REDRIVES	PIPE PILE PLATES	CONCRETE BARRIER RAIL	RIP RAP CLASS II (2'-0" THICK)	GEOTEXTILE FOR DRAINAGE	ELASTOMERIC BEARINGS
	LUMP SUM	LUMP SUM	SQ. FT.	SQ. FT.	CU. YDS.	LUMP SUM	LBS.	NO.	LIN. FT.	NO.	LIN. FT.	NO.	LIN. FT.	NO.	LIN. FT.	EACH	EACH	LIN. FT.	TONS	SQ. YDS.	LUMP SUM
SUPERSTRUCTURE			11,579	11,264		LUMP SUM		12	1,166.00									586.67			LUMP SUM
END BENT 1		LUMP SUM			23.2		3,903			7	455					4			367	411	
BENT 1					17.6		2,173					10	650			5					
BENT 2					20.0		2,165							8	560	4	8				
END BENT 2		LUMP SUM			23.2		3,766			8	480					4			329	368	
TOTAL	LUMP SUM	LUMP SUM	11,579	11,264	84.0	LUMP SUM	12,007	12	1,166.00	15	935	10	650	8	560	17	8	586.67	696	779	LUMP SUM

HYDRAULIC DATA

DESIGN DISCHARGE	=	5100 CFS
FREQUENCY OF DESIGN FLOOD	=	50 YR.
DESIGN HIGH WATER ELEVATION	=	90.6'
DRAINAGE AREA	=	95.6 Sq. MILES
BASE DISCHARGE (Q100)	=	6200 CFS
BASE HIGH WATER ELEVATION	=	91.4'

OVERTOPPING FLOOD DATA

OVERTOPPING DISCHARGE	=	>9000 CFS
FREQUENCY OF OVERTOPPING FLOOD	=	>500 YR.
OVERTOPPING FLOOD ELEVATION	=	97.0'

NORTH CAROLINA PROFESSIONAL SEAL 20047 ENGINEER RANDY L. WILLIS 6/27/13

PROJECT NO. R-2303C
SAMPSON COUNTY
STATION: 943+12.50 -L-

SHEET 3 OF 3

V&M Vaughn & Melton Consulting Engineers
Asheville, North Carolina 828-253-2796
Charlotte, North Carolina 704-357-0488
Tri-Cities, Tennessee 423-467-8401
Knoxville, Tennessee 865-546-5800
Middlesboro, Kentucky 606-248-6600
Spartanburg, South Carolina 864-574-4775

Copyright © 2006 Vaughn & Melton, Inc. All Rights Reserved

DWN. BY: PP/MAF DATE: SEPT. 2012
CHKD. BY: HLW DATE: SEPT. 2012

STATE OF NORTH CAROLINA
DEPARTMENT OF TRANSPORTATION
RALEIGH

LOCATION SKETCH & TOTAL BILL OF MATERIAL

(LEFT LANE)

REVISIONS						SHEET NO.
NO.	BY:	DATE:	NO.	BY:	DATE:	S-3
1			3			TOTAL SHEETS
2			4			138

STR. #1

INFORMATION FOR 63" MODIFIED BULB TEE (SPANS A, B, & C)

LOAD AND RESISTANCE FACTOR RATING (LRFR) SUMMARY FOR PRESTRESSED CONCRETE GIRDERS

LEVEL		VEHICLE	WEIGHT (W) (TONS)	CONTROLLING LOAD RATING (#)	MINIMUM RATING FACTORS (RF)	TONS = W × RF	STRENGTH I LIMIT STATE											SERVICE III LIMIT STATE						COMMENT NUMBER
								MOMENT					SHEAR						MOMENT					
							LIVE-LOAD FACTORS γ_{LL}	DISTRIBUTION FACTORS (DF)	RATING FACTOR	SPAN	GIRDER LOCATION	DISTANCE FROM LEFT END OF SPAN (ft)	DISTRIBUTION FACTORS (DF)	RATING FACTOR	SPAN	GIRDER LOCATION	DISTANCE FROM LEFT END OF SPAN (ft)	LIVE-LOAD FACTORS γ_{LL}	DISTRIBUTION FACTORS (DF)	RATING FACTOR	SPAN	GIRDER LOCATION	DISTANCE FROM LEFT END OF SPAN (ft)	
DESIGN LOAD RATING		HL-93 (INVENTORY)	N/A	1	1.15	--	1.75	0.7974	1.81	C		61.35 FT	0.9684	1.71	C		4.76 FT	0.80	0.7974	1.15	C		61.35 FT	
		HL-93 (OPERATING)	N/A		2.22	--	1.35	0.7974	2.35	C		61.35 FT	0.9684	2.22	C		4.76 FT	N/A	--	--	--	--	--	
		HS-20 (INVENTORY)	36.000	2	1.62	58.20	1.75	0.7974	2.55	C		61.35 FT	0.9684	2.44	C		4.76 FT	0.80	0.7974	1.62	C		61.35 FT	
		HS-20 (OPERATING)	36.000		3.16	113.90	1.35	0.7974	3.30	C		61.35 FT	0.9684	3.16	C		4.76 FT	N/A	--	--	--	--	--	
LEGAL LOAD RATING	SINGLE VEHICLE (SV)	SNSH	13.500		3.79	51.22	1.40	0.7974	7.47	C		61.35 FT	0.9684	7.77	C		4.76 FT	0.80	0.7974	3.79	C		61.35 FT	
		SNGARBS2	20.000		2.75	55.00	1.40	0.7974	5.42	C		61.35 FT	0.9684	5.35	C		4.76 FT	0.80	0.7974	2.75	C		61.35 FT	
		SNAGRIS2	22.000		2.58	56.65	1.40	0.7974	5.07	C		61.35 FT	0.9684	4.90	C		4.76 FT	0.80	0.7974	2.58	C		61.35 FT	
		SNCOTTS3	27.250		1.90	51.70	1.40	0.7974	3.74	C		61.35 FT	0.9684	3.85	C		4.76 FT	0.80	0.7974	1.90	C		61.35 FT	
		SNAGGRS4	34.925		1.56	54.42	1.40	0.7974	3.07	C		61.35 FT	0.9684	3.08	C		4.76 FT	0.80	0.7974	1.56	C		61.35 FT	
		SNS5A	35.550		1.53	54.48	1.40	0.7974	3.02	C		61.35 FT	0.9684	3.07	C		4.76 FT	0.80	0.7974	1.53	C		61.35 FT	
		SNS6A	39.950		1.39	55.59	1.40	0.7974	2.74	C		61.35 FT	0.9684	2.76	C		4.76 FT	0.80	0.7974	1.39	C		61.35 FT	
		SNS7B	42.000		1.33	55.90	1.40	0.7974	2.62	C		61.35 FT	0.9684	2.66	C		4.76 FT	0.80	0.7974	1.33	C		61.35 FT	
	TRUCK TRACTOR SEMI-TRAILER (TTST)	TNAGRIT3	33.000		1.71	56.27	1.40	0.7974	3.36	C		61.35 FT	0.9684	3.31	C		4.76 FT	0.80	0.7974	1.71	C		61.35 FT	
		TNT4A	33.075		1.69	55.96	1.40	0.7974	3.33	C		61.35 FT	0.9684	3.28	C		4.76 FT	0.80	0.7974	1.69	C		61.35 FT	
		TNAGRIT4	43.000		1.35	58.16	1.40	0.7974	2.66	C		61.35 FT	0.9684	2.56	C		4.76 FT	0.80	0.7974	1.35	C		61.35 FT	
		TNAGRT5A	45.000		1.29	57.99	1.40	0.7974	2.54	C		61.35 FT	0.9684	2.49	C		4.76 FT	0.80	0.7974	1.29	C		61.35 FT	
		TNAGRT5B	45.000	3	1.27	57.16	1.40	0.7974	2.50	C		61.35 FT	0.9684	2.44	C		4.76 FT	0.80	0.7974	1.27	C		61.35 FT	
		TNT6A	41.600		1.38	57.41	1.40	0.7974	2.72	C		61.35 FT	0.9684	2.75	C		4.76 FT	0.80	0.7974	1.38	C		61.35 FT	
		TNT7A	42.000		1.38	57.96	1.40	0.7974	2.72	C		61.35 FT	0.9684	2.71	C		4.76 FT	0.80	0.7974	1.38	C		61.35 FT	
		TNT7B	42.000		1.40	58.77	1.40	0.7974	2.75	C		61.35 FT	0.9684	2.64	C		4.76 FT	0.80	0.7974	1.40	C		61.35 FT	

LOAD FACTORS:

DESIGN LOAD RATING FACTORS	LIMIT STATE	γ_{DC}	γ_{DW}
	STRENGTH I	1.25	1.50
	SERVICE III	1.00	1.00

NOTES:

MINIMUM RATING FACTORS ARE BASED ON THE STRENGTH I AND SERVICE III LIMIT STATES.

ALLOWABLE STRESSES FOR SERVICE III LIMIT STATE ARE AS REQUIRED FOR DESIGN.

COMMENTS:

1.
2.
3.
4.

(#) CONTROLLING LOAD RATING

(1) DESIGN LOAD RATING (HL-93)
(2) DESIGN LOAD RATING (HS-20)
(3) LEGAL LOAD RATING **
** SEE CHART FOR VEHICLE TYPE

GIRDER LOCATION

I - INTERIOR GIRDER
EL - EXTERIOR LEFT GIRDER
ER - EXTERIOR RIGHT GIRDER

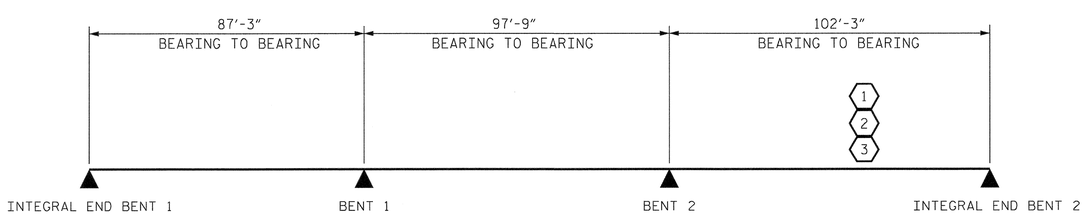

LRFR SUMMARY

PROJECT NO. R-2303C
SAMPSON COUNTY
STATION: 943+12.50 -L-

NORTH CAROLINA PROFESSIONAL SEAL 24277 ENGINEER HARDY L. WILLIS 11/12/12

STATE OF NORTH CAROLINA
DEPARTMENT OF TRANSPORTATION
RALEIGH

STANDARD
LRFR SUMMARY FOR PRESTRESSED CONCRETE GIRDERS
(NON-INTERSTATE TRAFFIC)
(LEFT LANE)

REVISIONS						SHEET NO.
NO.	BY:	DATE:	NO.	BY:	DATE:	S-4
1			3			TOTAL SHEETS
2			4			138

ASSEMBLED BY : MAF DATE : 09/2012
CHECKED BY : HLW DATE : 09/2012
DRAWN BY : MAA 1/08
CHECKED BY : GM/DI 2/08
REV. 11/12/08RR MAA/GM

$$$$$$SYSTIME$$$$$
$$$$$$$$$$$$$$$$$$$$$$$$DGN$$$$$$$$$$$$$$$$$$$$$$$
$$$$USERNAME$$$$

STR. #1 STD. NO. LRFR1

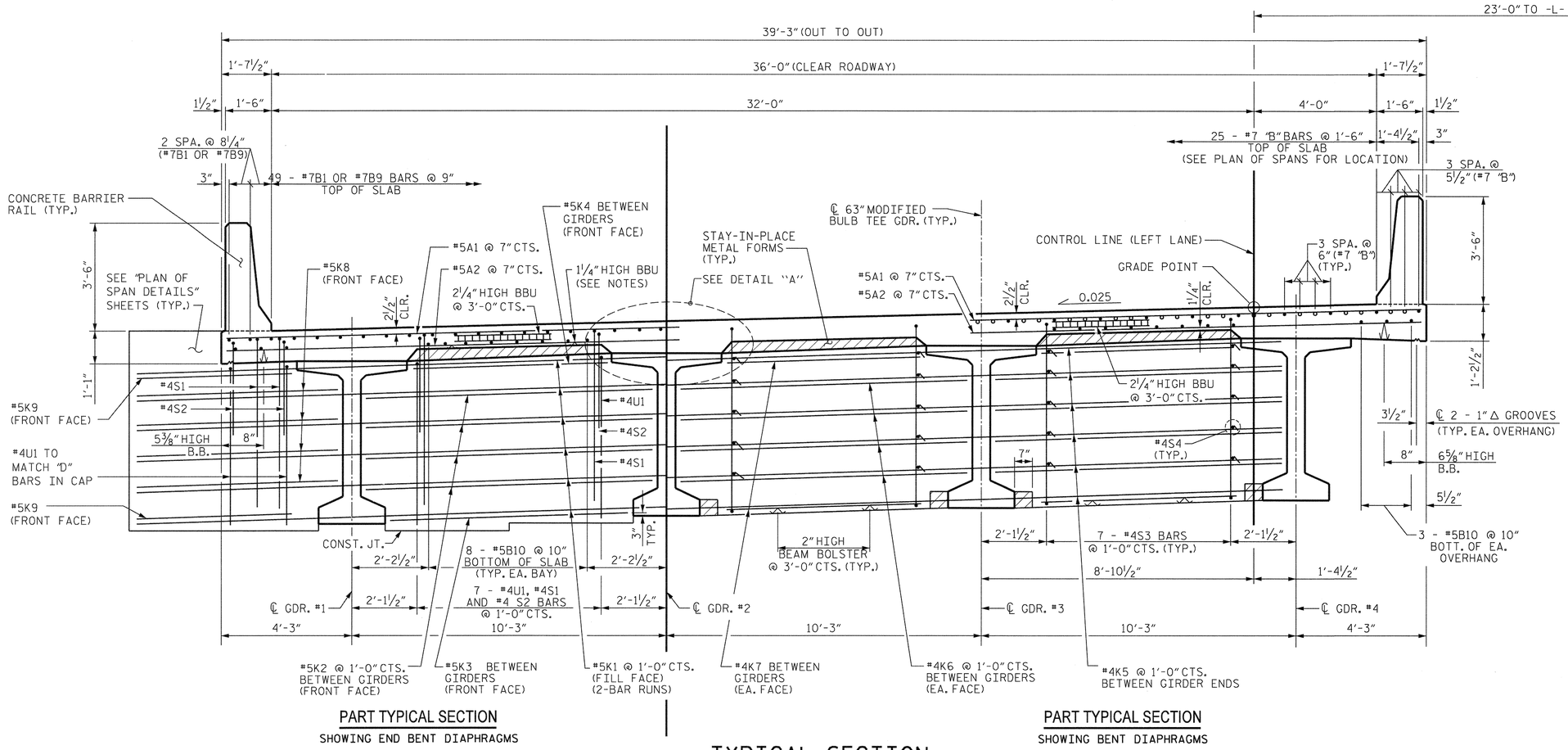

PART TYPICAL SECTION
SHOWING END BENT DIAPHRAGMS

PART TYPICAL SECTION
SHOWING BENT DIAPHRAGMS

TYPICAL SECTION

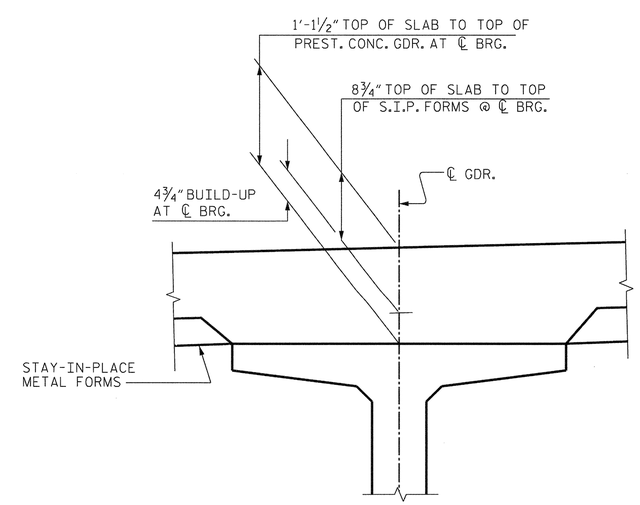

DETAIL "A"

NOTES:

PROVIDE 1¼" HIGH BEAM BOLSTERS UPPER @ 4'-0" CTS. ATOP THE METAL STAY-IN-PLACE FORMS TO SUPPORT THE BOTTOM MAT OF "A" BARS. WHEN USING REMOVABLE FORMS, PROVIDE CONTINUOUS HIGH CHAIRS FOR METAL DECK (C.H.C.M.) @ 4'-0" CTS. WITH A HEIGHT TO SUPPORT THE BOTTOM MAT OF "A" BARS A CLEAR DISTANCE OF 2½" ABOVE THE TOP OF THE REMOVABLE FORM.

BARRIER RAIL SHALL NOT BE CAST UNTIL ALL SLAB CONCRETE IN THE SPAN HAS BEEN CAST AND HAS REACHED A MINIMUM COMPRESSIVE STRENGTH OF 3000psi.

PREVIOUSLY CAST CONCRETE SHALL HAVE ATTAINED A MINIMUM COMPRESSIVE STRENGTH OF 3000psi BEFORE ADDITIONAL CONCRETE IS CAST IN THE UNIT.

LONGITUDINAL STEEL MAY BE SHIFTED SLIGHTLY, AS NECESSARY, TO AVOID INTERFERENCE WITH STIRRUPS IN PRESTRESSED CONCRETE GIRDERS.

NORTH CAROLINA PROFESSIONAL SEAL 20710 ENGINEER HARDY L. WILLIS
11/21/12

PROJECT NO. R-2303C
SAMPSON COUNTY
STATION: 943+12.50 -L-

V&M Vaughn & Melton Consulting Engineers
Asheville, North Carolina 828-253-2796
Charlotte, North Carolina 704-357-0488
Tri-Cities, Tennessee 423-467-8401
Knoxville, Tennessee 865-546-5800
Middlesboro, Kentucky 606-248-6600
Spartanburg, South Carolina 864-574-4775
Copyright © 2006 Vaughn & Melton, Inc. All Rights Reserved

DWN. BY: PP/MAF DATE: SEPT. 2012
CHKD. BY: HLW DATE: SEPT. 2012

STATE OF NORTH CAROLINA
DEPARTMENT OF TRANSPORTATION
RALEIGH

SUPERSTRUCTURE TYPICAL SECTION

(LEFT LANE)

REVISIONS								SHEET NO.
NO.	BY:	DATE:	NO.	BY:	DATE:			S-5
1			3					TOTAL SHEETS
2			4					138

STR. #1

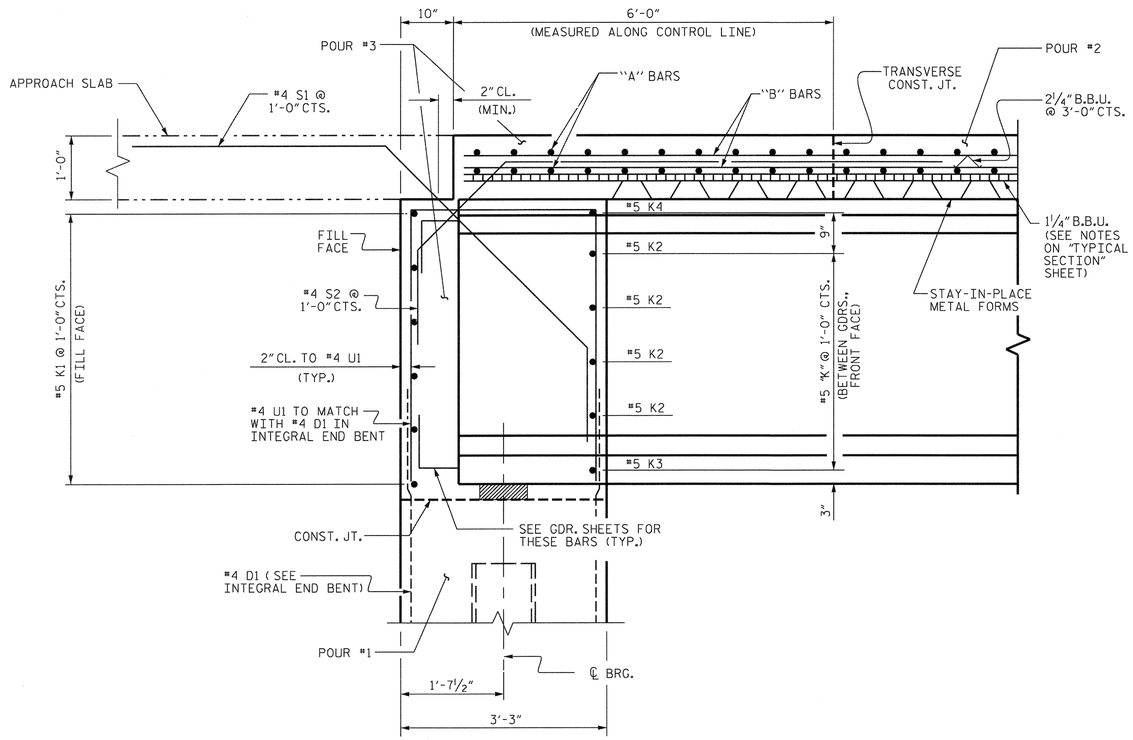

END OF GIRDER DETAIL
AT INTEGRAL END BENTS

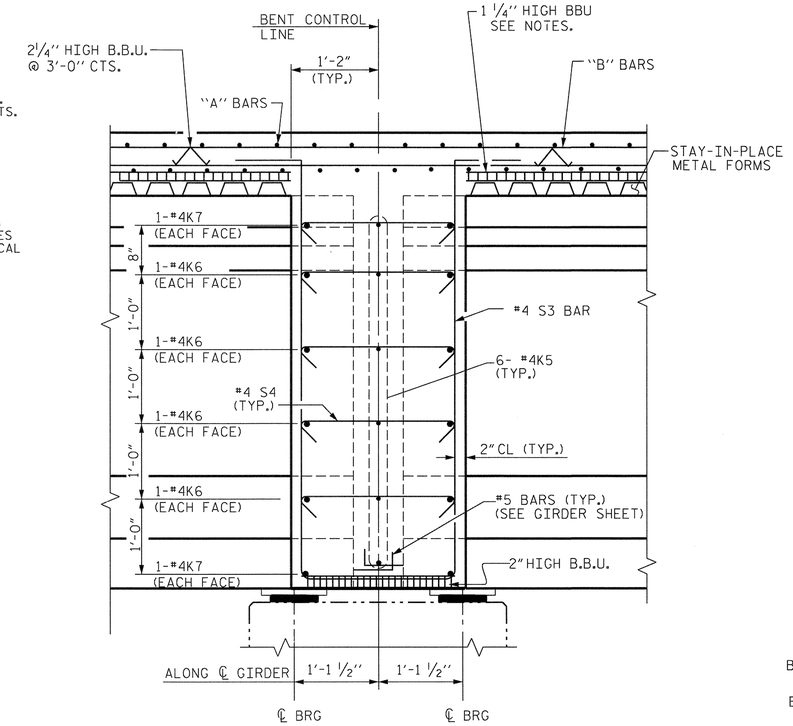

SECTION THROUGH DIAPHRAGM - BENTS 1 & 2

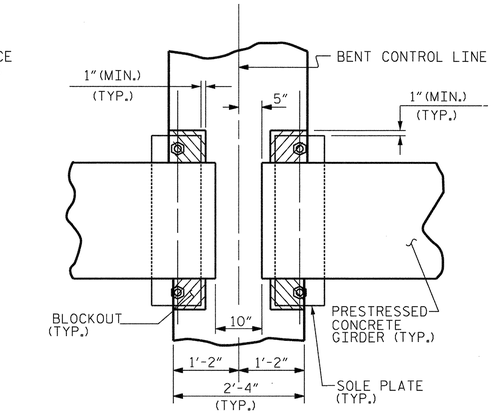

PLAN

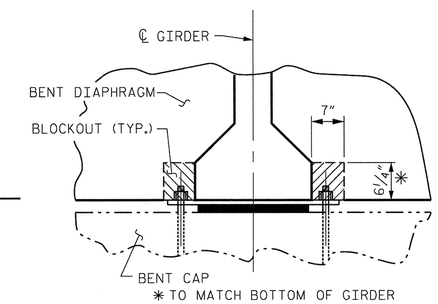

SECTION

BENT DIAPHRAGM
BLOCKOUT DETAIL

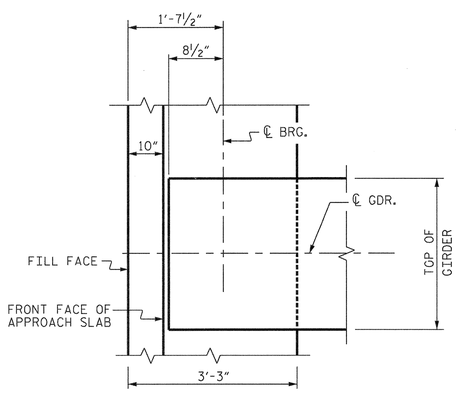

PLAN OF GIRDER
INTEGRAL END BENT NO. 1

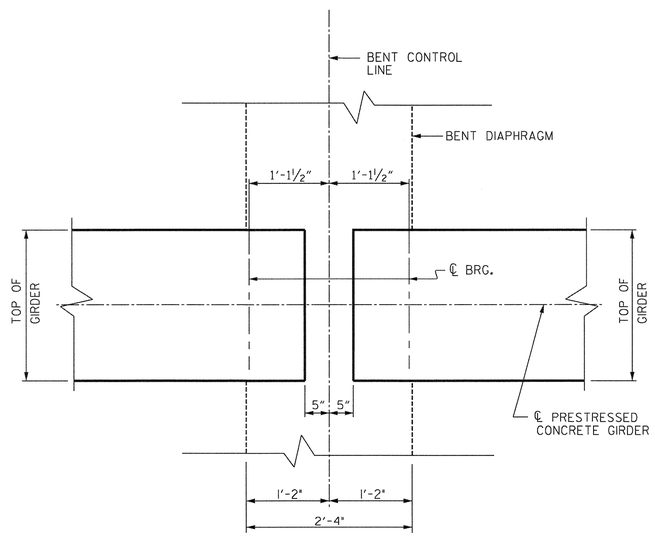

PLAN OF DIAPHRAGMS AT BENTS 1 & 2

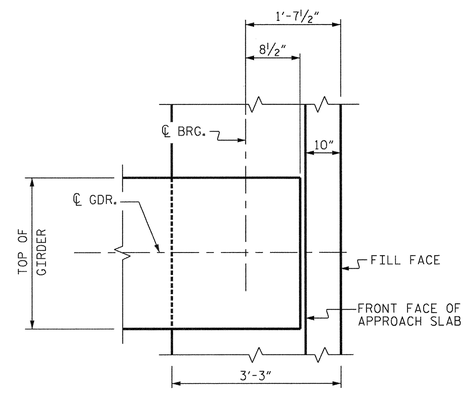

PLAN OF GIRDER
INTEGRAL END BENT NO. 2

NORTH CAROLINA PROFESSIONAL SEAL 20 ENGINEER HARDY L. WILLIS
11/12/12

PROJECT NO. R-2303C
SAMPSON COUNTY
STATION: 943+12.50 -L-

V&M
Vaughn & Melton
Consulting Engineers
Asheville, North Carolina
828-253-2796
Charlotte, North Carolina 704-357-0488
Tri-Cities, Tennessee 423-467-8401
Knoxville, Tennessee 865-546-5800
Middlesboro, Kentucky 606-248-6600
Spartanburg, South Carolina 864-574-4775

Copyright © 2006 Vaughn & Melton, INC. All Rights Reserved

DWN. BY: MAF DATE: SEPT. 2012
CHKD. BY: HLW DATE: SEPT. 2012

STATE OF NORTH CAROLINA
DEPARTMENT OF TRANSPORTATION
RALEIGH

TYPICAL SECTION DETAILS

(LEFT LANE)

REVISIONS						SHEET NO.
NO.	BY:	DATE:	NO.	BY:	DATE:	S-6
1			3			TOTAL SHEETS
2			4			138

STR. #1

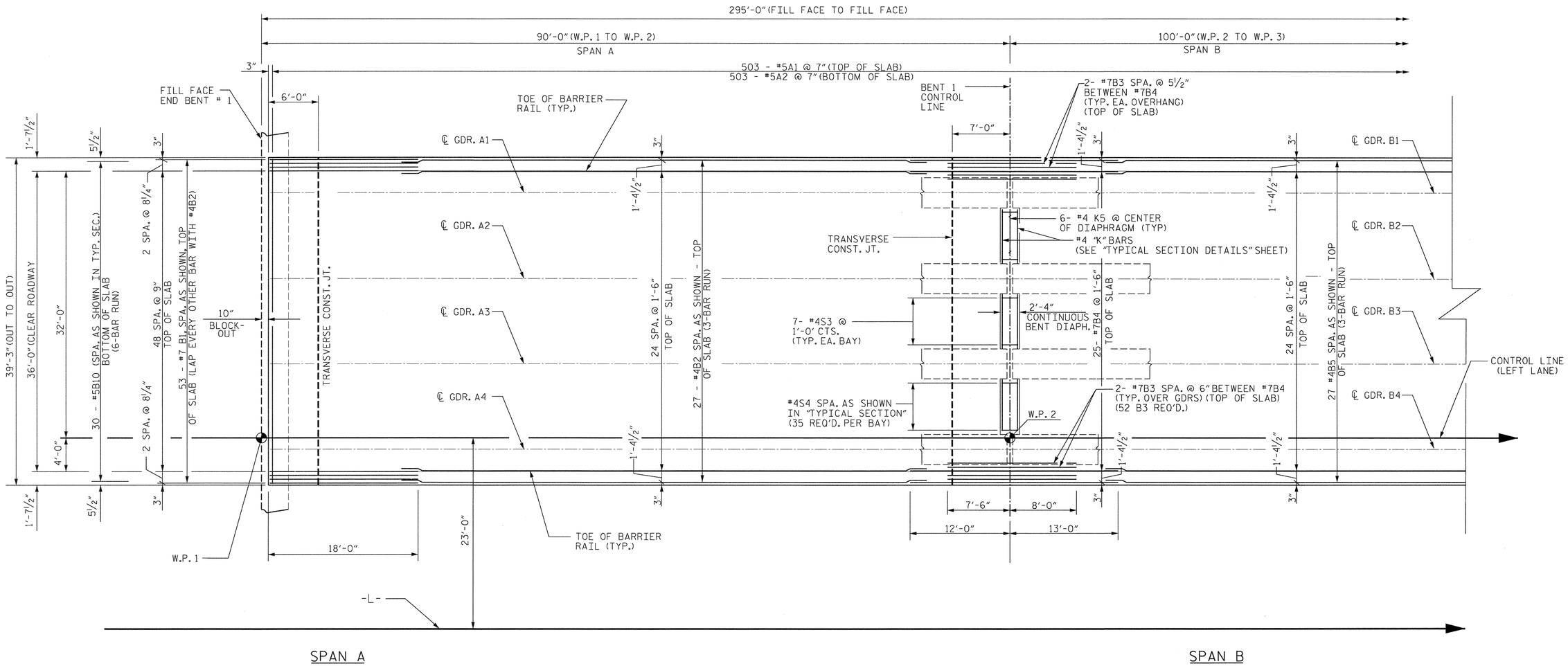

PLAN OF SPANS

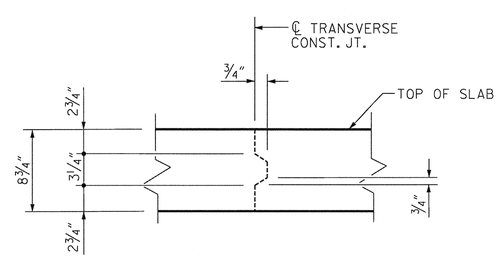

TRANSVERSE CONSTRUCTION JOINT DETAIL

REINFORCING STEEL IN SLAB NOT SHOWN. LONGITUDINAL REINFORCING STEEL SHALL BE CONTINUOUS THRU JOINT.

NOTES:

FOR LOCATION OF INTERMEDIATE DIAPHRAGMS, SEE "GIRDER LAYOUT" SHEETS.

FOR REINFORCING STEEL IN BARRIER RAIL, SEE "CONCRETE BARRIER RAIL" SHEET.

"A" BARS SHALL BE PLACED PERPENDICULAR TO ℄ -L-

MINIMUM SPLICE LENGTHS FOR ALL BARS SHALL BE IN ACCORDANCE WITH THE SPLICE LENGTH TABLE ON THE SUPERSTRUCTURE BILL OF MATERIAL SHEET. WHERE BARS OF DIFFERENT SIZES ARE LAPPED, USE THE MINIMUM SPLICE LENGTH OF SMALLER BAR.

NORTH CAROLINA PROFESSIONAL SEAL ENGINEER HARDY L. WILLIS 11/21/12

PROJECT NO. R-2303C
SAMPSON COUNTY
STATION: 943+12.50 -L-

SHEET 1 OF 5

V&M Vaughn & Melton Consulting Engineers
Asheville, North Carolina 828-253-2796
Charlotte, North Carolina 704-357-0488
Tri-Cities, Tennessee 423-467-840
Knoxville, Tennessee 865-546-5800
Middlesboro, Kentucky 606-248-6600
Spartanburg, South Carolina 864-574-4775

Copyright © 2006 Vaughn & Melton, Inc. All Rights Reserved

DWN. BY: MAF DATE: SEPT. 2012
CHKD. BY: HLW DATE: SEPT. 2012

STATE OF NORTH CAROLINA
DEPARTMENT OF TRANSPORTATION
RALEIGH

SUPERSTRUCTURE PLAN OF SPANS

(LEFT LANE)

REVISIONS						SHEET NO.
NO.	BY:	DATE:	NO.	BY:	DATE:	S-7
1			3			TOTAL SHEETS
2			4			138

STR. #1

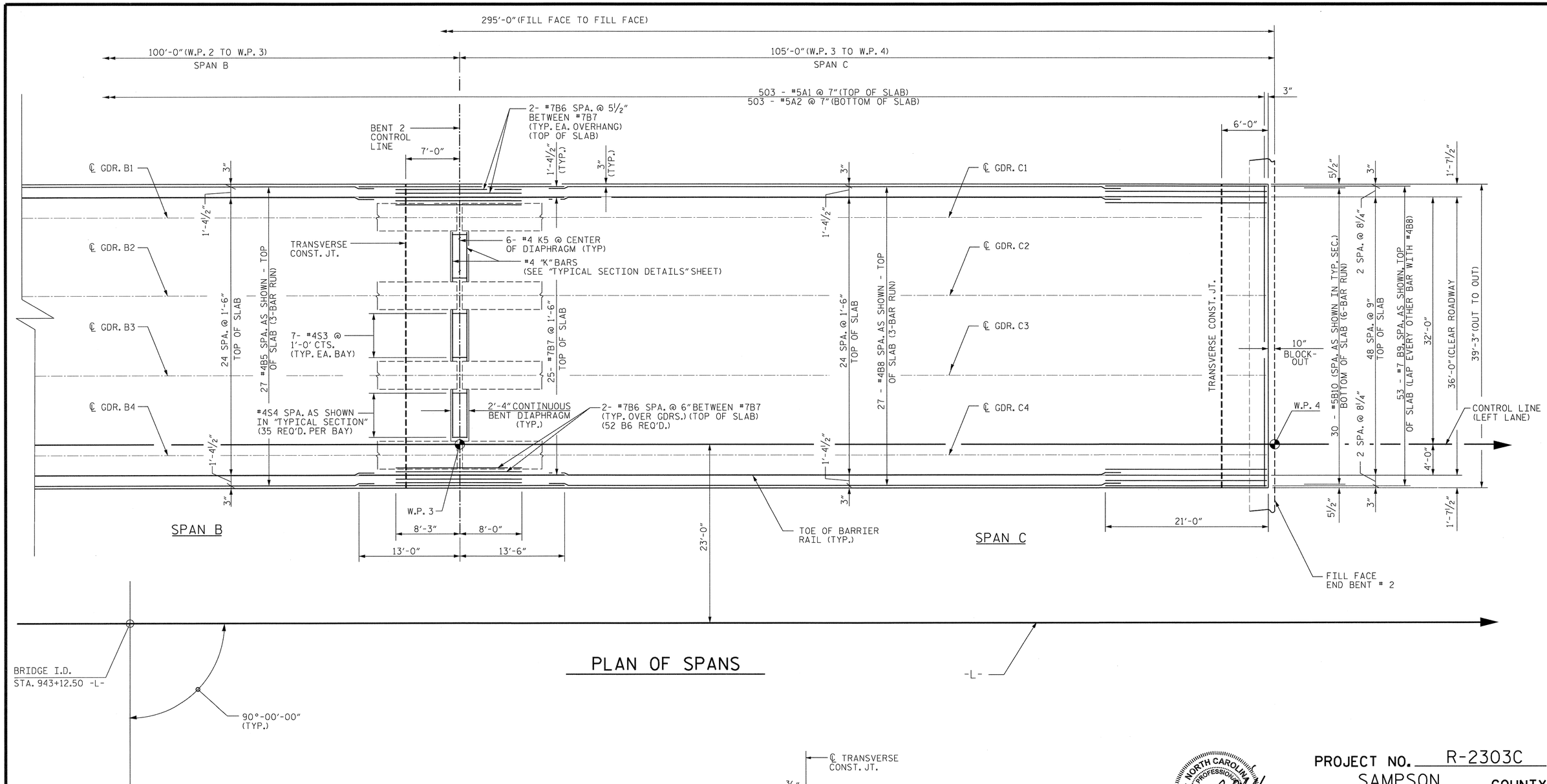

PLAN OF SPANS

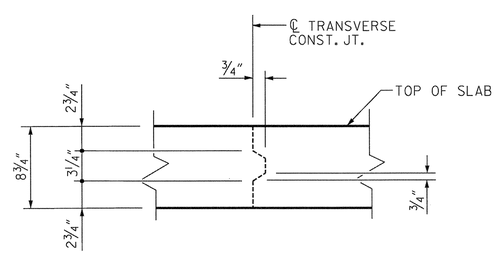

TRANSVERSE CONSTRUCTION JOINT DETAIL

REINFORCING STEEL IN SLAB NOT SHOWN. LONGITUDINAL REINFORCING STEEL SHALL BE CONTINUOUS THRU JOINT.

NOTES:

FOR LOCATION OF INTERMEDIATE DIAPHRAGMS, SEE "GIRDER LAYOUT" SHEETS.

FOR REINFORCING STEEL IN BARRIER RAIL, SEE "CONCRETE BARRIER RAIL" SHEET.

"A" BARS SHALL BE PLACED PERPENDICULAR TO ℄ -L-

MINIMUM SPLICE LENGTHS FOR ALL BARS SHALL BE IN ACCORDANCE WITH THE SPLICE LENGTH TABLE ON THE SUPERSTRUCTURE BILL OF MATERIAL SHEET. WHERE BARS OF DIFFERENT SIZES ARE LAPPED, USE THE MINIMUM SPLICE LENGTH OF SMALLER BAR.

NORTH CAROLINA PROFESSIONAL ENGINEER SEAL 10777 HARDY L. WILLIS 11/21/12

PROJECT NO. R-2303C
SAMPSON COUNTY
STATION: 943+12.50 -L-

SHEET 2 OF 5

V&M Vaughn & Melton Consulting Engineers
Asheville, North Carolina 828-253-2796
Charlotte, North Carolina 704-357-0488
Tri-Cities, Tennessee 423-467-8401
Knoxville, Tennessee 865-546-5800
Middlesboro, Kentucky 606-248-6600
Spartanburg, South Carolina 864-574-4775
Copyright © 2006 Vaughn & Melton, Inc. All Rights Reserved

STATE OF NORTH CAROLINA
DEPARTMENT OF TRANSPORTATION
RALEIGH

SUPERSTRUCTURE PLAN OF SPANS

(LEFT LANE)

REVISIONS						SHEET NO.
NO.	BY:	DATE:	NO.	BY:	DATE:	S-8
1			3			TOTAL SHEETS
2			4			138

DWN. BY: MAF DATE: SEPT. 2012
CHKD. BY: HLW DATE: SEPT. 2012

STR. #1

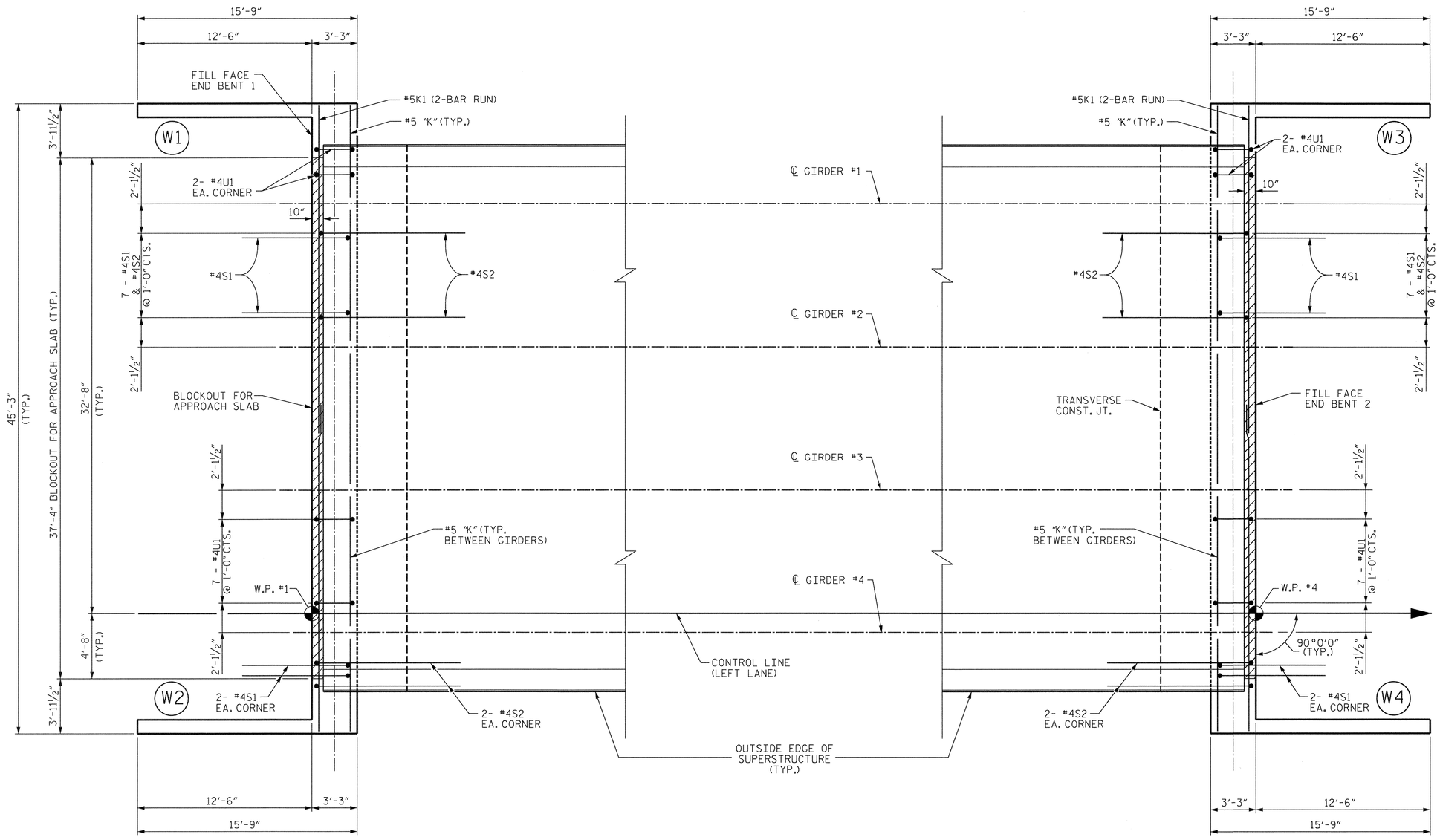

END BENT 1

END BENT 2

NOTES

FOR SECTION THROUGH ABUTMENT, SEE "TYPICAL SECTION" SHEET.

FOR DETAILS AND REINFORCING STEEL IN WINGS, SEE "PLAN OF SPAN DETAILS", SHEETS 4 & 5 of 5.

PLAN OF ABUTMENT WALLS

ALL DIMENSIONS AND REINFORCING STEEL ARE TYPICAL FOR BOTH END BENTS.

NORTH CAROLINA PROFESSIONAL SEAL ENGINEER HARDY L. WILLIS 11/21/12

PROJECT NO. R-2303C
SAMPSON COUNTY
STATION: 943+12.50 -L-

SHEET 3 OF 5

STATE OF NORTH CAROLINA
DEPARTMENT OF TRANSPORTATION
RALEIGH

PLAN OF SPAN DETAILS

(LEFT LANE)

V&M Vaughn & Melton Consulting Engineers
Asheville, North Carolina 828-253-2796
Charlotte, North Carolina 704-357-0488
Tri-Cities, Tennessee 423-467-8401
Knoxville, Tennessee 865-546-5800
Middlesboro, Kentucky 606-248-6600
Spartanburg, South Carolina 864-574-4775

Copyright © 2006 Vaughn & Melton, Inc. All Rights Reserved

DWN. BY: MAF DATE: SEPT. 2012
CHKD. BY: HLW DATE: SEPT. 2012

REVISIONS						
NO.	BY:	DATE:	NO.	BY:	DATE:	
1			3			
2			4			

SHEET NO. S-9
TOTAL SHEETS 138

STR. #1

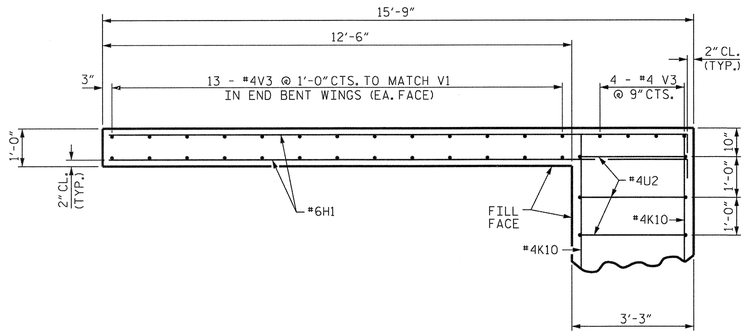

PLAN OF WING W1

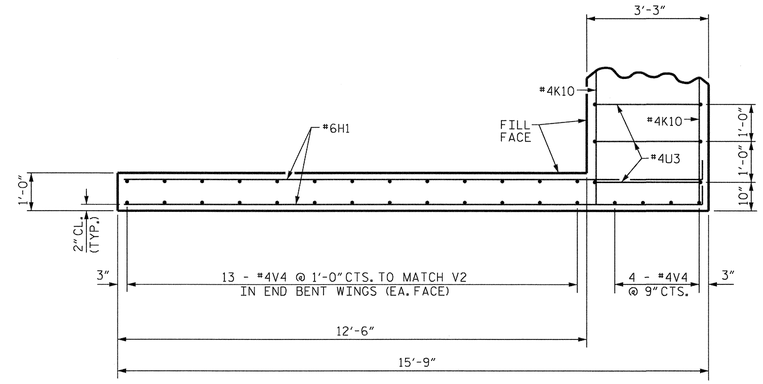

PLAN OF WING W2

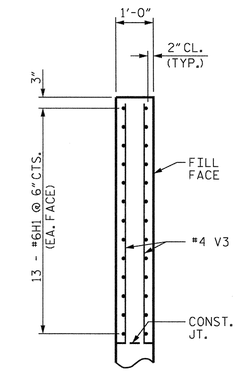

A-A

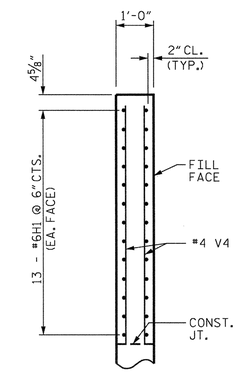

B-B

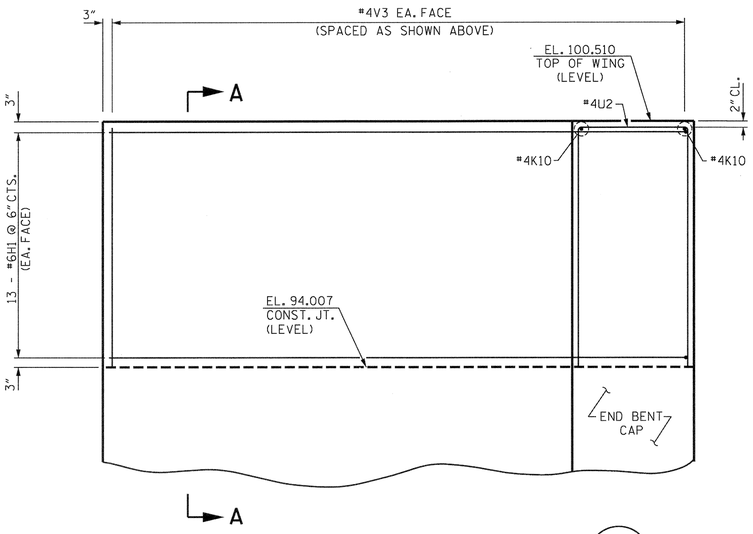

ELEVATION OF WING W1

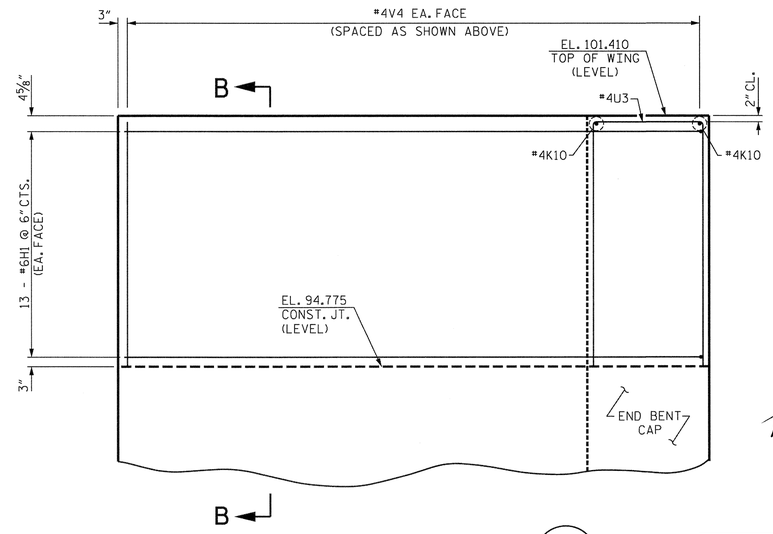

ELEVATION OF WING W2

NORTH CAROLINA PROFESSIONAL SEAL 29011 ENGINEER HARDY L. WILLIS 11/21/12

PROJECT NO. R-2303C
SAMPSON COUNTY
STATION: 943+12.50 -L-

SHEET 4 OF 5

STATE OF NORTH CAROLINA
DEPARTMENT OF TRANSPORTATION
RALEIGH

PLAN OF SPAN DETAILS

(LEFT LANE)

V&M
Vaughn & Melton
Consulting Engineers
Asheville, North Carolina 828-253-2796
Charlotte, North Carolina 704-357-0488
Tri-Cities, Tennessee 423-467-8401
Knoxville, Tennessee 865-546-5800
Middlesboro, Kentucky 606-248-6600
Spartanburg, South Carolina 864-574-4775

Copyright © 2006 Vaughn & Melton, Inc. All Rights Reserved

DWN. BY: MAF DATE: SEPT. 2012
CHKD. BY: HLW DATE: SEPT. 2012

REVISIONS								SHEET NO.
NO.	BY:	DATE:	NO.	BY:	DATE:			S-10
1			3					TOTAL SHEETS
2			4					138

STR. #1

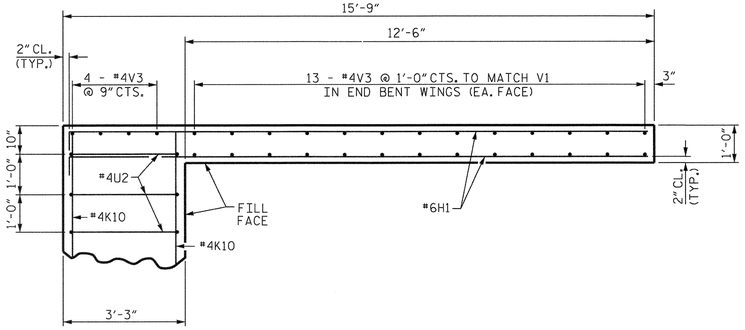

PLAN OF WING W3

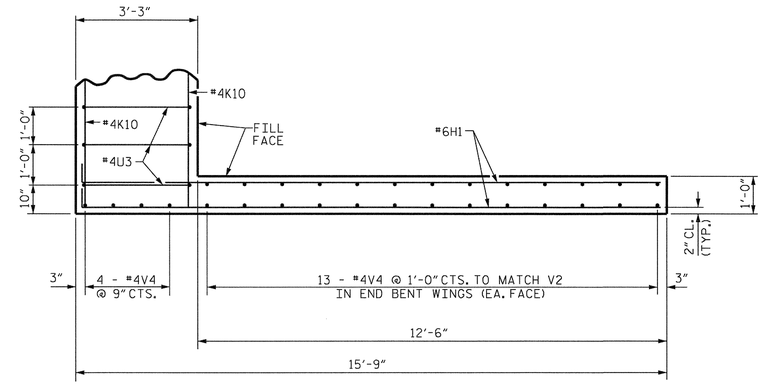

PLAN OF WING W4

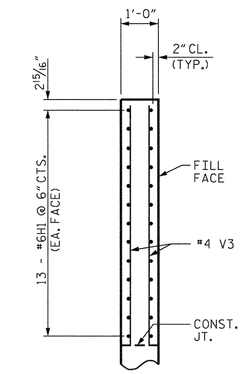

A-A

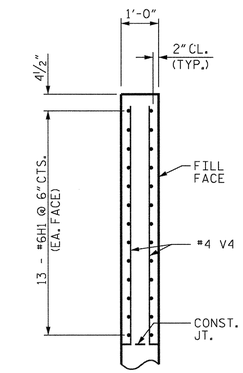

B-B

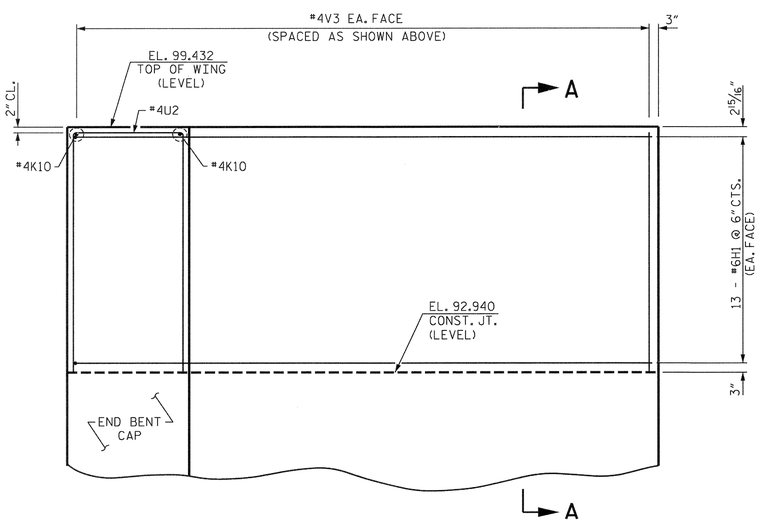

ELEVATION OF WING W3

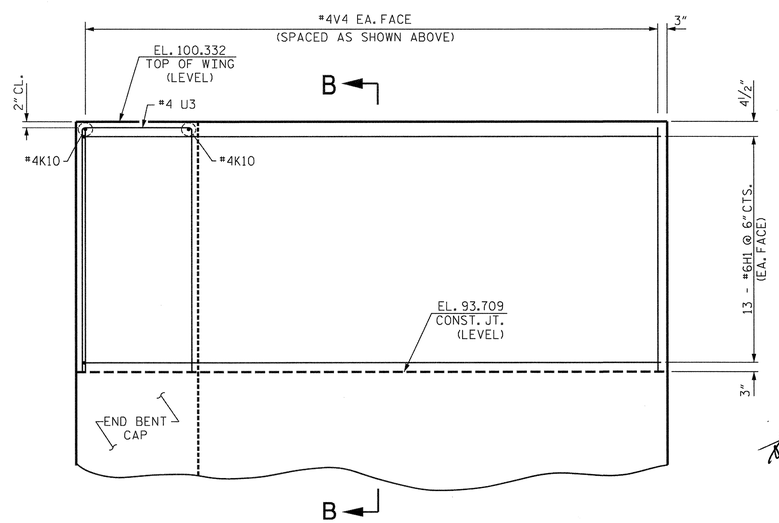

ELEVATION OF WING W4

NORTH CAROLINA PROFESSIONAL SEAL 027 ENGINEER HARDY L. WILLIS
11/21/12

PROJECT NO. R-2303C
SAMPSON COUNTY
STATION: 943+12.50 -L-

SHEET 5 OF 5

V&M Vaughn & Melton Consulting Engineers
Asheville, North Carolina 828-253-2796
Charlotte, North Carolina 704-357-0488
Tri-Cities, Tennessee 423-467-8401
Knoxville, Tennessee 865-546-5800
Middlesboro, Kentucky 606-248-6600
Spartanburg, South Carolina 864-574-4775
Copyright © 2006 Vaughn & Melton, Inc. All Rights Reserved

DWN. BY: MAF DATE: SEPT. 2012
CHKD. BY: HLW DATE: SEPT. 2012

STATE OF NORTH CAROLINA
DEPARTMENT OF TRANSPORTATION
RALEIGH

PLAN OF SPAN DETAILS

(LEFT LANE)

REVISIONS						SHEET NO.
NO.	BY:	DATE:	NO.	BY:	DATE:	S-11
1			3			TOTAL SHEETS
2			4			138

STR. #1

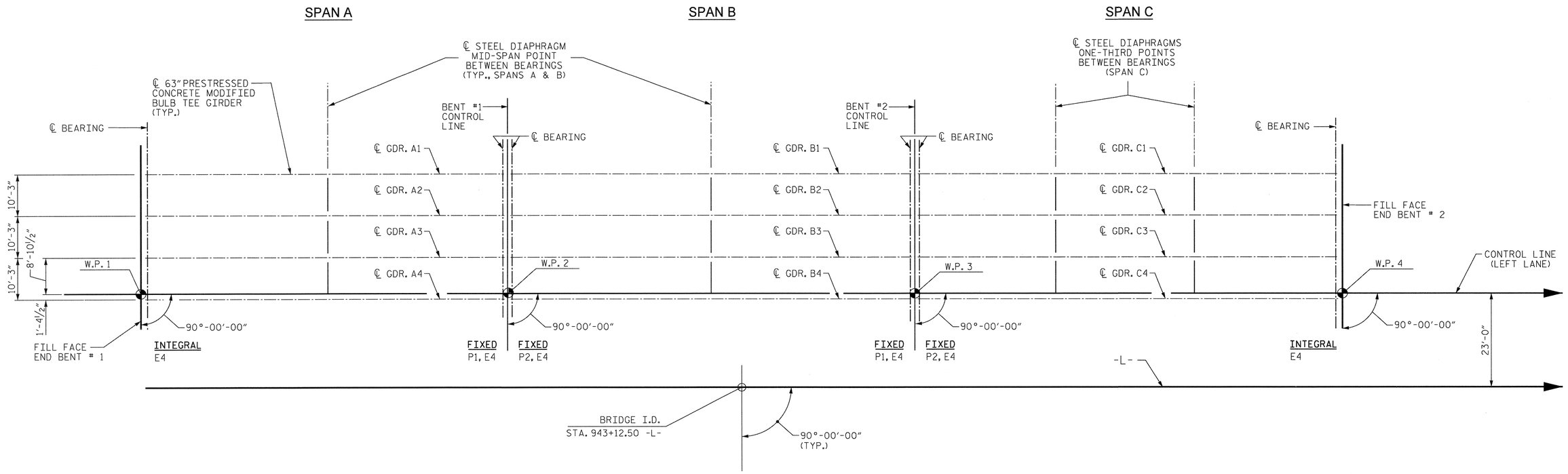

FRAMING PLAN

NORTH CAROLINA PROFESSIONAL SEAL 20777 ENGINEER HARDY L. WILLIS 11/21/12

PROJECT NO. R-2303C
SAMPSON COUNTY
STATION: 943+12.50 -L-

Vaughn & Melton Consulting Engineers
Asheville, North Carolina 828-253-2796
Charlotte, North Carolina 704-357-0488
Tri-Cities, Tennessee 423-467-8410
Knoxville, Tennessee 865-546-5800
Middlesboro, Kentucky 606-248-6600
Spartanburg, South Carolina 864-574-4775
Copyright © 2006 Vaughn & Melton, Inc. All Rights Reserved

DWN. BY: MAF DATE: SEPT. 2012
CHKD. BY: HLW DATE: SEPT. 2012

STATE OF NORTH CAROLINA
DEPARTMENT OF TRANSPORTATION
RALEIGH

FRAMING PLAN

(LEFT LANE)

REVISIONS						SHEET NO.
NO.	BY:	DATE:	NO.	BY:	DATE:	S-12
1			3			TOTAL SHEETS
2			4			138

STR. #1

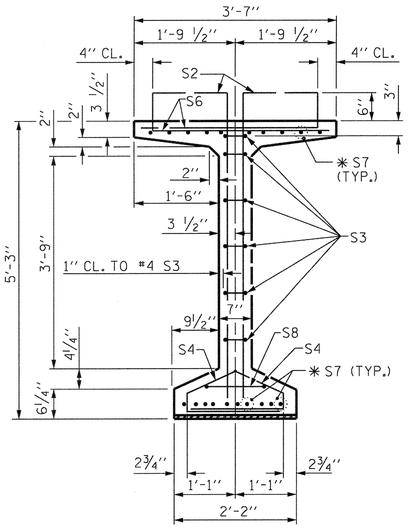

SECTION A-A

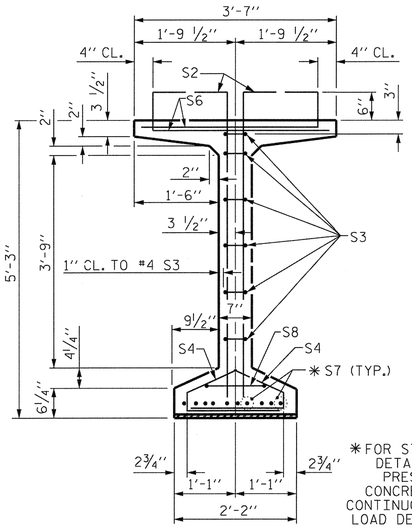

SECTION B-B

✱ FOR S7 BARS, SEE DETAIL "C" OF PRESTRESSED CONCRETE GIRDER CONTINUOUS FOR LIVE LOAD DETAILS SHEET

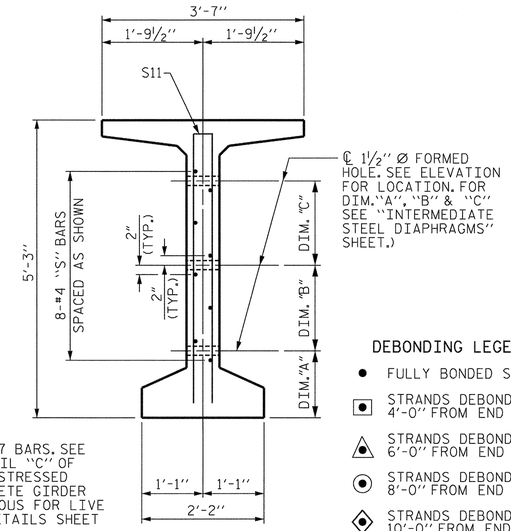

SECTION C-C

(S1, S6 AND S9 BARS NOT SHOWN)

DEBONDING LEGEND

- ● FULLY BONDED STRANDS
- STRANDS DEBONDED FOR 4'-0" FROM END OF GIRDER
- STRANDS DEBONDED FOR 6'-0" FROM END OF GIRDER
- STRANDS DEBONDED FOR 8'-0" FROM END OF GIRDER
- STRANDS DEBONDED FOR 10'-0" FROM END OF GIRDER
- STRANDS DEBONDED FOR 12'-0" FROM END OF GIRDER

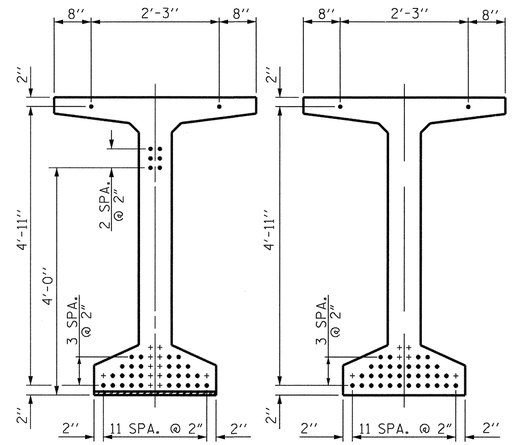

AT END OF GIRDER

AT ℄ OF GIRDER

0.6" Ø LOW RELAXATION STRAND LAYOUT

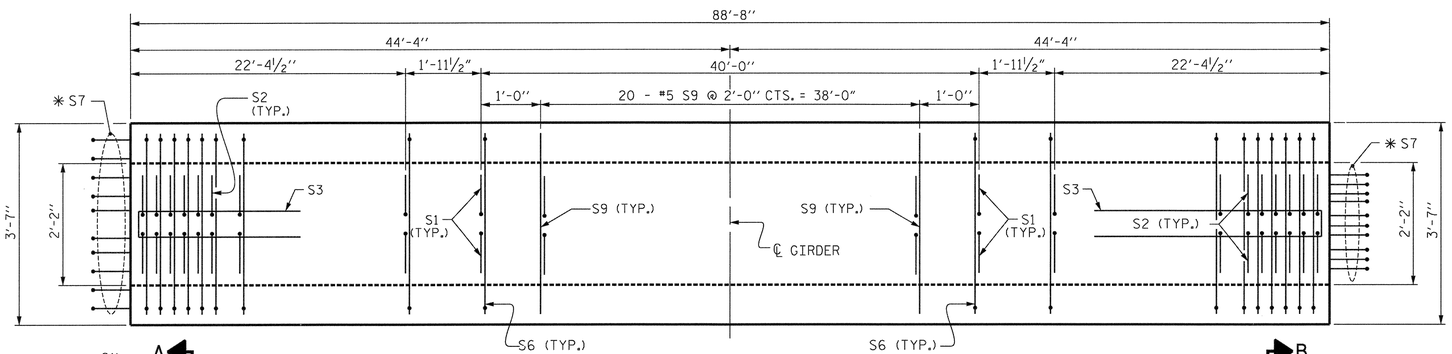

PLAN OF GIRDER - SPAN A

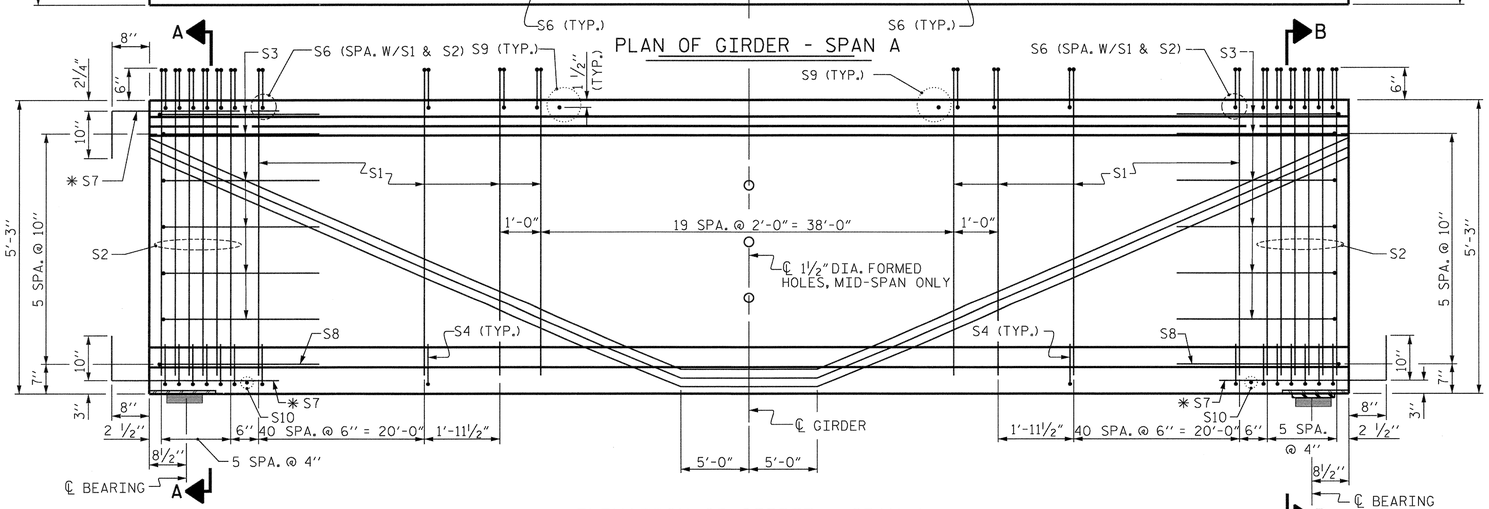

ELEVATION OF GIRDER - SPAN A

INTEGRAL END BENT

FIX

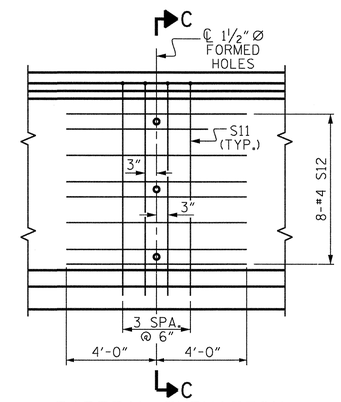

PARTIAL ELEVATION

SHOWING INTERMEDIATE STEEL DIAPHRAGM REINFORCING STEEL.

0.6" Ø L. R. GRADE 270 STRANDS

AREA (SQUARE INCHES)	ULTIMATE STRENGTH (LBS. PER STRAND)	APPLIED PRESTRESS (LBS. PER STRAND)
0.217	58,600	43,950

REINFORCING STEEL FOR ONE GDR

BAR	NUMBER	SIZE	TYPE	LENGTH	WEIGHT
S1	208	#4	1	6'-1"	845
S2	24	#5	1	6'-1"	152
S3	12	#4	2	8'-5"	67
S4	188	#4	3	3'-0"	377
S6	232	#5	4	4'-4"	1049
✱ S7	30	#5	STR	3'-8"	115
S8	2	#5	2	9'-0"	19
S9	20	#5	STR	3'-3"	68
S10	2	#3	STR	1'-10"	1
S11	4	#5	2	10'-2"	42
S12	8	#4	STR	8'-0"	43

✱ NOTE: S7 BARS SHALL BE BENT BEFORE SHIPMENT. HEAT BENDING SHALL NOT BE ALLOWED.

BAR TYPES

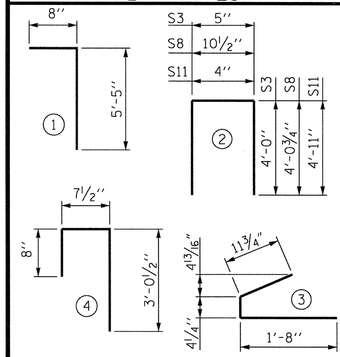

ALL BAR DIMENSIONS ARE OUT-TO-OUT

QUANTITIES FOR ONE GIRDER

	REINFORCING STEEL	9000 PSI CONCRETE	0.6" Ø L.R. STRANDS
	LB.	C.Y.	No.
EXTERIOR GIRDER	2,778	17.6	36
INTERIOR GIRDER	2,778	17.6	36

GIRDERS REQUIRED

NUMBER	LENGTH	TOTAL LENGTH
4	88'-8"	354'-8"

PROJECT NO. R-2303C

SAMPSON COUNTY

STATION: 943+12.50 -L-

SHEET 1 OF 3

STATE OF NORTH CAROLINA
DEPARTMENT OF TRANSPORTATION
RALEIGH

STANDARD
63" PRESTRESSED CONCRETE
MODIFIED BULB TEE
CONTINUOUS FOR LIVE LOAD
SPAN A
(LEFT LANE)

NORTH CAROLINA PROFESSIONAL SEAL 20177 ENGINEER HARDY L. WILLIS 11/21/12

ASSEMBLED BY : MAF	DATE : 9/2012
CHECKED BY : HLW	DATE : 9/2012

DRAWN BY : EEM 2/6/97	REV. 10/17/00	RWW/LES
CHECKED BY : VAP 2/6/97	REV. 5/1/06R	TLA/GM
	REV. 10/1/11	MAA/GM

REVISIONS

NO.	BY:	DATE:	NO.	BY:	DATE:
1			3		
2			4		

SHEET NO. S-13

TOTAL SHEETS 138

$$$$$$SYSTIME$$$$$
$$$$$$$$$$$$$$$$$$$$$$$$DGN$$$$$$$$$$$$$$$$$$$$$$$$
$$$$USERNAME$$$$

STR. #1

STD. NO. PCG9 (Sht. 2)

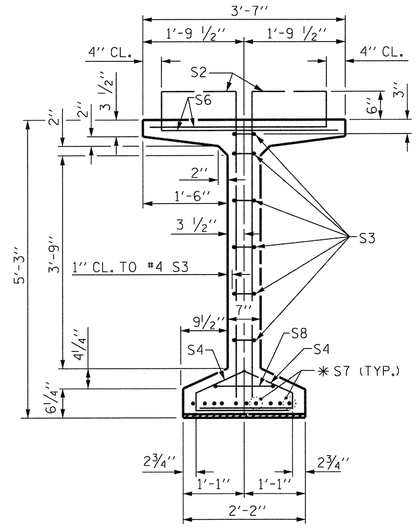

SECTION A-A

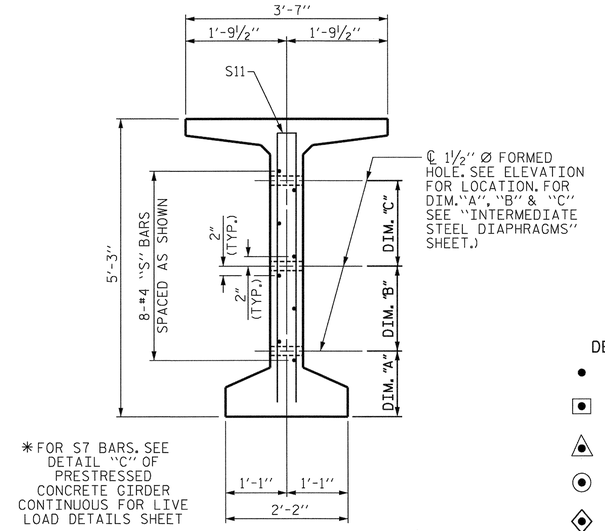

✱ FOR S7 BARS. SEE DETAIL "C" OF PRESTRESSED CONCRETE GIRDER CONTINUOUS FOR LIVE LOAD DETAILS SHEET

SECTION C-C

(S1, S6 AND S9 BARS NOT SHOWN)

DEBONDING LEGEND

- FULLY BONDED STRANDS
- STRANDS DEBONDED FOR 4'-0" FROM END OF GIRDER
- STRANDS DEBONDED FOR 6'-0" FROM END OF GIRDER
- STRANDS DEBONDED FOR 8'-0" FROM END OF GIRDER
- STRANDS DEBONDED FOR 10'-0" FROM END OF GIRDER
- STRANDS DEBONDED FOR 12'-0" FROM END OF GIRDER

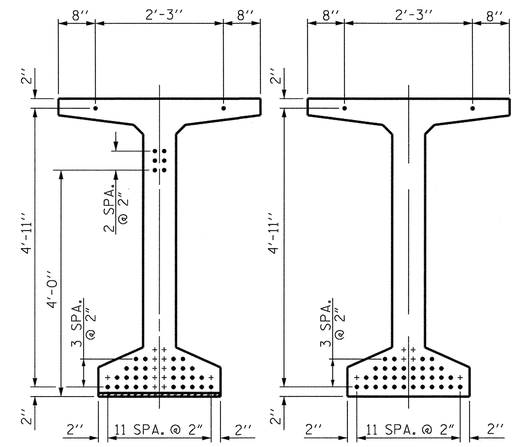

AT END OF GIRDER

AT ℄ OF GIRDER

0.6" Ø LOW RELAXATION STRAND LAYOUT

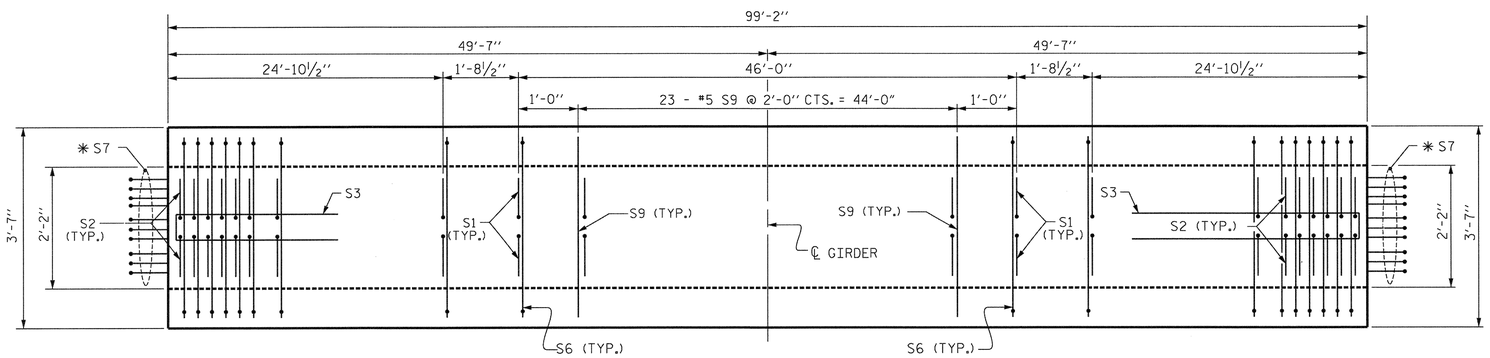

PLAN OF GIRDER - SPAN B

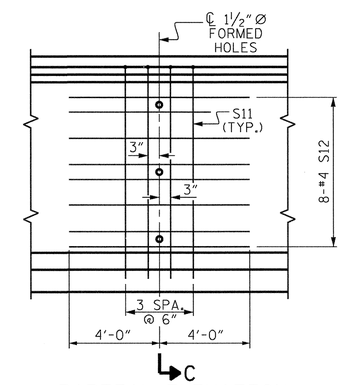

PARTIAL ELEVATION

SHOWING INTERMEDIATE STEEL DIAPHRAGM REINFORCING STEEL.

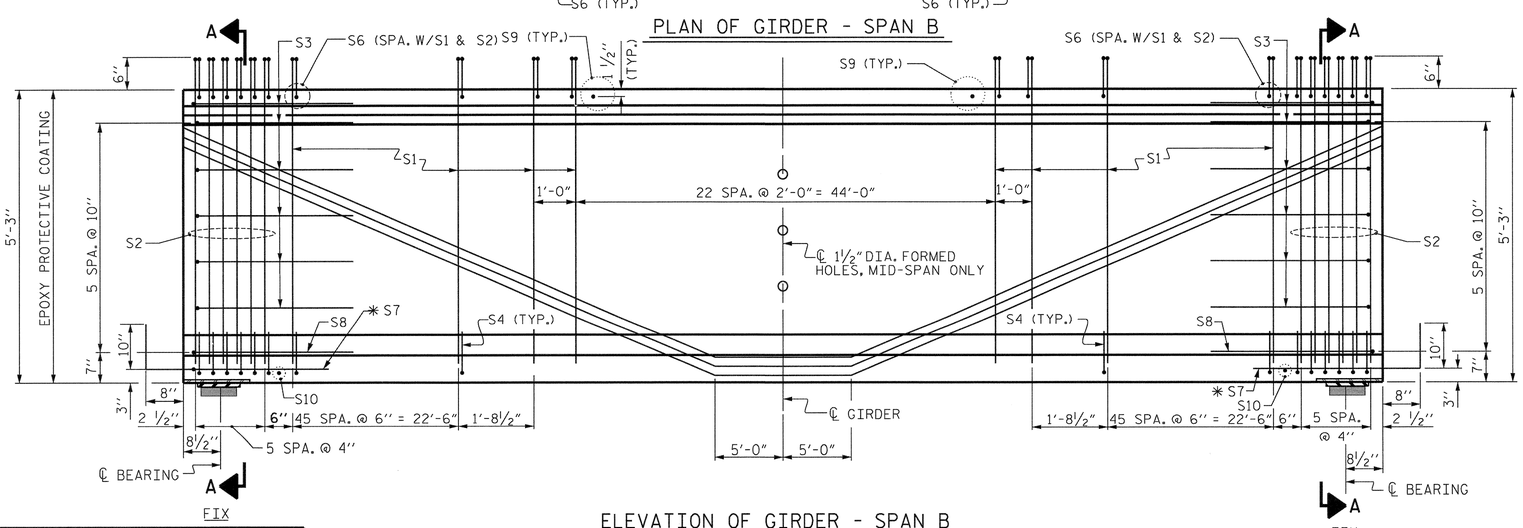

ELEVATION OF GIRDER - SPAN B

0.6" Ø L. R. GRADE 270 STRANDS		
AREA (SQUARE INCHES)	ULTIMATE STRENGTH (LBS. PER STRAND)	APPLIED PRESTRESS (LBS. PER STRAND)
0.217	58,600	43,950

REINFORCING STEEL FOR ONE GDR

BAR	NUMBER	SIZE	TYPE	LENGTH	WEIGHT
S1	234	#4	1	6'-1"	951
S2	24	#5	1	6'-1"	152
S3	12	#4	2	8'-5"	67
S4	208	#4	3	3'-0"	417
S6	258	#5	4	4'-4"	1166
✱ S7	20	#5	STR	3'-8"	76
S8	2	#5	2	9'-0"	19
S9	23	#5	STR	3'-3"	78
S10	2	#3	STR	1'-10"	1
S11	4	#5	2	10'-2"	42
S12	8	#4	STR	8'-0"	43

✱ NOTE: S7 BARS SHALL BE BENT BEFORE SHIPMENT. HEAT BENDING SHALL NOT BE ALLOWED.

BAR TYPES

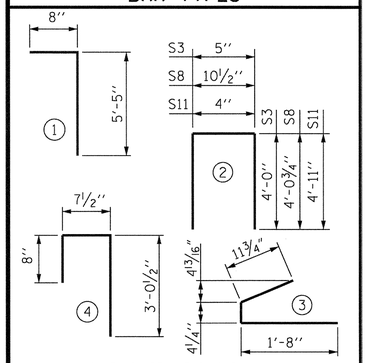

ALL BAR DIMENSIONS ARE OUT-TO-OUT

QUANTITIES FOR ONE GIRDER

	REINFORCING STEEL	9000 PSI CONCRETE	0.6" Ø L.R. STRANDS
	LB.	C.Y.	No.
EXTERIOR GIRDER	3,012	19.6	36
INTERIOR GIRDER	3,012	19.6	36

GIRDERS REQUIRED

NUMBER	LENGTH	TOTAL LENGTH
4	99'-2"	396'-8"

PROJECT NO. R-2303C

SAMPSON COUNTY

STATION: 943+12.50 -L-

SHEET 2 OF 3

STATE OF NORTH CAROLINA
DEPARTMENT OF TRANSPORTATION
RALEIGH

STANDARD
63" PRESTRESSED CONCRETE
MODIFIED BULB TEE
CONTINUOUS FOR LIVE LOAD
SPAN B
(LEFT LANE)

NORTH CAROLINA PROFESSIONAL SEAL 40721 ENGINEER RICHARDY L. WILLIS 11/21/12

REVISIONS							SHEET NO.
NO.	BY:	DATE:	NO.	BY:	DATE:		S-14
1			3				TOTAL SHEETS
2			4				138

ASSEMBLED BY : MAF		DATE : 9/2012
CHECKED BY : HLW		DATE : 9/2012
DRAWN BY : EEM 2/6/97	REV. 10/17/00	RWW/LES
CHECKED BY : VAP 2/6/97	REV. 5/1/06R	TLA/GM
	REV. 10/1/11	MAA/GM

$$$$$$$SYSTIME$$$$$
$$$$$$$$$$$$$$$$$$$$DGN$$$$$$$$$$$$$$$$$$$$$$$$
$$$$USERNAME$$$$

STR. #1

STD. NO. PCG9 (Sht. 1)

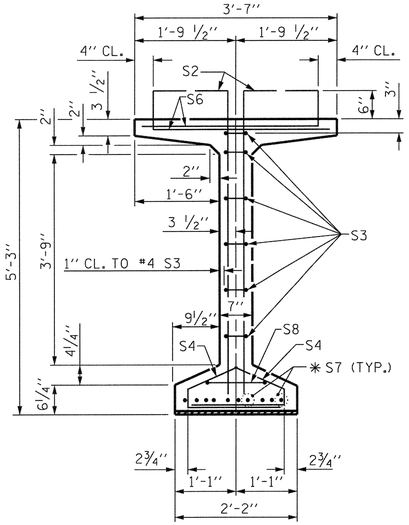

SECTION A-A

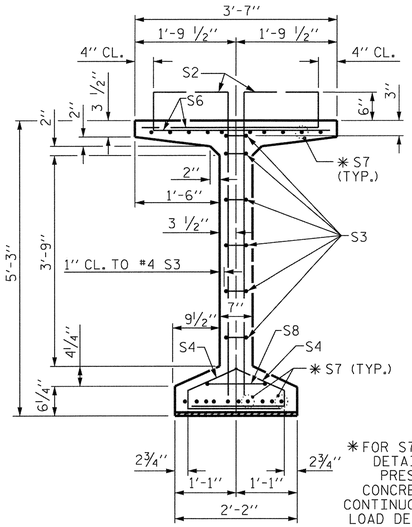

SECTION B-B

✱ FOR S7 BARS, SEE DETAIL "C" OF PRESTRESSED CONCRETE GIRDER CONTINUOUS FOR LIVE LOAD DETAILS SHEET

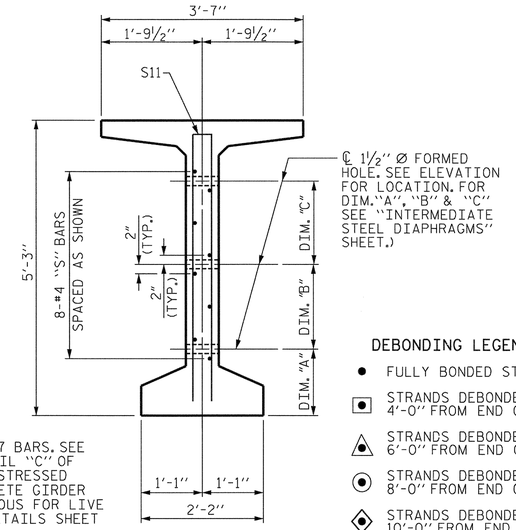

SECTION C-C

(S1, S6 AND S9 BARS NOT SHOWN)

DEBONDING LEGEND

- ● FULLY BONDED STRANDS
- STRANDS DEBONDED FOR 4'-0" FROM END OF GIRDER
- STRANDS DEBONDED FOR 6'-0" FROM END OF GIRDER
- STRANDS DEBONDED FOR 8'-0" FROM END OF GIRDER
- STRANDS DEBONDED FOR 10'-0" FROM END OF GIRDER
- STRANDS DEBONDED FOR 12'-0" FROM END OF GIRDER

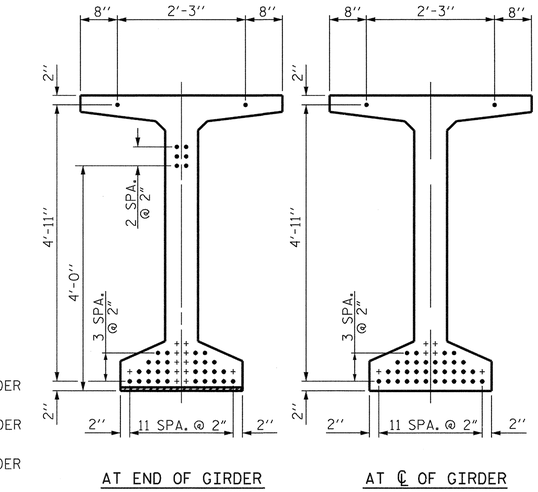

0.6" Ø LOW RELAXATION STRAND LAYOUT

0.6" Ø L. R. GRADE 270 STRANDS		
AREA (SQUARE INCHES)	ULTIMATE STRENGTH (LBS. PER STRAND)	APPLIED PRESTRESS (LBS. PER STRAND)
0.217	58,600	43,950

REINFORCING STEEL FOR ONE GDR

BAR	NUMBER	SIZE	TYPE	LENGTH	WEIGHT
S1	272	#4	1	6'-1"	1105
S2	24	#5	1	6'-1"	152
S3	12	#4	2	8'-5"	67
S4	220	#4	3	3'-0"	441
S6	296	#5	4	4'-4"	1338
✱ S7	30	#5	STR	3'-8"	115
S8	2	#5	2	9'-0"	19
S9	24	#5	STR	3'-3"	81
S10	2	#3	STR	1'-10"	1
S11	8	#5	2	10'-2"	85
S12	16	#4	STR	8'-0"	86

✱ NOTE: S7 BARS SHALL BE BENT BEFORE SHIPMENT. HEAT BENDING SHALL NOT BE ALLOWED.

BAR TYPES

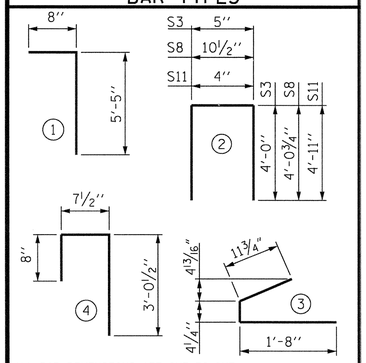

ALL BAR DIMENSIONS ARE OUT-TO-OUT

QUANTITIES FOR ONE GIRDER

	REINFORCING STEEL	9000 PSI CONCRETE	0.6" Ø L.R. STRANDS
	LB.	C.Y.	No.
EXTERIOR GIRDER	3,490	20.5	36
INTERIOR GIRDER	3,490	20.5	36

GIRDERS REQUIRED

NUMBER	LENGTH	TOTAL LENGTH
4	103'-8"	414'-8"

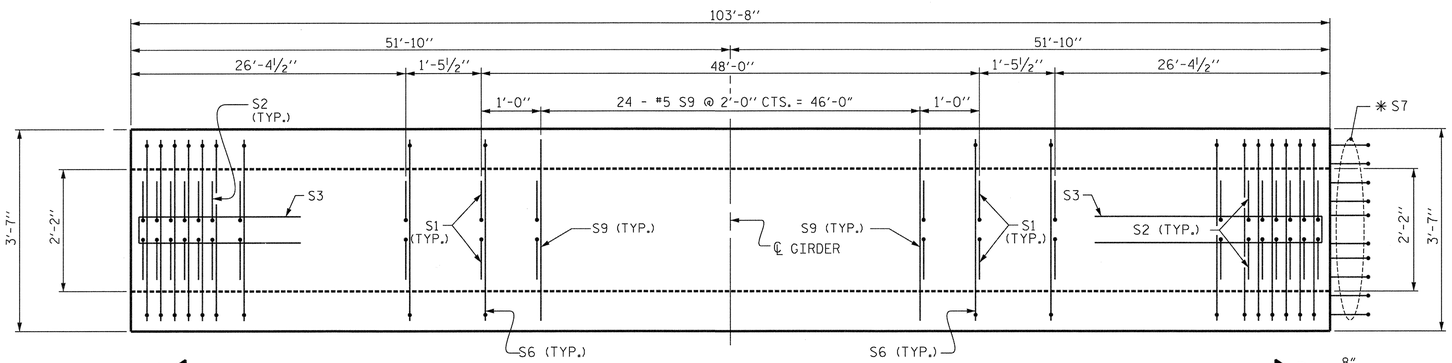

PLAN OF GIRDER - SPAN C

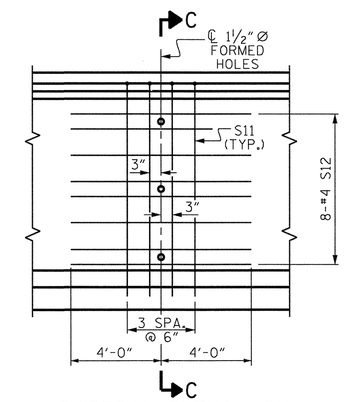

PARTIAL ELEVATION

SHOWING INTERMEDIATE STEEL DIAPHRAGM REINFORCING STEEL.

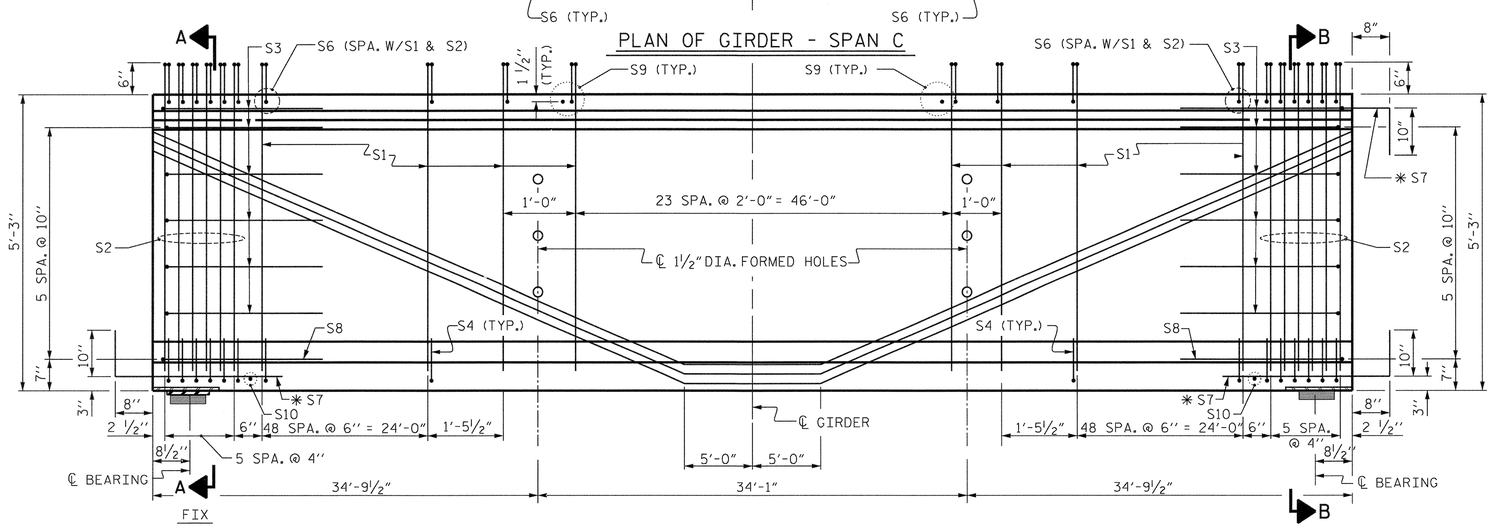

ELEVATION OF GIRDER - SPAN C

PROJECT NO. R-2303C

SAMPSON COUNTY

STATION: 943+12.50 -L-

SHEET 3 OF 3

STATE OF NORTH CAROLINA
DEPARTMENT OF TRANSPORTATION
RALEIGH

STANDARD
63" PRESTRESSED CONCRETE
MODIFIED BULB TEE
CONTINUOUS FOR LIVE LOAD
SPAN C
(LEFT LANE)

NORTH CAROLINA PROFESSIONAL SEAL 20772 ENGINEER HARDY L. WILLIS 11/21/12

REVISIONS						SHEET NO.
NO.	BY:	DATE:	NO.	BY:	DATE:	S-15
1			3			TOTAL SHEETS
2			4			138

ASSEMBLED BY : MAF		DATE : 9/2012
CHECKED BY : HLW		DATE : 9/2012
DRAWN BY : EEM 2/6/97	REV. 10/17/00	RWW/LES
CHECKED BY : VAP 2/6/97	REV. 5/1/06R	TLA/GM
	REV. 10/1/11	MAA/GM

$$$$$$SYSTIME$$$$$
$$$$$$$$$$$$$$$$$$$$$$$$DGN$$$$$$$$$$$$$$$$$$$$$$$$
$$$$USERNAME$$$$

STR. #1

STD. NO. PCG9 (Sht. 2)

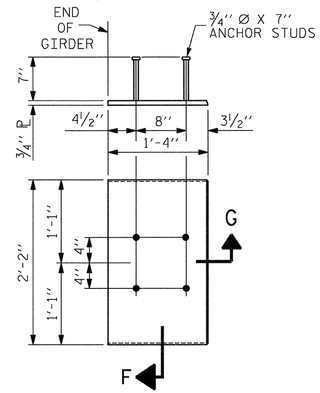

EMBEDDED PLATE "B-1" DETAILS FOR AASHTO TYPE IV GIRDER AND 63" & 72" MODIFIED BULB TEES

(2 REQ'D PER GIRDER)

NOTES

ALL PRESTRESSING STRANDS SHALL BE 7-WIRE LOW-RELAXATION GRADE 270 STRANDS AND SHALL CONFORM TO AASHTO M203 EXCEPT FOR SAMPLING REQUIREMENTS WHICH SHALL BE IN ACCORDANCE WITH THE STANDARD SPECIFICATIONS.

ALL REINFORCING STEEL SHALL BE GRADE 60.

EMBEDDED PLATE "B-1" SHALL BE GALVANIZED IN ACCORDANCE WITH THE STANDARD SPECIFICATIONS. BEVEL EDGES OF PLATE "B-1" TO GIVE CLOSE FIT BUT NOT TIGHT FIT TO STEEL CASTING FORM.

ANCHOR STUDS SHALL CONFORM TO AASHTO M169 GRADES 1010 THROUGH 1020 OR APPROVED EQUAL, AND SHALL MEET THE TYPE "B" REQUIREMENTS OF SUBSECTION 7.3 OF THE ANSI/AASHTO/AWS D1.5 BRIDGE WELDING CODE.

AT ENDS OF GIRDERS TO BE EMBEDDED IN CONCRETE DIAPHRAGMS OR END WALLS, PRESTRESSING STRANDS MAY EXTEND A MAXIMUM OF 2" BEYOND THE GIRDER ENDS. OTHERWISE, PRESTRESSING STRANDS SHALL BE CUT FLUSH WITH THE GIRDER ENDS.

THE TRANSFER OF LOAD FROM THE ANCHORAGES TO THE GIRDER SHALL BE DONE WHEN CONCRETE HAS REACHED A COMPRESSIVE STRENGTH OF NOT LESS THAN 7,000 PSI.

DEPENDING ON THE TYPE OF SYSTEM USED TO SUPPORT THE DECK SLAB FORMS, PRESET ANCHORS MAY BE NECESSARY IN THE PRESTRESSED CONCRETE GIRDER.

THE TOP SURFACE OF THE GIRDER, EXCLUDING THE OUTSIDE 4", SHALL BE RAKED TO A DEPTH OF 1/4".

WHEN DRAPED STRANDS ARE DETAILED, THE LONGITUDINAL LOCATION OF THE HOLD DOWN DEVICES SHALL BE WITHIN 6" OF THE LOCATION SHOWN AND THE CENTER OF GRAVITY OF THE GROUP OF DRAPED STRANDS SHALL BE LOCATED WITHIN 1/2" OF THE THEORETICAL LOCATION SHOWN.

A 2" x 2" CHAMFER IS ALLOWED AT THE INTERSECTION OF THE WEB AND THE BOTTOM FLANGE OF THE 63" AND 72" MODIFIED BULB TEES ONLY.

THE CONTRACTOR HAS THE OPTION TO PROVIDE, AT NO ADDITIONAL COST TO THE DEPARTMENT, 2 ADDITIONAL STRANDS AT THE TOP OF THE GIRDER TO FACILITATE TYING OF THE REINFORCING STEEL. THESE STRANDS SHALL BE PULLED TO A LOAD OF 4500 lbs.

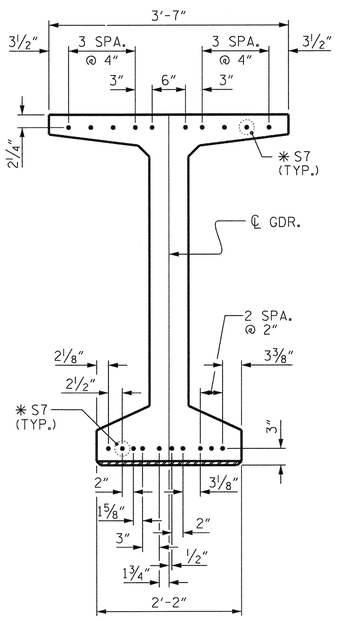

DETAIL "C"

(FOR 63" & 72" MODIFIED BULB TEES)

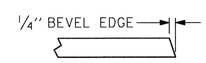

SECTION "G"

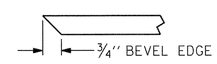

SECTION "F"

(SEE NOTES)

PROJECT NO. R-2303C

SAMPSON COUNTY

STATION: 943+12.50 -L-

STATE OF NORTH CAROLINA
DEPARTMENT OF TRANSPORTATION
RALEIGH

STANDARD

PRESTRESSED CONCRETE GIRDER CONTINUOUS FOR LIVE LOAD DETAILS

(LEFT LANE)

NORTH CAROLINA PROFESSIONAL SEAL 20777 ENGINEER HARDY L. WILLIS 11/21/12

REVISIONS						SHEET NO.
NO.	BY:	DATE:	NO.	BY:	DATE:	S-16
1			3			TOTAL SHEETS
2			4			138

ASSEMBLED BY : MAF	DATE : 09/2012
CHECKED BY : HLW	DATE : 09/2012
DRAWN BY : ELR 11/91	REV. 10/17/00 RWW/LES
CHECKED BY : GRP 11/91	REV. 7/10/01RR LES/RDR
	REV. 5/1/06 TLA/GM

$$$$$$$SYSTIME$$$$$
$$$$$$$$$$$$$$$$$$$$$$$$DGN$$$$$$$$$$$$$$$$$$$$$$$$
$$$$USERNAME$$$$

STR. #1 STD. NO. PCG11 (Sht. 5a)

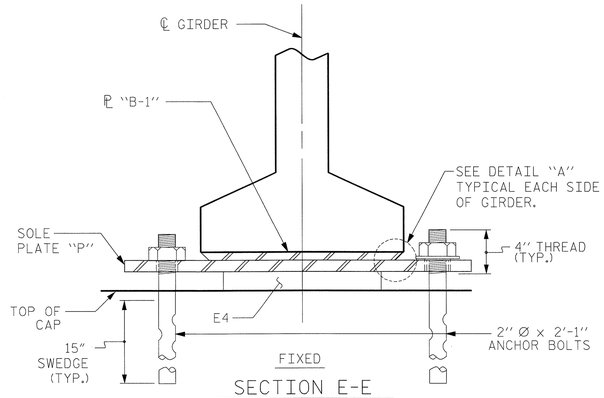

FIXED

SECTION E-E

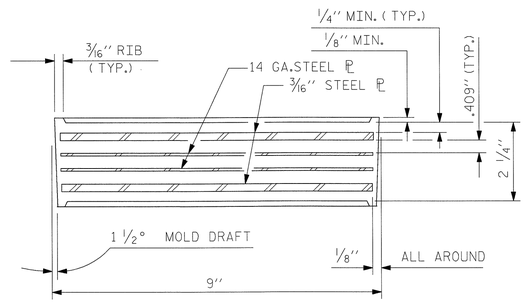

TYPICAL SECTION OF ELASTOMERIC BEARINGS

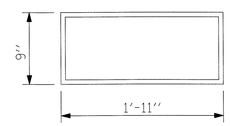

E4 (24REQ'D)

PLAN VIEW OF ELASTOMERIC BEARING

TYPE V

NOTES

AT ALL FIXED POINTS OF SUPPORT, NUTS FOR ANCHOR BOLTS ARE TO BE TIGHTENED FINGER TIGHT AND THEN BACKED OFF 1/2 TURN. THE THREAD OF THE NUT AND BOLT SHALL THEN BE BURRED WITH A SHARP POINTED TOOL.

STEEL SOLE PLATES, ANCHOR BOLTS, NUTS, AND WASHERS SHALL BE GALVANIZED IN ACCORDANCE WITH THE STANDARD SPECIFICATIONS.

PRIOR TO WELDING, GRIND THE GALVANIZED SURFACE OF THE PORTION OF THE EMBEDDED PLATE AND SOLE PLATE THAT ARE TO BE WELDED. AFTER WELDING, DAMAGED GALVANIZED SURFACES SHALL BE REPAIRED IN ACCORDANCE WITH THE STANDARD SPECIFICATIONS.

WHEN WELDING THE SOLE PLATE TO THE EMBEDDED PLATE IN THE GIRDER, USE TEMPERATURE INDICATING WAX PENS, OR OTHER SUITABLE MEANS, TO ENSURE THAT THE TEMPERATURE OF THE SOLE PLATE DOES NOT EXCEED 300°F. TEMPERATURES ABOVE THIS MAY DAMAGE THE ELASTOMER.

SOLE PLATE "P", BOLTS, NUTS, WASHERS, AND PIPE SLEEVE SHALL BE INCLUDED IN THE PAY ITEM FOR PRESTRESSED CONCRETE GIRDERS.

ANCHOR BOLTS SHALL MEET THE REQUIREMENTS OF ASTM A449. NUTS SHALL MEET THE REQUIREMENTS OF AASHTO M291-DH OR AASHTO M292-2H. WASHERS SHALL MEET THE REQUIREMENTS OF AASHTO M293. NO SHOP DRAWINGS ARE REQUIRED FOR ANCHOR BOLTS, NUTS AND WASHERS. SHOP INSPECTION IS REQUIRED.

ALL SURFACES OF BEARING PLATES SHALL BE SMOOTH AND STRAIGHT.

THE ELASTOMER IN THE STEEL REINFORCED BEARINGS SHALL HAVE A SHEAR MODULUS OF 0.160 KSI, IN ACCORDANCE WITH AASHTO M251.

FOR STEEL REINFORCED ELASTOMERIC BEARINGS, SEE SPECIAL PROVISIONS.

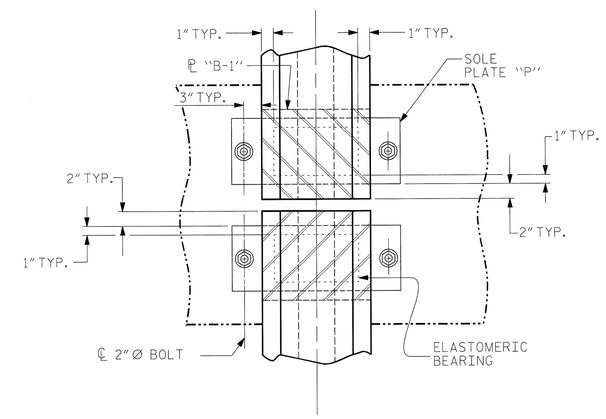

TYPICAL PLAN

(SHOWING CONTINUOUS BENT)

NORTH CAROLINA PROFESSIONAL SEAL 20077 ENGINEER HARDY L. WILLIS 6/27/13

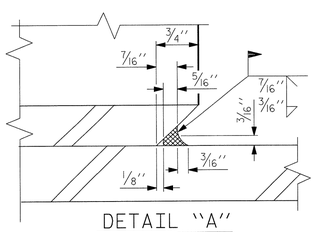

DETAIL "A"

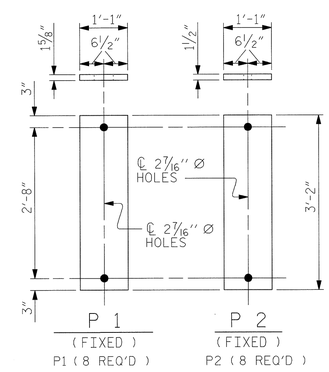

SOLE PLATE DETAILS ("P")

MAXIMUM ALLOWABLE SERVICE LOADS	
D.L.+L.L. (NO IMPACT)	
TYPE V	365 k
~~TYPE VI~~	~~420 k~~
~~TYPE VII~~	~~470 k~~

PROJECT NO. R-2303C

SAMPSON COUNTY

STATION: 943+12.50 -L-

STATE OF NORTH CAROLINA
DEPARTMENT OF TRANSPORTATION
RALEIGH

STANDARD
ELASTOMERIC BEARING DETAILS

PCG SUPERSTRUCTURE

(LEFT LANE)

REVISIONS						SHEET NO.
NO.	BY:	DATE:	NO.	BY:	DATE:	S-17
1			3			TOTAL SHEETS
2			4			138

ASSEMBLED BY : MAF	DATE : 09/2012
CHECKED BY : HLW	DATE : 09/2012
DRAWN BY : EEM 2/97	REV. 5/1/06 TLA/GM
CHECKED BY : VAP 2/97	REV. 10/1/11 MAA/GM
	REV. 10/24/12 AAC/MAA

$$$$$$$SYSTIME$$$$$
$$$$$$$$$$$$$$$$$$$$$$$$DGN$$$$$$$$$$$$$$$$$$$$$$$$
$$$$USERNAME$$$$

STR. #1

STD. NO. EB4

SPAN A - DEAD LOAD DEFLECTION TABLE FOR GIRDERS

0.60" ∅ LOW RELAXATION	GIRDER A1 OR A4											GIRDER A2 OR A3										
TENTH POINTS	0.0	0.1	0.2	0.3	0.4	0.5	0.6	0.7	0.8	0.9	1.0	0.0	0.1	0.2	0.3	0.4	0.5	0.6	0.7	0.8	0.9	1.0
CAMBER (GIRDER ALONE IN PLACE) (UP)	0.000	1.063	1.893	2.489	2.855	2.990	2.855	2.489	1.893	1.063	0.000	0.000	1.063	1.893	2.489	2.855	2.990	2.855	2.489	1.893	1.063	0.000
* DEFLECTION DUE TO SUPERIMPOSED D.L. (DOWN)	0.000	0.284	0.510	0.676	0.782	0.830	0.782	0.676	0.510	0.284	0.000	0.000	0.298	0.534	0.710	0.826	0.880	0.826	0.710	0.534	0.298	0.000
FINAL CAMBER (DECIMAL INCHES) (UP)	0	0.779	1.383	1.813	2.073	2.160	2.073	1.813	1.383	0.779	0.000	0	0.765	1.359	1.779	2.029	2.110	2.029	1.779	1.359	0.765	0.000
FINAL CAMBER (INCHES) (UP)	0"	3/4"	1 3/8"	1 13/16"	2 1/16"	2 3/16"	2 1/16"	1 13/16"	1 3/8"	3/4"	0"	0"	3/4"	1 3/8"	1 3/4"	2"	2 1/8"	2"	1 3/4"	1 3/8"	3/4"	0"

* INCLUDES WEIGHT OF SLAB, BUILDUP, STAY-IN-PLACE FORMS, AND FUTURE WEARING SURFACE.

SPAN B - DEAD LOAD DEFLECTION TABLE FOR GIRDERS

0.60" ∅ LOW RELAXATION	GIRDER B1 OR B4											GIRDER B2 OR B3										
TENTH POINTS	0.0	0.1	0.2	0.3	0.4	0.5	0.6	0.7	0.8	0.9	1.0	0.0	0.1	0.2	0.3	0.4	0.5	0.6	0.7	0.8	0.9	1.0
CAMBER (GIRDER ALONE IN PLACE) (UP)	0.000	1.233	2.192	2.881	3.300	3.450	3.300	2.881	2.192	1.233	0.000	0.000	1.233	2.192	2.881	3.300	3.450	3.300	2.881	2.192	1.233	0.000
* DEFLECTION DUE TO SUPERIMPOSED D.L. (DOWN)	0.000	0.404	0.728	0.972	1.136	1.220	1.136	0.972	0.728	0.404	0.000	0.000	0.433	0.779	1.039	1.213	1.300	1.213	1.039	0.779	0.433	0.000
FINAL CAMBER (DECIMAL INCHES) (UP)	0	0.829	1.464	1.909	2.164	2.230	2.164	1.909	1.464	0.829	0.000	0	0.800	1.413	1.842	2.087	2.150	2.087	1.842	1.413	0.800	0.000
FINAL CAMBER (INCHES) (UP)	0"	13/16"	1 7/16"	1 15/16"	2 3/16"	2 1/4"	2 3/16"	1 15/16"	1 7/16"	13/16"	0"	0"	13/16"	1 7/16"	1 13/16"	2 1/16"	2 1/8"	2 1/16"	1 13/16"	1 7/16"	13/16"	0"

* INCLUDES WEIGHT OF SLAB, BUILDUP, STAY-IN-PLACE FORMS, AND FUTURE WEARING SURFACE.

SPAN C - DEAD LOAD DEFLECTION TABLE FOR GIRDERS

0.60" ∅ LOW RELAXATION	GIRDER C1 OR C4											GIRDER C2 OR C3										
TWENTIETH POINTS	0.0	0.05	0.10	0.15	0.20	0.25	0.30	0.35	0.40	0.45	0.50	0.00	0.05	0.10	0.15	0.20	0.25	0.30	0.35	0.40	0.45	0.50
CAMBER (GIRDER ALONE IN PLACE) (UP)	0.000	0.684	1.296	1.835	2.303	2.700	3.026	3.280	3.464	3.577	3.620	0.000	0.684	1.296	1.835	2.303	2.700	3.026	3.280	3.464	3.577	3.620
* DEFLECTION DUE TO SUPERIMPOSED D.L. (DOWN)	0.000	0.269	0.513	0.733	0.929	1.100	1.247	1.369	1.467	1.541	1.590	0.000	0.287	0.547	0.781	0.989	1.170	1.325	1.453	1.555	1.631	1.680
FINAL CAMBER (DECIMAL INCHES) (UP)	0	0.415	0.783	1.102	1.374	1.600	1.779	1.911	1.997	2.036	2.030	0	0.397	0.749	1.054	1.314	1.530	1.701	1.827	1.909	1.946	1.940
FINAL CAMBER (INCHES) (UP)	0"	7/16"	13/16"	1 1/8"	1 3/8"	1 5/8"	1 3/4"	1 15/16"	2"	2 1/16"	2 1/16"	0"	3/8"	3/4"	1 1/16"	1 5/16"	1 1/2"	1 11/16"	1 13/16"	1 15/16"	1 15/16"	1 15/16"
TWENTIETH POINTS	0.55	0.60	0.65	0.70	0.75	0.80	0.85	0.90	0.95	1.00		0.55	0.60	0.65	0.70	0.75	0.80	0.85	0.90	0.95	1.00	
CAMBER (GIRDER ALONE IN PLACE) (UP)	3.577	3.464	3.280	3.026	2.700	2.303	1.835	1.296	0.684	0.000		3.577	3.464	3.280	3.026	2.700	2.303	1.835	1.296	0.684	0.000	
DEFLECTION DUE TO SUPERIMPOSED D.L. (DOWN)	1.541	1.467	1.369	1.247	1.100	0.929	0.733	0.513	0.269	0.000		1.631	1.555	1.453	1.325	1.170	0.989	0.781	0.547	0.287	0.000	
FINAL CAMBER (DECIMAL INCHES) (UP)	2.036	1.997	1.911	1.779	1.600	1.374	1.102	0.783	0.415	0.000		1.946	1.909	1.827	1.701	1.530	1.314	1.054	0.749	0.397	0.000	
FINAL CAMBER (INCHES) (UP)	2 1/16"	2"	1 15/16"	1 3/4"	1 5/8"	1 3/8"	1 1/8"	13/16"	7/16"	0"		1 15/16"	1 15/16"	1 13/16"	1 11/16"	1 1/2"	1 5/16"	1 1/16"	3/4"	3/8"	0"	

* INCLUDES WEIGHT OF SLAB, BUILDUP, STAY-IN-PLACE FORMS, AND FUTURE WEARING SURFACE.

NORTH CAROLINA PROFESSIONAL SEAL 19072 ENGINEER HARDY L. WILLIS
11/21/12

PROJECT NO. R-2303C
SAMPSON COUNTY
STATION: 943+12.50 -L-

V&M
Vaughn & Melton
Consulting Engineers
Asheville, North Carolina 828-253-2796
Charlotte, North Carolina 704-357-0488
Tri-Cities, Tennessee 423-467-8401
Knoxville, Tennessee 865-546-5800
Middlesboro, Kentucky 606-248-5600
Spartanburg, South Carolina 864-574-4775

Copyright © 2006 Vaughn & Melton, Inc. All Rights Reserved

STATE OF NORTH CAROLINA
DEPARTMENT OF TRANSPORTATION
RALEIGH

SUPERSTRUCTURE DEAD LOAD DEFLECTIONS

(LEFT LANE)

REVISIONS								
NO.	BY:	DATE:	NO.	BY:	DATE:			
1			3					
2			4					

SHEET NO. S-18
TOTAL SHEETS 158

DWN. BY: MAF DATE: SEPT. 2012
CHKD. BY: HLW DATE: SEPT. 2012

STR. #1

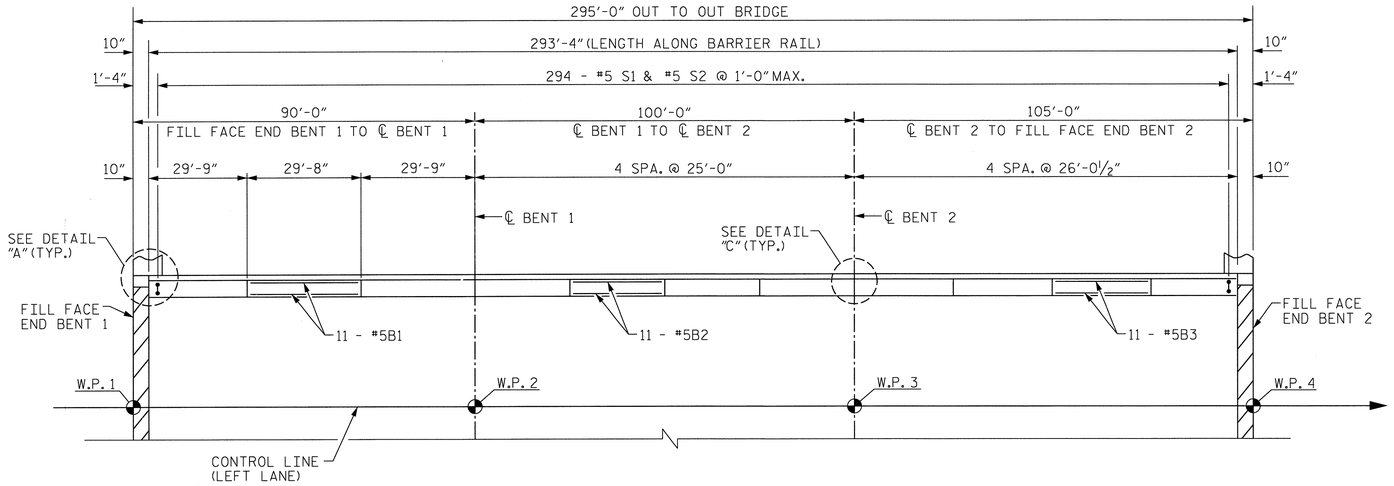

PLAN

NOT TO SCALE

LEFT SIDE BARRIER RAIL SHOWN, RIGHT SIDE SIMILAR.

NOTES

THE BARRIER RAIL IN EACH SPAN SHALL NOT BE CAST UNTIL ALL SLAB CONCRETE IN THAT SPAN HAS BEEN CAST AND HAS REACHED A MINIMUM COMPRESSIVE STRENGTH OF 3,000 PSI.

ALL REINFORCING STEEL IN BARRIER RAILS SHALL BE EPOXY COATED.

VERTICAL GROOVED CONTRACTION JOINTS, ½" IN DEPTH, SHALL BE TOOLED IN ALL EXPOSED FACES OF THE BARRIER RAIL AND IN ACCORDANCE WITH ARTICLE 825-10(B) OF THE STANDARD SPECIFICATIONS. THE CONTRACTION JOINT SHALL BE LOCATED AT EACH THIRD POINT BETWEEN BARRIER RAIL EXPANSION JOINTS. ONLY ONE CONTRACTION JOINT IS REQUIRED AT MIDPOINT OF BARRIER RAIL SEGMENTS LESS THAN 20 FEET IN LENGTH AND NO CONTRACTION JOINTS ARE REQUIRED FOR THOSE SEGMENTS LESS THAN 10 FEET IN LENGTH.

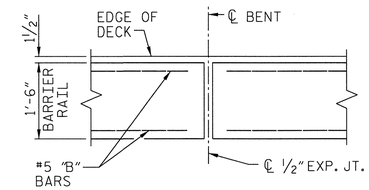

DETAIL "C"

LEFT SIDE SHOWN, RIGHT SIDE SIMILAR.
TYP. AT BENTS 1 & 2

BAR TYPES

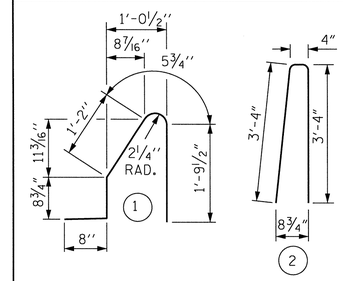

ALL BAR DIMENSIONS ARE OUT TO OUT

BILL OF MATERIAL

FOR CONCRETE BARRIER RAIL ONLY

BAR	NO.	SIZE	TYPE	LENGTH	WEIGHT
* B1	66	#5	STR	29'-3"	2014
* B2	88	#5	STR	24'-7"	2256
* B3	88	#5	STR	25'-7"	2348
* S1	588	#5	1	4'-10"	2964
* S2	588	#5	2	7'-0"	4293

* EPOXY COATED REINFORCING STEEL	13,875	LBS.
CLASS AA CONCRETE	79.8	CU. YDS.
CONCRETE BARRIER RAIL	586.67	LIN. FT.

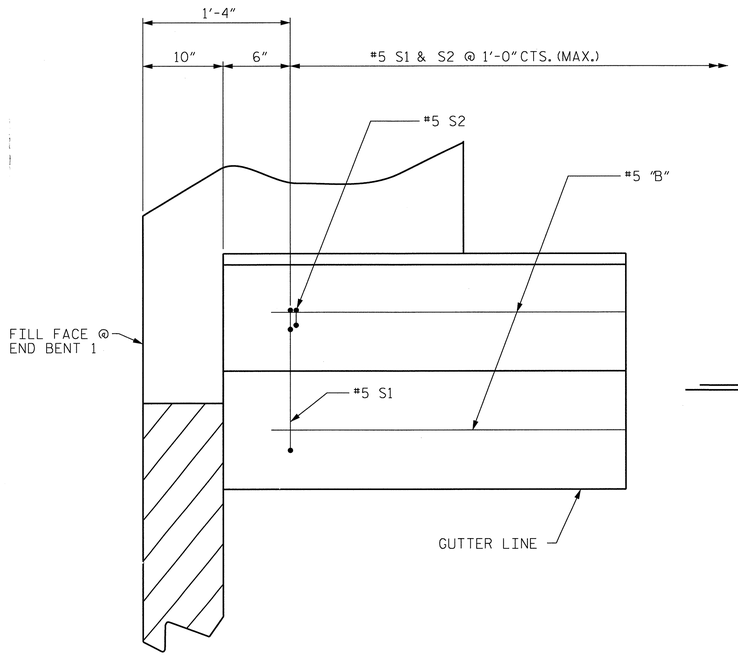

DETAIL "A"

TYPICAL FOR ALL CORNERS

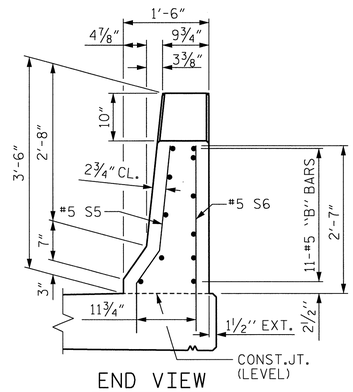

END VIEW

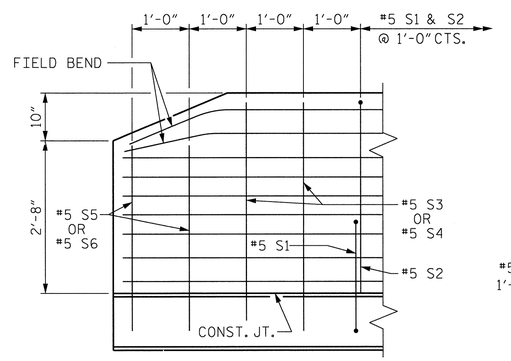

SIDE VIEW

END OF RAIL DETAILS

FOR ADHESIVE ANCHORING AT SAWED JOINTS

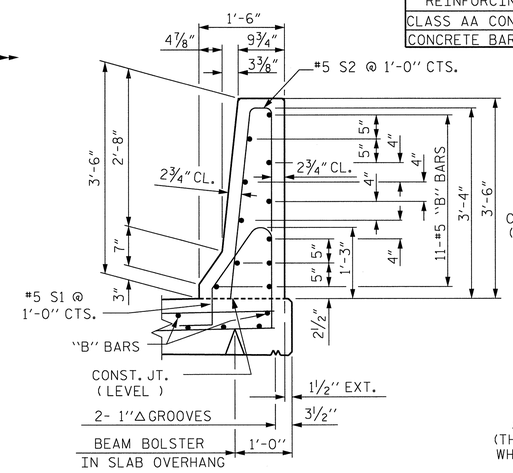

SECTION THRU RAIL

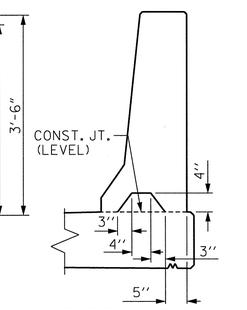

SECTION S-S

AT DAM IN OPEN JOINT
(THIS IS TO BE USED ONLY WHEN SLIP FORM IS USED)

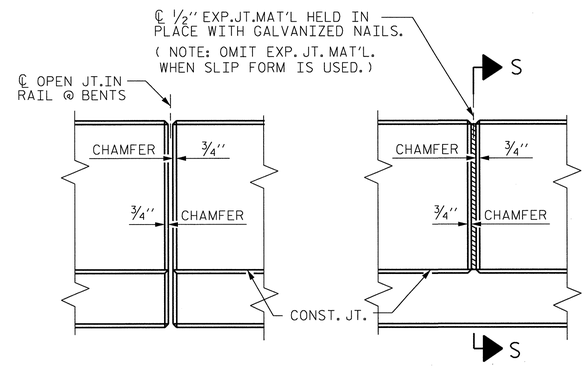

ELEVATION AT EXPANSION JOINTS

BARRIER RAIL DETAILS

PROJECT NO. R-2303C

SAMPSON COUNTY

STATION: 943+12.50 -L-

STATE OF NORTH CAROLINA
DEPARTMENT OF TRANSPORTATION
RALEIGH

STANDARD

CONCRETE BARRIER RAIL

(LEFT LANE)

NORTH CAROLINA PROFESSIONAL SEAL 20772 ENGINEER HARDY L. WILLIS 12/7/12

ASSEMBLED BY : MAF	DATE : SEPT. 2012		
CHECKED BY : HLW	DATE : SEPT. 2012		
DRAWN BY : ARB 5/87	REV. 10/1/11	MAA/GM	
CHECKED BY : SJD 9/87	REV. 7/12	MAA/GM	
	REV. 10/12	MAA/GM	

REVISIONS

NO.	BY:	DATE:	NO.	BY:	DATE:
1			3		
2			4		

SHEET NO. S-19

TOTAL SHEETS 138

STR. #1 STD. NO. CBR1 (SHT 1)

$$$$$$SYSTIME$$$$$
$$$$$$$$$$$$$$$$$$$$$$$$$$DGN$$$$$$$$$$$$$$$$$$$$$$$$
$$$$USERNAME$$$$

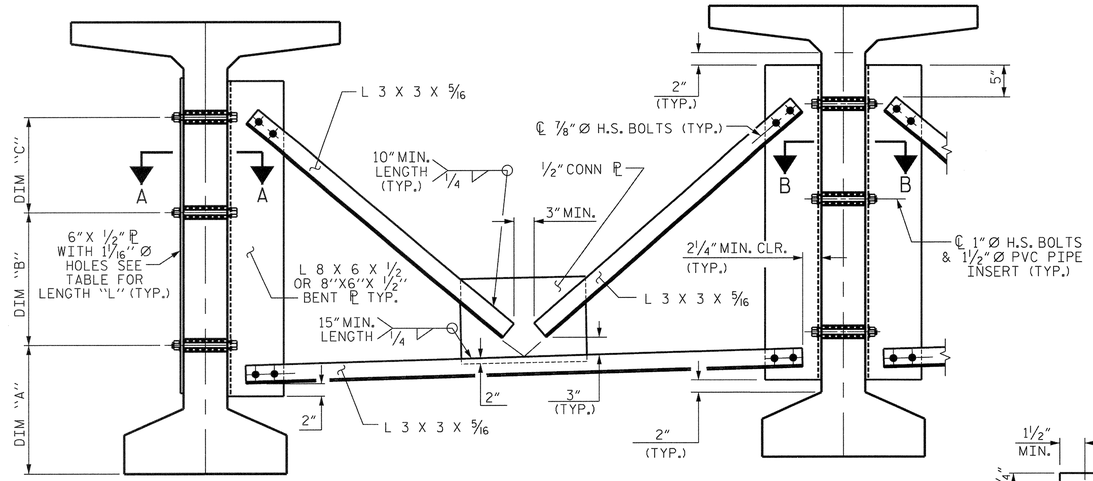

EXTERIOR GIRDER

INTERIOR GIRDER

PART SECTION AT INTERMEDIATE DIAPHRAGM

(63" BULB TEE OR 72" BULB TEE GIRDER SHOWN)

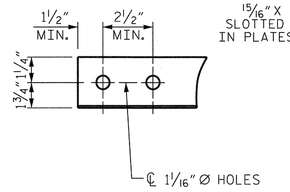

ANGLE END

(L 3 X 3 X 5/16)

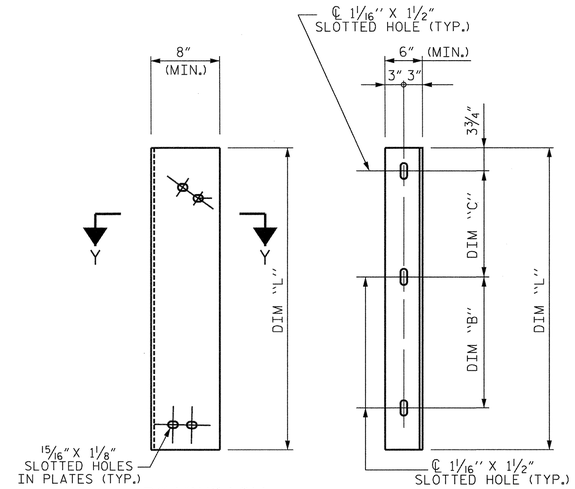

DIAPHRAGM FACE

WEB FACE

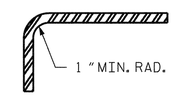

SECTION Y-Y

CONNECTOR PLATE DETAIL

STRUCTURAL STEEL NOTES

ALL INTERMEDIATE DIAPHRAGM STEEL AND CONNECTOR PLATES SHALL BE AASHTO M270 GRADE 50 OR APPROVED EQUAL.

TENSION ON THE ASTM A325 BOLTS THROUGH THE ANGLE MEMBER SHALL BE CALIBRATED USING DIRECT TENSION INDICATOR WASHERS IN ACCORDANCE WITH THE STANDARD SPECIFICATIONS.

TENSION ON THE ASTM A449 BOLTS THROUGH THE GIRDER WEB SHALL BE SNUG TIGHTENED FOLLOWED BY AN ADDITIONAL 1/4 TURN.

THE PLATES, BENT PLATES, AND ANGLES SHALL BE GALVANIZED OR METALLIZED IN ACCORDANCE WITH THE STANDARD SPECIFICATIONS. FOR THERMAL SPRAYED COATINGS (METALLIZATION), SEE SPECIAL PROVISIONS.

FOR METALLIZATION, APPLY AN 8 MIL THICK 99.99 PERCENT ZINC (W-Zn-1) THERMAL SPRAYED COATING WITH A 0.5 MIL THICK SEAL COAT TO ALL STEEL DIAPHRAGM SURFACES IN ACCORDANCE WITH THE THERMAL SPRAYED COATINGS SPECIAL PROVISION AND SECTION 442 OF THE STANDARD SPECIFICATIONS.

GALVANIZE THE HIGH STRENGTH BOLTS, NUTS, WASHERS AND DIRECT TENSION INDICATORS IN ACCORDANCE WITH THE STANDARD SPECIFICATIONS.

USE AN ASTM F436 HARDENED WASHER WITH STANDARD AND SLOTTED HOLES UNDER EACH BOLT HEAD AND NUT.

FOR BOLTS THROUGH THE GIRDER WEB, PROVIDE SUFFICIENT LENGTH OF THREADS ON ALL BOLTS TO ACCOMMODATE WASHERS AND THE THICKNESS OF CONNECTING MEMBER PLUS AT LEAST 1/4" PROJECTION BEYOND THE NUT.

INTERMEDIATE DIAPHRAGM ASSEMBLY SHALL COMPLY WITH SECTION 1072 OF THE STANDARD SPECIFICATIONS.

SUBMIT TWO SETS OF WORKING DRAWINGS FOR THE INTERMEDIATE DIAPHRAGM ASSEMBLY FOR REVIEW, COMMENTS AND ACCEPTANCE. AFTER REVIEW, COMMENTS, AND ACCEPTANCE, SUBMIT SEVEN SETS FOR DISTRIBUTION.

IN THE EXTERIOR BAYS, PLACE TEMPORARY STRUTS BETWEEN PRESTRESSED GIRDERS ADJACENT TO THE STEEL DIAPHRAGMS. STRUTS SHALL REMAIN IN PLACE 3 DAYS AFTER CONCRETE IS PLACED.

THE COST OF THE STEEL DIAPHRAGMS AND ASSEMBLIES SHALL BE INCLUDED IN THE UNIT PRICE BID FOR PRESTRESSED CONCRETE GIRDERS.

TABLE

GIRDER TYPE	DIM "A"	DIM "B"	DIM "C"	DIM "L"
63" BULB TEE	1'-9"	1'-0"	1'-0"	3'-5"
~~72" BULB TEE~~				~~4'-2"~~

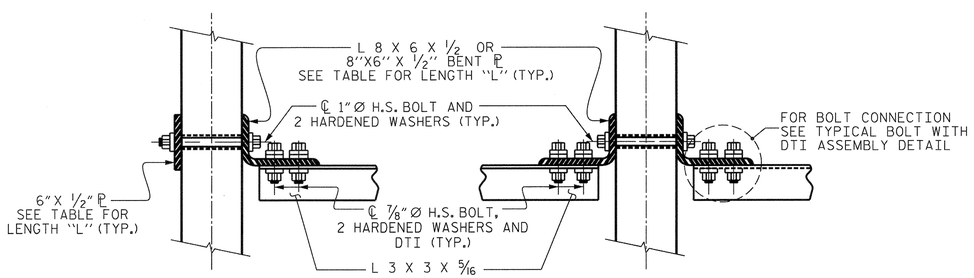

SECTION A-A

SECTION B-B

CONNECTION DETAILS

(FOR SKEW = 90°)

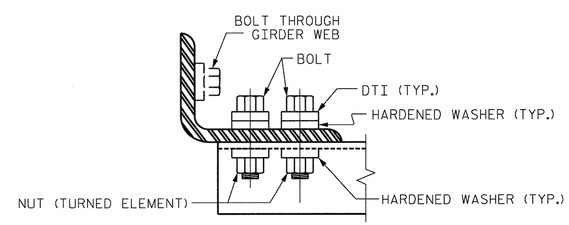

BOLT WITH DTI ASSEMBLY DETAIL

PROJECT NO. R-2303C

SAMPSON COUNTY

STATION: 943+12.50 -L-

NORTH CAROLINA PROFESSIONAL SEAL 19771 ENGINEER HARDY L. WILLIS 11/21/12

STATE OF NORTH CAROLINA
DEPARTMENT OF TRANSPORTATION
RALEIGH

STANDARD
INTERMEDIATE
STEEL DIAPHRAGMS
FOR 63" & 72"
MODIFIED BULB TEE
PRESTRESSED CONC. GDRS.
(LEFT LANE)

REVISIONS						SHEET NO.
NO.	BY:	DATE:	NO.	BY:	DATE:	S-20
1			3			TOTAL SHEETS
2			4			138

ASSEMBLED BY : DPP	DATE : 9/2012
CHECKED BY : HLW	DATE : 9/2012
DRAWN BY : RWW 11/09	ADDED 11/23/09R
CHECKED BY : GM 11/09	

$$$$$$$SYSTIME$$$$$
$$$$$$$$$$$$$$$$$$$$$$$$DGN$$$$$$$$$$$$$$$$$$$$$$
$$$$USERNAME$$$$

STR. #1

STD. NO. PCG13

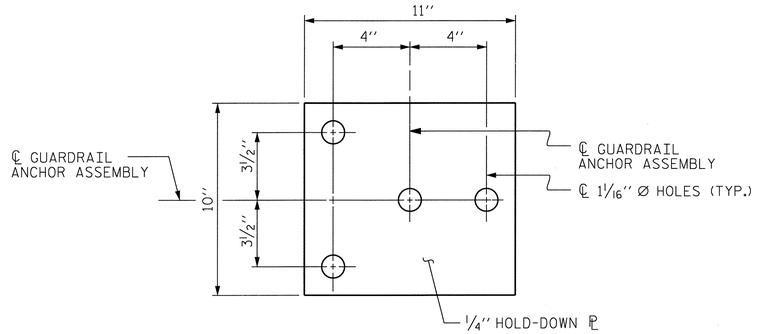

PLAN

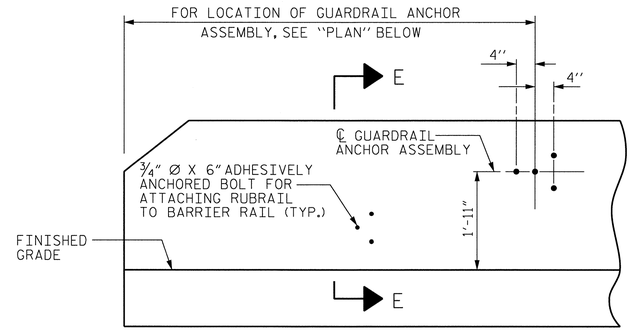

ELEVATION

FOR LOCATION OF RUBRAIL, SEE ROADWAY STD. 862.03

NOTES

THE GUARDRAIL ANCHOR ASSEMBLY SHALL CONSIST OF A 1/4'' HOLD DOWN PLATE AND 4 - 7/8'' Ø BOLTS WITH NUTS AND WASHERS, RUBRAIL, AND ADHESIVELY ANCHORED BOLTS.

THE HOLD-DOWN PLATE SHALL CONFORM TO AASHTO M270 GRADE 36. AFTER FABRICATION, THE HOLD-DOWN PLATE SHALL BE HOT-DIP GALVANIZED IN ACCORDANCE WITH AASHTO M111.

BOLTS SHALL CONFORM TO THE REQUIREMENTS OF ASTM A307 AND NUTS SHALL CONFORM TO THE REQUIREMENTS OF AASHTO M291. BOLTS, NUTS AND WASHERS SHALL BE GALVANIZED. (AT THE CONTRACTOR'S OPTION, STAINLESS STEEL BOLTS, NUTS AND WASHERS MAY BE USED AS AN ALTERNATE FOR THE 7/8'' Ø GALVANIZED BOLTS, NUTS AND WASHERS. THEY SHALL CONFORM TO OR EXCEED THE MECHANICAL REQUIREMENTS OF ASTM A307. THE USE OF THIS ALTERNATE SHALL BE APPROVED BY THE ENGINEER.)

THE GUARDRAIL ANCHOR ASSEMBLY IS REQUIRED AT ALL POINTS WHERE APPROACH GUARDRAIL IS TO BE ATTACHED TO THE END OF BARRIER RAIL. FOR POINTS OF ATTACHMENT, SEE SKETCH.

AFTER INSTALLATION, THE EXPOSED THREAD OF THE BOLT SHALL BE BURRED WITH A SHARP POINTED TOOL.

THE COST OF THE GUARDRAIL ANCHOR ASSEMBLY SHALL BE INCLUDED IN THE UNIT CONTRACT PRICE BID FOR CONCRETE BARRIER RAIL.

THE 1 1/4'' Ø HOLES SHALL BE FORMED OR DRILLED WITH A CORE BIT. IMPACT TOOLS WILL NOT BE PERMITTED. ANY CONCRETE DAMAGED BY THIS WORK SHALL BE REPAIRED TO THE SATISFACTION OF THE ENGINEER.

THE C6 X 8.2 RUBRAIL IS TO BE ADHESIVELY ANCHORED TO THE RAIL USING THREE 3/4" Ø X 6" BOLTS WITH WASHERS. LEVEL ONE FIELD TESTING IS REQUIRED, AND THE YIELD LOAD OF THE 3/4" Ø BOLT IS 12 KIPS. FOR ADHESIVELY ANCHORED ANCHOR BOLTS OR DOWELS, SEE STANDARD SPECIFICATIONS. SEE ROADWAY STANDARD 862.03 FOR DETAILS AND LOCATION OF THE RUBRAIL.

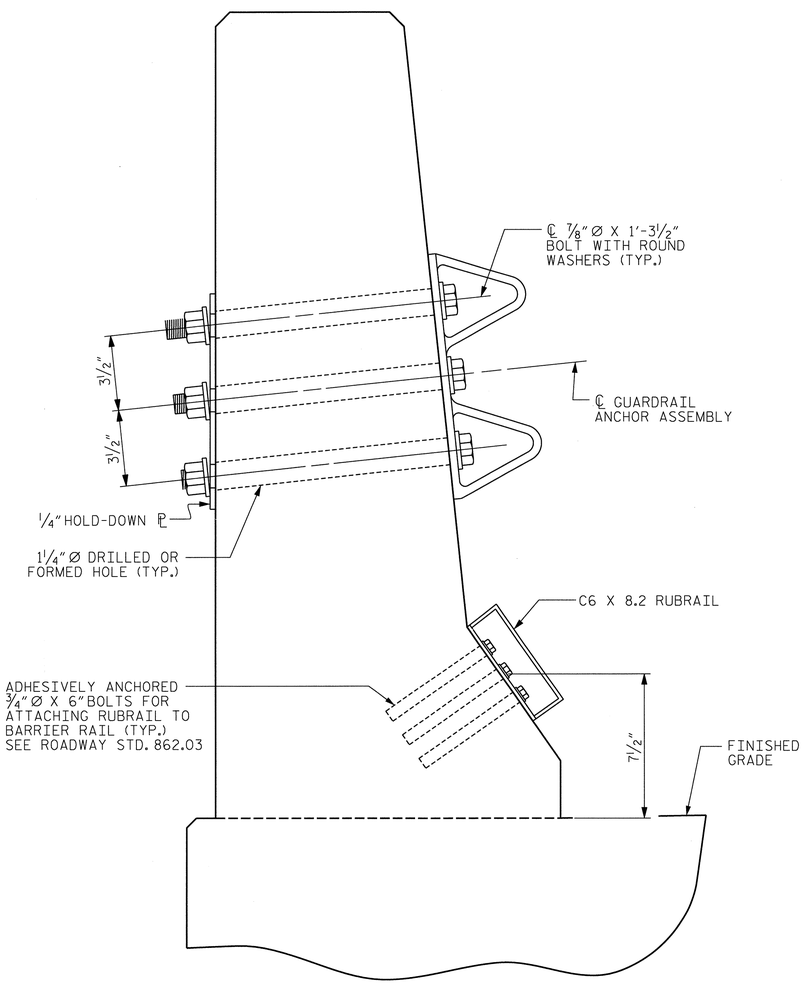

SECTION E-E

GUARDRAIL ANCHOR ASSEMBLY DETAILS

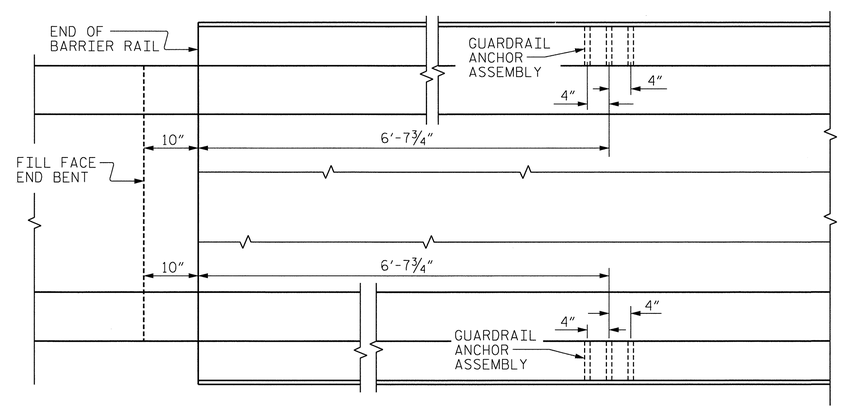

LOCATION OF ANCHORS FOR GUARDRAIL

END BENT #1 SHOWN, END BENT #2 SIMILAR.

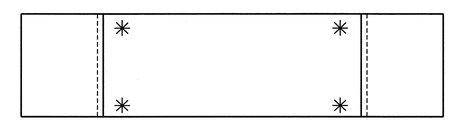

SKETCH SHOWING POINTS OF ATTACHMENTS

✳ DENOTES GUARDRAIL ANCHOR ASSEMBLY

PROJECT NO. R-2303C

SAMPSON COUNTY

STATION: 943+12.50 -L-

STATE OF NORTH CAROLINA
DEPARTMENT OF TRANSPORTATION
RALEIGH

STANDARD

GUARDRAIL ANCHORAGE FOR BARRIER RAIL

(LEFT LANE)

NORTH CAROLINA PROFESSIONAL SEAL 20767 ENGINEER HARDY L. WILLIS 12/7/12

REVISIONS								SHEET NO.
NO.	BY:	DATE:	NO.	BY:	DATE:			S-21
1			3					TOTAL SHEETS
2			4					138

ASSEMBLED BY : MAF		DATE : 09/2012	
CHECKED BY : HLW		DATE : 09/2012	
DRAWN BY : TLA 5/06	REV. 10/1/11	MAA/GM	
CHECKED BY : GM 5/06	REV. 7/12	MAA/GM	
	REV. 10/12	MAA/GM	

$$$$$$$SYSTIME$$$$$
$$$$$$$$$$$$$$$$$$$$$$$$DGN$$$$$$$$$$$$$$$$$$$$$$$$
$$$$USERNAME$$$$

(SHT 3) STR. #1 STD. NO. GRA2

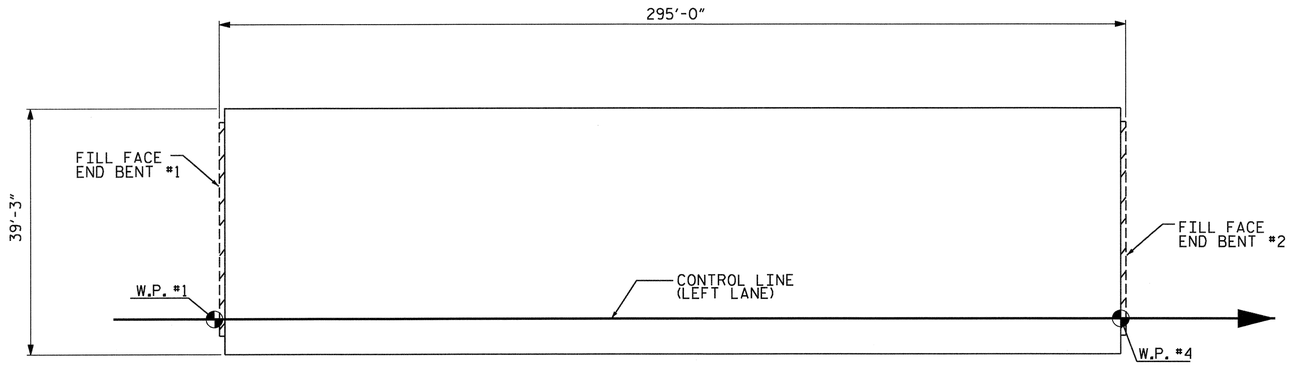

LAYOUT FOR COMPUTING AREA
REINFORCED CONCRETE DECK SLAB
(SQ. FT. = 11,579)

GROOVING BRIDGE FLOORS		
APPROACH SLABS	1,595	SQ.FT.
BRIDGE DECK	9,669	SQ.FT.
TOTAL	11,264	SQ.FT.

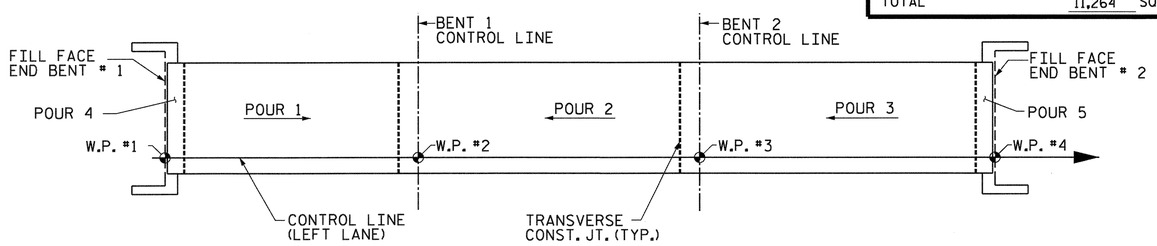

NOTE: CONCRETE IN THE UPPER PORTION OF THE WINGS SHALL BE INCLUDED WITH THE SUPERSTRUCTURE POUR.

SLAB POURING SEQUENCE

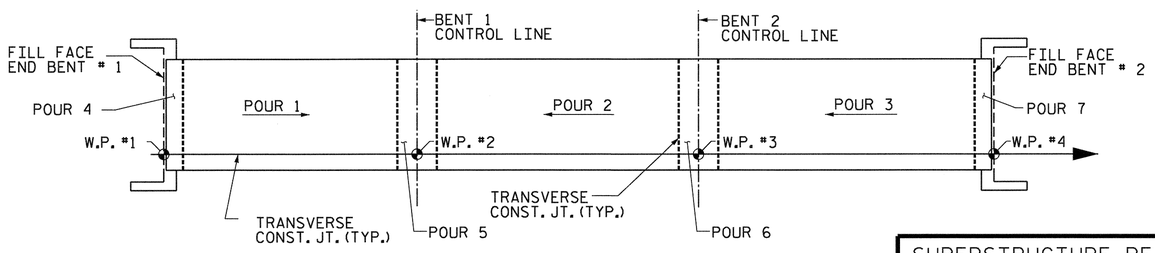

OPTIONAL POURING SEQUENCE

BILL OF MATERIAL

BAR	NO.	SIZE	TYPE	LENGTH	WEIGHT
✱ A1	503	#5	STR	38'-11"	20,417
A2	503	#5	STR	38'-11"	20,417
✱ B1	53	#7	STR	17'-10"	1,932
✱ B2	81	#4	STR	22'-4"	1,208
✱ B3	52	#7	STR	15'-6"	1,648
✱ B4	27	#7	STR	25'-0"	1,380
✱ B5	81	#4	STR	27'-4"	1,479
✱ B6	52	#7	STR	16'-3"	1,727
✱ B7	27	#7	STR	26'-6"	1,463
✱ B8	81	#4	STR	25'-11"	1,402
✱ B9	53	#7	STR	20'-10"	2,257
B10	180	#5	STR	50'-8"	9,512
H1	104	#6	1	15'-11"	2,491
K1	24	#5	STR	23'-9"	594
K2	24	#5	STR	9'-4"	234
K3	6	#5	STR	7'-9"	49
K4	6	#5	STR	6'-4"	40
K5	12	#4	STR	29'-10"	239
K6	48	#4	STR	9'-4"	299
K7	24	#4	STR	6'-4"	102
K8	16	#5	STR	6'-7"	110
K9	8	#5	STR	5'-10"	49
K10	8	#4	STR	2'-8"	14
✱ S1	50	#4	2	9'-9"	326
✱ S2	50	#4	2	12'-2"	406
S3	42	#4	4	15'-8"	440
S4	210	#4	5	2'-9"	386
U1	50	#4	3	13'-1"	437
U2	6	#4	3	15'-7"	62
U3	6	#4	3	15'-11"	64
V3	60	#4	STR.	6'-4"	254
V4	60	#4	STR.	6'-6"	261
REINFORCING STEEL					36,054 LBS.
✱ EPOXY COATED REINF. STEEL					35,645 LBS.

BAR TYPES

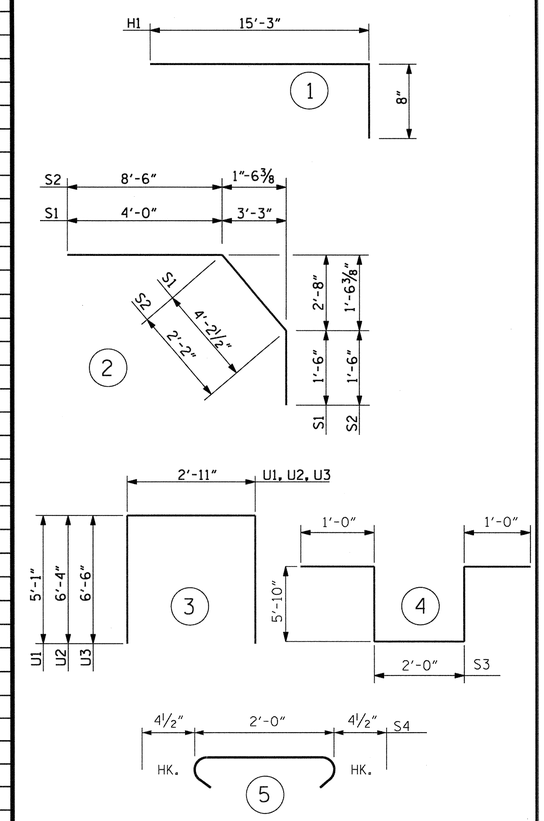

ALL BAR DIMENSIONS ARE OUT TO OUT

SUPERSTRUCTURE BILL OF MATERIAL

	CLASS AA CONCRETE	REINFORCING STEEL	EPOXY COATED REINFORCING STEEL
	(CU. YDS.)	(LBS.)	(LBS.)
POUR 1	107.2	—	—
POUR 2	154.6	—	—
POUR 3	161.9	—	—
POUR 4	83.9	—	—
TOTALS✱✱	507.6	36,054	35,645

✱✱QUANTITIES FOR BARRIER RAIL ARE NOT INCLUDED

PROJECT NO. R-2303C

SAMPSON COUNTY

STATION: 943+12.50 -L-

SUPERSTRUCTURE REINFORCING STEEL LENGTHS ARE BASED ON THE FOLLOWING MINIMUM SPLICE LENGTHS

BAR SIZE	SUPERSTRUCTURE EXCEPT APPROACH SLABS, PARAPET, AND BARRIER RAIL		APPROACH SLABS		PARAPET AND BARRIER RAIL
	EPOXY COATED	UNCOATED	EPOXY COATED	UNCOATED	
#4	2'-0"	1'-9"	2'-0"	1'-9"	2'-9"
#5	2'-6"	2'-2"	2'-6"	2'-2"	3'-5"
#6	3'-0"	2'-7"	3'-10"	2'-7"	4'-4"
#7	5'-3"	3'-6"			
#8	6'-10"	4'-7"			

NORTH CAROLINA PROFESSIONAL SEAL 20774 ENGINEER HARDY L. WILLIS 11/21/12

STATE OF NORTH CAROLINA
DEPARTMENT OF TRANSPORTATION
RALEIGH

STANDARD
SUPERSTRUCTURE
BILL OF MATERIAL
(LEFT LANE)

REVISIONS						SHEET NO.
NO.	BY:	DATE:	NO.	BY:	DATE:	S-22
1			3			TOTAL SHEETS
2			4			138

ASSEMBLED BY : DPP		DATE : 9/2012	
CHECKED BY : HLW		DATE : 9/2012	
DRAWN BY : JMB 5/87	REV. 6/1/94	EEM/GRP	
CHECKED BY : SJD 9/87	REV. 8/16/99	RWW/LES	
	REV. 5/1/06	TLA/GM	

STR. #1 STD. NO. BOM2

$$$$$$SYSTIME$$$$$
$$$$$$$$$$$$$$$$$$$$$$$$$$DGN$$$$$$$$$$$$$$$$$$$$$$$$
$$$$USERNAME$$$$

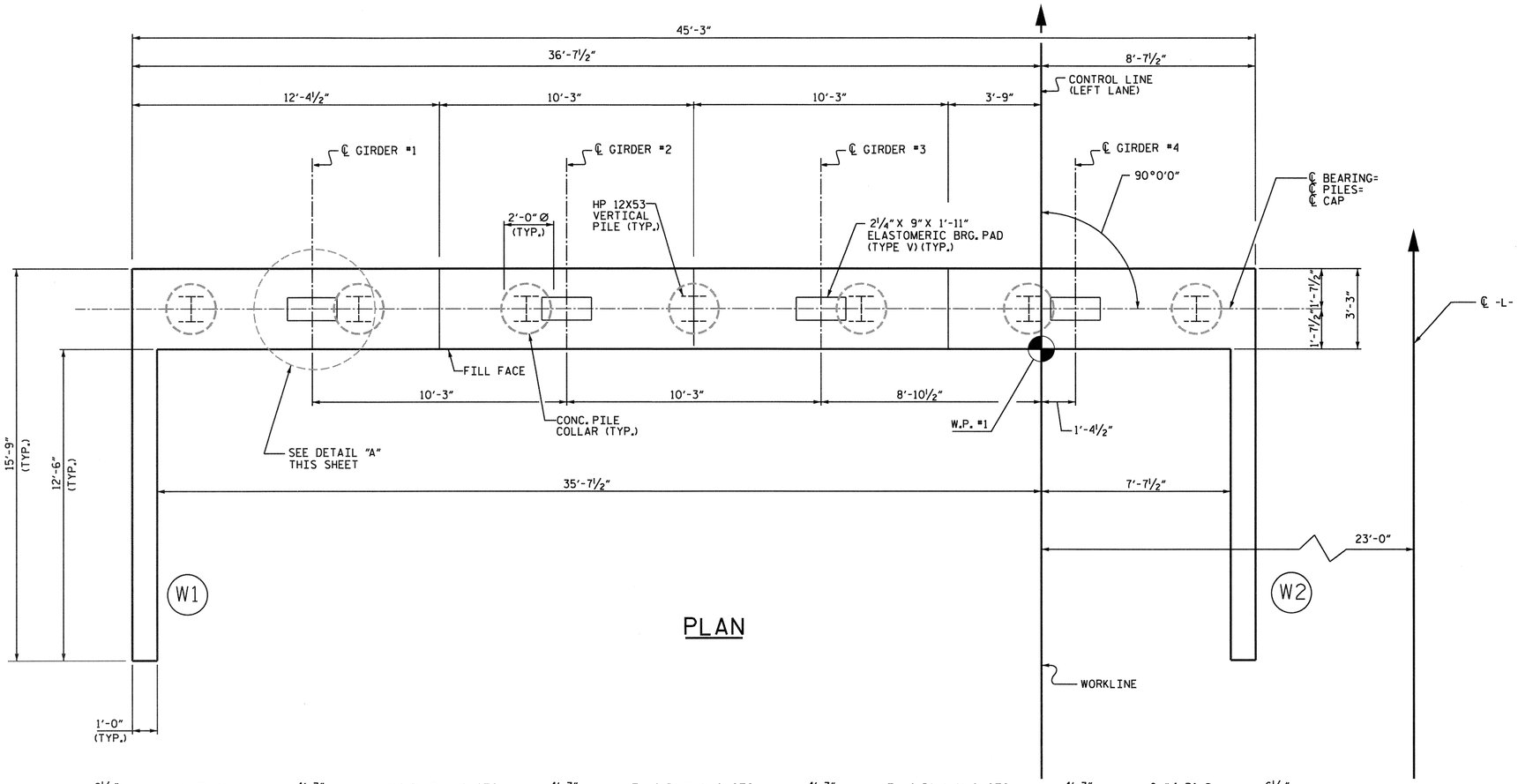

PLAN

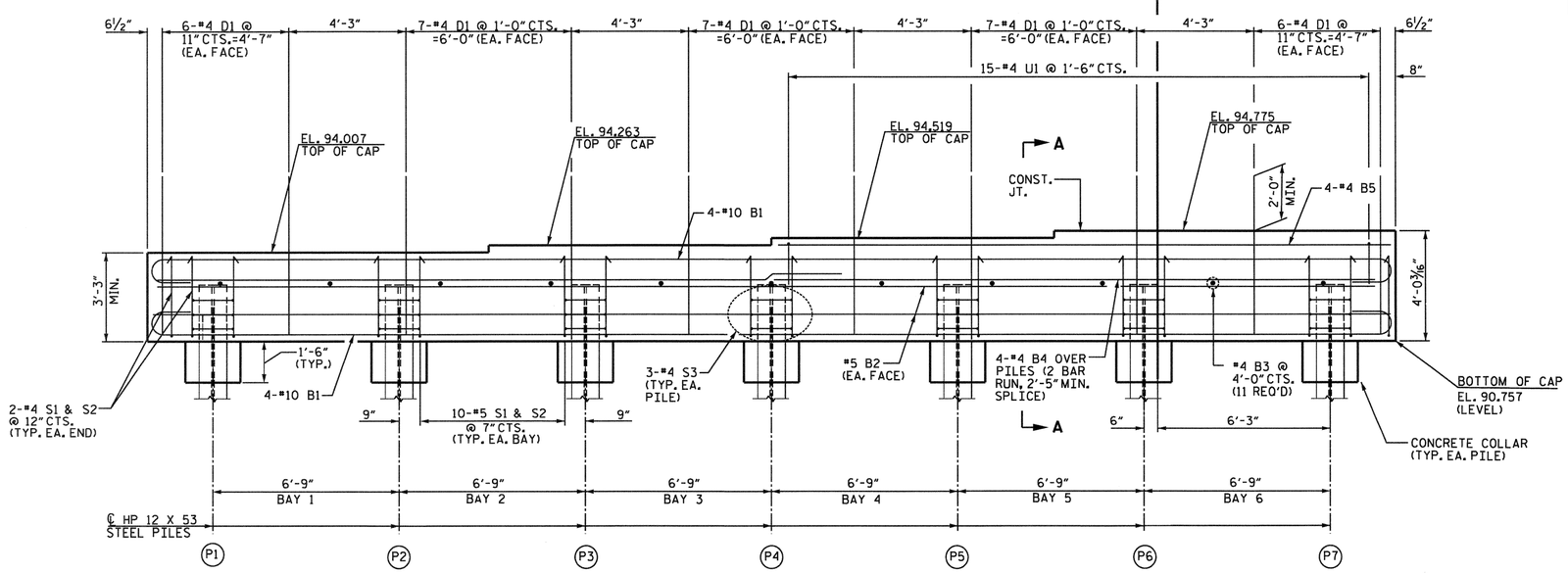

ELEVATION

(WINGS NOT SHOWN FOR CLARITY)

NOTES

FOR PILE SPLICE DETAILS, SEE SHEET 3 OF 3.

THE CONTRACTOR SHALL PROVIDE FOR INSTALLATION OF THE 4" DIAMETER DRAIN PIPE THROUGH THE WING WALL AS REQUIRED FOR REINFORCED BRIDGE APPROACH FILLS. SEE THE ROADWAY PLANS. REINFORCING STEEL IN THE WING WALL MAY BE SHIFTED AS NECESSARY TO CLEAR THE DRAIN PIPE.

SEE SUPERSTRUCTURE SHEETS FOR INTEGRAL END BENT DIAPHRAGM DETAILS, AND UPPER PART OF WINGS.

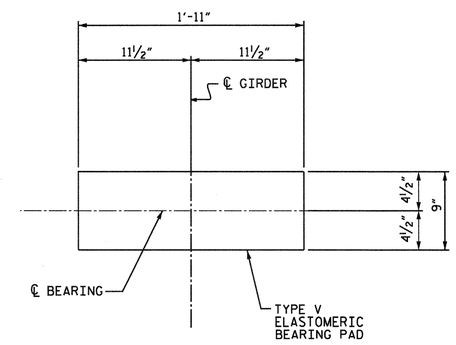

DETAIL "A"

NORTH CAROLINA PROFESSIONAL SEAL 20747 ENGINEER HARDY L. WILLIS 11/21/12

PROJECT NO. R-2303C

SAMPSON COUNTY

STATION: 943+12.50 -L-

SHEET 1 OF 3

STATE OF NORTH CAROLINA
DEPARTMENT OF TRANSPORTATION
RALEIGH

SUBSTRUCTURE
INTEGRAL
END BENT NO. 1

(LEFT LANE)

V&M Vaughn & Melton Consulting Engineers
Asheville, North Carolina 828-253-2796
Charlotte, North Carolina 704-357-0488
Tri-Cities, Tennessee 423-467-8401
Knoxville, Tennessee 865-546-5800
Middlesboro, Kentucky 606-248-6600
Spartanburg, South Carolina 864-574-4775
Copyright © 2006 Vaughn & Melton, Inc. All Rights Reserved

DWN. BY: MAF DATE: SEPT. 2012
CHKD. BY: HLW DATE: SEPT. 2012

REVISIONS								SHEET NO.
NO.	BY:	DATE:	NO.	BY:	DATE:			S-23
1			3					TOTAL SHEETS
2			4					138

STR. #1

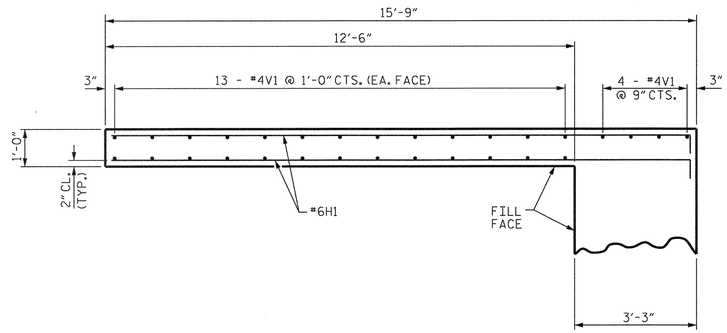

PLAN OF WING W1

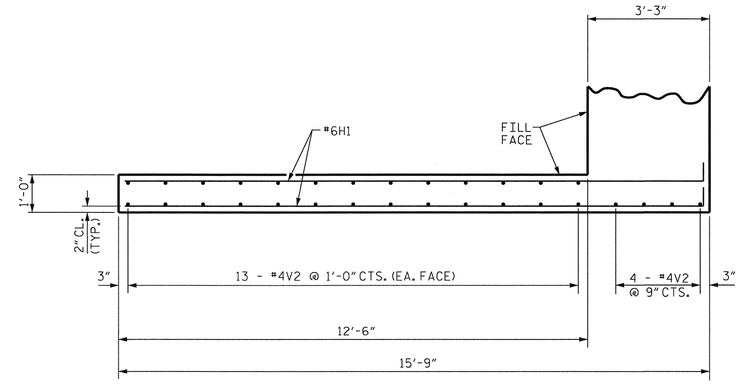

PLAN OF WING W2

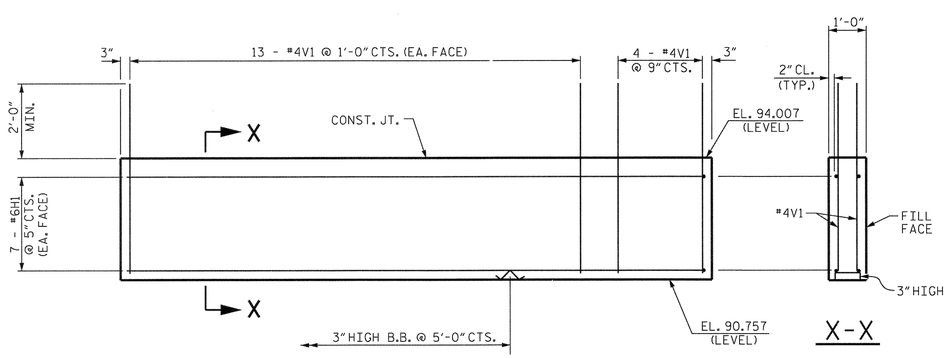

ELEVATION OF WING W1

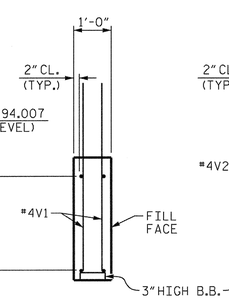

X-X

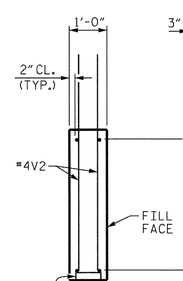

Y-Y

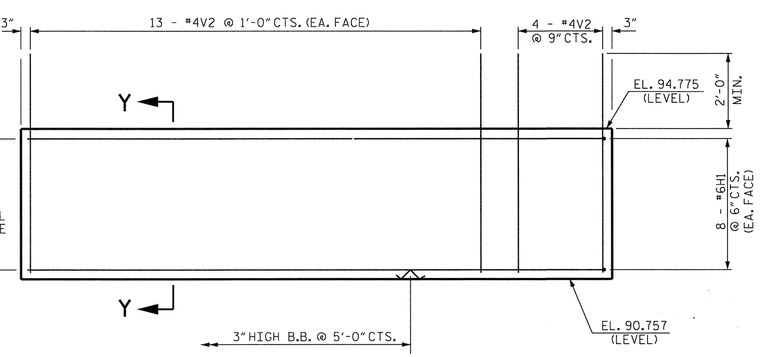

ELEVATION OF WING W2

NORTH CAROLINA PROFESSIONAL SEAL 19077 ENGINEER HARDY L. WILLIS 11/21/12

PROJECT NO. R-2303C

SAMPSON COUNTY

STATION: 943+12.50 -L-

SHEET 2 OF 3

STATE OF NORTH CAROLINA
DEPARTMENT OF TRANSPORTATION
RALEIGH

SUBSTRUCTURE
INTEGRAL
END BENT NO. 1

(LEFT LANE)

V&M Vaughn & Melton Consulting Engineers
Asheville, North Carolina 828-253-2796
Charlotte, North Carolina 704-357-0488
Tri-Cities, Tennessee 423-467-8401
Knoxville, Tennessee 865-546-5800
Middlesboro, Kentucky 606-248-6600
Spartanburg, South Carolina 864-574-4775

Copyright © 2006 Vaughn & Melton, Inc. All Rights Reserved

DWN. BY: MAF DATE: SEPT. 2012
CHKD. BY: HLW DATE: SEPT. 2012

REVISIONS						SHEET NO.
NO.	BY:	DATE:	NO.	BY:	DATE:	S-24
1			3			TOTAL SHEETS
2			4			138

STR. #1

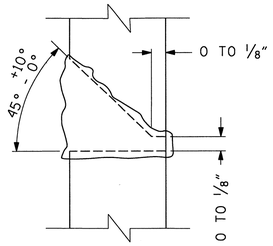

DETAIL A

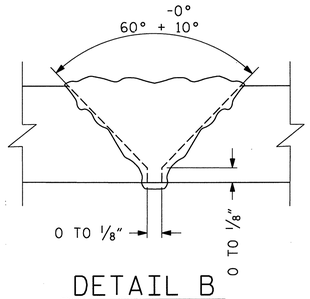

DETAIL B

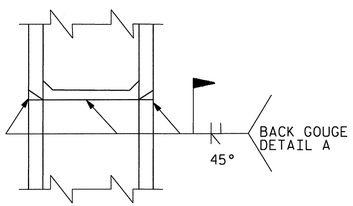

*PILE VERTICAL

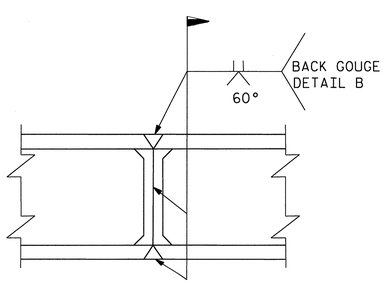

*PILE HORIZONTAL OR VERTICAL

* POSITION OF PILE DURING WELDING

PILE SPLICE DETAILS

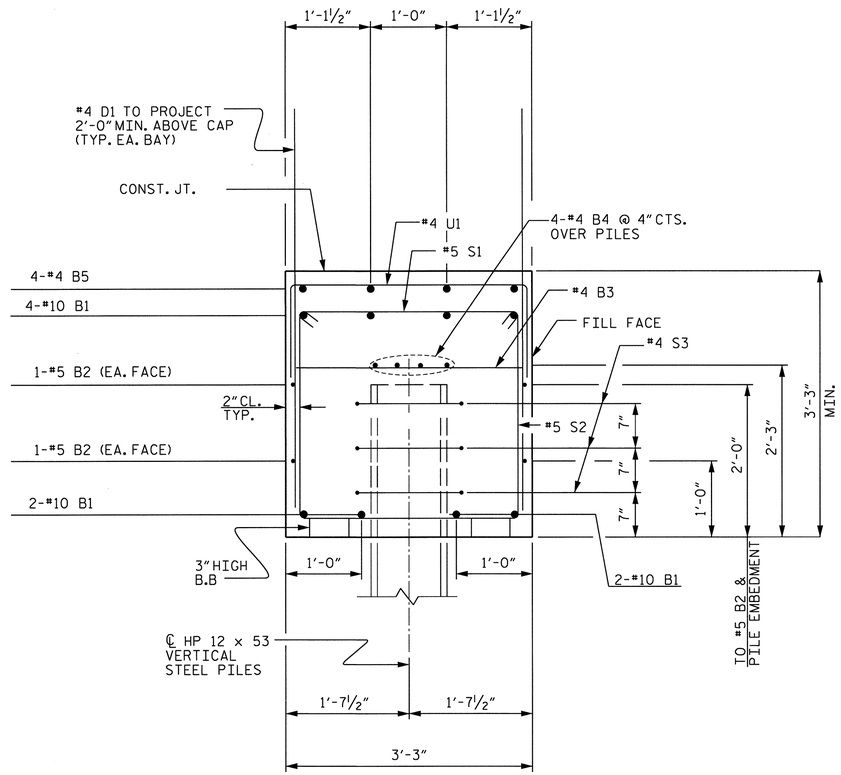

SECTION A-A

BAR TYPES

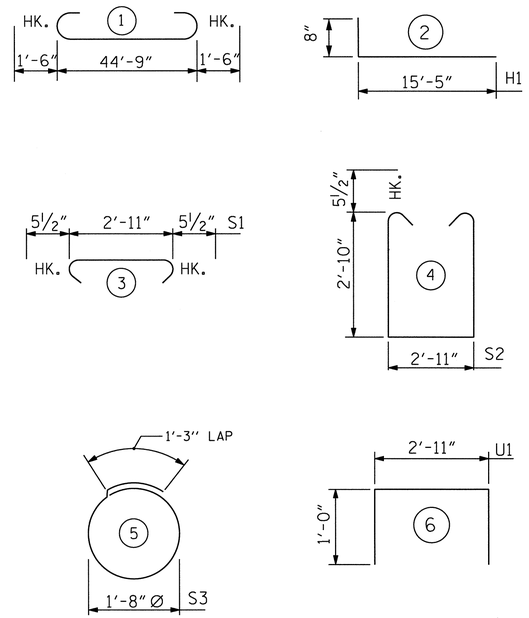

ALL BAR DIMENSIONS ARE OUT TO OUT.

BILL OF MATERIAL
END BENT 1

BAR	NO.	SIZE	TYPE	LENGTH	WEIGHT
B1	8	#10	1	47'-9"	1644
B2	4	#5	STR.	44'-11"	188
B3	11	#4	STR.	2'-11"	21
B4	8	#4	STR.	23'-8"	126
B5	4	#4	STR.	22'-3"	59
D1	66	#4	STR.	5'-9"	254
H1	15	#6	2	16'-1"	363
S1	64	#5	3	3'-10"	256
S2	64	#5	4	9'-6"	635
S3	21	#4	5	6'-6"	91
U1	15	#4	6	4'-11"	49
V1	30	#4	STR.	5'-0"	100
V2	30	#4	STR.	5'-10"	117

REINFORCING STEEL = 3,903 LBS.

CLASS A CONCRETE BREAKDOWN

POUR #1 CAP, CONCRETE COLLARS & LOWER PART OF WINGS = 23.2 C.Y.

TOTAL CLASS A CONCRETE = 23.2 C.Y.

HP 12 X 53 STEEL PILES
NO: 7 LIN. FT. = 455

PILE REDRIVES
EACH 4

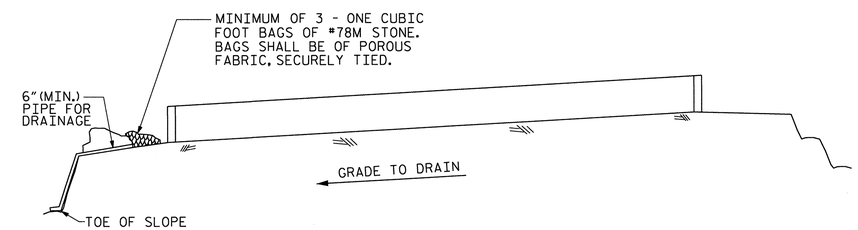

BAGGED STONE AND PIPE SHALL BE PLACED IMMEDIATELY AFTER COMPLETION OF END BENT EXCAVATION. PIPE MAY BE EITHER CONCRETE, CORRUGATED STEEL, CORRUGATED ALUMINUM ALLOY, OR CORRUGATED PLASTIC. PERFORATED PIPE WILL NOT BE ALLOWED.

BAGGED STONE SHALL REMAIN IN PLACE UNTIL THE ENGINEER DIRECTS THAT IT BE REMOVED. THE CONTRACTOR SHALL REMOVE AND DISPOSE OF SILT ACCUMULATIONS AT BAGGED STONE WHEN SO DIRECTED BY THE ENGINEER. BAGS SHALL BE REMOVED AND REPLACED WHENEVER THE ENGINEER DETERMINES THAT THEY HAVE DETERIORATED AND LOST THEIR EFFECTIVENESS.

NO SEPARATE PAYMENT WILL BE MADE FOR THIS WORK AND THE ENTIRE COST OF THIS WORK SHALL BE INCLUDED IN THE UNIT CONTRACT PRICE BID FOR THE SEVERAL PAY ITEMS.

TEMPORARY DRAINAGE AT END BENT

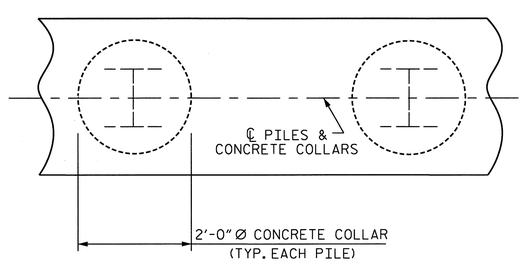

PLAN

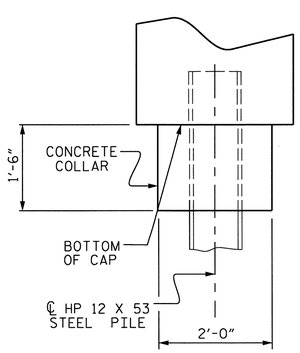

ELEVATION

CORROSION PROTECTION FOR STEEL PILES DETAIL

NORTH CAROLINA PROFESSIONAL SEAL 20717 ENGINEER HARDY L. WILLIS 12/7/12

V&M Vaughn & Melton Consulting Engineers
Asheville, North Carolina 828-253-2796
Charlotte, North Carolina 704-357-0488
Tri-Cities, Tennessee 423-467-8401
Knoxville, Tennessee 865-546-5800
Middlesboro, Kentucky 606-248-6600
Spartanburg, South Carolina 864-574-4775

Copyright © 2006 Vaughn & Melton, Inc. All Rights Reserved

DWN. BY: MAF DATE: SEPT. 2012
CHKD. BY: HLW DATE: SEPT. 2012

REVISIONS						
NO.	BY:	DATE:	NO.	BY:	DATE:	
1			3			
2			4			

SHEET NO. S-25
TOTAL SHEETS 136

PROJECT NO. R-2303C
SAMPSON COUNTY
STATION: 943+12.50 -L-
SHEET 3 OF 3

STATE OF NORTH CAROLINA
DEPARTMENT OF TRANSPORTATION
RALEIGH

SUBSTRUCTURE
INTEGRAL
END BENT NO. 1
(LEFT LANE)

STR. #1

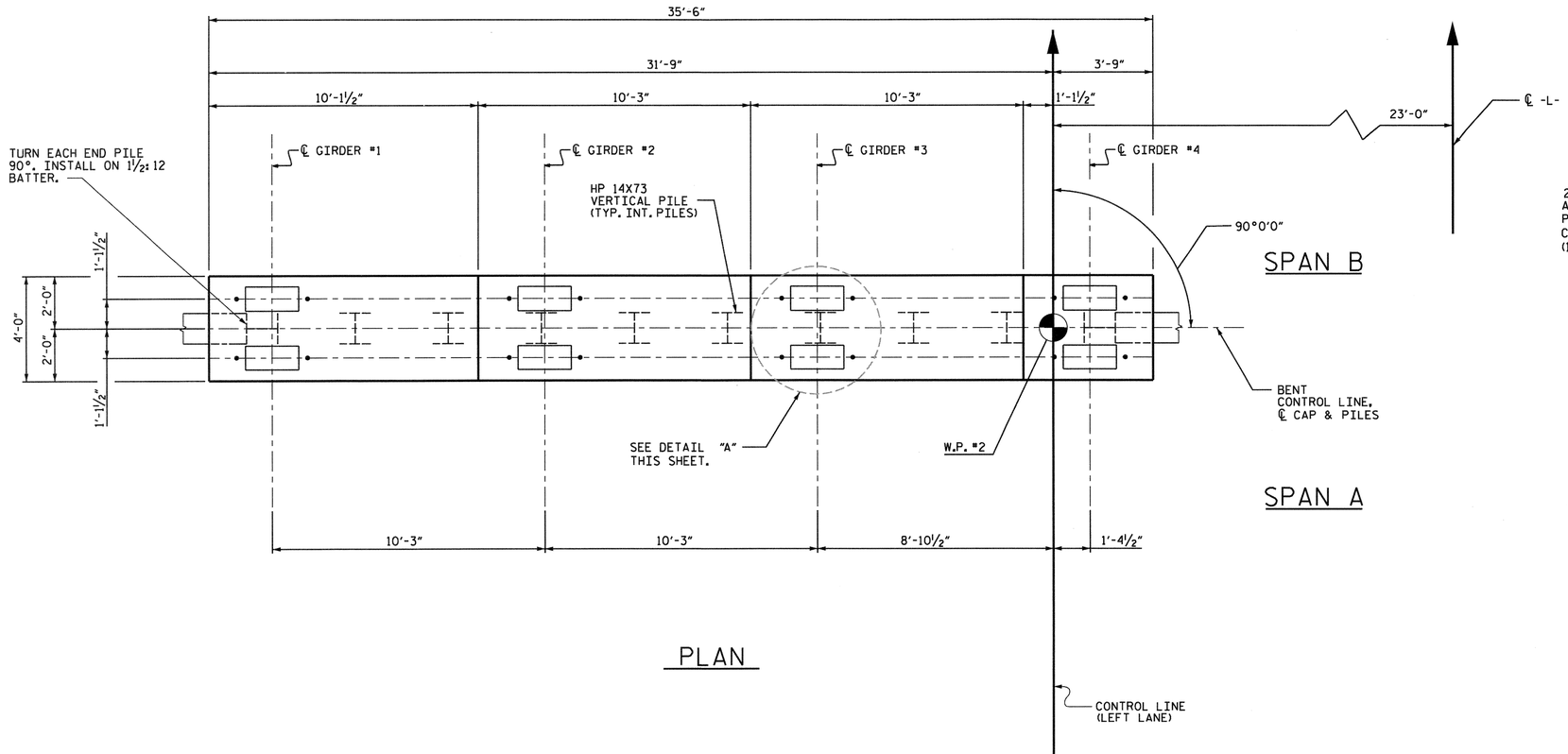

PLAN

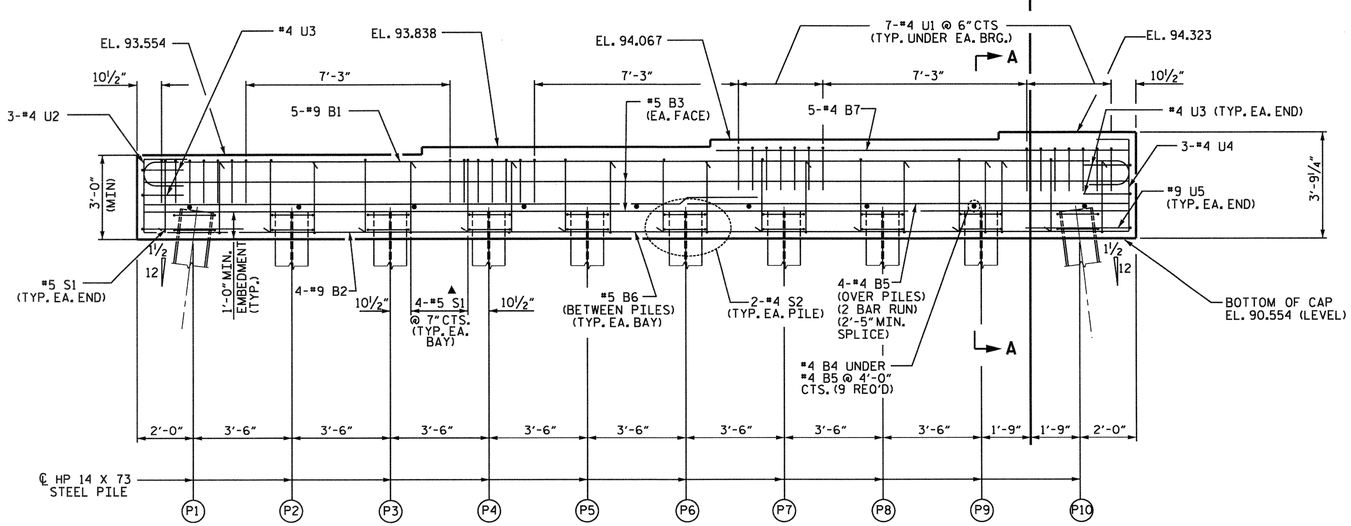

ELEVATION

▲ INVERT ALTERNATE STIRRUPS

NOTES

STIRRUPS AND "U" BARS IN CAP MAY BE SHIFTED AS NECESSARY TO CLEAR ANCHOR BOLTS.

FOR PILE SPLICE DETAILS, SEE SHEET S-25.

GALVANIZE THE TOP OF EACH INTERIOR BENT PILE A MINIMUM LENGTH OF 31 FEET. GALVANIZE IN ACCORDANCE WITH SECTION 1076 OF THE STANDARD SPECIFICATIONS.

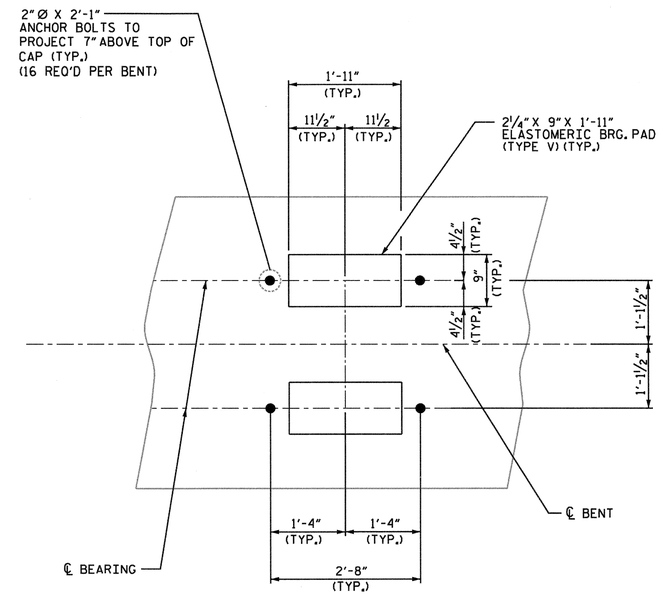

DETAIL "A"

NORTH CAROLINA PROFESSIONAL SEAL 20777 ENGINEER HARDY L. WILLIS 11/21/12

PROJECT NO. R-2303C

SAMPSON COUNTY

STATION: 943+12.50 -L-

SHEET 1 OF 2

V&M Vaughn & Melton Consulting Engineers

Asheville, North Carolina 828-253-2796

Charlotte, North Carolina 704-357-0488
Tri-Cities, Tennessee 423-467-8401
Knoxville, Tennessee 865-546-5800
Middlesboro, Kentucky 606-248-6600
Spartanburg, South Carolina 864-574-4775

Copyright © 2006 Vaughn & Melton, Inc. All Rights Reserved

STATE OF NORTH CAROLINA
DEPARTMENT OF TRANSPORTATION
RALEIGH

SUBSTRUCTURE
BENT NO. 1

(LEFT LANE)

REVISIONS						SHEET NO.
NO.	BY:	DATE:	NO.	BY:	DATE:	S-26
1			3			TOTAL SHEETS
2			4			138

DWN. BY: MAF DATE: SEPT. 2012
CHKD. BY: HLW DATE: SEPT. 2012

STR. #1

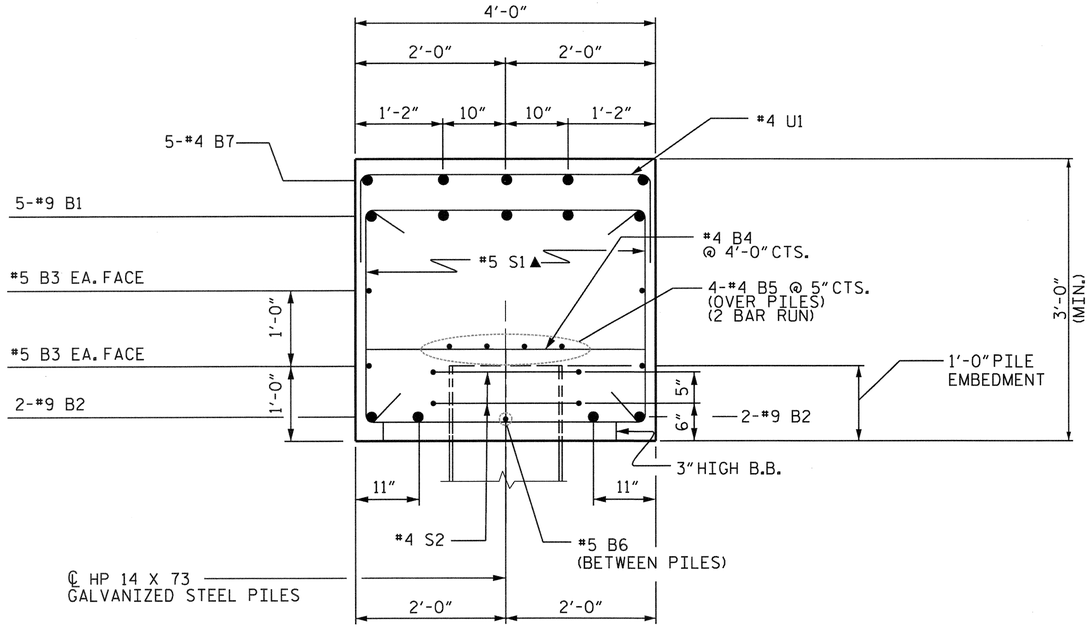

SECTION A-A

▲ INVERT ALTERNATE STIRRUPS

BAR TYPES

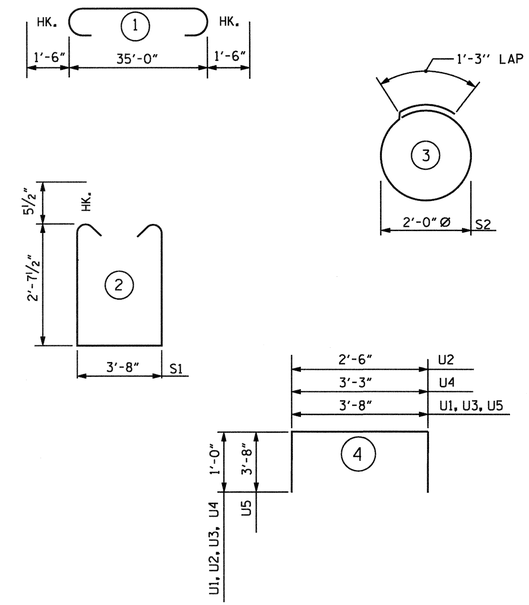

ALL BAR DIMENSIONS ARE OUT TO OUT.

BILL OF MATERIAL

BENT 1

BAR	NO.	SIZE	TYPE	LENGTH	WEIGHT
B1	5	#9	1	38'-0"	646
B2	4	#9	STR.	35'-2"	478
B3	4	#5	STR.	35'-2"	147
B4	9	#4	STR.	3'-8"	22
B5	8	#4	STR.	18'-10"	101
B6	9	#5	STR.	2'-6"	23
B7	5	#4	STR.	14'-9"	49
S1	38	#5	2	9'-10"	390
S2	20	#4	3	7'-7"	101
U1	28	#4	4	5'-8"	106
U2	3	#4	4	4'-6"	9
U3	4	#4	4	5'-8"	15
U4	3	#4	4	5'-3"	11
U5	2	#9	4	11'-0"	75

REINFORCING STEEL = 2,173 LBS.

CLASS A CONCRETE BREAKDOWN

POUR #1 CAP, CONCRETE = 17.6 C.Y.

TOTAL CLASS A CONCRETE = 17.6 C.Y.

HP 14 X 73 GALVANIZED STEEL PILES
NO: 10 LIN. FT. = 650

PILE REDRIVES
EACH 5

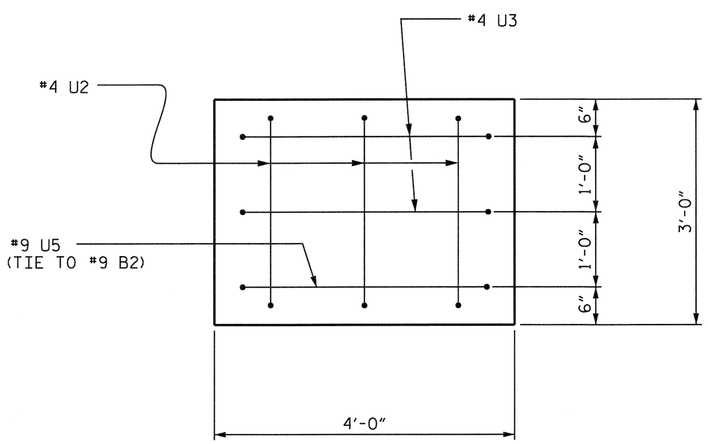

LEFT END OF CAP VIEW

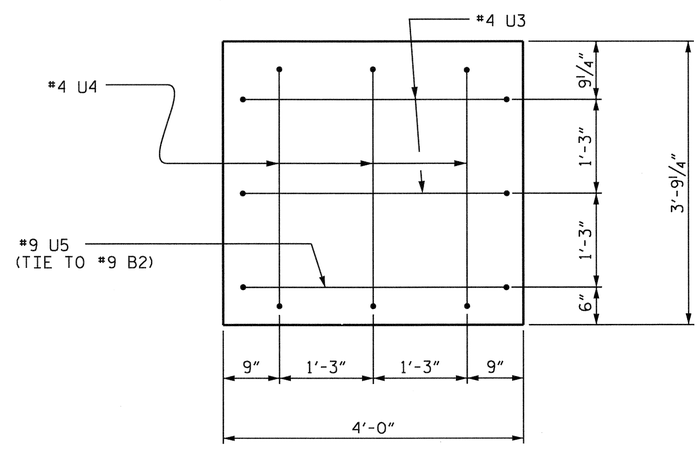

RIGHT END OF CAP VIEW

NORTH CAROLINA PROFESSIONAL SEAL 20771 ENGINEER HARDY L. WILLIS 11/21/12

PROJECT NO. R-2303C
SAMPSON COUNTY
STATION: 943+12.50 -L-

SHEET 2 OF 2

V&M
Vaughn & Melton
Consulting Engineers
Asheville, North Carolina 828-253-2796
Charlotte, North Carolina 704-357-0488
Tri-Cities, Tennessee 423-467-8401
Knoxville, Tennessee 865-546-5800
Middlesboro, Kentucky 606-248-6600
Spartanburg, South Carolina 864-574-4775

Copyright © 2006 Vaughn & Melton, Inc. All Rights Reserved

STATE OF NORTH CAROLINA
DEPARTMENT OF TRANSPORTATION
RALEIGH

SUBSTRUCTURE
BENT NO. 1

(LEFT LANE)

REVISIONS						SHEET NO.
NO.	BY:	DATE:	NO.	BY:	DATE:	S-27
1			3			TOTAL SHEETS
2			4			138

DWN. BY: MAF DATE: SEPT. 2012
CHKD. BY: HLW DATE: SEPT. 2012

STR. #1

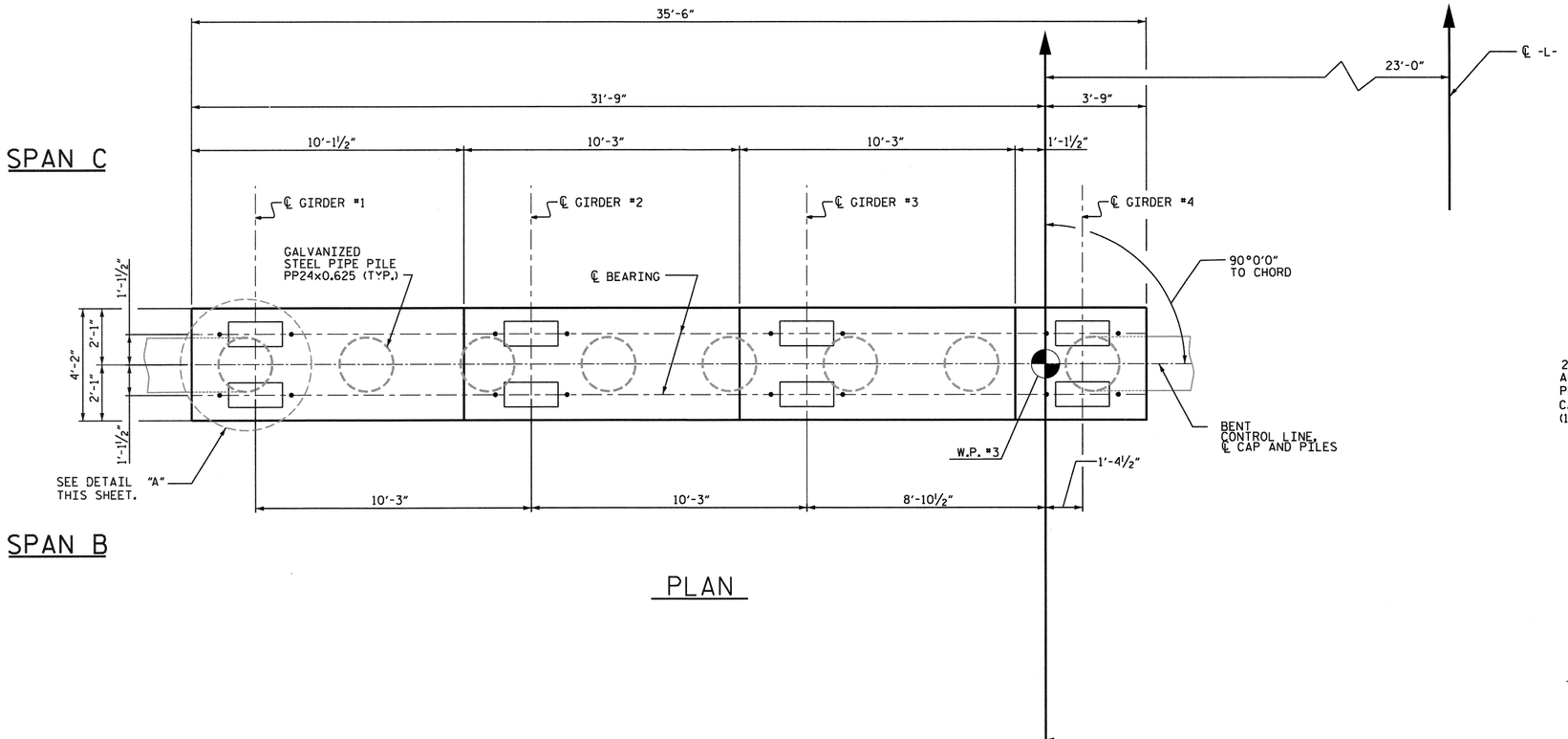

PLAN

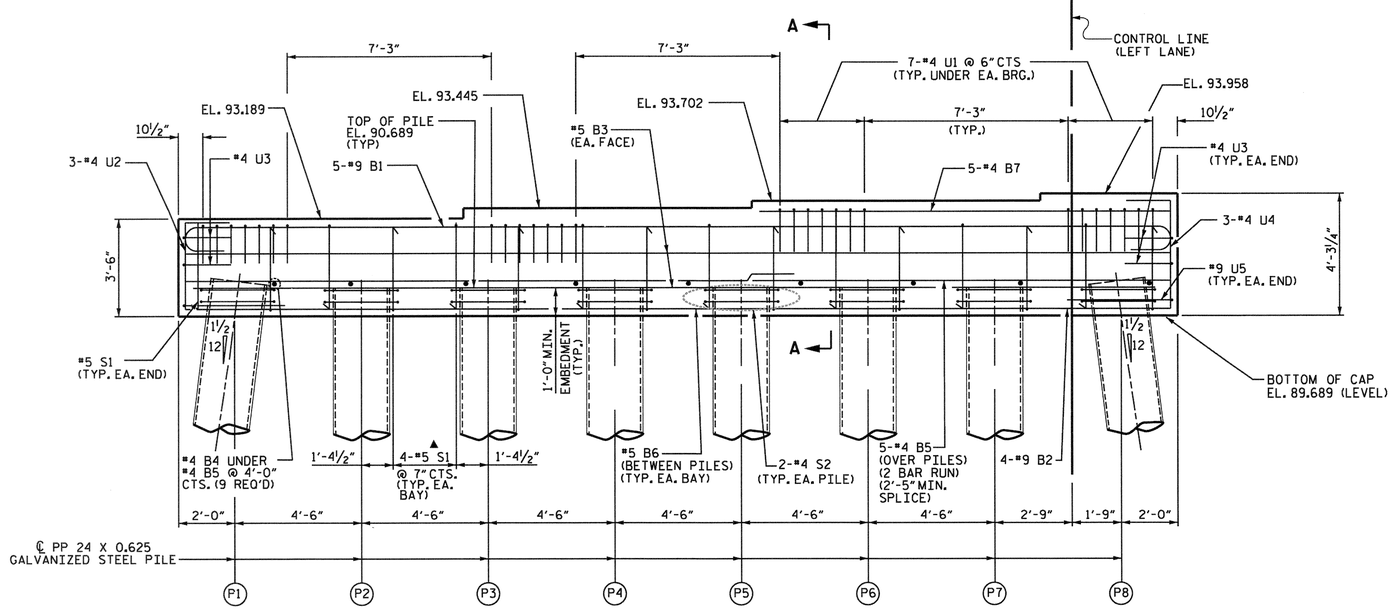

ELEVATION

▲ INVERT ALTERNATE STIRRUPS

NOTES

STIRRUPS AND "U" BARS IN CAP MAY BE SHIFTED AS NECESSARY TO CLEAR ANCHOR BOLTS.

FOR ADDITIONAL REINFORCING STEEL IN PP 24 X 0.625 GALVANIZED STEEL PIPE PILES, SEE 24" STEEL PIPE PILE STANDARD.

FOR PILE SPLICE DETAILS, SEE 24" STEEL PIPE PILE STANDARD.

GALVANIZE THE TOP OF EACH INTERIOR BENT PILE A MINIMUM LENGTH OF 37 FEET. GALVANIZE IN ACCORDANCE WITH SECTION 1076 OF THE STANDARD SPECIFICATIONS.

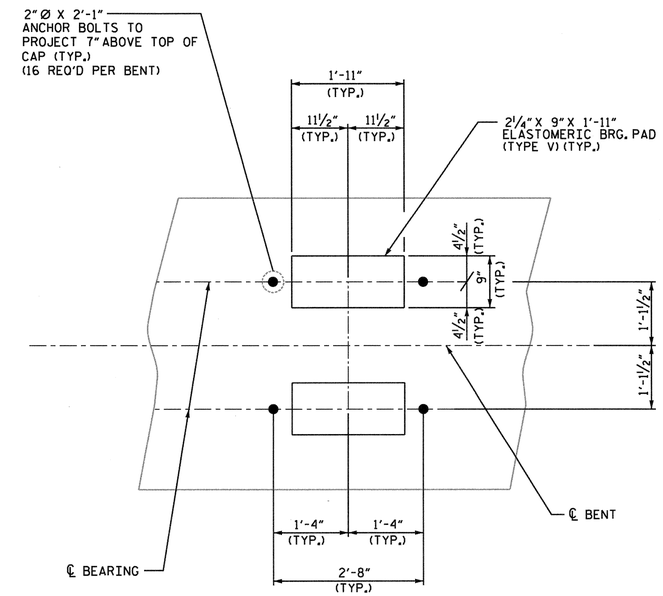

DETAIL "A"

NORTH CAROLINA PROFESSIONAL SEAL 20717 ENGINEER HARDY L. WILLIS 11/2/12

PROJECT NO. R-2303C

SAMPSON COUNTY

STATION: 943+12.50 -L-

SHEET 1 OF 2

V&M Vaughn & Melton Consulting Engineers

Asheville, North Carolina 828-253-2796

Charlotte, North Carolina 704-357-0488
Tri-Cities, Tennessee 423-467-8401
Knoxville, Tennessee 865-546-5800
Middlesboro, Kentucky 606-248-6600
Spartanburg, South Carolina 864-574-4775

Copyright © 2006 Vaughn & Melton, Inc. All Rights Reserved

DWN. BY: MAF DATE: SEPT. 2012
CHKD. BY: HLW DATE: SEPT. 2012

STATE OF NORTH CAROLINA
DEPARTMENT OF TRANSPORTATION
RALEIGH

SUBSTRUCTURE BENT NO. 2

(LEFT LANE)

REVISIONS						SHEET NO.
NO.	BY:	DATE:	NO.	BY:	DATE:	S-28
1			3			TOTAL SHEETS
2			4			138

STR. #1

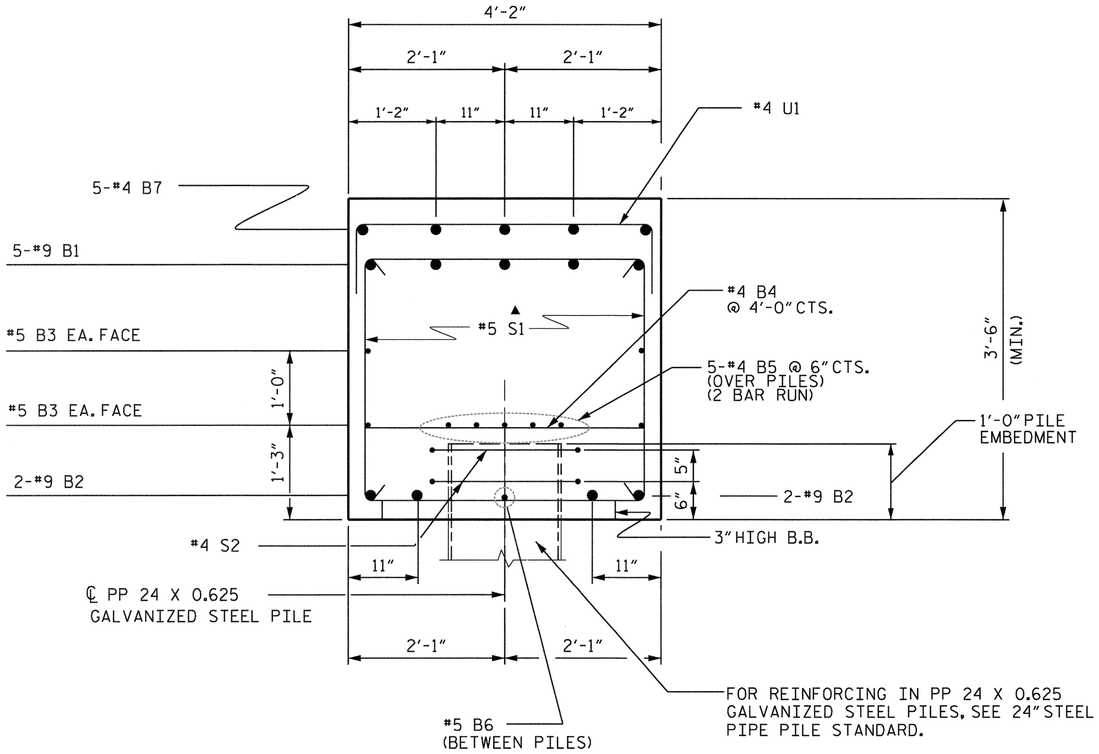

SECTION A-A

▲ INVERT ALTERNATE STIRRUPS

BAR TYPES

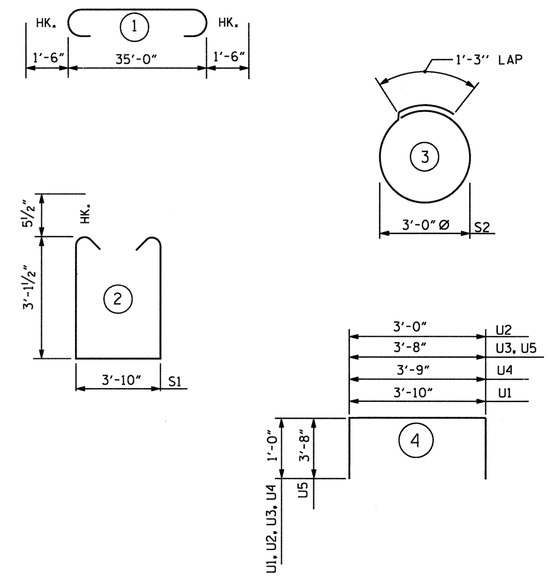

ALL BAR DIMENSIONS ARE OUT TO OUT.

BILL OF MATERIAL

BENT 2

BAR	NO.	SIZE	TYPE	LENGTH	WEIGHT
B1	5	#9	1	38'-0"	646
B2	4	#9	STR.	35'-2"	478
B3	4	#5	STR.	35'-2"	147
B4	9	#4	STR.	3'-10"	23
B5	10	#4	STR.	18'-10"	126
B6	7	#5	STR.	2'-0"	15
B7	5	#4	STR.	14'-9"	49
S1	30	#5	2	11'-0"	345
S2	16	#4	3	10'-9"	115
U1	28	#4	4	5'-10"	109
U2	3	#4	4	5'-0"	10
U3	4	#4	4	5'-8"	15
U4	3	#4	4	5'-9"	12
U5	2	#9	4	11'-0"	75

REINFORCING STEEL = 2,165 LBS.

CLASS A CONCRETE BREAKDOWN

✱ POUR #1 CAP, CONCRETE = 20.0 C.Y.

TOTAL CLASS A CONCRETE = 20.0 C.Y.

PP 24 X 0.625 GALVANIZED STEEL PILES
NO: 8 LIN. FT. = 560

PILE REDRIVES
EACH 4

PIPE PILE PLATES
EACH 8

✱ CONCRETE DISPLACED BY THE FILLED PP 24 X 0.625 GALVANIZED STEEL PILES HAS BEEN DEDUCTED FROM THE QUANTITY OF CLASS A CONCRETE FOR BENT CAP.

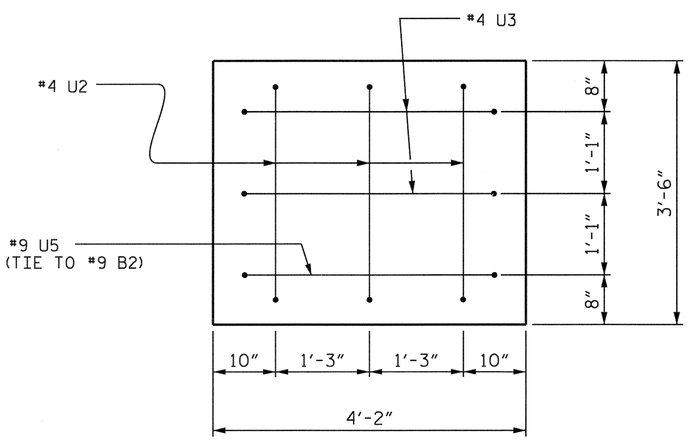

LEFT END OF CAP VIEW

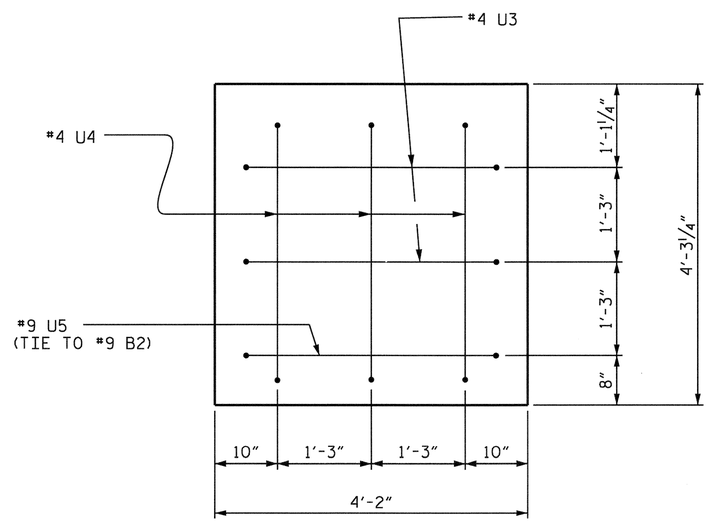

RIGHT END OF CAP VIEW

NORTH CAROLINA PROFESSIONAL SEAL 20777 ENGINEER HARDY L. WILLIS
11/21/12

PROJECT NO. R-2303C
SAMPSON COUNTY
STATION: 943+12.50 -L-

SHEET 2 OF 2

V&M Vaughn & Melton Consulting Engineers
Asheville, North Carolina 828-253-2796
Charlotte, North Carolina 704-357-0488
Tri-Cities, Tennessee 423-467-840
Knoxville, Tennessee 865-546-5800
Middlesboro, Kentucky 606-248-6600
Spartanburg, South Carolina 864-574-4775
Copyright © 2006 Vaughn & Melton, Inc. All Rights Reserved

DWN. BY: MAF DATE: SEPT. 2012
CHKD. BY: HLW DATE: SEPT. 2012

STATE OF NORTH CAROLINA
DEPARTMENT OF TRANSPORTATION
RALEIGH

SUBSTRUCTURE
BENT NO. 2

(LEFT LANE)

REVISIONS						SHEET NO.
NO.	BY:	DATE:	NO.	BY:	DATE:	S-29
1			3			TOTAL SHEETS
2			4			138

STR. #1

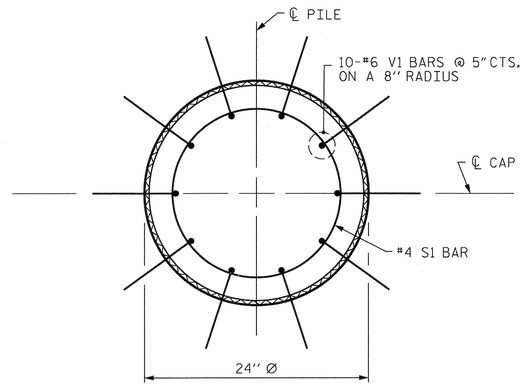

PLAN

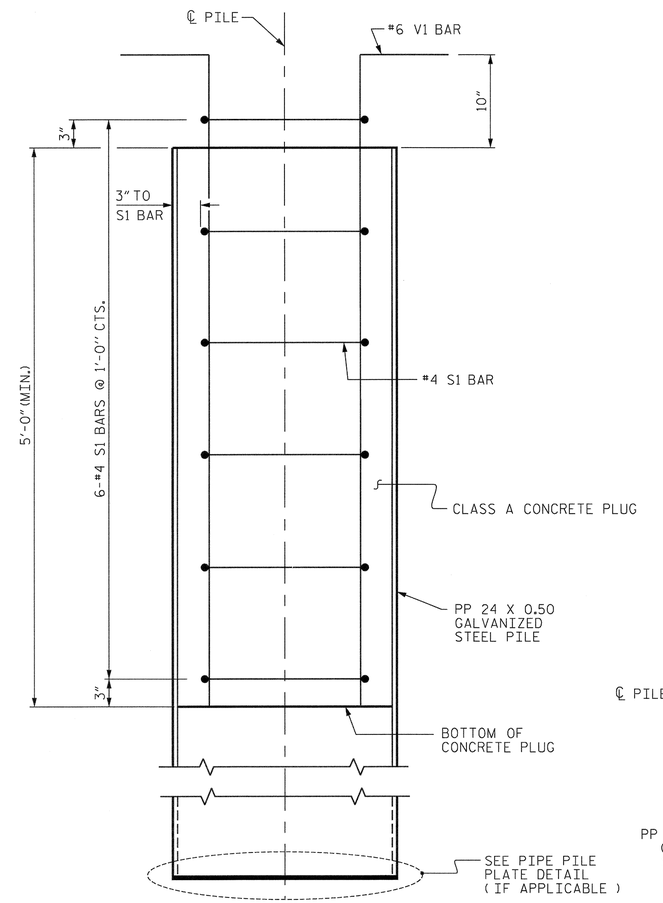

ELEVATION

PP 24 X 0.625 GALVANIZED STEEL PILE

(OPEN OR CLOSED END)

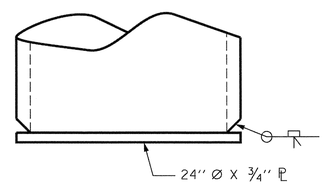

PIPE PILE PLATE DETAIL

(IF APPLICABLE)

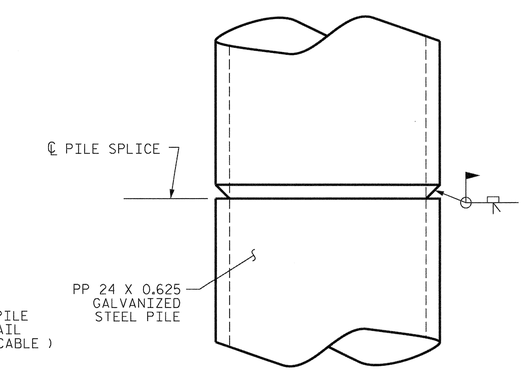

PIPE PILE SPLICE DETAIL

NOTES

PIPE PILES SHALL BE IN ACCORDANCE WITH SECTION 1084 OF THE STANDARD SPECIFICATIONS.

GALVANIZE STEEL PIPE PILES IN ACCORDANCE WITH SECTION 1076 OF THE STANDARD SPECIFICATIONS UNLESS METALLIZING IS REQUIRED. GALVANIZING OR METALLIZING PIPE PILE PLATES IS NOT REQUIRED.

PIPE PILE PLATES, IF REQUIRED, SHALL BE IN ACCORDANCE WITH SECTION 450 OF THE STANDARD SPECIFICATIONS.

REMOVE AND REPLACE OR REPAIR TO THE SATISFACTION OF THE ENGINEER PILES THAT ARE DAMAGED, DEFORMED OR COLLAPSED DURING INSTALLATION OR DRIVING.

PILE SPLICES SHALL BE IN ACCORDANCE WITH THE STANDARD SPECIFICATIONS AND AWS D1.1.

FOR CLOSED END PIPE PILES, REMOVE ALL SOIL AND WATER FROM INSIDE THE PILES JUST PRIOR TO PLACING REINFORCING STEEL AND CONCRETE FOR THE CONCRETE PLUG.

FOR OPEN END PIPE PILES, REMOVE ENOUGH SOIL AND WATER FROM INSIDE THE PILES TO CONSTRUCT THE CONCRETE PLUG WITHOUT FOULING THE CONCRETE.

FORM THE CONCRETE PLUG SUCH THAT THE REINFORCING STEEL OR CONCRETE DOES NOT MOVE AND THE CLEARANCE FROM THE REINFORCING STEEL TO THE INSIDE OF THE PILE IS MAINTAINED AFTER CONCRETE PLACEMENT. DO NOT PLACE CONCRETE IN THE BENT CAP UNTIL THE CONCRETE PLUG HAS ATTAINED A MINIMUM COMPRESSIVE STRENGTH OF 1500 PSI.

THE REINFORCING STEEL, CLASS A CONCRETE, AND GALVANIZING ARE CONSIDERED INCIDENTAL TO THE CONTRACT UNIT PRICE BID PER LINEAR FOOT FOR PP 24 X 0.625 GALVANIZED STEEL PILES.

BILL OF MATERIAL FOR ONE PP 24 X 0.625 GALVANIZED STEEL PILE

BAR	NO.	SIZE	TYPE	LENGTH	WEIGHT
S1	6	#4	1	6'-0"	24
V1	10	#6	2	6'-8"	100
REINFORCING STEEL =					124 lbs

CLASS A CONCRETE

5'-0" MINIMUM PLUG 0.5 CY

BAR TYPES

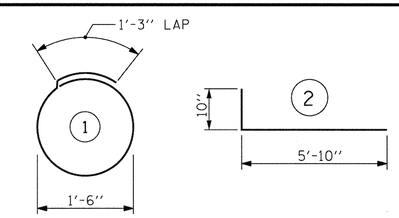

ALL BAR DIMENSIONS ARE OUT TO OUT.

PROJECT NO. R-2303C

SAMPSON COUNTY

STATION: 943+12.50 -L-

NORTH CAROLINA PROFESSIONAL SEAL 20777 ENGINEER HARDY L. WILLIS 11/21/12

STATE OF NORTH CAROLINA
DEPARTMENT OF TRANSPORTATION
RALEIGH

STANDARD

24" STEEL PIPE PILE

(LEFT LANE)

REVISIONS						SHEET NO.
NO.	BY:	DATE:	NO.	BY:	DATE:	S-30
1			3			TOTAL SHEETS
2			4			138

STR. #1 STD. NO. SPP4

ASSEMBLED BY : MAF	DATE : 09/2012
CHECKED BY : HLW	DATE : 09/2012
DRAWN BY : TLA 8/05	ADDED 10/1/05
CHECKED BY : GM 9/05	REV. 5/1/06R MAA/KMM
	REV. 10/1/11 MAA/GM

$$$$$$SYSTIME$$$$$
$$$$$$$$$$$$$$$$$$$$DGN$$$$$$$$$$$$$$$$$$$$$$$$
$$$$USERNAME$$$$

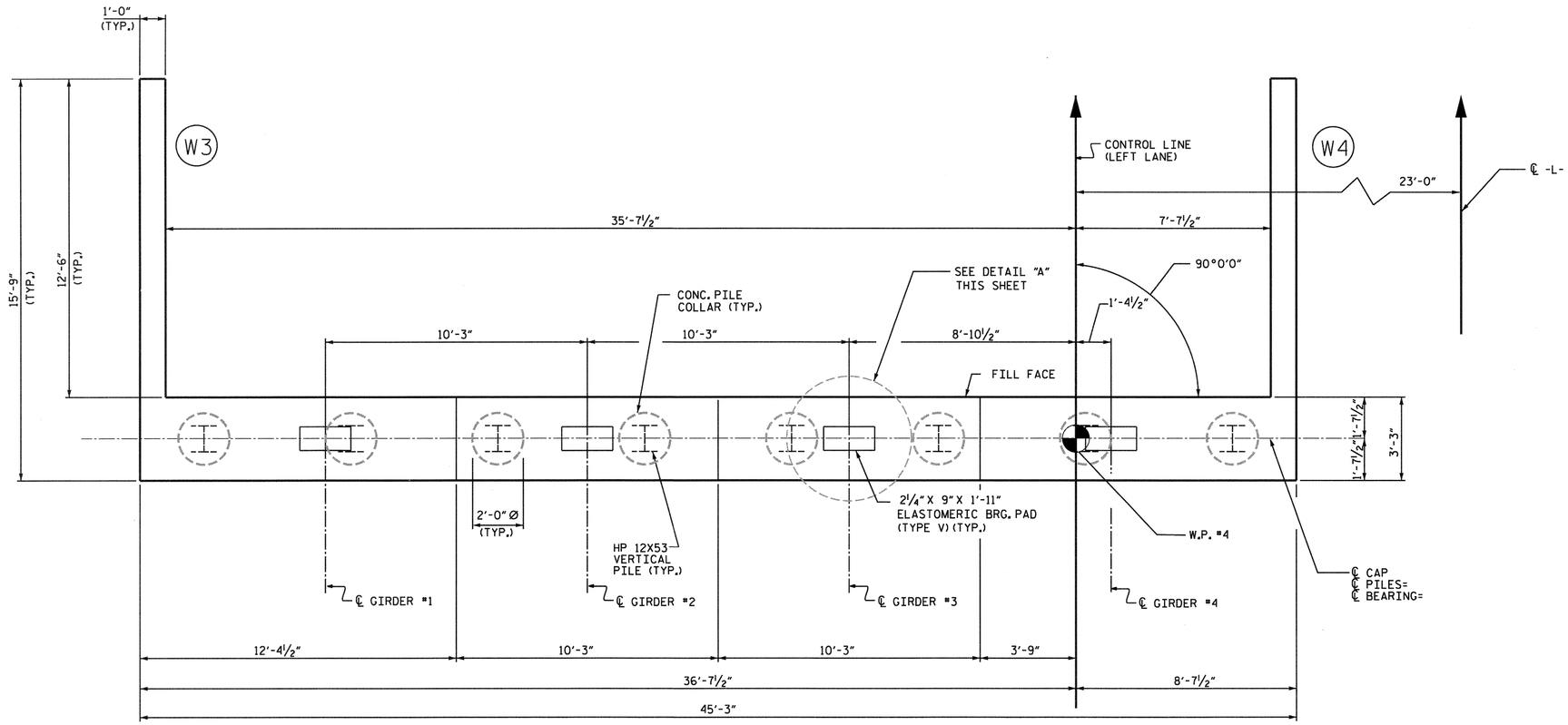

PLAN

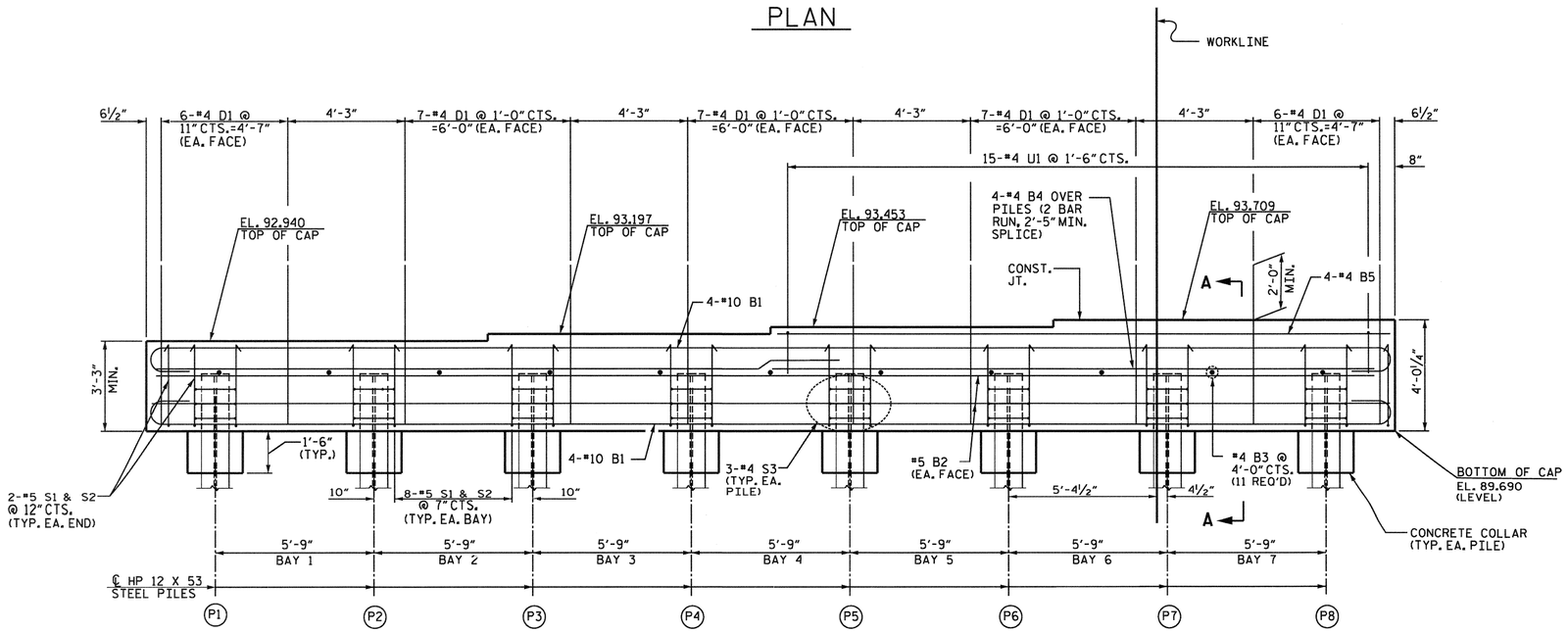

ELEVATION

(WINGS NOT SHOWN FOR CLARITY)

NOTES

FOR PILE SPLICE DETAILS, SEE SHEET 3 OF 3.

THE CONTRACTOR SHALL PROVIDE FOR INSTALLATION OF THE 4" DIAMETER DRAIN PIPE THROUGH THE WING WALL AS REQUIRED FOR REINFORCED BRIDGE APPROACH FILLS. SEE THE ROADWAY PLANS. REINFORCING STEEL IN THE WING WALL MAY BE SHIFTED AS NECESSARY TO CLEAR THE DRAIN PIPE.

SEE SUPERSTRUCTURE SHEETS FOR INTEGRAL END BENT DIAPHRAGM DETAILS, AND UPPER PART OF WINGS.

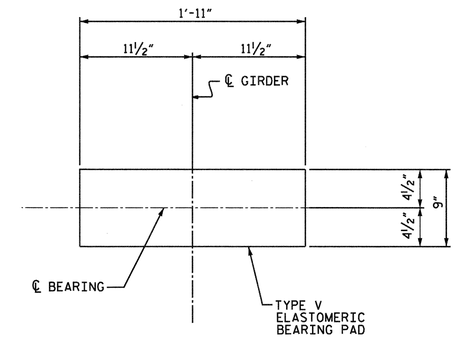

DETAIL "A"

PROJECT NO. R-2303C

SAMPSON COUNTY

STATION: 943+12.50 -L-

SHEET 1 OF 3

NORTH CAROLINA PROFESSIONAL SEAL 20711 ENGINEER HARDY L. WILLIS 11/12/12

V&M Vaughn & Melton Consulting Engineers
Asheville, North Carolina 828-253-2796
Charlotte, North Carolina 704-357-0488
Tri-Cities, Tennessee 423-467-840
Knoxville, Tennessee 865-546-5800
Middlesboro, Kentucky 606-248-6600
Spartanburg, South Carolina 864-574-4775
Copyright © 2006 Vaughn & Melton, Inc. All Rights Reserved

DWN. BY: MAF DATE: SEPT. 2012
CHKD. BY: HLW DATE: SEPT. 2012

STATE OF NORTH CAROLINA
DEPARTMENT OF TRANSPORTATION
RALEIGH

SUBSTRUCTURE
INTEGRAL
END BENT NO. 2

(LEFT LANE)

REVISIONS						
NO.	BY:	DATE:	NO.	BY:	DATE:	
1			3			
2			4			

SHEET NO. S-31
TOTAL SHEETS 138

STR. #1

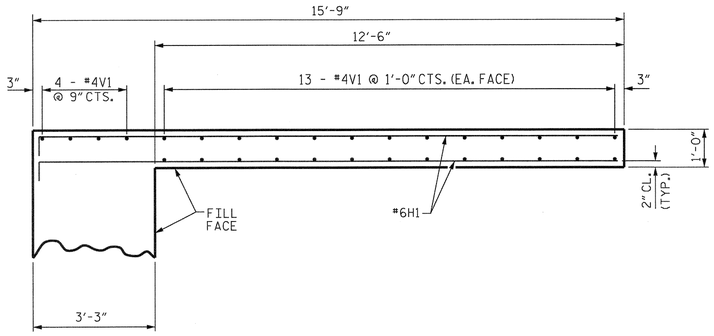

PLAN OF WING W3

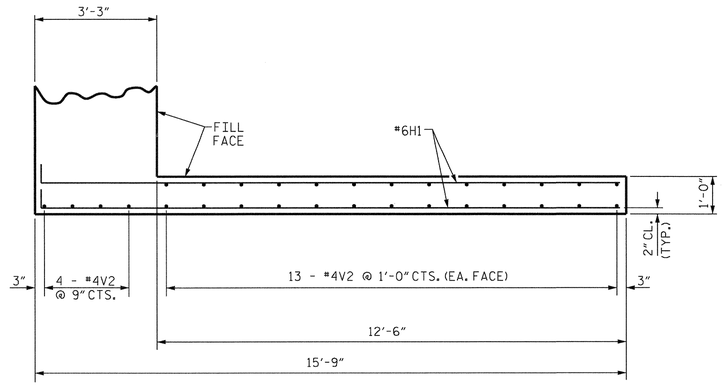

PLAN OF WING W4

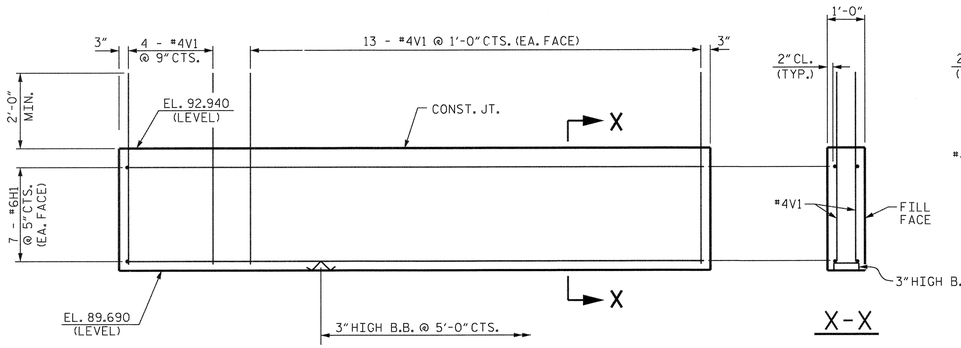

ELEVATION OF WING W3

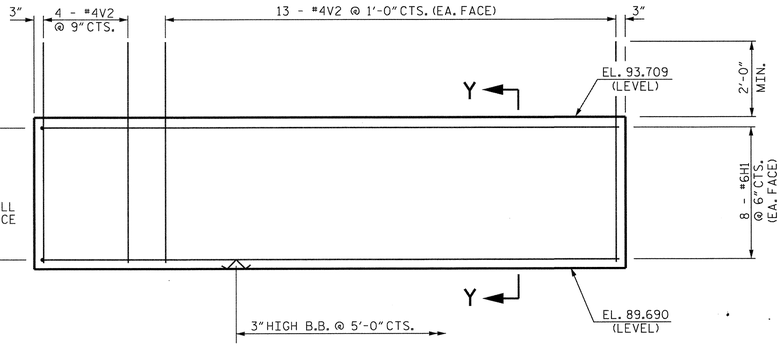

ELEVATION OF WING W4

NORTH CAROLINA PROFESSIONAL SEAL 40777 ENGINEER HARDY L. WILLIS
12/21/12

PROJECT NO. R-2303C
SAMPSON COUNTY
STATION: 943+12.50 -L-
SHEET 2 OF 3

V&M
Vaughn & Melton
Consulting Engineers
Asheville, North Carolina
828-253-2196
Charlotte, North Carolina 704-357-0488
Tri-Cities, Tennessee 423-467-840
Knoxville, Tennessee 865-546-5800
Middlesboro, Kentucky 606-248-5600
Spartanburg, South Carolina 864-574-4775

Copyright © 2006 Vaughn & Melton, Inc.
All Rights Reserved

DWN. BY: MAF DATE: SEPT. 2012
CHKD. BY: HLW DATE: SEPT. 2012

STATE OF NORTH CAROLINA
DEPARTMENT OF TRANSPORTATION
RALEIGH

SUBSTRUCTURE
INTEGRAL
END BENT NO. 2

(LEFT LANE)

REVISIONS						SHEET NO.
NO.	BY:	DATE:	NO.	BY:	DATE:	S-32
1			3			TOTAL SHEETS
2			4			138

STR. #1

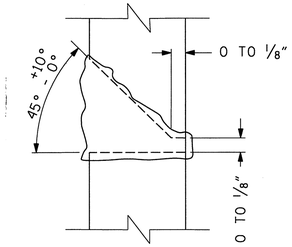

DETAIL A

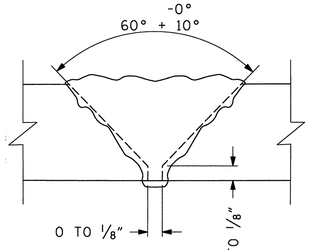

DETAIL B

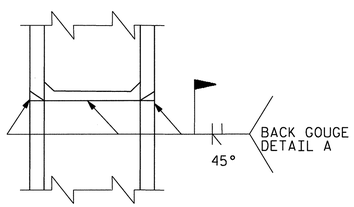

*PILE VERTICAL

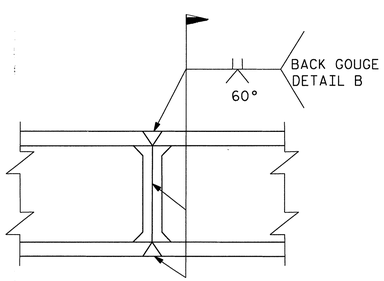

*PILE HORIZONTAL OR VERTICAL

* POSITION OF PILE DURING WELDING

PILE SPLICE DETAILS

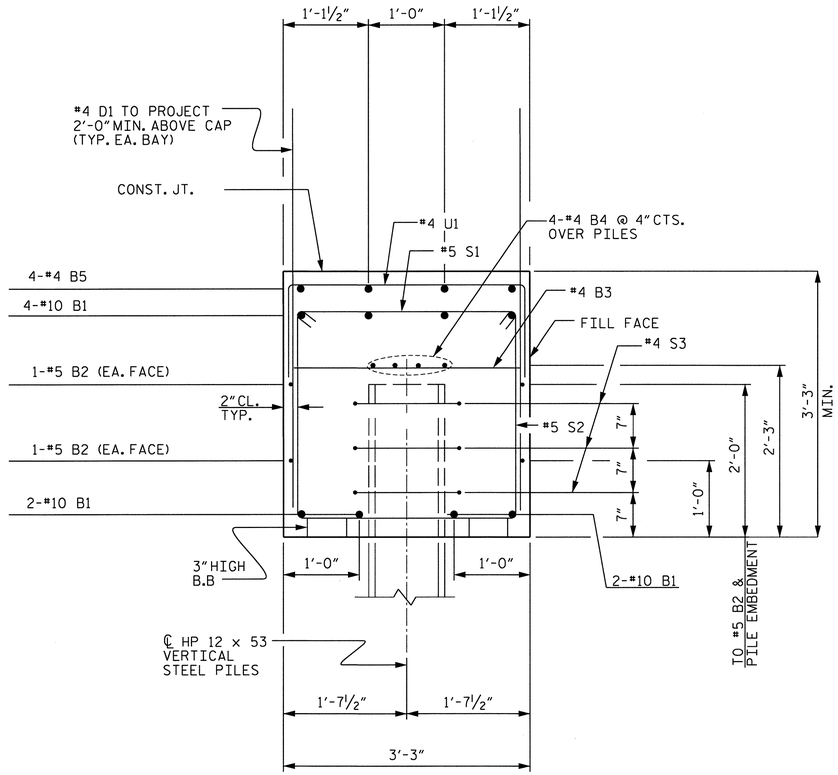

SECTION A-A

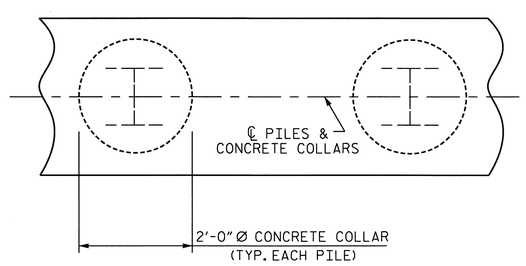

PLAN

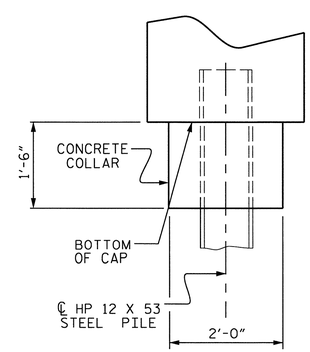

ELEVATION

CORROSION PROTECTION FOR STEEL PILES DETAIL

BAR TYPES

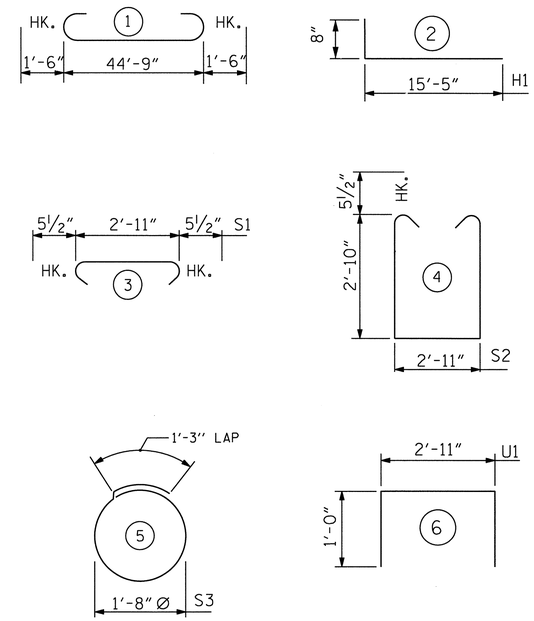

ALL BAR DIMENSIONS ARE OUT TO OUT.

BILL OF MATERIAL
END BENT 2

BAR	NO.	SIZE	TYPE	LENGTH	WEIGHT
B1	8	#10	1	47'-9"	1644
B2	2	#5	STR.	44'-11"	94
B3	11	#4	STR.	2'-11"	21
B4	8	#4	STR.	23'-8"	126
B5	4	#4	STR.	22'-3"	59
D1	66	#4	STR.	5'-9"	254
H1	15	#6	2	16'-1"	363
S1	60	#5	3	3'-10"	240
S2	60	#5	4	9'-6"	595
S3	24	#4	5	6'-6"	104
U1	15	#4	6	4'-11"	49
V1	30	#4	STR.	5'-0"	100
V2	30	#4	STR.	5'-10"	117

REINFORCING STEEL = 3,766 LBS.

CLASS A CONCRETE BREAKDOWN = 23.2 C.Y.

POUR #1 CAP, CONCRETE COLLARS & LOWER PART OF WINGS

TOTAL CLASS A CONCRETE = 23.2 C.Y.

HP 12 X 53 STEEL PILES
NO: 8 LIN. FT. = 480

PILE REDRIVES
EACH 4

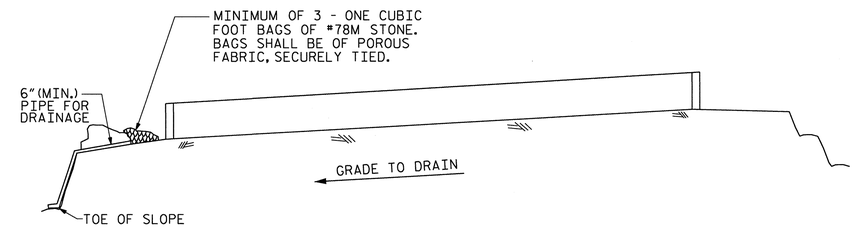

BAGGED STONE AND PIPE SHALL BE PLACED IMMEDIATELY AFTER COMPLETION OF END BENT EXCAVATION. PIPE MAY BE EITHER CONCRETE, CORRUGATED STEEL, CORRUGATED ALUMINUM ALLOY, OR CORRUGATED PLASTIC. PERFORATED PIPE WILL NOT BE ALLOWED.

BAGGED STONE SHALL REMAIN IN PLACE UNTIL THE ENGINEER DIRECTS THAT IT BE REMOVED. THE CONTRACTOR SHALL REMOVE AND DISPOSE OF SILT ACCUMULATIONS AT BAGGED STONE WHEN SO DIRECTED BY THE ENGINEER. BAGS SHALL BE REMOVED AND REPLACED WHENEVER THE ENGINEER DETERMINES THAT THEY HAVE DETERIORATED AND LOST THEIR EFFECTIVENESS.

NO SEPARATE PAYMENT WILL BE MADE FOR THIS WORK AND THE ENTIRE COST OF THIS WORK SHALL BE INCLUDED IN THE UNIT CONTRACT PRICE BID FOR THE SEVERAL PAY ITEMS.

TEMPORARY DRAINAGE AT END BENT

PROJECT NO. R-2303C
SAMPSON COUNTY
STATION: 943+12.50 -L-

SHEET 3 OF 3

STATE OF NORTH CAROLINA
DEPARTMENT OF TRANSPORTATION
RALEIGH

SUBSTRUCTURE
INTEGRAL
END BENT NO. 2

(LEFT LANE)

NORTH CAROLINA PROFESSIONAL SEAL 2011 ENGINEER HARDY L. WILLIS 2/7/12

V&M
Vaughn & Melton
Consulting Engineers
Asheville, North Carolina
828-253-2796
Charlotte, North Carolina 704-357-0488
Tri-Cities, Tennessee 423-467-8401
Knoxville, Tennessee 865-546-5800
Middlesboro, Kentucky 606-248-6600
Spartanburg, South Carolina 864-574-4775

Copyright © 2006 Vaughn & Melton, Inc. All Rights Reserved

DWN. BY: MAF DATE: SEPT. 2012
CHKD. BY: HLW DATE: SEPT. 2012

REVISIONS							SHEET NO.
NO.	BY:	DATE:	NO.	BY:	DATE:		S-33
1			3				TOTAL SHEETS
2			4				138

STR. #1

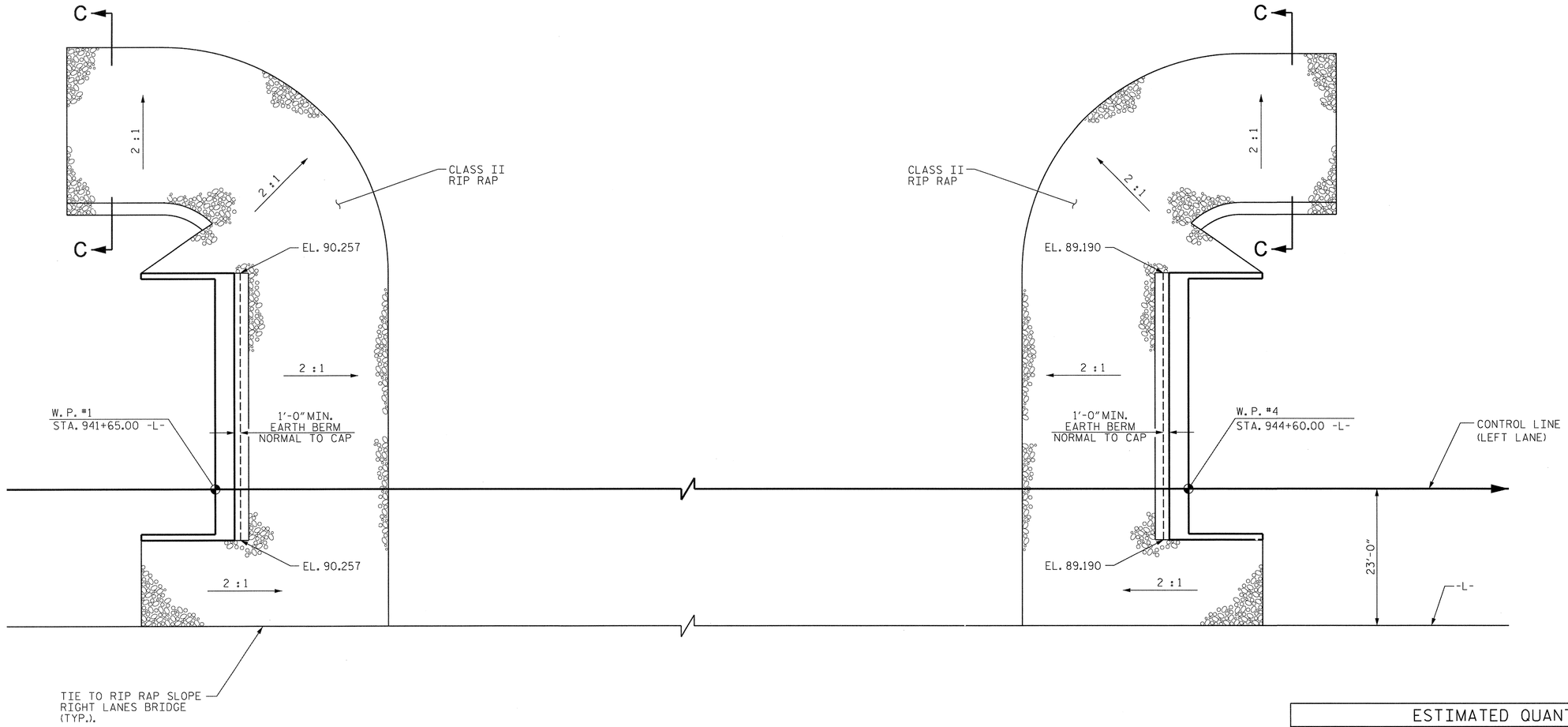

PLAN OF RIP RAP

ESTIMATED QUANTITIES		
BRIDGE @ STA. 943+12.50 -L- (LEFT LANE)	RIP RAP CLASS II (2'-0" THICK)	GEOTEXTILE FOR DRAINAGE
	TONS	SQUARE YARDS
END BENT 1	367	411
END BENT 2	329	368

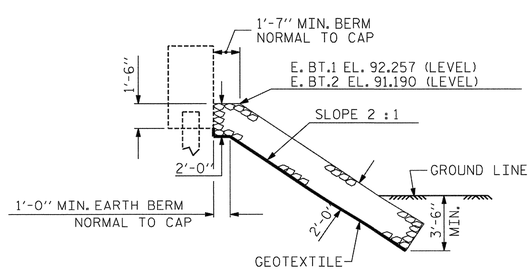

℄ SECTION

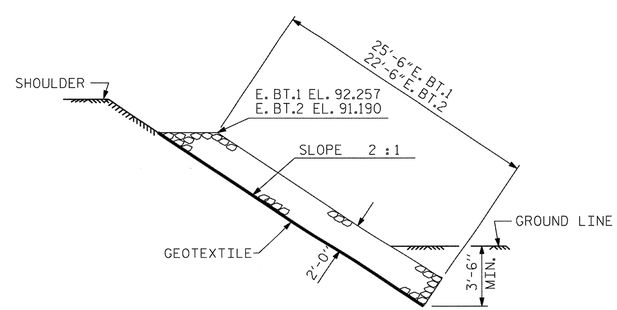

SECTION C-C

PROJECT NO. R-2303C

SAMPSON COUNTY

STATION: 943+12.50 -L-

NORTH CAROLINA PROFESSIONAL SEAL 20722 ENGINEER HARDY L. WILLIS 11/21/12

STATE OF NORTH CAROLINA
DEPARTMENT OF TRANSPORTATION
RALEIGH

STANDARD

RIP RAP DETAILS

(LEFT LANE)

REVISIONS						SHEET NO.
NO.	BY:	DATE:	NO.	BY:	DATE:	S-34
1			3			TOTAL SHEETS
2			4			138

ASSEMBLED BY : MAF		DATE : 09/2012
CHECKED BY : HLW		DATE : 09/2012
DRAWN BY : FCJ 2/88	REV. 8/16/99	RWW/LES
CHECKED BY : ARB 8/88	REV. 10/17/00	RWW/LES
	REV. 5/1/06R	TLA/GM

SKEW 90°

STR. #1

STD. NO. RR2

$$$$$$SYSTIME$$$$$
$$$$$$$$$$$$$$$$$$$$$$$$DGN$$$$$$$$$$$$$$$$$$$$$$$$
$$$$USERNAME$$$$

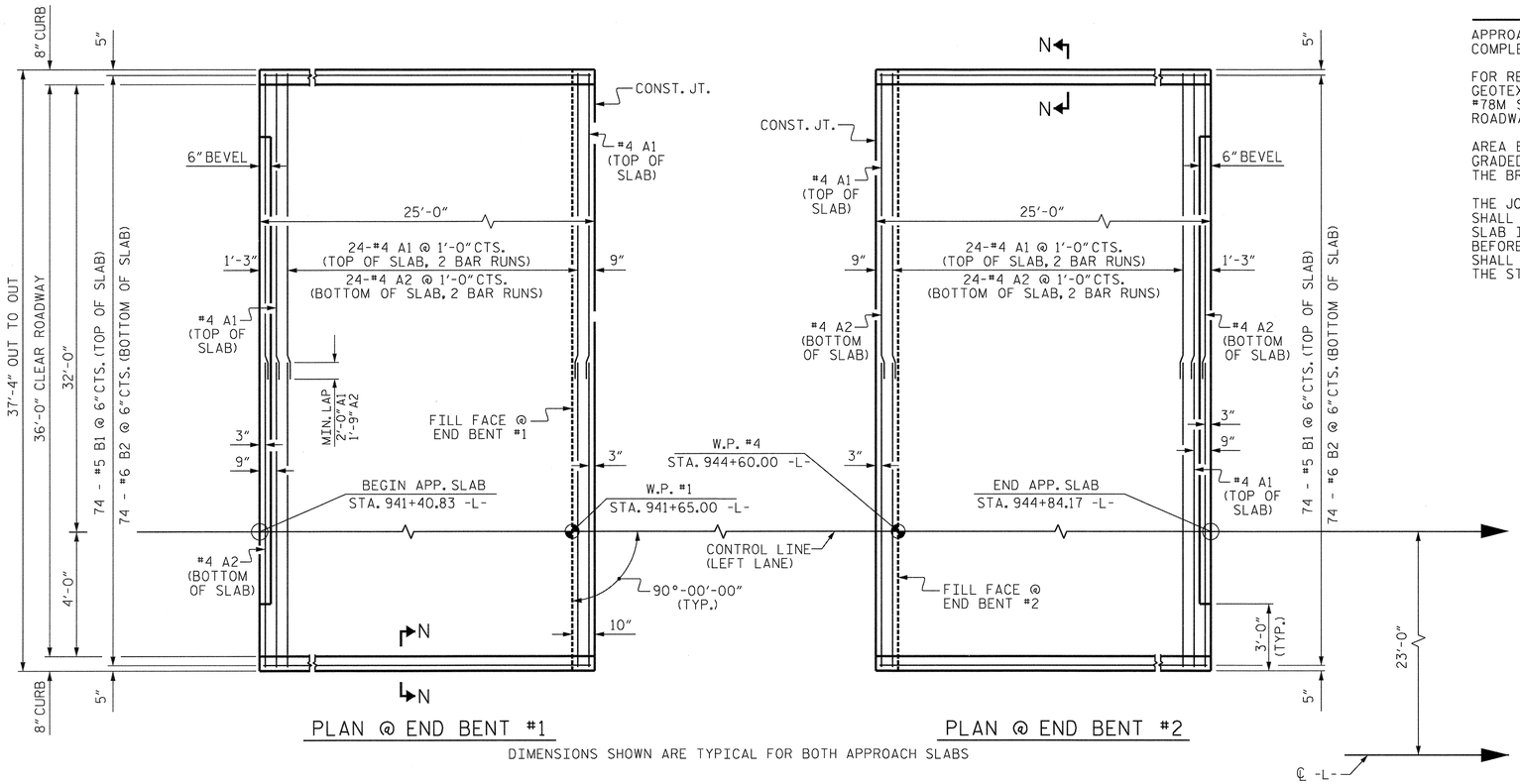

NOTES

APPROACH SLAB SHALL NOT BE CONSTRUCTED PRIOR TO COMPLETION OF THE BRIDGE DECK.

FOR REINFORCED BRIDGE APPROACH FILL FABRIC WALL INCLUDING GEOTEXTILE, IMPERMEABLE GEOMEMBRANE, 4" Ø DRAINAGE PIPE, #78M STONE, WELDED WIRE FORM, AND SELECT MATERIAL, SEE ROADWAY PLANS.

AREA BETWEEN THE WINGWALL AND APPROACH SLAB SHALL BE GRADED TO DRAIN THE WATER AWAY FROM THE FILL FACE OF THE BRIDGE AND SHALL BE PAVED. SEE ROADWAY PLANS.

THE JOINT OPENING AT THE APPROACH SLAB/DECK INTERFACE SHALL BE SAWED NO MORE THAN 12 HOURS AFTER THE APPROACH SLAB IS CAST. THE JOINT SHALL BE CLEANED OF ALL DEBRIS BEFORE THE SEALANT IS APPLIED. THE JOINT SEALER MATERIAL SHALL CONFORM TO THE REQUIREMENTS OF SECTION 1028-3 OF THE STANDARD SPECIFICATIONS.

BILL OF MATERIAL

FOR ONE APPROACH SLAB (2 REQ'D)

BAR	NO.	SIZE	TYPE	LENGTH	WEIGHT
✳ A1	52	#4	STR	19'-6"	677
A2	52	#4	STR	19'-5"	675
✳ B1	74	#5	STR	24'-2"	1,865
B2	74	#6	STR	24'-8"	2,744
REINFORCING STEEL				LBS.	3,419
✳ EPOXY COATED REINFORCING STEEL				LBS.	2,542
CLASS AA CONCRETE				C. Y.	40.4

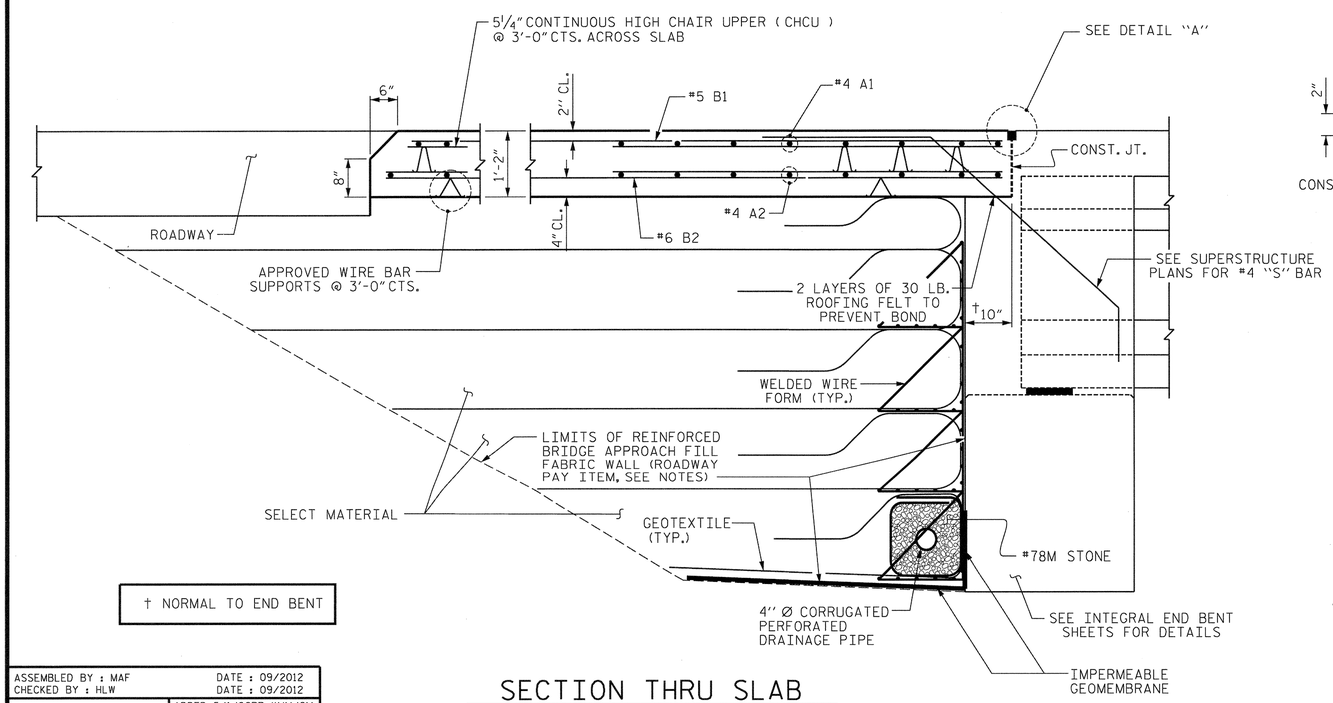

† NORMAL TO END BENT

SECTION THRU SLAB

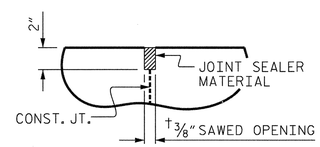

DETAIL "A"

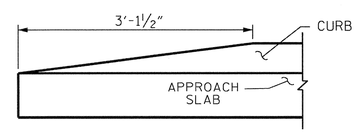

END OF CURB WITHOUT SHOULDER BERM GUTTER

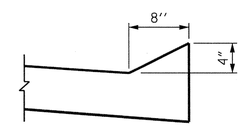

SECTION N-N

NORTH CAROLINA PROFESSIONAL SEAL 20777 ENGINEER HARDY L. WILLIS 11/12/12

PROJECT NO. R-2303C

SAMPSON COUNTY

STATION: 943+12.50 -L-

SHEET 1 OF 2

STATE OF NORTH CAROLINA
DEPARTMENT OF TRANSPORTATION
RALEIGH

STANDARD

BRIDGE APPROACH SLAB FOR INTEGRAL ABUTMENT

(LEFT LANE)

REVISIONS						SHEET NO.
NO.	BY:	DATE:	NO.	BY:	DATE:	S-35
1			3			TOTAL SHEETS
2			4			138

ASSEMBLED BY : MAF	DATE : 09/2012
CHECKED BY : HLW	DATE : 09/2012
DRAWN BY : TLA 10/05	ADDED 5/1/06RR KMM/GM
CHECKED BY : GM 5/06	REV. 10/1/11 MAA/GM
	REV. 12/21/11 MAA/GM

STR. #1

STD. NO. BAS5

$$$$$$SYSTIME$$$$$
$$$$$$$$$$$$$$$$$$$$$$$$DGN$$$$$$$$$$$$$$$$$$$$$$$$
$$$$USERNAME$$$$

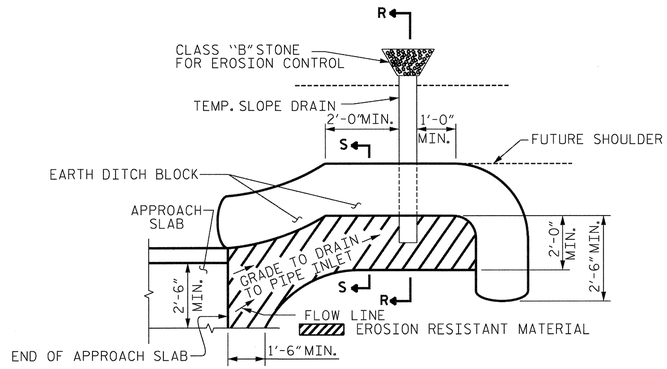

NOTE: IMMEDIATELY AFTER THE CONSTRUCTION OF THE APPROACH SLAB, THE CONTRACTOR SHALL PROVIDE TEMPORARY BERM AND SLOPE DRAIN. CONTRACTOR SHALL GRADE TO PIPE INLET AND PROVIDE EROSION RESISTANT MATERIAL AS SHOWN. THE EROSION RESISTANT MATERIAL SHALL BE EITHER 1) ASPHALT PLANT MIX, TYPE 1 OR TYPE 2, MIN. 2" DEPTH, 2) EROSION CONTROL MAT, OR 3) CONCRETE, AS DIRECTED BY THE ENGINEER. THE SLOPE DRAIN SHALL CONSIST OF A NON-PERFORATED TEMPORARY DRAINAGE PIPE, 12 INCHES IN DIAMETER.

PLAN VIEW

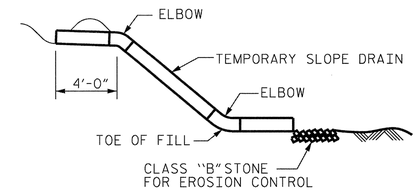

SECTION R-R

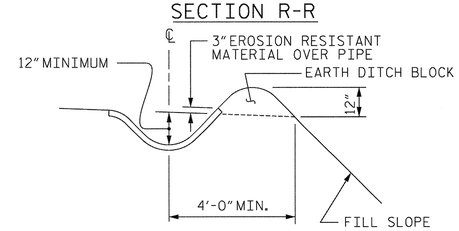

SECTION S-S

TEMPORARY BERM AND SLOPE DRAIN DETAILS

(TO BE USED WHEN SHOULDER BERM GUTTER IS REQUIRED)

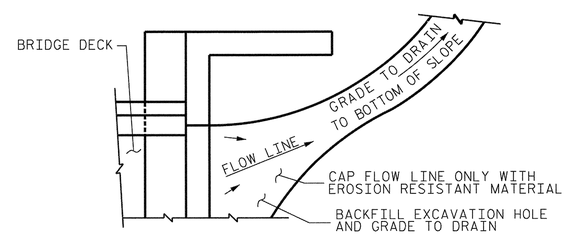

NOTE: IF THE APPROACH SLAB IS NOT CONSTRUCTED IMMEDIATELY AFTER THE BACKFILLING OF THE END BENT EXCAVATION, GRADE TO DRAIN TO THE BOTTOM OF THE SLOPE AND PROVIDE EROSION RESISTANT MATERIAL, SUCH AS FIBERGLASS ROVING OR AS DIRECTED BY THE ENGINEER TO PREVENT SOIL EROSION AND TO PROTECT THE AREA ADJACENT TO THE STRUCTURE. THE CONTRACTOR WILL BE REQUIRED TO REMOVE THESE MATERIALS PRIOR TO CONSTRUCTION OF THE APPROACH SLAB.

TEMPORARY DRAINAGE DETAIL

PROJECT NO. R-2303C

SAMPSON COUNTY

STATION: 943+12.50 -L-

SHEET 2 OF 2

STATE OF NORTH CAROLINA
DEPARTMENT OF TRANSPORTATION
RALEIGH

STANDARD

BRIDGE APPROACH
SLAB DETAILS

(LEFT LANE)

NORTH CAROLINA PROFESSIONAL SEAL 20774 ENGINEER HARDY L. WILLIS
11/21/12

REVISIONS						SHEET NO.
NO.	BY:	DATE:	NO.	BY:	DATE:	S-36
1			3			TOTAL SHEETS
2			4			138

ASSEMBLED BY : MAF		DATE : 09/2012	
CHECKED BY : HLW		DATE : 09/2012	
DRAWN BY : FCJ	11/88	REV. 10/17/00	RWW/LES
CHECKED BY : ARB	11/88	REV. 5/7/03	RWW/JTE
		REV. 5/1/06RRR	MAA/KMM

STR. #1 STD. NO. BAS10 (SHT 1)

$$$$$$$SYSTIME$$$$$
$$$$$$$$$$$$$$$$$$$$$$$$DGN$$$$$$$$$$$$$$$$$$$$$$$$$
$$$$USERNAME$$$$

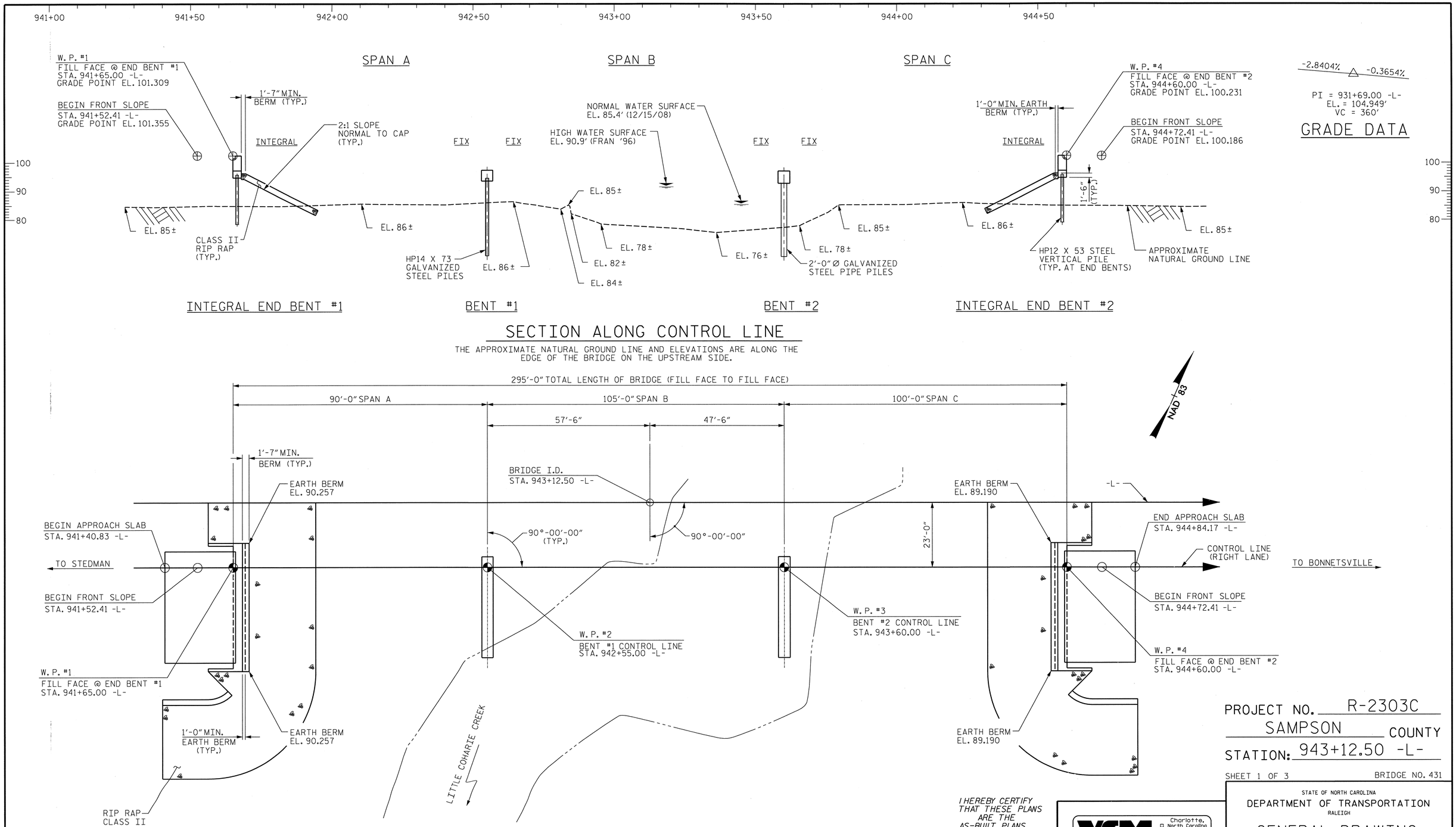
941+00
941+50
942+00
942+50
943+00
943+50
944+00
944+50
SPAN A
SPAN B
SPAN C
W. P. #1
FILL FACE @ END BENT #1
STA. 941+65.00 -L-
GRADE POINT EL. 101.309
BEGIN FRONT SLOPE
STA. 941+52.41 -L-
GRADE POINT EL. 101.355
1'-7" MIN.
BERM (TYP.)
INTEGRAL
2:1 SLOPE
NORMAL TO CAP
(TYP.)
FIX
FIX
NORMAL WATER SURFACE
EL. 85.4' (12/15/08)
HIGH WATER SURFACE
EL. 90.9' (FRAN '96)
FIX
FIX
1'-0" MIN. EARTH
BERM (TYP.)
INTEGRAL
W. P. #4
FILL FACE @ END BENT #2
STA. 944+60.00 -L-
GRADE POINT EL. 100.231
BEGIN FRONT SLOPE
STA. 944+72.41 -L-
GRADE POINT EL. 100.186
-2.8404%
-0.3654%
PI = 931+69.00 -L-
EL. = 104.949'
VC = 360'
GRADE DATA
100
90
80
EL. 85±
CLASS II
RIP RAP
(TYP.)
EL. 86±
HP14 X 73
GALVANIZED
STEEL PILES
EL. 86±
EL. 85±
EL. 82±
EL. 84±
EL. 78±
EL. 76±
EL. 78±
2'-0" Ø GALVANIZED
STEEL PIPE PILES
EL. 85±
EL. 86±
1'-6"
(TYP.)
HP12 X 53 STEEL
VERTICAL PILE
(TYP. AT END BENTS)
APPROXIMATE
NATURAL GROUND LINE
EL. 85±
INTEGRAL END BENT #1
BENT #1
BENT #2
INTEGRAL END BENT #2
SECTION ALONG CONTROL LINE
THE APPROXIMATE NATURAL GROUND LINE AND ELEVATIONS ARE ALONG THE
EDGE OF THE BRIDGE ON THE UPSTREAM SIDE.
295'-0" TOTAL LENGTH OF BRIDGE (FILL FACE TO FILL FACE)
90'-0" SPAN A
105'-0" SPAN B
100'-0" SPAN C
57'-6"
47'-6"
NAD '83
1'-7" MIN.
BERM (TYP.)
EARTH BERM
EL. 90.257
BRIDGE I.D.
STA. 943+12.50 -L-
EARTH BERM
EL. 89.190
-L-
BEGIN APPROACH SLAB
STA. 941+40.83 -L-
TO STEDMAN
90°-00'-00"
(TYP.)
90°-00'-00"
23'-0"
END APPROACH SLAB
STA. 944+84.17 -L-
CONTROL LINE
(RIGHT LANE)
TO BONNETSVILLE
BEGIN FRONT SLOPE
STA. 941+52.41 -L-
W. P. #3
BENT #2 CONTROL LINE
STA. 943+60.00 -L-
BEGIN FRONT SLOPE
STA. 944+72.41 -L-
W. P. #2
BENT #1 CONTROL LINE
STA. 942+55.00 -L-
W. P. #4
FILL FACE @ END BENT #2
STA. 944+60.00 -L-
W. P. #1
FILL FACE @ END BENT #1
STA. 941+65.00 -L-
1'-0" MIN.
EARTH BERM
(TYP.)
EARTH BERM
EL. 90.257
EARTH BERM
EL. 89.190
LITTLE COHARIE CREEK
RIP RAP
CLASS II
(TYP.)
PLAN
PILES NOT SHOWN FOR CLARITY.
NORTH CAROLINA
PROFESSIONAL
SEAL
30772
ENGINEER
HARDY L. WILLIS
12/7/12
I HEREBY CERTIFY
THAT THESE PLANS
ARE THE
AS-BUILT PLANS.
V&M
Vaughn & Melton
Consulting Engineers
Asheville, North Carolina
828-253-2796
Charlotte, North Carolina 704-357-0488
Tri-Cities, Tennessee 423-467-8401
Knoxville, Tennessee 865-546-5800
Middlesboro, Kentucky 606-248-6600
Spartanburg, South Carolina 864-574-4775
Copyright © 2006 Vaughn & Melton, Inc.
All Rights Reserved
DWN. BY: PP/MAF DATE: SEPT. 2012
CHKD. BY: HLW DATE: SEPT. 2012
PROJECT NO. R-2303C
SAMPSON COUNTY
STATION: 943+12.50 -L-
SHEET 1 OF 3
BRIDGE NO. 431
STATE OF NORTH CAROLINA
DEPARTMENT OF TRANSPORTATION
RALEIGH
GENERAL DRAWING
FOR BRIDGE OVER
LITTLE COHARIE CREEK
ON SR 24 BETWEEN NC 242
AND SR 1240
(RIGHT LANE)
REVISIONS
NO. BY: DATE: NO. BY: DATE:
1
2
3
4
SHEET NO.
S-37
TOTAL SHEETS
136
STR. #2

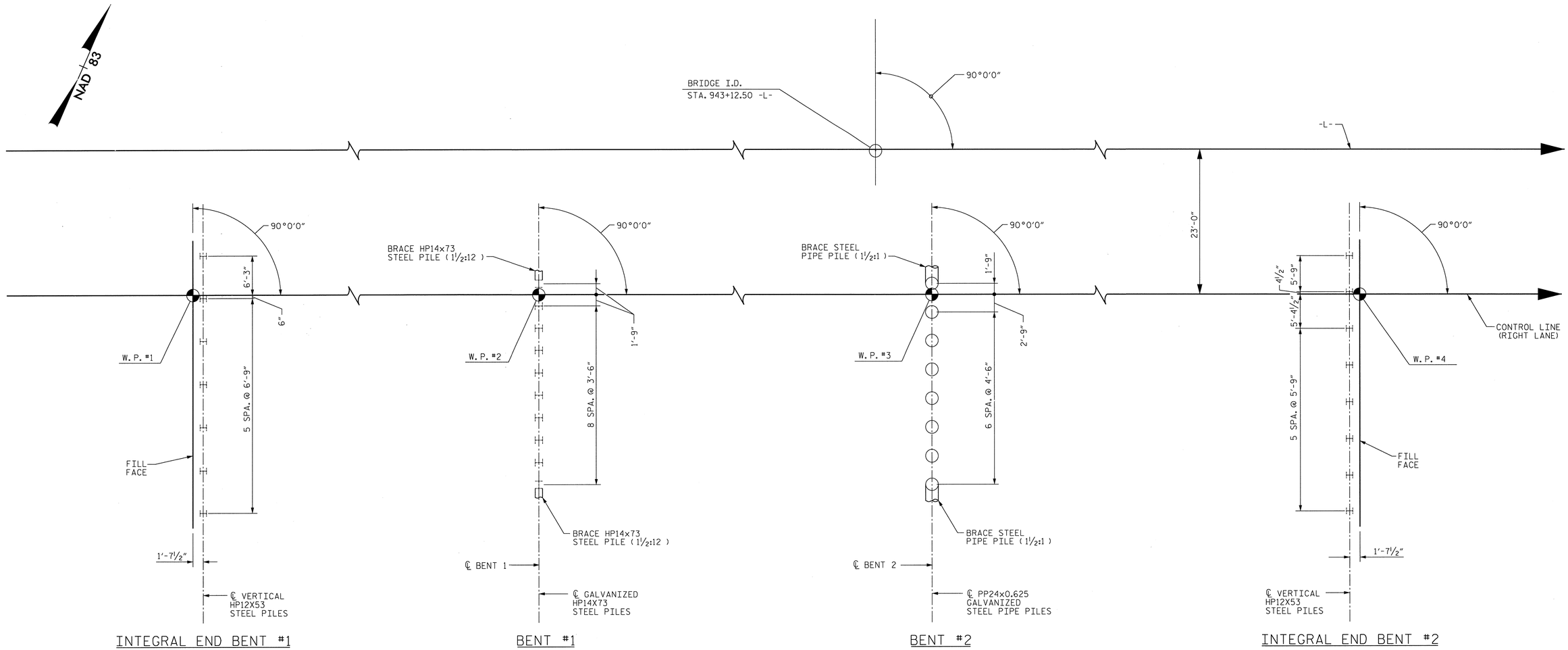

FOUNDATION LAYOUT

DIMENSIONS LOCATING PILES ARE TO PILE CENTERLINE AT THE BOTTOM OF CAP.

LEGEND

- H — VERTICAL H-PILE
- BRACE GALVANIZED H-PILE
- VERTICAL 2'-0" Ø GALVANIZED STEEL PIPE PILE (PP24x0.625)
- BRACE 2'-0" Ø GALVANIZED STEEL PIPE PILE (PP24x0.625)

FOUNDATION NOTES

FOR PILES, SEE SECTION 450 OF THE STANDARD SPECIFICATIONS.

PILES AT END BENT NO. 1, BENT NO. 1, BENT NO. 2 AND END BENT NO. 2 ARE DESIGNED FOR A FACTORED RESISTANCE OF 115, 130, 175 AND 110 TONS PER PILE, RESPECTIVELY.

DRIVE PILES AT END BENT NO. 1, BENT NO. 1, BENT NO. 2 AND END BENT NO. 2 TO A REQUIRED DRIVING RESISTANCE OF 195, 250, 360 AND 185 TONS PER PILE, RESPECTIVELY.

INSTALL PILES AT BENT NO. 1 AND BENT NO. 2 TO A TIP ELEVATION NO HIGHER THAN 58.0 FT. AND 43.0 FT., RESPECTIVELY.

THE SCOUR CRITICAL ELEVATIONS FOR BENT NO. 1 AND BENT NO. 2 ARE ELEVATION 77.0 FT. AND 65.0 FT., RESPECTIVELY. SCOUR CRITICAL ELEVATIONS ARE USED TO MONITOR POSSIBLE SCOUR PROBLEMS DURING THE LIFE OF THE STRUCTURE.

IT HAS BEEN ESTIMATED THAT A HAMMER WITH THE EQUIVALENT RATED ENERGY IN THE RANGE OF 85-155 FT-KIPS PER BLOW WILL BE REQUIRED TO DRIVE PILES AT BENT NO. 1 AND BENT NO. 2. THIS ESTIMATED ENERGY RANGE DOES NOT RELEASE THE CONTRACTOR FROM PROVIDING DRIVING EQUIPMENT IN ACCORDANCE WITH SUBARTICLE 450-3(D)(2) OF THE STANDARD SPECIFICATIONS.

PIPE PILE PLATES ARE REQUIRED FOR STEEL PIPE PILES AT BENT NO. 2. USE PIPE PILE PLATES WITH A DIAMETER EQUAL TO THE PIPE PILE DIAMETER. FOR STEEL PIPE PILE PLATES, SEE SECTION 450 OF THE STANDARD SPECIFICATIONS.

OBSERVE A ONE MONTH WAITING PERIOD AFTER CONSTRUCTING THE EMBANKMENT TO WITHIN 2 FT OF FINISHED GRADE BEFORE BEGINNING END BENT CONSTRUCTION AT BOTH END BENT NO. 1 AND END BENT NO. 2.

NORTH CAROLINA PROFESSIONAL SEAL 20777 ENGINEER HARDY L. WILLIS
2/13/13

PROJECT NO. R-2303C
SAMPSON COUNTY
STATION: 943+12.50 -L-

SHEET 2 OF 3

V&M Vaughn & Melton Consulting Engineers
Asheville, North Carolina 828-253-2796
Charlotte, North Carolina 704-357-0488
Tri-Cities, Tennessee 423-467-8401
Knoxville, Tennessee 865-546-5800
Middlesboro, Kentucky 606-248-6600
Spartanburg, South Carolina 864-574-4775

Copyright © 2006 Vaughn & Melton, Inc. All Rights Reserved

STATE OF NORTH CAROLINA
DEPARTMENT OF TRANSPORTATION
RALEIGH

FOUNDATION LAYOUT

(RIGHT LANE)

REVISIONS						
NO.	BY:	DATE:	NO.	BY:	DATE:	
1			3			
2			4			

SHEET NO. S-38
TOTAL SHEETS 138

DWN. BY: MAF DATE: SEPT. 2012
CHKD. BY: HLW DATE: SEPT. 2012

STR. #2

BM: NCGS SA20 ON SE WINGWALL OF EXISTING NC 24 BRIDGE
OVER LITTLE COHARIE CREEK, ELEV. 94.76', NAVD 88.

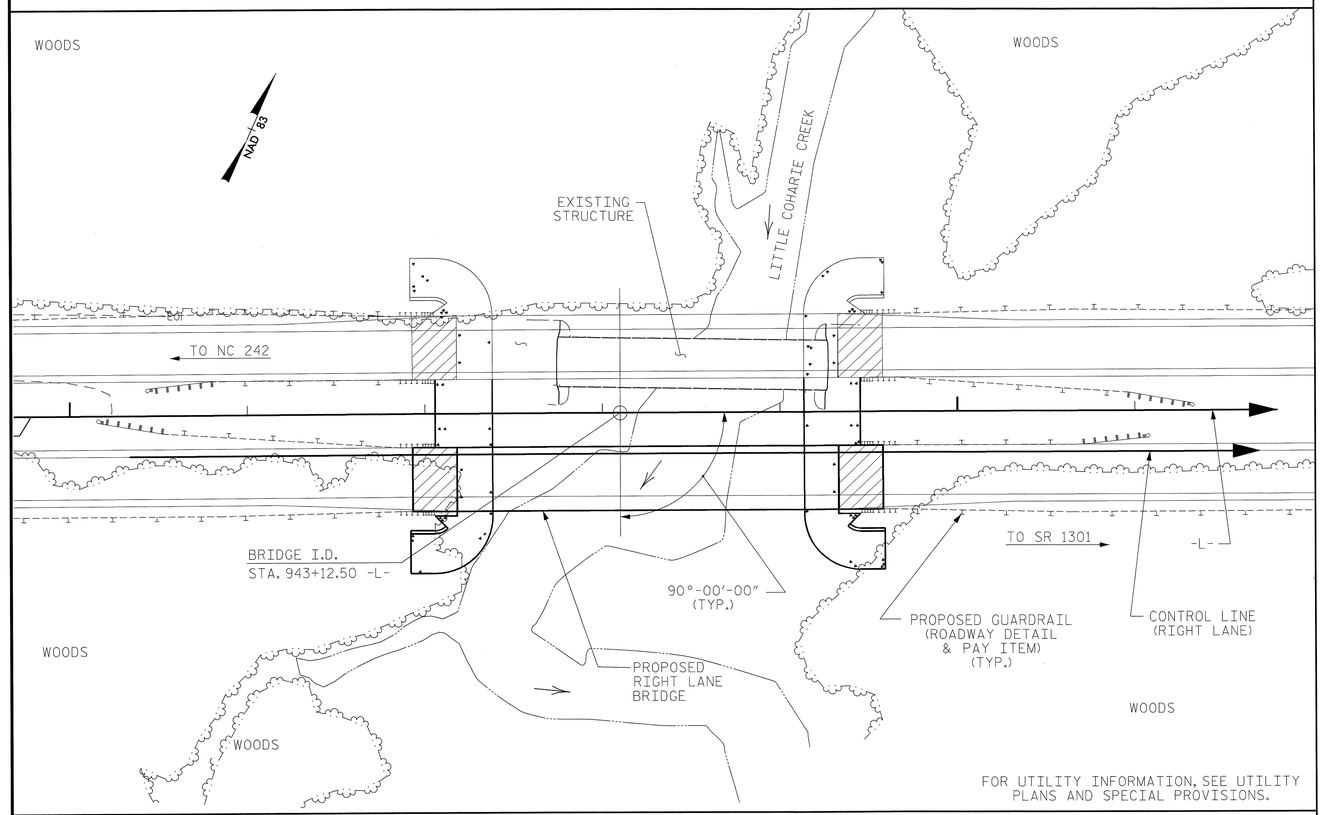

FOR UTILITY INFORMATION, SEE UTILITY PLANS AND SPECIAL PROVISIONS.

LOCATION SKETCH

GENERAL NOTES:

ASSUMED LIVE LOAD = HL-93 OR ALTERNATE LOADING.

THIS BRIDGE HAS BEEN DESIGNED IN ACCORDANCE WITH THE AASHTO LRFD BRIDGE DESIGN SPECIFICATIONS.

THIS BRIDGE IS LOCATED IN SEISMIC ZONE 1.

THIS STRUCTURE HAS BEEN DESIGNED IN ACCORDANCE WITH "HEC 18 - EVALUATING SCOUR AT BRIDGES."

FOR OTHER DESIGN DATA AND GENERAL NOTES, SEE STANDARD SHEET SN.

FOR FALSEWORK AND FORMWORK, SEE SPECIAL PROVISIONS.

FOR SUBMITTAL OF WORKING DRAWINGS, SEE SPECIAL PROVISIONS.

FOR INTERIOR BENTS 1 AND 2, ONLY PARTIAL GALVANIZING OF THE PILES IS REQUIRED. SEE INTERIOR BENT SHEETS FOR REQUIRED GALVANIZED LENGTHS. PAYMENT FOR PARTIALLY GALVANIZED PILES WILL BE MADE UNDER THE CONTRACT UNIT PRICE FOR GALVANIZED STEEL PILES.

FOR CRANE SAFETY, SEE SPECIAL PROVISIONS.

FOR GROUT FOR STRUCTURES, SEE SPECIAL PROVISIONS.

FOR PLACING LOAD ON STRUCTURE MEMBERS, SEE SPECIAL PROVISIONS.

PRESTRESSED CONCRETE DECK PANELS MAY BE USED IN LIEU OF METAL STAY-IN-PLACE FORMS IN ACCORDANCE WITH ARTICLE 420-3 OF THE STANDARD SPECIFICATIONS.

REMOVABLE FORMS MAY BE USED IN LIEU OF METAL STAY-IN-PLACE FORMS IN ACCORDANCE WITH ARTICLE 420-3 OF THE STANDARD SPECIFICATIONS.

NEEDLE BEAMS WILL NOT BE ALLOWED UNLESS OTHERWISE CALLED FOR ON THE PLANS OR APPROVED BY THE ENGINEER.

FOR EROSION CONTROL MEASURES, SEE EROSION CONTROL PLANS.

NORTH CAROLINA PROFESSIONAL SEAL ENGINEER HARDY L. WILLIS 022713

TOTAL BILL OF MATERIAL

	REINFORCED CONCRETE DECK SLAB	GROOVING BRIDGE FLOORS	CLASS A CONCRETE	BRIDGE APPROACH SLABS	REINFORCING STEEL	MODIFIED 63" PRESTRESSED CONCRETE GIRDERS		HP 12 X 53 STEEL PILES		HP 14 X 73 GALVANIZED STEEL PILES		PP24 X 0.625 GALVANIZED STEEL PILES		PILE REDRIVES	PIPE PILE PLATES	CONCRETE BARRIER RAIL	RIP RAP CLASS II (2'-0" THICK)	GEOTEXTILE FOR DRAINAGE	ELASTOMERIC BEARINGS
	SQ. FT.	SQ. FT.	CU. YDS.	LUMP SUM	LBS.	NO.	LIN. FT.	NO.	LIN. FT.	NO.	LIN. FT.	NO.	LIN. FT.	EACH	EACH	LIN. FT.	TONS	SQ. YDS.	LUMP SUM
SUPERSTRUCTURE	11,579	11,264		LUMP SUM		12	1,166.00									586.67			LUMP SUM
END BENT 1			23.2		3,903			7	455					4			354	397	
BENT 1			17.6		2,173					10	700			5					
BENT 2			20.0		2,165							8	600	4	8				
END BENT 2			23.2		3,766			8	440					4			309	346	
TOTAL	11,579	11,264	84.0	LUMP SUM	12,007	12	1,166.00	15	895	10	700	8	600	17	8	586.67	663	743	LUMP SUM

HYDRAULIC DATA

DESIGN DISCHARGE = 5100 CFS
FREQUENCY OF DESIGN FLOOD = 50 YR.
DESIGN HIGH WATER ELEVATION = 90.6'
DRAINAGE AREA = 95.6 Sq. MILES
BASE DISCHARGE (Q100) = 6200 CFS
BASE HIGH WATER ELEVATION = 91.4'

OVERTOPPING FLOOD DATA

OVERTOPPING DISCHARGE = >9000 CFS
FREQUENCY OF OVERTOPPING FLOOD = >500 YR.
OVERTOPPING FLOOD ELEVATION = 97.0'

PROJECT NO. R-2303C
SAMPSON COUNTY
STATION: 943+12.50 -L-

SHEET 3 OF 3

V&M Vaughn & Melton Consulting Engineers
Asheville, North Carolina 828-253-2796
Charlotte, North Carolina 704-357-0488
Tri-Cities, Tennessee 423-467-8401
Knoxville, Tennessee 865-546-5800
Middlesboro, Kentucky 606-248-6600
Spartanburg, South Carolina 864-574-4775

Copyright © 2006 Vaughn & Melton, Inc. All Rights Reserved

STATE OF NORTH CAROLINA
DEPARTMENT OF TRANSPORTATION
RALEIGH

LOCATION SKETCH & TOTAL BILL OF MATERIAL

(RIGHT LANE)

REVISIONS						
NO.	BY:	DATE:	NO.	BY:	DATE:	
1			3			
2			4			

SHEET NO. S-39
TOTAL SHEETS 138

DWN. BY: PP/MAF DATE: SEPT. 2012
CHKD. BY: HLW DATE: SEPT. 2012

STR. #2

INFORMATION FOR 63" MODIFIED BULB TEE (SPANS A, B, & C)

LOAD AND RESISTANCE FACTOR RATING (LRFR) SUMMARY FOR PRESTRESSED CONCRETE GIRDERS

LEVEL		VEHICLE	WEIGHT (W) (TONS)	CONTROLLING LOAD RATING (#)	MINIMUM RATING FACTORS (RF)	TONS = W x RF	STRENGTH I LIMIT STATE											SERVICE III LIMIT STATE						COMMENT NUMBER
							LIVE-LOAD FACTORS γ_{LL}	MOMENT					SHEAR					LIVE-LOAD FACTORS γ_{LL}	MOMENT					
								DISTRIBUTION FACTORS (DF)	RATING FACTOR	SPAN	GIRDER LOCATION	DISTANCE FROM LEFT END OF SPAN (ft)	DISTRIBUTION FACTORS (DF)	RATING FACTOR	SPAN	GIRDER LOCATION	DISTANCE FROM LEFT END OF SPAN (ft)		DISTRIBUTION FACTORS (DF)	RATING FACTOR	SPAN	GIRDER LOCATION	DISTANCE FROM LEFT END OF SPAN (ft)	
DESIGN LOAD RATING		HL-93 (INVENTORY)	N/A	1	1.54	--	1.75	0.7974	2.39	B		51.37 FT	0.9684	1.84	B		4.76 FT	0.80	0.7974	1.54	B		51.37 FT	
		HL-93 (OPERATING)	N/A		2.39	--	1.35	0.7974	3.09	B		51.37 FT	0.9684	2.39	B		4.76 FT	N/A	--	--	--	--	51.37 FT	
		HS-20 (INVENTORY)	36.000	2	2.11	76.09	1.75	0.7974	3.27	B		51.37 FT	0.9684	2.58	B		4.76 FT	0.80	0.7974	2.11	B		51.37 FT	
		HS-20 (OPERATING)	36.000		3.35	120.58	1.35	0.7974	4.24	B		51.37 FT	0.9684	3.35	B		4.76 FT	N/A	--	--	--	--	51.37 FT	
LEGAL LOAD RATING	SINGLE VEHICLE (SV)	SNSH	13.500		4.85	65.45	1.40	0.7974	9.37	B		51.37 FT	0.9684	7.93	B		4.76 FT	0.80	0.7974	4.85	B		51.37 FT	
		SNGARBS2	20.000		3.58	71.59	1.40	0.7974	6.92	B		51.37 FT	0.9684	5.62	B		4.76 FT	0.80	0.7974	3.58	B		51.37 FT	
		SNAGRIS2	22.000		3.38	74.26	1.40	0.7974	6.53	B		51.37 FT	0.9684	5.05	B		4.76 FT	0.80	0.7974	3.38	B		51.37 FT	
		SNCOTTS3	27.250		2.42	65.96	1.40	0.7974	4.68	B		51.37 FT	0.9684	4.02	B		4.76 FT	0.80	0.7974	2.42	B		51.37 FT	
		SNAGGRS4	34.925		2.01	70.21	1.40	0.7974	3.89	B		51.37 FT	0.9684	3.24	B		4.76 FT	0.80	0.7974	2.01	B		51.37 FT	
		SNS5A	35.550		1.97	69.96	1.40	0.7974	3.81	B		51.37 FT	0.9684	3.24	B		4.76 FT	0.80	0.7974	1.97	B		51.37 FT	
		SNS6A	39.950		1.80	71.90	1.40	0.7974	3.48	B		51.37 FT	0.9684	2.92	B		4.76 FT	0.80	0.7974	1.80	B		51.37 FT	
		SNS7B	42.000		1.71	72.03	1.40	0.7974	3.31	B		51.37 FT	0.9684	2.83	B		4.76 FT	0.80	0.7974	1.71	B		51.37 FT	
	TRUCK TRACTOR SEMI-TRAILER (TTST)	TNAGRIT3	33.000		2.20	72.53	1.40	0.7974	4.25	B		51.37 FT	0.9684	3.51	B		4.76 FT	0.80	0.7974	2.20	B		51.37 FT	
		TNT4A	33.075		2.19	72.60	1.40	0.7974	4.25	B		51.37 FT	0.9684	3.46	B		4.76 FT	0.80	0.7974	2.19	B		51.37 FT	
		TNAGRIT4	43.000		1.77	76.27	1.40	0.7974	3.43	B		51.37 FT	0.9684	2.72	B		4.76 FT	0.80	0.7974	1.77	B		51.37 FT	
		TNAGT5A	45.000		1.67	75.31	1.40	0.7974	3.23	B		51.37 FT	0.9684	2.65	B		4.76 FT	0.80	0.7974	1.67	B		51.37 FT	
		TNAGT5B	45.000	3	1.66	74.53	1.40	0.7974	3.20	B		51.37 FT	0.9684	2.59	B		4.76 FT	0.80	0.7974	1.66	B		51.37 FT	
		TNT6A	41.600		1.79	74.62	1.40	0.7974	3.47	B		51.37 FT	0.9684	2.95	B		4.76 FT	0.80	0.7974	1.79	B		51.37 FT	
		TNT7A	42.000		1.80	75.51	1.40	0.7974	3.48	B		51.37 FT	0.9684	2.90	B		4.76 FT	0.80	0.7974	1.80	B		51.37 FT	
		TNT7B	42.000		1.84	77.24	1.40	0.7974	3.56	B		51.37 FT	0.9684	2.80	B		4.76 FT	0.80	0.7974	1.84	B		51.37 FT	

LOAD FACTORS:

DESIGN LOAD RATING FACTORS	LIMIT STATE	γ_{DC}	γ_{DW}
	STRENGTH I	1.25	1.50
	SERVICE III	1.00	1.00

NOTES:

MINIMUM RATING FACTORS ARE BASED ON THE STRENGTH I AND SERVICE III LIMIT STATES.

ALLOWABLE STRESSES FOR SERVICE III LIMIT STATE ARE AS REQUIRED FOR DESIGN.

COMMENTS:

1.
2.
3.
4.

(#) CONTROLLING LOAD RATING

1. DESIGN LOAD RATING (HL-93)
2. DESIGN LOAD RATING (HS-20)
3. LEGAL LOAD RATING **

** SEE CHART FOR VEHICLE TYPE

GIRDER LOCATION

I - INTERIOR GIRDER
EL - EXTERIOR LEFT GIRDER
ER - EXTERIOR RIGHT GIRDER

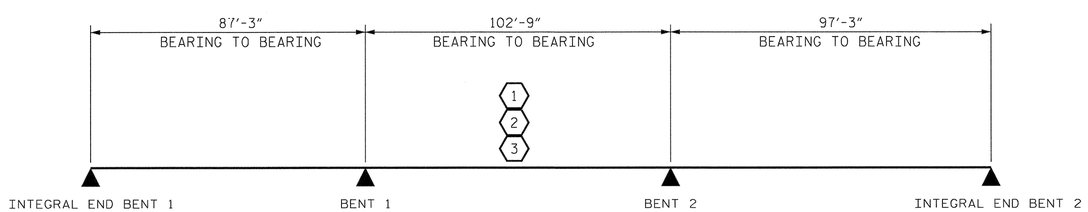

LRFR SUMMARY

PROJECT NO. R-2303C
SAMPSON COUNTY
STATION: 943+12.50 -L-

NORTH CAROLINA PROFESSIONAL SEAL 20772 ENGINEER HARDY L. WILLIS 11/21/12

STATE OF NORTH CAROLINA
DEPARTMENT OF TRANSPORTATION
RALEIGH

STANDARD
LRFR SUMMARY FOR PRESTRESSED CONCRETE GIRDERS
(NON-INTERSTATE TRAFFIC)
(RIGHT LANE)

REVISIONS						SHEET NO.
NO.	BY:	DATE:	NO.	BY:	DATE:	S-40
1			3			TOTAL SHEETS
2			4			138

ASSEMBLED BY : MAF DATE : 09/2012
CHECKED BY : HLW DATE : 09/2012
DRAWN BY : MAA 1/08
CHECKED BY : GM/DI 2/08
REV. 11/12/08RR MAA/GM

$$$$$$$SYSTIME$$$$$
$$$$$$$$$$$$$$$$$$$$$$$$DGN$$$$$$$$$$$$$$$$$$$$$$$
$$$$USERNAME$$$$

8-20-09

STR. #2 STD. NO. LRFR1

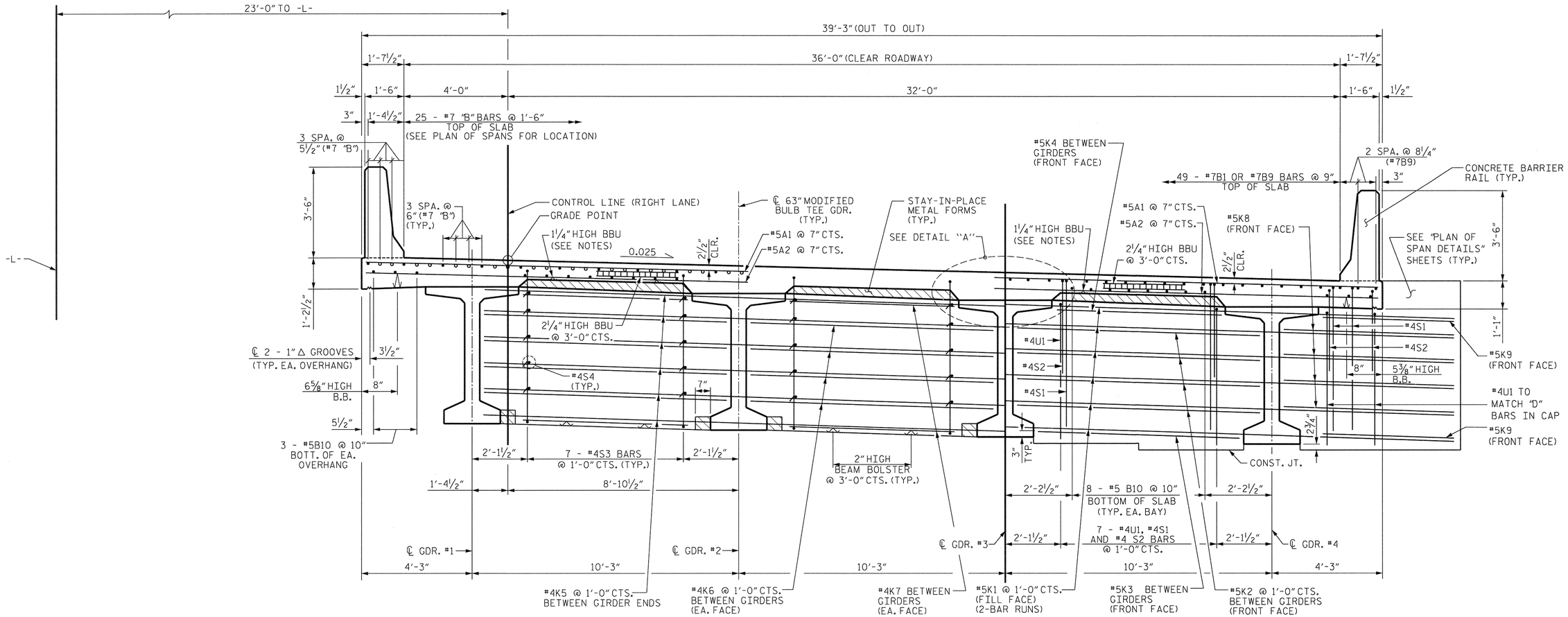

PART TYPICAL SECTION
SHOWING BENT DIAPHRAGMS

PART TYPICAL SECTION
SHOWING END BENT DIAPHRAGMS

TYPICAL SECTION

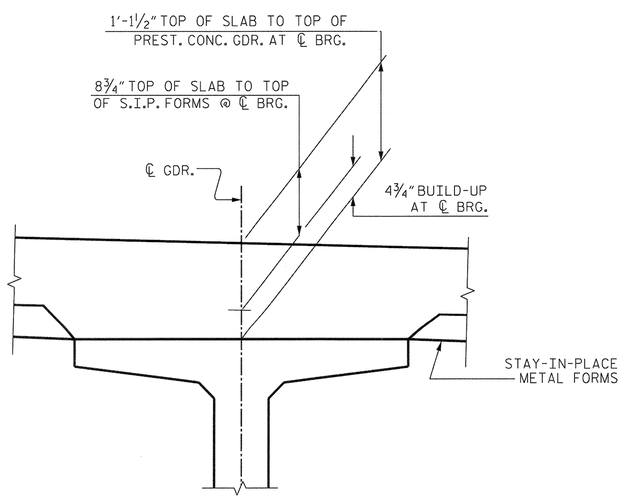

DETAIL "A"

NOTES:

PROVIDE 1 ¼" HIGH BEAM BOLSTERS UPPER @ 4'-0" CTS. ATOP THE METAL STAY-IN-PLACE FORMS TO SUPPORT THE BOTTOM MAT OF "A" BARS. WHEN USING REMOVABLE FORMS, PROVIDE CONTINUOUS HIGH CHAIRS FOR METAL DECK (C.H.C.M.) @ 4'-0" CTS. WITH A HEIGHT TO SUPPORT THE BOTTOM MAT OF "A" BARS A CLEAR DISTANCE OF 2 ½" ABOVE THE TOP OF THE REMOVABLE FORM.

BARRIER RAIL SHALL NOT BE CAST UNTIL ALL SLAB CONCRETE IN THE SPAN HAS BEEN CAST AND HAS REACHED A MINIMUM COMPRESSIVE STRENGTH OF 3000psi.

PREVIOUSLY CAST CONCRETE SHALL HAVE ATTAINED A MINIMUM COMPRESSIVE STRENGTH OF 3000psi BEFORE ADDITIONAL CONCRETE IS CAST IN THE UNIT.

LONGITUDINAL STEEL MAY BE SHIFTED SLIGHTLY, AS NECESSARY, TO AVOID INTERFERENCE WITH STIRRUPS IN PRESTRESSED CONCRETE GIRDERS.

NORTH CAROLINA PROFESSIONAL SEAL 29177 ENGINEER HARDY L. WILLIS
11/21/12

PROJECT NO. R-2303C
SAMPSON COUNTY
STATION: 943+12.50 -L-

V&M
Vaughn & Melton
Consulting Engineers
Asheville, North Carolina 828-253-2796
Charlotte, North Carolina 704-357-0488
Tri-Cities, Tennessee 423-467-8401
Knoxville, Tennessee 865-546-5800
Middlesboro, Kentucky 606-248-6600
Spartanburg, South Carolina 864-574-4775
Copyright © 2006 Vaughn & Melton, Inc. All Rights Reserved

STATE OF NORTH CAROLINA
DEPARTMENT OF TRANSPORTATION
RALEIGH

TYPICAL SECTION
SPANS A, B, & C

(RIGHT LANE)

REVISIONS						SHEET NO.
NO.	BY:	DATE:	NO.	BY:	DATE:	S-41
1			3			TOTAL SHEETS
2			4			138

DWN. BY: PP/MAF DATE: SEPT. 2012
CHKD. BY: HLW DATE: SEPT. 2012

STR. #2

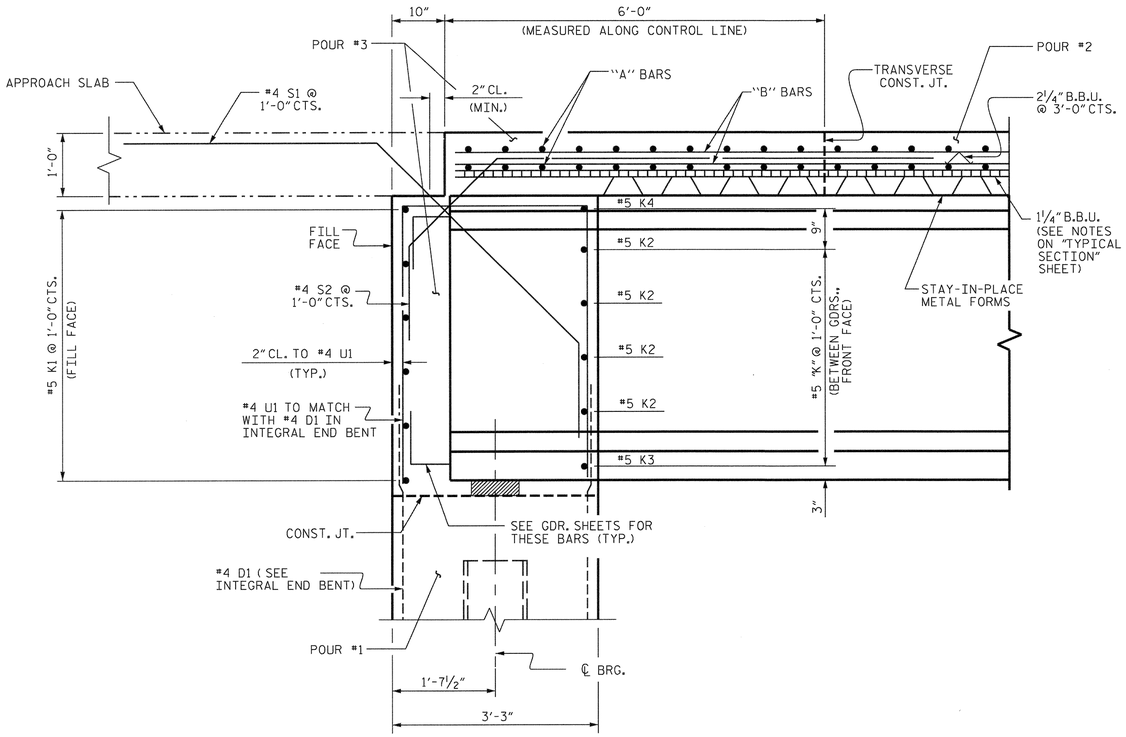

END OF GIRDER DETAIL
AT INTEGRAL END BENTS

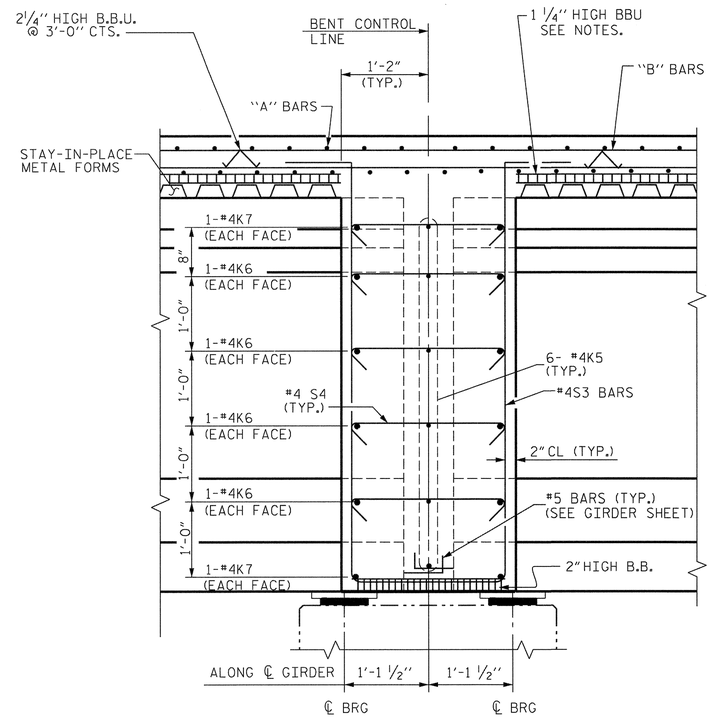

SECTION THROUGH DIAPHRAGM - BENTS 1 & 2

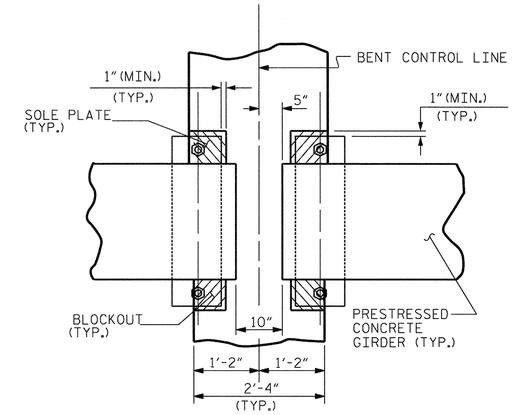

PLAN

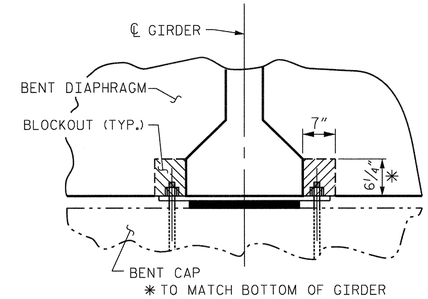

SECTION

BENT DIAPHRAGM
BLOCKOUT DETAIL

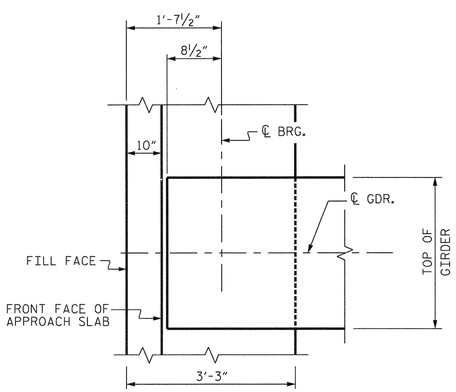

PLAN OF GIRDER
INTEGRAL END BENT NO. 1

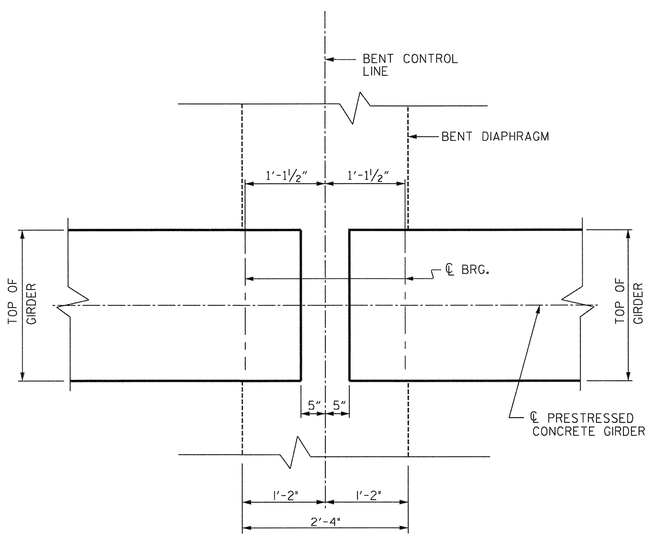

PLAN OF DIAPHRAGMS AT BENTS 1 & 2

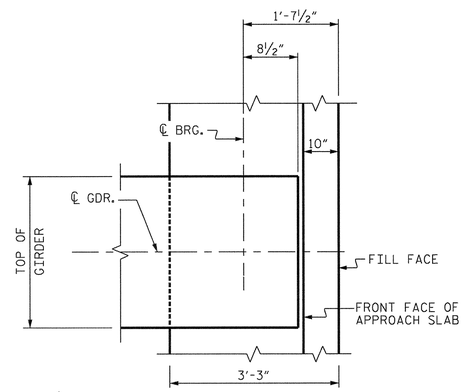

PLAN OF GIRDER
INTEGRAL END BENT NO. 2

NORTH CAROLINA PROFESSIONAL SEAL 030772 ENGINEER HARDY L. WILLIS 11/21/12

PROJECT NO. R-2303C
SAMPSON COUNTY
STATION: 943+12.50 -L-

V&M Vaughn & Melton Consulting Engineers
Asheville, North Carolina 828-253-2796
Charlotte, North Carolina 704-357-0468
Tri-Cities, Tennessee 423-467-8410
Knoxville, Tennessee 865-546-5800
Middlesboro, Kentucky 606-248-5600
Spartanburg, South Carolina 864-574-4775
Copyright © 2006 Vaughn & Melton, Inc. All Rights Reserved

DWN. BY: MAF DATE: SEPT. 2012
CHKD. BY: HLW DATE: SEPT. 2012

STATE OF NORTH CAROLINA
DEPARTMENT OF TRANSPORTATION
RALEIGH

TYPICAL SECTION DETAILS

(RIGHT LANE)

REVISIONS						SHEET NO.
NO.	BY:	DATE:	NO.	BY:	DATE:	S-42
1			3			TOTAL SHEETS
2			4			138

STR. #2

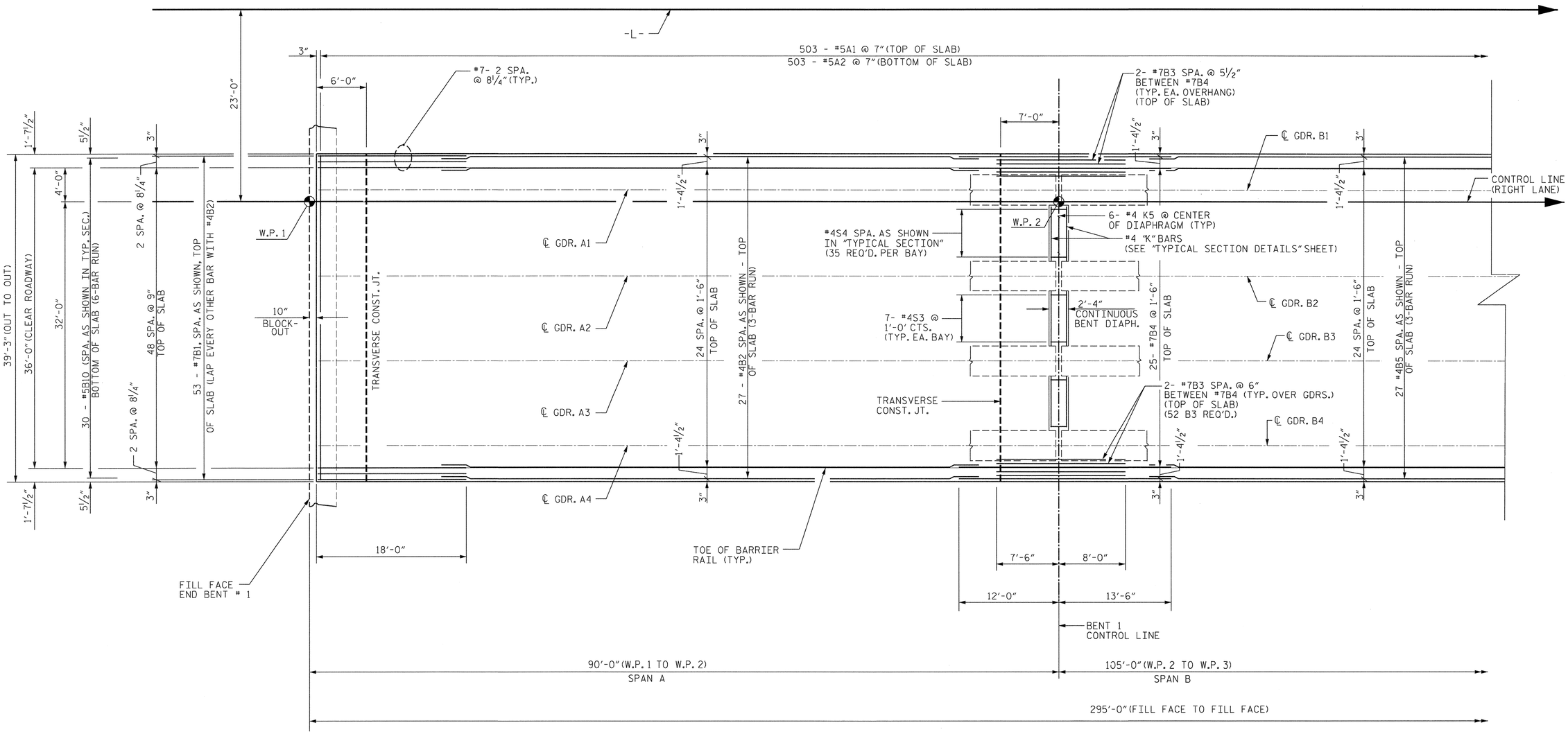

SPAN A

PLAN OF SPANS

SPAN B

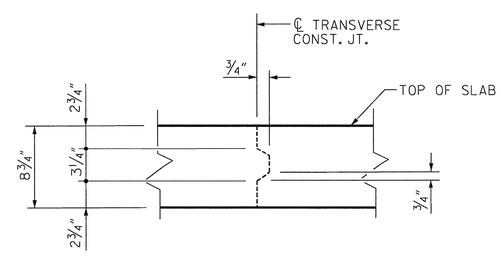

TRANSVERSE CONSTRUCTION JOINT DETAIL

REINFORCING STEEL IN SLAB NOT SHOWN. LONGITUDINAL REINFORCING STEEL SHALL BE CONTINUOUS THRU JOINT.

NOTES:

FOR LOCATION OF INTERMEDIATE DIAPHRAGMS, SEE "GIRDER LAYOUT" SHEETS.

FOR REINFORCING STEEL IN BARRIER RAIL, SEE "CONCRETE BARRIER RAIL" SHEET.

"A" BARS SHALL BE PLACED PERPENDICULAR TO ℄ -L-

MINIMUM SPLICE LENGTHS FOR ALL BARS SHALL BE IN ACCORDANCE WITH THE SPLICE LENGTH TABLE ON THE SUPERSTRUCTURE BILL OF MATERIAL SHEET. WHERE BARS OF DIFFERENT SIZES ARE LAPPED, USE THE MINIMUM SPLICE LENGTH OF SMALLER BAR.

NORTH CAROLINA PROFESSIONAL SEAL 20772 ENGINEER HARDY L. WILLIS
11/21/12

PROJECT NO. R-2303C
SAMPSON COUNTY
STATION: 943+12.50 -L-

SHEET 1 OF 5

V&M
Vaughn & Melton
Consulting Engineers
Asheville, North Carolina 828-253-2796
Charlotte, North Carolina 704-357-0488
Tri-Cities, Tennessee 423-467-8410
Knoxville, Tennessee 865-546-5800
Middlesboro, Kentucky 606-248-6600
Spartanburg, South Carolina 864-574-4775

Copyright © 2006 Vaughn & Melton, Inc. All Rights Reserved

STATE OF NORTH CAROLINA
DEPARTMENT OF TRANSPORTATION
RALEIGH

SUPERSTRUCTURE PLAN OF SPANS

(RIGHT LANE)

REVISIONS						SHEET NO.
NO.	BY:	DATE:	NO.	BY:	DATE:	S-43
1			3			TOTAL SHEETS
2			4			138

DWN. BY: MAF DATE: SEPT. 2012
CHKD. BY: HLW DATE: SEPT. 2012

STR. #2

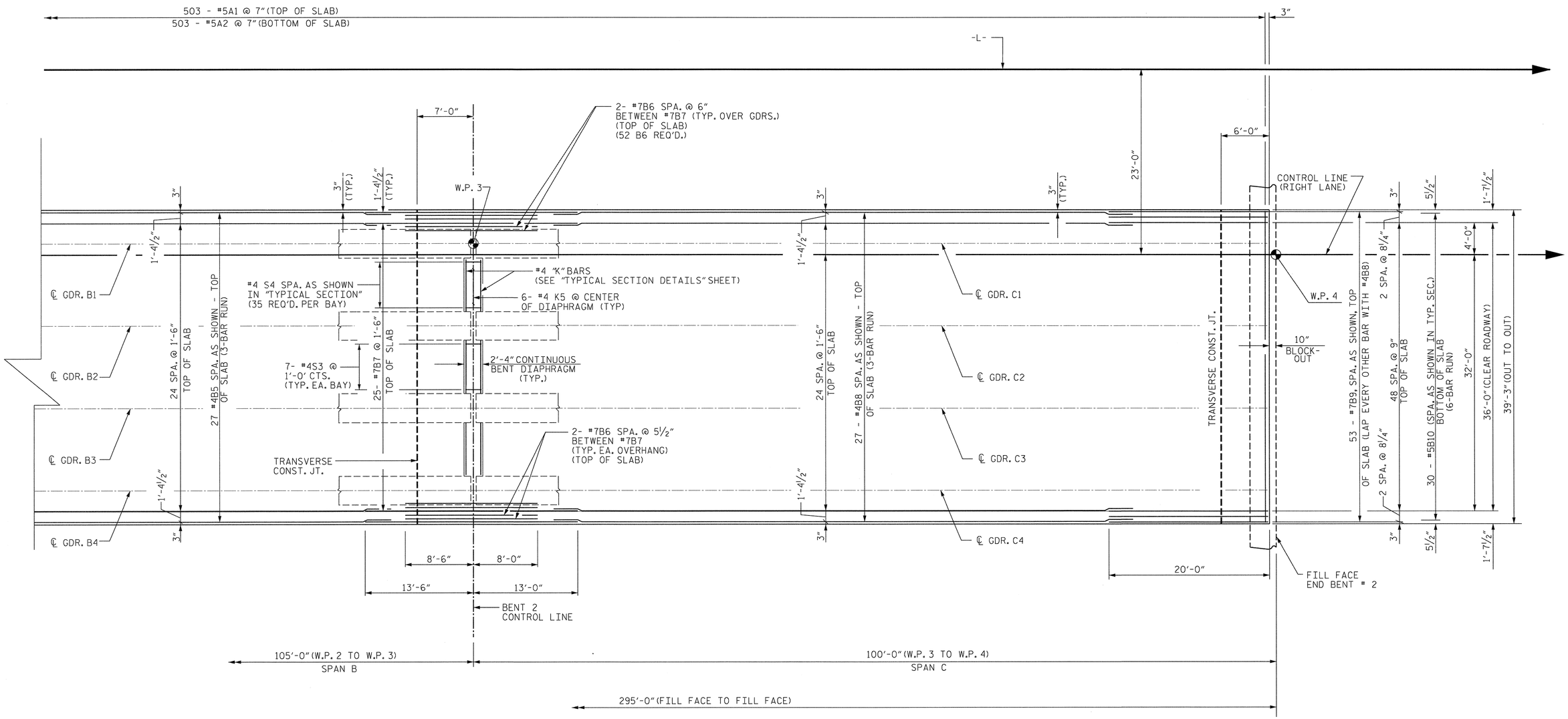

SPAN B

PLAN OF SPANS

SPAN C

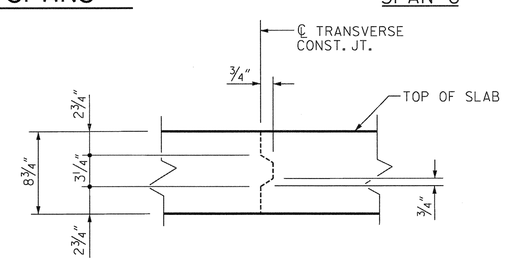

TRANSVERSE CONSTRUCTION JOINT DETAIL

REINFORCING STEEL IN SLAB NOT SHOWN. LONGITUDINAL REINFORCING STEEL SHALL BE CONTINUOUS THRU JOINT.

NOTES:

FOR LOCATION OF INTERMEDIATE DIAPHRAGMS, SEE "GIRDER LAYOUT" SHEETS.

FOR REINFORCING STEEL IN BARRIER RAIL, SEE "CONCRETE BARRIER RAIL" SHEET.

"A" BARS SHALL BE PLACED PERPENDICULAR TO ℄ -L-

MINIMUM SPLICE LENGTHS FOR ALL BARS SHALL BE IN ACCORDANCE WITH THE SPLICE LENGTH TABLE ON THE SUPERSTRUCTURE BILL OF MATERIAL SHEET. WHERE BARS OF DIFFERENT SIZES ARE LAPPED, USE THE MINIMUM SPLICE LENGTH OF SMALLER BAR.

NORTH CAROLINA PROFESSIONAL SEAL 20877 ENGINEER HARDY L. WILLIS 11/21/12

PROJECT NO. R-2303C
SAMPSON COUNTY
STATION: 943+12.50 -L-

SHEET 2 OF 5

Vaughn & Melton Consulting Engineers
Asheville, North Carolina 828-253-2796
Charlotte, North Carolina 704-357-0488
Tri-Cities, Tennessee 423-467-8401
Knoxville, Tennessee 865-546-5800
Middlesboro, Kentucky 606-248-6600
Spartanburg, South Carolina 864-574-4775
Copyright © 2006 Vaughn & Melton, Inc. All Rights Reserved

STATE OF NORTH CAROLINA
DEPARTMENT OF TRANSPORTATION
RALEIGH

SUPERSTRUCTURE PLAN OF SPANS

(RIGHT LANE)

DWN. BY: MAF	DATE: SEPT. 2012
CHKD. BY: HLW	DATE: SEPT. 2012

REVISIONS						SHEET NO.
NO.	BY:	DATE:	NO.	BY:	DATE:	S-44
1			3			TOTAL SHEETS
2			4			138

STR. #2

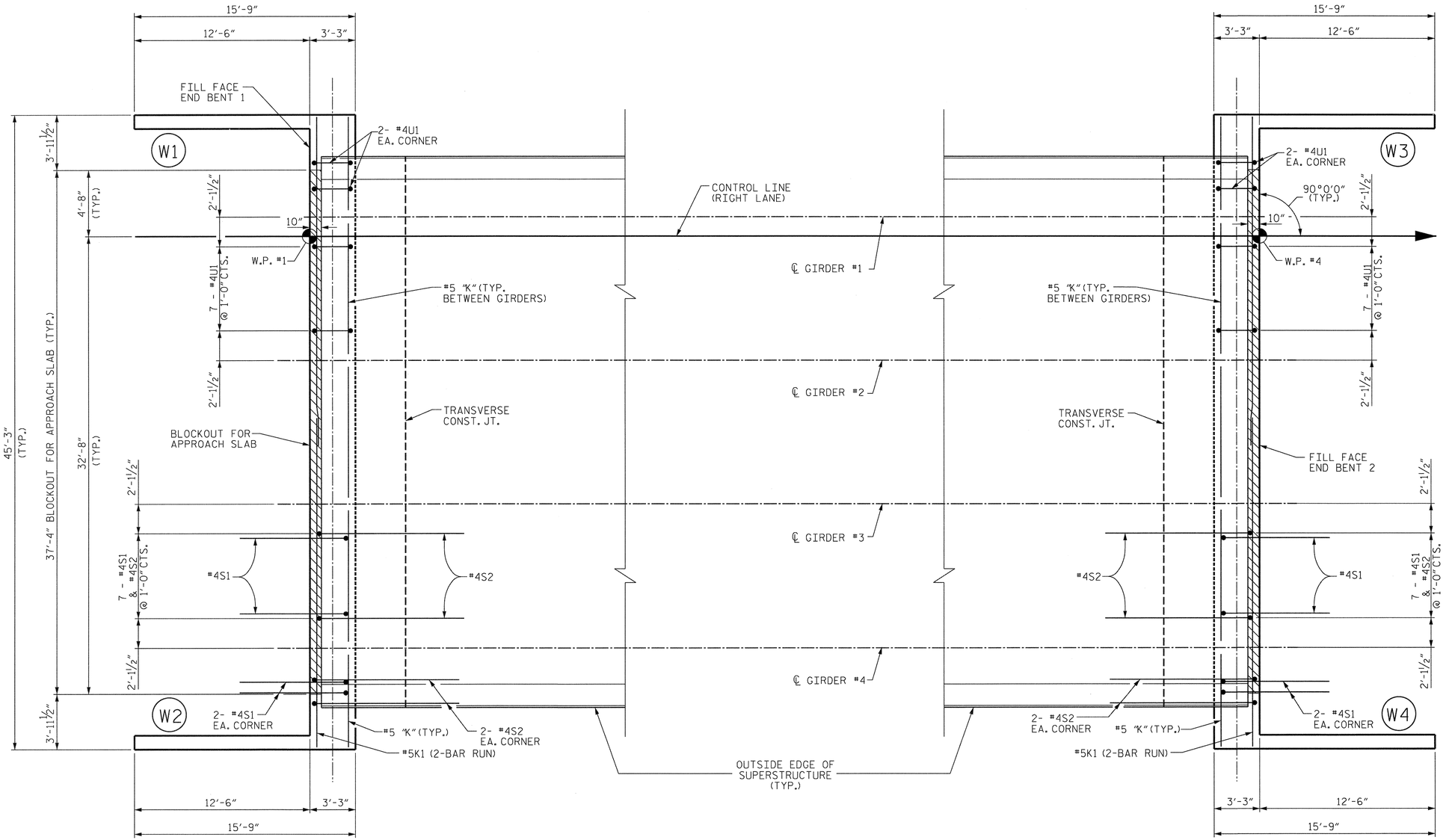

END BENT 1

END BENT 2

NOTES

FOR SECTION THROUGH ABUTMENT, SEE "TYPICAL SECTION" SHEET.

FOR DETAILS AND REINFORCING STEEL IN WINGS, SEE SHEETS 4 & 5 OF 5.

PLAN OF ABUTMENT WALLS

ALL DIMENSIONS AND REINFORCING STEEL ARE TYPICAL FOR BOTH END BENTS.

PROJECT NO. R-2303C

SAMPSON COUNTY

STATION: 943+12.50 -L-

SHEET 3 OF 5

STATE OF NORTH CAROLINA
DEPARTMENT OF TRANSPORTATION
RALEIGH

PLAN OF SPAN DETAILS

(RIGHT LANE)

NORTH CAROLINA PROFESSIONAL SEAL 20277 ENGINEER HARDY L. WILLIS 11/21/12

V&M
Vaughn & Melton
Consulting Engineers
Asheville, North Carolina 828-253-2796
Charlotte, North Carolina 704-357-0488
Tri-Cities, Tennessee 423-467-8401
Knoxville, Tennessee 865-546-5800
Middlesboro, Kentucky 606-248-6600
Spartanburg, South Carolina 864-574-4775

Copyright © 2006 Vaughn & Melton, Inc. All Rights Reserved

DWN. BY: MAF DATE: SEPT. 2012
CHKD. BY: HLW DATE: SEPT. 2012

REVISIONS								SHEET NO.
NO.	BY:	DATE:	NO.	BY:	DATE:			S-45
1			3					TOTAL SHEETS
2			4					138

STR. #2

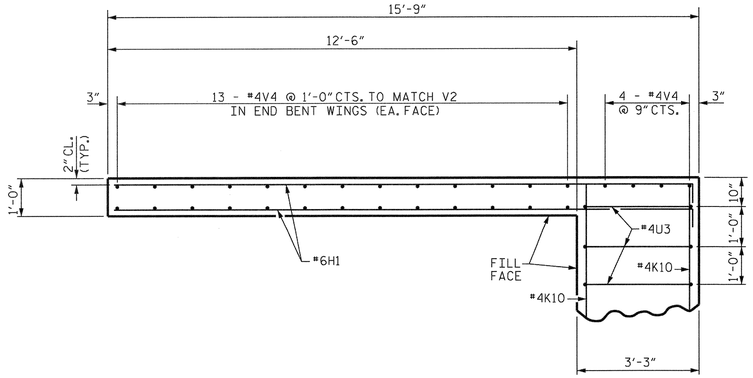

PLAN OF WING W1

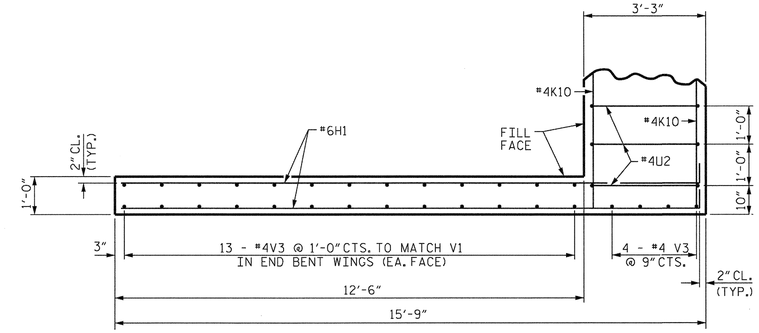

PLAN OF WING W2

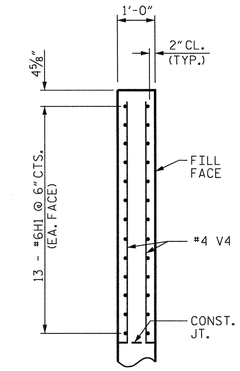

A-A

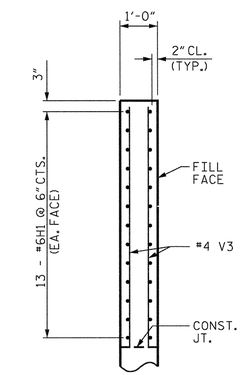

B-B

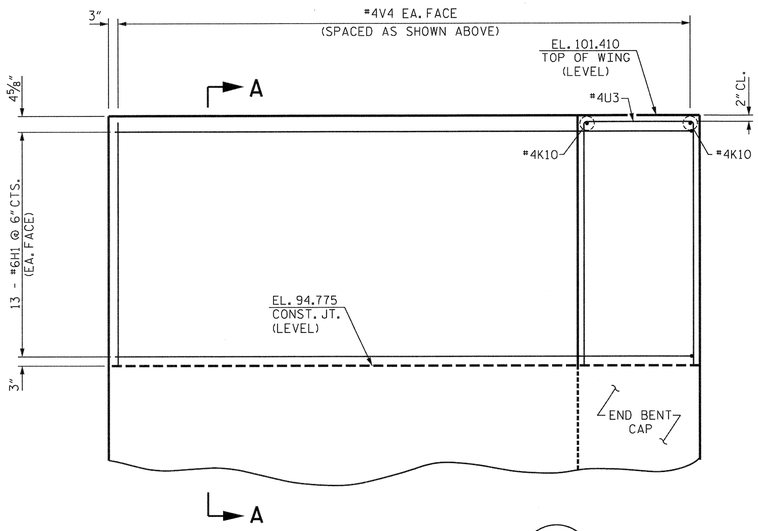

ELEVATION OF WING W1

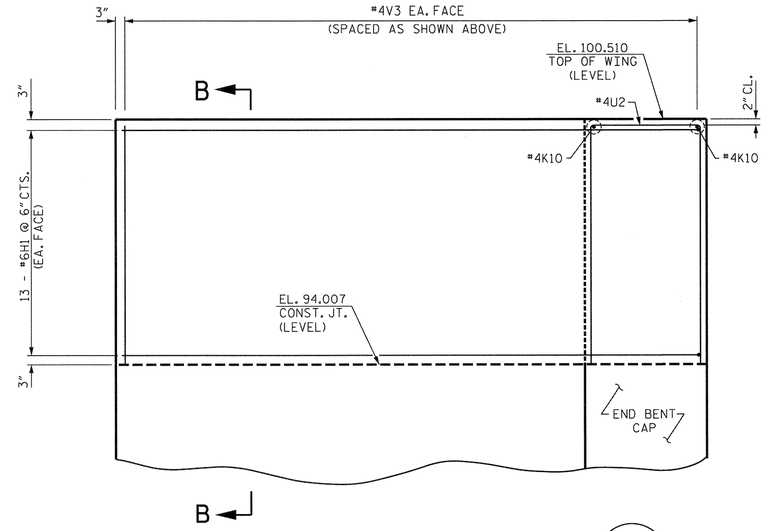

ELEVATION OF WING W2

NORTH CAROLINA PROFESSIONAL SEAL 20777 ENGINEER HARDY L. WILLIS 11/21/12

PROJECT NO. R-2303C

SAMPSON COUNTY

STATION: 943+12.50 -L-

SHEET 4 OF 5

STATE OF NORTH CAROLINA
DEPARTMENT OF TRANSPORTATION
RALEIGH

PLAN OF SPAN DETAILS

(RIGHT LANE)

V&M
Vaughn & Melton
Consulting Engineers
Asheville, North Carolina 828-253-2796
Charlotte, North Carolina 704-357-0488
Tri-Cities, Tennessee 423-467-8401
Knoxville, Tennessee 865-546-5800
Middlesboro, Kentucky 606-248-6600
Spartanburg, South Carolina 864-574-4775

Copyright © 2006 Vaughn & Melton, Inc. All Rights Reserved

DWN. BY: MAF DATE: SEPT. 2012
CHKD. BY: HLW DATE: SEPT. 2012

REVISIONS						SHEET NO.
NO.	BY:	DATE:	NO.	BY:	DATE:	S-46
1			3			TOTAL SHEETS
2			4			138

STR. #2

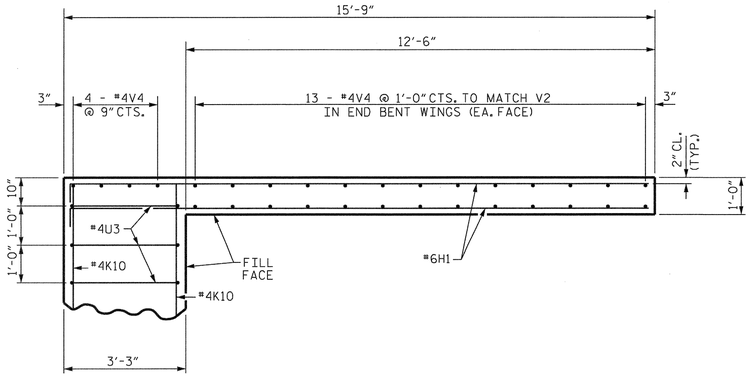

PLAN OF WING W3

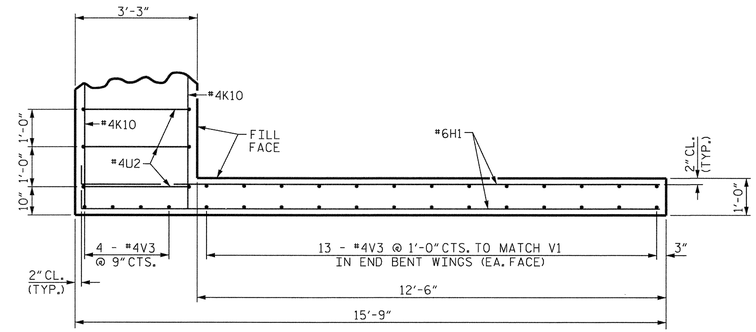

PLAN OF WING W4

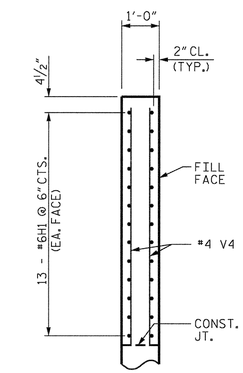

A-A

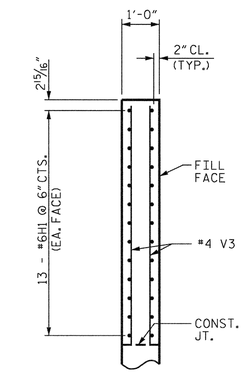

B-B

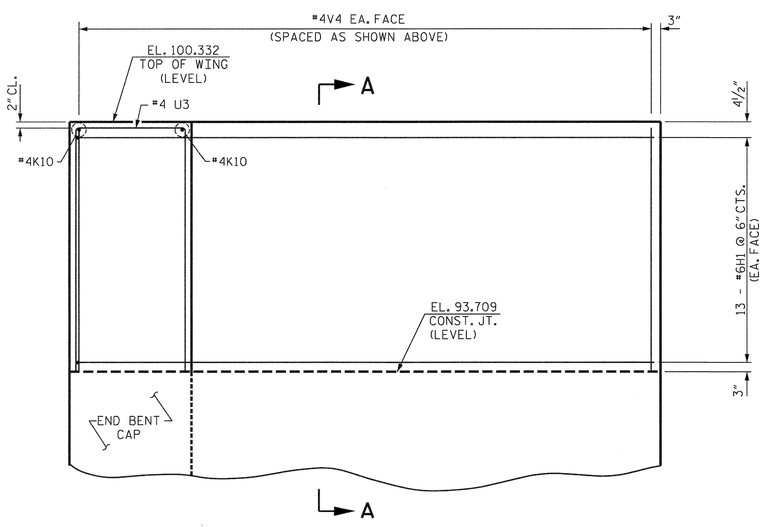

ELEVATION OF WING W3

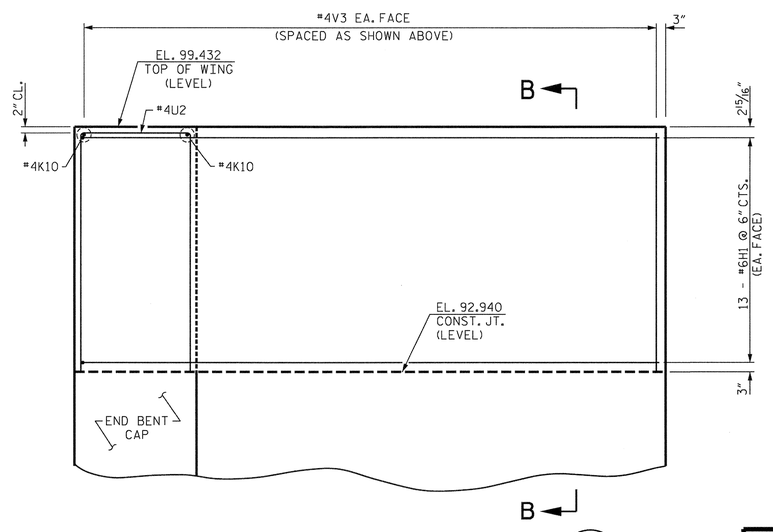

ELEVATION OF WING W4

NORTH CAROLINA PROFESSIONAL SEAL 20721 ENGINEER HARDY L. WILLIS 11/21/12

PROJECT NO. R-2303C
SAMPSON COUNTY
STATION: 943+12.50 -L-

SHEET 5 OF 5

STATE OF NORTH CAROLINA
DEPARTMENT OF TRANSPORTATION
RALEIGH

PLAN OF SPAN DETAILS

(RIGHT LANE)

V&M
Vaughn & Melton
Consulting Engineers
Asheville, North Carolina 828-253-2796
Charlotte, North Carolina 704-357-0488
Tri-Cities, Tennessee 423-467-8401
Knoxville, Tennessee 865-546-5800
Middlesboro, Kentucky 606-248-6600
Spartanburg, South Carolina 864-574-4775

Copyright © 2006 Vaughn & Melton, Inc. All Rights Reserved

DWN. BY: MAF DATE: SEPT. 2012
CHKD. BY: HLW DATE: SEPT. 2012

REVISIONS						
NO.	BY:	DATE:	NO.	BY:	DATE:	
1			3			
2			4			

SHEET NO. S-47
TOTAL SHEETS 138

STR. #2

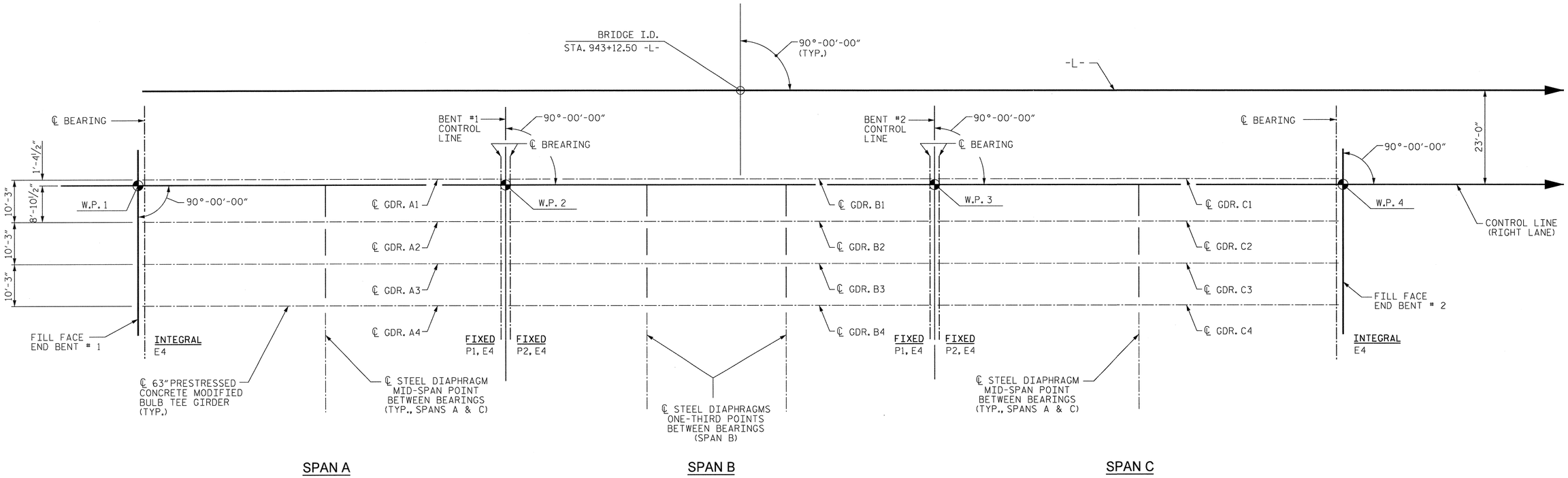

FRAMING PLAN

NORTH CAROLINA PROFESSIONAL SEAL ENGINEER HARDY L. WILLIS
11/21/12

PROJECT NO. R-2303C
SAMPSON COUNTY
STATION: 943+12.50 -L-

V&M
Vaughn & Melton
Consulting Engineers
Asheville, North Carolina
828-253-2796
Charlotte, North Carolina 704-357-0488
Tri-Cities, Tennessee 423-467-940
Knoxville, Tennessee 865-546-5800
Middlesboro, Kentucky 606-248-6600
Spartanburg, South Carolina 864-574-4775
Copyright © 2006 Vaughn & Melton, Inc.
All Rights Reserved

DWN. BY: MAF DATE: SEPT. 2012
CHKD. BY: HLW DATE: SEPT. 2012

STATE OF NORTH CAROLINA
DEPARTMENT OF TRANSPORTATION
RALEIGH

FRAMING PLAN

(RIGHT LANE)

REVISIONS						SHEET NO.
NO.	BY:	DATE:	NO.	BY:	DATE:	S-48
1			3			TOTAL SHEETS
2			4			138

STR. #2

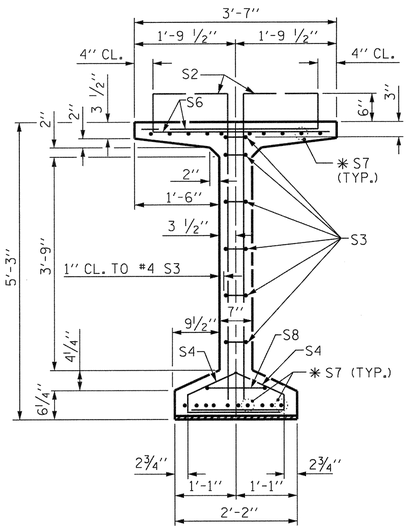

SECTION A-A

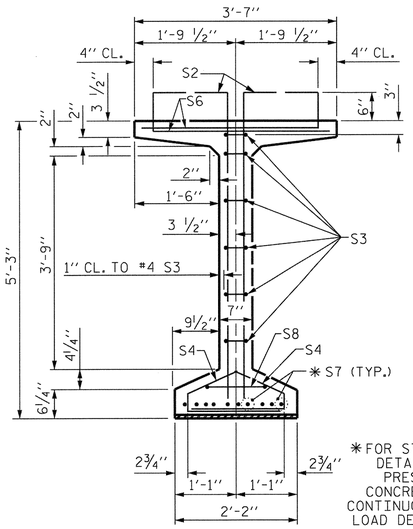

✱ FOR S7 BARS, SEE DETAIL "C" OF PRESTRESSED CONCRETE GIRDER CONTINUOUS FOR LIVE LOAD DETAILS SHEET

SECTION B-B

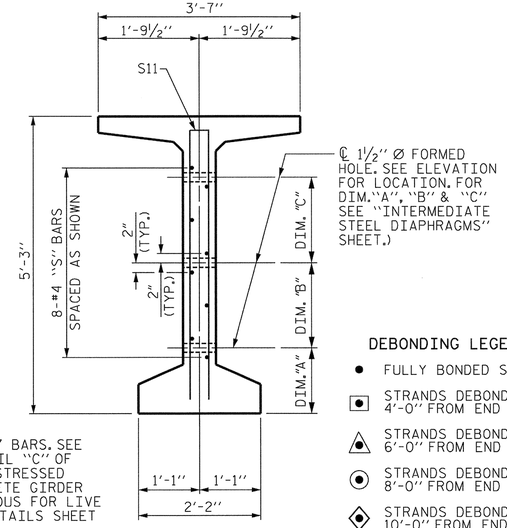

SECTION C-C

(S1, S6 AND S9 BARS NOT SHOWN)

DEBONDING LEGEND

- ● FULLY BONDED STRANDS
- STRANDS DEBONDED FOR 4'-0" FROM END OF GIRDER
- STRANDS DEBONDED FOR 6'-0" FROM END OF GIRDER
- STRANDS DEBONDED FOR 8'-0" FROM END OF GIRDER
- STRANDS DEBONDED FOR 10'-0" FROM END OF GIRDER
- STRANDS DEBONDED FOR 12'-0" FROM END OF GIRDER

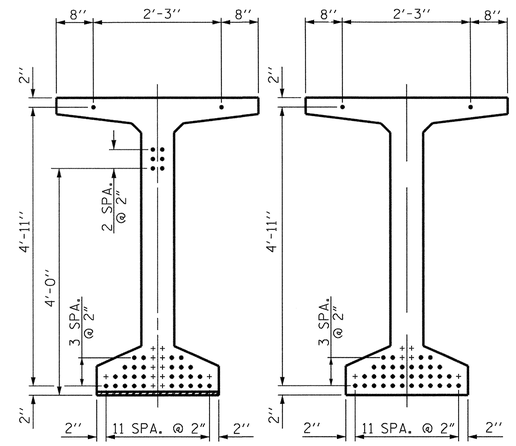

0.6" Ø LOW RELAXATION STRAND LAYOUT

0.6" Ø L. R. GRADE 270 STRANDS		
AREA (SQUARE INCHES)	ULTIMATE STRENGTH (LBS. PER STRAND)	APPLIED PRESTRESS (LBS. PER STRAND)
0.217	58,600	43,950

REINFORCING STEEL FOR ONE GDR

BAR	NUMBER	SIZE	TYPE	LENGTH	WEIGHT
S1	208	#4	1	6'-1"	845
S2	24	#5	1	6'-1"	152
S3	12	#4	2	8'-5"	67
S4	188	#4	3	3'-0"	377
S6	232	#5	4	4'-4"	1049
✱ S7	30	#5	STR	3'-8"	115
S8	2	#5	2	9'-0"	19
S9	20	#5	STR	3'-3"	68
S10	2	#3	STR	1'-10"	1
S11	4	#5	2	10'-2"	42
S12	8	#4	STR	8'-0"	43

✱ NOTE: S7 BARS SHALL BE BENT BEFORE SHIPMENT. HEAT BENDING SHALL NOT BE ALLOWED.

BAR TYPES

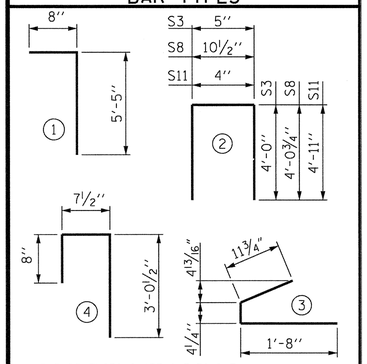

ALL BAR DIMENSIONS ARE OUT-TO-OUT

QUANTITIES FOR ONE GIRDER

	REINFORCING STEEL	9000 PSI CONCRETE	0.6" Ø L.R. STRANDS
	LB.	C.Y.	No.
EXTERIOR GIRDER	2,778	17.6	36
INTERIOR GIRDER	2,778	17.6	36

GIRDERS REQUIRED

NUMBER	LENGTH	TOTAL LENGTH
4	88'-8"	354'-8"

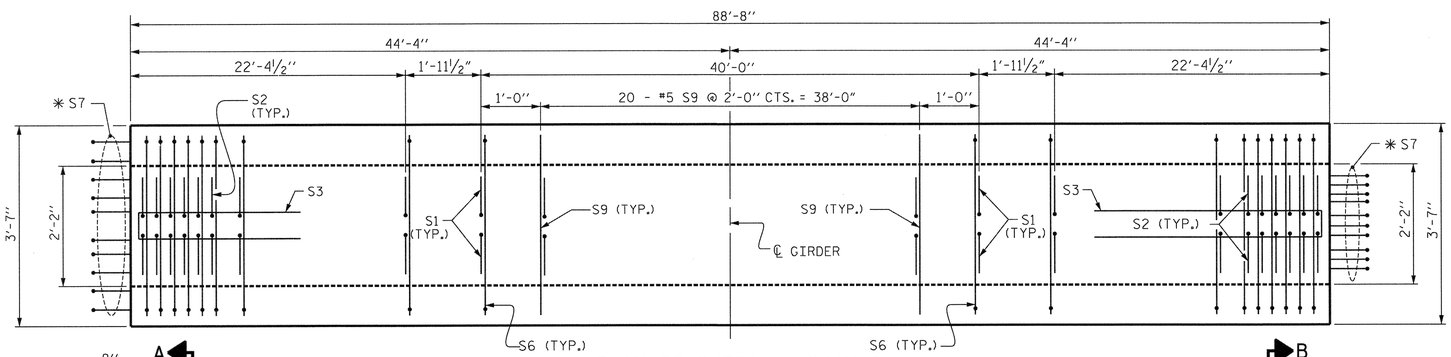

PLAN OF GIRDER - SPAN A

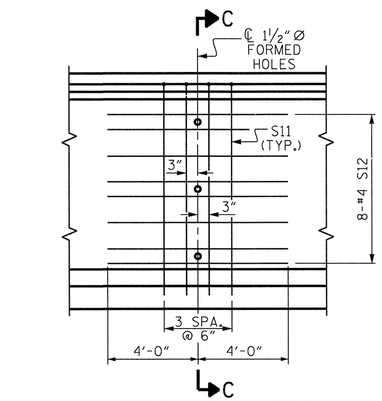

PARTIAL ELEVATION

SHOWING INTERMEDIATE STEEL DIAPHRAGM REINFORCING STEEL.

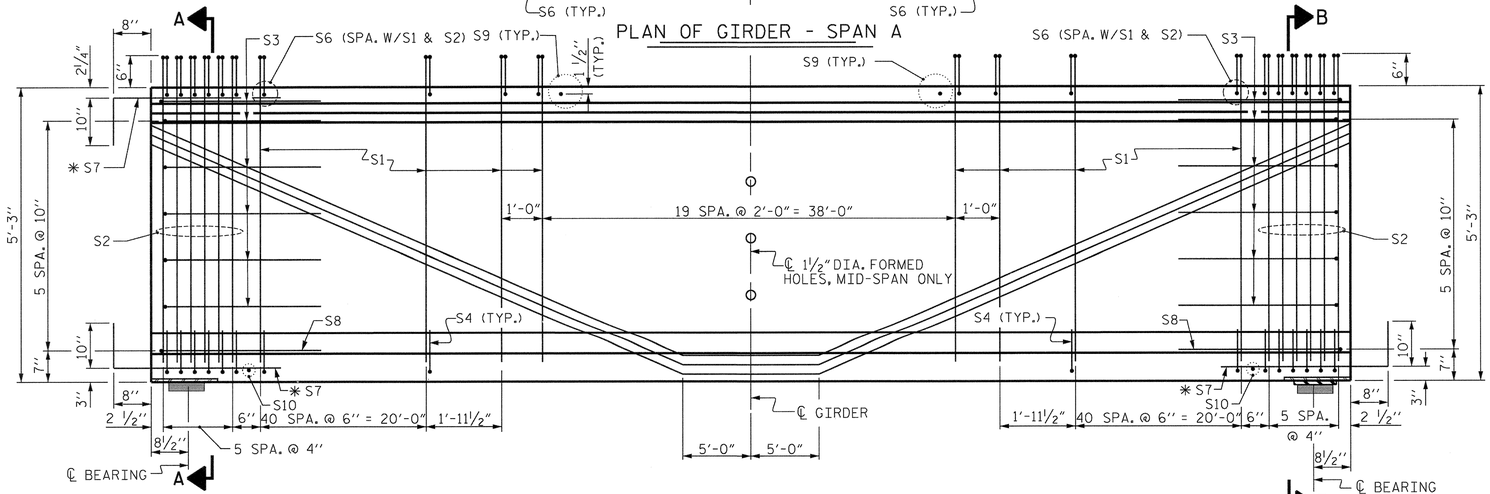

INTEGRAL END BENT

ELEVATION OF GIRDER - SPAN A

FIX

PROJECT NO. R-2303C

SAMPSON COUNTY

STATION: 943+12.50 -L-

SHEET 1 OF 3

STATE OF NORTH CAROLINA
DEPARTMENT OF TRANSPORTATION
RALEIGH

STANDARD
63" PRESTRESSED CONCRETE
MODIFIED BULB TEE
CONTINUOUS FOR LIVE LOAD
SPAN A
(RIGHT LANE)

NORTH CAROLINA PROFESSIONAL SEAL 20027 ENGINEER HARDY L. WILLIS 11/21/12

ASSEMBLED BY : MAF	DATE : 9/2012
CHECKED BY : HLW	DATE : 9/2012
DRAWN BY : EEM 2/6/97	REV. 10/17/00 RWW/LES
CHECKED BY : VAP 2/6/97	REV. 5/1/06R TLA/GM
	REV. 10/1/11 MAA/GM

REVISIONS

NO.	BY:	DATE:	NO.	BY:	DATE:
1			3		
2			4		

SHEET NO. S-49

TOTAL SHEETS 138

STR. #2

STD. NO. PCG9 (Sht. 2)

$$$$$$SYSTIME$$$$$
$$$$$$$$$$$$$$$$$$$$$$$$DGN$$$$$$$$$$$$$$$$$$$$$$$$
$$$$USERNAME$$$$

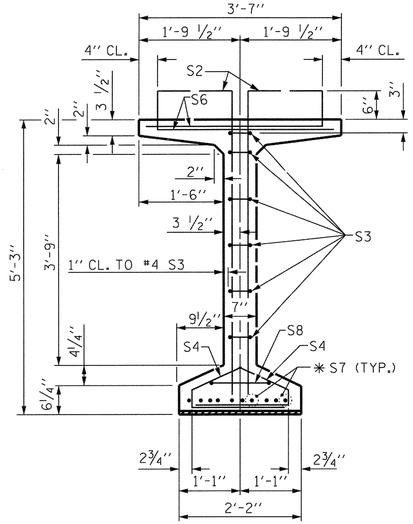

SECTION A-A

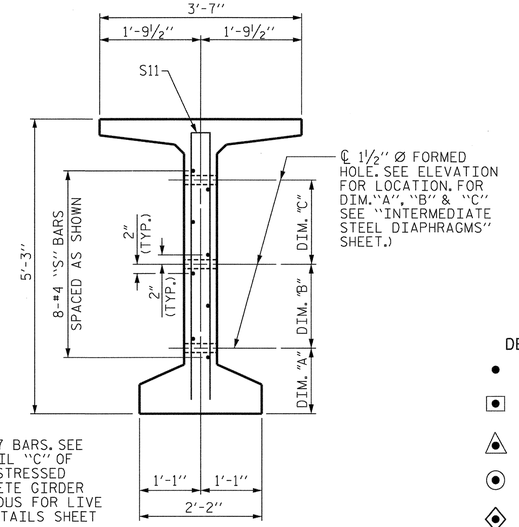

* FOR S7 BARS, SEE DETAIL "C" OF PRESTRESSED CONCRETE GIRDER CONTINUOUS FOR LIVE LOAD DETAILS SHEET

SECTION C-C

(S1, S6 AND S9 BARS NOT SHOWN)

DEBONDING LEGEND

- FULLY BONDED STRANDS
- STRANDS DEBONDED FOR 4'-0" FROM END OF GIRDER
- STRANDS DEBONDED FOR 6'-0" FROM END OF GIRDER
- STRANDS DEBONDED FOR 8'-0" FROM END OF GIRDER
- STRANDS DEBONDED FOR 10'-0" FROM END OF GIRDER
- STRANDS DEBONDED FOR 12'-0" FROM END OF GIRDER

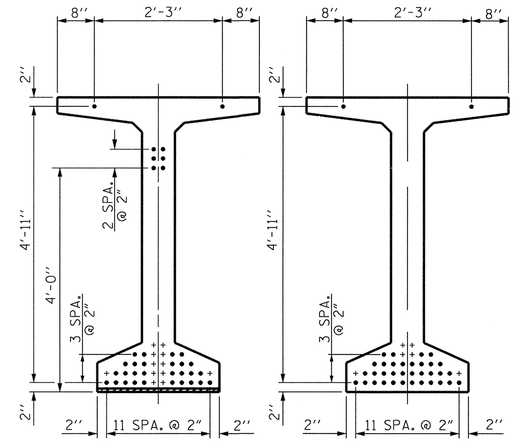

0.6" Ø LOW RELAXATION STRAND LAYOUT

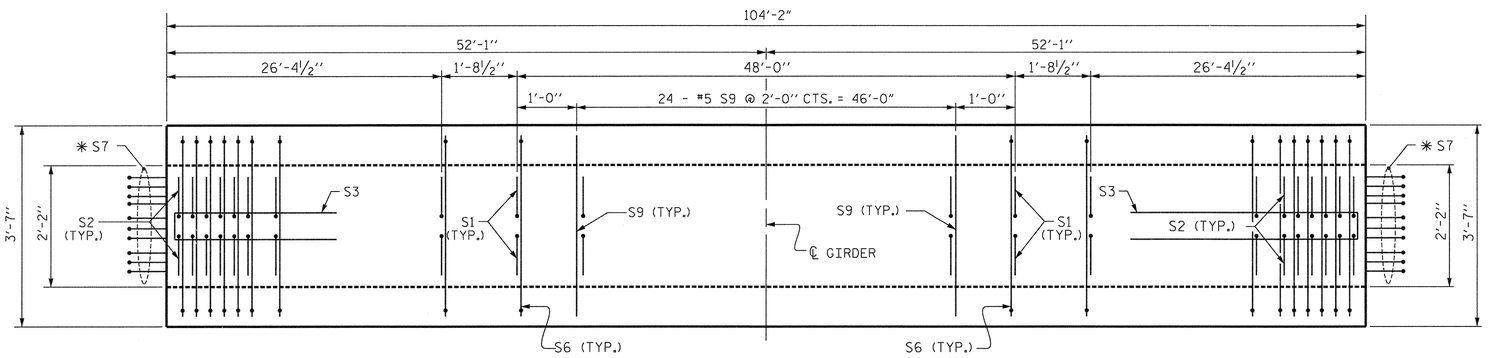

PLAN OF GIRDER - SPAN B

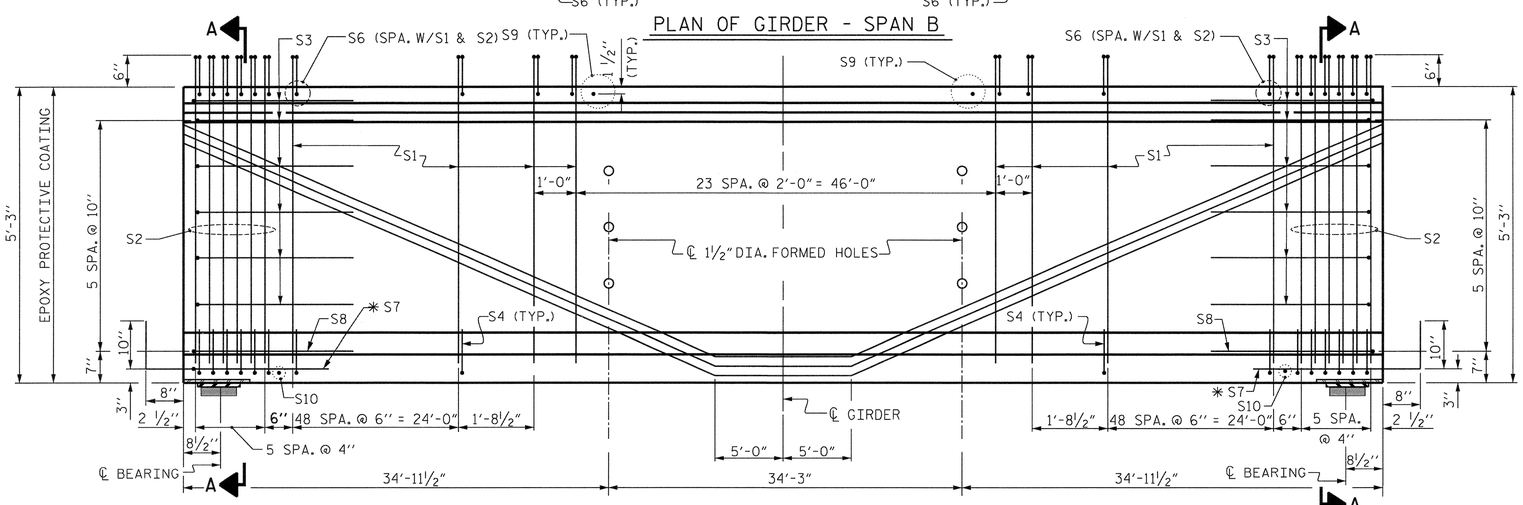

ELEVATION OF GIRDER - SPAN B

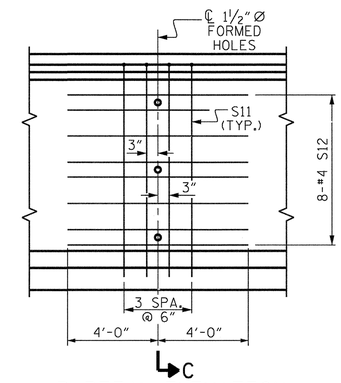

PARTIAL ELEVATION

SHOWING INTERMEDIATE STEEL DIAPHRAGM REINFORCING STEEL.

0.6" Ø L. R. GRADE 270 STRANDS

AREA (SQUARE INCHES)	ULTIMATE STRENGTH (LBS. PER STRAND)	APPLIED PRESTRESS (LBS. PER STRAND)
0.217	58,600	43,950

REINFORCING STEEL FOR ONE GDR

BAR	NUMBER	SIZE	TYPE	LENGTH	WEIGHT
S1	272	#4	1	6'-1"	1105
S2	24	#5	1	6'-1"	152
S3	12	#4	2	8'-5"	67
S4	220	#4	3	3'-0"	441
S6	296	#5	4	4'-4"	1338
* S7	20	#5	STR	3'-8"	76
S8	2	#5	2	9'-0"	19
S9	24	#5	STR	3'-3"	81
S10	2	#3	STR	1'-10"	1
S11	8	#5	2	10'-2"	85
S12	16	#4	STR	8'-0"	86

* NOTE: S7 BARS SHALL BE BENT BEFORE SHIPMENT. HEAT BENDING SHALL NOT BE ALLOWED.

BAR TYPES

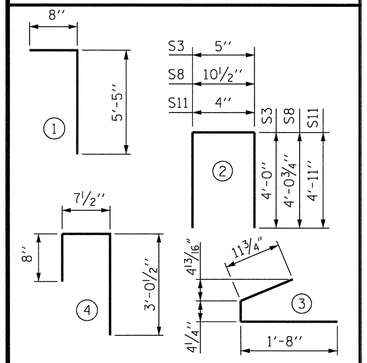

ALL BAR DIMENSIONS ARE OUT-TO-OUT

QUANTITIES FOR ONE GIRDER

	REINFORCING STEEL	9000 PSI CONCRETE	0.6" Ø L.R. STRANDS
	LB.	C.Y.	No.
EXTERIOR GIRDER	3,451	20.6	36
INTERIOR GIRDER	3,451	20.6	36

GIRDERS REQUIRED

NUMBER	LENGTH	TOTAL LENGTH
4	104'-2"	416'-8"

PROJECT NO. R-2303C

SAMPSON COUNTY

STATION: 943+12.50 -L-

SHEET 2 OF 3

STATE OF NORTH CAROLINA
DEPARTMENT OF TRANSPORTATION
RALEIGH

STANDARD

63" PRESTRESSED CONCRETE MODIFIED BULB TEE CONTINUOUS FOR LIVE LOAD SPAN B (RIGHT LANE)

NORTH CAROLINA PROFESSIONAL SEAL 24877 ENGINEER HARDY L. WILLIS 11/21/12

REVISIONS							
NO.	BY:	DATE:	NO.	BY:	DATE:	SHEET NO.	S-50
1			3			TOTAL SHEETS	138
2			4				

ASSEMBLED BY : MAF	DATE : 9/2012
CHECKED BY : HLW	DATE : 9/2012
DRAWN BY : EEM 2/6/97	REV. 10/17/00 RWW/LES
CHECKED BY : VAP 2/6/97	REV. 5/1/06R TLA/GM
	REV. 10/1/11 MAA/GM

$$$$$$SYSTIME$$$$$
$$$$$$$$$$$$$$$$$$$$$$$$DGN$$$$$$$$$$$$$$$$$$$$$$$$
$$$$USERNAME$$$$

STR. #2

STD. NO. PCG9 (Sht. 1)

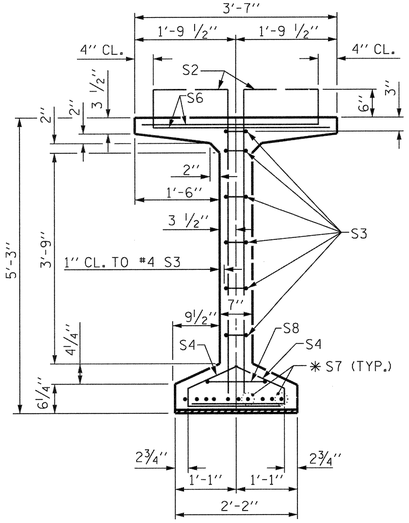

SECTION A-A

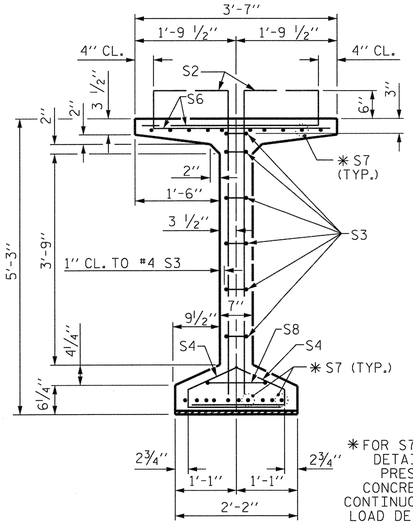

SECTION B-B

* FOR S7 BARS. SEE DETAIL "C" OF PRESTRESSED CONCRETE GIRDER CONTINUOUS FOR LIVE LOAD DETAILS SHEET

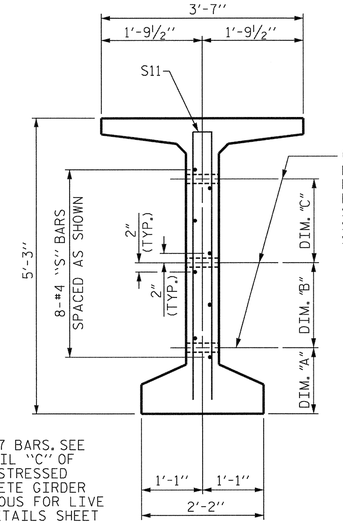

℄ 1 1/2" Ø FORMED HOLE. SEE ELEVATION FOR LOCATION. FOR DIM. "A", "B" & "C" SEE "INTERMEDIATE STEEL DIAPHRAGMS" SHEET.)

SECTION C-C

(S1, S6 AND S9 BARS NOT SHOWN)

DEBONDING LEGEND

- ● FULLY BONDED STRANDS
- STRANDS DEBONDED FOR 4'-0" FROM END OF GIRDER
- STRANDS DEBONDED FOR 6'-0" FROM END OF GIRDER
- STRANDS DEBONDED FOR 8'-0" FROM END OF GIRDER
- STRANDS DEBONDED FOR 10'-0" FROM END OF GIRDER
- STRANDS DEBONDED FOR 12'-0" FROM END OF GIRDER

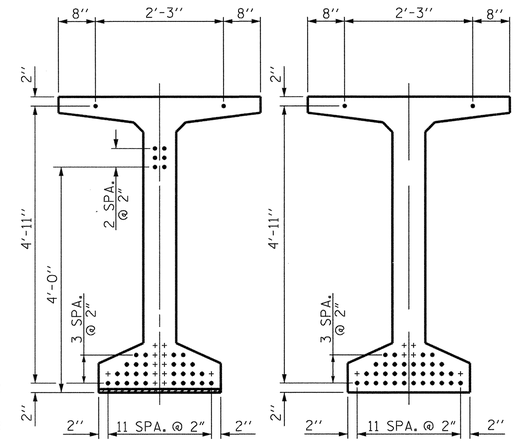

AT END OF GIRDER

AT ℄ OF GIRDER

0.6" Ø LOW RELAXATION STRAND LAYOUT

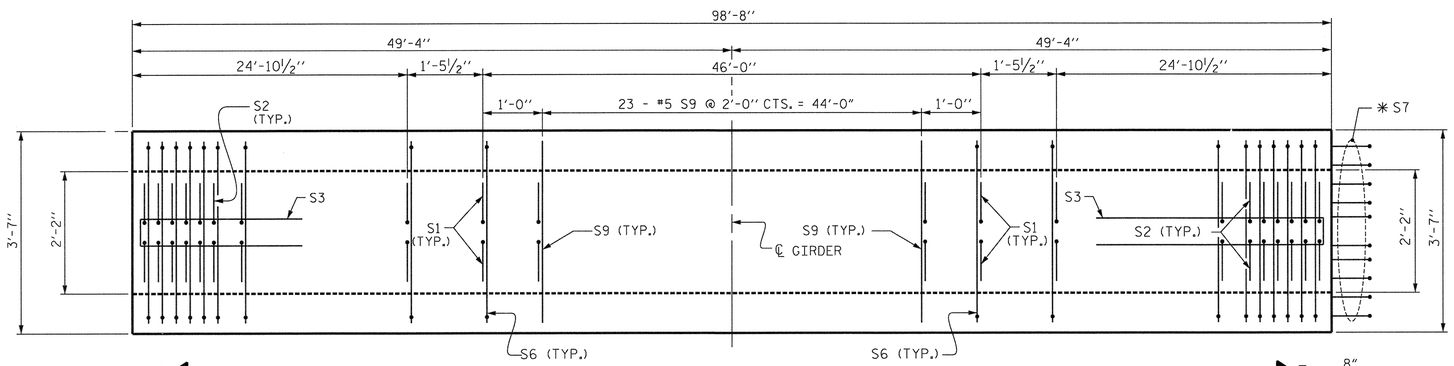

PLAN OF GIRDER - SPAN C

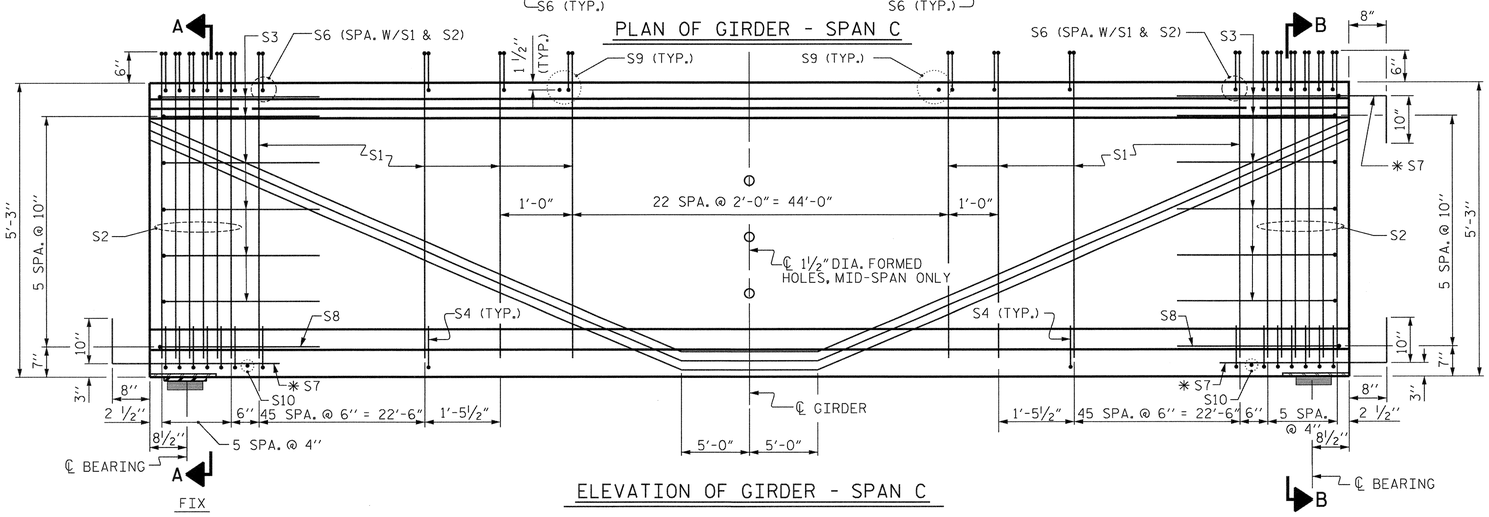

FIX

ELEVATION OF GIRDER - SPAN C

INTEGRAL END BENT

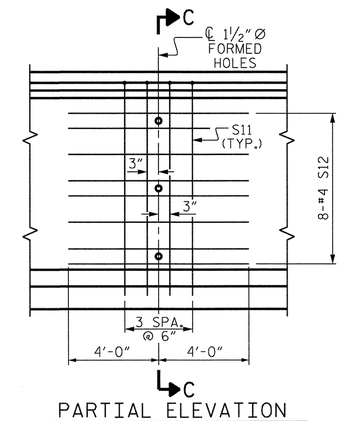

PARTIAL ELEVATION

SHOWING INTERMEDIATE STEEL DIAPHRAGM REINFORCING STEEL.

0.6" Ø L. R. GRADE 270 STRANDS

AREA (SQUARE INCHES)	ULTIMATE STRENGTH (LBS. PER STRAND)	APPLIED PRESTRESS (LBS. PER STRAND)
0.217	58,600	43,950

REINFORCING STEEL FOR ONE GDR

BAR	NUMBER	SIZE	TYPE	LENGTH	WEIGHT
S1	234	#4	1	6'-1"	951
S2	24	#5	1	6'-1"	152
S3	12	#4	2	8'-5"	67
S4	208	#4	3	3'-0"	417
S6	258	#5	4	4'-4"	1166
* S7	30	#5	STR	3'-8"	115
S8	2	#5	2	9'-0"	19
S9	23	#5	STR	3'-3"	78
S10	2	#3	STR	1'-10"	1
S11	4	#5	2	10'-2"	42
S12	8	#4	STR	8'-0"	43

* NOTE: S7 BARS SHALL BE BENT BEFORE SHIPMENT. HEAT BENDING SHALL NOT BE ALLOWED.

BAR TYPES

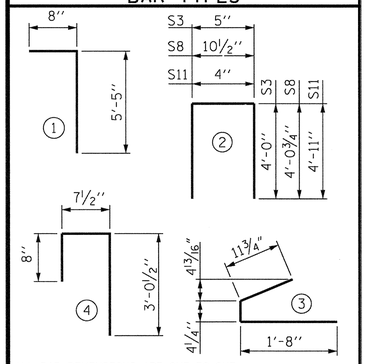

ALL BAR DIMENSIONS ARE OUT-TO-OUT

QUANTITIES FOR ONE GIRDER

	REINFORCING STEEL	9000 PSI CONCRETE	0.6" Ø L.R. STRANDS
	LB.	C.Y.	No.
EXTERIOR GIRDER	3,051	19.5	36
INTERIOR GIRDER	3,051	19.5	36

GIRDERS REQUIRED

NUMBER	LENGTH	TOTAL LENGTH
4	98'-8"	394'-8"

PROJECT NO. R-2303C

SAMPSON COUNTY

STATION: 943+12.50 -L-

SHEET 3 OF 3

STATE OF NORTH CAROLINA
DEPARTMENT OF TRANSPORTATION
RALEIGH

STANDARD
63" PRESTRESSED CONCRETE
MODIFIED BULB TEE
CONTINUOUS FOR LIVE LOAD
SPAN C
(RIGHT LANE)

NORTH CAROLINA PROFESSIONAL SEAL 20277 ENGINEER HARDY L. WILLIS 11/21/12

REVISIONS								SHEET NO.
NO.	BY:	DATE:	NO.	BY:	DATE:			S-51
1			3					TOTAL SHEETS
2			4					138

ASSEMBLED BY : MAF		DATE : 9/2012	
CHECKED BY : HLW		DATE : 9/2012	
DRAWN BY : EEM 2/6/97	REV. 10/17/00	RWW/LES	
CHECKED BY : VAP 2/6/97	REV. 5/1/06R	TLA/GM	
	REV. 10/1/11	MAA/GM	

$$$$$$$SYSTIME$$$$$
$$$$$$$$$$$$$$$$$$$$$$$$DGN$$$$$$$$$$$$$$$$$$$$$$$$
$$$$USERNAME$$$$

STR. #2

STD. NO. PCG9 (Sht. 2)

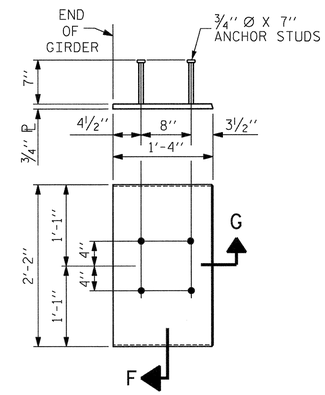

EMBEDDED PLATE "B-1" DETAILS FOR AASHTO TYPE IV GIRDER AND 63" & 72" MODIFIED BULB TEES

(2 REQ'D PER GIRDER)

NOTES

ALL PRESTRESSING STRANDS SHALL BE 7-WIRE LOW-RELAXATION GRADE 270 STRANDS AND SHALL CONFORM TO AASHTO M203 EXCEPT FOR SAMPLING REQUIREMENTS WHICH SHALL BE IN ACCORDANCE WITH THE STANDARD SPECIFICATIONS.

ALL REINFORCING STEEL SHALL BE GRADE 60.

EMBEDDED PLATE "B-1" SHALL BE GALVANIZED IN ACCORDANCE WITH THE STANDARD SPECIFICATIONS. BEVEL EDGES OF PLATE "B-1" TO GIVE CLOSE FIT BUT NOT TIGHT FIT TO STEEL CASTING FORM.

ANCHOR STUDS SHALL CONFORM TO AASHTO M169 GRADES 1010 THROUGH 1020 OR APPROVED EQUAL, AND SHALL MEET THE TYPE "B" REQUIREMENTS OF SUBSECTION 7.3 OF THE ANSI/AASHTO/AWS D1.5 BRIDGE WELDING CODE.

AT ENDS OF GIRDERS TO BE EMBEDDED IN CONCRETE DIAPHRAGMS OR END WALLS, PRESTRESSING STRANDS MAY EXTEND A MAXIMUM OF 2" BEYOND THE GIRDER ENDS. OTHERWISE, PRESTRESSING STRANDS SHALL BE CUT FLUSH WITH THE GIRDER ENDS.

THE TRANSFER OF LOAD FROM THE ANCHORAGES TO THE GIRDER SHALL BE DONE WHEN CONCRETE HAS REACHED A COMPRESSIVE STRENGTH OF NOT LESS THAN 7,000 PSI.

DEPENDING ON THE TYPE OF SYSTEM USED TO SUPPORT THE DECK SLAB FORMS, PRESET ANCHORS MAY BE NECESSARY IN THE PRESTRESSED CONCRETE GIRDER.

THE TOP SURFACE OF THE GIRDER, EXCLUDING THE OUTSIDE 4", SHALL BE RAKED TO A DEPTH OF 1/4".

WHEN DRAPED STRANDS ARE DETAILED, THE LONGITUDINAL LOCATION OF THE HOLD DOWN DEVICES SHALL BE WITHIN 6" OF THE LOCATION SHOWN AND THE CENTER OF GRAVITY OF THE GROUP OF DRAPED STRANDS SHALL BE LOCATED WITHIN 1/2" OF THE THEORETICAL LOCATION SHOWN.

A 2" x 2" CHAMFER IS ALLOWED AT THE INTERSECTION OF THE WEB AND THE BOTTOM FLANGE OF THE 63" AND 72" MODIFIED BULB TEES ONLY.

THE CONTRACTOR HAS THE OPTION TO PROVIDE, AT NO ADDITIONAL COST TO THE DEPARTMENT, 2 ADDITIONAL STRANDS AT THE TOP OF THE GIRDER TO FACILITATE TYING OF THE REINFORCING STEEL. THESE STRANDS SHALL BE PULLED TO A LOAD OF 4500 lbs.

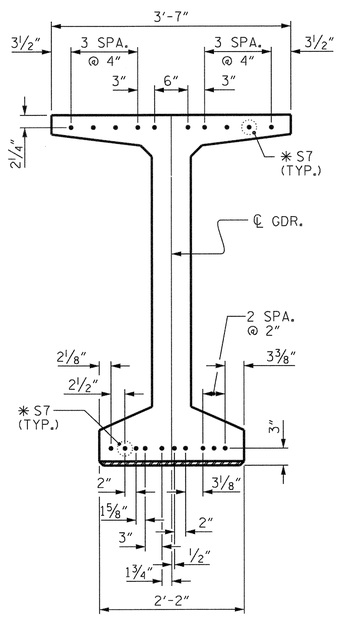

DETAIL "C"

(FOR 63" & 72" MODIFIED BULB TEES)

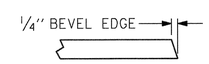

SECTION "G"

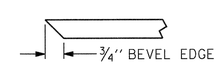

SECTION "F"

(SEE NOTES)

PROJECT NO. R-2303C

SAMPSON COUNTY

STATION: 943+12.50 -L-

STATE OF NORTH CAROLINA
DEPARTMENT OF TRANSPORTATION
RALEIGH

STANDARD

PRESTRESSED CONCRETE GIRDER CONTINUOUS FOR LIVE LOAD DETAILS

(RIGHT LANE)

NORTH CAROLINA PROFESSIONAL SEAL 20747 ENGINEER HARDY L. WILLIS 11/2/12

REVISIONS								SHEET NO.
NO.	BY:	DATE:	NO.	BY:	DATE:			S-52
1			3					TOTAL SHEETS
2			4					136

ASSEMBLED BY : MAF	DATE : 09/2012
CHECKED BY : HLW	DATE : 09/2012
DRAWN BY : ELR 11/91	REV. 10/17/00 RWW/LES
CHECKED BY : GRP 11/91	REV. 7/10/01RR LES/RDR
	REV. 5/1/06 TLA/GM

$$$$$$$SYSTIME$$$$$
$$$$$$$$$$$$$$$$$$$$$$$$DGN$$$$$$$$$$$$$$$$$$$$$$$$
$$$$USERNAME$$$$

STR. #2 STD. NO. PCG11 (Sht. 5a)

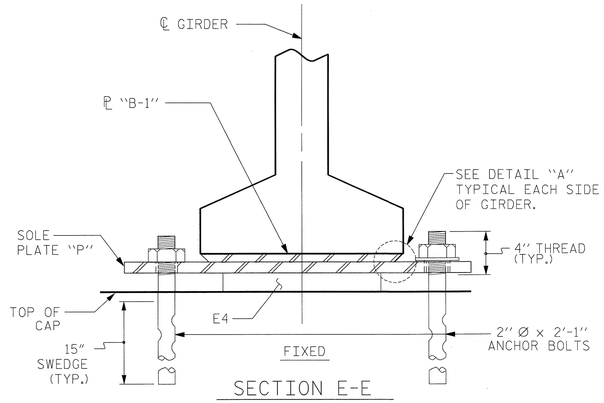

SECTION E-E

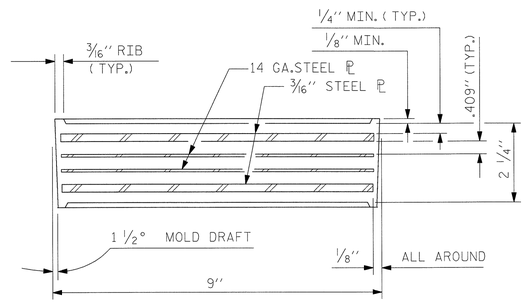

TYPICAL SECTION OF ELASTOMERIC BEARINGS

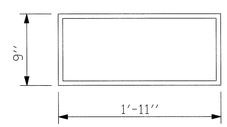

E4 (24 REQ'D)

PLAN VIEW OF ELASTOMERIC BEARING

TYPE V

NOTES

AT ALL FIXED POINTS OF SUPPORT, NUTS FOR ANCHOR BOLTS ARE TO BE TIGHTENED FINGER TIGHT AND THEN BACKED OFF 1/2 TURN. THE THREAD OF THE NUT AND BOLT SHALL THEN BE BURRED WITH A SHARP POINTED TOOL.

STEEL SOLE PLATES, ANCHOR BOLTS, NUTS, AND WASHERS SHALL BE GALVANIZED IN ACCORDANCE WITH THE STANDARD SPECIFICATIONS.

PRIOR TO WELDING, GRIND THE GALVANIZED SURFACE OF THE PORTION OF THE EMBEDDED PLATE AND SOLE PLATE THAT ARE TO BE WELDED. AFTER WELDING, DAMAGED GALVANIZED SURFACES SHALL BE REPAIRED IN ACCORDANCE WITH THE STANDARD SPECIFICATIONS.

WHEN WELDING THE SOLE PLATE TO THE EMBEDDED PLATE IN THE GIRDER, USE TEMPERATURE INDICATING WAX PENS, OR OTHER SUITABLE MEANS, TO ENSURE THAT THE TEMPERATURE OF THE SOLE PLATE DOES NOT EXCEED 300°F. TEMPERATURES ABOVE THIS MAY DAMAGE THE ELASTOMER.

SOLE PLATE "P", BOLTS, NUTS, WASHERS, AND PIPE SLEEVE SHALL BE INCLUDED IN THE PAY ITEM FOR PRESTRESSED CONCRETE GIRDERS.

ANCHOR BOLTS SHALL MEET THE REQUIREMENTS OF ASTM A449. NUTS SHALL MEET THE REQUIREMENTS OF AASHTO M291-DH OR AASHTO M292-2H. WASHERS SHALL MEET THE REQUIREMENTS OF AASHTO M293. NO SHOP DRAWINGS ARE REQUIRED FOR ANCHOR BOLTS, NUTS AND WASHERS. SHOP INSPECTION IS REQUIRED.

ALL SURFACES OF BEARING PLATES SHALL BE SMOOTH AND STRAIGHT.

THE ELASTOMER IN THE STEEL REINFORCED BEARINGS SHALL HAVE A SHEAR MODULUS OF 0.160 KSI, IN ACCORDANCE WITH AASHTO M251.

FOR STEEL REINFORCED ELASTOMERIC BEARINGS, SEE SPECIAL PROVISIONS.

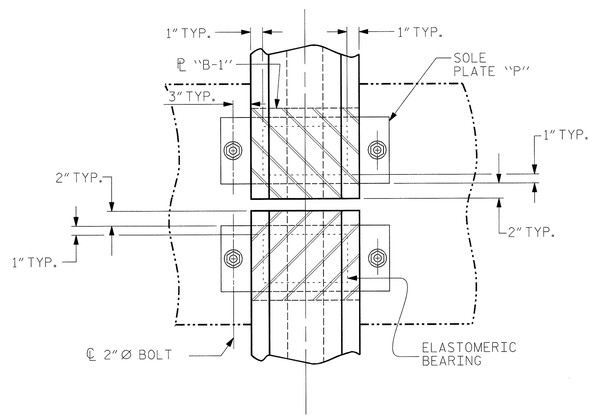

TYPICAL PLAN

(SHOWING CONTINUOUS BENT)

NORTH CAROLINA PROFESSIONAL SEAL ENGINEER HARDY L. WILLIS 6/27/13

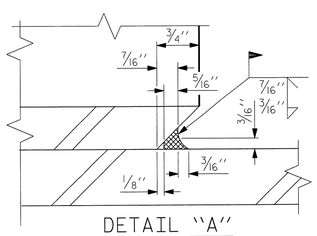

DETAIL "A"

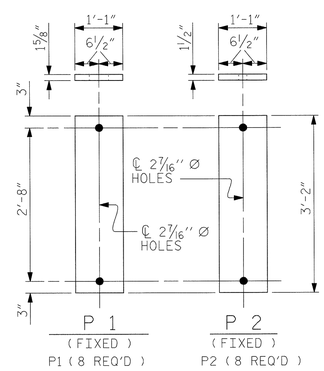

SOLE PLATE DETAILS ("P")

MAXIMUM ALLOWABLE SERVICE LOADS	
D.L.+L.L. (NO IMPACT)	
TYPE V	365 k
~~TYPE VI~~	~~420 k~~
~~TYPE VII~~	~~470 k~~

PROJECT NO. R-2303C

SAMPSON COUNTY

STATION: 943+12.50 -L-

STATE OF NORTH CAROLINA
DEPARTMENT OF TRANSPORTATION
RALEIGH

STANDARD

ELASTOMERIC BEARING DETAILS

PCG SUPERSTRUCTURE
(RIGHT LANE)

REVISIONS						SHEET NO.
NO.	BY:	DATE:	NO.	BY:	DATE:	S-53
1			3			TOTAL SHEETS
2			4			138

ASSEMBLED BY : MAF	DATE : 09/2012
CHECKED BY : HLW	DATE : 09/2012
DRAWN BY : EEM 2/97	REV. 5/1/06 TLA/GM
CHECKED BY : VAP 2/97	REV. 10/1/11 MAA/GM
	REV. 10/24/12 AAC/MAA

STR. #2

STD. NO. EB4

$$$$$$$$$$$$$$$$$$$$$$$$DGN$$$$$$$$$$$$$$$$$$$$$$$$
$$$$USERNAME$$$$

SPAN A - DEAD LOAD DEFLECTION TABLE FOR GIRDERS

0.60" ∅ LOW RELAXATION	GIRDER A1 OR A4											GIRDER A2 OR A3										
TENTH POINTS	0.0	0.1	0.2	0.3	0.4	0.5	0.6	0.7	0.8	0.9	1.0	0.0	0.1	0.2	0.3	0.4	0.5	0.6	0.7	0.8	0.9	1.0
CAMBER (GIRDER ALONE IN PLACE) (UP)	0.000	1.063	1.893	2.489	2.855	2.990	2.855	2.489	1.893	1.063	0.000	0.000	1.063	1.893	2.489	2.855	2.990	2.855	2.489	1.893	1.063	0.000
* DEFLECTION DUE TO SUPERIMPOSED D.L. (DOWN)	0.000	0.284	0.510	0.676	0.782	0.830	0.782	0.676	0.510	0.284	0.000	0.000	0.299	0.535	0.709	0.821	0.870	0.821	0.709	0.535	0.299	0.000
FINAL CAMBER (DECIMAL INCHES) (UP)	0	0.779	1.383	1.813	2.073	2.160	2.073	1.813	1.383	0.779	0.000	0	0.764	1.358	1.780	2.034	2.120	2.034	1.780	1.358	0.764	0.000
FINAL CAMBER (INCHES) (UP)	0"	3/4"	1 3/8"	1 13/16"	2 1/16"	2 3/16"	2 1/16"	1 13/16"	1 3/8"	3/4"	0"	0"	3/4"	1 3/8"	1 3/4"	2 1/16"	2 1/8"	2 1/16"	1 3/4"	1 3/8"	3/4"	0"

* INCLUDES WEIGHT OF SLAB, BUILDUP, STAY-IN-PLACE FORMS, AND FUTURE WEARING SURFACE.

SPAN B - DEAD LOAD DEFLECTION TABLE FOR GIRDERS

0.60" ∅ LOW RELAXATION	GIRDER B1 OR B4											GIRDER B2 OR B3										
TWENTIETH POINTS	0.0	0.05	0.10	0.15	0.20	0.25	0.30	0.35	0.40	0.45	0.50	0.00	0.05	0.10	0.15	0.20	0.25	0.30	0.35	0.40	0.45	0.50
CAMBER (GIRDER ALONE IN PLACE) (UP)	0.000	0.690	1.306	1.850	2.321	2.720	3.045	3.303	3.487	3.599	3.640	0.000	0.690	1.306	1.850	2.321	2.720	3.045	3.303	3.487	3.599	3.640
* DEFLECTION DUE TO SUPERIMPOSED D.L. (DOWN)	0.000	0.261	0.497	0.709	0.897	1.060	1.199	1.313	1.403	1.469	1.510	0.000	0.278	0.530	0.756	0.956	1.130	1.278	1.400	1.496	1.566	1.610
FINAL CAMBER (DECIMAL INCHES) (UP)	0	0.429	0.809	1.141	1.424	1.660	1.846	1.990	2.084	2.130	2.130	0	0.412	0.776	1.094	1.365	1.590	1.767	1.903	1.991	2.033	2.030
FINAL CAMBER (INCHES) (UP)	0"	7/16"	13/16"	1 1/8"	1 7/16"	1 11/16"	1 7/8"	2"	2 1/16"	2 1/8"	2 1/8"	0"	7/16"	3/4"	1 1/8"	1 3/8"	1 9/16"	1 3/4"	1 7/8"	2"	2 1/16"	2 1/16"
TWENTIETH POINTS	0.55	0.60	0.65	0.70	0.75	0.80	0.85	0.90	0.95	1.00		0.55	0.60	0.65	0.70	0.75	0.80	0.85	0.90	0.95	1.00	
CAMBER (GIRDER ALONE IN PLACE) (UP)	3.599	3.487	3.303	3.045	2.720	2.321	1.850	1.306	0.690	0.000		3.599	3.487	3.303	3.045	2.720	2.321	1.850	1.306	0.690	0.000	
* DEFLECTION DUE TO SUPERIMPOSED D.L. (DOWN)	1.469	1.403	1.313	1.199	1.060	0.897	0.709	0.497	0.261	0.000		1.566	1.496	1.400	1.278	1.130	0.956	0.756	0.530	0.278	0.000	
FINAL CAMBER (DECIMAL INCHES) (UP)	2.130	2.084	1.990	1.846	1.660	1.424	1.141	0.809	0.429	0.000		2.033	1.991	1.903	1.767	1.590	1.365	1.094	0.776	0.412	0.000	
FINAL CAMBER (INCHES) (UP)	2 1/8"	2 1/16"	2"	1 7/8"	1 11/16"	1 7/16"	1 1/8"	13/16"	7/16"	0"		2 1/16"	2"	1 7/8"	1 3/4"	1 9/16"	1 3/8"	1 1/8"	3/4"	7/16"	0"	

* INCLUDES WEIGHT OF SLAB, BUILDUP, STAY-IN-PLACE FORMS, AND FUTURE WEARING SURFACE.

SPAN C - DEAD LOAD DEFLECTION TABLE FOR GIRDERS

0.60" ∅ LOW RELAXATION	GIRDER C1 OR C4											GIRDER C2 OR C3										
TENTH POINTS	0.0	0.1	0.2	0.3	0.4	0.5	0.6	0.7	0.8	0.9	1.0	0.0	0.1	0.2	0.3	0.4	0.5	0.6	0.7	0.8	0.9	1.0
CAMBER (GIRDER ALONE IN PLACE) (UP)	0.000	1.222	2.174	2.859	3.277	3.430	3.277	2.859	2.174	1.222	0.000	0.000	1.222	2.174	2.859	3.277	3.430	3.277	2.859	2.174	1.222	0.000
* DEFLECTION DUE TO SUPERIMPOSED D.L. (DOWN)	0.000	0.416	0.752	1.008	1.184	1.280	1.184	1.008	0.752	0.416	0.000	0.000	0.445	0.803	1.075	1.261	1.360	1.261	1.075	0.803	0.445	0.000
FINAL CAMBER (DECIMAL INCHES) (UP)	0	0.806	1.422	1.851	2.093	2.150	2.093	1.851	1.422	0.806	0.000	0	0.777	1.371	1.784	2.016	2.070	2.016	1.784	1.371	0.777	0.000
FINAL CAMBER (INCHES) (UP)	0"	13/16"	1 7/16"	1 7/8"	2 1/16"	2 1/8"	2 1/16"	1 7/8"	1 7/16"	13/16"	0"	0"	3/4"	1 3/8"	1 13/16"	2"	2 1/16"	2"	1 13/16"	1 3/8"	3/4"	0"

* INCLUDES WEIGHT OF SLAB, BUILDUP, STAY-IN-PLACE FORMS, AND FUTURE WEARING SURFACE.

PROJECT NO. R-2303C
SAMPSON COUNTY
STATION: 943+12.50 -L-

NORTH CAROLINA PROFESSIONAL SEAL 20771 ENGINEER HARDY L. WILLIS 11/21/12

V&M
Vaughn & Melton
Consulting Engineers
Asheville, North Carolina 828-253-2796
Charlotte, North Carolina 704-357-0488
Tri-Cities, Tennessee 423-467-8410
Knoxville, Tennessee 865-546-5800
Middlesboro, Kentucky 606-248-6600
Spartanburg, South Carolina 864-574-4775

Copyright © 2006 Vaughn & Melton, Inc. All Rights Reserved

DWN. BY: MAF DATE: SEPT. 2012
CHKD. BY: HLW DATE: SEPT. 2012

STATE OF NORTH CAROLINA
DEPARTMENT OF TRANSPORTATION
RALEIGH

SUPERSTRUCTURE DEAD LOAD DEFLECTIONS

(RIGHT LANE)

REVISIONS						SHEET NO.
NO.	BY:	DATE:	NO.	BY:	DATE:	S-54
1			3			TOTAL SHEETS
2			4			138

STR. #2

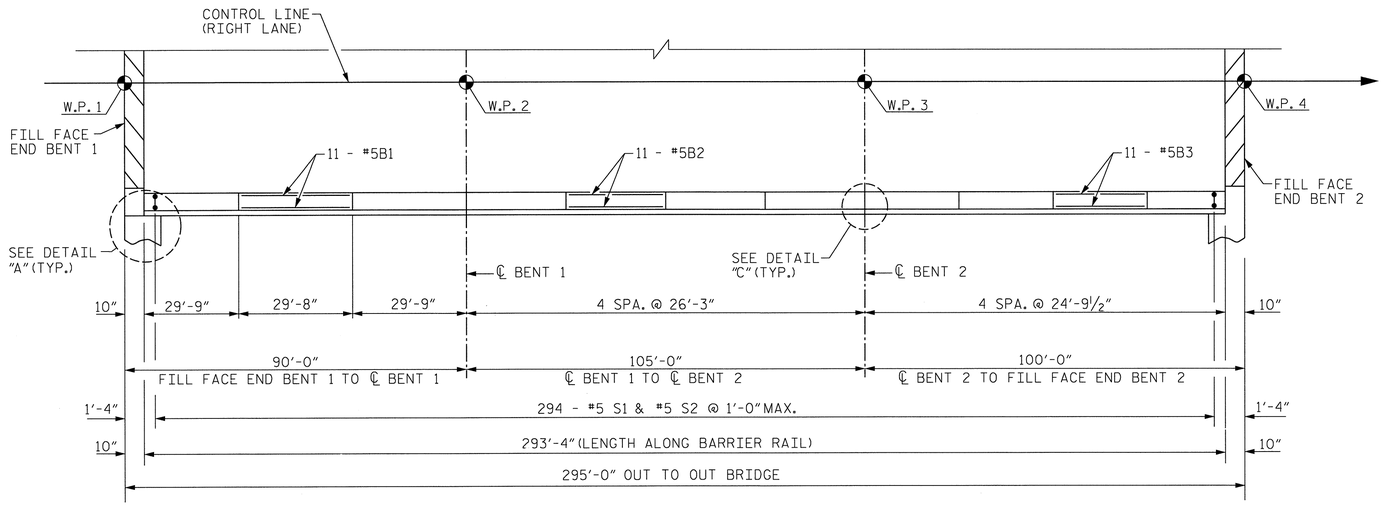

PLAN

NOT TO SCALE

RIGHT SIDE BARRIER RAIL SHOWN, LEFT SIDE SIMILAR.

NOTES

THE BARRIER RAIL IN EACH SPAN SHALL NOT BE CAST UNTIL ALL SLAB CONCRETE IN THAT SPAN HAS BEEN CAST AND HAS REACHED A MINIMUM COMPRESSIVE STRENGTH OF 3,000 PSI.

ALL REINFORCING STEEL IN BARRIER RAILS SHALL BE EPOXY COATED.

VERTICAL GROOVED CONTRACTION JOINTS, ½" IN DEPTH, SHALL BE TOOLED IN ALL EXPOSED FACES OF THE BARRIER RAIL AND IN ACCORDANCE WITH ARTICLE 825-10(B) OF THE STANDARD SPECIFICATIONS. THE CONTRACTION JOINT SHALL BE LOCATED AT EACH THIRD POINT BETWEEN BARRIER RAIL EXPANSION JOINTS. ONLY ONE CONTRACTION JOINT IS REQUIRED AT MIDPOINT OF BARRIER RAIL SEGMENTS LESS THAN 20 FEET IN LENGTH AND NO CONTRACTION JOINTS ARE REQUIRED FOR THOSE SEGMENTS LESS THAN 10 FEET IN LENGTH.

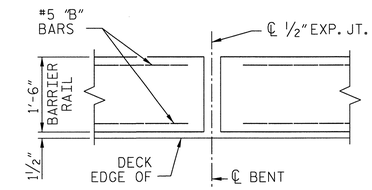

DETAIL "C"

RIGHT SIDE SHOWN, LEFT SIDE SIMILAR.
TYP. AT BENTS 1 & 2

BAR TYPES

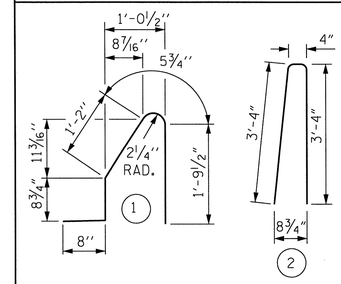

ALL BAR DIMENSIONS ARE OUT TO OUT

BILL OF MATERIAL

FOR CONCRETE BARRIER RAIL ONLY

BAR	NO.	SIZE	TYPE	LENGTH	WEIGHT
* B1	66	#5	STR	29'-3"	2014
* B2	88	#5	STR	25'-10"	2371
* B3	88	#5	STR	24'-4"	2233
* S1	588	#5	1	4'-10"	2964
* S2	588	#5	2	7'-0"	4293

* EPOXY COATED REINFORCING STEEL	13,875 LBS.
CLASS AA CONCRETE	79.8 CU. YDS.
CONCRETE BARRIER RAIL	586.67 LIN. FT.

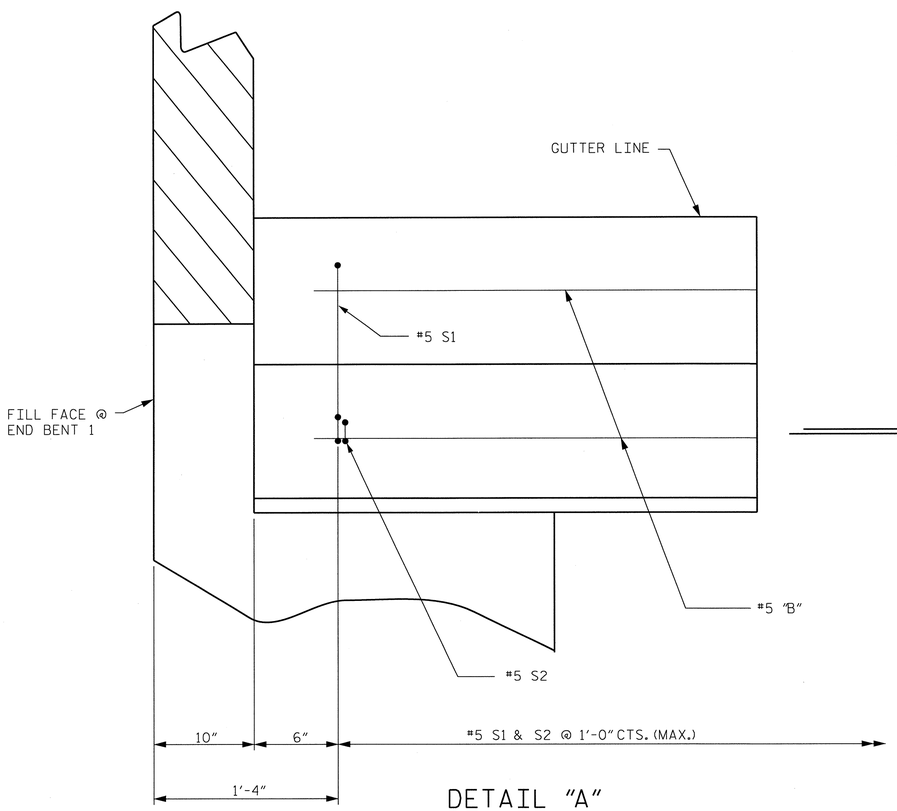

DETAIL "A"

TYPICAL FOR ALL CORNERS

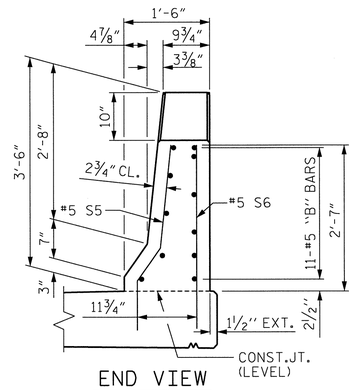

END VIEW

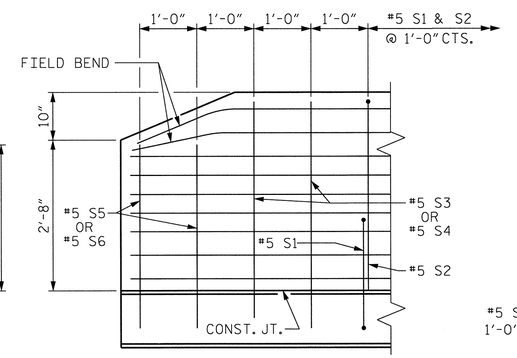

SIDE VIEW

END OF RAIL DETAILS

FOR ADHESIVE ANCHORING AT SAWED JOINTS

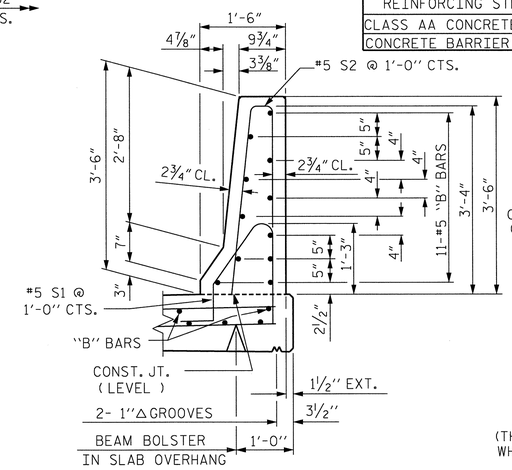

SECTION THRU RAIL

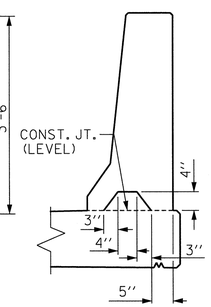

SECTION S-S

AT DAM IN OPEN JOINT
(THIS IS TO BE USED ONLY WHEN SLIP FORM IS USED)

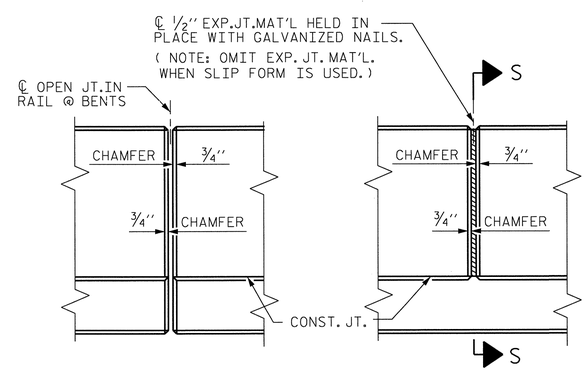

ELEVATION AT EXPANSION JOINTS

BARRIER RAIL DETAILS

PROJECT NO. R-2303C

SAMPSON COUNTY

STATION: 943+12.50 -L-

STATE OF NORTH CAROLINA
DEPARTMENT OF TRANSPORTATION
RALEIGH

STANDARD

CONCRETE BARRIER RAIL

(RIGHT LANE)

NORTH CAROLINA PROFESSIONAL SEAL 20177 ENGINEER HARDY L. WILLIS 12/7/12

REVISIONS								SHEET NO.
NO.	BY:	DATE:	NO.	BY:	DATE:			S-55
1			3					TOTAL SHEETS
2			4					138

ASSEMBLED BY : MAF		DATE : SEPT. 2012	
CHECKED BY : HLW		DATE : SEPT. 2012	
DRAWN BY : ARB 5/87	REV. 10/11/11	MAA/GM	
CHECKED BY : SJD 9/87	REV. 7/12	MAA/GM	
	REV. 10/12	MAA/GM	

$$$$$$$SYSTIME$$$$$
$$$$$$$$$$$$$$$$$$$$$$$$$DGN$$$$$$$$$$$$$$$$$$$$$$$$$
$$$$USERNAME$$$$

SHEET 1 AT 90

STR. #2

STD. NO. CBR1 (SHT 1)

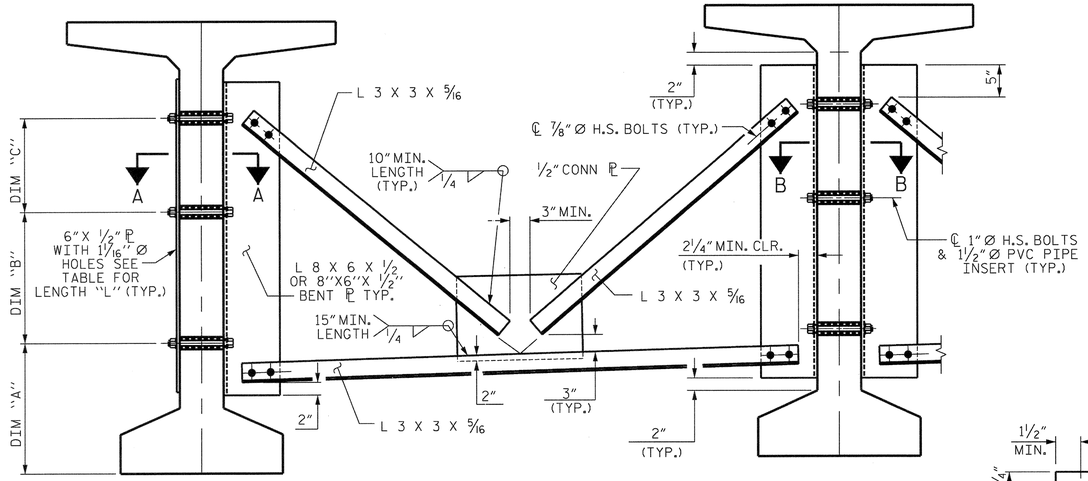

PART SECTION AT INTERMEDIATE DIAPHRAGM

(63" BULB TEE OR 72" BULB TEE GIRDER SHOWN)

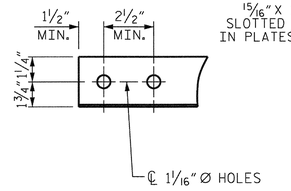

ANGLE END

(L 3 X 3 X 5/16)

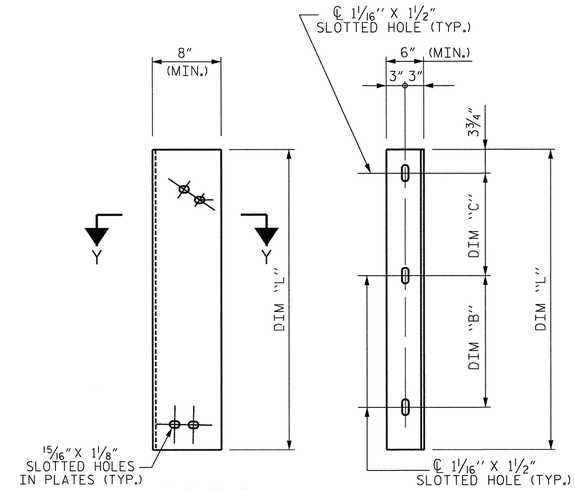

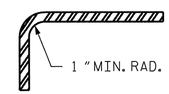

SECTION Y-Y

CONNECTOR PLATE DETAIL

STRUCTURAL STEEL NOTES

ALL INTERMEDIATE DIAPHRAGM STEEL AND CONNECTOR PLATES SHALL BE AASHTO M270 GRADE 50 OR APPROVED EQUAL.

TENSION ON THE ASTM A325 BOLTS THROUGH THE ANGLE MEMBER SHALL BE CALIBRATED USING DIRECT TENSION INDICATOR WASHERS IN ACCORDANCE WITH THE STANDARD SPECIFICATIONS.

TENSION ON THE ASTM A449 BOLTS THROUGH THE GIRDER WEB SHALL BE SNUG TIGHTENED FOLLOWED BY AN ADDITIONAL 1/4 TURN.

THE PLATES, BENT PLATES, AND ANGLES SHALL BE GALVANIZED OR METALLIZED IN ACCORDANCE WITH THE STANDARD SPECIFICATIONS. FOR THERMAL SPRAYED COATINGS (METALLIZATION), SEE SPECIAL PROVISIONS.

FOR METALLIZATION, APPLY AN 8 MIL THICK 99.99 PERCENT ZINC (W-Zn-1) THERMAL SPRAYED COATING WITH A 0.5 MIL THICK SEAL COAT TO ALL STEEL DIAPHRAGM SURFACES IN ACCORDANCE WITH THE THERMAL SPRAYED COATINGS SPECIAL PROVISION AND SECTION 442 OF THE STANDARD SPECIFICATIONS.

GALVANIZE THE HIGH STRENGTH BOLTS, NUTS, WASHERS AND DIRECT TENSION INDICATORS IN ACCORDANCE WITH THE STANDARD SPECIFICATIONS.

USE AN ASTM F436 HARDENED WASHER WITH STANDARD AND SLOTTED HOLES UNDER EACH BOLT HEAD AND NUT.

FOR BOLTS THROUGH THE GIRDER WEB, PROVIDE SUFFICIENT LENGTH OF THREADS ON ALL BOLTS TO ACCOMMODATE WASHERS AND THE THICKNESS OF CONNECTING MEMBER PLUS AT LEAST 1/4" PROJECTION BEYOND THE NUT.

INTERMEDIATE DIAPHRAGM ASSEMBLY SHALL COMPLY WITH SECTION 1072 OF THE STANDARD SPECIFICATIONS.

SUBMIT TWO SETS OF WORKING DRAWINGS FOR THE INTERMEDIATE DIAPHRAGM ASSEMBLY FOR REVIEW, COMMENTS AND ACCEPTANCE. AFTER REVIEW, COMMENTS, AND ACCEPTANCE, SUBMIT SEVEN SETS FOR DISTRIBUTION.

IN THE EXTERIOR BAYS, PLACE TEMPORARY STRUTS BETWEEN PRESTRESSED GIRDERS ADJACENT TO THE STEEL DIAPHRAGMS. STRUTS SHALL REMAIN IN PLACE 3 DAYS AFTER CONCRETE IS PLACED.

THE COST OF THE STEEL DIAPHRAGMS AND ASSEMBLIES SHALL BE INCLUDED IN THE UNIT PRICE BID FOR PRESTRESSED CONCRETE GIRDERS.

TABLE

GIRDER TYPE	DIM "A"	DIM "B"	DIM "C"	DIM "L"
63" BULB TEE	1'-9"	1'-0"	1'-0"	3'-5"
~~72" BULB TEE~~				~~4'-2"~~

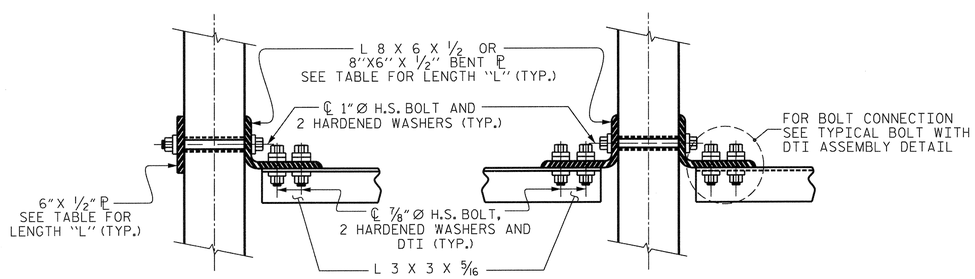

SECTION A-A

SECTION B-B

CONNECTION DETAILS

(FOR SKEW = 90°)

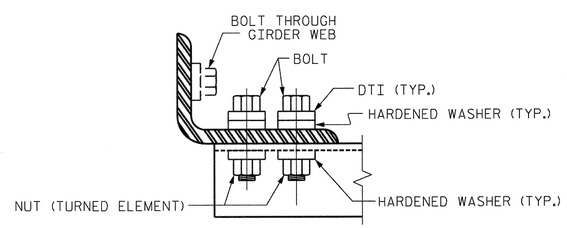

BOLT WITH DTI ASSEMBLY DETAIL

PROJECT NO. R-2303C

SAMPSON COUNTY

STATION: 943+12.50 -L-

NORTH CAROLINA PROFESSIONAL SEAL 8072 ENGINEER HARDY L. WILLIS 11/21/12

STATE OF NORTH CAROLINA
DEPARTMENT OF TRANSPORTATION
RALEIGH

STANDARD
INTERMEDIATE
STEEL DIAPHRAGMS
FOR 63" & 72"
MODIFIED BULB TEE
PRESTRESSED CONC. GDRS.
(RIGHT LANE)

REVISIONS						SHEET NO.
NO.	BY:	DATE:	NO.	BY:	DATE:	S-56
1			3			TOTAL SHEETS
2			4			138

ASSEMBLED BY : DPP	DATE : 9/2012
CHECKED BY : HLW	DATE : 9/2012
DRAWN BY : RWW 11/09	ADDED 11/23/09R
CHECKED BY : GM 11/09	

$$$$$$SYSTIME$$$$$
$$$$$$$$$$$$$$$$$$$$$$$$DGN$$$$$$$$$$$$$$$$$$$$$$$$
$$$$USERNAME$$$$

STR. #2

STD. NO. PCG13

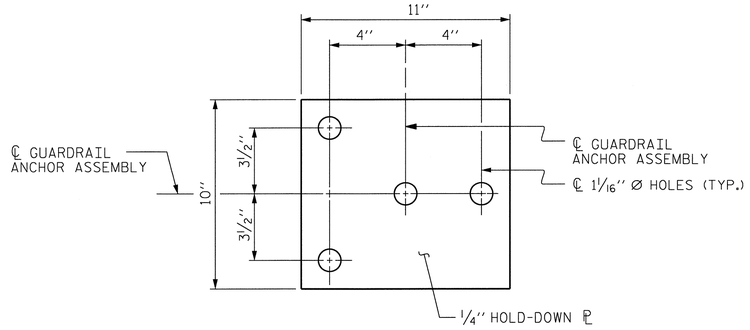

PLAN

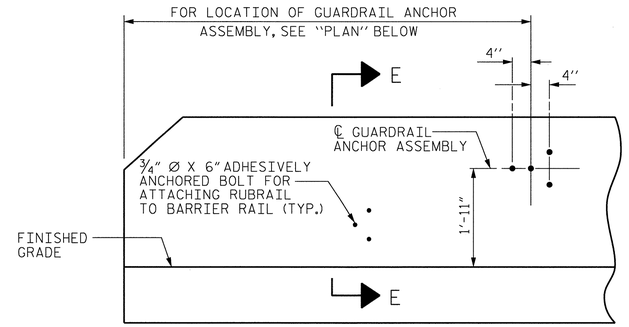

ELEVATION

FOR LOCATION OF RUBRAIL, SEE ROADWAY STD. 862.03

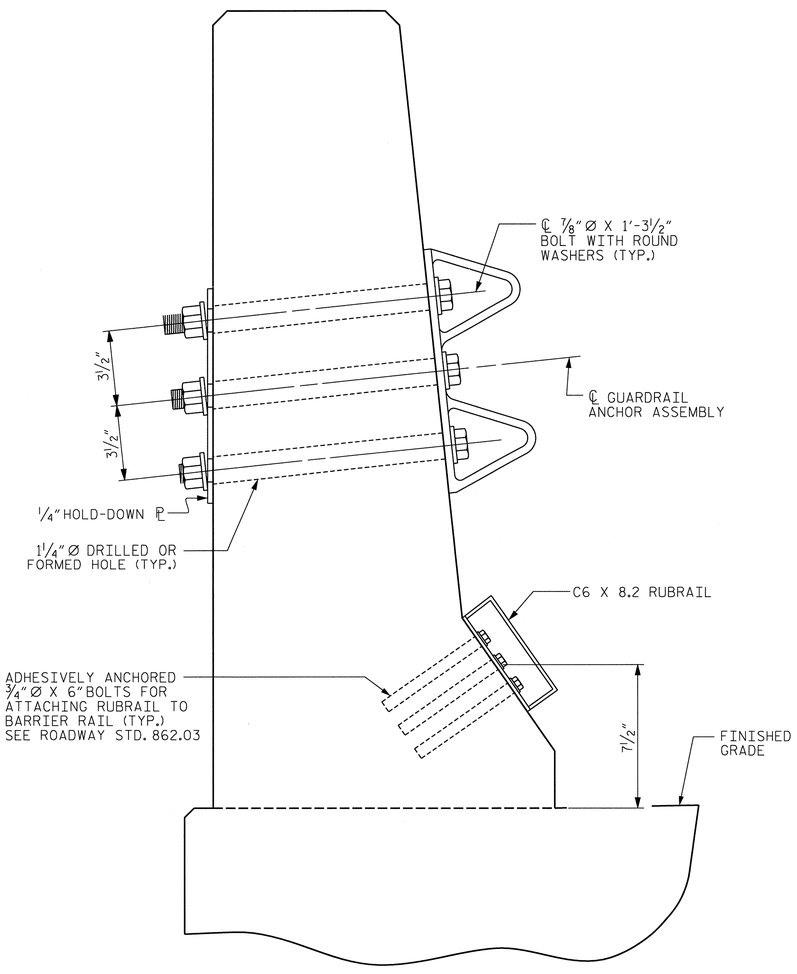

SECTION E-E

GUARDRAIL ANCHOR ASSEMBLY DETAILS

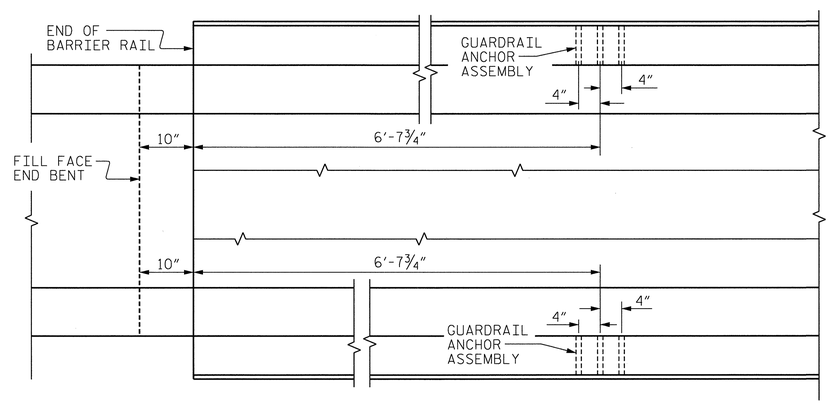

LOCATION OF ANCHORS FOR GUARDRAIL

END BENT #1 SHOWN, END BENT #2 SIMILAR.

NOTES

THE GUARDRAIL ANCHOR ASSEMBLY SHALL CONSIST OF A 1/4'' HOLD DOWN PLATE AND 4 - 7/8'' Ø BOLTS WITH NUTS AND WASHERS, RUBRAIL, AND ADHESIVELY ANCHORED BOLTS.

THE HOLD-DOWN PLATE SHALL CONFORM TO AASHTO M270 GRADE 36. AFTER FABRICATION, THE HOLD-DOWN PLATE SHALL BE HOT-DIP GALVANIZED IN ACCORDANCE WITH AASHTO M111.

BOLTS SHALL CONFORM TO THE REQUIREMENTS OF ASTM A307 AND NUTS SHALL CONFORM TO THE REQUIREMENTS OF AASHTO M291. BOLTS, NUTS AND WASHERS SHALL BE GALVANIZED. (AT THE CONTRACTOR'S OPTION, STAINLESS STEEL BOLTS, NUTS AND WASHERS MAY BE USED AS AN ALTERNATE FOR THE 7/8'' Ø GALVANIZED BOLTS, NUTS AND WASHERS. THEY SHALL CONFORM TO OR EXCEED THE MECHANICAL REQUIREMENTS OF ASTM A307. THE USE OF THIS ALTERNATE SHALL BE APPROVED BY THE ENGINEER.)

THE GUARDRAIL ANCHOR ASSEMBLY IS REQUIRED AT ALL POINTS WHERE APPROACH GUARDRAIL IS TO BE ATTACHED TO THE END OF BARRIER RAIL. FOR POINTS OF ATTACHMENT, SEE SKETCH.

AFTER INSTALLATION, THE EXPOSED THREAD OF THE BOLT SHALL BE BURRED WITH A SHARP POINTED TOOL.

THE COST OF THE GUARDRAIL ANCHOR ASSEMBLY SHALL BE INCLUDED IN THE UNIT CONTRACT PRICE BID FOR CONCRETE BARRIER RAIL.

THE 1 1/4'' Ø HOLES SHALL BE FORMED OR DRILLED WITH A CORE BIT. IMPACT TOOLS WILL NOT BE PERMITTED. ANY CONCRETE DAMAGED BY THIS WORK SHALL BE REPAIRED TO THE SATISFACTION OF THE ENGINEER.

THE C6 X 8.2 RUBRAIL IS TO BE ADHESIVELY ANCHORED TO THE RAIL USING THREE 3/4'' Ø X 6'' BOLTS WITH WASHERS. LEVEL ONE FIELD TESTING IS REQUIRED, AND THE YIELD LOAD OF THE 3/4'' Ø BOLT IS 12 KIPS. FOR ADHESIVELY ANCHORED ANCHOR BOLTS OR DOWELS, SEE STANDARD SPECIFICATIONS. SEE ROADWAY STANDARD 862.03 FOR DETAILS AND LOCATION OF THE RUBRAIL.

SKETCH SHOWING POINTS OF ATTACHMENTS

✳ DENOTES GUARDRAIL ANCHOR ASSEMBLY

PROJECT NO. R-2303C
SAMPSON COUNTY
STATION: 943+12.50 -L-

STATE OF NORTH CAROLINA
DEPARTMENT OF TRANSPORTATION
RALEIGH

STANDARD

GUARDRAIL ANCHORAGE FOR BARRIER RAIL

(RIGHT LANE)

NORTH CAROLINA PROFESSIONAL SEAL 29777 ENGINEER HARDY L. WILLIS 12/7/12

REVISIONS						SHEET NO.
NO.	BY:	DATE:	NO.	BY:	DATE:	S-57
1			3			TOTAL SHEETS
2			4			138

ASSEMBLED BY : MAF		DATE : 09/2012	
CHECKED BY : HLW		DATE : 09/2012	
DRAWN BY : TLA 5/06	REV. 10/1/11	MAA/GM	
CHECKED BY : GM 5/06	REV. 7/12	MAA/GM	
	REV. 10/12	MAA/GM	

$$$$$$SYSTIME$$$$$
$$$$$$$$$$$$$$$$$$$$$$$$DGN$$$$$$$$$$$$$$$$$$$$$$$$
$$$$USERNAME$$$$

STR. #2

STD. NO. GRA2 (SHT 3)

GROOVING BRIDGE FLOORS		
APPROACH SLABS	1,595	SQ.FT.
BRIDGE DECK	9,669	SQ.FT.
TOTAL	11,264	SQ.FT.

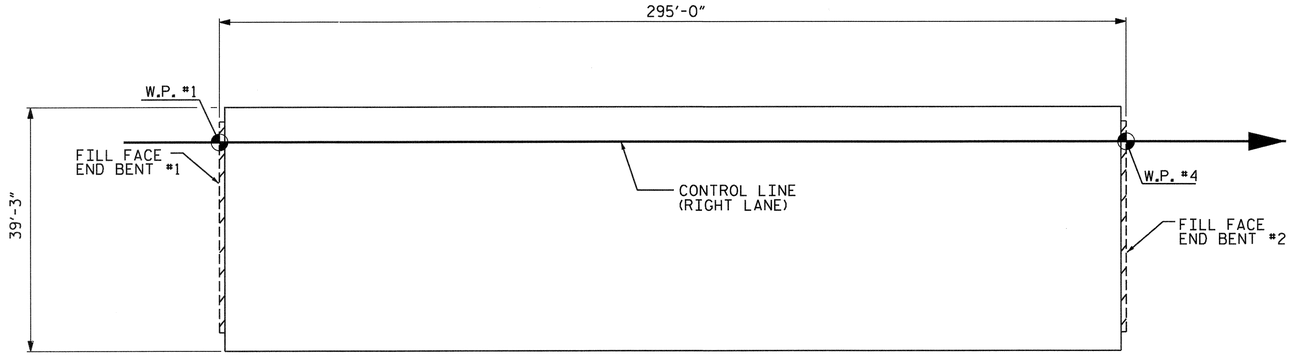

LAYOUT FOR COMPUTING AREA REINFORCED CONCRETE DECK SLAB (SQ. FT. = 11,579)

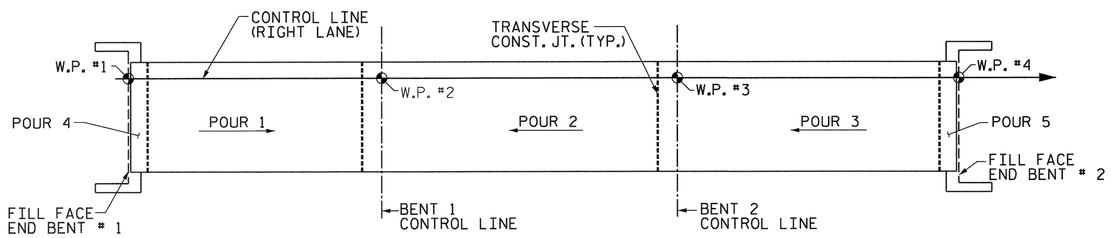

SLAB POURING SEQUENCE

NOTE: CONCRETE IN THE UPPER PORTION OF THE WINGS SHALL BE INCLUDED WITH THE SUPERSTRUCTURE POUR.

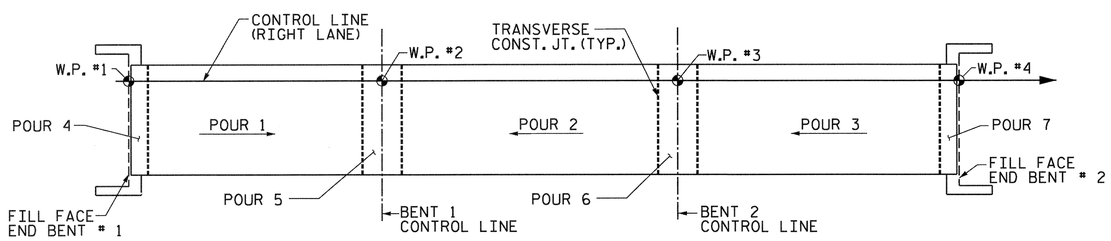

OPTIONAL POURING SEQUENCE

BILL OF MATERIAL

BAR	NO.	SIZE	TYPE	LENGTH	WEIGHT
* A1	503	#5	STR	38'-11"	20,417
A2	503	#5	STR	38'-11"	20,417
* B1	53	#7	STR	17'-10"	1,932
* B2	81	#4	STR	22'-4"	1,208
* B3	52	#7	STR	15'-6"	1,648
* B4	27	#7	STR	25'-6"	1,407
* B5	81	#4	STR	28'-8"	1,551
* B6	52	#7	STR	16'-6"	1,754
* B7	27	#7	STR	26'-6"	1,463
* B8	81	#4	STR	24'-8"	1,335
* B9	53	#7	STR	19'-10"	2,149
B10	180	#5	STR	50'-8"	9,512
H1	104	#6	1	15'-11"	2,486
K1	24	#5	STR	23'-9"	594
K2	24	#5	STR	9'-4"	234
K3	6	#5	STR	7'-9"	49
K4	6	#5	STR	6'-4"	40
K5	12	#4	STR	29'-10"	239
K6	48	#4	STR	9'-4"	299
K7	24	#4	STR	6'-4"	102
K8	16	#5	STR	6'-7"	110
K9	8	#5	STR	5'-10"	49
K10	8	#4	STR	2'-8"	14
* S1	50	#4	2	9'-9"	326
* S2	50	#4	2	12'-2"	406
S3	42	#4	4	15'-8"	440
S4	210	#4	5	2'-9"	386
U1	50	#4	3	13'-1"	437
U2	6	#4	3	15'-7"	62
U3	6	#4	3	15'-11"	64
V3	60	#4	STR.	6'-4"	254
V4	60	#4	STR.	6'-6"	261
REINFORCING STEEL					36,049 LBS.
* EPOXY COATED REINF. STEEL					35,596 LBS.

BAR TYPES

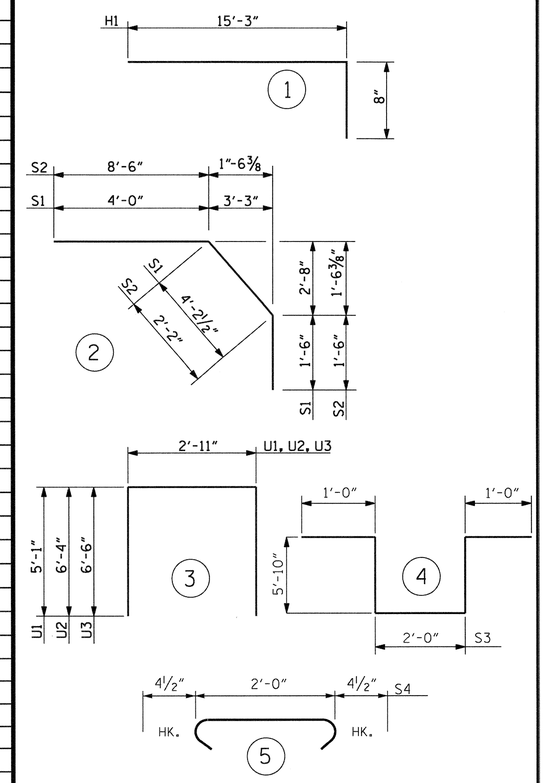

ALL BAR DIMENSIONS ARE OUT TO OUT

SUPERSTRUCTURE BILL OF MATERIAL

	CLASS AA CONCRETE	REINFORCING STEEL	EPOXY COATED REINFORCING STEEL
	(CU. YDS.)	(LBS.)	(LBS.)
POUR 1	107.2	—	—
POUR 2	161.6	—	—
POUR 3	154.9	—	—
POUR 4	83.9	—	—
TOTALS**	507.6	36,049	35,596

** QUANTITIES FOR BARRIER RAIL ARE NOT INCLUDED

PROJECT NO. R-2303C

SAMPSON COUNTY

STATION: 943+12.50 -L-

SUPERSTRUCTURE REINFORCING STEEL LENGTHS ARE BASED ON THE FOLLOWING MINIMUM SPLICE LENGTHS

BAR SIZE	SUPERSTRUCTURE EXCEPT APPROACH SLABS, PARAPET, AND BARRIER RAIL		APPROACH SLABS		PARAPET AND BARRIER RAIL
	EPOXY COATED	UNCOATED	EPOXY COATED	UNCOATED	
#4	2'-0"	1'-9"	2'-0"	1'-9"	2'-9"
#5	2'-6"	2'-2"	2'-6"	2'-2"	3'-5"
#6	3'-0"	2'-7"	3'-10"	2'-7"	4'-4"
#7	5'-3"	3'-6"			
#8	6'-10"	4'-7"			

NORTH CAROLINA PROFESSIONAL SEAL 20771 ENGINEER HARDY L. WILLIS 11/21/12

STATE OF NORTH CAROLINA
DEPARTMENT OF TRANSPORTATION
RALEIGH

STANDARD
SUPERSTRUCTURE
BILL OF MATERIAL
(RIGHT LANE)

REVISIONS						SHEET NO.
NO.	BY:	DATE:	NO.	BY:	DATE:	S-58
1			3			TOTAL SHEETS
2			4			138

ASSEMBLED BY : MAF		DATE : 09/2012	
CHECKED BY : HLW		DATE : 09/2012	
DRAWN BY : JMB	5/87	REV. 6/1/94	EEM/GRP
CHECKED BY : SJD	9/87	REV. 8/16/99	RWW/LES
		REV. 5/1/06	TLA/GM

STR. #2 STD. NO. BOM2

$$$$$$SYSTIME$$$$$
$$$$$$$$$$$$$$$$$$$$$$$$DGN$$$$$$$$$$$$$$$$$$$$$$$$
$$$$USERNAME$$$$

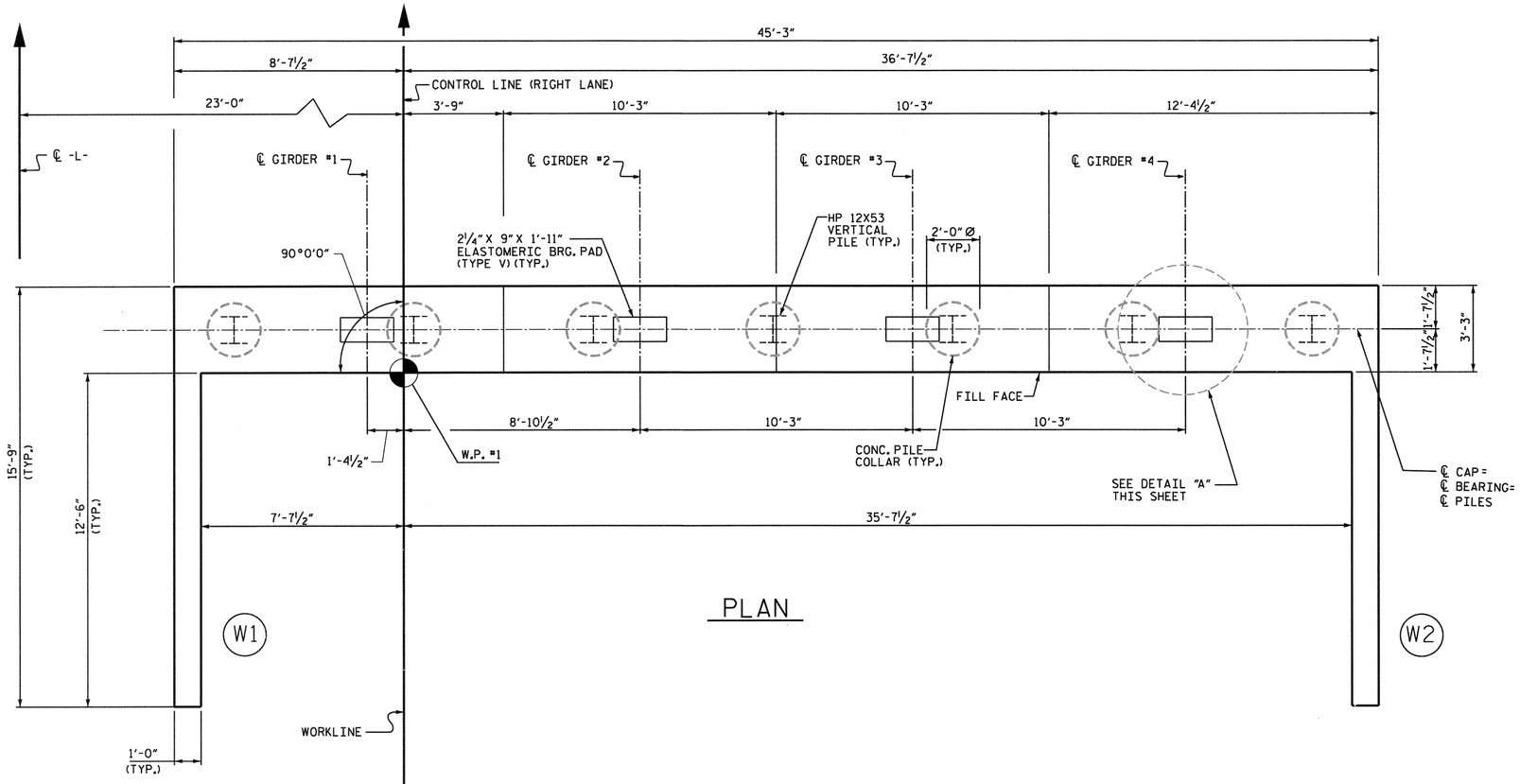

PLAN

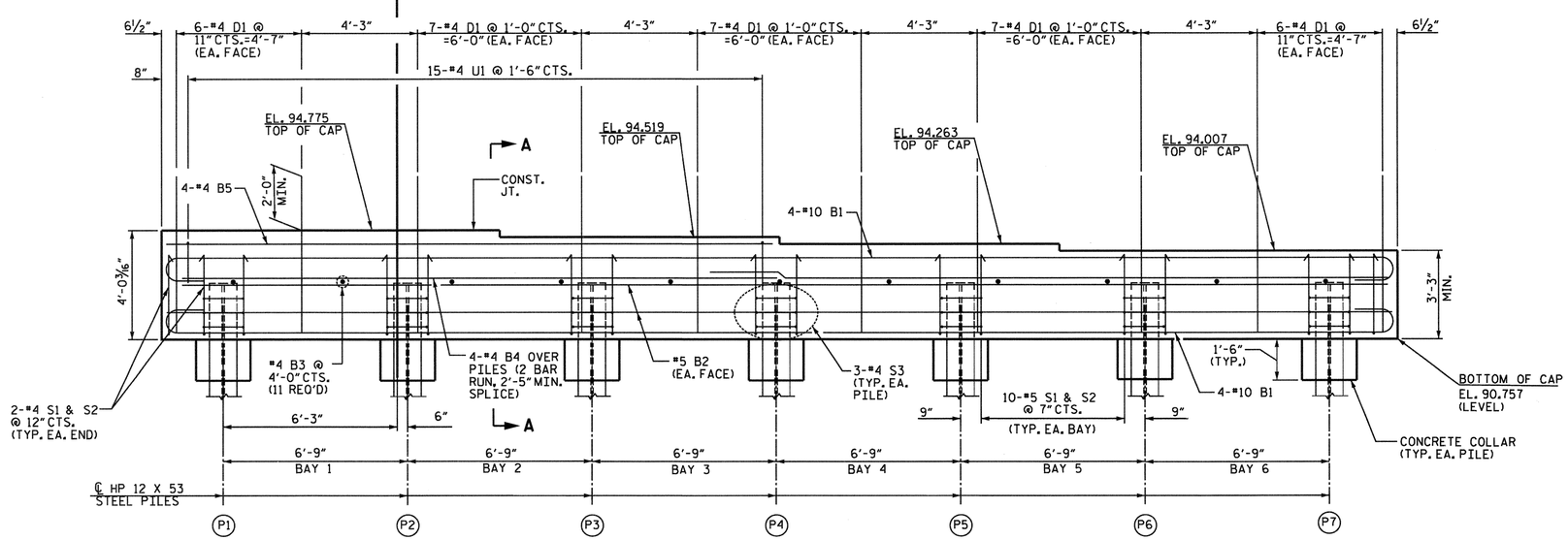

ELEVATION

(WINGS NOT SHOWN FOR CLARITY)

NOTES

FOR PILE SPLICE DETAILS, SEE SHEET 3 OF 3.

THE CONTRACTOR SHALL PROVIDE FOR INSTALLATION OF THE 4" DIAMETER DRAIN PIPE THROUGH THE WING WALL AS REQUIRED FOR REINFORCED BRIDGE APPROACH FILLS. SEE THE ROADWAY PLANS. REINFORCING STEEL IN THE WING WALL MAY BE SHIFTED AS NECESSARY TO CLEAR THE DRAIN PIPE.

SEE SUPERSTRUCTURE SHEETS FOR INTEGRAL END BENT DIAPHRAGM DETAILS, AND UPPER PART OF WINGS.

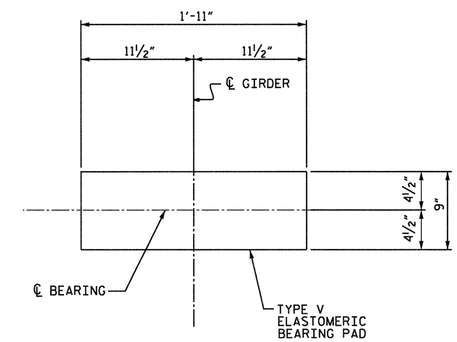

DETAIL "A"

NORTH CAROLINA PROFESSIONAL SEAL ENGINEER HARDY L. WILLIS 11/21/12

PROJECT NO. R-2303C

SAMPSON COUNTY

STATION: 943+12.50 -L-

SHEET 1 OF 3

STATE OF NORTH CAROLINA
DEPARTMENT OF TRANSPORTATION
RALEIGH

SUBSTRUCTURE
INTEGRAL
END BENT NO. 1

(RIGHT LANE)

V&M Vaughn & Melton Consulting Engineers
Asheville, North Carolina 828-253-2796
Charlotte, North Carolina 704-357-0488
Tri-Cities, Tennessee 423-467-8401
Knoxville, Tennessee 865-546-5800
Middlesboro, Kentucky 606-248-6600
Spartanburg, South Carolina 864-574-4775

Copyright © 2006 Vaughn & Melton, Inc. All Rights Reserved

DWN. BY: MAF DATE: SEPT. 2012
CHKD. BY: HLW DATE: SEPT. 2012

REVISIONS						
NO.	BY:	DATE:	NO.	BY:	DATE:	
1			3			
2			4			

SHEET NO. S-59

TOTAL SHEETS 138

STR. #2

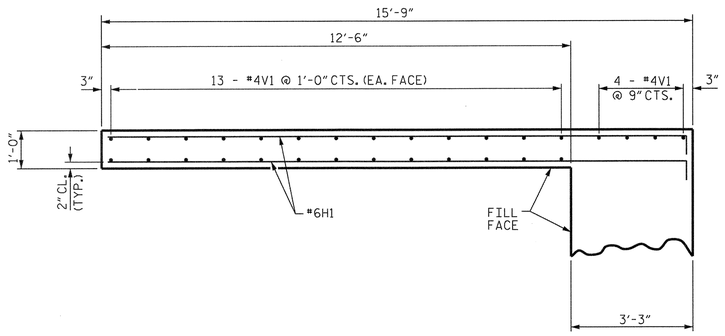

PLAN OF WING W1

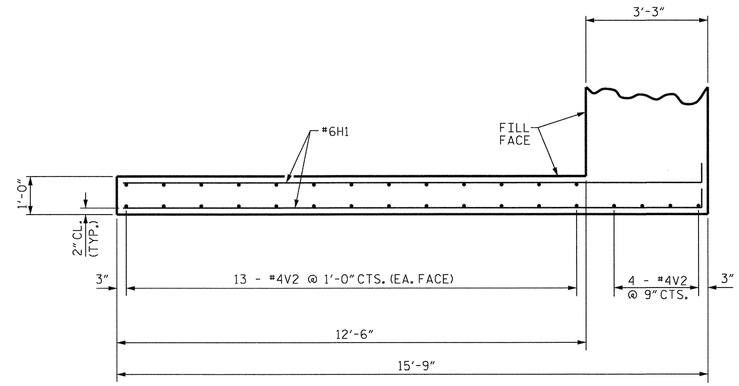

PLAN OF WING W2

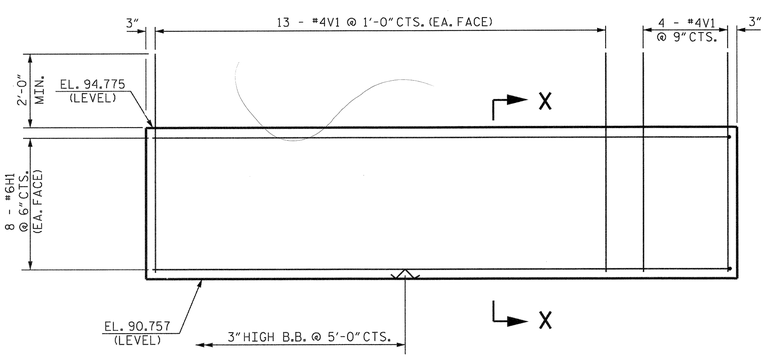

ELEVATION OF WING W1

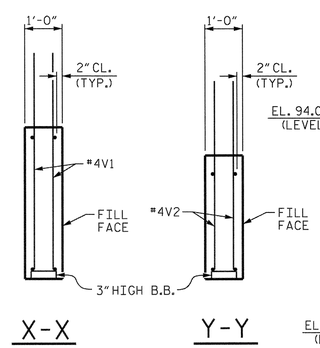

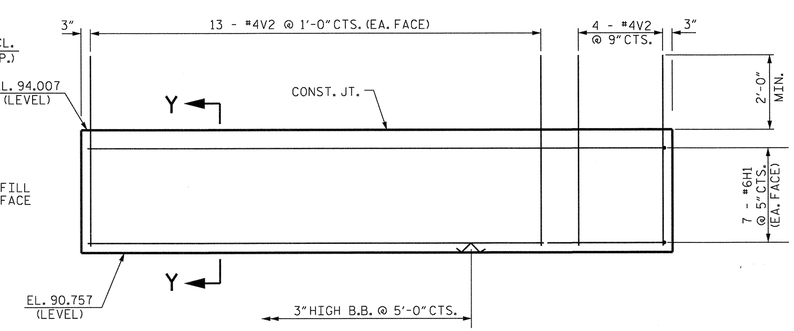

ELEVATION OF WING W2

NORTH CAROLINA PROFESSIONAL SEAL 20722 ENGINEER HARDY L. WILLIS 11/21/12

PROJECT NO. R-2303C

SAMPSON COUNTY

STATION: 943+12.50 -L-

SHEET 2 OF 3

STATE OF NORTH CAROLINA
DEPARTMENT OF TRANSPORTATION
RALEIGH

SUBSTRUCTURE
INTEGRAL
END BENT NO. 1

(RIGHT LANE)

V&M
Vaughn & Melton
Consulting Engineers
Asheville, North Carolina
828-253-2796
Charlotte, North Carolina 704-357-0488
Tri-Cities, Tennessee 423-467-8401
Knoxville, Tennessee 865-546-5800
Middlesboro, Kentucky 606-248-6600
Spartanburg, South Carolina 864-574-4775

Copyright © 2006 Vaughn & Melton, Inc. All Rights Reserved

DWN. BY: MAF DATE: SEPT. 2012
CHKD. BY: HLW DATE: SEPT. 2012

REVISIONS						
NO.	BY:	DATE:	NO.	BY:	DATE:	
1			3			
2			4			

SHEET NO. S-60

TOTAL SHEETS 138

STR. #2

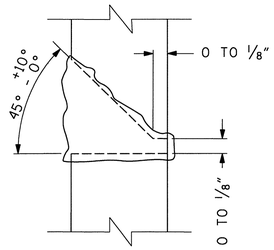

DETAIL A

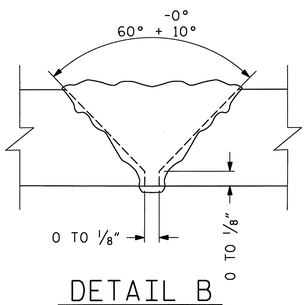

DETAIL B

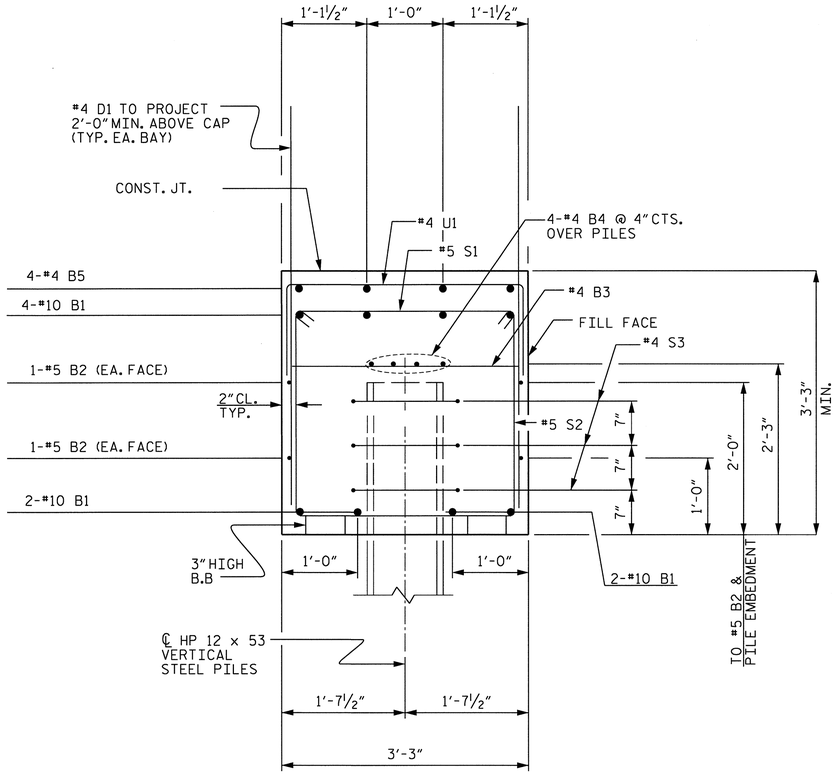

SECTION A-A

BAR TYPES

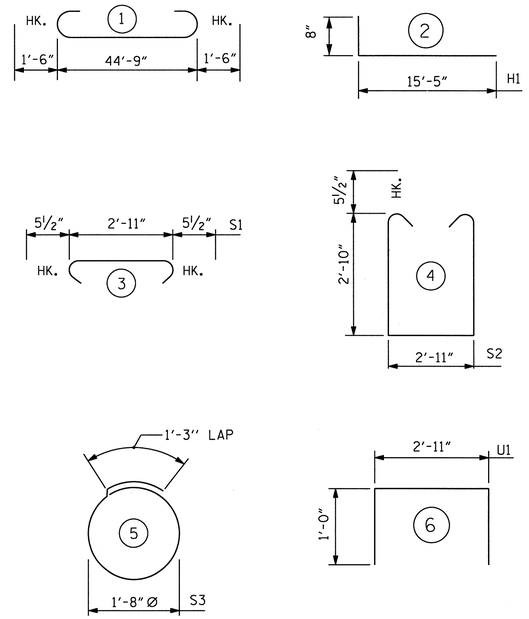

ALL BAR DIMENSIONS ARE OUT TO OUT.

BILL OF MATERIAL
END BENT 1

BAR	NO.	SIZE	TYPE	LENGTH	WEIGHT
B1	8	#10	1	47'-9"	1644
B2	4	#5	STR.	44'-11"	188
B3	11	#4	STR.	2'-11"	21
B4	8	#4	STR.	23'-8"	126
B5	4	#4	STR.	22'-3"	59
D1	66	#4	STR.	5'-9"	254
H1	15	#6	2	16'-1"	363
S1	64	#5	3	3'-10"	256
S2	64	#5	4	9'-6"	635
S3	21	#4	5	6'-6"	91
U1	15	#4	6	4'-11"	49
V1	30	#4	STR.	5'-0"	100
V2	30	#4	STR.	5'-10"	117

REINFORCING STEEL = 3,903 LBS.

CLASS A CONCRETE BREAKDOWN

POUR #1 CAP, CONCRETE COLLARS & LOWER PART OF WINGS = 23.2 C.Y.

TOTAL CLASS A CONCRETE = 23.2 C.Y.

HP 12 X 53 STEEL PILES
NO: 7 LIN. FT. = 455

PILE REDRIVES
EACH 4

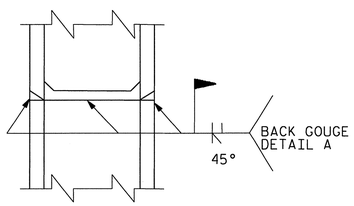

*PILE VERTICAL

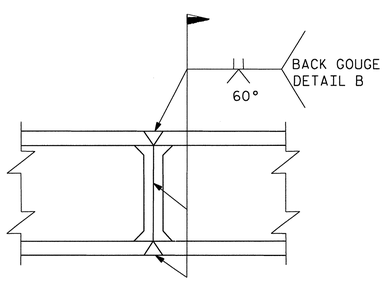

*PILE HORIZONTAL OR VERTICAL

* POSITION OF PILE DURING WELDING

PILE SPLICE DETAILS

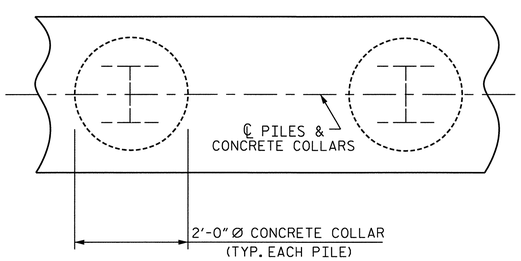

PLAN

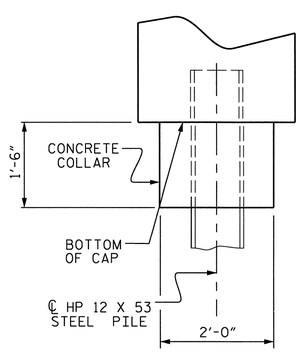

ELEVATION

CORROSION PROTECTION FOR STEEL PILES DETAIL

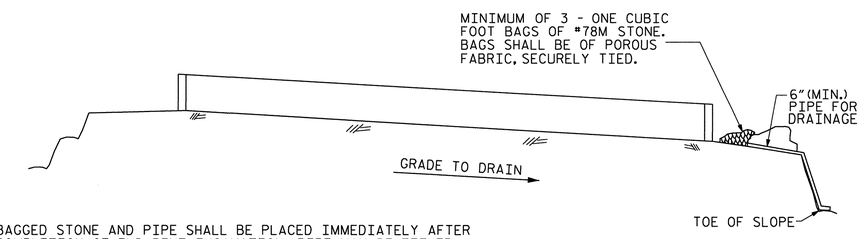

BAGGED STONE AND PIPE SHALL BE PLACED IMMEDIATELY AFTER COMPLETION OF END BENT EXCAVATION. PIPE MAY BE EITHER CONCRETE, CORRUGATED STEEL, CORRUGATED ALUMINUM ALLOY, OR CORRUGATED PLASTIC. PERFORATED PIPE WILL NOT BE ALLOWED.

BAGGED STONE SHALL REMAIN IN PLACE UNTIL THE ENGINEER DIRECTS THAT IT BE REMOVED. THE CONTRACTOR SHALL REMOVE AND DISPOSE OF SILT ACCUMULATIONS AT BAGGED STONE WHEN SO DIRECTED BY THE ENGINEER. BAGS SHALL BE REMOVED AND REPLACED WHENEVER THE ENGINEER DETERMINES THAT THEY HAVE DETERIORATED AND LOST THEIR EFFECTIVENESS.

NO SEPARATE PAYMENT WILL BE MADE FOR THIS WORK AND THE ENTIRE COST OF THIS WORK SHALL BE INCLUDED IN THE UNIT CONTRACT PRICE BID FOR THE SEVERAL PAY ITEMS.

TEMPORARY DRAINAGE AT END BENT

PROJECT NO. R-2303C
SAMPSON COUNTY
STATION: 943+12.50 -L-

SHEET 3 OF 3

STATE OF NORTH CAROLINA
DEPARTMENT OF TRANSPORTATION
RALEIGH

SUBSTRUCTURE
INTEGRAL
END BENT NO. 1

(RIGHT LANE)

NORTH CAROLINA PROFESSIONAL SEAL 20771 ENGINEER HARDY L. WILLIS 12/7/12

V&M Vaughn & Melton Consulting Engineers
Asheville, North Carolina 828-253-2796
Charlotte, North Carolina 704-357-0488
Tri-Cities, Tennessee 423-467-8401
Knoxville, Tennessee 865-546-5800
Middlesboro, Kentucky 606-248-6600
Spartanburg, South Carolina 864-574-4775
Copyright © 2006 Vaughn & Melton, Inc. All Rights Reserved

DWN. BY: MAF DATE: SEPT. 2012
CHKD. BY: HLW DATE: SEPT. 2012

REVISIONS						
NO.	BY:	DATE:	NO.	BY:	DATE:	
1			3			
2			4			

SHEET NO. S-61
TOTAL SHEETS 138

STR. #2

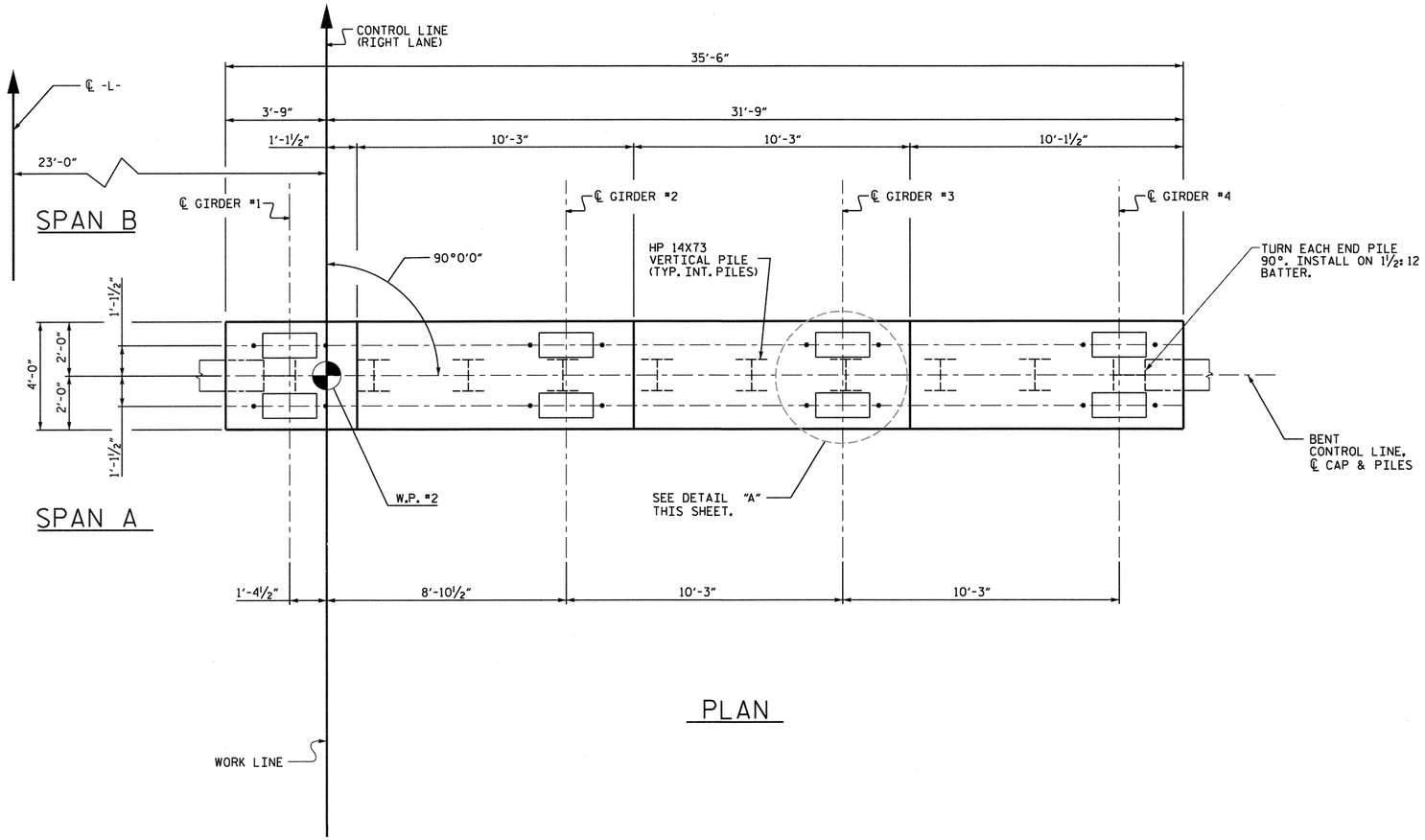

PLAN

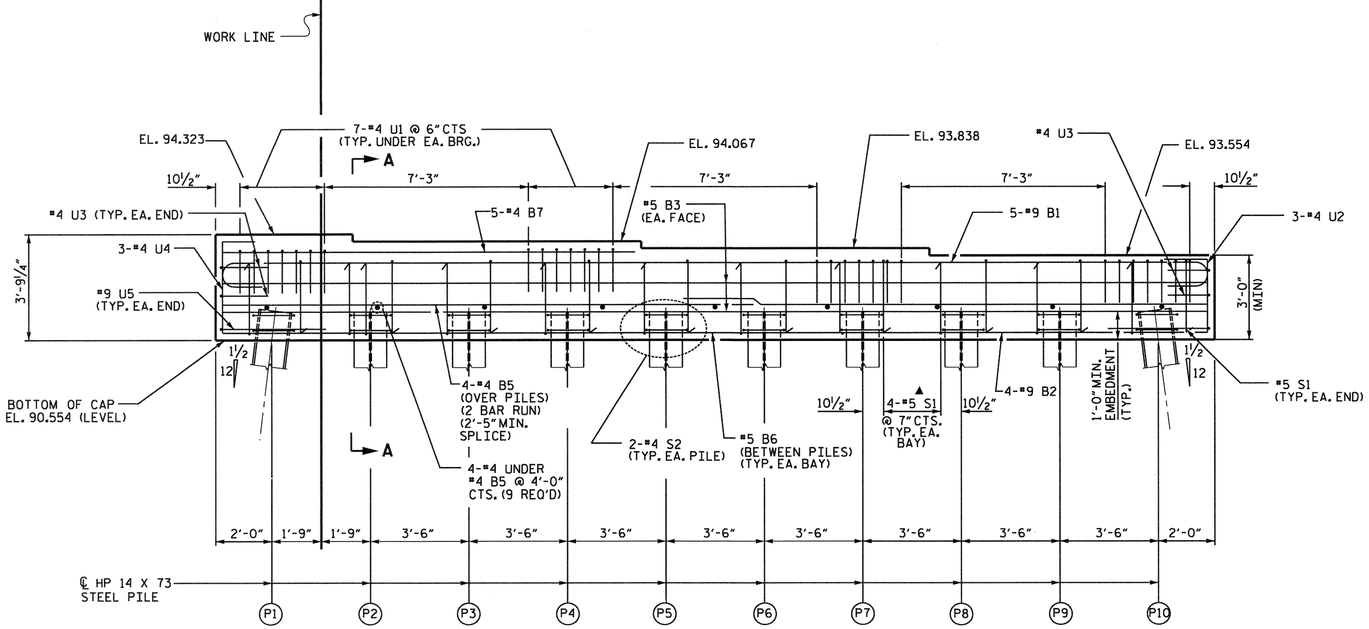

ELEVATION

▲ INVERT ALTERNATE STIRRUPS

NOTES

STIRRUPS AND "U" BARS IN CAP MAY BE SHIFTED AS NECESSARY TO CLEAR ANCHOR BOLTS.

FOR PILE SPLICE DETAILS, SEE SHEET S-61.

GALVANIZE THE TOP OF EACH INTERIOR BENT PILE A MINIMUM LENGTH OF 30 FEET. GALVANIZE IN ACCORDANCE WITH SECTION 1076 OF THE STANDARD SPECIFICATIONS.

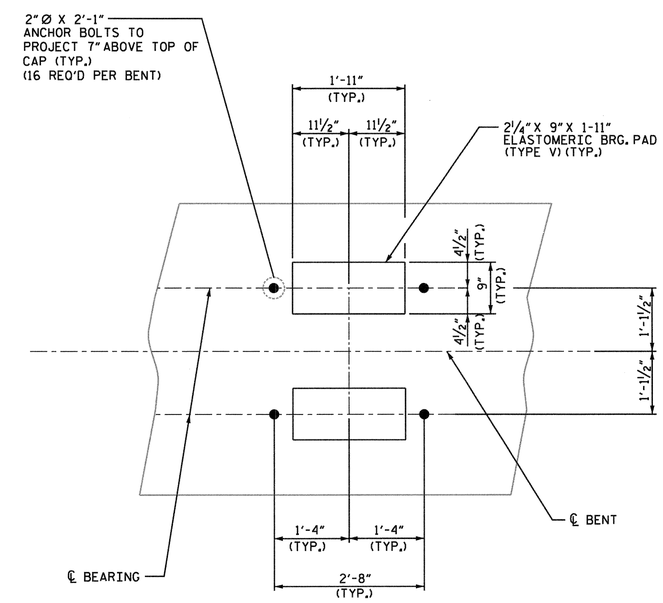

DETAIL "A"

NORTH CAROLINA PROFESSIONAL SEAL 024 ENGINEER HARDY L. WILLIS 11/12/12

PROJECT NO. R-2303C

SAMPSON COUNTY

STATION: 943+12.50 -L-

SHEET 1 OF 2

STATE OF NORTH CAROLINA
DEPARTMENT OF TRANSPORTATION
RALEIGH

SUBSTRUCTURE
BENT NO. 1

(RIGHT LANE)

V&M Vaughn & Melton Consulting Engineers
Asheville, North Carolina 828-253-2796
Charlotte, North Carolina 704-357-0488
Tri-Cities, Tennessee 423-467-840
Knoxville, Tennessee 865-546-5800
Middlesboro, Kentucky 606-248-6600
Spartanburg, South Carolina 864-574-4775
Copyright © 2006 Vaughn & Melton, Inc. All Rights Reserved

DWN. BY: MAF DATE: SEPT. 2012
CHKD. BY: HLW DATE: SEPT. 2012

REVISIONS						SHEET NO.
NO.	BY:	DATE:	NO.	BY:	DATE:	S-62
1			3			TOTAL SHEETS
2			4			138

STR. #2

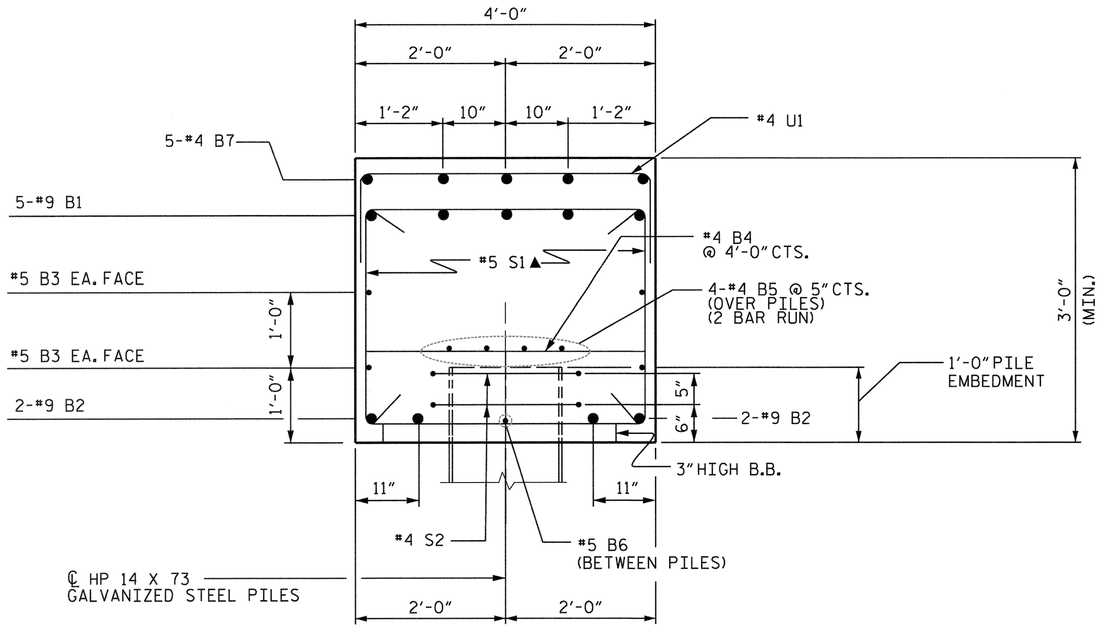

SECTION A-A

▲ INVERT ALTERNATE STIRRUPS

BAR TYPES

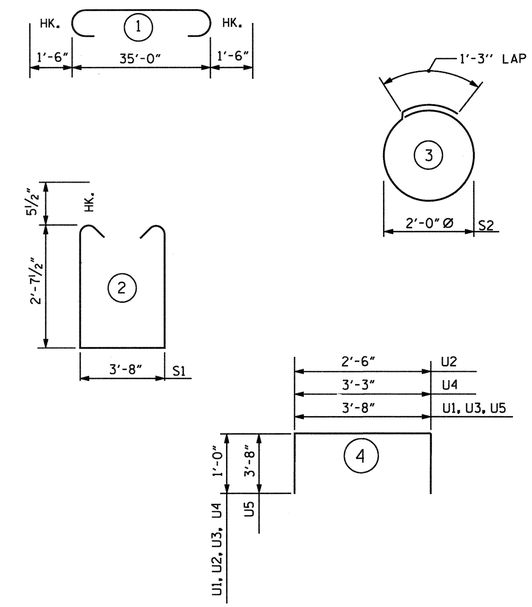

ALL BAR DIMENSIONS ARE OUT TO OUT.

BILL OF MATERIAL

BENT 1

BAR	NO.	SIZE	TYPE	LENGTH	WEIGHT
B1	5	#9	1	38'-0"	646
B2	4	#9	STR.	35'-2"	478
B3	4	#5	STR.	35'-2"	147
B4	9	#4	STR.	3'-8"	22
B5	8	#4	STR.	18'-10"	101
B6	9	#5	STR.	2'-6"	23
B7	5	#4	STR.	14'-9"	49
S1	38	#5	2	9'-10"	390
S2	20	#4	3	7'-7"	101
U1	28	#4	4	5'-8"	106
U2	3	#4	4	4'-6"	9
U3	4	#4	4	5'-8"	15
U4	3	#4	4	5'-3"	11
U5	2	#9	4	11'-0"	75

REINFORCING STEEL = 2,173 LBS.

CLASS A CONCRETE BREAKDOWN

POUR #1 CAP, CONCRETE = 17.6 C.Y.

TOTAL CLASS A CONCRETE = 17.6 C.Y.

HP 14 X 73 GALVANIZED STEEL PILES
NO: 10 LIN. FT. = 700

PILE REDRIVES
EACH 5

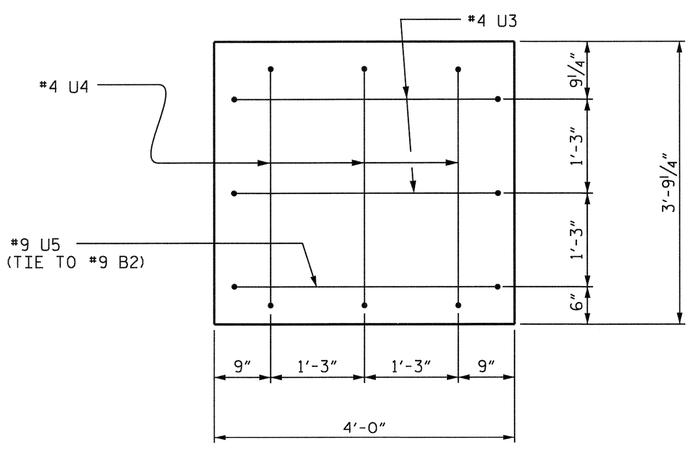

LEFT END OF CAP VIEW

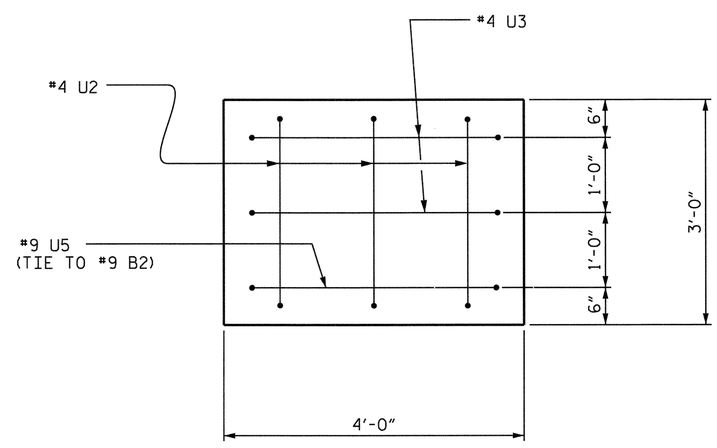

RIGHT END OF CAP VIEW

NORTH CAROLINA PROFESSIONAL SEAL 20776 ENGINEER HARDY L. WILLIS 11/21/12

PROJECT NO. R-2303C
SAMPSON COUNTY
STATION: 943+12.50 -L-

SHEET 2 OF 2

STATE OF NORTH CAROLINA
DEPARTMENT OF TRANSPORTATION
RALEIGH

SUBSTRUCTURE
BENT NO. 1

(RIGHT LANE)

V&M Vaughn & Melton Consulting Engineers
Asheville, North Carolina 828-253-2796
Charlotte, North Carolina 704-357-0488
Tri-Cities, Tennessee 423-467-8401
Knoxville, Tennessee 865-546-5800
Middlesboro, Kentucky 606-248-6600
Spartanburg, South Carolina 864-574-4775

Copyright © 2006 Vaughn & Melton, Inc. All Rights Reserved

DWN. BY: MAF DATE: SEPT. 2012
CHKD. BY: HLW DATE: SEPT. 2012

REVISIONS						SHEET NO.
NO.	BY:	DATE:	NO.	BY:	DATE:	S-63
1			3			TOTAL SHEETS
2			4			138

STR. #2

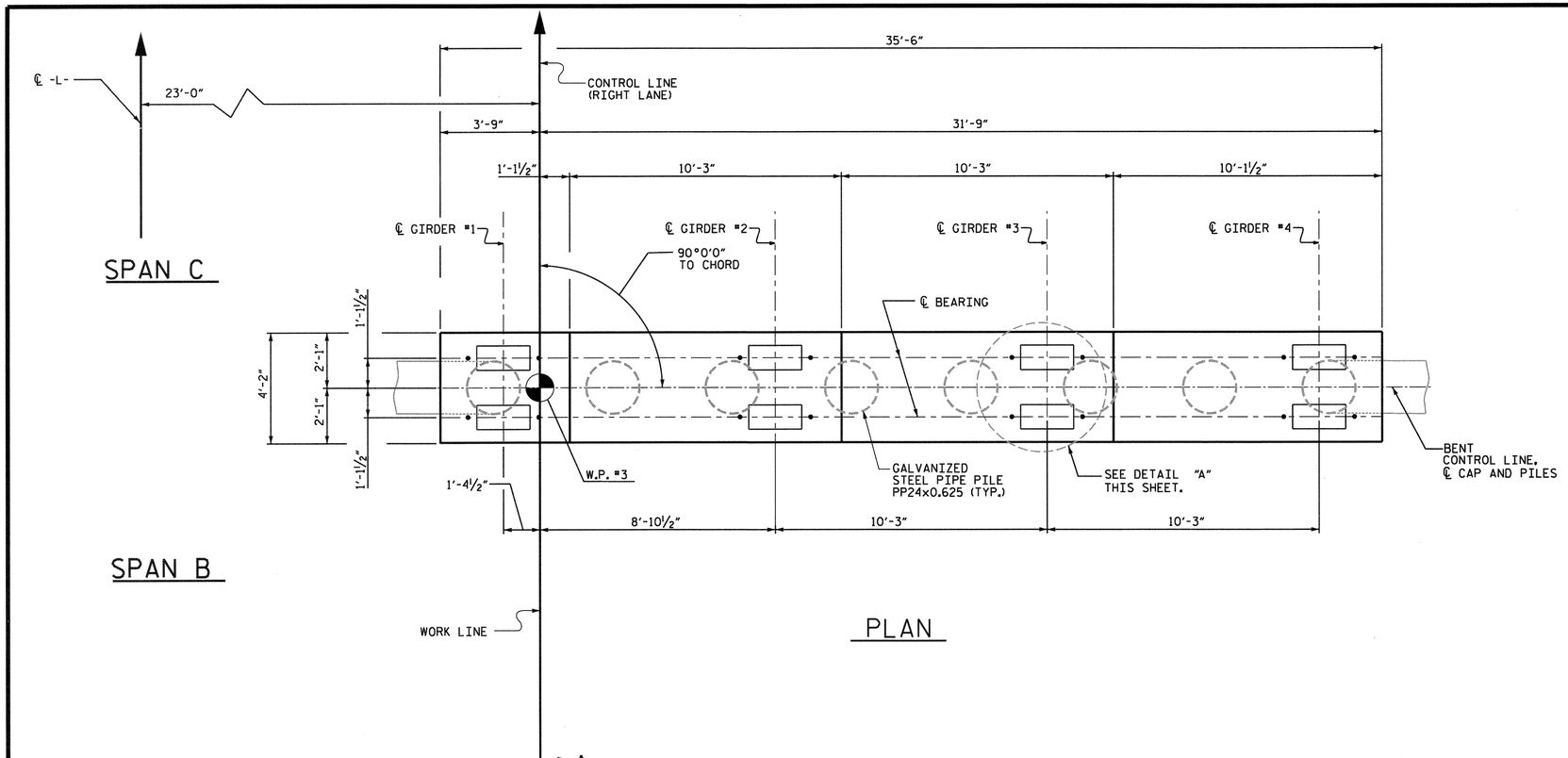

PLAN

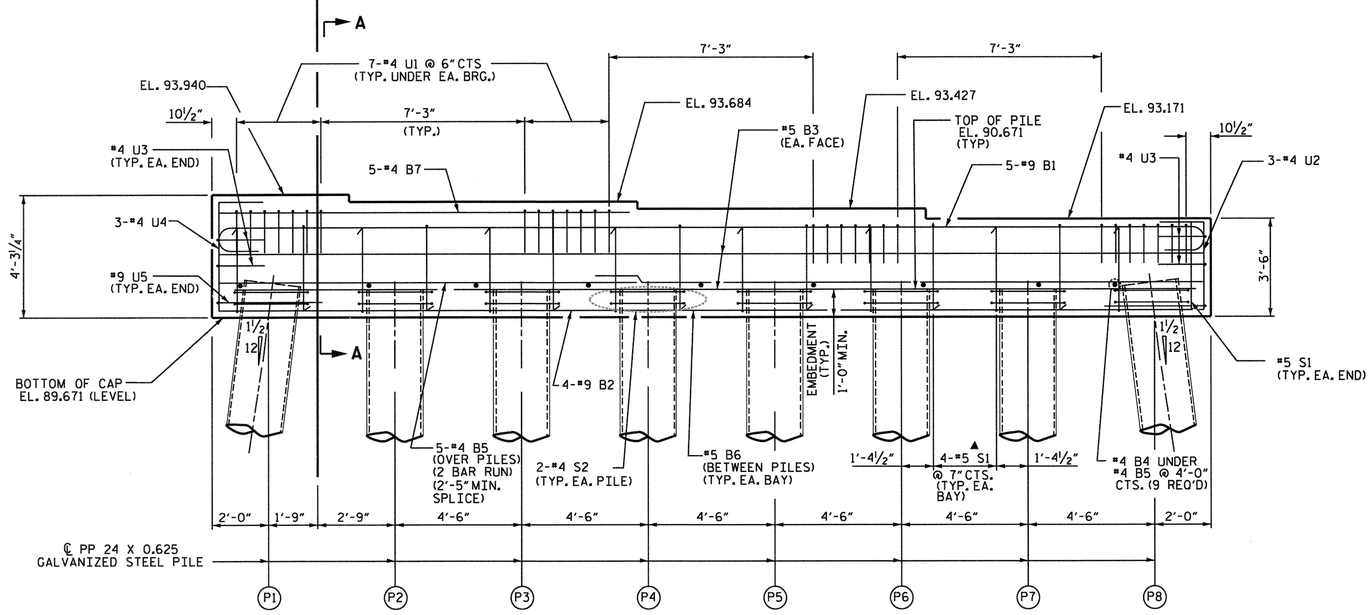

ELEVATION

INVERT ALTERNATE STIRRUPS ▲

NOTES

STIRRUPS AND "U" BARS IN CAP MAY BE SHIFTED AS NECESSARY TO CLEAR ANCHOR BOLTS.

FOR ADDITIONAL REINFORCING STEEL IN PP 24 X 0.625 GALVANIZED STEEL PIPE PILES, SEE 24" STEEL PIPE PILE STANDARD.

FOR PILE SPLICE DETAILS, SEE 24" STEEL PIPE PILE STANDARD.

GALVANIZE THE TOP OF EACH INTERIOR BENT PILE A MINIMUM LENGTH OF 38 FEET. GALVANIZE IN ACCORDANCE WITH SECTION 1076 OF THE STANDARD SPECIFICATIONS.

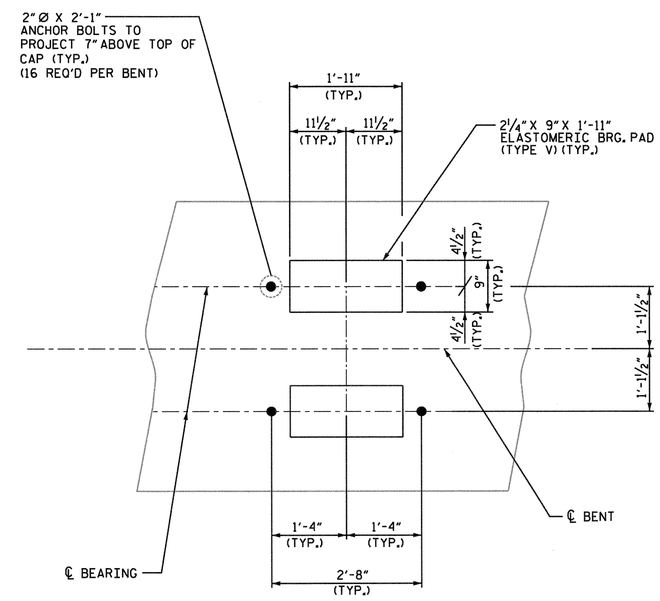

DETAIL "A"

NORTH CAROLINA PROFESSIONAL SEAL 20774 ENGINEER HARDY L. WILLIS 11/21/12

PROJECT NO. R-2303C

SAMPSON COUNTY

STATION: 943+12.50 -L-

SHEET 1 OF 2

V&M
Vaughn & Melton
Consulting Engineers
Asheville, North Carolina
828-253-2796
Charlotte, North Carolina 704-357-0488
Tri-Cities, Tennessee 423-467-8401
Knoxville, Tennessee 865-546-5800
Middlesboro, Kentucky 606-248-6400
Spartanburg, South Carolina 864-574-4775

Copyright © 2006 Vaughn & Melton, Inc.
All Rights Reserved

STATE OF NORTH CAROLINA
DEPARTMENT OF TRANSPORTATION
RALEIGH

SUBSTRUCTURE BENT NO. 2

(RIGHT LANE)

DWN. BY: MAF DATE: SEPT. 2012
CHKD. BY: HLW DATE: SEPT. 2012

REVISIONS						SHEET NO.
NO.	BY:	DATE:	NO.	BY:	DATE:	S-64
1			3			TOTAL SHEETS
2			4			138

STR. #2

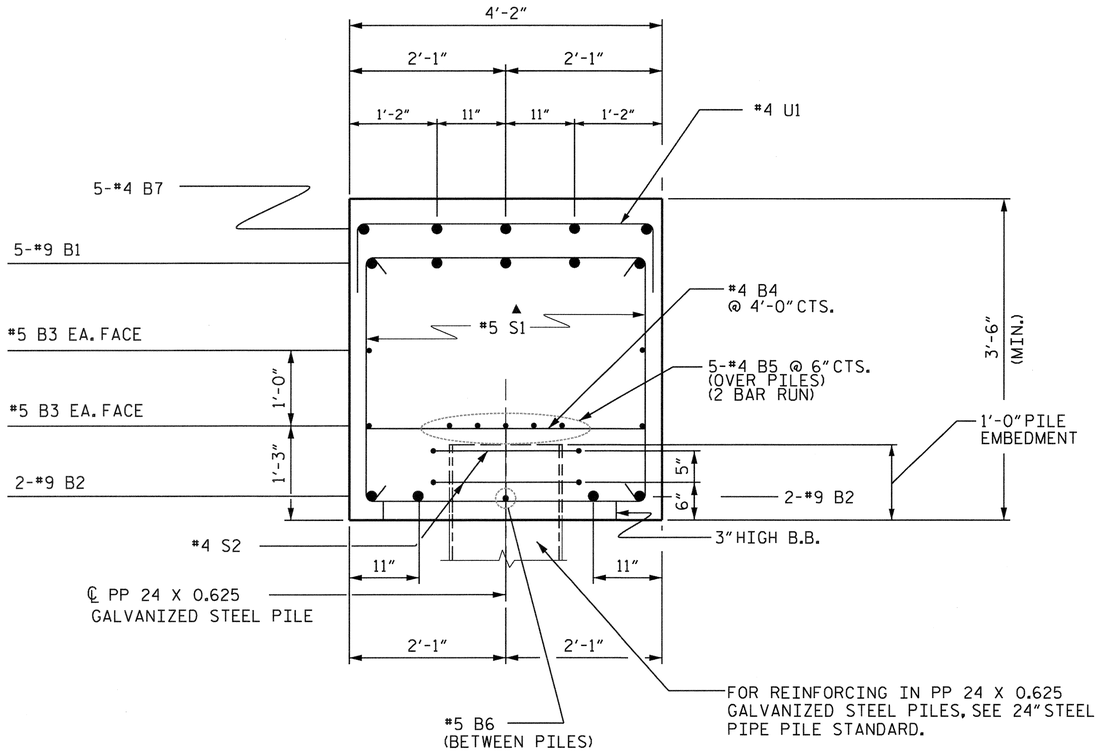

SECTION A-A

▲ INVERT ALTERNATE STIRRUPS

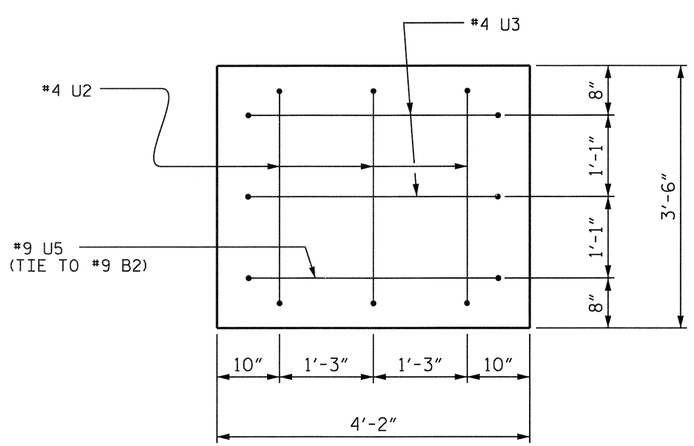

LEFT END OF CAP VIEW

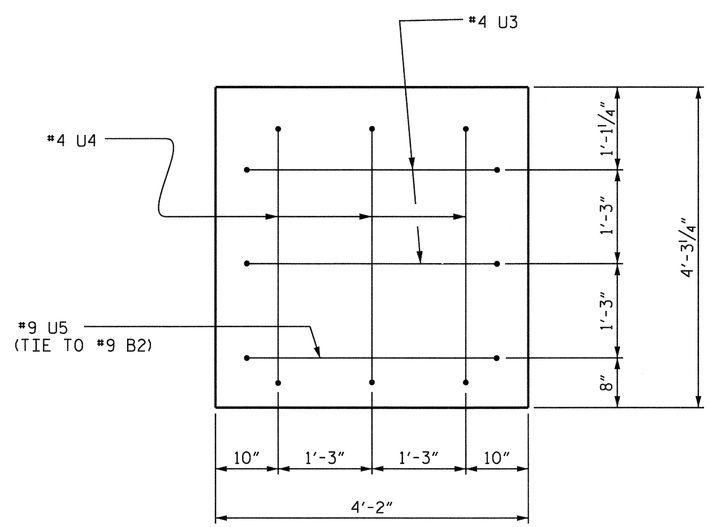

RIGHT END OF CAP VIEW

BAR TYPES

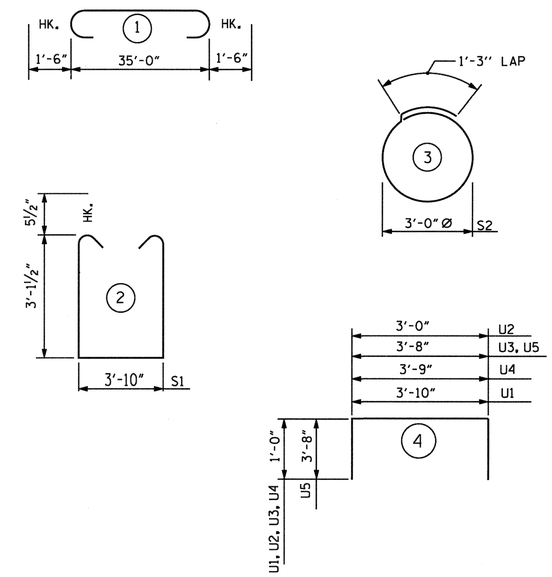

ALL BAR DIMENSIONS ARE OUT TO OUT.

BILL OF MATERIAL

BENT 2

BAR	NO.	SIZE	TYPE	LENGTH	WEIGHT
B1	5	#9	1	38'-0"	646
B2	4	#9	STR.	35'-2"	478
B3	4	#5	STR.	35'-2"	147
B4	9	#4	STR.	3'-10"	23
B5	10	#4	STR.	18'-10"	126
B6	7	#5	STR.	2'-0"	15
B7	5	#4	STR.	14'-9"	49
S1	30	#5	2	11'-0"	345
S2	16	#4	3	10'-9"	115
U1	28	#4	4	5'-10"	109
U2	3	#4	4	5'-0"	10
U3	4	#4	4	5'-8"	15
U4	3	#4	4	5'-9"	12
U5	2	#9	4	11'-0"	75

REINFORCING STEEL = 2,165 LBS.

CLASS A CONCRETE BREAKDOWN

✱ POUR #1 CAP, CONCRETE = 20.0 C.Y.

TOTAL CLASS A CONCRETE = 20.0 C.Y.

PP 24 X 0.625 GALVANIZED STEEL PILES
NO: 8 LIN. FT. = 600

PILE REDRIVES
EACH 4

PIPE PILE PLATES
EACH 8

✱ CONCRETE DISPLACED BY THE FILLED PP 24 X 0.625 GALVANIZED STEEL PILES HAS BEEN DEDUCTED FROM THE QUANTITY OF CLASS A CONCRETE FOR BENT CAP.

NORTH CAROLINA PROFESSIONAL SEAL 20777 ENGINEER HARDY L. WILLIS 11/21/12

PROJECT NO. R-2303C
SAMPSON COUNTY
STATION: 943+12.50 -L-

SHEET 2 OF 2

V&M Vaughn & Melton Consulting Engineers
Asheville, North Carolina 828-253-2796
Charlotte, North Carolina 704-357-0488
Tri-Cities, Tennessee 423-467-8401
Knoxville, Tennessee 865-546-5800
Middlesboro, Kentucky 606-248-6600
Spartanburg, South Carolina 864-574-4775

Copyright © 2006 Vaughn & Melton, Inc. All Rights Reserved

DWN. BY: MAF DATE: SEPT. 2012
CHKD. BY: HLW DATE: SEPT. 2012

STATE OF NORTH CAROLINA
DEPARTMENT OF TRANSPORTATION
RALEIGH

SUBSTRUCTURE
BENT NO. 2

(RIGHT LANE)

REVISIONS						SHEET NO.
NO.	BY:	DATE:	NO.	BY:	DATE:	S-65
1			3			TOTAL SHEETS
2			4			138

STR. #2

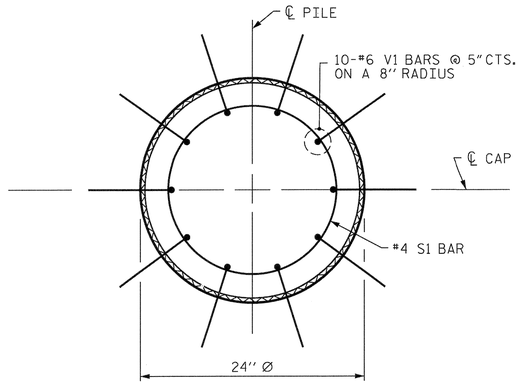

PLAN

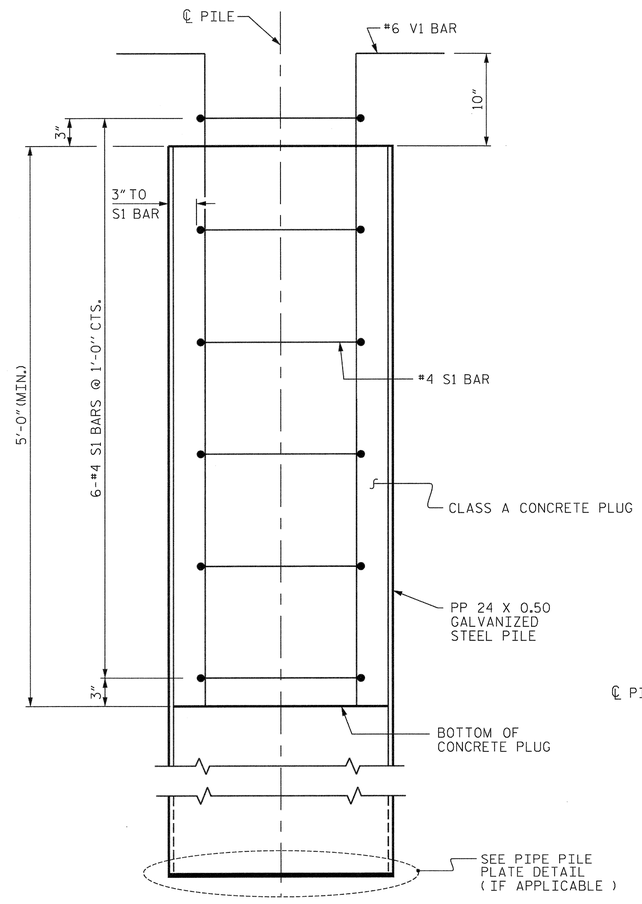

ELEVATION

PP 24 X 0.50 GALVANIZED STEEL PILE

(OPEN OR CLOSED END)

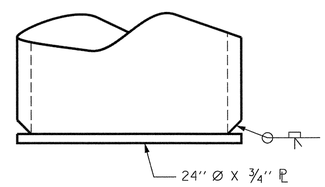

PIPE PILE PLATE DETAIL

(IF APPLICABLE)

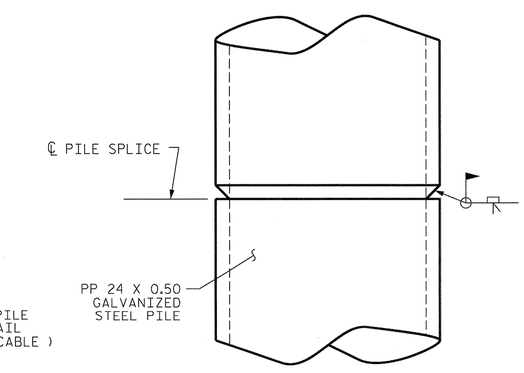

PIPE PILE SPLICE DETAIL

NOTES

PIPE PILES SHALL BE IN ACCORDANCE WITH SECTION 1084 OF THE STANDARD SPECIFICATIONS.

GALVANIZE STEEL PIPE PILES IN ACCORDANCE WITH SECTION 1076 OF THE STANDARD SPECIFICATIONS UNLESS METALLIZING IS REQUIRED. GALVANIZING OR METALLIZING PIPE PILE PLATES IS NOT REQUIRED.

PIPE PILE PLATES, IF REQUIRED, SHALL BE IN ACCORDANCE WITH SECTION 450 OF THE STANDARD SPECIFICATIONS.

REMOVE AND REPLACE OR REPAIR TO THE SATISFACTION OF THE ENGINEER PILES THAT ARE DAMAGED, DEFORMED OR COLLAPSED DURING INSTALLATION OR DRIVING.

PILE SPLICES SHALL BE IN ACCORDANCE WITH THE STANDARD SPECIFICATIONS AND AWS D1.1.

FOR CLOSED END PIPE PILES, REMOVE ALL SOIL AND WATER FROM INSIDE THE PILES JUST PRIOR TO PLACING REINFORCING STEEL AND CONCRETE FOR THE CONCRETE PLUG.

FOR OPEN END PIPE PILES, REMOVE ENOUGH SOIL AND WATER FROM INSIDE THE PILES TO CONSTRUCT THE CONCRETE PLUG WITHOUT FOULING THE CONCRETE.

FORM THE CONCRETE PLUG SUCH THAT THE REINFORCING STEEL OR CONCRETE DOES NOT MOVE AND THE CLEARANCE FROM THE REINFORCING STEEL TO THE INSIDE OF THE PILE IS MAINTAINED AFTER CONCRETE PLACEMENT. DO NOT PLACE CONCRETE IN THE BENT CAP UNTIL THE CONCRETE PLUG HAS ATTAINED A MINIMUM COMPRESSIVE STRENGTH OF 1500 PSI.

THE REINFORCING STEEL, CLASS A CONCRETE, AND GALVANIZING ARE CONSIDERED INCIDENTAL TO THE CONTRACT UNIT PRICE BID PER LINEAR FOOT FOR PP 24 X 0.50 GALVANIZED STEEL PILES.

BILL OF MATERIAL FOR ONE PP 24 X 0.50 GALVANIZED STEEL PILE

BAR	NO.	SIZE	TYPE	LENGTH	WEIGHT
S1	6	#4	1	6'-0"	24
V1	10	#6	2	6'-8"	100
REINFORCING STEEL =					124 lbs
CLASS A CONCRETE					
5'-0" MINIMUM PLUG					0.5 CY

BAR TYPES

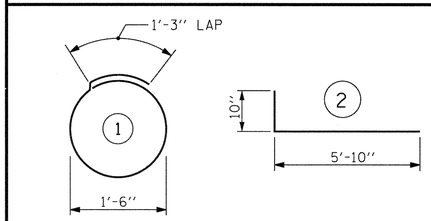

ALL BAR DIMENSIONS ARE OUT TO OUT.

PROJECT NO. R-2303C

SAMPSON COUNTY

STATION: 943+12.50 -L-

NORTH CAROLINA PROFESSIONAL SEAL 20776 ENGINEER HARDY L. WILLIS 11/21/12

STATE OF NORTH CAROLINA
DEPARTMENT OF TRANSPORTATION
RALEIGH

STANDARD

24" STEEL PIPE PILE

(RIGHT LANE)

REVISIONS						SHEET NO.
NO.	BY:	DATE:	NO.	BY:	DATE:	S-66
1			3			TOTAL SHEETS
2			4			138

STR. #2 STD. NO. SPP4

ASSEMBLED BY : MAF	DATE : 09/2012
CHECKED BY : HLW	DATE : 09/2012
DRAWN BY : TLA 8/05	ADDED 10/1/05
CHECKED BY : GM 9/05	REV. 5/1/06R MAA/KMM
	REV. 10/1/11 MAA/GM

$$$$$$SYSTIME$$$$$
$$$$$$$$$$$$$$$$$$$$DGN$$$$$$$$$$$$$$$$$$$$$$$$
$$$$USERNAME$$$$

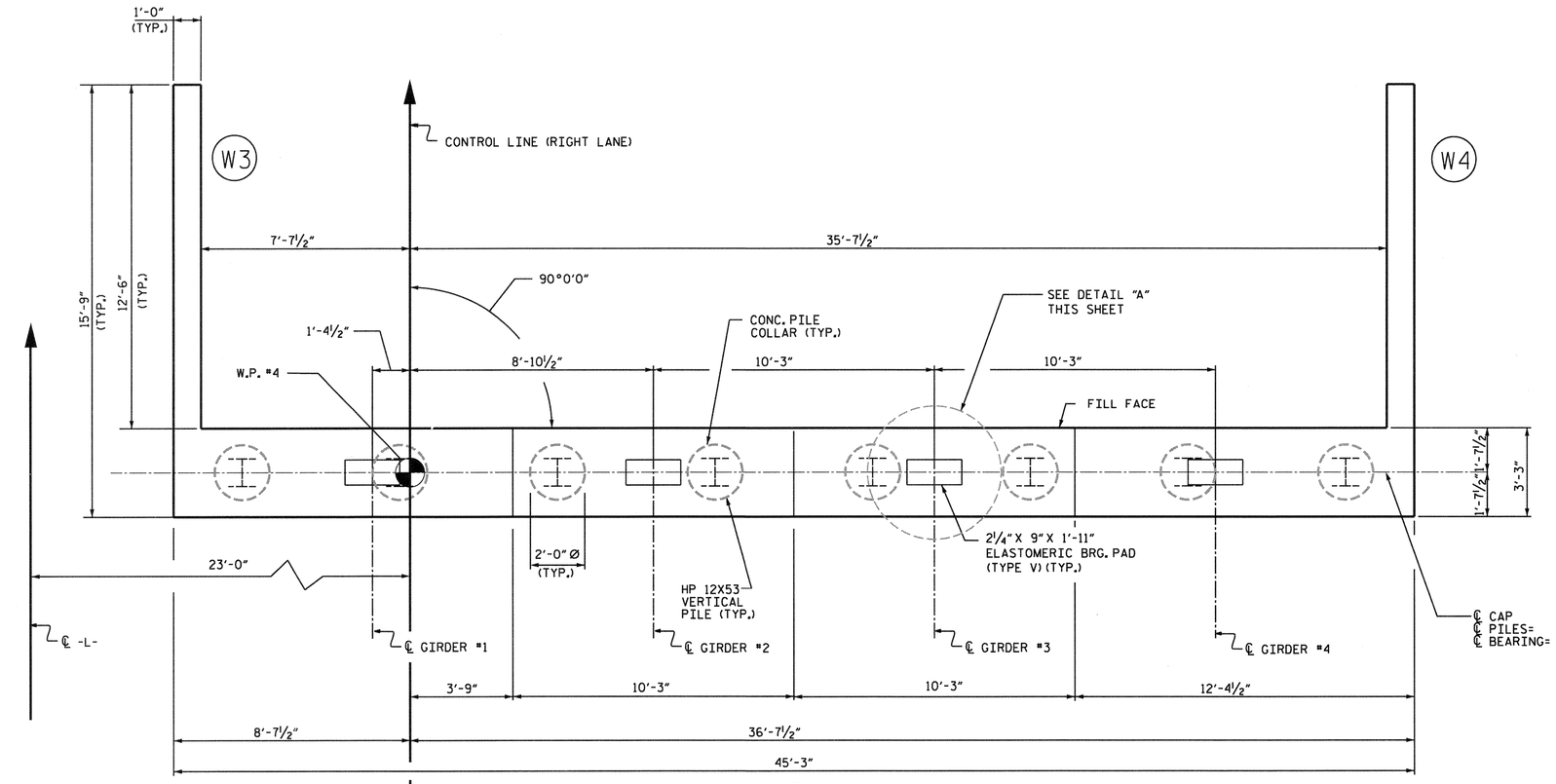

PLAN

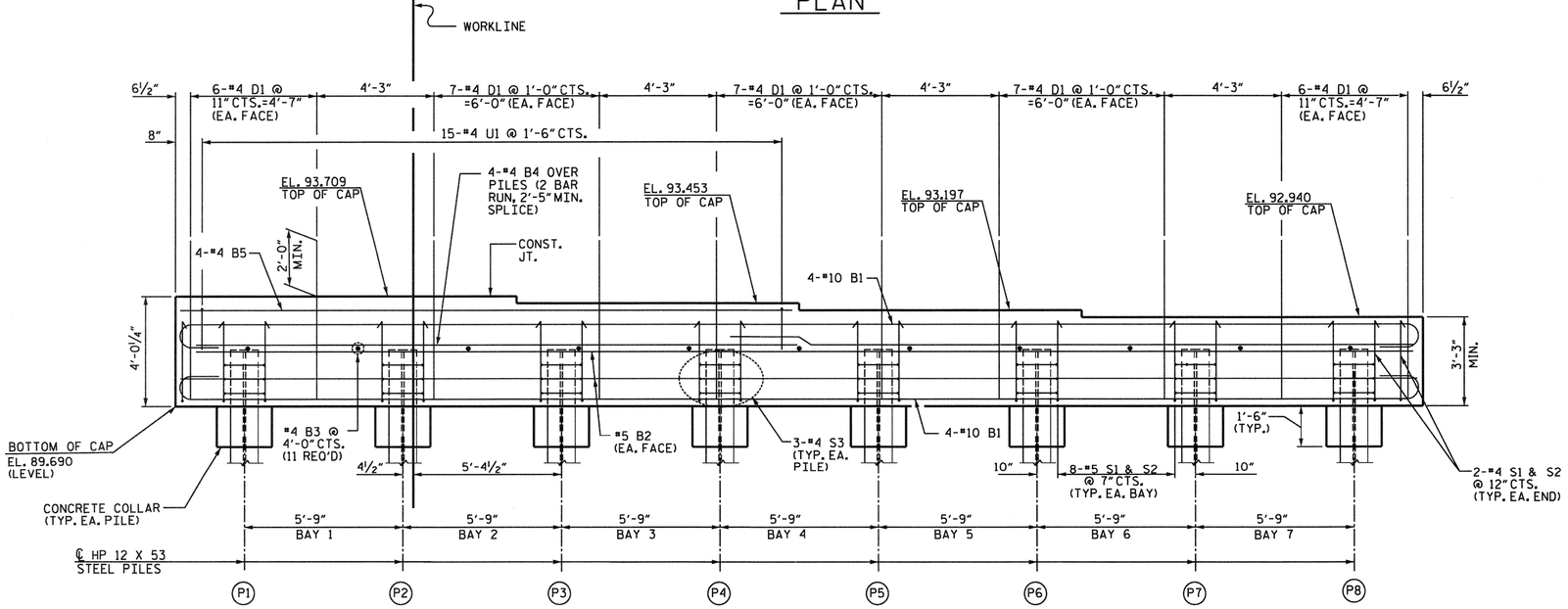

ELEVATION

(WINGS NOT SHOWN FOR CLARITY)

NOTES

FOR PILE SPLICE DETAILS, SEE SHEET 3 OF 3.

THE CONTRACTOR SHALL PROVIDE FOR INSTALLATION OF THE 4" DIAMETER DRAIN PIPE THROUGH THE WING WALL AS REQUIRED FOR REINFORCED BRIDGE APPROACH FILLS. SEE THE ROADWAY PLANS. REINFORCING STEEL IN THE WING WALL MAY BE SHIFTED AS NECESSARY TO CLEAR THE DRAIN PIPE.

SEE SUPERSTRUCTURE SHEETS FOR INTEGRAL END BENT DIAPHRAGM DETAILS, AND UPPER PART OF WINGS.

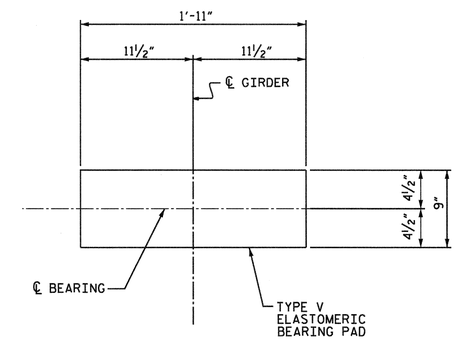

DETAIL "A"

PROJECT NO. R-2303C

SAMPSON COUNTY

STATION: 943+12.50 -L-

SHEET 1 OF 3

V&M Vaughn & Melton Consulting Engineers

Asheville, North Carolina 828-253-2796

Charlotte, North Carolina 704-357-0488
Tri-Cities, Tennessee 423-467-8401
Knoxville, Tennessee 865-546-5800
Middlesboro, Kentucky 606-248-6600
Spartanburg, South Carolina 864-574-4775

Copyright © 2006 Vaughn & Melton, Inc. All Rights Reserved

DWN. BY: MAF DATE: SEPT. 2012
CHKD. BY: HLW DATE: SEPT. 2012

STATE OF NORTH CAROLINA
DEPARTMENT OF TRANSPORTATION
RALEIGH

SUBSTRUCTURE
INTEGRAL END BENT NO. 2
(RIGHT LANE)

REVISIONS						SHEET NO.
NO.	BY:	DATE:	NO.	BY:	DATE:	S-67
1			3			TOTAL SHEETS
2			4			138

STR. #2

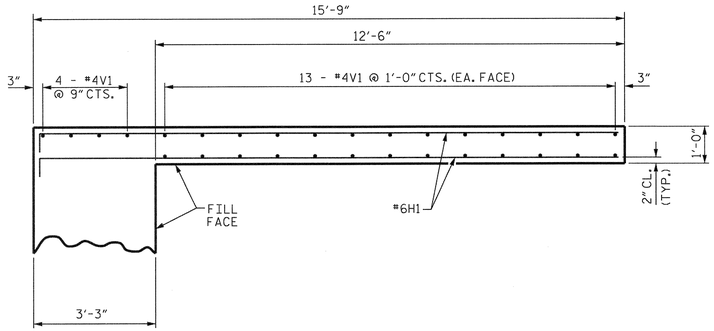

PLAN OF WING W3

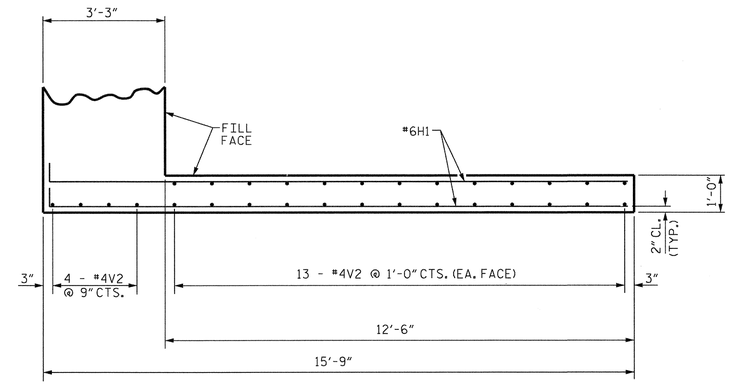

PLAN OF WING W4

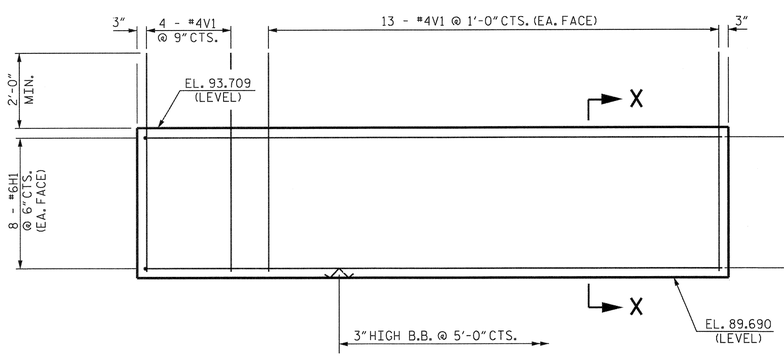

ELEVATION OF WING W3

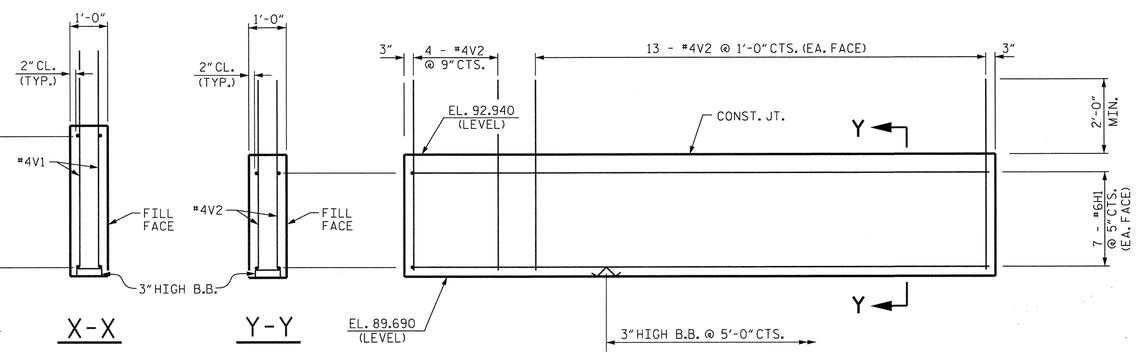

ELEVATION OF WING W4

NORTH CAROLINA PROFESSIONAL SEAL ENGINEER HARVEY L. WILLIS
11/21/12

PROJECT NO. R-2303C
SAMPSON COUNTY
STATION: 943+12.50 -L-

SHEET 2 OF 3

Vaughn & Melton
Consulting Engineers
Asheville, North Carolina
828-253-2796
Charlotte, North Carolina 704-357-0488
Tri-Cities, Tennessee 423-467-8410
Knoxville, Tennessee 865-546-5800
Middlesboro, Kentucky 606-248-6600
Spartanburg, South Carolina 864-574-4775
Copyright © 2006 Vaughn & Melton, Inc. All Rights Reserved

DWN. BY: MAF DATE: SEPT. 2012
CHKD. BY: HLW DATE: SEPT. 2012

STATE OF NORTH CAROLINA
DEPARTMENT OF TRANSPORTATION
RALEIGH

SUBSTRUCTURE
INTEGRAL
END BENT NO. 2

(RIGHT LANE)

REVISIONS						SHEET NO.
NO.	BY:	DATE:	NO.	BY:	DATE:	S-68
1			3			TOTAL SHEETS
2			4			138

STR. #2

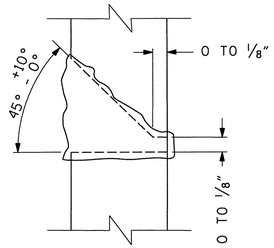

DETAIL A

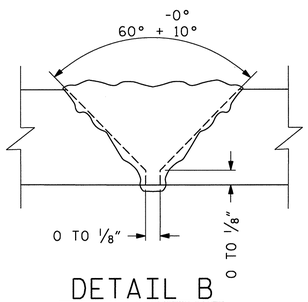

DETAIL B

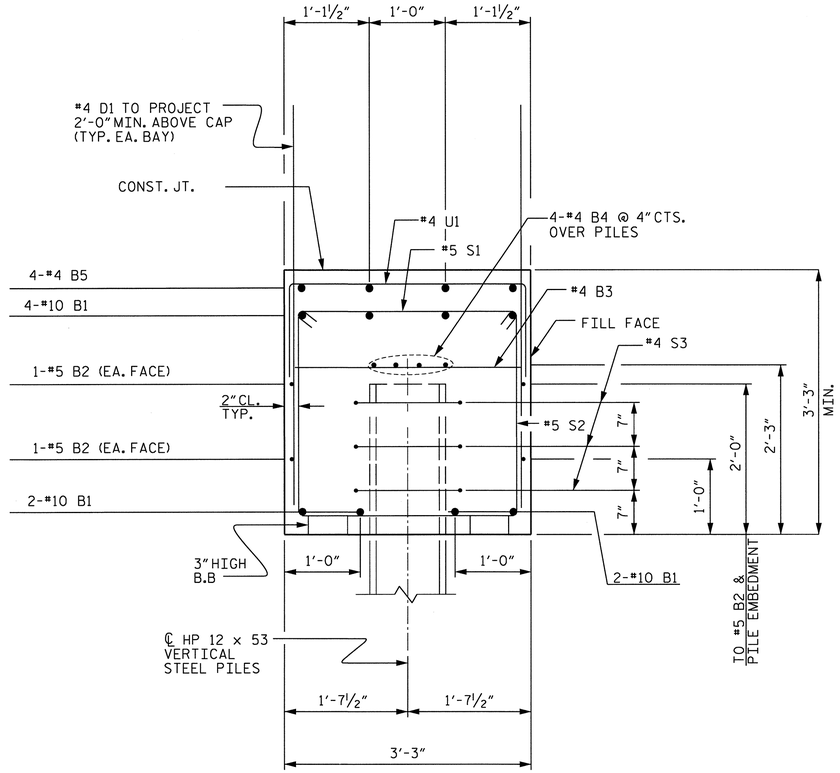

SECTION A-A

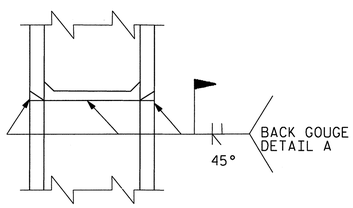

*PILE VERTICAL

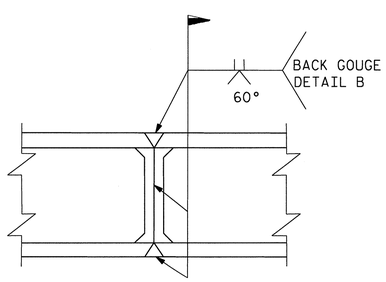

*PILE HORIZONTAL OR VERTICAL

* POSITION OF PILE DURING WELDING

PILE SPLICE DETAILS

BAR TYPES

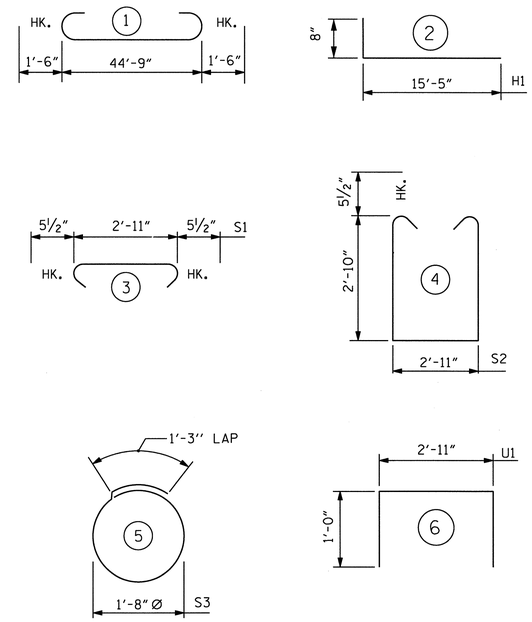

ALL BAR DIMENSIONS ARE OUT TO OUT.

BILL OF MATERIAL
END BENT 2

BAR	NO.	SIZE	TYPE	LENGTH	WEIGHT
B1	8	#10	1	47'-9"	1644
B2	2	#5	STR.	44'-11"	94
B3	11	#4	STR.	2'-11"	21
B4	8	#4	STR.	23'-8"	126
B5	4	#4	STR.	22'-3"	59
D1	66	#4	STR.	5'-9"	254
H1	15	#6	2	16'-1"	363
S1	60	#5	3	3'-10"	240
S2	60	#5	4	9'-6"	595
S3	24	#4	5	6'-6"	104
U1	15	#4	6	4'-11"	49
V1	30	#4	STR.	5'-0"	100
V2	30	#4	STR.	5'-10"	117

REINFORCING STEEL = 3,766 LBS.

CLASS A CONCRETE BREAKDOWN

POUR #1 CAP, CONCRETE COLLARS & LOWER PART OF WINGS = 23.2 C.Y.

TOTAL CLASS A CONCRETE = 23.2 C.Y.

HP 12 X 53 STEEL PILES
NO: 8 LIN. FT. = 440

PILE REDRIVES
EACH 4

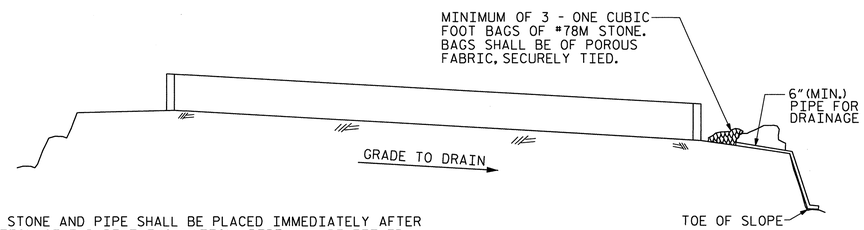

BAGGED STONE AND PIPE SHALL BE PLACED IMMEDIATELY AFTER COMPLETION OF END BENT EXCAVATION. PIPE MAY BE EITHER CONCRETE, CORRUGATED STEEL, CORRUGATED ALUMINUM ALLOY, OR CORRUGATED PLASTIC. PERFORATED PIPE WILL NOT BE ALLOWED.

BAGGED STONE SHALL REMAIN IN PLACE UNTIL THE ENGINEER DIRECTS THAT IT BE REMOVED. THE CONTRACTOR SHALL REMOVE AND DISPOSE OF SILT ACCUMULATIONS AT BAGGED STONE WHEN SO DIRECTED BY THE ENGINEER. BAGS SHALL BE REMOVED AND REPLACED WHENEVER THE ENGINEER DETERMINES THAT THEY HAVE DETERIORATED AND LOST THEIR EFFECTIVENESS.

NO SEPARATE PAYMENT WILL BE MADE FOR THIS WORK AND THE ENTIRE COST OF THIS WORK SHALL BE INCLUDED IN THE UNIT CONTRACT PRICE BID FOR THE SEVERAL PAY ITEMS.

TEMPORARY DRAINAGE AT END BENT

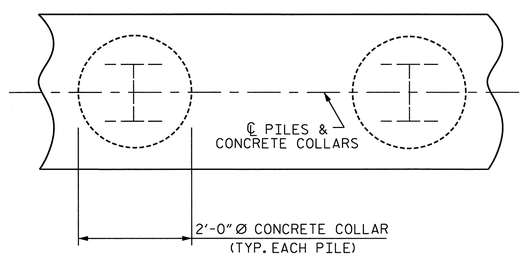

PLAN

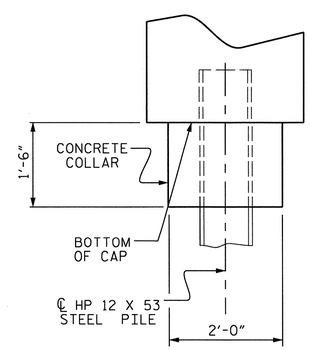

ELEVATION

CORROSION PROTECTION FOR STEEL PILES DETAIL

PROJECT NO. R-2303C
SAMPSON COUNTY
STATION: 943+12.50 -L-

SHEET 3 OF 3

STATE OF NORTH CAROLINA
DEPARTMENT OF TRANSPORTATION
RALEIGH

SUBSTRUCTURE
INTEGRAL
END BENT NO. 2

(RIGHT LANE)

V&M Vaughn & Melton Consulting Engineers
Asheville, North Carolina 828-253-2796
Charlotte, North Carolina 704-357-0488
Tri-Cities, Tennessee 423-467-8401
Knoxville, Tennessee 865-546-5800
Middlesboro, Kentucky 606-248-6600
Spartanburg, South Carolina 864-574-4175
Copyright © 2006 Vaughn & Melton, Inc. All Rights Reserved

NORTH CAROLINA PROFESSIONAL SEAL 28777 ENGINEER HARDY L. WILLIS 12/7/12

DWN. BY: MAF DATE: SEPT. 2012
CHKD. BY: HLW DATE: SEPT. 2012

REVISIONS						
NO.	BY:	DATE:	NO.	BY:	DATE:	
1			3			
2			4			

SHEET NO. S-69
TOTAL SHEETS 132

STR. #2

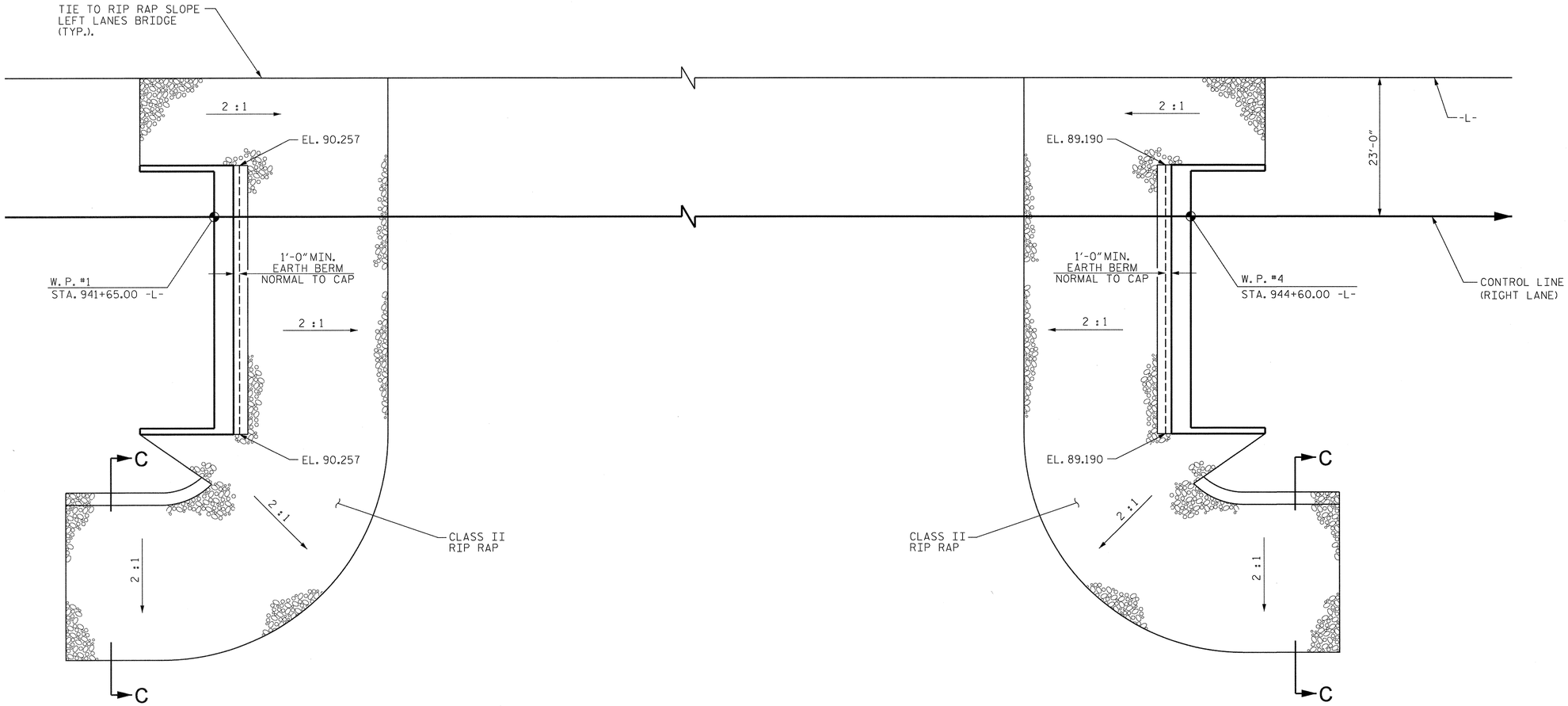

PLAN OF RIP RAP

ESTIMATED QUANTITIES		
BRIDGE @ STA. 943+12.50 -L- (RIGHT LANE)	RIP RAP CLASS II (2'-0" THICK)	GEOTEXTILE FOR DRAINAGE
	TONS	SQUARE YARDS
END BENT 1	354	397
END BENT 2	309	346

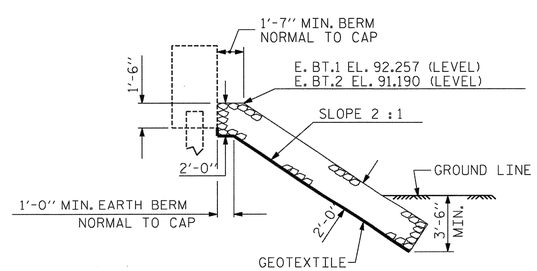

℄ SECTION

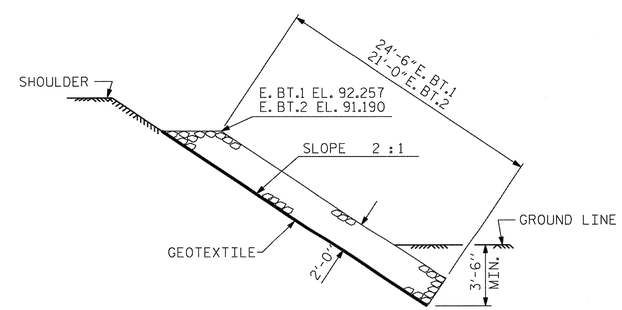

SECTION C-C

PROJECT NO. R-2303C

SAMPSON COUNTY

STATION: 943+12.50 -L-

NORTH CAROLINA PROFESSIONAL SEAL 20772 ENGINEER HARDY L. WILLIS 11/21/12

STATE OF NORTH CAROLINA
DEPARTMENT OF TRANSPORTATION
RALEIGH

STANDARD

RIP RAP DETAILS

(RIGHT LANE)

REVISIONS							SHEET NO.
NO.	BY:	DATE:	NO.	BY:	DATE:		S-70
1			3				TOTAL SHEETS
2			4				138

ASSEMBLED BY : MAF		DATE : 09/2012	
CHECKED BY : HLW		DATE : 09/2012	
DRAWN BY : FCJ 2/88	REV. 8/16/99	RWW/LES	
CHECKED BY : ARB 8/88	REV. 10/17/00	RWW/LES	
	REV. 5/1/06R	TLA/GM	

$$$$$$SYSTIME$$$$$
$$$$$$$$$$$$$$$$$$$$$$$$DGN$$$$$$$$$$$$$$$$$$$$$$
$$$$USERNAME$$$$

SKEW 90°

STR. #2

STD. NO. RR2

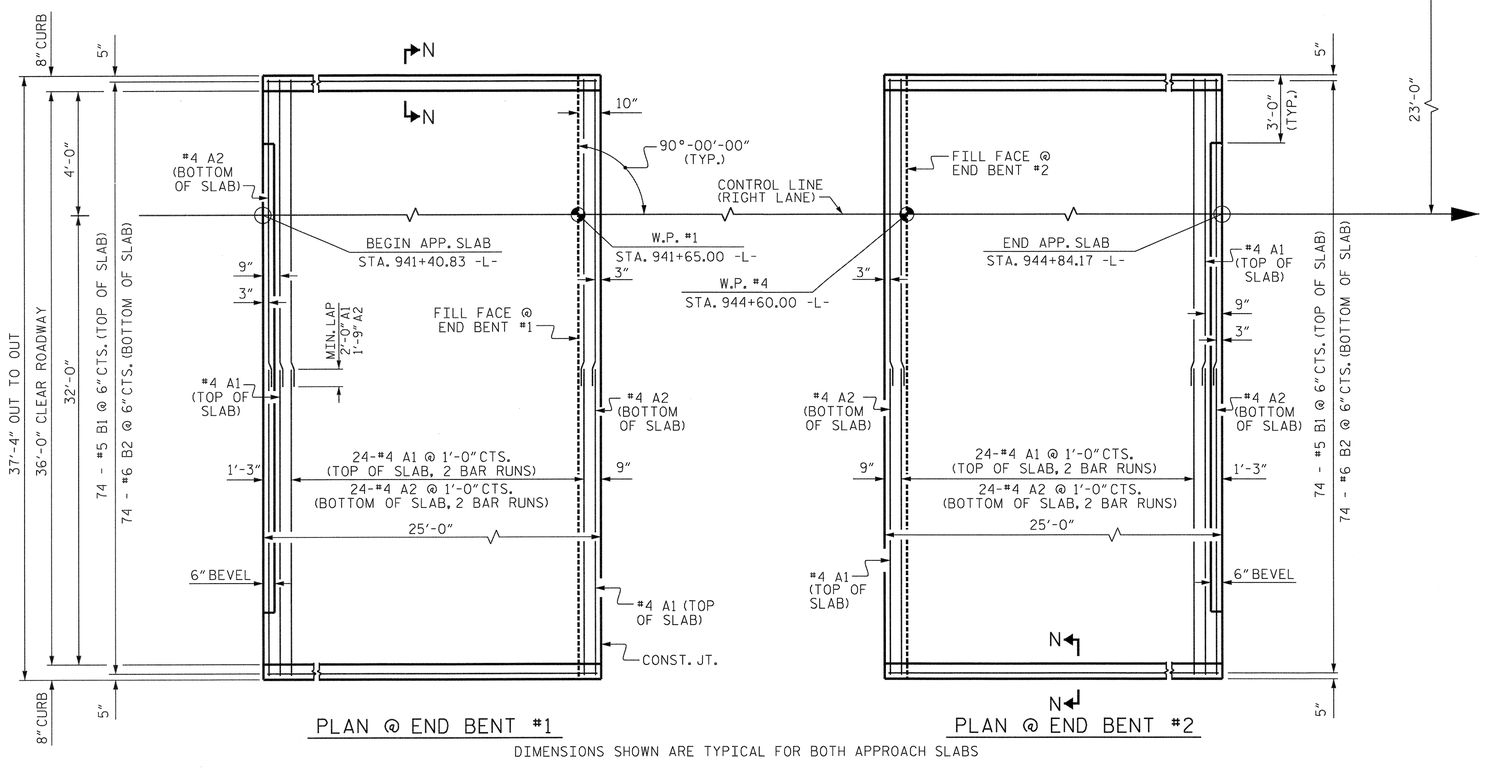

PLAN @ END BENT #1

PLAN @ END BENT #2

DIMENSIONS SHOWN ARE TYPICAL FOR BOTH APPROACH SLABS

NOTES

APPROACH SLAB SHALL NOT BE CONSTRUCTED PRIOR TO COMPLETION OF THE BRIDGE DECK.

FOR REINFORCED BRIDGE APPROACH FILL FABRIC WALL INCLUDING GEOTEXTILE, IMPERMEABLE GEOMEMBRANE, 4" Ø DRAINAGE PIPE, #78M STONE, WELDED WIRE FORM, AND SELECT MATERIAL, SEE ROADWAY PLANS.

AREA BETWEEN THE WINGWALL AND APPROACH SLAB SHALL BE GRADED TO DRAIN THE WATER AWAY FROM THE FILL FACE OF THE BRIDGE AND SHALL BE PAVED. SEE ROADWAY PLANS.

THE JOINT OPENING AT THE APPROACH SLAB/DECK INTERFACE SHALL BE SAWED NO MORE THAN 12 HOURS AFTER THE APPROACH SLAB IS CAST. THE JOINT SHALL BE CLEANED OF ALL DEBRIS BEFORE THE SEALANT IS APPLIED. THE JOINT SEALER MATERIAL SHALL CONFORM TO THE REQUIREMENTS OF SECTION 1028-3 OF THE STANDARD SPECIFICATIONS.

BILL OF MATERIAL

FOR ONE APPROACH SLAB (2 REQ'D)

BAR	NO.	SIZE	TYPE	LENGTH	WEIGHT
* A1	52	#4	STR	19'-6"	677
A2	52	#4	STR	19'-5"	675
* B1	74	#5	STR	24'-2"	1,865
B2	74	#6	STR	24'-8"	2,744
REINFORCING STEEL				LBS.	3,419
* EPOXY COATED REINFORCING STEEL				LBS.	2,542
CLASS AA CONCRETE				C.Y.	40.4

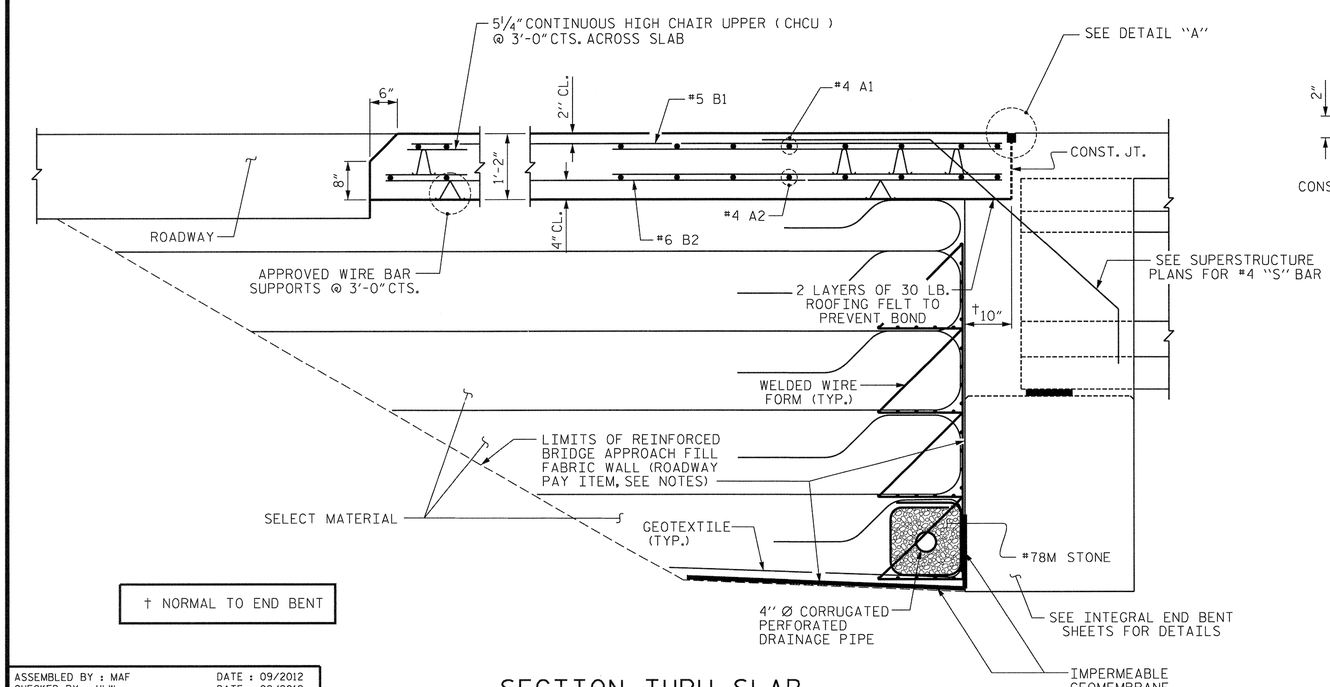

† NORMAL TO END BENT

SECTION THRU SLAB

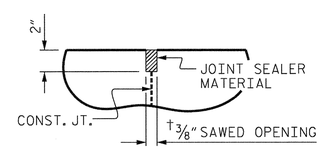

DETAIL "A"

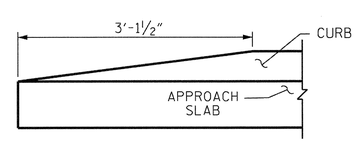

END OF CURB WITHOUT SHOULDER BERM GUTTER

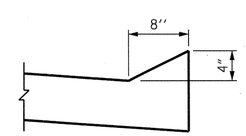

SECTION N-N

NORTH CAROLINA PROFESSIONAL SEAL 20712 ENGINEER HARDY L. WILLIS 11/21/12

PROJECT NO. R-2303C

SAMPSON COUNTY

STATION: 943+12.50 -L-

SHEET 1 OF 2

STATE OF NORTH CAROLINA
DEPARTMENT OF TRANSPORTATION
RALEIGH

STANDARD

BRIDGE APPROACH SLAB FOR INTEGRAL ABUTMENT

(RIGHT LANE)

REVISIONS						SHEET NO.
NO.	BY:	DATE:	NO.	BY:	DATE:	S-71
1			3			TOTAL SHEETS
2			4			138

ASSEMBLED BY : MAF	DATE : 09/2012
CHECKED BY : HLW	DATE : 09/2012
DRAWN BY : TLA 10/05	ADDED 5/1/06RR KMM/GM
CHECKED BY : GM 5/06	REV. 10/1/11 MAA/GM
	REV. 12/21/11 MAA/GM

STR. #2

STD. NO. BAS5

$$$$$$$SYSTIME$$$$$
$$$$$$$$$$$$$$$$$$$$$$$$DGN$$$$$$$$$$$$$$$$$$$$$$$$
$$$$USERNAME$$$$

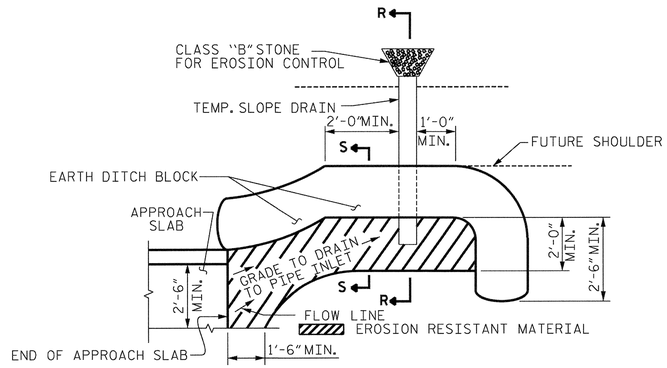

NOTE: IMMEDIATELY AFTER THE CONSTRUCTION OF THE APPROACH SLAB, THE CONTRACTOR SHALL PROVIDE TEMPORARY BERM AND SLOPE DRAIN. CONTRACTOR SHALL GRADE TO PIPE INLET AND PROVIDE EROSION RESISTANT MATERIAL AS SHOWN. THE EROSION RESISTANT MATERIAL SHALL BE EITHER 1) ASPHALT PLANT MIX, TYPE 1 OR TYPE 2, MIN. 2" DEPTH, 2) EROSION CONTROL MAT, OR 3) CONCRETE, AS DIRECTED BY THE ENGINEER. THE SLOPE DRAIN SHALL CONSIST OF A NON-PERFORATED TEMPORARY DRAINAGE PIPE, 12 INCHES IN DIAMETER.

PLAN VIEW

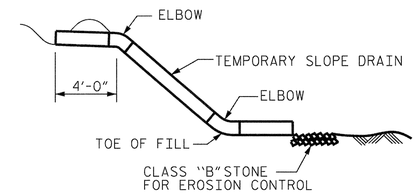

SECTION R-R

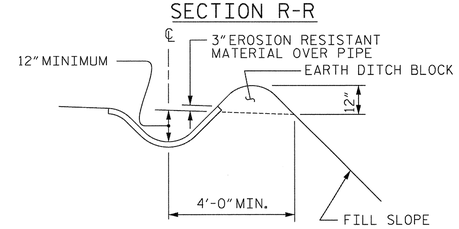

SECTION S-S

TEMPORARY BERM AND SLOPE DRAIN DETAILS

(TO BE USED WHEN SHOULDER BERM GUTTER IS REQUIRED)

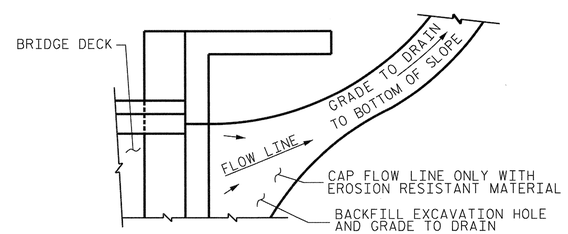

NOTE: IF THE APPROACH SLAB IS NOT CONSTRUCTED IMMEDIATELY AFTER THE BACKFILLING OF THE END BENT EXCAVATION, GRADE TO DRAIN TO THE BOTTOM OF THE SLOPE AND PROVIDE EROSION RESISTANT MATERIAL, SUCH AS FIBERGLASS ROVING OR AS DIRECTED BY THE ENGINEER TO PREVENT SOIL EROSION AND TO PROTECT THE AREA ADJACENT TO THE STRUCTURE. THE CONTRACTOR WILL BE REQUIRED TO REMOVE THESE MATERIALS PRIOR TO CONSTRUCTION OF THE APPROACH SLAB.

TEMPORARY DRAINAGE DETAIL

PROJECT NO. R-2303C

SAMPSON COUNTY

STATION: 943+12.50 -L-

SHEET 2 OF 2

NORTH CAROLINA PROFESSIONAL SEAL 20714 ENGINEER HARDY L. WILLIS

11/21/12

STATE OF NORTH CAROLINA
DEPARTMENT OF TRANSPORTATION
RALEIGH

STANDARD

BRIDGE APPROACH
SLAB DETAILS

(RIGHT LANE)

REVISIONS						SHEET NO.
NO.	BY:	DATE:	NO.	BY:	DATE:	S-72
1			3			TOTAL SHEETS
2			4			138

ASSEMBLED BY : MAF		DATE : 09/2012	
CHECKED BY : HLW		DATE : 09/2012	
DRAWN BY : FCJ	11/88	REV. 10/17/00	RWW/LES
CHECKED BY : ARB	11/88	REV. 5/7/03	RWW/JTE
		REV. 5/1/06RRR	MAA/KMM

$$$$$$$SYSTIME$$$$$
$$$$$$$$$$$$$$$$$$$$$$$$DGN$$$$$$$$$$$$$$$$$$$$$$$$
$$$$USERNAME$$$$

STR. #2

STD. NO. BAS10 (SHT 1)

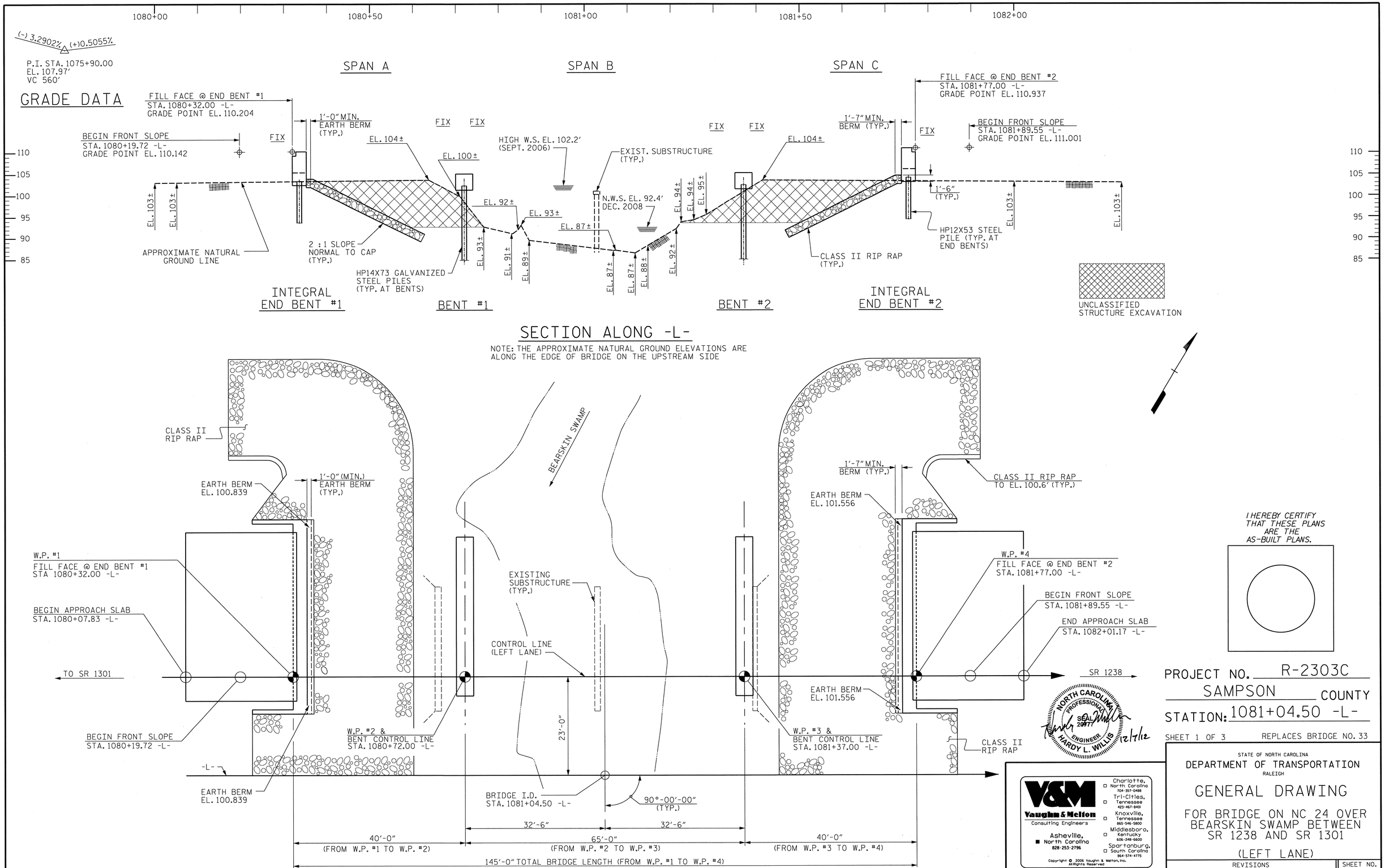
1080+00
1080+50
1081+00
1081+50
1082+00
(-) 3.2902%
(+)0.5055%
P.I. STA. 1075+90.00
EL. 107.97'
VC 560'
GRADE DATA
SPAN A
SPAN B
SPAN C
FILL FACE @ END BENT #1
STA. 1080+32.00 -L-
GRADE POINT EL. 110.204
BEGIN FRONT SLOPE
STA. 1080+19.72 -L-
GRADE POINT EL. 110.142
1'-0" MIN.
EARTH BERM
(TYP.)
FIX
EL. 104±
EL. 100±
HIGH W.S. EL. 102.2'
(SEPT. 2006)
EXIST. SUBSTRUCTURE
(TYP.)
N.W.S. EL. 92.4'
DEC. 2008
EL. 103±
EL. 92±
EL. 93±
EL. 87±
EL. 91±
EL. 89±
EL. 88±
EL. 94±
EL. 95±
APPROXIMATE NATURAL
GROUND LINE
2 : 1 SLOPE
NORMAL TO CAP
(TYP.)
HP14X73 GALVANIZED
STEEL PILES
(TYP. AT BENTS)
INTEGRAL
END BENT #1
BENT #1
BENT #2
INTEGRAL
END BENT #2
FILL FACE @ END BENT #2
STA. 1081+77.00 -L-
GRADE POINT EL. 110.937
1'-7" MIN.
BERM (TYP.)
BEGIN FRONT SLOPE
STA. 1081+89.55 -L-
GRADE POINT EL. 111.001
1'-6"
(TYP.)
HP12X53 STEEL
PILE (TYP. AT
END BENTS)
CLASS II RIP RAP
(TYP.)
UNCLASSIFIED
STRUCTURE EXCAVATION
SECTION ALONG -L-
NOTE: THE APPROXIMATE NATURAL GROUND ELEVATIONS ARE
ALONG THE EDGE OF BRIDGE ON THE UPSTREAM SIDE
CLASS II
RIP RAP
EARTH BERM
EL. 100.839
1'-0" (MIN.)
EARTH BERM
(TYP.)
BEARSKIN SWAMP
1'-7" MIN.
BERM (TYP.)
CLASS II RIP RAP
TO EL. 100.6' (TYP.)
EARTH BERM
EL. 101.556
W.P. #1
FILL FACE @ END BENT #1
STA 1080+32.00 -L-
BEGIN APPROACH SLAB
STA. 1080+07.83 -L-
EXISTING
SUBSTRUCTURE
(TYP.)
CONTROL LINE
(LEFT LANE)
W.P. #4
FILL FACE @ END BENT #2
STA. 1081+77.00 -L-
BEGIN FRONT SLOPE
STA. 1081+89.55 -L-
END APPROACH SLAB
STA. 1082+01.17 -L-
TO SR 1301
SR 1238
EARTH BERM
EL. 101.556
BEGIN FRONT SLOPE
STA. 1080+19.72 -L-
W.P. #2 &
BENT CONTROL LINE
STA. 1080+72.00 -L-
23'-0"
W.P. #3 &
BENT CONTROL LINE
STA. 1081+37.00 -L-
CLASS II
RIP RAP
-L-
EARTH BERM
EL. 100.839
BRIDGE I.D.
STA. 1081+04.50 -L-
90°-00'-00"
(TYP.)
32'-6"
32'-6"
40'-0"
(FROM W.P. #1 TO W.P. #2)
65'-0"
(FROM W.P. #2 TO W.P. #3)
40'-0"
(FROM W.P. #3 TO W.P. #4)
145'-0" TOTAL BRIDGE LENGTH (FROM W.P. #1 TO W.P. #4)
PLAN
(PILES NOT SHOWN FOR CLARITY)
I HEREBY CERTIFY
THAT THESE PLANS
ARE THE
AS-BUILT PLANS.
NORTH CAROLINA
PROFESSIONAL
SEAL
20977
ENGINEER
HARDY L. WILLIS
12/7/12
V&M
Vaughn & Melton
Consulting Engineers
Asheville, North Carolina 828-253-2796
Charlotte, North Carolina 704-357-0488
Tri-Cities, Tennessee 423-467-8401
Knoxville, Tennessee 865-546-5800
Middlesboro, Kentucky 606-248-5600
Spartanburg, South Carolina 864-574-4775
Copyright © 2006 Vaughn & Melton, Inc.
All Rights Reserved
DWN. BY: MDP/MAF DATE: SEPT. 2012
CHKD. BY: HLW DATE: SEPT. 2012
REVISIONS
NO. BY: DATE: NO. BY: DATE:
1
2
3
4
SHEET NO.
S-73
TOTAL SHEETS
138
STATE OF NORTH CAROLINA
DEPARTMENT OF TRANSPORTATION
RALEIGH
GENERAL DRAWING
FOR BRIDGE ON NC 24 OVER
BEARSKIN SWAMP BETWEEN
SR 1238 AND SR 1301
(LEFT LANE)
PROJECT NO. R-2303C
SAMPSON COUNTY
STATION: 1081+04.50 -L-
SHEET 1 OF 3
REPLACES BRIDGE NO. 33
STR. #3

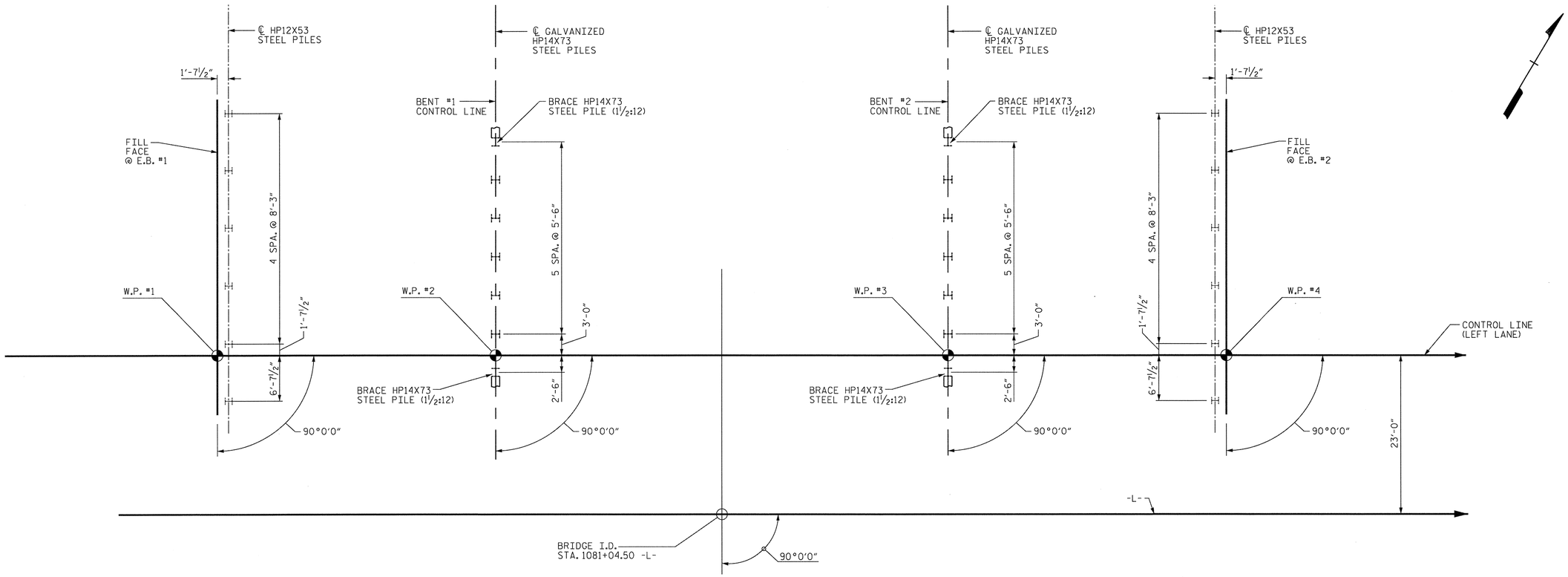

FOUNDATION LAYOUT

DIMENSIONS LOCATING PILES ARE TO PILE CENTERLINE AT THE BOTTOM OF CAP.

FOUNDATION NOTES

FOR PILES, SEE SECTION 450 OF THE STANDARD SPECIFICATIONS.

PILES AT END BENT NO. 1 AND END BENT NO. 2 ARE DESIGNED FOR A FACTORED RESISTANCE OF 85 TONS PER PILE.

PILES AT BENT NO. 1 AND BENT NO. 2 ARE DESIGNED FOR A FACTORED RESISTANCE OF 105 TONS PER PILE.

DRIVE PILES AT END BENT NO. 1 AND END BENT NO. 2 TO A REQUIRED DRIVING RESISTANCE OF 145 TONS PER PILE.

DRIVE PILES AT BENT NO. 1 AND BENT NO. 2 TO A REQUIRED DRIVING RESISTANCE OF 190 TONS PER PILE. THIS REQUIRED DRIVING RESISTANCE INCLUDES ADDITIONAL RESISTANCE FOR DOWNDRAG OR SCOUR.

INSTALL PILES AT BENT NO. 1 AND BENT NO. 2 TO A TIP ELEVATION NO HIGHER THAN 68.0 FT.

THE SCOUR CRITICAL ELEVATION FOR BENT NO. 1 AND BENT NO. 2 IS ELEVATION 87.0 FT. SCOUR CRITICAL ELEVATIONS ARE USED TO MONITOR POSSIBLE SCOUR PROBLEMS DURING THE LIFE OF THE STRUCTURE.

TESTING PILES WITH THE PDA DURING DRIVING, RESTRIKING OR REDRIVING MAY BE REQUIRED. THE ENGINEER WILL DETERMINE THE NEED FOR PDA TESTING. FOR PDA TESTING, SEE SECTION 450 OF THE STANDARD SPECIFICATIONS AND FOR PILE DRIVING CRITERIA, SEE PILE DRIVING CRITERIA PROVISION.

NORTH CAROLINA PROFESSIONAL SEAL 20211 ENGINEER HARDY L. WILLIS 11/21/12

PROJECT NO. R-2303C
SAMPSON COUNTY
STATION: 1081+04.50 -L-

SHEET 2 OF 3

V&M Vaughn & Melton Consulting Engineers
Asheville, North Carolina 828-253-2796
Charlotte, North Carolina 704-357-0488
Tri-Cities, Tennessee 423-467-8401
Knoxville, Tennessee 865-546-5820
Middlesboro, Kentucky 606-248-6600
Spartanburg, South Carolina 864-574-4775

Copyright © 2006 Vaughn & Melton, Inc. All Rights Reserved

DWN. BY: MAF DATE: SEPT. 2012
CHKD. BY: HLW DATE: SEPT. 2012

STATE OF NORTH CAROLINA
DEPARTMENT OF TRANSPORTATION
RALEIGH

GENERAL DRAWING
FOR BRIDGE ON NC 24 OVER BEARSKIN SWAMP BETWEEN SR 1238 AND SR 1301
(LEFT LANE)

REVISIONS						SHEET NO.
NO.	BY:	DATE:	NO.	BY:	DATE:	S-74
1			3			TOTAL SHEETS
2			4			138

STR. #3

BENCH MARK IS: BM #716 -BY11- STA. 6+10, 17' LEFT. RAILROAD SPIKE IN 48" OAK

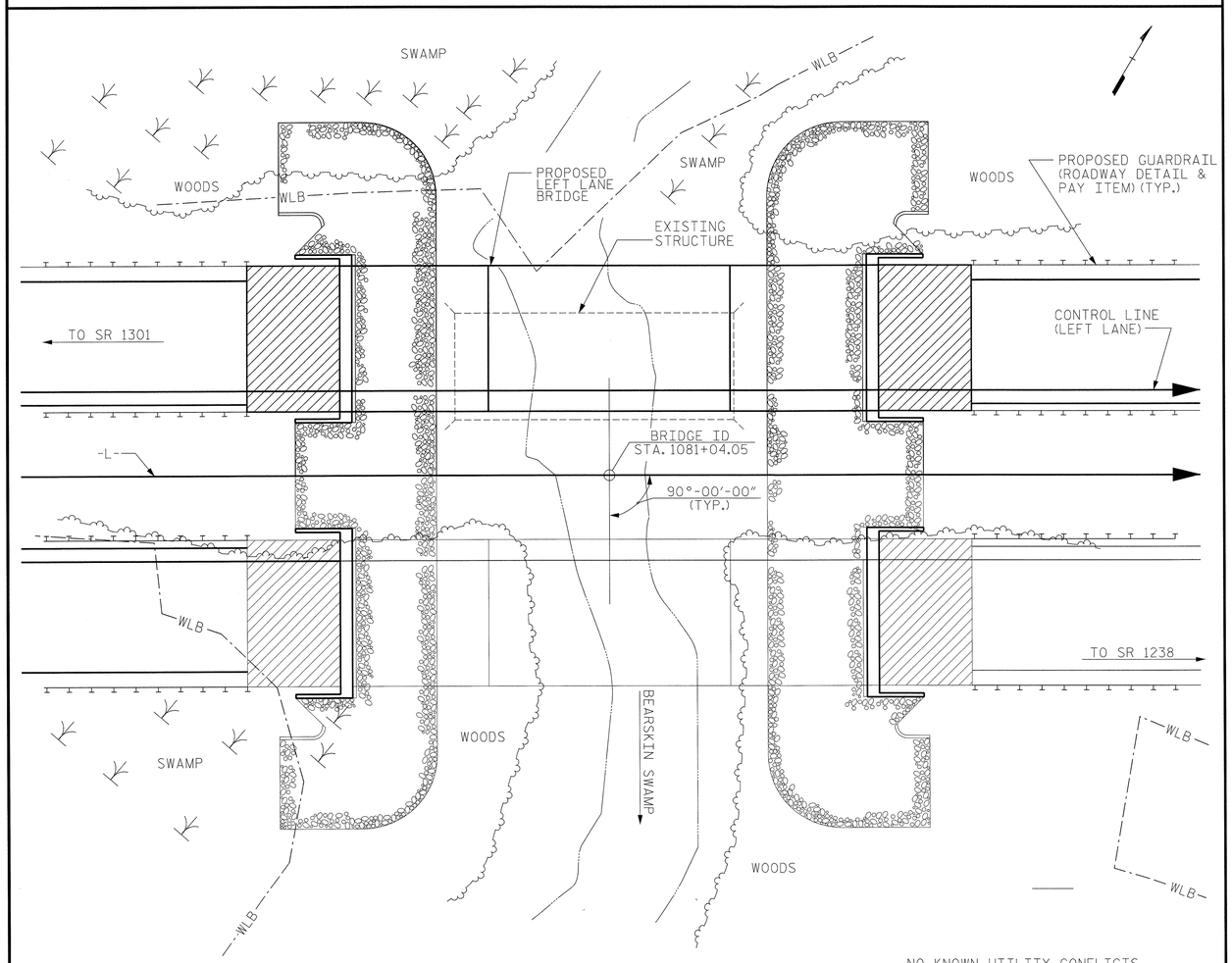

NO KNOWN UTILITY CONFLICTS.

LOCATION SKETCH

GENERAL NOTES:

ASSUMED LIVE LOAD = HL-93 OR ALTERNATE LOADING.

THIS BRIDGE HAS BEEN DESIGNED IN ACCORDANCE WITH THE AASHTO LRFD BRIDGE DESIGN SPECIFICATIONS.

THIS STRUCTURE HAS BEEN DESIGNED IN ACCORDANCE WITH 'HEC-18 - EVALUATING SCOUR AT BRIDGES'.

THIS BRIDGE IS LOCATED IN SEISMIC ZONE 1.

FOR OTHER DESIGN DATA AND GENERAL NOTES, SEE STANDARD SHEET SN.

FOR FALSEWORK AND FORMWORK, SEE SPECIAL PROVISIONS.

FOR SUBMITTAL OF WORKING DRAWINGS, SEE SPECIAL PROVISIONS.

FOR INTERIOR BENTS 1 AND 2, ONLY PARTIAL GALVANIZING OF THE PILES IS REQUIRED. SEE INTERIOR BENT SHEETS FOR REQUIRED GALVANIZED LENGTHS. PAYMENT FOR PARTIALLY GALVANIZED PILES WILL BE MADE UNDER THE CONTRACT UNIT PRICE FOR GALVANIZED STEEL PILES.

FOR CRANE SAFETY, SEE SPECIAL PROVISIONS.

FOR GROUT FOR STRUCTURES, SEE SPECIAL PROVISIONS.

FOR PLACING LOAD ON STRUCTURE MEMBERS, SEE SPECIAL PROVISIONS.

PRESTRESSED CONCRETE DECK PANELS MAY BE USED IN LIEU OF METAL STAY-IN-PLACE FORMS IN ACCORDANCE WITH ARTICLE 420-3 OF THE STANDARD SPECIFICATIONS.

REMOVABLE FORMS MAY BE USED IN LIEU OF METAL STAY-IN-PLACE FORMS IN ACCORDANCE WITH ARTICLE 420-3 OF THE STANDARD SPECIFICATIONS.

THE MATERIAL SHOWN IN THE CROSS-HATCHED AREA SHALL BE EXCAVATED FOR A DISTANCE OF 100 FT. LEFT FROM CENTERLINE ROADWAY (-L-) AS DIRECTED BY THE ENGINEER. THIS WORK WILL BE PAID FOR AT THE CONTRACT LUMP SUM PRICE FOR UNCLASSIFIED STRUCTURE EXCAVATION. SEE SECTION 412 OF THE STANDARD SPECIFICATIONS.

AFTER SERVING AS A TEMPORARY STRUCTURE, THE EXISTING STRUCTURE CONSISTING OF TWO 37.5-FOOT LONG, CONCRETE DECK ON CONCRETE GIRDER, SPANS ON CONCRETE BENTS AND ABUTMENTS, WITH A CLEAR ROADWAY WIDTH OF 25 FEET AND LOCATED AT THE STRUCTURE SHALL BE REMOVED. THE EXISTING BRIDGE IS PRESENTLY NOT POSTED FOR LOAD LIMIT. SHOULD THE STRUCTURAL INTEGRITY OF THE BRIDGE DETERIORATE DURING CONSTRUCTION OF THE PROPOSED BRIDGE, A LOAD LIMIT MAY BE POSTED AND MAY BE REDUCED AS FOUND NECESSARY DURING THE LIFE OF THE PROJECT.

THE SUBSTRUCTURE OF THE EXISTING BRIDGE INDICATED ON THE PLANS IS FROM THE BEST INFORMATION AVAILABLE. THIS INFORMATION IS SHOWN FOR THE CONVENIENCE OF THE CONTRACTOR. THE CONTRACTOR SHALL HAVE NO CLAIM WHATSOEVER AGAINST THE DEPARTMENT OF TRANSPORTATION FOR ANY DELAYS OR ADDITIONAL COST INCURRED BASED ON DIFFERENCES BETWEEN THE EXISTING BRIDGE SUBSTRUCTURE SHOWN ON THE PLANS AND THE ACTUAL CONDITIONS AT THE PROJECT SITE.

REMOVAL OF THE EXISTING BRIDGE SHALL BE PERFORMED IN A MANNER THAT PREVENTS DEBRIS FROM FALLING INTO THE WATER. THE CONTRACTOR SHALL SUBMIT DEMOLITION PLANS FOR REVIEW AND REMOVE THE BRIDGE IN ACCORDANCE WITH ARTICLE 402-2 OF THE STANDARD SPECIFICATIONS.

NORTH CAROLINA PROFESSIONAL SEAL 20777 ENGINEER HARDY L. WILLIS 10/27/13

TOTAL BILL OF MATERIAL

	REMOVAL OF EXISTING STRUCTURE	UNCLASSIFIED STRUCTURE EXCAVATION	REINFORCED CONCRETE DECK SLAB	GROOVING BRIDGE FLOORS	CLASS A CONCRETE	BRIDGE APPROACH SLABS	REINFORCING STEEL	45" PRESTRESSED CONCRETE GIRDERS		HP 12 X 53 STEEL PILES		HP 14 X 73 GALVANIZED STEEL PILES		PILE REDRIVES	CONCRETE BARRIER RAIL	RIP RAP CLASS II (2'-0" THICK)	GEOTEXTILE FOR DRAINAGE	ELASTOMERIC BEARINGS	PDA TESTING
	LUMP SUM	LUMP SUM	SQ. FT.	SQ. FT.	CU. YDS.	LUMP SUM	LBS.	NO.	LIN. FT.	NO.	LIN. FT.	NO.	LIN. FT.	EACH	LIN. FT.	TONS	SQ. YDS.	LUMP SUM	EACH
SUPERSTRUCTURE			5,691	6,347		LUMP SUM		12	565.67						286.67			LUMP SUM	
END BENT 1		LUMP SUM			22.5		3,415			6	360			3		417	467		
BENT 1					18.3		2,232					7	420	4					
BENT 2					18.3		2,232					7	455	4					
END BENT 2		LUMP SUM			22.5		3,415			6	360			3		411	461		
TOTAL	LUMP SUM	LUMP SUM	5,691	6,347	81.6	LUMP SUM	11,294	12	565.67	12	720	14	875	14	286.67	828	928	LUMP SUM	1

HYDRAULIC DATA

DESIGN DISCHARGE	= 2200 CFS
FREQUENCY OF DESIGN FLOOD	= 50 YR.
DESIGN HIGH WATER ELEVATION	= 99.6'
DRAINAGE AREA	= 21.5 Sq. MILES
BASIC DISCHARGE (Q100)	= 2700 CFS
BASIC HIGH WATER ELEVATION	= 100.4'

OVERTOPPING FLOOD DATA

OVERTOPPING DISCHARGE	= >4000 CFS
FREQUENCY OF OVERTOPPING FLOOD	= >500 YR.
OVERTOPPING FLOOD ELEVATION	= 109.2'

PROJECT NO. R-2303C
SAMPSON COUNTY
STATION: 1081+04.50 -L-

SHEET 3 OF 3

V&M Vaughn & Melton Consulting Engineers
Asheville, North Carolina 828-253-2796
Charlotte, North Carolina 704-357-0468
Tri-Cities, Tennessee 423-467-8403
Knoxville, Tennessee 865-546-5800
Middlesboro, Kentucky 606-248-6600
Spartanburg, South Carolina 864-574-4775

Copyright © 2006 Vaughn & Melton, Inc. All Rights Reserved

DWN. BY: MDP/MAF DATE: SEPT. 2012
CHKD. BY: HLW DATE: SEPT. 2012

STATE OF NORTH CAROLINA
DEPARTMENT OF TRANSPORTATION
RALEIGH

GENERAL DRAWING

FOR BRIDGE ON NC 24 OVER BEARSKIN SWAMP BETWEEN SR 1238 AND SR 1301

(LEFT LANE)

REVISIONS						SHEET NO.
NO.	BY:	DATE:	NO.	BY:	DATE:	S-75
1			3			TOTAL SHEETS
2			4			138

STR. #3

INFORMATION FOR 45" TYPE III PRESTRESSED CONCRETE GIRDER (SPANS A, B, & C)

LOAD AND RESISTANCE FACTOR RATING (LRFR) SUMMARY FOR PRESTRESSED CONCRETE GIRDERS

LEVEL		VEHICLE	WEIGHT (W) (TONS)	CONTROLLING LOAD RATING (#)	MINIMUM RATING FACTORS (RF)	TONS = W × RF	STRENGTH I LIMIT STATE											SERVICE III LIMIT STATE						COMMENT NUMBER
							LIVE-LOAD FACTORS (γ_{LL})	MOMENT					SHEAR					LIVE-LOAD FACTORS (γ_{LL})	MOMENT					
								DISTRIBUTION FACTORS (DF)	RATING FACTOR	SPAN	GIRDER LOCATION	DISTANCE FROM LEFT END OF SPAN (ft)	DISTRIBUTION FACTORS (DF)	RATING FACTOR	SPAN	GIRDER LOCATION	DISTANCE FROM LEFT END OF SPAN (ft)		DISTRIBUTION FACTORS (DF)	RATING FACTOR	SPAN	GIRDER LOCATION	DISTANCE FROM LEFT END OF SPAN (ft)	
DESIGN LOAD RATING		HL-93 (INVENTORY)	N/A	1	1.10	--	1.75	0.967	1.10	A		14.93 FT	1.0015	1.21	B		3.63 FT	0.80	0.857	1.35	B		31.42 FT	
		HL-93 (OPERATING)	N/A		1.42	--	1.35	0.967	1.42	A		14.93 FT	1.0015	1.57	B		3.63 FT	N/A	--	--	--		31.42 FT	
		HS-20 (INVENTORY)	36.000	2	1.36	48.96	1.75	0.967	1.36	A		14.93 FT	1.0015	1.51	B		3.63 FT	0.80	0.857	1.71	B		31.42 FT	
		HS-20 (OPERATING)	36.000		1.77	63.72	1.35	0.967	1.77	A		14.93 FT	1.0015	1.95	B		3.63 FT	N/A	--	--	--		31.42 FT	
LEGAL LOAD RATING	SINGLE VEHICLE (SV)	SNSH	13.500		2.24	30.24	1.40	0.967	2.24	A		14.93 FT	1.0015	3.21	A		33.70 FT	0.80	0.9667	2.39	A		14.93 FT	
		SNGARBS2	20.000		2.57	51.35	1.40	0.967	2.57	A		14.93 FT	1.0015	3.17	B		3.63 FT	0.80	0.857	2.75	B		31.42 FT	
		SNAGRIS2	22.000		2.54	55.95	1.40	0.967	2.54	A		14.93 FT	1.0015	2.94	B		3.63 FT	0.80	0.857	2.67	B		31.42 FT	
		SNCOTTS3	27.250		1.61	43.95	1.40	0.967	1.61	A		14.93 FT	1.0015	2.21	B		3.63 FT	0.80	0.9667	1.72	A		14.93 FT	
		SNAGGRS4	34.925		1.44	50.33	1.40	0.967	1.44	A		14.93 FT	1.0015	1.84	B		3.63 FT	0.80	0.857	1.53	B		31.42 FT	
		SNS5A	35.550		1.43	50.87	1.40	0.967	1.43	A		14.93 FT	1.0015	1.86	B		3.63 FT	0.80	0.857	1.50	B		31.42 FT	
		SNS6A	39.950		1.35	54.02	1.40	0.967	1.35	A		14.93 FT	1.0015	1.71	B		3.63 FT	0.80	0.857	1.39	B		31.42 FT	
		SNS7B	42.000		1.29	54.17	1.40	0.967	1.29	A		14.93 FT	1.0015	1.68	B		3.63 FT	0.80	0.857	1.33	B		31.42 FT	
	TRUCK TRACTOR SEMI-TRAILER (TTST)	TNAGRIT3	33.000		1.70	56.24	1.40	0.967	1.70	A		14.93 FT	1.0015	2.03	B		3.63 FT	0.80	0.857	1.72	B		31.42 FT	
		TNT4A	33.075		1.64	54.33	1.40	0.967	1.64	A		14.93 FT	1.0015	1.98	B		3.63 FT	0.80	0.857	1.71	B		31.42 FT	
		TNAGRIT4	43.000		1.42	60.88	1.40	0.967	1.42	A		14.93 FT	1.0015	1.59	B		3.63 FT	0.80	0.857	1.44	B		31.42 FT	
		TNAGT5A	45.000	3	1.15	51.93	1.40	0.967	1.15	A		14.93 FT	1.0015	1.59	B		3.63 FT	0.80	0.9667	1.23	A		14.93 FT	
		TNAGT5B	45.000		1.30	58.60	1.40	0.967	1.30	A		14.93 FT	1.0015	1.51	B		3.63 FT	0.80	0.857	1.32	B		31.42 FT	
		TNT6A	41.600		1.43	59.31	1.40	0.967	1.43	A		14.93 FT	1.0015	1.81	B		3.63 FT	0.80	0.857	1.43	B		31.42 FT	
		TNT7A	42.000		1.45	60.74	1.40	0.967	1.45	A		14.93 FT	1.0015	1.75	B		3.63 FT	0.80	0.857	1.45	B		31.42 FT	
		TNT7B	42.000		1.46	61.51	1.40	0.967	1.46	A		14.93 FT	1.0015	1.65	B		3.63 FT	0.80	0.857	1.48	B		31.42 FT	

LOAD FACTORS:

DESIGN LOAD RATING FACTORS	LIMIT STATE	γ_{DC}	γ_{DW}
	STRENGTH I	1.25	1.50
	SERVICE III	1.00	1.00

NOTES:

MINIMUM RATING FACTORS ARE BASED ON THE STRENGTH I AND SERVICE III LIMIT STATES.

ALLOWABLE STRESSES FOR SERVICE III LIMIT STATE ARE AS REQUIRED FOR DESIGN.

COMMENTS:

1.
2.
3.
4.

(#) CONTROLLING LOAD RATING

(1) DESIGN LOAD RATING (HL-93)
(2) DESIGN LOAD RATING (HS-20)
(3) LEGAL LOAD RATING **
** SEE CHART FOR VEHICLE TYPE

GIRDER LOCATION

I - INTERIOR GIRDER
EL - EXTERIOR LEFT GIRDER
ER - EXTERIOR RIGHT GIRDER

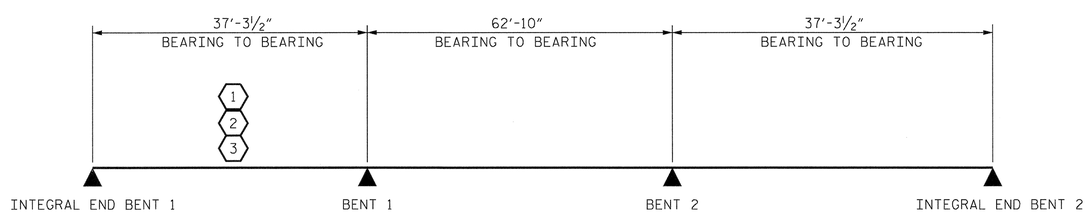

LRFR SUMMARY

NORTH CAROLINA PROFESSIONAL SEAL 20727 ENGINEER HARDY L. WILLIS 11/21/12

PROJECT NO. R-2303C
SAMPSON COUNTY
STATION: 1081+04.50 -L-

STATE OF NORTH CAROLINA
DEPARTMENT OF TRANSPORTATION
RALEIGH

STANDARD
LRFR SUMMARY FOR PRESTRESSED CONCRETE GIRDERS
(NON-INTERSTATE TRAFFIC)
(LEFT LANE)

REVISIONS						SHEET NO.
NO.	BY:	DATE:	NO.	BY:	DATE:	S-76
1			3			TOTAL SHEETS
2			4			138

STR. #3 STD. NO. LRFR1

ASSEMBLED BY :	DATE :
CHECKED BY :	DATE :
DRAWN BY : MAA 1/08	REV. 11/12/08RR MAA/GM
CHECKED BY : GM/DI 2/08	

$$$$$$$SYSTIME$$$$$
$$$$$$$$$$$$$$$$$$$$$$$$DGN$$$$$$$$$$$$$$$$$$$$$$$
$$$$USERNAME$$$$

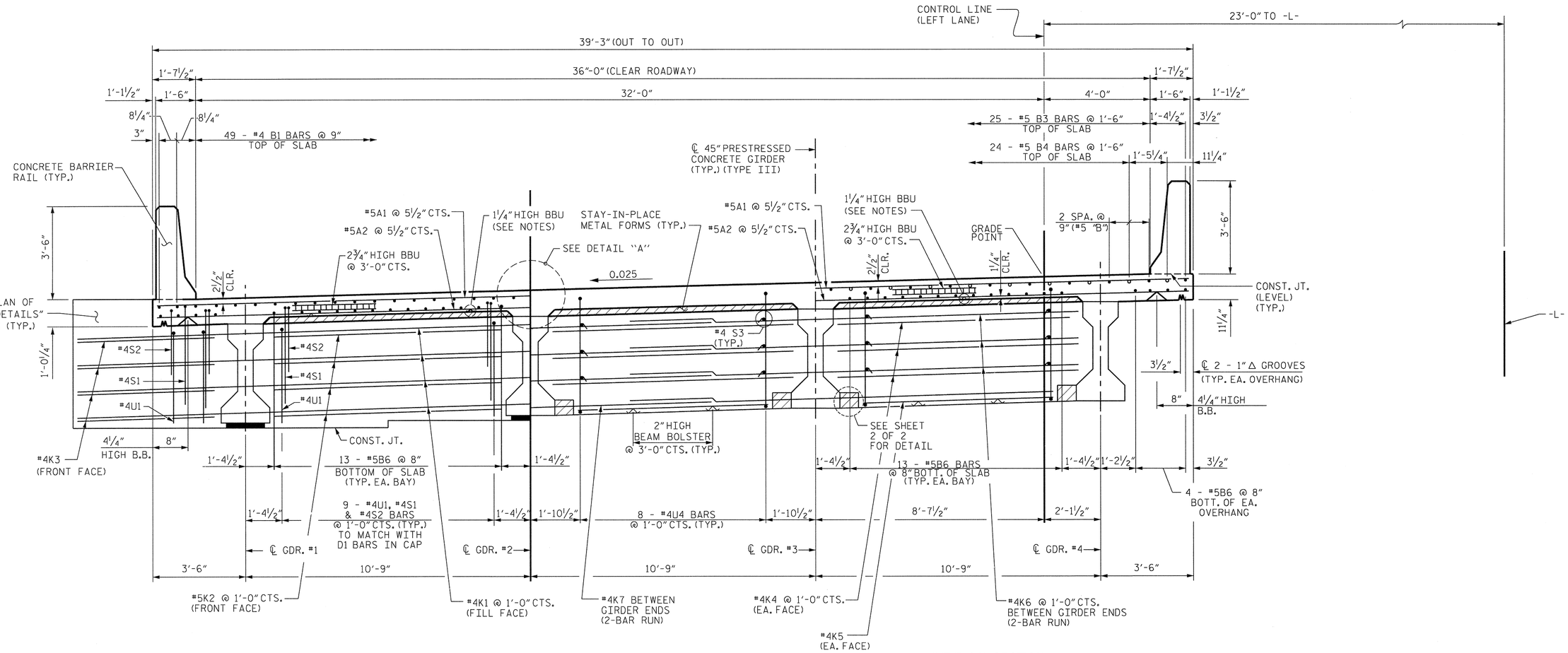

PART TYPICAL SECTION

SHOWING END BENT DIAPHRAGMS

TYPICAL SECTION

PART TYPICAL SECTION

SHOWING BENT DIAPHRAGMS

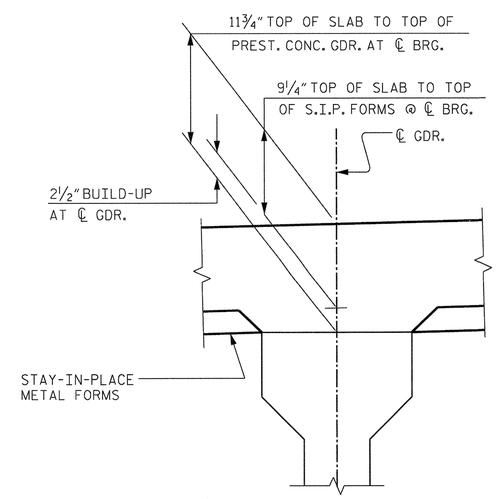

DETAIL "A"

NOTES:

PROVIDE 1 ¼" HIGH BEAM BOLSTERS UPPER @ 4'-0" CTS. ATOP THE METAL STAY-IN-PLACE FORMS TO SUPPORT THE BOTTOM MAT OF "A" BARS. WHEN USING REMOVABLE FORMS, PROVIDE CONTINUOUS HIGH CHAIRS FOR METAL DECK (C.H.C.M.) @ 4'-0" CTS. WITH A HEIGHT TO SUPPORT THE BOTTOM MAT OF "A" BARS A CLEAR DISTANCE OF 2 ½" ABOVE THE TOP OF THE REMOVABLE FORM.

BARRIER RAIL SHALL NOT BE CAST UNTIL ALL SLAB CONCRETE IN THE SPAN HAS BEEN CAST AND HAS REACHED A MINIMUM COMPRESSIVE STRENGTH OF 3000psi.

PREVIOUSLY CAST CONCRETE SHALL HAVE ATTAINED A MINIMUM COMPRESSIVE STRENGTH OF 3000psi BEFORE ADDITIONAL CONCRETE IS CAST IN THE UNIT.

LONGITUDINAL STEEL MAY BE SHIFTED SLIGHTLY, AS NECESSARY, TO AVOID INTERFERENCE WITH STIRRUPS IN PRESTRESSED CONCRETE GIRDERS.

NORTH CAROLINA PROFESSIONAL SEAL 20277 ENGINEER HARDY L. WILLIS 11/21/12

PROJECT NO. R-2303C

SAMPSON COUNTY

STATION: 1081+04.50 -L-

SHEET 1 OF 2

V&M Vaughn & Melton Consulting Engineers
Asheville, North Carolina 828-253-2796
Charlotte, North Carolina 704-357-0488
Tri-Cities, Tennessee 423-467-8401
Knoxville, Tennessee 865-546-3600
Middlesboro, Kentucky 606-248-6600
Spartanburg, South Carolina 864-574-4775

Copyright © 2006, Vaughn & Melton, Inc. All Rights Reserved

STATE OF NORTH CAROLINA
DEPARTMENT OF TRANSPORTATION
RALEIGH

TYPICAL SECTION

(LEFT LANE)

REVISIONS							SHEET NO.
NO.	BY:	DATE:	NO.	BY:	DATE:		S-77
1			3				TOTAL SHEETS
2			4				138

DWN. BY: MAF DATE: SEPT. 2012
CHKD. BY: HLW DATE: SEPT. 2012

STR. #3

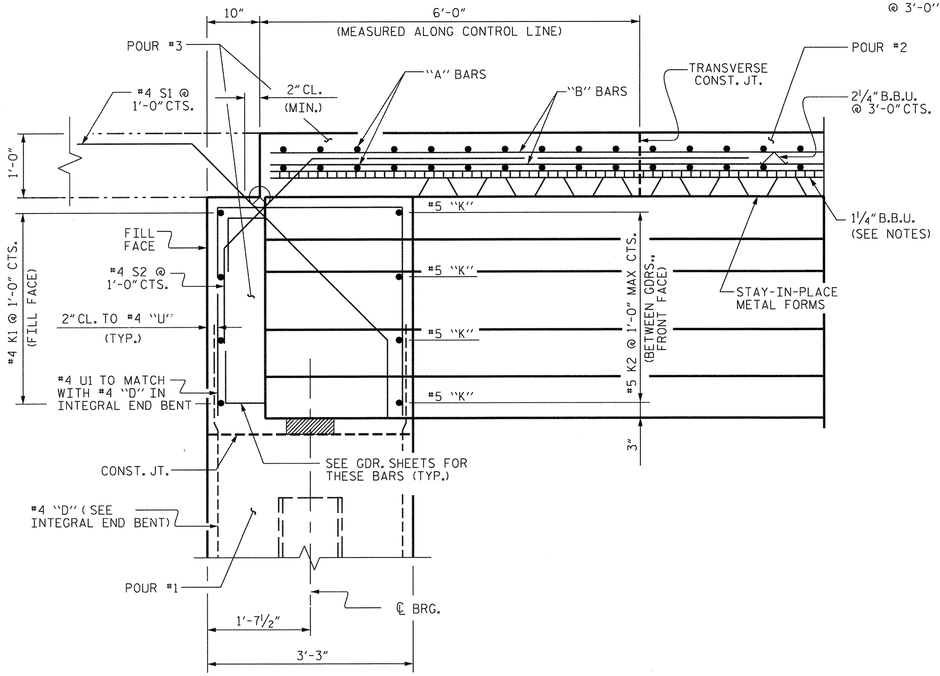

END OF GIRDER DETAIL
AT INTEGRAL END BENTS

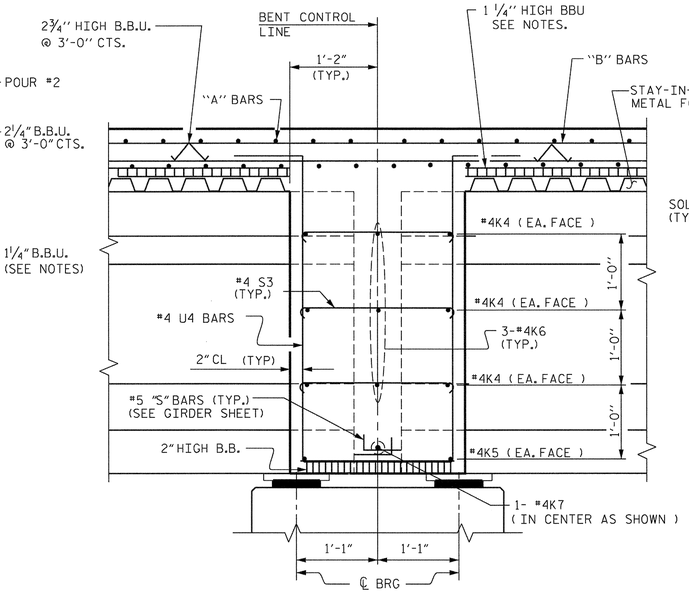

SECTION THROUGH BENT DIAPHRAGM

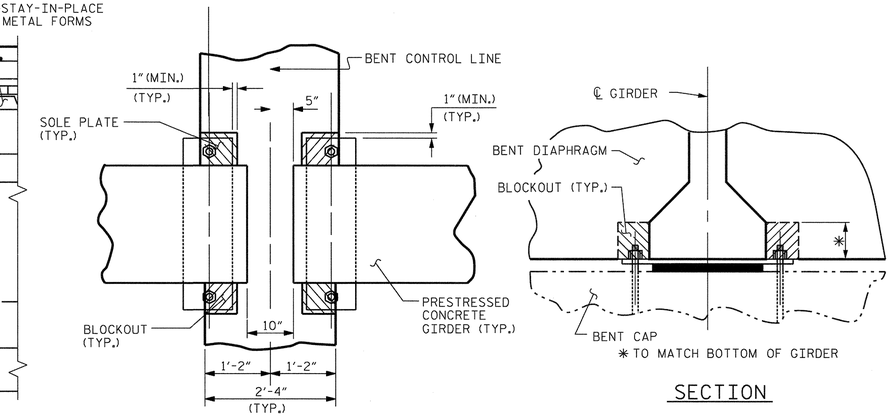

BENT DIAPHRAGM BLOCKOUT DETAIL

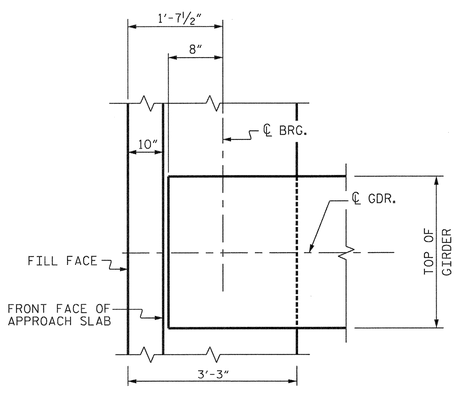

PLAN OF GIRDER
INTEGRAL END BENT NO. 1

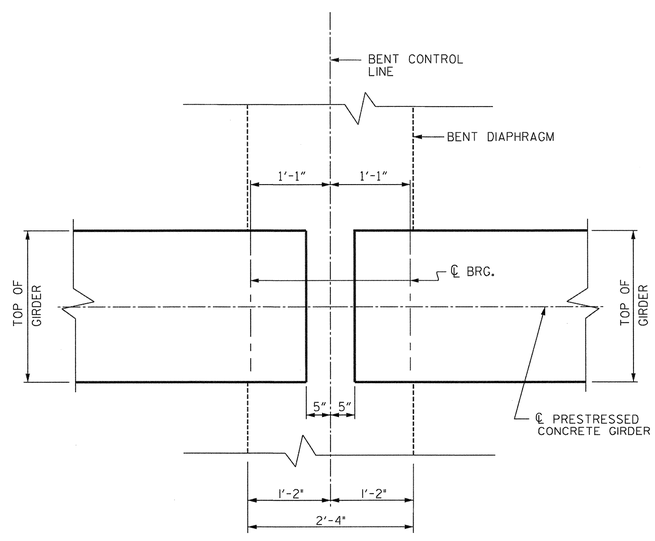

PLAN OF DIAPHRAGMS AT BENTS 1 & 2

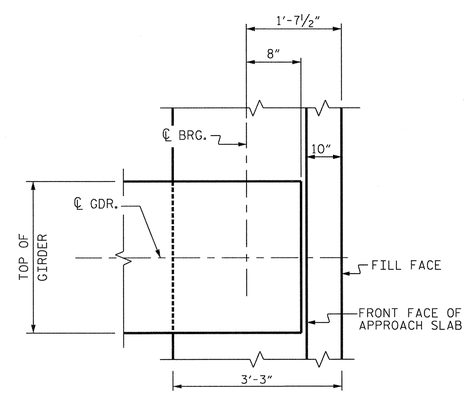

PLAN OF GIRDER
INTEGRAL END BENT NO. 2

NORTH CAROLINA PROFESSIONAL SEAL 20147 ENGINEER HARDY L. WILLIS 11/12/12

PROJECT NO. R-2303C
SAMPSON COUNTY
STATION: 1081+04.50 -L-
SHEET 2 OF 2

V&M Vaughn & Melton Consulting Engineers
Asheville, North Carolina 828-253-2796
Charlotte, North Carolina 704-357-0499
Tri-Cities, Tennessee 423-467-8400
Knoxville, Tennessee 865-546-5800
Middlesboro, Kentucky 606-248-6600
Spartanburg, South Carolina 864-574-4775
Copyright © 2006 Vaughn & Melton, Inc. All Rights Reserved

STATE OF NORTH CAROLINA
DEPARTMENT OF TRANSPORTATION
RALEIGH

TYPICAL SECTION DETAILS

(LEFT LANE)

REVISIONS						SHEET NO.
NO.	BY:	DATE:	NO.	BY:	DATE:	S-78
1			3			TOTAL SHEETS
2			4			138

DWN. BY: MAF DATE: SEPT. 2012
CHKD. BY: HLW DATE: SEPT. 2012

STR. #3

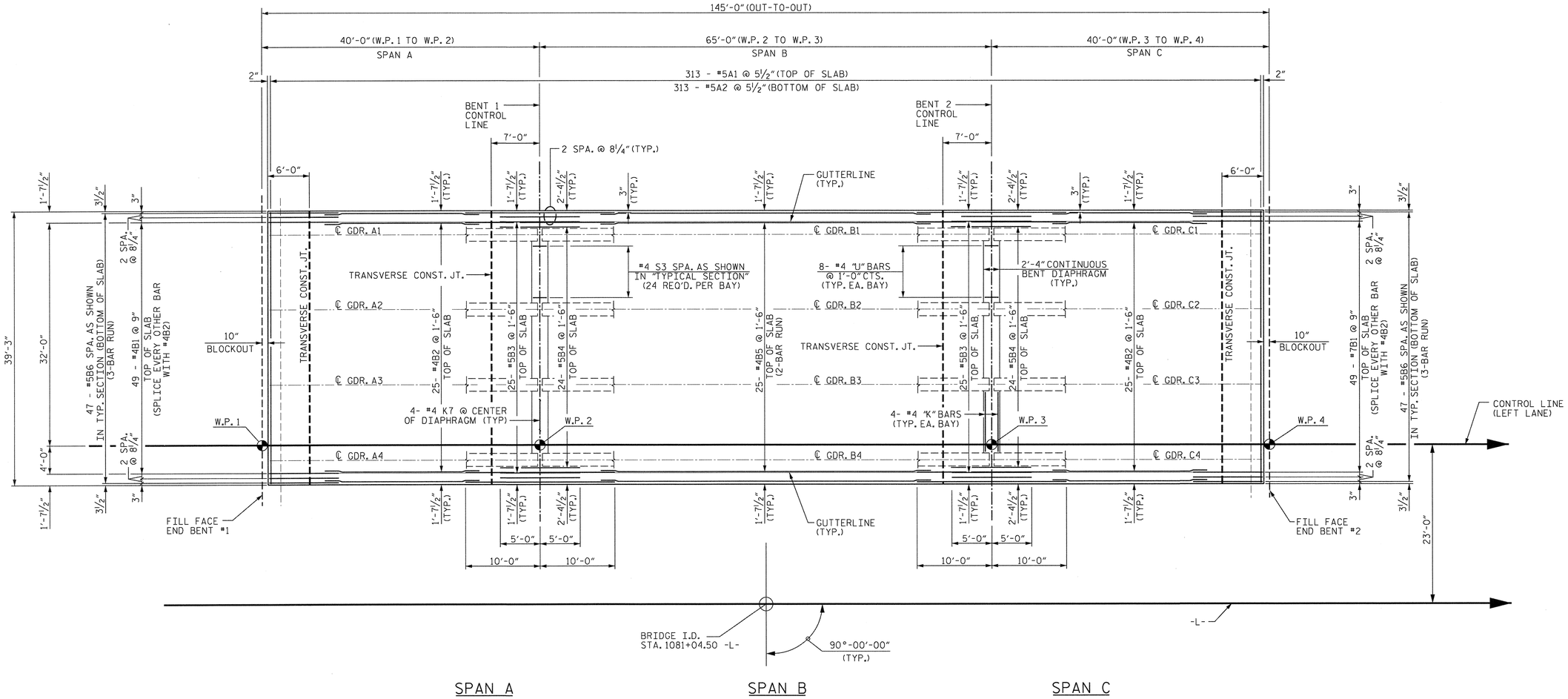

PLAN OF SPANS

NOTES:

FOR LOCATION OF INTERMEDIATE DIAPHRAGMS, SEE "GIRDER LAYOUT" SHEETS.

FOR REINFORCING STEEL IN BARRIER RAIL, SEE "CONCRETE BARRIER RAIL" SHEET.

MINIMUM SPLICE LENGTHS FOR ALL BARS SHALL BE IN ACCORDANCE WITH THE SPLICE LENGTH TABLE ON THE SUPERSTRUCTURE BILL OF MATERIAL SHEET. WHERE BARS OF DIFFERENT SIZES ARE LAPPED, USE THE MINIMUM SPLICE LENGTH OF SMALLER BAR.

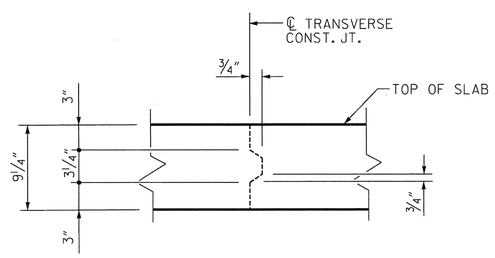

TRANSVERSE CONSTRUCTION JOINT DETAIL

REINFORCING STEEL IN SLAB NOT SHOWN. LONGITUDINAL REINFORCING STEEL SHALL BE CONTINUOUS THRU JOINT.

NORTH CAROLINA PROFESSIONAL ENGINEER SEAL 20777 HARDY L. WILLIS 11/21/12

PROJECT NO. R-2303C
SAMPSON COUNTY
STATION: 1081+04.50 -L-

SHEET 1 OF 4

V&M Vaughn & Melton Consulting Engineers
Asheville, North Carolina 828-253-2796
Charlotte, North Carolina 704-357-0488
Tri-Cities, Tennessee 423-467-8401
Knoxville, Tennessee 865-546-5800
Middlesboro, Kentucky 606-248-6600
Spartanburg, South Carolina 864-574-4775
Copyright © 2006 Vaughn & Melton, Inc. All Rights Reserved

DWN. BY: MAF DATE: SEPT. 2012
CHKD. BY: HLW DATE: SEPT. 2012

STATE OF NORTH CAROLINA
DEPARTMENT OF TRANSPORTATION
RALEIGH

SUPERSTRUCTURE PLAN OF SPANS

(LEFT LANE)

REVISIONS						SHEET NO.
NO.	BY:	DATE:	NO.	BY:	DATE:	S-79
1			3			TOTAL SHEETS
2			4			138

STR. #3

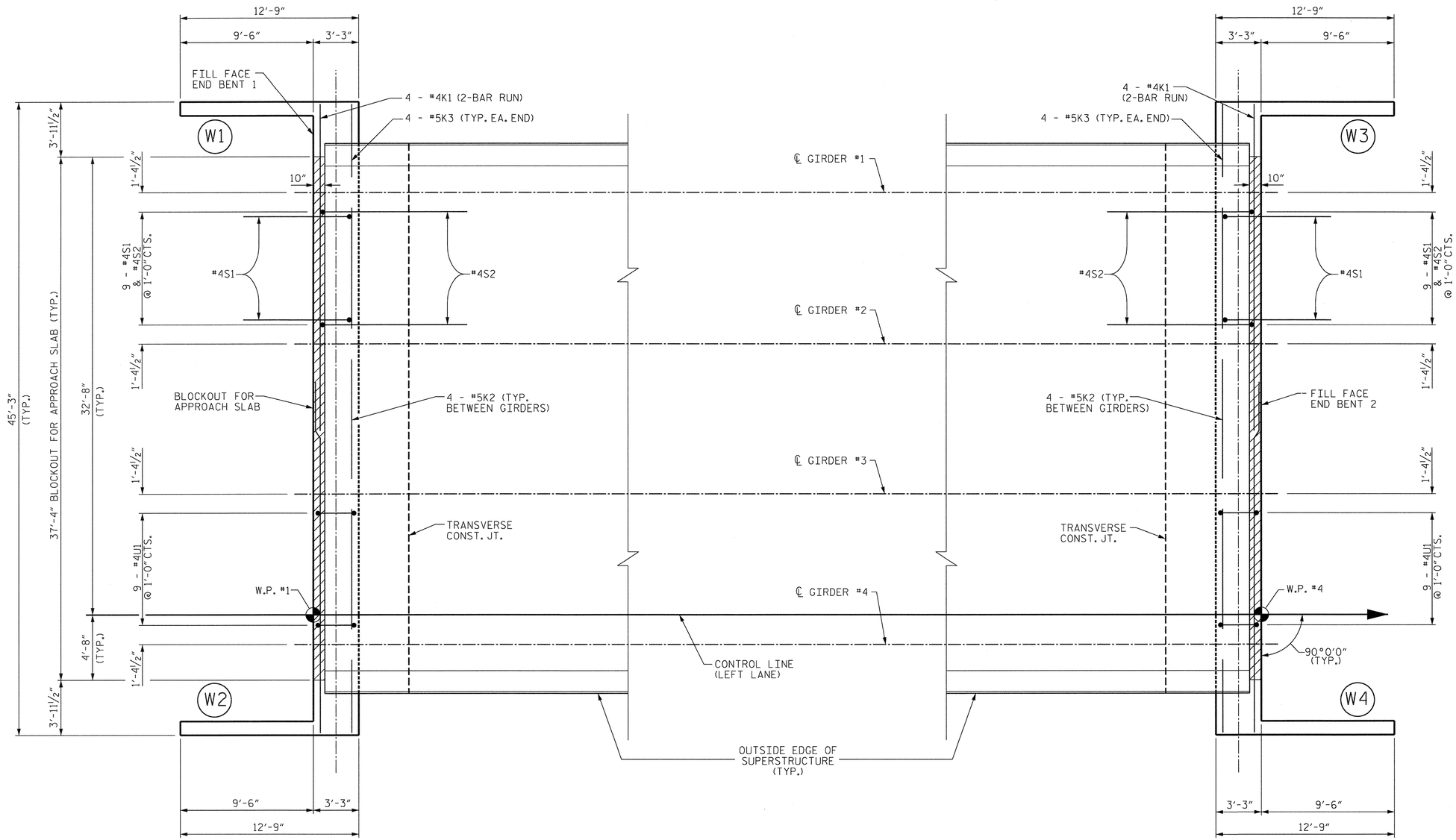

END BENT 1

END BENT 2

NOTES

FOR SECTION THROUGH ABUTMENT, SEE TYPICAL SECTION, SHEET S-5.

FOR DETAILS AND REINFORCING STEEL IN WINGS, SEE "PLAN OF SPAN DETAILS", SHEETS S-10 AND S-11.

PLAN OF ABUTMENT WALLS

ALL DIMENSIONS AND REINFORCING STEEL ARE TYPICAL FOR BOTH BENTS.

NORTH CAROLINA PROFESSIONAL SEAL 20772 ENGINEER HARDY L. WILLIS 11/21/12

V&M Vaughn & Melton Consulting Engineers
Asheville, North Carolina 828-253-2796
Charlotte, North Carolina 704-357-0488
Tri-Cities, Tennessee 423-467-8401
Knoxville, Tennessee 865-546-5800
Middlesboro, Kentucky 606-248-5600
Spartanburg, South Carolina 864-574-4775
Copyright © 2006 Vaughn & Melton, Inc. All Rights Reserved

DWN. BY: MAF DATE: SEPT. 2012
CHKD. BY: HLW DATE: SEPT. 2012

PROJECT NO. R-2303C
SAMPSON COUNTY
STATION: 1081+04.50 -L-

SHEET 2 OF 4

STATE OF NORTH CAROLINA
DEPARTMENT OF TRANSPORTATION
RALEIGH

PLAN OF SPAN DETAILS

(LEFT LANE)

REVISIONS						SHEET NO.
NO.	BY:	DATE:	NO.	BY:	DATE:	S-80
1			3			TOTAL SHEETS
2			4			138

STR. #3

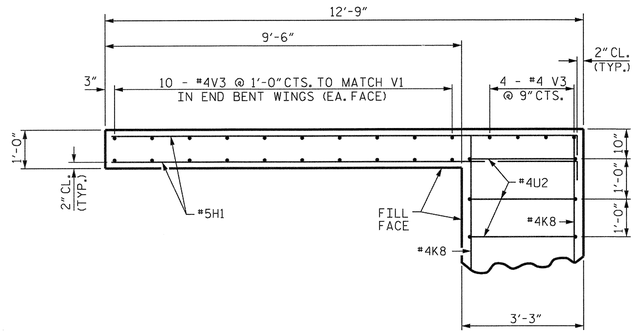

PLAN OF WING W1

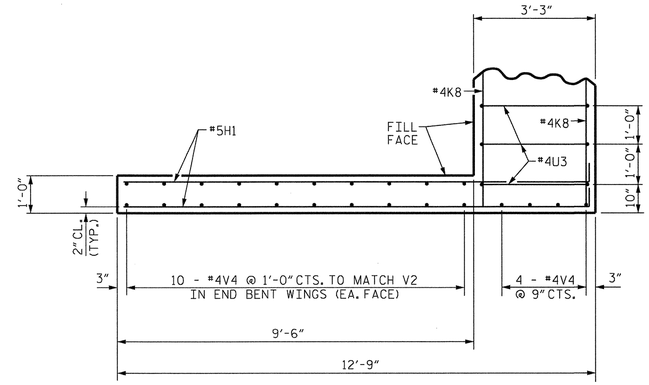

PLAN OF WING W2

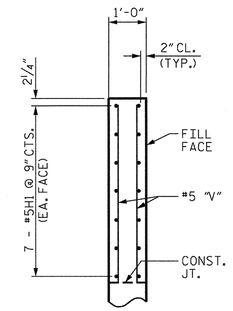

A-A

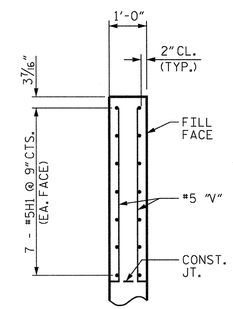

B-B

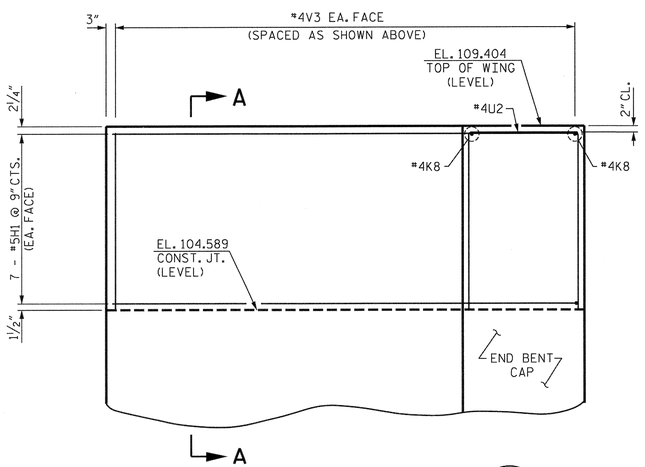

ELEVATION OF WING W1

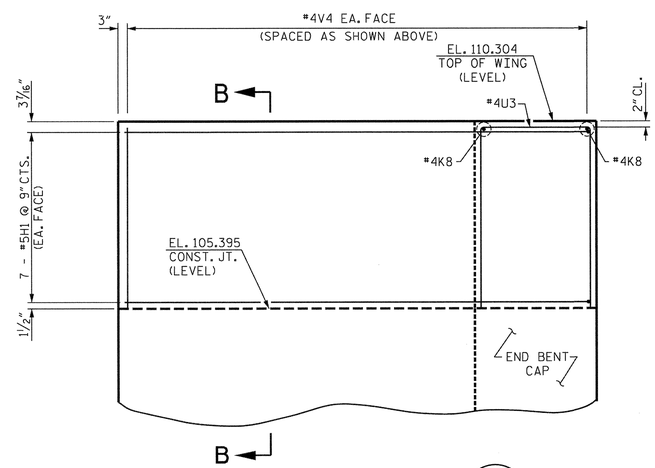

ELEVATION OF WING W2

NORTH CAROLINA PROFESSIONAL SEAL 20277 ENGINEER HARDY L. WILLIS 11/12/12

PROJECT NO. R-2303C

SAMPSON COUNTY

STATION: 1081+04.50 -L-

SHEET 3 OF 4

V&M
Vaughn & Melton
Consulting Engineers
Asheville, North Carolina
828-253-2796
Charlotte, North Carolina 704-357-0488
Tri-Cities, Tennessee 423-467-8401
Knoxville, Tennessee 865-546-5800
Middlesboro, Kentucky 606-248-6600
Spartanburg, South Carolina 864-574-4775

Copyright © 2006 Vaughn & Melton, Inc. All Rights Reserved

DWN. BY: MAF DATE: SEPT. 2012
CHKD. BY: HLW DATE: SEPT. 2012

STATE OF NORTH CAROLINA
DEPARTMENT OF TRANSPORTATION
RALEIGH

PLAN OF SPAN DETAILS

(LEFT LANE)

REVISIONS						SHEET NO.
NO.	BY:	DATE:	NO.	BY:	DATE:	S-81
1			3			TOTAL SHEETS
2			4			138

STR. #3

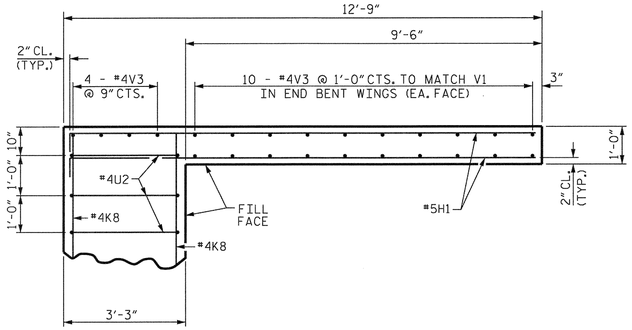

PLAN OF WING W3

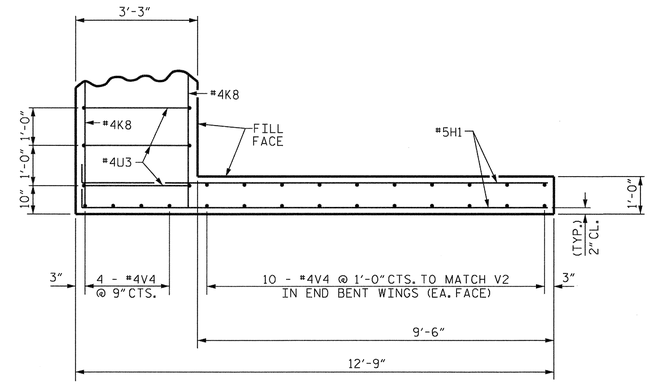

PLAN OF WING W4

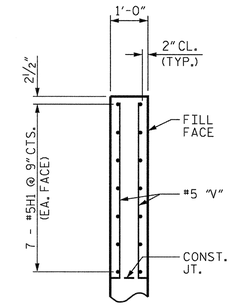

A-A

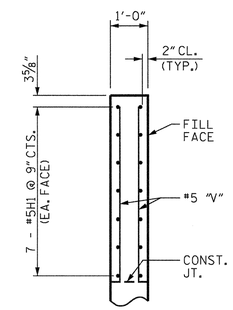

B-B

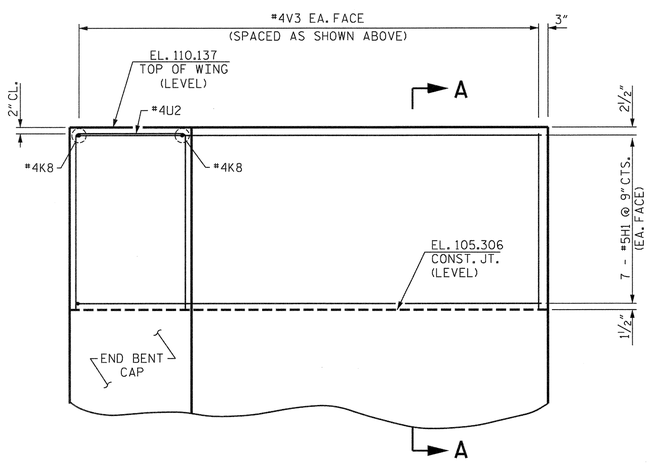

ELEVATION OF WING W3

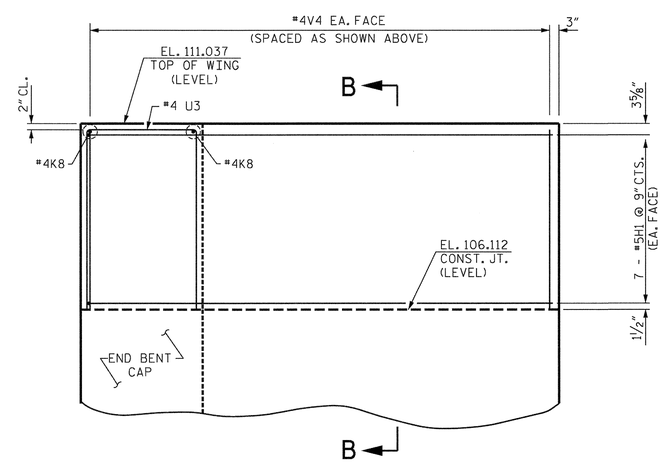

ELEVATION OF WING W4

NORTH CAROLINA PROFESSIONAL SEAL 20177 ENGINEER HARDY L. WILLIS

11/6/12

PROJECT NO. R-2303C

SAMPSON COUNTY

STATION: 1081+04.50 -L-

SHEET 4 OF 4

V&M Vaughn & Melton Consulting Engineers

Asheville, North Carolina 828-253-2796

Charlotte, North Carolina 704-357-0488
Tri-Cities, Tennessee 423-467-8401
Knoxville, Tennessee 865-546-5800
Middlesboro, Kentucky 606-248-6600
Spartanburg, South Carolina 864-574-4775

Copyright © 2006 Vaughn & Melton, Inc. All Rights Reserved

STATE OF NORTH CAROLINA
DEPARTMENT OF TRANSPORTATION
RALEIGH

PLAN OF SPAN DETAILS

(LEFT LANE)

REVISIONS						SHEET NO.
NO.	BY:	DATE:	NO.	BY:	DATE:	S-82
1			3			TOTAL SHEETS
2			4			138

DWN. BY: MAF DATE: SEPT. 2012
CHKD. BY: HLW DATE: SEPT. 2012

STR. #3

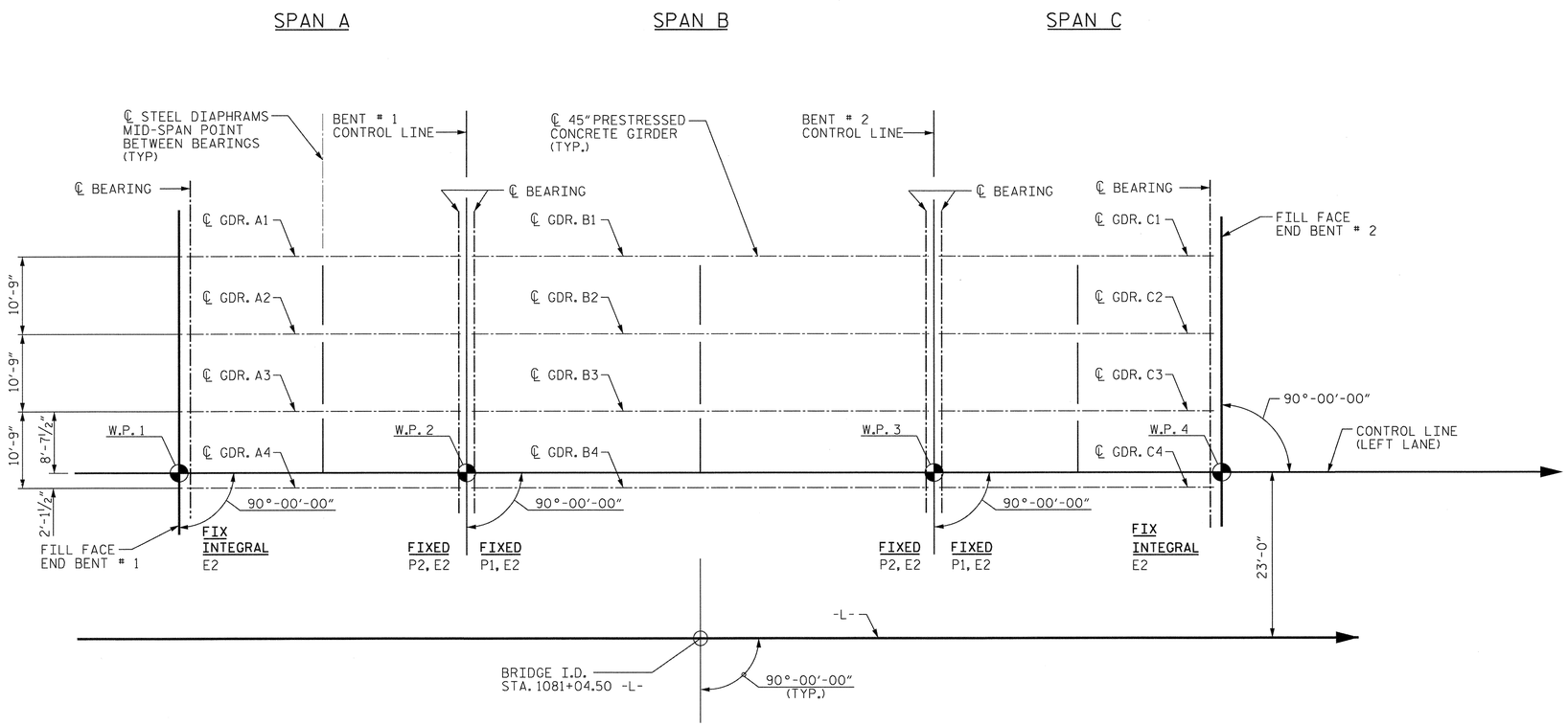

FRAMING PLAN

NORTH CAROLINA PROFESSIONAL SEAL 20 ENGINEER HARDY L. WILLIS 11/21/12

PROJECT NO. R-2303C
SAMPSON COUNTY
STATION: 1081+04.50 -L-

V&M Vaughn & Melton Consulting Engineers
Asheville, North Carolina 828-253-2796
Charlotte, North Carolina 704-357-0488
Tri-Cities, Tennessee 423-467-8401
Knoxville, Tennessee 865-546-5800
Middlesboro, Kentucky 606-248-6600
Spartanburg, South Carolina 864-574-4775

Copyright © 2006 Vaughn & Melton, Inc. All Rights Reserved

DWN. BY: MAF DATE: SEPT. 2012
CHKD. BY: HLW DATE: SEPT. 2012

STATE OF NORTH CAROLINA
DEPARTMENT OF TRANSPORTATION
RALEIGH

FRAMING PLAN

(LEFT LANE)

REVISIONS						SHEET NO.
NO.	BY:	DATE:	NO.	BY:	DATE:	S-83
1			3			TOTAL SHEETS
2			4			138

STR. #3

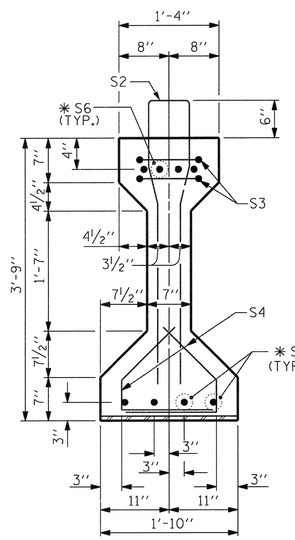

SECTION A-A

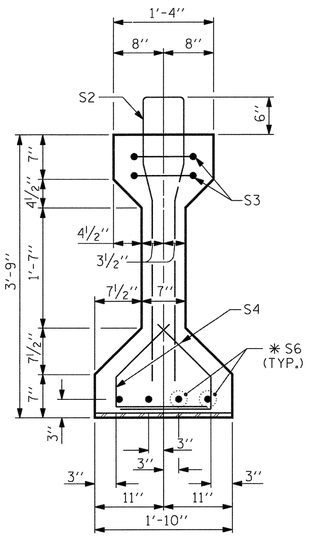

SECTION B-B

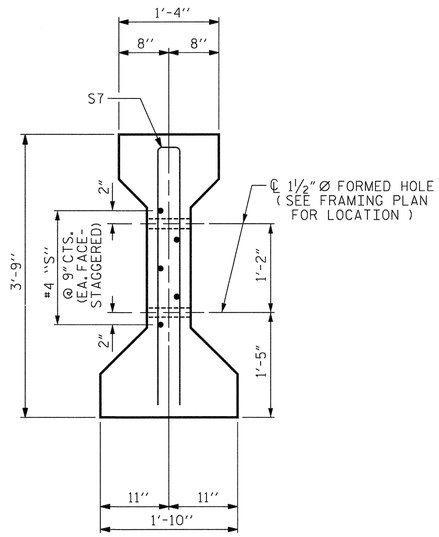

SECTION C-C

(S1 BARS NOT SHOWN)

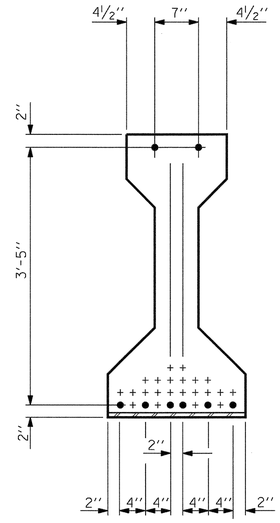

AT END OF GIRDER

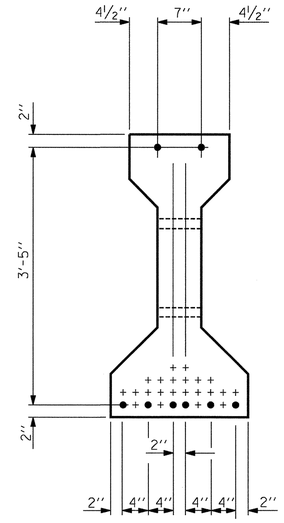

AT ℄ OF GIRDER

0.6" Ø LOW RELAXATION STRAND LAYOUT

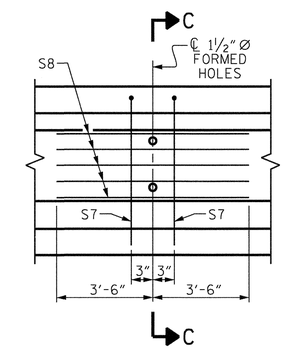

PARTIAL ELEVATION

SHOWING INTERMEDIATE DIAPHRAGM REINFORCING STEEL.

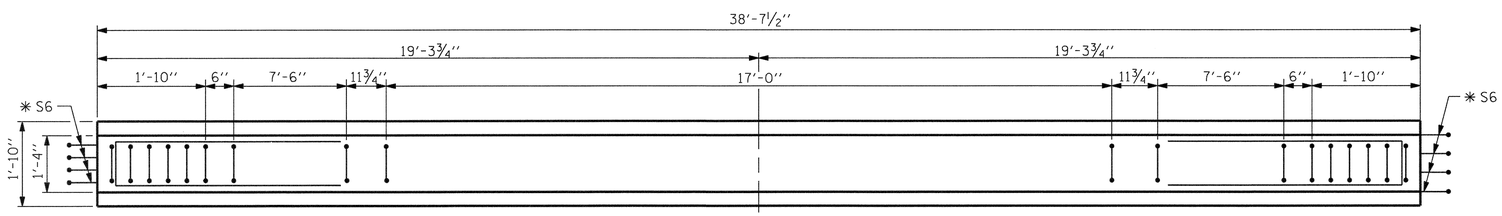

PLAN OF GIRDER - SPAN A

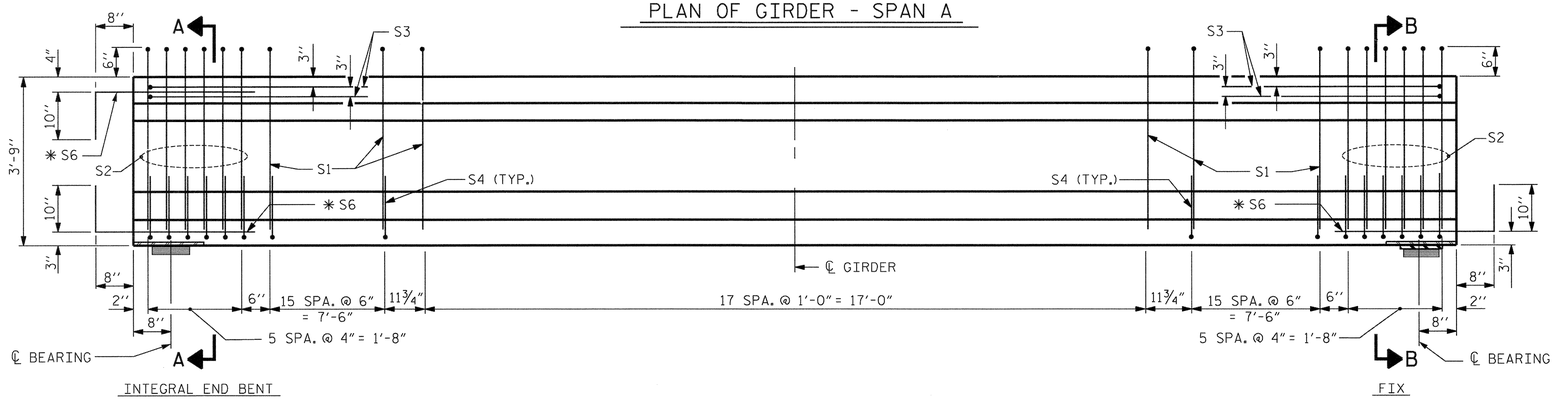

ELEVATION OF GIRDER - SPAN A

(SEE PARTIAL ELEVATION FOR ADDITIONAL "S" BARS)

0.6" Ø L. R. GRADE 270 STRANDS

AREA (SQUARE INCHES)	ULTIMATE STRENGTH (LBS. PER STRAND)	APPLIED PRESTRESS (LBS. PER STRAND)
0.217	58,600	43,950

REINFORCING STEEL FOR ONE GIRDER

BAR	NUMBER	SIZE	TYPE	LENGTH	WEIGHT
S1	50	#4	1	8'-6"	284
S2	12	#6	1	8'-6"	153
S3	4	#4	3	8'-8"	23
S4	88	#4	2	2'-9"	162
✱ S6	12	#5	STR	3'-8"	46
S7	2	#5	3	7'-2"	15
S8	5	#4	STR	7'-0"	5

✱ NOTE: S6 BARS SHALL BE BENT BEFORE SHIPMENT. HEAT BENDING SHALL NOT BE ALLOWED.

BAR TYPES

ALL BAR DIMENSIONS ARE OUT-TO-OUT

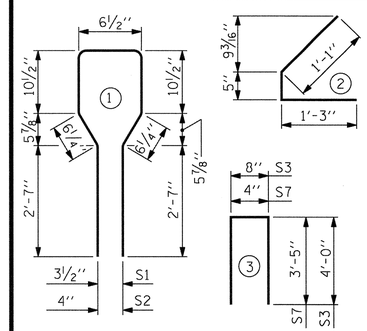

QUANTITIES FOR ONE GIRDER

	REINFORCING STEEL LB.	6000 PSI CONCRETE C.Y.	0.6" Ø L.R. STRANDS No.
EXTERIOR GIRDER	688	5.6	8
INTERIOR GIRDER	688	5.6	8

GIRDERS REQUIRED

NUMBER	LENGTH	TOTAL LENGTH
4	38'-7½"	154'-6"

PROJECT NO. R-2303C

SAMPSON COUNTY

STATION: 1081+04.50 -L-

SHEET 1 OF 5

STATE OF NORTH CAROLINA
DEPARTMENT OF TRANSPORTATION
RALEIGH

STANDARD
AASHTO TYPE III
PRESTRESSED CONCRETE GIRDER
CONTINUOUS FOR LIVE LOAD
SPAN A
(LEFT LANE)

NORTH CAROLINA PROFESSIONAL SEAL 20077 ENGINEER HARDY L. WILLIS 11/21/12

REVISIONS						SHEET NO.
NO.	BY:	DATE:	NO.	BY:	DATE:	S-84
1			3			TOTAL SHEETS
2			4			138

ASSEMBLED BY : MAF DATE : 9/2012
CHECKED BY : HLW DATE : 9/2012

DRAWN BY : ELR 8/91
CHECKED BY : GRP 8/91

REV. 10/17/00R RWW/LES
REV. 5/1/06R TLA/GM
REV. 10/1/11 RWW/LES

$$$$$$$SYSTIME$$$$$
$$$$$$$$$$$$$$$$$$$$$$$$DGN$$$$$$$$$$$$$$$$$$$$$$$$
$$$$USERNAME$$$$

45" PCG WITHOUT NOTCH

STR. #3

STD. NO. PCG5 (Sht. 2)

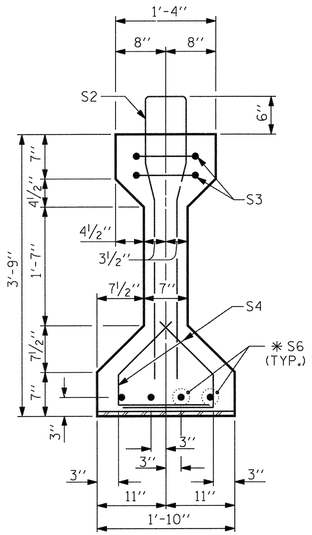

SECTION A-A

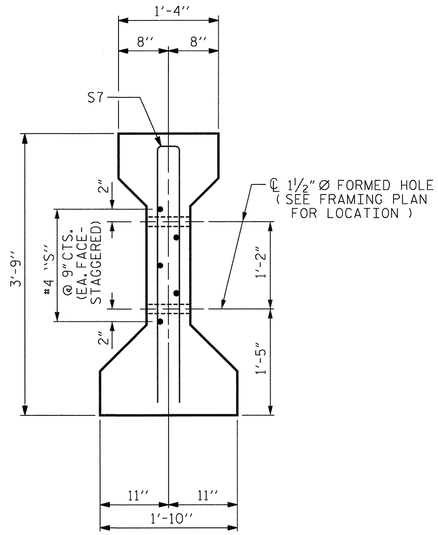

SECTION C-C

(S1 BARS NOT SHOWN)

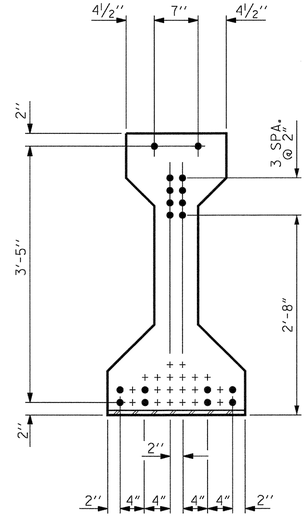

AT END OF GIRDER

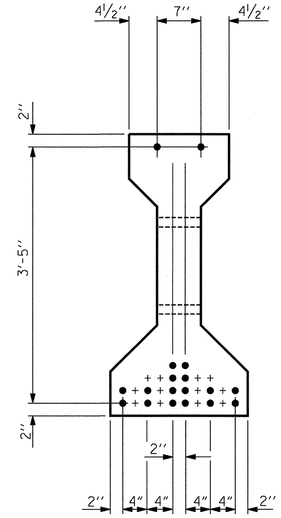

AT ℄ OF GIRDER

0.6" Ø LOW RELAXATION STRAND LAYOUT

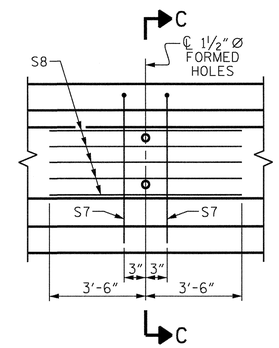

PARTIAL ELEVATION

SHOWING INTERMEDIATE DIAPHRAGM REINFORCING STEEL.

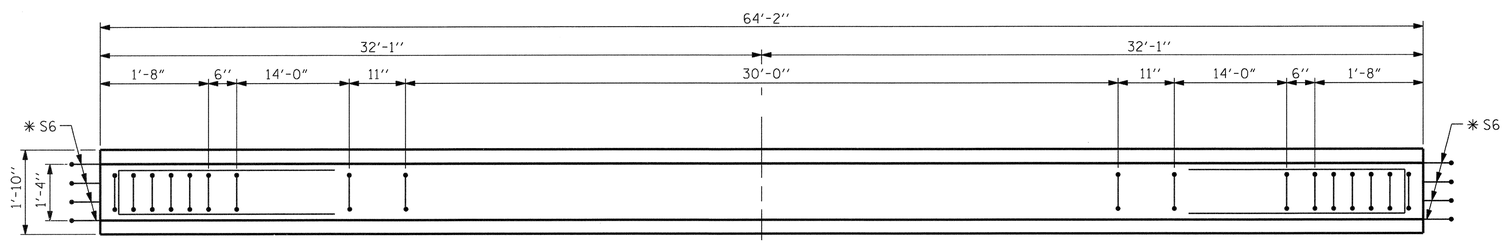

PLAN OF GIRDER - SPAN B

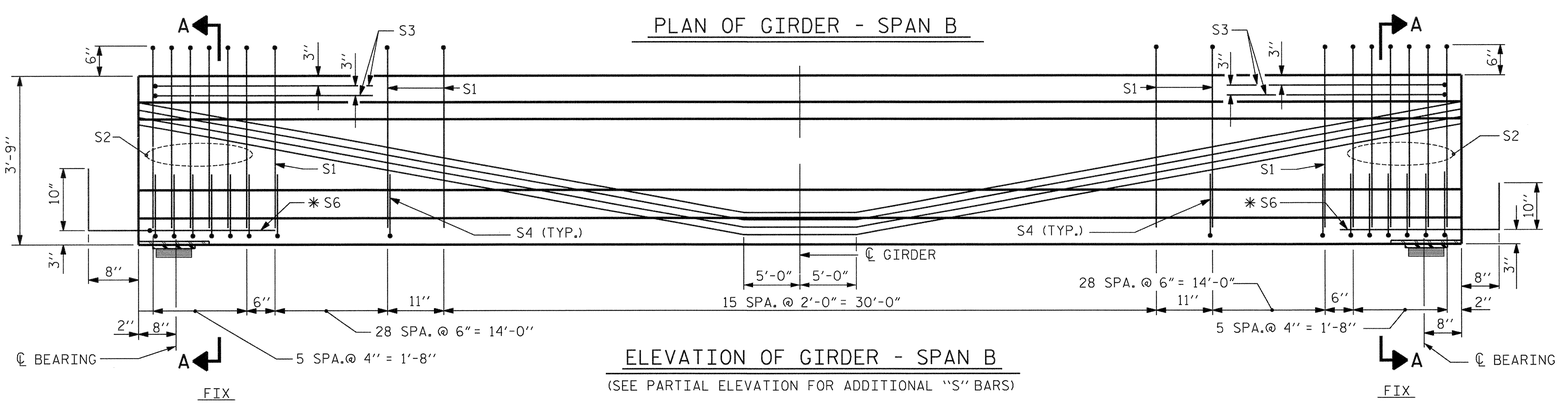

ELEVATION OF GIRDER - SPAN B

(SEE PARTIAL ELEVATION FOR ADDITIONAL "S" BARS)

0.6" Ø L. R. GRADE 270 STRANDS

AREA (SQUARE INCHES)	ULTIMATE STRENGTH (LBS. PER STRAND)	APPLIED PRESTRESS (LBS. PER STRAND)
0.217	58,600	43,950

REINFORCING STEEL FOR ONE GIRDER

BAR	NUMBER	SIZE	TYPE	LENGTH	WEIGHT
S1	74	#4	1	8'-6"	420
S2	12	#6	1	8'-6"	153
S3	4	#4	3	8'-8"	23
S4	140	#4	2	2'-9"	257
✱ S6	8	#5	STR	3'-8"	31
S7	2	#5	3	7'-2"	15
S8	5	#4	STR	7'-0"	5

✱ NOTE: S6 BARS SHALL BE BENT BEFORE SHIPMENT. HEAT BENDING SHALL NOT BE ALLOWED.

BAR TYPES

ALL BAR DIMENSIONS ARE OUT-TO-OUT

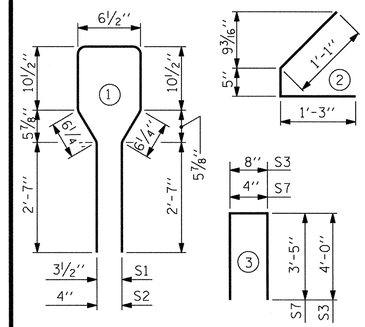

QUANTITIES FOR ONE GIRDER

	REINFORCING STEEL LB.	8000 PSI CONCRETE C.Y.	0.6" Ø L.R. STRANDS No.
EXTERIOR GIRDER	904	9.2	18
INTERIOR GIRDER	904	9.2	18

GIRDERS REQUIRED

NUMBER	LENGTH	TOTAL LENGTH
4	64'-2"	256'-8"

PROJECT NO. R-2303C

SAMPSON COUNTY

STATION: 1081+04.50 -L-

SHEET 2 OF 5

STATE OF NORTH CAROLINA
DEPARTMENT OF TRANSPORTATION
RALEIGH

STANDARD
AASHTO TYPE III
PRESTRESSED CONCRETE GIRDER
CONTINUOUS FOR LIVE LOAD
SPAN B
(LEFT LANE)

NORTH CAROLINA PROFESSIONAL SEAL 20772 ENGINEER HARDY L. WILLIS 11/21/12

REVISIONS								SHEET NO.
NO.	BY:	DATE:	NO.	BY:	DATE:			S-85
1			3					TOTAL SHEETS
2			4					138

ASSEMBLED BY : MAF	DATE : 9/2012
CHECKED BY : HLW	DATE : 9/2012
DRAWN BY : ELR 8/91	REV. 10/17/00R RWW/LES
CHECKED BY : GRP 8/91	REV. 5/1/06R TLA/GM
	REV. 10/1/11 MAA/GM

$$$$$$$SYSTIME$$$$$
$$$$$$$$$$$$$$$$$$$$$$DGN$$$$$$$$$$$$$$$$$$$$$$$$
$$$$USERNAME$$$$

45" PCG WITHOUT NOTCH

STR. #3 STD. NO. PCG5 (Sht. 1)

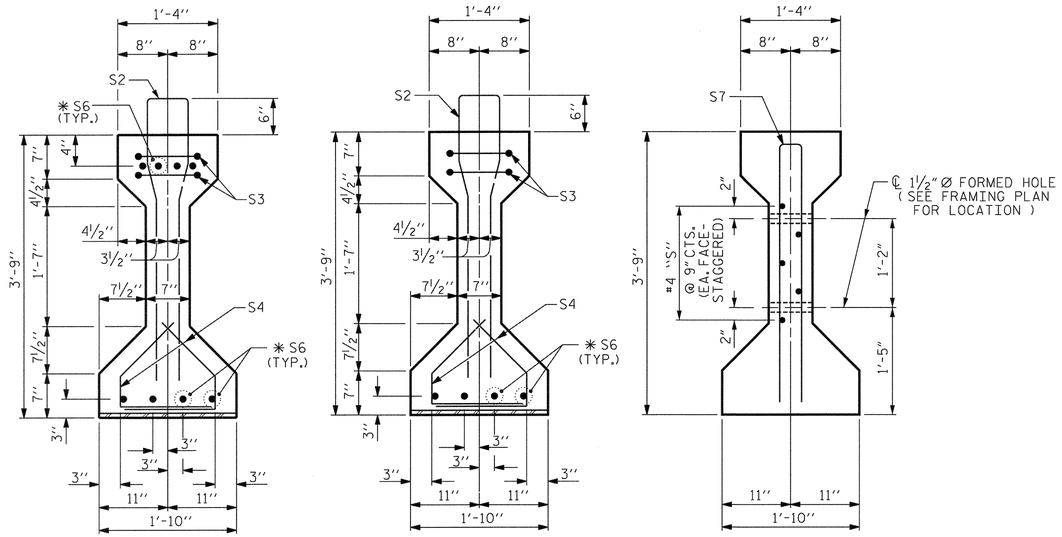

SECTION A-A

SECTION B-B

SECTION C-C

(S1 BARS NOT SHOWN)

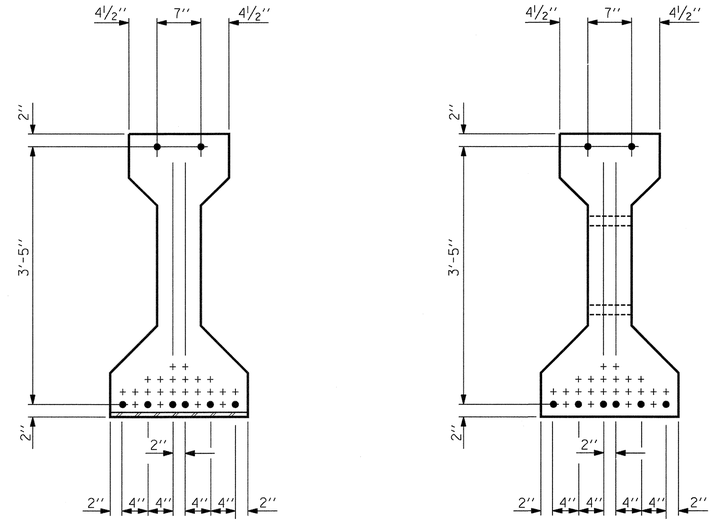

AT END OF GIRDER

AT ℄ OF GIRDER

0.6" Ø LOW RELAXATION STRAND LAYOUT

0.6" Ø L. R. GRADE 270 STRANDS		
AREA (SQUARE INCHES)	ULTIMATE STRENGTH (LBS. PER STRAND)	APPLIED PRESTRESS (LBS. PER STRAND)
0.217	58,600	43,950

REINFORCING STEEL FOR ONE GIRDER

BAR	NUMBER	SIZE	TYPE	LENGTH	WEIGHT
S1	50	#4	1	8'-6"	284
S2	12	#6	1	8'-6"	153
S3	4	#4	3	8'-8"	23
S4	88	#4	2	2'-9"	162
✱ S6	12	#5	STR	3'-8"	46
S7	2	#5	3	7'-2"	15
S8	5	#4	STR	7'-0"	5

✱ NOTE: S6 BARS SHALL BE BENT BEFORE SHIPMENT. HEAT BENDING SHALL NOT BE ALLOWED.

BAR TYPES

ALL BAR DIMENSIONS ARE OUT-TO-OUT

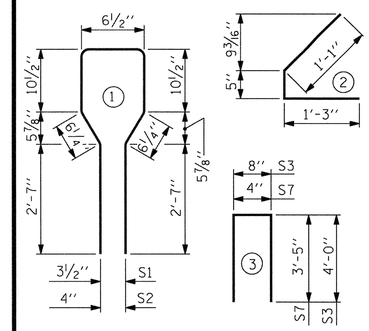

QUANTITIES FOR ONE GIRDER

	REINFORCING STEEL	6000 PSI CONCRETE	0.6" Ø L. R. STRANDS
	LB.	C.Y.	No.
EXTERIOR GIRDER	688	5.6	8
INTERIOR GIRDER	688	5.6	8

GIRDERS REQUIRED

NUMBER	LENGTH	TOTAL LENGTH
4	38'-7½"	154'-6"

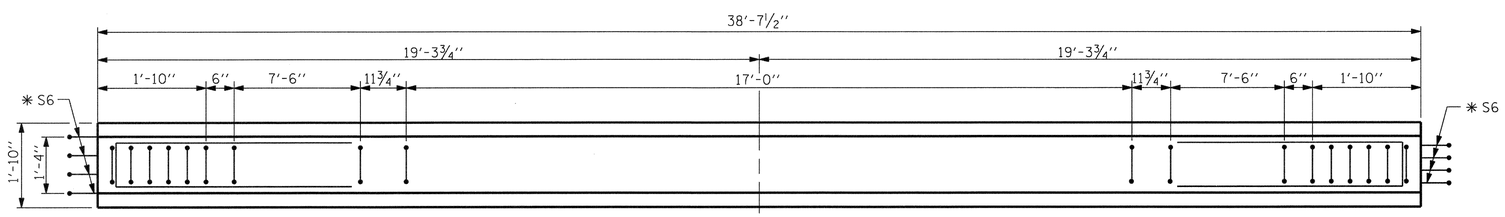

PLAN OF GIRDER - SPAN C

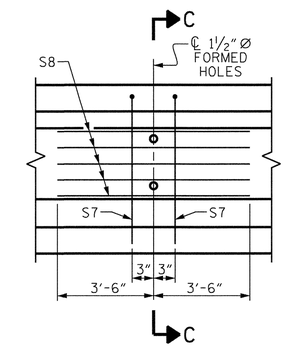

PARTIAL ELEVATION

SHOWING INTERMEDIATE DIAPHRAGM REINFORCING STEEL.

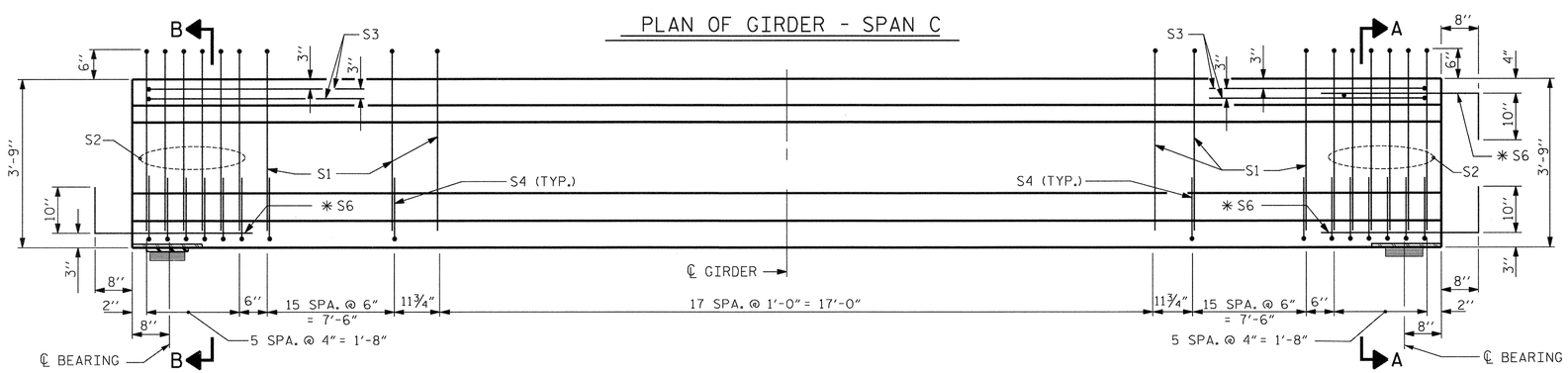

FIX

ELEVATION OF GIRDER - SPAN C

(SEE PARTIAL ELEVATION FOR ADDITIONAL "S" BARS)

INTEGRAL END BENT

PROJECT NO. R-2303C

SAMPSON COUNTY

STATION: 1081+04.50 -L-

SHEET 3 OF 5

STATE OF NORTH CAROLINA
DEPARTMENT OF TRANSPORTATION
RALEIGH

STANDARD
AASHTO TYPE III
PRESTRESSED CONCRETE GIRDER
CONTINUOUS FOR LIVE LOAD
SPAN C
(LEFT LANE)

NORTH CAROLINA PROFESSIONAL SEAL 20777 ENGINEER HARDY L. WILLIS 11/2/12

REVISIONS							SHEET NO.
NO.	BY:	DATE:	NO.	BY:	DATE:		S-86
1			3				TOTAL SHEETS
2			4				138

ASSEMBLED BY : MAF	DATE : 9/2012
CHECKED BY : HLW	DATE : 9/2012
DRAWN BY : ELR 8/91	REV. 10/17/00R RWW/LES
CHECKED BY : GRP 8/91	REV. 5/1/06R TLA/GM
	REV. 10/1/11 MAA/GM

$$$$$$$SYSTIME$$$$$
$$$$$$$$$$$$$$$$$$$$$$$$DGN$$$$$$$$$$$$$$$$$$$$$$$$
$$$$USERNAME$$$$

45" PCG WITHOUT NOTCH

STR. #3

STD. NO. PCG5 (Sht. 2)

SPAN A - DEAD LOAD DEFLECTION TABLE FOR GIRDERS

0.60" ∅ LOW RELAXATION	GIRDER A1 OR A4											GIRDER A2 OR A3										
TENTH POINTS	0.0	0.1	0.2	0.3	0.4	0.5	0.6	0.7	0.8	0.9	1.0	0.0	0.1	0.2	0.3	0.4	0.5	0.6	0.7	0.8	0.9	1.0
CAMBER (GIRDER ALONE IN PLACE) (UP)	0.000	0.059	0.103	0.133	0.149	0.150	0.149	0.133	0.103	0.059	0.000	0.000	0.059	0.103	0.133	0.149	0.150	0.149	0.133	0.103	0.059	0.000
DEFLECTION DUE TO SUPERIMPOSED D.L. (DOWN)	0.000	0.026	0.050	0.070	0.086	0.100	0.086	0.070	0.050	0.026	0.000	0.000	0.038	0.068	0.090	0.104	0.110	0.104	0.090	0.068	0.038	0.000
FINAL CAMBER (DECIMAL INCHES) (UP)	0	0.033	0.053	0.063	0.063	0.050	0.063	0.063	0.053	0.033	0.000	0	0.021	0.035	0.043	0.045	0.040	0.045	0.043	0.035	0.021	0.000
FINAL CAMBER (INCHES) (UP)	0"	1/16"	1/16"	1/16"	1/16"	1/16"	1/16"	1/16"	1/16"	1/16"	0"	0"	0"	1/16"	1/16"	1/16"	1/16"	1/16"	1/16"	1/16"	0"	0"

INCLUDES WEIGHT OF SLAB, BUILDUP, STAY-IN-PLACE FORMS, AND FUTURE WEARING SURFACE.

SPAN B - DEAD LOAD DEFLECTION TABLE FOR GIRDERS

0.60" ∅ LOW RELAXATION	GIRDER B1 OR B4											GIRDER B2 OR B3										
TENTH POINTS	0.0	0.1	0.2	0.3	0.4	0.5	0.6	0.7	0.8	0.9	1.0	0.0	0.1	0.2	0.3	0.4	0.5	0.6	0.7	0.8	0.9	1.0
CAMBER (GIRDER ALONE IN PLACE) (UP)	0.000	0.229	0.419	0.571	0.685	0.760	0.685	0.571	0.419	0.229	0.000	0.000	0.229	0.419	0.571	0.685	0.760	0.685	0.571	0.419	0.229	0.000
DEFLECTION DUE TO SUPERIMPOSED D.L. (DOWN)	0.000	0.227	0.407	0.541	0.629	0.670	0.629	0.541	0.407	0.227	0.000	0.000	0.249	0.449	0.599	0.699	0.750	0.699	0.599	0.449	0.249	0.000
FINAL CAMBER (DECIMAL INCHES) (UP)	0	0.002	0.012	0.030	0.056	0.090	0.056	0.030	0.012	0.002	0.000	0	-0.020	-0.030	-0.028	-0.014	0.010	-0.014	-0.028	-0.030	-0.020	0.000
FINAL CAMBER (INCHES) (UP)	0"	0"	0"	0"	0"	1/16"	0"	0"	0"	0"	0"	0"	0"	0"	0"	0"	0"	0"	0"	0"	0"	0"

INCLUDES WEIGHT OF SLAB, BUILDUP, STAY-IN-PLACE FORMS, AND FUTURE WEARING SURFACE.

SPAN C - DEAD LOAD DEFLECTION TABLE FOR GIRDERS

0.60" ∅ LOW RELAXATION	GIRDER C1 OR C4											GIRDER C2 OR C3										
TENTH POINTS	0.0	0.1	0.2	0.3	0.4	0.5	0.6	0.7	0.8	0.9	1.0	0.0	0.1	0.2	0.3	0.4	0.5	0.6	0.7	0.8	0.9	1.0
CAMBER (GIRDER ALONE IN PLACE) (UP)	0.000	0.059	0.103	0.133	0.149	0.150	0.149	0.133	0.103	0.059	0.000	0.000	0.059	0.103	0.133	0.149	0.150	0.149	0.133	0.103	0.059	0.000
DEFLECTION DUE TO SUPERIMPOSED D.L. (DOWN)	0.000	0.026	0.050	0.070	0.086	0.100	0.086	0.070	0.050	0.026	0.000	0.000	0.038	0.068	0.090	0.104	0.110	0.104	0.090	0.068	0.038	0.000
FINAL CAMBER (DECIMAL INCHES) (UP)	0	0.033	0.053	0.063	0.063	0.050	0.063	0.063	0.053	0.033	0.000	0	0.021	0.035	0.043	0.045	0.040	0.045	0.043	0.035	0.021	0.000
FINAL CAMBER (INCHES) (UP)	0"	1/16"	1/16"	1/16"	1/16"	1/16"	1/16"	1/16"	1/16"	1/16"	0"	0"	0"	1/16"	1/16"	1/16"	1/16"	1/16"	1/16"	1/16"	0"	0"

INCLUDES WEIGHT OF SLAB, BUILDUP, STAY-IN-PLACE FORMS, AND FUTURE WEARING SURFACE.

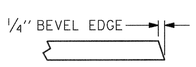

SECTION "G"

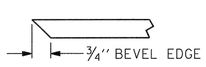

SECTION "F"

(SEE NOTES)

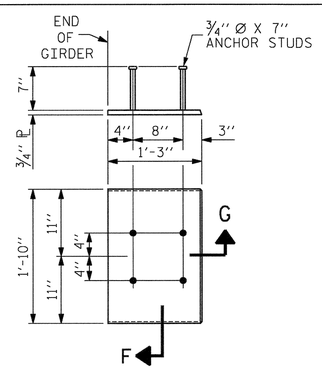

EMBEDDED PLATE "B-1" DETAILS FOR AASHTO TYPE III GIRDER

(2 REQ'D PER GIRDER)

NOTES

ALL PRESTRESSING STRANDS SHALL BE 7-WIRE LOW-RELAXATION GRADE 270 STRANDS AND SHALL CONFORM TO AASHTO M203 EXCEPT FOR SAMPLING REQUIREMENTS WHICH SHALL BE IN ACCORDANCE WITH THE STANDARD SPECIFICATIONS.

ALL REINFORCING STEEL SHALL BE GRADE 60.

APPLY EPOXY PROTECTIVE COATING TO END OF GIRDER SURFACES INDICATED IN ELEVATION VIEW.

EMBEDDED PLATE "B-1" SHALL BE GALVANIZED IN ACCORDANCE WITH THE STANDARD SPECIFICATIONS. BEVEL EDGES OF PLATE "B-1" TO GIVE CLOSE FIT BUT NOT TIGHT FIT TO STEEL CASTING FORM.

ANCHOR STUDS SHALL CONFORM TO AASHTO M169 GRADES 1010 THROUGH 1020 OR APPROVED EQUAL, AND SHALL MEET THE TYPE "B" REQUIREMENTS OF SUBSECTION 7.3 OF THE ANSI/AASHTO/AWS D1.5 BRIDGE WELDING CODE.

AT ENDS OF GIRDERS TO BE EMBEDDED IN CONCRETE DIAPHRAGMS OR END WALLS, PRESTRESSING STRANDS MAY EXTEND A MAXIMUM OF 2" BEYOND THE GIRDER ENDS. OTHERWISE, PRESTRESSING STRANDS SHALL BE CUT FLUSH WITH THE GIRDER ENDS.

THE TRANSFER OF LOAD FROM THE ANCHORAGES TO THE GIRDERS IN SPANS A&C SHALL BE DONE WHEN CONCRETE HAS REACHED A COMPRESSIVE STRENGTH OF NOT LESS THAN 5000 PSI. FOR SPAN B GIRDERS, THIS TRANSFER SHALL BE DONE WHEN CONCRETE HAS REACHED A COMPRESSIVE STRENGTH OF NOT LESS THAN 6000 PSI.

DEPENDING ON THE TYPE OF SYSTEM USED TO SUPPORT THE DECK SLAB FORMS, PRESET ANCHORS MAY BE NECESSARY IN THE PRESTRESSED CONCRETE GIRDER.

THE TOP SURFACE OF THE GIRDER, EXCLUDING THE OUTSIDE 4", SHALL BE RAKED TO A DEPTH OF 1/4".

WHEN DRAPED STRANDS ARE DETAILED, THE LONGITUDINAL LOCATION OF THE HOLD DOWN DEVICES SHALL BE WITHIN 6" OF THE LOCATION SHOWN AND THE CENTER OF GRAVITY OF THE GROUP OF DRAPED STRANDS SHALL BE LOCATED WITHIN 1/2" OF THE THEORETICAL LOCATION SHOWN.

THE CONTRACTOR HAS THE OPTION TO PROVIDE, AT NO ADDITIONAL COST TO THE DEPARTMENT, 2 ADDITIONAL STRANDS AT THE TOP OF THE GIRDER TO FACILITATE TYING OF THE REINFORCING STEEL. THESE STRANDS SHALL BE PULLED TO A LOAD OF 4500 lbs.

NORTH CAROLINA PROFESSIONAL SEAL 20777 ENGINEER HARDY L. WILLIS

11/12/12

PROJECT NO. R-2303C

SAMPSON COUNTY

STATION: 1081+04.50 -L-

SHEET 4 OF 5

STATE OF NORTH CAROLINA
DEPARTMENT OF TRANSPORTATION
RALEIGH

STANDARD
PRESTRESSED CONCRETE GIRDER
CONTINUOUS FOR LIVE LOAD
DETAILS &
DEAD LOAD DEFLECTIONS
(LEFT LANE)

REVISIONS						SHEET NO.
NO.	BY:	DATE:	NO.	BY:	DATE:	S-87
1			3			TOTAL SHEETS
2			4			138

ASSEMBLED BY : MAF DATE : 09/2012
CHECKED BY : HLW DATE : 09/2012

DRAWN BY : ELR 11/91
CHECKED BY : GRP 11/91

REV. 10/17/00 RWW/LES
REV. 7/10/01RR LES/RDR
REV. 5/1/06 TLA/GM

STR. #3 STD. NO. PCG11 (Sht. 2)

$$$$$$SYSTIME$$$$$
$$$$$$$$$$$$$$$$$$$$$$$$$$DGN$$$$$$$$$$$$$$$$$$$$$$$$$
$$$$USERNAME$$$$

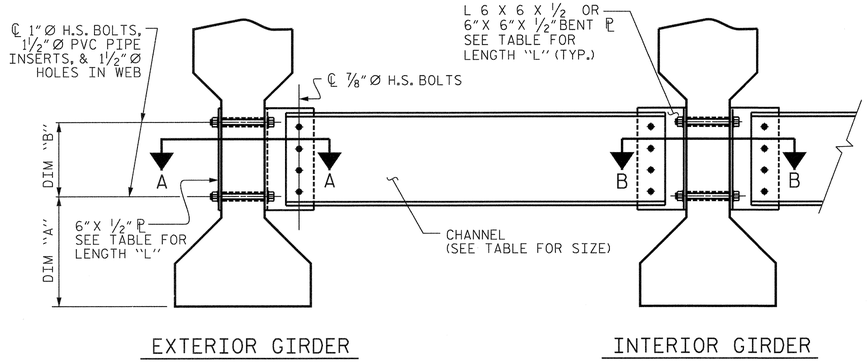

PART SECTION AT INTERMEDIATE DIAPHRAGM

(TYPE III OR TYPE IV GIRDER SHOWN)

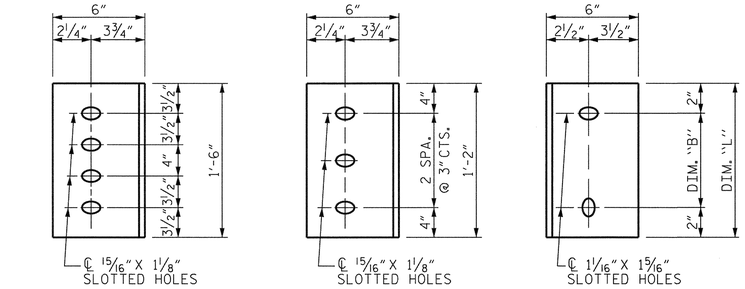

DIAPHRAGM FACE (TYPE III OR TYPE IV GDR.) | DIAPHRAGM FACE (TYPE II GDR.) | WEB FACE

CONNECTOR PLATE DETAILS

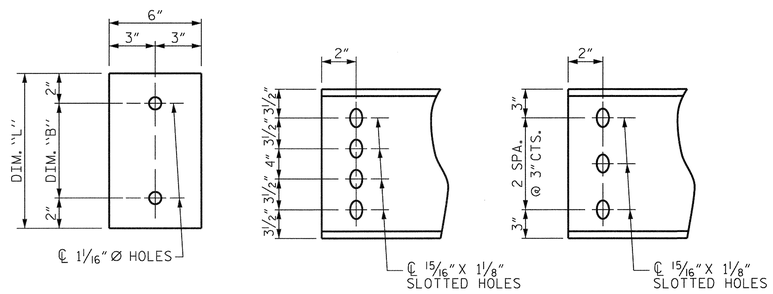

PLATE DETAILS | CHANNEL END (TYPE III OR TYPE IV GDR.) | CHANNEL END (TYPE II GDR.)

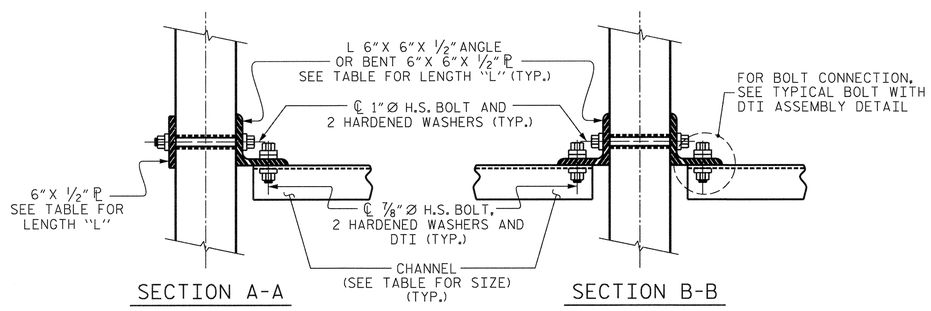

CONNECTION DETAILS

(FOR SKEW = 90°)

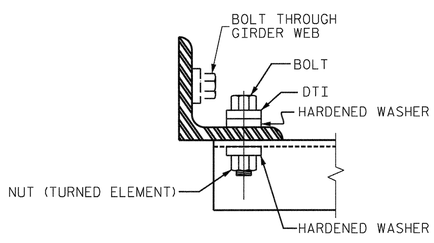

BOLT WITH DTI ASSEMBLY DETAIL

STRUCTURAL STEEL NOTES

ALL INTERMEDIATE DIAPHRAGM STEEL AND CONNECTOR PLATES SHALL BE AASHTO M270 GRADE 50 OR APPROVED EQUAL.

TENSION ON THE ASTM A325 BOLTS THROUGH THE CHANNEL MEMBER SHALL BE CALIBRATED USING DIRECT TENSION INDICATOR WASHERS IN ACCORDANCE WITH THE STANDARD SPECIFICATIONS.

TENSION ON THE ASTM A449 BOLTS THROUGH THE GIRDER WEB SHALL BE SNUG TIGHTENED FOLLOWED BY AN ADDITIONAL ¼ TURN.

THE PLATES, BENT PLATES, CHANNELS, AND ANGLES SHALL BE GALVANIZED OR METALLIZED IN ACCORDANCE WITH THE STANDARD SPECIFICATIONS. FOR THERMAL SPRAYED COATINGS (METALLIZATION), SEE SPECIAL PROVISIONS.

FOR METALLIZATION, APPLY AN 8 MIL THICK 99.99 PERCENT ZINC (W-Zn-1) THERMAL SPRAYED COATING WITH A 0.5 MIL THICK SEAL COAT TO ALL STEEL DIAPHRAGM SURFACES IN ACCORDANCE WITH THE THERMAL SPRAYED COATINGS SPECIAL PROVISION AND SECTION 442 OF THE STANDARD SPECIFICATIONS.

GALVANIZE THE HIGH STRENGTH BOLTS, NUTS, WASHERS AND DIRECT TENSION INDICATORS IN ACCORDANCE WITH THE STANDARD SPECIFICATIONS.

USE AN ASTM F436 HARDENED WASHER WITH STANDARD AND SLOTTED HOLES UNDER EACH BOLT HEAD AND NUT.

FOR BOLTS THROUGH THE GIRDER WEB, PROVIDE SUFFICIENT LENGTH OF THREADS ON ALL BOLTS TO ACCOMMODATE WASHERS AND THE THICKNESS OF CONNECTING MEMBER PLUS AT LEAST ¼" PROJECTION BEYOND THE NUT.

INTERMEDIATE DIAPHRAGM ASSEMBLY SHALL COMPLY WITH SECTION 1072 OF THE STANDARD SPECIFICATIONS.

SUBMIT TWO SETS OF WORKING DRAWINGS FOR THE INTERMEDIATE DIAPHRAGM ASSEMBLY FOR REVIEW, COMMENTS AND ACCEPTANCE. AFTER REVIEW, COMMENTS, AND ACCEPTANCE, SUBMIT SEVEN SETS FOR DISTRIBUTION.

IN THE EXTERIOR BAYS, PLACE TEMPORARY STRUTS BETWEEN PRESTRESSED GIRDERS ADJACENT TO THE STEEL DIAPHRAGMS. STRUTS SHALL REMAIN IN PLACE 3 DAYS AFTER CONCRETE IS PLACED.

THE COST OF THE STEEL DIAPHRAGMS AND ASSEMBLIES SHALL BE INCLUDED IN THE UNIT PRICE BID FOR PRESTRESSED CONCRETE GIRDERS.

TABLE

GIRDER TYPE	CHANNEL SIZE	DIM "A"	DIM "B"	DIM "L"
~~II~~	~~MC 12 x 31~~	~~1'-2½"~~	~~10"~~	~~1'-2"~~
III	MC 18 x 42.7	1'-5"	1'-2"	1'-6"
~~IV~~	~~MC 18 x 42.7~~	~~1'-9½"~~	~~1'-2"~~	~~1'-6"~~

NORTH CAROLINA PROFESSIONAL SEAL 20277 ENGINEER HARDY L. WILLIS 11/21/12

PROJECT NO. R-2303C

SAMPSON COUNTY

STATION: 1081+04.50 -L-

SHEET 5 OF 5

STATE OF NORTH CAROLINA
DEPARTMENT OF TRANSPORTATION
RALEIGH

STANDARD

INTERMEDIATE STEEL DIAPHRAGMS FOR TYPE II, III, & IV PRESTRESSED CONC. GDRS. (LEFT LANE)

REVISIONS						SHEET NO.
NO.	BY:	DATE:	NO.	BY:	DATE:	S-88
1			3			TOTAL SHEETS
2			4			138

ASSEMBLED BY : DPP	DATE : 9/2012
CHECKED BY : HLW	DATE : 9/2012
DRAWN BY : TLA 6/05	ADDED 10/21/05
CHECKED BY : VC 6/05	REV. 5/1/06RRR KMM/GM

STR. #3 STD. NO. PCG12

$$$$$$$SYSTIME$$$$$
$$$$$$$$$$$$$$$$$$$$$$$$DGN$$$$$$$$$$$$$$$$$$$$$$$$
$$$$USERNAME$$$$

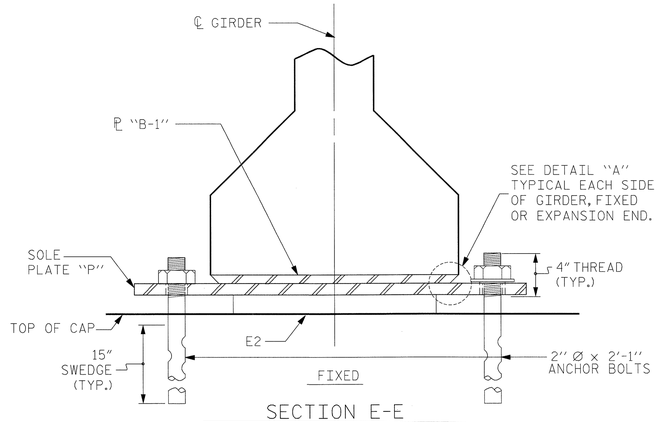

SECTION E-E

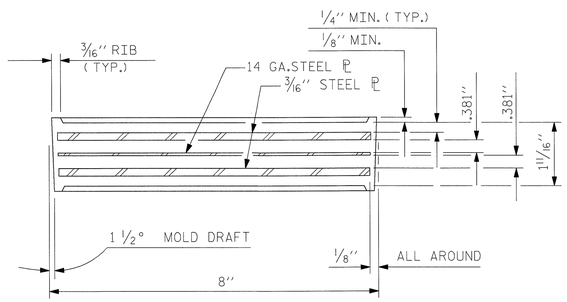

TYPICAL SECTION OF ELASTOMERIC BEARINGS

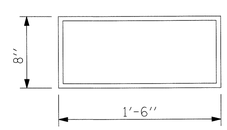

E2 (24 REQ'D)

PLAN VIEW OF ELASTOMERIC BEARING

TYPE III

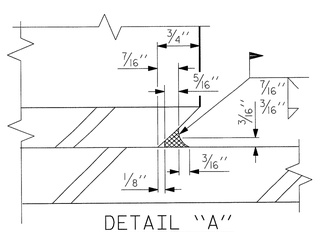

DETAIL "A"

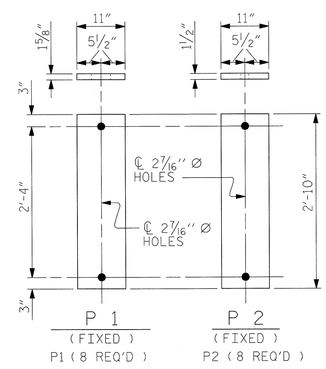

SOLE PLATE DETAILS ("P")

NOTES

AT ALL FIXED POINTS OF SUPPORT, NUTS FOR ANCHOR BOLTS ARE TO BE TIGHTENED FINGER TIGHT AND THEN BACKED OFF 1/2 TURN. THE THREAD OF THE NUT AND BOLT SHALL THEN BE BURRED WITH A SHARP POINTED TOOL.

STEEL SOLE PLATES, ANCHOR BOLTS, NUTS, AND WASHERS SHALL BE GALVANIZED IN ACCORDANCE WITH THE STANDARD SPECIFICATIONS.

PRIOR TO WELDING, GRIND THE GALVANIZED SURFACE OF THE PORTION OF THE EMBEDDED PLATE AND SOLE PLATE THAT ARE TO BE WELDED. AFTER WELDING, DAMAGED GALVANIZED SURFACES SHALL BE REPAIRED IN ACCORDANCE WITH THE STANDARD SPECIFICATIONS.

WHEN WELDING THE SOLE PLATE TO THE EMBEDDED PLATE IN THE GIRDER, USE TEMPERATURE INDICATING WAX PENS, OR OTHER SUITABLE MEANS, TO ENSURE THAT THE TEMPERATURE OF THE SOLE PLATE DOES NOT EXCEED 300°F. TEMPERATURES ABOVE THIS MAY DAMAGE THE ELASTOMER.

SOLE PLATE "P", BOLTS, NUTS, WASHERS, AND PIPE SLEEVE SHALL BE INCLUDED IN THE PAY ITEM FOR PRESTRESSED CONCRETE GIRDERS.

ANCHOR BOLTS SHALL MEET THE REQUIREMENTS OF ASTM A449. NUTS SHALL MEET THE REQUIREMENTS OF AASHTO M291-DH OR AASHTO M292-2H. WASHERS SHALL MEET THE REQUIREMENTS OF AASHTO M293. NO SHOP DRAWINGS ARE REQUIRED FOR ANCHOR BOLTS, NUTS AND WASHERS. SHOP INSPECTION IS REQUIRED.

ALL SURFACES OF BEARING PLATES SHALL BE SMOOTH AND STRAIGHT.

THE ELASTOMER IN THE STEEL REINFORCED BEARINGS SHALL HAVE A SHEAR MODULUS OF 0.160 KSI, IN ACCORDANCE WITH AASHTO M251.

FOR STEEL REINFORCED ELASTOMERIC BEARINGS, SEE SPECIAL PROVISIONS.

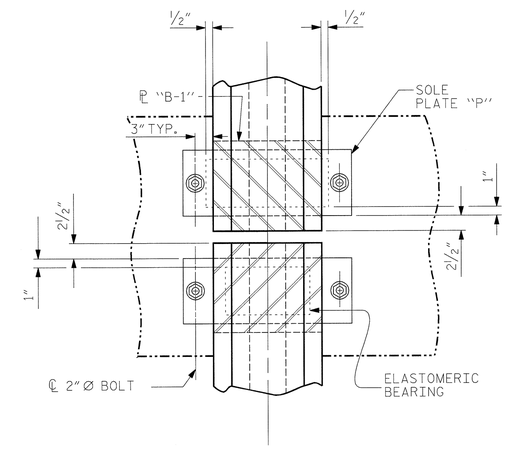

TYPICAL PLAN
(SHOWING CONTINUOUS BENT)

NORTH CAROLINA PROFESSIONAL SEAL 20077 ENGINEER RANDY L. WILLIS 6/27/13

MAXIMUM ALLOWABLE SERVICE LOADS	
D.L.+L.L. (NO IMPACT)	
~~TYPE II~~	~~145 k~~
TYPE III	205 k
~~TYPE IV~~	~~225 k~~

PROJECT NO. R-2303C

SAMPSON COUNTY

STATION: 1081+04.50 -L-

STATE OF NORTH CAROLINA
DEPARTMENT OF TRANSPORTATION
RALEIGH

STANDARD

ELASTOMERIC BEARING DETAILS

PCG SUPERSTRUCTURE (LEFT LANE)

REVISIONS						SHEET NO.
NO.	BY:	DATE:	NO.	BY:	DATE:	S-89
1			3			TOTAL SHEETS
2			4			138

STR. #3 STD. NO. EB3

ASSEMBLED BY : MAF		DATE : 09/2012	
CHECKED BY : HLW		DATE : 09/2012	
DRAWN BY : WJH 8/89	REV. 5/1/06	TLA/GM	
CHECKED BY : CRK 8/89	REV. 10/1/11	MAA/GM	
	REV. 10/24/12	AAC/MAA	

$$$$$$SYSTIME$$$$$
$$$$$$$$$$$$$$$$$$$$$$$$DGN$$$$$$$$$$$$$$$$$$$$$$$$
$$$$USERNAME$$$$

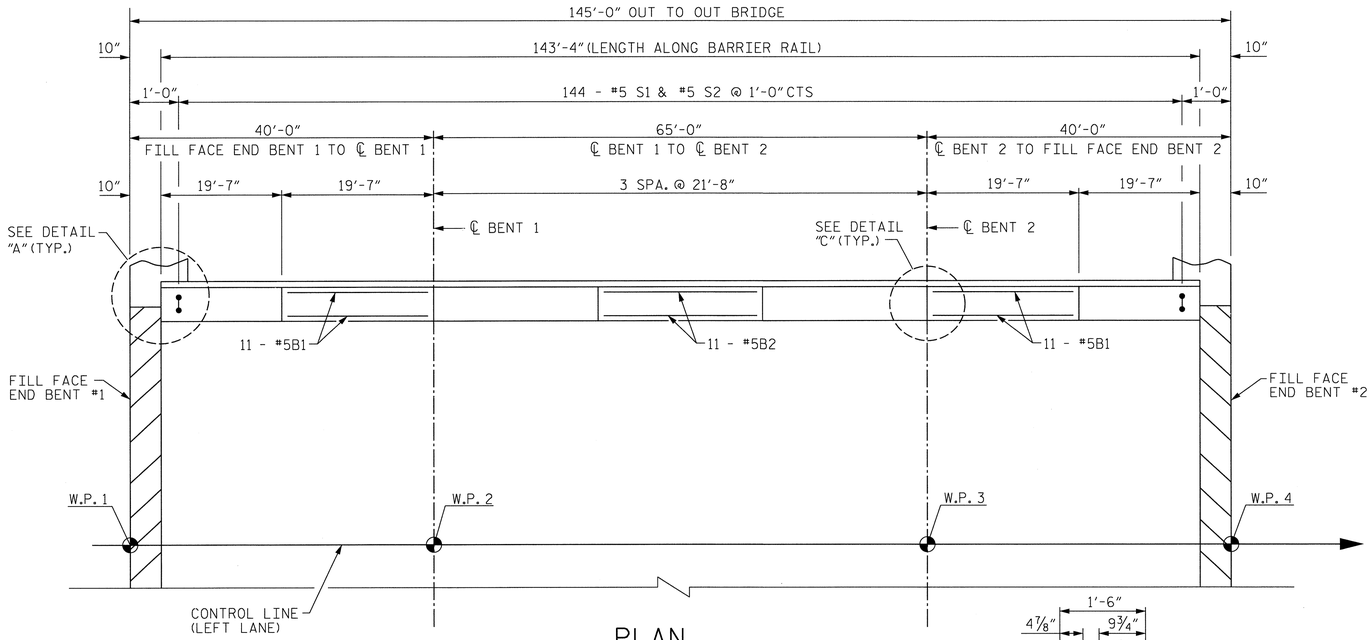

PLAN

NOT TO SCALE

LEFT SIDE BARRIER RAIL SHOWN, RIGHT SIDE SIMILAR.

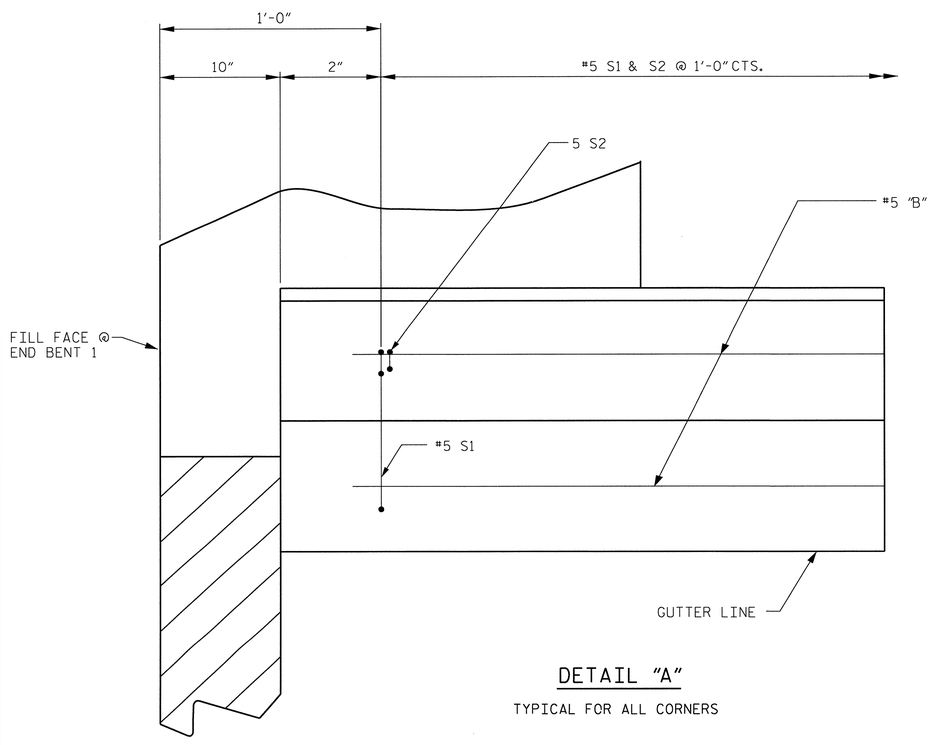

DETAIL "A"

TYPICAL FOR ALL CORNERS

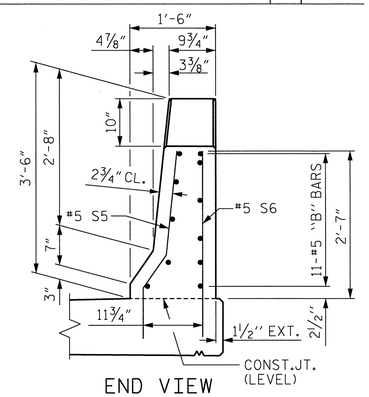

END VIEW

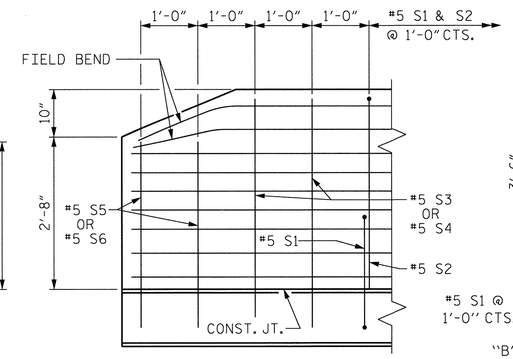

SIDE VIEW

END OF RAIL DETAILS

FOR ADHESIVE ANCHORING AT SAWED JOINTS

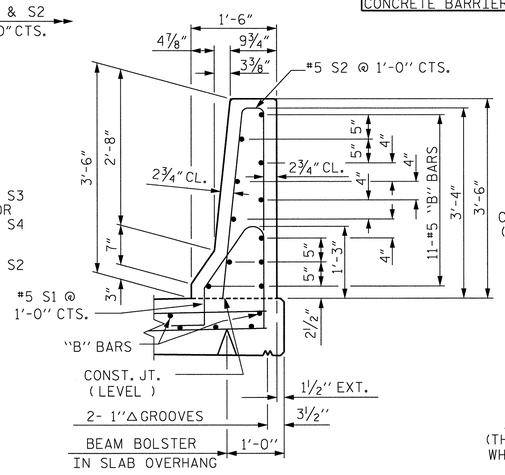

SECTION THRU RAIL

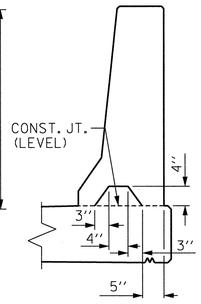

SECTION S-S

AT DAM IN OPEN JOINT (THIS IS TO BE USED ONLY WHEN SLIP FORM IS USED)

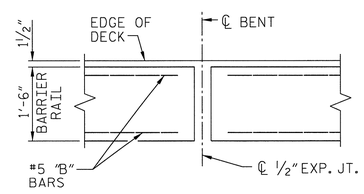

DETAIL "C"

LEFT SIDE SHOWN, RIGHT SIDE SIMILAR
TYP. AT BENTS 1 & 2

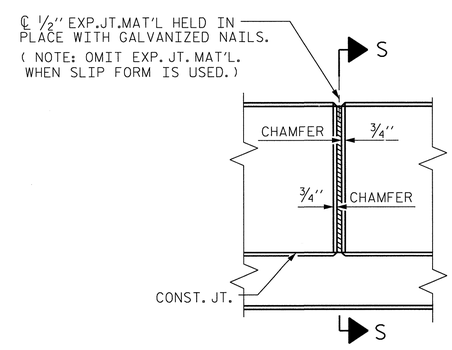

ELEVATION AT EXPANSION JOINTS

BARRIER RAIL DETAILS

NOTES

THE BARRIER RAIL IN EACH SPAN SHALL NOT BE CAST UNTIL ALL SLAB CONCRETE IN THAT SPAN HAS BEEN CAST AND HAS REACHED A MINIMUM COMPRESSIVE STRENGTH OF 3,000 PSI.

ALL REINFORCING STEEL IN BARRIER RAILS SHALL BE EPOXY COATED.

VERTICAL GROOVED CONTRACTION JOINTS, 1/2" IN DEPTH, SHALL BE TOOLED IN ALL EXPOSED FACES OF THE BARRIER RAIL AND IN ACCORDANCE WITH ARTICLE 825-10(B) OF THE STANDARD SPECIFICATIONS. THE CONTRACTION JOINT SHALL BE LOCATED AT EACH THIRD POINT BETWEEN BARRIER RAIL EXPANSION JOINTS. ONLY ONE CONTRACTION JOINT IS REQUIRED AT MIDPOINT OF BARRIER RAIL SEGMENTS LESS THAN 20 FEET IN LENGTH AND NO CONTRACTION JOINTS ARE REQUIRED FOR THOSE SEGMENTS LESS THAN 10 FEET IN LENGTH.

BAR TYPES

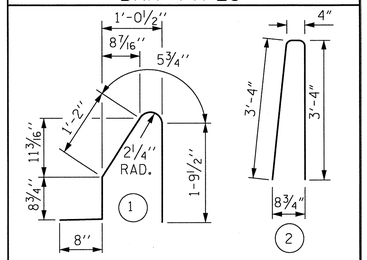

ALL BAR DIMENSIONS ARE OUT TO OUT

BILL OF MATERIAL

FOR CONCRETE BARRIER RAIL ONLY

BAR	NO.	SIZE	TYPE	LENGTH	WEIGHT
* B1	88	#5	STR	19'-2"	1759
* B2	66	#5	STR	21'-3"	1463
* S1	288	#5	1	4'-10"	1452
* S2	288	#5	2	7'-0"	2103

* EPOXY COATED REINFORCING STEEL	6,777 LBS.
CLASS AA CONCRETE	39.0 CU. YDS.
CONCRETE BARRIER RAIL	286.67 LIN. FT.

PROJECT NO. R-2303C

SAMPSON COUNTY

STATION: 1081+04.50 -L-

SHEET 1 OF 2

STATE OF NORTH CAROLINA
DEPARTMENT OF TRANSPORTATION
RALEIGH

STANDARD

CONCRETE BARRIER RAIL

(LEFT LANE)

NORTH CAROLINA PROFESSIONAL SEAL 20726 ENGINEER HARDY L. WILLIS 12/7/12

ASSEMBLED BY : MAF	DATE : SEPT. 2012
CHECKED BY : HLW	DATE : SEPT. 2012
DRAWN BY : ARB 5/87	REV. 10/1/11 MAA/GM
CHECKED BY : SJD 9/87	REV. 7/12 MAA/GM
	REV. 10/12 MAA/GM

REVISIONS						SHEET NO.
NO.	BY:	DATE:	NO.	BY:	DATE:	S-90
1			3			TOTAL SHEETS
2			4			138

STR. #3 STD. NO. CBR1 (SHT 1)

$$$$$$SYSTIME$$$$$
$$$$$$$$$$$$$$$$$$$$$$DGN$$$$$$$$$$$$$$$$$$$$$$$$$$
$$$$USERNAME$$$$

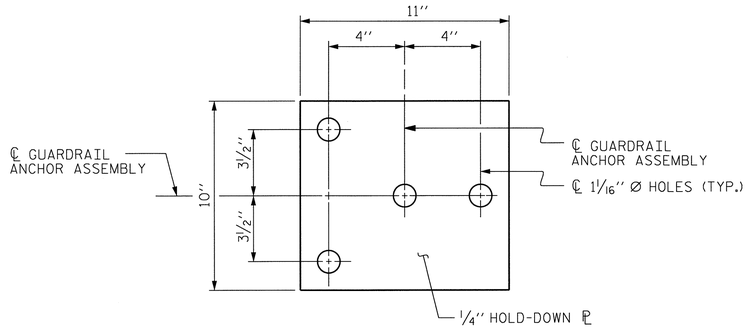

PLAN

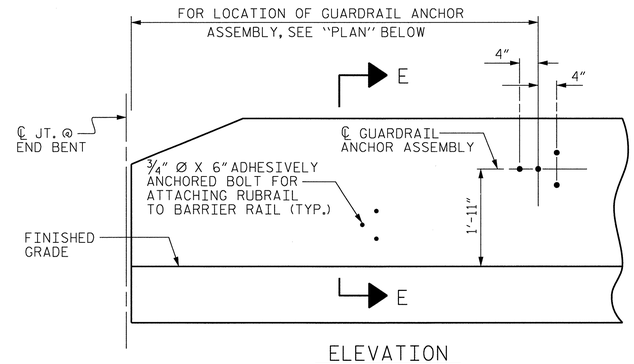

ELEVATION

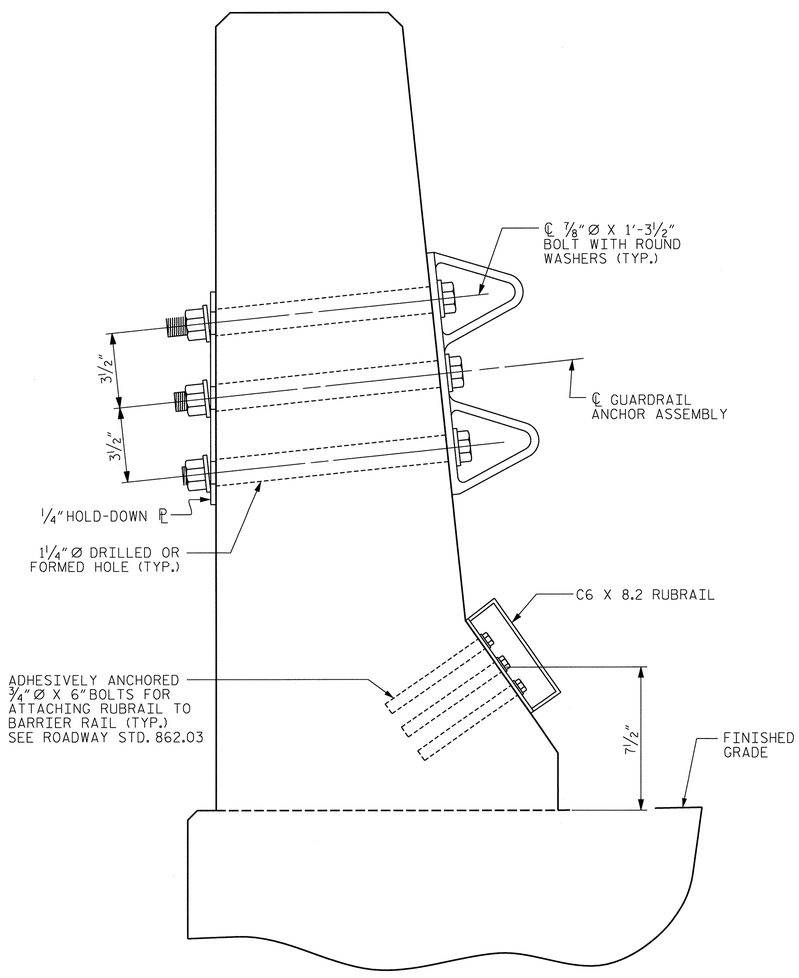

SECTION E-E

GUARDRAIL ANCHOR ASSEMBLY DETAILS

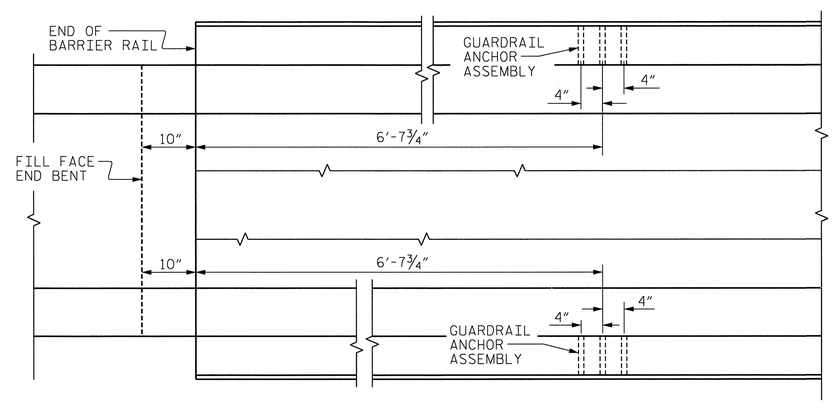

LOCATION OF ANCHORS FOR GUARDRAIL

END BENT #1 SHOWN, END BENT #2 SIMILAR.

NOTES

THE GUARDRAIL ANCHOR ASSEMBLY SHALL CONSIST OF A 1/4'' HOLD DOWN PLATE AND 4 - 7/8'' Ø BOLTS WITH NUTS AND WASHERS, RUBRAIL, AND ADHESIVELY ANCHORED BOLTS.

THE HOLD-DOWN PLATE SHALL CONFORM TO AASHTO M270 GRADE 36. AFTER FABRICATION, THE HOLD-DOWN PLATE SHALL BE HOT-DIP GALVANIZED IN ACCORDANCE WITH AASHTO M111.

BOLTS SHALL CONFORM TO THE REQUIREMENTS OF ASTM A307 AND NUTS SHALL CONFORM TO THE REQUIREMENTS OF AASHTO M291. BOLTS, NUTS AND WASHERS SHALL BE GALVANIZED. (AT THE CONTRACTOR'S OPTION, STAINLESS STEEL BOLTS, NUTS AND WASHERS MAY BE USED AS AN ALTERNATE FOR THE 7/8'' Ø GALVANIZED BOLTS, NUTS AND WASHERS. THEY SHALL CONFORM TO OR EXCEED THE MECHANICAL REQUIREMENTS OF ASTM A307. THE USE OF THIS ALTERNATE SHALL BE APPROVED BY THE ENGINEER.)

THE GUARDRAIL ANCHOR ASSEMBLY IS REQUIRED AT ALL POINTS WHERE APPROACH GUARDRAIL IS TO BE ATTACHED TO THE END OF BARRIER RAIL. FOR POINTS OF ATTACHMENT, SEE SKETCH.

AFTER INSTALLATION, THE EXPOSED THREAD OF THE BOLT SHALL BE BURRED WITH A SHARP POINTED TOOL.

THE COST OF THE GUARDRAIL ANCHOR ASSEMBLY SHALL BE INCLUDED IN THE UNIT CONTRACT PRICE BID FOR CONCRETE BARRIER RAIL.

THE 1 1/4'' Ø HOLES SHALL BE FORMED OR DRILLED WITH A CORE BIT. IMPACT TOOLS WILL NOT BE PERMITTED. ANY CONCRETE DAMAGED BY THIS WORK SHALL BE REPAIRED TO THE SATISFACTION OF THE ENGINEER.

THE C6 X 8.2 RUBRAIL IS TO BE ADHESIVELY ANCHORED TO THE RAIL USING THREE 3/4" Ø X 6" BOLTS WITH WASHERS. LEVEL ONE FIELD TESTING IS REQUIRED, AND THE YIELD LOAD OF THE 3/4" Ø BOLT IS 12 KIPS. FOR ADHESIVELY ANCHORED ANCHOR BOLTS OR DOWELS, SEE SPECIAL PROVISIONS. SEE ROADWAY STANDARD 862.03 FOR DETAILS AND LOCATION OF THE RUBRAIL.

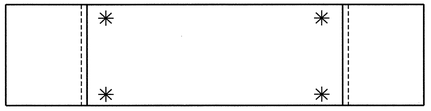

SKETCH SHOWING POINTS OF ATTACHMENTS

✳ DENOTES GUARDRAIL ANCHOR ASSEMBLY

PROJECT NO. R-2303C

SAMPSON COUNTY

STATION: 1081+04.50 -L-

SHEET 2 OF 2

STATE OF NORTH CAROLINA
DEPARTMENT OF TRANSPORTATION
RALEIGH

STANDARD

GUARDRAIL ANCHORAGE FOR BARRIER RAIL

(LEFT LANE)

NORTH CAROLINA PROFESSIONAL SEAL 027777 ENGINEER HARDY L. WILLIS 12/7/12

ASSEMBLED BY : MAF		DATE : 09/2012	
CHECKED BY : HLW		DATE : 09/2012	
DRAWN BY : TLA 5/06	REV. 10/1/11	MAA/GM	
CHECKED BY : GM 5/06	REV. 7/12	MAA/GM	
	REV. 10/12	MAA/GM	

REVISIONS						SHEET NO.
NO.	BY:	DATE:	NO.	BY:	DATE:	S-91
1			3			TOTAL SHEETS
2			4			138

$$$$$$SYSTIME$$$$$
$$$$$$$$$$$$$$$$$$$$DGN$$$$$$$$$$$$$$$$$$$$$$$$
$$$$USERNAME$$$$

(SHT 3) STR. #3 STD. NO. GRA2

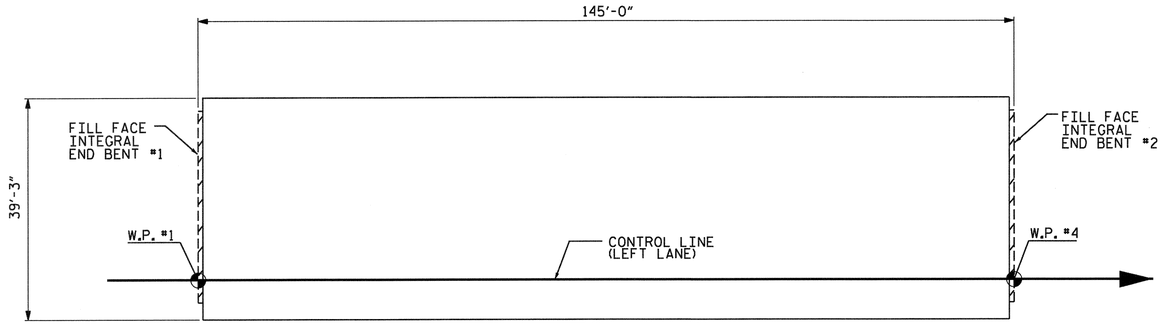

LAYOUT FOR COMPUTING AREA REINFORCED CONCRETE DECK SLAB (SQ. FT. = 5,691)

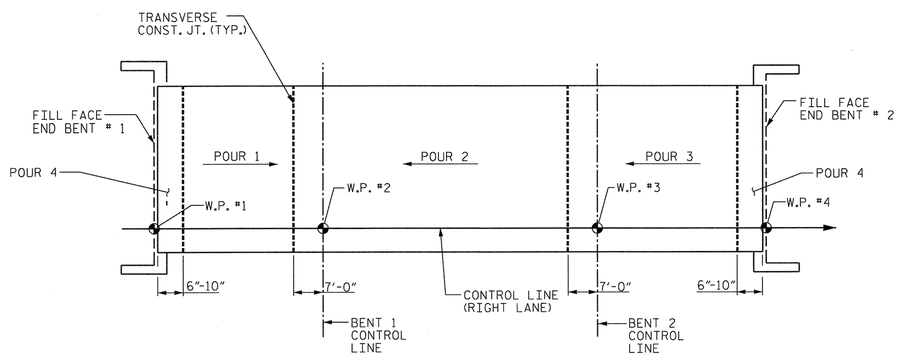

NOTE: CONCRETE IN THE UPPER PORTION OF THE WINGS SHALL BE INCLUDED WITH THE SUPERSTRUCTURE POUR.

SLAB POURING SEQUENCE

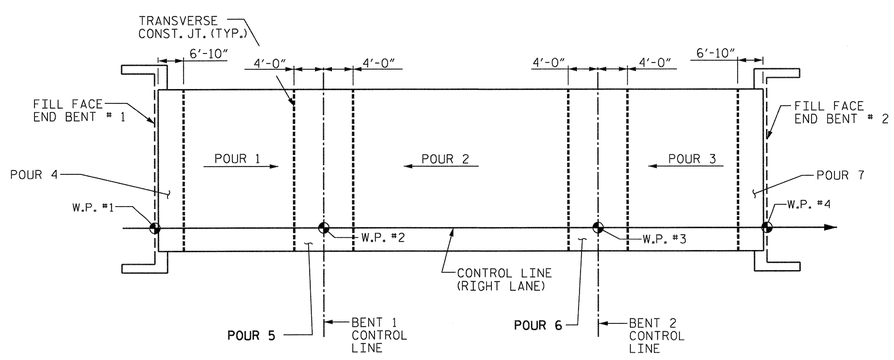

OPTIONAL POURING SEQUENCE

BILL OF MATERIAL

BAR	NO.	SIZE	TYPE	LENGTH	WEIGHT
* A1	313	#5	STR	38'-11"	12,705
A2	313	#5	STR	38'-11"	12,705
* B1	106	#4	STR	10'-0"	708
* B2	54	#4	STR	23'-6"	848
* B3	54	#5	STR	20'-0"	1,126
* B4	52	#5	STR	10'-0"	542
* B5	54	#4	STR	25'-6"	920
B6	141	#5	STR	49'-4"	7,255
H1	56	#5	1	13'-1"	764
K1	16	#4	STR	23'-0"	246
K2	24	#5	STR	8'-5"	211
K3	16	#5	STR	5'-2"	86
K4	36	#4	STR	8'-5"	202
K5	12	#4	STR	7'-0"	56
K6	12	#4	STR	17'-0"	136
K7	4	#4	STR	15'-0"	40
K8	8	#4	STR	2'-9"	15
* S1	62	#4	2	9'-9"	404
* S2	62	#4	2	11'-8"	483
S3	144	#4	4	2'-9"	265
U1	62	#4	3	10'-5"	431
U2	6	#4	3	12'-3"	49
U3	6	#4	3	12'-6"	50
U4	48	#4	5	14'-6"	465
V3	48	#4	STR	4'-8"	150
V4	48	#4	STR	4'-9"	152
REINFORCING STEEL					23,278 LBS.
* EPOXY COATED REINFORCING STEEL					17,736 LBS

BAR TYPES

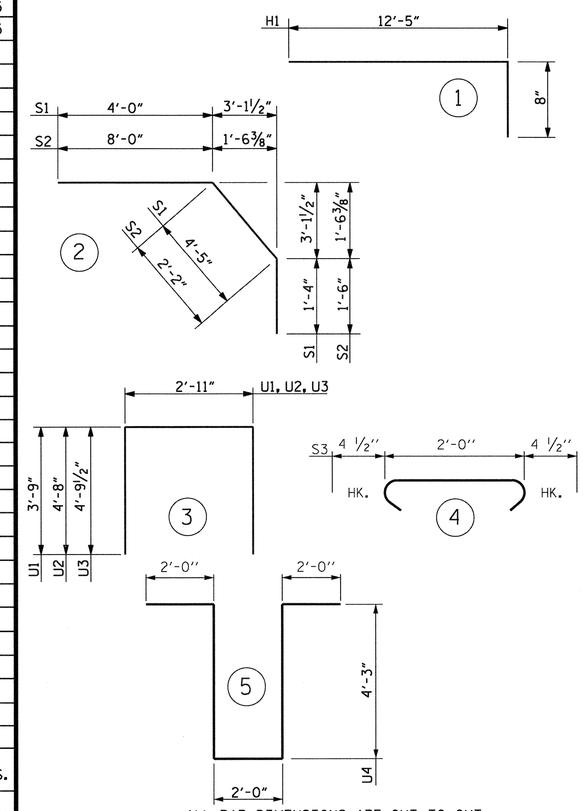

ALL BAR DIMENSIONS ARE OUT TO OUT

SUPERSTRUCTURE BILL OF MATERIAL

	CLASS AA CONCRETE	REINFORCING STEEL	EPOXY COATED REINFORCING STEEL
	(CU. YDS.)	(LBS.)	(LBS.)
POUR 1	34.3	———	———
POUR 2	95.3	———	———
POUR 3	62.8	———	———
POUR 4	64.2	———	———
TOTALS**	256.6	23,278	17,736

** QUANTITIES FOR BARRIER RAIL ARE NOT INCLUDED.

SUPERSTRUCTURE REINFORCING STEEL LENGTHS ARE BASED ON THE FOLLOWING MINIMUM SPLICE LENGTHS

BAR SIZE	SUPERSTRUCTURE EXCEPT APPROACH SLABS, PARAPET, AND BARRIER RAIL		APPROACH SLABS		PARAPET AND BARRIER RAIL
	EPOXY COATED	UNCOATED	EPOXY COATED	UNCOATED	
#4	2'-0"	1'-9"	2'-0"	1'-9"	2'-9"
#5	2'-6"	2'-2"	2'-6"	2'-2"	3'-5"
#6	3'-0"	2'-7"	3'-10"	2'-7"	4'-4"
#7	5'-3"	3'-6"			
#8	6'-10"	4'-7"			

GROOVING BRIDGE FLOORS

APPROACH SLABS	1,628	SQ.FT.
BRIDGE DECK	4,719	SQ.FT.
TOTAL	6,347	SQ.FT.

PROJECT NO. R-2303C

SAMPSON COUNTY

STATION: 1081+04.50 -L-

NORTH CAROLINA PROFESSIONAL SEAL 24 ENGINEER HARDY L. WILLIS 11/21/12

STATE OF NORTH CAROLINA
DEPARTMENT OF TRANSPORTATION
RALEIGH

STANDARD

SUPERSTRUCTURE BILL OF MATERIAL (LEFT LANE)

REVISIONS						SHEET NO.
NO.	BY:	DATE:	NO.	BY:	DATE:	S-92
1			3			TOTAL SHEETS
2			4			138

ASSEMBLED BY : DPP		DATE : 9/2012	
CHECKED BY : HLW		DATE : 9/2012	
DRAWN BY : JMB 5/87	REV. 6/1/94	EEM/GRP	
CHECKED BY : SJD 9/87	REV. 8/16/99	RWW/LES	
	REV. 5/1/06	TLA/GM	

STR. #3 STD. NO. BOM2

$$$$$$SYSTIME$$$$$
$$$$$$$$$$$$$$$$$$$$$$$$DGN$$$$$$$$$$$$$$$$$$$$$$$$
$$$$USERNAME$$$$

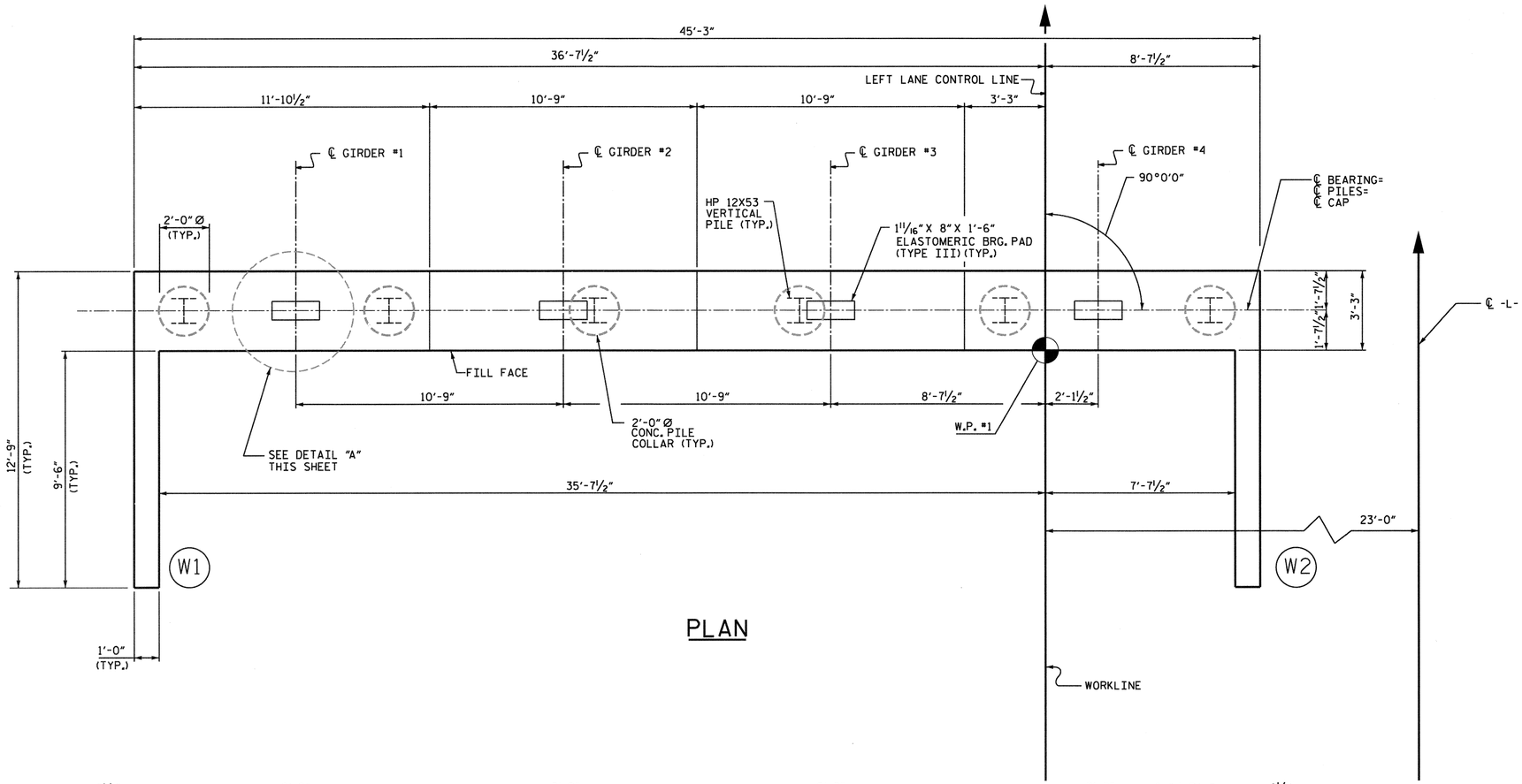

PLAN

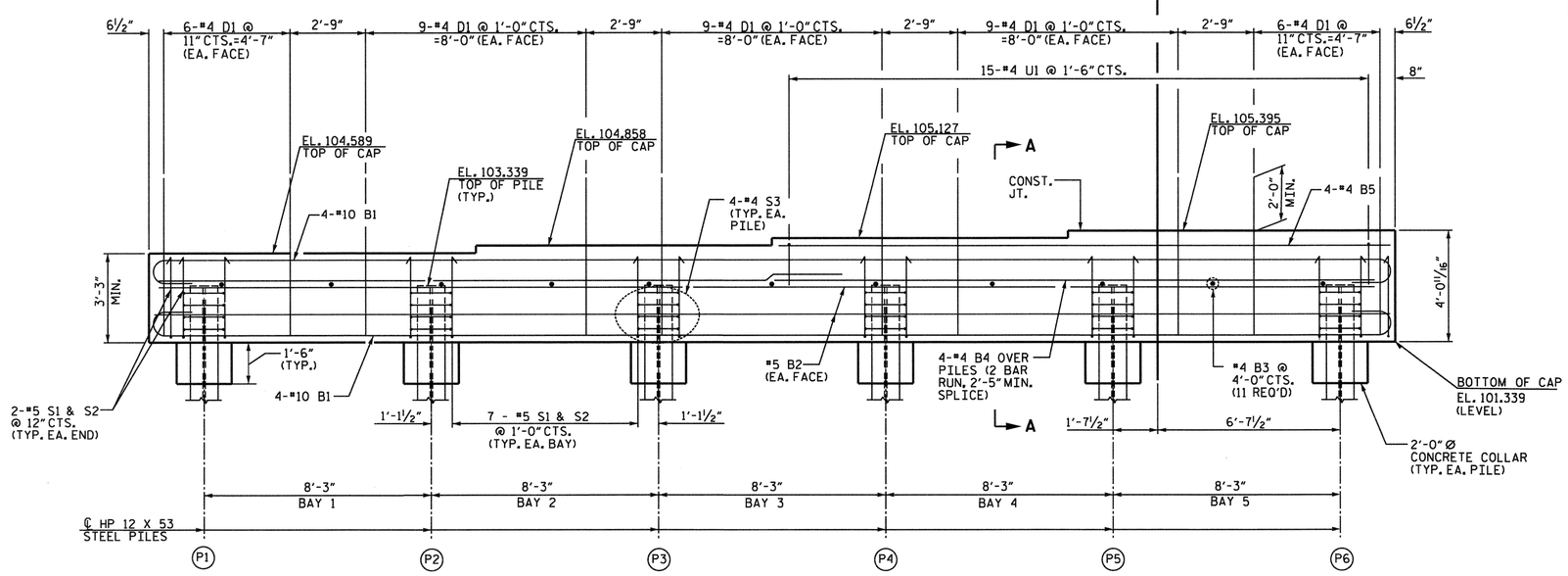

ELEVATION

(WINGS NOT SHOWN FOR CLARITY)

NOTES

FOR PILE SPLICE DETAILS, SEE SHEET 3 OF 3.

THE CONTRACTOR SHALL PROVIDE FOR INSTALLATION OF THE 4" DIAMETER DRAIN PIPE THROUGH THE WING WALL AS REQUIRED FOR REINFORCED BRIDGE APPROACH FILLS. SEE THE ROADWAY PLANS. REINFORCING STEEL IN THE WING WALL MAY BE SHIFTED AS NECESSARY TO CLEAR THE DRAIN PIPE.

SEE SUPERSTRUCTURE SHEETS FOR INTEGRAL END BENT DIAPHRAGM DETAILS.

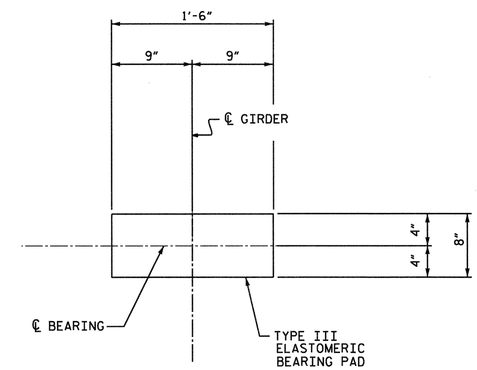

DETAIL "A"

NORTH CAROLINA PROFESSIONAL SEAL ENGINEER HARDY L. WILLIS 11/14/12

PROJECT NO. R-2303C

SAMPSON COUNTY

STATION: 1081+04.50 -L-

SHEET 1 OF 3

V&M Vaughn & Melton Consulting Engineers
Asheville, North Carolina 828-253-2796
Charlotte, North Carolina 704-357-0488
Tri-Cities, Tennessee 423-467-8401
Knoxville, Tennessee 865-546-5800
Middlesboro, Kentucky 606-248-6600
Spartanburg, South Carolina 864-574-4775
Copyright © 2006 Vaughn & Melton, Inc. All Rights Reserved

DWN. BY: MAF DATE: SEPT. 2012
CHKD. BY: HLW DATE: SEPT. 2012

STATE OF NORTH CAROLINA
DEPARTMENT OF TRANSPORTATION
RALEIGH

SUBSTRUCTURE
INTEGRAL
END BENT NO. 1

(LEFT LANE)

REVISIONS						SHEET NO.
NO.	BY:	DATE:	NO.	BY:	DATE:	S-93
1			3			TOTAL SHEETS
2			4			138

STR. #3

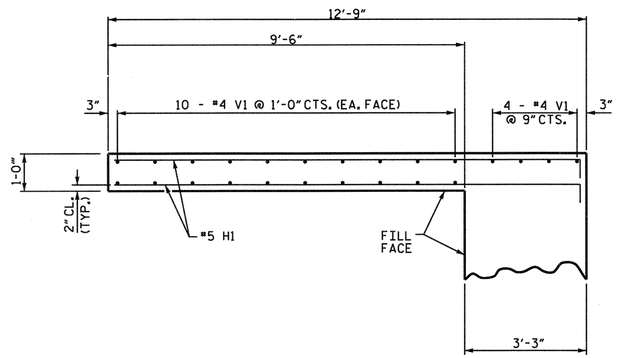

PLAN OF WING W1

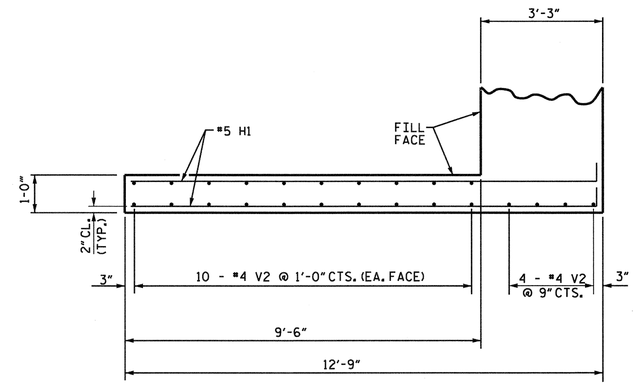

PLAN OF WING W2

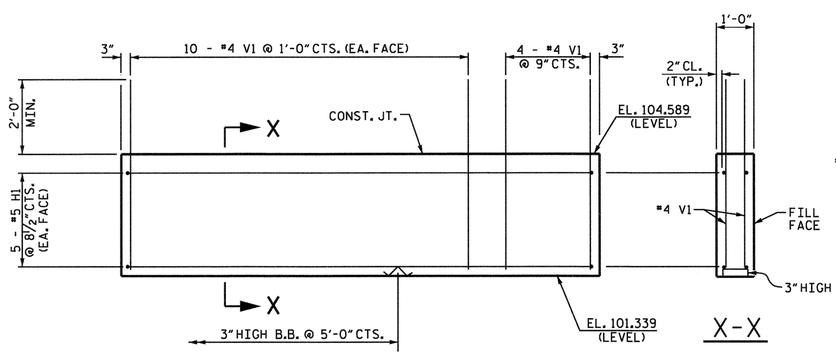

ELEVATION OF WING W1

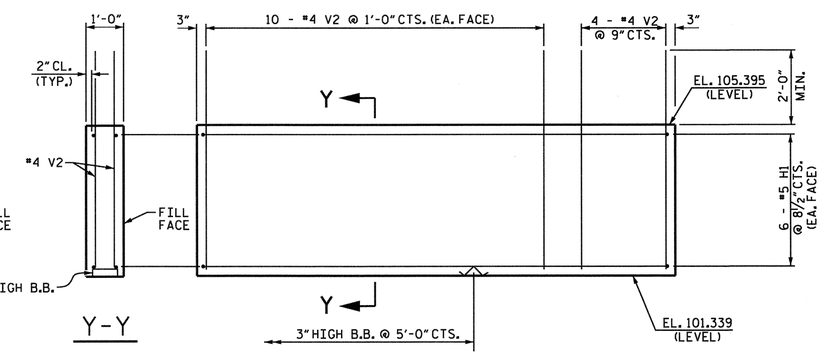

ELEVATION OF WING W2

NORTH CAROLINA PROFESSIONAL SEAL 024 ENGINEER HARDY L. WILLIS 11/12/12

PROJECT NO. R-2303C

SAMPSON COUNTY

STATION: 1081+04.50 -L-

SHEET 2 OF 3

STATE OF NORTH CAROLINA
DEPARTMENT OF TRANSPORTATION
RALEIGH

SUBSTRUCTURE
INTEGRAL
END BENT NO. 1

(LEFT LANE)

V&M Vaughn & Melton Consulting Engineers
Asheville, North Carolina 828-253-2796
Charlotte, North Carolina 704-357-0488
Tri-Cities, Tennessee 423-467-8401
Knoxville, Tennessee 865-546-5800
Middlesboro, Kentucky 606-248-6600
Spartanburg, South Carolina 864-574-4775

Copyright © 2006 Vaughn & Melton, Inc. All Rights Reserved

DWN. BY: MAF DATE: SEPT. 2012
CHKD. BY: HLW DATE: SEPT. 2012

REVISIONS						
NO.	BY:	DATE:	NO.	BY:	DATE:	
1			3			
2			4			

SHEET NO. S-94

TOTAL SHEETS 138

STR. #3

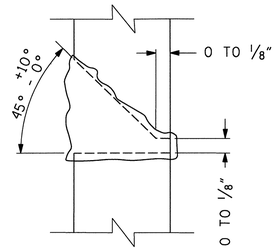

DETAIL A

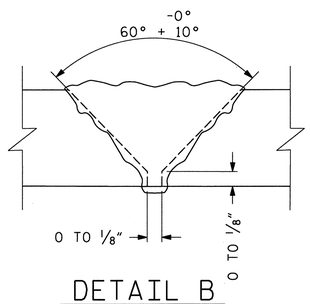

DETAIL B

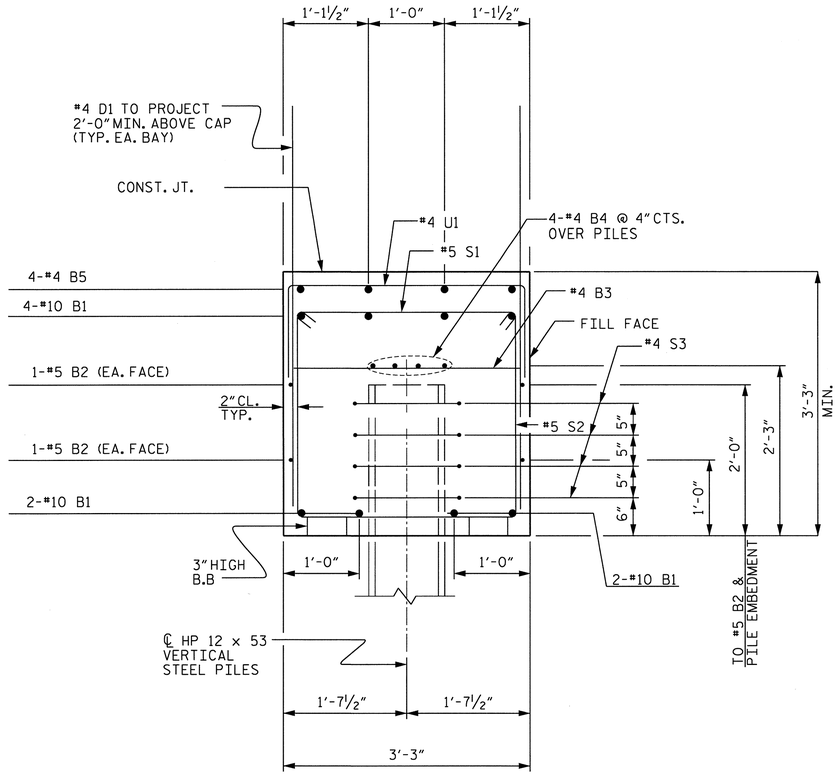

SECTION A-A

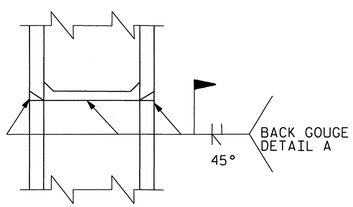

*PILE VERTICAL

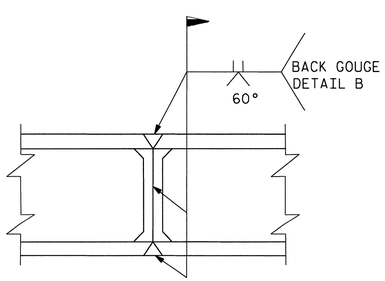

*PILE HORIZONTAL OR VERTICAL

* POSITION OF PILE DURING WELDING

PILE SPLICE DETAILS

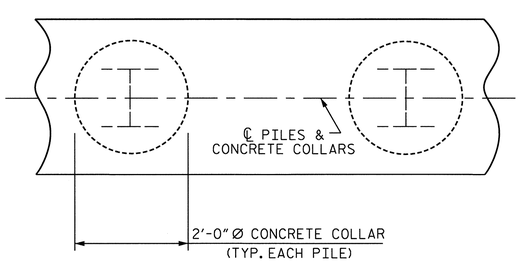

PLAN

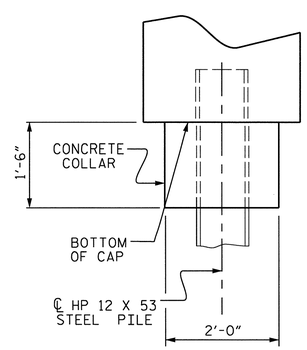

ELEVATION

CORROSION PROTECTION FOR STEEL PILES DETAIL

BAR TYPES

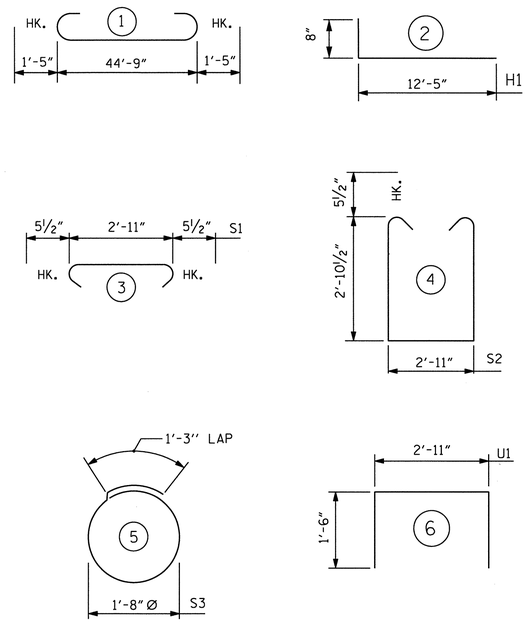

ALL BAR DIMENSIONS ARE OUT TO OUT.

BILL OF MATERIAL
END BENT 1

BAR	NO.	SIZE	TYPE	LENGTH	WEIGHT
B1	8	#10	1	47'-7"	1638
B2	2	#5	STR.	44'-11"	94
B3	11	#4	STR.	2'-11"	21
B4	8	#4	STR.	23'-8"	126
B5	4	#4	STR.	22'-3"	59
D1	78	#4	STR.	5'-10"	304
H1	22	#5	2	13'-1"	300
S1	39	#5	3	3'-10"	156
S2	39	#5	4	9'-7"	390
S3	24	#4	5	6'-6"	104
U1	15	#4	6	4'-11"	49
V1	24	#4	STR.	5'-0"	80
V2	24	#4	STR.	5'-10"	94

REINFORCING STEEL = 3,415 LBS.

CLASS A CONCRETE BREAKDOWN

POUR #1 CAP, CONCRETE COLLARS & LOWER PART OF WINGS = 22.5 C.Y.

TOTAL CLASS A CONCRETE = 22.5 C.Y.

HP 12 X 53 STEEL PILES
NO: 6 LIN. FT. = 360

PILE REDRIVES
EACH 3

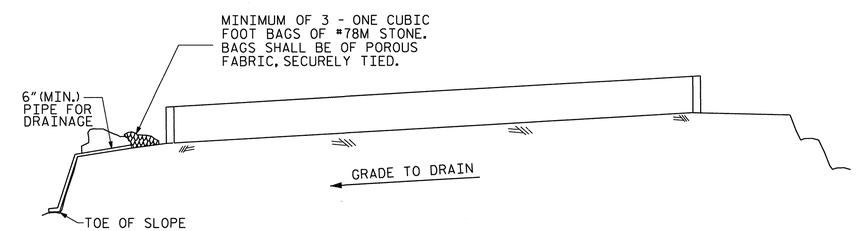

BAGGED STONE AND PIPE SHALL BE PLACED IMMEDIATELY AFTER COMPLETION OF END BENT EXCAVATION. PIPE MAY BE EITHER CONCRETE, CORRUGATED STEEL, CORRUGATED ALUMINUM ALLOY, OR CORRUGATED PLASTIC. PERFORATED PIPE WILL NOT BE ALLOWED.

BAGGED STONE SHALL REMAIN IN PLACE UNTIL THE ENGINEER DIRECTS THAT IT BE REMOVED. THE CONTRACTOR SHALL REMOVE AND DISPOSE OF SILT ACCUMULATIONS AT BAGGED STONE WHEN SO DIRECTED BY THE ENGINEER. BAGS SHALL BE REMOVED AND REPLACED WHENEVER THE ENGINEER DETERMINES THAT THEY HAVE DETERIORATED AND LOST THEIR EFFECTIVENESS.

NO SEPARATE PAYMENT WILL BE MADE FOR THIS WORK AND THE ENTIRE COST OF THIS WORK SHALL BE INCLUDED IN THE UNIT CONTRACT PRICE BID FOR THE SEVERAL PAY ITEMS.

TEMPORARY DRAINAGE AT END BENT

PROJECT NO. R-2303C
SAMPSON COUNTY
STATION: 1081+04.50 -L-

SHEET 3 OF 3

STATE OF NORTH CAROLINA
DEPARTMENT OF TRANSPORTATION
RALEIGH

SUBSTRUCTURE
INTEGRAL
END BENT NO. 1

(LEFT LANE)

NORTH CAROLINA PROFESSIONAL SEAL 22427 ENGINEER HARDY L. WILLIS 12/7/12

V&M Vaughn & Melton Consulting Engineers
Asheville, North Carolina 828-253-2796
Charlotte, North Carolina 704-357-0488
Tri-Cities, Tennessee 423-467-840
Knoxville, Tennessee 865-546-5800
Middlesboro, Kentucky 606-248-5600
Spartanburg, South Carolina 864-574-4775
Copyright © 2006 Vaughn & Melton, Inc. All Rights Reserved

DWN. BY: MAF DATE: SEPT. 2012
CHKD. BY: HLW DATE: SEPT. 2012

REVISIONS							SHEET NO.
NO.	BY:	DATE:	NO.	BY:	DATE:		S-95
1			3				TOTAL SHEETS
2			4				138

STR. #3

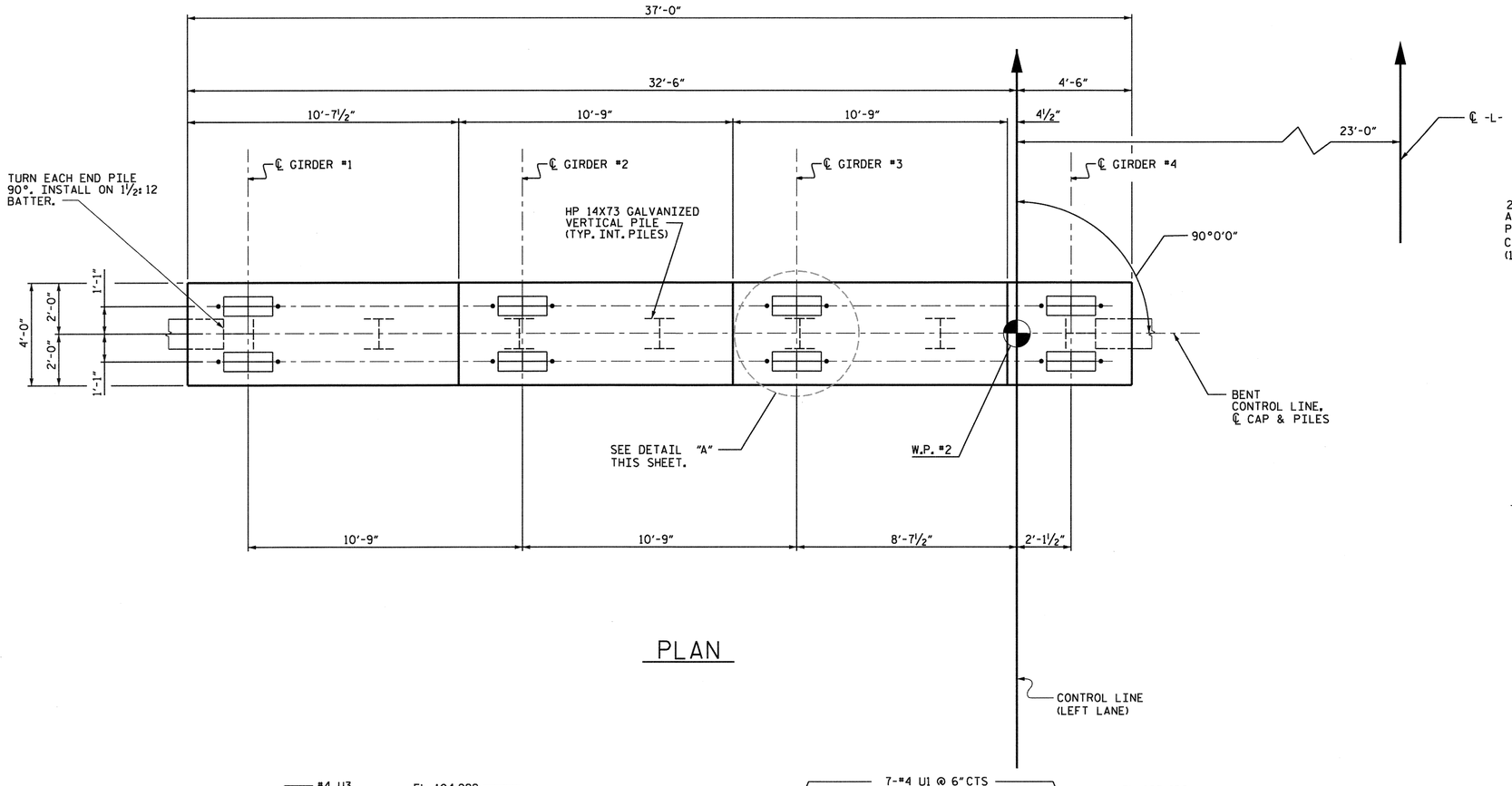

PLAN

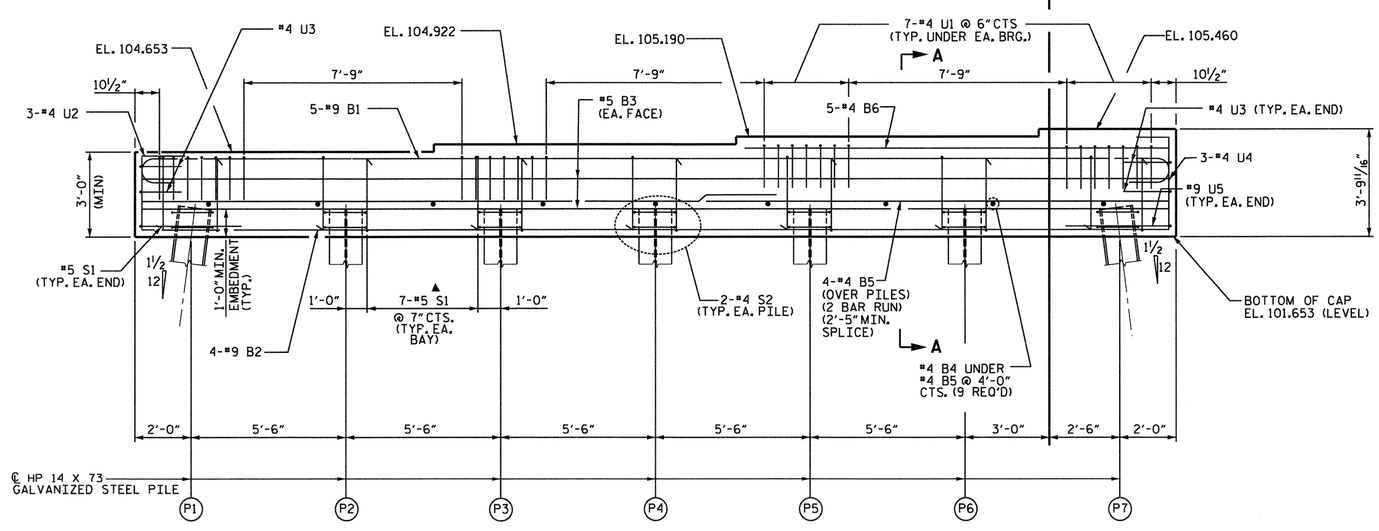

ELEVATION

▲ INVERT ALTERNATE STIRRUPS

NOTES

STIRRUPS AND "U" BARS IN CAP MAY BE SHIFTED AS NECESSARY TO CLEAR ANCHOR BOLTS.

FOR PILE SPLICE DETAILS, SEE SHEET S-95.

GALVANIZE THE TOP OF EACH INTERIOR BENT PILE A MINIMUM LENGTH OF 31 FEET. GALVANIZE IN ACCORDANCE WITH SECTION 1076 OF THE STANDARD SPECIFICATIONS.

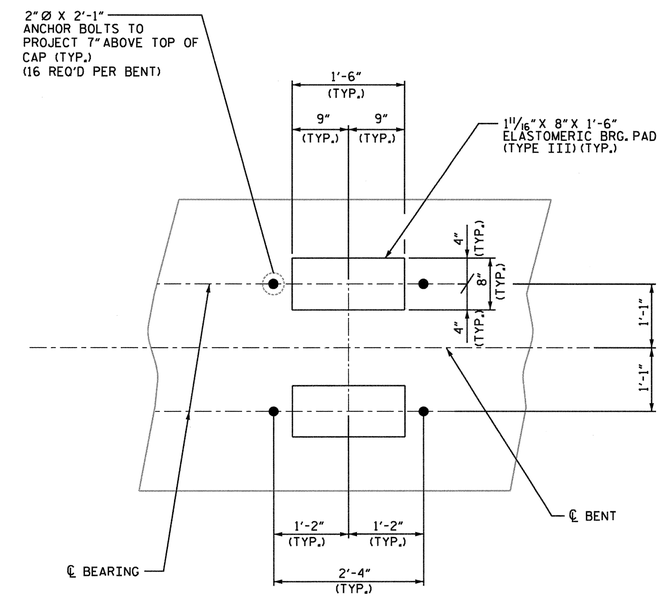

DETAIL "A"

NORTH CAROLINA PROFESSIONAL SEAL 20 ENGINEER HARDY L. WILLIS 11/21/12

PROJECT NO. R-2303C

SAMPSON COUNTY

STATION: 1081+04.50 -L-

SHEET 1 OF 2

V&M Vaughn & Melton Consulting Engineers

Asheville, North Carolina 828-253-2796

Charlotte, North Carolina 704-357-0488
Tri-Cities, Tennessee 423-467-8406
Knoxville, Tennessee 865-546-5800
Middlesboro, Kentucky 606-248-6600
Spartanburg, South Carolina 864-574-4775

Copyright © 2006 Vaughn & Melton, Inc. All Rights Reserved

STATE OF NORTH CAROLINA
DEPARTMENT OF TRANSPORTATION
RALEIGH

SUBSTRUCTURE
BENT NO. 1

(LEFT LANE)

REVISIONS						
NO.	BY:	DATE:	NO.	BY:	DATE:	
1			3			
2			4			

SHEET NO. S-96

TOTAL SHEETS 138

DWN. BY: MAF DATE: SEPT. 2012
CHKD. BY: HLW DATE: SEPT. 2012

STR. #3

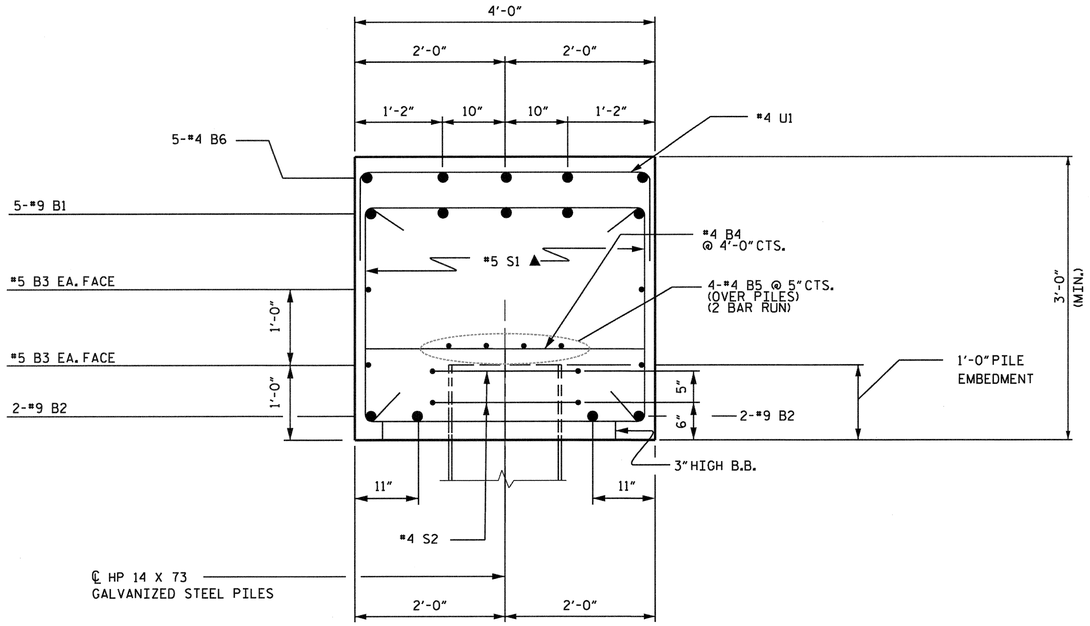

SECTION A-A

▲ INVERT ALTERNATE STIRRUPS

BAR TYPES

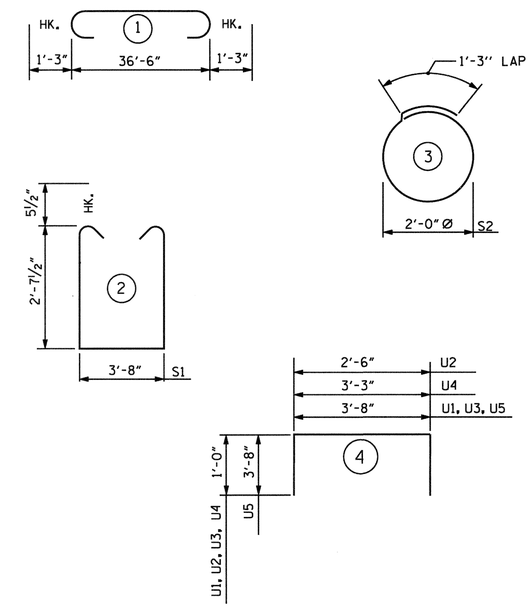

ALL BAR DIMENSIONS ARE OUT TO OUT.

BILL OF MATERIAL

BENT 1

BAR	NO.	SIZE	TYPE	LENGTH	WEIGHT
B1	5	#9	1	39'-0"	663
B2	4	#9	STR.	36'-8"	499
B3	4	#5	STR.	36'-8"	153
B4	9	#4	STR.	3'-8"	22
B5	8	#4	STR.	19'-7"	105
B6	5	#4	STR.	15'-3"	51
S1	44	#5	2	9'-10"	452
S2	14	#4	3	7'-7"	71
U1	28	#4	4	5'-8"	106
U2	3	#4	4	4'-6"	9
U3	4	#4	4	5'-8"	15
U4	3	#4	4	5'-3"	11
U5	2	#9	4	11'-0"	75

REINFORCING STEEL = 2,232 LBS.

CLASS A CONCRETE BREAKDOWN

POUR #1 CAP, CONCRETE = 18.3 C.Y.

TOTAL CLASS A CONCRETE = 18.3 C.Y.

HP 14 X 73 GALVANIZED STEEL PILES
NO: 7 LIN. FT. = 420

PILE REDRIVES
EACH 4

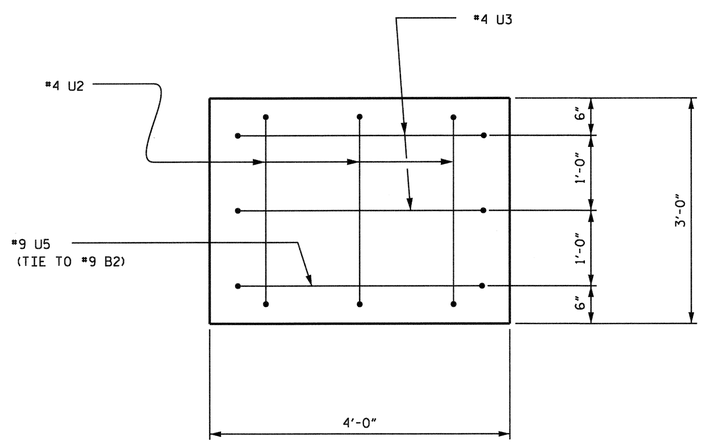

LEFT END OF CAP VIEW

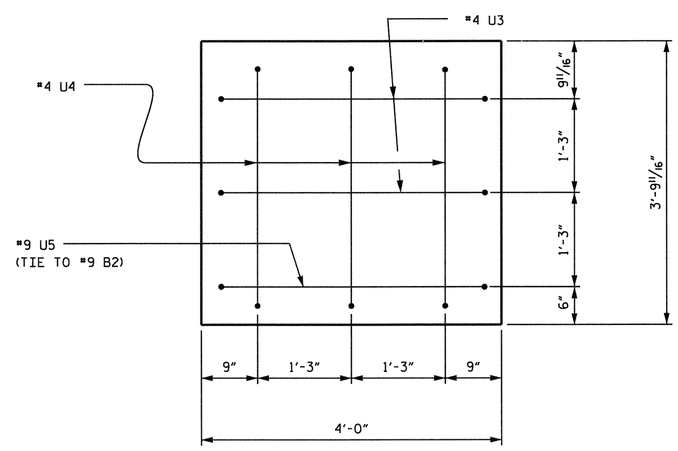

RIGHT END OF CAP VIEW

NORTH CAROLINA PROFESSIONAL SEAL ENGINEER HARDY L. WILLIS
11/21/12

PROJECT NO. R-2303C
SAMPSON COUNTY
STATION: 1081+04.50 -L-

SHEET 2 OF 2

V&M
Vaughn & Melton
Consulting Engineers
Asheville, North Carolina
828-253-2796
Charlotte, North Carolina 704-357-0488
Tri-Cities, Tennessee 423-467-9401
Knoxville, Tennessee 865-546-5800
Middlesboro, Kentucky 606-248-6600
Spartanburg, South Carolina 864-574-4775

Copyright © 2006 Vaughn & Melton, Inc.
All Rights Reserved

STATE OF NORTH CAROLINA
DEPARTMENT OF TRANSPORTATION
RALEIGH

SUBSTRUCTURE BENT NO. 1

(LEFT LANE)

REVISIONS						SHEET NO.
NO.	BY:	DATE:	NO.	BY:	DATE:	S-97
1			3			TOTAL SHEETS
2			4			138

DWN. BY: MAF DATE: SEPT. 2012
CHKD. BY: HLW DATE: SEPT. 2012

STR. #3

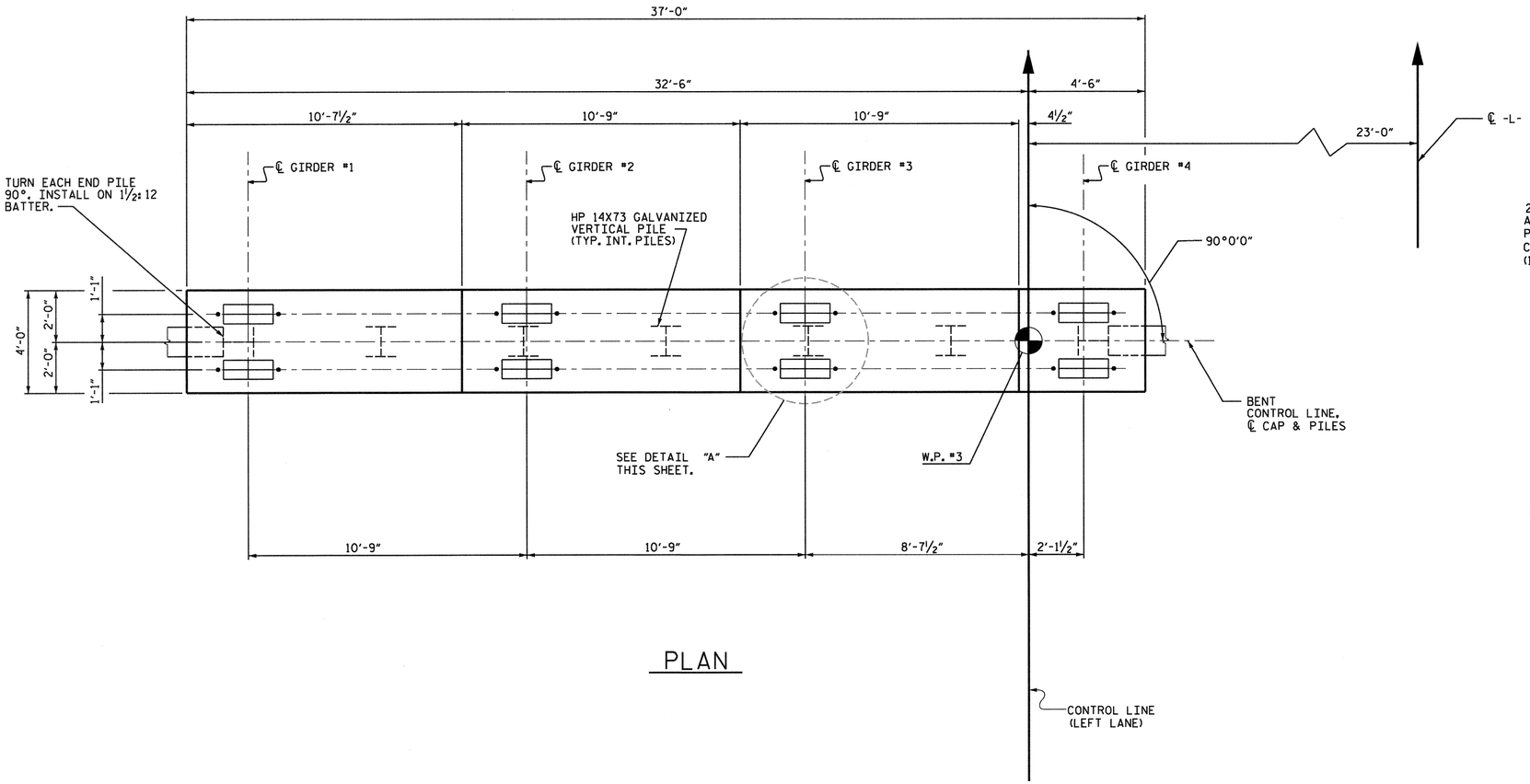

PLAN

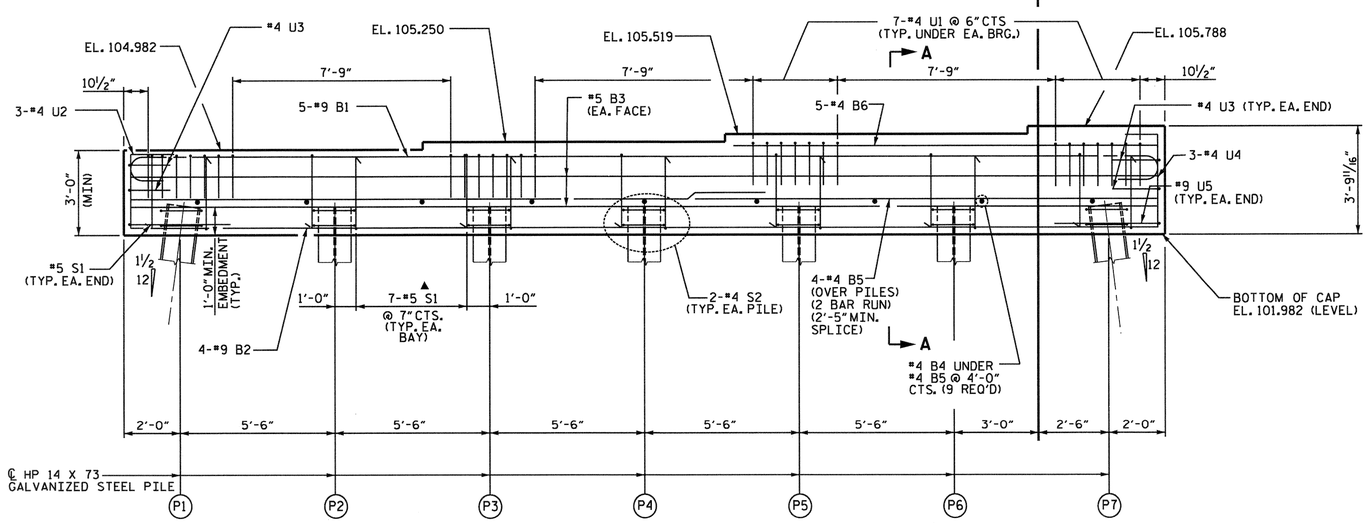

ELEVATION

▲ INVERT ALTERNATE STIRRUPS

NOTES

STIRRUPS AND "U" BARS IN CAP MAY BE SHIFTED AS NECESSARY TO CLEAR ANCHOR BOLTS.

FOR PILE SPLICE DETAILS, SEE SHEET S-95.

GALVANIZE THE TOP OF EACH INTERIOR BENT PILE A MINIMUM LENGTH OF 31 FEET. GALVANIZE IN ACCORDANCE WITH SECTION 1076 OF THE STANDARD SPECIFICATIONS.

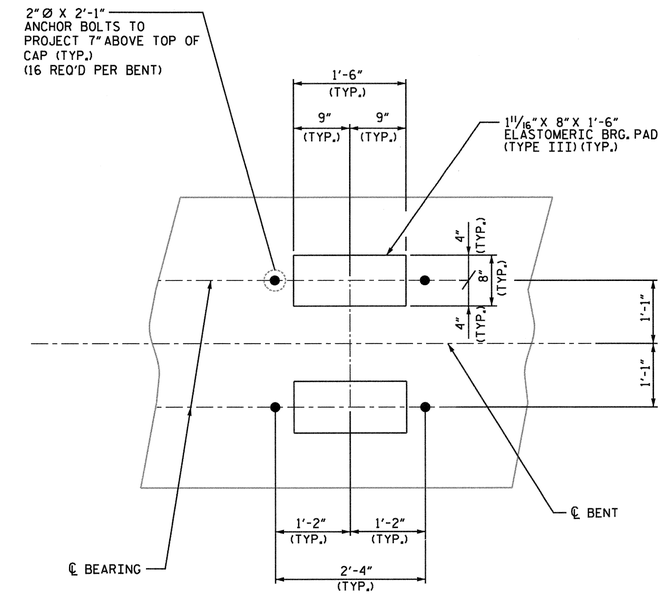

DETAIL "A"

NORTH CAROLINA PROFESSIONAL SEAL ENGINEER HARDY L. WILLIS 11/21/12

PROJECT NO. R-2303C

SAMPSON COUNTY

STATION: 1081+04.50 -L-

SHEET 1 OF 2

STATE OF NORTH CAROLINA
DEPARTMENT OF TRANSPORTATION
RALEIGH

SUBSTRUCTURE BENT NO. 2

(LEFT LANE)

V&M Vaughn & Melton Consulting Engineers
Asheville, North Carolina 828-253-2796
Charlotte, North Carolina 704-357-0488
Tri-Cities, Tennessee 423-467-8401
Knoxville, Tennessee 865-546-1800
Middlesboro, Kentucky 606-248-6600
Spartanburg, South Carolina 864-574-4775

Copyright © 2006 Vaughn & Melton, Inc. All Rights Reserved

DWN. BY: MAF DATE: SEPT. 2012
CHKD. BY: HLW DATE: SEPT. 2012

REVISIONS							SHEET NO.
NO.	BY:	DATE:	NO.	BY:	DATE:		S-98
1			3				TOTAL SHEETS
2			4				138

STR. #3

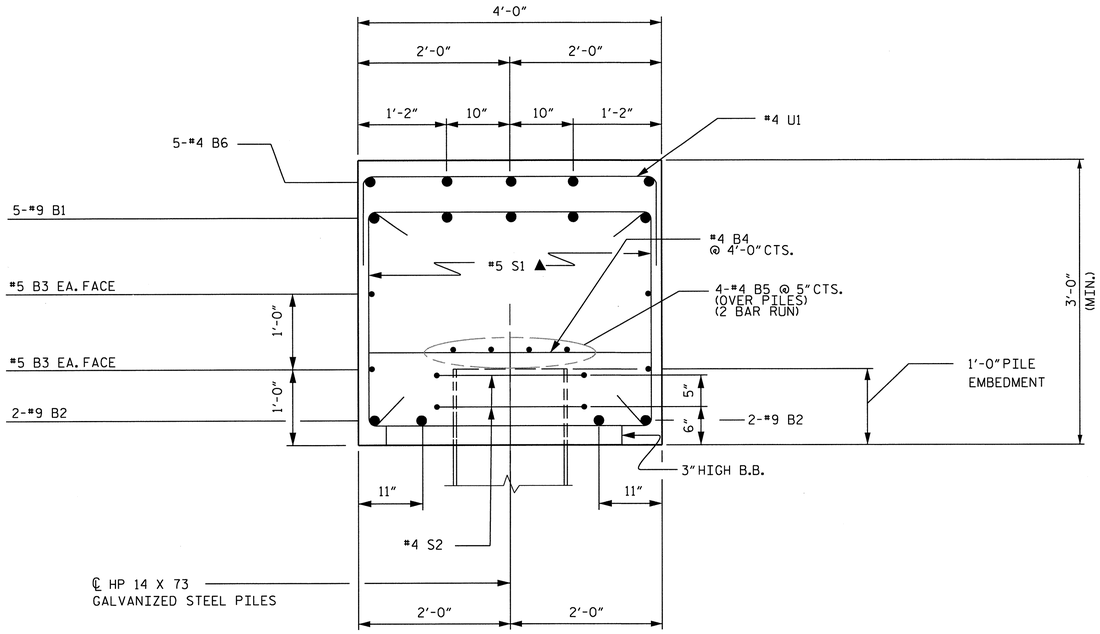

SECTION A-A

▲ INVERT ALTERNATE STIRRUPS

BAR TYPES

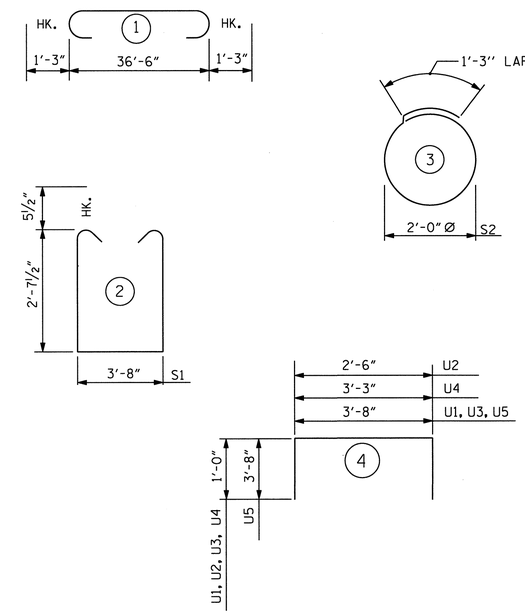

ALL BAR DIMENSIONS ARE OUT TO OUT.

BILL OF MATERIAL

BENT 2

BAR	NO.	SIZE	TYPE	LENGTH	WEIGHT
B1	5	#9	1	39'-0"	663
B2	4	#9	STR.	36'-8"	499
B3	4	#5	STR.	36'-8"	153
B4	9	#4	STR.	3'-8"	22
B5	8	#4	STR.	19'-7"	105
B6	5	#4	STR.	15'-3"	51
S1	44	#5	2	9'-10"	452
S2	14	#4	3	7'-7"	71
U1	28	#4	4	5'-8"	106
U2	3	#4	4	4'-6"	9
U3	4	#4	4	5'-8"	15
U4	3	#4	4	5'-3"	11
U5	2	#9	4	11'-0"	75

REINFORCING STEEL = 2,232 LBS.

CLASS A CONCRETE BREAKDOWN

POUR #1 CAP, CONCRETE = 18.3 C.Y.

TOTAL CLASS A CONCRETE = 18.3 C.Y.

HP 14 X 73 GALVANIZED STEEL PILES

NO: 7 LIN. FT. = 455

PILE REDRIVES

EACH 4

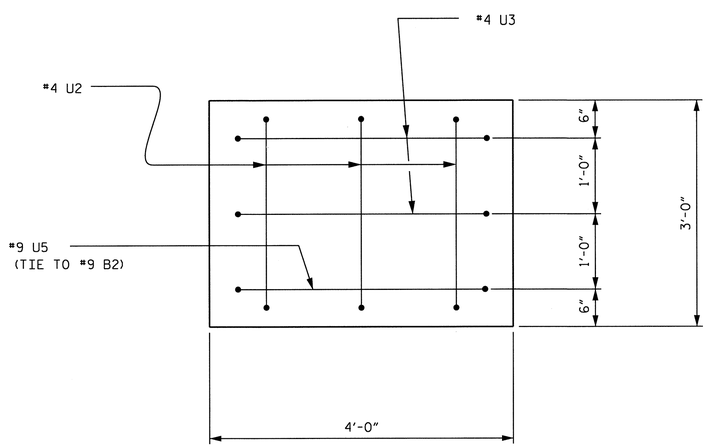

LEFT END OF CAP VIEW

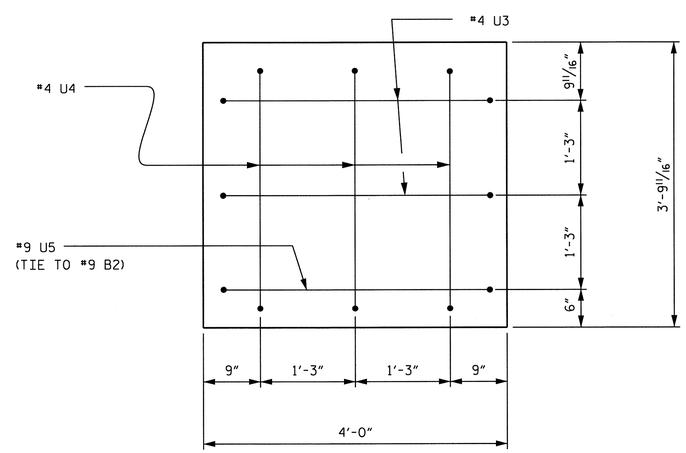

RIGHT END OF CAP VIEW

NORTH CAROLINA PROFESSIONAL SEAL 20707 ENGINEER HARDY L. WILLIS 12/7/12

PROJECT NO. R-2303C

SAMPSON COUNTY

STATION: 1081+04.50 -L-

SHEET 2 OF 2

V&M Vaughn & Melton Consulting Engineers

Asheville, North Carolina 828-253-2796

Charlotte, North Carolina 704-357-0488
Tri-Cities, Tennessee 423-467-8410
Knoxville, Tennessee 865-546-5800
Middlesboro, Kentucky 606-248-6600
Spartanburg, South Carolina 864-574-4775

Copyright © 2006 Vaughn & Melton, Inc. All Rights Reserved

STATE OF NORTH CAROLINA
DEPARTMENT OF TRANSPORTATION
RALEIGH

SUBSTRUCTURE BENT NO. 2

(LEFT LANE)

DWN. BY: MAF DATE: SEPT. 2012
CHKD. BY: HLW DATE: SEPT. 2012

REVISIONS						
NO.	BY:	DATE:	NO.	BY:	DATE:	
1			3			
2			4			

SHEET NO. S-99

TOTAL SHEETS 138

STR. #3

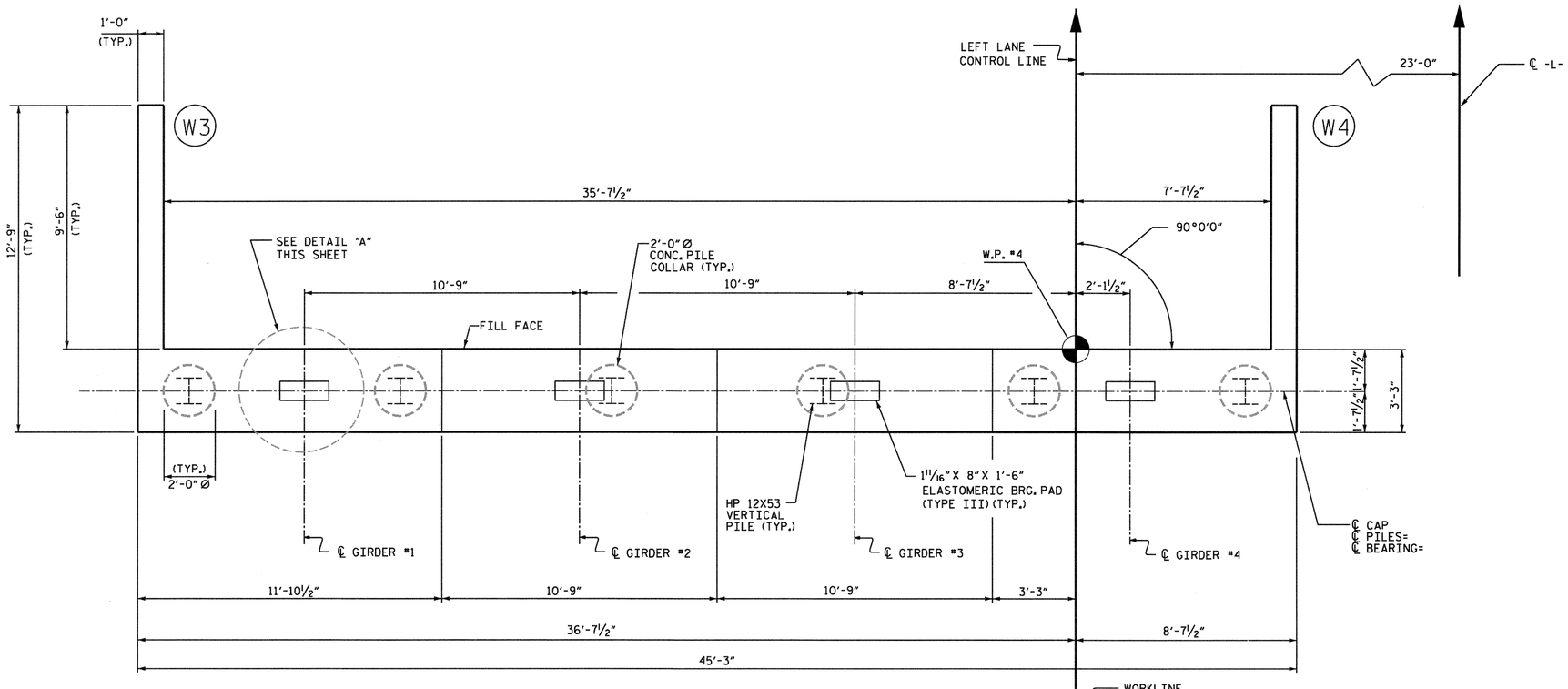

PLAN

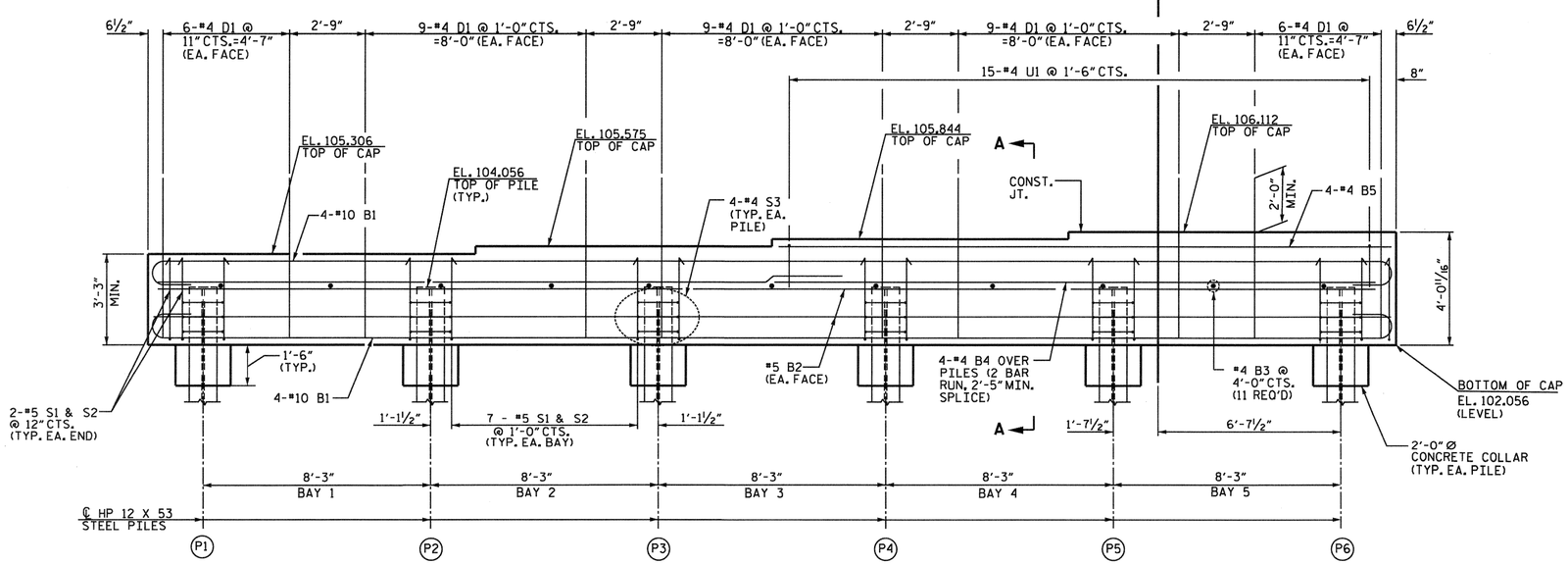

ELEVATION

(WINGS NOT SHOWN FOR CLARITY)

NOTES

FOR PILE SPLICE DETAILS & TEMPORARY DRAINAGE AT END BENT, SEE SHEET 3 OF 3.

THE CONTRACTOR SHALL PROVIDE FOR INSTALLATION OF THE 4" DIAMETER DRAIN PIPE THROUGH THE WING WALL AS REQUIRED FOR REINFORCED BRIDGE APPROACH FILLS. SEE THE ROADWAY PLANS. REINFORCING STEEL IN THE WING WALL MAY BE SHIFTED AS NECESSARY TO CLEAR THE DRAIN PIPE.

SEE SUPERSTRUCTURE SHEETS FOR INTEGRAL END BENT DIAPHRAGM DETAILS.

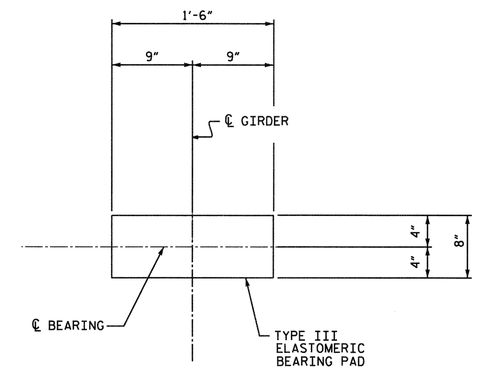

DETAIL "A"

NORTH CAROLINA PROFESSIONAL SEAL 20717 ENGINEER HARDY L. WILLIS 11/21/12

PROJECT NO. R-2303C

SAMPSON COUNTY

STATION: 1081+04.50 -L-

SHEET 1 OF 3

V&M Vaughn & Melton Consulting Engineers

Asheville, North Carolina 828-253-2796

Charlotte, North Carolina 704-357-0488
Tri-Cities, Tennessee 423-467-8401
Knoxville, Tennessee 865-546-5800
Middlesboro, Kentucky 606-248-6600
Spartanburg, South Carolina 864-574-4775

Copyright © 2006 Vaughn & Melton, Inc. All Rights Reserved

DWN. BY: MAF DATE: SEPT. 2012
CHKD. BY: HLW DATE: SEPT. 2012

STATE OF NORTH CAROLINA
DEPARTMENT OF TRANSPORTATION
RALEIGH

SUBSTRUCTURE
INTEGRAL
END BENT NO. 2

(LEFT LANE)

REVISIONS						SHEET NO.
NO.	BY:	DATE:	NO.	BY:	DATE:	S-100
1			3			TOTAL SHEETS
2			4			138

STR. #3

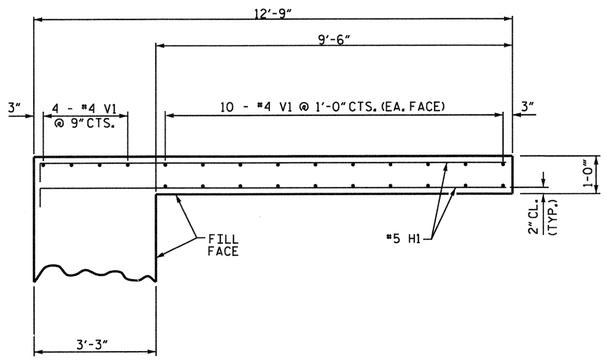

PLAN OF WING W3

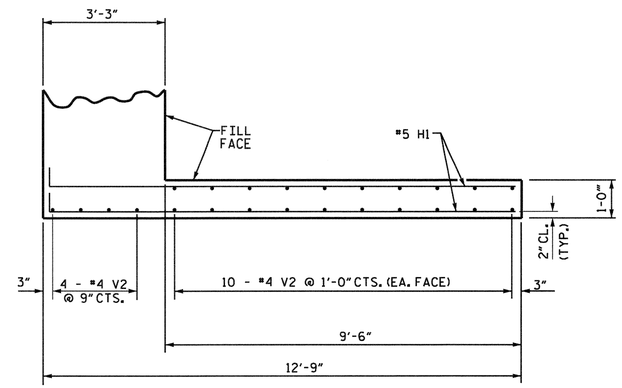

PLAN OF WING W4

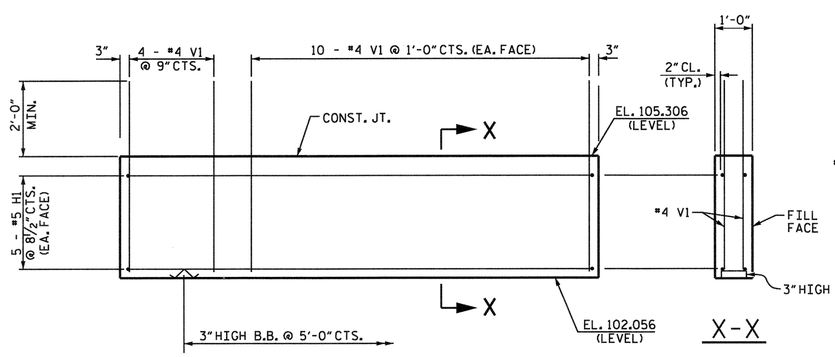

ELEVATION OF WING W3

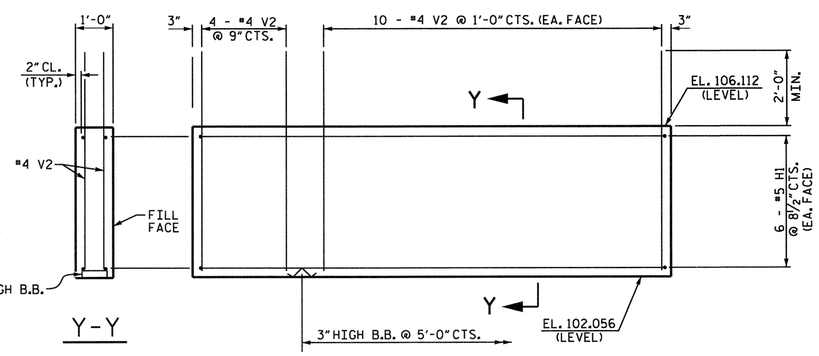

ELEVATION OF WING W4

NORTH CAROLINA PROFESSIONAL SEAL ENGINEER HARDY L. WILLIS 11/21/12

PROJECT NO. R-2303C

SAMPSON COUNTY

STATION: 1081+04.50 -L-

SHEET 2 OF 3

V&M Vaughn & Melton Consulting Engineers
Asheville, North Carolina 828-253-2796
Charlotte, North Carolina 704-357-0488
Tri-Cities, Tennessee 423-467-840
Knoxville, Tennessee 865-546-5800
Middlesboro, Kentucky 606-248-6600
Spartanburg, South Carolina 864-574-4775
Copyright © 2006 Vaughn & Melton, Inc. All Rights Reserved

STATE OF NORTH CAROLINA
DEPARTMENT OF TRANSPORTATION
RALEIGH

SUBSTRUCTURE
INTEGRAL
END BENT NO. 2

(LEFT LANE)

REVISIONS							
NO.	BY:	DATE:	NO.	BY:	DATE:		
1			3				
2			4				

SHEET NO. S-101

TOTAL SHEETS 138

DWN. BY: MAF DATE: SEPT. 2012
CHKD. BY: HLW DATE: SEPT. 2012

STR. #3

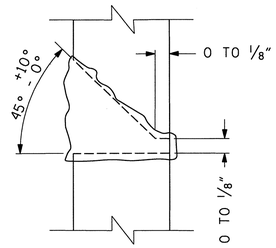

DETAIL A

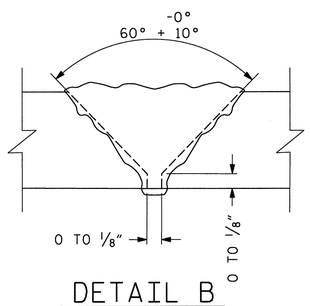

DETAIL B

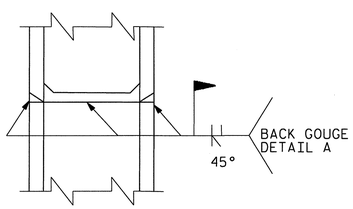

*PILE VERTICAL

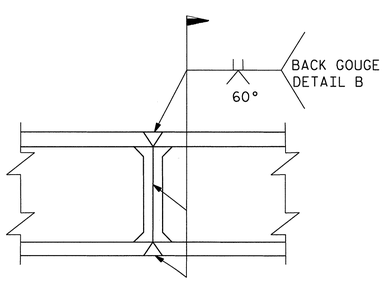

*PILE HORIZONTAL OR VERTICAL

* POSITION OF PILE DURING WELDING

PILE SPLICE DETAILS

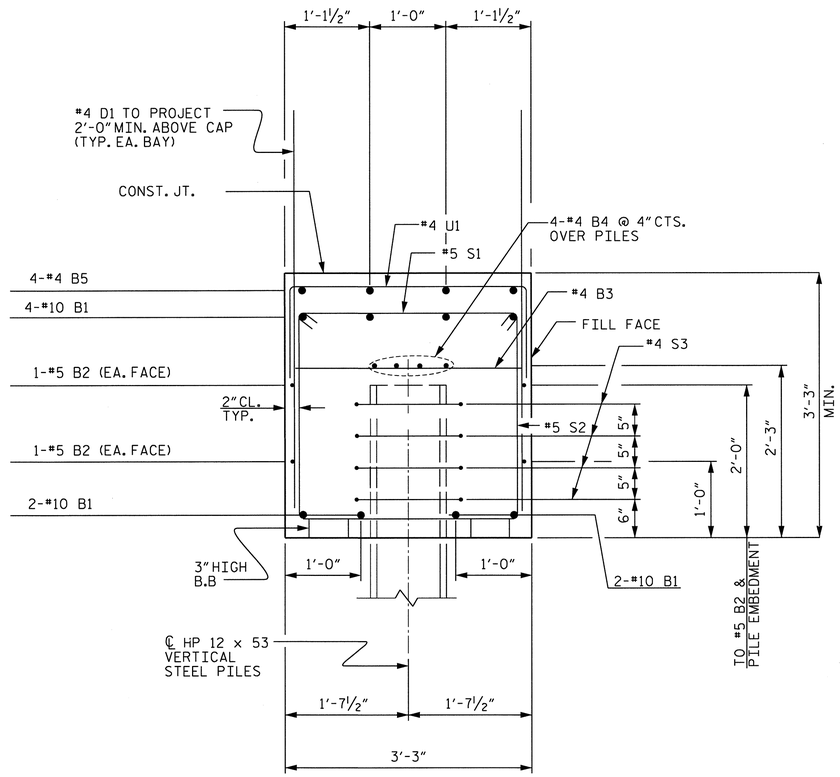

SECTION A-A

BAR TYPES

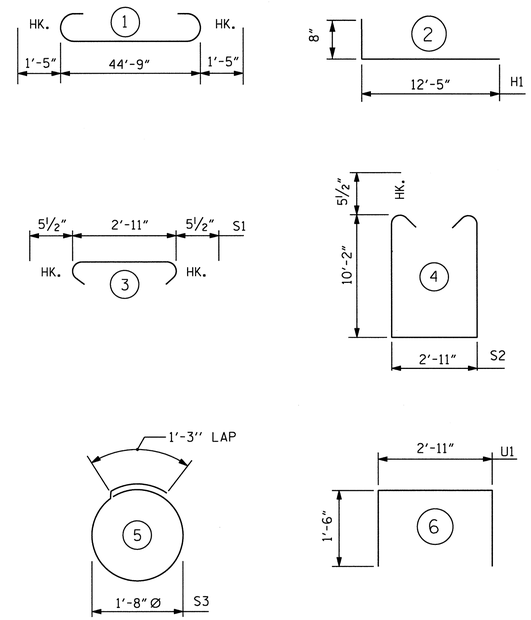

ALL BAR DIMENSIONS ARE OUT TO OUT.

BILL OF MATERIAL
END BENT 2

BAR	NO.	SIZE	TYPE	LENGTH	WEIGHT
B1	8	#10	1	47'-7"	1638
B2	2	#5	STR.	44'-11"	94
B3	11	#4	STR.	2'-11"	21
B4	8	#4	STR.	23'-8"	126
B5	4	#4	STR.	22'-3"	59
D1	78	#4	STR.	5'-10"	304
H1	22	#5	2	13'-1"	300
S1	39	#5	3	3'-10"	156
S2	39	#5	4	9'-7"	390
S3	24	#4	5	6'-6"	104
U1	15	#4	6	4'-11"	49
V1	24	#4	STR.	5'-0"	80
V2	24	#4	STR.	5'-10"	94

REINFORCING STEEL = 3,415 LBS.

CLASS A CONCRETE BREAKDOWN

POUR #1 CAP, CONCRETE COLLARS & LOWER PART OF WINGS = 22.5 C.Y.

TOTAL CLASS A CONCRETE = 22.5 C.Y.

HP 12 X 53 STEEL PILES
NO: 6 LIN. FT. = 360

PILE REDRIVES
EACH 3

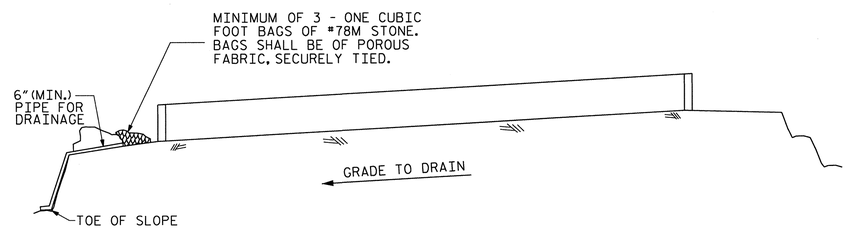

BAGGED STONE AND PIPE SHALL BE PLACED IMMEDIATELY AFTER COMPLETION OF END BENT EXCAVATION. PIPE MAY BE EITHER CONCRETE, CORRUGATED STEEL, CORRUGATED ALUMINUM ALLOY, OR CORRUGATED PLASTIC. PERFORATED PIPE WILL NOT BE ALLOWED.

BAGGED STONE SHALL REMAIN IN PLACE UNTIL THE ENGINEER DIRECTS THAT IT BE REMOVED. THE CONTRACTOR SHALL REMOVE AND DISPOSE OF SILT ACCUMULATIONS AT BAGGED STONE WHEN SO DIRECTED BY THE ENGINEER. BAGS SHALL BE REMOVED AND REPLACED WHENEVER THE ENGINEER DETERMINES THAT THEY HAVE DETERIORATED AND LOST THEIR EFFECTIVENESS.

NO SEPARATE PAYMENT WILL BE MADE FOR THIS WORK AND THE ENTIRE COST OF THIS WORK SHALL BE INCLUDED IN THE UNIT CONTRACT PRICE BID FOR THE SEVERAL PAY ITEMS.

TEMPORARY DRAINAGE AT END BENT

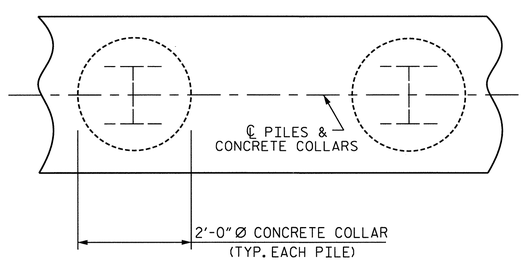

PLAN

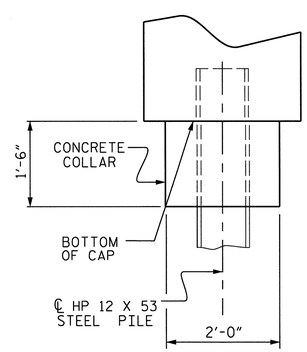

ELEVATION

CORROSION PROTECTION FOR STEEL PILES DETAIL

PROJECT NO. R-2303C
SAMPSON COUNTY
STATION: 1081+04.50-L-
SHEET 3 OF 3

STATE OF NORTH CAROLINA
DEPARTMENT OF TRANSPORTATION
RALEIGH

SUBSTRUCTURE
INTEGRAL
END BENT NO. 2

(LEFT LANE)

NORTH CAROLINA PROFESSIONAL SEAL 20727 ENGINEER HARDY L. WILLIS 12/7/12

V&M Vaughn & Melton Consulting Engineers
Asheville, North Carolina 828-253-2796
Charlotte, North Carolina 704-357-0488
Tri-Cities, Tennessee 423-467-8401
Knoxville, Tennessee 865-546-5800
Middlesboro, Kentucky 606-248-6609
Spartanburg, South Carolina 864-574-4775
Copyright © 2006 Vaughn & Melton, Inc. All Rights Reserved

DWN. BY: MAF DATE: SEPT. 2012
CHKD. BY: HLW DATE: SEPT. 2012

REVISIONS						
NO.	BY:	DATE:	NO.	BY:	DATE:	
1			3			
2			4			

SHEET NO. S-102
TOTAL SHEETS 138

STR. #3

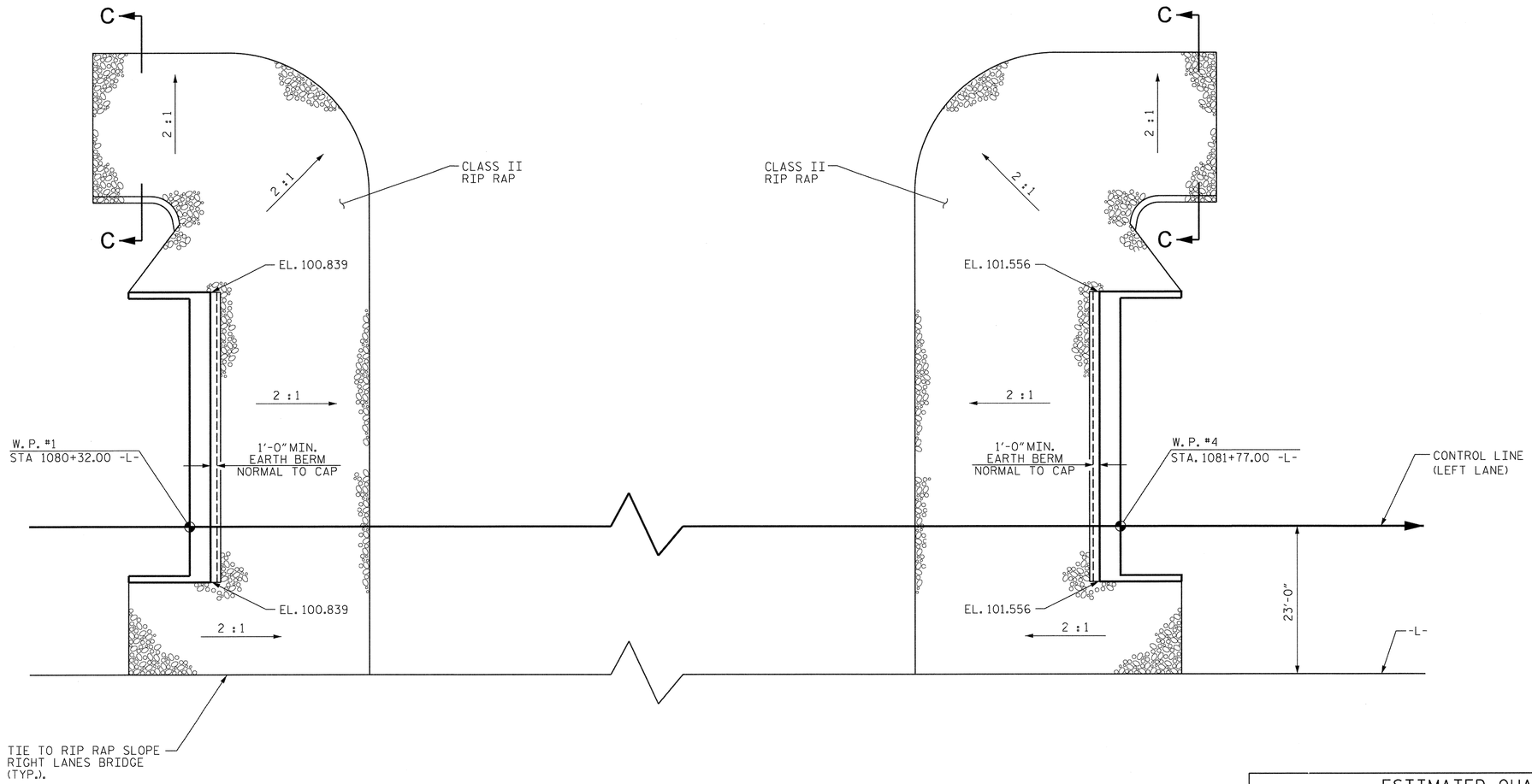

PLAN OF RIP RAP

ESTIMATED QUANTITIES		
BRIDGE @ STA. 1081+04.50	RIP RAP CLASS II (2'-0" THICK)	GEOTEXTILE FOR DRAINAGE
	TONS	SQUARE YARDS
END BENT 1	379	425
END BENT 2	420	470

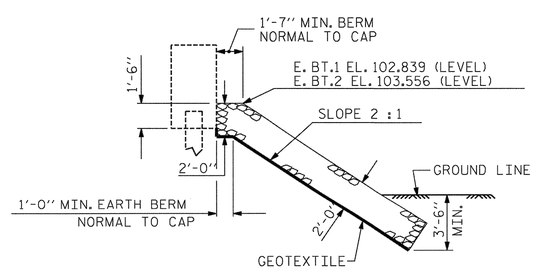

℄ SECTION

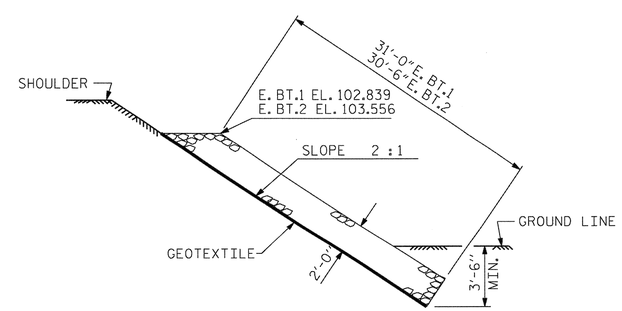

SECTION C-C

PROJECT NO. R-2303C

SAMPSON COUNTY

STATION: 1081+04.50 -L-

NORTH CAROLINA PROFESSIONAL SEAL 20277 ENGINEER HARDY L. WILLIS 11/21/12

STATE OF NORTH CAROLINA
DEPARTMENT OF TRANSPORTATION
RALEIGH

STANDARD

RIP RAP DETAILS

(LEFT LANE)

REVISIONS						SHEET NO.
NO.	BY:	DATE:	NO.	BY:	DATE:	S-103
1			3			TOTAL SHEETS
2			4			138

ASSEMBLED BY : MAF	DATE : 09/2012	
CHECKED BY : HLW	DATE : 09/2012	
DRAWN BY : FCJ 2/88	REV. 8/16/99	RWW/LES
CHECKED BY : ARB 8/88	REV. 10/17/00	RWW/LES
	REV. 5/1/06R	TLA/GM

$$$$$$SYSTIME$$$$$
$$$$$$$$$$$$$$$$$$$$$$$$DGN$$$$$$$$$$$$$$$$$$$$$$$$$
$$$$USERNAME$$$$

SKEW 90° STR. #3 STD. NO. RR2

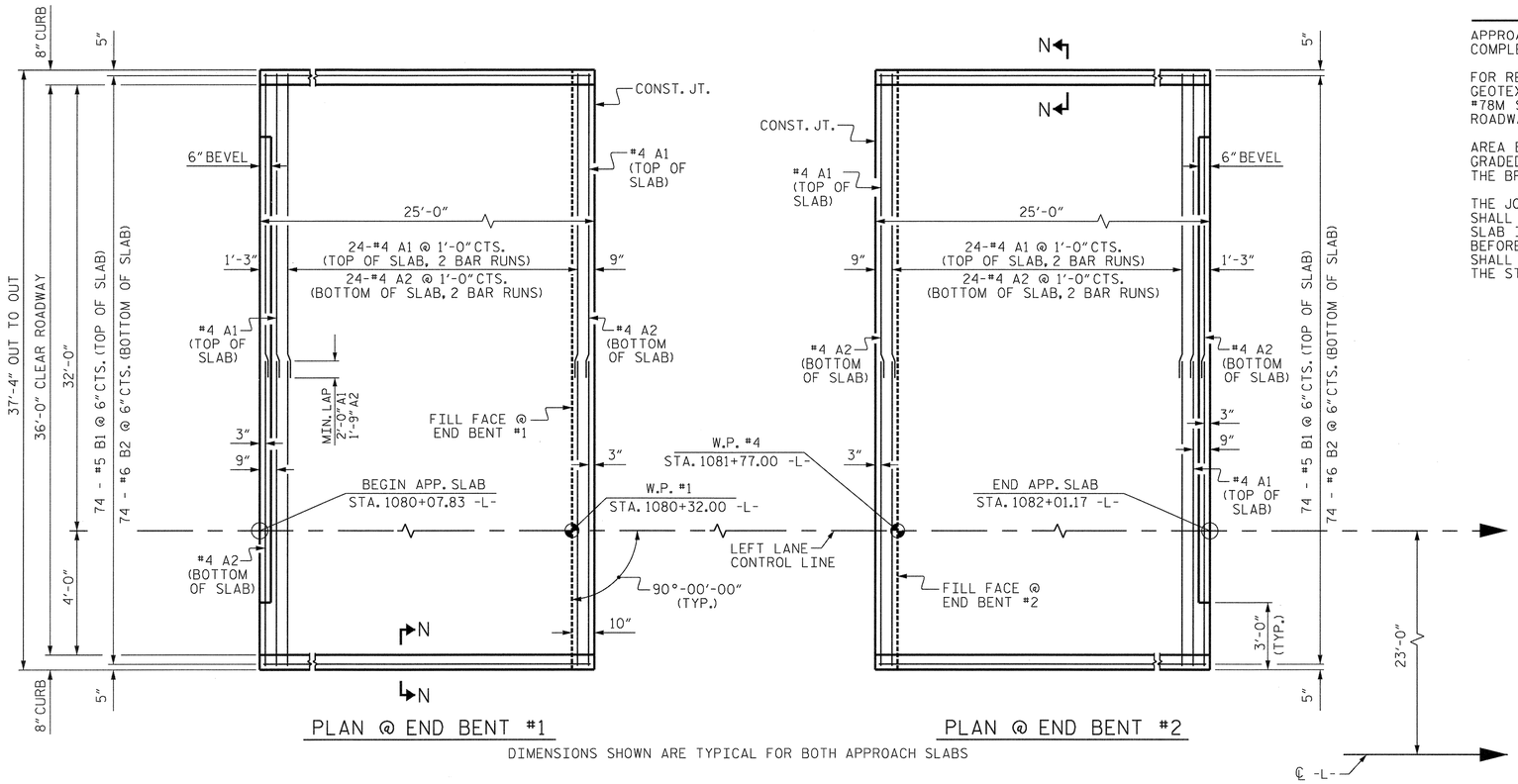

PLAN @ END BENT #1

PLAN @ END BENT #2

DIMENSIONS SHOWN ARE TYPICAL FOR BOTH APPROACH SLABS

NOTES

APPROACH SLAB SHALL NOT BE CONSTRUCTED PRIOR TO COMPLETION OF THE BRIDGE DECK.

FOR REINFORCED BRIDGE APPROACH FILL FABRIC WALL INCLUDING GEOTEXTILE, IMPERMEABLE GEOMEMBRANE, 4" Ø DRAINAGE PIPE, #78M STONE, WELDED WIRE FORM, AND SELECT MATERIAL, SEE ROADWAY PLANS.

AREA BETWEEN THE WINGWALL AND APPROACH SLAB SHALL BE GRADED TO DRAIN THE WATER AWAY FROM THE FILL FACE OF THE BRIDGE AND SHALL BE PAVED. SEE ROADWAY PLANS.

THE JOINT OPENING AT THE APPROACH SLAB/DECK INTERFACE SHALL BE SAWED NO MORE THAN 12 HOURS AFTER THE APPROACH SLAB IS CAST. THE JOINT SHALL BE CLEANED OF ALL DEBRIS BEFORE THE SEALANT IS APPLIED. THE JOINT SEALER MATERIAL SHALL CONFORM TO THE REQUIREMENTS OF SECTION 1028-3 OF THE STANDARD SPECIFICATIONS.

BILL OF MATERIAL

FOR ONE APPROACH SLAB (2 REQ'D)

BAR	NO.	SIZE	TYPE	LENGTH	WEIGHT
* A1	52	#4	STR	19'-6"	677
A2	52	#4	STR	19'-5"	675
* B1	74	#5	STR	24'-2"	1,865
B2	74	#6	STR	24'-8"	2,742
REINFORCING STEEL				LBS.	3,417
* EPOXY COATED REINFORCING STEEL				LBS.	2,542
CLASS AA CONCRETE				C.Y.	40.4

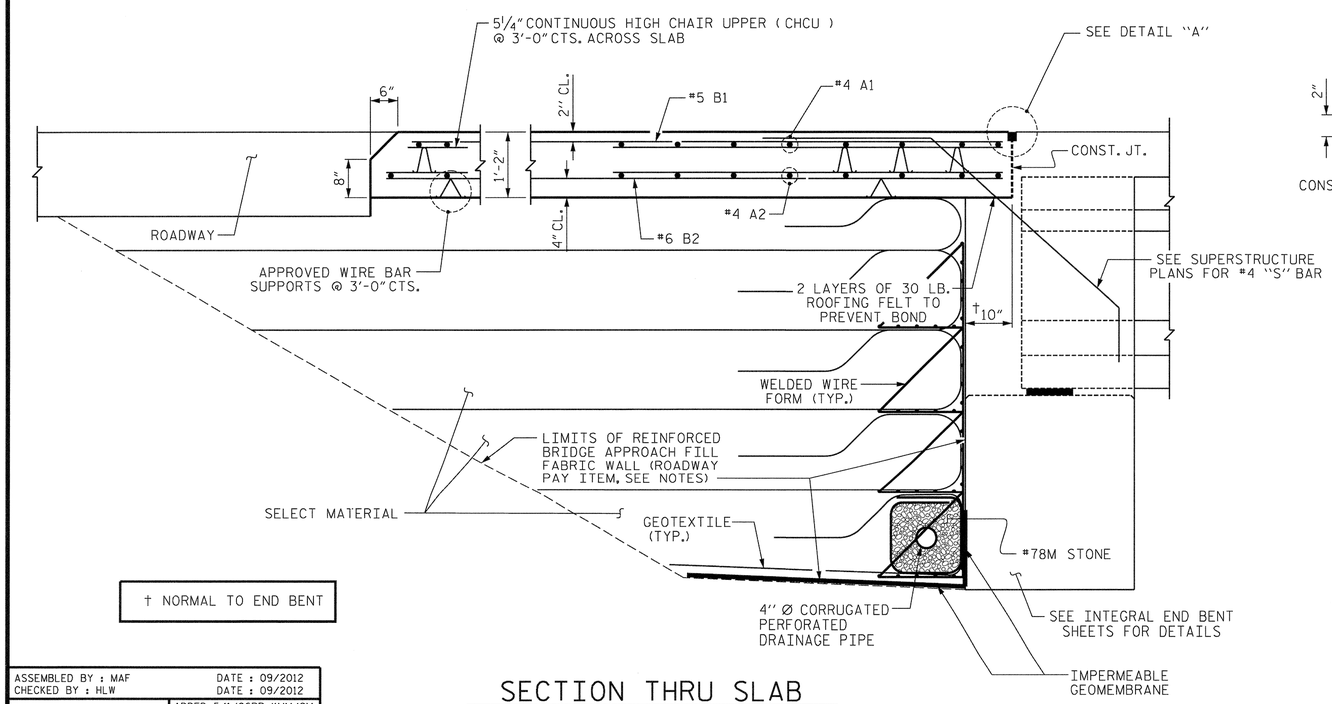

† NORMAL TO END BENT

SECTION THRU SLAB

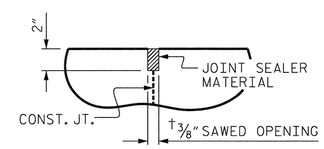

DETAIL "A"

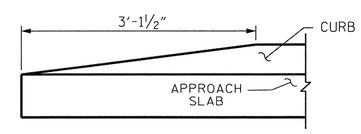

END OF CURB WITHOUT SHOULDER BERM GUTTER

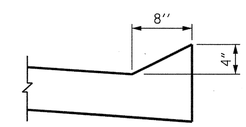

SECTION N-N

NORTH CAROLINA PROFESSIONAL SEAL 19772 ENGINEER HARDY L. WILLIS 11/21/12

PROJECT NO. R-2303C

SAMPSON COUNTY

STATION: 1081+04.50 -L-

SHEET 1 OF 2

STATE OF NORTH CAROLINA
DEPARTMENT OF TRANSPORTATION
RALEIGH

STANDARD

BRIDGE APPROACH SLAB FOR INTEGRAL ABUTMENT

(LEFT LANE)

REVISIONS						SHEET NO.
NO.	BY:	DATE:	NO.	BY:	DATE:	S-104
1			3			TOTAL SHEETS
2			4			138

STR. #3 STD. NO. BAS5

ASSEMBLED BY : MAF		DATE : 09/2012	
CHECKED BY : HLW		DATE : 09/2012	
DRAWN BY : TLA 10/05	ADDED 5/1/06RR	KMM/GM	
CHECKED BY : GM 5/06	REV. 10/1/11	MAA/GM	
	REV. 12/21/11	MAA/GM	

$$$$$$$SYSTIME$$$$$
$$$$$$$$$$$$$$$$$$$$$$$$DGN$$$$$$$$$$$$$$$$$$$$$$$$
$$$$USERNAME$$$$

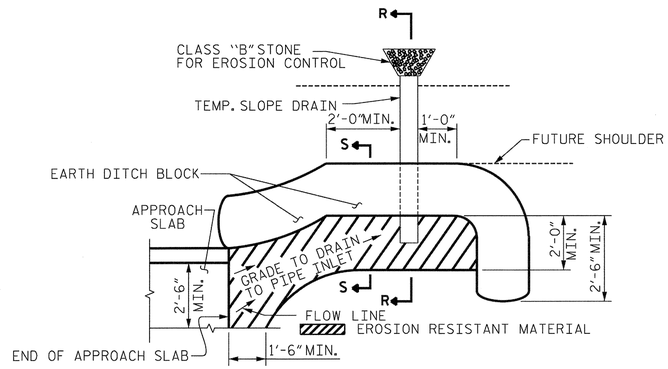

NOTE: IMMEDIATELY AFTER THE CONSTRUCTION OF THE APPROACH SLAB, THE CONTRACTOR SHALL PROVIDE TEMPORARY BERM AND SLOPE DRAIN. CONTRACTOR SHALL GRADE TO PIPE INLET AND PROVIDE EROSION RESISTANT MATERIAL AS SHOWN. THE EROSION RESISTANT MATERIAL SHALL BE EITHER 1) ASPHALT PLANT MIX, TYPE 1 OR TYPE 2, MIN. 2" DEPTH, 2) EROSION CONTROL MAT, OR 3) CONCRETE, AS DIRECTED BY THE ENGINEER. THE SLOPE DRAIN SHALL CONSIST OF A NON-PERFORATED TEMPORARY DRAINAGE PIPE, 12 INCHES IN DIAMETER.

PLAN VIEW

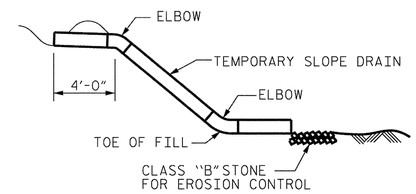

SECTION R-R

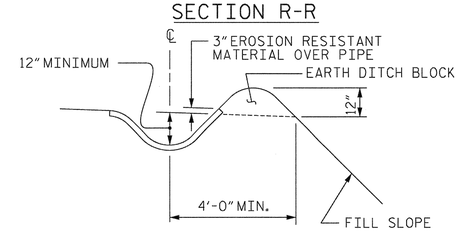

SECTION S-S

TEMPORARY BERM AND SLOPE DRAIN DETAILS

(TO BE USED WHEN SHOULDER BERM GUTTER IS REQUIRED)

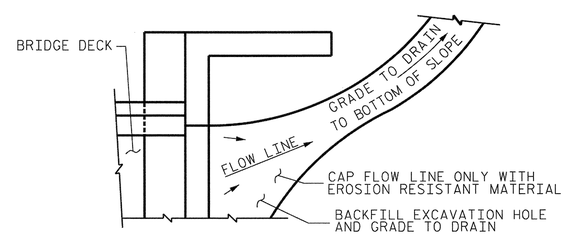

NOTE: IF THE APPROACH SLAB IS NOT CONSTRUCTED IMMEDIATELY AFTER THE BACKFILLING OF THE END BENT EXCAVATION, GRADE TO DRAIN TO THE BOTTOM OF THE SLOPE AND PROVIDE EROSION RESISTANT MATERIAL, SUCH AS FIBERGLASS ROVING OR AS DIRECTED BY THE ENGINEER TO PREVENT SOIL EROSION AND TO PROTECT THE AREA ADJACENT TO THE STRUCTURE. THE CONTRACTOR WILL BE REQUIRED TO REMOVE THESE MATERIALS PRIOR TO CONSTRUCTION OF THE APPROACH SLAB.

TEMPORARY DRAINAGE DETAIL

PROJECT NO. R-2303C

SAMPSON COUNTY

STATION: 1081+04.50 -L-

SHEET 2 OF 2

NORTH CAROLINA PROFESSIONAL SEAL 27777 ENGINEER HARDY L. WILLIS

11/21/12

STATE OF NORTH CAROLINA
DEPARTMENT OF TRANSPORTATION
RALEIGH

STANDARD

BRIDGE APPROACH
SLAB DETAILS

(LEFT LANE)

REVISIONS						SHEET NO.
NO.	BY:	DATE:	NO.	BY:	DATE:	S-105
1			3			TOTAL SHEETS
2			4			138

ASSEMBLED BY : MAF		DATE : 09/2012	
CHECKED BY : HLW		DATE : 09/2012	
DRAWN BY : FCJ	11/88	REV. 10/17/00	RWW/LES
CHECKED BY : ARB	11/88	REV. 5/7/03	RWW/JTE
		REV. 5/1/06RRR	MAA/KMM

$$$$$$SYSTIME$$$$$
$$$$$$$$$$$$$$$$$$$$$$$$DGN$$$$$$$$$$$$$$$$$$$$$$$$$
$$$$USERNAME$$$$

STR. #3 STD. NO. BAS10 (SHT 1)

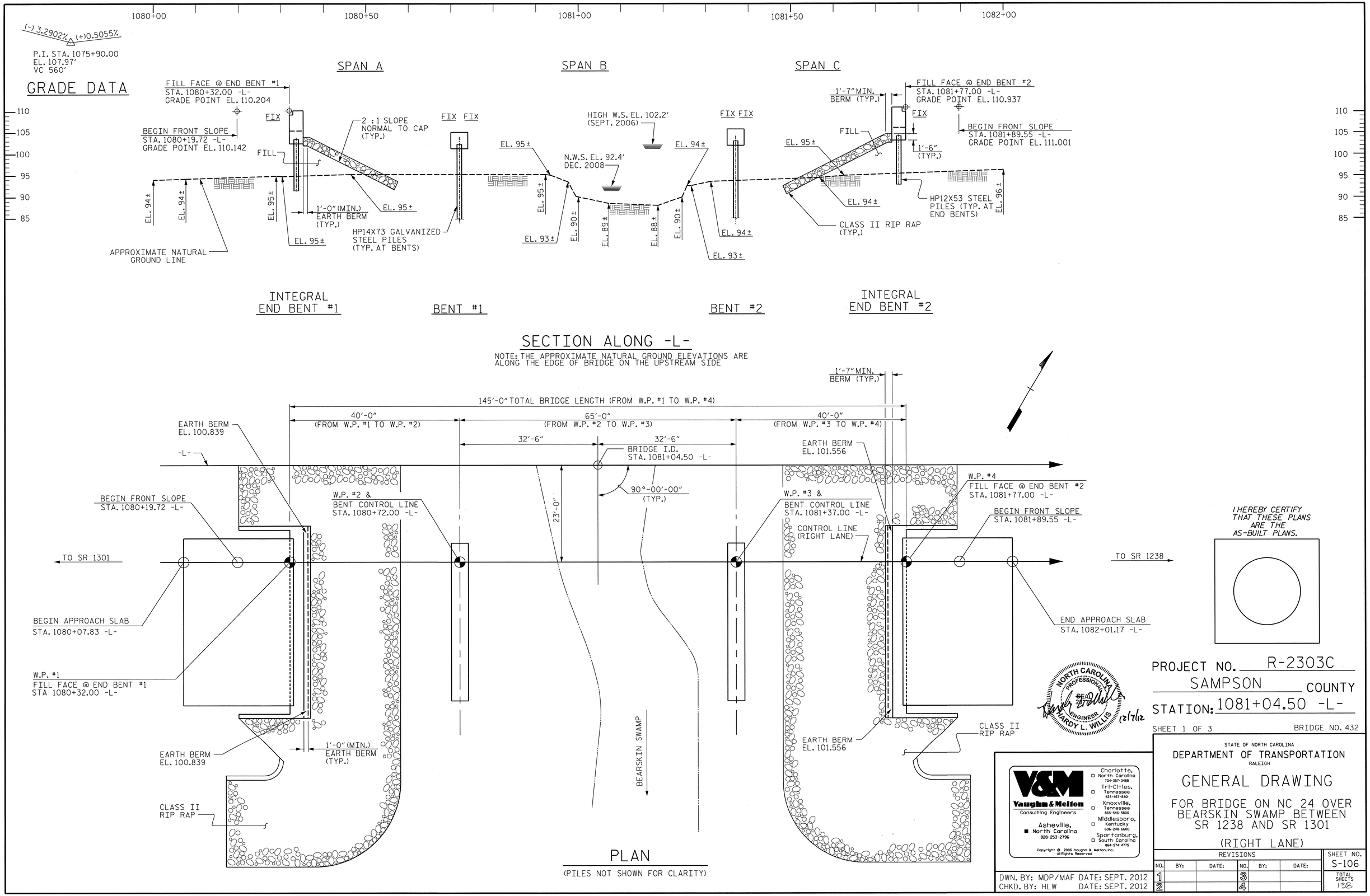

PROJECT NO. R-2303C

SAMPSON COUNTY

STATION: 1081+04.50 -L-

SHEET 1 OF 3

BRIDGE NO. 432

STATE OF NORTH CAROLINA
DEPARTMENT OF TRANSPORTATION
RALEIGH

GENERAL DRAWING

FOR BRIDGE ON NC 24 OVER BEARSKIN SWAMP BETWEEN SR 1238 AND SR 1301

(RIGHT LANE)

V&M
Vaughn & Melton
Consulting Engineers
Asheville, North Carolina 828-253-2796
Charlotte, North Carolina 704-357-0488
Tri-Cities, Tennessee 423-467-8401
Knoxville, Tennessee 865-546-5800
Middlesboro, Kentucky 606-248-6600
Spartanburg, South Carolina 864-574-4775

Copyright © 2006 Vaughn & Melton, Inc. All Rights Reserved

DWN. BY: MDP/MAF DATE: SEPT. 2012
CHKD. BY: HLW DATE: SEPT. 2012

REVISIONS						SHEET NO.
NO.	BY:	DATE:	NO.	BY:	DATE:	S-106
1			3			TOTAL SHEETS
2			4			138

STR. #4

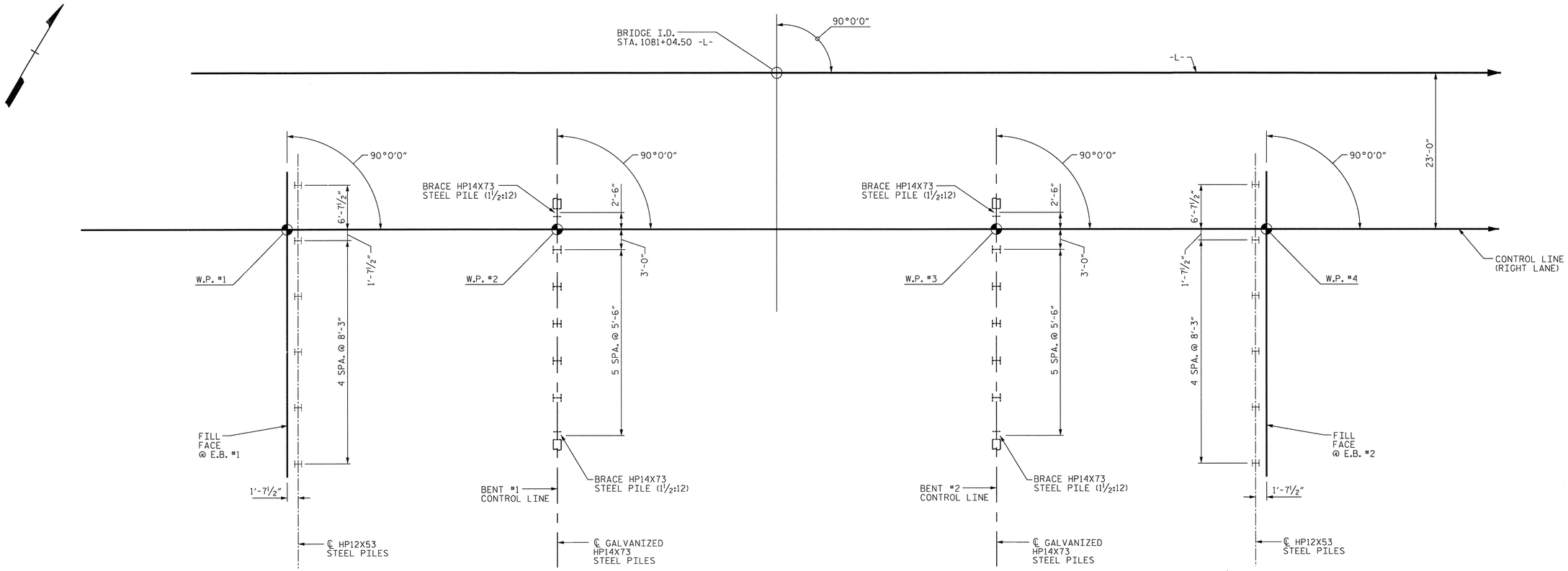

FOUNDATION LAYOUT

DIMENSIONS LOCATING PILES ARE TO PILE CENTERLINE
AT THE BOTTOM OF CAP.

FOUNDATION NOTES

FOR PILES, SEE SECTION 450 OF THE STANDARD SPECIFICATIONS.

PILES AT END BENT NO. 1 AND END BENT NO. 2 ARE DESIGNED FOR A FACTORED RESISTANCE OF 85 TONS PER PILE.

PILES AT BENT NO. 1 AND BENT NO. 2 ARE DESIGNED FOR A FACTORED RESISTANCE OF 105 TONS PER PILE.

DRIVE PILES AT END BENT NO. 1 AND END BENT NO. 2 TO A REQUIRED DRIVING RESISTANCE OF 145 TONS PER PILE.

DRIVE PILES AT BENT NO. 1 AND BENT NO. 2 TO A REQUIRED DRIVING RESISTANCE OF 195 TONS PER PILE. THIS REQUIRED DRIVING RESISTANCE INCLUDES ADDITIONAL RESISTANCE FOR DOWNDRAG OR SCOUR.

INSTALL PILES AT BENT NO. 1 AND BENT NO. 2 TO A TIP ELEVATION NO HIGHER THAN 68.0 FT.

THE SCOUR CRITICAL ELEVATIONS FOR BENT NO. 1 AND BENT NO. 2 ARE ELEVATIONS 88.0 FT. AND 83.0 FT., RESPECTIVELY. SCOUR CRITICAL ELEVATIONS ARE USED TO MONITOR POSSIBLE SCOUR PROBLEMS DURING THE LIFE OF THE STRUCTURE.

TESTING PILES WITH THE PDA DURING DRIVING, RESTRIKING OR REDRIVING MAY BE REQUIRED. THE ENGINEER WILL DETERMINE THE NEED FOR PDA TESTING. FOR PDA TESTING, SEE SECTION 450 OF THE STANDARD SPECIFICATIONS AND FOR PILE DRIVING CRITERIA, SEE PILE DRIVING CRITERIA PROVISION.

OBSERVE A 3 MONTH WAITING PERIOD AFTER CONSTRUCTING THE EMBANKMENT TO WITHIN 2 FT. OF FINISHED GRADE BEFORE BEGINNING END BENT CONSTRUCTION AT END BENT NO. 1 AND END BENT NO. 2.

FOR SETTLEMENT GAUGES, SEE ROADWAY PLANS.

NORTH CAROLINA PROFESSIONAL SEAL 20724 ENGINEER HARDY L. WILLIS
11/21/12

PROJECT NO. R-2303C
SAMPSON COUNTY
STATION: 1081+04.50 -L-

SHEET 2 OF 3

V&M
Vaughn & Melton
Consulting Engineers
Asheville, North Carolina 828-253-2796
Charlotte, North Carolina 704-357-0488
Tri-Cities, Tennessee 423-467-940
Knoxville, Tennessee 865-546-5800
Middlesboro, Kentucky 606-248-6600
Spartanburg, South Carolina 864-574-4775
Copyright © 2006 Vaughn & Melton, Inc.
All Rights Reserved

STATE OF NORTH CAROLINA
DEPARTMENT OF TRANSPORTATION
RALEIGH

GENERAL DRAWING
FOR BRIDGE ON NC 24 OVER BEARSKIN SWAMP BETWEEN SR 1238 AND SR 1301
(RIGHT LANE)

REVISIONS						SHEET NO.
NO.	BY:	DATE:	NO.	BY:	DATE:	S-107
1			3			TOTAL SHEETS
2			4			138

DWN. BY: MAF DATE: SEPT. 2012
CHKD. BY: HLW DATE: SEPT. 2012

STR. #4

BENCH MARK IS: BM #716 -BY11- STA. 6+10, 17' LEFT. RAILROAD SPIKE IN 48" OAK

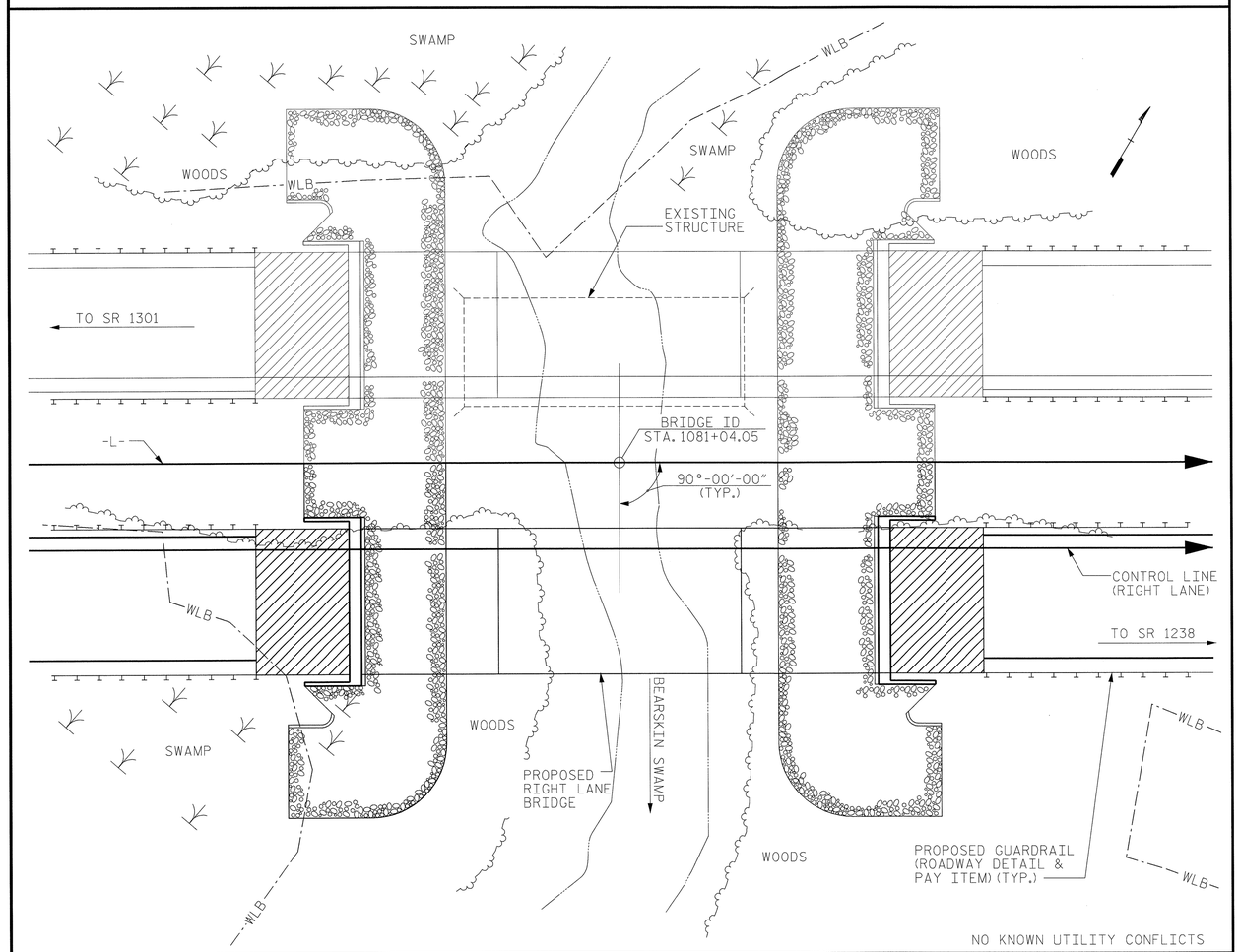

LOCATION SKETCH

GENERAL NOTES:

ASSUMED LIVE LOAD = HL-93 OR ALTERNATE LOADING.

THIS BRIDGE HAS BEEN DESIGNED IN ACCORDANCE WITH THE AASHTO LRFD BRIDGE DESIGN SPECIFICATIONS.

THIS STRUCTURE HAS BEEN DESIGNED IN ACCORDANCE WITH 'HEC-18 - EVALUATING SCOUR AT BRIDGES'.

THIS BRIDGE IS LOCATED IN SEISMIC ZONE 1.

FOR OTHER DESIGN DATA AND GENERAL NOTES, SEE STANDARD SHEET SN.

FOR FALSEWORK AND FORMWORK, SEE SPECIAL PROVISIONS.

FOR SUBMITTAL OF WORKING DRAWINGS, SEE SPECIAL PROVISIONS.

FOR INTERIOR BENTS 1 AND 2, ONLY PARTIAL GALVANIZING OF THE PILES IS REQUIRED. SEE INTERIOR BENT SHEETS FOR REQUIRED GALVANIZED LENGTHS. PAYMENT FOR PARTIALLY GALVANIZED PILES WILL BE MADE UNDER THE CONTRACT UNIT PRICE FOR GALVANIZED STEEL PILES.

FOR CRANE SAFETY, SEE SPECIAL PROVISIONS.

FOR GROUT FOR STRUCTURES, SEE SPECIAL PROVISIONS.

FOR PLACING LOAD ON STRUCTURE MEMBERS, SEE SPECIAL PROVISIONS.

PRESTRESSED CONCRETE DECK PANELS MAY BE USED IN LIEU OF METAL STAY-IN-PLACE FORMS IN ACCORDANCE WITH ARTICLE 420-3 OF THE STANDARD SPECIFICATIONS.

REMOVABLE FORMS MAY BE USED IN LIEU OF METAL STAY-IN-PLACE FORMS IN ACCORDANCE WITH ARTICLE 420-3 OF THE STANDARD SPECIFICATIONS.

NORTH CAROLINA PROFESSIONAL SEAL 20077 ENGINEER HARDY L. WILLIS 6/27/13

TOTAL BILL OF MATERIAL

	REINFORCED CONCRETE DECK SLAB	GROOVING BRIDGE FLOORS	CLASS A CONCRETE	BRIDGE APPROACH SLABS	REINFORCING STEEL	45" PRESTRESSED CONCRETE GIRDERS		HP 12 X 53 STEEL PILES		HP 14 X 73 GALVANIZED STEEL PILES		PILE REDRIVES	CONCRETE BARRIER RAIL	RIP RAP CLASS II (2'-0" THICK)	GEOTEXTILE FOR DRAINAGE	ELASTOMERIC BEARINGS	PDA TESTING
	SQ. FT.	SQ. FT.	CU. YDS.	LUMP SUM	LBS.	NO.	LIN. FT.	NO.	LIN. FT.	NO.	LIN. FT.	EACH	LIN. FT.	TONS	SQ. YDS.	LUMP SUM	EACH
SUPERSTRUCTURE	5,691	6,347		LUMP SUM		12	565.67						286.67			LUMP SUM	
END BENT 1			22.5		3,415			6	360			3		344	385		
BENT 1			18.3		2,232					7	490	4					
BENT 2			18.3		2,232					7	455	4					
END BENT 2			22.5		3,415			6	360			3		393	440		
TOTAL	5,691	6,347	81.6	LUMP SUM	11,294	12	565.67	12	720	14	945	14	286.67	737	825	LUMP SUM	1

HYDRAULIC DATA

DESIGN DISCHARGE	= 2200 CFS
FREQUENCY OF DESIGN FLOOD	= 50 YR.
DESIGN HIGH WATER ELEVATION	= 99.6'
DRAINAGE AREA	= 21.5 Sq. MILES
BASIC DISCHARGE (Q100)	= 2700 CFS
BASIC HIGH WATER ELEVATION	= 100.4'

OVERTOPPING FLOOD DATA

OVERTOPPING DISCHARGE	= >4000 CFS
FREQUENCY OF OVERTOPPING FLOOD	= >500 YR.
OVERTOPPING FLOOD ELEVATION	= 109.2'

PROJECT NO. R-2303C
SAMPSON COUNTY
STATION: 1081+04.50 -L-

SHEET 3 OF 3

V&M Vaughn & Melton Consulting Engineers
Asheville, North Carolina 828-253-2796
Charlotte, North Carolina 704-357-0488
Tri-Cities, Tennessee 423-467-8401
Knoxville, Tennessee 865-546-5800
Middlesboro, Kentucky 606-248-6600
Spartanburg, South Carolina 864-574-4775

Copyright © 2006 Vaughn & Melton, Inc. All Rights Reserved

DWN. BY: MDP/MAF DATE: SEPT. 2012
CHKD. BY: HLW DATE: SEPT. 2012

STATE OF NORTH CAROLINA
DEPARTMENT OF TRANSPORTATION
RALEIGH

GENERAL DRAWING

FOR BRIDGE ON NC 24 OVER BEARSKIN SWAMP BETWEEN SR 1238 AND SR 1301

(RIGHT LANE)

REVISIONS								SHEET NO.
NO.	BY:	DATE:	NO.	BY:	DATE:			S-108
1			3					TOTAL SHEETS
2			4					138

STR. #4

INFORMATION FOR 45" TYPE III PRESTRESSED CONCRETE GIRDER (SPANS A, B, & C)

LOAD AND RESISTANCE FACTOR RATING (LRFR) SUMMARY FOR PRESTRESSED CONCRETE GIRDERS

LEVEL		VEHICLE	WEIGHT (W) (TONS)	CONTROLLING LOAD RATING (#)	MINIMUM RATING FACTORS (RF)	TONS = W × RF	STRENGTH I LIMIT STATE											SERVICE III LIMIT STATE						COMMENT NUMBER
								MOMENT					SHEAR						MOMENT					
							LIVE-LOAD FACTORS $\gamma_{(LL)}$	DISTRIBUTION FACTORS (DF)	RATING FACTOR	SPAN	GIRDER LOCATION	DISTANCE FROM LEFT END OF SPAN (ft)	DISTRIBUTION FACTORS (DF)	RATING FACTOR	SPAN	GIRDER LOCATION	DISTANCE FROM LEFT END OF SPAN (ft)	LIVE-LOAD FACTORS $\gamma_{(LL)}$	DISTRIBUTION FACTORS (DF)	RATING FACTOR	SPAN	GIRDER LOCATION	DISTANCE FROM LEFT END OF SPAN (ft)	
DESIGN LOAD RATING		HL-93 (INVENTORY)	N/A	1	1.10	--	1.75	0.967	1.10	A		14.93 FT	1.0015	1.21	B		3.63 FT	0.80	0.857	1.35	B		31.42 FT	
		HL-93 (OPERATING)	N/A		1.42	--	1.35	0.967	1.42	A		14.93 FT	1.0015	1.57	B		3.63 FT	N/A	--	--	--		31.42 FT	
		HS-20 (INVENTORY)	36.000	2	1.36	48.96	1.75	0.967	1.36	A		14.93 FT	1.0015	1.51	B		3.63 FT	0.80	0.857	1.71	B		31.42 FT	
		HS-20 (OPERATING)	36.000		1.77	63.72	1.35	0.967	1.77	A		14.93 FT	1.0015	1.95	B		3.63 FT	N/A	--	--	--		31.42 FT	
LEGAL LOAD RATING	SINGLE VEHICLE (SV)	SNSH	13.500		2.24	30.24	1.40	0.967	2.24	A		14.93 FT	1.0015	3.21	A		33.70 FT	0.80	0.9667	2.39	A		14.93 FT	
		SNGARBS2	20.000		2.57	51.35	1.40	0.967	2.57	A		14.93 FT	1.0015	3.17	B		3.63 FT	0.80	0.857	2.75	B		31.42 FT	
		SNAGRIS2	22.000		2.54	55.95	1.40	0.967	2.54	A		14.93 FT	1.0015	2.94	B		3.63 FT	0.80	0.857	2.67	B		31.42 FT	
		SNCOTTS3	27.250		1.61	43.95	1.40	0.967	1.61	A		14.93 FT	1.0015	2.21	B		3.63 FT	0.80	0.9667	1.72	A		14.93 FT	
		SNAGGRS4	34.925		1.44	50.33	1.40	0.967	1.44	A		14.93 FT	1.0015	1.84	B		3.63 FT	0.80	0.857	1.53	B		31.42 FT	
		SNS5A	35.550		1.43	50.87	1.40	0.967	1.43	A		14.93 FT	1.0015	1.86	B		3.63 FT	0.80	0.857	1.50	B		31.42 FT	
		SNS6A	39.950		1.35	54.02	1.40	0.967	1.35	A		14.93 FT	1.0015	1.71	B		3.63 FT	0.80	0.857	1.39	B		31.42 FT	
		SNS7B	42.000		1.29	54.17	1.40	0.967	1.29	A		14.93 FT	1.0015	1.68	B		3.63 FT	0.80	0.857	1.33	B		31.42 FT	
	TRUCK TRACTOR SEMI-TRAILER (TTST)	TNAGRIT3	33.000		1.70	56.24	1.40	0.967	1.70	A		14.93 FT	1.0015	2.03	B		3.63 FT	0.80	0.857	1.72	B		31.42 FT	
		TNT4A	33.075		1.64	54.33	1.40	0.967	1.64	A		14.93 FT	1.0015	1.98	B		3.63 FT	0.80	0.857	1.71	B		31.42 FT	
		TNAGRIT4	43.000		1.42	60.88	1.40	0.967	1.42	A		14.93 FT	1.0015	1.59	B		3.63 FT	0.80	0.857	1.44	B		31.42 FT	
		TNAGT5A	45.000	3	1.15	51.93	1.40	0.967	1.15	A		14.93 FT	1.0015	1.59	B		3.63 FT	0.80	0.9667	1.23	A		14.93 FT	
		TNAGT5B	45.000		1.30	58.60	1.40	0.967	1.30	A		14.93 FT	1.0015	1.51	B		3.63 FT	0.80	0.857	1.32	B		31.42 FT	
		TNT6A	41.600		1.43	59.31	1.40	0.967	1.43	A		14.93 FT	1.0015	1.81	B		3.63 FT	0.80	0.857	1.43	B		31.42 FT	
		TNT7A	42.000		1.45	60.74	1.40	0.967	1.45	A		14.93 FT	1.0015	1.75	B		3.63 FT	0.80	0.857	1.45	B		31.42 FT	
		TNT7B	42.000		1.46	61.51	1.40	0.967	1.46	A		14.93 FT	1.0015	1.65	B		3.63 FT	0.80	0.857	1.48	B		31.42 FT	

LOAD FACTORS:

DESIGN LOAD RATING FACTORS	LIMIT STATE	γ_{DC}	γ_{DW}
	STRENGTH I	1.25	1.50
	SERVICE III	1.00	1.00

NOTES:

MINIMUM RATING FACTORS ARE BASED ON THE STRENGTH I AND SERVICE III LIMIT STATES.

ALLOWABLE STRESSES FOR SERVICE III LIMIT STATE ARE AS REQUIRED FOR DESIGN.

COMMENTS:

1.
2.
3.
4.

(#) CONTROLLING LOAD RATING

1. DESIGN LOAD RATING (HL-93)
2. DESIGN LOAD RATING (HS-20)
3. LEGAL LOAD RATING **

** SEE CHART FOR VEHICLE TYPE

GIRDER LOCATION

I - INTERIOR GIRDER
EL - EXTERIOR LEFT GIRDER
ER - EXTERIOR RIGHT GIRDER

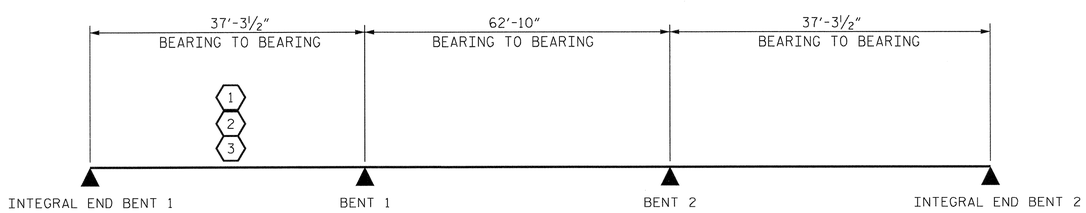

LRFR SUMMARY

NORTH CAROLINA PROFESSIONAL SEAL 20745 ENGINEER HARDY L. WILLIS 11/21/12

PROJECT NO. R-2303C
SAMPSON COUNTY
STATION: 1081+04.50 -L-

STATE OF NORTH CAROLINA
DEPARTMENT OF TRANSPORTATION
RALEIGH

STANDARD
LRFR SUMMARY FOR PRESTRESSED CONCRETE GIRDERS
(NON-INTERSTATE TRAFFIC)
(RIGHT LANE)

REVISIONS						SHEET NO.
NO.	BY:	DATE:	NO.	BY:	DATE:	S-109
1			3			TOTAL SHEETS
2			4			138

ASSEMBLED BY : MAF DATE : 09/2012
CHECKED BY : HLW DATE : 09/2012
DRAWN BY : MAA 1/08
CHECKED BY : GM/DI 2/08
REV. 11/12/08RR MAA/GM

$$$$$$$SYSTIME$$$$$
$$$$$$$$$$$$$$$$$$$$$$$$DGN$$$$$$$$$$$$$$$$$$$$$$
$$$$USERNAME$$$$

STR. #4 STD. NO. LRFR1

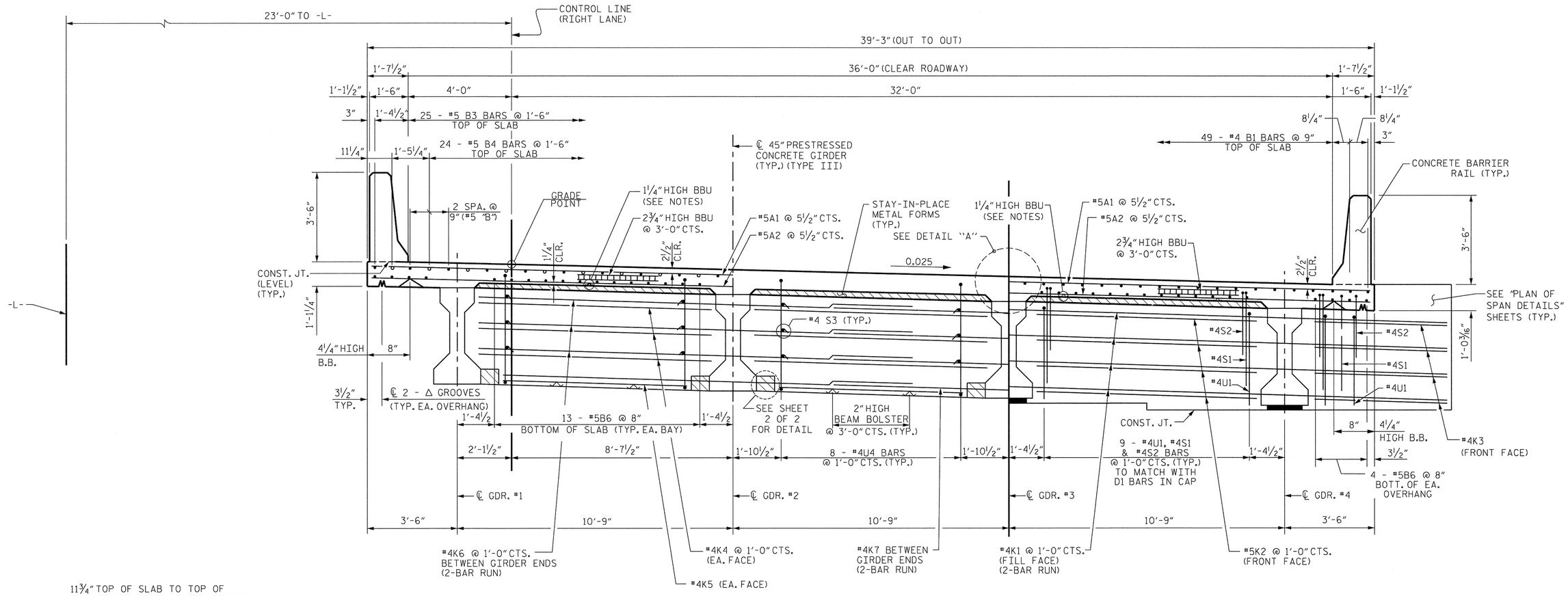

PART TYPICAL SECTION
SHOWING BENT DIAPHRAGMS

TYPICAL SECTION

PART TYPICAL SECTION
SHOWING END BENT DIAPHRAGMS

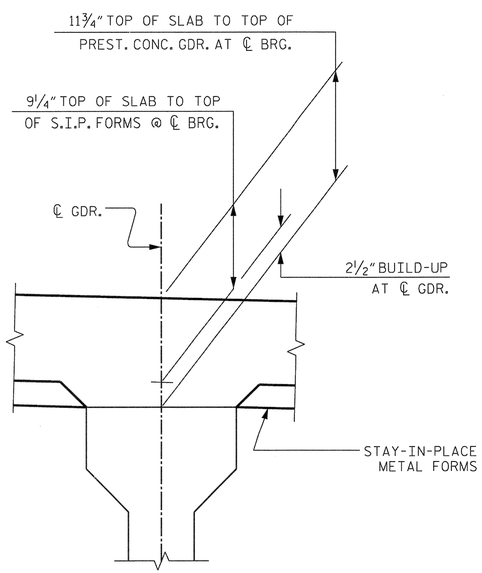

DETAIL "A"

NOTES:

PROVIDE 1 ¼" HIGH BEAM BOLSTERS UPPER @ 4'-0" CTS. ATOP THE METAL STAY-IN-PLACE FORMS TO SUPPORT THE BOTTOM MAT OF "A" BARS. WHEN USING REMOVABLE FORMS, PROVIDE CONTINUOUS HIGH CHAIRS FOR METAL DECK (C.H.C.M.) @ 4'-0" CTS. WITH A HEIGHT TO SUPPORT THE BOTTOM MAT OF "A" BARS A CLEAR DISTANCE OF 2 ½" ABOVE THE TOP OF THE REMOVABLE FORM.

BARRIER RAIL SHALL NOT BE CAST UNTIL ALL SLAB CONCRETE IN THE SPAN HAS BEEN CAST AND HAS REACHED A MINIMUM COMPRESSIVE STRENGTH OF 3000psi.

PREVIOUSLY CAST CONCRETE SHALL HAVE ATTAINED A MINIMUM COMPRESSIVE STRENGTH OF 3000psi BEFORE ADDITIONAL CONCRETE IS CAST IN THE UNIT.

LONGITUDINAL STEEL MAY BE SHIFTED SLIGHTLY, AS NECESSARY, TO AVOID INTERFERENCE WITH STIRRUPS IN PRESTRESSED CONCRETE GIRDERS.

NORTH CAROLINA PROFESSIONAL SEAL 30723 ENGINEER HARDY L. WILLIS
11/21/12

PROJECT NO. R-2303C
SAMPSON COUNTY
STATION: 1081+04.50 -L-

SHEET 1 OF 2

V&M
Vaughn & Melton
Consulting Engineers
Asheville, North Carolina 828-253-2796
Charlotte, North Carolina 704-357-0488
Tri-Cities, Tennessee 423-467-8401
Knoxville, Tennessee 865-546-5800
Middlesboro, Kentucky 606-248-6600
Spartanburg, South Carolina 864-574-4775
Copyright © 2006 Vaughn & Melton, Inc. All Rights Reserved

STATE OF NORTH CAROLINA
DEPARTMENT OF TRANSPORTATION
RALEIGH

TYPICAL SECTION

(RIGHT LANE)

REVISIONS						
NO.	BY:	DATE:	NO.	BY:	DATE:	
1			3			
2			4			

SHEET NO. S-110
TOTAL SHEETS 138

DWN. BY: MAF DATE: SEPT. 2012
CHKD. BY: HLW DATE: SEPT. 2012

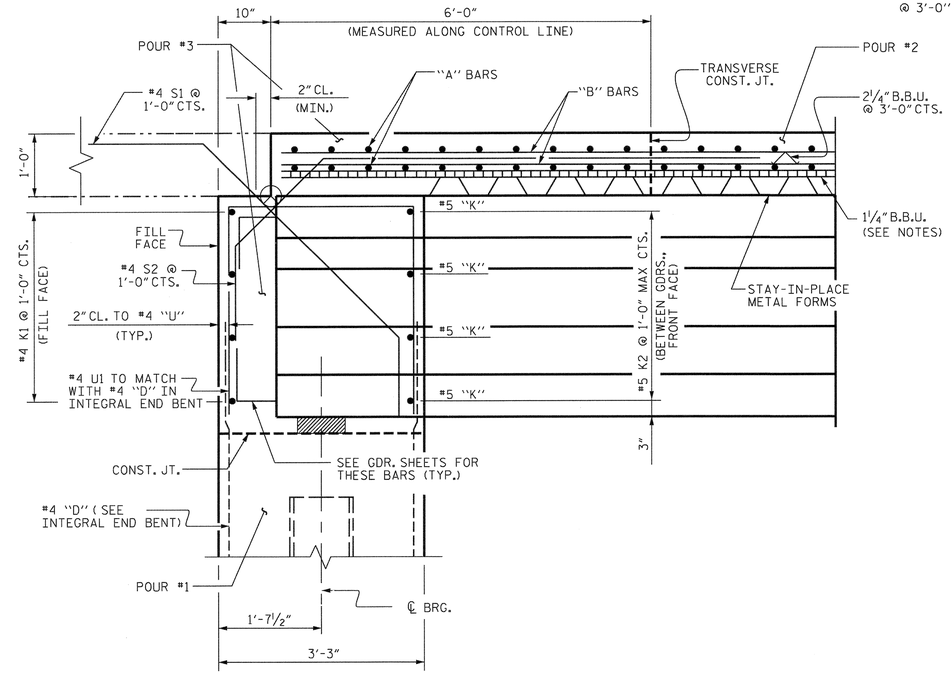

END OF GIRDER DETAIL
AT INTEGRAL END BENTS

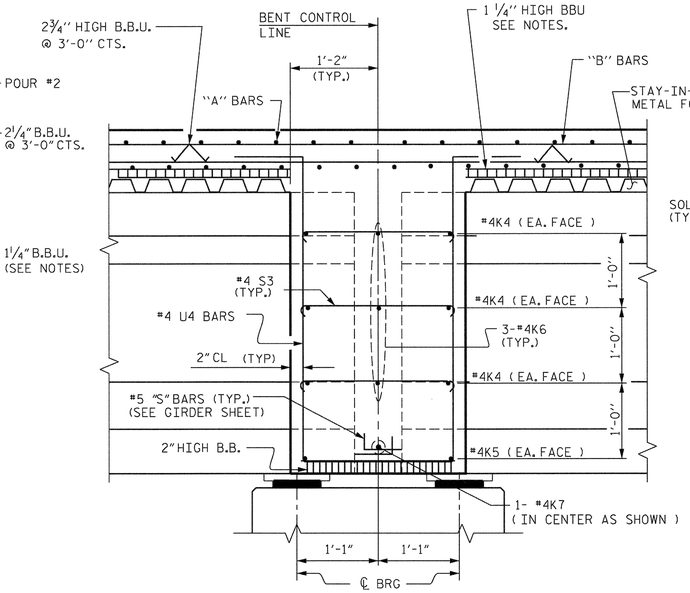

SECTION THROUGH BENT DIAPHRAGM

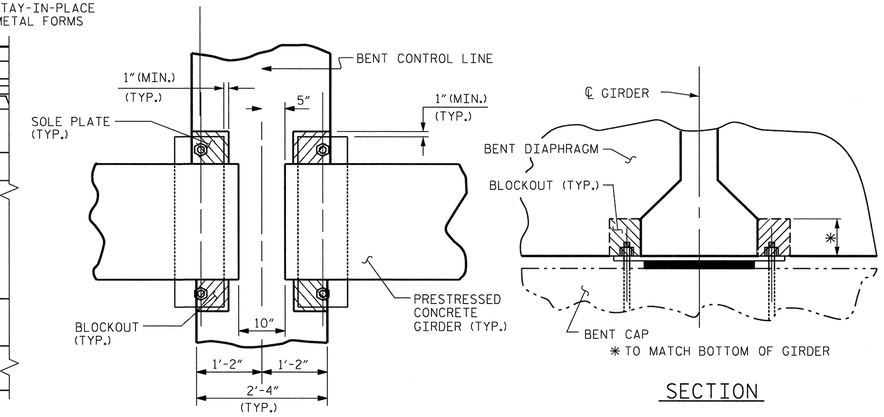

BENT DIAPHRAGM BLOCKOUT DETAIL

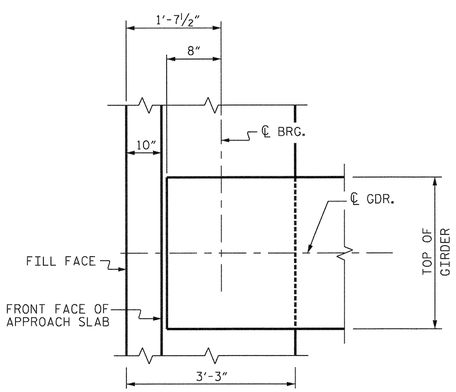

PLAN OF GIRDER
INTEGRAL END BENT NO. 1

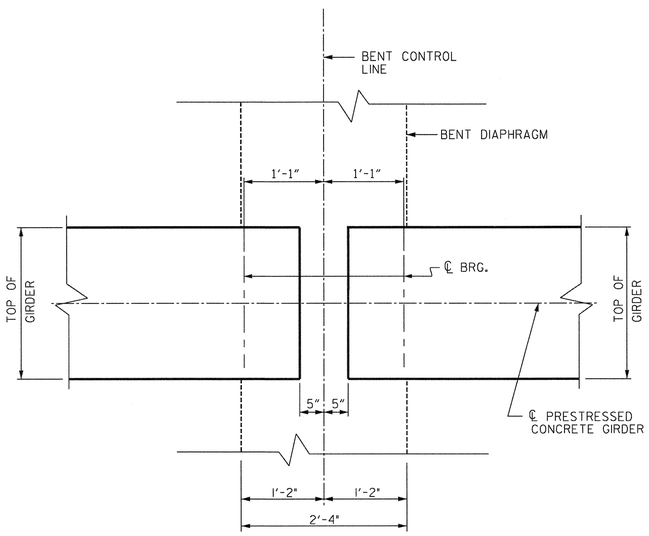

PLAN OF DIAPHRAGMS AT BENTS 1 & 2

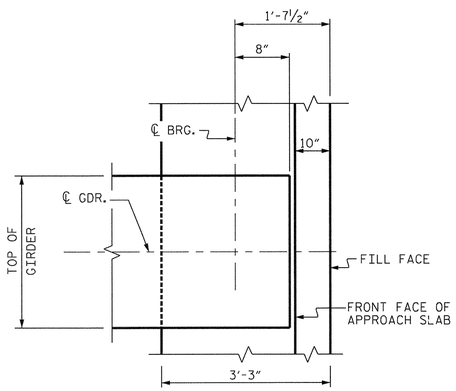

PLAN OF GIRDER
INTEGRAL END BENT NO. 2

NORTH CAROLINA PROFESSIONAL SEAL ENGINEER HARDY L. WILLIS 11/21/12

PROJECT NO. R-2303C
SAMPSON COUNTY
STATION: 1081+04.50 -L-
SHEET 2 OF 2

STATE OF NORTH CAROLINA
DEPARTMENT OF TRANSPORTATION
RALEIGH

TYPICAL SECTION DETAILS

(RIGHT LANE)

Vaughn & Melton Consulting Engineers
Asheville, North Carolina 828-253-2796
Charlotte, North Carolina 704-357-0488
Tri-Cities, Tennessee 423-467-8401
Knoxville, Tennessee 865-546-5800
Middlesboro, Kentucky 606-248-6600
Spartanburg, South Carolina 864-574-4775
Copyright © 2006 Vaughn & Melton, Inc. All Rights Reserved

DWN. BY: MAF DATE: SEPT. 2012
CHKD. BY: HLW DATE: SEPT. 2012

REVISIONS						
NO.	BY:	DATE:	NO.	BY:	DATE:	
1			3			
2			4			

SHEET NO. S-111
TOTAL SHEETS 138

STR. #4

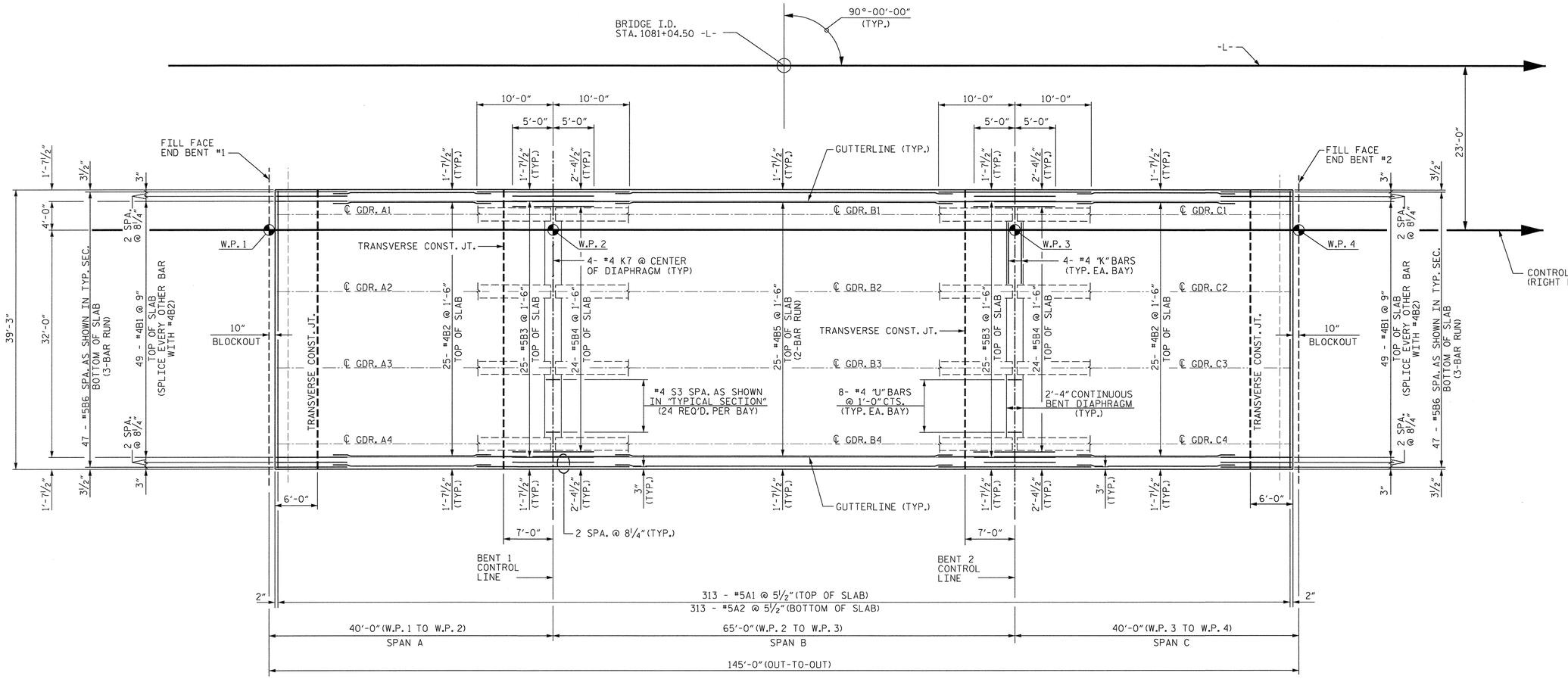

SPAN A SPAN B SPAN C

PLAN OF SPANS

NOTES:

FOR LOCATION OF INTERMEDIATE DIAPHRAGMS, SEE "GIRDER LAYOUT" SHEETS.

FOR REINFORCING STEEL IN BARRIER RAIL, SEE "CONCRETE BARRIER RAIL" SHEET.

MINIMUM SPLICE LENGTHS FOR ALL BARS SHALL BE IN ACCORDANCE WITH THE SPLICE LENGTH TABLE ON THE SUPERSTRUCTURE BILL OF MATERIAL SHEET. WHERE BARS OF DIFFERENT SIZES ARE LAPPED, USE THE MINIMUM SPLICE LENGTH OF SMALLER BAR.

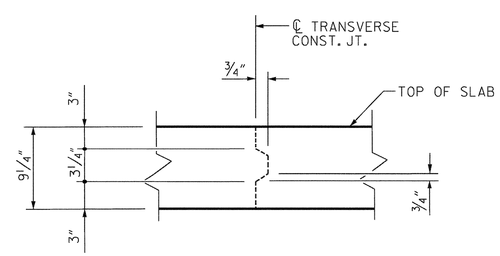

TRANSVERSE CONSTRUCTION JOINT DETAIL

REINFORCING STEEL IN SLAB NOT SHOWN. LONGITUDINAL REINFORCING STEEL SHALL BE CONTINUOUS THRU JOINT.

NORTH CAROLINA PROFESSIONAL SEAL 20072 ENGINEER HARDY L. WILLIS 11/21/12

PROJECT NO. R-2303C
SAMPSON COUNTY
STATION: 1081+04.50 -L-

SHEET 1 OF 4

V&M Vaughn & Melton Consulting Engineers
Asheville, North Carolina 828-253-2796
Charlotte, North Carolina 704-357-0488
Tri-Cities, Tennessee 423-467-9401
Knoxville, Tennessee 865-546-5800
Middlesboro, Kentucky 606-248-6600
Spartanburg, South Carolina 864-574-4775

Copyright © 2006 Vaughn & Melton, Inc. All Rights Reserved

STATE OF NORTH CAROLINA
DEPARTMENT OF TRANSPORTATION
RALEIGH

SUPERSTRUCTURE PLAN OF SPANS

(RIGHT LANE)

REVISIONS						SHEET NO.
NO.	BY:	DATE:	NO.	BY:	DATE:	S-112
1			3			TOTAL SHEETS
2			4			138

DWN. BY: MAF DATE: SEPT. 2012
CHKD. BY: HLW DATE: SEPT. 2012

STR. #4

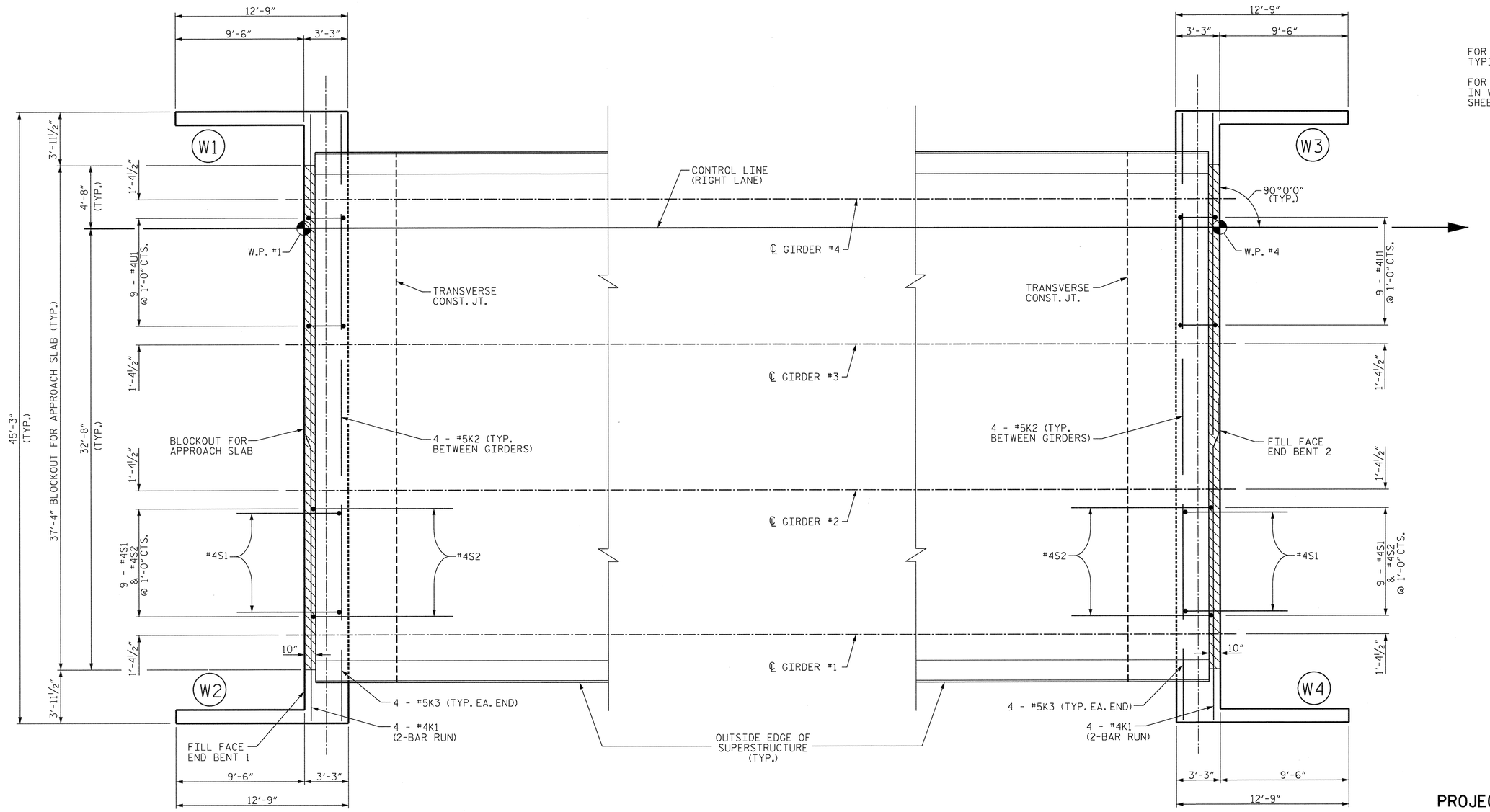

END BENT 1

END BENT 2

NOTES

FOR SECTION THROUGH ABUTMENT, SEE TYPICAL SECTION, SHEET S-5.

FOR DETAILS AND REINFORCING STEEL IN WINGS, SEE "PLAN OF SPAN DETAILS", SHEETS S-10 AND S-11.

PLAN OF ABUTMENT WALLS

ALL DIMENSIONS AND REINFORCING STEEL ARE TYPICAL FOR BOTH BENTS.

PROJECT NO. R-2303C

SAMPSON COUNTY

STATION: 1081+04.50 -L-

SHEET 2 OF 4

STATE OF NORTH CAROLINA
DEPARTMENT OF TRANSPORTATION
RALEIGH

PLAN OF SPAN DETAILS

(RIGHT LANE)

NORTH CAROLINA PROFESSIONAL SEAL 20777 ENGINEER HARDY L. WILLIS 11/21/12

V&M Vaughn & Melton Consulting Engineers
Asheville, North Carolina 828-253-2796
Charlotte, North Carolina 704-357-0488
Tri-Cities, Tennessee 423-467-8401
Knoxville, Tennessee 865-546-5800
Middlesboro, Kentucky 606-248-6600
Spartanburg, South Carolina 864-574-4775

Copyright © 2006 Vaughn & Melton, Inc. All Rights Reserved

DWN. BY: MAF DATE: SEPT. 2012
CHKD. BY: HLW DATE: SEPT. 2012

REVISIONS						SHEET NO.
NO.	BY:	DATE:	NO.	BY:	DATE:	S-113
1			3			TOTAL SHEETS
2			4			138

STR. #4

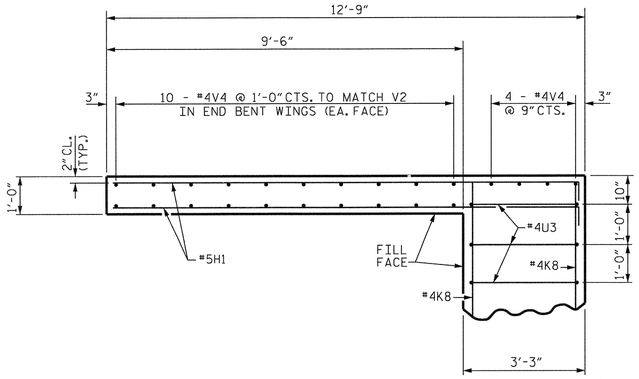

PLAN OF WING (W1)

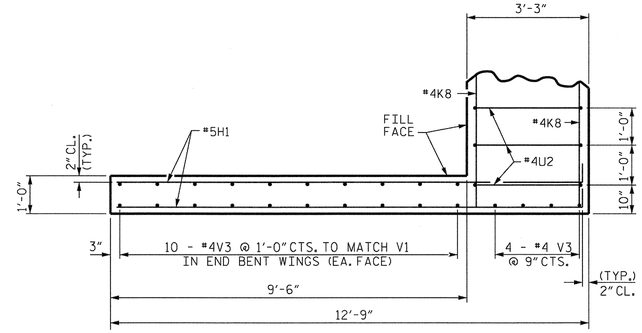

PLAN OF WING (W2)

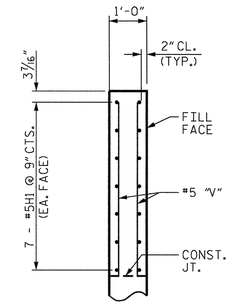

A-A

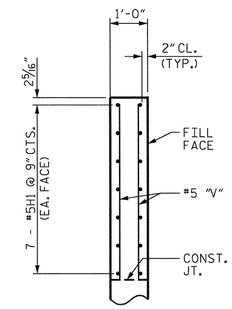

B-B

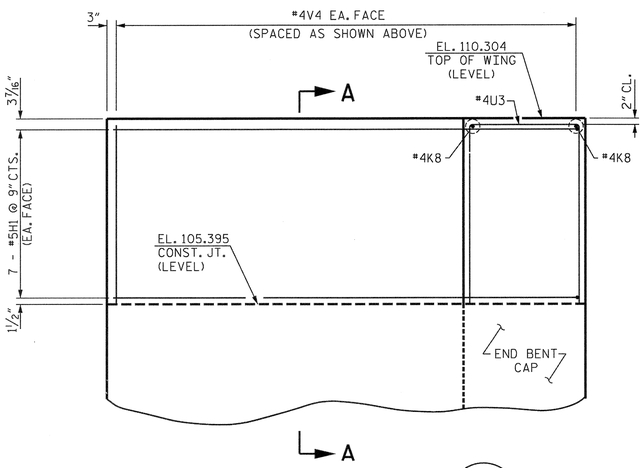

ELEVATION OF WING (W1)

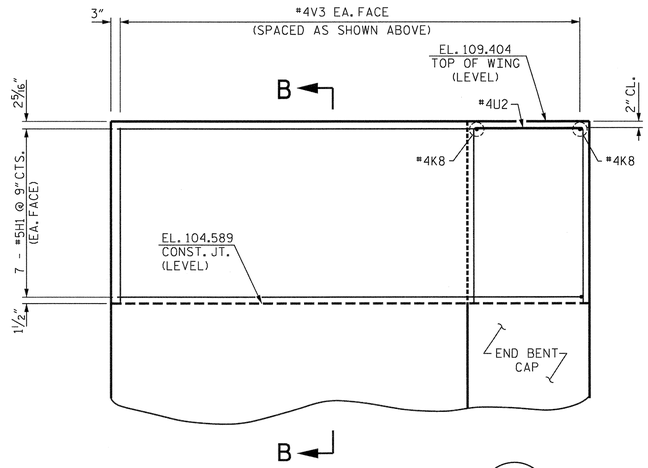

ELEVATION OF WING (W2)

NORTH CAROLINA PROFESSIONAL SEAL 20774 ENGINEER HARDY L. WILLIS 9/21/12

PROJECT NO. R-2303C

SAMPSON COUNTY

STATION: 1081+04.50 -L-

SHEET 3 OF 4

STATE OF NORTH CAROLINA
DEPARTMENT OF TRANSPORTATION
RALEIGH

PLAN OF SPAN DETAILS

(RIGHT LANE)

V&M Vaughn & Melton Consulting Engineers
Asheville, North Carolina 828-253-2796
Charlotte, North Carolina 704-357-0488
Tri-Cities, Tennessee 423-467-8401
Knoxville, Tennessee 865-546-5800
Middlesboro, Kentucky 606-248-6600
Spartanburg, South Carolina 864-574-4775

Copyright © 2006 Vaughn & Melton, Inc. All Rights Reserved

DWN. BY: MAF DATE: SEPT. 2012
CHKD. BY: HLW DATE: SEPT. 2012

REVISIONS							SHEET NO.
NO.	BY:	DATE:	NO.	BY:	DATE:		S-114
1			3				TOTAL SHEETS
2			4				138

STR. #4

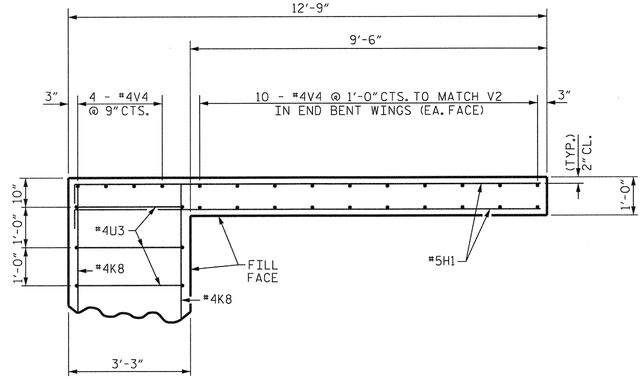

PLAN OF WING (W3)

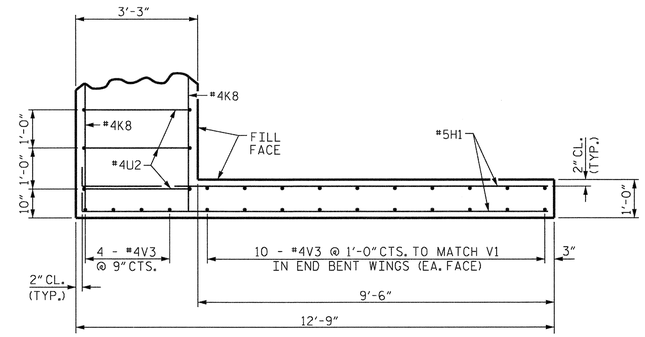

PLAN OF WING (W4)

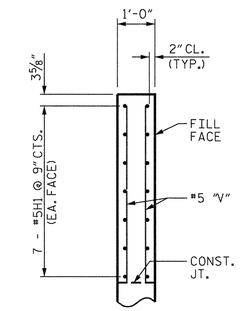

A-A

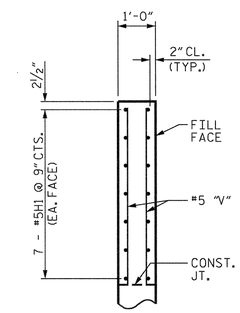

B-B

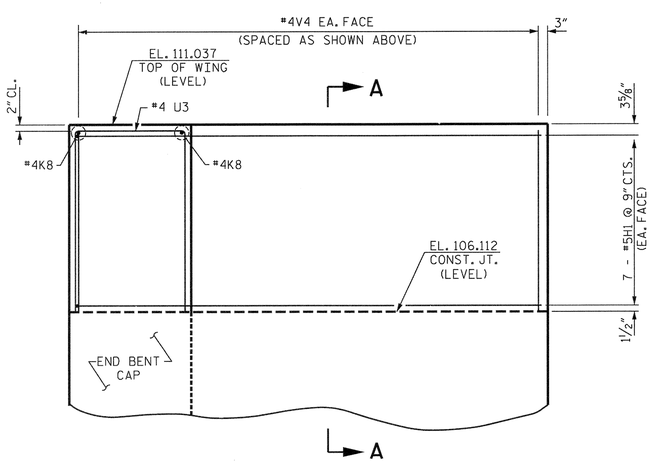

ELEVATION OF WING (W3)

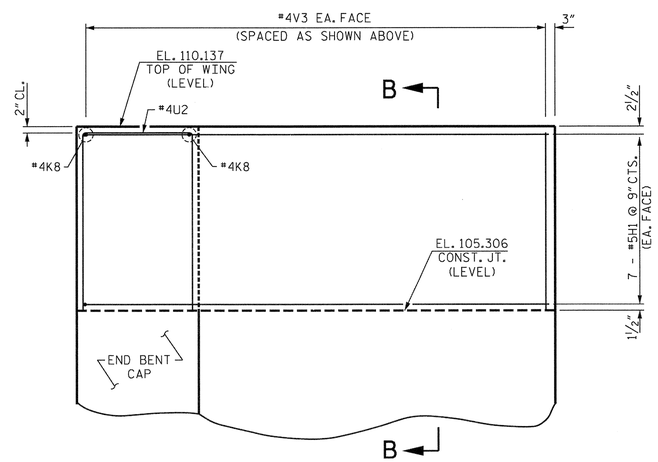

ELEVATION OF WING (W4)

PROJECT NO. R-2303C
SAMPSON COUNTY
STATION: 1081+04.50 -L-

SHEET 4 OF 4

V&M
Vaughn & Melton
Consulting Engineers
Asheville, North Carolina
828-253-2796
Charlotte, North Carolina 704-357-0488
Tri-Cities, Tennessee 423-467-8401
Knoxville, Tennessee 865-546-5800
Middlesboro, Kentucky 606-248-6600
Spartanburg, South Carolina 864-574-4775

Copyright © 2006 Vaughn & Melton, Inc.
All Rights Reserved

DWN. BY: MAF DATE: SEPT. 2012
CHKD. BY: HLW DATE: SEPT. 2012

STATE OF NORTH CAROLINA
DEPARTMENT OF TRANSPORTATION
RALEIGH

PLAN OF SPAN DETAILS

(RIGHT LANE)

REVISIONS						SHEET NO.
NO.	BY:	DATE:	NO.	BY:	DATE:	S-115
1			3			TOTAL SHEETS
2			4			138

STR. #4

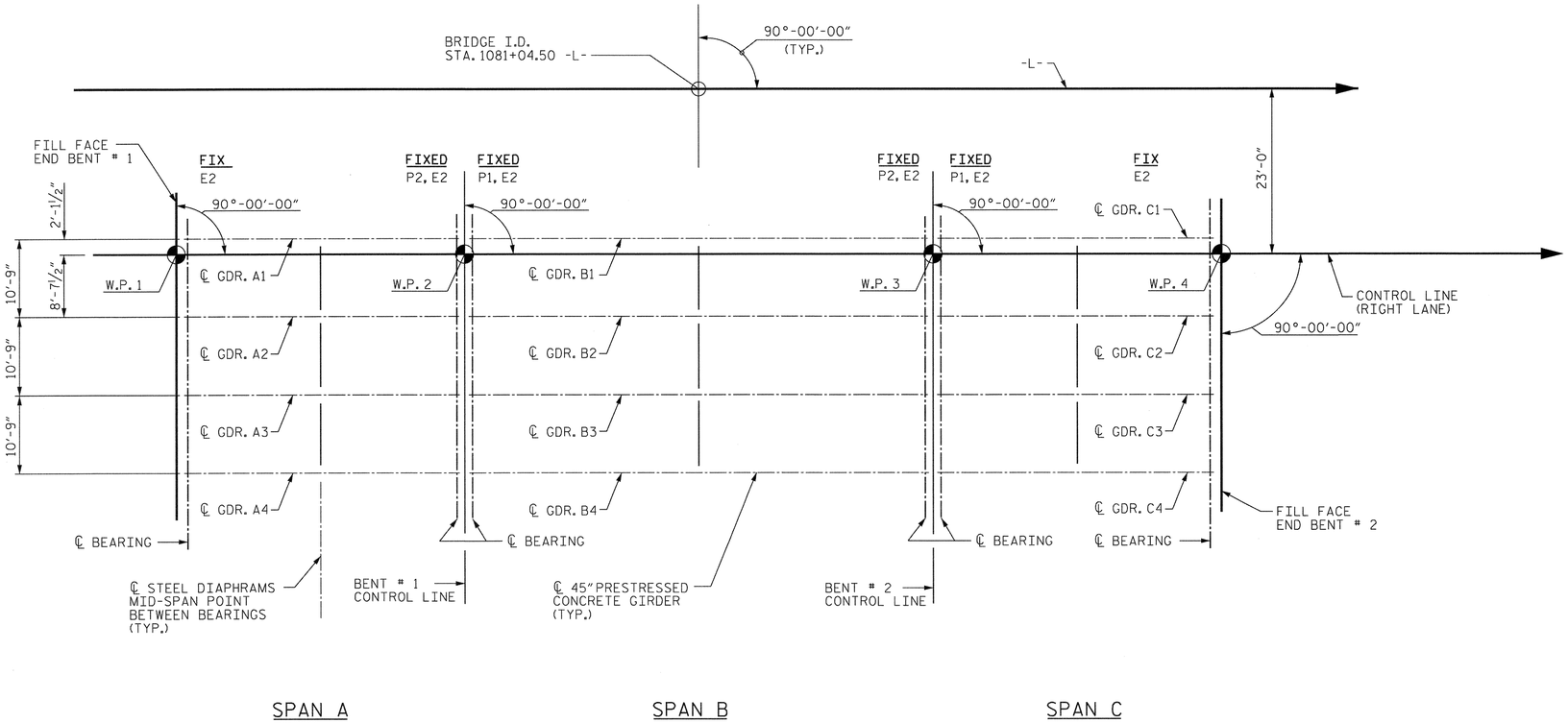

FRAMING PLAN

NORTH CAROLINA PROFESSIONAL SEAL 2077 ENGINEER HARDY L. WILLIS 11/21/12

PROJECT NO. R-2303C
SAMPSON COUNTY
STATION: 1081+04.50 -L-

V&M
Vaughn & Melton
Consulting Engineers
Asheville, North Carolina 828-253-2796
Charlotte, North Carolina 704-357-0488
Tri-Cities, Tennessee 423-467-8401
Knoxville, Tennessee 865-546-5800
Middlesboro, Kentucky 606-248-6600
Spartanburg, South Carolina 864-574-4775
Copyright © 2006 Vaughn & Melton, Inc. All Rights Reserved

STATE OF NORTH CAROLINA
DEPARTMENT OF TRANSPORTATION
RALEIGH

FRAMING PLAN

(RIGHT LANE)

REVISIONS						SHEET NO.
NO.	BY:	DATE:	NO.	BY:	DATE:	S-116
1			3			TOTAL SHEETS
2			4			138

DWN. BY: MAF DATE: SEPT. 2012
CHKD. BY: HLW DATE: SEPT. 2012

STR. #4

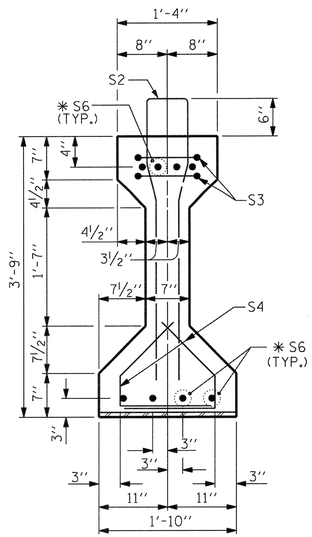

SECTION A-A

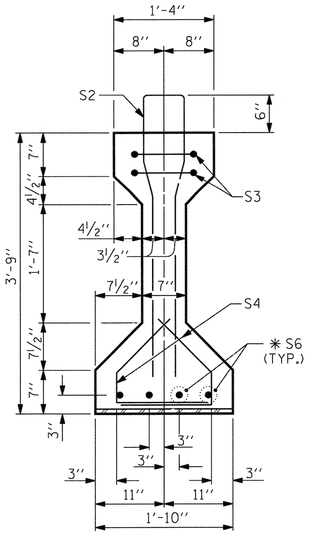

SECTION B-B

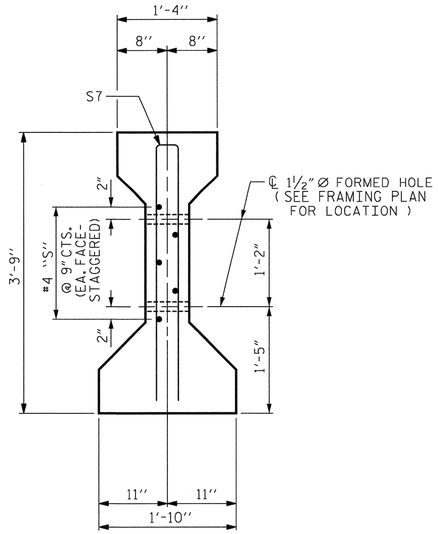

SECTION C-C

(S1 BARS NOT SHOWN)

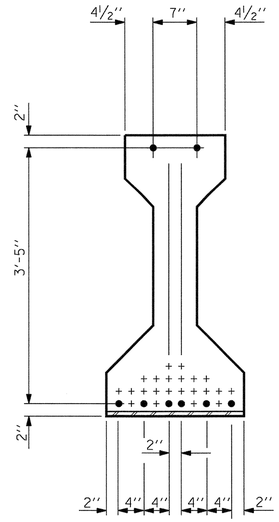

AT END OF GIRDER

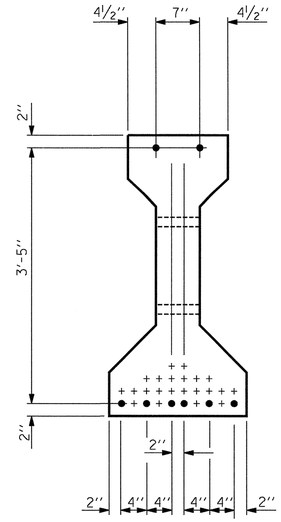

AT ℄ OF GIRDER

0.6" Ø LOW RELAXATION STRAND LAYOUT

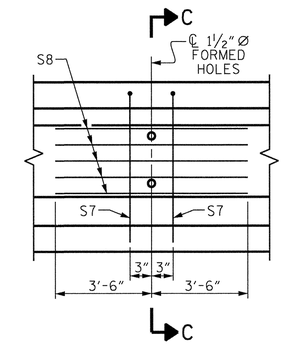

PARTIAL ELEVATION

SHOWING INTERMEDIATE DIAPHRAGM REINFORCING STEEL.

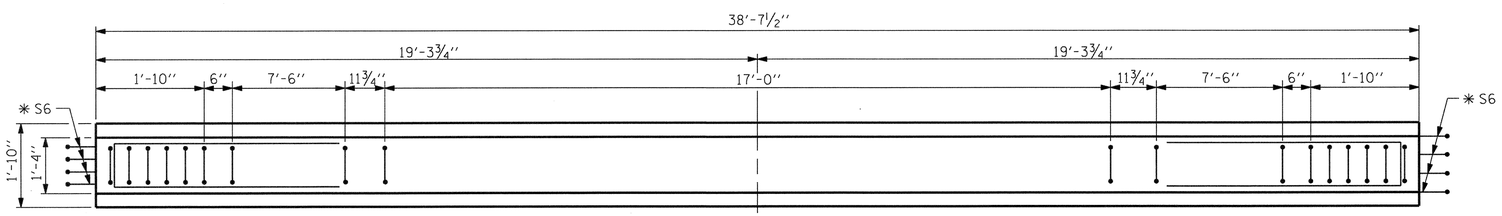

PLAN OF GIRDER - SPAN A

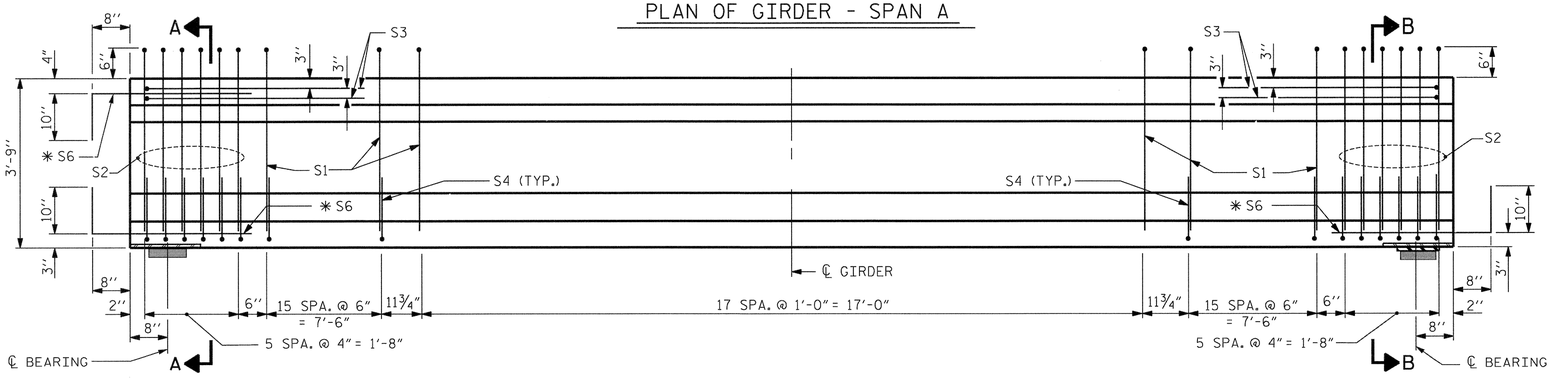

ELEVATION OF GIRDER - SPAN A

(SEE PARTIAL ELEVATION FOR ADDITIONAL "S" BARS)

0.6" Ø L. R. GRADE 270 STRANDS

AREA (SQUARE INCHES)	ULTIMATE STRENGTH (LBS. PER STRAND)	APPLIED PRESTRESS (LBS. PER STRAND)
0.217	58,600	43,950

REINFORCING STEEL FOR ONE GIRDER

BAR	NUMBER	SIZE	TYPE	LENGTH	WEIGHT
S1	50	#4	1	8'-6"	284
S2	12	#6	1	8'-6"	153
S3	4	#4	3	8'-8"	23
S4	88	#4	2	2'-9"	162
✱ S6	12	#5	STR	3'-8"	46
S7	2	#5	3	7'-2"	15
S8	5	#4	STR	7'-0"	5

✱ NOTE: S6 BARS SHALL BE BENT BEFORE SHIPMENT. HEAT BENDING SHALL NOT BE ALLOWED.

BAR TYPES

ALL BAR DIMENSIONS ARE OUT-TO-OUT

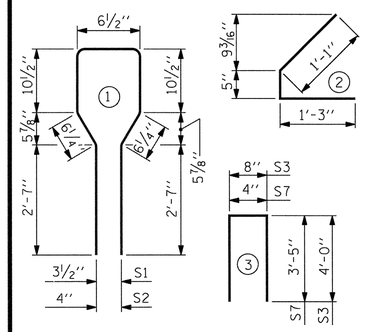

QUANTITIES FOR ONE GIRDER

	REINFORCING STEEL LB.	6000 PSI CONCRETE C.Y.	0.6" Ø L. R. STRANDS No.
EXTERIOR GIRDER	688	5.6	8
INTERIOR GIRDER	688	5.6	8

GIRDERS REQUIRED

NUMBER	LENGTH	TOTAL LENGTH
4	38'-7½"	154'-6"

PROJECT NO. R-2303C

SAMPSON COUNTY

STATION: 1081+04.50 -L-

SHEET 1 OF 5

STATE OF NORTH CAROLINA
DEPARTMENT OF TRANSPORTATION
RALEIGH

STANDARD
AASHTO TYPE III
PRESTRESSED CONCRETE GIRDER
CONTINUOUS FOR LIVE LOAD
SPAN A
(RIGHT LANE)

NORTH CAROLINA PROFESSIONAL SEAL ENGINEER HARDY L. WILLIS 11/21/12

REVISIONS						SHEET NO.
NO.	BY:	DATE:	NO.	BY:	DATE:	S-117
1			3			TOTAL SHEETS
2			4			138

ASSEMBLED BY : MAF	DATE : 9/2012
CHECKED BY : HLW	DATE : 9/2012
DRAWN BY : ELR 8/91	REV. 10/17/00R RWW/LES
CHECKED BY : GRP 8/91	REV. 5/1/06R TLA/GM
	REV. 10/1/11 RWW/LES

$$$$$$$SYSTIME$$$$$
$$$$$$$$$$$$$$$$$$$$$$$$$$DGN$$$$$$$$$$$$$$$$$$$$$$$
$$$$USERNAME$$$$

45" PCG WITHOUT NOTCH

STR. #4

STD. NO. PCG5 (Sht. 2)

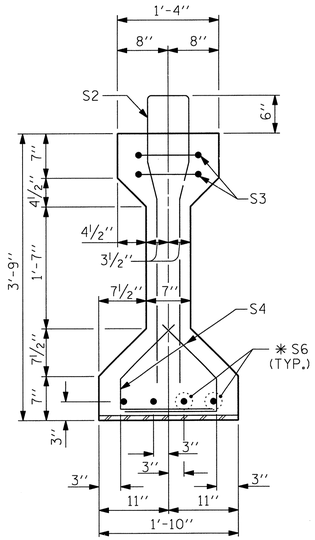

SECTION A-A

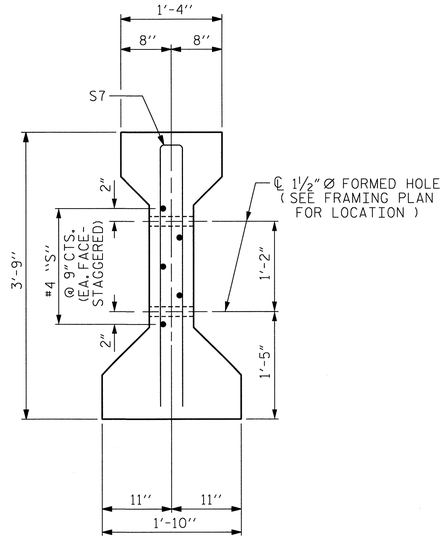

SECTION C-C

(S1 BARS NOT SHOWN)

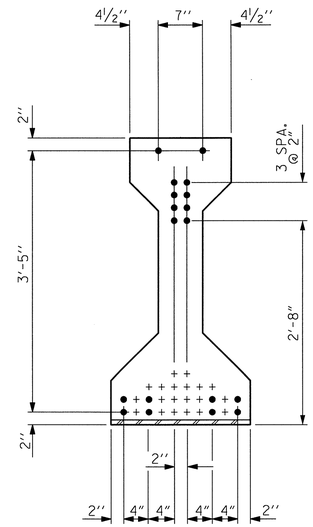

AT END OF GIRDER

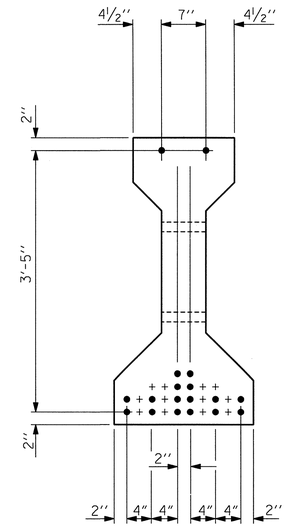

AT ℄ OF GIRDER

0.6'' Ø LOW RELAXATION STRAND LAYOUT

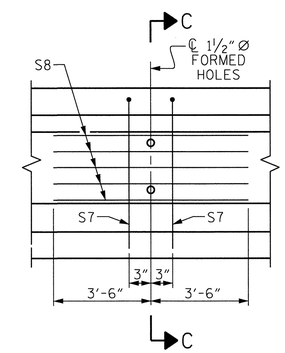

PARTIAL ELEVATION

SHOWING INTERMEDIATE DIAPHRAGM REINFORCING STEEL.

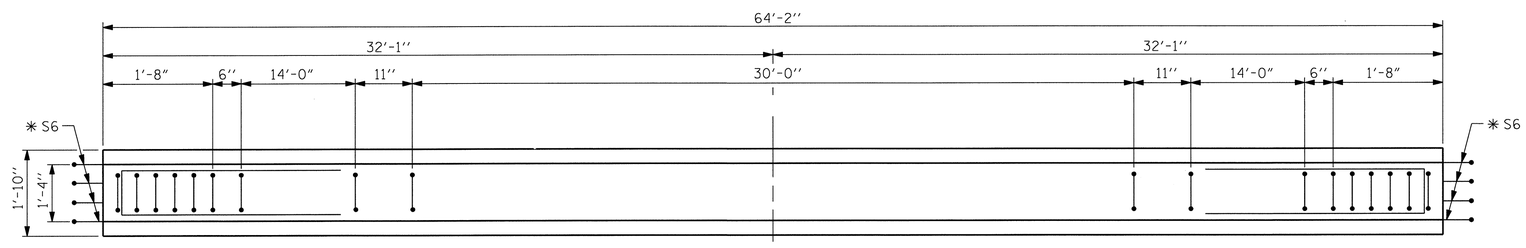

PLAN OF GIRDER - SPAN B

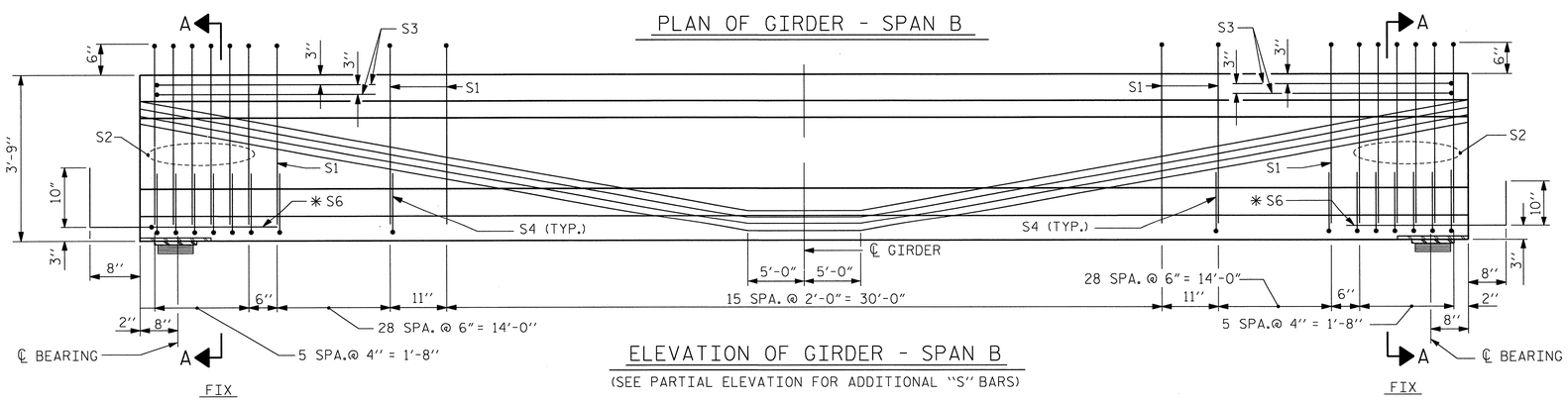

ELEVATION OF GIRDER - SPAN B

(SEE PARTIAL ELEVATION FOR ADDITIONAL "S" BARS)

0.6'' Ø L. R. GRADE 270 STRANDS

AREA (SQUARE INCHES)	ULTIMATE STRENGTH (LBS. PER STRAND)	APPLIED PRESTRESS (LBS. PER STRAND)
0.217	58,600	43,950

REINFORCING STEEL FOR ONE GIRDER

BAR	NUMBER	SIZE	TYPE	LENGTH	WEIGHT
S1	74	#4	1	8'-6''	420
S2	12	#6	1	8'-6''	153
S3	4	#4	3	8'-8''	23
S4	140	#4	2	2'-9''	257
✱ S6	8	#5	STR	3'-8''	31
S7	2	#5	3	7'-2''	15
S8	5	#4	STR	7'-0''	5

✱ NOTE: S6 BARS SHALL BE BENT BEFORE SHIPMENT. HEAT BENDING SHALL NOT BE ALLOWED.

BAR TYPES

ALL BAR DIMENSIONS ARE OUT-TO-OUT

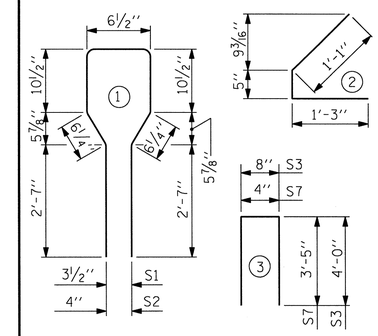

QUANTITIES FOR ONE GIRDER

	REINFORCING STEEL LB.	8000 PSI CONCRETE C.Y.	0.6'' Ø L. R. STRANDS No.
EXTERIOR GIRDER	904	9.2	18
INTERIOR GIRDER	904	9.2	18

GIRDERS REQUIRED

NUMBER	LENGTH	TOTAL LENGTH
4	64'-2"	256'-8"

PROJECT NO. R-2303C

SAMPSON COUNTY

STATION: 1081+04.50 -L-

SHEET 2 OF 5

STATE OF NORTH CAROLINA
DEPARTMENT OF TRANSPORTATION
RALEIGH

STANDARD
AASHTO TYPE III
PRESTRESSED CONCRETE GIRDER
CONTINUOUS FOR LIVE LOAD
SPAN B
(RIGHT LANE)

NORTH CAROLINA PROFESSIONAL SEAL 20179 ENGINEER HARDY L. WILLIS 11/21/12

REVISIONS						SHEET NO.
NO.	BY:	DATE:	NO.	BY:	DATE:	S-118
1			3			TOTAL SHEETS
2			4			138

ASSEMBLED BY : MAF	DATE : 9/2012
CHECKED BY : HLW	DATE : 9/2012
DRAWN BY : ELR 8/91	REV. 10/17/00R RWW/LES
CHECKED BY : GRP 8/91	REV. 5/1/06R TLA/GM
	REV. 10/1/11 MAA/GM

$$$$$$SYSTIME$$$$$
$$$$$$$$$$$$$$$$$$$$$$$$DGN$$$$$$$$$$$$$$$$$$$$$$$$
$$$$USERNAME$$$$

45" PCG WITHOUT NOTCH

STR. #4

STD. NO. PCG5 (Sht. 1)

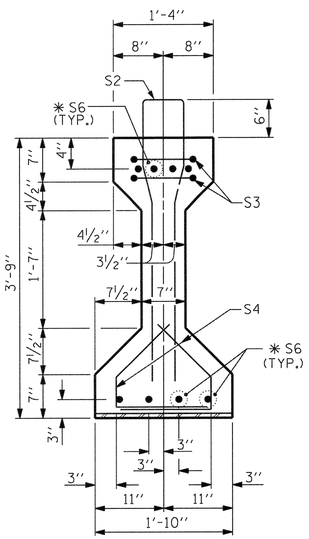

SECTION A-A

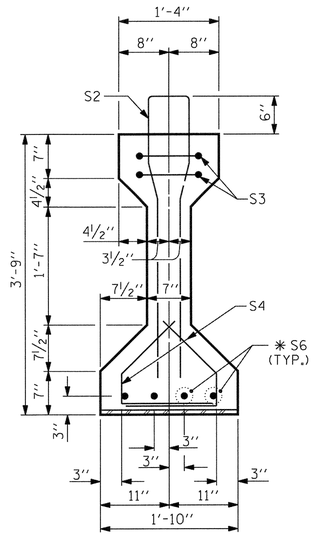

SECTION B-B

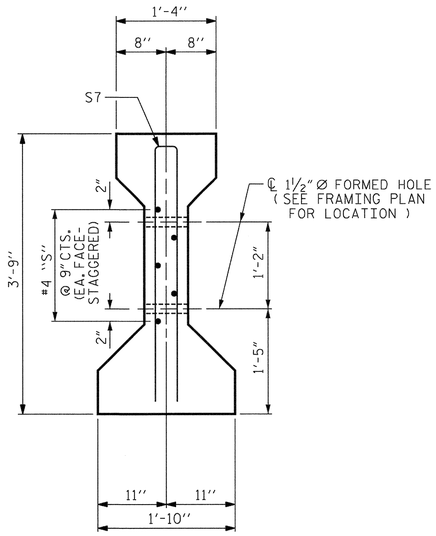

SECTION C-C

(S1 BARS NOT SHOWN)

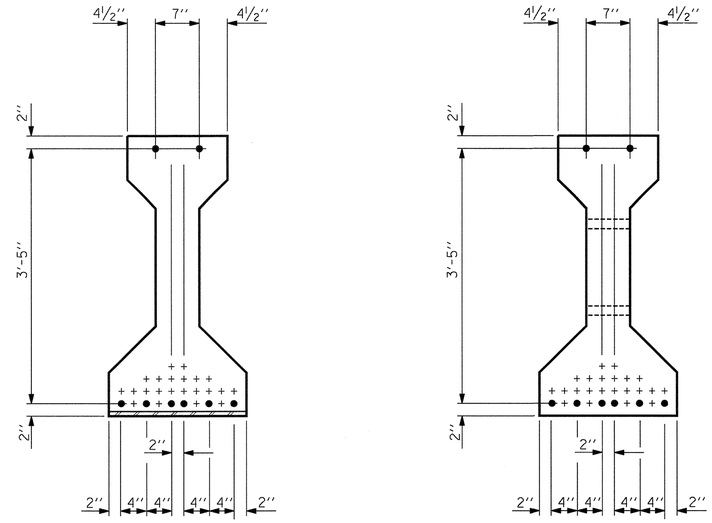

AT END OF GIRDER

AT ℄ OF GIRDER

0.6" Ø LOW RELAXATION STRAND LAYOUT

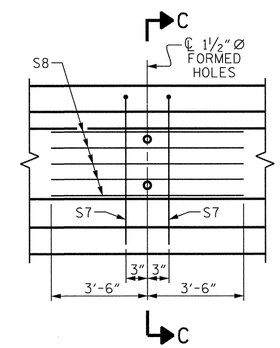

PARTIAL ELEVATION

SHOWING INTERMEDIATE DIAPHRAGM REINFORCING STEEL.

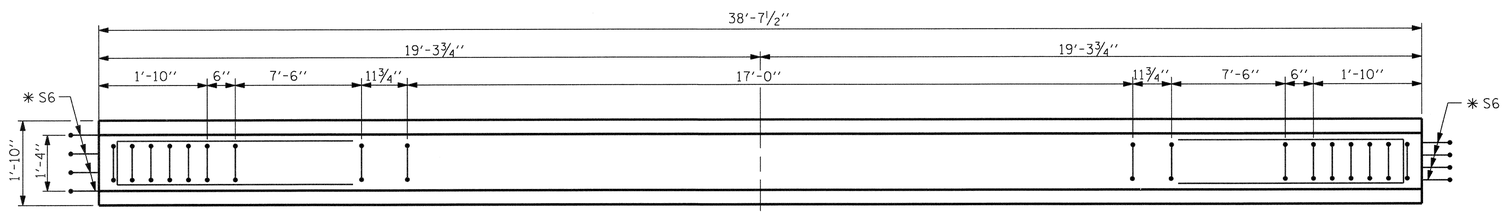

PLAN OF GIRDER - SPAN C

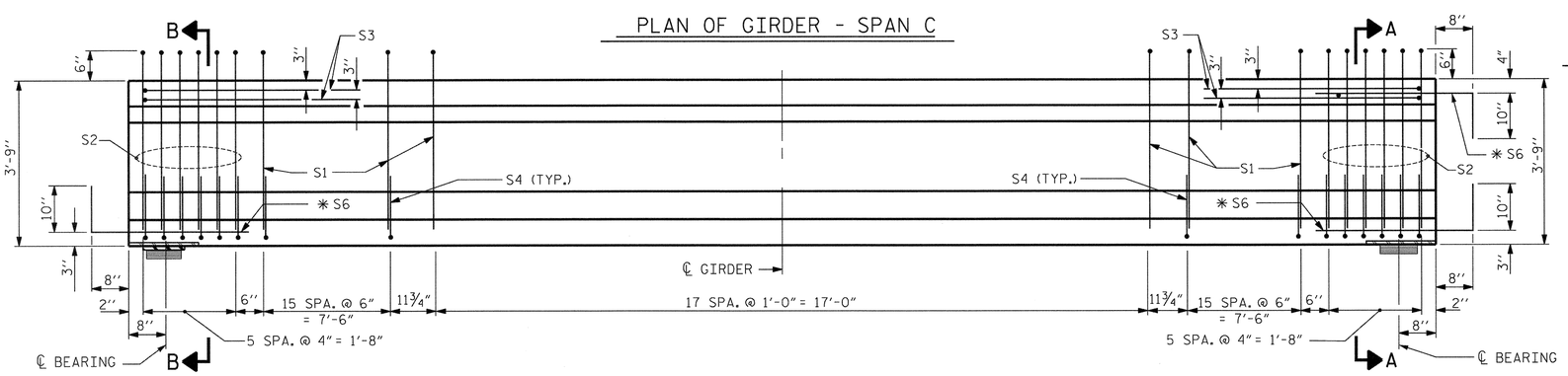

FIX

ELEVATION OF GIRDER - SPAN C

(SEE PARTIAL ELEVATION FOR ADDITIONAL "S" BARS)

INTEGRAL END BENT

0.6" Ø L. R. GRADE 270 STRANDS

AREA (SQUARE INCHES)	ULTIMATE STRENGTH (LBS. PER STRAND)	APPLIED PRESTRESS (LBS. PER STRAND)
0.217	58,600	43,950

REINFORCING STEEL FOR ONE GIRDER

BAR	NUMBER	SIZE	TYPE	LENGTH	WEIGHT
S1	50	#4	1	8'-6"	284
S2	12	#6	1	8'-6"	153
S3	4	#4	3	8'-8"	23
S4	88	#4	2	2'-9"	162
✱ S6	12	#5	STR	3'-8"	46
S7	2	#5	3	7'-2"	15
S8	5	#4	STR	7'-0"	5

✱ NOTE: S6 BARS SHALL BE BENT BEFORE SHIPMENT. HEAT BENDING SHALL NOT BE ALLOWED.

BAR TYPES

ALL BAR DIMENSIONS ARE OUT-TO-OUT

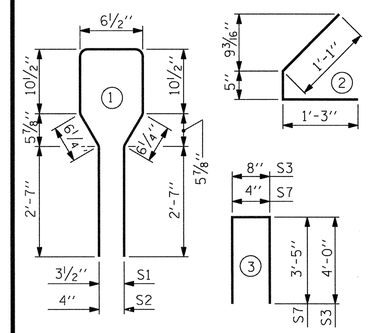

QUANTITIES FOR ONE GIRDER

	REINFORCING STEEL LB.	6000 PSI CONCRETE C.Y.	0.6" Ø L.R. STRANDS No.
EXTERIOR GIRDER	688	5.6	8
INTERIOR GIRDER	688	5.6	8

GIRDERS REQUIRED

NUMBER	LENGTH	TOTAL LENGTH
4	38'-7½"	154'-6"

PROJECT NO. R-2303C

SAMPSON COUNTY

STATION: 1081+04.50 -L-

SHEET 3 OF 5

STATE OF NORTH CAROLINA
DEPARTMENT OF TRANSPORTATION
RALEIGH

STANDARD
AASHTO TYPE III
PRESTRESSED CONCRETE GIRDER
CONTINUOUS FOR LIVE LOAD
SPAN C
(RIGHT LANE)

NORTH CAROLINA PROFESSIONAL SEAL 10771 ENGINEER HARDY L. WILLIS 11/21/12

REVISIONS						SHEET NO.
NO.	BY:	DATE:	NO.	BY:	DATE:	S-119
1			3			TOTAL SHEETS
2			4			138

ASSEMBLED BY : MAF	DATE : 9/2012
CHECKED BY : HLW	DATE : 9/2012
DRAWN BY : ELR 8/91	REV. 10/17/00R RWW/LES
CHECKED BY : GRP 8/91	REV. 5/1/06R TLA/GM
	REV. 10/1/11 MAA/GM

$$$$$$$SYSTIME$$$$$
$$$$$$$$$$$$$$$$$$$$$$$$DGN$$$$$$$$$$$$$$$$$$$$$$$$
$$$$USERNAME$$$$

45" PCG WITHOUT NOTCH

STR. #4

STD. NO. PCG5 (Sht. 2)

SPAN A - DEAD LOAD DEFLECTION TABLE FOR GIRDERS

0.60" ∅ LOW RELAXATION	GIRDER A1 OR A4											GIRDER A2 OR A3										
TENTH POINTS	0.0	0.1	0.2	0.3	0.4	0.5	0.6	0.7	0.8	0.9	1.0	0.0	0.1	0.2	0.3	0.4	0.5	0.6	0.7	0.8	0.9	1.0
CAMBER (GIRDER ALONE IN PLACE) (UP)	0.000	0.059	0.103	0.133	0.149	0.150	0.149	0.133	0.103	0.059	0.000	0.000	0.059	0.103	0.133	0.149	0.150	0.149	0.133	0.103	0.059	0.000
DEFLECTION DUE TO SUPERIMPOSED D.L. (DOWN)	0.000	0.026	0.050	0.070	0.086	0.100	0.086	0.070	0.050	0.026	0.000	0.000	0.038	0.068	0.090	0.104	0.110	0.104	0.090	0.068	0.038	0.000
FINAL CAMBER (DECIMAL INCHES) (UP)	0	0.033	0.053	0.063	0.063	0.050	0.063	0.063	0.053	0.033	0.000	0	0.021	0.035	0.043	0.045	0.040	0.045	0.043	0.035	0.021	0.000
FINAL CAMBER (INCHES) (UP)	0"	1/16"	1/16"	1/16"	1/16"	1/16"	1/16"	1/16"	1/16"	1/16"	0"	0"	0"	1/16"	1/16"	1/16"	1/16"	1/16"	1/16"	1/16"	0"	0"

INCLUDES WEIGHT OF SLAB, BUILDUP, STAY-IN-PLACE FORMS, AND FUTURE WEARING SURFACE.

SPAN B - DEAD LOAD DEFLECTION TABLE FOR GIRDERS

0.60" ∅ LOW RELAXATION	GIRDER B1 OR B4											GIRDER B2 OR B3										
TENTH POINTS	0.0	0.1	0.2	0.3	0.4	0.5	0.6	0.7	0.8	0.9	1.0	0.0	0.1	0.2	0.3	0.4	0.5	0.6	0.7	0.8	0.9	1.0
CAMBER (GIRDER ALONE IN PLACE) (UP)	0.000	0.229	0.419	0.571	0.685	0.760	0.685	0.571	0.419	0.229	0.000	0.000	0.229	0.419	0.571	0.685	0.760	0.685	0.571	0.419	0.229	0.000
DEFLECTION DUE TO SUPERIMPOSED D.L. (DOWN)	0.000	0.227	0.407	0.541	0.629	0.670	0.629	0.541	0.407	0.227	0.000	0.000	0.249	0.449	0.599	0.699	0.750	0.699	0.599	0.449	0.249	0.000
FINAL CAMBER (DECIMAL INCHES) (UP)	0	0.002	0.012	0.030	0.056	0.090	0.056	0.030	0.012	0.002	0.000	0	-0.020	-0.030	-0.028	-0.014	0.010	-0.014	-0.028	-0.030	-0.020	0.000
FINAL CAMBER (INCHES) (UP)	0"	0"	0"	0"	0"	1/16"	0"	0"	0"	0"	0"	0"	0"	0"	0"	0"	0"	0"	0"	0"	0"	0"

INCLUDES WEIGHT OF SLAB, BUILDUP, STAY-IN-PLACE FORMS, AND FUTURE WEARING SURFACE.

SPAN C - DEAD LOAD DEFLECTION TABLE FOR GIRDERS

0.60" ∅ LOW RELAXATION	GIRDER C1 OR C4											GIRDER C2 OR C3										
TENTH POINTS	0.0	0.1	0.2	0.3	0.4	0.5	0.6	0.7	0.8	0.9	1.0	0.0	0.1	0.2	0.3	0.4	0.5	0.6	0.7	0.8	0.9	1.0
CAMBER (GIRDER ALONE IN PLACE) (UP)	0.000	0.059	0.103	0.133	0.149	0.150	0.149	0.133	0.103	0.059	0.000	0.000	0.059	0.103	0.133	0.149	0.150	0.149	0.133	0.103	0.059	0.000
DEFLECTION DUE TO SUPERIMPOSED D.L. (DOWN)	0.000	0.026	0.050	0.070	0.086	0.100	0.086	0.070	0.050	0.026	0.000	0.000	0.038	0.068	0.090	0.104	0.110	0.104	0.090	0.068	0.038	0.000
FINAL CAMBER (DECIMAL INCHES) (UP)	0	0.033	0.053	0.063	0.063	0.050	0.063	0.063	0.053	0.033	0.000	0	0.021	0.035	0.043	0.045	0.040	0.045	0.043	0.035	0.021	0.000
FINAL CAMBER (INCHES) (UP)	0"	1/16"	1/16"	1/16"	1/16"	1/16"	1/16"	1/16"	1/16"	1/16"	0"	0"	0"	1/16"	1/16"	1/16"	1/16"	1/16"	1/16"	1/16"	0"	0"

INCLUDES WEIGHT OF SLAB, BUILDUP, STAY-IN-PLACE FORMS, AND FUTURE WEARING SURFACE.

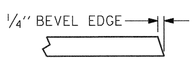

SECTION "G"

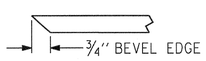

SECTION "F"

(SEE NOTES)

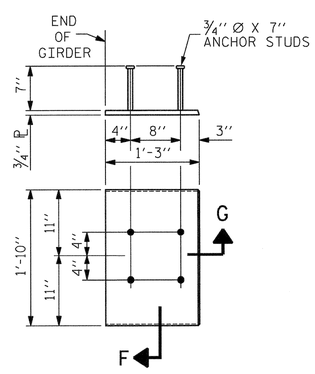

EMBEDDED PLATE "B-1" DETAILS FOR AASHTO TYPE III GIRDER

(2 REQ'D PER GIRDER)

NOTES

ALL PRESTRESSING STRANDS SHALL BE 7-WIRE LOW-RELAXATION GRADE 270 STRANDS AND SHALL CONFORM TO AASHTO M203 EXCEPT FOR SAMPLING REQUIREMENTS WHICH SHALL BE IN ACCORDANCE WITH THE STANDARD SPECIFICATIONS.

ALL REINFORCING STEEL SHALL BE GRADE 60.

APPLY EPOXY PROTECTIVE COATING TO END OF GIRDER SURFACES INDICATED IN ELEVATION VIEW.

EMBEDDED PLATE "B-1" SHALL BE GALVANIZED IN ACCORDANCE WITH THE STANDARD SPECIFICATIONS. BEVEL EDGES OF PLATE "B-1" TO GIVE CLOSE FIT BUT NOT TIGHT FIT TO STEEL CASTING FORM.

ANCHOR STUDS SHALL CONFORM TO AASHTO M169 GRADES 1010 THROUGH 1020 OR APPROVED EQUAL, AND SHALL MEET THE TYPE "B" REQUIREMENTS OF SUBSECTION 7.3 OF THE ANSI/AASHTO/AWS D1.5 BRIDGE WELDING CODE.

AT ENDS OF GIRDERS TO BE EMBEDDED IN CONCRETE DIAPHRAGMS OR END WALLS, PRESTRESSING STRANDS MAY EXTEND A MAXIMUM OF 2" BEYOND THE GIRDER ENDS. OTHERWISE, PRESTRESSING STRANDS SHALL BE CUT FLUSH WITH THE GIRDER ENDS.

THE TRANSFER OF LOAD FROM THE ANCHORAGES TO THE GIRDERS IN SPANS A&C SHALL BE DONE WHEN CONCRETE HAS REACHED A COMPRESSIVE STRENGTH OF NOT LESS THAN 5000 PSI. FOR SPAN B GIRDERS, THIS TRANSFER SHALL BE DONE WHEN CONCRETE HAS REACHED A COMPRESSIVE STRENGTH OF NOT LESS THAN 6000 PSI.

DEPENDING ON THE TYPE OF SYSTEM USED TO SUPPORT THE DECK SLAB FORMS, PRESET ANCHORS MAY BE NECESSARY IN THE PRESTRESSED CONCRETE GIRDER.

THE TOP SURFACE OF THE GIRDER, EXCLUDING THE OUTSIDE 4", SHALL BE RAKED TO A DEPTH OF 1/4".

WHEN DRAPED STRANDS ARE DETAILED, THE LONGITUDINAL LOCATION OF THE HOLD DOWN DEVICES SHALL BE WITHIN 6" OF THE LOCATION SHOWN AND THE CENTER OF GRAVITY OF THE GROUP OF DRAPED STRANDS SHALL BE LOCATED WITHIN 1/2" OF THE THEORETICAL LOCATION SHOWN.

THE CONTRACTOR HAS THE OPTION TO PROVIDE, AT NO ADDITIONAL COST TO THE DEPARTMENT, 2 ADDITIONAL STRANDS AT THE TOP OF THE GIRDER TO FACILITATE TYING OF THE REINFORCING STEEL. THESE STRANDS SHALL BE PULLED TO A LOAD OF 4500 lbs.

NORTH CAROLINA PROFESSIONAL SEAL 20774 ENGINEER HARDY L. WILLIS 11/21/12

PROJECT NO. R-2303C

SAMPSON COUNTY

STATION: 1081+04.50 -L-

SHEET 4 OF 5

STATE OF NORTH CAROLINA
DEPARTMENT OF TRANSPORTATION
RALEIGH

STANDARD
PRESTRESSED CONCRETE GIRDER
CONTINUOUS FOR LIVE LOAD
DETAILS &
DEAD LOAD DEFLECTIONS
(RIGHT LANE)

REVISIONS								SHEET NO.
NO.	BY:	DATE:	NO.	BY:	DATE:			S-120
1			3					TOTAL SHEETS
2			4					138

ASSEMBLED BY : MAF	DATE : 09/2012
CHECKED BY : HLW	DATE : 09/2012
DRAWN BY : ELR 11/91	REV. 7/10/01RR LES/RDR
CHECKED BY : GRP 11/91	REV. 5/1/06 TLA/GM
	REV. 10/1/11 KMM/GM

STR. #4 STD. NO. PCG11 (Sht. 2)

$$$$$$SYSTIME$$$$$
$$$$$$$$$$$$$$$$$$$$$$$$$$DGN$$$$$$$$$$$$$$$$$$$$$$$$
$$$$USERNAME$$$$

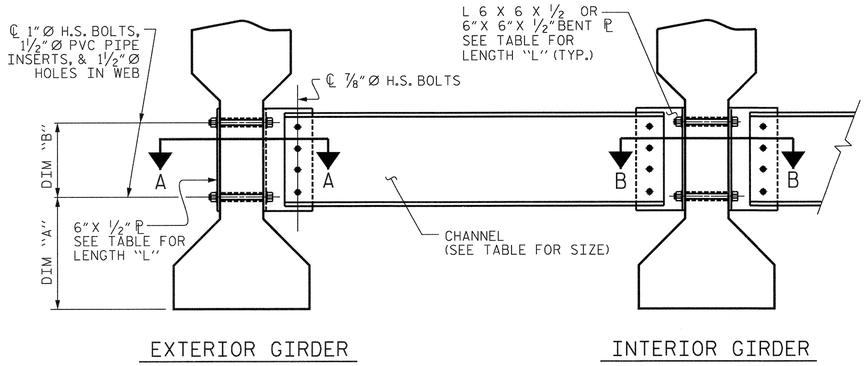

PART SECTION AT INTERMEDIATE DIAPHRAGM

(TYPE III OR TYPE IV GIRDER SHOWN)

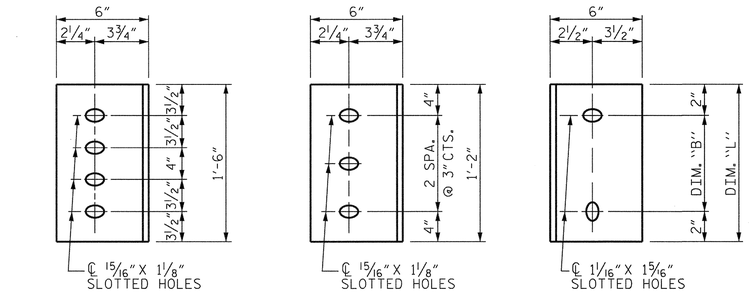

DIAPHRAGM FACE (TYPE III OR TYPE IV GDR.) | DIAPHRAGM FACE (TYPE II GDR.) | WEB FACE

CONNECTOR PLATE DETAILS

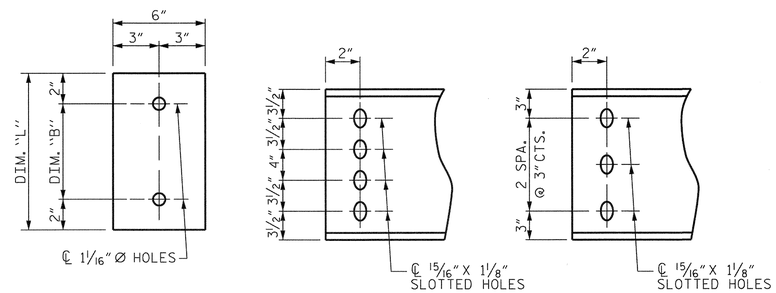

PLATE DETAILS | CHANNEL END (TYPE III OR TYPE IV GDR.) | CHANNEL END (TYPE II GDR.)

STRUCTURAL STEEL NOTES

ALL INTERMEDIATE DIAPHRAGM STEEL AND CONNECTOR PLATES SHALL BE AASHTO M270 GRADE 50 OR APPROVED EQUAL.

TENSION ON THE ASTM A325 BOLTS THROUGH THE CHANNEL MEMBER SHALL BE CALIBRATED USING DIRECT TENSION INDICATOR WASHERS IN ACCORDANCE WITH THE STANDARD SPECIFICATIONS.

TENSION ON THE ASTM A449 BOLTS THROUGH THE GIRDER WEB SHALL BE SNUG TIGHTENED FOLLOWED BY AN ADDITIONAL ¼ TURN.

THE PLATES, BENT PLATES, CHANNELS, AND ANGLES SHALL BE GALVANIZED OR METALLIZED IN ACCORDANCE WITH THE STANDARD SPECIFICATIONS. FOR THERMAL SPRAYED COATINGS (METALLIZATION), SEE SPECIAL PROVISIONS.

FOR METALLIZATION, APPLY AN 8 MIL THICK 99.99 PERCENT ZINC (W-Zn-1) THERMAL SPRAYED COATING WITH A 0.5 MIL THICK SEAL COAT TO ALL STEEL DIAPHRAGM SURFACES IN ACCORDANCE WITH THE THERMAL SPRAYED COATINGS SPECIAL PROVISION AND SECTION 442 OF THE STANDARD SPECIFICATIONS.

GALVANIZE THE HIGH STRENGTH BOLTS, NUTS, WASHERS AND DIRECT TENSION INDICATORS IN ACCORDANCE WITH THE STANDARD SPECIFICATIONS.

USE AN ASTM F436 HARDENED WASHER WITH STANDARD AND SLOTTED HOLES UNDER EACH BOLT HEAD AND NUT.

FOR BOLTS THROUGH THE GIRDER WEB, PROVIDE SUFFICIENT LENGTH OF THREADS ON ALL BOLTS TO ACCOMMODATE WASHERS AND THE THICKNESS OF CONNECTING MEMBER PLUS AT LEAST ¼" PROJECTION BEYOND THE NUT.

INTERMEDIATE DIAPHRAGM ASSEMBLY SHALL COMPLY WITH SECTION 1072 OF THE STANDARD SPECIFICATIONS.

SUBMIT TWO SETS OF WORKING DRAWINGS FOR THE INTERMEDIATE DIAPHRAGM ASSEMBLY FOR REVIEW, COMMENTS AND ACCEPTANCE. AFTER REVIEW, COMMENTS, AND ACCEPTANCE, SUBMIT SEVEN SETS FOR DISTRIBUTION.

IN THE EXTERIOR BAYS, PLACE TEMPORARY STRUTS BETWEEN PRESTRESSED GIRDERS ADJACENT TO THE STEEL DIAPHRAGMS. STRUTS SHALL REMAIN IN PLACE 3 DAYS AFTER CONCRETE IS PLACED.

THE COST OF THE STEEL DIAPHRAGMS AND ASSEMBLIES SHALL BE INCLUDED IN THE UNIT PRICE BID FOR PRESTRESSED CONCRETE GIRDERS.

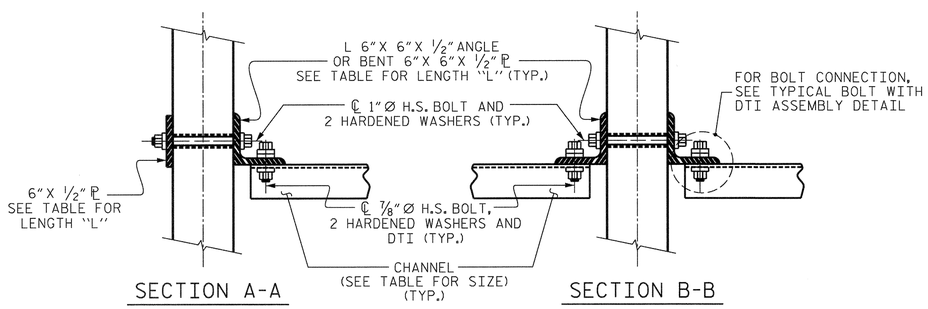

CONNECTION DETAILS

(FOR SKEW = 90°)

TABLE

GIRDER TYPE	CHANNEL SIZE	DIM "A"	DIM "B"	DIM "L"
~~II~~	~~MC 12 x 31~~	~~1'-2½"~~	~~10"~~	~~1'-2"~~
III	MC 18 x 42.7	1'-5"	1'-2"	1'-6"
~~IV~~	~~MC 18 x 42.7~~	~~1'-9½"~~	~~1'-2"~~	~~1'-6"~~

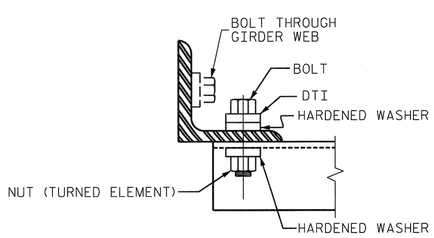

BOLT WITH DTI ASSEMBLY DETAIL

PROJECT NO. R-2303C

SAMPSON COUNTY

STATION: 1081+04.50 -L-

SHEET 5 OF 5

NORTH CAROLINA PROFESSIONAL SEAL 20746 ENGINEER HARDY L. WILLIS 11/21/12

STATE OF NORTH CAROLINA
DEPARTMENT OF TRANSPORTATION
RALEIGH

STANDARD

INTERMEDIATE STEEL DIAPHRAGMS FOR TYPE II, III, & IV PRESTRESSED CONC. GDRS. (RIGHT LANE)

REVISIONS						SHEET NO.
NO.	BY:	DATE:	NO.	BY:	DATE:	S-121
1			3			TOTAL SHEETS
2			4			138

ASSEMBLED BY : DPP DATE : 9/2012
CHECKED BY : HLW DATE : 9/2012
DRAWN BY : TLA 6/05
CHECKED BY : VC 6/05
ADDED 10/21/05
REV. 5/1/06RRR KMM/GM

$$$$$$$SYSTIME$$$$$
$$$$$$$$$$$$$$$$$$$$$$$$DGN$$$$$$$$$$$$$$$$$$$$$$$$
$$$$USERNAME$$$$

STR. #4 STD. NO. PCG12

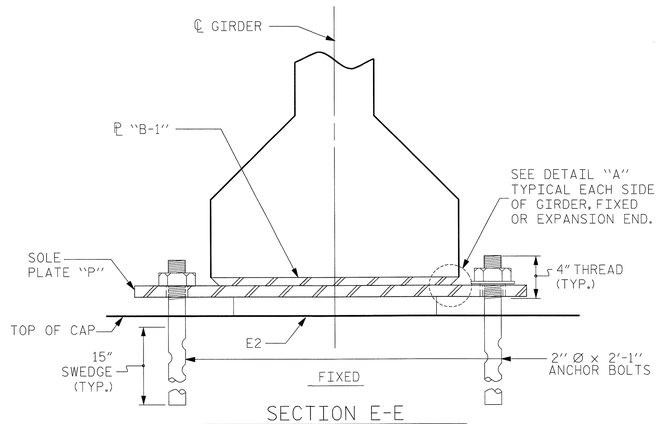

SECTION E-E

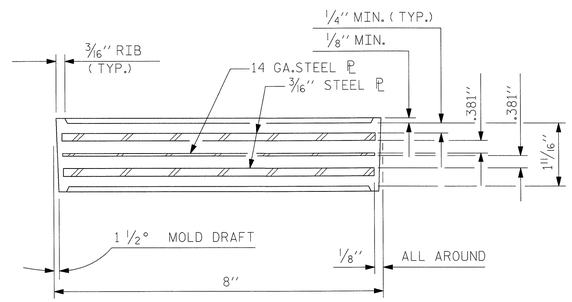

TYPICAL SECTION OF ELASTOMERIC BEARINGS

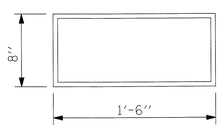

E2 (24 REQ'D)

PLAN VIEW OF ELASTOMERIC BEARING

TYPE III

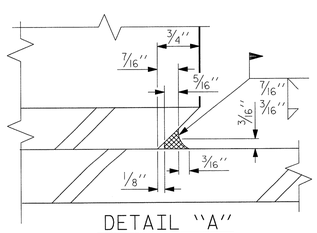

DETAIL "A"

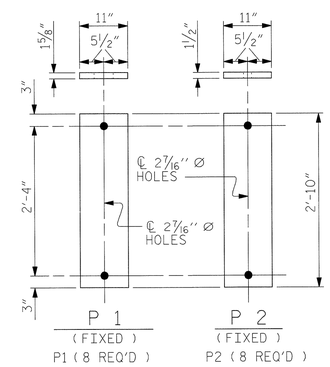

SOLE PLATE DETAILS ("P")

NOTES

AT ALL FIXED POINTS OF SUPPORT, NUTS FOR ANCHOR BOLTS ARE TO BE TIGHTENED FINGER TIGHT AND THEN BACKED OFF 1/2 TURN. THE THREAD OF THE NUT AND BOLT SHALL THEN BE BURRED WITH A SHARP POINTED TOOL.

STEEL SOLE PLATES, ANCHOR BOLTS, NUTS, AND WASHERS SHALL BE GALVANIZED IN ACCORDANCE WITH THE STANDARD SPECIFICATIONS.

PRIOR TO WELDING, GRIND THE GALVANIZED SURFACE OF THE PORTION OF THE EMBEDDED PLATE AND SOLE PLATE THAT ARE TO BE WELDED. AFTER WELDING, DAMAGED GALVANIZED SURFACES SHALL BE REPAIRED IN ACCORDANCE WITH THE STANDARD SPECIFICATIONS.

WHEN WELDING THE SOLE PLATE TO THE EMBEDDED PLATE IN THE GIRDER, USE TEMPERATURE INDICATING WAX PENS, OR OTHER SUITABLE MEANS, TO ENSURE THAT THE TEMPERATURE OF THE SOLE PLATE DOES NOT EXCEED 300°F. TEMPERATURES ABOVE THIS MAY DAMAGE THE ELASTOMER.

SOLE PLATE "P", BOLTS, NUTS, WASHERS, AND PIPE SLEEVE SHALL BE INCLUDED IN THE PAY ITEM FOR PRESTRESSED CONCRETE GIRDERS.

ANCHOR BOLTS SHALL MEET THE REQUIREMENTS OF ASTM A449. NUTS SHALL MEET THE REQUIREMENTS OF AASHTO M291-DH OR AASHTO M292-2H. WASHERS SHALL MEET THE REQUIREMENTS OF AASHTO M293. NO SHOP DRAWINGS ARE REQUIRED FOR ANCHOR BOLTS, NUTS AND WASHERS. SHOP INSPECTION IS REQUIRED.

ALL SURFACES OF BEARING PLATES SHALL BE SMOOTH AND STRAIGHT.

THE ELASTOMER IN THE STEEL REINFORCED BEARINGS SHALL HAVE A SHEAR MODULUS OF 0.160 KSI, IN ACCORDANCE WITH AASHTO M251.

FOR STEEL REINFORCED ELASTOMERIC BEARINGS, SEE SPECIAL PROVISIONS.

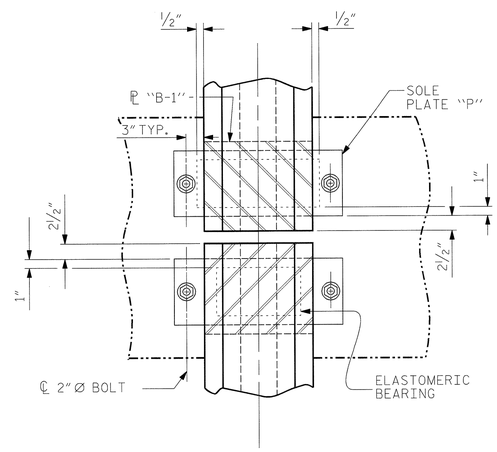

TYPICAL PLAN
(SHOWING CONTINUOUS BENT)

NORTH CAROLINA PROFESSIONAL SEAL 19877 ENGINEER HARDY L. WILLIS 6/27/13

MAXIMUM ALLOWABLE SERVICE LOADS	
D.L.+L.L. (NO IMPACT)	
~~TYPE II~~	~~145 k~~
TYPE III	205 k
~~TYPE IV~~	~~225 k~~

PROJECT NO. R-2303C

SAMPSON COUNTY

STATION: 1081+04.50 -L-

STATE OF NORTH CAROLINA
DEPARTMENT OF TRANSPORTATION
RALEIGH

STANDARD

ELASTOMERIC BEARING DETAILS

PCG SUPERSTRUCTURE (RIGHT LANE)

REVISIONS						SHEET NO.
NO.	BY:	DATE:	NO.	BY:	DATE:	S-122
1			3			TOTAL SHEETS
2			4			138

ASSEMBLED BY : MAF		DATE : 09/2012	
CHECKED BY : HLW		DATE : 09/2012	
DRAWN BY : WJH 8/89	REV. 5/1/06	TLA/GM	
CHECKED BY : CRK 8/89	REV. 10/1/11	MAA/GM	
	REV. 10/24/12	AAC/MAA	

$$$$$$$SYSTIME$$$$$
$$$$$$$$$$$$$$$$$$$$$$$$DGN$$$$$$$$$$$$$$$$$$$$$$$$$
$$$$USERNAME$$$$

STR. #4

STD. NO. EB4

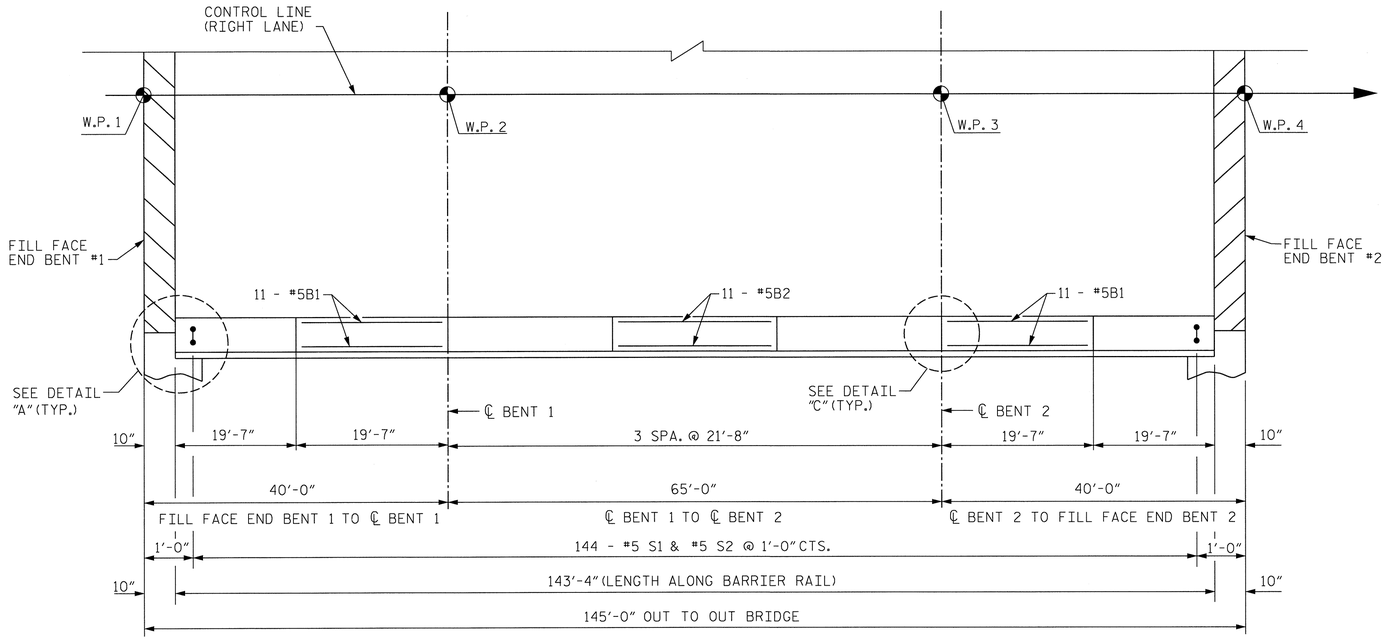

PLAN

NOT TO SCALE

RIGHT SIDE BARRIER RAIL SHOWN, LEFT SIDE SIMILAR.

NOTES

THE BARRIER RAIL IN EACH SPAN SHALL NOT BE CAST UNTIL ALL SLAB CONCRETE IN THAT SPAN HAS BEEN CAST AND HAS REACHED A MINIMUM COMPRESSIVE STRENGTH OF 3,000 PSI.

ALL REINFORCING STEEL IN BARRIER RAILS SHALL BE EPOXY COATED.

VERTICAL GROOVED CONTRACTION JOINTS, 1/2" IN DEPTH, SHALL BE TOOLED IN ALL EXPOSED FACES OF THE BARRIER RAIL AND IN ACCORDANCE WITH ARTICLE 825-10(B) OF THE STANDARD SPECIFICATIONS. THE CONTRACTION JOINT SHALL BE LOCATED AT EACH THIRD POINT BETWEEN BARRIER RAIL EXPANSION JOINTS. ONLY ONE CONTRACTION JOINT IS REQUIRED AT MIDPOINT OF BARRIER RAIL SEGMENTS LESS THAN 20 FEET IN LENGTH AND NO CONTRACTION JOINTS ARE REQUIRED FOR THOSE SEGMENTS LESS THAN 10 FEET IN LENGTH.

BAR TYPES

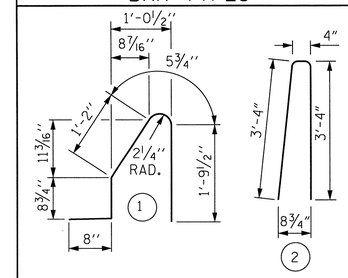

ALL BAR DIMENSIONS ARE OUT TO OUT

BILL OF MATERIAL

FOR CONCRETE BARRIER RAIL ONLY

BAR	NO.	SIZE	TYPE	LENGTH	WEIGHT
* B1	88	#5	STR	19'-2"	1759
* B2	66	#5	STR	21'-3"	1463
* S1	288	#5	1	4'-10"	1452
* S2	288	#5	2	7'-0"	2103

* EPOXY COATED REINFORCING STEEL	6,777 LBS.
CLASS AA CONCRETE	39.0 CU. YDS.
CONCRETE BARRIER RAIL	286.67 LIN. FT.

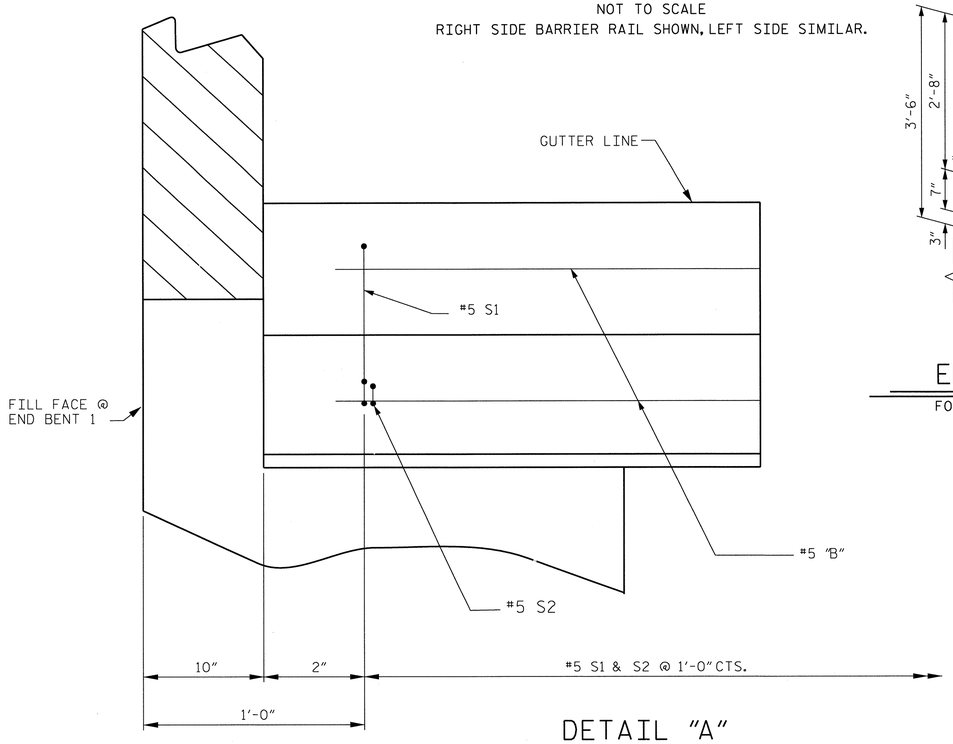

DETAIL "A"

TYPICAL FOR ALL CORNERS

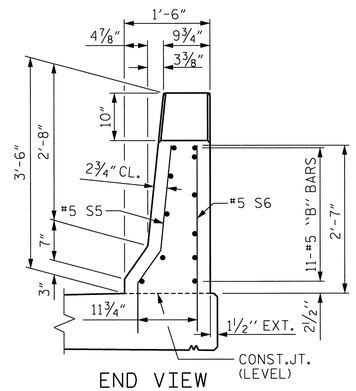

END VIEW

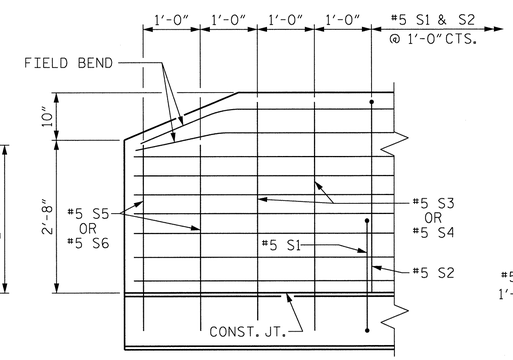

SIDE VIEW

END OF RAIL DETAILS

FOR ADHESIVE ANCHORING AT SAWED JOINTS

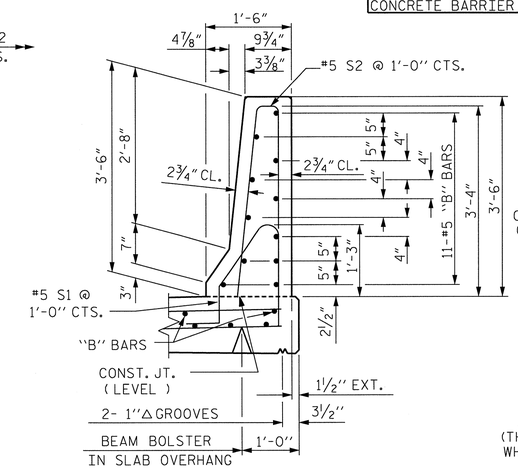

SECTION THRU RAIL

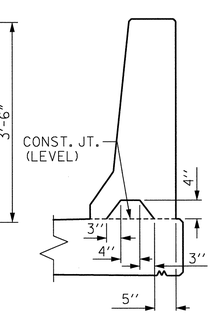

SECTION S-S

AT DAM IN OPEN JOINT
(THIS IS TO BE USED ONLY WHEN SLIP FORM IS USED)

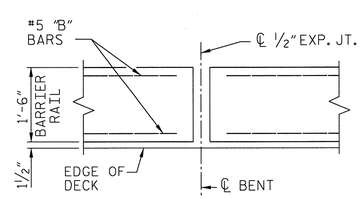

DETAIL "C"

RIGHT SIDE SHOWN, LEFT SIDE SIMILAR
TYP. AT BENTS 1 & 2

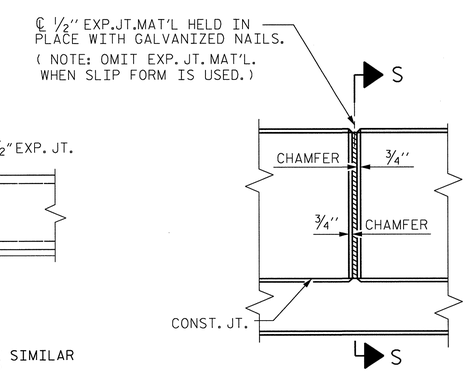

ELEVATION AT EXPANSION JOINTS

BARRIER RAIL DETAILS

NORTH CAROLINA PROFESSIONAL SEAL 019 ENGINEER HARDY L. WILLIS 12/7/12

PROJECT NO. R-2303C

SAMPSON COUNTY

STATION: 1081+04.50 -L-

SHEET 1 OF 2

STATE OF NORTH CAROLINA
DEPARTMENT OF TRANSPORTATION
RALEIGH

STANDARD

CONCRETE BARRIER RAIL

(RIGHT LANE)

REVISIONS						SHEET NO.
NO.	BY:	DATE:	NO.	BY:	DATE:	S-123
1			3			TOTAL SHEETS
2			4			136

ASSEMBLED BY : MAF		DATE : SEPT. 2012	
CHECKED BY : HLW		DATE : SEPT. 2012	
DRAWN BY : ARB 5/87	REV. 10/1/11	MAA/GM	
CHECKED BY : SJD 9/87	REV. 7/12	MAA/GM	
	REV. 10/12	MAA/GM	

$$$$$$SYSTIME$$$$$
$$$$$$$$$$$$$$$$$$$$$$$$DGN$$$$$$$$$$$$$$$$$$$$$$$$
$$$$USERNAME$$$$

SHEET 1 AT 90

STR. #4 STD. NO. CBR1 (SHT 1)

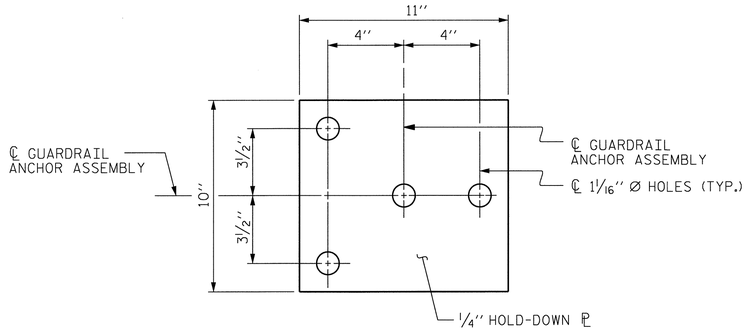

PLAN

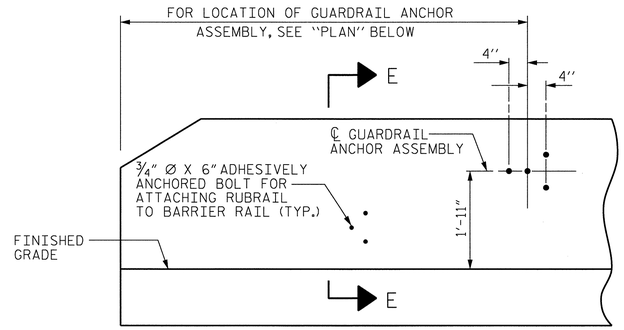

ELEVATION

FOR LOCATION OF RUBRAIL, SEE ROADWAY STD. 862.03

NOTES

THE GUARDRAIL ANCHOR ASSEMBLY SHALL CONSIST OF A 1/4" HOLD DOWN PLATE AND 4 - 7/8" Ø BOLTS WITH NUTS AND WASHERS, RUBRAIL, AND ADHESIVELY ANCHORED BOLTS.

THE HOLD-DOWN PLATE SHALL CONFORM TO AASHTO M270 GRADE 36. AFTER FABRICATION, THE HOLD-DOWN PLATE SHALL BE HOT-DIP GALVANIZED IN ACCORDANCE WITH AASHTO M111.

BOLTS SHALL CONFORM TO THE REQUIREMENTS OF ASTM A307 AND NUTS SHALL CONFORM TO THE REQUIREMENTS OF AASHTO M291. BOLTS, NUTS AND WASHERS SHALL BE GALVANIZED. (AT THE CONTRACTOR'S OPTION, STAINLESS STEEL BOLTS, NUTS AND WASHERS MAY BE USED AS AN ALTERNATE FOR THE 7/8" Ø GALVANIZED BOLTS, NUTS AND WASHERS. THEY SHALL CONFORM TO OR EXCEED THE MECHANICAL REQUIREMENTS OF ASTM A307. THE USE OF THIS ALTERNATE SHALL BE APPROVED BY THE ENGINEER.)

THE GUARDRAIL ANCHOR ASSEMBLY IS REQUIRED AT ALL POINTS WHERE APPROACH GUARDRAIL IS TO BE ATTACHED TO THE END OF BARRIER RAIL. FOR POINTS OF ATTACHMENT, SEE SKETCH.

AFTER INSTALLATION, THE EXPOSED THREAD OF THE BOLT SHALL BE BURRED WITH A SHARP POINTED TOOL.

THE COST OF THE GUARDRAIL ANCHOR ASSEMBLY SHALL BE INCLUDED IN THE UNIT CONTRACT PRICE BID FOR CONCRETE BARRIER RAIL.

THE 1 1/4" Ø HOLES SHALL BE FORMED OR DRILLED WITH A CORE BIT. IMPACT TOOLS WILL NOT BE PERMITTED. ANY CONCRETE DAMAGED BY THIS WORK SHALL BE REPAIRED TO THE SATISFACTION OF THE ENGINEER.

THE C6 X 8.2 RUBRAIL IS TO BE ADHESIVELY ANCHORED TO THE RAIL USING THREE 3/4" Ø X 6" BOLTS WITH WASHERS. LEVEL ONE FIELD TESTING IS REQUIRED, AND THE YIELD LOAD OF THE 3/4" Ø BOLT IS 12 KIPS. FOR ADHESIVELY ANCHORED ANCHOR BOLTS OR DOWELS, SEE SPECIAL PROVISIONS. SEE ROADWAY STANDARD 862.03 FOR DETAILS AND LOCATION OF THE RUBRAIL.

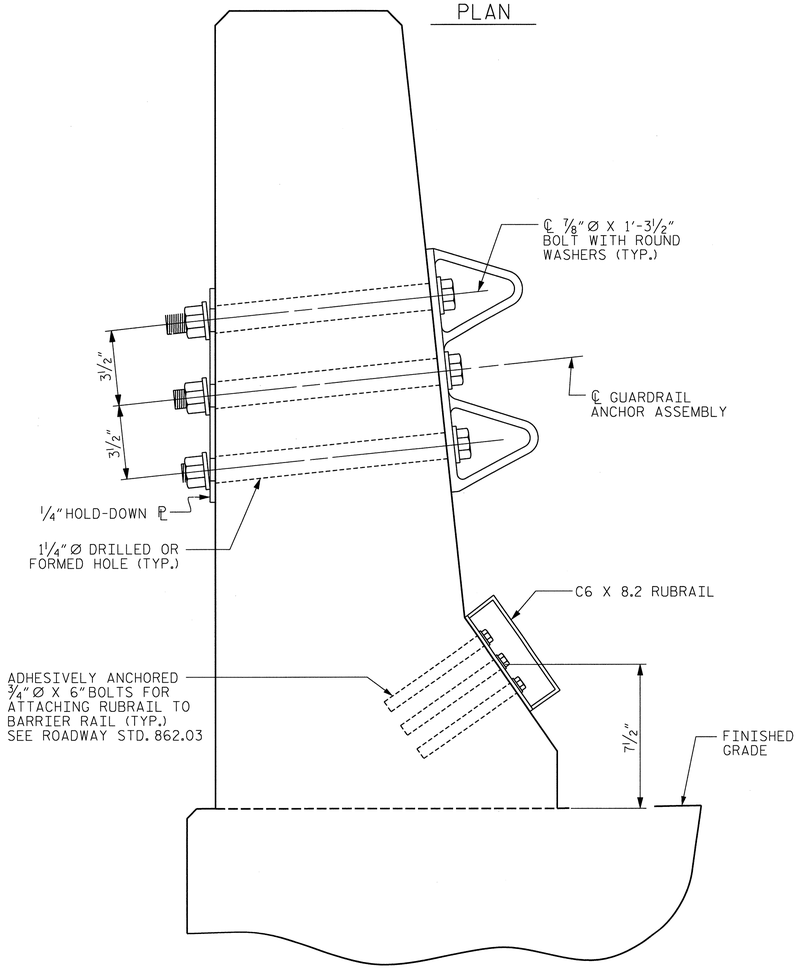

SECTION E-E

GUARDRAIL ANCHOR ASSEMBLY DETAILS

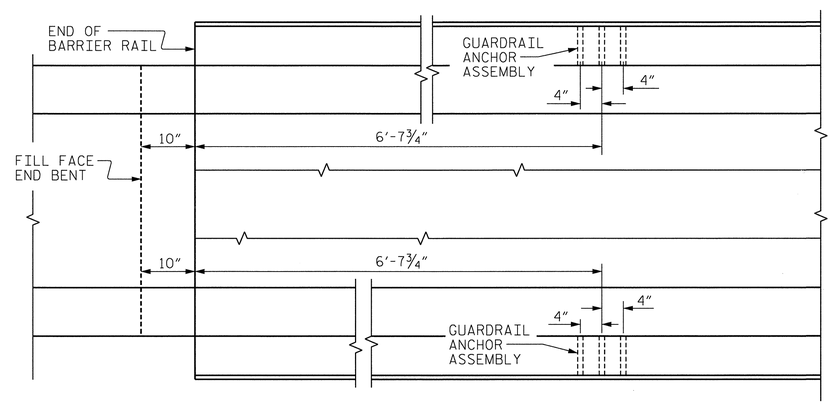

LOCATION OF ANCHORS FOR GUARDRAIL

END BENT #1 SHOWN, END BENT #2 SIMILAR.

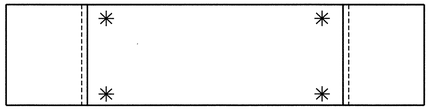

SKETCH SHOWING POINTS OF ATTACHMENTS

✳ DENOTES GUARDRAIL ANCHOR ASSEMBLY

PROJECT NO. R-2303C

SAMPSON COUNTY

STATION: 1081+04.50 -L-

SHEET 2 OF 2

STATE OF NORTH CAROLINA
DEPARTMENT OF TRANSPORTATION
RALEIGH

STANDARD

GUARDRAIL ANCHORAGE FOR BARRIER RAIL

(RIGHT LANE)

NORTH CAROLINA PROFESSIONAL SEAL 19778 ENGINEER HARDY L. WILLIS 12/7/12

REVISIONS						SHEET NO.
NO.	BY:	DATE:	NO.	BY:	DATE:	S-124
1			3			TOTAL SHEETS
2			4			138

ASSEMBLED BY : MAF		DATE : 09/2012	
CHECKED BY : HLW		DATE : 09/2012	
DRAWN BY : TLA 5/06	REV. 10/1/11	MAA/GM	
CHECKED BY : GM 5/06	REV. 7/12	MAA/GM	
	REV. 10/12	MAA/GM	

$$$$$$SYSTIME$$$$$
$$$$$$$$$$$$$$$$$$$$$$$$DGN$$$$$$$$$$$$$$$$$$$$$$$$
$$$$USERNAME$$$$

(SHT 3) STR. #4 STD. NO. GRA2

GROOVING BRIDGE FLOORS		
APPROACH SLABS	1,628	SQ.FT.
BRIDGE DECK	4,719	SQ.FT.
TOTAL	6,347	SQ.FT.

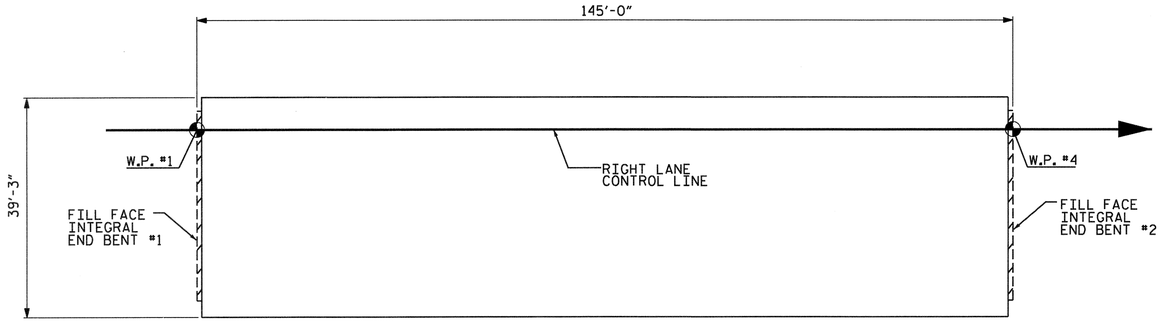

LAYOUT FOR COMPUTING AREA REINFORCED CONCRETE DECK SLAB (SQ. FT. = 5,691)

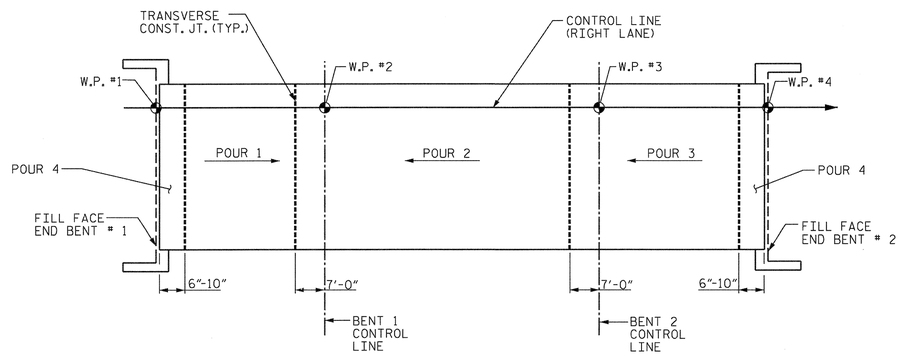

NOTE: CONCRETE IN THE UPPER PORTION OF THE WINGS SHALL BE INCLUDED WITH THE SUPERSTRUCTURE POUR.

SLAB POURING SEQUENCE

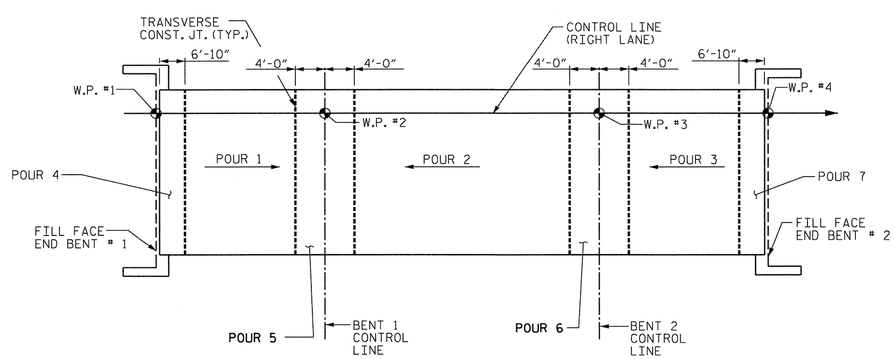

OPTIONAL POURING SEQUENCE

BILL OF MATERIAL

BAR	NO.	SIZE	TYPE	LENGTH	WEIGHT
* A1	313	#5	STR	38'-11"	12,705
A2	313	#5	STR	38'-11"	12,705
* B1	106	#4	STR	10'-0"	708
* B2	54	#4	STR	23'-6"	848
* B3	54	#5	STR	20'-0"	1,126
* B4	52	#5	STR	10'-0"	542
* B5	54	#4	STR	25'-6"	920
B6	141	#5	STR	49'-4"	7,255
H1	56	#5	1	13'-1"	764
K1	16	#4	STR	23'-0"	246
K2	24	#5	STR	8'-5"	211
K3	16	#5	STR	5'-2"	86
K4	36	#4	STR	8'-5"	202
K5	12	#4	STR	7'-0"	56
K6	12	#4	STR	17'-0"	136
K7	4	#4	STR	15'-0"	40
K8	8	#4	STR	2'-9"	15
* S1	62	#4	2	9'-9"	404
* S2	62	#4	2	11'-8"	483
S3	144	#4	4	2'-9"	265
U1	62	#4	3	10'-5"	431
U2	6	#4	3	12'-3"	49
U3	6	#4	3	12'-6"	50
U4	48	#4	5	14'-6"	465
V3	48	#4	STR	4'-8"	150
V4	48	#4	STR	4'-9"	152
REINFORCING STEEL					23,278 LBS.
* EPOXY COATED REINFORCING STEEL					17,736 LBS

BAR TYPES

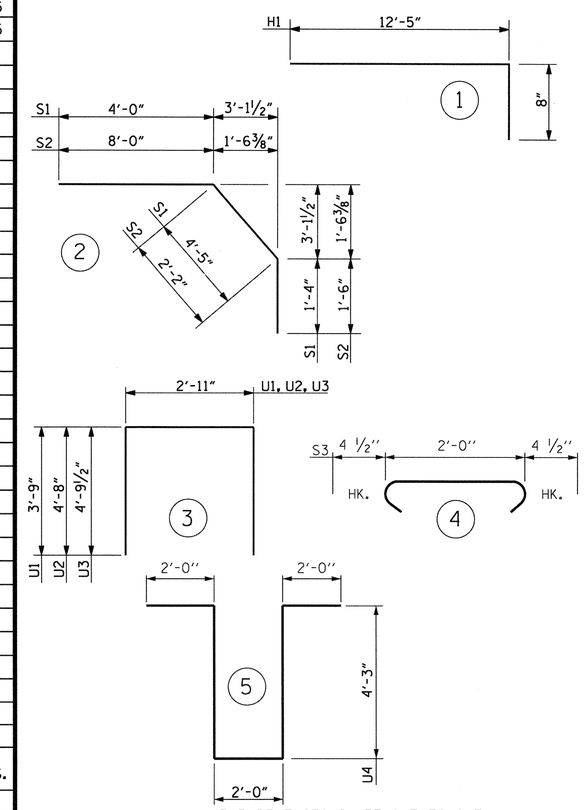

ALL BAR DIMENSIONS ARE OUT TO OUT

SUPERSTRUCTURE BILL OF MATERIAL

	CLASS AA CONCRETE	REINFORCING STEEL	EPOXY COATED REINFORCING STEEL
	(CU. YDS.)	(LBS.)	(LBS.)
POUR 1	34.3	———	———
POUR 2	95.3	———	———
POUR 3	62.8	———	———
POUR 4	64.2	———	———
TOTALS**	256.6	23,278	17,736

** QUANTITIES FOR BARRIER RAIL ARE NOT INCLUDED.

SUPERSTRUCTURE REINFORCING STEEL LENGTHS ARE BASED ON THE FOLLOWING MINIMUM SPLICE LENGTHS

BAR SIZE	SUPERSTRUCTURE EXCEPT APPROACH SLABS, PARAPET, AND BARRIER RAIL		APPROACH SLABS		PARAPET AND BARRIER RAIL
	EPOXY COATED	UNCOATED	EPOXY COATED	UNCOATED	
#4	2'-0"	1'-9"	2'-0"	1'-9"	2'-9"
#5	2'-6"	2'-2"	2'-6"	2'-2"	3'-5"
#6	3'-0"	2'-7"	3'-10"	2'-7"	4'-4"
#7	5'-3"	3'-6"			
#8	6'-10"	4'-7"			

PROJECT NO. R-2303C

SAMPSON COUNTY

STATION: 1081+04.50 -L-

NORTH CAROLINA PROFESSIONAL SEAL 20077 ENGINEER HARDY L. WILLIS 11/21/12

STATE OF NORTH CAROLINA
DEPARTMENT OF TRANSPORTATION
RALEIGH

STANDARD
SUPERSTRUCTURE BILL OF MATERIAL (RIGHT LANE)

REVISIONS						SHEET NO.
NO.	BY:	DATE:	NO.	BY:	DATE:	S-125
1			3			TOTAL SHEETS
2			4			138

ASSEMBLED BY : DPP		DATE : 9/2012	
CHECKED BY : HLW		DATE : 9/2012	
DRAWN BY : JMB 5/87	REV. 6/1/94	EEM/GRP	
CHECKED BY : SJD 9/87	REV. 8/16/99	RWW/LES	
	REV. 5/1/06	TLA/GM	

$$$$$$$SYSTIME$$$$$
$$$$$$$$$$$$$$$$$$$$$$$$DGN$$$$$$$$$$$$$$$$$$$$$$$$
$$$$$USERNAME$$$$$

STR. #4 STD. NO. BOM2

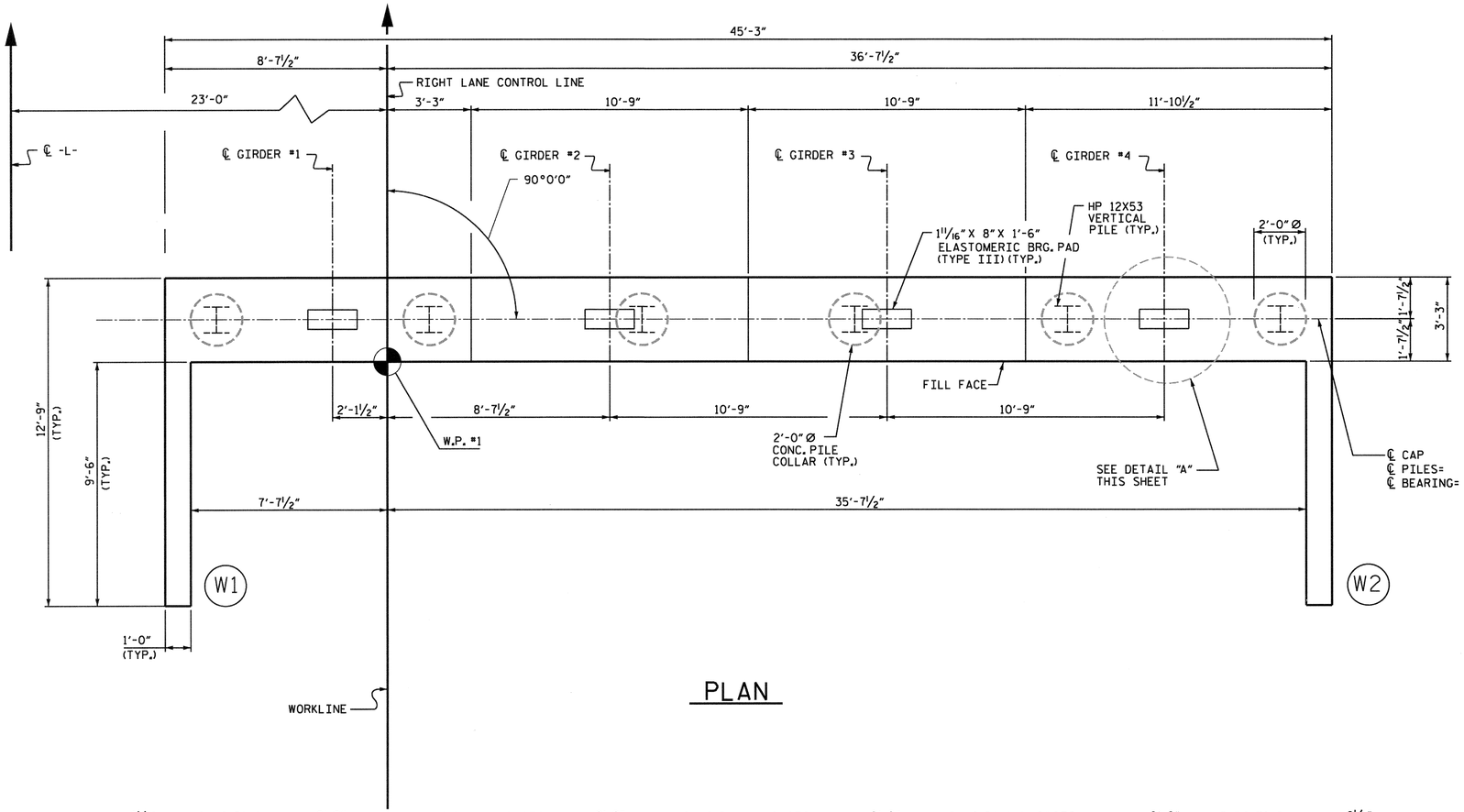

PLAN

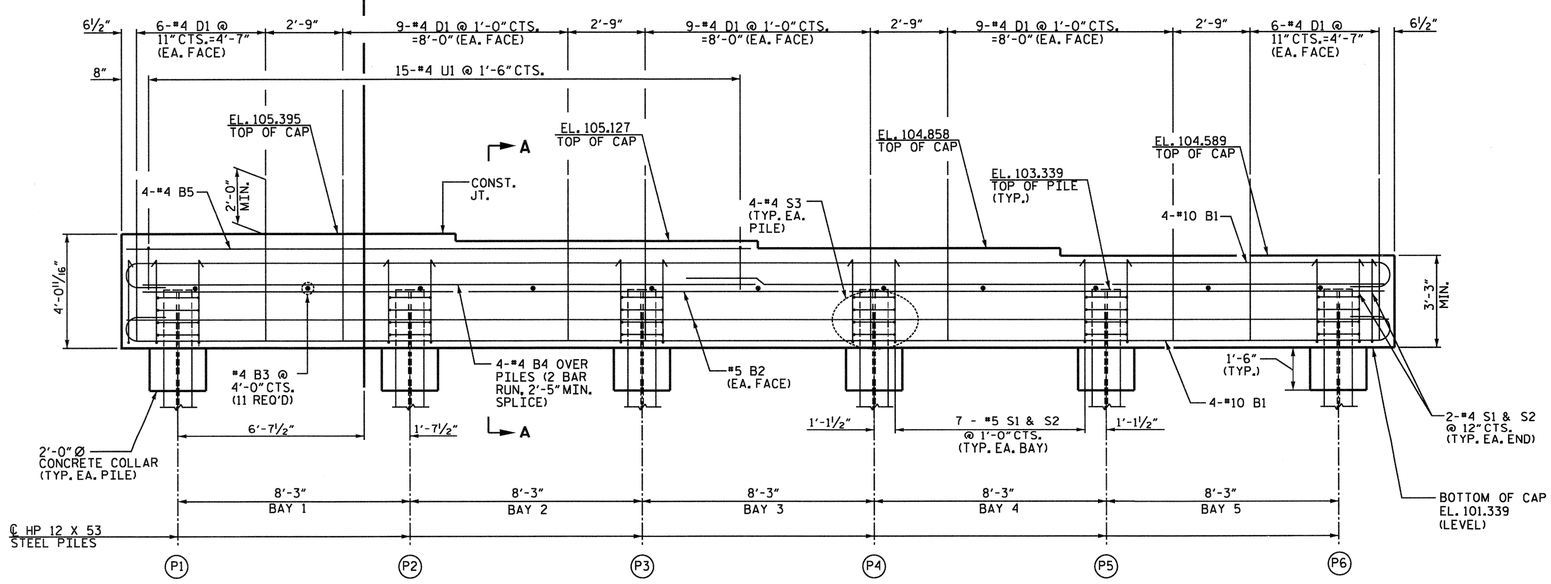

ELEVATION

(WINGS NOT SHOWN FOR CLARITY)

NOTES

FOR PILE SPLICE DETAILS, SEE SHEET 3 OF 3.

THE CONTRACTOR SHALL PROVIDE FOR INSTALLATION OF THE 4" DIAMETER DRAIN PIPE THROUGH THE WING WALL AS REQUIRED FOR REINFORCED BRIDGE APPROACH FILLS. SEE THE ROADWAY PLANS. REINFORCING STEEL IN THE WING WALL MAY BE SHIFTED AS NECESSARY TO CLEAR THE DRAIN PIPE.

SEE SUPERSTRUCTURE SHEETS FOR INTEGRAL END BENT DIAPHRAGM DETAILS.

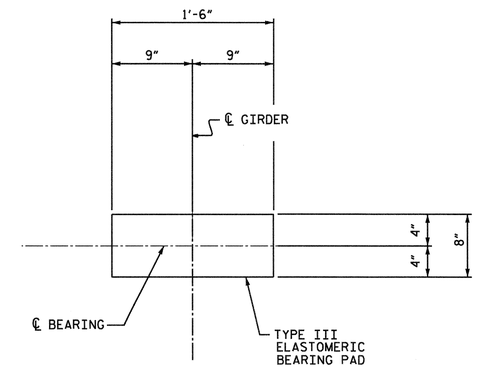

DETAIL "A"

NORTH CAROLINA PROFESSIONAL SEAL 20024 ENGINEER HARDY L. WILLIS 11/21/12

PROJECT NO. R-2303C

SAMPSON COUNTY

STATION: 1081+04.50 -L-

SHEET 1 OF 3

STATE OF NORTH CAROLINA
DEPARTMENT OF TRANSPORTATION
RALEIGH

SUBSTRUCTURE
INTEGRAL
END BENT NO. 1

(RIGHT LANE)

V&M Vaughn & Melton Consulting Engineers
Asheville, North Carolina 828-253-2796
Charlotte, North Carolina 704-357-0488
Tri-Cities, Tennessee 423-467-8401
Knoxville, Tennessee 865-546-5800
Middlesboro, Kentucky 606-248-6600
Spartanburg, South Carolina 864-574-4775
Copyright © 2006 Vaughn & Melton, Inc. All Rights Reserved

DWN. BY: MAF DATE: SEPT. 2012
CHKD. BY: HLW DATE: SEPT. 2012

REVISIONS						
NO.	BY:	DATE:	NO.	BY:	DATE:	
1			3			
2			4			

SHEET NO. S-126
TOTAL SHEETS 138

STR. #4

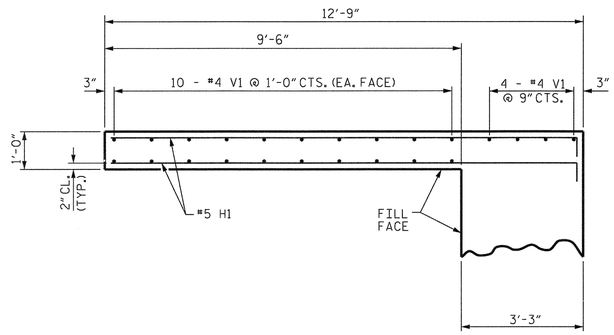

PLAN OF WING W1

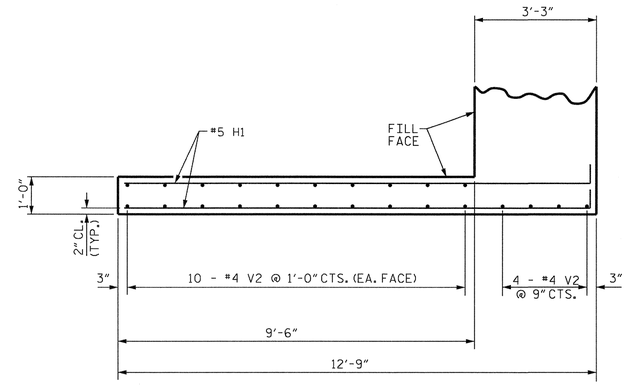

PLAN OF WING W2

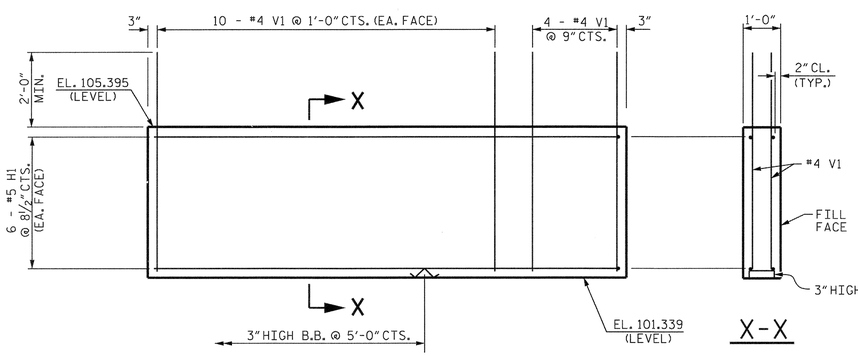

ELEVATION OF WING W1

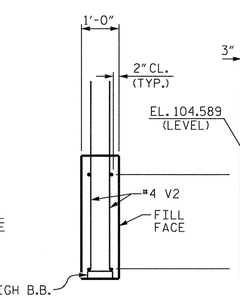

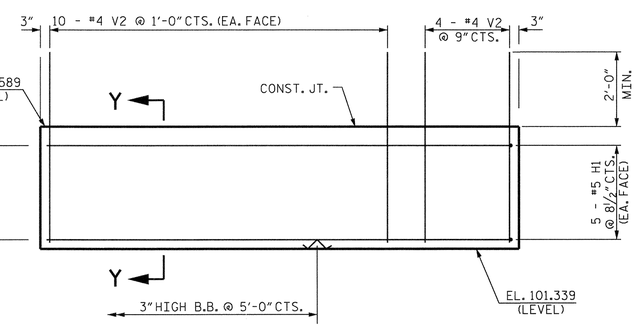

ELEVATION OF WING W2

NORTH CAROLINA PROFESSIONAL SEAL 2027 ENGINEER HARDY L. WILLIS 11/21/12

PROJECT NO. R-2303C

SAMPSON COUNTY

STATION: 1081+04.50 -L-

SHEET 2 OF 3

V&M Vaughn & Melton Consulting Engineers
Asheville, North Carolina 828-253-2796
Charlotte, North Carolina 704-357-0498
Tri-Cities, Tennessee 423-467-5410
Knoxville, Tennessee 865-546-5800
Middlesboro, Kentucky 606-248-6600
Spartanburg, South Carolina 864-574-4775
Copyright © 2006 Vaughn & Melton, Inc. All Rights Reserved

STATE OF NORTH CAROLINA
DEPARTMENT OF TRANSPORTATION
RALEIGH

SUBSTRUCTURE
INTEGRAL
END BENT NO. 1

(RIGHT LANE)

DWN. BY: MAF DATE: SEPT. 2012
CHKD. BY: HLW DATE: SEPT. 2012

REVISIONS						
NO.	BY:	DATE:	NO.	BY:	DATE:	
1			3			
2			4			

SHEET NO. S-127
TOTAL SHEETS 138

STR. #4

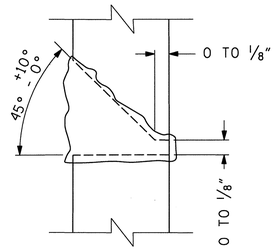

DETAIL A

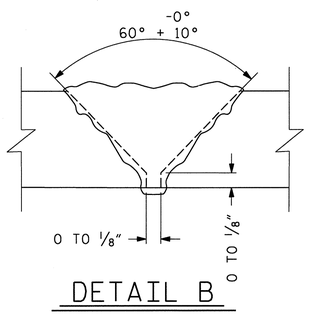

DETAIL B

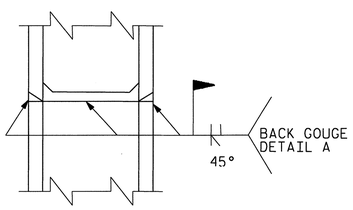

*PILE VERTICAL

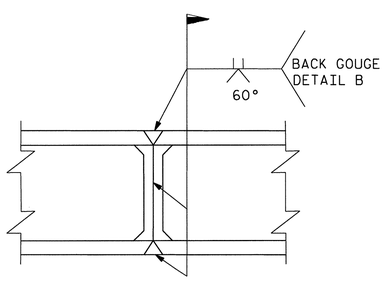

*PILE HORIZONTAL OR VERTICAL

* POSITION OF PILE DURING WELDING

PILE SPLICE DETAILS

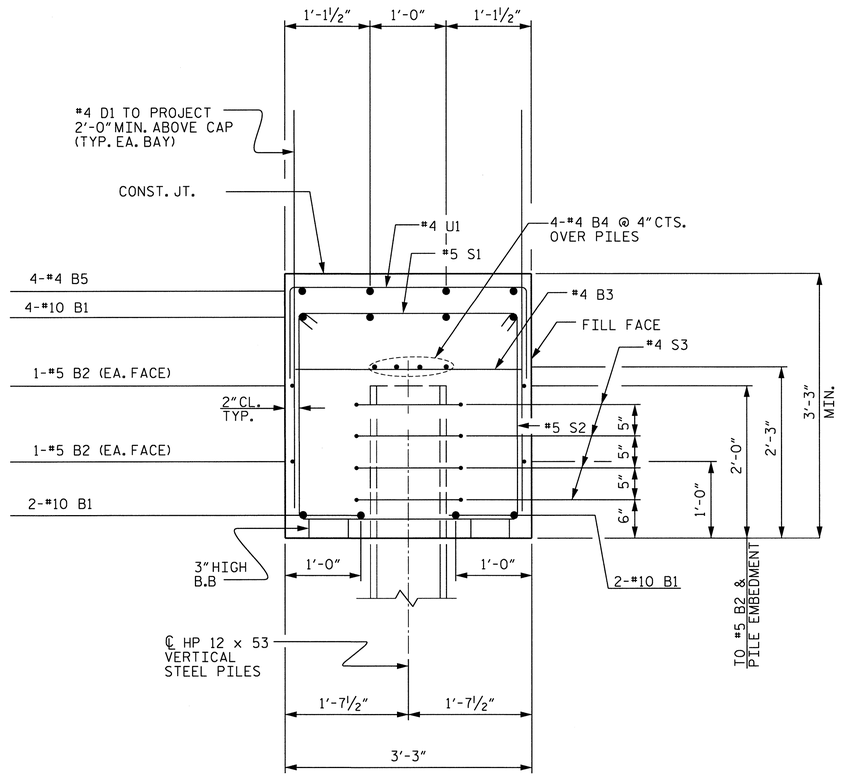

SECTION A-A

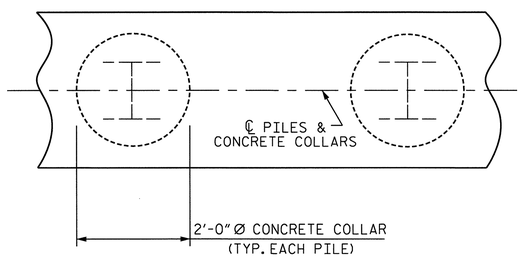

PLAN

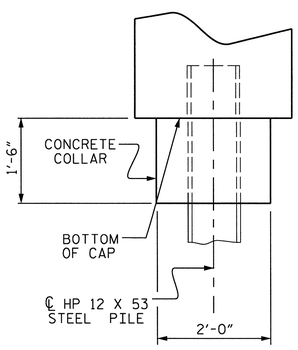

ELEVATION

CORROSION PROTECTION FOR STEEL PILES DETAIL

BAR TYPES

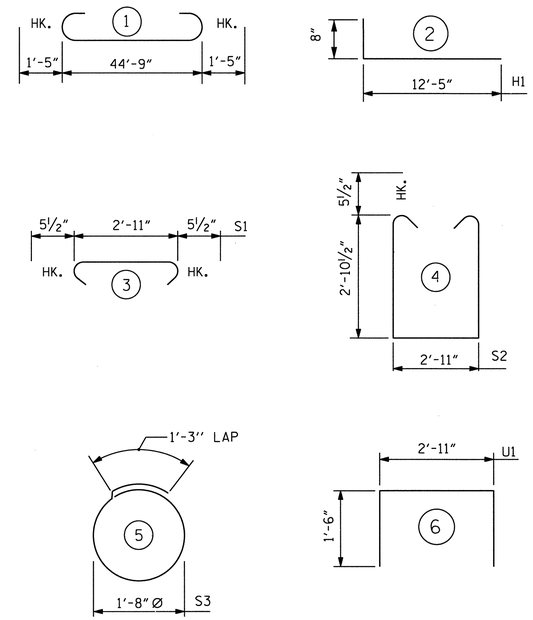

ALL BAR DIMENSIONS ARE OUT TO OUT.

BILL OF MATERIAL
END BENT 1

BAR	NO.	SIZE	TYPE	LENGTH	WEIGHT
B1	8	#10	1	47'-7"	1638
B2	2	#5	STR.	44'-11"	94
B3	11	#4	STR.	2'-11"	21
B4	8	#4	STR.	23'-8"	126
B5	4	#4	STR.	22'-3"	59
D1	78	#4	STR.	5'-10"	304
H1	22	#5	2	13'-1"	300
S1	39	#5	3	3'-10"	156
S2	39	#5	4	9'-7"	390
S3	24	#4	5	6'-6"	104
U1	15	#4	6	4'-11"	49
V1	24	#4	STR.	5'-0"	80
V2	24	#4	STR.	5'-10"	94

REINFORCING STEEL = 3415 LBS.

CLASS A CONCRETE BREAKDOWN

POUR #1 CAP, CONCRETE COLLARS & LOWER PART OF WINGS = 22.5 C.Y.

TOTAL CLASS A CONCRETE = 22.5 C.Y.

HP 12 X 53 STEEL PILES
NO: 6 LIN. FT. = 360

PILE REDRIVES
EACH 3

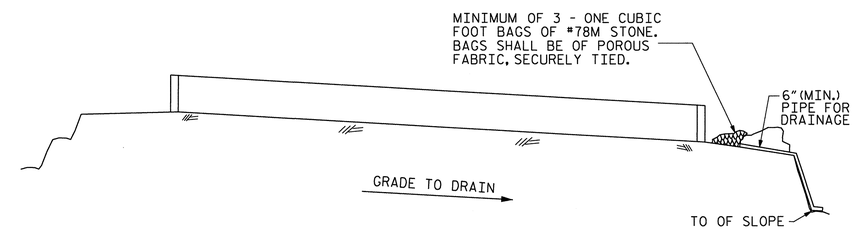

BAGGED STONE AND PIPE SHALL BE PLACED IMMEDIATELY AFTER COMPLETION OF END BENT EXCAVATION. PIPE MAY BE EITHER CONCRETE, CORRUGATED STEEL, CORRUGATED ALUMINUM ALLOY, OR CORRUGATED PLASTIC. PERFORATED PIPE WILL NOT BE ALLOWED.

BAGGED STONE SHALL REMAIN IN PLACE UNTIL THE ENGINEER DIRECTS THAT IT BE REMOVED. THE CONTRACTOR SHALL REMOVE AND DISPOSE OF SILT ACCUMULATIONS AT BAGGED STONE WHEN SO DIRECTED BY THE ENGINEER. BAGS SHALL BE REMOVED AND REPLACED WHENEVER THE ENGINEER DETERMINES THAT THEY HAVE DETERIORATED AND LOST THEIR EFFECTIVENESS.

NO SEPARATE PAYMENT WILL BE MADE FOR THIS WORK AND THE ENTIRE COST OF THIS WORK SHALL BE INCLUDED IN THE UNIT CONTRACT PRICE BID FOR THE SEVERAL PAY ITEMS.

TEMPORARY DRAINAGE AT END BENT

PROJECT NO. R-2303C
SAMPSON COUNTY
STATION: 1081+04.50 -L-

SHEET 3 OF 3

NORTH CAROLINA PROFESSIONAL SEAL 027 ENGINEER HARDY L. WILLIS 12/7/12

V&M Vaughn & Melton Consulting Engineers
Asheville, North Carolina 828-253-2796
Charlotte, North Carolina 704-357-0488
Tri-Cities, Tennessee 423-467-8401
Knoxville, Tennessee 865-546-5800
Middlesboro, Kentucky 606-248-6600
Spartanburg, South Carolina 864-574-4775
Copyright © 2006 Vaughn & Melton, Inc. All Rights Reserved

STATE OF NORTH CAROLINA
DEPARTMENT OF TRANSPORTATION
RALEIGH

SUBSTRUCTURE
INTEGRAL
END BENT NO. 1

(RIGHT LANE)

DWN. BY: MAF DATE: SEPT. 2012
CHKD. BY: HLW DATE: SEPT. 2012

REVISIONS						
NO.	BY:	DATE:	NO.	BY:	DATE:	
1			3			
2			4			

SHEET NO. S-128
TOTAL SHEETS 138

STR. #4

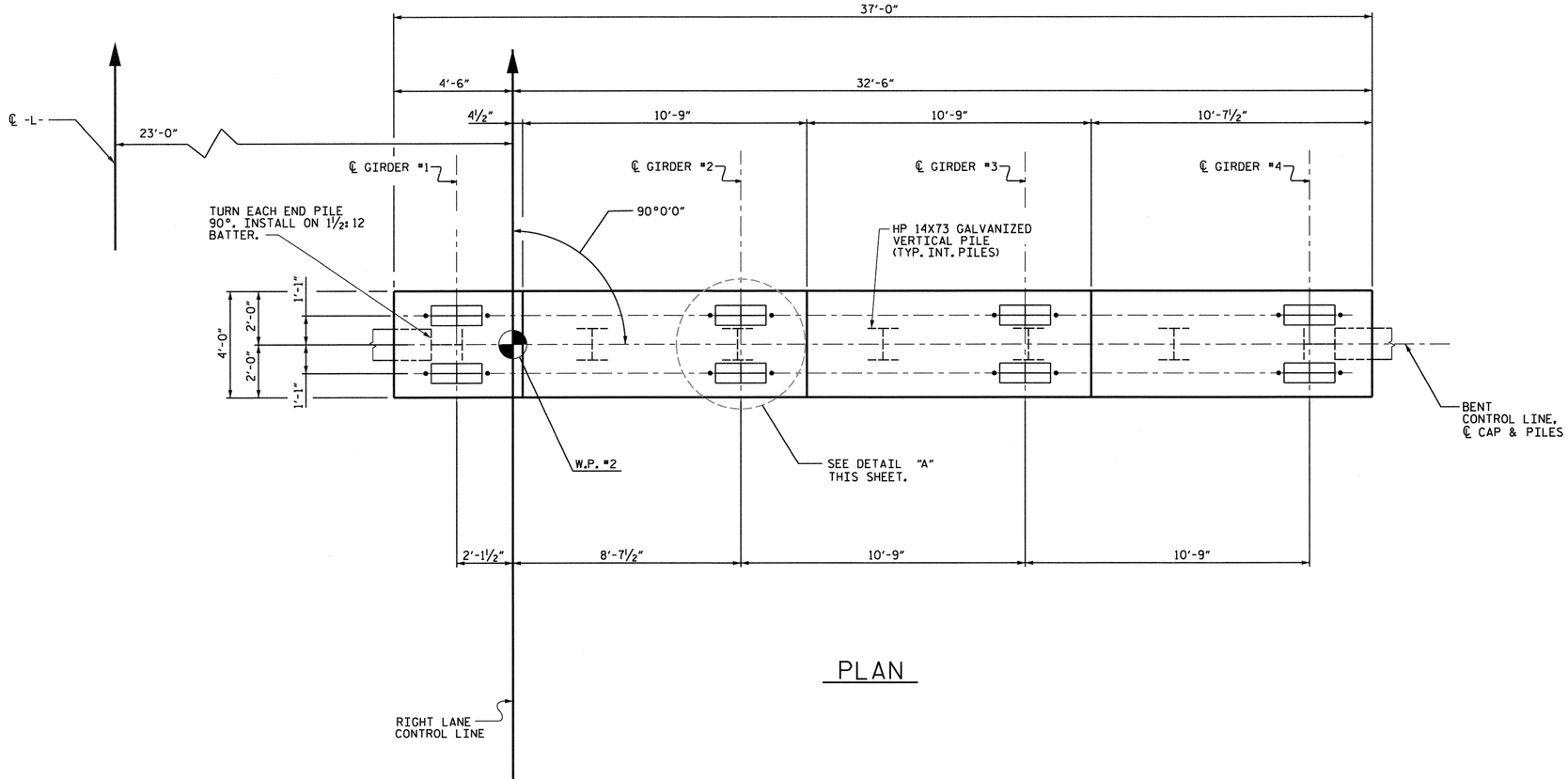

PLAN

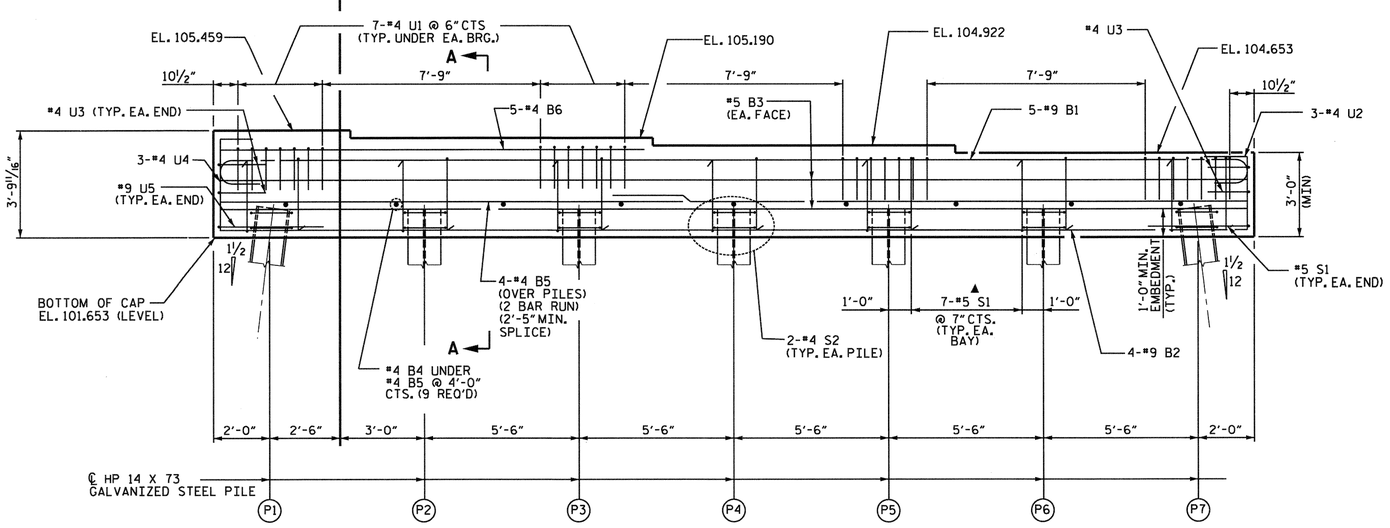

ELEVATION

▲ INVERT ALTERNATE STIRRUPS

NOTES

STIRRUPS AND "U" BARS IN CAP MAY BE SHIFTED AS NECESSARY TO CLEAR ANCHOR BOLTS.

FOR PILE SPLICE DETAILS, SEE SHEET S-128.

GALVANIZE THE TOP OF EACH INTERIOR BENT PILE A MINIMUM LENGTH OF 29 FEET. GALVANIZE IN ACCORDANCE WITH SECTION 1076 OF THE STANDARD SPECIFICATIONS.

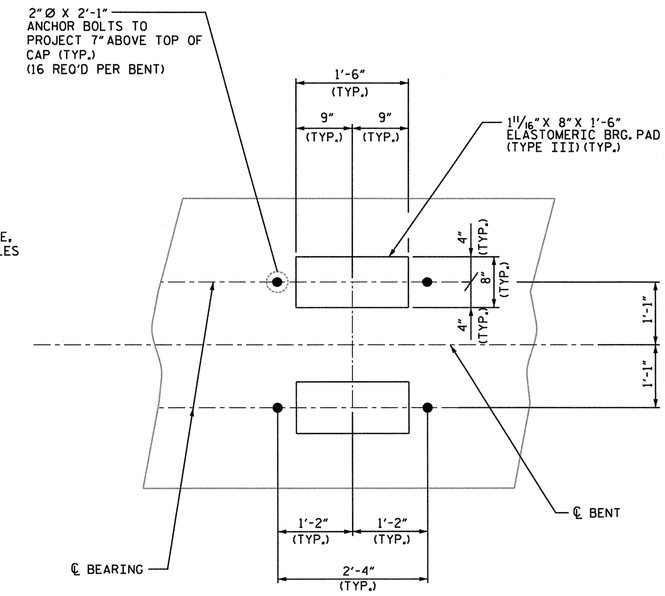

DETAIL "A"

NORTH CAROLINA PROFESSIONAL SEAL 20777 ENGINEER HARDY L. WILLIS 11/21/12

PROJECT NO. R-2303C

SAMPSON COUNTY

STATION: 1081+04.50 -L-

SHEET 1 OF 2

STATE OF NORTH CAROLINA
DEPARTMENT OF TRANSPORTATION
RALEIGH

SUBSTRUCTURE
BENT NO. 1

(RIGHT LANE)

V&M Vaughn & Melton Consulting Engineers
Asheville, North Carolina 828-253-2796
Charlotte, North Carolina 704-357-0448
Tri-Cities, Tennessee 423-467-8410
Knoxville, Tennessee 865-546-5800
Middlesboro, Kentucky 606-248-6600
Spartanburg, South Carolina 864-574-4775
Copyright © 2006 Vaughn & Melton, Inc. All Rights Reserved

DWN. BY: MAF DATE: SEPT. 2012
CHKD. BY: HLW DATE: SEPT. 2012

REVISIONS								SHEET NO.
NO.	BY:	DATE:	NO.	BY:	DATE:			S-129
1			3					TOTAL SHEETS
2			4					138

STR. #4

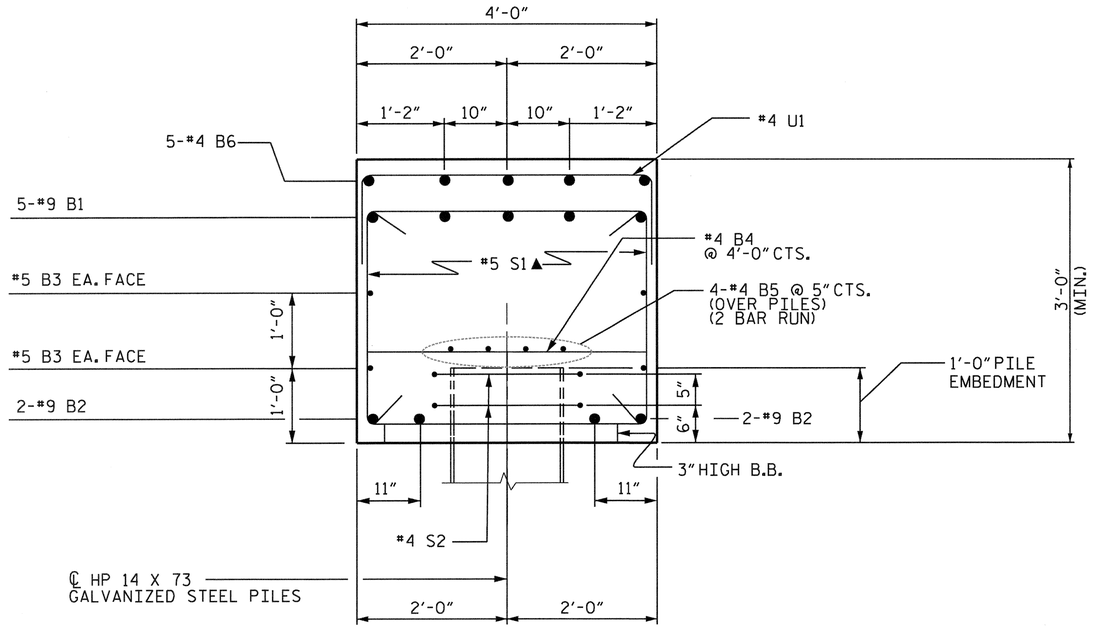

SECTION A-A

▲ INVERT ALTERNATE STIRRUPS

BAR TYPES

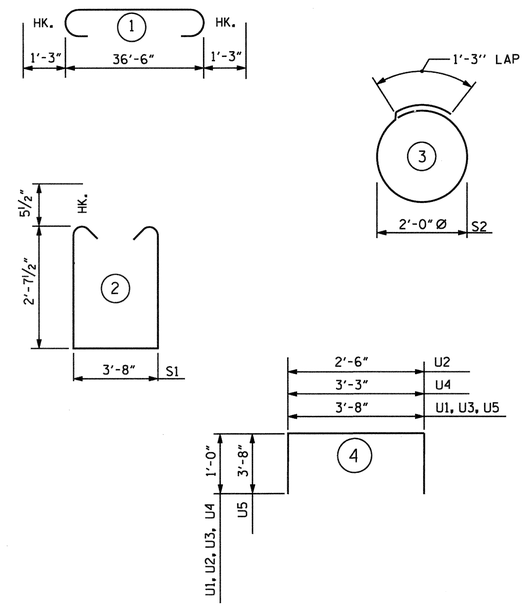

ALL BAR DIMENSIONS ARE OUT TO OUT.

BILL OF MATERIAL

BENT 1

BAR	NO.	SIZE	TYPE	LENGTH	WEIGHT
B1	5	#9	1	39'-0"	663
B2	4	#9	STR.	36'-8"	499
B3	4	#5	STR.	36'-8"	153
B4	9	#4	STR.	3'-8"	22
B5	8	#4	STR.	19'-7"	105
B6	5	#4	STR.	15'-3"	51
S1	44	#5	2	9'-10"	452
S2	14	#4	3	7'-7"	71
U1	28	#4	4	5'-8"	106
U2	3	#4	4	4'-6"	9
U3	4	#4	4	5'-8"	15
U4	3	#4	4	5'-3"	11
U5	2	#9	4	11'-0"	75

REINFORCING STEEL = 2,232 LBS.

CLASS A CONCRETE BREAKDOWN

POUR #1 CAP, CONCRETE = 18.3 C.Y.

TOTAL CLASS A CONCRETE = 18.3 C.Y.

HP 14 X 73 GALVANIZED STEEL PILES
NO: 7 LIN. FT. = 490

PILE REDRIVES
EACH 4

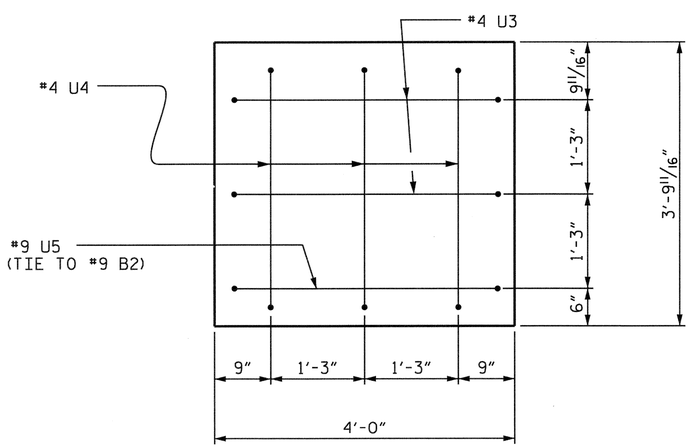

LEFT END OF CAP VIEW

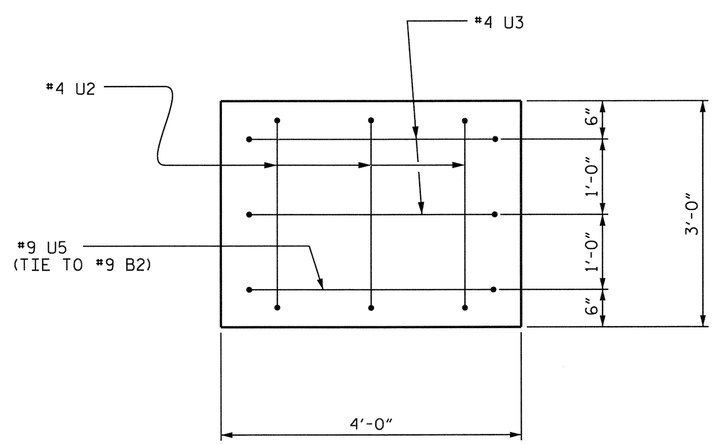

RIGHT END OF CAP VIEW

NORTH CAROLINA PROFESSIONAL SEAL 10747 ENGINEER HARDY L. WILLIS 11/21/12

PROJECT NO. R-2303C
SAMPSON COUNTY
STATION: 1081+04.50 -L-

SHEET 2 OF 2

STATE OF NORTH CAROLINA
DEPARTMENT OF TRANSPORTATION
RALEIGH

SUBSTRUCTURE
BENT NO. 1

(RIGHT LANE)

V&M Vaughn & Melton Consulting Engineers
Asheville, North Carolina 828-253-2796
Charlotte, North Carolina 704-357-0488
Tri-Cities, Tennessee 423-467-840
Knoxville, Tennessee 865-546-5800
Middlesboro, Kentucky 606-248-6600
Spartanburg, South Carolina 864-574-4775
Copyright © 2006 Vaughn & Melton's, Inc. All Rights Reserved

DWN. BY: MAF DATE: SEPT. 2012
CHKD. BY: HLW DATE: SEPT. 2012

REVISIONS							
NO.	BY:	DATE:	NO.	BY:	DATE:	SHEET NO.	
1			3			S-130	
2			4			TOTAL SHEETS 138	

STR. #4

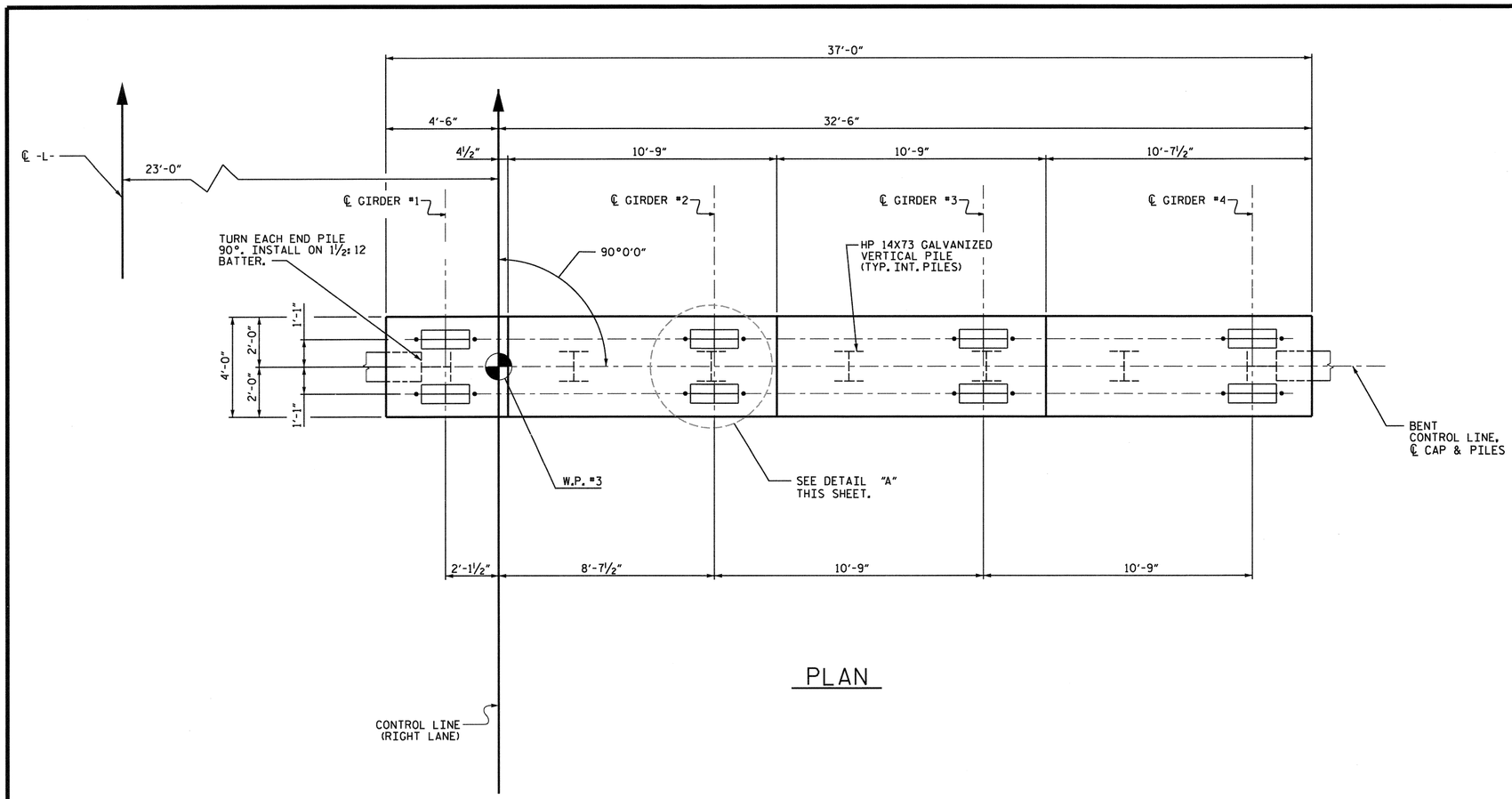

PLAN

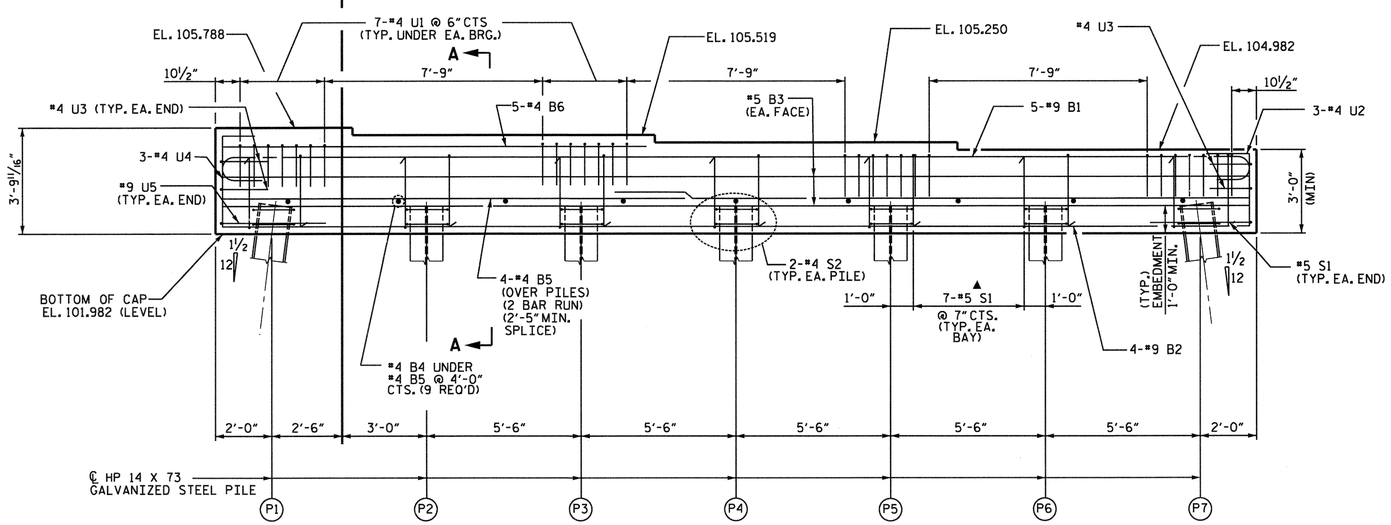

ELEVATION

▲ INVERT ALTERNATE STIRRUPS

NOTES

STIRRUPS AND "U" BARS IN CAP MAY BE SHIFTED AS NECESSARY TO CLEAR ANCHOR BOLTS.

FOR PILE SPLICE DETAILS, SEE SHEET S-128.

GALVANIZE THE TOP OF EACH INTERIOR BENT PILE A MINIMUM LENGTH OF 31 FEET. GALVANIZE IN ACCORDANCE WITH SECTION 1076 OF THE STANDARD SPECIFICATIONS.

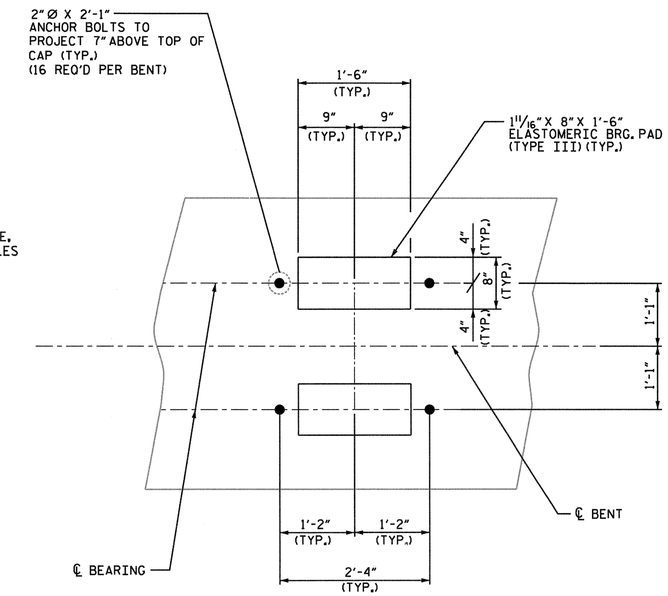

DETAIL "A"

NORTH CAROLINA PROFESSIONAL SEAL 20 ENGINEER HARDY L. WILLIS 11/2/12

PROJECT NO. R-2303C

SAMPSON COUNTY

STATION: 1081+04.50 -L-

SHEET 1 OF 2

V&M
Vaughn & Melton
Consulting Engineers
Asheville, North Carolina
828-253-2796
Charlotte, North Carolina 704-357-0468
Tri-Cities, Tennessee 423-467-840
Knoxville, Tennessee 865-546-1800
Middlesboro, Kentucky 606-248-5600
Spartanburg, South Carolina 864-574-4775

Copyright © 2006 Vaughn & Melton, Inc. All Rights Reserved

DWN. BY: MAF DATE: SEPT. 2012
CHKD. BY: HLW DATE: SEPT. 2012

STATE OF NORTH CAROLINA
DEPARTMENT OF TRANSPORTATION
RALEIGH

SUBSTRUCTURE
BENT NO. 2

(RIGHT LANE)

REVISIONS						SHEET NO.
NO.	BY:	DATE:	NO.	BY:	DATE:	S-131
1			3			TOTAL SHEETS
2			4			138

STR. #4

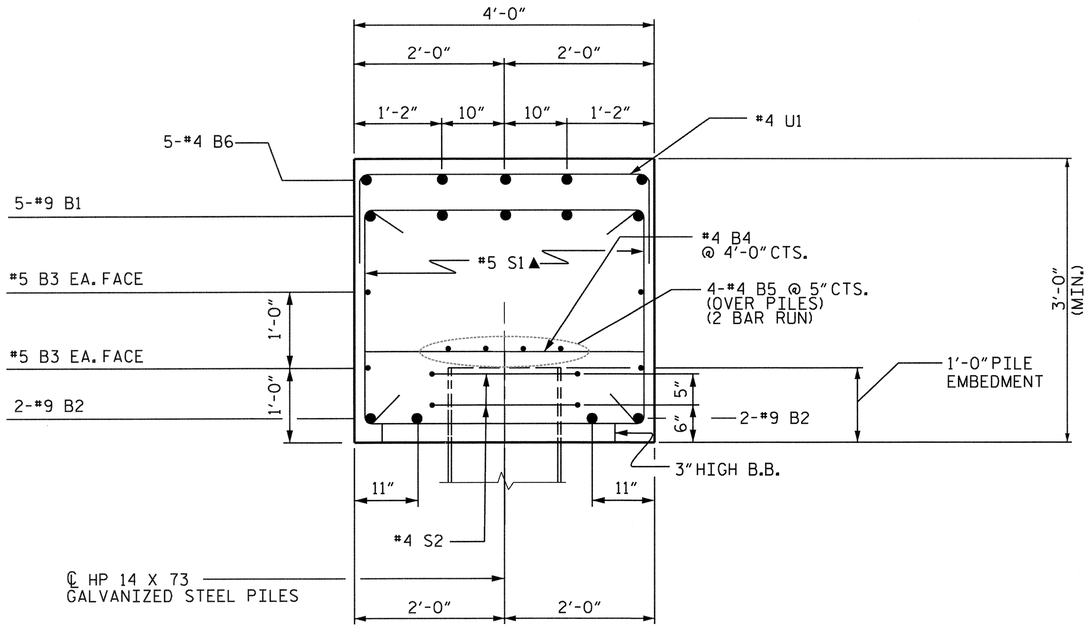

SECTION A-A

▲ INVERT ALTERNATE STIRRUPS

BAR TYPES

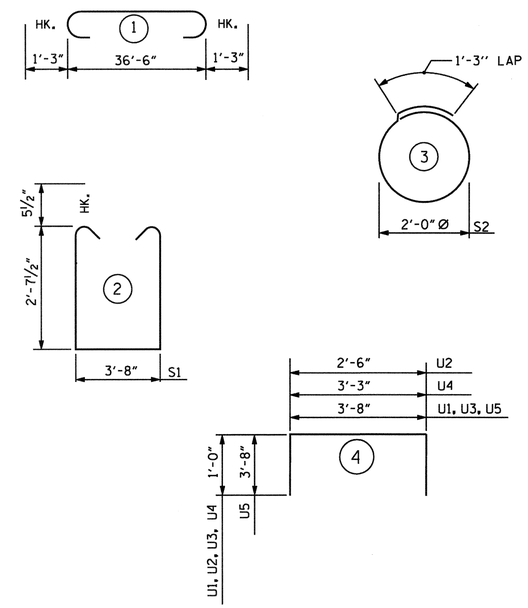

ALL BAR DIMENSIONS ARE OUT TO OUT.

BILL OF MATERIAL

BENT 2

BAR	NO.	SIZE	TYPE	LENGTH	WEIGHT
B1	5	#9	1	39'-0"	663
B2	4	#9	STR.	36'-8"	499
B3	4	#5	STR.	36'-8"	153
B4	9	#4	STR.	3'-8"	22
B5	8	#4	STR.	19'-7"	105
B6	5	#4	STR.	15'-3"	51
S1	44	#5	2	9'-10"	452
S2	14	#4	3	7'-7"	71
U1	28	#4	4	5'-8"	106
U2	3	#4	4	4'-6"	9
U3	4	#4	4	5'-8"	15
U4	3	#4	4	5'-3"	11
U5	2	#9	4	11'-0"	75

REINFORCING STEEL = 2,232 LBS.

CLASS A CONCRETE BREAKDOWN

POUR #1 CAP, CONCRETE = 18.3 C.Y.

TOTAL CLASS A CONCRETE = 18.3 C.Y.

HP 14 X 73 GALVANIZED STEEL PILES
NO: 7 LIN. FT. = 455

PILE REDRIVES
EACH 4

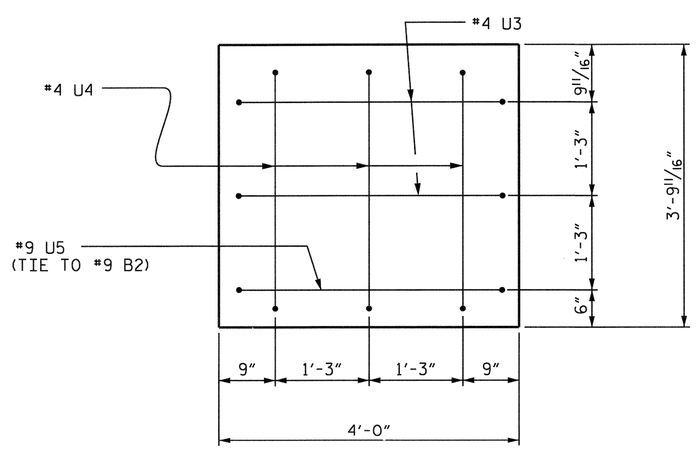

LEFT END OF CAP VIEW

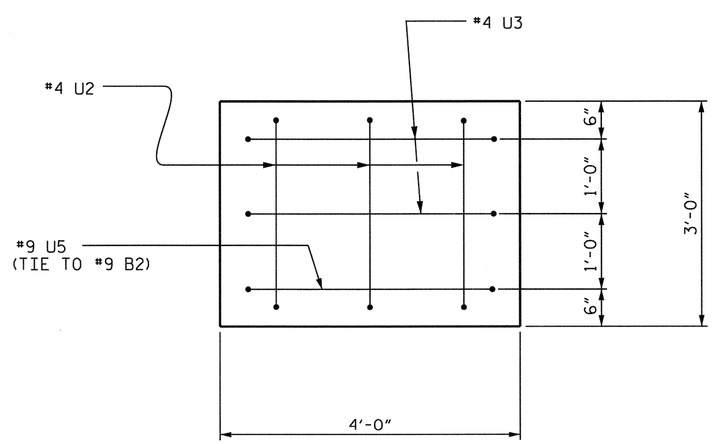

RIGHT END OF CAP VIEW

NORTH CAROLINA PROFESSIONAL SEAL 20747 ENGINEER HARDY L. WILLIS 11/21/12

PROJECT NO. R-2303C
SAMPSON COUNTY
STATION: 1081+04.50 -L-

SHEET 2 OF 2

STATE OF NORTH CAROLINA
DEPARTMENT OF TRANSPORTATION
RALEIGH

SUBSTRUCTURE
BENT NO. 2

(RIGHT LANE)

V&M Vaughn & Melton Consulting Engineers
Asheville, North Carolina 828-253-2796
Charlotte, North Carolina 704-357-0488
Tri-Cities, Tennessee 423-467-8401
Knoxville, Tennessee 865-546-5800
Middlesboro, Kentucky 606-248-6600
Spartanburg, South Carolina 864-574-4775

Copyright © 2006 Vaughn & Melton, Inc. All Rights Reserved

DWN. BY: MAF DATE: SEPT. 2012
CHKD. BY: HLW DATE: SEPT. 2012

REVISIONS						SHEET NO.
NO.	BY:	DATE:	NO.	BY:	DATE:	S-132
1			3			TOTAL SHEETS
2			4			138

STR. #4

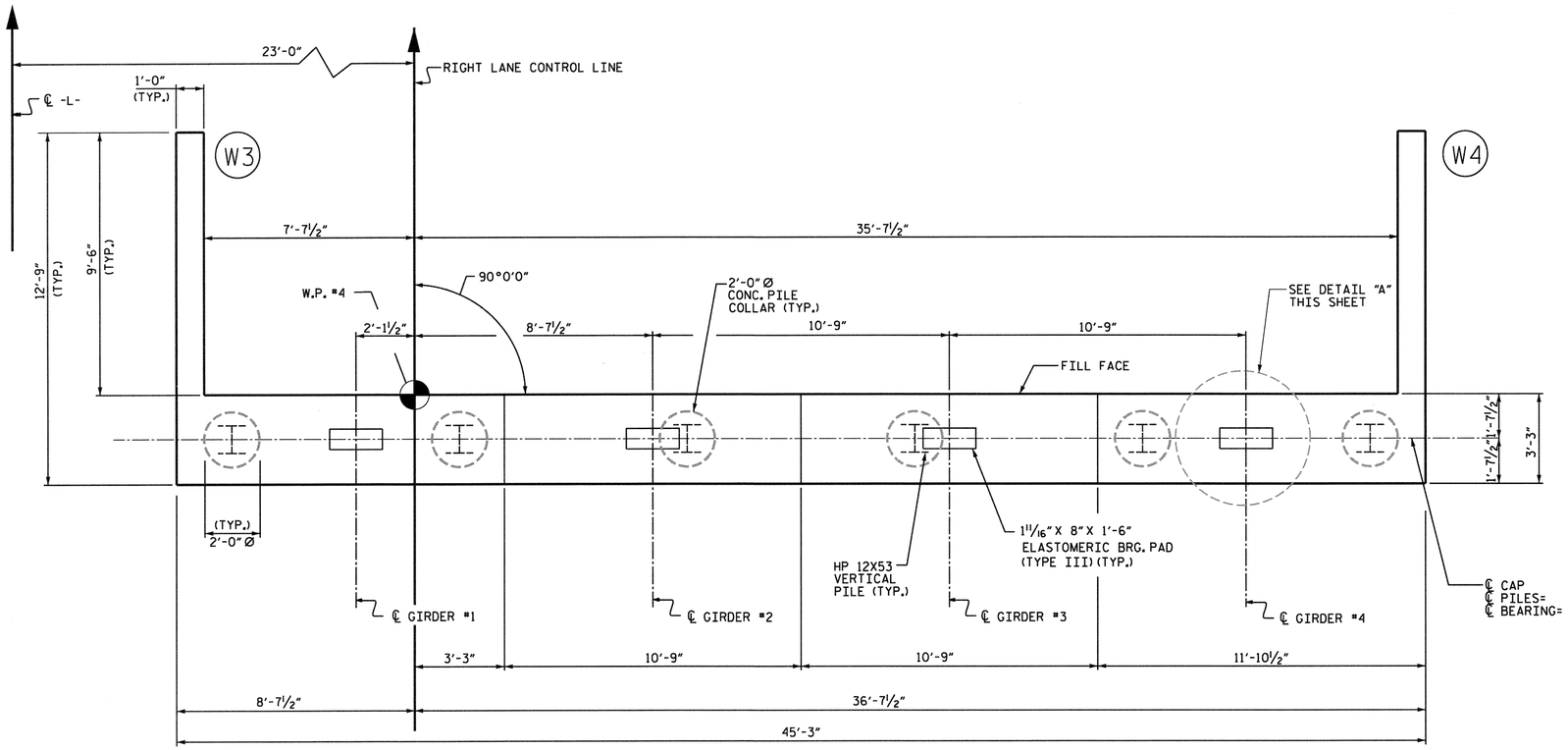

PLAN

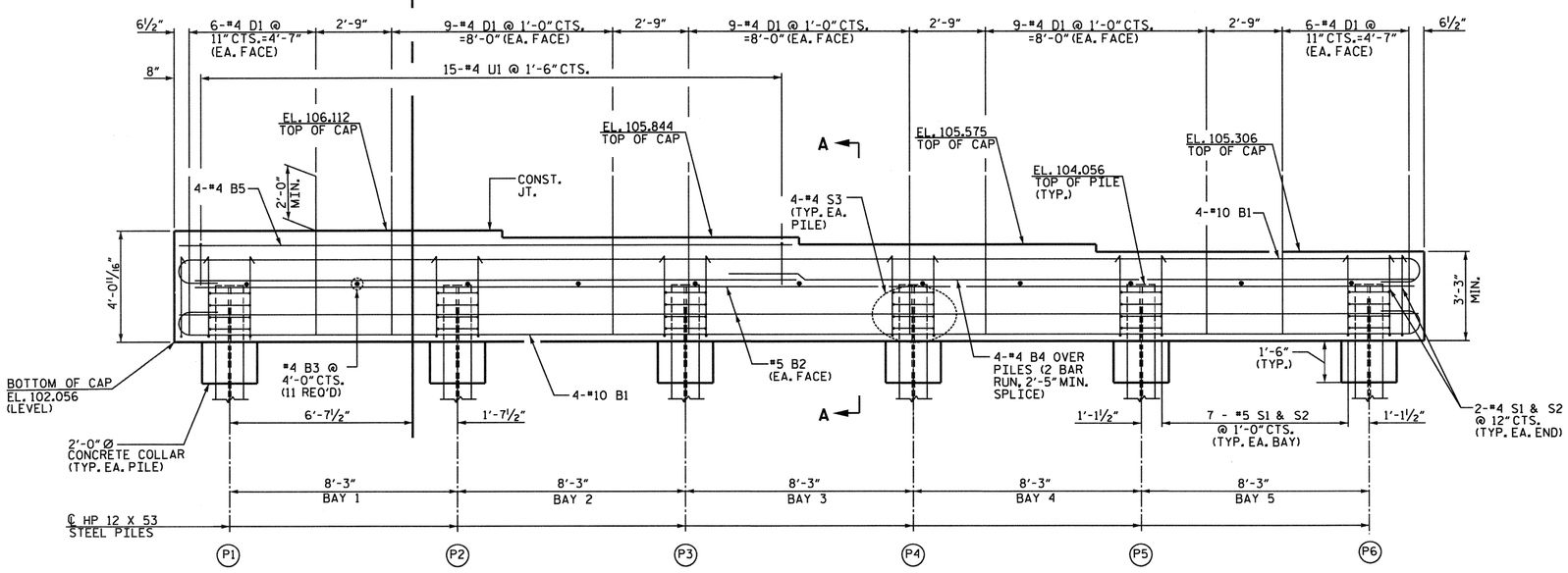

ELEVATION

NOTES

FOR PILE SPLICE DETAILS & TEMPORARY DRAINAGE AT END BENT, SEE SHEET 3 OF 3.

THE CONTRACTOR SHALL PROVIDE FOR INSTALLATION OF THE 4" DIAMETER DRAIN PIPE THROUGH THE WING WALL AS REQUIRED FOR REINFORCED BRIDGE APPROACH FILLS. SEE THE ROADWAY PLANS. REINFORCING STEEL IN THE WING WALL MAY BE SHIFTED AS NECESSARY TO CLEAR THE DRAIN PIPE.

SEE SUPERSTRUCTURE SHEETS FOR INTEGRAL END BENT DIAPHRAGM DETAILS.

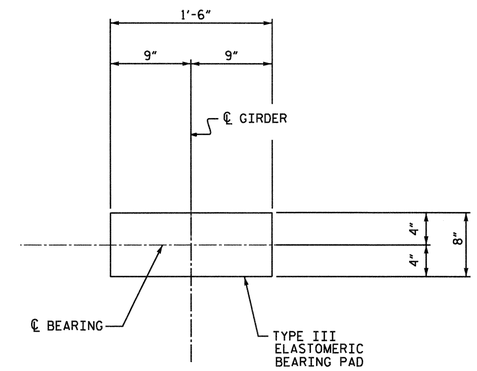

DETAIL "A"

NORTH CAROLINA PROFESSIONAL SEAL 20777 ENGINEER HARDY L. WILLIS 11/21/12

PROJECT NO. R-2303C

SAMPSON COUNTY

STATION: 1081+04.50 -L-

SHEET 1 OF 3

V&M Vaughn & Melton Consulting Engineers
Asheville, North Carolina 828-253-2796
Charlotte, North Carolina 704-357-0488
Tri-Cities, Tennessee 423-467-8401
Knoxville, Tennessee 865-546-5800
Middlesboro, Kentucky 606-248-6600
Spartanburg, South Carolina 864-574-4775

Copyright © 2006 Vaughn & Melton, Inc. All Rights Reserved

DWN. BY: MAF DATE: SEPT. 2012
CHKD. BY: HLW DATE: SEPT. 2012

STATE OF NORTH CAROLINA
DEPARTMENT OF TRANSPORTATION
RALEIGH

SUBSTRUCTURE
INTEGRAL
END BENT NO. 2

(RIGHT LANE)

REVISIONS						SHEET NO.
NO.	BY:	DATE:	NO.	BY:	DATE:	S-133
1			3			TOTAL SHEETS
2			4			138

STR. #4

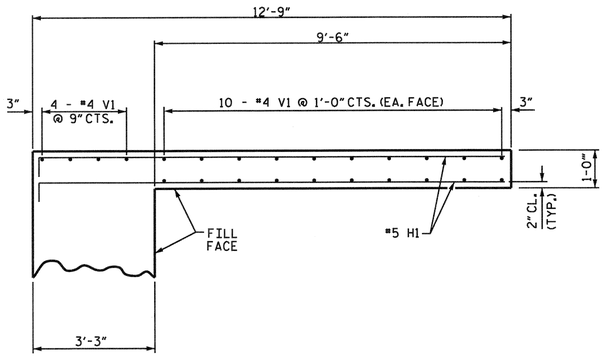

PLAN OF WING (W3)

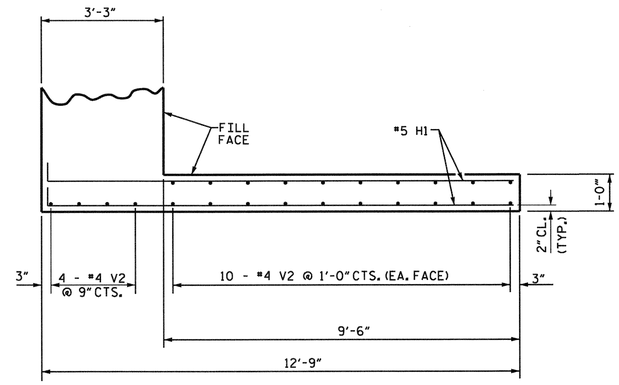

PLAN OF WING (W4)

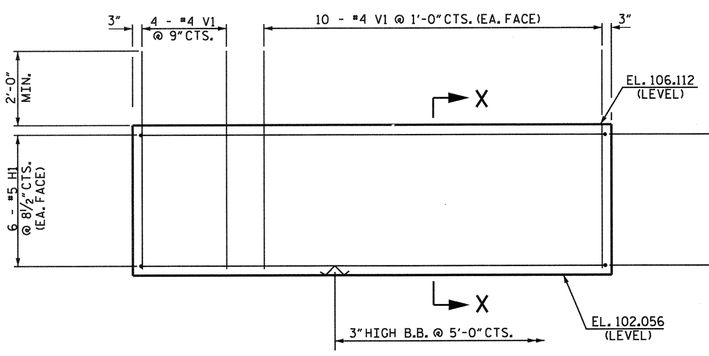

ELEVATION OF WING (W3)

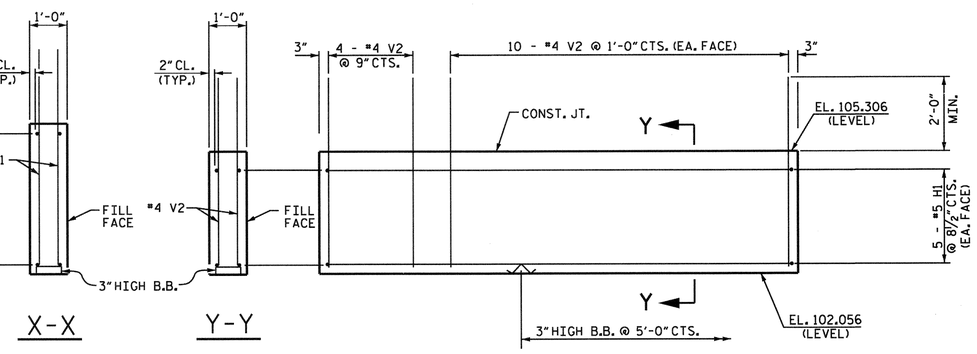

ELEVATION OF WING (W4)

NORTH CAROLINA PROFESSIONAL SEAL 20077 ENGINEER HARDY L. WILLIS 11/12/12

PROJECT NO. R-2303C

SAMPSON COUNTY

STATION: 1081+04.50 -L-

SHEET 2 OF 3

V&M
Vaughn & Melton
Consulting Engineers
Asheville, North Carolina
828-253-2796
Charlotte, North Carolina 704-357-0488
Tri-Cities, Tennessee 423-467-8401
Knoxville, Tennessee 865-546-5800
Middlesboro, Kentucky 606-248-6600
Spartanburg, South Carolina 864-574-4775

Copyright © 2006 Vaughn & Melton, Inc. All Rights Reserved

DWN. BY: MAF DATE: SEPT. 2012
CHKD. BY: HLW DATE: SEPT. 2012

STATE OF NORTH CAROLINA
DEPARTMENT OF TRANSPORTATION
RALEIGH

SUBSTRUCTURE
INTEGRAL
END BENT NO. 2

(RIGHT LANE)

REVISIONS						SHEET NO.
NO.	BY:	DATE:	NO.	BY:	DATE:	S-134
1			3			TOTAL SHEETS
2			4			138

STR. #4

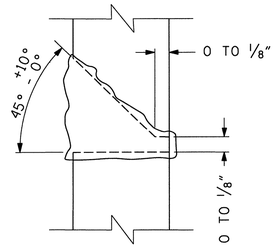

DETAIL A

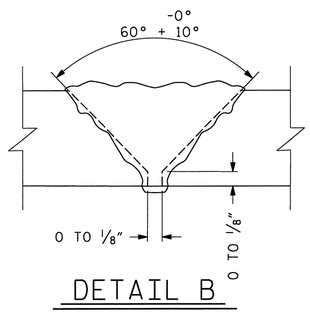

DETAIL B

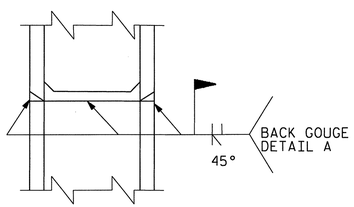

*PILE VERTICAL

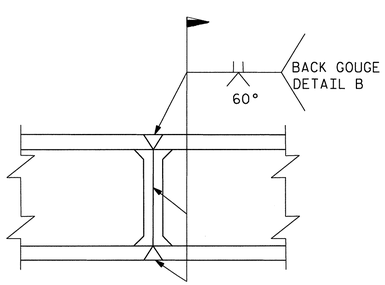

*PILE HORIZONTAL OR VERTICAL

* POSITION OF PILE DURING WELDING

PILE SPLICE DETAILS

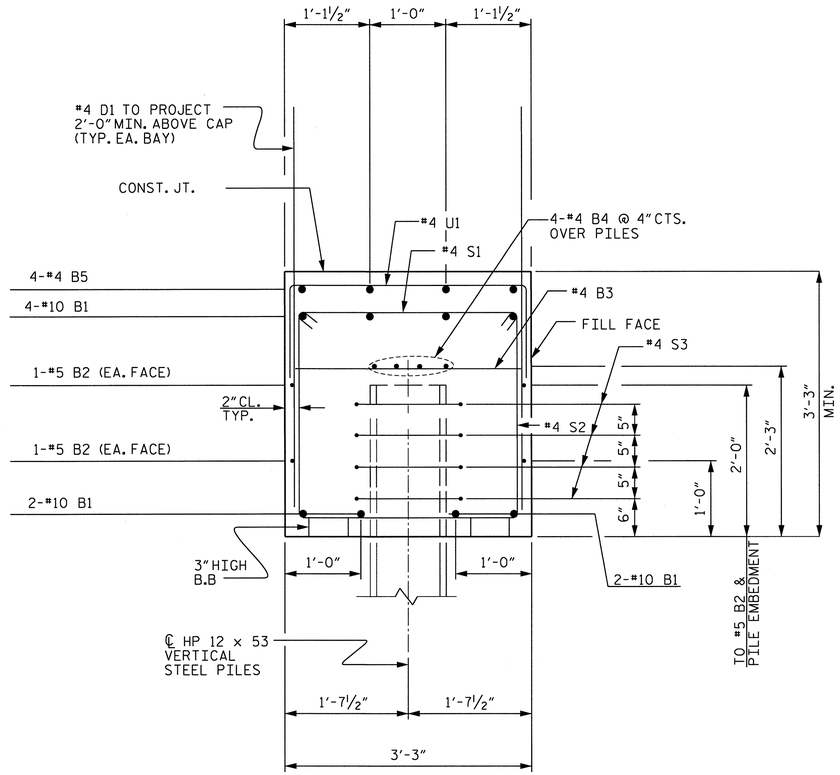

SECTION A-A

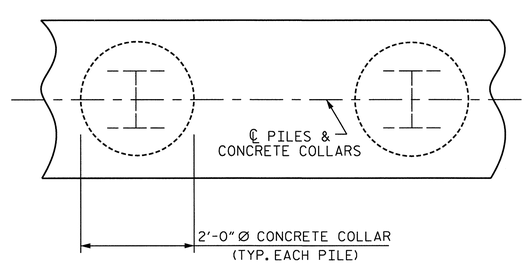

PLAN

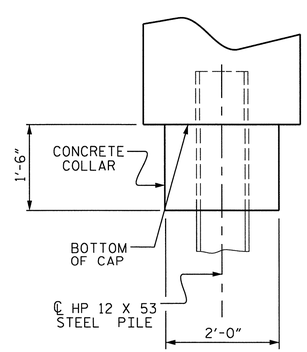

ELEVATION

CORROSION PROTECTION FOR STEEL PILES DETAIL

BAR TYPES

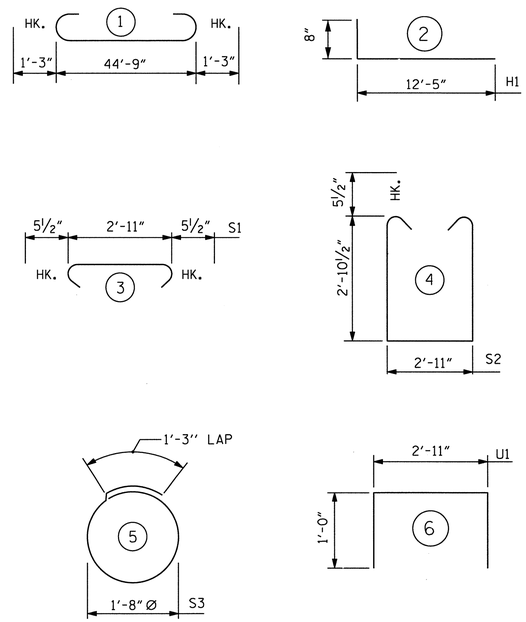

ALL BAR DIMENSIONS ARE OUT TO OUT.

BILL OF MATERIAL
END BENT 2

BAR	NO.	SIZE	TYPE	LENGTH	WEIGHT
B1	8	#10	1	47'-7"	1638
B2	2	#5	STR.	44'-11"	94
B3	11	#4	STR.	2'-11"	21
B4	8	#4	STR.	23'-8"	126
B5	4	#4	STR.	22'-3"	59
D1	78	#4	STR.	5'-10"	304
H1	22	#5	2	13'-1"	300
S1	39	#5	3	3'-10"	156
S2	39	#5	4	9'-7"	390
S3	24	#4	5	6'-6"	104
U1	15	#4	6	4'-11"	49
V1	24	#4	STR.	5'-0"	80
V2	24	#4	STR.	5'-10"	94

REINFORCING STEEL = 3415 LBS.

CLASS A CONCRETE BREAKDOWN

POUR #1 CAP, CONCRETE COLLARS & LOWER PART OF WINGS = 22.5 C.Y.

TOTAL CLASS A CONCRETE = 22.5 C.Y.

HP 12 X 53 STEEL PILES
NO: 6 LIN. FT. = 360

PILE REDRIVES
EACH 3

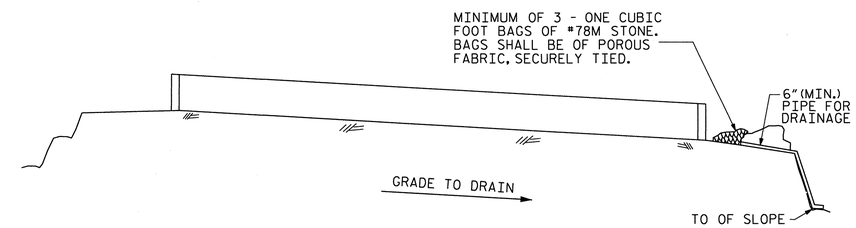

BAGGED STONE AND PIPE SHALL BE PLACED IMMEDIATELY AFTER COMPLETION OF END BENT EXCAVATION. PIPE MAY BE EITHER CONCRETE, CORRUGATED STEEL, CORRUGATED ALUMINUM ALLOY, OR CORRUGATED PLASTIC. PERFORATED PIPE WILL NOT BE ALLOWED.

BAGGED STONE SHALL REMAIN IN PLACE UNTIL THE ENGINEER DIRECTS THAT IT BE REMOVED. THE CONTRACTOR SHALL REMOVE AND DISPOSE OF SILT ACCUMULATIONS AT BAGGED STONE WHEN SO DIRECTED BY THE ENGINEER. BAGS SHALL BE REMOVED AND REPLACED WHENEVER THE ENGINEER DETERMINES THAT THEY HAVE DETERIORATED AND LOST THEIR EFFECTIVENESS.

NO SEPARATE PAYMENT WILL BE MADE FOR THIS WORK AND THE ENTIRE COST OF THIS WORK SHALL BE INCLUDED IN THE UNIT CONTRACT PRICE BID FOR THE SEVERAL PAY ITEMS.

TEMPORARY DRAINAGE AT END BENT

PROJECT NO. R-2303C
SAMPSON COUNTY
STATION: 1081+04.50 -L-

SHEET 3 OF 3

NORTH CAROLINA PROFESSIONAL SEAL ENGINEER HARDY L. WILLIS 12/7/12

V&M
Vaughn & Melton
Consulting Engineers
Asheville, North Carolina 828-253-2796
Charlotte, North Carolina 704-357-0488
Tri-Cities, Tennessee 423-467-8400
Knoxville, Tennessee 865-546-5800
Middlesboro, Kentucky 606-248-6600
Spartanburg, South Carolina 864-574-4775

Copyright © 2006 Vaughn & Melton, Inc. All Rights Reserved

STATE OF NORTH CAROLINA
DEPARTMENT OF TRANSPORTATION
RALEIGH

SUBSTRUCTURE
INTEGRAL
END BENT NO. 2
(RIGHT LANE)

DWN. BY: MAF DATE: SEPT. 2012
CHKD. BY: HLW DATE: SEPT. 2012

REVISIONS						
NO.	BY:	DATE:	NO.	BY:	DATE:	
1			3			
2			4			

SHEET NO. S-135
TOTAL SHEETS 138

STR. #4

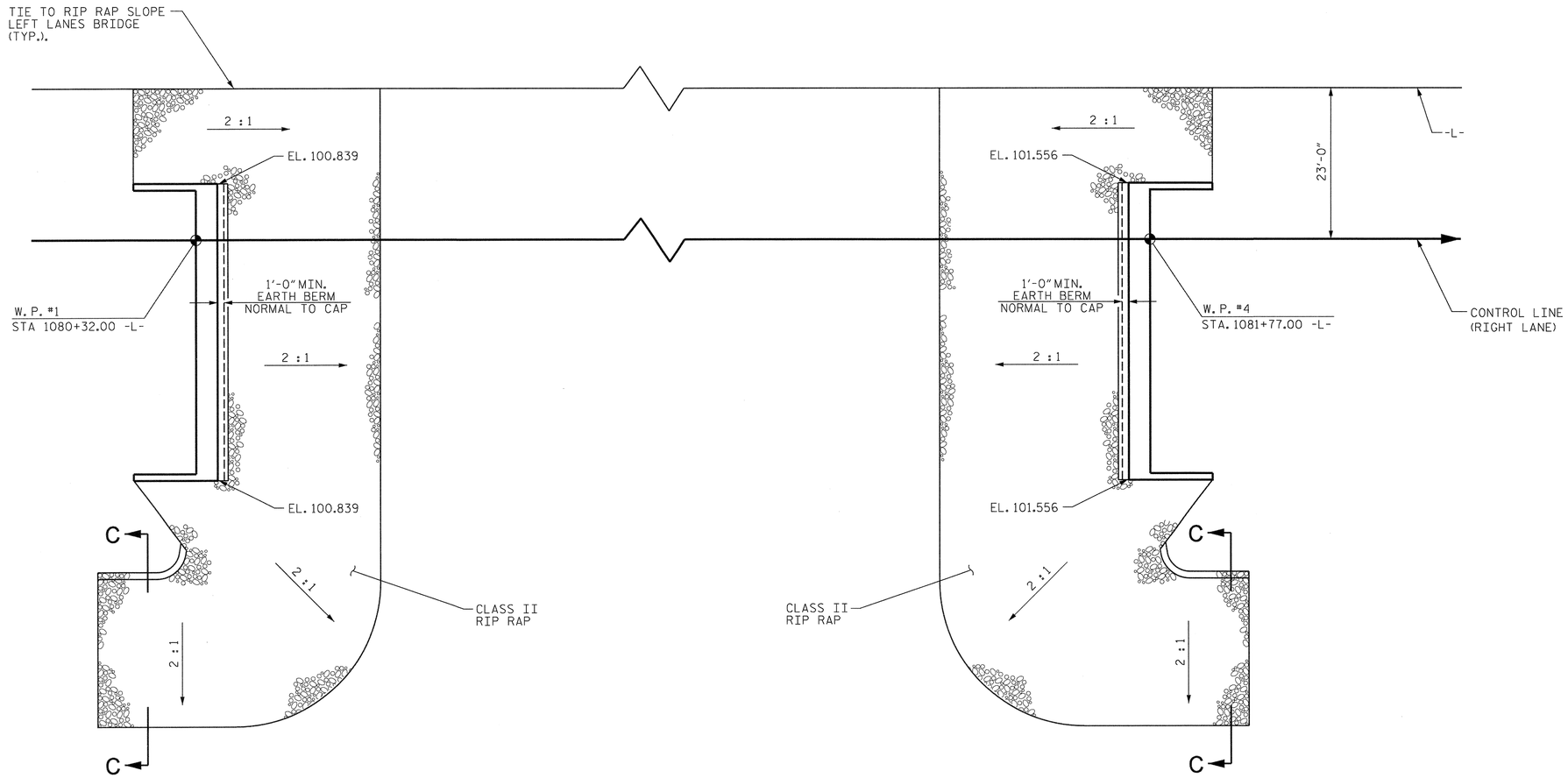

PLAN OF RIP RAP

ESTIMATED QUANTITIES		
BRIDGE @ STA. 1081+04.50	RIP RAP CLASS II (2'-0" THICK)	GEOTEXTILE FOR DRAINAGE
	TONS	SQUARE YARDS
END BENT 1	344	385
END BENT 2	393	440

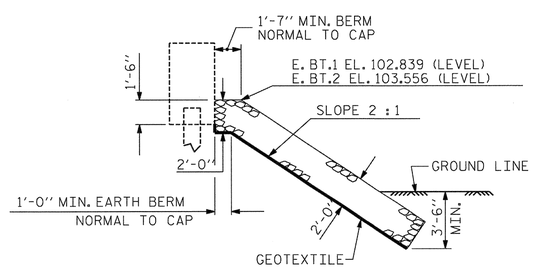

℄ SECTION

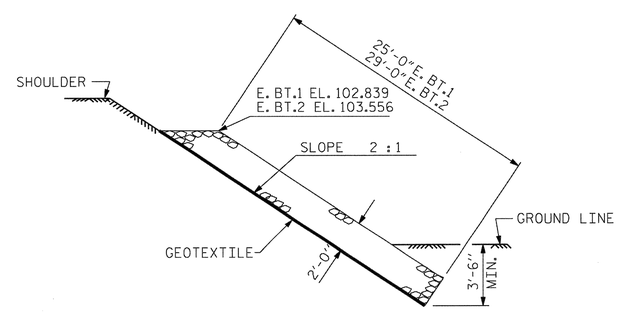

SECTION C-C

PROJECT NO. R-2303C

SAMPSON COUNTY

STATION: 1081+04.50 -L-

NORTH CAROLINA PROFESSIONAL SEAL 8077 ENGINEER HARDY L. WILLIS 11/21/12

STATE OF NORTH CAROLINA
DEPARTMENT OF TRANSPORTATION
RALEIGH

STANDARD

RIP RAP DETAILS

(RIGHT LANE)

REVISIONS								SHEET NO.
NO.	BY:	DATE:	NO.	BY:	DATE:			S-136
1			3					TOTAL SHEETS 138
2			4					

ASSEMBLED BY : MAF	DATE : 09/2012	
CHECKED BY : HLW	DATE : 09/2012	
DRAWN BY : FCJ 2/88	REV. 8/16/99	RWW/LES
CHECKED BY : ARB 8/88	REV. 10/17/00	RWW/LES
	REV. 5/1/06R	TLA/GM

SKEW 90° STR. #4 STD. NO. RR2

$$$$$$SYSTIME$$$$$
$$$$$$$$$$$$$$$$$$$$$$$$DGN$$$$$$$$$$$$$$$$$$$$$$$$
$$$$USERNAME$$$$

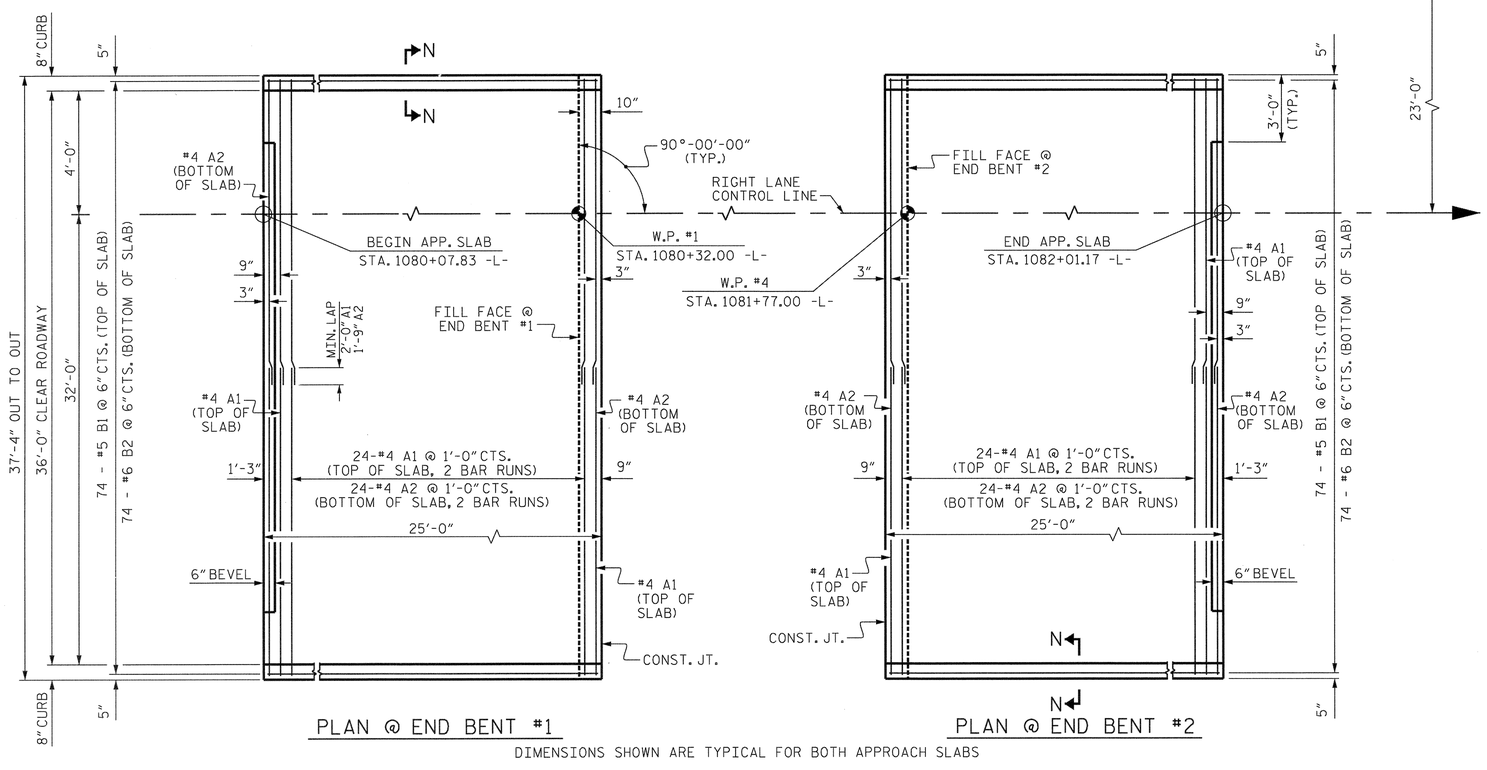

DIMENSIONS SHOWN ARE TYPICAL FOR BOTH APPROACH SLABS

NOTES

APPROACH SLAB SHALL NOT BE CONSTRUCTED PRIOR TO COMPLETION OF THE BRIDGE DECK.

FOR REINFORCED BRIDGE APPROACH FILL FABRIC WALL INCLUDING GEOTEXTILE, IMPERMEABLE GEOMEMBRANE, 4" Ø DRAINAGE PIPE, #78M STONE, WELDED WIRE FORM, AND SELECT MATERIAL, SEE ROADWAY PLANS.

AREA BETWEEN THE WINGWALL AND APPROACH SLAB SHALL BE GRADED TO DRAIN THE WATER AWAY FROM THE FILL FACE OF THE BRIDGE AND SHALL BE PAVED. SEE ROADWAY PLANS.

THE JOINT OPENING AT THE APPROACH SLAB/DECK INTERFACE SHALL BE SAWED NO MORE THAN 12 HOURS AFTER THE APPROACH SLAB IS CAST. THE JOINT SHALL BE CLEANED OF ALL DEBRIS BEFORE THE SEALANT IS APPLIED. THE JOINT SEALER MATERIAL SHALL CONFORM TO THE REQUIREMENTS OF SECTION 1028-3 OF THE STANDARD SPECIFICATIONS.

BILL OF MATERIAL

FOR ONE APPROACH SLAB (2 REQ'D)

BAR	NO.	SIZE	TYPE	LENGTH	WEIGHT
* A1	52	#4	STR	19'-6"	677
A2	52	#4	STR	19'-5"	675
* B1	74	#5	STR	24'-2"	1,865
B2	74	#6	STR	24'-8"	2,742
REINFORCING STEEL				LBS.	3,417
* EPOXY COATED REINFORCING STEEL				LBS.	2,542
CLASS AA CONCRETE				C.Y.	40.4

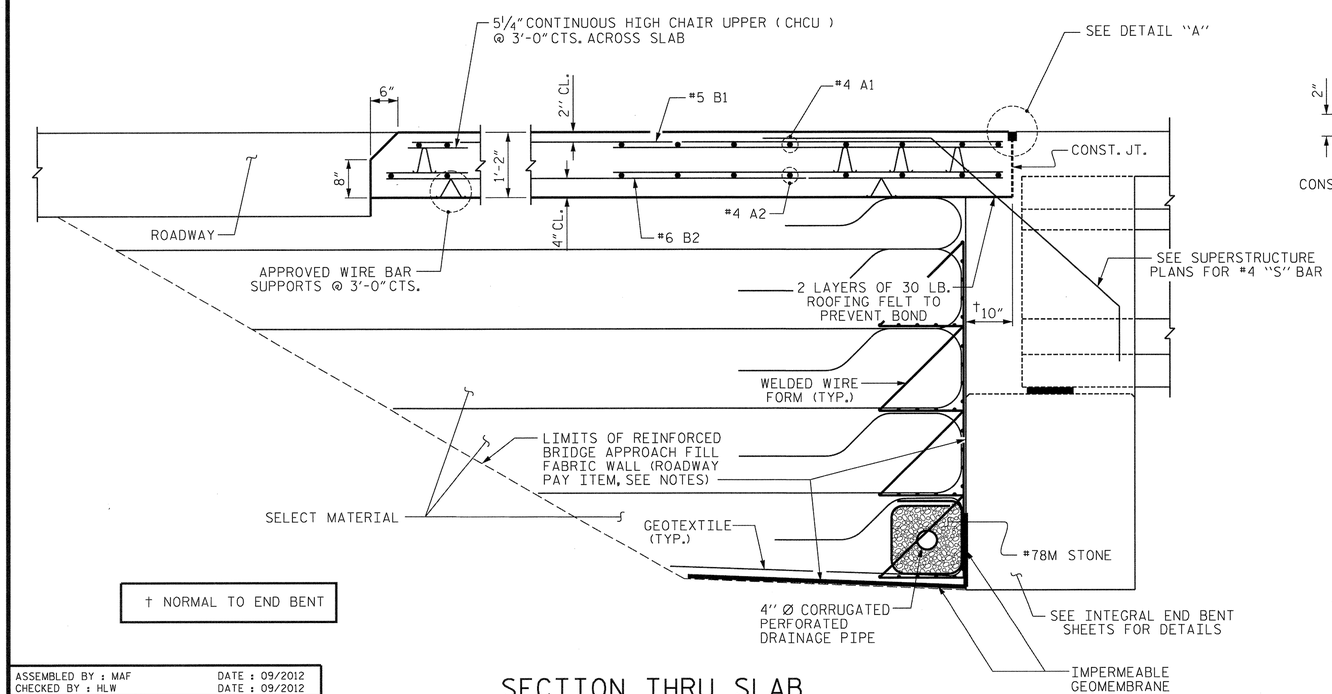

† NORMAL TO END BENT

SECTION THRU SLAB

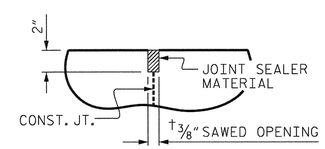

DETAIL "A"

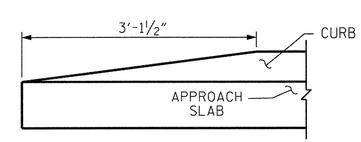

END OF CURB WITHOUT SHOULDER BERM GUTTER

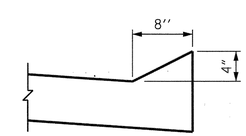

SECTION N-N

NORTH CAROLINA PROFESSIONAL SEAL 2027 ENGINEER HARDY L. WILLIS 11/21/12

PROJECT NO. R-2303C

SAMPSON COUNTY

STATION: 1081+04.50 -L-

SHEET 1 OF 2

STATE OF NORTH CAROLINA
DEPARTMENT OF TRANSPORTATION
RALEIGH

STANDARD

BRIDGE APPROACH SLAB FOR INTEGRAL ABUTMENT

(RIGHT LANE)

REVISIONS						SHEET NO.
NO.	BY:	DATE:	NO.	BY:	DATE:	S-137
1			3			TOTAL SHEETS
2			4			138

ASSEMBLED BY : MAF	DATE : 09/2012
CHECKED BY : HLW	DATE : 09/2012
DRAWN BY : TLA 10/05	ADDED 5/1/06RR KMM/GM
CHECKED BY : GM 5/06	REV. 10/1/11 MAA/GM
	REV. 12/21/11 MAA/GM

STR. #4 STD. NO. BAS5

$$$$$$SYSTIME$$$$$
$$$$$$$$$$$$$$$$$$$$$$DGN$$$$$$$$$$$$$$$$$$$$$$$$
$$$$USERNAME$$$$

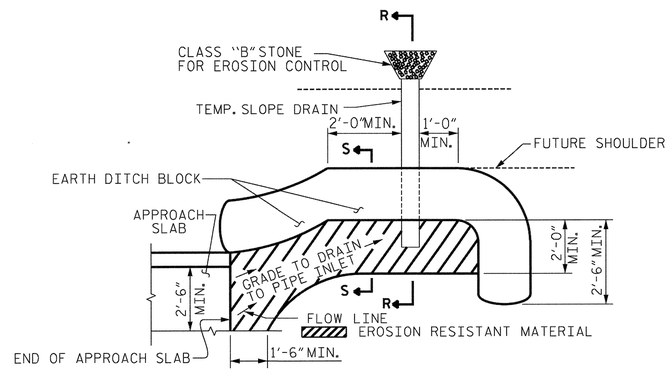

NOTE: IMMEDIATELY AFTER THE CONSTRUCTION OF THE APPROACH SLAB, THE CONTRACTOR SHALL PROVIDE TEMPORARY BERM AND SLOPE DRAIN. CONTRACTOR SHALL GRADE TO PIPE INLET AND PROVIDE EROSION RESISTANT MATERIAL AS SHOWN. THE EROSION RESISTANT MATERIAL SHALL BE EITHER 1) ASPHALT PLANT MIX, TYPE 1 OR TYPE 2, MIN. 2" DEPTH, 2) EROSION CONTROL MAT, OR 3) CONCRETE, AS DIRECTED BY THE ENGINEER. THE SLOPE DRAIN SHALL CONSIST OF A NON-PERFORATED TEMPORARY DRAINAGE PIPE, 12 INCHES IN DIAMETER.

PLAN VIEW

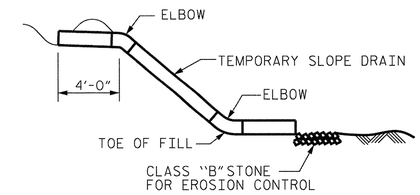

SECTION R-R

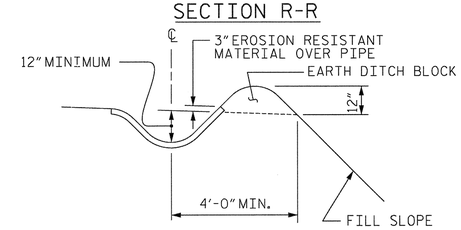

SECTION S-S

TEMPORARY BERM AND SLOPE DRAIN DETAILS

(TO BE USED WHEN SHOULDER BERM GUTTER IS REQUIRED)

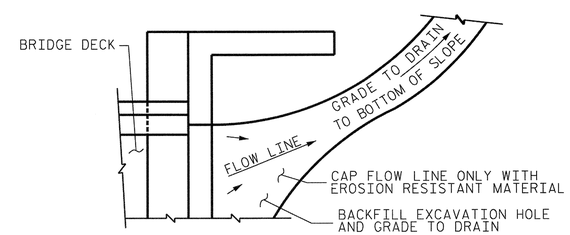

NOTE: IF THE APPROACH SLAB IS NOT CONSTRUCTED IMMEDIATELY AFTER THE BACKFILLING OF THE END BENT EXCAVATION, GRADE TO DRAIN TO THE BOTTOM OF THE SLOPE AND PROVIDE EROSION RESISTANT MATERIAL, SUCH AS FIBERGLASS ROVING OR AS DIRECTED BY THE ENGINEER TO PREVENT SOIL EROSION AND TO PROTECT THE AREA ADJACENT TO THE STRUCTURE. THE CONTRACTOR WILL BE REQUIRED TO REMOVE THESE MATERIALS PRIOR TO CONSTRUCTION OF THE APPROACH SLAB.

TEMPORARY DRAINAGE DETAIL

PROJECT NO. R-2303C

SAMPSON COUNTY

STATION: 1081+04.50 -L-

SHEET 2 OF 2

NORTH CAROLINA PROFESSIONAL SEAL ENGINEER HARDY L. WILLIS 11/21/12

STATE OF NORTH CAROLINA
DEPARTMENT OF TRANSPORTATION
RALEIGH

STANDARD

BRIDGE APPROACH
SLAB DETAILS

(RIGHT LANE)

REVISIONS						SHEET NO.
NO.	BY:	DATE:	NO.	BY:	DATE:	S-138
1			3			TOTAL SHEETS
2			4			138

ASSEMBLED BY : MAF		DATE : 09/2012	
CHECKED BY : HLW		DATE : 09/2012	
DRAWN BY : FCJ	11/88	REV. 10/17/00	RWW/LES
CHECKED BY : ARB	11/88	REV. 5/7/03	RWW/JTE
		REV. 5/1/06RRR	MAA/KMM

STR. #4 STD. NO. BAS10 (SHT 1)

$$$$$$$SYSTIME$$$$$
$$$$$$$$$$$$$$$$$$$$$$$$DGN$$$$$$$$$$$$$$$$$$$$$$$$
$$$$USERNAME$$$$

BENCH MARK: SANITARY SEWER MANHOLE TOP 127.98 FT RIGHT OF STA. 862+81.19 -L-, EL. 108.17', NAVD88.

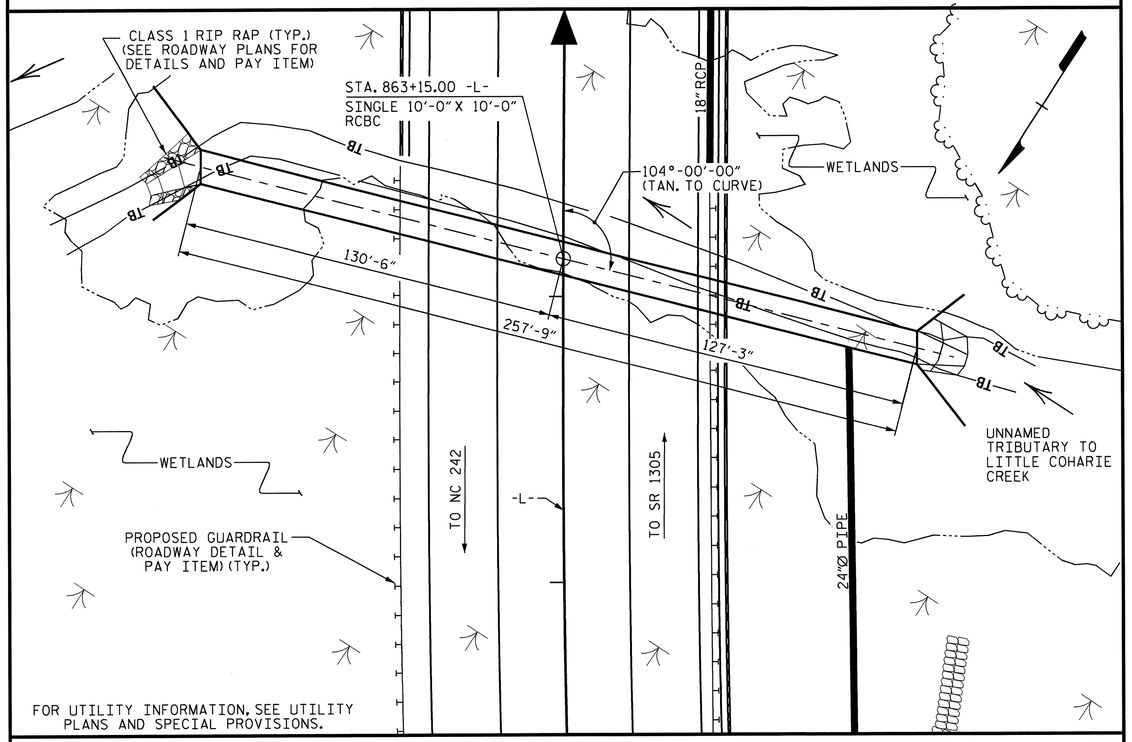

LOCATION SKETCH

TOTAL STRUCTURE QUANTITIES

CLASS A CONCRETE				
BARREL @	1.609	CY/FT	414.7	C.Y.
WING ETC.			44.8	C.Y.
TOTAL			459.5	C.Y.
REINFORCING STEEL				
BARREL			78237	LBS.
WINGS ETC.			3864	LBS.
TOTAL			82101	LBS.
FOUNDATION COND. MAT'L.			284	TONS
CULVERT EXCAVATION			LUMP SUM	

REINFORCING STEEL SCHEDULE FOR CULVERT BARREL

BAR	NO.	SIZE	TYPE	LENGTH	WEIGHT
A1	1032	#6	6	7'-6"	11625
A2	1032	#7	6	8'-0"	16875
A100	510	#6	STR	11'-3"	8618
A101	4	#6	STR	6'-8"	40
A102	4	#6	STR	2'-8"	16
A200	510	#6	STR	11'-3"	8618
A201	4	#6	STR	6'-8"	40
A202	4	#6	STR	2'-8"	16
B1	516	#5	STR	11'-11"	6413
B2	1032	#6	STR	9'-4"	14467
C1	590	#4	STR	27'-8"	10904
E1	16	#5	STR	4'-7"	76
G1	4	#4	STR	11'-7"	31
S2	12	#8	STR	11'-7"	371
F1	52	#4	STR	3'-8"	127

REINFORCING STEEL FOR BARREL 78237 LBS

NOTES

ASSUMED LIVE LOAD ----------HL-93 OR ALTERNATE LOADING.

DESIGN FILL---------- 24.64 FT

FOR OTHER DESIGN DATA AND NOTES SEE STANDARD NOTE SHEET.

3"Ø WEEP HOLES INDICATED TO BE IN ACCORDANCE WITH THE SPECIFICATIONS.

CONCRETE IN CULVERTS TO BE POURED IN THE FOLLOWING ORDER:

1. WING FOOTINGS AND FLOOR SLAB INCLUDING 4" OF ALL VERITCAL WALLS.
2. THE REMAINING PORTIONS OF THE WALLS AND WINGS FULL HEIGHT FOLLOWED BY ROOF SLAB AND HEADWALLS.

THE RESIDENT ENGINEER SHALL CHECK THE LENGTH OF CULVERT BEFORE STAKING IT OUT TO MAKE CERTAIN THAT IT WILL PROPERLY TAKE CARE OF THE FILL.

DIMENSIONS FOR WING LAYOUT AS WELL AS ADDITIONAL REINFORCING STEEL EMBEDDED IN BARREL ARE SHOWN ON WING SHEET.

TRANSVERSE CONSTRUCTION JOINTS SHALL BE USED IN THE BARREL, SPACED TO LIMIT THE POURS TO A MAXIMUM OF 70 FT. LOCATION OF JOINTS SHALL BE SUBJECT TO APPROVAL OF THE ENGINEER.

AT THE CONTRACTOR'S OPTION, HE MAY SPLICE THE VERTICAL REINFORCING STEEL IN THE INTERIOR FACE OF EXTERIOR WALL ABOVE LOWER WALL CONSTRUCTION JOINT. THE SPLICE LENGTH SHALL BE AS PROVIDED IN THE SPLICE LENGTH CHART SHOWN ON THE PLANS. EXTRA WEIGHT OF STEEL DUE TO THE SPLICES SHALL BE PAID FOR BY THE CONTRACTOR.

THE 24" DIA. PIPE THROUGH THE SIDEWALL OF THE CULVERT SHALL BE LOCATED BY THE ENGINEER. THE REINFORCING STEEL SHALL BE FIELD BENT AS NECESSARY TO CLEAR PIPE.

A 3 FOOT STRIP OF FILTER FABRIC SHALL BE ATTACHED TO THE FILL FACE OF THE WING COVERING THE ENTIRE LENGTH OF THE EXPANSION JOINT.

NO PRECAST REINFORCED BOX CULVERT OPTION WILL BE ALLOWED.

FOR CULVERT DIVERSION DETAILS AND PAY ITEM, SEE EROSION CONTROL PLANS.

FOR SUBMITTAL OF WORKING DRAWINGS, SEE SPECIAL PROVISIONS.

FOR FALSEWORK AND FORMWORK, SEE SPECIAL PROVISIONS.

FOR GROUT FOR STRUCTURES, SEE SPECIAL PROVISIONS.

FOR CRANE SAFETY, SEE SPECIAL PROVISIONS.

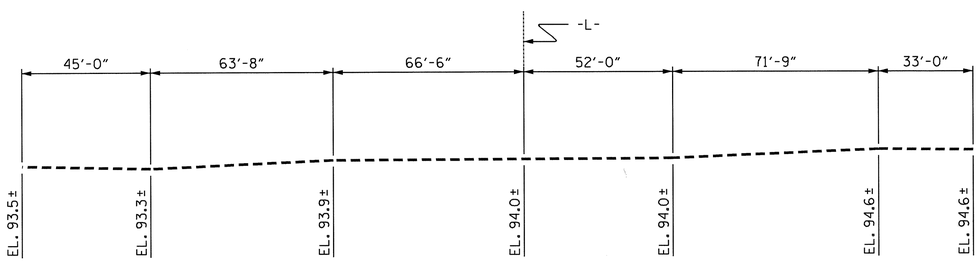

PROFILE ALONG ℄ CULVERT

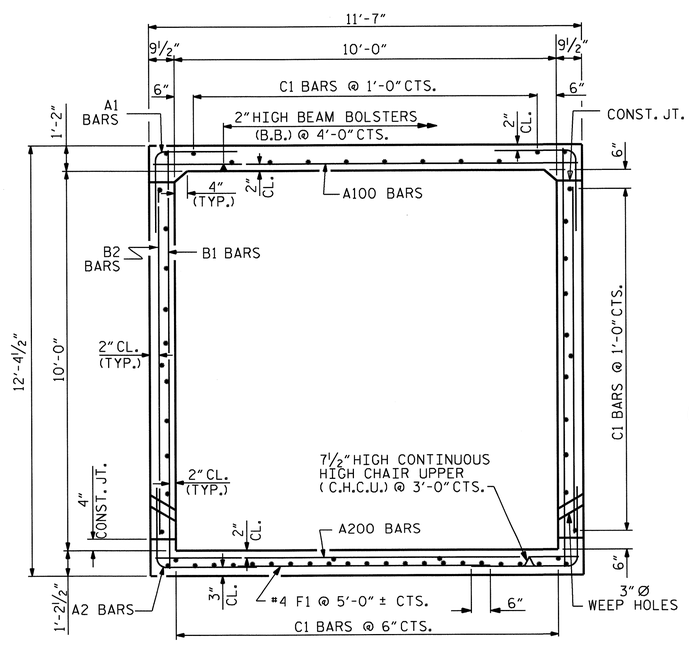

RIGHT ANGLE SECTION OF BARREL

THERE ARE 59 "C" BARS IN SECTION OF BARREL

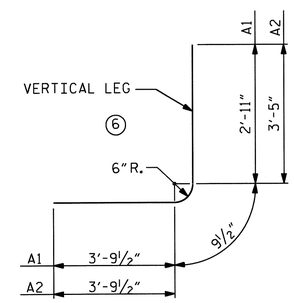

BAR TYPE

DIMENSIONS ARE OUT TO OUT

SPLICE CHART

BAR	SIZE	SPLICE LENGTH
B1	#5	2'-2"
C1	#4	1'-11"

GRADE DATA

GRADE POINT ELEVATION @ STA. 863+15.00 -L-	= 127.53'
BED ELEVATION @ STA. 863+15.00 -L-	= 93.00'
ROADWAY SLOPES	= 3:1

HYDRAULIC DATA

DESIGN DISCHARGE	= 900 CFS
FREQUENCY OF DESIGN FLOOD	= 50 YRS.
DESIGN HIGH WATER ELEVATION	= 104.70'
DRAINAGE AREA	= 0.93 SQ. MI.
BASE DISCHARGE (Q100)	= 1000 CFS
BASE HIGH WATER ELEVATION	= 105.50'

OVERTOPPING FLOOD DATA

OVERTOPPING DISCHARGE	= 2580 CFS
FREQUENCY OF OVERTOPPING FLOOD	= > 500 YRS.
OVERTOPPING FLOOD ELEVATION	= 127.80'

PROJECT NO. R-2303C
SAMPSON COUNTY
STATION: 863+15.00 -L-

SHEET 1 OF 4

STATE OF NORTH CAROLINA
DEPARTMENT OF TRANSPORTATION
RALEIGH

BARREL STANDARD

SINGLE 10 FT. X 10 FT.
CONCRETE BOX CULVERT
104° SKEW

AUGUST 1989

REVISIONS						SHEET NO.
NO.	BY:	DATE:	NO.	BY:	DATE:	C-1
1			3			TOTAL SHEETS
2			4			12

DESIGN ENGINEER OF RECORD:
MOHAMMED AHMED DATE : 5-14-13

ASSEMBLED BY : C. J. BUTLER DATE : 08/14/12
CHECKED BY : PEGGY ADKINS DATE : 3-6-13

DRAWN BY : R. WRIGHT DATE : AUG. 1989
CHECKED BY : C.R.K. DATE : AUG. 1989

SPECIAL STANDARD

REVISED 11-13-91 BY E.L.R. CHECKED BY G.R.P.
ADDED 8-22-89

24-JUN-2013 14:50
Z:\TIPProjects-R\R2303C\Structures\Plans\STR*5\cjbutler\Microstation\R2303C_SD_CU_str5.dgn

STR #05 STD. NO. CB221A

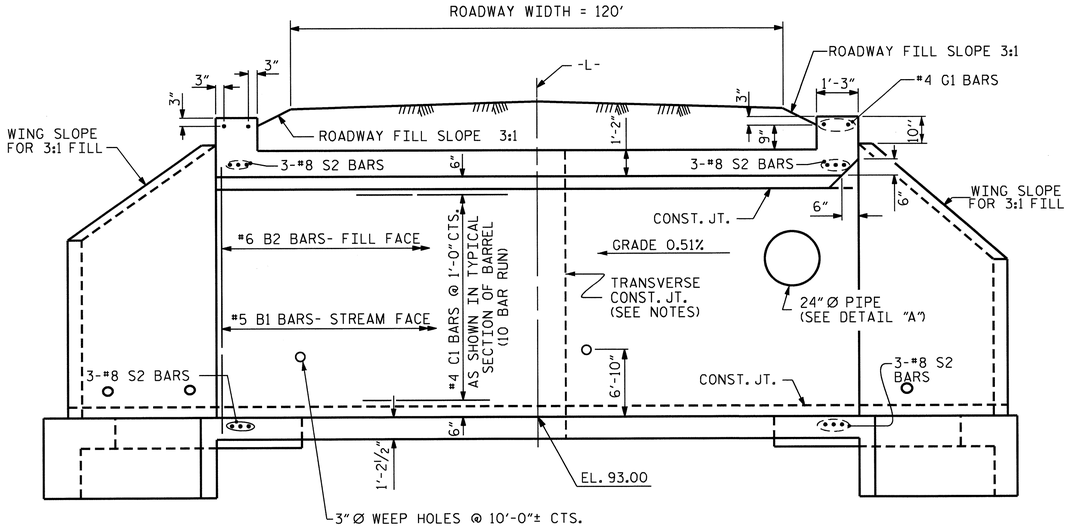

CULVERT SECTION NORMAL TO ROADWAY

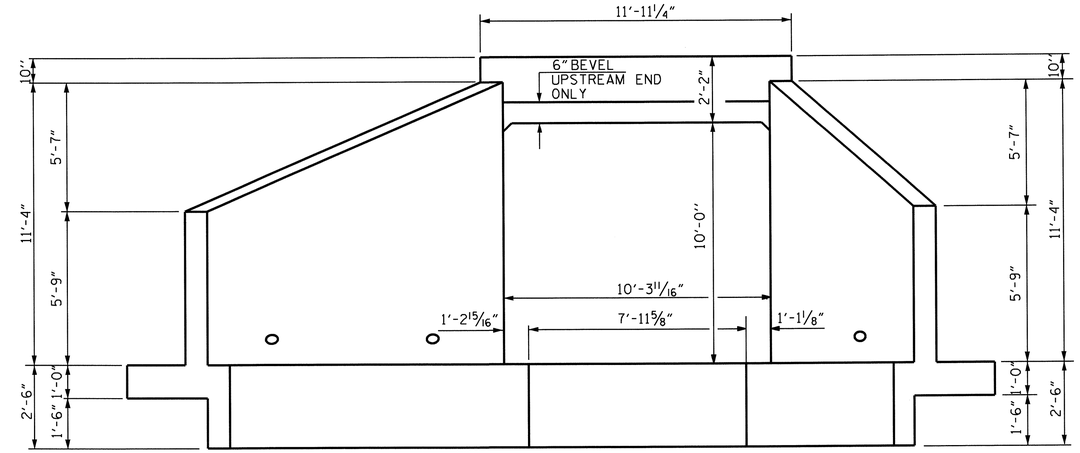

END ELEVATION NORMAL TO SKEW

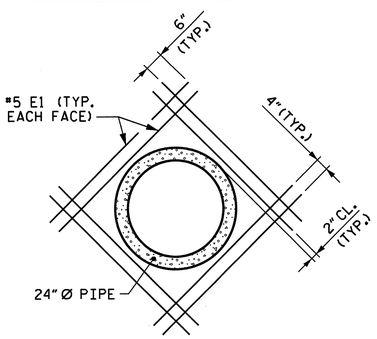

DETAIL "A"

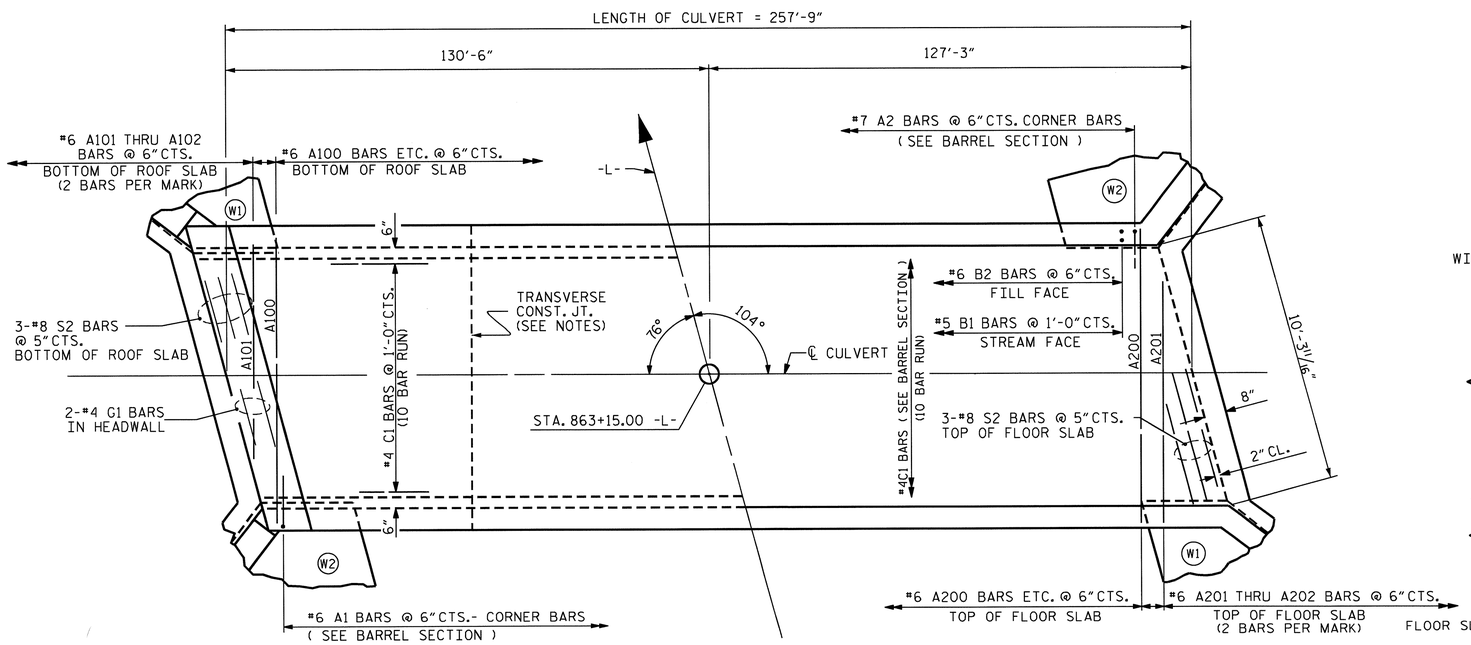

PART PLAN - ROOF SLAB

PART PLAN - FLOOR SLAB

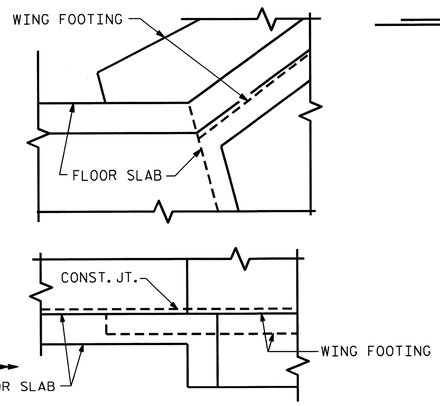

DETAIL

CONNECTION OF WING FOOTING AND FLOOR SLAB WHEN SLAB IS THICKER THAN FOOTING

PROJECT NO. R-2303C
SAMPSON COUNTY
STATION: 863+15.00 -L-

SHEET 2 OF 4

STATE OF NORTH CAROLINA
DEPARTMENT OF TRANSPORTATION
RALEIGH

BARREL STANDARD
SINGLE 10 FT. X 10 FT.
CONCRETE BOX CULVERT
104° SKEW

1971

REVISIONS						SHEET NO.
NO.	BY:	DATE:	NO.	BY:	DATE:	C-2
1			3			TOTAL SHEETS
2			4			12

NORTH CAROLINA PROFESSIONAL SEAL 025516 ENGINEER EMILY E. MURRAY
6/25/13

ASSEMBLED BY : C. J. BUTLER	DATE : 08/14/12	SPECIAL	DESIGN ENGINEER OF RECORD: MOHAMMED AHMED DATE : 5-14-13
CHECKED BY : PEGGY ADKINS	DATE : 3-6-13		
DRAWN BY : R.W. WRIGHT	DATE : AUG. 1989	STANDARD	
CHECKED BY : A.R. BISSETTE	DATE : AUG. 1989		

REVISED 8-28-92 BY E.L.R. CHECKED BY G.R.P.
REVISED 8-22-89 BY A.R.B. CHECKED BY C.R.K.
REDRAWN 8-22-89

REVISED 11-19-99 BY M.M. CHECKED BY R.W.W.

25-JUN-2013 10:56
Z:\TIPProjects-R\R2303C\Structures\Plans\STR#5\cjbutler\Microstation\R2303C_SD_CU_str5.dgn

STR #05

STD. NO. CB221

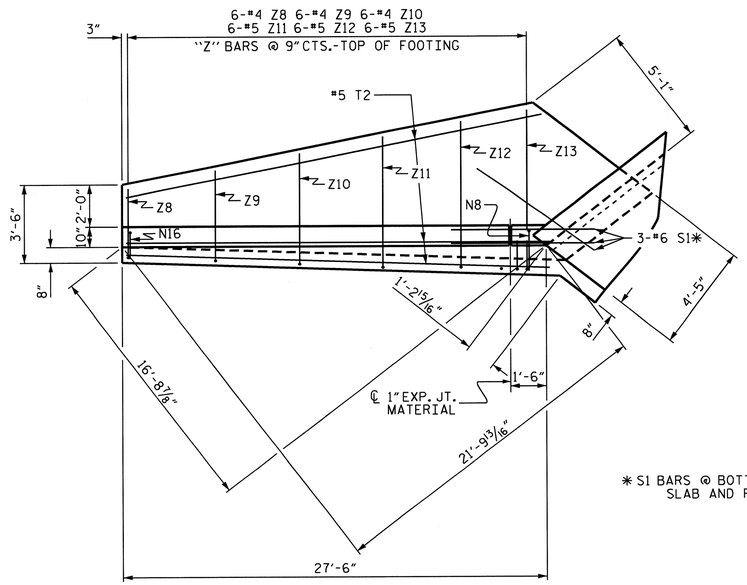

PLAN W1

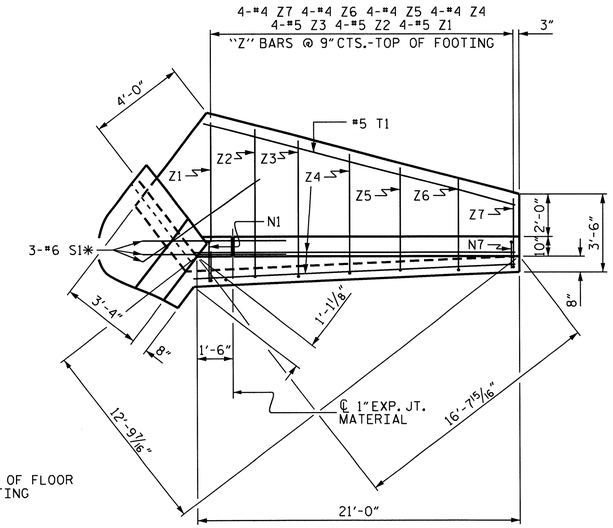

PLAN W2

* S1 BARS @ BOTTOM OF FLOOR SLAB AND FOOTING

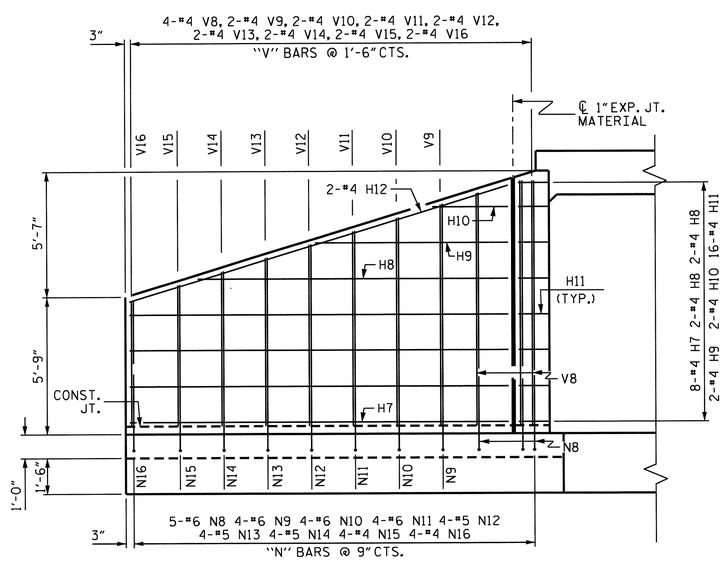

ELEVATION W1

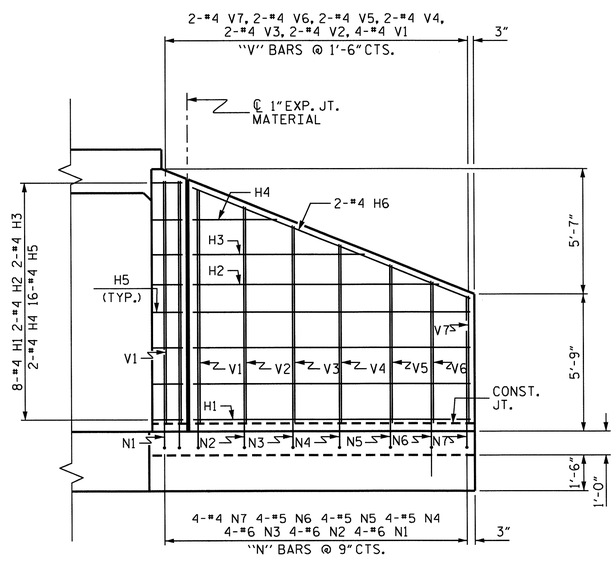

ELEVATION W2

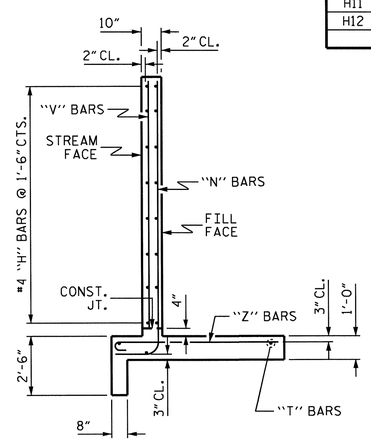

TYPICAL WING SECTION

BAR TYPES

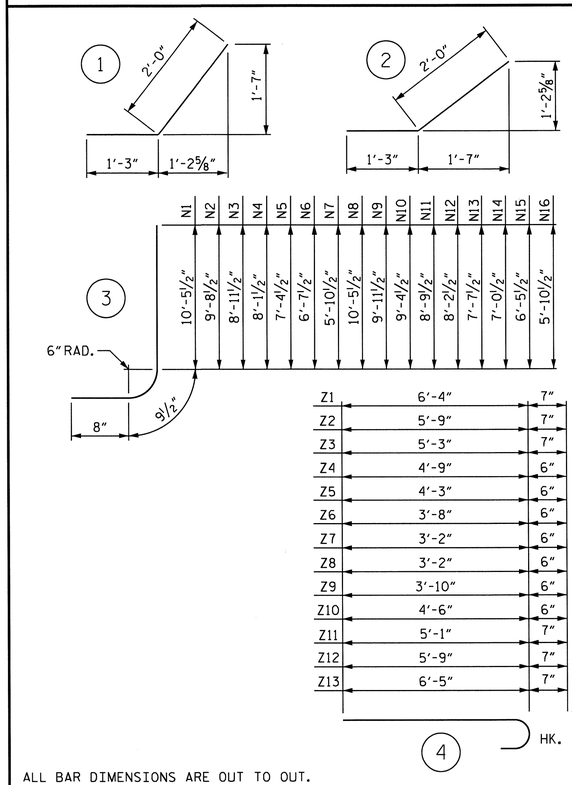

ALL BAR DIMENSIONS ARE OUT TO OUT.

BILL OF MATERIAL

BAR	NO.	SIZE	TYPE	LENGTH	WEIGHT
H1	16	#4	STR	19'-1'	204
H2	4	#4	STR	15'-8"	42
H3	4	#4	STR	9'-9"	26
H4	4	#4	STR	3'-11"	10
H5	32	#4	1	3'-3"	69
H6	4	#4	STR	19'-10"	53
H7	16	#4	STR	25'-7"	273
H8	4	#4	STR	21'-0"	56
H9	4	#4	STR	13'-3"	35
H10	4	#4	STR	5'-7"	15
H11	32	#4	2	3'-3"	69
H12	4	#4	STR	26'-2"	70

BILL OF MATERIAL

BAR	NO.	SIZE	TYPE	LENGTH	WEIGHT
N1	8	#6	3	11'-11"	143
N2	8	#6	3	11'-2"	134
N3	8	#6	3	10'-5"	125
N4	8	#5	3	9'-7"	80
N5	8	#5	3	8'-10"	74
N6	8	#5	3	8'-1"	67
N7	8	#4	3	7'-4"	39
N8	10	#6	3	11'-11"	179
N9	8	#6	3	11'-5"	137
N10	8	#6	3	10'-10"	130
N11	8	#6	3	10'-3"	123
N12	8	#5	3	9'-8"	81
N13	8	#5	3	9'-1"	76
N14	8	#5	3	8'-6"	71
N15	8	#4	3	7'-11"	42
N16	8	#4	3	7'-4"	39
S1	12	#6	STR	6'-0"	108
T1	6	#5	STR	21'-0"	131
T2	6	#5	STR	27'-6"	172
V1	8	#4	STR	9'-10"	53
V2	4	#4	STR	9'-1"	24
V3	4	#4	STR	8'-4"	22
V4	4	#4	STR	7'-7"	20
V5	4	#4	STR	6'-10"	18
V6	4	#4	STR	6'-0"	16
V7	4	#4	STR	5'-3"	14
V8	8	#4	STR	9'-11"	53
V9	4	#4	STR	9'-4"	25
V10	4	#4	STR	8'-9"	23
V11	4	#4	STR	8'-2"	22
V12	4	#4	STR	7'-7"	20
V13	4	#4	STR	7'-0"	19
V14	4	#4	STR	6'-5"	17
V15	4	#4	STR	5'-10"	16
V16	4	#4	STR	5'-3"	14
Z1	8	#5	4	6'-11"	58
Z2	8	#5	4	6'-4"	53
Z3	8	#5	4	5'-10"	49
Z4	8	#4	4	5'-3"	28
Z5	8	#4	4	4'-9"	25
Z6	8	#4	4	4'-2"	22
Z7	8	#4	4	3'-8"	20
Z8	12	#4	4	3'-8"	29
Z9	12	#4	4	4'-4"	35
Z10	12	#4	4	5'-0"	40
Z11	12	#5	4	5'-8"	71
Z12	12	#5	4	6'-4"	79
Z13	12	#5	4	7'-0"	88

REINFORCING STEEL FOR 4 WINGS	3846 LBS
CLASS A CONCRETE	
4 WINGS	42.7 CY
2 HEADWALL	1.1 CY
2 END CURTAIN WALL	1.0 CY
TOTAL	44.8 CY

PROJECT NO. R-2303C

SAMPSON COUNTY

STATION: 863+15.00 -L-

SHEET 3 OF 4

STATE OF NORTH CAROLINA
DEPARTMENT OF TRANSPORTATION
RALEIGH

WINGS FOR SINGLE BARREL CONCRETE BOX CULVERT

H = 10'-0" SLOPE = 3:1

105° SKEW

NORTH CAROLINA PROFESSIONAL SEAL 025516 ENGINEER EMILY E. MURRAY

6/25/13

REVISIONS						SHEET NO.
NO.	BY:	DATE:	NO.	BY:	DATE:	C-3
1			3			TOTAL SHEETS
2			4			12

STR. #05

DESIGN ENGINEER OF RECORD: MOHAMMED AHMED DATE : 5-14-13

ASSEMBLED BY : C . J BUTLER DATE : 8/10/12
CHECKED BY : PEGGY ADKINS DATE : 3-6-13

DRAWN BY : CCJ 01/00
CHECKED BY : RWW 03/00

13-MAY-2013 10:25
Z:\TIPProjects-R\R2303C\Structures\Plans\STR#5\cjbutler\Microstation\R2303C_SD_CU_str5.dgn
emurray

LOAD AND RESISTANCE FACTOR RATING (LRFR) SUMMARY FOR REINFORCED CONCRETE BOX CULVERTS

LEVEL		VEHICLE	WEIGHT (W) (TONS)	CONTROLLING LOAD RATING (#)	MINIMUM RATING FACTORS (RF)	TONS = W × RF	STRENGTH I LIMIT STATE									COMMENT NUMBER
							LIVE-LOAD FACTORS (γ_{LL})	MOMENT				SHEAR				
								RATING FACTOR	BOX NO.	ELEMENT TYPE	DISTANCE FROM LEFT END OF ELEMENT (ft)	RATING FACTOR	BOX NO.	ELEMENT TYPE	DISTANCE FROM LEFT END OF ELEMENT (ft)	
DESIGN LOAD RATING		HL-93 (INVENTORY)	N/A	1	1.08	--	1.75	3.23	1	EXTERIOR WALL	5.59	1.08	1	EXTERIOR WALL	10.01	
		HL-93 (OPERATING)	N/A		1.39	--	1.35	4.19	1	EXTERIOR WALL	5.59	1.39	1	EXTERIOR WALL	10.01	
		HS-20 (INVENTORY)	36.000	2	1.08	38.70	1.75	3.23	1	EXTERIOR WALL	5.59	1.08	1	EXTERIOR WALL	10.01	
		HS-20 (OPERATING)	36.000		1.39	50.17	1.35	4.19	1	EXTERIOR WALL	5.59	1.39	1	EXTERIOR WALL	10.01	
LEGAL LOAD RATING	SINGLE VEHICLE (SV)	SNSH	13.500	3	1.34	18.14	1.40	4.04	1	EXTERIOR WALL	5.59	1.34	1	EXTERIOR WALL	10.01	
		SNGARBS2	20.000		1.34	26.88	1.40	4.04	1	EXTERIOR WALL	5.59	1.34	1	EXTERIOR WALL	10.01	
		SNAGRIS2	22.000		1.34	29.56	1.40	4.04	1	EXTERIOR WALL	5.59	1.34	1	EXTERIOR WALL	10.01	
		SNCOTTS3	27.250		1.34	36.62	1.40	4.04	1	EXTERIOR WALL	5.59	1.34	1	EXTERIOR WALL	10.01	
		SNAGGRS4	34.925		1.34	46.93	1.40	4.04	1	EXTERIOR WALL	5.59	1.34	1	EXTERIOR WALL	10.01	
		SNS5A	35.550		1.34	47.77	1.40	4.04	1	EXTERIOR WALL	5.59	1.34	1	EXTERIOR WALL	10.01	
		SNS6A	39.950		1.34	53.69	1.40	4.04	1	EXTERIOR WALL	5.59	1.34	1	EXTERIOR WALL	10.01	
		SNS7B	42.000		1.34	56.44	1.40	4.04	1	EXTERIOR WALL	5.59	1.34	1	EXTERIOR WALL	10.01	
	TRUCK TRACTOR SEMI-TRAILER (TTST)	TNAGRIT3	33.000		1.34	44.35	1.40	4.04	1	EXTERIOR WALL	5.59	1.34	1	EXTERIOR WALL	10.01	
		TNT4A	33.075		1.34	44.45	1.40	4.04	1	EXTERIOR WALL	5.59	1.34	1	EXTERIOR WALL	10.01	
		TNT6A	41.600		1.34	55.90	1.40	4.04	1	EXTERIOR WALL	5.59	1.34	1	EXTERIOR WALL	10.01	
		TNT7A	42.000		1.34	56.44	1.40	4.04	1	EXTERIOR WALL	5.59	1.34	1	EXTERIOR WALL	10.01	
		TNT7B	42.000		1.34	56.44	1.40	4.04	1	EXTERIOR WALL	5.59	1.34	1	EXTERIOR WALL	10.01	
		TNAGRIT4	43.000		1.34	57.78	1.40	4.04	1	EXTERIOR WALL	5.59	1.34	1	EXTERIOR WALL	10.01	
		TNAGT5A	45.000		1.34	60.47	1.40	4.04	1	EXTERIOR WALL	5.59	1.34	1	EXTERIOR WALL	10.01	
		TNAGT5B	45.000		1.34	60.47	1.40	4.04	1	EXTERIOR WALL	5.59	1.34	1	EXTERIOR WALL	10.01	

LOAD FACTORS:

DESIGN LOAD RATING FACTORS

LOAD TYPE	MAX FACTOR	MIN FACTOR
DC	1.25	0.90
DW	1.50	0.65
EV	1.30	0.90
EH	1.35	0.90
ES	1.35	0.90
LS	1.75	--
WA	1.00	--

NOTE:

RATING FACTORS ARE BASED ON THE STRENGTH I LIMIT STATE.

COMMENTS:

1.
2.
3.
4.

(#) CONTROLLING LOAD RATING

(1) DESIGN LOAD RATING (HL-93)

(2) DESIGN LOAD RATING (HS-20)

(3) LEGAL LOAD RATING **

** SEE CHART FOR VEHICLE TYPE

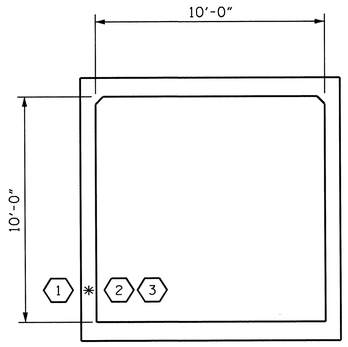

LRFR SUMMARY

(LOOKING DOWNSTREAM)

PROJECT NO. R-2303C

SAMPSON COUNTY

STATION: 863+15.00 -L-

SHEET 4 OF 4

STATE OF NORTH CAROLINA
DEPARTMENT OF TRANSPORTATION
RALEIGH

STANDARD

LRFR SUMMARY FOR REINFORCED CONCRETE BOX CULVERTS
(NON-INTERSTATE TRAFFIC)

NORTH CAROLINA PROFESSIONAL SEAL 025516 ENGINEER
EMILY E. MURRAY
6/25/13

REVISIONS						SHEET NO.
NO.	BY:	DATE:	NO.	BY:	DATE:	C-4
1			3			TOTAL SHEETS
2			4			12

STD. NO. LRFR5

DESIGN ENGINEER OF RECORD: MOHAMMED AHMED DATE : 5-14-13

ASSEMBLED BY : A.M. LEE, PE DATE : 12/2012
CHECKED BY : PEGGY ADKINS DATE : 3-6-13

DRAWN BY : WMC 7/11
CHECKED BY : GM 7/11
REV. 10/1/11 MAA/GM

13-MAY-2013 10:25
Z:\TIPProjects-R\R2303C\Structures\Plans\STR*5\cjbutler\Microstation\R2303C_SD_CU_str5.dgn
emurray

BENCH MARK: BM #707 RR SPIKE SET IN 24" GUM STA. 894+76.49 -BL- 278' RT. EL. 107.59 NAVD88

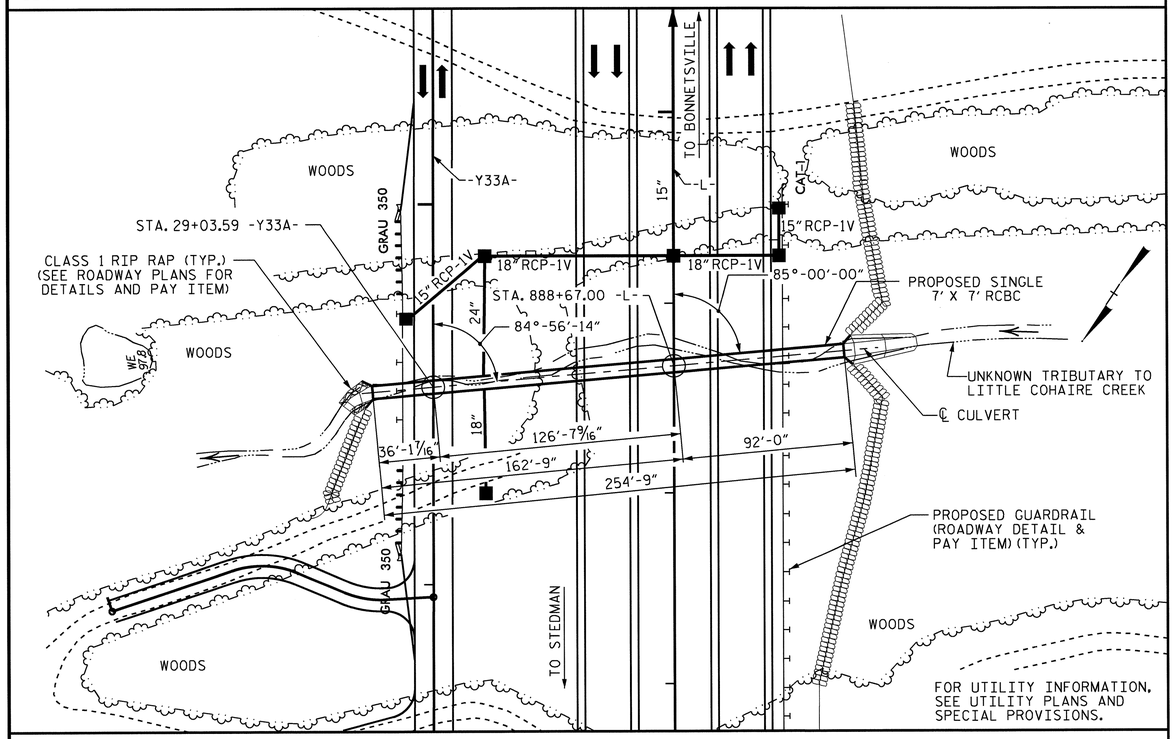

LOCATION SKETCH

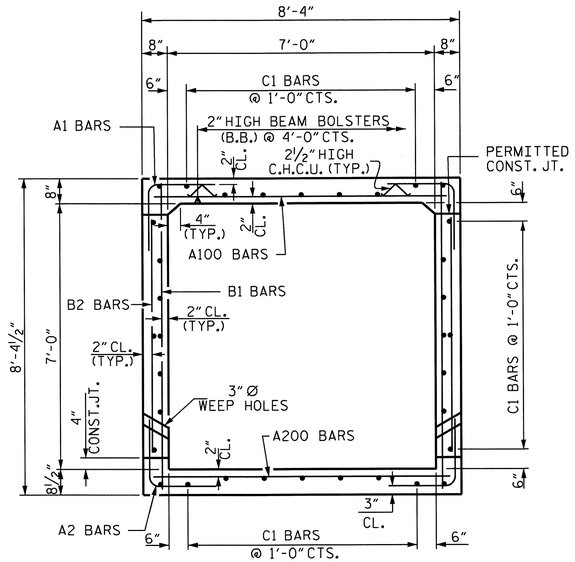

RIGHT ANGLE SECTION OF BARREL

THERE ARE 34 "C" BARS IN SECTION OF BARREL

NOTES

ASSUMED LIVE LOAD ----------HL-93 OR ALTERNATE LOADING.

DESIGN FILL----------13.78'

FOR OTHER DESIGN DATA AND NOTES SEE STANDARD NOTE SHEET.

3" Ø WEEP HOLES INDICATED TO BE IN ACCORDANCE WITH THE SPECIFICATIONS.

CONCRETE IN CULVERTS TO BE POURED IN THE FOLLOWING ORDER:

1. WING FOOTINGS AND FLOOR SLAB INCLUDING 4" OF ALL VERTICAL WALLS.
2. THE REMAINING PORTIONS OF THE WALLS AND WINGS FULL HEIGHT FOLLOWED BY ROOF SLAB AND HEADWALLS.

THE RESIDENT ENGINEER SHALL CHECK THE LENGTH OF CULVERT BEFORE STAKING IT OUT TO MAKE CERTAIN THAT IT WILL PROPERLY TAKE CARE OF THE FILL.

DIMENSIONS FOR WING LAYOUT AS WELL AS ADDITIONAL REINFORCING STEEL EMBEDDED IN BARREL ARE SHOWN ON WING SHEET.

TRANSVERSE CONSTRUCTION JOINTS SHALL BE USED IN THE BARREL, SPACED TO LIMIT THE POURS TO A MAXIMUM OF 70 FT. LOCATION OF JOINTS SHALL BE SUBJECT TO APPROVAL OF THE ENGINEER.

AT THE CONTRACTOR'S OPTION, HE MAY SPLICE THE VERTICAL REINFORCING STEEL IN THE INTERIOR FACE OF EXTERIOR WALL ABOVE LOWER WALL CONSTRUCTION JOINT. THE SPLICE LENGTH SHALL BE AS PROVIDED IN THE SPLICE LENGTH CHART SHOWN ON THE PLANS. EXTRA WEIGHT OF STEEL DUE TO THE SPLICES SHALL BE PAID FOR BY THE CONTRACTOR.

A 3 FOOT STRIP OF FILTER FABRIC SHALL BE ATTACHED TO THE FILL FACE OF THE WING COVERING THE ENTIRE LENGTH OF THE EXPANSION JOINT.

FOR CRANE SAFETY, SEE SPECIAL PROVISIONS.

FOR FALSEWORK AND FORMWORK, SEE SPECIAL PROVISIONS.

FOR CULVERT DIVERSION DETAILS AND PAY ITEM, SEE EROSION CONTROL PLANS.

FOR SUBMITTAL OF WORKING DRAWINGS, SEE SPECIAL PROVISIONS.

FOR GROUT FOR STRUCTURES, SEE SPECIAL PROVISIONS.

NO PRECAST REINFORCED BOX CULVERT OPTION WILL BE ALLOWED.

THE 24" DIA. AND 18" DIA. PIPES THROUGH THE SIDEWALL OF THE CULVERT SHALL BE LOCATED BY THE ENGINEER. THE REINFORCING STEEL SHALL BE FIELD BENT AS NECESSARY TO CLEAR PIPE.

HYDRAULIC DATA

DESIGN DISCHARGE	= 380 CFS
FREQUENCY OF DESIGN FLOOD	= 50 YRS.
DESIGN HIGH WATER ELEVATION	= 107.30'
DRAINAGE AREA	= 0.21 SQ. MI.
BASE DISCHARGE (Q100)	= 440 CFS
BASE HIGH WATER ELEVATION	= 108.30'

OVERTOPPING FLOOD DATA

OVERTOPPING DISCHARGE	= 860 CFS
FREQUENCY OF OVERTOPPING FLOOD	= > 500 YRS.
OVERTOPPING FLOOD ELEVATION	= 115.80'

GRADE DATA

GRADE POINT ELEVATION @ STA. 888+67.00 -L-	= 118.94'
GRADE POINT ELEVATION @ STA. 29+03.59 -Y33A-	= 110.46'
BED ELEVATION @ STA. 888+67.00 -L-	= 97.90'
BED ELEVATION @ STA. 29+03.59 -Y33A-	= 96.37'
ROADWAY FILL SLOPES	= 3 : 1

TOTAL STRUCTURE QUANTITIES

CLASS A CONCRETE			
BARREL @ 0.774 CY/FT	197.2	C.Y.	
WING ETC.	27.7	C.Y.	
TOTAL	224.9	C.Y.	
REINFORCING STEEL			
BARREL	27,453	LBS.	
WINGS ETC.	1,711	LBS.	
TOTAL	29,164	LBS.	
FOUNDATION CONDITIONING MAT'L.	222	TONS	
CULVERT EXCAVATION	LUMP SUM		

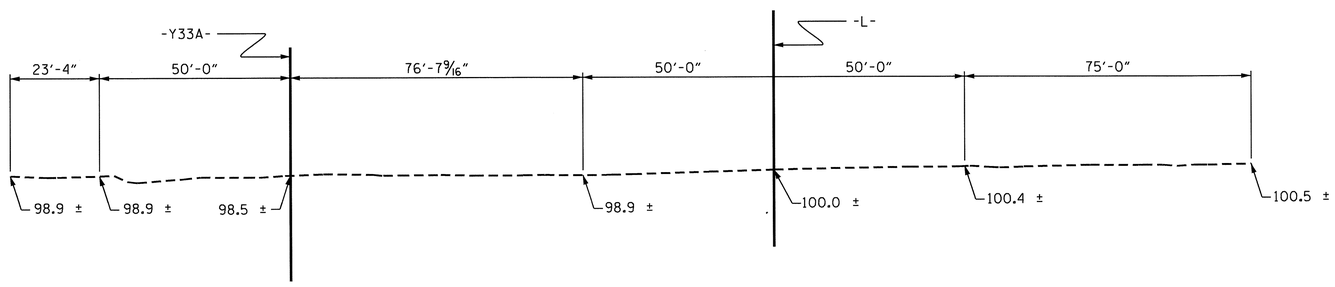

PROFILE ALONG ℄ CULVERT

PROJECT NO. R-2303C
SAMPSON COUNTY
STATION: 888+67.00 -L-

SHEET 1 OF 4

STATE OF NORTH CAROLINA
DEPARTMENT OF TRANSPORTATION
RALEIGH

SINGLE 7 FT. X 7 FT. CONCRETE BOX CULVERT 85° SKEW

NORTH CAROLINA PROFESSIONAL SEAL 027216 ENGINEER OMAR R. AZIZ 6/25/13

NORTH CAROLINA PROFESSIONAL SEAL 025516 ENGINEER EMILY E. MURRAY 6/25/13

REVISIONS								SHEET NO.
NO.	BY:	DATE:	NO.	BY:	DATE:			C-5
1			3					TOTAL SHEETS
2			4					12

STR. #6

ASSEMBLED BY : A. K. PATEL, PE	DATE : 11/2012	SPECIAL
CHECKED BY : A. M. LEE, PE	DATE : 12/2012	
DESIGN ENGINEER OF RECORD: M. M. AHMED	DATE : 5-14-13	
DRAWN BY : R. WRIGHT	DATE : AUG. 1989	STANDARD
CHECKED BY : C.R.K.	DATE : AUG. 1989	

REVISED 11-13-91 BY E.L.R. CHECKED BY G.R.P.
ADDED 8-22-89

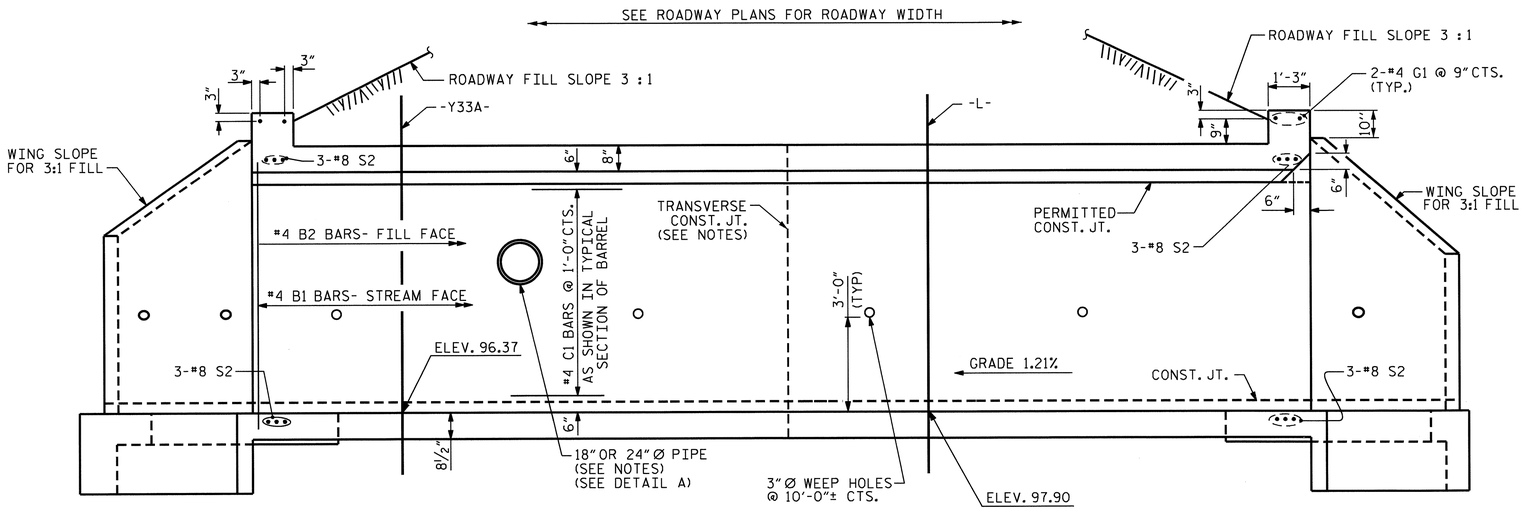

CULVERT SECTION NORMAL TO ROADWAY

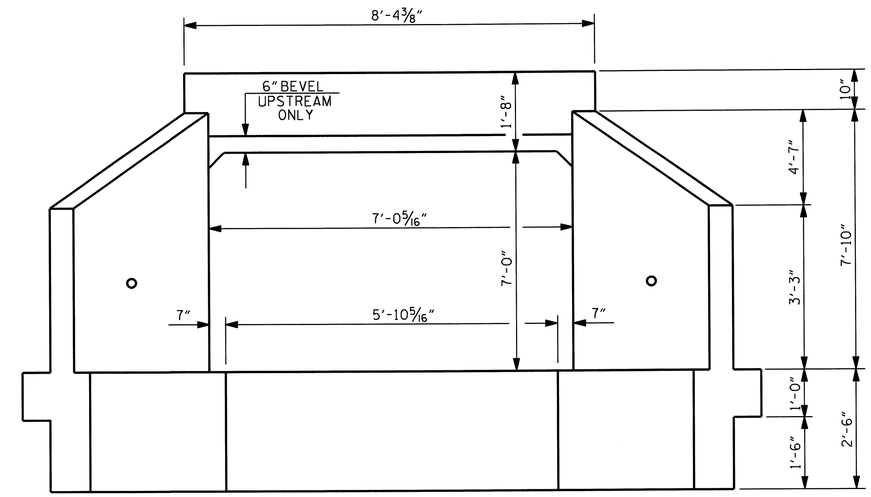

END ELEVATION NORMAL TO SKEW

BAR SCHEDULE					
BAR	NO.	SIZE	TYPE	LENGTH	WEIGHT
A1	680	#4	6	4'-11"	2233
A2	680	#6	6	5'-7"	5703
A100	339	#6	STR	7'-11"	4031
A200	339	#6	STR	7'-11"	4031
B1	510	#4	STR	7'-10"	2669
B2	510	#4	STR	6'-4"	2158
C1	340	#4	STR	27'-4"	6208
E1	16	#5	STR	4'-0"	67
E2	16	#5	STR	4'-7"	76
G1	4	#4	STR	8'-0"	21
S2	12	#8	STR	8'-0"	256
REINFORCING STEEL = 27,453 LBS					

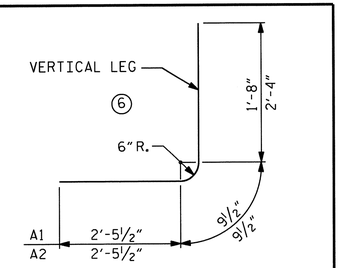

BAR TYPE

DIMENSIONS ARE OUT TO OUT

SPLICE LENGTH CHART		
BAR	SIZE	SPLICE LENGTH
B1	#4	1'-9"
C1	#4	1'-11"

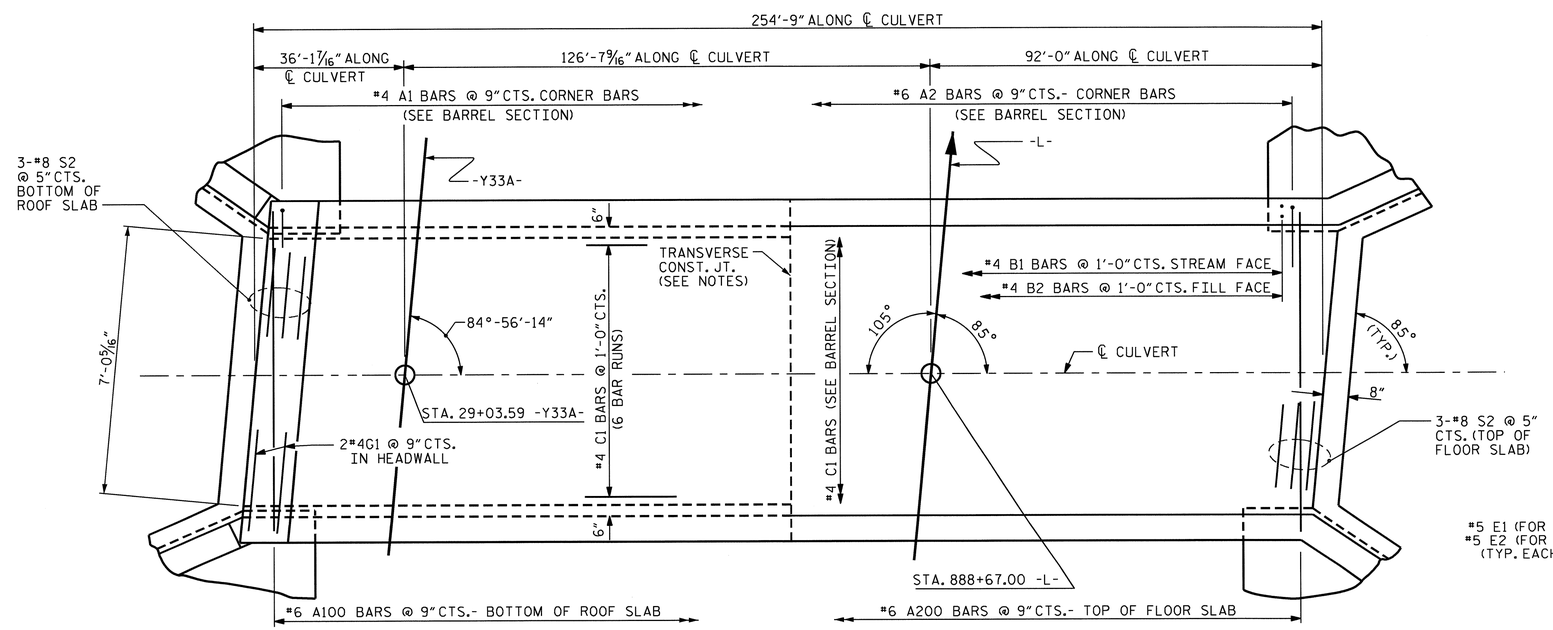

PART PLAN - ROOF SLAB

PART PLAN - FLOOR SLAB

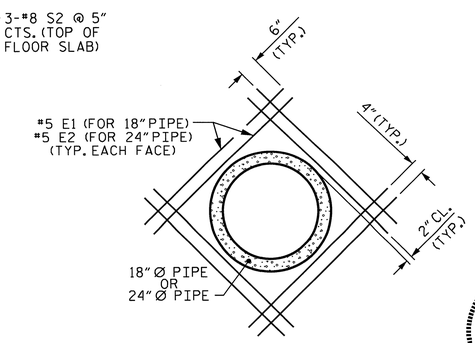

DETAIL A

PROJECT NO. R-2303C
SAMPSON COUNTY
STATION: 888+67.00 -L-

SHEET 2 OF 4

STATE OF NORTH CAROLINA
DEPARTMENT OF TRANSPORTATION
RALEIGH

SINGLE 7 FT. X 7 FT. CONCRETE BOX CULVERT 85° SKEW

REVISIONS						SHEET NO.
NO.	BY:	DATE:	NO.	BY:	DATE:	C-6
1			3			TOTAL SHEETS
2			4			12

NORTH CAROLINA PROFESSIONAL SEAL 025516 ENGINEER EMILY E. MURRAY 6/25/13

ASSEMBLED BY : A. K. PATEL, PE	DATE : 11/2012	SPECIAL	
CHECKED BY : A. M. LEE, PE	DATE : 12/2012		
DESIGN ENGINEER OF RECORD: M. M. AHMED	DATE : 5-14-13		
DRAWN BY : R.W. WRIGHT	DATE : AUG. 1989	STANDARD	
CHECKED BY : A.R. BISSETTE	DATE : AUG. 1989		

REVISED 8-28-92 BY E.L.R. CHECKED BY G.R.P.
REVISED 8-22-89 BY A.R.B. CHECKED BY C.R.K.
REDRAWN 8-22-89
REVISED 11-19-99 BY M.M. CHECKED BY R.W.W.

STR. #6 STD. NO. CB11

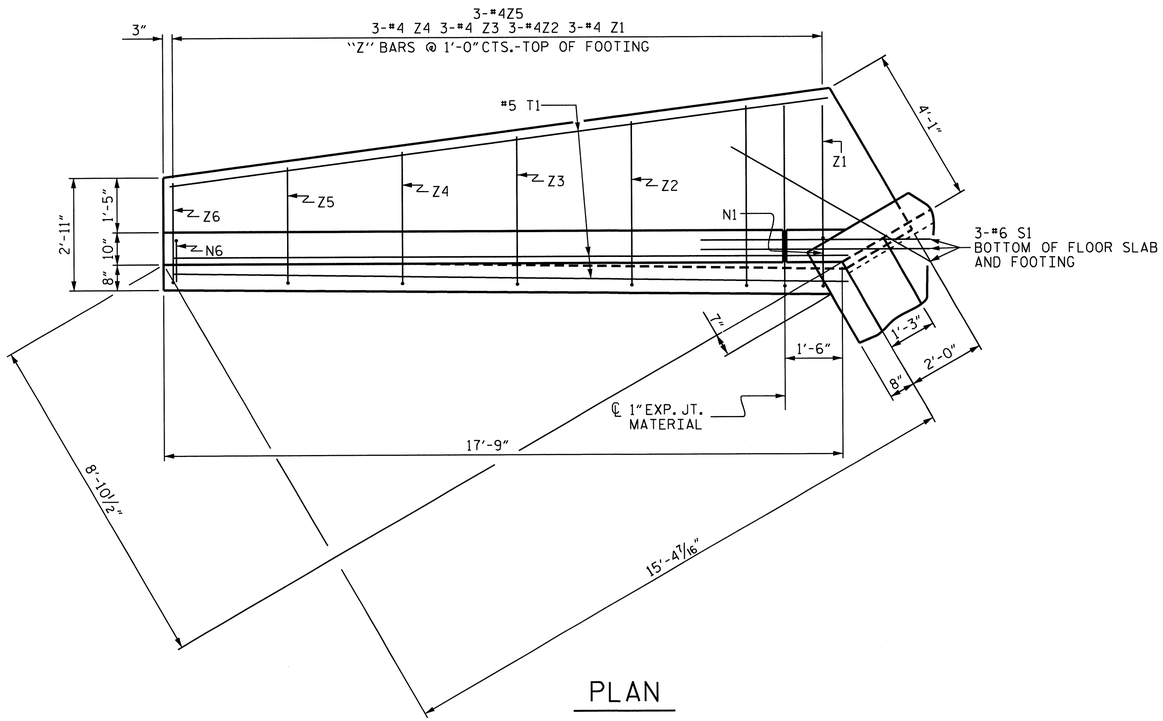

PLAN

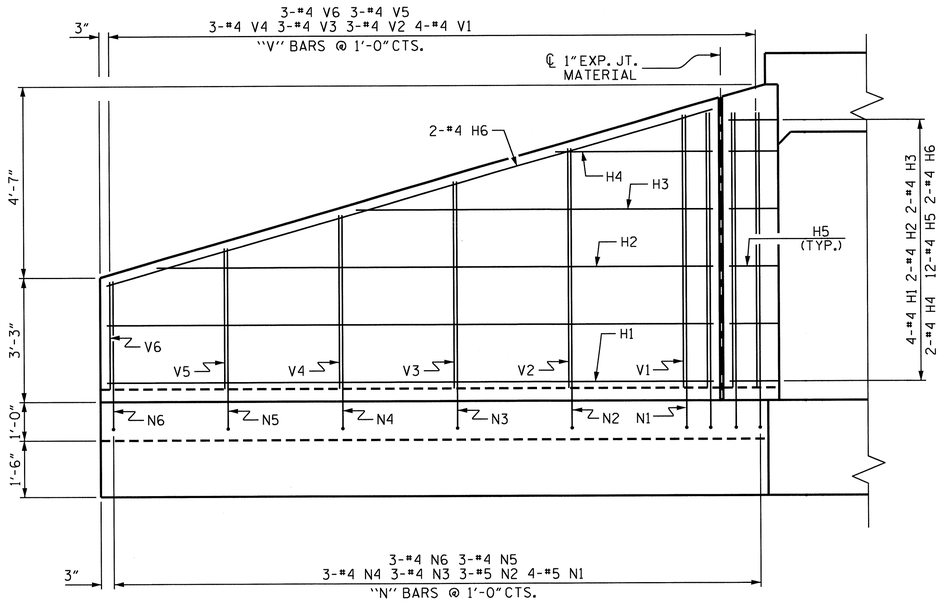

ELEVATION

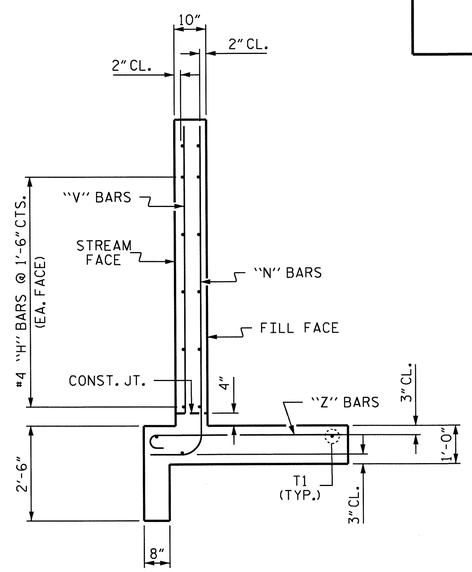

TYPICAL WING SECTION

BAR TYPES

ALL BAR DIMENSIONS ARE OUT TO OUT.

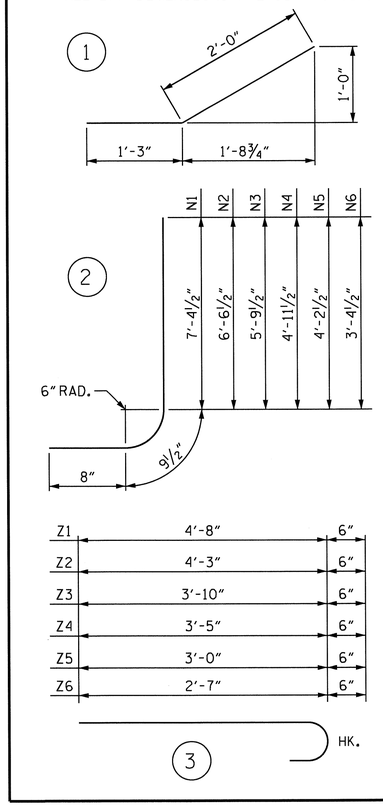

BILL OF MATERIAL

BAR	NO.	SIZE	TYPE	LENGTH	WEIGHT
H1	16	#4	STR	15'-10"	169
H2	8	#4	STR	14'-5"	77
H3	8	#4	STR	8'-9"	47
H4	8	#4	STR	3'-1"	16
H5	48	#4	1	3'-3"	104
H6	8	#4	STR	16'-5"	88
N1	16	#5	2	8'-10"	147
N2	12	#5	2	8'-0"	100
N3	12	#4	2	7'-3"	58
N4	12	#4	2	6'-5"	51
N5	12	#4	2	5'-8"	45
N6	12	#4	2	4'-10"	39
S1	12	#6	STR	6'-0"	108
T1	12	#5	STR	17'-4"	217
V1	16	#4	STR	6'-9"	72
V2	12	#4	STR	6'-0"	48
V3	12	#4	STR	5'-2"	41
V4	12	#4	STR	4'-4"	35
V5	12	#4	STR	3'-7"	29
V6	12	#4	STR	2'-9"	22
Z1	12	#4	3	5'-2"	41
Z2	12	#4	3	4'-9"	38
Z3	12	#4	3	4'-4"	35
Z4	12	#4	3	3'-11"	31
Z5	12	#4	3	3'-6"	28
Z6	12	#4	3	3'-1"	25

TOTAL REINFORCING STEEL
FOR 4 WINGS 1711 LBS

CLASS A CONCRETE
4 WINGS 26.2 CY
2 HEAD WALLS 0.8 CY
2 END CURTAIN WALLS 0.7 CY
TOTAL 27.7 CY

PROJECT NO. R-2303C
SAMPSON COUNTY
STATION: 888+67.00 -L-

SHEET 3 OF 4

STATE OF NORTH CAROLINA
DEPARTMENT OF TRANSPORTATION
RALEIGH

WINGS FOR CONCRETE BOX CULVERT

H = 7'-0" SLOPE = 3:1
90° SKEW

NORTH CAROLINA PROFESSIONAL SEAL 025516 ENGINEER
EMILY E. EMRRAY
6/25/13

REVISIONS						SHEET NO.
NO.	BY:	DATE:	NO.	BY:	DATE:	C-7
1			3			TOTAL SHEETS
2			4			12

STR. #6

ASSEMBLED BY : A. K. PATEL, PE DATE : 11/2012
CHECKED BY : A. M. LEE, PE DATE : 12/2012
DESIGN ENGINEER OF RECORD: M. M. AHMED DATE : 5/14/13

DRAWN BY : CCJ 10/99
CHECKED BY : RWW 03/00

LOAD AND RESISTANCE FACTOR RATING (LRFR) SUMMARY FOR REINFORCED CONCRETE BOX CULVERTS

LEVEL		VEHICLE	WEIGHT (W) (TONS)	CONTROLLING LOAD RATING (#)	MINIMUM RATING FACTORS (RF)	TONS = W x RF	STRENGTH I LIMIT STATE									COMMENT NUMBER
							LIVE-LOAD FACTORS (γ_{LL})	MOMENT				SHEAR				
								RATING FACTOR	BOX NO.	ELEMENT TYPE	DISTANCE FROM LEFT END OF ELEMENT (ft)	RATING FACTOR	BOX NO.	ELEMENT TYPE	DISTANCE FROM LEFT END OF ELEMENT (ft)	
DESIGN LOAD RATING		HL-93 (INVENTORY)	N/A	1	5.60	--	1.75	5.60	1	EXTERIOR WALL	3.84	8.07	1	EXTERIOR WALL	6.85	
		HL-93 (OPERATING)	N/A		7.27	--	1.35	7.27	1	EXTERIOR WALL	3.84	10.47	1	EXTERIOR WALL	6.85	
		HS-20 (INVENTORY)	36.000	2	5.60	201.76	1.75	5.60	1	EXTERIOR WALL	3.84	8.07	1	EXTERIOR WALL	6.85	
		HS-20 (OPERATING)	36.000		7.27	261.54	1.35	7.27	1	EXTERIOR WALL	3.84	10.47	1	EXTERIOR WALL	6.85	
LEGAL LOAD RATING	SINGLE VEHICLE (SV)	SNSH	13.500	3	7.01	94.58	1.40	7.01	1	EXTERIOR WALL	3.84	10.09	1	EXTERIOR WALL	6.85	
		SNGARBS2	20.000		7.01	140.11	1.40	7.01	1	EXTERIOR WALL	3.84	10.09	1	EXTERIOR WALL	6.85	
		SNAGRIS2	22.000		7.01	154.12	1.40	7.01	1	EXTERIOR WALL	3.84	10.09	1	EXTERIOR WALL	6.85	
		SNCOTTS3	27.250		7.01	190.90	1.40	7.01	1	EXTERIOR WALL	3.84	10.09	1	EXTERIOR WALL	6.85	
		SNAGGRS4	34.925		7.01	244.67	1.40	7.01	1	EXTERIOR WALL	3.84	10.09	1	EXTERIOR WALL	6.85	
		SNS5A	35.550		7.01	249.05	1.40	7.01	1	EXTERIOR WALL	3.84	10.09	1	EXTERIOR WALL	6.85	
		SNS6A	39.950		7.01	279.88	1.40	7.01	1	EXTERIOR WALL	3.84	10.09	1	EXTERIOR WALL	6.85	
		SNS7B	42.000		7.01	294.24	1.40	7.01	1	EXTERIOR WALL	3.84	10.09	1	EXTERIOR WALL	6.85	
	TRUCK TRACTOR SEMI-TRAILER (TTST)	TNAGRIT3	33.000		7.01	231.19	1.40	7.01	1	EXTERIOR WALL	3.84	10.09	1	EXTERIOR WALL	6.85	
		TNT4A	33.075		7.01	231.71	1.40	7.01	1	EXTERIOR WALL	3.84	10.09	1	EXTERIOR WALL	6.85	
		TNT6A	41.600		7.01	291.44	1.40	7.01	1	EXTERIOR WALL	3.84	10.09	1	EXTERIOR WALL	6.85	
		TNT7A	42.000		7.01	294.24	1.40	7.01	1	EXTERIOR WALL	3.84	10.09	1	EXTERIOR WALL	6.85	
		TNT7B	42.000		7.01	294.24	1.40	7.01	1	EXTERIOR WALL	3.84	10.09	1	EXTERIOR WALL	6.85	
		TNAGRIT4	43.000		7.01	301.24	1.40	7.01	1	EXTERIOR WALL	3.84	10.09	1	EXTERIOR WALL	6.85	
		TNAGT5A	45.000		7.01	315.25	1.40	7.01	1	EXTERIOR WALL	3.84	10.09	1	EXTERIOR WALL	6.85	
		TNAGT5B	45.000		7.01	315.25	1.40	7.01	1	EXTERIOR WALL	3.84	10.09	1	EXTERIOR WALL	6.85	

LOAD FACTORS:

DESIGN LOAD RATING FACTORS

LOAD TYPE	MAX FACTOR	MIN FACTOR
DC	1.25	0.90
DW	1.50	0.65
EV	1.30	0.90
EH	1.35	0.90
ES	1.35	0.90
LS	1.75	--
WA	1.00	--

NOTE:

RATING FACTORS ARE BASED ON THE STRENGTH I LIMIT STATE.

COMMENTS:

1.
2.
3.
4.

(#) CONTROLLING LOAD RATING

(1) DESIGN LOAD RATING (HL-93)

(2) DESIGN LOAD RATING (HS-20)

(3) LEGAL LOAD RATING **

** SEE CHART FOR VEHICLE TYPE

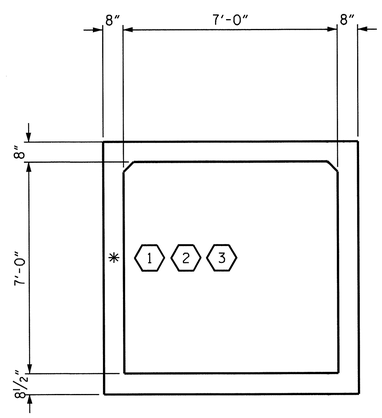

LRFR SUMMARY

(LOOKING DOWNSTREAM)

PROJECT NO. R-2303C

SAMPSON COUNTY

STATION: 888+67.00 -L-

SHEET 4 OF 4

STATE OF NORTH CAROLINA
DEPARTMENT OF TRANSPORTATION
RALEIGH

STANDARD

LRFR SUMMARY FOR REINFORCED CONCRETE BOX CULVERTS
(NON-INTERSTATE TRAFFIC)

NORTH CAROLINA PROFESSIONAL SEAL 025516 ENGINEER EMILY E. MURRAY 6/25/13

REVISIONS						SHEET NO.
NO.	BY:	DATE:	NO.	BY:	DATE:	C-8
1			3			TOTAL SHEETS
2			4			12

STR. #6 STD. NO. LRFR5

ASSEMBLED BY : A. K. PATEL, PE DATE : 11/2012
CHECKED BY : A. M. LEE, PE DATE : 12/2012
DESIGN ENGINEER OF RECORD: M. M. AHMED DATE : 5/14/13

DRAWN BY : WMC 7/11
CHECKED BY : GM 7/11

REV. 10/1/11 MAA/GM

13-MAY-2013 11:45
Z:\TIPProjects-R\R2303C\Structures\Plans\STR*6\akpatel\R-2303C_SD_CU_Str6.dgn
emurray

BENCH MARK: -T3- 3389 NAIL SET POT 10+58.28, EL. 101.06 NAVD88

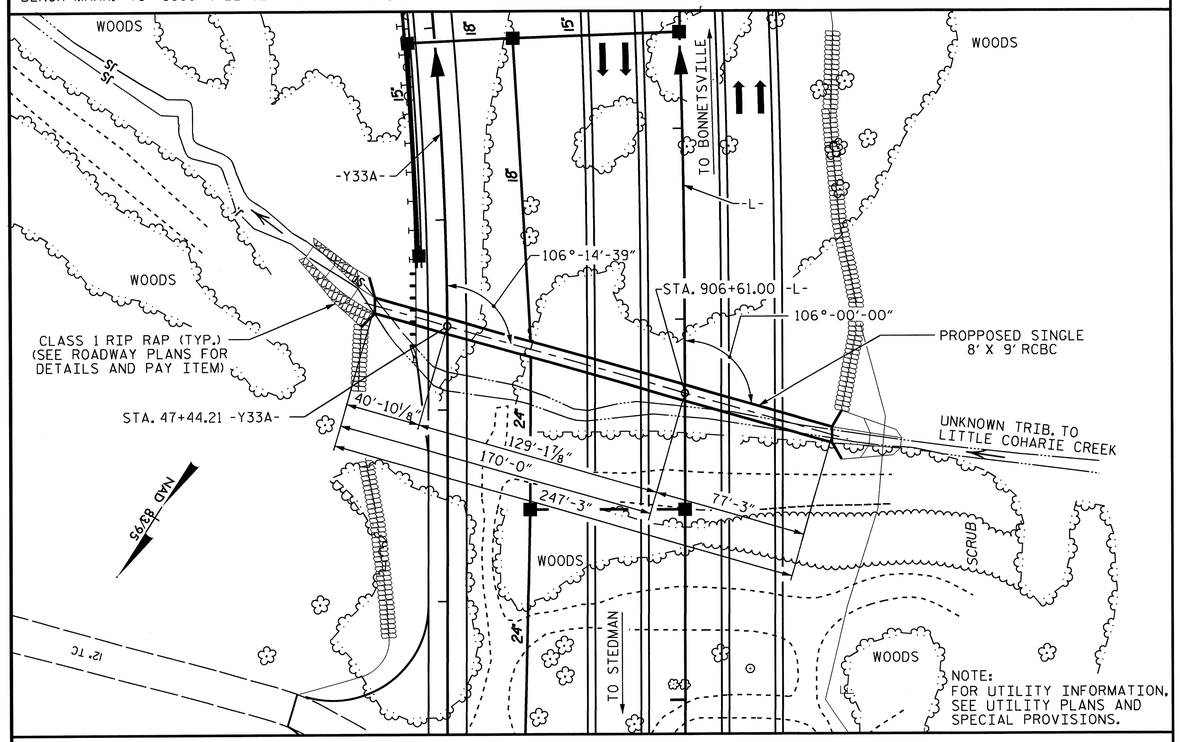

LOCATION SKETCH

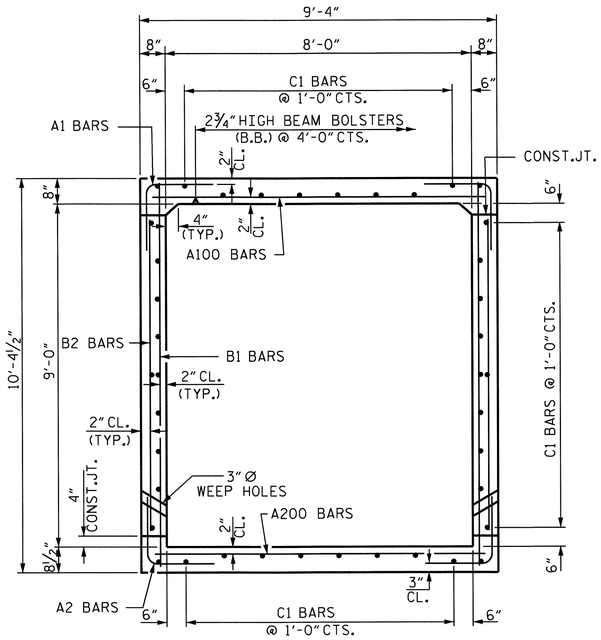

RIGHT ANGLE SECTION OF BARREL

THERE ARE 40 "C" BARS IN SECTION OF BARREL

NOTES

ASSUMED LIVE LOAD ----------HL-93 OR ALTERNATE LOADING.

DESIGN FILL----------8.55'

FOR OTHER DESIGN DATA AND NOTES SEE STANDARD NOTE SHEET.

3"Ø WEEP HOLES INDICATED TO BE IN ACCORDANCE WITH THE SPECIFICATIONS.

CONCRETE IN CULVERTS TO BE POURED IN THE FOLLOWING ORDER:

1. WING FOOTINGS AND FLOOR SLAB INCLUDING 4" OF ALL VERTICAL WALLS.
2. THE REMAINING PORTIONS OF THE WALLS AND WINGS FULL HEIGHT FOLLOWED BY ROOF SLAB AND HEADWALLS.

THE RESIDENT ENGINEER SHALL CHECK THE LENGTH OF CULVERT BEFORE STAKING IT OUT TO MAKE CERTAIN THAT IT WILL PROPERLY TAKE CARE OF THE FILL.

DIMENSIONS FOR WING LAYOUT AS WELL AS ADDITIONAL REINFORCING STEEL EMBEDDED IN BARREL ARE SHOWN ON WING SHEET.

TRANSVERSE CONSTRUCTION JOINTS SHALL BE USED IN THE BARREL, SPACED TO LIMIT THE POURS TO A MAXIMUM OF 70 FT. LOCATION OF JOINTS SHALL BE SUBJECT TO APPROVAL OF THE ENGINEER.

AT THE CONTRACTOR'S OPTION, HE MAY SPLICE THE VERTICAL REINFORCING STEEL IN THE INTERIOR FACE OF EXTERIOR WALL ABOVE LOWER WALL CONSTRUCTION JOINT. THE SPLICE LENGTH SHALL BE AS PROVIDED IN THE SPLICE LENGTH CHART SHOWN ON THE PLANS. EXTRA WEIGHT OF STEEL DUE TO THE SPLICES SHALL BE PAID FOR BY THE CONTRACTOR.

A 3 FOOT STRIP OF FILTER FABRIC SHALL BE ATTACHED TO THE FILL FACE OF THE WING COVERING THE ENTIRE LENGTH OF THE EXPANSION JOINT.

FOR CRANE SAFETY, SEE SPECIAL PROVISIONS.

FOR FALSEWORK AND FORMWORK, SEE SPECIAL PROVISIONS.

FOR CULVERT DIVERSION DETAILS AND PAY ITEM, SEE EROSION CONTROL PLANS.

FOR SUBMITTAL OF WORKING DRAWINGS, SEE SPECIAL PROVISIONS.

FOR GROUT FOR STRUCTURES, SEE SPECIAL PROVISIONS.

THE 24" DIA. AND 18" DIA. PIPES THROUGH THE SIDEWALL OF THE CULVERT SHALL BE LOCATED BY THE ENGINEER. THE REINFORCING STEEL SHALL BE FIELD BENT AS NECESSARY TO CLEAR PIPE.

AT THE CONTRACTOR'S OPTION HE MAY SUBMIT, TO THE ENGINEER FOR APPROVAL, DESIGN AND DETAIL DRAWINGS FOR A PRECAST REINFORCED CONCRETE BOX CULVERT IN LIEU OF THE CAST-IN-PLACE CULVERT SHOWN ON THE PLANS. THE DESIGN SHALL PROVIDE THE SAME SIZE AND NUMBER OF BARRELS AS USED ON THE CAST-IN-PLACE DESIGN. FOR OPTIONAL PRECAST REINFORCED CONCRETE BOX CULVERT, SEE SPECIAL PROVISIONS.

HYDRAULIC DATA

DESIGN DISCHARGE	= 600 CFS
FREQUENCY OF DESIGN FLOOD	= 50 YRS.
DESIGN HIGH WATER ELEVATION	= 107.50
DRAINAGE AREA	= 0.32 SQ. MI.
BASE DISCHARGE (Q100)	= 700 CFS
BASE HIGH WATER ELEVATION	= 108.70

OVERTOPPING FLOOD DATA

OVERTOPPING DISCHARGE	= 1085 CFS
FREQUENCY OF OVERTOPPING FLOOD	= > 100 YRS.
OVERTOPPING FLOOD ELEVATION	= 114.00

GRADE DATA

GRADE POINT ELEVATION @ STA. 906+61.00 -L-	= 113.17
GRADE POINT ELEVATION @ STA. 47+44.21.00 -Y33A-	= 113.75
BED ELEVATION @ STA. 906+61.00 -L-	= 97.10
BED ELEVATION @ STA. 47+44.21.00 -Y33A-	= 96.43
ROADWAY FILL SLOPES	= 3 :1

TOTAL STRUCTURE QUANTITIES

CLASS A CONCRETE			
BARREL @ 0.924 CY/FT	228.5	C.Y.	
WING ETC.	42.2	C.Y.	
TOTAL	270.7	C.Y.	
REINFORCING STEEL			
BARREL	32,740	LBS.	
WINGS ETC.	2,696	LBS.	
TOTAL	35,436	LBS.	
FOUNDATION CONDITIONING MAT'L.	232 TONS		
CULVERT EXCAVATION	LUMP SUM		

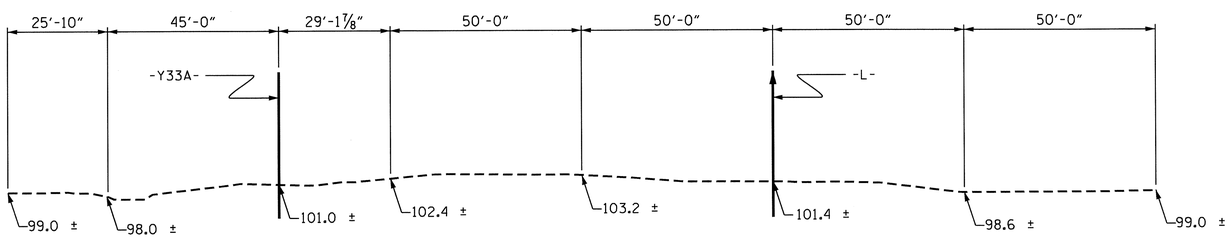

PROFILE ALONG ℄ CULVERT

PROJECT NO. R-2303C

SAMPSON COUNTY

STATION: 906+61.00 -L-

SHEET 1 OF 4

STATE OF NORTH CAROLINA
DEPARTMENT OF TRANSPORTATION
RALEIGH

SINGLE 8 FT. X 9 FT.
CONCRETE BOX CULVERT
106° SKEW

NORTH CAROLINA PROFESSIONAL SEAL 027241 ENGINEER OMAR R. AZZI 6/25/13

NORTH CAROLINA PROFESSIONAL SEAL 025516 ENGINEER EMILY E. MURRAY 6/25/13

REVISIONS						SHEET NO.
NO.	BY:	DATE:	NO.	BY:	DATE:	C-9
1			3			TOTAL SHEETS
2			4			12

STR. #7

ASSEMBLED BY : A. K. PATEL, PE	DATE : 11/2012	SPECIAL
CHECKED BY : A. M. LEE, PE	DATE : 12/2012	
DESIGN ENGINEER OF RECORD: M. M. AHMED	DATE : 5/14/13	
DRAWN BY : R. WRIGHT	DATE : AUG. 1989	STANDARD
CHECKED BY : C.R.K.	DATE : AUG. 1989	

REVISED 11-13-91 BY E.L.R. CHECKED BY G.R.P.
ADDED 8-22-89

13-MAY-2013 12:41
Z:\TIPProjects-R\R2303C\Structures\Plans\STR#7\PADKINS\R-2303C_SD_CU_07.dgn

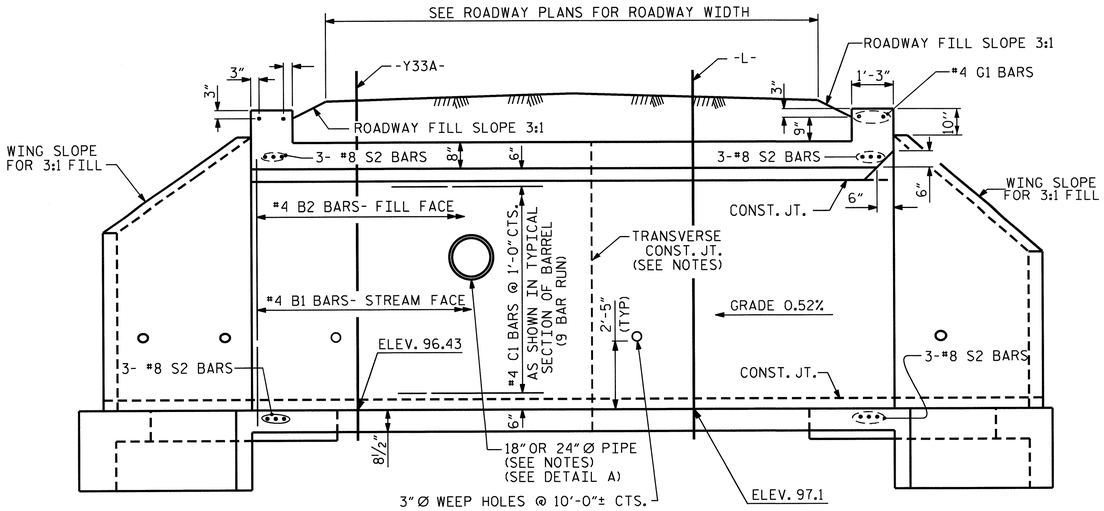

CULVERT SECTION NORMAL TO ROADWAY

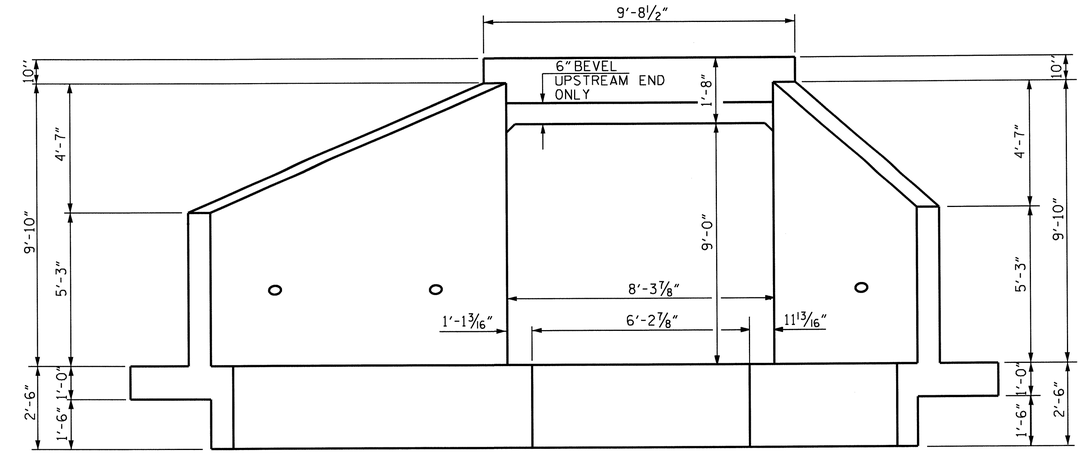

END ELEVATION NORMAL TO SKEW

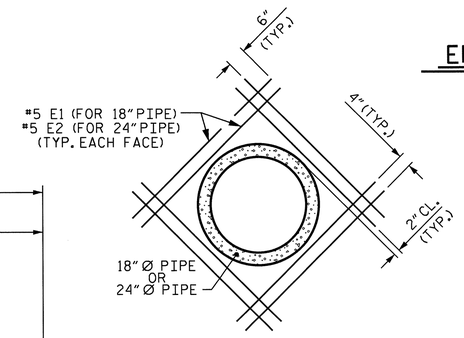

DETAIL A

BAR SCHEDULE					
BAR	NO.	SIZE	TYPE	LENGTH	WEIGHT
A1	660	#4	6	5'-4"	2351
A2	990	#5	6	5'-6"	5679
A100	489	#5	STR	8'-11"	4548
A101	2	#5	STR	7'-7"	16
A102	2	#5	STR	5'-10"	12
A103	2	#5	STR	4'-1"	9
A104	2	#5	STR	2'-4"	5
A200	489	#5	STR	8'-11"	4548
A201	2	#5	STR	7'-7"	16
A202	2	#5	STR	5'-10"	12
A203	2	#5	STR	4'-1"	9
A204	2	#5	STR	2'-4"	5
B1	660	#4	STR	9'-10"	4335
B2	660	#4	STR	8'-4"	3674
C1	360	#4	STR	29'-4"	7054
E1	16	#5	STR	4'-0"	67
E2	16	#5	STR	4'-7"	76
G1	4	#4	STR	9'-4"	25
S2	12	#8	STR	9'-4"	299
REINFORCING STEEL = 32,740 LBS					

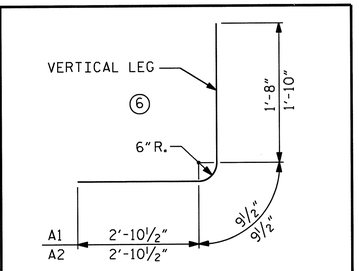

BAR TYPE

DIMENSIONS ARE OUT TO OUT

SPLICE LENGTH CHART		
BAR	SIZE	SPLICE LENGTH
B1	#4	1'-9"
C1	#4	1'-11"

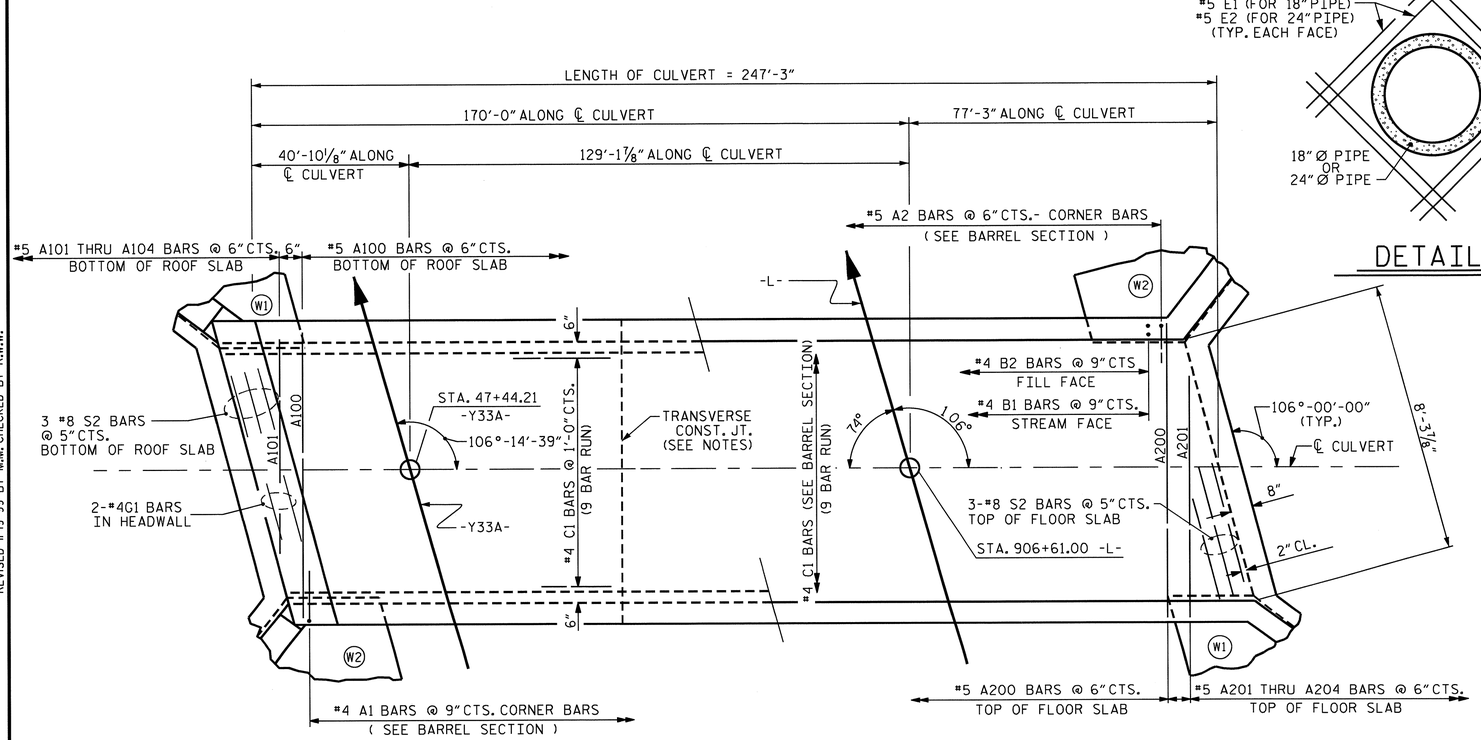

PART PLAN - ROOF SLAB

PART PLAN - FLOOR SLAB

NOTE: 1. USING HEADWALL ANGLE OF 106°
2. HYDRO IS NO LONGER SPECIFYING TYPE OF PIPE UNLESS LOAD BEARING. PRODUCT SELECTION IS BEING ALLOWED IN THE FIELD.

PROJECT NO. R-2303C
SAMPSON COUNTY
STATION: 906+61.00 -L-

SHEET 2 OF 4

STATE OF NORTH CAROLINA
DEPARTMENT OF TRANSPORTATION
RALEIGH

BARREL STANDARD
SINGLE 8 FT. X 9 FT.
CONCRETE BOX CULVERT
106° SKEW

1971

REVISIONS						SHEET NO.
NO.	BY:	DATE:	NO.	BY:	DATE:	C-10
1			3			TOTAL SHEETS
2			4			12

STR. #7 STD. NO. CB221

NORTH CAROLINA PROFESSIONAL SEAL 025516 ENGINEER EMILY E. MURRAY
6/25/13

ASSEMBLED BY : A. K. PATEL, PE DATE : 11/2012	SPECIAL	
CHECKED BY : A. M. LEE, PE DATE : 12/2012		
DESIGN ENGINEER OF RECORD: M. M. AHMED DATE : 5-14-13		
DRAWN BY : R.W. WRIGHT DATE : AUG. 1989	STANDARD	
CHECKED BY : A.R. BISSETTE DATE : AUG. 1989		

REVISED 8-28-92 BY E.L.R. CHECKED BY G.R.P.
REVISED 8-22-89 BY A.R.B. CHECKED BY C.R.K.
REDRAWN 8-22-89

REVISED 11-19-99 BY M.M. CHECKED BY R.W.W.

25-JUN-2013 lpll
Z:\TIPProjects-R\R2303C\Structures\Plans\STR#7\PADKINS\R-2303C_SD_CU_07.dgn

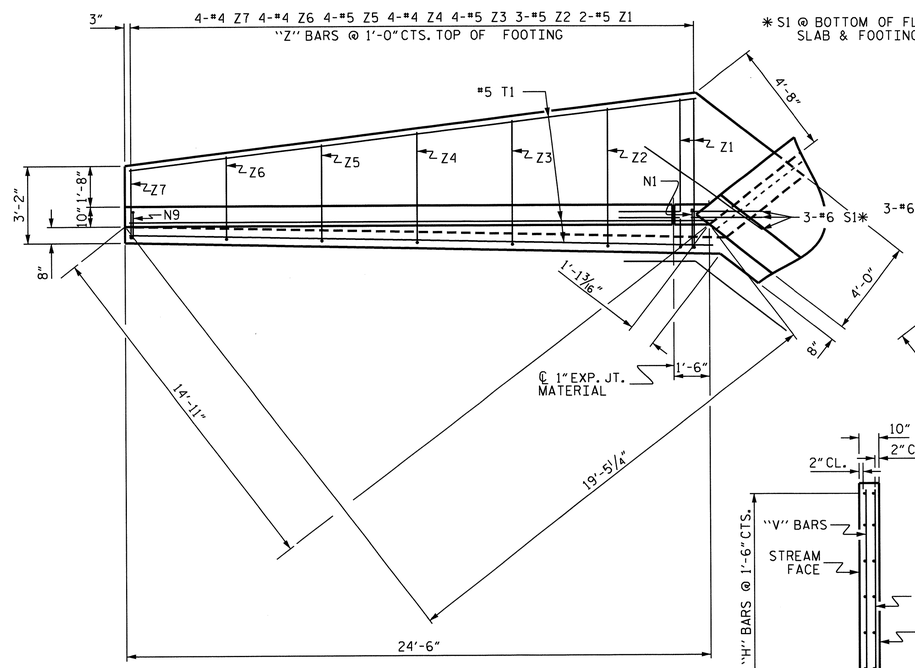

PLAN W1

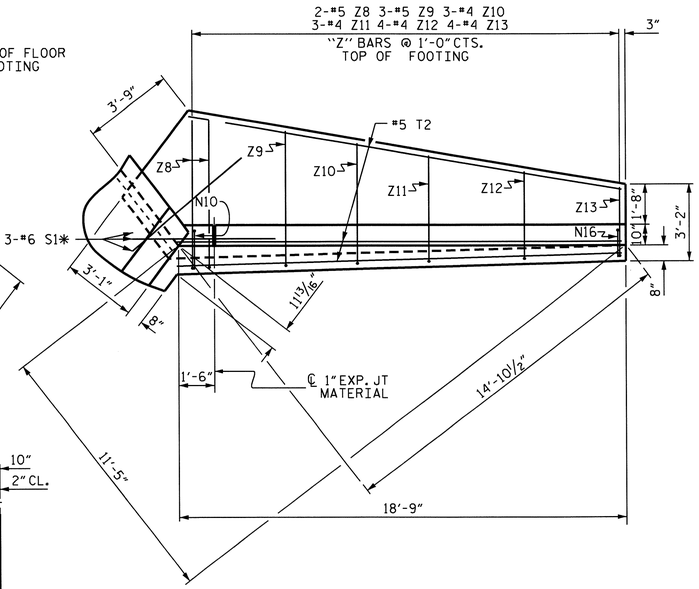

PLAN W2

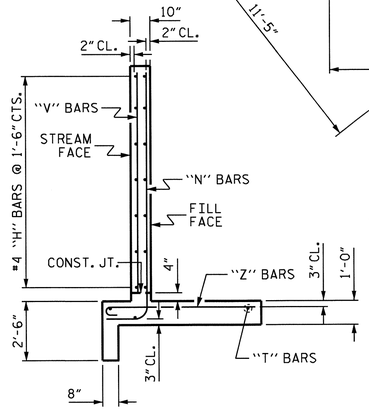

TYPICAL WING SECTION

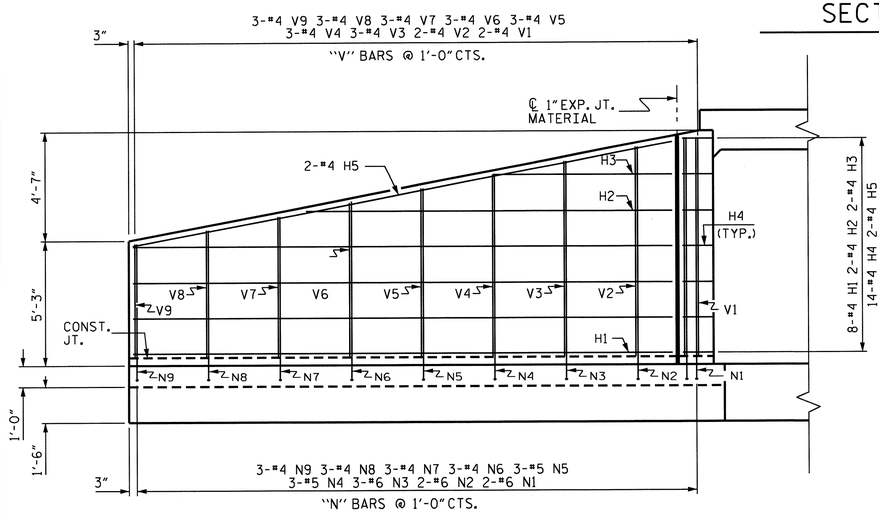

ELEVATION W1

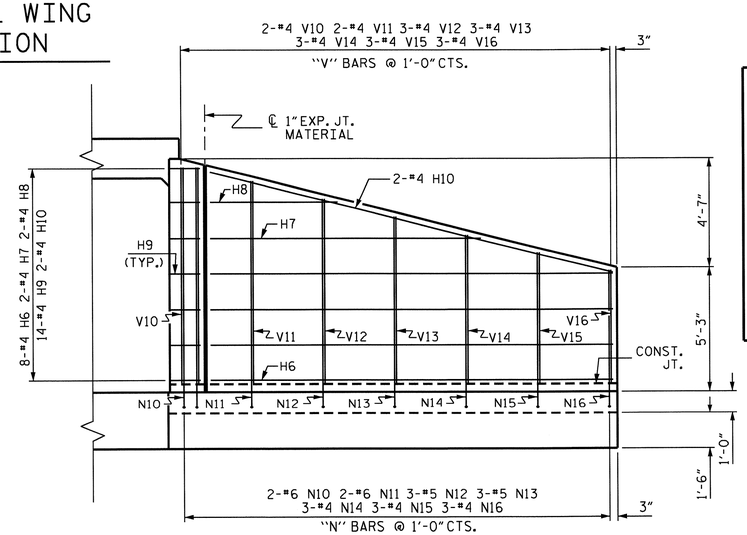

ELEVATION W2

BILL OF MATERIAL

BAR	NO.	SIZE	TYPE	LENGTH	WEIGHT
H1	16	#4	STR	22'-7"	241
H2	4	#4	STR	15'-4"	41
H3	4	#4	STR	7'-6"	20
H4	28	#4	1	3'-3"	61
H5	4	#4	STR	23'-0"	61
H6	16	#4	STR	16'-10"	180
H7	4	#4	STR	11'-4"	30
H8	4	#4	STR	5'-4"	14
H9	28	#4	2	3'-3"	61
H10	4	#4	STR	17'-5"	47
N1	4	#6	3	11'-3"	68
N2	4	#6	3	10'-10"	65
N3	6	#6	3	10'-3"	92
N4	6	#5	3	9'-9"	61
N5	6	#5	3	9'-2"	57
N6	6	#4	3	8'-7"	34
N7	6	#4	3	8'-0"	32
N8	6	#4	3	7'-5"	30
N9	6	#4	3	6'-10"	27
N10	4	#6	3	11'-2"	67
N11	4	#6	3	10'-7"	64
N12	6	#5	3	9'-10"	62
N13	6	#5	3	9'-1"	57
N14	6	#4	3	8'-4"	33
N15	6	#4	3	7'-7"	30
N16	6	#4	3	6'-10"	27
S1	12	#6	STR	6'-0"	108
T1	6	#5	STR	24'-0"	150
T2	6	#5	STR	18'-5"	115

BAR	NO.	SIZE	TYPE	LENGTH	WEIGHT
V1	4	#4	STR	9'-2"	24
V2	4	#4	STR	8'-10"	24
V3	6	#4	STR	9'-3"	37
V4	6	#4	STR	7'-8"	31
V5	6	#4	STR	7'-1"	28
V6	6	#4	STR	6'-6"	26
V7	6	#4	STR	5'-11"	24
V8	6	#4	STR	5'-4"	21
V9	6	#4	STR	4'-10"	19
V10	4	#4	STR	9'-2"	24
V11	4	#4	STR	8'-6"	23
V12	6	#4	STR	7'-9"	31
V13	6	#4	STR	7'-0"	28
V14	6	#4	STR	6'-3"	25
V15	6	#4	STR	5'-6"	22
V16	6	#4	STR	4'-9"	19
Z1	4	#5	4	6'-9"	28
Z2	6	#5	4	6'-4"	40
Z3	8	#5	4	5'-9"	48
Z4	8	#4	4	5'-1"	27
Z5	8	#4	4	4'-6"	24
Z6	8	#4	4	3'-11"	21
Z7	8	#4	4	3'-4"	18
Z8	4	#5	4	6'-9"	28
Z9	6	#5	4	6'-2"	39
Z10	6	#4	4	5'-6"	22
Z11	6	#4	4	4'-11"	20
Z12	8	#4	4	4'-2"	22
Z13	8	#4	4	3'-4"	18

REINFORCING STEEL = 2696 LBS
FOR 4 WINGS

CLASS A CONCRETE

4 WINGS	40.5	CY
2 HEADWALLS	0.9	CY
2 END CURTAIN WALLS	0.8	CY
TOTAL	42.2	CY

BAR TYPES

ALL BAR DIMENSIONS ARE OUT TO OUT.

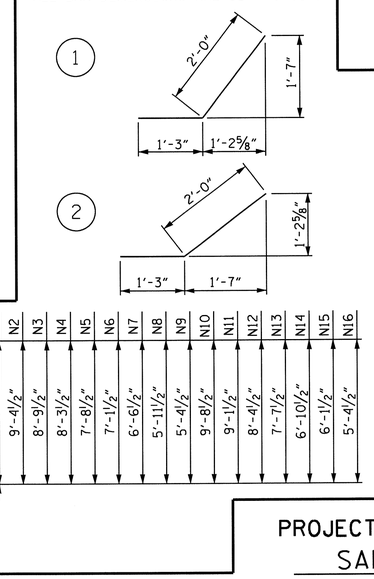

Z1	6'-2"	7"
Z2	5'-9"	7"
Z3	5'-2"	7"
Z4	4'-7"	6"
Z5	4'-0"	6"
Z6	3'-5"	6"
Z7	2'-10"	6"
Z8	6'-2"	7"
Z9	5'-7"	7"
Z10	5'-0"	6"
Z11	4'-5"	6"
Z12	3'-8"	6"
Z13	2'-10"	6"

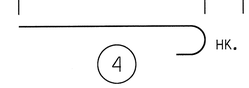

4

PROJECT NO. R-2303C
SAMPSON COUNTY
STATION: 906+61.00 -L-

SHEET 3 OF 4

STATE OF NORTH CAROLINA
DEPARTMENT OF TRANSPORTATION
RALEIGH

STANDARD WINGS FOR CONCRETE BOX CULVERT

H = 9'-0" SLOPE = 3:1
75° OR 105° SKEW

NORTH CAROLINA PROFESSIONAL SEAL 025516 ENGINEER ELMER E. MURRAY
6/25/13

REVISIONS						SHEET NO.
NO.	BY:	DATE:	NO.	BY:	DATE:	C-11
1			3			TOTAL SHEETS
2			4			12

STD. NO. CW7509 STR #7

ASSEMBLED BY : A. K. PATEL, PE DATE : 11/2012
CHECKED BY : A. M. LEE, PE DATE : 12/2012
DESIGN ENGINEER OF RECORD: M. M. AHMED DATE : 5-14-13
DRAWN BY : MMA 07/12
CHECKED BY :

25-JUN-2013 11:13
Z:\TIPProjects-R\R2303C\Structures\Plans\STR#7\PADKINS\R-2303C_SD_CU_07.dgn

LOAD AND RESISTANCE FACTOR RATING (LRFR) SUMMARY FOR REINFORCED CONCRETE BOX CULVERTS

LEVEL		VEHICLE	WEIGHT (W) (TONS)	CONTROLLING LOAD RATING (#)	MINIMUM RATING FACTORS (RF)	TONS = W × RF	STRENGTH I LIMIT STATE									COMMENT NUMBER
							LIVE-LOAD FACTORS (γ_{LL})	MOMENT				SHEAR				
								RATING FACTOR	BOX NO.	ELEMENT TYPE	DISTANCE FROM LEFT END OF ELEMENT (ft)	RATING FACTOR	BOX NO.	ELEMENT TYPE	DISTANCE FROM LEFT END OF ELEMENT (ft)	
DESIGN LOAD RATING		HL-93 (INVENTORY)	N/A	1	1.26	--	1.75	1.45	1	TOP CORNER WALL	0.48	1.26	1	BOTTOM SLAB	0.84	
		HL-93 (OPERATING)	N/A		1.63	--	1.35	1.89	1	TOP CORNER WALL	0.48	1.63	1	BOTTOM SLAB	0.84	
		HS-20 (INVENTORY)	36.000	2	1.67	59.95	1.75	1.99	1	TOP CORNER WALL	0.48	1.67	1	BOTTOM SLAB	0.84	
		HS-20 (OPERATING)	36.000		2.16	77.72	1.35	2.58	1	TOP CORNER WALL	0.48	2.16	1	BOTTOM SLAB	0.84	
LEGAL LOAD RATING	SINGLE VEHICLE (SV)	SNSH	13.500		3.01	40.65	1.40	3.27	1	TOP CORNER WALL	0.48	3.01	1	BOTTOM SLAB	0.84	
		SNGARBS2	20.000		2.81	56.21	1.40	3.10	1	TOP CORNER WALL	0.48	2.81	1	BOTTOM SLAB	0.84	
		SNAGRIS2	22.000		3.01	66.24	1.40	3.27	1	TOP CORNER WALL	0.48	3.01	1	BOTTOM SLAB	0.84	
		SNCOTTS3	27.250	3	1.58	42.94	1.40	1.82	1	TOP CORNER WALL	0.48	1.58	1	BOTTOM SLAB	0.84	
		SNAGGRS4	34.925		1.64	57.17	1.40	1.99	1	TOP CORNER WALL	0.48	1.64	1	BOTTOM SLAB	0.84	
		SNS5A	35.550		1.69	59.94	1.40	2.03	1	TOP CORNER WALL	0.48	1.69	1	BOTTOM SLAB	0.84	
		SNS6A	39.950		1.67	66.70	1.40	2.01	1	TOP CORNER WALL	0.48	1.67	1	BOTTOM SLAB	0.84	
		SNS7B	42.000		1.67	70.12	1.40	2.01	1	TOP CORNER WALL	0.48	1.67	1	BOTTOM SLAB	0.84	
	TRUCK TRACTOR SEMI-TRAILER (TTST)	TNAGRIT3	33.000		3.01	99.36	1.40	3.27	1	TOP CORNER WALL	0.48	3.01	1	BOTTOM SLAB	0.84	
		TNT4A	33.075		1.87	61.97	1.40	2.10	1	TOP CORNER WALL	0.48	1.87	1	BOTTOM SLAB	0.84	
		TNT6A	41.600		1.64	68.10	1.40	1.99	1	TOP CORNER WALL	0.48	1.64	1	BOTTOM SLAB	0.84	
		TNT7A	42.000		1.79	75.34	1.40	2.10	1	TOP CORNER WALL	0.48	1.79	1	BOTTOM SLAB	7.82	
		TNT7B	42.000		1.69	70.82	1.40	2.06	1	TOP CORNER WALL	0.48	1.69	1	BOTTOM SLAB	7.82	
		TNAGRIT4	43.000		1.79	77.13	1.40	2.01	1	TOP CORNER WALL	0.48	1.79	1	BOTTOM SLAB	0.84	
		TNAGT5A	45.000		1.83	82.48	1.40	2.06	1	TOP CORNER WALL	0.48	1.83	1	BOTTOM SLAB	0.84	
		TNAGT5B	45.000		1.87	84.31	1.40	2.10	1	TOP CORNER WALL	0.48	1.87	1	BOTTOM SLAB	0.84	

LOAD FACTORS:

DESIGN LOAD RATING FACTORS

LOAD TYPE	MAX FACTOR	MIN FACTOR
DC	1.25	0.90
DW	1.50	0.65
EV	1.30	0.90
EH	1.35	0.90
ES	1.35	0.90
LS	1.75	--
WA	1.00	--

NOTE:

RATING FACTORS ARE BASED ON THE STRENGTH I LIMIT STATE.

COMMENTS:

1.
2.
3.
4.

(#) CONTROLLING LOAD RATING

(1) DESIGN LOAD RATING (HL-93)

(2) DESIGN LOAD RATING (HS-20)

(3) LEGAL LOAD RATING **

** SEE CHART FOR VEHICLE TYPE

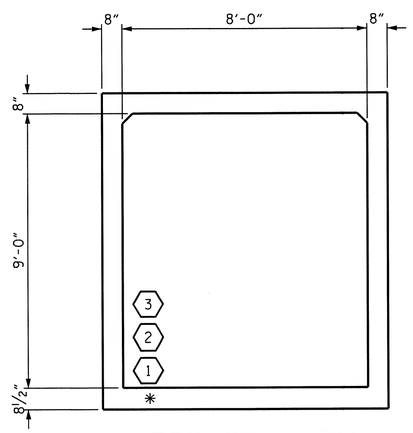

LRFR SUMMARY

(LOOKING DOWNSTREAM)

PROJECT NO. R-2303C

SAMPSON COUNTY

STATION: 906+61.00 -L-

SHEET 4 OF 4

STATE OF NORTH CAROLINA
DEPARTMENT OF TRANSPORTATION
RALEIGH

STANDARD

LRFR SUMMARY FOR REINFORCED CONCRETE BOX CULVERT (NON-INTERSTATE TRAFFIC)

NORTH CAROLINA PROFESSIONAL SEAL 025516 ENGINEER EMILY E. MURRAY
6/25/13

REVISIONS						SHEET NO.
NO.	BY:	DATE:	NO.	BY:	DATE:	C-12
1			3			TOTAL SHEETS
2			4			12

STR. #7 STD. NO. LRFR5

ASSEMBLED BY : A. K. PATEL, PE DATE : 11/2012
CHECKED BY : A. M. LEE, PE DATE : 12/2012
DESIGN ENGINEER OF RECORD: N. M. AHMED DATE : 5/14/13

DRAWN BY : WMC 7/11
CHECKED BY : GM 7/11

REV. 10/1/11 MAA/GM

13-MAY-2013 12:41
Z:\TIPProjects-R\R2303C\Structures\Plans\STR#7\PADKINS\R-2303C_SD_CU_07.dgn
emurray

STANDARD NOTES

DESIGN DATA:

SPECIFICATIONS	A.A.S.H.T.O. (CURRENT)
LIVE LOAD	SEE PLANS
IMPACT ALLOWANCE	SEE A.A.S.H.T.O.
STRESS IN EXTREME FIBER OF	
STRUCTURAL STEEL - AASHTO M270 GRADE 36	20,000 LBS. PER SQ. IN.
- AASHTO M270 GRADE 50W	27,000 LBS. PER SQ. IN.
- AASHTO M270 GRADE 50	27,000 LBS. PER SQ. IN.
REINFORCING STEEL IN TENSION	
GRADE 60	24,000 LBS. PER SQ. IN.
CONCRETE IN COMPRESSION	1,200 LBS. PER SQ. IN.
CONCRETE IN SHEAR	SEE A.A.S.H.T.O.
STRUCTURAL TIMBER - TREATED OR	
UNTREATED - EXTREME FIBER STRESS	1,800 LBS. PER SQ. IN.
COMPRESSION PERPENDICULAR TO GRAIN OF TIMBER	375 LBS. PER SQ. IN.
EQUIVALENT FLUID PRESSURE OF EARTH	30 LBS. PER CU. FT. (MINIMUM)

MATERIAL AND WORKMANSHIP:

EXCEPT AS MAY OTHERWISE BE SPECIFIED ON PLANS OR IN THE SPECIAL PROVISIONS, ALL MATERIAL AND WORKMANSHIP SHALL BE IN ACCORDANCE WITH THE 2012 "STANDARD SPECIFICATIONS FOR ROADS AND STRUCTURES" OF THE N. C. DEPARTMENT OF TRANSPORTATION.

STEEL SHEET PILING FOR PERMANENT OR TEMPORARY APPLICATIONS SHALL BE HOT ROLLED.

CONCRETE:

UNLESS OTHERWISE REQUIRED ON PLANS, CLASS A CONCRETE SHALL BE USED FOR ALL PORTIONS OF ALL STRUCTURES WITH THE EXCEPTION THAT: CLASS AA CONCRETE SHALL BE USED IN BRIDGE SUPERSTRUCTURES, ABUTMENT BACKWALLS, AND APPROACH SLABS; AND CLASS B CONCRETE SHALL BE USED FOR SLOPE PROTECTION AND RIP RAP.

CONCRETE CHAMFERS:

UNLESS OTHERWISE NOTED ON THE PLANS, ALL EXPOSED CORNERS ON STRUCTURES SHALL BE CHAMFERED 3/4" WITH THE FOLLOWING EXCEPTIONS: TOP CORNERS OF CURBS MAY BE ROUNDED TO 1-1/2" RADIUS WHICH IS BUILT INTO CURB FORMS; CORNERS OF TRANSVERSE FLOOR EXPANSION JOINTS SHALL BE ROUNDED WITH A 1/4" FINISHING TOOL UNLESS OTHERWISE REQUIRED ON PLANS; AND CORNERS OF EXPANSION JOINTS IN THE ROADWAY FACES AND TOPS OF CURBS AND SIDEWALKS SHALL BE ROUNDED TO A 1/4" RADIUS WITH A FINISHING STONE OR TOOL UNLESS OTHERWISE REQUIRED ON PLANS.

DOWELS:

DOWELS WHEN INDICATED ON PLANS AS FOR CULVERT EXTENSIONS, SHALL BE EMBEDDED AT LEAST 12" INTO THE OLD CONCRETE AND GROUTED INTO PLACE WITH 1:2 CEMENT MORTAR.

ALLOWANCE FOR DEAD LOAD DEFLECTION, SETTLEMENT, ETC. IN CASTING SUPERSTRUCTURES:

BRIDGES SHALL BE BUILT ON THE GRADE OR VERTICAL CURVE SHOWN ON PLANS. SLABS, CURBS AND PARAPETS SHALL CONFORM TO THE GRADE OR CURVE.

ALL DIMENSIONS WHICH ARE GIVEN IN SECTION AND ARE AFFECTED BY DEAD LOAD DEFLECTIONS ARE DIMENSIONS AT CENTER LINE OF BEARING UNLESS OTHERWISE NOTED ON PLANS. IN SETTING FORMS FOR STEEL BEAM BRIDGES AND PRESTRESSED CONCRETE GIRDER BRIDGES, ADJUSTMENTS SHALL BE MADE DUE TO THE DEAD LOAD DEFLECTIONS FOR THE ELEVATIONS SHOWN. WHERE BLOCKS ARE SHOWN OVER BEAMS FOR BUILDING UP TO THE SLAB, THE VERTICAL DIMENSIONS OF THE BLOCKS SHALL BE ADJUSTED BETWEEN BEARINGS TO COMPENSATE FOR DEAD LOAD DEFLECTIONS, VERTICAL CURVE ORDINATE, AND ACTUAL BEAM CAMBER. WHERE BOTTOM OF SLAB IS IN LINE WITH BOTTOM OF TOP FLANGES, DEPTH OF SLAB BETWEEN BEARINGS SHALL BE ADJUSTED TO COMPENSATE FOR DEAD LOAD DEFLECTION, VERTICAL CURVE ORDINATE, AND ACTUAL BEAM CAMBER.

IN SETTING FALSEWORK AND FORMS FOR REINFORCED CONCRETE SPANS, AN ALLOWANCE SHALL BE MADE FOR DEAD LOAD DEFLECTIONS, SETTLEMENT OF FALSEWORK, AND PERMANENT CAMBER WHICH SHALL BE PROVIDED FOR IN ADDITION TO THE ELEVATIONS SHOWN. AFTER REMOVAL OF THE FALSEWORK, THE FINISHED STRUCTURES SHALL CONFORM TO THE PROFILE AND ELEVATIONS SHOWN ON THE PLANS AND CONSTRUCTION ELEVATIONS FURNISHED BY THE ENGINEER.

DETAILED DRAWINGS FOR FALSEWORK OR FORMS FOR BRIDGE SUPERSTRUCTURE AND ANY STRUCTURE OR PARTS OF A STRUCTURE AS NOTED ON THE PLANS SHALL BE SUBMITTED TO THE ENGINEER FOR APPROVAL BEFORE CONSTRUCTION OF THE FALSEWORK OR FORMS IS STARTED.

REINFORCING STEEL:

ALL REINFORCING STEEL SHALL BE DEFORMED. DIMENSIONS RELATIVE TO PLACEMENT OF REINFORCING ARE TO CENTERS OF BARS UNLESS OTHERWISE INDICATED IN THE PLANS. DIMENSIONS ON BAR DETAILS ARE TO CENTERS OF BARS OR ARE OUT TO OUT AS INDICATED ON PLANS.

WIRE BAR SUPPORTS SHALL BE PROVIDED FOR REINFORCING STEEL WHERE INDICATED ON THE PLANS. WHEN BAR SUPPORT PIECES ARE PLACED IN CONTINUOUS LINES, THEY SHALL BE SO PLACED THAT THE ENDS OF THE SUPPORTING WIRES SHALL BE LAPPED TO LOCK LEGS ON ADJOINING PIECES.

STRUCTURAL STEEL:

AT THE CONTRACTOR'S OPTION, HE MAY SUBSTITUTE 7/8" Ø SHEAR STUDS FOR THE 3/4" Ø STUDS SPECIFIED ON THE PLANS. THIS SUBSTITUTION SHALL BE MADE AT THE RATE OF 3 - 7/8" Ø STUDS FOR 4 - 3/4" Ø STUDS, AND STUD SPACING CHANGES SHALL BE MADE AS NECESSARY TO PROVIDE THE SAME EQUIVALENT NUMBER OF 7/8" Ø STUDS ALONG THE BEAM AS SHOWN FOR 3/4" Ø STUDS BASED ON THE RATIO OF 3 - 7/8" Ø STUDS FOR 4 - 3/4" Ø STUDS. STUDS OF THE LENGTH SPECIFIED ON THE PLANS MUST BE PROVIDED. THE MAXIMUM SPACING SHALL BE 2'-0".

EXCEPT AT THE INTERIOR SUPPORTS OF CONTINUOUS BEAMS WHERE THE COVER PLATE IS IN CONTACT WITH BEARING PLATE, THE CONTRACTOR MAY, AT HIS OPTION, SUBSTITUTE FOR THE COVER PLATES DESIGNATED ON THE PLANS COVER PLATES OF THE EQUIVALENT AREA PROVIDED THESE PLATES ARE AT LEAST 5/16" IN THICKNESS AND DO NOT EXCEED A WIDTH EQUAL TO THE FLANGE WIDTH LESS 2" OR A THICKNESS EQUAL TO 2 TIMES THE FLANGE THICKNESS. THE SIZE OF FILLET WELDS SHALL CONFORM TO THE REQUIREMENTS OF THE CURRENT ANSI/AASHTO/AWS "BRIDGE WELDING CODE". ELECTROSLAG WELDING WILL NOT BE PERMITTED.

WITH THE SOLE EXCEPTION OF EDGES AT SURFACES WHICH BEAR ON OTHER SURFACES, ALL SHARP EDGES AND ENDS OF SHAPES AND PLATES SHALL BE SLIGHTLY ROUNDED BY SUITABLE MEANS TO A RADIUS OF APPROXIMATELY 1/16 INCH OR EQUIVALENT FLAT SURFACE AT A SUITABLE ANGLE PRIOR TO PAINTING, GALVANIZING, OR METALLIZING.

HANDRAILS AND POSTS:

METAL STANDARDS AND FACES OF THE CONCRETE END POSTS FOR THE METAL RAIL SHALL BE SET NORMAL TO THE GRADE OF THE CURB, UNLESS OTHERWISE SHOWN ON PLANS. THE METAL RAIL AND TOPS OF CONCRETE POSTS USED WITH THE ALUMINUM RAIL SHALL BE BUILT PARALLEL TO THE GRADE OF THE CURB.

METAL HANDRAILS SHALL BE IN ACCORDANCE WITH THE PLANS. RAILS SHALL BE AS MANUFACTURED FOR BRIDGE RAILING. CASTINGS SHALL BE OF A UNIFORM APPEARANCE. FINS AND OTHER DEFORMATIONS RESULTING FROM CASTING OR OTHERWISE SHALL BE REMOVED IN A MANNER SO THAT A UNIFORM COLORING OF THE COMPLETED CASTING SHALL BE OBTAINED. CASTINGS WITH DISCOLORATIONS OR OF NON-UNIFORM COLORING WILL NOT BE ACCEPTED. CERTIFIED MILL REPORTS ARE REQUIRED FOR METAL RAILS AND POSTS.

SPECIAL NOTES:

GENERALLY, IN CASE OF DISCREPANCY, THIS STANDARD SHEET OF NOTES SHALL GOVERN OVER THE SPECIFICATIONS, BUT THE REMAINDER OF THE PLANS SHALL GOVERN OVER NOTES HEREON, AND SPECIAL PROVISIONS SHALL GOVERN OVER ALL. SEE SPECIFICATIONS ARTICLE 105-4.

ENGLISH

JANUARY, 1990