09/08/99

TIP PROJECT: R-2633BB

CONTRACT: C203198

See Sheet 1-A For Index of Sheets
See Sheet 1-B For Conventional Symbols

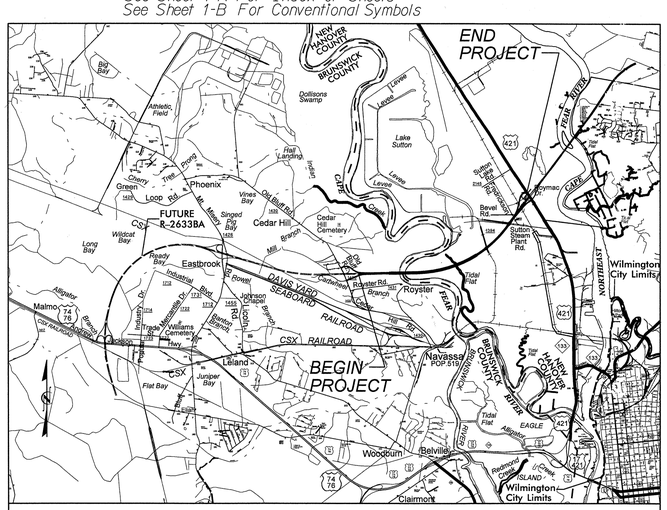

VICINITY MAP FOR STATE PROJECT R-2633BB

STATE OF NORTH CAROLINA
DIVISION OF HIGHWAYS

BRUNSWICK & NEW HANOVER COUNTIES

STATE	STATE PROJECT REFERENCE NO.	SHEET NO.	TOTAL SHEETS
N.C.	R-2633BB	1	

STATE PROJ. NO.	F. A. PROJ. NO.	DESCRIPTION
34491.1.2	STPNHF-17(1)	P.E.
34491.2.3		R/W
34491.3.GVS4	NHS-0017(131)	CONST.

LOCATION: US 17 (WILMINGTON BYPASS) FROM SR 1430 (CEDAR HILL ROAD) TO US 421 NORTH OF WILMINGTON

TYPE OF WORK: GRADING, DRAINAGE, PAVING, SIGNING, AND STRUCTURES

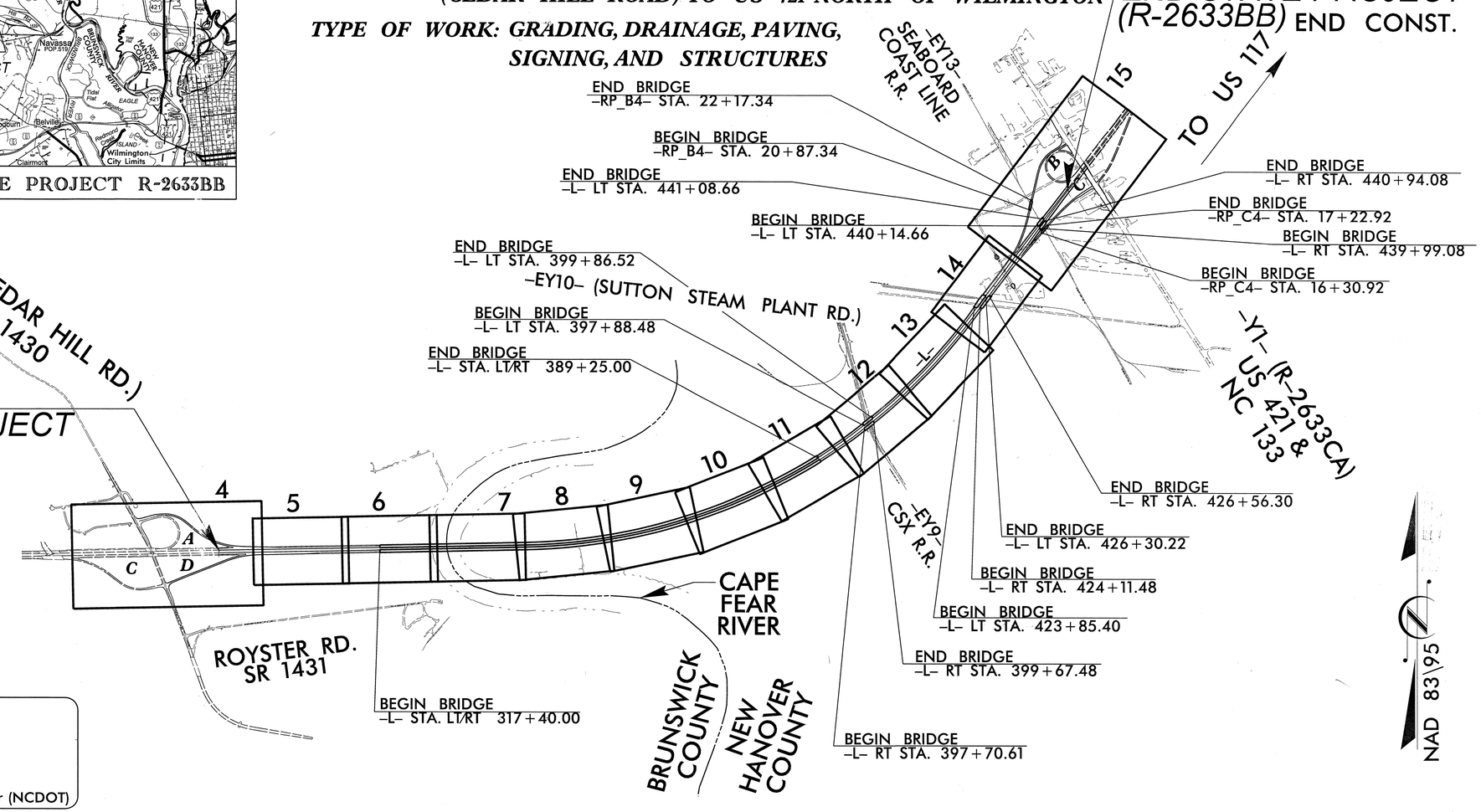

PREPARED FOR
DEPARTMENT OF TRANSPORTATION
DIVISION OF HIGHWAYS
RALEIGH, NC
PLANS COORDINATED BY:
Brenda Moore, P.E. – Project Engineer (NCDOT)

GRAPHIC SCALES

50' 25' 0 50' 100'
PLANS

50' 25' 0 50' 100'
PROFILE (HORIZONTAL)

10' 5' 0 10' 20'
PROFILE (VERTICAL)

DESIGN DATA

ADT 2013 = 39,600
ADT 2035 = 80,800
DHV = 12 %
D = 60 %
T = 15 % *
V = 70 MPH
* TTST 10% DUAL 5%
FUNC. CLASS. = INTERSTATE
STATEWIDE TIER

PROJECT LENGTH

LENGTH ROADWAY TIP PROJECT R-2633BB = 1.478 Miles
LENGTH STRUCTURES TIP PROJECT R-2633BB = 1.462 Miles
TOTAL LENGTH STATE TIP PROJECT R-2633BB = 2.940 Miles

THIS IS A CONTROL ACCESS PROJECT WITH ACCESS BEING LIMITED TO THE INTERCHANGES

NORTHBOUND LANES (-L- RT) WERE USED FOR PROJECT LENGTH CALCULATIONS

Prepared in the Office of:
LOCHNER
H. W. LOCHNER, INC.
2840 PLAZA PLACE, SUITE 202
RALEIGH, NC 27612
NC License Number F-0159
MULKEY, INC. NC License Number C-1021

2012 STANDARD SPECIFICATIONS

RIGHT OF WAY DATE:
June 20, 2008

LETTING DATE:
September 17, 2013

Brian K. Eason, P.E.
PROJECT ENGINEER

David Martin
PROJECT DESIGN ENGINEER

HYDRAULICS ENGINEER
NORTH CAROLINA PROFESSIONAL SEAL 020737 ENGINEER JONATHAN K. SCARCI
Jonathan K. Scarci 6/4/13 P.E.
SIGNATURE:

ROADWAY DESIGN ENGINEER
NORTH CAROLINA PROFESSIONAL SEAL 25523 ENGINEER BRIAN K. EASON
Brian K. Eason 6/4/13 P.E.
SIGNATURE:

DIVISION OF HIGHWAYS
STATE OF NORTH CAROLINA
STATE OF NORTH CAROLINA DEPARTMENT OF TRANSPORTATION

P.E.
STATE HIGHWAY DESIGN ENGINEER

SYTIME
R:\Roadway\Proj\R-2633BB\R-2633BB_Rdy_tsh.dgn
$$$$USERNAME$$$$

NORTH CAROLINA PROFESSIONAL SEAL 25523 ENGINEER BRIAN K. EASON
Brian K Eason 7/2/13

INDEX OF SHEETS R-2633BB

SHEET NUMBER	
1	TITLE SHEET
1-A	INDEX OF SHEETS
1-B	CONVENTIONAL SUMBOLS
1-C THRU 1-G	SURVEY CONTROL SHEETS
1-H	CENTERLINE COORDINATE LIST
2 THRU 2-B	"PAVEMENT SCHEDULE, TYPICAL SECTIONS, AND WEDGING DETAILS "
2-C THRU 2-D	DETAIL FOR CROSS SECTIONS
2-E THRU 2-G	MODIFIED INFILITRATION BASIN DETAIL
2-H	DETAIL CONVERT EXISTING D.I. TO J.B. W/ MANHOLE
2-I	10' CHAIN LINK FENCE AND GATE DETAIL
2-J	GEOGRID FOR BRIDGE END SLOPES DETAIL
3	SUMMARY OF QUANTITIES
3-A THRU 3-E	SUMMARY OF DRAINAGE QUANTITIES
3-F	SUMMARIES FOR CABLE GUIDERAIL, REMOVAL OF EXISTING ASPHALT PAVEMENT, ASPHALT PAVEMENT BREAKING, WOVEN WIRE FENCE, 72" CHAIN LINK FENCE, 120" CHAIN LINK FENCE SHOULDER BERM GUTTER, SUMMARY OF BRIDGE WAITING PERIODS, AND SUMMARY OF SUBSURFACE DRAINAGE
3-G	SUMMARY OF EARTHWORK
3-H	SUMMARY OF GUARDRAIL
3-I	PARCEL INDEX
4 THRU 15	PLAN SHEETS
16 THRU 26	PROFILE SHEETS
TMP- 1 THRU TMP- 8	TRANSPORTATION MANAGEMENT PLAN
PMP- 1 THRU PMP- 5	PAVEMENT MARKING PLANS
EC-1 THRU EC- 19	EROSION CONTROL PLANS
RF-1	REFORESTATION DETAIL SHEET
SIGN-1 THRU SIGN- 19	SIGNING PLANS
SIG-1 THRU SIG- 14	SIGNAL PLANS
UC-1 THRU UC- 5	UTILITIES CONSTRUCTION PLANS
UO-1 THRU UO- 5	UTILITY BY OTHERS PLANS
X-A THRU X-B	CROSS SECTION INDEX AND SUMMARY SHEET
X-1 THRU X-142	CROSS-SECTIONS
S-1 THRU S- 698	STRUCTURE PLANS

EFF. 01-17-2012

REV. 10-30-2012

2012 ROADWAY ENGLISH STANDARD DRAWINGS

The following Roadway Standards as appear in "Roadway Standard Drawings" Highway Design Branch - N. C. Department of Transportation - Raleigh, N. C., Dated January, 2012 are applicable to this project and by reference hereby are considered a part of these plans:

STD.NO.	TITLE
DIVISION 2 - EARTHWORK	
200.03	Method of Clearing - Method III
225.01	Guide for Grading Subgrade - Interstate and Freeway
225.02	Guide for Grading Subgrade - Secondary and Local
225.03	Deceleration and Acceleration Lanes
225.04	Method of Obtaining Superelevation - Two Lane Pavement
225.05	Method of Obtaining Superelevation - Divided Highways
225.06	Method of Grading Sight Distance at Intersections
225.09	Guide for Shoulder and Ditch Transition at Grade Separations
DIVISION 3 - PIPE CULVERTS	
300.01	Method of Pipe Installation
310.10	Driveway Pipe Construction
DIVISION 4 - MAJOR STRUCTURES	
422.10	Reinforced Bridge Approach Fills
DIVISION 5 - SUBGRADE, BASES AND SHOULDERS	
560.01	Method of Shoulder Construction - High Side of Superelevated Curve - Method I
560.02	Method of Shoulder Construction - High Side of Superelevated Curve - Method II (Sheet 2 of 3 is no longer applicable)
DIVISION 6 - ASPHALT BASES AND PAVEMENTS	
610.02	Guide for Paving Shoulders Under Bridges - Method II
665.01	Asphalt Shoulders - Milled Rumble Strips
DIVISION 8 - INCIDENTALS	
815.02	Subsurface Drain
816.04	Markers for Drainage Structure and Concrete Pad
838.01	Concrete Endwall for Single and Double Pipe Culverts - 15" thru 48" Pipe 90 Skew
838.11	Brick Endwall for Single and Double Pipe Culverts - 15" thru 48" Pipe 90 Skew
838.21	Reinforced Concrete Endwall Single 54" Pipe 90 Skew
838.51	Reinforced Brick Endwall Single 54" Pipe 90 Skew
838.80	Precast Endwalls - 12" thru 72" Pipe 90 Skew
840.00	Concrete Base Pad for Drainage Structures
840.17	Concrete Grated Drop Inlet Type 'A' - 12" thru 72" Pipe
840.18	Concrete Grated Drop Inlet Type 'B' - 12" thru 36" Pipe
840.20	Frames and Wide Slot Flat Grates
840.22	Frames and Wide Slot Sag Grates
840.25	Anchorage for Frames - Brick or Concrete or Precast
840.26	Brick Grated Drop Inlet Type 'A' - 12" thru 72" Pipe
840.27	Brick Grated Drop Inlet Type 'B' - 12" thru 36" Pipe
840.34	Traffic Bearing Junction Box - for Use with Pipes 42" and Under
840.35	Traffic Bearing Grated Drop Inlet - for Cast Iron Double Frame and Grates
840.36	Traffic Bearing Grated Drop Inlet - for Steel (840.37) Double Frame and Grates
840.37	Steel Grate and Frame
840.45	Precast Drainage Structure
840.46	Traffic Bearing Precast Drainage Structure
840.54	Manhole Frame and Cover
840.66	Drainage Structure Steps
840.72	Pipe Collar
846.01	Concrete Curb, Gutter and Curb & Gutter
846.04	Drop Inlet Installation in Shoulder Berm Gutter
852.01	Concrete Islands
854.02	Double Faced Concrete Barrier - Types 'T', 'T1' and 'T2'
862.01	Guardrail Placement
862.02	Guardrail Installation
862.03	Structure Anchor Units (Details in Lieu of Standard Drawing as March 2013 Letting)
862.04	Anchoring End of Guardrail - B-77 and B-83 Anchor Units
865.01	Cable Guiderail
866.01	Chain Link Fence - 4', 5' and 6' High Fence
866.02	Woven Wire Fence - with Wood Post
866.03	Woven Wire Fence - with Steel Post
876.01	Rip Rap in Channels
876.02	Guide for Rip Rap at Pipe Outlets
876.04	Drainage Ditches with Class 'B' Rip Rap

GENERAL NOTES: 2012 SPECIFICATIONS

EFFECTIVE: 01-17-2012

REVISED: 07-30-2012

GRADE LINE:

GRADING AND SURFACING:

THE GRADE LINES SHOWN DENOTE THE FINISHED ELEVATION OF THE PROPOSED SURFACING AT GRADE POINTS SHOWN ON THE TYPICAL SECTIONS. GRADE LINES MAY BE ADJUSTED AT THEIR BEGINNING AND ENDING AND AT STRUCTURES AS DIRECTED BY THE ENGINEER IN ORDER TO SECURE A PROPER TIE-IN.

CLEARING:

CLEARING ON THIS PROJECT SHALL BE PERFORMED TO THE LIMITS ESTABLISHED BY METHOD III.

SUPERELEVATION:

ALL CURVES ON THIS PROJECT SHALL BE SUPERELEVATED IN ACCORDANCE WITH STD. NO. 225.05 AND STD. NO. 225.06

SUPERELEVATION IS TO BE REVOLVED ABOUT THE GRADE POINTS SHOWN ON THE TYPICAL SECTIONS.

SHOULDER CONSTRUCTION:

ASPHALT, EARTH, AND CONCRETE SHOULDER CONSTRUCTION ON THE HIGH SIDE OF SUPERELEVATED CURVES SHALL BE IN ACCORDANCE WITH STD. NO. 560.01 AND STD. NO. 560.02

SIDE ROADS:

THE CONTRACTOR WILL BE REQUIRED TO DO ALL NECESSARY WORK TO PROVIDE SUITABLE CONNECTIONS WITH ALL ROADS, STREETS, AND DRIVES ENTERING THIS PROJECT. THIS WORK WILL BE PAID FOR AT THE CONTRACT UNIT PRICE FOR THE PARTICULAR ITEMS INVOLVED.

SUBSURFACE DRAINS:

SUBSURFACE DRAINS SHALL BE CONSTRUCTED IN ACCORDANCE WITH STD. NO. 815.02 AT LOCATIONS DIRECTED BY THE ENGINEER.

GUARDRAIL:

THE GUARDRAIL LOCATIONS SHOWN ON THE PLANS MAY BE ADJUSTED DURING CONSTRUCTION AS DIRECTED BY THE ENGINEER. THE CONTRACTOR SHOULD CONSULT WITH THE ENGINEER PRIOR TO ORDERING GUARDRAIL MATERIAL.

TEMPORARY SHORING:

SHORING REQUIRED FOR THE MAINTENANCE OF TRAFFIC WILL BE PAID FOR AS "EXTRA WORK" IN ACCORDANCE WITH SECTION 104-7.

END BENTS:

THE ENGINEER SHALL CHECK THE STRUCTURE END BENT PLANS, DETAILS, AND CROSS-SECTION PRIOR TO SETTING OF THE SLOPE STAKES FOR THE EMBANKMENT OR EXCAVATION APPROACHING A BRIDGE.

UTILITIES:

UTILITY OWNERS ON THIS PROJECT ARE: Progress Energy, AT&T Piedmont Natural Gas, and Cape Fear Public Utility Authority

ANY RELOCATION OF EXISTING UTILITIES WILL BE ACCOMPLISHED BY OTHERS, EXCEPT AS SHOWN ON THE PLANS.

RIGHT-OF-WAY MARKERS:

ALL RIGHT-OF-WAY MARKERS ON THIS PROJECT SHALL BE PLACED BY OTHERS.

8/17/99
S:\TIME
R:\Roadway\Proj\R-2633BB\R-2633BB_RDY_PSH01A.dgn
$$$$USERNAME$$$$

PROJECT REFERENCE NO.	SHEET NO.
R-2633BB	1-B

Note: Not to Scale

****S.U.E. = Subsurface Utility Engineering***

STATE OF NORTH CAROLINA
DIVISION OF HIGHWAYS

CONVENTIONAL PLAN SHEET SYMBOLS

BOUNDARIES AND PROPERTY:

- State Line
- County Line
- Township Line
- City Line
- Reservation Line
- Property Line
- Existing Iron Pin — EIP
- Property Corner
- Property Monument — ECM
- Parcel/Sequence Number — 123
- Existing Fence Line
- Proposed Woven Wire Fence
- Proposed Chain Link Fence
- Proposed Barbed Wire Fence
- Existing Wetland Boundary — WLB
- Proposed Wetland Boundary — WLB
- Existing High Quality Wetland Boundary — HQ WLB
- Existing Endangered Animal Boundary — EAB
- Existing Endangered Plant Boundary — EPB

BUILDINGS AND OTHER CULTURE:

- Gas Pump Vent or U/G Tank Cap
- Sign — S
- Well — W
- Small Mine
- Foundation
- Area Outline
- Cemetery
- Building
- School
- Church
- Dam

HYDROLOGY:

- Stream or Body of Water
- Hydro, Pool or Reservoir
- River Basin Buffer — RBB
- Flow Arrow
- Disappearing Stream
- Spring
- Swamp Marsh
- Proposed Lateral, Tail, Head Ditch — FLOW
- False Sump

RAILROADS:

- Standard Gauge — CSX TRANSPORTATION
- RR Signal Milepost — MILEPOST 35
- Switch — SWITCH
- RR Abandoned
- RR Dismantled

RIGHT OF WAY:

- Baseline Control Point
- Existing Right of Way Marker
- Existing Right of Way Line
- Proposed Right of Way Line — RW
- Proposed Right of Way Line with Iron Pin and Cap Marker — RW
- Proposed Right of Way Line with Concrete or Granite Marker — RW
- Existing Control of Access — CA
- Proposed Control of Access — CA
- Existing Easement Line — E
- Proposed Temporary Construction Easement — E
- Proposed Temporary Drainage Easement — TDE
- Proposed Permanent Drainage Easement — PDE
- Proposed Permanent Utility Easement — PUE

ROADS AND RELATED FEATURES:

- Existing Edge of Pavement
- Existing Curb
- Proposed Slope Stakes Cut — C
- Proposed Slope Stakes Fill — F
- Proposed Wheel Chair Ramp — WCR
- Curb Cut for Future Wheel Chair Ramp — CCFR
- Existing Metal Guardrail
- Proposed Guardrail
- Existing Cable Guiderail
- Proposed Cable Guiderail
- Equality Symbol
- Pavement Removal

VEGETATION:

- Single Tree
- Single Shrub
- Hedge
- Woods Line
- Orchard
- Vineyard — Vineyard

EXISTING STRUCTURES:

MAJOR:

- Bridge, Tunnel or Box Culvert — CONC
- Bridge Wing Wall, Head Wall and End Wall — CONC WW

MINOR:

- Head and End Wall — CONC HW
- Pipe Culvert
- Footbridge
- Drainage Box: Catch Basin, DI or JB — CB
- Paved Ditch Gutter
- Storm Sewer Manhole — S
- Storm Sewer — S

UTILITIES:

POWER:

- Existing Power Pole
- Proposed Power Pole
- Existing Joint Use Pole
- Proposed Joint Use Pole
- Power Manhole — P
- Power Line Tower
- Power Transformer
- U/G Power Cable Hand Hole — HH
- H-Frame Pole
- Recorded U/G Power Line — P
- Designated U/G Power Line (S.U.E.*) — P

TELEPHONE:

- Existing Telephone Pole
- Proposed Telephone Pole
- Telephone Manhole — T
- Telephone Booth
- Telephone Pedestal — T
- Telephone Cell Tower
- U/G Telephone Cable Hand Hole — HH
- Recorded U/G Telephone Cable — T
- Designated U/G Telephone Cable (S.U.E.*) — T
- Recorded U/G Telephone Conduit — TC
- Designated U/G Telephone Conduit (S.U.E.*) — TC
- Recorded U/G Fiber Optics Cable — T FO
- Designated U/G Fiber Optics Cable (S.U.E.*) — T FO

WATER:

- Water Manhole — W
- Water Meter
- Water Valve
- Water Hydrant
- Recorded U/G Water Line — W
- Designated U/G Water Line (S.U.E.*) — W
- Above Ground Water Line — A/G Water

TV:

- TV Satellite Dish
- TV Pedestal — C
- TV Tower
- U/G TV Cable Hand Hole — HH
- Recorded U/G TV Cable — TV
- Designated U/G TV Cable (S.U.E.*) — TV
- Recorded U/G Fiber Optic Cable — TV FO
- Designated U/G Fiber Optic Cable (S.U.E.*) — TV FO

GAS:

- Gas Valve
- Gas Meter
- Recorded U/G Gas Line — G
- Designated U/G Gas Line (S.U.E.*) — G
- Above Ground Gas Line — A/G Gas

SANITARY SEWER:

- Sanitary Sewer Manhole
- Sanitary Sewer Cleanout
- U/G Sanitary Sewer Line — SS
- Above Ground Sanitary Sewer — A/G Sanitary Sewer
- Recorded SS Forced Main Line — FSS
- Designated SS Forced Main Line (S.U.E.*) — FSS

MISCELLANEOUS:

- Utility Pole
- Utility Pole with Base
- Utility Located Object
- Utility Traffic Signal Box — S
- Utility Unknown U/G Line — ?UTL
- U/G Tank; Water, Gas, Oil
- A/G Tank; Water, Gas, Oil
- U/G Test Hole (S.U.E.*)
- Abandoned According to Utility Records — AATUR
- End of Information — E.O.I.

PROJECT REFERENCE NO.	SHEET NO.
R-2633-BB	1C 1
Location and Surveys	

SURVEY CONTROL SHEET R-2633B

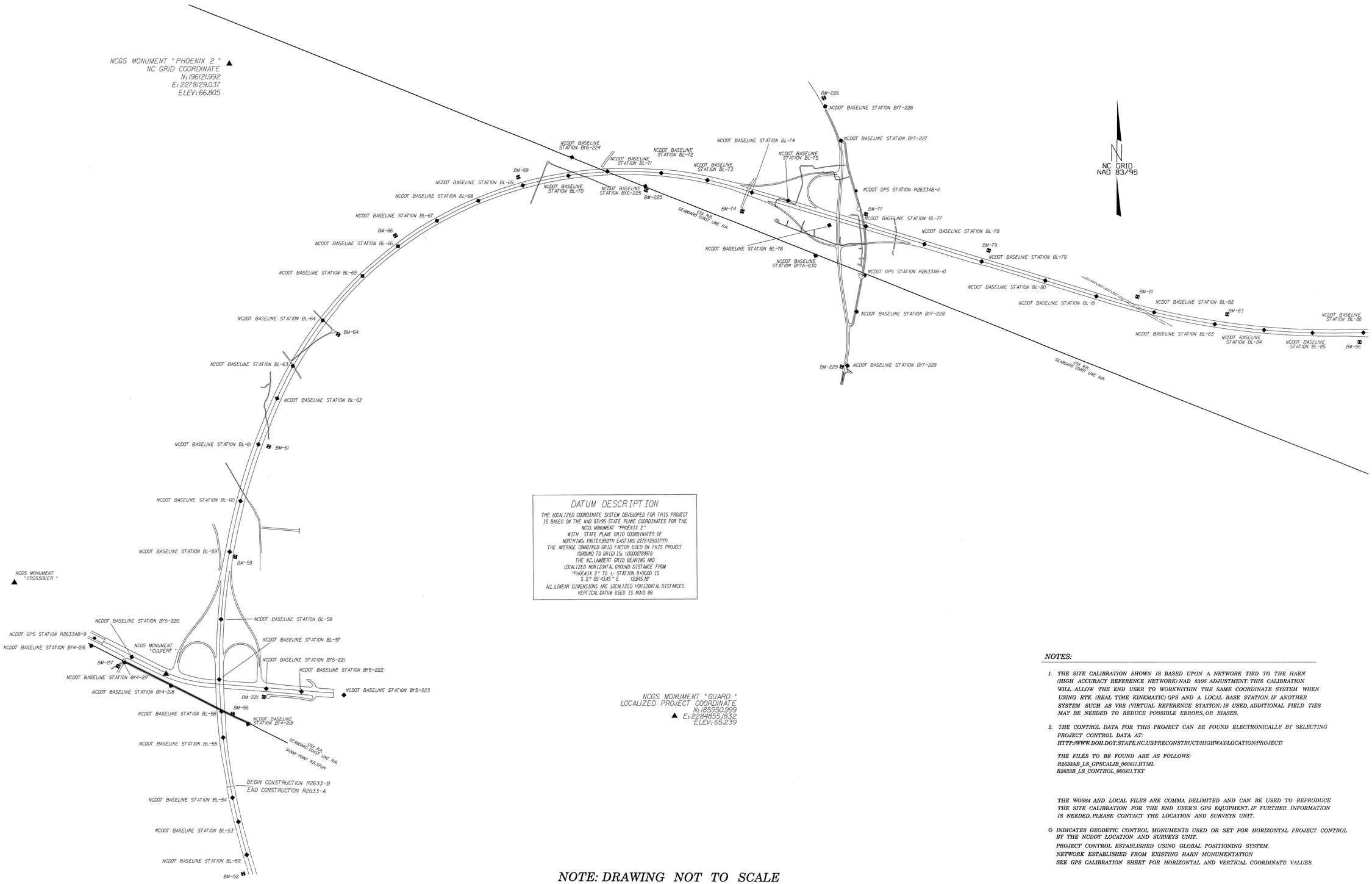

DATUM DESCRIPTION

THE LOCALIZED COORDINATE SYSTEM DEVELOPED FOR THIS PROJECT IS BASED ON THE NAD 83/95 STATE PLANE COORDINATES FOR THE NCGS MONUMENT "PHOENIX 2"
WITH STATE PLANE GRID COORDINATES OF
NORTHING: 196121.992(ft) EASTING: 2278129.037(ft)
THE AVERAGE COMBINED GRID FACTOR USED ON THIS PROJECT (GROUND TO GRID) IS: 1.0000278978
THE NC LAMBERT GRID BEARING AND LOCALIZED HORIZONTAL GROUND DISTANCE FROM "PHOENIX 2" TO +/- STATION 840.00 IS
S 2° 02' 43.45" E 1284.18'
ALL LINEAR DIMENSIONS ARE LOCALIZED HORIZONTAL DISTANCES
VERTICAL DATUM USED IS NGVD 88

NOTES:

1. THE SITE CALIBRATION SHOWN IS BASED UPON A NETWORK TIED TO THE HARN (HIGH ACCURACY REFERENCE NETWORK) NAD 83/95 ADJUSTMENT. THIS CALIBRATION WILL ALLOW THE END USER TO WORKWITHIN THE SAME COORDINATE SYSTEM WHEN USING RTK (REAL TIME KINEMATIC) GPS AND A LOCAL BASE STATION. IF ANOTHER SYSTEM SUCH AS VRS (VIRTUAL REFERENCE STATION) IS USED, ADDITIONAL FIELD TIES MAY BE NEEDED TO REDUCE POSSIBLE ERRORS, OR BIASES.

2. THE CONTROL DATA FOR THIS PROJECT CAN BE FOUND ELECTRONICALLY BY SELECTING PROJECT CONTROL DATA AT:
HTTP:/WWW.DOH.DOT.STATE.NC.US/PRECONSTRUCT/HIGHWAY/LOCATION/PROJECT/

THE FILES TO BE FOUND ARE AS FOLLOWS:
R2633AB_LS_GPSCALIB_060811.HTML
R2633B_LS_CONTROL_060811.TXT

THE WGS84 AND LOCAL FILES ARE COMMA DELIMITED AND CAN BE USED TO REPRODUCE THE SITE CALIBRATION FOR THE END USER'S GPS EQUIPMENT. IF FURTHER INFORMATION IS NEEDED, PLEASE CONTACT THE LOCATION AND SURVEYS UNIT.

© INDICATES GEODETIC CONTROL MONUMENTS USED OR SET FOR HORIZONTAL PROJECT CONTROL BY THE NCDOT LOCATION AND SURVEYS UNIT.
PROJECT CONTROL ESTABLISHED USING GLOBAL POSITIONING SYSTEM.
NETWORK ESTABLISHED FROM EXISTING HARN MONUMENTATION
SEE GPS CALIBRATION SHEET FOR HORIZONTAL AND VERTICAL COORDINATE VALUES.

NOTE: DRAWING NOT TO SCALE

6/2/99
31-MAY-2013 16:38
R:\Location\Surveys\r2633bb_ls_lc1_080902.dgn
$$$$USERNAME$$$$

PROJECT REFERENCE NO.	SHEET NO.
R-2633-BB	1C 2
Location and Surveys	

SURVEY CONTROL SHEET R-2633B

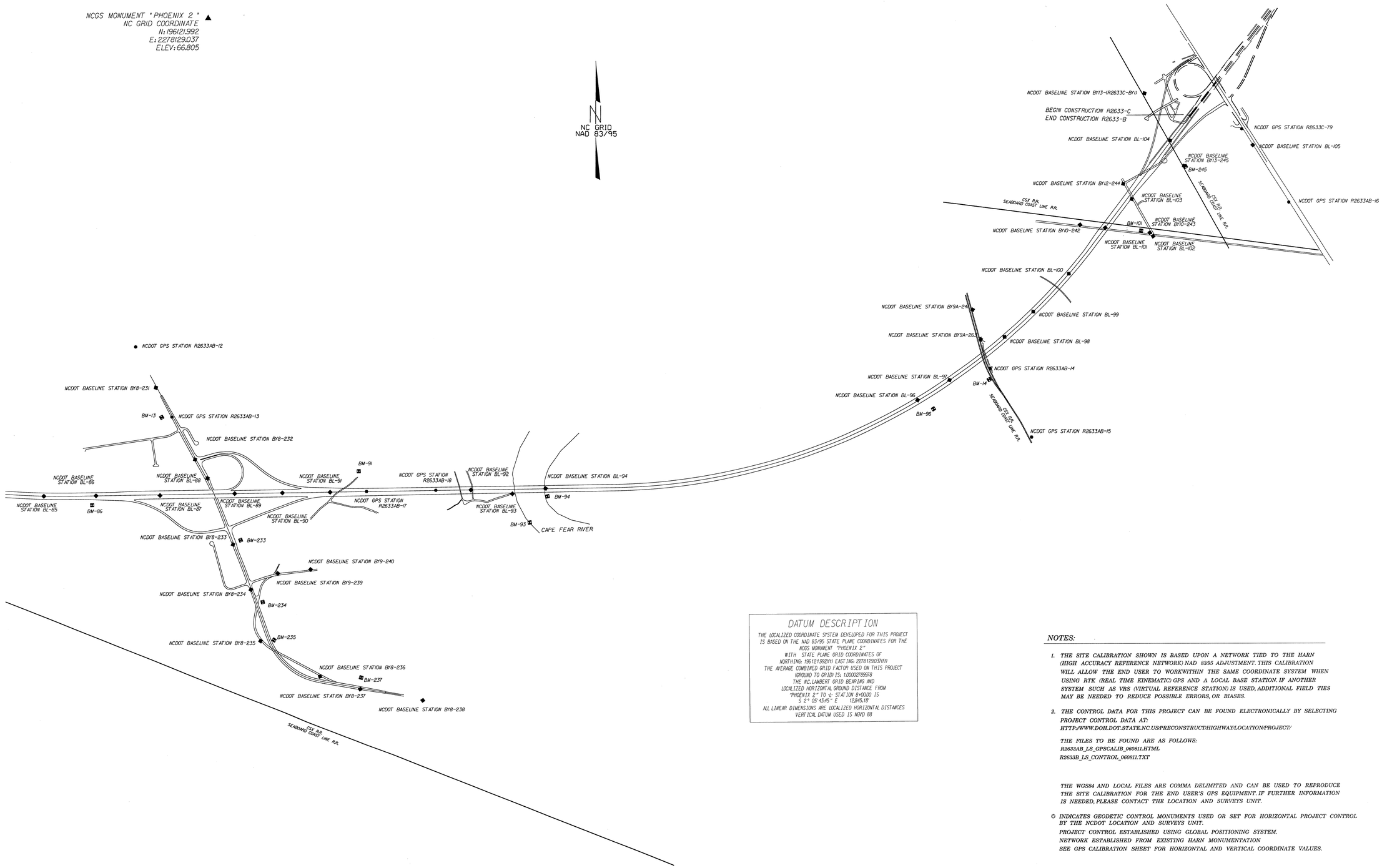

DATUM DESCRIPTION

THE LOCALIZED COORDINATE SYSTEM DEVELOPED FOR THIS PROJECT IS BASED ON THE NAD 83/95 STATE PLANE COORDINATES FOR THE NCGS MONUMENT "PHOENIX 2"
WITH STATE PLANE GRID COORDINATES OF
NORTHING: 196121.9921 EASTING: 2278129.0371
THE AVERAGE COMBINED GRID FACTOR USED ON THIS PROJECT (GROUND TO GRID) IS: 1.0000278998
THE N.C. LAMBERT GRID BEARING AND LOCALIZED HORIZONTAL GROUND DISTANCE FROM "PHOENIX 2" TO ℄ STATION 8+00.00 IS
S 2° 05' 43.45" E 12,845.18'
ALL LINEAR DIMENSIONS ARE LOCALIZED HORIZONTAL DISTANCES
VERTICAL DATUM USED IS NGVD 88

NOTES:

1. THE SITE CALIBRATION SHOWN IS BASED UPON A NETWORK TIED TO THE HARN (HIGH ACCURACY REFERENCE NETWORK) NAD 83/95 ADJUSTMENT. THIS CALIBRATION WILL ALLOW THE END USER TO WORKWITHIN THE SAME COORDINATE SYSTEM WHEN USING RTK (REAL TIME KINEMATIC) GPS AND A LOCAL BASE STATION. IF ANOTHER SYSTEM SUCH AS VRS (VIRTUAL REFERENCE STATION) IS USED, ADDITIONAL FIELD TIES MAY BE NEEDED TO REDUCE POSSIBLE ERRORS, OR BIASES.

2. THE CONTROL DATA FOR THIS PROJECT CAN BE FOUND ELECTRONICALLY BY SELECTING PROJECT CONTROL DATA AT:
HTTP://WWW.DOH.DOT.STATE.NC.US/PRECONSTRUCT/HIGHWAY/LOCATION/PROJECT/

THE FILES TO BE FOUND ARE AS FOLLOWS:
R2633AB_LS_GPSCALIB_060811.HTML
R2633B_LS_CONTROL_060811.TXT

THE WGS84 AND LOCAL FILES ARE COMMA DELIMITED AND CAN BE USED TO REPRODUCE THE SITE CALIBRATION FOR THE END USER'S GPS EQUIPMENT. IF FURTHER INFORMATION IS NEEDED, PLEASE CONTACT THE LOCATION AND SURVEYS UNIT.

◎ INDICATES GEODETIC CONTROL MONUMENTS USED OR SET FOR HORIZONTAL PROJECT CONTROL BY THE NCDOT LOCATION AND SURVEYS UNIT.
PROJECT CONTROL ESTABLISHED USING GLOBAL POSITIONING SYSTEM.
NETWORK ESTABLISHED FROM EXISTING HARN MONUMENTATION
SEE GPS CALIBRATION SHEET FOR HORIZONTAL AND VERTICAL COORDINATE VALUES.

NOTE: DRAWING NOT TO SCALE

6/2/99

31-MAY-2013 16:39
R:\Location_Surveys\r-2633bb_ls_1c2_060811.dgn
$$$$USERNAME$$$$

6/2/99

PROJECT REFERENCE NO.	SHEET NO.
R–2633–BB	1D
Location and Surveys	

SURVEY CONTROL SHEET R–2633–B

DATUM DESCRIPTION

THE LOCALIZED COORDINATE SYSTEM DEVELOPED FOR THIS PROJECT IS BASED ON THE NAD 83/95 STATE PLANE COORDINATES FOR THE NCGS MONUMENT "PHOENIX 2"
WITH STATE PLANE GRID COORDINATES OF
NORTHING: 196121.992(ft) EASTING: 2278129.037(ft)
THE AVERAGE COMBINED GRID FACTOR USED ON THIS PROJECT (GROUND TO GRID) IS: 1.000027900
THE N.C. LAMBERT GRID BEARING AND LOCALIZED HORIZONTAL GROUND DISTANCE FROM "PHOENIX 2" TO -L- STATION 8+00.00 IS
S 2° 05' 43.45" E 12,845.18'
ALL LINEAR DIMENSIONS ARE LOCALIZED HORIZONTAL DISTANCES
VERTICAL DATUM USED IS NGVD 88

GPS CALIBRATION REPORT

PROJECT : R2633AB

TIP NUMBER	R-2633B		
USER NAME	JNEAL	DATE & TIME	2:04:32 PM 3/27/2006
COORDINATE SYSTEM	SITE(AT GROUND)	ZONE	NORTH CAROLINA 3200(3)
HORIZONTAL DATUM	NAD 1983 (CONUS)		
VERTICAL DATUM	NAVD 88	GEOID MODEL	GEOID03 (CONUS)(2)
COORDINATE UNITS	US SURVEY FEET		
DISTANCE UNITS	US SURVEY FEET		
HEIGHT UNITS	US SURVEY FEET		

LOCAL SITE INFORMATION

LOCALIZED AROUND	PHOENIX 2
LATITUDE	34°17'07.13697"N
LONGITUDE	78°04'45.45174"W
SITE SCALE FACTOR	0.9999721010
HEIGHT	-51.790SFT

THE NORTH CAROLINA DEPARTMENT OF TRANSPORTATION USES A LOCALIZED COORDINATE SYSTEM
WHICH IS VERY SIMILAR TO NORTH CAROLINA ZONE 3200 FROM WHICH IT IS DERIVED.
PLEASE TAKE CARE IN UTILIZING THESE COORDINATES TO ELIMINATE CONFUSION OF THE TWO SYSTEMS.
THIS FILE IS TO AID IN THE USE OF REAL TIME KINEMATIC (RTK) GPS DURING CONSTRUCTION LAYOUT.

DATUM TRANSFORMATION PARAMETERS

DATUM TRANSFORMATION COMPUTATION NOT REQUESTED

UPDATED DEFAULT PROJECTION (TRANSVERSE MERCATOR) DEFINITION

UPDATED DEFAULT PROJECTION NOT REQUESTED

HORIZONTAL ADJUSTMENT PARAMETERS

NORTHING COORDINATE OF ROTATION CENTER	182836.287SFT
EASTING COORDINATE OF ROTATION CENTER	2288166.692SFT
ROTATION ABOUT THE CENTER POINT	0°00'00"
TRANSLATION NORTH	0.002SFT
TRANSLATION EAST	-0.005SFT
SCALE FACTOR	1.00000010

VERTICAL ADJUSTMENT PARAMETERS

NORTHING COORDINATE OF ORIGIN POINT	155960.007SFT
EASTING COORDINATE OF ORIGIN POINT	2276068.189SFT
VERTICAL SEPARATION AT ORIGIN	0.143SFT
SLOPE NORTH	-2.970PPM
SLOPE EAST	1.302PPM

GEOID MODEL DEFINITION

GEOID03 (CONUS)(2)

RESIDUAL DIFFERENCES BETWEEN GPS (WGS84) AND LOCAL COORDINATES

SUMMARY

	MAXIMUM ERROR	ROOT MEAN SQUARE ERROR	POINT
HORIZONTAL	0.001SFT	0.000	CROSSOVER_GPS
VERTICAL	0.099SFT	0.013	R2633AB-6_GPS
THREE-DIMENSIONAL	0.099SFT	0.013	R2633AB-6_GPS

POINT RESIDUALS

WGS84 COORDINATES — CALCULATED POINT FOR DISPLAY ONLY — LOCAL COORDINATES

POINT	LATITUDE	LONGITUDE	HEIGHT	NORTHING	EASTING	ELEVATION	HORZ ERROR	VERT ERROR	3D ERROR	POINT (LOCAL)	NORTHING (LOCAL)	EASTING (LOCAL)	ELEVATION (LOCAL)	UTILIZED / ADJUSTED QUALITY
R2633AB-3_GPS	34°10'30.06193"N	78°05'14.41103"W	-98.598SFT	155960.007SFT	2276068.189SFT	21.233SFT	0.000SFT	0.034SFT	0.034SFT	R2633AB-3	155960.007SFT	2276068.190SFT	21.199SFT	HORZ AND VERT
R2633AB-2_GPS	34°10'45.05824"N	78°05'05.52363"W	-94.556SFT	157482.842SFT	2276800.926SFT	25.248SFT	0.000SFT	0.088SFT	0.088SFT	R2633AB-2	157482.842SFT	2276800.927SFT	25.161SFT	HORZ AND VERT
R2633AB-4_GPS	34°11'40.19955"N	78°04'08.84982"W	-100.279SFT	163101.269SFT	2281510.100SFT	19.484SFT	0.000SFT	0.056SFT	0.056SFT	R2633AB-4	163101.269SFT	2281510.101SFT	19.540SFT	HORZ AND VERT
R2633AB-5_GPS	34°11'48.03700"N	78°03'53.27169"W	-82.630SFT	163905.843SFT	2282811.187SFT	37.147SFT	0.000SFT	0.030SFT	0.030SFT	R2633AB-5	163905.842SFT	2282811.188SFT	37.117SFT	HORZ AND VERT
R2633AB-6_GPS	34°11'43.86771"N	78°04'23.93893"W	-94.749SFT	163460.218SFT	2280239.165SFT	24.964SFT	0.000SFT	0.099SFT	0.099SFT	R2633AB-6	163460.218SFT	2280239.165SFT	25.063SFT	HORZ AND VERT
R2633AB-7_GPS	34°13'37.13239"N	78°04'35.65348"W	-60.399SFT	174900.776SFT	2279148.653SFT	58.911SFT	0.000SFT	0.074SFT	0.074SFT	R2633AB-7	174900.776SFT	2279148.653SFT	58.985SFT	HORZ AND VERT
R2633AB-8_GPS	34°13'49.27985"N	78°04'36.96772"W	-57.664SFT	176127.712SFT	2279026.882SFT	61.601SFT	0.000SFT	0.015SFT	0.015SFT	R2633AB-8	176127.711SFT	2279026.882SFT	61.586SFT	HORZ AND VERT
R2633AB-9_GPS	34°15'37.79538"N	78°05'10.27516"W	-53.064SFT	187071.436SFT	2276129.314SFT	65.763SFT	0.000SFT	0.025SFT	0.025SFT	R2633AB-9	187071.436SFT	2276129.314SFT	65.788SFT	HORZ AND VERT
CULVERT_GPS	34°15'32.42311"N	78°04'57.50205"W	-54.435SFT	186538.254SFT	2277206.408SFT	64.441SFT	0.000SFT	0.049SFT	0.049SFT	CULVERT	186538.254SFT	2277206.408SFT	64.490SFT	HORZ AND VERT
CROSSOVER_GPS	34°15'55.81045"N	78°05'52.19916"W	-54.717SFT	188860.353SFT	2272593.989SFT	63.955SFT	0.001SFT	0.091SFT	0.091SFT	CROSSOVER	188860.354SFT	2272593.990SFT	63.865SFT	HORZ AND VERT
GUARD_GPS	34°15'25.90542"N	78°03'26.44768"W	-54.114SFT	185950.999SFT	2284855.183SFT	65.014SFT	0.000SFT	?	0.000SFT	GUARD	185950.999SFT	2284855.183SFT	65.239SFT	HORIZONTAL
PHOENIX2_GPS	34°17'07.13693"N	78°04'45.45168"W	-51.829SFT	196121.992SFT	2278129.037SFT	66.792SFT	0.000SFT	0.012SFT	0.012SFT	PHOENIX2	196121.992SFT	2278129.037SFT	66.805SFT	HORZ AND VERT
R2633AB-10_GPS	34°16'31.31185"N	78°02'51.91211"W	-84.996SFT	192590.417SFT	2287690.511SFT	34.020SFT	0.000SFT	0.001SFT	0.001SFT	R2633AB-10	192590.417SFT	2287690.511SFT	34.021SFT	HORZ AND VERT
R2633AB-11_GPS	34°16'43.95360"N	78°02'53.45265"W	-84.502SFT	193867.094SFT	2287548.981SFT	34.472SFT	0.000SFT	0.002SFT	0.002SFT	R2633AB-11	193867.094SFT	2287548.981SFT	34.474SFT	HORZ AND VERT
R2633AB-12_GPS	34°16'44.15896"N	78°01'15.60457"W	-99.959SFT	193967.705SFT	2295759.507SFT	19.283SFT	0.000SFT	0.004SFT	0.004SFT	R2633AB-12	193967.705SFT	2295759.507SFT	19.279SFT	HORZ AND VERT
R2633AB-13_GPS	34°16'33.95558"N	78°01'09.37399"W	-98.107SFT	192941.439SFT	2296292.523SFT	21.184SFT	0.000SFT	0.006SFT	0.006SFT	R2633AB-13	192941.439SFT	2296292.523SFT	21.178SFT	HORZ AND VERT
R2633AB-17_GPS	34°16'23.05570"N	78°00'35.43273"W	-101.746SFT	191867.882SFT	2299151.719SFT	17.681SFT	0.000SFT	0.009SFT	0.009SFT	R2633AB-17	191867.882SFT	2299151.719SFT	17.672SFT	HORZ AND VERT
R2633AB-18_GPS	34°16'23.17837"N	78°00'23.32406"W	-102.285SFT	191890.435SFT	2300167.740SFT	17.177SFT	0.000SFT	0.010SFT	0.010SFT	R2633AB-18	191890.434SFT	2300167.740SFT	17.167SFT	HORZ AND VERT
R2633AB-14_GPS	34°16'40.27850"N	77°58'46.22883"W	-109.282SFT	193701.682SFT	2308298.063SFT	10.417SFT	0.000SFT	0.014SFT	0.014SFT	R2633AB-14	193701.682SFT	2308298.063SFT	10.403SFT	HORZ AND VERT
R2633AB-15_GPS	34°16'30.35823"N	77°58'39.09494"W	-107.854SFT	192705.039SFT	2308907.023SFT	11.900SFT	0.000SFT	0.015SFT	0.015SFT	R2633AB-15	192705.039SFT	2308907.023SFT	11.885SFT	HORZ AND VERT
R2633AB-16_GPS	34°17'04.26301"N	77°57'53.82936"W	-87.494SFT	196171.708SFT	2312669.810SFT	32.293SFT	0.000SFT	?	0.000SFT	R2633AB-16	196171.708SFT	2312669.810SFT	32.106SFT	HORIZONTAL
R2633C-79_GPS	34°17'14.91148"N	77°58'01.97309"W	-95.844SFT	197241.003SFT	2311975.296SFT	23.884SFT	0.000SFT	0.013SFT	0.013SFT	R2633C-79	197241.004SFT	2311975.296SFT	23.898SFT	HORZ AND VERT
LANVALE_GPS	34°12'37.26313"N	78°05'27.46559"W	-50.203SFT	168808.541SFT	2274853.604SFT	69.182SFT	0.000SFT	0.017SFT	0.017SFT	LANVALE	168808.542SFT	2274853.604SFT	69.164SFT	HORZ AND VERT

(Each local-coordinate entry reads: UTILIZED … ADJUSTED QUALITY / QUALITY)

NOTES:

1. THE SITE CALIBRATION SHOWN IS BASED UPON A NETWORK TIED TO THE HARN (HIGH ACCURACY REFERENCE NETWORK) NAD 83/95 ADJUSTMENT. THIS CALIBRATION WILL ALLOW THE END USER TO WORKWITHIN THE SAME COORDINATE SYSTEM WHEN USING RTK (REAL TIME KINEMATIC) GPS AND A LOCAL BASE STATION. IF ANOTHER SYSTEM SUCH AS VRS (VIRTUAL REFERENCE STATION) IS USED, ADDITIONAL FIELD TIES MAY BE NEEDED TO REDUCE POSSIBLE ERRORS, OR BIASES.

2. THE CONTROL DATA FOR THIS PROJECT CAN BE FOUND ELECTRONICALLY BY SELECTING PROJECT CONTROL DATA AT:
HTTP://WWW.DOH.DOT.STATE.NC.US/PRECONSTRUCT/HIGHWAY/LOCATION/PROJECT/

THE FILES TO BE FOUND ARE AS FOLLOWS:
R2633AB_LS_GPSCALIB_060811.HTML
R2633B_LS_CONTROL_060811.TXT

THE WGS84 AND LOCAL FILES ARE COMMA DELIMITED AND CAN BE USED TO REPRODUCE THE SITE CALIBRATION FOR THE END USER'S GPS EQUIPMENT. IF FURTHER INFORMATION IS NEEDED, PLEASE CONTACT THE LOCATION AND SURVEYS UNIT.

△ INDICATES GEODETIC CONTROL MONUMENTS USED OR SET FOR HORIZONTAL PROJECT CONTROL BY THE NCDOT LOCATION AND SURVEYS UNIT.
PROJECT CONTROL ESTABLISHED USING GLOBAL POSITIONING SYSTEM.
NETWORK ESTABLISHED FROM EXISTING HARN MONUMENTATION
SEE GPS CALIBRATION SHEET FOR HORIZONTAL AND VERTICAL COORDINATE VALUES.

NOTE: DRAWING NOT TO SCALE

31-MAY-2013 16:40
R:\LocationSurveys\r2633bb_ls_1d_060811.dgn
$$$$USERNAME$$$$

PROJECT REFERENCE NO.	SHEET NO.
R-2633-BB	1 E
LOCATION AND SURVEYS	

CONTROL DATA

-BL- POINT	DESC.	NORTH	EAST	ELEVATION	-L- STATION	OFFSET
52	BL-52	183810.3230	2278434.4160	69.08	13+50.01	3.80 LT
53	BL-53	184301.3300	2278307.1010	71.44	18+57.27	5.04 RT
54	BL-54	184664.7210	2278216.4870	70.21	22+31.81	1.71 LT
55	BL-55	185569.9230	2278070.4940	72.20	31+48.92	0.89 LT
56	BL-56	185975.1100	2278042.8520	68.08	35+55.13	9.47 RT
57	BL-57	186459.8260	2278004.8770	65.67	40+41.27	5.05 LT
58	BL-58	187367.3370	2278030.9580	64.74	49+49.25	0.66 RT
59	BL-59	188375.3850	2278156.6790	67.94	59+65.83	4.67 RT
60	BL-60	189143.1320	2278315.3670	69.43	67+50.12	1.40 LT
61	BL-61	190003.1810	2278580.3600	72.90	76+50.33	0.25 RT
62	BL-62	190698.4730	2278859.4560	69.20	83+99.77	0.93 RT
63	BL-63	191183.4380	2279094.4090	69.92	89+38.65	4.22 LT
64	BL-64	191866.5000	2279543.5190	64.59	97+56.43	1.16 LT
65	BL-65	192534.8590	2280138.4020	50.15	106+51.94	0.79 LT
66	BL-66	192989.0770	2280671.5300	43.37	113+52.64	1.16 LT
67	BL-67	193374.7280	2281255.2680	41.53	120+52.54	1.52 LT
68	BL-68	193682.6770	2281875.9070	40.96	127+45.68	0.40 LT
69	BL-69	193918.7530	2282542.9540	41.30	134+53.68	0.27 LT
70	BL-70	194069.6310	2283225.8620	41.88	141+53.47	0.08 RT
71	BL-71	194139.4050	2283812.8130	41.91	147+44.39	7.39 LT
72	BL-72	194118.0510	2284622.2130	40.02	155+54.25	0.94 RT
73	BL-73	194013.7480	2285316.4200	38.47	162+56.86	2.00 RT
74	BL-74	193834.3430	2285985.4680	38.06	169+49.95	2.63 RT
75	BL-75	193713.0190	2286529.4360	37.46	175+06.00	35.21 LT
76	BL-76	193342.6750	2287150.3340	35.16	182+06.41	143.95 RT
77	BL-77	193329.8890	2287699.5930	35.10	187+36.76	0.52 RT
78	BL-78	193068.6120	2288580.5980	28.50	196+55.69	1.35 RT
79	BL-79	192813.0290	2289443.2560	27.69	205+55.42	1.92 RT
80	BL-80	192530.2530	2290400.7420	32.51	215+53.79	1.69 RT
81	BL-81	192303.3960	2291169.6460	27.01	223+55.46	1.30 RT
82	BL-82	192068.0350	2292038.3950	26.35	232+55.59	2.12 RT
83	BL-83	191895.3310	2292950.2610	25.92	241+83.71	3.14 RT
84	BL-84	191814.9660	2293690.8100	25.20	249+26.65	0.77 LT
85	BL-85	191776.9100	2294416.8590	23.26	256+55.79	1.43 RT
86	BL-86	191785.8790	2295181.5700	22.16	264+20.58	0.28 LT
87	BL-87	191794.4050	2296120.4340	22.04	273+59.42	10.38 RT
88	BL-88	192048.3460	2296817.1800	21.52	280+61.21	229.27 LT
89	BL-89	191827.1640	2297216.0180	20.33	284+55.45	0.01 RT
90	BL-90	191841.2350	2297916.1330	22.41	291+55.70	0.25 RT
91	BL-91	191855.1160	2298616.8010	21.65	298+56.51	0.69 RT
17	R2633AB-17	191867.8820	2299151.7190	17.67	303+91.58	1.14 LT
18	R2633AB-18	191890.4340	2300167.7400	17.17	314+07.85	2.93 LT
92	BL-92	191898.1450	2300682.2570	11.42	319+22.41	0.12 LT
93	BL-93	191843.6780	2301292.2430	0.00	325+30.96	66.79 RT
94	BL-94	191925.0620	2301778.6080	0.00	330+19.88	4.63 LT
96	BL-96	193236.8710	2307233.5890	2.55	387+14.60	10.37 LT
97	BL-97	193528.8820	2307700.9030	6.98	392+66.08	2.70 LT
14	R2633AB-14	193701.6820	2308298.0630	10.40	398+42.69	212.58 RT
98	BL-98	194167.9170	2308506.6870	18.33	402+95.92	13.22 LT
99	BL-99	194542.5410	2308926.7510	12.04	408+59.20	1.67 LT
100	BL-100	195104.7740	2309447.6680	23.14	416+26.06	2.31 LT
101	BL-101	195780.3920	2309979.1030	19.00	424+05.92	0.57 LT
102	BL-102	195659.7830	2310681.2600	15.95	428+12.23	632.75 RT
103	BL-103	196200.8900	2310366.9440	14.17	430+55.16	56.05 RT
104	BL-104	197060.5610	2310926.7320	25.74	440+78.60	14.35 LT
105	BL-105	197002.0920	2312138.3530	25.93	447+61.19	988.40 RT
C79	R2633C-79	197241.2040	2311975.2960	23.90	448+53.83	714.39 RT

BY5

POINT	DESC.	NORTH	EAST	ELEVATION	Y5 STATION	OFFSET
9	R2633AB-9	187071.4360	2276129.3140	65.79	OUTSIDE PROJECT LIMITS	
220	BY5-220	186793.1739	2276688.9170	64.70	14+80.60	16.23 RT
C1	CULVERT	186538.2540	2277206.4080	64.49	20+56.37	17.41 RT
57	BL-57	186459.8260	2278004.8770	65.67	28+64.70	71.43 LT
221	BY5-221	186324.0289	2278713.2493	66.35	35+80.95	13.54 RT
222	BY5-222	186284.5245	2279244.2170	65.75	41+13.38	15.10 RT
223	BY5-223	186236.1414	2279883.8471	63.49	OUTSIDE PROJECT LIMITS	

BY7

POINT	DESC.	NORTH	EAST	ELEVATION	Y7 STATION	OFFSET
226	BY7-226	195129.3923	2287082.4381	34.49	14+43.84	21.84 LT
227	BY7-227	194616.6776	2287318.8412	35.46	20+03.26	29.39 LT
11	R2633AB-11	193867.0940	2287548.9810	34.47	27+31.23	240.77 LT
77	BL-77	193329.8890	2287699.5930	35.10	32+82.31	421.63 LT
10	R2633AB-10	192590.4170	2287690.5110	34.02	40+75.53	371.41 LT
228	BY7-228	192045.8410	2287567.3784	31.19	46+07.77	164.47 LT
229	BY7-229	191239.6880	2287432.6189	29.36	53+86.04	34.98 LT

BY8

POINT	DESC.	NORTH	EAST	ELEVATION	Y8 STATION	OFFSET
231	BY8-231	193369.0115	2296056.9892	19.43	11+99.45	13.12 RT
13	R2633AB-13	192941.4390	2296292.5230	21.18	16+87.60	13.90 RT
232	BY8-232	192325.2314	2296634.3654	21.52	23+92.28	12.92 RT
88	BY8-88	192048.3460	2296817.1800	21.52	27+22.93	13.19 LT
233	BY8-233	191078.3250	2297193.0312	20.84	37+62.38	13.77 RT
234	BY8-234	190409.0746	2297457.4497	13.58	44+82.27	7.65 RT
235	BY8-235	189656.0418	2297600.7711	13.21	52+35.56	124.90 RT
236	BY8-236	189145.9744	2298474.6228	21.65	62+50.23	65.63 LT
237	BY8-237	188964.2945	2299263.6092	21.81	68+63.25	15.24 RT
238	BY8-238	188801.8806	2299983.2242	18.54	OUTSIDE PROJECT LIMITS	

BY9

POINT	DESC.	NORTH	EAST	ELEVATION	Y9 STATION	OFFSET
240	BY9-240	192711.5104	2298331.9538	17.57	19+27.70	14.27 LT
239	BY9-239	192650.1275	2297849.6904	19.70	14+42.26	14.53 LT
234	BY8-234	190409.0746	2297457.4497	13.58	OUTSIDE PROJECT LIMITS	

SURVEY CONTROL SHEET R-2633-B

BY4

POINT	DESC.	NORTH	EAST	ELEVATION	L STATION	OFFSET
216	BY4-216	186955.8218	2276081.4546	65.67	44+94.12	1928.66 LT
217	BY4-217	186709.6969	2276575.7529	66.48	42+88.90	1431.44 LT
218	BY4-218	186358.0112	2277279.2644	66.40	39+62.50	733.21 LT
56	BL-56	185975.1100	2278042.8520	68.08	35+55.13	9.47 RT
219	BY4-219	185774.0936	2278441.3102	68.49	33+16.11	389.42 RT

BY6

POINT	DESC.	NORTH	EAST	ELEVATION	L STATION	OFFSET
224	BY6-224	194346.9729	2283279.6913	41.82	142+45.76	266.20 LT
71	BL-71	194139.4050	2283812.8130	41.91	147+44.39	7.39 LT
225	BY6-225	193916.6085	2284383.9544	40.75	153+25.57	217.85 RT

BY9A

POINT	DESC.	NORTH	EAST	ELEVATION	L STATION	OFFSET
241	BY9A-241	194566.3522	2308038.1306	11.53	401+98.10	621.00 LT
263	BY9A-263	194129.9986	2308156.8664	12.24	400+00.47	209.92 LT
14	R2633AB-14	193701.6820	2308298.0630	10.40	398+42.69	212.58 RT
15	R2633AB-15	192705.0390	2308907.0230	11.89	397+22.72	1373.25 RT

BY10

POINT	DESC.	NORTH	EAST	ELEVATION	L STATION	OFFSET
242	BY10-242	195822.2210	2309609.5562	21.67	422+96.89	320.85 LT
101	BL-101	195780.3920	2309979.1030	19.00	424+85.92	0.57 LT
243	BY10-243	195711.2976	2310633.5012	16.31	428+24.63	563.60 RT

BY12

POINT	DESC.	NORTH	EAST	ELEVATION	L STATION	OFFSET
244	BY12-244	196423.6082	2310241.6711	14.85	431+57.61	178.04 LT
103	BL-103	196200.8900	2310366.9440	14.17	430+55.16	56.05 RT
243	BY10-243	195711.2976	2310633.5012	16.31	428+24.63	563.60 RT

BY13

POINT	DESC.	NORTH	EAST	ELEVATION	L STATION	OFFSET
BY1	R2633C-BY1	197749.4926	2310547.0379	31.78	444+00.23	732.23 LT
104	BL-104	197060.5610	2310926.7320	25.74	440+78.60	14.35 LT
245	BY13-245	196693.0437	2311131.2206	25.55	439+08.20	370.15 RT

BM52 ELEVATION = 74.09
N 183487 E 2278395
L STATION 10+52 136 LEFT
RR SPIKE AT THE BASE OF A 12" PINE

BM56 ELEVATION = 69.37
N 185940 E 2278210
L STATION 35+07 173 RIGHT
RR SPIKE SET AT THE BASE OF A 12" PINE

BM59 ELEVATION = 69.63
N 188304 E 2278241
L STATION 59+09 100 RIGHT
RR SPIKE SET AT THE BASE OF A 10" PINE

BM61 ELEVATION = 75.13
N 189974 E 2278737
L STATION 76+75 157 RIGHT
RR SPIKE SET AT THE BASE OF A 14" PINE

BM64 ELEVATION = 64.54
N 191657 E 2279776
L STATION 97+29 311 RIGHT
RR SPIKE SET AT THE BASE OF A 12" PINE

BM66 ELEVATION = 45.02
N 193147 E 2280631
L STATION 114+14 152 LEFT
RR SPIKE SET AT THE BASE OF A 15" PINE

BM69 ELEVATION = 43.83
N 194044 E 2282474
L STATION 134+23 140 LEFT
RR SPIKE SET AT THE BASE OF A 15" PINE

BM74 ELEVATION = 40.70
N 193546 E 2285840
L STATION 168+92 320 RIGHT
RR SPIKE SET AT THE BASE OF A 20" OAK

BM77 ELEVATION = 33.54
N 193516 E 2287699
L STATION 186+84 178 LEFT
RR SPIKE SET AT THE BASE OF A 12" OAK

BM79 ELEVATION = 29.07
N 192980 E 2289548
L STATION 206+08 188 LEFT
RR SPIKE SET AT THE BASE OF A 15" TWIN PINE

BM81 ELEVATION = 27.84
N 192301 E 2291786
L STATION 229+53 164 LEFT
RR SPIKE SET AT THE BASE OF A 18" PINE

BM83 ELEVATION = 27.24
N 192047 E 2293136
L STATION 243+48 173 LEFT
RR SPIKE SET AT THE BASE OF A 8" PINE

BM86 ELEVATION = 24.94
N 191647 E 2295125
L STATION 263+61 138 RIGHT
RR SPIKE SET AT THE BASE OF A 15" PINE

BM91 ELEVATION = 20.52
N 192160 E 2299037
L STATION 302+83 296 LEFT
RR SPIKE SET AT THE BASE OF A 18" PINE

BM93 ELEVATION = 3.61
N 191421 E 2301547
L STATION 327+77 494 RIGHT
RR SPIKE SET AT THE BASE OF A 16" CYPRESS

BM94 ELEVATION = 2.67
N 191809 E 2301808
L STATION 330+46 112 RIGHT
RR SPIKE SET AT THE BASE OF A 12" CYPRESS

BM96 ELEVATION = 7.55
N 193109 E 2307467
L STATION 388+45 220 RIGHT
RR SPIKE SET AT THE BASE OF A 24" TWIN OAKS

BM101 ELEVATION = 16.81
N 195741 E 2310505
L STATION 427+71 443 RIGHT
RR SPIKE SET AT THE BASE OF A 18" PINE

BM217 ELEVATION = 68.11
N 186654 E 2276484
L STATION 42+40 1523 LEFT
RR SPIKE SET AT THE BASE OF A 12" PINE

BM221 ELEVATION = 68.80
N 186199 E 2278677
L STATION 37+45 657 RIGHT
RR SPIKE SET AT THE BASE OF A 18" PINE

BM225 ELEVATION = 41.41
N 193860 E 2284397
L STATION 153+42 274 RIGHT
RR SPIKE SET AT THE BASE OF A 12" PINE

BM226 ELEVATION = 34.83
N 195253 E 2287061
L STATION 175+79 1663 LEFT
RR SPIKE SET AT THE BASE OF A 8" OAK

BM229 ELEVATION = 28.80
N 191225 E 2287347
L STATION 189+96 2119 RIGHT
RR SPIKE SET AT THE BASE OF A 18" PINE

BM233 ELEVATION = 23.14
N 191143 E 2297305
L STATION 285+30 685 RIGHT
RR SPIKE SET AT THE BASE OF A 20" PINE

BM234 ELEVATION = 11.46
N 190226 E 2297631
L STATION 288+37 1609 RIGHT
RR SPIKE SET AT THE BASE OF A 18" PINE

BM235 ELEVATION = 14.24
N 189671 E 2297798
L STATION 289+93 2167 RIGHT
RR SPIKE SET AT THE BASE OF A 11" PINE

BM237 ELEVATION = 16.41
N 189133 E 2299078
L STATION 302+62 2731 RIGHT
RR SPIKE SET AT THE BASE OF A 9" PINE

BM245 ELEVATION = 26.06
N 196683 E 2311154
L STATION 439+14 394 RIGHT
RR SPIKE SET AT THE BASE OF A 10" PINE

BM13 ELEVATION = 24.20
N 192936 E 2296143
BY8 STATION 9+21 134 RIGHT
RR SPIKE IN BASE OF A 10" OAK

BM14 ELEVATION = 17.24
N 193539 E 2308284
BY9A STATION 15+35 97 RIGHT
RR SPIKE IN BASE OF A 12" PINE

NOTES

1. THE SITE CALIBRATION SHOWN IS BASED UPON A NETWORK TIED TO THE HARN (HIGH ACCURACY REFERENCE NETWORK) NAD 83/95 ADJUSTMENT. THIS CALIBRATION WILL ALLOW THE END USER TO WORK WITHIN THE SAME COORDINATE SYSTEM WHEN USING RTK (REAL TIME KINEMATIC) GPS AND A LOCAL BASE STATION. IF ANOTHER SYSTEM SUCH AS VRS (VIRTUAL REFERENCE STATION) IS USED, ADDITIONAL FIELD TIES MAYBE NEEDED TO REDUCE POSSIBLE ERRORS, OR BIASES.

2. THE CONTROL DATA FOR THIS PROJECT CAN BE FOUND ELECTRONICALLY BY SELECTING PROJECT CONTROL DATA AT HTTP://WWW.DOH.DOT.STATE.NC.US/PRECONSTRUCT/HIGHWAY/LOCATION/PROJECT/

   THE FILES TO BE FOUND ARE AS FOLLOWS:

   R2633AB_LS_GPSCALIB_060811.HTML
   R2633B_LS_CONTROL_060811.TXT

   THE WGS84 AND LOCAL FILES ARE COMMA DELIMITED AND CAN BE USED TO REPRODUCE THE SITE CALIBRATION FOR THE END USER'S GPS EQUIPMENT. IF FURTHER INFORMATION IS NEEDED, PLEASE CONTACT THE LOCATION AND SURVEYS UNIT.

DATUM DESCRIPTION

THE LOCALIZED COORDINATE SYSTEM DEVELOPED FOR THIS PROJECT IS BASED ON THE STATE PLANE COORDINATES ESTABLISHED BY NCDOT FOR MONUMENT "PHOENIX 2" WITH NAD 1983/95 STATE PLANE GRID COORDINATES OF NORTHING: 196121.992(ft) EASTING: 2278129.037(ft)
THE AVERAGE COMBINED GRID FACTOR USED ON THIS PROJECT (GROUND TO GRID) IS: 1.00002790
THE N.C. LAMBERT GRID BEARING AND LOCALIZED HORIZONTAL GROUND DISTANCE FROM "PHOENIX 2" TO -L- STATION 8+00.00 IS
S 2°05'43.5" E 12,845.18'
ALL LINEAR DIMENSIONS ARE LOCALIZED HORIZONTAL DISTANCES
VERTICAL DATUM USED IS NAVD 88

RIGHT-OF-WAY MONUMENT DATA SHEET

ROW MARKER IRON PIN AND CAP-E

ALIGN	STATION	OFFSET	NORTH	EAST
L	59+10.00	-121.34	188341.2050	2278023.0267
L	60+90.56	-115.00	188520.0295	2278061.1242
L	65+95.17	-115.06	189019.2664	2278167.4837
L	67+52.18	150.00	189107.4424	2278462.5112
L	67+54.97	147.24	189110.7932	2278460.5211
L	69+05.32	147.21	189253.9408	2278498.4937
L	69+43.00	-115.00	189359.9006	2278255.7154
L	72+00.00	-128.00	189613.2846	2278316.1319
L	78+00.00	-128.00	190188.6892	2278511.6122
L	78+72.00	-140.00	190261.1942	2278526.2066
L	83+54.50	-140.00	190713.8026	2278712.1225
L	84+00.79	147.23	190639.8494	2278993.5012
L	85+98.00	146.43	190815.4619	2279073.6795
L	86+04.50	-140.00	190945.4161	2278818.3395
L	89+00.00	-140.00	191214.6617	2278956.5906
L	91+10.00	-146.97	191405.0713	2279057.1687
L	99+82.74	-147.73	192137.2057	2279570.6461
L	100+45.64	145.62	191997.9768	2279836.4072
L	110+59.10	150.00	192690.7662	2280538.2011
L	110+67.45	144.78	192699.9795	2280541.1087
L	113+63.83	-148.34	193113.6443	2280592.3187
L	113+64.43	-150.00	193115.3402	2280591.8224
L	116+00.00	-150.00	193256.0997	2280788.3035
L	116+00.00	150.00	193008.6966	2280957.9846
L	131+00.00	150.00	193669.3784	2282256.2773
L	131+00.00	-150.00	193952.1752	2282156.1476
L	142+30.00	-150.00	194229.6340	2283280.0186
L	143+00.00	150.00	193942.0826	2283390.5312
L	145+40.00	180.00	193938.0309	2283625.5142
L	146+03.58	-175.00	194297.1168	2283658.9356
L	149+04.66	180.66	193957.8941	2283978.1167
L	151+10.00	-195.00	194335.2492	2284180.4726
L	153+59.09	169.69	193963.1024	2284418.6925
L	156+70.00	150.00	193958.6805	2284721.5348
L	157+15.00	-170.00	194271.7495	2284801.6490
L	163+05.26	-150.00	194151.9583	2285396.4487
L	165+84.24	150.00	193794.0558	2285595.6158
L	165+84.24	-150.00	194083.5317	2285674.3792
L	186+72.46	-150.00	193492.4604	2287680.5898
L	201+70.00	150.00	192780.2749	2289031.6744
L	201+70.00	-150.00	193067.9704	2289116.7116
L	216+70.00	-150.00	192642.7841	2290555.1888
L	216+70.00	150.00	192355.0887	2290470.1516
L	225+54.52	-150.00	192392.0596	2291403.4326
L	225+54.52	150.00	192104.3641	2291318.3954
L	235+74.60	-150.00	192149.8487	2292380.2946
L	235+74.60	150.00	191855.7512	2292321.0775
L	250+74.60	150.00	191653.6681	2293826.0589
L	250+74.60	-150.00	191952.9694	2293846.5211
L	260+94.60	150.00	191628.9695	2294858.7250
L	260+94.60	-150.00	191928.9068	2294852.5949
L	263+50.94	-150.00	191934.1448	2295108.8820
L	266+33.40	-150.00	191939.9164	2295391.2841
L	268+50.00	-150.00	191944.3424	2295607.8414
L	270+30.00	-168.00	191966.0166	2295787.4360
L	279+90.00	-188.00	192005.6286	2296746.8269
L	299+24.14	150.00	191707.2204	2298687.4719
L	306+60.00	-150.00	192022.1939	2299417.0460
L	309+55.00	150.00	191728.2844	2299718.1144
L	317+50.00	216.00	191678.5428	2300514.2970
L	318+60.00	150.00	191746.7767	2300622.9255
L	318+60.00	-150.00	192046.7141	2300616.7954
L	318+60.00	-275.00	192171.6880	2300614.2412
L	387+30.00	-150.00	193364.3235	2307174.5579
L	387+30.00	150.00	193107.5531	2307329.6996
L	387+30.00	185.00	193077.5965	2307347.7995
L	387+30.00	-185.00	193394.2801	2307156.4580
L	388+74.00	185.00	193154.5983	2307472.9694
L	388+74.00	-185.00	193468.1799	2307276.5857
L	397+45.00	185.00	193662.0886	2308202.3439
L	397+61.43	203.99	193657.3085	2308227.2288
L	398+62.58	201.27	193723.1680	2308307.0290
L	398+80.00	185.00	193746.9711	2308310.8638
L	398+93.00	-185.00	194044.6170	2308090.6915
L	400+15.00	-185.00	194119.7063	2308183.6419
L	403+15.00	-185.00	194309.6522	2308407.8083
L	403+50.00	-210.00	194351.0337	2308416.9950
L	405+20.00	-210.00	194462.1190	2308540.3898
L	406+95.00	-185.00	194560.7958	2308682.4552
L	410+20.00	185.00	194526.3018	2309173.6568
L	421+62.71	-185.00	195633.2940	2309637.2786
L	421+62.71	185.00	195410.5906	2309932.7498
L	423+22.16	-185.00	195760.6267	2309733.2522
L	425+41.16	185.00	195712.8089	2310160.5386
L	425+54.76	-185.00	195946.3755	2309873.2553
L	427+16.72	185.00	195853.0096	2310266.2111
L	429+83.48	185.00	196066.0341	2310426.7725
L	430+59.12	186.87	196125.3112	2310473.7946
L	430+97.55	187.82	196155.4306	2310497.6871

SURVEY CONTROL SHEET R-2633B

ROW MARKER IRON PIN AND CAP-E

ALIGN	STATION	OFFSET	NORTH	EAST
RP_A1	12+00.00	75.00	188148.5132	2277981.9749
RP_A1	12+92.24	75.05	188058.9957	2277962.9037
RP_A1	13+41.00	100.00	188017.9972	2277928.0920
RP_A1	15+00.00	100.00	187871.9997	2277888.8841
RP_A1	19+09.48	100.00	187527.7377	2277725.6613
RP_A1	22+09.48	100.00	187296.3589	2277551.0485
RP_A1	24+09.48	100.00	187127.2738	2277424.8393
RP_A1	26+04.54	100.00	186933.4275	2277328.8587
RP_A1	28+04.54	100.00	186730.5520	2277270.8938
RP_A1	28+69.57	100.00	186667.3848	2277255.4174

ROW MARKER IRON PIN AND CAP-E

ALIGN	STATION	OFFSET	NORTH	EAST
RP_A3	10+00.00	103.00	192006.6660	2298661.3390
RP_A3	12+50.00	100.00	192008.5932	2298411.3285
RP_A3	14+50.00	100.00	192017.7927	2298220.3405
RP_A3	20+31.24	100.00	192202.9694	2297729.2491
RP_A3	22+31.24	100.00	192322.1628	2297579.7368
RP_A3	24+31.24	100.00	192451.8568	2297402.5244
RP_A3	28+21.07	100.00	192502.6578	2296949.3168
RP_A3	30+71.00	100.00	192434.0187	2296708.9997

ROW MARKER IRON PIN AND CAP-E

ALIGN	STATION	OFFSET	NORTH	EAST
RP_B2	12+50.00	-101.23	194092.3751	2285641.5187
RP_B2	14+50.00	-100.00	194049.8480	2285829.7269
RP_B2	20+76.87	-100.00	194078.7187	2286407.4698
RP_B2	22+76.87	-100.00	194138.6370	2286590.9093
RP_B2	24+23.89	-97.60	194184.3051	2286736.2425
RP_B2	24+25.84	-136.87	194222.6005	2286727.2776
RP_B2	26+61.25	-112.16	194243.2420	2286990.8640
RP_B2	28+45.09	-131.68	194258.6710	2287189.9250

ROW MARKER IRON PIN AND CAP-E

ALIGN	STATION	OFFSET	NORTH	EAST
RP_B4	10+00.00	-138.00	196368.4840	2310191.4081
RP_B4	10+61.35	-137.90	196416.9314	2310227.9240
RP_B4	11+28.00	-155.00	196478.8035	2310252.1692
RP_B4	12+00.00	-150.00	196531.0849	2310294.8244
RP_B4	18+04.36	-150.00	197033.9452	2310528.6786
RP_B4	20+04.36	-150.00	197220.4736	2310574.6836
RP_B4	21+04.86	-160.00	197320.6739	2310587.3290
RP_B4	21+29.34	-187.73	197350.7170	2310565.7505
RP_B4	32+40.00	-80.26	198325.4701	2311178.4279

ROW MARKER IRON PIN AND CAP-E

ALIGN	STATION	OFFSET	NORTH	EAST
RP_C2	10+00.00	100.00	193728.9746	2285833.3038
RP_C2	12+00.00	100.00	193660.6799	2286021.2821
RP_C2	14+50.00	100.00	193571.3118	2286243.4504
RP_C2	17+63.47	100.00	193413.5061	2286482.6076
RP_C2	20+13.47	124.74	193227.4886	2286634.1085
RP_C2	21+73.25	143.07	193092.0043	2286744.4529

ROW MARKER IRON PIN AND CAP-E

ALIGN	STATION	OFFSET	NORTH	EAST
RP_C3	13+70.00	180.00	191550.6099	2295571.6508
RP_C3	15+43.00	132.00	191579.6963	2295727.5597
RP_C3	16+40.00	125.00	191566.0938	2295812.8625
RP_C3	19+87.24	100.00	191457.6260	2296106.3946
RP_C3	21+87.24	100.00	191342.9197	2296259.3763
RP_C3	22+85.00	108.00	191273.9317	2296335.9792
RP_C3	23+87.24	100.00	191218.5390	2296440.3576
RP_C3	26+95.00	100.00	191159.1740	2296798.9859
RP_C3	28+04.39	126.85	191155.0043	2296917.4592
RP_C3	29+58.50	99.74	191212.5184	2297062.9812

ROW MARKER IRON PIN AND CAP-E

ALIGN	STATION	OFFSET	NORTH	EAST
RP_C4	11+89.01	140.00	196486.5813	2310760.3753
RP_C4	13+51.43	198.89	196571.8252	2310910.6515
RP_C4	14+12.09	221.09	196603.5250	2310966.9235
RP_C4	15+10.75	256.96	196655.2490	2311058.2837
RP_C4	15+50.67	147.00	196757.0149	2311000.6042

ROW MARKER IRON PIN AND CAP-E

ALIGN	STATION	OFFSET	NORTH	EAST
RP_D1	10+00.00	-103.00	188432.1546	2278314.3876
RP_D1	13+00.00	-100.00	188147.3261	2278270.4649
RP_D1	19+56.68	-100.00	187558.1193	2278382.3569
RP_D1	22+56.68	-98.92	187307.0668	2278524.1660
RP_D1	24+56.68	-100.00	187122.5921	2278629.2532
RP_D1	25+54.90	-100.00	187019.5991	2278669.1085

ROW MARKER IRON PIN AND CAP-E

ALIGN	STATION	OFFSET	NORTH	EAST
RP_D2	10+00.00	-103.00	192887.4248	2288669.1683
RP_D2	12+50.00	-100.00	192954.2583	2288435.1623
RP_D2	17+11.47	-100.00	192998.3028	2288001.1492
RP_D2	17+39.03	-88.94	193008.6552	2287974.6589

ROW MARKER IRON PIN AND CAP-E

ALIGN	STATION	OFFSET	NORTH	EAST
RP_D3	12+00.00	-100.00	191701.9990	2298494.3812
RP_D3	15+28.12	-100.00	191641.6837	2298195.0750
RP_D3	17+28.12	-100.00	191574.5016	2298013.9273
RP_D3	25+50.00	-100.00	191271.7323	2297249.8471

ROW MARKER IRON PIN AND CAP-E

ALIGN	STATION	OFFSET	NORTH	EAST
SVRD7	10+57.00	-45.00	194649.5557	2287364.3011
SVRD7	11+26.76	-45.00	194559.9384	2287427.9465
SVRD7	11+50.00	-46.00	194536.9785	2287431.7050
SVRD7	14+00.00	-31.35	194287.7138	2287447.0098

ROW MARKER IRON PIN AND CAP-E

ALIGN	STATION	OFFSET	NORTH	EAST
SVRD8	29+82.68	41.35	192743.8608	2287635.6430
SVRD8	30+00.67	-38.56	192714.0582	2287711.9334
SVRD8	30+27.83	-173.07	192664.0184	2287840.0279
SVRD8	35+74.44	-39.35	192148.7680	2287606.9645
SVRD8	35+74.79	-55.62	192145.4048	2287622.8883
SVRD8	37+15.00	-57.50	192007.2805	2287598.7242
SVRD8	38+25.00	-66.50	191897.5206	2287587.1582
SVRD8	38+73.00	-57.00	191840.8344	2287564.3400

ROW MARKER IRON PIN AND CAP-E

ALIGN	STATION	OFFSET	NORTH	EAST
SVRD9	11+27.00	-38.00	192774.0861	2296555.0324
SVRD9	11+45.65	-35.00	192750.3341	2296568.4189
SVRD9	12+68.47	-35.00	192642.9196	2296627.9597

ROW MARKER IRON PIN AND CAP-E

ALIGN	STATION	OFFSET	NORTH	EAST
EY12DR1	10+35.26	25.00	196066.1523	2310507.3112
EY12DR1	11+11.17	25.00	196103.3228	2310573.4918
EY12DR1	12+39.13	25.00	196141.4762	2310694.0831

5/28/99

R:\Roadway\proj\R2633BB\R2633B_LS_1F.DGN
11-JUN-2013 \\R2
$$$$USERNAME$$$$

RIGHT-OF-WAY MONUMENT DATA SHEET

SURVEY CONTROL SHEET R-2633B

ROW MARKER IRON PIN AND CAP-E

ALIGN	STATION	OFFSET	NORTH	EAST
Y1	40+28.00	76.21	198396.6724	2311200.3290

ROW MARKER IRON PIN AND CAP-E

ALIGN	STATION	OFFSET	NORTH	EAST
Y7	18+60.00	38.98	194730.0817	2287208.2730
Y7	18+75.00	60.00	194708.8814	2287193.9793
Y7	19+51.60	-44.79	194672.0927	2287318.2356
Y7	19+70.35	60.00	194622.7553	2287223.9388
Y7	21+20.00	75.00	194482.0267	2287242.3879
Y7	22+96.28	75.00	194317.7429	2287258.9080
Y7	38+16.73	-160.00	192814.3869	2287455.1065
Y7	38+86.94	150.00	192717.9783	2287152.2493
Y7	43+15.29	150.00	192282.1955	2287208.8127
Y7	46+05.80	110.00	192002.3224	2287296.3749
Y7	48+15.80	78.90	191804.7442	2287356.6903
Y7	48+60.00	70.00	191763.5192	2287369.2753
Y7	48+60.00	-113.50	191777.2427	2287552.2614
Y7	51+76.32	70.00	191461.3337	2287362.5696
Y7	53+78.00	-88.87	191237.7604	2287487.0792
Y7	53+86.32	60.00	191256.7570	2287339.1896
Y7	55+00.00	40.56	191141.4388	2287337.5411
Y7	55+00.00	60.00	191144.9875	2287318.4326

ROW MARKER IRON PIN AND CAP-E

ALIGN	STATION	OFFSET	NORTH	EAST
Y8	13+04.94	-60.00	193312.0742	2296172.0209
Y8	13+40.00	60.00	193223.3224	2296083.9727
Y8	13+40.00	30.00	193237.8393	2296110.2263
Y8	18+40.00	60.00	192785.7604	2296325.9220
Y8	18+55.00	-60.00	192830.7014	2296438.1954
Y8	19+75.00	60.00	192667.6186	2296391.2484
Y8	21+11.15	-60.00	192606.5344	2296562.1483
Y8	22+42.50	-60.00	192491.5908	2296625.7062
Y8	22+75.00	-60.00	192463.1493	2296641.4329
Y8	23+70.17	60.00	192321.7988	2296582.4690
Y8	24+86.75	60.00	192219.7733	2296638.8839
Y8	25+50.00	52.50	192168.0516	2296676.0536
Y8	26+00.00	52.50	192124.2954	2296700.2485
Y8	36+15.00	60.00	191198.3065	2297095.7644
Y8	36+33.50	-80.00	191232.6816	2297232.7337
Y8	38+55.00	60.00	190975.1850	2297184.1770
Y8	39+95.00	72.00	190840.6102	2297224.5950
Y8	40+29.20	-80.00	190864.8056	2297378.5058
Y8	43+00.00	-80.00	190610.8205	2297476.5051
Y8	43+12.00	72.00	190546.2040	2297338.4008
Y8	43+44.27	105.00	190504.6102	2297318.7056
Y8	44+30.00	105.00	190424.7394	2297348.1698
Y8	44+40.00	-73.83	190476.7135	2297519.5720
Y8	44+65.00	75.00	190402.3209	2297388.2666
Y8	45+00.00	-51.88	190412.5884	2297519.4772
Y8	45+35.00	-51.17	190379.2942	2297530.6767
Y8	45+55.00	-69.26	190366.4661	2297554.4686
Y8	46+09.38	75.00	190267.0498	2297436.6361
Y8	46+12.64	-105.00	190323.7634	2297607.4992
Y8	47+95.00	-80.00	190143.4551	2297644.4909
Y8	47+95.00	-105.00	190151.7591	2297668.0715
Y8	47+99.07	73.00	190088.7977	2297501.5307
Y8	48+39.00	95.17	190043.7687	2297493.8790
Y8	48+92.65	124.98	189983.2620	2297483.5868
Y8	51+01.42	-80.00	189854.4290	2297746.2731
Y8	51+94.50	154.31	189686.3835	2297557.6603
Y8	52+05.69	150.65	189676.5348	2297565.2636
Y8	53+51.42	-70.00	189627.6770	2297826.3848
Y8	54+02.67	62.00	189520.0443	2297734.5648
Y8	55+23.78	-70.00	189492.3538	2297910.9568
Y8	55+30.00	68.00	189403.7271	2297804.9961
Y8	57+40.00	92.00	189223.3052	2297944.8792
Y8	60+60.00	102.50	189036.8698	2298242.2020
Y8	63+20.00	78.50	188991.5708	2298516.8778
Y8	63+69.01	-80.58	189140.2010	2298591.9033
Y8	66+30.00	60.00	188958.5625	2298826.1687
Y8	66+90.77	-30.00	189037.3249	2298900.9342
Y8	72+40.00	30.00	188887.6918	2299432.7801
Y8	72+40.00	60.00	188858.1015	2299427.8394

ROW MARKER IRON PIN AND CAP-E

ALIGN	STATION	OFFSET	NORTH	EAST
Y8A	11+83.16	28.54	192695.8073	2296240.5513
Y8A	11+95.72	-30.47	192635.8041	2296246.7477
Y8A	17+58.59	32.81	192608.7946	2295677.3028
Y8A	18+18.59	32.82	192599.5891	2295618.0066
Y8A	18+81.99	-26.74	192531.0038	2295564.5090
Y8A	20+30.00	-28.81	192507.6564	2295414.9635
Y8A	20+41.98	30.00	192566.3099	2295402.3421
Y8A	21+03.41	30.00	192573.5901	2295348.9204
Y8A	21+22.99	-64.02	192489.8998	2295301.3863
Y8A	21+42.39	-30.00	192527.8629	2295295.5007
Y8A	21+67.54	30.00	192592.0773	2295285.5278

ROW MARKER IRON PIN AND CAP-E

ALIGN	STATION	OFFSET	NORTH	EAST
Y8B	10+70.00	30.00	192473.3747	2295490.6865
Y8B	10+71.39	-35.44	192487.6698	2295554.5626
Y8B	11+56.18	-27.52	192403.4408	2295567.1420
Y8B	13+20.77	30.00	192229.8779	2295550.6453
Y8B	13+58.04	-29.61	192207.9361	2295617.4395

ROW MARKER IRON PIN AND CAP-E

ALIGN	STATION	OFFSET	NORTH	EAST
Y8C	9+10.80	-30.00	192175.7808	2295507.8645
Y8C	9+72.44	30.00	192122.8692	2295575.6874
Y8C	10+46.30	-30.00	192190.5746	2295642.5573
Y8C	12+63.68	-30.00	192214.3073	2295858.6358
Y8C	12+63.68	30.00	192154.6660	2295865.1864
Y8C	13+81.90	-30.00	192239.3263	2295966.6473
Y8C	13+81.90	30.00	192182.8789	2295986.9866
Y8C	15+00.13	-30.00	192267.5394	2296088.4483
Y8C	15+00.13	30.00	192207.8980	2296094.9989
Y8C	18+90.00	73.10	192207.6247	2296487.2460
Y8C	18+90.00	30.00	192250.4627	2296482.5410

ROW MARKER IRON PIN AND CAP-E

ALIGN	STATION	OFFSET	NORTH	EAST
Y9	11+05.00	-60.00	190597.8659	2297508.4780
Y9	11+65.15	50.00	190515.0706	2297602.6184
Y9	11+89.90	-60.00	190626.9046	2297588.2613
Y9	12+85.69	50.00	190552.2769	2297713.7698
Y9	15+17.60	-60.00	190706.5480	2297919.3463
Y9	17+00.00	-30.00	190699.1662	2298104.0504
Y9	17+06.60	30.00	190640.4302	2298117.9663

ROW MARKER PERMANENT EASEMENT-E

ALIGN	STATION	OFFSET	NORTH	EAST
Y7	20+10.43	65.79	194584.6651	2287228.9329
Y7	20+18.00	104.00	194567.9796	2287193.8486
Y7	20+46.00	100.00	194544.1158	2287203.9914
Y7	20+46.00	69.83	194551.1505	2287233.3271
Y7	46+95.00	98.16	191917.3861	2287322.3055
Y7	47+05.00	160.00	191898.4052	2287262.6615
Y7	47+65.00	87.73	191851.9177	2287342.2851

ROW MARKER PERMANENT EASEMENT-E

ALIGN	STATION	OFFSET	NORTH	EAST
SVRD7	10+82.00	-87.00	194654.2608	2287427.7100
SVRD7	10+93.00	-74.00	194627.7414	2287432.4902
SVRD7	10+93.00	-45.00	194611.3315	2287408.5819
SVRD7	19+05.00	-39.43	193808.4209	2287589.1316
SVRD7	19+05.00	-60.00	193814.2918	2287608.8460
SVRD7	19+30.00	-60.00	193790.3322	2287615.9833
SVRD7	19+30.00	-39.40	193784.4521	2287596.2381

ROW MARKER PERMANENT EASEMENT-E

ALIGN	STATION	OFFSET	NORTH	EAST
Y8	13+04.94	-65.00	193314.4926	2296176.3994
Y8	18+62.09	-65.00	192826.9200	2296446.0021
Y8	36+07.99	67.00	191202.2482	2297086.6752
Y8	38+55.00	67.00	190972.6068	2297177.6713
Y8	39+95.00	79.00	190838.0320	2297218.0893
Y8	43+12.00	79.00	190543.7485	2297331.8456
Y8	50+80.00	-138.00	189893.9025	2297793.8658
Y8	51+00.00	-159.00	189882.0134	2297820.3167
Y8	51+90.00	-90.00	189775.7503	2297785.0833
Y8	52+70.00	-91.00	189705.2648	2297813.8236

5/28/99

11-JUN-2013 11:30
R:\Roadway\Proj\R2633BB\R2633B_LS_1G.DGN
$$$$USERNAME$$$$

PROJ. REFERENCE NO.	SHEET NO.
R-2633BB	1-H

STATE OF NORTH CAROLINA
DIVISION OF HIGHWAYS

CENTERLINE COORDINATE LIST

Point #	Chain	Station	Northing (Y)	Easting (X)
1	L	292+00.00	191842.3924	2297960.4158
2	L	293+00.00	191844.4357	2298060.3949
3	L	294+00.00	191846.4791	2298160.3740
4	L	295+00.00	191848.5224	2298260.3532
5	L	296+00.00	191850.5658	2298360.3323
6	L	297+00.00	191852.6091	2298460.3114
7	L	298+00.00	191854.6524	2298560.2905
8	L	299+00.00	191856.6958	2298660.2697
9	L	300+00.00	191858.7391	2298760.2488
10	L	301+00.00	191860.7825	2298860.2279
11	L	302+00.00	191862.8258	2298960.2070
12	L	303+00.00	191864.8692	2299060.1861
13	L	304+00.00	191866.9125	2299160.1653
14	L	305+00.00	191868.9559	2299260.1444
15	L	306+00.00	191870.9992	2299360.1235
16	L	307+00.00	191873.0426	2299460.1026
17	L	308+00.00	191875.0859	2299560.0817
18	L	309+00.00	191877.1293	2299660.0609
19	L	310+00.00	191879.1726	2299760.0400
20	L	311+00.00	191881.2160	2299860.0191
21	L	312+00.00	191883.2593	2299959.9982
22	L	313+00.00	191885.3027	2300059.9774
23	L	314+00.00	191887.3460	2300159.9565
24	L	315+00.00	191889.3894	2300259.9356
25	L	316+00.00	191891.4327	2300359.9147
26	L	317+00.00	191893.4761	2300459.8938
27	L	318+00.00	191895.5194	2300559.8730
28	L	319+00.00	191897.5627	2300659.8521
29	L	320+00.00	191899.6061	2300759.8312
30	L	321+00.00	191901.6494	2300859.8103
31	L	322+00.00	191903.6928	2300959.7894
32	L	323+00.00	191905.7361	2301059.7686
33	L	324+00.00	191907.7795	2301159.7477
34	L	325+00.00	191909.8228	2301259.7268
35	L	326+00.00	191911.8662	2301359.7059
36	L	327+00.00	191913.9095	2301459.6851
37	L	328+00.00	191915.9529	2301559.6642
38	L	329+00.00	191917.9962	2301659.6433
39	L	330+00.00	191920.0396	2301759.6224
40	L	331+00.00	191922.0829	2301859.6015
41	L	332+00.00	191924.1263	2301959.5807
42	L	333+00.00	191926.1696	2302059.5598
43	L	334+00.00	191928.2130	2302159.5389
44	L	335+00.00	191930.2563	2302259.5180
45	L	336+00.00	191932.2997	2302359.4971
46	L	337+00.00	191934.3430	2302459.4763
47	L	338+00.00	191936.3863	2302559.4554
48	L	339+00.00	191938.4297	2302659.4345
49	L	340+00.00	191940.4730	2302759.4136
50	L	341+00.00	191942.8511	2302859.3849
51	L	342+00.00	191946.3120	2302959.3245
52	L	343+00.00	191950.8831	2303059.2195
53	L	344+00.00	191956.5638	2303159.0575
54	L	345+00.00	191963.3535	2303258.8262
55	L	346+00.00	191971.2513	2303358.5133
56	L	347+00.00	191980.2562	2303458.1065
57	L	348+00.00	191990.3671	2303557.5936
58	L	349+00.00	192001.5827	2303656.9621
59	L	350+00.00	192013.9018	2303756.1999
60	L	351+00.00	192027.3227	2303855.2947
61	L	352+00.00	192041.8438	2303954.2342
62	L	353+00.00	192057.4633	2304053.0063
63	L	354+00.00	192074.1794	2304151.5988
64	L	355+00.00	192091.9898	2304249.9994
65	L	356+00.00	192110.8924	2304348.1961
66	L	357+00.00	192130.8849	2304446.1767
67	L	358+00.00	192151.9649	2304543.9291
68	L	359+00.00	192174.1296	2304641.4412
69	L	360+00.00	192197.3765	2304738.7011
70	L	361+00.00	192221.7025	2304835.6967
71	L	362+00.00	192247.1048	2304932.4160
72	L	363+00.00	192273.5801	2305028.8471
73	L	364+00.00	192301.1252	2305124.9780
74	L	365+00.00	192329.7367	2305220.7970
75	L	366+00.00	192359.4111	2305316.2922
76	L	367+00.00	192390.1447	2305411.4518
77	L	368+00.00	192421.9337	2305506.2640
78	L	369+00.00	192454.7742	2305600.7172
79	L	370+00.00	192488.6621	2305694.7996
80	L	371+00.00	192523.5932	2305788.4997
81	L	372+00.00	192559.5633	2305881.8059
82	L	373+00.00	192596.5679	2305974.7067

Point #	Chain	Station	Northing (Y)	Easting (X)
83	L	374+00.00	192634.6024	2306067.1906
84	L	375+00.00	192673.6622	2306159.2462
85	L	376+00.00	192713.7423	2306250.8622
86	L	377+00.00	192754.8379	2306342.0271
87	L	378+00.00	192796.9439	2306432.7298
88	L	379+00.00	192840.0551	2306522.9591
89	L	380+00.00	192884.1662	2306612.7038
90	L	381+00.00	192929.2716	2306701.9529
91	L	382+00.00	192975.3660	2306790.6952
92	L	383+00.00	193022.4435	2306878.9200
93	L	384+00.00	193070.4983	2306966.6162
94	L	385+00.00	193119.5245	2307053.7731
95	L	386+00.00	193169.5161	2307140.3799
96	L	387+00.00	193220.4670	2307226.4259
97	L	388+00.00	193272.3707	2307311.9005
98	L	389+00.00	193325.2209	2307396.7931
99	L	390+00.00	193379.0110	2307481.0932
100	L	391+00.00	193433.7345	2307564.7905
101	L	392+00.00	193489.3846	2307647.8746
102	L	393+00.00	193545.9544	2307730.3352
103	L	394+00.00	193603.4369	2307812.1623
104	L	395+00.00	193661.8250	2307893.3455
105	L	396+00.00	193721.1115	2307973.8751
106	L	397+00.00	193781.2891	2308053.7409
107	L	398+00.00	193842.3504	2308132.9332
108	L	399+00.00	193904.2878	2308211.4421
109	L	400+00.00	193967.0937	2308289.2580
110	L	401+00.00	194030.7604	2308366.3713
111	L	402+00.00	194095.2798	2308442.7724
112	L	403+00.00	194160.6442	2308518.4520
113	L	404+00.00	194226.8455	2308593.4006
114	L	405+00.00	194293.8753	2308667.6090
115	L	406+00.00	194361.7256	2308741.0681
116	L	407+00.00	194430.3879	2308813.7688
117	L	408+00.00	194499.8537	2308885.7021
118	L	409+00.00	194570.1144	2308956.8591
119	L	410+00.00	194641.1615	2309027.2311
120	L	411+00.00	194712.9860	2309096.8094
121	L	412+00.00	194785.5792	2309165.5853
122	L	413+00.00	194858.9321	2309233.5504
123	L	414+00.00	194933.0356	2309300.6963
124	L	415+00.00	195007.8805	2309367.0146
125	L	416+00.00	195083.4577	2309432.4973
126	L	417+00.00	195159.7578	2309497.1363
127	L	418+00.00	195236.7714	2309560.9234
128	L	419+00.00	195314.4890	2309623.8510
129	L	420+00.00	195392.9010	2309685.9111
130	L	421+00.00	195471.9976	2309747.0962
131	L	422+00.00	195551.7228	2309807.4605
132	L	423+00.00	195631.5799	2309867.6506
133	L	424+00.00	195711.4370	2309927.8407
134	L	425+00.00	195791.2940	2309988.0308
135	L	426+00.00	195871.1511	2310048.2209
136	L	427+00.00	195951.0082	2310108.4110
137	L	428+00.00	196030.8652	2310168.6011
138	L	429+00.00	196110.7223	2310228.7911
139	L	430+00.00	196190.5794	2310288.9812
140	L	431+00.00	196270.4365	2310349.1713
141	L	432+00.00	196350.2935	2310409.3614
142	L	433+00.00	196430.1506	2310469.5515
143	L	434+00.00	196510.0077	2310529.7416
144	L	435+00.00	196589.8648	2310589.9317
145	L	436+00.00	196669.7218	2310650.1218
146	L	437+00.00	196749.5789	2310710.3119
147	L	438+00.00	196829.4360	2310770.5020
148	L	439+00.00	196909.2931	2310830.6921
149	L	440+00.00	196989.1501	2310890.8822
150	L	441+00.00	197069.0072	2310951.0723
151	L	442+00.00	197148.8643	2311011.2624
152	L	443+00.00	197228.7213	2311071.4525
153	L	444+00.00	197308.5784	2311131.6426
154	L	445+00.00	197388.4355	2311191.8327
155	L	446+00.00	197468.2926	2311252.0228
156	L	447+00.00	197548.1496	2311312.2129
157	L	448+00.00	197628.0067	2311372.4030
158	L	449+00.00	197707.8638	2311432.5931
159	L	450+00.00	197787.7209	2311492.7832
160	L	451+00.00	197867.5779	2311552.9733
161	L	451+70.24	197923.6664	2311595.2484
162	RP_A3	10+00.00	191903.6860	2298659.3093
163	RP_A3	11+00.00	191905.6566	2298559.3287

Point #	Chain	Station	Northing (Y)	Easting (X)
164	RP_A3	12+00.00	191907.6273	2298459.3481
165	RP_A3	13+00.00	191909.6888	2298359.3695
166	RP_A3	14+00.00	191914.0213	2298259.4714
167	RP_A3	15+00.00	191924.7856	2298160.0815
168	RP_A3	16+00.00	191944.0816	2298061.9932
169	RP_A3	17+00.00	191971.8532	2297965.9599
170	RP_A3	18+00.00	192007.8889	2297872.7125
171	RP_A3	19+00.00	192051.9145	2297782.9606
172	RP_A3	20+00.00	192103.5951	2297697.3874
173	RP_A3	21+00.00	192162.3497	2297616.4997
174	RP_A3	22+00.00	192225.6329	2297539.0777
175	RP_A3	23+00.00	192289.7332	2297462.3268
176	RP_A3	24+00.00	192348.3518	2297381.3826
177	RP_A3	25+00.00	192392.9808	2297292.0752
178	RP_A3	26+00.00	192419.0254	2297195.6989
179	RP_A3	27+00.00	192425.4038	2297096.0695
180	RP_A3	28+00.00	192411.8617	2296997.1588
181	RP_A3	29+00.00	192384.8267	2296900.8880
182	RP_A3	30+00.00	192357.3631	2296804.7332
183	RP_A3	31+00.00	192329.8994	2296708.5784
184	RP_A3	31+55.71	192314.5997	2296655.0115
185	RP_D3	10+00.00	191810.1989	2298685.3673
186	RP_D3	11+00.00	191807.5927	2298585.4025
187	RP_D3	12+00.00	191801.6120	2298485.5923
188	RP_D3	13+00.00	191789.4658	2298386.3519
189	RP_D3	14+00.00	191770.6469	2298288.1579
190	RP_D3	15+00.00	191745.2413	2298191.4586
191	RP_D3	16+00.00	191713.5618	2298096.6249
192	RP_D3	17+00.00	191677.8160	2298003.2351
193	RP_D3	18+00.00	191640.9891	2297910.2632
194	RP_D3	19+00.00	191604.1505	2297817.2959
195	RP_D3	20+00.00	191567.3119	2297724.3287
196	RP_D3	21+00.00	191530.4733	2297631.3614
197	RP_D3	22+00.00	191493.6347	2297538.3941
198	RP_D3	23+00.00	191456.7961	2297445.4268
199	RP_D3	24+00.00	191419.9575	2297352.4595
200	RP_D3	25+00.00	191383.1189	2297259.4922
201	RP_D3	26+00.00	191346.2803	2297166.5249
202	RP_D3	26+60.30	191324.0682	2297110.4697
203	RP_B4	10+00.00	196285.4216	2310301.6108
204	RP_B4	11+00.00	196365.5400	2310361.4515
205	RP_B4	12+00.00	196447.1926	2310419.1711
206	RP_B4	13+00.00	196531.5163	2310472.9040
207	RP_B4	14+00.00	196618.5367	2310522.1500
208	RP_B4	15+00.00	196708.0151	2310566.7744
209	RP_B4	16+00.00	196799.7063	2310606.6546
210	RP_B4	17+00.00	196893.3591	2310641.6814
211	RP_B4	18+00.00	196988.7166	2310671.7588
212	RP_B4	19+00.00	197085.4258	2310697.1748
213	RP_B4	20+00.00	197182.7990	2310719.9407
214	RP_B4	21+00.00	197280.2847	2310742.2235
215	RP_B4	22+00.00	197377.7705	2310764.5064
216	RP_B4	23+00.00	197475.2562	2310786.7892
217	RP_B4	24+00.00	197572.7420	2310809.0721
218	RP_B4	25+00.00	197670.2278	2310831.3549
219	RP_B4	26+00.00	197767.7135	2310853.6378
220	RP_B4	27+00.00	197864.8550	2310877.3371
221	RP_B4	28+00.00	197959.2144	2310910.1778
222	RP_B4	29+00.00	198046.0501	2310959.4350
223	RP_B4	30+00.00	198121.3692	2311024.9617
224	RP_B4	31+00.00	198182.2286	2311104.1078
225	RP_B4	32+00.00	198236.3321	2311188.2078
226	RP_B4	33+00.00	198290.4356	2311272.3078
227	RP_B4	33+73.16	198330.0168	2311333.8340
228	RP_C4	10+00.00	196433.8041	2310531.1604
229	RP_C4	11+00.00	196509.8377	2310596.1134
230	RP_C4	12+00.00	196585.8713	2310661.0664
231	RP_C4	13+00.00	196661.9049	2310726.0194
232	RP_C4	14+00.00	196737.9385	2310790.9724
233	RP_C4	15+00.00	196813.9721	2310855.9253
234	RP_C4	16+00.00	196890.0057	2310920.8783
235	RP_C4	17+00.00	196966.0393	2310985.8313
236	RP_C4	18+00.00	197042.0729	2311050.7843
237	RP_C4	19+00.00	197117.8945	2311115.9841
238	RP_C4	20+00.00	197192.3684	2311182.7136
239	RP_C4	21+00.00	197264.2534	2311252.2197
240	RP_C4	22+00.00	197333.1808	2311324.6598
241	RP_C4	23+00.00	197399.0309	2311399.9082
242	RP_C4	24+00.00	197461.6895	2311477.8342

Point #	Chain	Station	Northing (Y)	Easting (X)
243	RP_C4	25+00.00	197521.0476	2311558.3026
244	RP_C4	26+00.00	197577.2637	2311641.0002
245	RP_C4	27+00.00	197631.6887	2311724.8919
246	RP_C4	27+48.94	197658.1669	2311766.0504
247	EY12DR1	10+00.00	196070.6839	2310464.3231
248	EY12DR1	11+00.00	196119.6538	2310551.5122
249	EY12DR1	12+00.00	196148.4307	2310646.3262
250	EY12DR1	13+00.00	196192.1854	2310736.0233
251	EY12DR1	13+26.34	196204.5842	2310759.2648
252	BASIN	433+00.00	196701.0061	2310110.1947
253	BASIN	434+00.00	196780.8631	2310170.3848
254	BASIN	435+00.00	196860.7202	2310230.5749
255	BASIN	436+00.00	196940.5773	2310290.7650
256	BASIN	437+00.00	197020.4343	2310350.9551
257	BASIN	438+00.00	197100.2914	2310411.1452
258	BASIN	439+00.00	197180.1485	2310471.3353
259	BASIN	440+00.00	197260.0056	2310531.5254
260	EY9B	10+00.00	194394.5940	2308052.8010
261	EY9B	11+00.00	194298.1765	2308079.3276
262	EY9B	12+00.00	194201.7589	2308105.8541
263	EY9B	13+00.00	194105.3414	2308132.3807
264	EY9B	14+00.00	194008.9239	2308158.9073
265	EY9B	15+00.00	193912.5097	2308185.4512
266	EY9B	16+00.00	193817.1693	2308215.6208
267	EY9B	17+00.00	193724.0380	2308252.0427
268	EY9B	18+00.00	193633.5252	2308294.5566
269	EY9B	19+00.00	193546.0290	2308342.9758
270	EY9B	20+00.00	193461.7026	2308396.7289
271	EY9B	21+00.00	193378.1187	2308451.6264
272	EY9B	22+00.00	193294.5348	2308506.5239
273	EY9B	22+81.95	193226.0402	2308551.5109
274	EY11	10+00.00	195920.4133	2309408.9225
275	EY11	11+00.00	195907.4312	2309508.0762
276	EY11	12+00.00	195894.4492	2309607.2300
277	EY11	13+00.00	195881.4671	2309706.3837
278	EY11	14+00.00	195868.4850	2309805.5375
279	EY11	15+00.00	195855.5030	2309904.6912
280	EY11	16+00.00	195842.5209	2310003.8450
281	EY11	17+00.00	195829.7242	2310103.0230
282	EY11	18+00.00	195818.1881	2310202.3553
283	EY11	19+00.00	195807.2325	2310301.7534
284	EY11	20+00.00	195796.2770	2310401.1515
285	EY11	21+00.00	195785.3215	2310500.5495
286	EY11	21+88.73	195775.6002	2310588.7495
287	EY12	10+00.00	196004.9815	2310501.6597
288	EY12	11+00.00	196091.9239	2310452.2530
289	EY12	12+00.00	196178.8663	2310402.8464
290	EY12	13+00.00	196265.8087	2310353.4397
291	EY12	14+00.00	196352.7511	2310304.0330
292	EY12	15+00.00	196439.6935	2310254.6263
293	EY12	15+68.40	196499.1596	2310220.8336
294	EY13	10+00.00	197484.8386	2310662.7980
295	EY13	11+00.00	197397.8409	2310712.1072
296	EY13	12+00.00	197310.8431	2310761.4163
297	EY13	13+00.00	197223.8454	2310810.7255
298	EY13	14+00.00	197136.8476	2310860.0346
299	EY13	15+00.00	197049.8499	2310909.3438
300	EY13	16+00.00	196962.8522	2310958.6530
301	EY13	17+00.00	196875.8544	2311007.9621
302	EY13	18+00.00	196788.8567	2311057.2713
303	EY13	19+00.00	196701.8589	2311106.5804
304	EY13	20+00.00	196614.8612	2311155.8896
305	EY13	20+73.90	196550.5700	2311192.3290
306	Y1	36+00.00	198797.8553	2311032.8628
307	Y1	37+00.00	198713.7553	2311086.9663
308	Y1	38+00.00	198629.6553	2311141.0697
309	Y1	39+00.00	198545.5552	2311195.1732
310	Y1	40+00.00	198461.4552	2311249.2767
311	Y1	41+00.00	198377.3552	2311303.3801
312	Y1	42+00.00	198293.2551	2311357.4836
313	Y1	43+00.00	198209.1551	2311411.5871
314	Y1	44+00.00	198125.0551	2311465.6905
315	Y1	45+00.00	198040.9551	2311519.7940
316	Y1	46+00.00	197956.8550	2311573.8974
317	Y1	47+00.00	197872.7550	2311628.0009

Point #	Chain	Station	Northing (Y)	Easting (X)

6/2/99

PAVEMENT DESIGN SCHEDULE

C1	PROP. APPROX. 3" ASPHALT CONCRETE SURFACE COURSE, TYPE S9.5C, AT AN AVERAGE RATE OF 168 LBS. PER SQ. YD. IN EACH OF TWO LAYERS.	J3	PROP. VAR. DEPTH AGGREGATE BASE COURSE.
C2	PROP. APPROX. 3" ASPHALT CONCRETE SURFACE COURSE, TYPE S9.5B, AT AN AVERAGE RATE OF 168 LBS. PER SQ. YD. IN EACH OF TWO LAYERS.	P	PRIME COAT AT THE RATE OF 0.35 GAL PER SY.
D1	PROP. APPROX. 3" ASPHALT CONCRETE INTERMEDIATE COURSE, TYPE I19.0C, AT AN AVERAGE RATE OF 342 LBS. PER SQ. YD.	R1	SHOULDER BERM GUTTER
D2	PROP. APPROX. 2½" ASPHALT CONCRETE INTERMEDIATE COURSE, TYPE I19.0B, AT AN AVERAGE RATE OF 285 LBS. PER SQ. YD.	R2	CONCRETE MEDIAN BARRIER, TYPE T-2
D3	PROP. APPROX. 4" ASPHALT CONCRETE INTERMEDIATE COURSE, TYPE I19.0C, AT AN AVERAGE RATE OF 456 LBS. PER SQ. YD.	T	EARTH MATERIAL.
E1	PROP. APPROX. 4" ASPHALT CONCRETE BASE COURSE, TYPE B25.0C, AT AN AVERAGE RATE OF 456 LBS. PER SQ. YD.	U	EXISTING PAVEMENT.
J1	PROP. 8" AGGREGATE BASE COURSE.	V	MILLED RUMBLE STRIPS
J2	PROP. 10" AGGREGATE BASE COURSE.		

NOTE: PAVEMENT EDGE SLOPES ARE 1:1 UNLESS SHOWN OTHERWISE.

LOCHNER
H. W. LOCHNER, INC.
2840 PLAZA PLACE, SUITE 202
RALEIGH, NC 27612
NC License Number F-0159

PROJECT REFERENCE NO.	SHEET NO.
R-2633BB	2
ROADWAY DESIGN ENGINEER	PAVEMENT DESIGN ENGINEER

NORTH CAROLINA PROFESSIONAL SEAL 025923 ENGINEER BRIAN K. EASON 6/4/13

NORTH CAROLINA PROFESSIONAL SEAL 031484 ENGINEER VLADIMIR G. MITCHEV 6/7/13

DETAIL OF SHOULDER BERM GUTTER

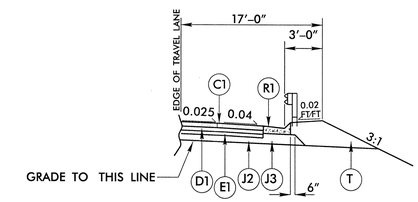

PARTIAL TYPICAL SECTION NO. 1A

USE PARTIAL TYPICAL 1A IN CONJUNCTION WITH TYPICAL 1 & 2 AT:

-L- STA. 302+50 RT. TO 317+16 RT.
-L- STA. 304+56 LT. TO 317+16 LT.
-L- STA. 389+49 RT. TO 397+34 RT.
-L- STA. 389+49 LT. TO 397+78 LT.
-L- STA. 399+77 RT. TO 403+00 RT.
-L- STA. 400+25 LT. TO 404+00 LT.
-L- STA. 422+00 RT. TO 424+07 RT.
-L- STA. 423+10 LT. TO 423+39 LT.
-L- STA. 426+31 LT. TO 430+83.34 LT.
-L- STA. 427+00 RT. TO 433+40 RT.
-L- STA. 439+06 RT. TO 439+60 RT.
-L- STA. 441+02 RT. TO 441+58 RT.
-L- STA. 441+47 LT. TO 443+98 LT.

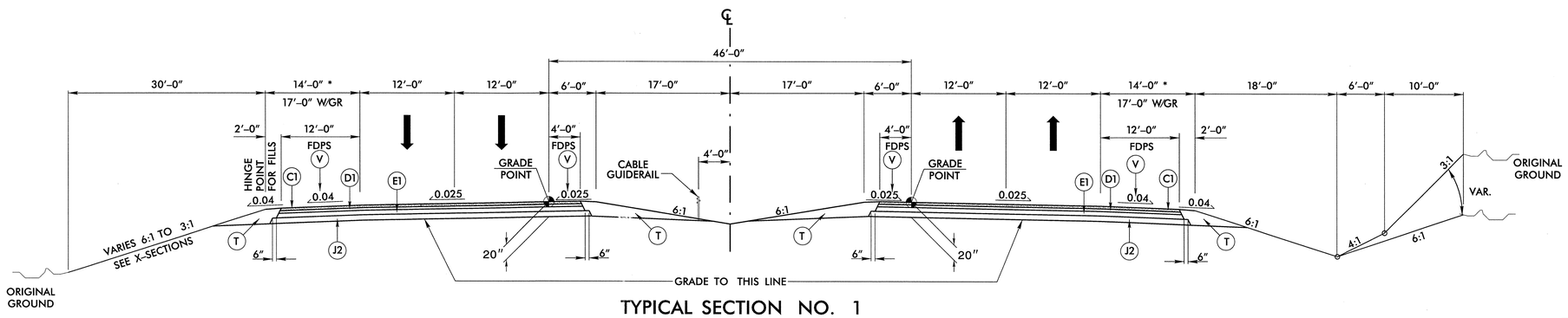

TYPICAL SECTION NO. 1

-L- US 17

USE TYPICAL SECTION NO. 1 AS FOLLOWS

-L- STA. 292+00.00 TO STA. 317+40.00 (BEGIN BRIDGE)
-L- STA. 389+25.00 (END BRIDGE) TO STA. 397+70.61 RT/STA. 397+88.48 LT (BEGIN BRIDGE)
-L- STA. 399+67.48 RT/STA. 399+86.52 LT (END BRIDGE) TO STA. 423+85.40 LT/STA. 424+11.48 RT (BEGIN BRIDGE)
-L- STA. 426+30.22 LT/STA 426+56.30 RT (END BRIDGE) TO STA. 436+28.39

DETAIL OF SHOULDER BERM GUTTER AT MEDIAN

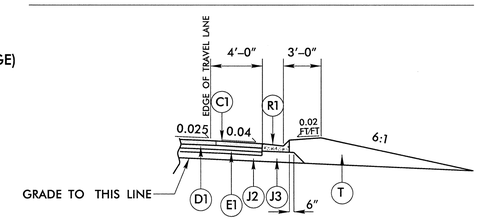

PARTIAL TYPICAL SECTION NO. 1B

USE PARTIAL TYPICAL 1B IN CONJUNCTION WITH TYPICAL 1 AT:

-L- STA. 316+45 RT. TO 317+16 RT.
-L- STA. 389+49 RT. TO 389+65 RT.
-L- STA. 397+00 RT. TO 397+48 RT.

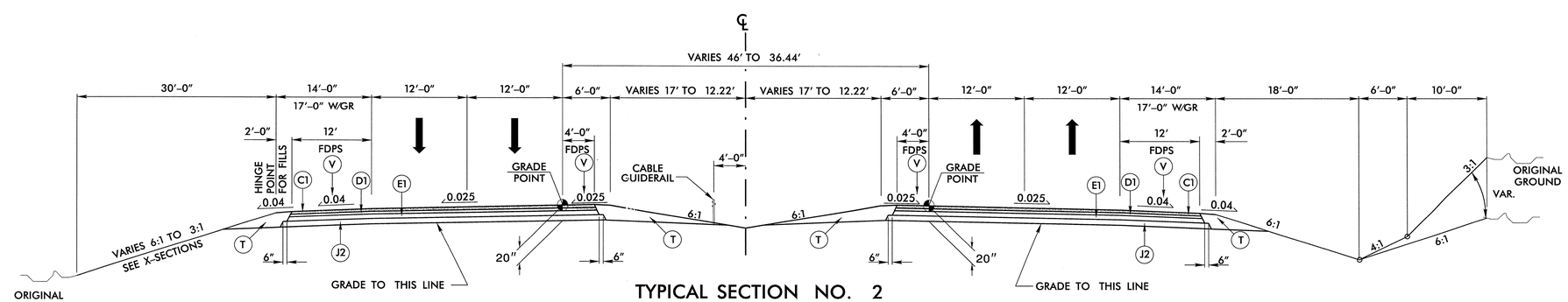

TYPICAL SECTION NO. 2

-L- US 17

USE TYPICAL SECTION NO. 2 AS FOLLOWS

-L- STA. 436+28.39 TO STA. 439+99.08 RT/STA. 440+14.66 LT (BEGIN BRIDGE)

SYTIME
R:\Roadway\Proj\R-2633BB\R-2633BB_Rdy_typ.dgn
$$$$USERNAME$$$$

6/2/99

LOCHNER

H. W. LOCHNER, INC.
2840 PLAZA PLACE, SUITE 202
RALEIGH, NC 27612

NC License Number F-0159

PROJECT REFERENCE NO.	SHEET NO.
R-2633BB	2-A

ROADWAY DESIGN ENGINEER — NORTH CAROLINA PROFESSIONAL SEAL 25523 ENGINEER — ERAN K. ELSON — 6/7/13

PAVEMENT DESIGN ENGINEER — NORTH CAROLINA PROFESSIONAL SEAL 031484 ENGINEER — VLADIMIR G. MITCHEV — 6/7/13

NOTE:
METRIC DIMENSIONS ON TYPICAL SECTION #3 ARE FOR TYING INTO METRIC PROJECT R-2633CA (SEE PLANS).

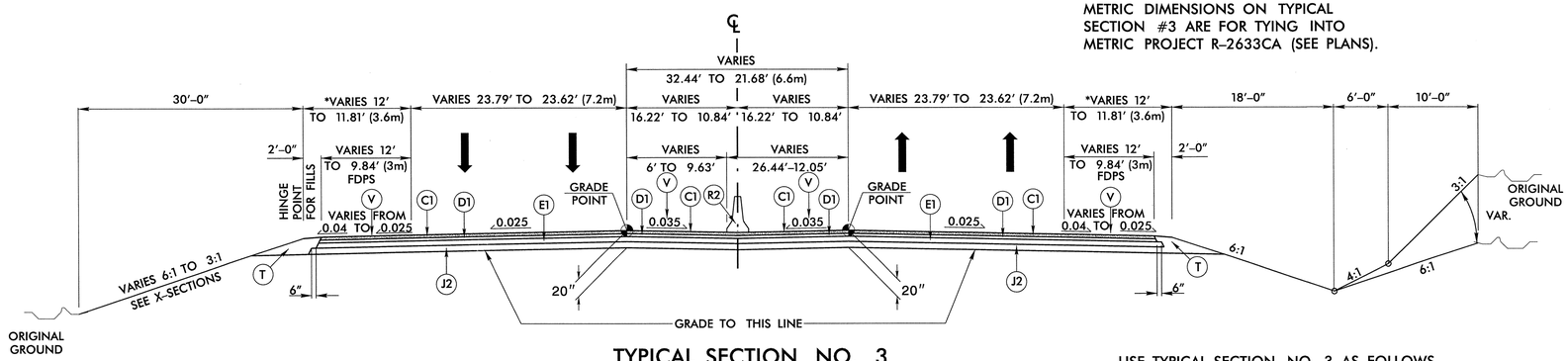

* - ADD 3' FOR GUARDRAIL

TYPICAL SECTION NO. 3

-L- US 17

USE TYPICAL SECTION NO. 3 AS FOLLOWS
-L- STA. 440+94.08 RT/STA. 441+08.66 (END BRIDGE) TO STA. 447+24.07 (TIE TO EXISTING)

PAVEMENT SCHEDULE	
C1	3" TYPE S9.5C
C2	3" TYPE S9.5B
D1	3" TYPE I19.0C
D2	2½" TYPE I19.0B
D3	4" TYPE I19.0C
E1	4" TYPE B25.0C
J1	8" ABC
J2	10" ABC
J3	VAR. DEPTH ABC
P	PRIME COAT
R1	SHOULDER BERM GUTTER
R2	CONCRETE MEDIAN BARRIER
T	EARTH MATERIAL
U	EXISTING PAVEMENT
V	MILLED RUMBLE STRIPS

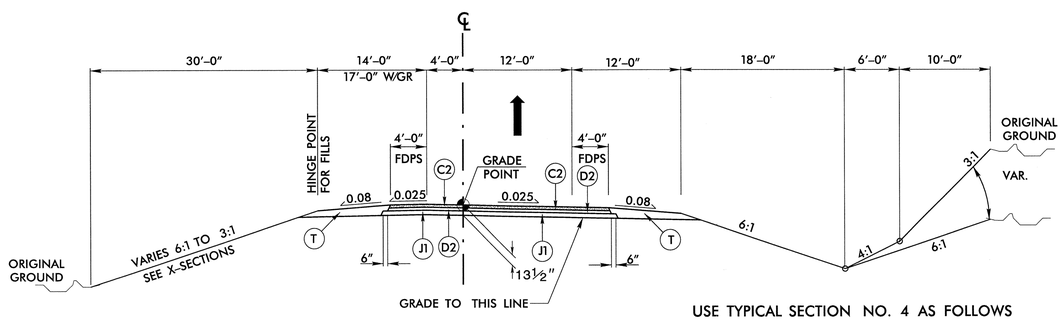

USE TYPICAL SECTION NO. 4 AS FOLLOWS
-RP_A3- STA. 10+00.00 TO STA. 17+08.71

TYPICAL SECTION NO. 4

-RP_A3-

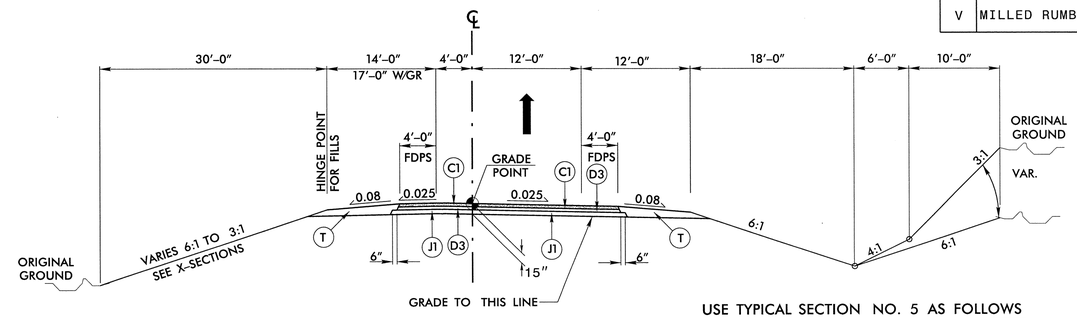

USE TYPICAL SECTION NO. 5 AS FOLLOWS
-RP_C4- STA. 10+00.00 TO STA. 16+30.92 (BEGIN BRIDGE)
-RP_C4- STA. 17+22.92 (END BRIDGE) TO STA. 27+05.63

TYPICAL SECTION NO. 5

-RP_C4-

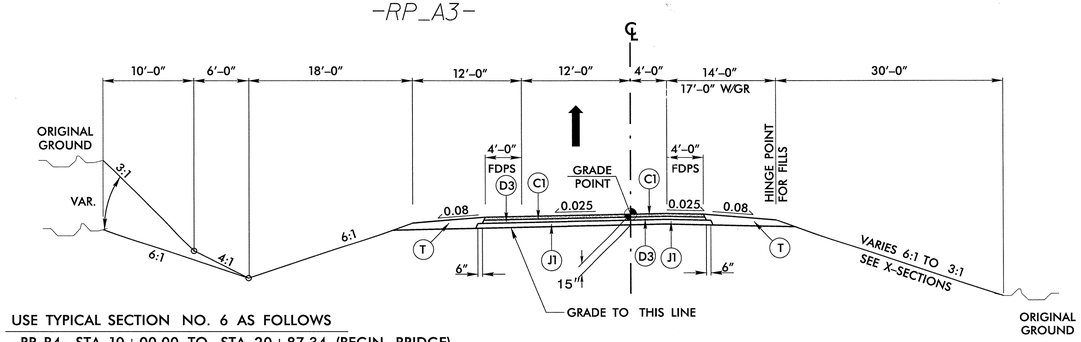

USE TYPICAL SECTION NO. 6 AS FOLLOWS
-RP_B4- STA. 10+00.00 TO STA. 20+87.34 (BEGIN BRIDGE)
-RP_B4- STA. 22+17.34 (END BRIDGE) TO STA. 33+41.66

TYPICAL SECTION NO. 6

-RP_B4-

DETAIL OF SHOULDER BERM GUTTER

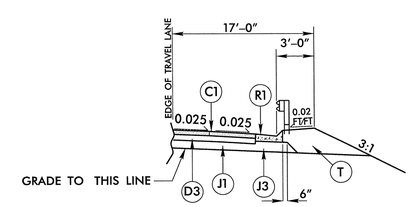

PARTIAL TYPICAL SECTION NO. 5A

USE PARTIAL TYPICAL 5A IN CONJUNCTION WITH TYPICAL 5 & 6 AT:
-RP_B4- STA. 10+00 LT. TO 20+82 LT.
-RP_B4- STA. 22+57 LT. TO 28+50 LT.
-RP_C4- STA. 10+00 RT. TO 16+01 RT.
-RP_C4- STA. 17+41 RT. TO 20+14 RT.

SYTIME
R:\Roadway\Proj\R-2633BB\R-2633BB_Rdy_typ.dgn
$$$$USERNAME$$$$

LOCHNER
H. W. LOCHNER, INC.
2840 PLAZA PLACE, SUITE 202
RALEIGH, NC 27612
NC License Number F-0159

PROJECT REFERENCE NO.	SHEET NO.
R-2633BB	2-B

ROADWAY DESIGN ENGINEER: NORTH CAROLINA PROFESSIONAL SEAL 25523 ENGINEER JAMIN K. EASON 6/4/13

PAVEMENT DESIGN ENGINEER: NORTH CAROLINA PROFESSIONAL SEAL 031484 ENGINEER VLADIMIR G. MITCHEV 6/7/13

PAVEMENT SCHEDULE	
C1	3" TYPE S9.5C
C2	3" TYPE S9.5B
D1	3" TYPE I19.0C
D2	2½" TYPE I19.0B
D3	4" TYPE I19.0C
E1	4" TYPE B25.0C
J1	8" ABC
J2	10" ABC
J3	VAR. DEPTH ABC
P	PRIME COAT
R1	SHOULDER BERM GUTTER
R2	CONCRETE MEDIAN BARRIER
T	EARTH MATERIAL
U	EXISTING PAVEMENT
V	MILLED RUMBLE STRIPS

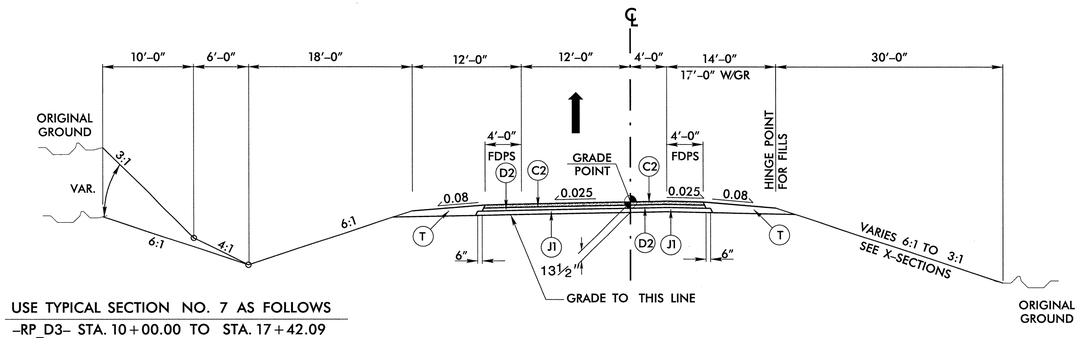

USE TYPICAL SECTION NO. 7 AS FOLLOWS
-RP_D3- STA. 10+00.00 TO STA. 17+42.09

TYPICAL SECTION NO. 7

RP_D3-

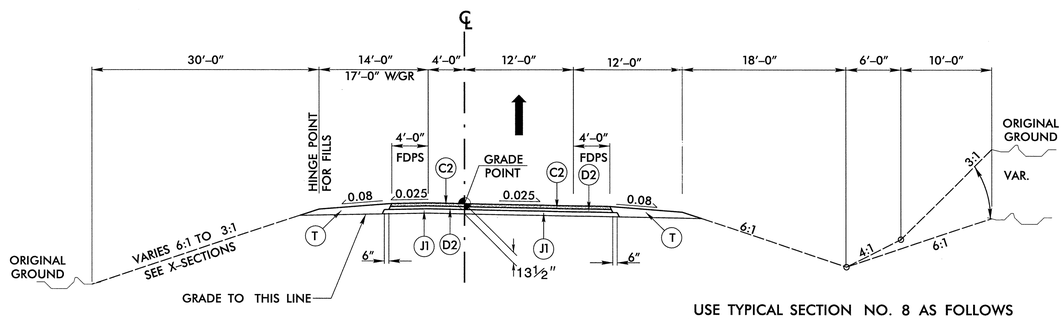

USE TYPICAL SECTION NO. 8 AS FOLLOWS
-RP_A3- STA. 17+08.71 TO STA. 30+52.78

TYPICAL SECTION NO. 8

-RP_A3-

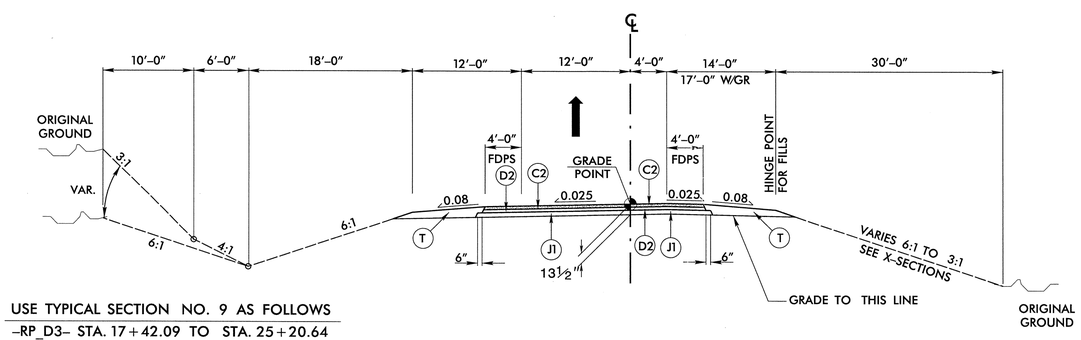

USE TYPICAL SECTION NO. 9 AS FOLLOWS
-RP_D3- STA. 17+42.09 TO STA. 25+20.64

TYPICAL SECTION NO. 9

RP_D3-

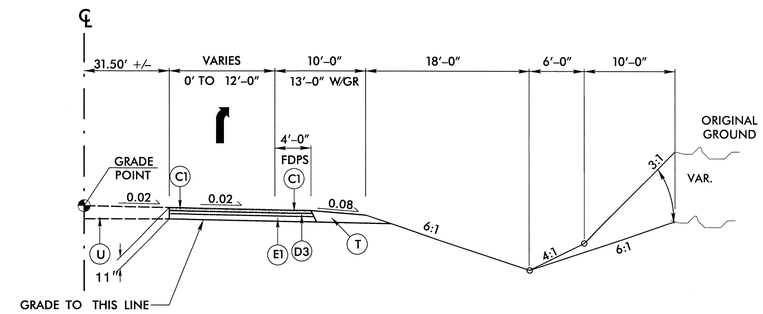

TYPICAL SECTION NO. 10

-Y1-
(FROM R-2633CA)

USE TYPICAL SECTION NO. 10 AS FOLLOWS
-Y1- STA. 37+24.29 TO STA. 40+24.29

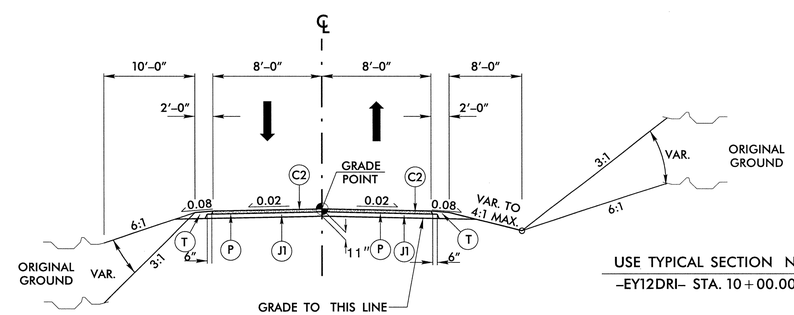

USE TYPICAL SECTION NO. 11 AS FOLLOWS
-EY12DRI- STA. 10+00.00 TO STA. 13+26.34

TYPICAL SECTION NO. 11

-EY12DRI-

6/2/99

SYTIME
R:\Roadway\Proj\R-2633BB\R-2633BB_Rdy_typ.dgn
$$$$USERNAME$$$$

X-SECTION LAYOUT & SHEAR POINT DIAGRAM
@ -Y8- CEDAR HILL RD INTERCHANGE
SCALE 1"=100'

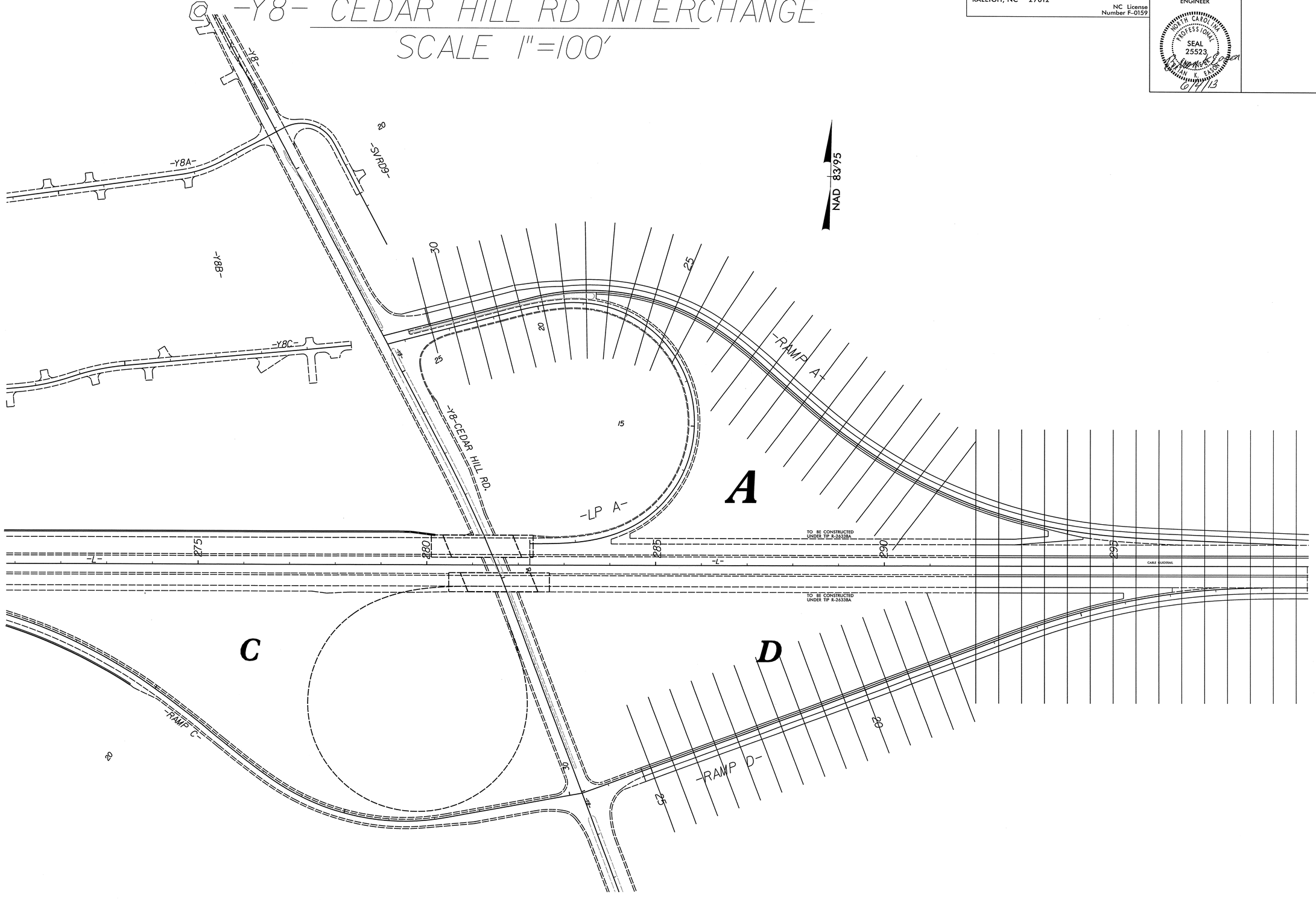

LOCHNER
H. W. LOCHNER, INC.
2840 PLAZA PLACE, SUITE 202
RALEIGH, NC 27612
NC License Number F-0159

PROJECT REFERENCE NO.	SHEET NO.
R-2633BB	2-C
R/W SHEET NO.	

ROADWAY DESIGN ENGINEER

NORTH CAROLINA PROFESSIONAL SEAL 25523 ENGINEER NATHAN K. EASON
6/4/13

SYTIME
R:\Roadway\Proj\R-2633BB\R-2633BB_RDY_SPD_Y8.dgn
$$$$USERNAME$$$$

X-SECTION LAYOUT & SHEAR POINT DIAGRAM
@ -Y1- US 421 INTERCHANGE
SCALE 1"=100'

LOCHNER
H. W. LOCHNER, INC.
2840 PLAZA PLACE, SUITE 202
RALEIGH, NC 27612
NC License Number F-0159

PROJECT REFERENCE NO.	SHEET NO.
R-2633BB	2-D
R/W SHEET NO.	

ROADWAY DESIGN ENGINEER

NORTH CAROLINA PROFESSIONAL SEAL 25523 ENGINEER ROBERT K. EASON
6/4/13

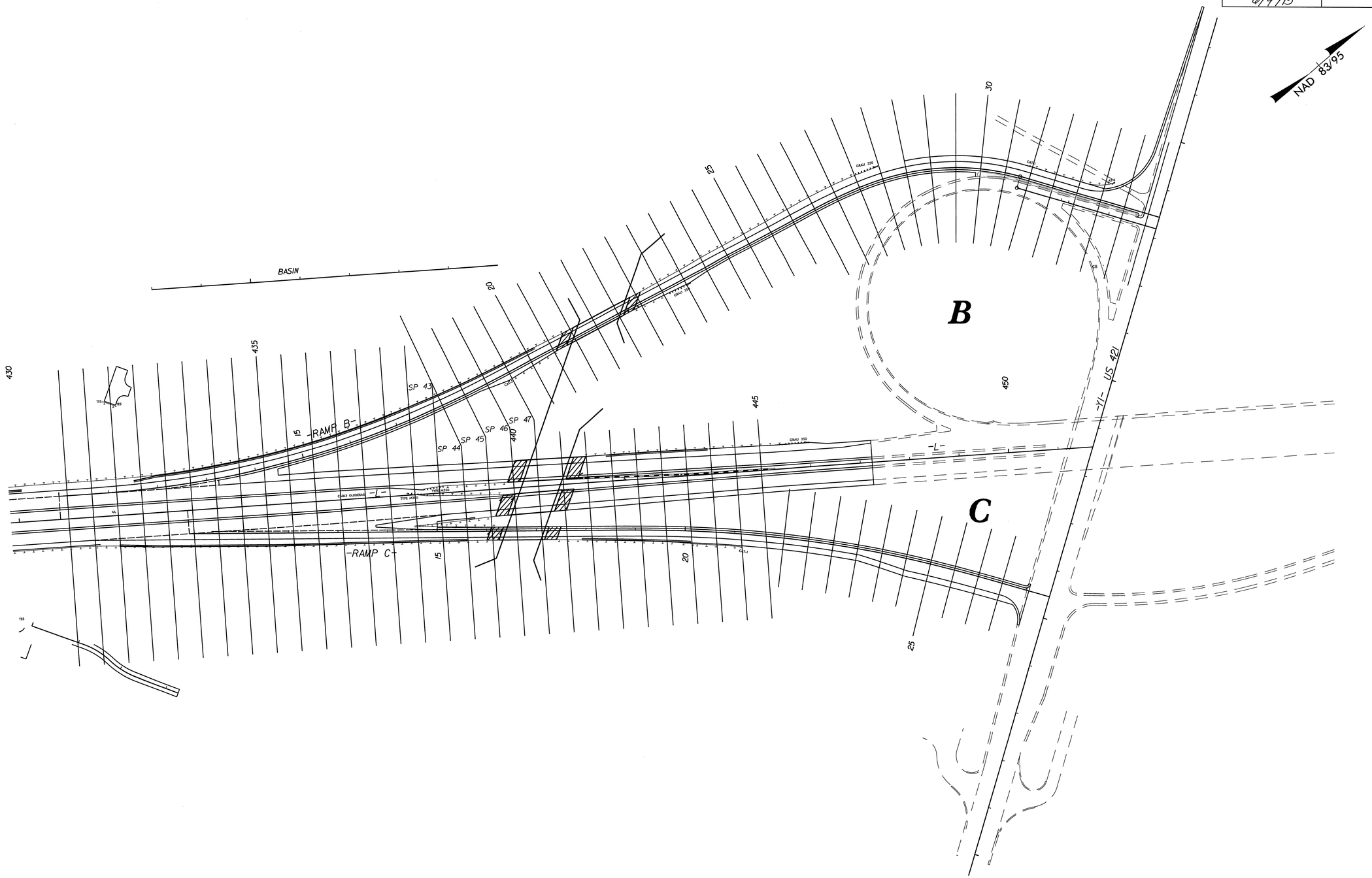

8/17/99

SYTIME
R:\Roadway\Proj\R-2633BB\R-2633BB_RDY_SPD_Y1.dgn
$$$$USERNAME$$$$

LOCHNER	PROJECT REFERENCE NO.	SHEET NO.
H. W. LOCHNER, INC. 2840 PLAZA PLACE, SUITE 202 RALEIGH, NC 27612 — NC License Number F-0159	R-2633BB	2-E
MULKEY INC. — NC License Number C-1021	R/W SHEET NO.	
	HYDRAULICS ENGINEER	

NORTH CAROLINA PROFESSIONAL SEAL 020737 ENGINEER JONATHAN K. SEARCY

6/4/13

MODIFIED INFILTRATION BASIN DETAIL (-L- 435+00 LT.)

SCALE: 1" = 50'

NOTE:

BOTTOM OF BASIN SURFACE AREA AT ELEV. 11.0 = 151,000 SF.
BOTTOM OF FOREBAY #1 SURFACE AREA AT ELEV. 11.5 = 179 SF.
BOTTOM OF FOREBAY #2 SURFACE AREA AT ELEV. 11.5 = 70 SF.
BOTTOM OF FOREBAY #3 SURFACE AREA AT ELEV. 11.5 = 70 SF.

NC GRID NAD 83

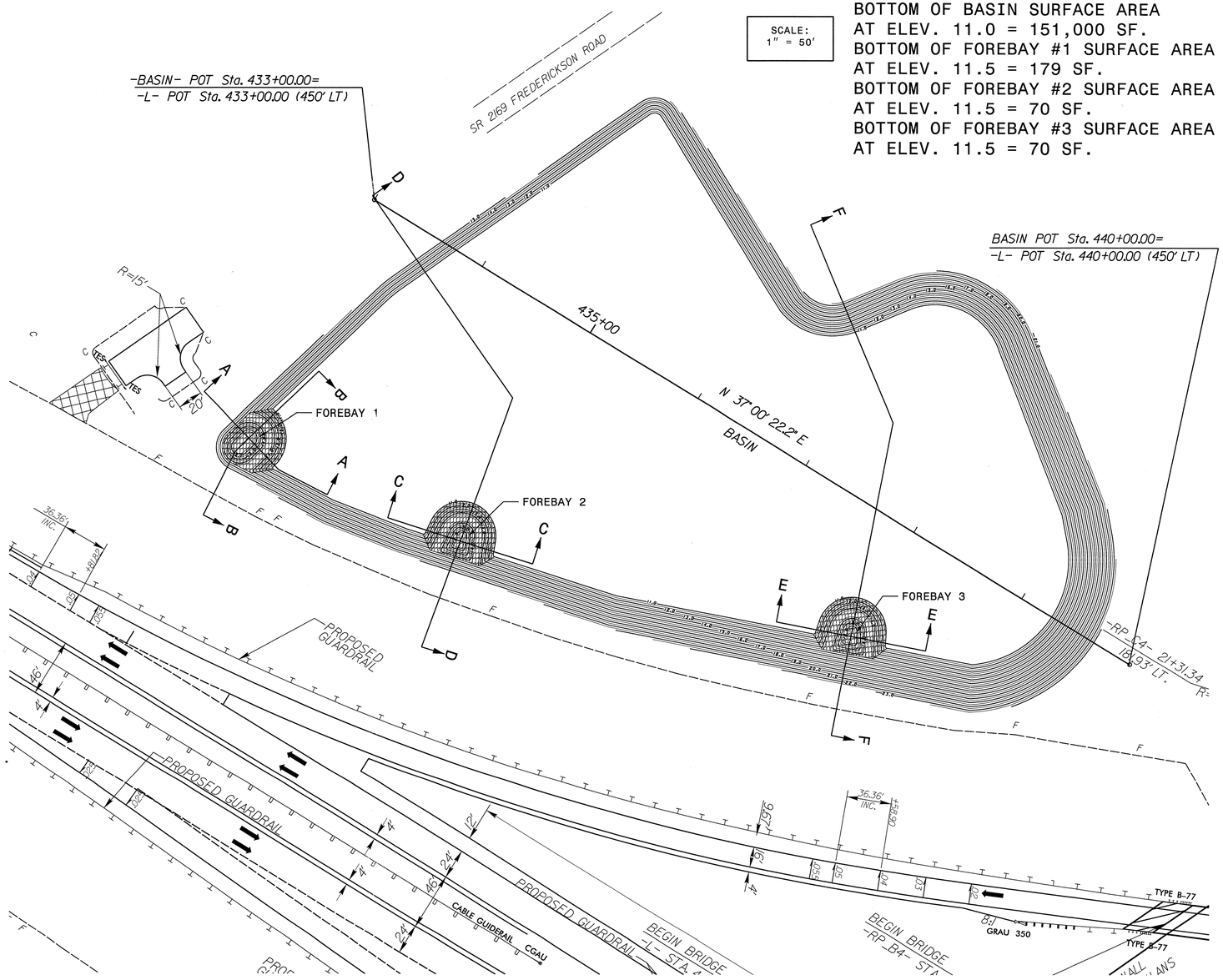

8/17/99

SYTIME
R:\Roadway\Proj\R-2633BB\R-2633B_hyd_RetBasin_detail.dgn
$$$$USERNAME$$$$

LOCHNER	PROJECT REFERENCE NO.	SHEET NO.
H. W. LOCHNER, INC. 2840 PLAZA PLACE, SUITE 202 RALEIGH, NC 27612 NC License Number F-0159	R-2633B	2-F
MULKEY INC. NC License Number C-1021	R/W SHEET NO.	
	HYDRAULICS ENGINEER	

NORTH CAROLINA PROFESSIONAL SEAL 020737 ENGINEER JONATHAN W. SPARCE

SECTION A-A

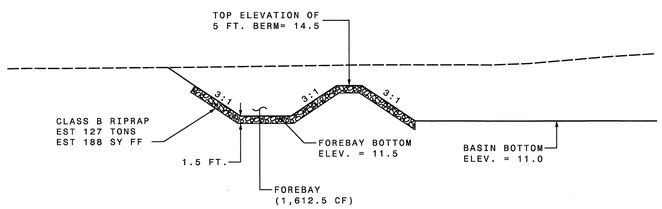

SECTION B-B

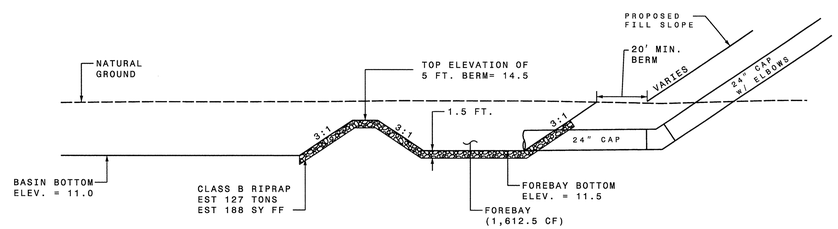

SECTION C-C

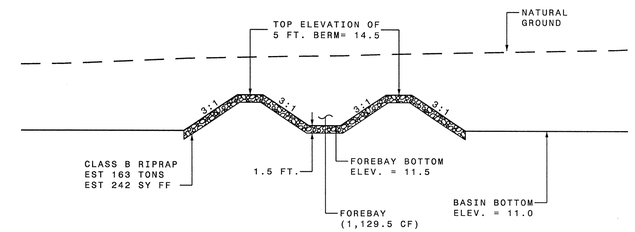

SECTION D-D

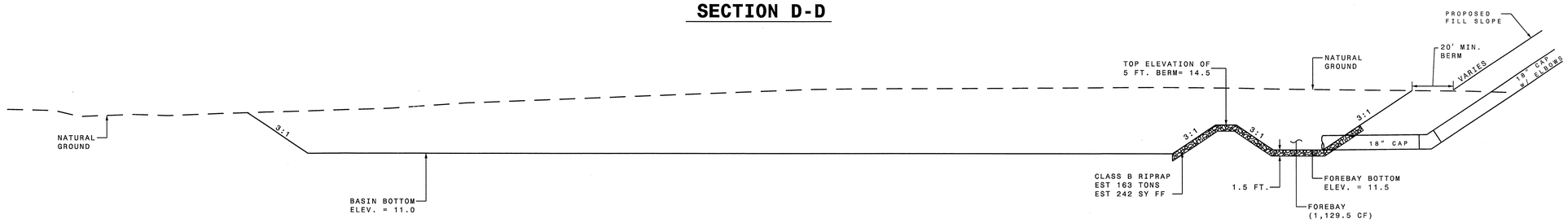

SECTION E-E

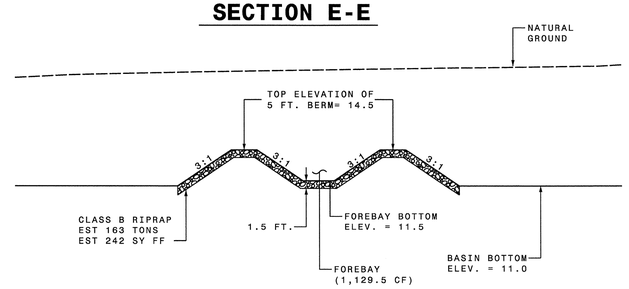

SECTION F-F

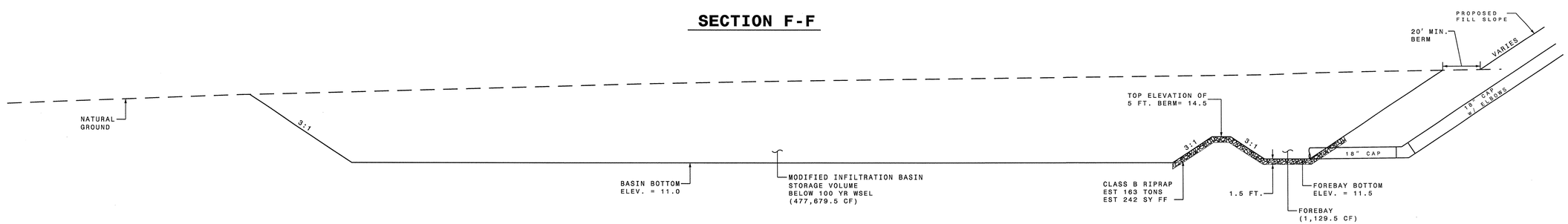

8/17/99

SYTIME
R:\Roadway\Proj\R-2633BB\R-2633B_hyd_RetBasin_detail.dgn
$$$$USERNAME$$$$

LOCHNER
H. W. LOCHNER, INC.
2840 PLAZA PLACE, SUITE 202
RALEIGH, NC 27612
NC License Number F-0159
MULKEY INC.
NC License Number C-1021

PROJECT REFERENCE NO.	SHEET NO.
R-2633B	2-G
R/W SHEET NO.	

HYDRAULICS ENGINEER

NORTH CAROLINA PROFESSIONAL SEAL 020737 ENGINEER JONATHAN K. LASCARCE

6/4/13

MODIFIED INFILTRATION BASIN NOTES

SEQUENCE OF CONSTRUCTION FOR MODIFIED INFILTRATION BASIN

1. INSTALL ALL EROSION CONTROL MEASURES (AS NEEDED THROUGH CONSTRUCTION STAGES).
2. EXCAVATE FOR THE BASIN AND FOREBAYS. PREPARE THE BASIN FLOOR AT THE GIVEN GRADE.
3. CONSTRUCT FOREBAYS.
4. CONSTRUCT MAIN BASIN.
5. PLACE SOD OR NATIVE GRASSES IN BASIN.

GENERAL NOTES FOR MODIFIED INFILTRATION BASIN

1. APPLY SEEDING OVER THE SIDE SLOPES AND ANY EXPOSED SURFACE THAT NEEDS TO BE PROTECTED AGAINST IMMEDIATE POTENTIAL STORM EVENT.

2. THE SURVEYOR SHALL VERIFY THE INVERTS AND ELEVATIONS AT THE FOLLOWING POINTS AT THE END OF EACH PHASE OF CONSTRUCTION:
   -INVERTS IN THE PIPE AND THE BOXES.

MAINTENANCE RECOMMENDATIONS

1. REMOVE DEBRIS, TRASH AND SEDIMENT BUILDUP FROM THE BASIN AND FOREBAYS AS NECESSARY.
2. REPAIR AND REVEGETATE ERODED AREAS AS NEEDED.
3. MOW AS NECESSARY TO LIMIT UNWANTED VEGETATION AND REMOVE CLIPPINGS AS PRACTICAL.
4. NO PORTION OF THE MODIFIED INFILTRATION BASIN SHOULD BE FERTILIZED AFTER THE FIRST INITIAL FERTILIZATION THAT IS REQUIRED TO ESTABLISH VEGETATION.
6. STABLE GROUNDCOVER SHOULD BE MAINTAINED IN THE DRAINAGE AREA TO REDUCE THE SEDIMENT LOAD TO THE MODIFIED INFILTRATION BASIN.
7. ONCE A YEAR, A DAM SAFETY EXPERT SHOULD INSPECT THE EMBANKMENT (IF APPLICABLE).
8. RECORDS OF OPERATION AND MAINTENANCE SHOULD BE KEPT IN A KNOWN SET LOCATION AND MUST BE AVAILABLE UPON REQUEST.

PROJECT REFERENCE NO.	SHEET NO.
R-2633BB	2-H

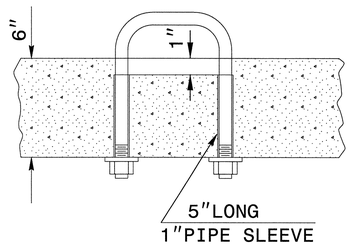

PARTIAL SECTION

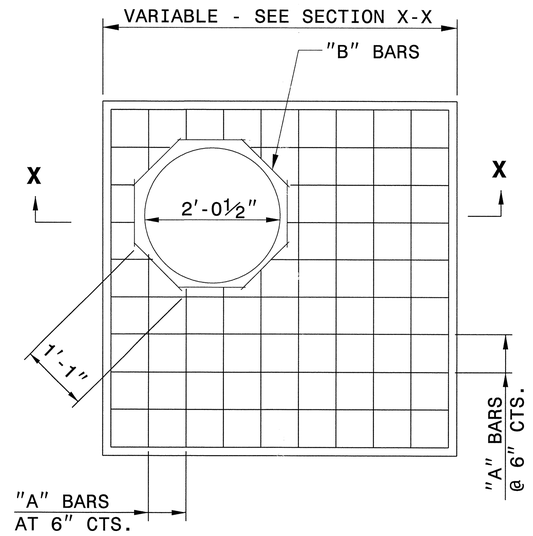

PLAN

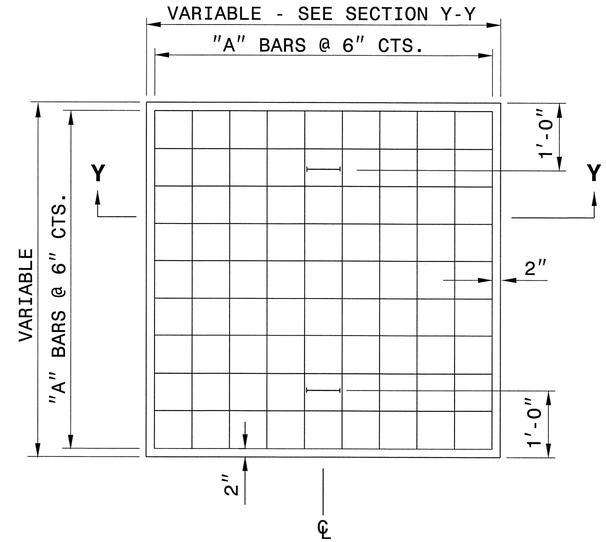

PLAN

GENERAL NOTES:

CONSTRUCT IN ACCORDANCE WITH SECTION 859 OF THE STANDARD SPECIFICATIONS.

FIELD VERIFY THE DIMENSIONS FOR THE EXISTING BOXES

DETAIL INTENDED FOR NON-TRAFFIC BEARING DRAINAGE STRUCTURES.

BILL OF MATERIALS

REINFORCING STEEL				
CODE	SIZE	QTY.	LENGTH	REINF. STEEL LBS.
A	#4	20	4'-6"	60.12
B	#4	8	1'-1"	5.79
TOTAL				65.91 *

MASONRY	CU YDS
TOP SLAB CONCRETE CLASS "B"	.433 *
BRICK MASONRY PER FT HT (MIN)	.4111

* NOTE:
QUANTITIES BASED ON 3'-6" X 3'-6" DRAINAGE STRUCTURE. ADJUST QUANTITIES FOR LARGER STRUCTURES AND MANHOLE CONSTRUCTION.

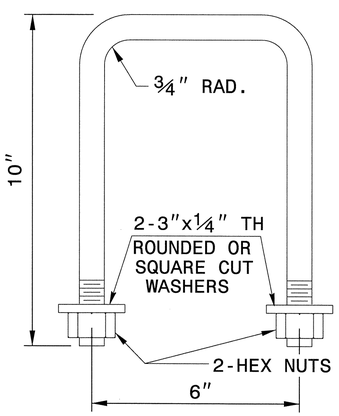

DETAIL OF HANDLE

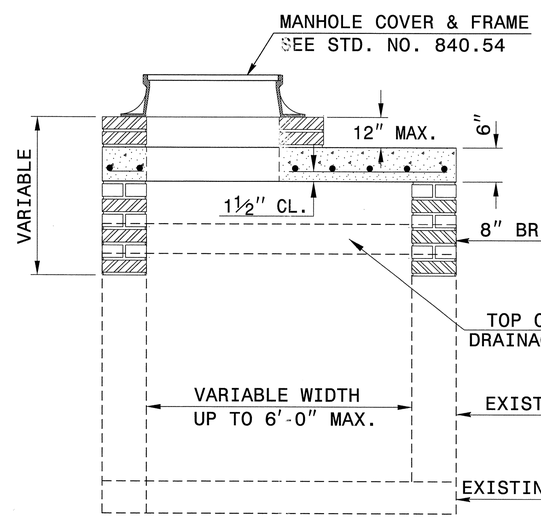

SECTION X-X

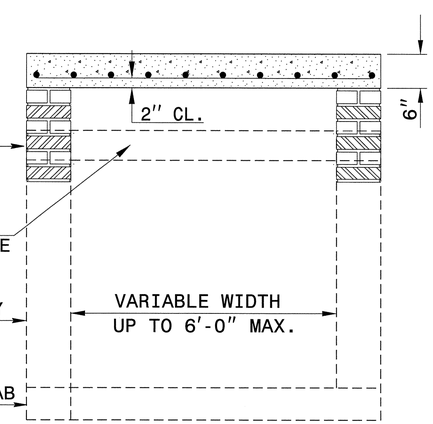

SECTION Y-Y

CONTRACT STANDARDS AND DEVELOPMENT UNIT
Office 919-707-6950 FAX 919-250-4119

DETAIL TO CONVERT EXISTING DROP INLET OR CATCH BASIN TO JUNCTION BOX (MANHOLE OPTIONAL)

ORIGINAL BY: T.S.S. DATE: NOV.1997
MODIFIED BY: E.E.W DATE: 8-28-02
CHECKED BY: DATE:
FILE SPEC.: /usr/details/stand/boxtojbe.dgn

$$$$SYSTIME$$$$
$$$$DGN$$$$
$$$$USERNAME$$$$

CSD261656 5/2/2013 fence2cl jhowerton CSD-Oce860-34bond

PROJECT REFERENCE NO.	SHEET NO.
R-2633BB	2-I

STATE OF NORTH CAROLINA DEPT. OF TRANSPORTATION DIVISION OF HIGHWAYS RALEIGH, N.C.
ENGLISH DETAIL DRAWING FOR CHAIN LINK FENCE 8' AND 10' HEIGHT
SHEET 1 OF 2 fence2cl

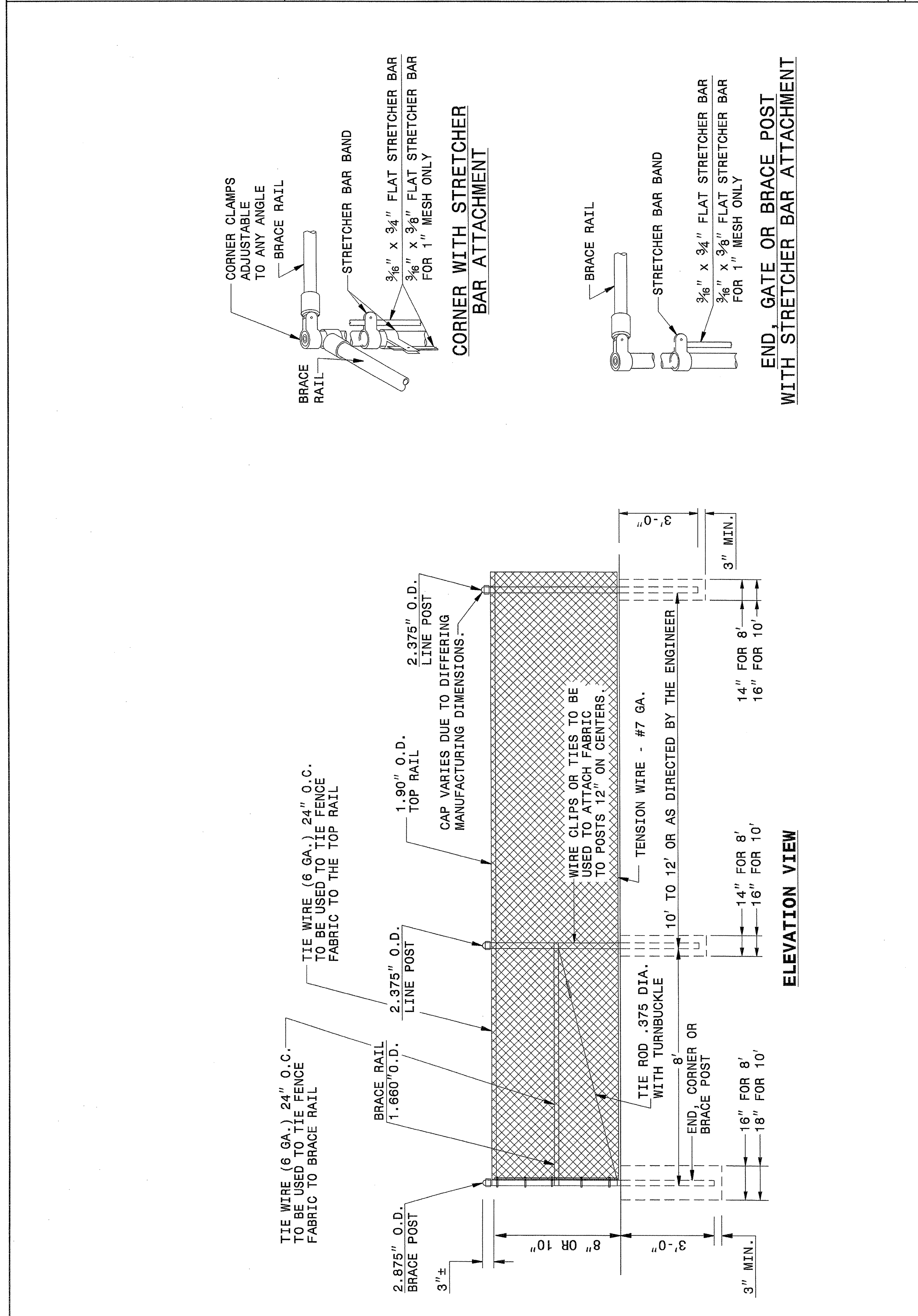

STATE OF
NORTH CAROLINA
DEPT. OF TRANSPORTATION
DIVISION OF HIGHWAYS
RALEIGH, N.C.

ENGLISH DETAIL DRAWING FOR
CHAIN LINK FENCE
8' AND 10' HEIGHT

SHEET 1 OF 2 **fence2cl**

STATE OF NORTH CAROLINA DEPT. OF TRANSPORTATION DIVISION OF HIGHWAYS RALEIGH, N.C.
ENGLISH DETAIL DRAWING FOR CHAIN LINK FENCE 8' AND 10' HEIGHT
SHEET 2 OF 2 fence2cl

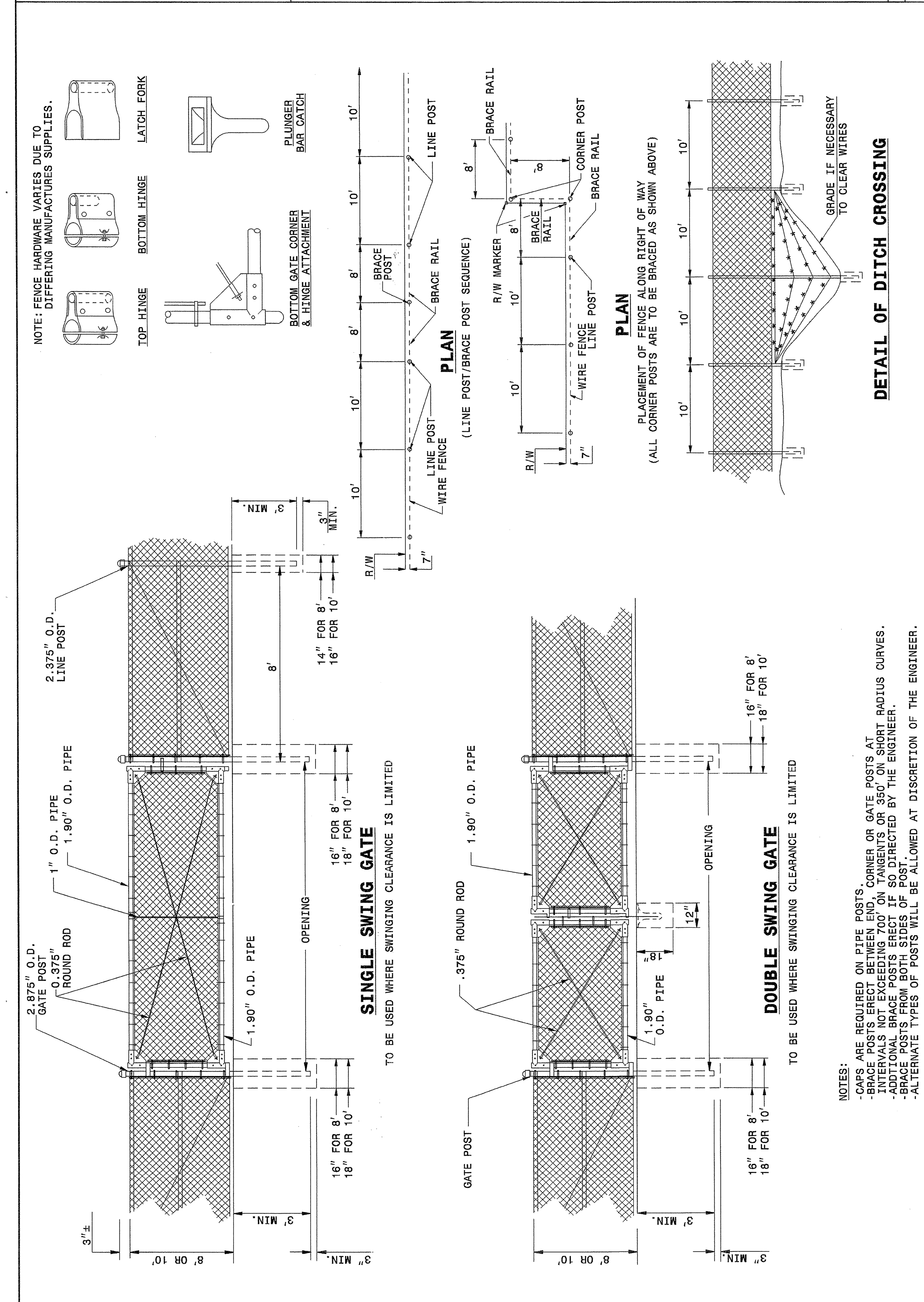

NOTES:
- CAPS ARE REQUIRED ON PIPE POSTS.
- BRACE POSTS ERECT BETWEEN END, CORNER OR GATE POSTS AT INTERVALS NOT EXCEEDING 700' ON TANGENTS OR 350' ON SHORT RADIUS CURVES.
- ADDTIONAL BRACE POSTS ERECT IF SO DIRECTED BY THE ENGINEER.
- BRACE POSTS FROM BOTH SIDES OF POST.
- ALTERNATE TYPES OF POSTS WILL BE ALLOWED AT DISCRETION OF THE ENGINEER.

STATE OF
NORTH CAROLINA
DEPT. OF TRANSPORTATION
DIVISION OF HIGHWAYS
RALEIGH, N.C.

ENGLISH DETAIL DRAWING FOR
CHAIN LINK FENCE
8' AND 10' HEIGHT

SHEET 2 OF 2 **fence2cl**

NORTH CAROLINA PROFESSIONAL SEAL 022966 ENGINEER JOEL S. HOWERTON
6/7/13

CONTRACT STANDARDS AND DEVELOPMENT UNIT
Office 919-707-6950 FAX 919-250-4119

SEE PLATE FOR TITLE

ORIGINAL BY: N.T. KEGLERS DATE: 3-11-96
MODIFIED BY: TSS DATE: 1-31-11
CHECKED BY: [signature] DATE: 5/2/13
FILE SPEC.: ds172:/usr/details/metric/fence/fence2cl.dgn

$$$$SYSTIME$$$$
$$$$$$$$$$$$DGN$$$$$$$$$$$$$$$$
$$$$USERNAME$$$$

PROJECT REFERENCE NO.	SHEET
R-2633BB (34491.1.2)	2-J

GEOTECHNICAL ENGINEER: NORTH CAROLINA PROFESSIONAL SEAL 30943 ENGINEER KYEIN TUN ZAN — SIGNATURE 6/3/13 DATE

ENGINEER: SIGNATURE DATE

NORTH CAROLINA PROFESSIONAL SEAL 17305 ENGINEER KYUNG JUN KIM 6/3/13

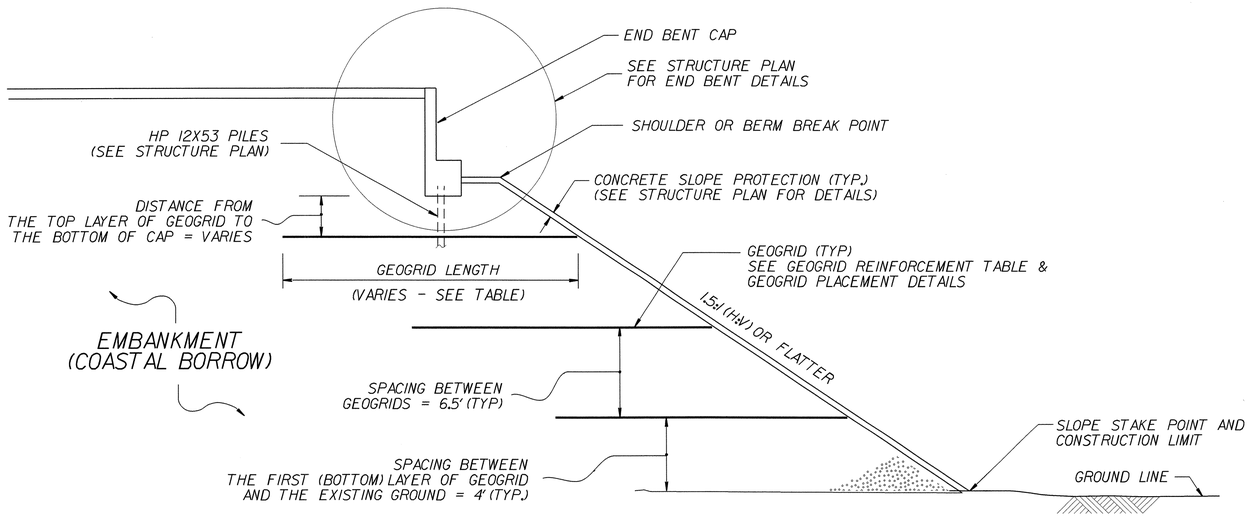

TYPICAL CROSS SECTION OF END BENTS WITH GEOGRID

**SEE TABLE AND GEOGRID PLACEMENT DETAILS.

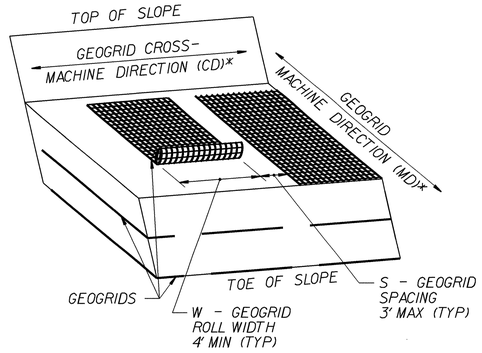

GEOGRID PLACEMENT DETAILS

(% COVERAGE = $\frac{W}{W+S}$ x 100 $\geq$ 75%)

*SEE NOTES 4 AND 5.

GEOGRID REINFORCEMENT TABLE

BRIDGE NO.	BRIDGE STATION	BENT NO.	SLOPE	GEOGRID LENGTH (FT)	SPACING BETWEEN GEOGRID LAYERS (FT)	MINIMUM REQUIRED LONG-TERM STRENGTH LTDS (LB/FT)
191 & 192	398+75.47 -L-	EB1	1.5:1 TO 2:1 (H:V)	35	6.5	2,000
191 & 192	398+75.47 -L-	EB2	1.5:1 TO 2:1 (H:V)	40	6.5	2,000
193 & 194	425+60.75 -L-	EB1	1.5:1 TO 2:1 (H:V)	30	6.5	2,000
193 & 194	425+60.75 -L-	EB2	1.5:1 TO 2:1 (H:V)	35	6.5	2,000

(LTDS IS BASED ON 100% COVERAGE FOR GEOGRID. SEE NOTE 5 FOR LESS THAN 100% COVERAGE.)

ESTIMATED QUANTITIES TABLE

BRIDGE NO.	BRIDGE STATION	BENT NO.	PAY ITEM	ESTIMATED GEOGRID AREA (SY)
191 & 192	398+75.47 -L-	EB1	GEOGRID FOR BRIDGE END SLOPES	4,100
191 & 192	398+75.47 -L-	EB2	GEOGRID FOR BRIDGE END SLOPES	5,800
193 & 194	425+60.75 -L-	EB1	GEOGRID FOR BRIDGE END SLOPES	2,500
193 & 194	425+60.75 -L-	EB2	GEOGRID FOR BRIDGE END SLOPES	4,000
			TOTAL	16,400

NOTES:

1. FOR GEOGRID FOR BRIDGE END BENTS, SEE GEOGRID FOR BRIDGE END SLOPES SPECIAL PROVISION.
2. GEOGRIDS ARE APPROVED FOR LONG-TERM DESIGN STRENGTHS FOR A 75-YEAR DESIGN LIFE IN THE MACHINE DIRECTION (MD) AND CROSS-MACHINE DIRECTION (CD) BASED ON MATERIAL TYPE. FOR DETAILS OF APPROVED GEOGRIDS AND LONG-TERM DESIGN STRENGTHS, SEE https://connect.ncdot.gov/resources/Materials/Pages/SoilsLaboratory.aspx
3. PLACE THE FIRST (BOTTOM) LAYER OF GEOGRID APPROXIMATELY 4' FROM THE EXISTING GROUND ELEVATION.
4. DO NOT OVERLAP GEOGRIDS IN THE MD SO OVERLAPS ARE PARALLEL TO THE SLOPE STAKE LINE.
5. FOR GEOGRIDS WITH 100% COVERAGE, PLACE GEOGRIDS SO GEOGRIDS ARE ADJACENT TO EACH OTHER IN THE CD. FOR GEOGRIDS WITH 75% TO LESS THAN 100% COVERAGE,

   MINIMUM REQUIRED LONG-TERM DESIGN STRENGTH = LTDS BASED ON 100% COVERAGE x (W + S) / W

   SEE TABLE FOR LTDS BASED ON 100% COVERAGE AND GEOGRID PLACEMENT DETAILS FOR GEOGRID ROLL WIDTH (W) AND SPACING (S). FOR GEOGRIDS WITH LESS THAN 100% COVERAGE, STAGGER GEOGRIDS SO GEOGRIDS ARE CENTERED OVER GAPS IN THE GEOGRID LAYER BELOW. DO NOT USE LESS THAN 75% COVERAGE FOR GEOGRIDS.
6. DO NOT PLACE GEOGRIDS UNTIL EXCAVATION DIMENSIONS AND IN-SITU MATERIAL ARE APPROVED.

PREPARED BY:	T.T.ZAN	DATE:	5/2013
REVIEWED BY:	J.R.BATTS	DATE:	5/2013

GEOTECHNICAL ENGINEERING UNIT

- [X] EASTERN REGIONAL OFFICE
- [ ] WESTERN REGIONAL OFFICE
- [ ] CONTRACT OFFICE

STATE OF NORTH CAROLINA
DEPARTMENT OF TRANSPORTATION
RALEIGH

GEOGRID
FOR BRIDGE END SLOPES

REVISIONS

NO.	BY	DATE	NO.	BY	DATE
1			3		
2			4		

STATE OF NORTH CAROLINA
DIVISION OF HIGHWAYS
ROADWAY SUMMARY OF QUANTITIES FOR CONTRACT - C203198

SUMMARY OF QUANTITIES - R-2633BB

ItemNumber	Sec #	Quantity	Unit	Description
0000100000-N	800	Lump Sum		MOBILIZATION
0001000000-E	200	Lump Sum		CLEARING & GRUBBING .. ACRE(S)
0008000000-E	200	4	ACR	SUPPLEMENTARY CLEARING & GRUBBING
0015000000-N	205	5	EA	SEALING ABANDONED WELLS
0022000000-E	225	59,000	CY	UNCLASSIFIED EXCAVATION
0029000000-N	SP	Lump Sum		REINFORCED BRIDGE APPROACH FILL, STATION ********** (317+50 -L-LT)
0029000000-N	SP	Lump Sum		REINFORCED BRIDGE APPROACH FILL, STATION ********** (317+50 -L-RT)
0029000000-N	SP	Lump Sum		REINFORCED BRIDGE APPROACH FILL, STATION ********** (398+75.47 -L-LT)
0029000000-N	SP	Lump Sum		REINFORCED BRIDGE APPROACH FILL, STATION ********** (398+75.47 -L-RT)
0029000000-N	SP	Lump Sum		REINFORCED BRIDGE APPROACH FILL, STATION ********** (425+60.75 -L-LT)
0029000000-N	SP	Lump Sum		REINFORCED BRIDGE APPROACH FILL, STATION ********** (425+60.75 -L-RT)
0036000000-E	225	4,500	CY	UNDERCUT EXCAVATION
0106000000-E	230	2,240,000	CY	BORROW EXCAVATION
0134000000-E	240	4,700	CY	DRAINAGE DITCH EXCAVATION
0156000000-E	250	520	SY	REMOVAL OF EXISTING ASPHALT PAVEMENT
0177000000-E	250	3,430	SY	BREAKING OF EXISTING ASPHALT PAVEMENT
0192000000-N	260	20	HR	PROOF ROLLING
0195000000-E	265	4,500	CY	SELECT GRANULAR MATERIAL
0196000000-E	270	12,200	SY	GEOTEXTILE FOR SOIL STABILIZATION
0241000000-E	SP	16,400	SY	GENERIC GRADING ITEM GEOGRID FOR BRIDGE END SLOPES
0318000000-E	300	1,070	TON	FOUNDATION CONDITIONING MATERIAL, MINOR STRUCTURES
0320000000-E	300	3,350	SY	FOUNDATION CONDITIONING GEOTEXTILE
0344000000-E	310	2,828	LF	18" SIDE DRAIN PIPE
0345000000-E	310	144	LF	24" SIDE DRAIN PIPE
0348000000-E	310	38	EA	**" SIDE DRAIN PIPE ELBOWS (18")
0348000000-E	310	2	EA	**" SIDE DRAIN PIPE ELBOWS (24")
0372000000-E	310	400	LF	18" RC PIPE CULVERTS, CLASS III
0378000000-E	310	536	LF	24" RC PIPE CULVERTS, CLASS III
0408000000-E	310	128	LF	54" RC PIPE CULVERTS, CLASS III
0448000000-E	310	232	LF	****" RC PIPE CULVERTS, CLASS IV (48")
0448300000-E	310	3,208	LF	18" RC PIPE CULVERTS, CLASS IV
0448400000-E	310	72	LF	24" RC PIPE CULVERTS, CLASS IV
0448500000-E	310	136	LF	30" RC PIPE CULVERTS, CLASS IV
0448600000-E	310	1,212	LF	36" RC PIPE CULVERTS, CLASS IV
0448700000-E	310	320	LF	42" RC PIPE CULVERTS, CLASS IV
0588000000-E	310	148	LF	18" CS PIPE CULVERTS, 0.064" THICK
0636000000-E	310	2	EA	**" CS PIPE ELBOWS, *****" THICK (18", 0.064")
0995000000-E	340	192	LF	PIPE REMOVAL
1011000000-N	500	Lump Sum		FINE GRADING
1099500000-E	505	1,000	CY	SHALLOW UNDERCUT
1099700000-E	505	1,900	TON	CLASS IV SUBGRADE STABILIZATION
1110000000-E	510	6,250	TON	STABILIZER AGGREGATE
1121000000-E	520	67,700	TON	AGGREGATE BASE COURSE
1220000000-E	545	500	TON	INCIDENTAL STONE BASE
1275000000-E	600	288.75	GAL	PRIME COAT
1491000000-E	610	17,600	TON	ASPHALT CONC BASE COURSE, TYPE B25.0C
1498000000-E	610	1,700	TON	ASPHALT CONC INTERMEDIATE COURSE, TYPE I19.0B
1503000000-E	610	15,300	TON	ASPHALT CONC INTERMEDIATE COURSE, TYPE I19.0C
1519000000-E	610	2,100	TON	ASPHALT CONC SURFACE COURSE, TYPE S9.5B
1523000000-E	610	14,200	TON	ASPHALT CONC SURFACE COURSE, TYPE S9.5C
1575000000-E	620	2,545	TON	ASPHALT BINDER FOR PLANT MIX
1840000000-E	665	29,600	LF	MILLED RUMBLE STRIPS (ASPHALT CONCRETE)
2022000000-E	815	336	CY	SUBDRAIN EXCAVATION
2026000000-E	815	1,000	SY	GEOTEXTILE FOR SUBSURFACE DRAINS
2036000000-E	815	168	CY	SUBDRAIN COARSE AGGREGATE
2044000000-E	815	1,000	LF	6" PERFORATED SUBDRAIN PIPE
2070000000-N	815	2	EA	SUBDRAIN PIPE OUTLET
2077000000-E	815	12	LF	6" OUTLET PIPE
2209000000-E	838	17.1	CY	ENDWALLS
2220000000-E	838	5	CY	REINFORCED ENDWALLS
2253000000-E	840	0.55	CY	PIPE COLLARS
2286000000-N	840	81	EA	MASONRY DRAINAGE STRUCTURES
2308000000-E	840	42.2	LF	MASONRY DRAINAGE STRUCTURES
2354000000-N	840	1	EA	FRAME WITH GRATE, STD 840.22
2364200000-N	840	38	EA	FRAME WITH TWO GRATES, STD 840.20
2365000000-N	840	28	EA	FRAME WITH TWO GRATES, STD 840.22
2396000000-N	840	2	EA	FRAME WITH COVER, STD 840.54
2407000000-N	840	14	EA	STEEL FRAME WITH TWO GRATES, STD 840.37
2556000000-E	846	9,400	LF	SHOULDER BERM GUTTER
2647000000-E	852	440	SY	5" MONOLITHIC CONCRETE ISLANDS (SURFACE MOUNTED)
2703000000-E	854	200	LF	CONCRETE BARRIER, TYPE ******* (T-2)
2717000000-E	854	700	LF	VARIABLE HEIGHT CONCRETE BARRIER, TYPE ********** (T-2)
2815000000-N	858	1	EA	ADJUSTMENT OF DROP INLETS
2938000000-N	859	1	EA	CONVERT EXISTING DROP INLET TO JUNCTION BOX WITH MANHOLE
3000000000-N	SP	1	EA	IMPACT ATTENUATOR UNIT, TYPE 350
3030000000-E	862	11,300	LF	STEEL BM GUARDRAIL
3045000000-E	862	75	LF	STEEL BM GUARDRAIL, SHOP CURVED
3105000000-N	862	4	EA	STEEL BM GUARDRAIL TERMINAL SECTIONS
3150000000-N	862	10	EA	ADDITIONAL GUARDRAIL POSTS
3195000000-N	862	1	EA	GUARDRAIL ANCHOR UNITS, TYPE AT-1
3210000000-N	862	5	EA	GUARDRAIL ANCHOR UNITS, TYPE CAT-1
3270000000-N	SP	6	EA	GUARDRAIL ANCHOR UNITS, TYPE 350
3285000000-N	SP	8	EA	GUARDRAIL ANCHOR UNITS, TYPE M-350
3317000000-N	862	28	EA	GUARDRAIL ANCHOR UNITS, TYPE B-77
3389200000-E	865	6,600	LF	CABLE GUIDERAIL
3389500000-N	865	10	EA	ADDITIONAL GUIDERAIL POSTS
3389600000-N	865	12	EA	CABLE GUIDERAIL ANCHOR UNITS
3503000000-E	866	10,400	LF	WOVEN WIRE FENCE, 47" FABRIC
3509000000-E	866	680	EA	4" TIMBER FENCE POSTS, 7'-6" LONG
3515000000-E	866	140	EA	5" TIMBER FENCE POSTS, 8'-0" LONG
3533000000-E	866	7,700	LF	CHAIN LINK FENCE, **" FABRIC (120")
3533000000-E	866	3,200	LF	CHAIN LINK FENCE, **" FABRIC (72")
3539000000-E	866	640	EA	METAL LINE POSTS FOR **" CHAIN LINK FENCE (120")
3539000000-E	866	270	EA	METAL LINE POSTS FOR **" CHAIN LINK FENCE (72")
3545000000-E	866	40	EA	METAL TERMINAL POSTS FOR **" CHAIN LINK FENCE (120")
3545000000-E	866	20	EA	METAL TERMINAL POSTS FOR **" CHAIN LINK FENCE (72")
3557000000-E	866	100	LF	ADDITIONAL BARBED WIRE
3564000000-E	866	2	EA	SINGLE GATES, **" HIGH, **' WIDE, **' OPENING (120", 20', 20')
3564000000-E	866	1	EA	SINGLE GATES, **" HIGH, **' WIDE, **' OPENING (72", 20', 20')
3628000000-E	876	30	TON	RIP RAP, CLASS I
3649000000-E	876	1,410	TON	RIP RAP, CLASS B
3656000000-E	876	4,600	SY	GEOTEXTILE FOR DRAINAGE
4048000000-E	902	35	CY	REINFORCED CONCRETE SIGN FOUNDATIONS
4054000000-E	902	1	CY	PLAIN CONCRETE SIGN FOUNDATIONS
4060000000-E	903	6,877	LB	SUPPORTS, BREAKAWAY STEEL BEAM
4066000000-E	903	15,928	LB	SUPPORTS, SIMPLE STEEL BEAM
4072000000-E	903	493	LF	SUPPORTS, 3-LB STEEL U-CHANNEL
4078000000-E	903	25	EA	SUPPORTS, 2-LB STEEL U-CHANNEL
4096000000-N	904	1	EA	SIGN ERECTION, TYPE D
4102000000-N	904	12	EA	SIGN ERECTION, TYPE E
4108000000-N	904	7	EA	SIGN ERECTION, TYPE F
4109000000-N	904	3	EA	SIGN ERECTION, TYPE *** (OVERHEAD) (A)
4109000000-N	904	2	EA	SIGN ERECTION, TYPE *** (OVERHEAD) (B)
4110000000-N	904	12	EA	SIGN ERECTION, TYPE *** (GROUND MOUNTED) (A)
4110000000-N	904	9	EA	SIGN ERECTION, TYPE *** (GROUND MOUNTED) (B)
4114000000-N	904	25	EA	SIGN ERECTION, MILEMARKERS
4115000000-N	904	1	EA	SIGN ERECTION, OVERLAY (OVERHEAD)
4116000000-N	904	9	EA	SIGN ERECTION, OVERLAY (GROUND MOUNTED)
4152000000-N	907	5	EA	DISPOSAL OF SIGN SYSTEM, STEEL BEAM
4155000000-N	907	5	EA	DISPOSAL OF SIGN SYSTEM, U-CHANNEL
4234000000-N	907	7	EA	DISPOSAL OF SIGN, A OR B (OVERHEAD)
4400000000-E	1110	208	SF	WORK ZONE SIGNS (STATIONARY)
4405000000-E	1110	410	SF	WORK ZONE SIGNS (PORTABLE)
4410000000-E	1110	68	SF	WORK ZONE SIGNS (BARRICADE MOUNTED)
4415000000-N	1115	1	EA	FLASHING ARROW BOARD
4420000000-N	1120	1	EA	PORTABLE CHANGEABLE MESSAGE SIGN
4430000000-N	1130	100	EA	DRUMS
4435000000-N	1135	50	EA	CONES
4445000000-E	1145	184	LF	BARRICADES (TYPE III)
4455000000-N	1150	38	DAY	FLAGGER
4480000000-N	1165	1	EA	TMA
4516000000-N	1180	50	EA	SKINNY DRUM
4685000000-E	1205	368	LF	THERMOPLASTIC PAVEMENT MARKING LINES (4", 90 MILS)
4686000000-E	1205	378	LF	THERMOPLASTIC PAVEMENT MARKING LINES (4", 120 MILS)
4710000000-E	1205	160	LF	THERMOPLASTIC PAVEMENT MARKING LINES (24", 120 MILS)
4725000000-E	1205	12	EA	THERMOPLASTIC PAVEMENT MARKING SYMBOL (90 MILS)

SUMMARY OF QUANTITIES - R-2633BB

ItemNumber	Sec #	Quantity	Unit	Description
4847100000-E	1205	77,841	LF	POLYUREA PAVEMENT MARKING LINES (6", **********) (HIGHLY REFLECTIVE ELEMENTS)
4847120000-E	1205	2,446	LF	POLYUREA PAVEMENT MARKING LINES (12", **********) (HIGHLY REFLECTIVE ELEMENTS)
4905000000-N	1253	647	EA	SNOWPLOWABLE PAVEMENT MARKERS
5325800000-E	1510	700	LF	8" WATER LINE
5546000000-E	1515	2	EA	8" VALVE
5835700000-E	1540	390	LF	16" ENCASEMENT PIPE
6000000000-E	1605	35,000	LF	TEMPORARY SILT FENCE
6006000000-E	1610	1,000	TON	STONE FOR EROSION CONTROL, CLASS A
6009000000-E	1610	5,000	TON	STONE FOR EROSION CONTROL, CLASS B
6012000000-E	1610	5,000	TON	SEDIMENT CONTROL STONE
6015000000-E	1615	100	ACR	TEMPORARY MULCHING
6018000000-E	1620	2,900	LB	SEED FOR TEMPORARY SEEDING
6021000000-E	1620	13.25	TON	FERTILIZER FOR TEMPORARY SEED-ING
6024000000-E	1622	10,000	LF	TEMPORARY SLOPE DRAINS
6029000000-E	SP	11,000	LF	SAFETY FENCE
6030000000-E	1630	15,000	CY	SILT EXCAVATION
6036000000-E	1631	25,000	SY	MATTING FOR EROSION CONTROL
6037000000-E	SP	500	SY	COIR FIBER MAT
6038000000-E	SP	750	SY	PERMANENT SOIL REINFORCEMENT MAT
6042000000-E	1632	4,800	LF	1/4" HARDWARE CLOTH
6048000000-E	SP	150	SY	FLOATING TURBIDITY CURTAIN
6070000000-N	1639	4	EA	SPECIAL STILLING BASINS
6071012000-E	SP	350	LF	COIR FIBER WATTLE
6071020000-E	SP	275	LB	POLYACRYLAMIDE (PAM)
6071030000-E	1640	5,000	LF	COIR FIBER BAFFLE
6071050000-E	SP	5	EA	*** SKIMMER (1-1/2")
6071050000-E	SP	3	EA	*** SKIMMER (2")
6084000000-E	1660	150	ACR	SEEDING & MULCHING
6087000000-E	1660	50	ACR	MOWING
6090000000-E	1661	1,350	LB	SEED FOR REPAIR SEEDING
6093000000-E	1661	10.25	TON	FERTILIZER FOR REPAIR SEEDING
6096000000-E	1662	5,675	LB	SEED FOR SUPPLEMENTAL SEEDING
6108000000-E	1665	170	TON	FERTILIZER TOPDRESSING
6114500000-N	1667	40	MHR	SPECIALIZED HAND MOWING
6117000000-N	SP	125	EA	RESPONSE FOR EROSION CONTROL
6123000000-E	1670	5	ACR	REFORESTATION
6135000000-E	SP	10	ACR	GENERIC EROSION CONTROL ITEM COMPOST BLANKET
7060000000-E	1705	1,400	LF	SIGNAL CABLE
7120000000-E	1705	11	EA	VEHICLE SIGNAL HEAD (12", 3 SECTION)
7132000000-E	1705	1	EA	VEHICLE SIGNAL HEAD (12", 4 SECTION)
7144000000-E	1705	1	EA	VEHICLE SIGNAL HEAD (12", 5 SECTION)
7300000000-E	1715	750	LF	UNPAVED TRENCHING (**********) (1, 2")
7300000000-E	1715	30	LF	UNPAVED TRENCHING (**********) (2, 2")
7300100000-E	1715	900	LF	UNPAVED TRENCHING FOR TEMP-ORARY LEAD-IN
7301000000-E	1715	250	LF	DIRECTIONAL DRILL (**********) (1, 2")
7301000000-E	1715	200	LF	DIRECTIONAL DRILL (**********) (2, 2")
7324000000-N	1716	11	EA	JUNCTION BOX (STANDARD SIZE)
7360000000-N	1720	4	EA	WOOD POLE
7372000000-N	1721	6	EA	GUY ASSEMBLY
7408000000-E	1722	1	EA	1" RISER WITH WEATHERHEAD
7420000000-E	1722	4	EA	2" RISER WITH WEATHERHEAD
7444000000-E	1725	1,500	LF	INDUCTIVE LOOP SAWCUT
7456000000-E	1726	5,000	LF	LEAD-IN CABLE (**********) (14-2)
7588000000-N	SP	1	EA	METAL POLE WITH SINGLE MAST ARM
7590000000-N	SP	1	EA	METAL POLE WITH DUAL MAST ARM
7613000000-N	SP	2	EA	SOIL TEST
7614100000-E	SP	14	CY	DRILLED PIER FOUNDATION
7631000000-N	SP	2	EA	MAST ARM WITH METAL POLE DE-SIGN
7684000000-N	1750	2	EA	SIGNAL CABINET FOUNDATION
7756000000-N	1751	2	EA	CONTROLLER WITH CABINET (TYPE 2070L, BASE MOUNTED)
7780000000-N	1751	10	EA	DETECTOR CARD (TYPE 2070L)
7901000000-N	1753	2	EA	CABINET BASE EXTENDER

COMPUTED BY: WCB DATE: 7/6/2012

CHECKED BY: DWM DATE: 4/26/2013

NORTH CAROLINA DEPARTMENT OF TRANSPORTATION
DIVISION OF HIGHWAYS

PROJECT NO.	SHEET NO.
R-2633BB	3-A

WSRAL-1003A

Note: Invert Elevations indicated are for Bid Purposes only and shall not be used for project construction stakeout. See "Standard Specifications For Roads and Structures, Section 300-5".

LIST OF PIPES, ENDWALLS, ETC. (FOR PIPES 48 INCHES & UNDER)

STATION	LOCATION (LT, RT, OR CL)*	STRUCTURE NO. FROM	STRUCTURE NO. TO	TOP ELEVATION	INVERT ELEVATION	INVERT ELEVATION	SLOPE CRITICAL	SIDE DRAIN PIPE (RCP, CSP, CAAP, HDPE, or PVC) SIZE 12"	15"	18"	24"	30"	36"	42"	48"	DO NOT USE RCP	DO NOT USE CSP	DO NOT USE CAAP	DO NOT USE HDPE	C.S. PIPE SIZE 12"	15"	18"	24"	30"	36"	42"	48"	THICKNESS OR GAUGE .064	.064	.064	.064	.079	.079	.109	.109	R.C. PIPE CLASS III 12"	15"	18"	24"	30"	36"	42"	48"	R.C. PIPE CLASS IV 12"	15"	18"	24"	30"	36"	42"	48"
-L- 294+00.00	CL	04-01		27.4																																															
-L- 294+00.00	CL	04-01	04-02		24.7	22.7																																								84						
-L- 294+00.00	RT	04-02		25.4																																															
-L- 294+00.00	RT	04-02	04-03		22.7	16.3																																								88						
-L- 298+76.25	CL	05-01		22.2																																															
-L- 298+76.25	CL	05-01	05-02		19.2	18.7																																								100						
-L- 300+95.00	CL	05-03																																																232	
-L- 302+53.00	RT	05-04		27.8																																															
-L- 302+53.00	RT	05-04	05-05		23.5	18.5				32																																									
-L- 304+60.00	RT	05-06		32.3																																															
-L- 304+60.00	RT	05-06	05-07		29.6	27.9																																								64						
-L- 304+60.00	CL	05-07		30.6																																															
-L- 304+60.00	CL	05-07	05-09		27.9	27.6	X																																							52						
-L- 304+70.00	LT	05-08		32.9																																															
-L- 304+70.00	LT	05-08	05-09		28.7	27.6																																								4						
-L- 304+60.00	LT	05-09		32.6																																															
-L- 304+60.00	LT	05-09	05-10		27.6	16.8				52																																									
-L- 308+50.00	RT	05-11		41.3																																															
-L- 308+50.00	RT	05-11	05-12		38.6	36.6																																								52						
-L- 308+50.00	CL	05-12		39.4																																															
-L- 308+50.00	CL	05-12	05-13		36.6	36.3																																								52						
-L- 308+50.00	LT	05-13		41.3																																															
-L- 308+50.00	LT	05-13	05-14		36.3	16				84																																									
-L- 312+50.00	RT	06-01		50.5																																															
-L- 312+50.00	RT	06-01	06-02		47.8	45.5																																								52						
-L- 312+50.00	CL	06-02		48.3																																															
-L- 312+50.00	CL	06-02	06-03		45.5	45.4																																								52						
-L- 312+50.00	LT	06-03		50.3																																															
-L- 312+50.00	LT	06-03	06-04		45.4	15.2				112																																									
-L- 316+50.13	RT	06-05		59.5																																															
-L- 316+50.13	RT	06-05	06-06		54.5	54.4																																								12						
-L- 316+50.00	CL	06-06		57.2																																															
-L- 316+50.00	CL	06-06	06-07		54.4	54.2																																								52						
-L- 316+50.00	LT	06-07		59.2																																															
-L- 316+50.00	LT	06-07	06-08		54.2	11.6				148																																									
-L- 389+59.92	RT	11-01		31.6																																															
-L- 389+59.92	RT	11-01	11-02		28.2	4.3				88																																									
-L- 389+59.92	RT	11-03		31.2																																															
-L- 389+59.92	RT	11-03	11-04		26.2	25.6																																								12						
-L- 389+59.92	CL	11-04		28.3																																															
-L- 389+59.92	CL	11-04	11-06		25.6	25.3																																								52						
-L- 389+70.00	LT	11-05		30.4																																															
-L- 389+70.00	LT	11-05	11-06		26.4	25.3																																								4						
-L- 389+59.92	LT	11-06		30.4																																															
-L- 389+59.92	LT	11-06	11-07		25.3	5.1				84																																									
-L- 393+50.00	CL	12-01		32.5																																															
-L- 393+50.00	CL	12-01	12-02		29.7	29.5																																								56						
-L- 393+50.00	LT	12-02		34.5																																															
-L- 393+50.00	LT	12-02	12-03		26.4	25.3				92																																									
-L- 397+11.13	RT	12-04		43.1																																															
SHEET TOTALS										692																																				788				232		

STATION	** R.C. PIPE (CLASS V)	**** RC PIPE CULVERTS, CONTRACTOR DESIGN	**** RC PIPE CULVERTS, CONTRACTOR DESIGN	15" SIDE DRAIN PIPE	18" SIDE DRAIN PIPE	ENDWALLS STD. 838.01 838.11 OR STD. 838.80 (UNLESS NOTED OTHERWISE) CU. YARDS R.C.P.	C.S.P.	QUANTITIES FOR DRAINAGE STRUCTURES *TOTAL L.F. FOR PAY QUANTITY SHALL BE COL. "A" + (1.3 X COL. "B") PER EACH (0' THRU 5.0')	LIN. FT. A 5.0' THRU 10.0'	B 10.0' AND ABOVE	C.B. STD. 840.01 OR STD. 840.02	FRAME, GRATES, AND HOOD STANDARD 840.03 TYPE OF GRATE E	F	G	CONCRETE TRANSITIONAL SECTION DROP INLET	CATCH BASIN	D.I. FRAME WITH TWO GRATES STD. 840.16	G.D.I. TYPE "A" STD. 840.17 OR 840.26	G.D.I. TYPE "B" STD. 840.18 OR 840.27	G.D.I. (W.S. FLAT) FRAME WITH TWO GRATES STD. 840.20	G.D.I. FRAME WITH GRATE STD. 840.22	G.D.I. FRAME WITH TWO GRATES STD. 840.22	T.B.G.D.I. STD. 840.36	T.B.J.B. STD. 840.34	T.B.G.D.I. STD. 840.35	M.H. FRAME AND COVER STD. 840.54	CONVERT EXISTING D.I. TO J.B. w/ M.H.(SEE SHEET 2-H)	ADJUSTMENT OF 2 G.I.	STEEL FRANE WITH TWO GRATES 840.37	SIDE DRAIN PIPE ELBOWS NO. & SIZE	C.S. PIPE ELBOWS NO. & SIZE	CONC. COLLARS CL. "B" C.Y. STD. 840.72	PIPE REMOVAL LIN. FT.	REMARKS
-L- 294+00.00								1											1				1														
-L- 294+00.00																																					
-L- 294+00.00								1											1				1														
-L- 294+00.00																																					
-L- 298+76.25								1											1				1														
-L- 298+76.25																																					
-L- 300+95.00						4.9																															
-L- 302+53.00								1											1		1																
-L- 302+53.00																																	2 @ 18"				2-18" ELBOWS
-L- 304+60.00								1											1		1																
-L- 304+60.00																																					
-L- 304+60.00								1											1				1														
-L- 304+70.00																																					
-L- 304+70.00								1											1		1																
-L- 304+60.00								1											1		1																
-L- 304+60.00																																	2 @ 18"				2-18" ELBOWS
-L- 308+50.00								1											1		1																
-L- 308+50.00																																					
-L- 308+50.00								1											1				1														
-L- 308+50.00								1											1		1																
-L- 308+50.00																																	2 @ 18"				2-18" ELBOWS
-L- 312+50.00								1											1		1																
-L- 312+50.00																																					
-L- 312+50.00								1											1				1														
-L- 312+50.00																																					
-L- 312+50.00								1											1		1																
-L- 312+50.00																																	2 @ 18"				2-18" ELBOWS
-L- 316+50.13								1																	1								1				
-L- 316+50.13																																					
-L- 316+50.00								1											1				1														
-L- 316+50.00																																					
-L- 316+50.00								1											1		1																
-L- 316+50.00																																	2 @ 18"			40	2-18" ELBOWS & REMOVE 18" PLASTIC PIPE
-L- 389+59.92								1											1		1																
-L- 389+59.92																																					
-L- 389+59.92								1																	1								1				
-L- 389+59.92																																					
-L- 389+59.92								1											1				1														
-L- 389+70.00																																					
-L- 389+70.00								1											1		1																
-L- 389+59.92																																					
-L- 389+59.92								1	0.1										1		1																
-L- 393+50.00																																	2 @ 18"				2-18" ELBOWS
-L- 393+50.00								1											1				1														
-L- 393+50.00																																					
-L- 393+50.00								1	3.1										1				1														
-L- 393+50.00																																	2 @ 18"				2-18" ELBOWS
-L- 397+11.13								1																	1								1				
SHEET TOTALS						4.9		25	3.2										22		12		10		3								3	14 @ 18"	0	0	40	

ABBREVIATIONS

C.B.	CATCH BASIN
N.D.I.	NARROW DROP INLET
D.I.	DROP INLET
G.D.I.	GRATED DROP INLET
G.D.I.(N.S.)	(NARROW SLOT)
J.B.	JUNCTION BOX
M.H.	MANHOLE
T.B.D.I.	TRAFFIC BEARING DROP INLET
T.B.J.B.	TRAFFIC BEARING JUNCTION BOX

COMPUTED BY: WCB DATE: 7/6/2012

CHECKED BY: DWM DATE: 4/26/2013

NORTH CAROLINA DEPARTMENT OF TRANSPORTATION
DIVISION OF HIGHWAYS

PROJECT NO.	SHEET NO.
R-2633BB	3-B

WSSAL-1003A

Note: Invert Elevations indicated are for Bid Purposes only and shall not be used for project construction stakeout. See "Standard Specifications For Roads and Structures, Section 300-5".

LIST OF PIPES, ENDWALLS, ETC. (FOR PIPES 48 INCHES & UNDER)

STATION	LOCATION (LT, RT, OR CL)'	STRUCTURE NO. FROM	STRUCTURE NO. TO	TOP ELEVATION	INVERT ELEVATION	INVERT ELEVATION	SLOPE CRITICAL	SIDE DRAIN PIPE (RCP, CSP, CAAP, HDPE, or PVC) SIZE 12"	15"	18"	24"	30"	36"	42"	48"	DO NOT USE RCP	DO NOT USE CSP	DO NOT USE CAAP	DO NOT USE HDPE	C.S. PIPE SIZE 12"	15"	18"	24"	30"	36"	42"	48"	R.C. PIPE CLASS III 12"	15"	18"	24"	30"	36"	42"	48"	R.C. PIPE CLASS IV 12"	15"	18"	24"	30"	36"	42"	48"
SIDE DRAIN PIPE THICKNESS OR GAUGE																				.064	.064	.064	.064	.079	.079	.109	.109																
-L- 397+11.13	RT	12-04	12-05		38.1	38.1																																16					
-L- 397+20.00	CL	12-05		40.8																																							
-L- 397+20.00	CL	12-05	12-06		38.1	37.8																																52					
-L- 397+20.00	LT	12-06		42.8																																							
-L- 397+20.00	LT	12-06	12-07		37.8	9.2				108																																	
-L- 402+95.00	RT	12-08		47.1																																							
-L- 402+95.00	RT	12-08	12-09		44.1	13.0				104																																	
-L- 404+00.00	CL	12-10		43.1																																							
-L- 404+00.00	CL	12-10	12-11		40.4	40.1																																52					
-L- 404+00.00	LT	12-11		45.1																																							
-L- 404+00.00	LT	12-11	12-12		40.1	10.9				136																																	
-L- 408+50.00	CL	13-01		36.5																																							
-L- 408+50.00	CL	13-01	13-02		33.8	11.2				172																																	
-L- 413+46.70	CL	13-03		31.1																																							
-L- 413+46.70	CL	13-03	13-04		26.8	10.6				152																																	
-L- 414+53.40	CL	13-05																																							320		
-L- 418+50.00	CL	13-06		35.4																																							
-L- 418+50.00	CL	13-06	13-07		32.6	15.8															148																						
-L- 421+90.00	CL	14-01			32.6	15.8																																			360		
-L- 422+05.00	RT	14-02		43.3																																							
-L- 422+05.00	RT	14-02	14-04		38.9	38.5																																72					
-L- 424+00.00	RT	14-03		41.7																																							
-L- 424+00.00	RT	14-03	14-04		40.5	38.5																																108					
-L- 422+85.00	RT	14-04		48.2																																							
-L- 422+85.00	RT	14-04	14-05		38.5	13.8				84																																	
-L- 423+35.00	LT	14-06		42.6																																							
-L- 423+35.00	LT	14-06	14-07		39.4	39.0																																12					
-L- 423+15.00	LT	14-07		42.1																																							
-L- 423+15.00	LT	14-07	14-08		39	20.1				88																																	
-L- 426+45.00	LT	14-09		45.8																																							
-L- 426+45.00	LT	14-09	14-10		42.4	42.3																																60					
-L- 427+10.00	LT	14-10		46.5																																							
-L- 427+10.00	LT	14-10	14-13		42.3	41.5																																56					
-L- 427+50.00	RT	14-11		47																																							
-L- 427+50.00	RT	14-11	14-12		44	43.6																																32					
-L- 427+10.00	RT	14-12		46.6																																							
-L- 427+10.00	RT	14-12	14-13		43.6	41.5																																52					
-L- 427+10.00	CL	14-13		44.5																																							
-L- 427+10.00	CL	14-13	14-16		41.5	40.6																								308													
-L- 430+25.00	RT	14-14		49.9																																							
-L- 430+25.00	RT	14-14	14-16		46.9	40.6																																52					
-L- 430+25.00	LT	14-15		49.9																																							
-L- 430+25.00	LT	14-15	14-16		46.5	40.6																																56					
-L- 430+25.00	CL	14-16		47.9																																							
-L- 430+25.00	CL	14-16	14-18		40.1	39.2																									292												
-L- 433+25.24	RT	14-17		52.9																																							
-L- 433+25.24	RT	14-17	14-18		46.9	39.7																																64					
-L- 433+25.00	CL	14-18		51.1																																							
-L- 433+25.00	CL	14-18	14-19		39.2	39																																	72				
-RP_B4- 12+45.00	RT	14-19		52																																							
SHEET TOTALS										844											148									308	292							684	72		360	320

STATION	** R.C. PIPE (CLASS V)	*** RC PIPE CULVERTS, CONTRACTOR DESIGN	**** RC PIPE CULVERTS, CONTRACTOR DESIGN	15" SIDE DRAIN PIPE	18" SIDE DRAIN PIPE	ENDWALLS STD. 838.01 838.11 OR STD. 838.80 (UNLESS NOTED OTHERWISE) CU. YARDS R.C.P.	C.S.P.	QUANTITIES FOR DRAINAGE STRUCTURES PER EACH (0' THRU 5.0')	LIN. FT. 5.0' THRU 10.0' A	10.0' AND ABOVE B	C.B. STD. 840.01 OR STD. 840.02	FRAME, GRATES, AND HOOD STANDARD 840.03 TYPE OF GRATE E	F	G	CONCRETE TRANSITIONAL SECTION DROP INLET	CATCH BASIN	D.I. FRAME WITH TWO GRATES STD. 840.16	G.D.I. TYPE "A" STD. 840.17 OR 840.26	G.D.I. TYPE "B" STD. 840.18 OR 840.27	G.D.I. (W.S. FLAT) FRAME WITH TWO GRATES STD. 840.20	G.D.I. FRAME WITH GRATE STD. 840.22	G.D.I. FRAME WITH TWO GRATES STD. 840.22	T.B.G.D.I. STD. 840.36	T.B.J.B. STD. 840.34	T.B.G.D.I. STD. 840.35	M.H. FRAME AND COVER STD. 840.54	CONVERT EXISTING D.I. TO J.B. w/ M.H.(SEE SHEET 2-H)	ADJUSTMENT OF 2 G.I.	STEEL FRAME WITH TWO GRATES 840.37	SIDE DRAIN PIPE ELBOWS NO. & SIZE	C.S. PIPE ELBOWS NO. & SIZE	CONC. COLLARS CL. "B" C.Y. STD. 840.72	PIPE REMOVAL LIN. FT.	REMARKS
-L- 397+11.13																																		
-L- 397+20.00								1											1			1												
-L- 397+20.00																																		
-L- 397+20.00								1											1		1													
-L- 397+20.00																															2 @ 18"			2-18" ELBOWS
-L- 402+95.00								1											1		1													
-L- 402+95.00																																		
-L- 404+00.00								1											1			1												
-L- 404+00.00																																		
-L- 404+00.00								1											1		1													
-L- 404+00.00																															2 @ 18"			2-18" ELBOWS
-L- 408+50.00								1											1			1												
-L- 408+50.00																															2 @ 18"			2-18" ELBOWS
-L- 413+46.70								1										1			1	1												3GI
-L- 413+46.70																															2 @ 18"			2-18" ELBOWS
-L- 414+53.40						3.8																												
-L- 418+50.00								1											1			1												
-L- 418+50.00																																2 @ 18"		2-18" ELBOWS
-L- 421+90.00						2.8																												
-L- 422+05.00								1											1		1													
-L- 422+05.00																																		
-L- 424+00.00								1											1		1													
-L- 424+00.00																																		
-L- 422+85.00								1	4.7										1		1													
-L- 422+85.00																															2 @ 18"			2-18" ELBOWS
-L- 423+35.00								1															1					1						
-L- 423+35.00																																		
-L- 423+15.00								1															1					1						
-L- 423+15.00																															2 @ 18"			2-18" ELBOWS
-L- 426+45.00								1															1					1						
-L- 426+45.00																																		
-L- 427+10.00								1															1					1						
-L- 427+10.00																																		
-L- 427+50.00								1											1		1													
-L- 427+50.00																																		
-L- 427+10.00								1											1		1													
-L- 427+10.00																																		
-L- 427+10.00								1											1			1												
-L- 427+10.00																																		
-L- 430+25.00								1											1		1													
-L- 430+25.00																																		
-L- 430+25.00								1											1		1													
-L- 430+25.00																																		
-L- 430+25.00								1	2.8										1			1												
-L- 430+25.00																																		
-L- 433+25.24								1	1.0										1		1													
-L- 433+25.24																																		
-L- 433+25.00								1	5.0	1.9									1			1												
-L- 433+25.00																																		
-RP_B4- 12+45.00								1	5.0	3.0									1		1													
SHEET TOTALS						6.6		24	18.5	4.9								1	19		12	1	8		4					4	12 @ 18"	2 @ 18"	0	0	

ABBREVIATIONS

C.B.	CATCH BASIN
N.D.I.	NARROW DROP INLET
D.I.	DROP INLET
G.D.I.	GRATED DROP INLET
G.D.I.(N.S.)	(NARROW SLOT)
J.B.	JUNCTION BOX
M.H.	MANHOLE
T.B.D.I.	TRAFFIC BEARING DROP INLET
T.B.J.B.	TRAFFIC BEARING JUNCTION BOX

COMPUTED BY:	WCB	DATE:	7/6/2012
CHECKED BY:	DWM	DATE:	4/26/2013

NORTH CAROLINA DEPARTMENT OF TRANSPORTATION
DIVISION OF HIGHWAYS

PROJECT NO.	SHEET NO.
R-2633BB	3-C

WSR4L-1003A

Note: Invert Elevations indicated are for Bid Purposes only and shall not be used for project construction stakeout. See "Standard Specifications For Roads and Structures, Section 300-5".

LIST OF PIPES, ENDWALLS, ETC. (FOR PIPES 48 INCHES & UNDER)

STATION / SIZE / THICKNESS OR GAUGE	LOCATION (L.T. RT. OR CL)'	STRUCTURE NO. FROM	STRUCTURE NO. TO	TOP ELEVATION	INVERT ELEVATION	INVERT ELEVATION	SLOPE CRITICAL	SIDE DRAIN PIPE (RCP, CSP, CAAP, HDPE, or PVC) 12"	15"	18"	24"	30"	36"	42"	48"	DO NOT USE RCP	DO NOT USE CSP	DO NOT USE CAAP	DO NOT USE HDPE	C.S. PIPE 12"	15"	18"	24"	30"	36"	42"	48"	R.C. PIPE CLASS III 12"	15"	18"	24"	30"	36"	42"	48"	R.C. PIPE CLASS IV 12"	15"	18"	24"	30"	36"	42"	48"
																				.064	.064	.064	.064	.079	.079	.109	.109																
-RP_B4- 12+45.00	LT	14-19	14-20		39.0	11.5					144																																
-EY12- 10+21.10	LT	14-21																																						44			
-EY12- 10+57.44	RT	14-22																																						36			
-EY12- 14+88.42	LT	14-23																																						384			
-EY12- 15+14.46	RT	14-24																																						388			
-EY12- 15+56.69	RT	14-25																																					68				
-EY12- 15+56.69	RT	14-26																																					68				
-L- 439+10.00	RT	15-01		58.4																																							
-L- 439+10.00	RT	15-01	15-02		55.4	55.0																																12					
-RP_C4- 15+55.00	LT	15-02		58.0																																							
-RP_C4- 15+55.00	LT	15-02	15-03		55.0	54.8																																28					
-RP_C4- 15+55.00	RT	15-03		58.4																																							
-RP_C4- 15+55.00	RT	15-03	15-04		54.8	53.7																																108					
-RP_C4- 14+45.00	RT	15-04		57.1																																							
-RP_C4- 14+45.00	RT	15-04	15-05		53.7	51.7																																256					
-RP_C4- 11+85.44	RT	15-05		54.7																																							
-RP_C4- 11+85.44	RT	15-05	15-06		51.7	50.2																																76					
-L- 435+25.00	CL	15-06		53.2																																							
-L- 435+25.00	CL	15-06	15-07		50.2	49.7																																96					
-RP_B4- 14+50.00	LT	15-07		53.0																																							
-RP_B4- 14+50.00	LT	15-07	15-08		49.7	11.5				148																																	
-L- 441+10.00	RT	15-09		57.9																																							
-L- 441+10.00	RT	15-09	15-10		54.4	52.1																										12											
-L- 441+10.00	RT	15-10		55.1																																							
-L- 441+10.00	RT	15-10	15-14		52.1	42.9				236																																	
-RP_C4- 17+50.00	RT	15-11		57.1																																							
-RP_C4- 17+50.00	RT	15-11	15-12		53.6	49.3																																160					
-RP_C4- 19+15.00	RT	15-12		52.5																																							
-RP_C4- 19+15.00	RT	15-12	15-13		49.3	44.8																																92					
-RP_C4- 20+10.00	RT	15-13		48.0																																							
-RP_C4- 20+10.00	RT	15-13	15-14		44.8	42.9																																40					
-RP_C4- 20+10.00	LT	15-14		45.6																																							
-RP_C4- 20+10.00	LT	15-14	15-15		33.3	23.0				192																																	
-RP_C4- 22+07.50	LT	15-15		36.0																																							
-RP_C4- 22+07.50	LT	15-15	15-16		33.3	23.0				132																																	
		15-17																																									
-L- 441+55.00	LT	15-18		58.0																																							
-L- 442+00.00	LT	15-18	15-19		53.9																																	236					
-L- 443+95.00	LT	15-19		56.0																																							
-L- 443+95.00	LT	15-19	15-20		53.0	22.0				104																																	
-RP_B4- 18+00.00	RT	15-21		51.0																																							
-RP_B4- 18+00.00	RT	15-21	15-22		48.0	47.7																										80											
-RP_B4- 18+00.00	LT	15-22		57.6																																							
-RP_B4- 18+00.00	LT	15-22	15-23		47.7	11.5				160																																	
-RP_B4- 22+95.00	LT	15-24		57.7																																							
-RP_B4- 22+95.00	LT	15-24	15-25		54.3	43.2																																264					
-RP_B4- 25+40.00	LT	15-25		46.3																																							
-RP_B4- 25+40.00	LT	15-25	15-26		43.2	40.2																																52					
-RP_B4- 26+00.00	LT	15-26		43.3																																							
SHEET TOTALS										972	144																					92								1,420	136	852	

STATION / SIZE / THICKNESS OR GAUGE	** " R.C. PIPE (CLASS V)	**** RC PIPE CULVERTS, CONTRACTOR DESIGN	***** RC PIPE CULVERTS, CONTRACTOR DESIGN	15" SIDE DRAIN PIPE	18" SIDE DRAIN PIPE	ENDWALLS STD. 838.01 838.11 OR STD. 838.80 (UNLESS NOTED OTHERWISE) CU. YARDS R.C.P.	C.S.P.	QUANTITIES FOR DRAINAGE STRUCTURES PER EACH (0' THRU 5.0')	"TOTAL L.F. FOR PAY QUANTITY SHALL BE COL. 'A' + (1.3 X COL. 'B') LIN. FT. A 5.0' THRU 10.0'	B 10.0' AND ABOVE	C.B. STD. 840.01 OR STD. 840.02	FRAME, GRATES, AND HOOD STANDARD 840.03 TYPE OF GRATE E	F	G	CONCRETE TRANSITIONAL SECTION DROP INLET	CATCH BASIN	D.I. FRAME WITH TWO GRATES STD. 840.16	G.D.I. TYPE "A" STD. 840.17 OR 840.26	G.D.I. TYPE "B" STD. 840.18 OR 840.27	G.D.I. (W.S. FLAT) FRAME WITH TWO GRATES STD. 840.20	G.D.I. FRAME WITH GRATE STD. 840.22	G.D.I. FRAME WITH TWO GRATES STD. 840.22	T.B.G.D.I. STD. 840.36	T.B.J.B. STD. 840.34	T.B.G.D.I. STD. 840.35	M.H. FRAME AND COVER STD. 840.54	CONVERT EXISTING D.I. TO J.B. w/ M.H.(SEE SHEET 2-H)	ADJUSTMENT OF 2 G.I.	STEEL FRAME WITH TWO GRATES 840.37	SIDE DRAIN PIPE ELBOWS NO. & SIZE	C.S. PIPE ELBOWS NO. & SIZE	CONC. COLLARS CL. "B" C.Y. STD. 840.72	PIPE REMOVAL LIN. FT.	REMARKS
-RP_B4- 12+45.00																																	2 @ 24"				2-24" ELBOWS
-EY12- 10+21.10																																					
-EY12- 10+57.44																																					
-EY12- 14+88.42						2.8																															
-EY12- 15+14.46						2.8																															
-EY12- 15+56.69																																					
-EY12- 15+56.69																																					
-L- 439+10.00								1												1		1															
-L- 439+10.00																																					
-RP_C4- 15+55.00								1												1				1													
-RP_C4- 15+55.00																																					
-RP_C4- 15+55.00								1																			1					1					
-RP_C4- 15+55.00																																					
-RP_C4- 14+45.00								1																			1					1					
-RP_C4- 14+45.00																																					
-RP_C4- 11+85.44								1														1		1													
-RP_C4- 11+85.44																																					
-L- 435+25.00								1														1				1											
-L- 435+25.00																																					
-RP_B4- 14+50.00								1														1		1													
-RP_B4- 14+50.00																																	2 @ 18"				2-18" ELBOWS
-L- 441+10.00								1														1		1													
-L- 441+10.00			12																																		
-L- 441+10.00								1														1				1											
-L- 441+10.00																																					
-RP_C4- 17+50.00								1																			1					1					
-RP_C4- 17+50.00																																					
-RP_C4- 19+15.00								1																			1					1					
-RP_C4- 19+15.00																																					
-RP_C4- 20+10.00								1														1		1													
-RP_C4- 20+10.00																																					
-RP_C4- 20+10.00								1	5.0	2.3										1				1													
-RP_C4- 20+10.00																																					
-RP_C4- 22+07.50								1												1				1													
-RP_C4- 22+07.50																																	2 @ 18"				2-18" ELBOWS
																																					STR. 15-17 NOT USED
-L- 441+55.00								1												1		1															
-L- 442+00.00																																					
-L- 443+95.00								1												1		1															
-L- 443+95.00																																	2 @ 18"				2-18" ELBOWS
-RP_B4- 18+00.00								1												1				1													
-RP_B4- 18+00.00																																					
-RP_B4- 18+00.00								1	4.9											1		1															
-RP_B4- 18+00.00																																	2 @ 18"				2-18" ELBOWS
-RP_B4- 22+95.00								1																			1					1					
-RP_B4- 22+95.00																																				64	REMOVE UNKNOWN PIPE SIZE
-RP_B4- 25+40.00								1																			1					1					
-RP_B4- 25+40.00																																					
-RP_B4- 26+00.00								1																			1					1					
SHEET TOTALS			92			5.6		21	9.9	2.3										14		8		6			7					7	8 @ 18"	0 @ 18"	0	64	
																																	2 @ 24"				

ABBREVIATIONS

C.B.	CATCH BASIN
N.D.I.	NARROW DROP INLET
D.I.	DROP INLET
G.D.I.	GRATED DROP INLET
G.D.I.(N.S.)	(NARROW SLOT)
J.B.	JUNCTION BOX
M.H.	MANHOLE
T.B.D.I.	TRAFFIC BEARING DROP INLET
T.B.J.B.	TRAFFIC BEARING JUNCTION BOX

COMPUTED BY: WCB DATE: 7/6/2012

CHECKED BY: DWM DATE: 4/26/2013

NORTH CAROLINA DEPARTMENT OF TRANSPORTATION
DIVISION OF HIGHWAYS

PROJECT NO.	SHEET NO.
R-2633BB	3-D

Note: Invert Elevations indicated are for Bid Purposes only and shall not be used for project construction stakeout.

LIST OF PIPES, ENDWALLS, ETC. (FOR PIPES 48 INCHES & UNDER)

STATION	LOCATION (LT, RT, OR CL)	STRUCTURE NO. FROM	STRUCTURE NO. TO	TOP ELEVATION	INVERT ELEVATION	INVERT ELEVATION	SLOPE CRITICAL	SIDE DRAIN PIPE (RCP, CSP, CAAP, HDPE, or PVC) 12"	15"	18"	24"	30"	36"	42"	48"	DO NOT USE RCP	DO NOT USE CSP	DO NOT USE CAAP	DO NOT USE HDPE	C.S. PIPE 12"	15"	18"	24"	30"	36"	42"	48"	R.C. PIPE CLASS III 12"	15"	18"	24"	30"	36"	42"	48"	R.C. PIPE CLASS IV 12"	15"	18"	24"	30"	36"	42"	48"
SIZE																																											
THICKNESS OR GAUGE																				.064	.064	.064	.064	.079	.079	.109	.109																
-RP_B4- 26+00.00	LT	15-26	15-27		40.2	18.0				80																																	
-RP_B4- 26+16.39	LT	15-28																												24													
-RP_B4- 26+66.15	RT	15-29		22.8																																							
-RP_B4- 26+66.15	RT	15-29	15-30		EX	20.9																								64													
-RP_B4- 28+45.00	LT	15-31		33.3																																							
-RP_B4- 28+45.00	LT	15-31	15-32		30.3	25.5				80																																	
-RP_B4- 31+55.00	RT	15-33		25.7																																							
-RP_B4- 31+55.00	RT	15-33	15-34		21.1	20.8																															52						
-RP_B4- 33+14.95	LT	15-35		23.2																																							
-RP_B4- 33+14.95	LT	15-35	15-36		17.0	EX																															76						
-RP_C4- 26+60.00	RT	15-37		20.0																																							
-RP_C4- 26+60.00	RT	15-37	15-38		17.3	16.7				16																																	
-RP_C4- 26+82.82	RT	15-38		23.6																																							
-RP_C4- 26+82.82	RT	15-38	15-39		16.7	12.3	X			16																																	
-Y1- 50+46.11	RT	15-39		22.0																																							
-RP_C4- 27+02	LT	15-40		21.8	17.9																																						
-L- 443+95.00	LT	15-41		56.6																																							
-L- 443+95.00	LT	15-42		56.9																																							
-L- 443+95.00	LT	15-41	15-42		53.6	53.6																															4						
-L- 443+95.00	LT	15-42	15-19		53.6	22.0																															44						
-L- 447+00.00	RT	15-43		52.6																																							
-L- 447+00.00	LT	15-44		52.6																																							
-L- 447+00.00		15-43	15-44		49.5	49.5																															4						
-L- 447+00.00	LT	15-44	15-45		49.5	36.5																															136						
-L-292+00.00	CL	04-05																																									
-L-292+00.00	RT	04-05	04-06							128																																	
-RP_A3- 19+15	CL	04-04																												156													
SHEET 3-D TOTAL										320																				244							316							
SHEET 3-C TOTAL										972	144																			92							1420		136	852				
SHEET 3-B TOTAL										844												148								308	292						684	72		360	320			
SHEET 3-A TOTAL										692																											788					232		
PROJECT TOTALS										2828	144											148								400	536						3208	72	136	1212	320	232		

STATION	** R.C. PIPE (CLASS V)	**** RC PIPE CULVERTS, CONTRACTOR DESIGN	**** RC PIPE CULVERTS, CONTRACTOR DESIGN	15" SIDE DRAIN PIPE	18" SIDE DRAIN PIPE	ENDWALLS STD. 838.01 838.11 OR STD. 838.80 (UNLESS NOTED OTHERWISE) CU. YARDS R.C.P.	C.S.P.	QUANTITIES FOR DRAINAGE STRUCTURES PER EACH (0' THRU 5.0')	LIN. FT. A 5.0' THRU 10.0'	LIN. FT. B 10.0' AND ABOVE	C.B. STD. 840.01 OR STD. 840.02	FRAME, GRATES, AND HOOD STANDARD 840.03 TYPE OF GRATE E	F	G	CONCRETE TRANSITIONAL SECTION DROP INLET	CATCH BASIN	D.I. FRAME WITH TWO GRATES STD. 840.16	G.D.I. TYPE "A" STD. 840.17 OR 840.26	G.D.I. TYPE "B" STD. 840.18 OR 840.27	G.D.I. (W.S. FLAT) FRAME WITH TWO GRATES STD. 840.20	G.D.I. FRAME WITH GRATE STD. 840.22	G.D.I. FRAME WITH TWO GRATES STD. 840.22	T.B.G.D.I. STD. 840.36	T.B.J.B. STD. 840.34	T.B.G.D.I. STD. 840.35	M.H. FRAME AND COVER STD. 840.54	CONVERT EXISTING D.I. TO J.B. w/ M.H.(SEE SHEET 2-H)	ADJUSTMENT OF 2 G.I.	STEEL FRAME WITH TWO GRATES 840.37	SIDE DRAIN PIPE ELBOWS NO. & SIZE	C.S. PIPE ELBOWS NO. & SIZE	CONC. COLLARS CL. "B" C.Y. STD. 840.72	PIPE REMOVAL LIN. FT.	REMARKS
-RP_B4- 26+00.00																															2 @ 18"				2-18" ELBOWS
-RP_B4- 26+16.39																																	0.5526		EXTEND 24" RCP & COLLAR
-RP_B4- 26+66.15																													1						
-RP_B4- 26+66.15																																			
-RP_B4- 28+45.00								1											1		1														
-RP_B4- 28+45.00																																			
-RP_B4- 31+55.00								1											1		1														
-RP_B4- 31+55.00																																			
-RP_B4- 33+14.95								1	1.2															1		1									
-RP_B4- 33+14.95																																		48	REMOVE 18" RCP
-RP_C4- 26+60.00								1											1				1												
-RP_C4- 26+60.00																																			
-RP_C4- 26+82.82																											1	1							REMOVE 2 G.I.
-RP_C4- 26+82.82																																			
-Y1- 50+46.11								1											1				1												
-RP_C4- 27+02								1											1				1												
-L- 443+95.00								1											1		1														
-L- 443+95.00								1											1		1														
-L- 443+95.00																																			
-L- 443+95.00																																			
-L- 447+00.00								1											1		1														
-L- 447+00.00								1											1		1														
-L- 447+00.00																																			
-L- 447+00.00																																			
-L-292+00.00								1											1				1												
-L-292+00.00																															2 @ 18"			40	REMOVE 30" RCP
-RP_A3- 19+15																																			
SHEET 3-D TOTAL								11	1.2										10		6		4		1		2	1	1		4 @ 18"		0.5526	88	
SHEET 3-C TOTAL						5.6		21	9.9	2.3									14		8		6		7					7	8 @ 18"	0	0	64	
																															2 @ 24"				
SHEET 3-B TOTAL						6.6		24	18.5	4.9							1		19		12	1	8		4					4	12 @ 18"	2 @ 18"	0	0	
SHEET 3-A TOTAL						4.9		25	3.2										22		12		10		3					3	14 @ 18"	0	0	40	
PROJECT TOTALS						17.1		81	32.8	7.2							1		65		38	1	28		14	1	2	1	1	14	38 @ 18"	2 @ 18"	0.5526	192	
									SAY 42.2 LF		(LF QUANTITY COMPUTED AS (32.8 + (1.3 * 7.2))																				2 @ 24"				

ABBREVIATIONS

C.B.	CATCH BASIN
N.D.I.	NARROW DROP INLET
D.I.	DROP INLET
G.D.I.	GRATED DROP INLET
G.D.I.(N.S.)	(NARROW SLOT)
J.B.	JUNCTION BOX
M.H.	MANHOLE
T.B.D.I.	TRAFFIC BEARING DROP INLET
T.B.J.B.	TRAFFIC BEARING JUNCTION BOX

4/10/2013WS

WSRAL-1003A

COMPUTED BY: DWM DATE: 6/27/2013

CHECKED BY: BKE DATE: 6/27/2013

NORTH CAROLINA DEPARTMENT OF TRANSPORTATION
DIVISION OF HIGHWAYS

PROJECT NO.	SHEET NO.
R-2633BB	3-E

Note: Invert Elevations indicated are for Bid Purposes only and shall not be used for project construction stakeout. See "Standard Specifications For Roads and Structures, Section 300-5".

LIST OF PIPES, ENDWALLS, ETC. (FOR PIPES 54" & OVER)

STATION	LOCATION (LT, RT, OR CL)'	STRUCTURE NO. FROM	STRUCTURE NO. TO	TOP ELEVATION	INVERT ELEVATION	INVERT ELEVATION	SLOPE CRITICAL	CLASS III R.C. PIPE (UNLESS NOTED OTHERWISE) SIZE 54" THICKNESS OR GAUGE	60"	66"	72"	78"	84"			C.S. PIPE SIZE 54" THICKNESS OR GAUGE .109	.138	.168	SHOP ELON-GATED .138	.168	60" .138	.168	66" .138	.168	72" .139	.168		STRUCTURAL PLATE PIPE 60" 12	10		66" 12	10		72" 12	10					REINFORCED ENDWALLS WITH R.C. - C.Y.	WITH C.S. - C.Y.	MASONRY DRAINAGE STRUCTURES CUBIC YARDS	C.B. STD. 840.01 OR 840.02	FRAMES, GRATES & HOOD STANDARD 840.03 TYPE OF GRATE E	F	G		CONCRETE TRANSITIONAL SECTION DROP INLET	CATCH BASIN												REINF. CONC. FLARED END SECTIONS NO. & SIZE	CORR. STEEL FLARED END SECTIONS NO. & Size	CORR. STEEL ELBOWS NO. & SIZE	CONC. COLLARS CL. "B" C.Y. STD. 840.72		PIPE REMOVAL LIN. FT.	REMARKS
-RP_D3- 18+00	CL	04-07						128																																	5.0																								
SHEET TOTALS								128																																	5.0																								
PROJECT TOTALS								128																																	5.0																								

ABBREVIATIONS

C.B.	CATCH BASIN
N.D.I.	NARROW DROP INLET
D.I.	DROP INLET
G.D.I.	GRATED DROP INLET
G.D.I.(N.S.)	GRATED DROP INLET (NARROW SLOT)
J.B.	JUNCTION BOX
M.H.	MANHOLE
T.B.D.I.	TRAFFIC BEARING DROP INLET
T.B.J.B.	TRAFFIC BEARING JUNCTION BOX

COMPUTED BY: WCB	DATE: 03/08/2013
CHECKED BY: DWM	DATE: 04/29/2013

STATE OF NORTH CAROLINA
DIVISION OF HIGHWAYS

PROJECT REFERENCE NO.	SHEET NO.
R-2633BB	3-F

CABLE GUIDERAIL SUMMARY

SURVEY LINE	STATION	STATION	LENGTH	END ANCHOR UNIT	INTERMEDIATE ANCHOR UNIT	COMMENTS
-L-	292+00	317+21	2,521	2	2	Beg. Project Tie to R-2633BA
-L-	389+45	397+59	814	2	0	
-L-	400+05	423+74	2,369	2	2	
-L-	426+75	437+29	1,054	2	0	
		SUBTOTAL:	6,758	8	4	
LESS TERMINAL ANCHOR UNITS			-200			
		GRAND TOTALS:	6,558	8	4	
		SAY:	6,600	8	4	

SUMMARY OF REMOVAL OF EXISTING ASPHALT PAVEMENT

SURVEY LINE	STATION	STATION	LOCATION LT/RT/CL	YD^2
-EY12-	10+90	11+23	CL.	84
-EY12-	14+95	15+45	CL.	128
-RP_B4-	21+87	23+00	LT.	301
		TOTAL:		513
		SAY:		520

SUMMARY OF BREAKING EXISTING ASPHALT PAVEMENT

SURVEY LINE	STATION	STATION	LOCATION LT/RT/CL	YD^2
-EY12-	11+23	14+95	CL.	951
-L-	438+33	438+33	LT./RT.	1938
-RP_B4-	23+00	24+32	CL.	533
		TOTAL:		3,422
		SAY:		3,430

WOVEN WIRE FENCE SUMMARY

SURVEY LINE	STATION	STATION	LOCATION (LT/CL/RT)	LINEAR FEET	4" POST	5" POSTS
-RPA3-	10+00	17+49	RT	715	48	6
-RPA3-	17+49	30+70	RT	1395	92	14
-L-	299+04	319+50	LT	2,180	140	30
-RPD3-	10+00	17+79	LT	745	51	5
-RPD3-	17+79	25+80	LT	813	53	11
-L-	297+31	320+00	RT	2,290	148	30
-L-	319+50	320+00	LT/RT	305	21	3
-L-/-RP_C4-	426+80	15+86	RT	1,528	98	22
-RP_B4-	22+82	23+74	LT	136	8	4
-RP_C4-	16+91	17+56	RT	142	8	4
-RP_C4-	32+40	40+28	LT	75	3	5
			TOTALS:	10,323.94	671	132
			SAY:	10,400	680	140

72" CHAIN LINK FENCE SUMMARY

SURVEY LINE	STATION	STATION	LOCATION (LT/CL/RT)	LINEAR FEET	LINE POST	TERMINAL POST
-L-/-RP_B4-	426+06	10+64	LT	781	65	3
-RP_B4-	10+70	11+25	LT	53	5	2
-RP_B4-	11+31	21+26	LT	1,038	87	5
-RP_B4-	12+66	21+05	LT	1,303	109	7
			TOTALS:	3,175	266	17
			SAY:	3,200	270	20

SHOULDER BERM GUTTER SUMMARY

SURVEY LINE	STATION	STATION	LENGTH
-L- (RT.)	302+50	317+16	1,466
-L- (LT.)	304+56	317+16	1,260
-L- (RT. Med.)	316+45	317+16	71
-L- (RT.)	389+50	397+34	784
-L- (LT.)	389+50	397+78	828
-L- (RT. Med.)	389+50	389+65	15
-L- (RT. Med.)	397+00	397+48	48
-L- (RT.)	399+77	403+00	323
-L- (LT.)	400+25	404+00	375
-L- (RT.)	422+00	424+07	207
-L- (LT.)	423+10	423+39	29
-L- (LT.)	426+31	430+83	452
-L- (RT.)	427+00	433+40	640
-L- (RT.)	439+06	439+60	54
-L- (RT.)	441+02	441+14	12
-L- (LT.)	441+47	443+98	251
-RP_B4- (LT.)	10+00	20+82	1,082
-RP_B4- (LT.)	22+57	28+50	593
-RP_C4- (RT.)	10+00	16+01	601
-RP_C4- (RT.)	17+41	20+14	273
		TOTAL:	9,364
		SAY:	9,400

120" CHAIN LINK FENCE SUMMARY

SURVEY LINE	STATION	STATION	LOCATION (LT/CL/RT)	LINEAR FEET	LINE POST	TERMINAL POST
-L-	389+25	398+03	LT	1,106	93	6
-L-	389+25	398+03	RT	1,090	92	6
-L-	401+02	423+38	LT	2,484	208	13
-L-	399+53	424+33	RT	2,924	245	13
			TOTALS:	7,604	638	38
			SAY:	7,700	640	40

SUMMARY OF BRIDGE WAITING PERIODS

BRIDGE DESCRIPTION	END BENT / BENT NO.	MONTHS
-L- OVER CAPE FEAR RIVER	1 & 2	1
-L- OVER RR (EY9)	1 & 2	1

Note: From Bridge Foundation Recommendations

SUMMARY OF SUBSURFACE DRAINAGE

SURVEY LINE	STATION	STATION	LOCATION (LT/CL/RT)	DRAIN TYPE* UD/BD/SD	LF
			CONTINGENCY	SD	1000
				TOTAL LF	1000

Note: From GEOTECHNICAL LETTER 4/22/13

* UD - UNDERDRAIN
* BD - BLIND DRAIN
* SD - SUBSURFACE DRAIN

12/06/07

SYTIME
R:\Roadway\Proj\R-2633B\R-2633BB_RDY_SUM.dgn
$$$$USERNAME$$$$

COMPUTED BY: B. BOLLMAN DATE: 07-02-12
CHECKED BY: D. MARTIN DATE: 04-29-13

PROJECT REFERENCE NO.	SHEET NO.
R-2633BB	3-G

DIVISION OF HIGHWAYS
STATE OF NORTH CAROLINA

SUMMARY OF EARTHWORK

IN CUBIC YARDS

Quantities are approximate only. The Resident Engineer will re-cross-section the work accurately when the project is staked out. These cross section notes will be used in computing the final quantities for which the contractor will be paid.

LOCATION	UNCLASSIFIED EXCAVATION	UNDERCUT	EMBT+%	BORROW	WASTE
SUMMARY 1					
-L- US 17 292+00 TO 317+40.00 (BEGIN BRIDGE)	577	-	447,693	447,116	-
-RPA3- 18+00 TO 31+35.18	450	-	21,515	21,065	-
-RPD3- 17+50 TO 26+40.30	178	-	13,363	13,185	-
TOTAL SUMMARY	1,205	-	482,570	481,365	-
SUMMARY 2					
-L- US 17 389+25.00 END BRG TO 397+79.55 (BEGIN BRG)	-	-	210,340	210,340	-
TOTAL SUMMARY	-	-	210,340	210,340	-
SUMMARY 3					
-L- US 17 399+77.00 (END BDG) TO 423+98.44 (BEG. BDG)	49	-	622,999	622,950	-
TOTAL SUMMARY	49	-	622,999	622,950	-
SUMMARY 4					
-L- US 17 426+44.41 (END BRG) TO 440+06.92 (BEGIN BRG)	-	-	584,625	584,625	-
-RP_B4- 18+00 TO 20+54.95 (BEGIN BRIDGE)	-	-	62,863	62,863	-
TOTAL SUMMARY	-	-	647,488	647,488	-
SUMMARY 5					
-L- US 17 441+01.41 (END BRIDGE) TO 447+24.07	772	-	137,478	136,706	-
-RP_B4- 22+17.34 (END BRIDGE) TO 33+41.66	841	-	73,945	73,104	-
-RP_C4- 22+00 TO 27+05.63	181	-	2,855	2,674	-
-Y1- (R-2633CA) US 421 37+50 TO 41+00	238	-	484	246	-
-EY12DR1-- 10+00 TO 13+00	196	-	-	-	196
-BASIN-- 433+00 TO 440+00	54,555	-	-	-	54,555
TOTAL SUMMARY	56,783	-	214,761	212,729	54,751
SUBTOTAL (SUMMARIES 1 - 5)	58,037	-	2,178,158	2,174,872	54,751
EST. LOSS DUE TO CLEAR. & GRUBBING	-		-	-	-
SHOULDER MATERIAL			12,500	12,500	
WASTE IN LIEU OF BORROW				-54,751	
PROJECT TOTAL	58,037	-	2,190,658	2,132,621	-
EST. 5% TO REPLACE TOP SOIL ON BORROW PIT				106,631	
GRAND TOTAL	58,037	-	2,190,658	2,239,252	
SAY:	59,000			2,240,000	

EST. UNDERCUT = 4,500 CY
EST. DDE = 4,700 CY

NOTE: EARTHWORK QUANTITIES ARE CALCULATED BY THE ROADWAY DESIGN UNIT. THESE EARTHWORK QUANTITIES ARE BASE IN PART ON SUBSURFACE DATA PROVIDED BY THE GEOTECHNICAL ENGINEERING UNIT.

6/4/99

SYTIME
R:\Roadway\Proj\R-2633BB\R-2633BB_RDY_SUM_EWK.dgn
$$$$USERNAME$$$$

WSRAL-0801A

COMPUTED BY:	DWM	DATE:	1/14/2013
CHECKED BY:	BKE	DATE:	05/05/2013

DIVISION OF HIGHWAYS
STATE OF NORTH CAROLINA

PROJECT REFERENCE NO.	SHEET NO.
R-2633BB	3-H

GUARDRAIL SUMMARY

"N" = DISTANCE FROM EDGE OF LANE TO FACE OF GUARDRAIL
TOTAL SHOULDER WIDTH = DISTANCE FROM EDGE OF TRAVEL LANE TO SHOULDER BREAK POINT.
FLARE LENGTH = DISTANCE FROM LAST SECTION OF PARALLEL GUARDRAIL TO END OF GUARDRAIL
W = TOTAL WIDTH OF FLARE FROM BEGIN

G = GATING IMPACT ATTENUATOR TYPE 350
NG = NON-GATING IMPACT ATTENUATOR TYPE 350

SURVEY LINE	BEG. STA.	END STA.	LOCATION	LENGTH			WARRANT POINT		"N" DIST. FROM E.O.L.	TOTAL SHOUL WIDTH	FLARE LENGTH		W		ANCHORS									IMPACT ATTENUATOR TYPE 350		SINGLE FACED CONCRETE BARRIER	REMOVE EXISTING GUARDRAIL	REMOVE & STOCKPILE EXISTING GUARDRAIL	REMARKS		
				STRAIGHT	SHOP CURVED	DOUBLE FACED	APPROACH END	TRAILING END			APPROACH END	TRAILING END	APPROACH END	TRAILING END	XI MOD	IAU	GRAU 350	M-350	XIII	AT-1	CAT-1	B-77	TES	G	NG						
L	301+90.00	317+40.00	RT	1550.00			303+50.00	BRIDGE	14	17	50		1				1					1									
L	304+40.00	317+40.00	LT	1300.00			BRIDGE	304+50.00	14	17											1	1									
L	315+27.50	317+40.00	RT/MED	212.50			BRIDGE		6	9	37.5		4					1				1									
L	389+25.00	391+37.50	LT/MED	212.50			BRIDGE		6	9	37.5		4					1				1									
L	389+25.00	397+56.46	RT	837.50			BRIDGE	BRIDGE	14	17												2									
L	389+25.00	398+02.91	LT	887.50			BRIDGE	BRIDGE	14	17												2									
L	395+60.48	397+72.98	RT/MED	212.50			BRIDGE		6	9	37.5		4					1				1									
L	399+83.98	401+96.48	LT/MED	212.50			BRIDGE		6	9	37.5		4					1				1									
L	399+52.47	403+02.47	RT	350.00			BRIDGE	403+00.00	14	17											1	1									
L	400+01.83	404+51.83	LT	450.00			BRIDGE	403+00.00	14	17	50		1				1					1									
L	421+32.80	424+32.80	RT	300.00			BRIDGE		14	17	50		1				1					1									
L	421+95.43	424+07.93	RT/MED	212.50			BRIDGE		6	9	37.5		4					1				1									
L	426+34.60	428+47.10	LT/MED	212.50			BRIDGE		6	9	37.5		4					1				1									
L	426+06.17	21+07.05/RP_B4	LT	1637.50			BRIDGE	BRIDGE	14	17												2									
L	426+77.62	16+24.38/RP_C4	RT	1350.00			BRIDGE	BRIDGE	14	17												2									
L	438+08.37	439+83.37	RT	175.00			BRIDGE		14	17												1			1						
L	437+89.20	440+01.70	RT/MED	212.50			BRIDGE		6	9	37.5		4					1				1									
L	438+24.57	440+12.07	LT/MED	187.50			BRIDGE		6	9	37.5		4					1				1									
L	441+24.35	445+99.35	LT	475.00			444+50.00	BRIDGE	14	17	50		1				1					1									
RP_C4	14+75.92	16+33.83	LT	162.50			BRIDGE		4	14												1									
RP_C4	17+16.38	21+16.38	RT	400.00			BRIDGE	21+15.00	14	17											1	1									
RP_B4	19+41.09	20+78.59	RT	137.50			BRIDGE	19+50.00	12	15											1	1									
RP_B4	22+08.58	23+58.58	RT	150.00			BRIDGE		12	15	50		1				1					1									
RP_B4	22+37.04	26+99.54	LT	462.50			28+00.00	BRIDGE	14	17	50		1				1					1									
RP_B4	30+92.00	32+67.00	LT	112.50	62.50		31+00.00	31+00.00	12	15										1	1										
EY12DR1	10+00		LT	25.00																			2								
EY12	15+51.00			25.00																			2								
		SUB-TOTAL		12462.50	62.50	0.00										0	6	8	0	1	5	28	4	0	1						
LESS ANCHORS:																															
GRAU 350		6	@ 50.00	- 300.00																											
M-350		8	@ 37.50	- 300.00																											
CAT-1		5	@ 6.25	- 31.25																											
AT-1		1	@ 6.25	- 6.25																											
B-77		28	@ 18.75	- 525.00																											
		TOTAL		11,300	62.50	0.00											6	8		1	5	28	4	0	1						
		SAY		11,300	75.00	0.00											6	8		1	5	28	4		1				ADDITIONAL POSTS= 10 EA		
			ADDITIONAL POSTS= 10 EA																												

PROJECT REFERENCE NO.	SHEET NO.
R-2633BB	3-1

STATE OF NORTH CAROLINA
DIVISION OF HIGHWAYS

PARCEL INDEX

PARCEL No.	SHEET No.	PROPERTY OWNER NAME
45	4	NEHEMIAH HOLLIDAY
59	4,5,6,7	WILMINGTON RIVER CLUB, LLC
76	5,6	COUNTY OF BRUNSWICK
77	6	HIGH RISE SERVICE CO., INC
78	7,8,9,10	CITY OF WILMINGTON
79	10,11,12,13,14	CAROLINA POWER AND LIGHT CO.
80	13	RIVERFRONT COMPANY, LLC
81	–	UNKNOWN
82	14	OLD DOMINION FREIGHT LINE, INC.
83	–	UNKNOWN
910	14	TIDEWATER TRANSIT CO., INC.
84	14,15	NEAL B. GLAZEBROOK, ETUX
85	14,15	DARRELL W. McCALL
85A	15	ELLINGTON & SONS, LLC
86	14	BGCS PROPERTY ASSOC., LLC.
87	14,15	HENRY G. LESSING, ET UX
88	14,15	MILTON R. HARDISON
89	15	LENA C EDWARDS, ETVIR
90	15	MILTON R. HARDISON
91	15	BLUE BIRD HOLDING COMPANY, INC.
92	–	UNKNOWN
93	–	UNKNOWN
94	15	HARRY L. TURNER
95	15	NORTH CAROLINA DEPARTMENT OF TRANSPORTATION
96	15	YELLOW TRANSPORTATION, INC.
904	15	SOUTHEASTERN PET CREMATION, INC
905	15	ICR CONTRACTING CO. INC.

PARCEL No.	SHEET No.	PROPERTY OWNER NAME

PARCEL No.	SHEET No.	PROPERTY OWNER NAME

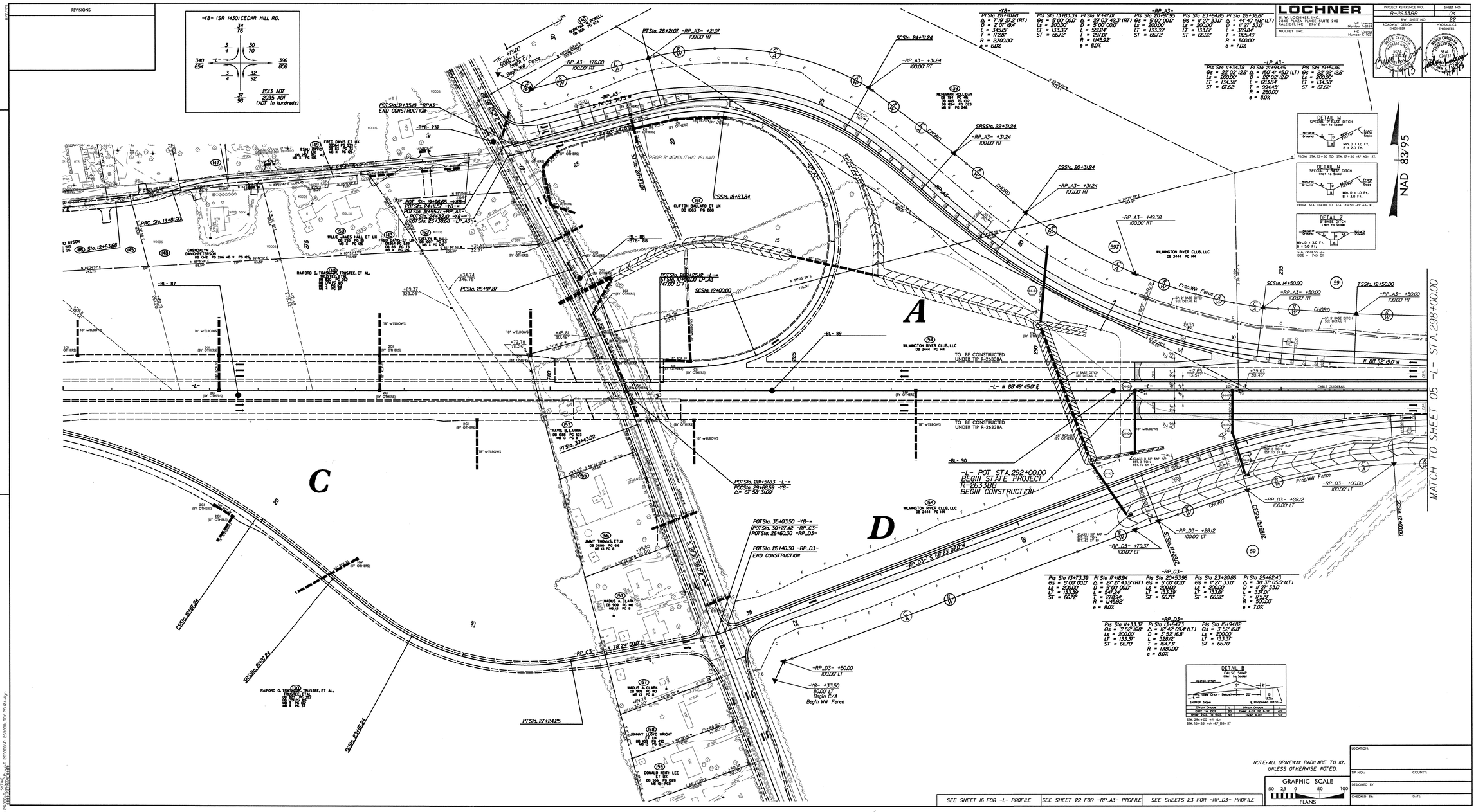

LOCHNER
H. W. LOCHNER, INC.
2840 PLAZA PLACE, SUITE 202
RALEIGH, NC 27612
NC License Number F-0159
MULKEY INC.
NC License Number C-1021
PROJECT REFERENCE NO.
R-2633BB
SHEET NO.
04
R/W SHEET NO.
22
ROADWAY DESIGN ENGINEER
HYDRAULICS ENGINEER
NORTH CAROLINA PROFESSIONAL SEAL 25 MAY 2012
NORTH CAROLINA PROFESSIONAL SEAL 02 MAY 2012
REVISIONS
-Y8- (SR 1430) CEDAR HILL RD.
2013 ADT
2035 ADT
(ADT In hundreds)
NAD 83/95
MATCH TO SHEET 05 -L- STA.298+00.00
-L- POT STA.292+00.00
BEGIN STATE PROJECT
R-2633BB
BEGIN CONSTRUCTION
A
C
D
PROP. 5' MONOLITHIC ISLAND
TO BE CONSTRUCTED UNDER TIP R-2633BA
WILMINGTON RIVER CLUB, LLC
CLIFTON BALLARD ET UX
RAIFORD G. TRAVIS TRUSTEE, ET AL.
JIMMY THOMAS, ETUX
WADUS A. CLARK
JOHNNY LLOYD WRIGHT
DONALD KEITH LEE ET UX
DETAIL M
SPECIAL 3' BASE DITCH
DETAIL N
SPECIAL 3' BASE DITCH
DETAIL 7
5' BASE DITCH
DETAIL B
FALSE SUMP
NOTE: ALL DRIVEWAY RADII ARE TO 10'. UNLESS OTHERWISE NOTED.
GRAPHIC SCALE
50 25 0 50 100
PLANS
SEE SHEET 16 FOR -L- PROFILE
SEE SHEET 22 FOR -RP_A3- PROFILE
SEE SHEETS 23 FOR -RP_D3- PROFILE
LOCATION:
TIP NO.:
COUNTY:
DESIGNED BY:
CHECKED BY:
DATE:

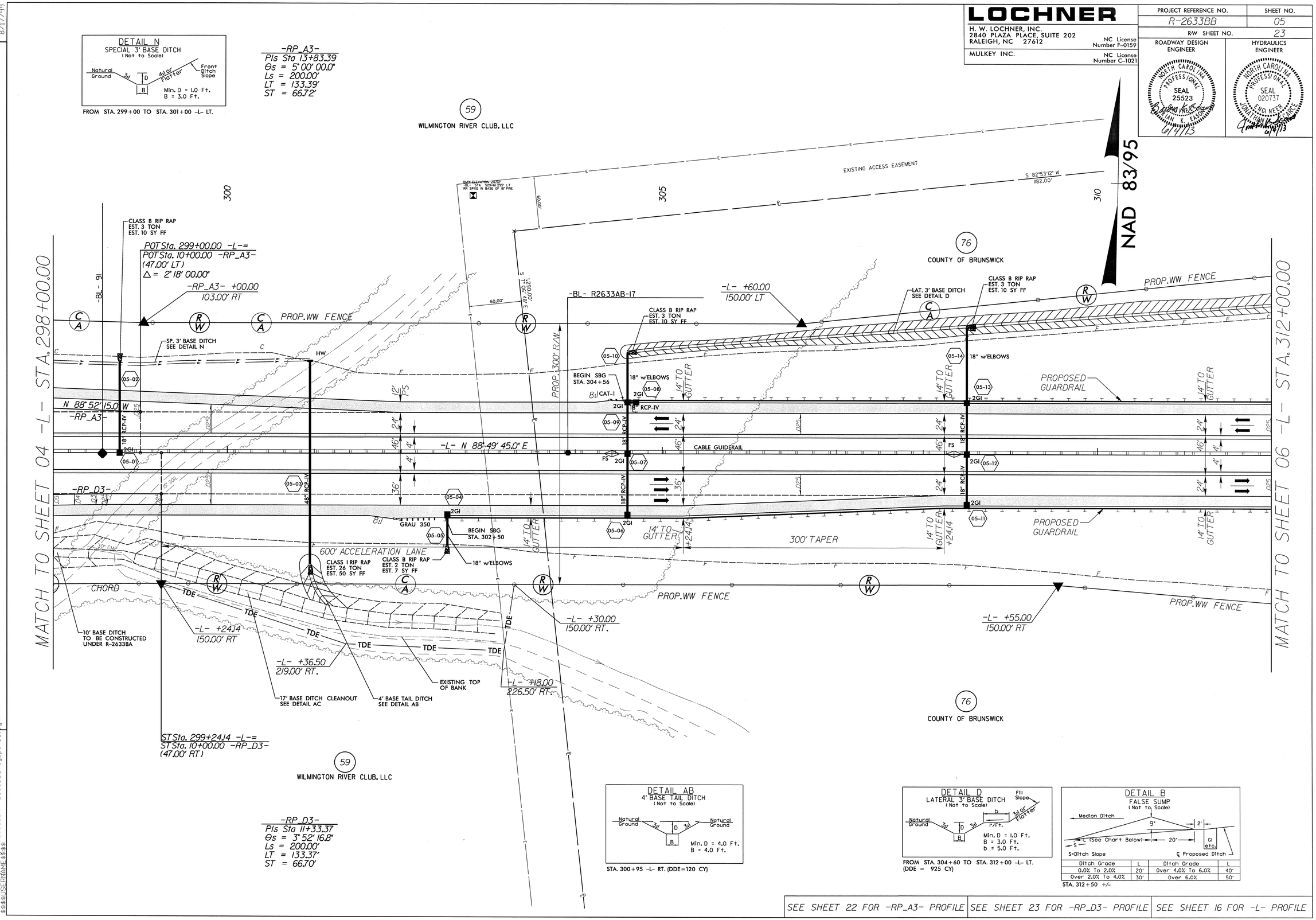

LOCHNER
H. W. LOCHNER, INC.
2840 PLAZA PLACE, SUITE 202
RALEIGH, NC 27612
NC License Number F-0159
MULKEY INC.
NC License Number C-1021
PROJECT REFERENCE NO.
R-2633BB
SHEET NO.
05
R/W SHEET NO.
23
ROADWAY DESIGN ENGINEER
HYDRAULICS ENGINEER
NORTH CAROLINA PROFESSIONAL SEAL 25523 ENGINEER JONATHAN K. EASON
NORTH CAROLINA PROFESSIONAL SEAL 020737 ENGINEER JONATHAN K. CARCE
6/4/13
DETAIL N
SPECIAL 3' BASE DITCH
(Not to Scale)
Natural Ground
3:1
D
B
4:1 or Flatter
Front Ditch Slope
Min. D = 1.0 Ft.
B = 3.0 Ft.
FROM STA. 299+00 TO STA. 301+00 -L- LT.
-RP_A3-
PIs Sta 13+83.39
Θs = 5° 00' 00.0"
Ls = 200.00'
LT = 133.39'
ST = 66.72'
59
WILMINGTON RIVER CLUB, LLC
EXISTING ACCESS EASEMENT
S 82°53'12" W
1182.00'
NAD 83/95
300
305
310
76
COUNTY OF BRUNSWICK
CLASS B RIP RAP
EST. 3 TON
EST. 10 SY FF
POT Sta. 299+00.00 -L-=
POT Sta. 10+00.00 -RP_A3-
(47.00' LT)
Δ = 2° 18' 00.00"
-RP_A3- +00.00
103.00' RT
-BL- 91
PROP.WW FENCE
SP. 3' BASE DITCH
SEE DETAIL N
HW
-BL- R2633AB-17
-L- +60.00
150.00' LT
LAT. 3' BASE DITCH
SEE DETAIL D
CLASS B RIP RAP
EST. 3 TON
EST. 10 SY FF
PROP. 300' R/W
BEGIN SBG
STA. 304+56
18" w/ELBOWS
14' TO GUTTER
PROPOSED GUARDRAIL
N 88° 52' 15.0" W
-RP_A3-
-L- N 88° 49' 45.0" E
CABLE GUIDERAIL
-RP_D3-
GRAU 350
BEGIN SBG
STA. 302+50
600' ACCELERATION LANE
CLASS I RIP RAP
EST. 26 TON
EST. 50 SY FF
CLASS B RIP RAP
EST. 2 TON
EST. 7 SY FF
300' TAPER
CHORD
TDE
10' BASE DITCH
TO BE CONSTRUCTED
UNDER R-2633BA
-L- +24.14
150.00' RT
-L- +36.50
219.00' RT.
17' BASE DITCH CLEANOUT
SEE DETAIL AC
4' BASE TAIL DITCH
SEE DETAIL AB
EXISTING TOP OF BANK
-L- +18.00
226.50' RT.
-L- +30.00
150.00' RT.
-L- +55.00
150.00' RT
ST Sta. 299+24.14 -L-=
ST Sta. 10+00.00 -RP_D3-
(47.00' RT)
MATCH TO SHEET 04 -L- STA. 298+00.00
MATCH TO SHEET 06 -L- STA. 312+00.00
-RP_D3-
PIs Sta 11+33.37
Θs = 3° 52' 16.8"
Ls = 200.00'
LT = 133.37'
ST = 66.70'
DETAIL AB
4' BASE TAIL DITCH
(Not to Scale)
Natural Ground
Min. D = 4.0 Ft.
B = 4.0 Ft.
STA. 300+95 -L- RT. (DDE=120 CY)
DETAIL D
LATERAL 3' BASE DITCH
(Not to Scale)
Fill Slope
Min. D = 1.0 Ft.
B = 3.0 Ft.
b = 5.0 Ft.
FROM STA. 304+60 TO STA. 312+00 -L- LT.
(DDE = 925 CY)
DETAIL B
FALSE SUMP
(Not to Scale)
Median Ditch
9"
2'
20'
L (See Chart Below)
S=Ditch Slope
℄ Proposed Ditch
Ditch Grade | L | Ditch Grade | L
0.0% To 2.0% | 20' | Over 4.0% To 6.0% | 40'
Over 2.0% To 4.0% | 30' | Over 6.0% | 50'
STA. 312+50 +/-
SEE SHEET 22 FOR -RP_A3- PROFILE
SEE SHEET 23 FOR -RP_D3- PROFILE
SEE SHEET 16 FOR -L- PROFILE
REVISIONS
8/17/99
SYTIME
R:\Roadway\Proj\R-2633BB\R-2633BB_Rdy_psh05.dgn
$$$$USERNAME$$$$

LOCHNER	PROJECT REFERENCE NO.	SHEET NO.
H. W. LOCHNER, INC. 2840 PLAZA PLACE, SUITE 202 RALEIGH, NC 27612 NC License Number F-0159	R-2633BB	06
MULKEY INC. NC License Number C-1021	R/W SHEET NO.	24
	ROADWAY DESIGN ENGINEER	HYDRAULICS ENGINEER
	NORTH CAROLINA PROFESSIONAL SEAL 25523 ENGINEER BRIAN K. EASON 6/4/13	NORTH CAROLINA PROFESSIONAL SEAL 020737 ENGINEER 6/4/13

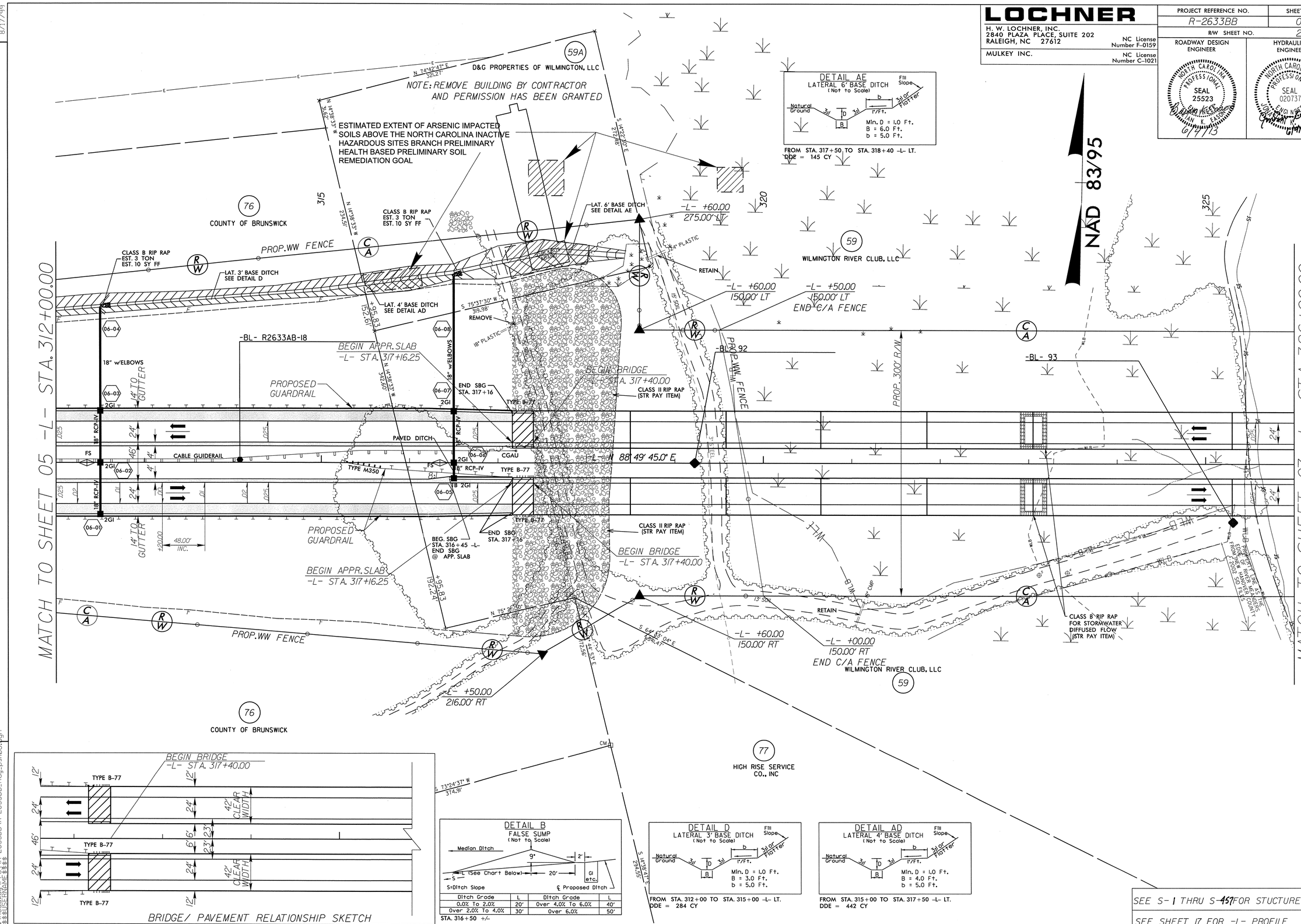

REVISIONS

8/17/99

SYTIME
R:\Roadway\Proj\R-2633BB\R-2633BB_Rdy_psh06.dgn
$$$$USERNAME$$$$

LOCHNER	PROJECT REFERENCE NO.	SHEET NO.
H. W. LOCHNER, INC. 2840 PLAZA PLACE, SUITE 202 RALEIGH, NC 27612 — NC License Number F-0159	R-2633BB	07
MULKEY INC. — NC License Number C-1021	R/W SHEET NO.	25
	ROADWAY DESIGN ENGINEER	HYDRAULICS ENGINEER

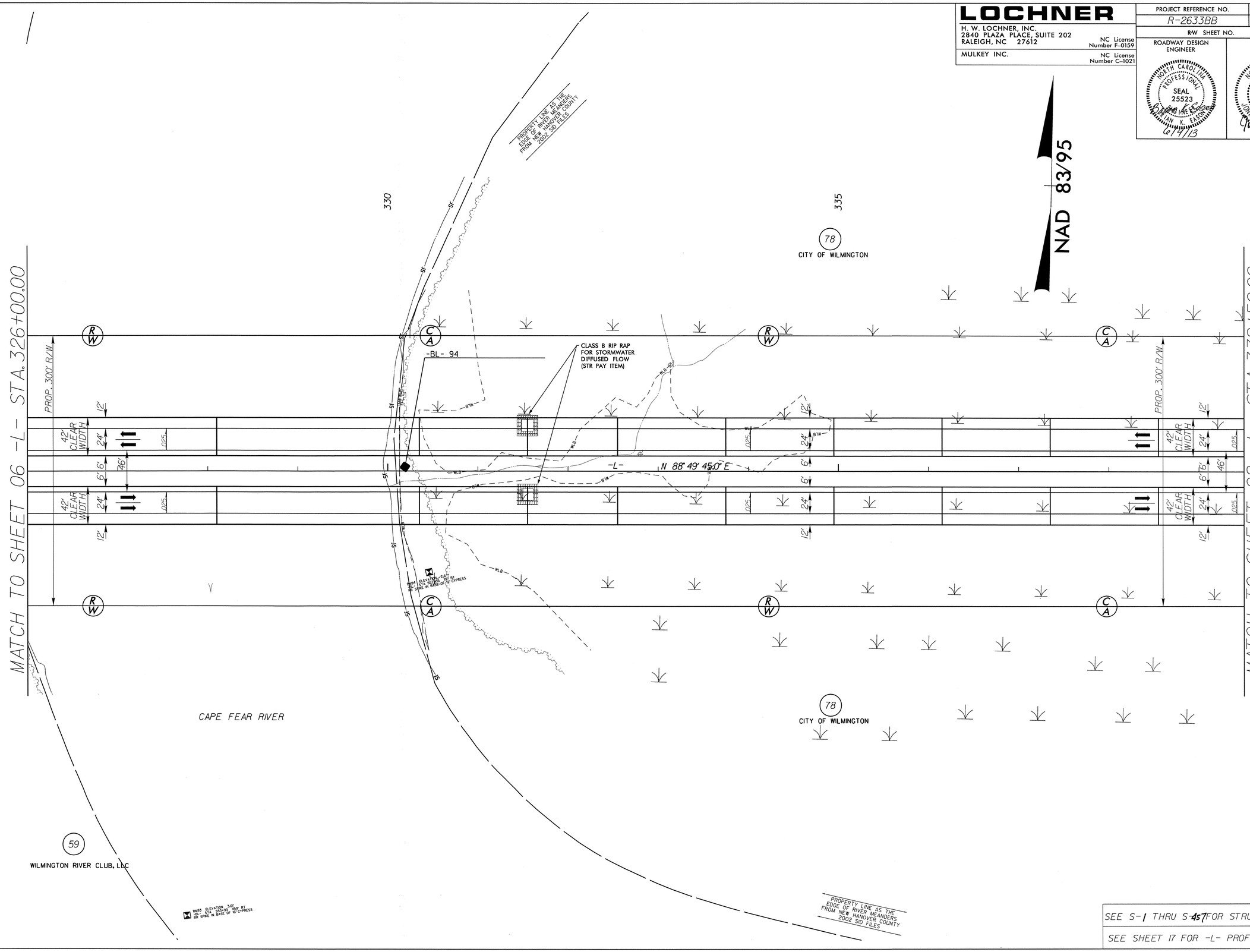

SEE S-1 THRU S-457 FOR STRUCTURE PLANS

SEE SHEET 17 FOR -L- PROFILE

REVISIONS

8/17/99

SYTIME
R:\Roadway\Proj\R-2633BB\R-2633BB_Rdy_psh07.dgn
$$$$USERNAME$$$$

LOCHNER	PROJECT REFERENCE NO.	SHEET NO.
H. W. LOCHNER, INC. 2840 PLAZA PLACE, SUITE 202 RALEIGH, NC 27612 NC License Number F-0159	R-2633BB	08
MULKEY INC. NC License Number C-1021	R/W SHEET NO.	26
	ROADWAY DESIGN ENGINEER	HYDRAULICS ENGINEER
	NORTH CAROLINA PROFESSIONAL SEAL 25523 ENGINEER JONATHAN K. EASON 6/4/13	NORTH CAROLINA PROFESSIONAL SEAL 020737 ENGINEER JONATHAN K. EASON 6/4/13

-L-
PI Sta 383+94.77
Δ = 51° 49' 22.8" (LT)
D = 0° 38' 11.8"
L = 8,140.34'
T = 4,372.40'
R = 9,000.00'
e = 2.5%
RUNOFF = 113'

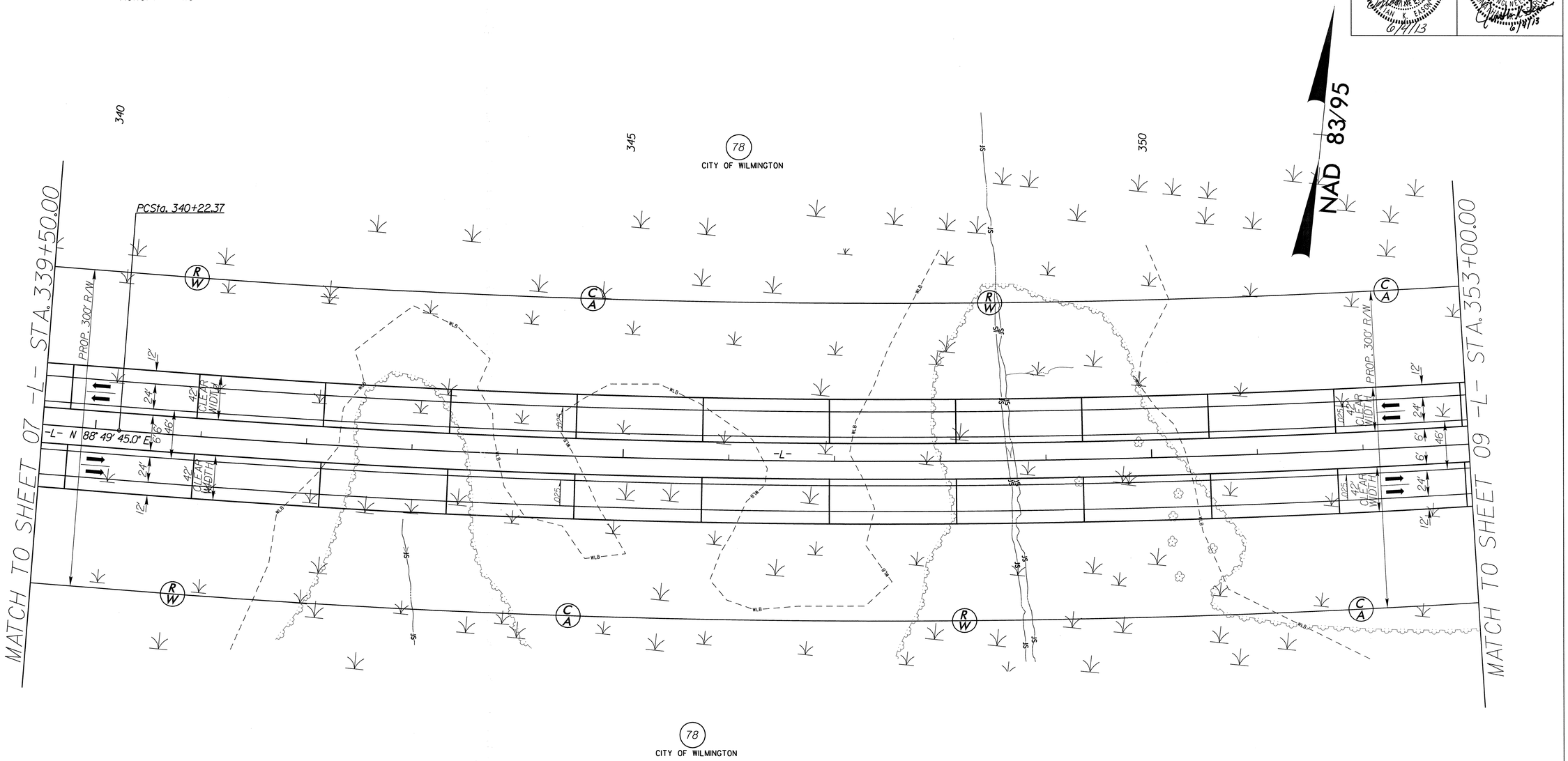

REVISIONS

8/17/99

SYTIME
R:\Roadway\Proj\R-2633BB\R-2633BB_Rdy_psh08.dgn
$$$$USERNAME$$$$

SEE S-1 THRU S-457 FOR STRUCTURE PLANS

SEE SHEET 18 FOR -L- PROFILE

LOCHNER	PROJECT REFERENCE NO.	SHEET NO.
H. W. LOCHNER, INC. 2840 PLAZA PLACE, SUITE 202 RALEIGH, NC 27612 — NC License Number F-0159	R-2633BB	09
MULKEY INC. — NC License Number C-1021	R/W SHEET NO.	27
	ROADWAY DESIGN ENGINEER	HYDRAULICS ENGINEER
	NORTH CAROLINA PROFESSIONAL SEAL 25523 ENGINEER JOHN K. EASTON 6/4/13	NORTH CAROLINA PROFESSIONAL SEAL 020737 ENGINEER JONATHAN K. GRIFFIN 6/4/13

-L-
PI Sta 383+94.77
Δ = 51° 49' 22.8" (LT)
D = 0° 38' 11.8"
L = 8,140.34'
T = 4,372.40'
R = 9,000.00'
e = 2.5%
RUNOFF = 113'

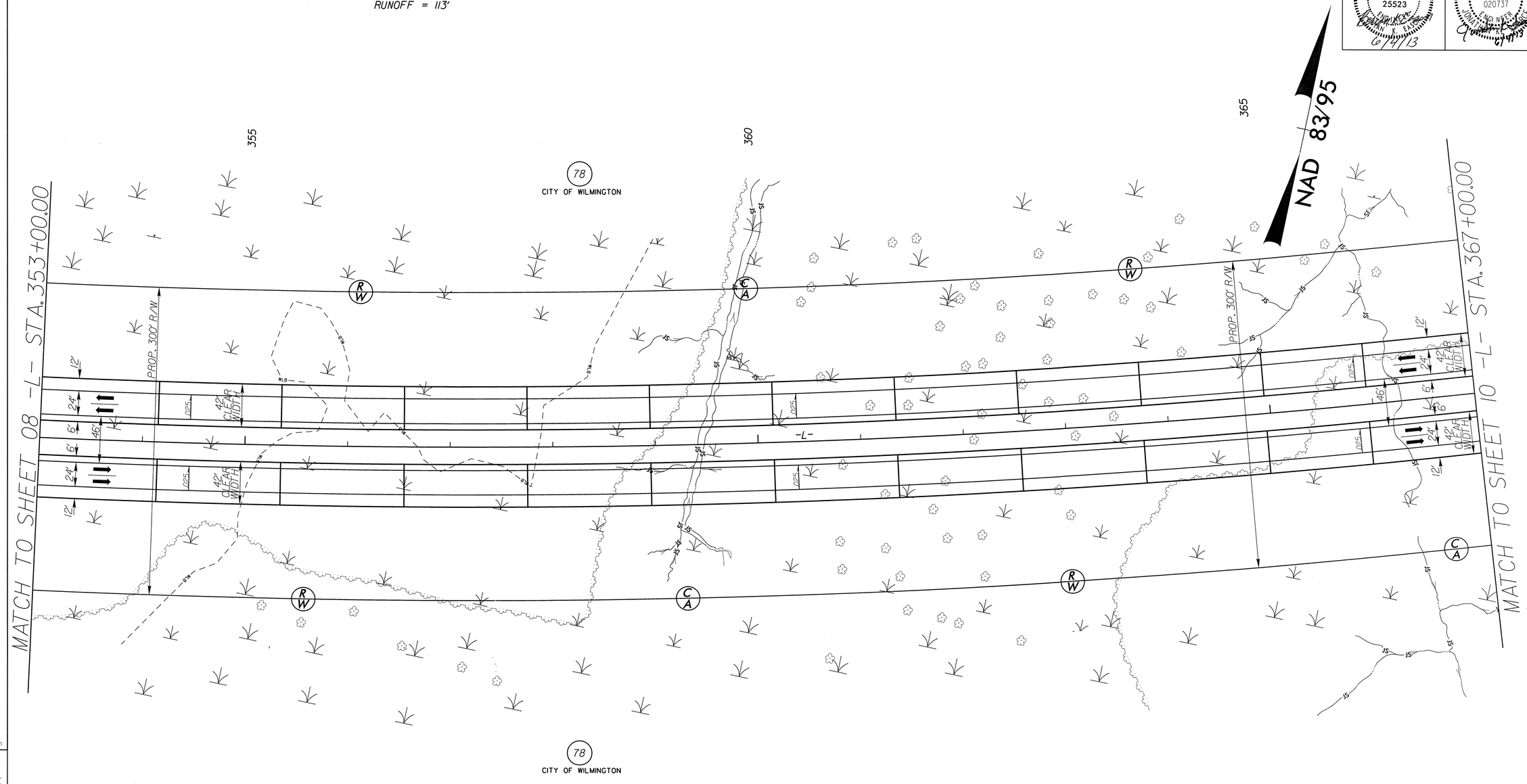

REVISIONS

8/17/99

SYTIME
R:\Roadway\Proj\R-2633BB\R-2633BB_Rdy_psh09.dgn
$$$$USERNAME$$$$

SEE S-1 THRU S-457 FOR STRUCTURE PLANS

SEE SHEET 18 FOR -L- PROFILE

LOCHNER	PROJECT REFERENCE NO.	SHEET NO.
H. W. LOCHNER, INC. 2840 PLAZA PLACE, SUITE 202 RALEIGH, NC 27612 NC License Number F-0159	R-2633BB	10
MULKEY INC. NC License Number C-1021	R/W SHEET NO.	28
	ROADWAY DESIGN ENGINEER NORTH CAROLINA PROFESSIONAL SEAL 25523 ENGINEER 6/4/13	HYDRAULICS ENGINEER NORTH CAROLINA PROFESSIONAL SEAL 020737 ENGINEER 6/4/13

-L-
PI Sta 383+94.77
Δ = 51° 49' 22.8" (LT)
D = 0° 38' 11.8"
L = 8,140.34'
T = 4,372.40'
R = 9,000.00'
e = 2.5%
RUNOFF = 113'

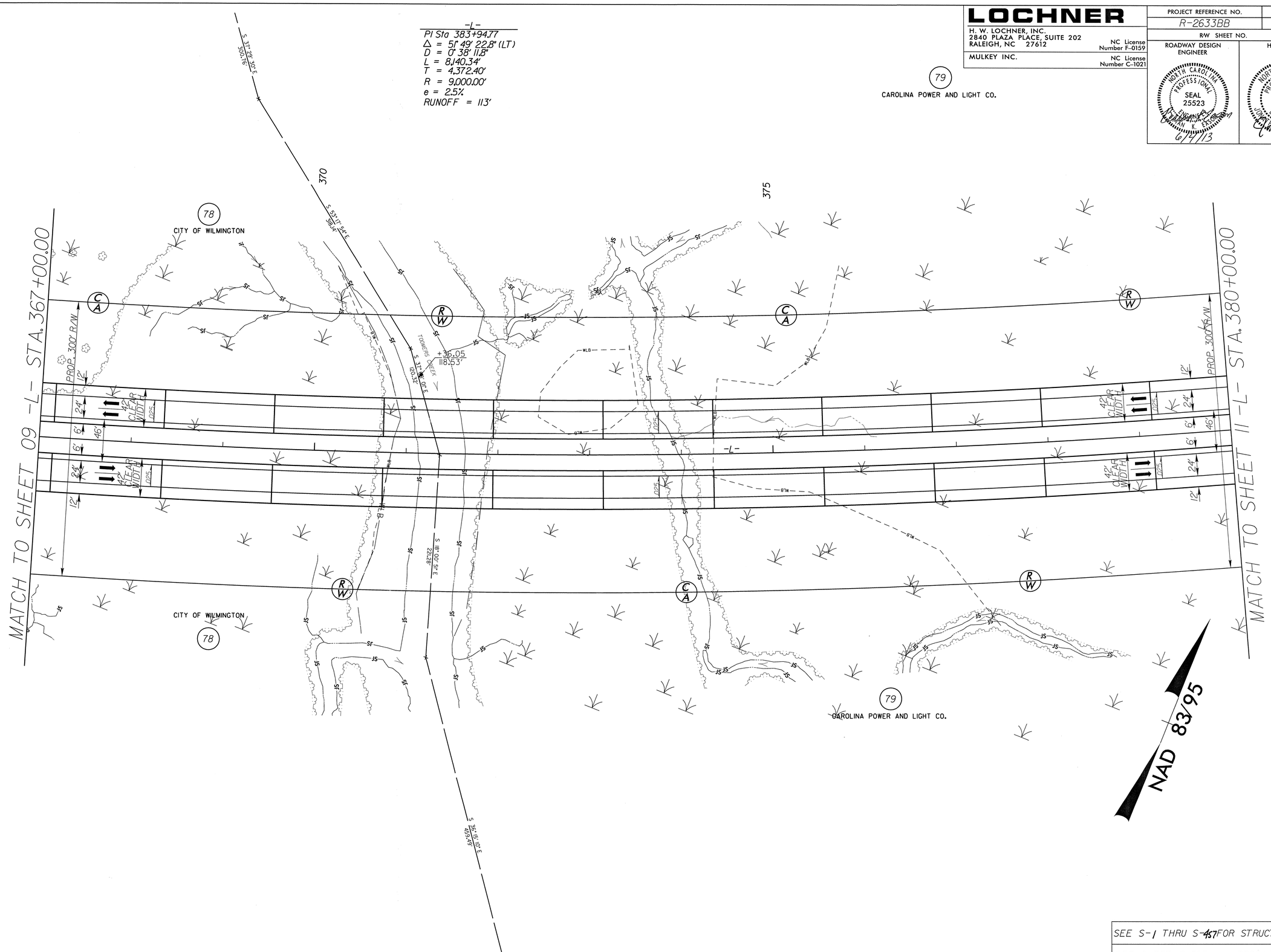

SEE S-1 THRU S-457 FOR STRUCTURE PLANS

SEE SHEET 19 FOR -L- PROFILE

REVISIONS

8/17/99

SYTIME
R:\Roadway\Proj\R-2633BB\R-2633BB_Rdy_psh10.dgn
$$$$USERNAME$$$$

LOCHNER
H. W. LOCHNER, INC.
2840 PLAZA PLACE, SUITE 202
RALEIGH, NC 27612
NC License Number F-0159

MULKEY INC.
NC License Number C-1021

PROJECT REFERENCE NO.	SHEET NO.
R-2633BB	11
R/W SHEET NO.	29
ROADWAY DESIGN ENGINEER	HYDRAULICS ENGINEER

NORTH CAROLINA PROFESSIONAL SEAL 25523 ENGINEER
6/14/13

NORTH CAROLINA PROFESSIONAL SEAL 020737 ENGINEER
6/14/13

REVISIONS

8/17/99

-L-
PI Sta 383+94.77
Δ = 51° 49' 22.8" (LT)
D = 0° 38' 11.8"
L = 8,140.34'
T = 4,372.40'
R = 9,000.00'
e = 2.5%
RUNOFF = 113'

NAD 83/95

79
CAROLINA POWER AND LIGHT CO.

385

390

MATCH TO SHEET 10 -L- STA. 380+00.00

MATCH TO SHEET 12 -L- STA. 393+00.00

PROP. 300' R/W

PROP. 370' R/W

-L- +30.00
185.00' LT

-L- +74.00
185.00' LT

-L- +24.57
185.00' LT

-L- +30.00
150.00' LT

PROP. 120" CHAIN LINK

LAT. 2' BASE DITCH SEE DETAIL A

LAT. 2' BASE DITCH SEE DETAIL AC

CLASS B RIP RAP
EST. 3 TON
EST. 10 SY FF

CLASS II RIP RAP (STR PAY ITEM)

18" w/ELBOWS

-BL- 96

-BL- 97

-L- +25.00
BEGIN C/A 120" CHAIN LINK FENCE

END BRIDGE
-L- STA. 389+25.00

END APPR. SLAB
-L- STA. 389+49.06

PROPOSED GUARDRAIL

14' TO GUTTER

42' CLEAR WIDTH

12' 24' 6' 6' 24' 12'

46' 6' 6'

-L-

TYPE B-77

BEGIN SBG STA. 389+50

18" RCP-IV

END SBG STA. 389+65

TYPE M350

CGAU

TB 2GI

CABLE GUIDERAIL

END APPR. SLAB
-L- STA. 389+48.69

END BRIDGE
-L- STA. 389+25.00

-L- +30.00
150.00' RT

-L- +30.00
185.00' RT

-L- +74.00
185.00' RT

-L- +24.50
185.00' RT

-L- +59.00
185.00' RT

BM96 ELEVATION 7.55'
96' - STA 389+60 7.52' RT.
80' SPIKE IN BASE OF 24" TWIN OAK

79
CAROLINA POWER AND LIGHT CO.

END BRIDGE
-L- STA. 389+25.00

TYPE B-77

42' CLEAR WIDTH

CGAU

CABLE GUIDERAIL

BRIDGE/ PAVEMENT RELATIONSHIP SKETCH

DETAIL B
FALSE SUMP
(Not to Scale)

Median Ditch

9' 2' 20' GI etc.

L (See Chart Below) S

S=Ditch Slope ℄ Proposed Ditch

Ditch Grade	L	Ditch Grade	L
0.0% To 2.0%	20'	Over 4.0% To 6.0%	40'
Over 2.0% To 4.0%	30'	Over 6.0%	50'

STA. 389+50 +/-

DETAIL AC
LATERAL 2' BASE DITCH
(Not to Scale)

Natural Ground 3:1 D 3:1 B b 1'/Ft. Fill Slope 3:1 or Flatter

Min. D = 0.0 Ft.
B = 2.0 Ft.
b = 5.0 Ft.

FROM STA. 388+25 TO STA. 390+50 -L- LT.
DDE = 101
FROM STA. 387+60 TO STA. 389+00 -L- RT.
DDE = 44

DETAIL A
LATERAL 2' BASE DITCH
(Not to Scale)

Natural Ground 3:1 D 3:1 B b 1'/Ft. Fill Slope 3:1 or Flatter

Min. D = 1.0 Ft.
B = 2.0 Ft.
b = 5.0 Ft.

FROM STA. 390+50 TO STA. 393+00 -L- LT.
DDE = 202 CY
FROM STA. 389+00 TO STA. 393+00 -L- RT.
DDE = 416 CY

SEE S-1 THRU S-457 FOR STRUCTURE PLANS

SEE SHEET 19 FOR -L- PROFILE

SYTIME
R:\Roadway\Proj\R-2633BB\R-2633BB_Rdy_psh11.dgn
$$$$USERNAME$$$$

LOCHNER	PROJECT REFERENCE NO.	SHEET NO.
H. W. LOCHNER, INC. 2840 PLAZA PLACE, SUITE 202 RALEIGH, NC 27612 — NC License Number F-0159	R-2633BB	12
MULKEY INC. — NC License Number C-1021	R/W SHEET NO.	30
ROADWAY DESIGN ENGINEER	HYDRAULICS ENGINEER	

NORTH CAROLINA PROFESSIONAL SEAL 25523 ENGINEER BRIAN K. EARNHARDT 6/14/13

NORTH CAROLINA PROFESSIONAL SEAL 020737 ENGINEER JAMES W. CRAIG 6/14/13

REVISIONS

8/17/99

-L-
PI Sta 383+94.77
Δ = 51° 49' 22.8" (LT)
D = 0° 38' 11.8"
L = 8,140.34'
T = 4,372.40'
R = 9,000.00'
e = 2.5%
RUNOFF = 113'

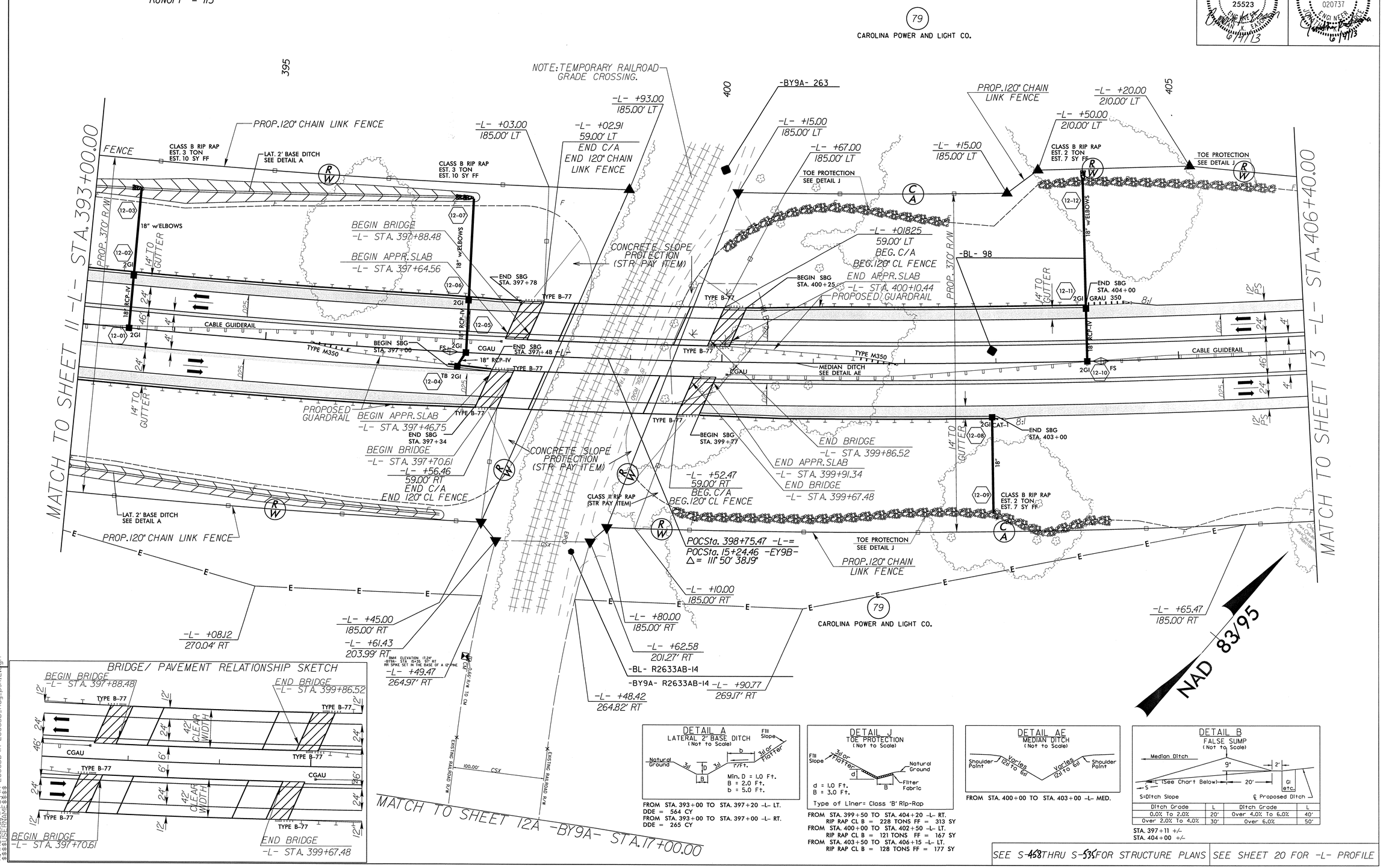

DETAIL A
LATERAL 2' BASE DITCH
(Not to Scale)

FROM STA. 393+00 TO STA. 397+20 -L- LT.
DDE = 564 CY
FROM STA. 393+00 TO STA. 397+00 -L- RT.
DDE = 265 CY

DETAIL J
TOE PROTECTION
(Not to Scale)

Type of Liner= Class 'B' Rip-Rap

FROM STA. 399+50 TO STA. 404+20 -L- RT.
RIP RAP CL B = 228 TONS FF = 313 SY
FROM STA. 400+00 TO STA. 402+50 -L- LT.
RIP RAP CL B = 121 TONS FF = 167 SY
FROM STA. 403+50 TO STA. 406+15 -L- LT.
RIP RAP CL B = 128 TONS FF = 177 SY

DETAIL AE
MEDIAN DITCH
(Not to Scale)

FROM STA. 400+00 TO STA. 403+00 -L- MED.

DETAIL B
FALSE SUMP
(Not to Scale)

Ditch Grade	L	Ditch Grade	L
0.0% To 2.0%	20'	Over 4.0% To 6.0%	40'
Over 2.0% To 4.0%	30'	Over 6.0%	50'

STA. 397+11 +/-
STA. 404+00 +/-

SEE S-458 THRU S-535 FOR STRUCTURE PLANS

SEE SHEET 20 FOR -L- PROFILE

SYTIME R:\Roadway\Proj\R-2633BB\R-2633BB_Rdy_psh12.dgn $$$$USERNAME$$$$

8/17/99

REVISIONS

-L-
PI Sta 383+94.77
Δ = 51° 49' 22.8" (LT)
D = 0° 38' 11.8"
L = 8,140.34'
T = 4,372.40'
R = 9,000.00'
e = 2.5%
RUNOFF = 113'

DETAIL AF
TOE PROTECTION
(Not to Scale)

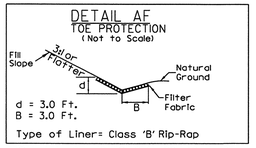

Type of Liner= Class 'B' Rip-Rap

FROM STA. 407+60 TO STA. 409+50 -L- RT.
RIP RAP CL B = 152 TONS FF = 127 SY

DETAIL J
TOE PROTECTION
(Not to Scale)

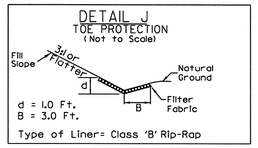

Type of Liner= Class 'B' Rip-Rap

FROM STA. 414+85 TO STA. 415+80 -L- RT.
RIP RAP CL B = 46 TONS FF = 64 SY

DETAIL B
FALSE SUMP
(Not to Scale)

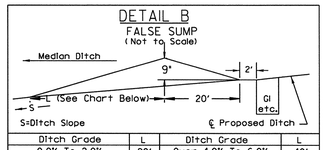

Ditch Grade	L	Ditch Grade	L
0.0% To 2.0%	20'	Over 4.0% To 6.0%	40'
Over 2.0% To 4.0%	30'	Over 6.0%	50'

STA. 408+50 +/-
STA. 418+35 +/-

DETAIL AG
LATERAL BASE DITCH
(Not to Scale)

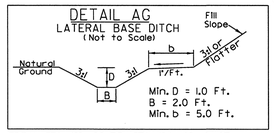

FROM STA. 411+00 TO STA. 414+62 -L- LT.
DDE = 255 CY
FROM STA. 415+00 TO STA. 418+50 -L- LT.
DDE = 314 CY

79
CAROLINA POWER AND LIGHT CO.

LOCHNER
H. W. LOCHNER, INC.
2840 PLAZA PLACE, SUITE 202
RALEIGH, NC 27612
NC License Number F-0159

MULKEY INC.
NC License Number C-1021

PROJECT REFERENCE NO.	SHEET NO.
R-2633BB	13
R/W SHEET NO.	31

ROADWAY DESIGN ENGINEER
NORTH CAROLINA PROFESSIONAL SEAL 25523 ENGINEER
6/4/13

HYDRAULICS ENGINEER
NORTH CAROLINA PROFESSIONAL SEAL 020737 ENGINEER
6/4/13

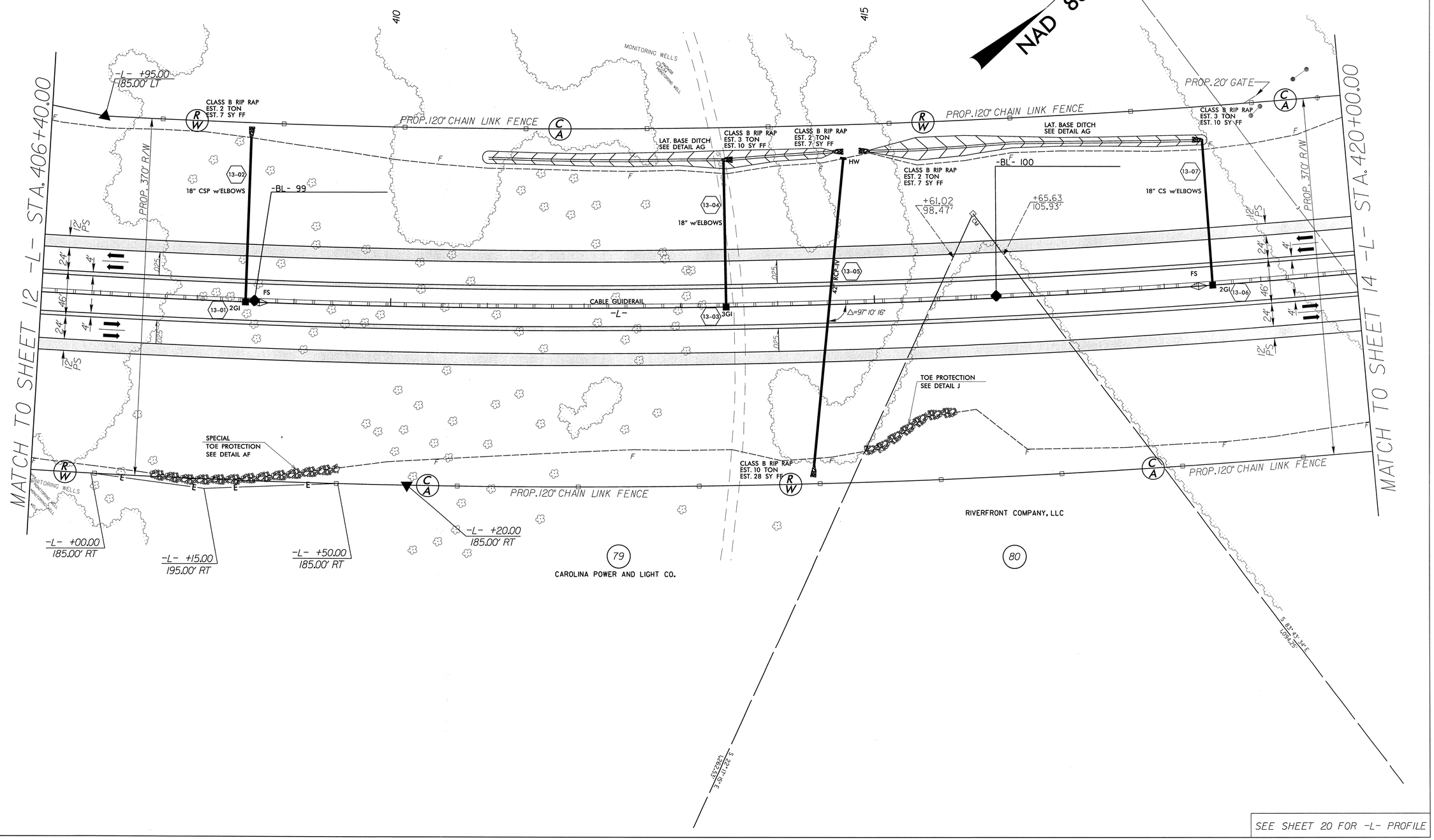

SEE SHEET 20 FOR -L- PROFILE

SYTIME
R:\Roadway\Proj\R-2633BB\R-2633BB_Rdy_pshi3.dgn
$$$$USERNAME$$$$

8/17/99

REVISIONS

LOCHNER

H. W. LOCHNER, INC.
2840 PLAZA PLACE, SUITE 202
RALEIGH, NC 27612
NC License Number F-0159

MULKEY INC.
NC License Number C-1021

PROJECT REFERENCE NO.	SHEET NO.
R-2633BB	14
RW SHEET NO.	32
ROADWAY DESIGN ENGINEER	HYDRAULICS ENGINEER

NORTH CAROLINA PROFESSIONAL SEAL 25523 ENGINEER BRIAN K. EARP 6/14/13

NORTH CAROLINA PROFESSIONAL SEAL 020737 ENGINEER JONATHAN W. SPEARS 6/14/13

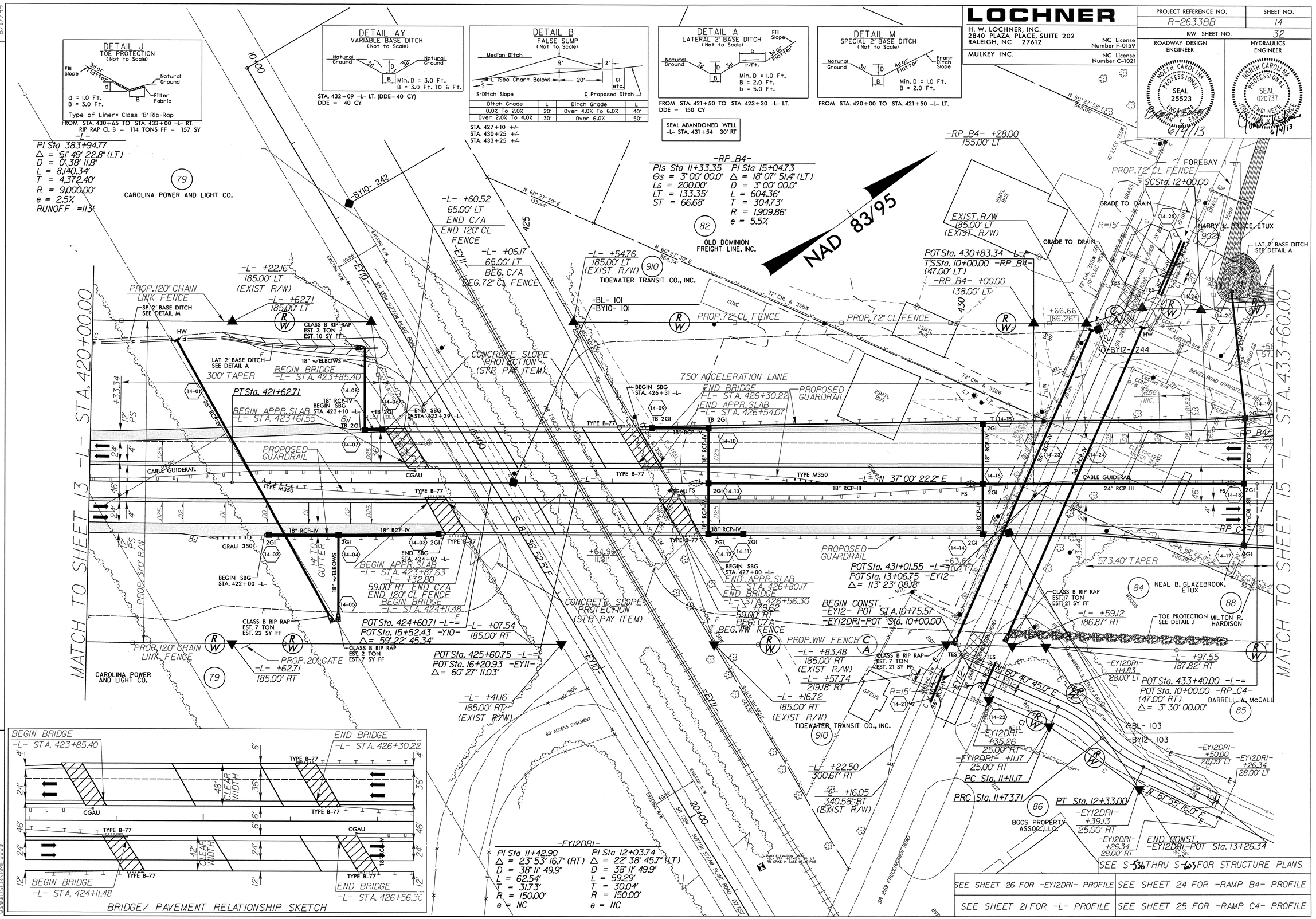

SYTIME
R:\Roadway\Proj\R-2633BB\R-2633BB_RDY_PSH14.dgn
$$$$USERNAME$$$$

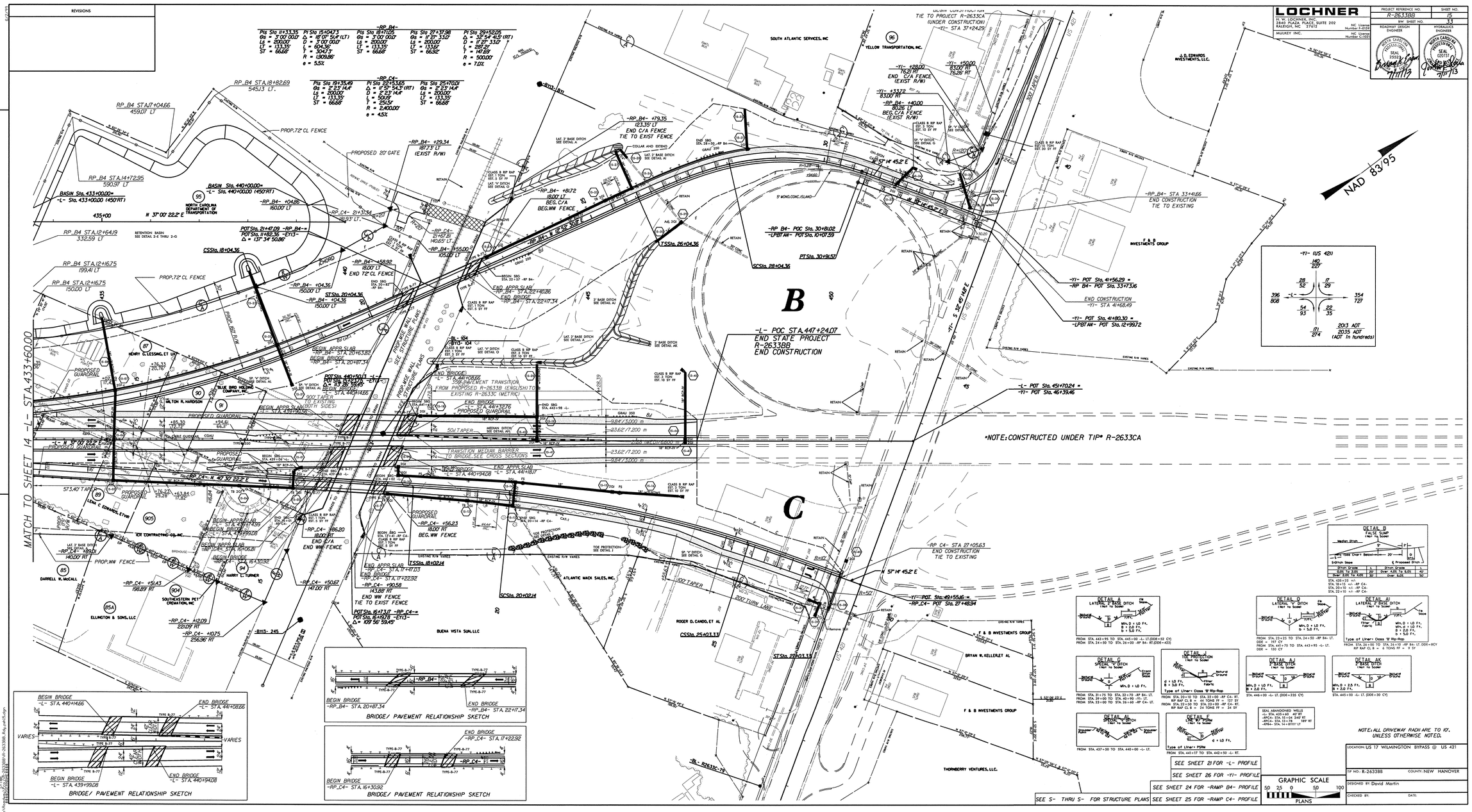

LOCHNER
H. W. LOCHNER, INC.
2840 PLAZA PLACE, SUITE 202
RALEIGH, NC 27612
MULKEY INC.
PROJECT REFERENCE NO. R-2633BB
SHEET NO. 15
R/W SHEET NO. 3.3
ROADWAY DESIGN ENGINEER
HYDRAULICS ENGINEER
REVISIONS
MATCH TO SHEET 14 -L- STA.433+60.00
NAD 83/95
B
C
*NOTE: CONSTRUCTED UNDER TIP# R-2633CA
-L- POC STA.447+24.07
END STATE PROJECT
R-2633BB
END CONSTRUCTION
BEGIN CONSTRUCTION
TIE TO PROJECT R-2633CA
(UNDER CONSTRUCTION)
-L- STA 37+24.29
SOUTH ATLANTIC SERVICES, INC
YELLOW TRANSPORTATION, INC.
J. D. EDWARDS INVESTMENTS, LLC.
F & B INVESTMENTS GROUP
NORTH CAROLINA DEPARTMENT OF TRANSPORTATION
HENRY G. LESSING, ET UX
BLUE BIRD HOLDING COMPANY, INC.
MILTON R. HARDISON
ICR CONTRACTING CO. INC.
DARRELL W. McCALL
HARRY L. TURNER
SOUTHEASTERN PET CREMATION, INC
ELLINGTON & SONS, LLC
BUENA VISTA SUN, LLC
ATLANTIC MACK SALES, INC.
ROGER D. CANDO, ET AL
BRYAN W. KELLER, ET AL
THORNBERRY VENTURES, LLC.
BRIDGE/ PAVEMENT RELATIONSHIP SKETCH
BRIDGE/ PAVEMENT RELATIONSHIP SKETCH
BRIDGE/ PAVEMENT RELATIONSHIP SKETCH
BRIDGE/ PAVEMENT RELATIONSHIP SKETCH
2013 ADT
2035 ADT
(ADT In hundreds)
DETAIL A LATERAL "2" BASE DITCH
DETAIL B FALSE SUMP
DETAIL C SPECIAL "V" DITCH
DETAIL D LATERAL "V" DITCH
DETAIL E SPECIAL "V" DITCH
DETAIL F LINE W/ PSRM
DETAIL G SPECIAL "V" DITCH
DETAIL H TOE PROTECTION
DETAIL I LATERAL "2" BASE DITCH
DETAIL J 2" BASE DITCH
DETAIL K 2" BASE DITCH
DETAIL AL SPECIAL "V" DITCH
NOTE: ALL DRIVEWAY RADII ARE TO 10', UNLESS OTHERWISE NOTED.
SEE SHEET 21 FOR -L- PROFILE
SEE SHEET 26 FOR -Y1- PROFILE
SEE SHEET 24 FOR -RAMP B4- PROFILE
SEE SHEET 25 FOR -RAMP C4- PROFILE
SEE S- THRU S- FOR STRUCTURE PLANS
GRAPHIC SCALE
PLANS
LOCATION: US 17 WILMINGTON BYPASS @ US 421
TIP NO. R-2633BB
COUNTY: NEW HANOVER
DESIGNED BY: David Martin
CHECKED BY:
DATE:

PROJECT REFERENCE NO.	SHEET NO.
R-2633BB	16

ROADWAY DESIGN ENGINEER — NORTH CAROLINA PROFESSIONAL SEAL 25523 ENGINEER JAN K. EASON 6/4/13

HYDRAULICS ENGINEER — NORTH CAROLINA PROFESSIONAL SEAL 020737 ENGINEER JONATHAN W. PRICE 6/4/13

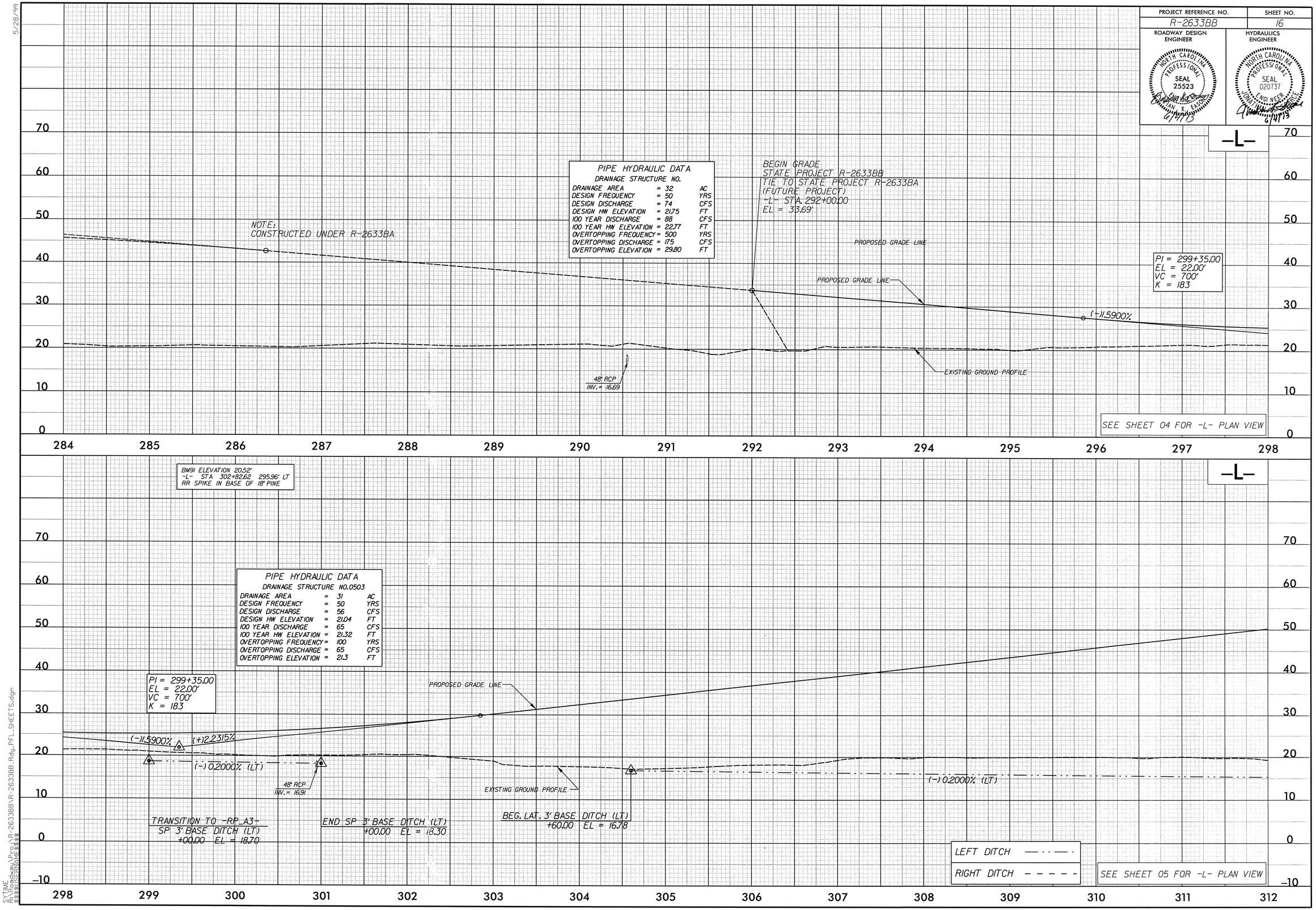

5/28/99

SYTIME R:\Roadway\Proj\R-2633BB\R-2633BB_Rdy_PFL_SHEETS.dgn
$$$$USERNAME$$$$

PROJECT REFERENCE NO.	SHEET NO.
R-2633BB	17
ROADWAY DESIGN ENGINEER	HYDRAULICS ENGINEER

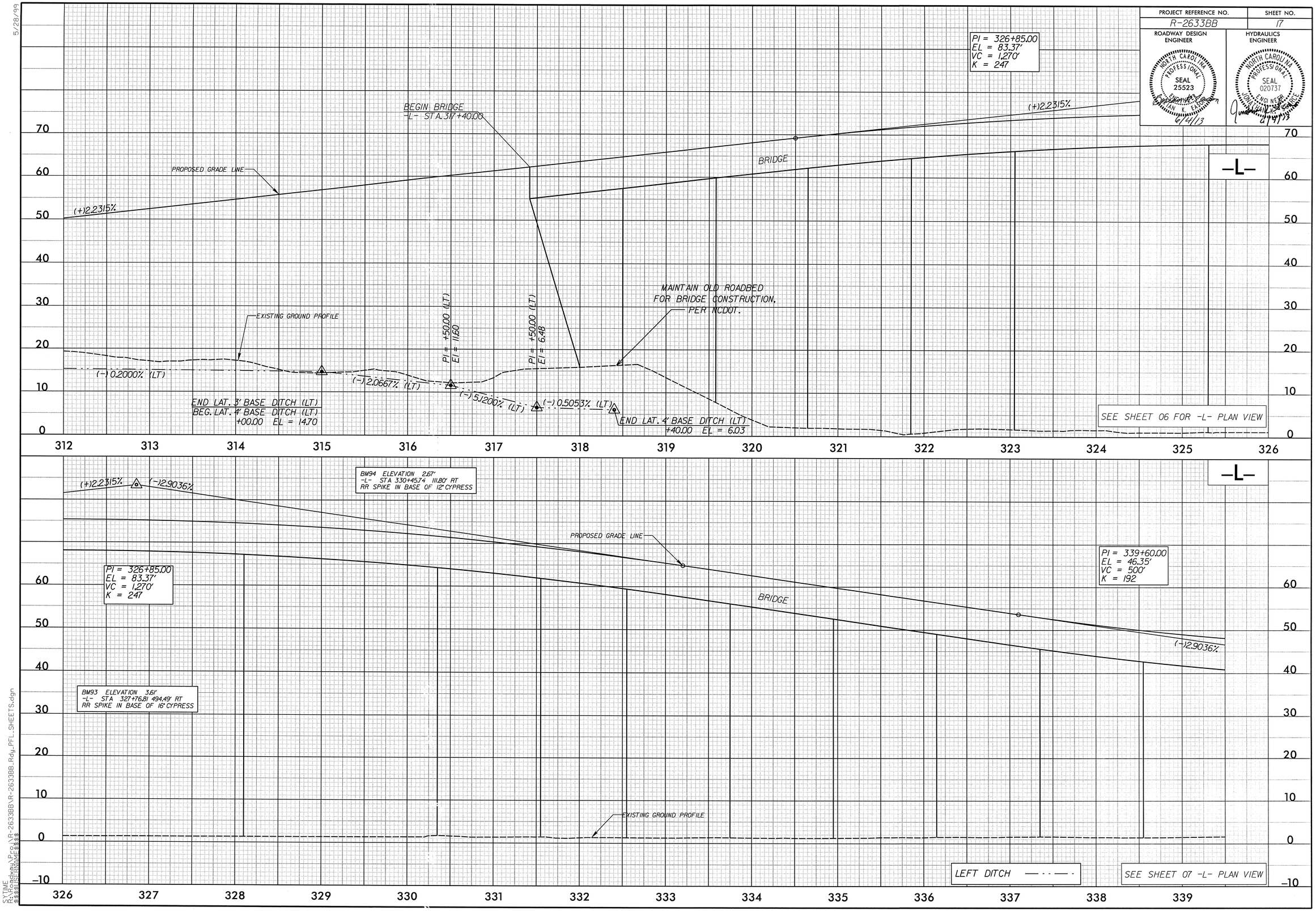

5/28/99

SYTIME
R:\Roadway\Proj\R-2633BB\R-2633BB_Rdy_PFL_SHEETS.dgn
$$$$USERNAME$$$$

PROJECT REFERENCE NO.	SHEET NO.
R-2633BB	18

ROADWAY DESIGN ENGINEER

NORTH CAROLINA PROFESSIONAL SEAL 25523 ENGINEERING

HYDRAULICS ENGINEER

NORTH CAROLINA PROFESSIONAL SEAL 020737 ENGINEERING

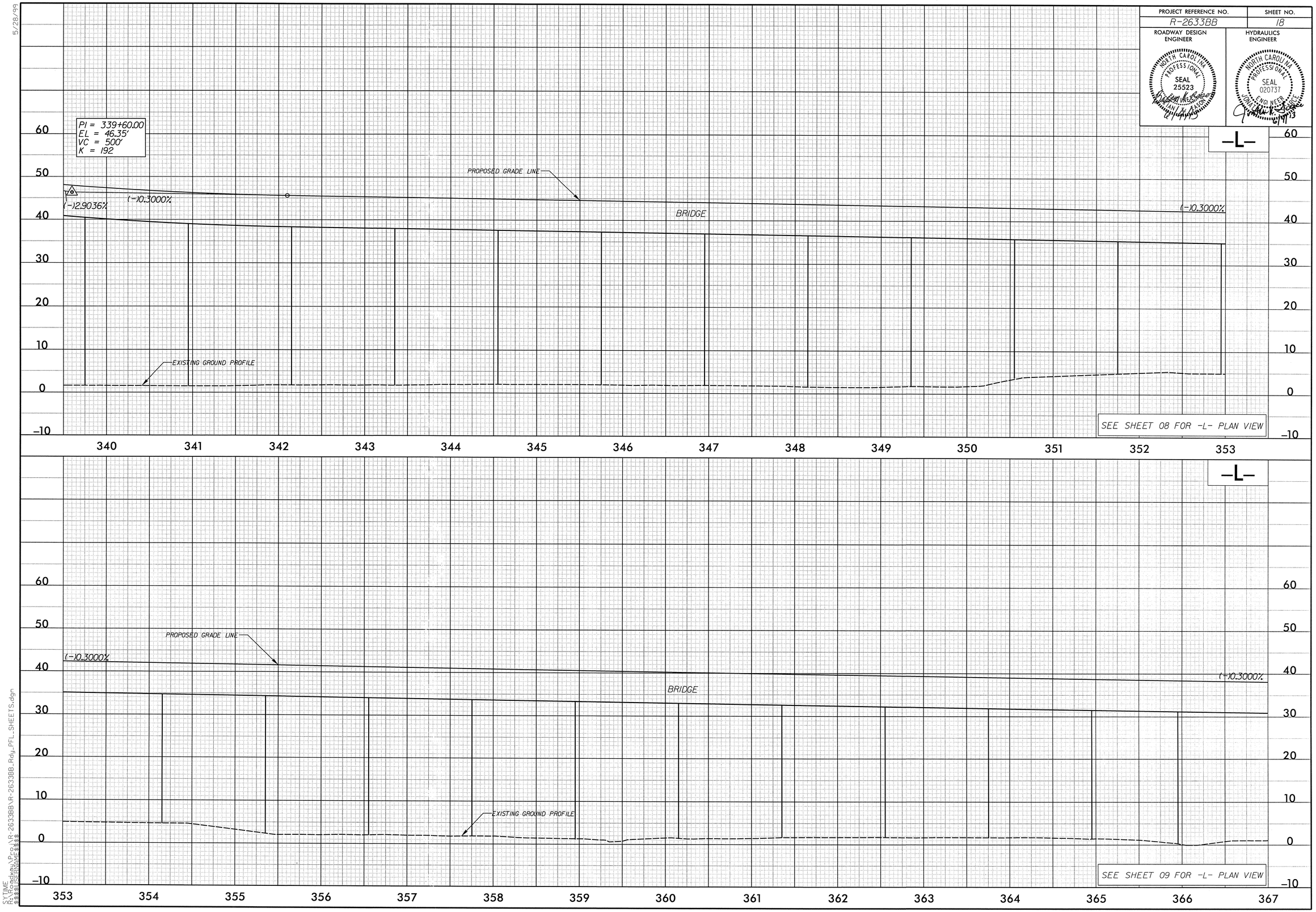

5/28/99

SYTIME
R:\Roadway\Proj\R-2633BB\R-2633BB_Rdy_PFL_SHEETS.dgn
$$$$USERNAME$$$$

PROJECT REFERENCE NO.	SHEET NO.
R-2633BB	19

ROADWAY DESIGN ENGINEER

NORTH CAROLINA PROFESSIONAL SEAL 25523 ENGINEER JONATHAN K. FASTON 6/4/13

HYDRAULICS ENGINEER

NORTH CAROLINA PROFESSIONAL SEAL 020737 ENGINEER JONATHAN K. FASTON 6/4/13

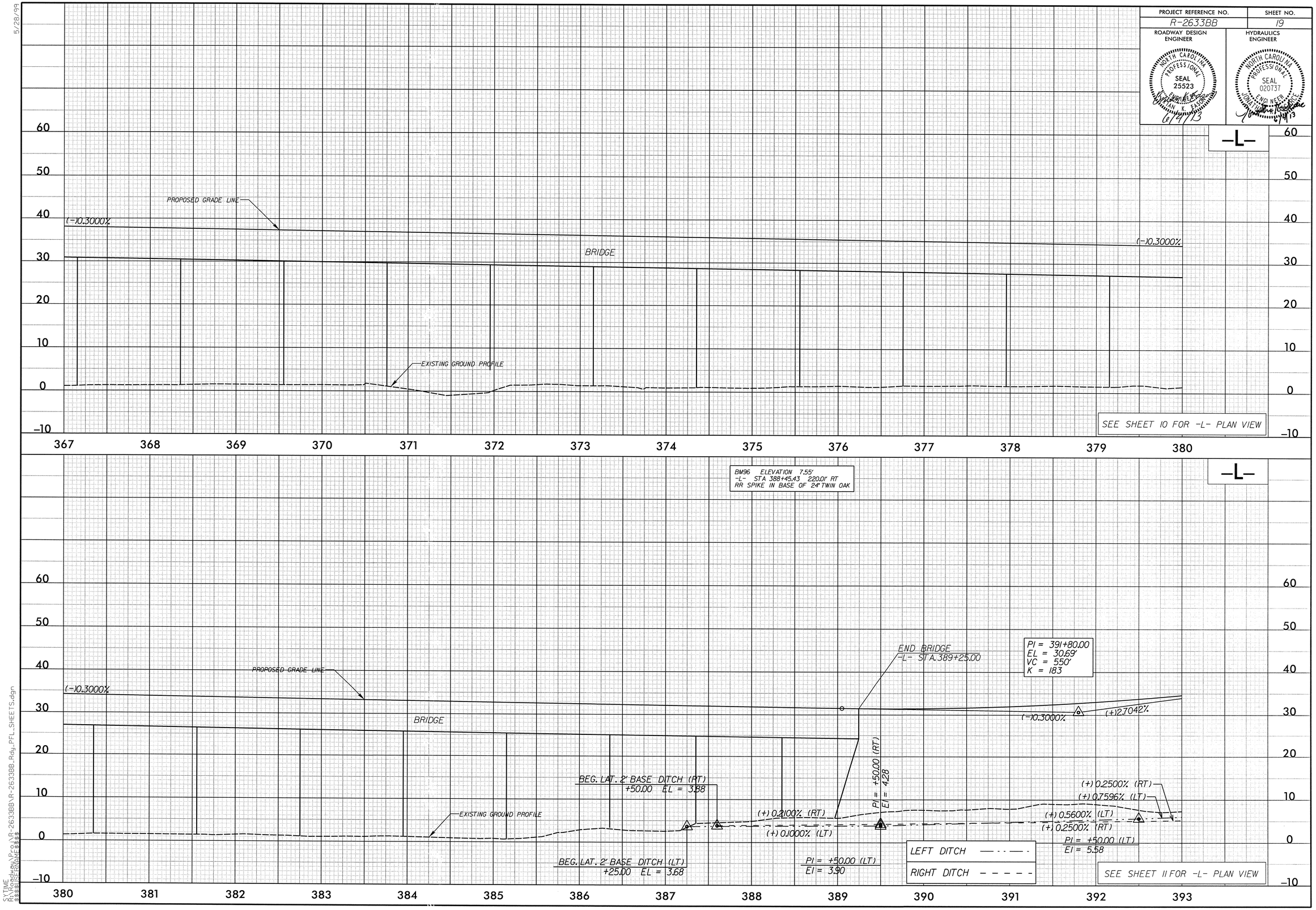

5/28/99

SYTIME
R:\Roadway\Proj\R-2633BB\R-2633BB_Rdy_PFL_SHEETS.dgn
$$$$USERNAME$$$$

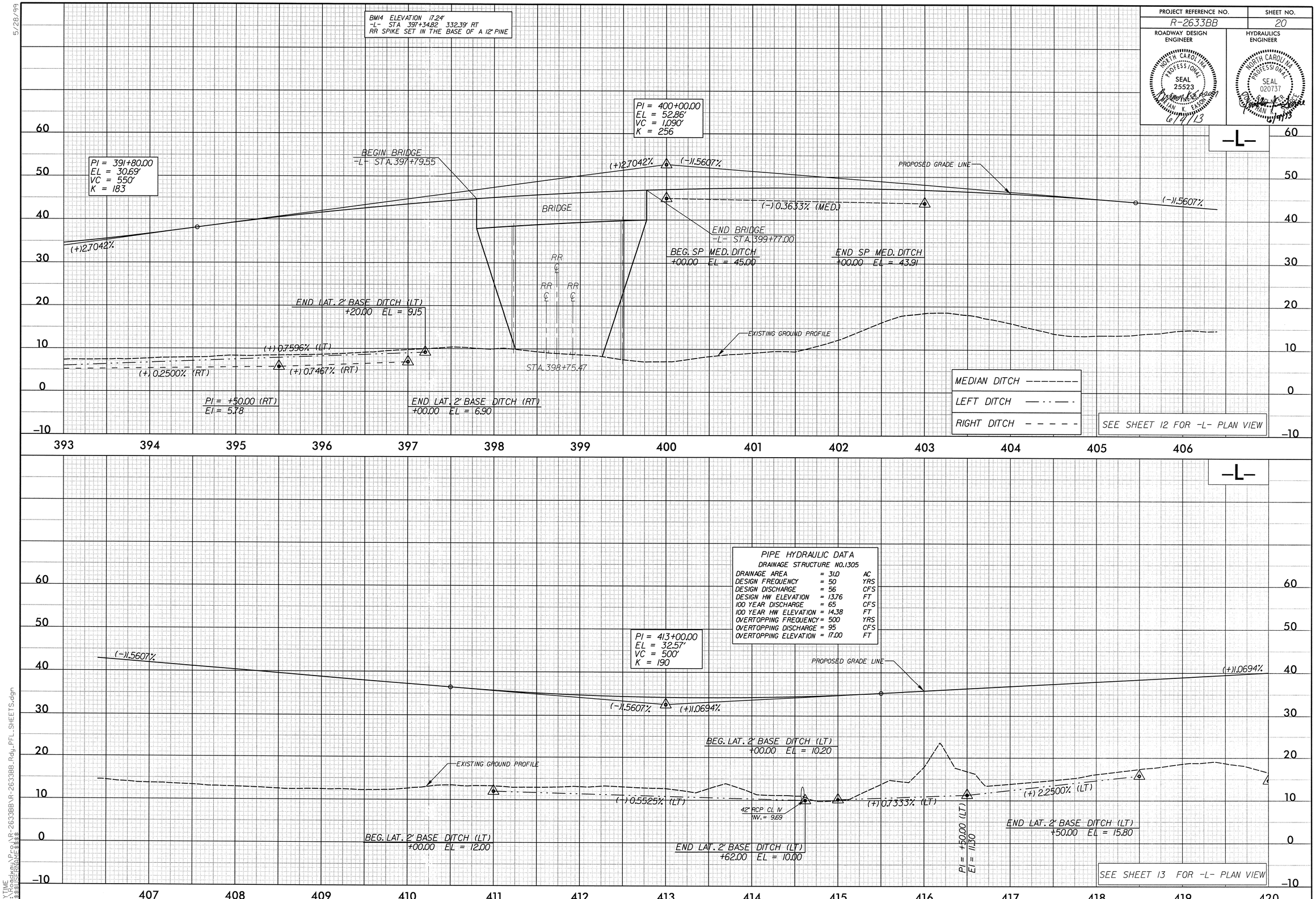

5/28/99

SYTIME
R:\Roadway\Proj\R-2633BB\R-2633BB_Rdy_PFL_SHEETS.dgn
$$$$USERNAME$$$$

PROJECT REFERENCE NO.	SHEET NO.
R-2633BB	21

ROADWAY DESIGN ENGINEER — NORTH CAROLINA PROFESSIONAL SEAL 25523 ENGINEER — 6/4/13

HYDRAULICS ENGINEER — NORTH CAROLINA PROFESSIONAL SEAL 020737 ENGINEER — 6/4/13

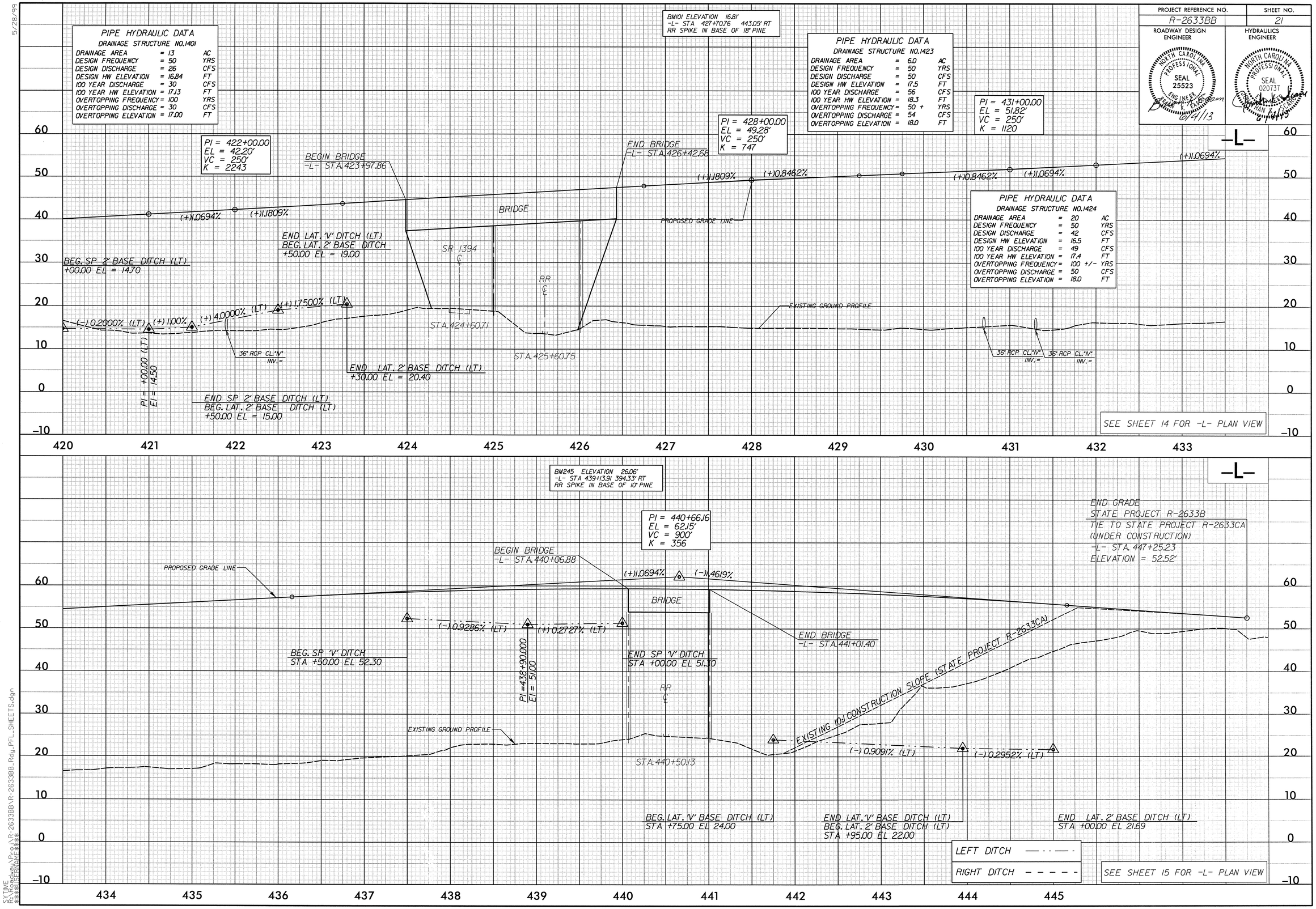

5/28/99

SYTIME
R:\Roadway\Proj\R-2633BB\R-2633BB_Rdy_PFL_SHEETS.dgn
$$$$USERNAME$$$$

PROJECT REFERENCE NO.	SHEET NO.
R-2633BB	22

ROADWAY DESIGN ENGINEER — NORTH CAROLINA PROFESSIONAL SEAL 25523 ENGINEER JAN K. EASON 6/4/13

HYDRAULICS ENGINEER — NORTH CAROLINA PROFESSIONAL SEAL 020737 ENGINEER JONATHAN K. SPRUCE 6/4/13

-RAMP A3-

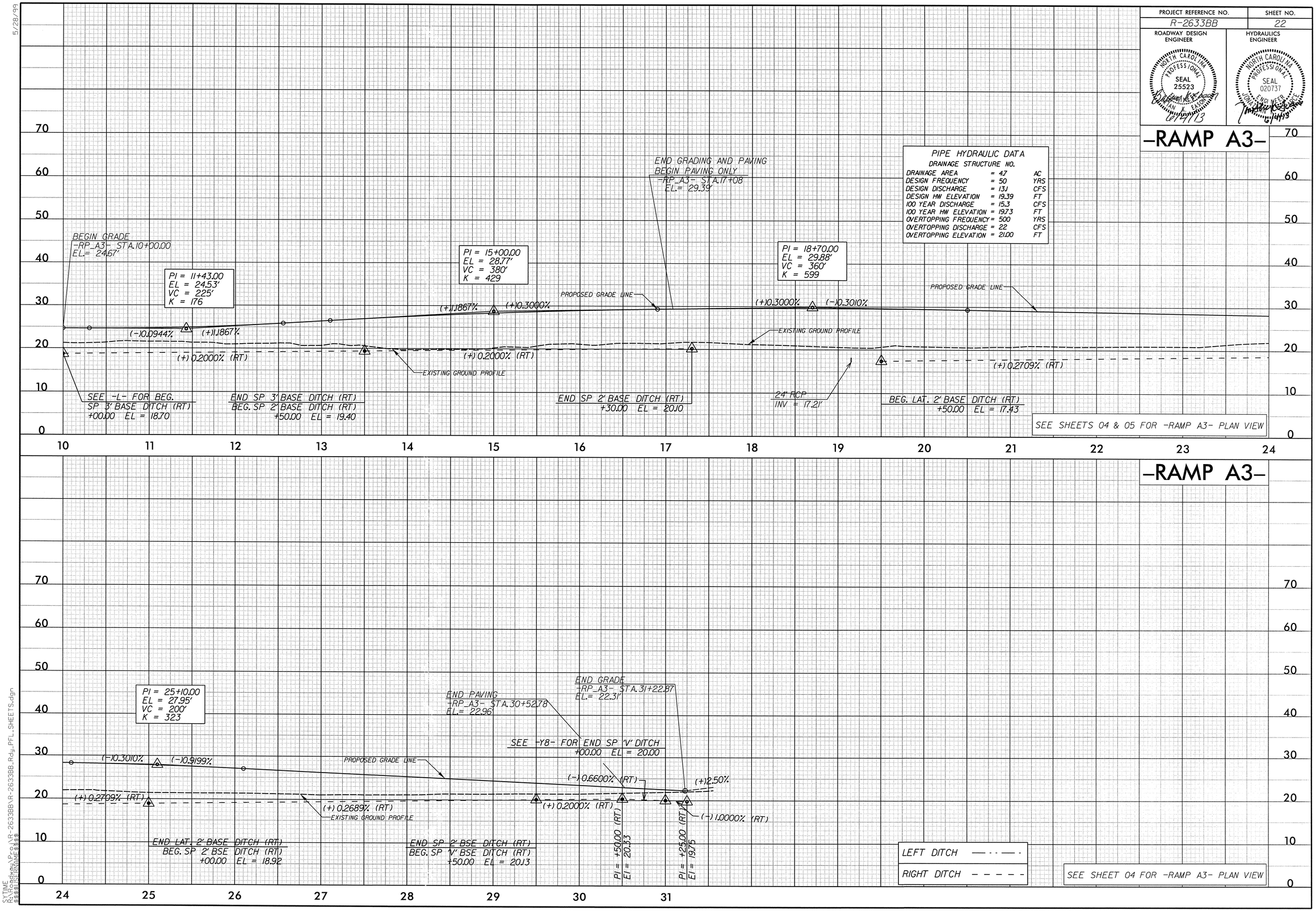

PIPE HYDRAULIC DATA
DRAINAGE STRUCTURE NO.

DRAINAGE AREA	= 4.7	AC
DESIGN FREQUENCY	= 50	YRS
DESIGN DISCHARGE	= 13.1	CFS
DESIGN HW ELEVATION	= 19.39	FT
100 YEAR DISCHARGE	= 15.3	CFS
100 YEAR HW ELEVATION	= 19.73	FT
OVERTOPPING FREQUENCY	= 500	YRS
OVERTOPPING DISCHARGE	= 22	CFS
OVERTOPPING ELEVATION	= 21.00	FT

SEE SHEETS 04 & 05 FOR -RAMP A3- PLAN VIEW

-RAMP A3-

SEE SHEET 04 FOR -RAMP A3- PLAN VIEW

5/28/99

SYTIME
R:\Roadway\Proj\R-2633BB\R-2633BB_Rdy_PFL_SHEETS.dgn
$$$$USERNAME$$$$

5/28/99

PROJECT REFERENCE NO.	SHEET NO.
R-2633BB	23

ROADWAY DESIGN ENGINEER

NORTH CAROLINA PROFESSIONAL SEAL 25523 ENGINEER BRIAN K. EASON

6/7/13

HYDRAULICS ENGINEER

NORTH CAROLINA PROFESSIONAL SEAL 020737 ENGINEER

6/14/13

-RAMP D3-

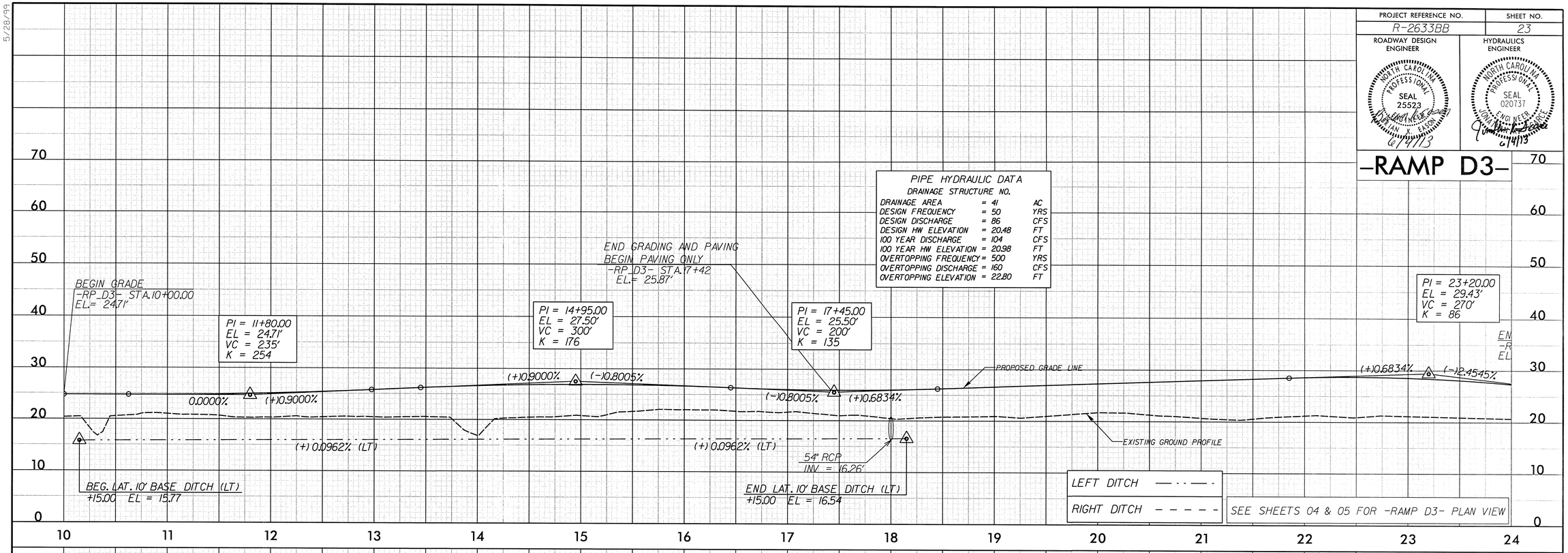

PIPE HYDRAULIC DATA

DRAINAGE STRUCTURE NO.

DRAINAGE AREA	= 41	AC
DESIGN FREQUENCY	= 50	YRS
DESIGN DISCHARGE	= 86	CFS
DESIGN HW ELEVATION	= 20.48	FT
100 YEAR DISCHARGE	= 104	CFS
100 YEAR HW ELEVATION	= 20.98	FT
OVERTOPPING FREQUENCY	= 500	YRS
OVERTOPPING DISCHARGE	= 160	CFS
OVERTOPPING ELEVATION	= 22.80	FT

SEE SHEETS 04 & 05 FOR -RAMP D3- PLAN VIEW

-RAMP D3-

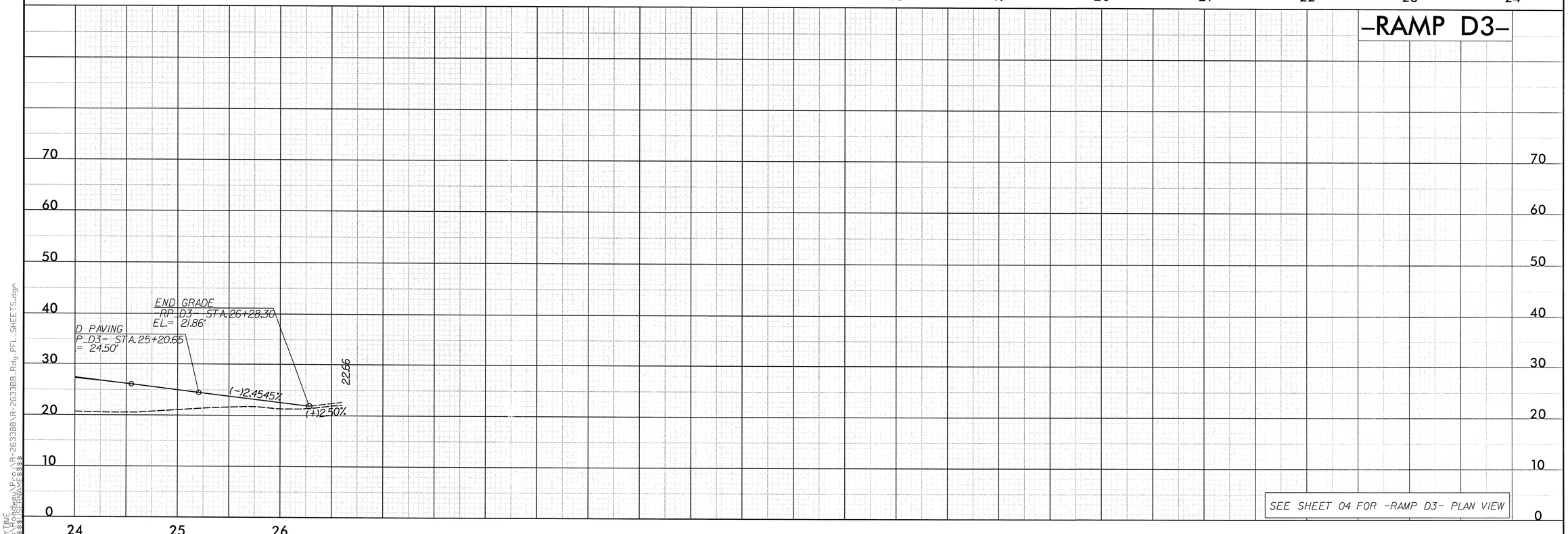

SEE SHEET 04 FOR -RAMP D3- PLAN VIEW

SYTIME
R:\Roadway\Proj\R-2633BB\R-2633BB_Rdy_PFL_SHEETS.dgn
$$$$USERNAME$$$$

PROJECT REFERENCE NO.	SHEET NO.
R-2633BB	24

ROADWAY DESIGN ENGINEER — NORTH CAROLINA PROFESSIONAL SEAL 25523 ENGINEER JONATHAN K. EASON 6/4/13

HYDRAULICS ENGINEER — NORTH CAROLINA PROFESSIONAL SEAL 020737 ENGINEER JONATHAN K. EASON 6/4/13

-RAMP B4-

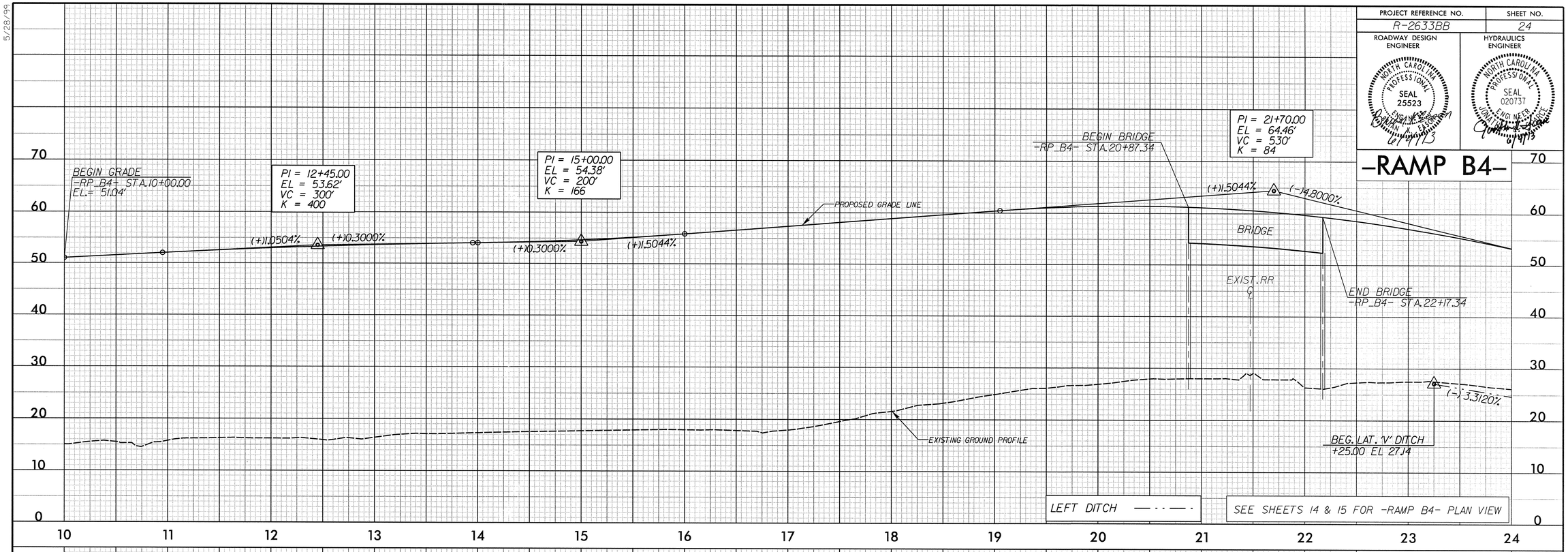

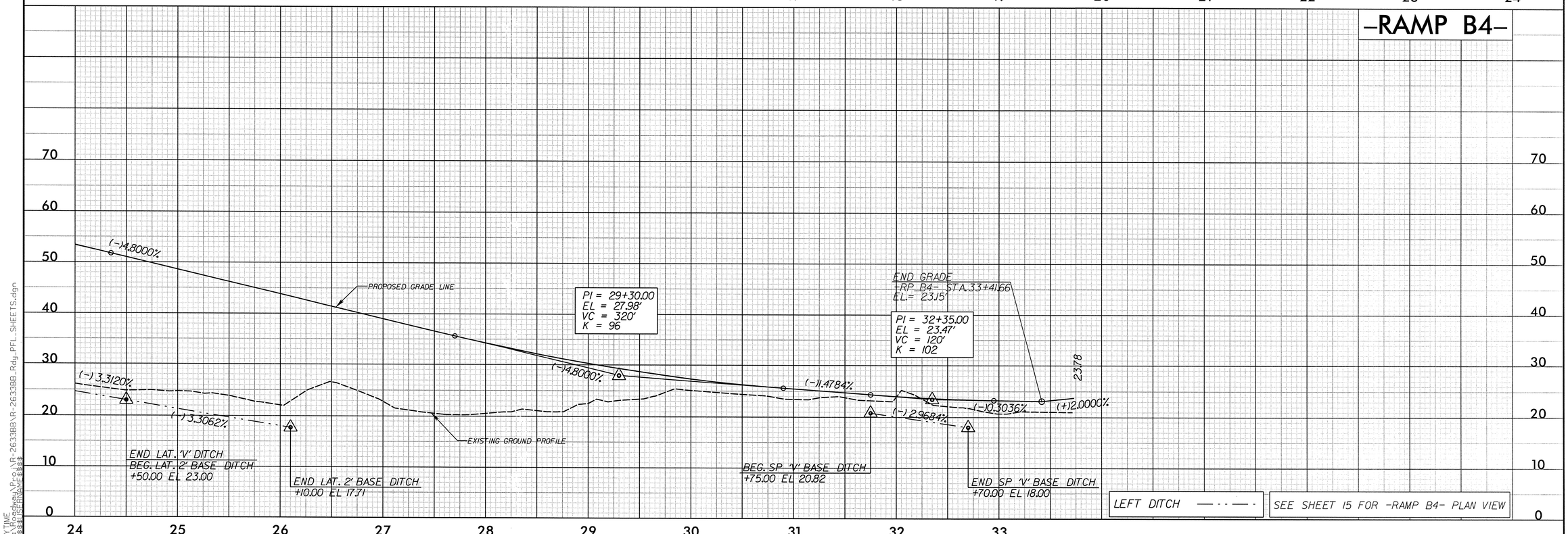

5/28/99

SYTIME
R:\Roadway\Proj\R-2633BB\R-2633BB_Rdy_PFL_SHEETS.dgn
$$$$USERNAME$$$$

5/28/99

PROJECT REFERENCE NO.	SHEET NO.
R-2633BB	25

ROADWAY DESIGN ENGINEER

NORTH CAROLINA PROFESSIONAL SEAL 25523 ENGINEER JONATHAN K. EASON 6/7/13

HYDRAULICS ENGINEER

NORTH CAROLINA PROFESSIONAL SEAL 020737 ENGINEER JONATHAN E. WOLNER 6/7/13

-RAMP C4-

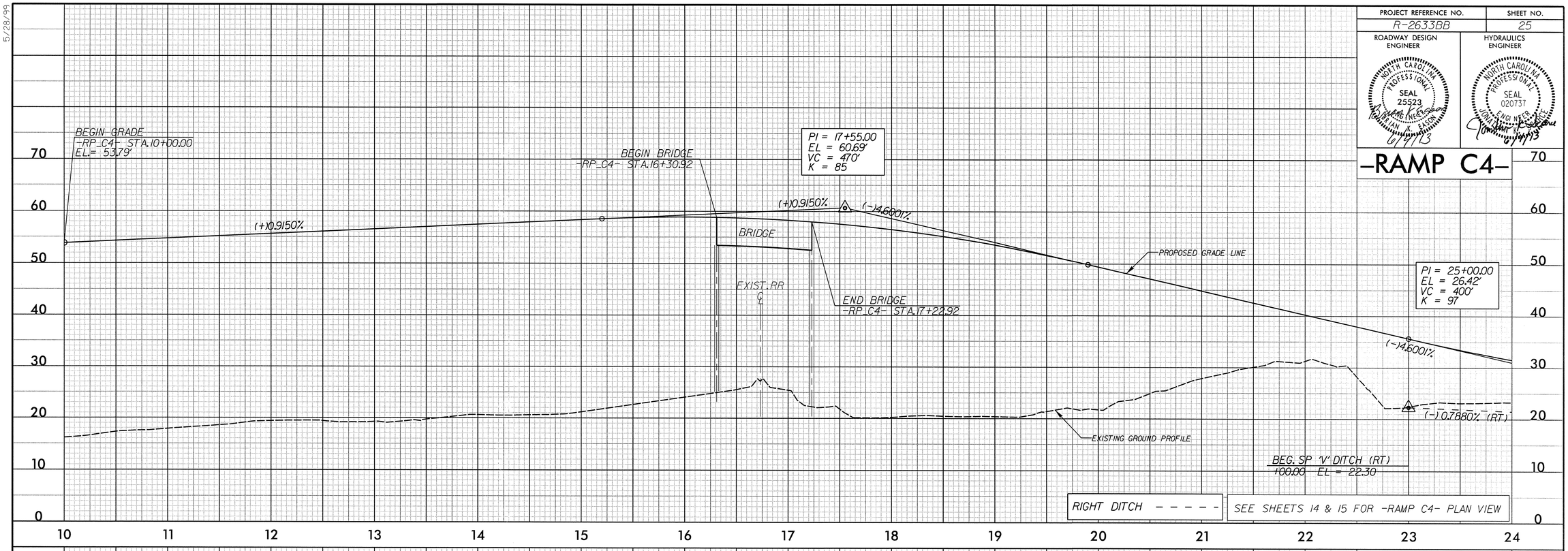

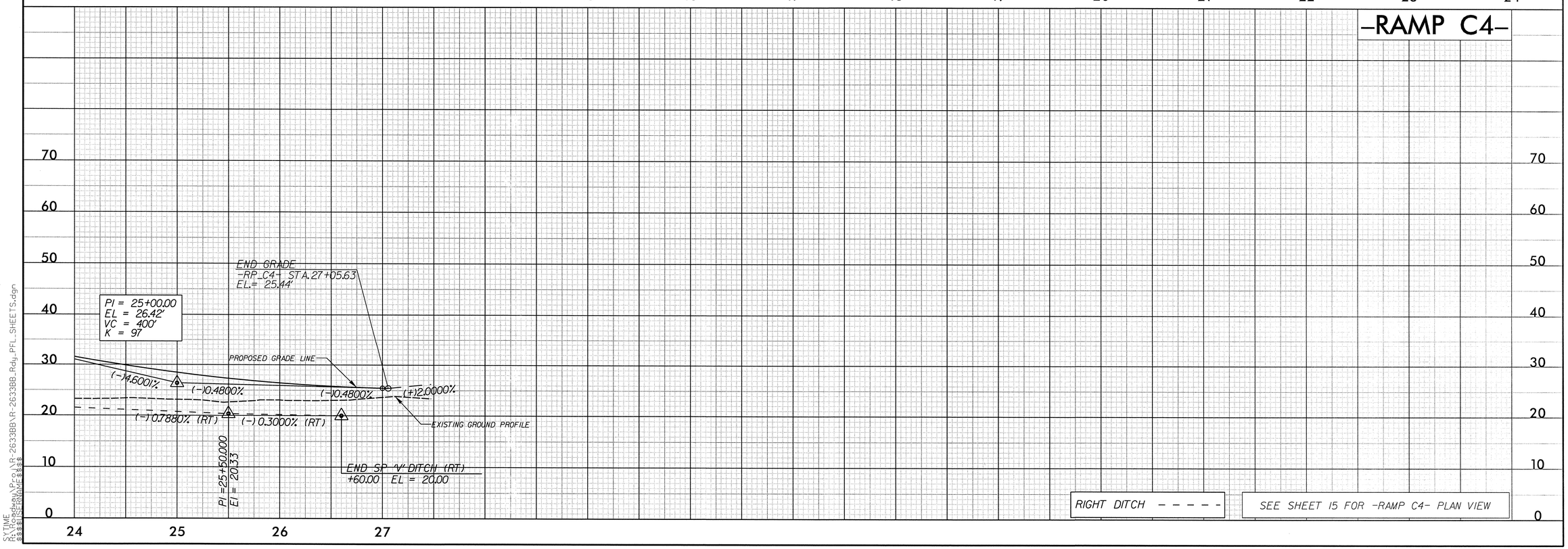

SYTIME
R:\Roadway\Proj\R-2633BB\R-2633BB_Rdy_PFL_SHEETS.dgn
$$$$USERNAME$$$$

PROJECT REFERENCE NO.	SHEET NO.
R-2633BB	26

ROADWAY DESIGN ENGINEER

NORTH CAROLINA PROFESSIONAL SEAL 25523 ENGINEER BRIAN K. EATON 6/7/13

HYDRAULICS ENGINEER

NORTH CAROLINA PROFESSIONAL SEAL 020737 ENGINEER 6/7/13

-Y1-

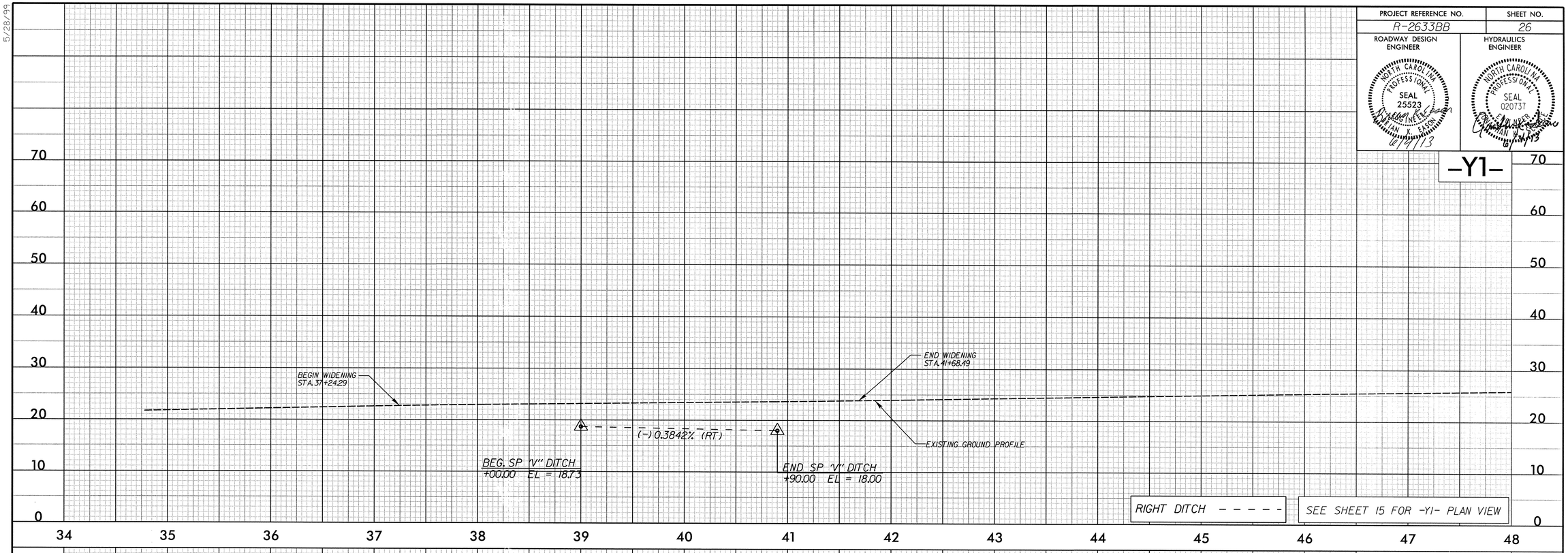

-EY12DR1-

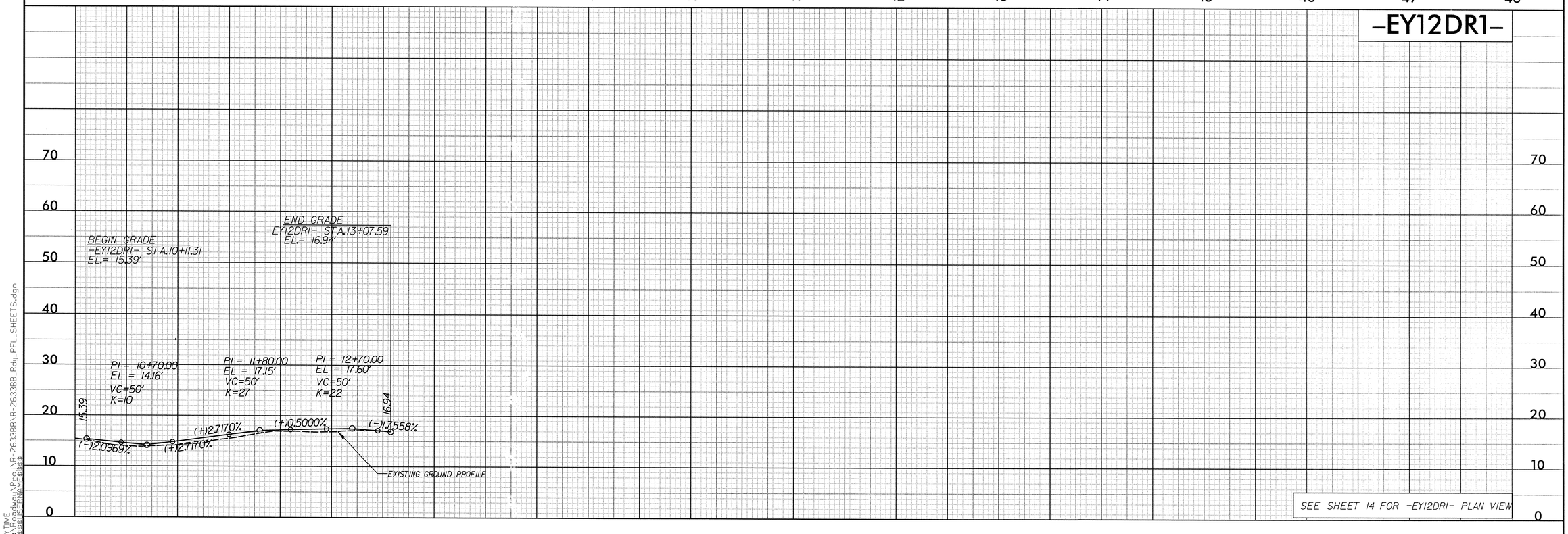

5/28/99

SYTIME
R:\Roadway\Proj\R-2633BB\R-2633BB_Rdy_PFL_SHEETS.dgn
$$$$USERNAME$$$$