INDEX

STR.	STATION	DESCRIPTION	SHEETS
1	353+32.50 -L-	BRIDGE ON US17 OVER CAPE FEAR RIVER (LEFT LANE)	S-1 THRU S-229
2	353+32.50 -L-	BRIDGE ON US17 OVER CAPE FEAR RIVER (RIGHT LANE)	S-230 THRU S-459
3	398+75.47 -L-	BRIDGE ON US17 OVER 3 SPUR LINES (LEFT LANE)	S-460 THRU S-498
4	398+75.47 -L-	BRIDGE ON US17 OVER 3 SPUR LINES (RIGHT LANE)	S-499 THRU S-537
5	425+60.75 -L-	BRIDGE ON US17 OVER SPUR LINE (LEFT LANE)	S-538 THRU S-571
6	425+60.75 -L-	BRIDGE ON US17 OVER SPUR LINE (RIGHT LANE)	S-572 THRU S-605
7	440+50.13 -L-	BRIDGE ON US17 OVER CSX RAILROAD (LEFT LANE)	S-606 THRU S-628
8	440+50.13 -L-	BRIDGE ON US17 OVER CSX RAILROAD (RIGHT LANE)	S-629 THRU S-651
9	16+73.17 -RP C4-	BRIDGE ON US17 RAMP OVER CSX RAILROAD	S-652 THRU S-674
10	21+47.09 -RP B4-	BRIDGE ON US17 RAMP OVER CSX RAILROAD	S-675 THRU S-700
11	21+26.284 -RP B4-	MSE RETAINING WALL NO. 1	W-1 THRU W-6
12	23+59.690 -RP B4-	MSE RETAINING WALL NO. 2	
13	441+89.758 -L-	MSE RETAINING WALL NO. 3	

PART 1

PART 2

PART 3

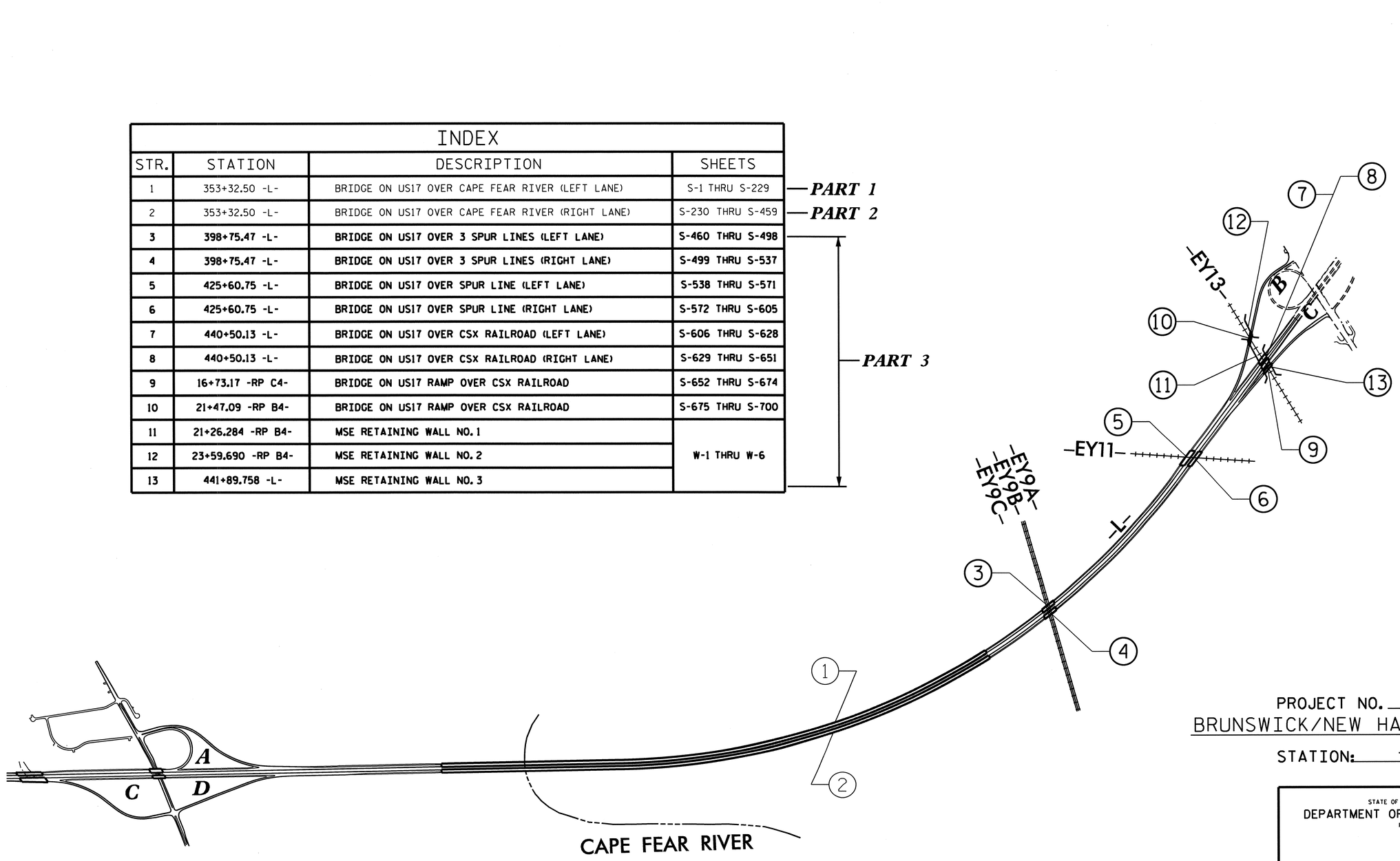

PROJECT NO. R-2633BB

BRUNSWICK/NEW HANOVER COUNTY

STATION: _____

STATE OF NORTH CAROLINA
DEPARTMENT OF TRANSPORTATION
RALEIGH

INDEX

REVISIONS					
NO.	BY:	DATE:	NO.	BY:	DATE:
1			3		
2			4		

PART 3 OF 3

DRAWN BY : W.D. CRUTCHER DATE : 6-27-13
CHECKED BY : R.D. MARTIN DATE : 7-4-13

03-JUL-2013 07:37
S:\PDEA\Darrell\r2633bb_title_index.dgn

F.A.PROJECT NHS-0017(125)

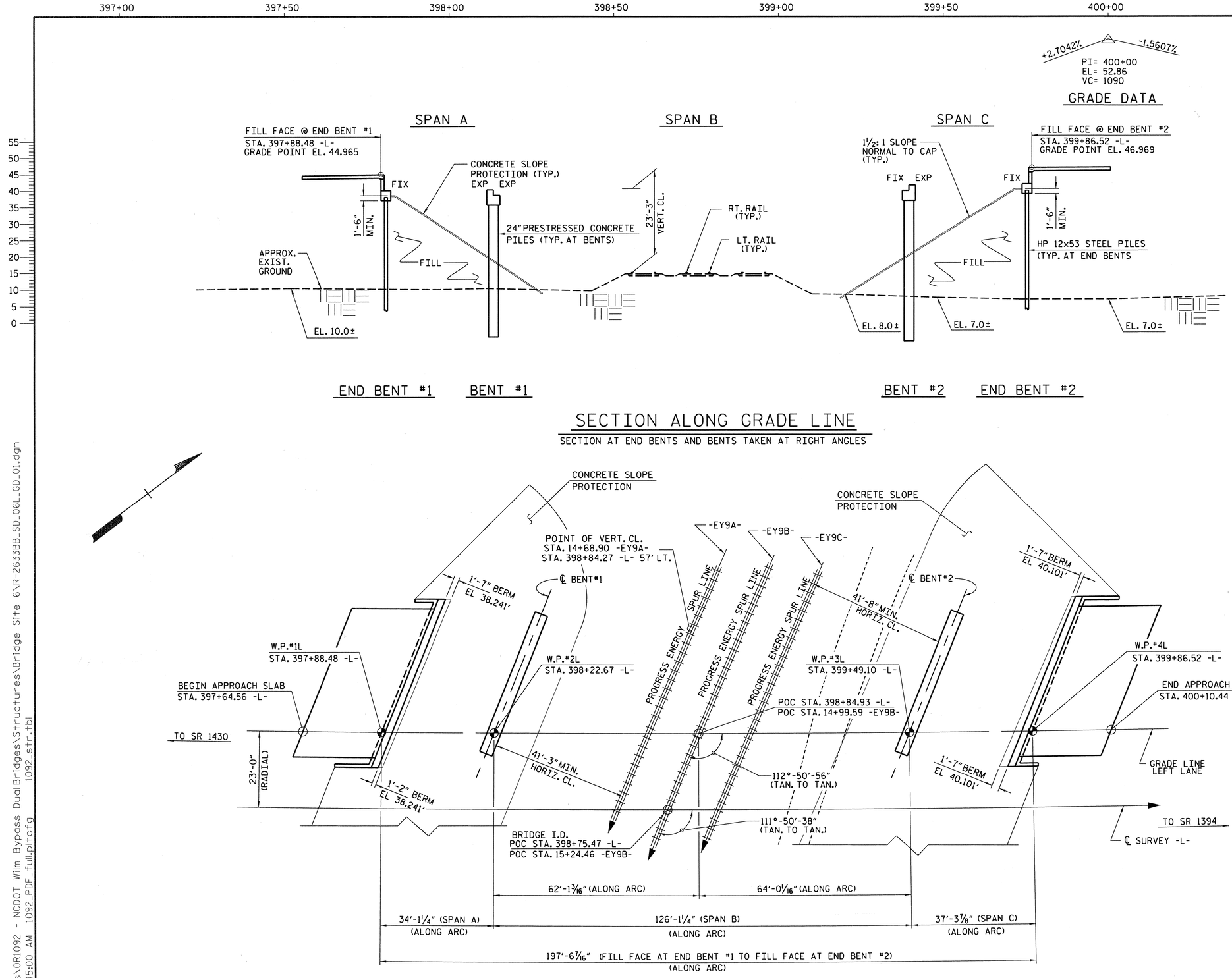

TOP OF RAIL ELEVATIONS		
STATION	LT. RAIL	RT. RAIL
14+00 -EY9A-	14.864	14.817
14+50 -EY9A-	14.938	14.852
15+00 -EY9A-	14.957	14.897
15+50 -EY9A-	14.950	14.910
16+00 -EY9A-	15.012	15.008

TOP OF RAIL ELEVATIONS		
STATION	LT. RAIL	RT. RAIL
14+00 -EY9B-	14.932	14.976
14+50 -EY9B-	14.910	14.964
15+00 -EY9B-	14.989	15.003
15+50 -EY9B-	14.927	14.928
16+00 -EY9B-	14.898	14.919

TOP OF RAIL ELEVATIONS		
STATION	LT. RAIL	RT. RAIL
14+00 -EY9C-	15.074	15.125
14+50 -EY9C-	15.085	15.184
15+00 -EY9C-	15.141	15.208
15+50 -EY9C-	15.198	15.248
16+00 -EY9C-	15.209	15.240

-L-

PI STA 383+94.77
Δ = 51°-49'-22.8" (LT)
D = 0°-38'-11.8"
L = 8,140.34'
T = 4,372.40'
R = 9,000.00'
e = 2.5%

HORIZONTAL CURVE DATA

PROJECT NO. R-2633BB
BRUNSWICK/NEW HANOVER COUNTY
STATION: 398+75.47 -L-
15+24.46 -EY9B-
SHEET 1 OF 5
MILEPOST AF-288.77
BRIDGE No. 192

STATE OF NORTH CAROLINA
DEPARTMENT OF TRANSPORTATION
RALEIGH

GENERAL DRAWING FOR BRIDGE ON US 17 OVER PROGRESS ENERGY SPUR LINES BETWEEN SR 1430 AND SR 1394 LEFT LANE

NORTH CAROLINA PROFESSIONAL SEAL 14047 ENGINEER STEPHEN D. COFFMAN
2/11/13

THE LOUIS BERGER GROUP, Inc.
1001 Wade Avenue, Suite 400
Raleigh, NC 27605-3322

REVISIONS						
NO.	BY:	DATE:	NO.	BY:	DATE:	
1			3			
2			4			

SHEET NO. S-460
TOTAL SHEETS 700

DRAWN BY : R. KNIGHT DATE : 8/11
CHECKED BY : R. COFFMAN DATE : 9/11

G:\OR Projects\OR1092 - NCDOT Wilm Bypass DualBridges\Structures\Bridge Site 6\R-2633BB_SD_06L_GD_01.dgn
2/11/2013 8:45:00 AM 1092_PDF_full.pltcfg 1092_str.tbl

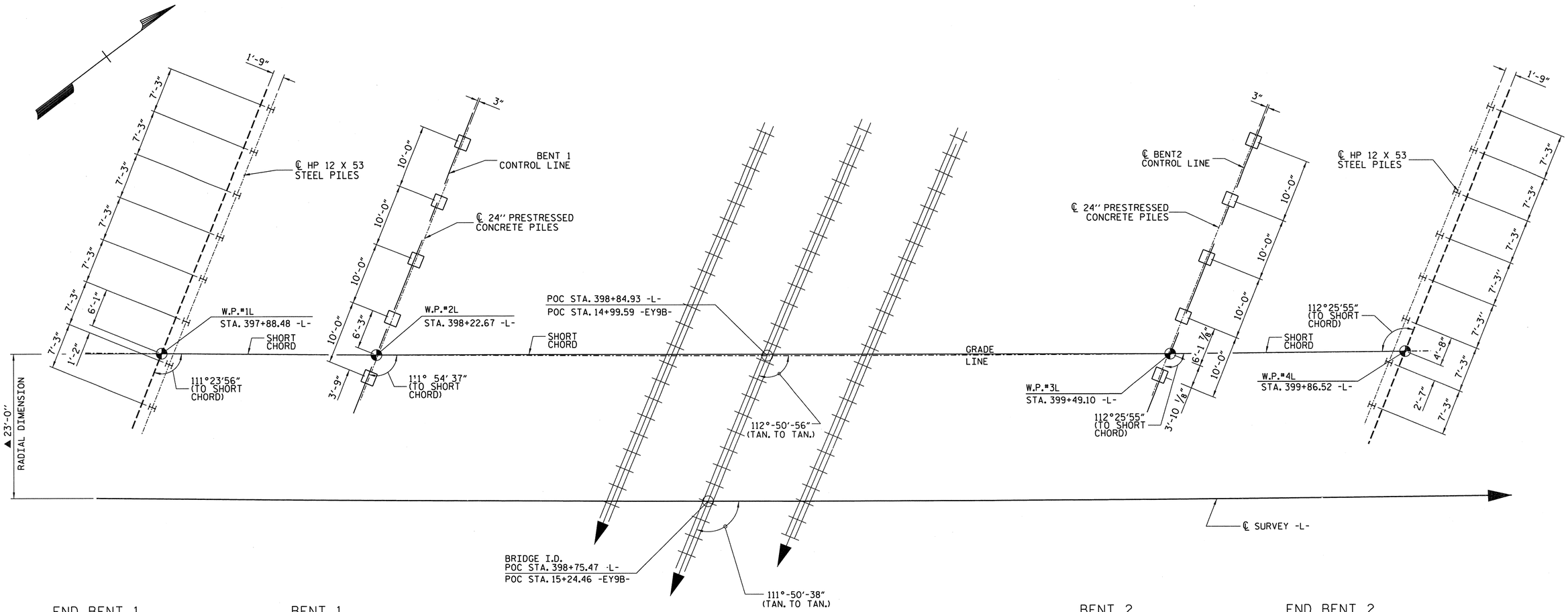

FOUNDATION LAYOUT

(DIMENSIONS LOCATING PILES ARE SHOWN TO CENTERLINE OF PILES)

FOUNDATION NOTES:

FOR PILES, SEE SECTION 450 OF THE STANDARD SPECIFICATIONS.

PILES AT END BENT NO. 1 AND END BENT NO. 2 ARE DESIGNED FOR A FACTORED RESISTANCE OF 60 TONS PER PILE.

DRIVE PILES AT END BENT NO. 1 AND END BENT NO. 2 TO A REQUIRED DRIVING RESISTANCE OF 100 TONS PER PILE.

PILES AT BENT NO. 1 AND BENT NO. 2 ARE DESIGNED FOR A FACTORED RESISTANCE OF 260 TONS PER PILE.

DRIVE PILES AT BENT NO. 1 AND BENT NO. 2 TO A REQUIRED DRIVING RESISTANCE OF 455 TONS PER PILE. THIS REQUIRED DRIVING RESISTANCE INCLUDES ADDITIONAL RESISTANCE FOR DOWNDRAG OR SCOUR.

INSTALL PILES AT BENT NO. 1 AND BENT NO. 2 TO A TIP ELEVATION NO HIGHER THAN -27 FT.

IT HAS BEEN ESTIMATED THAT A HAMMER WITH AN EQUIVALENT RATED ENERGY IN THE RANGE OF 120 - 200 FT-KIPS PER BLOW WILL BE REQUIRED TO DRIVE PILES AT BENT NO. 1 AND NO. 2. THIS ESTIMATED ENERGY RANGE DOES NOT RELEASE THE CONTRACTOR FROM PROVIDING DRIVING EQUIPMENT IN ACCORDANCE WITH SUBARTICLE 450-3(D)(2) OF THE STANDARD SPECIFICATIONS.

OBSERVE A 1 MONTH WAITING PERIOD AFTER CONSTRUCTING THE EMBANKMENT TO WITHIN 2 FT. OF FINISHED GRADE BEFORE BEGINNING END BENT CONSTRUCTION AT END BENT NO. 1 AND END BENT NO. 2.

PREDRILLING FOR PILES IS REQUIRED AT BENT NO. 1 AND BENT NO. 2. PREDRLL PILE LOCATIONS TO ELEVATION 8 FT. WITH EQUIPMENT THAT WILL RESULT IN A MAXIMUM PREDRIILING DIAMETER OF 24". FOR PREDRIILING FOR PILES, SEE SECTION 450 OF THE STANDARD SPECIFICATIONS,

SPUDDING MAY BE USED INSTEAD OF PREDRIILING AT BENT NO. 1 AND BENT NO. 2.

TESTING THE FIRST PRODUCTION PILE WITH THE PDA DURING PRESTRIKING OR PREDRIVING IS REQUIRED AT BENT NO. 1 AND BENT NO. 2. FOR PDA TESTING, SEE SECTION 450 OF THE STANDARD SPECIFICATIONS.

FOR REINFORCED SOIL SLOPE (RSS), SEE ROADWAY PLANS.

THE CONTRACTORS ATTENTION IS CALLED THE FACT THAT THE CENTERLINE OF THE 24" PRESTRESSED CONCRETE PILES AT BENT 1 AND BENT 2 IS OFFSET FROM THE WORKLINE BY 3 INCHES.

PROJECT NO. R-2633BB

BRUNSWICK/NEW HANOVER COUNTY

STATION: 398+75.47 -L-
15+24.46 -EY9B-

SHEET 2 OF 5

STATE OF NORTH CAROLINA
DEPARTMENT OF TRANSPORTATION
RALEIGH

GENERAL DRAWING FOR BRIDGE ON US 17 OVER PROGRESS ENERGY SPUR LINE AND SR 1394 BETWEEN SR 1430 AND US 421 LEFT LANE

NORTH CAROLINA PROFESSIONAL SEAL 14047 ENGINEER STEPHEN D. COOK
2/11/13

THE LOUIS BERGER GROUP, Inc.
1001 Wade Avenue, Suite 400
Raleigh, NC 27605-3322

REVISIONS						
NO.	BY:	DATE:	NO.	BY:	DATE:	SHEET NO. 5-401
1			3			TOTAL SHEETS 700
2			4			

DRAWN BY : J. MYA DATE : OCT. 2012
CHECKED BY : S. COOK DATE : OCT. 2012

G:\OR Projects\OR1092 - NCDOT Wilm Bypass DualBridges\Structures\Bridge Site 6\EccBents\R-2633BB_SD_06L_GD_02.dgn
2/11/2013 12:51:17 PM 1092_PDF_full.pltcfg 1092_str.tbl

BM 14 : RR SPIKE SET IN THE BASE OF A 12" PINE 332.39' RT OF -L-STA 397+34.82 ELEVATION 17.24'

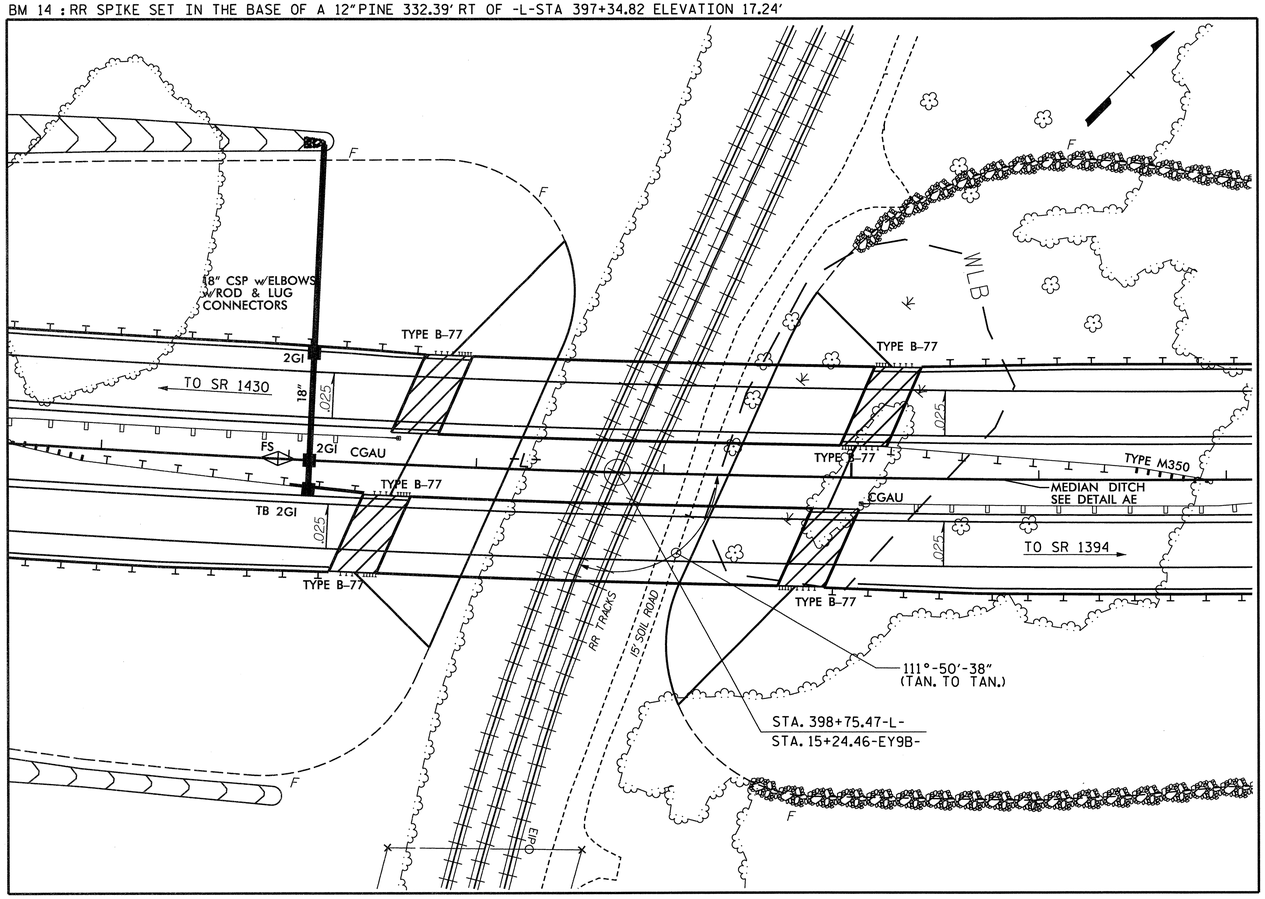

LOCATION SKETCH

- - NOTES - -

ASSUMED LIVE LOAD = HL 93 OR ALTERNATE LOADING.

THIS BRIDGE HAS BEEN DESIGNED IN ACCORDANCE WITH THE REQUIREMENTS OF THE AASHTO LRFD BRIDGE DESIGN SPECIFICATIONS FOR SEISMIC PERFORMANCE ZONE 1.

FOUNDATION TYPE WILL BE DETERMINED AFTER GEOLOGY REPORT HAS BEEN RECEIVED.

THIS BRIDGE HAS BEEN DESIGNED ACCORDING TO AASHTO LRFD DESIGN SPECIFICATIONS.

THIS STRUCTURE CONTAINS THE NECESSARY CORROSION PROTECTION REQUIRED FOR A CORROSIVE SITE.

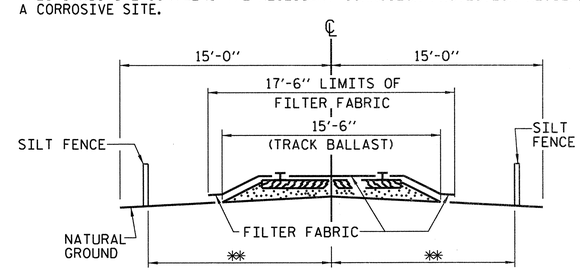

RAILROAD EROSION CONTROL DETAIL

NOTES

RAILROAD EROSION CONTROL MEASURES SHALL BE INSTALLED PRIOR TO PERFORMING ANY WORK IN THE RAILROAD RIGHT-OF-WAY.

ADDITIONAL EROSION CONTROL MEASURES FOR PROTECTION OF RAILROAD DITCHES MAY BE REQUIRED AS DIRECTED BY THE ENGINEER.

NO SEPARATE PAYMENT WILL BE MADE FOR RAILROAD EROSION CONTROL MEASURES.

LIMITS OF SILT FENCE AND FILTER FABRIC PARALLEL TO RAILROAD SHALL EXTEND A MINIMUM OF 25'-0" OUTSIDE EDGE OF SUPERSTRUCTURE OR TOE OF SLOPE ON CONSTRUCTION. A GREATER LENGTH OF SILT FENCE MAY BE REQUIRED IF SO DIRECTED BY THE ENGINEER.

FILTER FABRIC TO BE NAILED TO TIMBER RAIL TIES WITH PRIME SOURCE "GRIP CAP" OR EQUIVALENT. FILTER FABRIC ON SHOULDER TO BE SECURED AS DIRECTED BY THE ENGINEER AND RAILROAD.

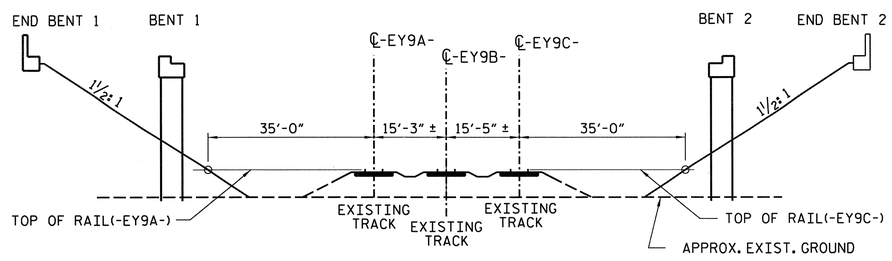

SPAN LENGTH BASED ON THIS SECTION

(LOOKING BACK STATION)

PROJECT NO. R-2633BB

BRUNSWICK/NEW HANOVER COUNTY

STATION: 398+75.47 -L-
15+24.46 -EY9B-

SHEET 3 OF 5

STATE OF NORTH CAROLINA
DEPARTMENT OF TRANSPORTATION
RALEIGH

GENERAL DRAWING FOR
BRIDGE ON US 17 OVER
PROGRESS ENERGY SPUR LINES
BETWEEN SR 1430 AND SR 1394
LEFT LANE

NORTH CAROLINA PROFESSIONAL SEAL 14047 ENGINEER STEPHEN D. COOK
9/11/13

THE LOUIS BERGER GROUP, Inc.
1001 Wade Avenue, Suite 400
Raleigh, NC 27605-3322

REVISIONS						SHEET NO.
NO.	BY:	DATE:	NO.	BY:	DATE:	S-42
1			3			TOTAL SHEETS
2			4			700

DRAWN BY : R. KNIGHT DATE : 8/11
CHECKED BY : R. COFFMAN DATE : 9/11

G:\OR Projects\OR1092 - NCDOT Wilm Bypass DualBridges\Structures\Bridge Site 6\R-2633BB_SD_06L_GD_03.dgn
2/11/2013 8:45:06 AM 1092_PDF_full.pltcfg 1092_str.tbl

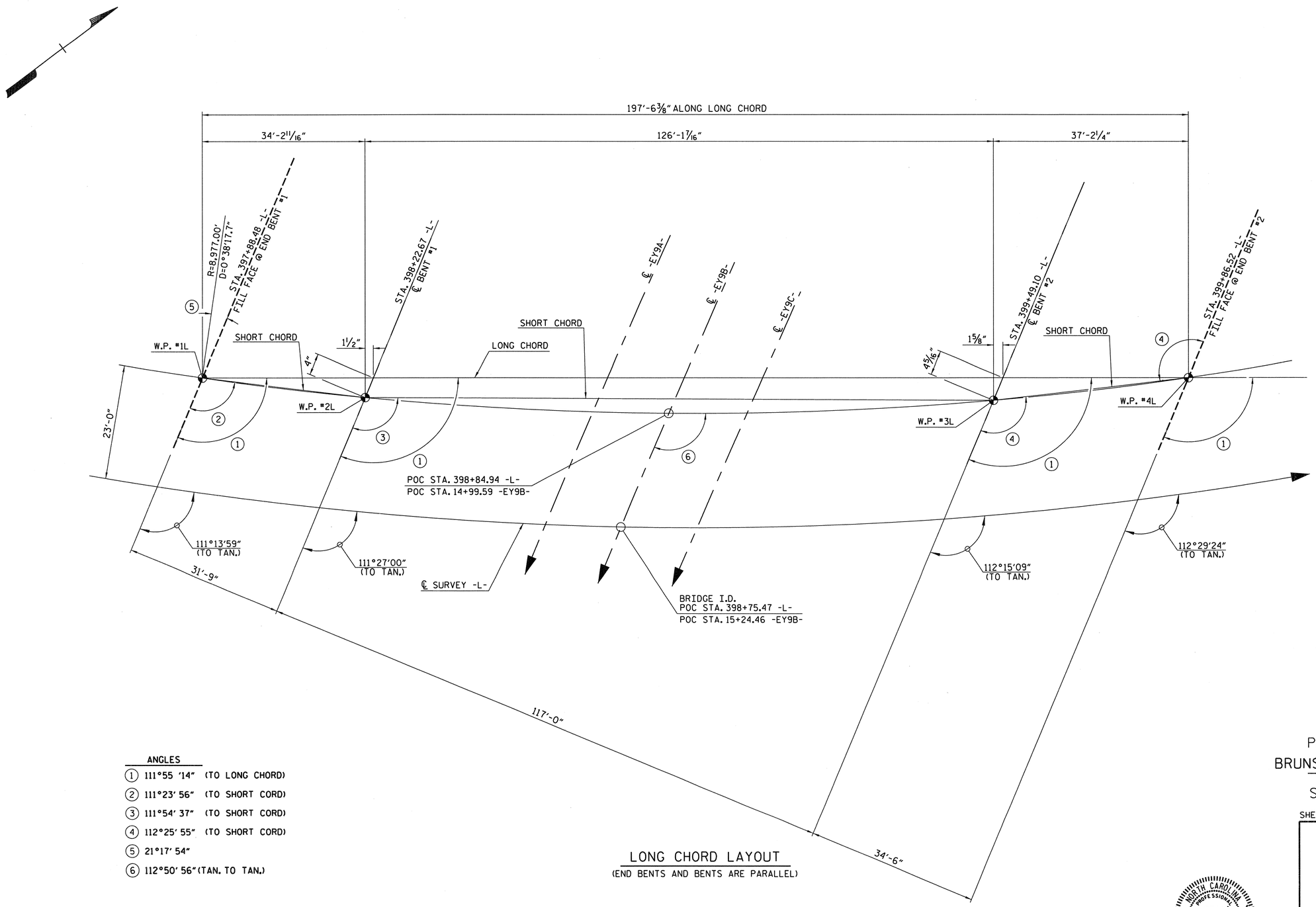

LONG CHORD LAYOUT

(END BENTS AND BENTS ARE PARALLEL)

ANGLES

1. 111°55' 14" (TO LONG CHORD)
2. 111°23' 56" (TO SHORT CORD)
3. 111°54' 37" (TO SHORT CORD)
4. 112°25' 55" (TO SHORT CORD)
5. 21°17' 54"
6. 112°50' 56" (TAN. TO TAN.)

-L-

PI STA 383+94.77
Δ = 51°-49'-22.8" (LT)
D = 0°-38'-11.8"
L = 8,140.34'
T = 4,372.40'
R = 9,000.00'
e = 2.5%

HORIZONTAL CURVE DATA

PROJECT NO. R-2633BB
BRUNSWICK/NEW HANOVER COUNTY
STATION: 398+75.47 -L-
15+24.46 -EY9B-

SHEET 4 OF 5

STATE OF NORTH CAROLINA
DEPARTMENT OF TRANSPORTATION
RALEIGH

GENERAL DRAWING FOR
BRIDGE ON US 17 OVER
PROGRESS ENERGY SPUR LINES
BETWEEN SR 1430 AND SR 1394
LEFT LANE

NORTH CAROLINA PROFESSIONAL SEAL 14047 ENGINEER STEPHEN D. COOK 2/11/13

THE LOUIS BERGER GROUP, Inc.
1001 Wade Avenue, Suite 400
Raleigh, NC 27605-3322

REVISIONS							SHEET NO.
NO.	BY:	DATE:	NO.	BY:	DATE:		S-403
1			3				TOTAL SHEETS
2			4				700

DRAWN BY : R. KNIGHT DATE : 8/11
CHECKED BY : R. COFFMAN DATE : 9/11

G:\OR Projects\OR1092 - NCDOT Wilm Bypass DualBridges\Structures\Bridge Site 6\R-2633BB_SD_06L_GD_04.dgn
2/11/2013 8:45:10 AM 1092_PDF_full.pltcfg 1092_str.tbl

TOTAL BILL OF MATERIAL

	PREDRILLING FOR PILES	PILE REDRIVES	PDA TESTING	REINFORCED CONCRETE DECK SLAB	GROOVING BRIDGE FLOORS	CLASS A CONCRETE	BRIDGE APPROACH SLABS	REINFORCING STEEL	45" PRESTRESSED CONCRETE GIRDERS		MODIFIED 72" PRESTRESSED CONCRETE GIRDERS		HP 12 X 53 STEEL PILES		24" PRESTRESSED CONCRETE PILES		CONCRETE BARRIER RAIL	72" CHAIN LINK FENCE	4" CONCRETE SLOPE PROTECTION	ELASTOMERIC BEARINGS	EXPANSION JOINT SEALS
	LIN. FT.	EACH	EACH	SQ. FT.	SQ. FT.	CU. YDS.	LUMP SUM	LBS.	NO.	LIN. FT.	NO.	LIN. FT.	NO.	LIN. FT.	NO.	LIN. FT.	LIN. FT.	LIN. FT.	SQ. YDS.	LUMP SUM	LUMP SUM
SUPERSTRUCTURE				8,837	9,732		LUMP SUM		10	338.18	5	628.85					432.70	380.0		LUMP SUM	LUMP SUM
END BENT NO. 1		4				31.0		4,567					8	480					471		
BENT NO. 1	50	3				26.0		3,444							5	375					
BENT NO. 2	50	3				26.0		3,444							5	375					
END BENT NO. 2		4				31.0		4,581					8	480					560		
TOTAL	100	14	1	8,837	9,732	114.0	LUMP SUM	16,036	10	338.18	5	628.85	16	960	10	750	432.70	380.0	1,031	LUMP SUM	LUMP SUM

GENERAL DRAWING NOTES

ASSUMED LIVE LOAD = HL-93 OR ALTERNATE LOADING.

FOR OTHER DESIGN DATA AND GENERAL NOTES, SEE SHEET SN.

FOR EROSION CONTROL MEASURES SEE EROSION CONTROL PLANS.

THIS BRIDGE HAS BEEN DESIGNED IN ACCORDANCE WITH THE AASHTO LRFD BRIDGE DESIGN SPECIFICATIONS.

REMOVABLE FORMS MAY BE USED IN LIEU OF METAL STAY-IN-PLACE FORMS IN ACCORDANCE WITH ARTICLE 420-3 OF THE STANDARD SPECIFICATIONS.

PRESTRESSED CONCRETE DECK PANELS MAY BE USED IN LIEU OF METAL STAY-IN-PLACE FORMS IN ACCORDANCE WITH ARTICLE 420-3 OF THE STANDARD SPECIFICATIONS.

NEEDLE BEAMS WILL NOT BE ALLOWED UNLESS OTHERWISE CALLED FOR ON THE PLANS OR APPROVED BY THE ENGINEER.

THE CONTRACTOR SHALL PROVIDE INDEPENDENT ASSURANCE SAMPLES OF REINFORCING STEEL AS FOLLOWS: FOR PROJECTS REQUIRING UP TO 400 TONS OF REINFORCING STEEL, ONE 30 INCH SAMPLE OF EACH SIZE BAR USED, AND FOR PROJECTS REQUIRING OVER 400 TONS OF REINFORCING STEEL, TWO 30 INCH SAMPLES OF EACH SIZE BAR USED. THE BARS FROM WHICH THE SAMPLES ARE TAKEN MUST THEN BE SPLICED WITH REPLACEMENT BARS OF THE SIZE AND LENGTH OF THE SAMPLE, PLUS A MINIMUM LAP SPLICE OF THIRTY BAR DIAMETERS. PAYMENT FOR THE SAMPLES OF REINFORCING STEEL SHALL BE CONSIDERED INCIDENTAL TO VARIOUS PAY ITEMS.

THE CONTRACTOR'S ATTENTION IS CALLED TO THE FACT THAT THE SHORING AND EXCAVATION PLANS HAVE BEEN SUBMITTED TO THE RAILROAD BY THE STATE. AS OF THE TIME OF PLAN PRINTING FOR ADVERTISEMENT FOR BIDS, RAILROAD APPROVAL HAS NOT BEEN RECEIVED. WHEN SUCH APPROVAL IS RECEIVED, THE CONTRACTOR WILL BE NOTIFIED BY ADDENDUM. IN THE EVENT RAILROAD APPROVAL IS NOT GIVEN PRIOR TO SUBMISSION OF BIDS, THE CONTRACTOR SHALL SUBMIT BIDS BASED ON THE CONTRACT PLANS. THE CONTRACTOR SHALL NOT BEGIN EXCAVATION AT THE LOCATIONS SHOWN ON THESE PLANS UNTIL NOTIFIED OF RAILROAD APPROVAL.

FOR UTILITY INFORMATION, SEE UTILITY PLANS AND SPECIAL PROVISIONS.

FOR SUBMITTAL OF WORKING DRAWINGS, SEE SPECIAL PROVISIONS.

FOR FALSEWORK AND FORMWORK, SEE SPECIAL PROVISIONS.

FOR CRANE SAFETY, SEE SPECIAL PROVISIONS.

THE RAILROAD TRACK TOP OF RAIL ELEVATIONS SHOWN ON THE PLANS ARE FROM THE BEST INFORMATION AVAILABLE. PRIOR TO BEGINNING BRIDGE CONSTRUCTION, VERIFY THE TOP OF RAIL ELEVATIONS AND REPORT ANY VARIATIONS TO THE ENGINEER. ANY PLAN REVISIONS NECESSARY TO ACHIEVE THE REQUIRED MINIMUM VERTICAL CLEARANCE WILL BE PROVIDED BY THE DEPARTMENT.

FOR GROUT FOR STRUCTURES, SEE SPECIAL PROVISIONS.

THIS BRIDGE IS LOCATED IN SEISMIC ZONE 1.

FOR PLACING LOAD ON STRUCTURE MEMBERS, SEE SPECIAL PROVISIONS.

PROJECT NO. R-2633BB
BRUNSWICK/NEW HANOVER COUNTY
STATION: 398+75.47 -L-
15+24.46 -EY9B-

SHEET 5 OF 5

STATE OF NORTH CAROLINA
DEPARTMENT OF TRANSPORTATION
RALEIGH

GENERAL DRAWING FOR BRIDGE ON US 17 OVER PROGRESS ENERGY SPUR LINE & SR 1394 BETWEEN SR 1430 & US 421 LEFT LANE

NORTH CAROLINA PROFESSIONAL SEAL 14047 ENGINEER STEPHEN D. COOK
2/11/13

THE LOUIS BERGER GROUP, Inc.
1001 Wade Avenue, Suite 400
Raleigh, NC 27605-3322

REVISIONS						SHEET NO.
NO.	BY:	DATE:	NO.	BY:	DATE:	S-4.4
1			3			TOTAL SHEETS
2			4			700

DRAWN BY : J. MYA DATE : OCT. 2012
CHECKED BY : S. COOK DATE : OCT. 2012

G:\OR Projects\OR1092 - NCDOT Wilm Bypass DualBridges\Structures\Bridge Site 6\R-2633BB_SD_06L_GD_05.dgn
2/11/2013 12:01:32 PM 1092_PDF_fullpltcfg 1092_str.tbl

LOAD AND RESISTANCE FACTOR RATING (LRFR) SUMMARY FOR PRESTRESSED CONCRETE GIRDERS

LEVEL		VEHICLE	WEIGHT (W) (TONS)	CONTROLLING LOAD RATING (#)	MINIMUM RATING FACTORS (RF)	TONS = W × RF	STRENGTH I LIMIT STATE											SERVICE III LIMIT STATE						COMMENT NUMBER
								MOMENT					SHEAR						MOMENT					
							LIVE-LOAD FACTORS (γ_{LL})	DISTRIBUTION FACTORS (DF)	RATING FACTOR	SPAN	GIRDER LOCATION	DISTANCE FROM LEFT END OF SPAN (ft)	DISTRIBUTION FACTORS (DF)	RATING FACTOR	SPAN	GIRDER LOCATION	DISTANCE FROM LEFT END OF SPAN (ft)	LIVE-LOAD FACTORS (γ_{LL})	DISTRIBUTION FACTORS (DF)	RATING FACTOR	SPAN	GIRDER LOCATION	DISTANCE FROM LEFT END OF SPAN (ft)	
DESIGN LOAD RATING		HL-93 (INVENTORY)	N/A	1	1.08	-	1.75	0.97	1.41	A	I	15.50	0.98	1.08	A	I	21.97	0.80	0.94	1.61	C	I	17.00	
		HL-93 (OPERATING)	N/A		1.83	-	1.35	0.97	1.83	A	I	15.50	0.98	2.00	C	I	27.60	N/A	-	-	-	-	-	
		HS-20 (INVENTORY)	36.000	2	1.13	40.680	1.75	0.82	1.46	B	EL	62.17	0.98	1.13	B	I	11.87	0.80	0.82	1.44	B	EL	62.17	
		HS-20 (OPERATING)	36.000		1.50	54.000	1.35	0.82	1.89	B	EL	62.17	0.98	1.50	B	I	11.87	N/A	-	-	-	-	-	
LEGAL LOAD RATING	SINGLE VEHICLE (SV)	SH	12.500		4.03	50.375	1.40	0.97	4.39	A	I	15.50	0.98	4.77	C	I	27.60	0.80	0.94	4.03	C	I	17.00	
		S3C	21.500		2.39	51.385	1.40	0.97	2.60	A	I	15.50	0.98	2.87	C	I	27.60	0.80	0.94	2.39	C	I	17.00	
		S3A	22.750		2.27	51.643	1.40	0.97	2.48	A	I	15.50	0.98	2.74	C	I	27.60	0.80	0.94	2.27	C	I	17.00	
		S4A	26.750		2.14	57.245	1.40	0.97	2.37	A	I	15.50	0.98	2.53	C	I	27.60	0.80	0.94	2.14	C	I	17.00	
		S5A	30.500		1.92	58.560	1.40	0.97	2.13	A	I	15.50	0.86	2.46	B	I	11.87	0.80	0.94	1.92	C	I	17.00	
		S6A	34.500		1.84	63.480	1.40	0.97	2.02	A	I	15.50	0.86	2.19	B	I	11.87	0.80	0.94	1.84	C	I	17.00	
		S7B	38.500	3	1.74	66.990	1.40	0.97	1.93	A	I	15.50	0.86	2.01	B	I	11.87	0.80	0.94	1.74	C	I	17.00	
		S7A	40.000		1.80	72.000	1.40	0.97	2.02	A	I	15.50	0.86	1.99	B	I	11.87	0.80	0.94	1.80	C	I	17.00	
	TRUCK TRACTOR SEMI-TRAILER (TTST)	T4A	28.250		2.27	64.128	1.40	0.94	3.06	A	I	17.00	0.98	2.60	A	I	27.60	0.80	0.94	2.27	A	EL	17.00	
		T5B	32.000		2.01	64.320	1.40	0.94	2.70	A	I	17.00	0.86	2.41	B	I	112.47	0.80	0.94	2.01	A	EL	17.00	
		T6A	36.000		1.99	71.640	1.40	0.82	2.65	B	EL	62.17	0.86	2.17	B	I	11.87	0.80	0.94	1.99	A	EL	17.00	
		T7A	40.000		1.92	76.800	1.40	0.82	2.43	B	EL	62.17	0.86	2.00	B	I	11.87	0.80	0.82	1.92	B	EL	62.17	
		T7B	40.000		1.92	76.800	1.40	0.82	2.54	B	EL	62.17	0.86	1.92	B	I	112.47	0.80	0.82	2.00	B	EL	62.17	

LOAD FACTORS:

DESIGN LOAD RATING FACTORS	LIMIT STATE	γ_{DC}	γ_{DW}
	STRENGTH I	1.25	1.50
	SERVICE III	1.00	1.00

NOTES:

MINIMUM RATING FACTORS ARE BASED ON THE STRENGTH I AND SERVICE III LIMIT STATES.

ALLOWABLE STRESSES FOR SERVICE III LIMIT STATE ARE AS REQUIRED FOR DESIGN.

COMMENTS:

1.
2.
3.
4.

(#) CONTROLLING LOAD RATING

- (1) DESIGN LOAD RATING (HL-93)
- (2) DESIGN LOAD RATING (HS-20)
- (3) LEGAL LOAD RATING **
- ** SEE CHART FOR VEHICLE TYPE

GIRDER LOCATION

- I - INTERIOR GIRDER
- EL - EXTERIOR LEFT GIRDER
- ER - EXTERIOR RIGHTGIRDER

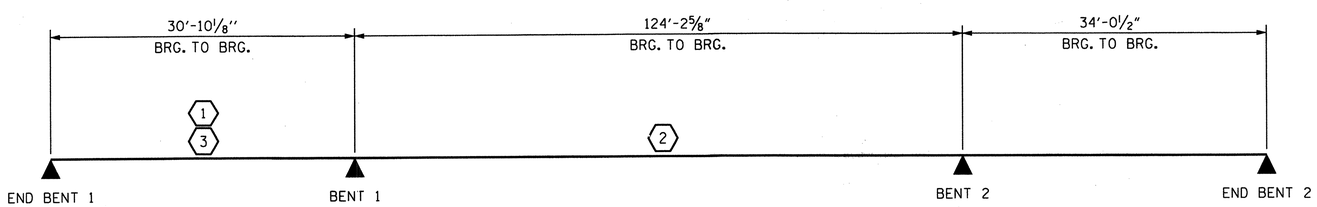

LRFR SUMMARY

PROJECT NO. R-2633BB
BRUNSWICK/NEW HANOVER COUNTY
STATION: 398+75.47 -L-

STATE OF NORTH CAROLINA
DEPARTMENT OF TRANSPORTATION
RALEIGH

STANDARD
LRFR SUMMARY FOR PRESTRESSED CONCRETE GIRDERS
LEFT LANE
(INTERSTATE TRAFFIC)

NORTH CAROLINA PROFESSIONAL SEAL 14047 ENGINEER STEPHEN D. COX
6/26/13

THE LOUIS BERGER GROUP, Inc.
1001 Wade Avenue, Suite 400
Raleigh, NC 27605-3322

REVISIONS						
NO.	BY:	DATE:	NO.	BY:	DATE:	
1			3			
2			4			

SHEET NO. S-465
TOTAL SHEETS 700

ASSEMBLED BY : J. MYA		DATE : SEPT 2012	
CHECKED BY : R.DECOLA		DATE : DEC 2012	
DRAWN BY : MAA 1/08	REV. 11/12/08RR	MAA/GM	
CHECKED BY : GM/DI 2/08	REV. 10/1/11	MAA/GM	

STD. NO. LRFR2

G:\OR Projects\OR1092 - NCDOT Wilm Bypass DualBridges\Structures\Bridge Site 6\R-2633BB_SD_06L_LRFR.dgn
6/27/2013 9:49:41 AM 1092_PDF_full.pltcfg 1092_str.tbl

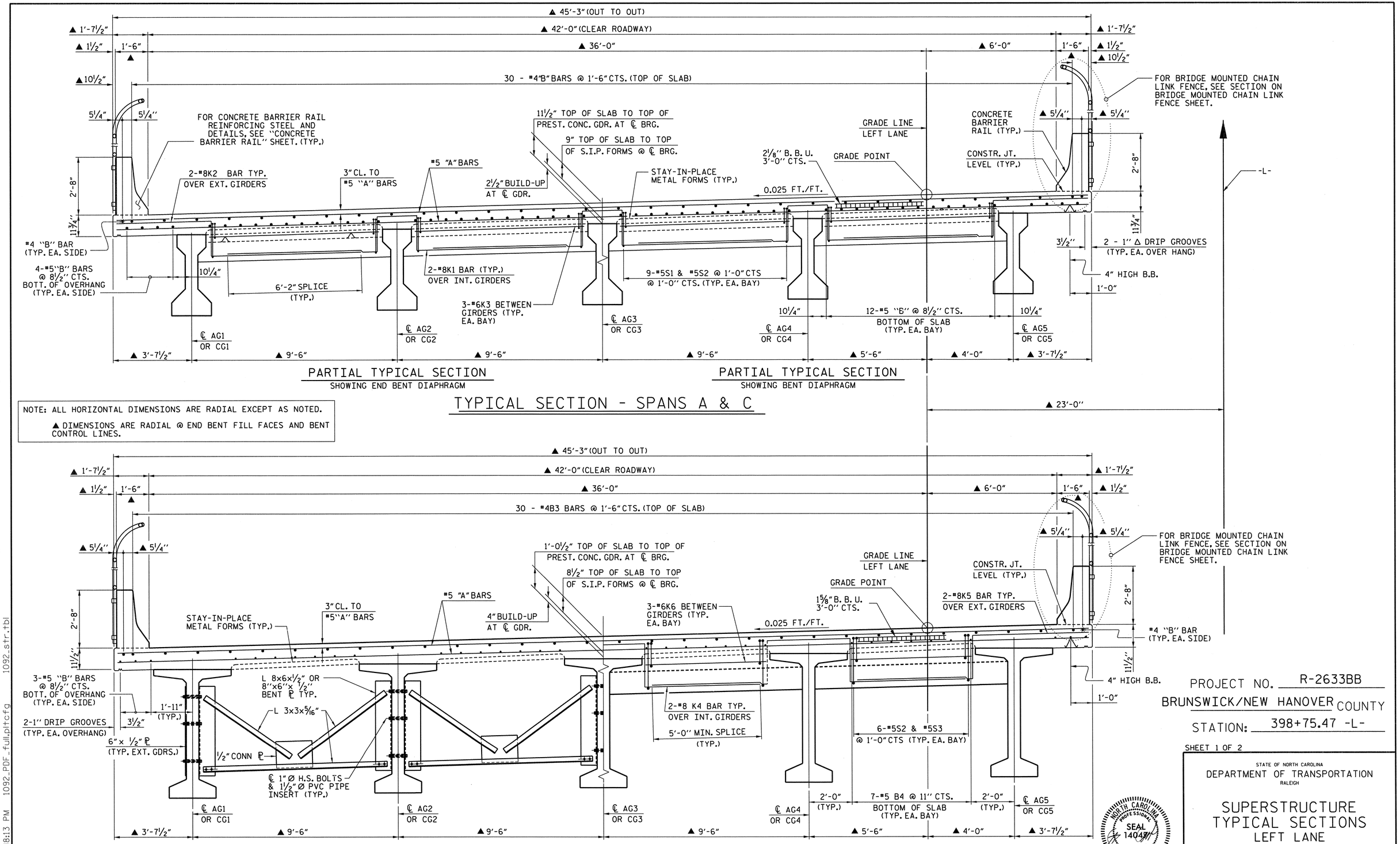

PROJECT NO. R-2633BB

BRUNSWICK/NEW HANOVER COUNTY

STATION: 398+75.47 -L-

SHEET 1 OF 2

STATE OF NORTH CAROLINA
DEPARTMENT OF TRANSPORTATION
RALEIGH

SUPERSTRUCTURE TYPICAL SECTIONS LEFT LANE

NORTH CAROLINA PROFESSIONAL SEAL 14047 ENGINEER STEPHEN D. COOK
3/26/13

THE LOUIS BERGER GROUP, Inc.
1001 Wade Avenue, Suite 400
Raleigh, NC 27605-3322

REVISIONS						SHEET NO.
NO.	BY:	DATE:	NO.	BY:	DATE:	S-066
1			3			TOTAL SHEETS
2			4			700

DRAWN BY : R. KNIGHT/J.MYA DATE : OCT 2012
CHECKED BY : S. COOK DATE : OCT 2012

G:\OR Projects\OR1092 - NCDOT Wilm Bypass DualBridges\Structures\Bridge Site 6\R-2633BB_SD_06L_TYP01.dgn
3/26/2013 1:48:13 PM 1092_PDF_full.pltcfg 1092_str.tbl

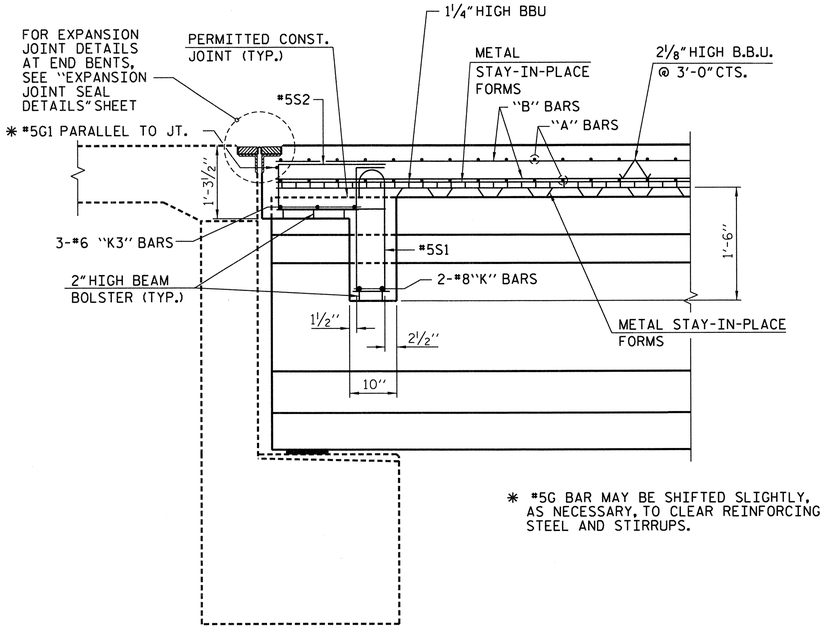

✱ #5G BAR MAY BE SHIFTED SLIGHTLY, AS NECESSARY, TO CLEAR REINFORCING STEEL AND STIRRUPS.

SECTION A-A

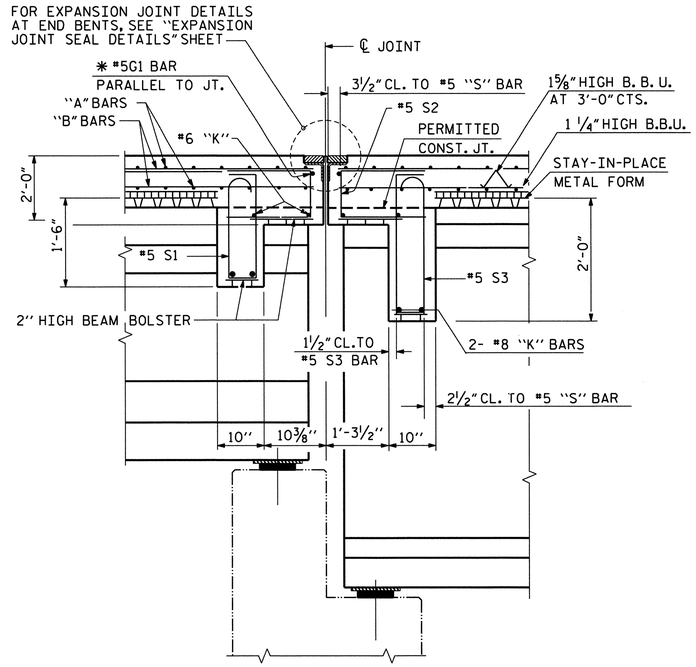

SECTION B-B

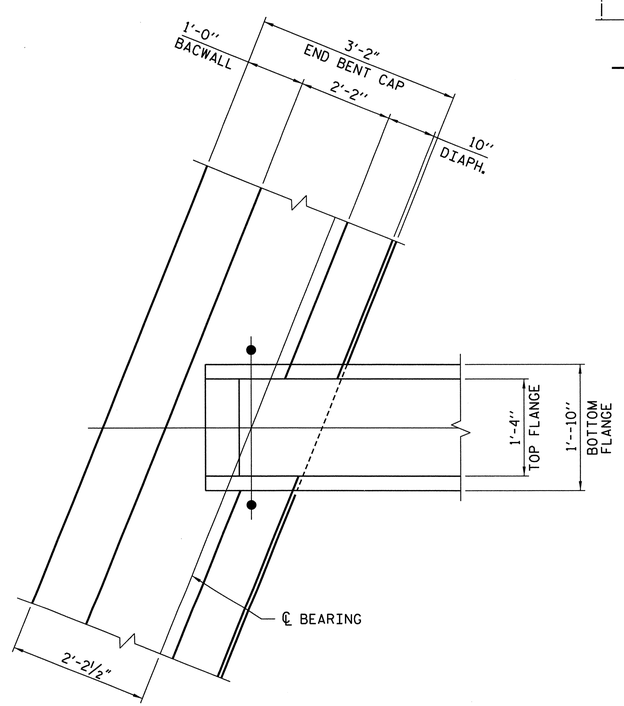

PLAN OF
END BENT DIAPHRAGM

PROJECT NO. R-2633BB
BRUNSWICK/NEW HANOVER COUNTY
STATION: 398+75.47 -L-

SHEET 2 OF 2

STATE OF NORTH CAROLINA
DEPARTMENT OF TRANSPORTATION
RALEIGH

SUPERSTRUCTURE
TYPICAL SECTION
DETAILS - LEFT LANE

NORTH CAROLINA PROFESSIONAL SEAL 14047 ENGINEER STEPHEN D. COOK
3/26/13

THE LOUIS BERGER GROUP, Inc.
1001 Wade Avenue, Suite 400
Raleigh, NC 27605-3322

REVISIONS						SHEET NO.
NO.	BY:	DATE:	NO.	BY:	DATE:	S-467
1			3			TOTAL SHEETS
2			4			700

DRAWN BY : J. MYA DATE : OCT. 2012
CHECKED BY : S. COOK DATE : OCT. 2012

G:\OR Projects\OR1092 - NCDOT Wilm Bypass DualBridges\Structures\Bridge Site 6\R-2633BB_SD_06L_TYP02.dgn
3/26/2013 1:48:15 PM 1092_PDF_full.pltcfg 1092_str.tbl

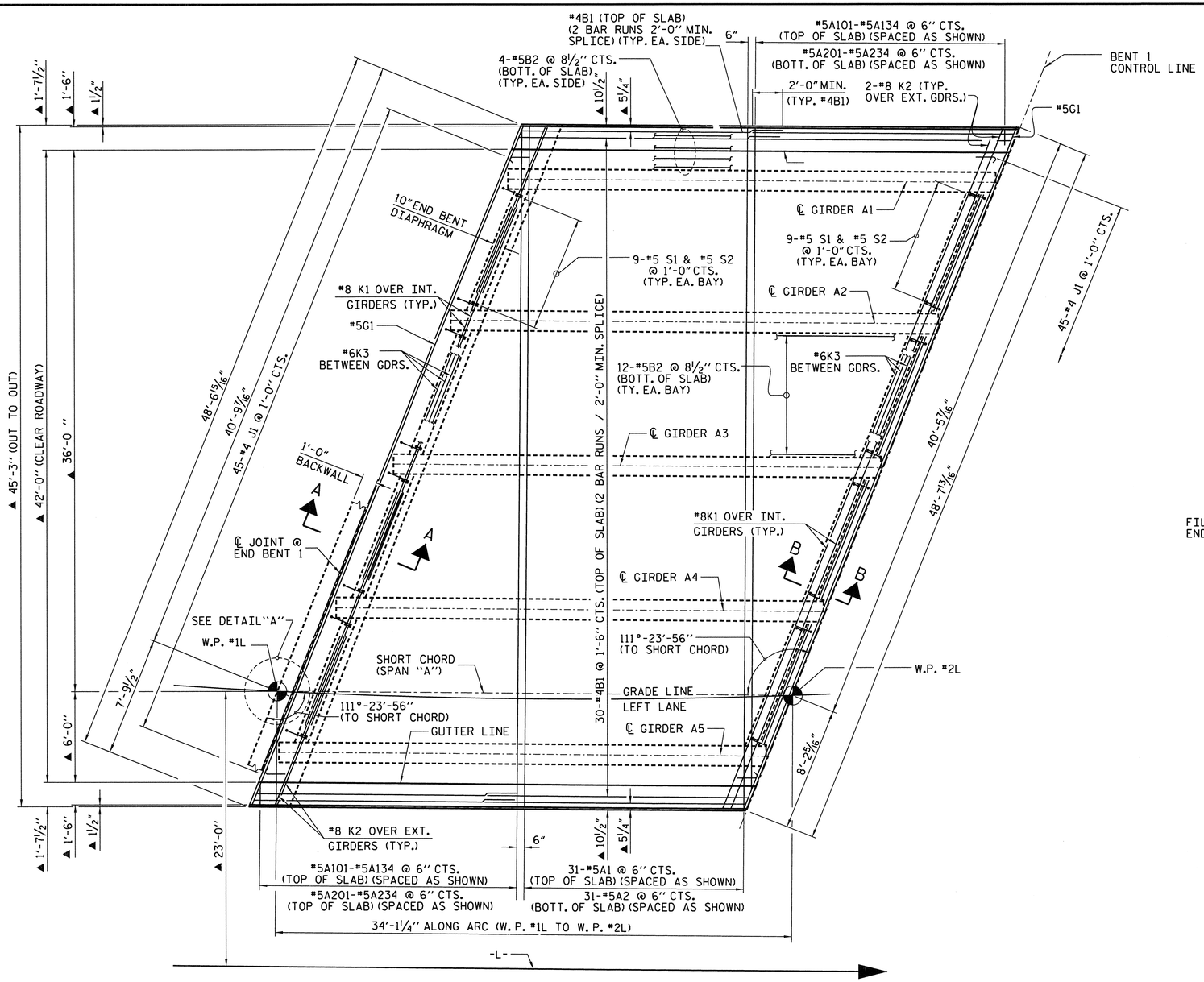

PLAN OF SPAN A

▲ RADIAL DIMENSIONS TO -L-.
FOR SECTION VIEWS, SEE "TYPICAL SECTION" SHEET 2 OF 2.

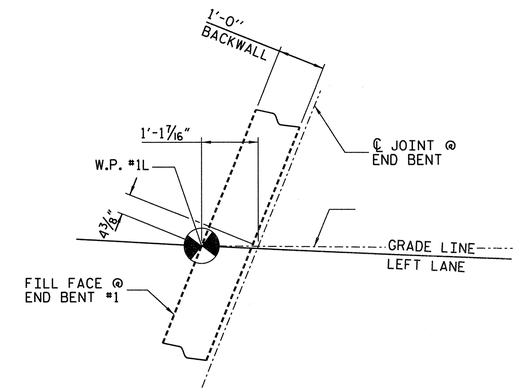

DETAIL "A"

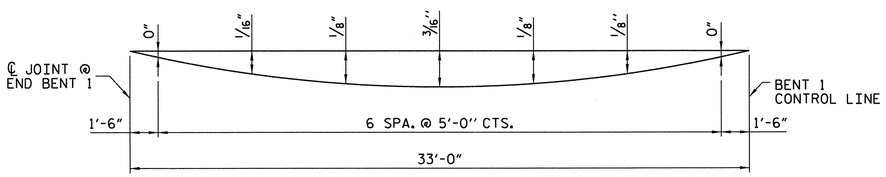

ARC OFFSET - LEFT SIDE

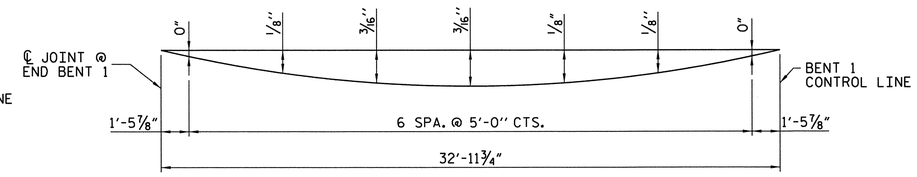

ARC OFFSET - RIGHT SIDE

PROJECT NO. R-2633BB
BRUNSWICK/NEW HANOVER COUNTY
STATION: 398+75.47 -L-

SHEET 1 OF 3

STATE OF NORTH CAROLINA
DEPARTMENT OF TRANSPORTATION
RALEIGH

SUPERSTRUCTURE PLAN OF SPAN "A" LEFT LANE

NORTH CAROLINA PROFESSIONAL SEAL 14047 ENGINEER STEPHEN D. COOK

THE LOUIS BERGER GROUP, Inc.
1001 Wade Avenue, Suite 400
Raleigh, NC 27605-3322

REVISIONS						SHEET NO.
NO.	BY:	DATE:	NO.	BY:	DATE:	S-428
1			3			TOTAL SHEETS
2			4			700

DRAWN BY : J. MYA DATE : OCT.2012
CHECKED BY : S.COOK DATE : OCT.2012

G:\OR Projects\OR1092 - NCDOT Wilm Bypass DualBridges\Structures\Bridge Site 6\R-2633BB_SD_06L_POSA_01.dgn
2/11/2013 1:14:32 PM 1092_PDF_full.pltcfg 1092_str.tbl

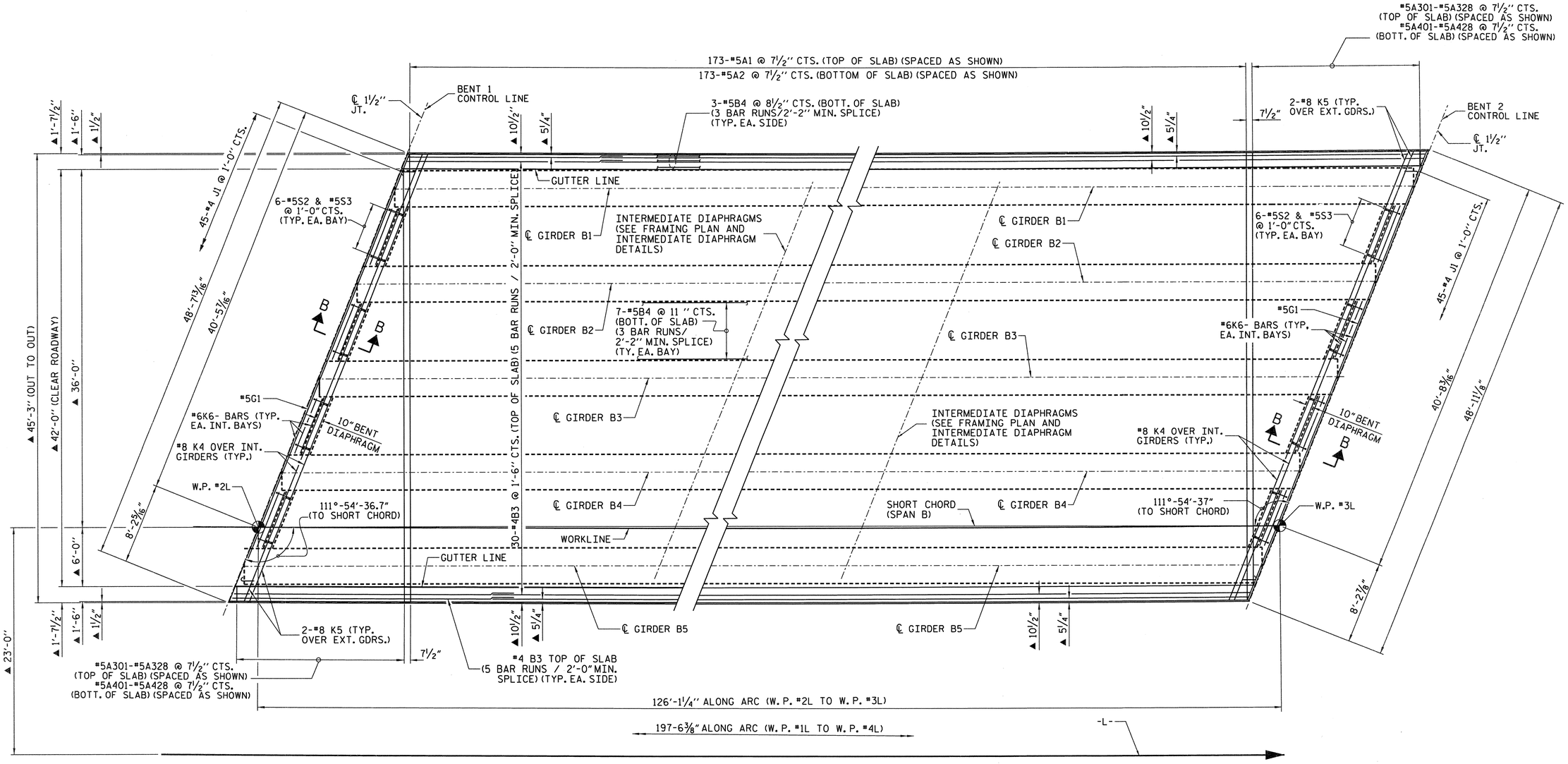

PLAN OF SPAN B

RADIAL DIMENSIONS TO -L-.
FOR SECTION VIEWS, SEE "TYPICAL SECTION" SHEET 2 OF 2.

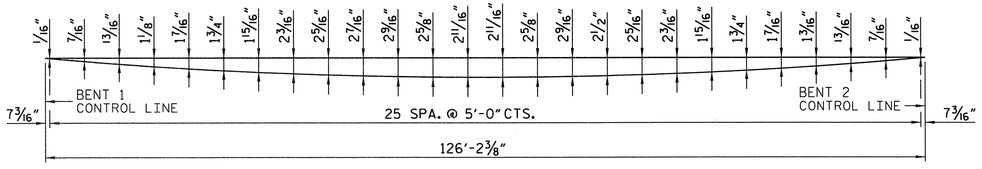

ARC OFFSET - LEFT SIDE

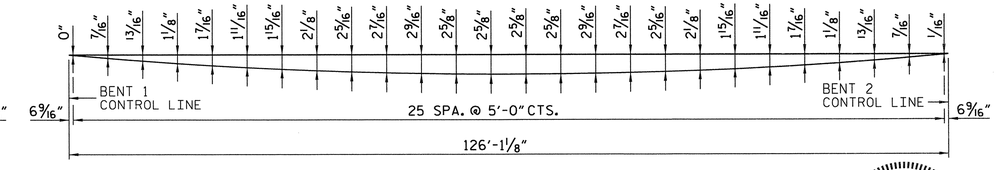

ARC OFFSET - RIGHT SIDE

PROJECT NO. R-2633BB
BRUNSWICK/NEW HANOVER COUNTY
STATION: 398+75.47 -L-
SHEET 2 OF 3

STATE OF NORTH CAROLINA
DEPARTMENT OF TRANSPORTATION
RALEIGH

SUPERSTRUCTURE PLAN OF SPAN "B" LEFT LANE

NORTH CAROLINA PROFESSIONAL SEAL 14047 ENGINEER STEPHEN D. COOK

THE LOUIS BERGER GROUP, Inc.
1001 Wade Avenue, Suite 400
Raleigh, NC 27605-3322

REVISIONS								SHEET NO.
NO.	BY:	DATE:	NO.	BY:	DATE:			S-49
1			3					TOTAL SHEETS
2			4					100

DRAWN BY : J. MYA DATE : SEP. 2012
CHECKED BY : S. COOK DATE : SEP. 2012

G:\OR Projects\OR1092 - NCDOT Wilm Bypass DualBridges\Structures\Bridge Site 6\R-2633BB_SD_06L_POSB_01.dgn
2/11/2013 8:45:27 AM 1092_PDF_full.pltcfg 1092_str.tbl

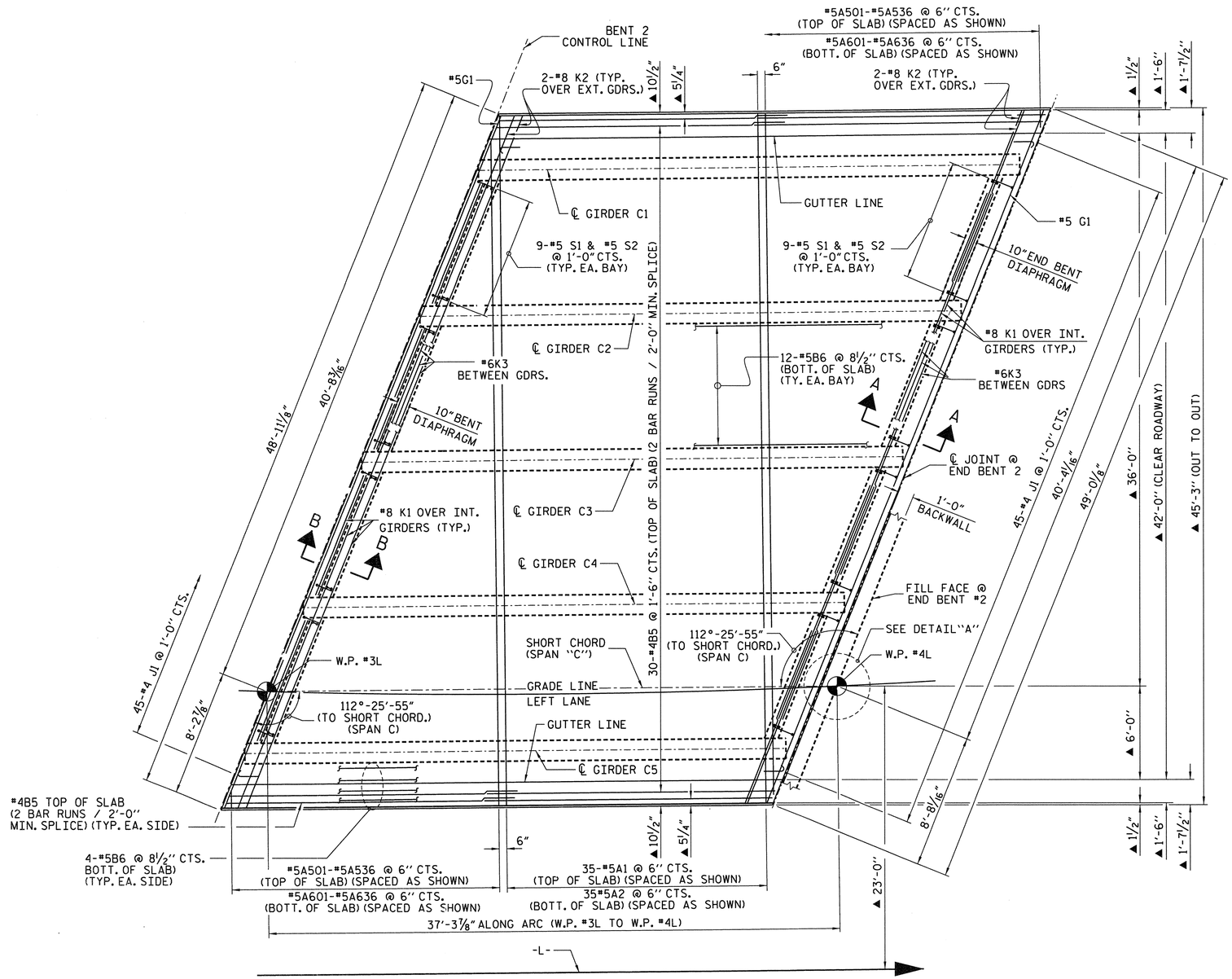

SPAN C

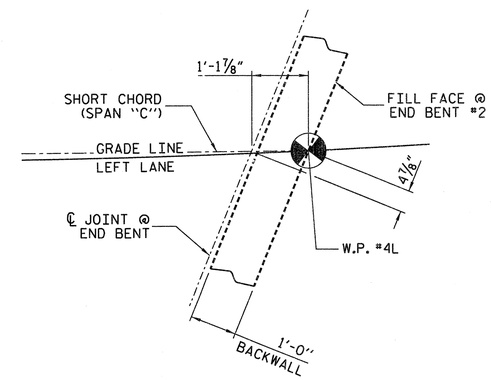

DETAIL "A"

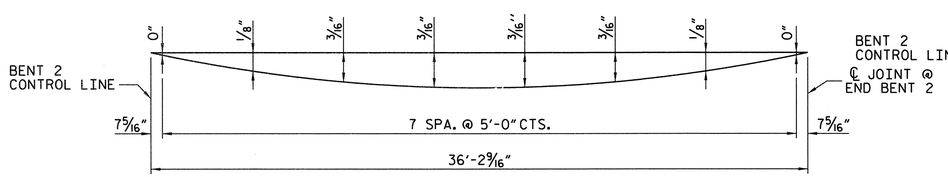

ARC OFFSET - LEFT SIDE

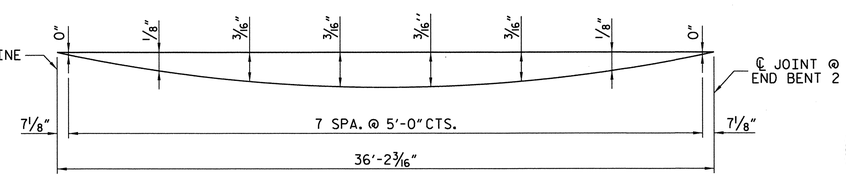

ARC OFFSET - RIGHT SIDE

PROJECT NO. R-2633BB

BRUNSWICK/NEW HANOVER COUNTY

STATION: 398+75.47 -L-

SHEET 3 OF 3

STATE OF NORTH CAROLINA
DEPARTMENT OF TRANSPORTATION
RALEIGH

SUPERSTRUCTURE PLAN OF SPAN "C" LEFT LANE

NORTH CAROLINA PROFESSIONAL SEAL 14047 ENGINEER STEPHEN D. COOK 3/11/13

THE LOUIS BERGER GROUP, Inc.
1001 Wade Avenue, Suite 400
Raleigh, NC 27605-3322

REVISIONS						SHEET NO.
NO.	BY:	DATE:	NO.	BY:	DATE:	S-470
1			3			TOTAL SHEETS
2			4			700

DRAWN BY : J. MYA DATE : OCT.2012
CHECKED BY : S.COOK DATE : OCT.2012

G:\OR Projects\OR1092 - NCDOT Wilm Bypass DualBridges\Structures\Bridge Site 6\R-2633BB_SD_06L_POSC_01.dgn
2/11/2013 8:45:30 AM 1092_PDF_full.pltcfg 1092_str.tbl

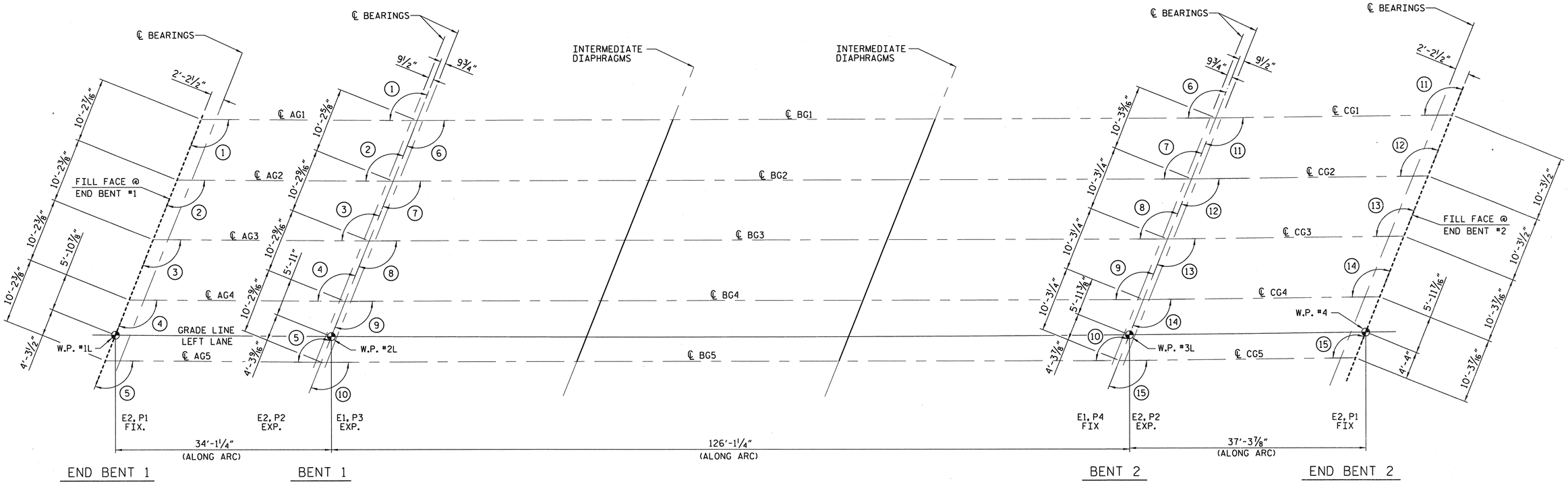

FRAMING PLAN

TABLE OF ANGLES	
NO.	ANGLE
1	111°29′04″
2	111°27′38″
3	111°26′12″
4	111°24′46″
5	111°23′20″
6	111°59′52″
7	111°58′24″
8	111°56′56″
9	111°55′28″
10	111°53′60″
11	112°31′18″
12	112°29′48″
13	112°28′17″
14	112°26′47″
15	112°25′17″

PROJECT NO. R-2633BB
BRUNSWICK/NEW HANOVER COUNTY
STATION: 398+75.47 -L-

STATE OF NORTH CAROLINA
DEPARTMENT OF TRANSPORTATION
RALEIGH

SUPERSTRUCTURE
FRAMING PLAN
LEFT LANE

NORTH CAROLINA PROFESSIONAL SEAL 14047 ENGINEER STEPHEN D. COOK
7/11/13

THE LOUIS BERGER GROUP, Inc.
1001 Wade Avenue, Suite 400
Raleigh, NC 27605-3322

REVISIONS						
NO.	BY:	DATE:	NO.	BY:	DATE:	
1			3			
2			4			

SHEET NO. S-471
TOTAL SHEETS 700

DRAWN BY : R. KNIGHT DATE : JAN 2012
CHECKED BY : S. COOK DATE : DEC 2012

G:\OR Projects\OR1092 - NCDOT Wilm Bypass DualBridges\Structures\Bridge Site 6\R-2633BB_SD_06L_FRM.dgn
2/12/2013 8:27:53 AM 1092_PDF_full.pltcfg 1092_str.tbl

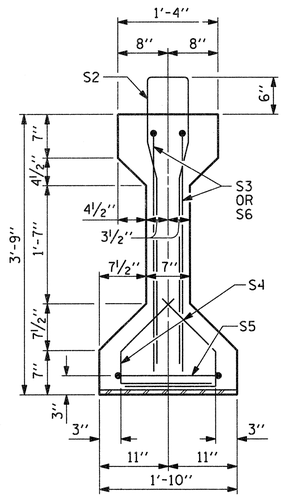

SECTION A-A

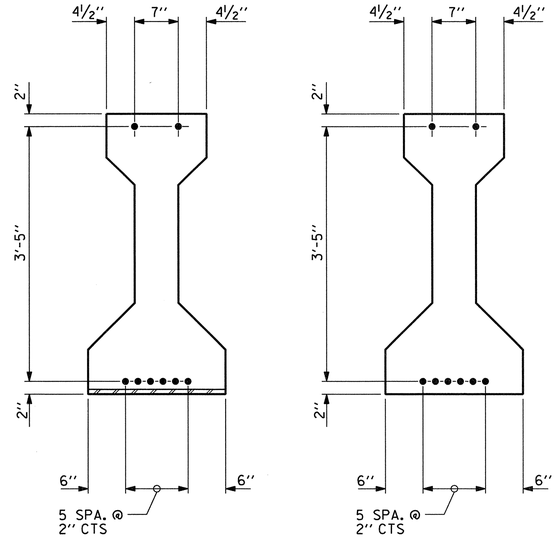

AT END OF GIRDER

AT ℄ OF GIRDER

0.6" Ø LOW RELAXATION STRAND LAYOUT

NOTES

ALL PRESTRESSING STRANDS SHALL BE 7-WIRE LOW-RELAXATION GRADE 270 STRANDS AND SHALL CONFORM TO AASHTO M203 EXCEPT FOR SAMPLING REQUIREMENTS WHICH SHALL BE IN ACCORDANCE WITH THE STANDARD SPECIFICATIONS.

APPLY EPOXY PROTECTIVE COATING TO END OF GIRDER SURFACES.

EMBEDDED PLATE "B-1" SHALL BE GALVANIZED IN ACCORDANCE WITH THE SPECIFICATIONS.

BEVEL EDGES OF PLATE "B-1" TO GIVE CLOSE FIT BUT NOT TIGHT FIT TO STEEL CASTING FORM.

ANCHOR STUDS SHALL CONFORM TO AASHTO M169 GRADES 1010 THROUGH 1020 OR APPROVED EQUAL, AND SHALL MEET THE TYPE "B" REQUIREMENTS OF SUBSECTION 7.3 OF THE ANSI/AASHTO/AWS D1.5 BRIDGE WELDING CODE.

ALL PRESTRESSED STRANDS SHALL BE CUT FLUSH WITH THE GIRDER ENDS.

THE TRANSFER OF LOAD FROM THE ANCHORAGES TO THE GIRDER SHALL BE DONE WHEN CONCRETE HAS REACHED A COMPRESSIVE STRENGTH OF NOT LESS THAN 5500 PSI.

DEPENDING ON THE TYPE OF SYSTEM USED TO SUPPORT THE DECK SLAB FORMS, PRESET ANCHORS MAY BE NECESSARY IN THE PRESTRESSED CONCRETE GIRDER.

THE TOP SURFACE OF THE GIRDER SHALL BE RAKED TO A DEPTH OF ¼" EXCEPT IN THE AREA BETWEEN THE STIRRUP AND THE EDGE OF THE GIRDER.

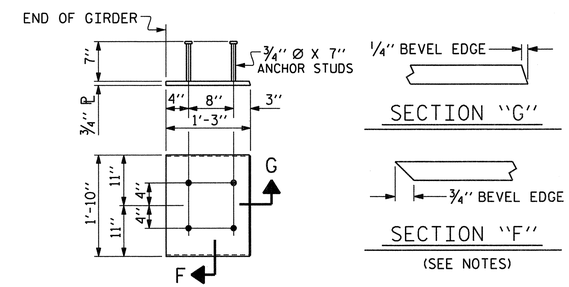

EMBEDDED PLATE "B-1" DETAILS

TWO EMBEDDED PLATES "B-1" ARE REQUIRED FOR EACH GIRDER.

0.6" Ø L. R. GRADE 270 STRANDS

AREA (SQUARE INCHES)	ULTIMATE STRENGTH (LBS. PER STRAND)	APPLIED PRESTRESS (LBS. PER STRAND)
0.217	58,600	43,950

REINFORCING STEEL FOR ONE GIRDER

BAR	NUMBER	SIZE	TYPE	LENGTH	WEIGHT
S1	26	#4	1	8'-6"	148
S2	8	#6	1	8'-6"	102
S3	4	#6	2	4'-8"	28
S4	56	#4	3	2'-9"	103
S5	2	#4	4	9'-6"	13
S6	4	#6	2	4'-6"	27

BAR TYPES

ALL BAR DIMENSIONS ARE OUT-TO-OUT

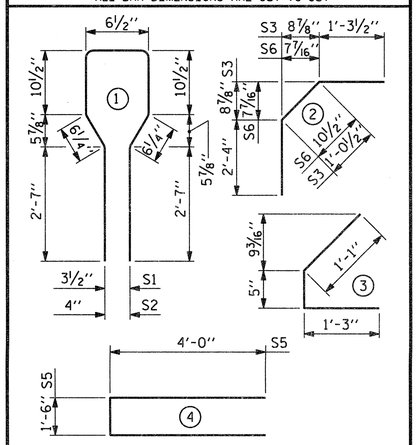

QUANTITIES FOR ONE GIRDER

REINFORCING STEEL	7000 PSI CONCRETE	0.6" Ø L. R. STRANDS
LB.	C.Y.	No.
421	4.6	8

GIRDERS REQUIRED

NUMBER	LENGTH	TOTAL LENGTH
5	32'-2⅝"	161-1⅛"

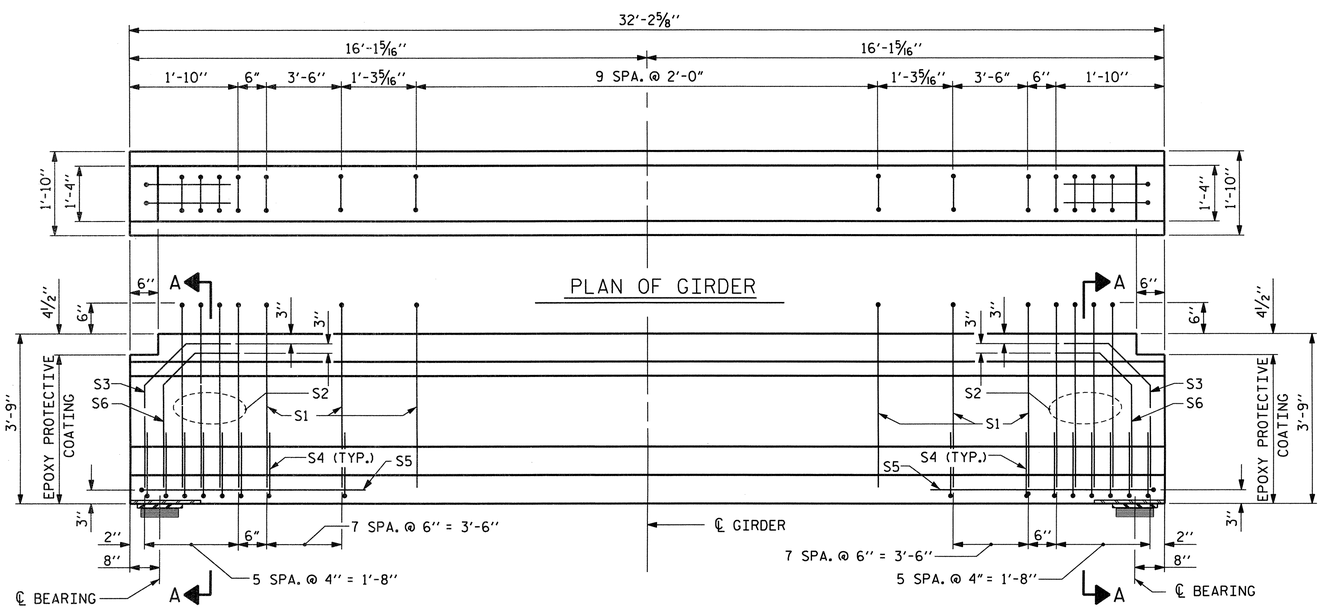

ELEVATION OF GIRDER

(SEE PARTIAL ELEVATION FOR ADDITIONAL "S" BARS)

PROJECT NO. R-2633BB

BRUNSWICK/NEW HANOVER COUNTY

STATION: 398+75.47 -L-

SHEET 1 OF 5

STATE OF NORTH CAROLINA
DEPARTMENT OF TRANSPORTATION
RALEIGH

STANDARD
AASHTO TYPE III
PRESTRESSED CONCRETE GIRDER
SPAN "A"
LEFT LANE

NORTH CAROLINA PROFESSIONAL SEAL 14047 ENGINEER STEPHEN D. COOK
2/11/13

THE LOUIS BERGER GROUP, Inc.
1001 Wade Avenue, Suite 400
Raleigh, NC 27605-3322

REVISIONS								SHEET NO.
NO.	BY:	DATE:	NO.	BY:	DATE:			S-472
1			3					TOTAL SHEETS
2			4					700

STD. NO. PCG2

ASSEMBLED BY : R. KNIGHT		DATE :	DEC 2012
CHECKED BY : R. DECOLA		DATE :	DEC 2012
DRAWN BY : JMB 12/87	REV. 8/16/99	RR	RWW/LES
CHECKED BY : ARB 12/87	REV. 5/1/06	R	TLA/GM
	REV. 10/1/11		MAA/GM

G:\OR Projects\OR1092 - NCDOT Wilm Bypass DualBridges\Structures\Bridge Site 6\R-2633BB_SD_06L_PCG_01.dgn
2/11/2013 8:45:35 AM 1092_PDF_full.pltcfg 1092_str.tbl

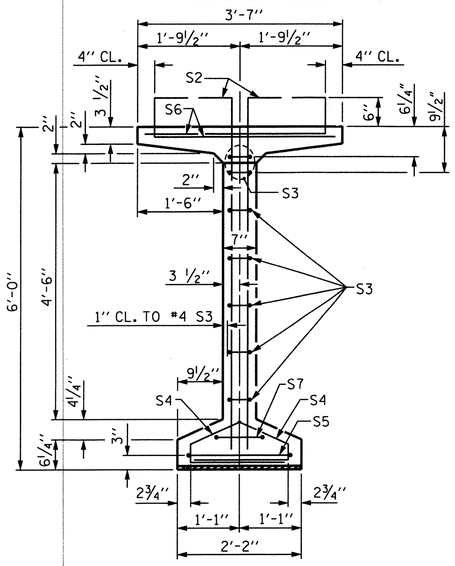

SECTION A-A

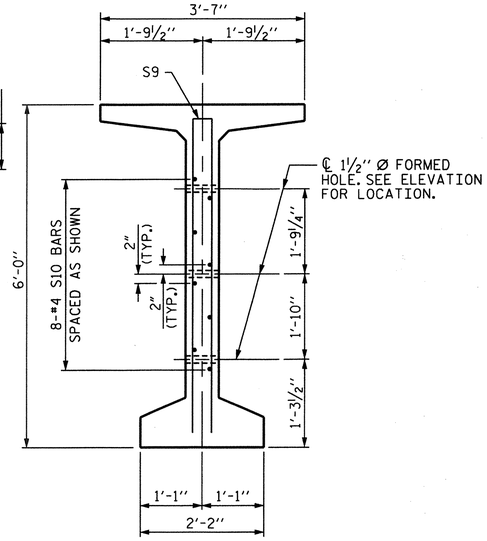

SECTION C-C

(S1, S6 AND S8 BARS NOT SHOWN)

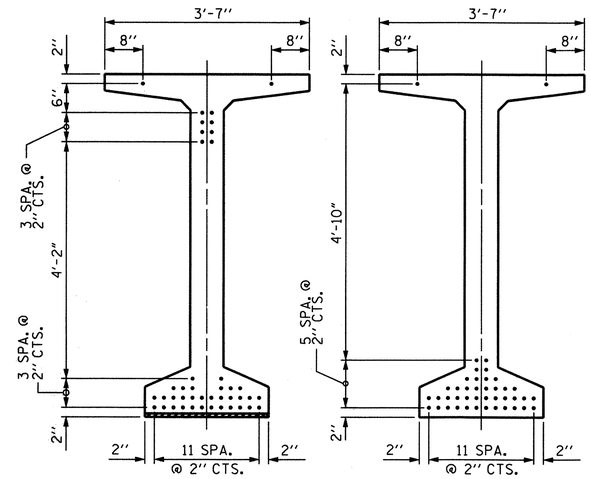

AT END OF GIRDER

AT ℄ OF GIRDER

0.6" Ø LOW RELAXATION STRAND LAYOUT

NOTES

ALL PRESTRESSING STRANDS SHALL BE 7-WIRE LOW-RELAXATION GRADE 270 STRANDS AND SHALL CONFORM TO AASHTO M203 EXCEPT FOR SAMPLING REQUIREMENTS WHICH SHALL BE IN ACCORDANCE WITH THE STANDARD SPECIFICATIONS.

ALL REINFORCING STEEL SHALL BE GRADE 60.

APPLY EPOXY PROTECTIVE COATING TO END OF GIRDER SURFACES INDICATED IN ELEVATION VIEW.

EMBEDDED PLATE "B-1" SHALL BE GALVANIZED IN ACCORDANCE WITH THE STANDARD SPECIFICATIONS. BEVEL EDGES OF PLATE "B-1" TO GIVE CLOSE FIT BUT NOT TIGHT FIT TO STEEL CASTING FORM.

ANCHOR STUDS SHALL CONFORM TO AASHTO M169 GRADES 1010 THROUGH 1020 OR APPROVED EQUAL, AND SHALL MEET THE TYPE "B" REQUIREMENTS OF SUBSECTION 7.3 OF THE ANSI/AASHTO/AWS D1.5 BRIDGE WELDING CODE.

ALL PRESTRESSING STRANDS SHALL BE CUT FLUSH WITH GIRDER ENDS.

THE TRANSFER OF LOAD FROM THE ANCHORAGES TO THE GIRDER SHALL BE DONE WHEN CONCRETE HAS REACHED A COMPRESSIVE STRENGTH OF NOT LESS THAN 8500 PSI.

DEPENDING ON THE TYPE OF SYSTEM USED TO SUPPORT THE DECK SLAB FORMS, PRESET ANCHORS MAY BE NECESSARY IN THE PRESTRESSED CONCRETE GIRDER.

THE TOP SURFACE OF THE GIRDER, EXCLUDING THE OUTSIDE 4", SHALL BE RAKED TO A DEPTH OF ¼".

WHEN DRAPED STRANDS ARE DETAILED, THE LONGITUDINAL LOCATION OF THE HOLD DOWN DEVICES SHALL BE WITHIN 6" OF THE LOCATION SHOWN AND THE CENTER OF GRAVITY OF THE GROUP OF DRAPED STRANDS SHALL BE LOCATED WITHIN ½" OF THE THEORETICAL LOCATION SHOWN.

A 2" x 2" CHAMFER IS ALLOWED AT THE INTERSECTION OF THE WEB AND THE BOTTOM FLANGE OF 72" MODIFIED BULB TEES ONLY.

THE CONTRACTOR HAS THE OPTION TO PROVIDE, AT NO ADDITIONAL COST TO THE DEPARTMENT, 2 ADDITIONAL STRANDS AT THE TOP OF THE GIRDER TO FACILITATE TYING OF THE REINFORCING STEEL. THESE STRANDS SHALL BE PULLED TO A LOAD OF 4500 lbs.

THE UPLIFT FORCE DUE TO DRAPED STRANDS IS 26 KIPS.

0.6" Ø L. R. GRADE 270 STRANDS

AREA (SQUARE INCHES)	ULTIMATE STRENGTH (LBS. PER STRAND)	APPLIED PRESTRESS (LBS. PER STRAND)
0.217	58,600	43,950

REINFORCING STEEL FOR ONE GIRDER

BAR	NUMBER	SIZE	TYPE	LENGTH	WEIGHT
S1	168	#4	1	6'-10"	767
S2	24	#5	1	6'-10"	171
S3	14	#4	2	8'-5"	79
S4	84	#4	3	3'-0"	168
S5	2	#5	2	9'-10"	21
S6	184	#5	4	4'-4"	832
S7	2	#5	2	9'-0"	19
S8	53	#5	STR	3'-3"	180
S9	8	#5	2	11'-8"	97
S10	16	#4	STR	8'-0"	86
S11	4	#4	5	7'-0"	19
S12	4	#4	5	7'-3"	19

BAR TYPES

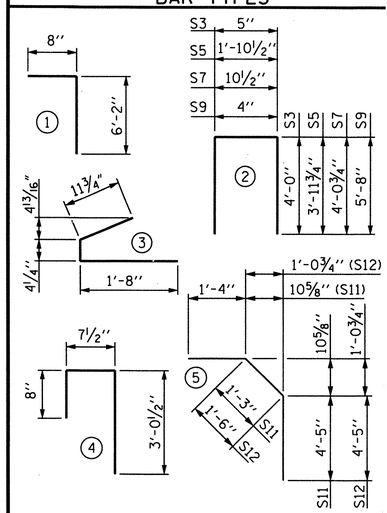

ALL BAR DIMENSIONS ARE OUT-TO-OUT

QUANTITIES FOR ONE GIRDER

REINFORCING STEEL	10,000 PSI CONCRETE	0.6" Ø L.R. STRANDS
LB.	C.Y.	No.
2458	27.0	42

GIRDERS REQUIRED

NUMBER	LENGTH	TOTAL LENGTH
5	125'-9⅞"	629'-1⅜"

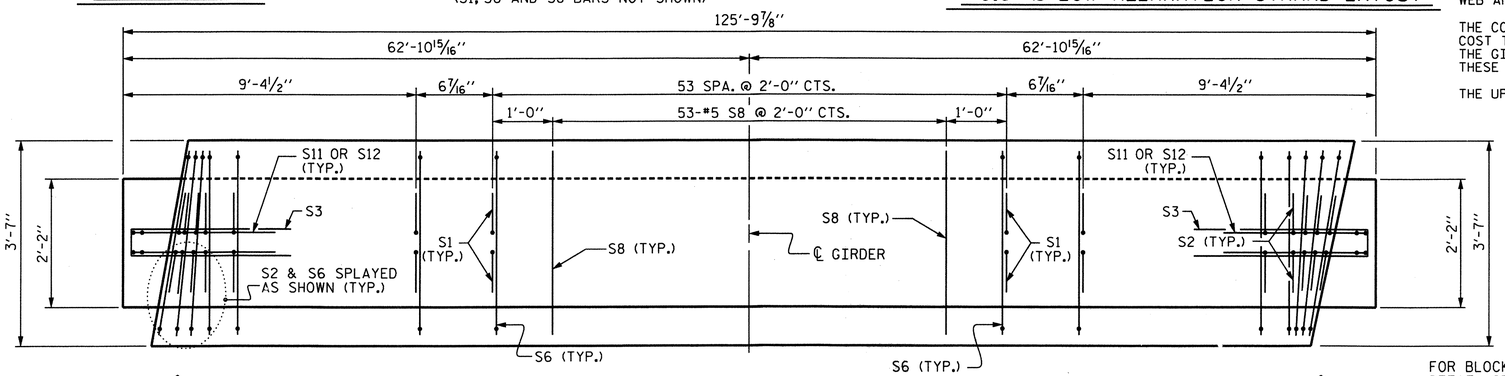

PLAN OF GIRDER

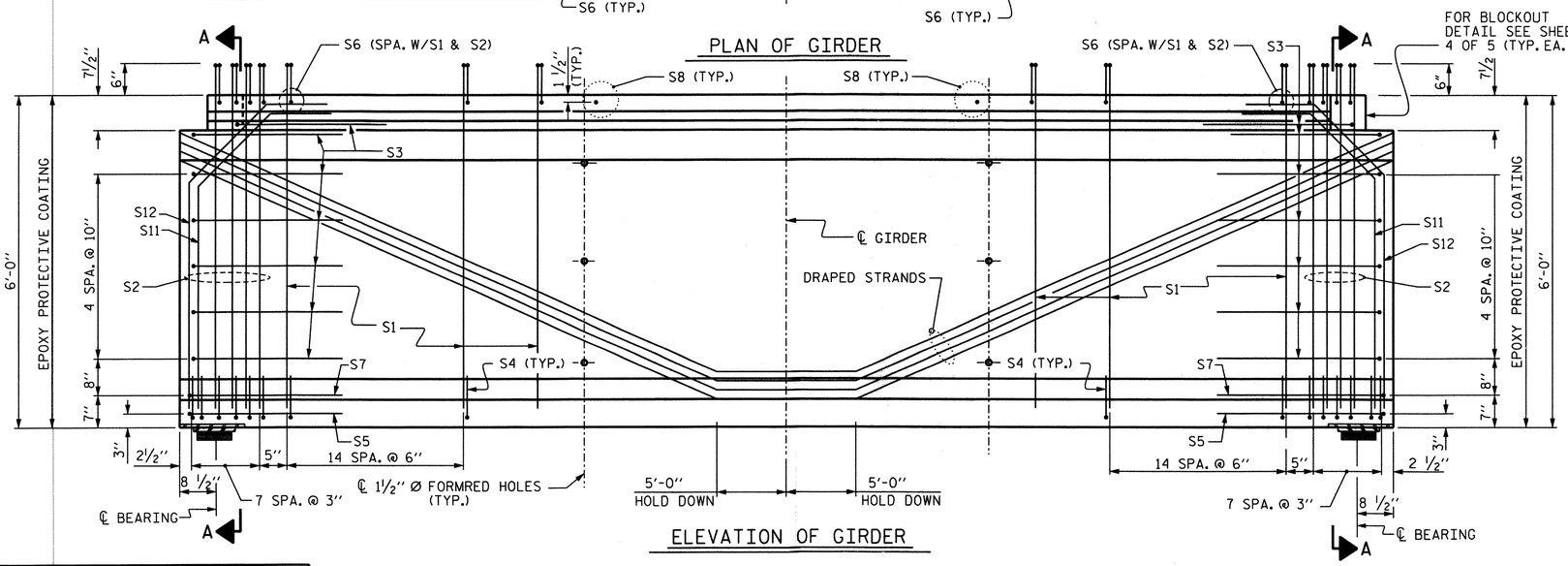

ELEVATION OF GIRDER

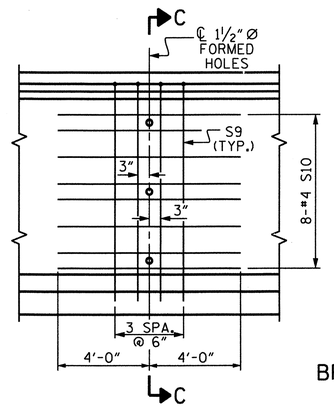

PARTIAL ELEVATION

SHOWING INTERMEDIATE STEEL DIAPHRAGM REINFORCING STEEL FOR GIRDER Nos. B1 THRU B5

PROJECT NO. R-2633BB

BRUNSWICK/NEW HANOVER COUNTY

STATION: 398+75.47 -L-

SHEET 2 OF 5

STATE OF NORTH CAROLINA
DEPARTMENT OF TRANSPORTATION
RALEIGH

72" PRESTRESSED CONCRETE MODIFIED BULB TEE SPAN "B" LEFT LANE

NORTH CAROLINA PROFESSIONAL SEAL 14047 ENGINEER STEPHEN D. COOK
6/28/13

THE LOUIS BERGER GROUP, Inc.
1001 Wade Avenue, Suite 400
Raleigh, NC 27605-3322

REVISIONS							SHEET NO.
NO.	BY:	DATE:	NO.	BY:	DATE:		S-473
1			3				TOTAL SHEETS
2			4				700

ASSEMBLED BY : J MYA		DATE : DEC 2012	
CHECKED BY : R. DECOLA		DATE : DEC 2012	
DRAWN BY : EEM 2/6/97	REV. 10/17/00	RWW/LES	
CHECKED BY : VAP 2/6/97	REV. 5/1/06R	TLA/GM	
	REV. 10/1/11	MAA/GM	

G:\OR Projects\OR1092 - NCDOT Wilm Bypass DualBridges\Structures\Bridge Site 6\R-2633BB_SD_06L_PCG_02.dgn
6/27/2013 2:00:40 PM 1092_PDF_full.pltcfg 1092_str.tbl

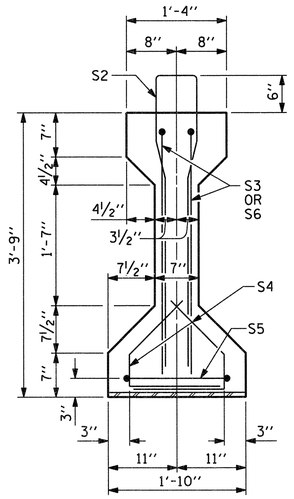

SECTION A-A

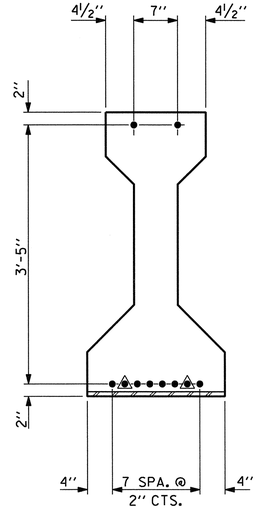

AT END OF GIRDER

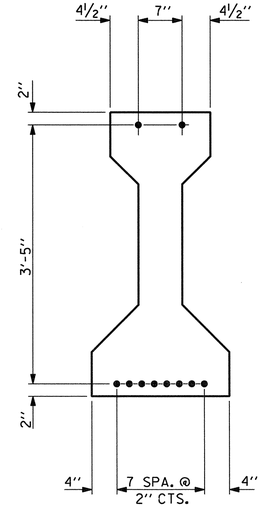

AT ℄ OF GIRDER

0.6" Ø LOW RELAXATION STRAND LAYOUT

▲ DENOTES STRANDS TO BE DEBONDED 2'-0" FROM ENDS OF GIRDER

NOTES

ALL PRESTRESSING STRANDS SHALL BE 7-WIRE LOW-RELAXATION GRADE 270 STRANDS AND SHALL CONFORM TO AASHTO M203 EXCEPT FOR SAMPLING REQUIREMENTS WHICH SHALL BE IN ACCORDANCE WITH THE STANDARD SPECIFICATIONS.

APPLY EPOXY PROTECTIVE COATING TO END OF GIRDER SURFACES.

EMBEDDED PLATE "B-1" SHALL BE GALVANIZED IN ACCORDANCE WITH THE SPECIFICATIONS.

BEVEL EDGES OF PLATE "B-1" TO GIVE CLOSE FIT BUT NOT TIGHT FIT TO STEEL CASTING FORM.

ANCHOR STUDS SHALL CONFORM TO AASHTO M169 GRADES 1010 THROUGH 1020 OR APPROVED EQUAL, AND SHALL MEET THE TYPE "B" REQUIREMENTS OF SUBSECTION 7.3 OF THE ANSI/AASHTO/AWS D1.5 BRIDGE WELDING CODE.

ALL PRESTRESSED STRANDS SHALL BE CUT FLUSH WITH THE GIRDER ENDS.

THE TRANSFER OF LOAD FROM THE ANCHORAGES TO THE GIRDER SHALL BE DONE WHEN CONCRETE HAS REACHED A COMPRESSIVE STRENGTH OF NOT LESS THAN 5500 PSI.

DEPENDING ON THE TYPE OF SYSTEM USED TO SUPPORT THE DECK SLAB FORMS, PRESET ANCHORS MAY BE NECESSARY IN THE PRESTRESSED CONCRETE GIRDER.

THE TOP SURFACE OF THE GIRDER SHALL BE RAKED TO A DEPTH OF ¼" EXCEPT IN THE AREA BETWEEN THE STIRRUP AND THE EDGE OF THE GIRDER.

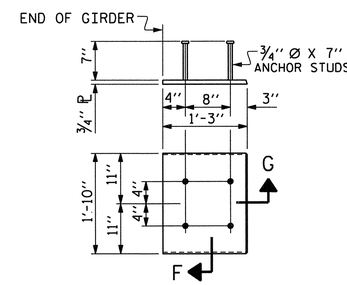

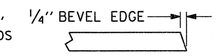

SECTION "G"

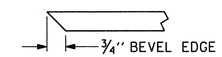

SECTION "F"

(SEE NOTES)

EMBEDDED PLATE "B-1" DETAILS

TWO EMBEDDED PLATES "B-1" ARE REQUIRED FOR EACH GIRDER.

0.6" Ø L. R. GRADE 270 STRANDS

AREA (SQUARE INCHES)	ULTIMATE STRENGTH (LBS. PER STRAND)	APPLIED PRESTRESS (LBS. PER STRAND)
0.217	58,600	43,950

REINFORCING STEEL FOR ONE GIRDER

BAR	NUMBER	SIZE	TYPE	LENGTH	WEIGHT
S1	28	#4	1	8'-6"	159
S2	8	#6	1	8'-6"	102
S3	4	#6	2	4'-8"	28
S4	56	#4	3	2'-9"	103
S5	2	#4	4	9'-6"	13
S6	4	#6	2	4'-6"	27

BAR TYPES

ALL BAR DIMENSIONS ARE OUT-TO-OUT

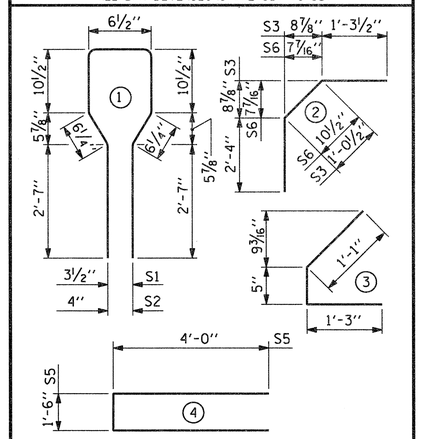

QUANTITIES FOR ONE GIRDER

REINFORCING STEEL	7000 P.S.I. CONCRETE	0.6" Ø L.R. STRANDS
LB.	C.Y.	No.
432	5.1	10

GIRDERS REQUIRED

NUMBER	LENGTH	TOTAL LENGTH
5	35'-5"	177'-1"

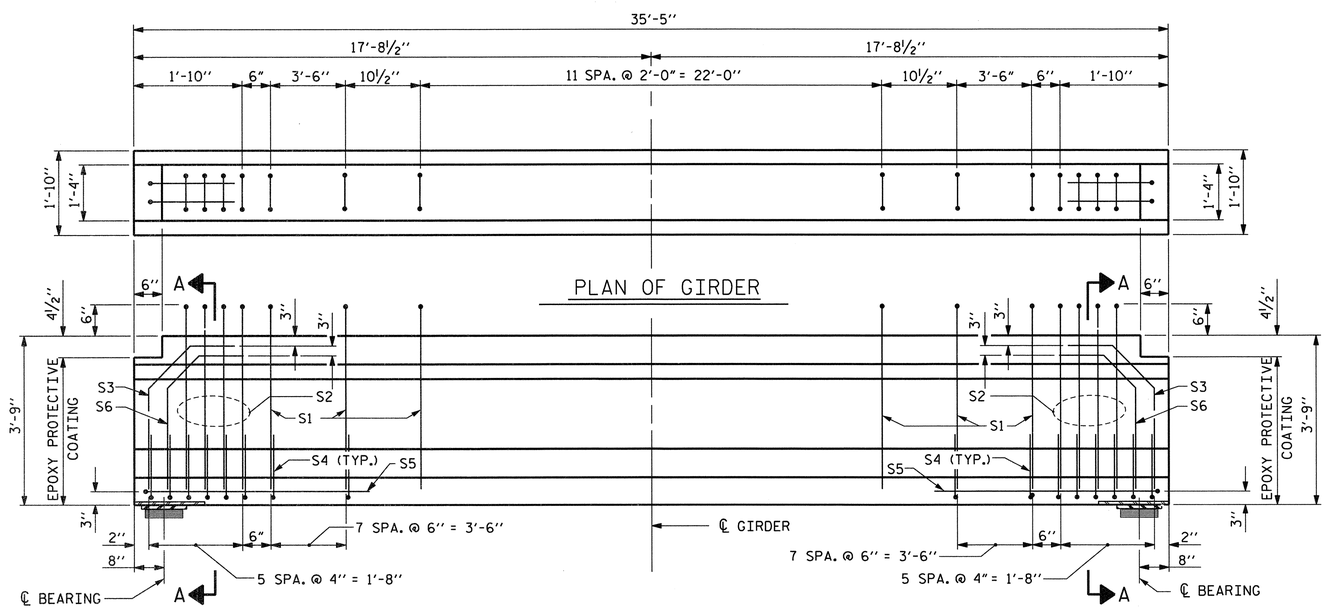

ELEVATION OF GIRDER

(SEE PARTIAL ELEVATION FOR ADDITIONAL "S" BARS)

PROJECT NO. R-2633BB

BRUNSWICK/NEW HANOVER COUNTY

STATION: 398+75.47 -L-

SHEET 3 OF 5

STATE OF NORTH CAROLINA
DEPARTMENT OF TRANSPORTATION
RALEIGH

STANDARD
AASHTO TYPE III
PRESTRESSED CONCRETE GIRDER
SPAN "C"
LEFT LANE

NORTH CAROLINA PROFESSIONAL SEAL 14047 ENGINEER STEPHEN D. COOK
7/11/12

THE LOUIS BERGER GROUP, Inc.
1001 Wade Avenue, Suite 400
Raleigh, NC 27605-3322

REVISIONS							
NO.	BY:	DATE:	NO.	BY:	DATE:	SHEET NO.	S-474
1			3			TOTAL SHEETS	700
2			4				

STD. NO. PCG2

ASSEMBLED BY : R. KNIGHT		DATE : DEC 2012	
CHECKED BY : R.DECOLA		DATE : DEC 2012	
DRAWN BY : JMB 12/87	REV. 8/16/99	RR	RWW/LES
CHECKED BY : ARB 12/87	REV. 5/1/06	R	TLA/GM
	REV. 10/1/11		MAA/GM

G:\OR Projects\OR1092 - NCDOT Wilm Bypass DualBridges\Structures\Bridge Site 6\R-2633BB_SD_06L_PCG_03.dgn
2/11/2013 8:45:40 AM 1092_PDF_full.pltcfg 1092_str.tbl

DEAD LOAD DEFLECTION TABLE FOR GIRDERS

0.6"Ø LOW RELAXATION	SPAN A - EXTERIOR GIRDER											SPAN A - INTERIOR GIRDER										
	GIRDERS 1 AND 5											GIRDERS 2 THRU 4										
TENTH POINTS	0	.1	.2	.3	.4	.5	.6	.7	.8	.9	0	0	.1	.2	.3	.4	.5	.6	.7	.8	.9	0
CAMBER (GIRDER ALONE IN PLACE)	0.000	0.004	0.007	0.009	0.010	0.010	0.010	0.009	0.007	0.004	0.000	0.000	0.004	0.007	0.009	0.010	0.010	0.010	0.009	0.007	0.004	0.000
* DEFLECTION DUE TO SUPERIMPOSED D.L.	0.000	0.001	0.002	0.003	0.003	0.003	0.003	0.003	0.002	0.001	0.000	0.000	0.001	0.002	0.003	0.003	0.004	0.003	0.003	0.002	0.001	0.000
FINAL CAMBER	0	1/16"	1/16"	1/16"	1/16"	1/16"	1/16"	1/16"	1/16"	1/16"	0	0	1/16"	1/16"	1/16"	1/16"	1/16"	1/16"	1/16"	1/16"	1/16"	0

DEAD LOAD DEFLECTION TABLE FOR GIRDERS

0.6"Ø LOW RELAXATION	SPAN B - EXTERIOR GIRDER																				
	GIRDERS 1 AND 5																				
TWENTIETH POINTS	0	.05	.10	.15	.20	.25	.30	.35	.40	.45	.50	.55	.60	.65	.70	.75	.80	.85	.90	.95	0
CAMBER (GIRDER ALONE IN PLACE)	0.000	0.061	0.121	0.170	0.218	0.254	0.290	0.313	0.336	0.344	0.352	0.344	0.336	0.313	0.290	0.254	0.218	0.170	0.121	0.061	0.000
* DEFLECTION DUE TO SUPERIMPOSED D.L.	0.000	0.026	0.052	0.077	0.102	0.121	0.140	0.153	0.165	0.169	0.173	0.169	0.165	0.153	0.140	0.121	0.102	0.077	0.052	0.026	0.000
FINAL CAMBER	0.000	7/16"	13/16"	1 1/8"	1 3/8"	1 5/8"	1 13/16"	1 15/16"	2 1/16"	2 1/16"	2 1/8"	2 1/16"	2 1/16"	1 15/16"	1 13/16"	1 5/8"	1 3/8"	1 1/8"	13/16"	7/16"	0.000

DEAD LOAD DEFLECTION TABLE FOR GIRDERS

0.6"Ø LOW RELAXATION	SPAN B - INTERIOR GIRDER																				
	GIRDERS 2 THRU 4																				
TWENTIETH POINTS	0	.05	.10	.15	.20	.25	.30	.35	.40	.45	.50	.55	.60	.65	.70	.75	.80	.85	.90	.95	0
CAMBER (GIRDER ALONE IN PLACE)	0.000	0.061	0.121	0.170	0.218	0.254	0.290	0.313	0.336	0.344	0.352	0.344	0.336	0.313	0.290	0.254	0.218	0.170	0.121	0.061	0.000
* DEFLECTION DUE TO SUPERIMPOSED D.L.	0.000	0.027	0.054	0.080	0.106	0.126	0.146	0.159	0.172	0.176	0.181	0.176	0.172	0.159	0.146	0.126	0.106	0.080	0.054	0.027	0.000
FINAL CAMBER	0.000	3/8"	13/16"	1 1/16"	1 3/8"	1 9/16"	1 3/4"	1 7/8"	1 15/16"	2"	2 1/16"	2"	1 15/16"	1 7/8"	1 3/4"	1 9/16"	1 3/8"	1 1/16"	13/16"	3/8"	0.000

DEAD LOAD DEFLECTION TABLE FOR GIRDERS

0.6"Ø LOW RELAXATION	SPAN C - EXTERIOR GIRDER											SPAN C - INTERIOR GIRDER										
	GIRDERS 1 AND 5											GIRDERS 2 THRU 4										
TENTH POINTS	0	.1	.2	.3	.4	.5	.6	.7	.8	.9	0	0	.1	.2	.3	.4	.5	.6	.7	.8	.9	0
CAMBER (GIRDER ALONE IN PLACE)	0.000	0.008	0.013	0.017	0.019	0.020	0.019	0.017	0.013	0.008	0.000	0.000	0.008	0.013	0.017	0.019	0.020	0.019	0.017	0.013	0.008	0.000
* DEFLECTION DUE TO SUPERIMPOSED D.L.	0.000	0.001	0.003	0.004	0.005	0.005	0.005	0.004	0.003	0.001	0.000	0.000	0.001	0.003	0.004	0.005	0.005	0.005	0.004	0.003	0.001	0.000
FINAL CAMBER	0	1/16"	1/8"	1/8"	3/16"	3/16"	3/16"	1/8"	1/8"	1/16"	0	0	1/16"	1/8"	1/8"	3/16"	3/16"	3/16"	1/8"	1/8"	1/16"	0

* INCLUDES FUTURE WEARING SURFACE
ALL VALUES ARE SHOWN IN FEET (DECIMAL FORM), EXCEPT "FINAL CAMBER", WHICH IS GIVEN IN INCHES (FRACTION FORM).

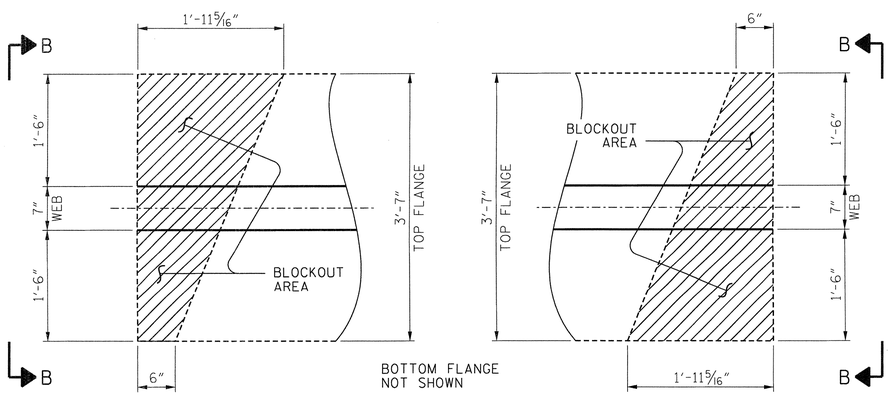

PLAN OF TOP FLANGE

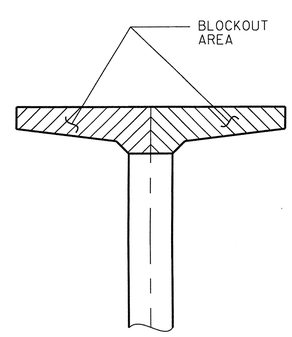

VIEW B-B

TOP FLANGE BLOCKOUT DETAILS AT BENTS

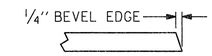

SECTION "G"

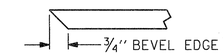

SECTION "F"

(SEE NOTES)

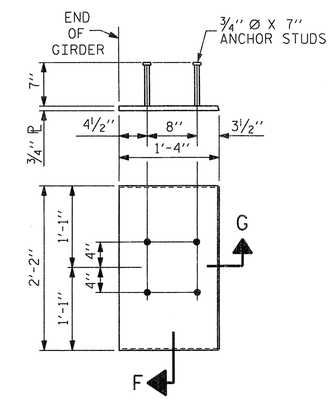

EMBEDDED PLATE "B-1" DETAILS FOR 72" MODIFIED BULB TEES

(2 REQ'D PER GIRDER)

PROJECT NO. R-2633BB
BRUNSWICK/NEW HANOVER COUNTY
STATION: 398+75.47 -L-

SHEET 4 OF 5

STATE OF NORTH CAROLINA
DEPARTMENT OF TRANSPORTATION
RALEIGH

STANDARD
PRESTRESSED CONCRETE GIRDER
DETAILS
LEFT LANE

NORTH CAROLINA PROFESSIONAL SEAL 14047 ENGINEER STEPHEN D. CONE
2/11/13

THE LOUIS BERGER GROUP, Inc.
1001 Wade Avenue, Suite 400
Raleigh, NC 27605-3322

REVISIONS									
NO.	BY:	DATE:	NO.	BY:	DATE:	SHEET NO.	TOTAL SHEETS
1			3			S-475	700
2			4				

ASSEMBLED BY : J. MYA		DATE : DEC 2012	
CHECKED BY : R. DECOLA		DATE : DEC 2012	
DRAWN BY : ELR 11/91	REV. 7/10/01RR	LES/RDR	
CHECKED BY : GRP 11/91	REV. 5/1/06	TLA/GM	
	REV. 10/1/11	MAA/GM	

STD. NO. PCG9

G:\OR Projects\OR1092 - NCDOT Wilm Bypass DualBridges\Structures\Bridge Site 6\R-2633BB_SD_06L_PCG_04.dgn
2/11/2013 8:45:43 AM 1092_PDF_full.pltcfg 1092_str.tbl

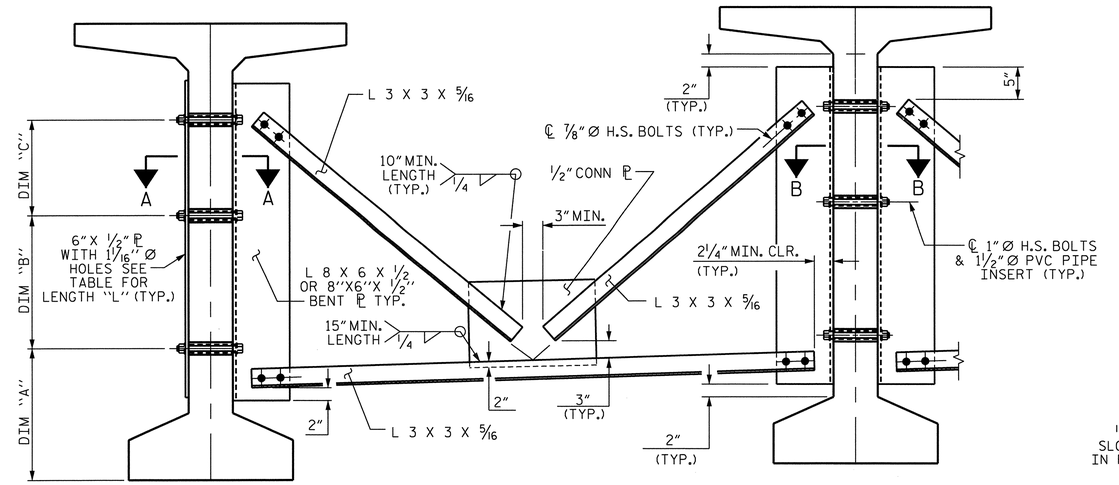

EXTERIOR GIRDER

INTERIOR GIRDER

PART SECTION AT INTERMEDIATE DIAPHRAGM

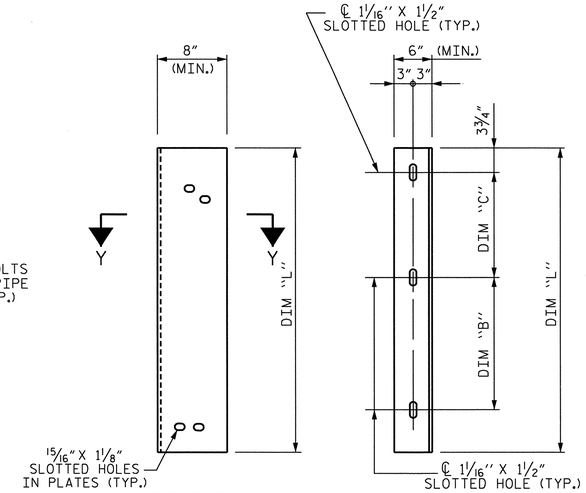

DIAPHRAGM FACE

WEB FACE

STRUCTURAL STEEL NOTES

ALL INTERMEDIATE DIAPHRAGM STEEL AND CONNECTOR PLATES SHALL BE AASHTO M270 GRADE 50 OR APPROVED EQUAL.

TENSION ON THE ASTM A325 BOLTS THROUGH THE ANGLE MEMBER SHALL BE CALIBRATED USING DIRECT TENSION INDICATOR WASHERS IN ACCORDANCE WITH THE STANDARD SPECIFICATIONS.

TENSION ON THE ASTM A449 BOLTS THROUGH THE GIRDER WEB SHALL BE SNUG TIGHTENED FOLLOWED BY AN ADDITIONAL 1/4 TURN.

THE PLATES. BENT PLATES. AND ANGLES SHALL BE GALVANIZED OR MET ALLIZED IN ACCORDANCE WITH THE STANDARD SPECIFICATIONS . FOR THERMAL SPRAYED COATINGS (METALLIZATION). SEE SPECIAL PROVISIONS.

FOR METALLIZATION, APPLY AN 8 MIL THICK 99.99 PERCENT ZINC (W-Zn-II) THERMAL SPRAYED COATING WITH A 0.5 MIL THICK SEAL COAT TO ALL STEEL DIAPHRAGM SURFACES IN ACCORDANCE WITH THE THERMAL SPRAYED COATINGS SPECIAL PROVISION AND SECTION 442 OF THE STANDARD SPECIFICATIONS.

GALVANIZE THE HIGH STRENGTH BOLTS, NUTS, WASHERS AND DIRECT TENSION INDICATORS IN ACCORDANCE WITH THE STANDARD SPECIFICATIONS.

USE AN ASTM F436 HARDENED WASHER WITH STANDARD AND SLOTTED HOLES UNDER EACH BOLT HEAD AND NUT.

FOR BOLTS THROUGH THE GIRDER WEB, PROVIDE SUFFICIENT LENGTH OF THREADS ON ALL BOLTS TO ACCOMMODATE WASHERS AND THE THICKNESS OF CONNECTING MEMBER PLUS AT LEAST 1/4" PROJECTION BEYOND THE NUT.

INTERMEDIATE DIAPHRAGM ASSEMBLY SHALL COMPLY WITH SECTION 1072 OF THE STANDARD SPECIFICATIONS.

SUBMIT TWO SETS OF WORKING DRAWINGS FOR THE INTERMEDIATE DIAPHRAGM ASSEMBLY FOR REVIEW, COMMENTS AND ACCEPTANCE. AFTER REVIEW, COMMENTS, AND ACCEPTANCE, SUBMIT SEVEN SETS FOR DISTRIBUTION.

IN THE EXTERIOR BAYS, PLACE TEMPORARY STRUTS BETWEEN PRESTRESSED GIRDERS ADJACENT TO THE STEEL DIAPHRAGMS.STRUTS SHALL REMAIN IN PLACE 3 DAYS AFTER CONCRETE IS PLACED.

THE COST OF THE STEEL DIAPHRAGMS AND ASSEMBLIES SHALL BE INCLUDED IN THE UNIT PRICE BID FOR PRESTRESSED CONCRETE GIRDERS.

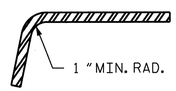

SECTION Y-Y

CONNECTOR PLATE DETAIL

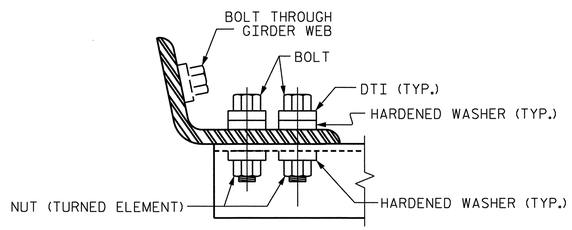

BOLT WITH DTI ASSEMBLY DETAIL

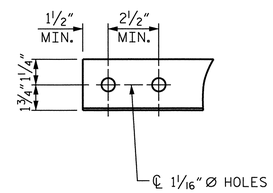

ANGLE END

(L 3 X 3 X 5/16)

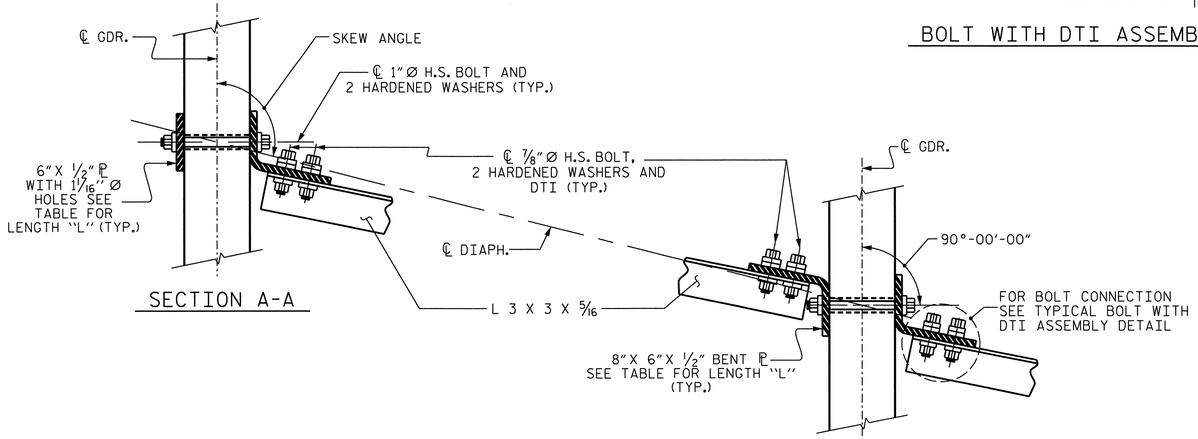

SECTION A-A

SECTION B-B

CONNECTION DETAILS

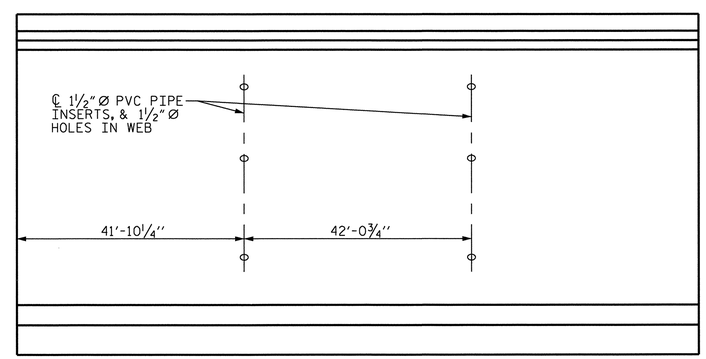

GIRDER ELEVATION

SHOWING LOCATION OF HOLES FOR INTERMEDIATE DIAPHRAGM INSTALLATION

TABLE

GIRDER TYPE	DIM "A"	DIM "B"	DIM "C"	DIM "L"
72" BULB TEE	1'-3 1/2"	1'-10"	1'-9 1/4"	4'-2"

PROJECT NO. R-2633BB

BRUNSWICK/NEW HANOVER COUNTY

STATION: 398+75.47 -L-

SHEET 5 OF 5

STATE OF NORTH CAROLINA
DEPARTMENT OF TRANSPORTATION
RALEIGH

STANDARD
INTERMEDIATE
STEEL DIAPHRAGMS
72" MODIFIED BULB TEE
PRESTRESSED CONCRETE
GIRDERS-LEFT LANE

NORTH CAROLINA PROFESSIONAL SEAL 14047 ENGINEER STEPHEN D. COOK
6/21/12

THE LOUIS BERGER GROUP, Inc.
1001 Wade Avenue, Suite 400
Raleigh, NC 27605-3322

REVISIONS						SHEET NO.
NO.	BY:	DATE:	NO.	BY:	DATE:	S-476
1			3			TOTAL SHEETS
2			4			700

STD. NO. PCG11

ASSEMBLED BY : R. KNIGHT	DATE : FEB 2012
CHECKED BY : R. DECOLA	DATE : DEC 2012
DRAWN BY : RWW 11/09	ADDED 11/23/09R
CHECKED BY : GM 11/09	REV. 10/1/11 MAA/GM

G:\OR Projects\OR1092 - NCDOT Wilm Bypass DualBridges\Structures\Bridge Site 6\R-2633BB_SD_06L_PCG_05.dgn
6/21/2013 11:01:25 AM 1092_PDF_full.pltcfg

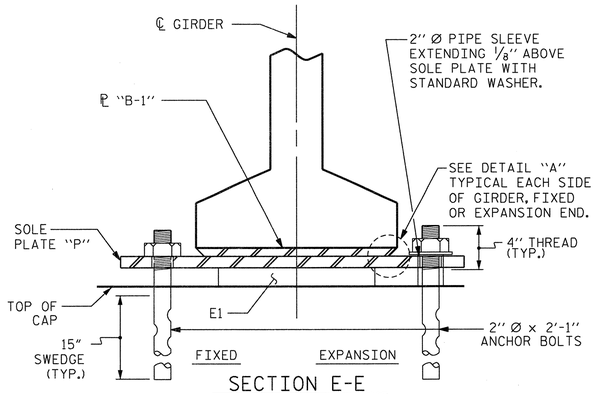

SECTION E-E

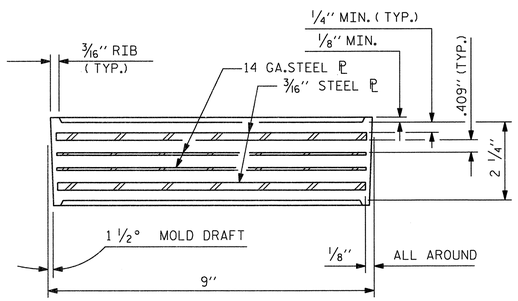

TYPICAL SECTION OF ELASTOMERIC BEARINGS

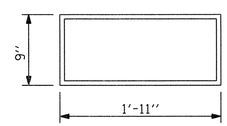

E1 (10 REQ'D)

PLAN VIEW OF ELASTOMERIC BEARING

TYPE V

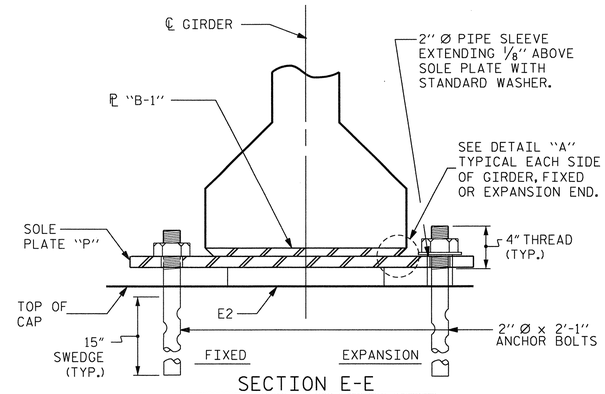

SECTION E-E

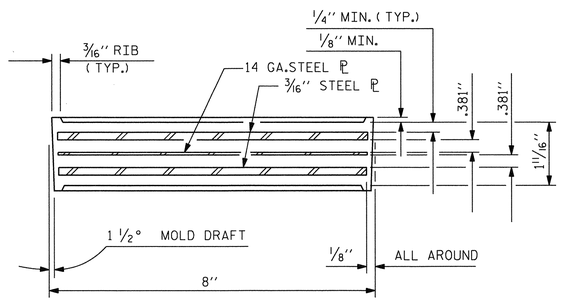

TYPICAL SECTION OF ELASTOMERIC BEARINGS

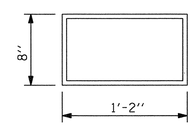

E2 (20 REQ'D)

PLAN VIEW OF ELASTOMERIC BEARING

TYPE II

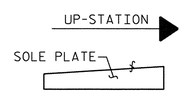

SOLE PLACEMENT DETAIL

NOTES

AT ALL FIXED POINTS OF SUPPORT, NUTS FOR ANCHOR BOLTS ARE TO BE TIGHTENED FINGER TIGHT AND THEN BACKED OFF 1/2 TURN. THE THREAD OF THE NUT AND BOLT SHALL THEN BE BURRED WITH A SHARP POINTED TOOL.

THE 2" Ø PIPE SLEEVE SHALL BE CUT FROM SCHEDULE 40 PVC PLASTIC PIPE. THE PVC PLASTIC PIPE SHALL MEET THE REQUIREMENTS OF ASTM D1785.

STEEL SOLE PLATES, ANCHOR BOLTS, NUTS, AND WASHERS SHALL BE GALVANIZED IN ACCORDANCE WITH THE STANDARD SPECIFICATIONS.

PRIOR TO WELDING, GRIND THE GALVANIZED SURFACE OF THE PORTION OF THE EMBEDDED PLATE AND SOLE PLATE THAT ARE TO BE WELDED. AFTER WELDING, DAMAGED GALVANIZED SURFACES SHALL BE REPAIRED IN ACCORDANCE WITH THE STANDARD SPECIFICATIONS.

WHEN WELDING THE SOLE PLATE TO THE EMBEDDED PLATE IN THE GIRDER, USE TEMPERATURE INDICATING WAX PENS, OR OTHER SUITABLE MEANS, TO ENSURE THAT THE TEMPERATURE OF THE SOLE PLATE DOES NOT EXCEED 300°F. TEMPERATURES ABOVE THIS MAY DAMAGE THE ELASTOMER.

SOLE PLATE "P", BOLTS, NUTS, WASHERS, AND PIPE SLEEVE SHALL BE INCLUDED IN THE PAY ITEM FOR PRESTRESSED CONCRETE GIRDERS.

ANCHOR BOLTS SHALL MEET THE REQUIREMENTS OF ASTM A449. NUTS SHALL MEET THE REQUIREMENTS OF AASHTO M291-DH OR AASHTO M292-2H. WASHERS SHALL MEET THE REQUIREMENTS OF AASHTO M293. SHOP DRAWINGS ARE NOT REQUIRED FOR ANCHOR BOLT, NUTS AND WASHERS. SHOP INSPECTION IS REQUIRED.

ALL SURFACES OF BEARING PLATES SHALL BE SMOOTH AND STRAIGHT.

THE ELASTOMER IN THE STEEL REINFORCED BEARINGS SHALL HAVE A SHEAR MODULUS OF 0.160 KSI. IN ACCORDANCE WITH AASHTO M251.

FOR STEEL REINFORCED ELASTOMERIC BEARINGS, SEE SPECIAL PROVISIONS.

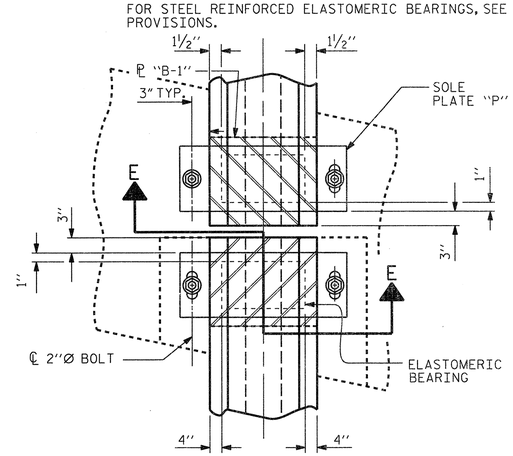

TYPICAL HALF-PLAN

BENT 1 SHOWN, BENT 2 SIMILAR

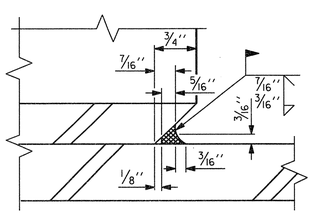

DETAIL "A"

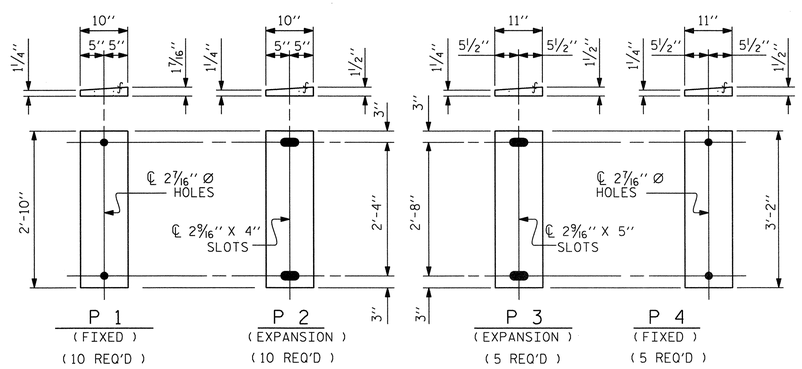

SOLE PLATE DETAILS ("P")

MAXIMUM ALLOWABLE SERVICE LOADS	
D.L.+L.L. (NO IMPACT)	
TYPE II	115 k
TYPE V	335 k

PROJECT NO. R-2633BB

BRUNSWICK/NEW HANOVER COUNTY

STATION: 398+75.47 -L-

STATE OF NORTH CAROLINA
DEPARTMENT OF TRANSPORTATION
RALEIGH

STANDARD

ELASTOMERIC BEARING DETAILS

PRESTRESSED CONCRETE GIRDER SUPERSTRUCTURE-LEFT LANE

NORTH CAROLINA PROFESSIONAL SEAL 14047 ENGINEER STEPHEN W. DA COSTA 2/11/13

THE LOUIS BERGER GROUP, Inc.
1001 Wade Avenue, Suite 400
Raleigh, NC 27605-3322

REVISIONS								SHEET NO.
NO.	BY:	DATE:	NO.	BY:	DATE:			S-477
1			3					TOTAL SHEETS
2			4					100

STD. NO. EB3

ASSEMBLED BY : J. MYA		DATE : OCT. 2012	
CHECKED BY : R. DECOLA		DATE : DEC. 2012	
DRAWN BY : WJH 8/89	REV. 7/10/01	RWW/LES	
CHECKED BY : CRK 8/89	REV. 5/1/06	TLA/GM	
	REV. 10/1/11	MAA/GM	

G:\OR Projects\OR1092 - NCDOT Wilm Bypass DualBridges\Structures\Bridge Site 6\R-2633BB_SD_06L_BRG.dgn
2/11/2013 8:45:48 AM 1092_PDF_full.pltcfg 1092_str.tbl

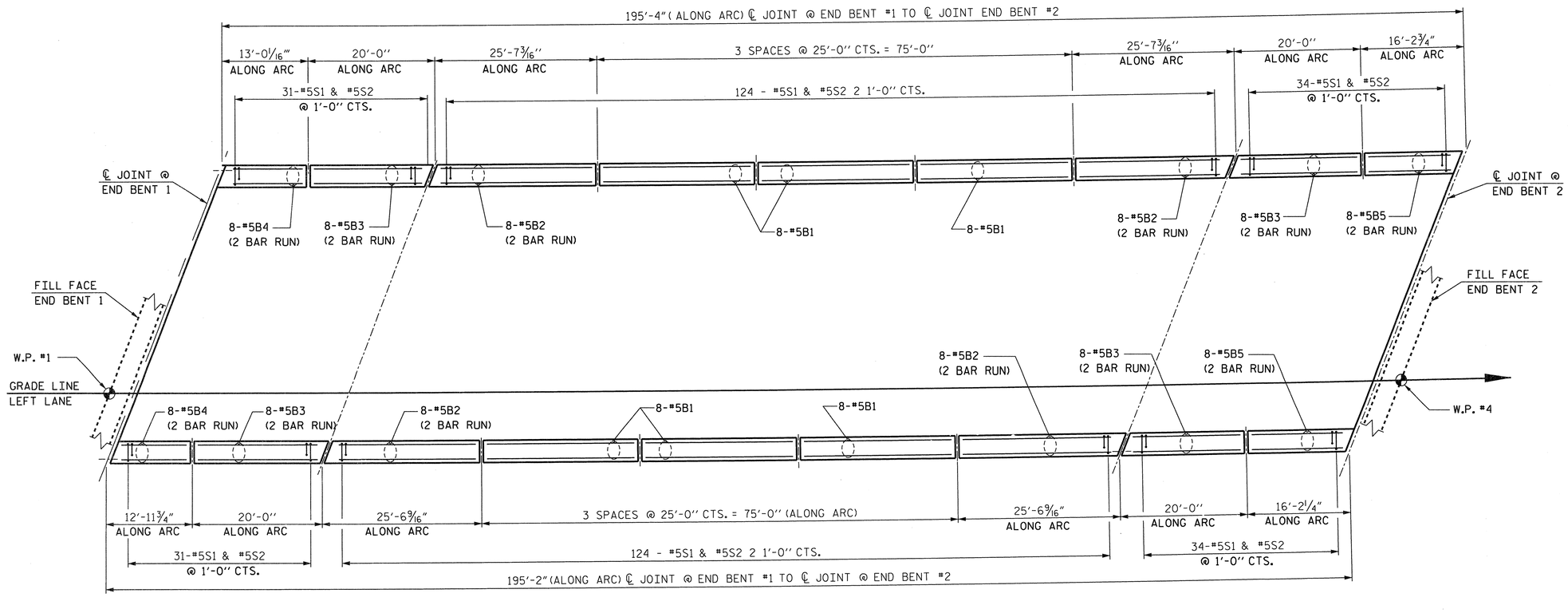

PLAN

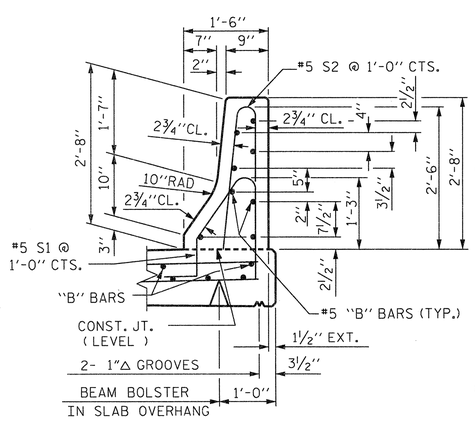

SECTION THRU RAIL

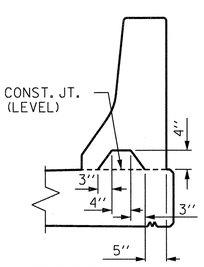

SECTION S-S

AT DAM IN OPEN JOINT (THIS IS TO BE USED ONLY WHEN SLIP FORM IS USED)

NOTES

THE BARRIER RAIL IN EACH SPAN SHALL NOT BE CAST UNTIL ALL SLAB CONCRETE IN THAT SPAN HAS BEEN CAST AND HAS REACHED A MINIMUM COMPRESSIVE STRENGTH OF 3,000 PSI.

ALL REINFORCING STEEL IN BARRIER RAILS SHALL BE EPOXY COATED.

GROOVED CONTRACTION JOINTS, 1/2" IN DEPTH, SHALL BE TOOLED IN ALL EXPOSED FACES OF THE BARRIER RAIL AND IN ACCORDANCE WITH ARTICLE 825-10(B) OF THE STANDARD SPECIFICATIONS. THE CONTRACTION JOINT SHALL BE LOCATED AT EACH THIRD POINT BETWEEN BARRIER RAIL EXPANSION JOINTS. ONLY ONE CONTRACTION JOINT IS REQUIRED AT MIDPOINT OF BARRIER RAIL SEGMENTS LESS THAN 20 FEET IN LENGTH AND NO CONTRACTION JOINTS ARE REQUIRED FOR THOSE SEGMENTS LESS THAN 10 FEET IN LENGTH.

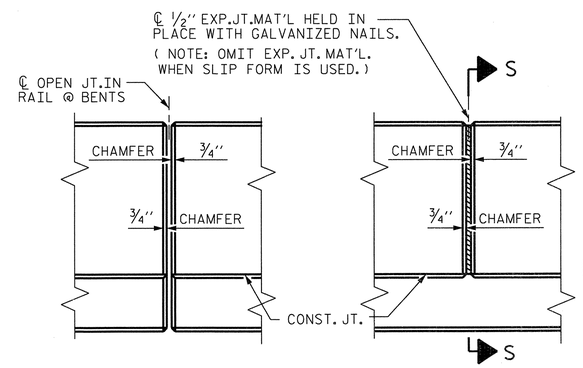

ELEVATION AT EXPANSION JOINTS

BARRIER RAIL DETAILS

BAR TYPES

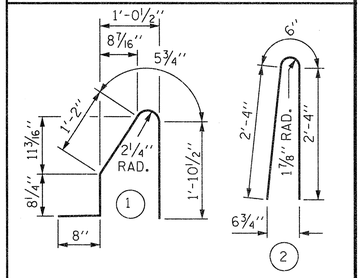

ALL BAR DIMENSIONS ARE OUT TO OUT

BILL OF MATERIAL

FOR CONCRETE BARRIER RAIL ONLY

BAR	NO.	SIZE	TYPE	LENGTH	WEIGHT
* B1	48	#5	STR	24'-7"	1231
* B2	64	#5	STR	14'-2"	946
* B3	64	#5	STR	11'-6"	768
* B4	32	#5	STR	8'-0"	267
* B5	32	#5	STR	10'-0"	334
* S1	378	#5	1	4'-9"	1873
* S2	378	#5	2	5'-2"	2037

* EPOXY COATED REINFORCING STEEL	7456	LBS.
CLASS AA CONCRETE	39.1	CU. YDS.
CONCRETE BARRIER RAIL	390.5	LIN. FT.

FOR EPOXY COATED REINFORCING STEEL AND CLASS AA CONCRETE IN THE BARRIER RAIL ON THE APPROACH SLABS, SEE "BRIDGE APPROACH SLAB DETAILS" SHEET.

PROJECT NO. R-2633BB

BRUNSWICK/NEW HANOVER COUNTY

STATION: 398+75.47 -L-

STATE OF NORTH CAROLINA
DEPARTMENT OF TRANSPORTATION
RALEIGH

STANDARD

CONCRETE BARRIER RAIL
LEFT LANE

NORTH CAROLINA PROFESSIONAL SEAL 14047 ENGINEER STEPHEN D. COOK

THE LOUIS BERGER GROUP, Inc.
1001 Wade Avenue, Suite 400
Raleigh, NC 27605-3322

REVISIONS								SHEET NO.
NO.	BY:	DATE:	NO.	BY:	DATE:			S-478
1			3					TOTAL SHEETS
2			4					700

ASSEMBLED BY : J. MYA DATE : SEPT. 2012
CHECKED BY : S. COOK DATE : SEPT. 2012

DRAWN BY : ARB 5/87
CHECKED BY : SJD 9/87

REV. 10/17/00 RWW/LES
REV. 5/7/03R RWW/JTE
REV. 5/1/06R TLA/GM

STD. NO. CBR1

G:\OR Projects\OR1092 - NCDOT Wlm Bypass DualBridges\Structures\Bridge Site 6\R-2633BB_SD_06L_CBR.dgn 2/11/2013 8:45:51 AM 1092_PDF_full.pltcfg 1092_str.tbl

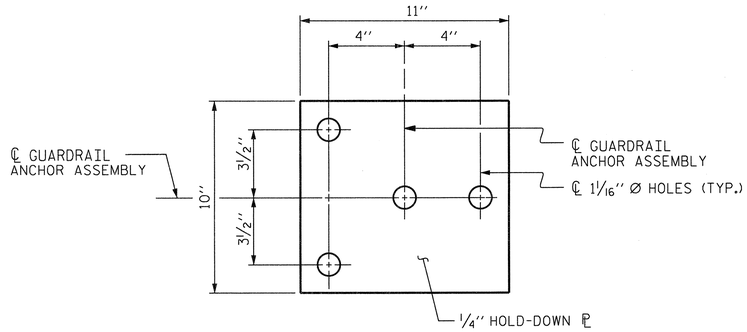

PLAN

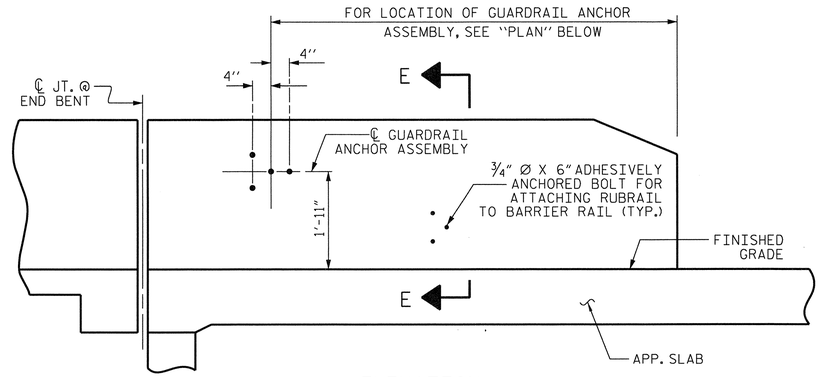

ELEVATION

FOR LOCATION OF RUBRAIL, SEE ROADWAY STD. 862.03

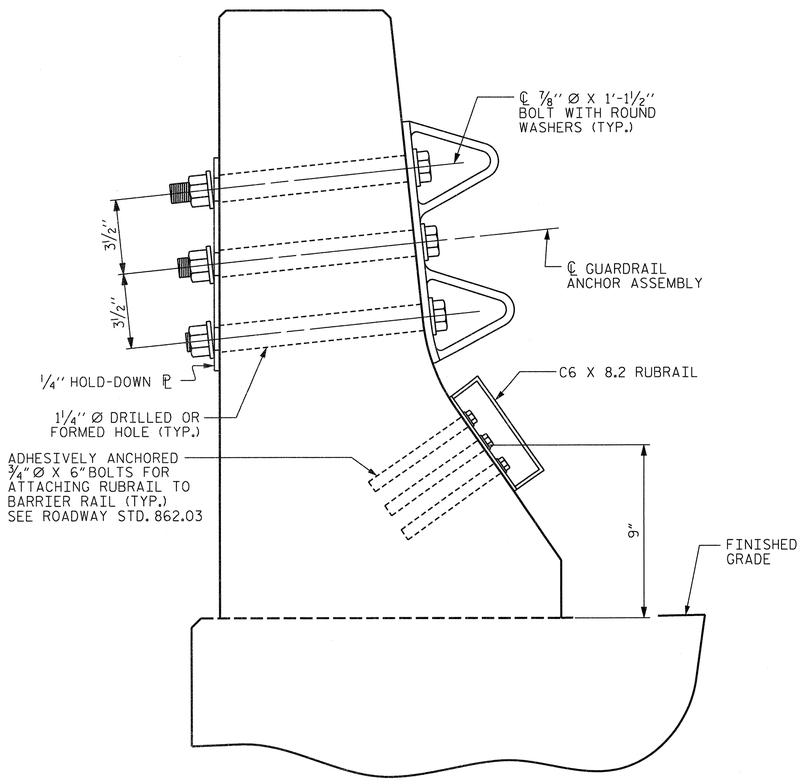

SECTION E-E

GUARDRAIL ANCHOR ASSEMBLY DETAILS

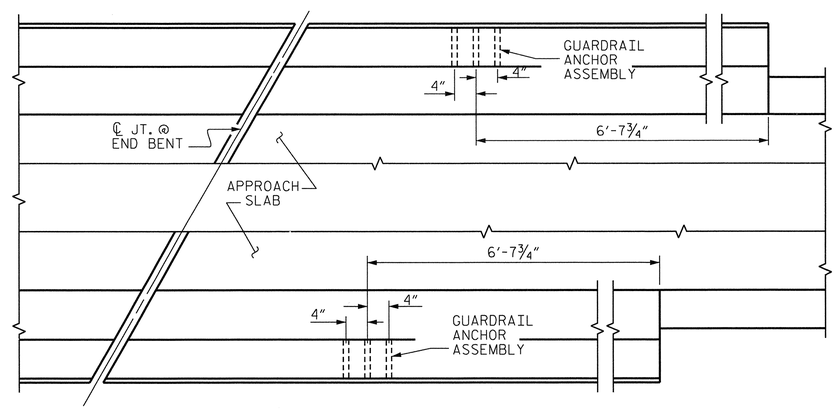

PLAN

LOCATION OF ANCHORS FOR GUARDRAIL

END BENT #2 SHOWN, END BENT #1 SIMILAR.

NOTES

THE GUARDRAIL ANCHOR ASSEMBLY SHALL CONSIST OF A ¼'' HOLD-DOWN PLATE AND 4 - ⅞'' Ø BOLTS WITH NUTS AND WASHERS, RUBRAIL, AND ADHESIVELY ANCHORED BOLTS.

THE HOLD-DOWN PLATE SHALL CONFORM TO AASHTO M270 GRADE 36. AFTER FABRICATION, THE HOLD-DOWN PLATE SHALL BE HOT-DIP GALVANIZED IN ACCORDANCE WITH AASHTO M111.

BOLTS SHALL CONFORM TO THE REQUIREMENTS OF ASTM A307 AND NUTS SHALL CONFORM TO THE REQUIREMENTS OF AASHTO M291. BOLTS, NUTS AND WASHERS SHALL BE GALVANIZED. (AT THE CONTRACTOR'S OPTION, STAINLESS STEEL BOLTS, NUTS AND WASHERS MAY BE USED AS AN ALTERNATE FOR THE ⅞'' Ø GALVANIZED BOLTS, NUTS AND WASHERS. THEY SHALL CONFORM TO OR EXCEED THE MECHANICAL REQUIREMENTS OF ASTM A307. THE USE OF THIS ALTERNATE SHALL BE APPROVED BY THE ENGINEER.)

THE GUARDRAIL ANCHOR ASSEMBLY IS REQUIRED AT ALL POINTS WHERE APPROACH GUARDRAIL IS TO BE ATTACHED TO THE END OF BARRIER RAIL. FOR POINTS OF ATTACHMENT, SEE SKETCH.

AFTER INSTALLATION, THE EXPOSED THREAD OF THE BOLT SHALL BE BURRED WITH A SHARP POINTED TOOL.

THE COST OF THE GUARDRAIL ANCHOR ASSEMBLY SHALL BE INCLUDED IN THE UNIT CONTRACT PRICE BID FOR CONCRETE BARRIER RAIL.

THE 1 ¼'' Ø HOLES SHALL BE FORMED OR DRILLED WITH A CORE BIT. IMPACT TOOLS WILL NOT BE PERMITTED. ANY CONCRETE DAMAGED BY THIS WORK SHALL BE REPAIRED TO THE SATISFACTION OF THE ENGINEER.

THE C6 X 8.2 RUBRAIL IS TO BE ADHESIVELY ANCHORED TO THE RAIL USING THREE ¾'' Ø X 6'' BOLTS WITH WASHERS. LEVEL ONE FIELD TESTING IS REQUIRED, AND THE YIELD LOAD OF THE ¾'' Ø BOLT IS 12 KIPS. FOR ADHESIVELY ANCHORED ANCHOR BOLTS OR DOWELS, SEE STANDARD SPECIFICATIONS. SEE ROADWAY STANDARD 862.03 FOR DETAILS AND LOCATION OF THE RUBRAIL.

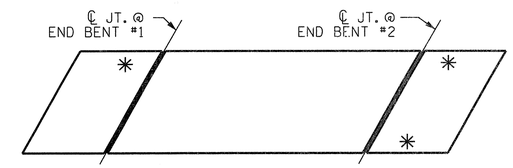

SKETCH SHOWING POINTS OF ATTACHMENTS

✳ DENOTES GUARDRAIL ANCHOR ASSEMBLY

PROJECT NO. R-2633BB
BRUNSWICK/NEW HANOVER COUNTY
STATION: 398+75.47 -L-

STATE OF NORTH CAROLINA
DEPARTMENT OF TRANSPORTATION
RALEIGH

STANDARD

GUARDRAIL ANCHORAGE FOR BARRIER RAIL
LEFT LANE

NORTH CAROLINA PROFESSIONAL SEAL 14047 ENGINEER STEPHEN D. COOK
2/11/13

THE LOUIS BERGER GROUP, Inc.
1001 Wade Avenue, Suite 400
Raleigh, NC 27605-3322

REVISIONS							SHEET NO.
NO.	BY:	DATE:	NO.	BY:	DATE:		S-479
1			3				TOTAL SHEETS
2			4				700

ASSEMBLED BY : J.MYA	DATE : SEPT. 2012
CHECKED BY : S. COOK	DATE : 2012
DRAWN BY : TLA 5/06	ADDED 5/1/06RR KMM/GM
CHECKED BY : GM 5/06	REV. 10/1/11 MAA/GM

(SHT 3b) STD. NO. GRA2

G:\OR Projects\OR1092 - NCDOT Wilm Bypass DualBridges\Structures\Bridge Site 6\R-2633BB_SD_06L_GRA.dgn
2/11/2013 8:45:53 AM 1092_PDF_full.pltcfg 1092_str.tbl

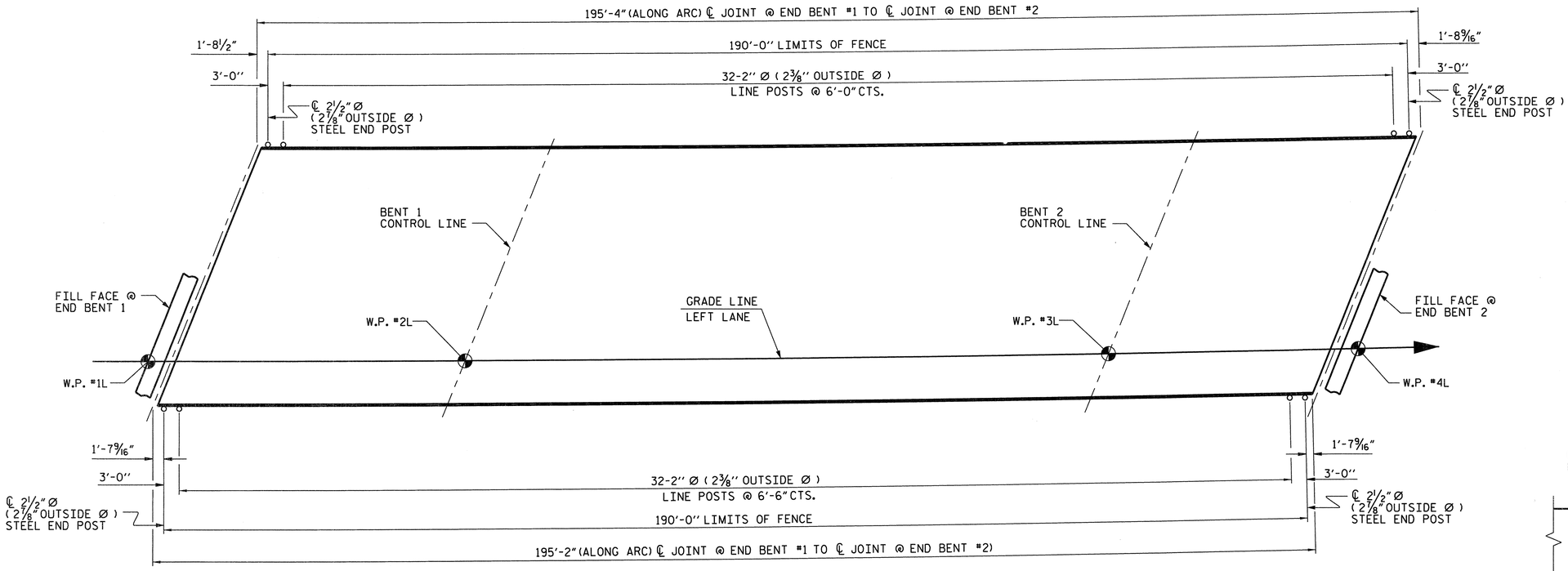

PLAN OF FENCE POST SPACING

PAY LENGTH = 380.00 FEET

NOTES:

FOR 72" CHAIN LINK FENCE, SEE SPECIAL PROVISIONS.

BOLTS SHALL CONFORM TO THE REQUIREMENTS OF ASTM A307 AND NUTS SHALL CONFORM TO THE REQUIREMENTS OF AASHTO M291. BOLTS, NUTS, AND WASHERS SHALL BE GALVANIZED. (AT THE CONTRACTOR'S OPTION, STAINLESS STEEL BOLTS, NUTS, AND WASHERS MAY BE USED AS AN ALTERNATE FOR THE ¾" Ø GALVANIZED BOLTS, NUTS, AND WASHERS. THEY SHALL CONFORM TO OR EXCEED THE MECHANICAL REQUIREMENTS OF ASTM A307. THE USE OF THIS ALTERNATE SHALL BE APPROVED BY THE ENGINEER.)

FOR SETTING ANCHOR BOLTS, THE CONTRACTOR SHALL USE AN ADHESIVE BONDING SYSTEM. LEVEL ONE FIELD TESTING OF BONDING SYSTEM IS REQUIRED AND THE YIELD LOAD OF THE ¾" Ø BOLTS IS 12.0 KIPS.

ALL FENCE MATERIAL SHALL MEET THE REQUIREMENTS OF SECTION 1050 OF THE STANDARD SPECIFICATIONS, GALVANIZE ALL STEEL PARTS AND HARDWARE IN ACCORDANCE WITH ARTICLE 1076 OF THE STANDARD SPECIFICATIONS.

FENCE POST LOCATIONS SHALL BE SHIFTED, AS NECESSARY, TO MAINTAIN 12" MINIMUM DISTANCE FROM ANCHOR BOLT TO JOINTS IN BARRIER RAIL.

DIMENSIONS TAKEN ALONG OUTSIDE FACE OF BARRIER RAIL.

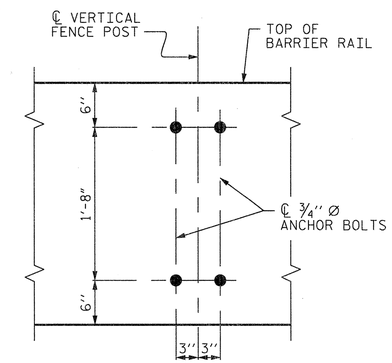

BOLT SETTING DETAIL

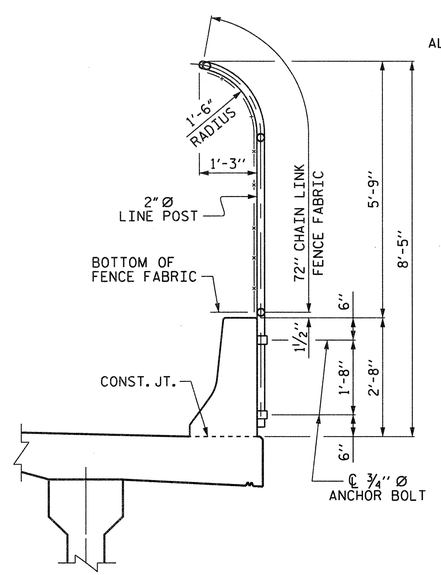

SECTION THRU FENCE

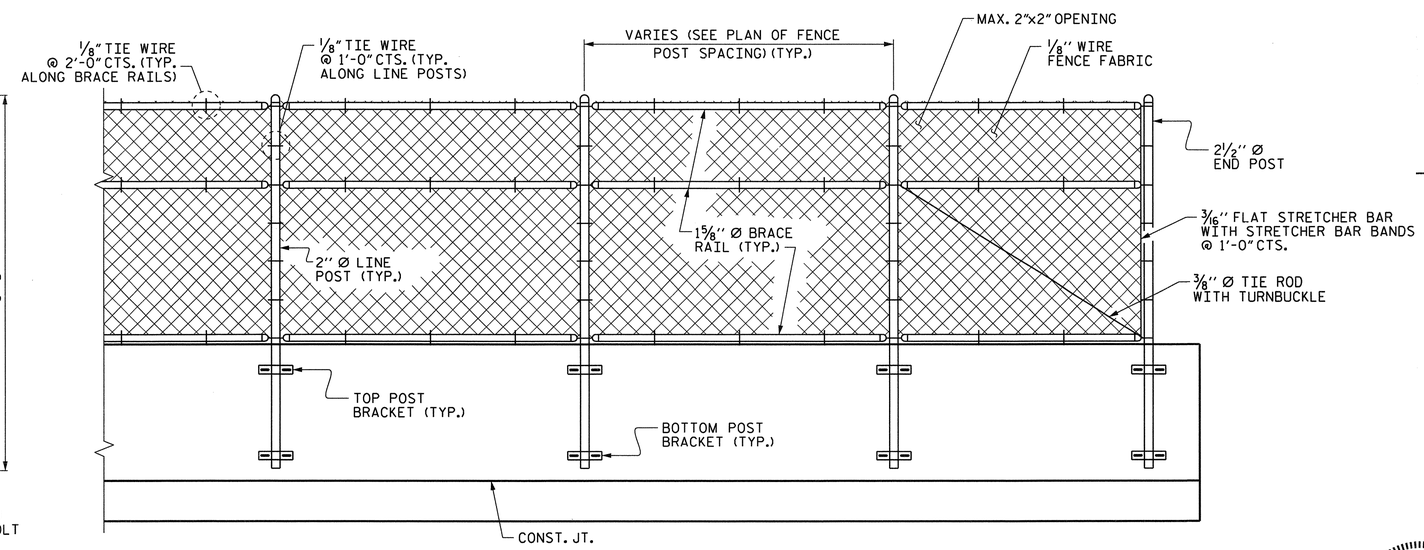

PARTIAL ELEVATION

PROJECT NO. R-2633BB

BRUNSWICK/NEW HANOVER COUNTY

STATION: 398+75.47 -L-

STATE OF NORTH CAROLINA
DEPARTMENT OF TRANSPORTATION
RALEIGH

SUPERSTRUCTURE
BRIDGE MOUNTED
72" CHAIN LINK FENCE
LEFT LANE

NORTH CAROLINA PROFESSIONAL SEAL 14047 ENGINEER STEPHEN D. COOK 2/11/12

THE LOUIS BERGER GROUP, Inc.
1001 Wade Avenue, Suite 400
Raleigh, NC 27605-3322

REVISIONS								SHEET NO.
NO.	BY:	DATE:	NO.	BY:	DATE:			S-180
1			3					TOTAL SHEETS
2			4					700

DRAWN BY : J.MYA DATE : SEP.2012
CHECKED BY : S.COOK DATE : SEP.2012

G:\OR Projects\OR1092 - NCDOT Wilm Bypass DualBridges\Structures\Bridge Site 6\R-2633BB_SD_06L_FNC.dgn
2/11/2013 8:45:56 AM 1092_PDF_full.pltcfg 1092_str.tbl

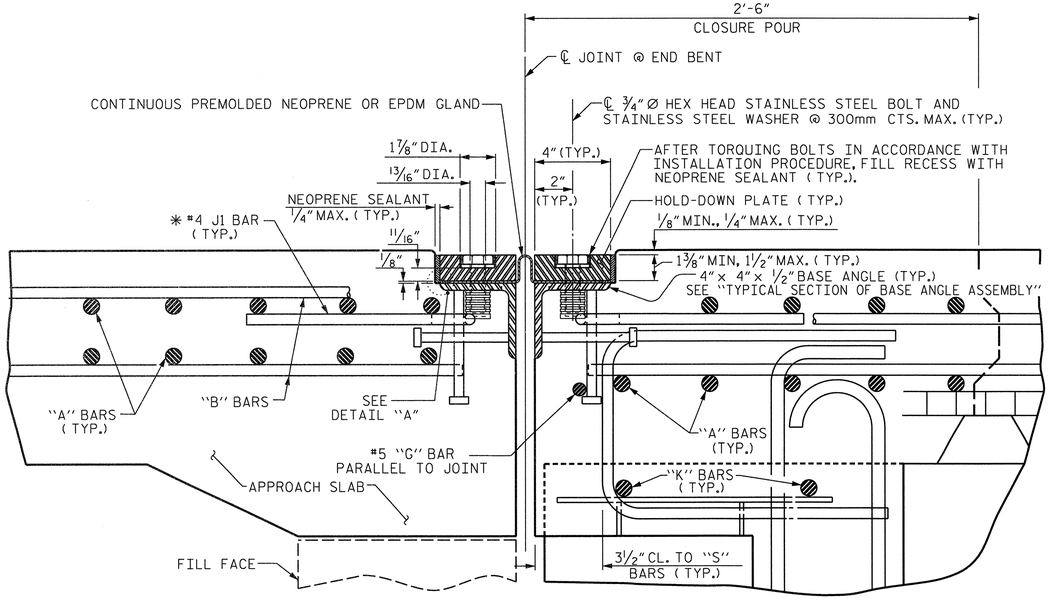

EXPANSION JOINT DETAILS

SECTION NORMAL TO JOINT

✱ THE QUANTITY OF #4 J1 BARS ON THE BILL OF MATERIAL IS BASED ON 1'-0" CENTERS. J1 BARS SHALL BE PLACED AT EACH VERTICAL STUD ANCHOR BOLT. IN THE EVENT THAT THE NUMBER OF VERTICAL STUD ANCHORS EXCEEDS THE NUMBER OF J1 BARS SPECIFIED, ADDITIONAL J1 BARS WILL NOT BE REQUIRED.

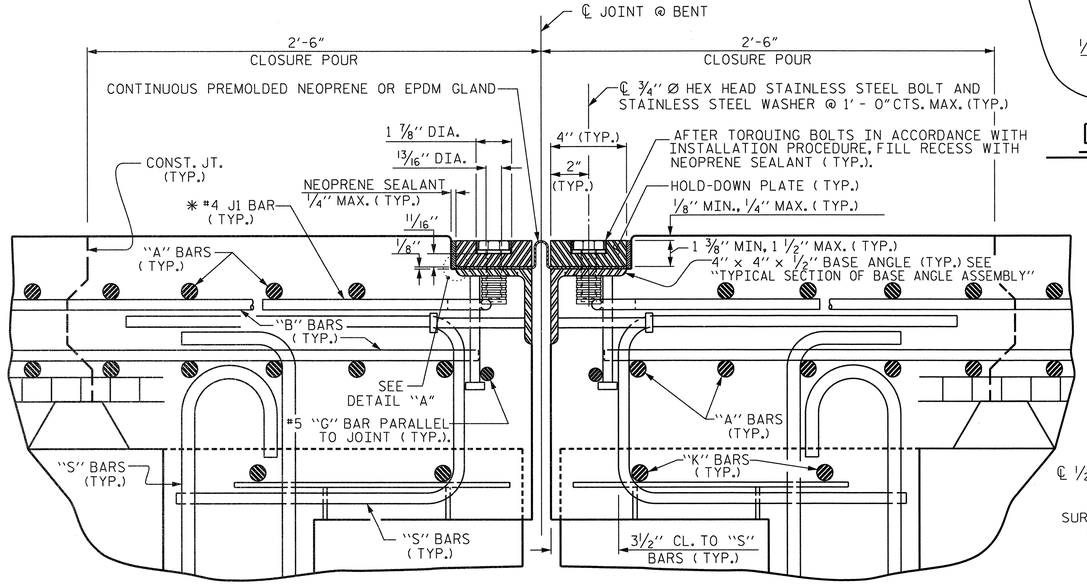

EXPANSION JOINT DETAILS

SECTION NORMAL TO JOINT

✱ THE QUANTITY OF #4 J1 BARS ON THE BILL OF MATERIAL IS BASED ON 1'-0" CENTERS. J1 BARS SHALL BE PLACED AT EACH VERTICAL STUD ANCHOR BOLT. IN THE EVENT THAT THE NUMBER OF VERTICAL STUD ANCHORS EXCEEDS THE NUMBER OF J1 BARS SPECIFIED, ADDITIONAL J1 BARS WILL NOT BE REQUIRED.

INSTALLATION PROCEDURE

1. A TEMPLATE OR OTHER SUITABLE DEVICE SHALL BE USED TO FORM THE TOP OF THE EXPANSION JOINT SEAL BLOCKOUT TO THE PROPER DEPTH AND WIDTH. THE TEMPLATE SHALL BE 4⅛" TO 4¼" WIDE AND OF SUCH THICKNESS AS TO PROVIDE FOR CORRECT FINAL ELEVATION OF TOP OF HOLD-DOWN PLATES. THE TEMPLATE SHALL BE ATTACHED TO THE BASE ANGLE ASSEMBLY WITH THE ¾"Ø HEX HEAD BOLTS PROVIDED FOR THE HOLD-DOWN PLATES. A 1"Ø HOLE SHALL BE PROVIDED IN THE TEMPLATE CENTERED OVER EACH WEEP HOLE IN THE 4" X 4" X ½" BASE ANGLE. OTHER METHODS OF INSURING DRAINAGE THROUGH WEEP HOLES MAY BE EMPLOYED SUBJECT TO ENGINEER'S APPROVAL.
2. AFTER THE CONCRETE HAS BEEN CAST ON BOTH SIDES OF THE JOINT, REMOVE THE TEMPLATE. THOROUGHLY CLEAN THE BOLT HOLES AND THE ANGLE PLATE. REMOVE ANY EXCESS CONCRETE THAT COMES OUT OF THE WEEP HOLES. ANY DAMAGED STEEL SHALL BE COATED WITH A MINIMUM THICKNESS OF 4 DRY MILS OF ZINC-RICH PAINT IN ACCORDANCE WITH THE STANDARD SPECIFICATIONS.
3. LAY THE GLAND ON THE BASE ANGLE AND FIELD MARK THE GLAND FOR THE BOLT HOLES. HOLES IN THE GLAND SHALL BE PUNCHED ⅞" IN DIAMETER WITH A HAND PUNCH.
4. IN ORDER TO CHECK FOR PROPER ALIGNMENT, PLACE THE GLAND AND HOLD-DOWN PLATES ON THE BASE ANGLE. DO NOT APPLY NEOPRENE SEALANT. BOLT THE HOLD-DOWN PLATES TO THE BASE ANGLE BUT DO NOT TIGHTEN. THE ENGINEER SHALL INSPECT THE JOINT SEAL DEVICE FOR PROPER ALIGNMENT.
5. AFTER INSPECTION, REMOVE THE HOLD-DOWN PLATES AND GLAND. APPLY NEOPRENE SEALANT TO THE BASE ANGLE IN ACCORDANCE WITH THE "INSTALLATION SKETCH". PLACE GLAND AND HOLD-DOWN PLATES ON THE BASE ANGLE. BOLT THE HOLD-DOWN PLATES TO THE BASE ANGLE ASSEMBLY AND TORQUE THE BOLTS TO 88 FT-LBS WITH A TORQUE WRENCH. CHECK THE TORQUE AFTER THREE (3) HOURS AND, IF NECESSARY, RETIGHTEN TO 88 FT-LBS. A FINAL CHECK SHALL BE MADE AT SEVEN (7) DAYS. TORQUE SHALL NOT BE LESS THAN 80 FT-LBS AFTER SEVEN (7) DAYS.
6. AFTER PROPER TORQUING, CLEAN THE BOLT HOLE RECESSES AND THE RECESS BETWEEN THE JOINT SEAL DEVICE AND CONCRETE, COMPLETELY FILL THESE RECESSES WITH NEOPRENE SEALANT.

GENERAL NOTES

1. FOR EXPANSION JOINT SEALS, SEE SPECIAL PROVISIONS.
2. ALL PLATES AND ANGLES SHALL CONFORM TO AASHTO M270 GRADE 36 STEEL OR APPROVED EQUAL. ALL HOLD-DOWN BOLTS SHALL CONFORM TO ASTM F593 ALLOY 304 STAINLESS STEEL AND WASHERS SHALL CONFORM TO ASTM F844 EXCEPT THEY SHALL BE MADE FROM ALLOY 304 STAINLESS STEEL. ALL STUD ANCHORS SHALL CONFORM TO AASHTO M169, GRADES 1010 THRU 1020 OR APPROVED EQUAL. ALL CONCRETE INSERTS SHALL BE CLOSED END AND SHALL CONFORM TO AASHTO M169, GRADE 12L14. TENSILE CAPACITY SHALL BE 3000 LBS. MIN.
3. A PREMOLDED CORRUGATED OR NON-CORRUGATED GLAND SHALL BE USED FOR JOINTS SKEWED BETWEEN 50° THRU 130°. FOR JOINTS SKEWED LESS THAN 50° OR MORE THAN 130°, ONLY A CORRUGATED GLAND SHALL BE USED.
4. CLOSED END FERRULES AND STUD ANCHORS SHALL BE SHOP WELDED AND ALL HOLES SHALL BE SHOP DRILLED AS SHOWN ON PLANS. STUD ANCHORS SHALL BE ELECTRIC ARC END WELDED WITH COMPLETE FUSION.
5. SURFACES COMING IN CONTACT WITH NEOPRENE SHALL BE GROUND SMOOTH PRIOR TO METALLIZING.
6. UPON COMPLETION OF SHOP FABRICATION, THE HOLD DOWN PLATE AND BASE ANGLE ASSEMBLY, AS SHOWN IN THE " TYPICAL SECTION OF BASE ANGLE ASSEMBLY", SHALL BE METALLIZED. SEE SPECIAL PROVISION FOR THERMAL SPRAYED COATINGS (METALLIZATION).
7. BASE ANGLE ASSEMBLY SHALL BE CONTINUOUS FOR THE LENGTH OF THE JOINT. AT CROWN BREAKS, THE ENDS OF THE BASE ANGLE ASSEMBLY SHALL BE CUT PARALLEL TO THE BRIDGE CENTERLINE FOR SKEWS LESS THAN 80° AND GREATER THAN 100°. FINISHED WELD SHALL BE GROUND SMOOTH AND COATED WITH A MINIMUM THICKNESS OF 4 DRY MILS OF ZINC-RICH PAINT IN ACCORDANCE WITH THE STANDARD SPECIFICATIONS.
8. FIELD SPLICES OF HOLD-DOWN PLATES SHALL BE KEPT TO A MINIMUM. CONTRACTOR SHALL FURNISH DETAILED PLANS SHOWING PROPOSED SPLICE LOCATIONS FOR APPROVAL. HOLD-DOWN PLATES SHALL NOT EXCEED 20' LENGTHS UNLESS APPROVED BY THE ENGINEER.
9. NO ALTERNATE JOINT DETAILS SHALL BE PERMITTED IN LIEU OF THOSE SHOWN ON THESE PLANS.
10. THE CONTRACTOR MAY, AT HIS OPTION, USE ADHESIVELY ANCHORED ANCHOR BOLTS IN PLACE OF CONCRETE INSERTS FOR COVER PLATES. THE YIELD LOAD OF THE ¾"Ø BOLT IS 10 KIPS. FIELD TESTING OF THE ADHESIVE BONDING SYSTEM IS NOT REQUIRED.

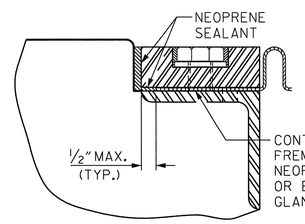

DETAIL "A"

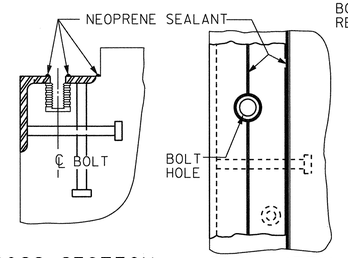

CROSS SECTION PLAN VIEW

INSTALLATION SKETCH

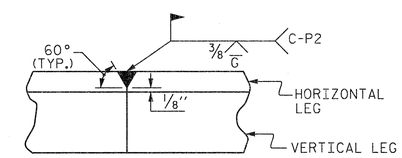

DETAIL- FIELD WELD SPLICE OF BASE ANGLE

MOVEMENT AND SETTING AT JOINT					
LOCATION	SKEW ANGLE	TOTAL MOVEMENT (ALONG ℄ RDWY)	PERPENDICULAR JOINT OPENING AT 45° F	PERPENDICULAR JOINT OPENING AT 60° F	PERPENDICULAR JOINT OPENING AT 90° F
END BENT 1	112°-23'-56"	0"	1"	1"	1"
BENT 1	111°-54'-37"	1"	1⅝"	1½"	1 3/16"
BENT 2	112°-25'-55"	1¼"	1⅛"	1⅛"	1"
END BENT 2	112°-25'-55"	0"	1"	1"	1"

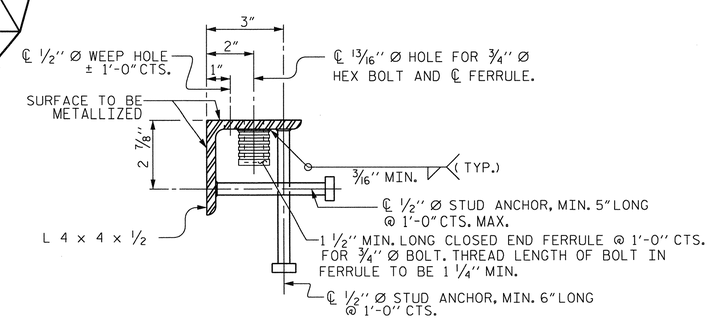

TYPICAL SECTION OF BASE ANGLE ASSEMBLY

PROJECT NO. R-2633BB

BRUNSWICK/NEW HANOVER COUNTY

STATION: 398+75.47 -L-

SHEET 1 OF 2

STATE OF NORTH CAROLINA
DEPARTMENT OF TRANSPORTATION
RALEIGH

STANDARD
EXPANSION JOINT SEAL DETAILS
LEFT LANE

NORTH CAROLINA PROFESSIONAL SEAL 14047 ENGINEER STEPHEN D. COOK 2/11/13

THE LOUIS BERGER GROUP, Inc.
1001 Wade Avenue, Suite 400
Raleigh, NC 27605-3322

REVISIONS								SHEET NO.
NO.	BY:	DATE:	NO.	BY:	DATE:			S-481
1			3					TOTAL SHEETS
2			4					700

ASSEMBLED BY : J. MYA		DATE : SEPT. 2012	
CHECKED BY : S. COOK		DATE : SEPT. 2012	
DRAWN BY : REK	9/87	REV. 5/7/03R	RWW/JTE
CHECKED BY : CRK	10/87	REV. 5/1/06R	TLA/GM
		REV. 10/1/11	MAA/GM

STD. NO. EJS1

G:\OR Projects\OR1092 - NCDOT Wilm Bypass DualBridges\Structures\Bridge Site 6\R-2633BB_SD_06L_EJS01.dgn
2/11/2013 8:45:59 AM 1092_PDF_full.pltcfg

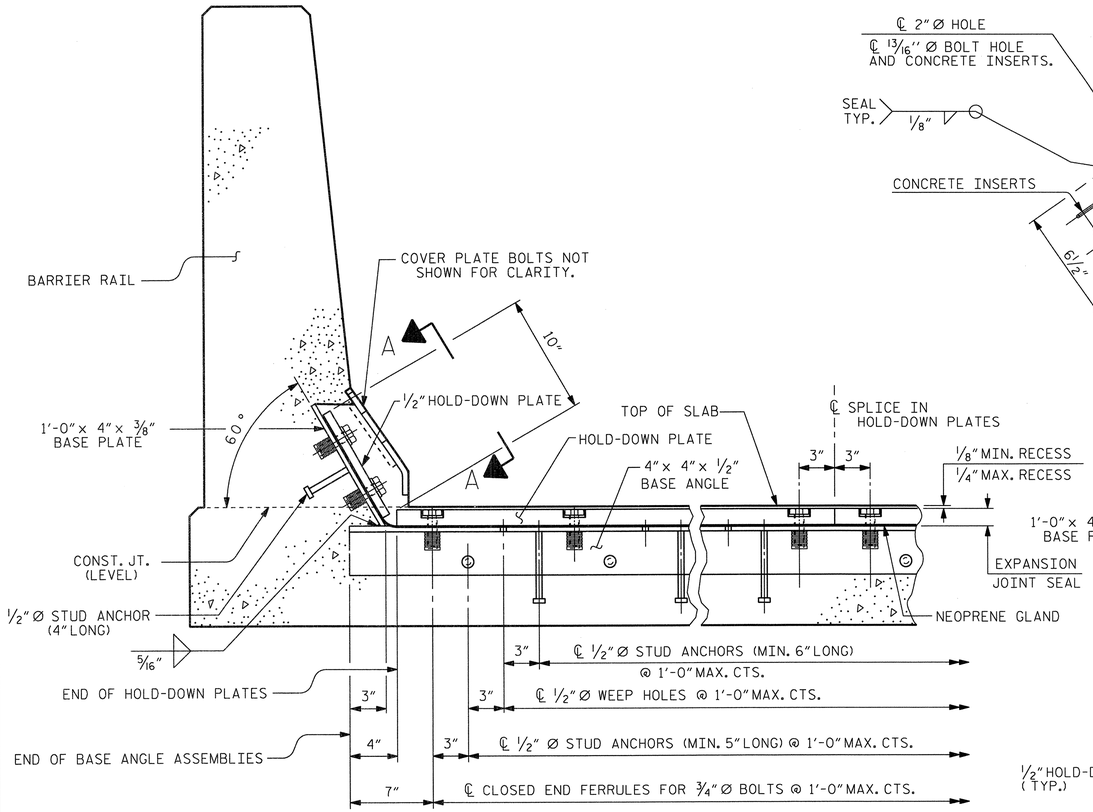

SECTION THRU RAIL NORMAL TO JOINT

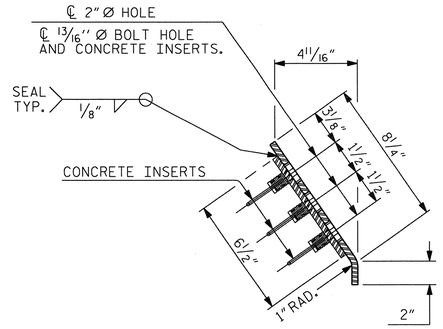

END VIEW

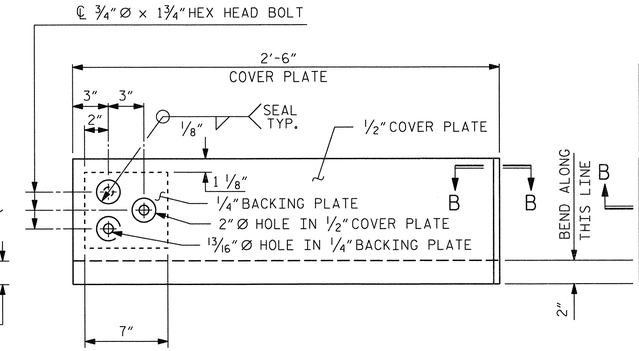

TYPE I - ELEVATION VIEW

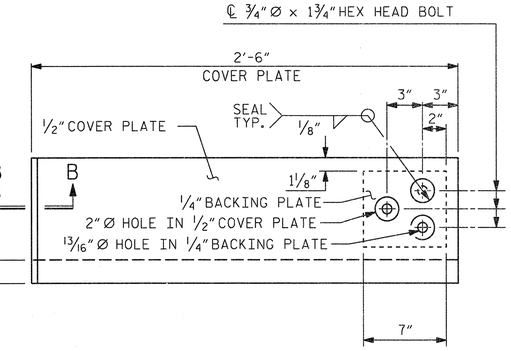

TYPE II - ELEVATION VIEW

COVER PLATE DETAILS

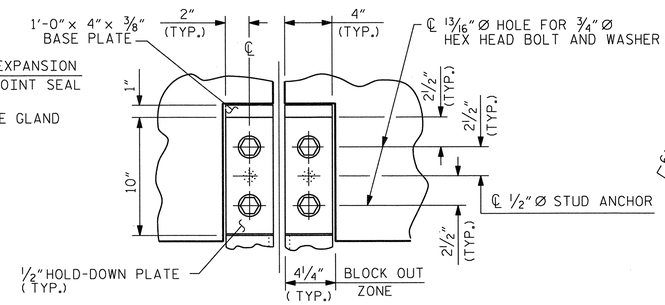

SECTION A - A

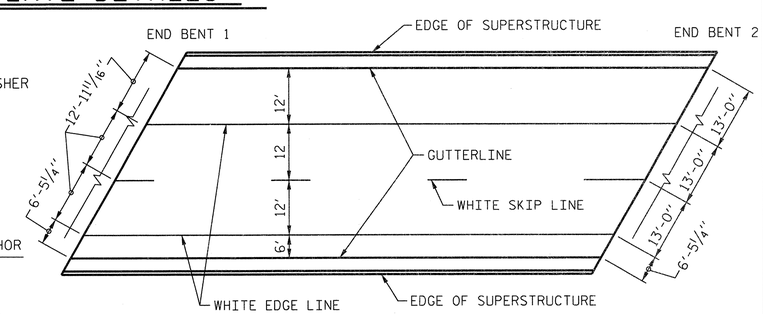

PAVEMENT MARKING ALIGNMENT

	@ 45°	@ 60°	@ 90°
END BENT 1	1"	1"	1"
BENT 1	1 5/8"	1 1/2"	1 3/16"
BENT 2	1 1/8"	1 1/8"	1"
END BENT 2	1"	1"	1"

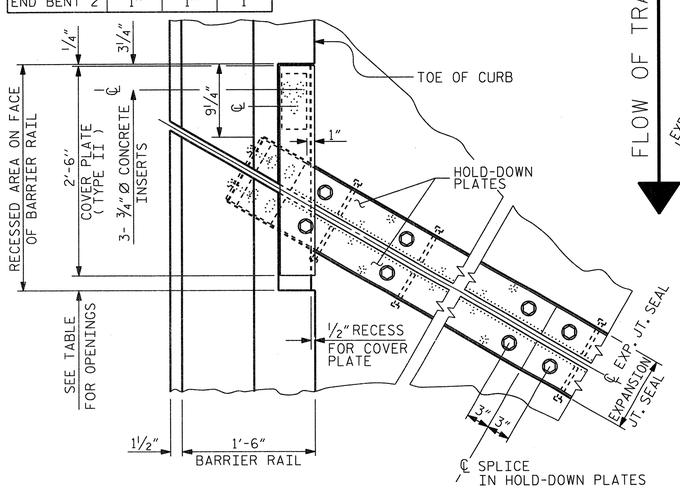

FLOW OF TRAFFIC

	@ 45°	@ 60°	@ 90°
END BENT 1	1"	1"	1"
BENT 1	1 5/8"	1 1/2"	1 3/16"
BENT 2	1 1/8"	1 1/8"	1"
END BENT 2	1"	1"	1"

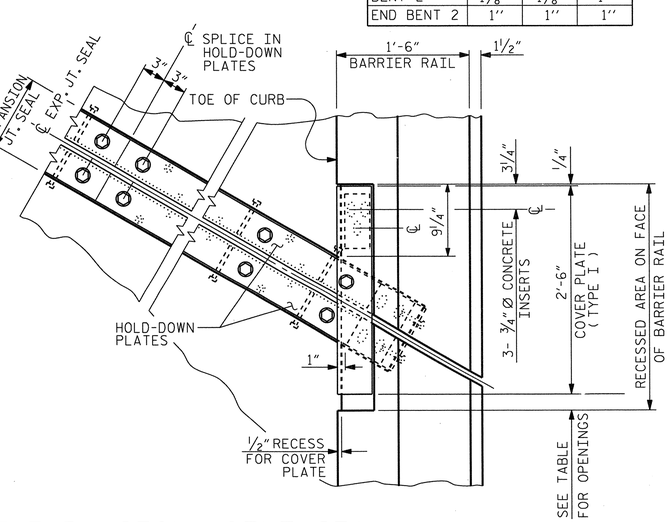

PLAN OF EXPANSION JOINT SEAL

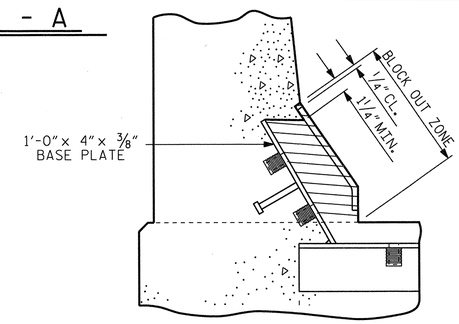

BLOCK OUT DETAIL

SEE "SECTION A - A" FOR OTHER DETAILS.

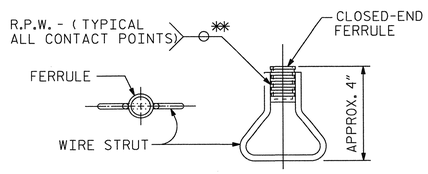

CONCRETE INSERT

** EACH WELDED ATTACHMENT OF WIRE TO FERRULE SHALL DEVELOP THE TENSILE STRENGTH OF THE WIRE.

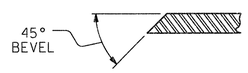

SECTION B - B

NORTH CAROLINA PROFESSIONAL SEAL 14047 ENGINEER STEPHEN D. COOK 2/11/13

THE LOUIS BERGER GROUP, Inc.
1001 Wade Avenue, Suite 400
Raleigh, NC 27605-3322

PROJECT NO. R-2633BB

BRUNSWICK/NEW HANOVER COUNTY

STATION: 398+75.47 -L-

SHEET 2 OF 2

STATE OF NORTH CAROLINA
DEPARTMENT OF TRANSPORTATION
RALEIGH

STANDARD
EXPANSION JOINT SEAL DETAILS FOR BARRIER RAIL
LEFT LANE

REVISIONS						SHEET NO.
NO.	BY:	DATE:	NO.	BY:	DATE:	S-482
1			3			TOTAL SHEETS
2			4			700

STD. NO. EJS2

ASSEMBLED BY : J. MYA DATE : DEC.2012
CHECKED BY : R. DECOLA DATE : DEC. 2012

DRAWN BY : REK 9/87
CHECKED BY : CRK 10/87

REV. 10/1/11 MAA/GM
REV. 7/12 MAA/GM
REV. 10/12 MAA/GM

G:\OR Projects\OR1092 - NCDOT Wilm Bypass DualBridges\Structures\Bridge Site 6\R-2633BB_SD_06L_EJS02.dgn
2/11/2013 8:46:01 AM 1092_PDF_full.pltcfg 1092_str.tbl

REINFORCING BAR SCHEDULE

SPAN "A"

BAR	NO.	SIZE	TYPE	LENGTH	WEIGHT
✱ A1	31	#5	STR	44'-11"	1452
✱ A101	2	#5	STR	43'-6"	91
✱ A102	2	#5	STR	42'-3"	88
✱ A103	2	#5	STR	41'-0"	86
✱ A104	2	#5	STR	39'-8"	83
✱ A105	2	#5	STR	38'-5"	80
✱ A106	2	#5	STR	37'-2"	78
✱ A107	2	#5	STR	35'-10"	75
✱ A108	2	#5	STR	34'-7"	72
✱ A109	2	#5	STR	33'-4"	70
✱ A110	2	#5	STR	32'-1"	67
✱ A111	2	#5	STR	30'-9"	64
✱ A112	2	#5	STR	29'-6"	62
✱ A113	2	#5	STR	28'-3"	59
✱ A114	2	#5	STR	26'-11"	56
✱ A115	2	#5	STR	25'-8"	54
✱ A116	2	#5	STR	24'-5"	51
✱ A117	2	#5	STR	23'-1"	48
✱ A118	2	#5	STR	21'-10"	46
✱ A119	2	#5	STR	20'-7"	43
✱ A120	2	#5	STR	19'-3"	40
✱ A121	2	#5	STR	18'-0"	38
✱ A122	2	#5	STR	16'-9"	35
✱ A123	2	#5	STR	15'-5"	32
✱ A124	2	#5	STR	14'-2"	30
✱ A125	2	#5	STR	12'-11"	27
✱ A126	2	#5	STR	11'-7"	24
✱ A127	2	#5	STR	10'-4"	22
✱ A128	2	#5	STR	9'-1"	19
✱ A129	2	#5	STR	7'-9"	16
✱ A130	2	#5	STR	6'-6"	14
✱ A131	2	#5	STR	5'-3"	11
✱ A132	2	#5	STR	4'-0"	8
✱ A133	2	#5	STR	2'-8"	6
✱ A134	2	#5	STR	1'-5"	3
A2	31	#5	STR	44'-11"	1452
A201	2	#5	STR	43'-6"	91
A202	2	#5	STR	42'-3"	88
A203	2	#5	STR	41'-0"	86
A204	2	#5	STR	39'-8"	83
A205	2	#5	STR	38'-5"	80
A206	2	#5	STR	37'-2"	78
A207	2	#5	STR	35'-10"	75
A208	2	#5	STR	34'-7"	72
A209	2	#5	STR	33'-4"	70
A210	2	#5	STR	32'-1"	67
A211	2	#5	STR	30'-9"	64
A212	2	#5	STR	29'-6"	62
A213	2	#5	STR	28'-3"	59
A214	2	#5	STR	26'-11"	56
A215	2	#5	STR	25'-8"	54
A216	2	#5	STR	24'-5"	51
A217	2	#5	STR	23'-1"	48
A218	2	#5	STR	21'-10"	46
A219	2	#5	STR	20'-7"	43
A220	2	#5	STR	19'-3"	40

BAR	NO.	SIZE	TYPE	LENGTH	WEIGHT
A221	2	#5	STR	18'-0"	38
A222	2	#5	STR	16'-9"	35
A223	2	#5	STR	15'-5"	32
A224	2	#5	STR	14'-2"	30
A225	2	#5	STR	12'-11"	27
A226	2	#5	STR	11'-7"	24
A227	2	#5	STR	10'-4"	22
A228	2	#5	STR	9'-1"	19
A229	2	#5	STR	7'-9"	16
A230	2	#5	STR	6'-6"	14
A231	2	#5	STR	5'-3"	11
A232	2	#5	STR	4'-0"	8
A233	2	#5	STR	2'-8"	6
A234	2	#5	STR	1'-5"	3
✱ B1	64	#4	STR	17'-6"	748
B2	56	#5	STR	32'-6"	1898
✱ G1	2	#5	STR	48'-3"	101
✱ J1	90	#4	6	1'-5"	85
✱ K1	12	#8	2	20'-4"	651
✱ K2	8	#8	1	14'-0"	299
✱ K3	24	#6	STR	8'-6"	306
✱ S1	72	#5	3	5'-0"	375
✱ S2	72	#5	5	3'-8"	275

REINFORCING BAR SCHEDULE

SPAN "B"

BAR	NO.	SIZE	TYPE	LENGTH	WEIGHT
✱ A1	173	#5	STR	44'-11"	8105
✱ A301	2	#5	STR	43'-5"	91
✱ A302	2	#5	STR	41'-10"	87
✱ A303	2	#5	STR	40'-4"	84
✱ A304	2	#5	STR	38'-9"	81
✱ A305	2	#5	STR	37'-2"	78
✱ A306	2	#5	STR	35'-8"	74
✱ A307	2	#5	STR	34'-1"	71
✱ A308	2	#5	STR	32'-6"	68
✱ A309	2	#5	STR	31'-0"	65
✱ A310	2	#5	STR	29'-5"	61
✱ A311	2	#5	STR	27'-10"	58
✱ A312	2	#5	STR	26'-3"	55
✱ A313	2	#5	STR	24'-9"	52
✱ A314	2	#5	STR	23'-2"	48
✱ A315	2	#5	STR	21'-7"	45
✱ A316	2	#5	STR	20'-1"	42
✱ A317	2	#5	STR	18'-6"	39
✱ A318	2	#5	STR	16'-11"	35
✱ A319	2	#5	STR	15'-5"	32
✱ A320	2	#5	STR	13'-10"	29
✱ A321	2	#5	STR	12'-3"	26
✱ A322	2	#5	STR	10'-9"	22
✱ A323	2	#5	STR	9'-2"	19
✱ A324	2	#5	STR	7'-7"	16
✱ A325	2	#5	STR	6'-0"	13
✱ A326	2	#5	STR	4'-6"	9
✱ A327	2	#5	STR	2'-11"	6
✱ A328	2	#5	STR	1'-4"	3
A2	173	#5	STR	44'-11"	8105
A401	2	#5	STR	43'-5"	91
A402	2	#5	STR	41'-10"	87
A403	2	#5	STR	40'-4"	84
A404	2	#5	STR	38'-9"	81
A405	2	#5	STR	37'-2"	78
A406	2	#5	STR	35'-8"	74
A407	2	#5	STR	34'-1"	71
A408	2	#5	STR	32'-6"	68
A409	2	#5	STR	31'-0"	65
A410	2	#5	STR	29'-5"	61
A411	2	#5	STR	27'-10"	58
A412	2	#5	STR	26'-3"	55
A413	2	#5	STR	24'-9"	52
A414	2	#5	STR	23'-2"	48
A415	2	#5	STR	21'-7"	45
A416	2	#5	STR	20'-1"	42
A417	2	#5	STR	18'-6"	39
A418	2	#5	STR	16'-11"	35
A419	2	#5	STR	15'-5"	32
A420	2	#5	STR	13'-10"	29
A421	2	#5	STR	12'-3"	26
A422	2	#5	STR	10'-9"	22
A423	2	#5	STR	9'-2"	19
A424	2	#5	STR	7'-7"	16
A425	2	#5	STR	6'-0"	13
A426	2	#5	STR	4'-6"	9
A427	2	#5	STR	2'-11"	6
A428	2	#5	STR	1'-4"	3

BAR	NO.	SIZE	TYPE	LENGTH	WEIGHT
✱ B3	160	#4	STR	26'-10"	2868
B4	102	#5	STR	43'-10"	4663
✱ G1	2	#5	STR	48'-3"	101
✱ J1	90	#4	6	1'-5"	85
✱ K4	12	#8	2	17'-10"	571
✱ K5	8	#8	1	13'-2"	281
✱ K6	24	#6	STR	6'-0"	216
✱ S2	48	#5	5	3'-8"	184
✱ S3	48	#5	3	6'-4"	317

PROJECT NO. R-2633BB

BRUNSWICK/NEW HANOVER COUNTY

STATION: 398+75.47 -L-

SHEET 1 OF 2

STATE OF NORTH CAROLINA
DEPARTMENT OF TRANSPORTATION
RALEIGH

STANDARD
SUPERSTRUCTURE
BILL OF MATERIAL
LEFT LANE

NORTH CAROLINA PROFESSIONAL SEAL 14047 ENGINEER STEPHEN D. COOK
2/11/13

THE LOUIS BERGER GROUP, Inc.
1001 Wade Avenue, Suite 400
Raleigh,NC27605-3322

REVISIONS								SHEET NO.
NO.	BY:	DATE:	NO.	BY:	DATE:			S-483
1			3					TOTAL SHEETS
2			4					700

STD. NO. BOM2

ASSEMBLED BY : J. MYA	DATE : OCT. 2012
CHECKED BY : S. COOK	DATE : OCT. 2012
DRAWN BY : JMB5/87	REV. 8/16/99RWW/LES
CHECKED BY :SJD9/87	REV. 5/1/06TLA/GM
	REV. 10/1/11MAA/GM

G:\OR Projects\OR1092 - NCDOT Wilm Bypass DualBridges\Structures\Bridge Site 6\R-2633BB_SD_06L_BOM_01.dgn
2/11/2013 8:46:04 AM 1092_PDF_full.pltcfg 1092_str.tbl

REINFORCING BAR SCHEDULE

SPAN "C"

BAR	NO.	SIZE	TYPE	LENGTH	WEIGHT
* A1	35	#5	STR	44'-11"	1640
* A501	2	#5	STR	43'-11"	92
* A502	2	#5	STR	42'-9"	89
* A503	2	#5	STR	41'-6"	87
* A504	2	#5	STR	40'-3"	84
* A505	2	#5	STR	39'-1"	82
* A506	2	#5	STR	37'-10"	79
* A507	2	#5	STR	36'-8"	76
* A508	2	#5	STR	35'-5"	74
* A509	2	#5	STR	34'-3"	71
* A510	2	#5	STR	33'-0"	69
* A511	2	#5	STR	31'-10"	66
* A512	2	#5	STR	30'-7"	64
* A513	2	#5	STR	29'-5"	61
* A514	2	#5	STR	28'-2"	59
* A515	2	#5	STR	27'-0"	56
* A516	2	#5	STR	25'-9"	54
* A517	2	#5	STR	25'-0"	52
* A518	2	#5	STR	23'-4"	49
* A519	2	#5	STR	22'-1"	46
* A520	2	#5	STR	20'-11"	44
* A521	2	#5	STR	19'-8"	41
* A522	2	#5	STR	18'-6"	39
* A523	2	#5	STR	17'-3"	36
* A524	2	#5	STR	16'-1"	34
* A525	2	#5	STR	14'-10	31
* A526	2	#5	STR	13'-8"	29
* A527	2	#5	STR	12'-5"	26
* A528	2	#5	STR	11'-3"	23
* A529	2	#5	STR	10'-0"	21
* A530	2	#5	STR	8'-10"	18
* A531	2	#5	STR	7'-7"	16
* A532	2	#5	STR	6'-5"	13
* A533	2	#5	STR	5'-2"	11
* A534	2	#5	STR	3'-11"	8
* A535	2	#5	STR	2'-9"	6
* A536	2	#5	STR	1'-6"	3
A2	35	#5	STR	44'-11"	1640
A601	2	#5	STR	43'-6"	91
A602	2	#5	STR	42'-3"	88
A603	2	#5	STR	41'-0"	86
A604	2	#5	STR	39'-8"	83
A605	2	#5	STR	38'-5"	80
A606	2	#5	STR	37'-2"	78
A607	2	#5	STR	35'-10"	75
A608	2	#5	STR	34'-7"	72
A609	2	#5	STR	33'-4"	70
A610	2	#5	STR	32'-1"	67
A611	2	#5	STR	30'-9"	64
A612	2	#5	STR	29'-6"	62
A613	2	#5	STR	28'-3"	59
A614	2	#5	STR	26'-11"	56
A615	2	#5	STR	25'-8"	54
A616	2	#5	STR	24'-5"	51
A617	2	#5	STR	23'-1"	48
A618	2	#5	STR	21'-10"	46
A619	2	#5	STR	20'-7"	43
A620	2	#5	STR	19'-3"	40

BAR	NO.	SIZE	TYPE	LENGTH	WEIGHT
A621	2	#5	STR	19'-8"	41
A622	2	#5	STR	18'-6"	39
A623	2	#5	STR	17'-3"	36
A624	2	#5	STR	16'-1"	34
A625	2	#5	STR	14'-10	31
A626	2	#5	STR	13'-8"	29
A627	2	#5	STR	12'-5"	26
A628	2	#5	STR	11'-3"	23
A629	2	#5	STR	10'-0"	21
A630	2	#5	STR	8'-10"	18
A631	2	#5	STR	7'-7"	16
A632	2	#5	STR	6'-5"	13
A633	2	#5	STR	5'-2"	11
A634	2	#5	STR	3'-11"	8
A635	2	#5	STR	2'-9"	6
A636	2	#5	STR	1'-6"	3
* B5	64	#4	STR	19'-3"	823
B6	56	#5	STR	35'-8"	2083
* G1	2	#5	STR	48'-3"	101
* J1	90	#4	6	1'-5"	85
* K1	12	#8	2	20'-4"	651
* K2	8	#8	1	14'-0"	299
* K3	24	#6	STR	8'-6"	306
* S1	72	#5	3	5'-0"	375
* S2	72	#5	5	3'-8"	275

SUPERSTRUCTURE REINFORCING STEEL LENGTHS ARE BASED ON THE FOLLOWING MINIMUM SPLICE LENGTHS

BAR SIZE	SUPERSTRUCTURE EXCEPT APPROACH SLABS, PARAPET, AND BARRIER RAIL		APPROACH SLABS		PARAPET AND BARRIER RAIL
	EPOXY COATED	UNCOATED	EPOXY COATED	UNCOATED	
#4	2'-0"	1'-9"	2'-0"	1'-9"	2'-9"
#5	2'-6"	2'-2"	2'-6"	2'-2"	3'-5"
#6	3'-0"	2'-7"	3'-10"	2'-7"	4'-4"
#7	5'-3"	3'-6"			
#8	6'-10"	4'-7"			

GROOVING BRIDGE FLOORS

APPROACH SLABS	2092	SQ.FT.
BRIDGE DECK	7,640	SQ.FT.
TOTAL	9,732	SQ.FT.

BAR TYPES

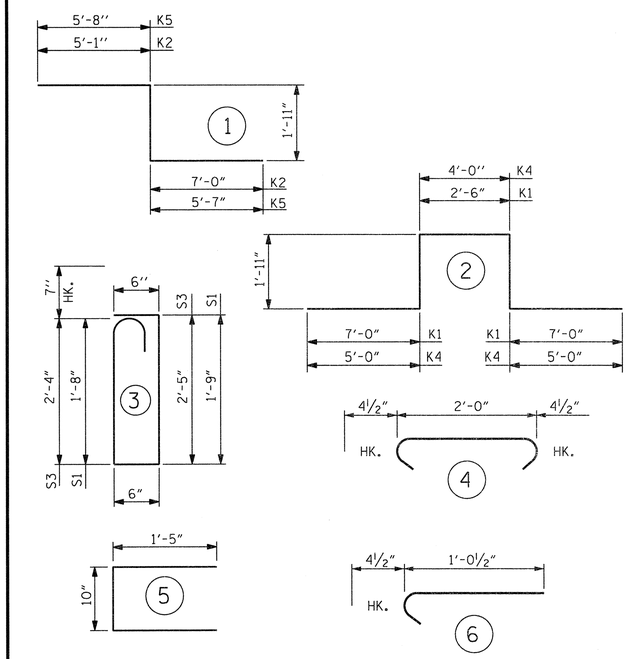

ALL BAR DIMENSIONS ARE OUT TO OUT

SUPERSTRUCTURE BILL OF MATERIAL

	CLASS AA CONCRETE	REINFORCING STEEL	EPOXY COATED REINFORCING STEEL
	(CU. YDS.)	(LBS.)	(LBS.)
SPANS "A"	45.2	4,948	* 5,890
SPANS "B"	194.6	14,077	* 14,037
SPANS "C"	49.3	5,432	* 6,264
TOTAL CLASS AA CONCRETE	289.1		
TOTAL REINFORCING STEEEL		24,457	
TOTAL EPOXY COATED REINFORCING STEEL			* 26,291

* QUANTITIES FOR BARRIER RAIL ARE NOT INCLUDED

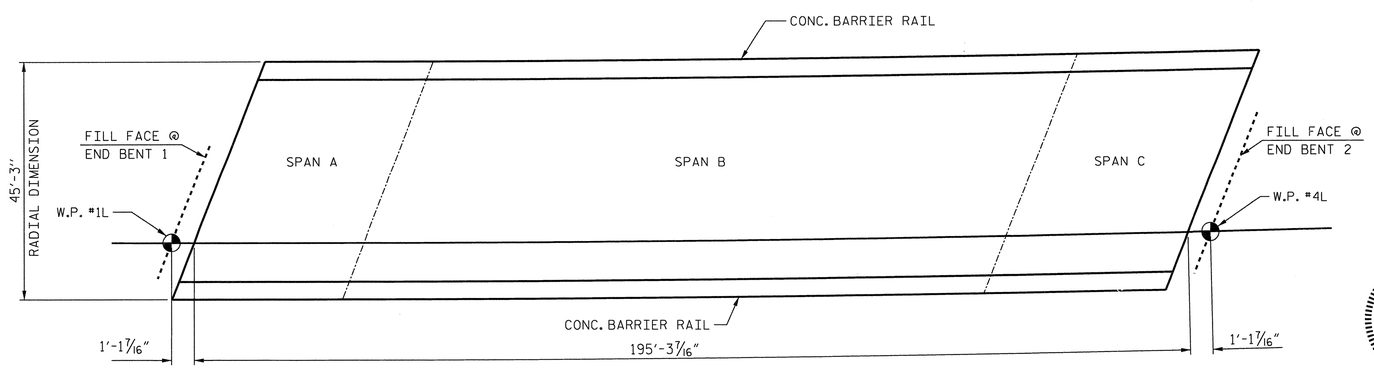

LAYOUT FOR COMPUTING AREA
REINFORCED CONCRETE DECK SLAB
(SQ. FT. = 8,837)

PROJECT NO. R-2633BB

BRUNSWICK/NEW HANOVER COUNTY

STATION: 398+75.47 -L-

SHEET 2 OF 2

STATE OF NORTH CAROLINA
DEPARTMENT OF TRANSPORTATION
RALEIGH

STANDARD
SUPERSTRUCTURE
BILL OF MATERIAL
LEFT LANE

NORTH CAROLINA PROFESSIONAL SEAL 14047 ENGINEER STEPHEN D. COOK
7/11/13

THE LOUIS BERGER GROUP, Inc.
1001 Wade Avenue, Suite 400
Raleigh, NC27605-3322

REVISIONS						SHEET NO.
NO.	BY:	DATE:	NO.	BY:	DATE:	S-484
1			3			TOTAL SHEETS
2			4			700

STD. NO. BOM2

ASSEMBLED BY : J. MYA	DATE : OCT. 2012
CHECKED BY : S. COOK	DATE : OCT. 2012
DRAWN BY : JMB5/87	REV. 8/16/99RWW/LES
CHECKED BY : SJD9/87	REV. 5/1/06TLA/GM
	REV. 10/1/11 MAA/GM

G:\OR Projects\OR1092 - NCDOT Wilm Bypass DualBridges\Structures\Bridge Site 6\R-2633BB_SD_06L_BOM_02.dgn
2/11/2013 8:46:07 AM 1092_PDF_full.pltcfg 1092_str.tbl

NOTES:

STIRRUPS IN CAP MAY BE SHIFTED AS NECESSARY TO CLEAR ANCHOR BOLTS.

THE CONTRACTOR SHALL PROVIDE FOR INSTALLATION OF THE 4" DIAMETER DRAIN PIPE THROUGH THE WING WALL AS REQUIRED FOR REINFORCED BRIDGE APPROACH FILLS. SEE THE ROADWAY PLANS. REINFORCING STEEL IN THE WING WALL MAY BE SHIFTED AS NECESSARY TO CLEAR THE DRAIN PIPE.

BACKWALL SHALL BE PLACED BEFORE APPLYING THE EPOXY PROTECTIVE COATING.

THE TOP SURFACE AREAS OF THE END BENT CAPS SHALL BE CURED IN ACCORDANCE WITH THE STANDARD SPECIFICATIONS EXCEPT THE MEMBRANE CURING COMPOUND METHOD SHALL NOT BE USED.

THE TOP SURFACE OF THE END BENT CAP EXCEPT THE BRIDGE SEAT BUILDUPS SHALL BE SLOPED TRANSVERSELY FROM THE FILL FACE TO THE BACK FACE AT THE RATE OF 2%.

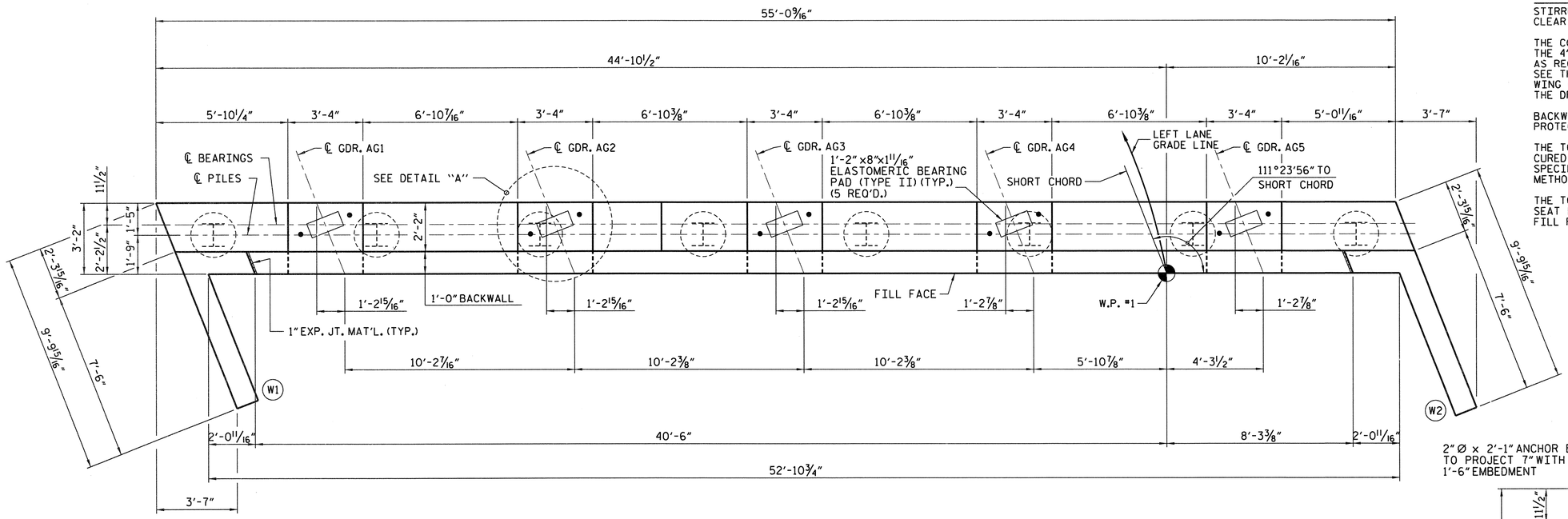

PLAN

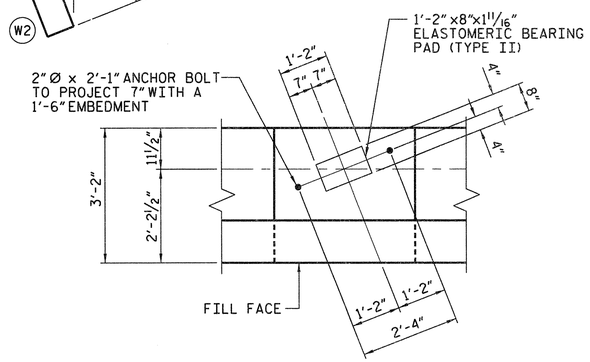

DETAIL "A"

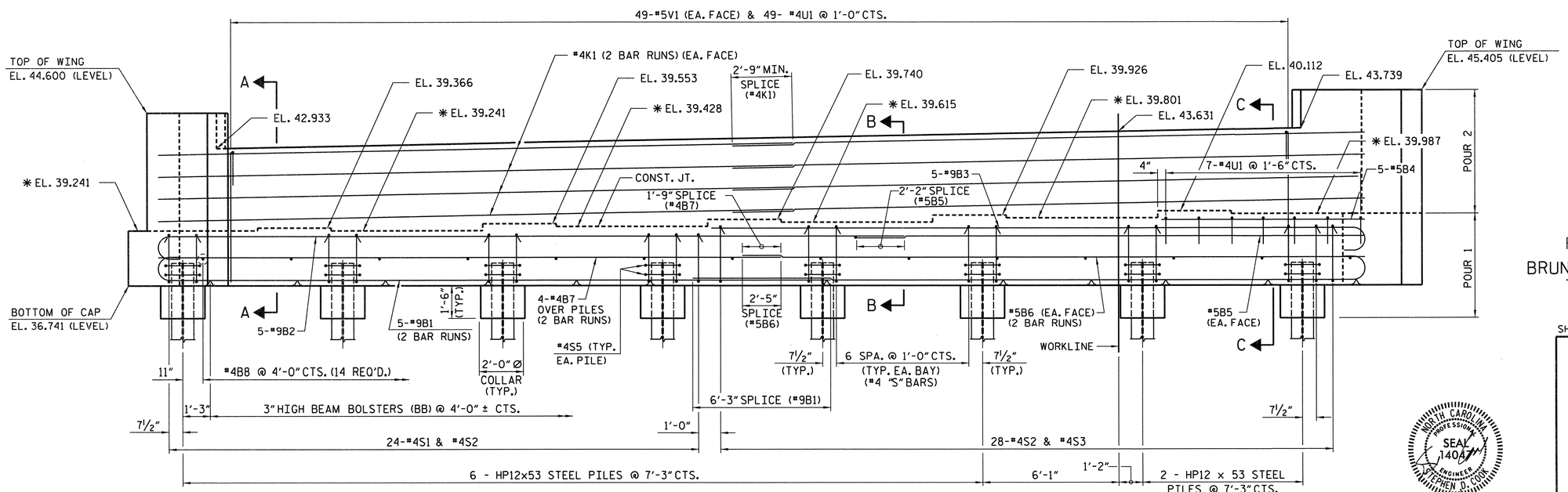

ELEVATION

PROJECT NO. R-2633BB

BRUNSWICK/NEW HANOVER COUNTY

STATION: 398+75.47 -L-

SHEET 1 OF 3

STATE OF NORTH CAROLINA
DEPARTMENT OF TRANSPORTATION
RALEIGH

SUBSTRUCTURE
END BENT 1
LEFT LANE

NORTH CAROLINA PROFESSIONAL SEAL 14047 ENGINEER STEPHEN D. COOK 2/11/13

THE LOUIS BERGER GROUP, Inc.
1001 Wade Avenue, Suite 400
Raleigh, NC 27605-3322

REVISIONS								SHEET NO.
NO.	BY:	DATE:	NO.	BY:	DATE:			S-485
1			3					TOTAL SHEETS
2			4					700

DRAWN BY : R. KNIGHT DATE : OCT 2012
CHECKED BY : S. COOK DATE : OCT 2012

G:\OR Projects\OR1092 - NCDOT Wilm Bypass DualBridges\Structures\Bridge Site 6\R-2633BB_SD_06L_EB_101.dgn
2/11/2013 8:46:10 AM 1092_PDF_full.pltcfg 1092_str.tbl

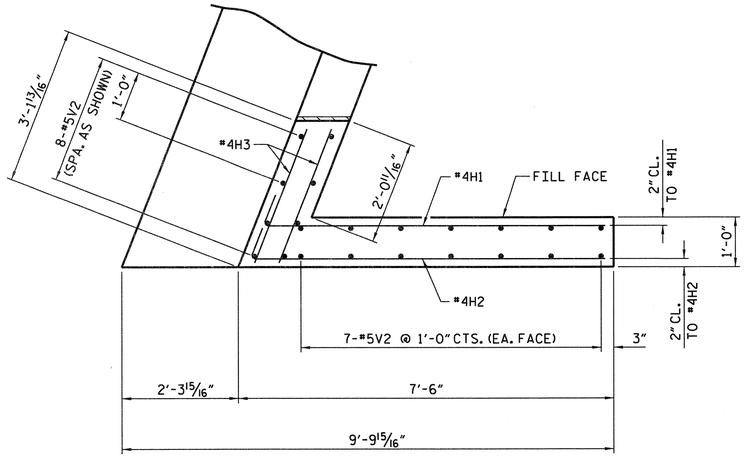

PLAN - WING (W1)

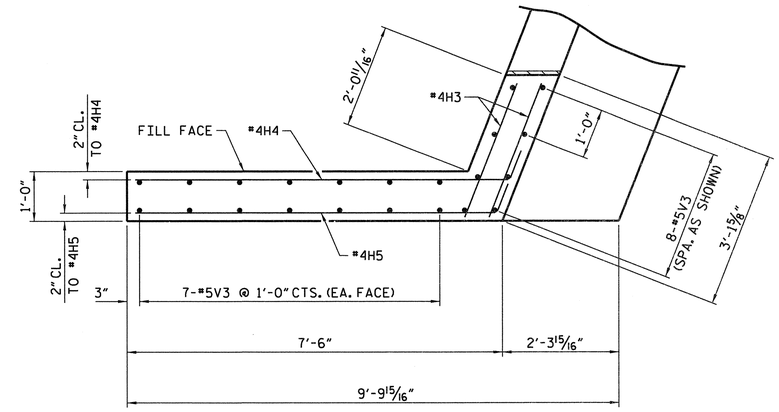

PLAN - WING (W2)

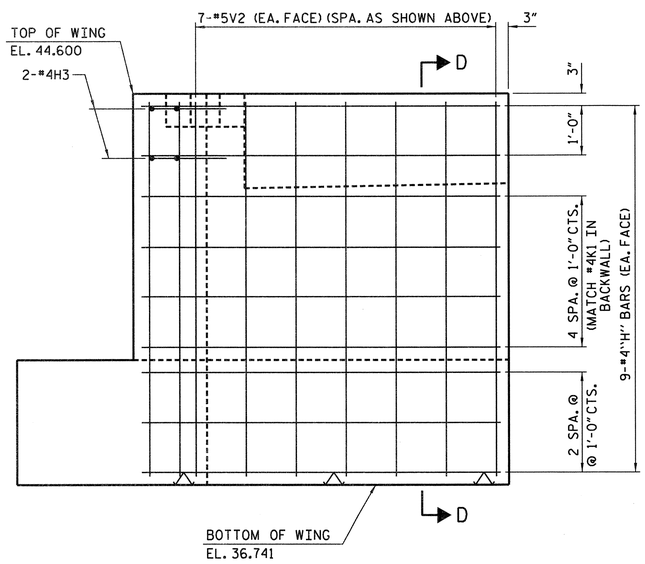

ELEVATION - WING (W1)

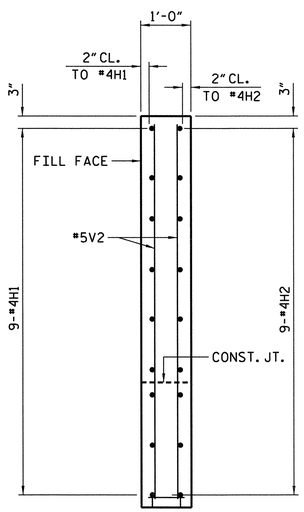

SECTION C-C

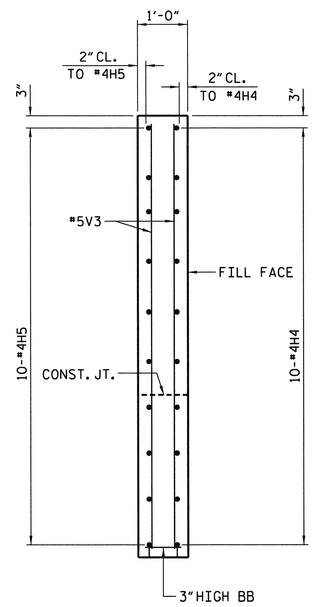

SECTION E-E

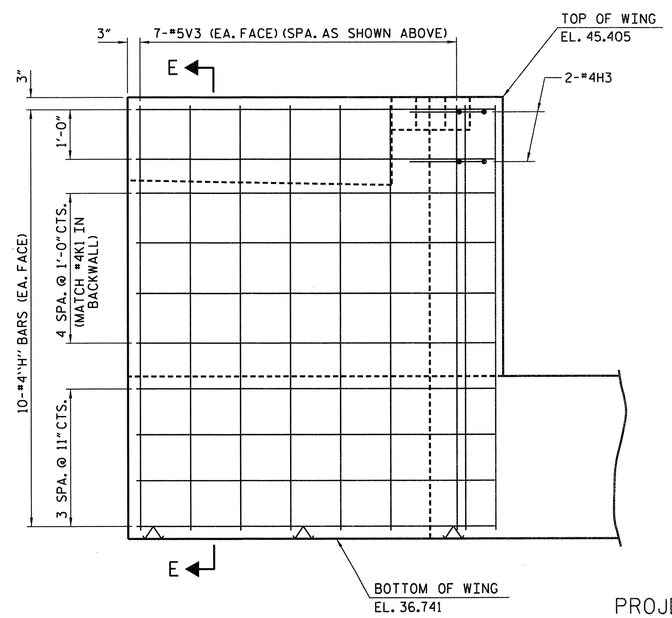

ELEVATION - WING (W2)

PROJECT NO. R-2633BB

BRUNSWICK/NEW HANOVER COUNTY

STATION: 398+75.47 -L-

SHEET 2 OF 3

STATE OF NORTH CAROLINA
DEPARTMENT OF TRANSPORTATION
RALEIGH

SUBSTRUCTURE
END BENT 1
LEFT LANE

NORTH CAROLINA PROFESSIONAL SEAL 14047 ENGINEER STEPHEN D. COOK 2/11/13

THE LOUIS BERGER GROUP, Inc.
1001 Wade Avenue, Suite 400
Raleigh, NC 27605-3322

REVISIONS							
NO.	BY:	DATE:	NO.	BY:	DATE:		
1			3				
2			4				

SHEET NO. S-486

TOTAL SHEETS 700

DRAWN BY : R. KNIGHT DATE : OCT 2012
CHECKED BY : S. COOK DATE : DEC 2012

G:\OR Projects\OR1092 - NCDOT Wilm Bypass DualBridges\Structures\Bridge Site 6\R-2633BB_SD_06L_EB_102.dgn
2/11/2013 8:46:12 AM 1092_PDF_full.pltcfg 1092_str.tbl

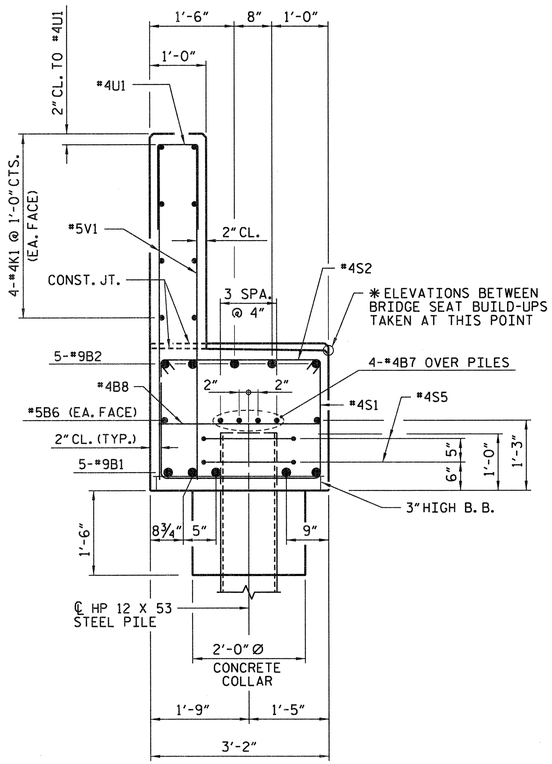

SECTION A-A

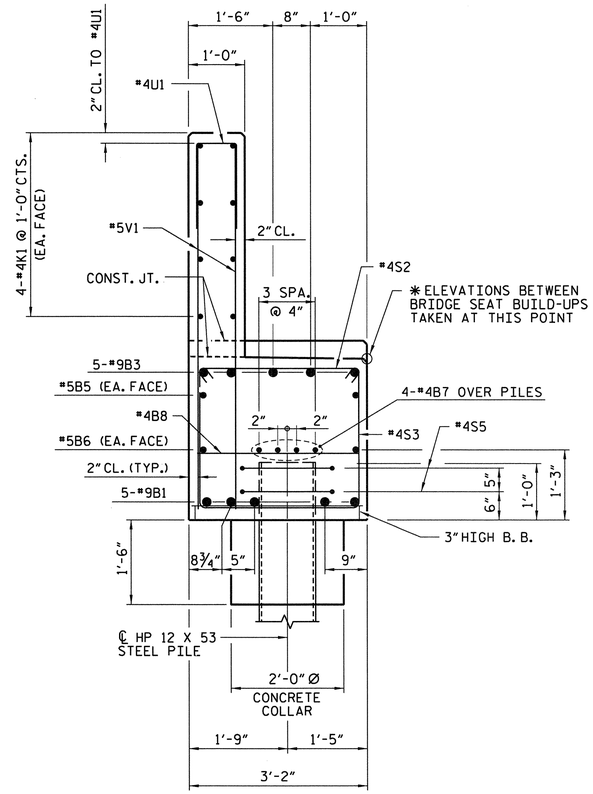

SECTION B-B

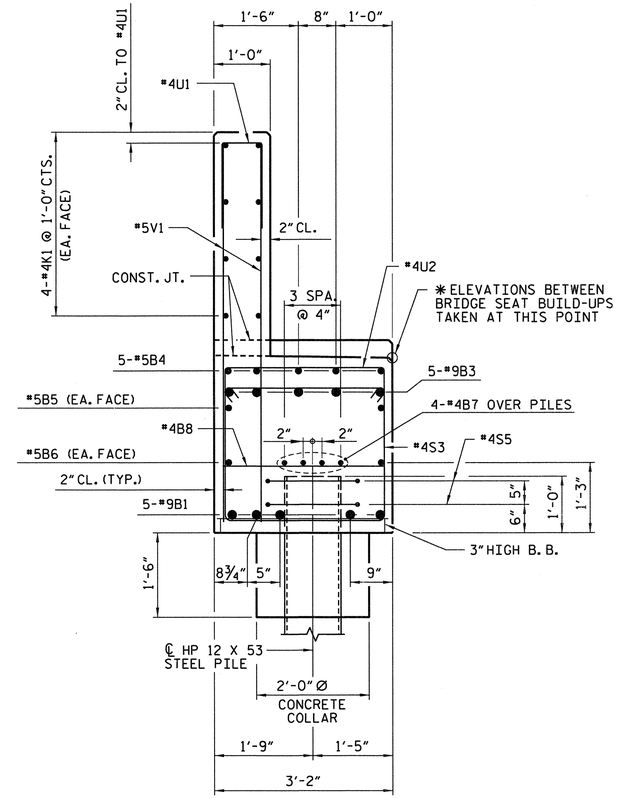

SECTION C-C

BILL OF MATERIAL
FOR END BENT 1

BAR	NO	SIZE	TYPE	LENGTH	WEIGHT
B1	10	9	1	32'-11"	1,119
B2	5	9	1	36'-3"	616
B3	5	9	1	29'-6"	502
B4	5	5	STR	7'-10"	41
B5	2	5	STR	21'-9"	45
B6	4	5	STR	28'-6"	119
B7	8	4	STR	28'-6"	152
B8	14	4	STR	2'-10"	26
H1	9	4	3	7'-6"	45
H2	9	4	3	7'-9"	47
H3	8	4	STR	2'-8"	14
H4	10	4	2	8'-0"	53
H5	10	4	2	7'-9"	52
K1	8	4	STR	28'-9"	154
S1	24	4	4	7'-10"	126
S2	52	4	5	3'-7"	124
S3	28	4	4	8'-7"	161
S5	16	4	7	6'-6"	69
U1	49	4	6	3'-8"	120
U2	7	4	6	5'-10"	27
V1	98	5	STR	5'-10"	596
V2	22	5	STR	7'-5"	170
V3	22	5	STR	8'-3"	189

REINFORCING STEEL LBS. 4,567

CLASS A CONCRETE BREAKDOWN

POUR #1 (CAP, CONCRETE COLLARS & LOWER PART OF WINGS C.Y. 19.5

POUR #2 (BACKWALL & UPPER PART OF WINGS) C.Y. 11.5

TOTAL CLASS A CONCRETE C.Y. 31.0

HP 12 X 53 STEEL PILES

NO. 8 LIN. FT. 480

PILE REDRVES No. 4

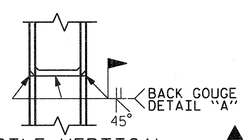

▲ PILE VERTICAL

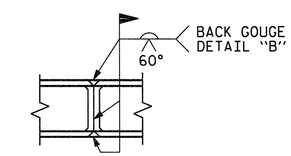

▲ PILE HORIZONTAL OR VERTICAL

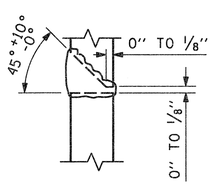

DETAIL A

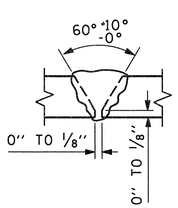

DETAIL B

▲ POSITION OF PILE DURING WELDING.

PILE SPLICE DETAILS

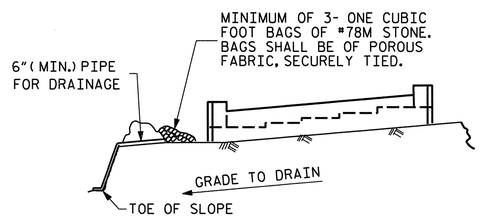

BAGGED STONE AND PIPE SHALL BE PLACED IMMEDIATELY AFTER COMPLETION OF END BENT EXCAVATION. PIPE MAY BE EITHER CONCRETE, CORRUGATED STEEL, CORRUGATED ALUMINUM ALLOY, OR CORRUGATED PLASTIC. PERFORATED PIPE WILL NOT BE ALLOWED.

BAGGED STONE SHALL REMAIN IN PLACE UNTIL THE ENGINEER DIRECTS THAT IT BE REMOVED. THE CONTRACTOR SHALL REMOVE AND DISPOSE OF SILT ACCUMULATIONS AT BAGGED STONE WHEN SO DIRECTED BY THE ENGINEER. BAGS SHALL BE REMOVED AND REPLACED WHENEVER THE ENGINEER DETERMINES THAT THEY HAVE DETERIORATED AND LOST THEIR EFFECTIVENESS.

NO SEPARATE PAYMENT WILL BE MADE FOR THIS WORK AND THE ENTIRE COST OF THIS WORK SHALL BE INCLUDED IN THE UNIT CONTRACT PRICE BID FOR THE SEVERAL PAY ITEMS.

TEMPORARY DRAINAGE AT END BENT

BAR TYPES

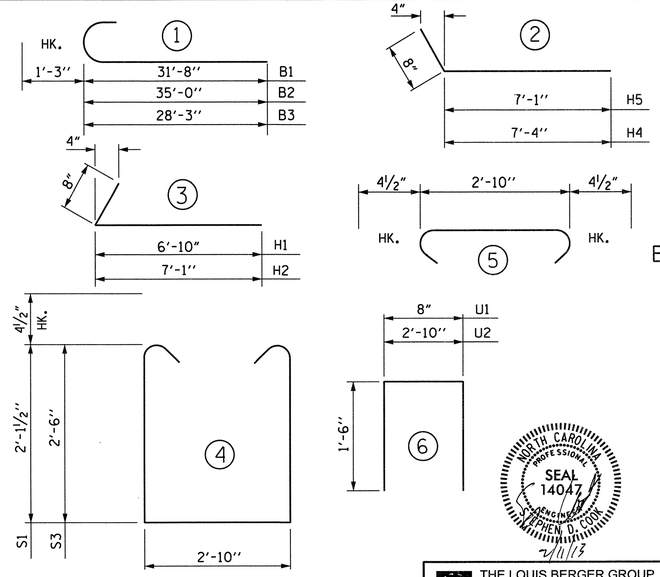

ALL BAR DIMENSIONS ARE OUT TO OUT.

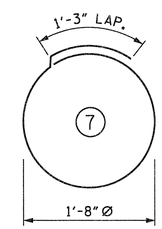

PROJECT NO. R-2633BB

BRUNSWICK/NEW HANOVER COUNTY

STATION: 398+75.47 -L-

SHEET 3 OF 3

STATE OF NORTH CAROLINA
DEPARTMENT OF TRANSPORTATION
RALEIGH

SUBSTRUCTURE END BENT 1 LEFT LANE

NORTH CAROLINA PROFESSIONAL SEAL 14047 ENGINEER STEPHEN D. COOK
2/11/13

THE LOUIS BERGER GROUP, Inc.
1001 Wade Avenue, Suite 400
Raleigh, NC 27605-3322

REVISIONS

NO.	BY:	DATE:	NO.	BY:	DATE:
1			3		
2			4		

SHEET NO. S-487

TOTAL SHEETS 700

DRAWN BY : R. KNIGHT DATE : OCT 2012
CHECKED BY : S. COOK DATE : DEC 2012

G:\OR Projects\OR1092 - NCDOT Wilm Bypass DualBridges\Structures\Bridge Site 6\R-2633BB_SD_06L_EB_103.dgn
2/11/2013 8:46:15 AM 1092_PDF_full.pltcfg 1092_str.tbl

NOTES

STIRRUPS IN CAP MAY BE SHIFTED AS NECESSARY TO CLEAR ANCHOR BOLTS.

FOR SECTIONS A-A, B-B, AND C-C & VIEWS X-X AND Y-Y, SEE SHEET 2 OF 3.

THE CONTRACTORS ATTENTION IS CALLED TO THE FACT THAT THAT THE CENTERLINE OF THE 24" PRESTRESSED CONCRETE PILES AT BENT 1 AND BENT 2 IS OFFSET FROM THE WORKLINE BY 3 INCHES.

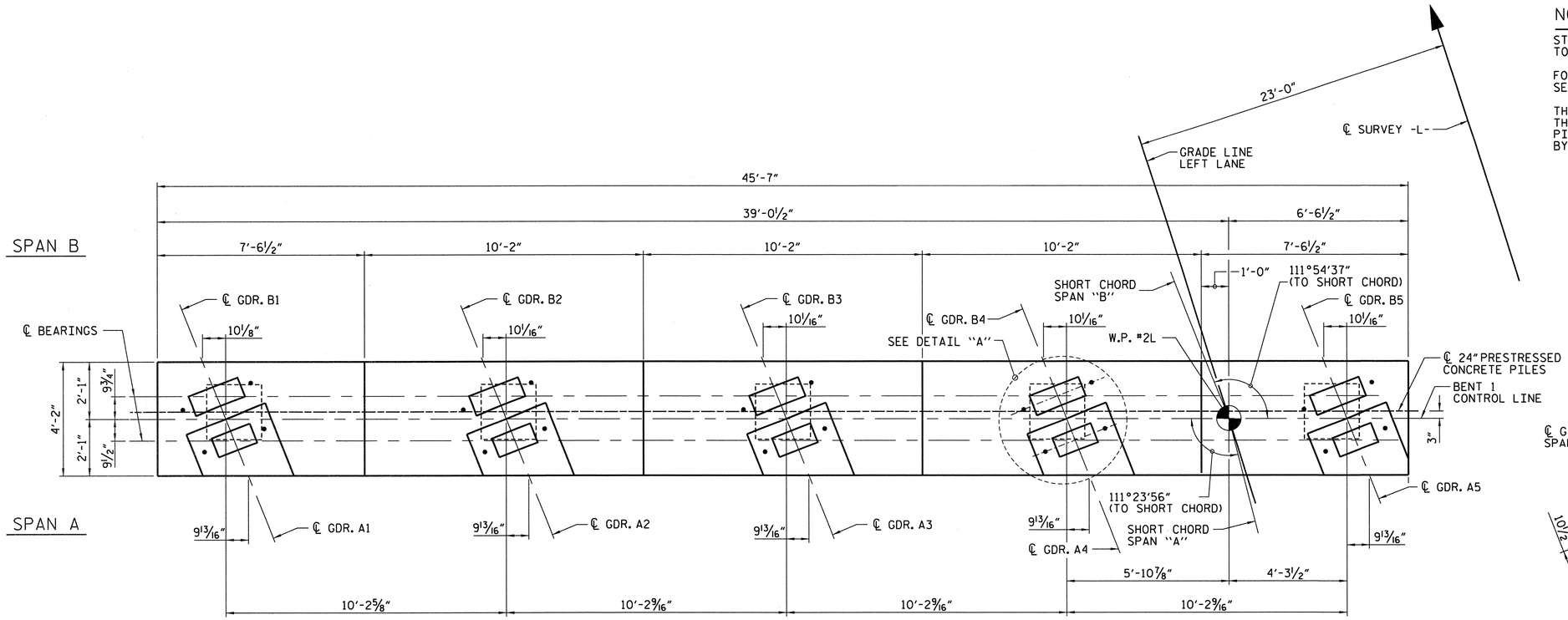

PLAN

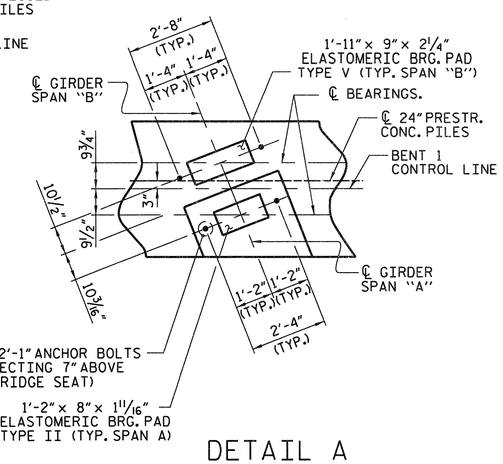

DETAIL A

(TYP. GDRS. A1 THRU A5 & B1 THRU B5)

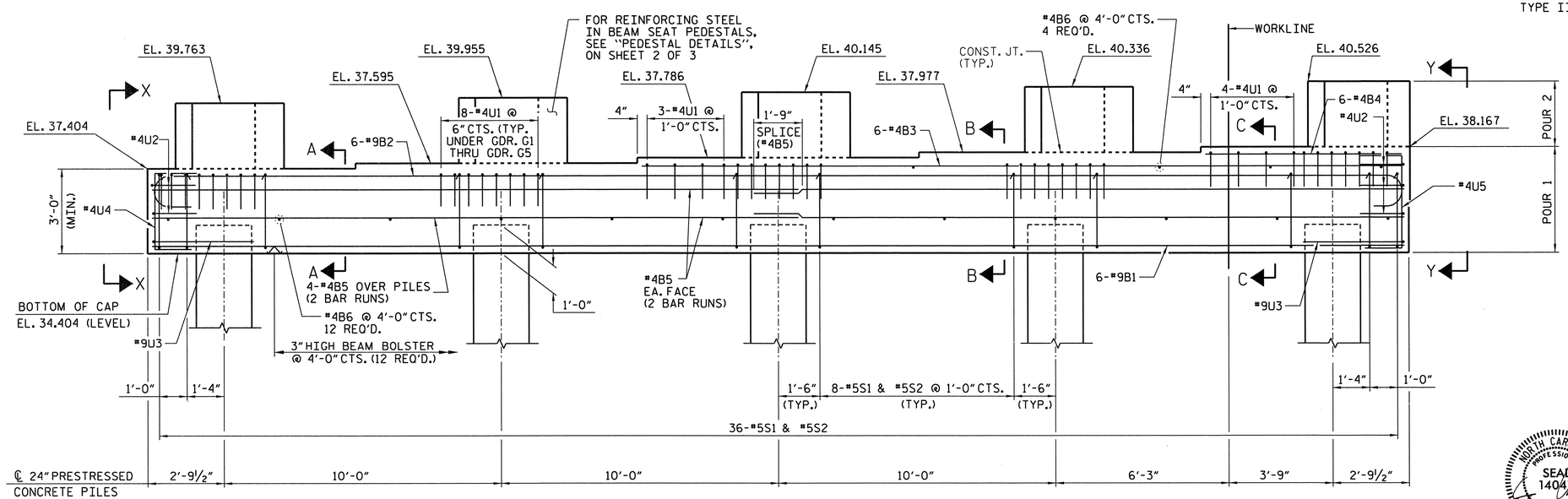

ELEVATION

PROJECT NO. R-2633BB

BRUNSWICK/NEW HANOVER COUNTY

STATION: 398+75.47 -L-

SHEET 1 OF 3

STATE OF NORTH CAROLINA
DEPARTMENT OF TRANSPORTATION
RALEIGH

SUBSTRUCTURE
BENT 1
LEFT LANE

NORTH CAROLINA PROFESSIONAL SEAL 14047 ENGINEER STEPHEN D. COX 1/11/13

THE LOUIS BERGER GROUP, Inc.
1001 Wade Avenue, Suite 400
Raleigh, NC 27605-3322

REVISIONS						SHEET NO.
NO.	BY:	DATE:	NO.	BY:	DATE:	S-428
1			3			TOTAL SHEETS
2			4			700

DRAWN BY : J. MYA/R. KNIGHT DATE : DEC 2012
CHECKED BY : R. DeCOLA DATE : DEC 2012

G:\OR Projects\OR1092 - NCDOT Wilm Bypass DualBridges\Structures\Bridge Site 6\EccBents\R-2633BB_SD_06L_BT_101.dgn
2/11/2013 12:51:20 PM 1092_PDF_full.pltcfg 1092_str.tbl

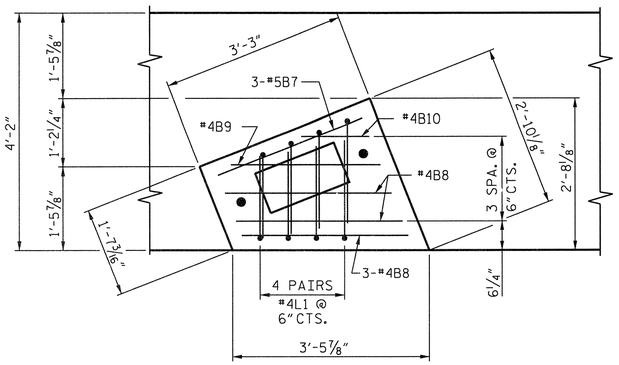

PLAN

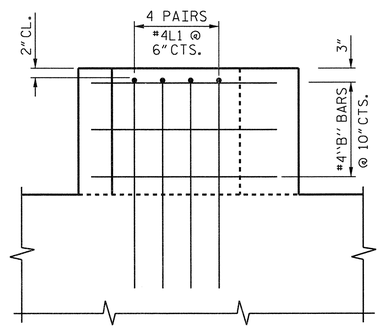

ELEVATION

PEDESTAL DETAILS

(TYP. EA. GIRDER)

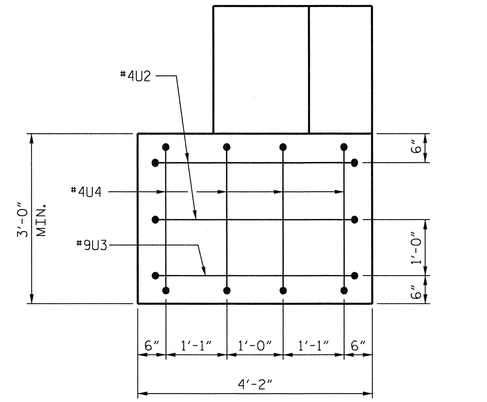

VIEW X-X

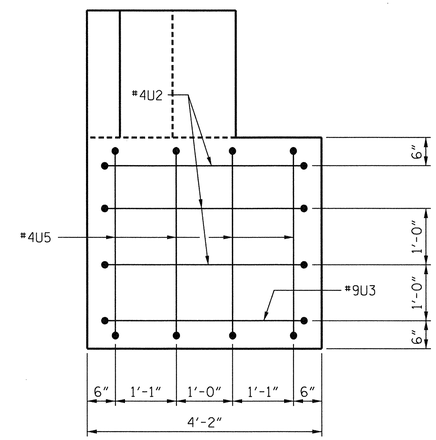

VIEW Y-Y

BAR TYPES

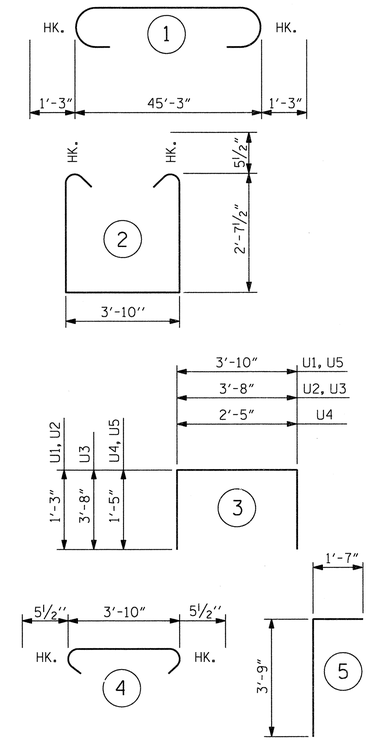

ALL BAR DIMENSIONS ARE OUT TO OUT.

BILL OF MATERIAL

BENT 1

BAR	NO.	SIZE	TYPE	LENGTH	WEIGHT
B1	6	9	STR	45'-3"	923
B2	6	9	1	47'-9"	974
B3	6	4	STR	27'-5"	110
B4	6	4	STR	7'-2"	29
B5	16	4	STR	23'-6"	251
B6	16	4	STR	3'-10"	41
B7	15	4	STR	2'-9"	28
B8	25	4	STR	3'-2"	53
B9	5	4	STR	2'-7"	9
B10	5	4	STR	1'-2"	4
L1	40	4	5	5'-4"	142
S1	36	5	2	10'-0"	375
S2	36	5	4	4'-9"	178
U1	47	4	3	6'-4"	199
U2	5	4	3	6'-2"	21
U3	2	9	3	11'-0"	75
U4	4	4	3	5'-3"	14
U5	4	4	3	6'-8"	18
TOTAL REINFORCING STEEL LBS.					3,444

CLASS A CONCRETE BREAKDOWN
POUR 1 - CAP 23.1 CY
POUR 2 - BEAM PEDESTALS 2.9 CY
TOTAL ▲ 26.0 CY

24" PRESTRESSED CONCRETE PILES
NO. 5 LIN. FT. 375

PILE REDRIVES NO. 3

PREDRILLING FOR PILES LIN. FT. 50

▲ CONCRETE DISPLACED BY THE 24" PRESTRESSED CONCRETE PILES HAS BEEN DEDUCTED.

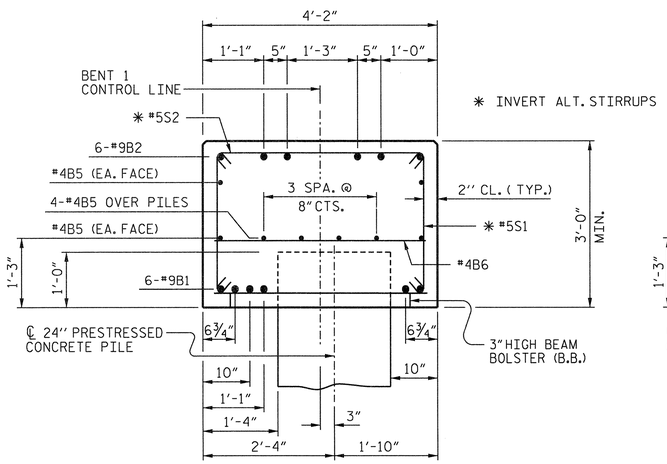

SECTION A-A

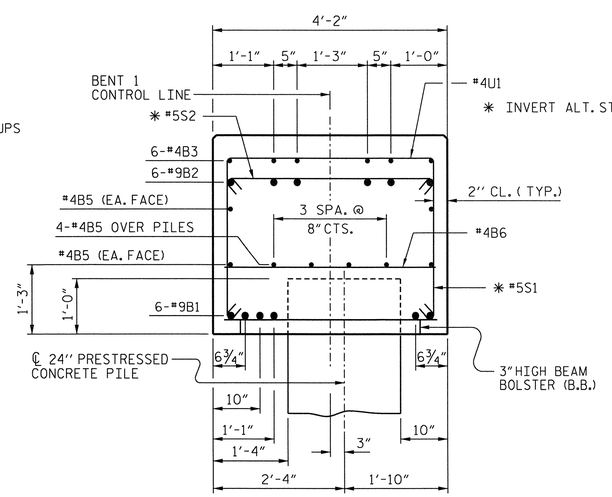

SECTION B-B

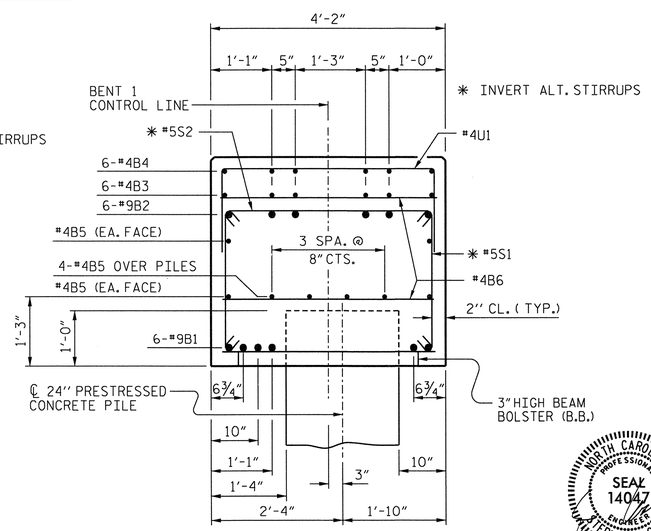

SECTION C-C

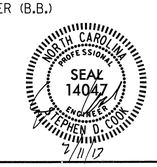

PROJECT NO. R-2633BB
BRUNSWICK/NEW HANOVER COUNTY
STATION: 398+75.47 -L-

SHEET 2 OF 3

STATE OF NORTH CAROLINA
DEPARTMENT OF TRANSPORTATION
RALEIGH

SUBSTRUCTURE
BENT 1
LEFT LANE

THE LOUIS BERGER GROUP, Inc.
1001 Wade Avenue, Suite 400
Raleigh, NC 27605-3322

REVISIONS							SHEET NO.
NO.	BY:	DATE:	NO.	BY:	DATE:		S-487
1			3				TOTAL SHEETS
2			4				700

DRAWN BY : J. MYA\R. KNIGHT DATE : NOV 2012
CHECKED BY : R. DeCOLA DATE : DEC 2012

G:\OR Projects\OR1092 - NCDOT Wilm Bypass DualBridges\Structures\Bridge Site 6\EccBents\R-2633BB_SD_06L_BT_102.dgn
2/11/2013 12:51:23 PM 1092_PDF_full.pltcfg 1092_str.tbl

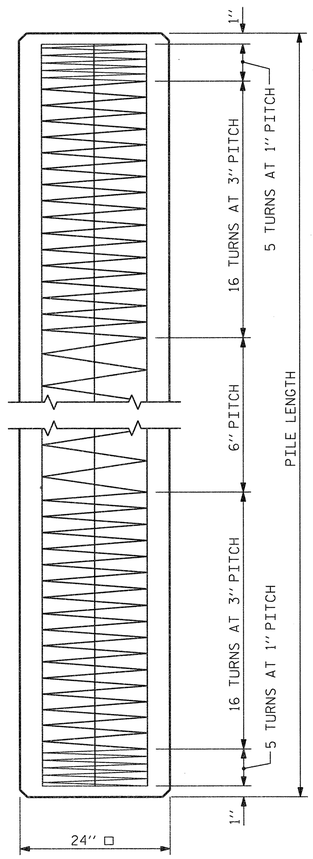

ELEVATION

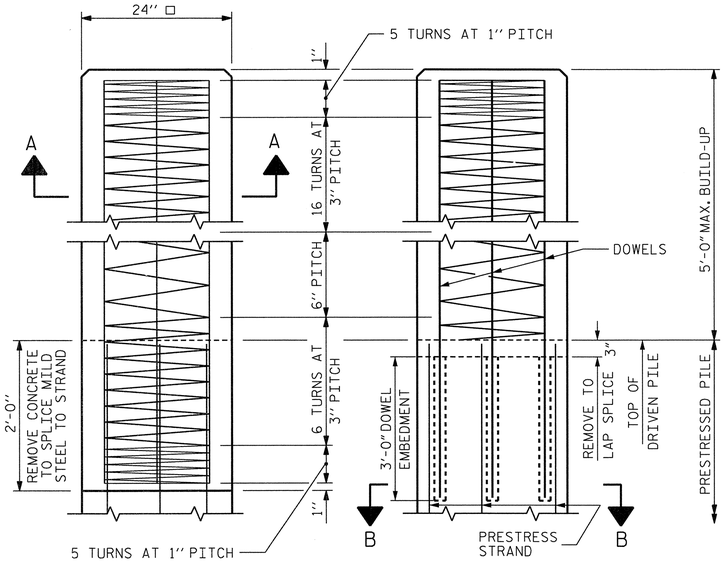

BUILD-UP AND SPIRAL REINFORCING

OPTIONAL BUILD-UP WITH DOWELS

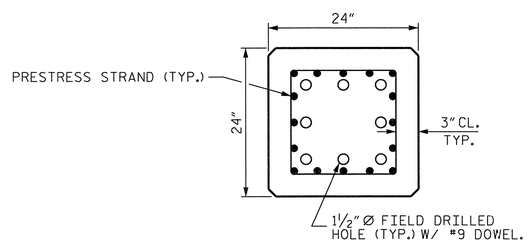

SECTION "B-B"

(AT THE CONTRACTOR'S OPTION, PILE BUILD-UP MAY BE CONSTRUCTED WITH DOWELS.)

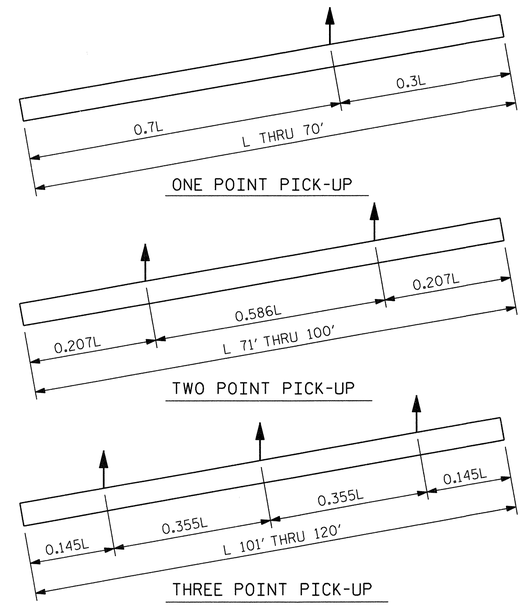

PICK-UP POINTS

NOTES

PRESTRESSED CONCRETE STRENGTH : f'c= 7,500 PSI

BUILD-UP CONCRETE STRENGTH : f'c= 7,500 PSI

STRAND DATA:

SIZE	GRADE	AREA	ULTIMATE STRENGTH	APPLIED PRESTRESS FORCE
½"	270 L.R.	0.153	41,300# PER STRAND	30,980# PER STRAND
0.6"	270 L.R.	0.217	58,600# PER STRAND	43,940# PER STRAND

ALL PRESTRESSING STRANDS SHALL BE 7-WIRE LOW-RELAXATION GRADE 270 STRANDS CONFORMING TO AASHTO M203. STRAND SAMPLING REQUIREMENTS SHALL BE IN ACCORDANCE WITH THE STANDARD SPECIFICATIONS.

AT THE CONTRACTOR'S OPTION, ½" OR 0.6" STRANDS MAY BE USED IN THE STRAND CONFIGURATION SHOWN IN THE TYPICAL SECTION DETAIL. MIXING OF STRAND SIZE IS NOT ALLOWED.

THE SLIP-FORM METHOD OF CASTING PILES WILL NOT BE PERMITTED.

TRANSFER THE LOAD FROM THE ANCHORAGES TO THE PILE AFTER THE CONCRETE HAS ATTAINED A MINIMUM COMPRESSIVE STRENGTH OF 4,000 PSI.

IF STRAND STRESS IS RELIEVED BY BURNING, THE STRANDS SHALL BE BURNED IN OPPOSITE PAIRS AS INDICATED IN THE TYPICAL PATTERN SHOWN. FOR ANY NUMBER OF STRANDS, BURN IN OPPOSITE PAIRS AND SYMMETRICALLY ABOUT BOTH THE VERTICAL AND HORIZONTAL AXES. STRANDS 1-1 SHALL BE BURNED BEFORE 2-2, ETC. NOT MORE THAN 4 STRANDS, SAY 5-5 AND 6-6, MAY BE BURNED AT ANY ONE SECTION BEFORE THESE SAME PAIRS OF STRANDS ARE BURNED AT BOTH ENDS OF THE BED AND BETWEEN EACH PAIR OF PILES IN THE BED.

PROPOSED DEVICES FOR LIFTING PILES, RECESS DETAILS, AND PATCHING MATERIAL SHALL BE DETAILED IN SHOP DRAWINGS. AFTER ATTACHMENTS HAVE BEEN REMOVED, OPENINGS SHALL BE REPAIRED SUCH THAT THE APPEARANCE OF THE PILE IS UNIFORM.

WHERE CAST-IN-PLACE LIFTING DEVICES ARE NOT USED, PICK-UP POINTS ARE TO BE INDICATED WITH A 2" WIDE BLACK MARK.

DRIVE PILES USING A METHOD APPROVED BY THE ENGINEER, WHEREBY THE HEAD OF THE PILE IS NOT DAMAGED.

DRIVING OF THE BUILT-UP PILE WILL NOT BE PERMITTED UNTIL THE CONCRETE HAS REACHED A COMPRESSIVE STRENGTH OF 5,000 PSI AND UNTIL A PERIOD OF SEVEN DAYS HAS ELAPSED SINCE CASTING OF THE BUILD-UP.

DOWEL INSTALLATION FOR OPTIONAL BUILD-UP

GROUT COMPRESSIVE STRENGTH: f'c= 5,000 PSI

BEFORE DRILLING DOWEL HOLES, REMOVE THE UPPER 3" OF CONCRETE FROM THE TOP OF THE PILE WITHOUT DAMAGE TO THE REINFORCING STEEL. THE REMOVAL PLANE SHOULD BE NORMAL TO THE EDGE OF THE PILE.

DOWEL HOLES SHALL BE POSITIONED TO MAINTAIN ½" CLEAR TO ALL EXISTING PRESTRESSING STRANDS IN THE CONCRETE PILE.

FIELD DRILLED HOLES SHALL BE CLEAN AND FREE OF ANY OBSTRUCTIONS BEFORE GROUTING OF DOWELS. DOWEL BARS SHALL BE INSTALLED AND GROUTED WITH AN APPROVED NON-SHRINK GROUT.

THE SPIRAL REINFORCING IN ALL BUILD-UPS SHALL BE W4.0 COLD DRAWN WIRE WHICH SHALL BE SECURED TO THE LONGITUDINAL REINFORCEMENT TO MAINTAIN PITCH.

THE SPIRAL REINFORCING IN THE BUILD-UP AND THE PRESTRESSED CONCRETE PILE SHALL BE SPLICED BY OVERLAPPING A MIN. OF ONE TURN.

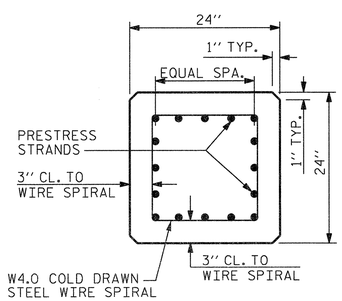

TYPICAL SECTION

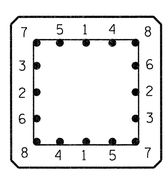

TYPICAL PATTERN FOR BURNING STRANDS

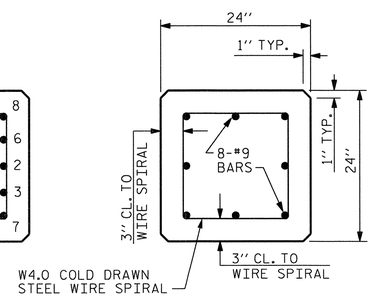

SECTION A-A

½" OR 0.6" Ø GRADE 270 L.R. PRESTRESS STRANDS

QUANTITIES FOR ONE 24" SQUARE PILE

LENGTH	CONCRETE CU. YDS.	PILE WT. TONS	ONE POINT PICK-UP 0.3L	ONE POINT PICK-UP 0.7L	TWO POINT PICK-UP 0.207L	TWO POINT PICK-UP 0.586L	THREE POINT PICK-UP 0.145L	THREE POINT PICK-UP 0.355L
25'-0"	3.69	7.47	7'-6"	17'-6"				
30'-0"	4.43	8.97	9'-0"	21'-0"				
35'-0"	5.17	10.46	10'-6"	24'-6"				
40'-0"	5.91	11.96	12'-0"	28'-0"				
45'-0"	6.64	13.45	13'-6"	31'-6"				
50'-0"	7.38	14.95	15'-0"	35'-0"				
55'-0"	8.12	16.44	16'-6"	38'-6"				
60'-0"	8.86	17.94	18'-0"	42'-0"				
65'-0"	9.60	19.43	19'-6"	45'-6"				
70'-0"	10.33	20.93	21'-0"	49'-0"				
75'-0"	11.07	22.42			15'-6½"	43'-11"		
80'-0"	11.81	23.92			16'-6½"	46'-11"		
85'-0"	12.55	25.41			17'-7"	49'-10"		
90'-0"	13.29	26.91			18'-7½"	52'-9"		
95'-0"	14.03	28.40			19'-8"	55'-8"		
100'-0"	14.76	29.90			20'-8½"	58'-7"		
105'-0"	15.50	31.39					15'-3"	37'-3"
110'-0"	16.24	32.89					15'-11½"	39'-0½"
115'-0"	16.98	34.38					16'-8"	40'-10"
120'-0"	17.72	35.87					17'-5"	42'-7"

PROJECT NO. R-2633BB

BRUNSWICK/NEW HANOVER COUNTY

STATION: 398+75.47 -L-

SHEET 3 OF 3

STATE OF NORTH CAROLINA
DEPARTMENT OF TRANSPORTATION
RALEIGH

STANDARD

24" PRESTRESSED CONCRETE PILE
BENT 1 & BENT 2
LEFT LANE

NORTH CAROLINA PROFESSIONAL SEAL 14047 ENGINEER STEPHEN D. COPE
2/11/13

THE LOUIS BERGER GROUP, Inc.
1001 Wade Avenue, Suite 400
Raleigh, NC 27605-3322

REVISIONS						SHEET NO.
NO.	BY:	DATE:	NO.	BY:	DATE:	S-496
1			3			TOTAL SHEETS
2			4			700

ASSEMBLED BY : J. MYA DATE : NOV 2012
CHECKED BY : R. DeCOLA DATE : DEC 2012

DRAWN BY : WJH 1/89 REV. 5/1/06R TLA/GM
CHECKED BY : CRK 3/89 REV. 11/30/10 WMC/GM
REV. 10/1/11 MAA/GM

STD. NO. PCP4

G:\OR Projects\OR1092 - NCDOT Wilm Bypass DualBridges\Structures\Bridge Site 6\R-2633BB_SD_06L_BT_103.dgn
2/11/2013 8:46:23 AM 1092_PDF_full.pltcfg 1092_str.tbl

NOTES

STIRRUPS IN CAP MAY BE SHIFTED AS NECESSARY TO CLEAR ANCHOR BOLTS.

FOR SECTIONS A-A, B-B AND C-C & VIEWS X-X AND Y-Y, SEE SHEET 2 OF 3.

THE CONTRACTORS ATTENTION IS CALLED TO THE FACT THAT THAT THE CENTERLINE OF THE 24"PRESTRESSED CONCRETE PILES AT BENT 1 AND BENT 2 IS OFFSET FROM THE WORKLINE BY 3 INCHES.

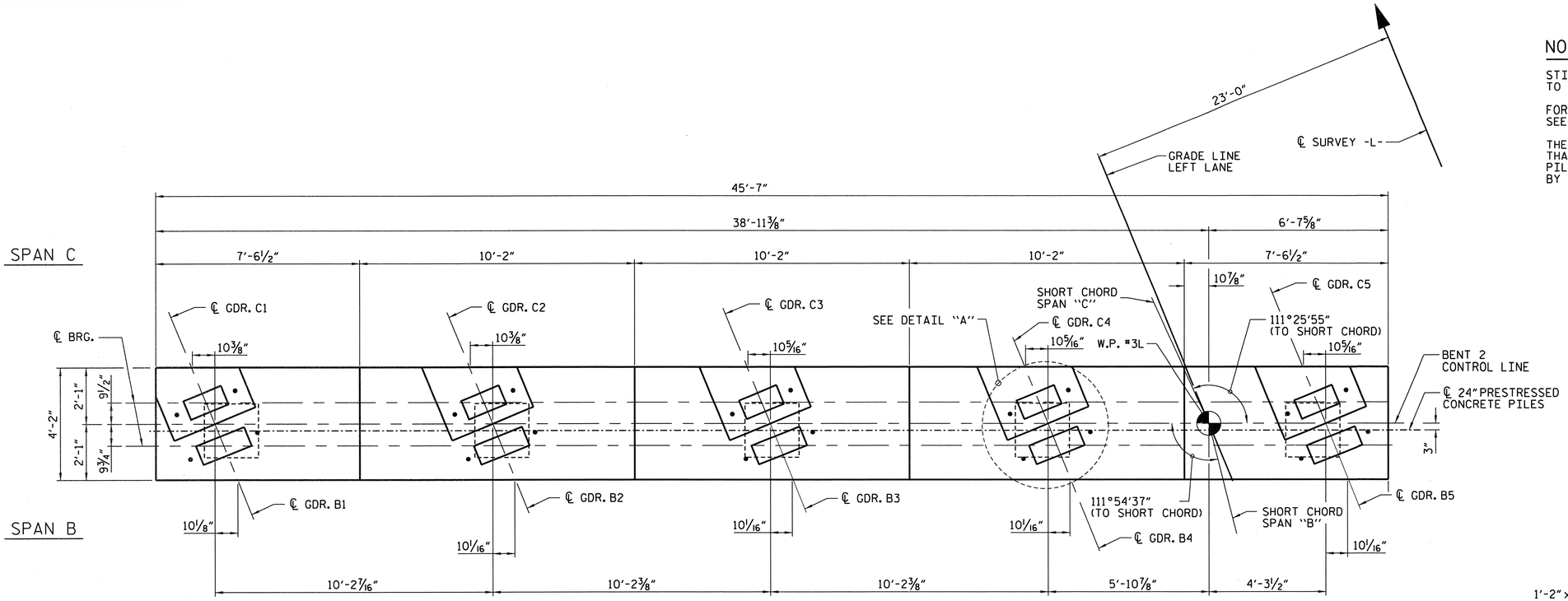

PLAN

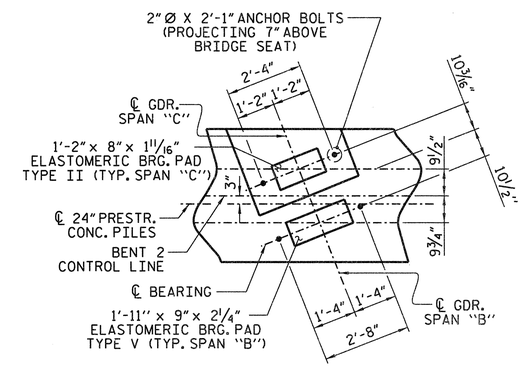

DETAIL A

(TYP. GIRDERS B1 THRU B5 & C1 THRU C5)

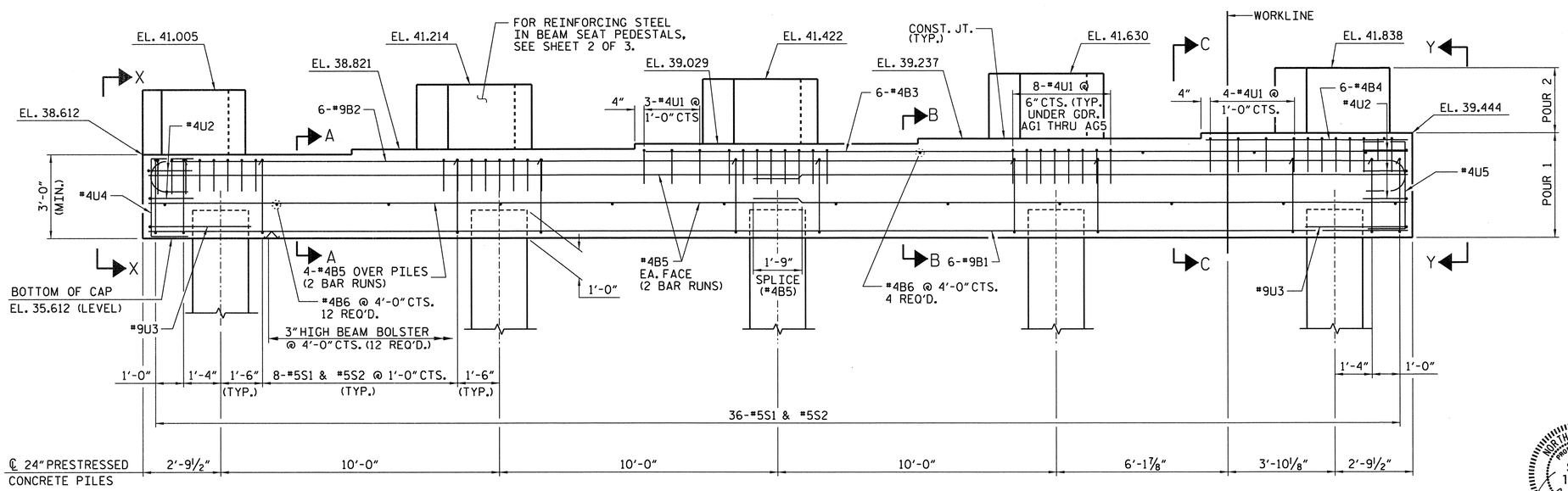

ELEVATION

PROJECT NO. R-2633BB

BRUNSWICK/NEW HANOVER COUNTY

STATION: 398+75.47 -L-

SHEET 1 OF 2

STATE OF NORTH CAROLINA
DEPARTMENT OF TRANSPORTATION
RALEIGH

SUBSTRUCTURE BENT 2 LEFT LANE

NORTH CAROLINA PROFESSIONAL SEAL 14047 ENGINEER STEPHEN D. COOK
2/11/13

THE LOUIS BERGER GROUP, Inc.
1001 Wade Avenue, Suite 400
Raleigh, NC 27605-3322

REVISIONS								SHEET NO.
NO.	BY:	DATE:	NO.	BY:	DATE:			S-491
1			3					TOTAL SHEETS
2			4					700

DRAWN BY : J. MYA/R. KNIGHT DATE : OCT 2012
CHECKED BY : R. DeCOLA DATE : DEC 2012

G:\OR Projects\OR1092 - NCDOT Wilm Bypass DualBridges\Structures\Bridge Site 6\EccBents\R-2633BB_SD_06L_BT_201.dgn
2/11/2013 12:51:26 PM 1092_PDF_full.pltcfg 1092_str.tbl

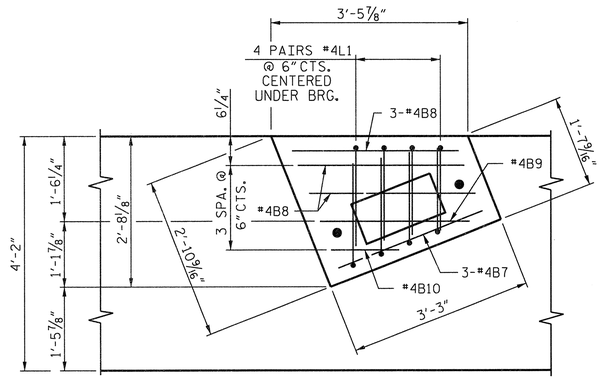

PLAN

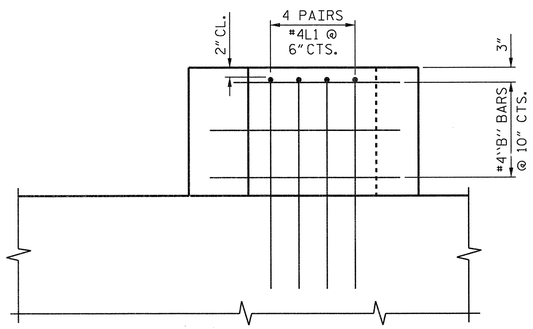

ELEVATION

PEDESTAL DETAILS

(TYP. EA. GIRDER)

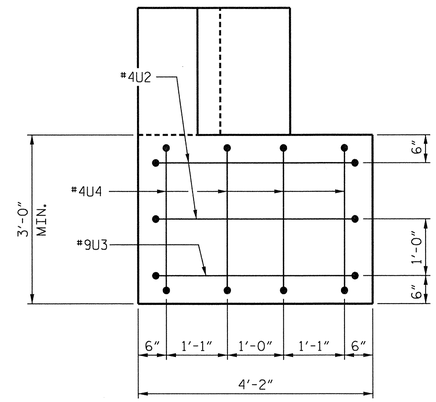

VIEW X-X

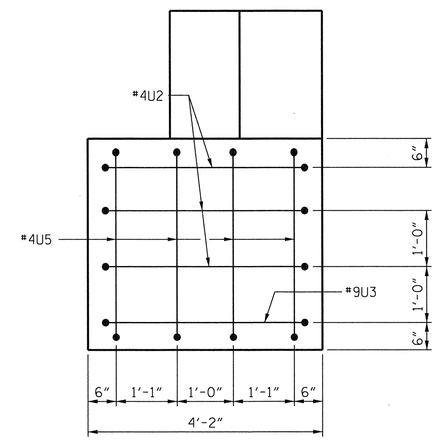

VIEW Y-Y

BAR TYPES

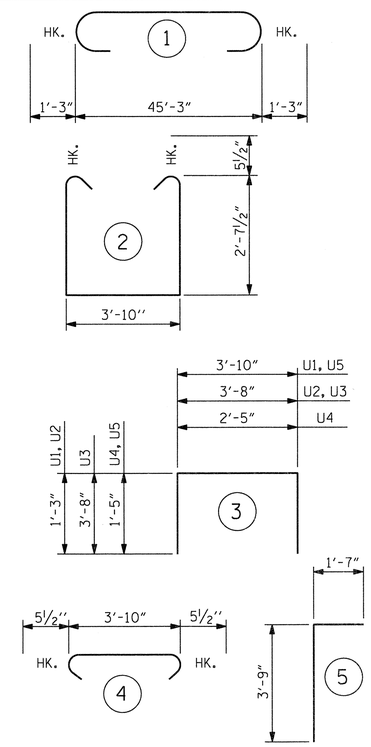

ALL BAR DIMENSIONS ARE OUT TO OUT.

BILL OF MATERIAL

BENT 2

BAR	NO.	SIZE	TYPE	LENGTH	WEIGHT
B1	6	9	STR	45'-3"	923
B2	6	9	1	47'-9"	974
B3	6	4	STR	27'-5"	110
B4	6	4	STR	7'-2"	29
B5	16	4	STR	23'-6"	251
B6	16	4	STR	3'-10"	41
B7	15	4	STR	2'-9"	28
B8	25	4	STR	3'-3"	53
B9	5	4	STR	2'-7"	9
B10	5	4	STR	1'-2"	4
L1	40	4	5	5'-4"	142
S1	36	5	2	10'-0"	375
S2	36	5	4	4'-9"	178
U1	47	4	3	6'-4"	199
U2	5	4	3	6'-2"	21
U3	2	9	3	11'-0"	75
U4	4	4	3	5'-3"	14
U5	4	4	3	6'-8"	18

TOTAL REINFORCING STEEL LBS. 3,444

CLASS A CONCRETE BREAKDOWN
POUR 1 - CAP 23.1 CY
POUR 2 - BEAM PEDESTALS 2.9 CY
TOTAL ▲ 26.0 CY

24" PRESTRESSED CONCRETE PILES
NO. 5 LIN. FT. 375

PILE REDRIVES NO. 3

PREDRILLING FOR PILES LIN. FT. 50

▲ CONCRETE DISPLACED BY THE 24" PRESTRESSED CONCRETE PILES HAS BEEN DEDUCTED.

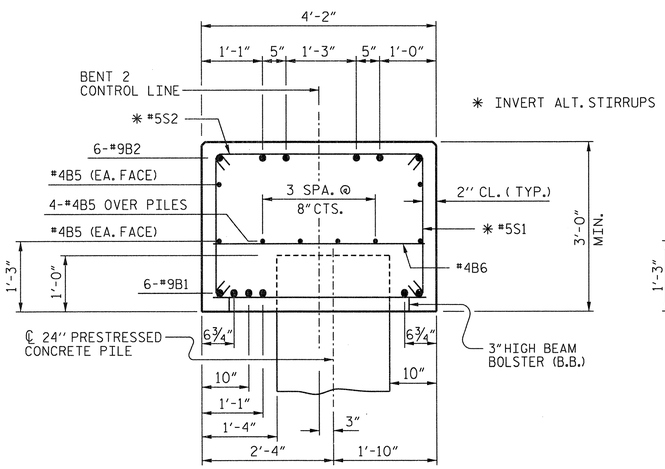

SECTION A-A

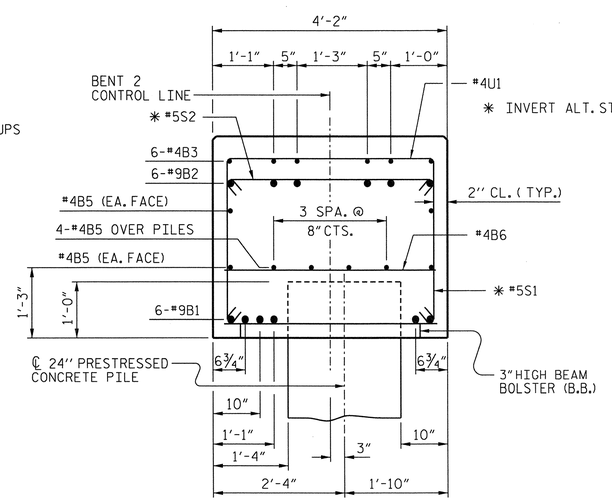

SECTION B-B

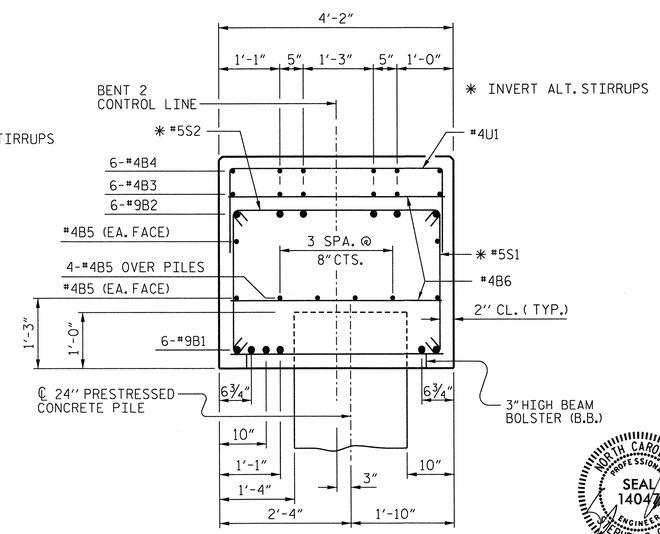

SECTION C-C

PROJECT NO. R-2633BB
BRUNSWICK/NEW HANOVER COUNTY
STATION: 398+75.47 -L-

SHEET 2 OF 2

STATE OF NORTH CAROLINA
DEPARTMENT OF TRANSPORTATION
RALEIGH

SUBSTRUCTURE
BENT 2
LEFT LANE

NORTH CAROLINA PROFESSIONAL SEAL 14047 ENGINEER STEPHEN D. COOK
7/11/13

THE LOUIS BERGER GROUP, Inc.
1001 Wade Avenue, Suite 400
Raleigh, NC 27605-3322

REVISIONS							SHEET NO.
NO.	BY:	DATE:	NO.	BY:	DATE:		S-492
1			3				TOTAL SHEETS
2			4				700

DRAWN BY : J. MYA/R. KNIGHT DATE : NOV 2012
CHECKED BY : R. DeCOLA DATE : DEC 2012

G:\OR Projects\OR1092 - NCDOT Wilm Bypass DualBridges\Structures\Bridge Site 6\EccBents\R-2633BB_SD_06L_BT_202.dgn
2/11/2013 12:51:29 PM 1092_PDF_full.pltcfg 1092_str.tbl

NOTES:

STIRRUPS IN CAP MAY BE SHIFTED AS NECESSARY TO CLEAR ANCHOR BOLTS.

THE CONTRACTOR SHALL PROVIDE FOR INSTALLATION OF THE 4" DIAMETER DRAIN PIPE THROUGH THE WING WALL AS REQUIRED FOR REINFORCED BRIDGE APPROACH FILLS. SEE THE ROADWAY PLANS. REINFORCING STEEL IN THE WING WALL MAY BE SHIFTED AS NECESSARY TO CLEAR THE DRAIN PIPE.

BACKWALL SHALL BE PLACED BEFORE APPLYING THE EPOXY PROTECTIVE COATING.

THE TOP SURFACE AREAS OF THE END BENT CAPS SHALL BE CURED IN ACCORDANCE WITH THE STANDARD SPECIFICATIONS EXCEPT THE MEMBRANE CURING COMPOUND METHOD SHALL NOT BE USED.

THE TOP SURFACE OF THE END BENT CAP EXCEPT THE BRIDGE SEAT BUILDUPS SHALL BE SLOPED TRANSVERSELY FROM THE FILL FACE TO THE BACK FACE AT THE RATE OF 2%.

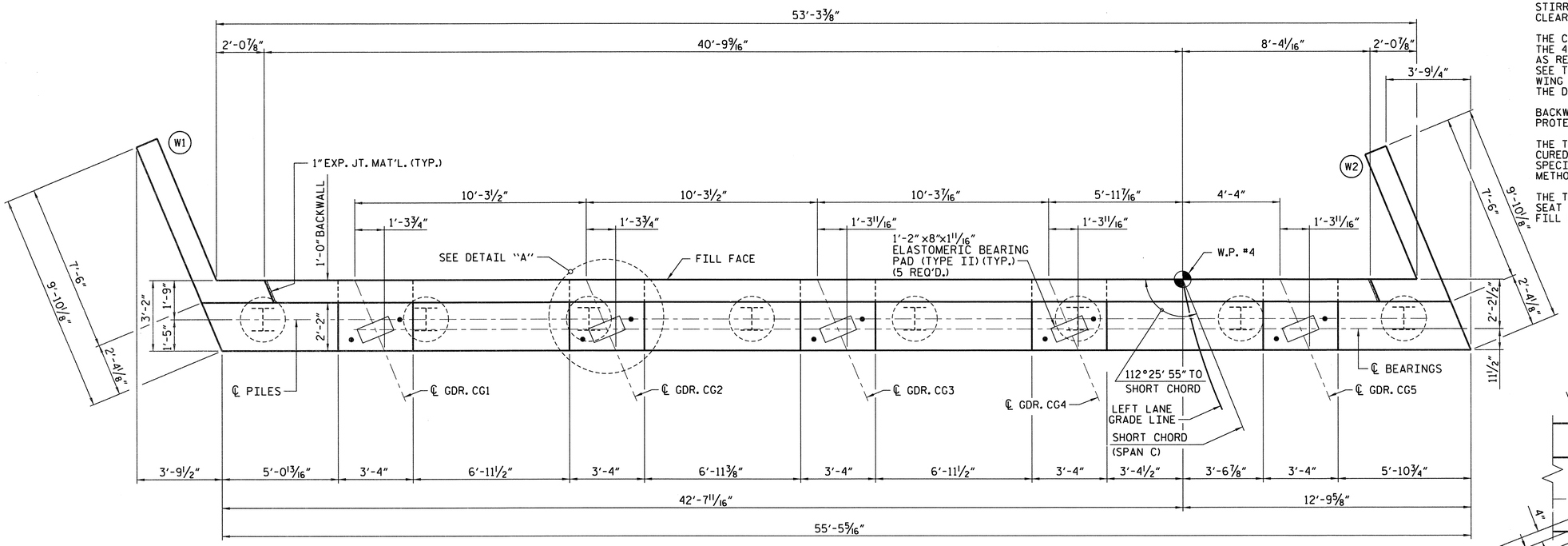

PLAN

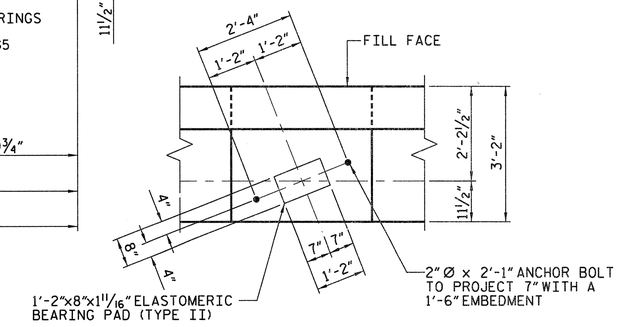

DETAIL "A"

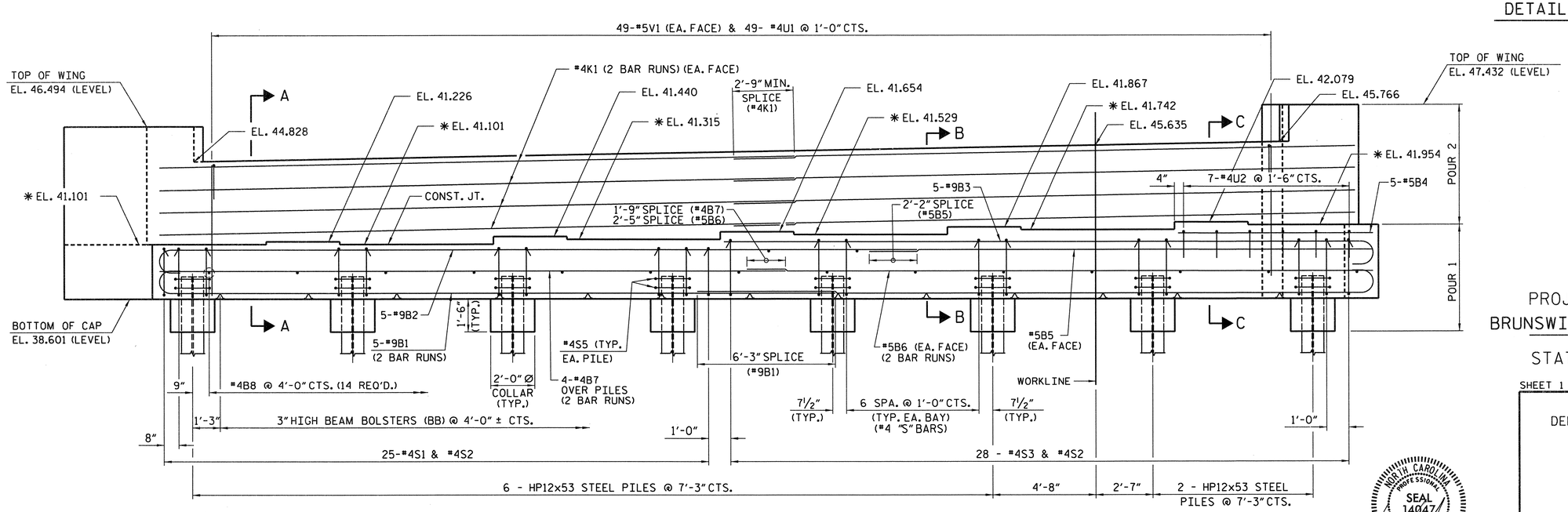

ELEVATION

PROJECT NO. R-2633BB

BRUNSWICK/NEW HANOVER COUNTY

STATION: 398+75.47 -L-

SHEET 1 OF 3

STATE OF NORTH CAROLINA
DEPARTMENT OF TRANSPORTATION
RALEIGH

SUBSTRUCTURE END BENT 2 LEFT LANE

NORTH CAROLINA PROFESSIONAL SEAL 14047 ENGINEER STEPHEN D. COOK 2/11/13

THE LOUIS BERGER GROUP, Inc.
1001 Wade Avenue, Suite 400
Raleigh, NC 27605-3322

REVISIONS								SHEET NO.
NO.	BY:	DATE:	NO.	BY:	DATE:			S-493
1			3					TOTAL SHEETS
2			4					700

DRAWN BY : R. KNIGHT DATE : NOV 2012
CHECKED BY : S. COOK DATE : DEC 2012

G:\OR Projects\OR1092 - NCDOT Wilm Bypass DualBridges\Structures\Bridge Site 6\R-2633BB_SD_06L_EB_201.dgn
2/11/2013 8:46:32 AM 1092_PDF_full.pltcfg 1092_str.tbl

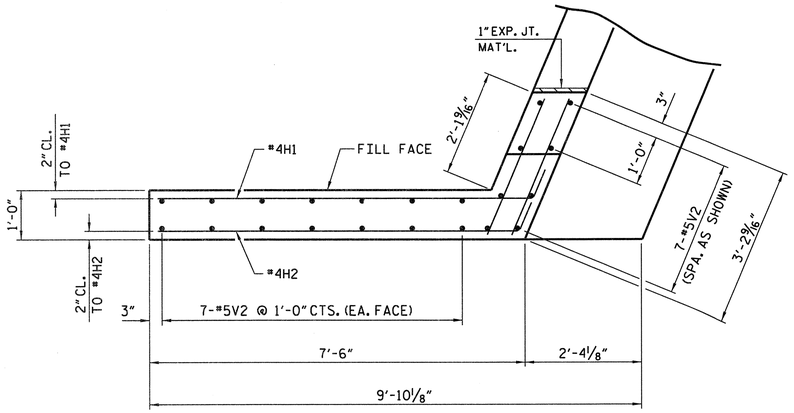

PLAN OF WING (W1)

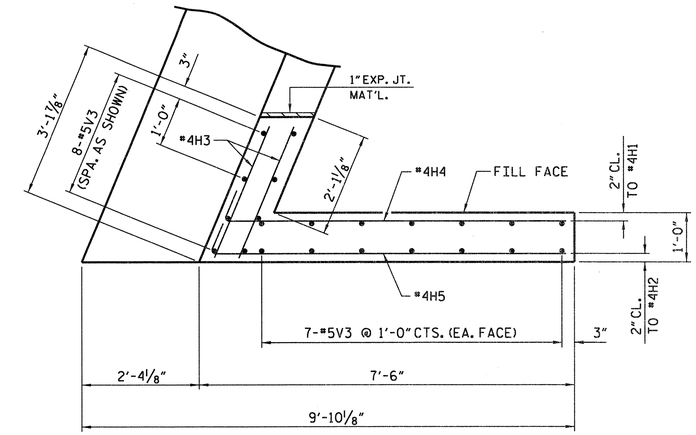

PLAN OF WING (W2)

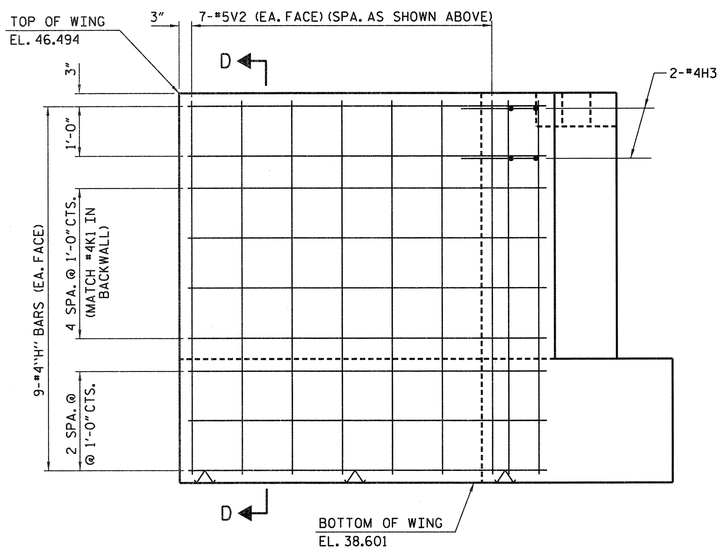

ELEVATION OF WING (W1)

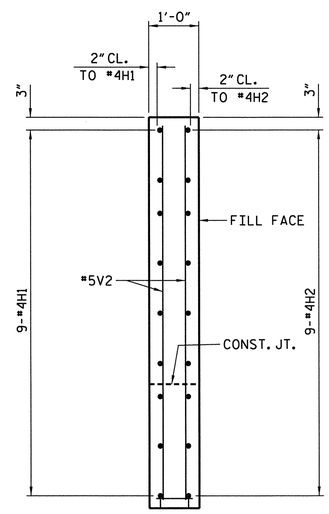

SECTION D-D

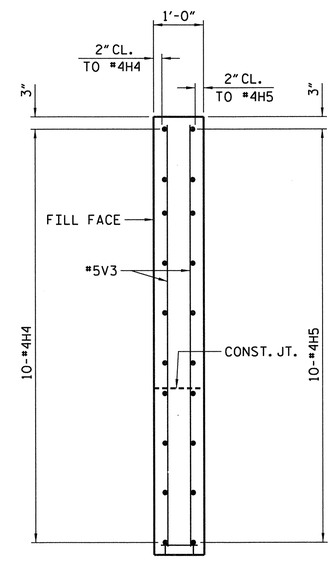

SECTION E-E

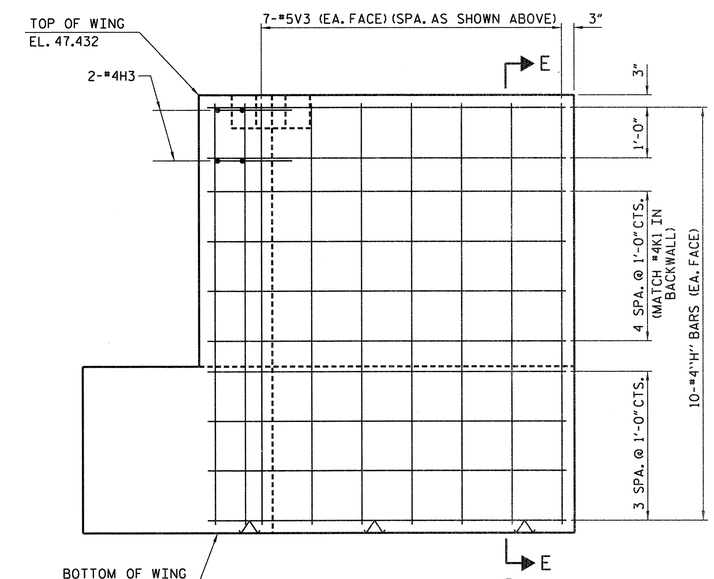

ELEVATION OF WING (W2)

PROJECT NO. R-2633BB

BRUNSWICK/NEW HANOVER COUNTY

STATION: 398+75.47 -L-

SHEET 2 OF 3

STATE OF NORTH CAROLINA
DEPARTMENT OF TRANSPORTATION
RALEIGH

SUBSTRUCTURE END BENT 2 LEFT LANE

NORTH CAROLINA PROFESSIONAL SEAL 14047 ENGINEER STEPHEN D. COOK
2/11/12

THE LOUIS BERGER GROUP, Inc.
1001 Wade Avenue, Suite 400
Raleigh, NC 27605-3322

REVISIONS						
NO.	BY:	DATE:	NO.	BY:	DATE:	
1			3			
2			4			

SHEET NO. S-44

TOTAL SHEETS 700

DRAWN BY : R. KNIGHT DATE : OCT 2012
CHECKED BY : S. COOK DATE : DEC 2012

G:\OR Projects\OR1092 - NCDOT Wilm Bypass DualBridges\Structures\Bridge Site 6\R-2633BB_SD_06L_EB_202.dgn
2/11/2013 8:46:35 AM 1092_PDF_full.pltcfg 1092_str.tbl

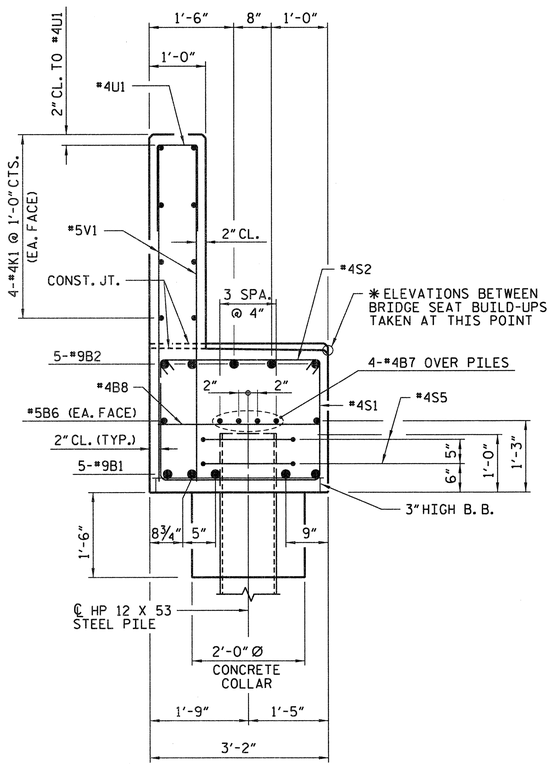

SECTION A-A

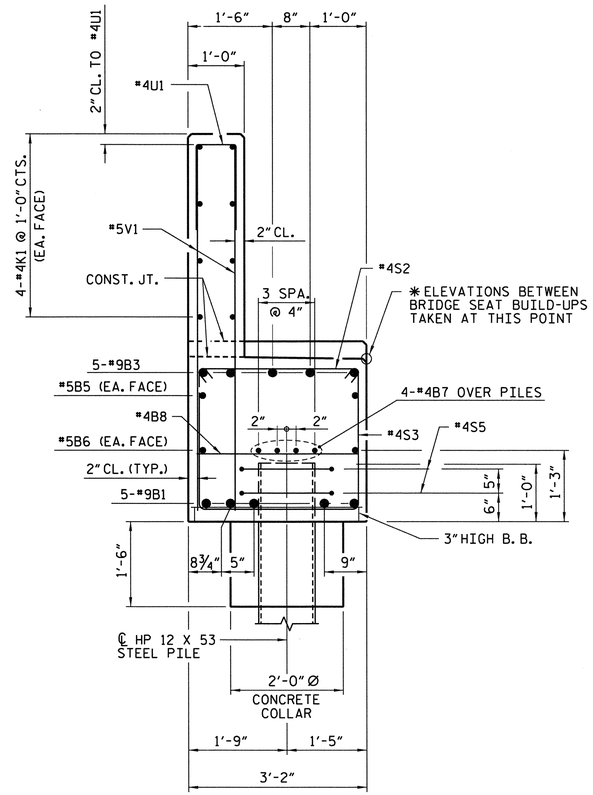

SECTION B-B

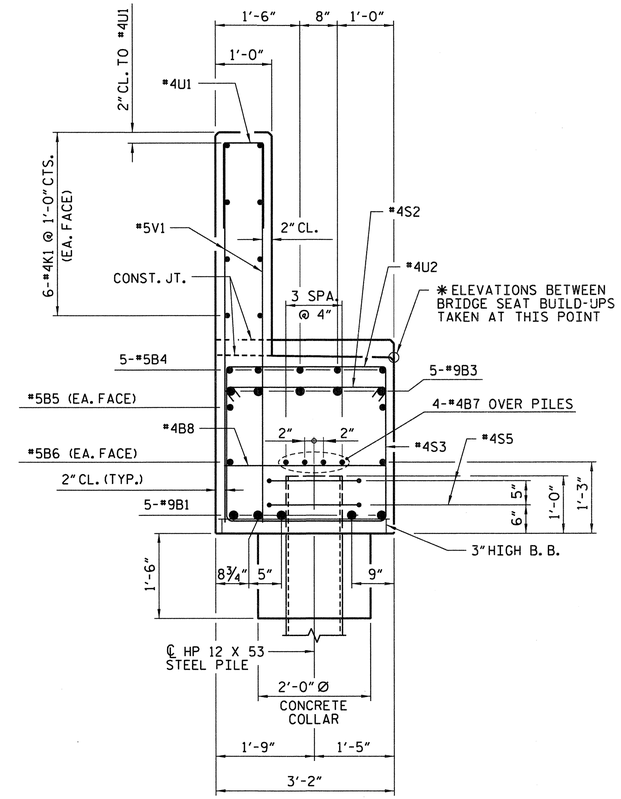

SECTION C-C

BILL OF MATERIAL FOR END BENT 2					
BAR	NO	SIZE	TYPE	LENGTH	WEIGHT
B1	10	9	1	33'-3"	1,131
B2	5	9	1	35'-11"	611
B3	5	9	1	29'-4"	499
B4	5	5	STR	7'-6"	39
B5	2	5	STR	23'-3"	48
B6	4	5	STR	28'-10"	120
B7	8	4	STR	28'-6"	152
B8	14	4	STR	2'-10"	26
H1	9	4	2	8'-0"	48
H2	9	4	2	7'-9"	47
H3	8	4	STR	2'-8"	14
H4	10	4	3	7'-6"	50
H5	10	4	3	7'-9"	52
K1	8	4	STR	29'-0"	155
S1	25	4	4	7'-10"	131
S2	53	4	5	3'-7"	127
S3	28	4	4	8'-8"	162
S5	16	4	7	6'-6"	69
U1	49	4	6	3'-8"	120
U2	7	4	6	5'-10"	27
V1	98	5	STR	5'-9"	588
V2	22	5	STR	7'-6"	172
V3	22	5	STR	8'-5"	193
REINFORCING STEEL				LBS.	4,581
CLASS A CONCRETE BREAKDOWN					
POUR #1 (CAP, CONCRETE COLLARS & LOWER PART OF WINGS				C.Y.	19.5
POUR #2 (BACKWALL & UPPER PART OF WINGS)				C.Y.	11.5
TOTAL CLASS A CONCRETE				C.Y.	31.0
HP 12 X 53 STEEL PILES					
NO. 8				LIN. FT.	480
PILE REDRVES				No.	4

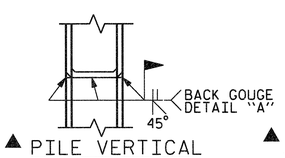

▲ PILE VERTICAL

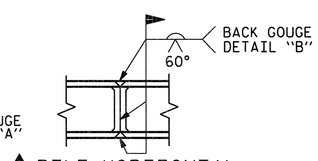

▲ PILE HORIZONTAL OR VERTICAL

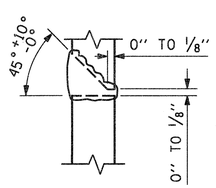

DETAIL A

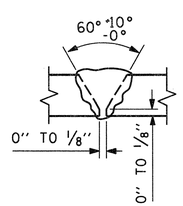

DETAIL B

▲ POSITION OF PILE DURING WELDING.

PILE SPLICE DETAILS

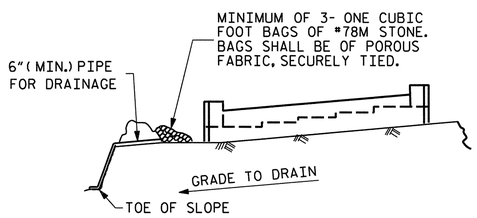

BAGGED STONE AND PIPE SHALL BE PLACED IMMEDIATELY AFTER COMPLETION OF END BENT EXCAVATION. PIPE MAY BE EITHER CONCRETE, CORRUGATED STEEL, CORRUGATED ALUMINUM ALLOY, OR CORRUGATED PLASTIC. PERFORATED PIPE WILL NOT BE ALLOWED.

BAGGED STONE SHALL REMAIN IN PLACE UNTIL THE ENGINEER DIRECTS THAT IT BE REMOVED. THE CONTRACTOR SHALL REMOVE AND DISPOSE OF SILT ACCUMULATIONS AT BAGGED STONE WHEN SO DIRECTED BY THE ENGINEER. BAGS SHALL BE REMOVED AND REPLACED WHENEVER THE ENGINEER DETERMINES THAT THEY HAVE DETERIORATED AND LOST THEIR EFFECTIVENESS.

NO SEPARATE PAYMENT WILL BE MADE FOR THIS WORK AND THE ENTIRE COST OF THIS WORK SHALL BE INCLUDED IN THE UNIT CONTRACT PRICE BID FOR THE SEVERAL PAY ITEMS.

TEMPORARY DRAINAGE AT END BENT

BAR TYPES

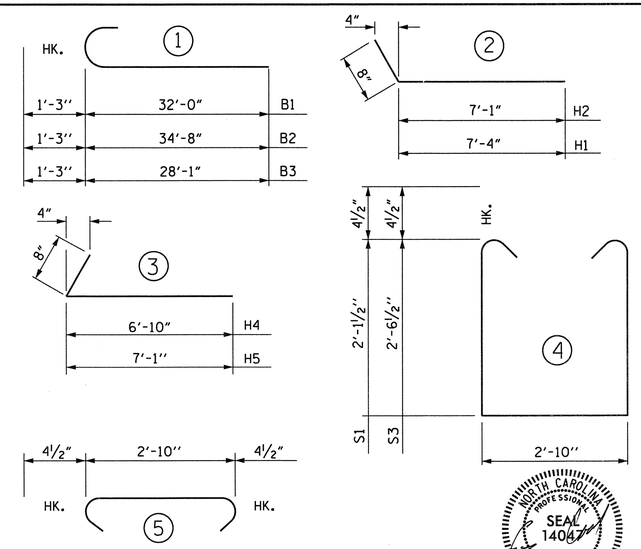

ALL BAR DIMENSIONS ARE OUT TO OUT.

PROJECT NO. R-2633BB

BRUNSWICK/NEW HANOVER COUNTY

STATION: 398+75.47 -L-

SHEET 3 OF 3

STATE OF NORTH CAROLINA
DEPARTMENT OF TRANSPORTATION
RALEIGH

SUBSTRUCTURE
END BENT 2
LEFT LANE

NORTH CAROLINA PROFESSIONAL SEAL 14047 ENGINEER STEPHEN D. COOK 2/11/13

THE LOUIS BERGER GROUP, Inc.
1001 Wade Avenue, Suite 400
Raleigh, NC 27605-3322

REVISIONS							
NO.	BY:	DATE:	NO.	BY:	DATE:	SHEET NO.	
1			3			S-495	
2			4			TOTAL SHEETS	700

DRAWN BY : R. KNIGHT DATE : OCT 2012
CHECKED BY : S. COOK DATE : DEC 2012

G:\OR Projects\OR1092 - NCDOT Wlm Bypass DualBridges\Structures\Bridge Site 6\R-2633BB_SD_06L_EB_203.dgn
2/11/2013 8:46:38 AM 1092_PDF_full.pltcfg 1092_str.tbl

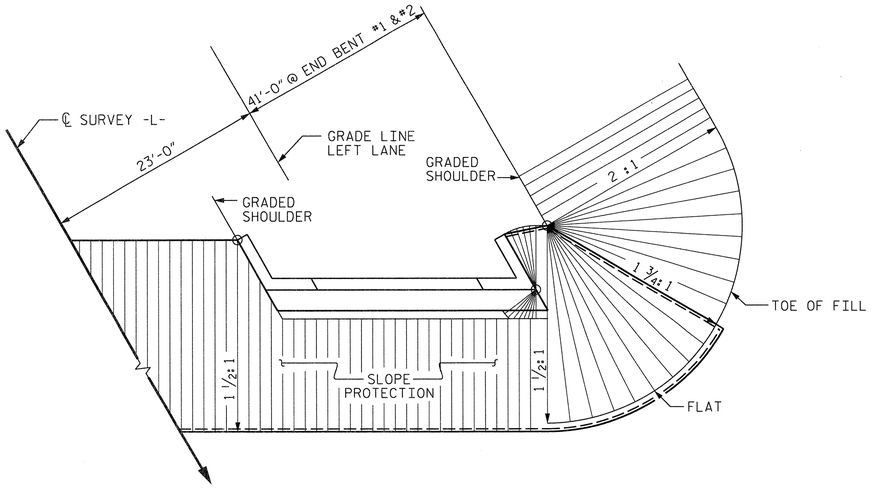

PLAN - END BENT WITH SWEPT BACK WINGS

BRIDGE @ STA. 398+75.47 -L- (LEFT LANE)	4 INCH SLOPE PROTECTION	* WELDED WIRE FABRIC 60 INCHES WIDE
	SQUARE YARDS	APPROX. L.F.
END BENT 1	471	942
END BENT 2	560	1,120

* QUANTITY SHOWN IS BASED ON 5' POURS.

GENERAL NOTES

SLOPE PROTECTION SHALL BE PLACED UNDER THE ENDS OF THE BRIDGE AS SHOWN IN THE DETAILS. THE STRAIGHT EDGING WILL NOT BE REQUIRED UNLESS, IN THE OPINION OF THE ENGINEER, VISUAL INSPECTION INDICATES A NEED FOR IT. MEASUREMENT AND PAYMENT SHALL BE AS PRESCRIBED IN SECTION 462 OF THE STANDARD SPECIFICATIONS. FOR BERM WIDTH, SEE GENERAL DRAWING.

ALTERNATE "A"

ALTERNATE "A" SHALL CONSIST OF 4" POURED-IN-PLACE CONCRETE PAVING AS SHOWN IN THE DETAILS ON THIS SHEET. CONCRETE SHALL BE CLASS "B". THE CONCRETE SURFACE SHALL BE FLOATED WITH A WOODEN FLOAT AND FINISHED. WELDED WIRE FABRIC REINFORCING SHALL BE 6 X 6 - W1.4 X W1.4, 60" WIDE. SLOPE PROTECTION SHALL BE POURED IN 5' STRIPS AS SHOWN IN THE "POURING DETAIL" WITH 2'-0" LONG #4 BARS PLACED ALONG THE SLOPE BETWEEN STRIPS AT 1'-6" MAXIMUM SPACING. SLOPE PROTECTION MAY BE POURED IN ALTERNATE 4' AND 5' STRIPS AS SHOWN IN THE "OPTIONAL POURING DETAIL" WITH ADJACENT RUNS OF WELDED WIRE FABRIC LAPPING AT LEAST 6". THE COST OF THE WELDED WIRE FABRIC AND #4 BARS, IF USED, SHALL BE INCLUDED IN THE CONTRACT UNIT PRICE BID PER SQUARE YARD FOR SLOPE PROTECTION.

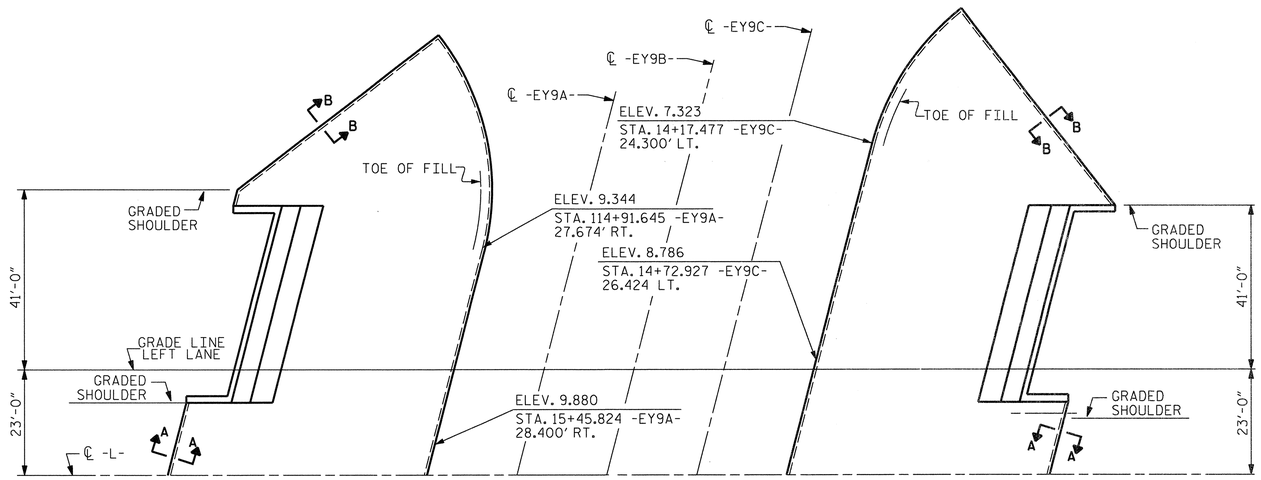

PLAN

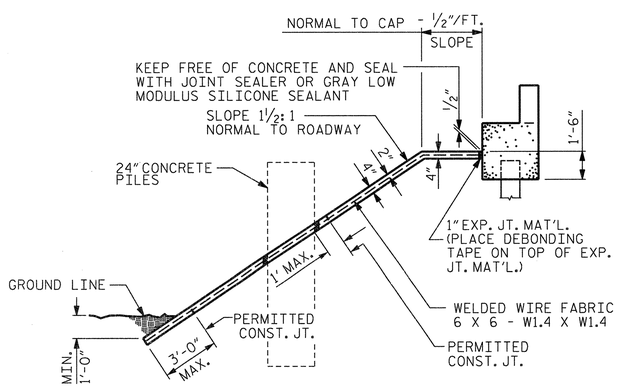

SECTION ALONG ℄ ROADWAY WITH 24" CONCRETE PILES

END BENT 2 SHOWN, END BENT 1 SIMILAR

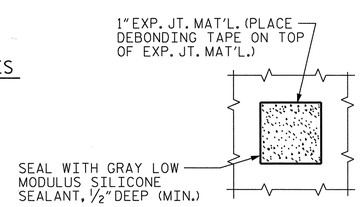

PLAN WHERE CONCRETE SLOPE PROTECTION MUST BE PLACED AROUND A BENT PILE

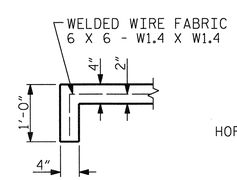

SECTION A-A

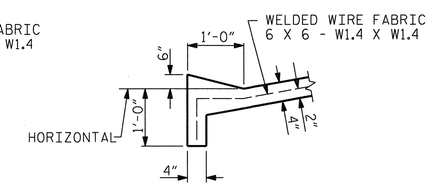

SECTION B-B

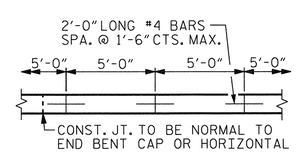

STRIP WIDTHS MAY VARY IN CURVED PORTION.

POURING DETAIL

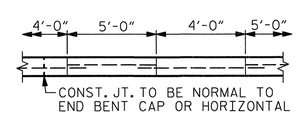

POUR A 4'-0" STRIP FIRST. STRIP WIDTHS MAY VARY IN CURVED PORTION.

OPTIONAL POURING DETAIL

PROJECT NO. R-2633BB

BRUNSWICK/NEW HANOVER COUNTY

STATION: 398+75.47 -L-

STATE OF NORTH CAROLINA
DEPARTMENT OF TRANSPORTATION
RALEIGH

SLOPE PROTECTION DETAILS LEFT LANE

NORTH CAROLINA PROFESSIONAL SEAL 14047 ENGINEER STEPHEN D. COOK
2/11/13

THE LOUIS BERGER GROUP, Inc.
1001 Wade Avenue, Suite 400
Raleigh, NC 27605-3322

REVISIONS						SHEET NO.
NO.	BY:	DATE:	NO.	BY:	DATE:	S-496
1			3			TOTAL SHEETS
2			4			700

ASSEMBLED BY : R. KNIGHT	DATE : DEC 2012
CHECKED BY : S. COOK	DATE : DEC 2012
DRAWN BY : ELR 5/92	REV. 5/1/06 TLA/GM
CHECKED BY : GRP 6/92	REV. 10/1/11 MAA/GM
	REV. 12/21/11 MAA/GM

STD. NO. SP1

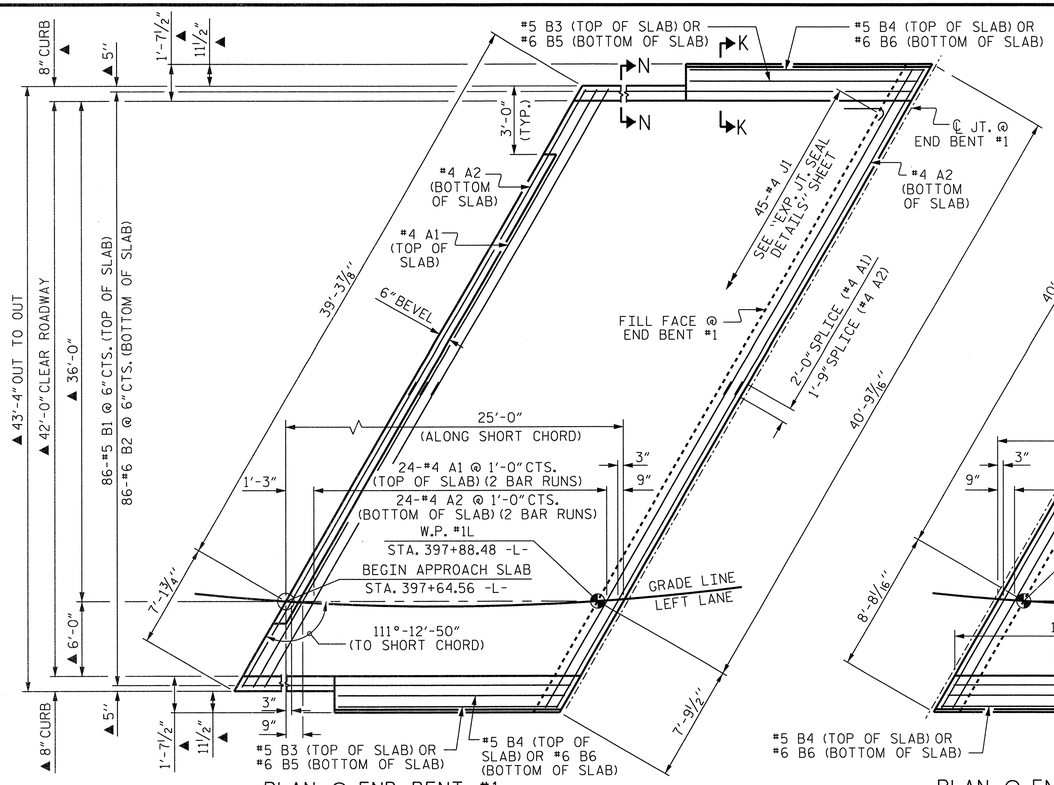

PLAN @ END BENT #1

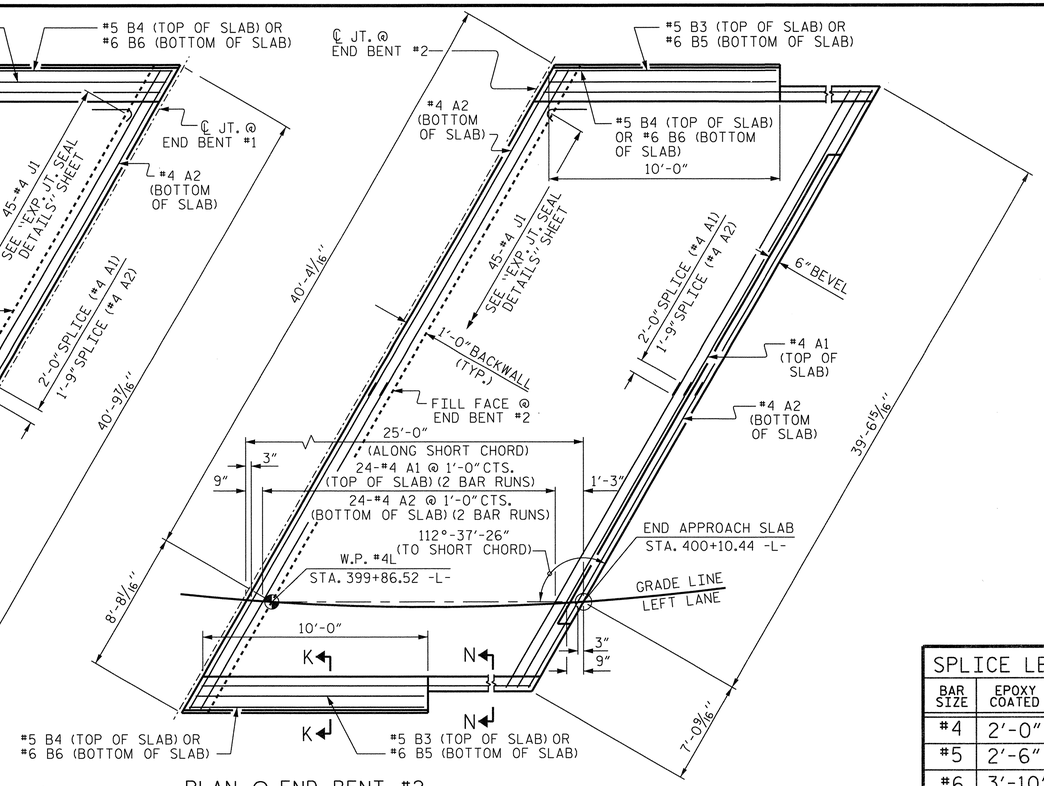

PLAN @ END BENT #2

▲ RADIAL DIMENSION ALONG -L-.

DIMENSIONS SHOWN ARE TYPICAL FOR BOTH APPROACH SLABS

SPLICE LENGTHS		
BAR SIZE	EPOXY COATED	UNCOATED
#4	2'-0"	1'-9"
#5	2'-6"	2'-2"
#6	3'-10"	2'-7"

NOTES

APPROACH SLAB SHALL NOT BE CONSTRUCTED PRIOR TO COMPLETION OF THE BRIDGE DECK.

FOR REINFORCED BRIDGE APPROACH FILL INCLUDING GEOTEXTILE, IMPERMEABLE GEOMEMBRANE, 4" Ø DRAINAGE PIPE, #78M STONE, AND SELECT MATERIAL, SEE ROADWAY PLANS.

AREA BETWEEN THE WINGWALL AND APPROACH SLAB SHALL BE GRADED TO DRAIN THE WATER AWAY FROM THE FILL FACE OF THE BRIDGE AND SHALL BE PAVED. SEE ROADWAY PLANS.

FOR EXPANSION JOINT SEALS, SEE SPECIAL PROVISIONS.

ARC OFFSETS ARE NEGLIGIBLE.

BILL OF MATERIAL

APPROACH SLAB AT EB #1

BAR	NO.	SIZE	TYPE	LENGTH	WEIGHT
✱ A1	50	#4	STR	26'-0"	868
A2	52	#4	STR	25'-9"	894
✱ B1	86	#5	STR	24'-7"	2205
B2	86	#6	STR	24'-7"	3175
✱ B3	4	#5	STR	10'-1"	42
✱ B4	4	#5	STR	10'-5"	43
B5	4	#6	STR	10'-1"	61
B6	4	#6	STR	10'-5"	63
✱ J1	45	#4	1	1'-5"	43
REINFORCING STEEL ✱✱				LBS.	4,193
✱ EPOXY COATED REINFORCING STEEL ✱✱				LBS.	3,201
CLASS AA CONCRETE ✱✱				C. Y.	49.5

APPROACH SLAB AT EB #2

BAR	NO.	SIZE	TYPE	LENGTH	WEIGHT
✱ A1	50	#4	STR	26'-0"	868
A2	52	#4	STR	25'-9"	894
✱ B1	86	#5	STR	24'-7"	2205
B2	86	#6	STR	24'-7"	3175
✱ B3	4	#5	STR	10'-1"	42
✱ B4	4	#5	STR	10'-5"	43
B5	4	#6	STR	10'-1"	61
B6	4	#6	STR	10'-5"	63
✱ J1	45	#4	1	1'-5"	43
REINFORCING STEEL ✱✱				LBS.	4,193
✱ EPOXY COATED REINFORCING STEEL ✱✱				LBS.	3,201
CLASS AA CONCRETE ✱✱				C. Y.	49.5

BAR TYPE

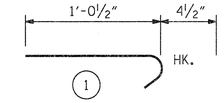

ALL BAR DIMENSIONS ARE OUT TO OUT

✱✱ QUANTITIES FOR BARRIER RAIL ARE NOT INCLUDED. SEE SHEET 2 OF 2.

THE QUANTITY OF #4 J1 BARS ON THE BILL OF MATERIAL IS BASED ON 1'-0" CENTERS. J1 BARS SHALL BE PLACED AT EACH VERTICAL STUD ANCHOR BOLT. IN THE EVENT THAT THE NUMBER OF VERTICAL STUD ANCHORS EXCEEDS THE NUMBER OF J1 BARS SPECIFIED, ADDITIONAL J1 BARS WILL NOT BE REQUIRED.

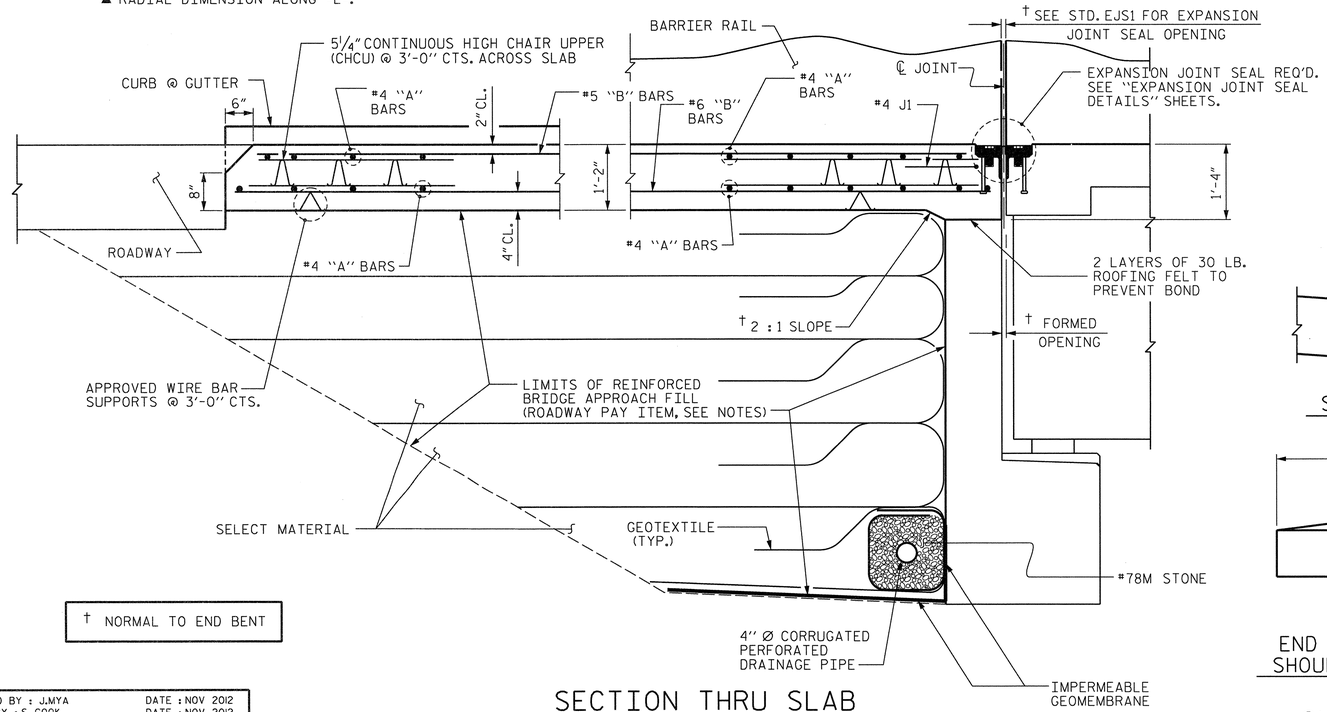

† NORMAL TO END BENT

SECTION THRU SLAB

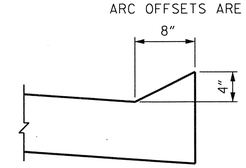

SECTION N-N

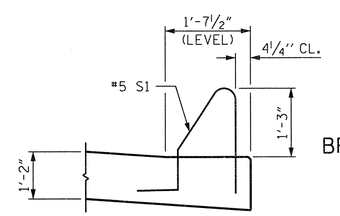

SECTION K-K

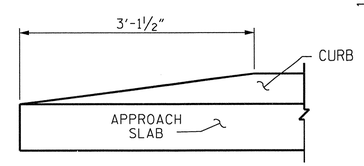

END OF CURB WITHOUT SHOULDER BERM GUTTER

CURB DETAILS

PROJECT NO. R-2633BB

BRUNSWICK/NEW HANOVER COUNTY

STATION: 398+75.47 -L-

SHEET 1 OF 2

STATE OF NORTH CAROLINA
DEPARTMENT OF TRANSPORTATION
RALEIGH

STANDARD
BRIDGE APPROACH SLAB
FOR FLEXIBLE PAVEMENT
LEFT LANE

NORTH CAROLINA PROFESSIONAL SEAL 14047 ENGINEER STEPHEN D. COOK
2/11/13

THE LOUIS BERGER GROUP, Inc.
1001 Wade Avenue, Suite 400
Raleigh, NC 27605-3322

REVISIONS						SHEET NO.
NO.	BY:	DATE:	NO.	BY:	DATE:	S-497
1			3			TOTAL SHEETS
2			4			700

ASSEMBLED BY : J.MYA		DATE : NOV 2012	
CHECKED BY : S. COOK		DATE : NOV 2012	
DRAWN BY : EEM 3/95	REV. 5/7/03R	RWW/JTE	
CHECKED BY : VAP 3/95	REV. 5/1/06RR	KMM/GM	
	REV. 10/1/11	MAA/GM	

STD. NO. BAS2 (SHT 4b)

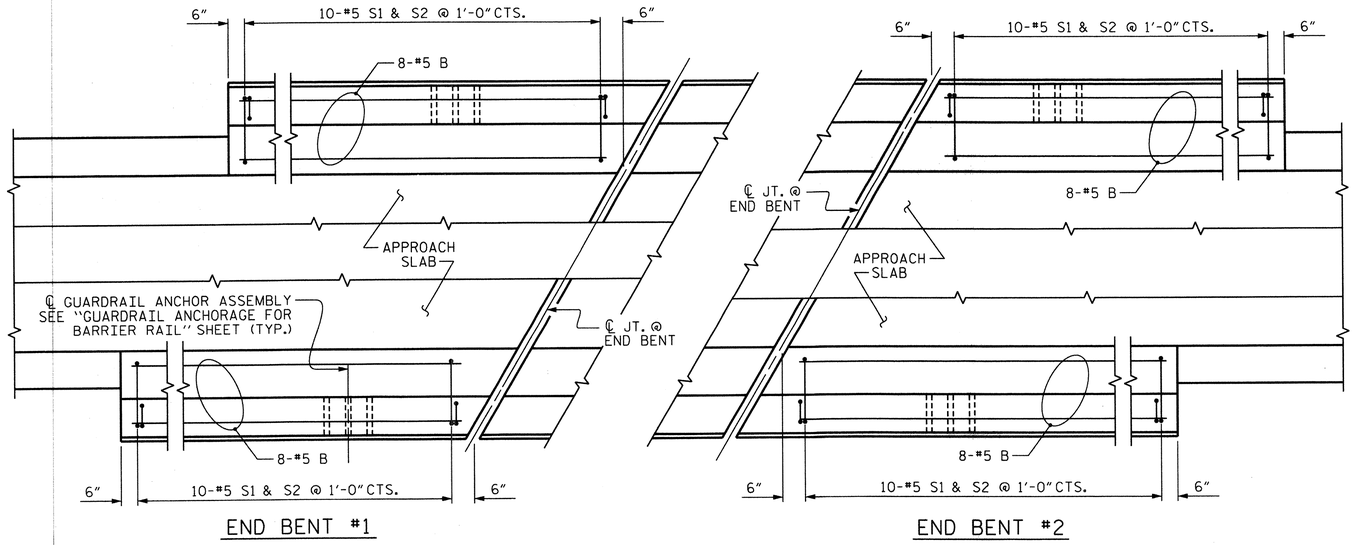

PLAN OF BARRIER RAIL

NOTES

THE COST OF THE BARRIER RAIL ON THE APPROACH SLAB SHALL BE INCLUDED IN THE LINEAR FOOT CONTRACT PRICE BID FOR "CONCRETE BARRIER RAIL".

THE BARRIER RAIL ON EACH APPROACH SLAB SHALL NOT BE CAST UNTIL ALL APPROACH SLAB CONCRETE HAS BEEN CAST AND HAS REACHED A MINIMUM COMPRESSIVE STRENGTH OF 3,000 PSI.

ALL REINFORCING STEEL IN BARRIER RAILS SHALL BE EPOXY COATED.

BAR TYPES

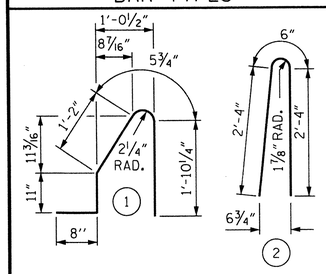

ALL BAR DIMENSIONS ARE OUT TO OUT

BILL OF MATERIAL

BARRIER RAIL ONLY

BAR	NO.	SIZE	TYPE	LENGTH	WEIGHT
* B1	32	#5	STR	9'-7"	320
* S1	40	#5	1	5'-1"	212
* S2	40	#5	2	5'-2"	216
* EPOXY COATED REINFORCING STEEL				LBS.	748
CLASS AA CONCRETE				C. Y.	4.2
CONCRETE BARRIER RAIL				42.0	LIN. FT.

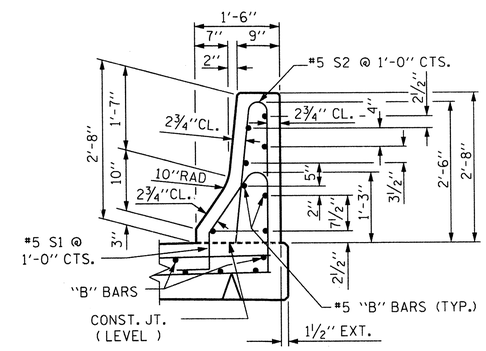

SECTION THRU RAIL

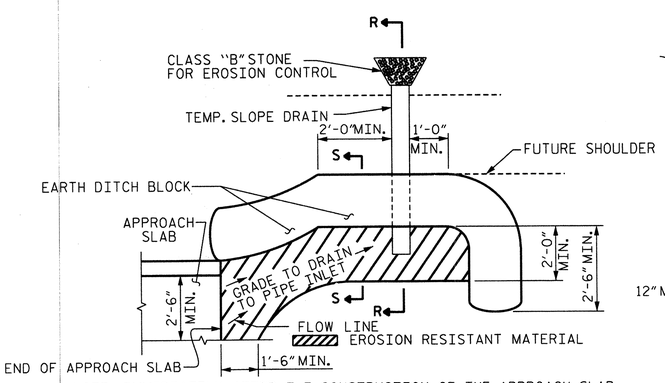

NOTE: IMMEDIATELY AFTER THE CONSTRUCTION OF THE APPROACH SLAB, THE CONTRACTOR SHALL PROVIDE TEMPORARY BERM AND SLOPE DRAIN. CONTRACTOR SHALL GRADE TO PIPE INLET AND PROVIDE EROSION RESISTANT MATERIAL AS SHOWN. THE EROSION RESISTANT MATERIAL SHALL BE EITHER 1) ASPHALT PLANT MIX, TYPE 1 OR TYPE 2, MIN. 2" DEPTH, 2) EROSION CONTROL MAT, OR 3) CONCRETE, AS DIRECTED BY THE ENGINEER. THE SLOPE DRAIN SHALL CONSIST OF A NON-PERFORATED TEMPORARY DRAINAGE PIPE, 12 INCHES IN DIAMETER.

PLAN VIEW

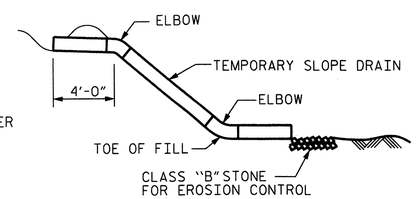

SECTION R-R

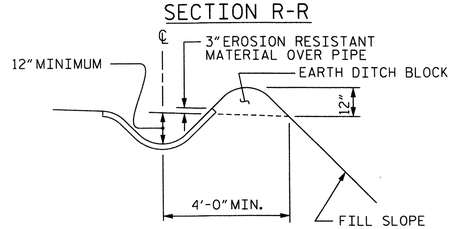

SECTION S-S

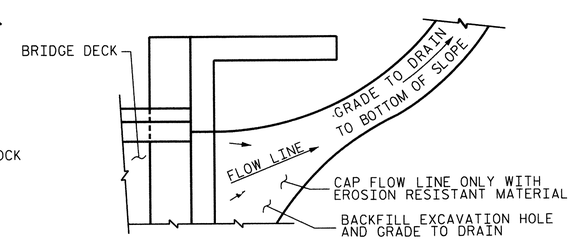

NOTE: IF THE APPROACH SLAB IS NOT CONSTRUCTED IMMEDIATELY AFTER THE BACKFILLING OF THE END BENT EXCAVATION, GRADE TO DRAIN TO THE BOTTOM OF THE SLOPE AND PROVIDE EROSION RESISTANT MATERIAL, SUCH AS FIBERGLASS ROVING OR AS DIRECTED BY THE ENGINEER TO PREVENT SOIL EROSION AND TO PROTECT THE AREA ADJACENT TO THE STRUCTURE. THE CONTRACTOR WILL BE REQUIRED TO REMOVE THESE MATERIALS PRIOR TO CONSTRUCTION OF THE APPROACH SLAB.

TEMPORARY DRAINAGE DETAIL

TEMPORARY BERM AND SLOPE DRAIN DETAILS

(TO BE USED WHEN SHOULDER BERM GUTTER IS REQUIRED)

PROJECT NO. R-2633BB

BRUNSWICK/NEW HANOVER COUNTY

STATION: 398+75.47 -L-

SHEET 2 OF 2

STATE OF NORTH CAROLINA
DEPARTMENT OF TRANSPORTATION
RALEIGH

STANDARD

BRIDGE APPROACH SLAB DETAILS LEFT LANE

NORTH CAROLINA PROFESSIONAL SEAL 14047 ENGINEER STEPHEN D. COOK
2/18/13

THE LOUIS BERGER GROUP, Inc.
1001 Wade Avenue, Suite 400
Raleigh, NC 27605-3322

REVISIONS							SHEET NO.
NO.	BY:	DATE:	NO.	BY:	DATE:		S-498
1			3				TOTAL SHEETS
2			4				700

ASSEMBLED BY : R. KNIGHT		DATE : AUG 2012	
CHECKED BY : S. COOK		DATE : AUG 2012	
DRAWN BY : FCJ	11/88	REV. 5/7/03	RWW/JTE
CHECKED BY : ARB	11/88	REV. 5/1/06RRR	MAA/KMM
		REV. 10/1/11	MAA/GM

G:\OR Projects\OR1092 - NCDOT Wilm Bypass DualBridges\Structures\Bridge Site 6\R-2633BB_SD_06L_AS02.dgn
2/18/2013 3:54:25 PM 1092_PDF_full.pltcfg 1092_str.tbl

STD. NO. BAS4 (SHT 3a)

F.A.PROJECT NHS-0017(125)

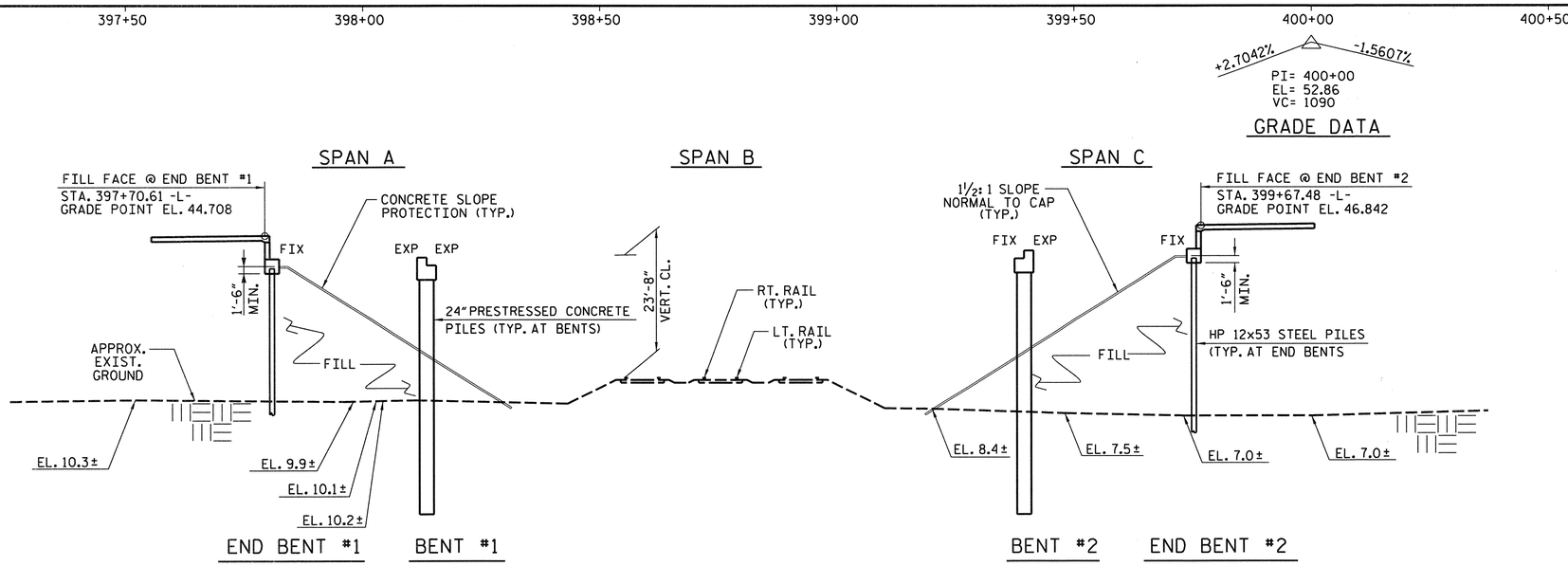

SECTION ALONG GRADE LINE

SECTION AT END BENTS AND BENTS TAKEN AT RIGHT ANGLES

TOP OF RAIL ELEVATIONS		
STATION	LT. RAIL	RT. RAIL
14+00 -EY9A-	14.864	14.817
14+50 -EY9A-	14.938	14.852
15+00 -EY9A-	14.957	14.897
15+50 -EY9A-	14.950	14.910
16+00 -EY9A-	15.012	15.008

TOP OF RAIL ELEVATIONS		
STATION	LT. RAIL	RT. RAIL
14+00 -EY9B-	14.932	14.976
14+50 -EY9B-	14.910	14.964
15+00 -EY9B-	14.989	15.003
15+50 -EY9B-	14.927	14.928
16+00 -EY9B-	14.898	14.919

TOP OF RAIL ELEVATIONS		
STATION	LT. RAIL	RT. RAIL
14+00 -EY9C-	15.074	15.125
14+50 -EY9C-	15.085	15.184
15+00 -EY9C-	15.141	15.208
15+50 -EY9C-	15.198	15.248
16+00 -EY9C-	15.209	15.240

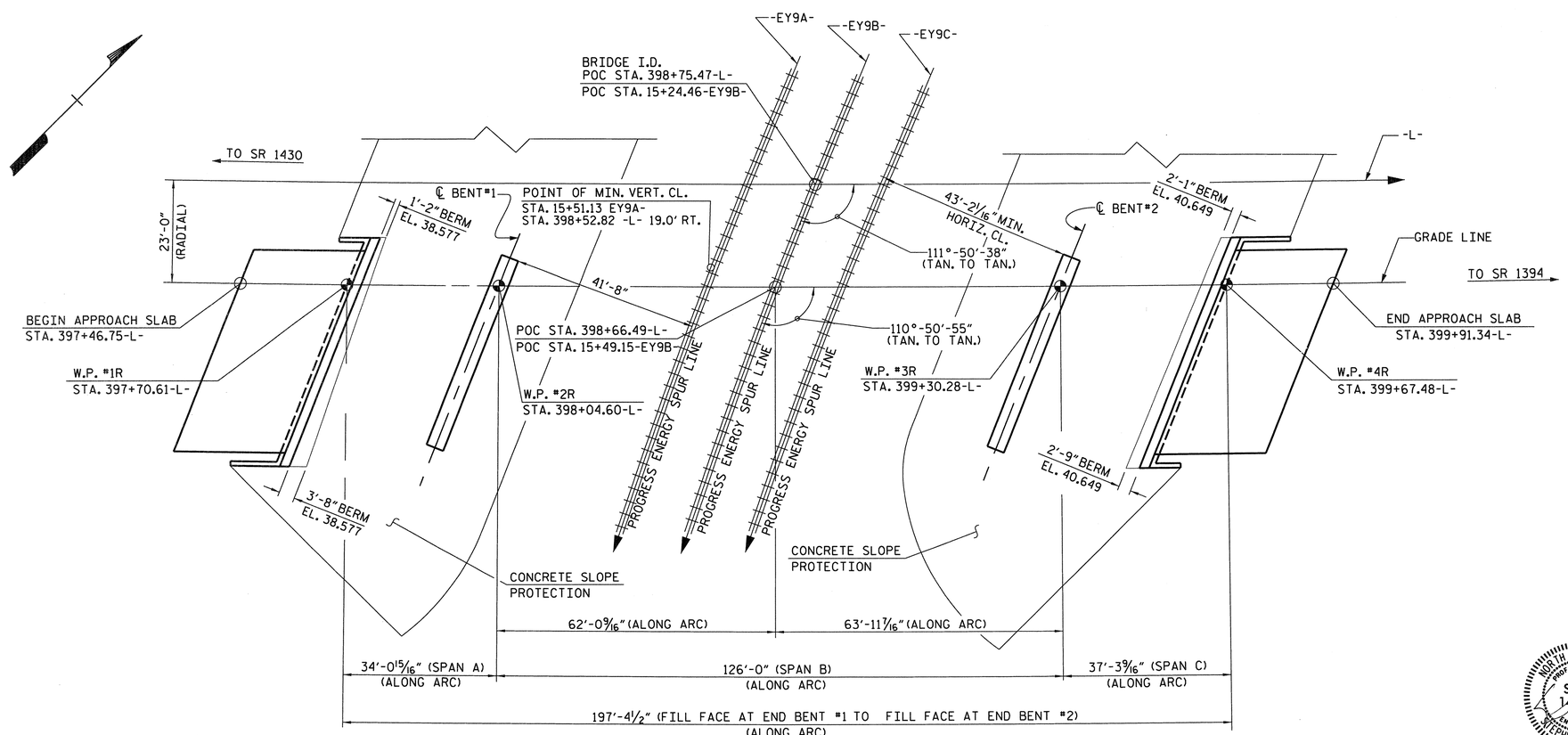

PLAN

(PILES NOT SHOWN FOR CLARITY)

HORIZONTAL CURVE DATA

-L-

PI STA 383+94.77
Δ = 51°-49'-22.8" (LT)
D = 0°-38'-11.8"
L = 8,140.34'
T = 4,372.40'
R = 9,000.00'
e = 2.5%

PROJECT NO. R-2633BB

BRUNSWICK/NEW HANOVER COUNTY

STATION: 398+75.47 -L-
15+24.46 -EY9B-

SHEET 1 OF 5
MILEPOST AF-288.28 BRIDGE No. 191

STATE OF NORTH CAROLINA
DEPARTMENT OF TRANSPORTATION
RALEIGH

GENERAL DRAWING FOR
BRIDGE ON US 17 OVER
PROGRESS ENERGY SPUR LINES
BETWEEN SR 1430 AND SR 1394
RIGHT LANE

NORTH CAROLINA PROFESSIONAL SEAL 14047 ENGINEER STEPHEN D. COOK 2/11/13

THE LOUIS BERGER GROUP, Inc.
1001 Wade Avenue, Suite 400
Raleigh, NC 27605-3322

REVISIONS							SHEET NO.
NO.	BY:	DATE:	NO.	BY:	DATE:		S-499
1			3				TOTAL SHEETS
2			4				700

DRAWN BY : R. KNIGHT DATE : 8/11
CHECKED BY : R. COFFMAN DATE : 9/11

G:\OR Projects\OR1092 - NCDOT Wilm Bypass DualBridges\Structures\Bridge Site 6\R-2633BB_SD_06R_GD_01.dgn
2/11/2013 8:46:49 AM 1092_PDF_full.pltcfg 1092_str.tbl

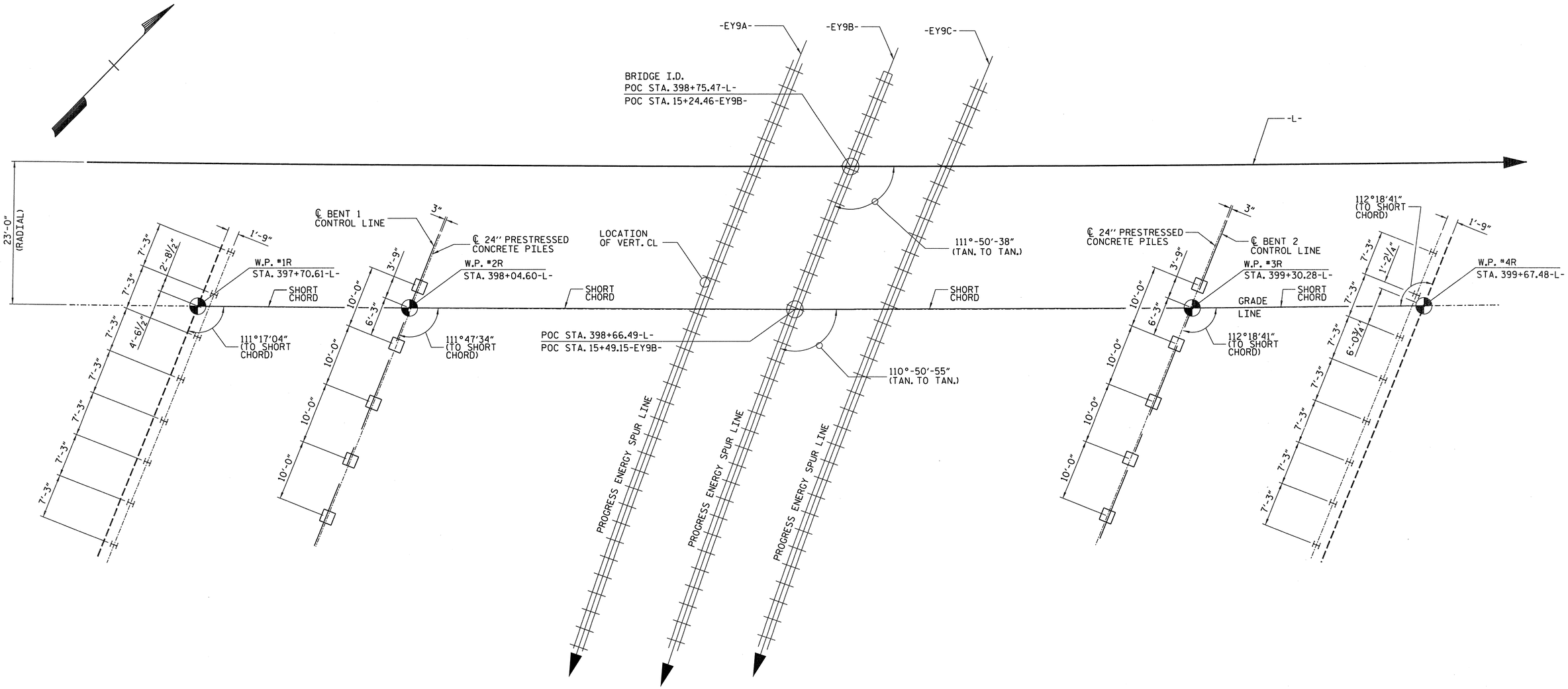

FOUNDATION LAYOUT

(DIMENSIONS LOCATING PILES ARE SHOWN TO CENTERLINE OF PILES)

FOUNDATION NOTES:

FOR PILES, SEE SECTION 450 OF THE STANDARD SPECIFICATIONS.

PILES AT END BENT NO. 1 AND END BENT NO. 2 ARE DESIGNED FOR A FACTORED RESISTANCE OF 60 TONS PER PILE.

DRIVE PILES AT END BENT NO. 1 AND END BENT NO. 2 TO A REQUIRED DRIVING RESISTANCE OF 100 TONS PER PILE.

PILES AT BENT NO. 1 AND BENT NO. 2 ARE DESIGNED FOR A FACTORED RESISTANCE OF 260 TONS PER PILE.

DRIVE PILES AT BENT NO. 1 AND BENT NO. 2 TO A REQUIRED DRIVING RESISTANCE OF 455 TONS PER PILE. THIS REQUIRED DRIVING RESISTANCE INCLUDES ADDITIONAL RESISTANCE FOR DOWNDRAG OR SCOUR.

INSTALL PILES AT BENT NO. 1 AND BENT NO. 2 TO A TIP ELEVATION NO HIGHER THAN -27 FT.

IT HAS BEEN ESTIMATED THAT A HAMMER WITH AN EQUIVALENT RATED ENERGY IN THE RANGE OF 120 - 200 FT-KIPS PER BLOW WILL BE REQUIRED TO DRIVE PILES AT BENT NO. 1 AND NO. 2. THIS ESTIMATED ENERGY RANGE DOES NOT RELEASE THE CONTRACTOR FROM PROVIDING DRIVING EQUIPMENT IN ACCORDANCE WITH SUBARTICLE 450-3(D)(2) OF THE STANDARD SPECIFICATIONS.

OBSERVE A 1 MONTH WAITING PERIOD AFTER CONSTRUCTING THE EMBANKMENT TO WITHIN 2 FT. OF FINISHED GRADE BEFORE BEGINNING END BENT CONSTRUCTION AT END BENT NO. 1 AND END BENT NO. 2.

PREDRILLING FOR PILES IS REQUIRED AT BENT NO. 1 AND BENT NO. 2. PREDRLL PILE LOCATIONS TO ELEVATION 8 FT. WITH EQUIPMENT THAT WILL RESULT IN A MAXIMUM PREDRIILING DIAMETER OF 24", FOR PREDRIILING FOR PILES, SEE SECTION 450 OF THE STANDARD SPECIFICATIONS.

SPUDDING MAY BE USED INSTEAD OF PREDRIILING AT BENT NO. 1 AND BENT NO. 2.

TESTING THE FIRST PRODUCTION PILE WITH THE PDA DURING PRESTRIKING OR PREDRIVING IS REQUIRED AT BENT NO. 1 AND BENT NO. 2. FOR PDA TESTING, SEE SECTION 450 OF THE STANDARD SPECIFICATIONS.

FOR REINFORCED SOIL SLOPE (RSS), SEE ROADWAY PLANS.

THE CONTRACTORS ATTENTION IS CALLED THE FACT THAT THE CENTERLINE OF THE 24" PRESTRESSED CONCRETE PILES AT BENT 1 AND BENT 2 IS OFFSET FROM THE WORKLINE BY 3 INCHES.

PROJECT NO. R-2633BB
BRUNSWICK/NEW HANOVER COUNTY
STATION: 398+75.47 -L-

SHEET 2 OF 5

STATE OF NORTH CAROLINA
DEPARTMENT OF TRANSPORTATION
RALEIGH

GENERAL DRAWING FOR BRIDGE ON US 17 OVER PROGRESS ENERGY SPUR LINES BETWEEN SR 1430 AND SR 1394 RIGHT LANE

NORTH CAROLINA PROFESSIONAL SEAL 14047 ENGINEER STEPHEN D. COOK
7/11/13

THE LOUIS BERGER GROUP, Inc.
1001 Wade Avenue, Suite 400
Raleigh, NC 27605-3322

REVISIONS						SHEET NO.
NO.	BY:	DATE:	NO.	BY:	DATE:	S-500
1			3			TOTAL SHEETS
2			4			700

DRAWN BY : J. MYA DATE : OCT. 2012
CHECKED BY : S. COOK DATE : OCT. 2012

G:\OR Projects\OR1092 - NCDOT Wilm Bypass DualBridges\Structures\Bridge Site 6\EccBents\R-2633BB_SD_06R_GD_02.dgn
2/11/2013 12:51:31 PM 1092_PDF_full.pltcfg 1092_str.tbl

BM 14 : RR SPIKE SET IN THE BASE OF A 12" PINE 332.39' RT OF -L-STA 397+34.82 ELEVATION 17.24'

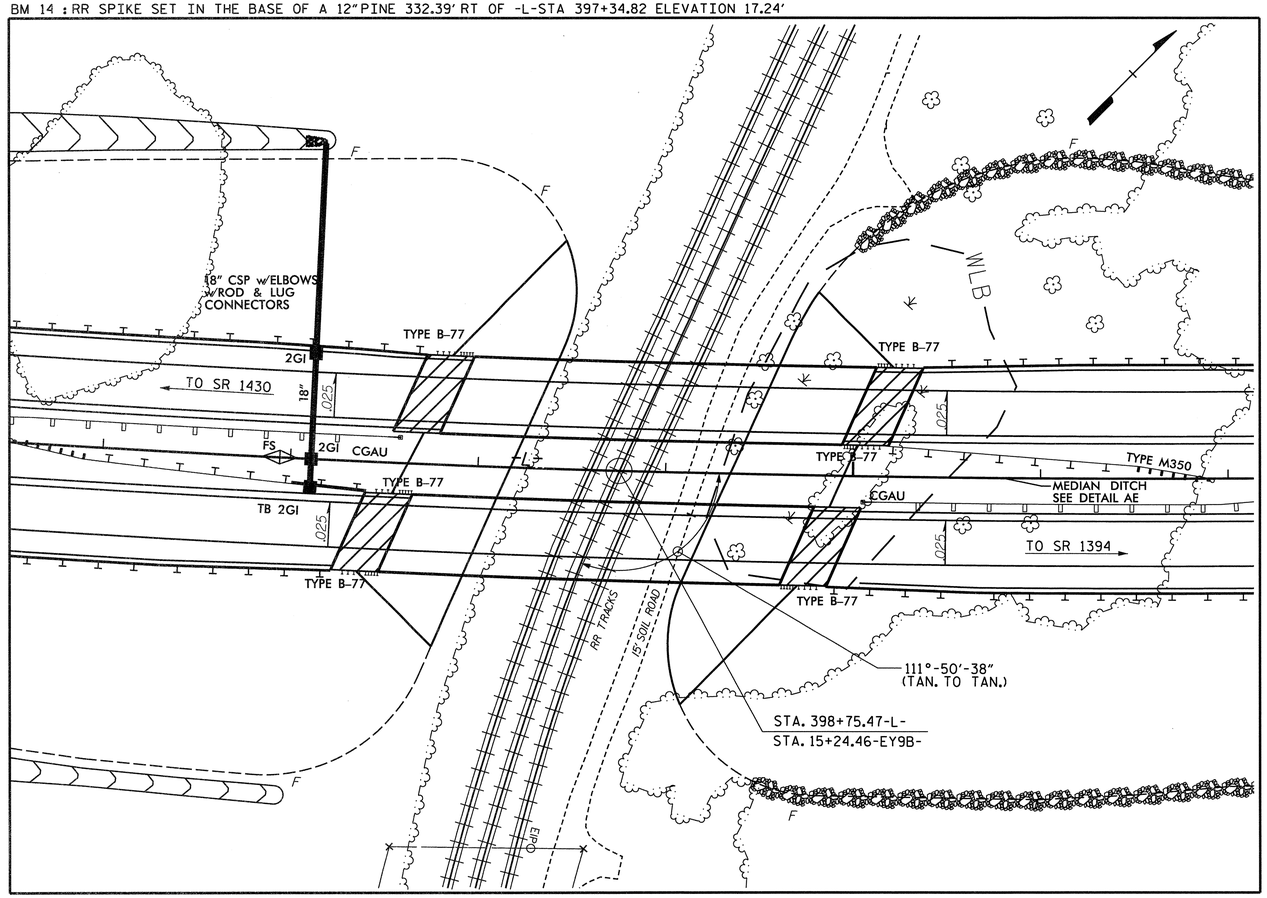

LOCATION SKETCH

- - NOTES - -

ASSUMED LIVE LOAD = HL 93 OR ALTERNATE LOADING.

THIS BRIDGE HAS BEEN DESIGNED IN ACCORDANCE WITH THE REQUIREMENTS OF THE AASHTO LRFD BRIDGE DESIGN SPECIFICATIONS FOR SEISMIC PERFORMANCE ZONE 1.

FOUNDATION TYPE WILL BE DETERMINED AFTER GEOLOGY REPORT HAS BEEN RECEIVED.

THIS BRIDGE HAS BEEN DESIGNED ACCORDING TO AASHTO LRFD DESIGN SPECIFICATIONS.

THIS STRUCTURE CONTAINS THE NECESSARY CORROSION PROTECTION REQUIRED FOR A CORROSIVE SITE.

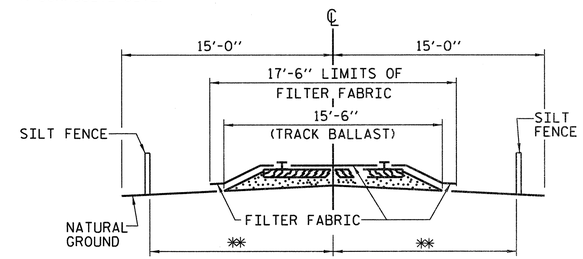

** TO BE DETERMINED BY THE ENGINEER IN CONSOLUTATION WITH THE RAILROAD.

RAILROAD EROSION CONTROL DETAIL

NOTES

RAILROAD EROSION CONTROL MEASURES SHALL BE INSTALLED PRIOR TO PERFORMING ANY WORK IN THE RAILROAD RIGHT-OF-WAY.

ADDITIONAL EROSION CONTROL MEASURES FOR PROTECTION OF RAILROAD DITCHES MAY BE REQUIRED AS DIRECTED BY THE ENGINEER.

NO SEPARATE PAYMENT WILL BE MADE FOR RAILROAD EROSION CONTROL MEASURES.

LIMITS OF SILT FENCE AND FILTER FABRIC PARALLEL TO RAILROAD SHALL EXTEND A MINIMUM OF 25'-0" OUTSIDE EDGE OF SUPERSTRUCTURE OR TOE OF SLOPE ON CONSTRUCTION. A GREATER LENGTH OF SILT FENCE MAY BE REQUIRED IF SO DIRECTED BY THE ENGINEER.

FILTER FABRIC TO BE NAILED TO TIMBER RAIL TIES WITH PRIME SOURCE "GRIP CAP" OR EQUIVALENT. FILTER FABRIC ON SHOULDER TO BE SECURED AS DIRECTED BY THE ENGINEER AND RAILROAD.

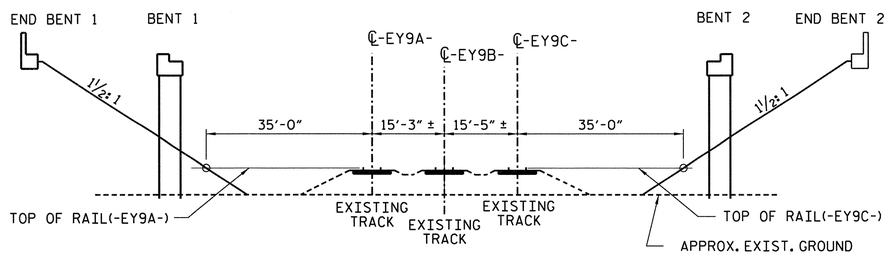

SPAN LENGTH BASED ON THIS SECTION

(LOOKING BACK STATION)

PROJECT NO. R-2633BB

BRUNSWICK/NEW HANOVER COUNTY

STATION: 398+75.47 -L-
15+24.46 -EY9B-

SHEET 3 OF 5

STATE OF NORTH CAROLINA
DEPARTMENT OF TRANSPORTATION
RALEIGH

GENERAL DRAWING FOR
BRIDGE ON US 17 OVER
PROGRESS ENERGY SPUR LINES
BETWEEN SR 1430 AND SR 1394
RIGHT LANE

NORTH CAROLINA PROFESSIONAL SEAL 19047 ENGINEER STEPHEN D. COOK
2/11/13

THE LOUIS BERGER GROUP, Inc.
1001 Wade Avenue, Suite 400
Raleigh, NC 27605-3322

REVISIONS							SHEET NO.
NO.	BY:	DATE:	NO.	BY:	DATE:		S-501
1			3				TOTAL SHEETS
2			4				700

DRAWN BY : R. KNIGHT DATE : 8/11
CHECKED BY : R. COFFMAN DATE : 9/11

G:\OR Projects\OR1092 - NCDOT Wilm Bypass DualBridges\Structures\Bridge Site 6\R-2633BB_SD_06R_GD_03.dgn
2/11/2013 8:46:54 AM 1092_PDF_full.pltcfg 1092_str.tbl

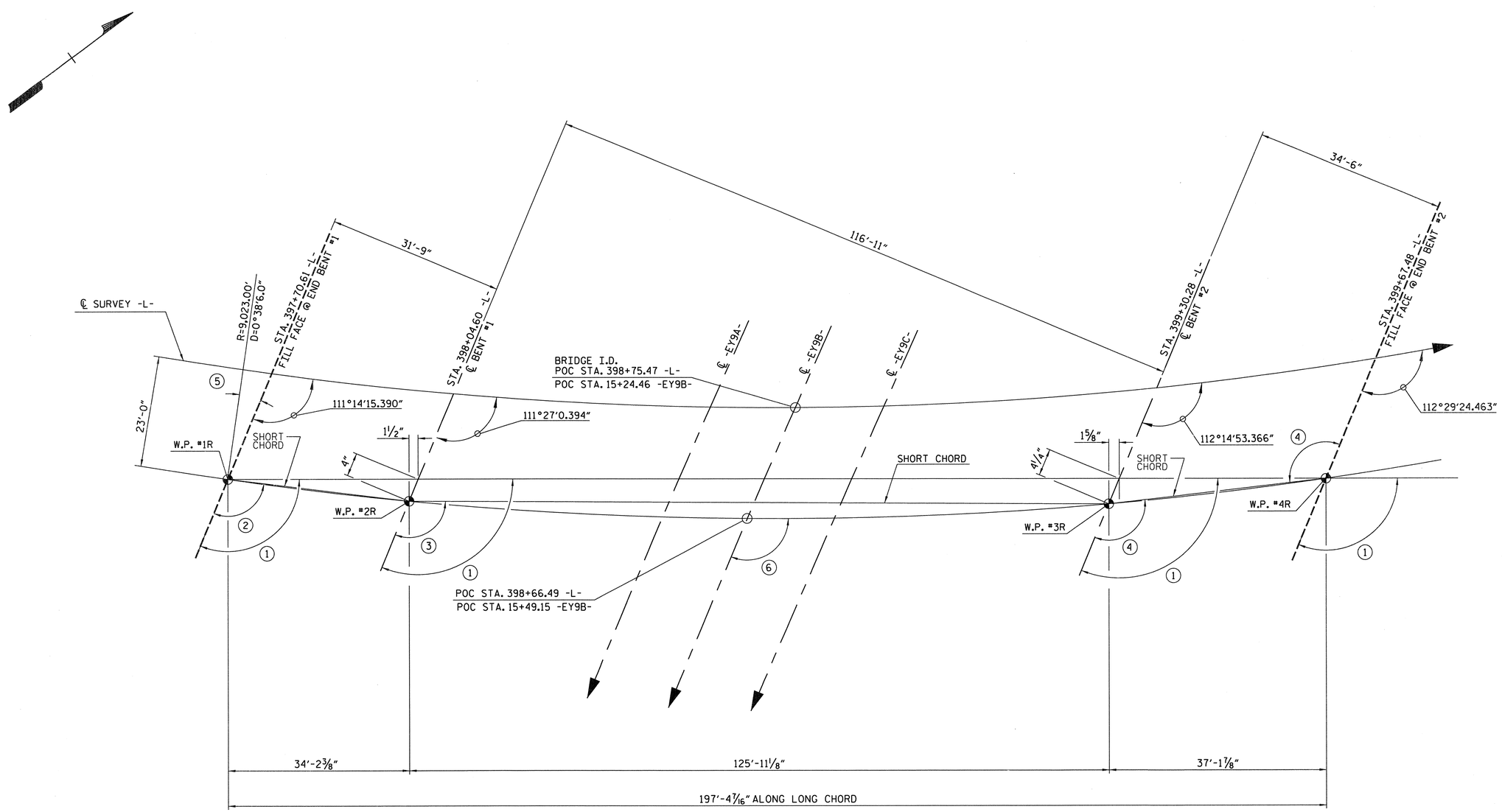

HORIZONTAL CURVE DATA

PI STA 383+94.77
Δ = 51°49'22.8"(LT)
D = 0°38'11.8"
L = 8,140.34'
T = 4,372.40'
R = 9,000.00'
e = 2.5%

LONG CHORD LAYOUT

(END BENTS AND BENTS ARE PARALLEL)

ANGLES

1. 111°48'11" (TO LONG CHORD)
2. 111°17'04" (TO SHORT CHORD)
3. 111°47'34" (TO SHORT CHORD)
4. 112°18'41" (TO SHORT CHORD)
5. 21°10'35"
6. 110°50'55" (TAN TO TAN)

NORTH CAROLINA PROFESSIONAL SEAL 14047 ENGINEER STEPHEN D. COFFMAN
2/11/13

PROJECT NO. R-2633BB
BRUNSWICK/NEW HANOVER COUNTY
STATION: 398+75.47 -L-
15+24.46 -EY9B-

SHEET 4 OF 5

STATE OF NORTH CAROLINA
DEPARTMENT OF TRANSPORTATION
RALEIGH

GENERAL DRAWING FOR
BRIDGE ON US 17 OVER
PROGRESS ENERGY SPUR LINES
BETWEEN SR 1430 AND SR 1394
RIGHT LANE

THE LOUIS BERGER GROUP, Inc.
1001 Wade Avenue, Suite 400
Raleigh, NC 27605-3322

REVISIONS							SHEET NO.
NO.	BY:	DATE:	NO.	BY:	DATE:		S-502
1			3				TOTAL SHEETS
2			4				700

DRAWN BY : R. KNIGHT DATE : 8/11
CHECKED BY : R. COFFMAN DATE : 9/11

G:\OR Projects\OR1092 - NCDOT Wilm Bypass DualBridges\Structures\Bridge Site 6\R-2633BB_SD_06R_GD_04.dgn
2/11/2013 8:46:57 AM 1092_PDF_full.pltcfg 1092_str.tbl

TOTAL BILL OF MATERIAL

	PREDRILLING FOR PILES	PILE REDRIVES	PDA TESTING	REINFORCED CONCRETE DECK SLAB	GROOVING BRIDGE FLOORS	CLASS A CONCRETE	BRIDGE APPROACH SLABS	REINFORCING STEEL	45" PRESTRESSED CONCRETE GIRDERS		MODIFIED 72" PRESTRESSED CONCRETE GIRDERS		HP 12 X 53 STEEL PILES		24" PRESTRESSED CONCRETE PILES		CONCRETE BARRIER RAIL	72" CHAIN LINK FENCE	4" CONCRETE SLOPE PROTECTION	ELASTOMERIC BEARINGS	EXPANSION JOINT SEALS
	LIN. FT.	EACH	EACH	SQ. FT.	SQ. FT.	CU. YDS.	LUMP SUM	LBS.	NO.	LIN. FT.	NO.	LIN. FT.	NO.	LIN. FT.	NO.	LIN. FT.	LIN. FT.	LIN. FT.	SQ. YDS.	LUMP SUM	LUMP SUM
SUPERSTRUCTURE				8,837	9,732		LUMP SUM		10	352.72	5	628.18					432.10	380.0		LUMP SUM	LUMP SUM
END BENT NO. 1		4				31.0		4,565					8	480					491		
BENT NO. 1	50	3				26.0		3,444							5	375					
BENT NO. 2	50	3				26.0		3,444							5	375					
END BENT NO. 2		4				31.0		4,581					8	480					565		
TOTAL	100	14	1	8,837	9,732	114.0	LUMP SUM	16,034	10	352.72	5	628.18	16	960	10	750	432.10	380.0	1,056	LUMP SUM	LUMP SUM

GENERAL DRAWING NOTES

ASSUMED LIVE LOAD = HL-93 OR ALTERNATE LOADING.

FOR OTHER DESIGN DATA AND GENERAL NOTES, SEE SHEET SN.

FOR EROSION CONTROL MEASURES SEE EROSION CONTROL PLANS.

THIS BRIDGE HAS BEEN DESIGNED IN ACCORDANCE WITH THE AASHTO LRFD BRIDGE DESIGN SPECIFICATIONS.

REMOVABLE FORMS MAY BE USED IN LIEU OF METAL STAY-IN-PLACE FORMS IN ACCORDANCE WITH ARTICLE 420-3 OF THE STANDARD SPECIFICATIONS.

PRESTRESSED CONCRETE DECK PANELS MAY BE USED IN LIEU OF METAL STAY-IN-PLACE FORMS IN ACCORDANCE WITH ARTICLE 420-3 OF THE STANDARD SPECIFICATIONS.

NEEDLE BEAMS WILL NOT BE ALLOWED UNLESS OTHERWISE CALLED FOR ON THE PLANS OR APPROVED BY THE ENGINEER.

THE CONTRACTOR SHALL PROVIDE INDEPENDENT ASSURANCE SAMPLES OF REINFORCING STEEL AS FOLLOWS: FOR PROJECTS REQUIRING UP TO 400 TONS OF REINFORCING STEEL, ONE 30 INCH SAMPLE OF EACH SIZE BAR USED, AND FOR PROJECTS REQUIRING OVER 400 TONS OF REINFORCING STEEL, TWO 30 INCH SAMPLES OF EACH SIZE BAR USED. THE BARS FROM WHICH THE SAMPLES ARE TAKEN MUST THEN BE SPLICED WITH REPLACEMENT BARS OF THE SIZE AND LENGTH OF THE SAMPLE, PLUS A MINIMUM LAP SPLICE OF THIRTY BAR DIAMETERS. PAYMENT FOR THE SAMPLES OF REINFORCING STEEL SHALL BE CONSIDERED INCIDENTAL TO VARIOUS PAY ITEMS.

THE CONTRACTOR'S ATTENTION IS CALLED TO THE FACT THAT THE SHORING AND EXCAVATION PLANS HAVE BEEN SUBMITTED TO THE RAILROAD BY THE STATE. AS OF THE TIME OF PLAN PRINTING FOR ADVERTISEMENT FOR BIDS, RAILROAD APPROVAL HAS NOT BEEN RECEIVED. WHEN SUCH APPROVAL IS RECEIVED, THE CONTRACTOR WILL BE NOTIFIED BY ADDENDUM. IN THE EVENT RAILROAD APPROVAL IS NOT GIVEN PRIOR TO SUBMISSION OF BIDS, THE CONTRACTOR SHALL SUBMIT BIDS BASED ON THE CONTRACT PLANS. THE CONTRACTOR SHALL NOT BEGIN EXCAVATION AT THE LOCATIONS SHOWN ON THESE PLANS UNTIL NOTIFIED OF RAILROAD APPROVAL.

FOR UTILITY INFORMATION, SEE UTILITY PLANS AND SPECIAL PROVISIONS.

FOR SUBMITTAL OF WORKING DRAWINGS, SEE SPECIAL PROVISIONS.

FOR FALSEWORK AND FORMWORK, SEE SPECIAL PROVISIONS.

FOR CRANE SAFETY, SEE SPECIAL PROVISIONS.

THE RAILROAD TRACK TOP OF RAIL ELEVATIONS SHOWN ON THE PLANS ARE FROM THE BEST INFORMATION AVAILABLE. PRIOR TO BEGINNING BRIDGE CONSTRUCTION, VERIFY THE TOP OF RAIL ELEVATIONS AND REPORT ANY VARIATIONS TO THE ENGINEER. ANY PLAN REVISIONS NECESSARY TO ACHIEVE THE REQUIRED MINIMUM VERTICAL CLEARANCE WILL BE PROVIDED BY THE DEPARTMENT.

FOR GROUT FOR STRUCTURES, SEE SPECIAL PROVISIONS.

THIS BRIDGE IS LOCATED IN SEISMIC ZONE 1.

FOR PLACING LOAD ON STRUCTURE MEMBERS, SEE SPECIAL PROVISIONS.

PROJECT NO. R-2633BB
BRUNSWICK/NEW HANOVER COUNTY
STATION: 398+75.47 -L-
15+24.46 -EY9B-

SHEET 5 OF 5

STATE OF NORTH CAROLINA
DEPARTMENT OF TRANSPORTATION
RALEIGH

GENERAL DRAWING FOR BRIDGE ON US 17 OVER PROGRESS ENERGY SPUR LINE & SR 1394 BETWEEN SR 1430 & US 421 RIGHT LANE

NORTH CAROLINA PROFESSIONAL SEAL 14047 ENGINEER STEPHEN D. COOK
2/11/13

THE LOUIS BERGER GROUP, Inc.
1001 Wade Avenue, Suite 400
Raleigh, NC 27605-3322

REVISIONS						SHEET NO.
NO.	BY:	DATE:	NO.	BY:	DATE:	S-503
1			3			TOTAL SHEETS
2			4			100

DRAWN BY : J. MYA DATE : OCT. 2012
CHECKED BY : S. COOK DATE : OCT. 2012

G:\OR Projects\OR1092 - NCDOT Wilm Bypass DualBridges\Structures\Bridge Site 6\R-2633BB_SD_06R_GD_05.dgn
2/11/2013 12:01:35 PM 1092_PDF_full.pltcfg 1092_str.tbl

LOAD AND RESISTANCE FACTOR RATING (LRFR) SUMMARY FOR PRESTRESSED CONCRETE GIRDERS

LEVEL		VEHICLE	WEIGHT (W) (TONS)	CONTROLLING LOAD RATING (#)	MINIMUM RATING FACTORS (RF)	TONS = W × RF	STRENGTH I LIMIT STATE											SERVICE III LIMIT STATE						COMMENT NUMBER
								MOMENT					SHEAR						MOMENT					
							LIVE-LOAD FACTORS (γ_{LL})	DISTRIBUTION FACTORS (DF)	RATING FACTOR	SPAN	GIRDER LOCATION	DISTANCE FROM LEFT END OF SPAN (ft)	DISTRIBUTION FACTORS (DF)	RATING FACTOR	SPAN	GIRDER LOCATION	DISTANCE FROM LEFT END OF SPAN (ft)	LIVE-LOAD FACTORS (γ_{LL})	DISTRIBUTION FACTORS (DF)	RATING FACTOR	SPAN	GIRDER LOCATION	DISTANCE FROM LEFT END OF SPAN (ft)	
DESIGN LOAD RATING		HL-93 (INVENTORY)	N/A	1	1.08	-	1.75	0.97	1.41	A	I	15.50	0.98	1.08	A	I	21.97	0.80	0.94	1.61	C	I	17.00	
		HL-93 (OPERATING)	N/A		1.83	-	1.35	0.97	1.83	A	I	15.50	0.98	2.00	C	I	27.60	N/A	-	-	-	-	-	
		HS-20 (INVENTORY)	36.000	2	1.13	40.680	1.75	0.82	1.46	B	EL	62.17	0.98	1.13	B	I	11.87	0.80	0.82	1.44	B	EL	62.17	
		HS-20 (OPERATING)	36.000		1.50	54.000	1.35	0.82	1.89	B	EL	62.17	0.98	1.50	B	I	11.87	N/A	-	-	-	-	-	
LEGAL LOAD RATING	SINGLE VEHICLE (SV)	SH	12.500		4.03	50.375	1.40	0.97	4.39	A	I	15.50	0.98	4.77	C	I	27.60	0.80	0.94	4.03	C	I	17.00	
		S3C	21.500		2.39	51.385	1.40	0.97	2.60	A	I	15.50	0.98	2.87	C	I	27.60	0.80	0.94	2.39	C	I	17.00	
		S3A	22.750		2.27	51.643	1.40	0.97	2.48	A	I	15.50	0.98	2.74	C	I	27.60	0.80	0.94	2.27	C	I	17.00	
		S4A	26.750		2.14	57.245	1.40	0.97	2.37	A	I	15.50	0.98	2.53	C	I	27.60	0.80	0.94	2.14	C	I	17.00	
		S5A	30.500		1.92	58.560	1.40	0.97	2.13	A	I	15.50	0.86	2.46	B	I	11.87	0.80	0.94	1.92	C	I	17.00	
		S6A	34.500		1.84	63.480	1.40	0.97	2.02	A	I	15.50	0.86	2.19	B	I	11.87	0.80	0.94	1.84	C	I	17.00	
		S7B	38.500	3	1.74	66.990	1.40	0.97	1.93	A	I	15.50	0.86	2.01	B	I	11.87	0.80	0.94	1.74	C	I	17.00	
		S7A	40.000		1.80	72.000	1.40	0.97	2.02	A	I	15.50	0.86	1.99	B	I	11.87	0.80	0.94	1.80	C	I	17.00	
	TRUCK TRACTOR SEMI-TRAILER (TTST)	T4A	28.250		2.27	64.128	1.40	0.94	3.06	A	I	17.00	0.98	2.60	A	I	27.60	0.80	0.94	2.27	A	EL	17.00	
		T5B	32.000		2.01	64.320	1.40	0.94	2.70	A	I	17.00	0.86	2.41	B	I	112.47	0.80	0.94	2.01	A	EL	17.00	
		T6A	36.000		1.99	71.640	1.40	0.82	2.65	B	EL	62.17	0.86	2.17	B	I	11.87	0.80	0.94	1.99	A	EL	17.00	
		T7A	40.000		1.92	76.800	1.40	0.82	2.43	B	EL	62.17	0.86	2.00	B	I	11.87	0.80	0.82	1.92	B	EL	62.17	
		T7B	40.000		1.92	76.800	1.40	0.82	2.54	B	EL	62.17	0.86	1.92	B	I	112.47	0.80	0.82	2.00	B	EL	62.17	

LOAD FACTORS:

DESIGN LOAD RATING FACTORS	LIMIT STATE	γ_{DC}	γ_{DW}
	STRENGTH I	1.25	1.50
	SERVICE III	1.00	1.00

NOTES:

MINIMUM RATING FACTORS ARE BASED ON THE STRENGTH I AND SERVICE III LIMIT STATES.

ALLOWABLE STRESSES FOR SERVICE III LIMIT STATE ARE AS REQUIRED FOR DESIGN.

COMMENTS:

1.
2.
3.
4.

(#) CONTROLLING LOAD RATING

(1) DESIGN LOAD RATING (HL-93)
(2) DESIGN LOAD RATING (HS-20)
(3) LEGAL LOAD RATING **

** SEE CHART FOR VEHICLE TYPE

GIRDER LOCATION

I - INTERIOR GIRDER
EL - EXTERIOR LEFT GIRDER
ER - EXTERIOR RIGHTGIRDER

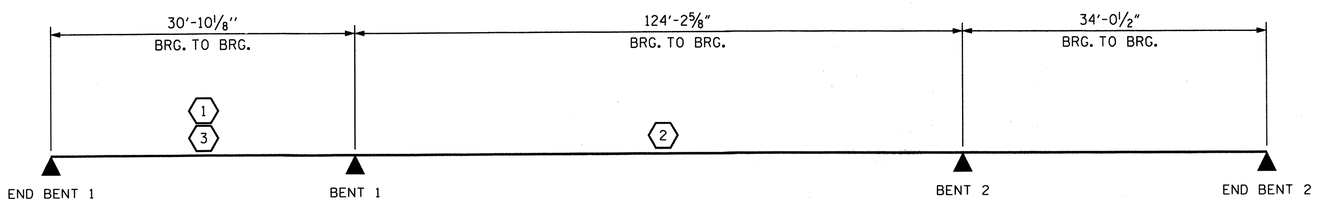

LRFR SUMMARY

PROJECT NO. R-2633BB
BRUNSWICK/NEW HANOVER COUNTY
STATION: 398+75.47 -L-

NORTH CAROLINA PROFESSIONAL SEAL 14047 ENGINEER STEPHEN D. COOK
6/26/13

STATE OF NORTH CAROLINA
DEPARTMENT OF TRANSPORTATION
RALEIGH

STANDARD
LRFR SUMMARY FOR PRESTRESSED CONCRETE GIRDERS RIGHT LANE
(INTERSTATE TRAFFIC)

THE LOUIS BERGER GROUP, Inc.
1001 Wade Avenue, Suite 400
Raleigh, NC 27605-3322

REVISIONS						
NO.	BY:	DATE:	NO.	BY:	DATE:	
1			3			
2			4			

SHEET NO. S-504
TOTAL SHEETS 700

ASSEMBLED BY : J. MYA DATE : SEPT 2012
CHECKED BY : R.DECOLA DATE : DEC 2012
DRAWN BY : MAA 1/08 REV. 11/12/08RR MAA/GM
CHECKED BY : GM/DI 2/08 REV. 10/1/11 MAA/GM

G:\OR Projects\OR1092 - NCDOT Wilm Bypass DualBridges\Structures\Bridge Site 6\R-2633BB_SD_06R_LRFR.dgn
6/27/2013 9:48:00 AM 1092_PDF_full.pltcfg 1092_str.tbl

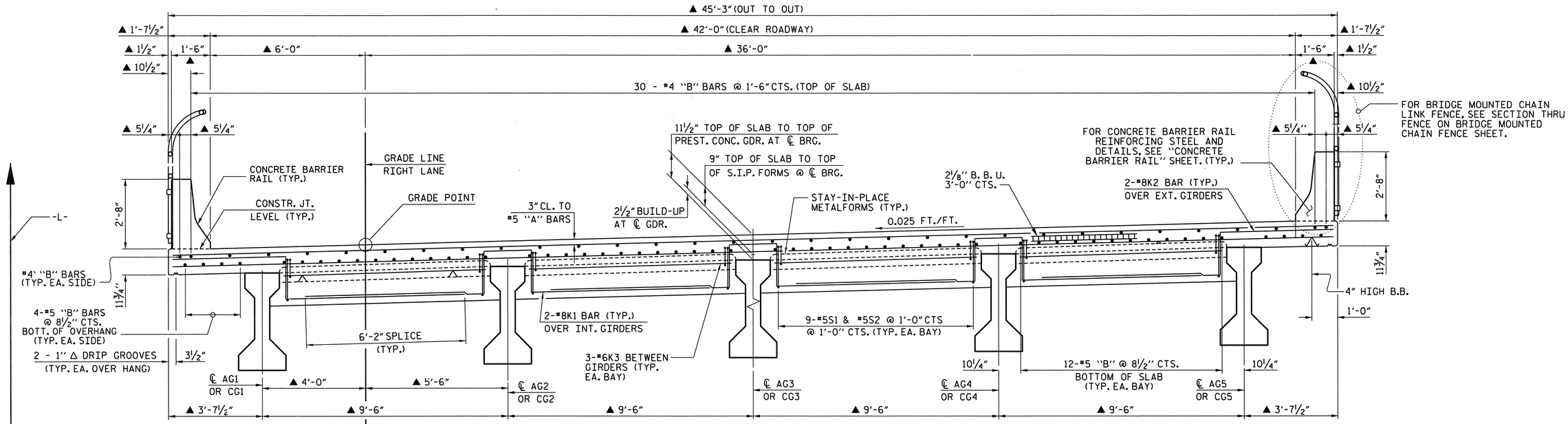

PARTIAL TYPICAL SECTION
SHOWING END BENT DIAPHRAGM

PARTIAL TYPICAL SECTION
SHOWING BENT DIAPHRAGM

TYPICAL SECTION - SPANS A & C

NOTE: ALL HORIZONTAL DIMENSIONS ARE RADIAL EXCEPT AS NOTED.

▲ DIMENSIONS ARE RADIAL @ END BENT FILL FACES AND BENT CONTROL LINES.

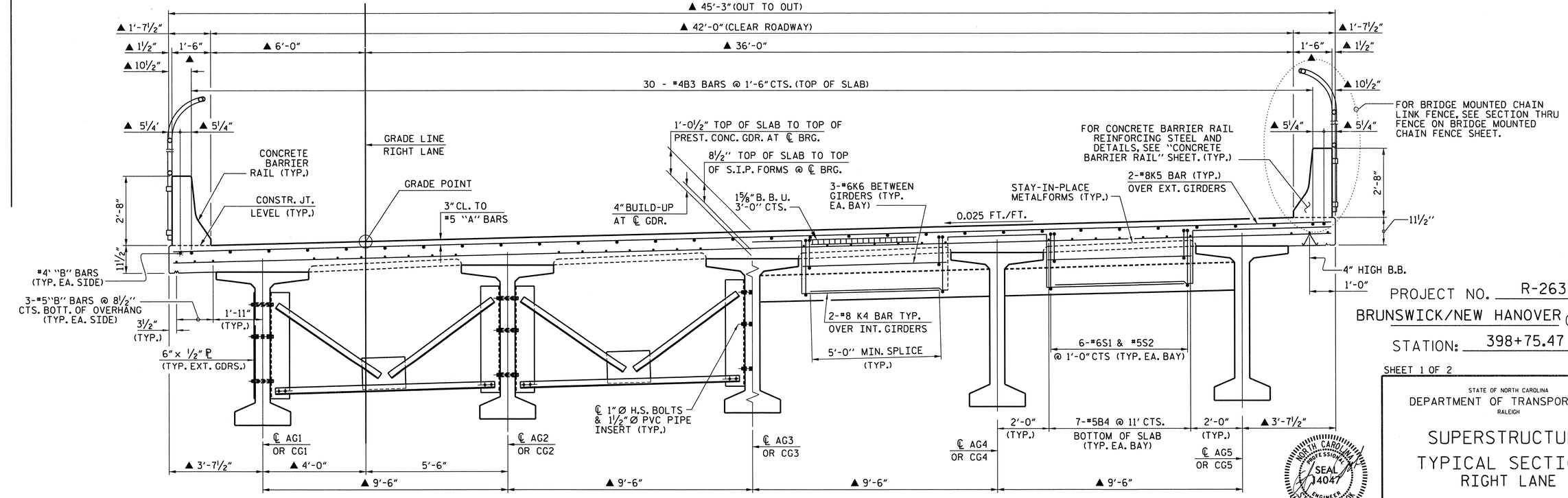

PARTIAL TYPICAL SECTION
SHOWING INTERMEDIATE DIAPHRAGM

TYPICAL SECTION - SPAN B

(SEE PRESTRESSED CONCRETE GIRDER SHEETS FOR DETAILS OF INTERMEDIATE DIAPHRAGMS)

PARTIAL TYPICAL SECTION
SHOWING BENT DIAPHRAGM

PROJECT NO. R-2633BB

BRUNSWICK/NEW HANOVER COUNTY

STATION: 398+75.47 -L-

SHEET 1 OF 2

STATE OF NORTH CAROLINA
DEPARTMENT OF TRANSPORTATION
RALEIGH

SUPERSTRUCTURE TYPICAL SECTIONS RIGHT LANE

NORTH CAROLINA PROFESSIONAL SEAL 14047 ENGINEER STEPHEN D. COOK 3/26/13

THE LOUIS BERGER GROUP, Inc.
1001 Wade Avenue, Suite 400
Raleigh, NC 27605-3322

REVISIONS								
NO.	BY:	DATE:	NO.	BY:	DATE:		SHEET NO.	
1			3				S-565	
2			4				TOTAL SHEETS	
							100	

DRAWN BY : R. KNIGHT/J.MYA DATE : DEC 2012
CHECKED BY : S. COOK DATE : DEC 2012

G:\OR Projects\OR1092 - NCDOT Wilm Bypass DualBridges\Structures\Bridge Site 6\R-2633BB_SD_06R_TYP01.dgn
3/26/2013 1:48:19 PM 1092_PDF_full.pltcfg 1092_str.tbl

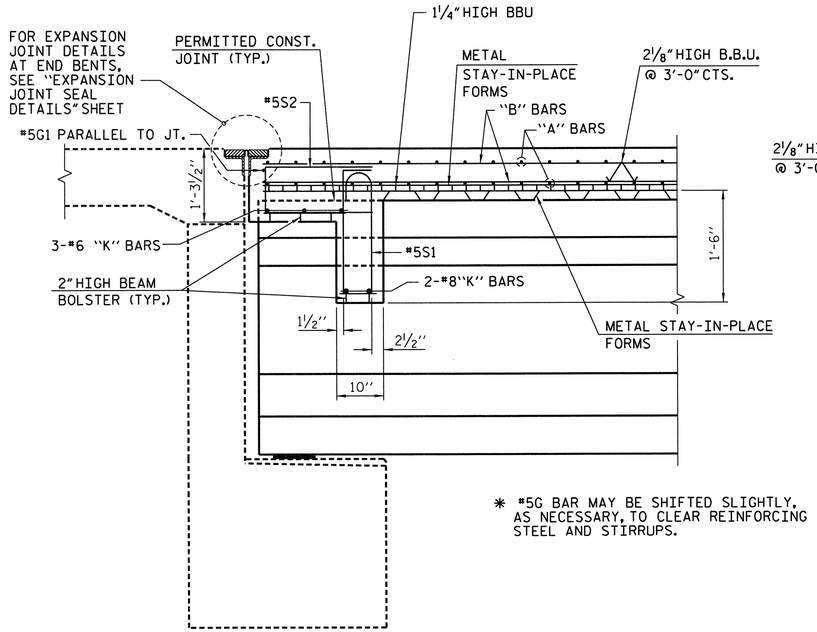

SECTION A-A

✱ #5G BAR MAY BE SHIFTED SLIGHTLY, AS NECESSARY, TO CLEAR REINFORCING STEEL AND STIRRUPS.

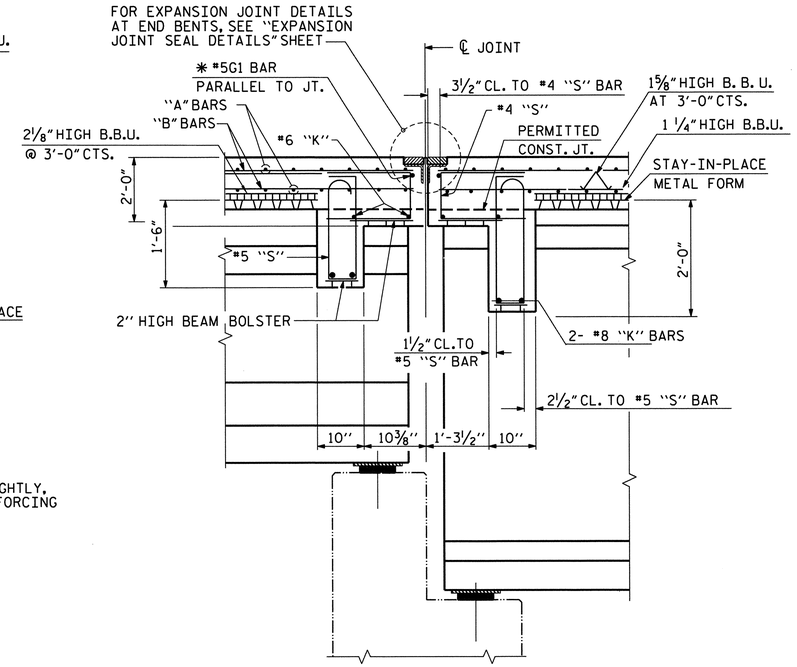

SECTION B-B

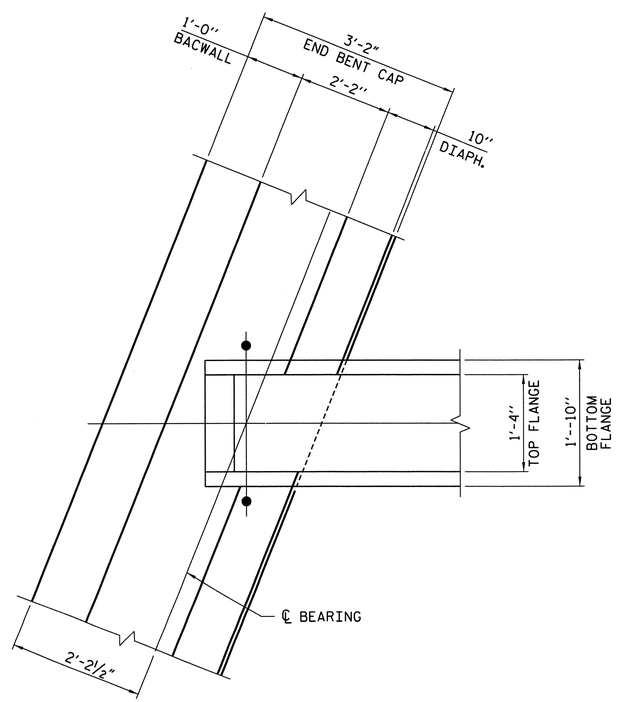

PLAN OF
END BENT DIAPHRAGM

PROJECT NO. R-2633BB
BRUNSWICK/NEW HANOVER COUNTY
STATION: 398+75.47 -L-

SHEET 2 OF 2

STATE OF NORTH CAROLINA
DEPARTMENT OF TRANSPORTATION
RALEIGH

SUPERSTRUCTURE
TYPICAL SECTION
DETAILS - RIGHT LANE

NORTH CAROLINA PROFESSIONAL SEAL 14047 ENGINEER STEPHEN D. COOK
3/26/13

THE LOUIS BERGER GROUP, Inc.
1001 Wade Avenue, Suite 400
Raleigh, NC 27605-3322

REVISIONS						SHEET NO.
NO.	BY:	DATE:	NO.	BY:	DATE:	S-506
1			3			TOTAL SHEETS
2			4			700

DRAWN BY : J. MYA DATE : OCT. 2012
CHECKED BY : S. COOK DATE : OCT. 2012

G:\OR Projects\OR1092 - NCDOT Wilm Bypass DualBridges\Structures\Bridge Site 6\R-2633BB_SD_06R_TYP02.dgn
3/26/2013 1:48:20 PM 1092_PDF_full.pltcfg 1092_str.tbl

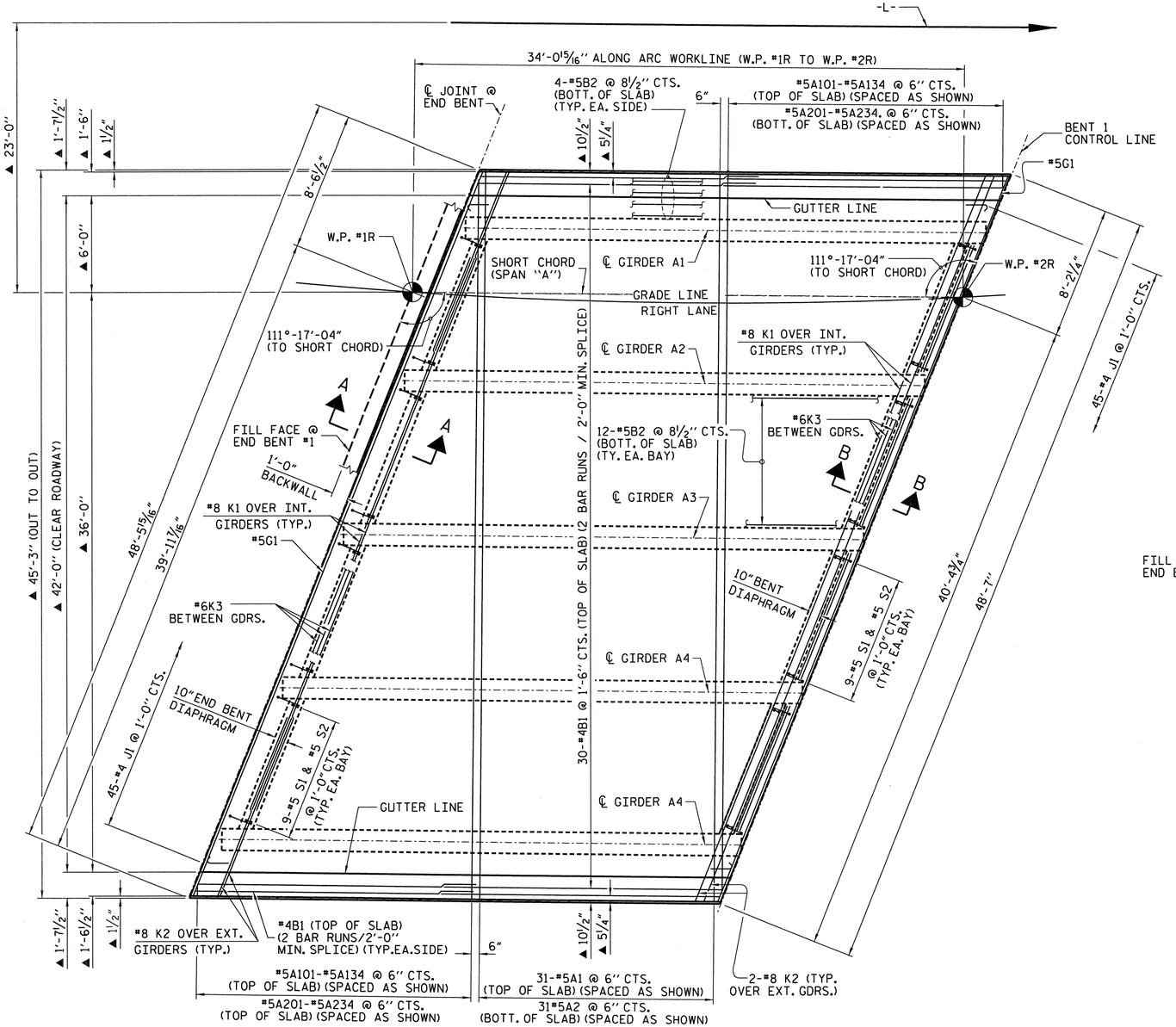

PLAN OF SPAN "A"

▲ RADIAL DIMENSIONS TO -L-.
FOR SECTION VIEWS, SEE "TYPICAL SECTION DETAILS" SHEET.

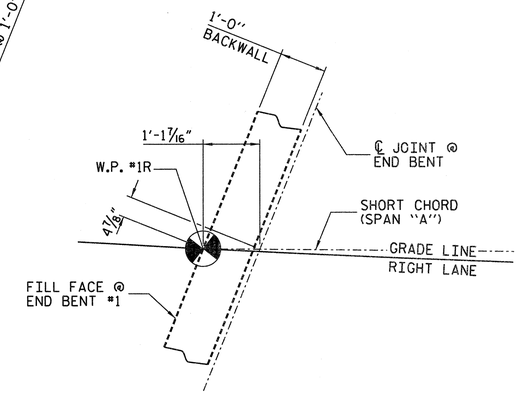

DETAIL "A"

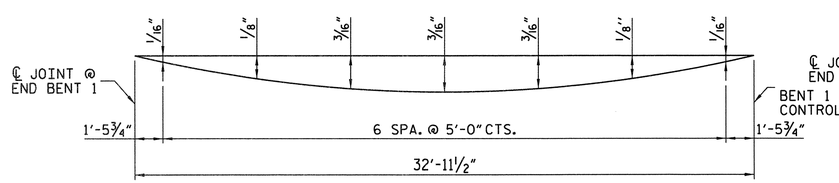

ARC OFFSET - LEFT SIDE

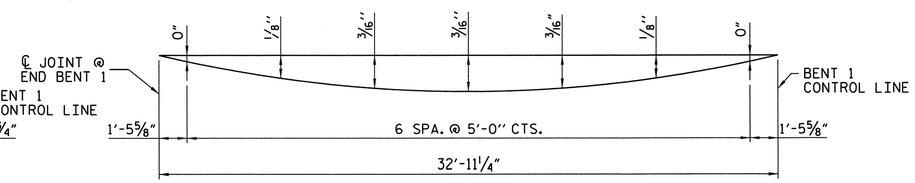

ARC OFFSET - RIGHT SIDE

PROJECT NO. R-2633BB
BRUNSWICK/NEW HANOVER COUNTY
STATION: 398+75.47 -L-

SHEET 1 OF 3

STATE OF NORTH CAROLINA
DEPARTMENT OF TRANSPORTATION
RALEIGH

SUPERSTRUCTURE
PLAN OF SPAN "A"
RIGHT LANE

NORTH CAROLINA PROFESSIONAL SEAL 14047 ENGINEER STEPHEN D. COOK 2/11/13

THE LOUIS BERGER GROUP, Inc.
1001 Wade Avenue, Suite 400
Raleigh, NC 27605-3322

REVISIONS							SHEET NO.
NO.	BY:	DATE:	NO.	BY:	DATE:		S-507
1			3				TOTAL SHEETS
2			4				700

DRAWN BY : J. MYA DATE : OCT.2012
CHECKED BY : S. COOK DATE : OCT.2012

G:\OR Projects\OR1092 - NCDOT Wilm Bypass DualBridges\Structures\Bridge Site 6\R-2633BB_SD_06R_POSA_01.dgn
2/11/2013 8:47:12 AM 1092_PDF_full.pltcfg 1092_str.tbl

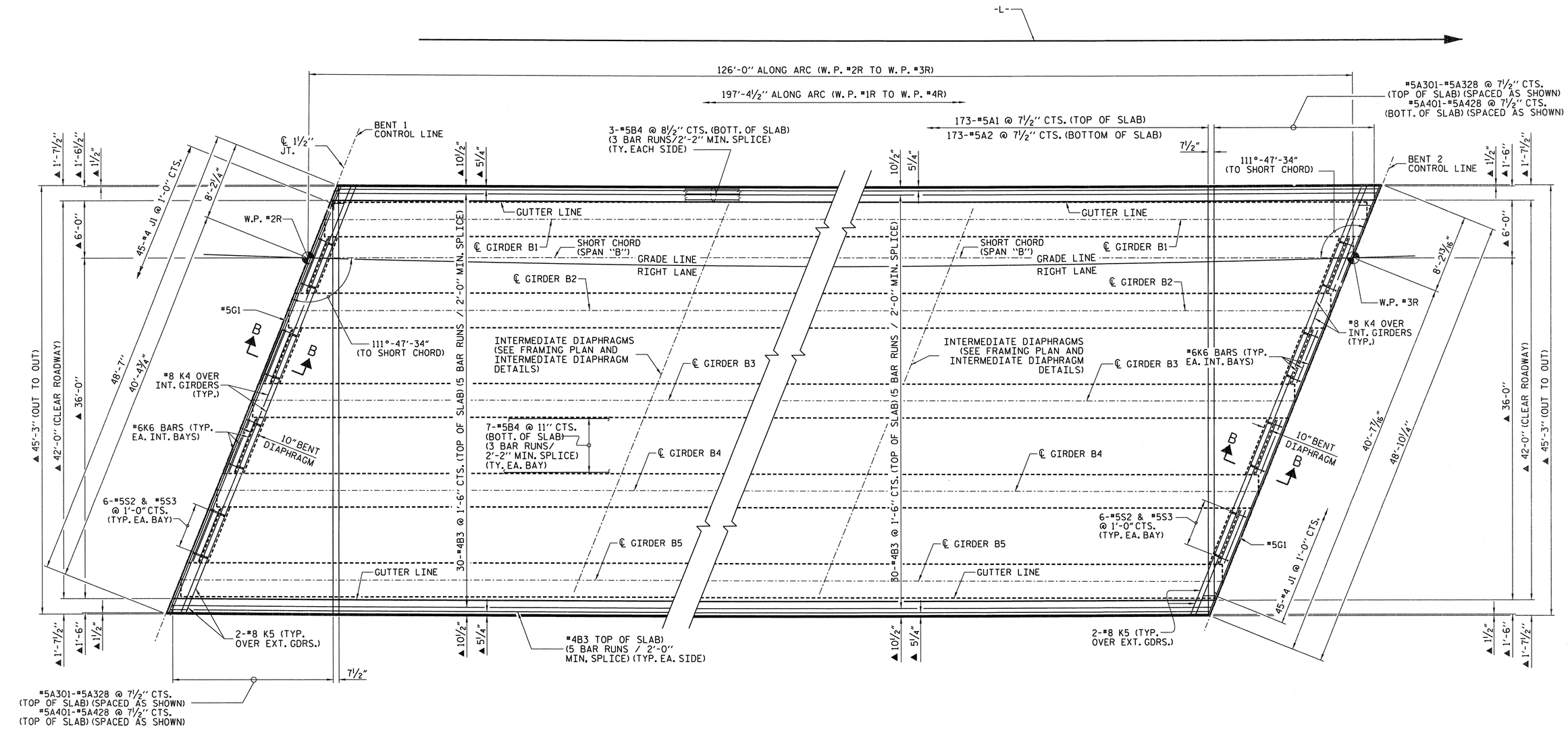

PLAN OF SPAN B

RADIAL DIMENSIONS TO -L-.
FOR SECTION VIEWS, SEE "TYPICAL SECTION DETAILS" SHEET.

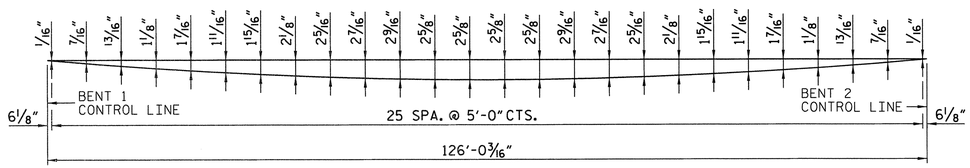

ARC OFFSET - LEFT SIDE

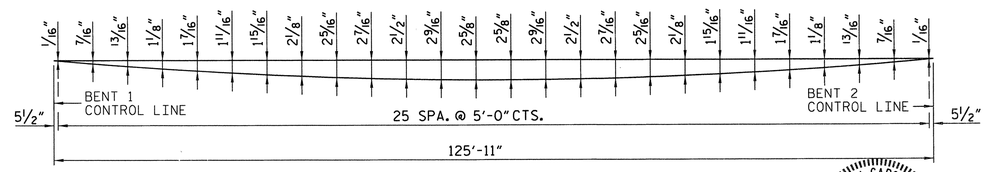

ARC OFFSET - RIGHT SIDE

PROJECT NO. R-2633BB
BRUNSWICK/NEW HANOVER COUNTY
STATION: 398+75.47 -L-

SHEET 2 OF 3

STATE OF NORTH CAROLINA
DEPARTMENT OF TRANSPORTATION
RALEIGH

SUPERSTRUCTURE PLAN OF SPAN "B" RIGHT LANE

NORTH CAROLINA PROFESSIONAL SEAL 14047 ENGINEER STEPHEN D. COOK 2/11/13

THE LOUIS BERGER GROUP, Inc.
1001 Wade Avenue, Suite 400
Raleigh, NC 27605-3322

REVISIONS								SHEET NO.
NO.	BY:	DATE:	NO.	BY:	DATE:			S-508
1			3					TOTAL SHEETS
2			4					700

DRAWN BY : J. MYA DATE : SEP. 2012
CHECKED BY : S. COOK DATE : SEP. 2012

G:\OR Projects\OR1092 - NCDOT Wilm Bypass DualBridges\Structures\Bridge Site 6\R-2633BB_SD_06R_POSB_01.dgn
2/11/2013 8:47:15 AM 1092_PDF_full.pltcfg 1092_str.tbl

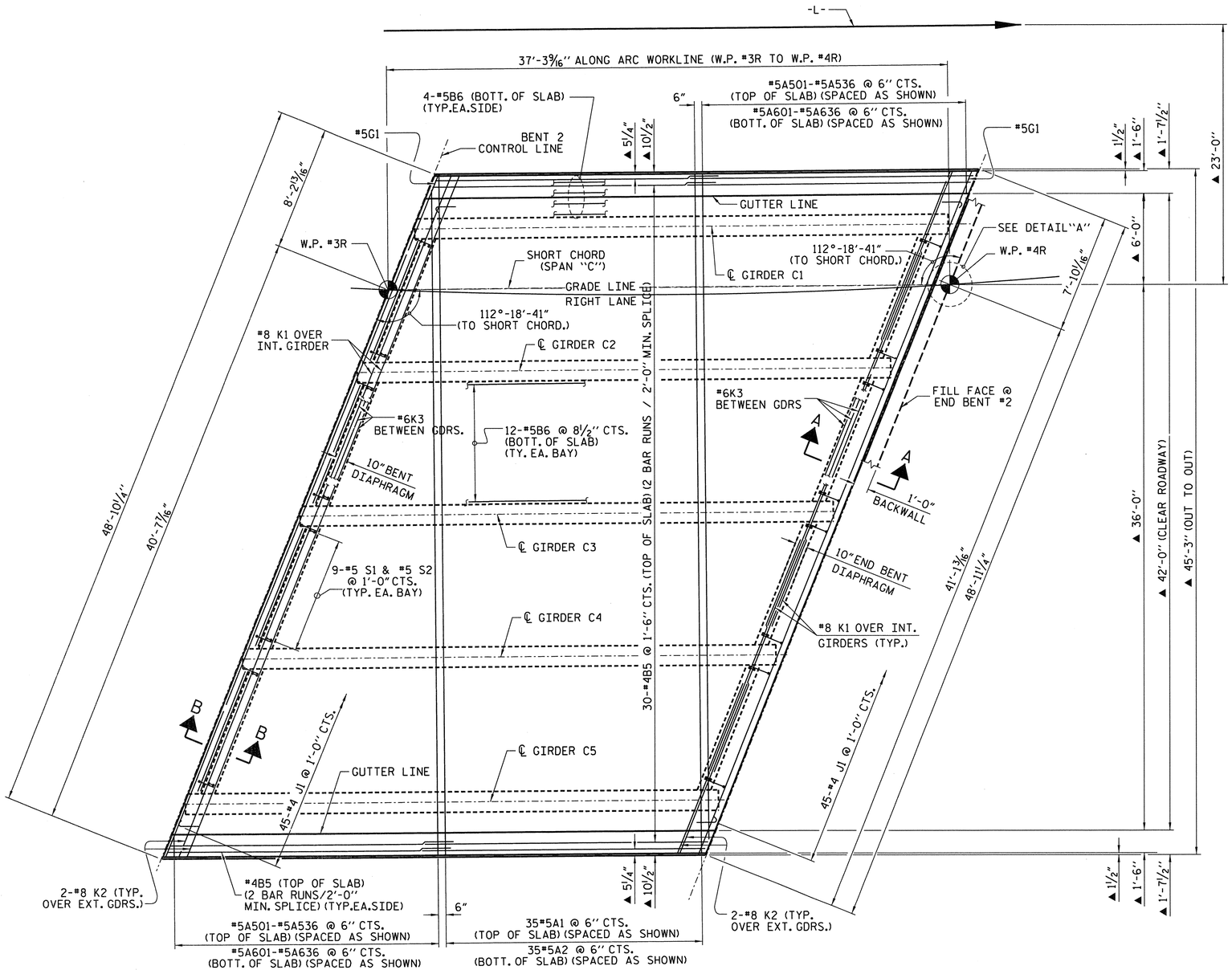

PLAN OF SPAN "C"

▲ RADIAL DIMENSIONS TO -L-.
FOR SECTION VIEWS, SEE "TYPICAL SECTION DETAILS" SHEET.

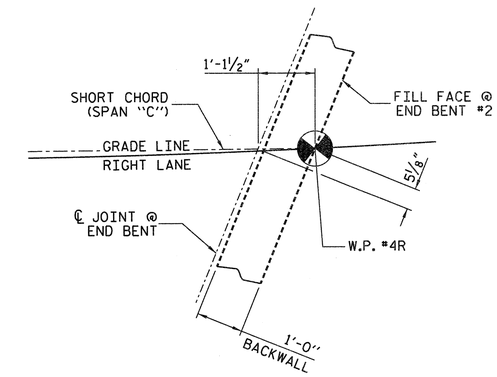

DETAIL "A"

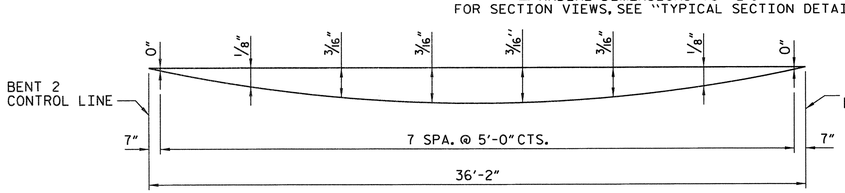

ARC OFFSET - LEFT SIDE

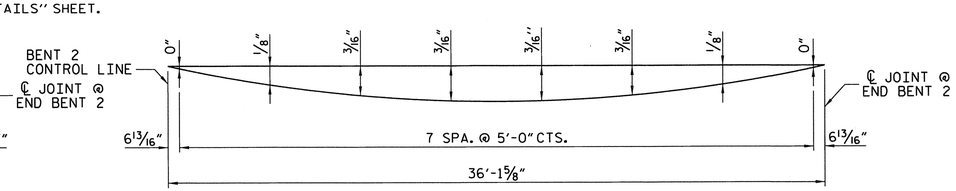

ARC OFFSET - RIGHT SIDE

PROJECT NO. R-2633BB
BRUNSWICK/NEW HANOVER COUNTY
STATION: 398+75.47 -L-

SHEET 3 OF 3

STATE OF NORTH CAROLINA
DEPARTMENT OF TRANSPORTATION
RALEIGH

SUPERSTRUCTURE PLAN OF SPAN "C" RIGHT LANE

NORTH CAROLINA PROFESSIONAL SEAL 14047 ENGINEER STEPHEN R. COOK 2/11/13

THE LOUIS BERGER GROUP, Inc.
1001 Wade Avenue, Suite 400
Raleigh, NC 27605-3322

REVISIONS							SHEET NO.
NO.	BY:	DATE:	NO.	BY:	DATE:		S-569
1			3				TOTAL SHEETS
2			4				700

DRAWN BY : J. MYA DATE : OCT.2012
CHECKED BY : S. COOK DATE : OCT.2012

G:\OR Projects\OR1092 - NCDOT Wilm Bypass DualBridges\Structures\Bridge Site 6\R-2633BB_SD_06R_POSC_01.dgn
2/11/2013 8:47:19 AM 1092.PDF full.pltcfg 1092.str.tbl

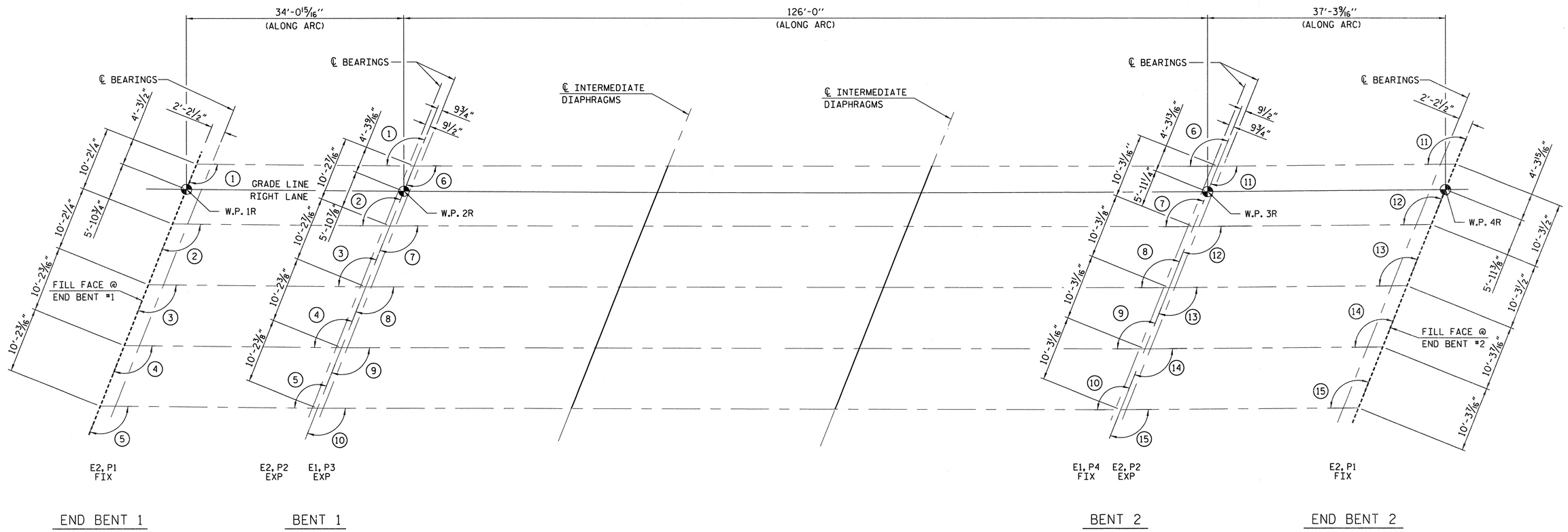

TABLE OF ANGLES	
NO.	ANGLE
1	111°17'40"
2	111°16'15"
3	111°14'51"
4	111°13'27"
5	111°12'03"
6	111°48'11"
7	111°46'44"
8	111°45'17"
9	111°43'51"
10	111°42'25"
11	112°19'-18"
12	112°17'49"
13	112°16'20"
14	112°14'52"
15	112°13'23"

FRAMING PLAN

PROJECT NO. R-2633BB
BRUNSWICK/NEW HANOVER COUNTY
STATION: 398+75.47 -L-

STATE OF NORTH CAROLINA
DEPARTMENT OF TRANSPORTATION
RALEIGH

SUPERSTRUCTURE
FRAMING PLAN
RIGHT LANE

NORTH CAROLINA PROFESSIONAL SEAL 14044 ENGINEER STEPHEN D. COOK
2/11/13

THE LOUIS BERGER GROUP, Inc.
1001 Wade Avenue, Suite 400
Raleigh, NC 27605-3322

REVISIONS						SHEET NO.
NO.	BY:	DATE:	NO.	BY:	DATE:	S-510
1			3			TOTAL SHEETS
2			4			700

DRAWN BY : R. KNIGHT DATE : JAN 2012
CHECKED BY : S. COOK DATE : OCT 2012

G:\OR Projects\OR1092 - NCDOT Wilm Bypass DualBridges\Structures\Bridge Site 6\R-2633BB_SD_06R_FRM.dgn
2/11/2013 8:47:22 AM 1092_PDF_full.pltcfg 1092_str.tbl

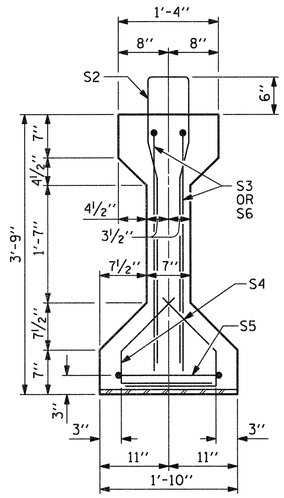

SECTION A-A

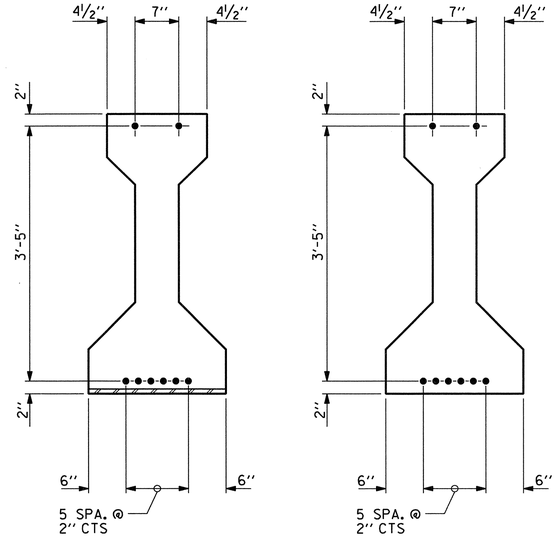

AT END OF GIRDER

AT ℄ OF GIRDER

0.6" Ø LOW RELAXATION STRAND LAYOUT

NOTES

ALL PRESTRESSING STRANDS SHALL BE 7-WIRE LOW-RELAXATION GRADE 270 STRANDS AND SHALL CONFORM TO AASHTO M203 EXCEPT FOR SAMPLING REQUIREMENTS WHICH SHALL BE IN ACCORDANCE WITH THE STANDARD SPECIFICATIONS.

APPLY EPOXY PROTECTIVE COATING TO END OF GIRDER SURFACES.

EMBEDDED PLATE "B-1" SHALL BE GALVANIZED IN ACCORDANCE WITH THE SPECIFICATIONS.

BEVEL EDGES OF PLATE "B-1" TO GIVE CLOSE FIT BUT NOT TIGHT FIT TO STEEL CASTING FORM.

ANCHOR STUDS SHALL CONFORM TO AASHTO M169 GRADES 1010 THROUGH 1020 OR APPROVED EQUAL, AND SHALL MEET THE TYPE "B" REQUIREMENTS OF SUBSECTION 7.3 OF THE ANSI/AASHTO/AWS D1.5 BRIDGE WELDING CODE.

ALL PRESTRESSED STRANDS SHALL BE CUT FLUSH WITH THE GIRDER ENDS.

THE TRANSFER OF LOAD FROM THE ANCHORAGES TO THE GIRDER SHALL BE DONE WHEN CONCRETE HAS REACHED A COMPRESSIVE STRENGTH OF NOT LESS THAN 5500 PSI.

DEPENDING ON THE TYPE OF SYSTEM USED TO SUPPORT THE DECK SLAB FORMS, PRESET ANCHORS MAY BE NECESSARY IN THE PRESTRESSED CONCRETE GIRDER.

THE TOP SURFACE OF THE GIRDER SHALL BE RAKED TO A DEPTH OF ¼" EXCEPT IN THE AREA BETWEEN THE STIRRUP AND THE EDGE OF THE GIRDER.

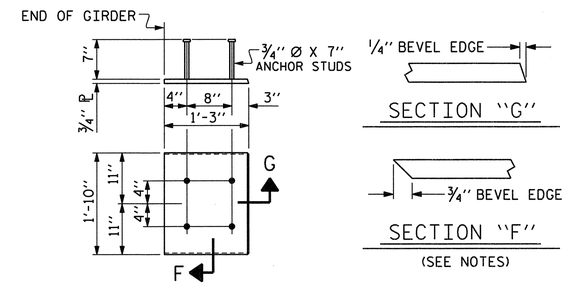

EMBEDDED PLATE "B-1" DETAILS

TWO EMBEDDED PLATES "B-1" ARE REQUIRED FOR EACH GIRDER.

0.6" Ø L. R. GRADE 270 STRANDS

AREA (SQUARE INCHES)	ULTIMATE STRENGTH (LBS. PER STRAND)	APPLIED PRESTRESS (LBS. PER STRAND)
0.217	58,600	43,950

REINFORCING STEEL FOR ONE GIRDER

BAR	NUMBER	SIZE	TYPE	LENGTH	WEIGHT
S1	26	#4	1	8'-6"	148
S2	8	#6	1	8'-6"	102
S3	4	#6	2	4'-8"	28
S4	56	#4	3	2'-9"	103
S5	2	#4	4	9'-6"	13
S6	4	#6	2	4'-6"	27

BAR TYPES

ALL BAR DIMENSIONS ARE OUT-TO-OUT

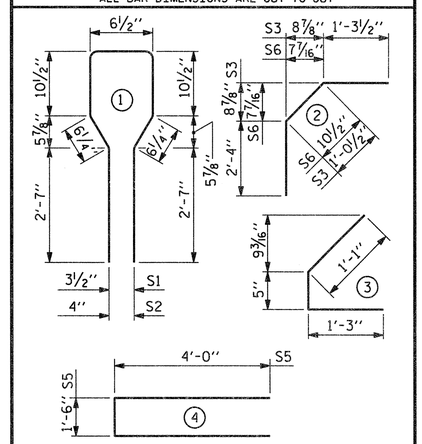

QUANTITIES FOR ONE GIRDER

REINFORCING STEEL	7000 PSI CONCRETE	0.6" Ø L. R. STRANDS
LB.	C.Y.	No.
421	4.6	8

GIRDERS REQUIRED

NUMBER	LENGTH	TOTAL LENGTH
5	32'-2⅛"	175-10⅛"

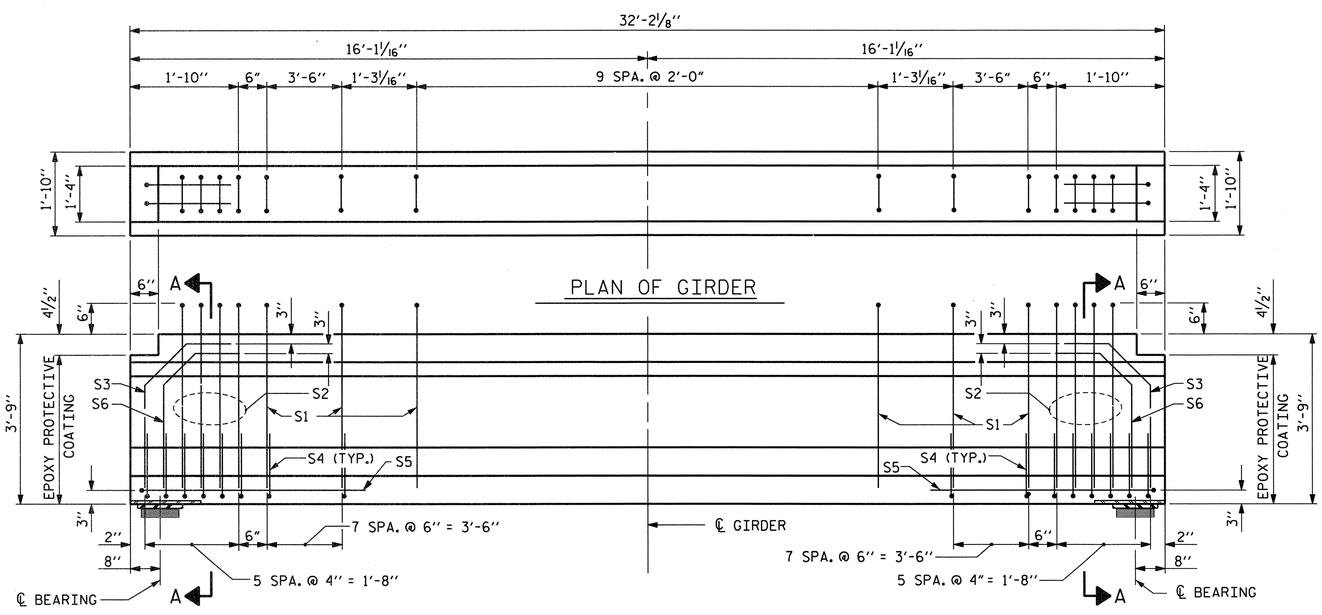

PROJECT NO. R-2633BB

BRUNSWICK/NEW HANOVER COUNTY

STATION: 398+75.47 -L-

SHEET 1 OF 5

STATE OF NORTH CAROLINA
DEPARTMENT OF TRANSPORTATION
RALEIGH

STANDARD
AASHTO TYPE III
PRESTRESSED CONCRETE GIRDER
SPAN "A"
RIGHT LANE

NORTH CAROLINA PROFESSIONAL SEAL 14047 ENGINEER STEPHEN D. COOK
2/4/13

THE LOUIS BERGER GROUP, Inc.
1001 Wade Avenue, Suite 400
Raleigh, NC 27605-3322

REVISIONS						
NO.	BY:	DATE:	NO.	BY:	DATE:	
1			3			
2			4			

SHEET NO. S-511

TOTAL SHEETS 700

STD. NO. PCG2

ASSEMBLED BY : R. KNIGHT		DATE : DEC 2012	
CHECKED BY : R. DECOLA		DATE : DEC 2012	
DRAWN BY : JMB 12/87	REV. 8/16/99	RWW/LES	
CHECKED BY : ARB 12/87	REV. 5/1/06	TLA/GM	
	REV. 10/1/11	MAA/GM	

G:\OR Projects\OR1092 - NCDOT Wilm Bypass DualBridges\Structures\Bridge Site 6\R-2633BB_SD_06R_PCG_01.dgn
2/11/2013 8:47:25 AM 1092_PDF_full.pltcfg 1092_str.tbl

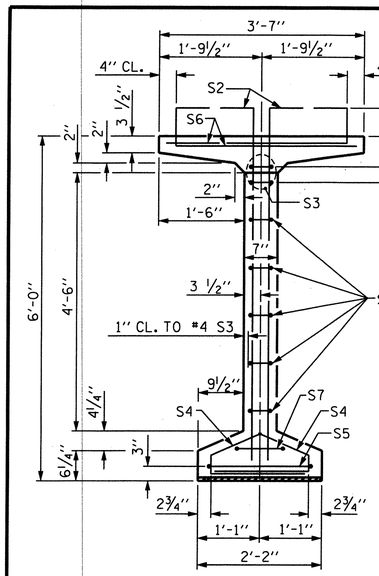

SECTION A-A

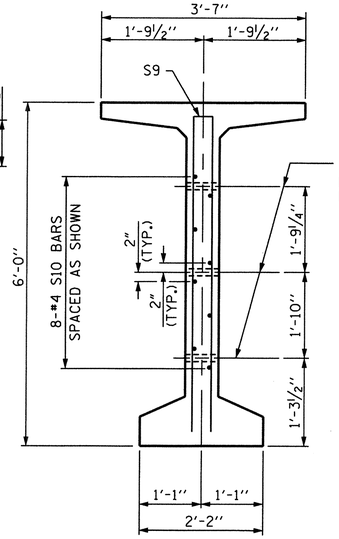

SECTION C-C

(S1, S6 AND S8 BARS NOT SHOWN)

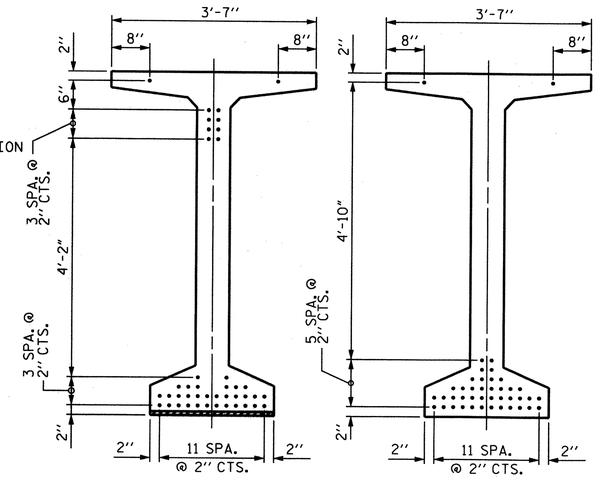

AT END OF GIRDER

AT ℄ OF GIRDER

0.6" Ø LOW RELAXATION STRAND LAYOUT

NOTES

ALL PRESTRESSING STRANDS SHALL BE 7-WIRE LOW-RELAXATION GRADE 270 STRANDS AND SHALL CONFORM TO AASHTO M203 EXCEPT FOR SAMPLING REQUIREMENTS WHICH SHALL BE IN ACCORDANCE WITH THE STANDARD SPECIFICATIONS.

ALL REINFORCING STEEL SHALL BE GRADE 60.

APPLY EPOXY PROTECTIVE COATING TO END OF GIRDER SURFACES INDICATED IN ELEVATION VIEW.

EMBEDDED PLATE "B-1" SHALL BE GALVANIZED IN ACCORDANCE WITH THE STANDARD SPECIFICATIONS. BEVEL EDGES OF PLATE "B-1" TO GIVE CLOSE FIT BUT NOT TIGHT FIT TO STEEL CASTING FORM.

ANCHOR STUDS SHALL CONFORM TO AASHTO M169 GRADES 1010 THROUGH 1020 OR APPROVED EQUAL, AND SHALL MEET THE TYPE "B" REQUIREMENTS OF SUBSECTION 7.3 OF THE ANSI/AASHTO/AWS D1.5 BRIDGE WELDING CODE.

ALL PRESTRESSING STRANDS SHALL BE CUT FLUSH WITH GIRDER ENDS.

THE TRANSFER OF LOAD FROM THE ANCHORAGES TO THE GIRDER SHALL BE DONE WHEN CONCRETE HAS REACHED A COMPRESSIVE STRENGTH OF NOT LESS THAN 8500 PSI.

DEPENDING ON THE TYPE OF SYSTEM USED TO SUPPORT THE DECK SLAB FORMS, PRESET ANCHORS MAY BE NECESSARY IN THE PRESTRESSED CONCRETE GIRDER.

THE TOP SURFACE OF THE GIRDER, EXCLUDING THE OUTSIDE 4", SHALL BE RAKED TO A DEPTH OF ¼".

WHEN DRAPED STRANDS ARE DETAILED, THE LONGITUDINAL LOCATION OF THE HOLD DOWN DEVICES SHALL BE WITHIN 6" OF THE LOCATION SHOWN AND THE CENTER OF GRAVITY OF THE GROUP OF DRAPED STRANDS SHALL BE LOCATED WITHIN ½" OF THE THEORETICAL LOCATION SHOWN.

A 2" x 2" CHAMFER IS ALLOWED AT THE INTERSECTION OF THE WEB AND THE BOTTOM FLANGE OF 72" MODIFIED BULB TEES ONLY.

THE CONTRACTOR HAS THE OPTION TO PROVIDE, AT NO ADDITIONAL COST TO THE DEPARTMENT, 2 ADDITIONAL STRANDS AT THE TOP OF THE GIRDER TO FACILITATE TYING OF THE REINFORCING STEEL. THESE STRANDS SHALL BE PULLED TO A LOAD OF 4500 lbs.

THE UPLIFT FORCE DUE TO DRAPED STRANDS IS 26 KIPS.

0.6" Ø L. R. GRADE 270 STRANDS

AREA (SQUARE INCHES)	ULTIMATE STRENGTH (LBS. PER STRAND)	APPLIED PRESTRESS (LBS. PER STRAND)
0.217	58,600	43,950

REINFORCING STEEL FOR ONE GIRDER

BAR	NUMBER	SIZE	TYPE	LENGTH	WEIGHT
S1	168	#4	1	6'-10"	767
S2	24	#5	1	6'-10"	171
S3	14	#4	2	8'-5"	79
S4	84	#4	3	3'-0"	168
S5	2	#5	2	9'-10"	21
S6	184	#5	4	4'-4"	832
S7	2	#5	2	9'-0"	19
S8	53	#5	STR	3'-3"	180
S9	8	#5	2	11'-8"	97
S10	16	#4	STR	8'-0"	86
S11	4	#4	5	7'-0"	19
S12	4	#4	5	7'-3"	19

BAR TYPES

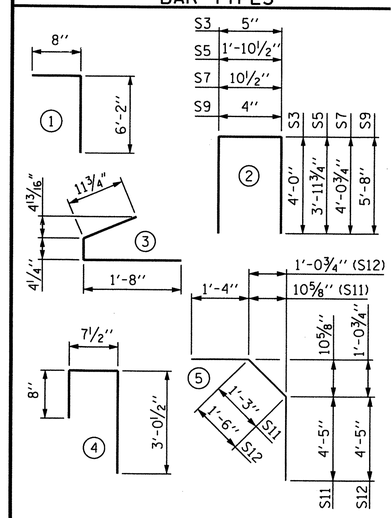

ALL BAR DIMENSIONS ARE OUT-TO-OUT

QUANTITIES FOR ONE GIRDER

REINFORCING STEEL	10,000 PSI CONCRETE	0.6" Ø L.R. STRANDS
LB.	C.Y.	No.
2458	27.0	42

GIRDERS REQUIRED

NUMBER	LENGTH	TOTAL LENGTH
5	125'-7⅞"	628'-3⅜"

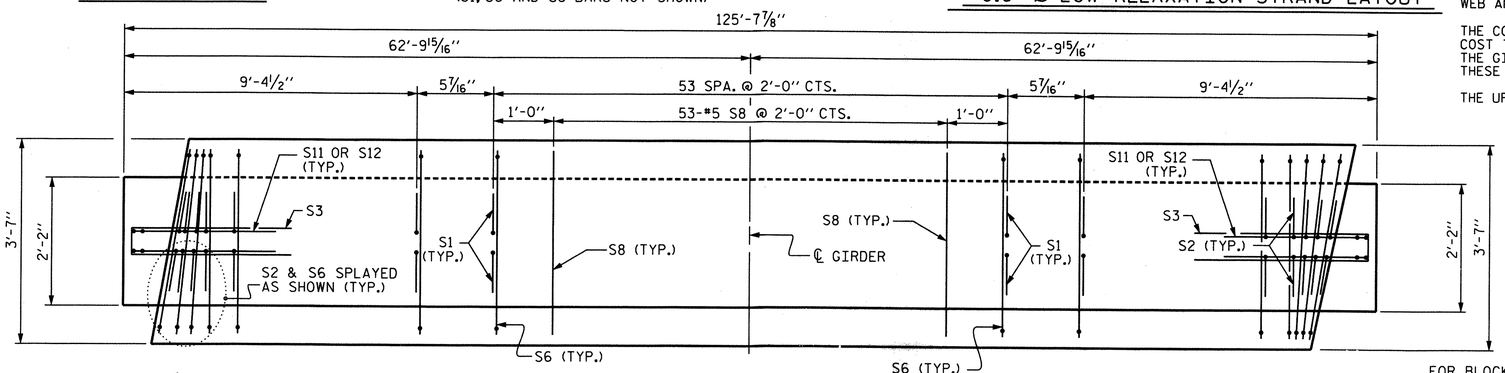

PLAN OF GIRDER

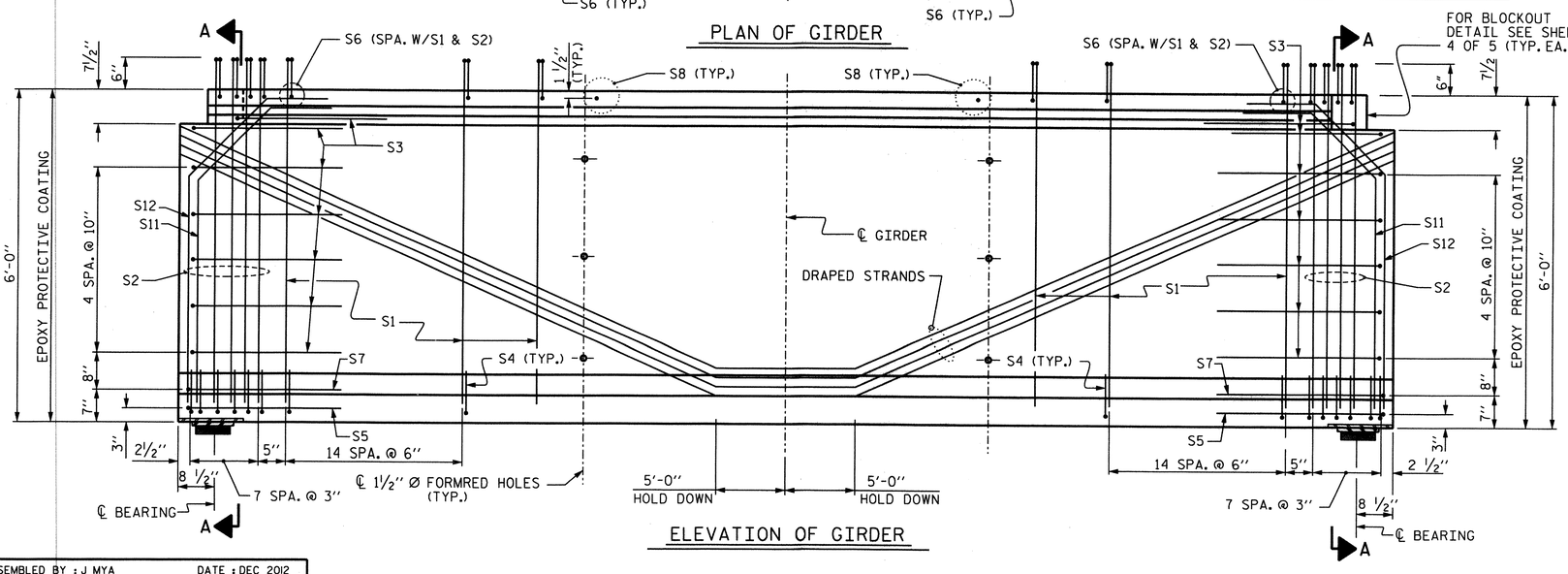

ELEVATION OF GIRDER

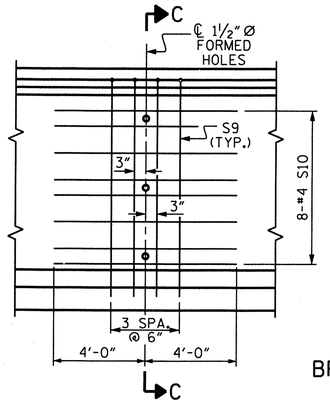

PARTIAL ELEVATION

SHOWING INTERMEDIATE STEEL DIAPHRAGM REINFORCING STEEL FOR GIRDER Nos. B1 THRU B5

PROJECT NO. R-2633BB

BRUNSWICK/NEW HANOVER COUNTY

STATION: 398+75.47 -L-

SHEET 2 OF 5

STATE OF NORTH CAROLINA
DEPARTMENT OF TRANSPORTATION
RALEIGH

72" PRESTRESSED CONCRETE MODIFIED BULB TEE SPAN "B" RIGHT LANE

NORTH CAROLINA PROFESSIONAL SEAL 14047 ENGINEER STEPHEN D. COX
6/28/13

THE LOUIS BERGER GROUP, Inc.
1001 Wade Avenue, Suite 400
Raleigh, NC 27605-3322

REVISIONS						
NO.	BY:	DATE:	NO.	BY:	DATE:	
1			3			
2			4			

SHEET NO. S-512

TOTAL SHEETS 700

ASSEMBLED BY : J MYA		DATE : DEC 2012	
CHECKED BY : R. DECOLA		DATE : DEC 2012	
DRAWN BY : EEM 2/6/97	REV. 10/17/00	RWW/LES	
CHECKED BY : VAP 2/6/97	REV. 5/1/06R	TLA/GM	
	REV. 10/1/11	MAA/GM	

G:\OR Projects\OR1092 - NCDOT Wilm Bypass DualBridges\Structures\Bridge Site 6\R-2633BB_SD_06R_PCG_02.dgn
6/27/2013 1:59:13 PM 1092_PDF_full.pltcfg 1092_str.tbl

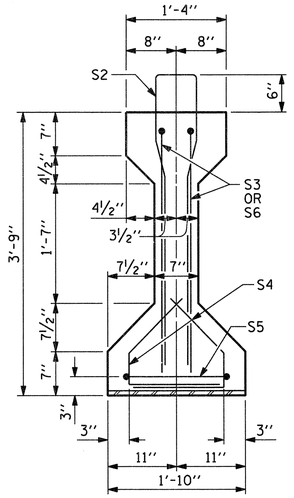

SECTION A-A

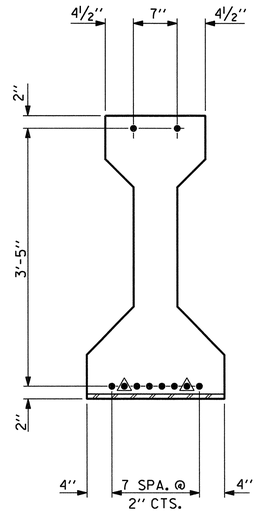

AT END OF GIRDER

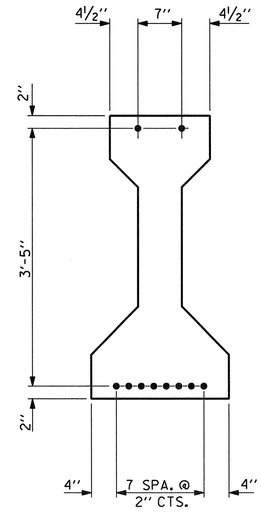

AT ℄ OF GIRDER

0.6" Ø LOW RELAXATION STRAND LAYOUT

▲ DENOTES STRANDS TO BE DEBONDED 2'-0" FROM ENDS OF GIRDER

NOTES

ALL PRESTRESSING STRANDS SHALL BE 7-WIRE LOW-RELAXATION GRADE 270 STRANDS AND SHALL CONFORM TO AASHTO M203 EXCEPT FOR SAMPLING REQUIREMENTS WHICH SHALL BE IN ACCORDANCE WITH THE STANDARD SPECIFICATIONS.

APPLY EPOXY PROTECTIVE COATING TO END OF GIRDER SURFACES.

EMBEDDED PLATE "B-1" SHALL BE GALVANIZED IN ACCORDANCE WITH THE SPECIFICATIONS.

BEVEL EDGES OF PLATE "B-1" TO GIVE CLOSE FIT BUT NOT TIGHT FIT TO STEEL CASTING FORM.

ANCHOR STUDS SHALL CONFORM TO AASHTO M169 GRADES 1010 THROUGH 1020 OR APPROVED EQUAL, AND SHALL MEET THE TYPE "B" REQUIREMENTS OF SUBSECTION 7.3 OF THE ANSI/AASHTO/AWS D1.5 BRIDGE WELDING CODE.

ALL PRESTRESSED STRANDS SHALL BE CUT FLUSH WITH THE GIRDER ENDS.

THE TRANSFER OF LOAD FROM THE ANCHORAGES TO THE GIRDER SHALL BE DONE WHEN CONCRETE HAS REACHED A COMPRESSIVE STRENGTH OF NOT LESS THAN 5500 PSI.

DEPENDING ON THE TYPE OF SYSTEM USED TO SUPPORT THE DECK SLAB FORMS, PRESET ANCHORS MAY BE NECESSARY IN THE PRESTRESSED CONCRETE GIRDER.

THE TOP SURFACE OF THE GIRDER SHALL BE RAKED TO A DEPTH OF ¼" EXCEPT IN THE AREA BETWEEN THE STIRRUP AND THE EDGE OF THE GIRDER.

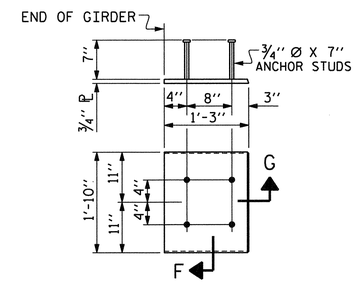

EMBEDDED PLATE "B-1" DETAILS

TWO EMBEDDED PLATES "B-1" ARE REQUIRED FOR EACH GIRDER.

0.6" Ø L. R. GRADE 270 STRANDS

AREA (SQUARE INCHES)	ULTIMATE STRENGTH (LBS. PER STRAND)	APPLIED PRESTRESS (LBS. PER STRAND)
0.217	58,600	43,950

REINFORCING STEEL FOR ONE GIRDER

BAR	NUMBER	SIZE	TYPE	LENGTH	WEIGHT
S1	28	#4	1	8'-6"	159
S2	8	#6	1	8'-6"	102
S3	4	#6	2	4'-8"	28
S4	56	#4	3	2'-9"	103
S5	2	#4	4	9'-6"	13
S6	4	#6	2	4'-6"	27

BAR TYPES

ALL BAR DIMENSIONS ARE OUT-TO-OUT

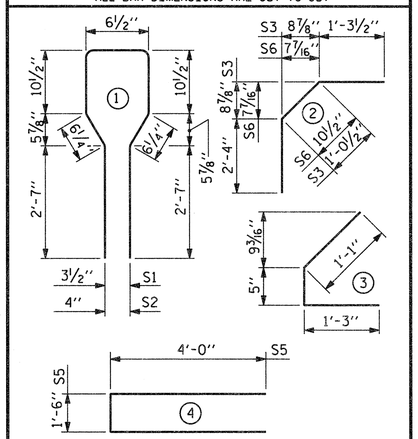

QUANTITIES FOR ONE GIRDER

REINFORCING STEEL	7000 P.S.I. CONCRETE	0.6" Ø L. R. STRANDS
LB.	C.Y.	No.
432	5.1	10

GIRDERS REQUIRED

NUMBER	LENGTH	TOTAL LENGTH
5	35'-4½"	176'-10½"

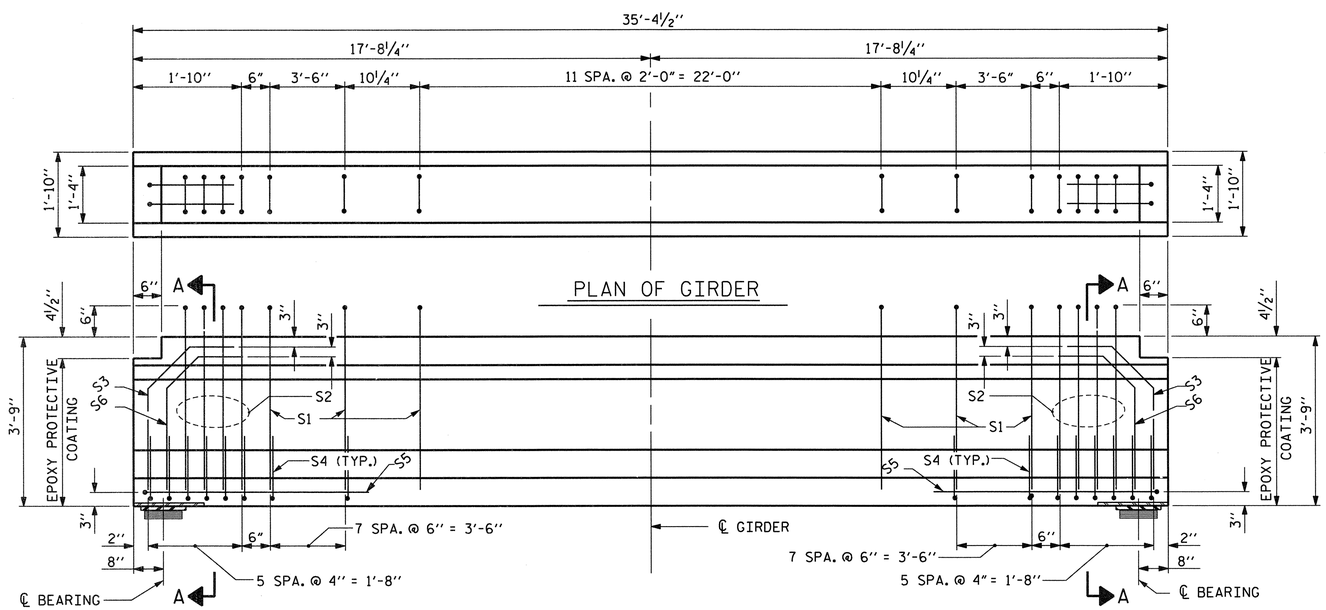

ELEVATION OF GIRDER

(SEE PARTIAL ELEVATION FOR ADDITIONAL "S" BARS)

PROJECT NO. R-2633BB

BRUNSWICK/NEW HANOVER COUNTY

STATION: 398+75.47 -L-

SHEET 3 OF 5

STATE OF NORTH CAROLINA
DEPARTMENT OF TRANSPORTATION
RALEIGH

STANDARD
AASHTO TYPE III
PRESTRESSED CONCRETE GIRDER
SPAN "C"
RIGHT LANE

NORTH CAROLINA PROFESSIONAL SEAL 14047 ENGINEER STEPHEN D. COOK
2/4/13

ASSEMBLED BY : R. KNIGHT	DATE : DEC 2012
CHECKED BY : R.DECOLA	DATE : DEC 2012
DRAWN BY : JMB 12/87	REV. 8/16/99RR RWW/LES
CHECKED BY : ARB 12/87	REV. 5/1/06R TLA/GM
	REV. 10/1/11 MAA/GM

THE LOUIS BERGER GROUP, Inc.
1001 Wade Avenue, Suite 400
Raleigh, NC 27605-3322

REVISIONS

NO.	BY:	DATE:	NO.	BY:	DATE:
1			3		
2			4		

SHEET NO. S-513

TOTAL SHEETS 700

STD. NO. PCG2

G:\OR Projects\OR1092 - NCDOT Wilm Bypass DualBridges\Structures\Bridge Site 6\R-2633BB_SD_06R_PCG_03.dgn
2/11/2013 8:47:30 AM 1092_PDF_full.pltcfg 1092_str.tbl

DEAD LOAD DEFLECTION TABLE FOR GIRDERS

0.6"Ø LOW RELAXATION	SPAN A - EXTERIOR GIRDER GIRDERS 1 AND 5											SPAN A - INTERIOR GIRDER GIRDERS 2 THRU 4										
TENTH POINTS	0	.1	.2	.3	.4	.5	.6	.7	.8	.9	0	0	.1	.2	.3	.4	.5	.6	.7	.8	.9	0
CAMBER (GIRDER ALONE IN PLACE)	0.000	0.004	0.007	0.009	0.010	0.010	0.010	0.009	0.007	0.004	0.000	0.000	0.004	0.007	0.009	0.010	0.010	0.010	0.009	0.007	0.004	0.000
* DEFLECTION DUE TO SUPERIMPOSED D.L.	0.000	0.001	0.002	0.003	0.003	0.003	0.003	0.003	0.002	0.001	0.000	0.000	0.001	0.002	0.003	0.003	0.004	0.003	0.003	0.002	0.001	0.000
FINAL CAMBER	0	1/16"	1/16"	1/16"	1/16"	1/16"	1/16"	1/16"	1/16"	1/16"	0	0	1/16"	1/16"	1/16"	1/16"	1/16"	1/16"	1/16"	1/16"	1/16"	0

DEAD LOAD DEFLECTION TABLE FOR GIRDERS

0.6"Ø LOW RELAXATION	SPAN B - EXTERIOR GIRDER GIRDERS 1 AND 5																				
TWENTIETH POINTS	0	.05	.10	.15	.20	.25	.30	.35	.40	.45	.50	.55	.60	.65	.70	.75	.80	.85	.90	.95	0
CAMBER (GIRDER ALONE IN PLACE)	0.000	0.061	0.121	0.170	0.218	0.254	0.290	0.313	0.336	0.344	0.352	0.344	0.336	0.313	0.290	0.254	0.218	0.170	0.121	0.061	0.000
* DEFLECTION DUE TO SUPERIMPOSED D.L.	0.000	0.026	0.052	0.077	0.102	0.121	0.140	0.153	0.165	0.169	0.173	0.169	0.165	0.153	0.140	0.121	0.102	0.077	0.052	0.026	0.000
FINAL CAMBER	0.000	7/16"	13/16"	1 1/8"	1 3/8"	1 5/8"	1 13/16"	1 15/16"	2 1/16"	2 1/16"	2 1/8"	2 1/16"	2 1/16"	1 15/16"	1 13/16"	1 5/8"	1 3/8"	1 1/8"	13/16"	7/16"	0.000

DEAD LOAD DEFLECTION TABLE FOR GIRDERS

0.6"Ø LOW RELAXATION	SPAN B - INTERIOR GIRDER GIRDERS 2 THRU 4																				
TWENTIETH POINTS	0	.05	.10	.15	.20	.25	.30	.35	.40	.45	.50	.55	.60	.65	.70	.75	.80	.85	.90	.95	0
CAMBER (GIRDER ALONE IN PLACE)	0.000	0.061	0.121	0.170	0.218	0.254	0.290	0.313	0.336	0.344	0.352	0.344	0.336	0.313	0.290	0.254	0.218	0.170	0.121	0.061	0.000
* DEFLECTION DUE TO SUPERIMPOSED D.L.	0.000	0.027	0.054	0.080	0.106	0.126	0.146	0.159	0.172	0.176	0.181	0.176	0.172	0.159	0.146	0.126	0.106	0.080	0.054	0.027	0.000
FINAL CAMBER	0.000	3/8"	13/16"	1 1/16"	1 3/8"	1 9/16"	1 3/4"	1 7/8"	1 15/16"	2"	2 1/16"	2"	1 15/16"	1 7/8"	1 3/4"	1 9/16"	1 3/8"	1 1/16"	13/16"	3/8"	0.000

DEAD LOAD DEFLECTION TABLE FOR GIRDERS

0.6"Ø LOW RELAXATION	SPAN C - EXTERIOR GIRDER GIRDERS 1 AND 5											SPAN C - INTERIOR GIRDER GIRDERS 2 THRU 4										
TENTH POINTS	0	.1	.2	.3	.4	.5	.6	.7	.8	.9	0	0	.1	.2	.3	.4	.5	.6	.7	.8	.9	0
CAMBER (GIRDER ALONE IN PLACE)	0.000	0.008	0.013	0.017	0.019	0.020	0.019	0.017	0.013	0.008	0.000	0.000	0.008	0.013	0.017	0.019	0.020	0.019	0.017	0.013	0.008	0.000
* DEFLECTION DUE TO SUPERIMPOSED D.L.	0.000	0.001	0.003	0.004	0.005	0.005	0.005	0.004	0.003	0.001	0.000	0.000	0.001	0.003	0.004	0.005	0.005	0.005	0.004	0.003	0.001	0.000
FINAL CAMBER	0	1/16"	1/8"	1/8"	3/16"	3/16"	3/16"	1/8"	1/8"	1/16"	0	0	1/16"	1/8"	1/8"	3/16"	3/16"	3/16"	1/8"	1/8"	1/16"	0

* INCLUDES FUTURE WEARING SURFACE
ALL VALUES ARE SHOWN IN FEET (DECIMAL FORM), EXCEPT "FINAL CAMBER", WHICH IS GIVEN IN INCHES (FRACTION FORM).

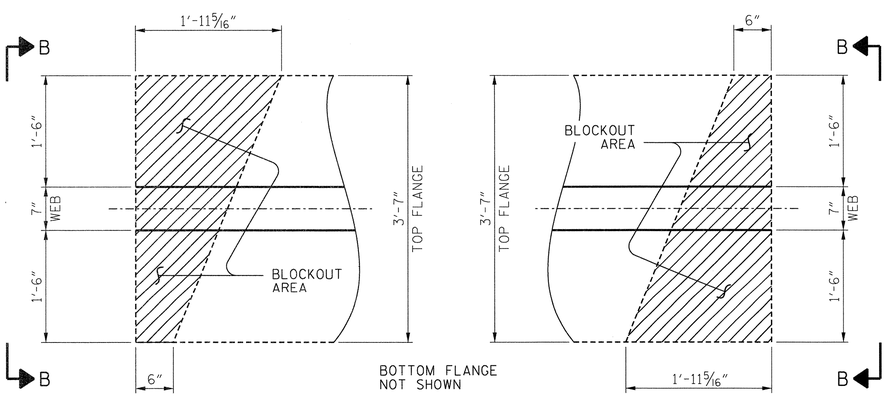

PLAN OF TOP FLANGE

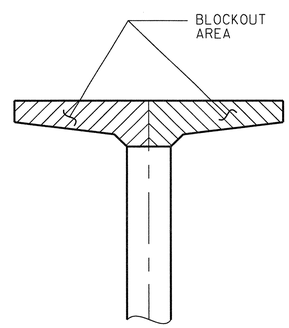

VIEW B-B

TOP FLANGE BLOCKOUT DETAILS AT BENTS

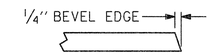

SECTION "G"

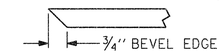

SECTION "F"

(SEE NOTES)

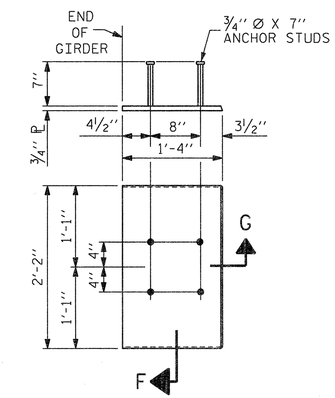

EMBEDDED PLATE "B-1" DETAILS FOR 72" MODIFIED BULB TEES

(2 REQ'D PER GIRDER)

PROJECT NO. R-2633BB
BRUNSWICK/NEW HANOVER COUNTY
STATION: 398+75.47 -L-

SHEET 4 OF 5

STATE OF NORTH CAROLINA
DEPARTMENT OF TRANSPORTATION
RALEIGH

STANDARD
PRESTRESSED CONCRETE GIRDER
DETAILS SPAN "B"
RIGHT LANE

NORTH CAROLINA PROFESSIONAL SEAL 14047 ENGINEER STEPHEN D. COOK
2/11/13

THE LOUIS BERGER GROUP, Inc.
1001 Wade Avenue, Suite 400
Raleigh, NC 27605-3322

REVISIONS						
NO.	BY:	DATE:	NO.	BY:	DATE:	
1			3			
2			4			

SHEET NO. 8-54
TOTAL SHEETS 100

STD. NO. PCG9

ASSEMBLED BY : J. MYA		DATE : DEC 2012	
CHECKED BY : R. DECOLA		DATE : DEC 2012	
DRAWN BY : ELR 11/91	REV. 7/10/01	RR	LES/RDR
CHECKED BY : GRP 11/91	REV. 5/1/06		TLA/GM
	REV. 10/1/11		MAA/GM

G:\OR Projects\OR1092 - NCDOT Wilm Bypass DualBridges\Structures\Bridge Site 6\R-2633BB_SD_06R_PCG_04.dgn
2/11/2013 8:47:33 AM 1092_PDF_full.pltcfg 1092_str.tbl

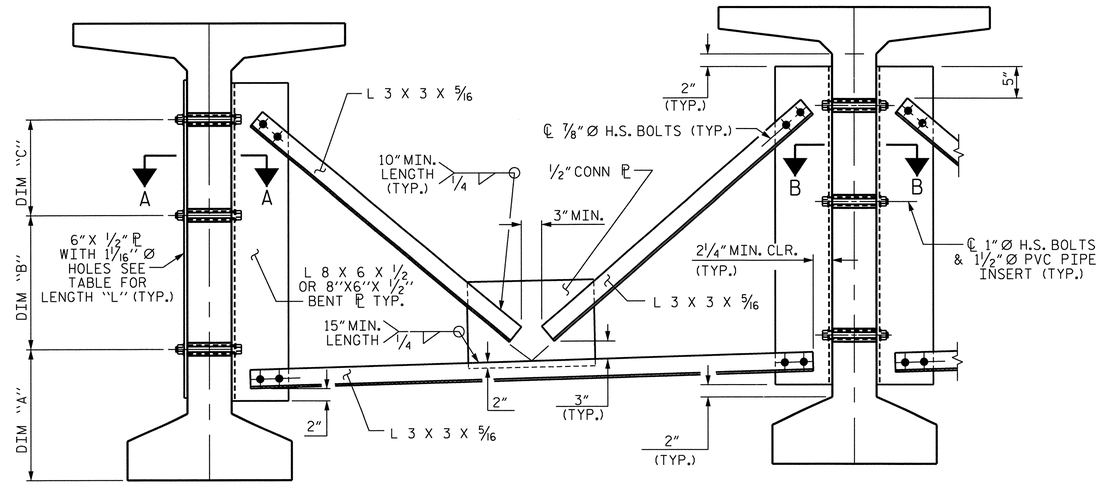

PART SECTION AT INTERMEDIATE DIAPHRAGM

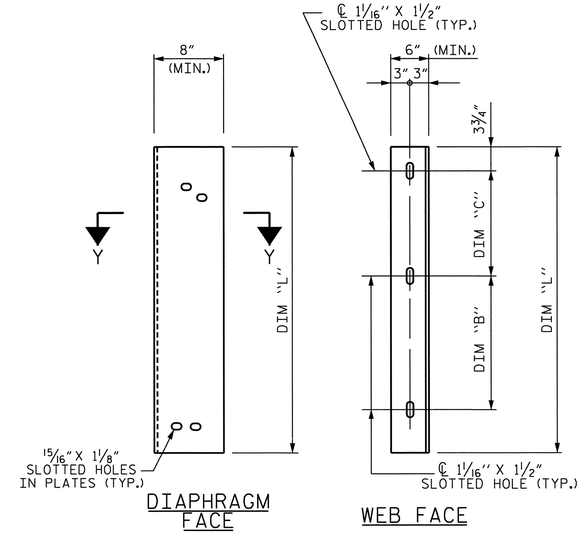

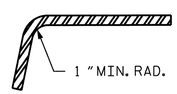

SECTION Y-Y

CONNECTOR PLATE DETAIL

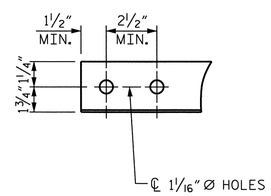

ANGLE END

(L 3 X 3 X 5/16)

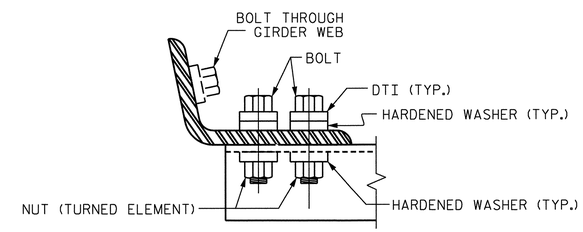

BOLT WITH DTI ASSEMBLY DETAIL

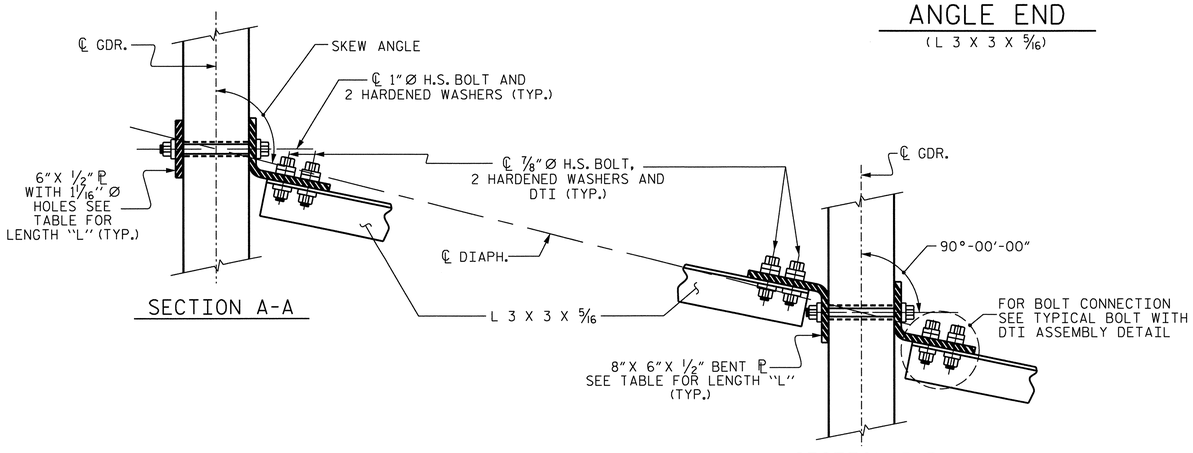

CONNECTION DETAILS

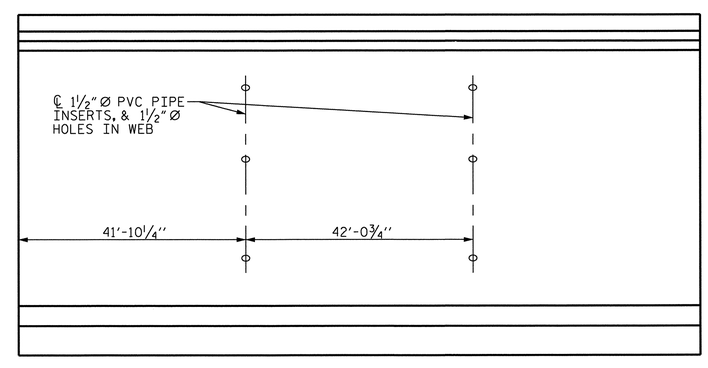

GIRDER ELEVATION

SHOWING LOCATION OF HOLES FOR INTERMEDIATE DIAPHRAGM INSTALLATION

TABLE

GIRDER TYPE	DIM "A"	DIM "B"	DIM "C"	DIM "L"
72" BULB TEE	1'-3 1/2"	1'-10"	1'-9 1/4"	4'-2"

STRUCTURAL STEEL NOTES

ALL INTERMEDIATE DIAPHRAGM STEEL AND CONNECTOR PLATES SHALL BE AASHTO M270 GRADE 50 OR APPROVED EQUAL.

TENSION ON THE ASTM A325 BOLTS THROUGH THE ANGLE MEMBER SHALL BE CALIBRATED USING DIRECT TENSION INDICATOR WASHERS IN ACCORDANCE WITH THE STANDARD SPECIFICATIONS.

TENSION ON THE ASTM A449 BOLTS THROUGH THE GIRDER WEB SHALL BE SNUG TIGHTENED FOLLOWED BY AN ADDITIONAL 1/4 TURN.

THE PLATES. BENT PLATES. AND ANGLES SHALL BE GALVANIZED OR MET ALLIZED IN ACCORDANCE WITH THE STANDARD SPECIFICATIONS . FOR THERMAL SPRAYED COATINGS (METALLIZATION). SEE SPECIAL PROVISIONS.

FOR METALLIZATION, APPLY AN 8 MIL THICK 99.99 PERCENT ZINC (W-Zn-II) THERMAL SPRAYED COATING WITH A 0.5 MIL THICK SEAL COAT TO ALL STEEL DIAPHRAGM SURFACES IN ACCORDANCE WITH THE THERMAL SPRAYED COATINGS SPECIAL PROVISION AND SECTION 442 OF THE STANDARD SPECIFICATIONS.

GALVANIZE THE HIGH STRENGTH BOLTS, NUTS, WASHERS AND DIRECT TENSION INDICATORS IN ACCORDANCE WITH THE STANDARD SPECIFICATIONS.

USE AN ASTM F436 HARDENED WASHER WITH STANDARD AND SLOTTED HOLES UNDER EACH BOLT HEAD AND NUT.

FOR BOLTS THROUGH THE GIRDER WEB, PROVIDE SUFFICIENT LENGTH OF THREADS ON ALL BOLTS TO ACCOMMODATE WASHERS AND THE THICKNESS OF CONNECTING MEMBER PLUS AT LEAST 1/4" PROJECTION BEYOND THE NUT.

INTERMEDIATE DIAPHRAGM ASSEMBLY SHALL COMPLY WITH SECTION 1072 OF THE STANDARD SPECIFICATIONS.

SUBMIT TWO SETS OF WORKING DRAWINGS FOR THE INTERMEDIATE DIAPHRAGM ASSEMBLY FOR REVIEW, COMMENTS AND ACCEPTANCE. AFTER REVIEW, COMMENTS, AND ACCEPTANCE, SUBMIT SEVEN SETS FOR DISTRIBUTION.

IN THE EXTERIOR BAYS, PLACE TEMPORARY STRUTS BETWEEN PRESTRESSED GIRDERS ADJACENT TO THE STEEL DIAPHRAGMS.STRUTS SHALL REMAIN IN PLACE 3 DAYS AFTER CONCRETE IS PLACED.

THE COST OF THE STEEL DIAPHRAGMS AND ASSEMBLIES SHALL BE INCLUDED IN THE UNIT PRICE BID FOR PRESTRESSED CONCRETE GIRDERS.

PROJECT NO. R-2633BB
BRUNSWICK/NEW HANOVER COUNTY
STATION: 398+75.47 -L-

SHEET 5 OF 5

STATE OF NORTH CAROLINA
DEPARTMENT OF TRANSPORTATION
RALEIGH

STANDARD
INTERMEDIATE
STEEL DIAPHRAGMS
72" MODIFIED BULB TEE
PRESTRESSED CONCRETE
GIRDERS-RIGHT LANE

NORTH CAROLINA PROFESSIONAL SEAL 14047 ENGINEER STEPHEN D. COOK
6/21/13

THE LOUIS BERGER GROUP, Inc.
1001 Wade Avenue, Suite 400
Raleigh, NC 27605-3322

REVISIONS						SHEET NO.
NO.	BY:	DATE:	NO.	BY:	DATE:	S-515
1			3			TOTAL SHEETS
2			4			100

STD. NO. PCG11

ASSEMBLED BY : R. KNIGHT CHECKED BY : R. DECOLA	DATE : FEB 2012 DATE : DEC 2012
DRAWN BY : RWW 11/09 CHECKED BY : GM 11/09	ADDED 11/23/09R REV. 10/1/11 MAA/GM

G:\DR Projects\DR1092 - NCDOT Wilm Bypass DualBridges\Structures\Bridge Site 6\R-2633BB_SD_06R_PCG_05.dgn
6/21/2013 11:01:29 AM 1092_PDF_full.pltcfg

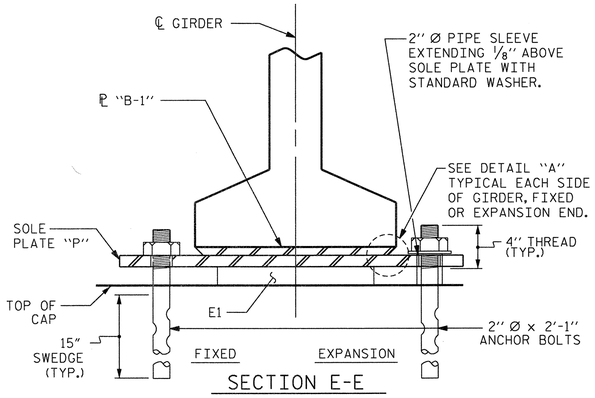

SECTION E-E

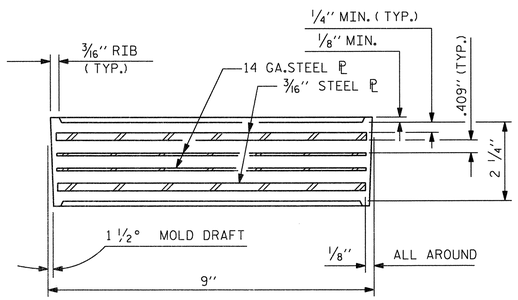

TYPICAL SECTION OF ELASTOMERIC BEARINGS

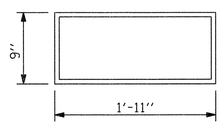

E1 (10 REQ'D)

PLAN VIEW OF ELASTOMERIC BEARING

TYPE V

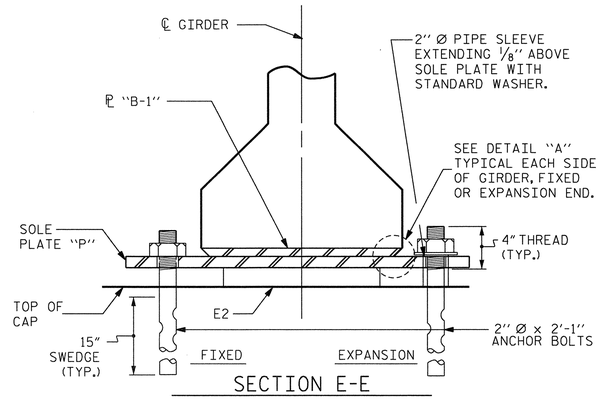

SECTION E-E

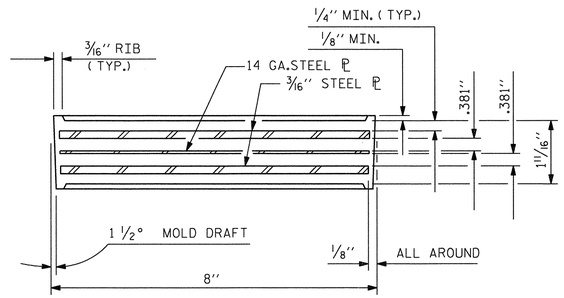

TYPICAL SECTION OF ELASTOMERIC BEARINGS

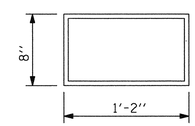

E2 (20 REQ'D)

PLAN VIEW OF ELASTOMERIC BEARING

TYPE II

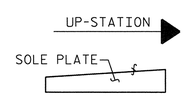

SOLE PLACEMENT DETAIL

NOTES

AT ALL FIXED POINTS OF SUPPORT, NUTS FOR ANCHOR BOLTS ARE TO BE TIGHTENED FINGER TIGHT AND THEN BACKED OFF 1/2 TURN. THE THREAD OF THE NUT AND BOLT SHALL THEN BE BURRED WITH A SHARP POINTED TOOL.

THE 2" Ø PIPE SLEEVE SHALL BE CUT FROM SCHEDULE 40 PVC PLASTIC PIPE. THE PVC PLASTIC PIPE SHALL MEET THE REQUIREMENTS OF ASTM D1785.

STEEL SOLE PLATES, ANCHOR BOLTS, NUTS, AND WASHERS SHALL BE GALVANIZED IN ACCORDANCE WITH THE STANDARD SPECIFICATIONS.

PRIOR TO WELDING, GRIND THE GALVANIZED SURFACE OF THE PORTION OF THE EMBEDDED PLATE AND SOLE PLATE THAT ARE TO BE WELDED. AFTER WELDING, DAMAGED GALVANIZED SURFACES SHALL BE REPAIRED IN ACCORDANCE WITH THE STANDARD SPECIFICATIONS.

WHEN WELDING THE SOLE PLATE TO THE EMBEDDED PLATE IN THE GIRDER, USE TEMPERATURE INDICATING WAX PENS, OR OTHER SUITABLE MEANS, TO ENSURE THAT THE TEMPERATURE OF THE SOLE PLATE DOES NOT EXCEED 300°F. TEMPERATURES ABOVE THIS MAY DAMAGE THE ELASTOMER.

SOLE PLATE "P", BOLTS, NUTS, WASHERS, AND PIPE SLEEVE SHALL BE INCLUDED IN THE PAY ITEM FOR PRESTRESSED CONCRETE GIRDERS.

ANCHOR BOLTS SHALL MEET THE REQUIREMENTS OF ASTM A449. NUTS SHALL MEET THE REQUIREMENTS OF AASHTO M291-DH OR AASHTO M292-2H. WASHERS SHALL MEET THE REQUIREMENTS OF AASHTO M293. SHOP DRAWINGS ARE NOT REQUIRED FOR ANCHOR BOLT, NUTS AND WASHERS. SHOP INSPECTION IS REQUIRED.

ALL SURFACES OF BEARING PLATES SHALL BE SMOOTH AND STRAIGHT.

THE ELASTOMER IN THE STEEL REINFORCED BEARINGS SHALL HAVE A SHEAR MODULUS OF 0.160 KSI. IN ACCORDANCE WITH AASHTO M251.

FOR STEEL REINFORCED ELASTOMERIC BEARINGS, SEE SPECIAL PROVISIONS.

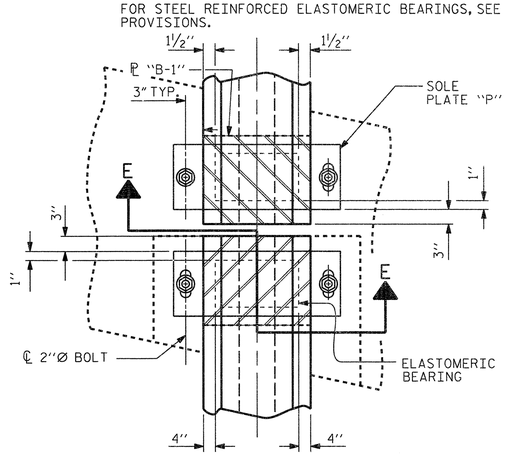

TYPICAL HALF-PLAN

BENT 1 SHOWN, BENT 2 SIMILAR

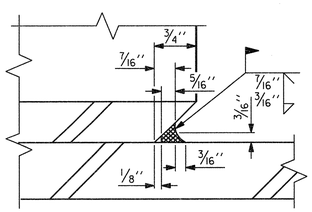

DETAIL "A"

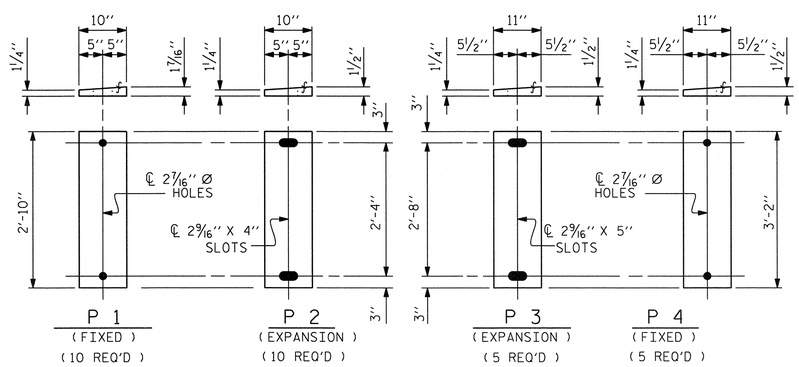

SOLE PLATE DETAILS ("P")

MAXIMUM ALLOWABLE SERVICE LOADS	
D.L.+L.L. (NO IMPACT)	
TYPE II	115 k
TYPE V	335 k

PROJECT NO. R-2633BB

BRUNSWICK/NEW HANOVER COUNTY

STATION: 398+75.47 -L-

STATE OF NORTH CAROLINA
DEPARTMENT OF TRANSPORTATION
RALEIGH

STANDARD

ELASTOMERIC BEARING DETAILS

PRESTRESSED CONCRETE GIRDER SUPERSTRUCTURE-RIGHT LANE

NORTH CAROLINA PROFESSIONAL SEAL 14047 ENGINEER STEPHEN D. COX
7/11/13

THE LOUIS BERGER GROUP, Inc.
1001 Wade Avenue, Suite 400
Raleigh, NC 27605-3322

REVISIONS							SHEET NO.
NO.	BY:	DATE:	NO.	BY:	DATE:		S-516
1			3				TOTAL SHEETS
2			4				100

ASSEMBLED BY : J. MYA		DATE : OCT. 2012	
CHECKED BY : R. DECOLA		DATE : DEC. 2012	
DRAWN BY : WJH 8/89	REV. 7/10/01	RWW/LES	
CHECKED BY : CRK 8/89	REV. 5/1/06	TLA/GM	
	REV. 10/1/11	MAA/GM	

STD. NO. EB3

G:\OR Projects\OR1092 - NCDOT Wilm Bypass DualBridges\Structures\Bridge Site 6\R-2633BB_SD_06R_BRG.dgn
2/11/2013 8:47:38 AM 1092_PDF_full.pltcfg 1092_str.tbl

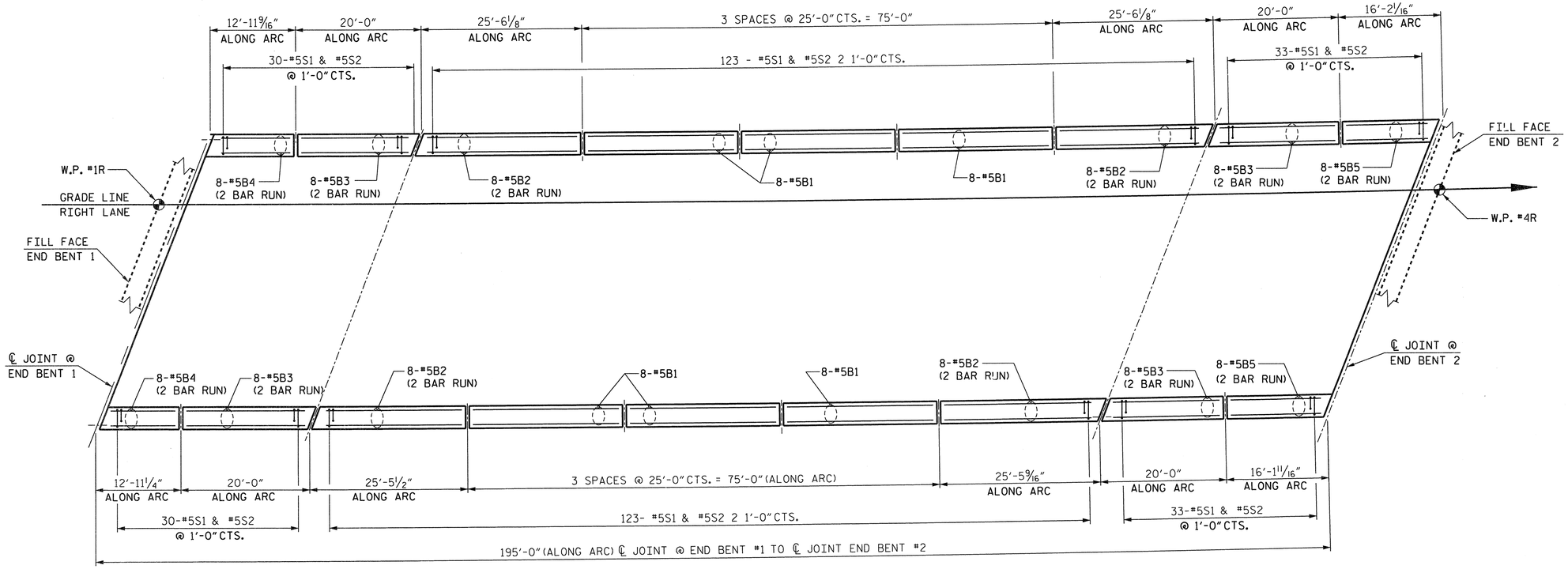

PLAN

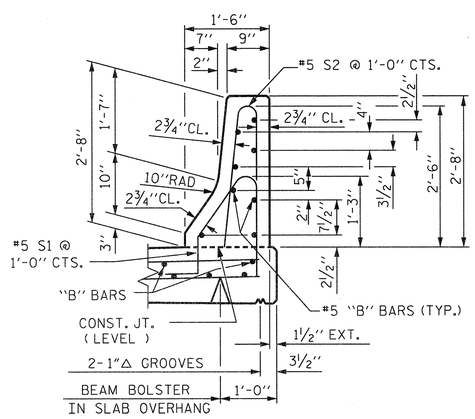

SECTION THRU RAIL

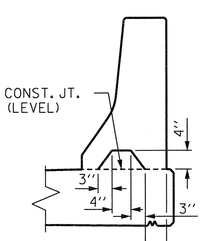

SECTION S-S

AT DAM IN OPEN JOINT (THIS IS TO BE USED ONLY WHEN SLIP FORM IS USED)

NOTES

THE BARRIER RAIL IN EACH SPAN SHALL NOT BE CAST UNTIL ALL SLAB CONCRETE IN THAT SPAN HAS BEEN CAST AND HAS REACHED A MINIMUM COMPRESSIVE STRENGTH OF 3,000 PSI.

ALL REINFORCING STEEL IN BARRIER RAILS SHALL BE EPOXY COATED.

GROOVED CONTRACTION JOINTS, 1/2" IN DEPTH, SHALL BE TOOLED IN ALL EXPOSED FACES OF THE BARRIER RAIL AND IN ACCORDANCE WITH ARTICLE 825-10(B) OF THE STANDARD SPECIFICATIONS. THE CONTRACTION JOINT SHALL BE LOCATED AT EACH THIRD POINT BETWEEN BARRIER RAIL EXPANSION JOINTS. ONLY ONE CONTRACTION JOINT IS REQUIRED AT MIDPOINT OF BARRIER RAIL SEGMENTS LESS THAN 20 FEET IN LENGTH AND NO CONTRACTION JOINTS ARE REQUIRED FOR THOSE SEGMENTS LESS THAN 10 FEET IN LENGTH.

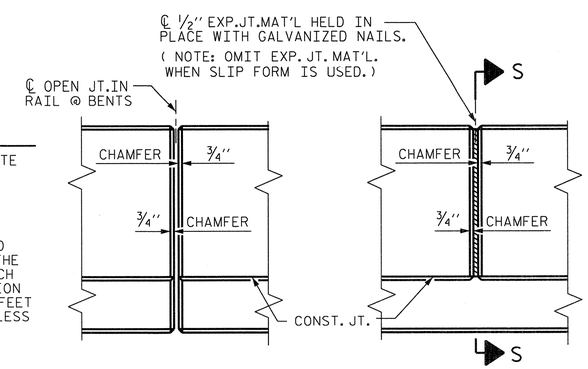

ELEVATION AT EXPANSION JOINTS

BARRIER RAIL DETAILS

BAR TYPES

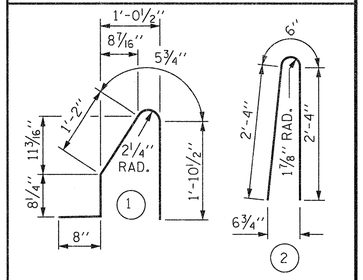

ALL BAR DIMENSIONS ARE OUT TO OUT

BILL OF MATERIAL

FOR CONCRETE BARRIER RAIL ONLY

BAR	NO.	SIZE	TYPE	LENGTH	WEIGHT
* B1	48	#5	STR	24'-7"	1231
* B2	64	#5	STR	14'-2"	946
* B3	64	#5	STR	11'-6"	768
* B4	32	#5	STR	8'-0"	267
* B5	32	#5	STR	10'-0"	334
* S1	372	#5	1	4'-9"	1843
* S2	372	#5	2	5'-2"	2005

* EPOXY COATED REINFORCING STEEL	7394	LBS.
CLASS AA CONCRETE	39.1	CU. YDS.
CONCRETE BARRIER RAIL	390.1	LIN. FT.

FOR EPOXY COATED REINFORCING STEEL AND CLASS AA CONCRETE IN THE BARRIER RAIL ON THE APPROACH SLABS, SEE "BRIDGE APPROACH SLAB DETAILS" SHEET.

PROJECT NO. R-2633BB
BRUNSWICK/NEW HANOVER COUNTY
STATION: 398+75.47 -L-

STATE OF NORTH CAROLINA
DEPARTMENT OF TRANSPORTATION
RALEIGH

STANDARD
CONCRETE BARRIER RAIL
RIGHT LANE

NORTH CAROLINA PROFESSIONAL SEAL 14047 ENGINEER STEPHEN D. COOK
2/11/13

THE LOUIS BERGER GROUP, Inc.
1001 Wade Avenue, Suite 400
Raleigh, NC 27605-3322

REVISIONS							
NO.	BY:	DATE:	NO.	BY:	DATE:	SHEET NO.	
1			3			S-517	
2			4			TOTAL SHEETS	
						700	

ASSEMBLED BY : J. MYA DATE : SEPT. 2012
CHECKED BY : S. COOK DATE : SEPT. 2012

DRAWN BY : ARB 5/87
CHECKED BY : SJD 9/87

REV. 10/17/00 RWW/LES
REV. 5/7/03R RWW/JTE
REV. 5/1/06R TLA/GM

STD. NO. CBR1

G:\OR Projects\OR1092 - NCDOT Wilm Bypass DualBridges\Structures\Bridge Site 6\R-2633BB_SD_06R_CBR.dgn
2/11/2013 8:47:41 AM 1092_PDF_fullpltcfg 1092_str.tbl

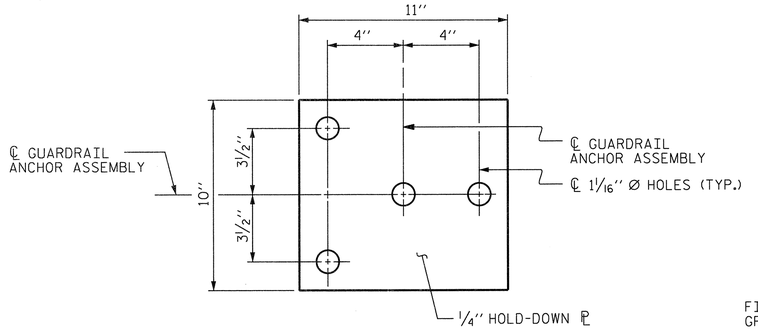

PLAN

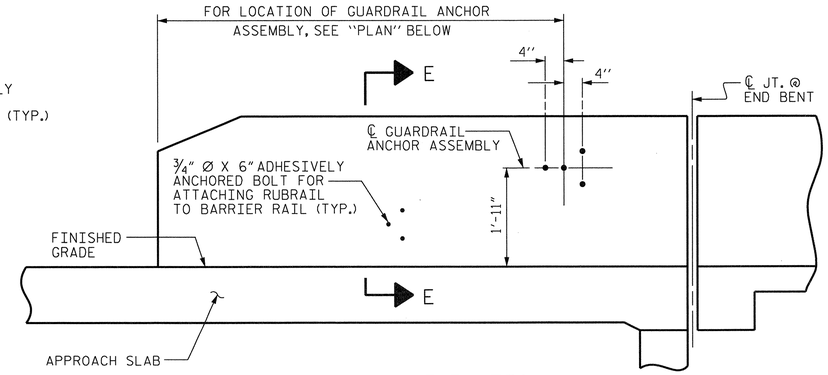

ELEVATION

FOR LOCATION OF RUBRAIL, SEE ROADWAY STD. 862.03

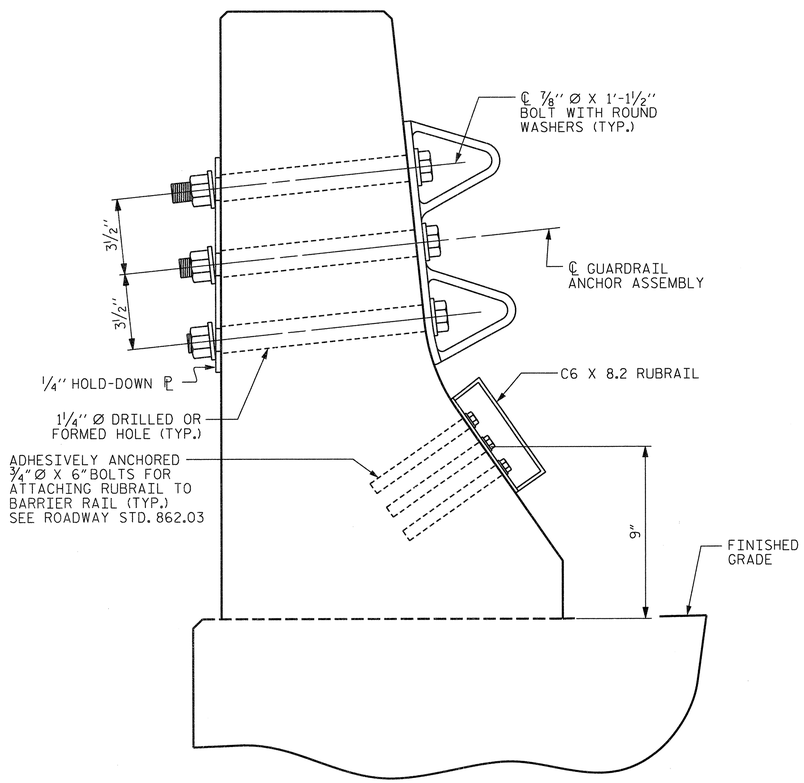

SECTION E-E

GUARDRAIL ANCHOR ASSEMBLY DETAILS

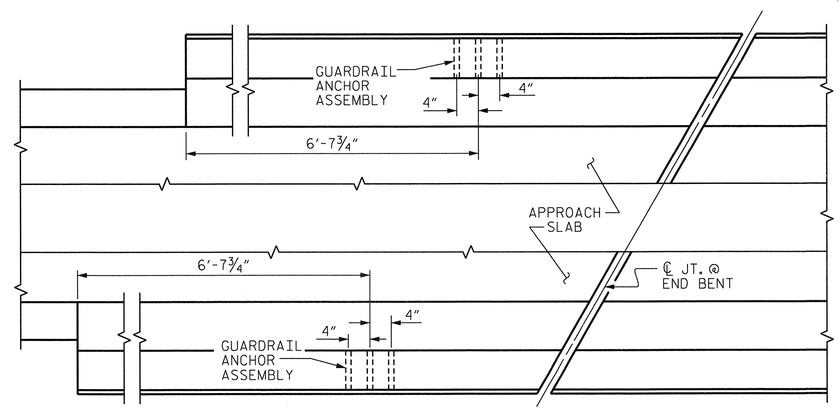

PLAN

LOCATION OF ANCHORS FOR GUARDRAIL

END BENT #2 SHOWN, END BENT #1 SIMILAR.

NOTES

THE GUARDRAIL ANCHOR ASSEMBLY SHALL CONSIST OF A ¼" HOLD-DOWN PLATE AND 4 - ⅞" Ø BOLTS WITH NUTS AND WASHERS, RUBRAIL, AND ADHESIVELY ANCHORED BOLTS.

THE HOLD-DOWN PLATE SHALL CONFORM TO AASHTO M270 GRADE 36. AFTER FABRICATION, THE HOLD-DOWN PLATE SHALL BE HOT-DIP GALVANIZED IN ACCORDANCE WITH AASHTO M111.

BOLTS SHALL CONFORM TO THE REQUIREMENTS OF ASTM A307 AND NUTS SHALL CONFORM TO THE REQUIREMENTS OF AASHTO M291. BOLTS, NUTS AND WASHERS SHALL BE GALVANIZED. (AT THE CONTRACTOR'S OPTION, STAINLESS STEEL BOLTS, NUTS AND WASHERS MAY BE USED AS AN ALTERNATE FOR THE ⅞" Ø GALVANIZED BOLTS, NUTS AND WASHERS. THEY SHALL CONFORM TO OR EXCEED THE MECHANICAL REQUIREMENTS OF ASTM A307. THE USE OF THIS ALTERNATE SHALL BE APPROVED BY THE ENGINEER.)

THE GUARDRAIL ANCHOR ASSEMBLY IS REQUIRED AT ALL POINTS WHERE APPROACH GUARDRAIL IS TO BE ATTACHED TO THE END OF BARRIER RAIL. FOR POINTS OF ATTACHMENT, SEE SKETCH.

AFTER INSTALLATION, THE EXPOSED THREAD OF THE BOLT SHALL BE BURRED WITH A SHARP POINTED TOOL.

THE COST OF THE GUARDRAIL ANCHOR ASSEMBLY SHALL BE INCLUDED IN THE UNIT CONTRACT PRICE BID FOR CONCRETE BARRIER RAIL.

THE 1 ¼" Ø HOLES SHALL BE FORMED OR DRILLED WITH A CORE BIT. IMPACT TOOLS WILL NOT BE PERMITTED. ANY CONCRETE DAMAGED BY THIS WORK SHALL BE REPAIRED TO THE SATISFACTION OF THE ENGINEER.

THE C6 X 8.2 RUBRAIL IS TO BE ADHESIVELY ANCHORED TO THE RAIL USING THREE ¾" Ø X 6" BOLTS WITH WASHERS. LEVEL ONE FIELD TESTING IS REQUIRED, AND THE YIELD LOAD OF THE ¾" Ø BOLT IS 12 KIPS. FOR ADHESIVELY ANCHORED ANCHOR BOLTS OR DOWELS, SEE STANDARD SPECIFICATIONS. SEE ROADWAY STANDARD 862.03 FOR DETAILS AND LOCATION OF THE RUBRAIL.

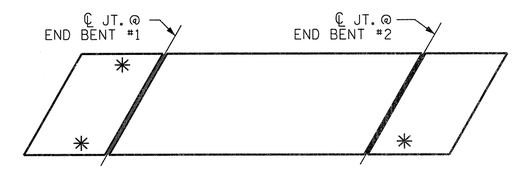

SKETCH SHOWING POINTS OF ATTACHMENTS

✳ DENOTES GUARDRAIL ANCHOR ASSEMBLY

PROJECT NO. R-2633BB

BRUNSWICK/NEW HANOVER COUNTY

STATION: 398+75.47 -L-

STATE OF NORTH CAROLINA
DEPARTMENT OF TRANSPORTATION
RALEIGH

STANDARD

GUARDRAIL ANCHORAGE FOR BARRIER RAIL
RIGHT LANE

NORTH CAROLINA PROFESSIONAL SEAL 14047 ENGINEER STEPHEN D. COOK
7/11/13

THE LOUIS BERGER GROUP, Inc.
1001 Wade Avenue, Suite 400
Raleigh, NC 27605-3322

REVISIONS							SHEET NO.
NO.	BY:	DATE:	NO.	BY:	DATE:		S-518
1			3				TOTAL SHEETS
2			4				700

ASSEMBLED BY : J.MYA	DATE : SEPT. 2012
CHECKED BY : S. COOK	DATE : SEPT. 2012
DRAWN BY : TLA 5/06	ADDED 5/1/06RR KMM/GM
CHECKED BY : GM 5/06	REV. 10/1/11 MAA/GM

(SHT 3b) STD. NO. GRA2

G:\OR Projects\OR1092 - NCDOT Wilm Bypass DualBridges\Structures\Bridge Site 6\R-2633BB_SD_06R_GRA.dgn
2/11/2013 8:47:44 AM 1092_PDF_full.pltcfg 1092_str.tbl

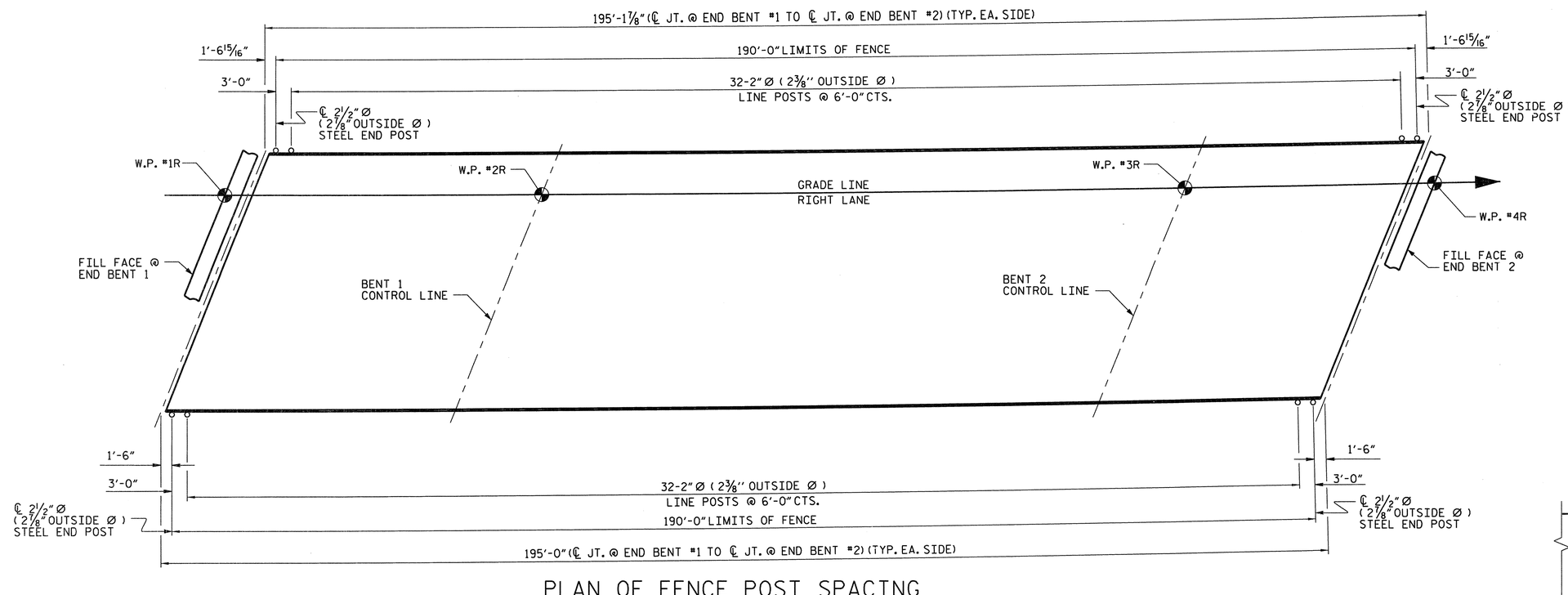

PLAN OF FENCE POST SPACING

PAY LENGTH = 380.00 FEET

NOTES:

FOR 72" CHAIN LINK FENCE, SEE SPECIAL PROVISIONS.

BOLTS SHALL CONFORM TO THE REQUIREMENTS OF ASTM A307 AND NUTS SHALL CONFORM TO THE REQUIREMENTS OF AASHTO M291. BOLTS, NUTS, AND WASHERS SHALL BE GALVANIZED. (AT THE CONTRACTOR'S OPTION, STAINLESS STEEL BOLTS, NUTS, AND WASHERS MAY BE USED AS AN ALTERNATE FOR THE 3/4" Ø GALVANIZED BOLTS, NUTS, AND WASHERS. THEY SHALL CONFORM TO OR EXCEED THE MECHANICAL REQUIREMENTS OF ASTM A307. THE USE OF THIS ALTERNATE SHALL BE APPROVED BY THE ENGINEER.)

FOR SETTING ANCHOR BOLTS, THE CONTRACTOR SHALL USE AN ADHESIVE BONDING SYSTEM. LEVEL ONE FIELD TESTING OF BONDING SYSTEM IS REQUIRED AND THE YIELD LOAD OF THE 3/4" Ø BOLTS IS 12.0 KIPS.

ALL FENCE MATERIAL SHALL MEET THE REQUIREMENTS OF SECTION 1050 OF THE STANDARD SPECIFICATIONS, GALVANIZE ALL STEEL PARTS AND HARDWARE IN ACCORDANCE WITH ARTICLE 1076 OF THE STANDARD SPECIFICATIONS.

FENCE POST LOCATIONS SHALL BE SHIFTED, AS NECESSARY, TO MAINTAIN 12" MINIMUM DISTANCE FROM ANCHOR BOLT TO JOINTS IN BARRIER RAIL.

DIMENSIONS TAKEN ALONG OUTSIDE FACE OF BARRIER RAIL.

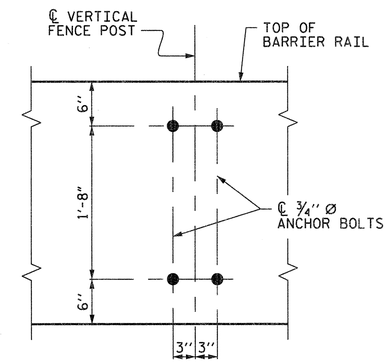

BOLT SETTING DETAIL

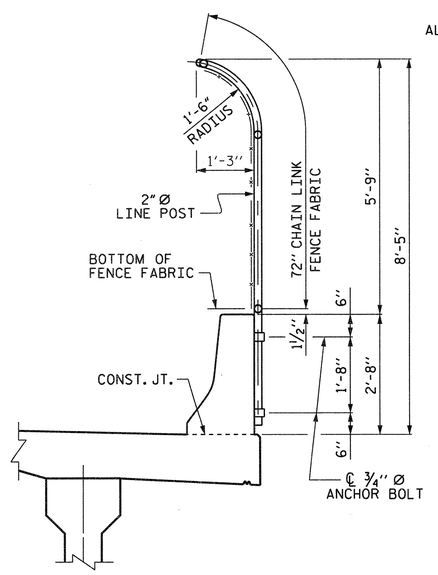

SECTION THRU FENCE

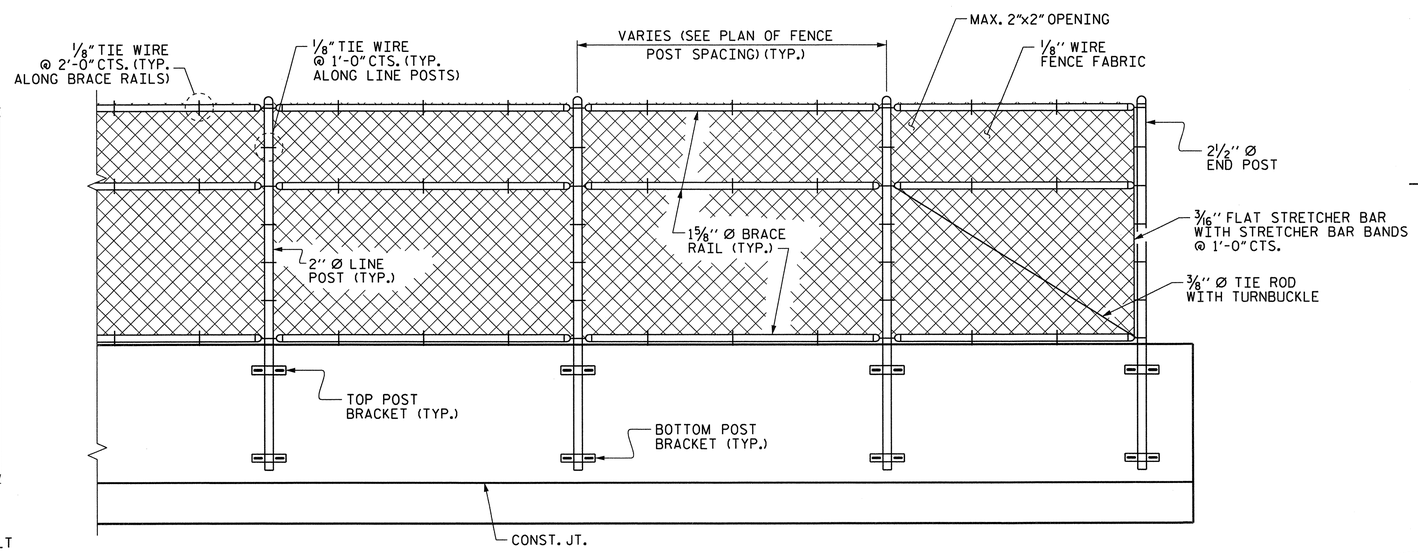

PARTIAL ELEVATION

PROJECT NO. R-2633BB

BRUNSWICK/NEW HANOVER COUNTY

STATION: 398+75.47 -L-

STATE OF NORTH CAROLINA
DEPARTMENT OF TRANSPORTATION
RALEIGH

SUPERSTRUCTURE

BRIDGE MOUNTED 72" CHAIN LINK FENCE RIGHT LANE

NORTH CAROLINA PROFESSIONAL SEAL 14047 ENGINEER STEPHEN D. COOK
2/11/13

THE LOUIS BERGER GROUP, Inc.
1001 Wade Avenue, Suite 400
Raleigh, NC 27605-3322

REVISIONS						SHEET NO.
NO.	BY:	DATE:	NO.	BY:	DATE:	S-519
1			3			TOTAL SHEETS
2			4			700

DRAWN BY : J.MYA DATE : SEP.2012
CHECKED BY : S.COOK DATE : SEP.2012

G:\OR Projects\OR1092 - NCDOT Wilm Bypass DualBridges\Structures\Bridge Site 6\R-2633BB_SD_06R_FNC.dgn
2/11/2013 8:47:46 AM 1092_PDF_full.pltcfg 1092_str.tbl

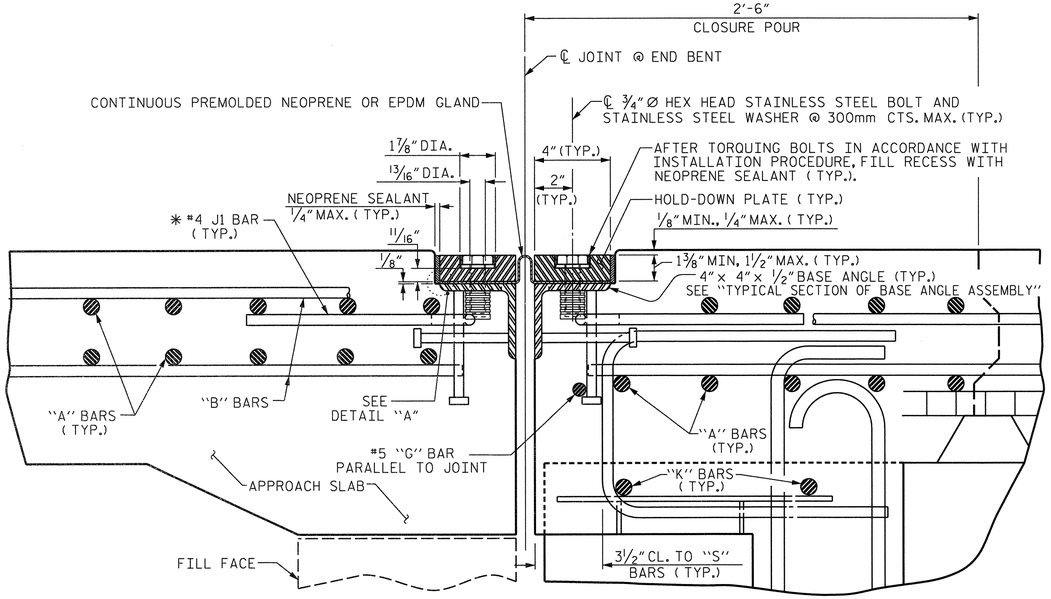

EXPANSION JOINT DETAILS

SECTION NORMAL TO JOINT

* THE QUANTITY OF #4 J1 BARS ON THE BILL OF MATERIAL IS BASED ON 1'-0" CENTERS. J1 BARS SHALL BE PLACED AT EACH VERTICAL STUD ANCHOR BOLT. IN THE EVENT THAT THE NUMBER OF VERTICAL STUD ANCHORS EXCEEDS THE NUMBER OF J1 BARS SPECIFIED, ADDITIONAL J1 BARS WILL NOT BE REQUIRED.

INSTALLATION PROCEDURE

1. A TEMPLATE OR OTHER SUITABLE DEVICE SHALL BE USED TO FORM THE TOP OF THE EXPANSION JOINT SEAL BLOCKOUT TO THE PROPER DEPTH AND WIDTH. THE TEMPLATE SHALL BE 4⅛" TO 4¼" WIDE AND OF SUCH THICKNESS AS TO PROVIDE FOR CORRECT FINAL ELEVATION OF TOP OF HOLD-DOWN PLATES. THE TEMPLATE SHALL BE ATTACHED TO THE BASE ANGLE ASSEMBLY WITH THE ¾"Ø HEX HEAD BOLTS PROVIDED FOR THE HOLD-DOWN PLATES. A 1"Ø HOLE SHALL BE PROVIDED IN THE TEMPLATE CENTERED OVER EACH WEEP HOLE IN THE 4" X 4" X ½" BASE ANGLE. OTHER METHODS OF INSURING DRAINAGE THROUGH WEEP HOLES MAY BE EMPLOYED SUBJECT TO ENGINEER'S APPROVAL.
2. AFTER THE CONCRETE HAS BEEN CAST ON BOTH SIDES OF THE JOINT, REMOVE THE TEMPLATE. THOROUGHLY CLEAN THE BOLT HOLES AND THE ANGLE PLATE. REMOVE ANY EXCESS CONCRETE THAT COMES OUT OF THE WEEP HOLES. ANY DAMAGED STEEL SHALL BE COATED WITH A MINIMUM THICKNESS OF 4 DRY MILS OF ZINC-RICH PAINT IN ACCORDANCE WITH THE STANDARD SPECIFICATIONS.
3. LAY THE GLAND ON THE BASE ANGLE AND FIELD MARK THE GLAND FOR THE BOLT HOLES. HOLES IN THE GLAND SHALL BE PUNCHED ⅞" IN DIAMETER WITH A HAND PUNCH.
4. IN ORDER TO CHECK FOR PROPER ALIGNMENT, PLACE THE GLAND AND HOLD-DOWN PLATES ON THE BASE ANGLE. DO NOT APPLY NEOPRENE SEALANT. BOLT THE HOLD-DOWN PLATES TO THE BASE ANGLE BUT DO NOT TIGHTEN. THE ENGINEER SHALL INSPECT THE JOINT SEAL DEVICE FOR PROPER ALIGNMENT.
5. AFTER INSPECTION, REMOVE THE HOLD-DOWN PLATES AND GLAND. APPLY NEOPRENE SEALANT TO THE BASE ANGLE IN ACCORDANCE WITH THE "INSTALLATION SKETCH". PLACE GLAND AND HOLD-DOWN PLATES ON THE BASE ANGLE. BOLT THE HOLD-DOWN PLATES TO THE BASE ANGLE ASSEMBLY AND TORQUE THE BOLTS TO 88 FT-LBS WITH A TORQUE WRENCH. CHECK THE TORQUE AFTER THREE (3) HOURS AND, IF NECESSARY, RETIGHTEN TO 88 FT-LBS. A FINAL CHECK SHALL BE MADE AT SEVEN (7) DAYS. TORQUE SHALL NOT BE LESS THAN 80 FT-LBS AFTER SEVEN (7) DAYS.
6. AFTER PROPER TORQUING, CLEAN THE BOLT HOLE RECESSES AND THE RECESS BETWEEN THE JOINT SEAL DEVICE AND CONCRETE, COMPLETELY FILL THESE RECESSES WITH NEOPRENE SEALANT.

GENERAL NOTES

1. FOR EXPANSION JOINT SEALS, SEE SPECIAL PROVISIONS.
2. ALL PLATES AND ANGLES SHALL CONFORM TO AASHTO M270 GRADE 36 STEEL OR APPROVED EQUAL. ALL HOLD-DOWN BOLTS SHALL CONFORM TO ASTM F593 ALLOY 304 STAINLESS STEEL AND WASHERS SHALL CONFORM TO ASTM F844 EXCEPT THEY SHALL BE MADE FROM ALLOY 304 STAINLESS STEEL. ALL STUD ANCHORS SHALL CONFORM TO AASHTO M169, GRADES 1010 THRU 1020 OR APPROVED EQUAL. ALL CONCRETE INSERTS SHALL BE CLOSED END AND SHALL CONFORM TO AASHTO M169, GRADE 12L14. TENSILE CAPACITY SHALL BE 3000 LBS. MIN.
3. A PREMOLDED CORRUGATED OR NON-CORRUGATED GLAND SHALL BE USED FOR JOINTS SKEWED BETWEEN 50° THRU 130°. FOR JOINTS SKEWED LESS THAN 50° OR MORE THAN 130°, ONLY A CORRUGATED GLAND SHALL BE USED.
4. CLOSED END FERRULES AND STUD ANCHORS SHALL BE SHOP WELDED AND ALL HOLES SHALL BE SHOP DRILLED AS SHOWN ON PLANS. STUD ANCHORS SHALL BE ELECTRIC ARC END WELDED WITH COMPLETE FUSION.
5. SURFACES COMING IN CONTACT WITH NEOPRENE SHALL BE GROUND SMOOTH PRIOR TO METALLIZING.
6. UPON COMPLETION OF SHOP FABRICATION, THE HOLD DOWN PLATE AND BASE ANGLE ASSEMBLY, AS SHOWN IN THE " TYPICAL SECTION OF BASE ANGLE ASSEMBLY", SHALL BE METALLIZED. SEE SPECIAL PROVISION FOR THERMAL SPRAYED COATINGS (METALLIZATION).
7. BASE ANGLE ASSEMBLY SHALL BE CONTINUOUS FOR THE LENGTH OF THE JOINT. AT CROWN BREAKS, THE ENDS OF THE BASE ANGLE ASSEMBLY SHALL BE CUT PARALLEL TO THE BRIDGE CENTERLINE FOR SKEWS LESS THAN 80° AND GREATER THAN 100°. FINISHED WELD SHALL BE GROUND SMOOTH AND COATED WITH A MINIMUM THICKNESS OF 4 DRY MILS OF ZINC-RICH PAINT IN ACCORDANCE WITH THE STANDARD SPECIFICATIONS.
8. FIELD SPLICES OF HOLD-DOWN PLATES SHALL BE KEPT TO A MINIMUM. CONTRACTOR SHALL FURNISH DETAILED PLANS SHOWING PROPOSED SPLICE LOCATIONS FOR APPROVAL. HOLD-DOWN PLATES SHALL NOT EXCEED 20' LENGTHS UNLESS APPROVED BY THE ENGINEER.
9. NO ALTERNATE JOINT DETAILS SHALL BE PERMITTED IN LIEU OF THOSE SHOWN ON THESE PLANS.
10. THE CONTRACTOR MAY, AT HIS OPTION, USE ADHESIVELY ANCHORED ANCHOR BOLTS IN PLACE OF CONCRETE INSERTS FOR COVER PLATES. THE YIELD LOAD OF THE ¾"Ø BOLT IS 10 KIPS. FIELD TESTING OF THE ADHESIVE BONDING SYSTEM IS NOT REQUIRED.

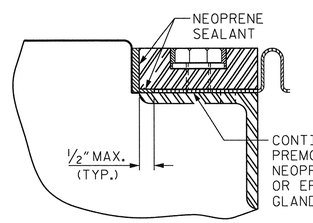

DETAIL "A"

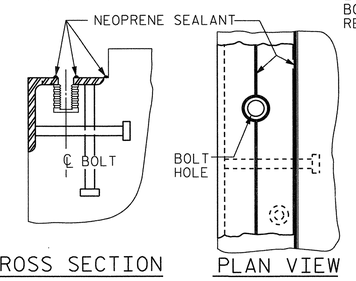

INSTALLATION SKETCH

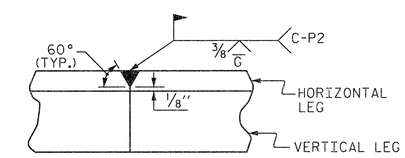

DETAIL- FIELD WELD SPLICE OF BASE ANGLE

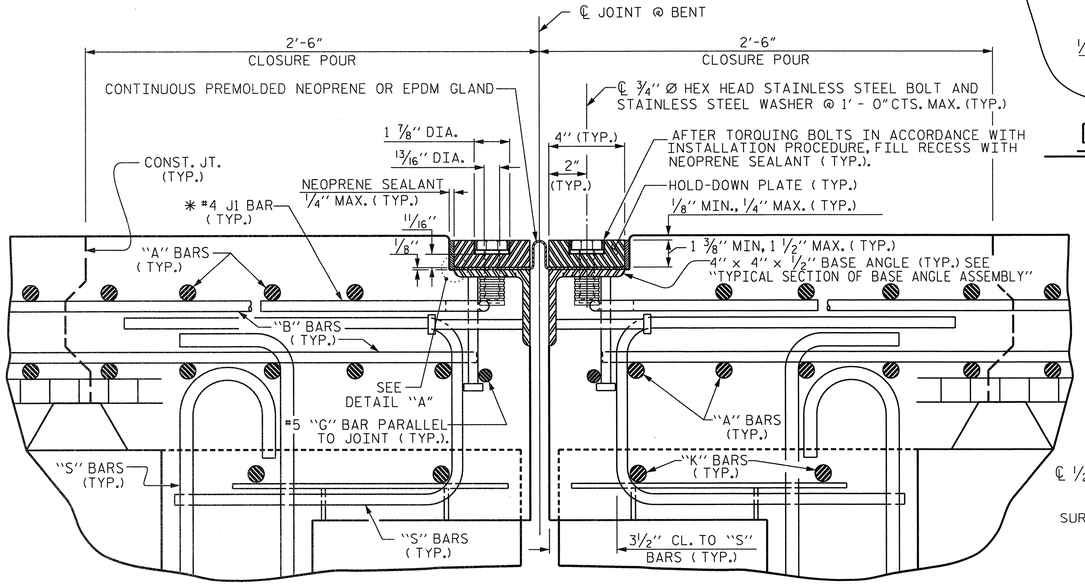

EXPANSION JOINT DETAILS

SECTION NORMAL TO JOINT

* THE QUANTITY OF #4 J1 BARS ON THE BILL OF MATERIAL IS BASED ON 1'-0" CENTERS. J1 BARS SHALL BE PLACED AT EACH VERTICAL STUD ANCHOR BOLT. IN THE EVENT THAT THE NUMBER OF VERTICAL STUD ANCHORS EXCEEDS THE NUMBER OF J1 BARS SPECIFIED, ADDITIONAL J1 BARS WILL NOT BE REQUIRED.

MOVEMENT AND SETTING AT JOINT

LOCATION	SKEW ANGLE	TOTAL MOVEMENT (ALONG ℄ RDWY)	PERPENDICULAR JOINT OPENING AT 45° F	PERPENDICULAR JOINT OPENING AT 60° F	PERPENDICULAR JOINT OPENING AT 90° F
END BENT 1	111°-17'-04"	0"	1"	1"	1"
BENT 1	111°-47'-34"	1"	1⅝"	1½"	1 3/16"
BENT 2	112°-18'-41"	1¼"	1⅛"	1⅛"	1"
END BENT 2	112°-18'-41"	0"	1"	1"	1"

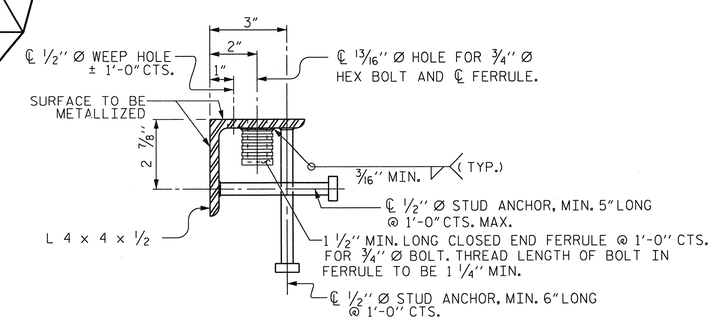

TYPICAL SECTION OF BASE ANGLE ASSEMBLY

PROJECT NO. R-2633BB

BRUNSWICK/NEW HANOVER COUNTY

STATION: 398+75.47 -L-

SHEET 1 OF 2

STATE OF NORTH CAROLINA
DEPARTMENT OF TRANSPORTATION
RALEIGH

STANDARD
EXPANSION JOINT SEAL DETAILS
RIGHT LANE

NORTH CAROLINA PROFESSIONAL SEAL 14047 ENGINEER STEPHEN D. COOK

THE LOUIS BERGER GROUP, Inc.
1001 Wade Avenue, Suite 400
Raleigh, NC 27605-3322

REVISIONS								SHEET NO.
NO.	BY:	DATE:	NO.	BY:	DATE:			S-520
1			3					TOTAL SHEETS
2			4					700

STD. NO. EJS1

ASSEMBLED BY : J. MYA		DATE : SEPT. 2012	
CHECKED BY : S. COOK		DATE : SEPT. 2012	
DRAWN BY : REK 9/87	REV. 5/7/03R	RWW/JTE	
CHECKED BY : CRK 10/87	REV. 5/1/06R	TLA/GM	
	REV. 10/1/11	MAA/GM	

G:\DR Projects\DR1092 - NCDOT Wilm Bypass DualBridges\Structures\Bridge Site 6\R-2633BB_SD_06R_EJS.dgn
2/11/2013 8:47:49 AM 1092_PDF_full.pltcfg

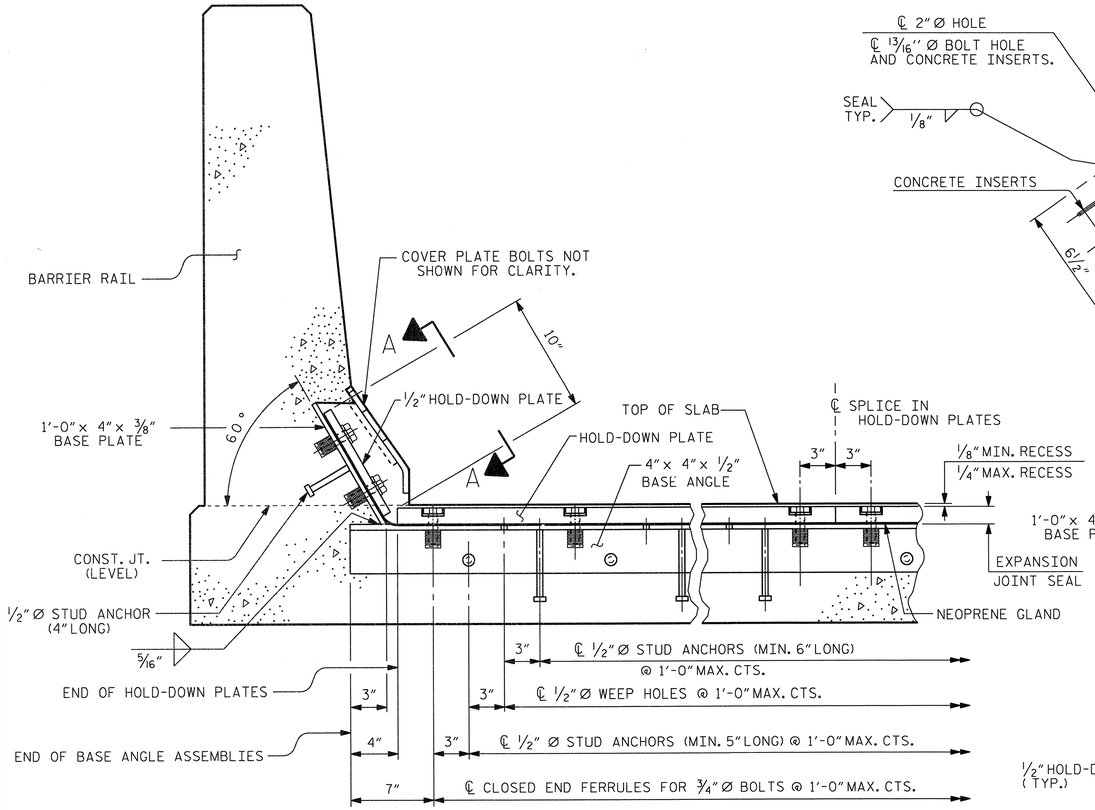

SECTION THRU RAIL NORMAL TO JOINT

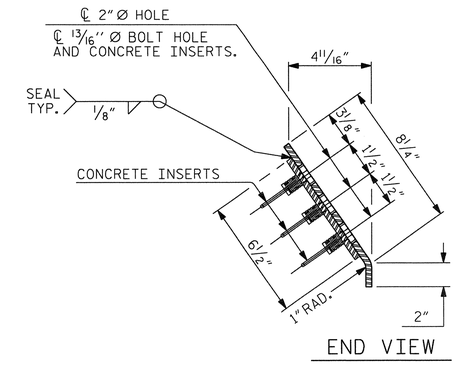

END VIEW

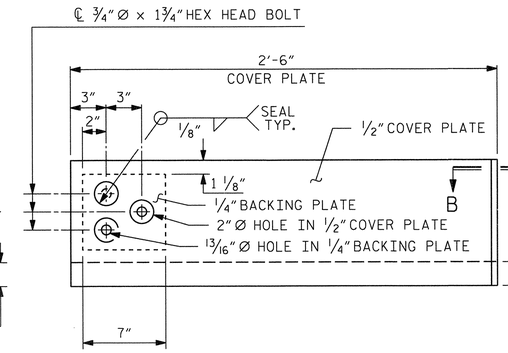

TYPE I - ELEVATION VIEW

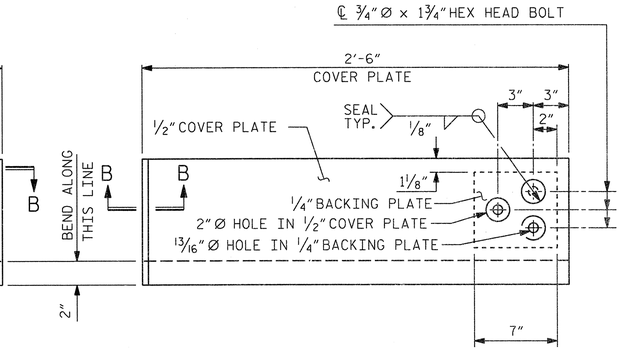

TYPE II - ELEVATION VIEW

COVER PLATE DETAILS

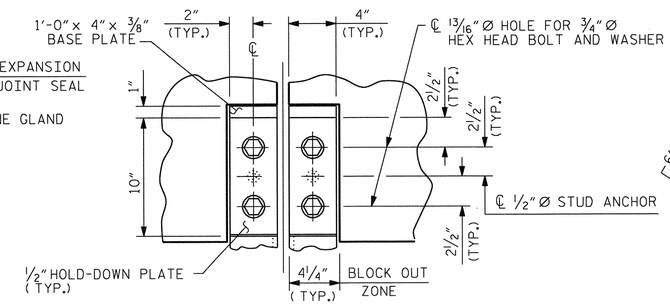

SECTION A - A

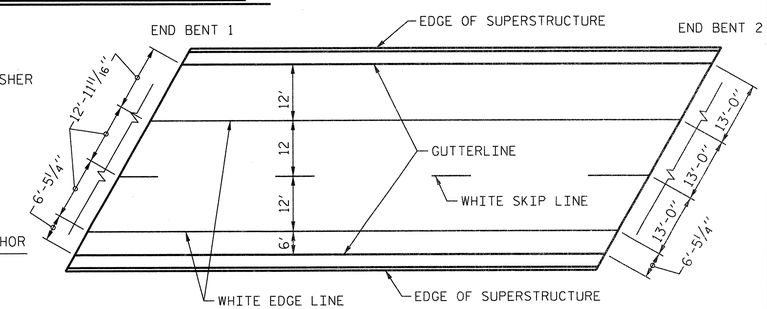

PAVEMENT MARKING ALIGNMENT

	@ 45°	@ 60°	@ 90°
END BENT 1	1"	1"	1"
BENT 1	1 5/8"	1 1/2"	1 3/16"
BENT 2	1 1/8"	1 1/8"	1"
END BENT 2	1"	1"	1"

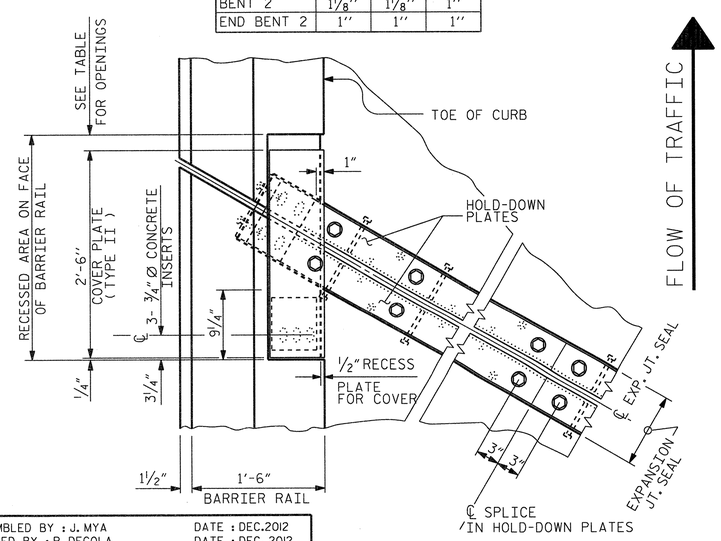

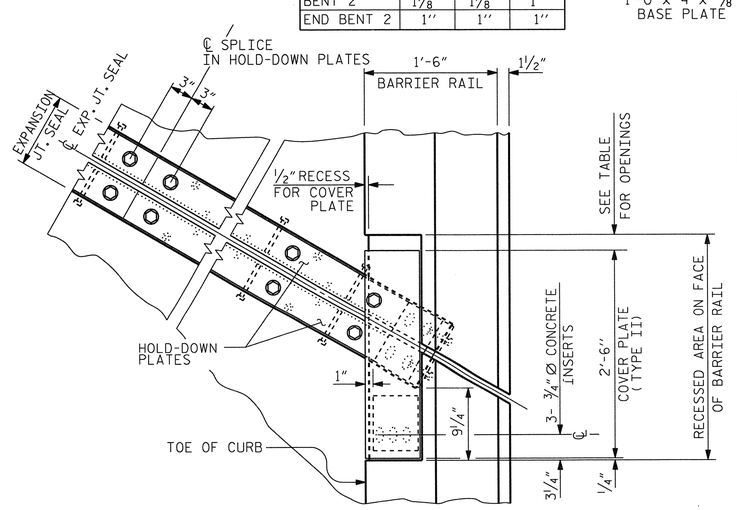

PLAN OF EXPANSION JOINT SEAL

	@ 45°	@ 60°	@ 90°
END BENT 1	1"	1"	1"
BENT 1	1 5/8"	1 1/2"	1 3/16"
BENT 2	1 1/8"	1 1/8"	1"
END BENT 2	1"	1"	1"

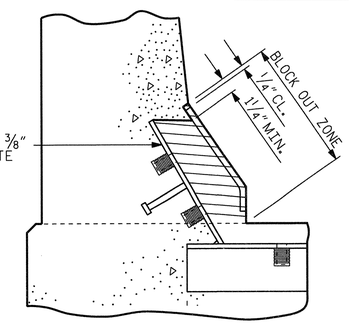

BLOCK OUT DETAIL

SEE "SECTION A - A" FOR OTHER DETAILS.

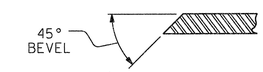

SECTION B - B

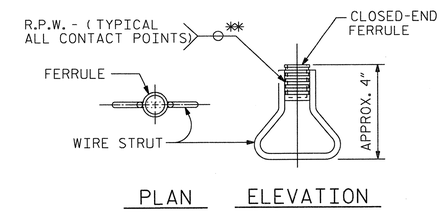

CONCRETE INSERT

** EACH WELDED ATTACHMENT OF WIRE TO FERRULE SHALL DEVELOP THE TENSILE STRENGTH OF THE WIRE.

NORTH CAROLINA PROFESSIONAL SEAL 14047 ENGINEER STEPHEN D. COOK 2/11/13

THE LOUIS BERGER GROUP, Inc.
1001 Wade Avenue, Suite 400
Raleigh, NC 27605-3322

PROJECT NO. R-2633BB

BRUNSWICK/NEW HANOVER COUNTY

STATION: 398+75.47 -L-

SHEET 2 OF 2

STATE OF NORTH CAROLINA
DEPARTMENT OF TRANSPORTATION
RALEIGH

STANDARD
EXPANSION JOINT SEAL DETAILS FOR BARRIER RAIL
RIGHT LANE

REVISIONS							SHEET NO.
NO.	BY:	DATE:	NO.	BY:	DATE:		S-521
1			3				TOTAL SHEETS
2			4				700

STD. NO. EJS2

ASSEMBLED BY : J. MYA DATE : DEC.2012
CHECKED BY : R. DECOLA DATE : DEC. 2012

DRAWN BY : REK 9/87
CHECKED BY : CRK 10/87

REV. 10/1/11 MAA/GM
REV. 7/12 MAA/GM
REV. 10/12 MAA/GM

G:\OR Projects\OR1092 - NCDOT Wilm Bypass Dual Bridges\Structures\Bridge Site 6\R-2633BB_SD_06R_EJS02.dgn
2/11/2013 8:47:52 AM 1092_PDF-full.pltcfg 1092_str.tbl

REINFORCING BAR SCHEDULE

SPAN "A"

BAR	NO.	SIZE	TYPE	LENGTH	WEIGHT
✳ A1	31	#5	STR	44'-11"	1452
✳ A101	2	#5	STR	43'-6"	91
✳ A102	2	#5	STR	42'-3"	88
✳ A103	2	#5	STR	41'-0"	86
✳ A104	2	#5	STR	39'-8"	83
✳ A105	2	#5	STR	38'-5"	80
✳ A106	2	#5	STR	37'-2"	78
✳ A107	2	#5	STR	35'-10"	75
✳ A108	2	#5	STR	34'-7"	72
✳ A109	2	#5	STR	33'-4"	70
✳ A110	2	#5	STR	32'-1"	67
✳ A111	2	#5	STR	30'-9"	64
✳ A112	2	#5	STR	29'-6"	62
✳ A113	2	#5	STR	28'-3"	59
✳ A114	2	#5	STR	26'-11"	56
✳ A115	2	#5	STR	25'-8"	54
✳ A116	2	#5	STR	24'-5"	51
✳ A117	2	#5	STR	23'-1"	48
✳ A118	2	#5	STR	21'-10"	46
✳ A119	2	#5	STR	20'-7"	43
✳ A120	2	#5	STR	19'-3"	40
✳ A121	2	#5	STR	18'-0"	38
✳ A122	2	#5	STR	16'-9"	35
✳ A123	2	#5	STR	15'-5"	32
✳ A124	2	#5	STR	14'-2"	30
✳ A125	2	#5	STR	12'-11"	27
✳ A126	2	#5	STR	11'-7"	24
✳ A127	2	#5	STR	10'-4"	22
✳ A128	2	#5	STR	9'-1"	19
✳ A129	2	#5	STR	7'-9"	16
✳ A130	2	#5	STR	6'-6"	14
✳ A131	2	#5	STR	5'-3"	11
✳ A132	2	#5	STR	4'-0"	8
✳ A133	2	#5	STR	2'-8"	6
✳ A134	2	#5	STR	1'-5"	3
A2	31	#5	STR	44'-11"	1452
A201	2	#5	STR	43'-6"	91
A202	2	#5	STR	42'-3"	88
A203	2	#5	STR	41'-0"	86
A204	2	#5	STR	39'-8"	83
A205	2	#5	STR	38'-5"	80
A206	2	#5	STR	37'-2"	78
A207	2	#5	STR	35'-10"	75
A208	2	#5	STR	34'-7"	72
A209	2	#5	STR	33'-4"	70
A210	2	#5	STR	32'-1"	67
A211	2	#5	STR	30'-9"	64
A212	2	#5	STR	29'-6"	62
A213	2	#5	STR	28'-3"	59
A214	2	#5	STR	26'-11"	56
A215	2	#5	STR	25'-8"	54
A216	2	#5	STR	24'-5"	51
A217	2	#5	STR	23'-1"	48
A218	2	#5	STR	21'-10"	46
A219	2	#5	STR	20'-7"	43
A220	2	#5	STR	19'-3"	40

BAR	NO.	SIZE	TYPE	LENGTH	WEIGHT
A221	2	#5	STR	18'-0"	38
A222	2	#5	STR	16'-9"	35
A223	2	#5	STR	15'-5"	32
A224	2	#5	STR	14'-2"	30
A225	2	#5	STR	12'-11"	27
A226	2	#5	STR	11'-7"	24
A227	2	#5	STR	10'-4"	22
A228	2	#5	STR	9'-1"	19
A229	2	#5	STR	7'-9"	16
A230	2	#5	STR	6'-6"	14
A231	2	#5	STR	5'-3"	11
A232	2	#5	STR	4'-0"	8
A233	2	#5	STR	2'-8"	6
A234	2	#5	STR	1'-5"	1
✳ B1	64	#4	STR	17'-6"	748
B2	56	#5	STR	32'-6"	1898
✳ G1	2	#5	STR	48'-3"	101
✳ J1	90	#4	6	1'-5"	85
✳ K1	12	#8	2	20'-4"	651
✳ K2	8	#8	1	14'-0"	299
✳ K3	24	#6	STR	8'-6"	306
✳ S1	72	#5	3	5'-0"	375
✳ S2	72	#5	5	3'-8"	275

REINFORCING BAR SCHEDULE

SPAN "B"

BAR	NO.	SIZE	TYPE	LENGTH	WEIGHT
✳ A1	173	#5	STR	44'-11"	8105
✳ A301	2	#5	STR	43'-4"	90
✳ A302	2	#5	STR	41'-9"	87
✳ A303	2	#5	STR	40'-3"	84
✳ A304	2	#5	STR	38'-8"	81
✳ A305	2	#5	STR	37'-1"	77
✳ A306	2	#5	STR	35'-6"	74
✳ A307	2	#5	STR	33'-11"	71
✳ A308	2	#5	STR	32'-5"	68
✳ A309	2	#5	STR	30'-10"	64
✳ A310	2	#5	STR	29'-3"	61
✳ A311	2	#5	STR	27'-8"	58
✳ A312	2	#5	STR	26'-1"	54
✳ A313	2	#5	STR	24'-6"	51
✳ A314	2	#5	STR	23'-0"	48
✳ A315	2	#5	STR	21'-5"	45
✳ A316	2	#5	STR	19'-10"	41
✳ A317	2	#5	STR	18'-3"	38
✳ A318	2	#5	STR	16'-8"	35
✳ A319	2	#5	STR	15'-2"	32
✳ A320	2	#5	STR	13'-7"	28
✳ A321	2	#5	STR	12'-0"	25
✳ A322	2	#5	STR	10'-5"	22
✳ A323	2	#5	STR	8'-10"	18
✳ A324	2	#5	STR	7'-3"	15
✳ A325	2	#5	STR	5'-9"	12
✳ A326	2	#5	STR	4'-2"	9
✳ A327	2	#5	STR	2'-7"	5
✳ A328	2	#5	STR	1'-0"	2
A2	173	#5	STR	44'-11"	8105
A401	2	#5	STR	43'-4"	90
A402	2	#5	STR	41'-9"	87
A403	2	#5	STR	40'-3"	84
A404	2	#5	STR	38'-8"	81
A405	2	#5	STR	37'-1"	77
A406	2	#5	STR	35'-6"	74
A407	2	#5	STR	33'-11"	71
A408	2	#5	STR	32'-5"	68
A409	2	#5	STR	30'-10"	64
A410	2	#5	STR	29'-3"	61
A411	2	#5	STR	27'-8"	58
A412	2	#5	STR	26'-1"	54
A413	2	#5	STR	24'-6"	51
A414	2	#5	STR	23'-0"	48
A415	2	#5	STR	21'-5"	45
A416	2	#5	STR	19'-10"	41
A417	2	#5	STR	18'-3"	38
A418	2	#5	STR	16'-8"	35
A419	2	#5	STR	15'-2"	32
A420	2	#5	STR	13'-7"	28
A421	2	#5	STR	12'-0"	25
A422	2	#5	STR	10'-5"	22
A423	2	#5	STR	8'-10"	18
A424	2	#5	STR	7'-3"	15
A425	2	#5	STR	5'-9"	12
A426	2	#5	STR	4'-2"	9
A427	2	#5	STR	2'-7"	5
A428	2	#5	STR	1'-0"	2

BAR	NO.	SIZE	TYPE	LENGTH	WEIGHT
✳ B3	160	#4	STR	26'-9"	2859
B4	102	#5	STR	43'-10"	4663
✳ G1	2	#5	STR	48'-3"	101
✳ J1	90	#4	6	1'-5"	85
✳ K4	12	#8	2	17'-10"	571
✳ K5	8	#8	1	13'-2"	281
✳ K6	24	#6	STR	6'-0"	216
✳ S2	48	#5	5	3'-8"	184
✳ S3	48	#5	3	6'-4"	317

PROJECT NO. R-2633BB

BRUNSWICK/NEW HANOVER COUNTY

STATION: 398+75.47 -L-

SHEET 1 OF 2

STATE OF NORTH CAROLINA
DEPARTMENT OF TRANSPORTATION
RALEIGH

STANDARD
SUPERSTRUCTURE
BILL OF MATERIAL
RIGHT LANE

NORTH CAROLINA PROFESSIONAL SEAL 14047 ENGINEER STEPHEN D. COOK

2/11/13

THE LOUIS BERGER GROUP, Inc.
1001 Wade Avenue, Suite 400
Raleigh, NC27605-3322

REVISIONS						SHEET NO.
NO.	BY:	DATE:	NO.	BY:	DATE:	S-522
1			3			TOTAL SHEETS
2			4			700

STD. NO. BOM2

ASSEMBLED BY : J. MYA DATE : OCT. 2012
CHECKED BY : S. COOK DATE : OCT. 2012

DRAWN BY : JMB5/87
CHECKED BY : SJD9/87

REV. 8/16/99RWW/LES
REV. 5/1/06TLA/GM
REV. 10/1/11MAA/GM

G:\OR Projects\OR1092 - NCDOT Wilm Bypass DualBridges\Structures\Bridge Site 6\R-2633BB_SD_06R_BOM.dgn
2/11/2013 8:47:54 AM 1092_PDF_full.pltcfg 1092_str.tbl

REINFORCING BAR SCHEDULE

SPAN "C"

BAR	NO.	SIZE	TYPE	LENGTH	WEIGHT
✱ A1	35	#5	STR	44'-11"	1640
✱ A501	2	#5	STR	43'-11"	92
✱ A502	2	#5	STR	42'-9"	89
✱ A503	2	#5	STR	41'-6"	87
✱ A504	2	#5	STR	40'-3"	84
✱ A505	2	#5	STR	39'-1"	82
✱ A506	2	#5	STR	37'-10"	79
✱ A507	2	#5	STR	36'-8"	76
✱ A508	2	#5	STR	35'-5"	74
✱ A509	2	#5	STR	34'-3"	71
✱ A510	2	#5	STR	33'-0"	69
✱ A511	2	#5	STR	31'-10"	66
✱ A512	2	#5	STR	30'-7"	64
✱ A513	2	#5	STR	29'-5"	61
✱ A514	2	#5	STR	28'-2"	59
✱ A515	2	#5	STR	27'-0"	56
✱ A516	2	#5	STR	25'-9"	54
✱ A517	2	#5	STR	25'-0"	52
✱ A518	2	#5	STR	23'-4"	49
✱ A519	2	#5	STR	22'-1"	46
✱ A520	2	#5	STR	20'-11"	44
✱ A521	2	#5	STR	19'-8"	41
✱ A522	2	#5	STR	18'-6"	39
✱ A523	2	#5	STR	17'-3"	36
✱ A524	2	#5	STR	16'-1"	34
✱ A525	2	#5	STR	14'-10	31
✱ A526	2	#5	STR	13'-8"	29
✱ A527	2	#5	STR	12'-5"	26
✱ A528	2	#5	STR	11'-3"	23
✱ A529	2	#5	STR	10'-0"	21
✱ A530	2	#5	STR	8'-10"	18
✱ A531	2	#5	STR	7'-7"	16
✱ A532	2	#5	STR	6'-5"	13
✱ A533	2	#5	STR	5'-2"	11
✱ A534	2	#5	STR	3'-11"	8
✱ A535	2	#5	STR	2'-9"	6
✱ A536	2	#5	STR	1'-6"	3
A2	35	#5	STR	44'-11"	1640
A601	2	#5	STR	43'-6"	91
A602	2	#5	STR	42'-3"	88
A603	2	#5	STR	41'-0"	86
A604	2	#5	STR	39'-8"	83
A605	2	#5	STR	38'-5"	80
A606	2	#5	STR	37'-2"	78
A607	2	#5	STR	35'-10"	75
A608	2	#5	STR	34'-7"	72
A609	2	#5	STR	33'-4"	70
A610	2	#5	STR	32'-1"	67
A611	2	#5	STR	30'-9"	64
A612	2	#5	STR	29'-6"	62
A613	2	#5	STR	28'-3"	59
A614	2	#5	STR	26'-11"	56
A615	2	#5	STR	25'-8"	54
A616	2	#5	STR	24'-5"	51
A617	2	#5	STR	23'-1"	48
A618	2	#5	STR	21'-10"	46
A619	2	#5	STR	20'-7"	43
A620	2	#5	STR	19'-3"	40

BAR	NO.	SIZE	TYPE	LENGTH	WEIGHT
A621	2	#5	STR	19'-8"	41
A622	2	#5	STR	18'-6"	39
A623	2	#5	STR	17'-3"	36
A624	2	#5	STR	16'-1"	34
A625	2	#5	STR	14'-10	31
A626	2	#5	STR	13'-8"	29
A627	2	#5	STR	12'-5"	26
A628	2	#5	STR	11'-3"	23
A629	2	#5	STR	10'-0"	21
A630	2	#5	STR	8'-10"	18
A631	2	#5	STR	7'-7"	16
A632	2	#5	STR	6'-5"	13
A633	2	#5	STR	5'-2"	11
A634	2	#5	STR	3'-11"	8
A635	2	#5	STR	2'-9"	6
A636	2	#5	STR	1'-6"	3
✱ B5	64	#4	STR	19'-3"	823
B6	56	#5	STR	35'-8"	2083
✱ G1	2	#5	STR	48'-3"	101
✱ J1	90	#4	6	1'-5"	85
✱ K1	12	#8	2	20'-4"	651
✱ K2	8	#8	1	14'-0"	299
✱ K3	24	#6	STR	8'-6"	306
✱ S1	72	#5	3	5'-0"	375
✱ S2	72	#5	5	3'-8"	275

SUPERSTRUCTURE REINFORCING STEEL LENGTHS ARE BASED ON THE FOLLOWING MINIMUM SPLICE LENGTHS

BAR SIZE	SUPERSTRUCTURE EXCEPT APPROACH SLABS, PARAPET, AND BARRIER RAIL		APPROACH SLABS		PARAPET AND BARRIER RAIL
	EPOXY COATED	UNCOATED	EPOXY COATED	UNCOATED	
#4	2'-0"	1'-9"	2'-0"	1'-9"	2'-9"
#5	2'-6"	2'-2"	2'-6"	2'-2"	3'-5"
#6	3'-0"	2'-7"	3'-10"	2'-7"	4'-4"
#7	5'-3"	3'-6"			
#8	6'-10"	4'-7"			

GROOVING BRIDGE FLOORS

APPROACH SLABS	2092	SQ.FT.
BRIDGE DECK	7,640	SQ.FT.
TOTAL	9,732	SQ.FT.

BAR TYPES

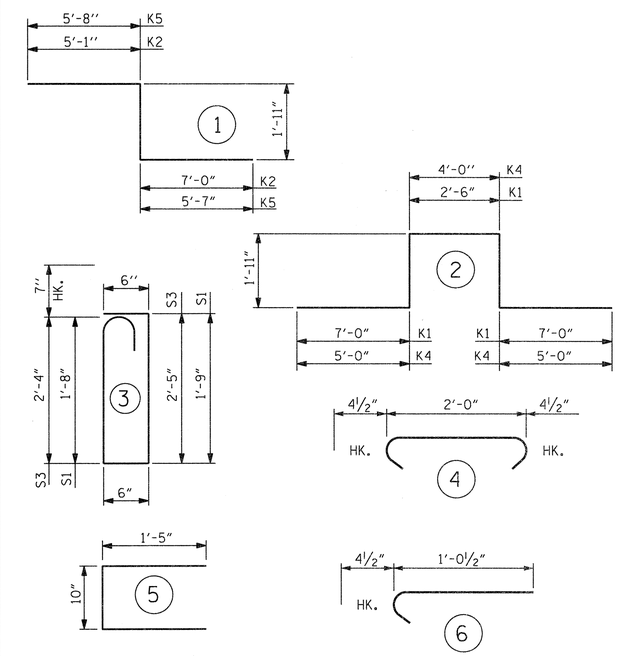

ALL BAR DIMENSIONS ARE OUT TO OUT

SUPERSTRUCTURE BILL OF MATERIAL

	CLASS AA CONCRETE	REINFORCING STEEL	EPOXY COATED REINFORCING STEEL
	(CU. YDS.)	(LBS.)	(LBS.)
SPANS "A"	45.2	4,948	✱ 5,890
SPANS "B"	194.6	14,063	✱ 14,014
SPANS "C"	49.3	5,432	✱ 6,264
TOTAL CLASS AA CONCRETE	289.1		
TOTAL REINFORCING STEEEL		24,443	
✱ TOTAL EPOXY COATED REINFORCING STEEL			✱ 26,168

✱ QUANTITIES FOR BARRIER RAIL ARE NOT INCLUDED

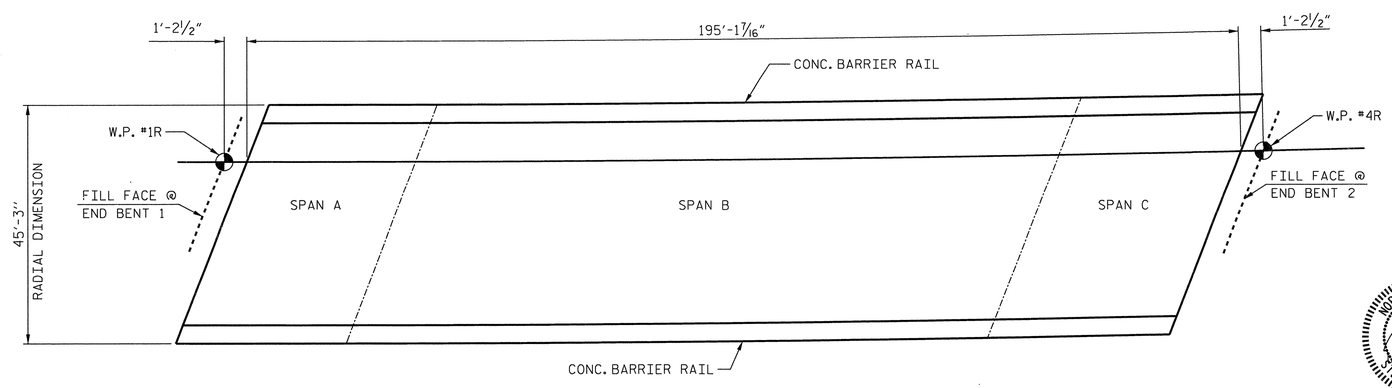

LAYOUT FOR COMPUTING AREA
REINFORCED CONCRETE DECK SLAB
(SQ. FT. = 8,837)

PROJECT NO. R-2633BB
BRUNSWICK/NEW HANOVER COUNTY
STATION: 398+75.47 -L-

SHEET 2 OF 2

STATE OF NORTH CAROLINA
DEPARTMENT OF TRANSPORTATION
RALEIGH

STANDARD
SUPERSTRUCTURE
BILL OF MATERIAL
RIGHT LANE

NORTH CAROLINA PROFESSIONAL SEAL 14047 ENGINEER STEPHEN D. COOK 2/11/13

THE LOUIS BERGER GROUP, Inc.
1001 Wade Avenue, Suite 400
Raleigh, NC27605-3322

REVISIONS							SHEET NO.
NO.	BY:	DATE:	NO.	BY:	DATE:		S-523
1			3				TOTAL SHEETS
2			4				700

STD. NO. BOM2

ASSEMBLED BY : J. MYA DATE : OCT. 2012
CHECKED BY : S. COOK DATE : OCT. 2012

DRAWN BY : JMB5/87
CHECKED BY : SJD9/87

REV. 8/16/99RWW/LES
REV. 5/1/06TLA/GM
REV. 10/1/11MAA/GM

G:\OR Projects\OR1092 - NCDOT Wilm Bypass DualBridges\Structures\Bridge Site 6\R-2633BB_SD_06R_BOM_02.dgn
2/11/2013 8:47:57 AM 1092_PDF_full.pltcfg 1092_str.tbl

NOTES:

STIRRUPS IN CAP MAY BE SHIFTED AS NECESSARY TO CLEAR ANCHOR BOLTS.

THE CONTRACTOR SHALL PROVIDE FOR INSTALLATION OF THE 4" DIAMETER DRAIN PIPE THROUGH THE WING WALL AS REQUIRED FOR REINFORCED BRIDGE APPROACH FILLS. SEE THE ROADWAY PLANS. REINFORCING STEEL IN THE WING WALL MAY BE SHIFTED AS NECESSARY TO CLEAR THE DRAIN PIPE.

BACKWALL SHALL BE PLACED BEFORE APPLYING THE EPOXY PROTECTIVE COATING.

THE TOP SURFACE AREAS OF THE END BENT CAPS SHALL BE CURED IN ACCORDANCE WITH THE STANDARD SPECIFICATIONS EXCEPT THE MEMBRANE CURING COMPOUND METHOD SHALL NOT BE USED.

THE TOP SURFACE OF THE END BENT CAP EXCEPT THE BRIDGE SEAT BUILDUPS SHALL BE SLOPED TRANSVERSELY FROM THE FILL FACE TO THE BACK FACE AT THE RATE OF 2%.

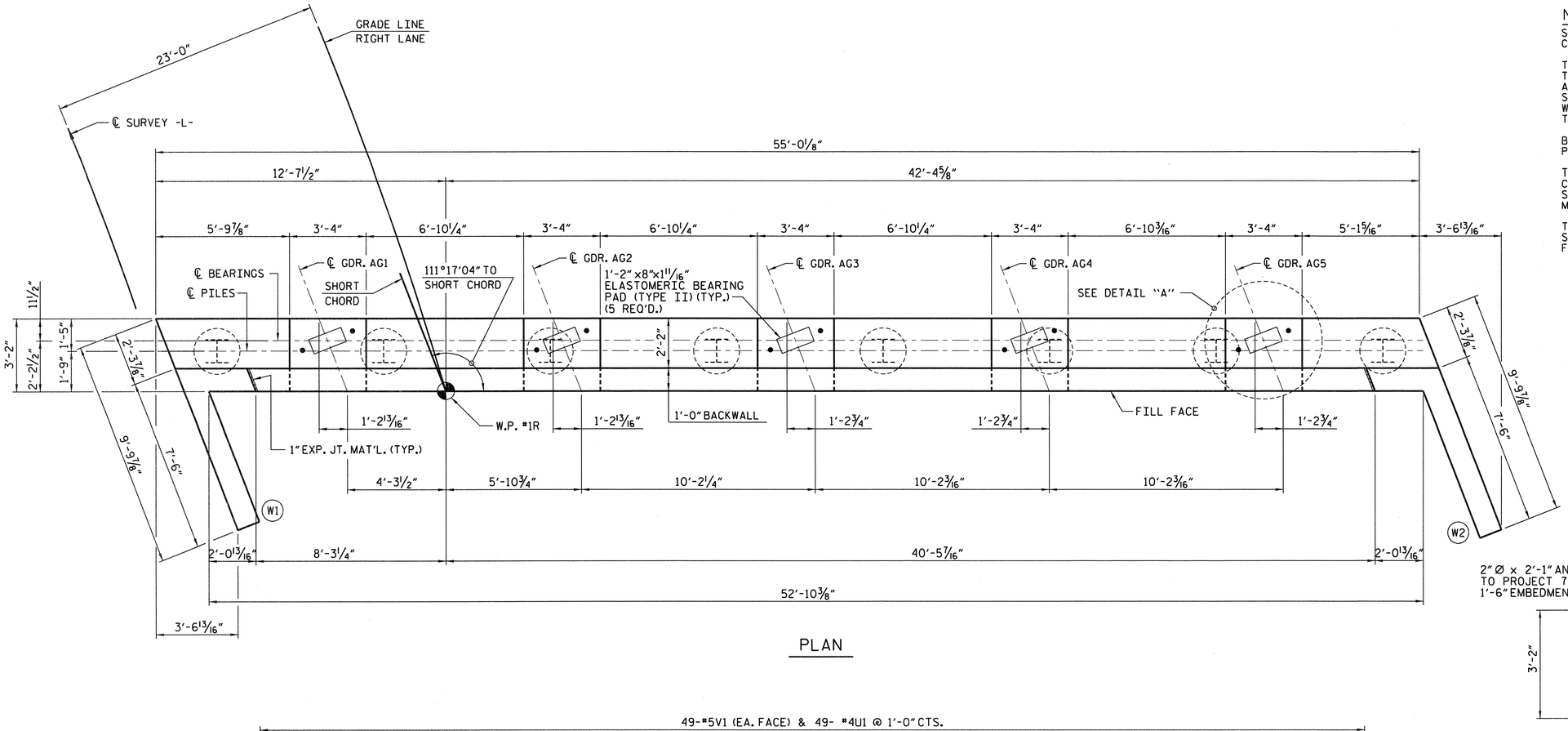

PLAN

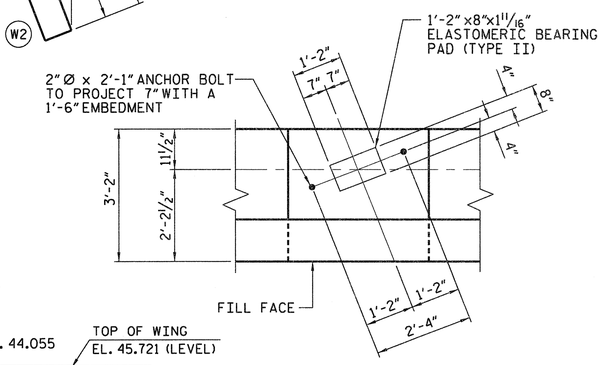

DETAIL "A"

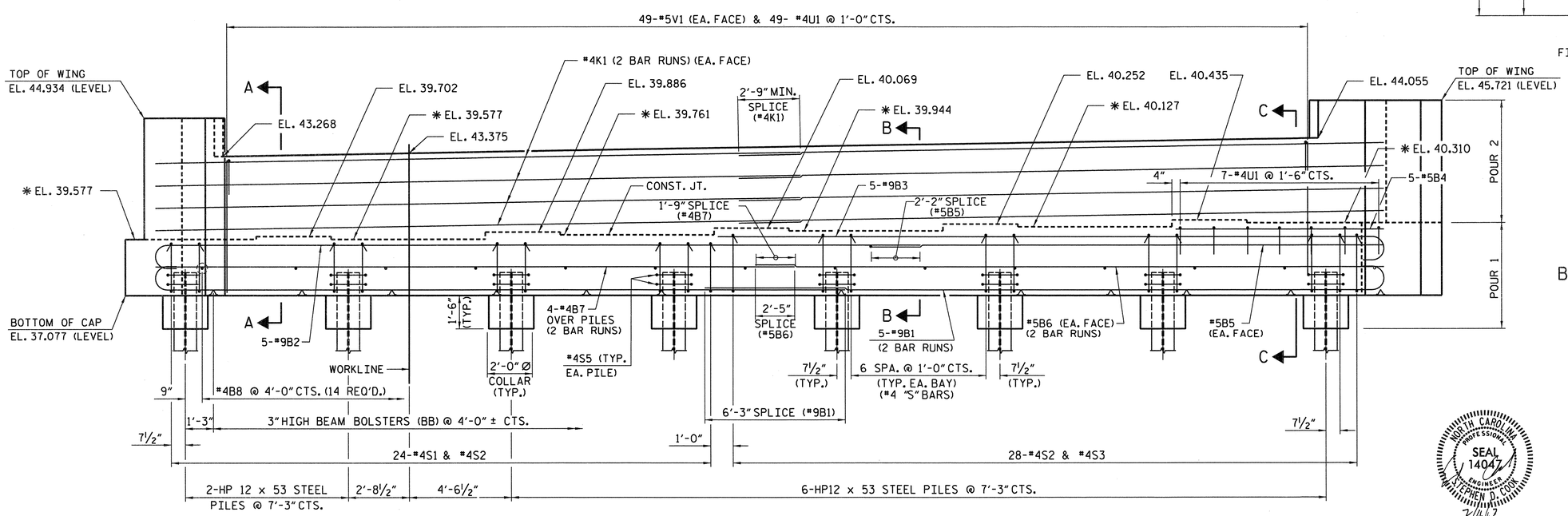

ELEVATION

PROJECT NO. R-2633BB

BRUNSWICK/NEW HANOVER COUNTY

STATION: 398+75.47 -L-

SHEET 1 OF 3

STATE OF NORTH CAROLINA
DEPARTMENT OF TRANSPORTATION
RALEIGH

SUBSTRUCTURE END BENT 1 RIGHT LANE

NORTH CAROLINA PROFESSIONAL SEAL 14047 ENGINEER STEPHEN D. COOK
2/11/13

THE LOUIS BERGER GROUP, Inc.
1001 Wade Avenue, Suite 400
Raleigh, NC 27605-3322

REVISIONS								SHEET NO.
NO.	BY:	DATE:	NO.	BY:	DATE:			S-524
1			3					TOTAL SHEETS
2			4					700

DRAWN BY : R. KNIGHT DATE : OCT 2012
CHECKED BY : S. COOK DATE : DEC 2012

G:\OR Projects\OR1092 - NCDOT Wilm Bypass DualBridges\Structures\Bridge Site 6\R-2633BB_SD_06R_EB_101.dgn
2/11/2013 8:48:00 AM 1092_PDF_full.pltcfg 1092_str.tbl

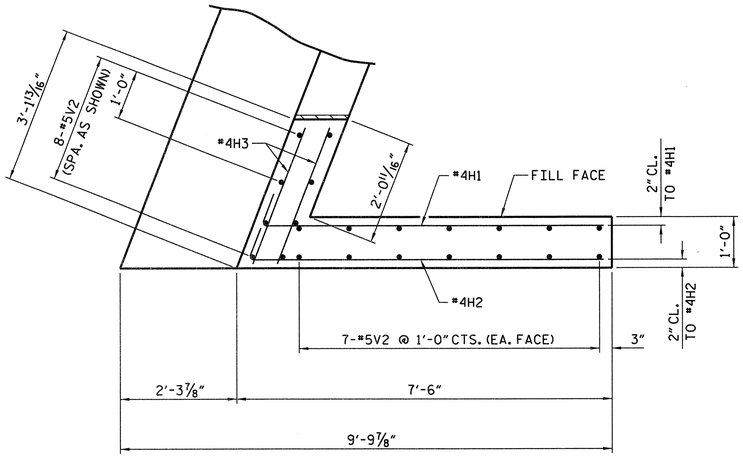

PLAN - WING (W1)

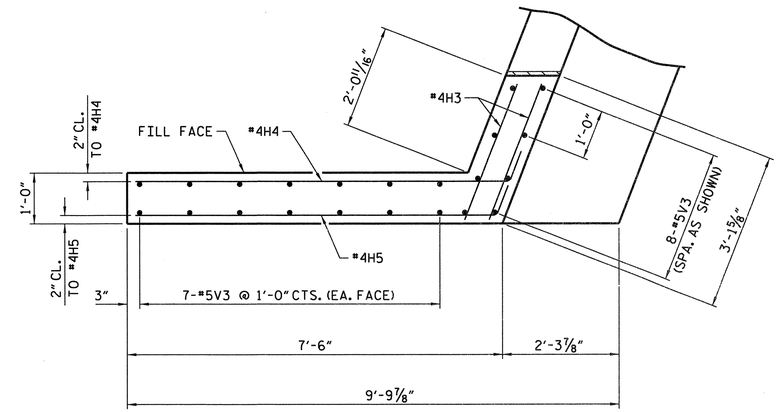

PLAN - WING (W2)

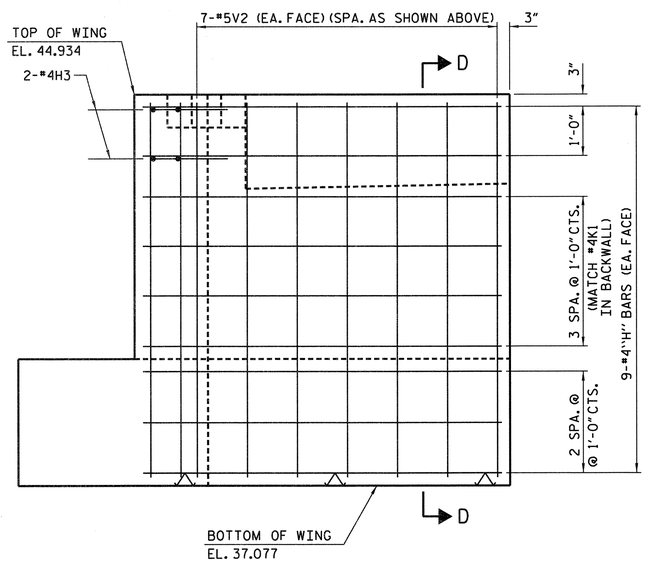

ELEVATION - WING (W2)

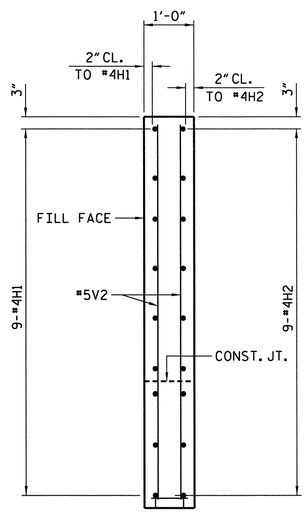

SECTION C-C

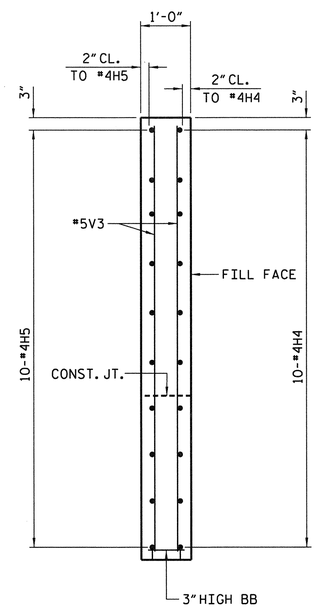

SECTION E-E

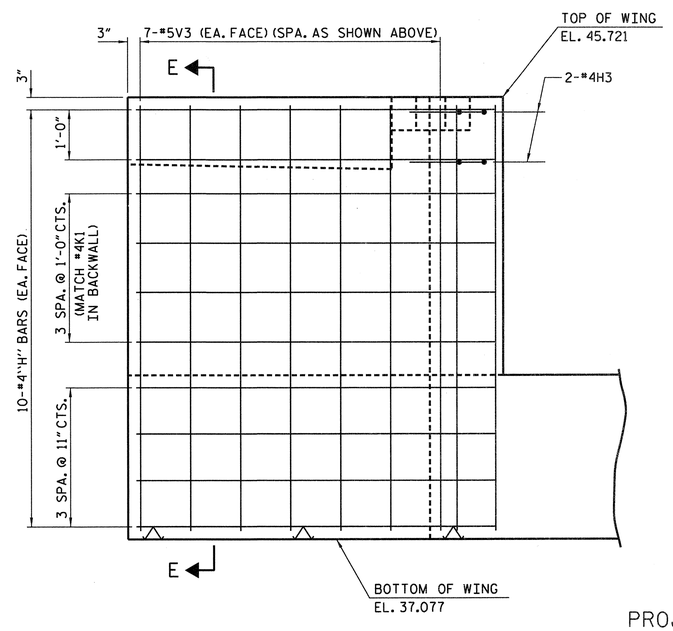

ELEVATION - WING (W1)

PROJECT NO. R-2633BB
BRUNSWICK/NEW HANOVER COUNTY
STATION: 398+75.47 -L-

SHEET 2 OF 3

STATE OF NORTH CAROLINA
DEPARTMENT OF TRANSPORTATION
RALEIGH

SUBSTRUCTURE END BENT 1 RIGHT LANE

NORTH CAROLINA PROFESSIONAL SEAL 14047 ENGINEER STEPHEN D. COOK 2/11/13

THE LOUIS BERGER GROUP, Inc.
1001 Wade Avenue, Suite 400
Raleigh, NC 27605-3322

REVISIONS							
NO.	BY:	DATE:	NO.	BY:	DATE:	SHEET NO.	
1			3			S-523	
2			4			TOTAL SHEETS	
						700	

DRAWN BY : R. KNIGHT DATE : OCT 2012
CHECKED BY : S. COOK DATE : DEC 2012

G:\OR Projects\OR1092 - NCDOT Wilm Bypass DualBridges\Structures\Bridge Site 6\R-2633BB_SD_06R_EB_102.dgn
2/11/2013 8:48:02 AM 1092_PDF_full.pltcfg 1092_str.tbl

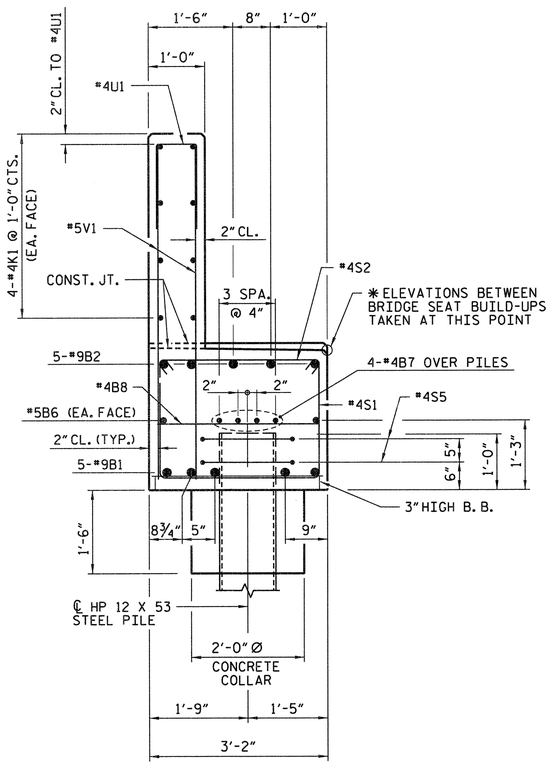

SECTION A-A

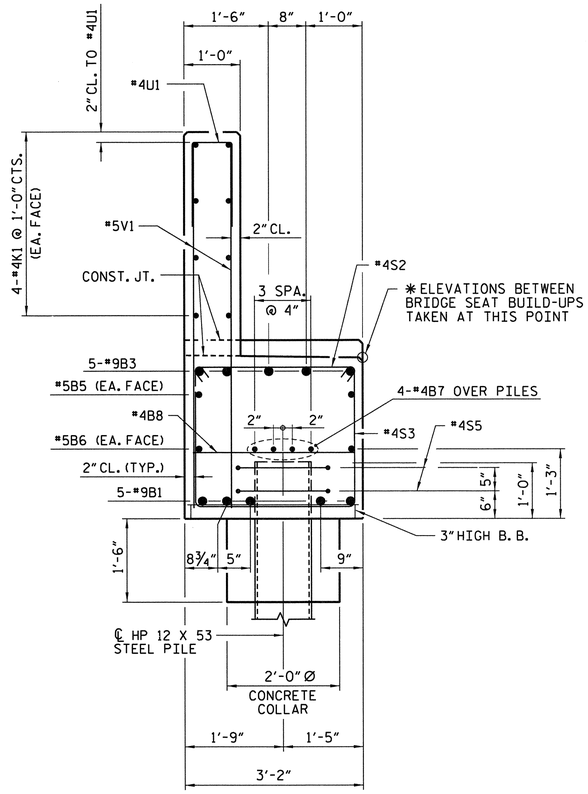

SECTION B-B

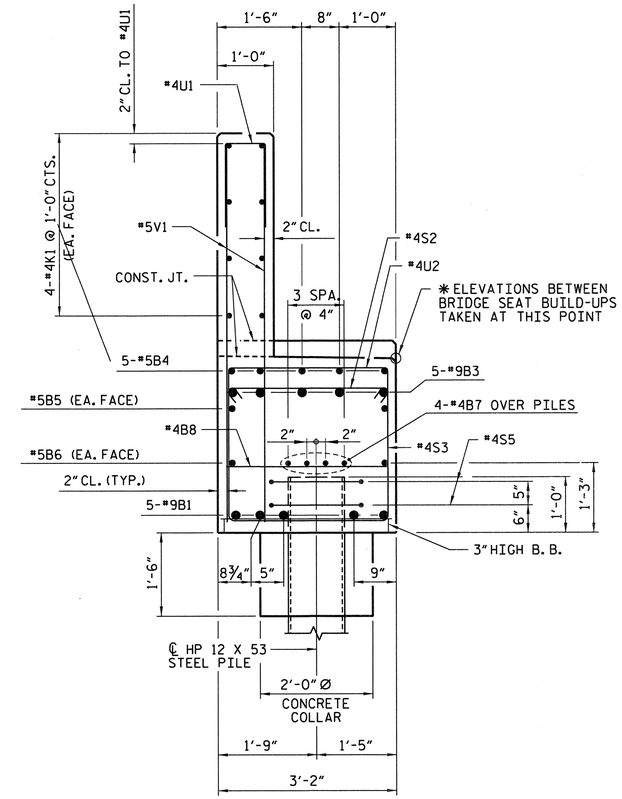

SECTION C-C

BILL OF MATERIAL FOR END BENT 1

BAR	NO	SIZE	TYPE	LENGTH	WEIGHT
B1	10	9	1	32'-11"	1,119
B2	5	9	1	36'-3"	616
B3	5	9	1	29'-6"	502
B4	5	5	STR	7'-10"	41
B5	2	5	STR	21'-9"	45
B6	4	5	STR	28'-6"	119
B7	8	4	STR	28'-6"	152
B8	14	4	STR	2'-10"	26
H1	9	4	3	7'-6"	45
H2	9	4	3	7'-9"	47
H3	8	4	STR	2'-8"	14
H4	10	4	2	8'-0"	53
H5	10	4	2	7'-9"	52
K1	8	4	STR	28'-9"	154
S1	24	4	4	7'-10"	126
S2	52	4	5	3'-7"	125
S3	28	4	4	8'-6"	159
S5	16	4	7	6'-6"	69
U1	49	4	6	3'-8"	120
U2	7	4	6	5'-10"	27
V1	98	5	STR	5'-10"	596
V2	22	5	STR	7'-5"	170
V3	22	5	STR	8'-3"	189

REINFORCING STEEL LBS. 4,565

CLASS A CONCRETE BREAKDOWN

POUR #1 (CAP, CONCRETE COLLARS & LOWER PART OF WINGS C.Y. 19.5

POUR #2 (BACKWALL & UPPER PART OF WINGS) C.Y. 11.5

TOTAL CLASS A CONCRETE C.Y. 31.0

HP 12 X 53 STEEL PILES

NO. 8 LIN. FT. 480

PILE REDRVES No. 4

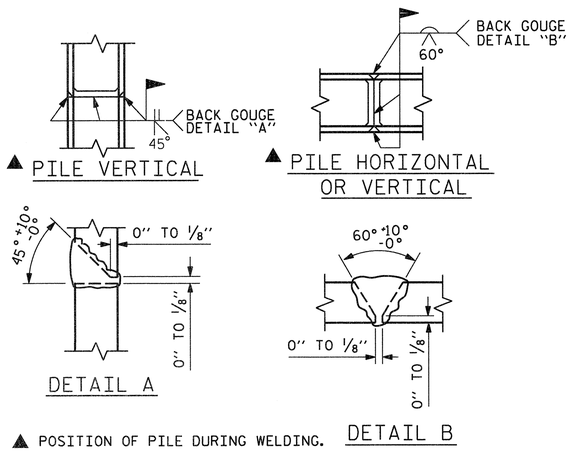

PILE SPLICE DETAILS

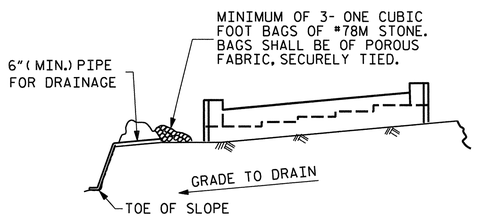

BAGGED STONE AND PIPE SHALL BE PLACED IMMEDIATELY AFTER COMPLETION OF END BENT EXCAVATION. PIPE MAY BE EITHER CONCRETE, CORRUGATED STEEL, CORRUGATED ALUMINUM ALLOY, OR CORRUGATED PLASTIC. PERFORATED PIPE WILL NOT BE ALLOWED.

BAGGED STONE SHALL REMAIN IN PLACE UNTIL THE ENGINEER DIRECTS THAT IT BE REMOVED. THE CONTRACTOR SHALL REMOVE AND DISPOSE OF SILT ACCUMULATIONS AT BAGGED STONE WHEN SO DIRECTED BY THE ENGINEER. BAGS SHALL BE REMOVED AND REPLACED WHENEVER THE ENGINEER DETERMINES THAT THEY HAVE DETERIORATED AND LOST THEIR EFFECTIVENESS.

NO SEPARATE PAYMENT WILL BE MADE FOR THIS WORK AND THE ENTIRE COST OF THIS WORK SHALL BE INCLUDED IN THE UNIT CONTRACT PRICE BID FOR THE SEVERAL PAY ITEMS.

TEMPORARY DRAINAGE AT END BENT

BAR TYPES

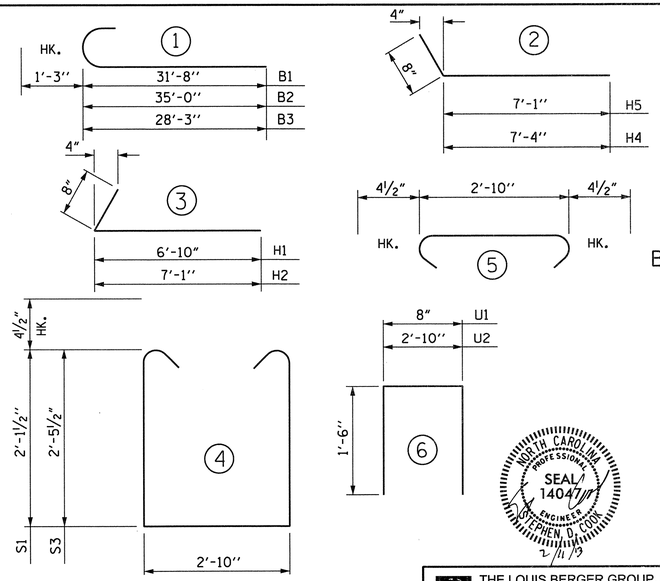

ALL BAR DIMENSIONS ARE OUT TO OUT.

PROJECT NO. R-2633BB

BRUNSWICK/NEW HANOVER COUNTY

STATION: 398+75.47 -L-

SHEET 3 OF 3

STATE OF NORTH CAROLINA
DEPARTMENT OF TRANSPORTATION
RALEIGH

SUBSTRUCTURE END BENT 1 RIGHT LANE

NORTH CAROLINA PROFESSIONAL SEAL 14047 ENGINEER STEPHEN D. COOK
2/11/13

THE LOUIS BERGER GROUP, Inc.
1001 Wade Avenue, Suite 400
Raleigh, NC 27605-3322

REVISIONS								SHEET NO.
NO.	BY:	DATE:	NO.	BY:	DATE:			S-526
1			3					TOTAL SHEETS
2			4					700

DRAWN BY : R. KNIGHT DATE : OCT 2012
CHECKED BY : S. COOK DATE : DEC 2012

G:\OR Projects\OR1092 - NCDOT Wlm Bypass DualBridges\Structures\Bridge Site 6\R-2633BB_SD_06R_EB_103.dgn
2/11/2013 8:48:05 AM 1092_PDF_full.pltcfg 1092_str.tbl

NOTES

STIRRUPS IN CAP MAY BE SHIFTED AS NECESSARY TO CLEAR ANCHOR BOLTS.

FOR SECTIONS A-A, B-B AND C-C & VIEWS X-X AND Y-Y, SEE SHEET 2 OF 3.

THE CONTRACTORS ATTENTION IS CALLED TO THE FACT THAT THAT THE CENTERLINE OF THE 24" PRESTRESSED CONCRETE PILES AT BENT 1 AND BENT 2 IS OFFSET FROM THE WORKLINE BY 3 INCHES.

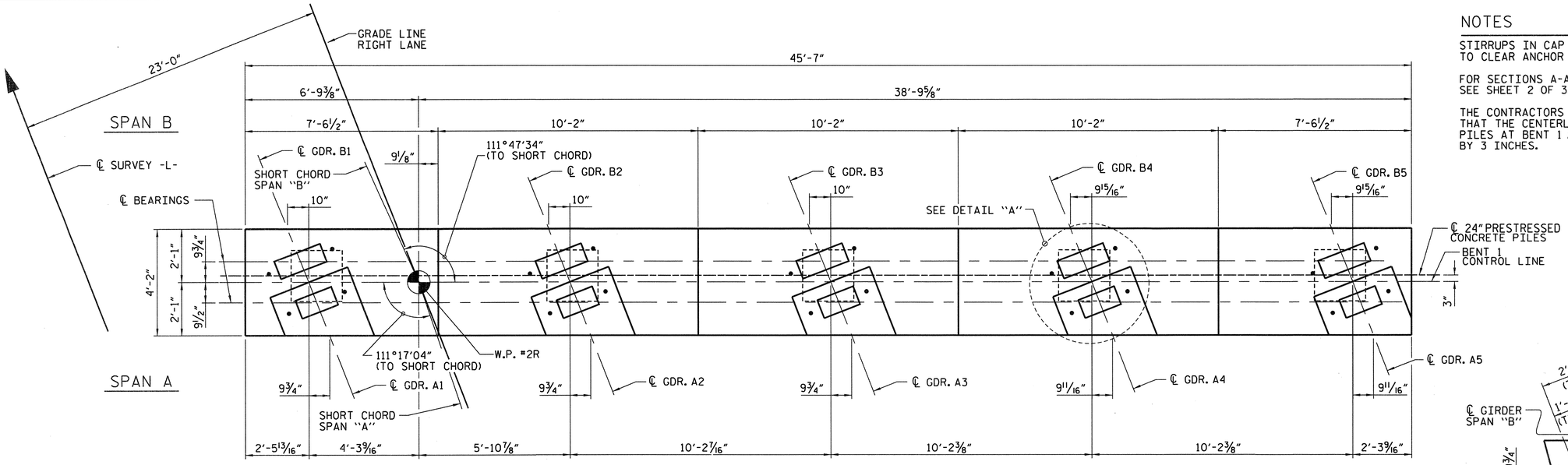

PLAN

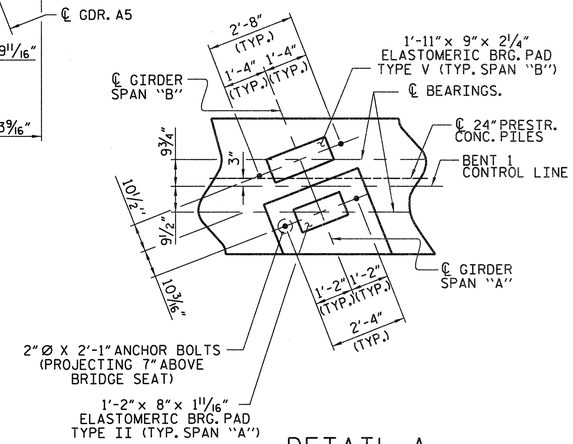

DETAIL A

(TYP. GIRDERS AG1 THRU AG4 & BG1 THRU BG4)

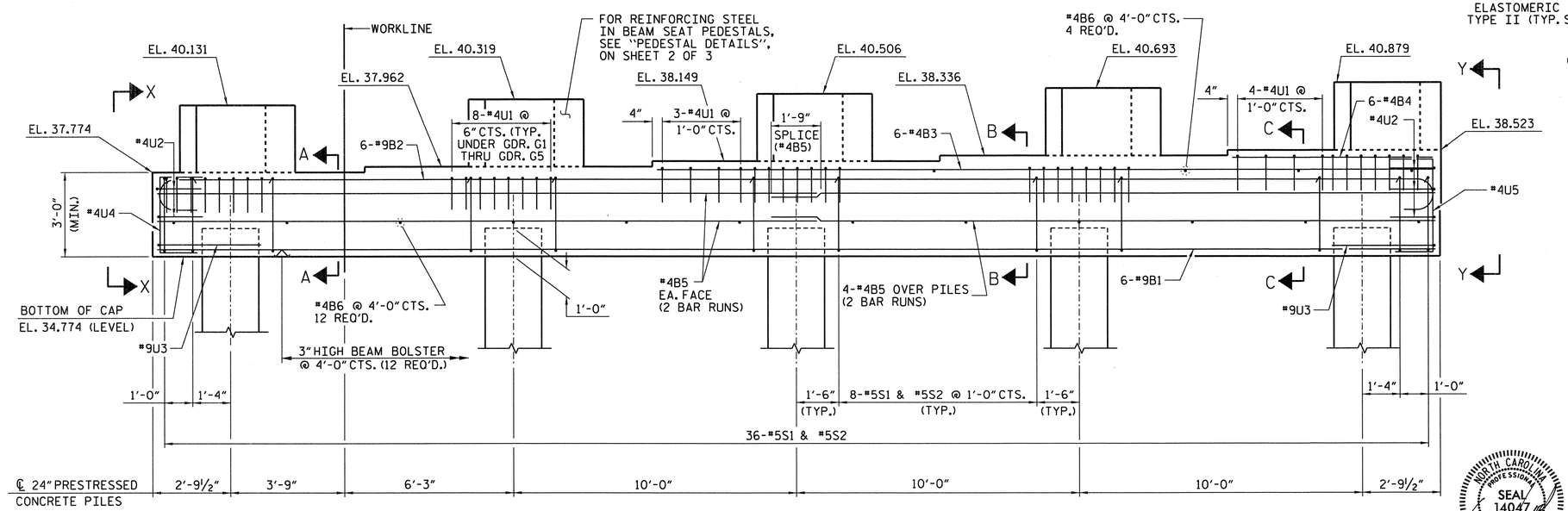

ELEVATION

PROJECT NO. R-2633BB

BRUNSWICK/NEW HANOVER COUNTY

STATION: 398+75.47 -L-

SHEET 1 OF 3

STATE OF NORTH CAROLINA
DEPARTMENT OF TRANSPORTATION
RALEIGH

SUBSTRUCTURE
BENT 1
RIGHT LANE

NORTH CAROLINA PROFESSIONAL SEAL 14047 ENGINEER STEPHEN D. COLA 2/11/13

THE LOUIS BERGER GROUP, Inc.
1001 Wade Avenue, Suite 400
Raleigh, NC 27605-3322

REVISIONS								
NO.	BY:	DATE:	NO.	BY:	DATE:		SHEET NO. S-527
1			3				TOTAL SHEETS 700
2			4				

DRAWN BY : R. KNIGHT DATE : DEC 2012
CHECKED BY : R. DeCOLA DATE : DEC 2012

G:\OR Projects\OR1092 - NCDOT Wlm Bypass DualBridges\Structures\Bridge Site 6\EccBents\R-2633BB_SD_06R_BT_101.dgn
2/11/2013 12:51:34 PM 1092_PDF_full.pltcfg 1092_str.tbl

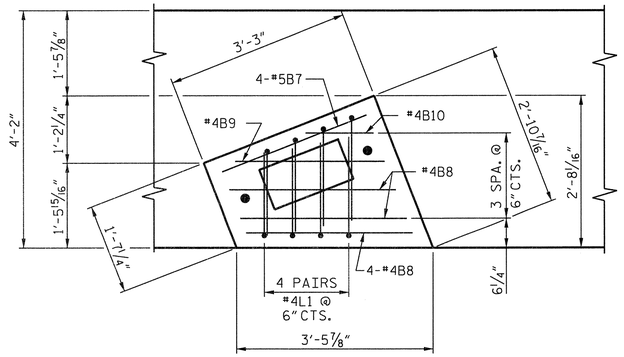

PLAN

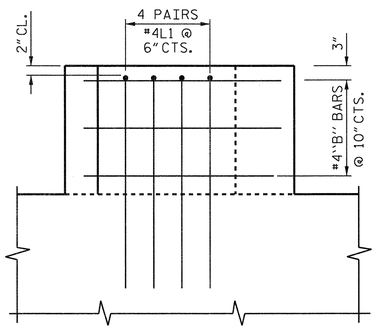

ELEVATION

PEDESTAL DETAILS

(TYP. EA. GIRDER)

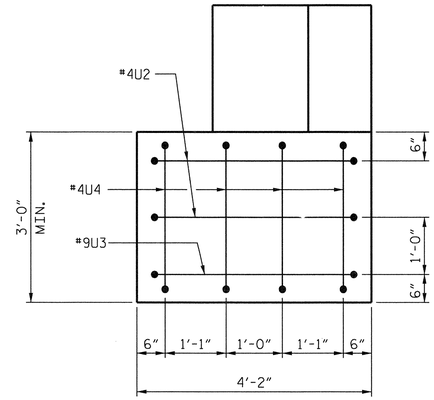

VIEW X-X

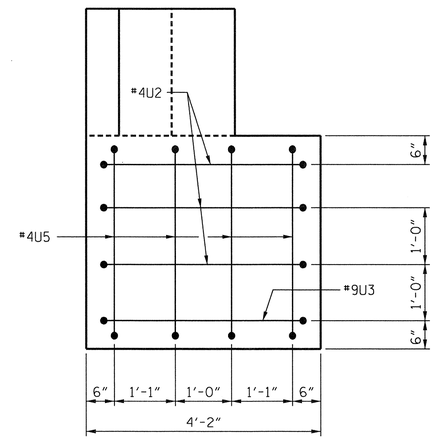

VIEW Y-Y

BAR TYPES

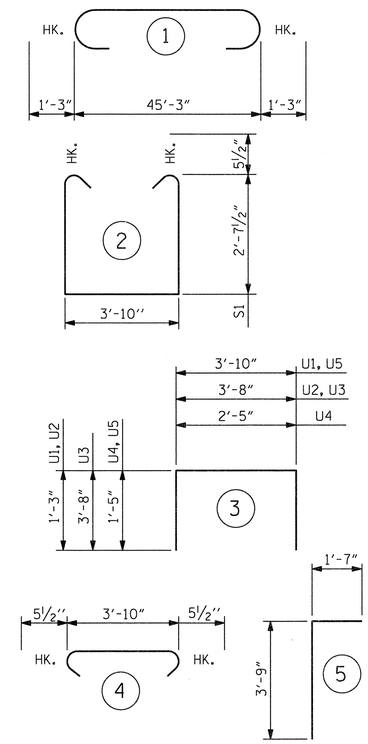

ALL BAR DIMENSIONS ARE OUT TO OUT.

BILL OF MATERIAL

BENT 1

BAR	NO.	SIZE	TYPE	LENGTH	WEIGHT
B1	6	9	STR	45'-3"	923
B2	6	9	1	47'-9"	974
B3	6	4	STR	27'-5"	110
B4	6	4	STR	7'-2"	29
B5	16	4	STR	23'-6"	251
B6	16	4	STR	3'-10"	41
B7	15	4	STR	2'-9"	28
B8	25	4	STR	3'-2"	53
B9	5	4	STR	2'-7"	9
B10	5	4	STR	1'-2"	4
L1	40	4	5	5'-4"	142
S1	36	5	2	10'-0"	375
S2	36	5	4	4'-9"	178
U1	47	4	3	6'-4"	199
U2	5	4	3	6'-2"	21
U3	2	9	3	11'-0"	75
U4	4	4	3	5'-3"	14
U5	4	4	3	6'-8"	18
TOTAL REINFORCING STEEL LBS.					3,444

CLASS A CONCRETE BREAKDOWN

POUR 1 - CAP	23.1 CY
POUR 2 - BEAM PEDESTALS	2.9 CY
TOTAL	▲ 26.0 CY

24" PRESTRESSED CONCRETE PILES

NO. 5	LIN. FT. 375
PILE REDRIVES	NO. 3
PREDRILLING FOR PILES	LIN. FT. 50

▲ CONCRETE DISPLACED BY THE 24" PRESTRESSED CONCRETE PILES HAS BEEN DEDUCTED.

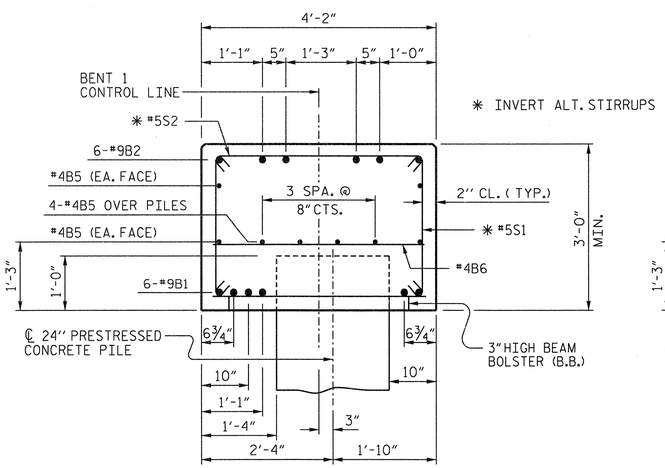

SECTION A-A

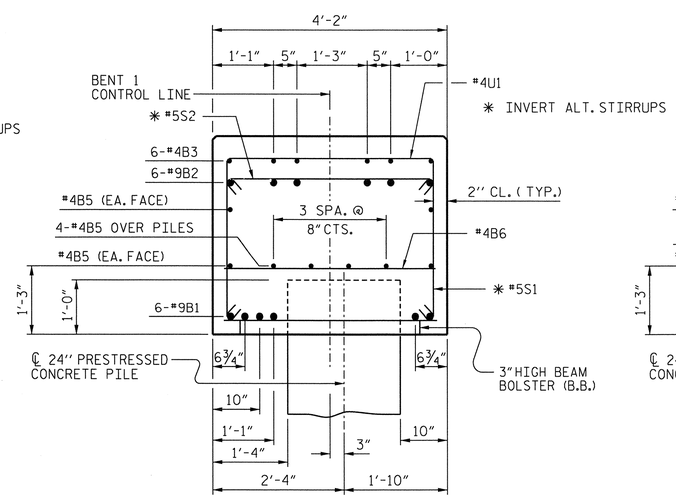

SECTION B-B

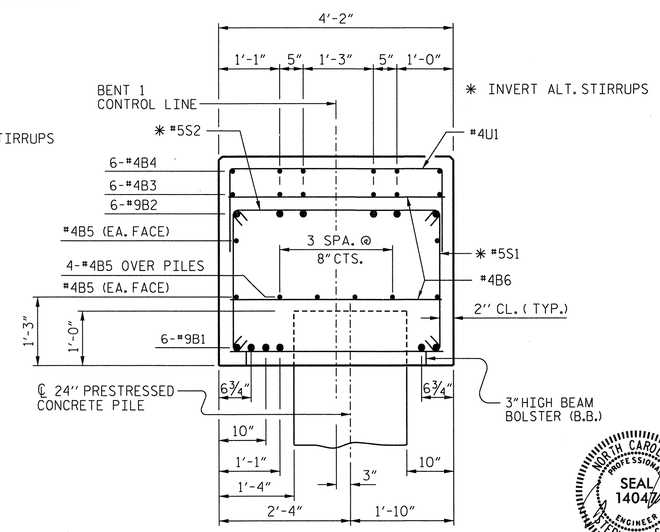

SECTION C-C

NORTH CAROLINA PROFESSIONAL SEAL 14047 ENGINEER STEPHEN D. COOK 7/9/13

PROJECT NO. R-2633BB

BRUNSWICK/NEW HANOVER COUNTY

STATION: 398+75.47 -L-

SHEET 2 OF 3

STATE OF NORTH CAROLINA
DEPARTMENT OF TRANSPORTATION
RALEIGH

SUBSTRUCTURE
BENT 1
RIGHT LANE

THE LOUIS BERGER GROUP, Inc.
1001 Wade Avenue, Suite 400
Raleigh, NC 27605-3322

REVISIONS								SHEET NO.
NO.	BY:	DATE:	NO.	BY:	DATE:			S-52B
1			3					TOTAL SHEETS
2			4					700

DRAWN BY : J. MYA\R. KNIGHT DATE : NOV 2012
CHECKED BY : R. DeCOLA DATE : DEC 2012

G:\OR Projects\OR1092 - NCDOT Wlm Bypass DualBridges\Structures\Bridge Site 6\EccBents\R-2633BB_SD_06R_BT_102.dgn
2/11/2013 12:51:37 PM 1092_PDF_full.pltcfg 1092_str.tbl

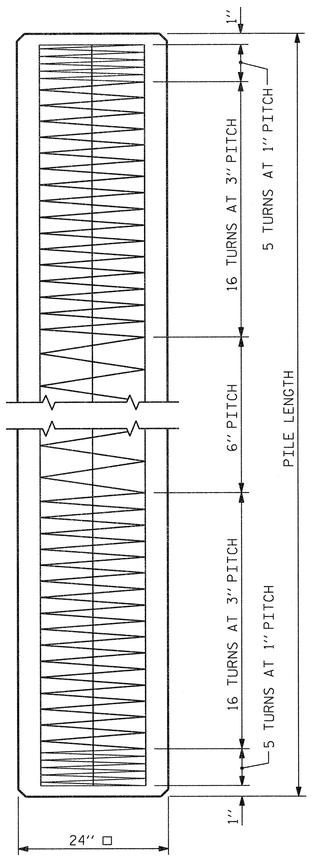

ELEVATION

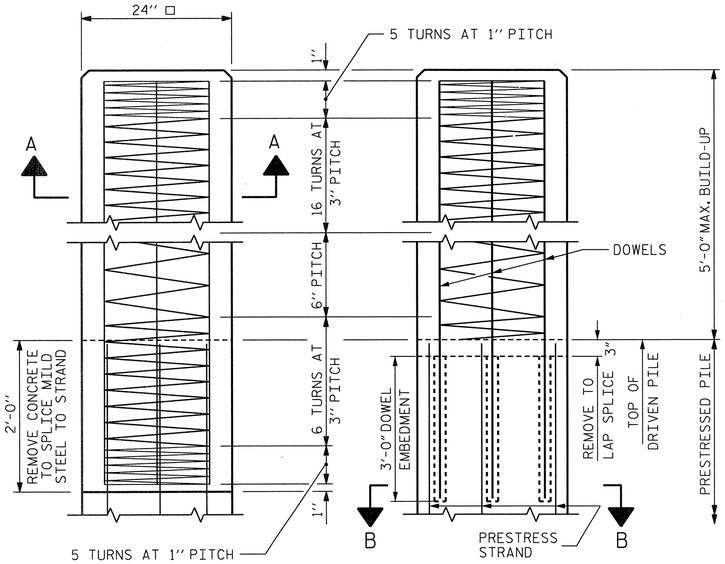

BUILD-UP AND SPIRAL REINFORCING

OPTIONAL BUILD-UP WITH DOWELS

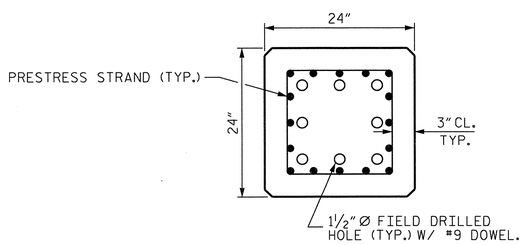

SECTION "B-B"

(AT THE CONTRACTOR'S OPTION, PILE BUILD-UP MAY BE CONSTRUCTED WITH DOWELS.)

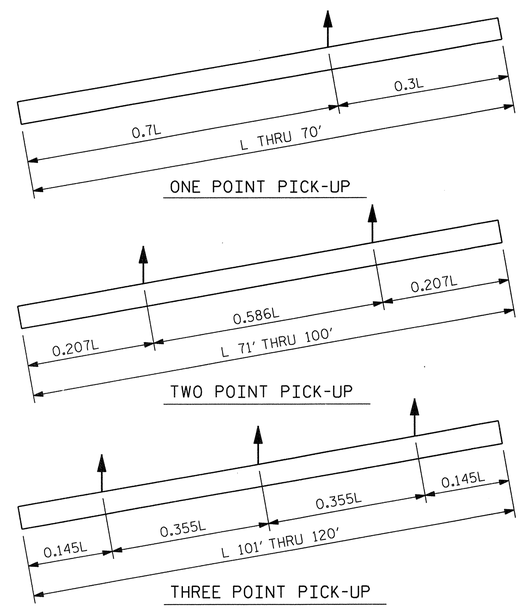

PICK-UP POINTS

NOTES

PRESTRESSED CONCRETE STRENGTH : f'c= 7,500 PSI

BUILD-UP CONCRETE STRENGTH : f'c= 7,500 PSI

STRAND DATA:

SIZE	GRADE	AREA	ULTIMATE STRENGTH	APPLIED PRESTRESS FORCE
½''	270 L.R.	0.153	41,300# PER STRAND	30,980# PER STRAND
0.6''	270 L.R.	0.217	58,600# PER STRAND	43,940# PER STRAND

ALL PRESTRESSING STRANDS SHALL BE 7-WIRE LOW-RELAXATION GRADE 270 STRANDS CONFORMING TO AASHTO M203. STRAND SAMPLING REQUIREMENTS SHALL BE IN ACCORDANCE WITH THE STANDARD SPECIFICATIONS.

AT THE CONTRACTOR'S OPTION, ½'' OR 0.6'' STRANDS MAY BE USED IN THE STRAND CONFIGURATION SHOWN IN THE TYPICAL SECTION DETAIL. MIXING OF STRAND SIZE IS NOT ALLOWED.

THE SLIP-FORM METHOD OF CASTING PILES WILL NOT BE PERMITTED.

TRANSFER THE LOAD FROM THE ANCHORAGES TO THE PILE AFTER THE CONCRETE HAS ATTAINED A MINIMUM COMPRESSIVE STRENGTH OF 4,000 PSI.

IF STRAND STRESS IS RELIEVED BY BURNING, THE STRANDS SHALL BE BURNED IN OPPOSITE PAIRS AS INDICATED IN THE TYPICAL PATTERN SHOWN. FOR ANY NUMBER OF STRANDS, BURN IN OPPOSITE PAIRS AND SYMMETRICALLY ABOUT BOTH THE VERTICAL AND HORIZONTAL AXES, STRANDS 1-1 SHALL BE BURNED BEFORE 2-2, ETC. NOT MORE THAN 4 STRANDS, SAY 5-5 AND 6-6, MAY BE BURNED AT ANY ONE SECTION BEFORE THESE SAME PAIRS OF STRANDS ARE BURNED AT BOTH ENDS OF THE BED AND BETWEEN EACH PAIR OF PILES IN THE BED.

PROPOSED DEVICES FOR LIFTING PILES, RECESS DETAILS, AND PATCHING MATERIAL SHALL BE DETAILED IN SHOP DRAWINGS. AFTER ATTACHMENTS HAVE BEEN REMOVED, OPENINGS SHALL BE REPAIRED SUCH THAT THE APPEARANCE OF THE PILE IS UNIFORM.

WHERE CAST-IN-PLACE LIFTING DEVICES ARE NOT USED, PICK-UP POINTS ARE TO BE INDICATED WITH A 2'' WIDE BLACK MARK.

DRIVE PILES USING A METHOD APPROVED BY THE ENGINEER, WHEREBY THE HEAD OF THE PILE IS NOT DAMAGED.

DRIVING OF THE BUILT-UP PILE WILL NOT BE PERMITTED UNTIL THE CONCRETE HAS REACHED A COMPRESSIVE STRENGTH OF 5,000 PSI AND UNTIL A PERIOD OF SEVEN DAYS HAS ELAPSED SINCE CASTING OF THE BUILD-UP.

DOWEL INSTALLATION FOR OPTIONAL BUILD-UP

GROUT COMPRESSIVE STRENGTH: f'c= 5,000 PSI

BEFORE DRILLING DOWEL HOLES, REMOVE THE UPPER 3'' OF CONCRETE FROM THE TOP OF THE PILE WITHOUT DAMAGE TO THE REINFORCING STEEL. THE REMOVAL PLANE SHOULD BE NORMAL TO THE EDGE OF THE PILE.

DOWEL HOLES SHALL BE POSITIONED TO MAINTAIN ½'' CLEAR TO ALL EXISTING PRESTRESSING STRANDS IN THE CONCRETE PILE.

FIELD DRILLED HOLES SHALL BE CLEAN AND FREE OF ANY OBSTRUCTIONS BEFORE GROUTING OF DOWELS. DOWEL BARS SHALL BE INSTALLED AND GROUTED WITH AN APPROVED NON-SHRINK GROUT.

THE SPIRAL REINFORCING IN ALL BUILD-UPS SHALL BE W4.0 COLD DRAWN WIRE WHICH SHALL BE SECURED TO THE LONGITUDINAL REINFORCEMENT TO MAINTAIN PITCH.

THE SPIRAL REINFORCING IN THE BUILD-UP AND THE PRESTRESSED CONCRETE PILE SHALL BE SPLICED BY OVERLAPPING A MIN. OF ONE TURN.

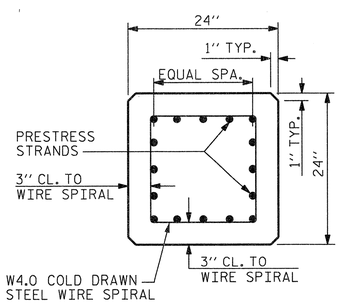

TYPICAL SECTION

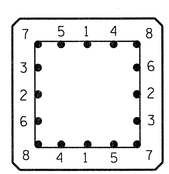

TYPICAL PATTERN FOR BURNING STRANDS

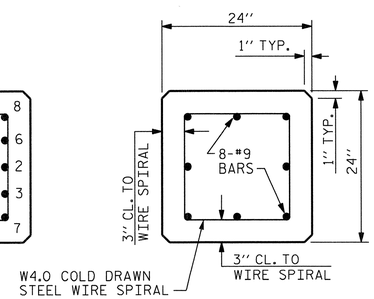

SECTION A-A

½'' OR 0.6'' Ø GRADE 270 L.R. PRESTRESS STRANDS

QUANTITIES FOR ONE 24'' SQUARE PILE

LENGTH	CONCRETE CU. YDS.	PILE WT. TONS	ONE POINT PICK-UP 0.3L	ONE POINT PICK-UP 0.7L	TWO POINT PICK-UP 0.207L	TWO POINT PICK-UP 0.586L	THREE POINT PICK-UP 0.145L	THREE POINT PICK-UP 0.355L
25'-0''	3.69	7.47	7'-6''	17'-6''				
30'-0''	4.43	8.97	9'-0''	21'-0''				
35'-0''	5.17	10.46	10'-6''	24'-6''				
40'-0''	5.91	11.96	12'-0''	28'-0''				
45'-0''	6.64	13.45	13'-6''	31'-6''				
50'-0''	7.38	14.95	15'-0''	35'-0''				
55'-0''	8.12	16.44	16'-6''	38'-6''				
60'-0''	8.86	17.94	18'-0''	42'-0''				
65'-0''	9.60	19.43	19'-6''	45'-6''				
70'-0''	10.33	20.93	21'-0''	49'-0''				
75'-0''	11.07	22.42			15'-6½''	43'-11''		
80'-0''	11.81	23.92			16'-6½''	46'-11''		
85'-0''	12.55	25.41			17'-7''	49'-10''		
90'-0''	13.29	26.91			18'-7½''	52'-9''		
95'-0''	14.03	28.40			19'-8''	55'-8''		
100'-0''	14.76	29.90			20'-8½''	58'-7''		
105'-0''	15.50	31.39					15'-3''	37'-3''
110'-0''	16.24	32.89					15'-11½''	39'-0½''
115'-0''	16.98	34.38					16'-8''	40'-10''
120'-0''	17.72	35.87					17'-5''	42'-7''

PROJECT NO. R-2633BB

BRUNSWICK/NEW HANOVER COUNTY

STATION: 398+75.47 -L-

SHEET 3 OF 3

STATE OF NORTH CAROLINA
DEPARTMENT OF TRANSPORTATION
RALEIGH

STANDARD
24'' PRESTRESSED CONCRETE PILE
BENT 1 & BENT 2
RIGHT LANE

NORTH CAROLINA PROFESSIONAL SEAL 14047 ENGINEER STEPHEN D. COOK 10/12

THE LOUIS BERGER GROUP, Inc.
1001 Wade Avenue, Suite 400
Raleigh, NC 27605-3322

REVISIONS								SHEET NO.
NO.	BY:	DATE:	NO.	BY:	DATE:			S-529
1			3					TOTAL SHEETS
2			4					700

STD. NO. PCP4

ASSEMBLED BY : R. KNIGHT	DATE : NOV 2012
CHECKED BY : R. DeCOLA	DATE : DEC 2012
DRAWN BY : WJH 1/89	REV. 5/1/06R TLA/GM
CHECKED BY : CRK 3/89	REV. 11/30/10 WMC/GM
	REV. 10/1/11 MAA/GM

G:\OR Projects\OR1092 - NCDOT Wilm Bypass DualBridges\Structures\Bridge Site 6\R-2633BB_SD_06R_BT_103.dgn
2/11/2013 8:52:33 AM 1092_PDF_full.pltcfg 1092_str.tbl

NOTES

STIRRUPS IN CAP MAY BE SHIFTED AS NECESSARY TO CLEAR ANCHOR BOLTS.

FOR SECTIONS A-A, B-B AND C-C & VIEWS X-X AND Y-Y, SEE SHEET 2 OF 3.

THE CONTRACTORS ATTENTION IS CALLED TO THE FACT THAT THAT THE CENTERLINE OF THE 24"PRESTRESSED CONCRETE PILES AT BENT 1 AND BENT 2 IS OFFSET FROM THE WORKLINE BY 3 INCHES.

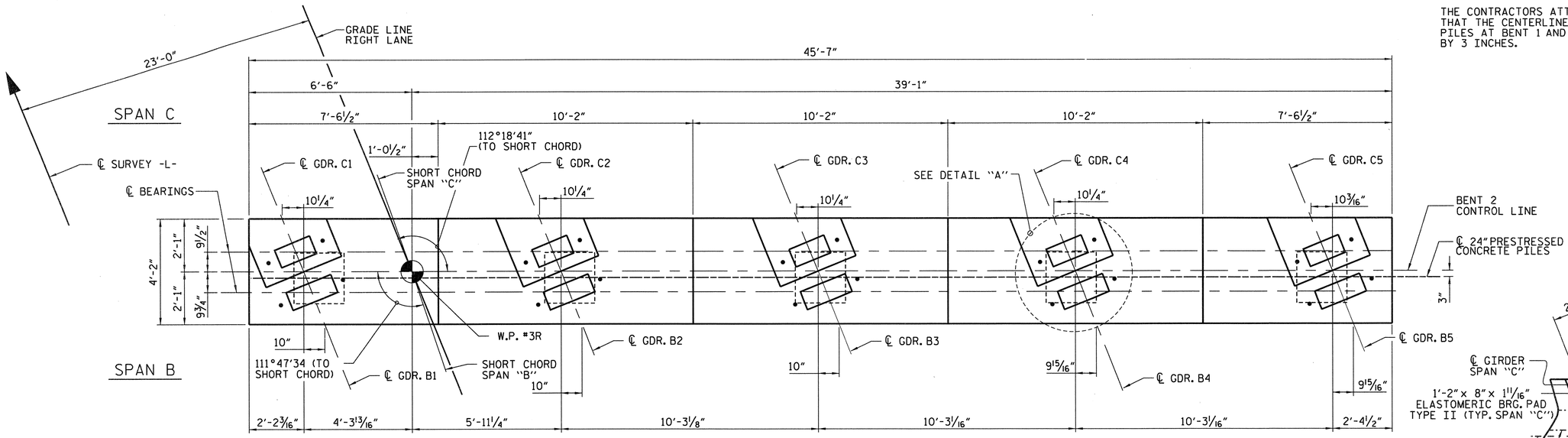

PLAN

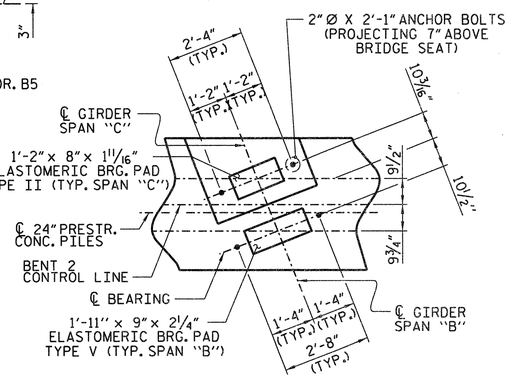

DETAIL A

(TYP. GIRDERS BG1 THRU BG5 & CG1 THRU CG5)

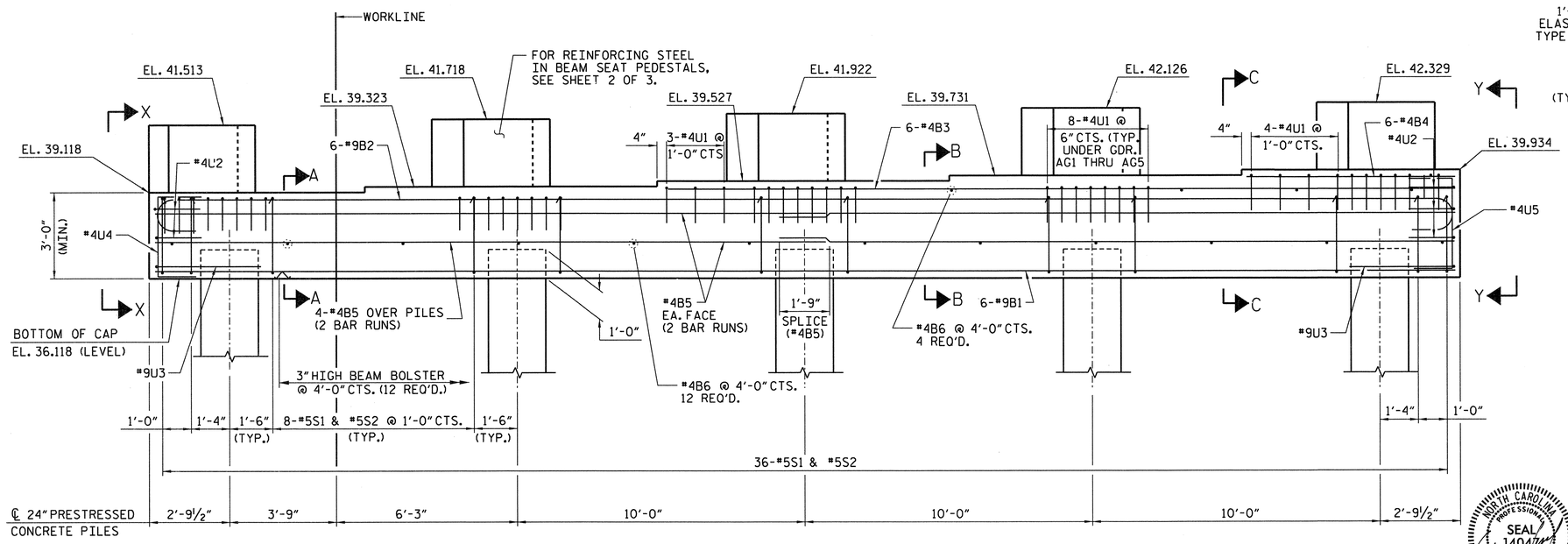

ELEVATION

PROJECT NO. R-2633BB

BRUNSWICK/NEW HANOVER COUNTY

STATION: 398+75.47 -L-

SHEET 1 OF 2

STATE OF NORTH CAROLINA
DEPARTMENT OF TRANSPORTATION
RALEIGH

SUBSTRUCTURE BENT 2 RIGHT LANE

NORTH CAROLINA PROFESSIONAL SEAL 14047 ENGINEER STEPHEN D. COOK
2/11/13

THE LOUIS BERGER GROUP, Inc.
1001 Wade Avenue, Suite 400
Raleigh, NC 27605-3322

REVISIONS							
NO.	BY:	DATE:	NO.	BY:	DATE:		
1			3				
2			4				

SHEET NO. S-5320

TOTAL SHEETS 700

DRAWN BY : R. KNIGHT DATE : DEC 2012
CHECKED BY : R. DeCOLA DATE : DEC 2012

G:\OR Projects\OR1092 - NCDOT Wilm Bypass DualBridges\Structures\Bridge Site 6\EccBents\R-2633BB_SD_06R_BT_201.dgn
2/11/2013 12:51:41 PM 1092_PDF_full.pltcfg 1092_str.tbl

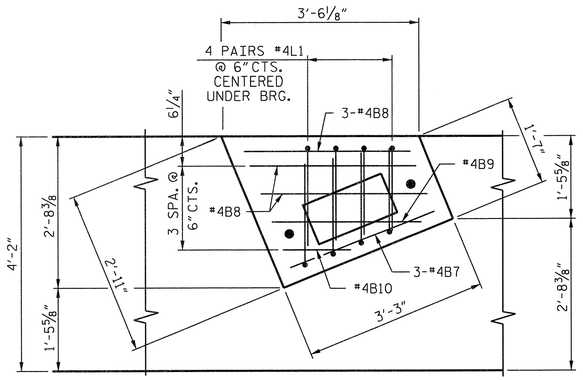

PLAN

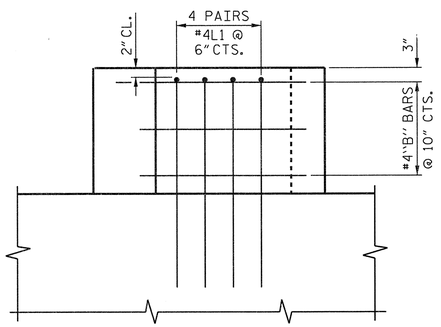

ELEVATION

PEDESTAL DETAILS

(TYP. EA. GIRDER)

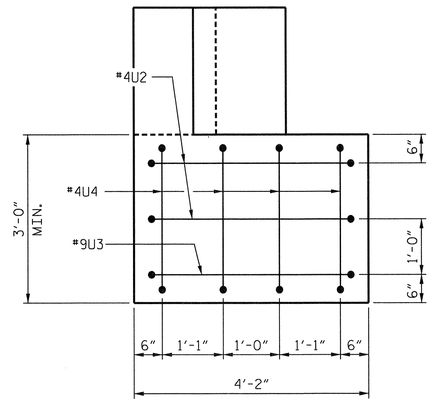

VIEW X-X

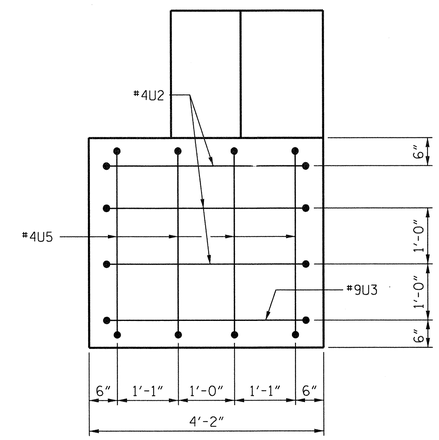

VIEW Y-Y

BAR TYPES

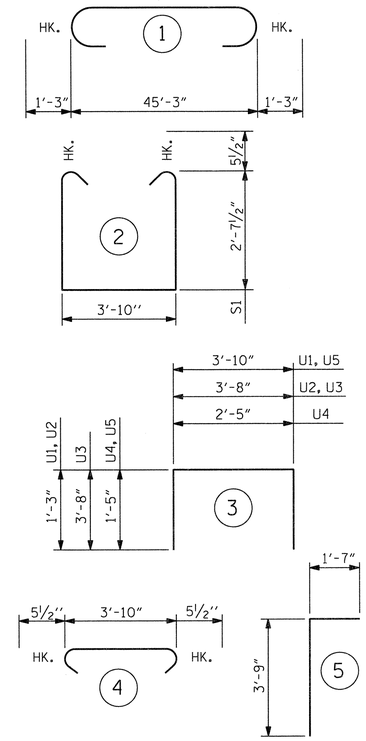

ALL BAR DIMENSIONS ARE OUT TO OUT.

BILL OF MATERIAL

BENT 2

BAR	NO.	SIZE	TYPE	LENGTH	WEIGHT
B1	6	9	STR	45'-3"	923
B2	6	9	1	47'-9"	974
B3	6	4	STR	27'-5"	110
B4	6	4	STR	7'-2"	29
B5	16	4	STR	23'-6"	251
B6	16	4	STR	3'-10"	41
B7	15	4	STR	2'-9"	28
B8	25	4	STR	3'-2"	53
B9	5	4	STR	2'-7"	9
B10	5	4	STR	1'-2"	4
L1	40	4	5	5'-4"	142
S1	36	5	2	10'-0"	375
S2	36	5	4	4'-9"	178
U1	47	4	3	6'-4"	199
U2	5	4	3	6'-2"	21
U3	2	9	3	11'-0"	75
U4	4	4	3	5'-3"	14
U5	4	4	3	6'-8"	18

TOTAL REINFORCING STEEL LBS. 3,444

CLASS A CONCRETE BREAKDOWN
POUR 1 - CAP 23.1 CY
POUR 2 - BEAM PEDESTALS 2.9 CY
TOTAL ▲ 26.0 CY

24" PRESTRESSED CONCRETE PILES
NO. 5 LIN. FT. 375

PILE REDRIVES NO. 3

PREDRILLING FOR PILES LIN. FT. 50

▲ CONCRETE DISPLACED BY THE 24" PRESTRESSED CONCRETE PILES HAS BEEN DEDUCTED.

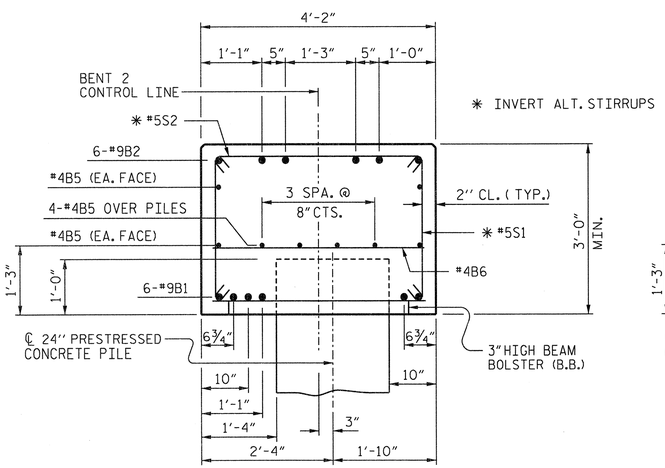

SECTION A-A

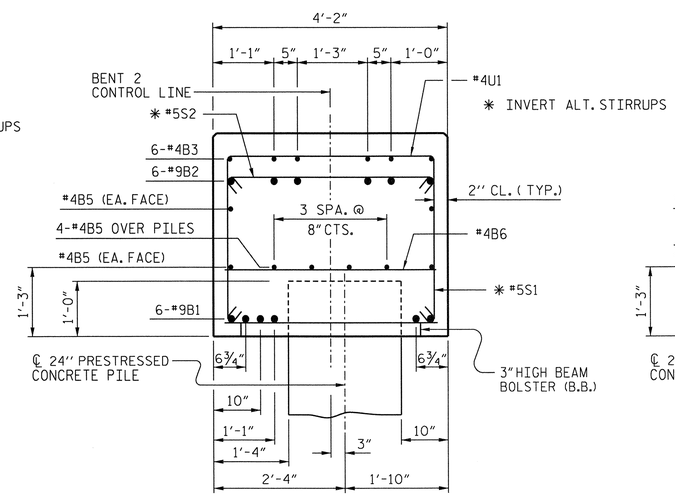

SECTION B-B

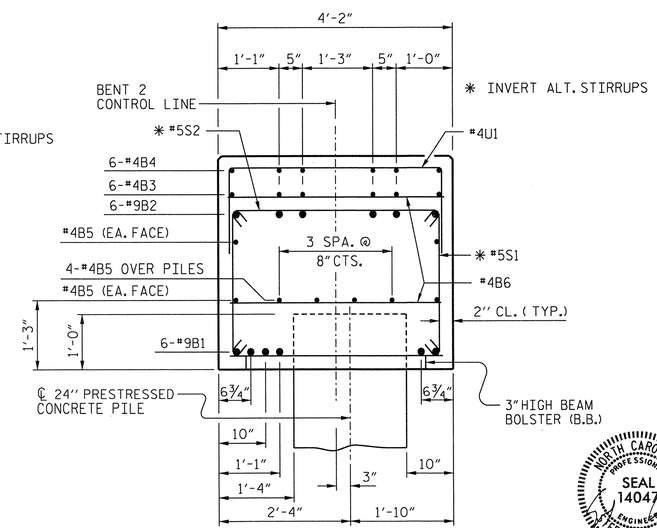

SECTION C-C

PROJECT NO. R-2633BB
BRUNSWICK/NEW HANOVER COUNTY
STATION: 398+75.47 -L-

SHEET 2 OF 2

STATE OF NORTH CAROLINA
DEPARTMENT OF TRANSPORTATION
RALEIGH

SUBSTRUCTURE
BENT 2
RIGHT LANE

NORTH CAROLINA PROFESSIONAL SEAL 14047 ENGINEER STEPHEN D. COOK 2/11/13

THE LOUIS BERGER GROUP, Inc.
1001 Wade Avenue, Suite 400
Raleigh, NC 27605-3322

REVISIONS						SHEET NO.
NO.	BY:	DATE:	NO.	BY:	DATE:	S-531
1			3			TOTAL SHEETS
2			4			700

DRAWN BY : R. KNIGHT DATE : NOV 2012
CHECKED BY : R. DeCOLA DATE : DEC 2012

G:\OR Projects\OR1092 - NCDOT Wilm Bypass DualBridges\Structures\Bridge Site 6\EccBents\R-2633BB_SD_06R_BT_202.dgn
2/11/2013 12:51:43 PM 1092_PDF_full.pltcfg 1092_str.tbl

NOTES:

STIRRUPS IN CAP MAY BE SHIFTED AS NECESSARY TO CLEAR ANCHOR BOLTS.

THE CONTRACTOR SHALL PROVIDE FOR INSTALLATION OF THE 4" DIAMETER DRAIN PIPE THROUGH THE WING WALL AS REQUIRED FOR REINFORCED BRIDGE APPROACH FILLS. SEE THE ROADWAY PLANS. REINFORCING STEEL IN THE WING WALL MAY BE SHIFTED AS NECESSARY TO CLEAR THE DRAIN PIPE.

BACKWALL SHALL BE PLACED BEFORE APPLYING THE EPOXY PROTECTIVE COATING.

THE TOP SURFACE AREAS OF THE END BENT CAPS SHALL BE CURED IN ACCORDANCE WITH THE STANDARD SPECIFICATIONS EXCEPT THE MEMBRANE CURING COMPOUND METHOD SHALL NOT BE USED.

THE TOP SURFACE OF THE END BENT CAP EXCEPT THE BRIDGE SEAT BUILDUPS SHALL BE SLOPED TRANSVERSELY FROM THE FILL FACE TO THE BACK FACE AT THE RATE OF 2%.

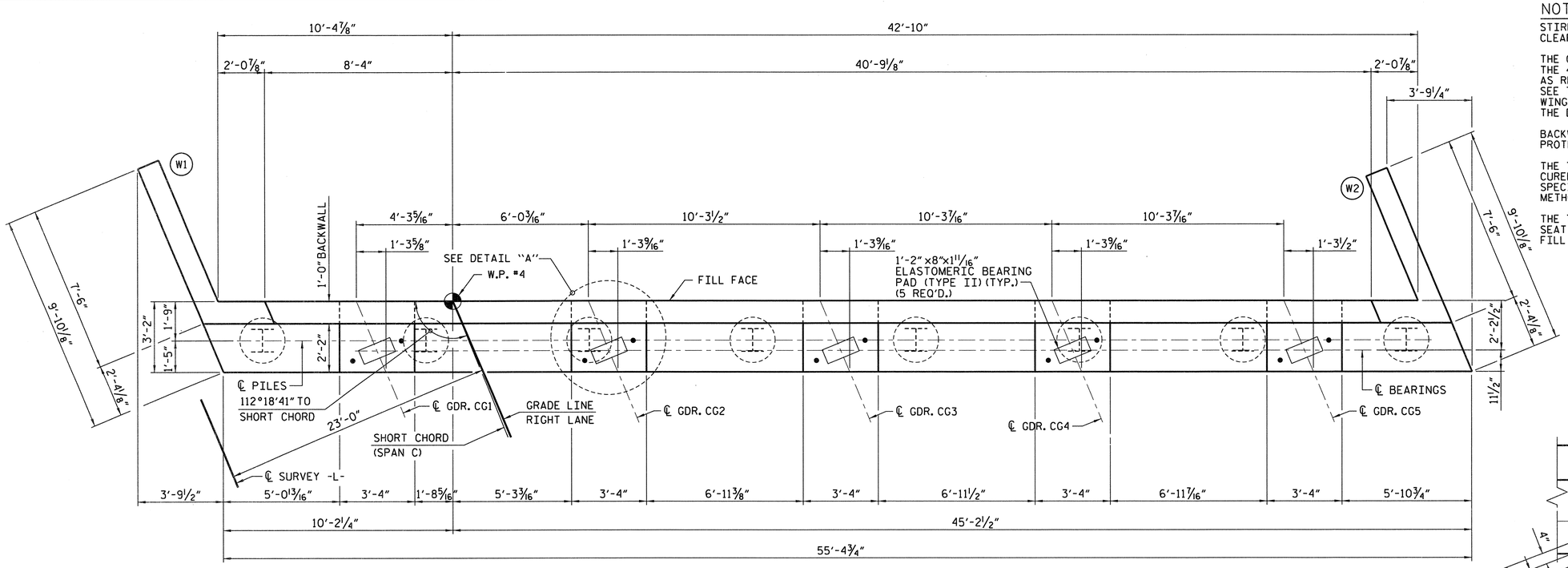

PLAN

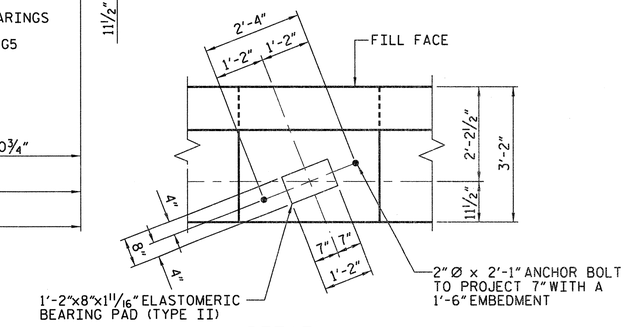

DETAIL "A"

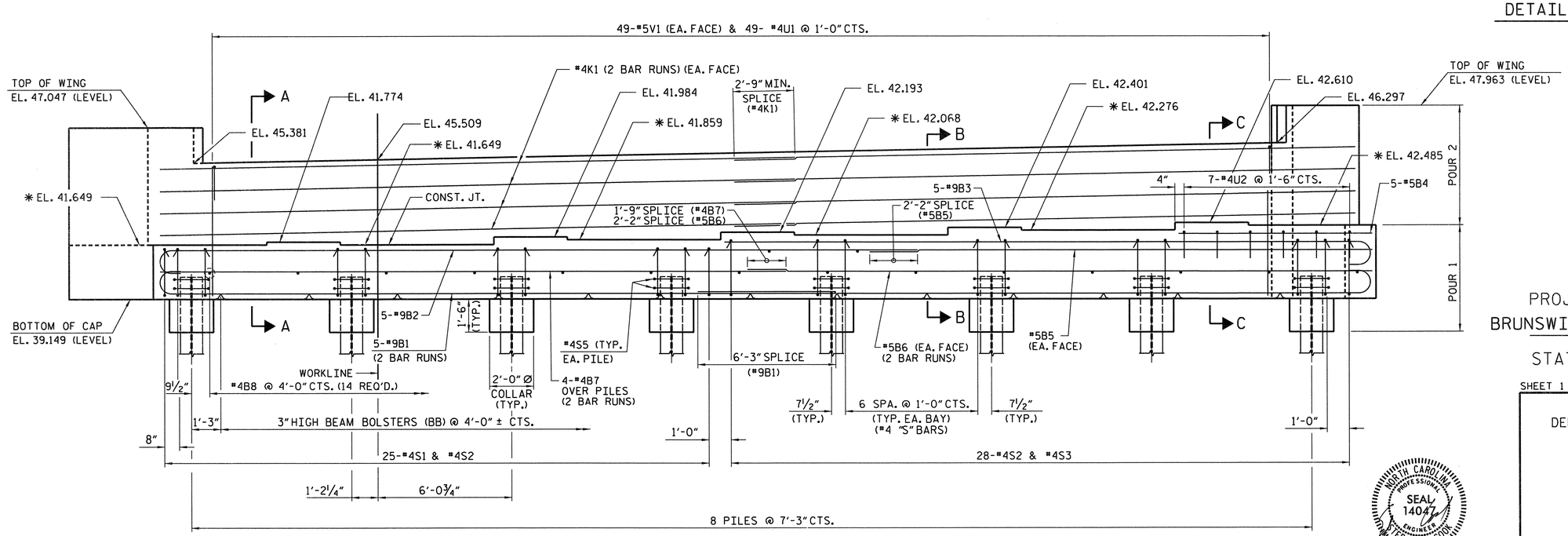

ELEVATION

PROJECT NO. R-2633BB

BRUNSWICK/NEW HANOVER COUNTY

STATION: 398+75.47 -L-

SHEET 1 OF 3

STATE OF NORTH CAROLINA
DEPARTMENT OF TRANSPORTATION
RALEIGH

SUBSTRUCTURE END BENT 2 RIGHT LANE

NORTH CAROLINA PROFESSIONAL SEAL 14047 ENGINEER STEPHEN D. COOK
2/11/13

THE LOUIS BERGER GROUP, Inc.
1001 Wade Avenue, Suite 400
Raleigh, NC 27605-3322

REVISIONS							
NO.	BY:	DATE:	NO.	BY:	DATE:		
1			3				
2			4				

SHEET NO. S-532

TOTAL SHEETS 700

DRAWN BY : R. KNIGHT DATE : NOV 2012
CHECKED BY : S. COOK DATE : DEC 2012

G:\OR Projects\OR1092 - NCDOT Wilm Bypass DualBridges\Structures\Bridge Site 6\R-2633BB_SD_06R_EB_201.dgn
2/11/2013 8:48:28 AM 1092_PDF_full.pltcfg 1092_str.tbl

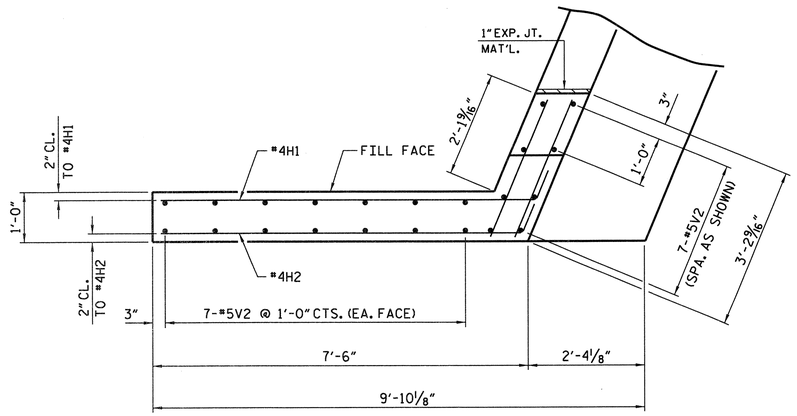

PLAN OF WING (W1)

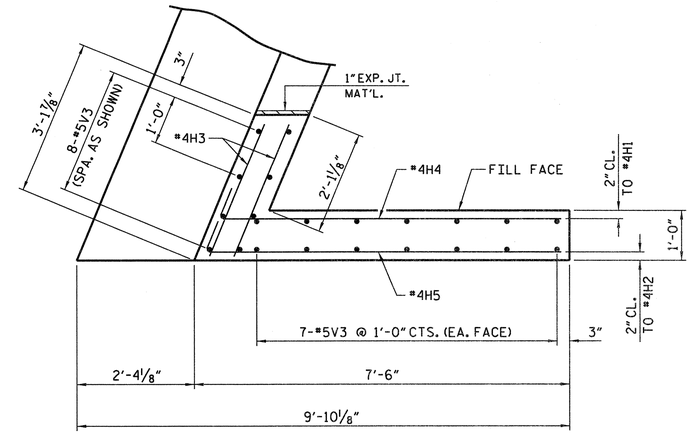

PLAN OF WING (W2)

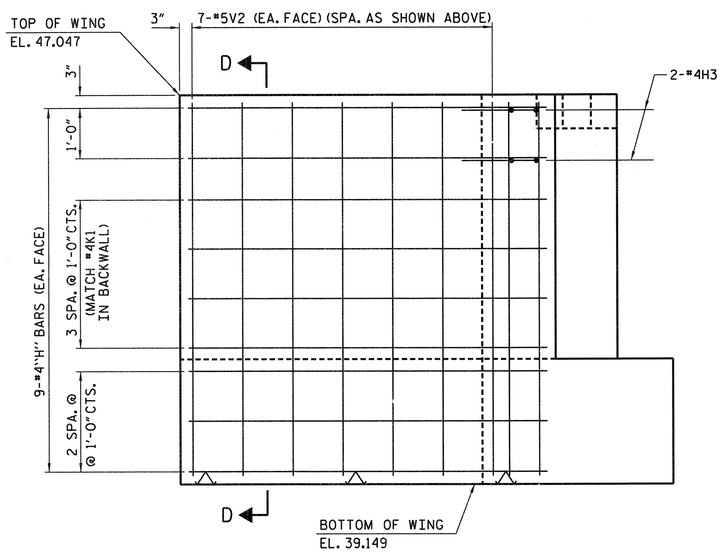

ELEVATION OF WING (W1)

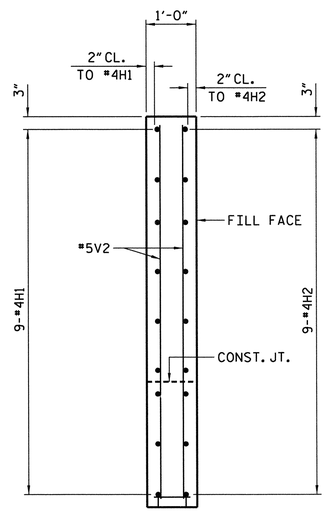

SECTION D-D

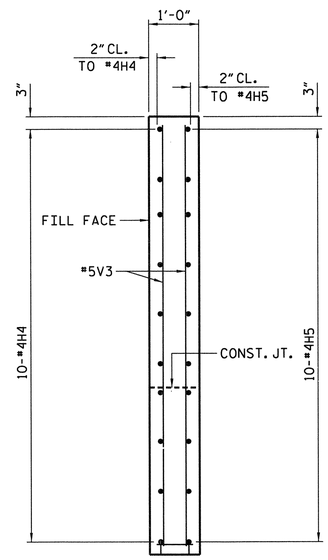

SECTION E-E

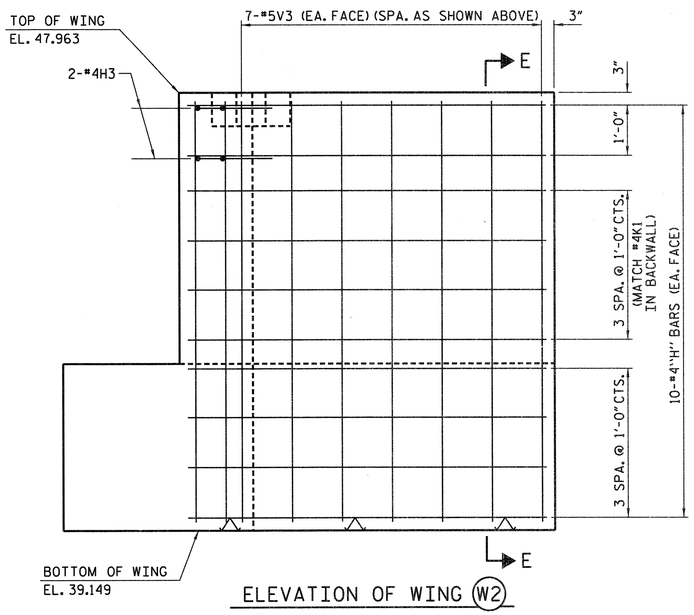

ELEVATION OF WING (W2)

PROJECT NO. R-2633BB

BRUNSWICK/NEW HANOVER COUNTY

STATION: 398+75.47 -L-

SHEET 2 OF 3

STATE OF NORTH CAROLINA
DEPARTMENT OF TRANSPORTATION
RALEIGH

SUBSTRUCTURE
END BENT 2
RIGHT LANE

NORTH CAROLINA PROFESSIONAL SEAL 14047 ENGINEER STEPHEN D. COOK
2/11/13

THE LOUIS BERGER GROUP, Inc.
1001 Wade Avenue, Suite 400
Raleigh, NC 27605-3322

REVISIONS						SHEET NO.
NO.	BY:	DATE:	NO.	BY:	DATE:	S-533
1			3			TOTAL SHEETS
2			4			700

DRAWN BY : R. KNIGHT DATE : OCT 2012
CHECKED BY : S. COOK DATE : DEC 2012

G:\OR Projects\OR1092 - NCDOT Wilm Bypass DualBridges\Structures\Bridge Site 6\R-2633BB_SD_06R_EB_202.dgn
2/11/2013 8:48:25 AM 1092_PDF_full.pltcfg 1092_str.tbl

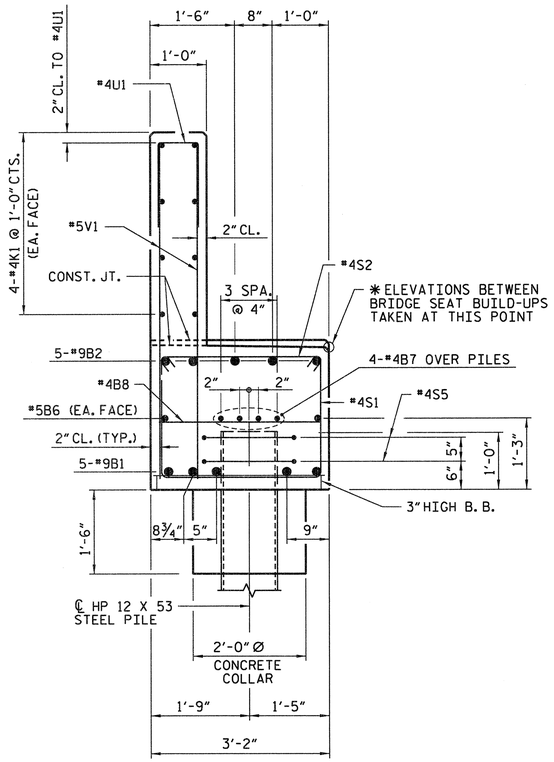

SECTION A-A

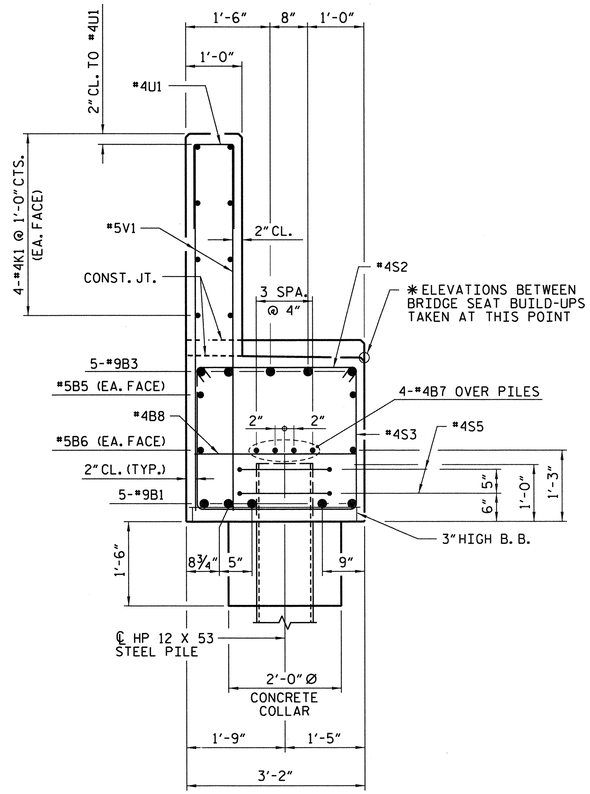

SECTION B-B

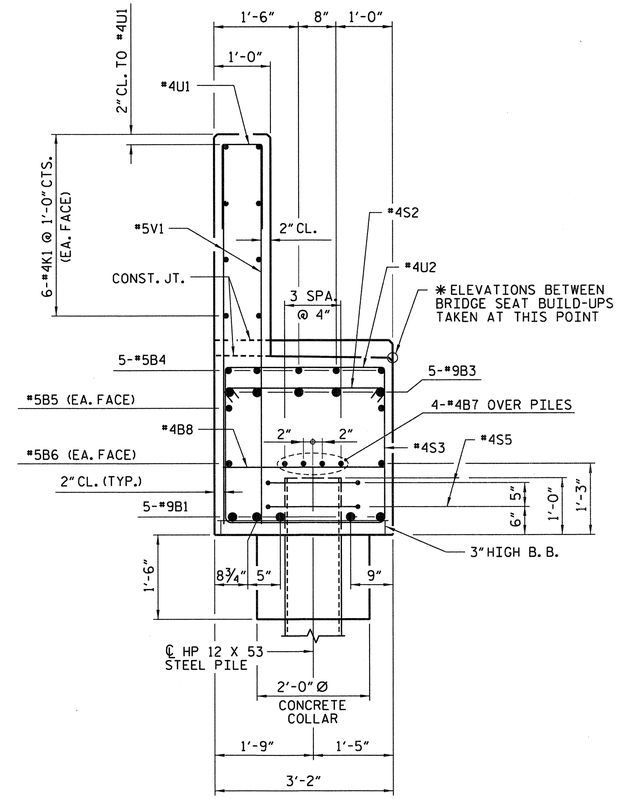

SECTION C-C

BILL OF MATERIAL FOR END BENT 2

BAR	NO	SIZE	TYPE	LENGTH	WEIGHT
B1	10	9	1	33'-3"	1,131
B2	5	9	1	35'-11"	611
B3	5	9	1	29'-4"	499
B4	5	5	STR	7'-6"	39
B5	2	5	STR	23'-3"	48
B6	4	5	STR	28'-10"	120
B7	8	4	STR	28'-6"	152
B8	14	4	STR	2'-10"	26
H1	9	4	2	8'-0"	48
H2	9	4	2	7'-9"	47
H3	8	4	STR	2'-8"	14
H4	10	4	3	7'-6"	50
H5	10	4	3	7'-9"	52
K1	8	4	STR	29'-0"	155
S1	25	4	4	7'-10"	131
S2	53	4	5	3'-7"	127
S3	28	4	4	8'-8"	162
S5	16	4	7	6'-6"	69
U1	49	4	6	3'-8"	120
U2	7	4	6	5'-10"	27
V1	98	5	STR	5'-9"	588
V2	22	5	STR	7'-6"	172
V3	22	5	STR	8'-5"	193

REINFORCING STEEL LBS. 4,581

CLASS A CONCRETE BREAKDOWN

POUR #1 (CAP, CONCRETE COLLARS & LOWER PART OF WINGS) C.Y. 19.5

POUR #2 (BACKWALL & UPPER PART OF WINGS) C.Y. 11.5

TOTAL CLASS A CONCRETE C.Y. 31.0

HP 12 X 53 STEEL PILES

NO. 8 LIN. FT. 480

PILE REDRVES No. 4

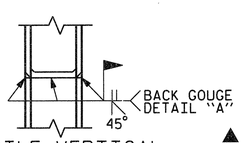

▲ PILE VERTICAL

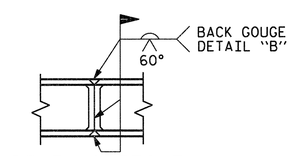

▲ PILE HORIZONTAL OR VERTICAL

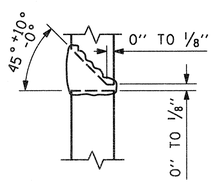

DETAIL A

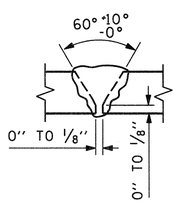

DETAIL B

▲ POSITION OF PILE DURING WELDING.

PILE SPLICE DETAILS

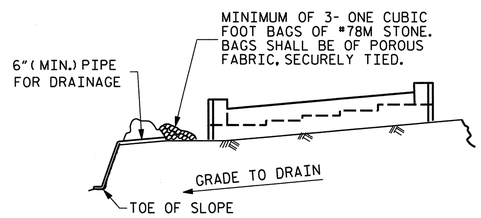

BAGGED STONE AND PIPE SHALL BE PLACED IMMEDIATELY AFTER COMPLETION OF END BENT EXCAVATION. PIPE MAY BE EITHER CONCRETE, CORRUGATED STEEL, CORRUGATED ALUMINUM ALLOY, OR CORRUGATED PLASTIC. PERFORATED PIPE WILL NOT BE ALLOWED.

BAGGED STONE SHALL REMAIN IN PLACE UNTIL THE ENGINEER DIRECTS THAT IT BE REMOVED. THE CONTRACTOR SHALL REMOVE AND DISPOSE OF SILT ACCUMULATIONS AT BAGGED STONE WHEN SO DIRECTED BY THE ENGINEER. BAGS SHALL BE REMOVED AND REPLACED WHENEVER THE ENGINEER DETERMINES THAT THEY HAVE DETERIORATED AND LOST THEIR EFFECTIVENESS.

NO SEPARATE PAYMENT WILL BE MADE FOR THIS WORK AND THE ENTIRE COST OF THIS WORK SHALL BE INCLUDED IN THE UNIT CONTRACT PRICE BID FOR THE SEVERAL PAY ITEMS.

TEMPORARY DRAINAGE AT END BENT

BAR TYPES

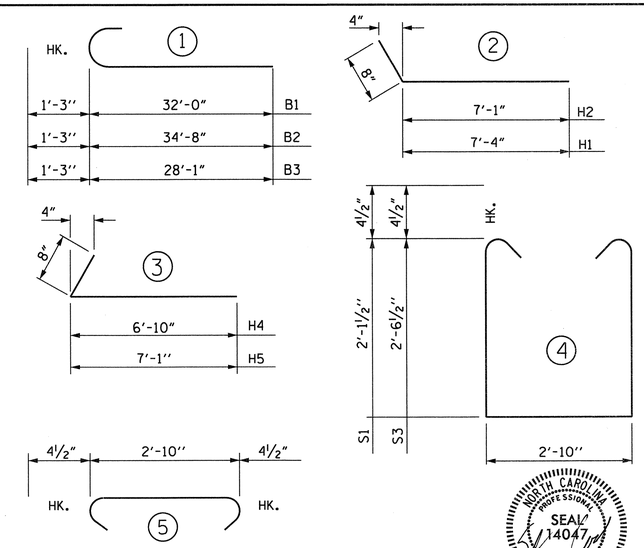

ALL BAR DIMENSIONS ARE OUT TO OUT.

PROJECT NO. R-2633BB

BRUNSWICK/NEW HANOVER COUNTY

STATION: 398+75.47 -L-

SHEET 3 OF 3

STATE OF NORTH CAROLINA
DEPARTMENT OF TRANSPORTATION
RALEIGH

SUBSTRUCTURE END BENT 2 RIGHT LANE

NORTH CAROLINA PROFESSIONAL ENGINEER SEAL 14047 STEPHEN D. COOK
2/11/13

THE LOUIS BERGER GROUP, Inc.
1001 Wade Avenue, Suite 400
Raleigh, NC 27605-3322

REVISIONS							
NO.	BY:	DATE:	NO.	BY:	DATE:	SHEET NO.	
1			3			S-53A	
2			4			TOTAL SHEETS	
						700	

DRAWN BY : R. KNIGHT DATE : OCT 2012
CHECKED BY : S. COOK DATE : DEC 2012

G:\OR Projects\OR1092 - NCDOT Wilm Bypass DualBridges\Structures\Bridge Site 6\VR-2633BB_SD_06R_EB_203.dgn
2/11/2013 8:48:28 AM 1092_PDF_full.pltcfg 1092_str.tbl

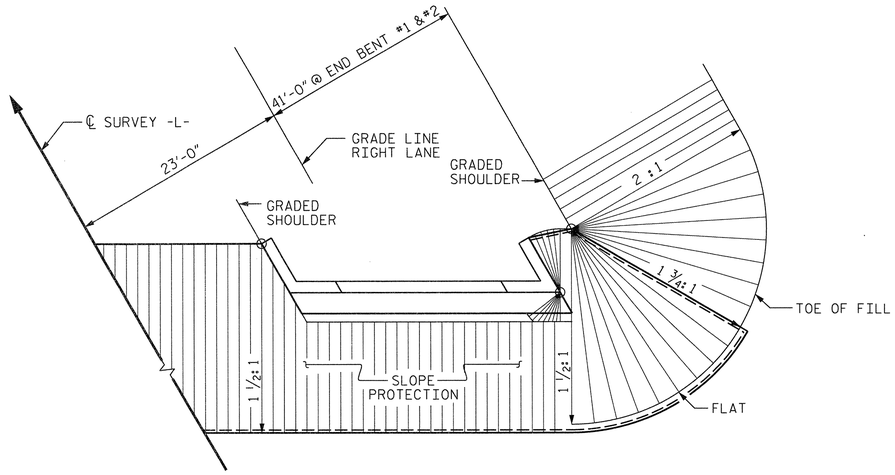

PLAN - END BENT WITH SWEPT BACK WINGS

BRIDGE @ STA. 398+75.47 -L- (RIGHT LANE)	4 INCH SLOPE PROTECTION	* WELDED WIRE FABRIC 60 INCHES WIDE
	SQUARE YARDS	APPROX. L.F.
END BENT 1	491	982
END BENT 2	565	1,130

* QUANTITY SHOWN IS BASED ON 5' POURS.

GENERAL NOTES

SLOPE PROTECTION SHALL BE PLACED UNDER THE ENDS OF THE BRIDGE AS SHOWN IN THE DETAILS. THE STRAIGHT EDGING WILL NOT BE REQUIRED UNLESS, IN THE OPINION OF THE ENGINEER, VISUAL INSPECTION INDICATES A NEED FOR IT. MEASUREMENT AND PAYMENT SHALL BE AS PRESCRIBED IN SECTION 462 OF THE STANDARD SPECIFICATIONS. FOR BERM WIDTH, SEE GENERAL DRAWING.

ALTERNATE "A"

ALTERNATE "A" SHALL CONSIST OF 4" POURED-IN-PLACE CONCRETE PAVING AS SHOWN IN THE DETAILS ON THIS SHEET. CONCRETE SHALL BE CLASS "B". THE CONCRETE SURFACE SHALL BE FLOATED WITH A WOODEN FLOAT AND FINISHED. WELDED WIRE FABRIC REINFORCING SHALL BE 6 X 6 - W1.4 X W1.4, 60" WIDE. SLOPE PROTECTION SHALL BE POURED IN 5' STRIPS AS SHOWN IN THE "POURING DETAIL" WITH 2'-0" LONG #4 BARS PLACED ALONG THE SLOPE BETWEEN STRIPS AT 1'-6" MAXIMUM SPACING. SLOPE PROTECTION MAY BE POURED IN ALTERNATE 4' AND 5' STRIPS AS SHOWN IN THE "OPTIONAL POURING DETAIL" WITH ADJACENT RUNS OF WELDED WIRE FABRIC LAPPING AT LEAST 6". THE COST OF THE WELDED WIRE FABRIC AND #4 BARS, IF USED, SHALL BE INCLUDED IN THE CONTRACT UNIT PRICE BID PER SQUARE YARD FOR SLOPE PROTECTION.

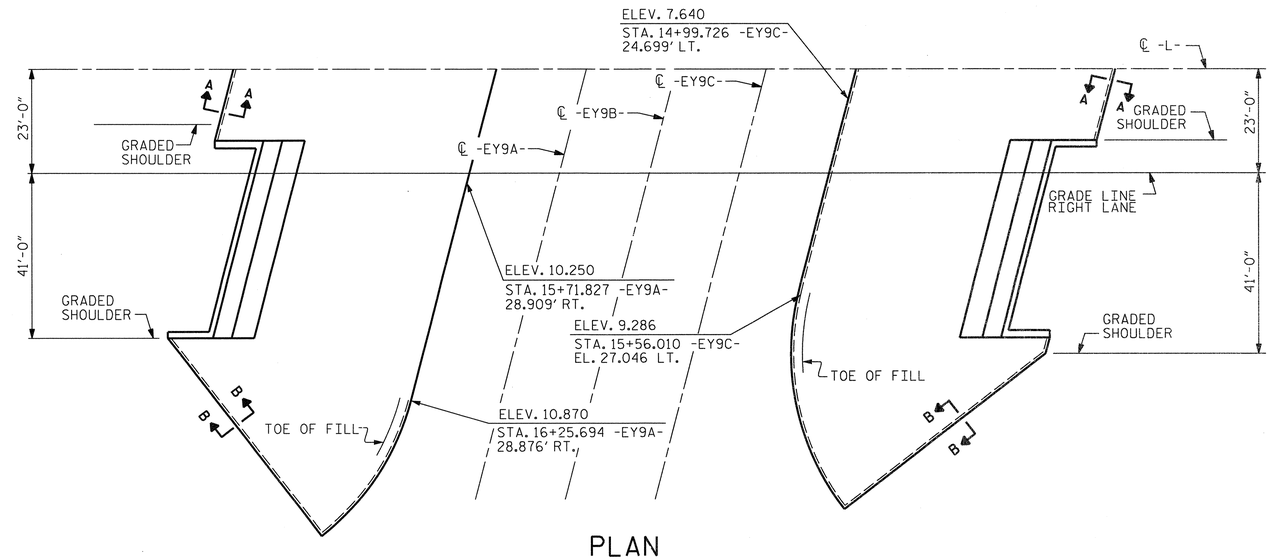

PLAN

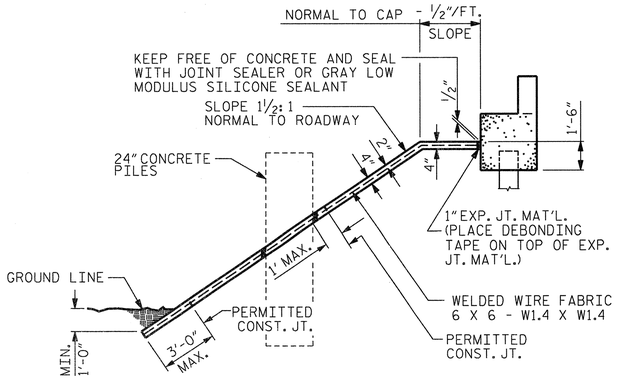

SECTION ALONG ℄ ROADWAY WITH 24" CONCRETE PILES

END BENT 2 SHOWN, END BENT 1 SIMILAR

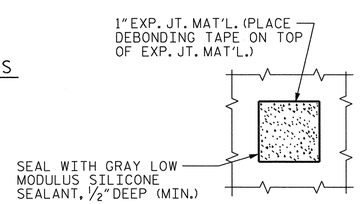

PLAN WHERE CONCRETE SLOPE PROTECTION MUST BE PLACED AROUND A BENT PILE

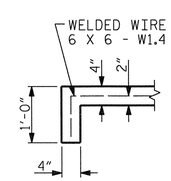

SECTION A-A

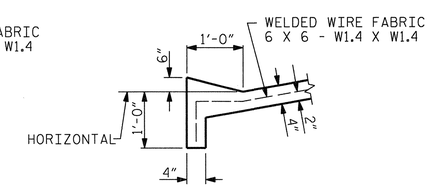

SECTION B-B

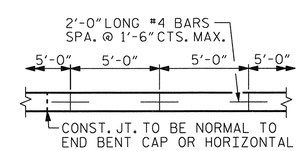

STRIP WIDTHS MAY VARY IN CURVED PORTION.

POURING DETAIL

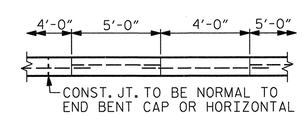

POUR A 4'-0" STRIP FIRST. STRIP WIDTHS MAY VARY IN CURVED PORTION.

OPTIONAL POURING DETAIL

PROJECT NO. R-2633BB

BRUNSWICK/NEW HANOVER COUNTY

STATION: 398+75.47 -L-

STATE OF NORTH CAROLINA
DEPARTMENT OF TRANSPORTATION
RALEIGH

SLOPE PROTECTION DETAILS RIGHT LANE

NORTH CAROLINA PROFESSIONAL SEAL 14047 ENGINEER STEPHEN D. COOK
7/11/12

THE LOUIS BERGER GROUP, Inc.
1001 Wade Avenue, Suite 400
Raleigh, NC 27605-3322

REVISIONS						SHEET NO.
NO.	BY:	DATE:	NO.	BY:	DATE:	S-535
1			3			TOTAL SHEETS
2			4			700

ASSEMBLED BY : R. KNIGHT	DATE : DEC 2012
CHECKED BY : S. COOK	DATE : DEC 2012
DRAWN BY : ELR 5/92	REV. 5/1/06 TLA/GM
CHECKED BY : GRP 6/92	REV. 10/1/11 MAA/GM
	REV. 12/21/11 MAA/GM

STD. NO. SP1

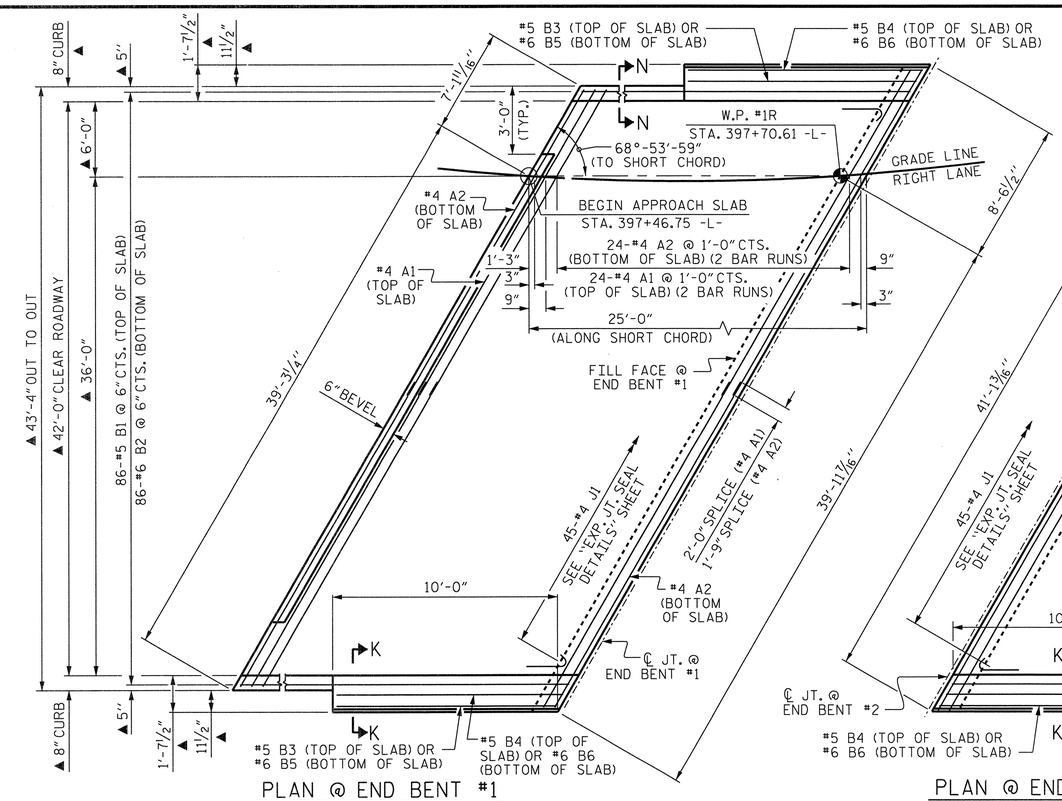

PLAN @ END BENT #1

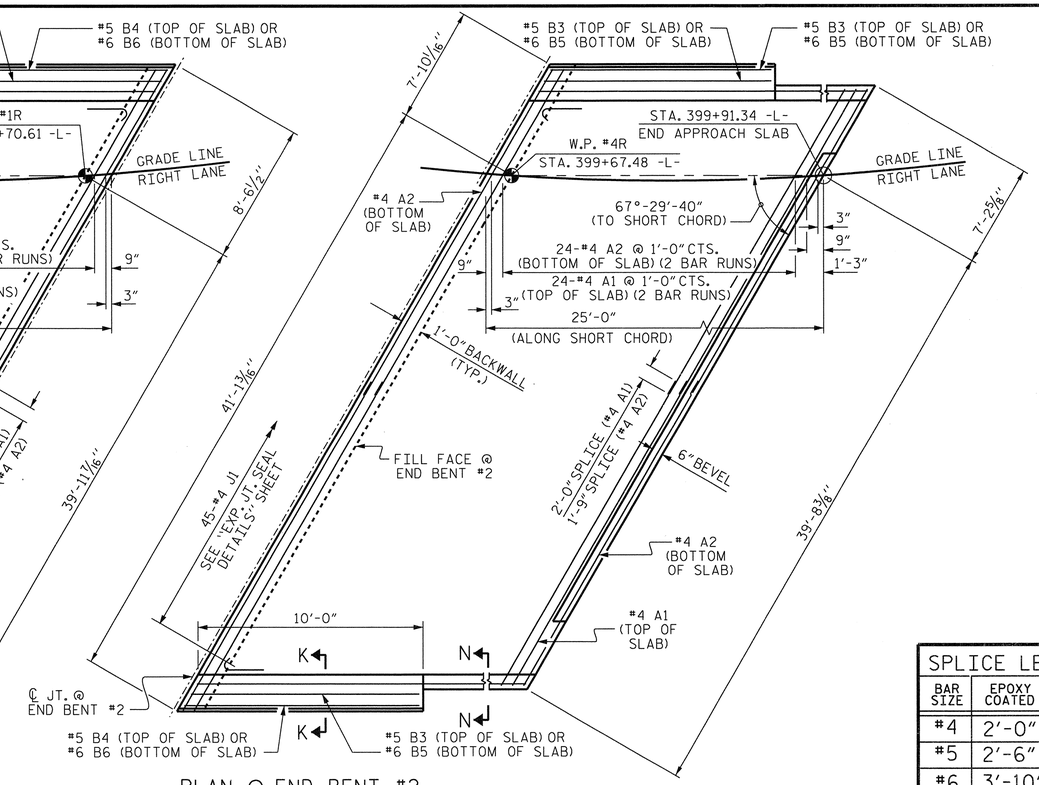

PLAN @ END BENT #2

▲ RADIAL DIMENSION ALONG -L-.

DIMENSIONS SHOWN ARE TYPICAL FOR BOTH APPROACH SLABS

SPLICE LENGTHS		
BAR SIZE	EPOXY COATED	UNCOATED
#4	2'-0"	1'-9"
#5	2'-6"	2'-2"
#6	3'-10"	2'-7"

NOTES

APPROACH SLAB SHALL NOT BE CONSTRUCTED PRIOR TO COMPLETION OF THE BRIDGE DECK.

FOR REINFORCED BRIDGE APPROACH FILL INCLUDING GEOTEXTILE, IMPERMEABLE GEOMEMBRANE, 4" Ø DRAINAGE PIPE, #78M STONE, AND SELECT MATERIAL, SEE ROADWAY PLANS.

AREA BETWEEN THE WINGWALL AND APPROACH SLAB SHALL BE GRADED TO DRAIN THE WATER AWAY FROM THE FILL FACE OF THE BRIDGE AND SHALL BE PAVED. SEE ROADWAY PLANS.

FOR EXPANSION JOINT SEALS, SEE SPECIAL PROVISIONS.

ARC OFFSETS ARE NEGLIGIBLE.

BILL OF MATERIAL

APPROACH SLAB AT EB #1

BAR	NO.	SIZE	TYPE	LENGTH	WEIGHT
✱A1	50	#4	STR	26'-0"	868
A2	52	#4	STR	25'-9"	894
✱B1	86	#5	STR	24'-7"	2205
B2	86	#6	STR	24'-7"	3175
✱B3	4	#5	STR	10'-1"	42
✱B4	4	#5	STR	10'-5"	43
B5	4	#6	STR	10'-1"	61
B6	4	#6	STR	10'-5"	63
✱J1	45	#4	1	1'-5"	43
REINFORCING STEEL ✱✱				LBS.	4,193
✱EPOXY COATED REINFORCING STEEL ✱✱				LBS.	3,201
CLASS AA CONCRETE ✱✱				C. Y.	49.5

APPROACH SLAB AT EB #2

BAR	NO.	SIZE	TYPE	LENGTH	WEIGHT
✱A1	50	#4	STR	26'-0"	868
A2	52	#4	STR	25'-9"	894
✱B1	86	#5	STR	24'-7"	2205
B2	86	#6	STR	24'-7"	3175
✱B3	4	#5	STR	10'-1"	42
✱B4	4	#5	STR	10'-5"	43
B5	4	#6	STR	10'-1"	61
B6	4	#6	STR	10'-5"	63
✱J1	45	#4	1	1'-5"	43
REINFORCING STEEL ✱✱				LBS.	4,193
✱EPOXY COATED REINFORCING STEEL ✱✱				LBS.	3,201
CLASS AA CONCRETE ✱✱				C. Y.	49.5

BAR TYPE

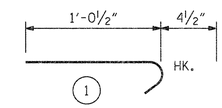

ALL BAR DIMENSIONS ARE OUT TO OUT

✱✱ QUANTITIES FOR BARRIER RAIL ARE NOT INCLUDED. SEE SHEET 2 OF 2.

THE QUANTITY OF #4 J1 BARS ON THE BILL OF MATERIAL IS BASED ON 1'-0" CENTERS. J1 BARS SHALL BE PLACED AT EACH VERTICAL STUD ANCHOR BOLT. IN THE EVENT THAT THE NUMBER OF VERTICAL STUD ANCHORS EXCEEDS THE NUMBER OF J1 BARS SPECIFIED, ADDITIONAL J1 BARS WILL NOT BE REQUIRED.

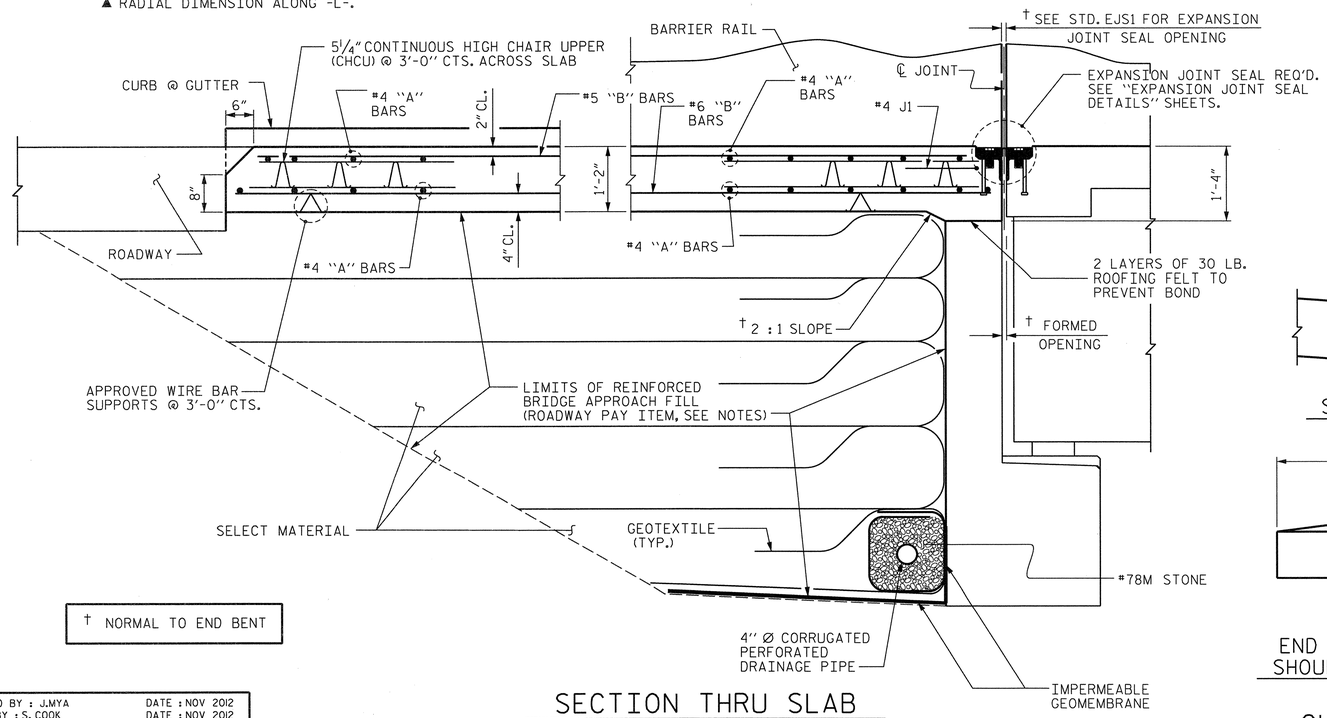

† NORMAL TO END BENT

SECTION THRU SLAB

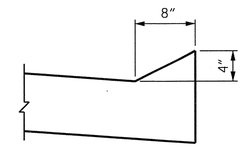

SECTION N-N

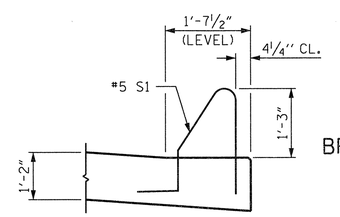

SECTION K-K

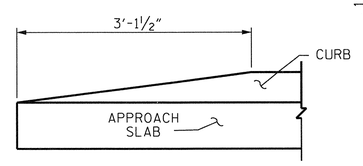

END OF CURB WITHOUT SHOULDER BERM GUTTER

CURB DETAILS

PROJECT NO. R-2633BB

BRUNSWICK/NEW HANOVER COUNTY

STATION: 398+75.47 -L-

SHEET 1 OF 2

STATE OF NORTH CAROLINA
DEPARTMENT OF TRANSPORTATION
RALEIGH

STANDARD
BRIDGE APPROACH SLAB
FOR FLEXIBLE PAVEMENT
RIGHT LANE

NORTH CAROLINA PROFESSIONAL SEAL 14047 ENGINEER STEPHEN D. COOK
7/1/13

THE LOUIS BERGER GROUP, Inc.
1001 Wade Avenue, Suite 400
Raleigh, NC 27605-3322

REVISIONS								SHEET NO.
NO.	BY:	DATE:	NO.	BY:	DATE:			S-536
1			3					TOTAL SHEETS
2			4					700

ASSEMBLED BY : J.MYA		DATE : NOV 2012	
CHECKED BY : S. COOK		DATE : NOV 2012	
DRAWN BY : EEM	3/95	REV. 5/7/03R	RWW/JTE
CHECKED BY : VAP	3/95	REV. 5/1/06RR	KMM/GM
		REV. 10/1/11	MAA/GM

STD. NO. BAS2 (SHT 4b)

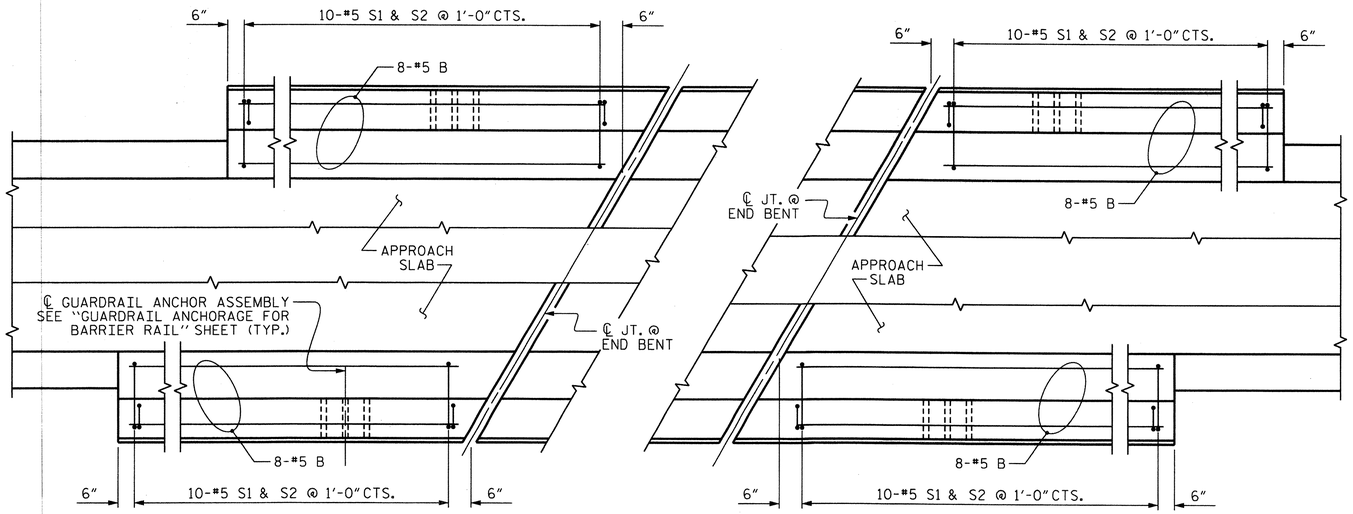

PLAN OF BARRIER RAIL

NOTES

THE COST OF THE BARRIER RAIL ON THE APPROACH SLAB SHALL BE INCLUDED IN THE LINEAR FOOT CONTRACT PRICE BID FOR "CONCRETE BARRIER RAIL".

THE BARRIER RAIL ON EACH APPROACH SLAB SHALL NOT BE CAST UNTIL ALL APPROACH SLAB CONCRETE HAS BEEN CAST AND HAS REACHED A MINIMUM COMPRESSIVE STRENGTH OF 3,000 PSI.

ALL REINFORCING STEEL IN BARRIER RAILS SHALL BE EPOXY COATED.

BAR TYPES

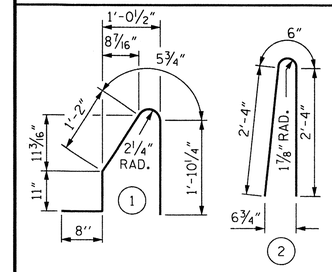

ALL BAR DIMENSIONS ARE OUT TO OUT

BILL OF MATERIAL

BARRIER RAIL ONLY

BAR	NO.	SIZE	TYPE	LENGTH	WEIGHT
✱B1	32	#5	STR	9'-7"	320
✱S1	40	#5	1	5'-1"	212
✱S2	40	#5	2	5'-2"	216
✱EPOXY COATED REINFORCING STEEL				LBS.	748
CLASS AA CONCRETE				C.Y.	4.2
CONCRETE BARRIER RAIL				42.0 LIN.FT.	

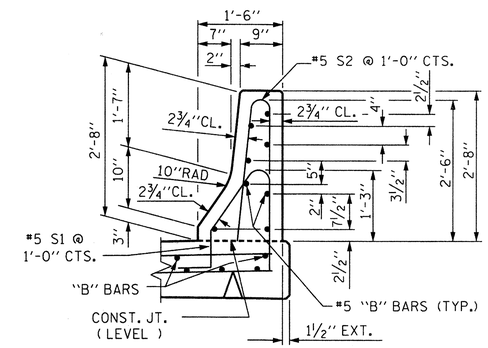

SECTION THRU RAIL

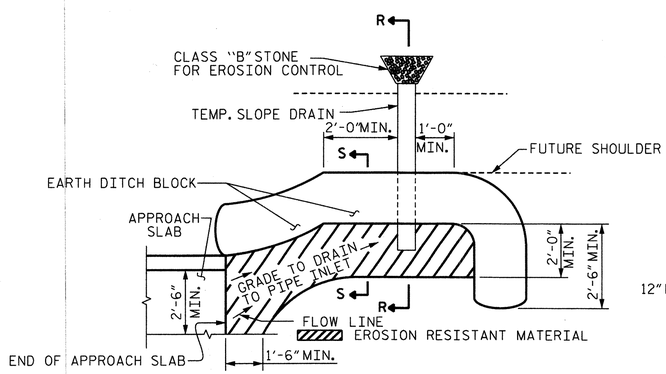

NOTE: IMMEDIATELY AFTER THE CONSTRUCTION OF THE APPROACH SLAB, THE CONTRACTOR SHALL PROVIDE TEMPORARY BERM AND SLOPE DRAIN. CONTRACTOR SHALL GRADE TO PIPE INLET AND PROVIDE EROSION RESISTANT MATERIAL AS SHOWN. THE EROSION RESISTANT MATERIAL SHALL BE EITHER 1) ASPHALT PLANT MIX, TYPE 1 OR TYPE 2, MIN. 2" DEPTH, 2) EROSION CONTROL MAT, OR 3) CONCRETE, AS DIRECTED BY THE ENGINEER. THE SLOPE DRAIN SHALL CONSIST OF A NON-PERFORATED TEMPORARY DRAINAGE PIPE, 12 INCHES IN DIAMETER.

PLAN VIEW

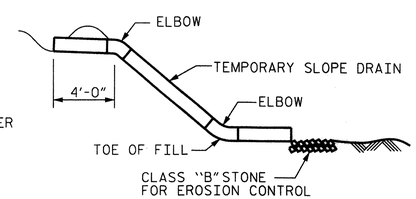

SECTION R-R

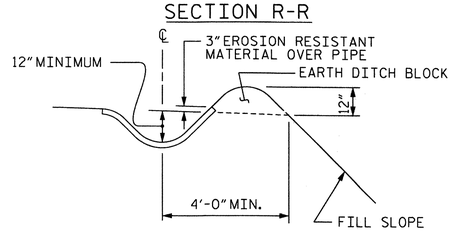

SECTION S-S

TEMPORARY BERM AND SLOPE DRAIN DETAILS

(TO BE USED WHEN SHOULDER BERM GUTTER IS REQUIRED)

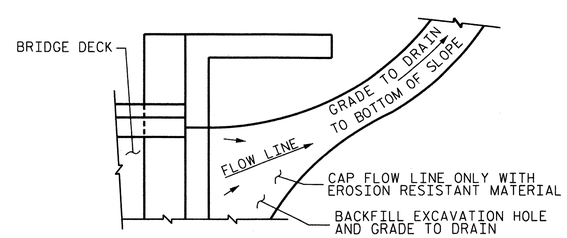

NOTE: IF THE APPROACH SLAB IS NOT CONSTRUCTED IMMEDIATELY AFTER THE BACKFILLING OF THE END BENT EXCAVATION, GRADE TO DRAIN TO THE BOTTOM OF THE SLOPE AND PROVIDE EROSION RESISTANT MATERIAL, SUCH AS FIBERGLASS ROVING OR AS DIRECTED BY THE ENGINEER TO PREVENT SOIL EROSION AND TO PROTECT THE AREA ADJACENT TO THE STRUCTURE. THE CONTRACTOR WILL BE REQUIRED TO REMOVE THESE MATERIALS PRIOR TO CONSTRUCTION OF THE APPROACH SLAB.

TEMPORARY DRAINAGE DETAIL

PROJECT NO. R-2633BB

BRUNSWICK/NEW HANOVER COUNTY

STATION: 398+75.47 -L-

SHEET 2 OF 2

STATE OF NORTH CAROLINA
DEPARTMENT OF TRANSPORTATION
RALEIGH

STANDARD

BRIDGE APPROACH SLAB DETAILS RIGHT LANE

NORTH CAROLINA PROFESSIONAL SEAL 14047 ENGINEER STEPHEN D. COOK
2/18/13

THE LOUIS BERGER GROUP, Inc.
1001 Wade Avenue, Suite 400
Raleigh, NC 27605-3322

REVISIONS						
NO.	BY:	DATE:	NO.	BY:	DATE:	
1			3			
2			4			

SHEET NO. S-537

TOTAL SHEETS 700

ASSEMBLED BY : R. KNIGHT			DATE : OCT 2012	
CHECKED BY : S. COOK			DATE : DEC 2012	
DRAWN BY : FCJ	11/88	REV. 5/7/03	RWW/JTE	
CHECKED BY : ARB	11/88	REV. 5/1/06RRR	MAA/KMM	
		REV. 10/1/11	MAA/GM	

G:\OR Projects\OR1092 - NCDOT Wilm Bypass DualBridges\Structures\Bridge Site 6\R-2633BB_SD_06R_AS02.dgn
2/18/2013 3:54:27 PM 1092_PDF_full.pltcfg 1092_str.tbl

STD. NO. BAS4 (SHT 3a)

F.A.PROJECT STPNHF-0017(125)

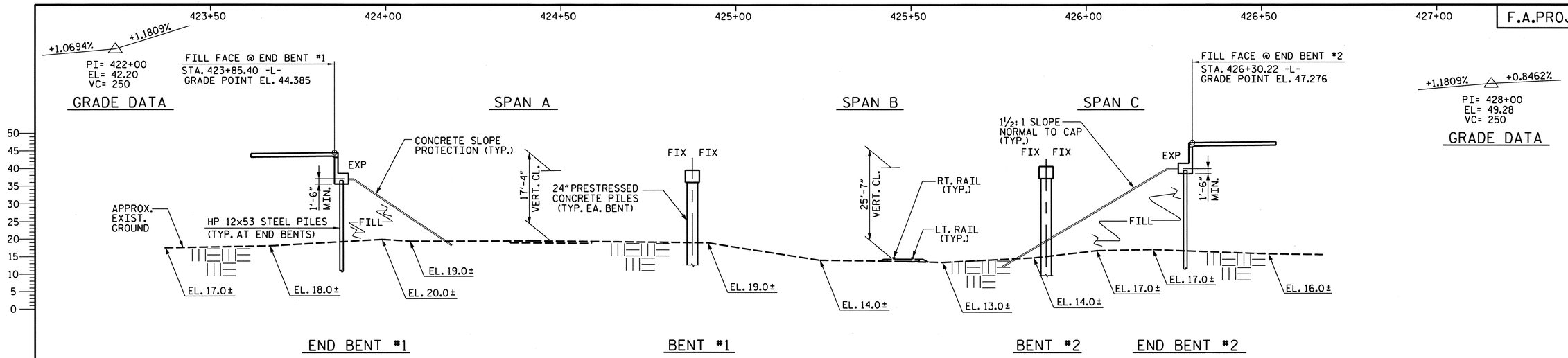

SECTION ALONG GRADE LINE LEFT LANE

TOP OF RAIL ELEVATIONS		
STATION	LT. RAIL	RT. RAIL
15+00 -EY11-	14.432	14.442
15+50 -EY11-	14.396	14.420
16+00 -EY11-	14.473	14.428
16+50 -EY11-	14.554	14.505
17+00 -EY11-	14.617	14.582

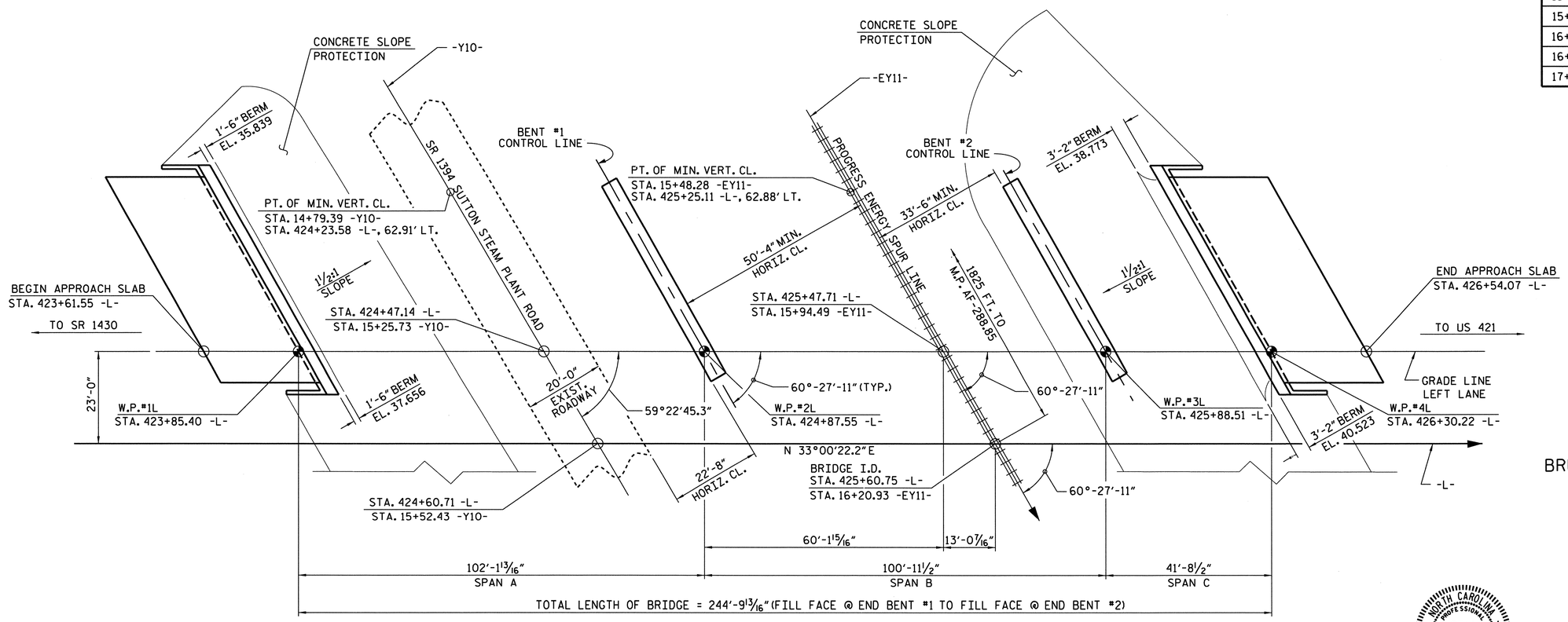

PLAN

(PILES NOT SHOWN FOR CLARITY)

PROJECT NO. R-2633BB

BRUNSWICK/NEW HANOVER COUNTY

STATION: 425+60.75 -L-

SHEET 1 OF 4 16+20.93 -EY11-

MILEPOST AF-288.85 BRIDGE NO. 194

STATE OF NORTH CAROLINA
DEPARTMENT OF TRANSPORTATION
RALEIGH

GENERAL DRAWING FOR BRIDGE ON US 17 OVER PROGRESS ENERGY SPUR LINE & SR 1394 BETWEEN SR 1430 & US 421 LEFT LANE

NORTH CAROLINA PROFESSIONAL SEAL 14047 ENGINEER STEPHEN D. COOK
7/9/13

THE LOUIS BERGER GROUP, Inc.
1001 Wade Avenue, Suite 400
Raleigh, NC 27605-3322

REVISIONS							
NO.	BY:	DATE:	NO.	BY:	DATE:	SHEET NO. S-538
1			3			TOTAL SHEETS 700
2			4			

DRAWN BY : R. KNIGHT DATE : AUG 2011
CHECKED BY : S. COOK DATE : AUG 2012

G:\OR Projects\OR1092 - NCDOT Wilm Bypass DualBridges\Structures\Bridge Site 7\R-2633BB_SD_07L_GD_01.dgn
7/9/2013 7:01:47 AM 1092_PDF_full.pltcfg 1092_str.tbl

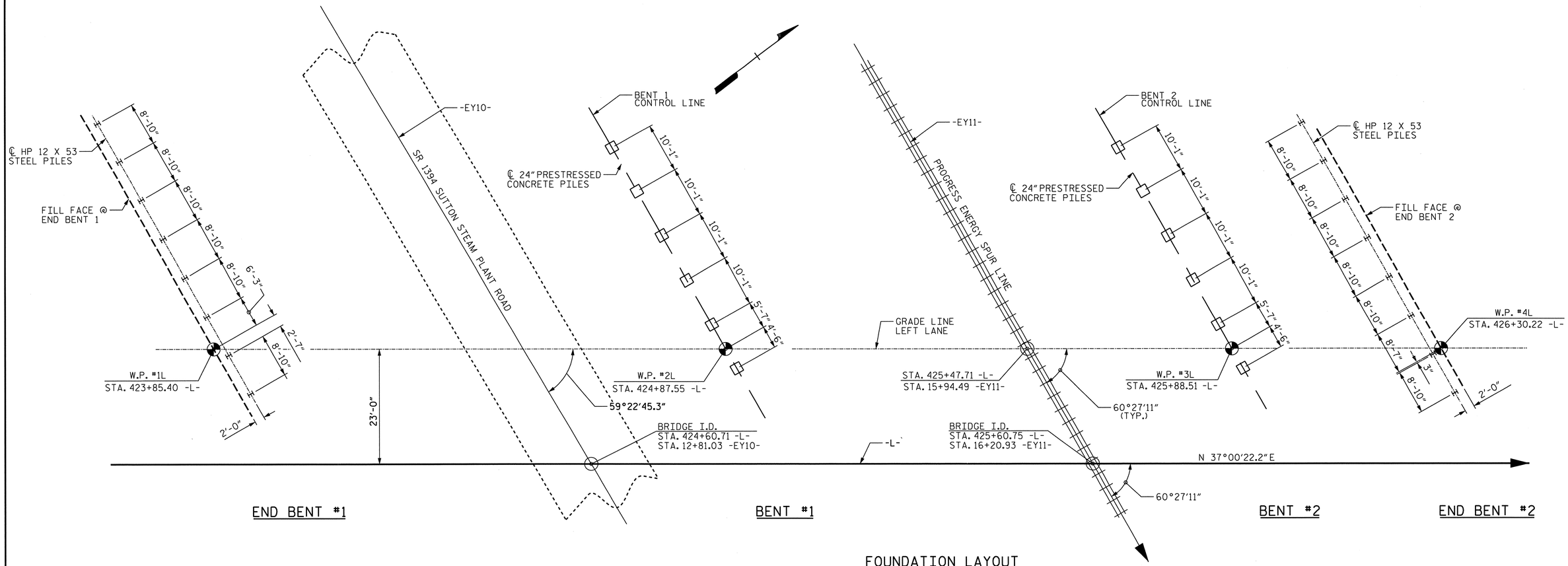

FOUNDATION LAYOUT

(DIMENSIONS LOCATING PILES ARE SHOWN TO CENTERLINE OF PILES)

FOUNDATION NOTES:

FOR PILES, SEE SECTION 450 OF THE STANDARD SPECIFICATIONS.

PILES AT END BENT NO. 1 AND END BENT NO. 2 ARE DESIGNED FOR A FACTORED RESISTANCE OF 115 TONS PER PILE.

DRIVE PILES AT END BENT NO. 1 AND END BENT NO. 2 TO A REQUIRED DRIVING RESISTANCE OF 195 TONS PER PILE.

PILES AT BENT NO. 1 AND BENT NO. 2 ARE DESIGNED FOR A FACTORED RESISTANCE OF 290 TONS AND 210 TONS PER PILE, RESPECTIVELY.

DRIVE PILES AT BENT NO. 1 AND BENT NO. 2 TO A REQUIRED DRIVING RESISTANCE OF 390 TONS AND 280 TONS PER PILE, RESPECTIVELY.

INSTALL PILES AT BENT NO. 1 AND BENT NO. 2 TO A TIP ELEVATION NO HIGHER THAN -15 FT.

IT HAS BEEN ESTIMATED THAT A HAMMER WITH AN EQUIVALENT RATED ENERGY IN THE RANGE OF 96,500 FT-LBS TO 125,000 FT-LBS PER BLOW WILL BE REQUIRED TO DRIVE PILES AT BENT NO. 1 AND NO. 2. THIS ESTIMATED ENERGY RANGE DOES NOT RELEASE THE CONTRACTOR FROM PROVIDING DRIVING EQUIPMENT IN ACCORDANCE WITH SUBARTICLE 450-3(D)(2) OF THE STANDARD SPECIFICATIONS.

TESTING THE FIRST 24" PRESTRESSED CONCRETE PILE WITH THE PDA DURING DRIVING, RESTRIKING OR REDRIVING IS REQUIRED. FOR PDA TESTING, SEE SECTION 450 OF THE STANDARD SPECIFICATIONS.

IF NECESSARY, PREDRILL PILE LOCATIONS AT BENT NO. 1 AND BENT NO. 2 TO ELEVATION -5 FT WITH EQUIPMENT THAT WILL RESULT IN A MAXIMUM PREDRILLING DIAMETER OF 24". FOR PREDRILLING FOR PILES, SEE SECTION 450 OF THE STANDARD SPECIFICATIONS.

PROJECT NO. R-2633BB
BRUNSWICK/NEW HANOVER COUNTY
STATION: 425+60.75 -L-
16+20.93 -EY11-

SHEET 2 OF 4

NORTH CAROLINA PROFESSIONAL SEAL 14047 ENGINEER STEPHEN D. COOK
6/21/13

STATE OF NORTH CAROLINA
DEPARTMENT OF TRANSPORTATION
RALEIGH

GENERAL DRAWING FOR BRIDGE ON US 17 OVER PROGRESS ENERGY SPUR LINE AND SR 1394 BETWEEN SR 1430 AND US 421 LEFT LANE

THE LOUIS BERGER GROUP, Inc.
1001 Wade Avenue, Suite 400
Raleigh, NC 27605-3322

REVISIONS						
NO.	BY:	DATE:	NO.	BY:	DATE:	
1			3			
2			4			

SHEET NO. S-539
TOTAL SHEETS 700

DRAWN BY : M. HOGAN DATE : JULY 2012
CHECKED BY : S. COOK DATE : AUG 2012

G:\OR Projects\OR1092 - NCDOT Wilm Bypass DualBridges\Structures\Bridge Site 7\R-2633BB_SD_07L_GD_02.dgn
6/21/2013 11:18:10 AM 1092_PDF_full.pltcfg 1092_str.tbl

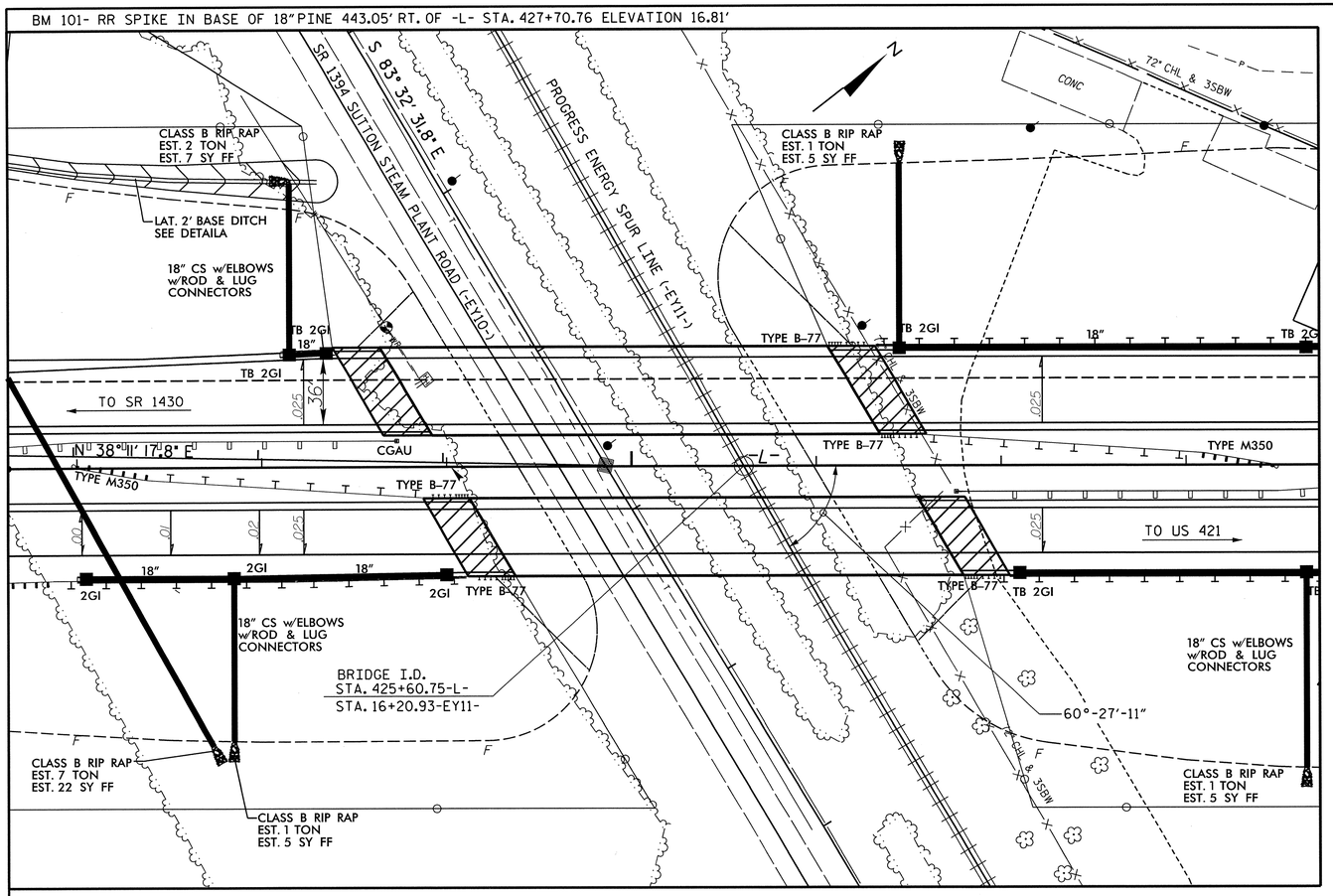

LOCATION SKETCH

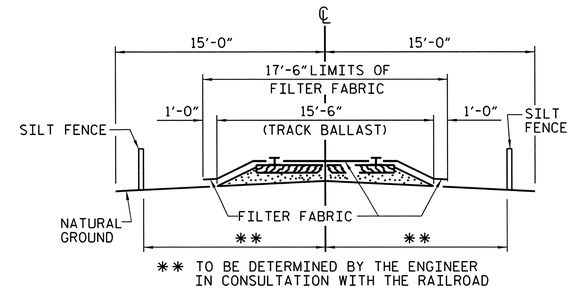

RAILROAD EROSION CONTROL DETAIL

NOTES

RAILROAD EROSION CONTROL MEASURES SHALL BE INSTALLED PRIOR TO PERFORMING ANY WORK IN THE RAILROAD RIGHT-OF-WAY.

ADDITIONAL EROSION CONTROL MEASURES FOR PROTECTION OF RAILROAD DITCHES MAY BE REQUIRED AS DIRECTED BY THE ENGINEER.

NO SEPARATE PAYMENT WILL BE MADE FOR RAILROAD EROSION CONTROL MEASURES.

LIMITS OF SILT FENCE AND FILTER FABRIC PARALLEL TO RAILROAD SHALL EXTEND A MINIMUM OF 25'-0" OUTSIDE EDGE OF SUPERSTRUCTURE OR TOE OF SLOPE ON CONSTRUCTION. A GREATER LENGTH OF SILT FENCE MAY BE REQUIRED IF SO DIRECTED BY THE ENGINEER.

FILTER FABRIC TO BE NAILED TO TIMBER RAIL TIES WITH PRIME SOURCE "GRIP CAP" OR EQUIVALENT. FILTER FABRIC ON SHOULDER TO BE SECURED AS DIRECTED BY THE ENGINEER AND RAILROAD.

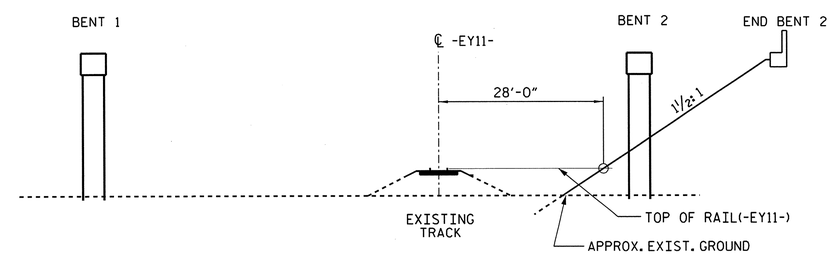

SPAN LENGTH BASED ON THIS SECTION

(LOOKING BACK STATION)

PROJECT NO. R-2633BB

BRUNSWICK/NEW HANOVER COUNTY

STATION: 425+60.75 -L-
16+20.93 -EY11-

SHEET 3 OF 4

STATE OF NORTH CAROLINA
DEPARTMENT OF TRANSPORTATION
RALEIGH

GENERAL DRAWING FOR BRIDGE ON US 17 OVER PROGRESS ENERGY SPUR LINE AND SR 1394 BETWEEN SR 1430 AND US 421 LEFT LANE

NORTH CAROLINA PROFESSIONAL SEAL 14042 ENGINEER STEPHEN D. COOK
11/16/12

THE LOUIS BERGER GROUP, Inc.
1001 Wade Avenue, Suite 400
Raleigh, NC 27605-3322

REVISIONS							
NO.	BY:	DATE:	NO.	BY:	DATE:		
1			3				
2			4				

SHEET NO. S-540
TOTAL SHEETS 700

DRAWN BY : R. KNIGHT DATE : JULY 2012
CHECKED BY : S. COOK DATE : AUG 2012

G:\OR Projects\OR1092 - NCDOT Wilm Bypass Dual Bridges\Structures\Bridge Site 7\R-2633BB_SD_07L_GD_03.dgn
11/16/2012 11:49:27 AM 1092_PDF_full.pltcfg 1092_str.tbl

TOTAL BILL OF MATERIAL

	PREDRILLING FOR PILES	PILE REDRIVES	PDA TESTING	REINFORCED CONCRETE DECK SLAB	GROOVING BRIDGE FLOORS	CLASS A CONCRETE	BRIDGE APPROACH SLABS	REINFORCING STEEL	54" PRESTRESSED CONCRETE GIRDERS		HP 12 X 53 STEEL PILES		24" PRESTRESSED CONCRETE PILES		CONCRETE BARRIER RAIL	72" CHAIN LINK FENCE	4" SLOPE PROTECTION	ELASTOMERIC BEARINGS	EXPANSION JOINT SEALS
	LIN. FT.	EACH	EACH	SQ. FT.	SQ. FT.	CU. YDS.	LUMP SUM	LBS.	NO.	LIN. FT.	NO.	LIN. FT.	NO.	LIN. FT.	LIN. FT.	LIN. FT.	SQ. YDS.	LUMP SUM	LUMP SUM
SUPERSTRUCTURE				12,424	13,183		LUMP SUM		18	1,435.19					526.54	480.00		LUMP SUM	LUMP SUM
END BENT NO. 1		4				43.0		5,908			8	640					373		
BENT NO. 1	127	3				31.1		5,417					6	510					
BENT NO. 2	108	3				31.1		5,417					6	510					
END BENT NO. 2		4				43.0		5,908			8	640					555		
TOTAL	235	14	1	12,424	13,183	148.2	LUMP SUM	22,650	18	1,435.19	16	1,280	12	1,020	526.54	480.00	928	LUMP SUM	LUMP SUM

GENERAL DRAWING NOTES

ASSUMED LIVE LOAD = HL-93 OR ALTERNATE LOADING.

FOR OTHER DESIGN DATA AND GENERAL NOTES, SEE SHEET SN.

FOR EROSION CONTROL MEASURES SEE EROSION CONTROL PLANS.

THIS BRIDGE HAS BEEN DESIGNED IN ACCORDANCE WITH THE AASHTO LRFD BRIDGE DESIGN SPECIFICATIONS.

REMOVABLE FORMS MAY BE USED IN LIEU OF METAL STAY-IN-PLACE FORMS IN ACCORDANCE WITH ARTICLE 420-3 OF THE STANDARD SPECIFICATIONS.

PRESTRESSED CONCRETE DECK PANELS MAY BE USED IN LIEU OF METAL STAY-IN-PLACE FORMS IN ACCORDANCE WITH ARTICLE 420-3 OF THE STANDARD SPECIFICATIONS.

FOR MAINTENANCE AND PROTECTION OF TRAFFIC BENEATH PROPOSED STRUCTURE, SEE SPECIAL PROVISIONS.

THE CLASS AA CONCRETE IN THE BRIDGE DECK SHALL CONTAIN FLY ASH OR GROUND GRANULATED BLAST FURNACE SLAG AT THE SUBSTITUTION RATE SPECIFIED IN ARTICLE 1024-1 AND IN ACCORDANCE WITH ARTICLES 1024-5 AND 1024-6 OF THE STANDARD SPECIFICATIONS. NO PAYMENT WILL BE MADE FOR THIS SUBSTITUTION AS IT IS CONSIDERED INCIDENTAL TO THE COST OF THE REINFORCED CONCRETE DECK SLAB.

NEEDLE BEAMS WILL NOT BE ALLOWED UNLESS OTHERWISE CALLED FOR ON THE PLANS OR APPROVED BY THE ENGINEER.

THE CONTRACTOR SHALL PROVIDE INDEPENDENT ASSURANCE SAMPLES OF REINFORCING STEEL AS FOLLOWS: FOR PROJECTS REQUIRING UP TO 400 TONS OF REINFORCING STEEL, ONE 30 INCH SAMPLE OF EACH SIZE BAR USED, AND FOR PROJECTS REQUIRING OVER 400 TONS OF REINFORCING STEEL, TWO 30 INCH SAMPLES OF EACH SIZE BAR USED. THE BARS FROM WHICH THE SAMPLES ARE TAKEN MUST THEN BE SPLICED WITH REPLACEMENT BARS OF THE SIZE AND LENGTH OF THE SAMPLE, PLUS A MINIMUM LAP SPLICE OF THIRTY BAR DIAMETERS. PAYMENT FOR THE SAMPLES OF REINFORCING STEEL SHALL BE CONSIDERED INCIDENTAL TO VARIOUS PAY ITEMS.

THE CONTRACTOR'S ATTENTION IS CALLED TO THE FACT THAT THE SHORING AND EXCAVATION PLANS HAVE BEEN SUBMITTED TO THE RAILROAD BY THE STATE. AS OF THE TIME OF PLAN PRINTING FOR ADVERTISEMENT FOR BIDS, RAILROAD APPROVAL HAS NOT BEEN RECEIVED. WHEN SUCH APPROVAL IS RECEIVED, THE CONTRACTOR WILL BE NOTIFIED BY ADDENDUM. IN THE EVENT RAILROAD APPROVAL IS NOT GIVEN PRIOR TO SUBMISSION OF BIDS, THE CONTRACTOR SHALL SUBMIT BIDS BASED ON THE CONTRACT PLANS. THE CONTRACTOR SHALL NOT BEGIN EXCAVATION AT THE LOCATIONS SHOWN ON THESE PLANS UNTIL NOTIFIED OF RAILROAD APPROVAL.

FOR UTILITY INFORMATION, SEE UTILITY PLANS AND SPECIAL PROVISIONS.

FOR SUBMITTAL OF WORKING DRAWINGS, SEE SPECIAL PROVISIONS.

FOR FALSEWORK AND FORMWORK, SEE SPECIAL PROVISIONS.

FOR CRANE SAFETY, SEE SPECIAL PROVISIONS.

THE RAILROAD TRACK TOP OF RAIL ELEVATIONS SHOWN ON THE PLANS ARE FROM THE BEST INFORMATION AVAILABLE. PRIOR TO BEGINNING BRIDGE CONSTRUCTION, VERIFY THE TOP OF RAIL ELEVATIONS AND REPORT ANY VARIATIONS TO THE ENGINEER. ANY PLAN REVISIONS NECESSARY TO ACHIEVE THE REQUIRED MINIMUM VERTICAL CLEARANCE WILL BE PROVIDED BY THE DEPARTMENT.

FOR GROUT FOR STRUCTURES, SEE SPECIAL PROVISIONS.

THIS BRIDGE IS LOCATED IN SEISMIC ZONE 1.

FOR PLACING LOAD ON STRUCTURE MEMBERS, SEE SPECIAL PROVISIONS.

PROJECT NO. R-2633BB
BRUNSWICK/NEW HANOVER COUNTY
STATION: 425+60.75 -L-
16+20.93 -EY11-

SHEET 4 OF 4

NORTH CAROLINA PROFESSIONAL SEAL 14047 ENGINEER STEPHEN D. COOK

STATE OF NORTH CAROLINA
DEPARTMENT OF TRANSPORTATION
RALEIGH

GENERAL DRAWING FOR BRIDGE ON US 17 OVER PROGRESS ENERGY SPUR LINE & SR 1394 BETWEEN SR 1430 & US421 LEFT LANE

THE LOUIS BERGER GROUP, Inc.
1001 Wade Avenue, Suite 400
Raleigh, NC 27605-3322

REVISIONS						SHEET NO.
NO.	BY:	DATE:	NO.	BY:	DATE:	S-541
1			3			TOTAL SHEETS
2			4			700

DRAWN BY : M. HOGAN DATE : JULY 2012
CHECKED BY : S. COOK DATE : AUG 2012

G:\OR Projects\OR1092 - NCDOT Wilm Bypass DualBridges\Structures\Bridge Site 7\R-2633BB_SD_07L_GD_04.dgn
11/16/2012 11:49:32 AM 1092_PDF_fullpltcfg 1092_str.tbl

LOAD AND RESISTANCE FACTOR RATING (LRFR) SUMMARY FOR PRESTRESSED CONCRETE GIRDERS

LEVEL		VEHICLE	WEIGHT (W) (TONS)	CONTROLLING LOAD RATING (#)	MINIMUM RATING FACTORS (RF)	TONS = W × RF	STRENGTH I LIMIT STATE											SERVICE III LIMIT STATE						COMMENT NUMBER
								MOMENT					SHEAR						MOMENT					
							LIVE-LOAD FACTORS (γ_{LL})	DISTRIBUTION FACTORS (DF)	RATING FACTOR	SPAN	GIRDER LOCATION	DISTANCE FROM LEFT END OF SPAN (FT)	DISTRIBUTION FACTORS (DF)	RATING FACTOR	SPAN	GIRDER LOCATION	DISTANCE FROM LEFT END OF SPAN (FT)	LIVE-LOAD FACTORS (γ_{LL})	DISTRIBUTION FACTORS (DF)	RATING FACTOR	SPAN	GIRDER LOCATION	DISTANCE FROM LEFT END OF SPAN (FT)	
DESIGN LOAD RATING		HL-93 (INVENTORY)	N/A	1	1.01	-	1.75	0.81	1.54	C	I	49.35	0.96	1.40	A	I	19.25	0.80	0.81	1.01	B	I	49.35	
		HL-93 (OPERATING)	N/A		1.86	-	1.35	0.81	2.00	C	I	49.35	0.96	1.86	A	I	19.25	N/A	-	-	-	-		
		HS-20 (INVENTORY)	36.000	2	1.40	50.40	1.75	0.91	2.08	C	I	15.02	0.96	1.87	A	I	19.25	0.80	0.81	1.40	B	I	59.37	
		HS-20 (OPERATING)	36.000		2.47	88.92	1.35	0.91	2.69	C	I	15.02	0.96	2.47	A	I	19.25	N/A	-	-	-	-	-	
LEGAL LOAD RATING	SINGLE VEHICLE (SV)	SH	12.500		3.63	45.38	1.40	0.91	5.33	C	EL	18.95	0.96	6.54	A	I	19.25	0.80	0.81	3.63	B	EL	45.41	
		S3C	21.500		2.12	45.58	1.40	0.91	3.12	C	EL	18.95	0.96	3.77	A	I	19.25	0.80	0.81	2.12	B	EL	45.63	
		S3A	22.750		2.01	45.73	1.40	0.91	2.97	C	EL	18.95	0.96	3.57	A	I	19.25	0.80	0.81	2.01	B	EL	45.74	
		S4A	26.750		1.76	47.08	1.40	0.91	2.75	C	EL	18.95	0.96	3.09	A	I	19.25	0.80	0.81	1.76	B	EL	47.09	
		S5A	30.500		1.55	47.28	1.40	0.91	2.45	C	EL	18.95	0.96	2.81	A	I	19.25	0.80	0.81	1.55	B	EL	47.35	
		S6A	34.500		1.40	48.30	1.40	0.91	2.31	C	EL	18.95	0.96	2.52	A	I	19.25	0.80	0.81	1.4	B	EL	48.39	
		S7B	38.500		1.27	48.90	1.40	0.91	2.16	C	EL	18.95	0.96	2.33	A	I	19.25	0.80	0.81	1.27	B	EL	49.02	
		S7A	40.000	3	1.25	50.00	1.40	0.91	2.24	C	EL	18.95	0.96	2.38	A	I	19.25	0.80	0.81	1.25	B	EL	50.12	
	TRUCK TRACTOR SEMI-TRAILER (TTST)	T4A	28.250		1.72	48.59	1.40	0.91	2.89	C	I	18.95	0.96	2.99	A	I	19.25	0.80	0.81	1.72	B	EL	49.35	
		T5B	32.000		1.52	48.64	1.40	0.91	2.52	C	I	18.95	0.96	2.82	A	I	19.25	0.80	0.81	1.52	B	EL	49.35	
		T6A	36.000		1.38	49.68	1.40	0.91	2.44	C	I	18.95	0.96	2.56	B	I	19.32	0.80	0.81	1.38	B	EL	49.35	
		T7A	40.000		1.28	51.20	1.40	0.91	2.39	C	I	18.95	0.96	2.38	A	I	19.25	0.80	0.81	1.28	B	EL	49.35	
		T7B	40.000		1.32	52.80	1.40	0.81	2.58	B	EL	49.35	0.96	2.24	A	I	19.25	0.80	0.81	1.32	B	EL	59.37	

LOAD FACTORS:

DESIGN LOAD RATING FACTORS	LIMIT STATE	γ_{DC}	γ_{DW}
	STRENGTH I	1.25	1.50
	SERVICE III	1.00	1.00

NOTES:

MINIMUM RATING FACTORS ARE BASED ON THE STRENGTH I AND SERVICE III LIMIT STATES.

ALLOWABLE STRESSES FOR SERVICE III LIMIT STATE ARE AS REQUIRED FOR DESIGN.

COMMENTS:

1.
2.
3.
4.

(#) CONTROLLING LOAD RATING

(1) DESIGN LOAD RATING (HL-93)
(2) DESIGN LOAD RATING (HS-20)
(3) LEGAL LOAD RATING **
** SEE CHART FOR VEHICLE TYPE

GIRDER LOCATION

I - INTERIOR GIRDER
EL - EXTERIOR LEFT GIRDER
ER - EXTERIOR RIGHT GIRDER

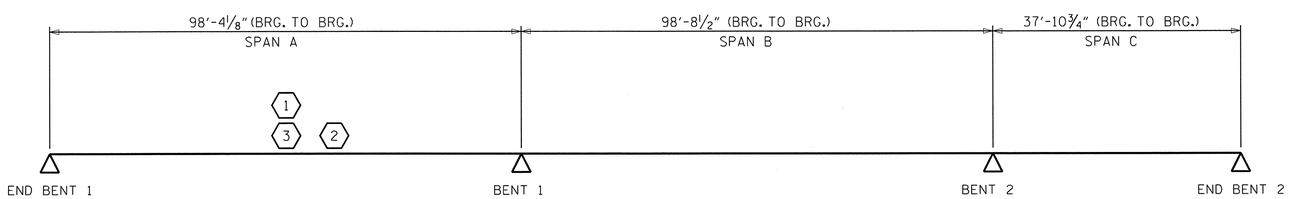

LRFR SUMMARY

PROJECT NO. R-2633BB
BRUNSWICK/NEW HANOVER COUNTY
STATION: 425+60.75 -L-
16+20.93 -EY11-

STATE OF NORTH CAROLINA
DEPARTMENT OF TRANSPORTATION
RALEIGH

STANDARD
LRFR SUMMARY FOR PRESTRESSED CONCRETE GIRDERS
LEFT LANE
(INTERSTATE TRAFFIC)

NORTH CAROLINA PROFESSIONAL SEAL 14047 ENGINEER STEPHEN D. COOK
11/16/11

THE LOUIS BERGER GROUP, Inc.
1001 Wade Avenue, Suite 400
Raleigh, NC 27605-3322

REVISIONS								
NO.	BY:	DATE:	NO.	BY:	DATE:	SHEET NO. S-542
1			3			TOTAL SHEETS 700
2			4			

STD. NO. LRFR2

ASSEMBLED BY : R. KNIGHT	DATE : JULY 2012
CHECKED BY : S. COOK	DATE : AUG 2012
DRAWN BY : MAA 1/08	REV. 11/12/08RR MAA/GM
CHECKED BY : GM/DI 2/08	REV. 10/1/11 MAA/GM

G:\OR Projects\OR1092 - NCDOT Wilm Bypass DualBridges\Structures\Bridge Site 7\R-2633BB_SD_07L_LRFR.dgn
11/16/2012 11:49:38 AM 1092_PDF_full.pltcfg 1092_str.tbl

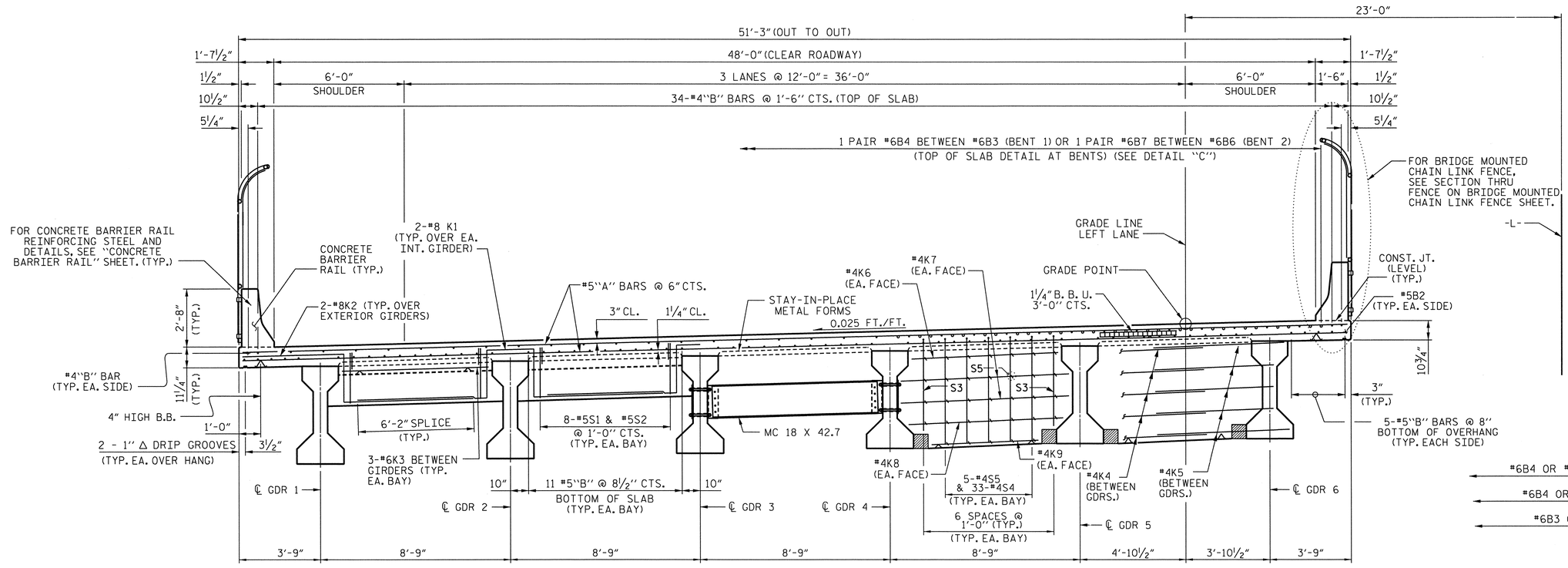

TYPICAL SECTION @ END BENT DIAPHRAGMS

TYPICAL SECTION @ INTERMEDIATE DIAPHRAGMS

(SEE PRESTRESSED CONCRETE GIRDER SHEETS FOR DETAILS OF INTERMEDIATE DIAPHRAGMS)

TYPICAL SECTION @ BENT DIAPHRAGMS

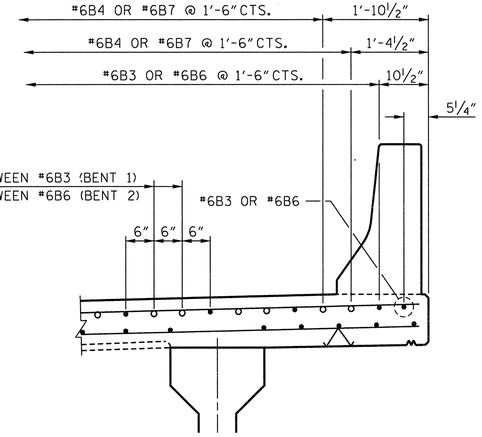

DETAIL "C"

(#6 "B" BARS AT BENTS)

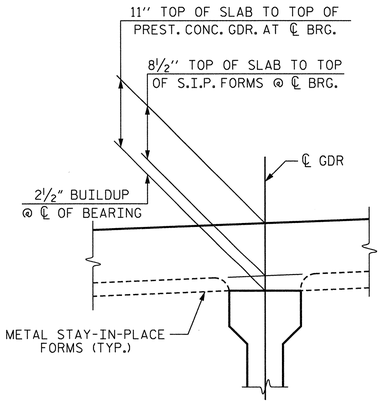

DETAIL A

NOTES

PROVIDE 1¼" HIGH BEAM BOLSTERS UPPER AT 4'-0" CTS. ATOP THE METAL STAY-IN-PLACE FORMS TO SUPPORT THE BOTTOM MAT OF 'A' BARS. WHEN USING REMOVABLE FORMS, PROVIDE CONTINUOUS HIGH CHAIRS FOR METAL DECK (C.H.C.M.) @ 4'-0" CTS. WITH A HEIGHT TO SUPPORT THE BOTTOM MAT OF 'A' BARS A CLEAR DISTANCE OF 2½" ABOVE THE TOP OF THE REMOVABLE FORM.

LONGITUDINAL STEEL MAY BE SHIFTED SLIGHTLY, AS NECESSARY, TO AVOID INTERFERENCE WITH STIRRUPS IN PRESTRESSED CONCRETE GIRDERS.

BARRIER RAIL IN EACH SPAN SHALL NOT BE CAST UNTIL ALL SLAB CONCRETE IN THAT SPAN HAS BEEN CAST AND HAS REACHED A MINIMUM COMPRESSIVE STRENGTH OF 3,000 PSI.

NO CHAMFER IS REQUIRED ON CORNERS OF GIRDER BUILDUPS.

PREVIOUSLY CAST CONCRETE IN A CONTINUOUS UNIT SHALL HAVE ATTAINED A MINIMUM COMPRESSIVE STRENGTH OF 3,000 PSI BEFORE ADDITIONAL CONCRETE IS CAST IN THE UNIT.

PROJECT NO. R-2633BB

BRUNSWICK/NEW HANOVER COUNTY

STATION: 425+60.75 -L-
16+20.93 -EY11-

SHEET 1 OF 2

STATE OF NORTH CAROLINA
DEPARTMENT OF TRANSPORTATION
RALEIGH

SUPERSTRUCTURE
TYPICAL SECTIONS
LEFT LANE

NORTH CAROLINA PROFESSIONAL SEAL 14047 ENGINEER STEPHEN D. COOK
3/26/13

THE LOUIS BERGER GROUP, Inc.
1001 Wade Avenue, Suite 400
Raleigh, NC 27605-3322

REVISIONS						SHEET NO.
NO.	BY:	DATE:	NO.	BY:	DATE:	S-543
1			3			TOTAL SHEETS
2			4			700

DRAWN BY : J. MYA DATE : JULY 2012
CHECKED BY : S. COOK DATE : AUG 2012

G:\OR Projects\OR1092 - NCDOT Wilm Bypass DualBridges\Structures\Bridge Site 7\R-2633BB_SD_07L_TYP_01.dgn
3/26/2013 2:01:30 PM 1092_PDF_full.pltcfg 1092_str.tbl

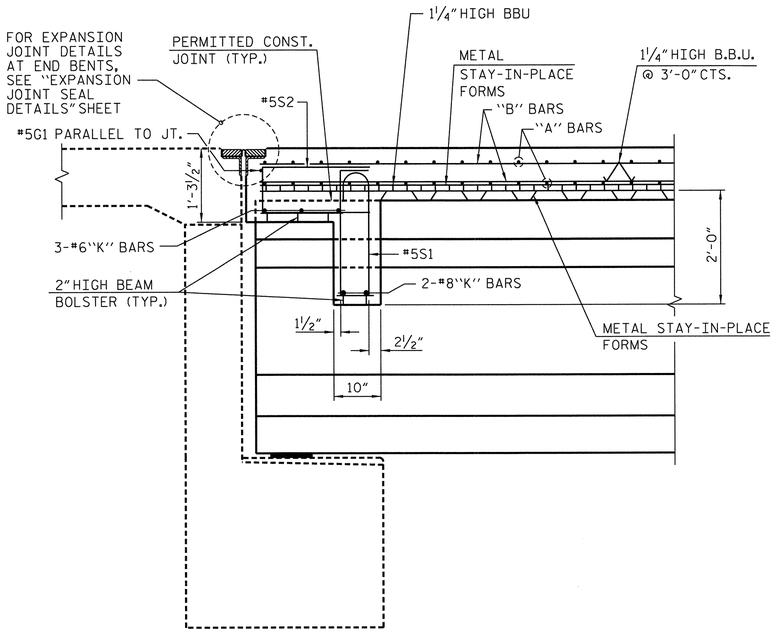

SECTION A-A

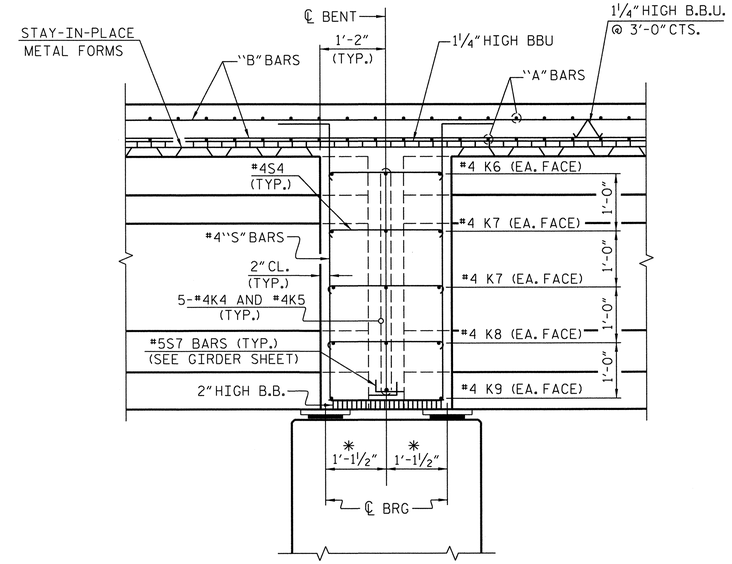

SECTION B-B

* MEASURED ALONG CENTERLINE GIRDER

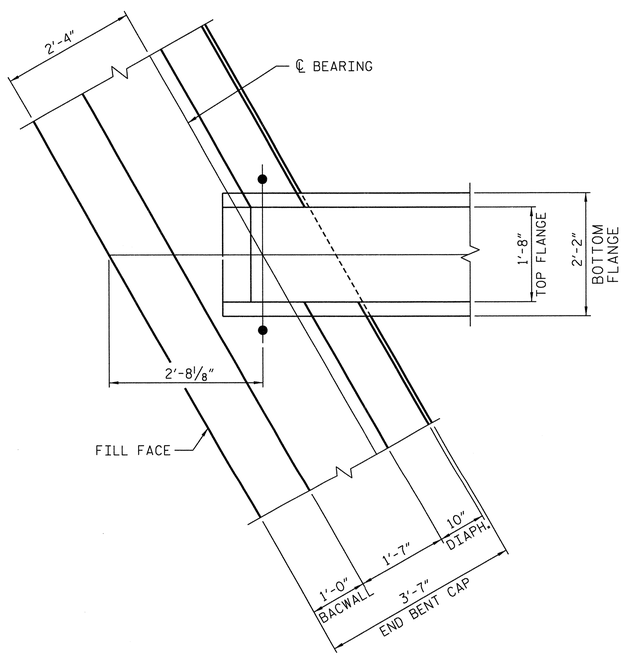

PLAN OF END BENT DIAPHRAGM

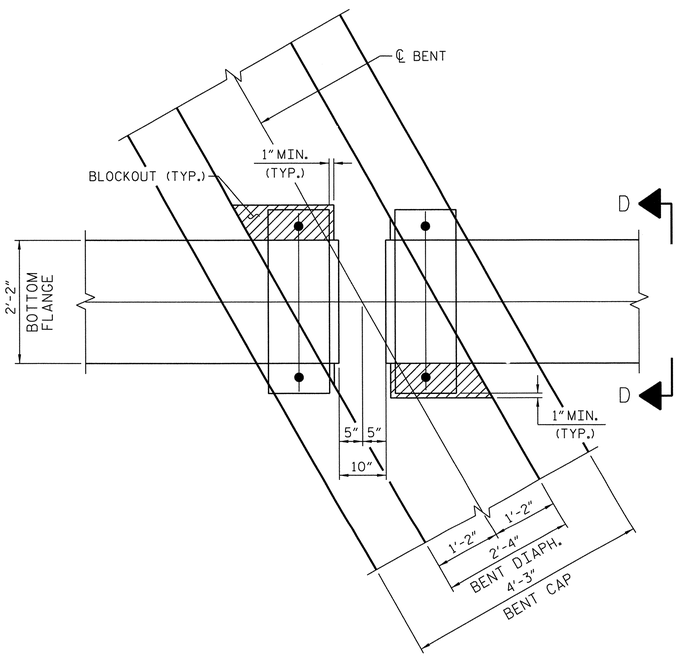

BENT DIAPHRAGM BLOCKOUT DETAIL

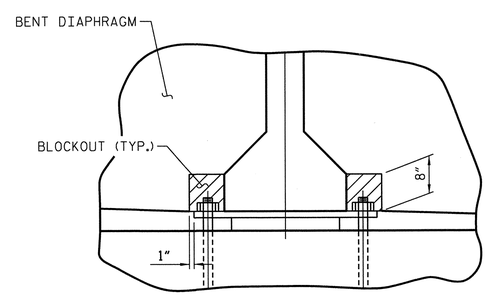

VIEW D-D

PROJECT NO. R-2633BB

BRUNSWICK/NEW HANOVER COUNTY

STATION: 425+60.75 -L-
16+20.93 -EY11-

SHEET 2 OF 2

STATE OF NORTH CAROLINA
DEPARTMENT OF TRANSPORTATION
RALEIGH

SUPERSTRUCTURE TYPICAL SECTION DETAILS - LEFT LANE

NORTH CAROLINA PROFESSIONAL SEAL 14047 ENGINEER STEPHEN D. COOK
3/26/13

THE LOUIS BERGER GROUP, Inc.
1001 Wade Avenue, Suite 400
Raleigh, NC 27605-3322

REVISIONS						
NO.	BY:	DATE:	NO.	BY:	DATE:	
1			3			
2			4			

SHEET NO. S-544

TOTAL SHEETS 700

DRAWN BY : J. MYA DATE : JULY 2012
CHECKED BY : S. COOK DATE : AUG 2012

G:\OR Projects\OR1092 - NCDOT Wilm Bypass DualBridges\Structures\Bridge Site 7\R-2633BB_SD_07L_TYP_02.dgn
3/26/2013 2:01:32 PM 1092_PDF_full.pltcfg 1092_str.tbl

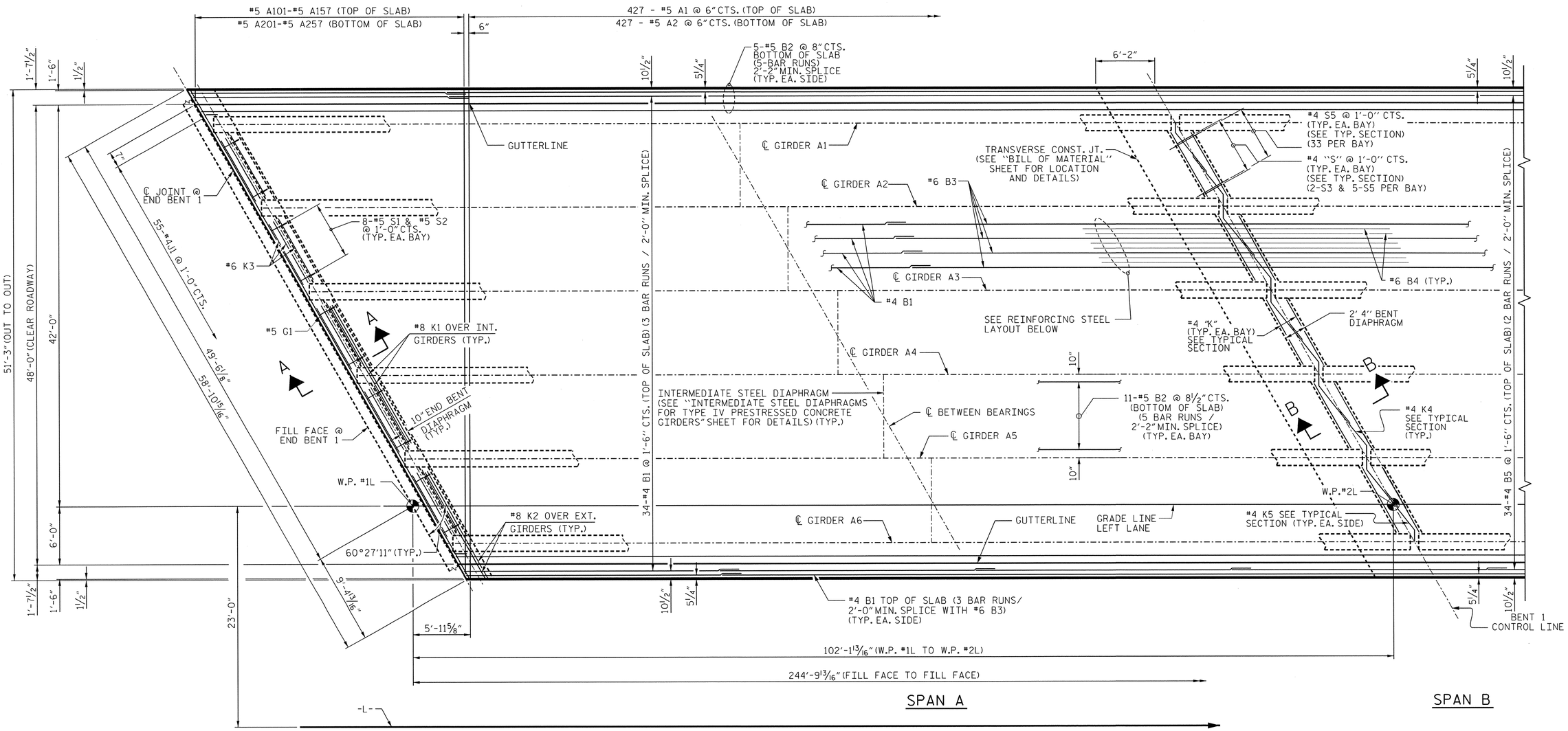

PLAN OF SPAN A & B

FOR SECTION VIEWS, SEE "TYPICAL SECTION" SHEET 7 OF 35.

FOR DETAILS OF INTERMEDIATE DIAPHRAGMS, SEE "INTERMEDIATE STEEL DIAPHRAGMS", SHEET 15 OF 35.

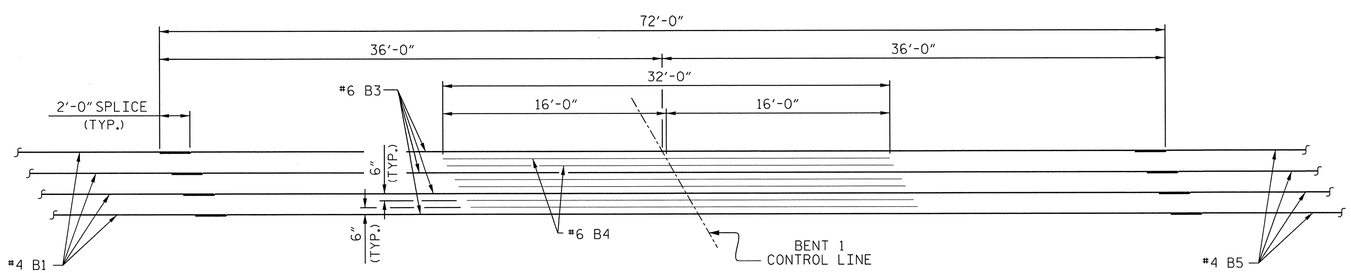

REINFORCING STEEL LAYOUT @ BENT 1

SHOWING "B" BARS IN TOP OF SLAB

PROJECT NO. R-2633BB

BRUNSWICK/NEW HANOVER COUNTY

STATION: 425+60.75 -L-
16+20.93 -EY11-

SHEET 1 OF 2

STATE OF NORTH CAROLINA
DEPARTMENT OF TRANSPORTATION
RALEIGH

SUPERSTRUCTURE PLAN OF SPAN A & B LEFT LANE

NORTH CAROLINA PROFESSIONAL SEAL 14047 ENGINEER STEPHEN D. COOK 11/16/12

THE LOUIS BERGER GROUP, Inc.
1001 Wade Avenue, Suite 400
Raleigh, NC 27605-3322

REVISIONS									SHEET NO.
NO.	BY:	DATE:	NO.	BY:	DATE:				S-545
1			3						TOTAL SHEETS
2			4						700

DRAWN BY : J. MYA DATE : JULY 2012
CHECKED BY : S. COOK DATE : AUG 2012

G:\OR Projects\OR1092 - NCDOT Wilm Bypass DualBridges\Structures\Bridge Site 7\R-2633BB_SD_07L_POSAB.dgn
11/16/2012 11:49:47 AM 1092_PDF_full.pltcfg 1092_str.tbl

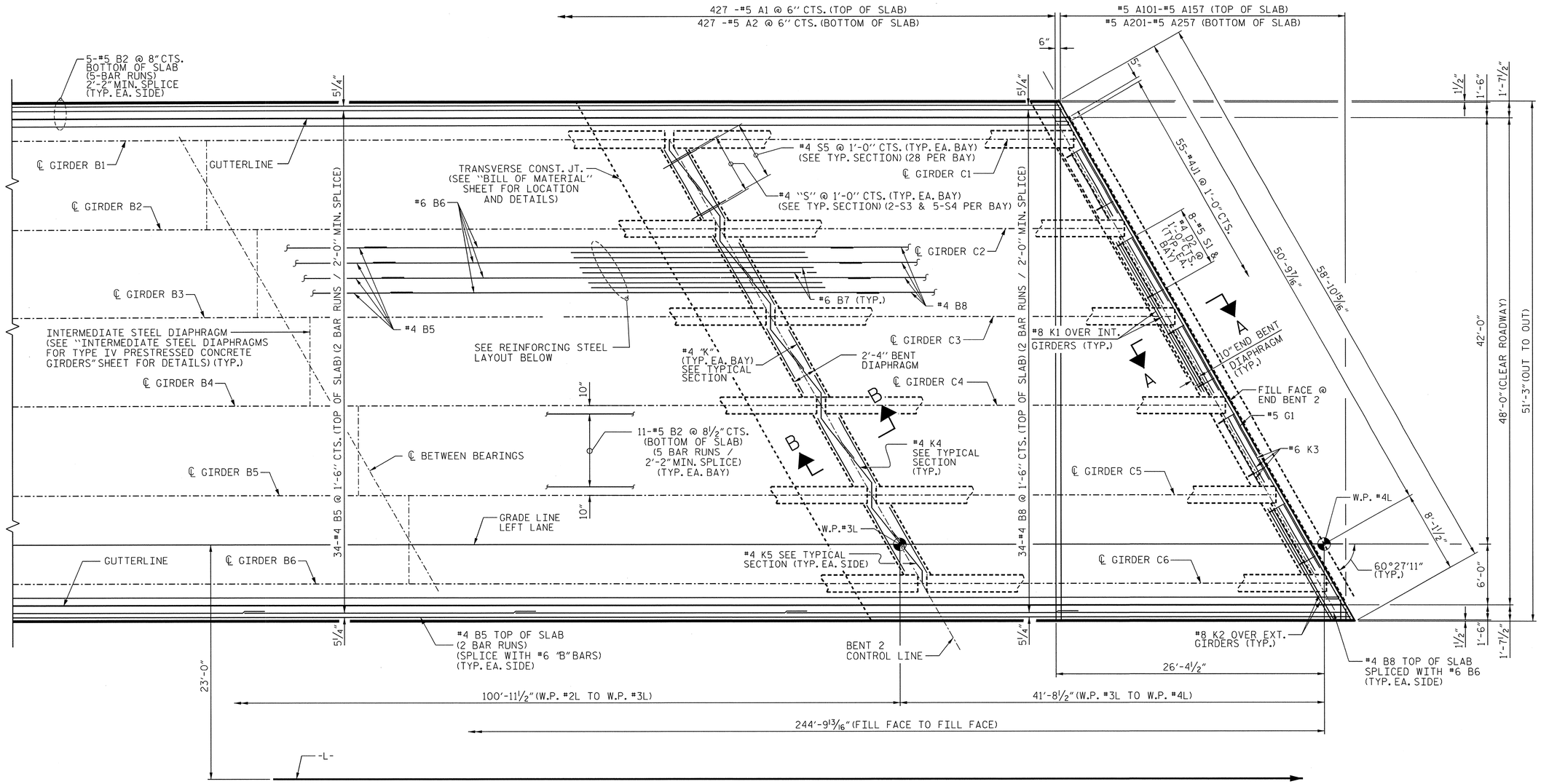

PLAN OF SPAN B & C

FOR SECTION VIEWS, SEE "TYPICAL SECTION" SHEET 7 OF 35

FOR DETAILS OF INTERMEDIATE DIAPHRAGMS, SEE INTERMEDIATE STEEL DIAPHRAGMS" SHEET 15 OF 35.

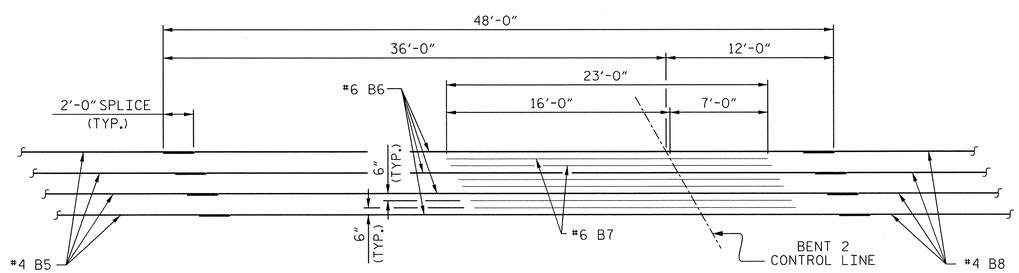

REINFORCING STEEL LAYOUT @ BENT 2

SHOWING "B" BARS IN TOP OF SLAB

PROJECT NO. R-2633BB

BRUNSWICK/NEW HANOVER COUNTY

STATION: 425+60.75 -L-
16+20.93 -EY11-

SHEET 2 OF 2

STATE OF NORTH CAROLINA
DEPARTMENT OF TRANSPORTATION
RALEIGH

SUPERSTRUCTURE
PLAN OF SPAN B & C
LEFT LANE

NORTH CAROLINA PROFESSIONAL SEAL 14047 ENGINEER STEPHEN D. COOK
11/16/12

THE LOUIS BERGER GROUP, Inc.
1001 Wade Avenue, Suite 400
Raleigh, NC 27605-3322

REVISIONS								SHEET NO.
NO.	BY:	DATE:	NO.	BY:	DATE:			S-5A6
1			3					TOTAL SHEETS
2			4					700

DRAWN BY : J. MYA DATE : JULY 2012
CHECKED BY : S. COOK DATE : AUG 2012

G:\OR Projects\OR1092 - NCDOT Wilm Bypass DualBridges\Structures\Bridge Site 7\R-2633BB_SD_07L_POSBC.dgn
11/16/2012 11:49:49 AM 1092_PDF_full.pltcfg 1092_str.tbl

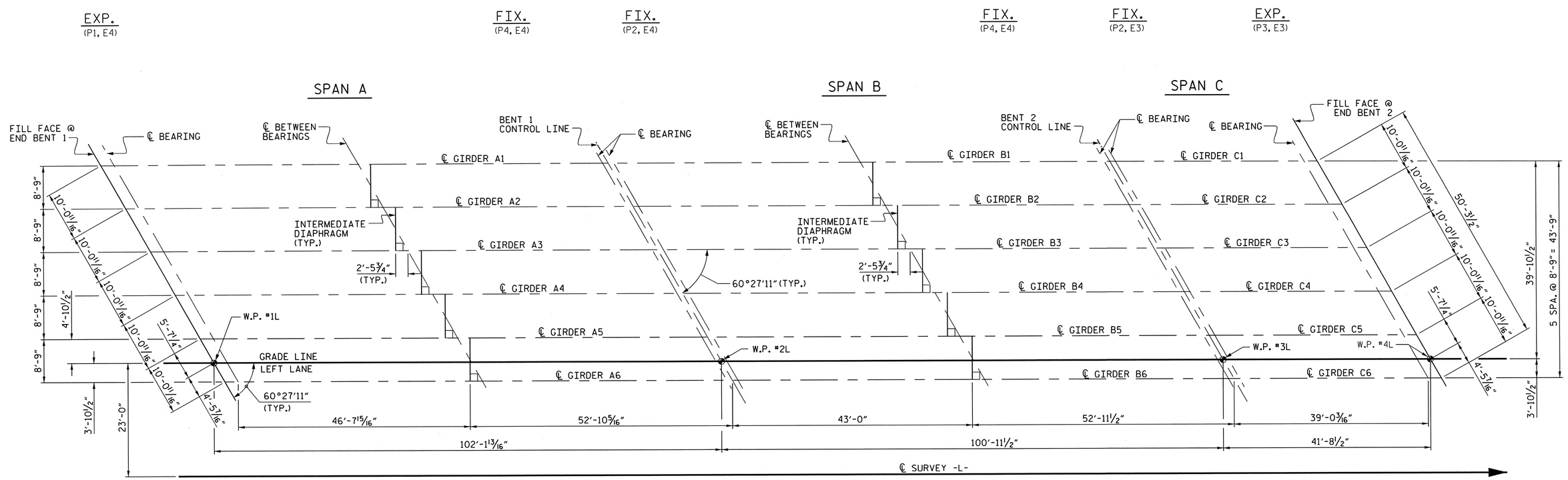

FRAMING PLAN

PROJECT NO. R-2633BB
BRUNSWICK/NEW HANOVER COUNTY
STATION: 425+60.75 -L-
16+20.93 -EY11-

STATE OF NORTH CAROLINA
DEPARTMENT OF TRANSPORTATION
RALEIGH

SUPERSTRUCTURE FRAMING PLAN LEFT LANE

NORTH CAROLINA PROFESSIONAL SEAL 14047 ENGINEER STEPHEN D. COOK
11/16/12

THE LOUIS BERGER GROUP, Inc.
1001 Wade Avenue, Suite 400
Raleigh, NC 27605-3322

REVISIONS						
NO.	BY:	DATE:	NO.	BY:	DATE:	
1			3			
2			4			

SHEET NO. S-547
TOTAL SHEETS 700

DRAWN BY : J. MYA DATE : JULY 2012
CHECKED BY : S. COOK DATE : AUG 2012

G:\OR Projects\OR1092 - NCDOT Wilm Bypass DualBridges\Structures\Bridge Site 7\R-2633BB_SD_07L_FRM.dgn
11/16/2012 11:49:52 AM 1092_PDF_full.pltcfg 1092_str.tbl

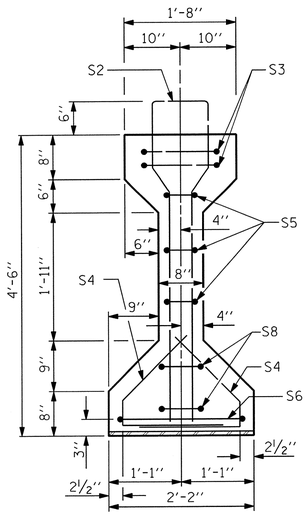

SECTION A-A

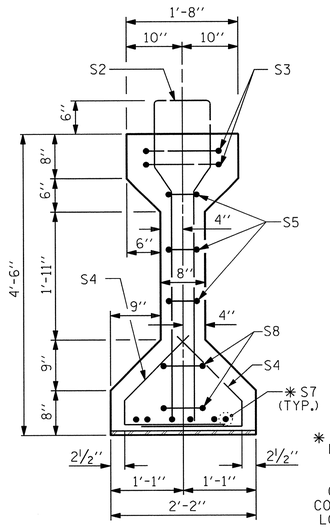

SECTION B-B

* FOR S7 BARS, SEE DETAIL "A" OF PRESTRESSED CONCRETE GIRDER CONTINUOUS FOR LIVE LOAD DETAILS SHEET

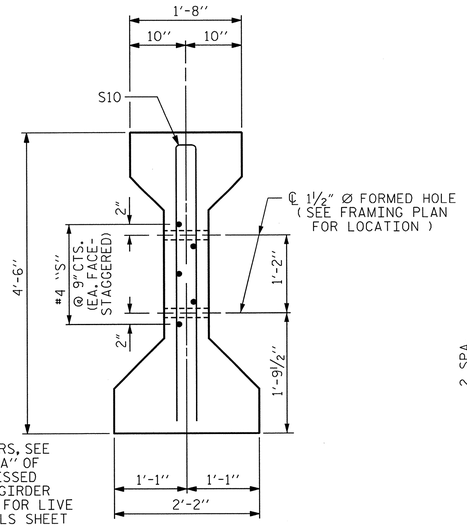

SECTION C-C

(S1 BARS NOT SHOWN)

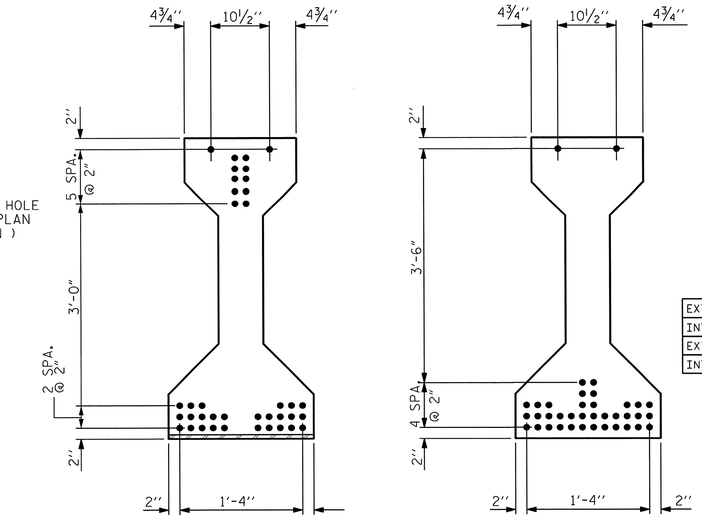

AT END OF GIRDER

AT ℄ OF GIRDER

0.6" Ø LOW RELAXATION STRAND LAYOUT

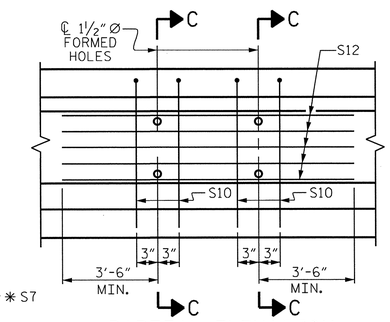

PARTIAL ELEVATION

SHOWING INTERMEDIATE DIAPHRAGM REINFORCING STEEL FOR GIRDER Nos. G2 THRU G5

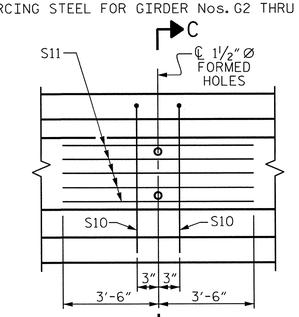

PARTIAL ELEVATION

SHOWING INTERMEDIATE DIAPHRAGM REINFORCING STEEL FOR GIRDERS A1 & A6

0.6" Ø L. R. GRADE 270 STRANDS

AREA (SQUARE INCHES)	ULTIMATE STRENGTH (LBS. PER STRAND)	APPLIED PRESTRESS (LBS. PER STRAND)
0.217	58,600	43,950

REINFORCING STEEL FOR ONE GIRDER

	BAR	NUMBER	SIZE	TYPE	LENGTH	WEIGHT
	S1	80	#4	1	10'-8"	570
	S2	10	#6	1	10'-8"	160
	S3	2	#4	2	9'-1"	12
	S4	64	#4	3	3'-5"	146
	S5	6	#4	2	8'-5"	34
	S6	1	#4	2	9'-11"	7
	* S7	6	#5	STR	3'-8"	23
	S8	4	#4	2	8'-7"	23
	S9	1	#3	STR	5'-7"	1
EXTERIOR GDR.	S10	2	#5	2	8'-8"	18
INTERIOR GDR.	S10	4	#5	2	8'-8"	36
EXTERIOR GDR.	S11	5	#4	STR	7'-0"	23
INTERIOR GDR.	S12	5	#4	STR	12'-0"	40
	S13	2	#6	4	5'-3"	16
	S14	2	#6	4	5'-5"	16

* NOTE: S7 BARS SHALL BE BENT BEFORE SHIPMENT. HEAT BENDING SHALL NOT BE ALLOWED.

BAR TYPES

ALL BAR DIMENSIONS ARE OUT-TO-OUT

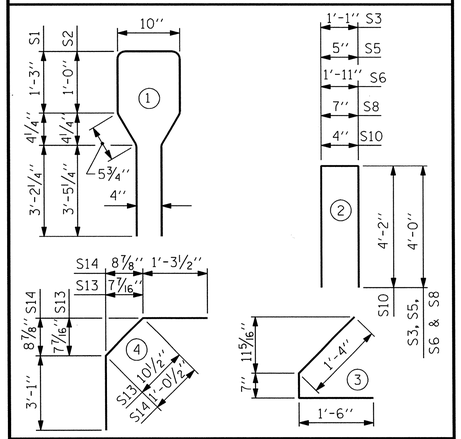

QUANTITIES FOR ONE GIRDER

	REINFORCING STEEL LB.	8000 PSI CONCRETE C.Y.	0.6" Ø L.R. STRANDS No.
EXTERIOR GIRDER	1049	20.2	38
INTERIOR GIRDER	1084	20.2	38

GIRDERS REQUIRED

NUMBER	LENGTH	TOTAL LENGTH
6	99'-9⅛"	598'-6¾"

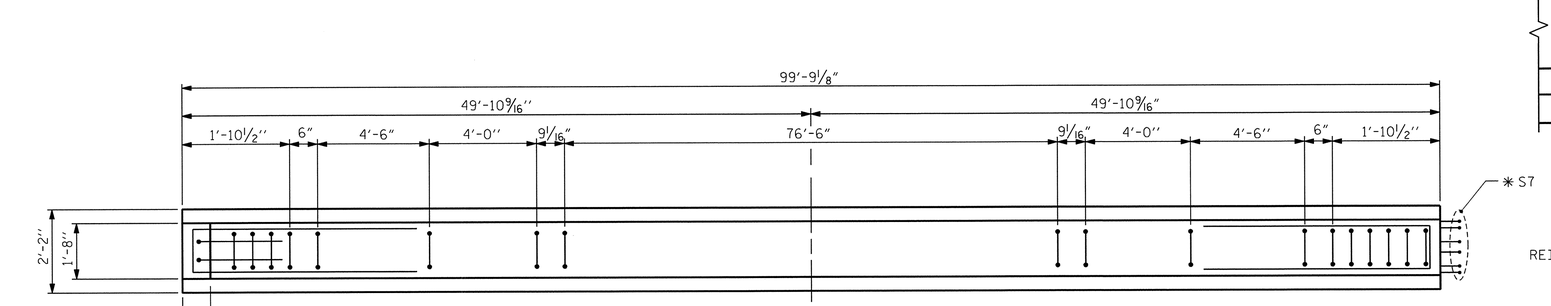

PLAN OF GIRDER

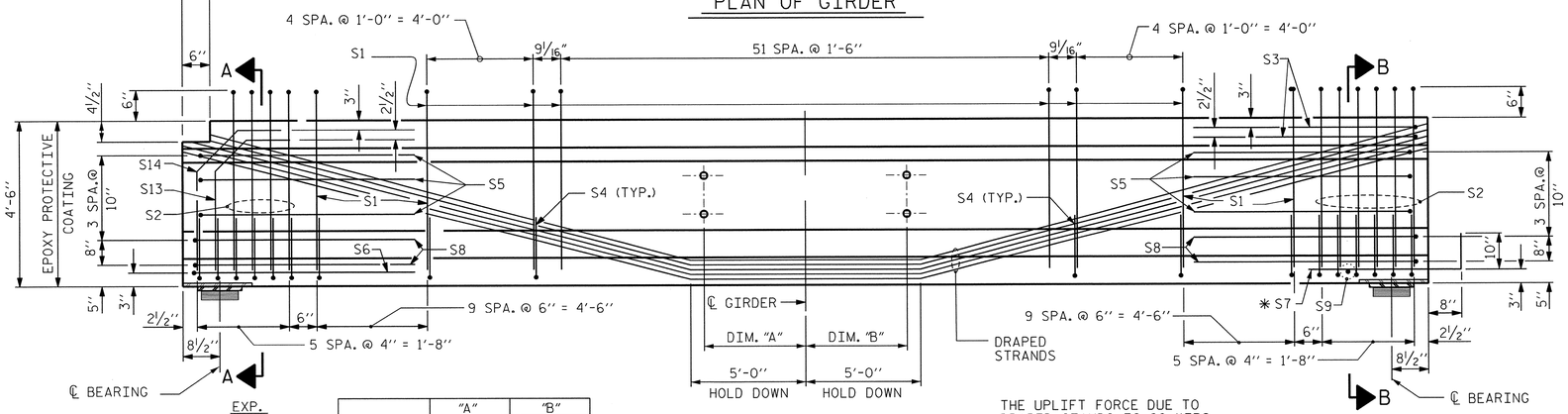

	"A"	"B"
GDR. A1	-	2'-5¾"
GDR. A2-A5	2'-5¾"	2'-5¾"
GDR. A6	2'-5¾"	-

THE UPLIFT FORCE DUE TO DRAPED STANDS IS 26 KIPS

ELEVATION OF GIRDER

(SEE PARTIAL ELEVATION FOR ADDITIONAL "S" BARS)

PROJECT NO. R-2633BB

BRUNSWICK/NEW HANOVER COUNTY

STATION: 425+60.75 -L-
16+20.93 -EY11-

STATE OF NORTH CAROLINA
DEPARTMENT OF TRANSPORTATION
RALEIGH

STANDARD

AASHTO TYPE IV PRESTRESSED CONCRETE GIRDER CONTINUOUS FOR LIVE LOAD SPAN A - LEFT LANE

NORTH CAROLINA PROFESSIONAL SEAL 14047 ENGINEER STEPHEN D. COOK
11/16/12

ASSEMBLED BY : J. MYA DATE : JUNE 2012
CHECKED BY : S. COOK DATE : AUG 2012

DRAWN BY : ELR 8/91
CHECKED BY : GRP 8/91

REV. 10/17/00R RWW/LES
REV. 5/1/06R TLA/GM
REV. 10/1/11 MAA/GM

THE LOUIS BERGER GROUP, Inc.
1001 Wade Avenue, Suite 400
Raleigh, NC 27605-3322

REVISIONS								SHEET NO.
NO.	BY:	DATE:	NO.	BY:	DATE:			S-548
1			3					TOTAL SHEETS
2			4					700

STD. NO. PCG6

G:\OR Projects\OR1092 - NCDOT Wilm Bypass DualBridges\Structures\Bridge Site 7\R-2633BB_SD_07L_G01.dgn
11/16/2012 11:49:55 AM 1092_PDF_full.pltcfg 1092_str.tbl

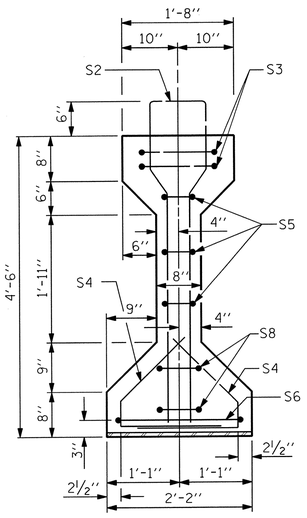

SECTION A-A

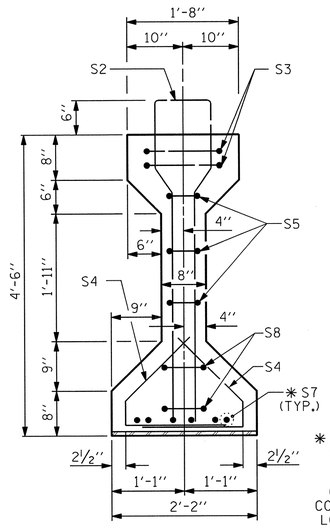

SECTION B-B

* FOR S7 BARS, SEE DETAIL "A" OF PRESTRESSED CONCRETE GIRDER CONTINUOUS FOR LIVE LOAD DETAILS SHEET

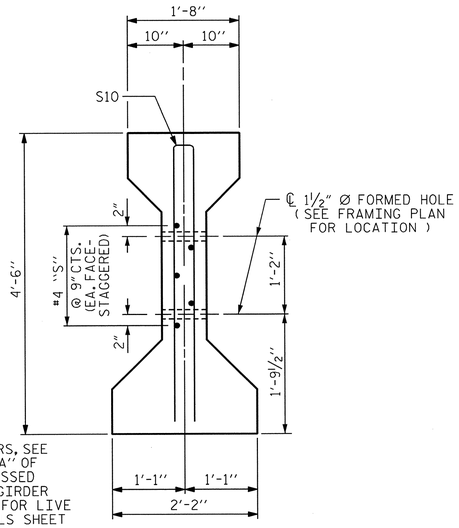

SECTION C-C

(S1 BARS NOT SHOWN)

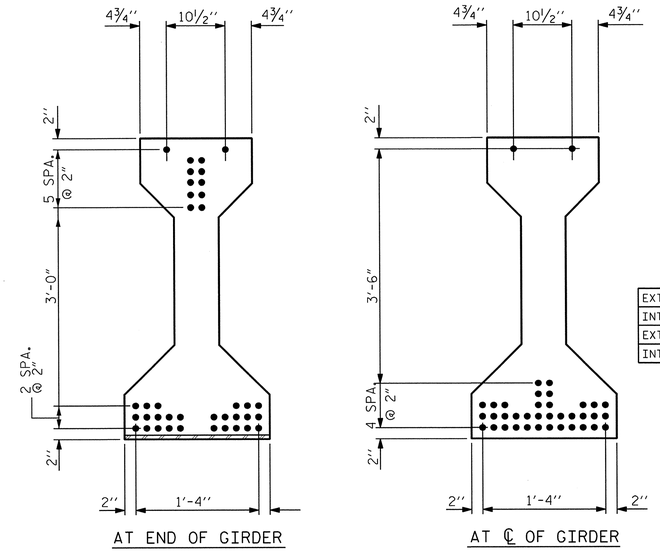

AT END OF GIRDER

AT ℄ OF GIRDER

0.6" Ø LOW RELAXATION STRAND LAYOUT

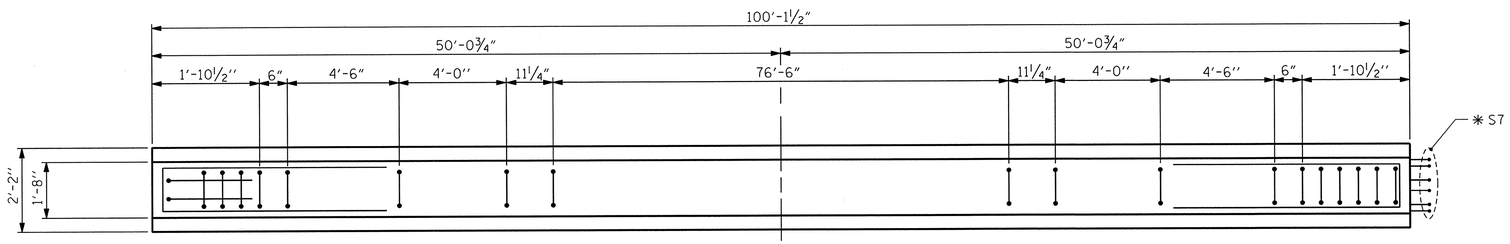

PLAN OF GIRDER

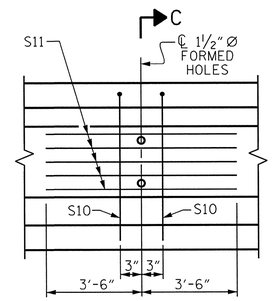

PARTIAL ELEVATION

SHOWING INTERMEDIATE DIAPHRAGM REINFORCING STEEL FOR GIRDERS B1 & B6

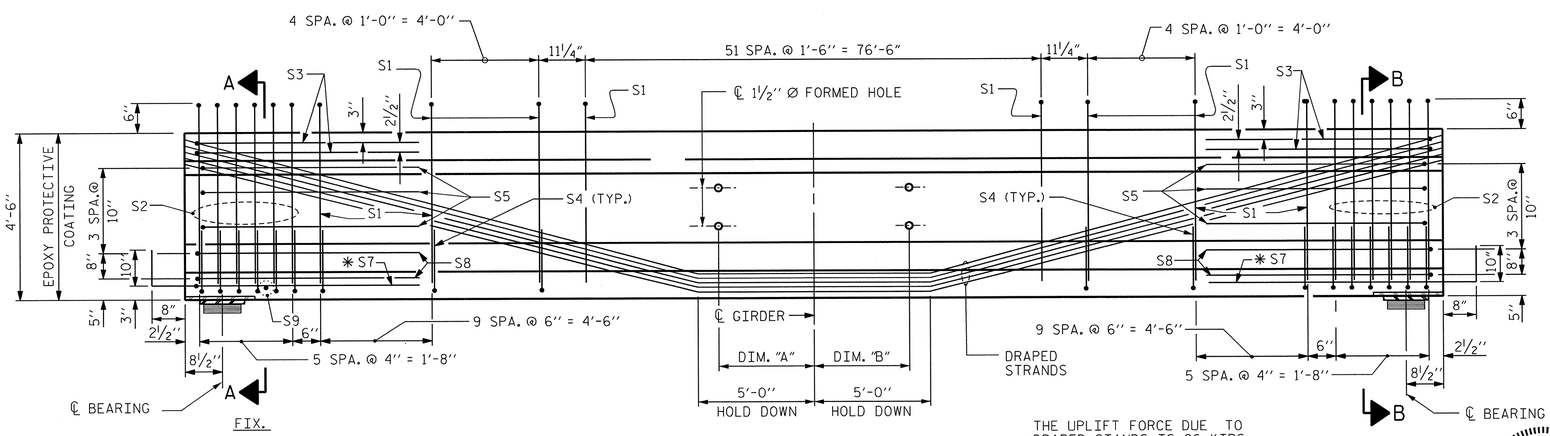

ELEVATION OF GIRDER

(SEE PARTIAL ELEVATION FOR ADDITIONAL "S" BARS)

	"A"	"B"
GDR. B1	-	2'-5¾"
GDR. B2-B5	2'-5¾"	2'-5¾"
GDR. B6	2'-5¾"	-

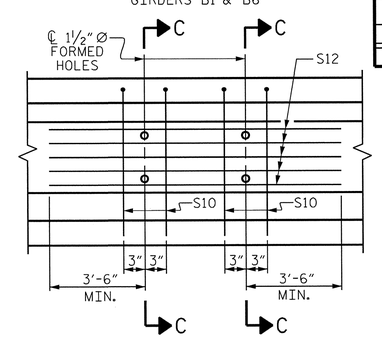

PARTIAL ELEVATION

SHOWING INTERMEDIATE DIAPHRAGM REINFORCING STEEL FOR GIRDER B2 THRU B5

0.6" Ø L. R. GRADE 270 STRANDS

AREA (SQUARE INCHES)	ULTIMATE STRENGTH (LBS. PER STRAND)	APPLIED PRESTRESS (LBS. PER STRAND)
0.217	58,600	43,950

REINFORCING STEEL FOR ONE GIRDER

	BAR	NUMBER	SIZE	TYPE	LENGTH	WEIGHT
	S1	80	#4	1	10'-8"	570
	S2	12	#6	1	10'-8"	192
	S3	4	#4	2	9'-1"	24
	S4	64	#4	3	3'-5"	146
	S5	6	#4	2	8'-5"	34
	* S7	12	#5	STR	3'-8"	46
	S8	4	#4	2	8'-7"	23
	S9	2	#3	STR	5'-7"	2
EXTERIOR GDR.	S10	2	#5	2	8'-8"	18
INTERIOR GDR.	S10	4	#5	2	8'-8"	36
EXTERIOR GDR.	S11	5	#4	STR	7'-0"	23
INTERIOR GDR.	S12	5	#4	STR	12'-0"	40

* NOTE: S7 BARS SHALL BE BENT BEFORE SHIPMENT. HEAT BENDING SHALL NOT BE ALLOWED.

BAR TYPES

ALL BAR DIMENSIONS ARE OUT-TO-OUT

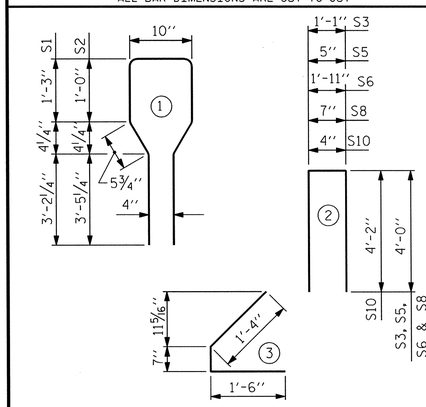

QUANTITIES FOR ONE GIRDER

	REINFORCING STEEL LB.	8000 PSI CONCRETE C.Y.	0.6" Ø L.R. STRANDS No.
EXTERIOR GIRDER	1078	20.2	38
INTERIOR GIRDER	1113	20.2	38

GIRDERS REQUIRED

NUMBER	LENGTH	TOTAL LENGTH
6	100'-1½"	600'-9"

PROJECT NO. R-2633BB

BRUNSWICK/NEW HANOVER COUNTY

STATION: 425+60.75 -L-
16+20.93 -EY11-

STATE OF NORTH CAROLINA
DEPARTMENT OF TRANSPORTATION
RALEIGH

STANDARD

AASHTO TYPE IV
PRESTRESSED CONCRETE GIRDER
CONTINUOUS FOR LIVE LOAD
SPAN B - LEFT LANE

ASSEMBLED BY : J. MYA DATE : JULY 2012
CHECKED BY : S. COOK DATE : AUG 2012

DRAWN BY : ELR 8/91
CHECKED BY : GRP 8/91

REV. 10/17/00R RWW/LES
REV. 5/1/06R TLA/GM
REV. 10/1/11 MAA/GM

THE LOUIS BERGER GROUP, Inc.
1001 Wade Avenue, Suite 400
Raleigh, NC 27605-3322

NORTH CAROLINA PROFESSIONAL SEAL 14047 ENGINEER STEPHEN D. COOK

REVISIONS								SHEET NO.
NO.	BY:	DATE:	NO.	BY:	DATE:			S-549
1			3					TOTAL SHEETS
2			4					700

STD. NO. PCG6

G:\OR Projects\OR1092 - NCDOT Wilm Bypass DualBridges\Structures\Bridge Site 7\R-2633BB_SD_07L_G02.dgn
11/16/2012 11:49:57 AM 1092_PDF_full.pltcfg 1092_str.tbl

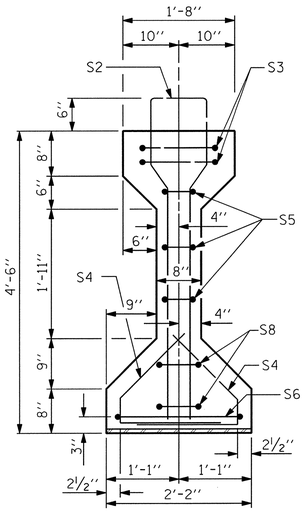

SECTION A-A

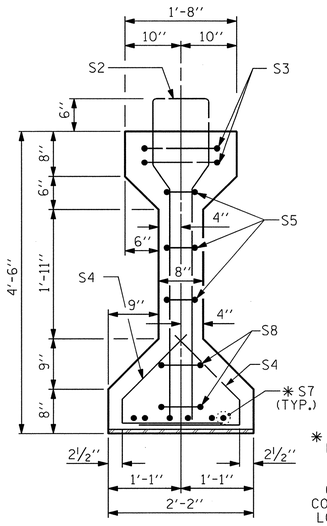

SECTION B-B

✱ FOR S7 BARS, SEE DETAIL "A" OF PRESTRESSED CONCRETE GIRDER CONTINUOUS FOR LIVE LOAD DETAILS SHEET

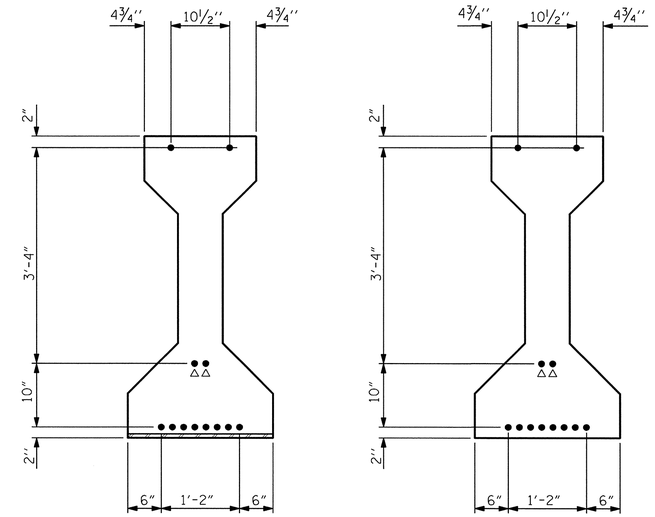

△△ STRANDS SHALL BE STRESSED TO 4500 LBS. (MAX.)

AT END OF GIRDER

AT ℄ OF GIRDER

0.6" Ø LOW RELAXATION STRAND LAYOUT

0.6" Ø L. R. GRADE 270 STRANDS

AREA (SQUARE INCHES)	ULTIMATE STRENGTH (LBS. PER STRAND)	APPLIED PRESTRESS (LBS. PER STRAND)
0.217	58,600	43,950

REINFORCING STEEL FOR ONE GIRDER

BAR	NUMBER	SIZE	TYPE	LENGTH	WEIGHT
S1	40	#4	1	10'-8"	285
S2	10	#6	1	10'-8"	160
S3	2	#4	2	9'-1"	12
S4	64	#4	3	3'-5"	146
S5	6	#4	2	8'-5"	34
S6	1	#4	2	9'-11"	7
✱ S7	6	#5	STR	3'-8"	23
S8	4	#4	2	8'-7"	23
S9	1	#3	STR	5'-7"	1
S12	2	#6	4	5'-3"	16
S13	2	#6	4	5'-5"	16

✱ NOTE: S7 BARS SHALL BE BENT BEFORE SHIPMENT. HEAT BENDING SHALL NOT BE ALLOWED.

BAR TYPES

ALL BAR DIMENSIONS ARE OUT-TO-OUT

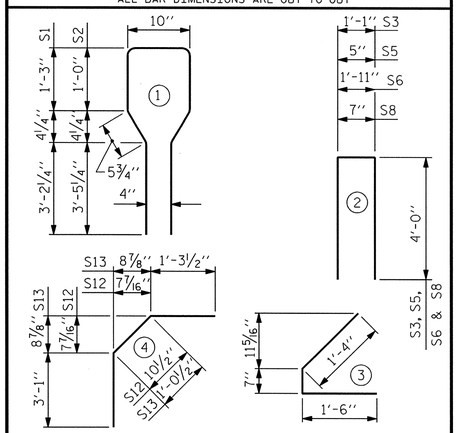

QUANTITIES FOR ONE GIRDER

REINFORCING STEEL LB.	8000 PSI CONCRETE C.Y.	0.6" Ø L.R. STRANDS No.
723	7.9	12

GIRDERS REQUIRED

NUMBER	LENGTH	TOTAL LENGTH
6	39'-3¾"	235'-10½"

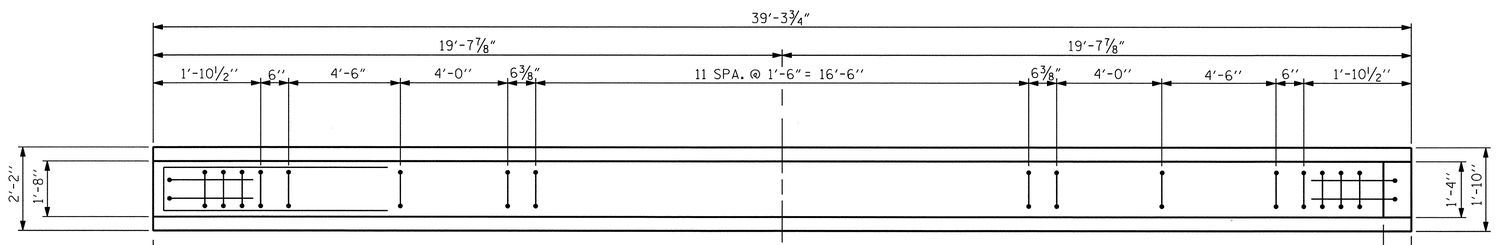

PLAN OF GIRDER

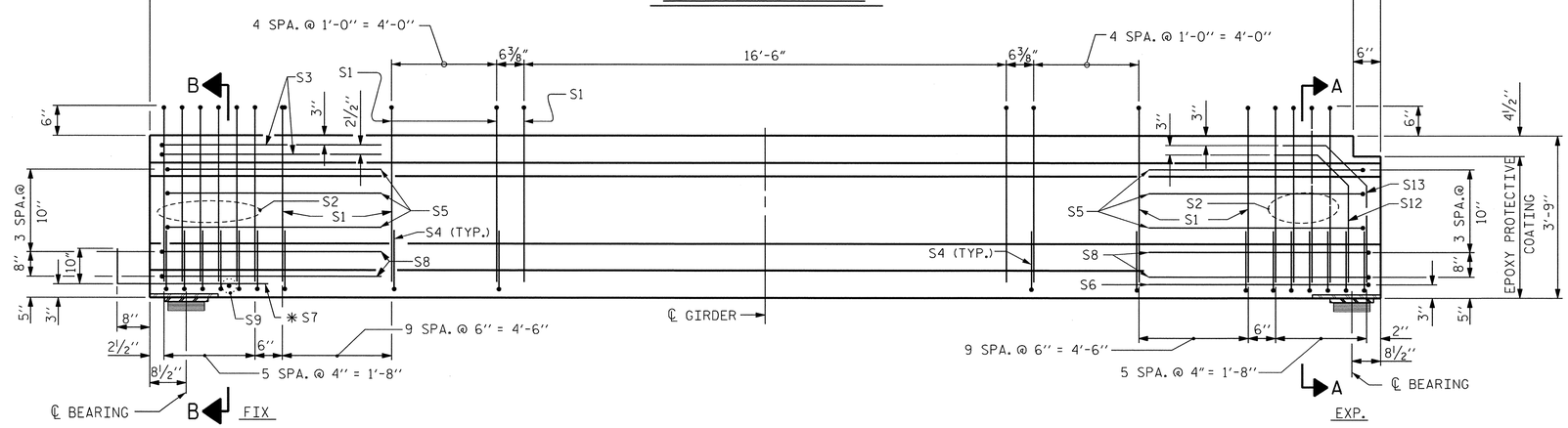

ELEVATION OF GIRDER

(SEE PARTIAL ELEVATION FOR ADDITIONAL "S" BARS)

PROJECT NO. R-2633BB

BRUNSWICK/NEW HANOVER COUNTY

STATION: 425+60.75 -L-
16+20.93 -EY11-

STATE OF NORTH CAROLINA
DEPARTMENT OF TRANSPORTATION
RALEIGH

STANDARD

AASHTO TYPE IV
PRESTRESSED CONCRETE GIRDER
CONTINUOUS FOR LIVE LOAD
SPAN C - LEFT LANE

NORTH CAROLINA PROFESSIONAL SEAL 14047 ENGINEER STEPHEN D. COOK
11/16/12

THE LOUIS BERGER GROUP, Inc.
1001 Wade Avenue, Suite 400
Raleigh, NC 27605-3322

REVISIONS								SHEET NO.
NO.	BY:	DATE:	NO.	BY:	DATE:			S-550
1			3					TOTAL SHEETS
2			4					700

ASSEMBLED BY : J. MYA	DATE : JULY 2012		
CHECKED BY : S. COOK	DATE : AUG 2012		
DRAWN BY : ELR 8/91	REV. 10/17/00R	RWW/LES	
CHECKED BY : GRP 8/91	REV. 5/1/06R	TLA/GM	
	REV. 10/1/11	MAA/GM	

STD. NO. PCG6

G:\OR Projects\OR1092 - NCDOT Wilm Bypass DualBridges\Structures\Bridge Site 7\R-2633BB_SD_07L_G03.dgn
11/16/2012
1092_str.tbl

DEAD LOAD DEFLECTION TABLE FOR GIRDERS

0.6"Ø LOW RELAXATION	SPAN A - EXTERIOR GIRDER											SPAN A - INTERIOR GIRDER										
	GIRDERS A1 & A6											GIRDERS A2 THRU A5										
TENTH POINTS	0	.1	.2	.3	.4	.5	.6	.7	.8	.9	0	0	.1	.2	.3	.4	.5	.6	.7	.8	.9	0
CAMBER (GIRDER ALONE IN PLACE)	0	0.089	0.161	0.216	0.251	0.263	0.251	0.216	0.161	0.089	0	0	0.089	0.161	0.216	0.251	0.263	0.251	0.216	0.161	0.089	0
* DEFLECTION DUE TO SUPERIMPOSED D.L.	0	0.043	0.084	0.116	0.136	0.143	0.136	0.116	0.084	0.043	0	0	0.046	0.091	0.126	0.148	0.156	0.148	0.126	0.091	0.046	0
FINAL CAMBER	0	9/16"	15/16"	1 3/16"	1 3/8"	1 7/16"	1 3/8"	1 3/16"	15/16"	9/16"	0	0	1/2"	7/8"	1 1/16"	1 1/4"	1 5/16"	1 1/4"	1 1/16"	13/16"	1/2"	0

DEAD LOAD DEFLECTION TABLE FOR GIRDERS

0.6"Ø LOW RELAXATION	SPAN B - EXTERIOR GIRDER											SPAN B - INTERIOR GIRDER										
	GIRDERS B1 & B6											GIRDERS B2 THRU B5										
TENTH POINTS	0	.1	.2	.3	.4	.5	.6	.7	.8	.9	0	0	.1	.2	.3	.4	.5	.6	.7	.8	.9	0
CAMBER (GIRDER ALONE IN PLACE)	0	0.089	0.162	0.216	0.251	0.264	0.251	0.216	0.162	0.089	0	0	0.089	0.162	0.216	0.251	0.264	0.251	0.216	0.162	0.089	0
* DEFLECTION DUE TO SUPERIMPOSED D.L.	0	0.046	0.089	0.123	0.144	0.152	0.144	0.123	0.089	0.046	0	0	0.047	0.093	0.128	0.150	0.158	0.150	0.128	0.093	0.047	0
FINAL CAMBER	0	1/2"	7/8"	1 1/8"	1 5/16"	1 5/16"	1 5/16"	1 1/8"	7/8"	1/2"	0	0	1/2"	13/16"	1 1/16"	1 3/16"	1 1/4"	1 3/16"	1 1/16"	13/16"	1/2"	0

DEAD LOAD DEFLECTION TABLE FOR GIRDERS

0.6"Ø LOW RELAXATION	SPAN C - EXTERIOR GIRDER											SPAN C - INTERIOR GIRDER										
	GIRDERS C1 AND C6											GIRDERS C2 THRU C5										
TENTH POINTS	0	.1	.2	.3	.4	.5	.6	.7	.8	.9	0	0	.1	.2	.3	.4	.5	.6	.7	.8	.9	0
CAMBER (GIRDER ALONE IN PLACE)	0	0.005	0.008	0.011	0.012	0.013	0.012	0.011	0.008	0.005	0	0	0.005	0.008	0.011	0.012	0.013	0.012	0.011	0.008	0.005	0
* DEFLECTION DUE TO SUPERIMPOSED D.L.	0	0.001	0.002	0.003	0.003	0.003	0.003	0.003	0.002	0.001	0	0	0.001	0.002	0.003	0.003	0.004	0.003	0.003	0.002	0.001	0
FINAL CAMBER	0	1/16"	1/16"	1/8"	1/8"	1/8"	1/8"	1/8"	1/16"	1/16"	0	0	1/16"	1/16"	1/8"	1/8"	1/8"	1/8"	1/8"	1/16"	1/16"	0

* INCLUDES FUTURE WEARING SURFACE
ALL VALUES ARE SHOWN IN FEET (DECIMAL FORM), EXCEPT "FINAL CAMBER", WHICH IS GIVEN IN INCHES (FRACTION FORM).

NOTES

ALL PRESTRESSING STRANDS SHALL BE 7-WIRE LOW-RELAXATION GRADE 270 STRANDS AND SHALL CONFORM TO AASHTO M203 EXCEPT FOR SAMPLING REQUIREMENTS WHICH SHALL BE IN ACCORDANCE WITH THE STANDARD SPECIFICATIONS.

ALL REINFORCING STEEL SHALL BE GRADE 60.

APPLY EPOXY PROTECTIVE COATING TO END OF GIRDER SURFACES INDICATED IN ELEVATION VIEW.

EMBEDDED PLATE "B-1" SHALL BE GALVANIZED IN ACCORDANCE WITH THE STANDARD SPECIFICATIONS. BEVEL EDGES OF PLATE "B-1" TO GIVE CLOSE FIT BUT NOT TIGHT FIT TO STEEL CASTING FORM.

ANCHOR STUDS SHALL CONFORM TO AASHTO M169 GRADES 1010 THROUGH 1020 OR APPROVED EQUAL, AND SHALL MEET THE TYPE "B" REQUIREMENTS OF SUBSECTION 7.3 OF THE ANSI/AASHTO/AWS D1.5 BRIDGE WELDING CODE.

AT ENDS OF GIRDERS TO BE EMBEDDED IN CONCRETE DIAPHRAGMS OR END WALLS, PRESTRESSING STRANDS MAY EXTEND A MAXIMUM OF 2" BEYOND THE GIRDER ENDS. OTHERWISE, PRESTRESSING STRANDS SHALL BE CUT FLUSH WITH THE GIRDER ENDS.

THE TRANSFER OF LOAD FROM THE ANCHORAGES TO THE GIRDER SHALL BE DONE WHEN CONCRETE HAS REACHED A COMPRESSIVE STRENGTH OF NOT LESS THAN 6400 PSI.

DEPENDING ON THE TYPE OF SYSTEM USED TO SUPPORT THE DECK SLAB FORMS, PRESET ANCHORS MAY BE NECESSARY IN THE PRESTRESSED CONCRETE GIRDER.

THE TOP SURFACE OF THE GIRDER, EXCLUDING THE OUTSIDE 4", SHALL BE RAKED TO A DEPTH OF 1/4".

WHEN DRAPED STRANDS ARE DETAILED, THE LONGITUDINAL LOCATION OF THE HOLD DOWN DEVICES SHALL BE WITHIN 6" OF THE LOCATION SHOWN AND THE CENTER OF GRAVITY OF THE GROUP OF DRAPED STRANDS SHALL BE LOCATED WITHIN 1/2" OF THE THEORETICAL LOCATION SHOWN.

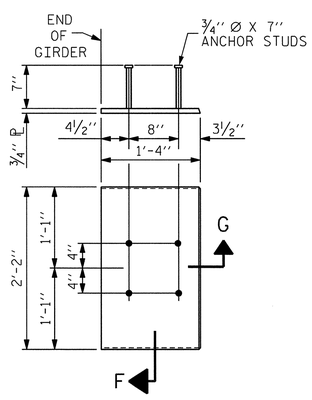

EMBEDDED PLATE "B-1" DETAILS
(2 REQ'D PER GIRDER)

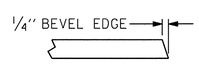

SECTION "G"

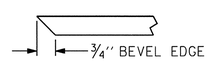

SECTION "F"
(SEE NOTES)

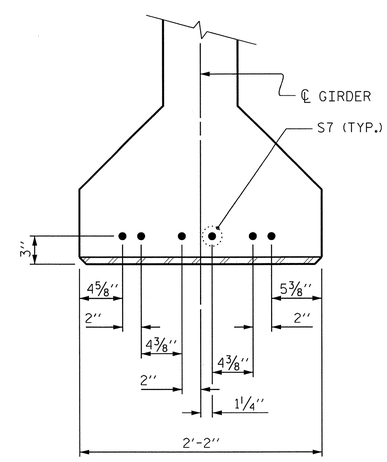

DETAIL "A"

PROJECT NO. R-2633BB
BRUNSWICK/NEW HANOVER COUNTY
STATION: 425+60.75 -L-
16+20.93 -EY11-

STATE OF NORTH CAROLINA
DEPARTMENT OF TRANSPORTATION
RALEIGH

STANDARD
PRESTRESSED CONCRETE GIRDER
CONTINUOUS FOR LIVE LOAD
DETAILS
LEFT LANE

NORTH CAROLINA PROFESSIONAL SEAL 14047 ENGINEER STEPHEN D. COOK
11/16/12

THE LOUIS BERGER GROUP, Inc.
1001 Wade Avenue, Suite 400
Raleigh, NC 27605-3322

REVISIONS						SHEET NO.
NO.	BY:	DATE:	NO.	BY:	DATE:	S-551
1			3			TOTAL SHEETS
2			4			700

ASSEMBLED BY : J. MYA	DATE : JULY 2012
CHECKED BY : S. COOK	DATE : AUG 2012
DRAWN BY : ELR 11/91	REV. 7/10/01RR LES/RDR
CHECKED BY : GRP 11/91	REV. 5/1/06 TLA/GM
	REV. 10/1/11 MAA/GM

STD. NO. PCG9

G:\OR Projects\OR1092 - NCDOT Wilm Bypass DualBridges\Structures\Bridge Site 7\R-2633BB_SD_07L_G04.dgn
11/16/2012 11:50:03 AM 1092_PDF_full.pltcfg 1092_str.tbl

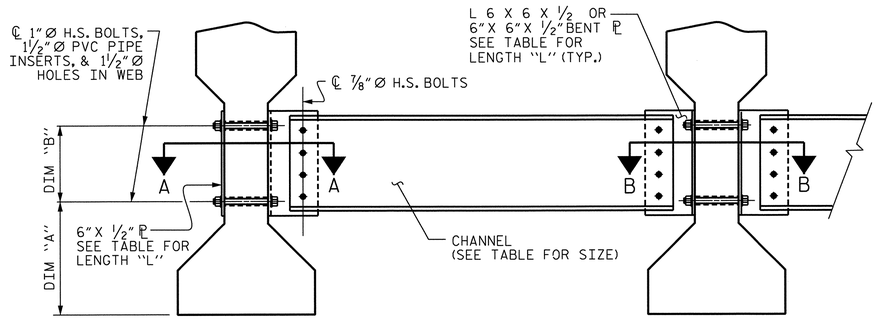

EXTERIOR GIRDER

INTERIOR GIRDER

PART SECTION AT INTERMEDIATE DIAPHRAGM

(TYPE III OR TYPE IV GIRDER SHOWN)

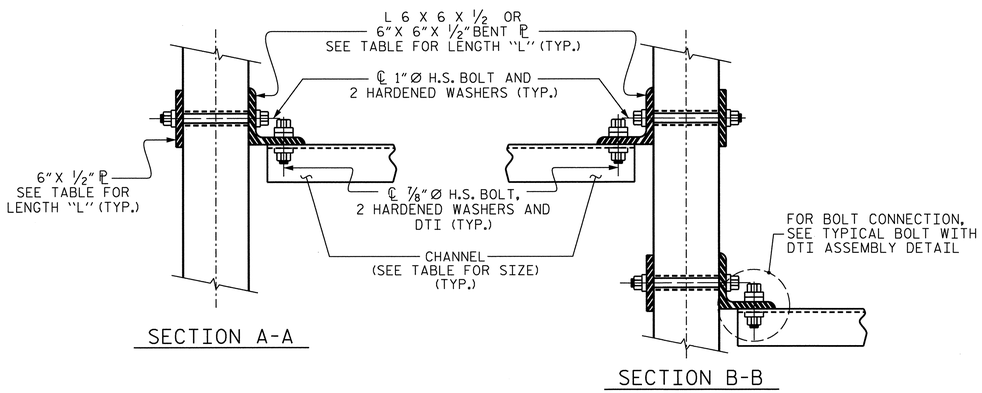

SECTION A-A

SECTION B-B

CONNECTION DETAILS

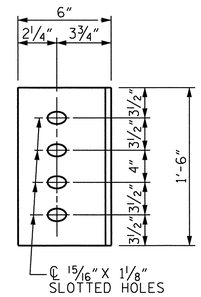

DIAPHRAGM FACE

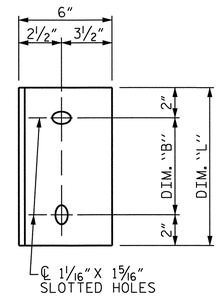

WEB FACE

CONNECTOR PLATE DETAILS

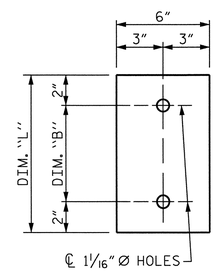

PLATE DETAILS

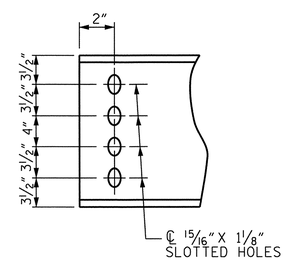

CHANNEL END

STRUCTURAL STEEL NOTES

ALL INTERMEDIATE DIAPHRAGM STEEL AND CONNECTOR PLATES SHALL BE AASHTO M270 GRADE 50 OR APPROVED EQUAL.

TENSION ON THE ASTM A325 BOLTS THROUGH THE ANGLE MEMBER SHALL BE CALIBRATED USING DIRECT TENSION INDICATOR WASHERS IN ACCORDANCE WITH THE STANDARD SPECIFICATIONS.

TENSION ON THE ASTM A449 BOLTS THROUGH THE GIRDER WEB SHALL BE SNUG TIGHTENED FOLLOWED BY AN ADDITIONAL ¼ TURN.

THE PLATES. BENT PLATES. AND ANGLES SHALL BE GALVANIZED OR MET ALLIZED IN ACCORDANCE WITH THE STANDARD SPECIFICATIONS . FOR THERMAL SPRAYED COATINGS (METALLIZATION). SEE SPECIAL PROVISIONS.

FOR METALLIZATION, APPLY AN 8 MIL THICK 99.99 PERCENT ZINC (W-Zn-II) THERMAL SPRAYED COATING WITH A 0.5 MIL THICK SEAL COAT TO ALL STEEL DIAPHRAGM SURFACES IN ACCORDANCE WITH THE THERMAL SPRAYED COATINGS SPECIAL PROVISION AND SECTION 442 OF THE STANDARD SPECIFICATIONS.

GALVANIZE THE HIGH STRENGTH BOLTS, NUTS, WASHERS AND DIRECT TENSION INDICATORS IN ACCORDANCE WITH THE STANDARD SPECIFICATIONS.

USE AN ASTM F436 HARDENED WASHER WITH STANDARD AND SLOTTED HOLES UNDER EACH BOLT HEAD AND NUT.

FOR BOLTS THROUGH THE GIRDER WEB, PROVIDE SUFFICIENT LENGTH OF THREADS ON ALL BOLTS TO ACCOMMODATE WASHERS AND THE THICKNESS OF CONNECTING MEMBER PLUS AT LEAST ¼" PROJECTION BEYOND THE NUT.

INTERMEDIATE DIAPHRAGM ASSEMBLY SHALL COMPLY WITH SECTION 1072 OF THE STANDARD SPECIFICATIONS.

SUBMIT TWO SETS OF WORKING DRAWINGS FOR THE INTERMEDIATE DIAPHRAGM ASSEMBLY FOR REVIEW, COMMENTS AND ACCEPTANCE. AFTER REVIEW, COMMENTS, AND ACCEPTANCE, SUBMIT SEVEN SETS FOR DISTRIBUTION.

IN THE EXTERIOR BAYS, PLACE TEMPORARY STRUTS BETWEEN PRESTRESSED GIRDERS ADJACENT TO THE STEEL DIAPHRAGMS.STRUTS SHALL REMAIN IN PLACE 3 DAYS AFTER CONCRETE IS PLACED.

THE COST OF THE STEEL DIAPHRAGMS AND ASSEMBLIES SHALL BE INCLUDED IN THE UNIT PRICE BID FOR PRESTRESSED CONCRETE GIRDERS.

TABLE

GIRDER TYPE	CHANNEL SIZE	DIM "A"	DIM "B"	DIM "L"
IV	MC 18 x 42.7	1'-9½"	1'-2"	1'-6"

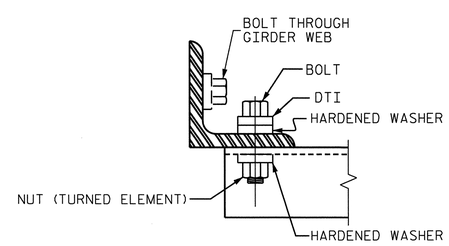

BOLT WITH DTI ASSEMBLY DETAIL

PROJECT NO. R-2633BB

BRUNSWICK/NEW HANOVER COUNTY

STATION: 425+60.75 -L-

16+20.93 -EY11-

NORTH CAROLINA PROFESSIONAL SEAL 14047 ENGINEER STEPHEN D. COOK

6/21/13

STATE OF NORTH CAROLINA
DEPARTMENT OF TRANSPORTATION
RALEIGH

SUPERSTRUCTURE
INTERMEDIATE
STEEL DIAPHRAGMS
FOR TYPE IV PRESTRESSED
CONCRETE GIRDERS
LEFT LANE

THE LOUIS BERGER GROUP, Inc.
1001 Wade Avenue, Suite 400
Raleigh, NC 27605-3322

REVISIONS						
NO.	BY:	DATE:	NO.	BY:	DATE:
1			3		
2			4		

SHEET NO. S-552

TOTAL SHEETS 700

STD. NO. PCG10

DRAWN BY : R. KNIGHT DATE : JUNE 2012

CHECKED BY : S. COOK DATE : AUG 2012

G:\OR Projects\OR1092 - NCDOT Wilm Bypass DualBridges\Structures\Bridge Site 7\R-2633BB_SD_07L_G05.dgn
6/21/2013 11:12:43 AM 1092_PDF_full.pltcfg 1092_str.tbl

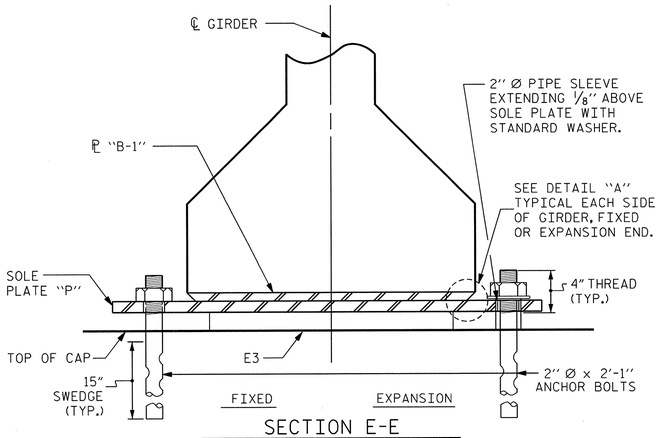

SECTION E-E

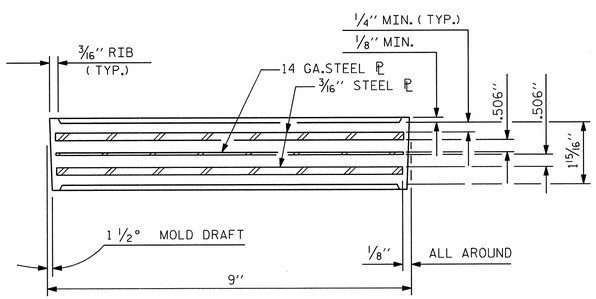

TYPICAL SECTION OF ELASTOMERIC BEARINGS

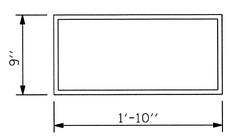

E3 (12 REQ'D)

PLAN VIEW OF ELASTOMERIC BEARING

TYPE IV

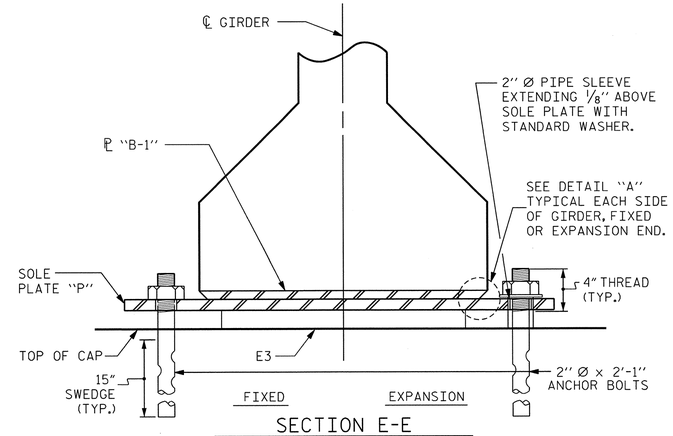

SECTION E-E

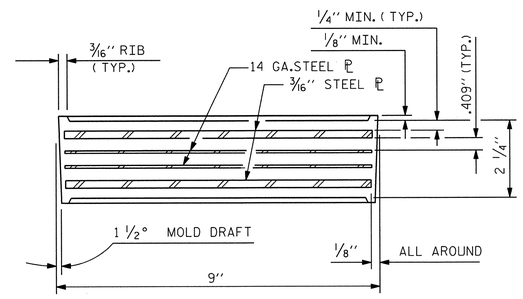

TYPICAL SECTION OF ELASTOMERIC BEARINGS

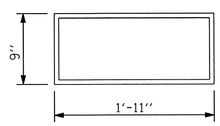

E4 (24 REQ'D)

PLAN VIEW OF ELASTOMERIC BEARING

TYPE V

NOTES

AT ALL FIXED POINTS OF SUPPORT, NUTS FOR ANCHOR BOLTS ARE TO BE TIGHTENED FINGER TIGHT AND THEN BACKED OFF 1/2 TURN. THE THREAD OF THE NUT AND BOLT SHALL THEN BE BURRED WITH A SHARP POINTED TOOL.

THE 2" Ø PIPE SLEEVE SHALL BE CUT FROM SCHEDULE 40 PVC PLASTIC PIPE. THE PVC PLASTIC PIPE SHALL MEET THE REQUIREMENTS OF ASTM D1785.

STEEL SOLE PLATES, ANCHOR BOLTS, NUTS, AND WASHERS SHALL BE GALVANIZED IN ACCORDANCE WITH THE STANDARD SPECIFICATIONS.

PRIOR TO WELDING, GRIND THE GALVANIZED SURFACE OF THE PORTION OF THE EMBEDDED PLATE AND SOLE PLATE THAT ARE TO BE WELDED. AFTER WELDING, DAMAGED GALVANIZED SURFACES SHALL BE REPAIRED IN ACCORDANCE WITH THE STANDARD SPECIFICATIONS.

WHEN WELDING THE SOLE PLATE TO THE EMBEDDED PLATE IN THE GIRDER, USE TEMPERATURE INDICATING WAX PENS, OR OTHER SUITABLE MEANS, TO ENSURE THAT THE TEMPERATURE OF THE SOLE PLATE DOES NOT EXCEED 300°F. TEMPERATURES ABOVE THIS MAY DAMAGE THE ELASTOMER.

SOLE PLATE "P", BOLTS, NUTS, WASHERS, AND PIPE SLEEVE SHALL BE INCLUDED IN THE PAY ITEM FOR PRESTRESSED CONCRETE GIRDERS.

ANCHOR BOLTS SHALL MEET THE REQUIREMENTS OF ASTM A449. NUTS SHALL MEET THE REQUIREMENTS OF AASHTO M291-DH OR AASHTO M292-2H. WASHERS SHALL MEET THE REQUIREMENTS OF AASHTO M293. NO SHOP DRAWINGS ARE REQUIRED FOR ANCHOR BOLTS, NUTS AND WASHERS. SHOP INSPECTION IS REQUIRED.

ALL SURFACES OF BEARING PLATES SHALL BE SMOOTH AND STRAIGHT.

THE ELASTOMER IN THE STEEL REINFORCED BEARINGS SHALL HAVE A SHEAR MODULUS OF 0.160 KSI, IN ACCORDANCE WITH AASHTO M251.

FOR STEEL REINFORCED ELASTOMERIC BEARINGS, SEE SPECIAL PROVISIONS.

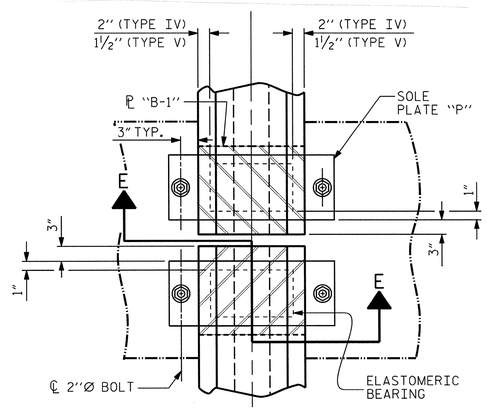

TYPICAL HALF-PLAN
(SHOWING CONTINUOUS BENT)

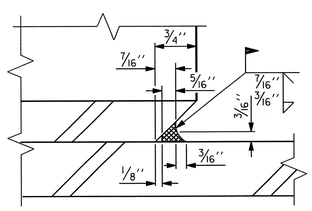

DETAIL "A"

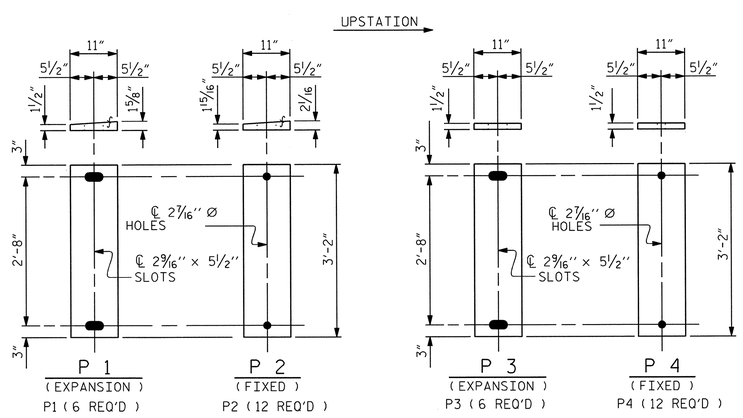

SOLE PLATE DETAILS ("P")

MAXIMUM ALLOWABLE SERVICE LOADS	
D.L.+L.L. (NO IMPACT)	
TYPE IV	200 K
TYPE V	320 K

PROJECT NO. R-2633BB

BRUNSWICK/NEW HANOVER COUNTY

STATION: 425+60.75 -L-
16+20.93 -EY11-

STATE OF NORTH CAROLINA
DEPARTMENT OF TRANSPORTATION
RALEIGH

STANDARD
ELASTOMERIC BEARING
DETAILS
PRESTRESSED CONCRETE GIRDER
SUPERSTRUCTURE
LEFT LANE

NORTH CAROLINA PROFESSIONAL SEAL 14044 ENGINEER STEPHEN D. COOK
11/16/12

THE LOUIS BERGER GROUP, Inc.
1001 Wade Avenue, Suite 400
Raleigh, NC 27605-3322

REVISIONS								SHEET NO.
NO.	BY:	DATE:	NO.	BY:	DATE:			S-553
1			3					TOTAL SHEETS
2			4					700

ASSEMBLED BY : R. KNIGHT		DATE :	
CHECKED BY : S. COOK		DATE :	
DRAWN BY : EEM	2/97	REV. 5/1/06	TLA/GM
CHECKED BY : VAP	2/97	REV. 10/1/11	MAA/GM
		REV. 10/24/12	AAC/MAA

STD. NO. EB3

G:\OR Projects\OR1092 - NCDOT Wilm Bypass DualBridges\Structures\Bridge Site 7\R-2633BB_SD_07L_BRG.dgn
11/16/2012 11:50:08 AM 1092.PDF_full.pltcfg 1092_str.tbl

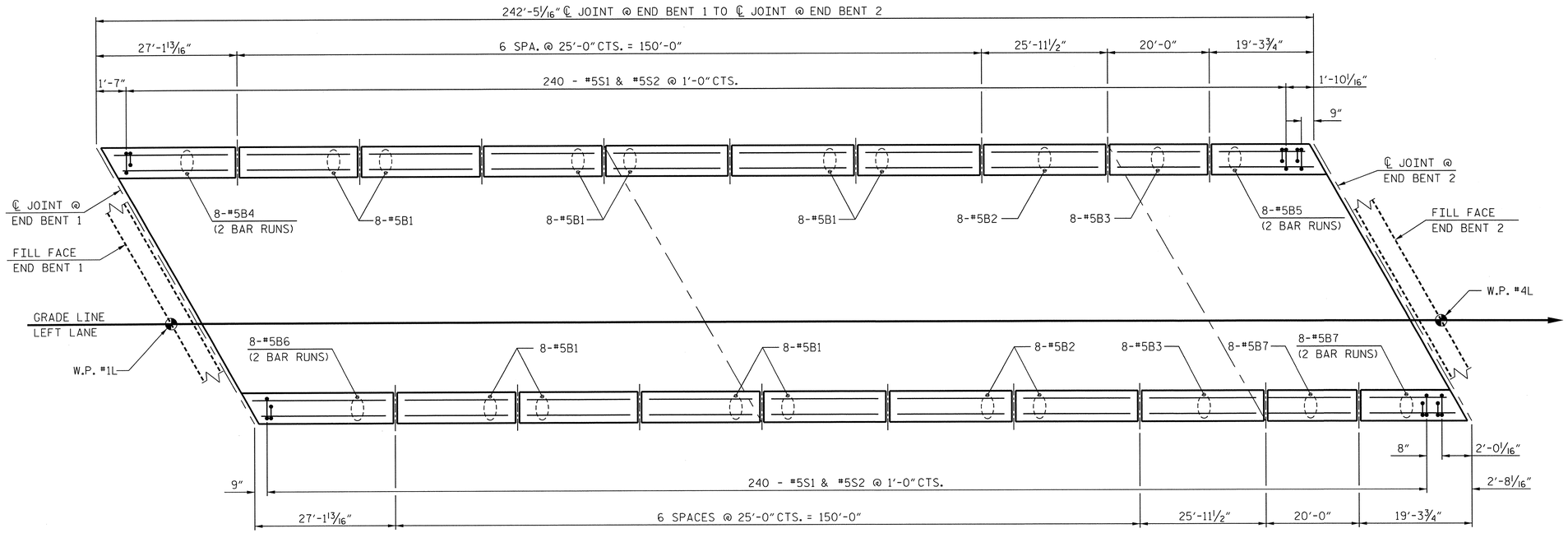

PLAN

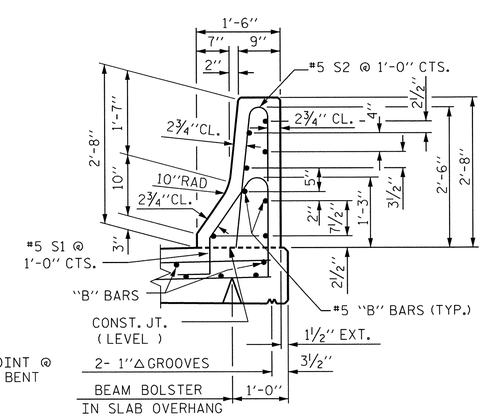

SECTION THRU RAIL

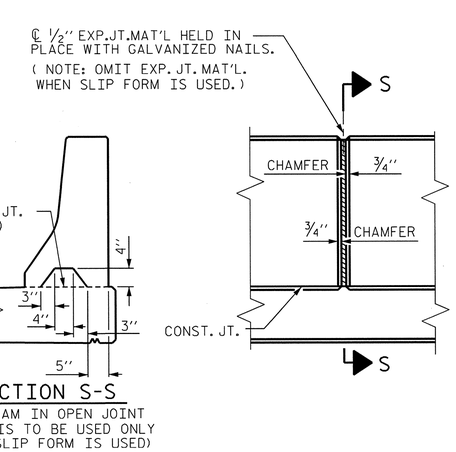

SECTION S-S

AT DAM IN OPEN JOINT (THIS IS TO BE USED ONLY WHEN SLIP FORM IS USED)

ELEVATION AT EXPANSION JOINTS

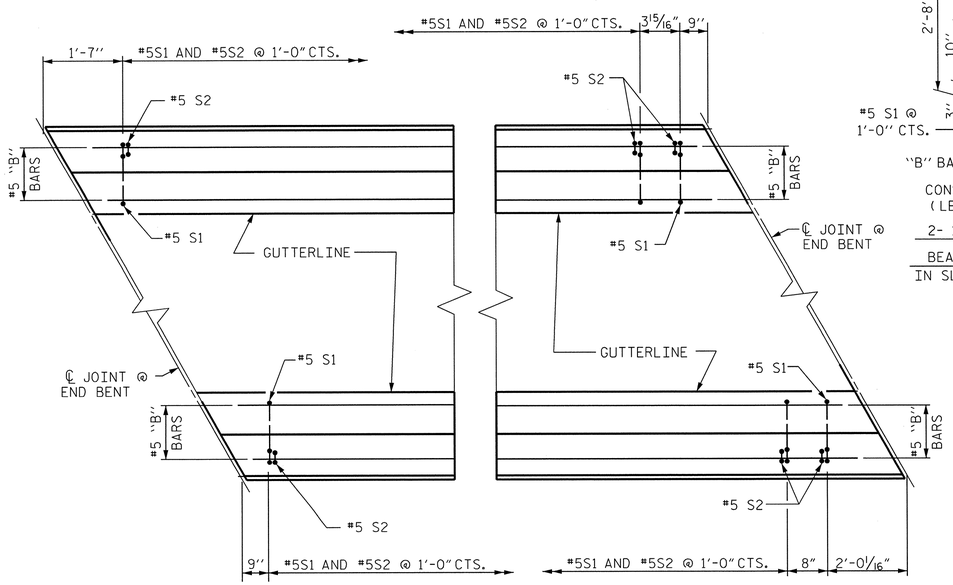

PLAN @ END BENT 1

PLAN @ END BENT 2

NOTES

THE BARRIER RAIL IN EACH CONTINUOUS UNIT SHALL NOT BE CAST UNTIL ALL SLAB CONCRETE IN THAT SPAN HAS BEEN CAST AND HAS REACHED A MINIMUM COMPRESSIVE STRENGTH OF 3,000 PSI.

ALL REINFORCING STEEL IN BARRIER RAILS SHALL BE EPOXY COATED.

GROOVED CONTRACTION JOINTS, 1/2" IN DEPTH, SHALL BE TOOLED IN ALL EXPOSED FACES OF THE BARRIER RAIL AND IN ACCORDANCE WITH ARTICLE 825-10(B) OF THE STANDARD SPECIFICATIONS. THE CONTRACTION JOINT SHALL BE LOCATED AT EACH THIRD POINT BETWEEN BARRIER RAIL EXPANSION JOINTS. ONLY ONE CONTRACTION JOINT IS REQUIRED AT MIDPOINT OF BARRIER RAIL SEGMENTS LESS THAN 20 FEET IN LENGTH AND NO CONTRACTION JOINTS ARE REQUIRED FOR THOSE SEGMENTS LESS THAN 10 FEET IN LENGTH.

BAR TYPES

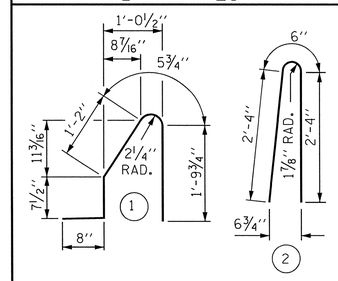

ALL BAR DIMENSIONS ARE OUT TO OUT

BILL OF MATERIAL

FOR CONCRETE BARRIER RAIL ONLY

BAR	NO.	SIZE	TYPE	LENGTH	WEIGHT
* B1	96	#5	STR	24'-7"	2,461
* B2	16	#5	STR	25'-7"	427
* B3	16	#5	STR	19'-7"	327
* B4	16	#5	STR	15'-1"	252
* B5	16	#5	STR	11'-8"	195
* B6	16	#5	STR	15'-7"	260
* B7	16	#5	STR	11'-4"	189
* S1	482	#5	1	4'-9"	2388
* S2	482	#5	2	5'-2"	2597

* EPOXY COATED	
REINFORCING STEEL	9,096 LBS.
CLASS AA CONCRETE	48.5 CU. YDS.
CONCRETE BARRIER RAIL	
SUPERSTRUCTURE	484.8 LIN. FT.
● APPROACH SLABS	41.7 LIN. FT.
TOTAL	526.5 LIN. FT.

● FOR EPOXY COATED REINFORCING STEEL AND CLASS AA CONCRETE IN THE BARRIER RAIL ON THE APPROACH SLABS, SEE "BRIDGE APPROACH SLAB DETAILS" SHEET.

BARRIER RAIL DETAILS

PROJECT NO. R-2633BB

BRUNSWICK/NEW HANOVER COUNTY

STATION: 425+60.75 -L-
16+20.93 -EY11-

STATE OF NORTH CAROLINA
DEPARTMENT OF TRANSPORTATION
RALEIGH

STANDARD
CONCRETE BARRIER RAIL
LEFT LANE

NORTH CAROLINA PROFESSIONAL SEAL 14047 ENGINEER STEPHEN D. COOK
11/16/12

THE LOUIS BERGER GROUP, Inc.
1001 Wade Avenue, Suite 400
Raleigh, NC 27605-3322

ASSEMBLED BY : R. KNIGHT	DATE : JULY 2012
CHECKED BY : S. COOK	DATE : AUG 2012
DRAWN BY : ARB 5/87	REV. 5/7/03R RWW/JTE
CHECKED BY : SJD 9/87	REV. 5/1/06R TLA/GM
	REV. 10/1/11 MAA/GM

REVISIONS								SHEET NO.
NO.	BY:	DATE:	NO.	BY:	DATE:			S-33A
1			3					TOTAL SHEETS
2			4					700

STD. NO. CBR1

G:\OR Projects\OR1092 - NCDOT Wilm Bypass DualBridges\Structures\Bridge Site 7\R-2633BB_SD_07L_CBR.dgn
11/16/2012 11:50:11 AM 1092_PDF_full.pltcfg 1092_str.tbl

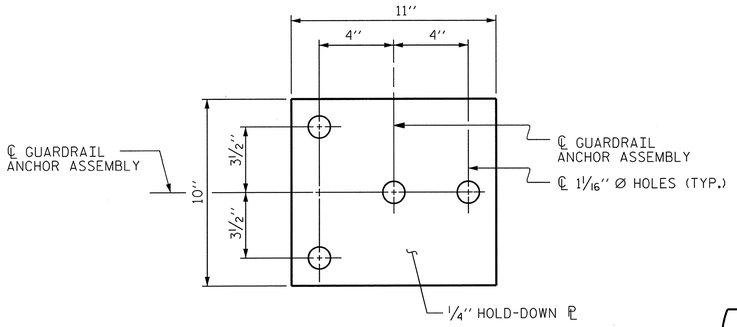

PLAN

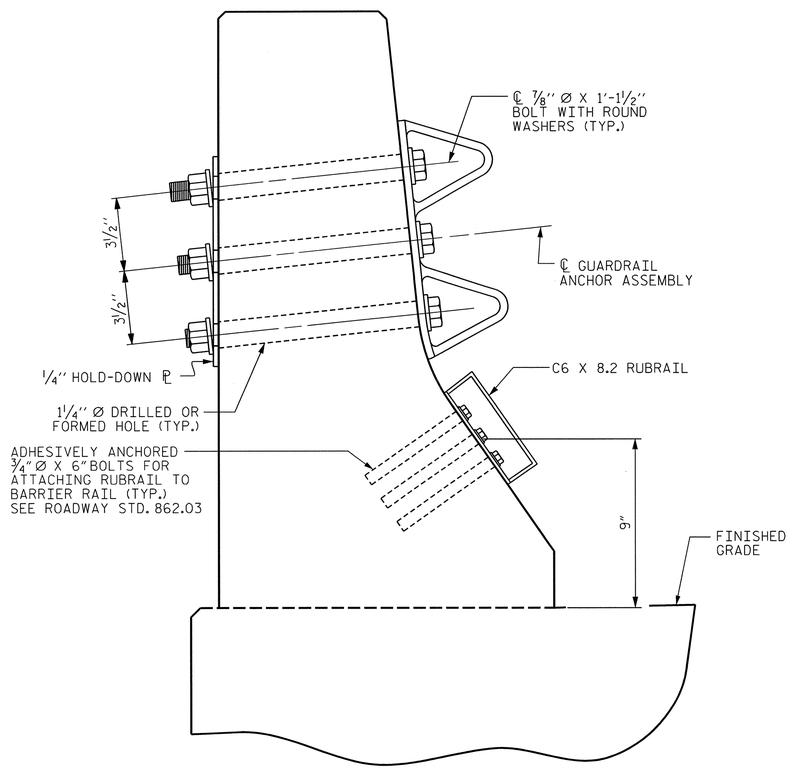

SECTION E-E

GUARDRAIL ANCHOR ASSEMBLY DETAILS

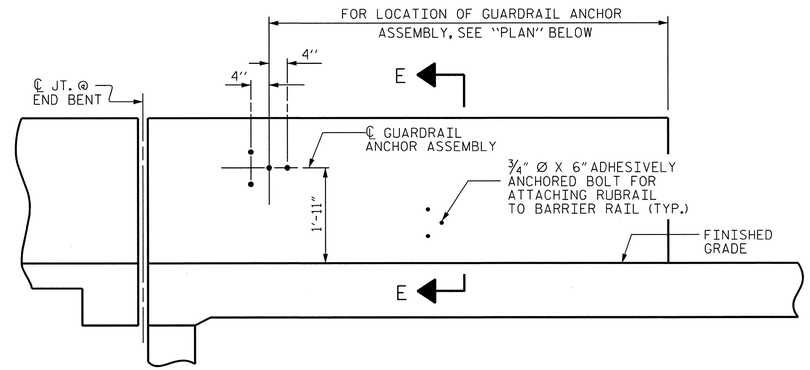

ELEVATION

FOR LOCATION OF RUBRAIL, SEE ROADWAY STD. 862.03

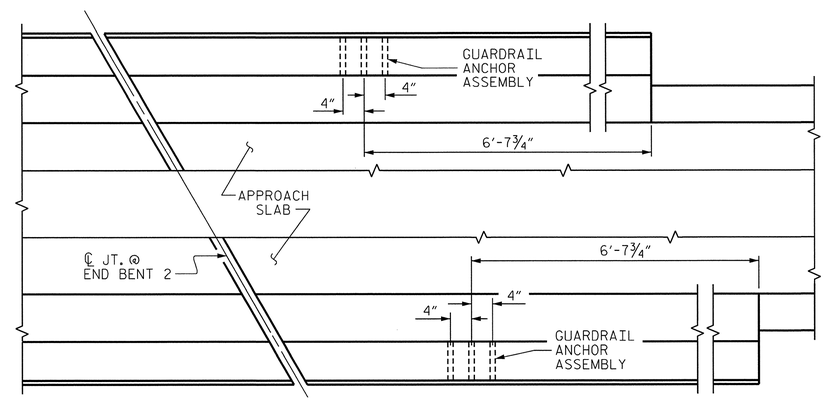

PLAN

LOCATION OF ANCHORS FOR GUARDRAIL

END BENT #2 SHOWN

NOTES

THE GUARDRAIL ANCHOR ASSEMBLY SHALL CONSIST OF A 1/4" HOLD-DOWN PLATE AND 4 - 7/8" Ø BOLTS WITH NUTS AND WASHERS, RUBRAIL, AND ADHESIVELY ANCHORED BOLTS.

THE HOLD-DOWN PLATE SHALL CONFORM TO AASHTO M270 GRADE 36. AFTER FABRICATION, THE HOLD-DOWN PLATE SHALL BE HOT-DIP GALVANIZED IN ACCORDANCE WITH AASHTO M111.

BOLTS SHALL CONFORM TO THE REQUIREMENTS OF ASTM A307 AND NUTS SHALL CONFORM TO THE REQUIREMENTS OF AASHTO M291. BOLTS, NUTS AND WASHERS SHALL BE GALVANIZED. (AT THE CONTRACTOR'S OPTION, STAINLESS STEEL BOLTS, NUTS AND WASHERS MAY BE USED AS AN ALTERNATE FOR THE 7/8" Ø GALVANIZED BOLTS, NUTS AND WASHERS. THEY SHALL CONFORM TO OR EXCEED THE MECHANICAL REQUIREMENTS OF ASTM A307. THE USE OF THIS ALTERNATE SHALL BE APPROVED BY THE ENGINEER.)

THE GUARDRAIL ANCHOR ASSEMBLY IS REQUIRED AT ALL POINTS WHERE APPROACH GUARDRAIL IS TO BE ATTACHED TO THE END OF BARRIER RAIL. FOR POINTS OF ATTACHMENT, SEE SKETCH.

AFTER INSTALLATION, THE EXPOSED THREAD OF THE BOLT SHALL BE BURRED WITH A SHARP POINTED TOOL.

THE COST OF THE GUARDRAIL ANCHOR ASSEMBLY SHALL BE INCLUDED IN THE UNIT CONTRACT PRICE BID FOR CONCRETE BARRIER RAIL.

THE 1 1/4" Ø HOLES SHALL BE FORMED OR DRILLED WITH A CORE BIT. IMPACT TOOLS WILL NOT BE PERMITTED. ANY CONCRETE DAMAGED BY THIS WORK SHALL BE REPAIRED TO THE SATISFACTION OF THE ENGINEER.

THE C6 X 8.2 RUBRAIL IS TO BE ADHESIVELY ANCHORED TO THE RAIL USING THREE 3/4" Ø X 6" BOLTS WITH WASHERS. LEVEL ONE FIELD TESTING IS REQUIRED, AND THE YIELD LOAD OF THE 3/4" Ø BOLT IS 12 KIPS. FOR ADHESIVELY ANCHORED ANCHOR BOLTS OR DOWELS, SEE STANDARD SPECIFICATIONS. SEE ROADWAY STANDARD 862.03 FOR DETAILS AND LOCATION OF THE RUBRAIL.

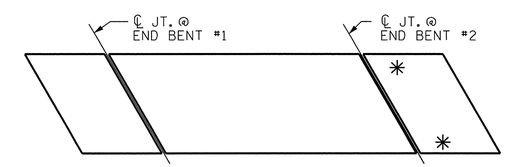

SKETCH SHOWING POINTS OF ATTACHMENTS

✳ DENOTES GUARDRAIL ANCHOR ASSEMBLY

PROJECT NO. R-2633BB

BRUNSWICK/NEW HANOVER COUNTY

STATION: 425+60.75 -L-
16+20.93 -EY11-

STATE OF NORTH CAROLINA
DEPARTMENT OF TRANSPORTATION
RALEIGH

STANDARD
GUARDRAIL ANCHORAGE FOR BARRIER RAIL LEFT LANE

NORTH CAROLINA PROFESSIONAL SEAL 14044 ENGINEER STEPHEN D. COOK
11/16/12

THE LOUIS BERGER GROUP, Inc.
1001 Wade Avenue, Suite 400
Raleigh, NC 27605-3322

REVISIONS							SHEET NO.
NO.	BY:	DATE:	NO.	BY:	DATE:		S-555
1			3				TOTAL SHEETS
2			4				700

(SHT 3a) STD. NO. GRA2

ASSEMBLED BY : R. KNIGHT	DATE : JULY 2012
CHECKED BY : S. COOK	DATE : AUG 2012
DRAWN BY : TLA 5/06	ADDED 5/1/06RR KMM/GM
CHECKED BY : GM 5/06	REV. 10/1/11 MAA/GM

G:\OR Projects\OR1092 - NCDOT Wilm Bypass DualBridges\Structures\Bridge Site 7\R-2633BB_SD_07L_GRA.dgn
11/16/2012 11:50:15 AM 1092_PDF_full.pltcfg 1092_str.tbl

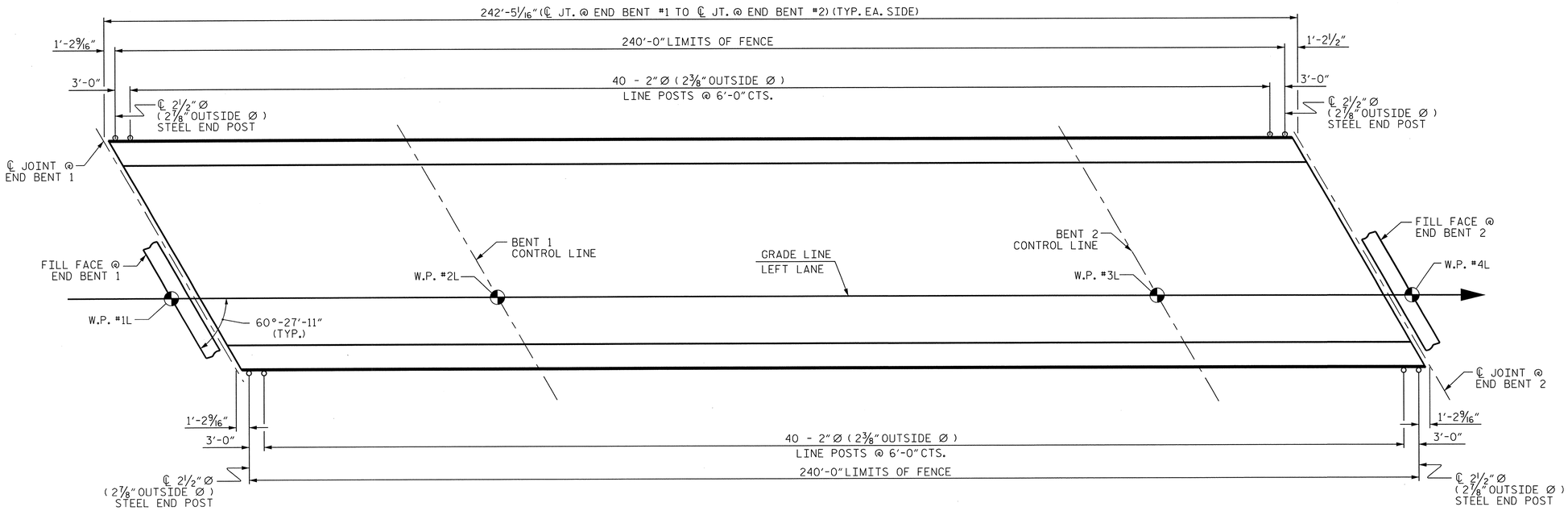

PLAN OF FENCE POST SPACING

PAY LENGTH = 480.00 FEET

NOTES:

FOR 72" CHAIN LINK FENCE, SEE SPECIAL PROVISIONS.

BOLTS SHALL CONFORM TO THE REQUIREMENTS OF ASTM A307 AND NUTS SHALL CONFORM TO THE REQUIREMENTS OF AASHTO M291. BOLTS, NUTS, AND WASHERS SHALL BE GALVANIZED. (AT THE CONTRACTOR'S OPTION, STAINLESS STEEL BOLTS, NUTS, AND WASHERS MAY BE USED AS AN ALTERNATE FOR THE 3/4" Ø GALVANIZED BOLTS, NUTS, AND WASHERS. THEY SHALL CONFORM TO OR EXCEED THE MECHANICAL REQUIREMENTS OF ASTM A307. THE USE OF THIS ALTERNATE SHALL BE APPROVED BY THE ENGINEER.)

FOR SETTING ANCHOR BOLTS, THE CONTRACTOR SHALL USE AN ADHESIVE BONDING SYSTEM. LEVEL ONE FIELD TESTING OF BONDING SYSTEM IS REQUIRED AND THE YIELD LOAD OF THE 3/4" Ø BOLTS IS 12.0 KIPS.

ALL FENCE MATERIAL SHALL MEET THE REQUIREMENTS OF SECTION 1050 OF THE STANDARD SPECIFICATIONS. GALVANIZE ALL STEEL PARTS AND HARDWARE IN ACCORDANCE WITH ARTICLE 1076 OF THE STANDARD SPECIFICATIONS.

FENCE POST LOCATIONS SHALL BE SHIFTED, AS NECESSARY, TO MAINTAIN 12" MINIMUM DISTANCE FROM ANCHOR BOLT TO JOINTS IN BARRIER RAIL.

DIMENSIONS TAKEN ALONG OUTSIDE FACE OF BARRIER RAIL.

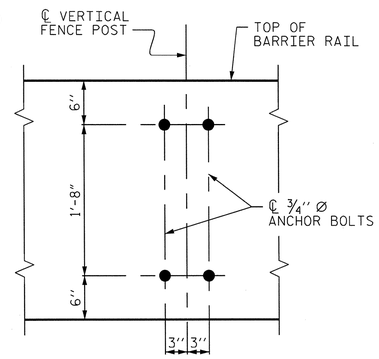

BOLT SETTING DETAIL

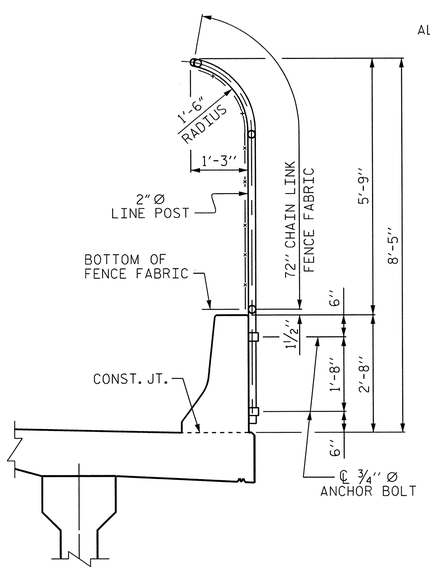

SECTION THRU FENCE

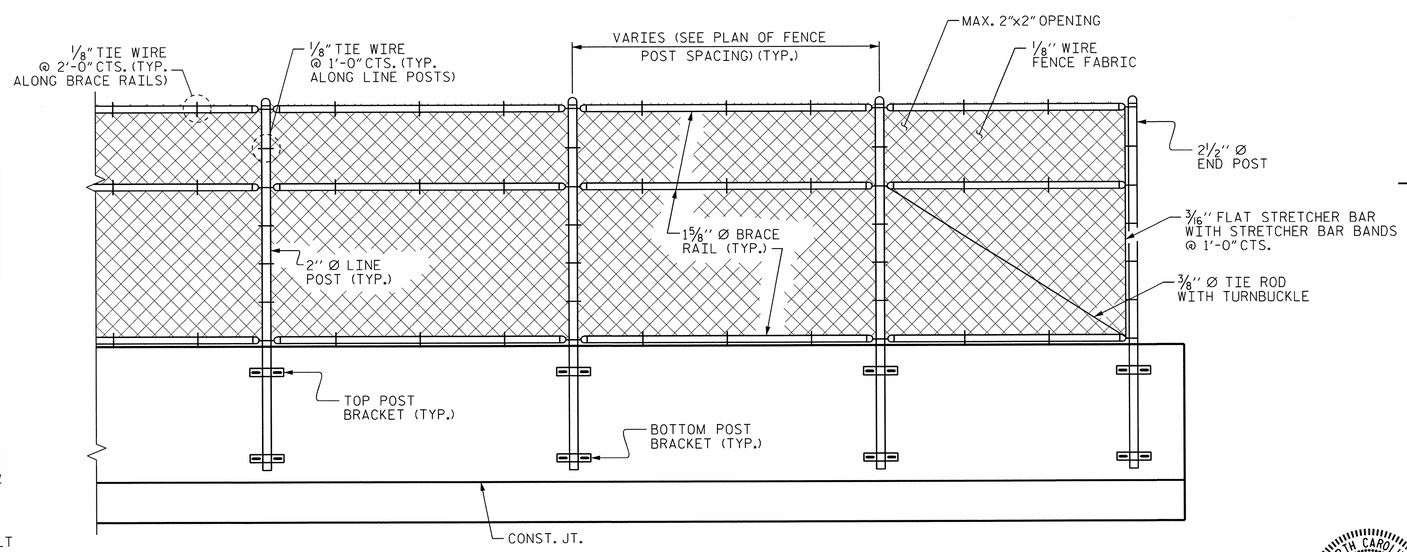

PARTIAL ELEVATION

PROJECT NO. R-2633BB

BRUNSWICK/NEW HANOVER COUNTY

STATION: 425+60.75 -L-
16+20.93 -EY11-

STATE OF NORTH CAROLINA
DEPARTMENT OF TRANSPORTATION
RALEIGH

SUPERSTRUCTURE
BRIDGE MOUNTED
72" CHAIN LINK FENCE
LEFT LANE

NORTH CAROLINA PROFESSIONAL SEAL 14047 ENGINEER STEPHEN D. COOK
1/16/12

THE LOUIS BERGER GROUP, Inc.
1001 Wade Avenue, Suite 400
Raleigh, NC 27605-3322

REVISIONS						SHEET NO.
NO.	BY:	DATE:	NO.	BY:	DATE:	8-556
1			3			TOTAL SHEETS
2			4			700

DRAWN BY : J. MYA DATE : JULY 2012
CHECKED BY : S. COOK DATE : AUG 2012

G:\OR Projects\OR1092 - NCDOT Wilm Bypass DualBridges\Structures\Bridge Site 7\R-2633BB_SD_07L_FNC.dgn
11/16/2012 11:50:13 AM 1092_PDF_full.pltcfg 1092_str.tbl

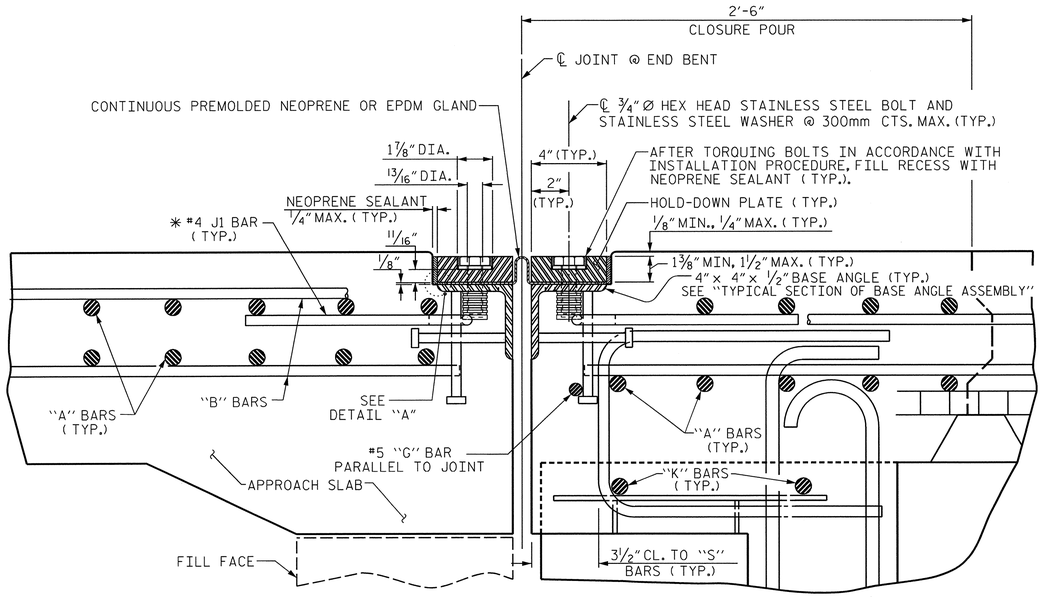

EXPANSION JOINT DETAILS

SECTION NORMAL TO JOINT -- PRESTRESSED GIRDER SUPERSTRUCTURE

✳ THE QUANTITY OF #4 J1 BARS ON THE BILL OF MATERIAL IS BASED ON 1'-0" CENTERS. J1 BARS SHALL BE PLACED AT EACH VERTICAL STUD ANCHOR BOLT. IN THE EVENT THAT THE NUMBER OF VERTICAL STUD ANCHORS EXCEEDS THE NUMBER OF J1 BARS SPECIFIED, ADDITIONAL J1 BARS WILL NOT BE REQUIRED.

INSTALLATION PROCEDURE

1. A TEMPLATE OR OTHER SUITABLE DEVICE SHALL BE USED TO FORM THE TOP OF THE EXPANSION JOINT SEAL BLOCKOUT TO THE PROPER DEPTH AND WIDTH. THE TEMPLATE SHALL BE 4⅛" TO 4¼" WIDE AND OF SUCH THICKNESS AS TO PROVIDE FOR CORRECT FINAL ELEVATION OF TOP OF HOLD-DOWN PLATES. THE TEMPLATE SHALL BE ATTACHED TO THE BASE ANGLE ASSEMBLY WITH THE ¾" Ø HEX HEAD BOLTS PROVIDED FOR THE HOLD-DOWN PLATES. A 1" Ø HOLE SHALL BE PROVIDED IN THE TEMPLATE CENTERED OVER EACH WEEP HOLE IN THE 4" X 4" X ½" BASE ANGLE. OTHER METHODS OF INSURING DRAINAGE THROUGH WEEP HOLES MAY BE EMPLOYED SUBJECT TO ENGINEER'S APPROVAL.
2. AFTER THE CONCRETE HAS BEEN CAST ON BOTH SIDES OF THE JOINT, REMOVE THE TEMPLATE. THOROUGHLY CLEAN THE BOLT HOLES AND THE ANGLE PLATE. REMOVE ANY EXCESS CONCRETE THAT COMES OUT OF THE WEEP HOLES. ANY DAMAGED STEEL SHALL BE COATED WITH A MINIMUM THICKNESS OF 4 DRY MILS OF ZINC-RICH PAINT IN ACCORDANCE WITH THE STANDARD SPECIFICATIONS.
3. LAY THE GLAND ON THE BASE ANGLE AND FIELD MARK THE GLAND FOR THE BOLT HOLES. HOLES IN THE GLAND SHALL BE PUNCHED ⅞" IN DIAMETER WITH A HAND PUNCH.
4. IN ORDER TO CHECK FOR PROPER ALIGNMENT, PLACE THE GLAND AND HOLD-DOWN PLATES ON THE BASE ANGLE. DO NOT APPLY NEOPRENE SEALANT. BOLT THE HOLD-DOWN PLATES TO THE BASE ANGLE BUT DO NOT TIGHTEN. THE ENGINEER SHALL INSPECT THE JOINT SEAL DEVICE FOR PROPER ALIGNMENT.
5. AFTER INSPECTION, REMOVE THE HOLD-DOWN PLATES AND GLAND. APPLY NEOPRENE SEALANT TO THE BASE ANGLE IN ACCORDANCE WITH THE "INSTALLATION SKETCH". PLACE GLAND AND HOLD-DOWN PLATES ON THE BASE ANGLE. BOLT THE HOLD-DOWN PLATES TO THE BASE ANGLE ASSEMBLY AND TORQUE THE BOLTS TO 88 FT-LBS WITH A TORQUE WRENCH. CHECK THE TORQUE AFTER THREE (3) HOURS AND, IF NECESSARY, RETIGHTEN TO 88 FT-LBS. A FINAL CHECK SHALL BE MADE AT SEVEN (7) DAYS. TORQUE SHALL NOT BE LESS THAN 80 FT-LBS AFTER SEVEN (7) DAYS.
6. AFTER PROPER TORQUING, CLEAN THE BOLT HOLE RECESSES AND THE RECESS BETWEEN THE JOINT SEAL DEVICE AND CONCRETE, COMPLETELY FILL THESE RECESSES WITH NEOPRENE SEALANT.

GENERAL NOTES

1. FOR EXPANSION JOINT SEALS, SEE SPECIAL PROVISIONS.
2. ALL PLATES AND ANGLES SHALL CONFORM TO AASHTO M270 GRADE 36 STEEL OR APPROVED EQUAL. ALL HOLD-DOWN BOLTS SHALL CONFORM TO ASTM F593 ALLOY 304 STAINLESS STEEL AND WASHERS SHALL CONFORM TO ASTM F844 EXCEPT THEY SHALL BE MADE FROM ALLOY 304 STAINLESS STEEL. ALL STUD ANCHORS SHALL CONFORM TO AASHTO M169, GRADES 1010 THRU 1020 OR APPROVED EQUAL. ALL CONCRETE INSERTS SHALL BE CLOSED END AND SHALL CONFORM TO AASHTO M169, GRADE 12L14. TENSILE CAPACITY SHALL BE 3000 LBS. MIN.
3. A PREMOLDED CORRUGATED OR NON-CORRUGATED GLAND SHALL BE USED FOR JOINTS SKEWED BETWEEN 50° THRU 130°. FOR JOINTS SKEWED LESS THAN 50° OR MORE THAN 130°, ONLY A CORRUGATED GLAND SHALL BE USED.
4. CLOSED END FERRULES AND STUD ANCHORS SHALL BE SHOP WELDED AND ALL HOLES SHALL BE SHOP DRILLED AS SHOWN ON PLANS. STUD ANCHORS SHALL BE ELECTRIC ARC END WELDED WITH COMPLETE FUSION.
5. SURFACES COMING IN CONTACT WITH NEOPRENE SHALL BE GROUND SMOOTH PRIOR TO METALLIZING.
6. UPON COMPLETION OF SHOP FABRICATION, THE HOLD DOWN PLATE AND BASE ANGLE ASSEMBLY, AS SHOWN IN THE "TYPICAL SECTION OF BASE ANGLE ASSEMBLY", SHALL BE METALLIZED. SEE SPECIAL PROVISION FOR THERMAL SPRAYED COATINGS (METALLIZATION).
7. BASE ANGLE ASSEMBLY SHALL BE CONTINUOUS FOR THE LENGTH OF THE JOINT. AT CROWN BREAKS, THE ENDS OF THE BASE ANGLE ASSEMBLY SHALL BE CUT PARALLEL TO THE BRIDGE CENTERLINE FOR SKEWS LESS THAN 80° AND GREATER THAN 100°. FINISHED WELD SHALL BE GROUND SMOOTH AND COATED WITH A MINIMUM THICKNESS OF 4 DRY MILS OF ZINC-RICH PAINT IN ACCORDANCE WITH THE STANDARD SPECIFICATIONS.
8. FIELD SPLICES OF HOLD-DOWN PLATES SHALL BE KEPT TO A MINIMUM. CONTRACTOR SHALL FURNISH DETAILED PLANS SHOWING PROPOSED SPLICE LOCATIONS FOR APPROVAL. HOLD-DOWN PLATES SHALL NOT EXCEED 20' LENGTHS UNLESS APPROVED BY THE ENGINEER.
9. NO ALTERNATE JOINT DETAILS SHALL BE PERMITTED IN LIEU OF THOSE SHOWN ON THESE PLANS.
10. THE CONTRACTOR MAY, AT HIS OPTION, USE ADHESIVELY ANCHORED ANCHOR BOLTS IN PLACE OF CONCRETE INSERTS FOR COVER PLATES. THE YIELD LOAD OF THE ¾" Ø BOLT IS 10 KIPS. FIELD TESTING OF THE ADHESIVE BONDING SYSTEM IS NOT REQUIRED.

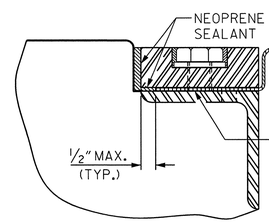

DETAIL "A"

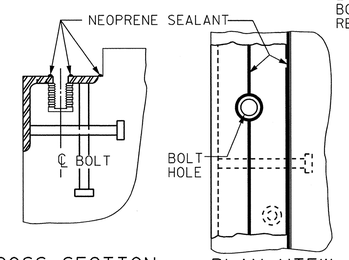

CROSS SECTION PLAN VIEW

INSTALLATION SKETCH

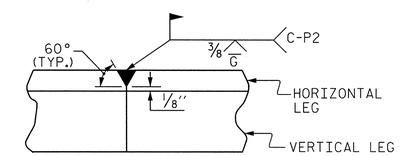

DETAIL- FIELD WELD SPLICE OF BASE ANGLE

MOVEMENT AND SETTING AT JOINT					
END BENT NO.	SKEW ANGLE	TOTAL MOVEMENT (ALONG ℄ RDWY)	PERPENDICULAR JOINT OPENING AT 45° F	PERPENDICULAR JOINT OPENING AT 60° F	PERPENDICULAR JOINT OPENING AT 90° F
1	60°-27'-11"	1¼"	1⁷⁄₁₆"	1½"	1¹¹⁄₁₆"
2	60°-27'-11"	¾"	1⁷⁄₁₆"	1½"	1⅝"

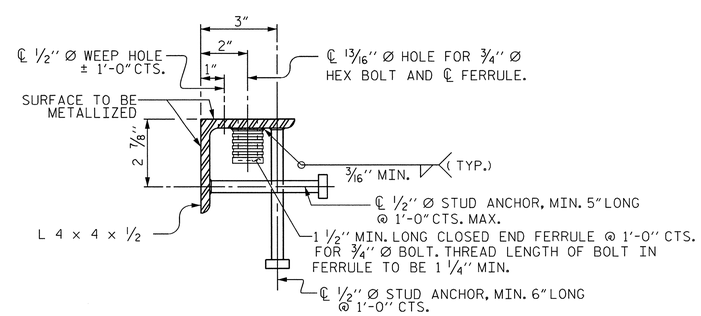

TYPICAL SECTION OF BASE ANGLE ASSEMBLY

PROJECT NO. R-2633BB

BRUNSWICK/NEW HANOVER COUNTY

STATION: 425+60.75 -L-
16+20.93 -EY11-

SHEET 1 OF 2

STATE OF NORTH CAROLINA
DEPARTMENT OF TRANSPORTATION
RALEIGH

STANDARD

EXPANSION JOINT SEAL DETAILS LEFT LANE

NORTH CAROLINA PROFESSIONAL ENGINEER SEAL 14047 STEPHEN D. COOK
11/16/12

THE LOUIS BERGER GROUP, Inc.
1001 Wade Avenue, Suite 400
Raleigh, NC 27605-3322

REVISIONS							
NO.	BY:	DATE:	NO.	BY:	DATE:	SHEET NO. S-567
1			3			TOTAL SHEETS 700
2			4			

ASSEMBLED BY : R. KNIGHT		DATE : AUG 2012	
CHECKED BY : S. COOK		DATE : AUG 2012	
DRAWN BY : REK 9/87	REV. 5/7/03R	RWW/JTE	
CHECKED BY : CRK 10/87	REV. 5/1/06R	TLA/GM	
	REV. 10/1/11	MAA/GM	

STD. NO. EJS1

G:\OR Projects\OR1092 - NCDOT Wilm Bypass DualBridges\Structures\Bridge Site 7\R-2633BB_SD_07L_EJS01.dgn
11/16/2012 11:50:18 AM 1092_PDF_full.pltcfg

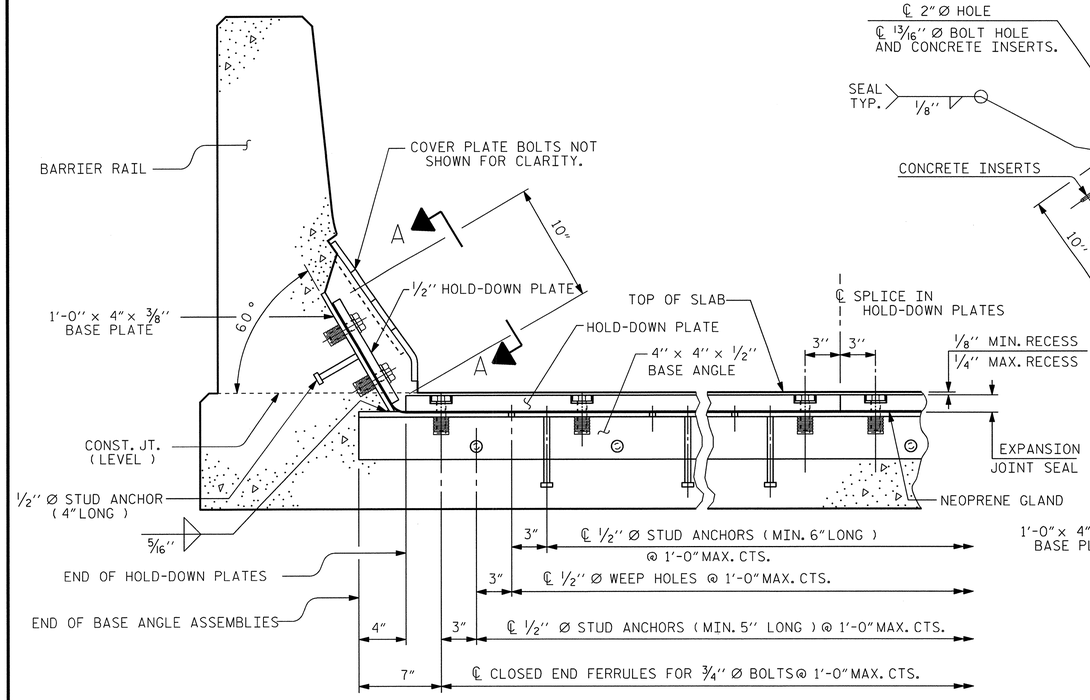

SECTION THRU RAIL NORMAL TO JOINT

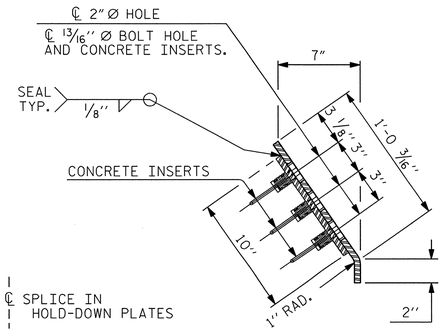

END VIEW

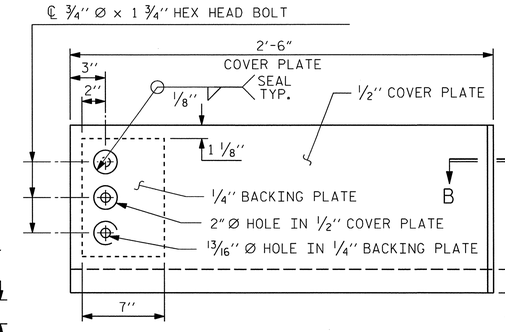

TYPE I - ELEVATION VIEW

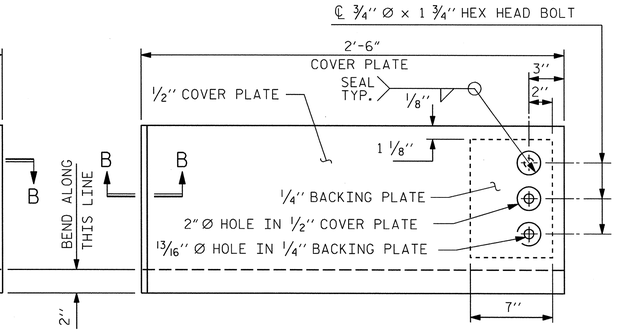

TYPE II - ELEVATION VIEW

COVER PLATE DETAILS

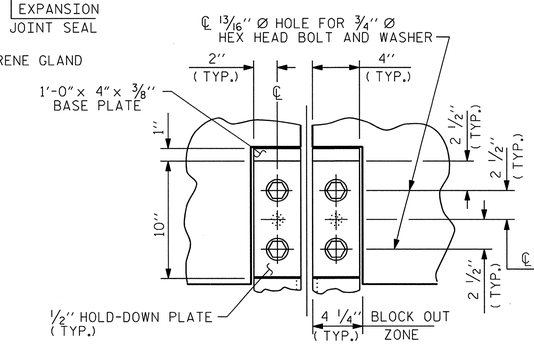

SECTION A - A

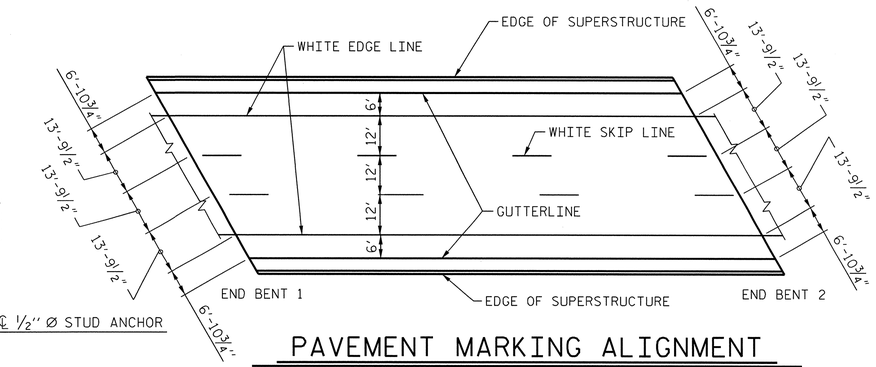

PAVEMENT MARKING ALIGNMENT

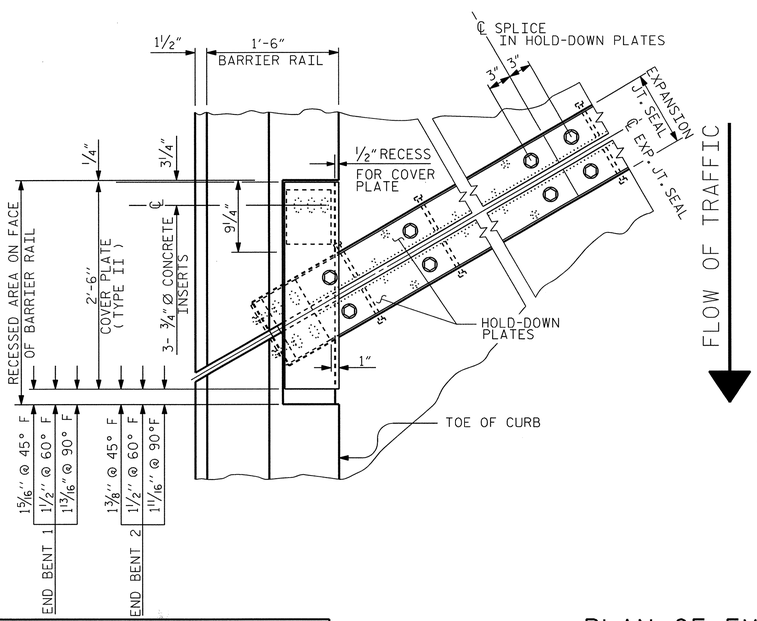

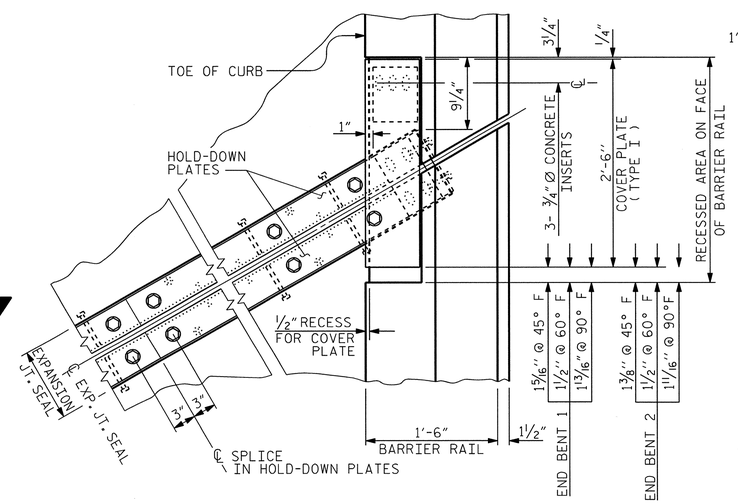

PLAN OF EXPANSION JOINT SEAL

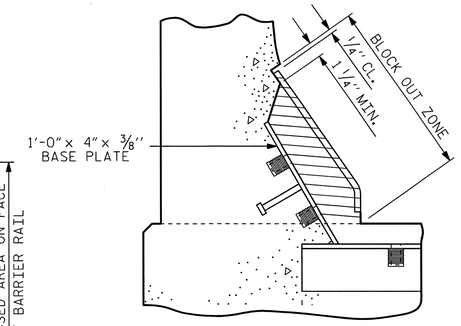

BLOCK OUT DETAIL

SEE "SECTION A - A" FOR OTHER DETAILS.

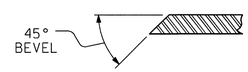

SECTION B - B

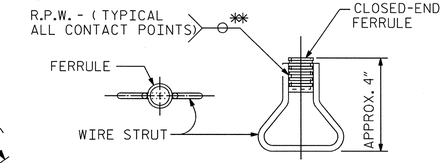

CONCRETE INSERT

** EACH WELDED ATTACHMENT OF WIRE TO FERRULE SHALL DEVELOP THE TENSILE STRENGTH OF THE WIRE.

PROJECT NO. R-2633BB

BRUNSWICK/NEW HANOVER COUNTY

STATION: 425+60.75 -L-
16+20.93 -EY11-

SHEET 2 OF 2

STATE OF NORTH CAROLINA
DEPARTMENT OF TRANSPORTATION
RALEIGH

STANDARD

EXPANSION JOINT SEAL DETAILS FOR BARRIER RAIL LEFT LANE

NORTH CAROLINA PROFESSIONAL SEAL 14047 ENGINEER STEPHEN D. COOK
11/16/12

ASSEMBLED BY : R. KNIGHT	DATE : AUG 2012
CHECKED BY : S. COOK	DATE : AUG 2012
DRAWN BY : REK 9/87	REV. 10/17/00 RWW/LES
CHECKED BY : CRK 10/87	REV. 5/1/06 TLA/GM
	REV. 10/1/11 MAA/GM

THE LOUIS BERGER GROUP, Inc.
1001 Wade Avenue, Suite 400
Raleigh, NC 27605-3322

REVISIONS								SHEET NO.
NO.	BY:	DATE:		NO.	BY:	DATE:		S-558
1				3				TOTAL SHEETS
2				4				700

STD. NO. EJS2 SHT 3a

G:\OR Projects\OR1092 - NCDOT Wilm Bypass DualBridges\Structures\Bridge Site 7\R-2633BB_SD_07L_EJS02.dgn
11/16/2012 11:50:21 AM 1092_PDF_full.pltcfg 1092_str.tbl

REINFORCING BAR SCHEDULE - SPANS A, B & C

BAR	NO.	SIZE	TYPE	LENGTH	WEIGHT	BAR	NO.	SIZE	TYPE	LENGTH	WEIGHT	BAR	NO.	SIZE	TYPE	LENGTH	WEIGHT
✱ A1	427	# 5	STR	50'-10"	22639	A2	427	# 5	STR	50'-10"	22639	✱ B1	108	# 4	STR	24'-0"	1731
												B2	325	# 5	STR	50'-6"	17118
✱ A101	2	# 5	STR	50'-6"	105	A201	2	# 5	STR	50'-6"	105	✱ B3	72	# 6	STR	37'-6"	4055
✱ A102	2	# 5	STR	49'-8"	104	A202	2	# 5	STR	49'-8"	104	✱ B4	66	# 6	STR	32'-0"	3172
✱ A103	2	# 5	STR	48'-10"	102	A203	2	# 5	STR	48'-10"	102	✱ B5	72	# 4	STR	17' 0"	818
✱ A104	2	# 5	STR	48'-0"	100	A204	2	# 5	STR	48'-0"	100	✱ B6	72	# 6	STR	26'-0"	2812
✱ A105	2	# 5	STR	47'-2"	98	A205	2	# 5	STR	47'-2"	98	✱ B7	66	# 6	STR	23' 0"	2280
✱ A106	2	# 5	STR	46'-4"	97	A206	2	# 5	STR	46'-4"	97	✱ B8	72	# 4	STR	22'-0"	1058
✱ A107	2	# 5	STR	45'-6"	95	A207	2	# 5	STR	45'-6"	95					-	
✱ A108	2	# 5	STR	44'-8"	93	A208	2	# 5	STR	44'-8"	93	✱ G1	2	# 5	STR	58'-6"	122
✱ A109	2	# 5	STR	43'-10"	91	A209	2	# 5	STR	43'-10"	91					-	
✱ A110	2	# 5	STR	43'-0"	90	A210	2	# 5	STR	43'-0"	90	✱ J1	110	# 4	9	1' 5"	104
✱ A111	2	# 5	STR	42'-2"	88	A211	2	# 5	STR	42'-2"	88					-	
✱ A112	2	# 5	STR	41'-4"	86	A212	2	# 5	STR	41'-4"	86	✱ K1	16	# 8	2	20'-4"	869
✱ A113	2	# 5	STR	40'-6"	84	A213	2	# 5	STR	40'-6"	84	✱ K2	8	# 8	1	14'-2"	303
✱ A114	2	# 5	STR	39'-8"	83	A214	2	# 5	STR	39'-8"	83	✱ K3	30	# 6	STR	7'-6"	338
✱ A115	2	# 5	STR	38'-0"	81	A215	2	# 5	STR	38'-0"	81	K4	40	# 4	8	12'10"	343
✱ A116	2	# 5	STR	38'-2"	79	A216	2	# 5	STR	38'-2"	79	K5	20	# 4	7	6'-3"	84
✱ A117	2	# 5	STR	37'-4"	78	A217	2	# 5	STR	37'-4"	78	K6	20	# 4	STR	7'-6"	100
✱ A118	2	# 5	STR	36'-6"	76	A218	2	# 5	STR	36'-6"	76	K7	40	# 4	STR	8'-6"	227
✱ A119	2	# 5	STR	35'-8"	74	A219	2	# 5	STR	35'-8"	74	K8	20	# 4	STR	7'-10"	105
✱ A120	2	# 5	STR	34'-10"	72	A220	2	# 5	STR	34'-10"	72	K9	20	# 4	STR	7'-0"	94
✱ A121	2	# 5	STR	33'-0"	71	A221	2	# 5	STR	33'-0"	71						
✱ A122	2	# 5	STR	33'-2"	69	A222	2	# 5	STR	33'-2"	69	✱ S1	80	# 5	3	6' 4"	528
✱ A123	2	# 5	STR	32'-4"	67	A223	2	# 5	STR	32'-4"	67	✱ S2	80	# 5	5	3' 8"	306
✱ A124	2	# 5	STR	31'-6"	65	A224	2	# 5	STR	31'-6"	65	S3	20	# 4	6	11' 1"	148
✱ A125	2	# 5	STR	30'-8"	64	A225	2	# 5	STR	30'-8"	64	✱ S4	330	# 4	4	2' 9"	606
✱ A126	2	# 5	STR	29'-10"	62	A226	2	# 5	STR	29'-10"	62	✱ S5	50	# 4	6	12' 9"	426
✱ A127	2	# 5	STR	28'-0"	60	A227	2	# 5	STR	28'-0"	60						
✱ A128	2	# 5	STR	28'-2"	58	A228	2	# 5	STR	28'-2"	58	REINFORCING STEEL					LBS. 44,088
✱ A129	2	# 5	STR	27'-4"	57	A229	2	# 5	STR	27'-4"	57	EPOXY COATED REINFORCING STEEL					LBS. 45,397
✱ A130	2	# 5	STR	26'-6"	55	A230	2	# 5	STR	26'-6"	55						
✱ A131	2	# 5	STR	25'-8"	53	A231	2	# 5	STR	25'-8"	53						
✱ A132	2	# 5	STR	24'-10"	51	A232	2	# 5	STR	24'-10"	51						
✱ A133	2	# 5	STR	23'-0"	50	A233	2	# 5	STR	23'-0"	50						
✱ A134	2	# 5	STR	23'-2"	48	A234	2	# 5	STR	23'-2"	48						
✱ A135	2	# 5	STR	22'-4"	46	A235	2	# 5	STR	22'-4"	46						
✱ A136	2	# 5	STR	21'-6"	45	A236	2	# 5	STR	21'-6"	45						
✱ A137	2	# 5	STR	20'-8"	43	A237	2	# 5	STR	20'-8"	43						
✱ A138	2	# 5	STR	19'-10"	41	A238	2	# 5	STR	19'-10"	41						
✱ A139	2	# 5	STR	18'-0"	39	A239	2	# 5	STR	18'-0"	39						
✱ A140	2	# 5	STR	18'-2"	38	A240	2	# 5	STR	18'-2"	38						
✱ A141	2	# 5	STR	17'-4"	36	A241	2	# 5	STR	17'-4"	36						
✱ A142	2	# 5	STR	16'-6"	34	A242	2	# 5	STR	16'-6"	34						
✱ A143	2	# 5	STR	15'-8"	32	A243	2	# 5	STR	15'-8"	32						
✱ A144	2	# 5	STR	14'-10"	31	A244	2	# 5	STR	14'-10"	31						
✱ A145	2	# 5	STR	13'-0"	29	A245	2	# 5	STR	13'-0"	29						
✱ A146	2	# 5	STR	13'-2"	27	A246	2	# 5	STR	13'-2"	27						
✱ A147	2	# 5	STR	12'-4"	25	A247	2	# 5	STR	12'-4"	25						
✱ A148	2	# 5	STR	11'-6"	24	A248	2	# 5	STR	11'-6"	24						
✱ A149	2	# 5	STR	10'-8"	22	A249	2	# 5	STR	10'-8"	22						
✱ A150	2	# 5	STR	9'-10"	20	A250	2	# 5	STR	9'-10"	20						
✱ A151	2	# 5	STR	8'-0"	18	A251	2	# 5	STR	8'-0"	18						
✱ A152	2	# 5	STR	8'-2"	17	A252	2	# 5	STR	8'-2"	17						
✱ A153	2	# 5	STR	7'-4"	15	A253	2	# 5	STR	7'-4"	15						
✱ A154	2	# 5	STR	6'-6"	13	A254	2	# 5	STR	6'-6"	13						
✱ A155	2	# 5	STR	5'-8"	11	A255	2	# 5	STR	5'-8"	11						
✱ A156	2	# 5	STR	4'-10"	10	A256	2	# 5	STR	4'-10"	10						
✱ A157	2	# 5	STR	3'-10"	8	A257	2	# 5	STR	3'-10"	8						

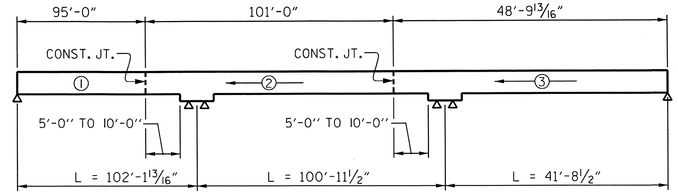

POURING SEQUENCE

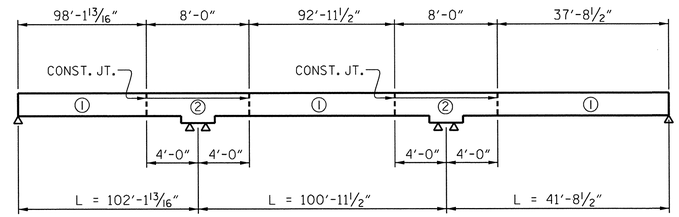

OPTIONAL POURING SEQUENCE

POUR ② CAN NOT BE STARTED UNTIL BOTH ADJACENT ① POURS REACH A MINIMUM OF 3,000 PSI.

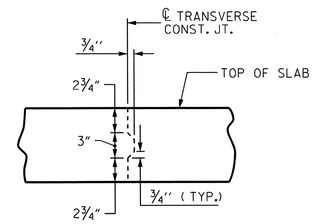

TRANSVERSE CONSTRUCTION JOINT DETAIL

NOTE: REINFORCING STEEL IN SLAB NOT SHOWN. LONGITUDINAL REINFORCING STEEL SHALL BE CONTINUOUS THRU JOINT

BAR TYPES

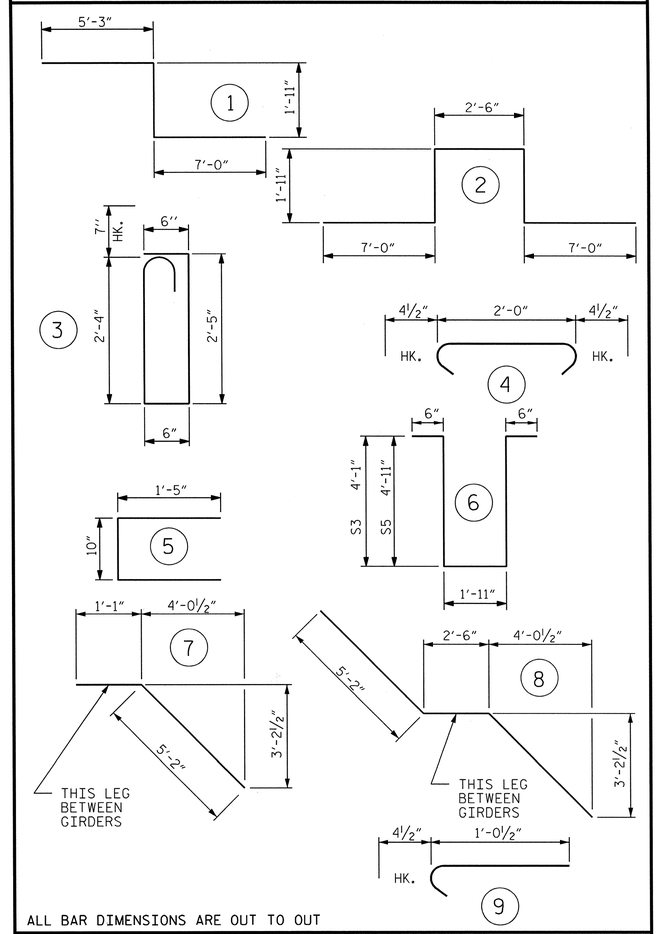

ALL BAR DIMENSIONS ARE OUT TO OUT

GROOVING BRIDGE FLOORS

APPROACH SLABS	2,346	SQ.FT.
BRIDGE DECK	10,837	SQ.FT.
TOTAL	13,183	SQ.FT.

SUPERSTRUCTURE BILL OF MATERIAL

	CLASS AA CONCRETE	REINFORCING STEEL	EPOXY COATED REINFORCING STEEL
	(CU. YDS.)	(LBS.)	(LBS.)
SPANS "A", "B" & "C"	398.3	44,088	✱✱ 45,397

✱✱ QUANTITIES FOR BARRIER RAIL ARE NOT INCLUDED

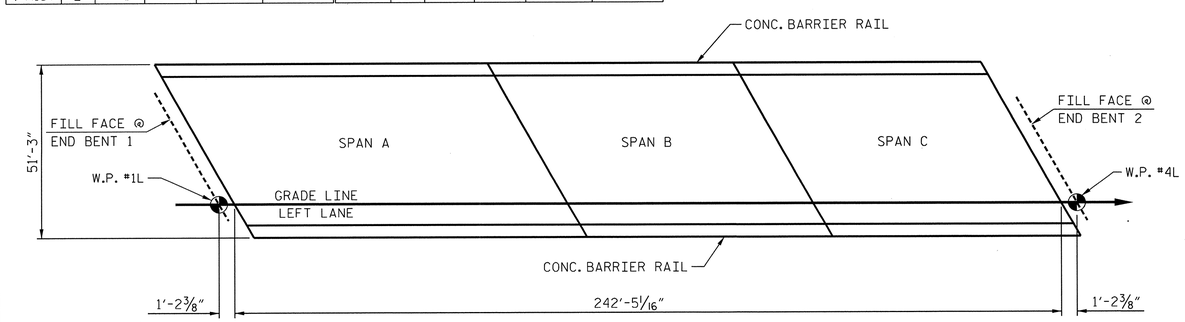

LAYOUT FOR COMPUTING AREA REINFORCED CONCRETE DECK SLAB (SQ. FT. = 12,424)

SUPERSTRUCTURE REINFORCING STEEL LENGTHS ARE BASED ON THE FOLLOWING MINIMUM SPLICE LENGTHS

BAR SIZE	SUPERSTRUCTURE EXCEPT APPROACH SLABS, PARAPET, AND BARRIER RAIL		APPROACH SLABS		PARAPET AND BARRIER RAIL
	EPOXY COATED	UNCOATED	EPOXY COATED	UNCOATED	
#4	2'-0"	1'-9"	2'-0"	1'-9"	2'-9"
#5	2'-6"	2'-2"	2'-6"	2'-2"	3'-5"
#6	3'-0"	2'-7"	3'-10"	2'-7"	4'-4"
#7	5'-3"	3'-6"			
#8	6'-10"	4'-7"			

PROJECT NO. R-2633BB

BRUNSWICK/NEW HANOVER COUNTY

STATION: 425+60.75 -L-
16+20.93 -EY11-

NORTH CAROLINA PROFESSIONAL SEAL 14047 ENGINEER STEPHEN D. COOK
11/14/12

THE LOUIS BERGER GROUP, Inc.
1001 Wade Avenue, Suite 400
Raleigh, NC27605-3322

STATE OF NORTH CAROLINA
DEPARTMENT OF TRANSPORTATION
RALEIGH

STANDARD
SUPERSTRUCTURE BILL OF MATERIAL LEFT LANE

REVISIONS						SHEET NO.
NO.	BY:	DATE:	NO.	BY:	DATE:	6-559
1			3			TOTAL SHEETS
2			4			100

STD. NO. BOM2

ASSEMBLED BY : R. KNIGHT DATE : JULY 2012
CHECKED BY : S. COOK DATE : AUG 2012
DRAWN BY : JMB5/87 REV. 8/16/99RWW/LES
CHECKED BY : SJD9/87 REV. 5/1/06TLA/GM
REV. 10/1/11MAA/GM

G:\OR Projects\OR1092 - NCDOT Wilm Bypass Dual Bridges\Structures\Bridge Site 7\R-2633BB_SD_07L_BOM.dgn
11/16/2012 11:50:23 AM 1092_PDF_full.pltcfg 1092_str.tbl

NOTES:

STIRRUPS IN CAP MAY BE SHIFTED AS NECESSARY TO CLEAR ANCHOR BOLTS.

THE CONTRACTOR SHALL PROVIDE FOR INSTALLATION OF THE 4"DIAMETER DRAIN PIPE THROUGH THE WING WALL AS REQUIRED FOR REINFORCED BRIDGE APPROACH FILLS. SEE THE ROADWAY PLANS. REINFORCING STEEL IN THE WING WALL MAY BE SHIFTED AS NECESSARY TO CLEAR THE DRAIN PIPE.

BACKWALL SHALL BE PLACED BEFORE APPLYING THE EPOXY PROTECTIVE COATING.

THE TOP SURFACE AREAS OF THE END BENT CAPS SHALL BE CURED IN ACCORDANCE WITH THE STANDARD SPECIFICATIONS EXCEPT THE MEMBRANE CURING COMPOUND METHOD SHALL NOT BE USED.

THE TOP SURFACE OF THE END BENT CAP EXCEPT THE BRIDGE SEAT BUILDUPS SHALL BE SLOPED TRANSVERSELY FROM THE FILL FACE TO THE BACK FACE AT THE RATE OF 2%.

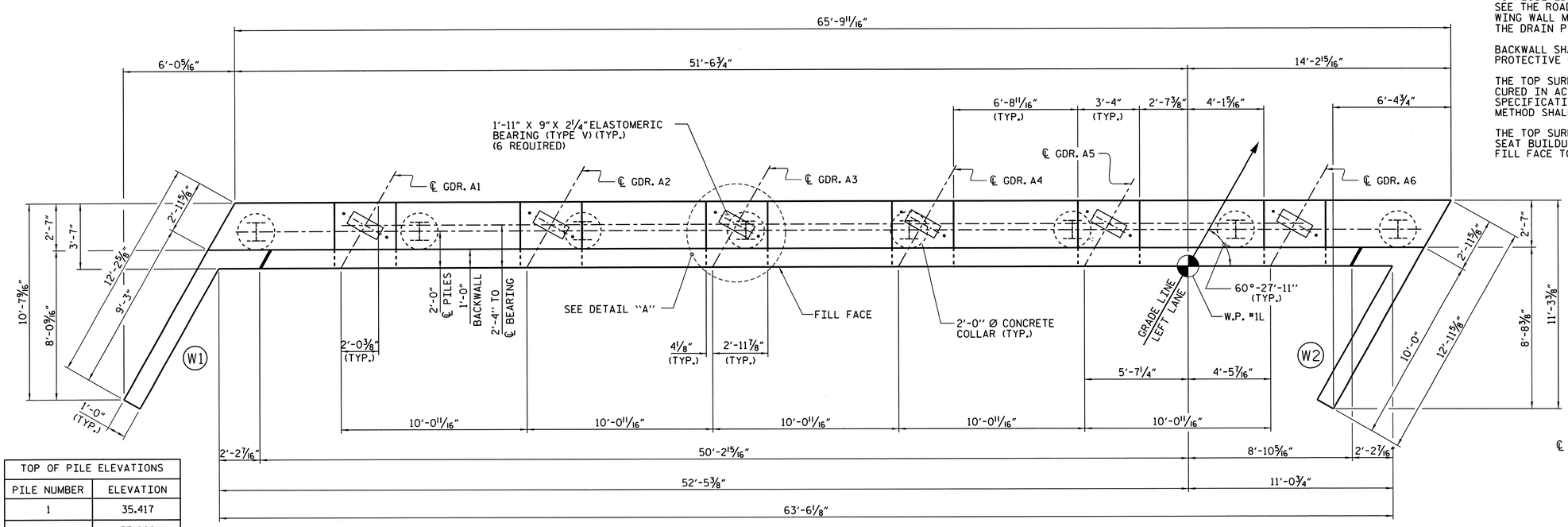

PLAN

TOP OF PILE ELEVATIONS	
PILE NUMBER	ELEVATION
1	35.417
2	35.662
3	35.901
4	36.146
5	36.391
6	36.635
7	36.880
8	37.124

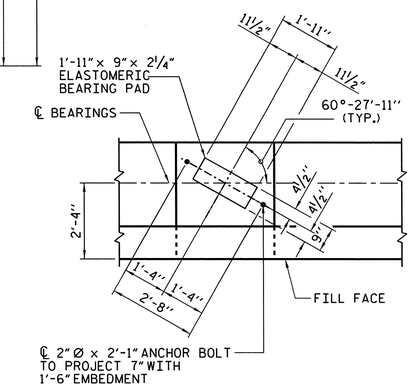

DETAIL "A"

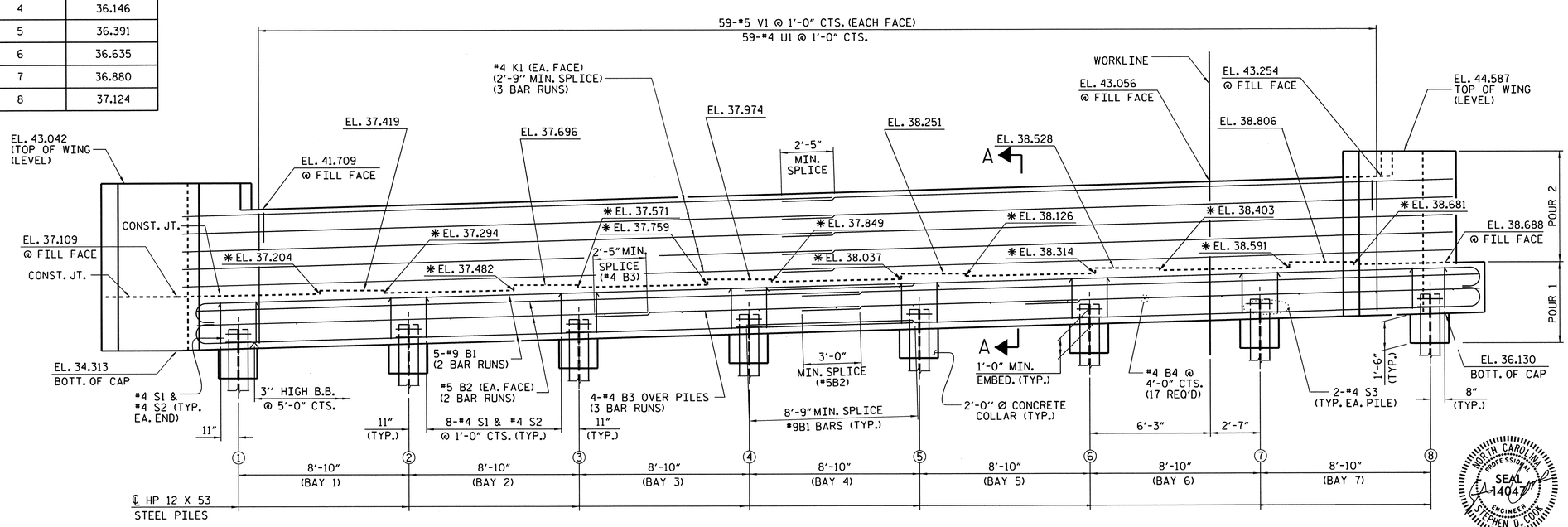

ELEVATION

✱ FOR LOCATION OF ELEVATIONS BETWEEN BRIDGE SEAT BUILDUPS. SEE SECTION A-A ON SHEET 3 OF 3.

NORTH CAROLINA PROFESSIONAL SEAL 14047 ENGINEER STEPHEN D. COOK
11/16/12

PROJECT NO. R-2633BB
BRUNSWICK/NEW HANOVER COUNTY
STATION: 425+60.75 -L-
16+20.93 -EY11-

SHEET 1 OF 3

STATE OF NORTH CAROLINA
DEPARTMENT OF TRANSPORTATION
RALEIGH

SUBSTRUCTURE
END BENT 1
LEFT LANE

REVISIONS						SHEET NO.
NO.	BY:	DATE:	NO.	BY:	DATE:	S-560
1			3			TOTAL SHEETS
2			4			700

THE LOUIS BERGER GROUP, Inc.
1001 Wade Avenue, Suite 400
Raleigh, NC 27605-3322

DRAWN BY : J. MYA DATE : 8-2012
CHECKED BY : S. COOK DATE : 8-2012

G:\OR Projects\OR1092 - NCDOT Wilm Bypass DualBridges\Structures\Bridge Site 7\R-2633BB_SD_07L_EB1101.dgn
11/16/2012 11:50:26 AM 1092_PDF_full.pltcfg 1092_str.tbl

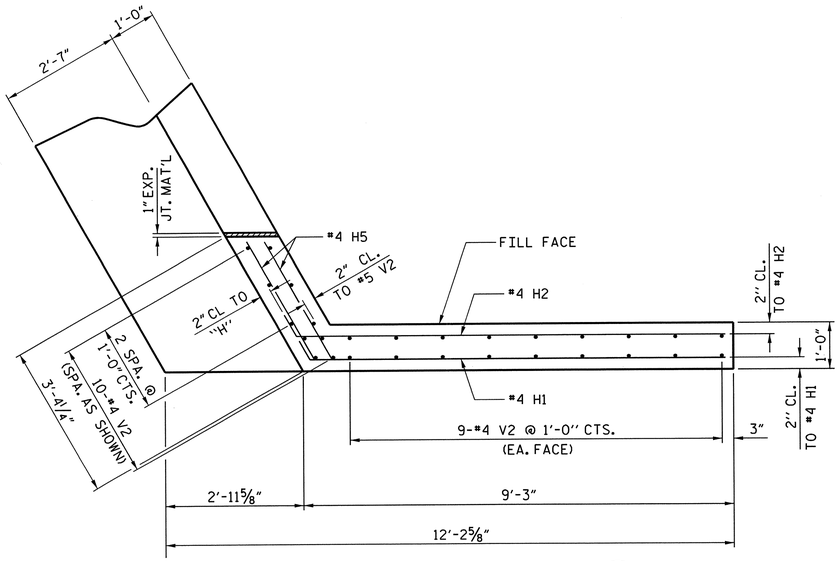

PLAN OF WING - (W1)

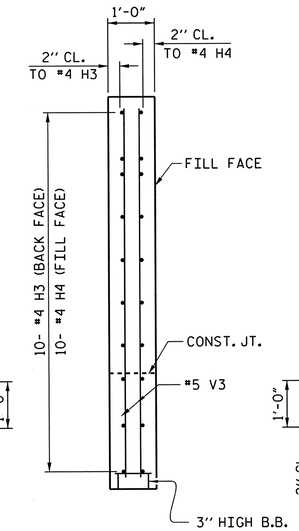

SECTION Y-Y

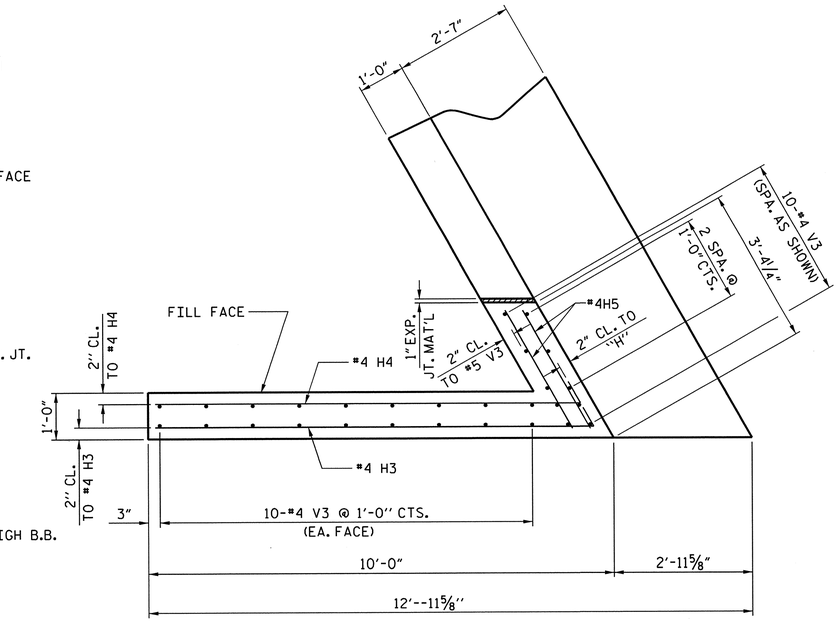

PLAN OF WING - (W2)

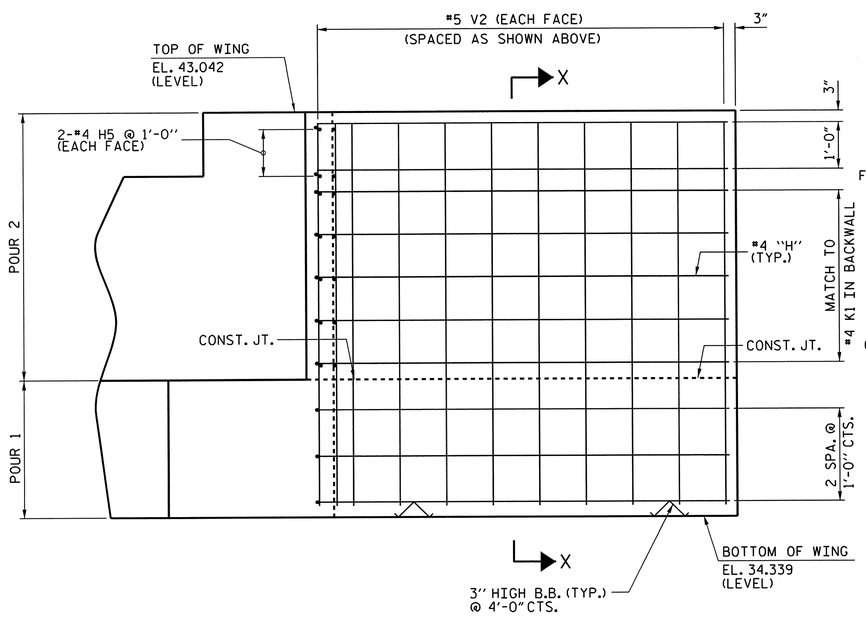

ELEVATION OF WING - (W1)

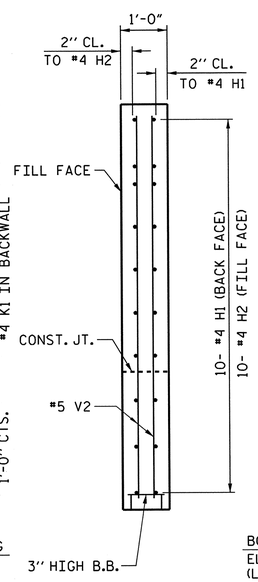

SECTION X-X

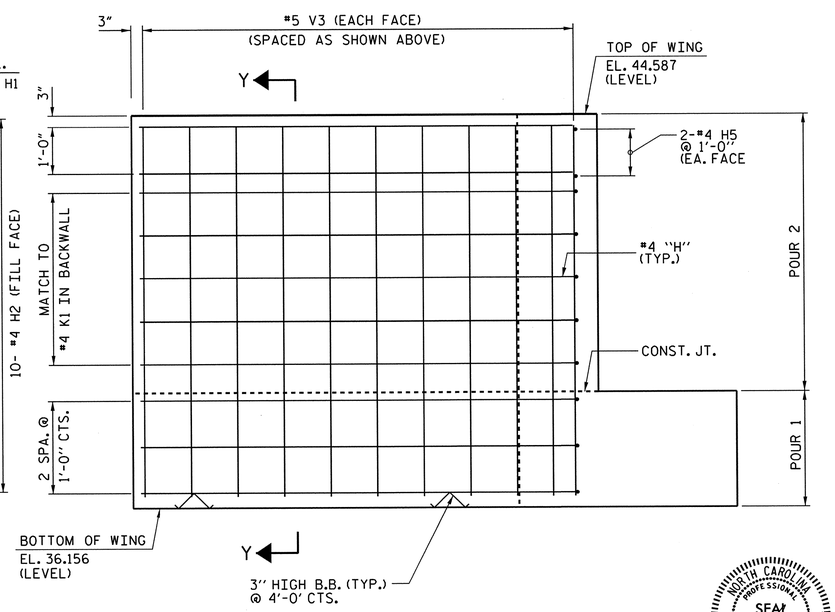

PLAN OF WING - (W2)

PROJECT NO. R-2633BB

BRUNSWICK/NEW HANOVER COUNTY

STATION: 425+60.75 -L-
16+20.93 -EY11-

SHEET 2 OF 3

STATE OF NORTH CAROLINA
DEPARTMENT OF TRANSPORTATION
RALEIGH

SUBSTRUCTURE
END BENT 1
LEFT LANE

NORTH CAROLINA PROFESSIONAL SEAL 14047 ENGINEER STEPHEN D. COOK
11/16/12

THE LOUIS BERGER GROUP, Inc.
1001 Wade Avenue, Suite 400
Raleigh, NC 27605-3322

REVISIONS								SHEET NO.
NO.	BY:	DATE:	NO.	BY:	DATE:			S-56
1			3					TOTAL SHEETS
2			4					100

DRAWN BY : J. MYA DATE : JULY 2012
CHECKED BY : S. COOK DATE : AUG 2012

G:\OR Projects\OR1092 - NCDOT Wilm Bypass Dual Bridges\Structures\Bridge Site 7\R-2633BB_SD_07L_EB102.dgn
11/16/2012 11:50:29 AM 1092_PDF_full.pltcfg 1092_str.tbl

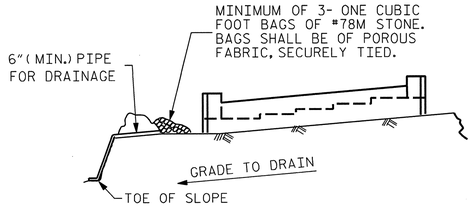

BAGGED STONE AND PIPE SHALL BE PLACED IMMEDIATELY AFTER COMPLETION OF END BENT EXCAVATION. PIPE MAY BE EITHER CONCRETE, CORRUGATED STEEL, CORRUGATED ALUMINUM ALLOY, OR CORRUGATED PLASTIC. PERFORATED PIPE WILL NOT BE ALLOWED.

BAGGED STONE SHALL REMAIN IN PLACE UNTIL THE ENGINEER DIRECTS THAT IT BE REMOVED. THE CONTRACTOR SHALL REMOVE AND DISPOSE OF SILT ACCUMULATIONS AT BAGGED STONE WHEN SO DIRECTED BY THE ENGINEER. BAGS SHALL BE REMOVED AND REPLACED WHENEVER THE ENGINEER DETERMINES THAT THEY HAVE DETERIORATED AND LOST THEIR EFFECTIVENESS.

NO SEPARATE PAYMENT WILL BE MADE FOR THIS WORK AND THE ENTIRE COST OF THIS WORK SHALL BE INCLUDED IN THE UNIT CONTRACT PRICE BID FOR THE SEVERAL PAY ITEMS.

TEMPORARY DRAINAGE AT END BENT

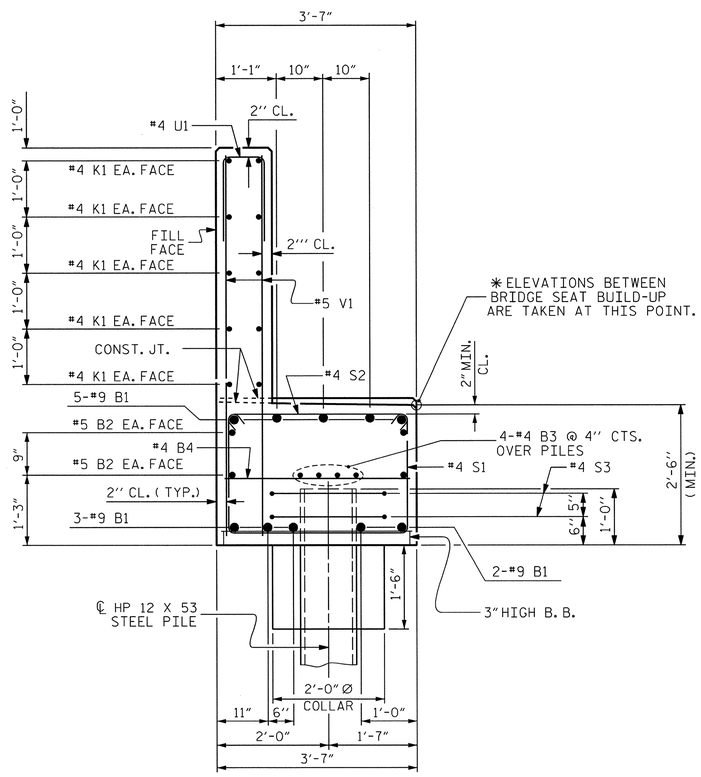

SECTION A-A

BAR TYPES

ALL BAR DIMENSIONS ARE OUT TO OUT.

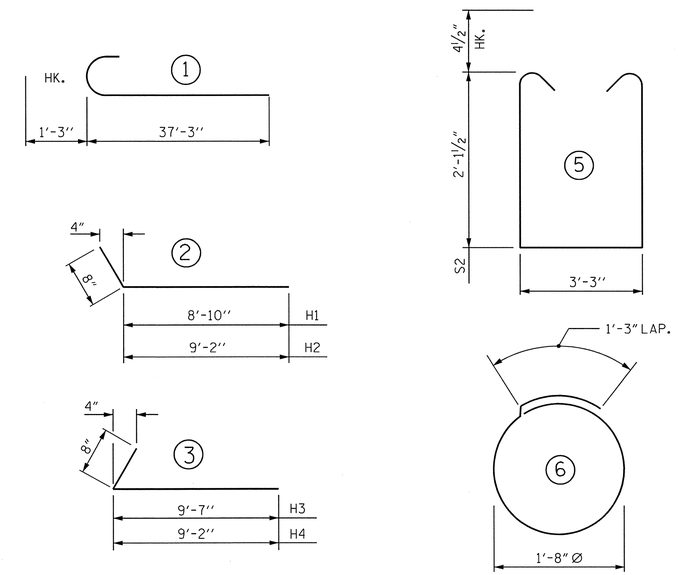

BILL OF MATERIAL
FOR END BENT 1

BAR	NO	SIZE	TYPE	LENGTH	WEIGHT
B1	20	9	1	38'-6"	2,618
B2	8	5	STR.	34'-3"	286
B3	12	4	STR.	23'-10"	191
B4	17	4	STR.	3'-3"	37
H1	10	4	2	9'-6"	63
H2	10	4	2	9'-10"	66
H3	10	4	3	10'-3"	68
H4	10	4	3	9'-10"	66
H5	8	4	STR.	2'-11"	16
K1	30	4	STR.	24'-0"	481
S1	58	4	5	8'-3"	320
S2	58	4	4	4'-0"	155
S3	16	4	6	6'-6"	69
U1	59	4	7	3'-8"	145
V1	118	5	STR.	6'-9"	831
V2	28	5	STR.	8'-4"	243
V3	30	5	STR.	8'-1"	253
REINFORCING STEEL				= LBS.	5,908

CLASS A CONCRETE BREAKDOWN

POUR #1 (CAP, CONCRETE COLLARS & LOWER PART OF WINGS	C.Y.	27.5
POUR #2 (BACKWALL & UPPER PART OF WINGS)	C.Y.	15.5
TOTAL CLASS A CONCRETE	C.Y.	43.0

HP 12 X 53 STEEL PILES NO. 8	LIN. FT.	640
PILE REDRVES	No.	4

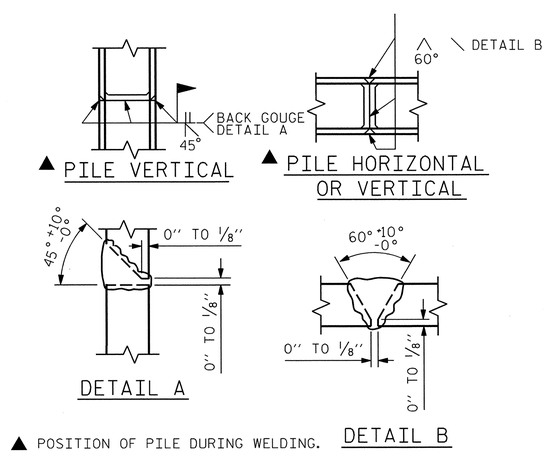

▲ POSITION OF PILE DURING WELDING.

PILE SPLICE DETAILS

PROJECT NO. R-2633BB

BRUNSWICK/NEW HANOVER COUNTY

STATION: 425+60.75 -L-
16+20.93 -EY11-

SHEET 3 OF 3

STATE OF NORTH CAROLINA
DEPARTMENT OF TRANSPORTATION
RALEIGH

SUBSTRUCTURE
END BENT 1
LEFT LANE

NORTH CAROLINA PROFESSIONAL SEAL 14047 ENGINEER STEPHEN D. COOK
11/16/12

THE LOUIS BERGER GROUP, Inc.
1001 Wade Avenue, Suite 400
Raleigh, NC 27605-3322

REVISIONS							SHEET NO.
NO.	BY:	DATE:	NO.	BY:	DATE:		S-562
1			3				TOTAL SHEETS
2			4				700

DRAWN BY : J. MYA DATE : JULY 2012
CHECKED BY : S. COOK DATE : JULY 2012

G:\OR Projects\OR1092 - NCDOT Wilm Bypass DualBridges\Structures\Bridge Site 7\R-2633BB_SD_07L_EB103.dgn
11/16/2012 11:50:32 AM 1092_PDF_full.pltcfg 1092_str.tbl

NOTES

STIRRUPS AND #4U4 BARS IN CAP MAY BE SHIFTED AS NECESSARY TO CLEAR ANCHOR BOLTS

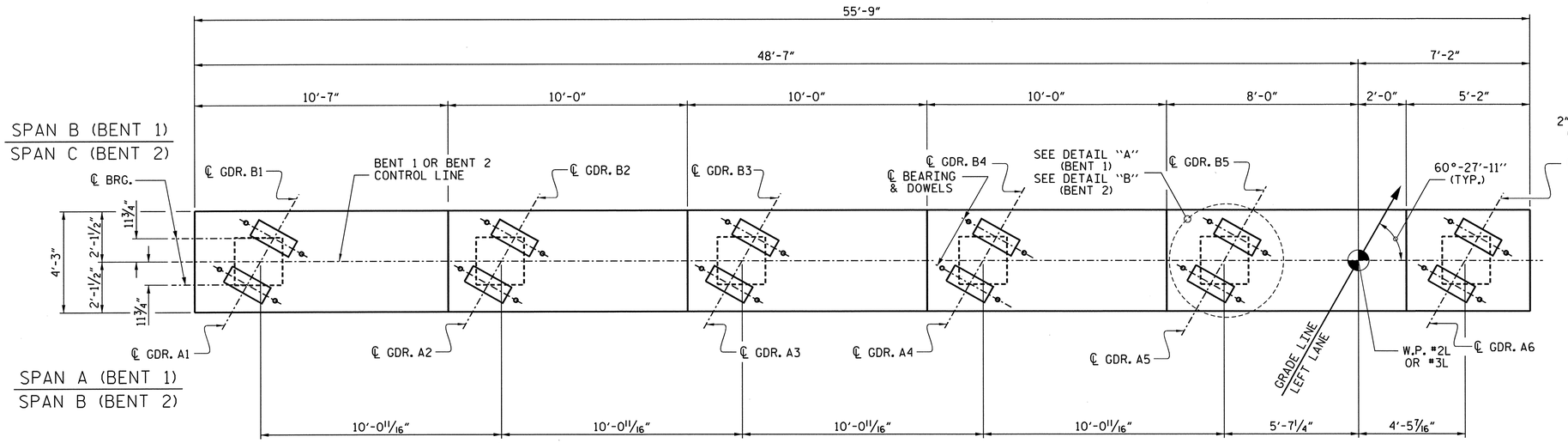

PLAN

(BENT 1 SHOWN BENT 2 SIMILAR)

TOP OF PILE ELEVATIONS		
PILE NUMBER	BENT 1 ELEVATION	BENT 2 ELEVATION
1	35.772	36.972
2	36.022	37.222
3	36.272	37.472
4	36.522	37.722
5	36.172	37.972
6	37.022	38.222

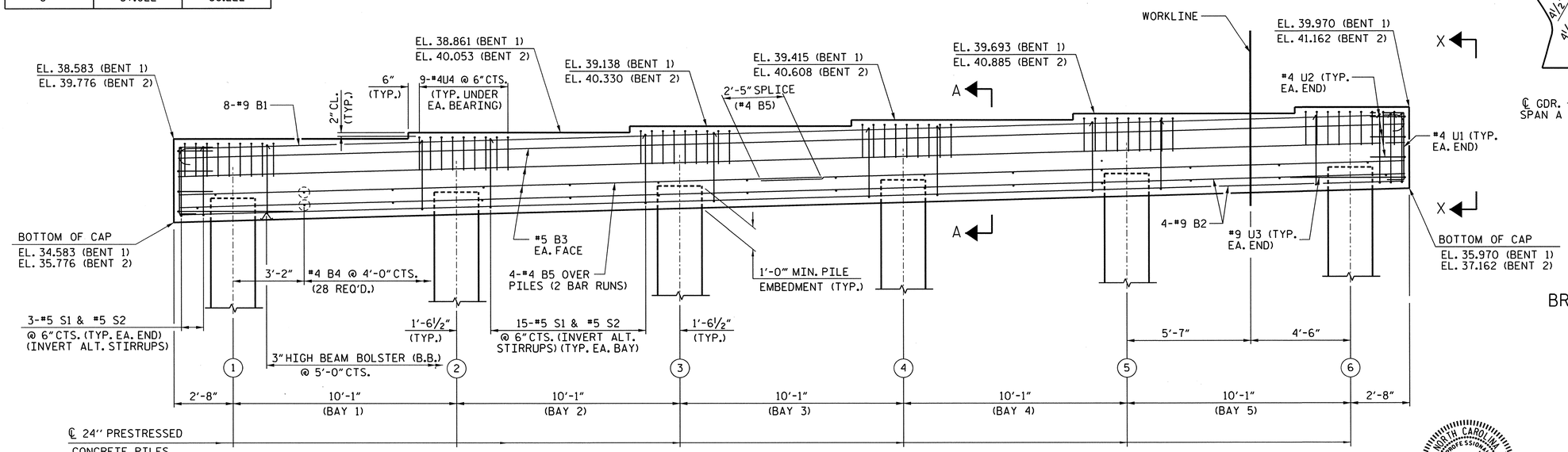

ELEVATION

(BENT 1 SHOWN, BENT 2 SIMILAR)

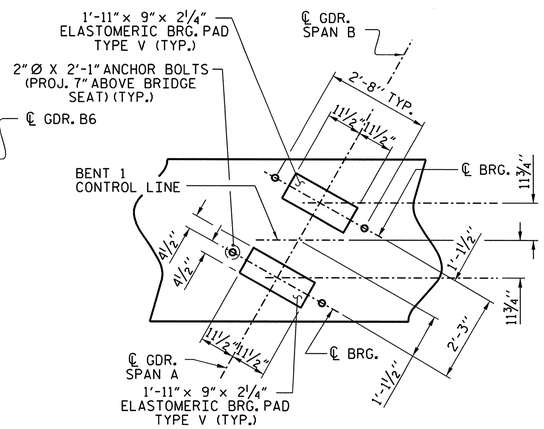

DETAIL A

(TYP. EA. GIRDER)
(BENT 1)

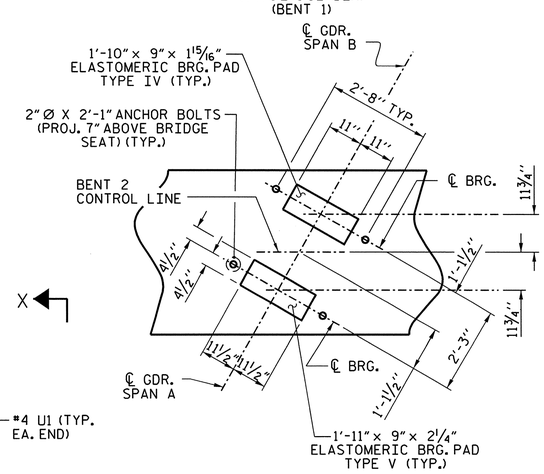

DETAIL B

(TYP. EA. GIRDER)
(BENT 2)

PROJECT NO. R-2633BB

BRUNSWICK/NEW HANOVER COUNTY

STATION: 425+60.75 -L-
16+20.93 -EY11-

SHEET 1 OF 3

STATE OF NORTH CAROLINA
DEPARTMENT OF TRANSPORTATION
RALEIGH

SUBSTRUCTURE BENT 1 & BENT 2 LEFT LANE

NORTH CAROLINA PROFESSIONAL SEAL 14047 ENGINEER STEPHEN D. COOK
11/16/12

THE LOUIS BERGER GROUP, Inc.
1001 Wade Avenue, Suite 400
Raleigh, NC 27605-3322

REVISIONS						SHEET NO.
NO.	BY:	DATE:	NO.	BY:	DATE:	S-563
1			3			TOTAL SHEETS
2			4			700

DRAWN BY : J. MYA DATE : AUG. 2012
CHECKED BY : S. COOK DATE : AUG. 2012

G:\OR Projects\OR1092 - NCDOT Wilm Bypass DualBridges\Structures\Bridge Site 7\R-2633BB_SD_07L_BT101.dgn
11/16/2012 12:00:07 PM 1092_PDF_full.pltcfg 1092_str.tbl

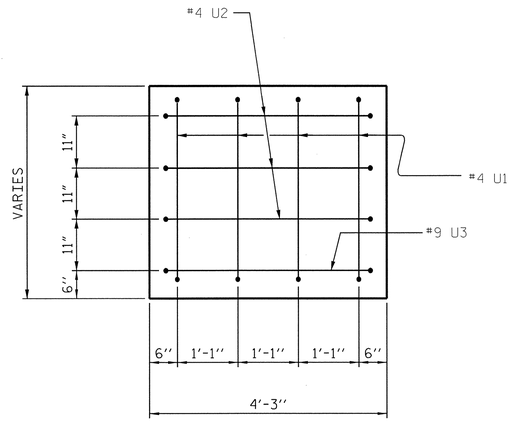

VIEW X-X

(TYP. EA. END)

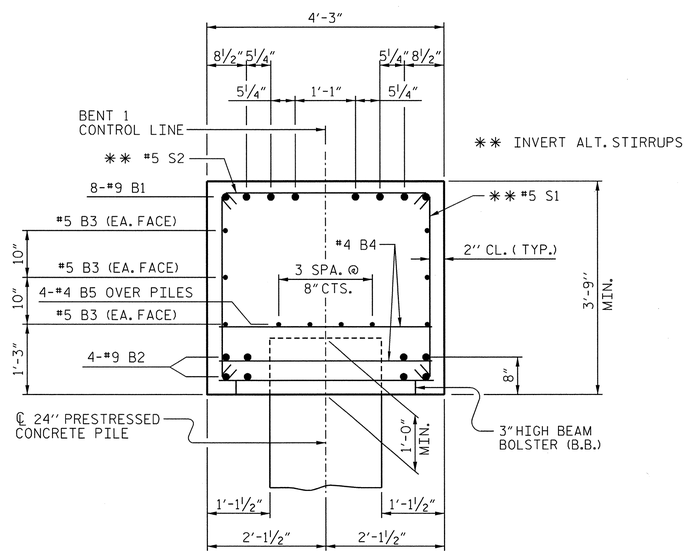

SECTION A-A

(BENT 1 SHOWN BENT 2 SIMILAR)

BAR TYPES

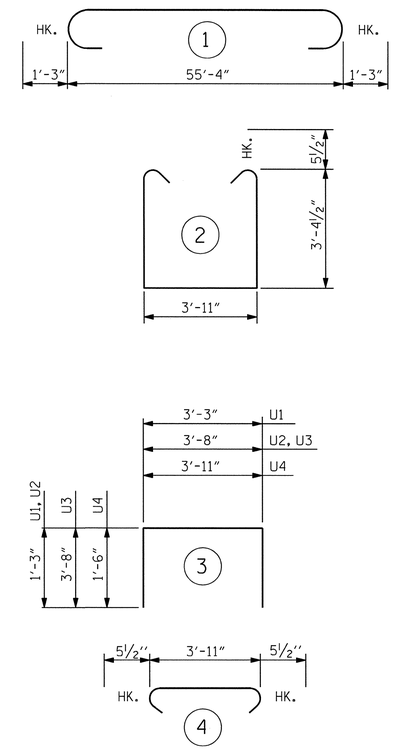

ALL BAR DIMENSIONS ARE OUT TO OUT.

BILL OF MATERIAL

FOR ONE BENT (2 REQ'D)

BAR	NO.	SIZE	TYPE	LENGTH	WEIGHT
B1	8	#9	1	57'-10"	1573
B2	8	#9	STR	55'-3"	1503
B3	6	#5	STR	55'-3"	346
B4	28	#4	STR	3'-11"	73
B5	8	#4	STR	28'-11"	155
S1	81	#5	2	11'-7"	979
S2	81	#5	4	4'-10"	408
U1	8	#4	3	5'-9"	31
U2	6	#4	3	6'-2"	25
U3	2	#9	3	11'-0"	75
U4	54	#4	3	6'-11"	249

TOTAL REINFORCING STEEL LBS. 5,417

CLASS A CONCRETE C.Y. ▲ 31.1

24" PRESTRESSED CONCRETE PILES

BENT 1	No. 6	LIN. FT.	510
BENT 2	No. 6	LIN. FT.	510

PILES REDRIVES

BENT 1	NO. 3
BENT 2	NO. 3

PREDRILLING FOR PILES

BENT 1	LIN. FT. 119
BENT 2	LIN. FT. 108

▲ CONCRETE DISPLACED BY THE 24" PRESTRESSED CONCRETE PILES HAS BEEN DEDUCTED.

PROJECT NO. R-2633BB

BRUNSWICK/NEW HANOVER COUNTY

STATION: 425+60.75 -L-
16+20.93 -EY11-

SHEET 2 OF 3

STATE OF NORTH CAROLINA
DEPARTMENT OF TRANSPORTATION
RALEIGH

SUBSTRUCTURE
BENT 1 & BENT 2
LEFT LANE

NORTH CAROLINA PROFESSIONAL SEAL 14047 ENGINEER STEPHEN D. COOK
11/16/12

THE LOUIS BERGER GROUP, Inc.
1001 Wade Avenue, Suite 400
Raleigh, NC 27605-3322

REVISIONS								SHEET NO.
NO.	BY:	DATE:	NO.	BY:	DATE:			S-5LA
1			3					TOTAL SHEETS
2			4					700

DRAWN BY : J. MYA DATE : JULY 2012
CHECKED BY : S. COOK DATE : AUG 2012

G:\OR Projects\OR1092 - NCDOT Wilm Bypass DualBridges\Structures\Bridge Site 7\R-2633BB_SD_07L_BT102.dgn
11/16/2012 11:50:38 AM 1092_PDF_full.pltcfg 1092_str.tbl

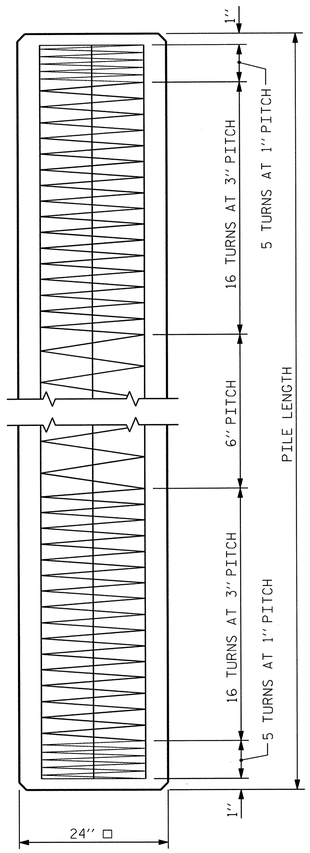

ELEVATION

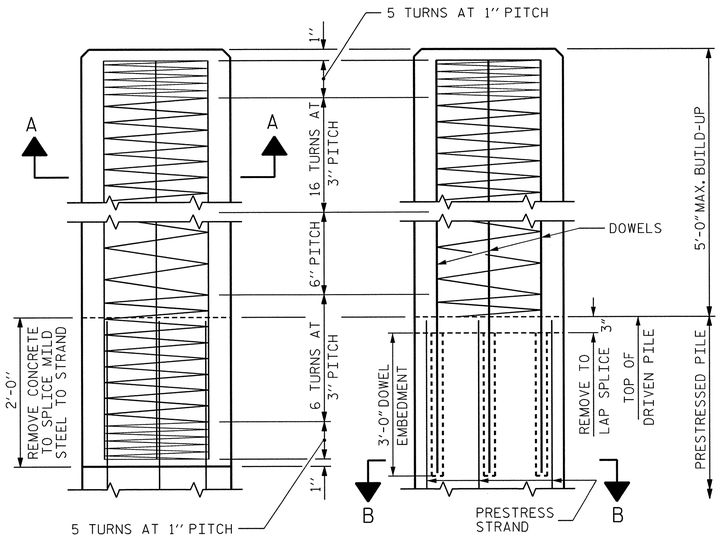

BUILD-UP AND SPIRAL REINFORCING

OPTIONAL BUILD-UP WITH DOWELS

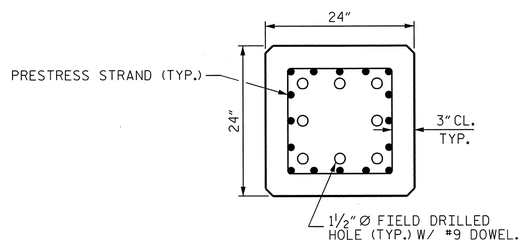

SECTION "B-B"

(AT THE CONTRACTOR'S OPTION, PILE BUILD-UP MAY BE CONSTRUCTED WITH DOWELS.)

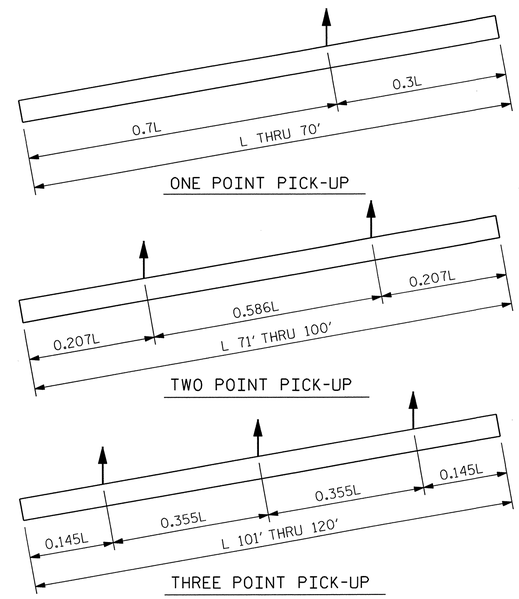

PICK-UP POINTS

NOTES

PRESTRESSED CONCRETE STRENGTH : f'c= 7,500 PSI

BUILD-UP CONCRETE STRENGTH : f'c= 7,500 PSI

STRAND DATA:

SIZE	GRADE	AREA	ULTIMATE STRENGTH	APPLIED PRESTRESS FORCE
½"	270 L.R.	0.153	41,300# PER STRAND	30,980# PER STRAND
0.6"	270 L.R.	0.217	58,600# PER STRAND	43,940# PER STRAND

ALL PRESTRESSING STRANDS SHALL BE 7-WIRE LOW-RELAXATION GRADE 270 STRANDS CONFORMING TO AASHTO M203. STRAND SAMPLING REQUIREMENTS SHALL BE IN ACCORDANCE WITH THE STANDARD SPECIFICATIONS.

AT THE CONTRACTOR'S OPTION, ½" OR 0.6" STRANDS MAY BE USED IN THE STRAND CONFIGURATION SHOWN IN THE TYPICAL SECTION DETAIL. MIXING OF STRAND SIZE IS NOT ALLOWED.

THE SLIP-FORM METHOD OF CASTING PILES WILL NOT BE PERMITTED.

TRANSFER THE LOAD FROM THE ANCHORAGES TO THE PILE AFTER THE CONCRETE HAS ATTAINED A MINIMUM COMPRESSIVE STRENGTH OF 4,000 PSI.

IF STRAND STRESS IS RELIEVED BY BURNING, THE STRANDS SHALL BE BURNED IN OPPOSITE PAIRS AS INDICATED IN THE TYPICAL PATTERN SHOWN. FOR ANY NUMBER OF STRANDS, BURN IN OPPOSITE PAIRS AND SYMMETRICALLY ABOUT BOTH THE VERTICAL AND HORIZONTAL AXES, STRANDS 1-1 SHALL BE BURNED BEFORE 2-2, ETC. NOT MORE THAN 4 STRANDS, SAY 5-5 AND 6-6, MAY BE BURNED AT ANY ONE SECTION BEFORE THESE SAME PAIRS OF STRANDS ARE BURNED AT BOTH ENDS OF THE BED AND BETWEEN EACH PAIR OF PILES IN THE BED.

PROPOSED DEVICES FOR LIFTING PILES, RECESS DETAILS, AND PATCHING MATERIAL SHALL BE DETAILED IN SHOP DRAWINGS. AFTER ATTACHMENTS HAVE BEEN REMOVED, OPENINGS SHALL BE REPAIRED SUCH THAT THE APPEARANCE OF THE PILE IS UNIFORM.

WHERE CAST-IN-PLACE LIFTING DEVICES ARE NOT USED, PICK-UP POINTS ARE TO BE INDICATED WITH A 2" WIDE BLACK MARK.

DRIVE PILES USING A METHOD APPROVED BY THE ENGINEER, WHEREBY THE HEAD OF THE PILE IS NOT DAMAGED.

DRIVING OF THE BUILT-UP PILE WILL NOT BE PERMITTED UNTIL THE CONCRETE HAS REACHED A COMPRESSIVE STRENGTH OF 5,000 PSI AND UNTIL A PERIOD OF SEVEN DAYS HAS ELAPSED SINCE CASTING OF THE BUILD-UP.

DOWEL INSTALLATION FOR OPTIONAL BUILD-UP

GROUT COMPRESSIVE STRENGTH: f'c= 5,000 PSI

BEFORE DRILLING DOWEL HOLES, REMOVE THE UPPER 3" OF CONCRETE FROM THE TOP OF THE PILE WITHOUT DAMAGE TO THE REINFORCING STEEL. THE REMOVAL PLANE SHOULD BE NORMAL TO THE EDGE OF THE PILE.

DOWEL HOLES SHALL BE POSITIONED TO MAINTAIN ½" CLEAR TO ALL EXISTING PRESTRESSING STRANDS IN THE CONCRETE PILE.

FIELD DRILLED HOLES SHALL BE CLEAN AND FREE OF ANY OBSTRUCTIONS BEFORE GROUTING OF DOWELS. DOWEL BARS SHALL BE INSTALLED AND GROUTED WITH AN APPROVED NON-SHRINK GROUT.

THE SPIRAL REINFORCING IN ALL BUILD-UPS SHALL BE W4.0 COLD DRAWN WIRE WHICH SHALL BE SECURED TO THE LONGITUDINAL REINFORCEMENT TO MAINTAIN PITCH.

THE SPIRAL REINFORCING IN THE BUILD-UP AND THE PRESTRESSED CONCRETE PILE SHALL BE SPLICED BY OVERLAPPING A MIN. OF ONE TURN.

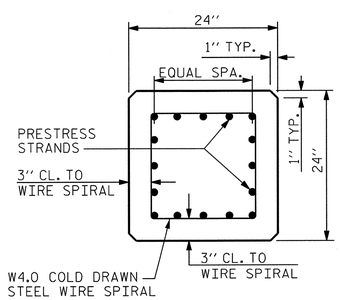

TYPICAL SECTION

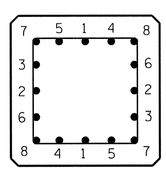

TYPICAL PATTERN FOR BURNING STRANDS

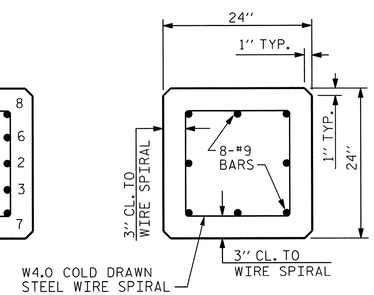

SECTION A-A

½" OR 0.6" Ø GRADE 270 L.R. PRESTRESS STRANDS

QUANTITIES FOR ONE 24" SQUARE PILE

LENGTH	CONCRETE CU. YDS.	PILE WT. TONS	ONE POINT PICK-UP 0.3L	ONE POINT PICK-UP 0.7L	TWO POINT PICK-UP 0.207L	TWO POINT PICK-UP 0.586L	THREE POINT PICK-UP 0.145L	THREE POINT PICK-UP 0.355L
25'-0"	3.69	7.47	7'-6"	17'-6"				
30'-0"	4.43	8.97	9'-0"	21'-0"				
35'-0"	5.17	10.46	10'-6"	24'-6"				
40'-0"	5.91	11.96	12'-0"	28'-0"				
45'-0"	6.64	13.45	13'-6"	31'-6"				
50'-0"	7.38	14.95	15'-0"	35'-0"				
55'-0"	8.12	16.44	16'-6"	38'-6"				
60'-0"	8.86	17.94	18'-0"	42'-0"				
65'-0"	9.60	19.43	19'-6"	45'-6"				
70'-0"	10.33	20.93	21'-0"	49'-0"				
75'-0"	11.07	22.42			15'-6½"	43'-11"		
80'-0"	11.81	23.92			16'-6½"	46'-11"		
85'-0"	12.55	25.41			17'-7"	49'-10"		
90'-0"	13.29	26.91			18'-7½"	52'-9"		
95'-0"	14.03	28.40			19'-8"	55'-8"		
100'-0"	14.76	29.90			20'-8½"	58'-7"		
105'-0"	15.50	31.39					15'-3"	37'-3"
110'-0"	16.24	32.89					15'-11½"	39'-0½"
115'-0"	16.98	34.38					16'-8"	40'-10"
120'-0"	17.72	35.87					17'-5"	42'-7"

PROJECT NO. R-2633BB

BRUNSWICK/NEW HANOVER COUNTY

STATION: 425+60.75 -L-
16+20.93 -EY11-

SHEET 3 OF 3

STATE OF NORTH CAROLINA
DEPARTMENT OF TRANSPORTATION
RALEIGH

STANDARD

24" PRESTRESSED CONCRETE PILE
LEFT LANE

NORTH CAROLINA PROFESSIONAL SEAL 140471 ENGINEER STEPHEN D. COOK
11/16/12

THE LOUIS BERGER GROUP, Inc.
1001 Wade Avenue, Suite 400
Raleigh, NC 27605-3322

REVISIONS								SHEET NO.
NO.	BY:	DATE:	NO.	BY:	DATE:			S-525
1			3					TOTAL SHEETS
2			4					700

STD. NO. PCP4

ASSEMBLED BY : J. MYA/C. KING		DATE : AUG 2012	
CHECKED BY : S. COOK		DATE : AUG 2012	
DRAWN BY : WJH 1/89	REV. 5/1/06R	TLA/GM	
CHECKED BY : CRK 3/89	REV. 11/30/10	WMC/GM	
	REV. 10/1/11	MAA/GM	

G:\OR Projects\OR1092 - NCDOT Wilm Bypass DualBridges\Structures\Bridge Site 7\R-2633BB_SD_07L_BT103.dgn
11/16/2012 11:50:41 AM 1092_PDF_full.pltcfg 1092_str.tbl

NOTES:

STIRRUPS IN CAP MAY BE SHIFTED AS NECESSARY TO ANCHOR BOLTS.

THE CONTRACTOR SHALL PROVIDE FOR INSTALLATION OF THE 4"DIAMETER DRAIN PIPE THROUGH THE WING WALL AS REQUIRED FOR REINFORCED BRIDGE APPROACH FILLS. SEE THE ROADWAY PLANS. REINFORCING STEEL IN THE WING WALL MAY BE SHIFTED AS NECESSARY TO CLEAR THE DRAIN PIPE.

BACKWALL SHALL BE PLACED BEFORE APPLYING THE EPOXY PROTECTIVE COATING.

THE TOP SURFACE AREAS OF THE END BENT CAP SHALL BE CURED IN ACCORDANCE WITH THE STANDARD SPECIFICATIONS EXCEPT THE MEMBRANE CURING COMPOUND METHOD SHALL NOT BE USED.

THE TOP SURFACE OF THE CAP EXCEPT THE BRIDGE SEAT BUILDUPS SHALL BE SLOPED TRANSVERSELY FROM THE FILLFACE TO THE BACK FACE AT THE RATE OF 2%.

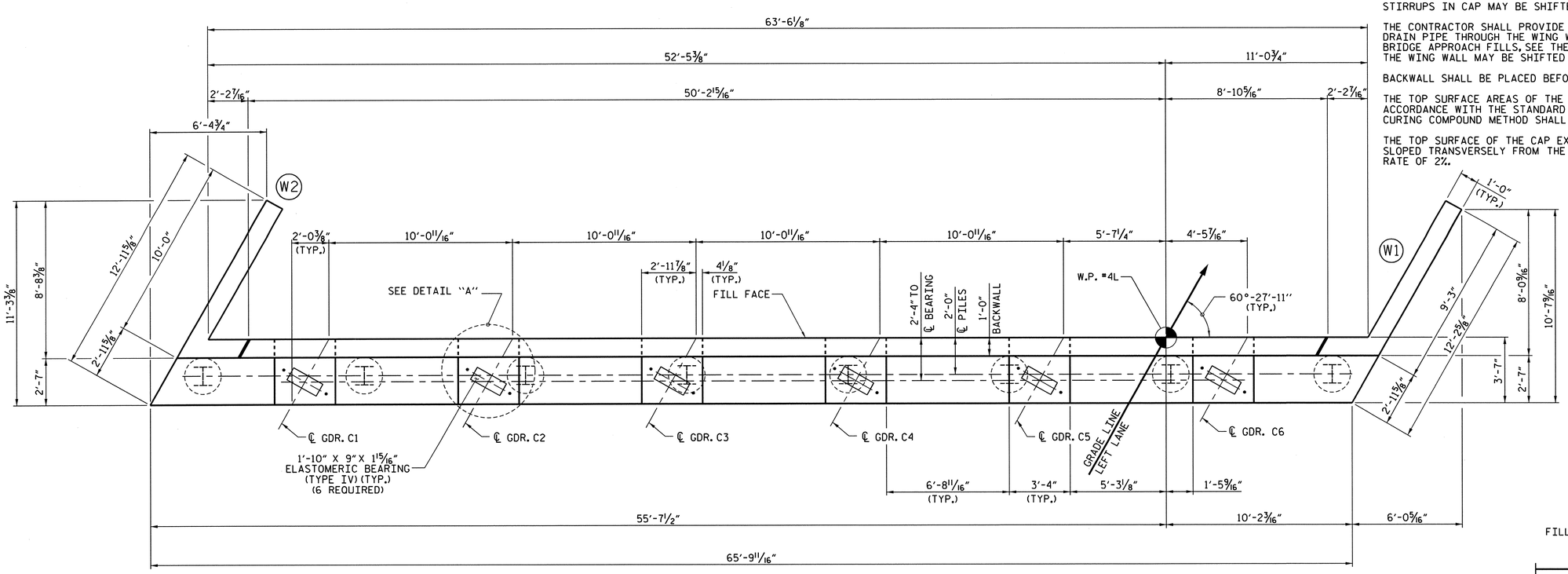

PLAN

TOP OF PILE ELEVATIONS	
PILE NUMBER	ELEVATION
1	38.349
2	38.583
3	38.818
4	39.052
5	39.286
6	39.526
7	39.760
8	39.995

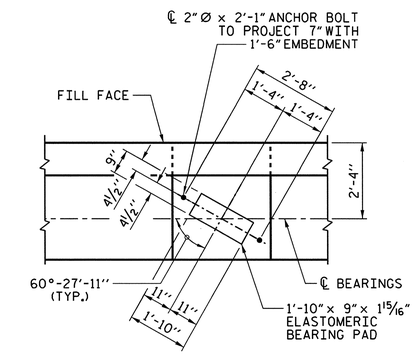

DETAIL "A"

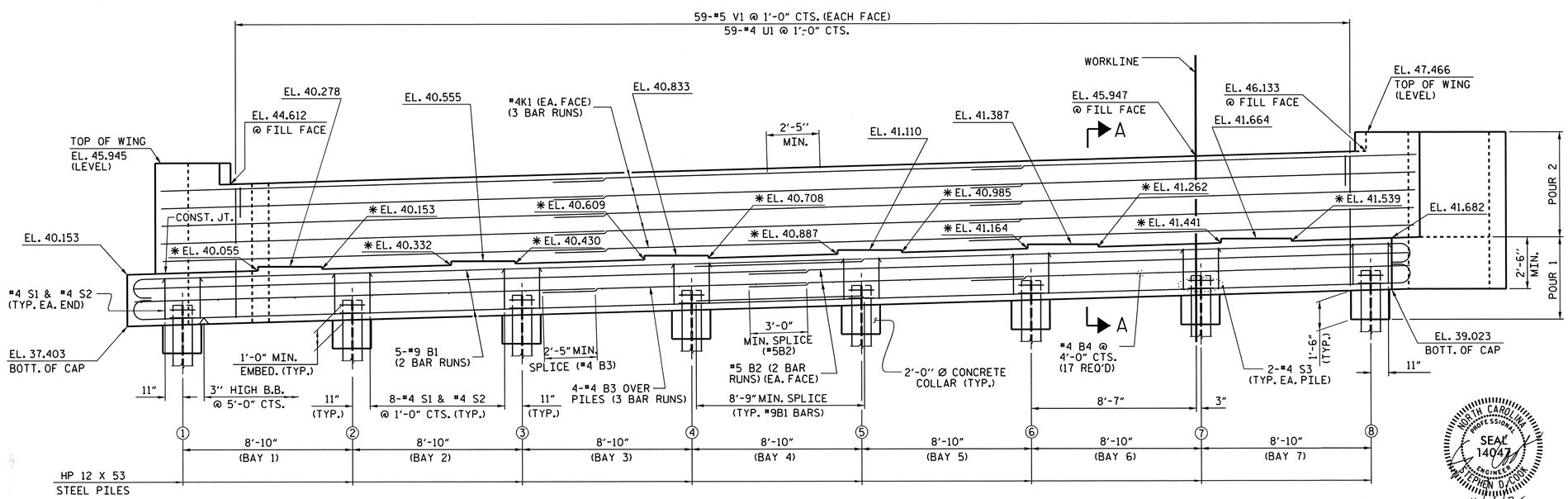

ELEVATION

✱ FOR LOCATION OF ELEVATIONS BETWEEN BRIDGE SEAT BUILDUPS. SEE SECTION A-A ON SHEET 3 OF 3.

PROJECT NO. R-2633BB

BRUNSWICK/NEW HANOVER COUNTY

STATION: 425+60.75 -L- / 16+20.93 -EY11-

SHEET 1 OF 3

STATE OF NORTH CAROLINA
DEPARTMENT OF TRANSPORTATION
RALEIGH

SUBSTRUCTURE
END BENT 2
LEFT LANE

NORTH CAROLINA PROFESSIONAL SEAL 14047 ENGINEER STEPHEN D. COOK
11/16/12

THE LOUIS BERGER GROUP, Inc.
1001 Wade Avenue, Suite 400
Raleigh, NC 27605-3322

REVISIONS								SHEET NO.
NO.	BY:	DATE:	NO.	BY:	DATE:			S-566
1			3					TOTAL SHEETS
2			4					700

DRAWN BY : J. MYA DATE : JULY 2012
CHECKED BY : S. COOK DATE : AUG 2012

G:\OR Projects\OR1092 - NCDOT Wilm Bypass DualBridges\Structures\Bridge Site 7\R-2633BB_SD_07L_EB201.dgn
11/16/2012 11:50:43 AM 1092_PDF_full.pltcfg 1092_str.tbl

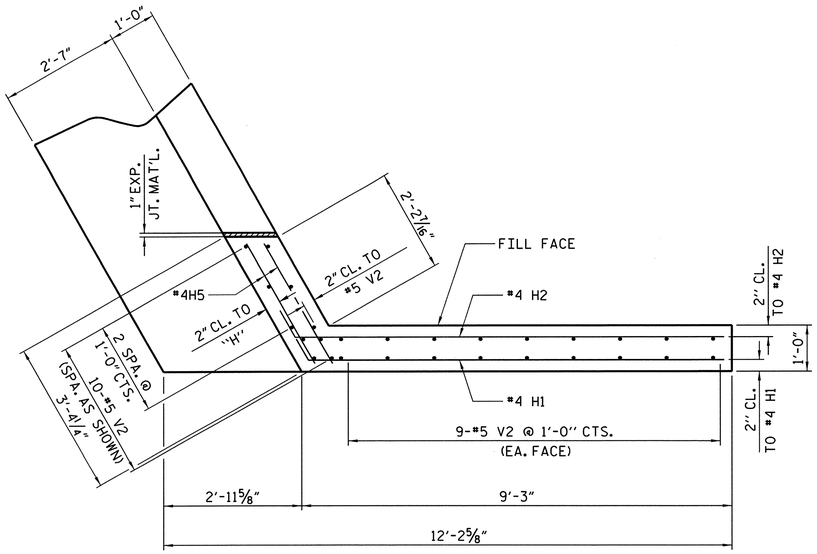

PLAN OF WING - (W1)

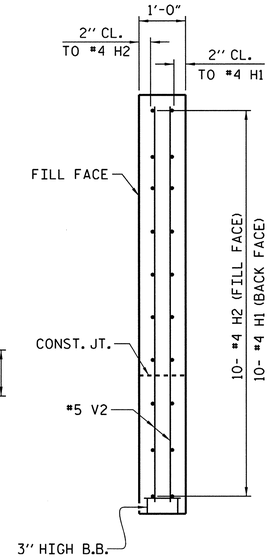

SECTION X-X

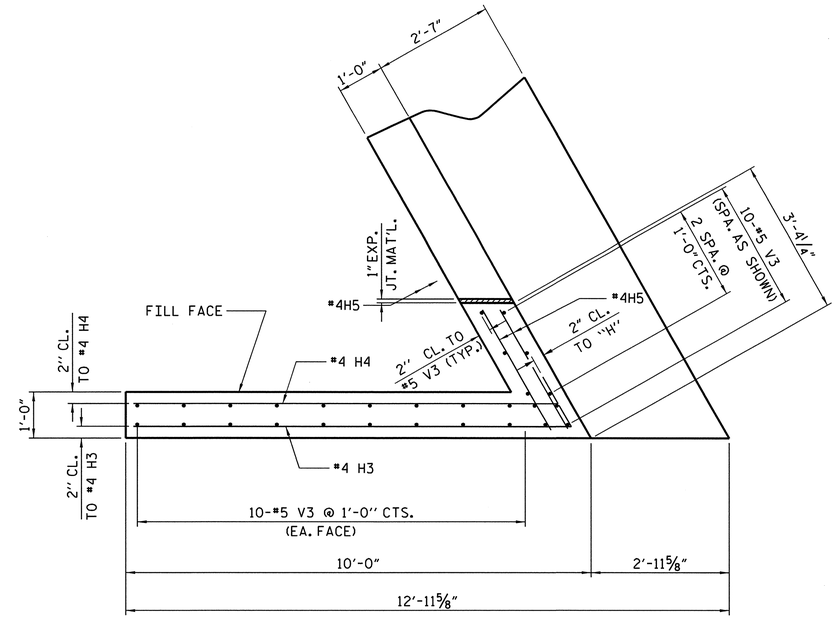

PLAN OF WING - (W2)

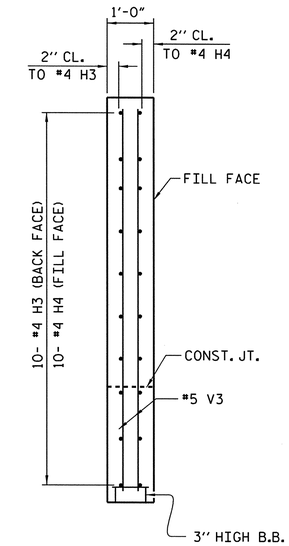

SECTION Y-Y

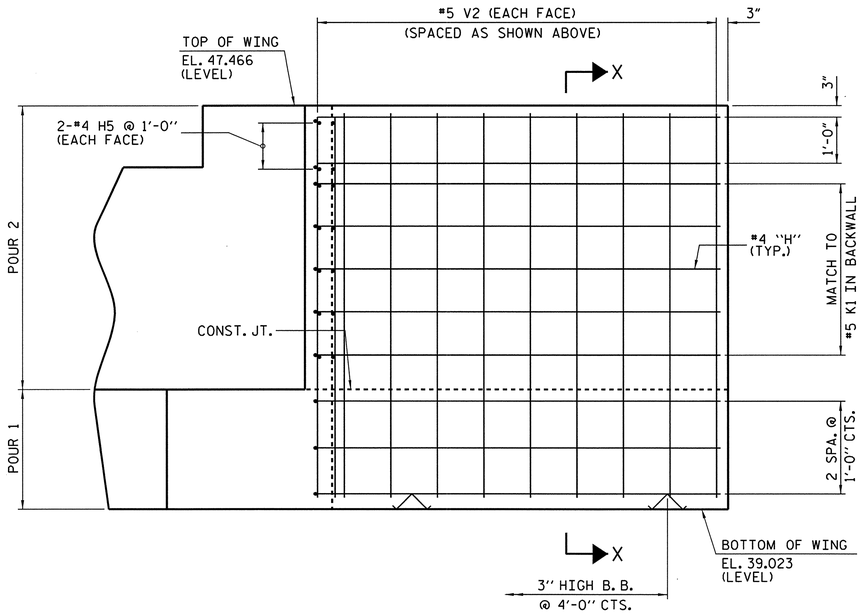

ELEVATION OF WING - (W1)

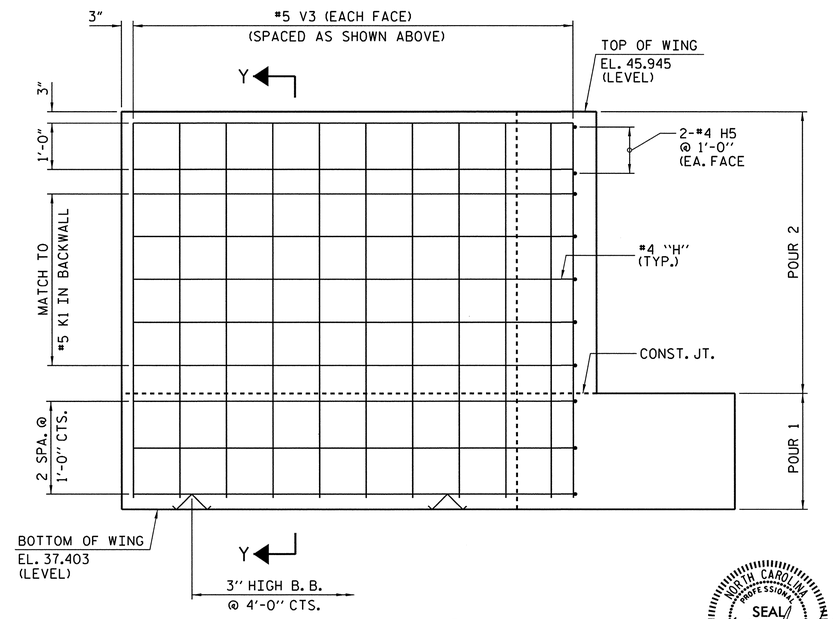

PLAN OF WING - (W2)

PROJECT NO. R-2633BB

BRUNSWICK/NEW HANOVER COUNTY

STATION: 425+60.75 -L-

16+20.93 -EY11-

SHEET 2 OF 3

STATE OF NORTH CAROLINA
DEPARTMENT OF TRANSPORTATION
RALEIGH

SUBSTRUCTURE
END BENT 2
LEFT LANE

NORTH CAROLINA PROFESSIONAL SEAL 14047 ENGINEER STEPHEN D. COOK

11/16/12

THE LOUIS BERGER GROUP, Inc.
1001 Wade Avenue, Suite 400
Raleigh, NC 27605-3322

REVISIONS								SHEET NO.
NO.	BY:	DATE:	NO.	BY:	DATE:			S-567
1			3					TOTAL SHEETS
2			4					700

DRAWN BY : J. MYA DATE : JULY 2012
CHECKED BY : S. COOK DATE : AUG 2012

G:\OR Projects\OR1092 - NCDOT Wilm Bypass DualBridges\Structures\Bridge Site 7\R-2633BB_SD_07L_EB202.dgn
11/16/2012 12:47:27 PM 1092_PDF_full.pltcfg 1092_str.tbl

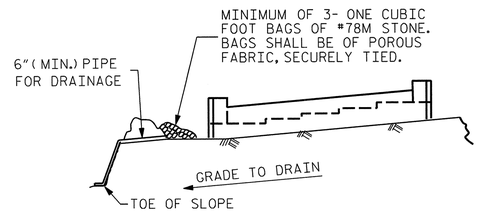

BAGGED STONE AND PIPE SHALL BE PLACED IMMEDIATELY AFTER COMPLETION OF END BENT EXCAVATION. PIPE MAY BE EITHER CONCRETE, CORRUGATED STEEL, CORRUGATED ALUMINUM ALLOY, OR CORRUGATED PLASTIC. PERFORATED PIPE WILL NOT BE ALLOWED.

BAGGED STONE SHALL REMAIN IN PLACE UNTIL THE ENGINEER DIRECTS THAT IT BE REMOVED. THE CONTRACTOR SHALL REMOVE AND DISPOSE OF SILT ACCUMULATIONS AT BAGGED STONE WHEN SO DIRECTED BY THE ENGINEER. BAGS SHALL BE REMOVED AND REPLACED WHENEVER THE ENGINEER DETERMINES THAT THEY HAVE DETERIORATED AND LOST THEIR EFFECTIVENESS.

NO SEPARATE PAYMENT WILL BE MADE FOR THIS WORK AND THE ENTIRE COST OF THIS WORK SHALL BE INCLUDED IN THE UNIT CONTRACT PRICE BID FOR THE SEVERAL PAY ITEMS.

TEMPORARY DRAINAGE AT END BENT

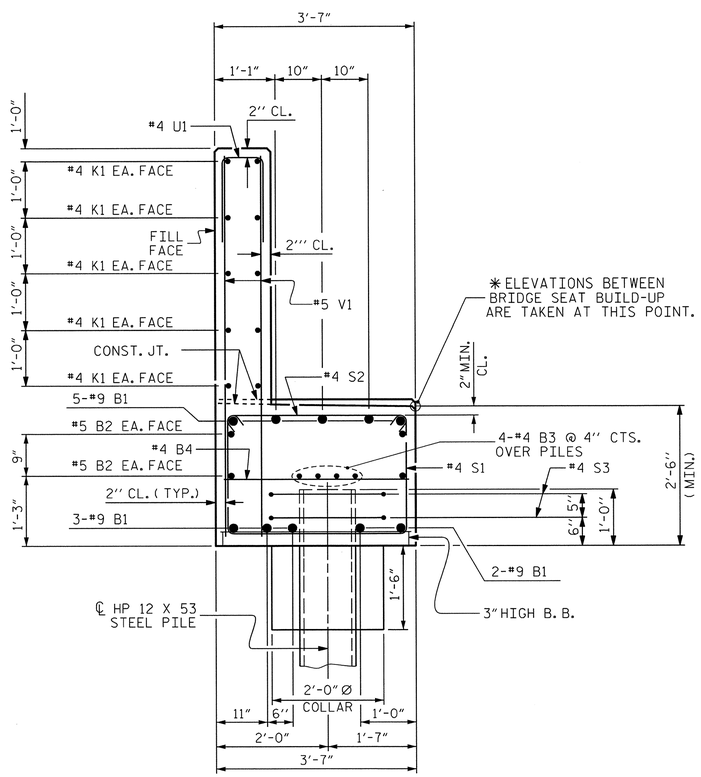

SECTION A-A

BAR TYPES

ALL BAR DIMENSIONS ARE OUT TO OUT.

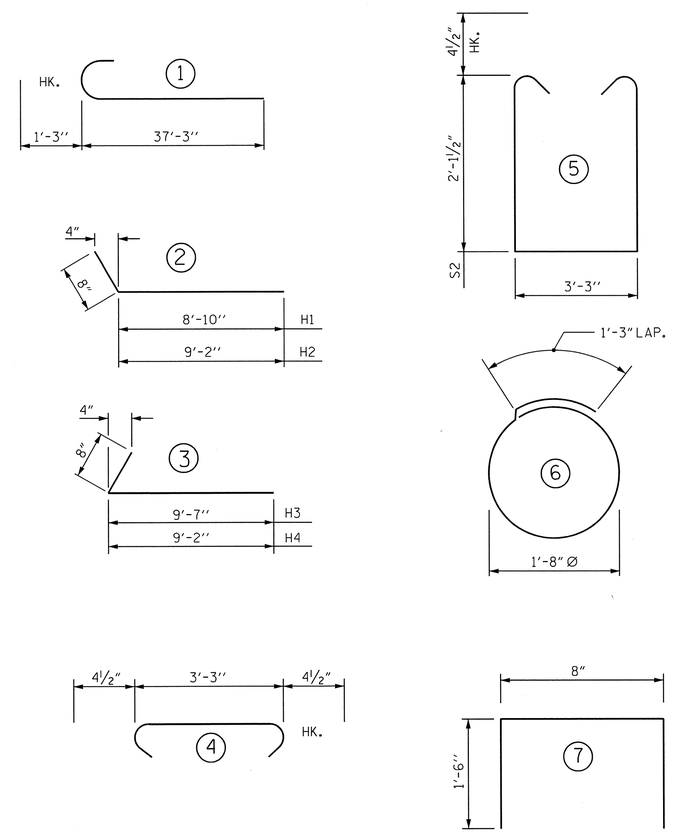

BILL OF MATERIAL FOR END BENT 2

BAR	NO	SIZE	TYPE	LENGTH	WEIGHT
B1	20	9	1	38'-6"	2,618
B2	8	5	STR.	34'-3"	286
B3	12	4	STR.	23'-10"	191
B4	17	4	STR.	3'-3"	37
H1	10	4	2	9'-6"	63
H2	10	4	2	9'-10"	66
H3	10	4	3	10'-3"	68
H4	10	4	3	9'-10"	66
H5	8	4	STR.	2'-11"	16
K1	30	4	STR.	24'-0"	481
S1	58	4	5	8'-3"	320
S2	58	4	4	4'-0"	155
S3	16	4	6	6'-6"	69
U1	59	4	7	3'-8"	145
V1	118	5	STR.	6'-9"	831
V2	28	5	STR.	8'-4"	243
V3	30	5	STR.	8'-1"	253
REINFORCING STEEL				= LBS.	5,908

CLASS A CONCRETE BREAKDOWN

POUR #1 (CAP, CONCRETE COLLARS & LOWER PART OF WINGS	C.Y.	27.5
POUR #2 (BACKWALL & UPPER PART OF WINGS)	C.Y.	15.5
TOTAL CLASS A CONCRETE	C.Y.	43.0

HP 12 X 53 STEEL PILES NO. 8	LIN. FT.	640
PILE REDRVES	No.	4

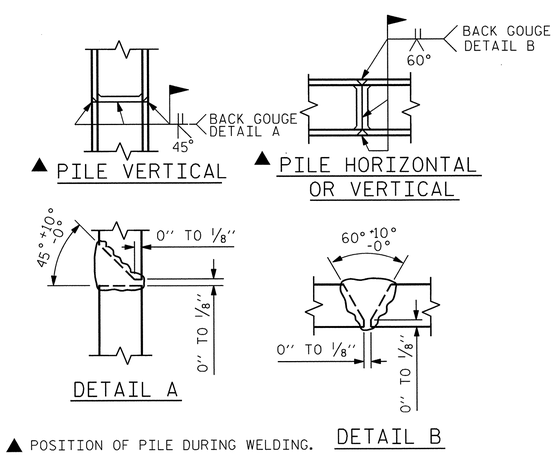

▲ POSITION OF PILE DURING WELDING.

PILE SPLICE DETAILS

PROJECT NO. R-2633BB

BRUNSWICK/NEW HANOVER COUNTY

STATION: 425+60.75 -L-
16+20.93 -EY11-

SHEET 3 OF 3

STATE OF NORTH CAROLINA
DEPARTMENT OF TRANSPORTATION
RALEIGH

SUBSTRUCTURE
END BENT 2
LEFT LANE

NORTH CAROLINA PROFESSIONAL SEAL 14047 ENGINEER STEPHEN D. COOK
11/16/12

THE LOUIS BERGER GROUP, Inc.
1001 Wade Avenue, Suite 400
Raleigh, NC 27605-3322

REVISIONS							SHEET NO.
NO.	BY:	DATE:	NO.	BY:	DATE:		S-568
1			3				TOTAL SHEETS
2			4				700

DRAWN BY : J. MYA DATE : JULY 2012
CHECKED BY : S. COOK DATE : AUG 2012

G:\OR Projects\OR1092 - NCDOT Wilm Bypass DualBridges\Structures\Bridge Site 7\R-2633BB_SD_07L_EB203.dgn
11/16/2012 11:50:49 AM 1092_PDF_full.pltcfg 1092_str.tbl

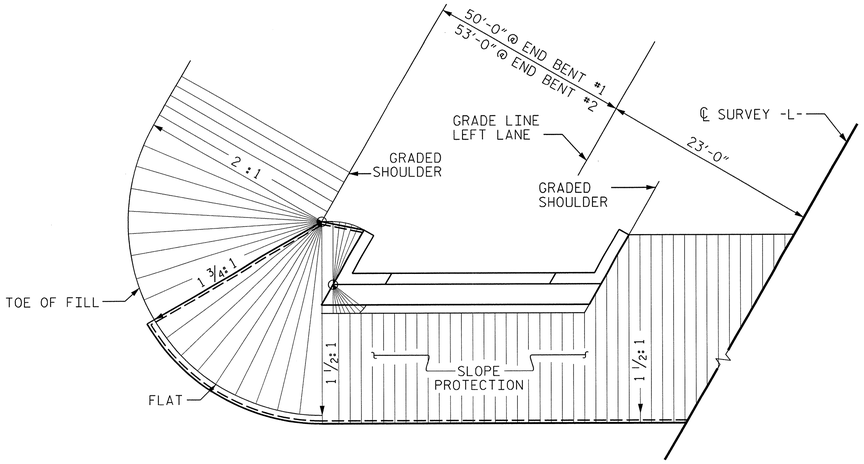

PLAN - END BENT WITH SWEPT BACK WINGS - SKEWED

(1 1/2 : 1 SLOPE)

BRIDGE @ STA. 425+60.75 -L-	4 INCH SLOPE PROTECTION	* WELDED WIRE FABRIC 60 INCHES WIDE
	SQUARE YARDS	APPROX. L.F.
END BENT 1	373	746
END BENT 2	555	1110

* QUANTITY SHOWN IS BASED ON 5' POURS.

GENERAL NOTES

SLOPE PROTECTION SHALL BE PLACED UNDER THE ENDS OF THE BRIDGE AS SHOWN IN THE DETAILS. THE STRAIGHT EDGING WILL NOT BE REQUIRED UNLESS, IN THE OPINION OF THE ENGINEER, VISUAL INSPECTION INDICATES A NEED FOR IT. MEASUREMENT AND PAYMENT SHALL BE AS PRESCRIBED IN SECTION 462 OF THE STANDARD SPECIFICATIONS. FOR BERM WIDTH, SEE GENERAL DRAWING.

ALTERNATE "A"

ALTERNATE "A" SHALL CONSIST OF 4" POURED-IN-PLACE CONCRETE PAVING AS SHOWN IN THE DETAILS ON THIS SHEET. CONCRETE SHALL BE CLASS "B". THE CONCRETE SURFACE SHALL BE FLOATED WITH A WOODEN FLOAT AND FINISHED. WELDED WIRE FABRIC REINFORCING SHALL BE 6 X 6 - W1.4 X W1.4, 60" WIDE. SLOPE PROTECTION SHALL BE POURED IN 5' STRIPS AS SHOWN IN THE "POURING DETAIL" WITH 2'-0" LONG #4 BARS PLACED ALONG THE SLOPE BETWEEN STRIPS AT 1'-6" MAXIMUM SPACING. SLOPE PROTECTION MAY BE POURED IN ALTERNATE 4' AND 5' STRIPS AS SHOWN IN THE "OPTIONAL POURING DETAIL" WITH ADJACENT RUNS OF WELDED WIRE FABRIC LAPPING AT LEAST 6". THE COST OF THE WELDED WIRE FABRIC AND #4 BARS, IF USED, SHALL BE INCLUDED IN THE CONTRACT UNIT PRICE BID PER SQUARE YARD FOR SLOPE PROTECTION.

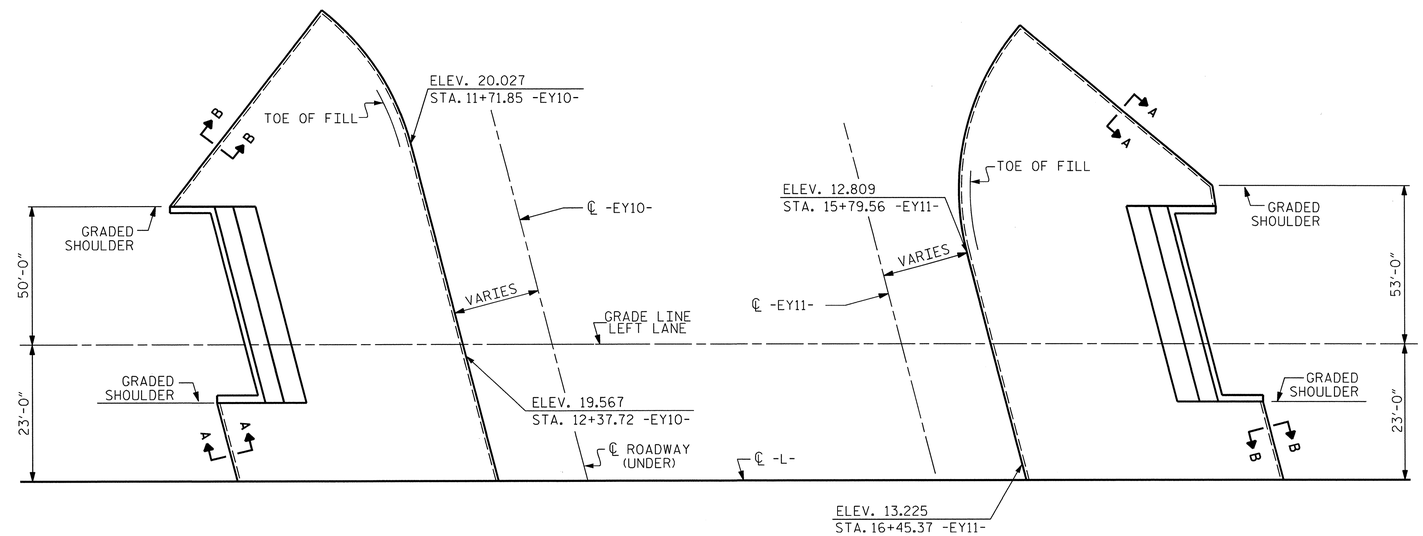

PLAN

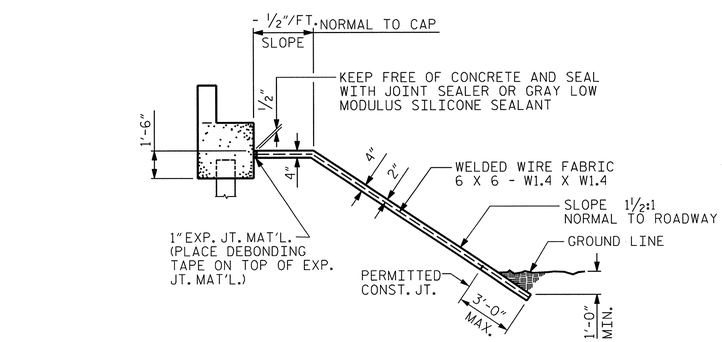

SECTION ALONG ℄ ROADWAY WHEN DITCH IS NOT PROVIDED

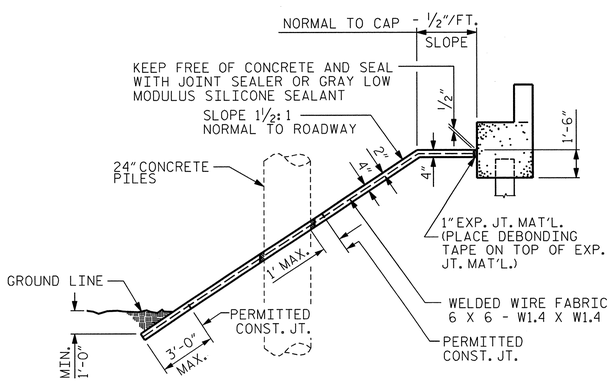

SECTION ALONG ℄ ROADWAY WITH 24" CONCRETE PILES

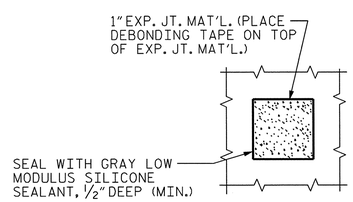

PLAN WHERE CONCRETE SLOPE PROTECTION MUST BE PLACED AROUND A BENT PILE

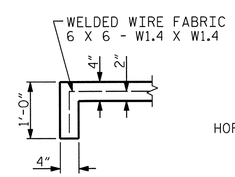

SECTION A-A

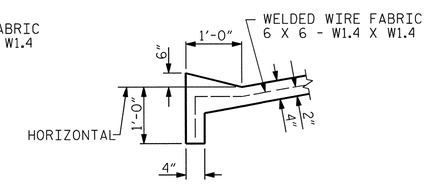

SECTION B-B

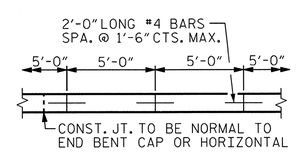

STRIP WIDTHS MAY VARY IN CURVED PORTION.

POURING DETAIL

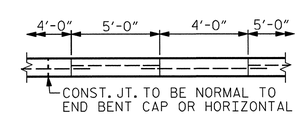

POUR A 4'-0" STRIP FIRST. STRIP WIDTHS MAY VARY IN CURVED PORTION.

OPTIONAL POURING DETAIL

PROJECT NO. R-2633BB

BRUNSWICK/NEW HANOVER COUNTY

STATION: 425+60.75 -L-
16+20.93 -EY11-

STATE OF NORTH CAROLINA
DEPARTMENT OF TRANSPORTATION
RALEIGH

SLOPE PROTECTION DETAILS LEFT LANE

NORTH CAROLINA PROFESSIONAL SEAL 14047 ENGINEER STEPHEN D. COOK
4/16/12

THE LOUIS BERGER GROUP, Inc.
1001 Wade Avenue, Suite 400
Raleigh, NC 27605-3322

REVISIONS							
NO.	BY:	DATE:	NO.	BY:	DATE:		
1			3				
2			4				

SHEET NO. S-569

TOTAL SHEETS 700

ASSEMBLED BY : M. HOGAN	DATE : JULY 2012
CHECKED BY : S. COOK	DATE : AUG 2012
DRAWN BY : ELR 5/92	REV. 5/1/06 TLA/GM
CHECKED BY : GRP 6/92	REV. 10/1/11 MAA/GM
	REV. 12/21/11 MAA/GM

STD. NO. SP1

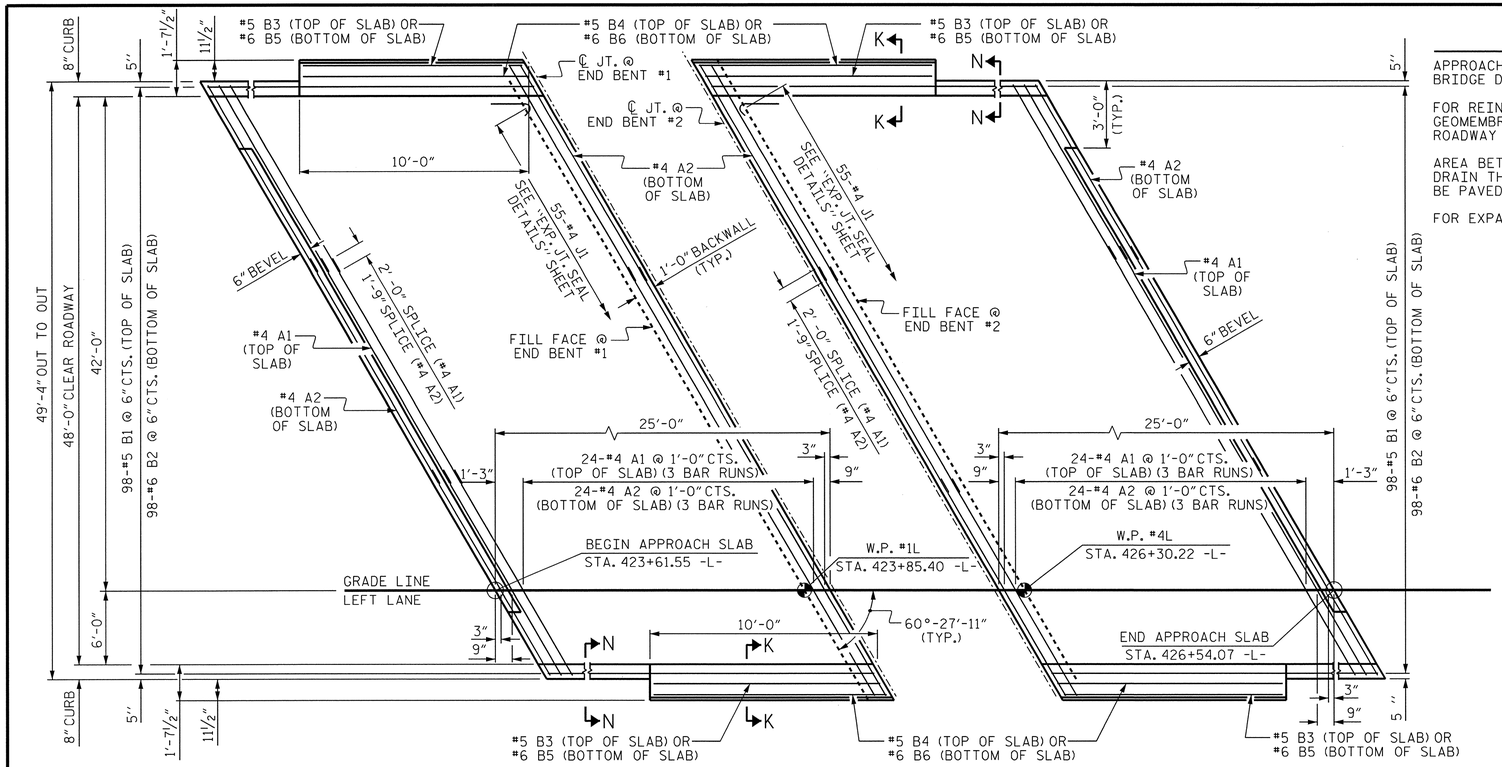

PLAN @ END BENT #1

PLAN @ END BENT #2

DIMENSIONS SHOWN ARE TYPICAL FOR BOTH APPROACH SLABS

NOTES

APPROACH SLAB SHALL NOT BE CONSTRUCTED PRIOR TO COMPLETION OF THE BRIDGE DECK.

FOR REINFORCED BRIDGE APPROACH FILL INCLUDING GEOTEXTILE, IMPERMEABLE GEOMEMBRANE, 4" Ø DRAINAGE PIPE, #78M STONE, AND SELECT MATERIAL, SEE ROADWAY PLANS.

AREA BETWEEN THE WINGWALL AND APPROACH SLAB SHALL BE GRADED TO DRAIN THE WATER AWAY FROM THE FILL FACE OF THE BRIDGE AND SHALL BE PAVED. SEE ROADWAY PLANS.

FOR EXPANSION JOINT SEALS, SEE SPECIAL PROVISIONS.

BILL OF MATERIAL

APPROACH SLAB AT EB #1

BAR	NO.	SIZE	TYPE	LENGTH	WEIGHT
✱A1	75	#4	STR	20'-11"	1,048
A2	78	#4	STR	20'-9"	1,081
✱B1	98	#5	STR	24'-7"	2513
B2	98	#6	STR	24'-7"	3619
✱B3	4	#5	STR	10'-1"	42
B4	4	#5	STR	10'-5"	43
✱B5	4	#6	STR	10'-1"	61
B6	4	#6	STR	10'-5"	63
✱J1	55	#4	1	1'-5"	52

REINFORCING STEEL ✱✱ LBS. 4,806

✱EPOXY COATED REINFORCING STEEL ✱✱ LBS. 3,716

CLASS AA CONCRETE ✱✱ C. Y. 54.7

APPROACH SLAB AT EB #2

BAR	NO.	SIZE	TYPE	LENGTH	WEIGHT
✱A1	75	#4	STR	20'-11"	1,048
A2	78	#4	STR	20'-9"	1,081
✱B1	98	#5	STR	24'-7"	2513
B2	98	#6	STR	24'-7"	3619
✱B3	4	#5	STR	10'-1"	42
B4	4	#5	STR	10'-5"	43
✱B5	4	#6	STR	10'-1"	61
B6	4	#6	STR	10'-5"	63
✱J1	55	#4	1	1'-5"	52

REINFORCING STEEL ✱✱ LBS. 4,806

✱EPOXY COATED REINFORCING STEEL ✱✱ LBS. 3,716

CLASS AA CONCRETE ✱✱ C. Y. 54.7

BAR TYPE

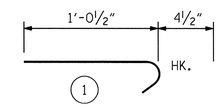

ALL BAR DIMENSIONS ARE OUT TO OUT

✱✱ QUANTITIES FOR BARRIER RAIL ARE NOT INCLUDED. SEE SHEET 2 OF 2.

THE QUANTITY OF #4 J1 BARS ON THE BILL OF MATERIAL IS BASED ON 1'-0" CENTERS. J1 BARS SHALL BE PLACED AT EACH VERTICAL STUD ANCHOR BOLT. IN THE EVENT THAT THE NUMBER OF VERTICAL STUD ANCHORS EXCEEDS THE NUMBER OF J1 BARS SPECIFIED, ADDITIONAL J1 BARS WILL NOT BE REQUIRED.

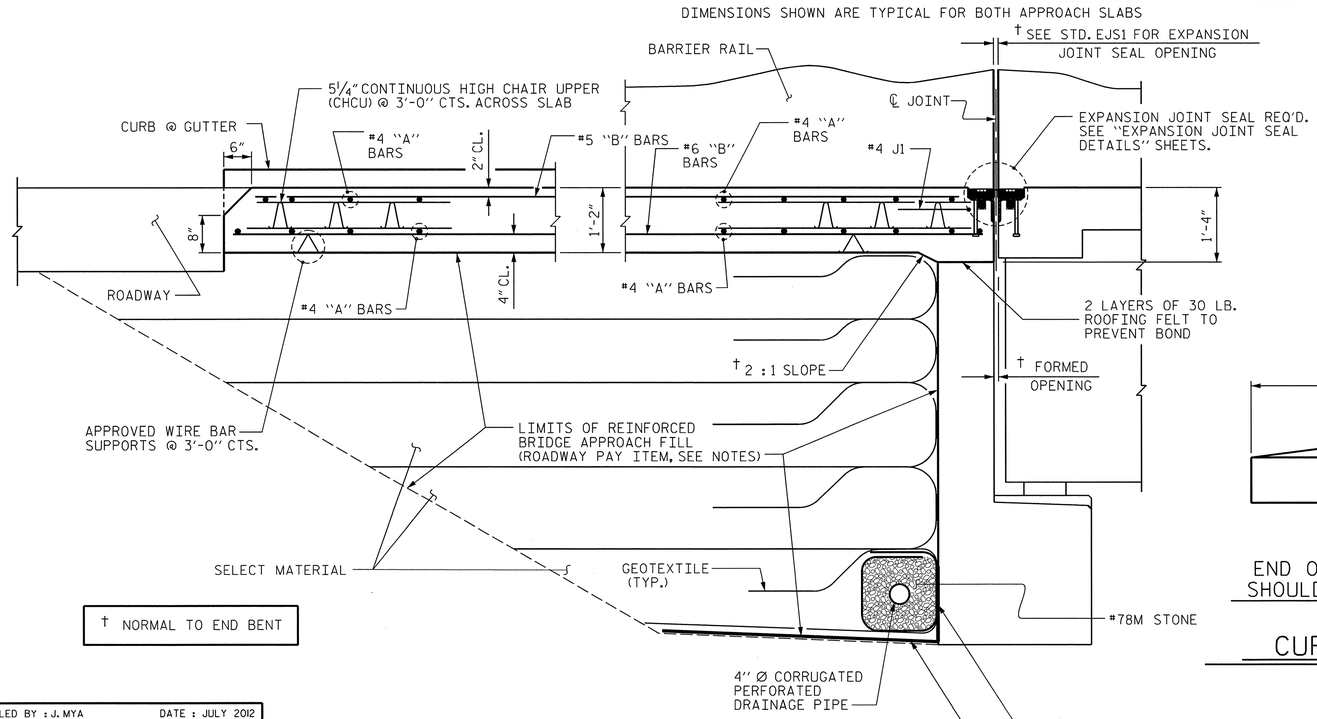

† NORMAL TO END BENT

SECTION THRU SLAB

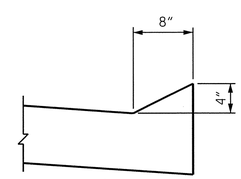

SECTION N-N

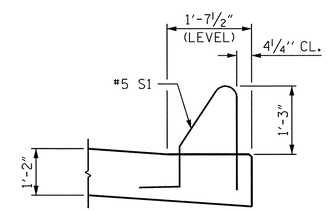

SECTION K-K

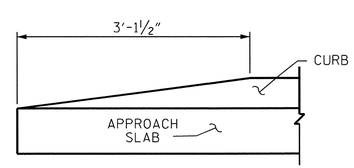

END OF CURB WITHOUT SHOULDER BERM GUTTER

CURB DETAILS

SPLICE LENGTHS		
BAR SIZE	EPOXY COATED	UNCOATED
#4	2'-0"	1'-9"
#5	2'-6"	2'-2"
#6	3'-10"	2'-7"

PROJECT NO. R-2633BB

BRUNSWICK/NEW HANOVER COUNTY

STATION: 425+60.75 -L-
16+20.93 -EY11-

SHEET 1 OF 2

STATE OF NORTH CAROLINA
DEPARTMENT OF TRANSPORTATION
RALEIGH

STANDARD

BRIDGE APPROACH SLAB FOR FLEXIBLE PAVEMENT LEFT LANE

NORTH CAROLINA PROFESSIONAL SEAL 14047 ENGINEER STEPHEN D. COOK

11/16/12

THE LOUIS BERGER GROUP, Inc.
1001 Wade Avenue, Suite 400
Raleigh, NC 27605-3322

REVISIONS							SHEET NO.
NO.	BY:	DATE:	NO.	BY:	DATE:		S-570
1			3				TOTAL SHEETS
2			4				700

ASSEMBLED BY : J. MYA		DATE : JULY 2012	
CHECKED BY : S. COOK		DATE : AUG 2012	
DRAWN BY : EEM 3/95	REV. 5/7/03R	RWW/JTE	
CHECKED BY : VAP 3/95	REV. 5/1/06RR	KMM/GM	
	REV. 10/1/11	MAA/GM	

STD. NO. BAS2 (SHT 4a)

G:\OR Projects\OR1092 - NCDOT Wilm Bypass DualBridges\Structures\Bridge Site 7\R-2633BB_SD_07L_AS01.dgn
11/16/2012 11:50:54 AM 1092_PDF_full.pltcfg 1092_str.tbl

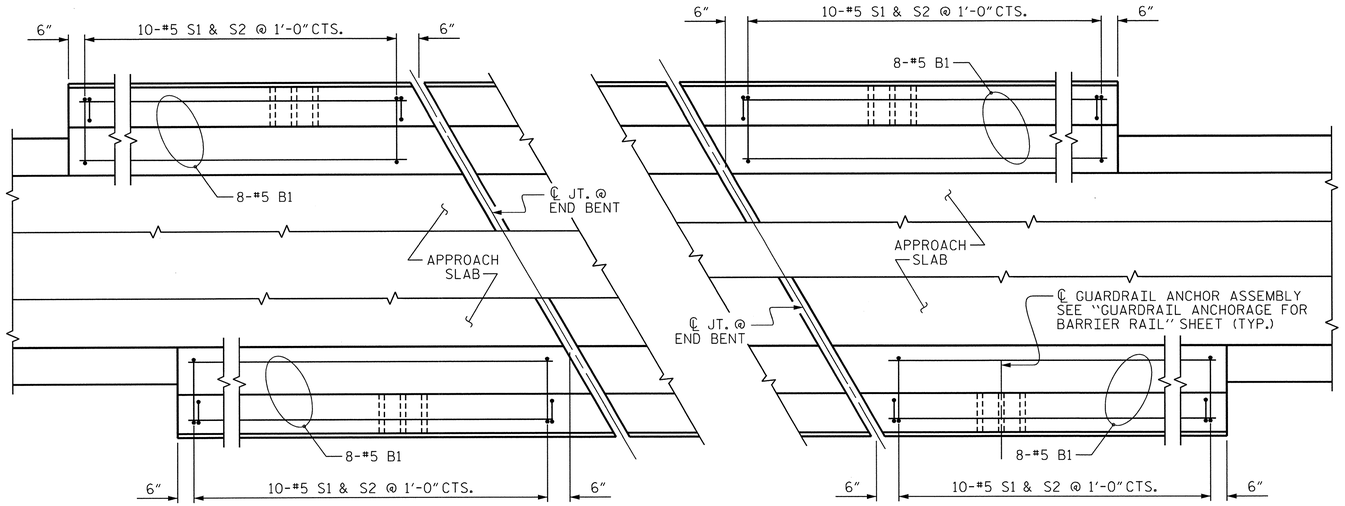

PLAN OF BARRIER RAIL

NOTES

THE COST OF THE BARRIER RAIL ON THE APPROACH SLAB SHALL BE INCLUDED IN THE LINEAR FOOT CONTRACT PRICE BID FOR "CONCRETE BARRIER RAIL".

THE BARRIER RAIL ON EACH APPROACH SLAB SHALL NOT BE CAST UNTIL ALL APPROACH SLAB CONCRETE HAS BEEN CAST AND HAS REACHED A MINIMUM COMPRESSIVE STRENGTH OF 3,000 PSI.

ALL REINFORCING STEEL IN BARRIER RAILS SHALL BE EPOXY COATED.

BAR TYPES

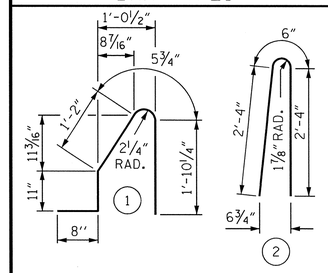

ALL BAR DIMENSIONS ARE OUT TO OUT

BILL OF MATERIAL

BARRIER RAIL ONLY

BAR	NO.	SIZE	TYPE	LENGTH	WEIGHT
✳B1	32	#5	STR	9'-7"	320
✳S1	40	#5	1	5'-1"	212
✳S2	40	#5	2	5'-2"	216
✳EPOXY COATED REINFORCING STEEL				LBS.	748
CLASS AA CONCRETE				C.Y.	4.2
CONCRETE BARRIER RAIL					41.8 LIN. FT.

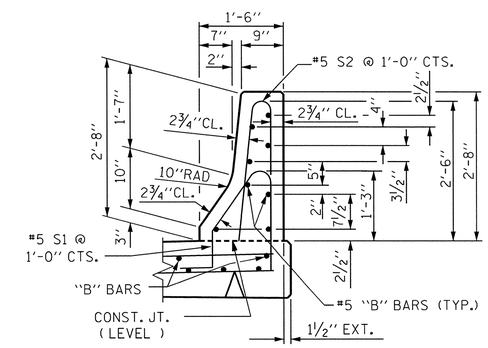

SECTION THRU RAIL

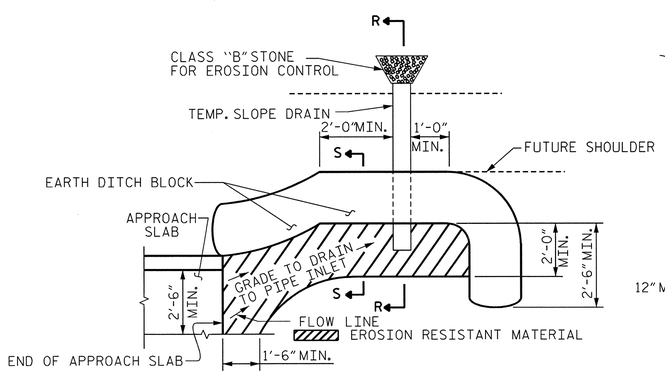

NOTE: IMMEDIATELY AFTER THE CONSTRUCTION OF THE APPROACH SLAB, THE CONTRACTOR SHALL PROVIDE TEMPORARY BERM AND SLOPE DRAIN. CONTRACTOR SHALL GRADE TO PIPE INLET AND PROVIDE EROSION RESISTANT MATERIAL AS SHOWN. THE EROSION RESISTANT MATERIAL SHALL BE EITHER 1) ASPHALT PLANT MIX, TYPE 1 OR TYPE 2, MIN. 2" DEPTH, 2) EROSION CONTROL MAT, OR 3) CONCRETE, AS DIRECTED BY THE ENGINEER. THE SLOPE DRAIN SHALL CONSIST OF A NON-PERFORATED TEMPORARY DRAINAGE PIPE, 12 INCHES IN DIAMETER.

PLAN VIEW

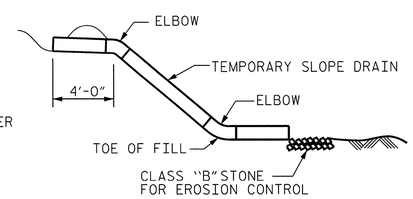

SECTION R-R

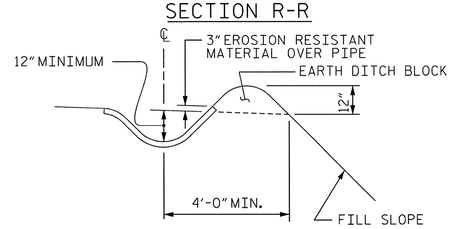

SECTION S-S

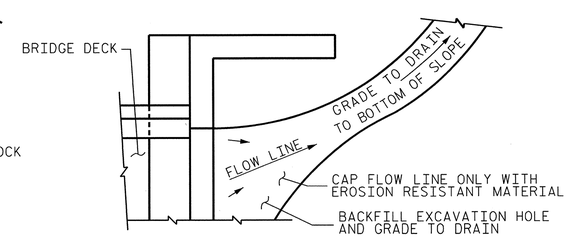

NOTE: IF THE APPROACH SLAB IS NOT CONSTRUCTED IMMEDIATELY AFTER THE BACKFILLING OF THE END BENT EXCAVATION, GRADE TO DRAIN TO THE BOTTOM OF THE SLOPE AND PROVIDE EROSION RESISTANT MATERIAL, SUCH AS FIBERGLASS ROVING OR AS DIRECTED BY THE ENGINEER TO PREVENT SOIL EROSION AND TO PROTECT THE AREA ADJACENT TO THE STRUCTURE. THE CONTRACTOR WILL BE REQUIRED TO REMOVE THESE MATERIALS PRIOR TO CONSTRUCTION OF THE APPROACH SLAB.

TEMPORARY DRAINAGE DETAIL

TEMPORARY BERM AND SLOPE DRAIN DETAILS

(TO BE USED WHEN SHOULDER BERM GUTTER IS REQUIRED)

PROJECT NO. R-2633BB

BRUNSWICK/NEW HANOVER COUNTY

STATION: 425+60.75 -L-
16+20.93 -EY11-

SHEET 2 OF 2

STATE OF NORTH CAROLINA
DEPARTMENT OF TRANSPORTATION
RALEIGH

STANDARD

BRIDGE APPROACH SLAB DETAILS LEFT LANE

NORTH CAROLINA PROFESSIONAL SEAL 14047 ENGINEER STEPHEN D. COOK
11/16/12

THE LOUIS BERGER GROUP, Inc.
1001 Wade Avenue, Suite 400
Raleigh, NC 27605-3322

REVISIONS								SHEET NO.
NO.	BY:	DATE:	NO.	BY:	DATE:			S-571
1			3					TOTAL SHEETS
2			4					700

ASSEMBLED BY : R. KNIGHT		DATE : AUG 2012	
CHECKED BY : S. COOK		DATE : AUG 2012	
DRAWN BY : FCJ	11/88	REV. 5/7/03	RWW/JTE
CHECKED BY : ARB	11/88	REV. 5/1/06RRR	MAA/KMM
		REV. 10/1/11	MAA/GM

STD. NO. BAS4 (SHT 3a)

G:\OR Projects\OR1092 - NCDOT Wilm Bypass DualBridges\Structures\Bridge Site 7\R-2633BB_SD_07L_AS02.dgn
11/16/2012 11:50:56 AM 1092_PDF_full.pltcfg 1092_str.tbl

F.A.PROJECT STPNHF-0017(125)

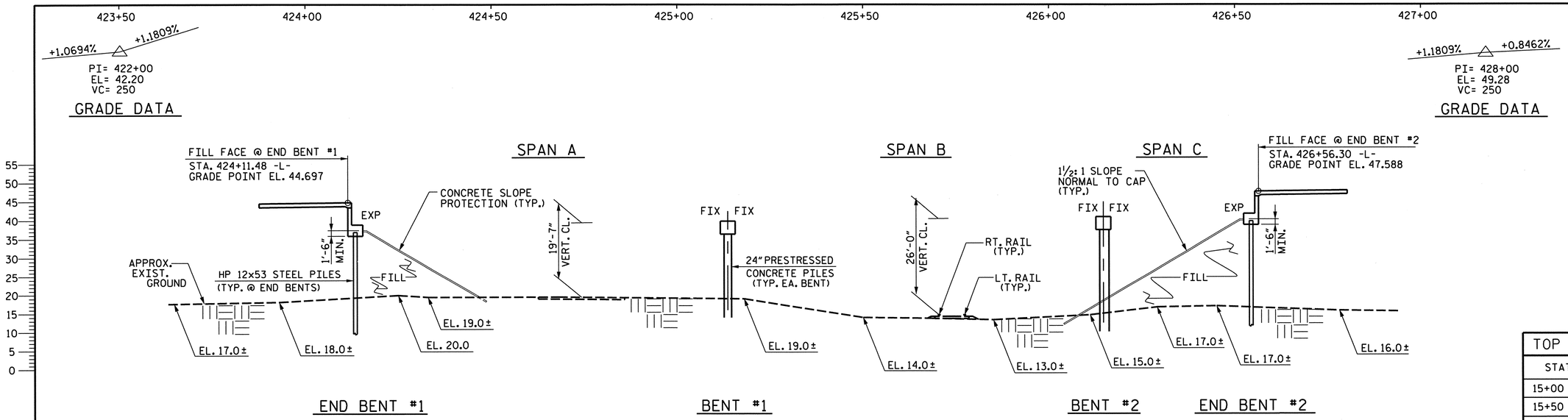

SECTION ALONG GRADE LINE RIGHT LANE

SECTION AT END BENTS AND BENTS TAKEN AT RIGHT ANGLES

TOP OF RAIL ELEVATIONS		
STATION	LT. RAIL	RT. RAIL
15+00 -EY11-	14.432	14.442
15+50 -EY11-	14.396	14.420
16+00 -EY11-	14.473	14.428
16+50 -EY11-	14.554	14.505
17+00 -EY11-	14.617	14.582

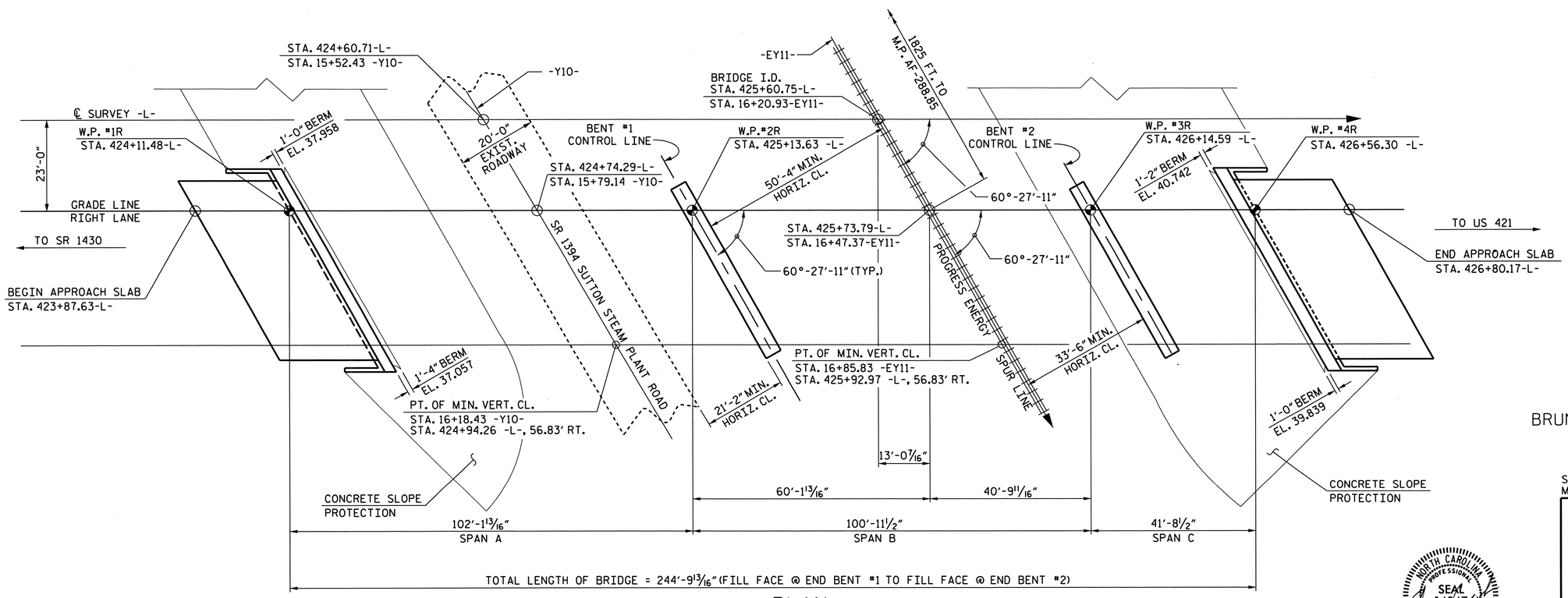

PLAN

(PILES NOT SHOWN FOR CLARITY)

PROJECT NO. R-2633BB

BRUNSWICK/NEW HANOVER COUNTY

STATION: 425+60.75 -L-
16+20.93 -EY11-

SHEET 1 OF 4
MILEPOST AF-288.85 BRIDGE NO. 193

STATE OF NORTH CAROLINA
DEPARTMENT OF TRANSPORTATION
RALEIGH

GENERAL DRAWING FOR BRIDGE ON US 17 OVER PROGRESS ENERGY SPUR LINE & SR 1394 BETWEEN SR 1430 & US 421 RIGHT LANE

NORTH CAROLINA PROFESSIONAL SEAL 14047 ENGINEER STEPHEN D. COOK
7/9/13

THE LOUIS BERGER GROUP, Inc.
1001 Wade Avenue, Suite 400
Raleigh, NC 27605-3322

REVISIONS						
NO.	BY:	DATE:	NO.	BY:	DATE:	
1			3			
2			4			

SHEET NO. S-572
TOTAL SHEETS 700

DRAWN BY : R. KNIGHT DATE : AUG 2011
CHECKED BY : S. COOK DATE : AUG 2012

G:\OR Projects\OR1092 - NCDOT Wilm Bypass DualBridges\Structures\Bridge Site 7\R-2633BB_SD_07R_GD01.dgn
7/9/2013 7:02:21 AM 1092_PDF_full.pltcfg 1092_str.tbl

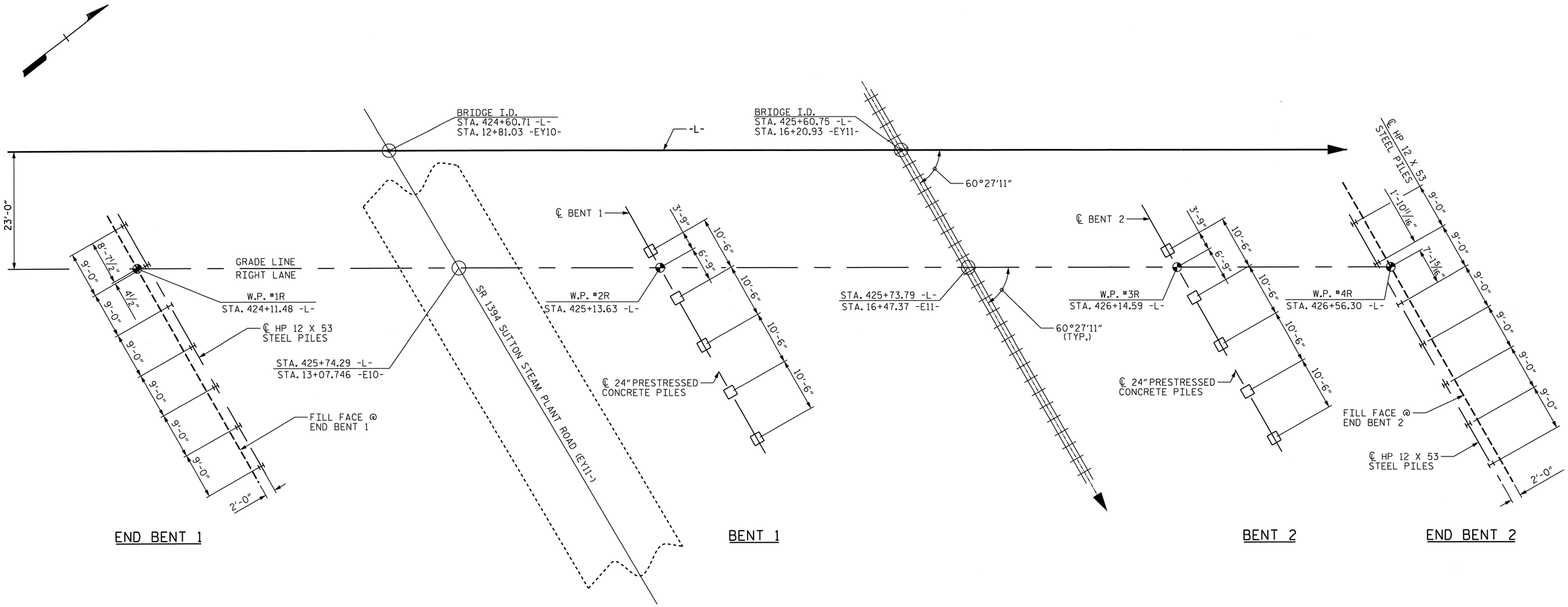

FOUNDATION LAYOUT

(DIMENSIONS LOCATING PILES ARE SHOWN TO CENTERLINE OF PILES)

FOUNDATION NOTES:

FOR PILES, SEE SECTION 450 OF THE STANDARD SPECIFICATIONS.

PILES AT END BENT NO. 1 AND END BENT NO. 2 ARE DESIGNED FOR A FACTORED RESISTANCE OF 120 TONS PER PILE.

DRIVE PILES AT END BENT NO. 1 AND END BENT NO. 2 TO A REQUIRED DRIVING RESISTANCE OF 200 TONS PER PILE.

PILES AT BENT NO. 1 AND BENT NO. 2 ARE DESIGNED FOR A FACTORED RESISTANCE OF 225 TONS AND 140 TONS PER PILE, RESPECTIVELY.

DRIVE PILES AT BENT NO. 1 AND BENT NO. 2 TO A REQUIRED DRIVING RESISTANCE OF 300 TONS AND 190 TONS PER PILE, RESPECTIVELY.

INSTALL PILES AT BENT NO. 1 AND BENT NO. 2 TO A TIP ELEVATION NO HIGHER THAN -15 FT.

IT HAS BEEN ESTIMATED THAT A HAMMER WITH AN EQUIVALENT RATED ENERGY IN THE RANGE OF 96,500 FT-LBS TO 125,000 FT-LBS PER BLOW WILL BE REQUIRED TO DRIVE PILES AT BENT NO. 1 AND NO. 2. THIS ESTIMATED ENERGY RANGE DOES NOT RELEASE THE CONTRACTOR FROM PROVIDING DRIVING EQUIPMENT IN ACCORDANCE WITH SUBARTICLE 450-3(D)(2) OF THE STANDARD SPECIFICATIONS.

TESTING THE FIRST 24" PRESTRESSED CONCRETE PILE WITH THE PDA DURING DRIVING, RESTRIKING OR REDRIVING IS REQUIRED. FOR PDA TESTING, SEE SECTION 450 OF THE STANDARD SPECIFICATIONS.

IF NECESSARY, PREDRILL PILE LOCATIONS AT BENT NO. 1 AND BENT NO. 2 TO ELEVATION -5 FT WITH EQUIPMENT THAT WILL RESULT IN A MAXIMUM PREDRILLING DIAMETER OF 24". FOR PREDRILLING FOR PILES, SEE SECTION 450 OF THE STANDARD SPECIFICATIONS.

PROJECT NO. R-2633BB
BRUNSWICK/NEW HANOVER COUNTY
STATION: 425+60.75 -L-
16+20.93 -EY11-

SHEET 2 OF 4

STATE OF NORTH CAROLINA
DEPARTMENT OF TRANSPORTATION
RALEIGH

GENERAL DRAWING FOR BRIDGE ON US 17 OVER PROGRESS ENERGY SPUR LINE AND SR 1394 BETWEEN SR 1430 AND US 421 RIGHT LANE

NORTH CAROLINA PROFESSIONAL SEAL 14047 ENGINEER STEPHEN D. COOK
6/21/13

THE LOUIS BERGER GROUP, Inc.
1001 Wade Avenue, Suite 400
Raleigh, NC 27605-3322

REVISIONS							SHEET NO.
NO.	BY:	DATE:	NO.	BY:	DATE:		S-573
1			3				TOTAL SHEETS
2			4				700

DRAWN BY : R. KNIGHT DATE : JULY 2012
CHECKED BY : S. COOK DATE : AUG 2012

G:\OR Projects\OR1092 - NCDOT Wilm Bypass DualBridges\Structures\Bridge Site 7\R-2633BB_SD_07R_GD02.dgn
6/21/2013 11:18:32 AM 1092_PDF_full.pltcfg 1092_str.tbl

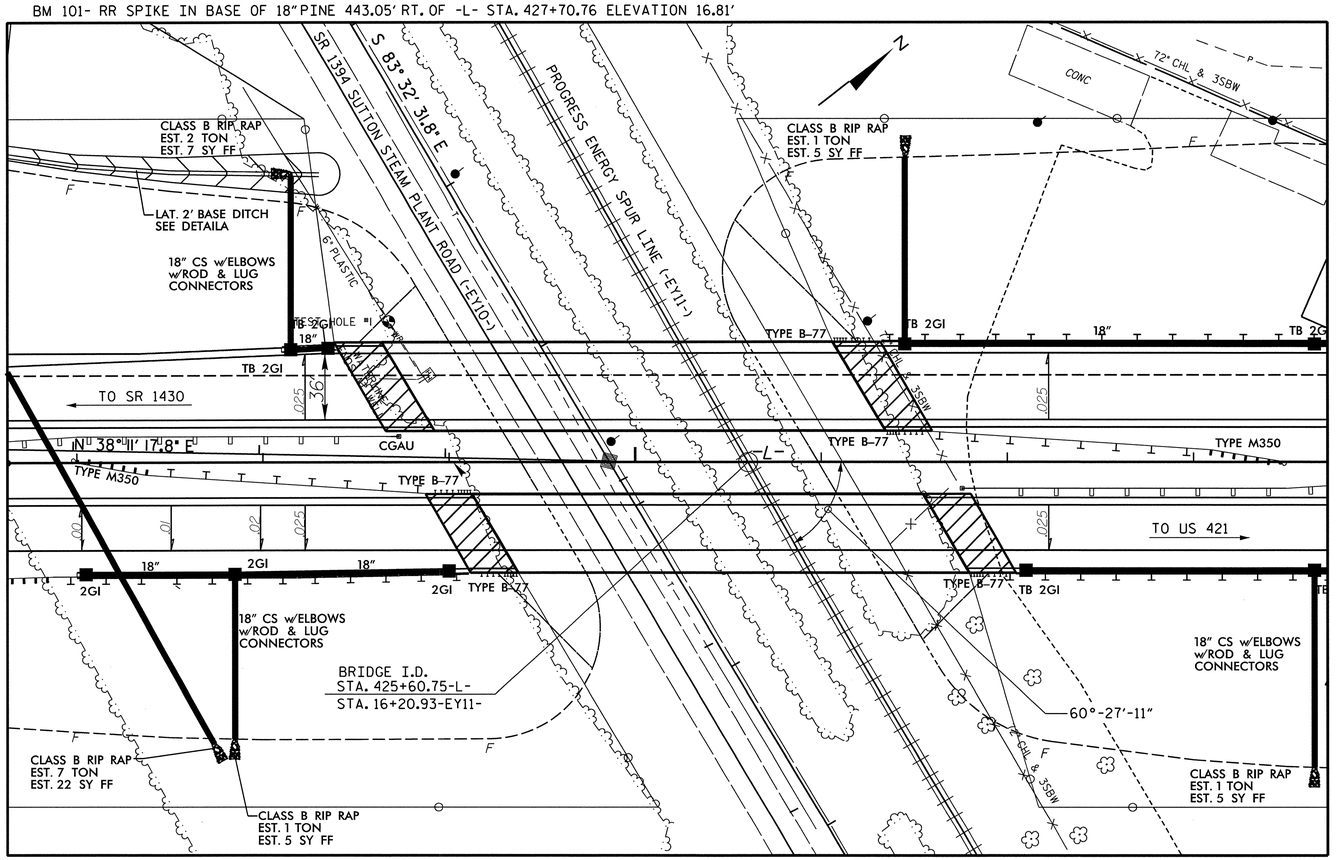

LOCATION SKETCH

THIS STRUCTURE CONTAINS THE NECESSARY CORROSION PROTECTION REQUIRED FOR A CORROSIVE SITE.

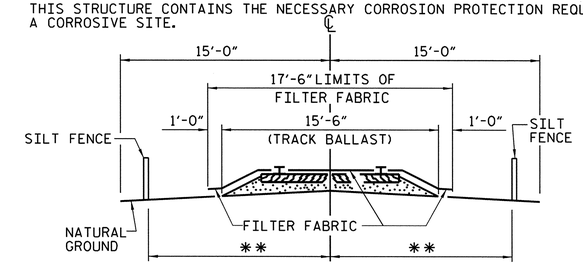

** TO BE DETERMINED BY THE ENGINEER IN CONSULTATION WITH THE RAILROAD

RAILROAD EROSION CONTROL DETAIL

NOTES

RAILROAD EROSION CONTROL MEASURES SHALL BE INSTALLED PRIOR TO PERFORMING ANY WORK IN THE RAILROAD RIGHT-OF-WAY.

ADDITIONAL EROSION CONTROL MEASURES FOR PROTECTION OF RAILROAD DITCHES MAY BE REQUIRED AS DIRECTED BY THE ENGINEER.

NO SEPARATE PAYMENT WILL BE MADE FOR RAILROAD EROSION CONTROL MEASURES.

LIMITS OF SILT FENCE AND FILTER FABRIC PARALLEL TO RAILROAD SHALL EXTEND A MINIMUM OF 25'-0" OUTSIDE EDGE OF SUPERSTRUCTURE OR TOE OF SLOPE ON CONSTRUCTION. A GREATER LENGTH OF SILT FENCE MAY BE REQUIRED IF SO DIRECTED BY THE ENGINEER.

FILTER FABRIC TO BE NAILED TO TIMBER RAIL TIES WITH PRIME SOURCE "GRIP CAP" OR EQUIVALENT. FILTER FABRIC ON SHOULDER TO BE SECURED AS DIRECTED BY THE ENGINEER AND RAILROAD.

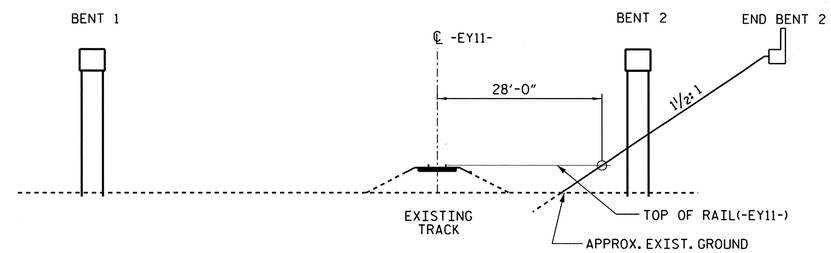

SPAN LENGTH BASED ON THIS SECTION

(LOOKING BACK STATION)

PROJECT NO. R-2633BB

BRUNSWICK/NEW HANOVER COUNTY

STATION: 425+60.75 -L-
16+20.93 -EY11-

SHEET 3 OF 4

STATE OF NORTH CAROLINA
DEPARTMENT OF TRANSPORTATION
RALEIGH

GENERAL DRAWING FOR BRIDGE ON US 17 OVER PROGRESS ENERGY SPUR LINE AND SR 1394 BETWEEN SR 1430 AND US 421 RIGHT LANE

NORTH CAROLINA PROFESSIONAL SEAL 14047 ENGINEER STEPHEN D. COOK
11/16/12

THE LOUIS BERGER GROUP, Inc.
1001 Wade Avenue, Suite 400
Raleigh, NC 27605-3322

REVISIONS								SHEET NO.
NO.	BY:	DATE:	NO.	BY:	DATE:			S-574
1			3					TOTAL SHEETS
2			4					700

DRAWN BY : R. KNIGHT DATE : 8/11
CHECKED BY : S. COOK DATE : 9/11

G:\OR Projects\OR1092 - NCDOT Wilm Bypass Dual Bridges\Structures\Bridge Site 7\R-2633BB_SD_07R_GD03.dgn
11/16/2012 11:51:07 AM 1092_PDF_full.pltcfg 1092_str.tbl

TOTAL BILL OF MATERIAL

	PREDRILLING FOR PILES	PILE REDRIVES	PDA TESTING	REINFORCED CONCRETE DECK SLAB	GROOVING BRIDGE FLOORS	CLASS A CONCRETE	BRIDGE APPROACH SLABS	REINFORCING STEEL	54" PRESTRESSED CONCRETE GIRDERS		HP 12 X 53 STEEL PILES		24" PRESTRESSED CONCRETE PILES		CONCRETE BARRIER RAIL	72" CHAIN LINK FENCE	4" SLOPE PROTECTION	ELASTOMERIC BEARINGS	EXPANSION JOINT SEALS
	LIN. FT.	EACH	EACH	SQ. FT.	SQ. FT.	CU. YDS.	LUMP SUM	LBS.	NO.	LIN. FT.	NO.	LIN. FT.	NO.	LIN. FT.	LIN. FT.	LIN. FT.	SQ. YDS.	LUMP SUM	LUMP SUM
SUPERSTRUCTURE				10,970	11,940		LUMP SUM		15	1,244.3					526.5	480.0		LUMP SUM	LUMP SUM
END BENT NO. 1		4				39.1		5,414			7	595					363		
BENT NO. 1	119.0	3				29.1		4,776					5	450.0					
BENT NO. 2	108.0	3				29.1		4,776					5	450.0					
END BENT NO. 2		4				39.1		5,423			7	525					501		
TOTAL	227.0	14	1	10,970	11,940	136.4	LUMP SUM	20,389	15	1,244.3	14	1,120	10	900.0	526.5	480.0	864	LUMP SUM	LUMP SUM

GENERAL DRAWING NOTES

ASSUMED LIVE LOAD = HL-93 OR ALTERNATE LOADING.

FOR OTHER DESIGN DATA AND GENERAL NOTES, SEE SHEET SN.

FOR EROSION CONTROL MEASURES SEE EROSION CONTROL PLANS.

THIS BRIDGE HAS BEEN DESIGNED IN ACCORDANCE WITH THE AASHTO LRFD BRIDGE DESIGN SPECIFICATIONS.

REMOVABLE FORMS MAY BE USED IN LIEU OF METAL STAY-IN-PLACE FORMS IN ACCORDANCE WITH ARTICLE 420-3 OF THE STANDARD SPECIFICATIONS.

PRESTRESSED CONCRETE DECK PANELS MAY BE USED IN LIEU OF METAL STAY-IN-PLACE FORMS IN ACCORDANCE WITH ARTICLE 420-3 OF THE STANDARD SPECIFICATIONS.

FOR MAINTENANCE AND PROTECTION OF TRAFFIC BENEATH PROPOSED STRUCTURE, SEE SPECIAL PROVISIONS.

THE CLASS AA CONCRETE IN THE BRIDGE DECK SHALL CONTAIN FLY ASH OR GROUND GRANULATED BLAST FURNACE SLAG AT THE SUBSTITUTION RATE SPECIFIED IN ARTICLE 1024-1 AND IN ACCORDANCE WITH ARTICLES 1024-5 AND 1024-6 OF THE STANDARD SPECIFICATIONS. NO PAYMENT WILL BE MADE FOR THIS SUBSTITUTION AS IT IS CONSIDERED INCIDENTAL TO THE COST OF THE REINFORCED CONCRETE DECK SLAB.

NEEDLE BEAMS WILL NOT BE ALLOWED UNLESS OTHERWISE CALLED FOR ON THE PLANS OR APPROVED BY THE ENGINEER.

THE CONTRACTOR SHALL PROVIDE INDEPENDENT ASSURANCE SAMPLES OF REINFORCING STEEL AS FOLLOWS: FOR PROJECTS REQUIRING UP TO 400 TONS OF REINFORCING STEEL, ONE 30 INCH SAMPLE OF EACH SIZE BAR USED, AND FOR PROJECTS REQUIRING OVER 400 TONS OF REINFORCING STEEL, TWO 30 INCH SAMPLES OF EACH SIZE BAR USED. THE BARS FROM WHICH THE SAMPLES ARE TAKEN MUST THEN BE SPLICED WITH REPLACEMENT BARS OF THE SIZE AND LENGTH OF THE SAMPLE, PLUS A MINIMUM LAP SPLICE OF THIRTY BAR DIAMETERS. PAYMENT FOR THE SAMPLES OF REINFORCING STEEL SHALL BE CONSIDERED INCIDENTAL TO VARIOUS PAY ITEMS.

THE CONTRACTOR'S ATTENTION IS CALLED TO THE FACT THAT THE SHORING AND EXCAVATION PLANS HAVE BEEN SUBMITTED TO THE RAILROAD BY THE STATE. AS OF THE TIME OF PLAN PRINTING FOR ADVERTISEMENT FOR BIDS, RAILROAD APPROVAL HAS NOT BEEN RECEIVED. WHEN SUCH APPROVAL IS RECEIVED, THE CONTRACTOR WILL BE NOTIFIED BY ADDENDUM. IN THE EVENT RAILROAD APPROVAL IS NOT GIVEN PRIOR TO SUBMISSION OF BIDS, THE CONTRACTOR SHALL SUBMIT BIDS BASED ON THE CONTRACT PLANS. THE CONTRACTOR SHALL NOT BEGIN EXCAVATION AT THE LOCATIONS SHOWN ON THESE PLANS UNTIL NOTIFIED OF RAILROAD APPROVAL.

FOR UTILITY INFORMATION, SEE UTILITY PLANS AND SPECIAL PROVISIONS.

FOR SUBMITTAL OF WORKING DRAWINGS, SEE SPECIAL PROVISIONS.

FOR FALSEWORK AND FORMWORK, SEE SPECIAL PROVISIONS.

FOR CRANE SAFETY, SEE SPECIAL PROVISIONS.

THE RAILROAD TRACK TOP OF RAIL ELEVATIONS SHOWN ON THE PLANS ARE FROM THE BEST INFORMATION AVAILABLE. PRIOR TO BEGINNING BRIDGE CONSTRUCTION, VERIFY THE TOP OF RAIL ELEVATIONS AND REPORT ANY VARIATIONS TO THE ENGINEER. ANY PLAN REVISIONS NECESSARY TO ACHIEVE THE REQUIRED MINIMUM VERTICAL CLEARANCE WILL BE PROVIDED BY THE DEPARTMENT.

FOR GROUT FOR STRUCTURES, SEE SPECIAL PROVISIONS.

THIS BRIDGE IS LOCATED IN SEISMIC ZONE 1.

FOR PLACING LOAD ON STRUCTURE MEMBERS, SEE SPECIAL PROVISIONS.

PROJECT NO. R-2633BB
BRUNSWICK/NEW HANOVER COUNTY
STATION: 425+60.75 -L-
16+20.93 -EY11-
SHEET 4 OF 4

NORTH CAROLINA PROFESSIONAL SEAL 14047 ENGINEER STEPHEN D. COOK
11/16/12

STATE OF NORTH CAROLINA
DEPARTMENT OF TRANSPORTATION
RALEIGH

GENERAL DRAWING FOR BRIDGE ON US 17 OVER PROGRESS ENERGY SPUR LINE & SR 1394 BETWEEN SR 1430 & US421 RIGHT LANE

THE LOUIS BERGER GROUP, Inc.
1001 Wade Avenue, Suite 400
Raleigh, NC 27605-3322

REVISIONS								SHEET NO.
NO.	BY:	DATE:	NO.	BY:	DATE:			S-575
1			3					TOTAL SHEETS
2			4					700

DRAWN BY : M. HOGAN DATE : JULY 2012
CHECKED BY : S. COOK DATE : AUG 2012

G:\OR Projects\OR1092 - NCDOT Wilm Bypass DualBridges\Structures\Bridge Site 7\R-2633BB_SD_07R_GD04.dgn
11/16/2012 11:51:09 AM 1092_PDF_full.pltcfg 1092_str.tbl

LOAD AND RESISTANCE FACTOR RATING (LRFR) SUMMARY FOR PRESTRESSED CONCRETE GIRDERS

LEVEL		VEHICLE	WEIGHT (W) (TONS)	CONTROLLING LOAD RATING (#)	MINIMUM RATING FACTORS (RF)	TONS = W × RF	STRENGTH I LIMIT STATE											SERVICE III LIMIT STATE						COMMENT NUMBER
								MOMENT					SHEAR						MOMENT					
							LIVE-LOAD FACTORS (γ_{LL})	DISTRIBUTION FACTORS (DF)	RATING FACTOR	SPAN	GIRDER LOCATION	DISTANCE FROM LEFT END OF SPAN (FT)	DISTRIBUTION FACTORS (DF)	RATING FACTOR	SPAN	GIRDER LOCATION	DISTANCE FROM LEFT END OF SPAN (FT)	LIVE-LOAD FACTORS (γ_{LL})	DISTRIBUTION FACTORS (DF)	RATING FACTOR	SPAN	GIRDER LOCATION	DISTANCE FROM LEFT END OF SPAN (FT)	
DESIGN LOAD RATING		HL-93 (INVENTORY)	N/A	1	1.00	--	1.75	0.95	1.57	C	I	18.95	1.01	1.85	A	I	19.25	0.80	0.74	1.00	B	I	59.37	
		HL-93 (OPERATING)	N/A		2.04	--	1.35	0.95	2.04	C	I	18.95	1.01	2.45	A	I	19.25	N/A	--	--	--	--	--	--
		HS-20 (INVENTORY)	36.000	2	1.39	50.04	1.75	0.95	1.97	C	I	15.02	1.01	2.46	A	I	19.25	0.80	0.74	1.39	B	I	59.37	
		HS-20 (OPERATING)	36.000		2.55	91.80	1.35	0.95	2.55	C	I	15.02	1.01	3.23	A	I	19.25	N/A	--	--	--	--	--	--
LEGAL LOAD RATING	SINGLE VEHICLE (SV)	SH	12.500		3.57	44.63	1.40	0.95	5.04	C	I	18.95	1.01	8.48	A	I	19.20	0.80	0.95	3.57	C	I	44.62	
		S3C	21.500		2.09	44.94	1.40	0.95	2.95	C	I	18.95	1.01	4.90	A	I	19.20	0.80	0.95	2.09	B	I	44.85	
		S3A	22.750		1.99	45.27	1.40	0.95	2.80	C	I	18.95	1.01	4.64	A	I	19.20	0.80	0.95	1.99	B	I	45.16	
		S4A	26.750		1.76	47.08	1.40	0.95	2.60	C	I	18.95	1.01	4.03	A	I	19.20	0.80	0.74	1.76	B	I	47.06	
		S5A	30.500		1.55	47.28	1.40	0.95	2.31	C	I	18.95	1.01	3.67	A	I	19.20	0.80	0.74	1.55	B	I	47.38	
		S6A	34.500		1.40	48.30	1.40	0.95	2.19	C	I	18.95	1.01	3.29	A	I	19.20	0.80	0.74	1.40	B	I	48.32	
		S7B	38.500		1.27	48.90	1.40	0.95	2.04	C	I	18.95	1.01	3.05	A	I	19.20	0.80	0.74	1.27	B	I	48.99	
		S7A	40.000	3	1.25	50.00	1.40	0.95	2.12	C	I	18.95	1.01	3.11	A	I	19.20	0.80	0.74	1.25	B	I	50.14	
	TRUCK TRACTOR SEMI-TRAILER (TTST)	T4A	28.250		1.71	48.31	1.40	0.95	2.73	C	I	18.95	1.01	3.90	A	I	19.25	0.80	0.74	1.71	B	EL	59.37	
		T5B	32.000		1.52	48.64	1.40	0.95	2.38	C	I	18.95	1.01	3.67	A	I	19.25	0.80	0.74	1.52	B	EL	49.35	
		T6A	36.000		1.38	49.68	1.40	0.95	2.30	C	I	18.95	1.01	3.35	B	I	19.32	0.80	0.74	1.38	B	EL	49.35	
		T7A	40.000		1.28	51.20	1.40	0.95	2.26	C	I	18.95	1.01	3.11	A	I	19.25	0.80	0.74	1.28	B	EL	49.35	
		T7B	40.000		1.31	52.40	1.40	0.95	2.44	C	I	18.95	1.01	2.93	A	I	19.25	0.80	0.74	1.31	B	EL	59.37	

LOAD FACTORS:

DESIGN LOAD RATING FACTORS	LIMIT STATE	γ_{DC}	γ_{DW}
	STRENGTH I	1.25	1.50
	SERVICE III	1.00	1.00

NOTES:

MINIMUM RATING FACTORS ARE BASED ON THE STRENGTH I AND SERVICE III LIMIT STATES.

ALLOWABLE STRESSES FOR SERVICE III LIMIT STATE ARE AS REQUIRED FOR DESIGN.

COMMENTS:

1.
2.
3.
4.

(#) CONTROLLING LOAD RATING

(1) DESIGN LOAD RATING (HL-93)
(2) DESIGN LOAD RATING (HS-20)
(3) LEGAL LOAD RATING **
** SEE CHART FOR VEHICLE TYPE

GIRDER LOCATION

I - INTERIOR GIRDER
EL - EXTERIOR LEFT GIRDER
ER - EXTERIOR RIGHTGIRDER

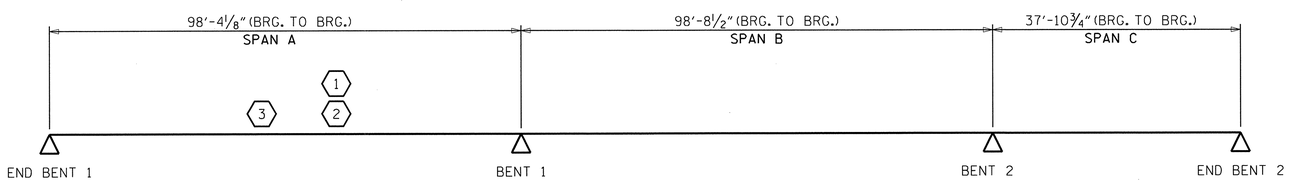

LRFR SUMMARY

PRELIMINARY PLANS
DO NOT USE FOR CONSTRUCTION

PROJECT NO. R-2633BB
BRUNSWICK/NEW HANOVER COUNTY
STATION: 425+60.75 -L-
16+20.93 -EY11-

STATE OF NORTH CAROLINA
DEPARTMENT OF TRANSPORTATION
RALEIGH

STANDARD
LRFR SUMMARY FOR PRESTRESSED CONCRETE GIRDERS
(INTERSTATE TRAFFIC)
RIGHT LANE

NORTH CAROLINA PROFESSIONAL SEAL 14047 ENGINEER STEPHEN D. COOK
11/16/12

THE LOUIS BERGER GROUP, Inc.
1001 Wade Avenue, Suite 400
Raleigh, NC 27605-3322

REVISIONS								SHEET NO.
NO.	BY:	DATE:	NO.	BY:	DATE:			S-57C
1			3					TOTAL SHEETS
2			4					700

STD. NO. LRFR2

ASSEMBLED BY : R. KNIGHT DATE : JULY 2012
CHECKED BY : S. COOK DATE : AUG 2012
DRAWN BY : MAA 1/08
CHECKED BY : GM/DI 2/08
REV. 11/12/08RR MAA/GM
REV. 10/1/11 MAA/GM

G:\OR Projects\OR1092 - NCDOT Wilm Bypass DualBridges\Structures\Bridge Site 7\R-2633BB_SD_07R_LRFR.dgn
11/16/2012 11:51:12 AM 1092_PDF_full.pltcfg 1092_str.tbl

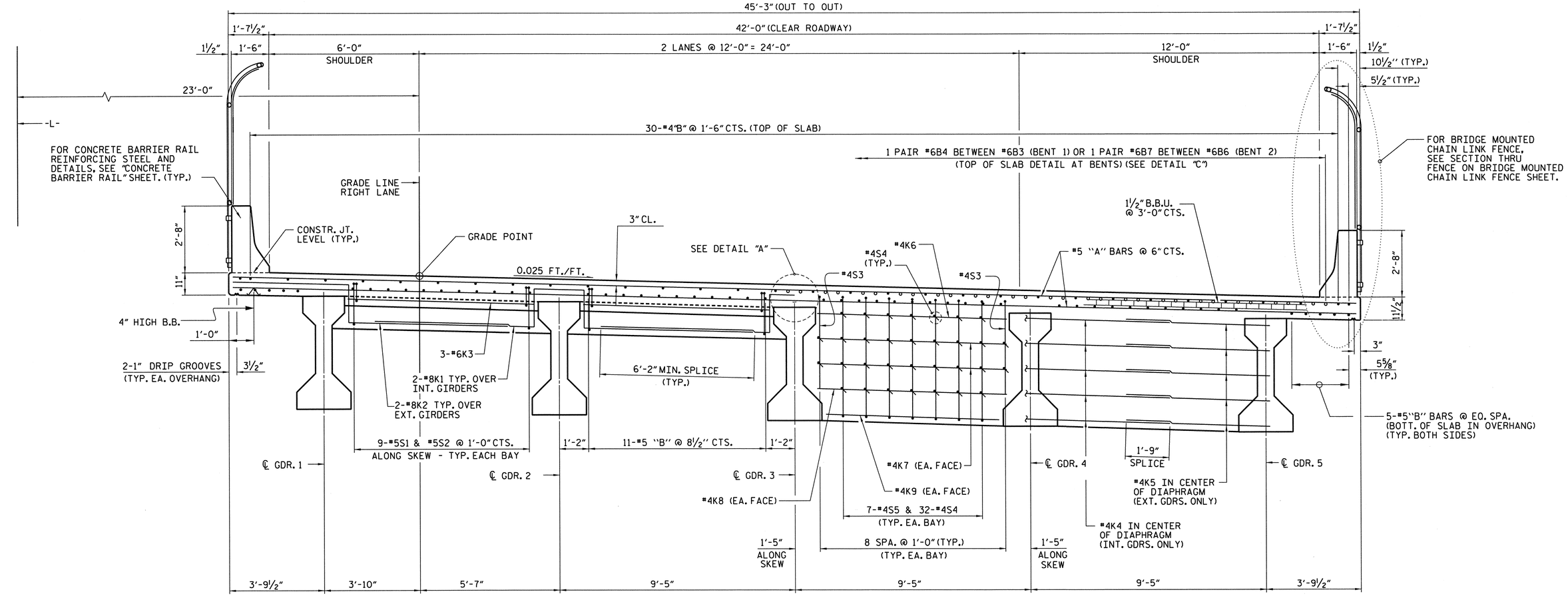

TYPICAL HALF SECTION
END BENT DIAPHRAGMS

TYPICAL SECTION
(SEE PRESTRESSED CONCRETE GIRDER SHEETS FOR DETAILS OF INTERMEDIATE DIAPHRAGMS)

TYPICAL HALF SECTION
BENT DIAPHRAGMS

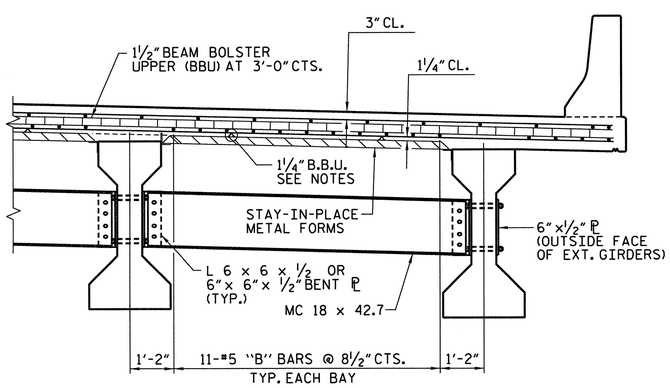

TYPICAL INTERMEDIATE DIAPHRAGM

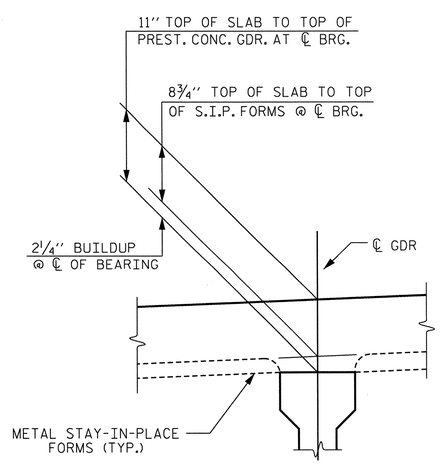

DETAIL A

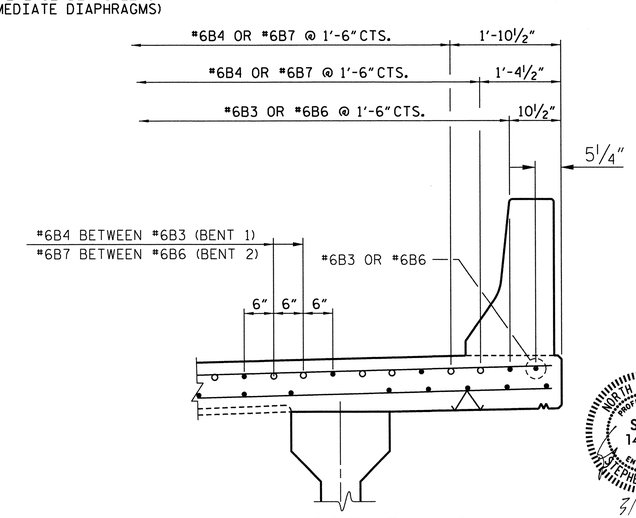

DETAIL "C"
(#6 "B" BARS AT BENTS)

NORTH CAROLINA PROFESSIONAL SEAL 14047 ENGINEER STEPHEN D. COOK
5/20/13

PROJECT NO. R-2633BB
BRUNSWICK/NEW HANOVER COUNTY
STATION: 425+60.75 -L-
16+20.93 -EY11-

SHEET 1 OF 2

STATE OF NORTH CAROLINA
DEPARTMENT OF TRANSPORTATION
RALEIGH

SUPERSTRUCTURE TYPICAL SECTION RIGHT LANE

THE LOUIS BERGER GROUP, Inc.
1001 Wade Avenue, Suite 400
Raleigh, NC 27605-3322

REVISIONS						SHEET NO.
NO.	BY:	DATE:	NO.	BY:	DATE:	S-577
1			3			TOTAL SHEETS
2			4			100

DRAWN BY : J. MYA DATE : JULY 2012
CHECKED BY : S. COOK DATE : AUG 2012

G:\OR Projects\OR1092 - NCDOT Wilm Bypass DualBridges\Structures\Bridge Site 7\R-2633BB_SD_07R_TYP_01.dgn
3/26/2013 2:01:35 PM 1092_PDF_full.pltcfg 1092_str.tbl

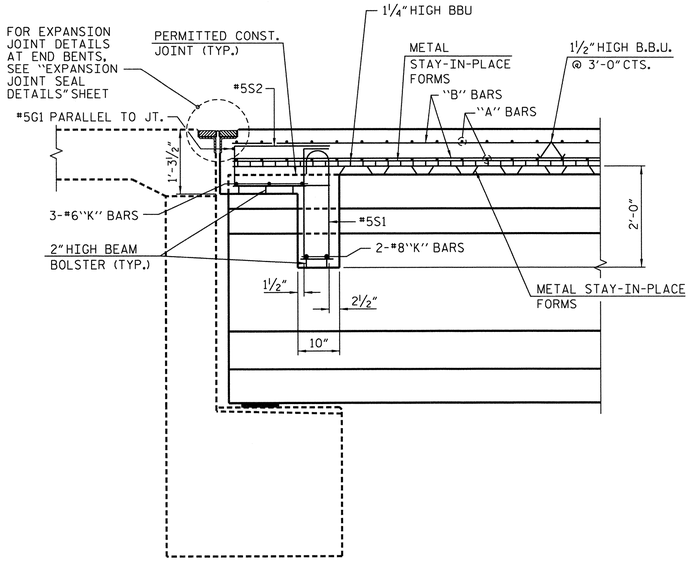

SECTION A-A

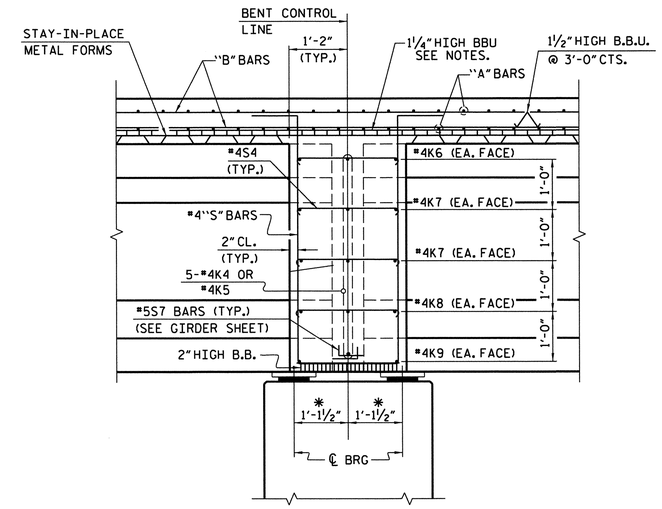

SECTION B-B

*MEASURED ALONG CENTERLINE OF GIRDER

NOTES:

PROVIDE 1¼" HIGH BEAM BOLSTERS UPPER AT 4'-0" CTS. ATOP THE METAL STAY-IN-PLACE FORMS TO SUPPORT THE BOTTOM MAT OF 'A' BARS. WHEN USING REMOVABLE FORMS, PROVIDE CONTINUOUS HIGH CHAIRS FOR METAL DECK (C.H.C.M.) @ 4'-0" CTS. WITH A HEIGHT TO SUPPORT THE BOTTOM MAT OF 'A' BARS A CLEAR DISTANCE OF 2½" ABOVE THE TOP OF THE REMOVABLE FORM.

LONGITUDINAL STEEL MAY BE SHIFTED SLIGHTLY, AS NECESSARY, TO AVOID INTERFERENCE WITH STIRRUPS IN PRESTRESSED CONCRETE GIRDERS.

BARRIER RAIL IN A CONTINUOUS UNIT SHALL NOT BE CAST UNTIL ALL SLAB CONCRETE IN THAT UNIT HAS BEEN CAST AND HAS REACHED A MINIMUM COMPRESSIVE STRENGTH OF 3,000 PSI.

NO CHAMFER IS REQUIRED ON CORNERS OF GIRDER BUILDUPS.

PREVIOUSLY CAST CONCRETE IN A CONTINUOUS UNIT SHALL HAVE ATTAINED A MINIMUM COMPRESSIVE STRENGTH OF 3,000 PSI BEFORE ADDITIONAL CONCRETE IS CAST IN THE UNIT.

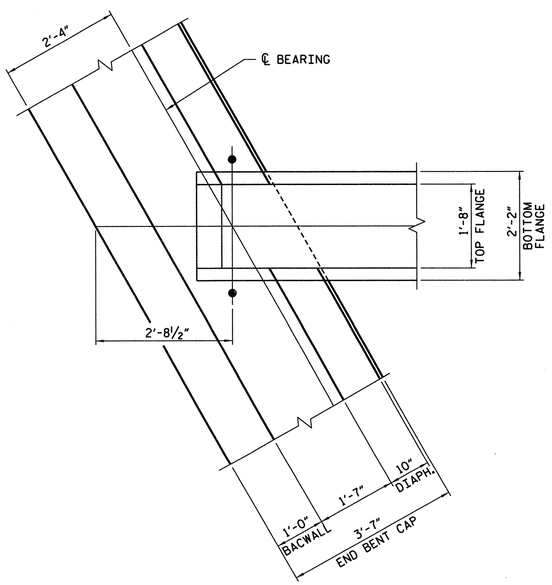

PLAN OF
END BENT DIAPHRAGM

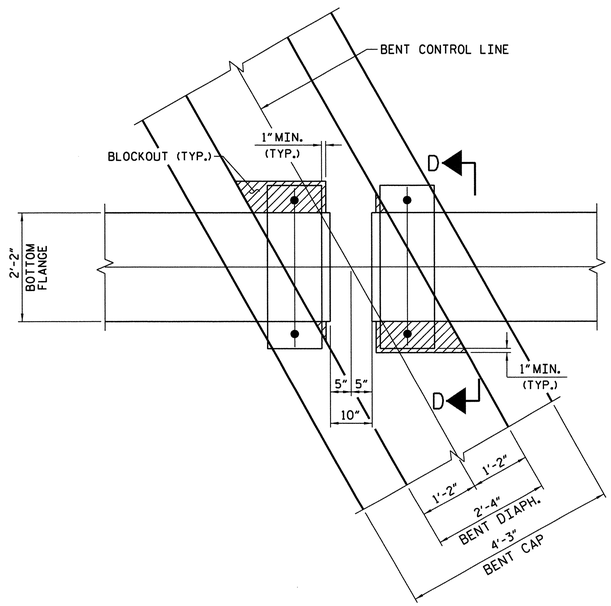

PLAN OF
INTERMEDIATE DIAPHRAGM

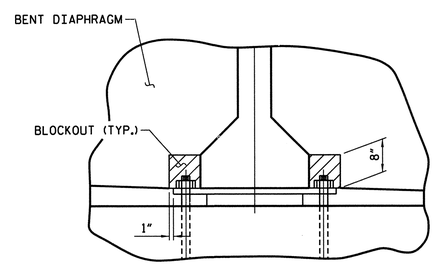

SECTION D-D

PROJECT NO. R-2633BB
BRUNSWICK/NEW HANOVER COUNTY
STATION: 425+60.75 -L-
16+20.93 -EY11-

SHEET 2 OF 2

STATE OF NORTH CAROLINA
DEPARTMENT OF TRANSPORTATION
RALEIGH

SUPERSTRUCTURE TYPICAL SECTION DETAILS - RIGHT LANE

NORTH CAROLINA PROFESSIONAL SEAL 14047 ENGINEER STEPHEN D. COOK
3/26/13

THE LOUIS BERGER GROUP, Inc.
1001 Wade Avenue, Suite 400
Raleigh, NC 27605-3322

REVISIONS						SHEET NO.
NO.	BY:	DATE:	NO.	BY:	DATE:	S-578
1			3			TOTAL SHEETS
2			4			700

DRAWN BY : R. KNIGHT DATE : JUNE 2012
CHECKED BY : S. COOK DATE : AUG 2012

G:\OR Projects\OR1092 - NCDOT Wilm Bypass DualBridges\Structures\Bridge Site 7\R-2633BB_SD_07R_TYP_02.dgn
3/26/2013 2:01:36 PM 1092_PDF_full.pltcfg 1092_str.tbl

℄ -L-

244'-9 13/16" TOTAL LENGTH OF BRIDGE FILL FACE TO FILL FACE

#5A101 - #5A148 (TOP OF SLAB)
#5A201 - #5A248 (BOTTOM OF SLAB)

6"

23'-0"

1'-7 1/2" 1'-6" 1 1/2"

#5A148 OR #5A248

10 1/2" 5 1/2"

5-#5B2 @ EQ. SPA. (BOTTOM OF SLAB)
(5 BAR RUNS) (TYP. BOTH SIDES)

BENT CONTROL LINE

8'-9 3/16"

6'-0"

W.P. #1R

8'-11 5/16"

6'-2"

SPLICE
#8K1 & #8K2

#5A101 OR #5A201

60°-27'-11"
(TYP.)

1'-0" BACKWALL

℄ JOINT

FILL FACE @
END BENT #1

#8K1 OVER INT.
GIRDERS (TYP.)

45'-3"

42'-0"

36'-0"

52'-0 5/8"

43'-10 5/8"

48-#4J1 @ 1'-0" CTS.

9-#5S1 & #5S2
@ 1'-0" CTS.
(TYP. EA. BAY)

3-#6K3

#5G1

A

A

#8K2 OVER EXT.
GIRDERS (TYP.)

GRADE LINE
RIGHT LANE

℄ GDR. A1

℄ GDR. A2

℄ GDR. A3

℄ GDR. A4

℄ GDR. A5

30-#4B1 @ 1'-6" CTS. (TOP OF SLAB - 3 BAR RUNS) 2'-6" MIN. SPLICE

1'-2"

11-#5B2 @ 8 1/2" CTS.
(BOTT. OF SLAB)
(5 BAR RUNS)
(TYP. EA. BAY)

2'-2" SPLICE
(TYP. #5B2)

#4 B1

#6B3

6"

6"

W.P. #2R

#6B4 (TYP.)

SEE REINFORCING STEEL
LAYOUT BELOW

7-#4S5
(TYP.)

8 SPA.
@ 1'-0"

#4S3 (TYP.)

43'-3"

B

B

1'-9" SPLICE
(TYP.)

5-#4K4 IN CENTER
OF DIAPHRAGM
(TYP. INT. GIRDERS)

5-#4K5 IN CENTER
OF DIAPHRAGM
(TYP. EXT. GIRDERS)

℄ GDR. B1

℄ GDR. B2

℄ GDR. B3

℄ GDR. B4

℄ GDR. B5

1'-7 1/2" 1'-6" 1 1/2"

7"

10 1/2" 5 1/2"

2'-6" SPLICE
(TYP. #4B1)

#4 B1 TOP OF SLAB (3 BAR RUNS/
2'-0" MIN. SPLICE WITH #6 B3)
(TYP. EA. SIDE)

22'-8 1/16"

434-#5A1 @ 6" CTS. (TOP OF SLAB)
434-#5A2 @ 6" CTS. (BOTTOM OF SLAB)

SPAN A

SPAN B

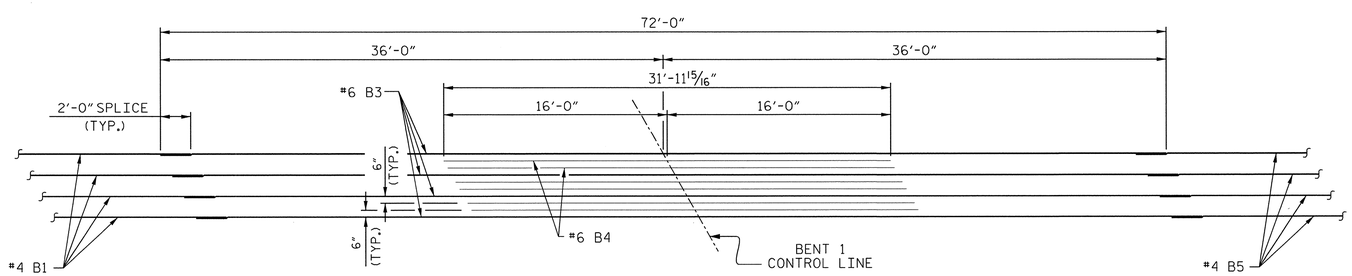

REINFORCING STEEL LAYOUT @ BENT 1

SHOWING "B" BARS IN TOP OF SLAB

PROJECT NO. R-2633BB

BRUNSWICK/NEW HANOVER COUNTY

STATION: 425+60.75 -L-
16+20.93 -EY11-

SHEET 1 OF 2

STATE OF NORTH CAROLINA
DEPARTMENT OF TRANSPORTATION
RALEIGH

SUPERSTRUCTURE
PLAN OF SPAN A & B
RIGHT LANE

NORTH CAROLINA PROFESSIONAL SEAL 14047 ENGINEER STEPHEN D. COOK

11/16/12

THE LOUIS BERGER GROUP, Inc.
1001 Wade Avenue, Suite 400
Raleigh, NC 27605-3322

REVISIONS							SHEET NO.
NO.	BY:	DATE:	NO.	BY:	DATE:		S-579
1			3				TOTAL SHEETS
2			4				700

DRAWN BY : J. MYA DATE : JULY 2012
CHECKED BY : S. COOK DATE : AUG 2012

G:\OR Projects\OR1092 - NCDOT Wilm Bypass DualBridges\Structures\Bridge Site 7\R-2633BB_SD_07R_POSAB.dgn
11/16/2012 11:51:21 AM 1092_PDF_full.pltcfg 1092_str.tbl

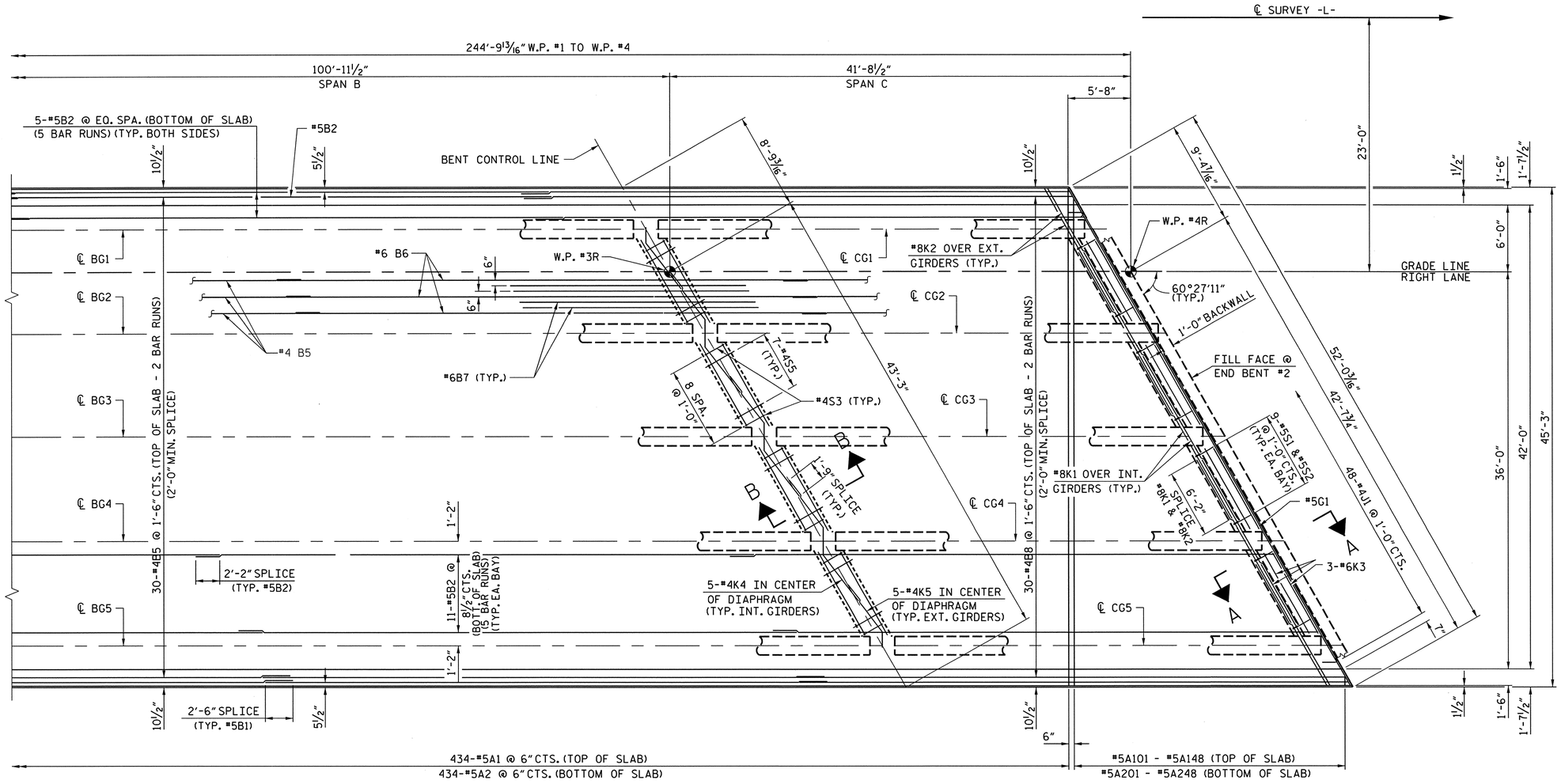

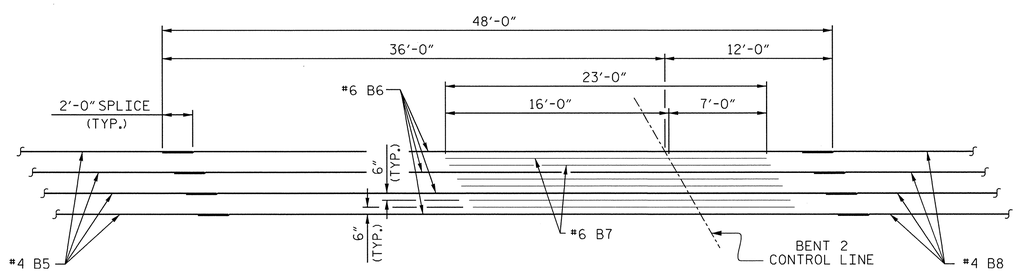

REINFORCING STEEL LAYOUT @ BENT 2

SHOWING "B" BARS IN TOP OF SLAB

PROJECT NO. R-2633BB

BRUNSWICK/NEW HANOVER COUNTY

STATION: 425+60.75 -L-
16+20.93 -EY11-

SHEET 2 OF 2

STATE OF NORTH CAROLINA
DEPARTMENT OF TRANSPORTATION
RALEIGH

SUPERSTRUCTURE PLAN OF SPAN B & C RIGHT LANE

NORTH CAROLINA PROFESSIONAL SEAL 14047 ENGINEER STEPHEN D. COOK
11/16/12

THE LOUIS BERGER GROUP, Inc.
1001 Wade Avenue, Suite 400
Raleigh, NC 27605-3322

REVISIONS						
NO.	BY:	DATE:	NO.	BY:	DATE:	
1			3			
2			4			

SHEET NO. S-580

TOTAL SHEETS 700

DRAWN BY : J. MYA DATE : JULY 2012
CHECKED BY : S. COOK DATE : AUG 2012

G:\OR Projects\OR1092 - NCDOT Wilm Bypass DualBridges\Structures\Bridge Site 7\R-2633BB_SD_07R_POSBC.dgn
11/16/2012 11:51:25 AM 1092_PDF_full.pltcfg 1092_str.tbl

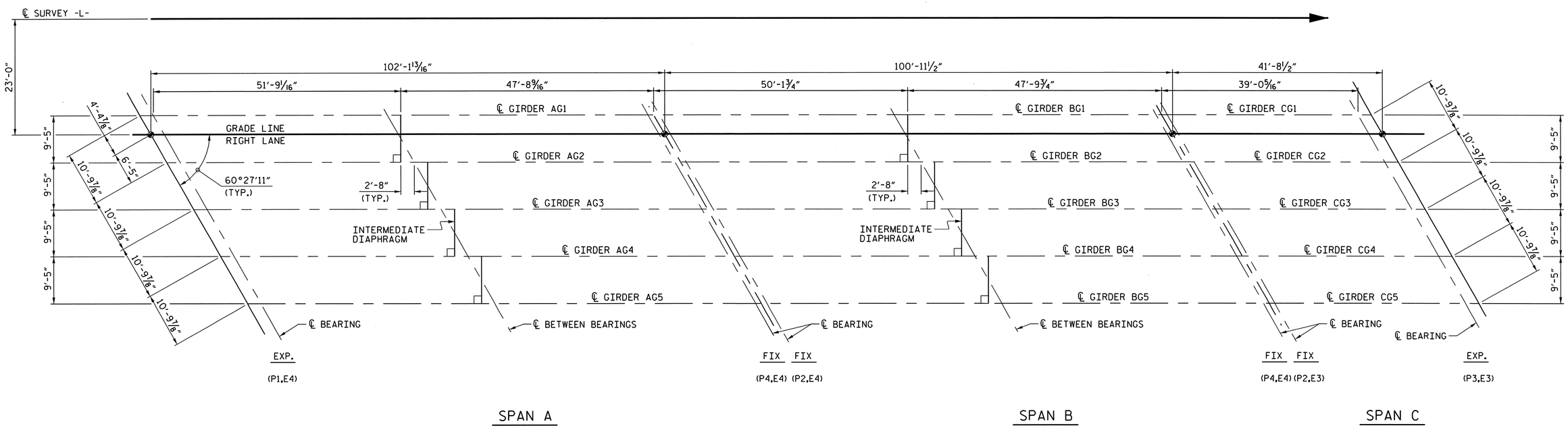

PROJECT NO. R-2633BB

BRUNSWICK/NEW HANOVER COUNTY

STATION: 425+60.75 -L-
16+20.93 -EY11-

STATE OF NORTH CAROLINA
DEPARTMENT OF TRANSPORTATION
RALEIGH

SUPERSTRUCTURE FRAMING PLAN RIGHT LANE

NORTH CAROLINA PROFESSIONAL SEAL 14047 ENGINEER STEPHEN D. COOK
11/16/12

THE LOUIS BERGER GROUP, Inc.
1001 Wade Avenue, Suite 400
Raleigh, NC 27605-3322

REVISIONS							SHEET NO.
NO.	BY:	DATE:	NO.	BY:	DATE:		S-501
1			3				TOTAL SHEETS
2			4				700

DRAWN BY : R. KNIGHT DATE : JULY 2012
CHECKED BY : S. COOK DATE : AUG 2012

G:\OR Projects\OR1092 - NCDOT Wilm Bypass DualBridges\Structures\Bridge Site 7\R-2633BB_SD_07R_FRM.dgn
11/16/2012 11:51:27 AM 1092_PDF_full.pltcfg 1092_str.tbl

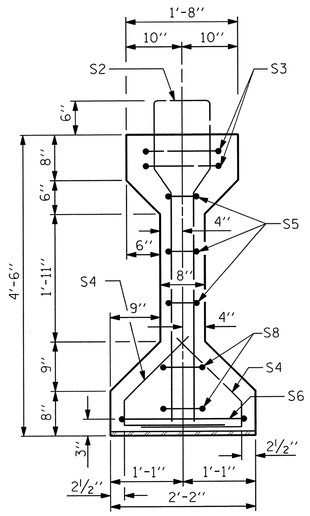

SECTION A-A

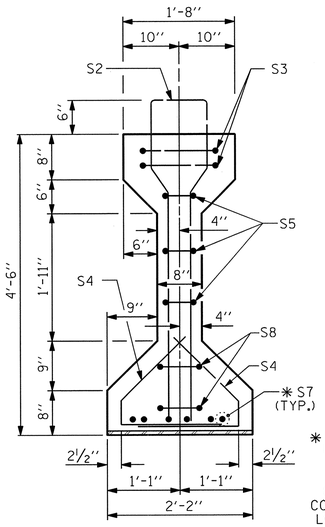

SECTION B-B

* FOR S7 BARS, SEE DETAIL "A" OF PRESTRESSED CONCRETE GIRDER CONTINUOUS FOR LIVE LOAD DETAILS SHEET

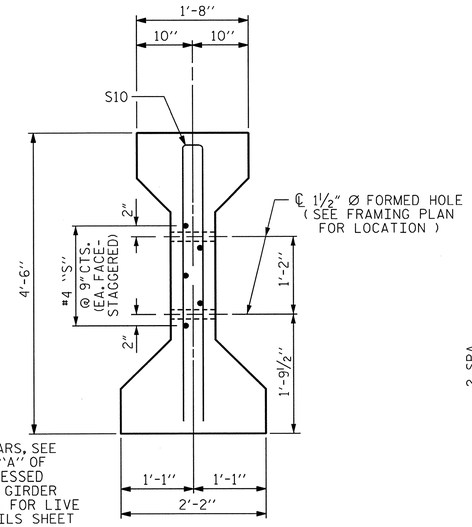

SECTION C-C

(S1 BARS NOT SHOWN)

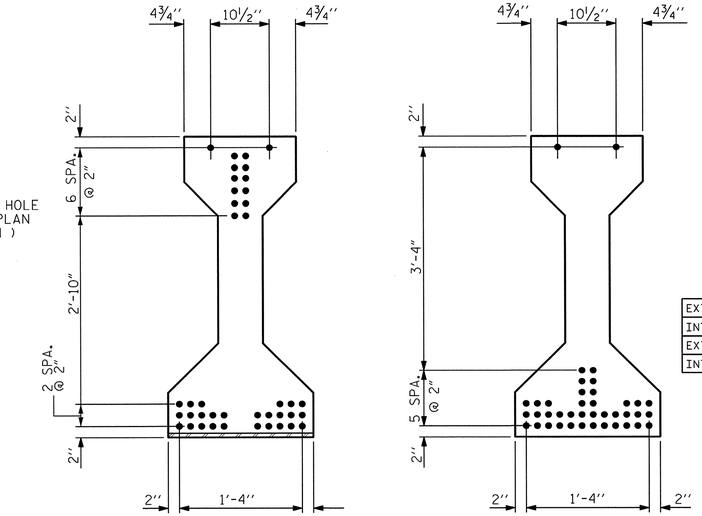

AT END OF GIRDER

AT ℄ OF GIRDER

0.6" Ø LOW RELAXATION STRAND LAYOUT

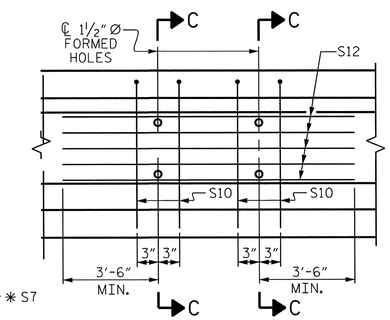

PARTIAL ELEVATION

SHOWING INTERMEDIATE DIAPHRAGM REINFORCING STEEL FOR GIRDER Nos. G2 THRU G5

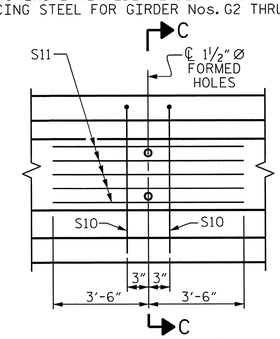

PARTIAL ELEVATION

SHOWING INTERMEDIATE DIAPHRAGM REINFORCING STEEL FOR GIRDERS A1 & A6

0.6" Ø L. R. GRADE 270 STRANDS

AREA (SQUARE INCHES)	ULTIMATE STRENGTH (LBS. PER STRAND)	APPLIED PRESTRESS (LBS. PER STRAND)
0.217	58,600	43,950

REINFORCING STEEL FOR ONE GIRDER

	BAR	NUMBER	SIZE	TYPE	LENGTH	WEIGHT
	S1	80	#4	1	10'-8"	570
	S2	10	#6	1	10'-8"	160
	S3	2	#4	2	9'-1"	12
	S4	64	#4	3	3'-5"	146
	S5	6	#4	2	8'-5"	34
	S6	1	#4	2	9'-11"	7
	* S7	6	#5	STR	3'-8"	23
	S8	4	#4	2	8'-7"	23
	S9	1	#3	STR	5'-7"	1
EXTERIOR GDR.	S10	2	#5	2	8'-8"	18
INTERIOR GDR.	S10	4	#5	2	8'-8"	36
EXTERIOR GDR.	S11	5	#4	STR	7'-0"	23
INTERIOR GDR.	S12	5	#4	STR	12'-0"	40
	S13	2	#6	4	5'-3"	16
	S14	2	#6	4	5'-5"	16

* NOTE: S7 BARS SHALL BE BENT BEFORE SHIPMENT. HEAT BENDING SHALL NOT BE ALLOWED.

BAR TYPES

ALL BAR DIMENSIONS ARE OUT-TO-OUT

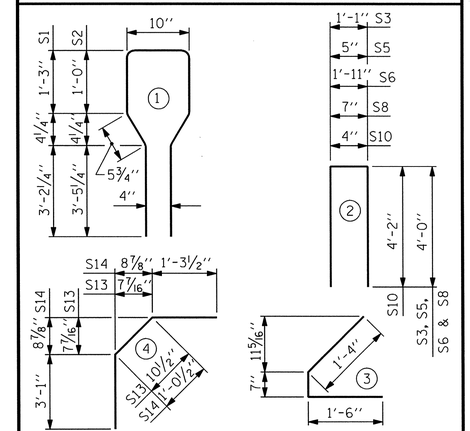

QUANTITIES FOR ONE GIRDER

	REINFORCING STEEL LB.	8000 PSI CONCRETE C.Y.	0.6" Ø L. R. STRANDS No.
EXTERIOR GIRDER	1049	20.2	40
INTERIOR GIRDER	1084	20.2	40

GIRDERS REQUIRED

NUMBER	LENGTH	TOTAL LENGTH
5	99'-9⅛"	547'-1"

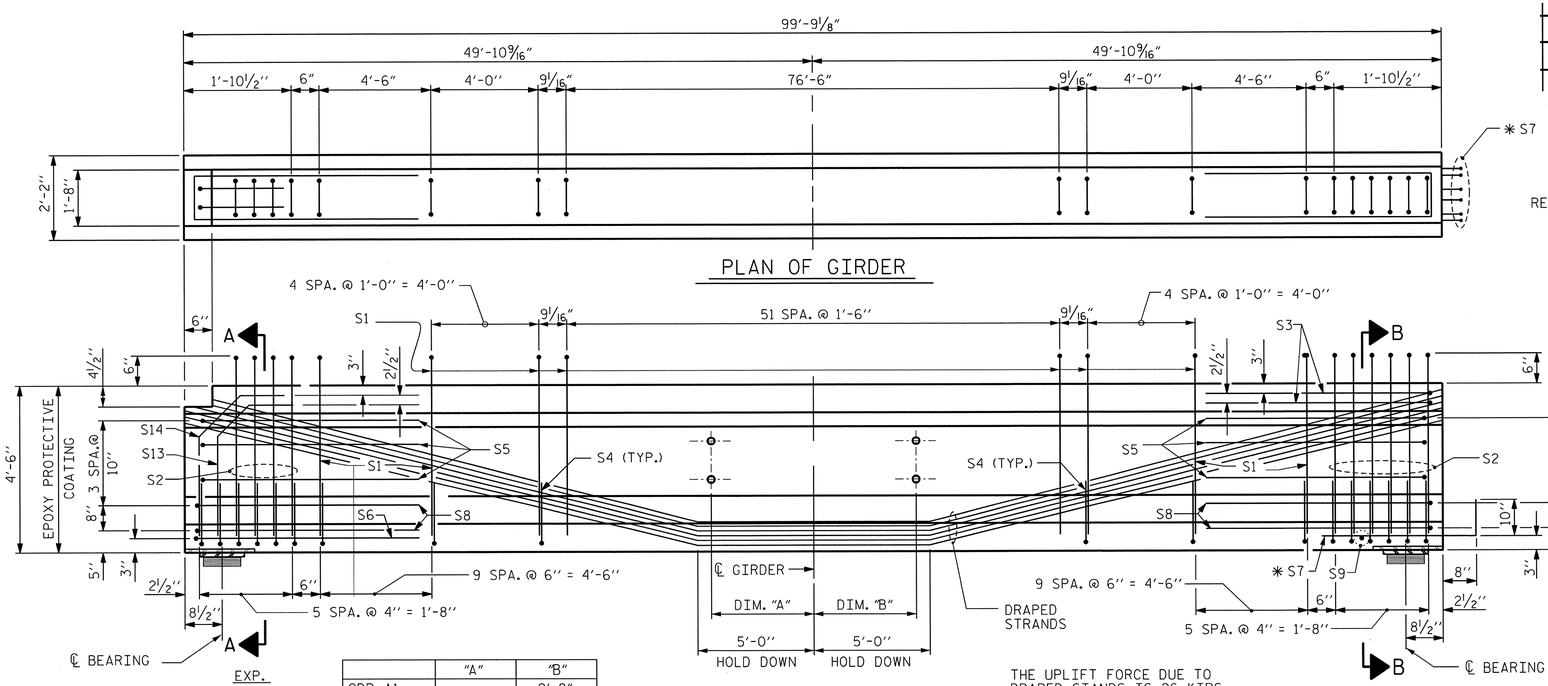

THE UPLIFT FORCE DUE TO DRAPED STANDS IS 26 KIPS

	"A"	"B"
GDR. A1	-	2'-8"
GDR. A2-A4	2'-8"	2'-8"
GDR. A5	2'-8"	-

ELEVATION OF GIRDER

(SEE PARTIAL ELEVATION FOR ADDITIONAL "S" BARS)

PROJECT NO. R-2633BB

BRUNSWICK/NEW HANOVER COUNTY

STATION: 425+60.75 -L-
16+20.93 -EY11-

STATE OF NORTH CAROLINA
DEPARTMENT OF TRANSPORTATION
RALEIGH

STANDARD

AASHTO TYPE IV PRESTRESSED CONCRETE GIRDER CONTINUOUS FOR LIVE LOAD SPAN A - RIGHT LANE

NORTH CAROLINA PROFESSIONAL SEAL 14047 ENGINEER STEPHEN D. COOK
11/16/12

THE LOUIS BERGER GROUP, Inc.
1001 Wade Avenue, Suite 400
Raleigh, NC 27605-3322

REVISIONS								SHEET NO.
NO.	BY:	DATE:	NO.	BY:	DATE:			S-582
1			3					TOTAL SHEETS
2			4					700

STD. NO. PCG6

ASSEMBLED BY : J. MYA	DATE : JUNE 2012		
CHECKED BY : S. COOK	DATE : AUG 2012		
DRAWN BY : ELR 8/91	REV. 10/17/00R	RWW/LES	
CHECKED BY : GRP 8/91	REV. 5/1/06R	TLA/GM	
	REV. 10/1/11	MAA/GM	

G:\OR Projects\OR1092 - NCDOT Wilm Bypass DualBridges\Structures\Bridge Site 7\R-2633BB_SD_07R_G01.dgn
11/16/2012 11:51:30 AM 1092_PDF_full.pltcfg 1092_str.tbl

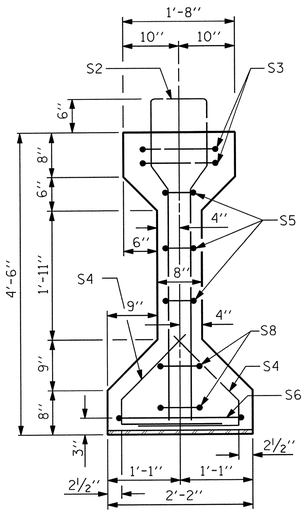

SECTION A-A

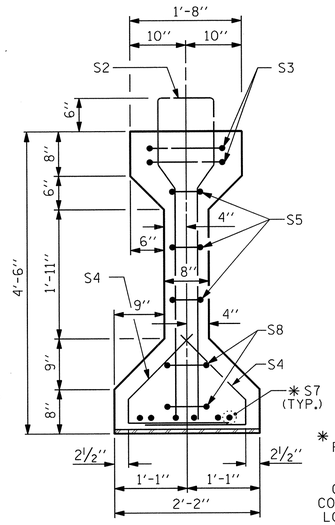

SECTION B-B

✱ FOR S7 BARS, SEE DETAIL "A" OF PRESTRESSED CONCRETE GIRDER CONTINUOUS FOR LIVE LOAD DETAILS SHEET

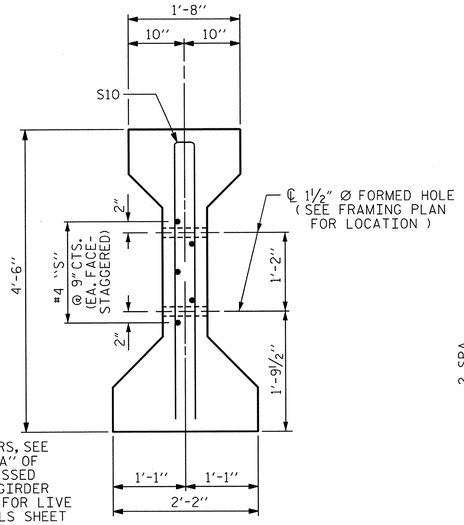

SECTION C-C

(S1 BARS NOT SHOWN)

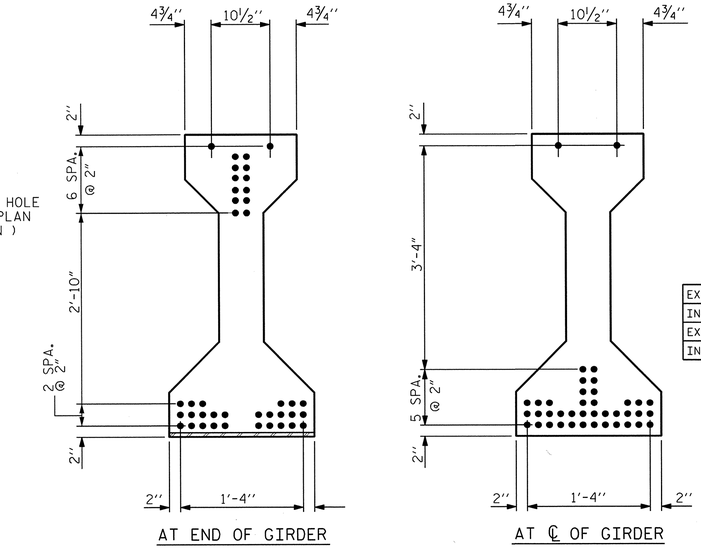

AT END OF GIRDER

AT ℄ OF GIRDER

0.6" Ø LOW RELAXATION STRAND LAYOUT

0.6" Ø L. R. GRADE 270 STRANDS

AREA (SQUARE INCHES)	ULTIMATE STRENGTH (LBS. PER STRAND)	APPLIED PRESTRESS (LBS. PER STRAND)
0.217	58,600	43,950

REINFORCING STEEL FOR ONE GIRDER

	BAR	NUMBER	SIZE	TYPE	LENGTH	WEIGHT
	S1	80	#4	1	10'-8"	570
	S2	12	#6	1	10'-8"	192
	S3	4	#4	2	9'-1"	24
	S4	64	#4	3	3'-5"	146
	S5	6	#4	2	8'-5"	34
	✱ S7	12	#5	STR	3'-8"	46
	S8	4	#4	2	8'-7"	23
	S9	2	#3	STR	5'-7"	2
EXTERIOR GDR.	S10	2	#5	2	8'-8"	18
INTERIOR GDR.	S10	4	#5	2	8'-8"	36
EXTERIOR GDR.	S11	5	#4	STR	7'-0"	23
INTERIOR GDR.	S12	5	#4	STR	12'-0"	40

✱ NOTE: S7 BARS SHALL BE BENT BEFORE SHIPMENT. HEAT BENDING SHALL NOT BE ALLOWED.

BAR TYPES

ALL BAR DIMENSIONS ARE OUT-TO-OUT

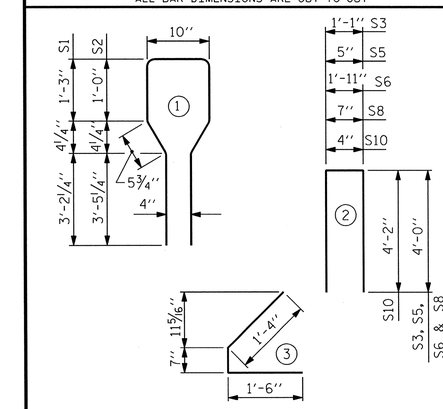

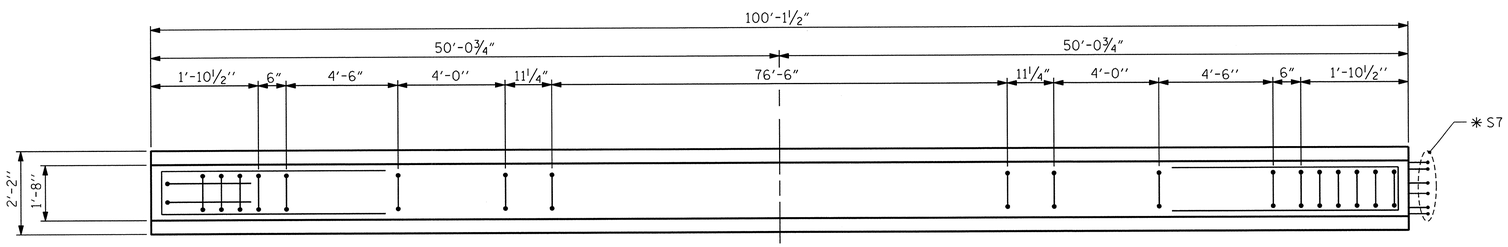

PLAN OF GIRDER

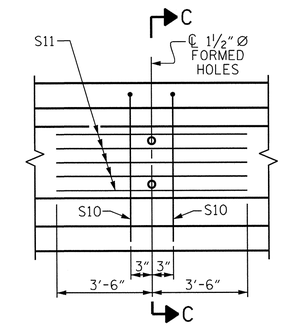

PARTIAL ELEVATION

SHOWING INTERMEDIATE DIAPHRAGM REINFORCING STEEL FOR GIRDERS B1 & B6

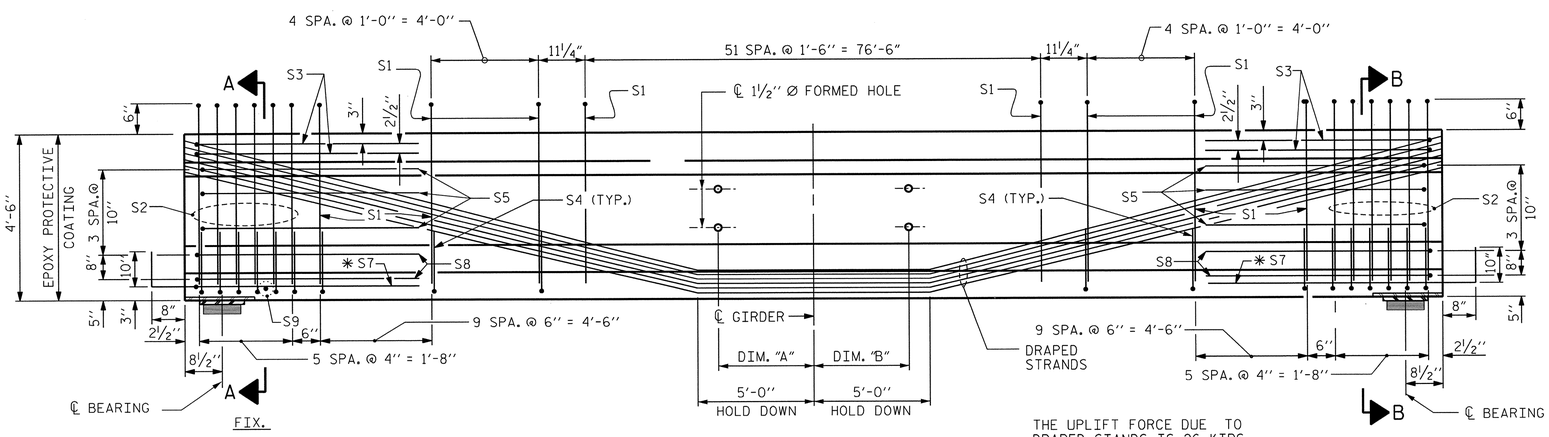

THE UPLIFT FORCE DUE TO DRAPED STANDS IS 26 KIPS

	"A"	"B"
GDR. A1	-	2'-8"
GDR. A2-A5	2'-8"	2'-8"
GDR. A6	2'-8"	-

ELEVATION OF GIRDER

(SEE PARTIAL ELEVATION FOR ADDITIONAL "S" BARS)

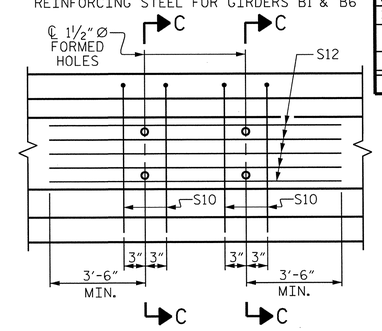

PARTIAL ELEVATION

SHOWING INTERMEDIATE DIAPHRAGM REINFORCING STEEL FOR GIRDER B2 THRU B5

QUANTITIES FOR ONE GIRDER

	REINFORCING STEEL LB.	8000 PSI CONCRETE C.Y.	0.6" Ø L.R. STRANDS No.
EXTERIOR GIRDER	1078	20.2	40
INTERIOR GIRDER	1113	20.2	40

GIRDERS REQUIRED

NUMBER	LENGTH	TOTAL LENGTH
5	100'-1½"	500'-7½"

PROJECT NO. R-2633BB

BRUNSWICK/NEW HANOVER COUNTY

STATION: 425+60.75 -L-

16+20.93 -EY11-

STATE OF NORTH CAROLINA
DEPARTMENT OF TRANSPORTATION
RALEIGH

STANDARD

AASHTO TYPE IV
PRESTRESSED CONCRETE GIRDER
CONTINUOUS FOR LIVE LOAD
SPAN B - RIGHT LANE

NORTH CAROLINA PROFESSIONAL SEAL 14047 ENGINEER STEPHEN D. COOK
11/16/12

THE LOUIS BERGER GROUP, Inc.
1001 Wade Avenue, Suite 400
Raleigh, NC 27605-3322

REVISIONS							
NO.	BY:	DATE:	NO.	BY:	DATE:	SHEET NO.	S-523
1			3			TOTAL SHEETS	700
2			4				

ASSEMBLED BY : J. MYA	DATE : JULY 2012		
CHECKED BY : S. COOK	DATE : AUG 2012		
DRAWN BY : ELR 8/91	REV. 10/17/00R	RWW/LES	
CHECKED BY : GRP 8/91	REV. 5/1/06R	TLA/GM	
	REV. 10/1/11	MAA/GM	

STD. NO. PCG6

G:\OR Projects\OR1092 - NCDOT Wilm Bypass DualBridges\Structures\Bridge Site 7\R-2633BB_SD_07R_G02.dgn
11/16/2012 11:51:33 AM 1092_PDF_full.pltcfg 1092_str.tbl

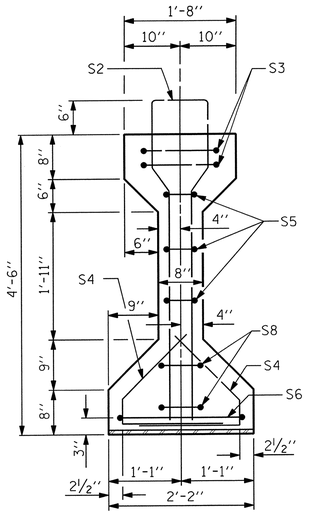

SECTION A-A

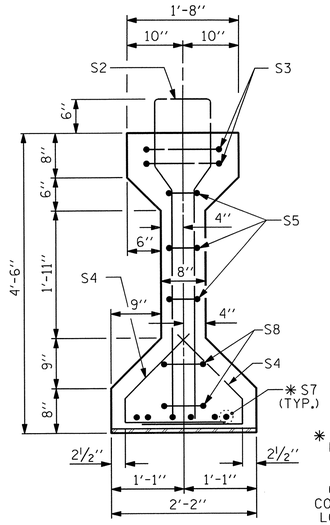

SECTION B-B

✱ FOR S7 BARS, SEE DETAIL "A" OF PRESTRESSED CONCRETE GIRDER CONTINUOUS FOR LIVE LOAD DETAILS SHEET

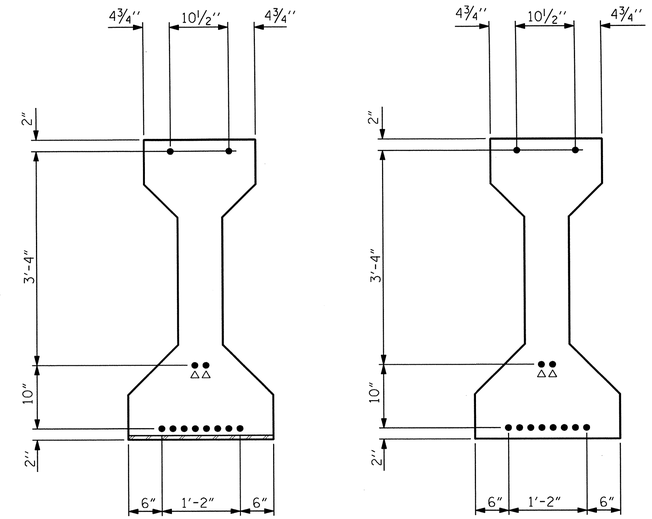

△△ STRANDS SHALL BE STRESSED TO 4500 LBS. (MAX.)

AT END OF GIRDER

AT ℄ OF GIRDER

0.6" Ø LOW RELAXATION STRAND LAYOUT

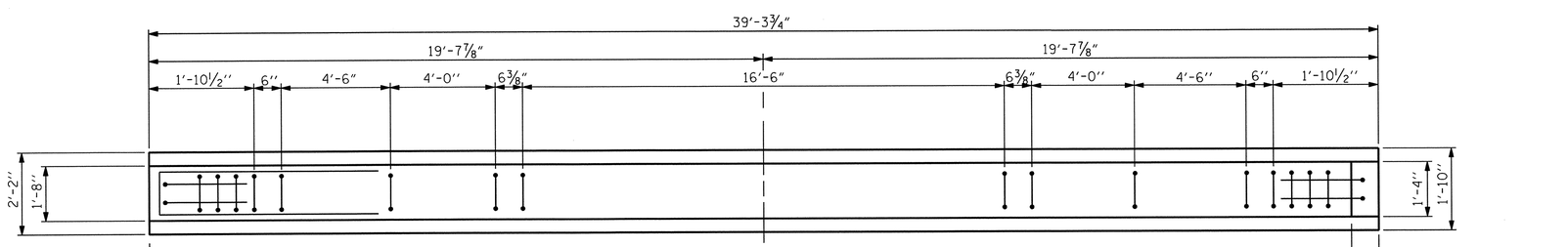

PLAN OF GIRDER

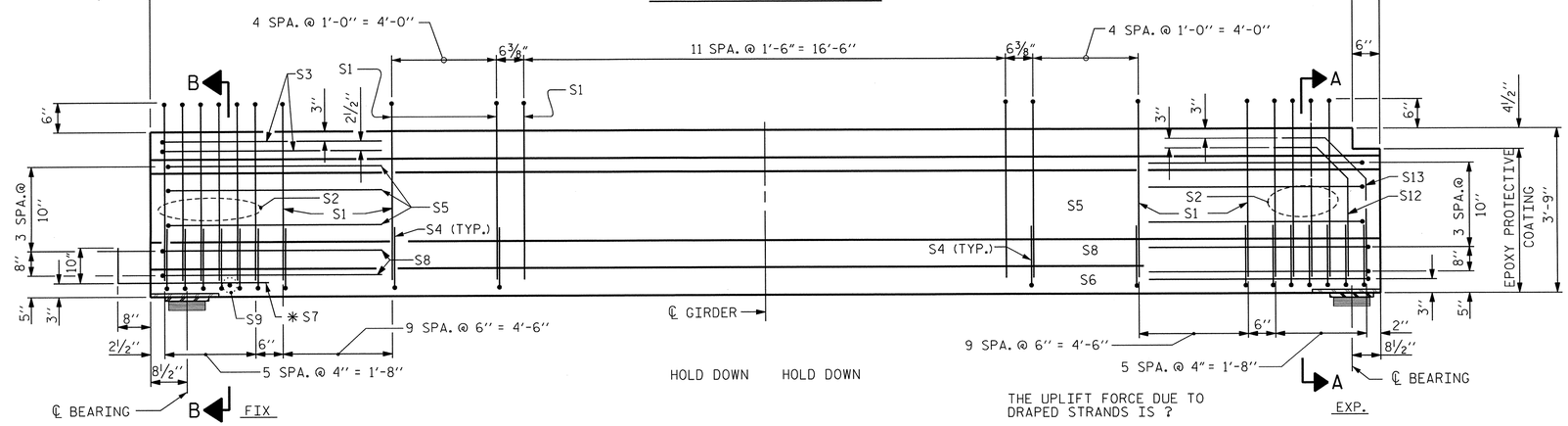

ELEVATION OF GIRDER

(SEE PARTIAL ELEVATION FOR ADDITIONAL "S" BARS)

0.6" Ø L. R. GRADE 270 STRANDS

AREA (SQUARE INCHES)	ULTIMATE STRENGTH (LBS. PER STRAND)	APPLIED PRESTRESS (LBS. PER STRAND)
0.217	58,600	43,950

REINFORCING STEEL FOR ONE GIRDER

BAR	NUMBER	SIZE	TYPE	LENGTH	WEIGHT
S1	40	#4	1	10'-8"	285
S2	10	#6	1	10'-8"	160
S3	2	#4	2	9'-1"	12
S4	64	#4	3	3'-5"	146
S5	6	#4	2	8'-5"	34
S6	1	#4	2	9'-11"	7
✱ S7	6	#5	STR	3'-8"	23
S8	4	#4	2	8'-7"	23
S9	1	#3	STR	5'-7"	1
S12	2	#6	4	5'-3"	16
S13	2	#6	4	5'-5"	16

✱ NOTE: S7 BARS SHALL BE BENT BEFORE SHIPMENT. HEAT BENDING SHALL NOT BE ALLOWED.

BAR TYPES

ALL BAR DIMENSIONS ARE OUT-TO-OUT

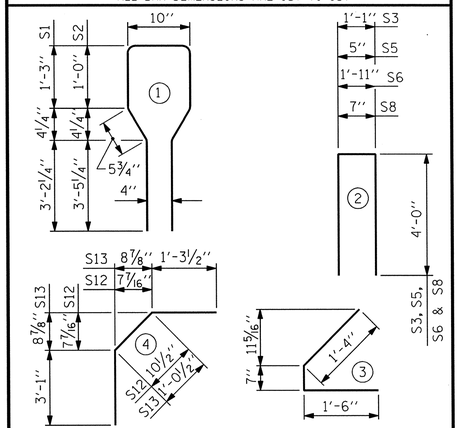

QUANTITIES FOR ONE GIRDER

REINFORCING STEEL	8000 PSI CONCRETE	0.6" Ø L. R. STRANDS
LB.	C.Y.	No.
723	7.9	12

GIRDERS REQUIRED

NUMBER	LENGTH	TOTAL LENGTH
5	39'-3¾"	196'-6¾"

PROJECT NO. R-2633BB

BRUNSWICK/NEW HANOVER COUNTY

STATION: 425+60.75 -L-
16+20.93 -EY11-

STATE OF NORTH CAROLINA
DEPARTMENT OF TRANSPORTATION
RALEIGH

STANDARD
AASHTO TYPE IV
PRESTRESSED CONCRETE GIRDER
CONTINUOUS FOR LIVE LOAD
SPAN C - RIGHT LANE

NORTH CAROLINA PROFESSIONAL SEAL 14047 ENGINEER STEPHEN D. COOK
11/16/12

ASSEMBLED BY : J. MYA	DATE : JULY 2012
CHECKED BY : S. COOK	DATE : AUG 2012
DRAWN BY : ELR 8/91	REV. 10/17/00R RWW/LES
CHECKED BY : GRP 8/91	REV. 5/1/06R TLA/GM
	REV. 10/1/11 MAA/GM

THE LOUIS BERGER GROUP, Inc.
1001 Wade Avenue, Suite 400
Raleigh, NC 27605-3322

REVISIONS								
NO.	BY:	DATE:	NO.	BY:	DATE:			
1			3					
2			4					

SHEET NO. S-584
TOTAL SHEETS 700

STD. NO. PCG6

G:\OR Projects\OR1092 - NCDOT Wilm Bypass DualBridges\Structures\Bridge Site 7\R-2633BB_SD_07R_G03.dgn
11/16/2012
1092_str.tbl

DEAD LOAD DEFLECTION TABLE FOR GIRDERS

0.6"Ø LOW RELAXATION	SPAN A - EXTERIOR GIRDER											SPAN A - INTERIOR GIRDER										
	GIRDERS 1 AND 5											GIRDERS 2 THRU 4										
TENTH POINTS	0	.1	.2	.3	.4	.5	.6	.7	.8	.9	0	0	.1	.2	.3	.4	.5	.6	.7	.8	.9	0
CAMBER (GIRDER ALONE IN PLACE)	0	0.090	0.163	0.220	0.257	0.270	0.257	0.220	0.163	0.090	0	0	0.090	0.163	0.220	0.257	0.270	0.257	0.220	0.163	0.090	0
* DEFLECTION DUE TO SUPERIMPOSED D.L.	0	0.047	0.092	0.127	0.150	0.157	0.150	0.127	0.092	0.047	0	0	0.050	0.098	0.136	0.160	0.168	0.160	0.136	0.098	0.050	0
FINAL CAMBER	0	1/2"	7/8"	1 1/8"	1 5/16"	1 3/8"	1 5/16"	1 1/8"	7/8"	1/2"	0	0	1/2"	3/4"	1"	1 3/16"	1 1/4"	1 3/16"	1"	3/4"	1/2"	0

DEAD LOAD DEFLECTION TABLE FOR GIRDERS

0.6"Ø LOW RELAXATION	SPAN B - EXTERIOR GIRDER											SPAN B - INTERIOR GIRDER										
	GIRDERS 1 AND 5											GIRDERS 2 THRU 4										
TENTH POINTS	0	.1	.2	.3	.4	.5	.6	.7	.8	.9	0	0	.1	.2	.3	.4	.5	.6	.7	.8	.9	0
CAMBER (GIRDER ALONE IN PLACE)	0	0.090	0.163	0.220	0.257	0.270	0.257	0.220	0.163	0.090	0	0	0.090	0.163	0.220	0.257	0.270	0.257	0.220	0.163	0.090	0
* DEFLECTION DUE TO SUPERIMPOSED D.L.	0	0.048	0.094	0.130	0.152	0.160	0.152	0.130	0.094	0.048	0	0	0.051	0.100	0.138	0.162	0.171	0.162	0.138	0.100	0.051	0
FINAL CAMBER	0	1/2"	13/16"	1 1/16"	1 1/4"	1 5/16"	1 1/4"	1 1/16"	13/16"	1/2"	0	0	7/16"	3/4"	1"	1 1/8"	1 3/16"	1 1/8"	1"	3/4"	7/16"	0

DEAD LOAD DEFLECTION TABLE FOR GIRDERS

0.6"Ø LOW RELAXATION	SPAN C - EXTERIOR GIRDER											SPAN C - INTERIOR GIRDER										
	GIRDERS 1 AND 5											GIRDERS 2 THRU 4										
TENTH POINTS	0	.1	.2	.3	.4	.5	.6	.7	.8	.9	0	0	.1	.2	.3	.4	.5	.6	.7	.8	.9	0
CAMBER (GIRDER ALONE IN PLACE)	0	0.005	0.008	0.011	0.012	0.013	0.012	0.011	0.008	0.005	0	0	0.005	0.008	0.011	0.012	0.013	0.012	0.011	0.008	0.005	0
* DEFLECTION DUE TO SUPERIMPOSED D.L.	0	0.001	0.002	0.003	0.003	0.004	0.003	0.003	0.002	0.001	0	0	0.001	0.002	0.003	0.004	0.004	0.004	0.003	0.002	0.001	0
FINAL CAMBER	0	1/16"	1/16"	1/8"	1/8"	1/8"	1/8"	1/8"	1/16"	1/16"	0	0	1/16"	1/16"	1/16"	1/8"	1/8"	1/8"	1/16"	1/16"	1/16"	0

* INCLUDES FUTURE WEARING SURFACE
ALL VALUES ARE SHOWN IN FEET (DECIMAL FORM), EXCEPT "FINAL CAMBER", WHICH IS GIVEN IN INCHES (FRACTION FORM).

NOTES

ALL PRESTRESSING STRANDS SHALL BE 7-WIRE LOW-RELAXATION GRADE 270 STRANDS AND SHALL CONFORM TO AASHTO M203 EXCEPT FOR SAMPLING REQUIREMENTS WHICH SHALL BE IN ACCORDANCE WITH THE STANDARD SPECIFICATIONS.

ALL REINFORCING STEEL SHALL BE GRADE 60.

APPLY EPOXY PROTECTIVE COATING TO END OF GIRDER SURFACES INDICATED IN ELEVATION VIEW.

EMBEDDED PLATE "B-1" SHALL BE GALVANIZED IN ACCORDANCE WITH THE STANDARD SPECIFICATIONS. BEVEL EDGES OF PLATE "B-1" TO GIVE CLOSE FIT BUT NOT TIGHT FIT TO STEEL CASTING FORM.

ANCHOR STUDS SHALL CONFORM TO AASHTO M169 GRADES 1010 THROUGH 1020 OR APPROVED EQUAL, AND SHALL MEET THE TYPE "B" REQUIREMENTS OF SUBSECTION 7.3 OF THE ANSI/AASHTO/AWS D1.5 BRIDGE WELDING CODE.

AT ENDS OF GIRDERS TO BE EMBEDDED IN CONCRETE DIAPHRAGMS OR END WALLS, PRESTRESSING STRANDS MAY EXTEND A MAXIMUM OF 2" BEYOND THE GIRDER ENDS. OTHERWISE, PRESTRESSING STRANDS SHALL BE CUT FLUSH WITH THE GIRDER ENDS.

THE TRANSFER OF LOAD FROM THE ANCHORAGES TO THE GIRDER SHALL BE DONE WHEN CONCRETE HAS REACHED A COMPRESSIVE STRENGTH OF NOT LESS THAN 6400 PSI.

DEPENDING ON THE TYPE OF SYSTEM USED TO SUPPORT THE DECK SLAB FORMS, PRESET ANCHORS MAY BE NECESSARY IN THE PRESTRESSED CONCRETE GIRDER.

THE TOP SURFACE OF THE GIRDER, EXCLUDING THE OUTSIDE 4", SHALL BE RAKED TO A DEPTH OF 1/4".

WHEN DRAPED STRANDS ARE DETAILED, THE LONGITUDINAL LOCATION OF THE HOLD DOWN DEVICES SHALL BE WITHIN 6" OF THE LOCATION SHOWN AND THE CENTER OF GRAVITY OF THE GROUP OF DRAPED STRANDS SHALL BE LOCATED WITHIN 1/2" OF THE THEORETICAL LOCATION SHOWN.

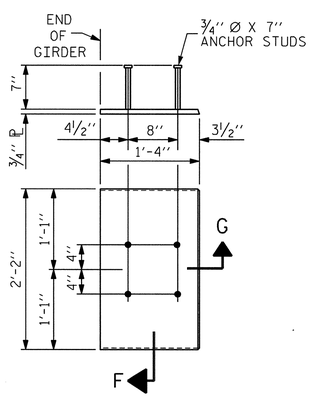

EMBEDDED PLATE "B-1" DETAILS FOR AASHTO TYPE IV GIRDER

(2 REQ'D PER GIRDER)

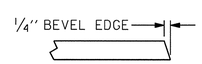

SECTION "G"

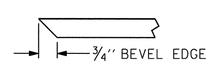

SECTION "F"

(SEE NOTES)

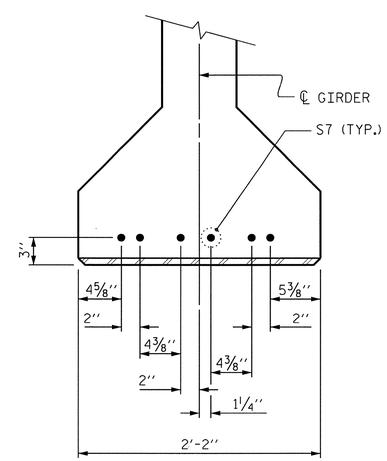

DETAIL "A"

(FOR AASHTO TYPE IV GIRDERS)

PROJECT NO. R-2633BB
BRUNSWICK/NEW HANOVER COUNTY
STATION: 425+60.75 -L-
16+20.93 -EY11-

STATE OF NORTH CAROLINA
DEPARTMENT OF TRANSPORTATION
RALEIGH

STANDARD

PRESTRESSED CONCRETE GIRDER
CONTINUOUS FOR LIVE LOAD
DETAILS
RIGHT LANE

NORTH CAROLINA PROFESSIONAL SEAL 14047 ENGINEER STEPHEN D. COOK
11/16/12

ASSEMBLED BY : J. MYA	DATE : JULY 2012		
CHECKED BY : S. COOK	DATE : AUG 2012		
DRAWN BY : ELR 11/91	REV. 7/10/01 RR LES/RDR		
CHECKED BY : GRP 11/91	REV. 5/1/06 TLA/GM		
	REV. 10/1/11 MAA/GM		

THE LOUIS BERGER GROUP, Inc.
1001 Wade Avenue, Suite 400
Raleigh, NC 27605-3322

REVISIONS						SHEET NO.
NO.	BY:	DATE:	NO.	BY:	DATE:	S-585
1			3			TOTAL SHEETS
2			4			700

STD. NO. PCG9

G:\OR Projects\OR1092 - NCDOT Wilm Bypass DualBridges\Structures\Bridge Site 7\R-2633BB_SD_07R_G04.dgn
11/16/2012 11:51:39 AM 1092_PDF_full.pltcfg 1092_str.tbl

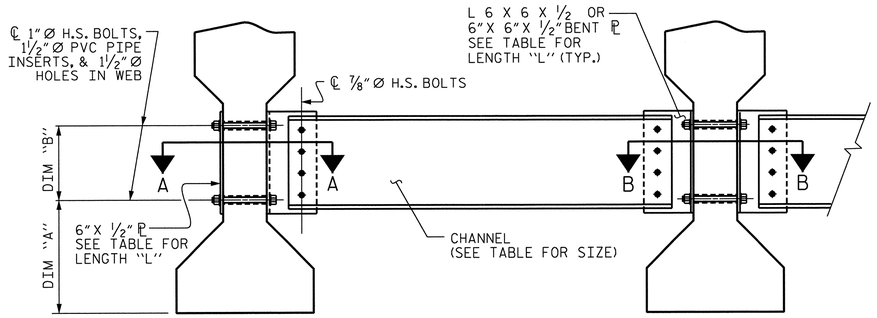

EXTERIOR GIRDER

INTERIOR GIRDER

PART SECTION AT INTERMEDIATE DIAPHRAGM

(TYPE III OR TYPE IV GIRDER SHOWN)

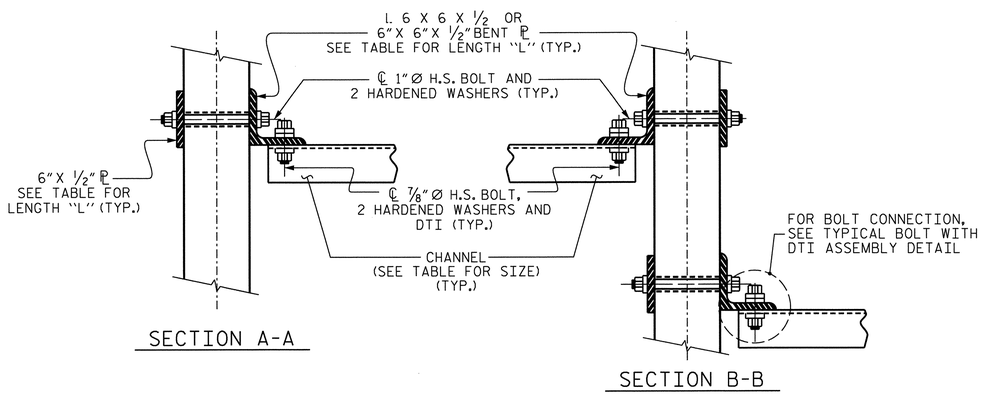

SECTION A-A

SECTION B-B

CONNECTION DETAILS

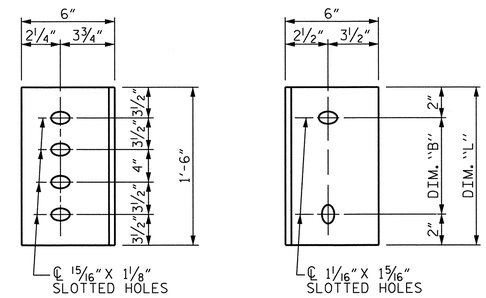

DIAPHRAGM FACE

WEB FACE

CONNECTOR PLATE DETAILS

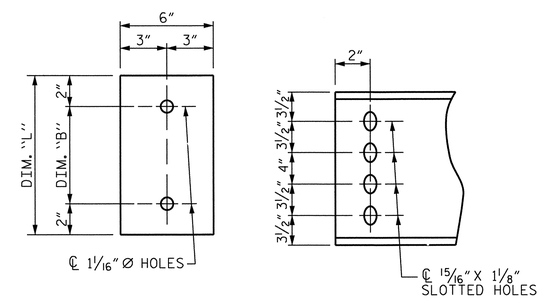

PLATE DETAILS

CHANNEL END

STRUCTURAL STEEL NOTES

ALL INTERMEDIATE DIAPHRAGM STEEL AND CONNECTOR PLATES SHALL BE AASHTO M270 GRADE 50 OR APPROVED EQUAL.

TENSION ON THE ASTM A325 BOLTS THROUGH THE ANGLE MEMBER SHALL BE CALIBRATED USING DIRECT TENSION INDICATOR WASHERS IN ACCORDANCE WITH THE STANDARD SPECIFICATIONS.

TENSION ON THE ASTM A449 BOLTS THROUGH THE GIRDER WEB SHALL BE SNUG TIGHTENED FOLLOWED BY AN ADDITIONAL ¼ TURN.

THE PLATES. BENT PLATES. AND ANGLES SHALL BE GALVANIZED OR MET ALLIZED IN ACCORDANCE WITH THE STANDARD SPECIFICATIONS . FOR THERMAL SPRAYED COATINGS (METALLIZATION). SEE SPECIAL PROVISIONS.

FOR METALLIZATION, APPLY AN 8 MIL THICK 99.99 PERCENT ZINC (W-Zn-II) THERMAL SPRAYED COATING WITH A 0.5 MIL THICK SEAL COAT TO ALL STEEL DIAPHRAGM SURFACES IN ACCORDANCE WITH THE THERMAL SPRAYED COATINGS SPECIAL PROVISION AND SECTION 442 OF THE STANDARD SPECIFICATIONS.

GALVANIZE THE HIGH STRENGTH BOLTS, NUTS, WASHERS AND DIRECT TENSION INDICATORS IN ACCORDANCE WITH THE STANDARD SPECIFICATIONS.

USE AN ASTM F436 HARDENED WASHER WITH STANDARD AND SLOTTED HOLES UNDER EACH BOLT HEAD AND NUT.

FOR BOLTS THROUGH THE GIRDER WEB, PROVIDE SUFFICIENT LENGTH OF THREADS ON ALL BOLTS TO ACCOMMODATE WASHERS AND THE THICKNESS OF CONNECTING MEMBER PLUS AT LEAST ¼" PROJECTION BEYOND THE NUT.

INTERMEDIATE DIAPHRAGM ASSEMBLY SHALL COMPLY WITH SECTION 1072 OF THE STANDARD SPECIFICATIONS.

SUBMIT TWO SETS OF WORKING DRAWINGS FOR THE INTERMEDIATE DIAPHRAGM ASSEMBLY FOR REVIEW, COMMENTS AND ACCEPTANCE. AFTER REVIEW, COMMENTS, AND ACCEPTANCE, SUBMIT SEVEN SETS FOR DISTRIBUTION.

IN THE EXTERIOR BAYS, PLACE TEMPORARY STRUTS BETWEEN PRESTRESSED GIRDERS ADJACENT TO THE STEEL DIAPHRAGMS.STRUTS SHALL REMAIN IN PLACE 3 DAYS AFTER CONCRETE IS PLACED.

THE COST OF THE STEEL DIAPHRAGMS AND ASSEMBLIES SHALL BE INCLUDED IN THE UNIT PRICE BID FOR PRESTRESSED CONCRETE GIRDERS.

TABLE

GIRDER TYPE	CHANNEL SIZE	DIM "A"	DIM "B"	DIM "L"
IV	MC 18 × 42.7	1'-9½"	1'-2"	1'-6"

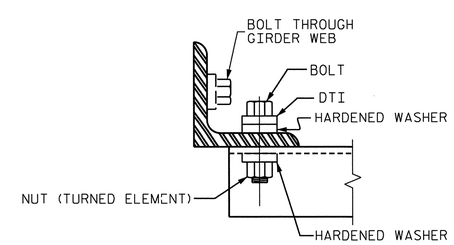

BOLT WITH DTI ASSEMBLY DETAIL

PRELIMINARY PLANS
DO NOT USE FOR CONSTRUCTION

PROJECT NO. R-2633BB

BRUNSWICK/NEW HANOVER COUNTY

STATION: 425+60.75 -L-
16+20.93 -EY11-

STATE OF NORTH CAROLINA
DEPARTMENT OF TRANSPORTATION
RALEIGH

SUPERSTRUCTURE
INTERMEDIATE
STEEL DIAPHRAGMS
FOR TYPE IV PRESTRESSED
CONCRETE GIRDERS
RIGHT LANE

NORTH CAROLINA PROFESSIONAL SEAL 14047 ENGINEER STEPHEN D. COOK
6/11/13

THE LOUIS BERGER GROUP, Inc.
1001 Wade Avenue, Suite 400
Raleigh, NC 27605-3322

REVISIONS						
NO.	BY:	DATE:	NO.	BY:	DATE:
1			3		
2			4		

SHEET NO. S-586

TOTAL SHEETS 700

DRAWN BY : R. KNIGHT DATE : JUNE 2012
CHECKED BY : S. COOK DATE : AUG 2012

STD. NO. PCG10

G:\OR Projects\OR1092 - NCDOT Wilm Bypass DualBridges\Structures\Bridge Site 7\R-2633BB_SD_07R_G05.dgn
6/21/2013 11:13:08 AM 1092_PDF_fullpltcfg 1092_str.tbl

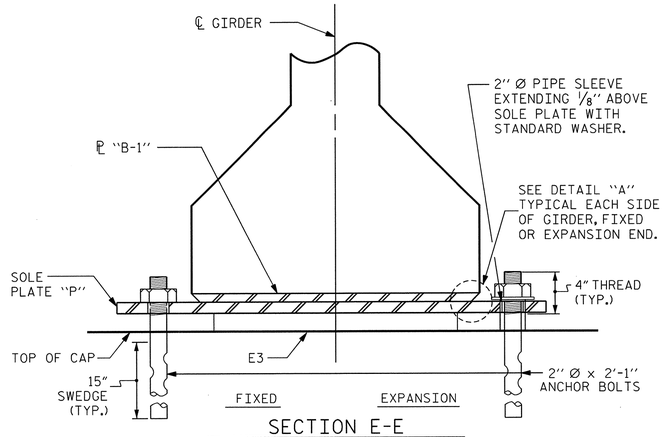

SECTION E-E

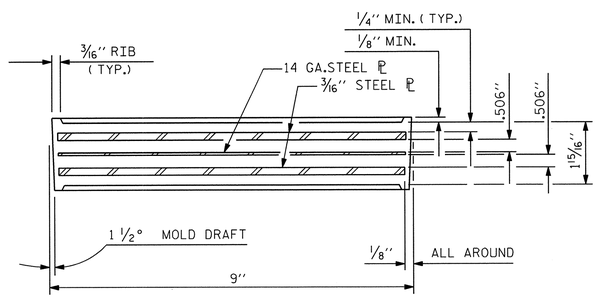

TYPICAL SECTION OF ELASTOMERIC BEARINGS

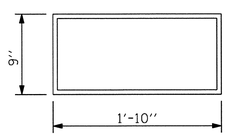

E3 (10 REQ'D)

PLAN VIEW OF ELASTOMERIC BEARING

TYPE IV

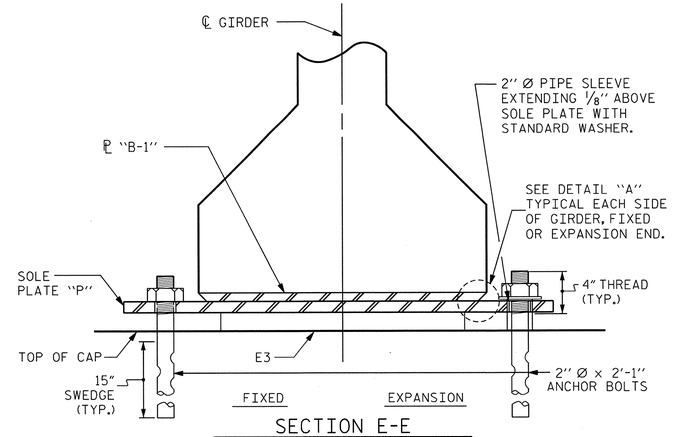

SECTION E-E

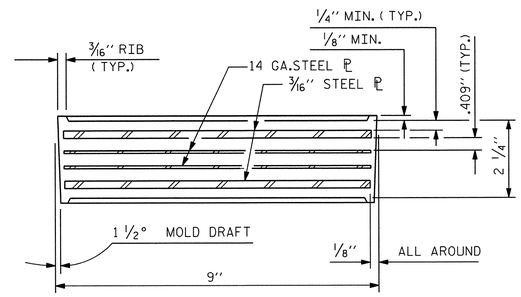

TYPICAL SECTION OF ELASTOMERIC BEARINGS

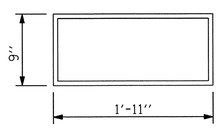

E4 (20 REQ'D)

PLAN VIEW OF ELASTOMERIC BEARING

TYPE V

NOTES

AT ALL FIXED POINTS OF SUPPORT, NUTS FOR ANCHOR BOLTS ARE TO BE TIGHTENED FINGER TIGHT AND THEN BACKED OFF 1/2 TURN. THE THREAD OF THE NUT AND BOLT SHALL THEN BE BURRED WITH A SHARP POINTED TOOL.

THE 2" Ø PIPE SLEEVE SHALL BE CUT FROM SCHEDULE 40 PVC PLASTIC PIPE. THE PVC PLASTIC PIPE SHALL MEET THE REQUIREMENTS OF ASTM D1785.

STEEL SOLE PLATES, ANCHOR BOLTS, NUTS, AND WASHERS SHALL BE GALVANIZED IN ACCORDANCE WITH THE STANDARD SPECIFICATIONS.

PRIOR TO WELDING, GRIND THE GALVANIZED SURFACE OF THE PORTION OF THE EMBEDDED PLATE AND SOLE PLATE THAT ARE TO BE WELDED. AFTER WELDING, DAMAGED GALVANIZED SURFACES SHALL BE REPAIRED IN ACCORDANCE WITH THE STANDARD SPECIFICATIONS.

WHEN WELDING THE SOLE PLATE TO THE EMBEDDED PLATE IN THE GIRDER, USE TEMPERATURE INDICATING WAX PENS, OR OTHER SUITABLE MEANS, TO ENSURE THAT THE TEMPERATURE OF THE SOLE PLATE DOES NOT EXCEED 300°F. TEMPERATURES ABOVE THIS MAY DAMAGE THE ELASTOMER.

SOLE PLATE "P", BOLTS, NUTS, WASHERS, AND PIPE SLEEVE SHALL BE INCLUDED IN THE PAY ITEM FOR PRESTRESSED CONCRETE GIRDERS.

ANCHOR BOLTS SHALL MEET THE REQUIREMENTS OF ASTM A449. NUTS SHALL MEET THE REQUIREMENTS OF AASHTO M291-DH OR AASHTO M292-2H. WASHERS SHALL MEET THE REQUIREMENTS OF AASHTO M293. NO SHOP DRAWINGS ARE REQUIRED FOR ANCHOR BOLTS, NUTS AND WASHERS. SHOP INSPECTION IS REQUIRED.

ALL SURFACES OF BEARING PLATES SHALL BE SMOOTH AND STRAIGHT.

THE ELASTOMER IN THE STEEL REINFORCED BEARINGS SHALL HAVE A SHEAR MODULUS OF 0.160 KSI, IN ACCORDANCE WITH AASHTO M251.

FOR STEEL REINFORCED ELASTOMERIC BEARINGS, SEE SPECIAL PROVISIONS.

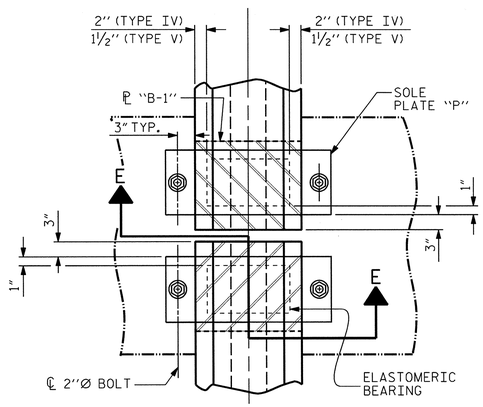

TYPICAL HALF-PLAN

(SHOWING CONTINUOUS BENT)

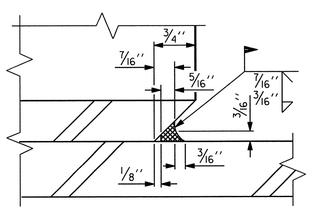

DETAIL "A"

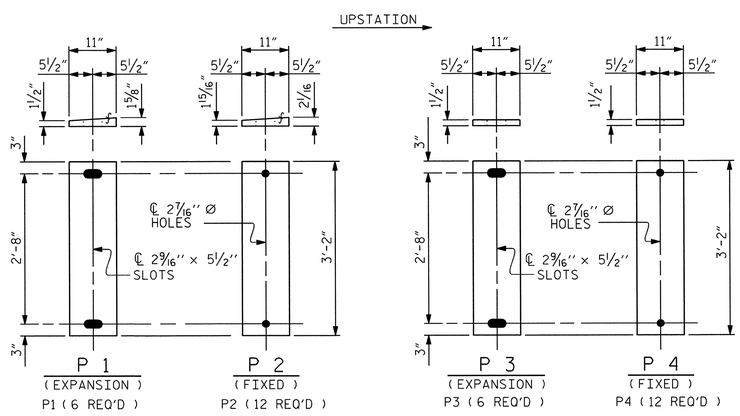

SOLE PLATE DETAILS ("P")

MAXIMUM ALLOWABLE SERVICE LOADS	
D.L.+L.L. (NO IMPACT)	
TYPE IV	200 k
TYPE V	320 k

PROJECT NO. R-2633BB

BRUNSWICK/NEW HANOVER COUNTY

STATION: 425+60.75 -L-

16+20.93 -EY11-

NORTH CAROLINA PROFESSIONAL SEAL 14047 ENGINEER STEPHEN D. COOK

THE LOUIS BERGER GROUP, Inc.
1001 Wade Avenue, Suite 400
Raleigh, NC 27605-3322

STATE OF NORTH CAROLINA
DEPARTMENT OF TRANSPORTATION
RALEIGH

STANDARD
ELASTOMERIC BEARING DETAILS
PRESTRESSED CONCRETE GIRDER
SUPERSTRUCTURE
RIGHT LANE

REVISIONS								SHEET NO.
NO.	BY:	DATE:	NO.	BY:	DATE:			S-387
1			3					TOTAL SHEETS
2			4					700

STD. NO. EB3

ASSEMBLED BY : R. KNIGHT		DATE : JULY 2012	
CHECKED BY : S. COOK		DATE : JULY 2012	
DRAWN BY : EEM 2/97	REV. 5/1/06	TLA/GM	
CHECKED BY : VAP 2/97	REV. 10/1/11	MAA/GM	
	REV. 10/24/12	AAC/MAA	

G:\OR Projects\OR1092 - NCDOT Wilm Bypass DualBridges\Structures\Bridge Site 7\R-2633BB_SD_07R_BRG.dgn
11/16/2012 11:51:44 AM 1092_PDF_full.pltcfg 1092_str.tbl

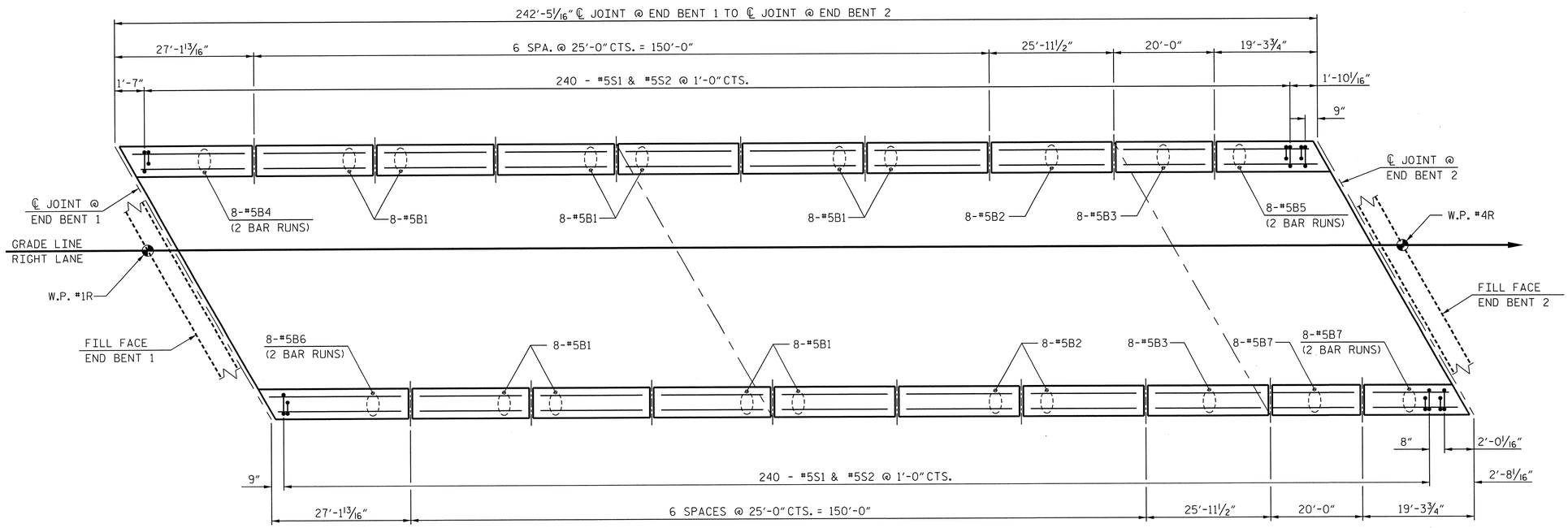

PLAN

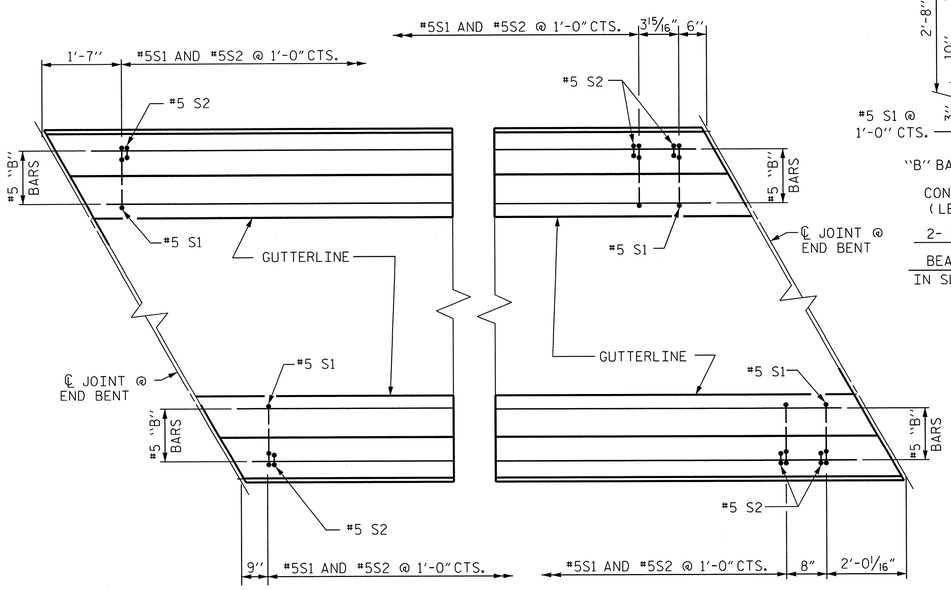

PLAN @ END BENT 1

PLAN @ END BENT 2

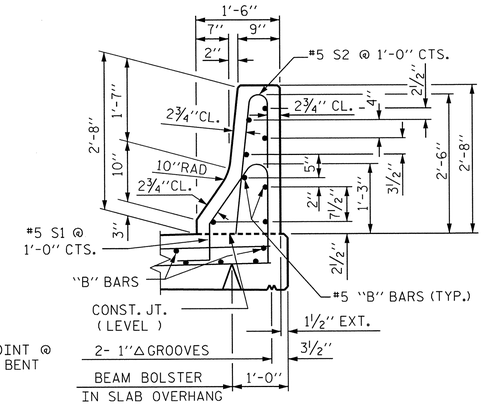

SECTION THRU RAIL

℄ 1/2" EXP.JT.MAT'L HELD IN PLACE WITH GALVANIZED NAILS.
(NOTE: OMIT EXP. JT. MAT'L. WHEN SLIP FORM IS USED.)

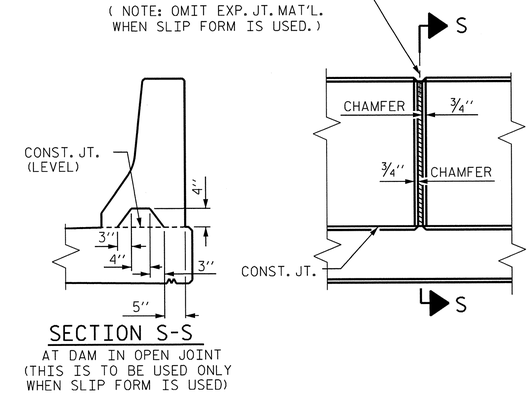

SECTION S-S
AT DAM IN OPEN JOINT
(THIS IS TO BE USED ONLY WHEN SLIP FORM IS USED)

ELEVATION AT EXPANSION JOINTS

BAR TYPES

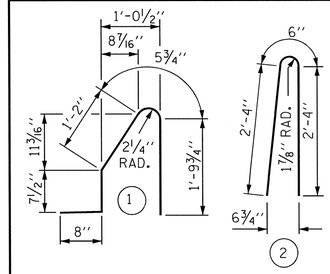

ALL BAR DIMENSIONS ARE OUT TO OUT

BILL OF MATERIAL

FOR CONCRETE BARRIER RAIL ONLY

BAR	NO.	SIZE	TYPE	LENGTH	WEIGHT
* B1	96	#5	STR	24'-7"	2,461
* B2	16	#5	STR	25'-7"	427
* B3	16	#5	STR	19'-7"	327
* B4	16	#5	STR	15'-1"	252
* B5	16	#5	STR	11'-8"	195
* B6	16	#5	STR	15'-7"	260
* B7	16	#5	STR	11'-4"	189
* S1	482	#5	1	4'-9"	2388
* S2	482	#5	2	5'-2"	2597

* EPOXY COATED	
REINFORCING STEEL	9,096 LBS.
CLASS AA CONCRETE	48.5 CU. YDS.
CONCRETE BARRIER RAIL	
SUPERSTRUCTURE	484.8 LIN. FT.
● APPROACH SLABS	41.7 LIN. FT.
TOTAL	526.5 LIN. FT.

● FOR EPOXY COATED REINFORCING STEEL AND CLASS AA CONCRETE IN THE BARRIER RAIL ON THE APPROACH SLABS, SEE "BRIDGE APPROACH SLAB DETAILS" SHEET.

NOTES

THE BARRIER RAIL IN EACH CONTINUOUS UNIT SHALL NOT BE CAST UNTIL ALL SLAB CONCRETE IN THAT SPAN HAS BEEN CAST AND HAS REACHED A MINIMUM COMPRESSIVE STRENGTH OF 3,000 PSI.

ALL REINFORCING STEEL IN BARRIER RAILS SHALL BE EPOXY COATED.

GROOVED CONTRACTION JOINTS, 1/2" IN DEPTH, SHALL BE TOOLED IN ALL EXPOSED FACES OF THE BARRIER RAIL AND IN ACCORDANCE WITH ARTICLE 825-10(B) OF THE STANDARD SPECIFICATIONS. THE CONTRACTION JOINT SHALL BE LOCATED AT EACH THIRD POINT BETWEEN BARRIER RAIL EXPANSION JOINTS. ONLY ONE CONTRACTION JOINT IS REQUIRED AT MIDPOINT OF BARRIER RAIL SEGMENTS LESS THAN 20 FEET IN LENGTH AND NO CONTRACTION JOINTS ARE REQUIRED FOR THOSE SEGMENTS LESS THAN 10 FEET IN LENGTH.

BARRIER RAIL DETAILS

PROJECT NO. R-2633BB
BRUNSWICK/NEW HANOVER COUNTY
STATION: 425+60.75 -L-
16+20.93 -EY11-

NORTH CAROLINA PROFESSIONAL SEAL 14047 ENGINEER STEPHEN D. COOK
11/16/12

STATE OF NORTH CAROLINA
DEPARTMENT OF TRANSPORTATION
RALEIGH

STANDARD
CONCRETE BARRIER RAIL
RIGHT LANE

THE LOUIS BERGER GROUP, Inc.
1001 Wade Avenue, Suite 400
Raleigh, NC 27605-3322

REVISIONS								SHEET NO.
NO.	BY:	DATE:	NO.	BY:	DATE:			S-588
1			3					TOTAL SHEETS
2			4					700

ASSEMBLED BY : R. KNIGHT		DATE : JULY 2012	
CHECKED BY : S. COOK		DATE : JULY 2012	
DRAWN BY : ARB 5/87	REV. 5/7/03R	RWW/JTE	
CHECKED BY : SJD 9/87	REV. 5/1/06R	TLA/GM	
	REV. 10/1/11	MAA/GM	

STD. NO. CBR1

G:\OR Projects\OR1092 - NCDOT Wilm Bypass DualBridges\Structures\Bridge Site 7\R-2633BB_SD_07R_CBR.dgn
11/16/2012 11:51:46 AM 1092_PDF_full.pltcfg 1092_str.tbl

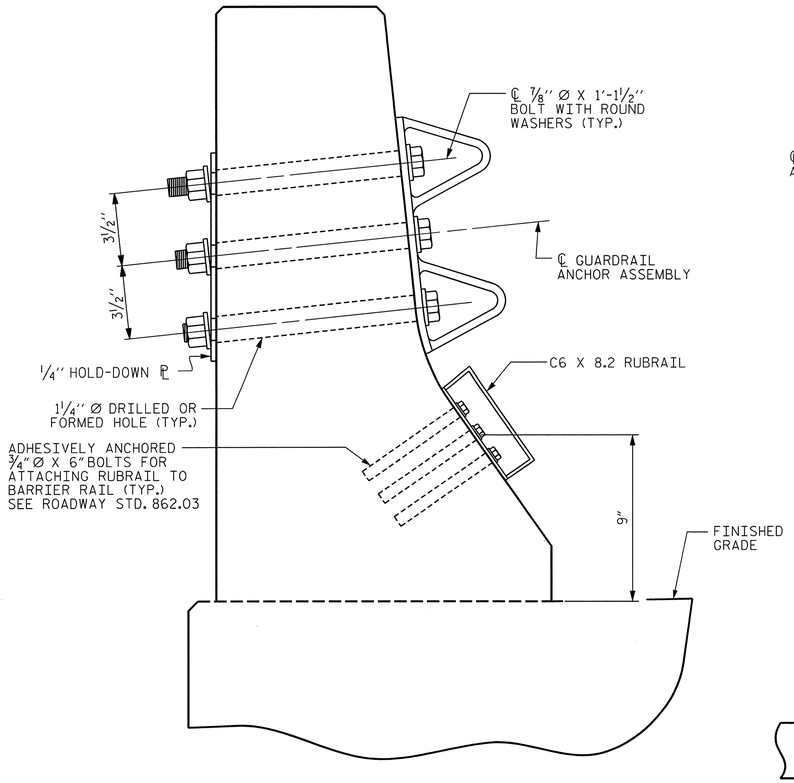

SECTION E-E

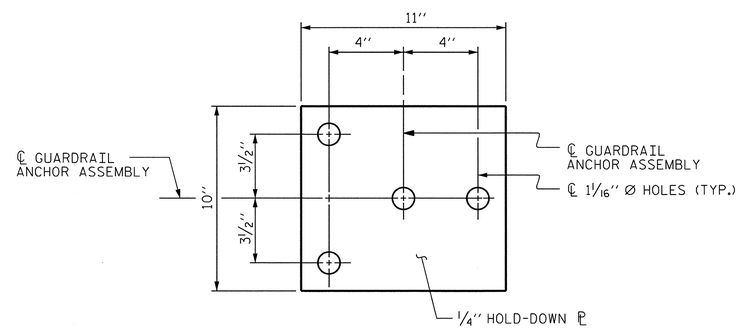

PLAN

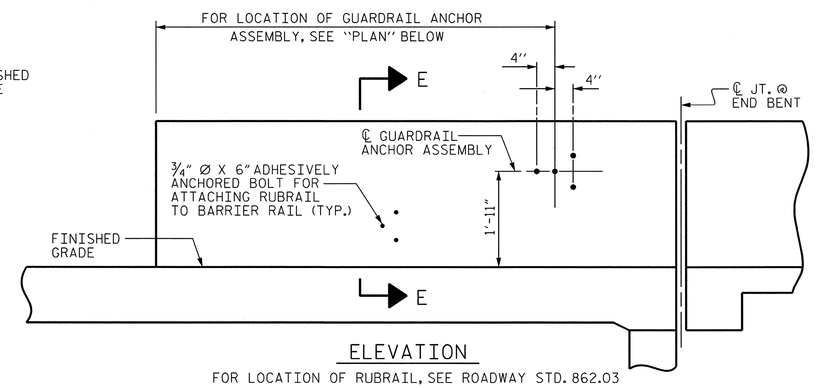

ELEVATION

FOR LOCATION OF RUBRAIL, SEE ROADWAY STD. 862.03

GUARDRAIL ANCHOR ASSEMBLY DETAILS

NOTES

THE GUARDRAIL ANCHOR ASSEMBLY SHALL CONSIST OF A 1/4" HOLD-DOWN PLATE AND 4 - 7/8" Ø BOLTS WITH NUTS AND WASHERS, RUBRAIL, AND ADHESIVELY ANCHORED BOLTS.

THE HOLD-DOWN PLATE SHALL CONFORM TO AASHTO M270 GRADE 36. AFTER FABRICATION, THE HOLD-DOWN PLATE SHALL BE HOT-DIP GALVANIZED IN ACCORDANCE WITH AASHTO M111.

BOLTS SHALL CONFORM TO THE REQUIREMENTS OF ASTM A307 AND NUTS SHALL CONFORM TO THE REQUIREMENTS OF AASHTO M291. BOLTS, NUTS AND WASHERS SHALL BE GALVANIZED. (AT THE CONTRACTOR'S OPTION, STAINLESS STEEL BOLTS, NUTS AND WASHERS MAY BE USED AS AN ALTERNATE FOR THE 7/8" Ø GALVANIZED BOLTS, NUTS AND WASHERS. THEY SHALL CONFORM TO OR EXCEED THE MECHANICAL REQUIREMENTS OF ASTM A307. THE USE OF THIS ALTERNATE SHALL BE APPROVED BY THE ENGINEER.)

THE GUARDRAIL ANCHOR ASSEMBLY IS REQUIRED AT ALL POINTS WHERE APPROACH GUARDRAIL IS TO BE ATTACHED TO THE END OF BARRIER RAIL. FOR POINTS OF ATTACHMENT, SEE SKETCH.

AFTER INSTALLATION, THE EXPOSED THREAD OF THE BOLT SHALL BE BURRED WITH A SHARP POINTED TOOL.

THE COST OF THE GUARDRAIL ANCHOR ASSEMBLY SHALL BE INCLUDED IN THE UNIT CONTRACT PRICE BID FOR CONCRETE BARRIER RAIL.

THE 1 1/4" Ø HOLES SHALL BE FORMED OR DRILLED WITH A CORE BIT. IMPACT TOOLS WILL NOT BE PERMITTED. ANY CONCRETE DAMAGED BY THIS WORK SHALL BE REPAIRED TO THE SATISFACTION OF THE ENGINEER.

THE C6 X 8.2 RUBRAIL IS TO BE ADHESIVELY ANCHORED TO THE RAIL USING THREE 3/4" Ø X 6" BOLTS WITH WASHERS. LEVEL ONE FIELD TESTING IS REQUIRED, AND THE YIELD LOAD OF THE 3/4" Ø BOLT IS 12 KIPS. FOR ADHESIVELY ANCHORED ANCHOR BOLTS OR DOWELS, SEE STANDARD SPECIFICATIONS. SEE ROADWAY STANDARD 862.03 FOR DETAILS AND LOCATION OF THE RUBRAIL.

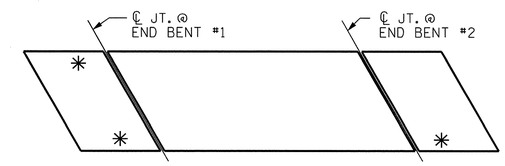

SKETCH SHOWING POINTS OF ATTACHMENTS

✳ DENOTES GUARDRAIL ANCHOR ASSEMBLY

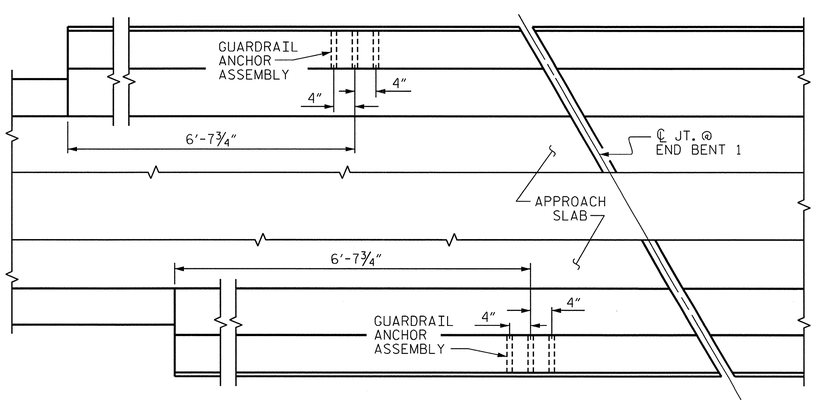

PLAN @ END BENT 1

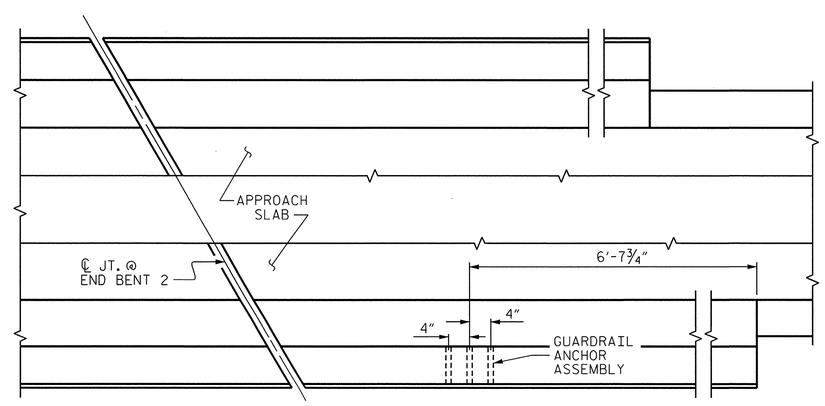

PLAN @ END BENT 2

LOCATION OF ANCHORS FOR GUARDRAIL

PROJECT NO. R-2633BB
BRUNSWICK/NEW HANOVER COUNTY
STATION: 425+60.75 -L-
16+20.93 -EY11-

STATE OF NORTH CAROLINA
DEPARTMENT OF TRANSPORTATION
RALEIGH

STANDARD
GUARDRAIL ANCHORAGE FOR BARRIER RAIL RIGHT LANE

NORTH CAROLINA PROFESSIONAL SEAL 14047 ENGINEER STEPHEN D. COOK
11/16/12

THE LOUIS BERGER GROUP, Inc.
1001 Wade Avenue, Suite 400
Raleigh, NC 27605-3322

REVISIONS							SHEET NO.
NO.	BY:	DATE:	NO.	BY:	DATE:		S-589
1			3				TOTAL SHEETS
2			4				700

ASSEMBLED BY : R. KNIGHT	DATE : JULY 2012
CHECKED BY : S. COOK	DATE : AUG 2012
DRAWN BY : TLA 5/06	ADDED 5/1/06RR KMM/GM
CHECKED BY : GM 5/06	REV. 10/1/11 MAA/GM

(SHT 3a) STD. NO. GRA2

G:\OR Projects\OR1092 - NCDOT Wilm Bypass DualBridges\Structures\Bridge Site 7\R-2633BB_SD_07R_GRA.dgn
11/16/2012 11:51:48 AM 1092_PDF_full.pltcfg

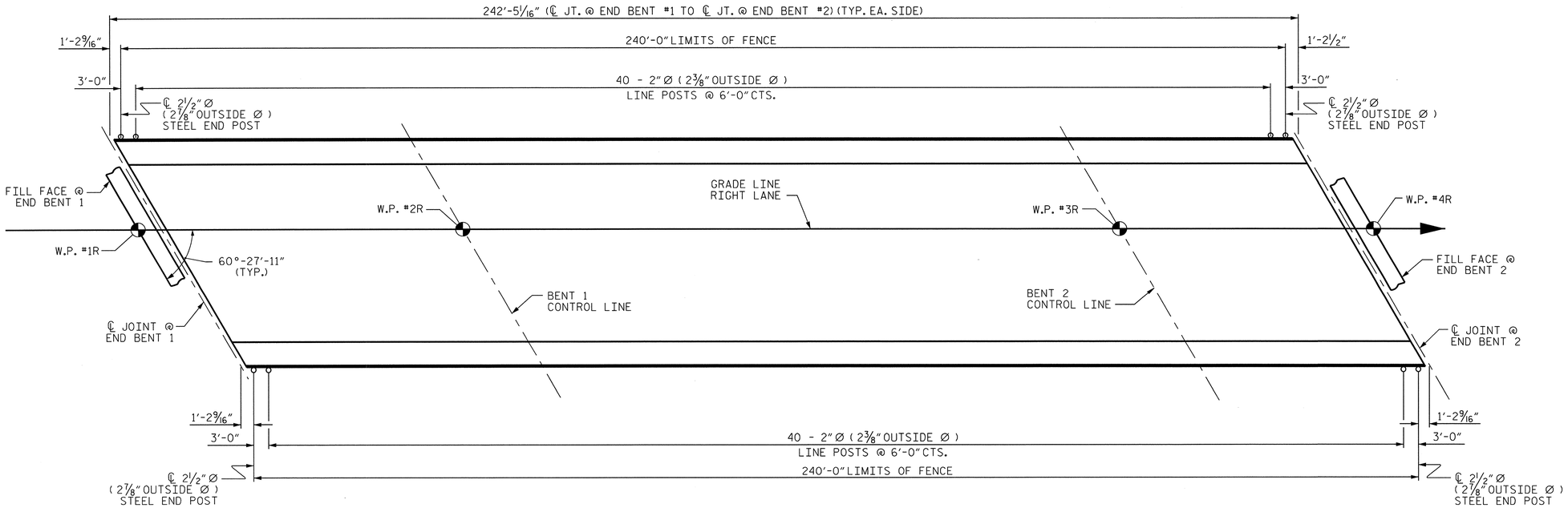

PLAN OF FENCE POST SPACING

PAY LENGTH = 480.00 FEET

NOTES:

FOR 72" CHAIN LINK FENCE, SEE SPECIAL PROVISIONS.

BOLTS SHALL CONFORM TO THE REQUIREMENTS OF ASTM A307 AND NUTS SHALL CONFORM TO THE REQUIREMENTS OF AASHTO M291. BOLTS, NUTS, AND WASHERS SHALL BE GALVANIZED. (AT THE CONTRACTOR'S OPTION, STAINLESS STEEL BOLTS, NUTS, AND WASHERS MAY BE USED AS AN ALTERNATE FOR THE 3/4" Ø GALVANIZED BOLTS, NUTS, AND WASHERS. THEY SHALL CONFORM TO OR EXCEED THE MECHANICAL REQUIREMENTS OF ASTM A307. THE USE OF THIS ALTERNATE SHALL BE APPROVED BY THE ENGINEER.)

FOR SETTING ANCHOR BOLTS, THE CONTRACTOR SHALL USE AN ADHESIVE BONDING SYSTEM. LEVEL ONE FIELD TESTING OF BONDING SYSTEM IS REQUIRED AND THE YIELD LOAD OF THE 3/4" Ø BOLTS IS 12.0 KIPS.

ALL FENCE MATERIAL SHALL MEET THE REQUIREMENTS OF SECTION 1050 OF THE STANDARD SPECIFICATIONS, GALVANIZE ALL STEEL PARTS AND HARDWARE IN ACCORDANCE WITH ARTICLE 1076 OF THE STANDARD SPECIFICATIONS.

FENCE POST LOCATIONS SHALL BE SHIFTED, AS NECESSARY, TO MAINTAIN 12" MINIMUM DISTANCE FROM ANCHOR BOLT TO JOINTS IN BARRIER RAIL.

DIMENSIONS TAKEN ALONG OUTSIDE FACE OF BARRIER RAIL.

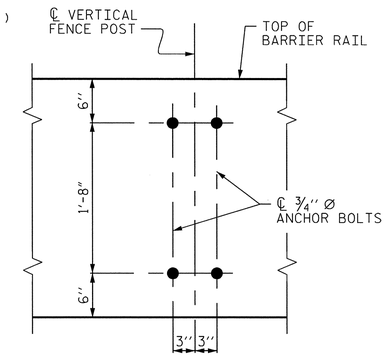

BOLT SETTING DETAIL

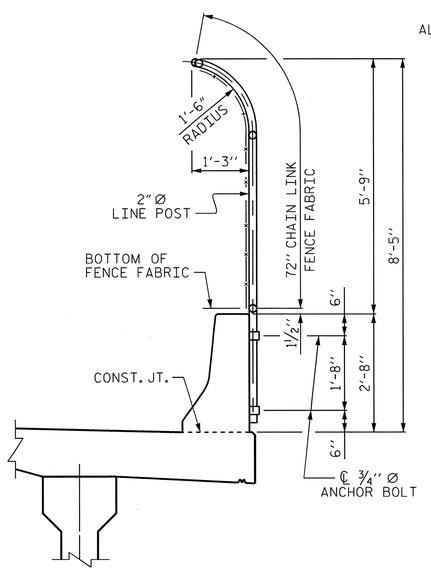

SECTION THRU FENCE

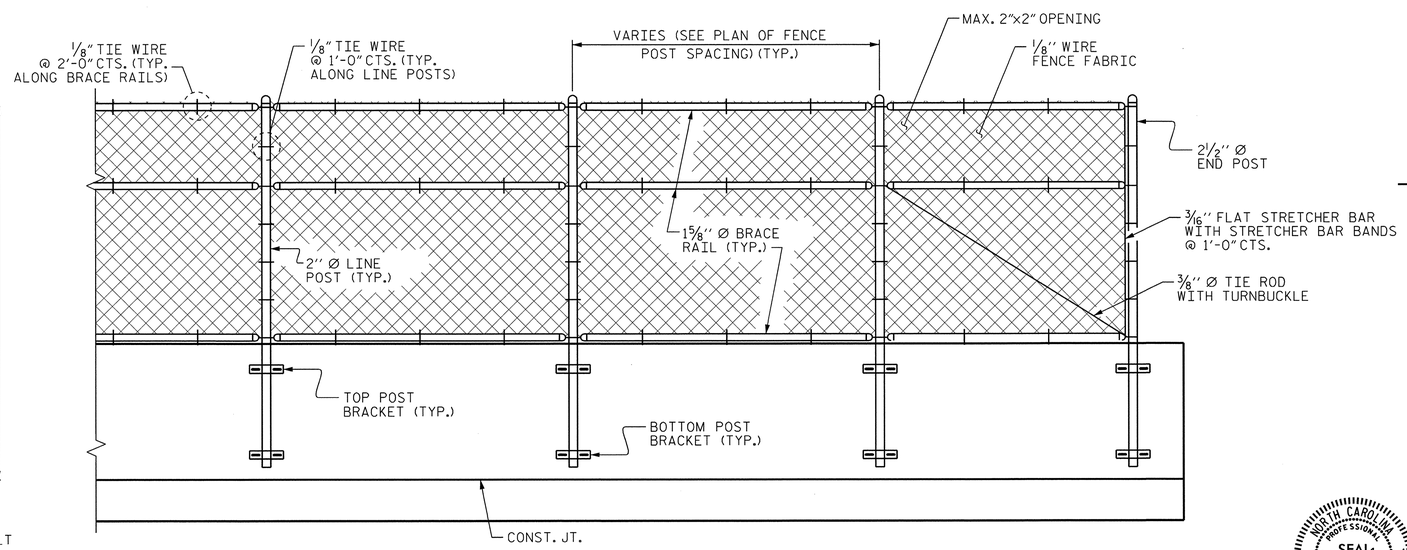

PARTIAL ELEVATION

PROJECT NO. R-2633BB

BRUNSWICK/NEW HANOVER COUNTY

STATION: 425+60.75 -L-

16+20.93 -EY11-

STATE OF NORTH CAROLINA
DEPARTMENT OF TRANSPORTATION
RALEIGH

SUPERSTRUCTURE BRIDGE MOUNTED 72" CHAIN LINK FENCE RIGHT LANE

NORTH CAROLINA PROFESSIONAL SEAL 14047 ENGINEER STEPHEN D. COOK

11/16/12

THE LOUIS BERGER GROUP, Inc.
1001 Wade Avenue, Suite 400
Raleigh, NC 27605-3322

REVISIONS								SHEET NO.
NO.	BY:	DATE:	NO.	BY:	DATE:			S-590
1			3					TOTAL SHEETS
2			4					700

DRAWN BY : R. KNIGHT DATE : JULY 2012
CHECKED BY : S. COOK DATE : AUG 2012

G:\OR Projects\OR1092 - NCDOT Wilm Bypass DualBridges\Structures\Bridge Site 7\R-2633BB_SD_07R_FNC.dgn
11/16/2012 11:51:51 AM 1092_PDF_full.pltcfg 1092_str.tbl

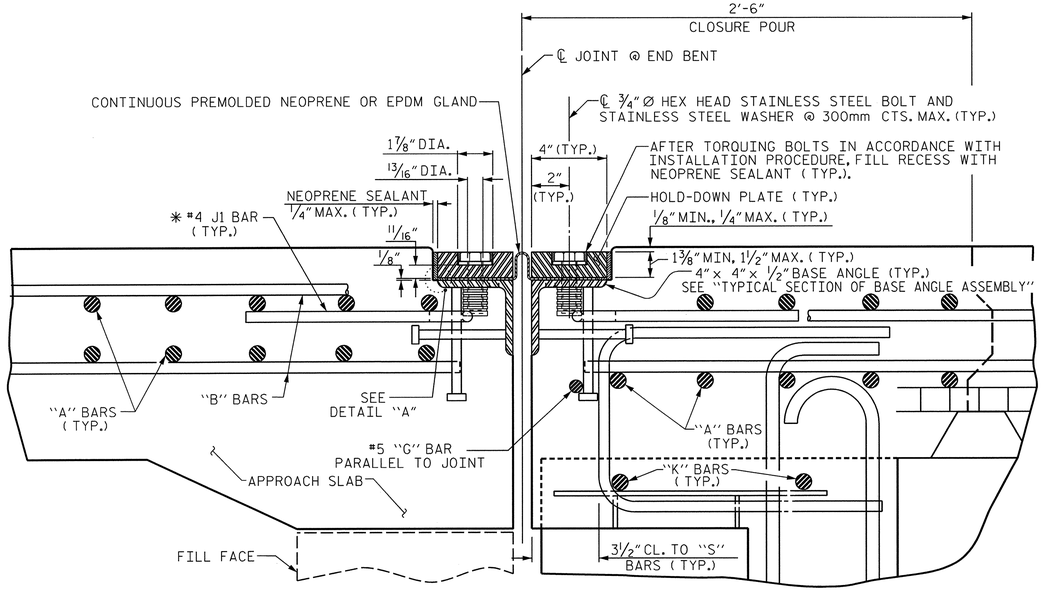

EXPANSION JOINT DETAILS

SECTION NORMAL TO JOINT -- PRESTRESSED GIRDER SUPERSTRUCTURE

✱ THE QUANTITY OF #4 J1 BARS ON THE BILL OF MATERIAL IS BASED ON 1'-0" CENTERS. J1 BARS SHALL BE PLACED AT EACH VERTICAL STUD ANCHOR BOLT. IN THE EVENT THAT THE NUMBER OF VERTICAL STUD ANCHORS EXCEEDS THE NUMBER OF J1 BARS SPECIFIED, ADDITIONAL J1 BARS WILL NOT BE REQUIRED.

INSTALLATION PROCEDURE

1. A TEMPLATE OR OTHER SUITABLE DEVICE SHALL BE USED TO FORM THE TOP OF THE EXPANSION JOINT SEAL BLOCKOUT TO THE PROPER DEPTH AND WIDTH. THE TEMPLATE SHALL BE 4⅛" TO 4¼" WIDE AND OF SUCH THICKNESS AS TO PROVIDE FOR CORRECT FINAL ELEVATION OF TOP OF HOLD-DOWN PLATES. THE TEMPLATE SHALL BE ATTACHED TO THE BASE ANGLE ASSEMBLY WITH THE ¾"Ø HEX HEAD BOLTS PROVIDED FOR THE HOLD-DOWN PLATES. A 1"Ø HOLE SHALL BE PROVIDED IN THE TEMPLATE CENTERED OVER EACH WEEP HOLE IN THE 4" X 4" X ½" BASE ANGLE. OTHER METHODS OF INSURING DRAINAGE THROUGH WEEP HOLES MAY BE EMPLOYED SUBJECT TO ENGINEER'S APPROVAL.
2. AFTER THE CONCRETE HAS BEEN CAST ON BOTH SIDES OF THE JOINT, REMOVE THE TEMPLATE. THOROUGHLY CLEAN THE BOLT HOLES AND THE ANGLE PLATE. REMOVE ANY EXCESS CONCRETE THAT COMES OUT OF THE WEEP HOLES. ANY DAMAGED STEEL SHALL BE COATED WITH A MINIMUM THICKNESS OF 4 DRY MILS OF ZINC-RICH PAINT IN ACCORDANCE WITH THE STANDARD SPECIFICATIONS.
3. LAY THE GLAND ON THE BASE ANGLE AND FIELD MARK THE GLAND FOR THE BOLT HOLES. HOLES IN THE GLAND SHALL BE PUNCHED ⅞" IN DIAMETER WITH A HAND PUNCH.
4. IN ORDER TO CHECK FOR PROPER ALIGNMENT, PLACE THE GLAND AND HOLD-DOWN PLATES ON THE BASE ANGLE. DO NOT APPLY NEOPRENE SEALANT. BOLT THE HOLD-DOWN PLATES TO THE BASE ANGLE BUT DO NOT TIGHTEN. THE ENGINEER SHALL INSPECT THE JOINT SEAL DEVICE FOR PROPER ALIGNMENT.
5. AFTER INSPECTION, REMOVE THE HOLD-DOWN PLATES AND GLAND. APPLY NEOPRENE SEALANT TO THE BASE ANGLE IN ACCORDANCE WITH THE "INSTALLATION SKETCH". PLACE GLAND AND HOLD-DOWN PLATES ON THE BASE ANGLE. BOLT THE HOLD-DOWN PLATES TO THE BASE ANGLE ASSEMBLY AND TORQUE THE BOLTS TO 88 FT-LBS WITH A TORQUE WRENCH. CHECK THE TORQUE AFTER THREE (3) HOURS AND, IF NECESSARY, RETIGHTEN TO 88 FT-LBS. A FINAL CHECK SHALL BE MADE AT SEVEN (7) DAYS. TORQUE SHALL NOT BE LESS THAN 80 FT-LBS AFTER SEVEN (7) DAYS.
6. AFTER PROPER TORQUING, CLEAN THE BOLT HOLE RECESSES AND THE RECESS BETWEEN THE JOINT SEAL DEVICE AND CONCRETE, COMPLETELY FILL THESE RECESSES WITH NEOPRENE SEALANT.

GENERAL NOTES

1. FOR EXPANSION JOINT SEALS, SEE SPECIAL PROVISIONS.
2. ALL PLATES AND ANGLES SHALL CONFORM TO AASHTO M270 GRADE 36 STEEL OR APPROVED EQUAL. ALL HOLD-DOWN BOLTS SHALL CONFORM TO ASTM F593 ALLOY 304 STAINLESS STEEL AND WASHERS SHALL CONFORM TO ASTM F844 EXCEPT THEY SHALL BE MADE FROM ALLOY 304 STAINLESS STEEL. ALL STUD ANCHORS SHALL CONFORM TO AASHTO M169, GRADES 1010 THRU 1020 OR APPROVED EQUAL. ALL CONCRETE INSERTS SHALL BE CLOSED END AND SHALL CONFORM TO AASHTO M169, GRADE 12L14. TENSILE CAPACITY SHALL BE 3000 LBS. MIN.
3. A PREMOLDED CORRUGATED OR NON-CORRUGATED GLAND SHALL BE USED FOR JOINTS SKEWED BETWEEN 50° THRU 130°. FOR JOINTS SKEWED LESS THAN 50° OR MORE THAN 130°, ONLY A CORRUGATED GLAND SHALL BE USED.
4. CLOSED END FERRULES AND STUD ANCHORS SHALL BE SHOP WELDED AND ALL HOLES SHALL BE SHOP DRILLED AS SHOWN ON PLANS. STUD ANCHORS SHALL BE ELECTRIC ARC END WELDED WITH COMPLETE FUSION.
5. SURFACES COMING IN CONTACT WITH NEOPRENE SHALL BE GROUND SMOOTH PRIOR TO METALLIZING.
6. UPON COMPLETION OF SHOP FABRICATION, THE HOLD DOWN PLATE AND BASE ANGLE ASSEMBLY, AS SHOWN IN THE "TYPICAL SECTION OF BASE ANGLE ASSEMBLY", SHALL BE METALLIZED. SEE SPECIAL PROVISION FOR THERMAL SPRAYED COATINGS (METALLIZATION).
7. BASE ANGLE ASSEMBLY SHALL BE CONTINUOUS FOR THE LENGTH OF THE JOINT. AT CROWN BREAKS, THE ENDS OF THE BASE ANGLE ASSEMBLY SHALL BE CUT PARALLEL TO THE BRIDGE CENTERLINE FOR SKEWS LESS THAN 80° AND GREATER THAN 100°. FINISHED WELD SHALL BE GROUND SMOOTH AND COATED WITH A MINIMUM THICKNESS OF 4 DRY MILS OF ZINC-RICH PAINT IN ACCORDANCE WITH THE STANDARD SPECIFICATIONS.
8. FIELD SPLICES OF HOLD-DOWN PLATES SHALL BE KEPT TO A MINIMUM. CONTRACTOR SHALL FURNISH DETAILED PLANS SHOWING PROPOSED SPLICE LOCATIONS FOR APPROVAL. HOLD-DOWN PLATES SHALL NOT EXCEED 20' LENGTHS UNLESS APPROVED BY THE ENGINEER.
9. NO ALTERNATE JOINT DETAILS SHALL BE PERMITTED IN LIEU OF THOSE SHOWN ON THESE PLANS.
10. THE CONTRACTOR MAY, AT HIS OPTION, USE ADHESIVELY ANCHORED ANCHOR BOLTS IN PLACE OF CONCRETE INSERTS FOR COVER PLATES. THE YIELD LOAD OF THE ¾"Ø BOLT IS 10 KIPS. FIELD TESTING OF THE ADHESIVE BONDING SYSTEM IS NOT REQUIRED.

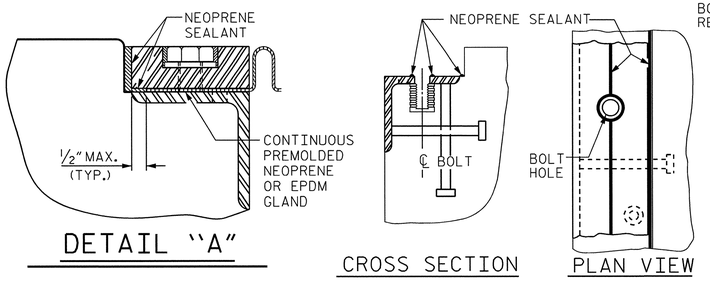

DETAIL "A"

INSTALLATION SKETCH

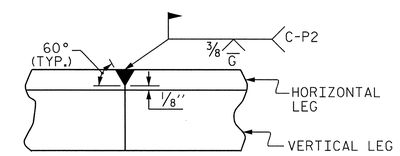

DETAIL- FIELD WELD SPLICE OF BASE ANGLE

MOVEMENT AND SETTING AT JOINT					
END BENT NO.	SKEW ANGLE	TOTAL MOVEMENT (ALONG ℄ RDWY)	PERPENDICULAR JOINT OPENING AT 45° F	PERPENDICULAR JOINT OPENING AT 60° F	PERPENDICULAR JOINT OPENING AT 90° F
1	60°-27'-11"	1¼"	1⁷⁄₁₆"	1½"	1¹¹⁄₁₆"
2	60°-27'-11"	¾"	1⁷⁄₁₆"	1½"	1⅝"

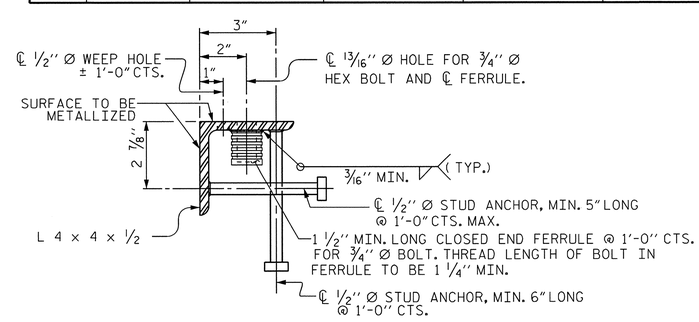

TYPICAL SECTION OF BASE ANGLE ASSEMBLY

PROJECT NO. R-2633BB

BRUNSWICK/NEW HANOVER COUNTY

STATION: 425+60.75 -L-

16+20.93 -EY11-

SHEET 1 OF 2

STATE OF NORTH CAROLINA
DEPARTMENT OF TRANSPORTATION
RALEIGH

STANDARD

EXPANSION JOINT SEAL DETAILS RIGHT LANE

NORTH CAROLINA PROFESSIONAL SEAL 14047 ENGINEER STEPHEN D. COOK
11/16/12

THE LOUIS BERGER GROUP, Inc.
1001 Wade Avenue, Suite 400
Raleigh, NC 27605-3322

REVISIONS								SHEET NO.
NO.	BY:	DATE:	NO.	BY:	DATE:			S-591
1			3					TOTAL SHEETS
2			4					700

STD. NO. EJS1

ASSEMBLED BY : R. KNIGHT		DATE : AUG 2012	
CHECKED BY : S. COOK		DATE : AUG 2012	
DRAWN BY : REK 9/87	REV. 5/7/03R	RWW/JTE	
CHECKED BY : CRK 10/87	REV. 5/1/06R	TLA/GM	
	REV. 10/1/11	MAA/GM	

G:\OR Projects\OR1092 - NCDOT Wilm Bypass DualBridges\Structures\Bridge Site 7\R-2633BB_SD_07R_EJS01.dgn
11/16/2012 11:51:54 AM 1092_PDF_full.pltcfg

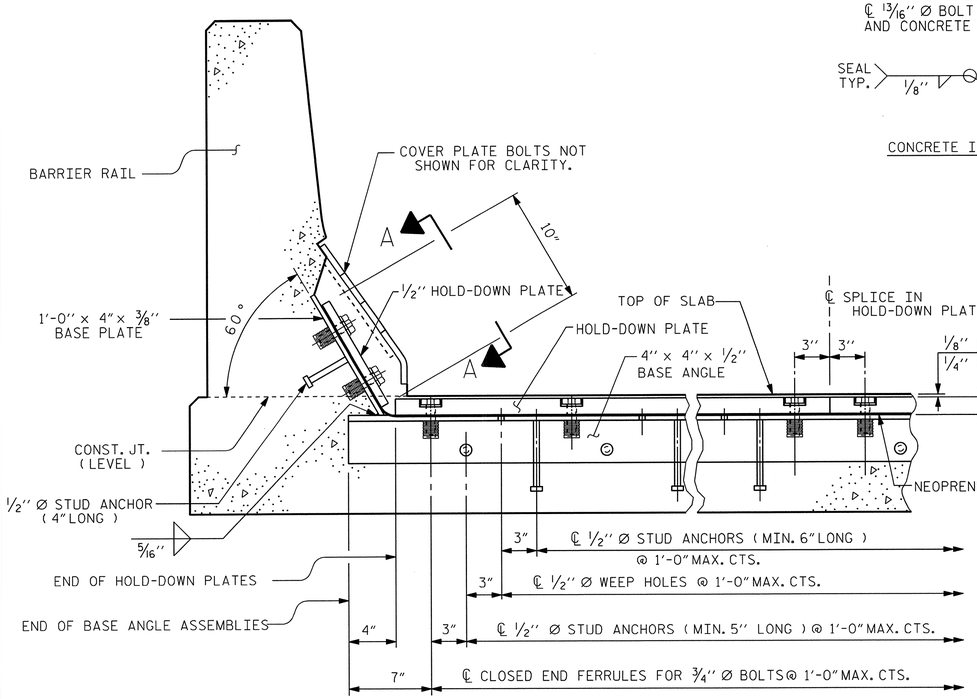

SECTION THRU RAIL NORMAL TO JOINT

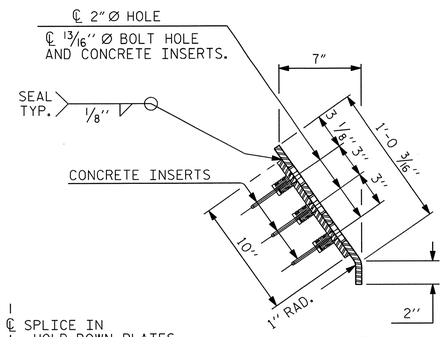

END VIEW

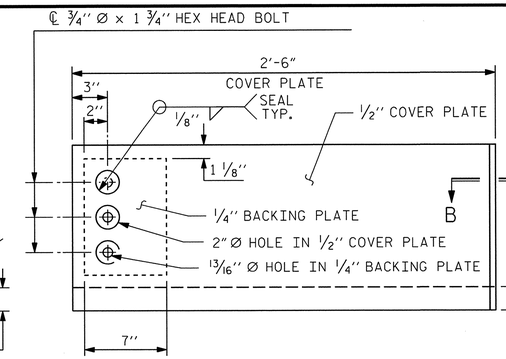

TYPE I - ELEVATION VIEW

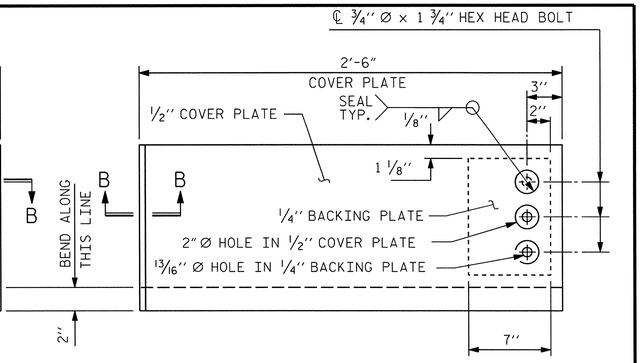

TYPE II - ELEVATION VIEW

COVER PLATE DETAILS

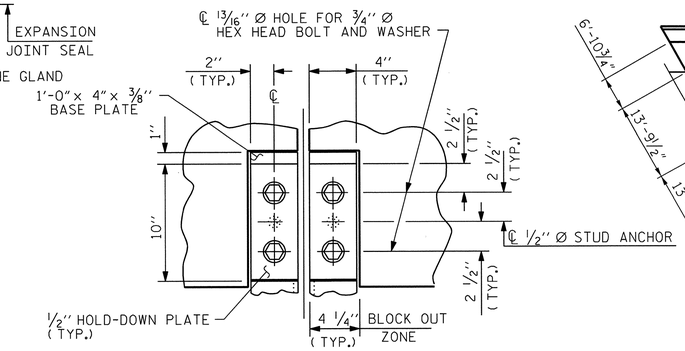

SECTION A - A

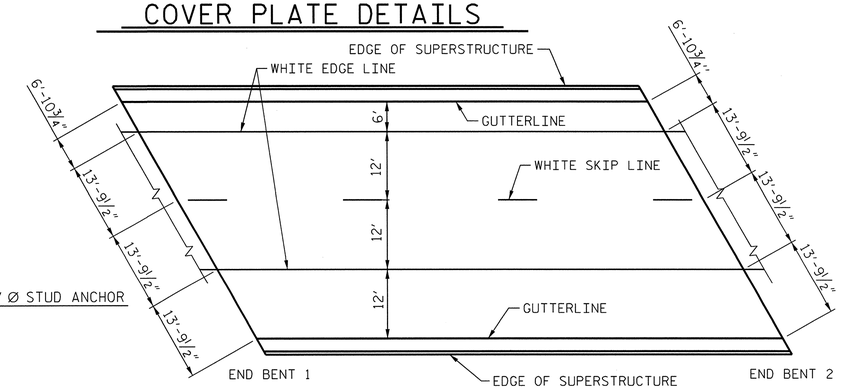

PAVEMENT MARKING ALIGNMENT

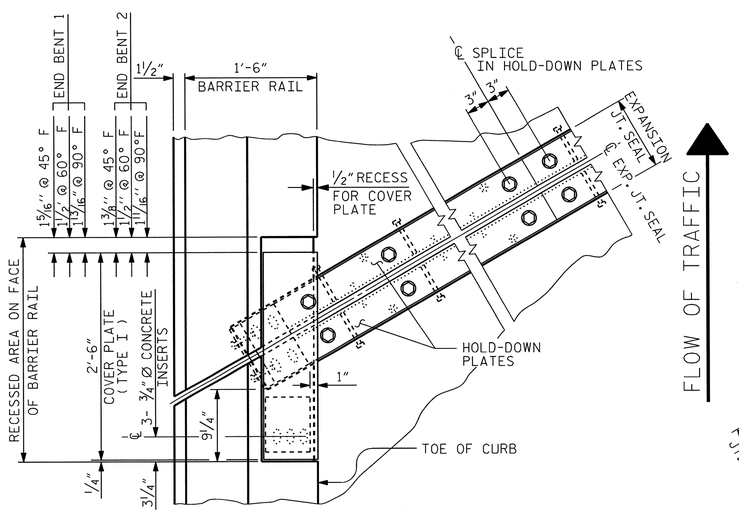

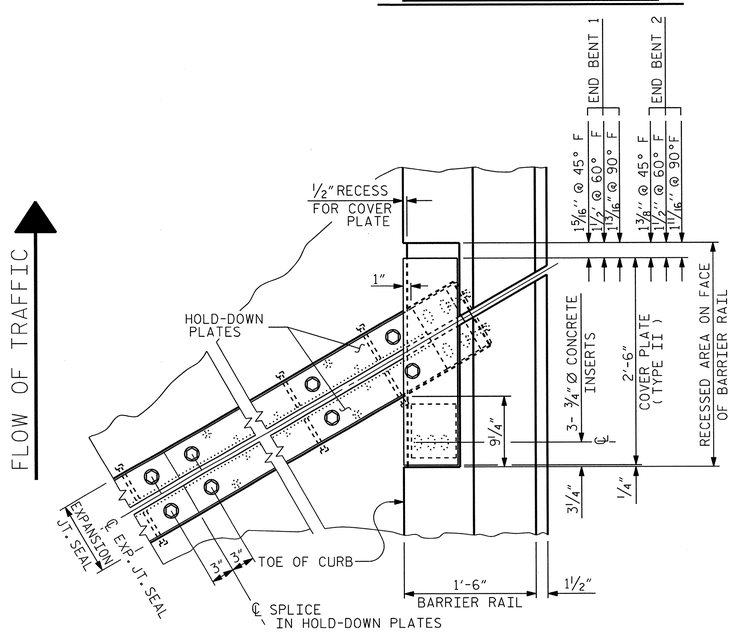

PLAN OF EXPANSION JOINT SEAL

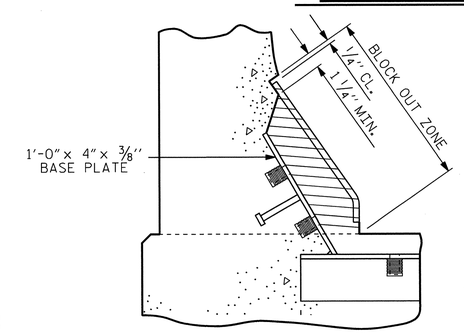

BLOCK OUT DETAIL

SEE "SECTION A - A" FOR OTHER DETAILS.

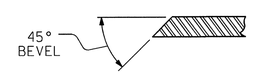

SECTION B - B

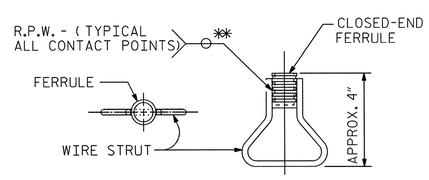

CONCRETE INSERT

** EACH WELDED ATTACHMENT OF WIRE TO FERRULE SHALL DEVELOP THE TENSILE STRENGTH OF THE WIRE.

PROJECT NO. R-2633BB

BRUNSWICK/NEW HANOVER COUNTY

STATION: 425+60.75 -L-
16+20.93 -EY11-

SHEET 2 OF 2

STATE OF NORTH CAROLINA
DEPARTMENT OF TRANSPORTATION
RALEIGH

STANDARD

EXPANSION JOINT SEAL DETAILS FOR BARRIER RAIL RIGHT LANE

NORTH CAROLINA PROFESSIONAL SEAL 14047 ENGINEER STEPHEN D. COOK 11/16/12

THE LOUIS BERGER GROUP, Inc.
1001 Wade Avenue, Suite 400
Raleigh, NC 27605-3322

REVISIONS								SHEET NO.
NO.	BY:	DATE:	NO.	BY:	DATE:			S-592
1			3					TOTAL SHEETS
2			4					700

STD. NO. EJS2

ASSEMBLED BY : R. KNIGHT		DATE : AUG 2012	
CHECKED BY : S. COOK		DATE : AUG 2012	
DRAWN BY : REK 9/87	REV. 10/17/00	RWW/LES	
CHECKED BY : CRK 10/87	REV. 5/1/06	TLA/GM	
	REV. 10/1/11	MAA/GM	

G:\OR Projects\OR1092 - NCDOT Wilm Bypass DualBridges\Structures\Bridge Site 7\R-2633BB_SD_07R_EJS02.dgn
11/16/2012 11:51:56 AM 1092_PDF_full.pltcfg 1092_str.tbl

REINFORCING BAR SCHEDULE - SPANS A, B & C

BAR	NO.	SIZE	TYPE	LENGTH	WEIGHT	BAR	NO.	SIZE	TYPE	LENGTH	WEIGHT	BAR	NO.	SIZE	TYPE	LENGTH	WEIGHT
✱ A1	434	# 5	STR	44 - 10	20294	A2	434	# 5	STR	44 - 10	20294	✱ B1	96	# 4	STR	24 - 0	1539
												B2	270	# 5	STR	50 - 6	14221
✱ A101	2	# 5	STR	43 - 11	92	A201	2	# 5	STR	43 - 11	92	✱ B3	64	# 6	STR	37 - 6	3605
✱ A102	2	# 5	STR	43 - 1	90	A202	2	# 5	STR	43 - 1	90	✱ B4	58	# 6	STR	32 - 0	2788
✱ A103	2	# 5	STR	42 - 2	88	A203	2	# 5	STR	42 - 2	88	✱ B5	64	# 4	STR	17 0	727
✱ A104	2	# 5	STR	41 - 3	86	A204	2	# 5	STR	41 - 3	86	✱ B6	64	# 6	STR	26 - 0	2499
✱ A105	2	# 5	STR	40 - 5	84	A205	2	# 5	STR	40 - 5	84	✱ B7	58	# 6	STR	23 0	2004
✱ A106	2	# 5	STR	39 - 7	83	A206	2	# 5	STR	39 - 7	83	✱ B8	64	# 4	STR	22 - 0	941
✱ A107	2	# 5	STR	38 - 8	81	A207	2	# 5	STR	38 - 8	81					-	
✱ A108	2	# 5	STR	37 - 9	79	A208	2	# 5	STR	37 - 9	79	✱ G1	2	# 5	STR	51 - 6	107
✱ A109	2	# 5	STR	36 - 10	77	A209	2	# 5	STR	36 - 10	77					-	
✱ A110	2	# 5	STR	36 - 0	75	A210	2	# 5	STR	36 - 0	75	✱ J1	96	# 4	9	1 - 5	91
✱ A111	2	# 5	STR	35 - 2	73	A211	2	# 5	STR	35 - 2	73					-	
✱ A112	2	# 5	STR	34 - 3	71	A212	2	# 5	STR	34 - 3	71	✱ K1	12	# 8	2	20 - 10	668
✱ A113	2	# 5	STR	33 - 4	70	A213	2	# 5	STR	33 - 4	70	✱ K2	8	# 8	1	14 - 5	308
✱ A114	2	# 5	STR	32 - 5	68	A214	2	# 5	STR	32 - 5	68	✱ K3	24	# 6	STR	8 - 2	294
✱ A115	2	# 5	STR	31 - 7	66	A215	2	# 5	STR	31 - 7	66	K4	30	# 4	8	13 6	271
✱ A116	2	# 5	STR	30 - 9	64	A216	2	# 5	STR	30 - 9	64	K5	20	# 4	7	6 - 7	88
✱ A117	2	# 5	STR	29 - 10	62	A217	2	# 5	STR	29 - 10	62	K6	16	# 4	STR	8 - 2	87
✱ A118	2	# 5	STR	28 - 11	60	A218	2	# 5	STR	28 - 11	60	K7	32	# 4	STR	9 - 4	200
✱ A119	2	# 5	STR	28 - 1	59	A219	2	# 5	STR	28 - 1	59	K8	16	# 4	STR	8 - 2	87
✱ A120	2	# 5	STR	27 - 2	57	A220	2	# 5	STR	27 - 2	57	K9	16	# 4	STR	7 - 8	82
✱ A121	2	# 5	STR	26 - 3	55	A221	2	# 5	STR	26 - 3	55						
✱ A122	2	# 5	STR	25 - 4	53	A222	2	# 5	STR	25 - 4	53	✱ S1	72	# 5	3	6 4	476
✱ A123	2	# 5	STR	24 - 5	51	A223	2	# 5	STR	24 - 5	51	✱ S2	72	# 5	5	3 8	275
✱ A124	2	# 5	STR	23 - 7	49	A224	2	# 5	STR	23 - 7	49	S3	16	# 4	6	11 1	118
✱ A125	2	# 5	STR	22 - 9	47	A225	2	# 5	STR	22 - 9	47	✱ S4	256	# 4	4	2 9	470
✱ A126	2	# 5	STR	21 - 10	46	A226	2	# 5	STR	21 - 10	46	✱ S5	56	# 4	6	12 9	477
✱ A127	2	# 5	STR	21 - 0	44	A227	2	# 5	STR	21 - 0	44						
✱ A128	2	# 5	STR	20 - 1	42	A228	2	# 5	STR	20 - 1	42	REINFORCING STEEL					LBS 37,771
✱ A129	2	# 5	STR	19 - 2	40	A229	2	# 5	STR	19 - 2	40	EPOXY COATED REINFORCING STEEL					LBS 39,886
✱ A130	2	# 5	STR	18 - 4	38	A230	2	# 5	STR	18 - 4	38						
✱ A131	2	# 5	STR	17 - 4	36	A231	2	# 5	STR	17 - 4	36						
✱ A132	2	# 5	STR	16 - 7	35	A232	2	# 5	STR	16 - 7	35						
✱ A133	2	# 5	STR	15 - 8	33	A233	2	# 5	STR	15 - 8	33						
✱ A134	2	# 5	STR	14 - 10	31	A234	2	# 5	STR	14 - 10	31						
✱ A135	2	# 5	STR	13 - 11	29	A235	2	# 5	STR	13 - 11	29						
✱ A136	2	# 5	STR	13 - 0	27	A236	2	# 5	STR	13 - 0	27						
✱ A137	2	# 5	STR	12 - 2	25	A237	2	# 5	STR	12 - 2	25						
✱ A138	2	# 5	STR	11 - 3	23	A238	2	# 5	STR	11 - 3	23						
✱ A139	2	# 5	STR	10 - 4	22	A239	2	# 5	STR	10 - 4	22						
✱ A140	2	# 5	STR	9 - 6	20	A240	2	# 5	STR	9 - 6	20						
✱ A141	2	# 5	STR	8 - 7	18	A241	2	# 5	STR	8 - 7	18						
✱ A142	2	# 5	STR	7 - 9	16	A242	2	# 5	STR	7 - 9	16						
✱ A143	2	# 5	STR	6 - 10	14	A243	2	# 5	STR	6 - 10	14						
✱ A144	2	# 5	STR	5 - 11	12	A244	2	# 5	STR	5 - 11	12						
✱ A145	2	# 5	STR	5 - 1	11	A245	2	# 5	STR	5 - 1	11						
✱ A146	2	# 5	STR	4 - 2	9	A246	2	# 5	STR	4 - 2	9						
✱ A147	2	# 5	STR	3 - 4	7	A247	2	# 5	STR	3 - 4	7						
✱ A148	2	# 5	STR	2 - 5	5	A248	2	# 5	STR	2 - 5	5						

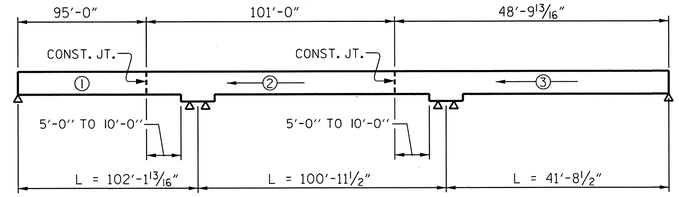

POURING SEQUENCE

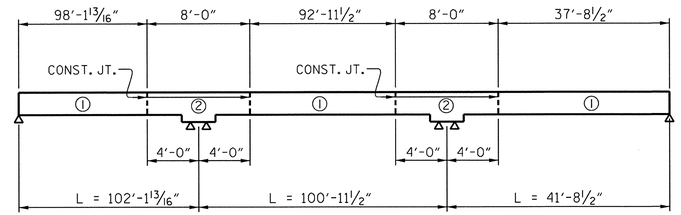

OPTIONAL POURING SEQUENCE

POUR ② CAN NOT BE STARTED UNTIL BOTH ADJACENT ① POURS REACH A MINIMUM OF 3,000 PSI.

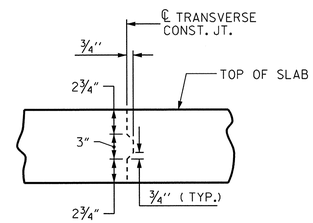

TRANSVERSE CONSTRUCTION JOINT DETAIL

NOTE: REINFORCING STEEL IN SLAB NOT SHOWN.
LONGITUDINAL REINFORCING STEEL SHALL BE CONTINUOUS THRU JOINT

BAR TYPES

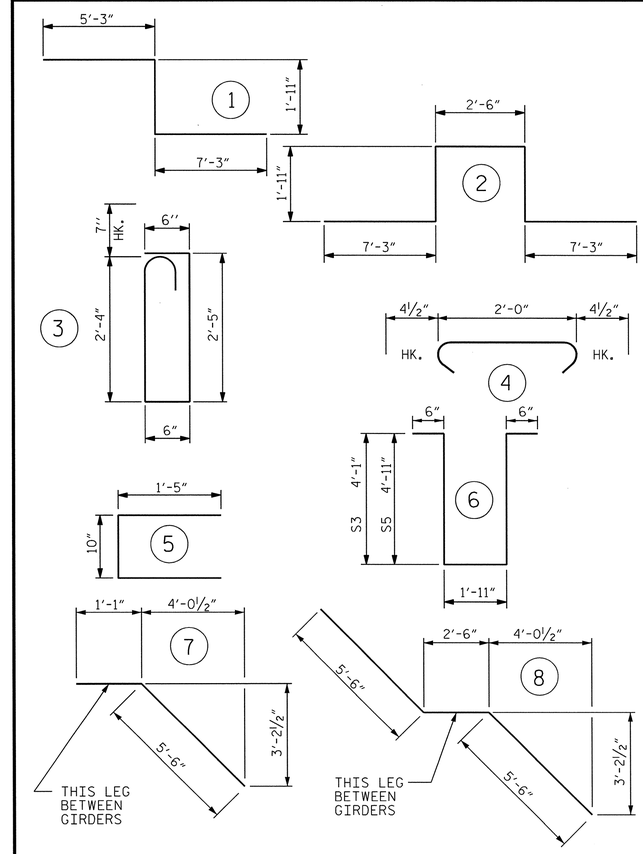

ALL BAR DIMENSIONS ARE OUT TO OUT

SUPERSTRUCTURE BILL OF MATERIAL

	CLASS AA CONCRETE	REINFORCING STEEL	EPOXY COATED REINFORCING STEEL
	(CU. YDS.)	(LBS.)	(LBS.)
SPANS "A", "B" & "C"	358.8	37,771	✱✱ 39,886

✱✱ QUANTITIES FOR BARRIER RAIL ARE NOT INCLUDED

GROOVING BRIDGE FLOORS

APPROACH SLABS	2,092	SQ.FT.
BRIDGE DECK	9,848	SQ.FT.
TOTAL	11,940	SQ.FT.

SUPERSTRUCTURE REINFORCING STEEL LENGTHS ARE BASED ON THE FOLLOWING MINIMUM SPLICE LENGTHS

BAR SIZE	SUPERSTRUCTURE EXCEPT APPROACH SLABS, PARAPET, AND BARRIER RAIL		APPROACH SLABS		PARAPET AND BARRIER RAIL
	EPOXY COATED	UNCOATED	EPOXY COATED	UNCOATED	
#4	2'-0"	1'-9"	2'-0"	1'-9"	2'-9"
#5	2'-6"	2'-2"	2'-6"	2'-2"	3'-5"
#6	3'-0"	2'-7"	3'-10"	2'-7"	4'-4"
#7	5'-3"	3'-6"			
#8	6'-10"	4'-7"			

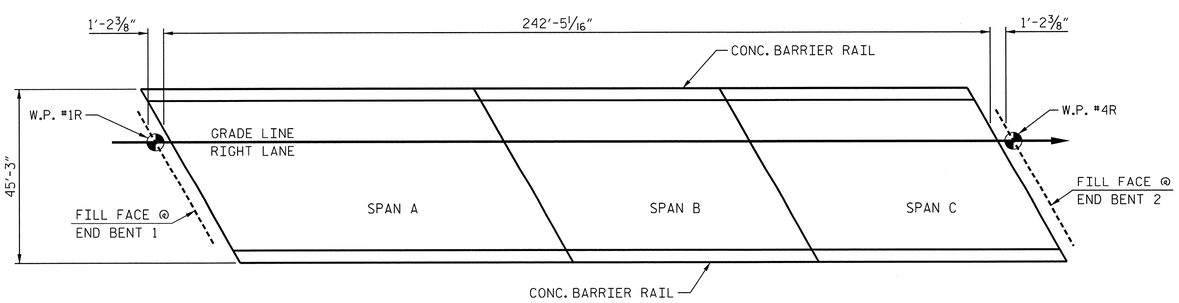

LAYOUT FOR COMPUTING AREA REINFORCED CONCRETE DECK SLAB (SQ. FT. = 10,970)

PROJECT NO. R-2633BB
BRUNSWICK/NEW HANOVER COUNTY
STATION: 425+60.75 -L-
16+20.93 -EY11-

STATE OF NORTH CAROLINA
DEPARTMENT OF TRANSPORTATION
RALEIGH

STANDARD
SUPERSTRUCTURE BILL OF MATERIAL RIGHT LANE

NORTH CAROLINA PROFESSIONAL SEAL 14047 ENGINEER STEPHEN D. COOK
4/16/12

THE LOUIS BERGER GROUP, Inc.
1001 Wade Avenue, Suite 400
Raleigh, NC27605-3322

REVISIONS								SHEET NO.
NO.	BY:	DATE:	NO.	BY:	DATE:			S-593
1			3					TOTAL SHEETS
2			4					100

STD. NO. BOM2

ASSEMBLED BY : R. KNIGHT DATE : JULY 2012
CHECKED BY : S. COOK DATE : AUG 2012
DRAWN BY : JMB5/87 REV. 8/16/99RWW/LES
CHECKED BY :SJD9/87 REV. 5/1/06TLA/GM
REV. 10/1/11 MAA/GM

G:\OR Projects\OR1092 - NCDOT Wilm Bypass DualBridges\Structures\Bridge Site 7\R-2633BB_SD_07R_BOM.dgn
11/16/2012 11:51:59 AM 1092_PDF_full.pltcfg 1092_str.tbl

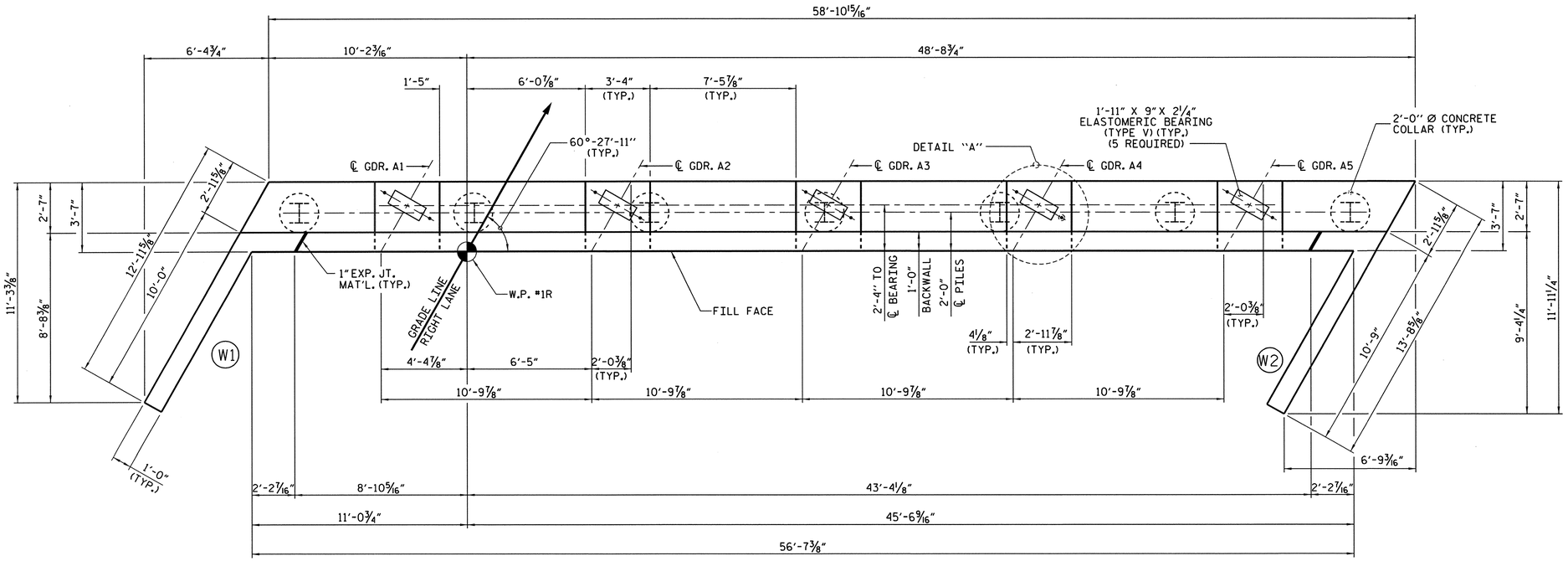

PLAN

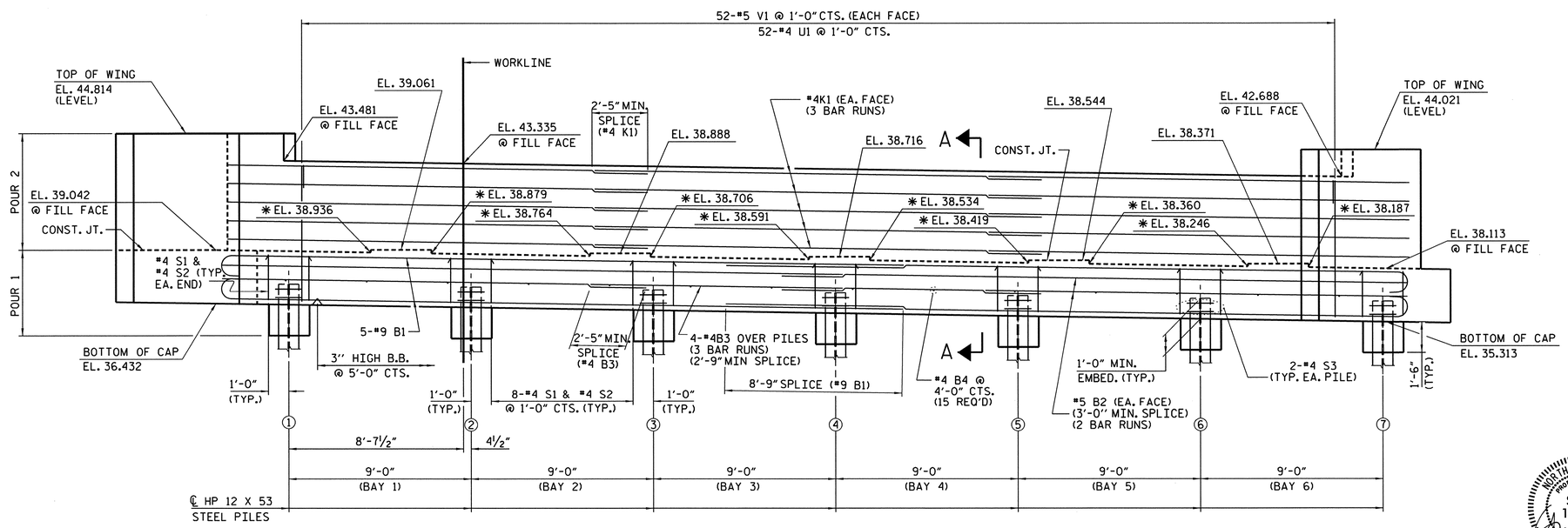

ELEVATION

✱ FOR LOCATION OF ELEVATIONS BETWEEN BRIDGE SEAT BUILDUPS. SEE SECTION A-A ON SHEET 3 OF 3.

NOTES:

STIRRUPS IN CAP MAY BE SHIFTED AS NECESSARY TO CLEAR ANCHOR BOLTS.

THE CONTRACTOR SHALL PROVIDE FOR INSTALLATION OF THE 4" DIAMETER DRAIN PIPE THROUGH THE WING WALL AS REQUIRED FOR REINFORCED BRIDGE APPROACH FILLS. SEE THE ROADWAY PLANS. REINFORCING STEEL IN THE WING WALL MAY BE SHIFTED AS NECESSARY TO CLEAR THE DRAIN PIPE.

BACKWALL SHALL BE PLACED BEFORE APPLYING THE EPOXY PROTECTIVE COATING.

THE TOP SURFACE AREAS OF THE END BENT CAPS SHALL BE CURED IN ACCORDANCE WITH THE STANDARD SPECIFICATIONS EXCEPT THE MEMBRANE CURING COMPOUND METHOD SHALL NOT BE USED.

THE TOP SURFACE OF THE CAP EXCEPT THE BRIDGE SEAT BUILDUPS SHALL BE SLOPED TRANSVERSELY FROM THE FILL FACE TO THE BACK FACE AT THE RATE OF 2%.

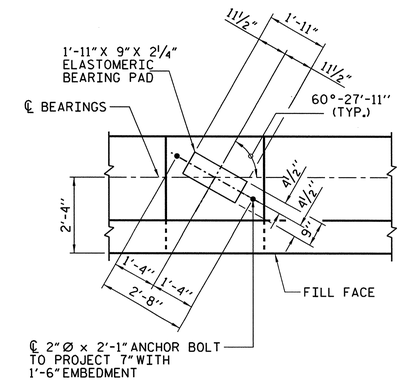

DETAIL "A"

TOP OF PILE ELEVATIONS	
PILE NUMBER	ELEVATION
1	37.474
2	37.319
3	37.164
4	37.009
5	36.854
6	36.699
7	36.542

PROJECT NO. R-2633BB

BRUNSWICK/NEW HANOVER COUNTY

STATION: 425+60.75 -L-
16+20.93 -EY11-

SHEET 1 OF 3

STATE OF NORTH CAROLINA
DEPARTMENT OF TRANSPORTATION
RALEIGH

SUBSTRUCTURE END BENT 1 RIGHT LANE

NORTH CAROLINA PROFESSIONAL SEAL 14047 ENGINEER STEPHEN D. COOK
11/16/12

THE LOUIS BERGER GROUP, Inc.
1001 Wade Avenue, Suite 400
Raleigh, NC 27605-3322

REVISIONS								SHEET NO.
NO.	BY:	DATE:	NO.	BY:	DATE:			S-594
1			3					TOTAL SHEETS
2			4					700

DRAWN BY : J. MYA DATE : AUG. 2012
CHECKED BY : S. COOK DATE : AUG. 2012

G:\OR Projects\OR1092 - NCDOT Wilm Bypass DualBridges\Structures\Bridge Site 7\R-2633BB_SD_07R_EB101.dgn
11/16/2012 12:09:29 PM 1092_PDF_full.pltcfg 1092_str.tbl

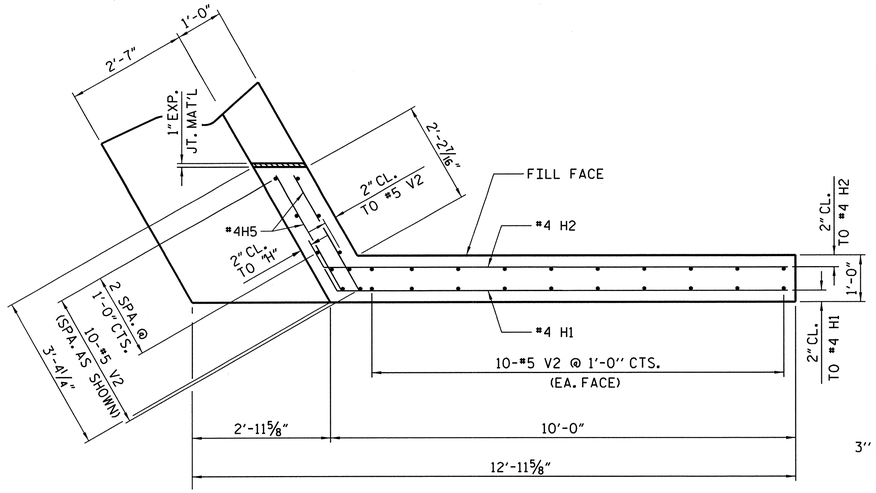

PLAN OF WING - (W1)

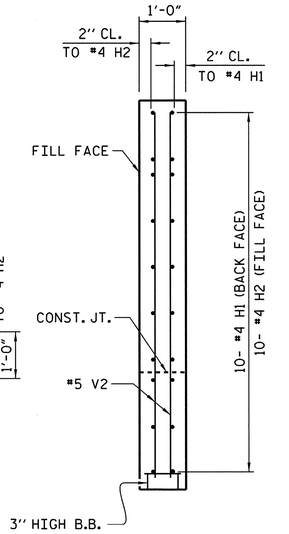

SECTION X-X

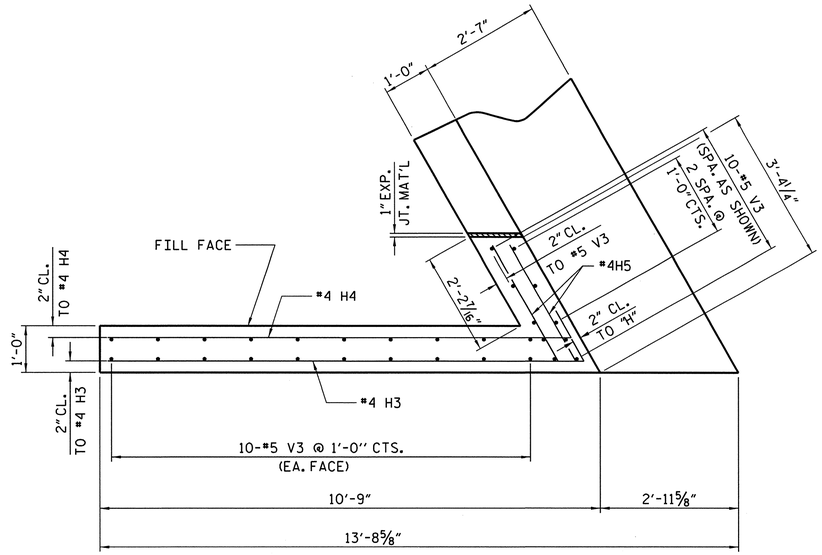

PLAN OF WING - (W2)

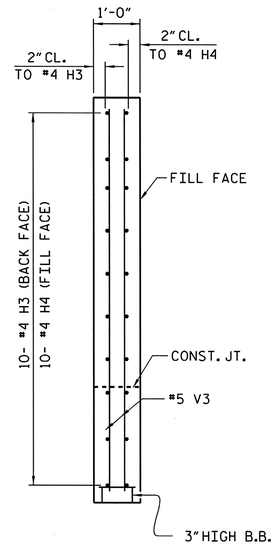

SECTION Y-Y

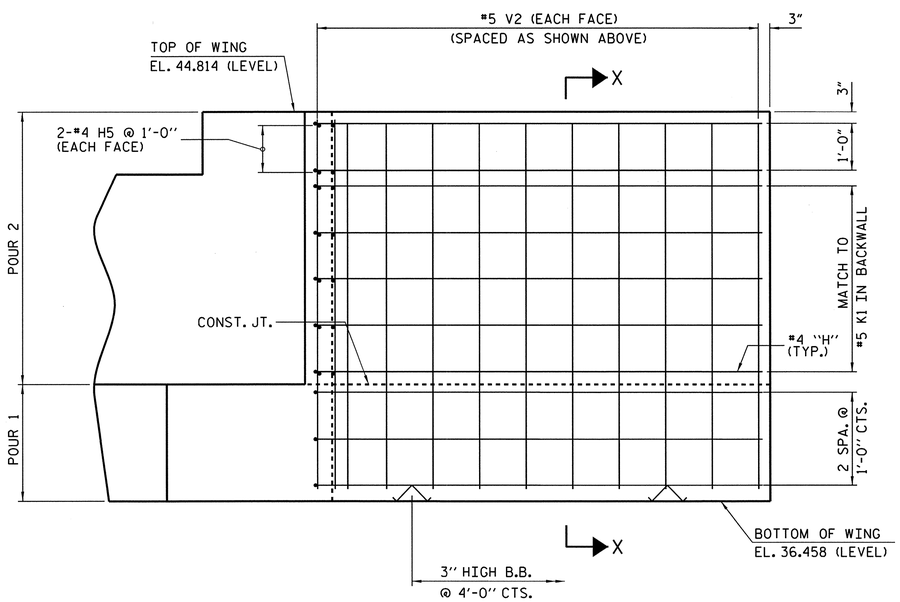

ELEVATION OF WING - (W1)

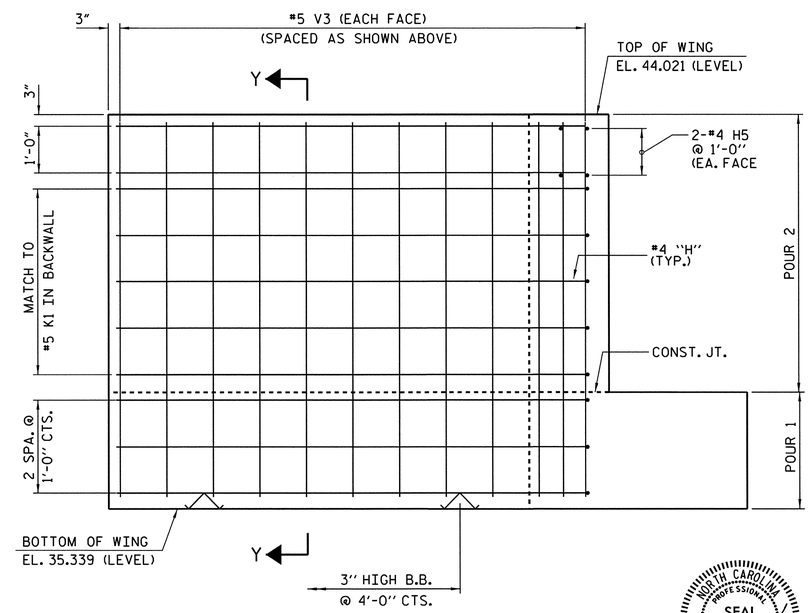

PLAN OF WING - (W2)

PROJECT NO. R-2633BB

BRUNSWICK/NEW HANOVER COUNTY

STATION: 425+60.75 -L-
16+20.93 -EY11-

SHEET 2 OF 3

STATE OF NORTH CAROLINA
DEPARTMENT OF TRANSPORTATION
RALEIGH

SUBSTRUCTURE
END BENT 1
RIGHT LANE

NORTH CAROLINA PROFESSIONAL SEAL 14047 ENGINEER STEPHEN D. COOK
11/16/12

THE LOUIS BERGER GROUP, Inc.
1001 Wade Avenue, Suite 400
Raleigh, NC 27605-3322

REVISIONS								SHEET NO.
NO.	BY:	DATE:	NO.	BY:	DATE:			S-595
1			3					TOTAL SHEETS
2			4					700

DRAWN BY : J. MYA DATE : JULY 2012
CHECKED BY : S. COOK DATE : SEPT 2012

G:\OR Projects\OR1092 - NCDOT Wilm Bypass DualBridges\Structures\Bridge Site 7\R-2633BB_SD_07R_EB102.dgn
11/16/2012 11:52:04 AM 1092_PDF_full.pltcfg 1092_str.tbl

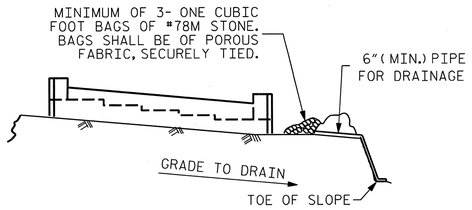

BAGGED STONE AND PIPE SHALL BE PLACED IMMEDIATELY AFTER COMPLETION OF END BENT EXCAVATION. PIPE MAY BE EITHER CONCRETE, CORRUGATED STEEL, CORRUGATED ALUMINUM ALLOY, OR CORRUGATED PLASTIC. PERFORATED PIPE WILL NOT BE ALLOWED.

BAGGED STONE SHALL REMAIN IN PLACE UNTIL THE ENGINEER DIRECTS THAT IT BE REMOVED. THE CONTRACTOR SHALL REMOVE AND DISPOSE OF SILT ACCUMULATIONS AT BAGGED STONE WHEN SO DIRECTED BY THE ENGINEER. BAGS SHALL BE REMOVED AND REPLACED WHENEVER THE ENGINEER DETERMINES THAT THEY HAVE DETERIORATED AND LOST THEIR EFFECTIVENESS.

NO SEPARATE PAYMENT WILL BE MADE FOR THIS WORK AND THE ENTIRE COST OF THIS WORK SHALL BE INCLUDED IN THE UNIT CONTRACT PRICE BID FOR THE SEVERAL PAY ITEMS.

TEMPORARY DRAINAGE AT END BENT

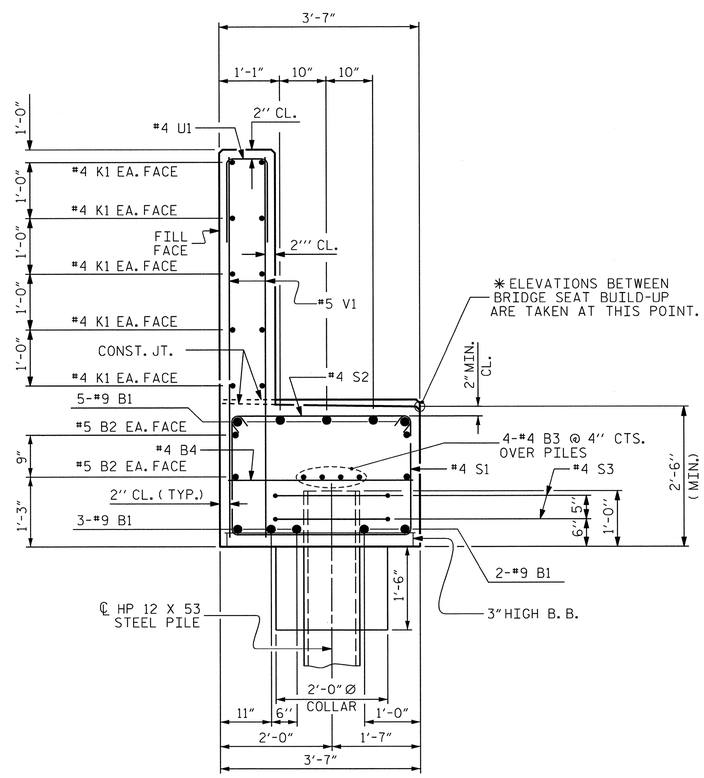

SECTION A-A

BAR TYPES

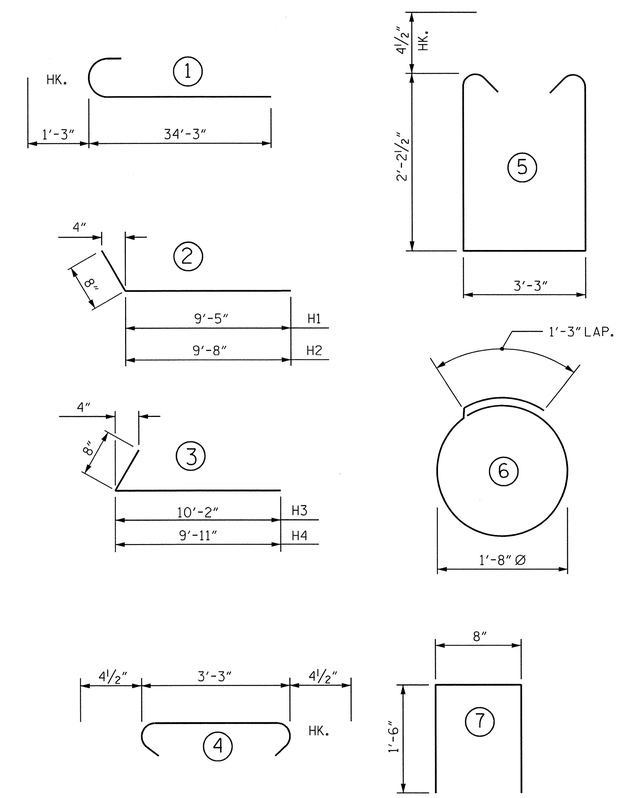

ALL BAR DIMENSIONS ARE OUT TO OUT.

BILL OF MATERIAL
FOR END BENT 1

BAR	NO	SIZE	TYPE	LENGTH	WEIGHT
B1	20	#9	1	35'-6"	2,414
B2	8	#5	STR.	30'-9"	257
B3	12	#4	STR.	21'-6"	172
B4	15	#4	STR.	3'-3"	33
H1	10	#4	2	10'-1"	67
H2	10	#4	2	10'-4"	69
H3	10	#4	3	10'-10"	72
H4	10	#4	3	10'-7"	71
H5	8	#4	STR.	2'-11"	16
K1	30	#4	STR.	21'-6"	431
S1	50	#4	5	8'-3"	276
S2	50	#4	4	4'-0"	134
S3	14	#4	6	6'-6"	61
U1	52	#4	7	3'-8"	127
V1	104	#5	STR.	6'-6"	705
V2	30	#5	STR.	8'-1"	253
V3	30	#5	STR.	8'-2"	256
REINFORCING STEEL				= LBS.	5,414

CLASS A CONCRETE BREAKDOWN

POUR #1 (CAP, CONCRETE COLLARS & LOWER PART OF WINGS	C.Y.	24.4
POUR #2 (BACKWALL & UPPER PART OF WINGS)	C.Y.	14.7
TOTAL CLASS A CONCRETE	C.Y.	39.1

HP 12 X 53 STEEL PILES NO. 7	LIN. FT.	595
PILE REDRVES	No.	4

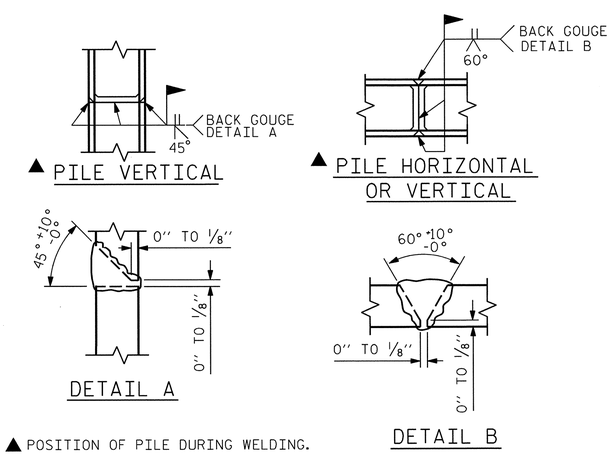

▲ POSITION OF PILE DURING WELDING.

PILE SPLICE DETAILS

PROJECT NO. R-2633BB

BRUNSWICK/NEW HANOVER COUNTY

STATION: 425+60.75 -L-
16+20.93 -EY11-

SHEET 3 OF 3

STATE OF NORTH CAROLINA
DEPARTMENT OF TRANSPORTATION
RALEIGH

SUBSTRUCTURE END BENT 1 RIGHT LANE

NORTH CAROLINA PROFESSIONAL SEAL 14047 ENGINEER STEPHEN D. COOK
11/16/12

THE LOUIS BERGER GROUP, Inc.
1001 Wade Avenue, Suite 400
Raleigh, NC 27605-3322

REVISIONS						
NO.	BY:	DATE:	NO.	BY:	DATE:	
1			3			
2			4			

SHEET NO. S-57C

TOTAL SHEETS 700

DRAWN BY : J. MYA DATE : AUG.2012
CHECKED BY : S.COOK DATE : AUG.2012

G:\OR Projects\OR1092 - NCDOT Wilm Bypass DualBridges\Structures\Bridge Site 7\R-2633BB_SD_07R_EB103.dgn
11/16/2012 11:52:07 AM 1092_PDF_full.pltcfg 1092_str.tbl

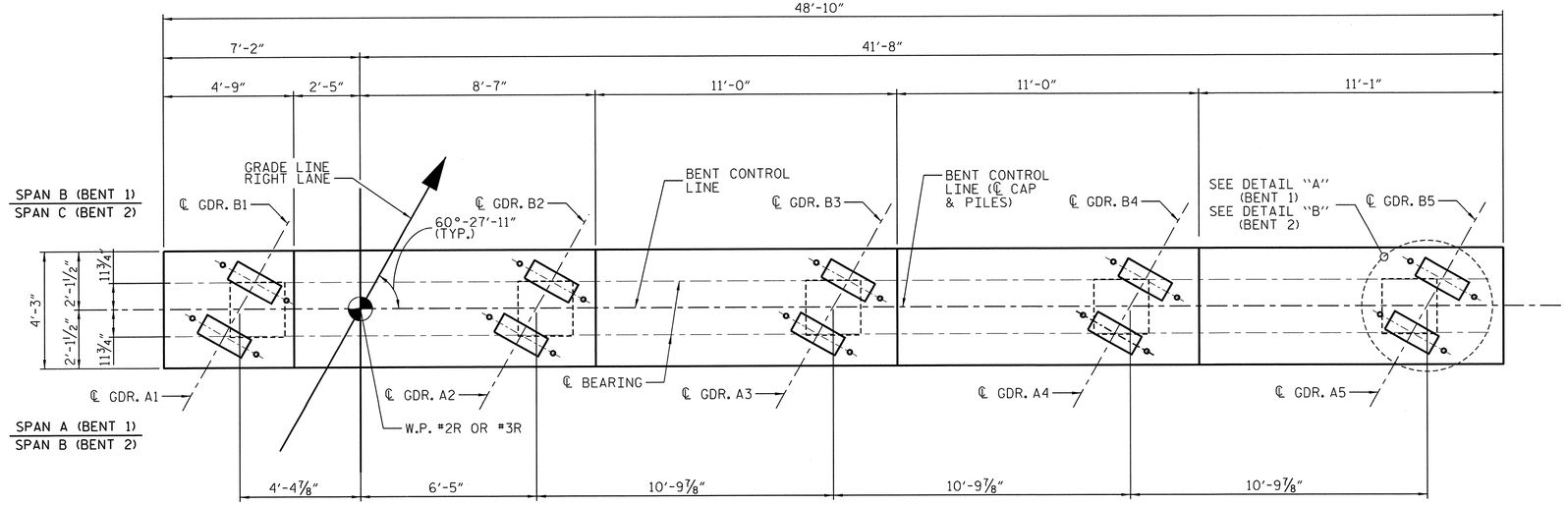

PLAN

(BENT 1 SHOWN, BENT 2 SIMILAR)

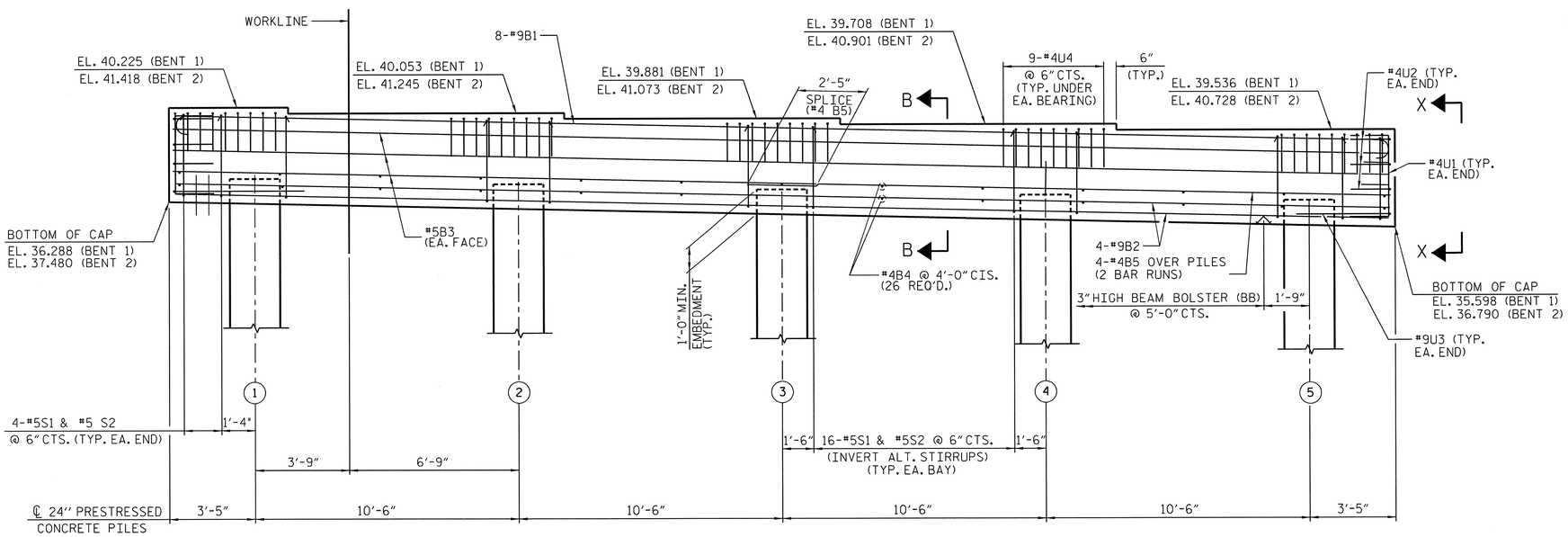

ELEVATION

(BENT 1 SHOWN, BENT 2 SIMILAR)

TOP OF PILE ELEVATIONS		
PILE NUMBER	BENT 1 ELEVATION	BENT 2 ELEVATION
1	37.379	38.481
2	37.229	38.331
3	37.079	38.181
4	36.929	38.031
5	36.779	37.881

NOTES

STIRRUPS AND #4U4 BARS IN CAP MAY BE SHIFTED AS NECESSARY TO CLEAR ANCHOR BOLTS.

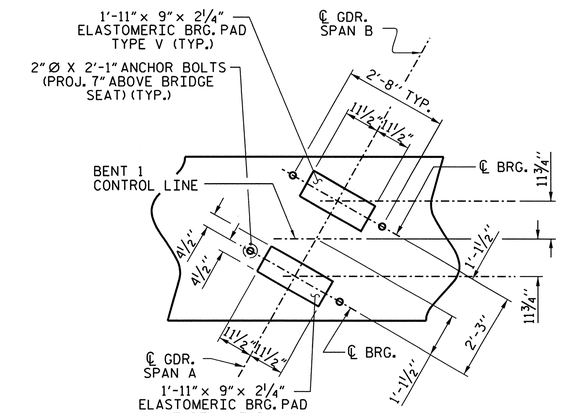

DETAIL A

(TYP. EA. GIRDER)
(BENT 1)

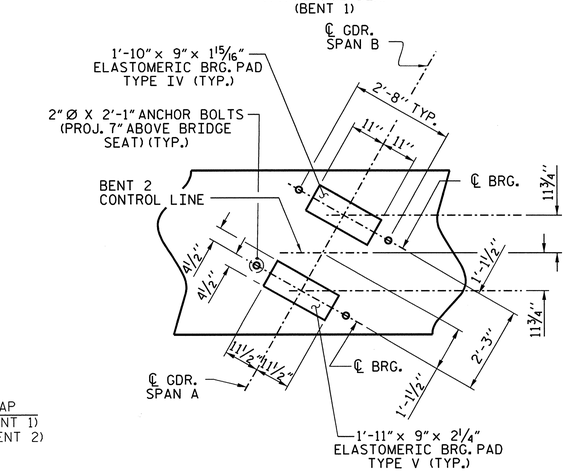

DETAIL B

(TYP. EA. GIRDER)
(BENT 2)

PROJECT NO. R-2633BB

BRUNSWICK/NEW HANOVER COUNTY

STATION: 425+60.75 -L-
16+20.93 -EY11-

SHEET 1 OF 3

STATE OF NORTH CAROLINA
DEPARTMENT OF TRANSPORTATION
RALEIGH

SUBSTRUCTURE
BENT NO. 1 & 2
RIGHT LANE

NORTH CAROLINA PROFESSIONAL SEAL 14047 ENGINEER STEPHEN D. COOK
11/16/12

THE LOUIS BERGER GROUP, Inc.
1001 Wade Avenue, Suite 400
Raleigh, NC 27605-3322

REVISIONS							SHEET NO.
NO.	BY:	DATE:	NO.	BY:	DATE:		S-597
1			3				TOTAL SHEETS
2			4				700

DRAWN BY : M.HOGAN DATE : AUG.2012
CHECKED BY : S.COOK DATE : AUG.2012

G:\OR Projects\OR1092 - NCDOT Wilm Bypass DualBridges\Structures\Bridge Site 7\R-2633BB_SD_07R_BT101.dgn
11/16/2012 12:13:49 PM 1092_PDF_full.pltcfg 1092_str.tbl

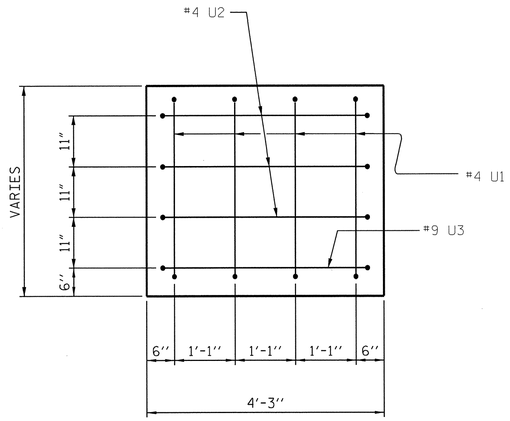

VIEW X-X

(TYP. EA. END)

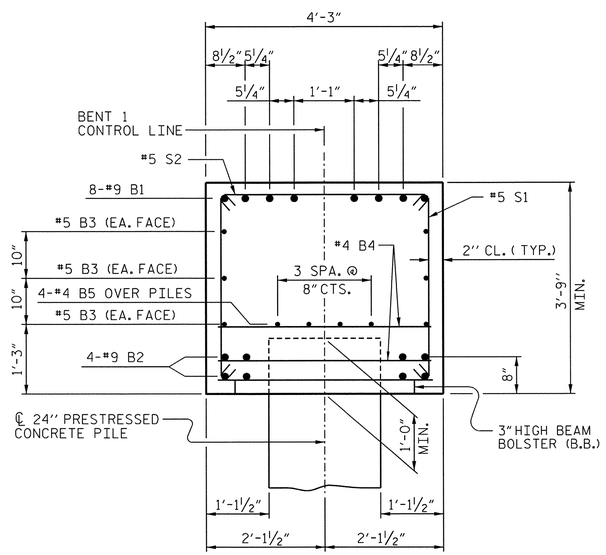

SECTION A-A

(BENT 1 SHOWN BENT 2 SIMILAR)

BAR TYPES

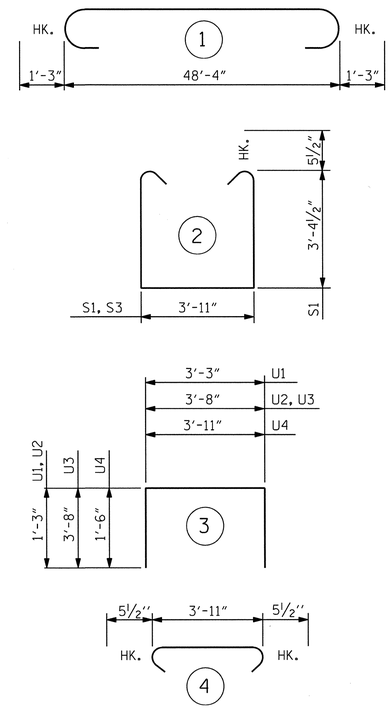

ALL BAR DIMENSIONS ARE OUT TO OUT.

BILL OF MATERIAL

FOR ONE BENT (2 REQ'D)

BAR	NO.	SIZE	TYPE	LENGTH	WEIGHT
B1	8	#9	1	50'-10"	1383
B2	8	#9	STR	48'-4"	1315
B3	6	#5	STR	48'-4"	302
B4	26	#4	STR	3'-11"	68
B5	8	#4	STR	25'-6"	136
S1	72	#5	2	11'-7"	870
S2	72	#5	4	4'-10"	363
U1	8	#4	3	5'-9"	31
U2	6	#4	3	6'-2"	25
U3	2	#4	3	11'-0"	75
U4	45	#4	3	6'-11"	208

TOTAL REINFORCING STEEL LBS. 4,776

CLASS A CONCRETE C.Y. ▲ 29.1

24" PRESTRESSED CONCRETE PILES

BENT 1	No. 5	LIN. FT.	450
BENT 2	No. 5	LIN. FT.	450

PREDRILLING FOR PILES

BENT 1	LIN. FT.	119.0
BENT 2	LIN. FT.	108.0

PILES REDRIVES

BENT 1	NO. 3
BENT 2	NO. 3

▲ CONCRETE DISPLACED BY THE 24" PRESTRESSED CONCRETE PILES HAS BEEN DEDUCTED.

PROJECT NO. R-2633BB

BRUNSWICK/NEW HANOVER COUNTY

STATION: 425+60.75 -L-
16+20.93 -EY11-

SHEET 2 OF 3

STATE OF NORTH CAROLINA
DEPARTMENT OF TRANSPORTATION
RALEIGH

SUBSTRUCTURE
BENT NO. 1 & 2
RIGHT LANE

NORTH CAROLINA PROFESSIONAL SEAL 14040 ENGINEER STEPHEN D. COOK
11/16/12

THE LOUIS BERGER GROUP, Inc.
1001 Wade Avenue, Suite 400
Raleigh, NC 27605-3322

REVISIONS							SHEET NO.
NO.	BY:	DATE:	NO.	BY:	DATE:		S-59B
1			3				TOTAL SHEETS
2			4				100

DRAWN BY : J. MYA DATE : AUG.2012
CHECKED BY : S.COOK DATE : AUG.2012

G:\OR Projects\OR1092 - NCDOT Wilm Bypass DualBridges\Structures\Bridge Site 7\R-2633BB_SD_07R_BT1102.dgn
11/16/2012 11:52:13 AM 1092_PDF_full.pltcfg 1092_str.tbl

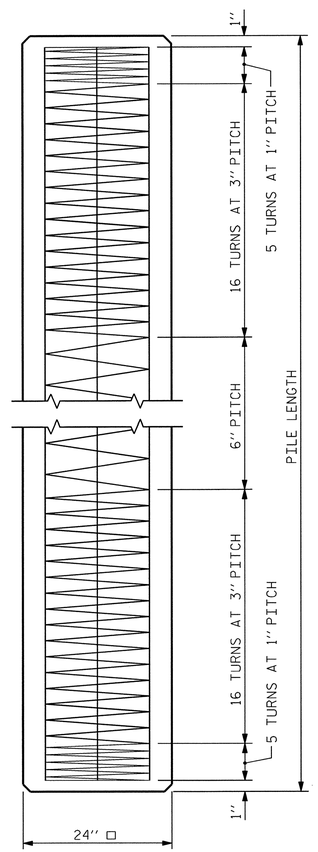

ELEVATION

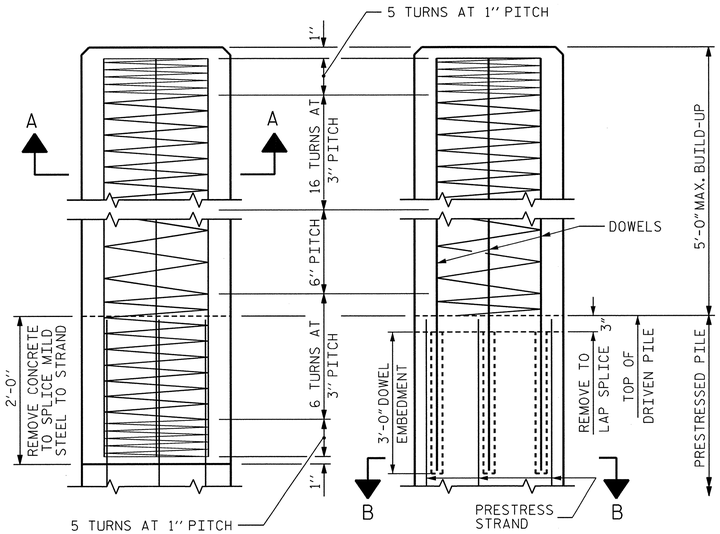

BUILD-UP AND SPIRAL REINFORCING

OPTIONAL BUILD-UP WITH DOWELS

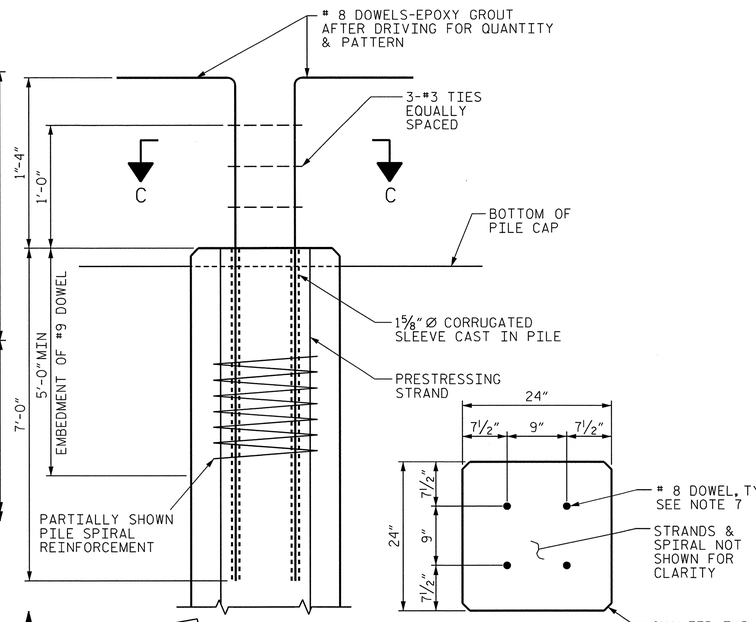

SECTION "C-C"

(AT THE CONTRACTOR'S OPTION, PILE BUILD-UP MAY BE CONSTRUCTED WITH DOWELS.)

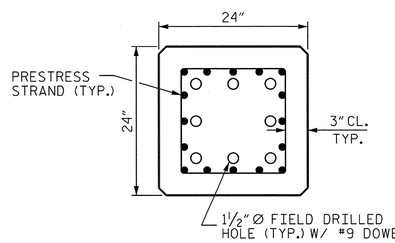

SECTION "B-B"

(AT THE CONTRACTOR'S OPTION, PILE BUILD-UP MAY BE CONSTRUCTED WITH DOWELS.)

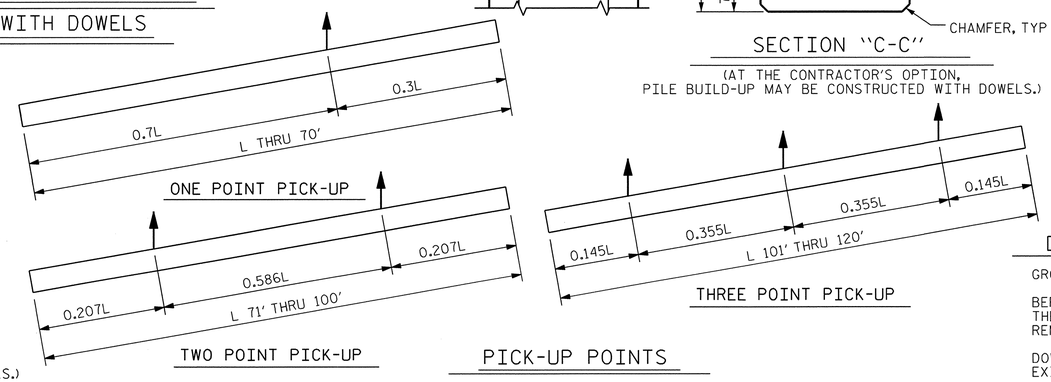

PICK-UP POINTS

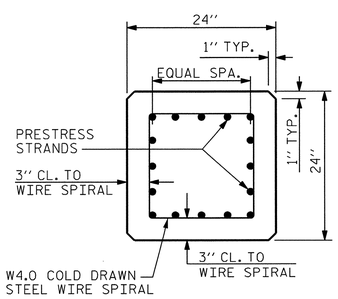

TYPICAL SECTION

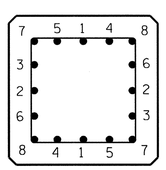

TYPICAL PATTERN FOR BURNING STRANDS

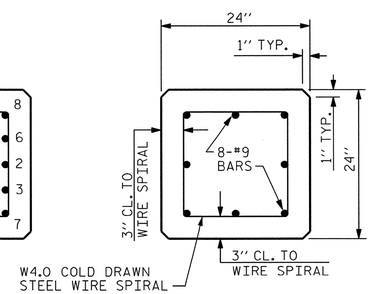

SECTION A-A

½" OR 0.6" Ø GRADE 270 L.R. PRESTRESS STRANDS

NOTES

PRESTRESSED CONCRETE STRENGTH : f'c= 7,500 PSI

BUILD-UP CONCRETE STRENGTH : f'c= 7,500 PSI

STRAND DATA:

SIZE	GRADE	AREA	ULTIMATE STRENGTH	APPLIED PRESTRESS FORCE
½"	270 L.R.	0.153	41,300# PER STRAND	30,980# PER STRAND
0.6"	270 L.R.	0.217	58,600# PER STRAND	43,940# PER STRAND

ALL PRESTRESSING STRANDS SHALL BE 7-WIRE LOW-RELAXATION GRADE 270 STRANDS CONFORMING TO AASHTO M203. STRAND SAMPLING REQUIREMENTS SHALL BE IN ACCORDANCE WITH THE STANDARD SPECIFICATIONS.

AT THE CONTRACTOR'S OPTION, ½" OR 0.6" STRANDS MAY BE USED IN THE STRAND CONFIGURATION SHOWN IN THE TYPICAL SECTION DETAIL. MIXING OF STRAND SIZE IS NOT ALLOWED.

THE SLIP-FORM METHOD OF CASTING PILES WILL NOT BE PERMITTED.

TRANSFER THE LOAD FROM THE ANCHORAGES TO THE PILE AFTER THE CONCRETE HAS ATTAINED A MINIMUM COMPRESSIVE STRENGTH OF 4,000 PSI.

IF STRAND STRESS IS RELIEVED BY BURNING, THE STRANDS SHALL BE BURNED IN OPPOSITE PAIRS AS INDICATED IN THE TYPICAL PATTERN SHOWN. FOR ANY NUMBER OF STRANDS, BURN IN OPPOSITE PAIRS AND SYMMETRICALLY ABOUT BOTH THE VERTICAL AND HORIZONTAL AXES, STRANDS 1-1 SHALL BE BURNED BEFORE 2-2, ETC. NOT MORE THAN 4 STRANDS, SAY 5-5 AND 6-6, MAY BE BURNED AT ANY ONE SECTION BEFORE THESE SAME PAIRS OF STRANDS ARE BURNED AT BOTH ENDS OF THE BED AND BETWEEN EACH PAIR OF PILES IN THE BED.

PROPOSED DEVICES FOR LIFTING PILES, RECESS DETAILS, AND PATCHING MATERIAL SHALL BE DETAILED IN SHOP DRAWINGS. AFTER ATTACHMENTS HAVE BEEN REMOVED, OPENINGS SHALL BE REPAIRED SUCH THAT THE APPEARANCE OF THE PILE IS UNIFORM.

WHERE CAST-IN-PLACE LIFTING DEVICES ARE NOT USED, PICK-UP POINTS ARE TO BE INDICATED WITH A 2" WIDE BLACK MARK.

DRIVE PILES USING A METHOD APPROVED BY THE ENGINEER, WHEREBY THE HEAD OF THE PILE IS NOT DAMAGED.

DRIVING OF THE BUILT-UP PILE WILL NOT BE PERMITTED UNTIL THE CONCRETE HAS REACHED A COMPRESSIVE STRENGTH OF 5,000 PSI AND UNTIL A PERIOD OF SEVEN DAYS HAS ELAPSED SINCE CASTING OF THE BUILD-UP.

DOWEL INSTALLATION FOR OPTIONAL BUILD-UP

GROUT COMPRESSIVE STRENGTH: f'c= 5,000 PSI

BEFORE DRILLING DOWEL HOLES, REMOVE THE UPPER 3" OF CONCRETE FROM THE TOP OF THE PILE WITHOUT DAMAGE TO THE REINFORCING STEEL. THE REMOVAL PLANE SHOULD BE NORMAL TO THE EDGE OF THE PILE.

DOWEL HOLES SHALL BE POSITIONED TO MAINTAIN ½" CLEAR TO ALL EXISTING PRESTRESSING STRANDS IN THE CONCRETE PILE.

FIELD DRILLED HOLES SHALL BE CLEAN AND FREE OF ANY OBSTRUCTIONS BEFORE GROUTING OF DOWELS. DOWEL BARS SHALL BE INSTALLED AND GROUTED WITH AN APPROVED NON-SHRINK GROUT.

THE SPIRAL REINFORCING IN ALL BUILD-UPS SHALL BE W4.0 COLD DRAWN WIRE WHICH SHALL BE SECURED TO THE LONGITUDINAL REINFORCEMENT TO MAINTAIN PITCH.

THE SPIRAL REINFORCING IN THE BUILD-UP AND THE PRESTRESSED CONCRETE PILE SHALL BE SPLICED BY OVERLAPPING A MIN. OF ONE TURN.

QUANTITIES FOR ONE 24" SQUARE PILE

LENGTH	CONCRETE CU. YDS.	PILE WT. TONS	ONE POINT PICK-UP 0.3L	ONE POINT PICK-UP 0.7L	TWO POINT PICK-UP 0.207L	TWO POINT PICK-UP 0.586L	THREE POINT PICK-UP 0.145L	THREE POINT PICK-UP 0.355L
25'-0"	3.69	7.47	7'-6"	17'-6"				
30'-0"	4.43	8.97	9'-0"	21'-0"				
35'-0"	5.17	10.46	10'-6"	24'-6"				
40'-0"	5.91	11.96	12'-0"	28'-0"				
45'-0"	6.64	13.45	13'-6"	31'-6"				
50'-0"	7.38	14.95	15'-0"	35'-0"				
55'-0"	8.12	16.44	16'-6"	38'-6"				
60'-0"	8.86	17.94	18'-0"	42'-0"				
65'-0"	9.60	19.43	19'-6"	45'-6"				
70'-0"	10.33	20.93	21'-0"	49'-0"				
75'-0"	11.07	22.42			15'-6½"	43'-11"		
80'-0"	11.81	23.92			16'-6½"	46'-11"		
85'-0"	12.55	25.41			17'-7"	49'-10"		
90'-0"	13.29	26.91			18'-7½"	52'-9"		
95'-0"	14.03	28.40			19'-8"	55'-8"		
100'-0"	14.76	29.90			20'-8½"	58'-7"		
105'-0"	15.50	31.39					15'-3"	37'-3"
110'-0"	16.24	32.89					15'-11½"	39'-0½"
115'-0"	16.98	34.38					16'-8"	40'-10"
120'-0"	17.72	35.87					17'-5"	42'-7"

PROJECT NO. R-2633BB

BRUNSWICK/NEW HANOVER COUNTY

STATION: 425+60.75 -L-
16+20.93 -EY11-

SHEET 3 OF 3

STATE OF NORTH CAROLINA
DEPARTMENT OF TRANSPORTATION
RALEIGH

STANDARD

24" PRESTRESSED CONCRETE PILE RIGHT LANE

NORTH CAROLINA PROFESSIONAL SEAL 14047 ENGINEER STEPHEN D. COOK
4/16/12

THE LOUIS BERGER GROUP, Inc.
1001 Wade Avenue, Suite 400
Raleigh, NC 27605-3322

REVISIONS									SHEET NO.
NO.	BY:	DATE:	NO.	BY:	DATE:				S-599
1			3						TOTAL SHEETS
2			4						700

STD. NO. PCP4

ASSEMBLED BY : J. MYA/C. KING	DATE : AUG 2012		
CHECKED BY : S. COOK	DATE : AUG 2012		
DRAWN BY : WJH 1/89	REV. 5/1/06R	TLA/GM	
CHECKED BY : CRK 3/89	REV. 11/30/10	WMC/GM	
	REV. 10/1/11	MAA/GM	

G:\OR Projects\OR1092 - NCDOT Wilm Bypass DualBridges\Structures\Bridge Site 7\R-2633BB_SD_07R_BT103.dgn
11/16/2012 11:52:15 AM 1092_PDF_full.pltcfg 1092_str.tbl

NOTES:

STIRRUPS IN CAP MAY BE SHIFTED AS NECESSARY TO ANCHOR BOLTS.

THE CONTRACTOR SHALL PROVIDE FOR INSTALLATION OF THE 4" DIAMETER DRAIN PIPE THROUGH THE WING WALL AS REQUIRED FOR REINFORCED BRIDGE APPROACH FILLS. SEE THE ROADWAY PLANS. REINFORCING STEEL IN THE WING WALL MAY BE SHIFTED AS NECESSARY TO CLEAR THE DRAIN PIPE.

BACKWALL SHALL BE PLACED BEFORE APPLYING THE EPOXY PROTECTIVE COATING.

THE TOP SURFACE AREAS OF THE END BENT CAPS SHALL BE CURED IN ACCORDANCE WITH THE STANDARD SPECIFICATIONS EXCEPT THE MEMBRANE CURING COMPOUND METHOD SHALL NOT BE USED.

THE TOP SURFACE OF THE CAP EXCEPT THE BRIDGE SEAT BUILDUPS SHALL BE SLOPED TRANSVERSELY FROM THE FILLFACE TO THE BACK FACE AT THE RATE OF 2%.

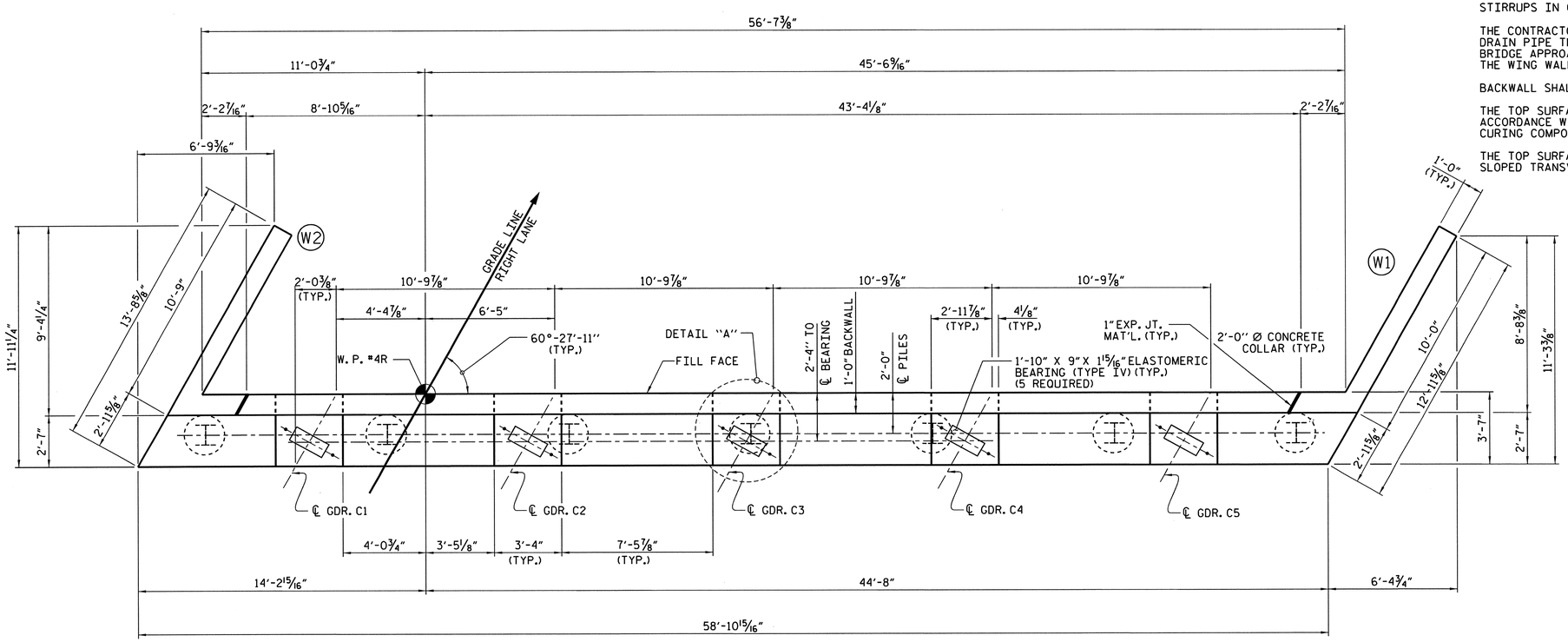

PLAN

TOP OF PILE ELEVATIONS	
PILE NUMBER	ELEVATION
1	40.300
2	40.150
3	40.000
4	39.850
5	39.700
6	39.550
7	39.400

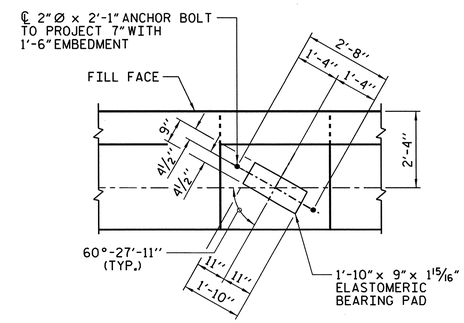

DETAIL "A"

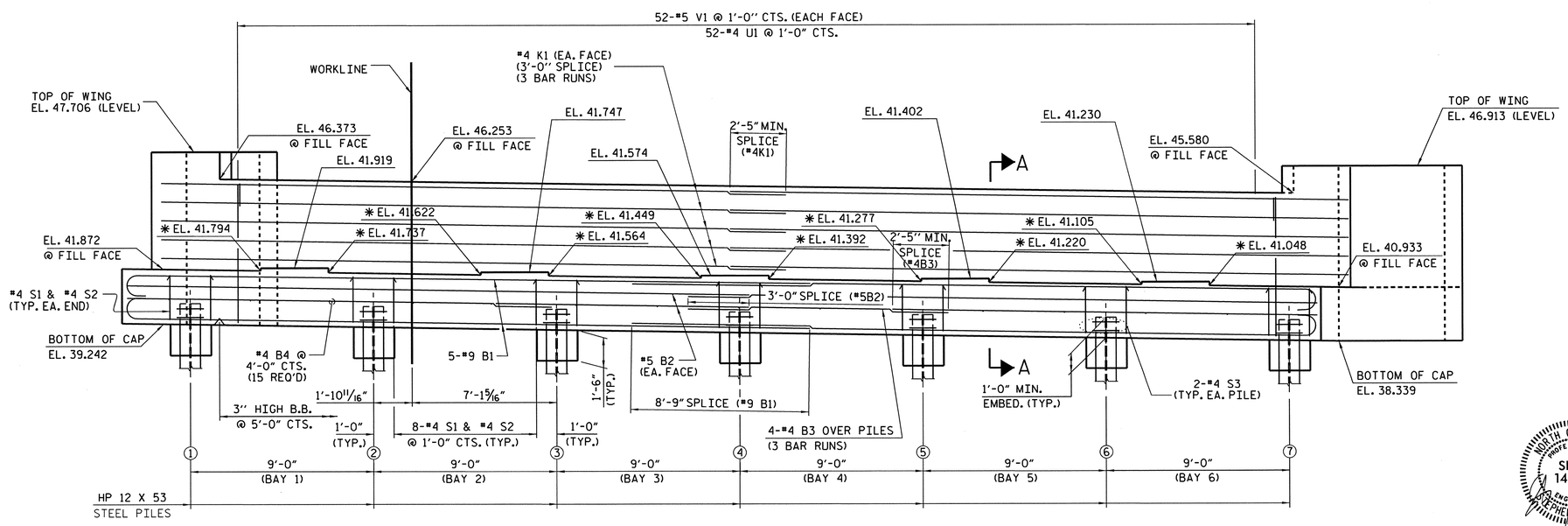

ELEVATION

* FOR LOCATION OF ELEVATIONS BETWEEN BRIDGE SEAT BUILDUPS. SEE SECTION A-A ON SHEET 3 OF 3.

PROJECT NO. R-2633BB

BRUNSWICK/NEW HANOVER COUNTY

STATION: 425+60.75 -L-
16+20.93 -EY11-

SHEET 1 OF 3

STATE OF NORTH CAROLINA
DEPARTMENT OF TRANSPORTATION
RALEIGH

SUBSTRUCTURE END BENT 2 RIGHT LANE

NORTH CAROLINA PROFESSIONAL SEAL 14047 ENGINEER STEPHEN D. COOK
11/16/12

THE LOUIS BERGER GROUP, Inc.
1001 Wade Avenue, Suite 400
Raleigh, NC 27605-3322

REVISIONS						
NO.	BY:	DATE:	NO.	BY:	DATE:	
1			3			
2			4			

SHEET NO. S-600
TOTAL SHEETS 700

DRAWN BY : J. MYA DATE : AUG 2012
CHECKED BY : S. COOK DATE : SEPT 2012

G:\OR Projects\OR1092 - NCDOT Wilm Bypass DualBridges\Structures\Bridge Site 7\R-2633BB_SD_07R_EB201.dgn
11/16/2012 11:52:18 AM 1092_PDF_full.pltcfg 1092_str.tbl

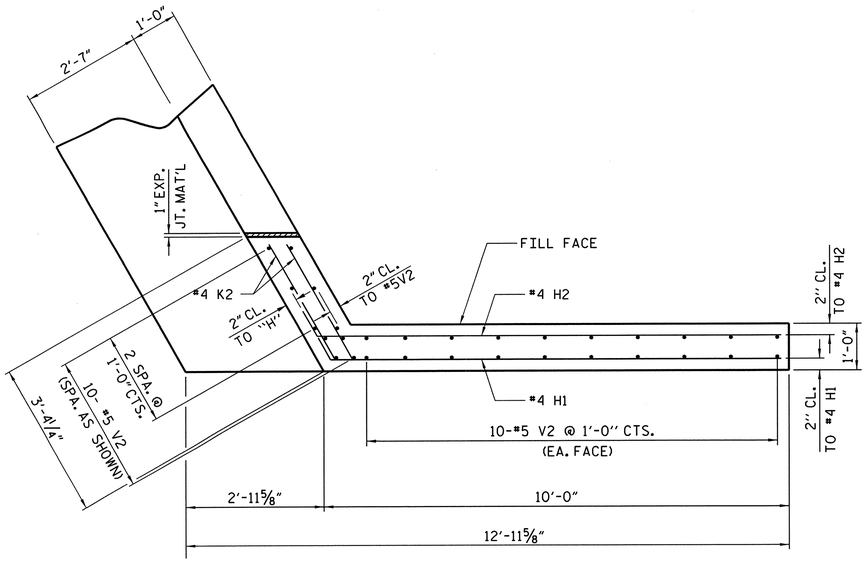

PLAN OF WING - (W1)

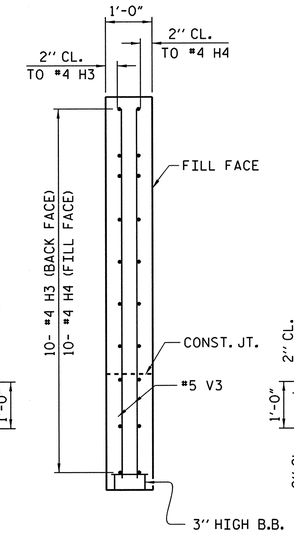

SECTION Y-Y

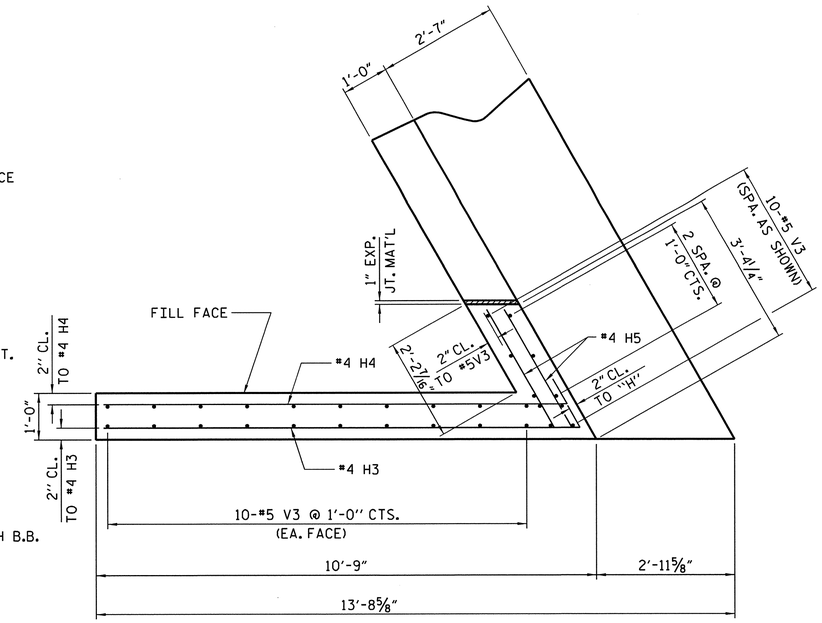

PLAN OF WING - (W2)

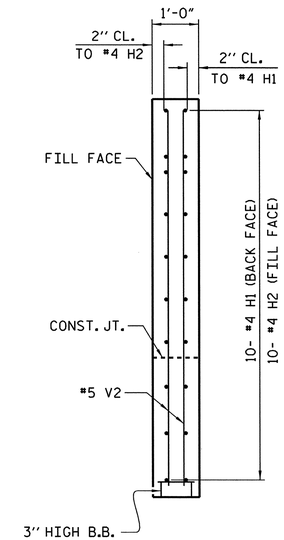

SECTION X-X

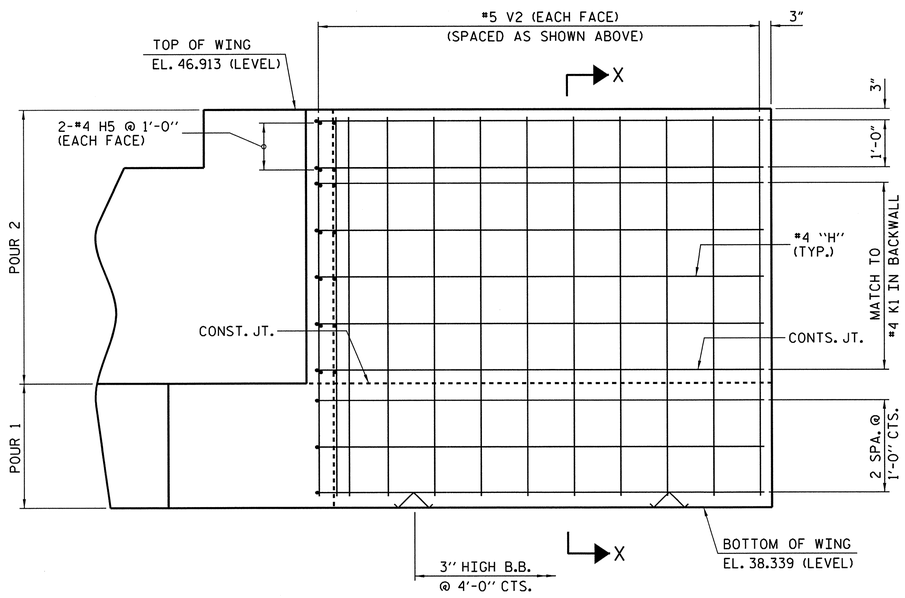

ELEVATION OF WING - (W1)

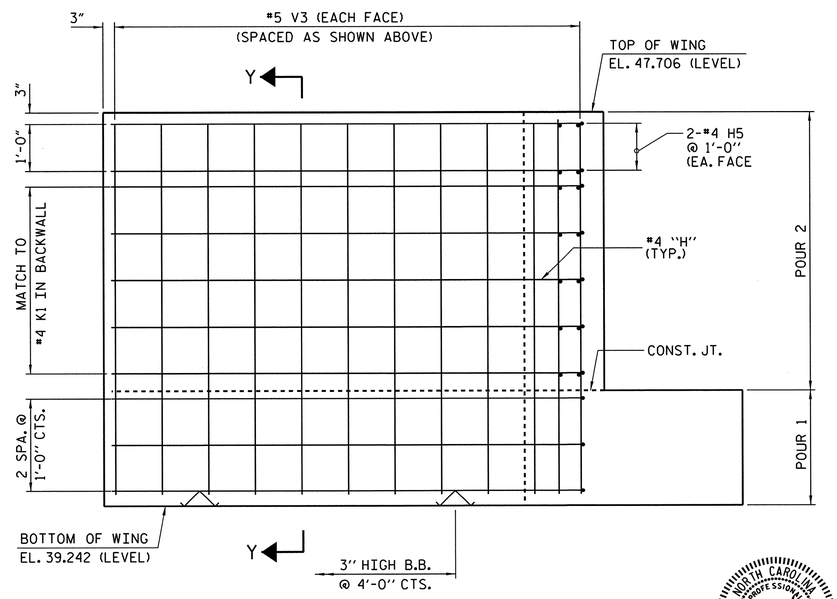

PLAN OF WING - (W2)

PROJECT NO. R-2633BB

BRUNSWICK/NEW HANOVER COUNTY

STATION: 425+60.75 -L-
16+20.93 -EY11-

SHEET 2 OF 3

STATE OF NORTH CAROLINA
DEPARTMENT OF TRANSPORTATION
RALEIGH

SUBSTRUCTURE END BENT 2 RIGHT LANE

NORTH CAROLINA PROFESSIONAL SEAL 14047 ENGINEER STEPHEN D. COOK
11/16/12

THE LOUIS BERGER GROUP, Inc.
1001 Wade Avenue, Suite 400
Raleigh, NC 27605-3322

REVISIONS								SHEET NO.
NO.	BY:	DATE:	NO.	BY:	DATE:			S-601
1			3					TOTAL SHEETS
2			4					700

DRAWN BY : J. MYA DATE : JULY 2012
CHECKED BY : S. COOK DATE : SEPT 2012

G:\OR Projects\OR1092 - NCDOT Wilm Bypass DualBridges\Structures\Bridge Site 7\R-2633BB_SD_07R_EB202.dgn
11/16/2012 11:52:21 AM 1092_PDF_full.pltcfg 1092_str.tbl

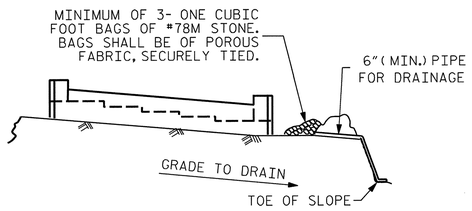

BAGGED STONE AND PIPE SHALL BE PLACED IMMEDIATELY AFTER COMPLETION OF END BENT EXCAVATION. PIPE MAY BE EITHER CONCRETE, CORRUGATED STEEL, CORRUGATED ALUMINUM ALLOY, OR CORRUGATED PLASTIC. PERFORATED PIPE WILL NOT BE ALLOWED.

BAGGED STONE SHALL REMAIN IN PLACE UNTIL THE ENGINEER DIRECTS THAT IT BE REMOVED. THE CONTRACTOR SHALL REMOVE AND DISPOSE OF SILT ACCUMULATIONS AT BAGGED STONE WHEN SO DIRECTED BY THE ENGINEER. BAGS SHALL BE REMOVED AND REPLACED WHENEVER THE ENGINEER DETERMINES THAT THEY HAVE DETERIORATED AND LOST THEIR EFFECTIVENESS.

NO SEPARATE PAYMENT WILL BE MADE FOR THIS WORK AND THE ENTIRE COST OF THIS WORK SHALL BE INCLUDED IN THE UNIT CONTRACT PRICE BID FOR THE SEVERAL PAY ITEMS.

TEMPORARY DRAINAGE AT END BENT

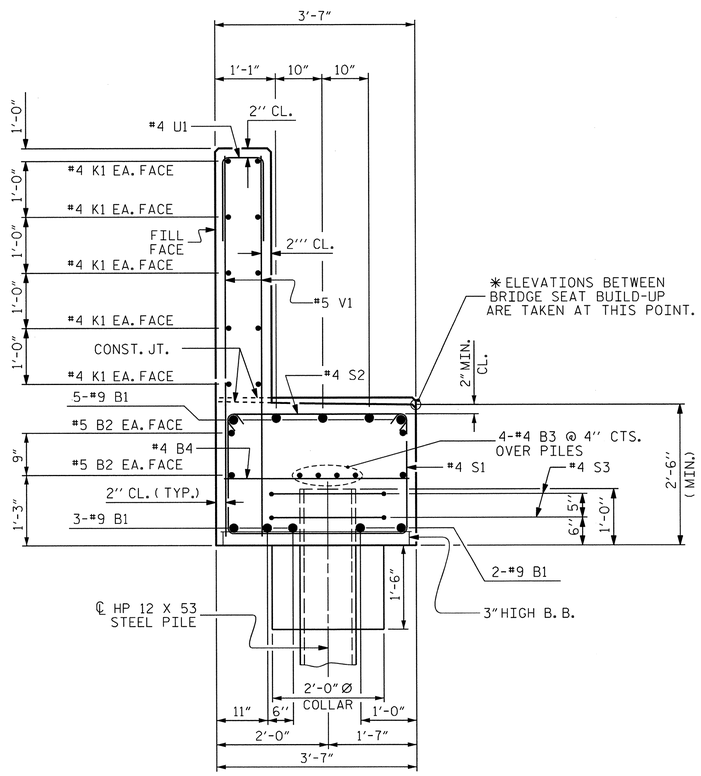

SECTION A-A

BAR TYPES

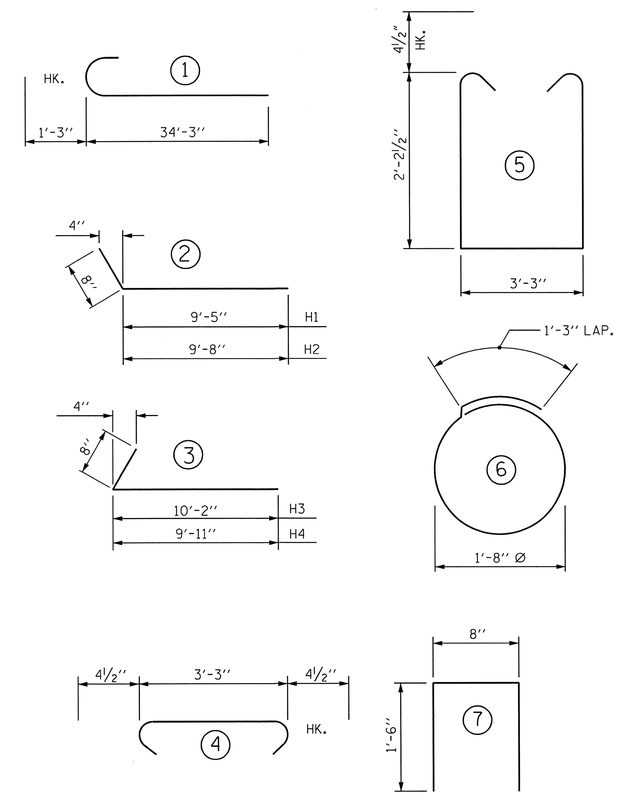

ALL BAR DIMENSIONS ARE OUT TO OUT.

BILL OF MATERIAL FOR END BENT 2

BAR	NO	SIZE	TYPE	LENGTH	WEIGHT
B1	20	#9	1	35'-6"	2,414
B2	8	#5	STR.	30'-9"	257
B3	12	#4	STR.	21'-6"	172
B4	15	#4	STR.	3'-3"	33
H1	10	#4	2	10'-1"	67
H2	10	#4	2	10'-4"	69
H3	10	#4	3	10'-10"	72
H4	10	#4	3	10'-7"	71
H5	8	#4	STR.	2'-11"	16
K1	30	#4	STR.	21'-6"	431
S1	50	#4	5	8'-3"	276
S2	50	#4	4	4'-0"	134
S3	14	#4	6	6'-6"	61
U1	52	#4	7	3'-8"	127
V1	104	#5	STR.	6'-7"	714
V2	30	#5	STR.	8'-1"	253
V3	30	#5	STR.	8'-2"	256
REINFORCING STEEL				= LBS.	5,423

CLASS A CONCRETE BREAKDOWN

POUR #1 (CAP, CONCRETE COLLARS & LOWER PART OF WINGS	C.Y.	24.4
POUR #2 (BACKWALL & UPPER PART OF WINGS)	C.Y.	14.7
TOTAL CLASS A CONCRETE	C.Y.	39.1

HP 12 X 53 STEEL PILES NO. 7	LIN. FT.	525
PILE REDRVES	No.	4

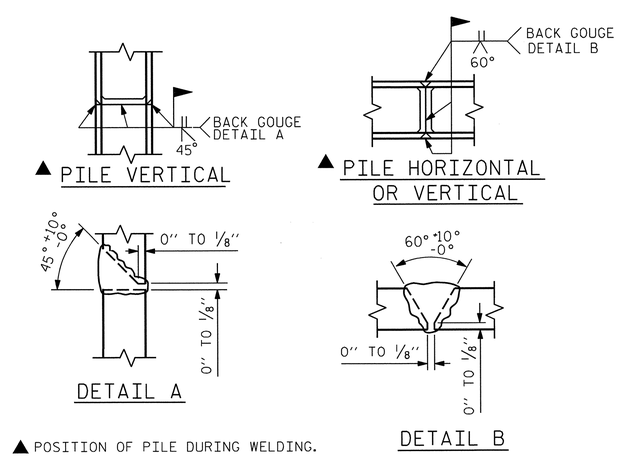

▲ POSITION OF PILE DURING WELDING.

PILE SPLICE DETAILS

PROJECT NO. R-2633BB

BRUNSWICK/NEW HANOVER COUNTY

STATION: 425+60.75 -L-
16+20.93 -EY11-

SHEET 3 OF 3

STATE OF NORTH CAROLINA
DEPARTMENT OF TRANSPORTATION
RALEIGH

SUBSTRUCTURE END BENT 2 RIGHT LANE

NORTH CAROLINA PROFESSIONAL SEAL 14047 ENGINEER STEPHEN D. COOK

11/16/12

THE LOUIS BERGER GROUP, Inc.
1001 Wade Avenue, Suite 400
Raleigh, NC 27605-3322

REVISIONS								SHEET NO.
NO.	BY:	DATE:	NO.	BY:	DATE:			S-602
1			3					TOTAL SHEETS
2			4					700

DRAWN BY : J. MYA DATE : AUG 2012
CHECKED BY : S. COOK DATE : SEPT 2012

G:\OR Projects\OR1092 - NCDOT Wilm Bypass DualBridges\Structures\Bridge Site 7\R-2633BB_SD_07R_EB203.dgn
11/16/2012 11:52:24 AM 1092_PDF_full.pltcfg 1092_str.tbl

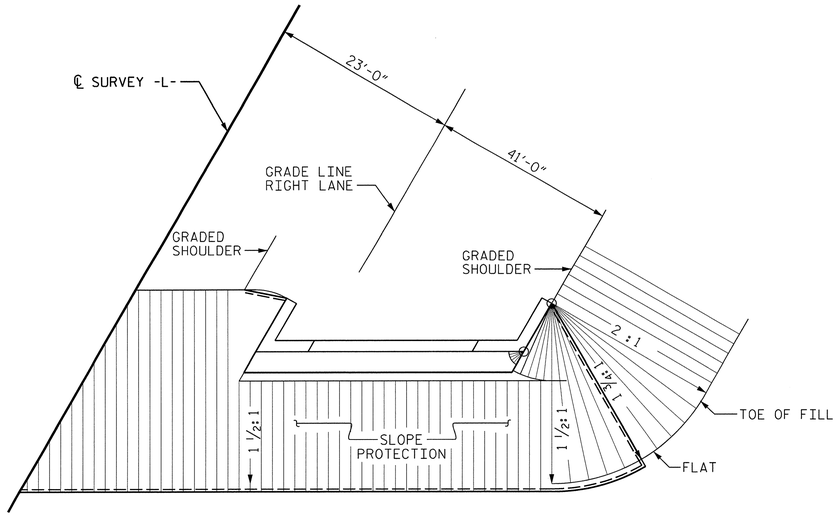

PLAN - END BENT WITH SWEPT BACK WINGS - SKEWED

(1 1/2 : 1 SLOPE)

BRIDGE @ STA. 425+60.75 -L-	4 INCH SLOPE PROTECTION	* WELDED WIRE FABRIC 60 INCHES WIDE
	SQUARE YARDS	APPROX. L.F.
END BENT 1	373	746
END BENT 2	555	1110

* QUANTITY SHOWN IS BASED ON 5' POURS.

GENERAL NOTES

SLOPE PROTECTION SHALL BE PLACED UNDER THE ENDS OF THE BRIDGE AS SHOWN IN THE DETAILS. THE STRAIGHT EDGING WILL NOT BE REQUIRED UNLESS, IN THE OPINION OF THE ENGINEER, VISUAL INSPECTION INDICATES A NEED FOR IT. MEASUREMENT AND PAYMENT SHALL BE AS PRESCRIBED IN SECTION 462 OF THE STANDARD SPECIFICATIONS. FOR BERM WIDTH, SEE GENERAL DRAWING.

ALTERNATE "A"

ALTERNATE "A" SHALL CONSIST OF 4" POURED-IN-PLACE CONCRETE PAVING AS SHOWN IN THE DETAILS ON THIS SHEET. CONCRETE SHALL BE CLASS "B". THE CONCRETE SURFACE SHALL BE FLOATED WITH A WOODEN FLOAT AND FINISHED. WELDED WIRE FABRIC REINFORCING SHALL BE 6 X 6 - W1.4 X W1.4, 60" WIDE. SLOPE PROTECTION SHALL BE POURED IN 5' STRIPS AS SHOWN IN THE "POURING DETAIL" WITH 2'-0" LONG #4 BARS PLACED ALONG THE SLOPE BETWEEN STRIPS AT 1'-6" MAXIMUM SPACING. SLOPE PROTECTION MAY BE POURED IN ALTERNATE 4' AND 5' STRIPS AS SHOWN IN THE "OPTIONAL POURING DETAIL" WITH ADJACENT RUNS OF WELDED WIRE FABRIC LAPPING AT LEAST 6". THE COST OF THE WELDED WIRE FABRIC AND #4 BARS, IF USED, SHALL BE INCLUDED IN THE CONTRACT UNIT PRICE BID PER SQUARE YARD FOR SLOPE PROTECTION.

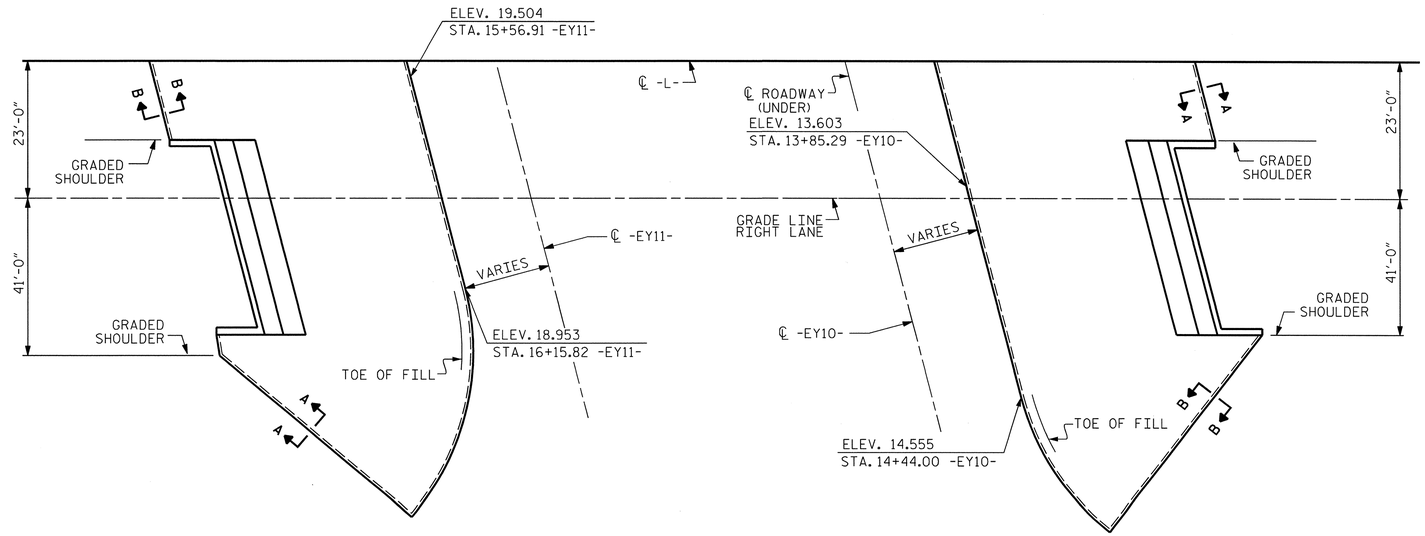

PLAN

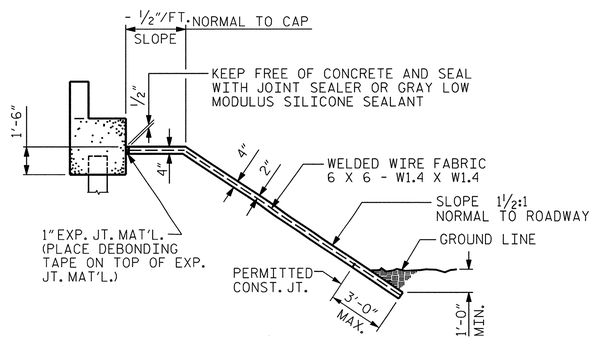

SECTION ALONG ℄ ROADWAY WHEN DITCH IS NOT PROVIDED

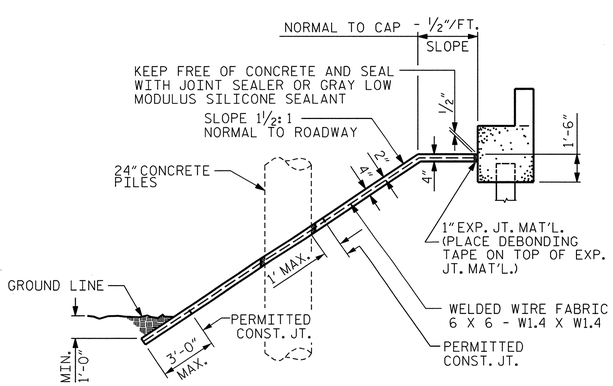

SECTION ALONG ℄ ROADWAY WITH 24" CONCRETE PILES

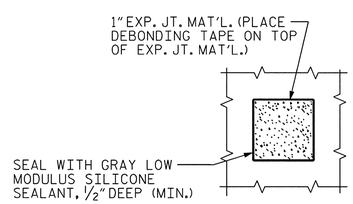

PLAN WHERE CONCRETE SLOPE PROTECTION MUST BE PLACED AROUND A BENT PILE

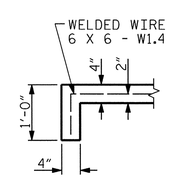

SECTION A-A

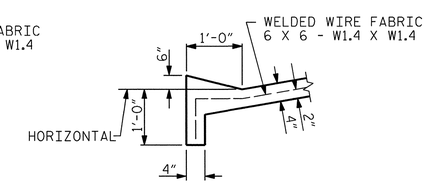

SECTION B-B

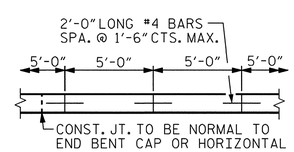

STRIP WIDTHS MAY VARY IN CURVED PORTION.

POURING DETAIL

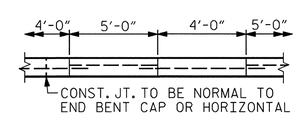

POUR A 4'-0" STRIP FIRST. STRIP WIDTHS MAY VARY IN CURVED PORTION.

OPTIONAL POURING DETAIL

PROJECT NO. R-2633BB

BRUNSWICK/NEW HANOVER COUNTY

STATION: 425+60.75 -L-
16+20.93 -EY11-

STATE OF NORTH CAROLINA
DEPARTMENT OF TRANSPORTATION
RALEIGH

SLOPE PROTECTION DETAILS
RIGHT LANE

NORTH CAROLINA PROFESSIONAL SEAL 14047 ENGINEER STEPHEN D. COOK
11/16/12

THE LOUIS BERGER GROUP, Inc.
1001 Wade Avenue, Suite 400
Raleigh, NC 27605-3322

REVISIONS							
NO.	BY:	DATE:	NO.	BY:	DATE:		
1			3				
2			4				

SHEET NO. S-603
TOTAL SHEETS 700

STD. NO. SP1

ASSEMBLED BY : R. KNIGHT		DATE : JULY 2012	
CHECKED BY : S. COOK		DATE : AUG 2012	
DRAWN BY : ELR 5/92	REV. 5/1/06	TLA/GM	
CHECKED BY : GRP 6/92	REV. 10/1/11	MAA/GM	
	REV. 12/21/11	MAA/GM	

G:\OR Projects\OR1092 - NCDOT Wilm Bypass DualBridges\Structures\Bridge Site 7\R-2633BB_SD_07R_SP01.dgn
11/16/2012 11:52:26 AM 1092_PDF_full.pltcfg 1092_str.tbl

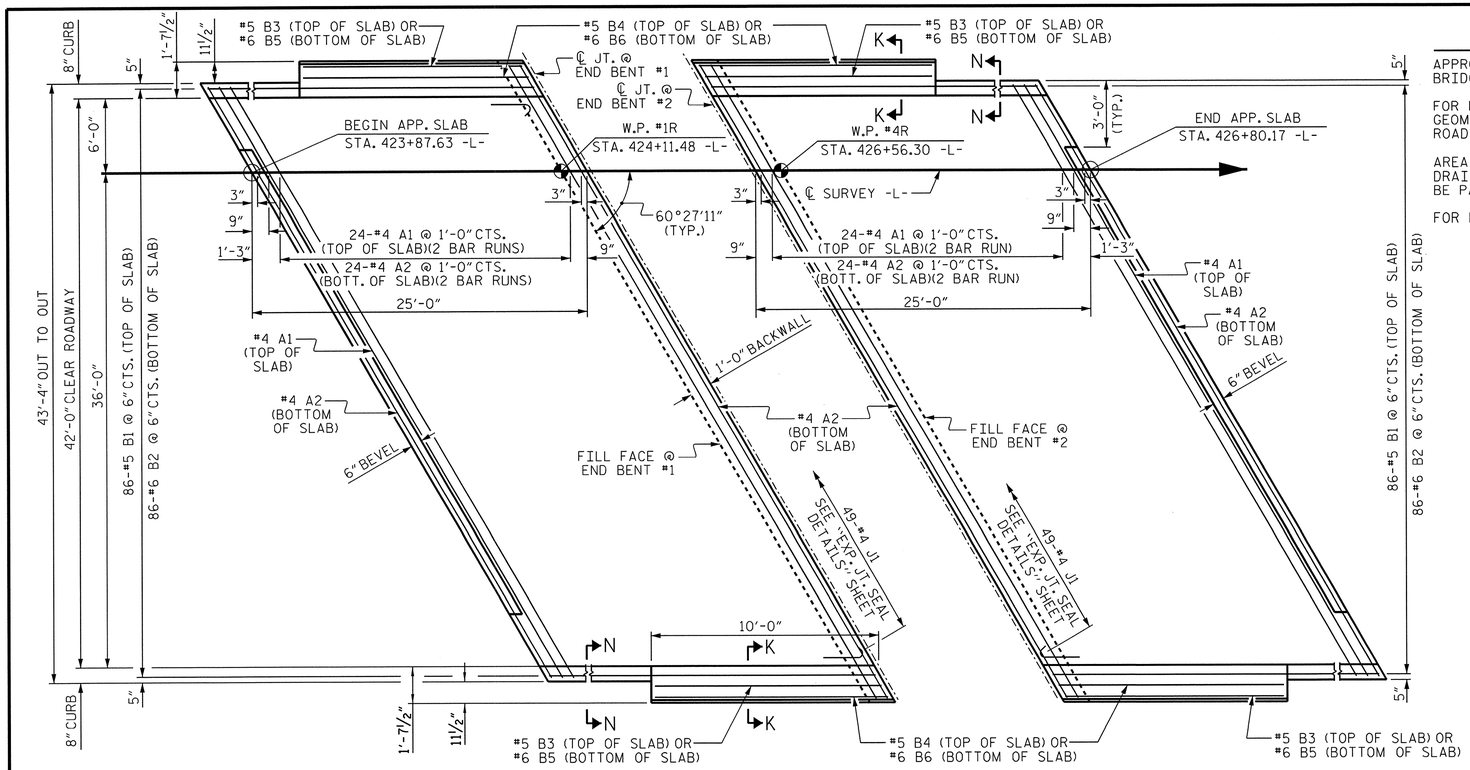

PLAN @ END BENT #1

PLAN @ END BENT #2

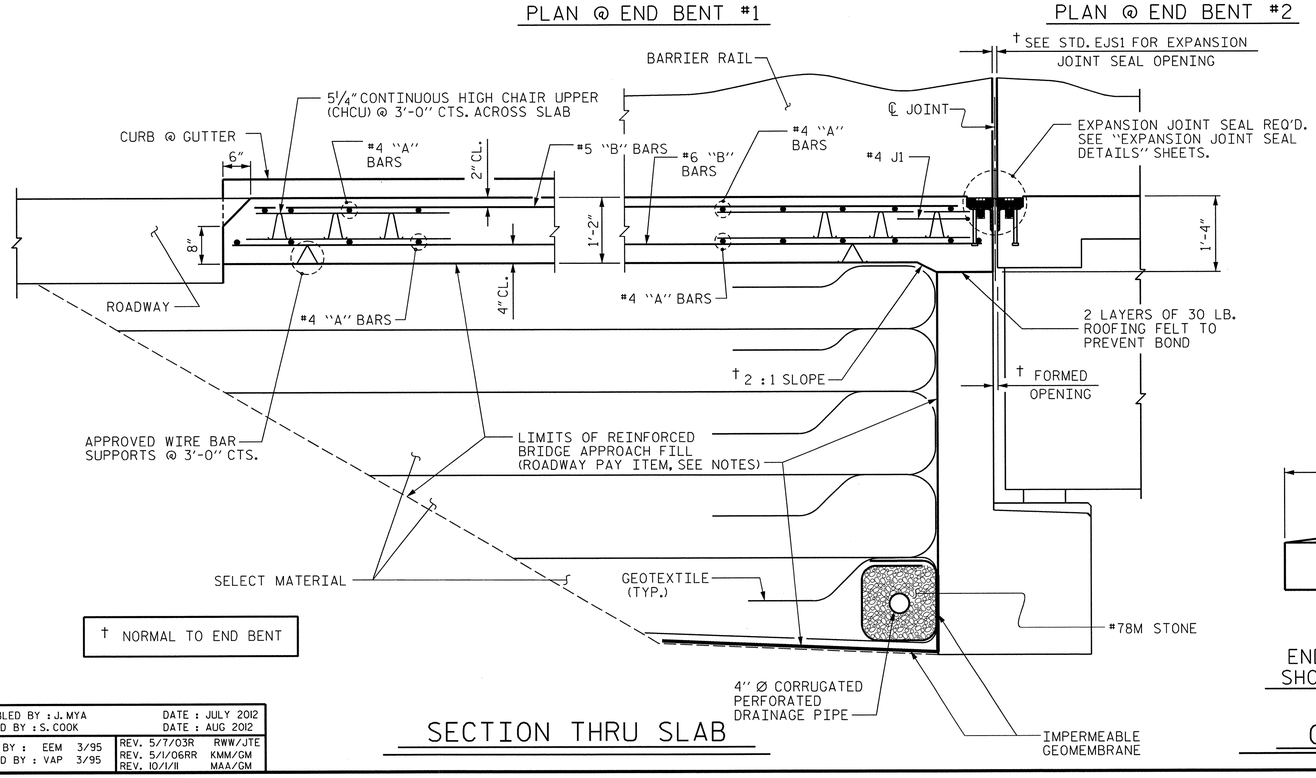

SECTION THRU SLAB

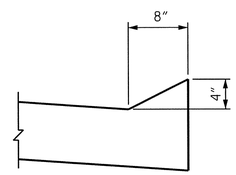

SECTION N-N

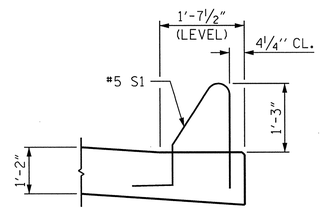

SECTION K-K

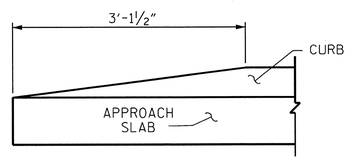

END OF CURB WITHOUT SHOULDER BERM GUTTER

CURB DETAILS

NOTES

APPROACH SLAB SHALL NOT BE CONSTRUCTED PRIOR TO COMPLETION OF THE BRIDGE DECK.

FOR REINFORCED BRIDGE APPROACH FILL INCLUDING GEOTEXTILE, IMPERMEABLE GEOMEMBRANE, 4" Ø DRAINAGE PIPE, #78M STONE, AND SELECT MATERIAL, SEE ROADWAY PLANS.

AREA BETWEEN THE WINGWALL AND APPROACH SLAB SHALL BE GRADED TO DRAIN THE WATER AWAY FROM THE FILL FACE OF THE BRIDGE AND SHALL BE PAVED. SEE ROADWAY PLANS.

FOR EXPANSION JOINT SEALS, SEE SPECIAL PROVISIONS.

BILL OF MATERIAL

APPROACH SLAB AT EB #1

BAR	NO.	SIZE	TYPE	LENGTH	WEIGHT
✱A1	50	#4	STR	28'-10"	963
A2	52	#4	STR	28'-9"	999
✱B1	86	#5	STR	24'-7"	2205
B2	86	#6	STR	24'-7"	3175
✱B3	4	#5	STR	10'-1"	42
B4	4	#5	STR	10'-5"	43
✱B5	4	#6	STR	10'-1"	61
B6	4	#6	STR	10'-5"	63
✱J1	49	#4	1	1'-5"	46

REINFORCING STEEL ✱✱ LBS. 4,280

✱EPOXY COATED REINFORCING STEEL ✱✱ LBS. 3,317

CLASS AA CONCRETE ✱✱ C. Y. 48.0

APPROACH SLAB AT EB #2

BAR	NO.	SIZE	TYPE	LENGTH	WEIGHT
✱A1	50	#4	STR	28'-10"	963
A2	52	#4	STR	28'-9"	999
✱B1	86	#5	STR	24'-7"	2205
B2	86	#6	STR	24'-7"	3175
✱B3	4	#5	STR	10'-1"	42
B4	4	#5	STR	10'-5"	43
✱B5	4	#6	STR	10'-1"	61
B6	4	#6	STR	10'-5"	63
✱J1	49	#4	1	1'-5"	46

REINFORCING STEEL ✱✱ LBS. 4,280

✱EPOXY COATED REINFORCING STEEL ✱✱ LBS. 3,317

CLASS AA CONCRETE ✱✱ C. Y. 48.0

BAR TYPE

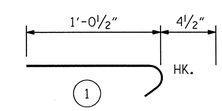

ALL BAR DIMENSIONS ARE OUT TO OUT

✱✱ QUANTITIES FOR BARRIER RAIL ARE NOT INCLUDED. SEE SHEET 2 OF 2.

THE QUANTITY OF #4 J1 BARS ON THE BILL OF MATERIAL IS BASED ON 1'-0" CENTERS. J1 BARS SHALL BE PLACED AT EACH VERTICAL STUD ANCHOR BOLT. IN THE EVENT THAT THE NUMBER OF VERTICAL STUD ANCHORS EXCEEDS THE NUMBER OF J1 BARS SPECIFIED, ADDITIONAL J1 BARS WILL NOT BE REQUIRED.

PROJECT NO. R-2633BB

BRUNSWICK/NEW HANOVER COUNTY

STATION: 425+60.75 -L-
16+20.93 -EY11-

SHEET 1 OF 2

STATE OF NORTH CAROLINA
DEPARTMENT OF TRANSPORTATION
RALEIGH

STANDARD

BRIDGE APPROACH SLAB FOR FLEXIBLE PAVEMENT RIGHT LANE

NORTH CAROLINA PROFESSIONAL SEAL 14047 ENGINEER STEPHEN D. COOK
11/16/12

ASSEMBLED BY : J. MYA	DATE : JULY 2012
CHECKED BY : S. COOK	DATE : AUG 2012
DRAWN BY : EEM 3/95	REV. 5/7/03R RWW/JTE
CHECKED BY : VAP 3/95	REV. 5/1/06RR KMM/GM
	REV. 10/1/11 MAA/GM

THE LOUIS BERGER GROUP, Inc.
1001 Wade Avenue, Suite 400
Raleigh, NC 27605-3322

REVISIONS								SHEET NO.
NO.	BY:	DATE:	NO.	BY:	DATE:			S-604
1			3					TOTAL SHEETS
2			4					700

STD. NO. BAS2

G:\OR Projects\OR1092 - NCDOT Wilm Bypass Dual Bridges\Structures\Bridge Site T\R-2633BB_SD_07R_AS01.dgn
11/16/2012 11:52:29 AM 1092_PDF_full.pltcfg 1092_str.tbl

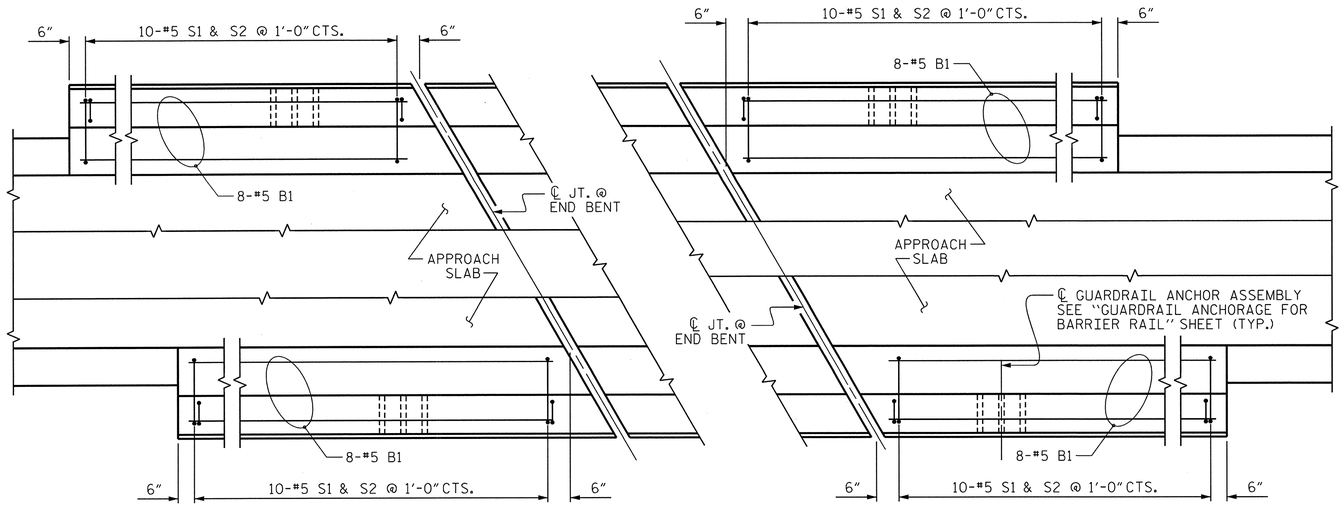

END BENT #1

END BENT #2

PLAN OF BARRIER RAIL

NOTES

THE COST OF THE BARRIER RAIL ON THE APPROACH SLAB SHALL BE INCLUDED IN THE LINEAR FOOT CONTRACT PRICE BID FOR "CONCRETE BARRIER RAIL".

THE BARRIER RAIL ON EACH APPROACH SLAB SHALL NOT BE CAST UNTIL ALL APPROACH SLAB CONCRETE HAS BEEN CAST AND HAS REACHED A MINIMUM COMPRESSIVE STRENGTH OF 3,000 PSI.

ALL REINFORCING STEEL IN BARRIER RAILS SHALL BE EPOXY COATED.

BAR TYPES

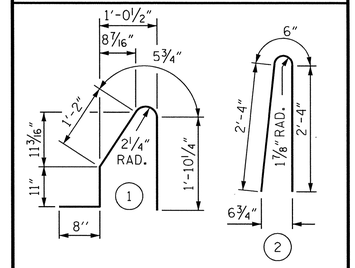

ALL BAR DIMENSIONS ARE OUT TO OUT

BILL OF MATERIAL

BARRIER RAIL ONLY

BAR	NO.	SIZE	TYPE	LENGTH	WEIGHT
✳B1	32	#5	STR	9'-7"	320
✳S1	40	#5	1	5'-1"	212
✳S2	40	#5	2	5'-2"	216
✳EPOXY COATED REINFORCING STEEL				LBS.	748
CLASS AA CONCRETE				C.Y.	4.2
CONCRETE BARRIER RAIL					41.8 LIN. FT.

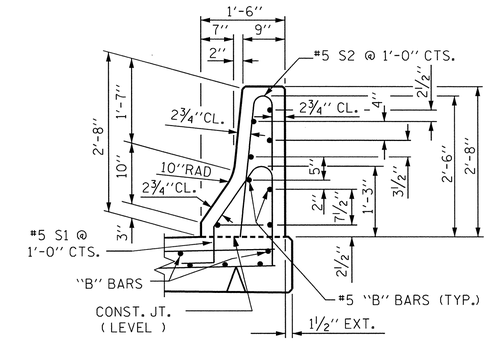

SECTION THRU RAIL

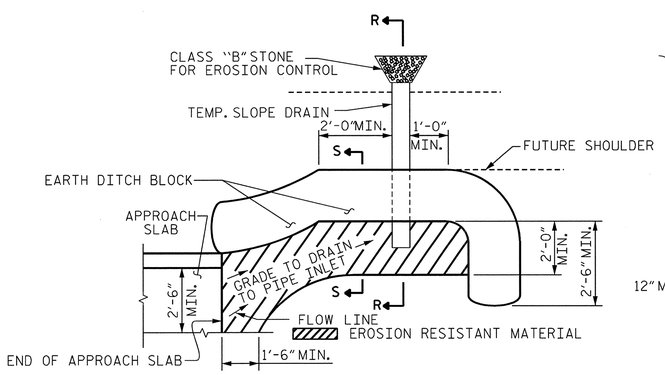

NOTE: IMMEDIATELY AFTER THE CONSTRUCTION OF THE APPROACH SLAB, THE CONTRACTOR SHALL PROVIDE TEMPORARY BERM AND SLOPE DRAIN. CONTRACTOR SHALL GRADE TO PIPE INLET AND PROVIDE EROSION RESISTANT MATERIAL AS SHOWN. THE EROSION RESISTANT MATERIAL SHALL BE EITHER 1) ASPHALT PLANT MIX, TYPE 1 OR TYPE 2, MIN. 2" DEPTH, 2) EROSION CONTROL MAT, OR 3) CONCRETE, AS DIRECTED BY THE ENGINEER. THE SLOPE DRAIN SHALL CONSIST OF A NON-PERFORATED TEMPORARY DRAINAGE PIPE, 12 INCHES IN DIAMETER.

PLAN VIEW

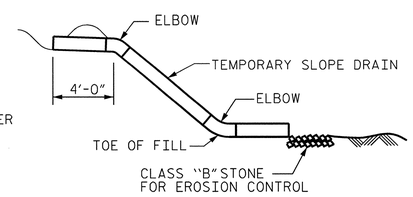

SECTION R-R

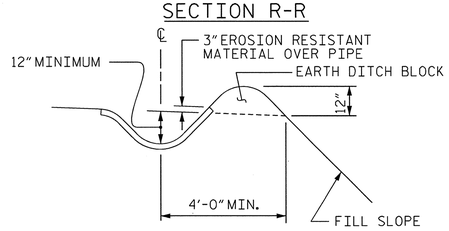

SECTION S-S

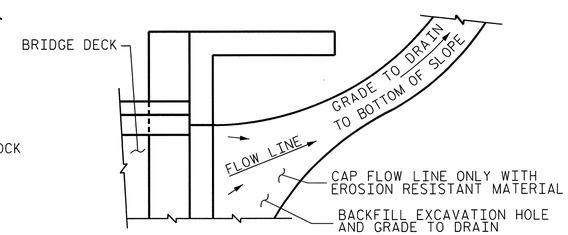

NOTE: IF THE APPROACH SLAB IS NOT CONSTRUCTED IMMEDIATELY AFTER THE BACKFILLING OF THE END BENT EXCAVATION, GRADE TO DRAIN TO THE BOTTOM OF THE SLOPE AND PROVIDE EROSION RESISTANT MATERIAL, SUCH AS FIBERGLASS ROVING OR AS DIRECTED BY THE ENGINEER TO PREVENT SOIL EROSION AND TO PROTECT THE AREA ADJACENT TO THE STRUCTURE. THE CONTRACTOR WILL BE REQUIRED TO REMOVE THESE MATERIALS PRIOR TO CONSTRUCTION OF THE APPROACH SLAB.

TEMPORARY DRAINAGE DETAIL

TEMPORARY BERM AND SLOPE DRAIN DETAILS

(TO BE USED WHEN SHOULDER BERM GUTTER IS REQUIRED)

PROJECT NO. R-2633BB

BRUNSWICK/NEW HANOVER COUNTY

STATION: 425+60.75 -L-

16+20.93 -EY11-

SHEET OF

STATE OF NORTH CAROLINA
DEPARTMENT OF TRANSPORTATION
RALEIGH

STANDARD

BRIDGE APPROACH SLAB DETAILS RIGHT LANE

NORTH CAROLINA PROFESSIONAL SEAL 14047 ENGINEER STEPHEN D. COOK

11/16/12

THE LOUIS BERGER GROUP, Inc.
1001 Wade Avenue, Suite 400
Raleigh, NC 27605-3322

REVISIONS								SHEET NO.
NO.	BY:	DATE:	NO.	BY:	DATE:			S-605
1			3					TOTAL SHEETS
2			4					700

ASSEMBLED BY : R. KNIGHT		DATE : AUG 2012	
CHECKED BY : S. COOK		DATE : AUG 2012	
DRAWN BY : FCJ	11/88	REV. 5/7/03	RWW/JTE
CHECKED BY : ARB	11/88	REV. 5/1/06RRR	MAA/KMM
		REV. 10/1/11	MAA/GM

STD. NO. BAS4 (SHT 3a)

G:\OR Projects\OR1092 - NCDOT Wilm Bypass DualBridges\Structures\Bridge Site 7\R-2633BB_SD_07R_AS02.dgn
11/16/2012 11:52:32 AM 1092_PDF_full.pltcfg 1092_str.tbl

F.A.PROJECT NHS-0017(125)

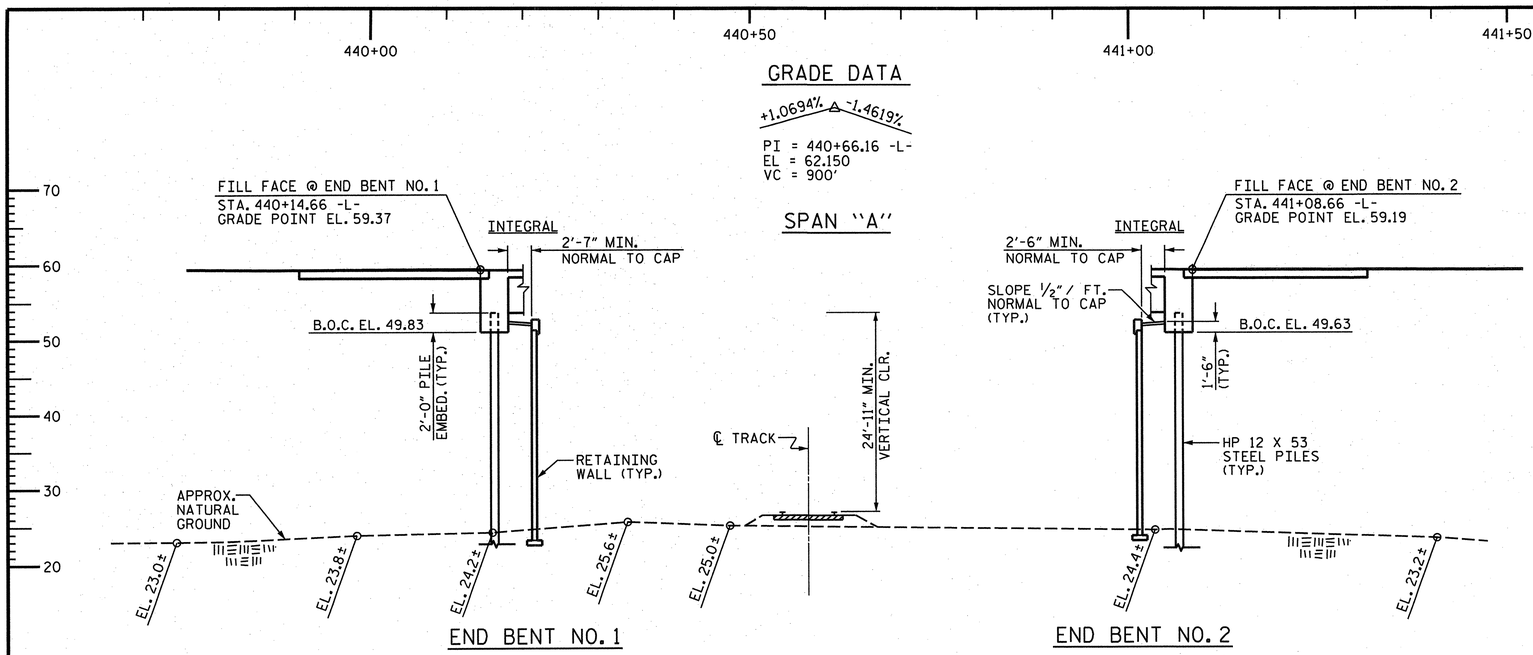

SECTION ALONG GRADE LINE - LEFT LANE

SECTION AT END BENTS ARE @ RIGHT ANGLES

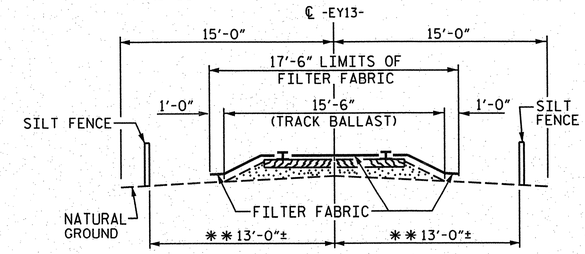

RAILROAD EROSION CONTROL DETAIL

NOTES

RAILROAD EROSION CONTROL MEASURES SHALL BE INSTALLED PRIOR TO PERFORMING ANY WORK IN THE RAILROAD RIGHT-OF-WAY.

ADDITIONAL EROSION CONTROL MEASURES FOR PROTECTION OF RAILROAD DITCHES MAY BE REQUIRED AS DIRECTED BY THE ENGINEER.

NO SEPARATE PAYMENT WILL BE MADE FOR RAILROAD EROSION CONTROL MEASURES.

LIMITS OF SILT FENCE AND FILTER FABRIC PARALLEL TO RAILROAD SHALL EXTEND A MINIMUM OF 25'-0" OUTSIDE EDGE OF SUPERSTRUCTURE OR TOE OF SLOPE ON CONSTRUCTION. A GREATER LENGTH OF SILT FENCE MAY BE REQUIRED IF SO DIRECTED BY THE ENGINEER.

FILTER FABRIC TO BE NAILED TO TIMBER RAIL TIES WITH PRIME SOURCE "GRIP CAP" OR EQUIVALENT. FILTER FABRIC ON SHOULDER TO BE SECURED AS DIRECTED BY THE ENGINEER AND RAILROAD.

THE RAILROAD TRACK TOP OF RAIL ELEVATIONS SHOWN ON THE PLANS ARE FROM THE BEST INFORMATION AVAILABLE. PRIOR TO BEGINNING BRIDGE CONSTRUCTION, VERIFY THE TOP OF RAIL ELEVATIONS AND REPORT ANY VARIATIONS TO THE ENGINEER. ANY PLAN REVISIONS NECESSARY TO ACHEIVE THE REQUIRED MINIMUM VERTICAL CLEARANCE WILL BE PROVIDED BY THE DEPARTMENT.

✱✱ THIS DIMENSION TO BE DETERMINED IN THE FIELD BY THE ENGINEER UPON CONSTULTATION WITH THE RAILROAD.

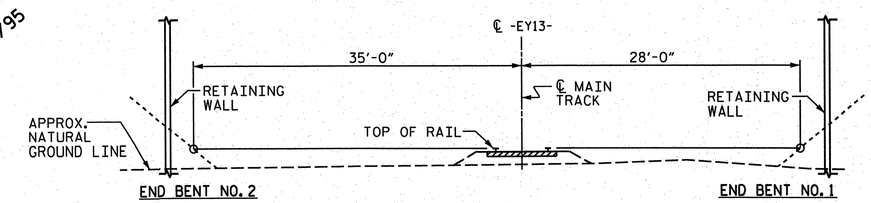

SPAN LENGTH BASED ON THIS SECTION

(LOOKING STATION AHEAD ALONG RAILROAD)

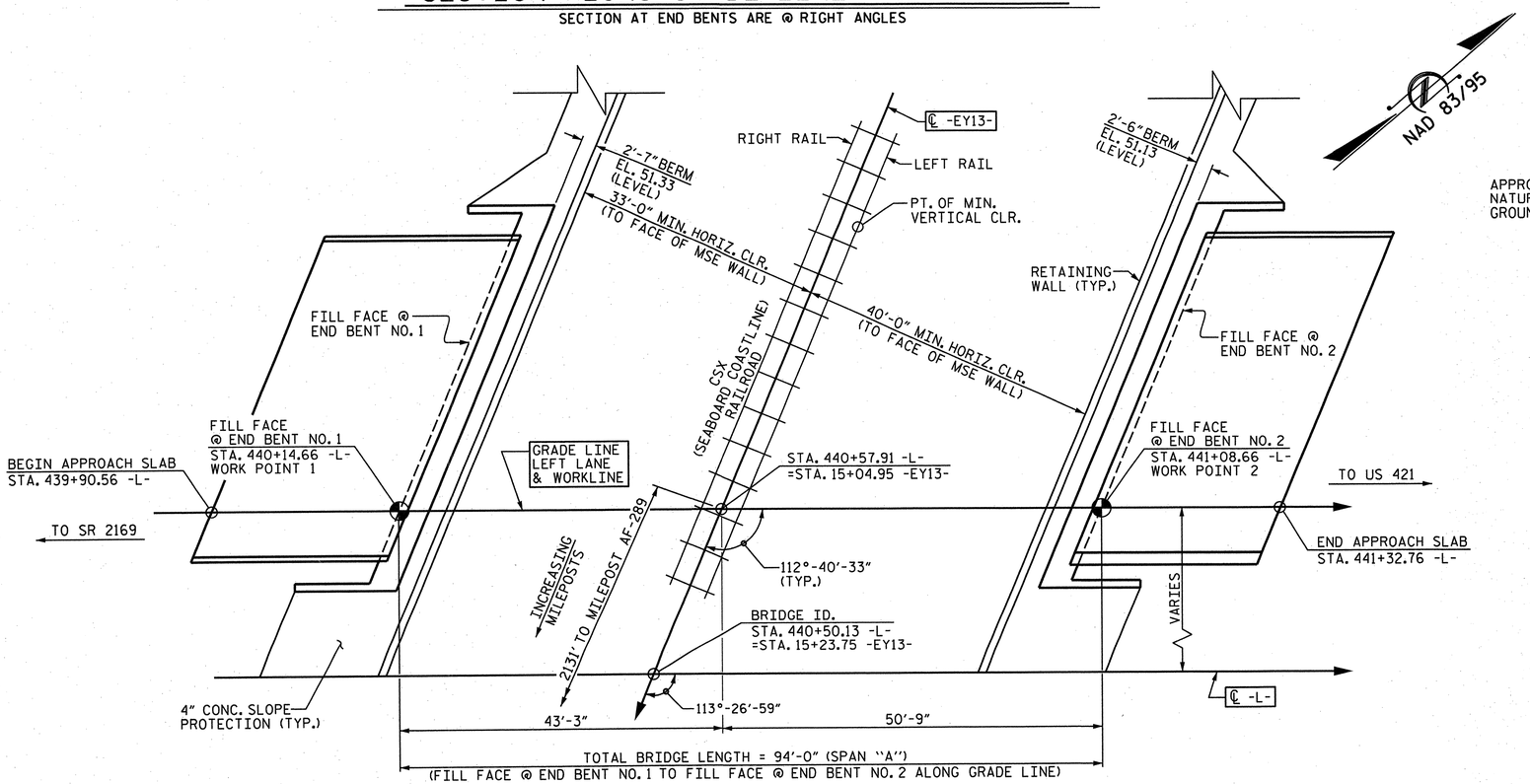

PLAN

PILES NOT SHOWN FOR CLARITY.

TOP OF RAIL ELEVATIONS		
TRACK STATION	LEFT RAIL	RIGHT RAIL
14+00 -EY13-	28.230	28.150
14+50 -EY13-	28.090	28.005
15+00 -EY13-	27.961	27.875
15+50 -EY13-	27.842	27.767
16+00 -EY13-	27.730	27.662

PROJECT NO. R-2633BB

BRUNSWICK/NEW HANOVER COUNTY

STATION: 440+50.13 -L-
=15+23.75 -EY13-

BRIDGE NO. 640196
MILEPOST AF-288.60

SHEET 1 OF 3

STATE OF NORTH CAROLINA
DEPARTMENT OF TRANSPORTATION
RALEIGH

GENERAL DRAWING
FOR BRIDGE OVER CSX SEABOARD COASTLINE R. R. ON US 17 (WILMINGTON BYPASS) BETWEEN SR 2169 AND US 421 LEFT LANE

PLAN PREPARED BY:

ALPHA & OMEGA GROUP
CIVIL & STRUCTURAL ENGINEERS
4601 Lake Boone Trail, Ste. 3C Raleigh, NC 27607
Phone 919 981 0310 Fax 919 981 0451
Firm License No. C-1684 www.aogroup.com
A&O PROJECT NO. 2011.036

NORTH CAROLINA PROFESSIONAL SEAL ENGINEER GLENN ZEBLO 03272A 1-17-13

REFERENCE NO. 7-1

REVISIONS								SHEET NO.
NO.	BY:	DATE:	NO.	BY:	DATE:			S-606
1			3					TOTAL SHEETS
2			4					700

STRUCTURE NO. 7

DRAWN BY :	JR FISHER	DATE :	11/12
CHECKED BY :	HM SWANSON / TGZ	DATE :	11/12
QC / QA BY :	TL BARTELT	DATE :	11/12

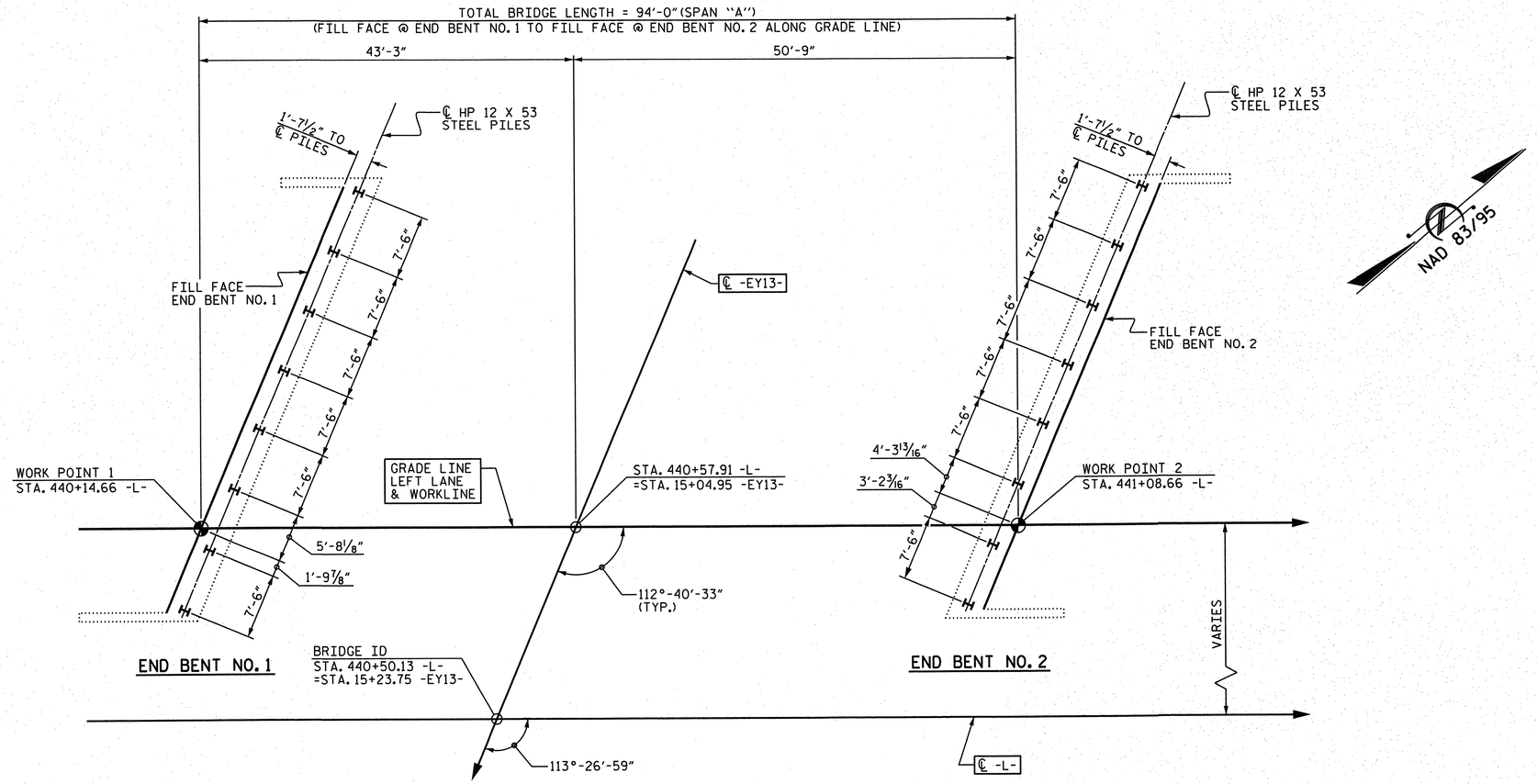

FOUNDATION LAYOUT

DIMENSIONS LOCATING PILES ARE SHOWN TO THE PILE CENTERLINE AT THE BOTTOM OF THE CAP.

NOTES

PILES AT END BENT NO.1 AND NO.2 ARE DESIGNED FOR A FACTORED RESISTANCE OF 120 TONS PER PILE.

DRIVE PILES AT END BENT NO.1 AND NO.2 TO A REQUIRED DRIVING RESISTANCE OF 200 TONS PER PILE.

FOR PILES, SEE SECTION 450 OF THE STANDARD SPECIFICATIONS.

TESTING PILES WITH THE PDA DURING DRIVING, RESTRIKING, OR REDRIVING MAY BE REQUIRED. THE ENGINEER WILL DETERMINE THE NEED FOR PDA TESTING. FOR PDA TESTING, SEE SECTION 450 OF THE STANDARD SPECIFICATIONS.

IT HAS BEEN ESTIMATED THAT A HAMMER WITH AN EQUIVALENT RATED ENERGY IN THE RANGE OF 45-75 FT-KIPS PER BLOW WILL BE REQUIRED TO DRIVE PILES AT END BENT NO.1 AND END BENT NO.2. THIS ESTIMATED ENERGY RANGE DOES NOT RELEASE THE CONTRACTOR FROM PROVIDING DRIVING EQUIPMENT IN ACCORDANCE WITH THE PILES PROVISION.

DRIVE END BENT PILES BEFORE CONSTRUCTING THE MSE WALLS.

PROJECT NO. R-2633BB
BRUNSWICK/NEW HANOVER COUNTY
STATION: 440+50.13 -L-
SHEET 2 OF 3

STATE OF NORTH CAROLINA
DEPARTMENT OF TRANSPORTATION
RALEIGH

GENERAL DRAWING
FOR BRIDGE OVER CSX SEABOARD COASTLINE R.R. ON US 17 (WILMINGTON BYPASS) BETWEEN SR 2169 AND US 421 LEFT LANE

REVISIONS						SHEET NO.
NO.	BY:	DATE:	NO.	BY:	DATE:	S-607
1			3			TOTAL SHEETS
2			4			700

STRUCTURE NO. 7

PLAN PREPARED BY:
ALPHA & OMEGA GROUP
CIVIL & STRUCTURAL ENGINEERS
4601 Lake Boone Trail, Ste. 3C Raleigh, NC 27607
Phone 919 981 0310 Fax 919 981 0451
Firm License No. C-1684 www.aogroup.com
A&O PROJECT NO. 2011.036

NORTH CAROLINA PROFESSIONAL SEAL 032724 ENGINEER GLENN ZEHLO
1-17-13

REFERENCE NO. 7-2

DRAWN BY :	JR FISHER	DATE :	11/12
CHECKED BY :	HM SWANSON / TGZ	DATE :	11/12
QC / QA BY :	TL BARTELT	DATE :	11/12

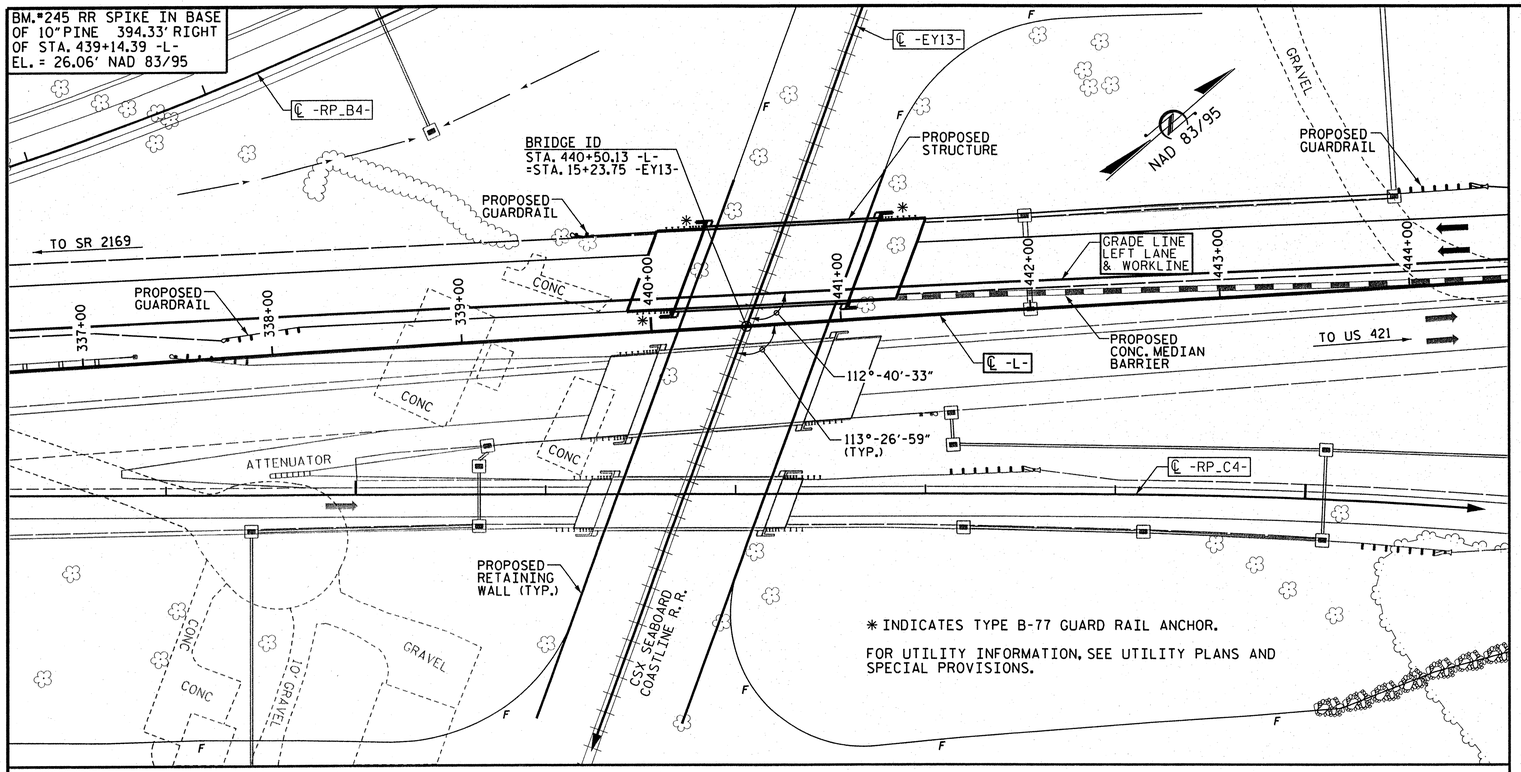

LOCATION SKETCH

NOTES

ASSUMED LIVE LOAD = HL-93 OR ALTERNATE LOADING.

THIS BRIDGE HAS BEEN DESIGNED IN ACCORDANCE WITH REQUIREMENTS OF AASHTO LRFD BRIDGE DESIGN SPECIFICATIONS.

FOR SUBMITTAL OF WORKING DRAWINGS, SEE SPECIAL PROVISIONS.

FOR FALSEWORK AND FORMWORK, SEE SPECIAL PROVISIONS.

FOR CRANE SAFETY, SEE SPECIAL PROVISIONS.

FOR GROUT FOR STRUCTURES, SEE SPECIAL PROVISIONS.

FOR OTHER DESIGN DATA AND GENERAL NOTES, SEE SHEET SN.

FOR EROSION CONTROL MEASURES, SEE EROSION CONTROL PLANS.

THIS BRIDGE IS LOCATED IN SEISMIC ZONE 1.

THE CONTRACTOR SHALL PROVIDE INDEPENDENT ASSURANCE SAMPLES OF REINFORCING STEEL AS FOLLOWS: FOR PROJECTS REQUIRING UP TO 400 TONS OF REINFORCING STEEL, ONE 30 INCH SAMPLE OF EACH SIZE BAR USED, AND FOR PROJECTS REQUIRING OVER 400 TONS OF REINFORCING STEEL, TWO 30 INCH SAMPLES OF EACH SIZE BAR USED. THE BARS FROM WHICH THE SAMPLES ARE TAKEN MUST THEN BE SPLICED WITH REPLACEMENT BARS OF THE SIZE AND LENGTH OF THE SAMPLE, PLUS A MINIMUM LAP SPLICE OF THIRTY BAR DIAMETERS. PAYMENT FOR THE SAMPLES OF REINFORCING STEEL SHALL BE CONSIDERED INCIDENTAL TO VARIOUS PAY ITEMS.

REMOVABLE FORMS MAY BE USED IN LIEU OF METAL STAY-IN-PLACE FORMS IN ACCORDANCE WITH ARTICLE 420-3 OF THE STANDARD SPECIFICATIONS.

NEEDLE BEAMS WILL NOT BE ALLOWED UNLESS OTHERWISE CALLED FOR ON THE PLANS OR APPROVED BY THE ENGINEER.

FOR PLACING LOAD ON STRUCTURE MEMBERS, SEE SPECIAL PROVISIONS.

TOTAL BILL OF MATERIAL

	PDA TESTING	REINFORCED CONCRETE DECK SLAB	GROOVING BRIDGE FLOORS	CLASS A CONCRETE	BRIDGE APPROACH SLABS	REINFORCING STEEL	54" PRESTRESSED CONCRETE GIRDER		HP 12 X 53 STEEL PILES		PILE REDRIVES	CONCRETE BARRIER RAIL	72" CHAIN LINK FENCE	4" SLOPE PROTECTION	ELASTOMERIC BEARINGS
	EACH	SQ. FT.	SQ. FT.	CU. YDS.	LUMP SUM	LBS.	NO.	LIN. FEET	NO.	LIN. FT.	EACH	LIN. FT.	LN. FT.	SQ. YDS.	LUMP SUM
SUPERSTRUCTURE	-	4254	5461	-	-	-	5	455.42	-	-	-	210.0	177.36	-	LUMP SUM
END BENT NO. 1	-	-	-	26.4	-	3421	-	-	8	640	4	-	-	53	-
END BENT NO. 2	-	-	-	26.5	-	3413	-	-	8	640	4	-	-	48	-
TOTAL	1	4254	5461	52.9	LUMP SUM	6834	5	455.42	16	1280	8	210.0	177.36	101	LUMP SUM

PROJECT NO. R-2633BB
BRUNSWICK/NEW HANOVER COUNTY
STATION: 440+50.13 -L-
SHEET 3 OF 3

STATE OF NORTH CAROLINA
DEPARTMENT OF TRANSPORTATION
RALEIGH

GENERAL DRAWING
FOR BRIDGE OVER CSX SEABOARD COASTLINE R.R. ON US 17 (WILMINGTON BYPASS) BETWEEN SR 2169 AND US 421 LEFT LANE

REVISIONS						SHEET NO.
NO.	BY:	DATE:	NO.	BY:	DATE:	8-L08
1			3			TOTAL SHEETS
2			4			700

STRUCTURE NO. 7

PLAN PREPARED BY:
ALPHA & OMEGA GROUP
CIVIL & STRUCTURAL ENGINEERS
4601 Lake Boone Trail, Ste. 3C Raleigh, NC 27607
Phone 919 981 0310 Fax 919 981 0451
Firm License No. C-1684 www.aogroup.com
A&O PROJECT NO. 2011.036

NORTH CAROLINA PROFESSIONAL SEAL 032724 ENGINEER GLENN ZEBLO
4-1-13

REFERENCE NO. 7-3

DRAWN BY : JR FISHER DATE : 11/12
CHECKED BY : HM SWANSON / TGZ DATE : 11/12
QC / QA BY : TL BARTELT DATE : 11/12

LOAD AND RESISTANCE FACTOR RATING (LRFD) SUMMARY FOR PRESTRESSED CONCRETE GIRDERS

LEVEL		VEHICLE	WEIGHT (W) (TONS)	CONTROLLING LOAD RATING (#)	MINIMUM RATING FACTORS (RF)	TONS = W x RF	STRENGTH I LIMIT STATE											SERVICE III LIMIT STATE						COMMENT NUMBER
								MOMENT					SHEAR						MOMENT					
							LIVE-LOAD FACTORS (γ_{LL})	DISTRIBUTION FACTORS (DF)	RATING FACTOR	SPAN	GIRDER LOCATION	DISTANCE FROM LEFT END OF SPAN (ft)	DISTRIBUTION FACTORS (DF)	RATING FACTOR	SPAN	GIRDER LOCATION	DISTANCE FROM LEFT END OF SPAN (ft)	LIVE-LOAD FACTORS (γ_{LL})	DISTRIBUTION FACTORS (DF)	RATING FACTOR	SPAN	GIRDER LOCATION	DISTANCE FROM LEFT END OF SPAN (ft)	
DESIGN LOAD RATING		HL-93 (INVENTORY)	N/A	1	1.07	--	1.75	0.817	1.33	A	E	44.8	0.999	1.48	A	I	0.0	0.80	0.770	1.07	A	I	44.8	
		HL-93 (OPERATING)	N/A		1.73	--	1.35	0.817	1.73	A	E	44.8	0.999	1.92	A	I	0.0	N/A	0.770	--	--	--	--	
		HS-20 (INVENTORY)	36.000	2	1.46	52.56	1.75	0.817	1.82	A	E	44.8	0.999	1.98	A	I	0.0	0.80	0.770	1.46	A	I	44.8	
		HS-20 (OPERATING)	36.000		2.35	84.60	1.35	0.817	2.35	A	E	44.8	0.999	2.56	A	I	0.0	N/A	0.770	--	--	--	--	
LEGAL LOAD RATING	SINGLE VEHICLE (SV)	SH	12.500		3.72	46.50	1.40	0.817	5.77	A	E	44.8	0.999	6.58	A	I	0.0	0.80	0.770	3.72	A	I	44.8	
		S3C	21.500		2.17	46.66	1.40	0.817	3.37	A	E	44.8	0.999	3.86	A	I	0.0	0.80	0.770	2.17	A	I	44.8	
		S3A	22.750		2.06	46.87	1.40	0.817	3.19	A	E	44.8	0.999	3.66	A	I	0.0	0.80	0.770	2.06	A	I	44.8	
		S4A	26.750		1.81	48.42	1.40	0.817	2.81	A	E	44.8	0.999	3.18	A	I	0.0	0.80	0.770	1.81	A	I	44.8	
		S5A	30.500		1.60	48.80	1.40	0.817	2.48	A	E	44.8	0.999	2.89	A	I	0.0	0.80	0.770	1.60	A	I	44.8	
		S6A	34.500		1.45	50.03	1.40	0.817	2.25	A	E	44.8	0.999	2.60	A	I	0.0	0.80	0.770	1.45	A	I	44.8	
		S7B	38.500		1.32	50.82	1.40	0.817	2.04	A	E	44.8	0.999	2.41	A	I	0.0	0.80	0.770	1.32	A	I	44.8	
		S7A	40.000	3	1.30	52.00	1.40	0.817	2.02	A	E	44.8	0.999	2.44	A	I	0.0	0.80	0.770	1.30	A	I	44.8	
	TRUCK TRACTOR SEMI-TRAILER (TTST)	T4A	28.250		1.78	50.29	1.40	0.817	2.76	A	E	44.8	0.999	3.07	A	I	0.0	0.80	0.770	1.78	A	I	44.8	
		T5B	32.000		1.57	50.24	1.40	0.817	2.43	A	E	44.8	0.999	2.88	A	I	0.0	0.80	0.770	1.57	A	I	44.8	
		T6A	36.000		1.43	51.48	1.40	0.817	2.22	A	E	44.8	0.999	2.63	A	I	0.0	0.80	0.770	1.43	A	I	44.8	
		T7A	40.000		1.33	53.20	1.40	0.817	2.06	A	E	44.8	0.999	2.43	A	I	0.0	0.80	0.770	1.33	A	I	44.8	
		T7B	40.000		1.41	56.40	1.40	0.817	2.19	A	E	44.8	0.999	2.27	A	I	0.0	0.80	0.770	1.41	A	I	44.8	

LOAD FACTORS:

DESIGN LOAD RATING FACTORS	LIMIT STATE	γ_{DC}	γ_{DW}
	STRENGTH I	1.25	1.50
	SERVICE III	1.00	1.00

NOTES:

MINIMUM RATING FACTORS ARE BASED ON THE STRENGTH I AND SERVICE III LIMIT STATES.

ALLOWABLE STRESSES FOR SERVICE III LIMIT STATE ARE AS REQUIRED FOR DESIGN.

COMMENTS:

1.
2.
3.
4.

(#) CONTROLLING LOAD RATING

1. DESIGN LOAD RATING (HL-93)
2. DESIGN LOAD RATING (HS-20)
3. LEGAL LOAD RATING **

** SEE CHART FOR VEHICLE TYPE

GIRDER LOCATION

I - INTERIOR GIRDER
EL - EXTERIOR LEFT GIRDER
ER - EXTERIOR RIGHTGIRDER

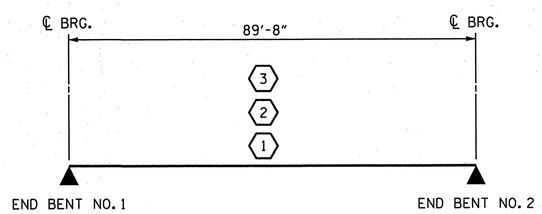

LRFR SUMMARY

PROJECT NO. R-2633BB
BRUNSWICK/NEW HANOVER COUNTY
STATION: 440+50.13 -L-

STATE OF NORTH CAROLINA
DEPARTMENT OF TRANSPORTATION
RALEIGH

STANDARD
LRFR SUMMARY FOR PRESTRESSED CONCRETE GIRDERS
(INTERSTATE TRAFFIC)
LEFT LANE

REVISIONS						SHEET NO.
NO.	BY:	DATE:	NO.	BY:	DATE:	S-609
1			3			TOTAL SHEETS
2			4			700

STRUCTURE NO. 7

STD. NO. LRFR2

PLAN PREPARED BY:

ALPHA & OMEGA GROUP
CIVIL & STRUCTURAL ENGINEERS
4601 Lake Boone Trail, Ste. 3C Raleigh, NC 27607
Phone 919 981 0310 Fax 919 981 0451
Firm License No. C-1684 www.aogroup.com
A&O PROJECT NO. 2011.036

NORTH CAROLINA PROFESSIONAL SEAL 032724 ENGINEER T. GLENN ZEBLO 1-17-12

REFERENCE NO. 7-4

DRAWN BY :	JR FISHER	DATE :	11/12
CHECKED BY :	HM SWANSON / TGZ	DATE :	11/12
QC / QA BY :	TL BARTELT	DATE :	11/12

DRAWN BY : MAA 1/08	REV. 11/12/08RR	MAA/GM	
CHECKED BY : GM/DI 2/08	REV. 10/1/11	MAA/GM	

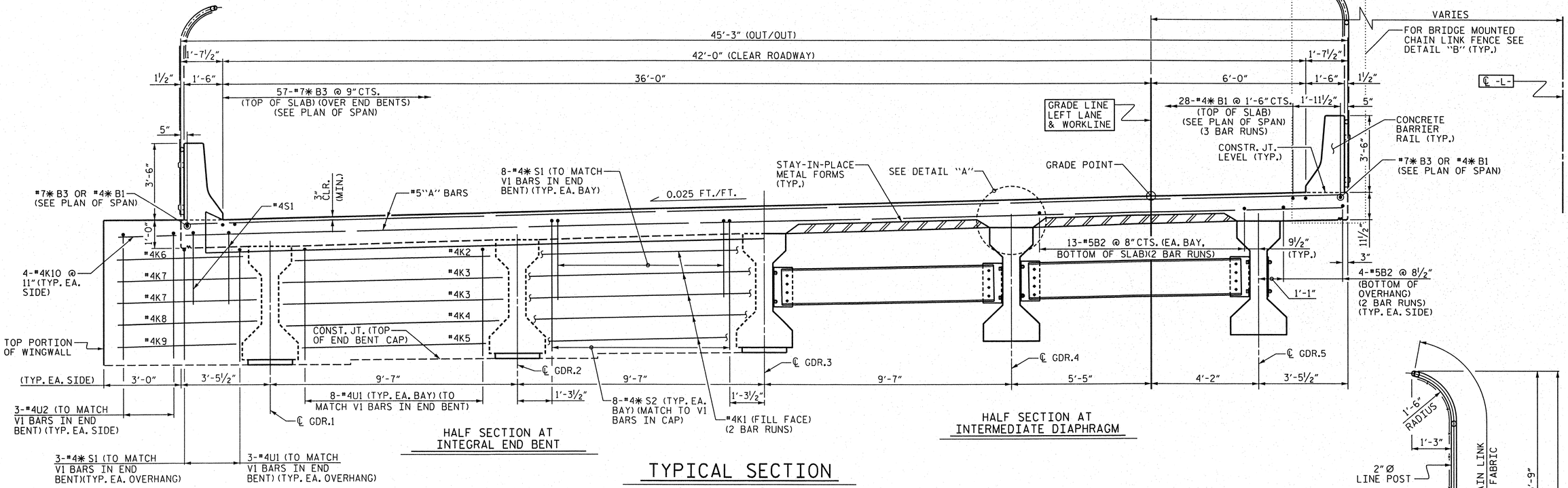

TYPICAL SECTION

DETAIL "B"

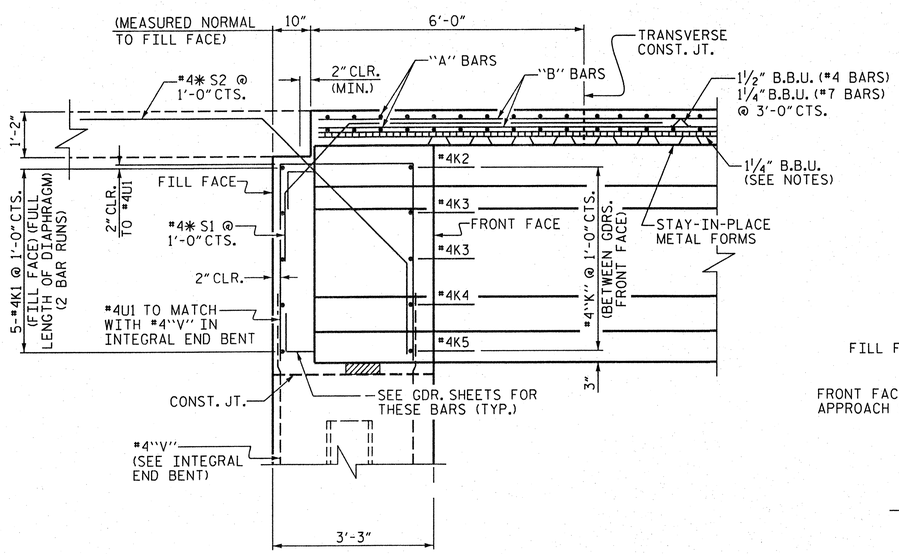

SECTION "A-A"

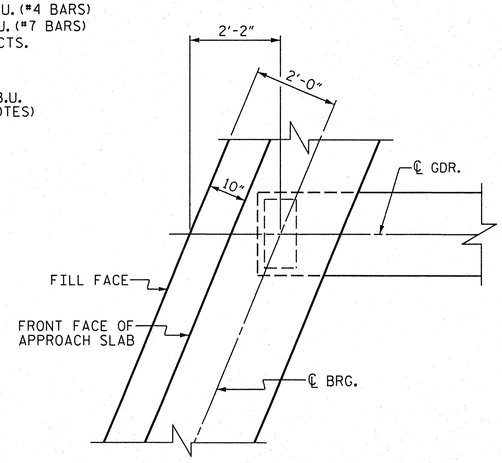

PLAN OF GIRDER AT INTEGRAL END BENT

NOTES

PROVIDE 1¼" HIGH BEAM BOLSTERS UPPER @ 4'-0" CTS. ATOP THE METAL STAY-IN-PLACE FORMS TO SUPPORT THE BOTTOM MAT OF "A" BARS WHEN USING REMOVABLE FORMS, PROVIDE CONTINUOUS HIGH CHAIRS FOR METAL DECK (C.H.C.M.) AT 4'-0" CTS. WITH A HEIGHT TO SUPPORT THE BOTTOM MAT OF "A" BARS A CLEAR DISTANCE OF 2½" ABOVE THE TOP OF THE REMOVABLE FORM.

LONGITUDINAL STEEL MAY BE SHIFTED SLIGHTLY, AS NECESSARY, TO AVOID INTERFERENCE WITH STIRRUPS IN PRESTRESSED CONCRETE GIRDERS.

SEE "SECTION THRU RAIL" ON SHEET 7-12 FOR DRIP GROOVES AND BEAM BOLSTERS IN OVERHANG.

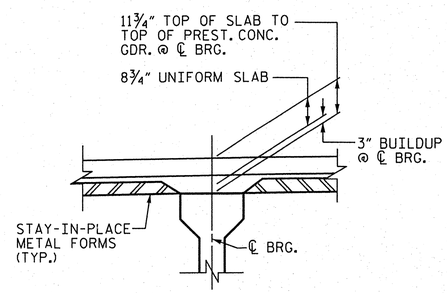

DETAIL "A"

PROJECT NO. R-2633BB

BRUNSWICK/NEW HANOVER COUNTY

STATION: 440+50.13 -L-

STATE OF NORTH CAROLINA
DEPARTMENT OF TRANSPORTATION
RALEIGH

SUPERSTRUCTURE TYPICAL SECTION
LEFT LANE

PLAN PREPARED BY:

ALPHA & OMEGA GROUP
CIVIL & STRUCTURAL ENGINEERS
4601 Lake Boone Trail, Ste. 3C Raleigh, NC 27607
Phone 919 981 0310 Fax 919 981 0451
Firm License No. C-1684 www.aogroup.com
A&O PROJECT NO. 2011.036

NORTH CAROLINA PROFESSIONAL SEAL 032724 ENGINEER GLENN ZERILLO 4-1-13

REFERENCE NO. 7-5

REVISIONS						SHEET NO.
NO.	BY:	DATE:	NO.	BY:	DATE:	8-610
1			3			TOTAL SHEETS
2			4			700

STRUCTURE NO. 7

DRAWN BY :	JR FISHER	DATE :	11/12
CHECKED BY :	HM SWANSON / TGZ	DATE :	11/12
QC / QA BY :	TL BARTELT	DATE :	11/12

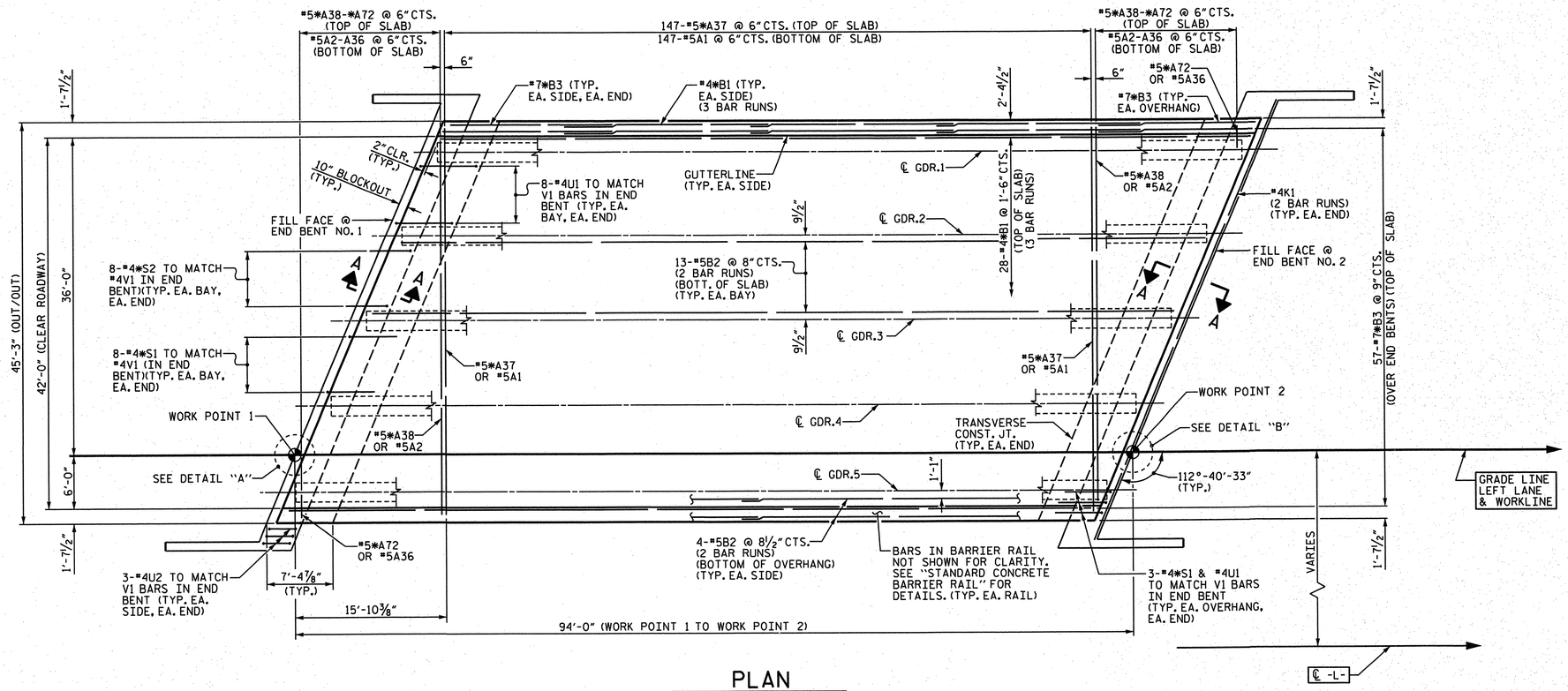

PLAN

SEE PLAN OF SPAN DETAILS SHEET FOR ADDITIONAL REINFORCING STEEL IN WINGS

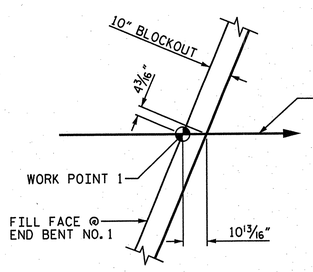

DETAIL "A"

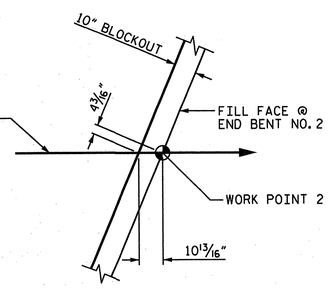

DETAIL "B"

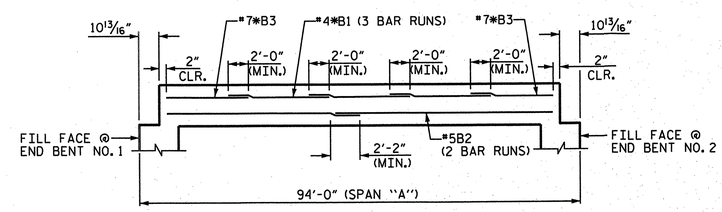

SCHEMATIC DIAGRAM OF SPAN "A"

PROJECT NO. R-2633BB
BRUNSWICK/NEW HANOVER COUNTY
STATION: 440+50.13 -L-

STATE OF NORTH CAROLINA
DEPARTMENT OF TRANSPORTATION
RALEIGH

SUPERSTRUCTURE PLAN OF SPAN "A" LEFT LANE

PLAN PREPARED BY:

ALPHA & OMEGA GROUP
CIVIL & STRUCTURAL ENGINEERS
4601 Lake Boone Trail, Ste. 3C Raleigh, NC 27607
Phone 919 981 0310 Fax 919 981 0451
Firm License No. C-1684 www.aogroup.com
A&O PROJECT NO. 2011.036

NORTH CAROLINA PROFESSIONAL SEAL 030724 ENGINEER T. GLENN ZEBLO 1-17-13

REFERENCE NO. 7-6

REVISIONS						SHEET NO.
NO.	BY:	DATE:	NO.	BY:	DATE:	S-61
1			3			TOTAL SHEETS
2			4			100

STRUCTURE NO. 7

DRAWN BY :	JR FISHER	DATE :	11/12
CHECKED BY :	HM SWANSON / TGZ	DATE :	11/12
QC / QA BY :	TL BARTELT	DATE :	11/12

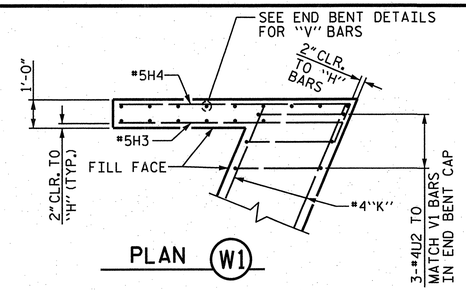

PLAN (W1)

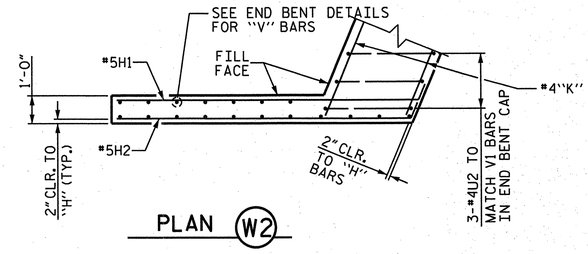

PLAN (W2)

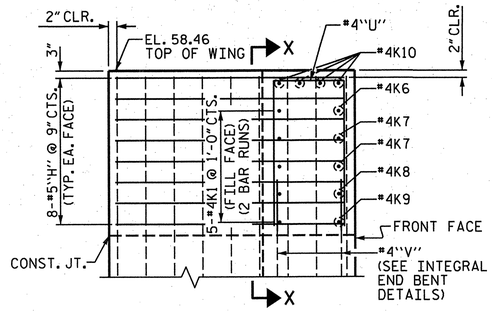

ELEVATION (W1)

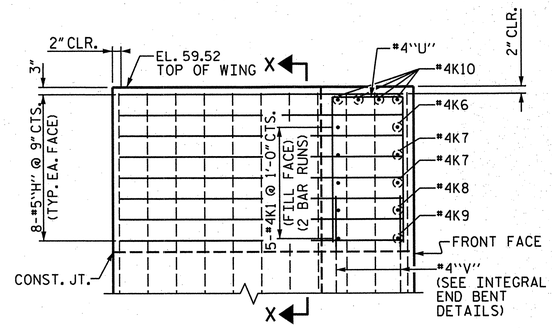

ELEVATION (W2)

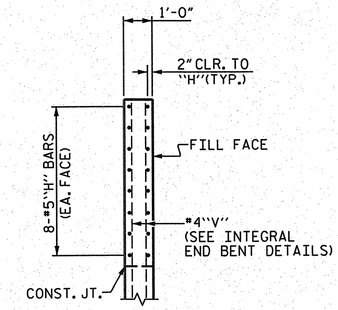

SECTION "X-X"

END BENT NO. 1

(FOR WING DIMENSIONS SEE SUBSTRUCUTRE END BENT NO. 1)

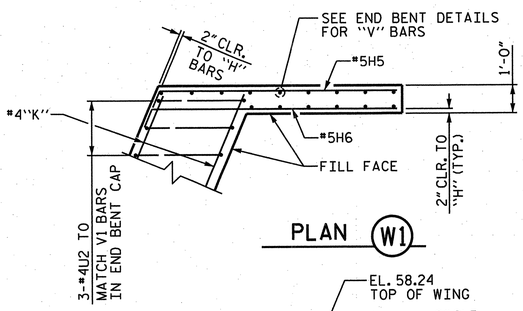

PLAN (W1)

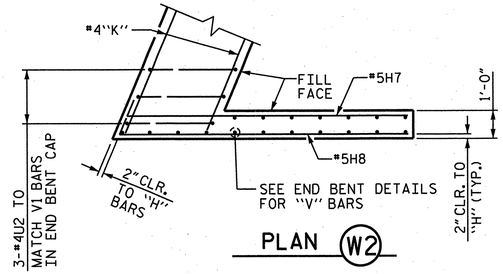

PLAN (W2)

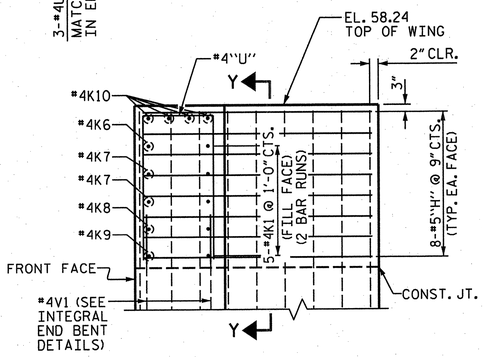

ELEVATION (W1)

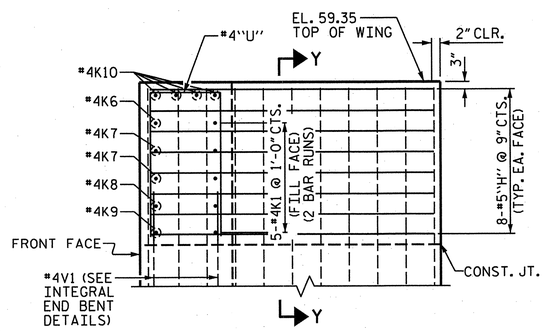

ELEVATION (W2)

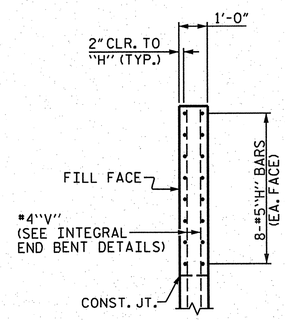

SECTION "Y-Y"

END BENT NO. 2

(FOR WING DIMENSIONS SEE SUBSTRUCUTRE END BENT NO. 2)

PROJECT NO. R-2633BB
BRUNSWICK/NEW HANOVER COUNTY
STATION: 440+50.13 -L-

STATE OF NORTH CAROLINA
DEPARTMENT OF TRANSPORTATION
RALEIGH

SUPERSTRUCTURE
PLAN OF SPAN DETAILS
TOP OF WINGS
END BENT NO. 1 &
END BENT NO. 2
LEFT LANE

PLAN PREPARED BY:

ALPHA & OMEGA GROUP
CIVIL & STRUCTURAL ENGINEERS
4601 Lake Boone Trail, Ste. 3C Raleigh, NC 27607
Phone 919 981 0310 Fax 919 981 0451
Firm License No. C-1684 www.aogroup.com
A&O PROJECT NO. 2011.036

NORTH CAROLINA PROFESSIONAL SEAL 032724 ENGINEER GLENN ZEBLO
T. Glenn Zeblo
1-17-13

REFERENCE NO. 7-7

REVISIONS						SHEET NO.
NO.	BY:	DATE:	NO.	BY:	DATE:	S-612
1			3			TOTAL SHEETS
2			4			700

STRUCTURE NO. 7

DRAWN BY :	JR FISHER	DATE :	11/12
CHECKED BY :	HM SWANSON / TGZ	DATE :	11/12
QC / QA BY :	TL BARTELT	DATE :	11/12

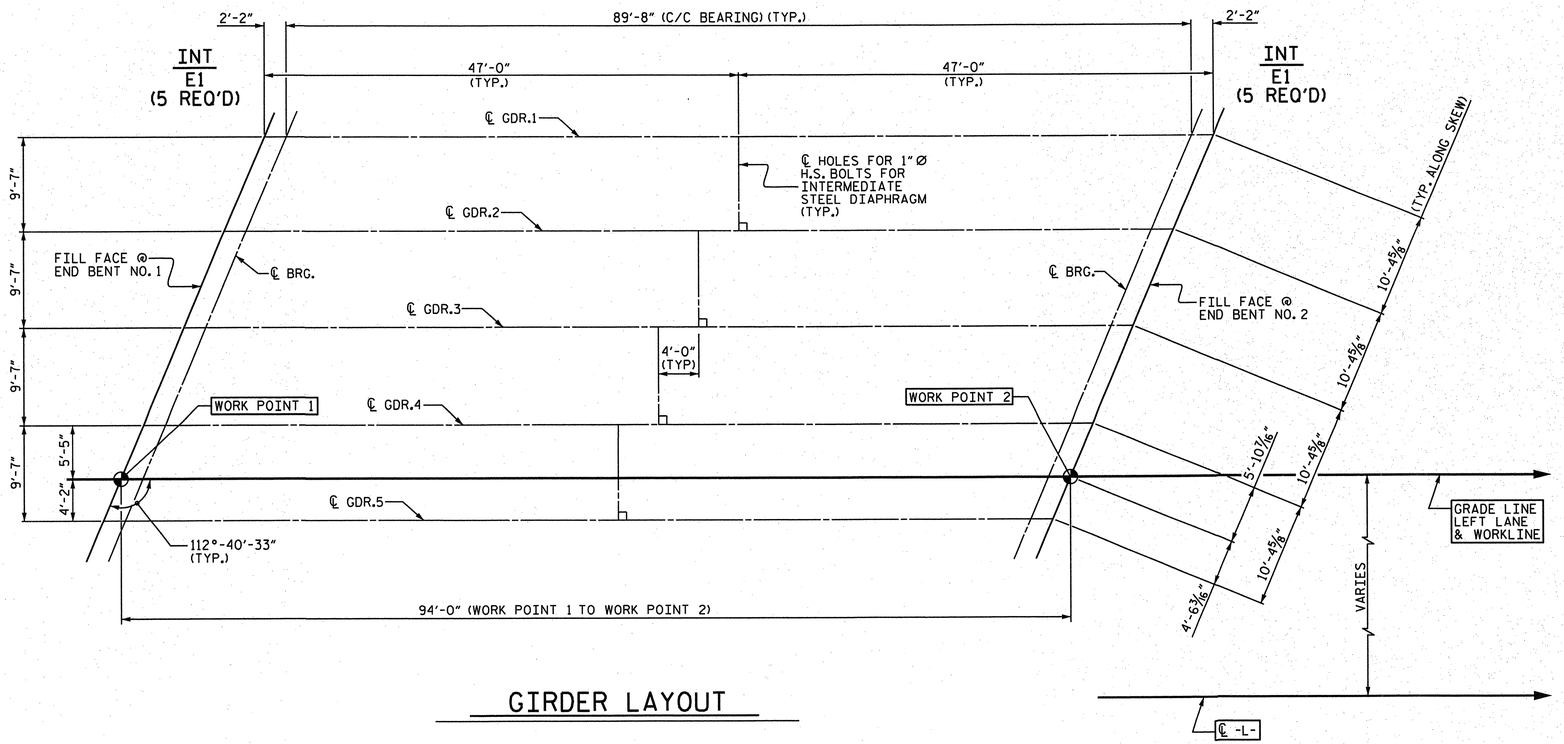

GIRDER LAYOUT

DEAD LOAD DEFLECTION TABLE FOR GIRDERS											
0.6"Ø LOW RELAXATION STRANDS	SPAN "A" GIRDERS 1 THRU 5										
TENTH POINTS	0	.10	.20	.30	.40	.50	.60	.70	.80	.90	0
CAMBER (GIRDER ALONE IN PLACE)	0.0	0.109	0.188	0.241	0.272	0.282	0.272	0.241	0.188	0.109	0.0
* DEFLECTION DUE TO SUPERIMPOSED D.L.	0.0	-0.040	-0.077	-0.107	-0.126	-0.133	-0.126	-0.107	-0.077	-0.040	0.0
FINAL CAMBER	0	13/16	1 5/16	1 5/8	1 3/4	1 13/16	1 3/4	1 5/8	1 5/16	13/16	0

* INCLUDES FUTURE WEARING SURFACE.
ALL VALUES ARE SHOWN IN FEET (DECIMAL FORM), EXCEPT "FINAL CAMBER", WHICH IS GIVEN IN INCHES (FRACTION FORM).

PROJECT NO. R-2633BB
BRUNSWICK/NEW HANOVER COUNTY
STATION: 440+50.13 -L-

STATE OF NORTH CAROLINA
DEPARTMENT OF TRANSPORTATION
RALEIGH

SUPERSTRUCTURE GIRDER LAYOUT
LEFT LANE

PLAN PREPARED BY:
ALPHA & OMEGA GROUP
CIVIL & STRUCTURAL ENGINEERS
4601 Lake Boone Trail, Ste. 3C Raleigh, NC 27607
Phone 919 981 0310 Fax 919 981 0451
Firm License No. C-1684 www.aogroup.com
A&O PROJECT NO. 2011.036

NORTH CAROLINA PROFESSIONAL SEAL 032724 ENGINEER GLENN ZEBLO
1-17-13

REFERENCE NO. 7-8

REVISIONS						SHEET NO.
NO.	BY:	DATE:	NO.	BY:	DATE:	S-4-13
1			3			TOTAL SHEETS
2			4			100

STRUCTURE NO. 7

DRAWN BY :	JR FISHER	DATE :	11/12
CHECKED BY :	HM SWANSON / TGZ	DATE :	11/12
QC / QA BY :	TL BARTELT	DATE :	11/12

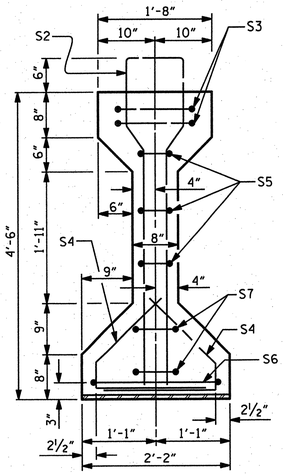

SECTION "A-A"

(TYP. EACH END)

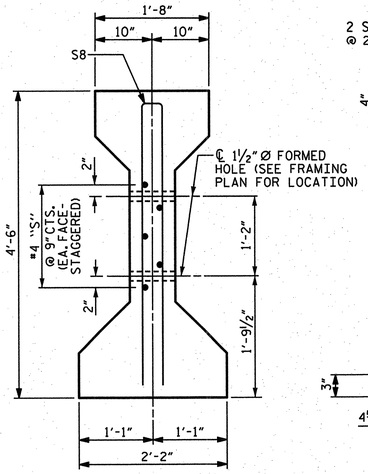

SECTION "C-C"

FOR *S10 BARS, SEE DETAIL "A"

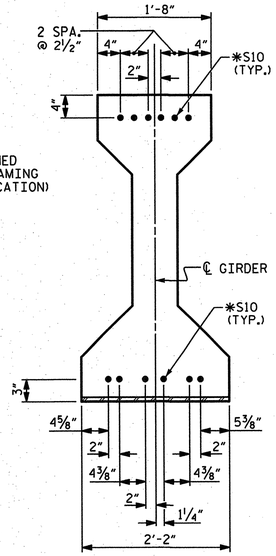

DETAIL "A"

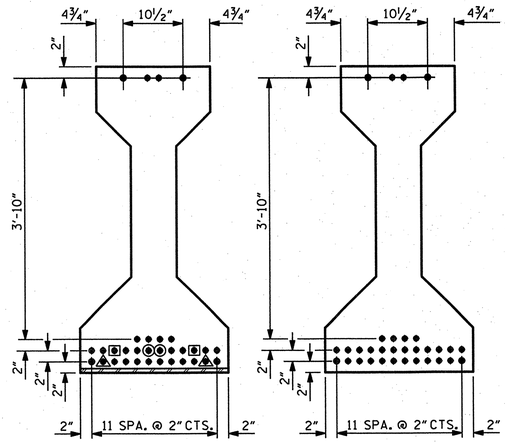

AT END OF GIRDER

AT ℄ OF GIRDER

0.6"Ø LOW RELAXATION STRAND LAYOUT

▣ STRANDS DEBONDED 4'-0" FROM END OF GIRDER.
▲ STRANDS DEBONDED 6'-0" FROM END OF GIRDER.
◉ STRANDS DEBONDED 8'-0" FROM END OF GIRDER.

NOTES

ALL PRESTRESSING STRANDS SHALL BE 7-WIRE LOW-RELAXATION GRADE 270 STRANDS AND SHALL CONFORM TO AASHTO M203 EXCEPT FOR SAMPLING REQUIREMENTS WHICH SHALL BE IN ACCORDANCE WITH THE STANDARD SPECIFICATIONS.

EMBEDDED PLATE "B-1" SHALL BE GALVANIZED IN ACCORDANCE WITH THE SPECIFICATIONS.

BEVEL EDGES OF PLATE "B-1" TO GIVE CLOSE FIT BUT NOT TIGHT FIT TO STEEL CASTING FORM.

ANCHOR STUDS SHALL CONFORM TO AASHTO M169 GRADES 1010 THROUGH 1020 OR APPROVED EQUAL, AND SHALL MEET THE TYPE "B" REQUIREMENTS OF SUBSECTION 7.3 OF THE ANSI/AASHTO/AWS D1.5 BRIDGE WELDING CODE.

AT ENDS OF GIRDERS TO BE EMBEDDED IN CONCRETE DIAPHRAGMS OR END WALLS, PRESTRESSING STRANDS MAY EXTEND A MAXIMUM OF 2" BEYOND THE GIRDER ENDS. OTHERWISE, PRESTRESSING STRANDS SHALL BE CUT FLUSH WITH THE GIRDER ENDS.

THE TRANSFER OF LOAD FROM THE ANCHORAGES TO THE GIRDER SHALL BE DONE WHEN CONCRETE HAS REACHED A COMPRESSIVE STRENGTH OF NOT LESS THAN 5300 PSI.

THE TOP SURFACE OF THE GIRDER SHALL BE RAKED TO A DEPTH OF 1/4" EXCEPT IN THE AREA BETWEEN THE STIRRUP AND THE EDGE OF THE GIRDER.

ALL REINFORCING STEEL SHALL BE GRADE 60.

DEPENDING ON THE TYPE OF SYSTEM USED TO SUPPORT THE DECK SLAB FORMS, PRESET ANCHORS MAY BE NECESSARY IN THE PRESTRESSSED CONCRETE GIRDER.

0.6"Ø L. R. GRADE 270 STRANDS

AREA (SQUARE INCHES)	ULTIMATE STRENGTH (LBS. PER STRAND)	APPLIED PRESTRESS (LBS. PER STRAND)
0.217	58,600	43,950

REINFORCING STEEL FOR ONE GIRDER

	BAR	NUMBER	SIZE	TYPE	LENGTH	WEIGHT
	S1	97	#4	1	10'-8"	691
	S2	12	#5	1	10'-8"	134
	S3	4	#4	2	9'-1"	24
	S4	64	#4	3	3'-5"	146
	S5	6	#4	2	8'-5"	34
	S6	2	#4	2	9'-11"	13
	S7	4	#4	2	8'-7"	23
EXTERIOR GDR.	S8	2	#5	2	8'-8"	18
INTERIOR GDR.	S8	4	#5	2	8'-8"	36
EXTERIOR GDR.	S9	5	#4	STR	7'-0"	23
INTERIOR GDR.	S9	5	#4	STR	11'-0"	37
	*S10	24	#5	4	3'-8"	92
	S11	2	#3	STR	1'-10"	1
	S12	2	#3	STR	1'-4"	1

*NOTE: S10 BARS SHALL BE BENT BEFORE SHIPMENT. HEAT BENDING SHALL NOT BE ALLOWED.

BAR TYPES

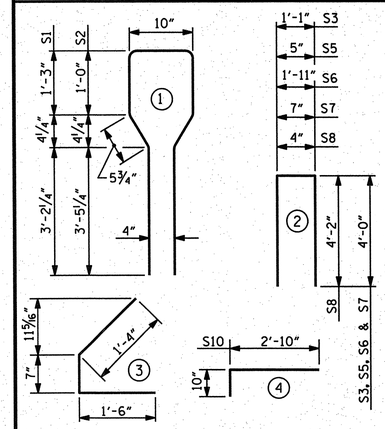

ALL BAR DIMENSIONS ARE OUT-TO-OUT.

QUANTITIES FOR ONE GIRDER

	REINFORCING STEEL LB.	6500 PSI CONCRETE C.Y.	0.6"Ø L.R. STRANDS No.
EXTERIOR GIRDER	1200	18.5	30
INTERIOR GIRDER	1232	18.5	30

GIRDERS REQUIRED

NUMBER	LENGTH	TOTAL LENGTH
5	91'-1"	455'-5"

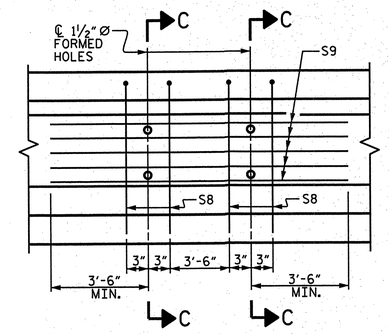

PARTIAL ELEVATION

SHOWING INTERMEDIATE DIAPHRAGM REINFORCING STEEL FOR GIRDER NOs. 2, 3 & 4.

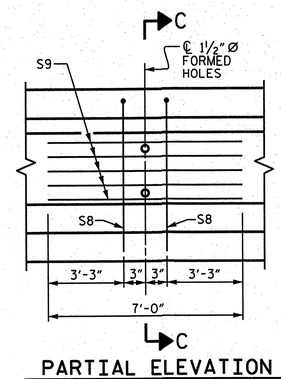

PARTIAL ELEVATION

SHOWING INTERMEDIATE DIAPHRAGM REINFORCING STEEL FOR GIRDER Nos. 1 & 5.

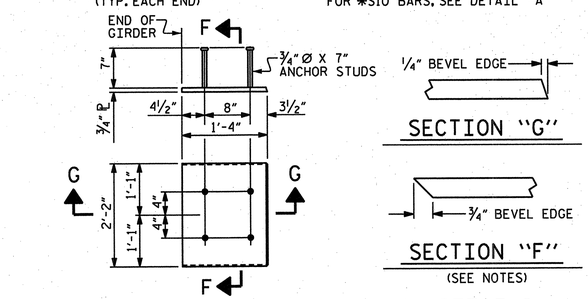

EMBEDDED PLATE "B-1" DETAILS

TWO EMBEDDED PLATES "B-1" ARE REQUIRED FOR EACH GIRDER.

SECTION "G"

SECTION "F"

(SEE NOTES)

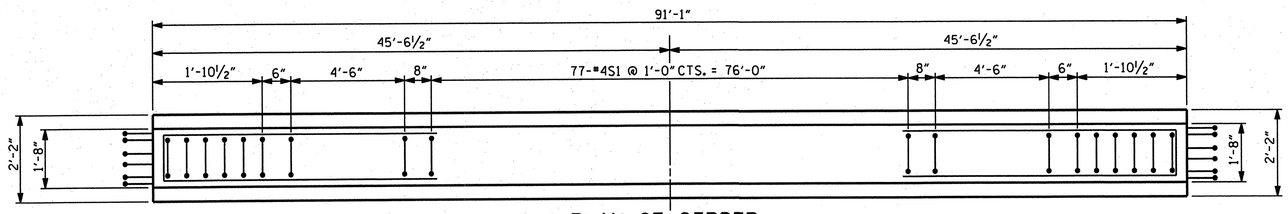

PLAN OF GIRDER

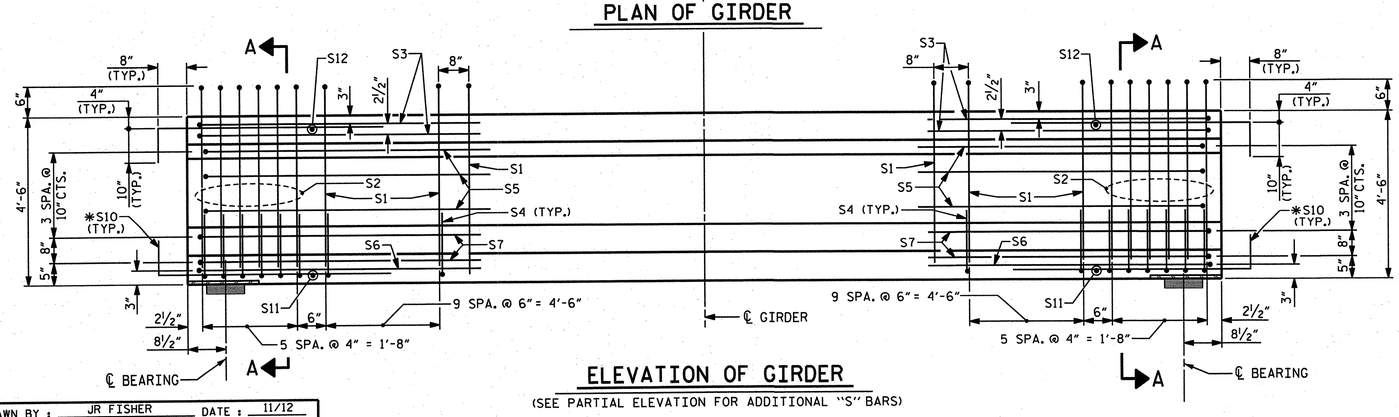

ELEVATION OF GIRDER

(SEE PARTIAL ELEVATION FOR ADDITIONAL "S" BARS)

PROJECT NO. R-2633BB

BRUNSWICK/NEW HANOVER COUNTY

STATION: 440+50.13 -L-

STATE OF NORTH CAROLINA
DEPARTMENT OF TRANSPORTATION
RALEIGH

STANDARD
AASHTO TYPE IV
PRESTRESSED
CONCRETE GIRDER
LEFT LANE

DRAWN BY :	JR FISHER	DATE :	11/12
CHECKED BY :	HM SWANSON / TGZ	DATE :	11/12
QC / QA BY :	TL BARTELT	DATE :	11/12

DRAWN BY :	JMB 12/87	REV. 8/16/99	RRW/LES
CHECKED BY :	ARB 12/87	REV. 5/1/06	TLA/GM
		REV. 10/1/11	MAA/GM

PLAN PREPARED BY:

ALPHA & OMEGA GROUP
CIVIL & STRUCTURAL ENGINEERS
4601 Lake Boone Trail, Ste. 3C Raleigh, NC 27607
Phone 919 981 0310 Fax 919 981 0451
Firm License No. C-1684 www.aogroup.com
A&O PROJECT NO. 2011.036

NOTE: THIS STANDARD DRAWING REVIEWED AND ADOPTED FOR USE AT THE REFERENCED LOCATION BY THE UNDERSIGNED.

NORTH CAROLINA PROFESSIONAL SEAL 032724 ENGINEER GLENN ZEBLO
1-17-12

REFERENCE NO. 7-9

REVISIONS								SHEET NO.
NO.	BY:	DATE:	NO.	BY:	DATE:			S-614
1			3					TOTAL SHEETS
2			4					100

STRUCTURE NO. 7

STD. NO. PCG3

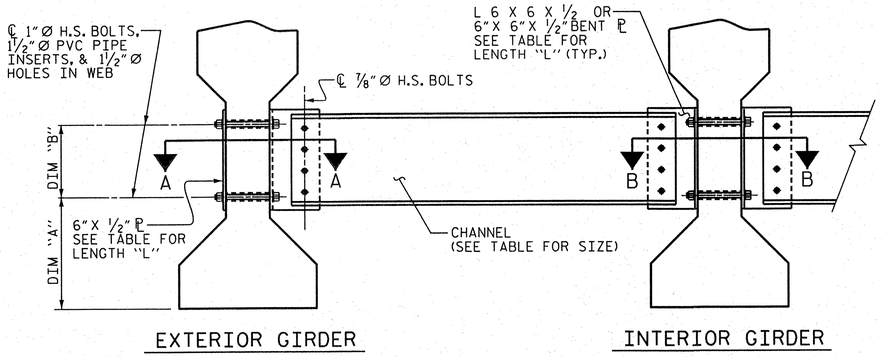

PART SECTION AT INTERMEDIATE DIAPHRAGM

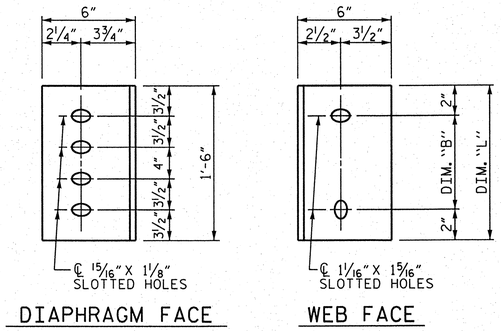

CONNECTOR PLATE DETAILS

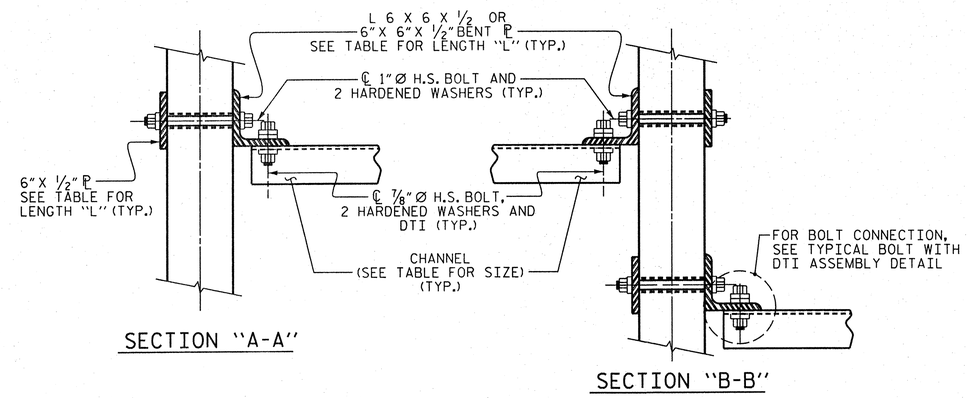

CONNECTION DETAILS

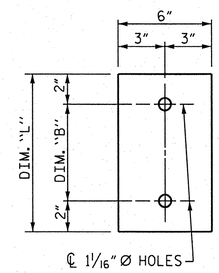

PLATE DETAILS

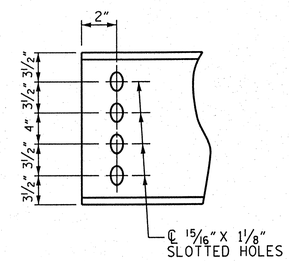

CHANNEL END

STRUCTURAL STEEL NOTES

ALL INTERMEDIATE DIAPHRAGM STEEL AND CONNECTOR PLATES SHALL BE AASHTO M270 GRADE 50 OR APPROVED EQUAL.

TENSION ON THE ASTM A325 BOLTS THROUGH THE ANGLE MEMBER SHALL BE CALIBRATED USING DIRECT TENSION INDICATOR WASHERS IN ACCORDANCE WITH THE STANDARD SPECIFICATIONS.

TENSION ON THE ASTM A449 BOLTS THROUGH THE GIRDER WEB SHALL BE SNUG TIGHTENED FOLLOWED BY AN ADDITIONAL ¼ TURN.

THE PLATES, BENT PLATES, CHANNELS, ANGLES, AND PLATE WASHERS SHALL BE METALLIZED IN ACCORDANCE WITH THE STANDARD SPECIFICATIONS. FOR THERMAL SPRAYED COATINGS (METALLIZATION), SEE SPECIAL PROVISIONS.

FOR METALLIZATION, APPLY AN 8 MIL THICK 99.50 PERCENT ZINC 1350 ALUMINUM (W-A1-1350) THERMAL SPRAYED COATING WITH A 0.5 MIL THICK SEAL COAT TO ALL PLATES, BENT PLATES, CHANNELS, ANGLES, AND PLATE WASHERS IN ACCORDANCE WITH THE THERMAL SPRAYED COATINGS SPECIAL PROVISION AND SECTION 442 OF THE STANDARD SPECIFICATIONS.

APPLY 1 COAT EACH OF 1080-12 GRAY PAINT ON THE EDGES AND THE WEB FACE OF THE CONNECTOR PLATE WHICH COMES IN CONTACT WITH THE CONCRETE GIRDER IN ACCORDANCE WITH SECTION 442 OF THE STANDARD SPECIFICATIONS.

GALVANIZE THE HIGH STRENGTH BOLTS, NUTS, WASHERS AND DIRECT TENSION INDICATORS IN ACCORDANCE WITH THE STANDARD SPECIFICATIONS.

USE AN ASTM F436 HARDENED WASHER WITH STANDARD AND SLOTTED HOLES UNDER EACH BOLT HEAD AND NUT.

FOR BOLTS THROUGH THE GIRDER WEB, PROVIDE SUFFICIENT LENGTH OF THREADS ON ALL BOLTS TO ACCOMMODATE WASHERS AND THE THICKNESS OF CONNECTING MEMBER PLUS AT LEAST ¼" PROJECTION BEYOND THE NUT.

INTERMEDIATE DIAPHRAGM ASSEMBLY SHALL COMPLY WITH SECTION 1072 OF THE STANDARD SPECIFICATIONS.

SUBMIT TWO SETS OF WORKING DRAWINGS FOR THE INTERMEDIATE DIAPHRAGM ASSEMBLY FOR REVIEW, COMMENTS AND ACCEPTANCE. AFTER REVIEW, COMMENTS, AND ACCEPTANCE, SUBMIT SEVEN SETS FOR DISTRIBUTION.

IN THE EXTERIOR BAYS, PLACE TEMPORARY STRUTS BETWEEN PRESTRESSED GIRDERS ADJACENT TO THE STEEL DIAPHRAGMS. STRUTS SHALL REMAIN IN PLACE 3 DAYS AFTER CONCRETE IS PLACED.

THE COST OF THE STEEL DIAPHRAGMS AND ASSEMBLIES SHALL BE INCLUDED IN THE UNIT PRICE BID FOR PRESTRESSED CONCRETE GIRDERS.

TABLE

GIRDER TYPE	CHANNEL SIZE	DIM "A"	DIM "B"	DIM "L"
IV	MC 18 x 42.7	1'-9½"	1'-2"	1'-6"

PROJECT NO. R-2633BB

BRUNSWICK/NEW HANOVER COUNTY

STATION: 440+50.13 -L-

STATE OF NORTH CAROLINA
DEPARTMENT OF TRANSPORTATION
RALEIGH

STANDARD
INTERMEDIATE STEEL DIAPHRAGMS FOR TYPE IV
LEFT LANE

REVISIONS						SHEET NO.
NO.	BY:	DATE:	NO.	BY:	DATE:	S-615
1			3			TOTAL SHEETS
2			4			700

STRUCTURE NO. 7 STD. NO. PCG10

DRAWN BY :	JR FISHER	DATE :	11/12
CHECKED BY :	HM SWANSON / TGZ	DATE :	11/12
QC / QA BY :	TL BARTELT	DATE :	11/12

DRAWN BY : TLA 6/05	ADDED 10/21/05		
CHECKED BY : VC 6/05	REV. 5/1/06	RRR	KMM/GM
	REV. 10/1/11		MAA/GM

PLAN PREPARED BY:
ALPHA & OMEGA GROUP
CIVIL & STRUCTURAL ENGINEERS
4601 Lake Boone Trail, Ste. 3C Raleigh, NC 27607
Phone 919 981 0310 Fax 919 981 0451
Firm License No. C-1684 www.aogroup.com
A&O PROJECT NO. 2011.036

NOTE: THIS STANDARD DRAWING REVIEWED AND ADOPTED FOR USE AT THE REFERENCED LOCATION BY THE UNDERSIGNED.

NORTH CAROLINA PROFESSIONAL SEAL 032724 ENGINEER GLENN ZEBLO 4-17-13

REFERENCE NO. 7-10

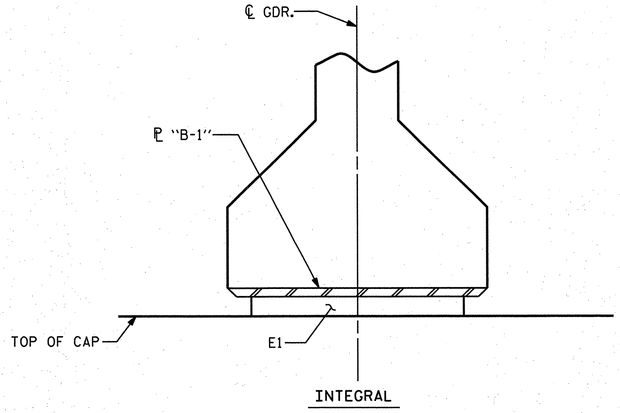

SECTION "E-E"

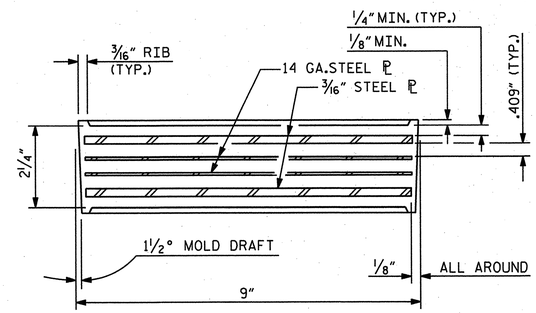

TYPICAL SECTION OF ELASTOMERIC BEARINGS

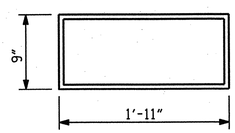

E1 (10 REQ'D)

PLAN VIEW OF ELASTOMERIC BEARING

TYPE V

NOTES

THE ELASTOMER IN THE STEEL REINFORCED BEARINGS SHALL HAVE A SHEAR MODULUS OF 0.160 KSI, IN ACCORDANCE WITH AASHTO M251.

FOR STEEL REINFORCED ELASTOMERIC BEARINGS, SEE SPECIAL PROVISIONS.

MAXIMUM ALLOWABLE SERVICE LOADS	
D.L.+L.L. (NO IMPACT)	
TYPE V	365 K

PROJECT NO. R-2633BB

BRUNSWICK/NEW HANOVER COUNTY

STATION: 440+50.13 -L-

STATE OF NORTH CAROLINA
DEPARTMENT OF TRANSPORTATION
RALEIGH

STANDARD
TYPE V
ELASTOMERIC BEARING
DETAILS
LEFT LANE

REVISIONS						SHEET NO.
NO.	BY:	DATE:	NO.	BY:	DATE:	S-6C
1			3			TOTAL SHEETS
2			4			700

STRUCTURE NO. 7

STD. NO. EB4

DRAWN BY :	JR FISHER	DATE :	11/12
CHECKED BY :	HM SWANSON / TGZ	DATE :	11/12
QC / QA BY :	TL BARTELT	DATE :	11/12

DRAWN BY :	EEM 2/97	REV. 5/1/06	TLA/GM
CHECKED BY :	VAP 2/97	REV. 10/1/11	MAA/GM
		REV. 10/24/12	AAC/MAA

PLAN PREPARED BY:

ALPHA & OMEGA GROUP
CIVIL & STRUCTURAL ENGINEERS
4601 Lake Boone Trail, Ste. 3C Raleigh, NC 27607
Phone 919 981 0310 Fax 919 981 0451
Firm License No. C-1684 www.aogroup.com
A&O PROJECT NO. 2011.036

NOTE: THIS STANDARD DRAWING REVIEWED AND ADOPTED FOR USE AT THE REFERENCED LOCATION BY THE UNDERSIGNED.

NORTH CAROLINA PROFESSIONAL SEAL 032724 ENGINEER GLENN ZEBLO
T. J. Bartelt 1-17-13

REFERENCE NO. 7-11

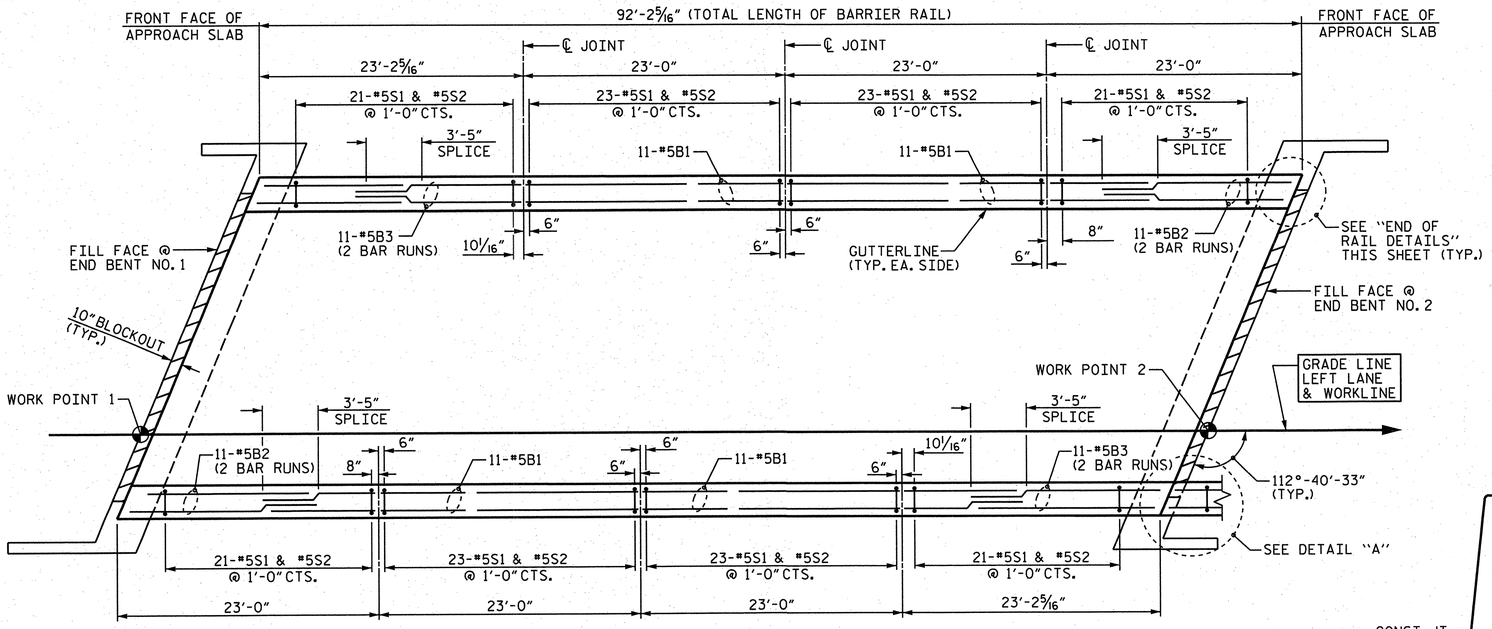

PLAN

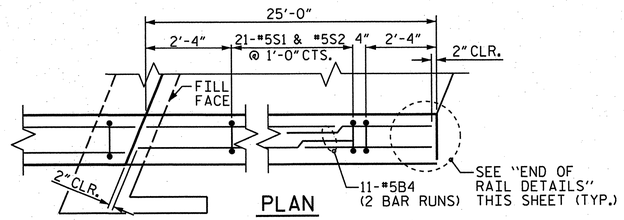

DETAIL "A"

(APPROACH SLAB)

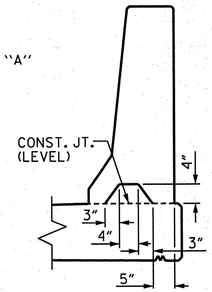

SECTION "S-S"

AT DAM IN OPEN JOINT (THIS IS TO BE USED ONLY WHEN SLIP FORM IS USED)

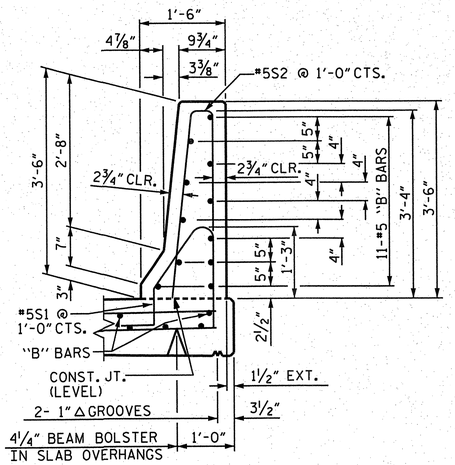

SECTION THRU RAIL

NOTES

THE BARRIER RAIL IN THE SPAN SHALL NOT BE CAST UNTIL ALL SLAB CONCRETE IN THE SPAN HAS BEEN CAST AND HAS REACHED A MINIMUM COMPRESSIVE STRENGTH OF 3,000 PSI.

ALL REINFORCING STEEL IN BARRIER RAILS SHALL BE EPOXY COATED.

GROOVED CONTRACTION JOINTS, 1/2" IN DEPTH, SHALL BE TOOLED IN ALL EXPOSED FACES OF THE BARRIER RAIL AND IN ACCORDANCE WITH ARTICLE 825-10(B) OF THE STANDARD SPECIFICATIONS. THE CONTRACTION JOINT SHALL BE LOCATED AT EACH THIRD POINT BETWEEN BARRIER RAIL EXPANSION JOINTS. ONLY ONE CONTRACTION JOINT IS REQUIRED AT MIDPOINT OF BARRIER RAIL SEGMENTS LESS THAN 20 FEET IN LENGTH AND NO CONTRACTION JOINTS ARE REQUIRED FOR THOSE SEGMENTS LESS THAN 10 FEET IN LENGTH.

BAR TYPES

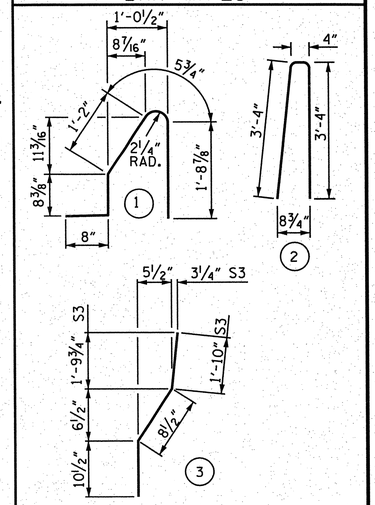

ALL BAR DIMENSIONS ARE OUT TO OUT.

BILL OF MATERIAL

FOR CONCRETE BARRIER RAIL ONLY

BAR	NO.	SIZE	TYPE	LENGTH	WEIGHT
* S1	197	#5	1	4'-9"	976
* S2	197	#5	2	7'-0"	1438
* S3	8	#5	3	3'-5"	29
* S4	8	#5	STR	3'-3"	27
* B1	44	#5	STR	22'-8"	1040
* B2	44	#5	STR	13'-1"	600
* B3	44	#5	STR	13'-6"	620
* B4	22	#5	STR	14'-5"	331
* EPOXY COATED REINFORCING STEEL					5061 LBS.
CLASS AA CONCRETE					28.6 CU. YDS.
CONCRETE BARRIER RAIL					210.0 L.F.

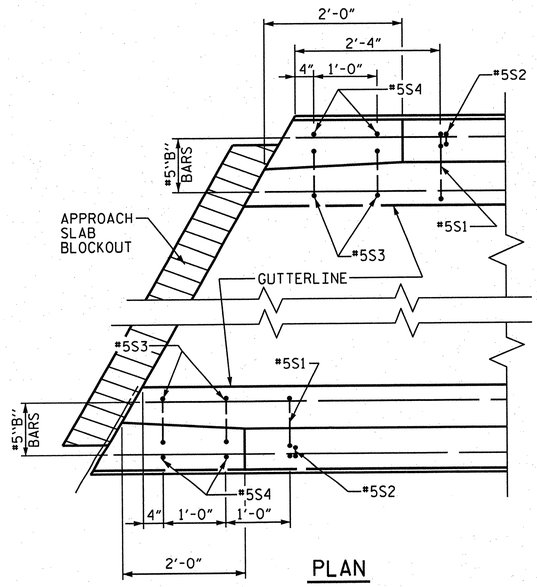

PLAN

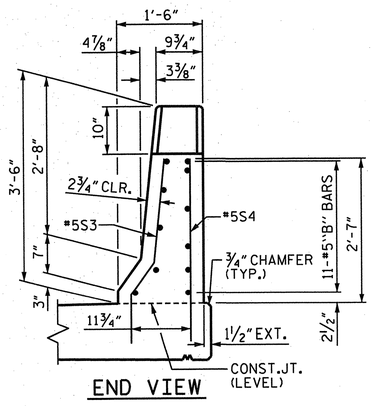

END VIEW

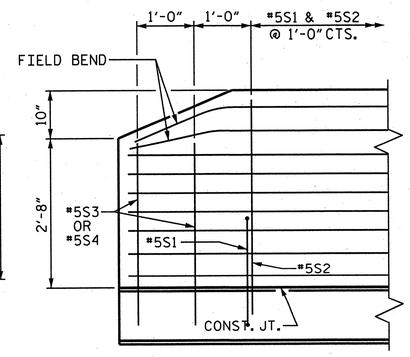

SIDE VIEW

END OF RAIL DETAILS

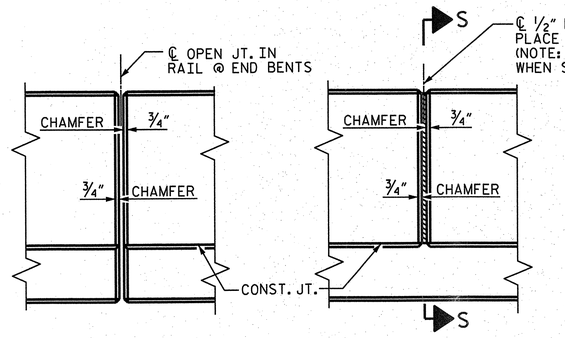

ELEVATION AT EXPANSION JOINTS

BARRIER RAIL DETAILS

PROJECT NO. R-2633BB

BRUNSWICK/NEW HANOVER COUNTY

STATION: 440+50.13 -L-

STATE OF NORTH CAROLINA
DEPARTMENT OF TRANSPORTATION
RALEIGH

STANDARD
CONCRETE
BARRIER RAIL
LEFT LANE

DRAWN BY : JR FISHER	DATE : 11/12		
CHECKED BY : HM SWANSON / TGZ	DATE : 11/12		
QC / QA BY : TL BARTELT	DATE : 11/12		
DRAWN BY : ARB 5/87	REV. 10/1/11	MAA/GM	
CHECKED BY : SJD 9/87	REV. 7/12	MAA/GM	
	REV. 10/12	MAA/GM	

PLAN PREPARED BY:

ALPHA & OMEGA GROUP
CIVIL & STRUCTURAL ENGINEERS
4601 Lake Boone Trail, Ste. 3C Raleigh, NC 27607
Phone 919 981 0310 Fax 919 981 0451
Firm License No. C-1684 www.aogroup.com
A&O PROJECT NO. 2011.036

NOTE: THIS STANDARD DRAWING REVIEWED AND ADOPTED FOR USE AT THE REFERENCED LOCATION BY THE UNDERSIGNED.

NORTH CAROLINA PROFESSIONAL SEAL 032724 ENGINEER GLENN ZEBLO
1-17-13

REFERENCE NO. 7-12

REVISIONS								SHEET NO.
NO.	BY:	DATE:	NO.	BY:	DATE:			S-60
1			3					TOTAL SHEETS
2			4					100

STRUCTURE NO. 7

STD. NO. CBR1

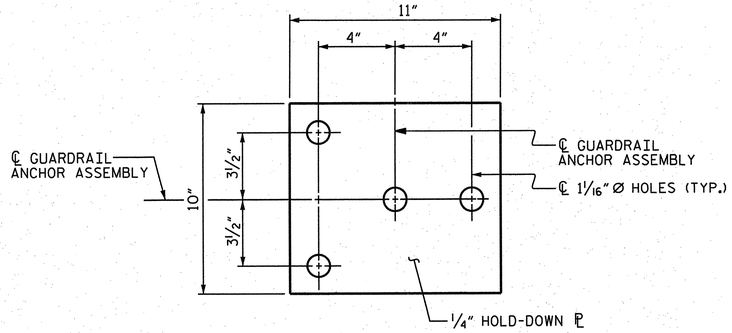

PLAN

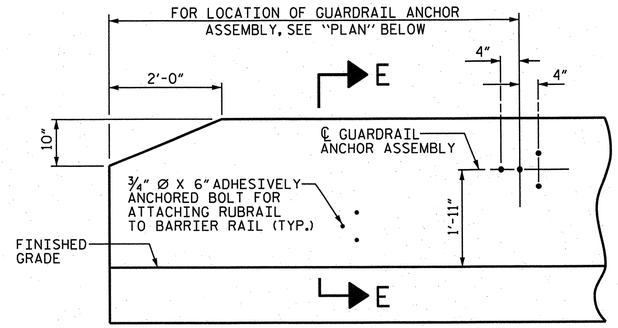

ELEVATION

NOTES

THE GUARDRAIL ANCHOR ASSEMBLY SHALL CONSIST OF A 1/4" HOLD-DOWN PLATE AND 4 - 7/8" Ø BOLTS WITH NUTS AND WASHERS, RUBRAIL, AND ADHESIVELY ANCHORED BOLTS.

THE HOLD-DOWN PLATE SHALL CONFORM TO AASHTO M270 GRADE 36. AFTER FABRICATION, THE HOLD-DOWN PLATE SHALL BE HOT-DIP GALVANIZED IN ACCORDANCE WITH AASHTO M111.

BOLTS SHALL CONFORM TO THE REQUIREMENTS OF ASTM A307 AND NUTS SHALL CONFORM TO THE REQUIREMENTS OF AASHTO M291. BOLTS, NUTS AND WASHERS SHALL BE GALVANIZED. (AT THE CONTRACTOR'S OPTION, STAINLESS STEEL BOLTS, NUTS AND WASHERS MAY BE USED AS AN ALTERNATE FOR THE 7/8" Ø GALVANIZED BOLTS, NUTS AND WASHERS. THEY SHALL CONFORM TO OR EXCEED THE MECHANICAL REQUIREMENTS OF ASTM A307. THE USE OF THIS ALTERNATE SHALL BE APPROVED BY THE ENGINEER.)

THE GUARDRAIL ANCHOR ASSEMBLY IS REQUIRED AT ALL POINTS WHERE APPROACH GUARDRAIL IS TO BE ATTACHED TO THE END OF BARRIER RAIL. FOR POINTS OF ATTACHMENT, SEE SKETCH.

AFTER INSTALLATION, THE EXPOSED THREAD OF THE BOLT SHALL BE BURRED WITH A SHARP POINTED TOOL.

THE COST OF THE GUARDRAIL ANCHOR ASSEMBLY SHALL BE INCLUDED IN THE UNIT CONTRACT PRICE BID FOR CONCRETE BARRIER RAIL.

THE 1 1/4" Ø HOLES SHALL BE FORMED OR DRILLED WITH A CORE BIT. IMPACT TOOLS WILL NOT BE PERMITTED. ANY CONCRETE DAMAGED BY THIS WORK SHALL BE REPAIRED TO THE SATISFACTION OF THE ENGINEER.

THE C6 X 8.2 RUBRAIL IS TO BE ADHESIVELY ANCHORED TO THE RAIL USING THREE 3/4" Ø X 6" BOLTS WITH WASHERS. LEVEL ONE FIELD TESTING IS REQUIRED, AND THE YIELD LOAD OF THE 3/4" Ø BOLT IS 12 KIPS. FOR ADHESIVELY ANCHORED ANCHOR BOLTS OR DOWELS, SEE STANDARD SPECIFICATIONS. SEE ROADWAY STANDARD 862.03 FOR DETAILS AND LOCATION OF THE RUBRAIL.

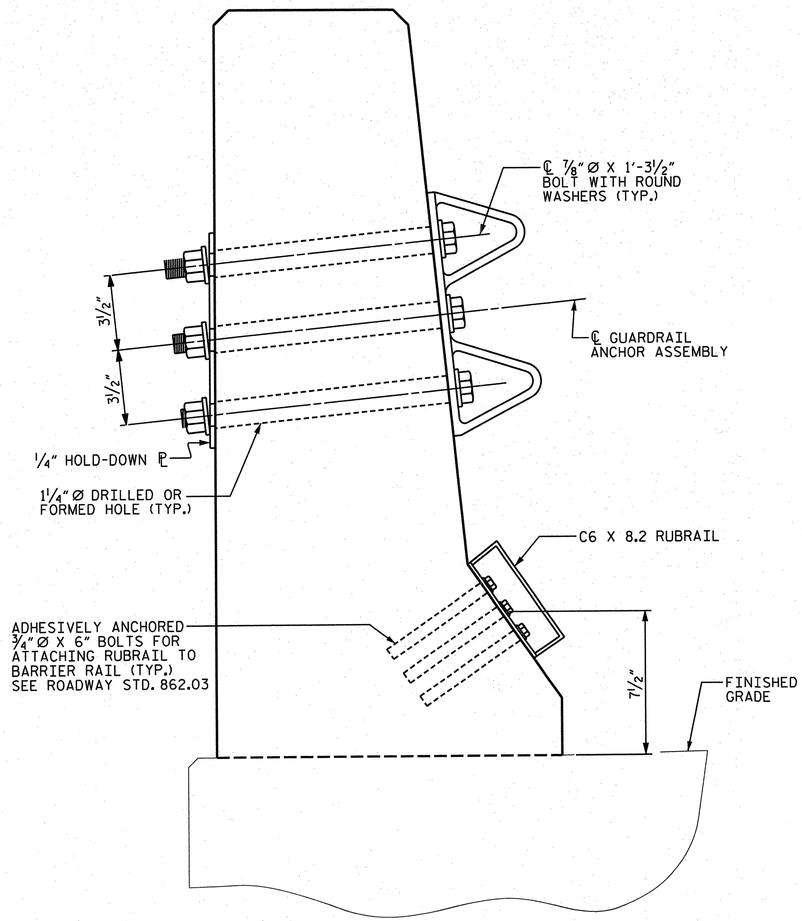

SECTION "E-E"

GUARDRAIL ANCHOR ASSEMBLY DETAILS

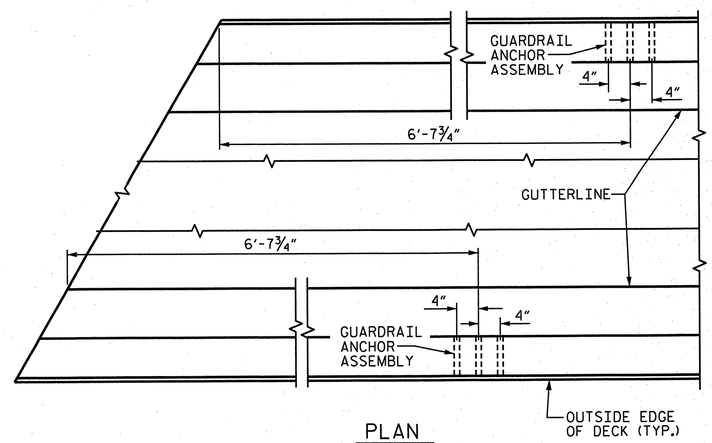

PLAN

LOCATION OF ANCHORS FOR GUARDRAIL

(END BENT NO. 1 SHOWN, END BENT NO. 2 SIMILAR ON LEFT SIDE)

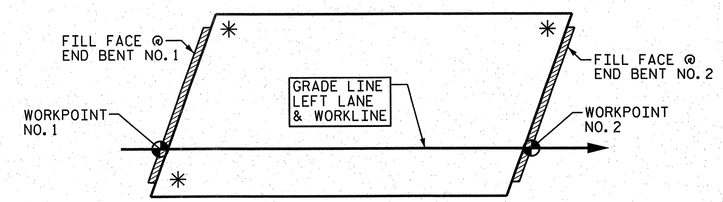

SKETCH SHOWING POINTS OF ATTACHMENTS

✳ DENOTES GUARDRAIL ANCHOR ASSEMBLY

PROJECT NO. R-2633BB

BRUNSWICK/NEW HANOVER COUNTY

STATION: 440+50.13 -L-

STATE OF NORTH CAROLINA
DEPARTMENT OF TRANSPORTATION
RALEIGH

STANDARD
GUARDRAIL ANCHORAGE FOR BARRIER RAIL
LEFT LANE

REVISIONS						SHEET NO.
NO.	BY:	DATE:	NO.	BY:	DATE:	S-618
1			3			TOTAL SHEETS
2			4			700

STRUCTURE NO. 7 STD. NO. GRA2

DRAWN BY :	JR FISHER	DATE :	11/12
CHECKED BY :	HM SWANSON / TGZ	DATE :	11/12
QC / QA BY :	TL BARTELT	DATE :	11/12

DRAWN BY :	TLA	5/06	ADDED 5/1/06RR KMM/GM
CHECKED BY :	GM	5/06	REV. 10/1/11 MAA/GM
			REV. 7/12 MAA/GM

PLAN PREPARED BY:

ALPHA & OMEGA GROUP
CIVIL & STRUCTURAL ENGINEERS
4601 Lake Boone Trail, Ste. 3C Raleigh, NC 27607
Phone 919 981 0310 Fax 919 981 0451
Firm License No. C-1684 www.aogroup.com
A&O PROJECT NO. 2011.036

NOTE: THIS STANDARD DRAWING REVIEWED AND ADOPTED FOR USE AT THE REFERENCED LOCATION BY THE UNDERSIGNED.

NORTH CAROLINA PROFESSIONAL SEAL 032724 ENGINEER GLENN ZEOLO
1-17-13

REFERENCE NO. 7-13

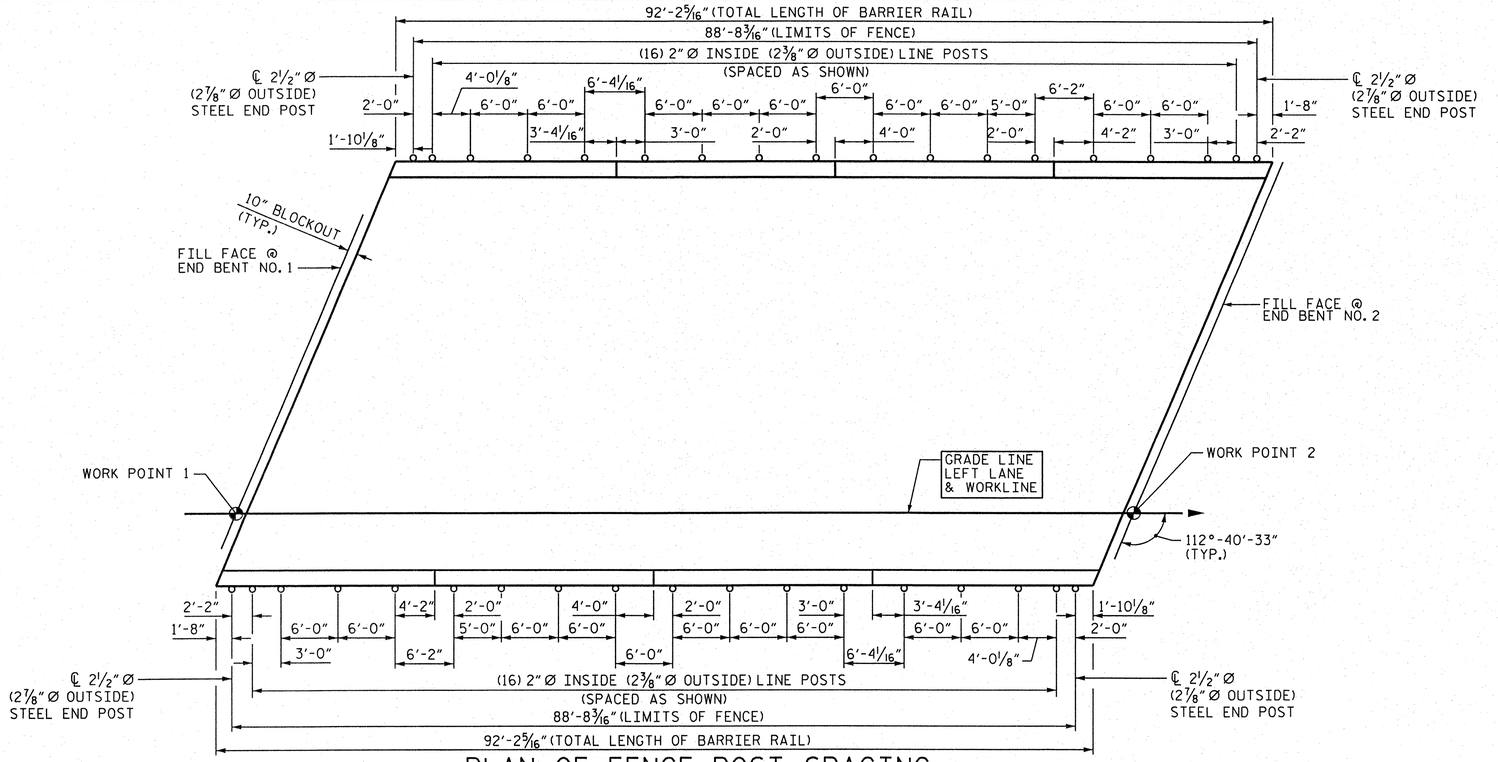

PLAN OF FENCE POST SPACING

PAY LENGTH = 177.36 FEET

NOTES:

FOR 72" CHAIN LINK FENCE, SEE SPECIAL PROVISIONS.

BOLTS SHALL CONFORM TO THE REQUIREMENTS OF ASTM A307 AND NUTS SHALL CONFORM TO THE REQUIREMENTS OF AASHTO M291. BOLTS, NUTS, AND WASHERS SHALL BE GALVANIZED. (AT THE CONTRACTOR'S OPTION, STAINLESS STEEL BOLTS, NUTS, AND WASHERS MAY BE USED AS AN ALTERNATE FOR THE 3/4" Ø GALVANIZED BOLTS, NUTS, AND WASHERS. THEY SHALL CONFORM TO OR EXCEED THE MECHANICAL REQUIREMENTS OF ASTM A307. THE USE OF THIS ALTERNATE SHALL BE APPROVED BY THE ENGINEER.)

FOR SETTING ANCHOR BOLTS, THE CONTRACTOR SHALL USE AN ADHESIVE BONDING SYSTEM. LEVEL ONE FIELD TESTING OF BONDING SYSTEM IS REQUIRED AND THE YIELD LOAD OF THE 3/4" Ø BOLTS IS 12.0 KIPS.

ALL FENCE MATERIAL SHALL MEET THE REQUIREMENTS OF SECTION 1050 OF THE STANDARD SPECIFICATIONS. GALVANIZE ALL STEEL PARTS AND HARDWARE IN ACCORDANCE WITH ARTICLE 1076 OF THE STANDARD SPECIFICATIONS.

FENCE POST LOCATIONS SHALL BE SHIFTED, AS NECESSARY, TO MAINTAIN 12" MINIMUM DISTANCE FROM ANCHOR BOLT TO JOINTS IN BARRIER RAIL.

DIMENSIONS TAKEN ALONG OUTSIDE FACE OF BARRIER RAIL.

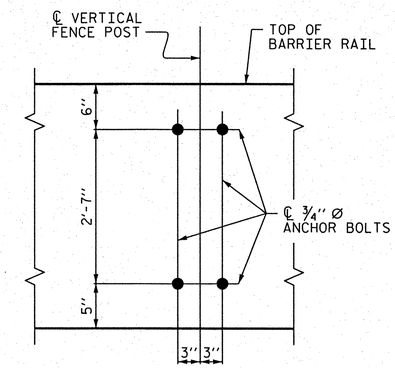

BOLT SETTING DETAIL

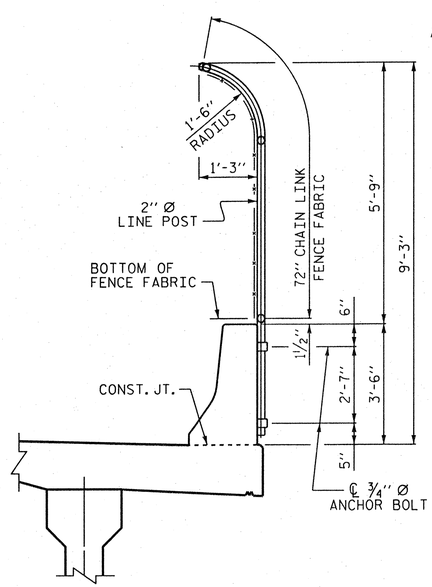

SECTION THRU FENCE

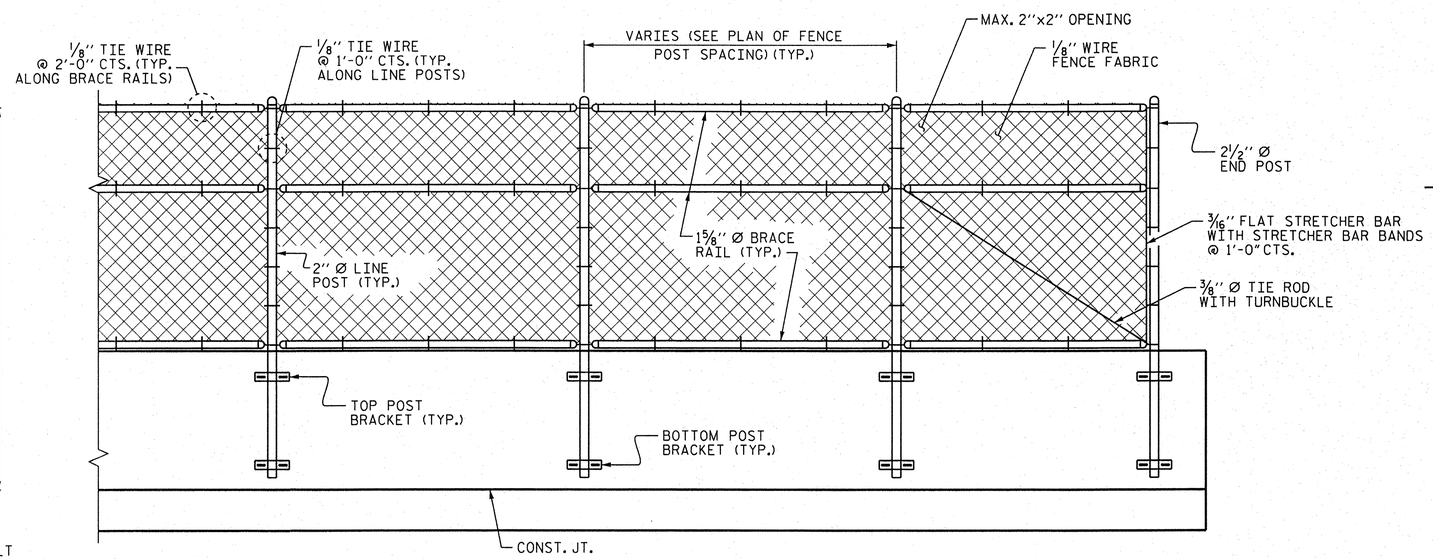

PARTIAL ELEVATION

PROJECT NO. R-2633BB

BRUNSWICK/NEW HANOVER COUNTY

STATION: 440+50.13 -L-

STATE OF NORTH CAROLINA
DEPARTMENT OF TRANSPORTATION
RALEIGH

STANDARD

BRIDGE MOUNTED
72" CHAIN LINK FENCE
LEFT LANE

REVISIONS								SHEET NO.
NO.	BY:	DATE:	NO.	BY:	DATE:			S-619
1			3					TOTAL SHEETS
2			4					700

STRUCTURE NO. 7

PLAN PREPARED BY:

ALPHA & OMEGA GROUP
CIVIL & STRUCTURAL ENGINEERS
4601 Lake Boone Trail, Ste. 3C Raleigh, NC 27607
Phone 919 981 0310 Fax 919 981 0451
Firm License No. C-1684 www.aogroup.com
A&O PROJECT NO. 2011.036

NOTE: THIS STANDARD DRAWING REVIEWED AND ADOPTED FOR USE AT THE REFERENCED LOCATION BY THE UNDERSIGNED.

NORTH CAROLINA PROFESSIONAL SEAL 032724 ENGINEER GLENN ZEBLO
T. J. Bartelt 8-1-13

REFERENCE NO. 7-13a

DRAWN BY :	JD GOODIN	DATE :	3/18/13
CHECKED BY :	HM SWANSON/TGZ	DATE :	3/19/13
QC / QA BY :	TL BARTELT	DATE :	3/20/13

REINFORCING BAR SCHEDULE

BAR	NO.	SIZE	TYPE	LENGTH	WEIGHT	BAR	NO.	SIZE	TYPE	LENGTH	WEIGHT
A1	147	#5	STR.	44'-11"	6887	*A52	2	#5	STR.	27'-0"	56
A2	2	#5	STR.	43'-9"	91	*A53	2	#5	STR.	25'-10"	54
A3	2	#5	STR.	42'-7"	89	*A54	2	#5	STR.	24'-7"	51
A4	2	#5	STR.	41'-4"	86	*A55	2	#5	STR.	23'-5"	49
A5	2	#5	STR.	40'-2"	84	*A56	2	#5	STR.	22'-3"	46
A6	2	#5	STR.	39'-0"	81	*A57	2	#5	STR.	21'-0"	44
A7	2	#5	STR.	37'-9"	79	*A58	2	#5	STR.	19'-10"	41
A8	2	#5	STR.	36'-7"	76	*A59	2	#5	STR.	18'-7"	39
A9	2	#5	STR.	35'-5"	74	*A60	2	#5	STR.	17'-5"	36
A10	2	#5	STR.	34'-2"	71	*A61	2	#5	STR.	16'-3"	34
A11	2	#5	STR.	33'-0"	69	*A62	2	#5	STR.	15'-0"	31
A12	2	#5	STR.	31'-9"	66	*A63	2	#5	STR.	13'-10"	29
A13	2	#5	STR.	30'-7"	64	*A64	2	#5	STR.	12'-8"	26
A14	2	#5	STR.	29'-5"	61	*A65	2	#5	STR.	11'-5"	24
A15	2	#5	STR.	28'-2"	59	*A66	2	#5	STR.	10'-3"	21
A16	2	#5	STR.	27'-0"	56	*A67	2	#5	STR.	9'-1"	19
A17	2	#5	STR.	25'-10"	54	*A68	2	#5	STR.	7'-10"	16
A18	2	#5	STR.	24'-7"	51	*A69	2	#5	STR.	6'-8"	14
A19	2	#5	STR.	23'-5"	49	*A70	2	#5	STR.	5'-5"	11
A20	2	#5	STR.	22'-3"	46	*A71	2	#5	STR.	4'-3"	9
A21	2	#5	STR.	21'-0"	44	*A72	2	#5	STR.	3'-1"	6
A22	2	#5	STR.	19'-10"	41						
A23	2	#5	STR.	18'-7"	39	*B1	90	#4	STR.	20'-9"	1247
A24	2	#5	STR.	17'-5"	36	B2	120	#5	STR.	47'-0"	5883
A25	2	#5	STR.	16'-3"	34	*B3	118	#7	STR.	18'-10"	4542
A26	2	#5	STR.	15'-0"	31						
A27	2	#5	STR.	13'-10"	29	*S1	76	#4	1	11'-8"	592
A28	2	#5	STR.	12'-8"	26	*S2	64	#4	1	10'-6"	449
A29	2	#5	STR.	11'-5"	24						
A30	2	#5	STR.	10'-3"	21	K1	20	#4	STR	28'-6"	381
A31	2	#5	STR.	9'-1"	19	K2	8	#4	STR	8'-3"	44
A32	2	#5	STR.	7'-10"	16	K3	16	#4	STR	9'-4"	100
A33	2	#5	STR.	6'-8"	14	K4	8	#4	STR	9'-3"	49
A34	2	#5	STR.	5'-5"	11	K5	8	#4	STR	7'-8"	41
A35	2	#5	STR.	4'-3"	9	K6	4	#4	STR	5'-9"	15
A36	2	#5	STR.	3'-1"	6	K7	8	#4	STR	6'-3"	33
						K8	4	#4	STR	6'-2"	16
*A37	147	#5	STR.	44'-11"	6887	K9	4	#4	STR	5'-6"	15
*A38	2	#5	STR.	43'-9"	91	K10	16	#4	STR	2'-11"	31
*A39	2	#5	STR.	42'-7"	89						
*A40	2	#5	STR.	41'-4"	86	U1	76	#4	2	11'-3"	571
*A41	2	#5	STR.	40'-2"	84	U2	12	#4	2	13'-11"	112
*A42	2	#5	STR.	39'-0"	81						
*A43	2	#5	STR.	37'-9"	79	H1	8	#5	4	11'-2"	93
*A44	2	#5	STR.	36'-7"	76	H2	8	#5	4	10'-11"	91
*A45	2	#5	STR.	35'-5"	74	H3	8	#5	3	9'-1"	76
*A46	2	#5	STR.	34'-2"	71	H4	8	#5	3	9'-3"	77
*A47	2	#5	STR.	33'-0"	69	H5	8	#5	4	9'-2"	76
*A48	2	#5	STR.	31'-9"	66	H6	8	#5	4	9'-4"	78
*A49	2	#5	STR.	30'-7"	64	H7	8	#5	3	10'-9"	90
*A50	2	#5	STR.	29'-5"	61	H8	8	#5	3	10'-11"	91
*A51	2	#5	STR.	28'-2"	59						

*EPOXY COATED REINFORCING STEEL.

SUPERSTRUCTURE BILL OF MATERIAL

SUPERSTRUCTURE BILL OF MATERIAL			
	CLASS AA CONCRETE	REINFORCING STEEL	EPOXY COATED REINFORCING STEEL
	(CU. YDS.)	(LBS.)	(LBS.)
POUR 1	114.5		
POUR 2	95.9		
TOTALS**	210.4	16556	15423

**QUANTITIES FOR BARRIER RAIL ARE NOT INCLUDED.

GROOVING BRIDGE FLOORS

APPROACH SLABS	1880	SQ.FT.
BRIDGE DECK	3581	SQ.FT.
TOTAL	5461	SQ.FT.

SUPERSTRUCTURE REINFORCING STEEL LENGTHS ARE BASED ON THE FOLLOWING MINIMUM SPLICE LENGTHS

BAR SIZE	SUPERSTRUCTURE EXCEPT APPROACH SLABS, PARAPET, AND BARRIER RAIL		APPROACH SLABS		PARAPET AND BARRIER RAIL
	EPOXY COATED	UNCOATED	EPOXY COATED	UNCOATED	
#4	2'-0"	1'-9"	2'-0"	1'-9"	2'-9"
#5	2'-6"	2'-2"	2'-6"	2'-2"	3'-5"
#6	3'-0"	2'-7"	3'-10"	2'-7"	4'-4"
#7	5'-3"	3'-6"			
#8	6'-10"	4'-7"			

BAR TYPES

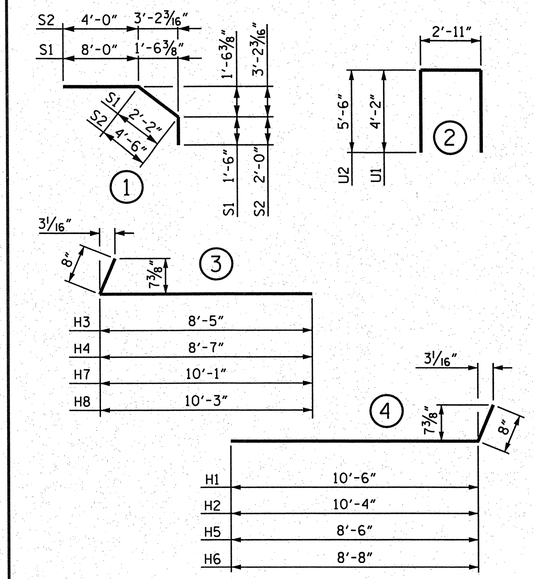

ALL BAR DIMENSIONS ARE OUT TO OUT.

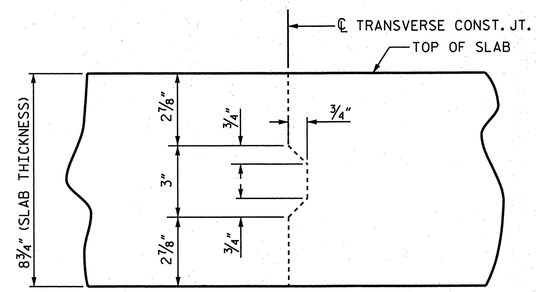

TRANSVERSE CONSTRUCTION JOINT IN DECK SLAB

REINFORCING STEEL IN SLAB NOT SHOWN.
LONGITUDINAL REINFORCING STEEL SHALL BE CONTINUOUS THRU JOINT.

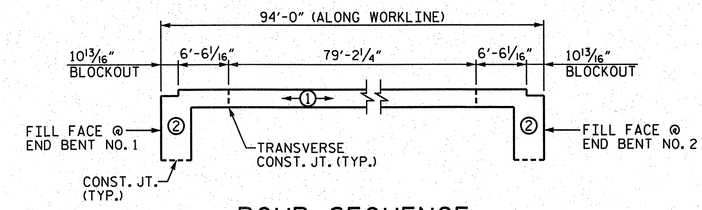

POUR SEQUENCE

INDICATES POUR NUMBER AND DIRECTION OF POUR.

(POUR #2 CANNOT BE STARTED UNTIL POUR #1 HAS REACHED A MINIMUM OF 3,000 PSI.)

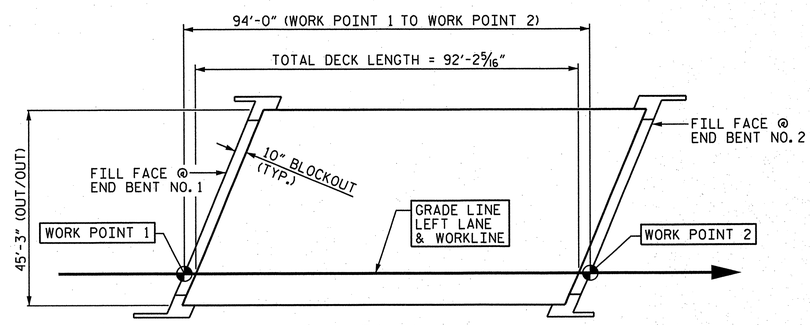

PLAN

LAYOUT FOR COMPUTING AREA OF REINFORCED CONCRETE DECK SLAB.
(SQ. FT. = 4254)

PROJECT NO. R-2633BB
BRUNSWICK/NEW HANOVER COUNTY
STATION: 440+50.13 -L-

STATE OF NORTH CAROLINA
DEPARTMENT OF TRANSPORTATION
RALEIGH

STANDARD
SUPERSTRUCTURE
BILL OF MATERIAL
LEFT LANE

REVISIONS								SHEET NO.
NO.	BY:	DATE:	NO.	BY:	DATE:			S-620
1			3					TOTAL SHEETS
2			4					700

PLAN PREPARED BY:

ALPHA & OMEGA GROUP
CIVIL & STRUCTURAL ENGINEERS
4601 Lake Boone Trail, Ste. 3C Raleigh, NC 27607
Phone 919 981 0310 Fax 919 981 0451
Firm License No. C-1684 www.aogroup.com
A&O PROJECT NO. 2011.036

NOTE: THIS STANDARD DRAWING REVIEWED AND ADOPTED FOR USE AT THE REFERENCED LOCATION BY THE UNDERSIGNED.

NORTH CAROLINA PROFESSIONAL SEAL 032724 ENGINEER GLENN ZEBLO
1-17-13

REFERENCE NO. 7-14

DRAWN BY : JR FISHER	DATE : 11/12		
CHECKED BY : HM SWANSON / TGZ	DATE : 11/12		
QC / QA BY : TL BARTELT	DATE : 11/12		
DRAWN BY : JMB 5/87	REV. 8/16/99	RWW/LES	
CHECKED BY : SJD 9/87	REV. 5/1/06	TLA/GM	
	REV. 10/1/11	MAA/GM	

STRUCTURE NO. 7

STD. NO. BOM1

NOTES

THE #4V1 BARS IN CAP MAY BE SHIFTED SLIGHTLY AVOID STIRRUPS IN CAP.

FOR PILE SPLICE DETAILS, SEE SHEET 5 OF 5.

FOR WING DETAILS, SEE SHEET 5 OF 5.

THE TOP SURFACE OF THE CAP AND WINGS, EXCLUDING THE BEARING AREA, SHALL BE RAKED TO A DEPTH OF 1/4".

SEE SUPERSTRUCTURE SHEETS FOR UPPER PART OF THE INTEGRAL END BENT DETAILS.

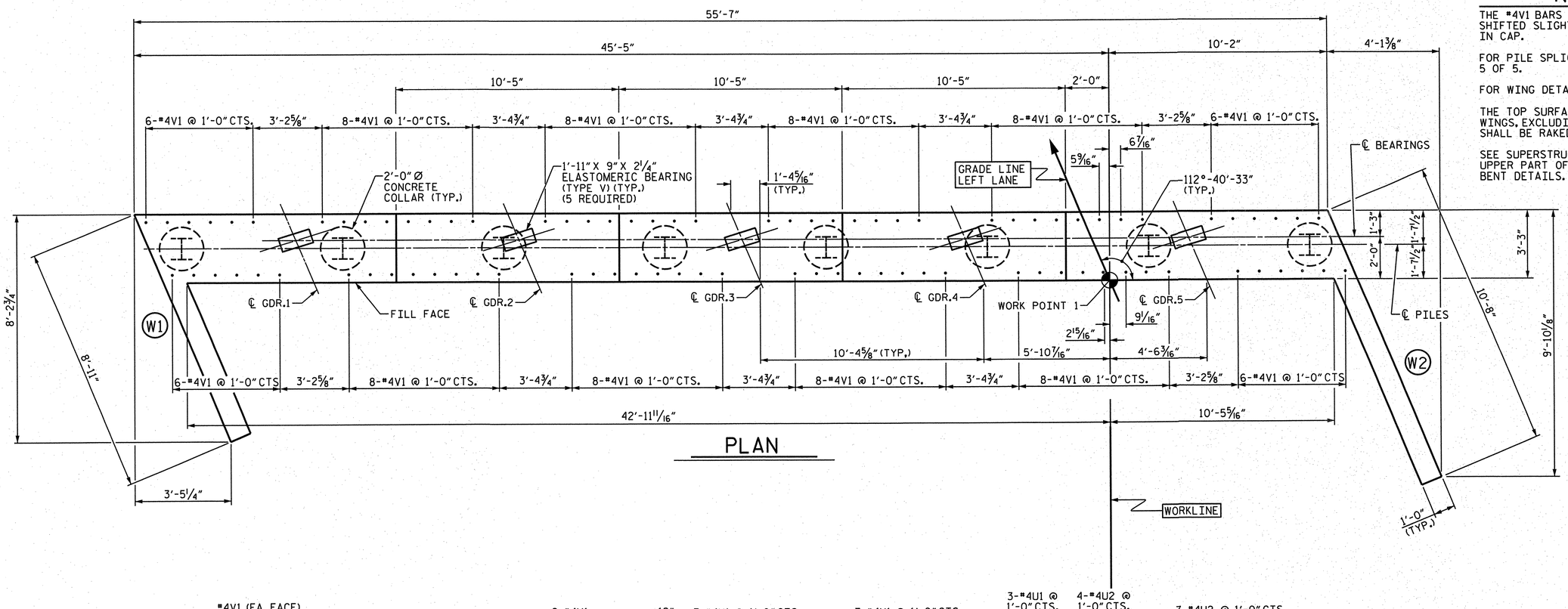

PLAN

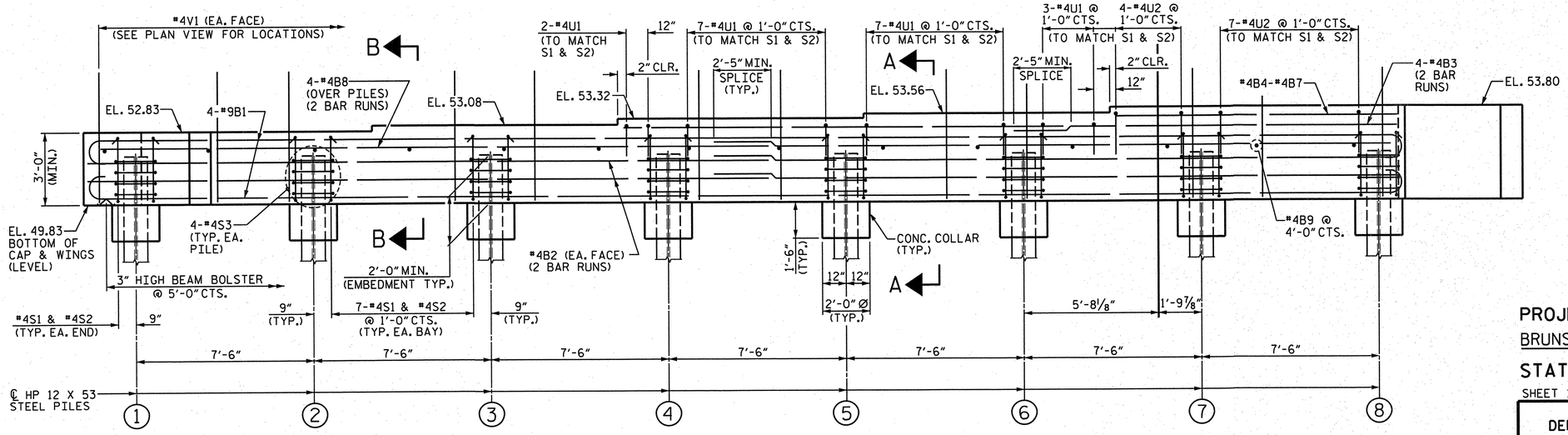

ELEVATION

FOR SECTION "A-A" AND PARTIAL SECTION "B-B", SEE SHEET 2 OF 5.

PROJECT NO. R-2633BB

BRUNSWICK/NEW HANOVER COUNTY

STATION: 440+50.13 -L-

SHEET 1 OF 5

STATE OF NORTH CAROLINA
DEPARTMENT OF TRANSPORTATION
RALEIGH

SUBSTRUCTURE
END BENT NO. 1
LEFT LANE

PLAN PREPARED BY:

ALPHA & OMEGA GROUP
CIVIL & STRUCTURAL ENGINEERS
4601 Lake Boone Trail, Ste. 3C Raleigh, NC 27607
Phone 919 981 0310 Fax 919 981 0451
Firm License No. C-1684 www.aogroup.com
A&O PROJECT NO. 2011.036

NORTH CAROLINA PROFESSIONAL SEAL 032724 ENGINEER T. GLENN ZEBLO
T. Glenn Zeblo
1-17-13

REFERENCE NO. 7-15

REVISIONS						SHEET NO.
NO.	BY:	DATE:	NO.	BY:	DATE:	S-C21
1			3			TOTAL SHEETS
2			4			700

STRUCTURE NO. 7

DRAWN BY :	JR FISHER	DATE :	11/12
CHECKED BY :	HM SWANSON / TGZ	DATE :	11/12
QC / QA BY :	TL BARTELT	DATE :	11/12

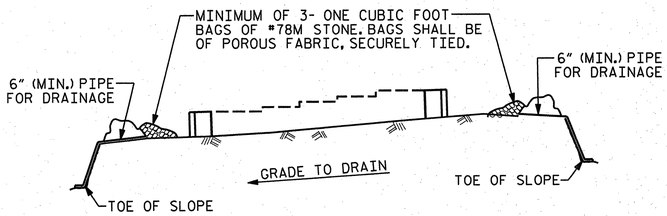

BAGGED STONE AND PIPE SHALL BE PLACED IMMEDIATELY AFTER COMPLETION OF END BENT EXCAVATION. PIPE MAY BE EITHER CONCRETE, CORRUGATED STEEL, CORRUGATED ALUMINUM ALLOY, OR CORRUGATED PLASTIC. PERFORATED PIPE WILL NOT BE ALLOWED.

BAGGED STONE SHALL REMAIN IN PLACE UNTIL THE ENGINEER DIRECTS THAT IT BE REMOVED. THE CONTRACTOR SHALL REMOVE AND DISPOSE OF SILT ACCUMULATIONS AT BAGGED STONE WHEN SO DIRECTED BY THE ENGINEER. BAGS SHALL BE REMOVED AND REPLACED WHENEVER THE ENGINEER DETERMINES THAT THEY HAVE DETERIORATED AND LOST THEIR EFFECTIVENESS.

NO SEPARATE PAYMENT WILL BE MADE FOR THIS WORK AND THE ENTIRE COST OF THIS WORK SHALL BE INCLUDED IN THE UNIT CONTRACT PRICE BID FOR THE SEVERAL PAY ITEMS.

TEMPORARY DRAINAGE AT END BENT

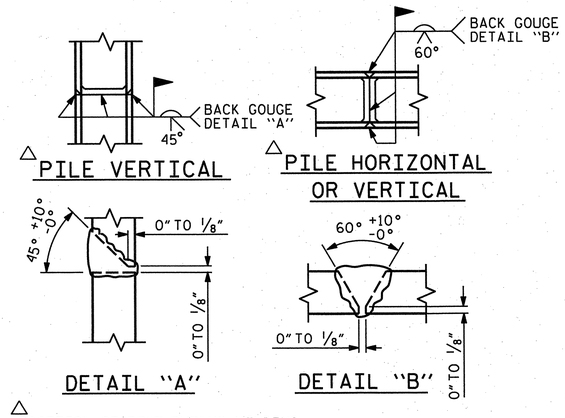

△ POSITION OF PILE DURING WELDING.

PILE SPLICE DETAILS

BAR TYPES

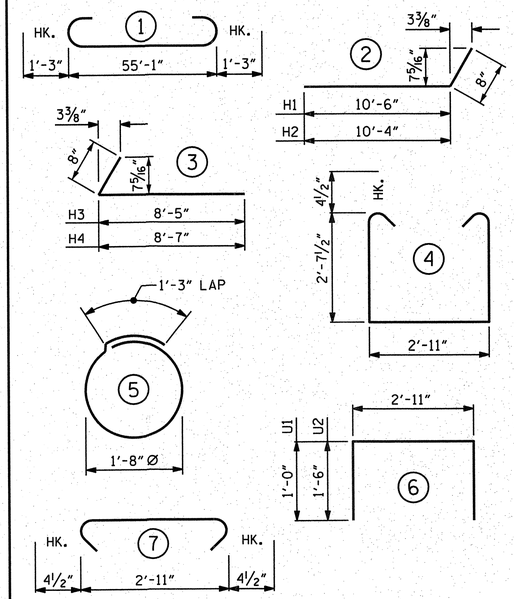

ALL BAR DIMENSIONS ARE OUT TO OUT.

BILL OF MATERIAL

INTEGRAL END BENT NO. 1

BAR	NO.	SIZE	TYPE	LENGTH	WEIGHT
B1	8	#9	1	57'-7"	1566
B2	8	#4	STR	28'-9"	154
B3	8	#4	STR	18'-9"	100
B4	1	#4	STR	14'-2"	9
B5	1	#4	STR	13'-8"	9
B6	1	#4	STR	13'-2"	9
B7	1	#4	STR	12'-8"	8
B8	8	#4	STR	28'-9"	154
B9	14	#4	STR	2'-11"	27
H1	5	#5	2	11'-2"	58
H2	5	#5	2	11'-0"	57
H3	4	#5	3	9'-1"	38
H4	4	#5	3	9'-3"	39
S1	51	#4	4	8'-11"	304
S2	51	#4	7	3'-8"	125
S3	32	#4	5	6'-6"	139
V1	88	#4	STR	5'-8"	333
V2	14	#4	STR	8'-2"	76
V3	18	#4	STR	9'-3"	111
U1	19	#4	6	4'-11"	62
U2	11	#4	6	5'-11"	43

REINFORCING STEEL 3421 LBS.

CLASS A CONCRETE BREAKDOWN

POUR #1 CAP, LOWER PART OF WINGS & COLLARS 26.4 C.Y.

TOTAL CLASS A CONCRETE 26.4 C.Y.

HP 12 X 53 STEEL PILES NO. = 8 640 L.F.

PILE DRIVES 4 EA.

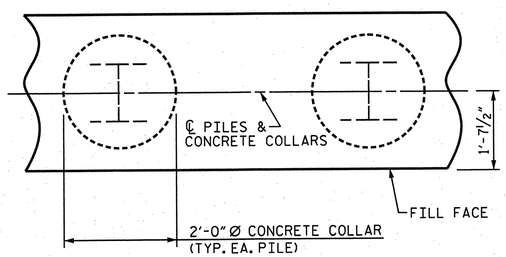

PLAN

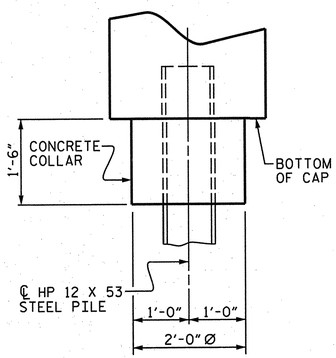

ELEVATION

CORROSION PROTECTION FOR STEEL PILES DETAIL

(END BENT NO. 1 SHOWN, END BENT NO. 2 SIMILAR BY ROTATION)

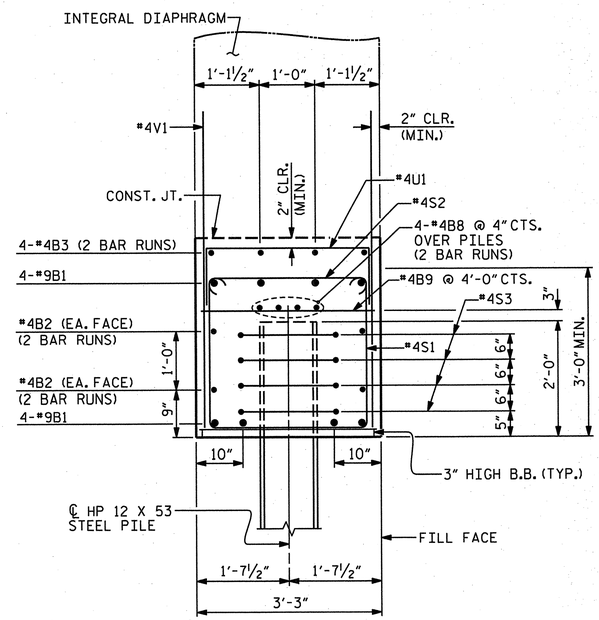

SECTION "A-A"

(CONCRETE COLLAR NOT SHOWN FOR CLARITY. SEE "CORROSION PROTECTION FOR STEEL PILES DETAIL.")

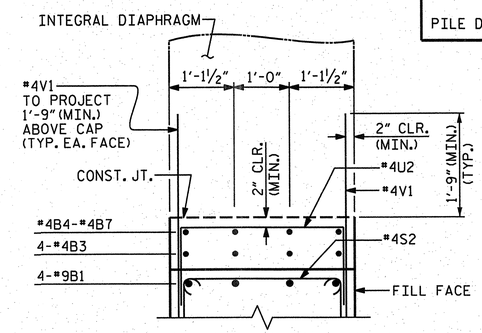

PATIAL SECTION "B-B"

PROJECT NO. R-2633BB

BRUNSWICK/NEW HANOVER COUNTY

STATION: 440+50.13 -L-

SHEET 2 OF 5

STATE OF NORTH CAROLINA
DEPARTMENT OF TRANSPORTATION
RALEIGH

SUBSTRUCTURE
END BENT NO. 1
DETAILS
LEFT LANE

PLAN PREPARED BY:

ALPHA & OMEGA GROUP
CIVIL & STRUCTURAL ENGINEERS
4601 Lake Boone Trail, Ste. 3C Raleigh, NC 27607
Phone 919 981 0310 Fax 919 981 0451
Firm License No. C-1684 www.aogroup.com
A&O PROJECT NO. 2011.036

NORTH CAROLINA PROFESSIONAL SEAL ENGINEER T. GLENN ZEBLO 032724 1-17-12

REFERENCE NO. 7-16

REVISIONS								SHEET NO.
NO.	BY:	DATE:	NO.	BY:	DATE:			S-622
1			3					TOTAL SHEETS
2			4					100

STRUCTURE NO. 7

DRAWN BY :	JR FISHER	DATE :	11/12
CHECKED BY :	HM SWANSON / TGZ	DATE :	11/12
QC / QA BY :	TL BARTELT	DATE :	11/12

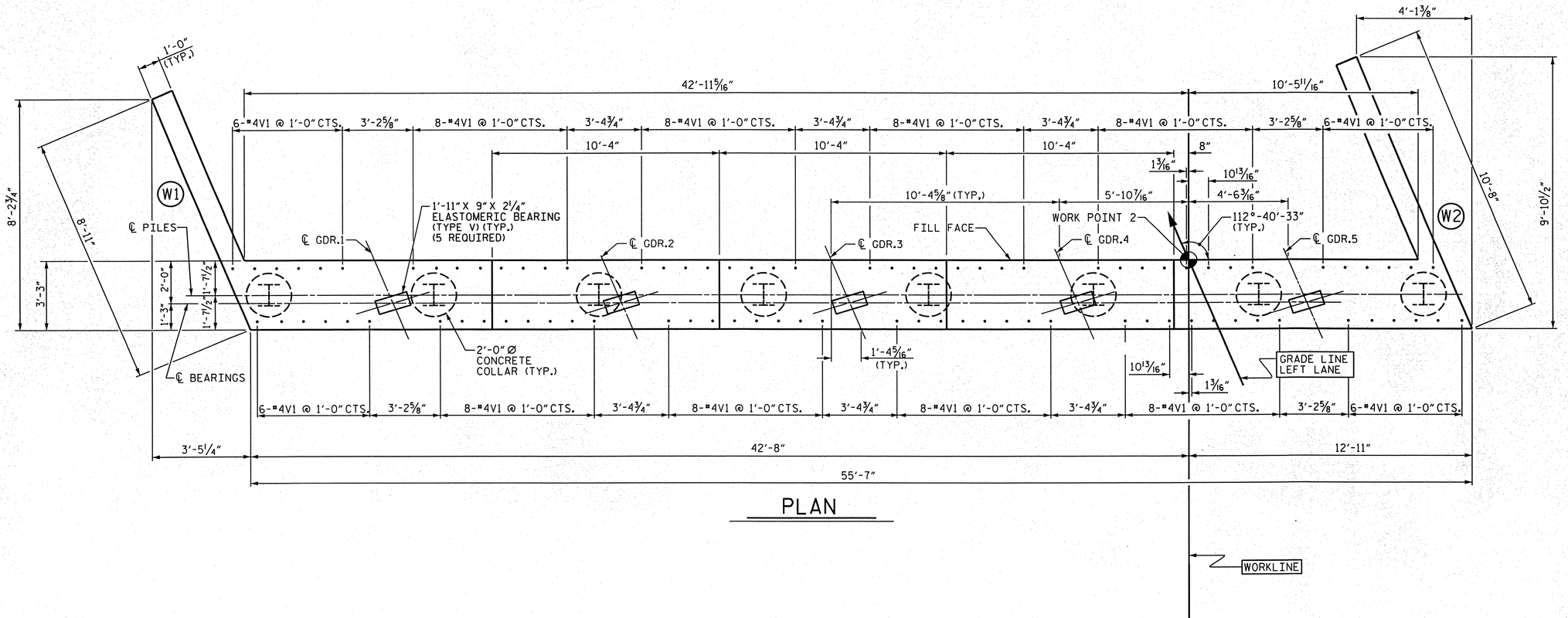

PLAN

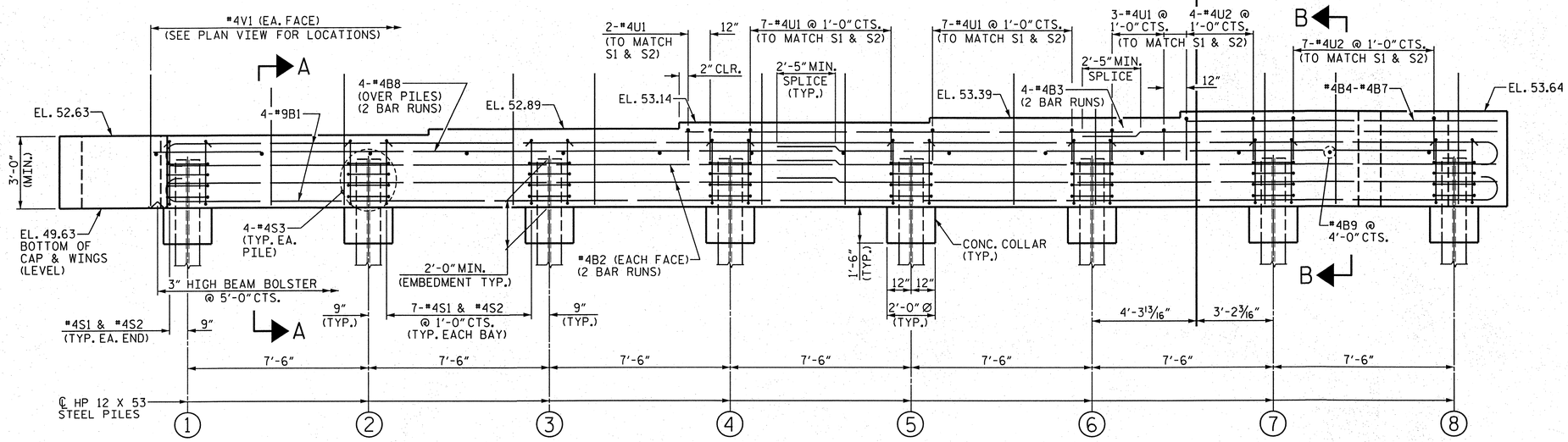

ELEVATION

FOR SECTION "A-A" AND PARTIAL SECTION "B-B", SEE SHEET 4 OF 5.

NOTES

THE #4V1 BARS IN CAP MAY BE SHIFTED SLIGHTLY AVOID STIRRUPS IN CAP.

FOR PILE SPLICE DETAILS, SEE SHEET 5 OF 5.

FOR WING DETAILS, SEE SHEET 5 OF 5.

THE TOP SURFACE OF THE CAP AND WINGS, EXCLUDING THE BEARING AREA, SHALL BE RAKED TO A DEPTH OF 1/4".

SEE SUPERSTRUCTURE SHEETS FOR UPPER PART OF THE INTEGRAL END BENT DETAILS.

PROJECT NO. R-2633BB
BRUNSWICK/NEW HANOVER COUNTY
STATION: 440+50.13 -L-
SHEET 3 OF 5

STATE OF NORTH CAROLINA
DEPARTMENT OF TRANSPORTATION
RALEIGH

SUBSTRUCTURE
END BENT NO. 2
LEFT LANE

PLAN PREPARED BY:

ALPHA & OMEGA GROUP
CIVIL & STRUCTURAL ENGINEERS
4601 Lake Boone Trail, Ste. 3C Raleigh, NC 27607
Phone 919 981 0310 Fax 919 981 0451
Firm License No. C-1684 www.aogroup.com
A&O PROJECT NO. 2011.036

NORTH CAROLINA PROFESSIONAL SEAL 032724 ENGINEER GLENN ZEBLO 1-17-13

REFERENCE NO. 7-17

REVISIONS								SHEET NO.
NO.	BY:	DATE:	NO.	BY:	DATE:			S-623
1			3					TOTAL SHEETS
2			4					700

DRAWN BY :	JR FISHER	DATE :	11/12
CHECKED BY :	HM SWANSON / TGZ	DATE :	11/12
QC / QA BY :	TL BARTELT	DATE :	11/12

STRUCTURE NO. 7

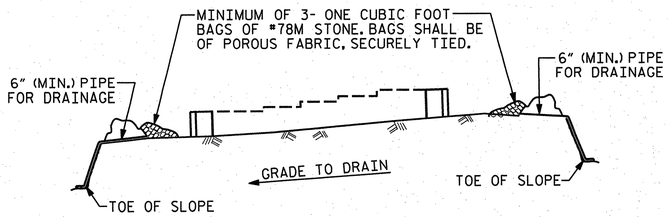

BAGGED STONE AND PIPE SHALL BE PLACED IMMEDIATELY AFTER COMPLETION OF END BENT EXCAVATION. PIPE MAY BE EITHER CONCRETE, CORRUGATED STEEL, CORRUGATED ALUMINUM ALLOY, OR CORRUGATED PLASTIC. PERFORATED PIPE WILL NOT BE ALLOWED.

BAGGED STONE SHALL REMAIN IN PLACE UNTIL THE ENGINEER DIRECTS THAT IT BE REMOVED. THE CONTRACTOR SHALL REMOVE AND DISPOSE OF SILT ACCUMULATIONS AT BAGGED STONE WHEN SO DIRECTED BY THE ENGINEER. BAGS SHALL BE REMOVED AND REPLACED WHENEVER THE ENGINEER DETERMINES THAT THEY HAVE DETERIORATED AND LOST THEIR EFFECTIVENESS.

NO SEPARATE PAYMENT WILL BE MADE FOR THIS WORK AND THE ENTIRE COST OF THIS WORK SHALL BE INCLUDED IN THE UNIT CONTRACT PRICE BID FOR THE SEVERAL PAY ITEMS.

TEMPORARY DRAINAGE AT END BENT

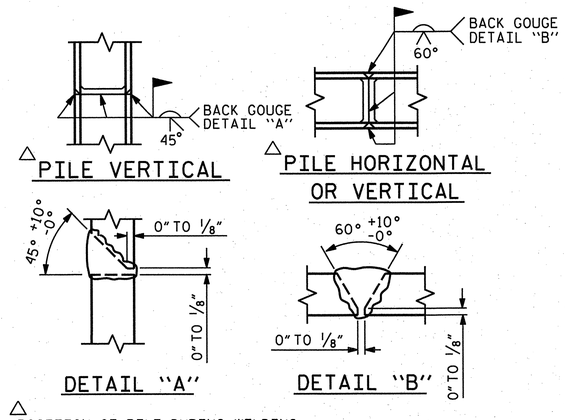

△ POSITION OF PILE DURING WELDING.

PILE SPLICE DETAILS

BAR TYPES

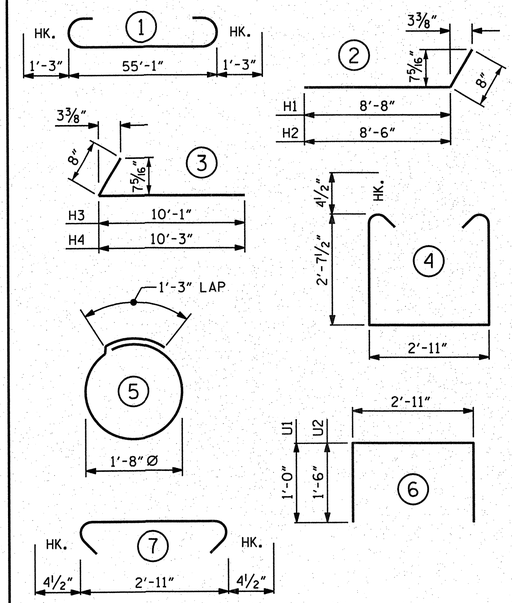

ALL BAR DIMENSIONS ARE OUT TO OUT.

BILL OF MATERIAL

INTEGRAL END BENT NO. 1

BAR	NO.	SIZE	TYPE	LENGTH	WEIGHT
B1	8	#9	1	57'-7"	1566
B2	8	#4	STR	28'-9"	154
B3	8	#4	STR	18'-3"	98
B4	1	#4	STR	14'-2"	9
B5	1	#4	STR	13'-8"	8
B6	1	#4	STR	13'-2"	8
B7	1	#4	STR	12'-8"	8
B8	8	#4	STR	28'-9"	154
B9	14	#4	STR	2'-11"	27
H1	5	#5	2	9'-4"	49
H2	5	#5	2	9'-2"	48
H3	4	#5	3	10'-9"	45
H4	4	#5	3	10'-11"	46
S1	51	#4	4	8'-11"	304
S2	51	#4	7	3'-8"	125
S3	32	#4	5	6'-6"	139
V1	88	#4	STR	5'-8"	333
V2	14	#4	STR	8'-2"	76
V3	18	#4	STR	9'-3"	111
U1	19	#4	6	4'-11"	62
U2	11	#4	6	5'-11"	43

REINFORCING STEEL 3413 LBS.

CLASS A CONCRETE BREAKDOWN

POUR #1 CAP, LOWER PART OF WINGS & COLLARS 26.5 C.Y.

TOTAL CLASS A CONCRETE 26.5 C.Y.

HP 12 X 53 STEEL PILES NO. = 8 640 L.F.

PILE REDRIVES 4 EA.

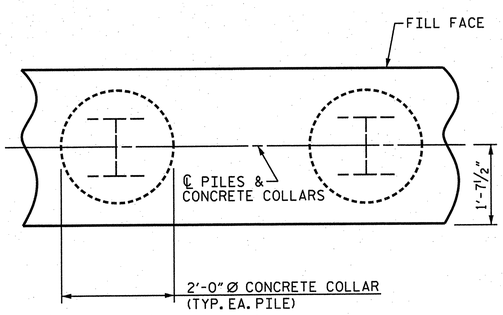

PLAN

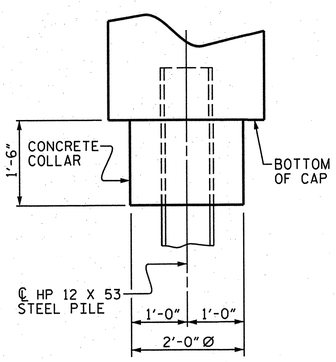

ELEVATION

CORROSION PROTECTION FOR STEEL PILES DETAIL

(END BENT NO. 2 SHOWN, END BENT NO. 1 SIMILAR BY ROTATION)

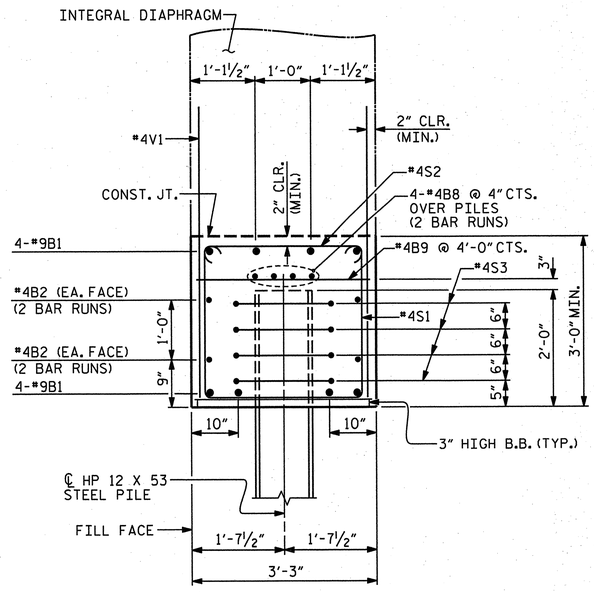

SECTION "A-A"

(CONCRETE COLLAR NOT SHOWN FOR CLARITY. SEE "CORROSION PROTECTION FOR STEEL PILES DETAIL.")

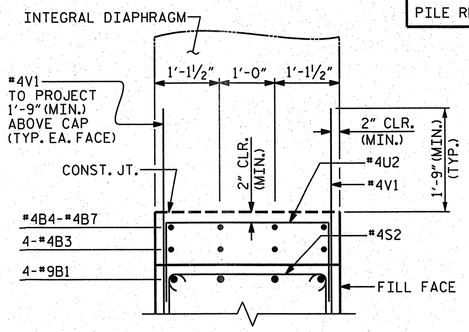

PATIAL SECTION "B-B"

PROJECT NO. R-2633BB

BRUNSWICK/NEW HANOVER COUNTY

STATION: 440+50.13 -L-

SHEET 4 OF 5

STATE OF NORTH CAROLINA
DEPARTMENT OF TRANSPORTATION
RALEIGH

SUBSTRUCTURE
END BENT NO. 2
DETAILS
LEFT LANE

REVISIONS								SHEET NO.
NO.	BY:	DATE:	NO.	BY:	DATE:			S-624
1			3					TOTAL SHEETS
2			4					700

STRUCTURE NO. 7

PLAN PREPARED BY:

ALPHA & OMEGA GROUP
CIVIL & STRUCTURAL ENGINEERS
4601 Lake Boone Trail, Ste. 3C Raleigh, NC 27607
Phone 919 981 0310 Fax 919 981 0451
Firm License No. C-1684 www.aogroup.com
A&O PROJECT NO. 2011.036

NORTH CAROLINA PROFESSIONAL SEAL 032724 ENGINEER GLENN ZEBLO
1-17-13

REFERENCE NO. 7-18

DRAWN BY :	JR FISHER	DATE :	11/12
CHECKED BY :	HM SWANSON / TGZ	DATE :	11/12
QC / QA BY :	TL BARTELT	DATE :	11/12

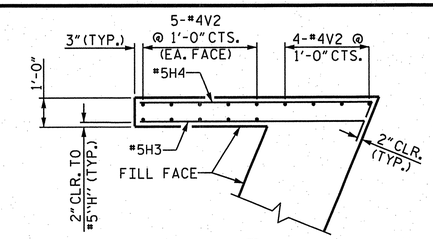

PLAN (W1)

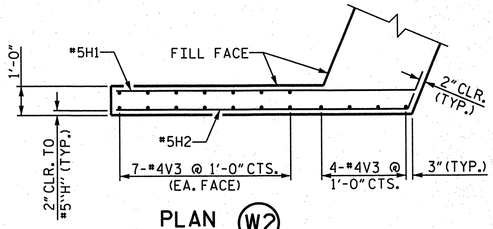

PLAN (W2)

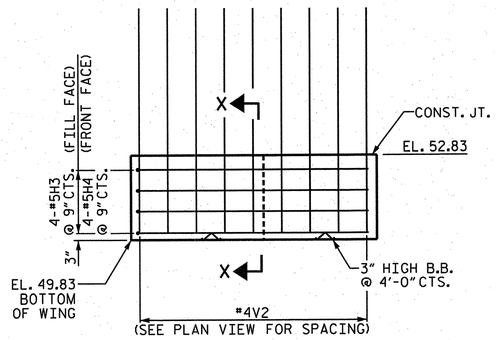

ELEVATION (W1)

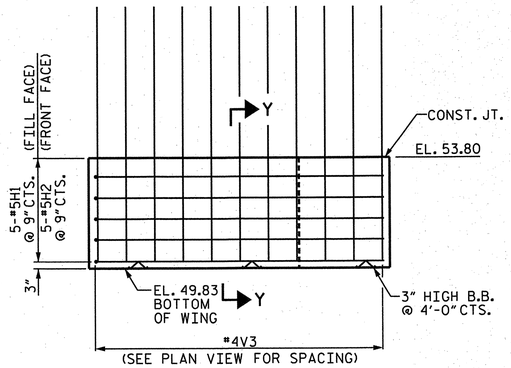

ELEVATION (W2)

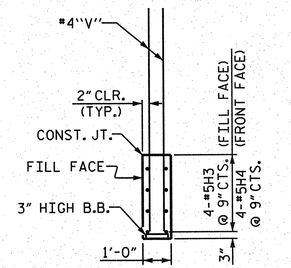

SECTION "X-X"

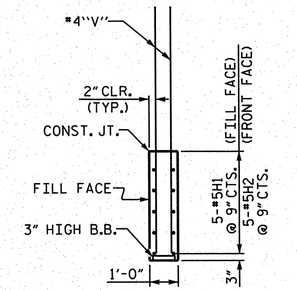

SECTION "Y-Y"

END BENT NO. 1

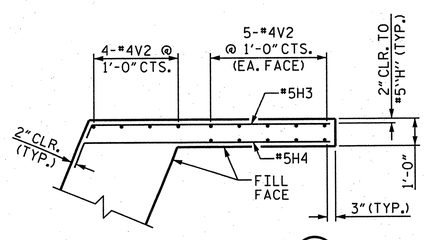

PLAN (W1)

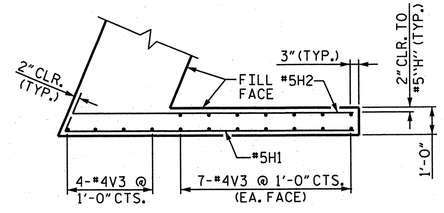

PLAN (W2)

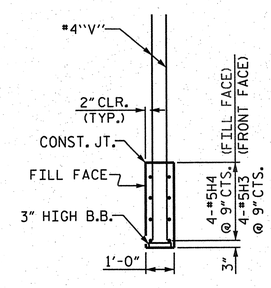

SECTION "X-X"

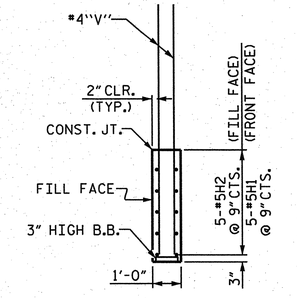

SECTION "Y-Y"

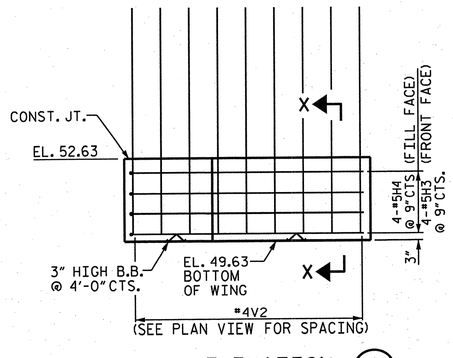

ELEVATION (W1)

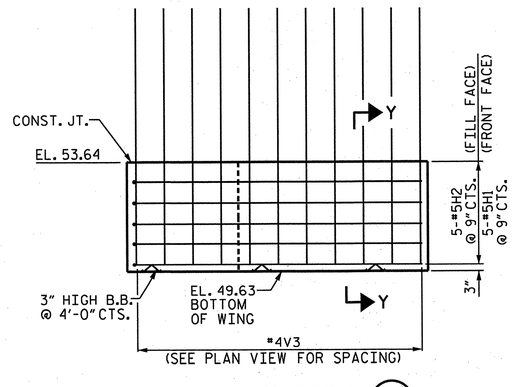

ELEVATION (W2)

END BENT NO. 2

PROJECT NO. R-2633BB

BRUNSWICK/NEW HANOVER COUNTY

STATION: 440+50.13 -L-

SHEET 5 OF 5

STATE OF NORTH CAROLINA
DEPARTMENT OF TRANSPORTATION
RALEIGH

SUBSTRUCTURE

BOTTOM OF WINGS END BENT NO. 1 & END BENT NO. 2

LEFT LANE

PLAN PREPARED BY:

ALPHA & OMEGA GROUP
CIVIL & STRUCTURAL ENGINEERS
4601 Lake Boone Trail, Ste. 3C Raleigh, NC 27607
Phone 919 981 0310 Fax 919 981 0451
Firm License No. C-1684 www.aogroup.com

A&O PROJECT NO. 2011.036

NORTH CAROLINA PROFESSIONAL ENGINEER SEAL 032724 GLENN ZERO 1-17-13

REFERENCE NO. 7-19

REVISIONS						SHEET NO.
NO.	BY:	DATE:	NO.	BY:	DATE:	S-625
1			3			TOTAL SHEETS
2			4			700

STRUCTURE NO. 7

DRAWN BY :	JR FISHER	DATE :	11/12
CHECKED BY :	HM SWANSON / TGZ	DATE :	11/12
QC / QA BY :	TL BARTELT	DATE :	11/12

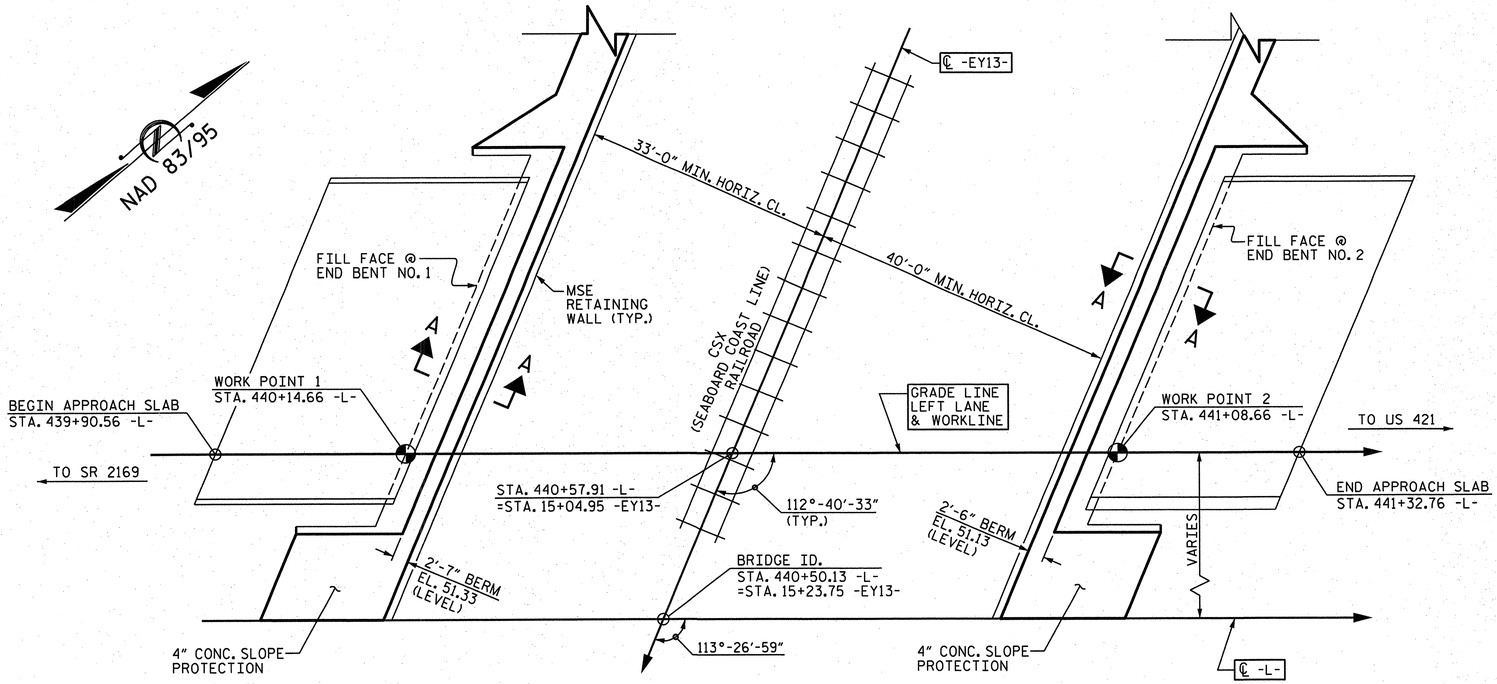

PLAN ALONG -L-

PILES ARE NOT SHOWN IN PLAN VIEW

GENERAL NOTES

SLOPE PROTECTION SHALL BE PLACED UNDER THE ENDS OF THE BRIDGE AS SHOWN IN THE DETAILS. STRAIGHT EDGING WILL NOT BE REQUIRED UNLESS, IN THE OPINION OF THE ENGINEER, VISUAL INSPECTION INDICATES A NEED FOR IT. MEASUREMENT AND PAYMENT SHALL BE AS PRESCRIBED IN SECTION 462 OF THE STANDARD SPECIFICATIONS. FOR BERM WIDTH, SEE GENERAL DRAWING.

SLOPE PROTECTION SHALL CONSIST OF 4" POURED-IN-PLACE CONCRETE PAVING AS SHOWN IN THE DETAILS ON THIS SHEET. CONCRETE SHALL BE CLASS "B". THE CONCRETE SURFACE SHALL BE FLOATED WITH A WOODEN FLOAT AND FINISHED. WELDED WIRE FABRIC REINFORCING SHALL BE 6 X 6 - W1.4 X W1.4, 60" WIDE. SLOPE PROTECTION SHALL BE POURED IN 5' STRIPS AS SHOWN IN THE "POURING DETAIL" WITH 2'-0" LONG #4 BARS PLACED ALONG THE SLOPE BETWEEN STRIPS AT 1'-6" MAXIMUM SPACING. SLOPE PROTECTION MAY BE POURED IN ALTERNATE 4' AND 5' STRIPS AS SHOWN IN THE "OPTIONAL POURING DETAIL" WITH ADJACENT RUNS OF WELDED WIRE FABRIC LAPPING AT LEAST 6". THE COST OF THE WELDED WIRE FABRIC AND #4 BARS, IF USED, SHALL BE INCLUDED IN THE CONTRACT UNIT PRICE BID PER SQUARE YARD FOR SLOPE PROTECTION.

BRIDGE @ STA. 440+50.13 -L-	4 INCH SLOPE PROTECTION	* WELDED WIRE FABRIC 60 INCHES WIDE
	SQUARE YARDS	APPROX. L.F.
END BENT NO. 1	53	96
END BENT NO. 2	48	87

* QUANTITY SHOWN IS BASED ON 5' POURS.

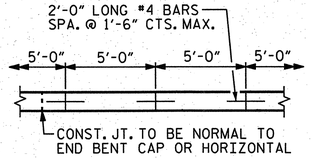

STRIP WIDTHS MAY VARY IN CURVED PORTION.

POURING DETAIL

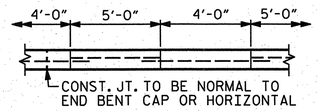

POUR A 4'-0" STRIP FIRST. STRIP WIDTHS MAY VARY IN CURVED PORTION.

OPTIONAL POURING DETAIL

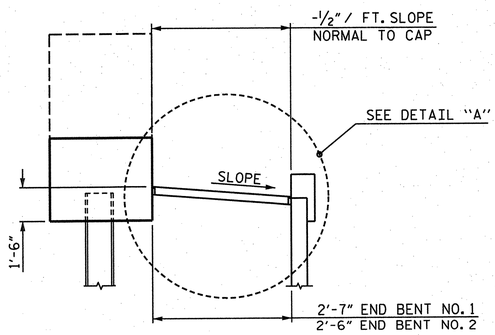

SECTION "A-A"

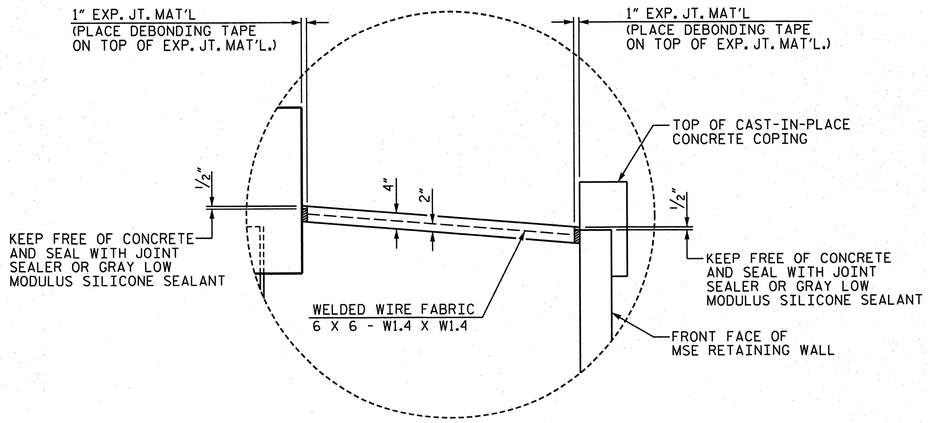

DETAIL "A"

PROJECT NO. R-2633BB

BRUNSWICK/NEW HANOVER COUNTY

STATION: 440+50.13 -L-

STATE OF NORTH CAROLINA
DEPARTMENT OF TRANSPORTATION
RALEIGH

STANDARD
SLOPE PROTECTION DETAILS
LEFT LANE

DRAWN BY : JR FISHER	DATE : 11/12	DRAWN BY : ELR 5/92	REV. 5/1/06 TLA/GM
CHECKED BY : HM SWANSON / TGZ	DATE : 11/12	CHECKED BY : GRP 6/92	REV. 10/1/11 MAA/GM
QC / QA BY : TL BARTELT	DATE : 11/12		REV. 12/21/11 MAA/GM

PLAN PREPARED BY:

ALPHA & OMEGA GROUP
CIVIL & STRUCTURAL ENGINEERS
4601 Lake Boone Trail, Ste. 3C Raleigh, NC 27607
Phone 919 981 0310 Fax 919 981 0451
Firm License No. C-1684 www.aogroup.com
A&O PROJECT NO. 2011.036

NOTE: THIS STANDARD DRAWING REVIEWED AND ADOPTED FOR USE AT THE REFERENCED LOCATION BY THE UNDERSIGNED.

NORTH CAROLINA PROFESSIONAL SEAL 032724 ENGINEER GLENN ZEBLO

REFERENCE NO. 7-20

REVISIONS								SHEET NO.
NO.	BY:	DATE:	NO.	BY:	DATE:			S-626
1			3					TOTAL SHEETS
2			4					100

STRUCTURE NO. 7

STD. NO. SP1

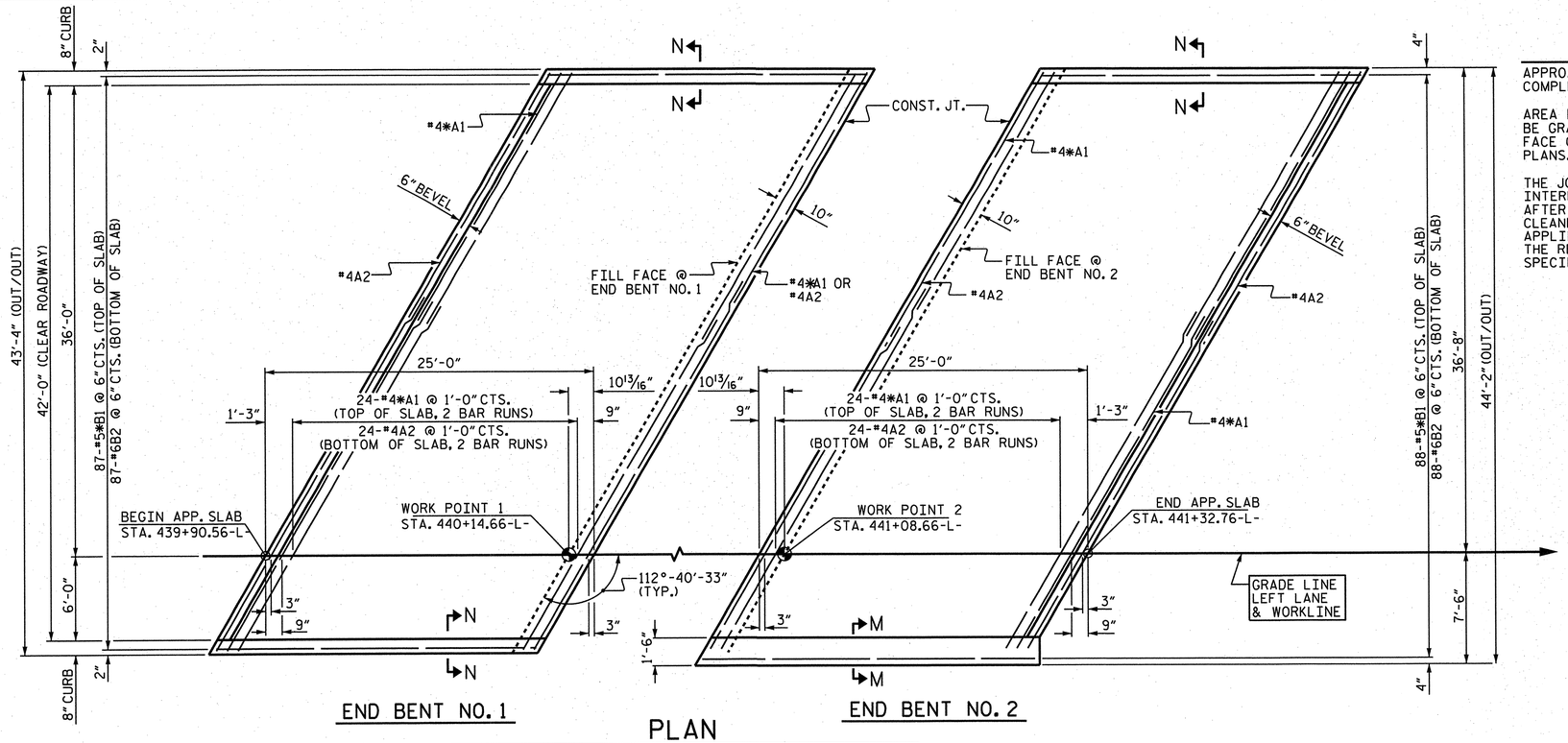

END BENT NO. 1

END BENT NO. 2

PLAN

DIMENSIONS SHOWN ARE TYPICAL FOR BOTH APPROACH SLABS

NOTES

APPROACH SLAB SHALL NOT BE CONSTRUCTED PRIOR TO COMPLETION OF THE BRIDGE DECK.

AREA BETWEEN THE WINGWALL AND APPROACH SLAB SHALL BE GRADED TO DRAIN THE WATER AWAY FROM THE FILL FACE OF THE BRIDGE AND SHALL BE PAVED. SEE ROADWAY PLANS.

THE JOINT OPENING AT THE APPROACH SLAB/DECK INTERFACE SHALL BE SAWED NO MORE THAN 12 HOURS AFTER THE APPROACH SLAB IS CAST. THE JOINT SHALL BE CLEANED OF ALL DEBRIS BEFORE THE SEALANT IS APPLIED. THE JOINT SEALER MATERIAL SHALL CONFORM TO THE REQUIREMENTS OF SECTION 1028-3 OF THE STANDARD SPECIFICATIONS.

BILL OF MATERIAL

APPROACH SLAB AT END BENT NO. 1

BAR	NO.	SIZE	TYPE	LENGTH	WEIGHT
*A1	52	#4	STR	24'-9"	860
A2	52	#4	STR	24'-7"	854
*B1	87	#5	STR	24'-2"	2193
B2	87	#6	STR	24'-8"	3223

REINFORCING STEEL	4077 LBS.
* EPOXY COATED REINFORCING STEEL	3053 LBS.
CLASS AA CONCRETE	46.8 C.Y.

BILL OF MATERIAL

APPROACH SLAB AT END BENT NO. 2

BAR	NO.	SIZE	TYPE	LENGTH	WEIGHT
*A1	52	#4	STR	24'-9"	860
A2	52	#4	STR	24'-7"	854
*B1	88	#5	STR	24'-2"	2218
B2	88	#6	STR	24'-8"	3260

REINFORCING STEEL	4114 LBS.
* EPOXY COATED REINFORCING STEEL	3078 LBS.
CLASS AA CONCRETE	47.6 C.Y.

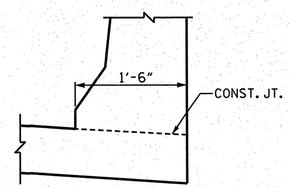

SECTION "M-M"

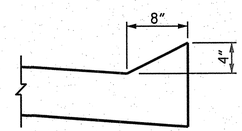

SECTION "N-N"

SPLICE CHART	
#4*A1	2'-0" MIN.
#4A2	1'-9" MIN.

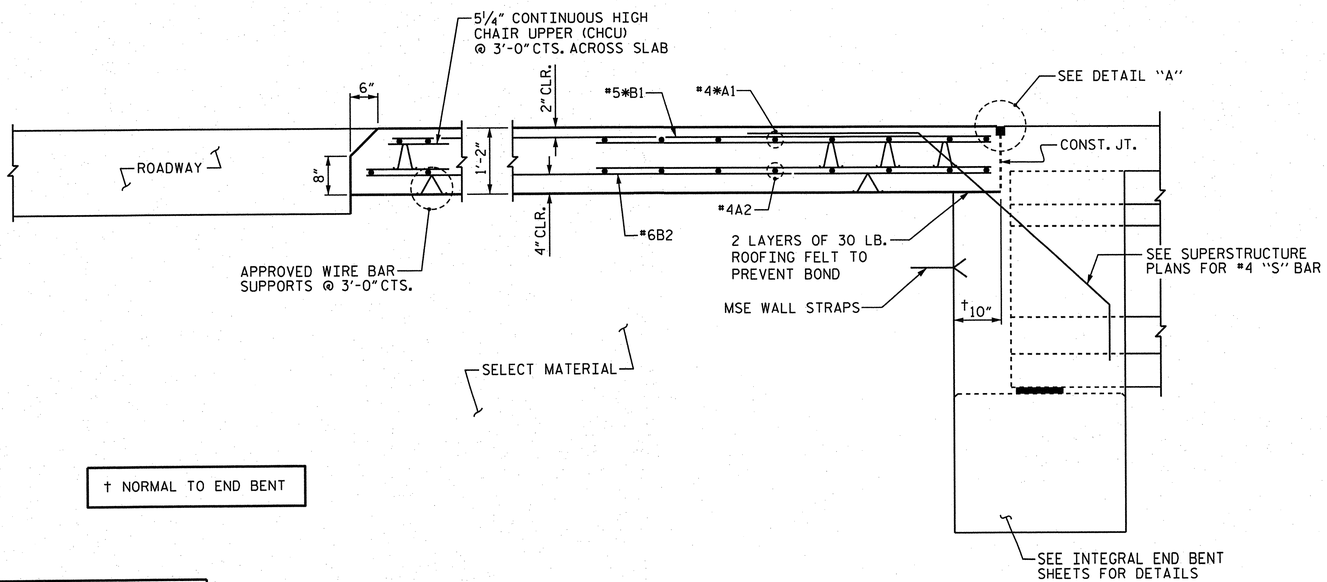

† NORMAL TO END BENT

SECTION THRU SLAB

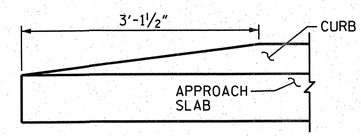

END OF CURB WITHOUT SHOULDER BERM GUTTER

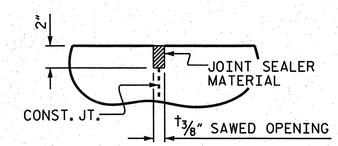

DETAIL "A"

PROJECT NO. R-2633BB

BRUNSWICK/NEW HANOVER COUNTY

STATION: 440+50.13 -L-

SHEET 1 OF 2

STATE OF NORTH CAROLINA
DEPARTMENT OF TRANSPORTATION
RALEIGH

STANDARD
BRIDGE APPROACH SLAB FOR INTEGRAL END BENT
LEFT LANE

DRAWN BY : JR FISHER	DATE : 11/12	DRAWN BY : TLA 10/05	ADDED 5/1/06 RR KMM/GM
CHECKED BY : HM SWANSON / TGZ	DATE : 11/12	CHECKED BY : GM 5/06	REV. 10/1/11 MAA/GM
OC / OA BY : TL BARTELT	DATE : 11/12		REV. 12/21/11 MAA/GM

PLAN PREPARED BY:

ALPHA & OMEGA GROUP
CIVIL & STRUCTURAL ENGINEERS
4601 Lake Boone Trail, Ste. 3C Raleigh, NC 27607
Phone 919 981 0310 Fax 919 981 0451
Firm License No. C-1684 www.aogroup.com
A&O PROJECT NO. 2011.036

NOTE: THIS STANDARD DRAWING REVIEWED AND ADOPTED FOR USE AT THE REFERENCED LOCATION BY THE UNDERSIGNED.

NORTH CAROLINA PROFESSIONAL SEAL 032724 ENGINEER GLENN ZEBLO
T. Gene Bartelt 1-17-13

REFERENCE NO. 7-21

REVISIONS								SHEET NO.
NO.	BY:	DATE:	NO.	BY:	DATE:			S-627
1			3					TOTAL SHEETS
2			4					700

STRUCTURE NO. 7

STD. NO. BAS5

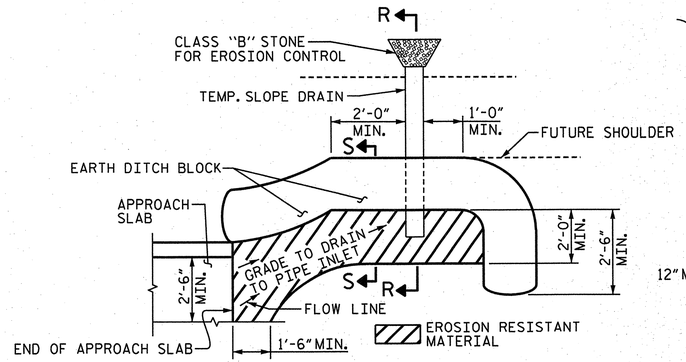

NOTE: IMMEDIATELY AFTER THE CONSTRUCTION OF THE APPROACH SLAB, THE CONTRACTOR SHALL PROVIDE TEMPORARY BERM AND SLOPE DRAIN. CONTRACTOR SHALL GRADE TO PIPE INLET AND PROVIDE EROSION RESISTANT MATERIAL AS SHOWN. THE EROSION RESISTANT MATERIAL SHALL BE EITHER 1) ASPHALT PLANT MIX, TYPE 1 OR TYPE 2, MIN. 2" DEPTH, 2) EROSION CONTROL MAT, OR 3) CONCRETE, AS DIRECTED BY THE ENGINEER. THE SLOPE DRAIN SHALL CONSIST OF A NON-PERFORATED TEMPORARY DRAINAGE PIPE, 12 INCHES IN DIAMETER.

PLAN VIEW

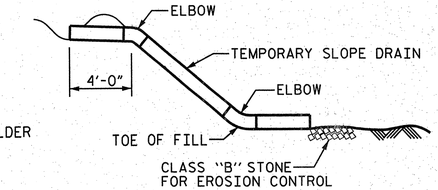

SECTION "R-R"

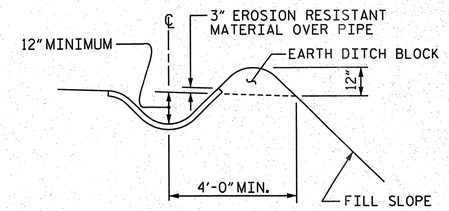

SECTION "S-S"

TEMPORARY BERM AND SLOPE DRAIN DETAILS

(TO BE USED WHEN SHOULDER BERM GUTTER IS REQUIRED)

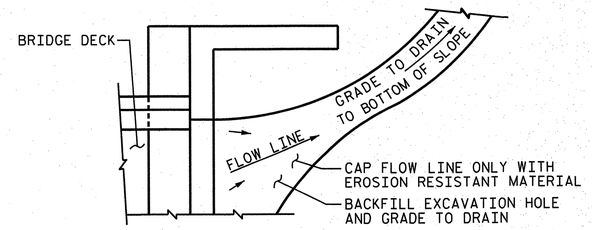

NOTE: IF THE APPROACH SLAB IS NOT CONSTRUCTED IMMEDIATELY AFTER THE BACKFILLING OF THE END BENT EXCAVATION, GRADE TO DRAIN TO THE BOTTOM OF THE SLOPE AND PROVIDE EROSION RESISTANT MATERIAL, SUCH AS FIBERGLASS ROVING OR AS DIRECTED BY THE ENGINEER TO PREVENT SOIL EROSION AND TO PROTECT THE AREA ADJACENT TO THE STRUCTURE. THE CONTRACTOR WILL BE REQUIRED TO REMOVE THESE MATERIALS PRIOR TO CONSTRUCTION OF THE APPROACH SLAB.

TEMPORARY DRAINAGE DETAIL

PROJECT NO. R-2633BB

BRUNSWICK/NEW HANOVER COUNTY

STATION: 440+50.13 -L-

SHEET 2 OF 2

STATE OF NORTH CAROLINA
DEPARTMENT OF TRANSPORTATION
RALEIGH

STANDARD
BRIDGE APPROACH SLAB DETAILS
LEFT LANE

PLAN PREPARED BY:

ALPHA & OMEGA GROUP
CIVIL & STRUCTURAL ENGINEERS
4601 Lake Boone Trail, Ste. 3C Raleigh, NC 27607
Phone 919 981 0310 Fax 919 981 0451
Firm License No. C-1684 www.aogroup.com
A&O PROJECT NO. 2011.036

NOTE: THIS STANDARD DRAWING REVIEWED AND ADOPTED FOR USE AT THE REFERENCED LOCATION BY THE UNDERSIGNED.

NORTH CAROLINA PROFESSIONAL SEAL 032724 ENGINEER T. GLENN ZEBLO
1-17-13

REFERENCE NO. 7-22

REVISIONS						SHEET NO.
NO.	BY:	DATE:	NO.	BY:	DATE:	S-628
1			3			TOTAL SHEETS
2			4			700

STRUCTURE NO. 7

STD. NO. BAS4

DRAWN BY :	JR FISHER	DATE :	11/12
CHECKED BY :	HM SWANSON / TGZ	DATE :	11/12
QC / QA BY :	TL BARTELT	DATE :	11/12

DRAWN BY : FCJ	11/88	REV. 5/1/06RRR	MAA/KMM
CHECKED BY : ARB	11/88	REV. 10/1/11	MAA/GM
		REV. 7/12	MAA/GM

F.A.PROJECT NHS-0017(125)

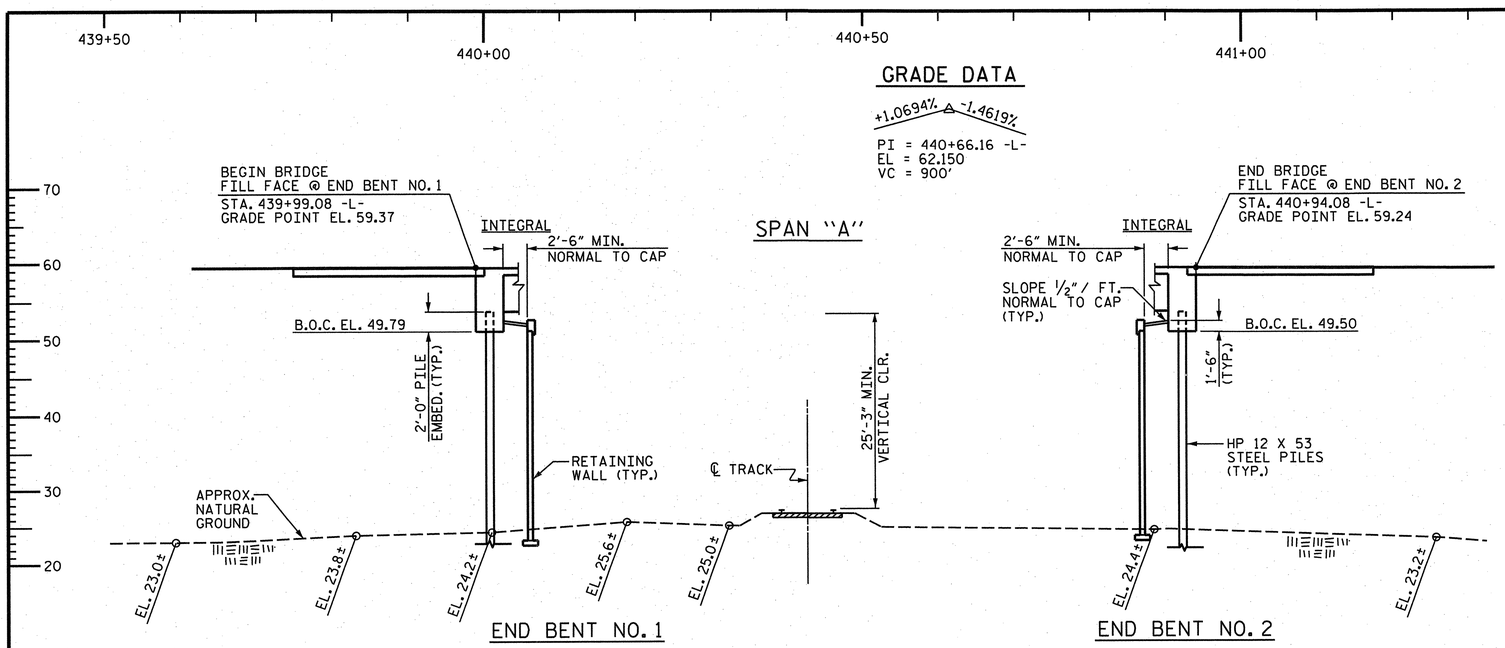

SECTION ALONG GRADE LINE - RIGHT LANE

SECTION AT END BENTS ARE @ RIGHT ANGLES

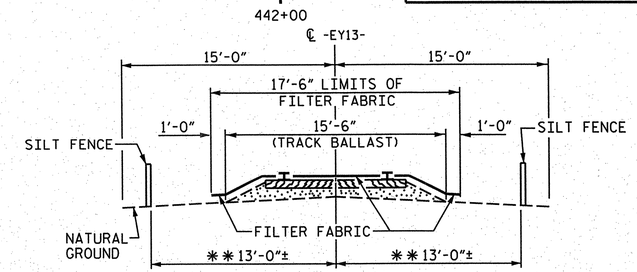

RAILROAD EROSION CONTROL DETAIL

NOTES

RAILROAD EROSION CONTROL MEASURES SHALL BE INSTALLED PRIOR TO PERFORMING ANY WORK IN THE RAILROAD RIGHT-OF-WAY.

ADDITIONAL EROSION CONTROL MEASURES FOR PROTECTION OF RAILROAD DITCHES MAY BE REQUIRED AS DIRECTED BY THE ENGINEER.

NO SEPARATE PAYMENT WILL BE MADE FOR RAILROAD EROSION CONTROL MEASURES.

LIMITS OF SILT FENCE AND FILTER FABRIC PARALLEL TO RAILROAD SHALL EXTEND A MINIMUM OF 25'-0" OUTSIDE EDGE OF SUPERSTRUCTURE OR TOE OF SLOPE ON CONSTRUCTION. A GREATER LENGTH OF SILT FENCE MAY BE REQUIRED IF SO DIRECTED BY THE ENGINEER.

FILTER FABRIC TO BE NAILED TO TIMBER RAIL TIES WITH PRIME SOURCE "GRIP CAP" OR EQUIVALENT. FILTER FABRIC ON SHOULDER TO BE SECURED AS DIRECTED BY THE ENGINEER AND RAILROAD.

THE RAILROAD TRACK TOP OF RAIL ELEVATIONS SHOWN ON THE PLANS ARE FROM THE BEST INFORMATION AVAILABLE. PRIOR TO BEGINNING BRIDGE CONSTRUCTION, VERIFY THE TOP OF RAIL ELEVATIONS AND REPORT ANY VARIATIONS TO THE ENGINEER. ANY PLAN REVISIONS NECESSARY TO ACHEIVE THE REQUIRED MINIMUM VERTICAL CLEARANCE WILL BE PROVIDED BY THE DEPARTMENT.

** THIS DIMENSION TO BE DETERMINED IN THE FIELD BY THE ENGINEER UPON CONSTULTATION WITH THE RAILROAD.

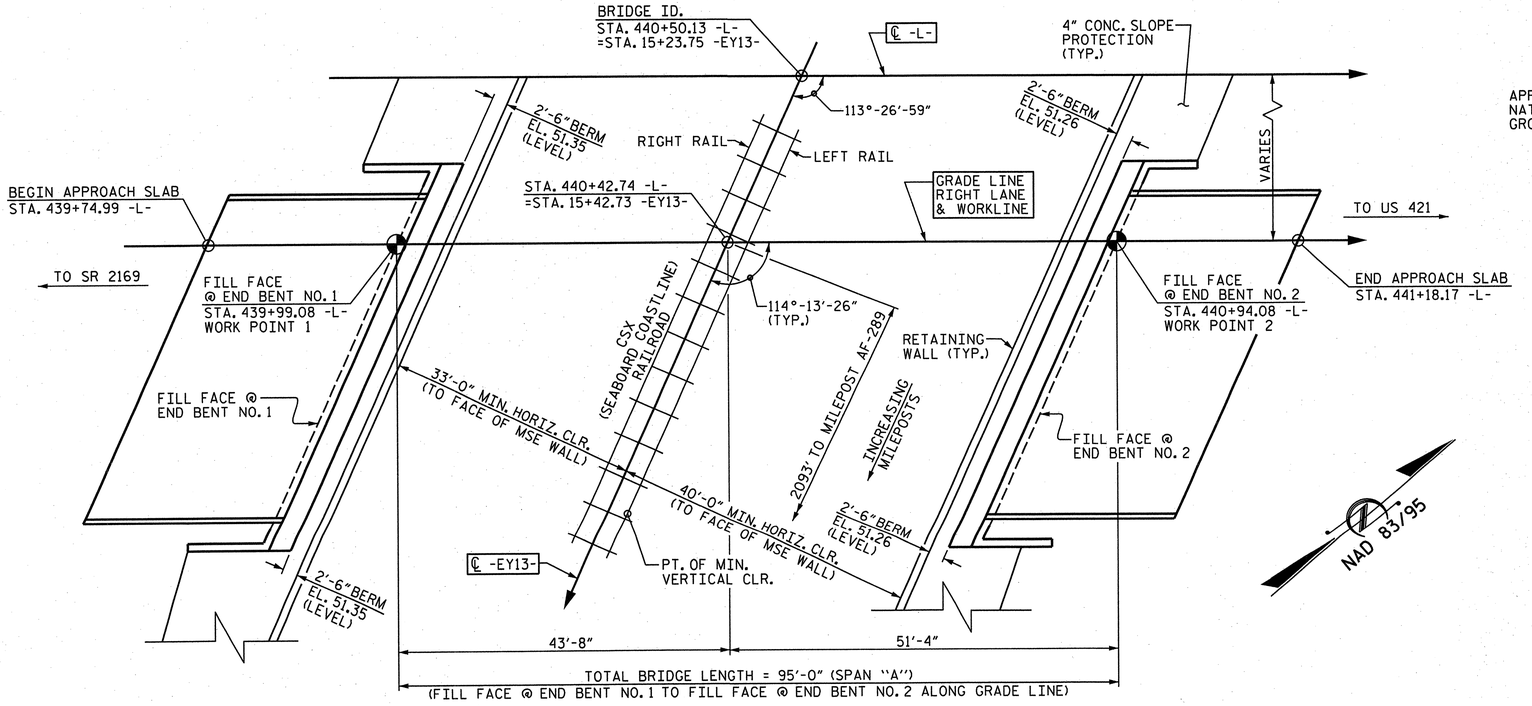

PLAN

PILES NOT SHOWN FOR CLARITY.

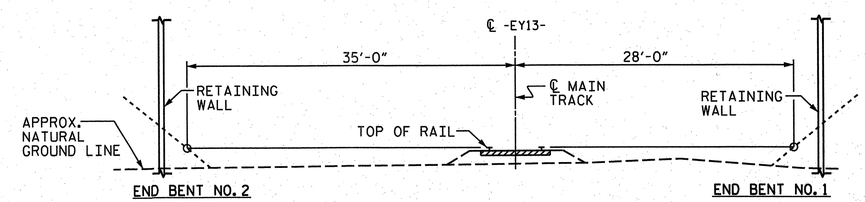

SPAN LENGTH BASED ON THIS SECTION

(LOOKING STATION AHEAD ALONG RAILROAD)

TOP OF RAIL ELEVATIONS		
STATION	LT. RAIL	RT. RAIL
14+50 -EY13-	28.090	28.005
15+00 -EY13-	27.961	27.875
15+50 -EY13-	27.842	27.767
16+00 -EY13-	27.730	27.662
16+50 -EY13-	27.647	27.588

PROJECT NO. R-2633BB

BRUNSWICK/NEW HANOVER COUNTY

STATION: 440+50.13 -L-
=15+23.75 -EY13-

BRIDGE NO. 640195
MILEPOST AF-288.60

SHEET 1 OF 3

STATE OF NORTH CAROLINA
DEPARTMENT OF TRANSPORTATION
RALEIGH

GENERAL DRAWING
FOR BRIDGE OVER CSX SEABOARD COASTLINE R.R. ON US 17 (WILMINGTON BYPASS) BETWEEN SR 2169 AND US 421 RIGHT LANE

REVISIONS							SHEET NO.
NO.	BY:	DATE:	NO.	BY:	DATE:		S-629
1			3				TOTAL SHEETS
2			4				700

STRUCTURE NO. 8

PLAN PREPARED BY:

ALPHA & OMEGA GROUP
CIVIL & STRUCTURAL ENGINEERS
4601 Lake Boone Trail, Ste. 3C Raleigh, NC 27607
Phone 919 981 0310 Fax 919 981 0451
Firm License No. C-1684 www.aogroup.com
A&O PROJECT NO. 2011.036

NORTH CAROLINA PROFESSIONAL SEAL 032724 ENGINEER T. GLENN ZEBLO 5-17-13

REFERENCE NO. 8-1

DRAWN BY :	JR FISHER	DATE :	11/12
CHECKED BY :	HM SWANSON / TGZ	DATE :	11/12
QC / QA BY :	TL BARTELT	DATE :	11/12

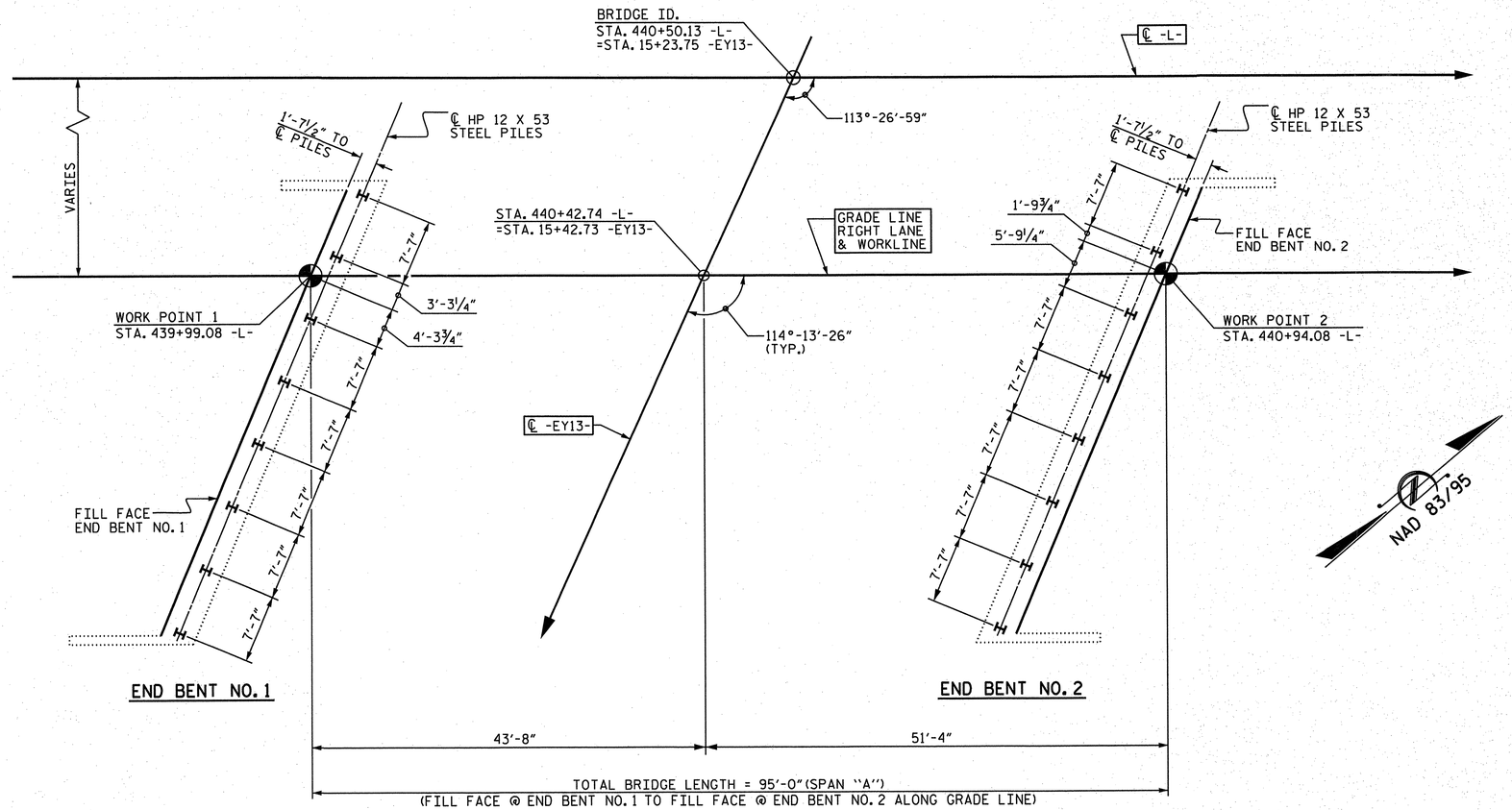

FOUNDATION LAYOUT

DIMENSIONS LOCATING PILES ARE SHOWN TO THE PILE CENTERLINE AT THE BOTTOM OF THE CAP.

NOTES

PILES AT END BENT NO. 1 AND NO. 2 ARE DESIGNED FOR A FACTORED RESISTANCE OF 120 TONS PER PILE.

DRIVE PILES AT END BENT NO. 1 AND NO. 2 TO A REQUIRED DRIVING RESISTANCE OF 200 TONS PER PILE.

FOR PILES, SEE SECTION 450 OF THE STANDARD SPECIFICATIONS.

TESTING PILES WITH THE PDA DURING DRIVING, RESTRIKING, OR REDRIVING MAY BE REQUIRED. THE ENGINEER WILL DETERMINE THE NEED FOR PDA TESTING. FOR PDA TESTING, SEE SECTION 450 OF THE STANDARD SPECIFICATIONS.

IT HAS BEEN ESTIMATED THAT A HAMMER WITH AN EQUIVALENT RATED ENERGY IN THE RANGE OF 45-75 FT-KIPS PER BLOW WILL BE REQUIRED TO DRIVE PILES AT END BENT NO. 1 AND END BENT NO. 2. THIS ESTIMATED ENERGY RANGE DOES NOT RELEASE THE CONTRACTOR FROM PROVIDING DRIVING EQUIPMENT IN ACCORDANCE WITH THE PILES PROVISION.

DRIVE END BENT PILES BEFORE CONSTRUCTING THE MSE WALLS.

PROJECT NO. R-2633BB
BRUNSWICK/NEW HANOVER COUNTY
STATION: 440+50.13 -L-
SHEET 2 OF 3

STATE OF NORTH CAROLINA
DEPARTMENT OF TRANSPORTATION
RALEIGH

GENERAL DRAWING
FOR BRIDGE OVER CSX SEABOARD COASTLINE R. R. ON US 17 (WILMINGTON BYPASS) BETWEEN SR 2169 AND US 421 RIGHT LANE

REVISIONS						SHEET NO.
NO.	BY:	DATE:	NO.	BY:	DATE:	S-630
1			3			TOTAL SHEETS
2			4			700

STRUCTURE NO. 8

PLAN PREPARED BY:
ALPHA & OMEGA GROUP
CIVIL & STRUCTURAL ENGINEERS
4601 Lake Boone Trail, Ste. 3C Raleigh, NC 27607
Phone 919 981 0310 Fax 919 981 0451
Firm License No. C-1684 www.aogroup.com
A&O PROJECT NO. 2011.036

NORTH CAROLINA PROFESSIONAL SEAL 032724 ENGINEER GLENN ZEMKO
T. Glenn Zemko 1-17-13

REFERENCE NO. 8-2

DRAWN BY :	JR FISHER	DATE :	11/12
CHECKED BY :	HM SWANSON / TGZ	DATE :	11/12
QC / QA BY :	TL BARTELT	DATE :	11/12

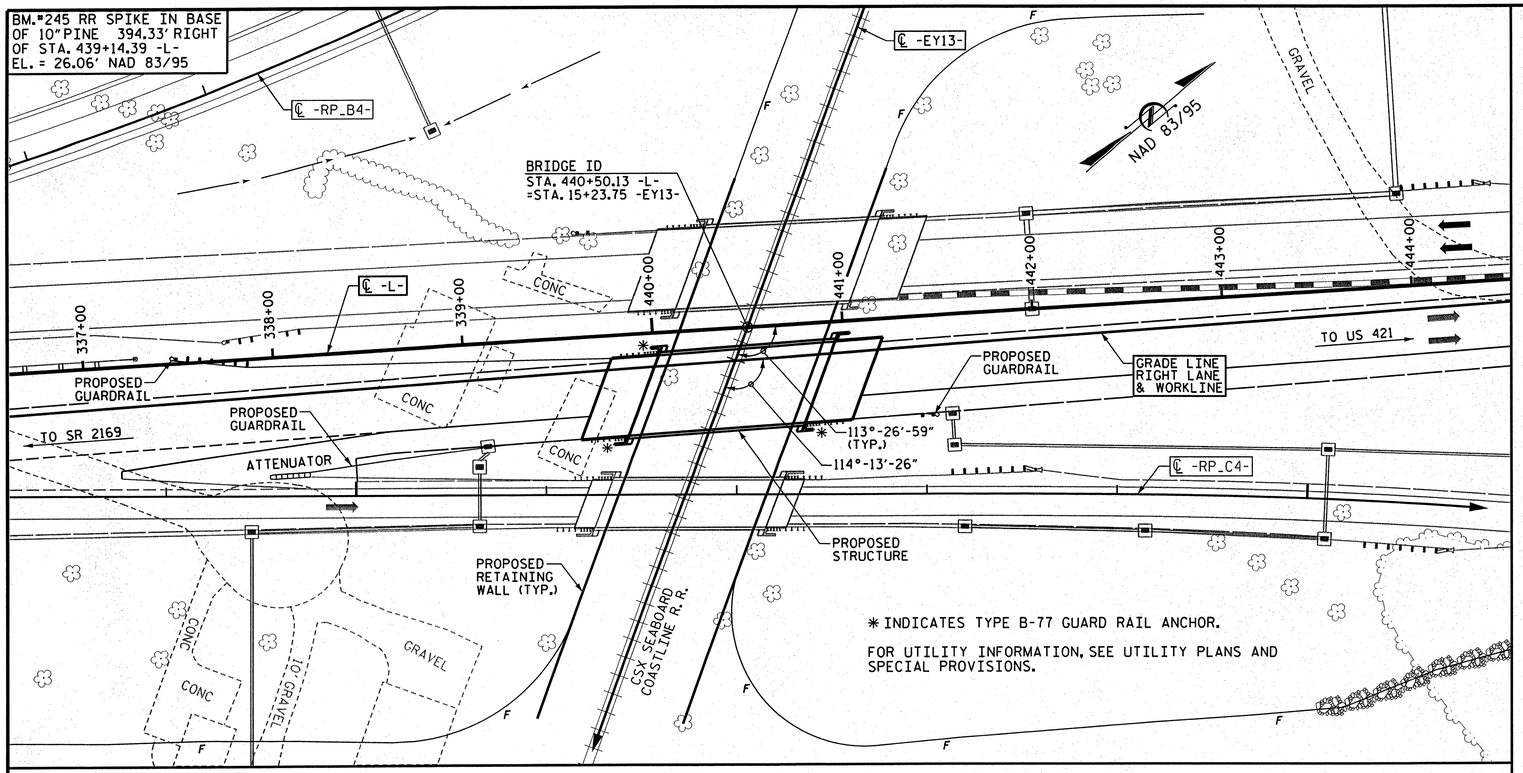

LOCATION SKETCH

NOTES

ASSUMED LIVE LOAD = HL-93 OR ALTERNATE LOADING.

THIS BRIDGE HAS BEEN DESIGNED IN ACCORDANCE WITH REQUIREMENTS OF AASHTO LRFD BRIDGE DESIGN SPECIFICATIONS.

FOR SUBMITTAL OF WORKING DRAWINGS, SEE SPECIAL PROVISIONS.

FOR FALSEWORK AND FORMWORK, SEE SPECIAL PROVISIONS.

FOR CRANE SAFETY, SEE SPECIAL PROVISIONS.

FOR GROUT FOR STRUCTURES, SEE SPECIAL PROVISIONS.

FOR OTHER DESIGN DATA AND GENERAL NOTES, SEE SHEET SN.

FOR EROSION CONTROL MEASURES, SEE EROSION CONTROL PLANS.

THIS BRIDGE IS LOCATED IN SEISMIC ZONE 1.

THE CONTRACTOR SHALL PROVIDE INDEPENDENT ASSURANCE SAMPLES OF REINFORCING STEEL AS FOLLOWS: FOR PROJECTS REQUIRING UP TO 400 TONS OF REINFORCING STEEL, ONE 30 INCH SAMPLE OF EACH SIZE BAR USED, AND FOR PROJECTS REQUIRING OVER 400 TONS OF REINFORCING STEEL, TWO 30 INCH SAMPLES OF EACH SIZE BAR USED. THE BARS FROM WHICH THE SAMPLES ARE TAKEN MUST THEN BE SPLICED WITH REPLACEMENT BARS OF THE SIZE AND LENGTH OF THE SAMPLE, PLUS A MINIMUM LAP SPLICE OF THIRTY BAR DIAMETERS. PAYMENT FOR THE SAMPLES OF REINFORCING STEEL SHALL BE CONSIDERED INCIDENTAL TO VARIOUS PAY ITEMS.

REMOVABLE FORMS MAY BE USED IN LIEU OF METAL STAY-IN-PLACE FORMS IN ACCORDANCE WITH ARTICLE 420-3 OF THE STANDARD SPECIFICATIONS.

NEEDLE BEAMS WILL NOT BE ALLOWED UNLESS OTHERWISE CALLED FOR ON THE PLANS OR APPROVED BY THE ENGINEER.

FOR PLACING LOAD ON STRUCTURE MEMBERS, SEE SPECIAL PROVISIONS.

TOTAL BILL OF MATERIAL

	PDA TESTING	REINFORCED CONCRETE DECK SLAB	GROOVING BRIDGE FLOORS	CLASS A CONCRETE	BRIDGE APPROACH SLABS	REINFORCING STEEL	54" PRESTRESSED CONCRETE GIRDER		HP 12 X 53 STEEL PILES		PILE REDRIVES	CONCRETE BARRIER RAIL	72" CHAIN LINK FENCE	4" SLOPE PROTECTION	ELASTOMERIC BEARINGS
	EACH	SQ. FT.	SQ. FT.	CU. YDS.	LUMP SUM	LBS.	NO.	LIN. FEET	NO.	LIN. FT.	EACH	LIN. FT.	LN. FT.	SQ. YDS.	LUMP SUM
SUPERSTRUCTURE	-	4299	5499	-	-		5	459.58	-	-	-	186.3	179.01	-	LUMP SUM
END BENT NO. 1	-	-	-	26.5	-	3459	-	-	8	640	4	-	-	56	-
END BENT NO. 2	-	-	-	26.5	-	3446	-	-	8	640	4	-	-	60	-
TOTAL	1	4299	5499	53.0	LUMP SUM	6905	5	459.58	16	1280	8	186.3	179.01	116	LUMP SUM

PROJECT NO. R-2633BB

BRUNSWICK/NEW HANOVER COUNTY

STATION: 440+50.13 -L-

SHEET 3 OF 3

STATE OF NORTH CAROLINA
DEPARTMENT OF TRANSPORTATION
RALEIGH

GENERAL DRAWING
FOR BRIDGE OVER CSX SEABOARD COAST LINE R.R. ON US 17 (WILMINGTON BYPASS) BETWEEN SR 2169 AND US 421 RIGHT LANE

REVISIONS						SHEET NO.
NO.	BY:	DATE:	NO.	BY:	DATE:	S-631
1			3			TOTAL SHEETS
2			4			700

STRUCTURE NO. 8

PLAN PREPARED BY:

ALPHA & OMEGA GROUP
CIVIL & STRUCTURAL ENGINEERS
4601 Lake Boone Trail, Ste. 3C Raleigh, NC 27607
Phone 919 981 0310 Fax 919 981 0451
Firm License No. C-1684 www.aogroup.com

A&O PROJECT NO. 2011.036

NORTH CAROLINA PROFESSIONAL SEAL 032724 ENGINEER T. GLENN ZEBLO

REFERENCE NO. 8-3

DRAWN BY : JR FISHER DATE : 11/12
CHECKED BY : HM SWANSON / TGZ DATE : 11/12
QC / QA BY : TL BARTELT DATE : 11/12

LOAD AND RESISTANCE FACTOR RATING (LRFD) SUMMARY FOR PRESTRESSED CONCRETE GIRDERS

LEVEL		VEHICLE	WEIGHT (W) (TONS)	CONTROLLING LOAD RATING (#)	MINIMUM RATING FACTORS (RF)	TONS = W x RF	STRENGTH I LIMIT STATE											SERVICE III LIMIT STATE						COMMENT NUMBER
								MOMENT					SHEAR						MOMENT					
							LIVE-LOAD FACTORS (γ_{LL})	DISTRIBUTION FACTORS (DF)	RATING FACTOR	SPAN	GIRDER LOCATION	DISTANCE FROM LEFT END OF SPAN (FT)	DISTRIBUTION FACTORS (DF)	RATING FACTOR	SPAN	GIRDER LOCATION	DISTANCE FROM LEFT END OF SPAN (FT)	LIVE-LOAD FACTORS (γ_{LL})	DISTRIBUTION FACTORS (DF)	RATING FACTOR	SPAN	GIRDER LOCATION	DISTANCE FROM LEFT END OF SPAN (FT)	
DESIGN LOAD RATING		HL-93 (INVENTORY)	N/A	1	1.02	--	1.75	0.745	1.32	A	E	45.3	1.003	1.46	A	I	0.0	0.80	0.768	1.02	A	I	45.3	
		HL-93 (OPERATING)	N/A		1.71	--	1.35	0.745	1.71	A	E	45.3	1.003	1.89	A	I	8.5	N/A	0.768	--	--	--	--	
		HS-20 (INVENTORY)	36.000	2	1.39	50.04	1.75	0.745	1.80	A	E	45.3	1.003	1.96	A	I	0.0	0.80	0.768	1.39	A	I	45.3	
		HS-20 (OPERATING)	36.000		2.34	84.24	1.35	0.745	2.34	A	E	45.3	1.003	2.53	A	I	0.0	N/A	0.768	--	--	--	--	
LEGAL LOAD RATING	SINGLE VEHICLE (SV)	SH	12.500		3.54	44.25	1.40	0.745	5.73	A	E	45.3	1.003	6.52	A	I	0.0	0.80	0.768	3.54	A	I	45.3	
		S3C	21.500		2.07	44.51	1.40	0.745	3.35	A	E	45.3	1.003	3.82	A	I	0.0	0.80	0.768	2.07	A	I	45.3	
		S3A	22.750		1.96	44.59	1.40	0.745	3.18	A	E	45.3	1.003	3.62	A	I	0.0	0.80	0.768	1.96	A	I	45.3	
		S4A	26.750		1.72	46.01	1.40	0.745	2.79	A	E	45.3	1.003	3.15	A	I	0.0	0.80	0.768	1.72	A	I	45.3	
		S5A	30.500		1.52	46.36	1.40	0.745	2.46	A	E	45.3	1.003	2.86	A	I	0.0	0.80	0.768	1.52	A	I	45.3	
		S6A	34.500		1.38	47.61	1.40	0.745	2.23	A	E	45.3	1.003	2.57	A	I	0.0	0.80	0.768	1.38	A	I	45.3	
		S7B	38.500		1.25	48.13	1.40	0.745	2.03	A	E	45.3	1.003	2.38	A	I	0.0	0.80	0.768	1.25	A	I	45.3	
		S7A	40.000	3	1.24	49.60	1.40	0.745	2.00	A	E	45.3	1.003	2.41	A	I	0.0	0.80	0.768	1.24	A	I	45.3	
	TRUCK TRACTOR SEMI-TRAILER (TTST)	T4A	28.250		1.70	48.03	1.40	0.745	2.75	A	E	45.3	1.003	3.04	A	I	0.0	0.80	0.768	1.70	A	I	45.3	
		T5B	32.000		1.49	47.68	1.40	0.745	2.41	A	E	45.3	1.003	2.85	A	I	0.0	0.80	0.768	1.49	A	I	45.3	
		T6A	36.000		1.36	48.96	1.40	0.745	2.21	A	E	45.3	1.003	2.60	A	I	0.0	0.80	0.768	1.36	A	I	45.3	
		T7A	40.000		1.26	50.40	1.40	0.745	2.05	A	E	45.3	1.003	2.41	A	I	0.0	0.80	0.768	1.26	A	I	45.3	
		T7B	40.000		1.34	53.60	1.40	0.745	2.18	A	E	45.3	1.003	2.29	A	I	0.0	0.80	0.768	1.34	A	I	45.3	

LOAD FACTORS:

DESIGN LOAD RATING FACTORS	LIMIT STATE	γ_{DC}	γ_{DW}
	STRENGTH I	1.25	1.50
	SERVICE III	1.00	1.00

NOTES:

MINIMUM RATING FACTORS ARE BASED ON THE STRENGTH I AND SERVICE III LIMIT STATES.

ALLOWABLE STRESSES FOR SERVICE III LIMIT STATE ARE AS REQUIRED FOR DESIGN.

COMMENTS:

1.
2.
3.
4.

(#) CONTROLLING LOAD RATING

(1) DESIGN LOAD RATING (HL-93)
(2) DESIGN LOAD RATING (HS-20)
(3) LEGAL LOAD RATING **
** SEE CHART FOR VEHICLE TYPE

GIRDER LOCATION

I - INTERIOR GIRDER
EL - EXTERIOR LEFT GIRDER
ER - EXTERIOR RIGHTGIRDER

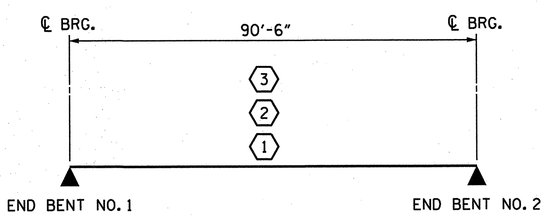

LRFR SUMMARY

PROJECT NO. R-2633BB
BRUNSWICK/NEW HANOVER COUNTY
STATION: 440+50.13 -L-

STATE OF NORTH CAROLINA
DEPARTMENT OF TRANSPORTATION
RALEIGH

STANDARD
LRFR SUMMARY FOR PRESTRESSED CONCRETE GIRDERS
(INTERSTATE TRAFFIC)
RIGHT LANE

REVISIONS						SHEET NO.
NO.	BY:	DATE:	NO.	BY:	DATE:	S-632
1			3			TOTAL SHEETS
2			4			700

STRUCTURE NO. 8 STD. NO. LRFR2

PLAN PREPARED BY:
ALPHA & OMEGA GROUP
CIVIL & STRUCTURAL ENGINEERS
4601 Lake Boone Trail, Ste. 3C Raleigh, NC 27607
Phone 919 981 0310 Fax 919 981 0451
Firm License No. C-1684 www.aogroup.com
A&O PROJECT NO. 2011.036

NORTH CAROLINA PROFESSIONAL SEAL 032734 ENGINEER GLENN ZEBLO
T. L. Bartelt 1-17-13

REFERENCE NO. 8-4

DRAWN BY :	JR FISHER	DATE :	11/12
CHECKED BY :	HM SWANSON / TGZ	DATE :	11/12
QC / QA BY :	TL BARTELT	DATE :	11/12

DRAWN BY : MAA 1/08	REV. 11/12/08RR	MAA/GM
CHECKED BY : GM/DI 2/08	REV. 10/1/11	MAA/GM

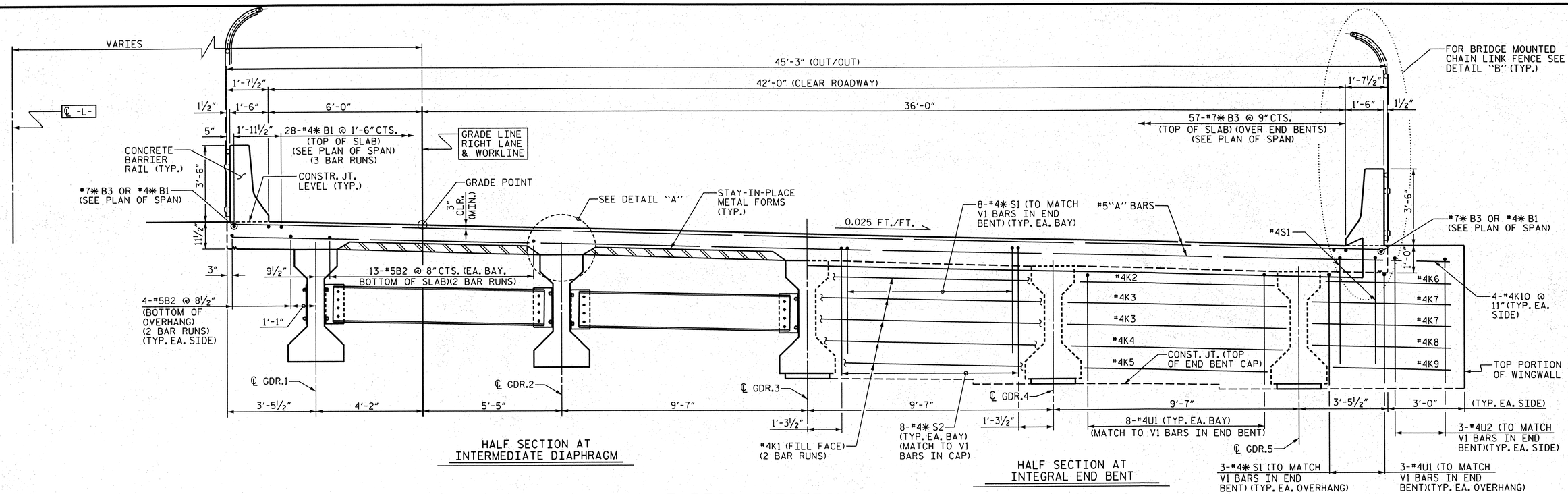

HALF SECTION AT INTERMEDIATE DIAPHRAGM

HALF SECTION AT INTEGRAL END BENT

TYPICAL SECTION

NOTES

PROVIDE 1¼" HIGH BEAM BOLSTERS UPPER @ 4'-0" CTS. ATOP THE METAL STAY-IN-PLACE FORMS TO SUPPORT THE BOTTOM MAT OF "A" BARS WHEN USING REMOVABLE FORMS, PROVIDE CONTINUOUS HIGH CHAIRS FOR METAL DECK (C.H.C.M.) AT 4'-0" CTS. WITH A HEIGHT TO SUPPORT THE BOTTOM MAT OF "A" BARS A CLEAR DISTANCE OF 2½" ABOVE THE TOP OF THE REMOVABLE FORM.

LONGITUDINAL STEEL MAY BE SHIFTED SLIGHTLY, AS NECESSARY, TO AVOID INTERFERENCE WITH STIRRUPS IN PRESTRESSED CONCRETE GIRDERS.

SEE "SECTION THRU RAIL" ON SHEET 8-12 FOR DRIP GROOVES AND BEAM BOLSTERS IN OVERHANG.

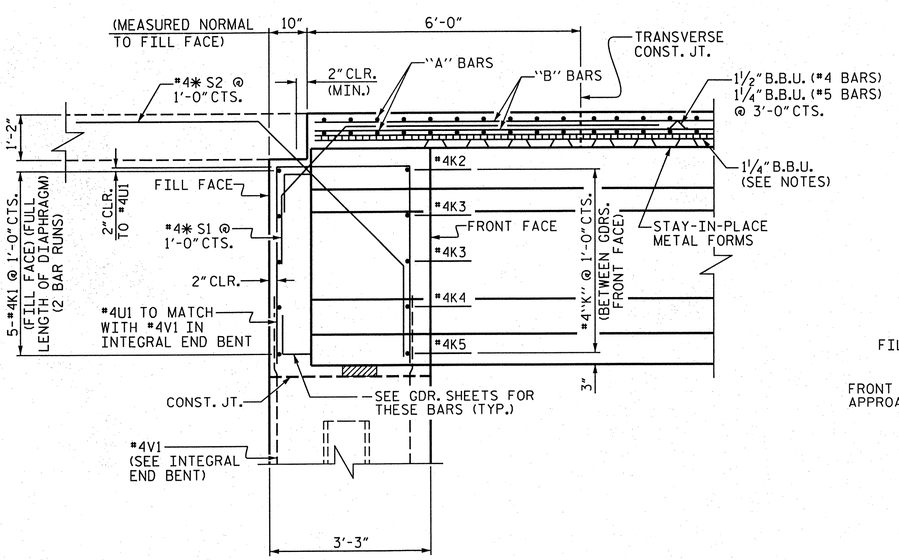

SECTION "A-A"

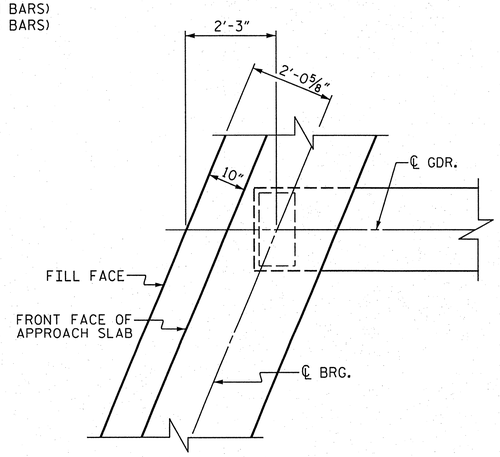

PLAN OF GIRDER AT INTEGRAL END BENT

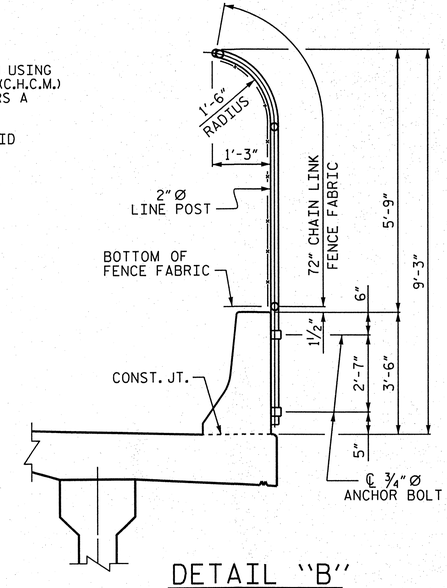

DETAIL "B"

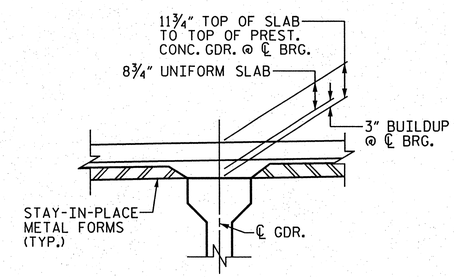

DETAIL "A"

PROJECT NO. R-2633BB

BRUNSWICK/NEW HANOVER COUNTY

STATION: 440+50.13 -L-

STATE OF NORTH CAROLINA
DEPARTMENT OF TRANSPORTATION
RALEIGH

SUPERSTRUCTURE TYPICAL SECTION
RIGHT LANE

REVISIONS						SHEET NO.
NO.	BY:	DATE:	NO.	BY:	DATE:	S-633
1			3			TOTAL SHEETS
2			4			700

STRUCTURE NO. 8

DRAWN BY :	JR FISHER	DATE :	11/12
CHECKED BY :	HM SWANSON / TGZ	DATE :	11/12
QC / QA BY :	TL BARTELT	DATE :	11/12

PLAN PREPARED BY:

ALPHA & OMEGA GROUP
CIVIL & STRUCTURAL ENGINEERS
4601 Lake Boone Trail, Ste. 3C Raleigh, NC 27607
Phone 919 981 0310 Fax 919 981 0451
Firm License No. C-1684 www.aogroup.com
A&O PROJECT NO. 2011.036

NORTH CAROLINA PROFESSIONAL SEAL 032724 ENGINEER GLENN ZEBLO 4-1-12

REFERENCE NO. 8-5

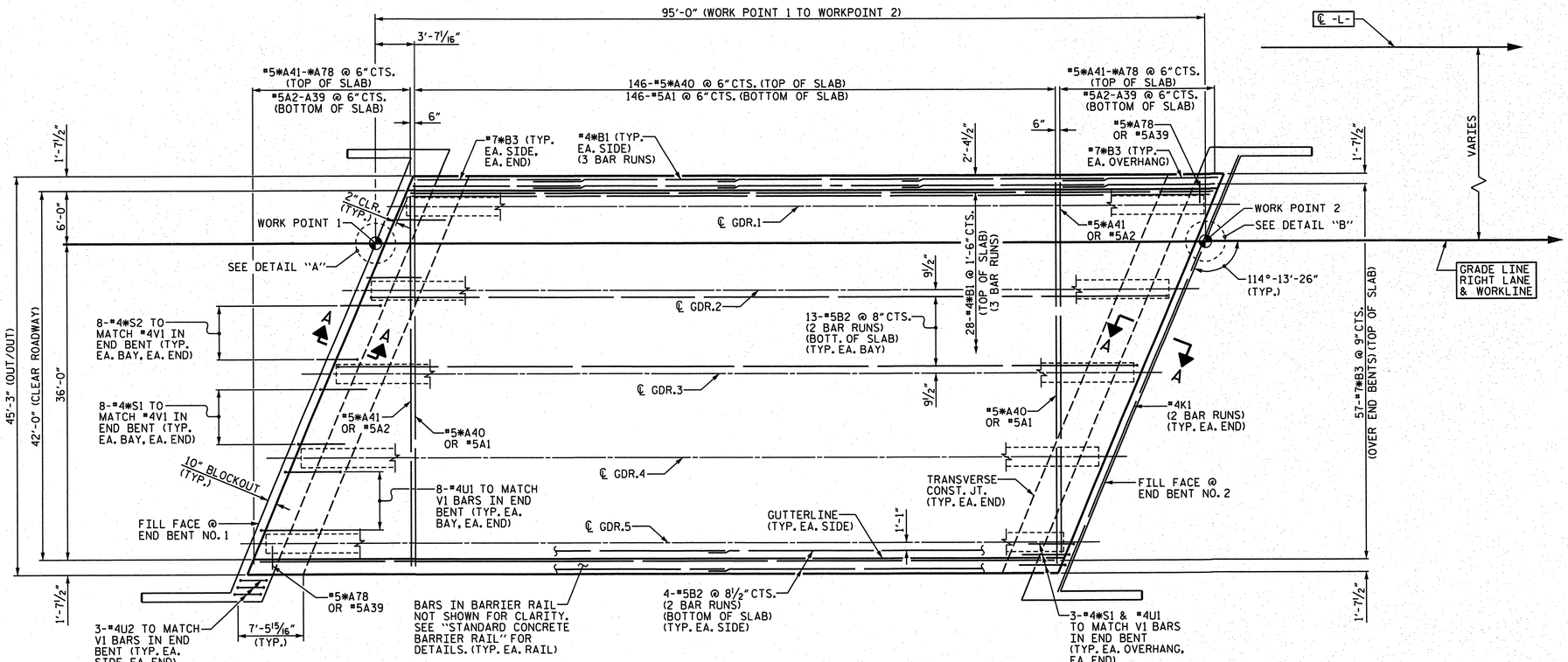

PLAN

SEE PLAN OF SPAN DETAILS SHEET FOR ADDITIONAL REINFORCING STEEL IN WINGS

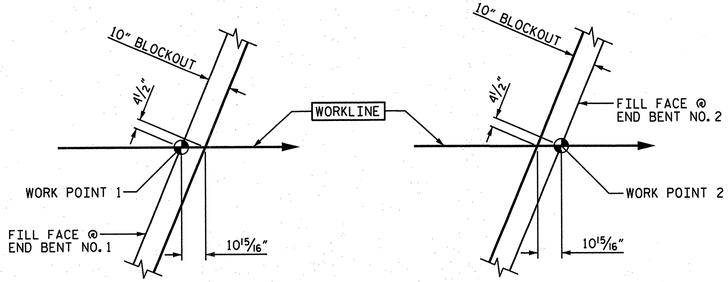

DETAIL "A"

DETAIL "B"

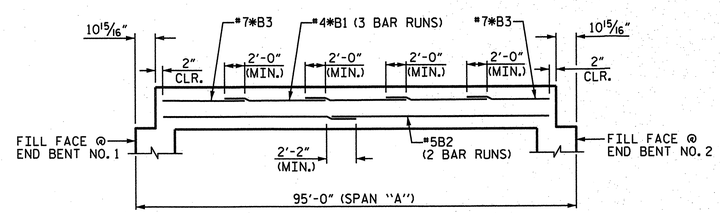

SCHEMATIC DIAGRAM OF SPAN "A"

PROJECT NO. R-2633BB

BRUNSWICK/NEW HANOVER COUNTY

STATION: 440+50.13 -L-

STATE OF NORTH CAROLINA
DEPARTMENT OF TRANSPORTATION
RALEIGH

SUPERSTRUCTURE PLAN OF SPAN "A" RIGHT LANE

PLAN PREPARED BY:

ALPHA & OMEGA GROUP
CIVIL & STRUCTURAL ENGINEERS
4601 Lake Boone Trail, Ste. 3C Raleigh, NC 27607
Phone 919 981 0310 Fax 919 981 0451
Firm License No. C-1684 www.aogroup.com
A&O PROJECT NO. 2011.036

NORTH CAROLINA PROFESSIONAL ENGINEER SEAL 032724 GLENN ZEBLO
1-17-13

REFERENCE NO. 8-6

REVISIONS						SHEET NO.
NO.	BY:	DATE:	NO.	BY:	DATE:	S-634
1			3			TOTAL SHEETS
2			4			700

STRUCTURE NO. 8

DRAWN BY :	JR FISHER	DATE :	11/12
CHECKED BY :	HM SWANSON / TGZ	DATE :	11/12
QC / QA BY :	TL BARTELT	DATE :	11/12

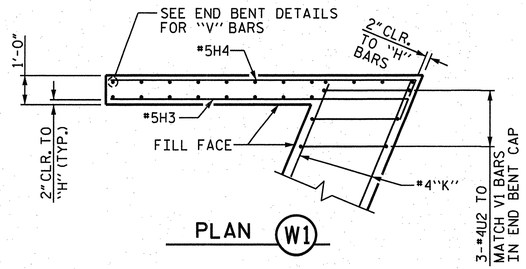

PLAN (W1)

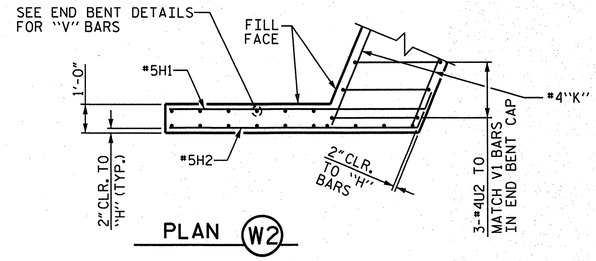

PLAN (W2)

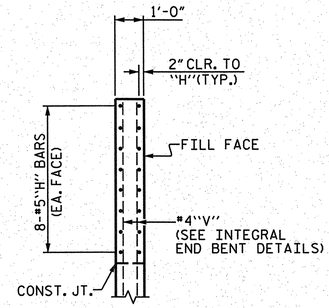

SECTION "X-X"

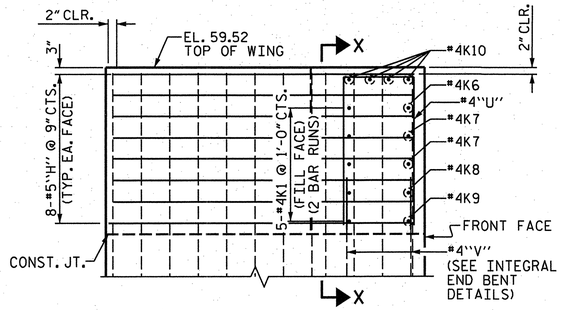

ELEVATION (W1)

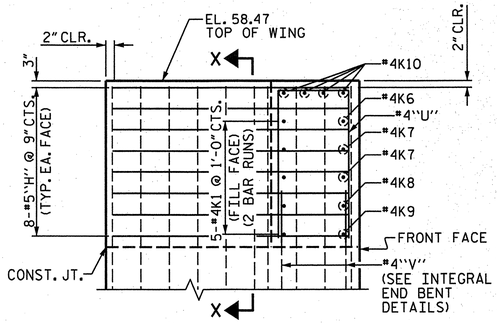

ELEVATION (W2)

END BENT NO. 1

(FOR WING DIMENSIONS, SEE SUBSTRUCTURE END BENT NO. 1)

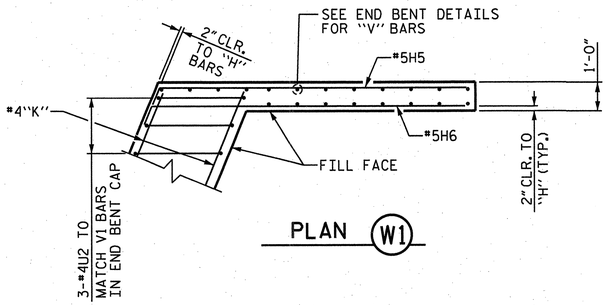

PLAN (W1)

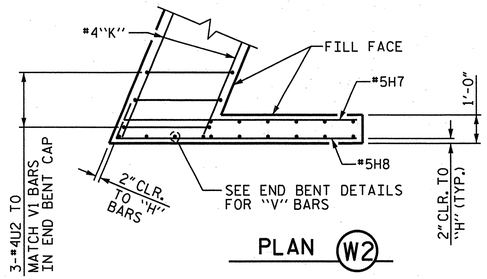

PLAN (W2)

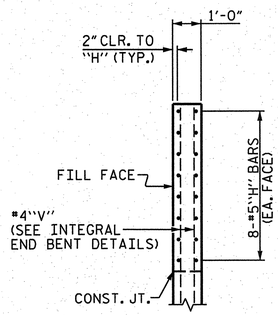

SECTION "Y-Y"

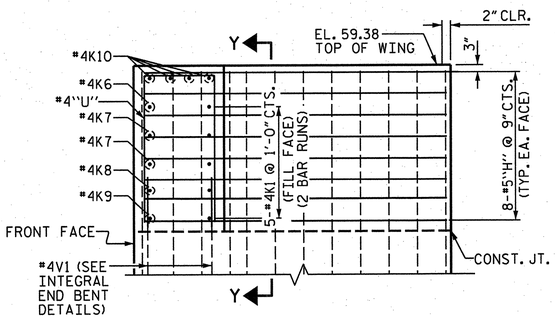

ELEVATION (W1)

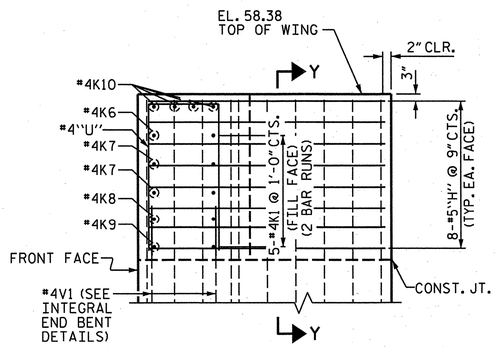

ELEVATION (W2)

END BENT NO. 2

(FOR WING DIMENSIONS, SEE SUBSTRUCTURE END BENT NO. 2)

PROJECT NO. R-2633BB
BRUNSWICK/NEW HANOVER COUNTY
STATION: 440+50.13 -L-

STATE OF NORTH CAROLINA
DEPARTMENT OF TRANSPORTATION
RALEIGH

SUPERSTRUCTURE
PLAN OF SPAN DETAILS
TOP OF WINGS
END BENT NO. 1 &
END BENT NO. 2
RIGHT LANE

DRAWN BY : JR FISHER	DATE : 11/12
CHECKED BY : HM SWANSON / TGZ	DATE : 11/12
QC / QA BY : TL BARTELT	DATE : 11/12

PLAN PREPARED BY:
ALPHA & OMEGA GROUP
CIVIL & STRUCTURAL ENGINEERS
4601 Lake Boone Trail, Ste. 3C Raleigh, NC 27607
Phone 919 981 0310 Fax 919 981 0451
Firm License No. C-1684 www.aogroup.com
A&O PROJECT NO. 2011.036

NORTH CAROLINA PROFESSIONAL ENGINEER SEAL 032724 1-17-13 T. GLENN ZEBLEY

REFERENCE NO. 8-7

REVISIONS								SHEET NO.
NO.	BY:	DATE:	NO.	BY:	DATE:			S-635
1			3					TOTAL SHEETS
2			4					700

STRUCTURE NO. 8

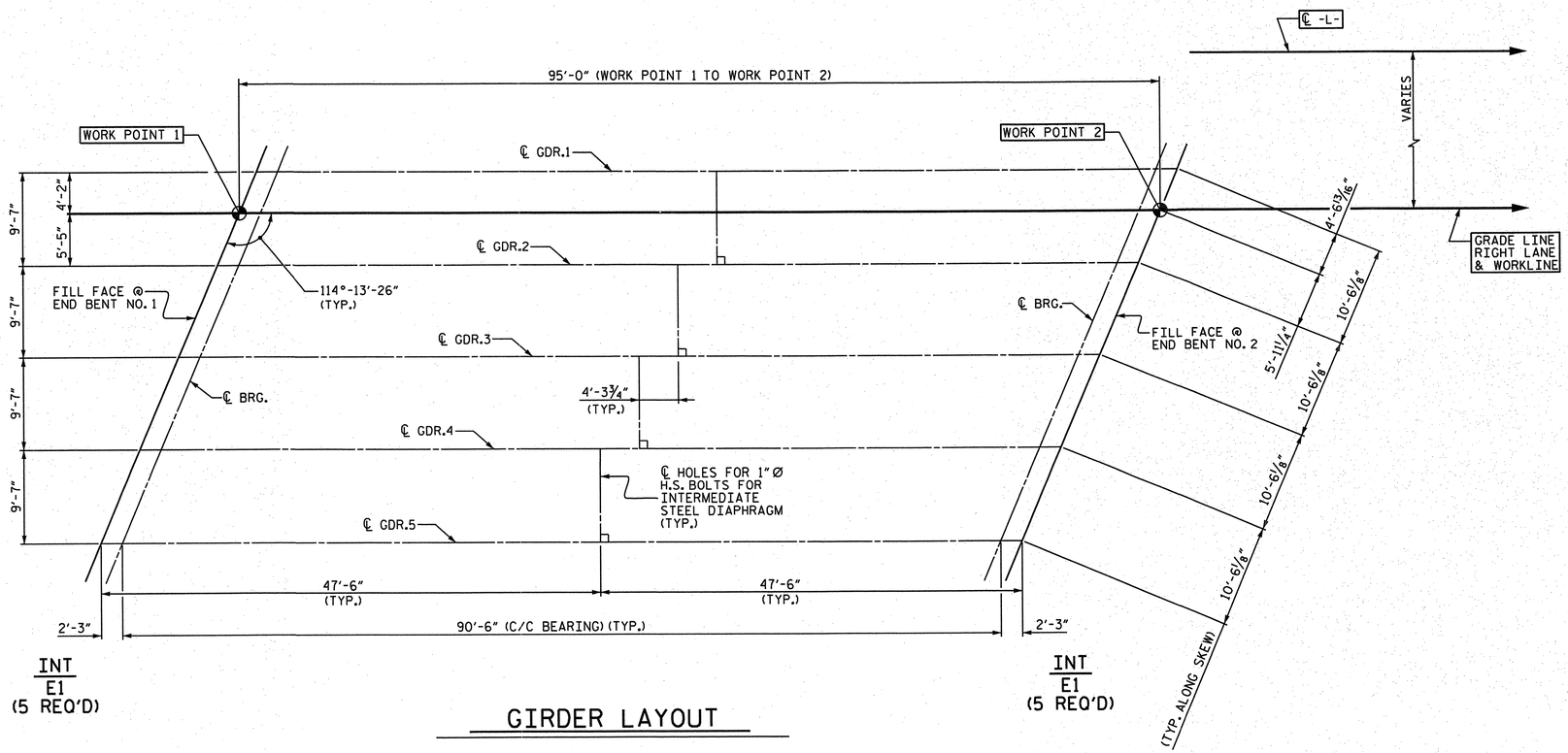

GIRDER LAYOUT

DEAD LOAD DEFLECTION TABLE FOR GIRDERS											
0.6"Ø LOW RELAXATION STRANDS	SPAN "A" GIRDERS 1 THRU 5										
TENTH POINTS	0	.10	.20	.30	.40	.50	.60	.70	.80	.90	0
CAMBER (GIRDER ALONE IN PLACE)	0.0	0.110	0.190	0.243	0.274	0.284	0.274	0.243	0.190	0.110	0.0
* DEFLECTION DUE TO SUPERIMPOSED D.L.	0.0	-0.041	-0.079	-0.110	-0.131	-0.137	-0.131	-0.110	-0.079	-0.041	0.0
FINAL CAMBER	0	13/16	1 5/16	1 5/8	1 3/4	1 3/4	1 3/4	1 5/8	1 5/16	13/16	0

* INCLUDES FUTURE WEARING SURFACE.
ALL VALUES ARE SHOWN IN FEET (DECIMAL FORM), EXCEPT "FINAL CAMBER", WHICH IS GIVEN IN INCHES (FRACTION FORM).

PROJECT NO. R-2633BB
BRUNSWICK/NEW HANOVER COUNTY
STATION: 440+50.13 -L-

STATE OF NORTH CAROLINA
DEPARTMENT OF TRANSPORTATION
RALEIGH

SUPERSTRUCTURE
GIRDER LAYOUT
RIGHT LANE

PLAN PREPARED BY:
ALPHA & OMEGA GROUP
CIVIL & STRUCTURAL ENGINEERS
4601 Lake Boone Trail, Ste. 3C Raleigh, NC 27607
Phone 919 981 0310 Fax 919 981 0451
Firm License No. C-1684 www.aogroup.com
A&O PROJECT NO. 2011.036

NORTH CAROLINA PROFESSIONAL ENGINEER 032724 T. GLENN ZEBLO
1-17-13

REFERENCE NO. 8-8

REVISIONS						SHEET NO.
NO.	BY:	DATE:	NO.	BY:	DATE:	S-636
1			3			TOTAL SHEETS
2			4			700

STRUCTURE NO. 8

DRAWN BY : JR FISHER DATE : 11/12
CHECKED BY : HM SWANSON / TGZ DATE : 11/12
QC / QA BY : TL BARTELT DATE : 11/12

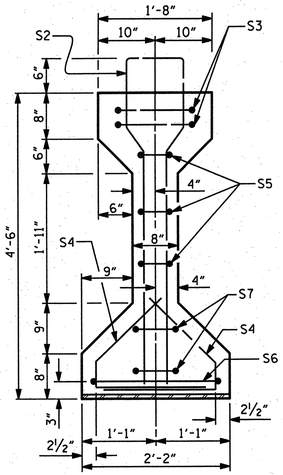

SECTION "A-A"

(TYP. EACH END)

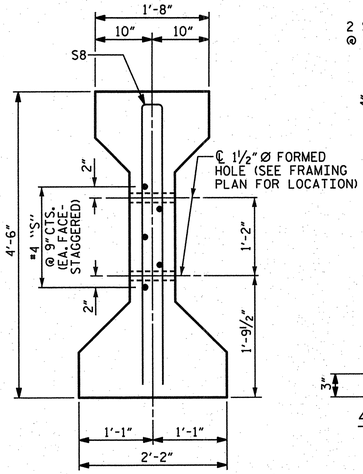

SECTION "C-C"

FOR *S10 BARS, SEE DETAIL "A"

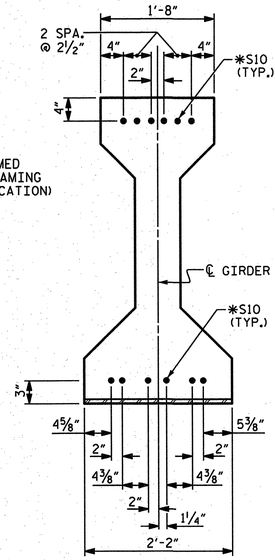

DETAIL "A"

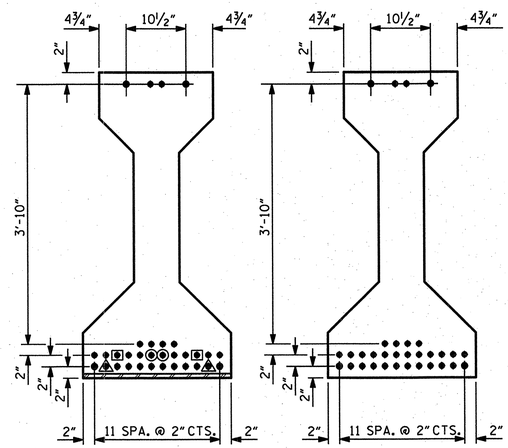

0.6"Ø LOW RELAXATION STRAND LAYOUT

▣ STRANDS DEBONDED 4'-0" FROM END OF GIRDER.
▲ STRANDS DEBONDED 6'-0" FROM END OF GIRDER.
◉ STRANDS DEBONDED 8'-0" FROM END OF GIRDER.

NOTES

ALL PRESTRESSING STRANDS SHALL BE 7-WIRE LOW-RELAXATION GRADE 270 STRANDS AND SHALL CONFORM TO AASHTO M203 EXCEPT FOR SAMPLING REQUIREMENTS WHICH SHALL BE IN ACCORDANCE WITH THE STANDARD SPECIFICATIONS.

EMBEDDED PLATE "B-1" SHALL BE GALVANIZED IN ACCORDANCE WITH THE SPECIFICATIONS.

BEVEL EDGES OF PLATE "B-1" TO GIVE CLOSE FIT BUT NOT TIGHT FIT TO STEEL CASTING FORM.

ANCHOR STUDS SHALL CONFORM TO AASHTO M169 GRADES 1010 THROUGH 1020 OR APPROVED EQUAL, AND SHALL MEET THE TYPE "B" REQUIREMENTS OF SUBSECTION 7.3 OF THE ANSI/AASHTO/AWS D1.5 BRIDGE WELDING CODE.

AT ENDS OF GIRDERS TO BE EMBEDDED IN CONCRETE DIAPHRAGMS OR END WALLS, PRESTRESSING STRANDS MAY EXTEND A MAXIMUM OF 2" BEYOND THE GIRDER ENDS. OTHERWISE, PRESTRESSING STRANDS SHALL BE CUT FLUSH WITH THE GIRDER ENDS.

THE TRANSFER OF LOAD FROM THE ANCHORAGES TO THE GIRDER SHALL BE DONE WHEN CONCRETE HAS REACHED A COMPRESSIVE STRENGTH OF NOT LESS THAN 5300 PSI.

THE TOP SURFACE OF THE GIRDER SHALL BE RAKED TO A DEPTH OF ¼" EXCEPT IN THE AREA BETWEEN THE STIRRUP AND THE EDGE OF THE GIRDER.

ALL REINFORCING STEEL SHALL BE GRADE 60.

DEPENDING ON THE TYPE OF SYSTEM USED TO SUPPORT THE DECK SLAB FORMS, PRESET ANCHORS MAY BE NECESSARY IN THE PRESTRESSSED CONCRETE GIRDER.

0.6"Ø L. R. GRADE 270 STRANDS

AREA (SQUARE INCHES)	ULTIMATE STRENGTH (LBS. PER STRAND)	APPLIED PRESTRESS (LBS. PER STRAND)
0.217	58,600	43,950

REINFORCING STEEL FOR ONE GIRDER

	BAR	NUMBER	SIZE	TYPE	LENGTH	WEIGHT
	S1	97	#4	1	10'-8"	691
	S2	12	#5	1	10'-8"	134
	S3	4	#4	2	9'-1"	24
	S4	64	#4	3	3'-5"	146
	S5	6	#4	2	8'-5"	34
	S6	2	#4	2	9'-11"	13
	S7	4	#4	2	8'-7"	23
EXTERIOR GDR.	S8	2	#5	2	8'-8"	18
INTERIOR GDR.	S8	4	#5	2	8'-8"	36
EXTERIOR GDR.	S9	5	#4	STR	7'-0"	23
INTERIOR GDR.	S9	5	#4	STR	11'-4"	38
	*S10	24	#5	4	3'-8"	92
	S11	2	#3	STR	1'-10"	1
	S12	2	#3	STR	1'-4"	1

*NOTE: *S10 BARS SHALL BE BENT BEFORE SHIPMENT. HEAT BENDING SHALL NOT BE ALLOWED.

BAR TYPES

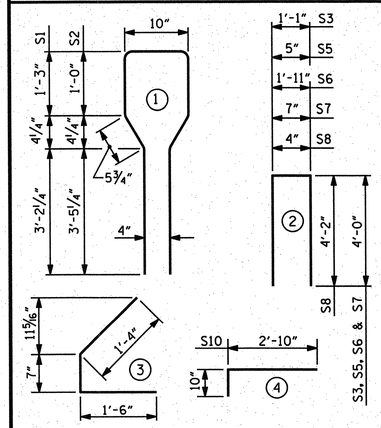

ALL BAR DIMENSIONS ARE OUT-TO-OUT.

QUANTITIES FOR ONE GIRDER

	REINFORCING STEEL LB.	6500 PSI CONCRETE C.Y.	0.6"Ø L.R. STRANDS No.
EXTERIOR GIRDER	1200	18.65	30
INTERIOR GIRDER	1233	18.65	30

GIRDERS REQUIRED

NUMBER	LENGTH	TOTAL LENGTH
5	91'-11"	459'-7"

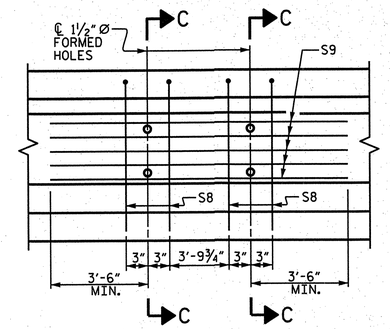

PARTIAL ELEVATION

SHOWING INTERMEDIATE DIAPHRAGM REINFORCING STEEL FOR GIRDER NOs. 2, 3 & 4.

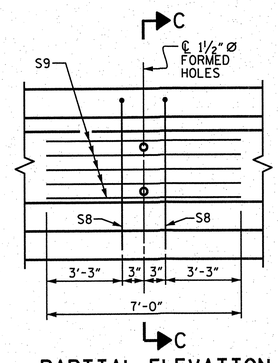

PARTIAL ELEVATION

SHOWING INTERMEDIATE DIAPHRAGM REINFORCING STEEL FOR GIRDER Nos. 1 & 5.

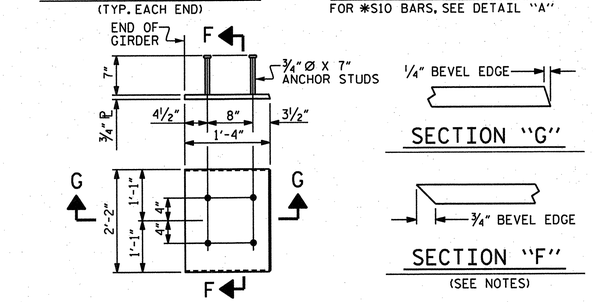

EMBEDDED PLATE "B-1" DETAILS

TWO EMBEDDED PLATES "B-1" ARE REQUIRED FOR EACH GIRDER.

SECTION "G"

SECTION "F"

(SEE NOTES)

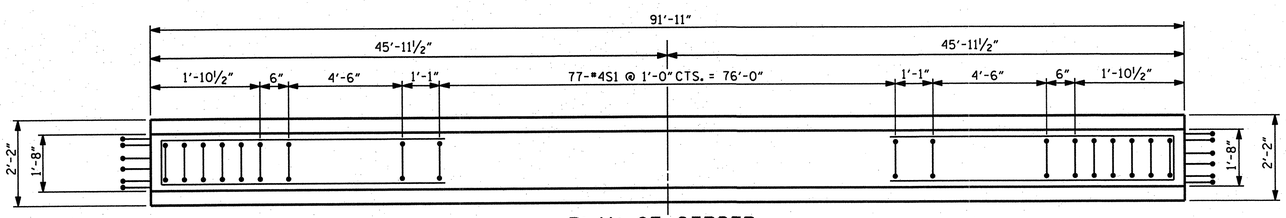

PLAN OF GIRDER

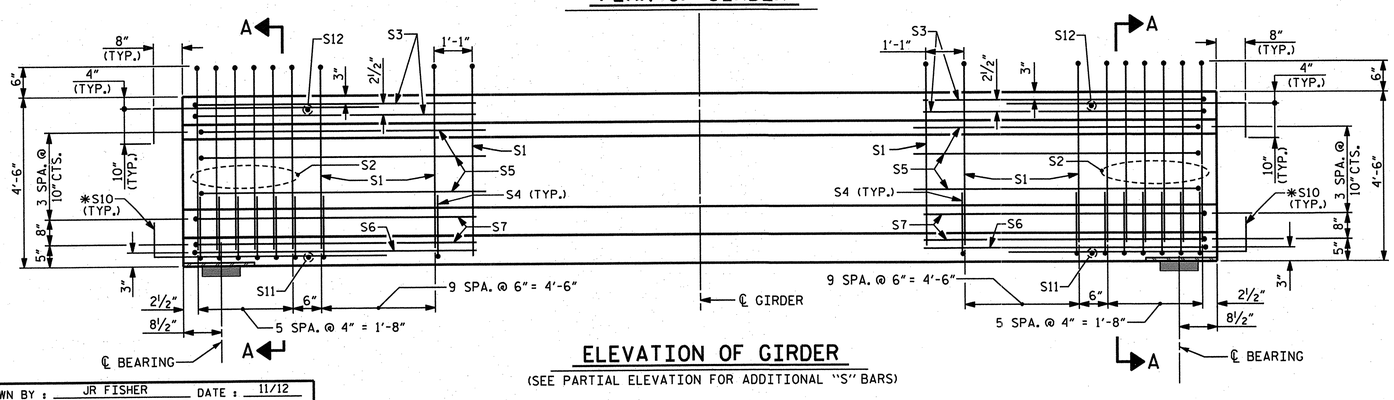

ELEVATION OF GIRDER

(SEE PARTIAL ELEVATION FOR ADDITIONAL "S" BARS)

PROJECT NO. R-2633BB

BRUNSWICK/NEW HANOVER COUNTY

STATION: 440+50.13 -L-

STATE OF NORTH CAROLINA
DEPARTMENT OF TRANSPORTATION
RALEIGH

STANDARD
AASHTO TYPE IV
PRESTRESSED
CONCRETE GIRDER
RIGHT LANE

DRAWN BY : JR FISHER	DATE : 11/12
CHECKED BY : HM SWANSON / TGZ	DATE : 11/12
QC / QA BY : TL BARTELT	DATE : 11/12

DRAWN BY : JMB 12/87	REV. 8/16/99RR	RWW/LES
CHECKED BY : ARB 12/87	REV. 5/1/06R	TLA/GM
	REV. 10/1/11	MAA/GM

PLAN PREPARED BY:

ALPHA & OMEGA GROUP
CIVIL & STRUCTURAL ENGINEERS
4601 Lake Boone Trail, Ste. 3C Raleigh, NC 27607
Phone 919 981 0310 Fax 919 981 0451
Firm License No. C-1684 www.aogroup.com
A&O PROJECT NO. 2011.036

NOTE: THIS STANDARD DRAWING REVIEWED AND ADOPTED FOR USE AT THE REFERENCED LOCATION BY THE UNDERSIGNED.

NORTH CAROLINA PROFESSIONAL SEAL 032724 ENGINEER GLENN ZEBLO 1-17-13

REFERENCE NO. 8-9

REVISIONS							SHEET NO.
NO.	BY:	DATE:	NO.	BY:	DATE:		S-637
1			3				TOTAL SHEETS
2			4				700

STRUCTURE NO. 8

STD. NO. PCG3

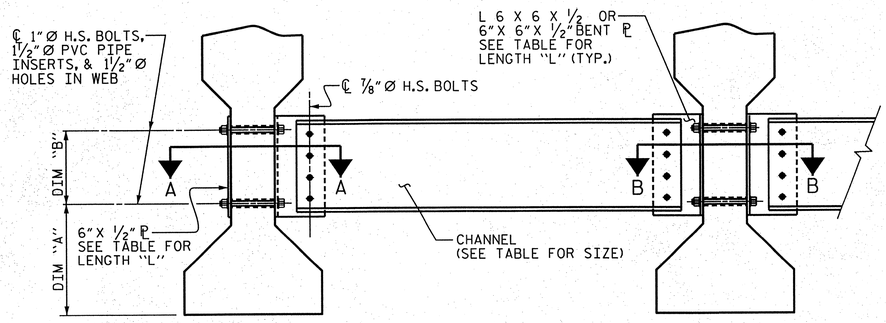

PART SECTION AT INTERMEDIATE DIAPHRAGM

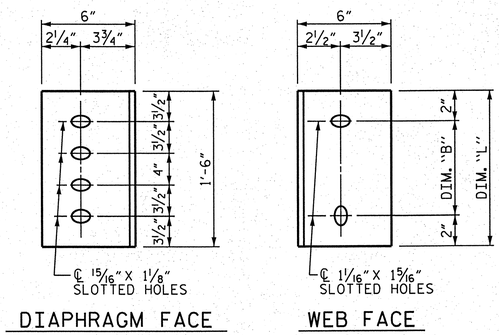

CONNECTOR PLATE DETAILS

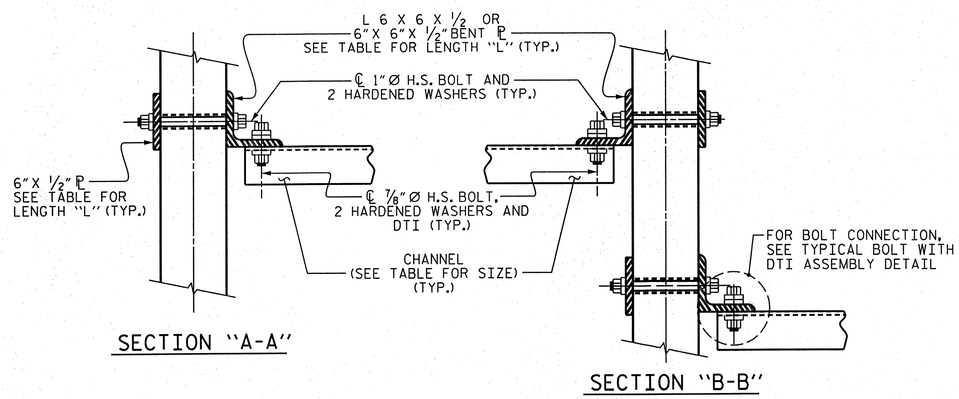

CONNECTION DETAILS

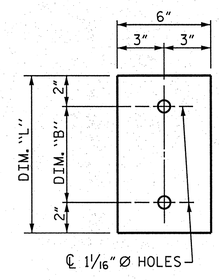

PLATE DETAILS

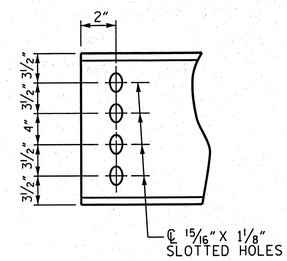

CHANNEL END

STRUCTURAL STEEL NOTES

ALL INTERMEDIATE DIAPHRAGM STEEL AND CONNECTOR PLATES SHALL BE AASHTO M270 GRADE 50 OR APPROVED EQUAL.

TENSION ON THE ASTM A325 BOLTS THROUGH THE ANGLE MEMBER SHALL BE CALIBRATED USING DIRECT TENSION INDICATOR WASHERS IN ACCORDANCE WITH THE STANDARD SPECIFICATIONS.

TENSION ON THE ASTM A449 BOLTS THROUGH THE GIRDER WEB SHALL BE SNUG TIGHTENED FOLLOWED BY AN ADDITIONAL ¼ TURN.

THE PLATES, BENT PLATES, CHANNELS, ANGLES, AND PLATE WASHERS SHALL BE METALLIZED IN ACCORDANCE WITH THE STANDARD SPECIFICATIONS. FOR THERMAL SPRAYED COATINGS (METALLIZATION), SEE SPECIAL PROVISIONS.

FOR METALLIZATION, APPLY AN 8 MIL THICK 99.50 PERCENT ZINC 1350 ALUMINUM (W-A1-1350) THERMAL SPRAYED COATING WITH A 0.5 MIL THICK SEAL COAT TO ALL PLATES, BENT PLATES, CHANNELS, ANGLES, AND PLATE WASHERS IN ACCORDANCE WITH THE THERMAL SPRAYED COATINGS SPECIAL PROVISION AND SECTION 442 OF THE STANDARD SPECIFICATIONS.

APPLY 1 COAT EACH OF 1080-12 GRAY PAINT ON THE EDGES AND THE WEB FACE OF THE CONNECTOR PLATE WHICH COMES IN CONTACT WITH THE CONCRETE GIRDER IN ACCORDANCE WITH SECTION 442 OF THE STANDARD SPECIFICATIONS.

GALVANIZE THE HIGH STRENGTH BOLTS, NUTS, WASHERS AND DIRECT TENSION INDICATORS IN ACCORDANCE WITH THE STANDARD SPECIFICATIONS.

USE AN ASTM F436 HARDENED WASHER WITH STANDARD AND SLOTTED HOLES UNDER EACH BOLT HEAD AND NUT.

FOR BOLTS THROUGH THE GIRDER WEB, PROVIDE SUFFICIENT LENGTH OF THREADS ON ALL BOLTS TO ACCOMMODATE WASHERS AND THE THICKNESS OF CONNECTING MEMBER PLUS AT LEAST ¼" PROJECTION BEYOND THE NUT.

INTERMEDIATE DIAPHRAGM ASSEMBLY SHALL COMPLY WITH SECTION 1072 OF THE STANDARD SPECIFICATIONS.

SUBMIT TWO SETS OF WORKING DRAWINGS FOR THE INTERMEDIATE DIAPHRAGM ASSEMBLY FOR REVIEW, COMMENTS AND ACCEPTANCE. AFTER REVIEW, COMMENTS, AND ACCEPTANCE, SUBMIT SEVEN SETS FOR DISTRIBUTION.

IN THE EXTERIOR BAYS, PLACE TEMPORARY STRUTS BETWEEN PRESTRESSED GIRDERS ADJACENT TO THE STEEL DIAPHRAGMS. STRUTS SHALL REMAIN IN PLACE 3 DAYS AFTER CONCRETE IS PLACED.

THE COST OF THE STEEL DIAPHRAGMS AND ASSEMBLIES SHALL BE INCLUDED IN THE UNIT PRICE BID FOR PRESTRESSED CONCRETE GIRDERS.

TABLE

GIRDER TYPE	CHANNEL SIZE	DIM "A"	DIM "B"	DIM "L"
IV	MC 18 x 42.7	1'-9½"	1'-2"	1'-6"

PROJECT NO. R-2633BB
BRUNSWICK/NEW HANOVER COUNTY
STATION: 440+50.13 -L-

DRAWN BY :	JR FISHER	DATE :	11/12
CHECKED BY :	HM SWANSON / TGZ	DATE :	11/12
QC / QA BY :	TL BARTELT	DATE :	11/12

DRAWN BY : TLA	6/05	ADDED 10/21/05	
CHECKED BY : VC	6/05	REV. 5/1/06RRR	KMM/GM
		REV. 10/1/11	MAA/GM

PLAN PREPARED BY:

ALPHA & OMEGA GROUP
CIVIL & STRUCTURAL ENGINEERS
4601 Lake Boone Trail, Ste. 3C Raleigh, NC 27607
Phone 919 981 0310 Fax 919 981 0451
Firm License No. C-1684 www.aogroup.com
A&O PROJECT NO. 2011.036

NOTE: THIS STANDARD DRAWING REVIEWED AND ADOPTED FOR USE AT THE REFERENCED LOCATION BY THE UNDERSIGNED.

NORTH CAROLINA PROFESSIONAL SEAL 032724 ENGINEER T. GLENN ZEBLO
8-1-13

REFERENCE NO. 8-10

STATE OF NORTH CAROLINA
DEPARTMENT OF TRANSPORTATION
RALEIGH

STANDARD
INTERMEDIATE STEEL DIAPHRAGMS FOR TYPE IV
RIGHT LANE

REVISIONS							
NO.	BY:	DATE:	NO.	BY:	DATE:	SHEET NO.	S-638
1			3			TOTAL SHEETS	700
2			4				

STRUCTURE NO. 8 STD. NO. PCG10

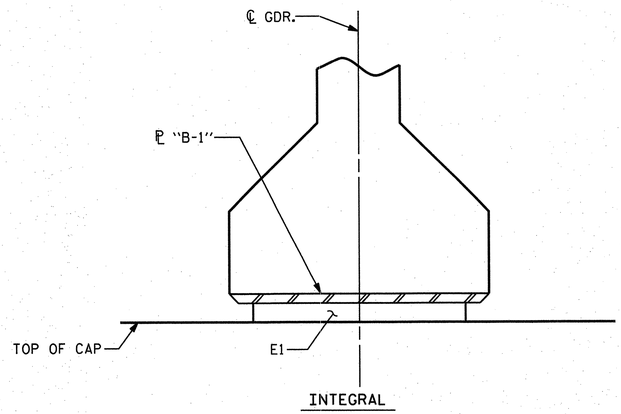

SECTION "E-E"

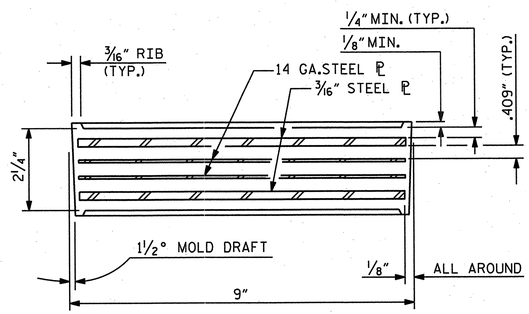

TYPICAL SECTION OF ELASTOMERIC BEARINGS

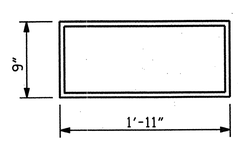

E1 (10 REQ'D)

PLAN VIEW OF ELASTOMERIC BEARING

TYPE V

NOTES

THE ELASTOMER IN THE STEEL REINFORCED BEARINGS SHALL HAVE A SHEAR MODULUS OF 0.160 KSI, IN ACCORDANCE WITH AASHTO M251.

FOR STEEL REINFORCED ELASTOMERIC BEARINGS, SEE SPECIAL PROVISIONS.

MAXIMUM ALLOWABLE SERVICE LOADS	
D.L.+L.L. (NO IMPACT)	
TYPE V	365 K

PROJECT NO. R-2633BB
BRUNSWICK/NEW HANOVER COUNTY
STATION: 440+50.13 -L-

STATE OF NORTH CAROLINA
DEPARTMENT OF TRANSPORTATION
RALEIGH

STANDARD
TYPE V
ELASTOMERIC BEARING
DETAILS
RIGHT LANE

DRAWN BY :	JR FISHER	DATE :	11/12
CHECKED BY :	HM SWANSON / TGZ	DATE :	11/12
QC / QA BY :	TL BARTELT	DATE :	11/12

DRAWN BY :	EEM 2/97	REV. 5/1/06	TLA/GM
CHECKED BY :	VAP 2/97	REV. 10/1/11	MAA/GM
		REV. 10/24/12	AAC/MAA

PLAN PREPARED BY:

ALPHA & OMEGA GROUP
CIVIL & STRUCTURAL ENGINEERS
4601 Lake Boone Trail, Ste. 3C Raleigh, NC 27607
Phone 919 981 0310 Fax 919 981 0451
Firm License No. C-1684 www.aogroup.com
A&O PROJECT NO. 2011.036

NORTH CAROLINA PROFESSIONAL SEAL 032724 ENGINEER GLENN ZEBLO
1-17-13

REFERENCE NO. 8-11

REVISIONS								SHEET NO.
NO.	BY:	DATE:	NO.	BY:	DATE:			S-639
1			3					TOTAL SHEETS
2			4					700

STRUCTURE NO. 8

STD. NO. EB4

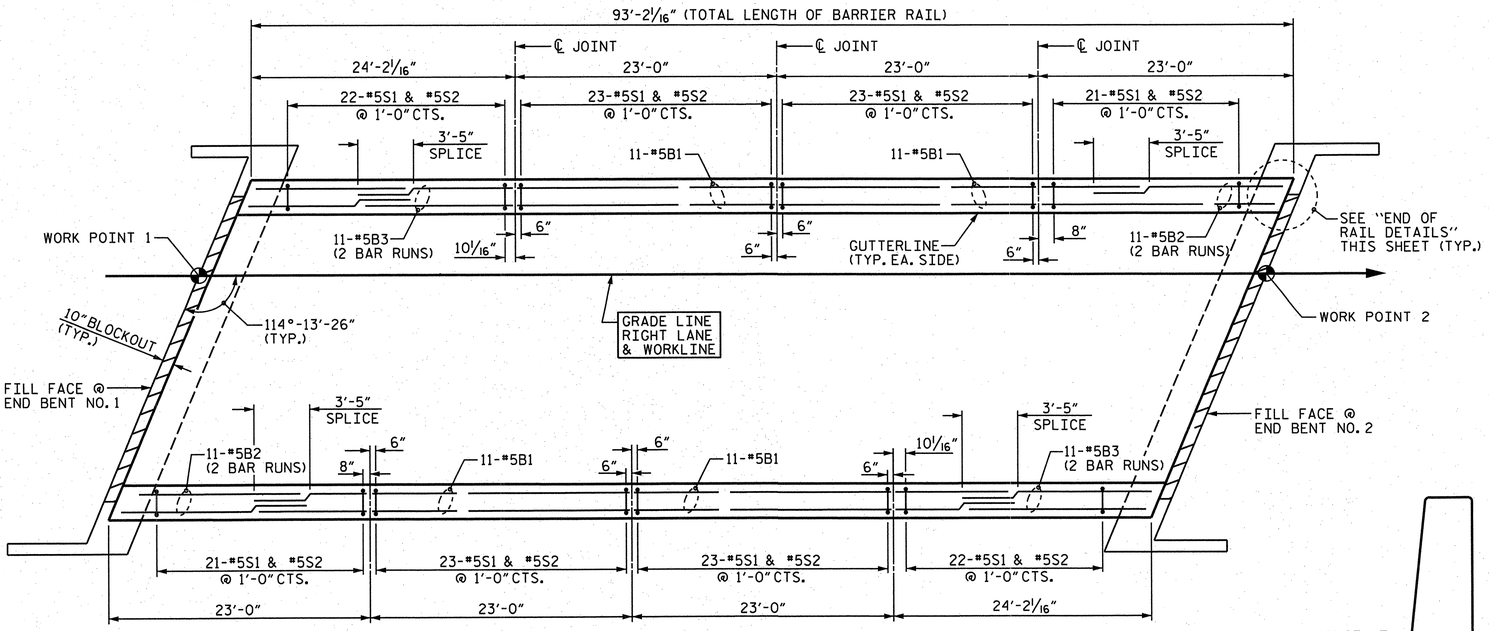

PLAN

NOTES

THE BARRIER RAIL IN THE SPAN SHALL NOT BE CAST UNTIL ALL SLAB CONCRETE IN THE SPAN HAS BEEN CAST AND HAS REACHED A MINIMUM COMPRESSIVE STRENGTH OF 3,000 PSI.

ALL REINFORCING STEEL IN BARRIER RAILS SHALL BE EPOXY COATED.

GROOVED CONTRACTION JOINTS, 1/2" IN DEPTH, SHALL BE TOOLED IN ALL EXPOSED FACES OF THE BARRIER RAIL AND IN ACCORDANCE WITH ARTICLE 825-10(B) OF THE STANDARD SPECIFICATIONS. THE CONTRACTION JOINT SHALL BE LOCATED AT EACH THIRD POINT BETWEEN BARRIER RAIL EXPANSION JOINTS. ONLY ONE CONTRACTION JOINT IS REQUIRED AT MIDPOINT OF BARRIER RAIL SEGMENTS LESS THAN 20 FEET IN LENGTH AND NO CONTRACTION JOINTS ARE REQUIRED FOR THOSE SEGMENTS LESS THAN 10 FEET IN LENGTH.

BAR TYPES

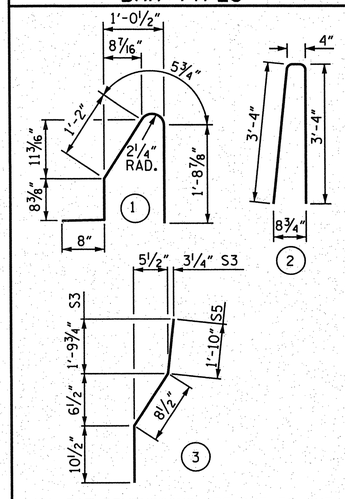

ALL BAR DIMENSIONS ARE OUT TO OUT.

BILL OF MATERIAL

FOR CONCRETE BARRIER RAIL ONLY

BAR	NO.	SIZE	TYPE	LENGTH	WEIGHT
✱ S1	178	#5	1	4'-9"	882
✱ S2	178	#5	2	7'-0"	1300
✱ S3	8	#5	3	3'-5"	29
✱ S4	8	#5	STR	3'-3"	27
✱ B1	44	#5	STR	22'-8"	1040
✱ B2	44	#5	STR	13'-1"	600
✱ B3	44	#5	STR	14'-0"	642

✱ EPOXY COATED REINFORCING STEEL	4520 LBS.
CLASS AA CONCRETE	25.15 CU. YDS.
CONCRETE BARRIER RAIL	186.3 LIN. FT.

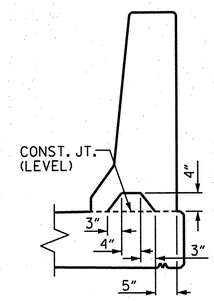

SECTION "S-S"

AT DAM IN OPEN JOINT (THIS IS TO BE USED ONLY WHEN SLIP FORM IS USED)

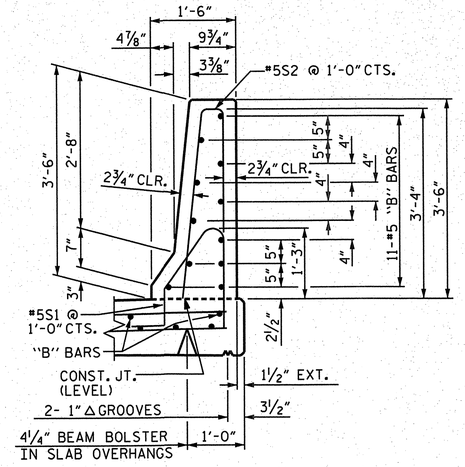

SECTION THRU RAIL

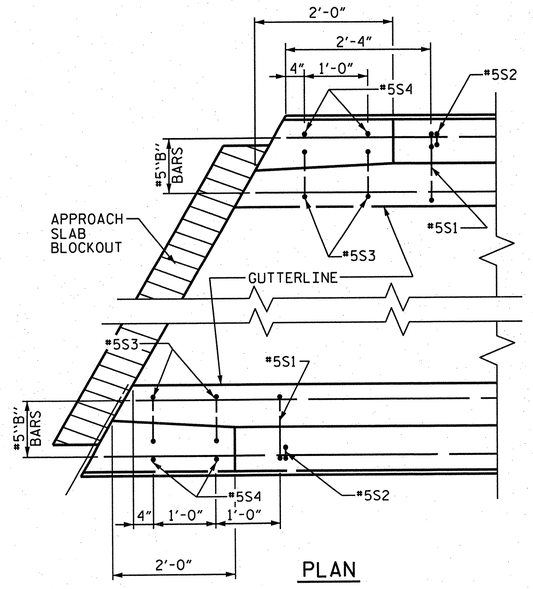

PLAN

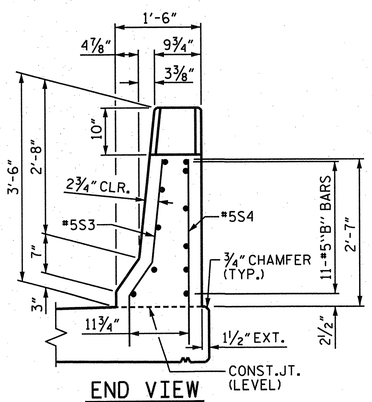

END VIEW

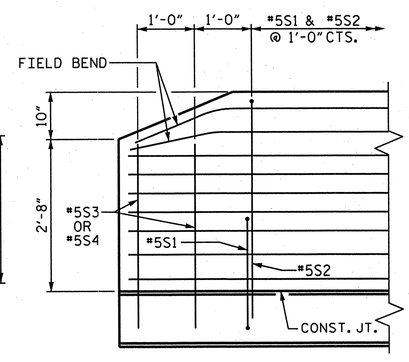

SIDE VIEW

END OF RAIL DETAILS

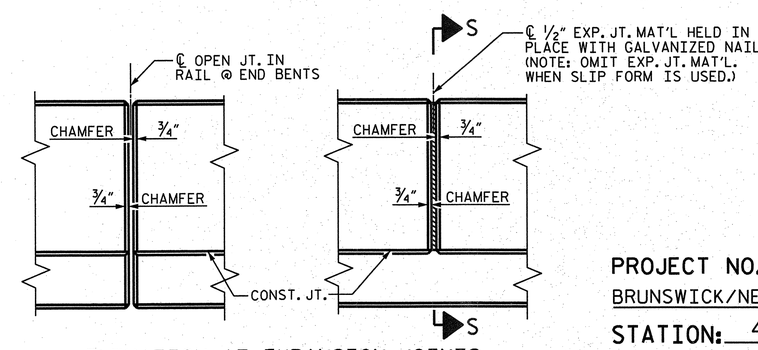

ELEVATION AT EXPANSION JOINTS

BARRIER RAIL DETAILS

PROJECT NO. R-2633BB

BRUNSWICK/NEW HANOVER COUNTY

STATION: 440+50.13 -L-

STATE OF NORTH CAROLINA
DEPARTMENT OF TRANSPORTATION
RALEIGH

STANDARD
CONCRETE
BARRIER RAIL
RIGHT LANE

DRAWN BY : JR FISHER	DATE : 11/12	DRAWN BY : ARB 5/87	REV. 10/1/11 MAA/GM
CHECKED BY : HM SWANSON / TGZ	DATE : 11/12	CHECKED BY : SJD 9/87	REV. 7/12 MAA/GM
QC / QA BY : TL BARTELT	DATE : 11/12		REV. 10/12 MAA/GM

PLAN PREPARED BY:

ALPHA & OMEGA GROUP
CIVIL & STRUCTURAL ENGINEERS
4601 Lake Boone Trail, Ste. 3C Raleigh, NC 27607
Phone 919 981 0310 Fax 919 981 0451
Firm License No. C-1684 www.aogroup.com
A&O PROJECT NO. 2011.036

NOTE: THIS STANDARD DRAWING REVIEWED AND ADOPTED FOR USE AT THE REFERENCED LOCATION BY THE UNDERSIGNED.

NORTH CAROLINA PROFESSIONAL SEAL 032724 ENGINEER GLENN ZEBLO 1-17-13

REFERENCE NO. 8-12

REVISIONS								SHEET NO.
NO.	BY:	DATE:	NO.	BY:	DATE:			S-C40
1			3					TOTAL SHEETS
2			4					700

STRUCTURE NO. 8

STD. NO. CBR1

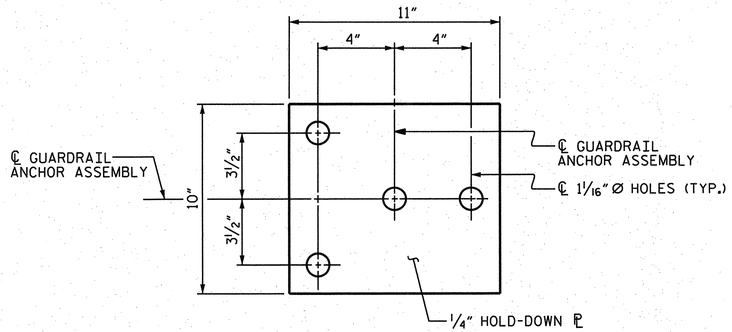

PLAN

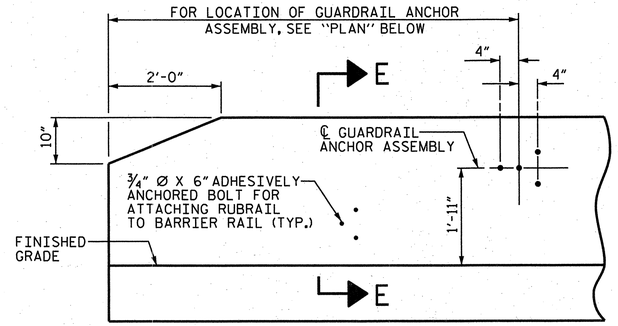

ELEVATION

NOTES

THE GUARDRAIL ANCHOR ASSEMBLY SHALL CONSIST OF A 1/4" HOLD-DOWN PLATE AND 4 - 7/8" Ø BOLTS WITH NUTS AND WASHERS, RUBRAIL, AND ADHESIVELY ANCHORED BOLTS.

THE HOLD-DOWN PLATE SHALL CONFORM TO AASHTO M270 GRADE 36. AFTER FABRICATION, THE HOLD-DOWN PLATE SHALL BE HOT-DIP GALVANIZED IN ACCORDANCE WITH AASHTO M111.

BOLTS SHALL CONFORM TO THE REQUIREMENTS OF ASTM A307 AND NUTS SHALL CONFORM TO THE REQUIREMENTS OF AASHTO M291. BOLTS, NUTS AND WASHERS SHALL BE GALVANIZED. (AT THE CONTRACTOR'S OPTION, STAINLESS STEEL BOLTS, NUTS AND WASHERS MAY BE USED AS AN ALTERNATE FOR THE 7/8" Ø GALVANIZED BOLTS, NUTS AND WASHERS. THEY SHALL CONFORM TO OR EXCEED THE MECHANICAL REQUIREMENTS OF ASTM A307. THE USE OF THIS ALTERNATE SHALL BE APPROVED BY THE ENGINEER.)

THE GUARDRAIL ANCHOR ASSEMBLY IS REQUIRED AT ALL POINTS WHERE APPROACH GUARDRAIL IS TO BE ATTACHED TO THE END OF BARRIER RAIL. FOR POINTS OF ATTACHMENT, SEE SKETCH.

AFTER INSTALLATION, THE EXPOSED THREAD OF THE BOLT SHALL BE BURRED WITH A SHARP POINTED TOOL.

THE COST OF THE GUARDRAIL ANCHOR ASSEMBLY SHALL BE INCLUDED IN THE UNIT CONTRACT PRICE BID FOR CONCRETE BARRIER RAIL.

THE 1 1/4" Ø HOLES SHALL BE FORMED OR DRILLED WITH A CORE BIT. IMPACT TOOLS WILL NOT BE PERMITTED. ANY CONCRETE DAMAGED BY THIS WORK SHALL BE REPAIRED TO THE SATISFACTION OF THE ENGINEER.

THE C6 X 8.2 RUBRAIL IS TO BE ADHESIVELY ANCHORED TO THE RAIL USING THREE 3/4" Ø X 6" BOLTS WITH WASHERS. LEVEL ONE FIELD TESTING IS REQUIRED, AND THE YIELD LOAD OF THE 3/4" Ø BOLT IS 12 KIPS. FOR ADHESIVELY ANCHORED ANCHOR BOLTS OR DOWELS, SEE STANDARD SPECIFICATIONS. SEE ROADWAY STANDARD 862.03 FOR DETAILS AND LOCATION OF THE RUBRAIL.

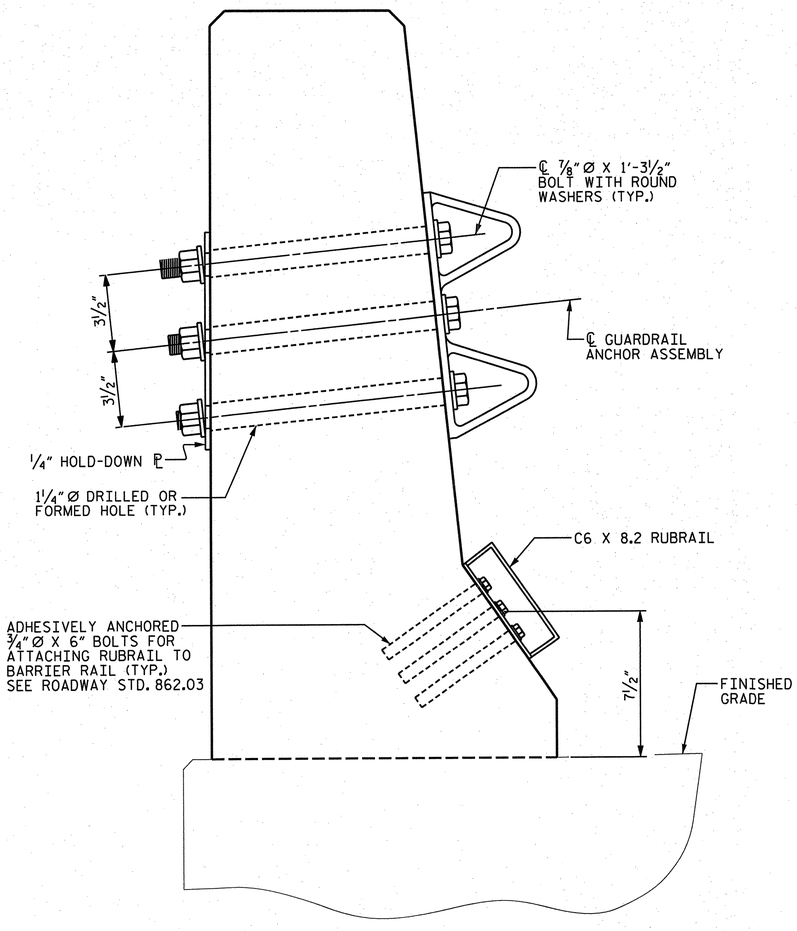

SECTION "E-E"

GUARDRAIL ANCHOR ASSEMBLY DETAILS

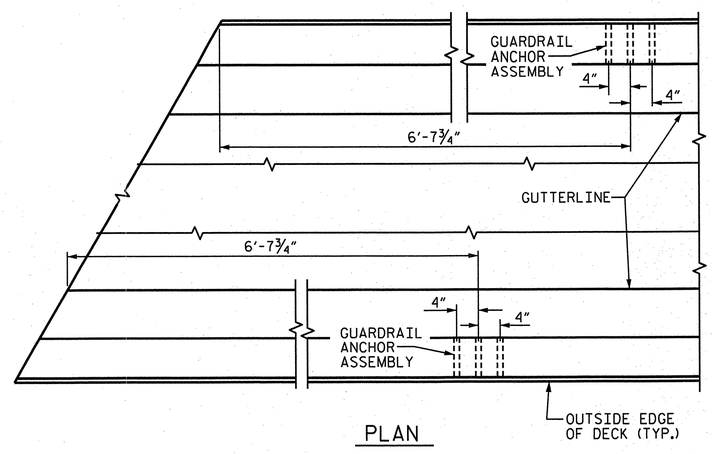

PLAN

LOCATION OF ANCHORS FOR GUARDRAIL

(END BENT NO. 1 SHOWN, END BENT NO. 2 SIMILAR ON RIGHT SIDE)

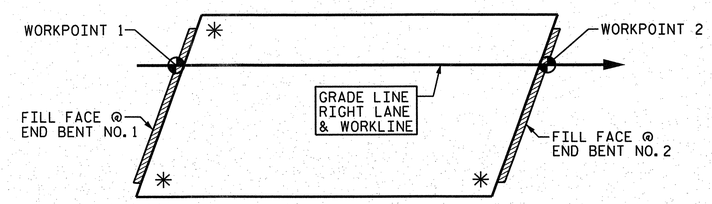

SKETCH SHOWING POINTS OF ATTACHMENTS

✳ DENOTES GUARDRAIL ANCHOR ASSEMBLY

PROJECT NO. R-2633BB
BRUNSWICK/NEW HANOVER COUNTY
STATION: 440+50.13 -L-

STATE OF NORTH CAROLINA
DEPARTMENT OF TRANSPORTATION
RALEIGH

STANDARD
GUARDRAIL ANCHORAGE FOR BARRIER RAIL
RIGHT LANE

DRAWN BY : JR FISHER	DATE : 11/12		
CHECKED BY : HM SWANSON / TGZ	DATE : 11/12		
QC / QA BY : TL BARTELT	DATE : 11/12		
DRAWN BY : TLA 5/06	ADDED 5/1/06RR	KMM/GM	
CHECKED BY : GM 5/06	REV. 10/1/11	MAA/GM	
	REV. 7/12	MAA/GM	

PLAN PREPARED BY:
ALPHA & OMEGA GROUP
CIVIL & STRUCTURAL ENGINEERS
4601 Lake Boone Trail, Ste. 3C Raleigh, NC 27607
Phone 919 981 0310 Fax 919 981 0451
Firm License No. C-1684 www.aogroup.com
A&O PROJECT NO. 2011.036

NOTE: THIS STANDARD DRAWING REVIEWED AND ADOPTED FOR USE AT THE REFERENCED LOCATION BY THE UNDERSIGNED.

NORTH CAROLINA PROFESSIONAL SEAL 032724 ENGINEER GLENN ZEBO
1-17-13

REFERENCE NO. 8-13

REVISIONS							SHEET NO.
NO.	BY:	DATE:	NO.	BY:	DATE:		S-641
1			3				TOTAL SHEETS
2			4				700

STRUCTURE NO. 8

STD. NO. GRA2

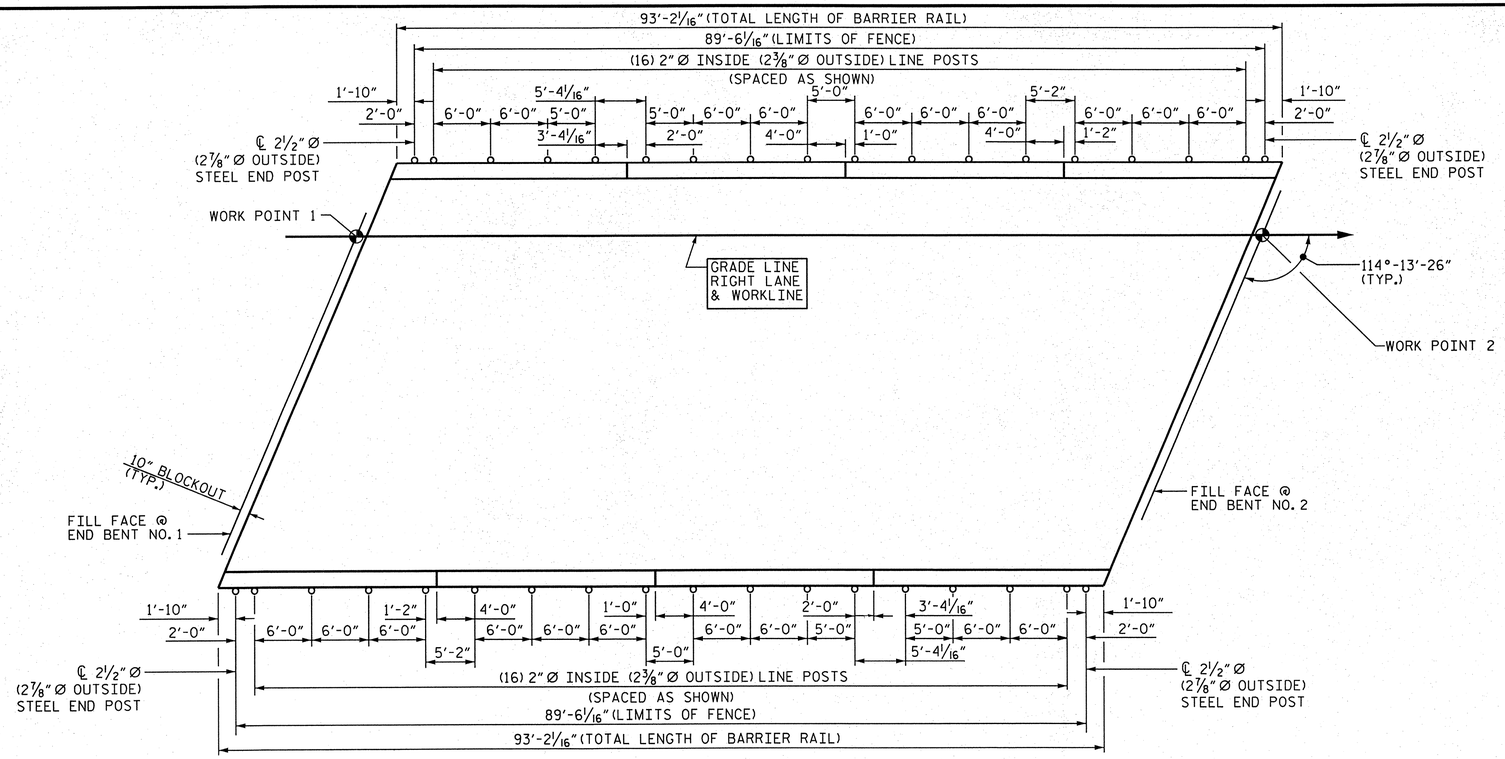

PLAN OF FENCE POST SPACING

PAY LENGTH = 179.01 FEET

NOTES:

FOR 72" CHAIN LINK FENCE, SEE SPECIAL PROVISIONS.

BOLTS SHALL CONFORM TO THE REQUIREMENTS OF ASTM A307 AND NUTS SHALL CONFORM TO THE REQUIREMENTS OF AASHTO M291. BOLTS, NUTS, AND WASHERS SHALL BE GALVANIZED. (AT THE CONTRACTOR'S OPTION, STAINLESS STEEL BOLTS, NUTS, AND WASHERS MAY BE USED AS AN ALTERNATE FOR THE 3/4" Ø GALVANIZED BOLTS, NUTS, AND WASHERS. THEY SHALL CONFORM TO OR EXCEED THE MECHANICAL REQUIREMENTS OF ASTM A307. THE USE OF THIS ALTERNATE SHALL BE APPROVED BY THE ENGINEER.)

FOR SETTING ANCHOR BOLTS, THE CONTRACTOR SHALL USE AN ADHESIVE BONDING SYSTEM. LEVEL ONE FIELD TESTING OF BONDING SYSTEM IS REQUIRED AND THE YIELD LOAD OF THE 3/4" Ø BOLTS IS 12.0 KIPS.

ALL FENCE MATERIAL SHALL MEET THE REQUIREMENTS OF SECTION 1050 OF THE STANDARD SPECIFICATIONS. GALVANIZE ALL STEEL PARTS AND HARDWARE IN ACCORDANCE WITH ARTICLE 1076 OF THE STANDARD SPECIFICATIONS.

FENCE POST LOCATIONS SHALL BE SHIFTED, AS NECESSARY, TO MAINTAIN 12" MINIMUM DISTANCE FROM ANCHOR BOLT TO JOINTS IN BARRIER RAIL.

DIMENSIONS TAKEN ALONG OUTSIDE FACE OF BARRIER RAIL.

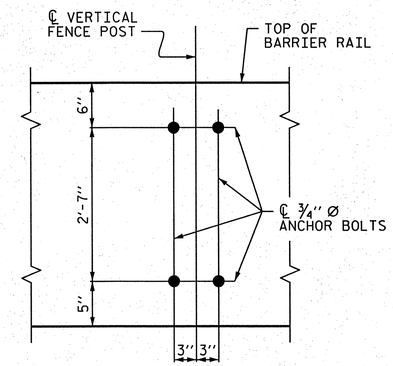

BOLT SETTING DETAIL

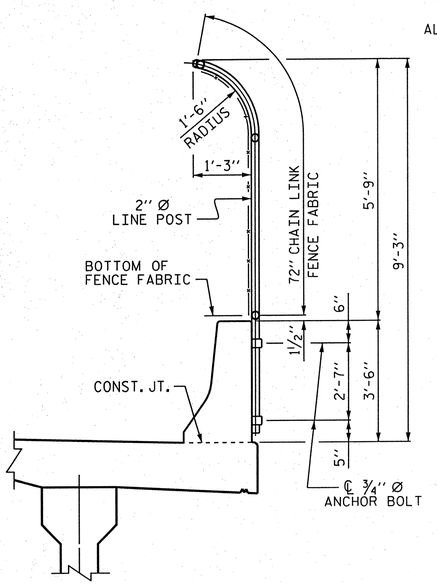

SECTION THRU FENCE

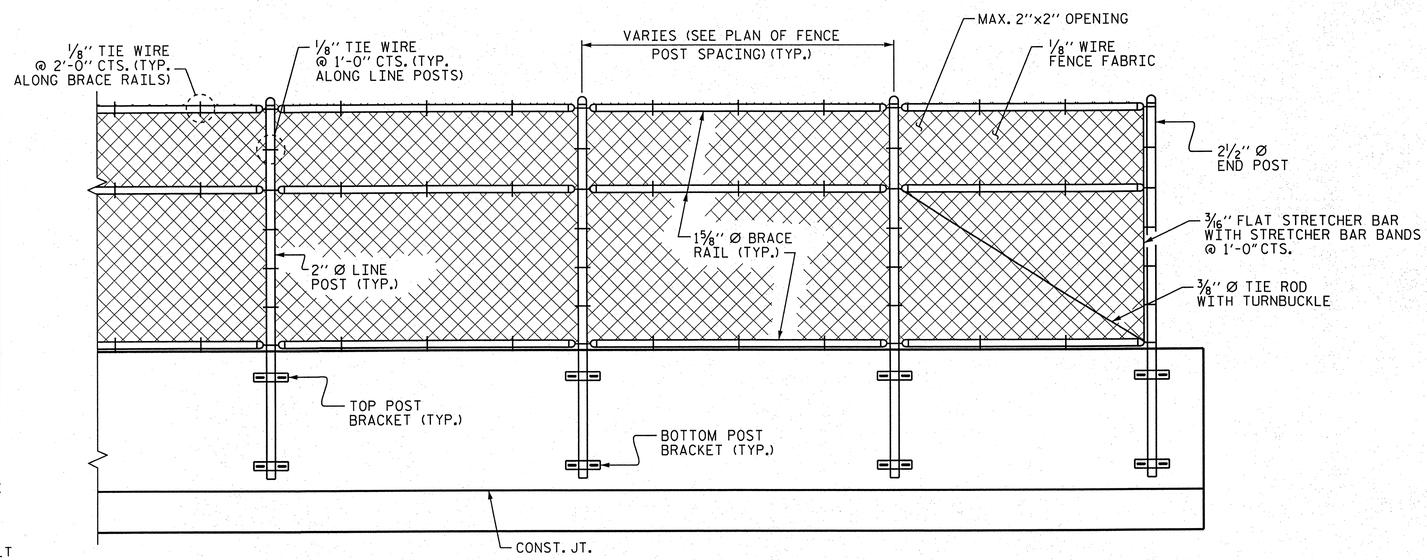

PARTIAL ELEVATION

PROJECT NO. R-2633BB

BRUNSWICK/NEW HANOVER COUNTY

STATION: 440+50.13 -L-

STATE OF NORTH CAROLINA
DEPARTMENT OF TRANSPORTATION
RALEIGH

STANDARD

BRIDGE MOUNTED
72" CHAIN LINK FENCE
RIGHT LANE

PLAN PREPARED BY:

ALPHA & OMEGA GROUP
CIVIL & STRUCTURAL ENGINEERS
4601 Lake Boone Trail, Ste. 3C Raleigh, NC 27607
Phone 919 981 0310 Fax 919 981 0451
Firm License No. C-1684 www.aogroup.com
A&O PROJECT NO. 2011.036

NOTE: THIS STANDARD DRAWING REVIEWED AND ADOPTED FOR USE AT THE REFERENCED LOCATION BY THE UNDERSIGNED.

NORTH CAROLINA PROFESSIONAL SEAL 032724 ENGINEER T. GLENN ZEBLO
4-1-13

REFERENCE NO. 8-13a

REVISIONS							
NO.	BY:	DATE:	NO.	BY:	DATE:		
1			3				
2			4				

SHEET NO. S-CA2

TOTAL SHEETS 700

DRAWN BY :	JD GOODIN	DATE :	3/18/13
CHECKED BY :	HM SWANSON/TGZ	DATE :	3/19/13
QC / QA BY :	TL BARTELT	DATE :	3/20/13

STRUCTURE NO. 8

REINFORCING BAR SCHEDULE

BAR	NO.	SIZE	TYPE	LENGTH	WEIGHT	BAR	NO.	SIZE	TYPE	LENGTH	WEIGHT
A1	146	#5	STR.	44'-11"	6840	*A55	2	#5	STR.	28'-4"	59
A2	2	#5	STR.	43'-10"	91	*A56	2	#5	STR.	27'-3"	57
A3	2	#5	STR.	42'-9"	89	*A57	2	#5	STR.	26'-1"	54
A4	2	#5	STR.	41'-8"	87	*A58	2	#5	STR.	25'-0"	52
A5	2	#5	STR.	40'-6"	84	*A59	2	#5	STR.	23'-11"	50
A6	2	#5	STR.	39'-5"	82	*A60	2	#5	STR.	22'-9"	47
A7	2	#5	STR.	38'-4"	80	*A61	2	#5	STR.	21'-8"	45
A8	2	#5	STR.	37'-2"	78	*A62	2	#5	STR.	20'-7"	43
A9	2	#5	STR.	36'-1"	75	*A63	2	#5	STR.	19'-5"	41
A10	2	#5	STR.	35'-0"	73	*A64	2	#5	STR.	18'-4"	38
A11	2	#5	STR.	33'-10"	71	*A65	2	#5	STR.	17'-3"	36
A12	2	#5	STR.	32'-9"	68	*A66	2	#5	STR.	16'-1"	34
A13	2	#5	STR.	31'-8"	66	*A67	2	#5	STR.	15'-0"	31
A14	2	#5	STR.	30'-7"	64	*A68	2	#5	STR.	13'-11"	29
A15	2	#5	STR.	29'-5"	61	*A69	2	#5	STR.	12'-9"	27
A16	2	#5	STR.	28'-4"	59	*A70	2	#5	STR.	11'-8"	24
A17	2	#5	STR.	27'-3"	57	*A71	2	#5	STR.	10'-7"	22
A18	2	#5	STR.	26'-1"	54	*A72	2	#5	STR.	9'-5"	20
A19	2	#5	STR.	25'-0"	52	*A73	2	#5	STR.	8'-4"	17
A20	2	#5	STR.	23'-11"	50	*A74	2	#5	STR.	7'-3"	15
A21	2	#5	STR.	22'-9"	47	*A75	2	#5	STR.	6'-1"	13
A22	2	#5	STR.	21'-8"	45	*A76	2	#5	STR.	5'-0"	10
A23	2	#5	STR.	20'-7"	43	*A77	2	#5	STR.	3'-11"	8
A24	2	#5	STR.	19'-5"	41	*A78	2	#5	STR.	2'-9"	6
A25	2	#5	STR.	18'-4"	38						
A26	2	#5	STR.	17'-3"	36	*B1	90	#4	STR.	21'-0"	1263
A27	2	#5	STR.	16'-1"	34	B2	120	#5	STR.	47'-6"	5945
A28	2	#5	STR.	15'-0"	31	*B3	118	#7	STR.	19'-0"	4583
A29	2	#5	STR.	13'-11"	29						
A30	2	#5	STR.	12'-9"	27	*S1	76	#4	1	11'-8"	592
A31	2	#5	STR.	11'-8"	24	*S2	64	#4	1	10'-6"	449
A32	2	#5	STR.	10'-7"	22						
A33	2	#5	STR.	9'-5"	20	K1	20	#4	STR	28'-10"	385
A34	2	#5	STR.	8'-4"	17	K2	8	#4	STR	8'-4"	45
A35	2	#5	STR.	7'-3"	15	K3	16	#4	STR	9'-5"	101
A36	2	#5	STR.	6'-1"	13	K4	8	#4	STR	9'-4"	50
A37	2	#5	STR.	5'-0"	10	K5	8	#4	STR	7'-9"	41
A38	2	#5	STR.	3'-11"	8	K6	4	#4	STR	5'-10"	16
A39	2	#5	STR.	2'-9"	6	K7	8	#4	STR	6'-4"	34
						K8	4	#4	STR	6'-3"	17
*A40	146	#5	STR.	44'-11"	6840	K9	4	#4	STR	5'-6"	15
*A41	2	#5	STR.	43'-10"	91	K10	16	#4	STR	2'-11"	31
*A42	2	#5	STR.	42'-9"	89						
*A43	2	#5	STR.	41'-8"	87	U1	76	#4	2	11'-10"	601
*A44	2	#5	STR.	40'-6"	84	U2	12	#4	2	14'-2"	114
*A45	2	#5	STR.	39'-5"	82						
*A46	2	#5	STR.	38'-4"	80	H1	8	#5	4	9'-1"	76
*A47	2	#5	STR.	37'-2"	78	H2	8	#5	4	8'-10"	74
*A48	2	#5	STR.	36'-1"	75	H3	8	#5	3	11'-3"	94
*A49	2	#5	STR.	35'-0"	73	H4	8	#5	3	11'-6"	96
*A50	2	#5	STR.	33'-10"	71	H5	8	#5	4	11'-5"	95
*A51	2	#5	STR.	32'-9"	68	H6	8	#5	4	11'-8"	97
*A52	2	#5	STR.	31'-8"	66	H7	8	#5	3	8'-7"	72
*A53	2	#5	STR.	30'-7"	64	H8	8	#5	3	8'-10"	74
*A54	2	#5	STR.	29'-5"	61						

* EPOXY COATED REINFORCING STEEL.

SUPERSTRUCTURE BILL OF MATERIAL

SUPERSTRUCTURE BILL OF MATERIAL			
	CLASS AA CONCRETE	REINFORCING STEEL	EPOXY COATED REINFORCING STEEL
	(CU. YDS.)	(LBS.)	(LBS.)
POUR 1	115.67		
POUR 2	97.2		
TOTALS**	212.87	16760	15574

**QUANTITIES FOR BARRIER RAIL ARE NOT INCLUDED.

GROOVING BRIDGE FLOORS

APPROACH SLABS	1879	SQ.FT.
BRIDGE DECK	3620	SQ.FT.
TOTAL	5499	SQ.FT.

SUPERSTRUCTURE REINFORCING STEEL LENGTHS ARE BASED ON THE FOLLOWING MINIMUM SPLICE LENGTHS

BAR SIZE	SUPERSTRUCTURE EXCEPT APPROACH SLABS, PARAPET, AND BARRIER RAIL		APPROACH SLABS		PARAPET AND BARRIER RAIL
	EPOXY COATED	UNCOATED	EPOXY COATED	UNCOATED	
#4	2'-0"	1'-9"	2'-0"	1'-9"	2'-9"
#5	2'-6"	2'-2"	2'-6"	2'-2"	3'-5"
#6	3'-0"	2'-7"	3'-10"	2'-7"	4'-4"
#7	5'-3"	3'-6"			
#8	6'-10"	4'-7"			

BAR TYPES

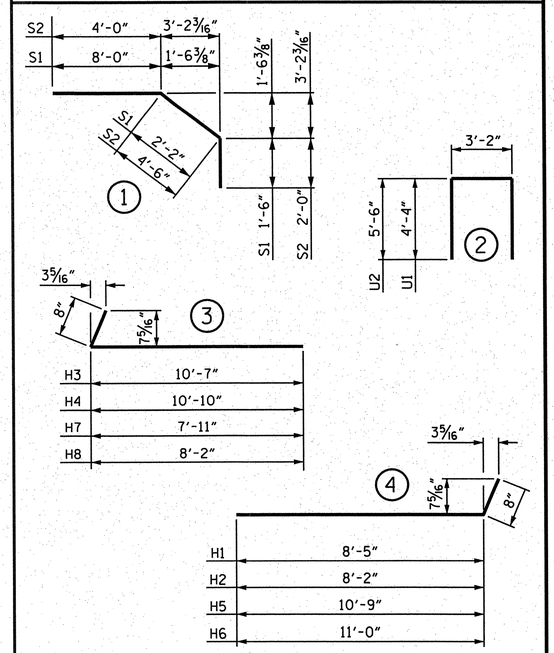

ALL BAR DIMENSIONS ARE OUT TO OUT.

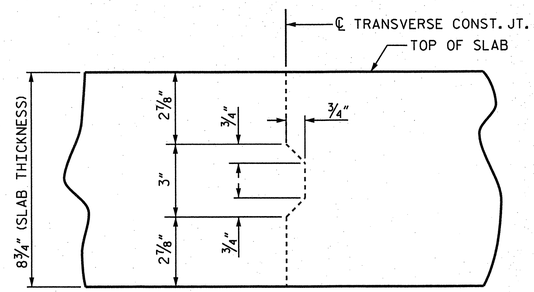

TRANSVERSE CONSTRUCTION JOINT IN DECK SLAB

REINFORCING STEEL IN SLAB NOT SHOWN.
LONGITUDINAL REINFORCING STEEL SHALL BE CONTINUOUS THRU JOINT.

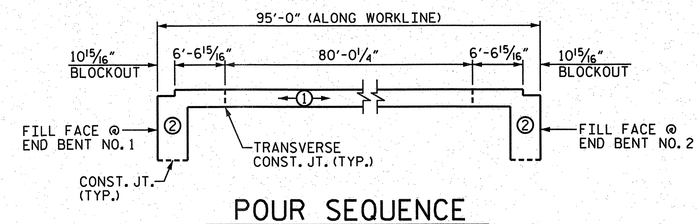

POUR SEQUENCE

-①- INDICATES POUR NUMBER AND DIRECTION OF POUR.
(POUR #2 CANNOT BE STARTED UNTIL POUR #1 HAS REACHED A MINIMUM OF 3,000 PSI.)

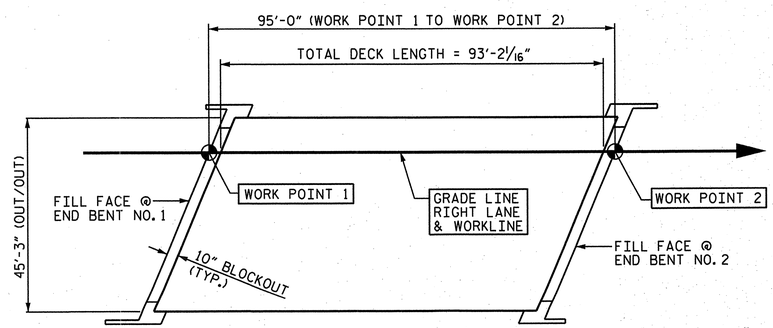

PLAN

LAYOUT FOR COMPUTING AREA OF REINFORCED CONCRETE DECK SLAB.
(SQ. FT. = 4299)

PROJECT NO. R-2633BB
BRUNSWICK/NEW HANOVER COUNTY
STATION: 440+50.13 -L-

STATE OF NORTH CAROLINA
DEPARTMENT OF TRANSPORTATION
RALEIGH

STANDARD
SUPERSTRUCTURE
BILL OF MATERIAL
RIGHT LANE

DRAWN BY : JR FISHER	DATE : 11/12		
CHECKED BY : HM SWANSON / TGZ	DATE : 11/12		
QC / QA BY : TL BARTELT	DATE : 11/12		
DRAWN BY : JMB 5/87	REV. 8/16/99	RWW/LES	
CHECKED BY : SJD 9/87	REV. 5/1/06	TLA/GM	
	REV. 10/1/11	MAA/GM	

PLAN PREPARED BY:
ALPHA & OMEGA GROUP
CIVIL & STRUCTURAL ENGINEERS
4601 Lake Boone Trail, Ste. 3C Raleigh, NC 27607
Phone 919 981 0310 Fax 919 981 0451
Firm License No. C-1684 www.aogroup.com
A&O PROJECT NO. 2011.036

NOTE: THIS STANDARD DRAWING REVIEWED AND ADOPTED FOR USE AT THE REFERENCED LOCATION BY THE UNDERSIGNED.

NORTH CAROLINA PROFESSIONAL SEAL 03724 ENGINEER T. GLENN ZEBLO
1-17-13

REFERENCE NO. 8-14

REVISIONS								SHEET NO.
NO.	BY:	DATE:	NO.	BY:	DATE:			S-643
1			3					TOTAL SHEETS
2			4					700

STRUCTURE NO. 8

STD. NO. BOM1

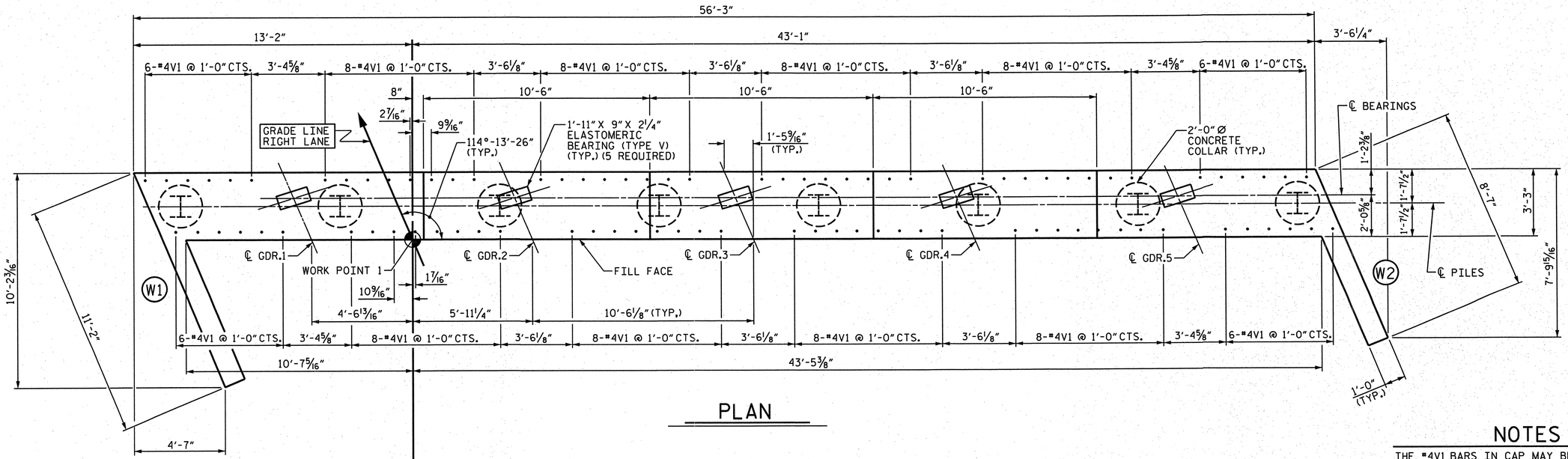

PLAN

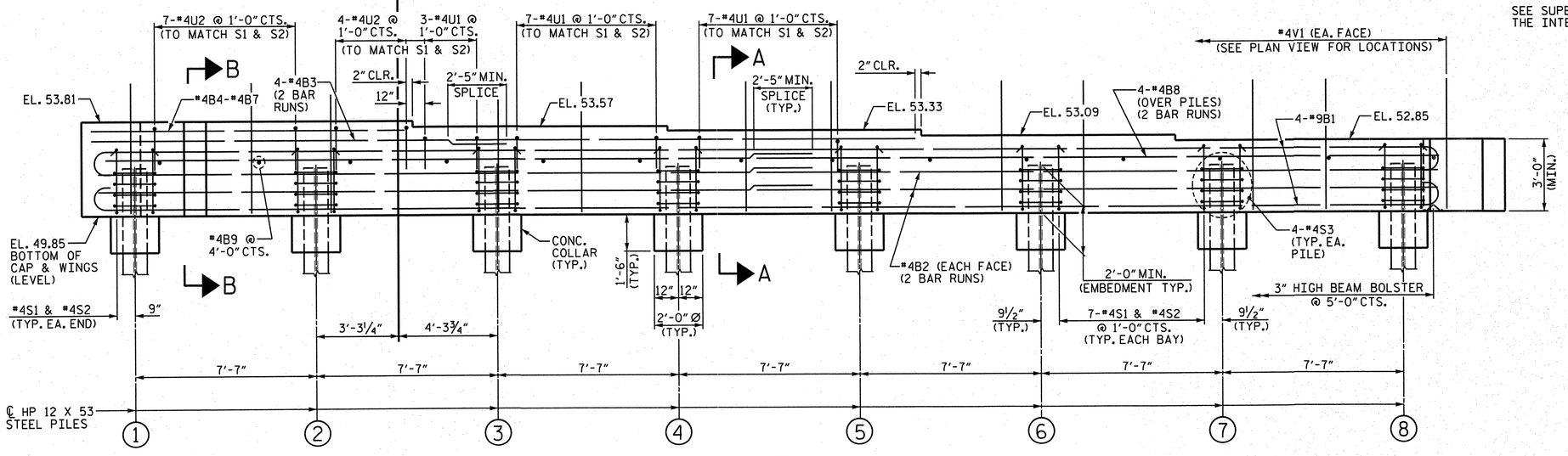

ELEVATION

FOR SECTION "A-A" AND PARTIAL SECTION "B-B", SEE SHEET 2 OF 5.

NOTES

THE #4V1 BARS IN CAP MAY BE SHIFTED SLIGHTLY TO AVOID STIRRUPS IN CAP.

FOR PILE SPLICE DETAILS, SEE SHEET 2 OF 5.

FOR WING DETAILS, SEE SHEET 5 OF 5.

THE TOP SURFACE OF THE CAP AND WINGS, EXCLUDING THE BEARING AREA, SHALL BE RAKED TO A DEPTH OF ¼".

SEE SUPERSTRUCTURE SHEETS FOR UPPER PART OF THE INTEGRAL END BENT DETAILS.

PROJECT NO. R-2633BB

BRUNSWICK/NEW HANOVER COUNTY

STATION: 440+50.13 -L-

SHEET 1 OF 5

STATE OF NORTH CAROLINA
DEPARTMENT OF TRANSPORTATION
RALEIGH

SUBSTRUCTURE
END BENT NO. 1
RIGHT LANE

REVISIONS							SHEET NO.
NO.	BY:	DATE:	NO.	BY:	DATE:		S-44
1			3				TOTAL SHEETS
2			4				700

STRUCTURE NO. 8

PLAN PREPARED BY:

ALPHA & OMEGA GROUP
CIVIL & STRUCTURAL ENGINEERS
4601 Lake Boone Trail, Ste. 3C Raleigh, NC 27607
Phone 919 981 0310 Fax 919 981 0451
Firm License No. C-1684 www.aogroup.com
A&O PROJECT NO. 2011.036

NORTH CAROLINA PROFESSIONAL SEAL 032724 ENGINEER GLENN ZEBLO 1-17-13

REFERENCE NO. 8-15

DRAWN BY :	JR FISHER	DATE :	11/12
CHECKED BY :	HM SWANSON / TGZ	DATE :	11/12
QC / QA BY :	TL BARTELT	DATE :	11/12

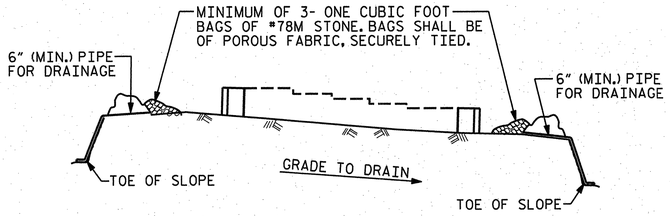

BAGGED STONE AND PIPE SHALL BE PLACED IMMEDIATELY AFTER COMPLETION OF END BENT EXCAVATION. PIPE MAY BE EITHER CONCRETE, CORRUGATED STEEL, CORRUGATED ALUMINUM ALLOY, OR CORRUGATED PLASTIC. PERFORATED PIPE WILL NOT BE ALLOWED.

BAGGED STONE SHALL REMAIN IN PLACE UNTIL THE ENGINEER DIRECTS THAT IT BE REMOVED. THE CONTRACTOR SHALL REMOVE AND DISPOSE OF SILT ACCUMULATIONS AT BAGGED STONE WHEN SO DIRECTED BY THE ENGINEER. BAGS SHALL BE REMOVED AND REPLACED WHENEVER THE ENGINEER DETERMINES THAT THEY HAVE DETERIORATED AND LOST THEIR EFFECTIVENESS.

NO SEPARATE PAYMENT WILL BE MADE FOR THIS WORK AND THE ENTIRE COST OF THIS WORK SHALL BE INCLUDED IN THE UNIT CONTRACT PRICE BID FOR THE SEVERAL PAY ITEMS.

TEMPORARY DRAINAGE AT END BENT

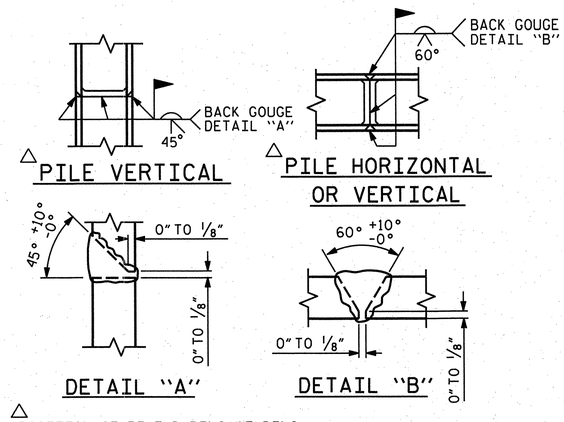

△ POSITION OF PILE DURING WELDING.

PILE SPLICE DETAILS

BAR TYPES

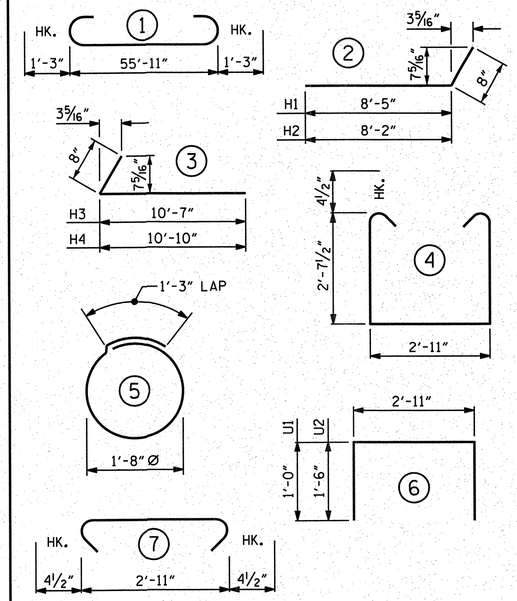

ALL BAR DIMENSIONS ARE OUT TO OUT.

BILL OF MATERIAL

INTEGRAL END BENT NO. 1

BAR	NO.	SIZE	TYPE	LENGTH	WEIGHT
B1	8	#9	1	58'-5"	1589
B2	8	#4	STR	29'-2"	156
B3	8	#4	STR	18'-5"	98
B4	1	#4	STR	13'-6"	9
B5	1	#4	STR	13'-1"	9
B6	1	#4	STR	12'-8"	8
B7	1	#4	STR	12'-3"	8
B8	8	#4	STR	29'-2"	156
B9	14	#4	STR	2'-11"	27
H1	4	#5	2	9'-1"	38
H2	4	#5	2	8'-10"	37
H3	5	#5	3	11'-3"	59
H4	5	#5	3	11'-6"	60
S1	51	#4	4	8'-11"	304
S2	51	#4	7	3'-8"	125
S3	32	#4	5	6'-6"	139
V1	88	#4	STR	5'-8"	333
V2	19	#4	STR	9'-3"	117
V3	16	#4	STR	8'-3"	88
U1	17	#4	6	4'-11"	56
U2	11	#4	6	5'-11"	43

REINFORCING STEEL 3459 LBS.

CLASS A CONCRETE BREAKDOWN

POUR #1 CAP, LOWER PART OF WINGS & COLLARS 26.5 C.Y.

TOTAL CLASS A CONCRETE 26.5 C.Y.

HP 12 X 53 STEEL PILES NO. = 8 640 L.F.

PILE DRIVES 4 EA.

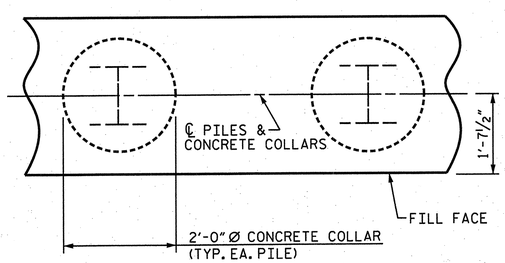

PLAN

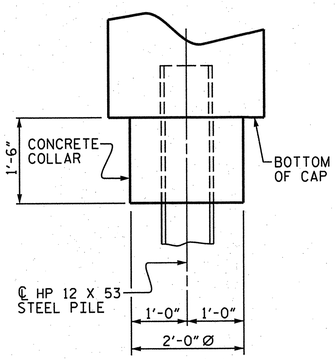

ELEVATION

CORROSION PROTECTION FOR STEEL PILES DETAIL

(END BENT NO. 1 SHOWN, END BENT NO. 2 SIMILAR BY ROTATION)

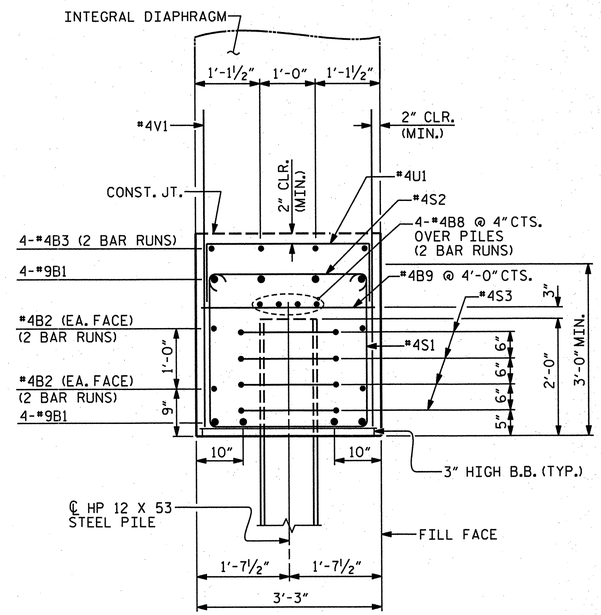

SECTION "A-A"

(CONCRETE COLLAR NOT SHOWN FOR CLARITY. SEE "CORROSION PROTECTION FOR STEEL PILES DETAIL.")

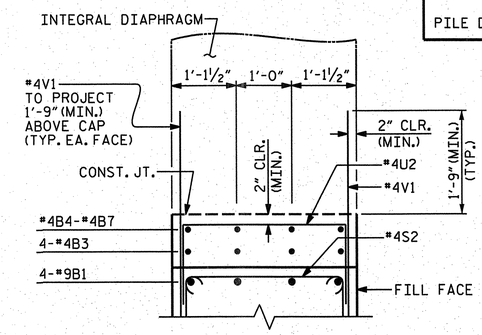

PATIAL SECTION "B-B"

PROJECT NO. R-2633BB

BRUNSWICK/NEW HANOVER COUNTY

STATION: 440+50.13 -L-

SHEET 2 OF 5

STATE OF NORTH CAROLINA
DEPARTMENT OF TRANSPORTATION
RALEIGH

SUBSTRUCTURE
END BENT NO. 1
DETAILS
RIGHT LANE

REVISIONS								SHEET NO.
NO.	BY:	DATE:	NO.	BY:	DATE:			S-645
1			3					TOTAL SHEETS
2			4					100

STRUCTURE NO. 8

PLAN PREPARED BY:

ALPHA & OMEGA GROUP
CIVIL & STRUCTURAL ENGINEERS
4601 Lake Boone Trail, Ste. 3C Raleigh, NC 27607
Phone 919 981 0310 Fax 919 981 0451
Firm License No. C-1684 www.aogroup.com
A&O PROJECT NO. 2011.036

NORTH CAROLINA PROFESSIONAL SEAL 032724 ENGINEER GLENN ZEBLO
T. Glenn Zeblo 1-17-13

REFERENCE NO. 8-16

DRAWN BY :	JR FISHER	DATE :	11/12
CHECKED BY :	HM SWANSON / TGZ	DATE :	11/12
QC / QA BY :	TL BARTELT	DATE :	11/12

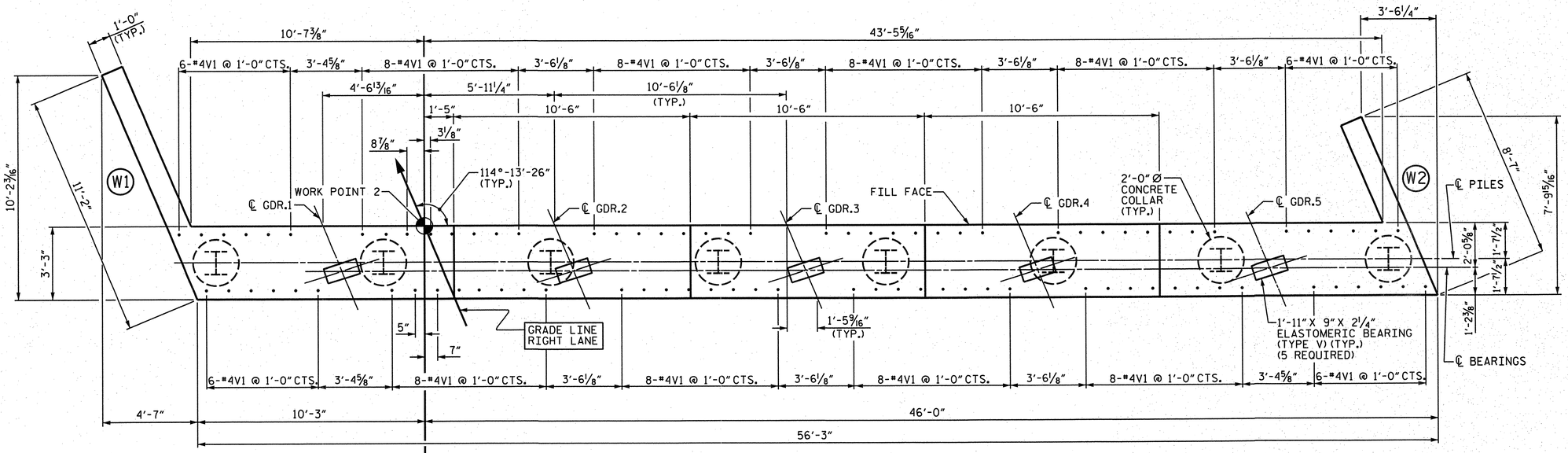

PLAN

WORKLINE

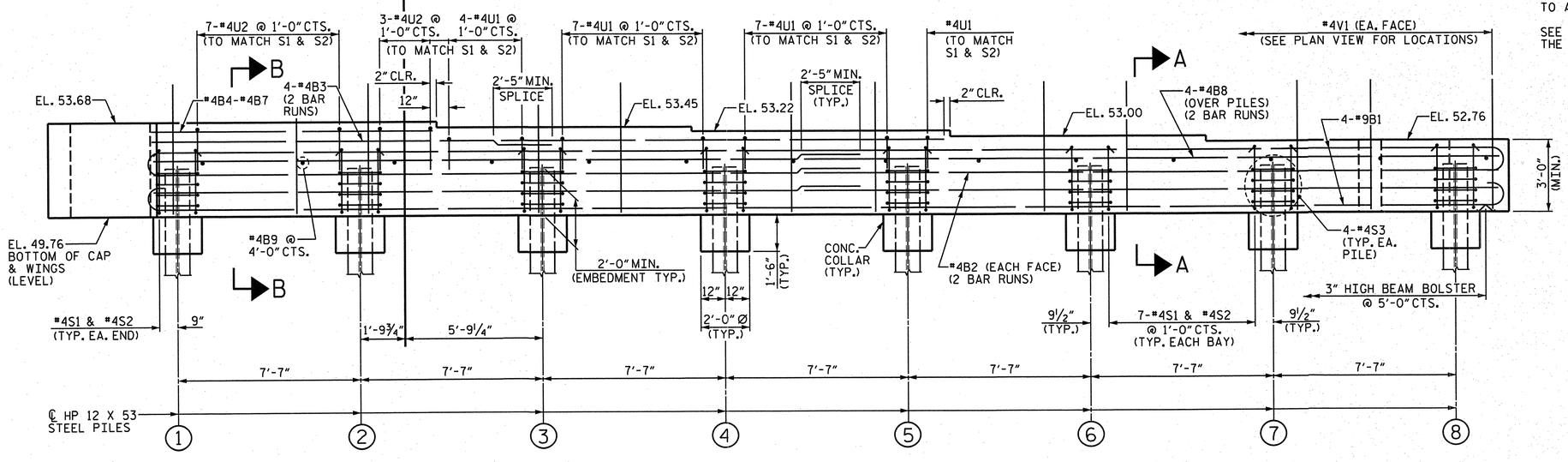

ELEVATION

FOR SECTION "A-A" AND PARTIAL SECTION "B-B", SEE SHEET 4 OF 5.

NOTES

THE #4V1 BARS IN CAP MAY BE SHIFTED SLIGHTLY TO AVOID STIRRUPS IN CAP.

FOR PILE SPLICE DETAILS, SEE SHEET 4 OF 5.

FOR WING DETAILS, SEE SHEET 5 OF 5.

THE TOP SURFACE OF THE CAP AND WINGS, EXCLUDING THE BEARING AREA, SHALL BE RAKED TO A DEPTH OF 1/4".

SEE SUPERSTRUCTURE SHEETS FOR UPPER PART OF THE INTEGRAL END BENT DETAILS.

PROJECT NO. R-2633BB

BRUNSWICK/NEW HANOVER COUNTY

STATION: 440+50.13 -L-

SHEET 3 OF 5

STATE OF NORTH CAROLINA
DEPARTMENT OF TRANSPORTATION
RALEIGH

SUBSTRUCTURE
END BENT NO. 2
RIGHT LANE

REVISIONS						SHEET NO.
NO.	BY:	DATE:	NO.	BY:	DATE:	S-646
1			3			TOTAL SHEETS
2			4			700

STRUCTURE NO. 8

PLAN PREPARED BY:

ALPHA & OMEGA GROUP
CIVIL & STRUCTURAL ENGINEERS
4601 Lake Boone Trail, Ste. 3C Raleigh, NC 27607
Phone 919 981 0310 Fax 919 981 0451
Firm License No. C-1684 www.aogroup.com
A&O PROJECT NO. 2011.036

NORTH CAROLINA PROFESSIONAL SEAL 032724 ENGINEER GLENN ZEBLO
1-17-13

REFERENCE NO. 8-17

DRAWN BY :	JR FISHER	DATE :	11/12
CHECKED BY :	HM SWANSON / TGZ	DATE :	11/12
QC / QA BY :	TL BARTELT	DATE :	11/12

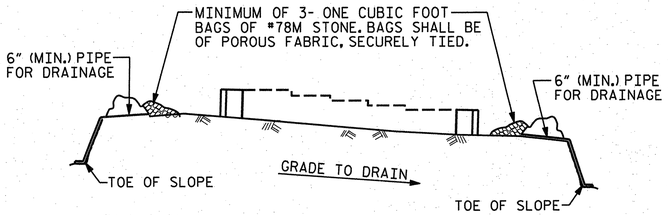

BAGGED STONE AND PIPE SHALL BE PLACED IMMEDIATELY AFTER COMPLETION OF END BENT EXCAVATION. PIPE MAY BE EITHER CONCRETE, CORRUGATED STEEL, CORRUGATED ALUMINUM ALLOY, OR CORRUGATED PLASTIC. PERFORATED PIPE WILL NOT BE ALLOWED.

BAGGED STONE SHALL REMAIN IN PLACE UNTIL THE ENGINEER DIRECTS THAT IT BE REMOVED. THE CONTRACTOR SHALL REMOVE AND DISPOSE OF SILT ACCUMULATIONS AT BAGGED STONE WHEN SO DIRECTED BY THE ENGINEER. BAGS SHALL BE REMOVED AND REPLACED WHENEVER THE ENGINEER DETERMINES THAT THEY HAVE DETERIORATED AND LOST THEIR EFFECTIVENESS.

NO SEPARATE PAYMENT WILL BE MADE FOR THIS WORK AND THE ENTIRE COST OF THIS WORK SHALL BE INCLUDED IN THE UNIT CONTRACT PRICE BID FOR THE SEVERAL PAY ITEMS.

TEMPORARY DRAINAGE AT END BENT

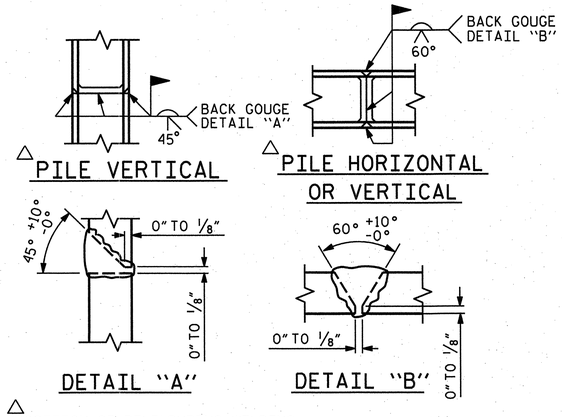

△ POSITION OF PILE DURING WELDING.

PILE SPLICE DETAILS

BAR TYPES

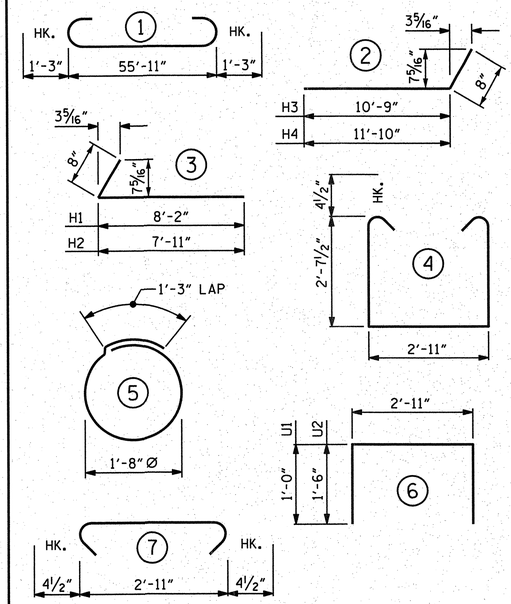

ALL BAR DIMENSIONS ARE OUT TO OUT.

BILL OF MATERIAL

INTEGRAL END BENT NO. 2

BAR	NO.	SIZE	TYPE	LENGTH	WEIGHT
B1	8	#9	1	58'-5"	1589
B2	8	#4	STR	29'-2"	156
B3	8	#4	STR	18'-1"	97
B4	1	#4	STR	11'-4"	8
B5	1	#4	STR	10'-11"	7
B6	1	#4	STR	10'-6"	7
B7	1	#4	STR	10'-1"	7
B8	8	#4	STR	29'-2"	156
B9	14	#4	STR	2'-11"	27
H1	4	#5	3	8'-10"	37
H2	4	#5	3	8'-7"	36
H3	5	#5	2	11'-5"	60
H4	5	#5	2	11'-8"	61
S1	51	#4	4	8'-11"	304
S2	51	#4	7	3'-8"	125
S3	32	#4	5	6'-6"	139
V1	88	#4	STR	5'-6"	323
V2	19	#4	STR	9'-3"	117
V3	16	#4	STR	8'-3"	88
U1	19	#4	6	4'-11"	62
U2	10	#4	6	5'-11"	40

REINFORCING STEEL 3446 LBS.

CLASS A CONCRETE BREAKDOWN

POUR #1 CAP, LOWER PART OF WINGS & COLLARS 26.5 C.Y.

TOTAL CLASS A CONCRETE 26.5 C.Y.

HP 12 X 53 STEEL PILES NO. = 8 640 L.F.

PILE REDRIVES 4 EA.

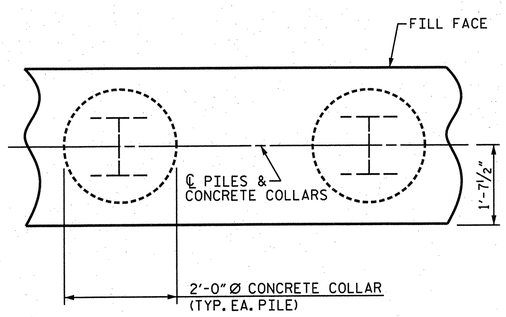

PLAN

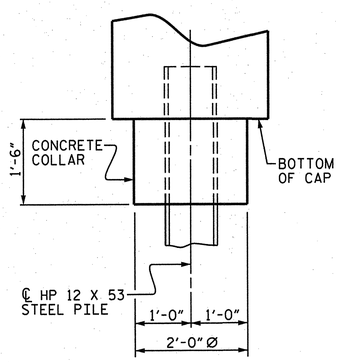

ELEVATION

CORROSION PROTECTION FOR STEEL PILES DETAIL

(END BENT NO. 2 SHOWN, END BENT NO. 1 SIMILAR BY ROTATION)

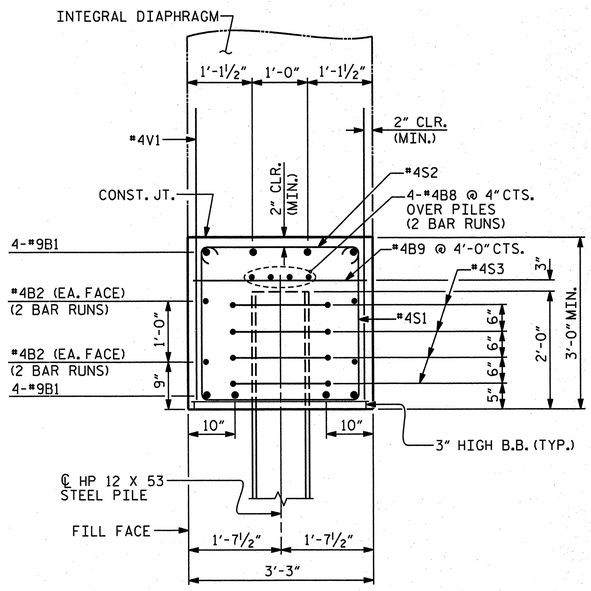

SECTION "A-A"

(CONCRETE COLLAR NOT SHOWN FOR CLARITY. SEE "CORROSION PROTECTION FOR STEEL PILES DETAIL.")

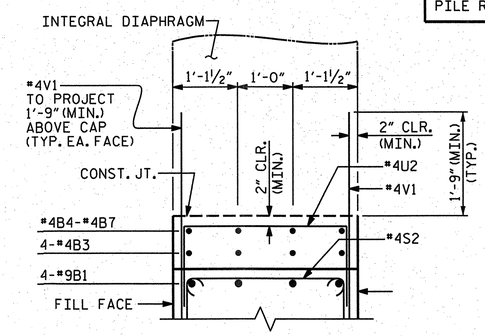

PATIAL SECTION "B-B"

PROJECT NO. R-2633BB

BRUNSWICK/NEW HANOVER COUNTY

STATION: 440+50.13 -L-

SHEET 4 OF 5

STATE OF NORTH CAROLINA
DEPARTMENT OF TRANSPORTATION
RALEIGH

SUBSTRUCTURE

END BENT NO. 2 DETAILS

RIGHT LANE

PLAN PREPARED BY:

ALPHA & OMEGA GROUP
CIVIL & STRUCTURAL ENGINEERS
4601 Lake Boone Trail, Ste. 3C Raleigh, NC 27607
Phone 919 981 0310 Fax 919 981 0451
Firm License No. C-1684 www.aogroup.com
A&O PROJECT NO. 2011.036

NORTH CAROLINA PROFESSIONAL SEAL 032724 ENGINEER GLENN ZEBLO 7-17-12

REFERENCE NO. 8-18

REVISIONS							SHEET NO.
NO.	BY:	DATE:	NO.	BY:	DATE:		S-647
1			3				TOTAL SHEETS
2			4				700

STRUCTURE NO. 8

DRAWN BY :	JR FISHER	DATE :	11/12
CHECKED BY :	HM SWANSON / TGZ	DATE :	11/12
QC / QA BY :	TL BARTELT	DATE :	11/12

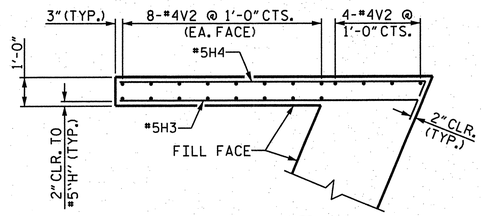

PLAN (W1)

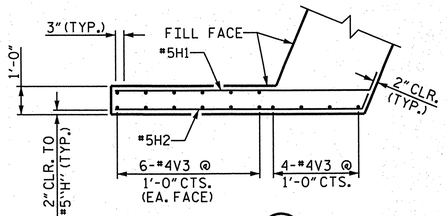

PLAN (W2)

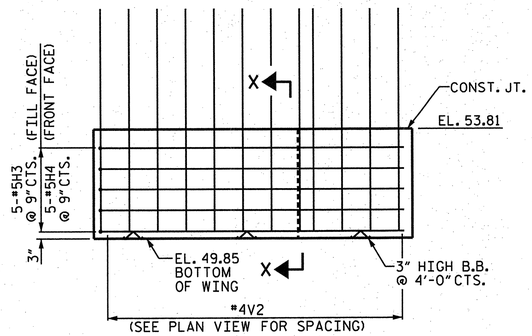

ELEVATION (W1)

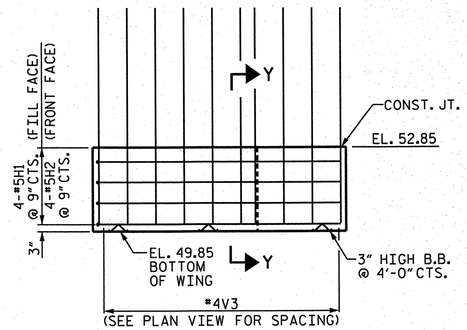

ELEVATION (W2)

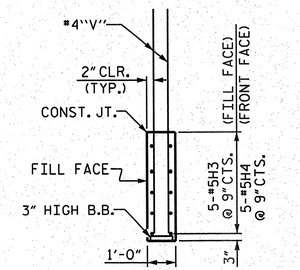

SECTION "X-X"

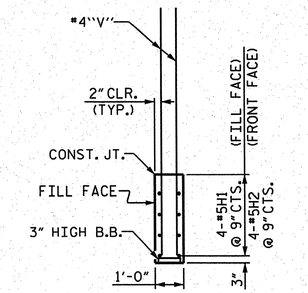

SECTION "Y-Y"

END BENT NO. 1

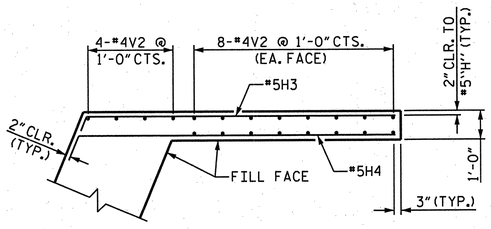

PLAN (W1)

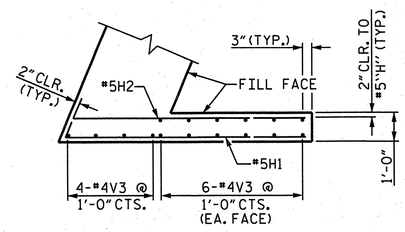

PLAN (W2)

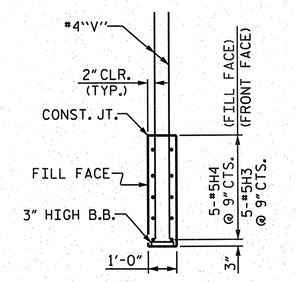

SECTION "X-X"

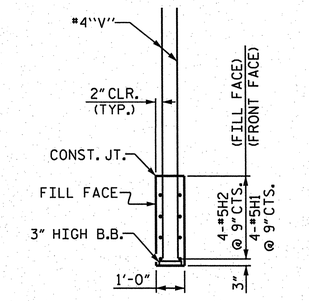

SECTION "Y-Y"

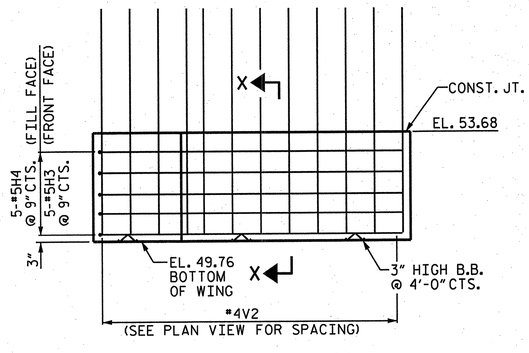

ELEVATION (W1)

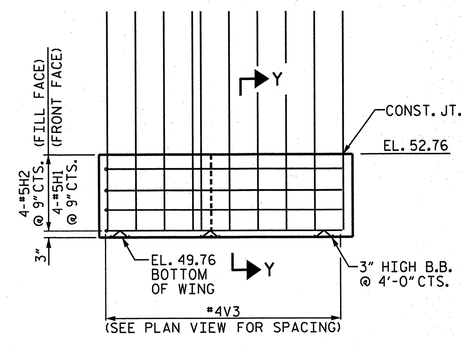

ELEVATION (W2)

END BENT NO. 2

PROJECT NO. R-2633BB

BRUNSWICK/NEW HANOVER COUNTY

STATION: 440+50.13 -L-

SHEET 5 OF 5

STATE OF NORTH CAROLINA
DEPARTMENT OF TRANSPORTATION
RALEIGH

SUBSTRUCTURE
BOTTOM OF WINGS
END BENT NO. 1
& END BENT NO. 2
RIGHT LANE

PLAN PREPARED BY:

ALPHA & OMEGA GROUP
CIVIL & STRUCTURAL ENGINEERS
4601 Lake Boone Trail, Ste. 3C Raleigh, NC 27607
Phone 919 981 0310 Fax 919 981 0451
Firm License No. C-1684 www.aogroup.com
A&O PROJECT NO. 2011.036

NORTH CAROLINA PROFESSIONAL SEAL ENGINEER T. GLENN TERRY 032724 1-17-12

REFERENCE NO. 8-19

REVISIONS							SHEET NO.
NO.	BY:	DATE:	NO.	BY:	DATE:		S-648
1			3				TOTAL SHEETS
2			4				700

STRUCTURE NO. 8

DRAWN BY :	JR FISHER	DATE :	11/12
CHECKED BY :	HM SWANSON / TGZ	DATE :	11/12
QC / QA BY :	TL BARTELT	DATE :	11/12

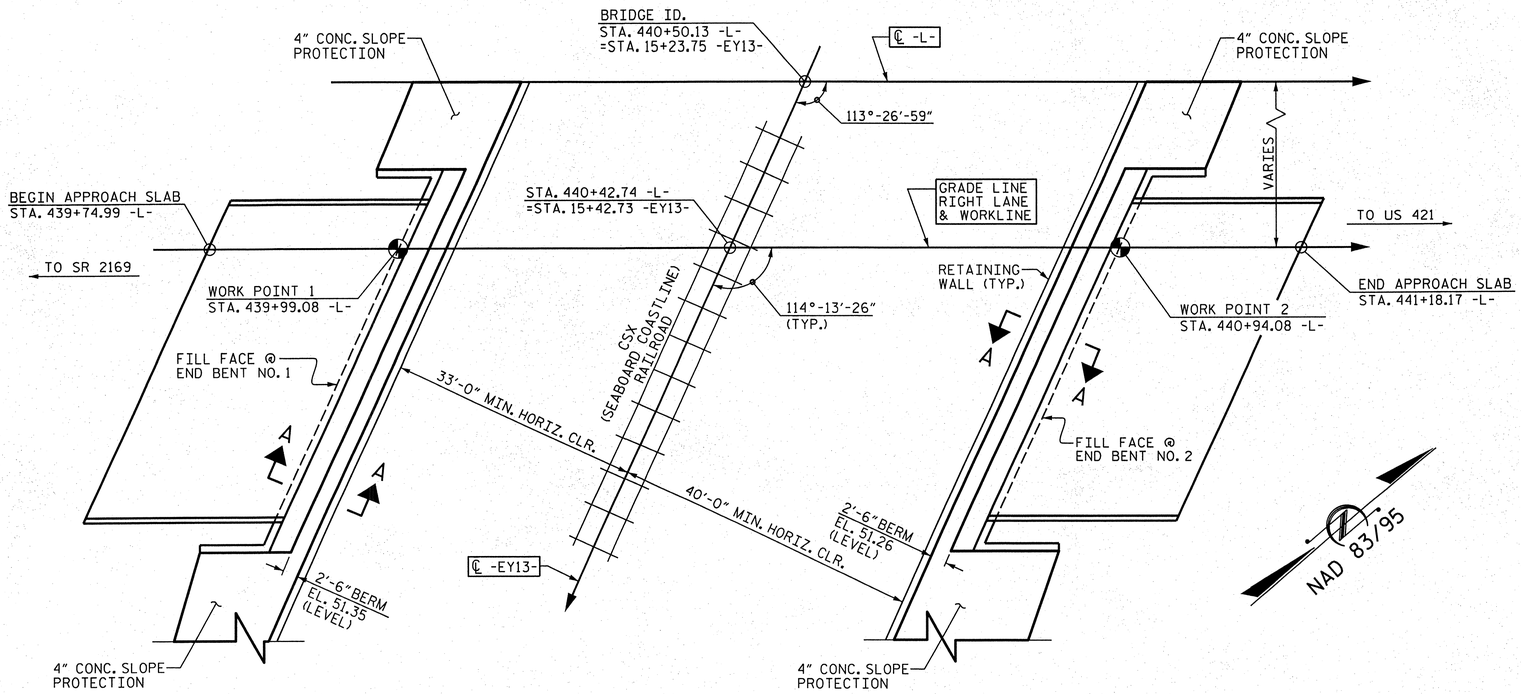

PLAN ALONG -L-

PILES NOT SHOWN FOR CLARITY.

GENERAL NOTES

SLOPE PROTECTION SHALL BE PLACED UNDER THE ENDS OF THE BRIDGE AS SHOWN IN THE DETAILS. STRAIGHT EDGING WILL NOT BE REQUIRED UNLESS, IN THE OPINION OF THE ENGINEER, VISUAL INSPECTION INDICATES A NEED FOR IT. MEASUREMENT AND PAYMENT SHALL BE AS PRESCRIBED IN SECTION 462 OF THE STANDARD SPECIFICATIONS. FOR BERM WIDTH, SEE GENERAL DRAWING.

SLOPE PROTECTION SHALL CONSIST OF 4" POURED-IN-PLACE CONCRETE PAVING AS SHOWN IN THE DETAILS ON THIS SHEET. CONCRETE SHALL BE CLASS "B". THE CONCRETE SURFACE SHALL BE FLOATED WITH A WOODEN FLOAT AND FINISHED. WELDED WIRE FABRIC REINFORCING SHALL BE 6 X 6 - W1.4 X W1.4, 60" WIDE. SLOPE PROTECTION SHALL BE POURED IN 5' STRIPS AS SHOWN IN THE "POURING DETAIL" WITH 2'-0" LONG #4 BARS PLACED ALONG THE SLOPE BETWEEN STRIPS AT 1'-6" MAXIMUM SPACING. SLOPE PROTECTION MAY BE POURED IN ALTERNATE 4' AND 5' STRIPS AS SHOWN IN THE "OPTIONAL POURING DETAIL" WITH ADJACENT RUNS OF WELDED WIRE FABRIC LAPPING AT LEAST 6". THE COST OF THE WELDED WIRE FABRIC AND #4 BARS, IF USED, SHALL BE INCLUDED IN THE CONTRACT UNIT PRICE BID PER SQUARE YARD FOR SLOPE PROTECTION.

BRIDGE @ STA. 440+50.13 -L-	4 INCH SLOPE PROTECTION	* WELDED WIRE FABRIC 60 INCHES WIDE
	SQUARE YARDS	APPROX. L.F.
END BENT NO. 1	56	101
END BENT NO. 2	60	108

* QUANTITY SHOWN IS BASED ON 5' POURS.

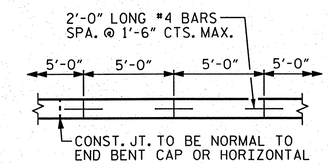

STRIP WIDTHS MAY VARY IN CURVED PORTION.

POURING DETAIL

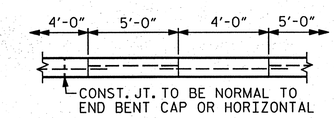

POUR A 4'-0" STRIP FIRST. STRIP WIDTHS MAY VARY IN CURVED PORTION.

OPTIONAL POURING DETAIL

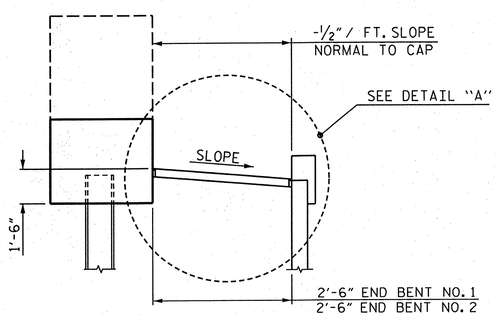

SECTION "A-A"

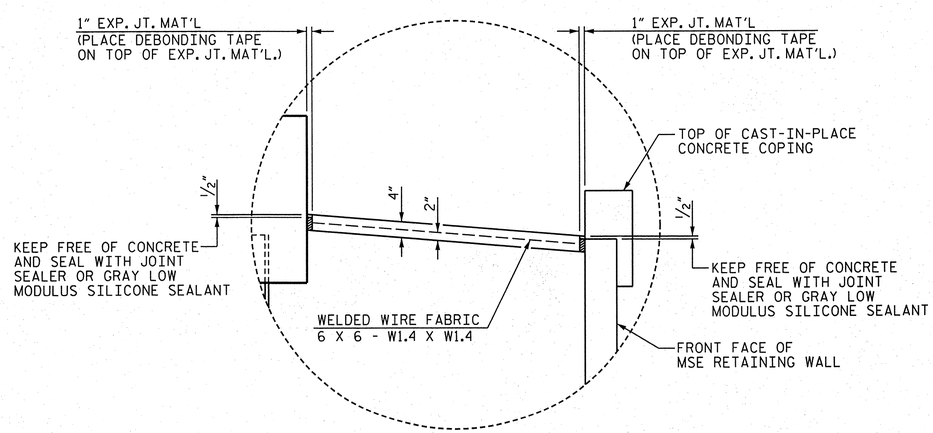

DETAIL "A"

PROJECT NO. R-2633BB

BRUNSWICK/NEW HANOVER COUNTY

STATION: 440+50.13 -L-

STATE OF NORTH CAROLINA
DEPARTMENT OF TRANSPORTATION
RALEIGH

STANDARD
SLOPE PROTECTION DETAILS
RIGHT LANE

DRAWN BY : JR FISHER	DATE : 11/12
CHECKED BY : HM SWANSON / TGZ	DATE : 11/12
QC / QA BY : TL BARTELT	DATE : 11/12

DRAWN BY : ELR 5/92	REV. 5/1/06	TLA/GM
CHECKED BY : GRP 6/92	REV. 10/1/11	MAA/GM
	REV. 12/21/11	MAA/GM

PLAN PREPARED BY:

ALPHA & OMEGA GROUP
CIVIL & STRUCTURAL ENGINEERS
4601 Lake Boone Trail, Ste. 3C Raleigh, NC 27607
Phone 919 981 0310 Fax 919 981 0451
Firm License No. C-1684 www.aogroup.com
A&O PROJECT NO. 2011.036

NOTE: THIS STANDARD DRAWING REVIEWED AND ADOPTED FOR USE AT THE REFERENCED LOCATION BY THE UNDERSIGNED.

NORTH CAROLINA PROFESSIONAL SEAL 032124 ENGINEER GLENN ZEBLO 7-28-12

REFERENCE NO. 8-20

REVISIONS								SHEET NO.
NO.	BY:	DATE:	NO.	BY:	DATE:			S-649
1			3					TOTAL SHEETS
2			4					700

STRUCTURE NO. 8

STD. NO. SP1

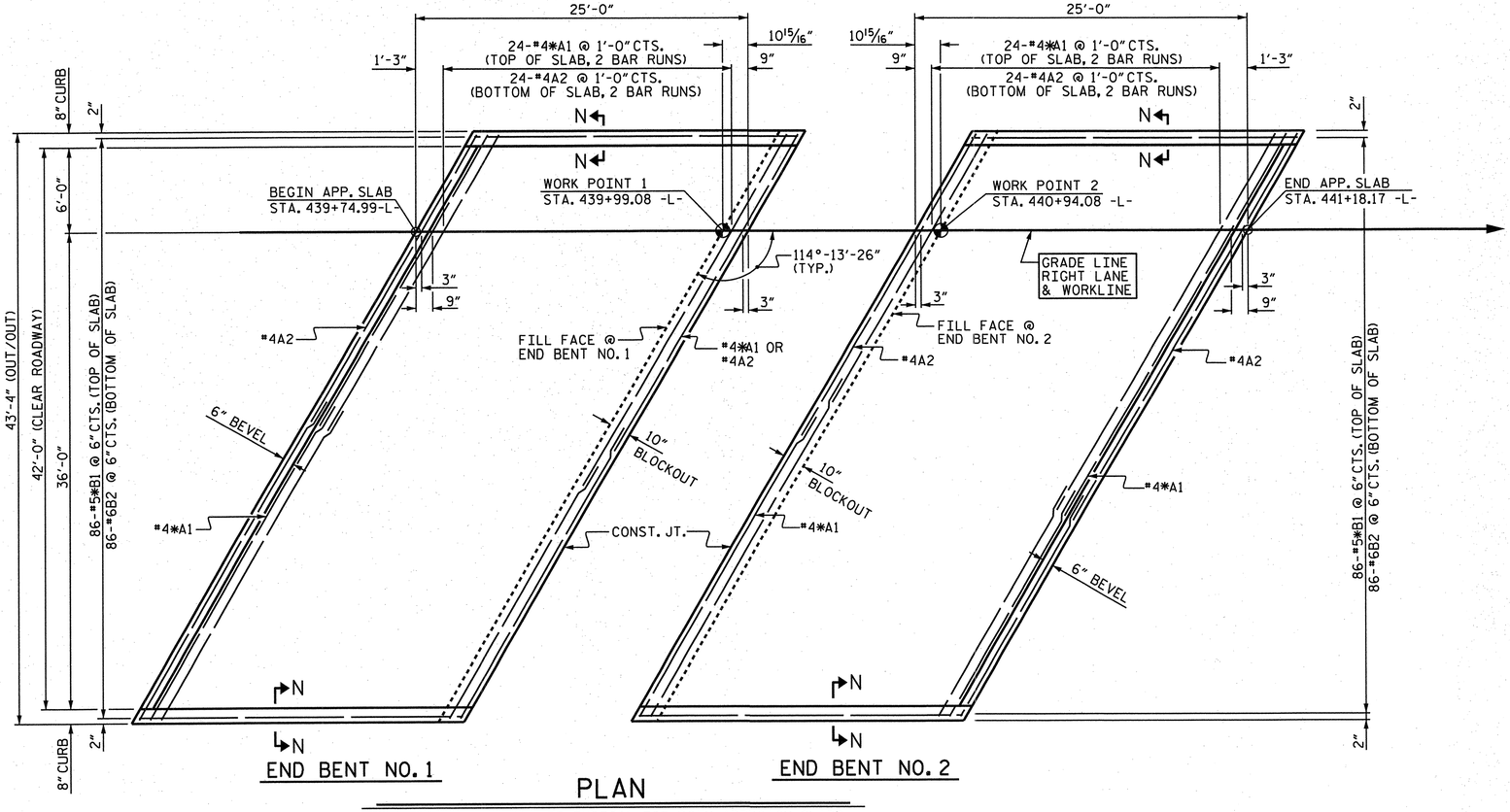

PLAN

DIMENSIONS SHOWN ARE TYPICAL FOR BOTH APPROACH SLABS

NOTES

APPROACH SLAB SHALL NOT BE CONSTRUCTED PRIOR TO COMPLETION OF THE BRIDGE DECK.

AREA BETWEEN THE WINGWALL AND APPROACH SLAB SHALL BE GRADED TO DRAIN THE WATER AWAY FROM THE FILL FACE OF THE BRIDGE AND SHALL BE PAVED. SEE ROADWAY PLANS.

THE JOINT OPENING AT THE APPROACH SLAB/DECK INTERFACE SHALL BE SAWED NO MORE THAN 12 HOURS AFTER THE APPROACH SLAB IS CAST. THE JOINT SHALL BE CLEANED OF ALL DEBRIS BEFORE THE SEALANT IS APPLIED. THE JOINT SEALER MATERIAL SHALL CONFORM TO THE REQUIREMENTS OF SECTION 1028-3 OF THE STANDARD SPECIFICATIONS.

BILL OF MATERIAL

APPROACH SLAB AT END BENT NO. 1

BAR	NO.	SIZE	TYPE	LENGTH	WEIGHT
*A1	52	#4	STR	24'-7"	854
A2	52	#4	STR	24'-6"	851
*B1	86	#5	STR	24'-2"	2167
B2	86	#6	STR	24'-8"	3187

REINFORCING STEEL 4038 LBS.
* EPOXY COATED REINFORCING STEEL 3021 LBS.

CLASS AA CONCRETE 46.8 C. Y.

BILL OF MATERIAL

APPROACH SLAB AT END BENT NO. 2

BAR	NO.	SIZE	TYPE	LENGTH	WEIGHT
*A1	52	#4	STR	24'-7"	854
A2	52	#4	STR	24'-6"	851
*B1	86	#5	STR	24'-2"	2167
B2	86	#6	STR	24'-8"	3187

REINFORCING STEEL 4038 LBS.
* EPOXY COATED REINFORCING STEEL 3021 LBS.

CLASS AA CONCRETE 46.8 C. Y.

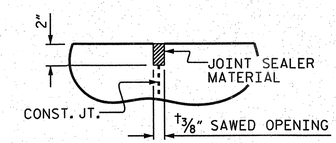

DETAIL "A"

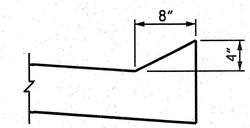

SECTION "N-N"

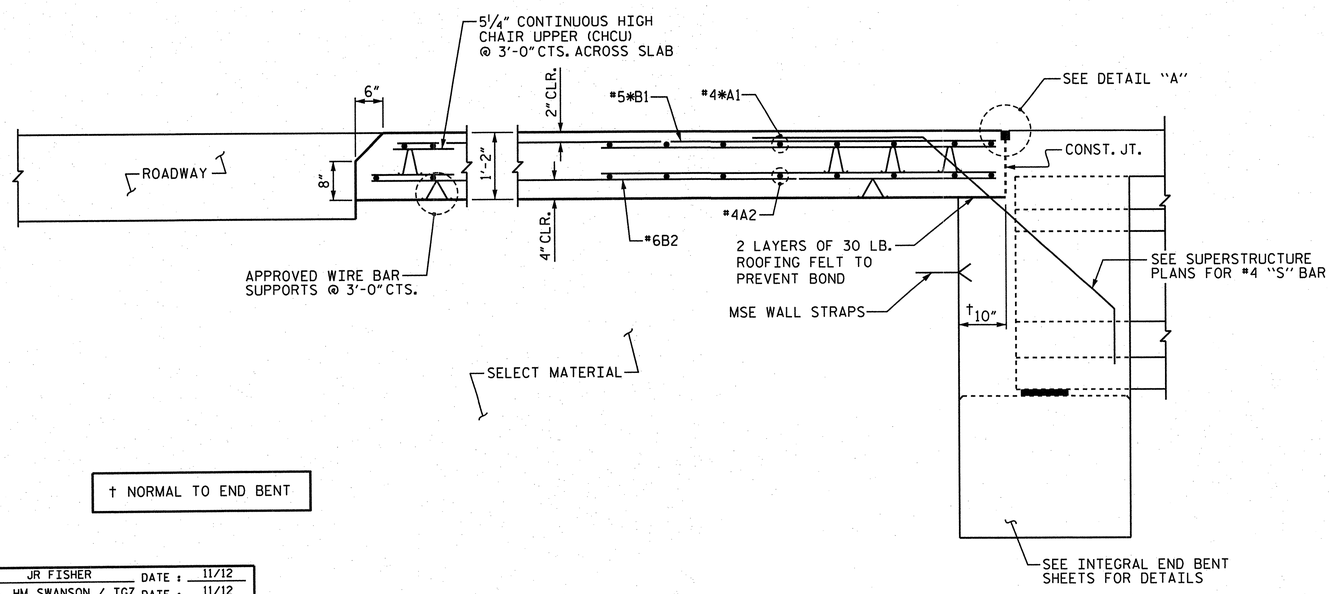

† NORMAL TO END BENT

SECTION THRU SLAB

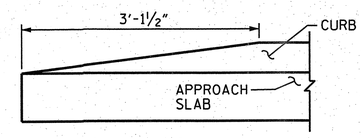

END OF CURB WITHOUT SHOULDER BERM GUTTER

SPLICE CHART	
#4*A1	2'-0" MIN.
#4A2	1'-9" MIN.

PROJECT NO. R-2633BB
BRUNSWICK/NEW HANOVER COUNTY
STATION: 440+50.13 -L-
SHEET 1 OF 2

STATE OF NORTH CAROLINA
DEPARTMENT OF TRANSPORTATION
RALEIGH

STANDARD
BRIDGE APPROACH SLAB FOR INTEGRAL END BENT
RIGHT LANE

DRAWN BY : JR FISHER	DATE : 11/12	
CHECKED BY : HM SWANSON / TGZ	DATE : 11/12	
QC / QA BY : TL BARTELT	DATE : 11/12	
DRAWN BY : TLA 10/05	ADDED 5/1/06RR	KMM/GM
CHECKED BY : GM 5/06	REV. 10/1/11	MAA/GM
	REV. 12/21/11	MAA/GM

PLAN PREPARED BY:
ALPHA & OMEGA GROUP
CIVIL & STRUCTURAL ENGINEERS
4601 Lake Boone Trail, Ste. 3C Raleigh, NC 27607
Phone 919 981 0310 Fax 919 981 0451
Firm License No. C-1684 www.aogroup.com
A&O PROJECT NO. 2011.036

NOTE: THIS STANDARD DRAWING REVIEWED AND ADOPTED FOR USE AT THE REFERENCED LOCATION BY THE UNDERSIGNED.

NORTH CAROLINA PROFESSIONAL SEAL ENGINEER GLENN ZEBLO 032724 1-17-12

REFERENCE NO. 8-21

REVISIONS								SHEET NO.
NO.	BY:	DATE:	NO.	BY:	DATE:			6-650
1			3					TOTAL SHEETS
2			4					700

STRUCTURE NO. 8

STD. NO. BAS5

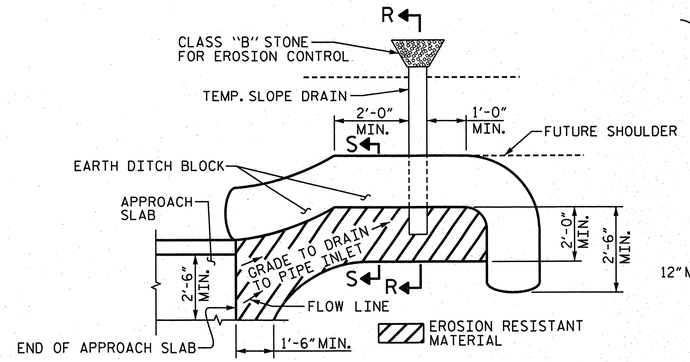

NOTE: IMMEDIATELY AFTER THE CONSTRUCTION OF THE APPROACH SLAB, THE CONTRACTOR SHALL PROVIDE TEMPORARY BERM AND SLOPE DRAIN. CONTRACTOR SHALL GRADE TO PIPE INLET AND PROVIDE EROSION RESISTANT MATERIAL AS SHOWN. THE EROSION RESISTANT MATERIAL SHALL BE EITHER 1) ASPHALT PLANT MIX, TYPE 1 OR TYPE 2, MIN. 2" DEPTH, 2) EROSION CONTROL MAT, OR 3) CONCRETE, AS DIRECTED BY THE ENGINEER. THE SLOPE DRAIN SHALL CONSIST OF A NON-PERFORATED TEMPORARY DRAINAGE PIPE, 12 INCHES IN DIAMETER.

PLAN VIEW

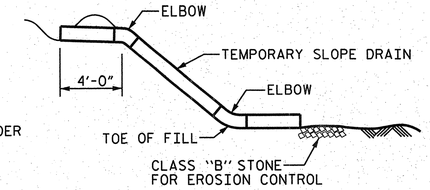

SECTION "R-R"

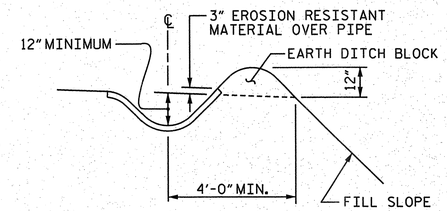

SECTION "S-S"

TEMPORARY BERM AND SLOPE DRAIN DETAILS

(TO BE USED WHEN SHOULDER BERM GUTTER IS REQUIRED)

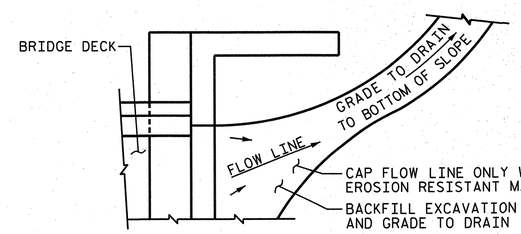

NOTE: IF THE APPROACH SLAB IS NOT CONSTRUCTED IMMEDIATELY AFTER THE BACKFILLING OF THE END BENT EXCAVATION, GRADE TO DRAIN TO THE BOTTOM OF THE SLOPE AND PROVIDE EROSION RESISTANT MATERIAL, SUCH AS FIBERGLASS ROVING OR AS DIRECTED BY THE ENGINEER TO PREVENT SOIL EROSION AND TO PROTECT THE AREA ADJACENT TO THE STRUCTURE. THE CONTRACTOR WILL BE REQUIRED TO REMOVE THESE MATERIALS PRIOR TO CONSTRUCTION OF THE APPROACH SLAB.

TEMPORARY DRAINAGE DETAIL

PROJECT NO. R-2633BB
BRUNSWICK/NEW HANOVER COUNTY
STATION: 440+50.13 -L-
SHEET 2 OF 2

STATE OF NORTH CAROLINA
DEPARTMENT OF TRANSPORTATION
RALEIGH

STANDARD
BRIDGE APPROACH SLAB DETAILS
RIGHT LANE

REVISIONS						SHEET NO.
NO.	BY:	DATE:	NO.	BY:	DATE:	S-651
1			3			TOTAL SHEETS
2			4			700

STRUCTURE NO. 8

STD. NO. BAS4

DRAWN BY :	JR FISHER	DATE :	11/12
CHECKED BY :	HM SWANSON / TGZ	DATE :	11/12
QC / QA BY :	TL BARTELT	DATE :	11/12

DRAWN BY :	FCJ	11/88	REV. 5/1/06RRR	MAA/KMM
CHECKED BY :	ARB	11/88	REV. 10/1/11	MAA/GM
			REV. 7/12	MAA/GM

PLAN PREPARED BY:

ALPHA & OMEGA GROUP
CIVIL & STRUCTURAL ENGINEERS
4601 Lake Boone Trail, Ste. 3C Raleigh, NC 27607
Phone 919 981 0310 Fax 919 981 0451
Firm License No. C-1684 www.aogroup.com
A&O PROJECT NO. 2011.036

NOTE: THIS STANDARD DRAWING REVIEWED AND ADOPTED FOR USE AT THE REFERENCED LOCATION BY THE UNDERSIGNED.

NORTH CAROLINA PROFESSIONAL SEAL 032724 ENGINEER GLENN ZEBLO
1-17-13

REFERENCE NO. 8-22

F.A.PROJECT STPNHF-0017(125)

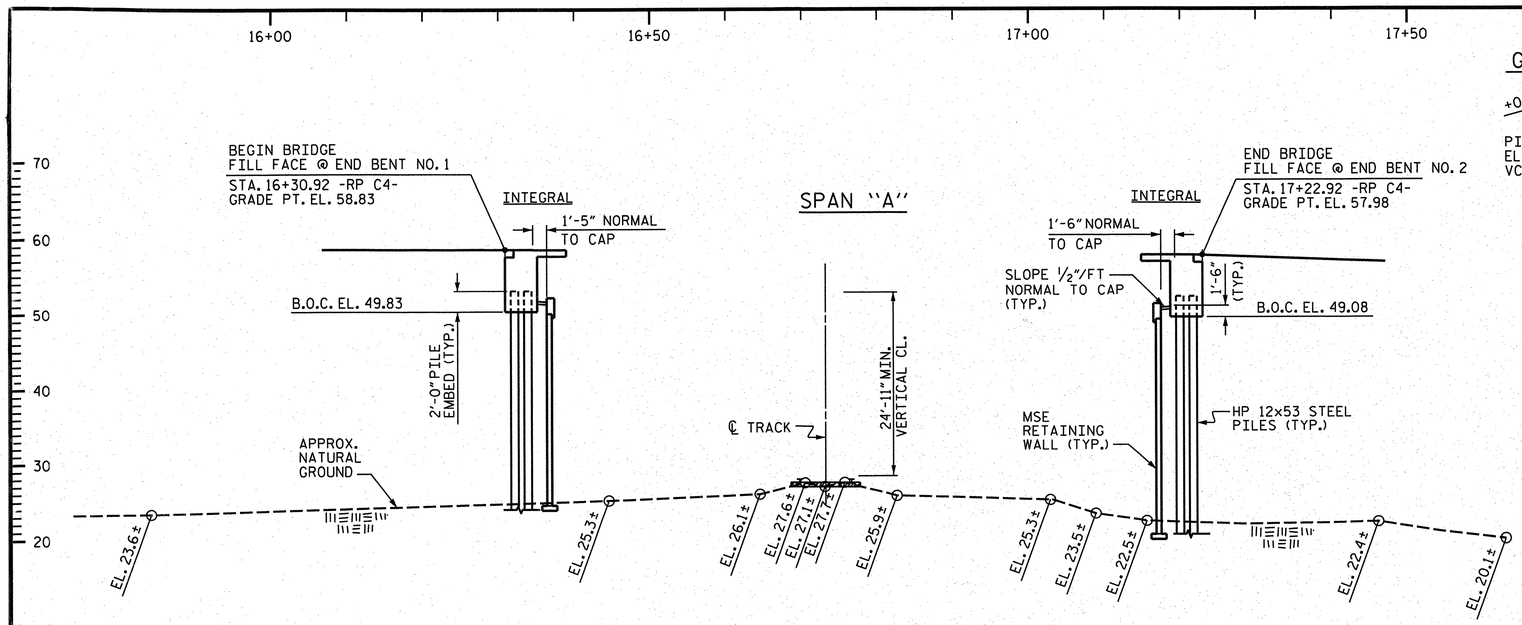

SECTION ALONG -RP C4-

SECTION AT END BENTS TAKEN AT RIGHT ANGLES

GRADE DATA

+0.9150% ~4.6001%

PI = 17+55.00 -RP C4-
EL = 60.690
VC = 470'

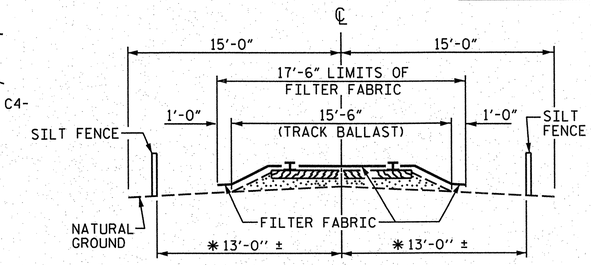

RAILROAD EROSION CONTROL DETAIL

NOTES

RAILROAD EROSION CONTROL MEASURES SHALL BE INSTALLED PRIOR TO PERFORMING ANY WORK IN THE RAILROAD RIGHT-OF-WAY.

ADDITIONAL EROSION CONTROL MEASURES FOR PROTECTION OF RAILROAD DITCHES MAY BE REQUIRED AS DIRECTED BY THE ENGINEER.

NO SEPARATE PAYMENT WILL BE MADE FOR RAILROAD EROSION CONTROL MEASURES.

LIMITS OF SILT FENCE AND FILTER FABRIC PARALLEL TO RAILROAD SHALL EXTEND A MINIMUM OF 25'-0" OUTSIDE EDGE OF SUPERSTRUCTURE OR TOE OF SLOPE ON CONSTRUCTION. A GREATER LENGTH OF SILT FENCE MAY BE REQUIRED IF SO DIRECTED BY THE ENGINEER.

FILTER FABRIC TO BE NAILED TO TIMBER RAIL TIES WITH PRIME SOURCE "GRIP CAP" OR EQUIVALENT. FILTER FABRIC ON SHOULDER TO BE SECURED AS DIRECTED BY THE ENGINEER AND RAILROAD.

* - THIS DIMENSION TO BE DETERMINED IN THE FIELD BY THE ENGINEER UPON CONSULTATION WITH THE RAILROAD.

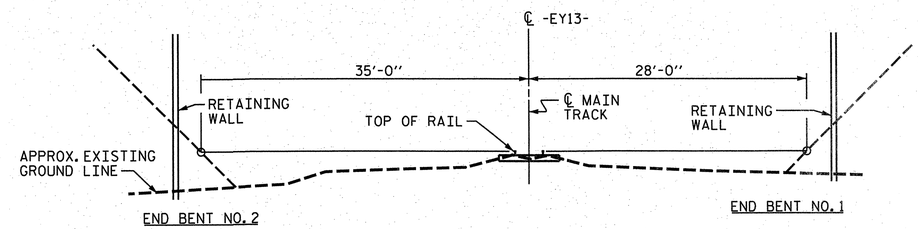

SPAN LENGTH BASED ON THIS SECTION

(LOOKING UP STATION)

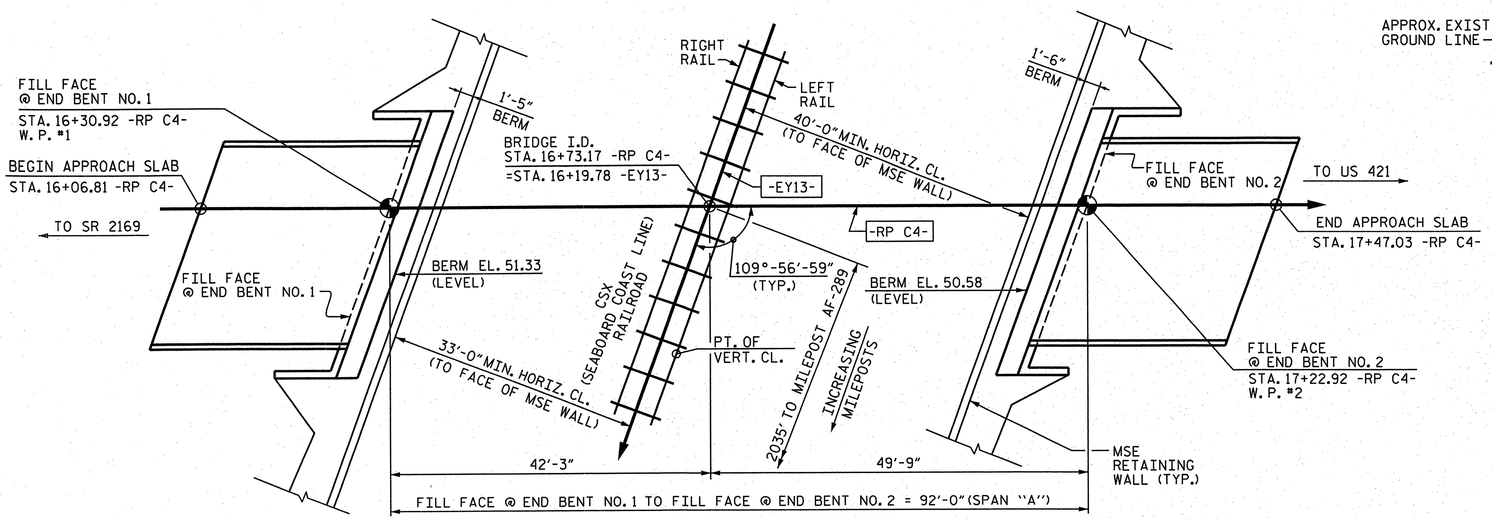

PLAN

(PILES NOT SHOWN FOR CLARITY)

TOP OF RAIL ELEVATIONS		
STATION	LT. RAIL	RT. RAIL
15+50 -EY13-	27.842	27.767
16+00 -EY13-	27.730	27.662
16+50 -EY13-	27.647	27.588
17+00 -EY13-	27.562	27.511
17+50 -EY13-	27.496	27.428

PROJECT NO. R-2633BB

BRUNSWICK/ NEW HANOVER COUNTY

STATION: 16+73.17 -RP C4-
=16+19.78 -EY 13-

BRIDGE NO. 640197
MILEPOST AF-288.61

SHEET 1 OF 3

STATE OF NORTH CAROLINA
DEPARTMENT OF TRANSPORTATION
RALEIGH

GENERAL DRAWING FOR
BRIDGE OVER CSX
SEABOARD COASTLINE R. R.
ON US 17 (WILMINGTON BYPASS)
BETWEEN SR 2169 AND US 421

PLAN PREPARED BY:

ALPHA & OMEGA GROUP
CIVIL & STRUCTURAL ENGINEERS
4601 Lake Boone Trail, Ste. 3C Raleigh, NC 27607
Phone 919 981 0310 Fax 919 981 0451
Firm License No. C-1684 www.aogroup.com
A&O PROJECT NO. 2011.036

NORTH CAROLINA PROFESSIONAL ENGINEER SEAL 032724 GLENN ZEBLO
12-18-12

REFERENCE NO. 9-1

REVISIONS						SHEET NO.
NO.	BY:	DATE:	NO.	BY:	DATE:	S-652
1			3			TOTAL SHEETS
2			4			100

DRAWN BY :	J.D. GOODIN	DATE :	09/14/12
CHECKED BY :	TG ZEBLO	DATE :	09/28/12
QC / QA :	TL BARTELT	DATE :	10/30/12

STR. NO. 9

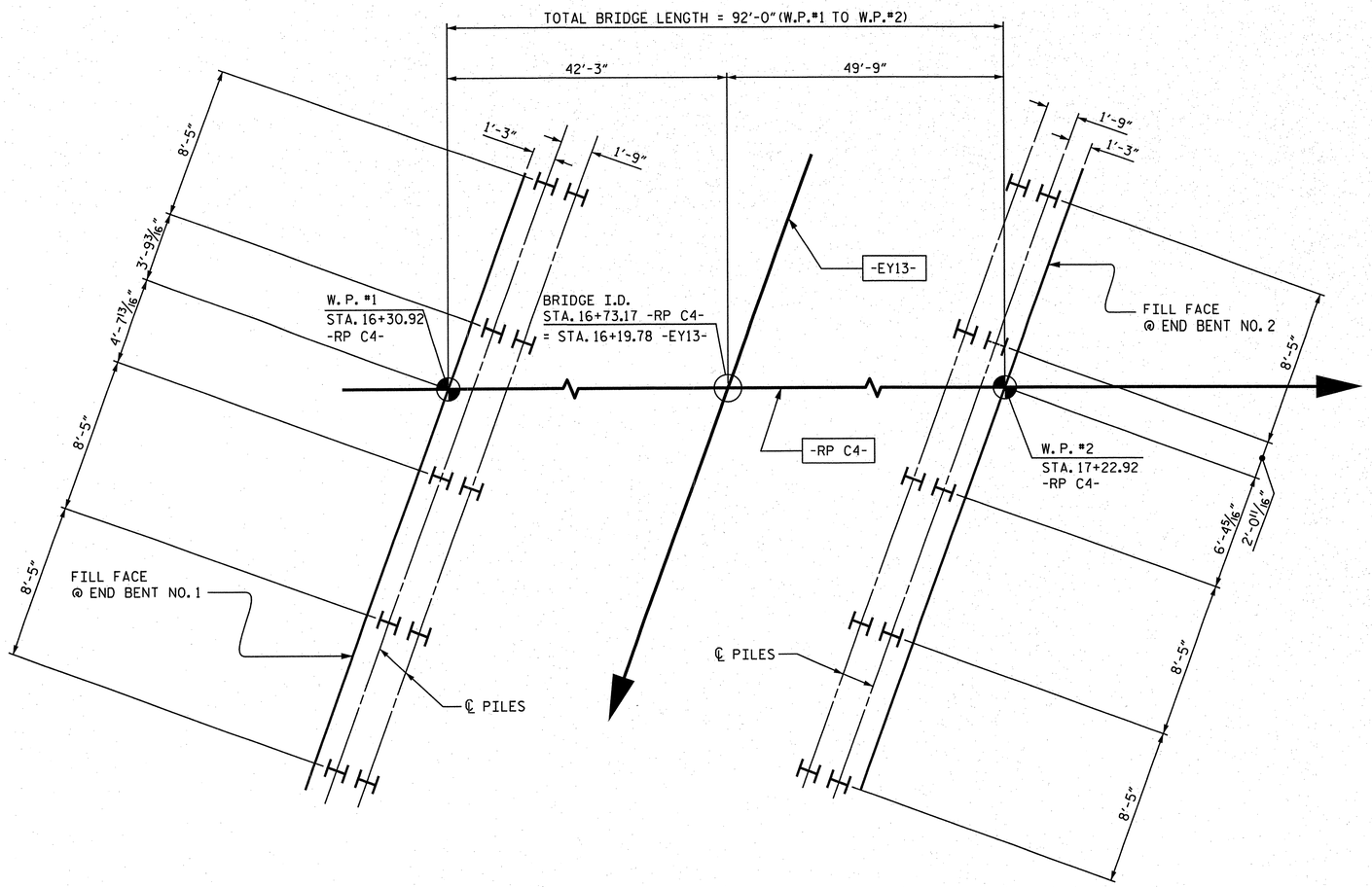

END BENT NO. 1

END BENT NO. 2

FOUNDATION LAYOUT

DIMENSIONS LOCATING PILES ARE SHOWN
TO THE CENTERLINE OF PILES.

NOTES

FOR PILES, SEE SECTION 450 OF THE STANDARD SPECIFICATIONS.

PILES AT END BENT NO. 1 AND END BENT NO. 2 ARE DESIGNED FOR A FACTORED RESISTANCE OF 128 TONS PER PILE.

DRIVE PILES AT END BENT NO. 1 AND END BENT NO. 2 TO A REQUIRED DRIVING REISISTANCE OF 215 TONS PER PILE.

IT HAS BEEN ESTIMATED THAT A HAMMER WITH AN EQUIVALENT RATED ENERGY IN THE RANGE OF 59,500 FT-LBS TO 74,000 FT-LBS PER BLOW WILL BE REQUIRED TO DRIVE THE PILES AT END BENT NO. 1 AND END BENT NO. 2. THIS ESTIMATED ENERGY RANGE DOES NOT RELEASE THE CONTRACTOR FROM PROVIDING DRIVING EQUIPMENT IN ACCORDANCE WITH SUBARTICLE 450-3(D)(2) OF THE STANDARD SPECIFICATIONS.

TESTING PILES WITH THE PDA DURING DRIVING, RESTRIKING, OR REDRIVING MAY BE REQUIRED. THE ENGINEER WILL DETERMINE THE NEED
FOR PDA TESTING. FOR PDA TESTING, SEE SECTION 450 OF THE STANDARD SPECIFICATIONS.

PROJECT NO. R-2633BB
BRUNSWICK/ NEW HANOVER COUNTY
STATION: 16+73.17 -RP C4-

SHEET 2 OF 3

STATE OF NORTH CAROLINA
DEPARTMENT OF TRANSPORTATION
RALEIGH

GENERAL DRAWING FOR
BRIDGE OVER CSX
SEABOARD COASTLINE R. R.
ON US 17 (WILMINGTON BYPASS)
BETWEEN SR 2169 AND US 421

REVISIONS						SHEET NO.
NO.	BY:	DATE:	NO.	BY:	DATE:	S-653
1			3			TOTAL SHEETS
2			4			700

PLAN PREPARED BY:

ALPHA & OMEGA GROUP
CIVIL & STRUCTURAL ENGINEERS
4601 Lake Boone Trail, Ste. 3C Raleigh, NC 27607
Phone 919 981 0310 Fax 919 981 0451
Firm License No. C-1684 www.aogroup.com
A&O PROJECT NO. 2011.036

NORTH CAROLINA PROFESSIONAL ENGINEER SEAL 032724 GLENN ZEBLO
12-18-12

REFERENCE NO. 9-2

DRAWN BY :	J.D. GOODIN	DATE :	09/14/12
CHECKED BY :	TG ZEBLO	DATE :	09/28/12
QC / QA :	TL BARTELT	DATE :	10/30/12

STR. NO. 9

BM.#245 RR SPIKE IN BASE OF 10"PINE 394.33' RIGHT OF STA. 439+14.39 -L-, EL. = 26.06

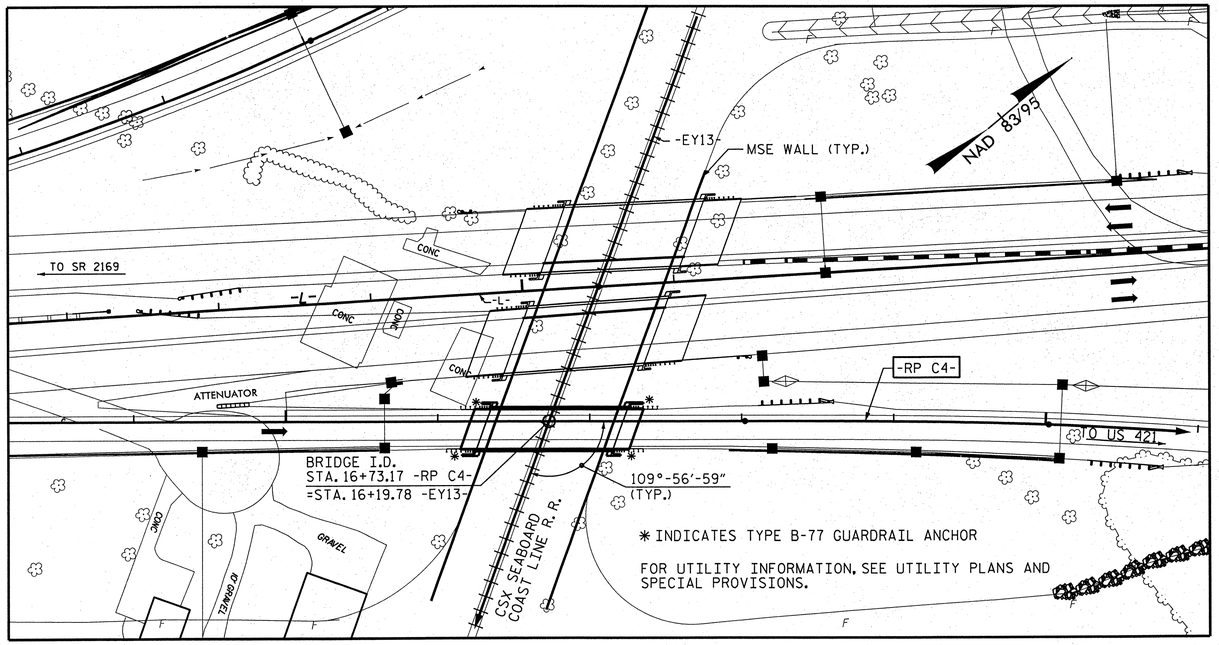

LOCATION SKETCH

NOTES

ASSUMED LIVE LOAD = HL-93 OR ALTERNATE LOADING.

FOR OTHER DESIGN DATA AND GENERAL NOTES, SEE SHEET SN.

FOR EROSION CONTROL MEASURES, SEE EROSION CONTROL PLANS.

THIS BRIDGE HAS BEEN DESIGNED IN ACCORDANCE WITH THE AASHTO LRFD BRIDGE DESIGN SPECIFICATIONS.

PRESTRESSED CONCRETE DECK PANELS MAY BE USED IN LIEU OF METAL STAY-IN-PLACE FORMS IN ACCORDANCE WITH ARTICLE 420-3 OF THE STANDARD SPECIFICATIONS.

REMOVABLE FORMS MAY BE USED IN LIEU OF METAL STAY-IN-PLACE FORMS IN ACCORDANCE WITH ARTICLE 420-3 OF THE STANDARD SPECIFICATIONS.

FOR GROUT FOR STRUCTURES, SEE SPECIAL PROVISIONS.

THE CONTRACTOR SHALL PROVIDE INDEPENDENT ASSURANCE SAMPLES OF REINFORCING STEEL AS FOLLOWS: FOR PROJECTS REQUIRING UP TO 400 TONS OF REINFORCING STEEL, ONE 30 INCH SAMPLE OF EACH SIZE BAR USED, AND FOR PROJECTS REQUIRING OVER 400 TONS OF REINFORCING STEEL, TWO 30 INCH SAMPLES OF EACH SIZE BAR USED. THE BARS FROM WHICH THE SAMPLES ARE TAKEN MUST THEN BE SPLICED WITH REPLACEMENT BARS OF THE SIZE AND LENGTH OF THE SAMPLE, PLUS A MINIMUM LAP SPLICE OF THIRTY BAR DIAMETERS. PAYMENT FOR THE SAMPLES OF REINFORCING STEEL SHALL BE CONSIDERED INCIDENTAL TO VARIOUS PAY ITEMS.

NEEDLE BEAMS WILL NOT BE ALLOWED UNLESS OTHERWISE CALLED FOR ON THE PLANS OR APPROVED BY THE ENGINEER.

FOR SUBMITTAL OF WORKING DRAWINGS, SEE SPECIAL PROVISIONS.

FOR FALSEWORK AND FORMWORK, SEE SPECIAL PROVISIONS.

FOR CRANE SAFETY, SEE SPECIAL PROVISIONS.

THE RAILROAD TRACK TOP OF RAIL ELEVATIONS SHOWN ON THE PLANS ARE FROM THE BEST INFORMATION AVAILABLE. PRIOR TO BEGINNING BRIDGE CONSTRUCTION, VERIFY THE TOP OF RAIL ELEVATIONS AND REPORT ANY VARIATIONS TO THE ENGINEER. ANY PLAN REVISIONS NECESSARY TO ACHIEVE THE REQUIRED MINIMUM VERTICAL CLEARANCE WILL BE PROVIDED BY THE DEPARTMENT.

THIS BRIDGE IS LOCATED IN SEISMIC ZONE 1.

FOR PLACING LOAD ON STRUCTURE MEMBERS, SEE SPECIAL PROVISIONS.

TOTAL BILL OF MATERIAL

	PDA TESTING	REINFORCED CONCRETE DECK SLAB	GROOVING BRIDGE FLOORS	CLASS A CONCRETE	BRIDGE APPROACH SLABS	REINFORCING STEEL	54" PRESTRESSED CONC. GIRDERS	HP 12 X 53 STEEL PILES		CONCRETE BARRIER RAIL	72" CHAIN LINK FENCE	4" CONCRETE SLOPE PROTECTION	ELASTOMERIC BEARINGS	PILE REDRIVES
	EACH	SQ.FT.	SQ.FT.	CU.YDS.	LUMP SUM	LBS.	LIN. FT.	NO.	LIN.FT.	LIN.FT.	LN. FT.	SQ.YDS.	LUMP SUM	EACH
SUPERSTRUCTURE		2691	3180		LUMP SUM		357.00			180.5	174.03		LUMP SUM	
END BENT NO.1				27.5		3057		10	850		-	66		3
END BENT NO.2				27.1		3055		10	800		-	75		3
TOTAL	1	2691	3180	54.6	LUMP SUM	6112	357.00	20	1650	180.5	174.03	141	LUMP SUM	6

PROJECT NO. R-2633BB

BRUNSWICK/ NEW HANOVER COUNTY

STATION: 16+73.17 -RP C4-
=16+19.78 -EY 13-

SHEET 3 OF 3

STATE OF NORTH CAROLINA
DEPARTMENT OF TRANSPORTATION
RALEIGH

GENERAL DRAWING FOR
BRIDGE OVER CSX
SEABOARD COASTLINE R. R.
ON US 17 (WILMINGTON BYPASS)
BETWEEN SR 2169 AND US 421

PLAN PREPARED BY:

ALPHA & OMEGA GROUP
CIVIL & STRUCTURAL ENGINEERS
4601 Lake Boone Trail, Ste. 3C Raleigh, NC 27607
Phone 919 981 0310 Fax 919 981 0451
Firm License No. C-1684 www.aogroup.com
A&O PROJECT NO. 2011.036

NORTH CAROLINA PROFESSIONAL SEAL 032724 ENGINEER TL GLENN ZEBLO
10-30-12

REFERENCE NO. 9-3

REVISIONS								SHEET NO.
NO.	BY:	DATE:	NO.	BY:	DATE:			S-654
1			3					TOTAL SHEETS
2			4					700

STR. NO. 9

DRAWN BY :	J.D. GOODIN	DATE :	09/14/12
CHECKED BY :	TG ZEBLO	DATE :	09/28/12
QC / QA :	TL BARTELT	DATE :	10/30/12

LOAD AND RESISTANCE FACTOR RATING (LRFR) SUMMARY FOR PRESTRESSED CONCRETE GIRDERS

LEVEL		VEHICLE	WEIGHT (W) (TONS)	CONTROLLING LOAD RATING (#)	MINIMUM RATING FACTORS (RF)	TONS = W × RF	STRENGTH I LIMIT STATE											SERVICE III LIMIT STATE						COMMENT NUMBER
								MOMENT					SHEAR						MOMENT					
							LIVE-LOAD FACTORS (γ_{LL})	DISTRIBUTION FACTORS (DF)	RATING FACTOR	SPAN	GIRDER LOCATION	DISTANCE FROM LEFT END OF SPAN (ft)	DISTRIBUTION FACTORS (DF)	RATING FACTOR	SPAN	GIRDER LOCATION	DISTANCE FROM LEFT END OF SPAN (ft)	LIVE-LOAD FACTORS (γ_{LL})	DISTRIBUTION FACTORS (DF)	RATING FACTOR	SPAN	GIRDER LOCATION	DISTANCE FROM LEFT END OF SPAN (ft)	
DESIGN LOAD RATING		HL-93 (INVENTORY)	N/A	1	1.00	--	1.75	0.676	1.30	92'	I	43.9	0.711	1.01	92'	I	26.1	0.80	0.676	1.00	92'	I	43.9	
		HL-93 (OPERATING)	N/A		1.43	--	1.35	0.676	1.68	92'	I	43.9	0.711	1.43	92'	I	8.2	N/A	--	--	--	--	--	
		HS-20 (INVENTORY)	36.000	2	1.36	48.96	1.75	0.676	1.76	92'	I	43.9	0.711	1.49	92'	I	8.2	0.80	0.676	1.36	92'	I	43.9	
		HS-20 (OPERATING)	36.000		1.94	69.84	1.35	0.676	2.28	92'	I	43.9	0.711	1.94	92'	I	8.2	N/A	--	--	--	--	--	
LEGAL LOAD RATING	SINGLE VEHICLE (SV)	SH	12.500		3.44	43.0	1.40	0.676	5.56	92'	I	43.9	0.711	5.35	92'	I	8.2	0.80	0.676	3.44	92'	I	43.9	
		S3C	21.500		2.01	43.22	1.40	0.676	3.25	92'	I	43.9	0.711	3.03	92'	I	8.2	0.80	0.676	2.01	92'	I	43.9	
		S3A	22.750		1.91	43.45	1.40	0.676	3.08	92'	I	43.9	0.711	2.86	92'	I	8.2	0.80	0.676	1.91	92'	I	43.9	
		S4A	26.750		1.68	44.94	1.40	0.676	2.71	92'	I	43.9	0.711	2.46	92'	I	8.2	0.80	0.676	1.68	92'	I	43.9	
		S5A	30.500		1.48	45.14	1.40	0.676	2.39	92'	I	43.9	0.711	2.23	92'	I	8.2	0.80	0.676	1.48	92'	I	43.9	
		S6A	34.500		1.34	46.23	1.40	0.676	2.17	92'	I	43.9	0.711	1.98	92'	I	8.2	0.80	0.676	1.34	92'	I	43.9	
		S7B	38.500		1.22	46.97	1.40	0.676	1.98	92'	I	43.9	0.711	1.83	92'	I	8.2	0.80	0.676	1.22	92'	I	43.9	
		S7A	40.000	3	1.21	48.40	1.40	0.676	1.95	92'	I	43.9	0.711	1.86	92'	I	8.2	0.80	0.676	1.21	92'	I	43.9	
	TRUCK TRACTOR SEMI-TRAILER (TTST)	T4A	28.250		1.65	46.61	1.40	0.676	2.67	92'	I	43.9	0.711	2.37	92'	I	8.2	0.80	0.676	1.65	92'	I	43.9	
		T5B	32.000		1.45	46.40	1.40	0.676	2.35	92'	I	43.9	0.711	2.23	92'	I	8.2	0.80	0.676	1.45	92'	I	43.9	
		T6A	36.000		1.33	47.88	1.40	0.676	2.15	92'	I	43.9	0.711	2.02	92'	I	8.2	0.80	0.676	1.33	92'	I	43.9	
		T7A	40.000		1.23	49.20	1.40	0.676	1.99	92'	I	43.9	0.711	1.87	92'	I	8.2	0.80	0.676	1.23	92'	I	43.9	
		T7B	40.000		1.32	52.80	1.40	0.676	2.13	92'	I	43.9	0.711	1.75	92'	I	8.2	0.80	0.676	1.32	92'	I	43.9	

LOAD FACTORS:

DESIGN LOAD RATING FACTORS	LIMIT STATE	γ_{DC}	γ_{DW}
	STRENGTH I	1.25	1.50
	SERVICE III	1.00	1.00

NOTES:

MINIMUM RATING FACTORS ARE BASED ON THE STRENGTH I AND SERVICE III LIMIT STATES.

ALLOWABLE STRESSES FOR SERVICE III LIMIT STATE ARE AS REQUIRED FOR DESIGN.

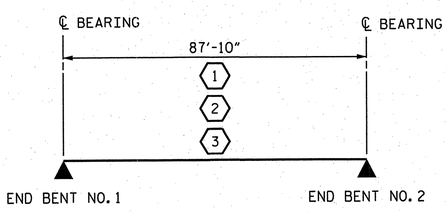

LRFR SUMMARY

CONTROLLING LOAD RATING
1 DESIGN LOAD RATING (HL-93)
2 DESIGN LOAD RATING (HS-20)
3 LEGAL LOAD RATING **
** SEE CHART FOR VEHICLE TYPE
GIRDER LOCATION
I - INTERIOR GIRDER
E - EXTERIOR GIRDER

PROJECT NO. R-2633BB

BRUNSWICK/ NEW HANOVER COUNTY

STATION: 16+73.17 -RP C4-

PLAN PREPARED BY:

ALPHA & OMEGA GROUP
CIVIL & STRUCTURAL ENGINEERS
4601 Lake Boone Trail, Ste. 3C Raleigh, NC 27607
Phone 919 981 0310 Fax 919 981 0451
Firm License No. C-1684 www.aogroup.com
A&O PROJECT NO. 2011.036

NOTE: THIS STANDARD DRAWING REVIEWED AND ADOPTED FOR USE AT THE REFERENCED LOCATION BY THE UNDERSIGNED.

NORTH CAROLINA PROFESSIONAL SEAL 032724 ENGINEER T. GLENN ZEBLO

12-18-12

REFERENCE NO. 9-4

STATE OF NORTH CAROLINA
DEPARTMENT OF TRANSPORTATION
RALEIGH

STANDARD
LRFR SUMMARY FOR PRESTRESSED CONCRETE GIRDERS
(INTERSTATE TRAFFIC)

REVISIONS						SHEET NO.
NO.	BY:	DATE:	NO.	BY:	DATE:	S-655
1			3			TOTAL SHTS
2			4			700

DRAWN BY : J.D. GOODIN DATE : 09/14/12
CHECKED BY : TG ZEBLO DATE : 09/28/12
QC / QA : TL BARTELT DATE : 10/30/12

STR. NO. 9

STD. NO. LRFR2

NOTES

ALL SURFACES OF BEARING PLATES SHALL BE SMOOTH AND STRAIGHT.

ELASTOMER IN BEARINGS AT THE END BENTS SHALL BE 60 DUROMETER HARDNESS.

PROVIDE 1¼" HIGH BEAM BOLSTERS UPPER AT 4'-0" CTS. ATOP THE METAL STAY-IN-PLACE FORMS TO SUPPORT THE BOTTOM MAT OF "A" BARS. WHEN USING REMOVABLE FORMS, PROVIDE CONTINUOUS HIGH CHAIRS FOR METAL DECK (C.H.C.M.) @ 4'-0" CTS. WITH A HEIGHT TO SUPPORT THE BOTTOM MAT OF "A" BARS A CLEAR DISTANCE OF 2½" ABOVE THE TOP OF THE REMOVABLE FORM.

LONGITUDINAL STEEL MAY BE SHIFTED SLIGHTLY AS NECESSARY TO AVOID INTERFERENCE WITH STIRRUPS IN PRESTRESSED CONCRETE GIRDERS.

PREVIOUSLY CAST CONCRETE IN A CONTINUOUS UNIT SHALL HAVE ATTAINED A MINIMUM COMPRESSIVE STRENGTH OF 3000 PSI BEFORE ADDITIONAL CONCRETE IS CAST IN THE UNIT.

FOR LOCATION OF SECTIONS, SEE "PLAN OF SPAN" SHEETS.

SEE "SECTION THRU RAIL" ON SHEET 9-11 FOR DRIP GROOVES AND BEAM BOLSTERS IN OVERHANG.

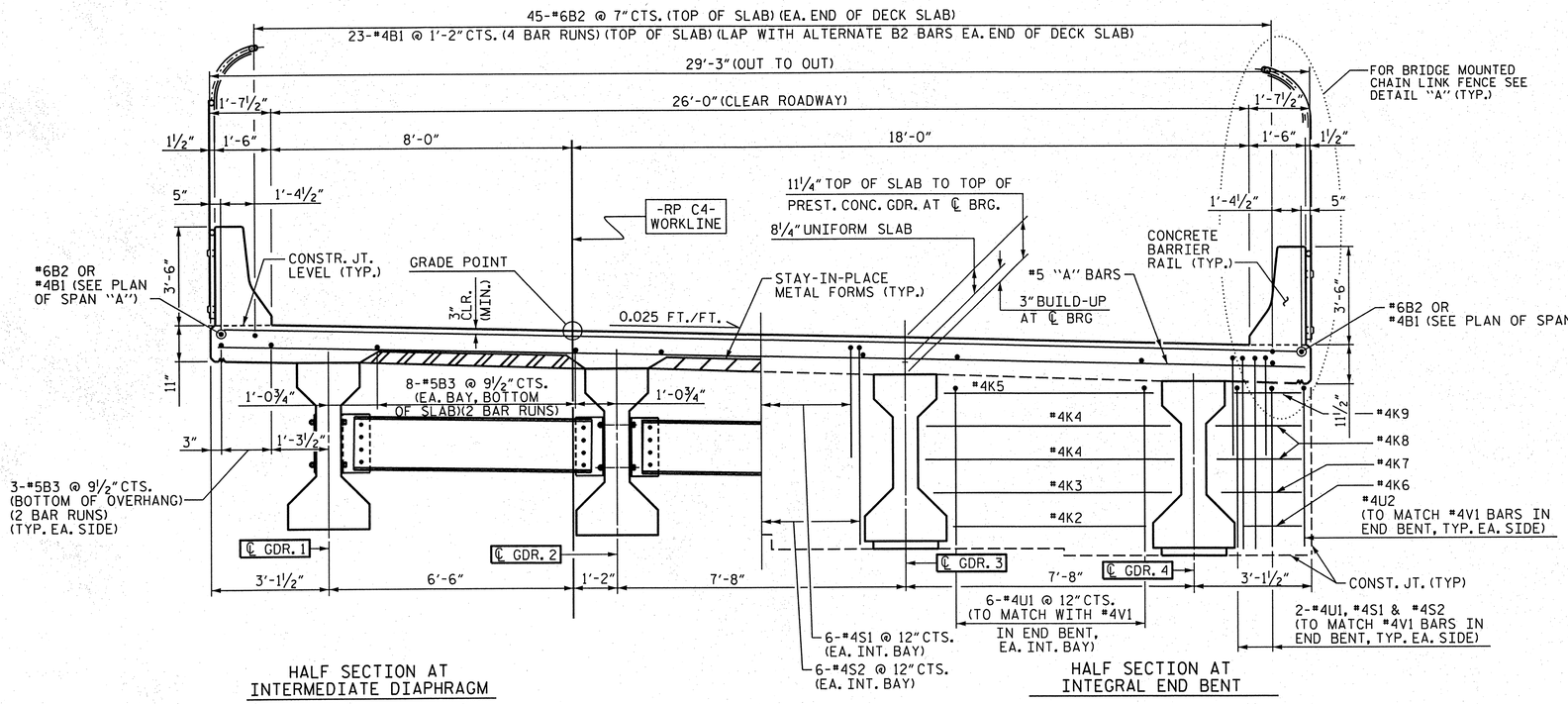

TYPICAL SECTION

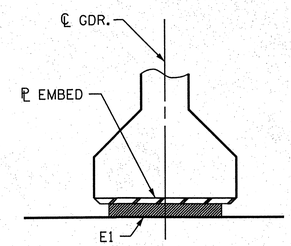

SECTION "D-D"

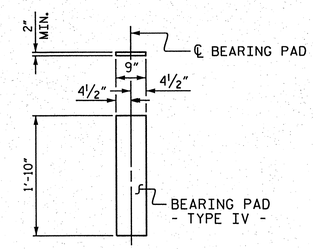

(TYPE IV - 8 REQ'D)

ELASTOMERIC BEARING DETAIL

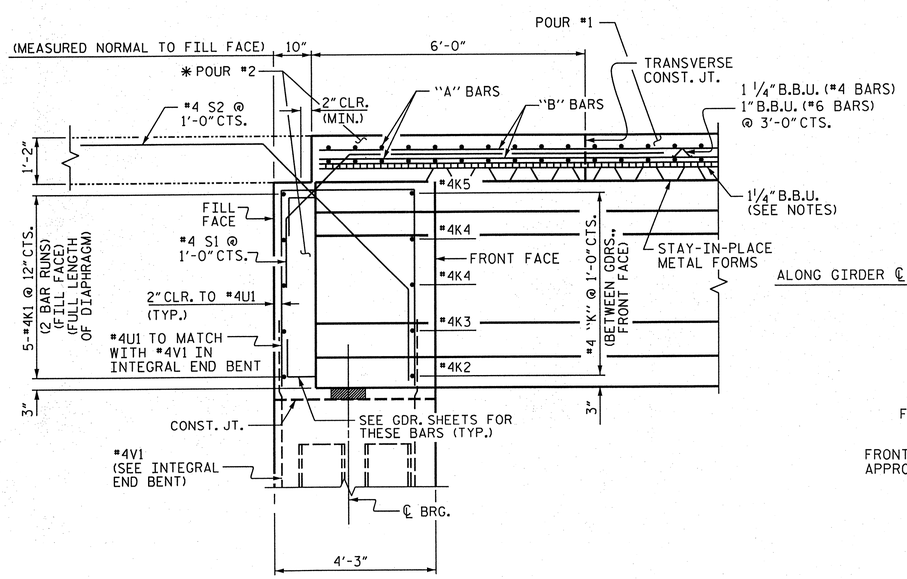

SECTION "A-A"

* POUR 2 INCLUDES THE INTEGRAL DIAPHRAGM.

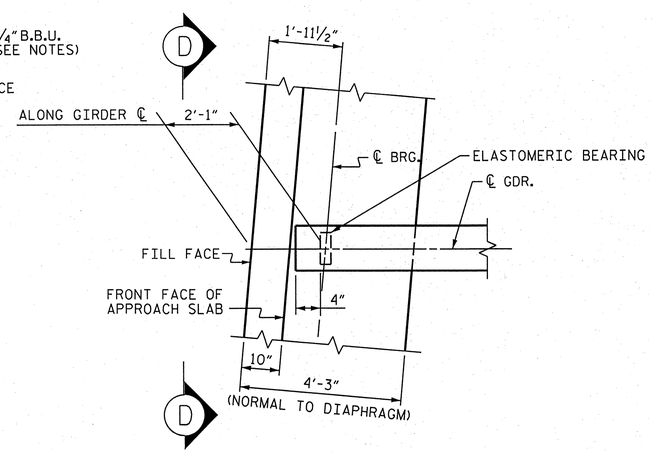

PLAN OF DIAPHRAGM

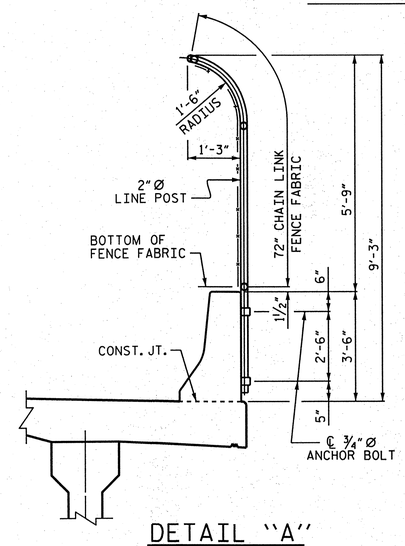

DETAIL "A"

PROJECT NO. R-2633BB

BRUNSWICK/ NEW HANOVER COUNTY

STATION: 16+73.17 -RP C4-

STATE OF NORTH CAROLINA
DEPARTMENT OF TRANSPORTATION
RALEIGH

SUPERSTRUCTURE TYPICAL SECTION AND DETAILS

PLAN PREPARED BY:

ALPHA & OMEGA GROUP
CIVIL & STRUCTURAL ENGINEERS
4601 Lake Boone Trail, Ste. 3C Raleigh, NC 27607
Phone 919 981 0310 Fax 919 981 0451
Firm License No. C-1684 www.aogroup.com
A&O PROJECT NO. 2011.036

NORTH CAROLINA PROFESSIONAL SEAL 032724 ENGINEER GLENN ZEBLO 12-1-12

REFERENCE NO. 9-5

REVISIONS								SHEET NO.
NO.	BY:	DATE:	NO.	BY:	DATE:			5-GF56
1			3					TOTAL SHEETS
2			4					700

DRAWN BY :	J.D. GOODIN	DATE :	09/14/12
CHECKED BY :	TG ZEBLO	DATE :	09/28/12
QC / QA :	TL BARTELT	DATE :	10/30/12

STR. NO. 9

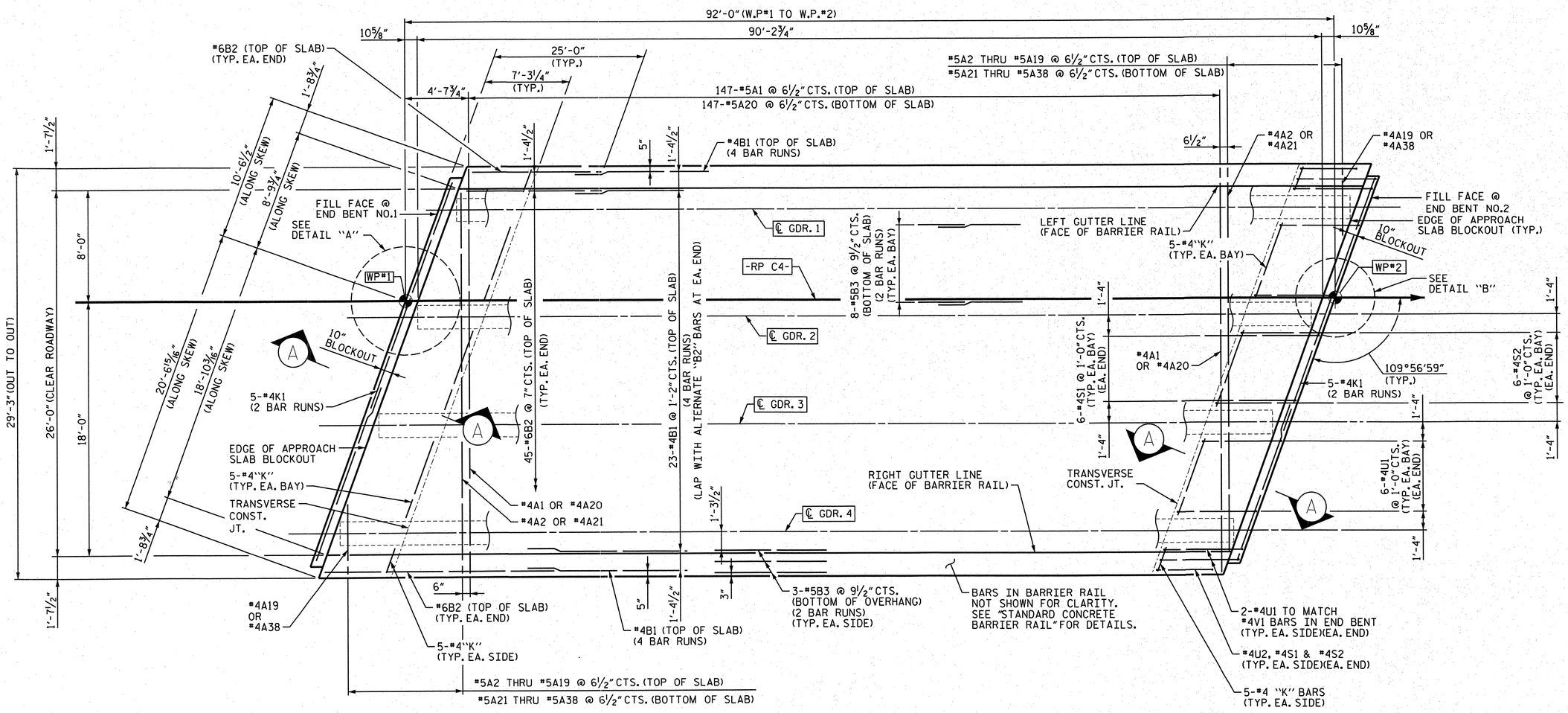

PLAN

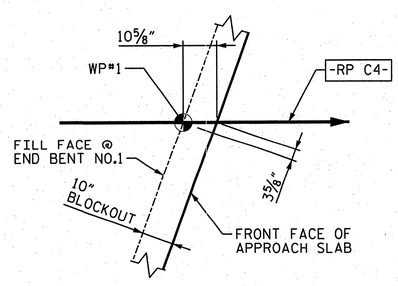

DETAIL "A"

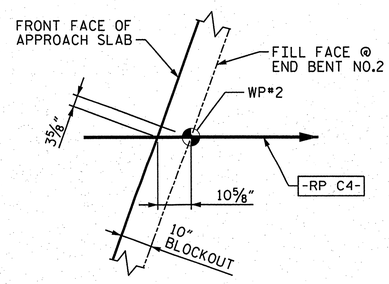

DETAIL "B"

PROJECT NO. R-2633BB

BRUNSWICK/ NEW HANOVER COUNTY

STATION: 16+73.17 -RP C4-

STATE OF NORTH CAROLINA
DEPARTMENT OF TRANSPORTATION
RALEIGH

SUPERSTRUCTURE PLAN OF SPAN "A"

PLAN PREPARED BY:

ALPHA & OMEGA GROUP
CIVIL & STRUCTURAL ENGINEERS
4601 Lake Boone Trail, Ste. 3C Raleigh, NC 27607
Phone 919 981 0310 Fax 919 981 0451
Firm License No. C-1684 www.aogroup.com
A&O PROJECT NO. 2011.036

NORTH CAROLINA PROFESSIONAL SEAL 032724 ENGINEER T. GLENN ZEBLO 12-18-12

DRAWN BY :	J.D. GOODIN	DATE :	09/14/12
CHECKED BY :	TG ZEBLO	DATE :	09/28/12
QC / QA :	TL BARTELT	DATE :	10/30/12

REFERENCE NO. 9-6

REVISIONS						SHEET NO.
NO.	BY:	DATE:	NO.	BY:	DATE:	S-C57
1			3			TOTAL SHEETS
2			4			700

STR. NO. 9

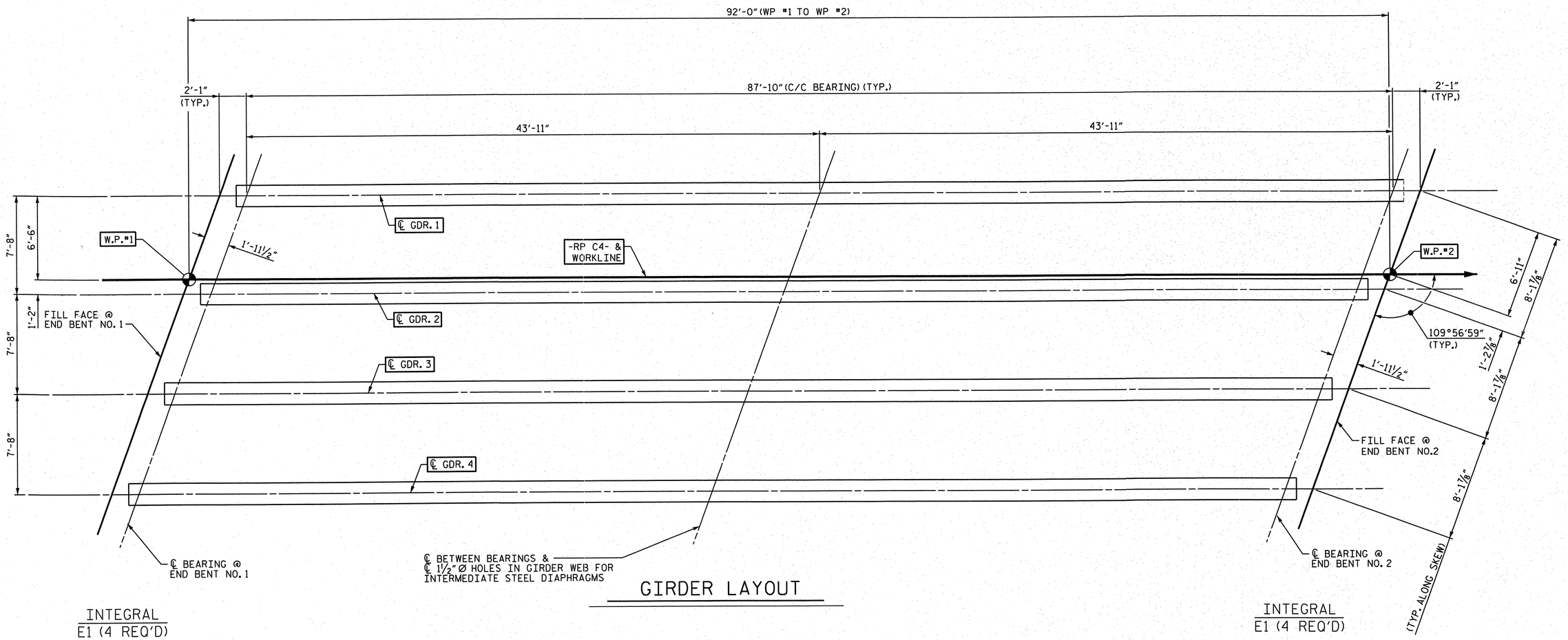

GIRDER LAYOUT

PROJECT NO. R-2633BB

BRUNSWICK/ NEW HANOVER COUNTY

STATION: 16+73.17 -RP C4-

STATE OF NORTH CAROLINA
DEPARTMENT OF TRANSPORTATION
RALEIGH

SUPERSTRUCTURE FRAMING PLAN

PLAN PREPARED BY:

ALPHA & OMEGA GROUP
CIVIL & STRUCTURAL ENGINEERS
4601 Lake Boone Trail, Ste. 3C Raleigh, NC 27607
Phone 919 981 0310 Fax 919 981 0451
Firm License No. C-1684 www.aogroup.com
A&O PROJECT NO. 2011.036

NORTH CAROLINA PROFESSIONAL SEAL 032724 ENGINEER GLENN ZEBLO
T. Glenn Zeblo 12-18-12

REFERENCE NO. 9-7

REVISIONS								SHEET NO.
NO.	BY:	DATE:	NO.	BY:	DATE:			S-658
1			3					TOTAL SHEETS
2			4					100

DRAWN BY :	J.D. GOODIN	DATE :	09/14/12
CHECKED BY :	TG ZEBLO	DATE :	09/28/12
QC / QA :	TL BARTELT	DATE :	10/30/12

STR. NO. 9

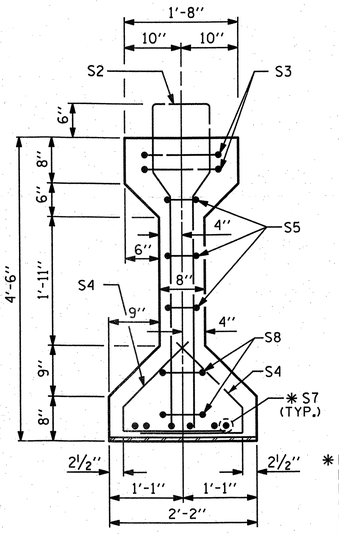

SECTION "A-A"

(TYP. EA. END)

✱ FOR S7 BARS, SEE DETAIL "A" OF PRESTRESSED CONCRETE GIRDER CONTINUOUS FOR LIVE LOAD DETAILS SHEET

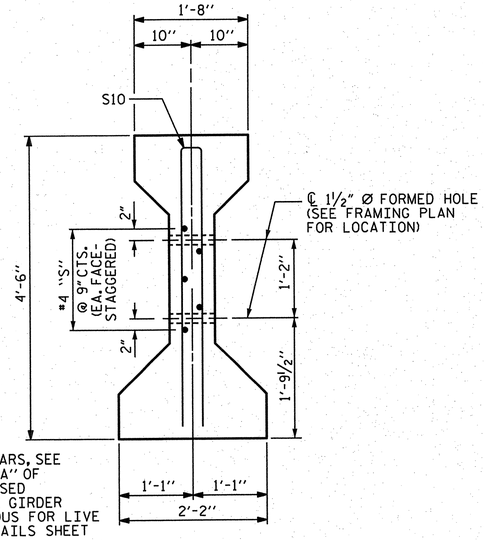

SECTION "B-B"

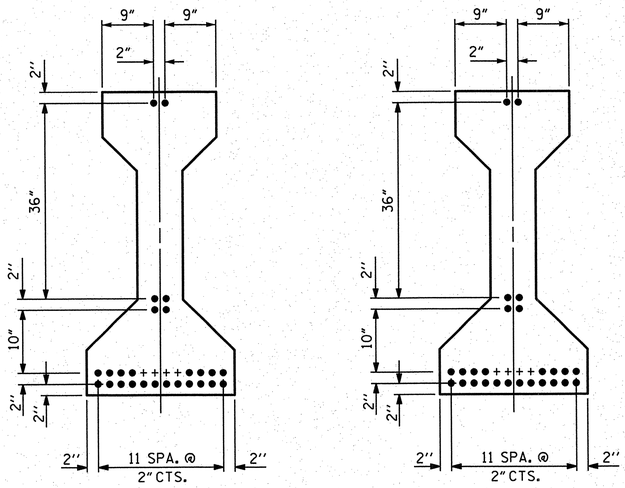

AT END OF GIRDER

AT ℄ OF GIRDER

0.6" Ø LOW RELAXATION STRAND LAYOUT

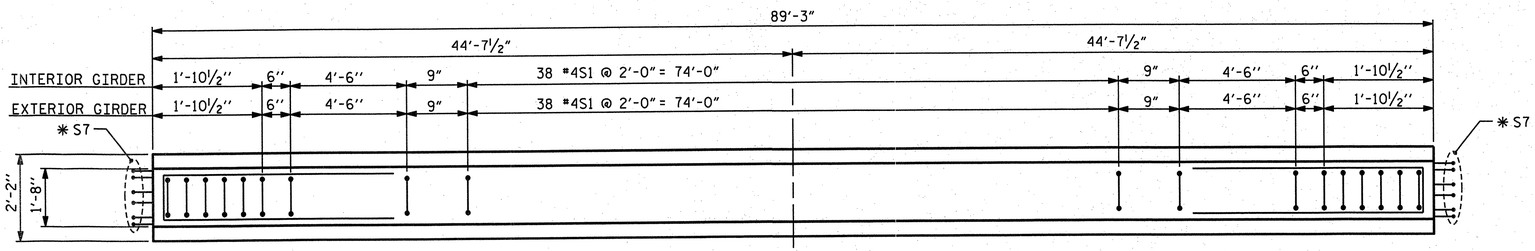

PLAN OF GIRDER

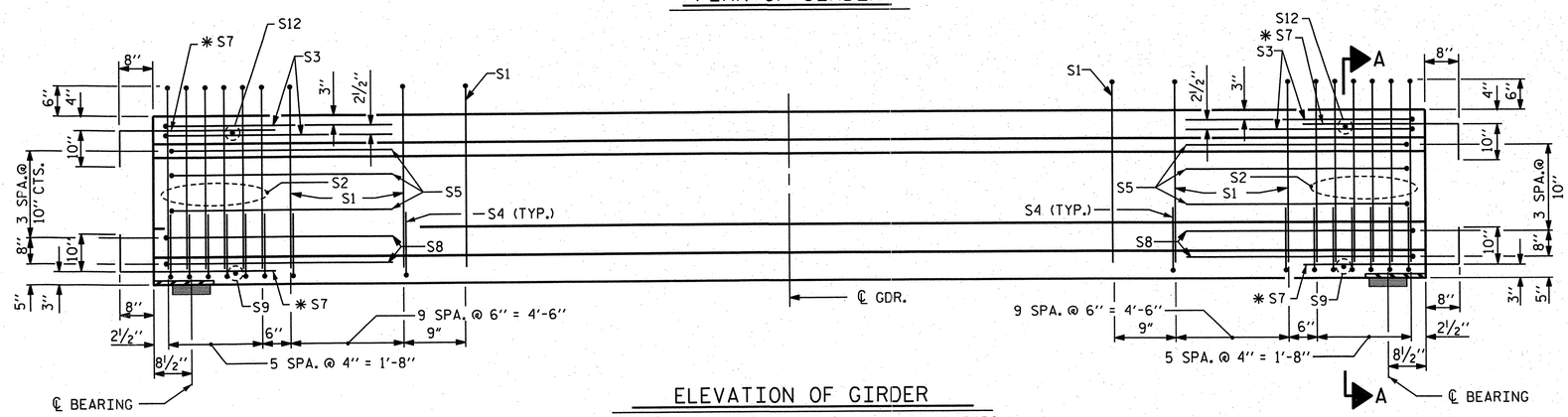

ELEVATION OF GIRDER

(SEE PARTIAL ELEVATION FOR ADDITIONAL "S" BARS)

0.6" Ø L. R. GRADE 270 STRANDS

AREA (SQUARE INCHES)	ULTIMATE STRENGTH (LBS. PER STRAND)	APPLIED PRESTRESS (LBS. PER STRAND)
0.217	58,600	43,950

REINFORCING STEEL FOR ONE GIRDER

	BAR	NUMBER	SIZE	TYPE	LENGTH	WEIGHT
EXTERIOR GDR.	S1	58	#4	1	10'-8"	413
INTERIOR GDR.	S1	58	#4	1	10'-8"	413
	S2	12	#6	1	10'-8"	192
	S3	4	#4	2	9'-1"	24
	S4	64	#4	3	3'-5"	146
	S5	6	#4	2	8'-5"	34
	✱ S7	24	#5	4	3'-8"	92
	S8	4	#4	2	8'-7"	23
	S9	2	#3	STR	1'-10"	1
EXTERIOR GDR.	S10	2	#5	2	8'-8"	18
INTERIOR GDR.	S10	2	#5	2	8'-8"	18
EXTERIOR GDR.	S11	5	#4	STR	7'-0"	23
INTERIOR GDR.	S11	5	#4	STR	7'-0"	23
	S12	2	#3	STR	1'-4"	1

✱ NOTE: S7 BARS SHALL BE BENT BEFORE SHIPMENT. HEAT BENDING SHALL NOT BE ALLOWED.

BAR TYPES

ALL BAR DIMENSIONS ARE OUT-TO-OUT.

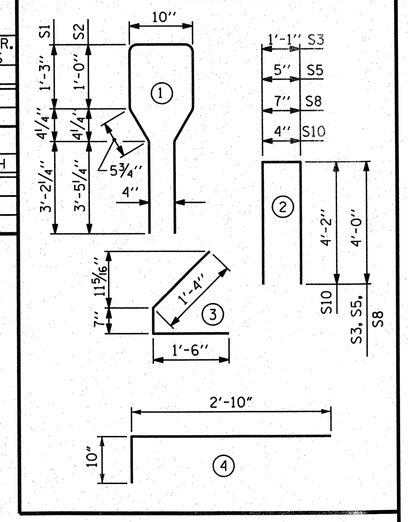

QUANTITIES FOR ONE GIRDER

	REINFORCING STEEL LB.	6,500 PSI CONCRETE C.Y.	0.6" Ø L.R. STRANDS No.
EXTERIOR GIRDER	967	18.15	26
INTERIOR GIRDER	967	18.15	26

GIRDERS REQUIRED

NUMBER	LENGTH	TOTAL LENGTH
4	89'-3"	357'-0"

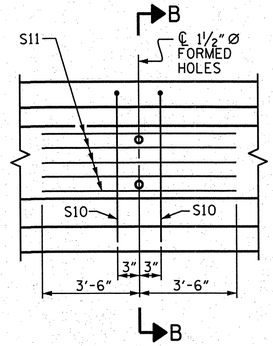

PARTIAL ELEVATION

REINFORCING STEEL FOR GIRDER NOs. 1-4 SHOWING INTERMEDIATE DIAPHRAGM

PROJECT NO. R-2633BB

BRUNSWICK/ NEW HANOVER COUNTY

STATION: 16+73.17 -RP C4-

STATE OF NORTH CAROLINA
DEPARTMENT OF TRANSPORTATION
RALEIGH

STANDARD

AASHTO TYPE IV
PRESTRESSED CONCRETE GIRDER
CONTINUOUS FOR LIVE LOAD

DRAWN BY :	J.D. GOODIN	DATE :	09/14/12
CHECKED BY :	TG ZEBLO	DATE :	09/28/12
QC / QA :	TL BARTELT	DATE :	10/30/12

DRAWN BY : ELR 8/91
CHECKED BY : GRP 8/91

REV. 10/17/00R RWW/LES
REV. 5/1/06R TLA/GM
REV. 10/1/11 MAA/GM

PLAN PREPARED BY:

ALPHA & OMEGA GROUP
CIVIL & STRUCTURAL ENGINEERS
4601 Lake Boone Trail, Ste. 3C Raleigh, NC 27607
Phone 919 981 0310 Fax 919 981 0451
Firm License No. C-1684 www.aogroup.com
A&O PROJECT NO. 2011.036

NOTE: THIS STANDARD DRAWING REVIEWED AND ADOPTED FOR USE AT THE REFERENCED LOCATION BY THE UNDERSIGNED.

NORTH CAROLINA PROFESSIONAL SEAL 032724 ENGINEER GLENN ZEBLO
12-18-12

REFERENCE NO. 9-8

REVISIONS						SHEET NO.
NO.	BY:	DATE:	NO.	BY:	DATE:	S-6A
1			3			TOTAL SHEETS
2			4			100

STR. NO. 9

STD. NO. PCG6

DEAD LOAD DEFLECTION TABLE FOR GIRDERS

0.6" Ø LOW RELAXATION	SPAN "A" GIRDERS 1 THRU 4										
TENTH POINTS	0	.1	.2	.3	.4	.5	.6	.7	.8	.9	0
CAMBER (GIRDER ALONE IN PLACE) ↑	0	0.078	0.133	0.169	0.189	0.196	0.189	0.169	0.133	0.078	0
* DEFLECTION DUE TO SUPERIMPOSED D.L. ↓	0	0.031	0.060	0.083	0.098	0.104	0.098	0.083	0.060	0.031	0
FINAL CAMBER ↑	0	9/16"	7/8"	1"	1 1/16"	1 1/8"	1 1/16"	1"	7/8"	9/16"	0

* INCLUDES FUTURE WEARING SURFACE
ALL VALUES ARE SHOWN IN FEET (DECIMAL FORM), EXCEPT "FINAL CAMBER", WHICH IS GIVEN IN INCHES (FRACTION FORM).

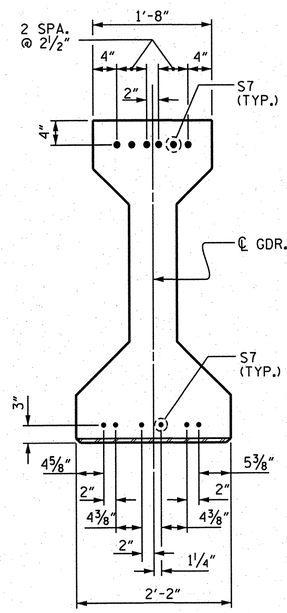

DETAIL "A"

NOTES

ALL PRESTRESSING STRANDS SHALL BE 7-WIRE LOW-RELAXATION GRADE 270 STRANDS AND SHALL CONFORM TO AASHTO M203 EXCEPT FOR SAMPLING REQUIREMENTS WHICH SHALL BE IN ACCORDANCE WITH THE STANDARD SPECIFICATIONS.

ALL REINFORCING STEEL SHALL BE GRADE 60.

EMBEDDED PLATE "B-1" SHALL BE GALVANIZED IN ACCORDANCE WITH THE STANDARD SPECIFICATIONS. BEVEL EDGES OF PLATE "B-1" TO GIVE CLOSE FIT BUT NOT TIGHT FIT TO STEEL CASTING FORM.

ANCHOR STUDS SHALL CONFORM TO AASHTO M169 GRADES 1010 THROUGH 1020 OR APPROVED EQUAL, AND SHALL MEET THE TYPE "B" REQUIREMENTS OF SUBSECTION 7.3 OF THE ANSI/AASHTO/AWS D1.5 BRIDGE WELDING CODE.

AT ENDS OF GIRDERS TO BE EMBEDDED IN CONCRETE DIAPHRAGMS OR END WALLS, PRESTRESSING STRANDS MAY EXTEND A MAXIMUM OF 2" BEYOND THE GIRDER ENDS. OTHERWISE, PRESTRESSING STRANDS SHALL BE CUT FLUSH WITH THE GIRDER ENDS.

THE TRANSFER OF LOAD FROM THE ANCHORAGES TO THE GIRDER SHALL BE DONE WHEN CONCRETE HAS REACHED A COMPRESSIVE STRENGTH OF NOT LESS THAN 5,000 PSI.

DEPENDING ON THE TYPE OF SYSTEM USED TO SUPPORT THE DECK SLAB FORMS, PRESET ANCHORS MAY BE NECESSARY IN THE PRESTRESSED CONCRETE GIRDER.

THE TOP SURFACE OF THE GIRDER, EXCLUDING THE OUTSIDE 4", SHALL BE RAKED TO A DEPTH OF 1/4".

PROJECT NO. R-2633BB
BRUNSWICK/ NEW HANOVER COUNTY
STATION: 16+73.17 -RP C4-

DRAWN BY :	J.D. GOODIN	DATE :	09/14/12
CHECKED BY :	TG ZEBLO	DATE :	09/28/12
QC / QA :	TL BARTLETT	DATE :	10/30/12

DRAWN BY :	ELR	11/91	REV. 7/10/01RR LES/RDR
CHECKED BY :	GRP	11/91	REV. 5/1/06 TLA/GM
			REV. 10/1/11 MAA/GM

PLAN PREPARED BY:

ALPHA & OMEGA GROUP
CIVIL & STRUCTURAL ENGINEERS
4601 Lake Boone Trail, Ste. 3C Raleigh, NC 27607
Phone 919 981 0310 Fax 919 981 0451
Firm License No. C-1684 www.aogroup.com
A&O PROJECT NO. 2011.036

NOTE: THIS STANDARD DRAWING REVIEWED AND ADOPTED FOR USE AT THE REFERENCED LOCATION BY THE UNDERSIGNED.

NORTH CAROLINA PROFESSIONAL SEAL 032724 ENGINEER GLENN ZEBLO
12-18-12

REFERENCE NO. 9-9

STATE OF NORTH CAROLINA
DEPARTMENT OF TRANSPORTATION
RALEIGH

STANDARD

PRESTRESSED CONCRETE GIRDER CONTINUOUS FOR LIVE LOAD DETAILS

REVISIONS						SHEET NO.
NO.	BY:	DATE:	NO.	BY:	DATE:	S-60
1			3			TOTAL SHEETS
2			4			700

STR. NO. 9 STD. NO. PCG9

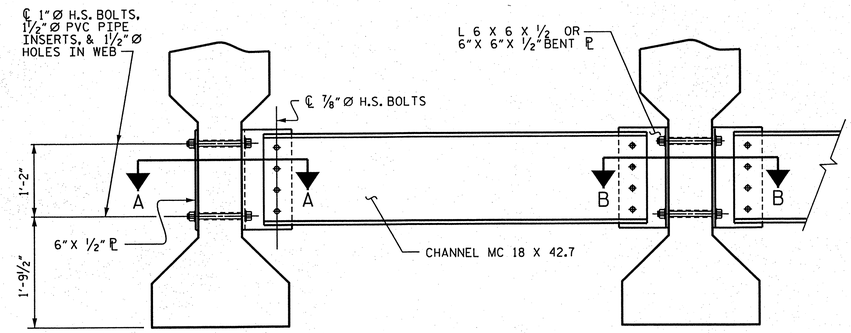

PART SECTION AT INTERMEDIATE DIAPHRAGM

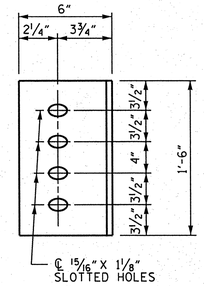

DIAPHRAGM FACE

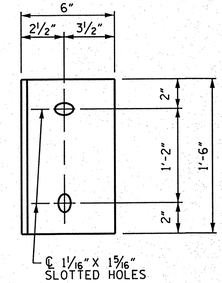

WEB FACE

CONNECTOR PLATE DETAILS

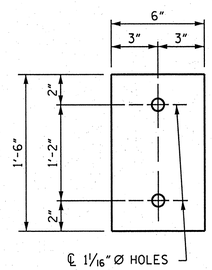

PLATE DETAILS

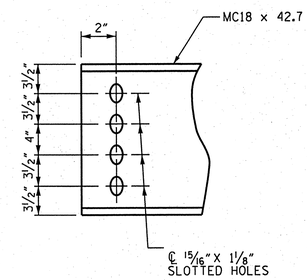

CHANNEL END

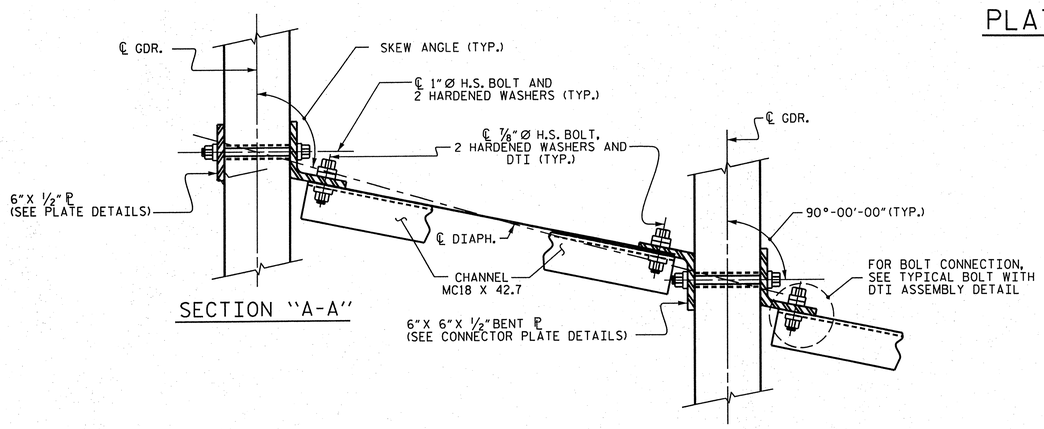

CONNECTION DETAILS

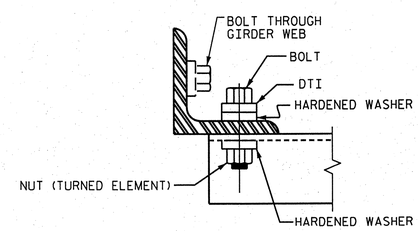

BOLT WITH DTI ASSEMBLY DETAIL

STRUCTURAL STEEL NOTES

ALL INTERMEDIATE DIAPHRAGM STEEL AND CONNECTOR PLATES SHALL BE AASHTO M270 GRADE 50 OR APPROVED EQUAL.

TENSION ON THE ASTM A325 BOLTS THROUGH THE ANGLE MEMBER SHALL BE CALIBRATED USING DIRECT TENSION INDICATOR WASHERS IN ACCORDANCE WITH THE STANDARD SPECIFICATIONS.

TENSION ON THE ASTM A449 BOLTS THROUGH THE GIRDER WEB SHALL BE SNUG TIGHTENED FOLLOWED BY AN ADDITIONAL ¼ TURN.

THE PLATES, BENT PLATES, CHANNELS, ANGLES, AND PLATE WASHERS SHALL BE METALLIZED IN ACCORDANCE WITH THE STANDARD SPECIFICATIONS. FOR THERMAL SPRAYED COATINGS (METALLIZATION), SEE SPECIAL PROVISIONS.

FOR METALLIZATION, APPLY AN 8 MIL THICK 99.50 PERCENT ZINC 1350 ALUMINUM (W-A1-1350) THERMAL SPRAYED COATING WITH A 0.5 MIL THICK SEAL COAT TO ALL PLATES, BENT PLATES, CHANNELS, ANGLES, AND PLATE WASHERS IN ACCORDANCE WITH THE THERMAL SPRAYED COATINGS SPECIAL PROVISION AND SECTION 442 OF THE STANDARD SPECIFICATIONS.

APPLY 1 COAT EACH OF 1080-12 GRAY PAINT ON THE EDGES AND THE WEB FACE OF THE CONNECTOR PLATE WHICH COMES IN CONTACT WITH THE CONCRETE GIRDER IN ACCORDANCE WITH SECTION 442 OF THE STANDARD SPECIFICATIONS.

GALVANIZE THE HIGH STRENGTH BOLTS, NUTS, WASHERS AND DIRECT TENSION INDICATORS IN ACCORDANCE WITH THE STANDARD SPECIFICATIONS.

USE AN ASTM F436 HARDENED WASHER WITH STANDARD AND SLOTTED HOLES UNDER EACH BOLT HEAD AND NUT.

FOR BOLTS THROUGH THE GIRDER WEB, PROVIDE SUFFICIENT LENGTH OF THREADS ON ALL BOLTS TO ACCOMMODATE WASHERS AND THE THICKNESS OF CONNECTING MEMBER PLUS AT LEAST ¼"PROJECTION BEYOND THE NUT.

INTERMEDIATE DIAPHRAGM ASSEMBLY SHALL COMPLY WITH SECTION 1072 OF THE STANDARD SPECIFICATIONS.

SUBMIT TWO SETS OF WORKING DRAWINGS FOR THE INTERMEDIATE DIAPHRAGM ASSEMBLY FOR REVIEW, COMMENTS AND ACCEPTANCE. AFTER REVIEW, COMMENTS, AND ACCEPTANCE, SUBMIT SEVEN SETS FOR DISTRIBUTION.

IN THE EXTERIOR BAYS, PLACE TEMPORARY STRUTS BETWEEN PRESTRESSED GIRDERS ADJACENT TO THE STEEL DIAPHRAGMS. STRUTS SHALL REMAIN IN PLACE 3 DAYS AFTER CONCRETE IS PLACED.

THE COST OF THE STEEL DIAPHRAGMS AND ASSEMBLIES SHALL BE INCLUDED IN THE UNIT PRICE BID FOR PRESTRESSED CONCRETE GIRDERS.

PROJECT NO. R-2633BB
BRUNSWICK/ NEW HANOVER COUNTY
STATION: 16+73.17 -RP C4-

DRAWN BY :	J.D. GOODIN	DATE :	09/14/12
CHECKED BY :	TG ZEBLO	DATE :	09/28/12
QC / QA :	TL BARTELT	DATE :	10/30/12

DRAWN BY : TLA 6/05
CHECKED BY : VC 6/05

ADDED 10/21/05
REV. 5/1/06RRR KMM/GM
REV. 10/1/11 MAA/GM

PLAN PREPARED BY:

ALPHA & OMEGA GROUP
CIVIL & STRUCTURAL ENGINEERS
4601 Lake Boone Trail, Ste. 3C Raleigh, NC 27607
Phone 919 981 0310 Fax 919 981 0451
Firm License No. C-1684 www.aogroup.com
A&O PROJECT NO. 2011.036

NOTE: THIS STANDARD DRAWING REVIEWED AND ADOPTED FOR USE AT THE REFERENCED LOCATION BY THE UNDERSIGNED.

NORTH CAROLINA PROFESSIONAL SEAL 032724 ENGINEER GLENN ZEBLO
10-1-12

REFERENCE NO. 9-10

STATE OF NORTH CAROLINA
DEPARTMENT OF TRANSPORTATION
RALEIGH

STANDARD
INTERMEDIATE STEEL DIAPHRAGMS FOR TYPE IV PRESTRESSED CONCRETE GIRDERS

REVISIONS						SHEET NO.
NO.	BY:	DATE:	NO.	BY:	DATE:	S-661
1			3			TOTAL SHEETS
2			4			100

STR. NO. 9

STD. NO. PCG10

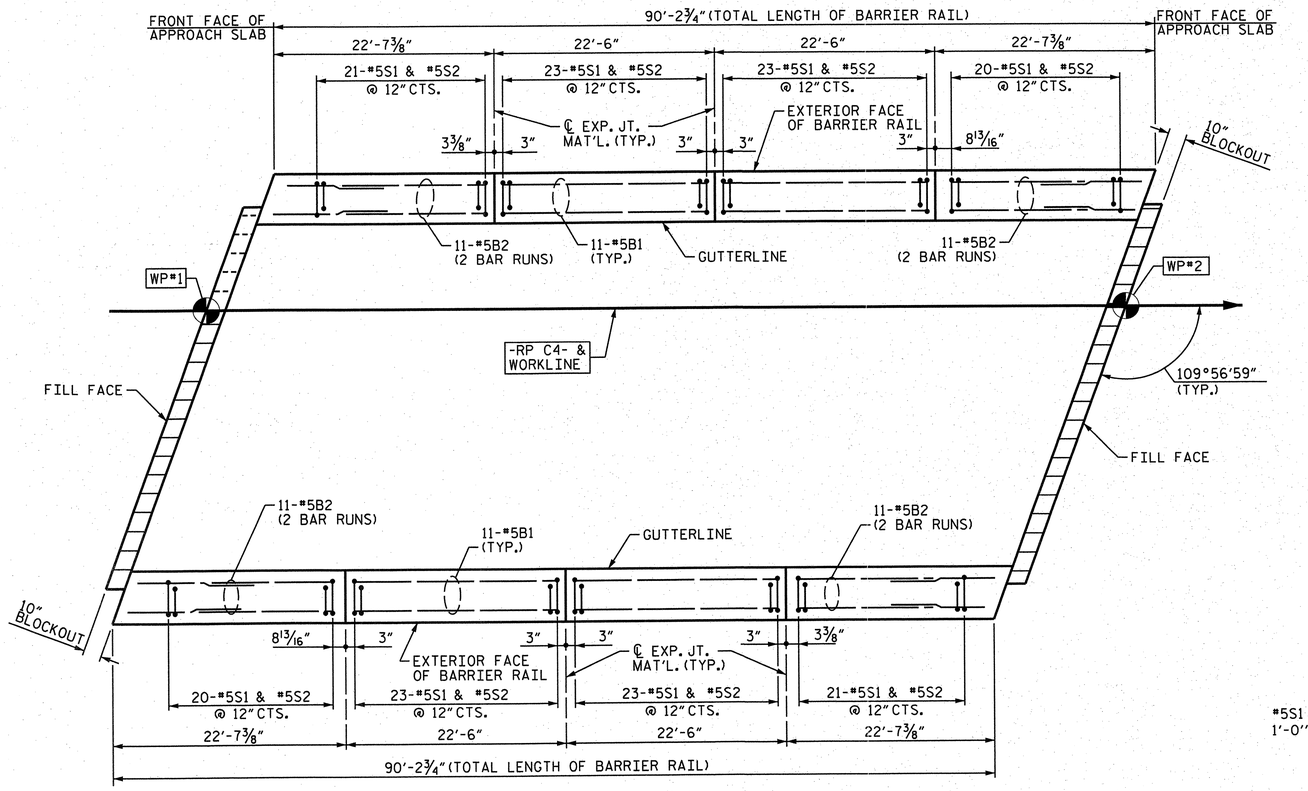

PLAN

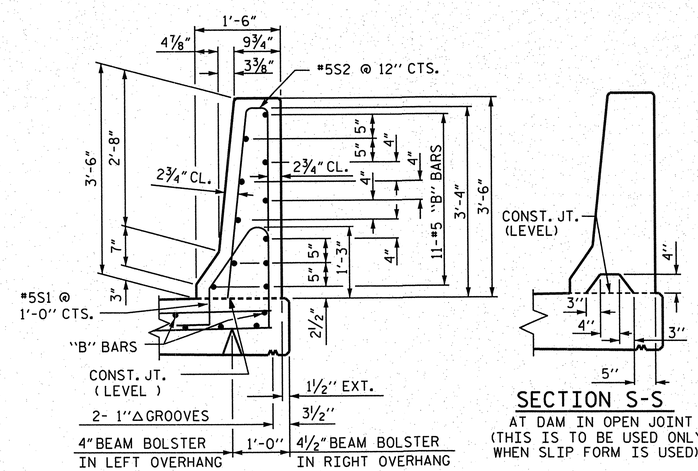

SECTION THRU RAIL

SECTION S-S

AT DAM IN OPEN JOINT (THIS IS TO BE USED ONLY WHEN SLIP FORM IS USED)

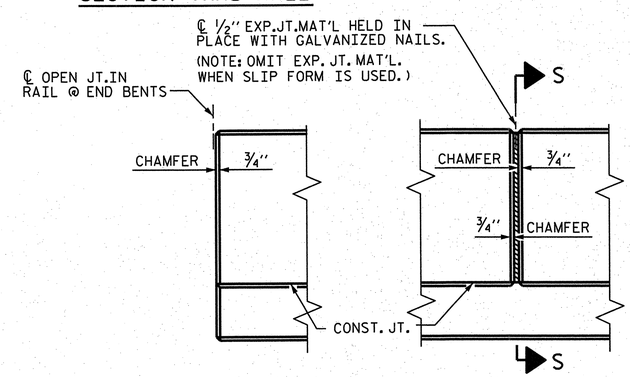

ELEVATION AT EXPANSION JOINTS

BARRIER RAIL DETAILS

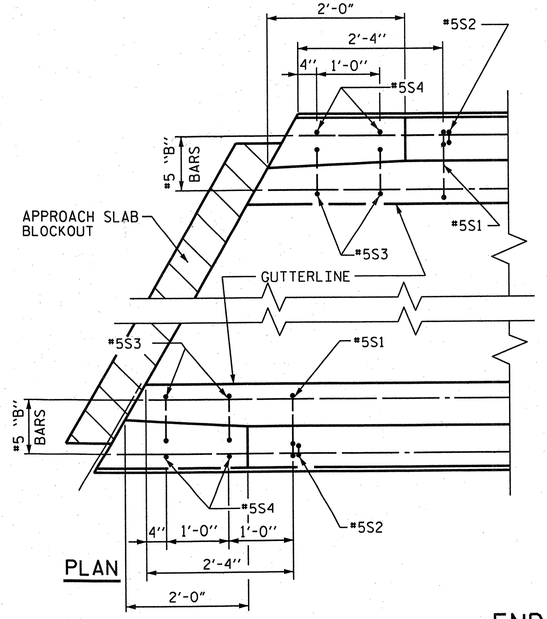

PLAN

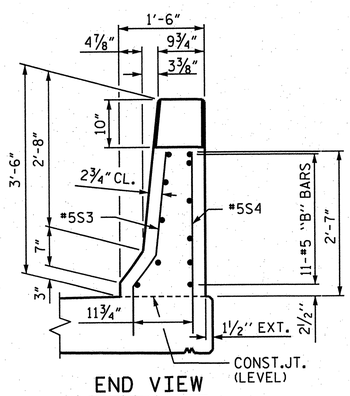

END VIEW

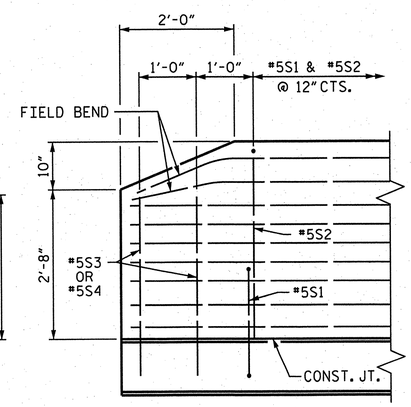

SIDE VIEW

END OF RAIL DETAILS

NOTES

THE BARRIER RAIL IN THE SPAN SHALL NOT BE CAST UNTIL ALL SLAB CONCRETE IN THE SPAN HAS BEEN CAST AND HAS REACHED A MINIMUM COMPRESSIVE STRENGTH OF 3,000 PSI.

ALL REINFORCING STEEL IN BARRIER RAILS SHALL BE EPOXY COATED.

GROOVED CONTRACTION JOINTS, ½" IN DEPTH, SHALL BE TOOLED IN ALL EXPOSED FACES OF THE BARRIER RAIL AND IN ACCORDANCE WITH ARTICLE 825-10(B) OF THE STANDARD SPECIFICATIONS. THE CONTRACTION JOINT SHALL BE LOCATED AT EACH THIRD POINT BETWEEN BARRIER RAIL EXPANSION JOINTS. ONLY ONE CONTRACTION JOINT IS REQUIRED AT MIDPOINT OF BARRIER RAIL SEGMENTS LESS THAN 20 FEET IN LENGTH AND NO CONTRACTION JOINTS ARE REQUIRED FOR THOSE SEGMENTS LESS THAN 10 FEET IN LENGTH.

BAR TYPES

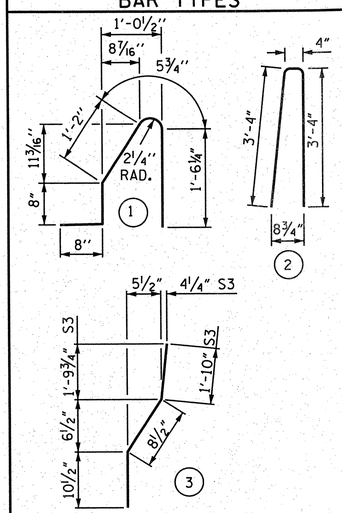

ALL BAR DIMENSIONS ARE OUT TO OUT.

BILL OF MATERIAL

FOR CONCRETE BARRIER RAIL ONLY

BAR	NO.	SIZE	TYPE	LENGTH	WEIGHT
* S1	174	#5	1	4'-6"	817
* S2	174	#5	2	7'-0"	1270
* S3	8	#5	3	3'-5"	29
* S4	8	#5	STR.	3'-3"	27
* B1	44	#5	STR.	22'-1"	1013
* B2	88	#5	STR.	13'-0"	1193

* EPOXY COATED REINFORCING STEEL	4349 LBS.
CLASS AA CONCRETE	24.6 CU. YDS.
CONCRETE BARRIER RAIL	180.5 LIN. FT.

PROJECT NO. R-2633BB

BRUNSWICK/ NEW HANOVER COUNTY

STATION: 16+73.17 -RP C4-

DRAWN BY :	J.D. GOODIN	DATE :	09/14/12
CHECKED BY :	TG ZEBLO	DATE :	09/28/12
QC / QA :	TL BARTELT	DATE :	10/30/12

DRAWN BY : ARB 5/87	REV. 5/1/06R	TLA/GM
CHECKED BY : SJD 9/87	REV. 10/1/11	MAA/GM
	REV. 7/12	MAA/GM

PLAN PREPARED BY:

ALPHA & OMEGA GROUP
CIVIL & STRUCTURAL ENGINEERS
4601 Lake Boone Trail, Ste. 3C Raleigh, NC 27607
Phone 919 981 0310 Fax 919 981 0451
Firm License No. C-1684 www.aogroup.com
A&O PROJECT NO. 2011.036

NOTE: THIS STANDARD DRAWING REVIEWED AND ADOPTED FOR USE AT THE REFERENCED LOCATION BY THE UNDERSIGNED.

NORTH CAROLINA PROFESSIONAL SEAL 032724 ENGINEER GLENN ZEBLO 12-18-12

REFERENCE NO. 9-11

STATE OF NORTH CAROLINA
DEPARTMENT OF TRANSPORTATION
RALEIGH

STANDARD

CONCRETE BARRIER RAIL

REVISIONS							SHEET NO.
NO.	BY:	DATE:	NO.	BY:	DATE:		S-662
1			3				TOTAL SHEETS
2			4				700

STR. NO. 9

STD. NO. CBR1

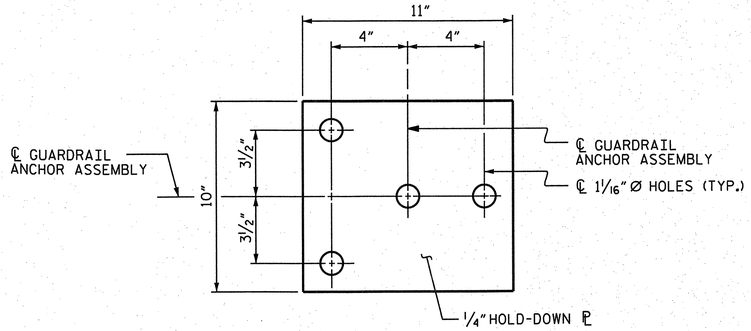

PLAN

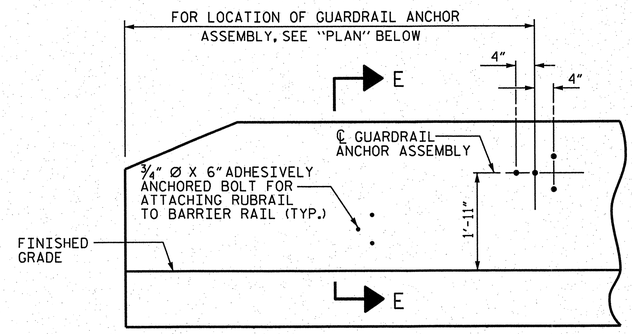

ELEVATION

NOTES

THE GUARDRAIL ANCHOR ASSEMBLY SHALL CONSIST OF A 1/4" HOLD-DOWN PLATE AND 4 - 7/8" Ø BOLTS WITH NUTS AND WASHERS, RUBRAIL, AND ADHESIVELY ANCHORED BOLTS.

THE HOLD-DOWN PLATE SHALL CONFORM TO AASHTO M270 GRADE 36. AFTER FABRICATION, THE HOLD-DOWN PLATE SHALL BE HOT-DIP GALVANIZED IN ACCORDANCE WITH AASHTO M111.

BOLTS SHALL CONFORM TO THE REQUIREMENTS OF ASTM A307 AND NUTS SHALL CONFORM TO THE REQUIREMENTS OF AASHTO M291. BOLTS, NUTS AND WASHERS SHALL BE GALVANIZED. (AT THE CONTRACTOR'S OPTION, STAINLESS STEEL BOLTS, NUTS AND WASHERS MAY BE USED AS AN ALTERNATE FOR THE 7/8" Ø GALVANIZED BOLTS, NUTS AND WASHERS. THEY SHALL CONFORM TO OR EXCEED THE MECHANICAL REQUIREMENTS OF ASTM A307. THE USE OF THIS ALTERNATE SHALL BE APPROVED BY THE ENGINEER.)

THE GUARDRAIL ANCHOR ASSEMBLY IS REQUIRED AT ALL POINTS WHERE APPROACH GUARDRAIL IS TO BE ATTACHED TO THE END OF BARRIER RAIL. FOR POINTS OF ATTACHMENT, SEE SKETCH.

AFTER INSTALLATION, THE EXPOSED THREAD OF THE BOLT SHALL BE BURRED WITH A SHARP POINTED TOOL.

THE COST OF THE GUARDRAIL ANCHOR ASSEMBLY SHALL BE INCLUDED IN THE UNIT CONTRACT PRICE BID FOR CONCRETE BARRIER RAIL.

THE 1 1/4" Ø HOLES SHALL BE FORMED OR DRILLED WITH A CORE BIT. IMPACT TOOLS WILL NOT BE PERMITTED. ANY CONCRETE DAMAGED BY THIS WORK SHALL BE REPAIRED TO THE SATISFACTION OF THE ENGINEER.

THE C6 X 8.2 RUBRAIL IS TO BE ADHESIVELY ANCHORED TO THE RAIL USING THREE 3/4" Ø X 6" BOLTS WITH WASHERS. LEVEL ONE FIELD TESTING IS REQUIRED, AND THE YIELD LOAD OF THE 3/4" Ø BOLT IS 12 KIPS. FOR ADHESIVELY ANCHORED ANCHOR BOLTS OR DOWELS, SEE STANDARD SPECIFICATIONS. SEE ROADWAY STANDARD 862.03 FOR DETAILS AND LOCATION OF THE RUBRAIL.

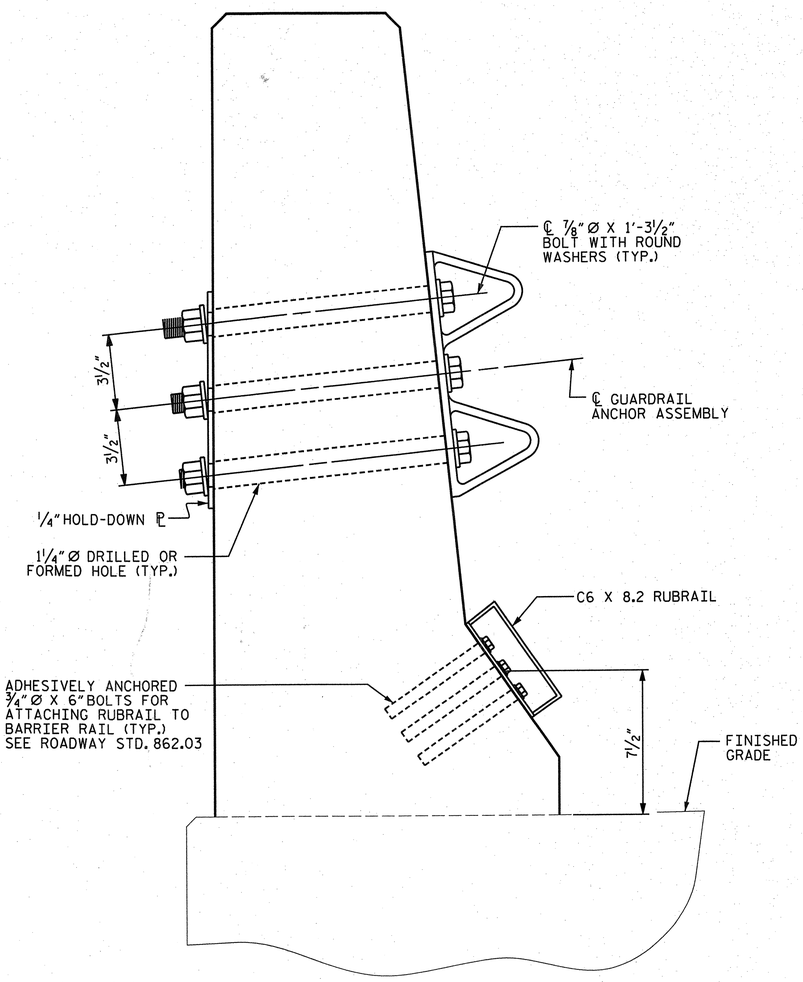

SECTION "E-E"

GUARDRAIL ANCHOR ASSEMBLY DETAILS

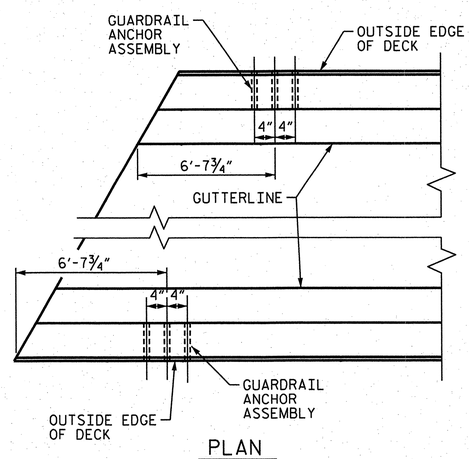

PLAN

LOCATION OF ANCHORS FOR GUARDRAIL

END BENT NO. 1 SHOWN, END BENT NO. 2 SIMILAR.

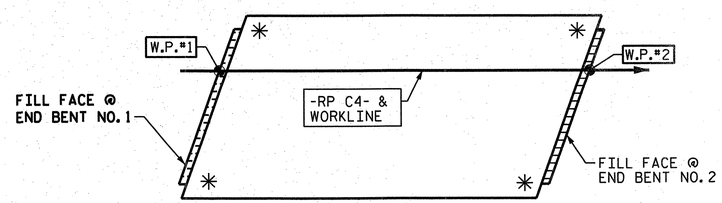

SKETCH SHOWING POINTS OF ATTACHMENTS

✳ DENOTES GUARDRAIL ANCHOR ASSEMBLY

PROJECT NO. R-2633BB

BRUNSWICK/ NEW HANOVER COUNTY

STATION: 16+73.17 -RP C4-

DRAWN BY :	J.D. GOODIN	DATE :	09/14/12
CHECKED BY :	TG ZEBLO	DATE :	09/28/12
QC / QA :	TL BARTELT	DATE :	10/30/12

DRAWN BY :	TLA	5/06	ADDED 5/1/06RR KMM/GM
CHECKED BY :	GM	5/06	REV. 10/1/11 MAA/GM
			REV. 7/12 MAA/GM

PLAN PREPARED BY:

ALPHA & OMEGA GROUP
CIVIL & STRUCTURAL ENGINEERS
4601 Lake Boone Trail, Ste. 3C Raleigh, NC 27607
Phone 919 981 0310 Fax 919 981 0451
Firm License No. C-1684 www.aogroup.com
A&O PROJECT NO. 2011.036

NOTE: THIS STANDARD DRAWING REVIEWED AND ADOPTED FOR USE AT THE REFERENCED LOCATION BY THE UNDERSIGNED.

NORTH CAROLINA PROFESSIONAL ENGINEER SEAL 032724 GLENN ZEBLO 12-18-12

REFERENCE NO. 9-12

STATE OF NORTH CAROLINA
DEPARTMENT OF TRANSPORTATION
RALEIGH

STANDARD
GUARDRAIL ANCHORAGE FOR BARRIER RAIL

REVISIONS								SHEET NO.
NO.	BY:	DATE:	NO.	BY:	DATE:			S-663
1			3					TOTAL SHEETS
2			4					700

Str No. 9

STD. NO. GRA2

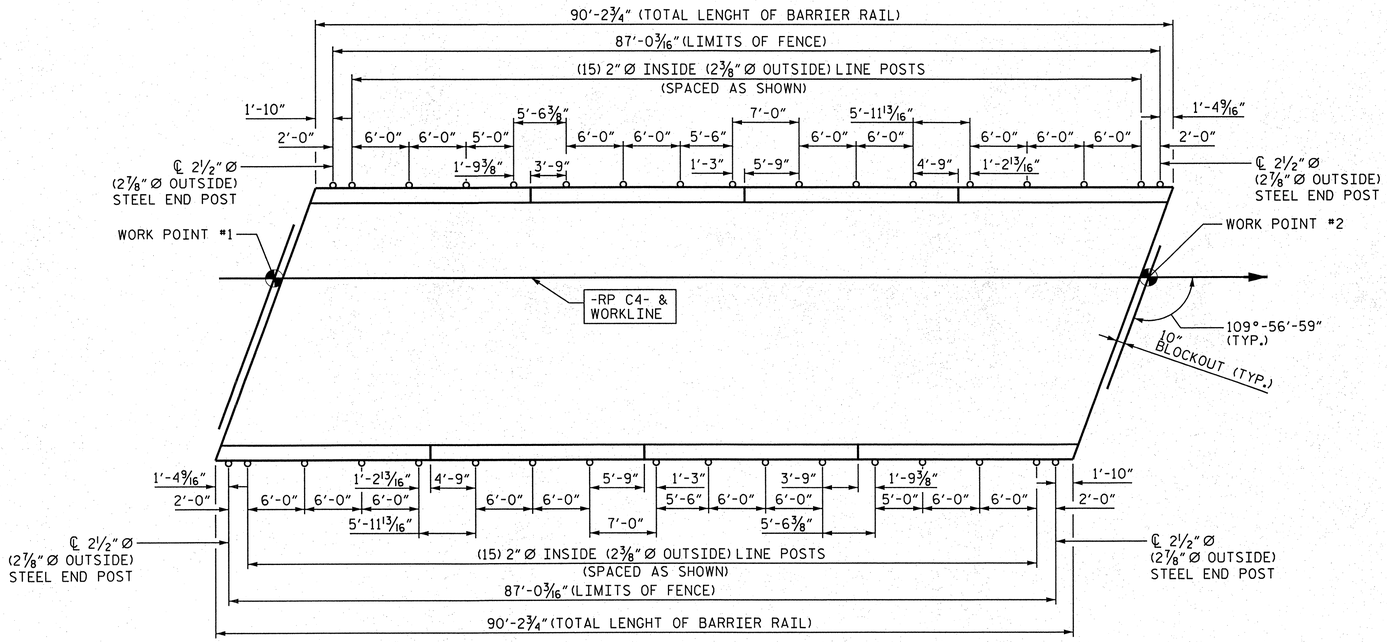

PLAN OF FENCE POST SPACING

PAY LENGTH = 174.03 FEET

NOTES:

FOR 72" CHAIN LINK FENCE, SEE SPECIAL PROVISIONS.

BOLTS SHALL CONFORM TO THE REQUIREMENTS OF ASTM A307 AND NUTS SHALL CONFORM TO THE REQUIREMENTS OF AASHTO M291. BOLTS, NUTS, AND WASHERS SHALL BE GALVANIZED. (AT THE CONTRACTOR'S OPTION, STAINLESS STEEL BOLTS, NUTS, AND WASHERS MAY BE USED AS AN ALTERNATE FOR THE ¾" Ø GALVANIZED BOLTS, NUTS, AND WASHERS. THEY SHALL CONFORM TO OR EXCEED THE MECHANICAL REQUIREMENTS OF ASTM A307. THE USE OF THIS ALTERNATE SHALL BE APPROVED BY THE ENGINEER.)

FOR SETTING ANCHOR BOLTS, THE CONTRACTOR SHALL USE AN ADHESIVE BONDING SYSTEM. LEVEL ONE FIELD TESTING OF BONDING SYSTEM IS REQUIRED AND THE YIELD LOAD OF THE ¾" Ø BOLTS IS 12.0 KIPS.

ALL FENCE MATERIAL SHALL MEET THE REQUIREMENTS OF SECTION 1050 OF THE STANDARD SPECIFICATIONS, GALVANIZE ALL STEEL PARTS AND HARDWARE IN ACCORDANCE WITH ARTICLE 1076 OF THE STANDARD SPECIFICATIONS.

FENCE POST LOCATIONS SHALL BE SHIFTED, AS NECESSARY, TO MAINTAIN 12" MINIMUM DISTANCE FROM ANCHOR BOLT TO JOINTS IN BARRIER RAIL.

DIMENSIONS TAKEN ALONG OUTSIDE FACE OF BARRIER RAIL.

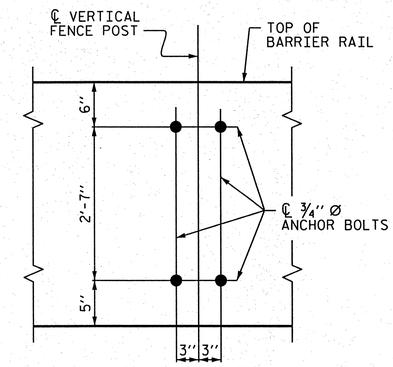

BOLT SETTING DETAIL

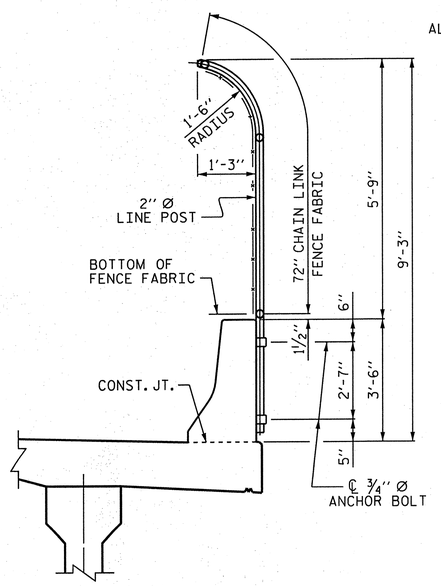

SECTION THRU FENCE

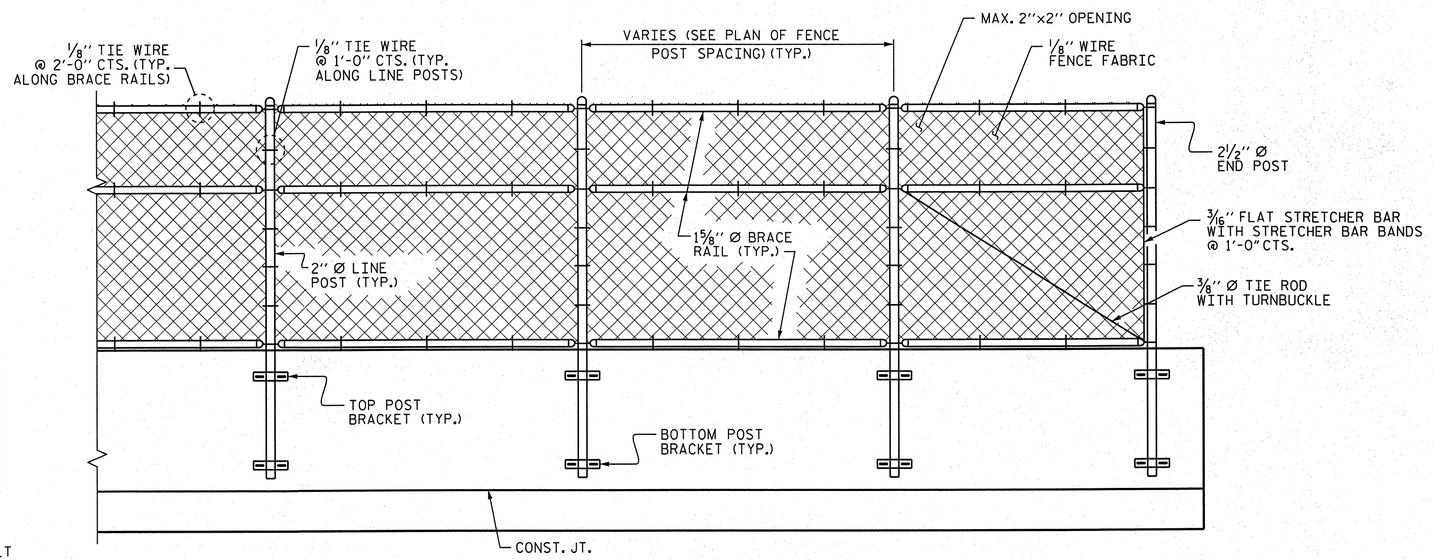

PARTIAL ELEVATION

PROJECT NO. R-2633BB

BRUNSWICK/NEW HANOVER COUNTY

STATION: 16+73.17 -RP C4-

STATE OF NORTH CAROLINA
DEPARTMENT OF TRANSPORTATION
RALEIGH

STANDARD

BRIDGE MOUNTED
72" CHAIN LINK FENCE

REVISIONS								SHEET NO.
NO.	BY:	DATE:	NO.	BY:	DATE:			S-6A
1			3					TOTAL SHEETS
2			4					700

REFERENCE NO. 9-12a

STRUCTURE NO. 9

NOTE: THIS STANDARD DRAWING REVIEWED AND ADOPTED FOR USE AT THE REFERENCED LOCATION BY THE UNDERSIGNED.

NORTH CAROLINA PROFESSIONAL SEAL 032724 ENGINEER GLENN ZEBLO 8-1-13

PLAN PREPARED BY:

ALPHA & OMEGA GROUP
CIVIL & STRUCTURAL ENGINEERS
4601 Lake Boone Trail, Ste. 3C Raleigh, NC 27607
Phone 919 981 0310 Fax 919 981 0451
Firm License No. C-1684 www.aogroup.com
A&O PROJECT NO. 2011.036

DRAWN BY :	JD GOODIN	DATE :	3/18/13
CHECKED BY :	TG ZEBLO	DATE :	3/19/13
QC / QA BY :	TL BARTELT	DATE :	3/20/13

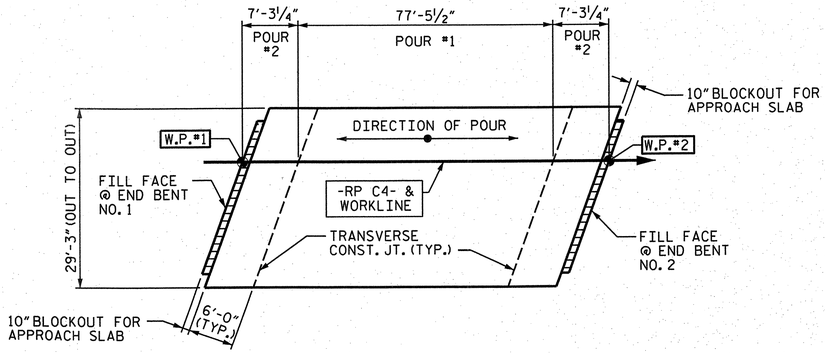

POURING SEQUENCE

POUR #2 INCLUDES THE INTEGRAL DIAPHRAGM AND CANNOT BE STARTED UNTIL POUR #1 HAS REACHED A MINIMUM OF 3000 PSI.

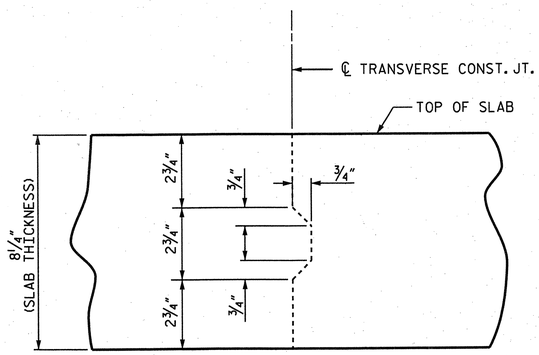

TRANSVERSE CONSTRUCTION JOINT IN DECK SLAB

NOTE: REINFORCING STEEL IN SLAB NOT SHOWN. LONGITUDINAL REINFORCING STEEL SHALL BE CONTINUOUS THRU JOINT.

REINFORCING BAR SCHEDULE

BAR	NO	SIZE	TYPE	LENGTH	WEIGHT	BAR	NO	SIZE	TYPE	LENGTH	WEIGHT
*A1	147	5	STR.	28'-11"	4434	A35	2	5	STR.	6'-10"	14
*A2	2	5	STR.	27'-9"	58	A36	2	5	STR.	5'-4"	11
*A3	2	5	STR.	26'-3"	55	A37	2	5	STR.	3'-10"	8
*A4	2	5	STR.	24'-9"	52	A38	2	5	STR.	2'-4"	5
*A5	2	5	STR.	23'-3"	48						
*A6	2	5	STR.	21'-9"	45						
*A7	2	5	STR.	20'-3"	42	*B1	100	4	STR.	24'-0"	1603
*A8	2	5	STR.	18'-9"	39	*B2	94	6	STR.	25'-0"	3530
*A9	2	5	STR.	17'-3"	36	B3	60	5	STR.	46'-0"	2879
*A10	2	5	STR.	15'-9"	33						
*A11	2	5	STR.	14'-3"	30	K1	20	4	STR.	15'-3"	204
*A12	2	5	STR.	12'-9"	27	K2	6	4	STR.	5'-6"	22
*A13	2	5	STR.	11'-4"	24	K3	6	4	STR.	6'-8"	27
*A14	2	5	STR.	9'-10"	21	K4	12	4	STR.	7'-1"	57
*A15	2	5	STR.	8'-4"	17	K5	6	4	STR.	6'-0"	24
*A16	2	5	STR.	6'-10"	14	K6	4	4	STR.	1'-9"	5
*A17	2	5	STR.	5'-4"	11	K7	4	4	STR.	2'-4"	6
*A18	2	5	STR.	3'-10"	8	K8	8	4	STR.	2'-6"	13
*A19	2	5	STR.	2'-4"	5	K9	4	4	STR.	2'-0"	5
A20	147	5	STR.	28'-11"	4434	*S1	40	4	1	11'-8"	312
A21	2	5	STR.	27'-9"	58	*S2	40	4	1	10'-2"	272
A22	2	5	STR.	26'-3"	55						
A23	2	5	STR.	24'-9"	52	U1	44	4	2	12'-10"	377
A24	2	5	STR.	23'-3"	48	U2	4	4	2	12'-0"	32
A25	2	5	STR.	21'-9"	45						
A26	2	5	STR.	20'-3"	42						
A27	2	5	STR.	18'-9"	39						
A28	2	5	STR.	17'-3"	36						
A29	2	5	STR.	15'-9"	33						
A30	2	5	STR.	14'-3"	30						
A31	2	5	STR.	12'-9"	27						
A32	2	5	STR.	11'-4"	24						
A33	2	5	STR.	9'-10"	21						
A34	2	5	STR.	8'-4"	17						

BAR TYPES

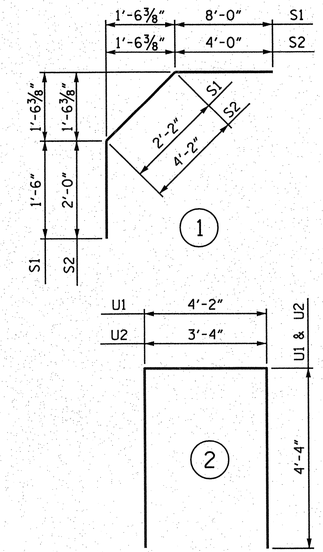

ALL BAR DIMENSIONS ARE OUT TO OUT.

SUPERSTRUCTURE BILL OF MATERIAL

	CLASS AA CONCRETE	REINFORCING STEEL	EPOXY COATED REINFORCING STEEL
	(CU. YDS.)	(LBS.)	(LBS.)
POUR 1	70.0		
POUR 2	48.5		
TOTALS**	118.5	8650	10716

**QUANTITIES FOR BARRIER RAIL ARE NOT INCLUDED.

REINFORCING STEEL	=	8650	LBS.
*EPOXY COATED REINF. STEEL	=	10716	LBS.

GROOVING BRIDGE FLOORS

APPROACH SLABS	=	1,112	SQ. FT.
BRIDGE DECK	=	2,068	SQ. FT.
TOTAL	=	3,180	SQ. FT.

SUPERSTRUCTURE REINFORCING STEEL LENGTHS ARE BASED ON THE FOLLOWING MINIMUM SPLICE LENGTHS

BAR SIZE	SUPERSTRUCTURE EXCEPT APPROACH SLABS, PARAPET, AND BARRIER RAIL		APPROACH SLABS		PARAPET AND BARRIER RAIL
	EPOXY COATED	UNCOATED	EPOXY COATED	UNCOATED	
#4	2'-0"	1'-9"	2'-0"	1'-9"	2'-9"
#5	2'-6"	2'-2"	2'-6"	2'-2"	3'-5"
#6	3'-0"	2'-7"	3'-10"	2'-7"	4'-4"
#7	5'-3"	3'-6"			
#8	6'-10"	4'-7"			

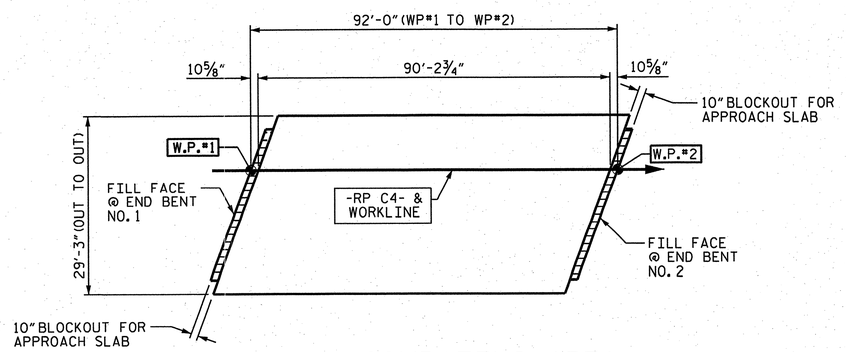

LAYOUT FOR COMPUTING AREA REINFORCED CONCRETE DECK SLAB

(SQ. FT. = 2691)

PROJECT NO. R-2633BB

BRUNSWICK/ NEW HANOVER COUNTY

STATION: 16+73.17 -RP C4-

STATE OF NORTH CAROLINA
DEPARTMENT OF TRANSPORTATION
RALEIGH

STANDARD
SUPERSTRUCTURE BILL OF MATERIAL

PLAN PREPARED BY:

ALPHA & OMEGA GROUP
CIVIL & STRUCTURAL ENGINEERS
4601 Lake Boone Trail, Ste. 3C Raleigh, NC 27607
Phone 919 981 0310 Fax 919 981 0451
Firm License No. C-1684 www.aogroup.com
A&O PROJECT NO. 2011.036

NORTH CAROLINA PROFESSIONAL SEAL 032724 ENGINEER GLENN ZEBLO 12/18/12

DRAWN BY :	J.D. GOODIN	DATE :	09/14/12
CHECKED BY :	TG ZEBLO	DATE :	09/28/12
QC / QA :	TL BARTELT	DATE :	10/30/12

REFERENCE NO. 9-13

REVISIONS						SHEET NO.
NO.	BY:	DATE:	NO.	BY:	DATE:	S-65
1			3			TOTAL SHEETS
2			4			700

STR. NO. 9

NOTES

SEE END BENT NO. 1 SHEET 3 OF 3 FOR SECTION "A-A" AND PARTIAL SECTION "B-B".

THE TOP SURFACE OF THE CAP AND WINGS, EXCLUDING THE BEARING AREA, SHALL BE RAKED TO A DEPTH OF 1/4".

THE #4V1 BARS MAY BE SHIFTED SLIGHTLY TO AVOID STIRRUPS IN CAP.

THE CONCRETE IN THE SHADED AREA OF THE WING SHALL BE POURED AFTER THE JOINT BETWEEN THE DECK AND THE APPROACH SLAB HAS BEEN SAWED AND THE CONCRETE BARRIER RAIL IS CAST IF SLIP FORMING IS USED.

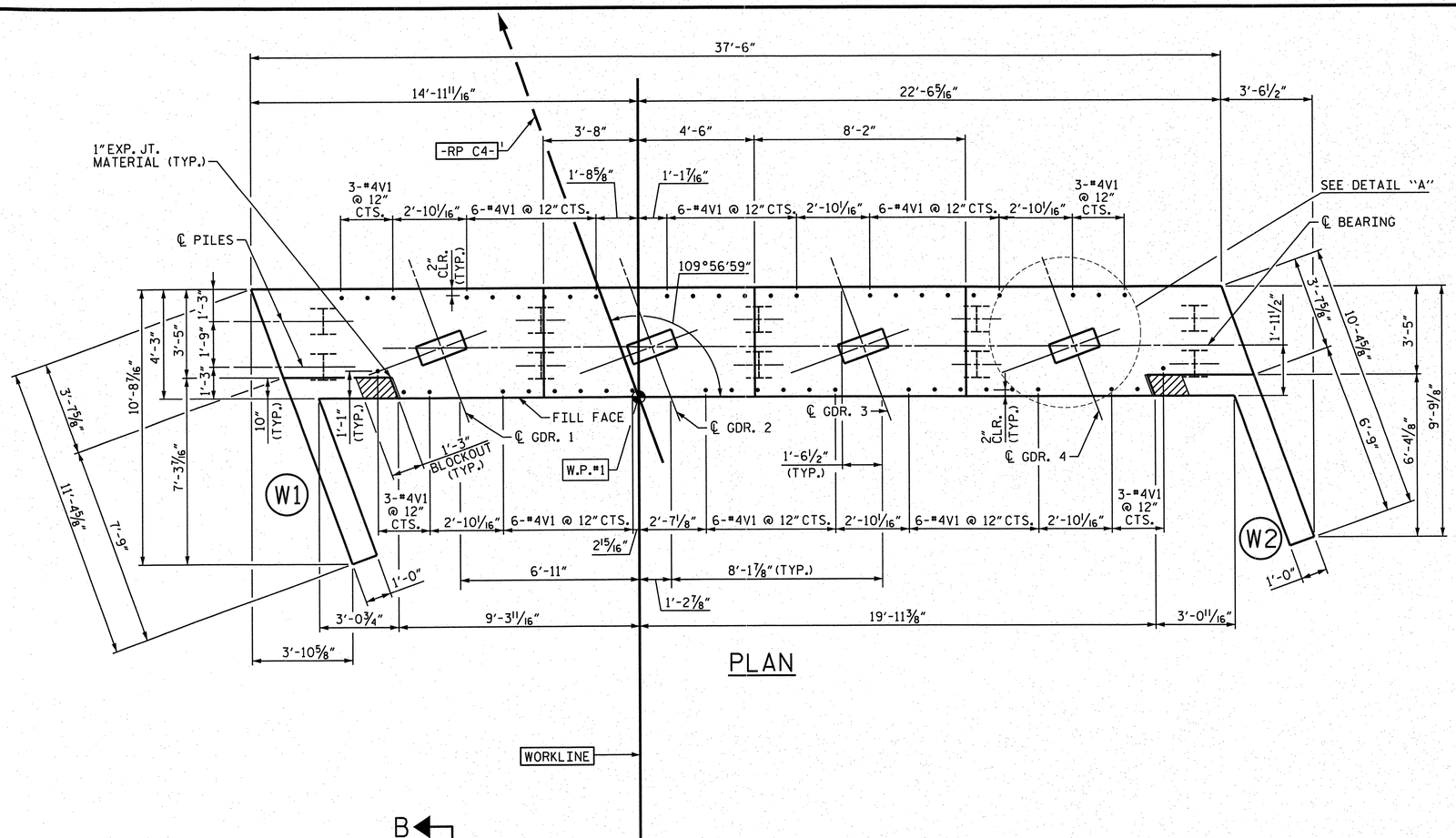

PLAN

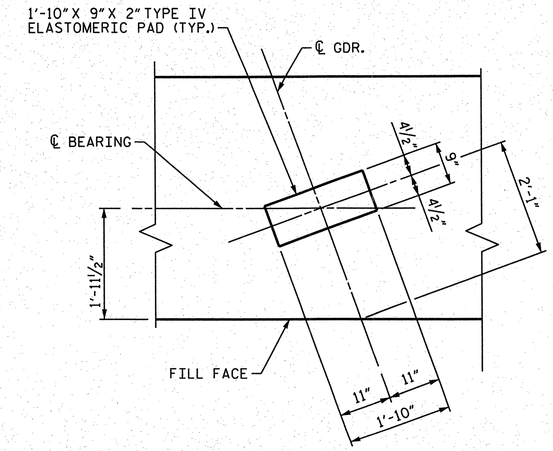

DETAIL "A"

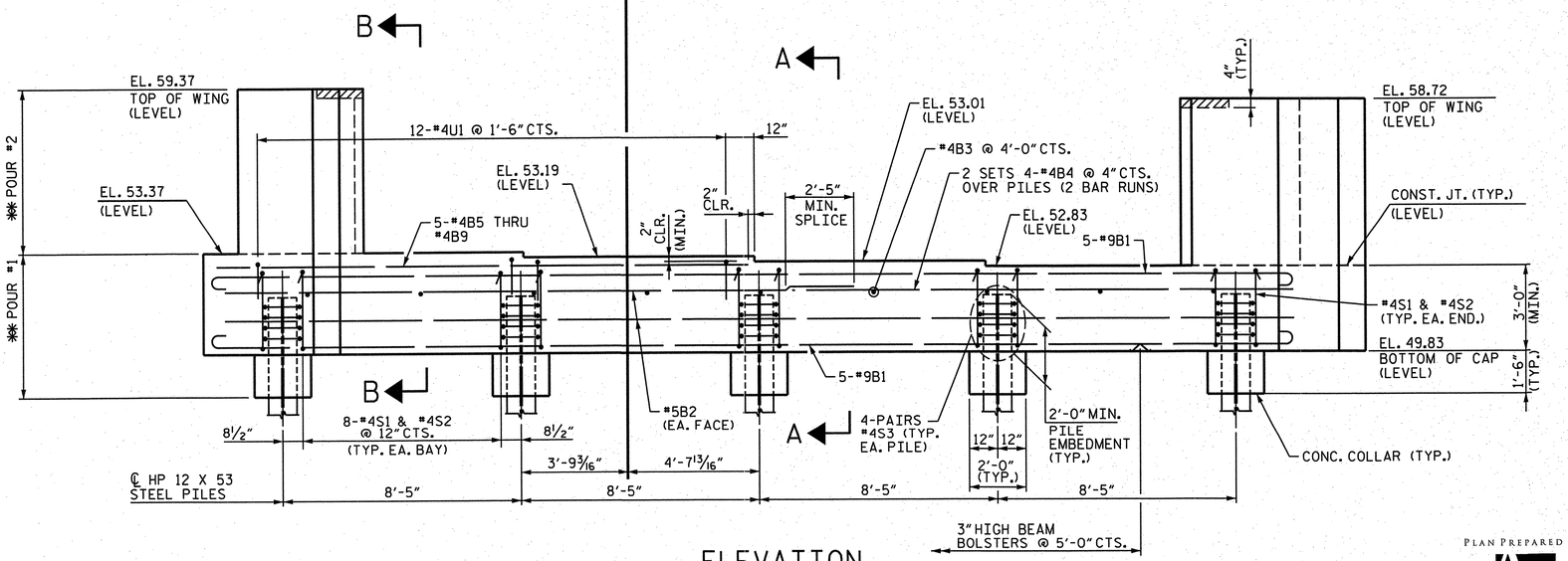

ELEVATION

POUR #1: CAP, CONCRETE COLLAR & LOWER PART OF WINGS.
POUR #2: UPPER PART OF WINGS.

PROJECT NO. R-2633BB
BRUNSWICK/ NEW HANOVER COUNTY
STATION: 16+73.17 -RP C4-

SHEET 1 OF 3

STATE OF NORTH CAROLINA
DEPARTMENT OF TRANSPORTATION
RALEIGH

SUBSTRUCTURE END BENT NO. 1

DRAWN BY :	J.D. GOODIN	DATE :	09/14/12
CHECKED BY :	TG ZEBLO	DATE :	09/28/12
QC / QA :	TL BARTELT	DATE :	10/30/12

PLAN PREPARED BY:
ALPHA & OMEGA GROUP
CIVIL & STRUCTURAL ENGINEERS
4601 Lake Boone Trail, Ste. 3C Raleigh, NC 27607
Phone 919 981 0310 Fax 919 981 0451
Firm License No. C-1684 www.aogroup.com
A&O PROJECT NO. 2011.036

NORTH CAROLINA PROFESSIONAL SEAL 032724 ENGINEER T. GLENN ZEBLO 12-18-12

REFERENCE NO. 9-14

REVISIONS						
NO.	BY:	DATE:	NO.	BY:	DATE:	
1			3			
2			4			

SHEET NO. 8-666
TOTAL SHEETS 700

STR. NO. 9

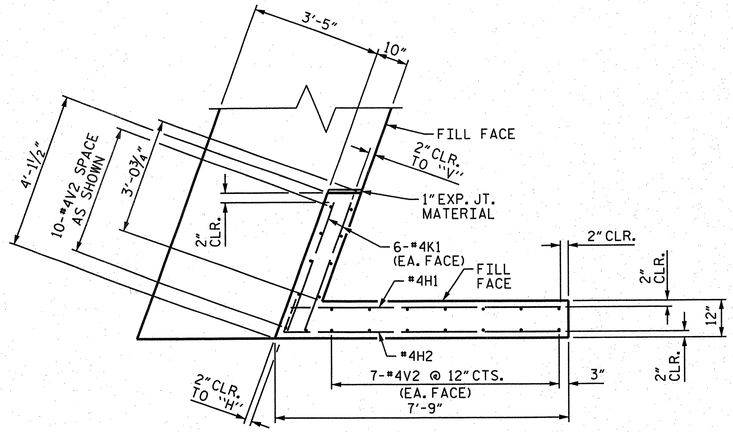

PLAN OF WING W1

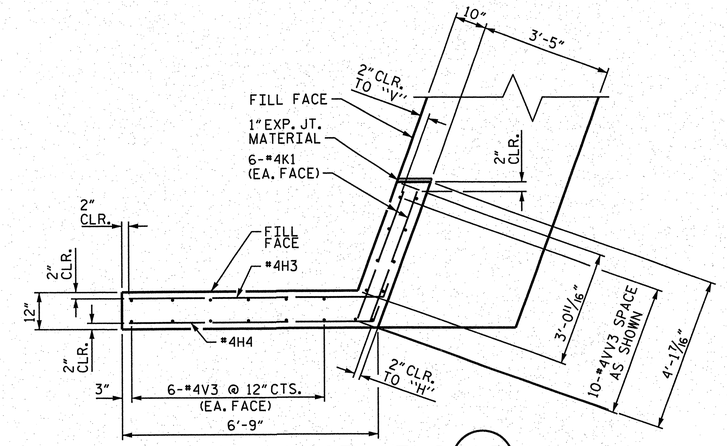

PLAN OF WING W2

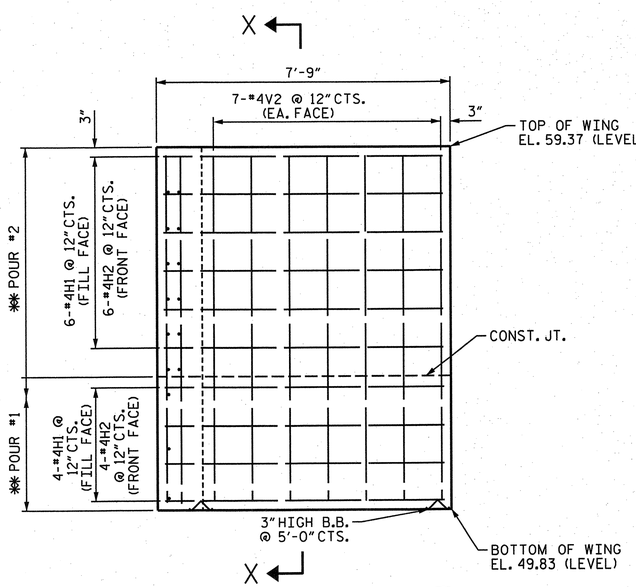

ELEVATION OF WING W1

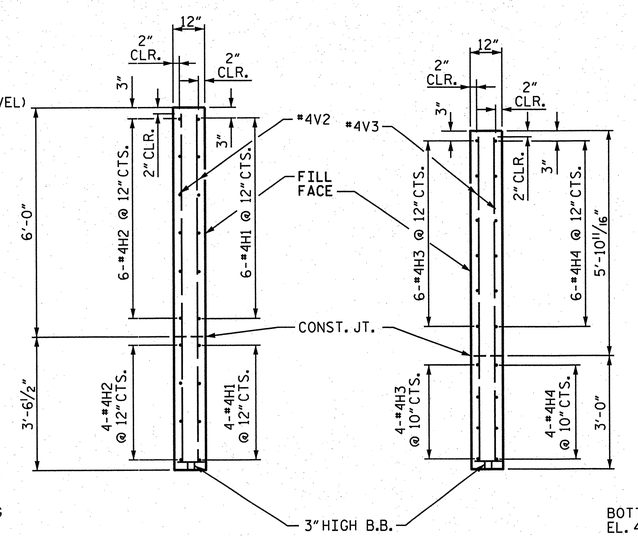

SECTION "X-X"

SECTION "Y-Y"

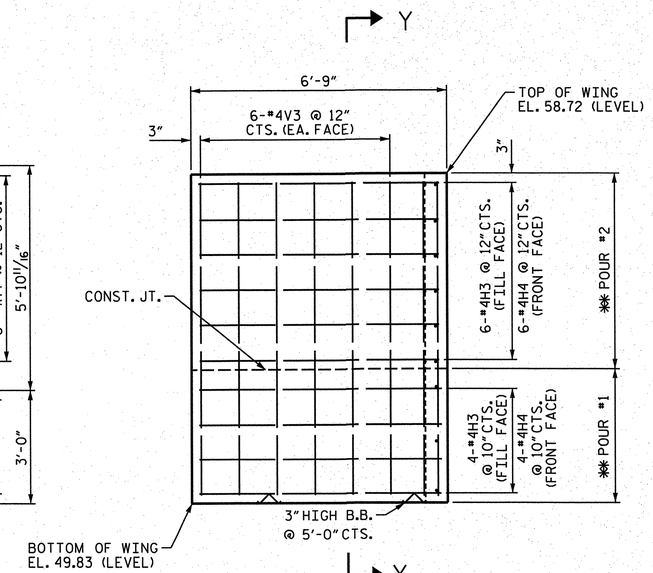

ELEVATION OF WING W2

PROJECT NO. R-2633BB

BRUNSWICK/ NEW HANOVER COUNTY

STATION: 16+73.17 -RP C4-

SHEET 2 OF 3

STATE OF NORTH CAROLINA
DEPARTMENT OF TRANSPORTATION
RALEIGH

SUBSTRUCTURE END BENT NO. 1

PLAN PREPARED BY:

ALPHA & OMEGA GROUP
CIVIL & STRUCTURAL ENGINEERS
4601 Lake Boone Trail, Ste. 3C Raleigh, NC 27607
Phone 919 981 0310 Fax 919 981 0451
Firm License No. C-1684 www.aogroup.com
A&O PROJECT NO. 2011.036

NORTH CAROLINA PROFESSIONAL ENGINEER SEAL 032724 GLENN ZEBLO
12-18-12

DRAWN BY :	J.D. GOODIN	DATE :	09/14/12
CHECKED BY :	TG ZEBLO	DATE :	09/28/12
QC / QA :	TL BARTELT	DATE :	10/30/12

REFERENCE NO. 9-15

REVISIONS						SHEET NO.
NO.	BY:	DATE:	NO.	BY:	DATE:	S-667
1			3			TOTAL SHEETS
2			4			700

STR. NO. 9

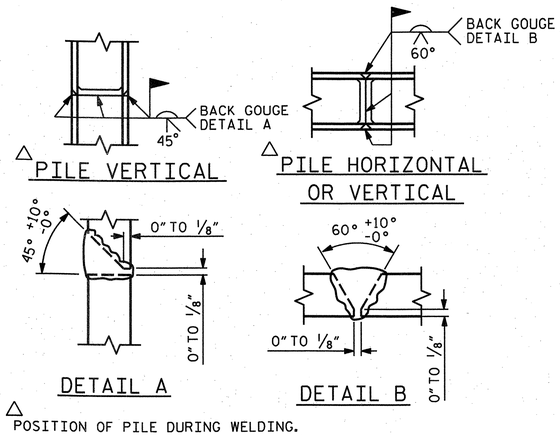

PILE SPLICE DETAILS

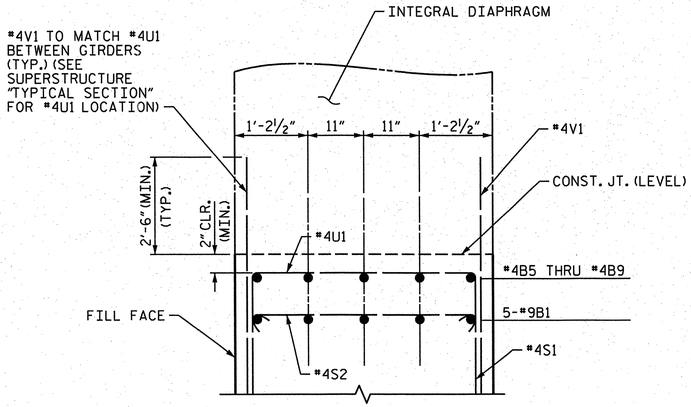

PARTIAL SECTION "B-B"

BAR TYPES

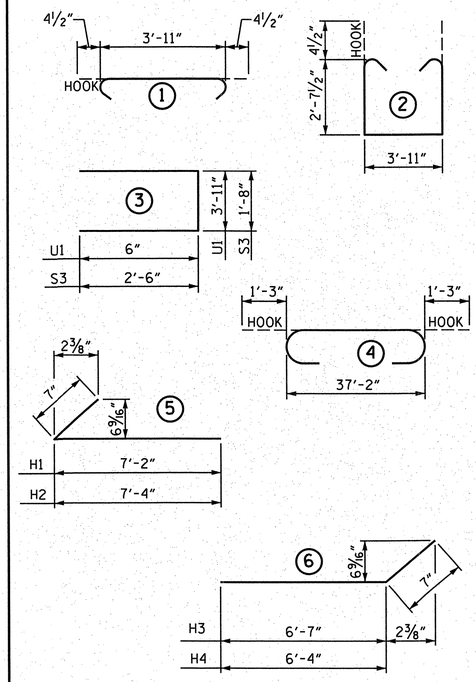

ALL BAR DIMENSIONS ARE OUT TO OUT.

BILL OF MATERIAL
END BENT NO. 1

BAR	NO.	SIZE	TYPE	LENGTH	WEIGHT
B1	10	#9	4	39'-8"	1349
B2	4	#5	STR	37'-2"	155
B3	9	#4	STR	3'-11"	24
B4	16	#4	STR	19'-11"	213
B5	1	#4	STR	17'-7"	12
B6	1	#4	STR	17'-11"	12
B7	1	#4	STR	18'-3"	12
B8	1	#4	STR	18'-7"	12
B9	1	#4	STR	18'-11"	13
H1	10	#4	5	7'-9"	52
H2	10	#4	5	7'-11"	53
H3	10	#4	6	7'-2"	48
H4	10	#4	6	6'-11"	46
K1	24	#4	STR	3'-9"	60
S1	34	#4	2	9'-11"	225
S2	34	#4	1	4'-8"	106
S3	40	#4	3	6'-8"	178
U1	12	#4	3	4'-11"	39
V1	48	#4	STR	5'-6"	176
V2	24	#4	STR	9'-2"	147
V3	22	#4	STR	8'-6"	125

REINFORCING STEEL 3057 LBS.

CLASS A CONCRETE BREAKDOWN:

POUR #1- CAP, LOWER PART OF WINGS & COLLARS 23.2 C.Y.

POUR #2- UPPER PART OF WINGS 4.3 C.Y.

TOTAL CLASS A CONCRETE 27.5 C.Y.

HP 12 X 53 STEEL PILES NO. = 10 850 L.F.

PILE REDRIVES 3 EA.

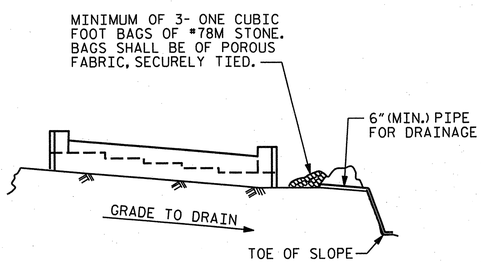

BAGGED STONE AND PIPE SHALL BE PLACED IMMEDIATELY AFTER COMPLETION OF END BENT EXCAVATION. PIPE MAY BE EITHER CONCRETE, CORRUGATED STEEL, CORRUGATED ALUMINUM ALLOY, OR CORRUGATED PLASTIC. PERFORATED PIPE WILL NOT BE ALLOWED.

BAGGED STONE SHALL REMAIN IN PLACE UNTIL THE ENGINEER DIRECTS THAT IT BE REMOVED. THE CONTRACTOR SHALL REMOVE AND DISPOSE OF SILT ACCUMULATIONS AT BAGGED STONE WHEN SO DIRECTED BY THE ENGINEER. BAGS SHALL BE REMOVED AND REPLACED WHENEVER THE ENGINEER DETERMINES THAT THEY HAVE DETERIORATED AND LOST THEIR EFFECTIVENESS.

NO SEPARATE PAYMENT WILL BE MADE FOR THIS WORK AND THE ENTIRE COST OF THIS WORK SHALL BE INCLUDED IN THE UNIT CONTRACT PRICE BID FOR THE SEVERAL PAY ITEMS.

TEMPORARY DRAINAGE AT END BENT

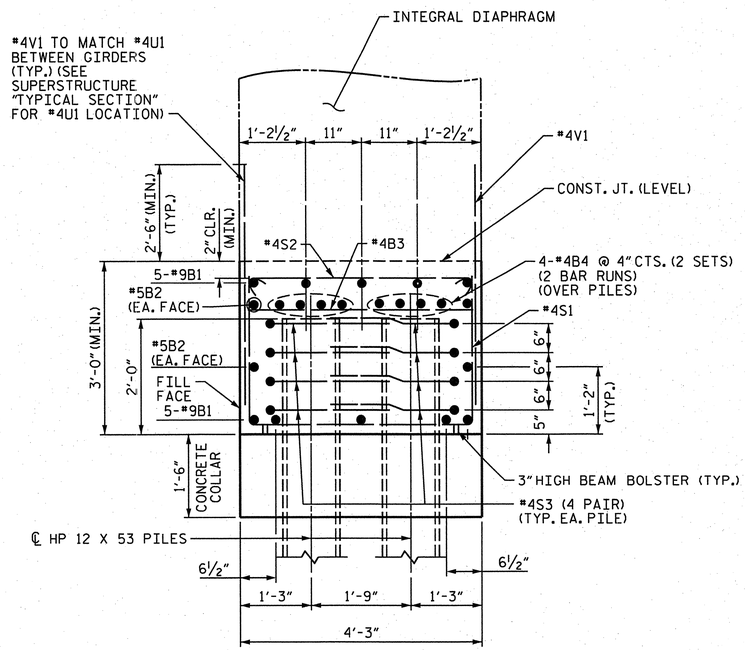

SECTION "A-A"

PROJECT NO. R-2633BB

BRUNSWICK/ NEW HANOVER COUNTY

STATION: 16+73.17 -RP C4-

SHEET 3 OF 3

STATE OF NORTH CAROLINA
DEPARTMENT OF TRANSPORTATION
RALEIGH

SUBSTRUCTURE
END BENT NO. 1

DRAWN BY :	J.D. GOODIN	DATE : 09/14/12
CHECKED BY :	TG ZEBLO	DATE : 09/28/12
QC / QA :	TL BARTELT	DATE : 10/30/12

PLAN PREPARED BY:

ALPHA & OMEGA GROUP
CIVIL & STRUCTURAL ENGINEERS
4601 Lake Boone Trail, Ste. 3C Raleigh, NC 27607
Phone 919 981 0310 Fax 919 981 0451
Firm License No. C-1684 www.aogroup.com
A&O PROJECT NO. 2011.036

NORTH CAROLINA PROFESSIONAL SEAL 032724 ENGINEER GLENN ZEBLO
T. G. Zeblo 6-18-12

REFERENCE NO. 9-16

REVISIONS								SHEET NO.
NO.	BY:	DATE:	NO.	BY:	DATE:			S-668
1			3					TOTAL SHEETS
2			4					100

STR. NO. 9

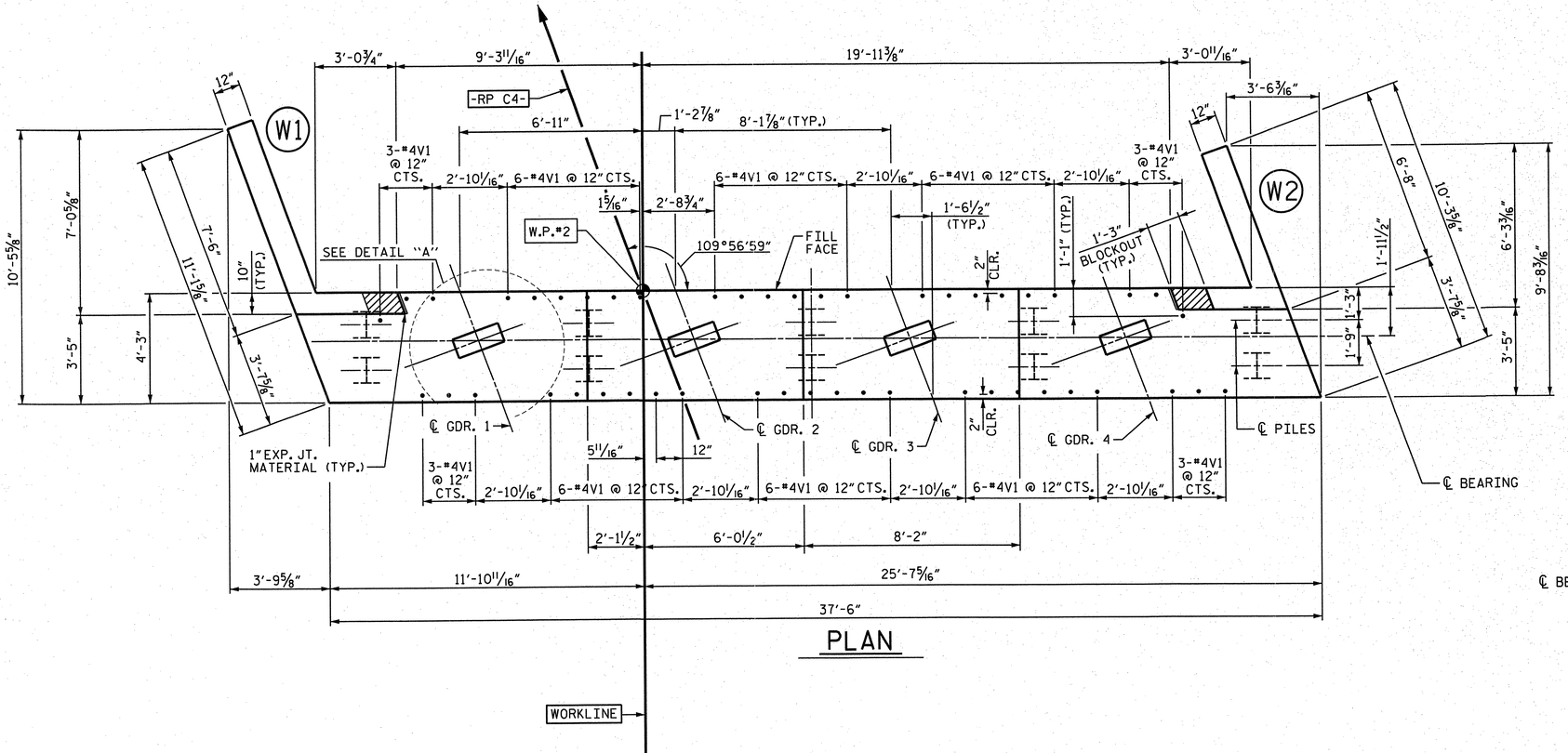

PLAN

NOTES

SEE END BENT NO. 2 SHEET 3 OF 3 FOR SECTION "A-A" AND PARTIAL SECTION "B-B".

THE TOP SURFACE OF THE CAP AND WINGS, EXCLUDING THE BEARING AREA, SHALL BE RAKED TO A DEPTH OF ¼".

THE #4V1 BARS MAY BE SHIFTED SLIGHTLY TO AVOID STIRRUPS IN CAP.

THE CONCRETE IN THE SHADED AREA OF THE WING SHALL BE POURED AFTER THE JOINT BETWEEN THE DECK AND THE APPROACH SLAB HAS BEEN SAWED AND THE CONCRETE BARRIER RAIL IS CAST IF SLIP FORMING IS USED.

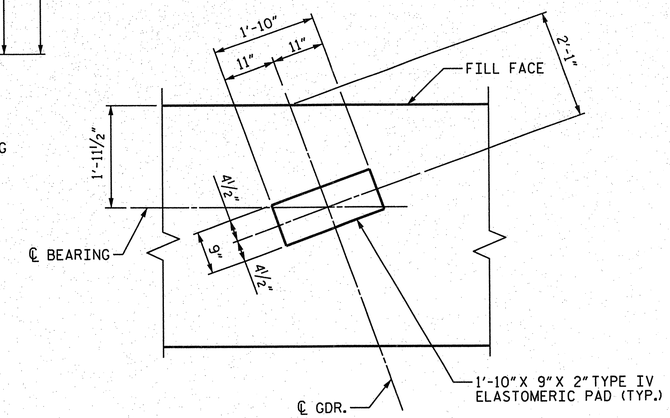

DETAIL "A"

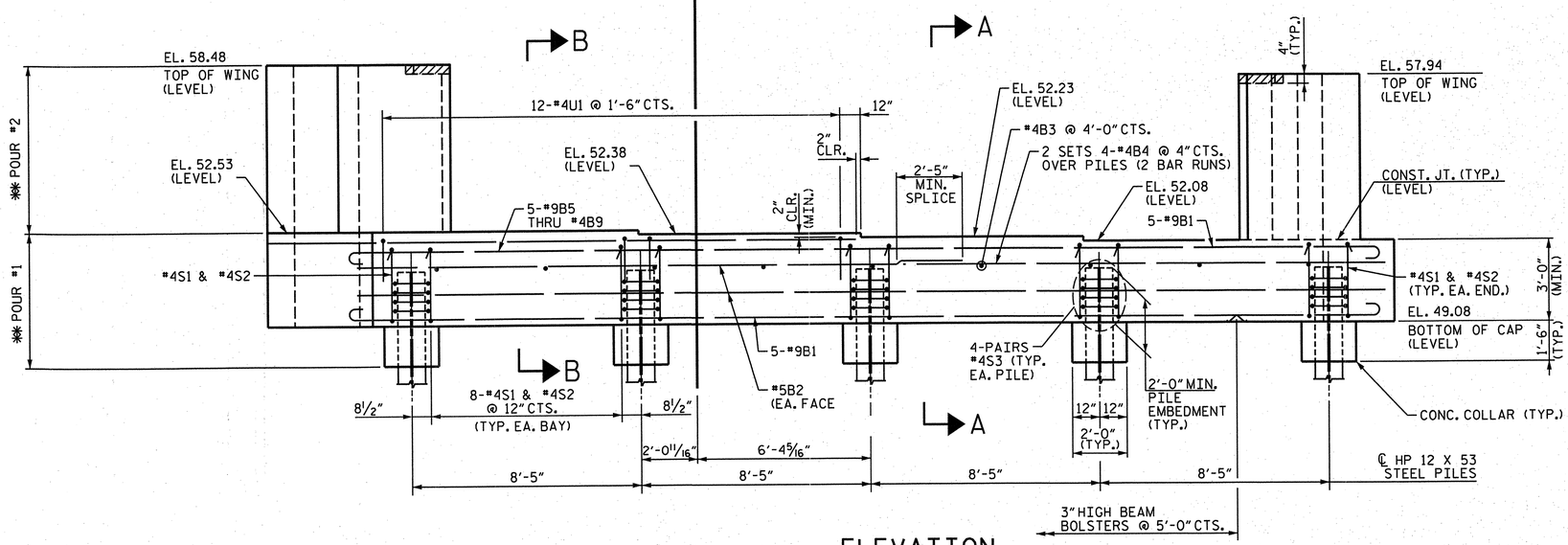

ELEVATION

✱✱ POUR #1: CAP, CONCRETE COLLAR & LOWER PART OF WINGS.
✱✱ POUR #2: UPPER PART OF WINGS.

PROJECT NO. R-2633BB
BRUNSWICK/ NEW HANOVER COUNTY
STATION: 16+73.17 -RP C4-

SHEET 1 OF 3

STATE OF NORTH CAROLINA
DEPARTMENT OF TRANSPORTATION
RALEIGH

SUBSTRUCTURE END BENT NO. 2

DRAWN BY :	J.D. GOODIN	DATE :	09/14/12
CHECKED BY :	TG ZEBLO	DATE :	09/28/12
QC / QA :	TL BARTELT	DATE :	10/30/12

PLAN PREPARED BY:
ALPHA & OMEGA GROUP
CIVIL & STRUCTURAL ENGINEERS
4601 Lake Boone Trail, Ste. 3C Raleigh, NC 27607
Phone 919 981 0310 Fax 919 981 0451
Firm License No. C-1684 www.aogroup.com
A&O PROJECT NO. 2011.036

NORTH CAROLINA PROFESSIONAL ENGINEER SEAL 032724 12-18-12 T. GLENN ZEBLO

REFERENCE NO. 9-17

REVISIONS						
NO.	BY:	DATE:	NO.	BY:	DATE:	
1			3			
2			4			

SHEET NO. S-669
TOTAL SHEETS 700

STR. NO. 9

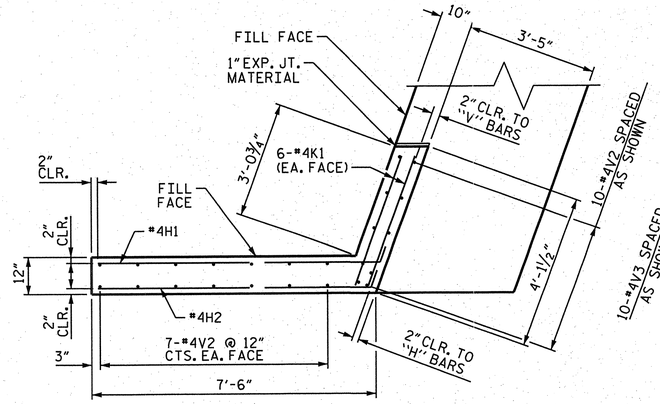

PLAN OF WING (W1)

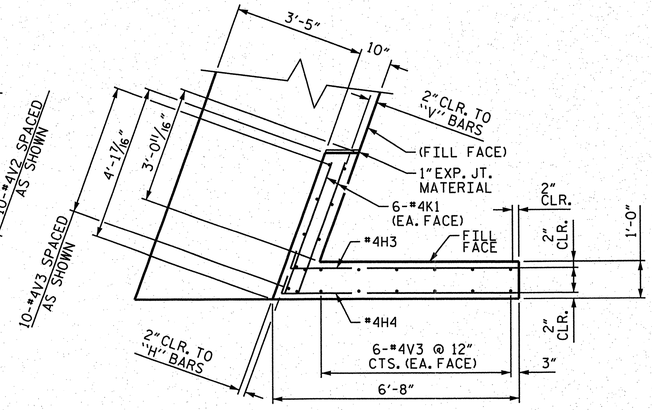

PLAN OF WING (W2)

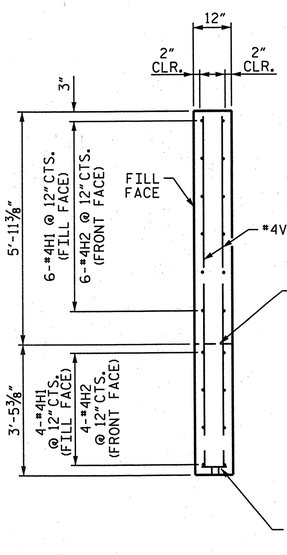

SECTION "X-X"

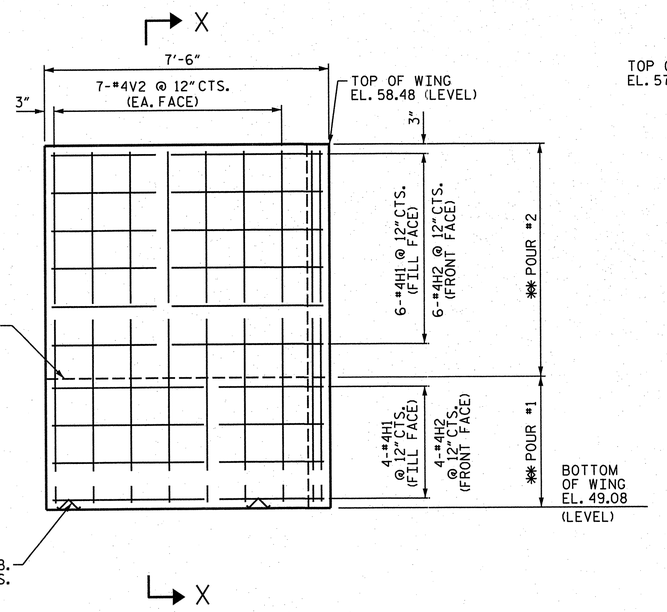

ELEVATION OF WING (W1)

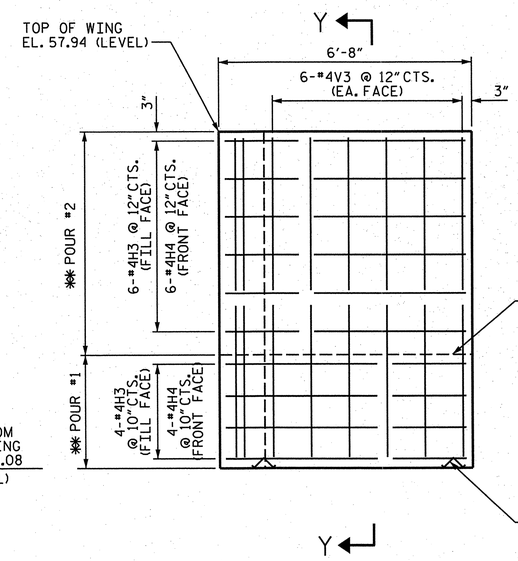

ELEVATION OF WING (W2)

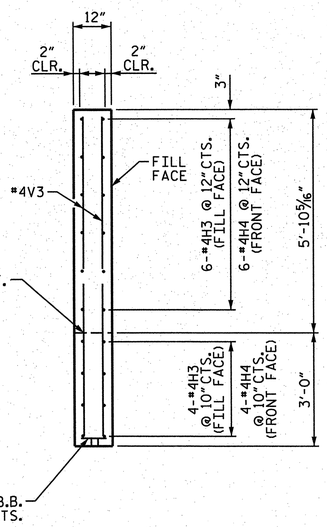

SECTION "Y-Y"

PROJECT NO. R-2633BB

BRUNSWICK/ NEW HANOVER COUNTY

STATION: 16+73.17 -RP C4-

SHEET 2 OF 3

STATE OF NORTH CAROLINA
DEPARTMENT OF TRANSPORTATION
RALEIGH

SUBSTRUCTURE END BENT NO. 2

PLAN PREPARED BY:

ALPHA & OMEGA GROUP
CIVIL & STRUCTURAL ENGINEERS
4601 Lake Boone Trail, Ste. 3C Raleigh, NC 27607
Phone 919 981 0310 Fax 919 981 0451
Firm License No. C-1684 www.aogroup.com
A&O PROJECT NO. 2011.036

NORTH CAROLINA PROFESSIONAL SEAL 032724 ENGINEER TIMOTHY GLENN ZEBLO
12-18-12

REFERENCE NO. 9-18

REVISIONS						SHEET NO.
NO.	BY:	DATE:	NO.	BY:	DATE:	S-670
1			3			TOTAL SHEETS
2			4			700

STR. NO. 9

DRAWN BY :	J.D. GOODIN	DATE :	09/14/12
CHECKED BY :	TG ZEBLO	DATE :	09/28/12
QC / QA :	TL BARTELT	DATE :	10/30/12

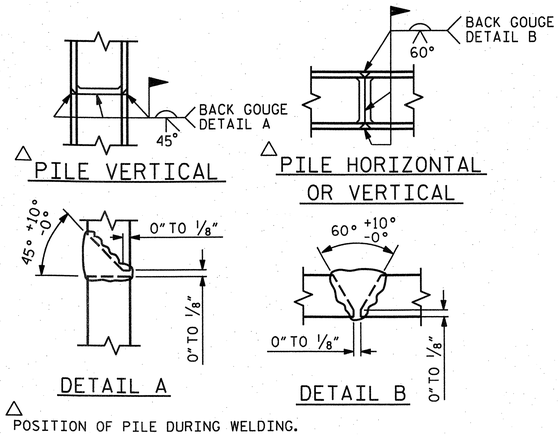

PILE SPLICE DETAILS

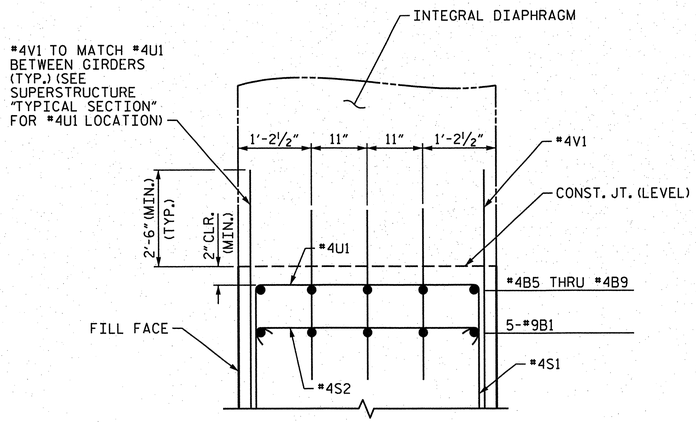

PARTIAL SECTION "B-B"

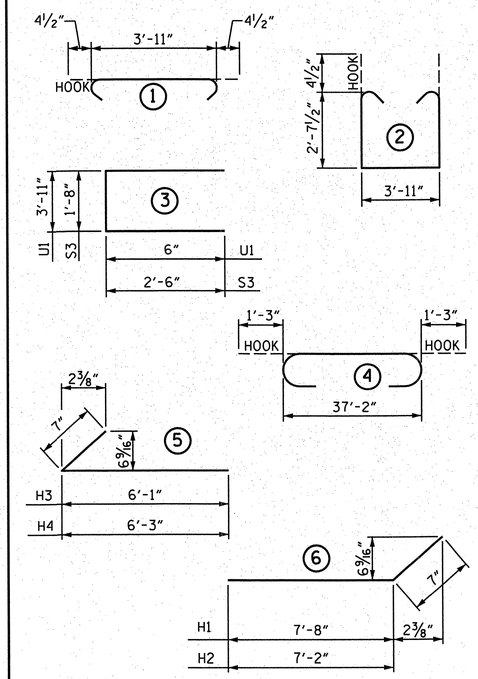

ALL BAR DIMENSIONS ARE OUT TO OUT.

BILL OF MATERIAL
END BENT NO. 2

BAR	NO.	SIZE	TYPE	LENGTH	WEIGHT
B1	10	#9	4	39'-8"	1349
B2	4	#5	STR	37'-2"	155
B3	9	#4	STR	3'-11"	24
B4	16	#4	STR	19'-11"	213
B5	1	#4	STR	17'-7"	12
B6	1	#4	STR	17'-11"	12
B7	1	#4	STR	18'-3"	12
B8	1	#4	STR	18'-7"	12
B9	1	#4	STR	18'-11"	13
H1	10	#4	6	8'-3"	55
H2	10	#4	6	7'-9"	52
H3	10	#4	5	6'-8"	45
H4	10	#4	5	6'-10"	46
K1	24	#4	STR	3'-9"	60
S1	34	#4	2	9'-11"	225
S2	34	#4	1	4'-8"	106
S3	40	#4	3	6'-8"	178
U1	12	#4	3	4'-11"	39
V1	48	#4	STR	5'-6"	176
V2	24	#4	STR	9'-1"	146
V3	22	#4	STR	8'-6"	125

REINFORCING STEEL 3055 LBS.

CLASS A CONCRETE BREAKDOWN:

POUR #1- CAP, LOWER PART OF WINGS & COLLARS 22.9 C.Y.

POUR #2- UPPER PART OF WINGS 4.2 C.Y.

TOTAL CLASS A CONCRETE 27.1 C.Y.

HP 12 X 53 STEEL PILES NO. = 10 800 L.F.

PILE REDRIVES 3 EA.

BAGGED STONE AND PIPE SHALL BE PLACED IMMEDIATELY AFTER COMPLETION OF END BENT EXCAVATION. PIPE MAY BE EITHER CONCRETE, CORRUGATED STEEL, CORRUGATED ALUMINUM ALLOY, OR CORRUGATED PLASTIC. PERFORATED PIPE WILL NOT BE ALLOWED.

BAGGED STONE SHALL REMAIN IN PLACE UNTIL THE ENGINEER DIRECTS THAT IT BE REMOVED. THE CONTRACTOR SHALL REMOVE AND DISPOSE OF SILT ACCUMULATIONS AT BAGGED STONE WHEN SO DIRECTED BY THE ENGINEER. BAGS SHALL BE REMOVED AND REPLACED WHENEVER THE ENGINEER DETERMINES THAT THEY HAVE DETERIORATED AND LOST THEIR EFFECTIVENESS.

NO SEPARATE PAYMENT WILL BE MADE FOR THIS WORK AND THE ENTIRE COST OF THIS WORK SHALL BE INCLUDED IN THE UNIT CONTRACT PRICE BID FOR THE SEVERAL PAY ITEMS.

TEMPORARY DRAINAGE AT END BENT

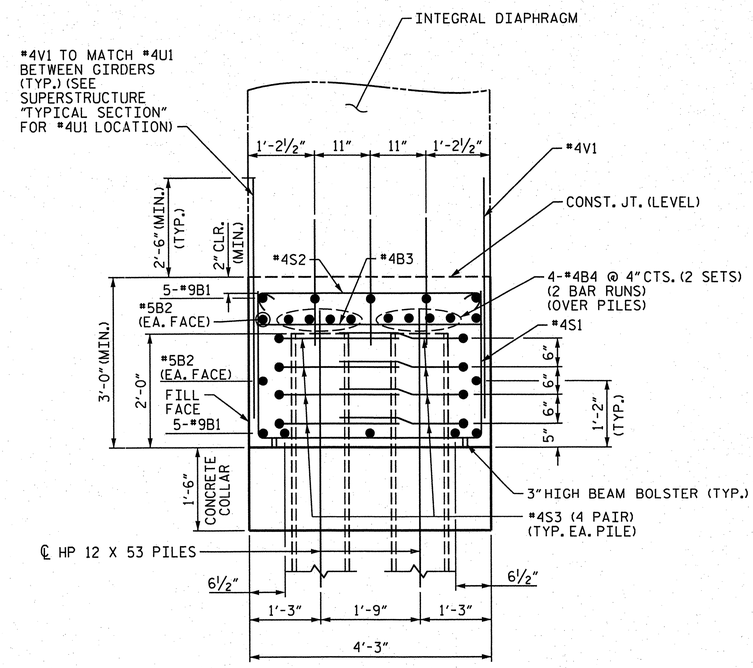

SECTION "A-A"

PROJECT NO. R-2633BB

BRUNSWICK/ NEW HANOVER COUNTY

STATION: 16+73.17 -RP C4-

SHEET 3 OF 3

STATE OF NORTH CAROLINA
DEPARTMENT OF TRANSPORTATION
RALEIGH

SUBSTRUCTURE END BENT NO. 2

REVISIONS							SHEET NO.
NO.	BY:	DATE:	NO.	BY:	DATE:		S-671
1			3				TOTAL SHEETS
2			4				700

REFERENCE NO. 9-19

STR. NO. 9

PLAN PREPARED BY:

ALPHA & OMEGA GROUP
CIVIL & STRUCTURAL ENGINEERS
4601 Lake Boone Trail, Ste. 3C Raleigh, NC 27607
Phone 919 981 0310 Fax 919 981 0451
Firm License No. C-1684 www.aogroup.com
A&O PROJECT NO. 2011.036

NORTH CAROLINA PROFESSIONAL ENGINEER SEAL 032724 GLENN ZEBLO
12-18-12

DRAWN BY :	J.D. GOODIN	DATE :	09/14/12
CHECKED BY :	TG ZEBLO	DATE :	09/28/12
QC / QA :	TL BARTELT	DATE :	10/30/12

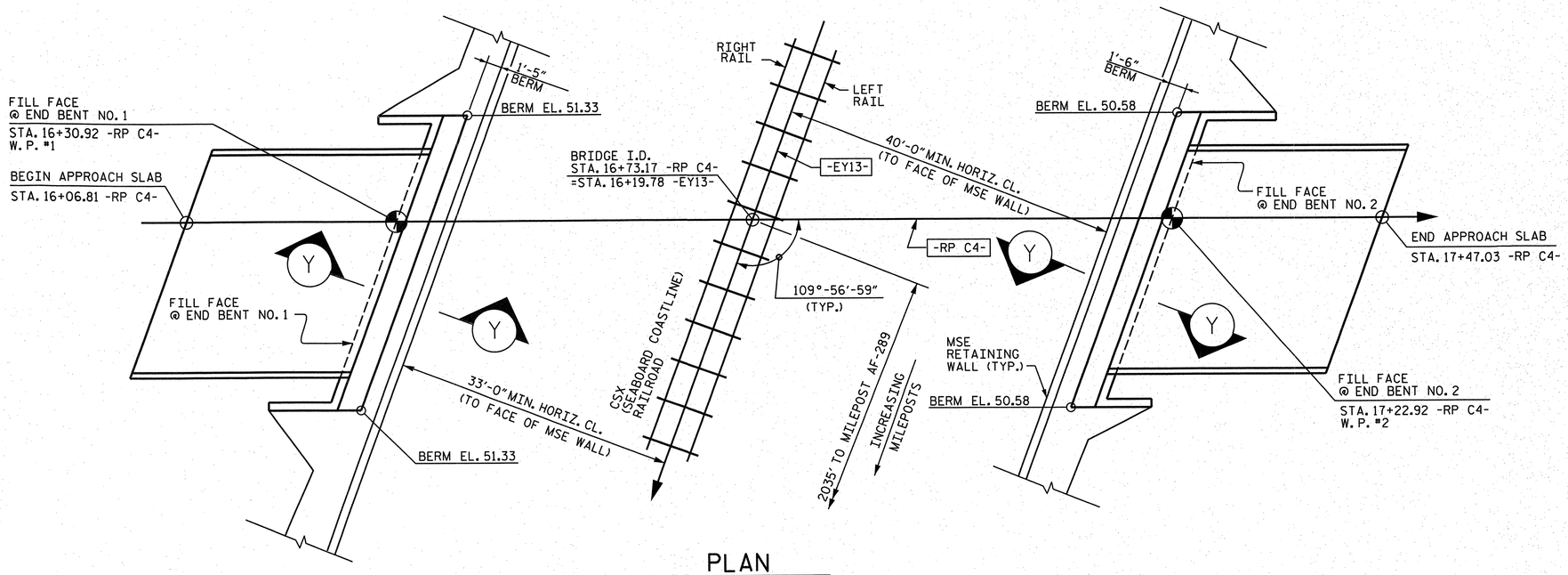

PLAN

GENERAL NOTES

SLOPE PROTECTION SHALL BE PLACED UNDER THE ENDS OF THE BRIDGE AS SHOWN IN THE DETAILS. STRAIGHT EDGING WILL NOT BE REQUIRED UNLESS, IN THE OPINION OF THE ENGINEER, VISUAL INSPECTION INDICATES A NEED FOR IT. MEASUREMENT AND PAYMENT SHALL BE AS PRESCRIBED IN SECTION 462 OF THE STANDARD SPECIFICATIONS. FOR BERM WIDTH, SEE GENERAL DRAWING.

SLOPE PROTECTION SHALL CONSIST OF 4" POURED-IN-PLACE CONCRETE PAVING AS SHOWN IN THE DETAILS ON THIS SHEET. CONCRETE SHALL BE CLASS "B". THE CONCRETE SURFACE SHALL BE FLOATED WITH A WOODEN FLOAT AND FINISHED. WELDED WIRE FABRIC REINFORCING SHALL BE 6 X 6 - W1.4 X W1.4, 60" WIDE. SLOPE PROTECTION SHALL BE POURED IN 5' STRIPS AS SHOWN IN THE "POURING DETAIL" WITH 2'-0" LONG #4 BARS PLACED ALONG THE SLOPE BETWEEN STRIPS AT 1'-6" MAXIMUM SPACING. SLOPE PROTECTION MAY BE POURED IN ALTERNATE 4' AND 5' STRIPS AS SHOWN IN THE "OPTIONAL POURING DETAIL" WITH ADJACENT RUNS OF WELDED WIRE FABRIC LAPPING AT LEAST 6". THE COST OF THE WELDED WIRE FABRIC AND #4 BARS, IF USED, SHALL BE INCLUDED IN THE CONTRACT UNIT PRICE BID PER SQUARE YARD FOR SLOPE PROTECTION.

BRIDGE @ STA. 16+73.17 -RP C4-	4 INCH SLOPE PROTECTION	* WELDED WIRE FABRIC 60 INCHES WIDE
	SQUARE YARDS	APPROX. L.F.
END BENT NO. 1	66	119
END BENT NO. 2	75	135

* QUANTITY SHOWN IS BASED ON 5' POURS.

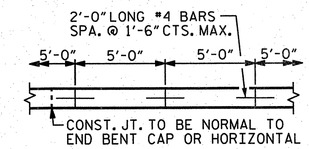

STRIP WIDTHS MAY VARY IN CURVED PORTION.

POURING DETAIL

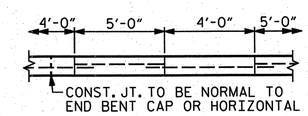

POUR A 4'-0" STRIP FIRST. STRIP WIDTHS MAY VARY IN CURVED PORTION.

OPTIONAL POURING DETAIL

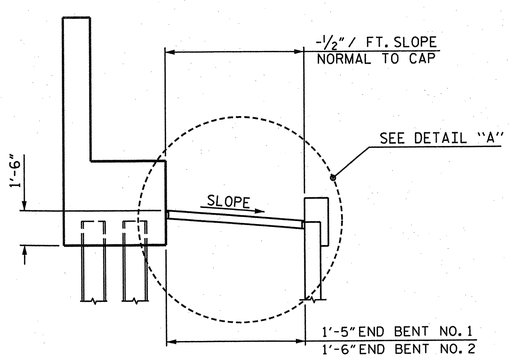

SECTION "Y-Y"

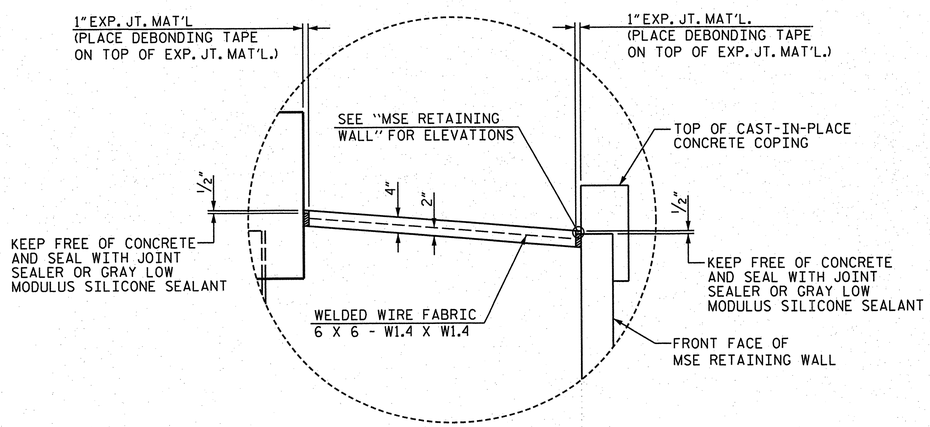

DETAIL "A"

PROJECT NO. R-2633BB

BRUNSWICK/ NEW HANOVER COUNTY

STATION: 16+73.17 -RP C4-

STATE OF NORTH CAROLINA
DEPARTMENT OF TRANSPORTATION
RALEIGH

STANDARD

SLOPE PROTECTION DETAILS

DRAWN BY :	J.D. GOODIN	DATE :	09/14/12
CHECKED BY :	TG ZEBLO	DATE :	09/28/12
QC / QA :	TL BARTELT	DATE :	10/30/12

DRAWN BY :	ELR	5/92	REV. 5/1/06 TLA/GM
CHECKED BY :	GRP	6/92	REV. 10/1/11 MAA/GM
			REV. 12/21/11 MAA/GM

PLAN PREPARED BY:

ALPHA & OMEGA GROUP
CIVIL & STRUCTURAL ENGINEERS
4601 Lake Boone Trail, Ste. 3C Raleigh, NC 27607
Phone 919 981 0310 Fax 919 981 0451
Firm License No. C-1684 www.aogroup.com
A&O PROJECT NO. 2011.036

NOTE: THIS STANDARD DRAWING REVIEWED AND ADOPTED FOR USE AT THE REFERENCED LOCATION BY THE UNDERSIGNED.

NORTH CAROLINA PROFESSIONAL SEAL 032724 ENGINEER TERRENCE L. GLENN ZEBLO
12-18-12

REFERENCE NO. 9-20

REVISIONS								SHEET NO.
NO.	BY:	DATE:	NO.	BY:	DATE:			S-272
1			3					TOTAL SHEETS
2			4					700

STR. NO. 9

STD. NO. SP1

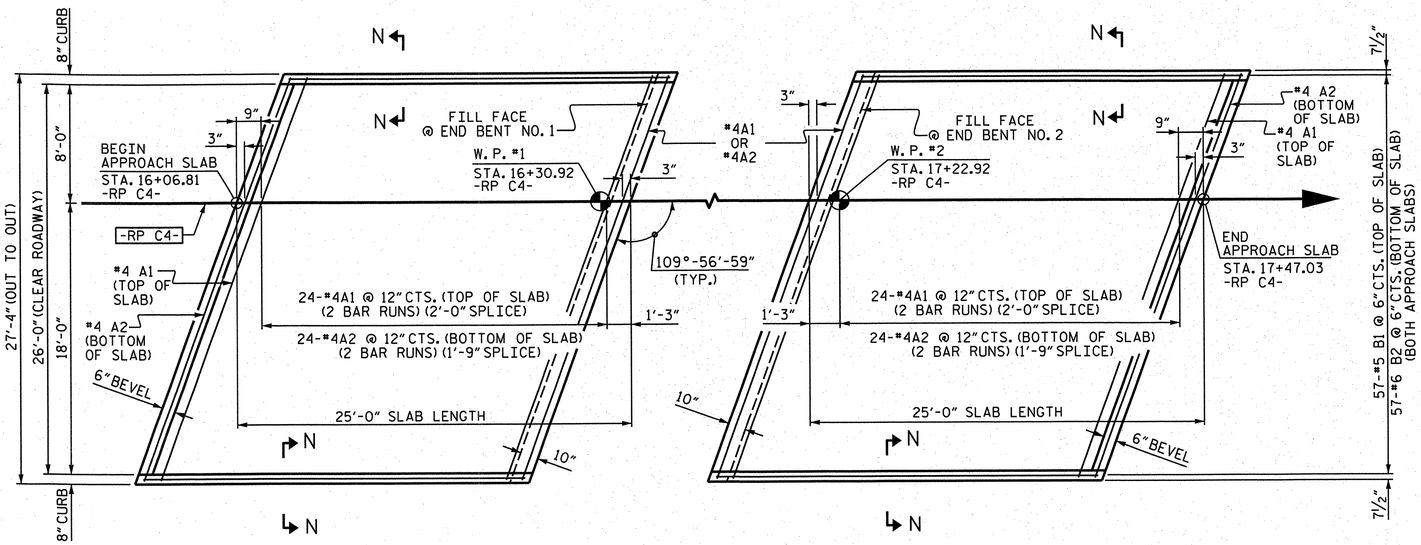

PLAN AT END BENT NO. 1

PLAN AT END BENT NO. 2

NOTES

APPROACH SLAB SHALL NOT BE CONSTRUCTED PRIOR TO COMPLETION OF THE BRIDGE DECK.

AREA BETWEEN THE WINGWALL AND APPROACH SLAB SHALL BE GRADED TO DRAIN THE WATER AWAY FROM THE FILL FACE OF THE BRIDGE AND SHALL BE PAVED. SEE ROADWAY PLANS.

THE JOINT OPENING AT THE APPROACH SLAB/DECK INTERFACE SHALL BE SAWED NO MORE THAN 12 HOURS AFTER THE APPROACH SLAB IS CAST. THE JOINT SHALL BE CLEANED OF ALL DEBRIS BEFORE THE SEALANT IS APPLIED. THE JOINT SEALER MATERIAL SHALL CONFORM TO THE REQUIREMENTS OF SECTION 1028-3 OF THE STANDARD SPECIFICATIONS.

FOR BACKFILL MATERIAL, SEE MSE RETAINING WALL PLANS AND SPECIAL PROVISIONS.

BILL OF MATERIAL

APPROACH SLAB AT END BENT NO. 1

BAR	NO.	SIZE	TYPE	LENGTH	WEIGHT
* A1	50	#4	STR	16'-4"	546
A2	52	#4	STR	16'-3"	564
* B1	57	#5	STR	24'-0"	1427
B2	57	#6	STR	24'-6"	2098

REINFORCING STEEL 2662 LBS.
* EPOXY COATED REINFORCING STEEL 1973 LBS.
CLASS AA CONCRETE 31.7 C. Y.

APPROACH SLAB AT END BENT NO. 2

BAR	NO.	SIZE	TYPE	LENGTH	WEIGHT
* A1	50	#4	STR	16'-4"	546
A2	52	#4	STR	16'-3"	564
* B1	57	#5	STR	24'-0"	1427
B2	57	#6	STR	24'-6"	2098

REINFORCING STEEL 2662 LBS.
* EPOXY COATED REINFORCING STEEL 1973 LBS.
CLASS AA CONCRETE 31.7 C. Y.

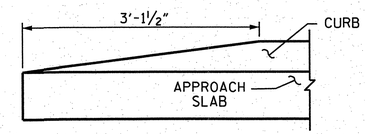

END OF CURB WITHOUT SHOULDER BERM GUTTER

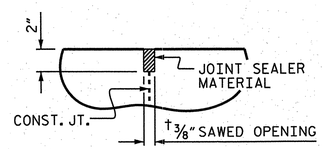

DETAIL "A"

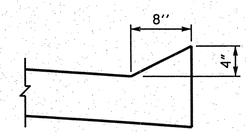

SECTION "N-N"

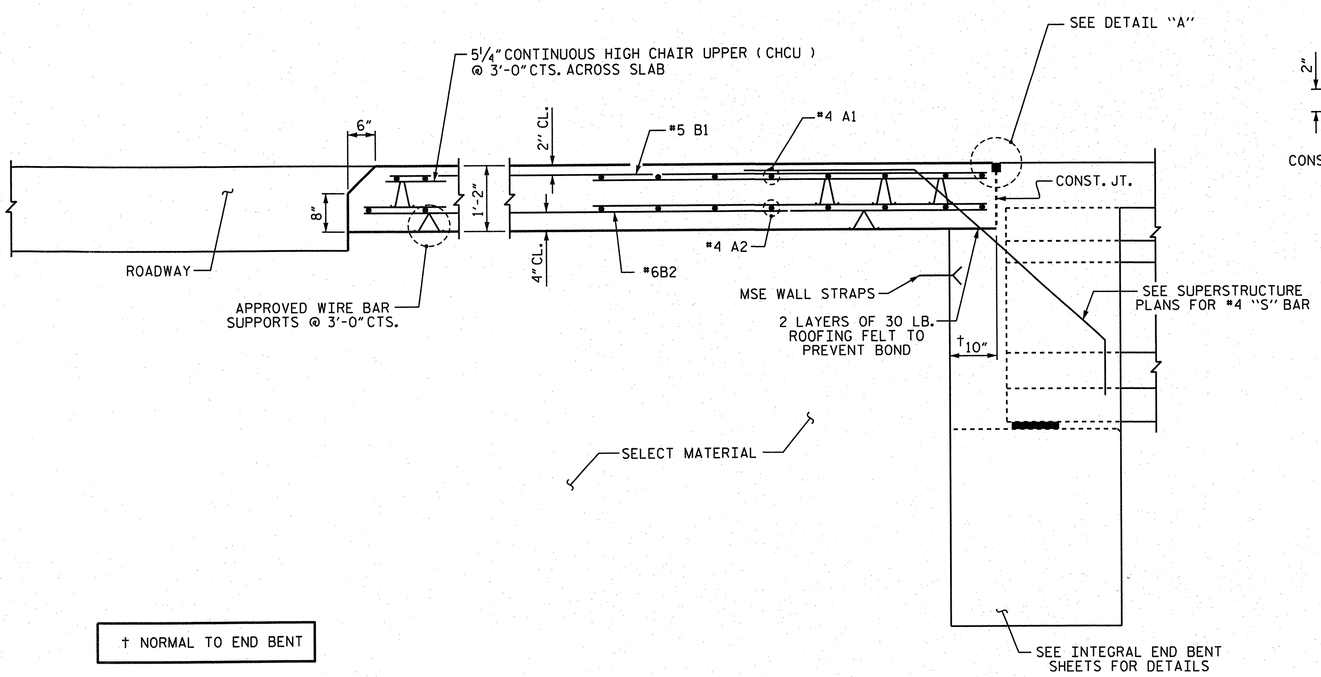

† NORMAL TO END BENT

SECTION THRU SLAB

DRAWN BY :	J.D. GOODIN	DATE :	09/14/12
CHECKED BY :	TG ZEBLO	DATE :	09/28/12
QC / QA :	TL BARTELT	DATE :	10/30/12

DRAWN BY : TLA	10/05	ADDED 5/1/06	RR KMM/GM
CHECKED BY : GM	5/06	REV. 10/1/11	MAA/GM
		REV. 12/21/11	MAA/GM

PLAN PREPARED BY:

ALPHA & OMEGA GROUP
CIVIL & STRUCTURAL ENGINEERS
4601 Lake Boone Trail, Ste. 3C Raleigh, NC 27607
Phone 919 981 0310 Fax 919 981 0451
Firm License No. C-1684 www.aogroup.com
A&O PROJECT NO. 2011.036

NOTE: THIS STANDARD DRAWING REVIEWED AND ADOPTED FOR USE AT THE REFERENCED LOCATION BY THE UNDERSIGNED.

NORTH CAROLINA PROFESSIONAL SEAL 032724 ENGINEER T. GLENN ZEBLO 12-18-12

REFERENCE NO. 9-21

PROJECT NO. R-2633BB

BRUNSWICK/ NEW HANOVER COUNTY

STATION: 16+73.17 -RP C4-

SHEET 1 OF 2

STATE OF NORTH CAROLINA
DEPARTMENT OF TRANSPORTATION
RALEIGH

STANDARD

BRIDGE APPROACH SLAB FOR INTEGRAL ABUTMENT

REVISIONS							SHEET NO.
NO.	BY:	DATE:	NO.	BY:	DATE:		S-673
1			3				TOTAL SHEETS
2			4				700

STR. NO. 9

STD. NO. BAS5

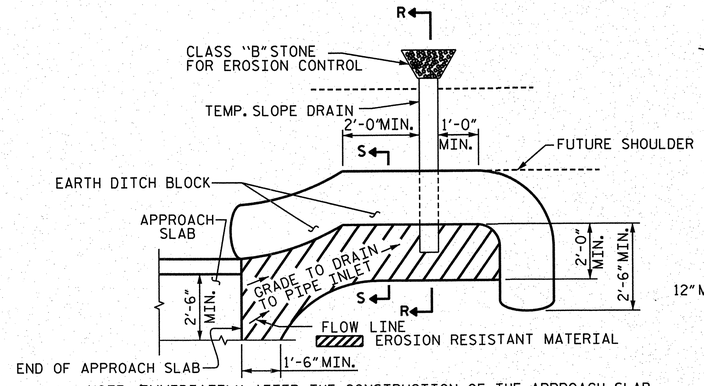

NOTE: IMMEDIATELY AFTER THE CONSTRUCTION OF THE APPROACH SLAB, THE CONTRACTOR SHALL PROVIDE TEMPORARY BERM AND SLOPE DRAIN. CONTRACTOR SHALL GRADE TO PIPE INLET AND PROVIDE EROSION RESISTANT MATERIAL AS SHOWN. THE EROSION RESISTANT MATERIAL SHALL BE EITHER 1) ASPHALT PLANT MIX, TYPE 1 OR TYPE 2, MIN. 2" DEPTH, 2) EROSION CONTROL MAT, OR 3) CONCRETE, AS DIRECTED BY THE ENGINEER. THE SLOPE DRAIN SHALL CONSIST OF A NON-PERFORATED TEMPORARY DRAINAGE PIPE, 12 INCHES IN DIAMETER.

PLAN VIEW

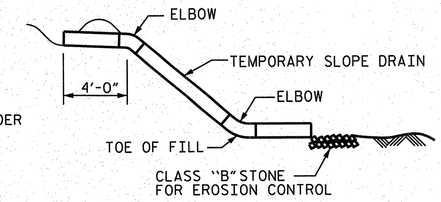

SECTION R-R

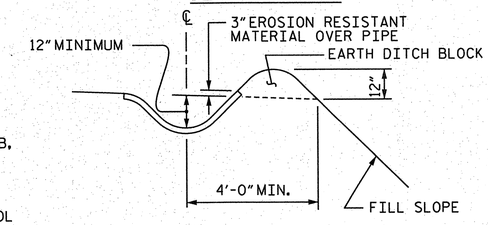

SECTION S-S

TEMPORARY BERM AND SLOPE DRAIN DETAILS

(TO BE USED WHEN SHOULDER BERM GUTTER IS REQUIRED)

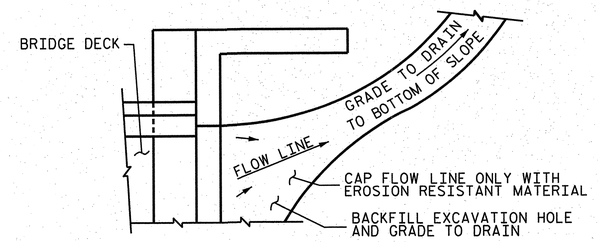

NOTE: IF THE APPROACH SLAB IS NOT CONSTRUCTED IMMEDIATELY AFTER THE BACKFILLING OF THE END BENT EXCAVATION, GRADE TO DRAIN TO THE BOTTOM OF THE SLOPE AND PROVIDE EROSION RESISTANT MATERIAL, SUCH AS FIBERGLASS ROVING OR AS DIRECTED BY THE ENGINEER TO PREVENT SOIL EROSION AND TO PROTECT THE AREA ADJACENT TO THE STRUCTURE. THE CONTRACTOR WILL BE REQUIRED TO REMOVE THESE MATERIALS PRIOR TO CONSTRUCTION OF THE APPROACH SLAB.

TEMPORARY DRAINAGE DETAIL

PROJECT NO. R-2633BB

BRUNSWICK/ NEW HANOVER COUNTY

STATION: 16+73.17 -RP C4-

SHEET 2 OF 2

STATE OF NORTH CAROLINA
DEPARTMENT OF TRANSPORTATION
RALEIGH

STANDARD

BRIDGE APPROACH
SLAB DETAILS

DRAWN BY :	J.D. GOODIN	DATE :	09/14/12
CHECKED BY :	TG ZEBLO	DATE :	09/28/12
QC / QA :	TL BARTELT	DATE :	10/30/12

DRAWN BY : FCJ	11/88	REV. 5/7/03 RWW/JTE
CHECKED BY : ARB	11/88	REV. 5/1/06RRRMAA/KMM
		REV. 10/1/11 MAA/GM

PLAN PREPARED BY:

ALPHA & OMEGA GROUP
CIVIL & STRUCTURAL ENGINEERS
4601 Lake Boone Trail, Ste. 3C Raleigh, NC 27607
Phone 919 981 0310 Fax 919 981 0451
Firm License No. C-1684 www.aogroup.com
A&O PROJECT NO. 2011.036

NOTE: THIS STANDARD DRAWING REVIEWED AND ADOPTED FOR USE AT THE REFERENCED LOCATION BY THE UNDERSIGNED.

NORTH CAROLINA PROFESSIONAL SEAL 032726 ENGINEER GLENN ZEBLO
12-18-12

REFERENCE NO. 9-22

REVISIONS								SHEET NO.
NO.	BY:	DATE:	NO.	BY:	DATE:			S-674
1			3					TOTAL SHEETS
2			4					700

STR. NO. 9

STD. NO. BAS4

F.A. PROJECT STPNHF-0017(125)

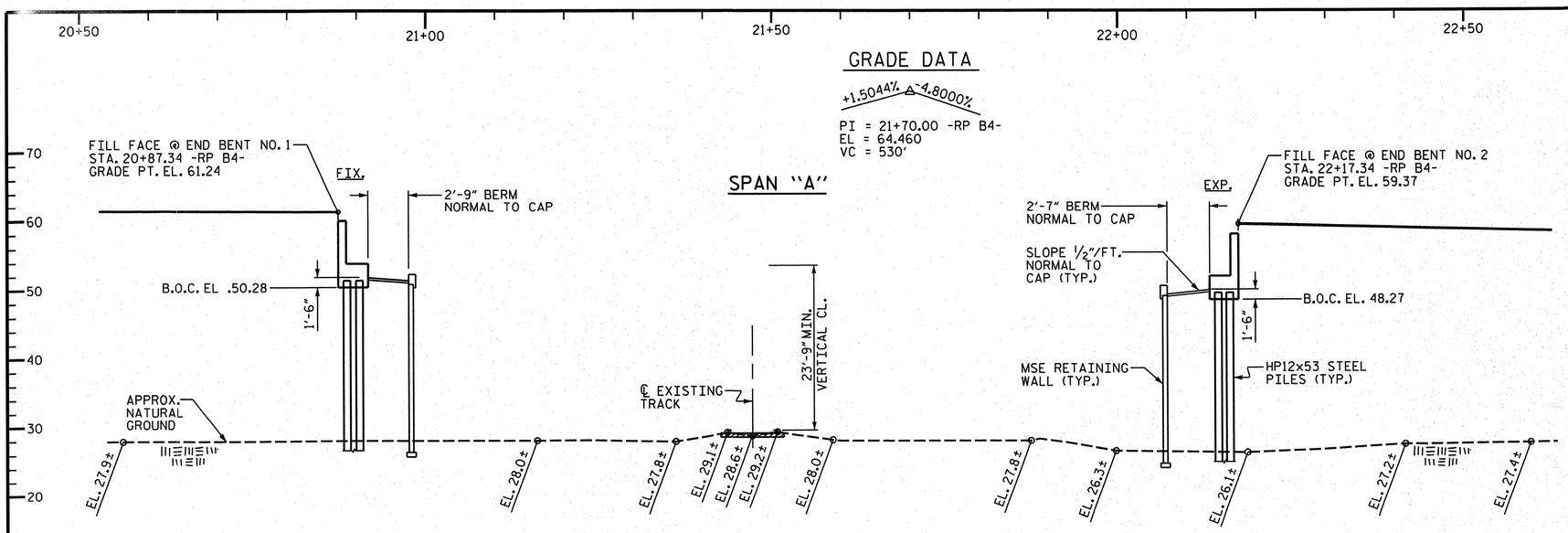

END BENT NO. 1

SECTION ALONG -RP B4-

SECTION AT END BENTS TAKEN AT RIGHT ANGLES

END BENT NO. 2

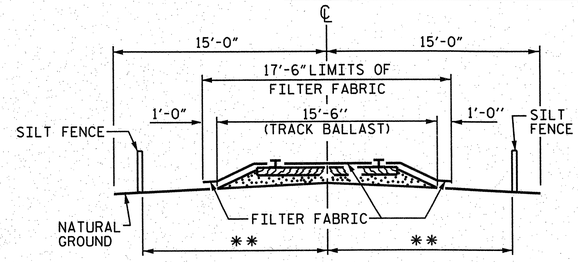

RAILROAD EROSION CONTROL DETAIL

** THESE DIMENSIONS TO BE DETERMINED IN THE FIELD BY THE ENGINEER UPON CONSULTATION WITH THE RAILROAD.

NOTES

RAILROAD EROSION CONTROL MEASURES SHALL BE INSTALLED PRIOR TO PERFORMING ANY WORK IN THE RAILROAD RIGHT-OF-WAY.

ADDITIONAL EROSION CONTROL MEASURES FOR PROTECTION OF RAILROAD DITCHES MAY BE REQUIRED AS DIRECTED BY THE ENGINEER.

NO SEPARATE PAYMENT WILL BE MADE FOR RAILROAD EROSION CONTROL MEASURES.

LIMITS OF SILT FENCE AND FILTER FABRIC PARALLEL TO RAILROAD SHALL EXTEND A MINIMUM OF 25'-0" OUTSIDE EDGE OF SUPERSTRUCTURE OR TOE OF SLOPE ON CONSTRUCTION. A GREATER LENGTH OF SILT FENCE MAY BE REQUIRED IF SO DIRECTED BY THE ENGINEER.

FILTER FABRIC TO BE NAILED TO TIMBER RAIL TIES WITH PRIME SOURCE "GRIP CAP" OR EQUIVALENT. FILTER FABRIC ON SHOULDER TO BE SECURED AS DIRECTED BY THE ENGINEER AND RAILROAD.

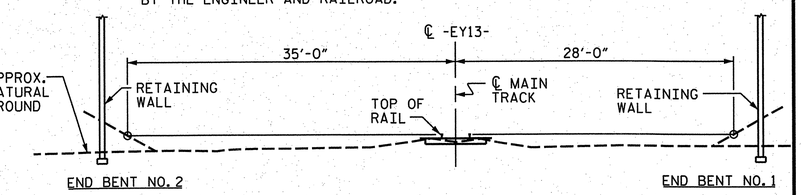

SPAN LENGTH BASED ON THIS SECTION

(LOOKING UP STATION)

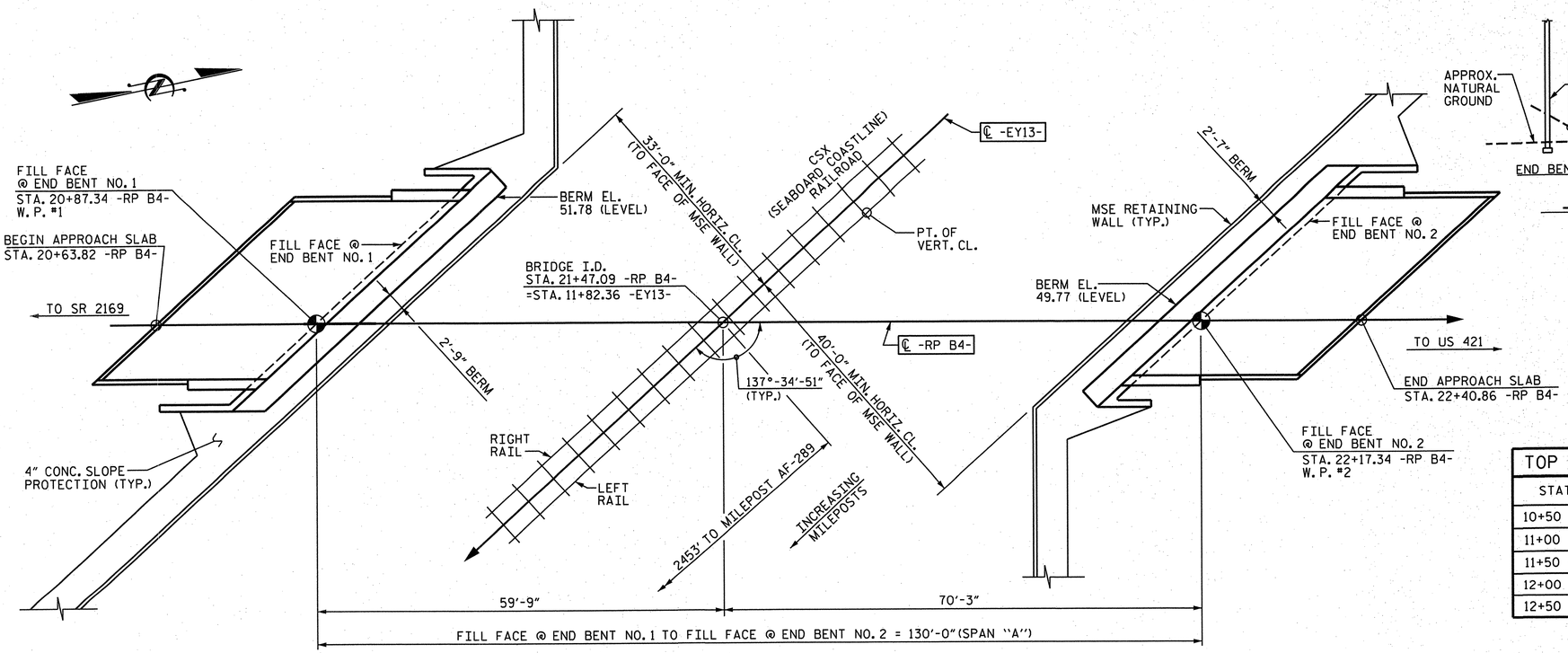

PLAN

PILES NOT SHOWN FOR CLARITY

TOP OF RAIL ELEVATIONS		
STATION	LT. RAIL	RT. RAIL
10+50 -EY13-	29.873	29.813
11+00 -EY13-	29.547	29.493
11+50 -EY13-	29.294	29.244
12+00 -EY13-	29.068	29.018
12+50 -EY13-	28.846	28.795

BRIDGE NO. 640198

PROJECT NO. R-2633BB

BRUNSWICK/NEW HANOVER COUNTY

STATION: 21+47.09 -RP B4-
=STA. 11+82.36 -EY13-

SHEET 1 OF 3

MILEPOST AF-288.54

STATE OF NORTH CAROLINA
DEPARTMENT OF TRANSPORTATION
RALEIGH

GENERAL DRAWING

FOR BRIDGE OVER CSX
SEABOARD COASTLINE R. R.
ON US 17 (WILMINGTON BYPASS)
BETWEEN SR 2169 AND US 421

PLAN PREPARED BY:

ALPHA & OMEGA GROUP
CIVIL & STRUCTURAL ENGINEERS
4601 Lake Boone Trail, Ste. 3C Raleigh, NC 27607
Phone 919 981 0310 Fax 919 981 0451
Firm License No. C-1684 www.aogroup.com
A&O PROJECT NO. 2011.016

NORTH CAROLINA PROFESSIONAL SEAL 032724 ENGINEER GLENN ZEBLO
T. G. Zeblo 11-5-12

REFERENCE NO. 10-1

DRAWN BY :	J.D. GOODIN	DATE :	08/24/12
CHECKED BY :	TG ZEBLO	DATE :	08/24/12
QC / QA :	CD ROBINSON	DATE :	10/30/12

REVISIONS								SHEET NO.
NO.	BY:	DATE:		NO.	BY:	DATE:		S-675
1				3				TOTAL SHEETS
2				4				700

STRUCTURE NO. 10

NOTES

FOR PILES, SEE SECTION 450 OF THE STANDARD SPECIFICATIONS.

PILES AT END BENT NO. 1 AND END BENT NO. 2 ARE DESIGNED FOR A FACTORED RESISTANCE OF 75 TONS PER PILE.

DRIVE PILES AT END BENT NO. 1 AND END BENT NO. 2 TO A REQUIRED DRIVING REISISTANCE OF 125 TONS PER PILE.

TESTING PILES WITH THE PDA DURING DRIVING, RESTRIKING, OR REDRIVING MAY BE REQUIRED. THE ENGINEER WILL DETERMINE THE NEED FOR PDA TESTING. FOR PDA TESTING, SEE SECTION 450 OF THE STANDARD SPECIFICATIONS.

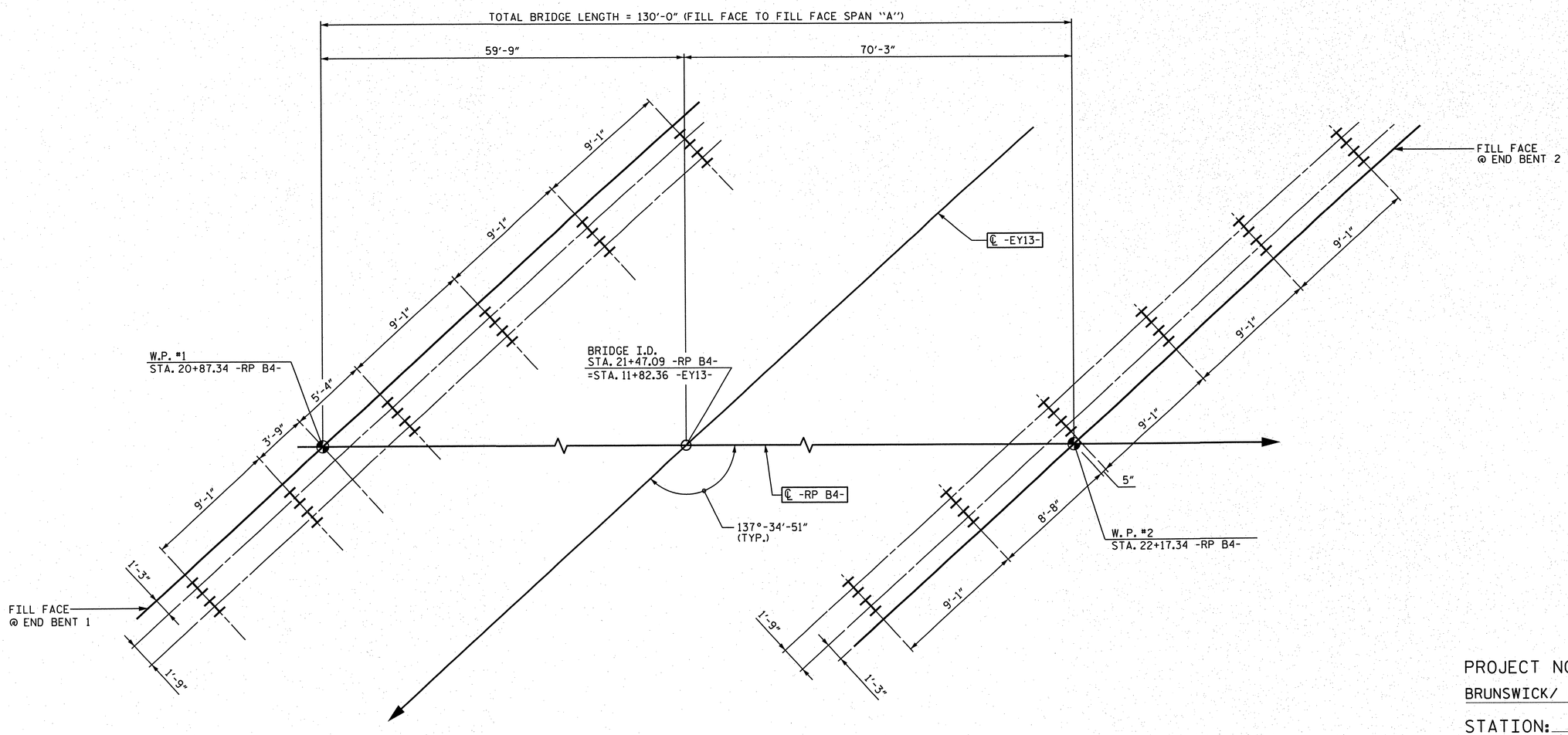

END BENT NO. 1

END BENT NO. 2

FOUNDATION LAYOUT

DIMENSIONS LOCATING PILES ARE SHOWN TO THE CENTERLINE OF PILES.

PROJECT NO. R-2633BB

BRUNSWICK/ NEW HANOVER COUNTY

STATION: 21+47.09 -RP B4-

SHEET 2 OF 3

STATE OF NORTH CAROLINA
DEPARTMENT OF TRANSPORTATION
RALEIGH

GENERAL DRAWING FOR
BRIDGE OVER CSX
SEABOARD COAST LINE R. R.
ON US 17 (WILMINGTON BYPASS)
BETWEEN SR 2169 AND US 421

REVISIONS						SHEET NO.
NO.	BY:	DATE:	NO.	BY:	DATE:	S-676
1			3			TOTAL SHEETS
2			4			700

PLAN PREPARED BY:

ALPHA & OMEGA GROUP
CIVIL & STRUCTURAL ENGINEERS
4601 Lake Boone Trail, Ste. 3C Raleigh, NC 27607
Phone 919 981 0310 Fax 919 981 0451
Firm License No. C-1684 www.aogroup.com
A&O PROJECT NO. 2011.016

NORTH CAROLINA PROFESSIONAL SEAL 032724 ENGINEER T. GLENN ZEBLO

REFERENCE NO. 10-2

DRAWN BY :	J.D. GOODIN	DATE :	08/24/12
CHECKED BY :	TG ZEBLO	DATE :	08/24/12
QC / QA :	CD ROBINSON	DATE :	10/30/12

STR. NO. 10

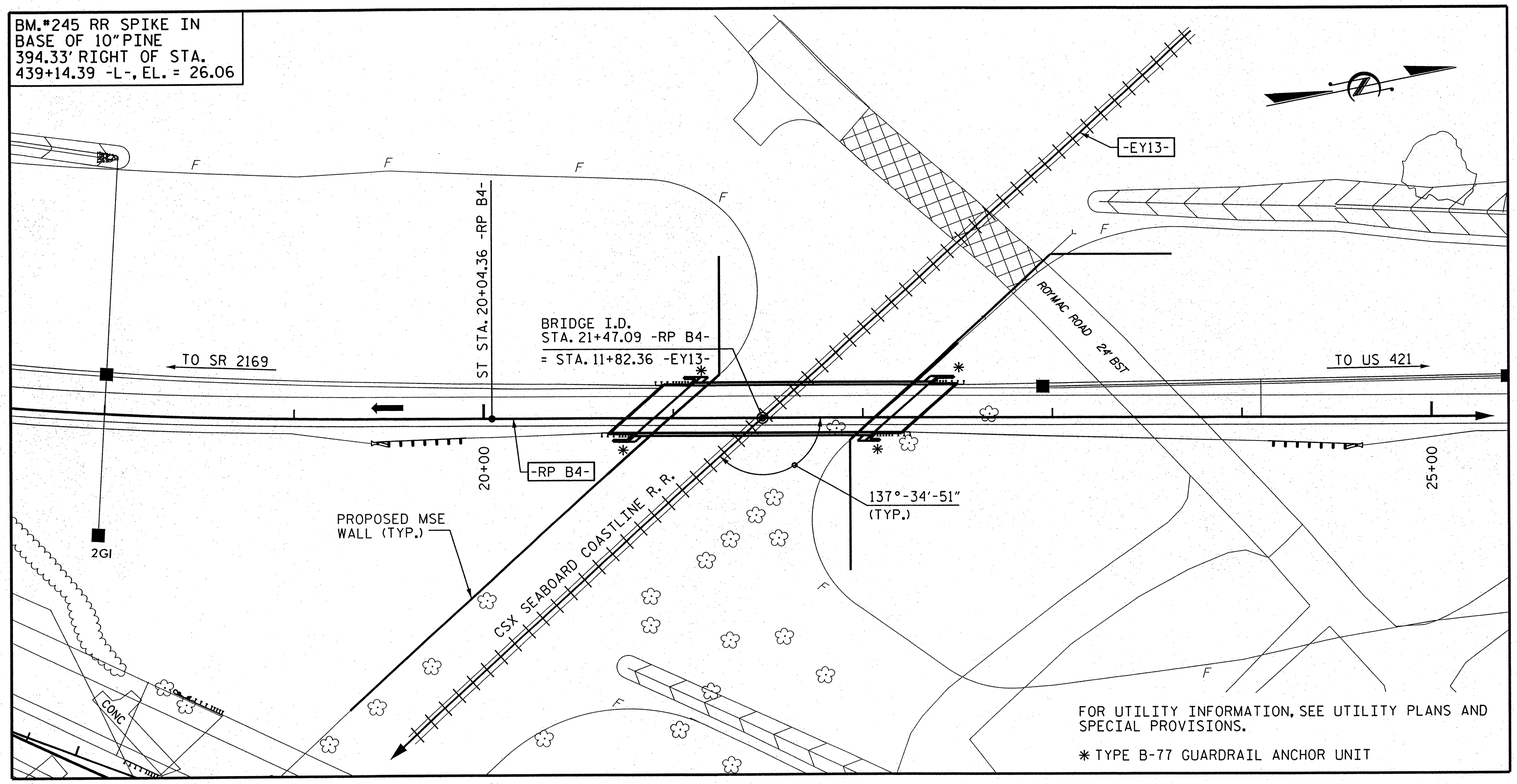

LOCATION SKETCH

STANDARD NOTES

ASSUMED LIVE LOAD = HL-93 OR ALTERNATE LOADING.

FOR OTHER DESIGN DATA AND GENERAL NOTES, SEE SHEET SN.

FOR EROSION CONTROL MEASURES, SEE EROSION CONTROL PLANS.

THIS BRIDGE HAS BEEN DESIGNED IN ACCORDANCE WITH THE AASHTO LRFD BRIDGE DESIGN SPECIFICATIONS.

PRESTRESSED CONCRETE DECK PANELS MAY BE USED IN LIEU OF METAL STAY-IN-PLACE FORMS IN ACCORDANCE WITH ARTICLE 420-3 OF THE STANDARD SPECIFICATIONS.

REMOVABLE FORMS MAY BE USED IN LIEU OF METAL STAY-IN-PLACE FORMS IN ACCORDANCE WITH ARTICLE 420-3 OF THE STANDARD SPECIFICATIONS.

NEEDLE BEAMS WILL NOT BE ALLOWED UNLESS OTHERWISE CALLED FOR ON THE PLANS OR APPROVED BY THE ENGINEER.

FOR SUBMITTAL OF WORKING DRAWINGS, SEE SPECIAL PROVISIONS.

FOR FALSEWORK AND FORMWORK, SEE SPECIAL PROVISIONS.

FOR CRANE SAFETY, SEE SPECIAL PROVISIONS.

FOR PLACING LOAD ON STRUCTURE MEMBERS, SEE SPECIAL PROVISIONS.

THE RAILROAD TRACK TOP OF RAIL ELEVATIONS SHOWN ON THE PLANS ARE FROM THE BEST INFORMATION AVAILABLE. PRIOR TO BEGINNING BRIDGE CONSTRUCTION, VERIFY THE TOP OF RAIL ELEVATIONS AND REPORT ANY VARIATIONS TO THE ENGINEER. ANY PLAN REVISIONS NECESSARY TO ACHIEVE THE REQUIRED MINIMUM VERTICAL CLEARANCE WILL BE PROVIDED BY THE DEPARTMENT.

THIS BRIDGE IS LOCATED IN SEISMIC ZONE 1.

FOR GROUT FOR STRUCTURES, SEE SPECIAL PROVISIONS.

THE CONTRACTOR SHALL PROVIDE INDEPENDENT ASSURANCE SAMPLES OF REINFORCING STEEL AS FOLLOWS: FOR PROJECTS REQUIRING UP TO 400 TONS OF REINFORCING STEEL, ONE 30 INCH SAMPLE OF EACH SIZE BAR USED, AND FOR PROJECTS REQUIRING OVER 400 TONS OF REINFORCING STEEL, TWO 30 INCH SAMPLES OF EACH SIZE BAR USED. THE BARS FROM WHICH THE SAMPLES ARE TAKEN MUST THEN BE SPLICED WITH REPLACEMENT BARS OF THE SIZE AND LENGTH OF THE SAMPLE, PLUS A MINIMUM LAP SPLICE OF THIRTY BAR DIAMETERS. PAYMENT FOR THE SAMPLES OF REINFORCING STEEL SHALL BE CONSIDERED INCIDENTAL TO VARIOUS PAY ITEMS.

TOTAL BILL OF MATERIAL

	PDA TESTING	REINFORCED CONCRETE DECK SLAB	GROOVING BRIDGE FLOORS	CLASS A CONCRETE	BRIDGE APPROACH SLABS	REINFORCING STEEL	MODIFIED 72" PRESTRESSED CONC. GIRDERS	HP 12 X 53 STEEL PILES		PILE REDRIVES	CONCRETE BARRIER RAIL	72" CHAIN LINK FENCE	4" SLOPE PROTECTION	ELASTOMERIC BEARINGS	EXPANSION JOINT SEALS
	EACH	SQ.FT.	SQ.FT.	CU.YDS.	LUMP SUM	LBS.	LIN. FT.	NO.	LIN.FT.	EACH	LIN.FT.	LN. FT.	SQ.YDS.	LUMP SUM	LUMP SUM
SUPERSTRUCTURE		3,712	3,938				495.00				297.06	244.83		LUMP SUM	LUMP SUM
END BENT NO. 1	1			52.4		7,378		12	960	6		-	86		
END BENT NO. 2	1			55.5		7,330		12	960	6		-	67		
TOTAL	2	3,712	3,938	107.9	LUMP SUM	14,708	495.00	24	1,920	12	297.06	244.83	153	LUMP SUM	LUMP SUM

PROJECT NO. R-2633BB

BRUNSWICK/ NEW HANOVER COUNTY

STATION: 21+47.09 -RP B4-

SHEET 3 OF 3

STATE OF NORTH CAROLINA
DEPARTMENT OF TRANSPORTATION
RALEIGH

GENERAL DRAWING
FOR
BRIDGE OVER CSX
SEABOARD COASTLINE R. R.
ON US 17 (WILMINGTON BYPASS)
BETWEEN SR 2169 AND US 421

REVISIONS						SHEET NO.
NO.	BY:	DATE:	NO.	BY:	DATE:	8677
1			3			TOTAL SHEETS
2			4			700

PLAN PREPARED BY:

ALPHA & OMEGA GROUP
CIVIL & STRUCTURAL ENGINEERS
4601 Lake Boone Trail, Ste. 3C Raleigh, NC 27607
Phone 919 981 0310 Fax 919 981 0451
Firm License No. C-1684 www.aogroup.com
A&O PROJECT NO. 2011.016

NORTH CAROLINA PROFESSIONAL SEAL 032724 ENGINEER GLENN ZEBLO
T. 4-1-13

REFERENCE NO. 10-3

DRAWN BY :	J.D. GOODIN	DATE :	08/24/12
CHECKED BY :	TG ZEBLO	DATE :	08/24/12
QC / QA :	CD ROBINSON	DATE :	10/30/12

STR NO. 10

LOAD AND RESISTANCE FACTOR RATING (LRFR) SUMMARY FOR PRESTRESSED CONCRETE GIRDERS

LEVEL		VEHICLE	WEIGHT (W) (TONS)	CONTROLLING LOAD RATING (#)	MINIMUM RATING FACTORS (RF)	TONS = W x RF	STRENGTH I LIMIT STATE											SERVICE III LIMIT STATE						COMMENT NUMBER
								MOMENT					SHEAR						MOMENT					
							LIVE-LOAD FACTORS (γ_{LL})	DISTRIBUTION FACTORS (DF)	RATING FACTOR	SPAN	GIRDER LOCATION	DISTANCE FROM LEFT END OF SPAN (ft)	DISTRIBUTION FACTORS (DF)	RATING FACTOR	SPAN	GIRDER LOCATION	DISTANCE FROM LEFT END OF SPAN (ft)	LIVE-LOAD FACTORS (γ_{LL})	DISTRIBUTION FACTORS (DF)	RATING FACTOR	SPAN	GIRDER LOCATION	DISTANCE FROM LEFT END OF SPAN (ft)	
DESIGN LOAD RATING		HL-93 (INVENTORY)	N/A	1	1.05	--	1.75	0.664	1.33	A	E	61.2	0.884	1.13	A	I	6	0.80	0.664	1.05	A	E	61.2	
		HL-93 (OPERATING)	N/A		1.47	--	1.35	0.664	1.72	A	E	61.2	0.884	1.47	A	I	6	N/A	--	--	--	--	--	
		HS-20 (INVENTORY)	36.000	2	1.54	55.4	1.75	0.664	1.95	A	E	61.2	0.884	1.69	A	I	6	0.80	0.664	1.54	A	E	61.2	
		HS-20 (OPERATING)	36.000		2.19	78.8	1.35	0.664	2.53	A	E	61.2	0.884	2.19	A	I	6	N/A	--	--	--	--	--	
LEGAL LOAD RATING	SINGLE VEHICLE (SV)	SH	12.500		4.05	50.6	1.40	0.664	6.42	A	E	61.2	0.884	6.21	A	I	6	0.80	0.664	4.05	A	E	61.2	
		S3C	21.500		2.36	50.7	1.40	0.664	3.75	A	E	61.2	0.884	3.51	A	I	6	0.80	0.664	2.36	A	E	61.2	
		S3A	22.750		2.24	51.0	1.40	0.664	3.55	A	E	61.2	0.884	3.32	A	I	6	0.80	0.664	2.24	A	E	61.2	
		S4A	26.750		1.95	52.2	1.40	0.664	3.09	A	E	61.2	0.884	2.83	A	I	6	0.80	0.664	1.95	A	E	61.2	
		S5A	30.500		1.72	52.5	1.40	0.664	2.72	A	E	61.2	0.884	2.53	A	I	6	0.80	0.664	1.72	A	E	61.2	
		S6A	34.500		1.54	53.1	1.40	0.664	2.45	A	E	61.2	0.884	2.23	A	I	6	0.80	0.664	1.54	A	E	61.2	
		S7B	38.500		1.40	53.9	1.40	0.664	2.22	A	E	61.2	0.884	2.03	A	I	6	0.80	0.664	1.40	A	E	61.2	
		S7A	40.000	3	1.37	54.8	1.40	0.664	2.17	A	E	61.2	0.884	2.02	A	I	6	0.80	0.664	1.37	A	E	61.2	
	TRUCK TRACTOR SEMI-TRAILER (TTST)	T4A	28.250		1.90	53.7	1.40	0.664	3.01	A	E	61.2	0.884	2.71	A	I	6	0.80	0.664	1.90	A	E	61.2	
		T5B	32.000		1.67	53.4	1.40	0.664	2.65	A	E	61.2	0.884	2.48	A	I	6	0.80	0.664	1.67	A	E	61.2	
		T6A	36.000		1.51	54.4	1.40	0.664	2.40	A	E	61.2	0.884	2.23	A	I	6	0.80	0.664	1.51	A	E	61.2	
		T7A	40.000		1.39	55.6	1.40	0.664	2.21	A	E	61.2	0.884	2.02	A	I	6	0.80	0.664	1.39	A	E	61.2	
		T7B	40.000		1.45	58.0	1.40	0.664	2.30	A	E	61.2	0.884	1.94	A	I	6	0.80	0.664	1.45	A	E	61.2	

LOAD FACTORS:

DESIGN LOAD RATING FACTORS	LIMIT STATE	γ_{DC}	γ_{DW}
	STRENGTH I	1.25	1.50
	SERVICE III	1.00	1.00

NOTES:

MINIMUM RATING FACTORS ARE BASED ON THE STRENGTH I AND SERVICE III LIMIT STATES.

ALLOWABLE STRESSES FOR SERVICE III LIMIT STATE ARE AS REQUIRED FOR DESIGN.

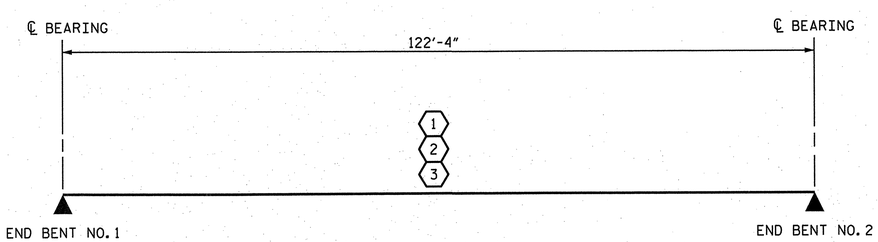

LRFR SUMMARY

CONTROLLING LOAD RATING
1 DESIGN LOAD RATING (HL-93)
2 DESIGN LOAD RATING (HS-20)
3 LEGAL LOAD RATING **
** SEE CHART FOR VEHICLE TYPE
GIRDER LOCATION
I - INTERIOR GIRDER
E - EXTERIOR GIRDER

PROJECT NO. R-2633BB

BRUNSWICK/ NEW HANOVER COUNTY

STATION: 21+47.09 -RP B4-

PLAN PREPARED BY:

ALPHA & OMEGA GROUP
CIVIL & STRUCTURAL ENGINEERS
4601 Lake Boone Trail, Ste. 3C Raleigh, NC 27607
Phone 919 981 0310 Fax 919 981 0451
Firm License No. C-1684 www.aogroup.com
A&O PROJECT NO. 2011.016

NORTH CAROLINA PROFESSIONAL ENGINEER SEAL 032724 T. GLENN ZEBLO

REFERENCE NO. 10-4

STATE OF NORTH CAROLINA
DEPARTMENT OF TRANSPORTATION
RALEIGH

STANDARD
LRFR SUMMARY FOR PRESTRESSED CONCRETE GIRDERS
(INTERSTATE TRAFFIC)

REVISIONS								SHEET NO.
NO.	BY:	DATE:	NO.	BY:	DATE:			S-C78
1			3					TOTAL SHEETS
2			4					100

DRAWN BY :	J.D. GOODIN	DATE :	08/24/12
CHECKED BY :	TG ZEBLO	DATE :	08/24/12
QC / QA :	CD ROBINSON	DATE :	10/30/12

STR. NO. 10

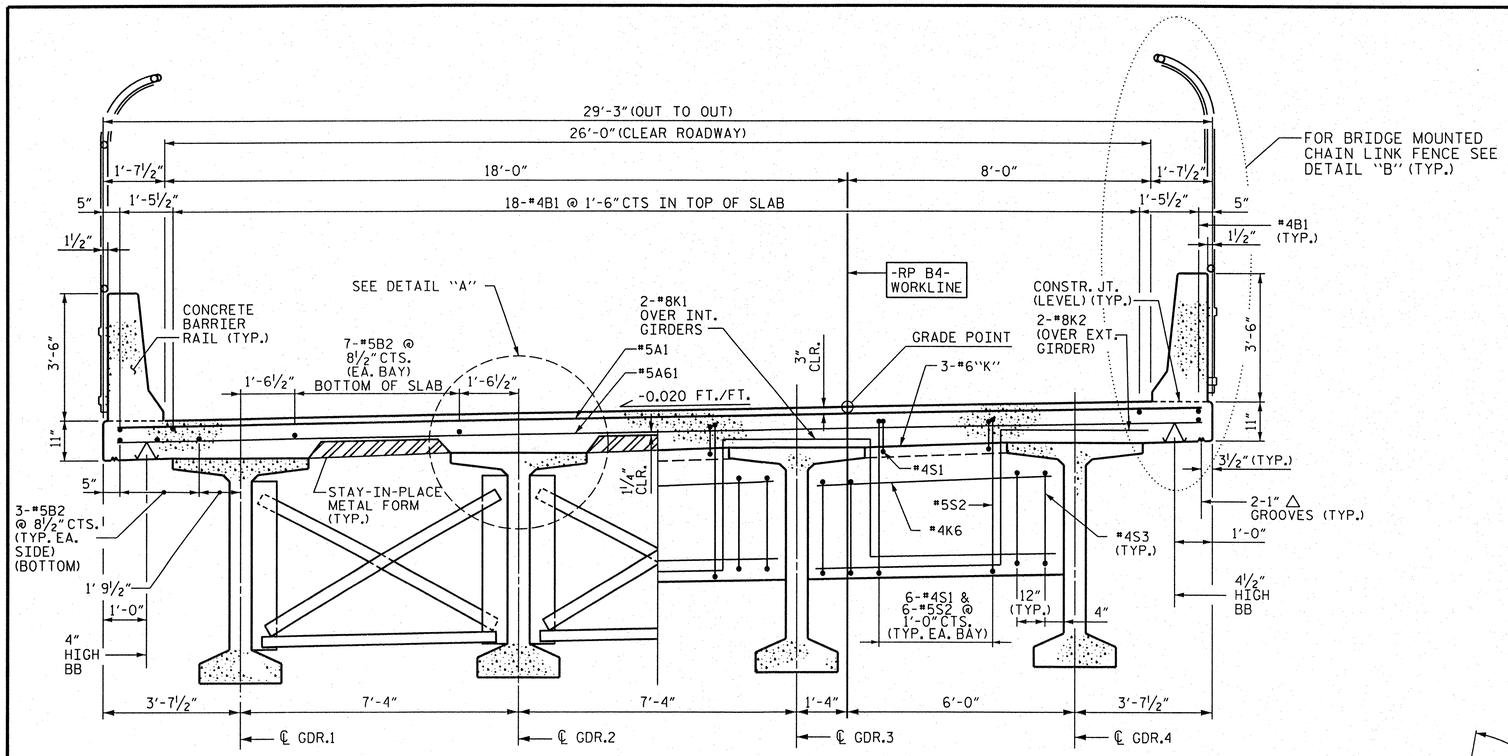

HALF SECTION @ INTERMEDIATE DIAPHRAGM

HALF SECTION @ END DIAPHRAGM

TYPICAL SECTION

NOTES

PROVIDE 1¼" HIGH BEAM BOLSTERS UPPER AT 4'-0" CTS. ATOP THE METAL STAY-IN-PLACE FORMS TO SUPPORT THE BOTTOM MAT OF "A" BARS. WHEN USING REMOVABLE FORMS, PROVIDE CONTINUOUS HIGH CHAIRS FOR METAL DECK (C.H.C.M.) @ 4'-0" CTS. WITH A HEIGHT TO SUPPORT THE BOTTOM MAT OF "A" BARS A CLEAR DISTANCE OF 2½" ABOVE THE TOP OF THE REMOVABLE FORM.

LONGITUDINAL STEEL MAY BE SHIFTED SLIGHTLY, AS NECESSARY, TO AVOID INTERFERENCE WITH STIRRUPS IN PRESTRESSED CONCRETE GIRDERS.

BARRIER RAIL IN EACH SPAN SHALL NOT BE CAST UNTIL ALL SLAB CONCRETE IN THAT SPAN HAS BEEN CAST AND HAS REACHED A MINIMUM COMPRESSIVE STRENGTH OF 3,000 PSI.

#5G1 MAY BE SHIFTED SLIGHTLY, AS NECESSARY, TO CLEAR REINFORCING STEEL AND STIRRUPS.

THE SKEWED END CONDITIONS AT END BENTS ARE SUCH THAT THE USE OF 4' WIDE PRESTRESSED CONCRETE PANELS IS NOT POSSIBLE; USE OF 8' WIDE PRESTRESSED CONCRETE PANELS IS NECESSARY.

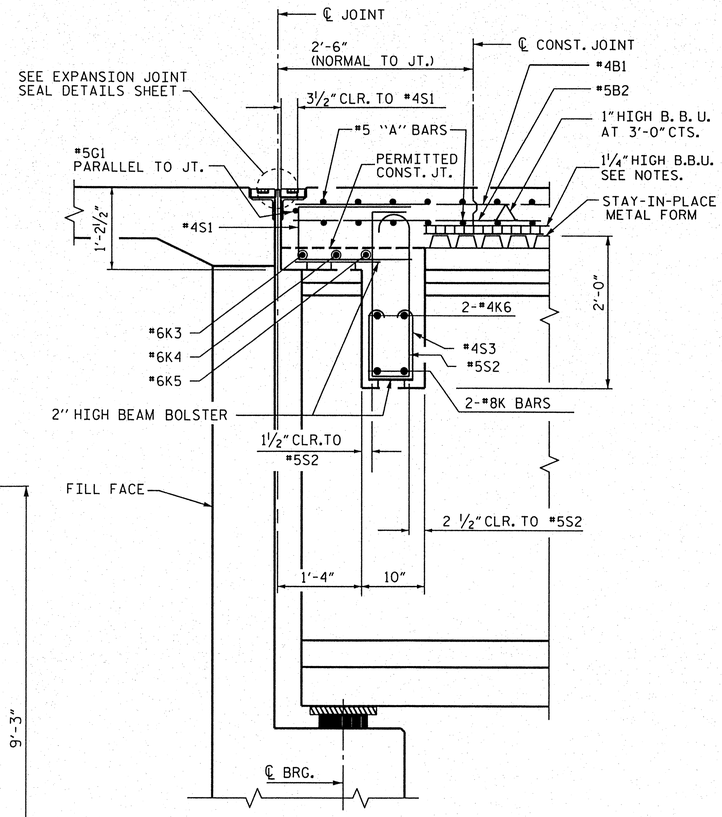

SECTION AT END BENT

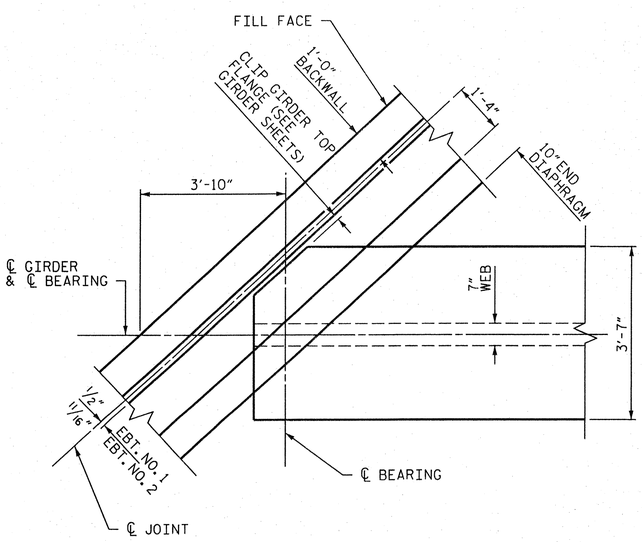

TYPICAL PLAN OF GIRDER END

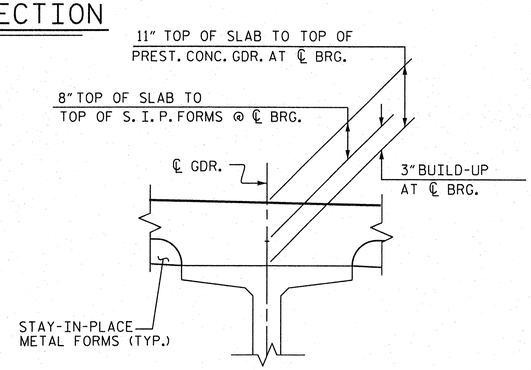

DETAIL "A"

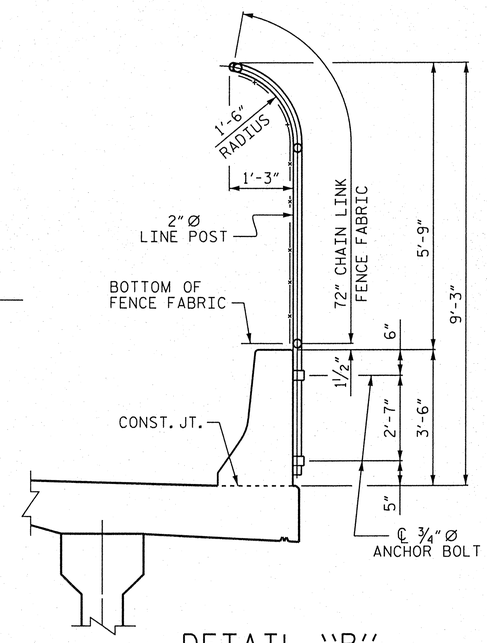

DETAIL "B"

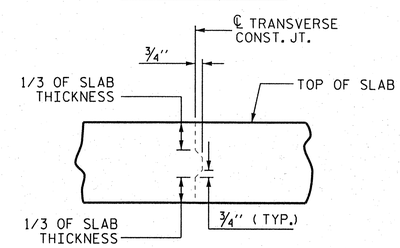

TRANSVERSE CONSTRUCTION JOINT DETAIL

NOTE: REINFORCING STEEL IN SLAB NOT SHOWN. REINFORCING STEEL SHALL BE CONTINUOUS THRU JOINT

PROJECT NO. R-2633BB

BRUNSWICK/ NEW HANOVER COUNTY

STATION: 21+47.09 -RP B4-

STATE OF NORTH CAROLINA
DEPARTMENT OF TRANSPORTATION
RALEIGH

SUPERSTRUCTURE TYPICAL SECTION

REVISIONS								SHEET NO.
NO.	BY:	DATE:	NO.	BY:	DATE:			S-69
1			3					TOTAL SHEETS
2			4					700

REFERENCE NO. 10-5

STR. NO. 10

PLAN PREPARED BY:

ALPHA & OMEGA GROUP
CIVIL & STRUCTURAL ENGINEERS
4601 Lake Boone Trail, Ste. 3C Raleigh, NC 27607
Phone 919 981 0310 Fax 919 981 0451
Firm License No. C-1684 www.aogroup.com
A&O PROJECT NO. 2011.016

NORTH CAROLINA PROFESSIONAL SEAL 032724 ENGINEER GLENN ZEBLO 4-1-13

DRAWN BY :	J.D. GOODIN	DATE :	08/24/12
CHECKED BY :	TG ZEBLO	DATE :	08/24/12
QC / QA :	CD ROBINSON	DATE :	10/30/12

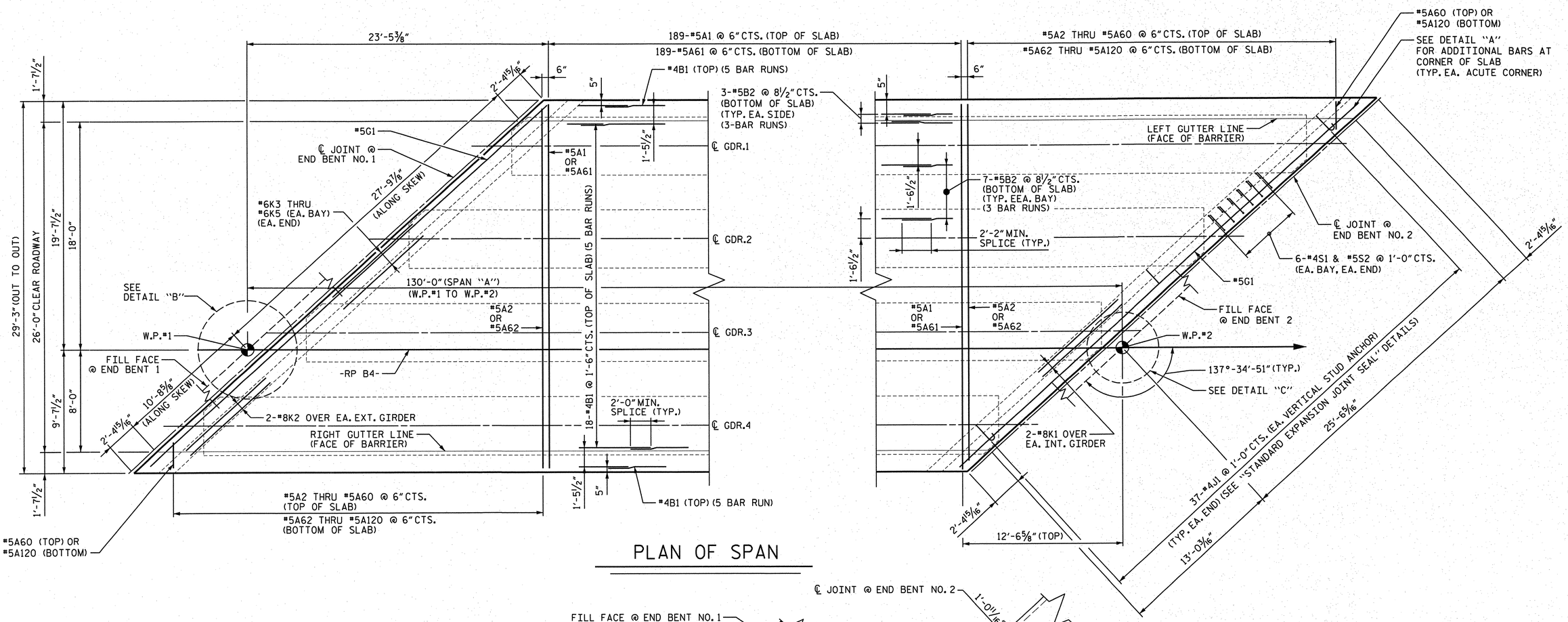

PLAN OF SPAN

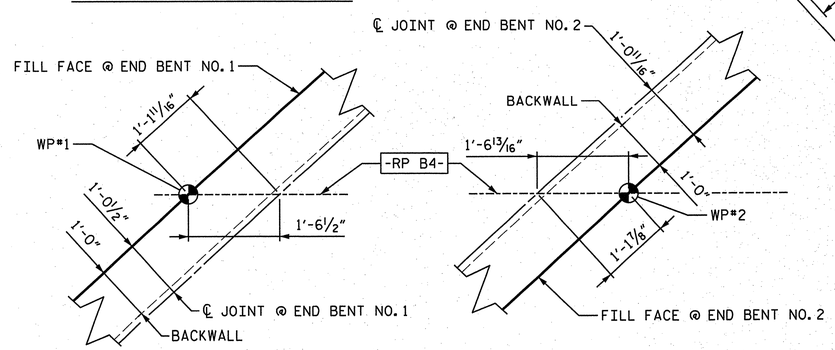

DETAIL "B"

DETAIL "C"

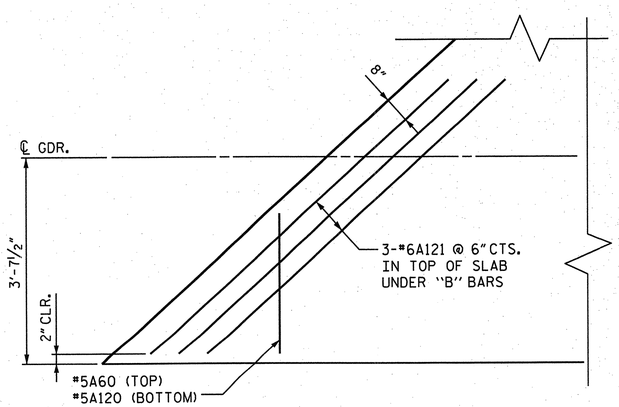

ADDITIONAL BARS AT ACUTE CORNERS OF SLAB

DETAIL "A"

PROJECT NO. R-2633BB

BRUNSWICK/ NEW HANOVER COUNTY

STATION: 21+47.09 -RP B4-

STATE OF NORTH CAROLINA
DEPARTMENT OF TRANSPORTATION
RALEIGH

SUPERSTRUCTURE PLAN OF SPAN "A"

PLAN PREPARED BY:

ALPHA & OMEGA GROUP
CIVIL & STRUCTURAL ENGINEERS
4601 Lake Boone Trail, Ste. 3C Raleigh, NC 27607
Phone 919 981 0310 Fax 919 981 0451
Firm License No. C-1684 www.aogroup.com
A&O PROJECT NO. 2011.016

NORTH CAROLINA PROFESSIONAL SEAL 032724 ENGINEER T. GLENN ZEBLO
11-5-12

REFERENCE NO. 10-6

REVISIONS							
NO.	BY:	DATE:	NO.	BY:	DATE:		
1			3				
2			4				

SHEET NO. S-680

TOTAL SHEETS 700

STR NO. 10

DRAWN BY :	J.D. GOODIN	DATE :	08/24/12
CHECKED BY :	TG ZEBLO	DATE :	08/24/12
QC / QA :	CD ROBINSON	DATE :	10/30/12

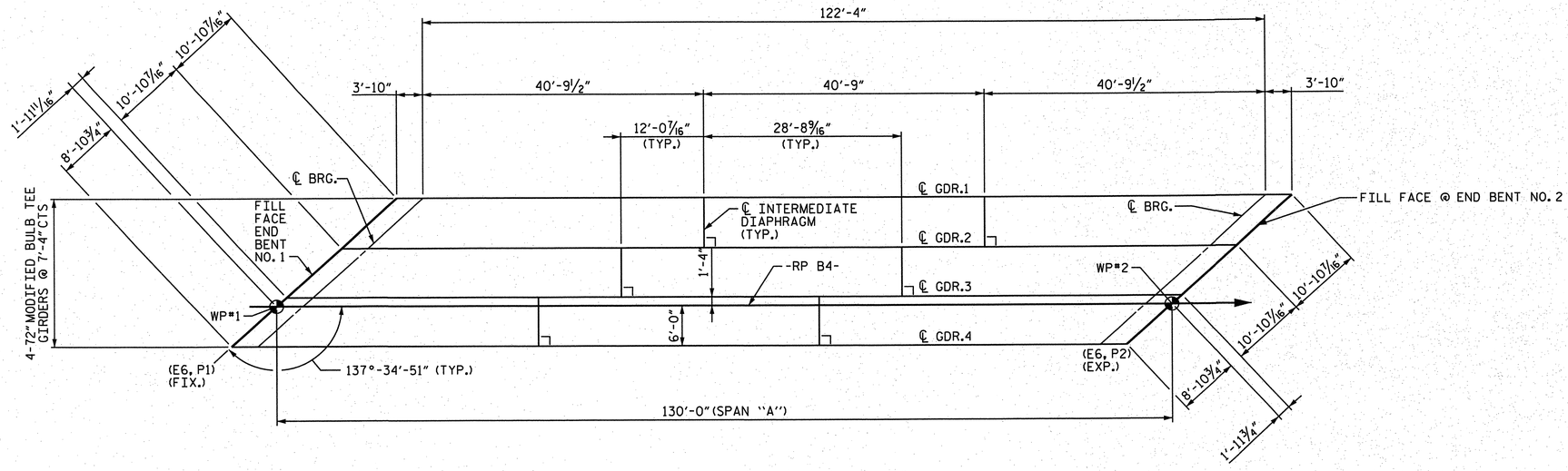

GIRDER LAYOUT

DEAD LOAD DEFLECTION TABLE FOR GIRDERS

0.6" Ø LOW RELAXATION STRANDS	SPAN "A" ALL GIRDERS																				
TWENTIETH POINTS	0	.05	.10	.15	.20	.25	.30	.35	.40	.45	.50	.55	.60	.65	.70	.75	.80	.85	.90	.95	1
CAMBER (GIRDER ALONE IN PLACE) ↑	0.0	0.078	0.145	0.203	0.252	0.293	0.325	0.350	0.368	0.379	0.382	0.379	0.368	0.350	0.325	0.293	0.252	0.203	0.145	0.078	0.0
* DEFLECTION DUE TO SUPERIMPOSED D.L. ↓	0.0	0.033	0.066	0.097	0.126	0.151	0.174	0.191	0.204	0.212	0.215	0.212	0.204	0.191	0.173	0.151	0.126	0.097	0.066	0.033	0.0
FINAL CAMBER ↑	0	½"	15/16"	1 ¼"	1 ½"	1 11/16"	1 13/16"	1 ⅞"	1 15/16"	1 15/16"	2"	1 15/16"	1 15/16"	1 ⅞"	1 13/16"	1 11/16"	1 ½"	1 ¼"	15/16"	½"	0"

* INCLUDES FUTURE WEARING SURFACE
ALL VALUES ARE SHOWN IN FEET (DECIMAL FORM), EXCEPT "FINAL CAMBER", WHICH IS GIVEN IN INCHES (FRACTION FORM).

PROJECT NO. R-2633BB
BRUNSWICK/ NEW HANOVER COUNTY
STATION: 21+47.09 -RP B4-

STATE OF NORTH CAROLINA
DEPARTMENT OF TRANSPORTATION
RALEIGH

SUPERSTRUCTURE FRAMING PLAN AND DEAD LOAD DEFLECTION TABLE

PLAN PREPARED BY:
ALPHA & OMEGA GROUP
CIVIL & STRUCTURAL ENGINEERS
4601 Lake Boone Trail, Ste. 3C Raleigh, NC 27607
Phone 919 981 0310 Fax 919 981 0451
Firm License No. C-1684 www.aogroup.com
A&O PROJECT NO. 2011.016

NORTH CAROLINA PROFESSIONAL SEAL 032724 ENGINEER T. GLENN ZEBLO
11-5-12

REFERENCE NO. 10-7

REVISIONS						SHEET NO.
NO.	BY:	DATE:	NO.	BY:	DATE:	S-681
1			3			TOTAL SHEETS
2			4			700

DRAWN BY :	J.D. GOODIN	DATE :	08/24/12
CHECKED BY :	TG ZEBLO	DATE :	08/24/12
QC / QA :	CD ROBINSON	DATE :	10/30/12

STR. NO. 10

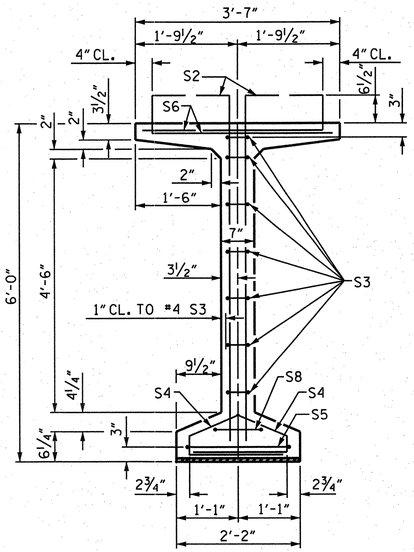

SECTION "A-A"

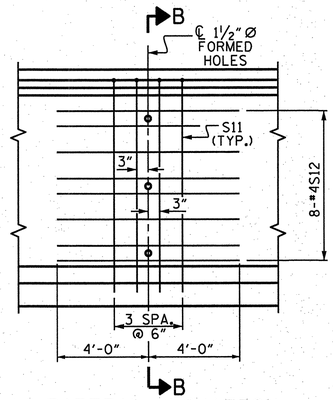

PARTIAL ELEVATION

SHOWING INTERMEDIATE STEEL DIAPHRAGM REINFORCING STEEL FOR EXTERIOR GIRDERS

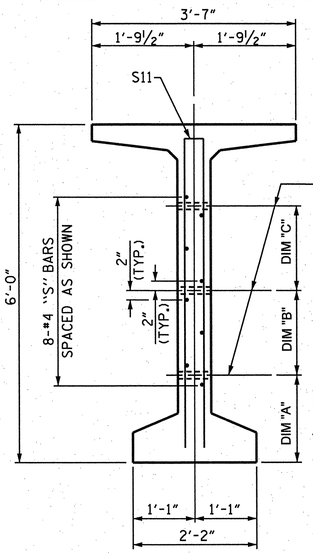

℄ 1½" FORMED HOLE. SEE ELEVATION FOR LOCATION. FOR DIM. "A", "B" & "C" SEE "INTERMEDIATE STEEL DIAPHRAGMS" SHEET.)

SECTION "B-B"

(S1, S6 AND S9 BARS NOT SHOWN)

DEBONDING LEGEND

- ● FULLY BONDED STRANDS
- ▣ STRANDS DEBONDED FOR 6'-0" FROM END OF GIRDER
- ▽ STRANDS DEBONDED FOR 12'-0" FROM END OF GIRDER
- △ STRANDS DEBONDED FOR 24'-0" FROM END OF GIRDER
- ⊙ STRANDS DEBONDED FOR 36'-0" FROM END OF GIRDER

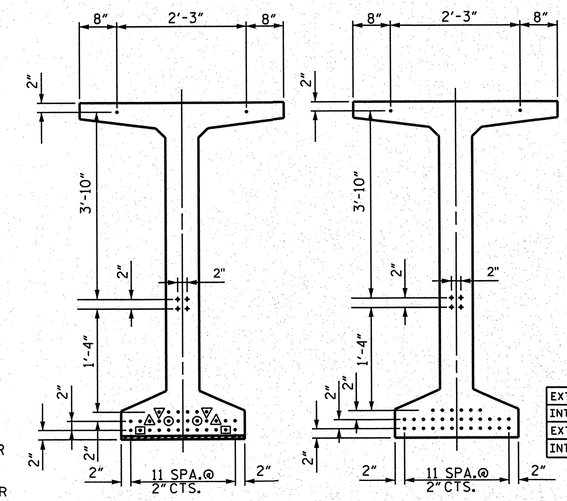

AT END OF GIRDER

AT ℄ OF GIRDER

0.6" Ø LOW RELAXATION STRAND LAYOUT

EXTERIOR GDR.	
INTERIOR GDR.	
EXTERIOR GDR.	
INTERIOR GDR.	

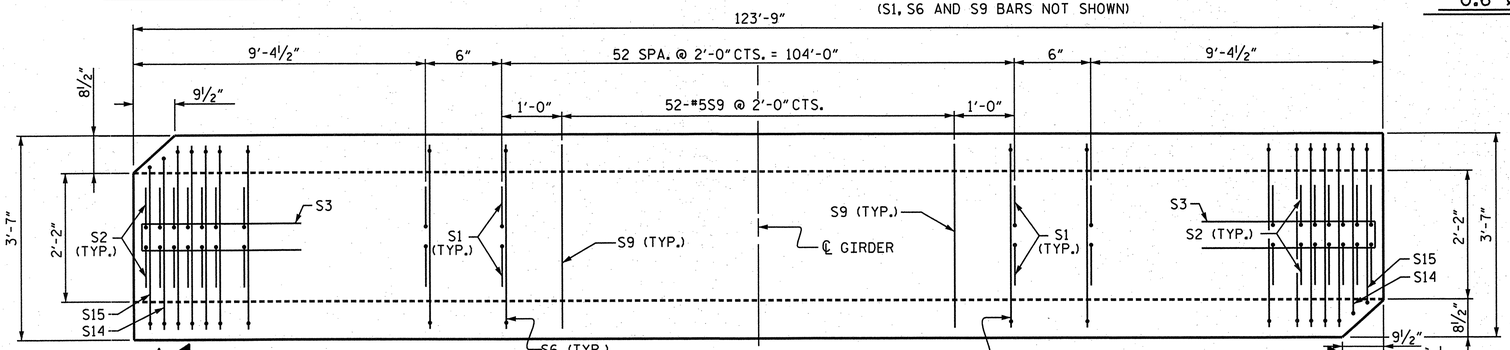

PLAN OF GIRDER

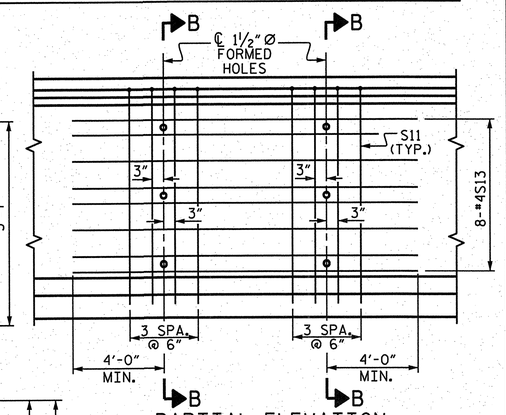

PARTIAL ELEVATION

SHOWING INTERMEDIATE STEEL DIAPHRAGM REINFORCING STEEL FOR INTERIOR GIRDERS

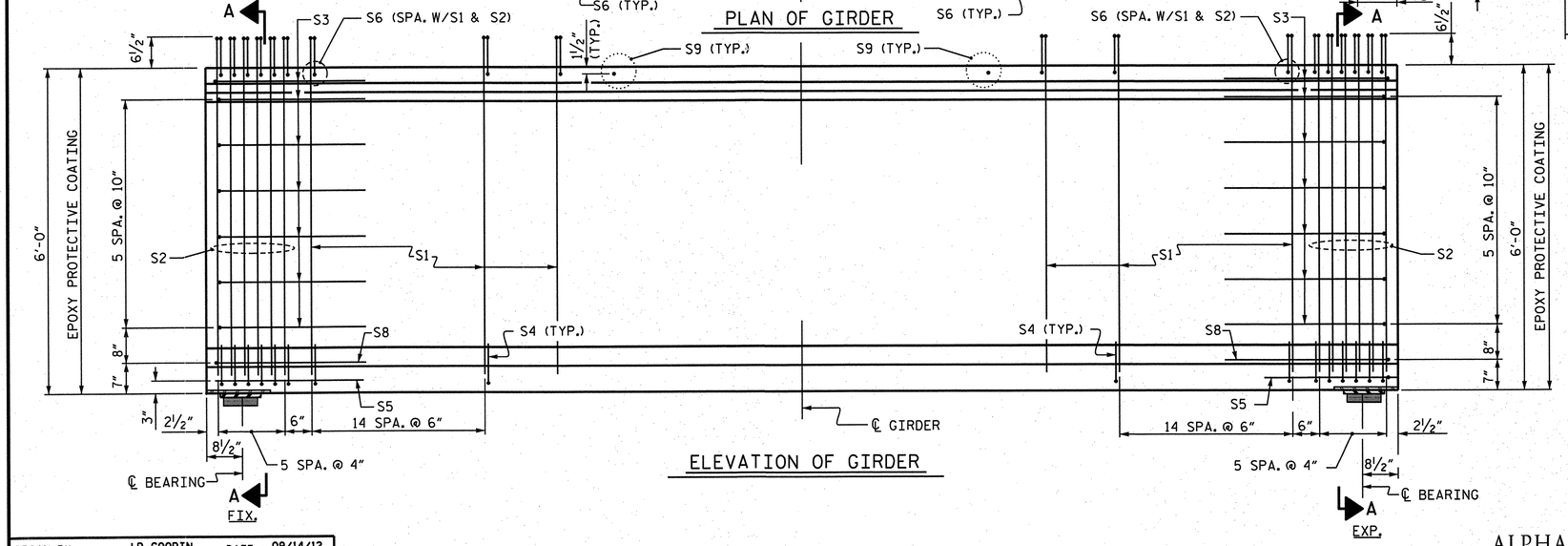

ELEVATION OF GIRDER

0.6" Ø L. R. GRADE 270 STRANDS

AREA (SQUARE INCHES)	ULTIMATE STRENGTH (LBS. PER STRAND)	APPLIED PRESTRESS (LBS. PER STRAND)
0.217	58,600	43,950

REINFORCING STEEL FOR ONE GDR.

BAR	NUMBER	SIZE	TYPE	LENGTH	WEIGHT
S1	166	#4	1	6'-10"	758
S2	24	#5	1	6'-10"	171
S3	14	#4	2	8'-5"	79
S4	84	#4	3	3'-0"	168
S5	2	#5	2	9'-10"	21
S6	182	#5	4	4'-4"	823
S8	2	#5	2	9'-0"	19
S9	52	#5	STR	3'-3"	176
S11	4	#5	2	11'-8"	49
S11	8	#5	2	11'-8"	97
S12	8	#4	STR	8'-0"	43
S13	8	#4	STR	20'-1"	107
S14	4	#5	4	4'-1"	17
S15	4	#5	4	3'-9"	16

BAR TYPES

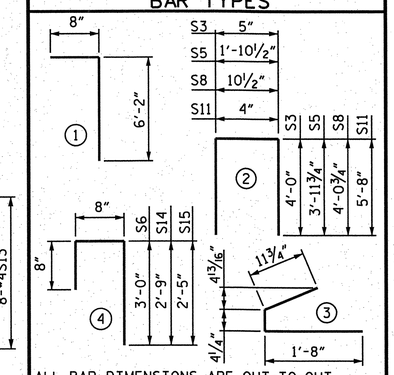

ALL BAR DIMENSIONS ARE OUT-TO-OUT

QUANTITIES FOR ONE GIRDER

	REINFORCING STEEL LB.	6500 PSI CONCRETE C.Y.	0.6" Ø L.R. STRANDS No.
EXTERIOR GIRDER	2340	26.5	36
INTERIOR GIRDER	2452	26.5	36

GIRDERS REQUIRED

NUMBER	LENGTH	TOTAL LENGTH
4	123'-9"	495'-0"

PROJECT NO. R-2633 BB

BRUNSWICK/ NEW HANOVER COUNTY

STATION: 21+47.09 -RP B4-

STATE OF NORTH CAROLINA
DEPARTMENT OF TRANSPORTATION
RALEIGH

STANDARD

72" PRESTRESSED CONCRETE MODIFIED BULB TEE

DRAWN BY :	J.D. GOODIN	DATE :	09/14/12		
CHECKED BY :	TG ZEBLO	DATE :	09/28/12		
QC / QA :	CD ROBINSON	DATE :	10/30/12		
DRAWN BY : EEM 2/6/97	REV. 10/17/00	RWW/LES			
CHECKED BY : VAP 2/6/97	REV. 5/1/06R	TLA/GM			
	REV. 10/1/11	MAA/GM			

PLAN PREPARED BY:

ALPHA & OMEGA GROUP
CIVIL & STRUCTURAL ENGINEERS
4601 Lake Boone Trail, Ste. 3C Raleigh, NC 27607
Phone 919 981 0310 Fax 919 981 0451
Firm License No. C-1684 www.aogroup.com
A&O PROJECT NO. 2011.016

NOTE: THIS STANDARD DRAWING REVIEWED AND ADOPTED FOR USE AT THE REFERENCED LOCATION BY THE UNDERSIGNED.

NORTH CAROLINA PROFESSIONAL SEAL 032724 ENGINEER T. GLENN ZEBLO
T. Glenn Zeblo 11-5-12

REFERENCE NO. 10-8

REVISIONS						SHEET NO.
NO.	BY:	DATE:	NO.	BY:	DATE:	S-682
1			3			TOTAL SHEETS
2			4			700

STD. NO. PCG8 STR. NO. 10

NOTES

ALL PRESTRESSING STRANDS SHALL BE 7-WIRE LOW-RELAXATION GRADE 270 STRANDS AND SHALL CONFORM TO AASHTO M203 EXCEPT FOR SAMPLING REQUIREMENTS WHICH SHALL BE IN ACCORDANCE WITH THE STANDARD SPECIFICATIONS.

ALL REINFORCING STEEL SHALL BE GRADE 60.

APPLY EPOXY PROTECTIVE COATING TO END OF GIRDER SURFACES INDICATED IN ELEVATION VIEW.

EMBEDDED PLATE "B-1" SHALL BE GALVANIZED IN ACCORDANCE WITH THE STANDARD SPECIFICATIONS. BEVEL EDGES OF PLATE "B-1" TO GIVE CLOSE FIT BUT NOT TIGHT FIT TO STEEL CASTING FORM.

ANCHOR STUDS SHALL CONFORM TO AASHTO M169 GRADES 1010 THROUGH 1020 OR APPROVED EQUAL, AND SHALL MEET THE TYPE "B" REQUIREMENTS OF SUBSECTION 7.3 OF THE ANSI/AASHTO/AWS D1.5 BRIDGE WELDING CODE.

AT ENDS OF GIRDERS TO BE EMBEDDED IN CONCRETE DIAPHRAGMS OR END WALLS, PRESTRESSING STRANDS MAY EXTEND A MAXIMUM OF 2" BEYOND THE GIRDER ENDS. OTHERWISE, PRESTRESSING STRANDS SHALL BE CUT FLUSH WITH THE GIRDER ENDS.

THE TRANSFER OF LOAD FROM THE ANCHORAGES TO THE GIRDER SHALL BE DONE WHEN CONCRETE HAS REACHED A COMPRESSIVE STRENGTH OF NOT LESS THAN 5300 PSI.

DEPENDING ON THE TYPE OF SYSTEM USED TO SUPPORT THE DECK SLAB FORMS, PRESET ANCHORS MAY BE NECESSARY IN THE PRESTRESSED CONCRETE GIRDER.

THE TOP SURFACE OF THE GIRDER, EXCLUDING THE OUTSIDE 4", SHALL BE RAKED TO A DEPTH OF 1/4".

A 2"x2" CHAMFER IS ALLOWED AT THE INTERSECTION OF THE WEB AND THE BOTTOM FLANGE OF THE 63" AND 72" MODIFIED BULB TEES ONLY.

THE CONTRACTOR HAS THE OPTION TO PROVIDE, AT NO ADDITIONAL COST TO THE DEPARTMENT, 2 ADDITIONAL STRANDS AT THE TOP OF THE GIRDER TO FACILITATE TYING OF THE REINFORCING STEEL. THESE STRANDS SHALL BE PULLED TO A LOAD OF 4500 lbs.

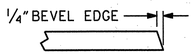

SECTION "G"

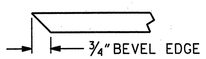

SECTION "F"

(SEE NOTES)

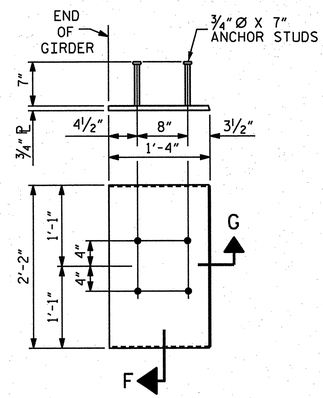

EMBEDDED PLATE "B-1" DETAILS
FOR
72" MODIFIED BULB TEES

(2 REQ'D PER GIRDER)

PROJECT NO. R-2633 BB

BRUNSWICK/ NEW HANOVER COUNTY

STATION: 21+47.09 -RP B4-

STATE OF NORTH CAROLINA
DEPARTMENT OF TRANSPORTATION
RALEIGH

STANDARD
PRESTRESSED CONCRETE GIRDER
DETAILS

DRAWN BY :	J.D. GOODIN	DATE :	09/14/12
CHECKED BY :	TG ZEBLO	DATE :	09/28/12
QC / QA :	CD ROBINSON	DATE :	10/30/12

DRAWN BY :	ELR	11/91	REV. 7/10/01 RR LES/RDR
CHECKED BY :	GRP	11/91	REV. 5/1/06 TLA/GM
			REV. 10/1/11 MAA/GM

PLAN PREPARED BY:

ALPHA & OMEGA GROUP
CIVIL & STRUCTURAL ENGINEERS
4601 Lake Boone Trail, Ste. 3C Raleigh, NC 27607
Phone 919 981 0310 Fax 919 981 0451
Firm License No. C-1684 www.aegroup.com
A&O PROJECT NO. 2011.016

NOTE: THIS STANDARD DRAWING REVIEWED AND ADOPTED FOR USE AT THE REFERENCED LOCATION BY THE UNDERSIGNED.

NORTH CAROLINA PROFESSIONAL SEAL 032724 ENGINEER GLENN ZEBLO

T. Glenn Zeblo 11-5-12

REFERENCE NO. 10-9

REVISIONS						SHEET NO.
NO.	BY:	DATE:	NO.	BY:	DATE:	S-683
1			3			TOTAL SHEETS
2			4			700

STD. NO. PCG9 STR. NO. 10

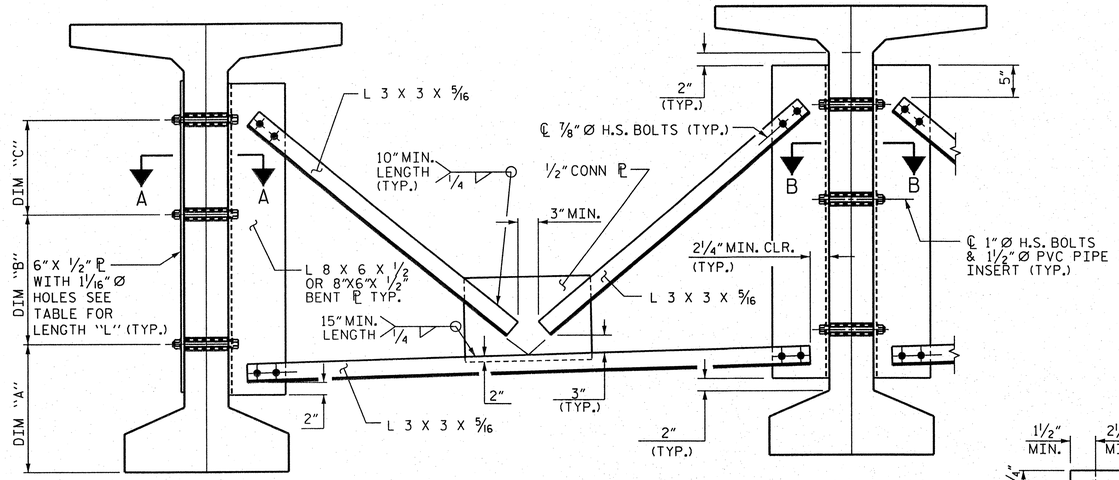

EXTERIOR GIRDER

INTERIOR GIRDER

PART SECTION AT INTERMEDIATE DIAPHRAGM

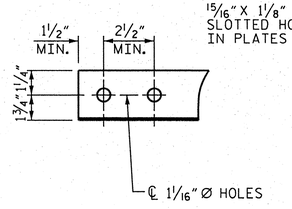

ANGLE END

(L 3 X 3 X 5/16)

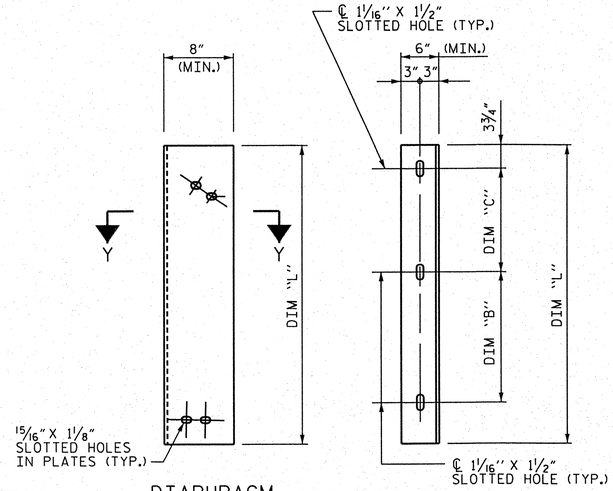

DIAPHRAGM FACE

WEB FACE

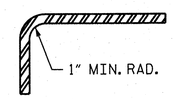

SECTION "Y-Y"

CONNECTOR PLATE DETAIL

STRUCTURAL STEEL NOTES

ALL INTERMEDIATE DIAPHRAGM STEEL AND CONNECTOR PLATES SHALL BE AASHTO M270 GRADE 50 OR APPROVED EQUAL.

TENSION ON THE ASTM A325 BOLTS THROUGH THE ANGLE MEMBER SHALL BE CALIBRATED USING DIRECT TENSION INDICATOR WASHERS IN ACCORDANCE WITH THE STANDARD SPECIFICATIONS.

TENSION ON THE ASTM A449 BOLTS THROUGH THE GIRDER WEB SHALL BE SNUG TIGHTENED FOLLOWED BY AN ADDITIONAL 1/4 TURN.

THE PLATES, BENT PLATES, CHANNELS, ANGLES, AND PLATE WASHERS SHALL BE METALLIZED IN ACCORDANCE WITH THE STANDARD SPECIFICATIONS. FOR THERMAL SPRAYED COATINGS (METALLIZATION), SEE SPECIAL PROVISIONS.

FOR METALLIZATION, APPLY AN 8 MIL THICK 99.50 PERCENT ZINC 1350 ALUMINUM (W-A1-1350) THERMAL SPRAYED COATING WITH A 0.5 MIL THICK SEAL COAT TO ALL PLATES, BENT PLATES, CHANNELS, ANGLES, AND PLATE WASHERS IN ACCORDANCE WITH THE THERMAL SPRAYED COATINGS SPECIAL PROVISION AND SECTION 442 OF THE STANDARD SPECIFICATIONS.

APPLY 1 COAT EACH OF 1080-12 GRAY PAINT ON THE EDGES AND THE WEB FACE OF THE CONNECTOR PLATE WHICH COMES IN CONTACT WITH THE CONCRETE GIRDER IN ACCORDANCE WITH SECTION 442 OF THE STANDARD SPECIFICATIONS.

GALVANIZE THE HIGH STRENGTH BOLTS, NUTS, WASHERS AND DIRECT TENSION INDICATORS IN ACCORDANCE WITH THE STANDARD SPECIFICATIONS.

USE AN ASTM F436 HARDENED WASHER WITH STANDARD AND SLOTTED HOLES UNDER EACH BOLT HEAD AND NUT.

FOR BOLTS THROUGH THE GIRDER WEB, PROVIDE SUFFICIENT LENGTH OF THREADS ON ALL BOLTS TO ACCOMMODATE WASHERS AND THE THICKNESS OF CONNECTING MEMBER PLUS AT LEAST 1/4" PROJECTION BEYOND THE NUT.

INTERMEDIATE DIAPHRAGM ASSEMBLY SHALL COMPLY WITH SECTION 1072 OF THE STANDARD SPECIFICATIONS.

SUBMIT TWO SETS OF WORKING DRAWINGS FOR THE INTERMEDIATE DIAPHRAGM ASSEMBLY FOR REVIEW, COMMENTS AND ACCEPTANCE. AFTER REVIEW, COMMENTS, AND ACCEPTANCE, SUBMIT SEVEN SETS FOR DISTRIBUTION.

IN THE EXTERIOR BAYS, PLACE TEMPORARY STRUTS BETWEEN PRESTRESSED GIRDERS ADJACENT TO THE STEEL DIAPHRAGMS. STRUTS SHALL REMAIN IN PLACE 3 DAYS AFTER CONCRETE IS PLACED.

THE COST OF THE STEEL DIAPHRAGMS AND ASSEMBLIES SHALL BE INCLUDED IN THE UNIT PRICE BID FOR PRESTRESSED CONCRETE GIRDERS.

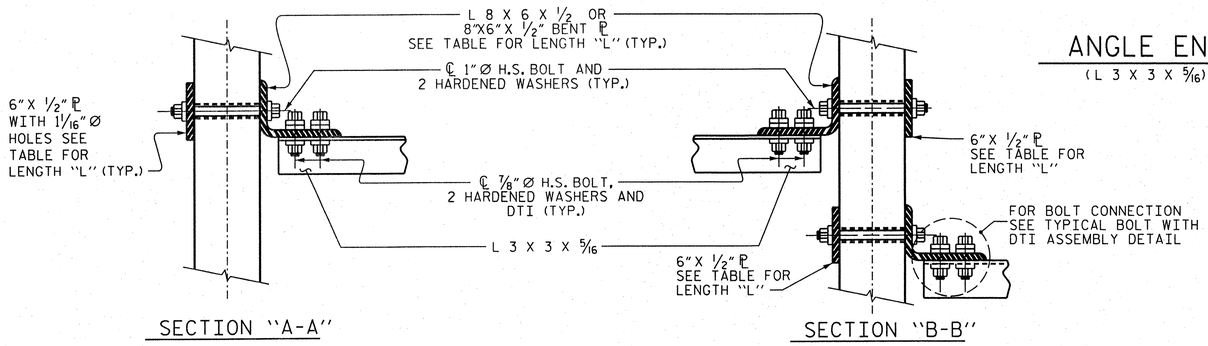

SECTION "A-A"

SECTION "B-B"

CONNECTION DETAILS

TABLE

GIRDER TYPE	DIM "A"	DIM "B"	DIM "C"	DIM "L"
72" BULB TEE	1'-4 1/4"	1'-9 1/2"	1'-9"	4'-2"

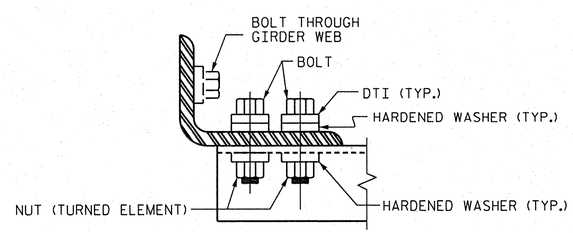

BOLT WITH DTI ASSEMBLY DETAIL

PROJECT NO. R-2633BB

BRUNSWICK/ NEW HANOVER COUNTY

STATION: 21+47.09 -RP B4-

DRAWN BY : J.D. GOODIN	DATE : 09/14/12	DRAWN BY : RWW 11/09	ADDED 11/23/09R
CHECKED BY : TG ZEBLO	DATE : 09/28/12	CHECKED BY : GM 11/09	REV. 10/1/11 MAA/GM
QC / QA : CD ROBINSON	DATE : 10/30/12		

PLAN PREPARED BY:

ALPHA & OMEGA GROUP
CIVIL & STRUCTURAL ENGINEERS
4601 Lake Boone Trail, Ste. 3C Raleigh, NC 27607
Phone 919 981 0310 Fax 919 981 0451
Firm License No. C-1684 www.aogroup.com
A&O PROJECT NO. 2011.016

NOTE: THIS STANDARD DRAWING REVIEWED AND ADOPTED FOR USE AT THE REFERENCED LOCATION BY THE UNDERSIGNED.

NORTH CAROLINA PROFESSIONAL SEAL 032724 ENGINEER GLENN ZEBLO 8-1-12

REFERENCE NO. 10-10

STATE OF NORTH CAROLINA
DEPARTMENT OF TRANSPORTATION
RALEIGH

STANDARD
INTERMEDIATE
STEEL DIAPHRAGMS
FOR 63" & 72"
MODIFIED BULB TEE
PRESTRESSED CONCRETE
GIRDERS

REVISIONS							SHEET NO.
NO.	BY:	DATE:	NO.	BY:	DATE:		S-C84
1			3				TOTAL SHEETS
2			4				700

STD. NO. PCG11 STR. NO. 10

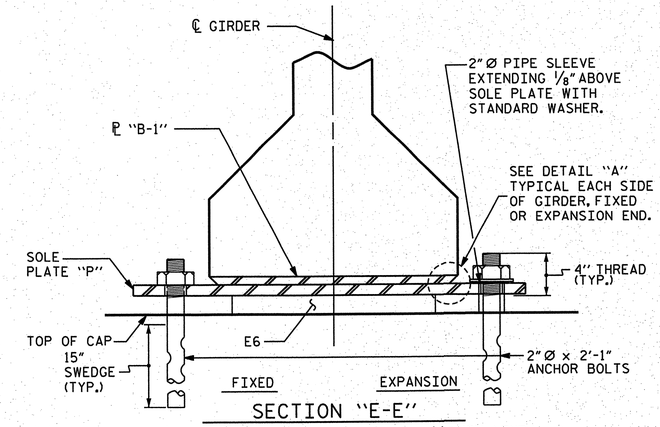

SECTION "E-E"

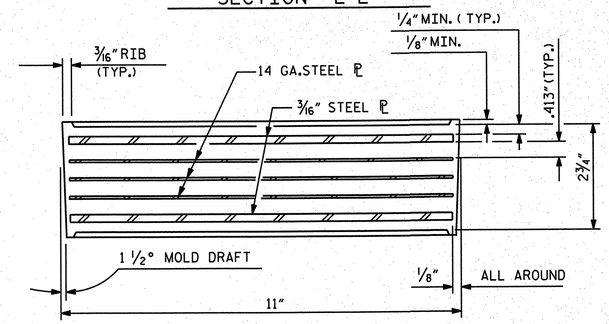

TYPICAL SECTION OF ELASTOMERIC BEARINGS

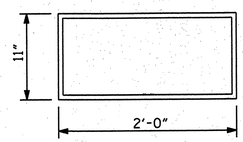

E6 (8 REQ'D)

PLAN VIEW OF ELASTOMERIC BEARING

TYPE VII

NOTES

AT ALL FIXED POINTS OF SUPPORT, NUTS FOR ANCHOR BOLTS ARE TO BE TIGHTENED FINGER TIGHT AND THEN BACKED OFF 1/2 TURN. THE THREAD OF THE NUT AND BOLT SHALL THEN BE BURRED WITH A SHARP POINTED TOOL.

THE 2"Ø PIPE SLEEVE SHALL BE CUT FROM SCHEDULE 40 PVC PLASTIC PIPE. THE PVC PLASTIC PIPE SHALL MEET THE REQUIREMENTS OF ASTM D1785.

STEEL SOLE PLATES, ANCHOR BOLTS, NUTS, AND WASHERS SHALL BE GALVANIZED IN ACCORDANCE WITH THE STANDARD SPECIFICATIONS.

PRIOR TO WELDING, GRIND THE GALVANIZED SURFACE OF THE PORTION OF THE EMBEDDED PLATE AND SOLE PLATE THAT ARE TO BE WELDED. AFTER WELDING, DAMAGED GALVANIZED SURFACES SHALL BE REPAIRED IN ACCORDANCE WITH THE STANDARD SPECIFICATIONS.

WHEN WELDING THE SOLE PLATE TO THE EMBEDDED PLATE IN THE GIRDER, USE TEMPERATURE INDICATING WAX PENS, OR OTHER SUITABLE MEANS, TO ENSURE THAT THE TEMPERATURE OF THE SOLE PLATE DOES NOT EXCEED 300°F. TEMPERATURES ABOVE THIS MAY DAMAGE THE ELASTOMER.

SOLE PLATE "P", BOLTS, NUTS, WASHERS, AND PIPE SLEEVE SHALL BE INCLUDED IN THE PAY ITEM FOR PRESTRESSED CONCRETE GIRDERS.

ANCHOR BOLTS SHALL MEET THE REQUIREMENTS OF ASTM A449. NUTS SHALL MEET THE REQUIREMENTS OF AASHTO M291-DH OR AASHTO M292-2H. WASHERS SHALL MEET THE REQUIREMENTS OF AASHTO M293. NO SHOP DRAWINGS ARE REQUIRED FOR ANCHOR BOLTS, NUTS AND WASHERS. SHOP INSPECTION IS REQUIRED.

ALL SURFACES OF BEARING PLATES SHALL BE SMOOTH AND STRAIGHT.

FOR STEEL REINFORCED ELASTOMERIC BEARINGS, SEE SPECIAL PROVISIONS.

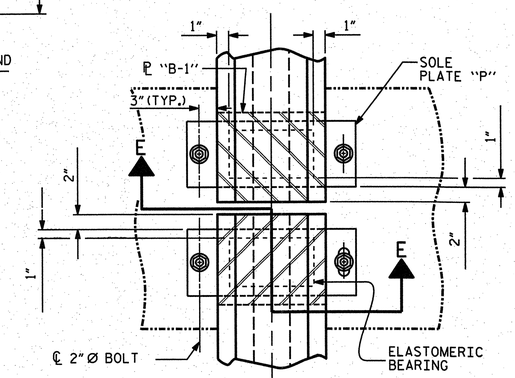

TYPICAL HALF-PLAN (SHOWING CONTINUOUS BENT)

TYPICAL HALF-PLAN (SHOWING SIMPLE SPAN BENT)

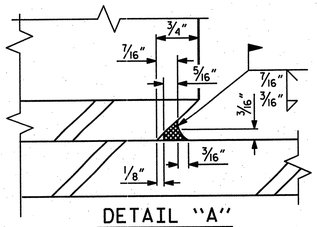

DETAIL "A"

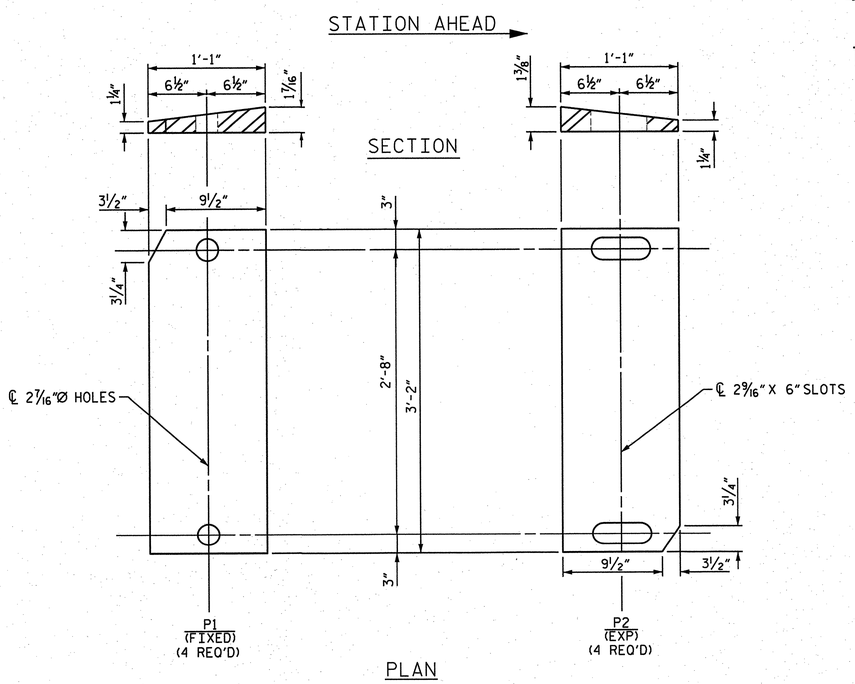

PLAN

SOLE PLATE DETAILS ("P")

LOAD RATINGS	
	MAX.D.L.+ L.L.
TYPE VII	264 K

PROJECT NO. R-2633BB

BRUNSWICK/ NEW HANOVER COUNTY

STATION: 21+47.09 -RP B4-

DRAWN BY :	J.D. GOODIN	DATE :	09/14/12
CHECKED BY :	TG ZEBLO	DATE :	09/28/12
QC / QA :	CD ROBINSON	DATE :	10/30/12

DRAWN BY :	EEM	2/97	REV. 10/17/00	RWW/LES
CHECKED BY :	VAP	2/97	REV. 5/1/06	TLA/GM
			REV. 10/1/11	MAA/GM

PLAN PREPARED BY:

ALPHA & OMEGA GROUP
CIVIL & STRUCTURAL ENGINEERS
4601 Lake Boone Trail, Ste. 3C Raleigh, NC 27607
Phone 919 981 0310 Fax 919 981 0451
Firm License No. C-1684 www.aogroup.com
A&O PROJECT NO. 2011.016

NOTE: THIS STANDARD DRAWING REVIEWED AND ADOPTED FOR USE AT THE REFERENCED LOCATION BY THE UNDERSIGNED.

NORTH CAROLINA PROFESSIONAL SEAL 032724 ENGINEER T. GLENN ZEBLO

T. Glenn Zeblo 11-5-12

REFERENCE NO. 10-11

STATE OF NORTH CAROLINA
DEPARTMENT OF TRANSPORTATION
RALEIGH

STANDARD
ELASTOMERIC BEARING DETAILS

PRESTRESSED CONCRETE GIRDER SUPERSTRUCTURE

REVISIONS							
NO.	BY:	DATE:	NO.	BY:	DATE:		
1			3				
2			4				

SHEET NO. S-685

TOTAL SHEETS 700

STD. NO. EB4 STR. NO. 10

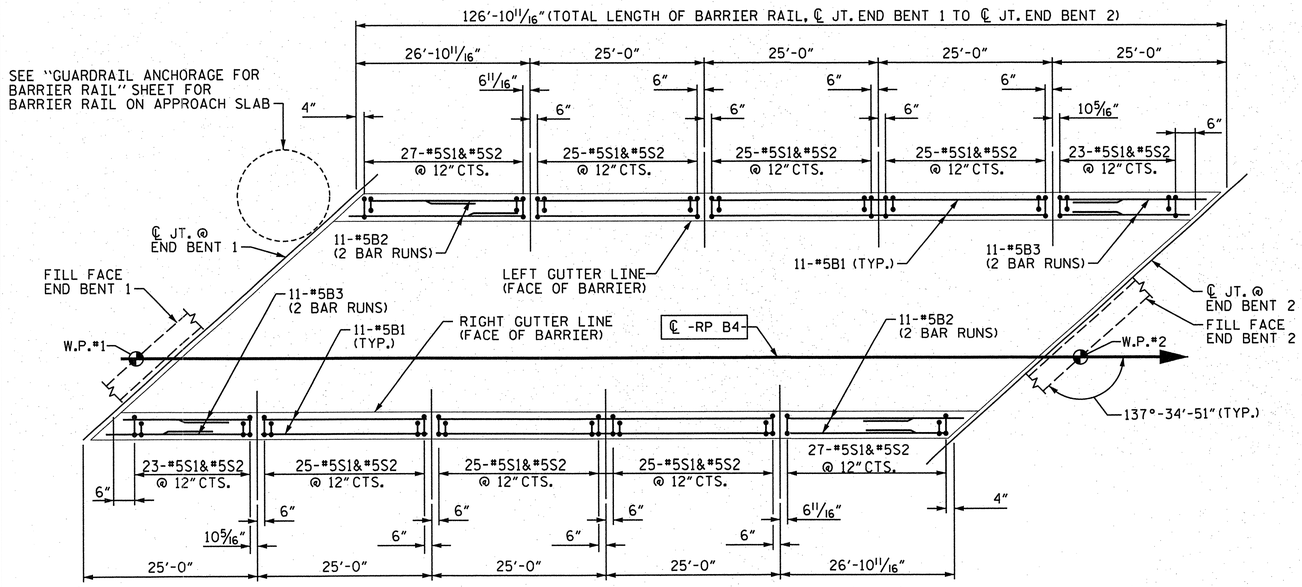

PLAN

NOTES

THE BARRIER RAIL IN THE SPAN SHALL NOT BE CAST UNTIL ALL SLAB CONCRETE IN THE SPAN HAS BEEN CAST AND HAS REACHED A MINIMUM COMPRESSIVE STRENGTH OF 3,000 PSI.

ALL REINFORCING STEEL IN BARRIER RAILS SHALL BE EPOXY COATED.

GROOVED CONTRACTION JOINTS, 1/2" IN DEPTH, SHALL BE TOOLED IN ALL EXPOSED FACES OF THE BARRIER RAIL AND IN ACCORDANCE WITH ARTICLE 825-10(B) OF THE STANDARD SPECIFICATIONS. THE CONTRACTION JOINT SHALL BE LOCATED AT EACH THIRD POINT BETWEEN BARRIER RAIL EXPANSION JOINTS. ONLY ONE CONTRACTION JOINT IS REQUIRED AT MIDPOINT OF BARRIER RAIL SEGMENTS LESS THAN 20 FEET IN LENGTH AND NO CONTRACTION JOINTS ARE REQUIRED FOR THOSE SEGMENTS LESS THAN 10 FEET IN LENGTH.

BAR TYPES

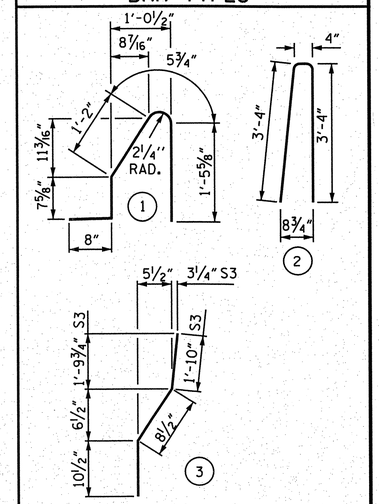

ALL BAR DIMENSIONS ARE OUT TO OUT.

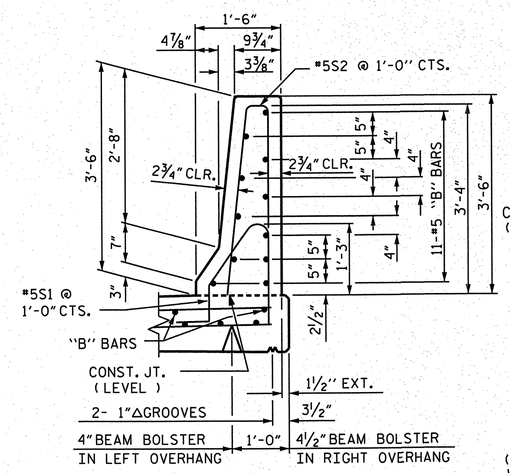

SECTION THRU RAIL

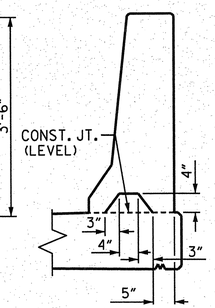

SECTION "S-S"

AT DAM IN OPEN JOINT (THIS IS TO BE USED ONLY WHEN SLIP FORM IS USED)

BILL OF MATERIAL

FOR CONCRETE BARRIER RAIL ONLY

BAR	NO.	SIZE	TYPE	LENGTH	WEIGHT
* S1	280	#5	1	4'-5"	1290
* S2	280	#5	2	7'-0"	2044
* S3	8	#5	3	3'-5"	29
* S4	8	#5	STR	3'-3"	27
* B1	66	#5	STR	24'-8"	1698
* B2	44	#5	STR	15'-9"	723
* B3	44	#5	STR	14'-0"	643
* B4	88	#5	STR	7'-4"	673

* EPOXY COATED REINFORCING STEEL	7130	LBS.
CLASS AA CONCRETE	40.4	CU. YDS.
CONCRETE BARRIER RAIL	297.06	LIN. FT.

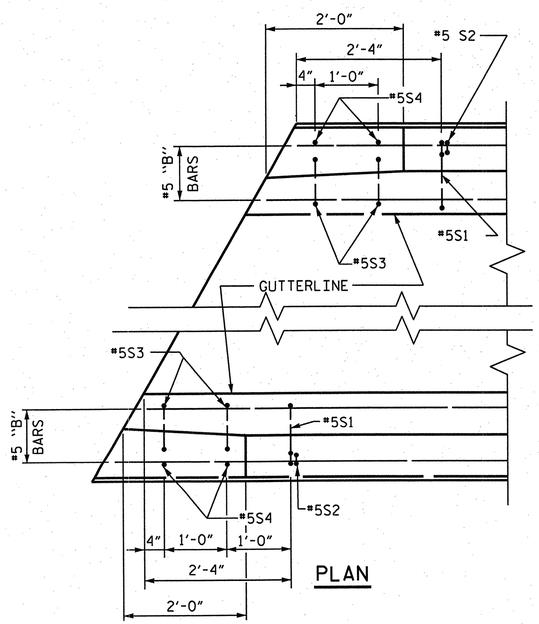

PLAN

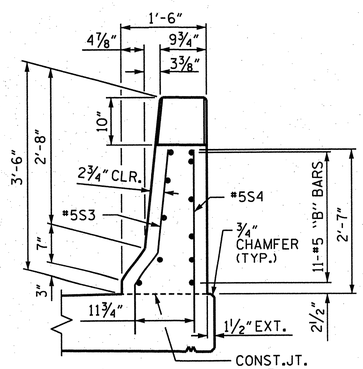

END VIEW

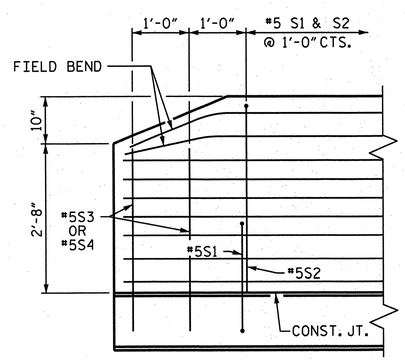

SIDE VIEW

END OF RAIL DETAILS

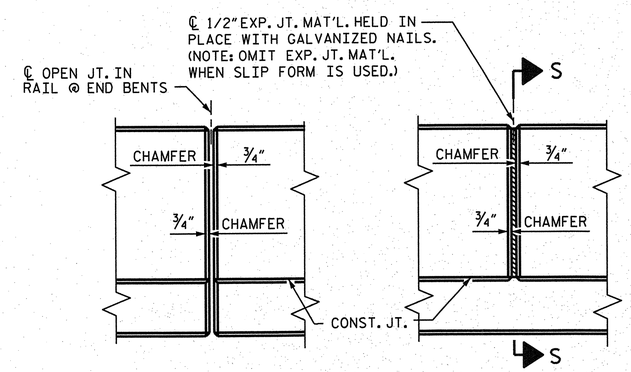

ELEVATION AT EXPANSION JOINTS

BARRIER RAIL DETAILS

PROJECT NO. R-2633BB

BRUNSWICK/ NEW HANOVER COUNTY

STATION: 21+47.09 -RP B4-

STATE OF NORTH CAROLINA
DEPARTMENT OF TRANSPORTATION
RALEIGH

STANDARD

CONCRETE BARRIER RAIL

ASSEMBLED BY :	JD GOODIN	DATE :	02/07/12		
CHECKED BY :	TG ZEBLO	DATE :	02/08/12		
QC / QA :	CD ROBINSON	DATE :	10/30/12		
DRAWN BY :	ARB 5/87	REV. 5/1/06R	TLA/GM		
CHECKED BY :	SJD 9/87	REV. 10/1/11	MAA/GM		
		REV. 7/12	MAA/GM		

PLAN PREPARED BY:

ALPHA & OMEGA GROUP
CIVIL & STRUCTURAL ENGINEERS
4601 Lake Boone Trail, Ste. 3C Raleigh, NC 27607
Phone 919 981 0310 Fax 919 981 0451
Firm License No. C-1684 www.aogroup.com
A&O PROJECT NO. 2011.016

NOTE: THIS STANDARD DRAWING REVIEWED AND ADOPTED FOR USE AT THE REFERENCED LOCATION BY THE UNDERSIGNED.

NORTH CAROLINA PROFESSIONAL SEAL 032724 ENGINEER T. GLENN ZEBLO
T. Glenn Zeblo 11-5-12

REFERENCE NO. 10-12

REVISIONS							
NO.	BY:	DATE:	NO.	BY:	DATE:	SHEET NO.	S-686
1			3			TOTAL SHEETS	700
2			4				

STR. NO. 10 STD. NO. CBR1

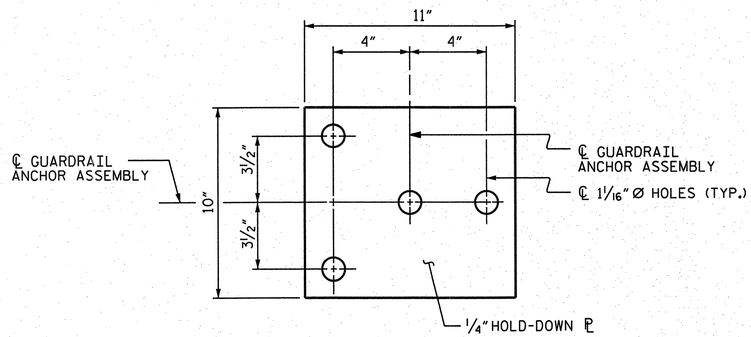

PLAN

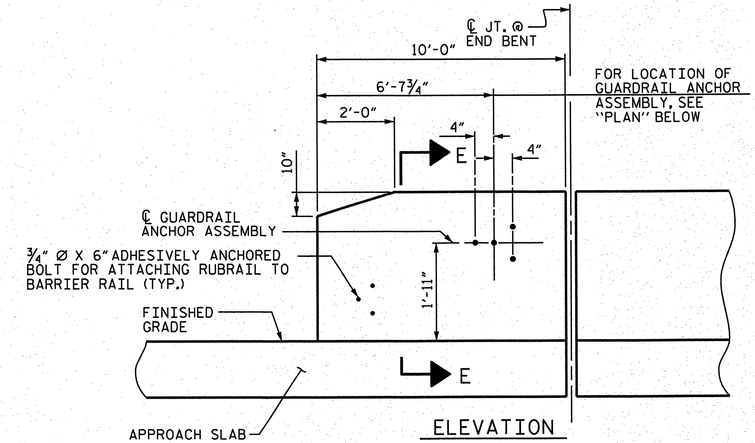

ELEVATION

(FOR LOCATION OF RUBRAIL ANCHORS, SEE ROADWAY STANDARD NO. 862.03)

NOTES

THE GUARDRAIL ANCHOR ASSEMBLY SHALL CONSIST OF A 1/4" HOLD-DOWN PLATE AND 4-7/8" Ø BOLTS WITH NUTS AND WASHERS, RUBRAIL, AND ADHESIVELY ANCHORED BOLTS.

THE HOLD-DOWN PLATE SHALL CONFORM TO AASHTO M270 GRADE 36. AFTER FABRICATION, THE HOLD-DOWN PLATE SHALL BE HOT-DIP GALVANIZED IN ACCORDANCE WITH AASHTO M111.

BOLTS SHALL CONFORM TO THE REQUIREMENTS OF ASTM A307 AND NUTS SHALL CONFORM TO THE REQUIREMENTS OF AASHTO M291. BOLTS, NUTS AND WASHERS SHALL BE GALVANIZED. (AT THE CONTRACTOR'S OPTION, STAINLESS STEEL BOLTS, NUTS AND WASHERS MAY BE USED AS AN ALTERNATE FOR THE 7/8" Ø GALVANIZED BOLTS, NUTS AND WASHERS. THEY SHALL CONFORM TO OR EXCEED THE MECHANICAL REQUIREMENTS OF ASTM A307. THE USE OF THIS ALTERNATE SHALL BE APPROVED BY THE ENGINEER.)

THE GUARDRAIL ANCHOR ASSEMBLY IS REQUIRED AT ALL POINTS WHERE APPROACH GUARDRAIL IS TO BE ATTACHED TO THE END OF BARRIER RAIL. FOR POINTS OF ATTACHMENT, SEE SKETCH.

AFTER INSTALLATION, THE EXPOSED THREAD OF THE BOLT SHALL BE BURRED WITH A SHARP POINTED TOOL.

THE COST OF THE GUARDRAIL ANCHOR ASSEMBLY SHALL BE INCLUDED IN THE UNIT CONTRACT PRICE BID FOR CONCRETE BARRIER RAIL.

THE 1 1/4" Ø HOLES SHALL BE FORMED OR DRILLED WITH A CORE BIT. IMPACT TOOLS WILL NOT BE PERMITTED. ANY CONCRETE DAMAGED BY THIS WORK SHALL BE REPAIRED TO THE SATISFACTION OF THE ENGINEER.

THE C6 X 8.2 RUBRAIL IS TO BE ADHESIVELY ANCHORED TO THE RAIL USING THREE 3/4" Ø X 6" BOLTS WITH WASHERS. LEVEL ONE FIELD TESTING IS REQUIRED, AND THE YIELD LOAD OF THE 3/4" Ø BOLT IS 12 KIPS. FOR ADHESIVELY ANCHORED ANCHOR BOLTS OR DOWELS, SEE STANDARD SPECIFICATIONS. SEE ROADWAY STANDARD 862.03 FOR DETAILS AND LOCATION OF THE RUBRAIL.

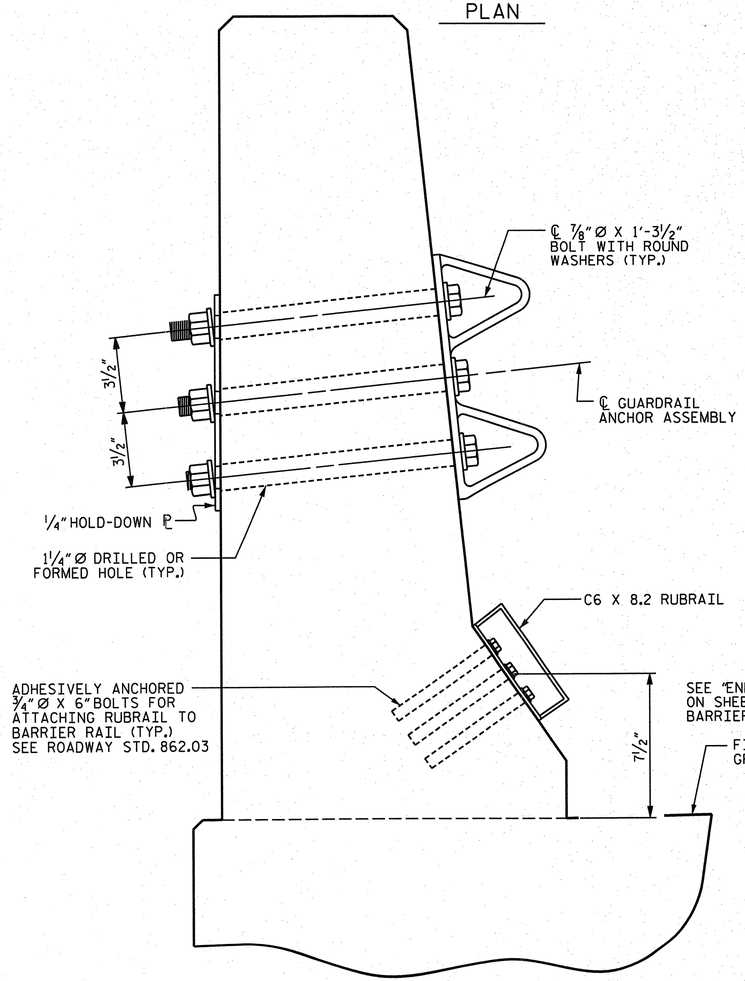

SECTION "E-E"

GUARDRAIL ANCHOR ASSEMBLY DETAILS

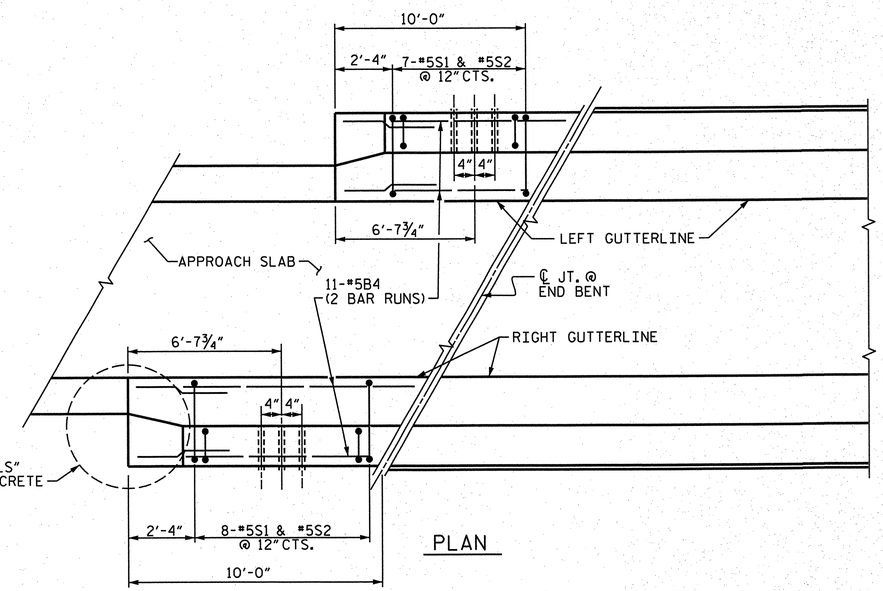

PLAN

LOCATION OF ANCHORS FOR GUARDRAIL

END BENT #1 SHOWN, END BENT #2 SIMILAR.

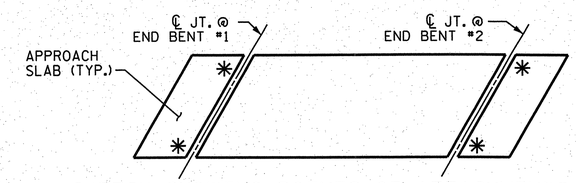

SKETCH SHOWING POINTS OF ATTACHMENTS

✳ DENOTES GUARDRAIL ANCHOR ASSEMBLY

PROJECT NO. R-2633BB

BRUNSWICK/ NEW HANOVER COUNTY

STATION: 21+47.09 -RP B4-

ASSEMBLED BY :	JD GOODIN	DATE :	02/07/12
CHECKED BY :	TG ZEBLO	DATE :	02/08/12
QC / QA :	CD ROBINSON	DATE :	10/30/12
DRAWN BY : TLA 5/06	ADDED 5/1/06RR KMM/GM		
CHECKED BY : GM 5/06	REV. 10/1/11 MAA/GM		

PLAN PREPARED BY:

ALPHA & OMEGA GROUP
CIVIL & STRUCTURAL ENGINEERS
4601 Lake Boone Trail, Ste. 3C Raleigh, NC 27607
Phone 919 981 0310 Fax 919 981 0451
Firm License No. C-1684 www.aogroup.com
A&O PROJECT NO. 2011.016

NOTE: THIS STANDARD DRAWING REVIEWED AND ADOPTED FOR USE AT THE REFERENCED LOCATION BY THE UNDERSIGNED.

NORTH CAROLINA PROFESSIONAL SEAL 032724 ENGINEER GLENN ZEBLO

T. Gregory Zeblo 11-5-12

REFERENCE NO. 10-13

STATE OF NORTH CAROLINA
DEPARTMENT OF TRANSPORTATION
RALEIGH

STANDARD

GUARDRAIL ANCHORAGE FOR BARRIER RAIL

REVISIONS						SHEET NO.
NO.	BY:	DATE:	NO.	BY:	DATE:	S-687
1			3			TOTAL SHEETS
2			4			700

Str No. 10 (SHT 1b) STD. NO. GRA2

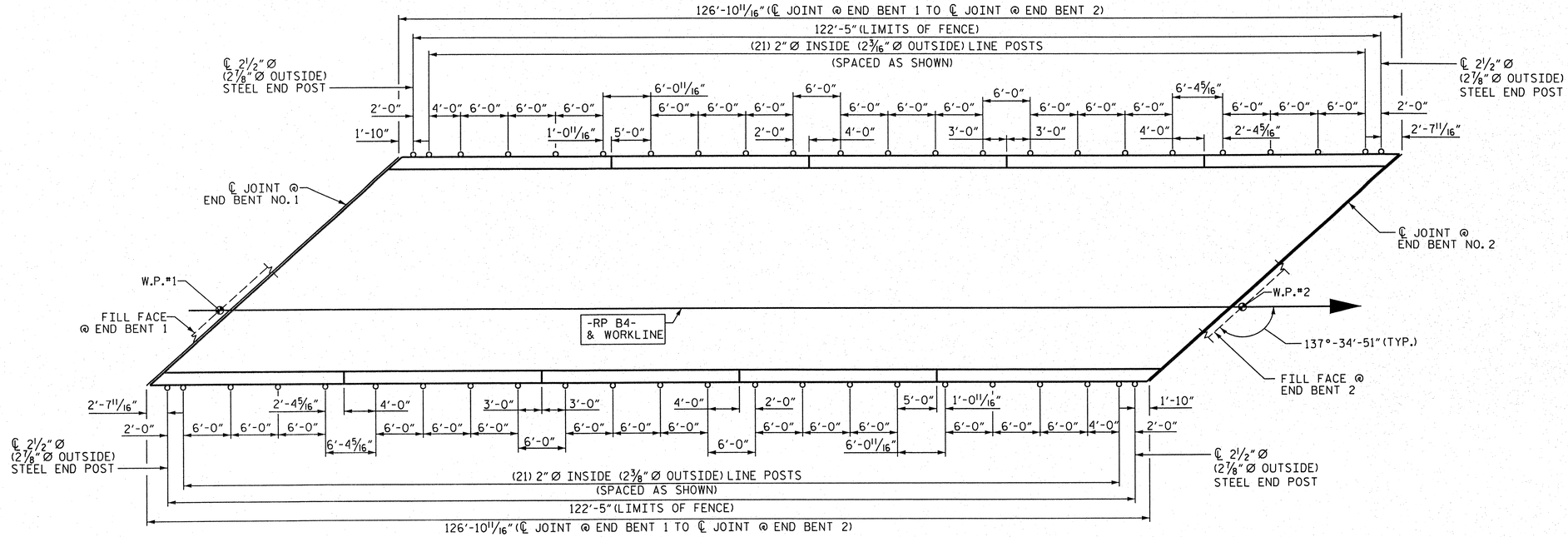

PLAN OF FENCE POST SPACING

PAY LENGTH = 244.83 FEET

NOTES:

FOR 72" CHAIN LINK FENCE, SEE SPECIAL PROVISIONS.

BOLTS SHALL CONFORM TO THE REQUIREMENTS OF ASTM A307 AND NUTS SHALL CONFORM TO THE REQUIREMENTS OF AASHTO M291. BOLTS, NUTS, AND WASHERS SHALL BE GALVANIZED. (AT THE CONTRACTOR'S OPTION, STAINLESS STEEL BOLTS, NUTS, AND WASHERS MAY BE USED AS AN ALTERNATE FOR THE 3/4" Ø GALVANIZED BOLTS, NUTS, AND WASHERS. THEY SHALL CONFORM TO OR EXCEED THE MECHANICAL REQUIREMENTS OF ASTM A307. THE USE OF THIS ALTERNATE SHALL BE APPROVED BY THE ENGINEER.)

FOR SETTING ANCHOR BOLTS, THE CONTRACTOR SHALL USE AN ADHESIVE BONDING SYSTEM. LEVEL ONE FIELD TESTING OF BONDING SYSTEM IS REQUIRED AND THE YIELD LOAD OF THE 3/4" Ø BOLTS IS 12.0 KIPS.

ALL FENCE MATERIAL SHALL MEET THE REQUIREMENTS OF SECTION 1050 OF THE STANDARD SPECIFICATIONS. GALVANIZE ALL STEEL PARTS AND HARDWARE IN ACCORDANCE WITH ARTICLE 1076 OF THE STANDARD SPECIFICATIONS.

FENCE POST LOCATIONS SHALL BE SHIFTED, AS NECESSARY, TO MAINTAIN 12" MINIMUM DISTANCE FROM ANCHOR BOLT TO JOINTS IN BARRIER RAIL.

DIMENSIONS TAKEN ALONG OUTSIDE FACE OF BARRIER RAIL.

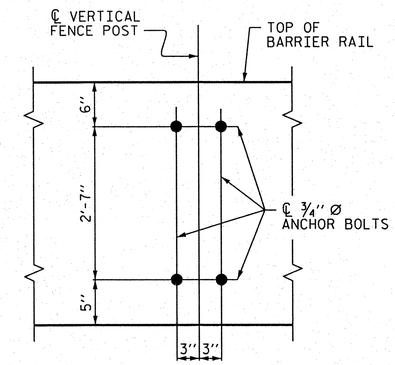

BOLT SETTING DETAIL

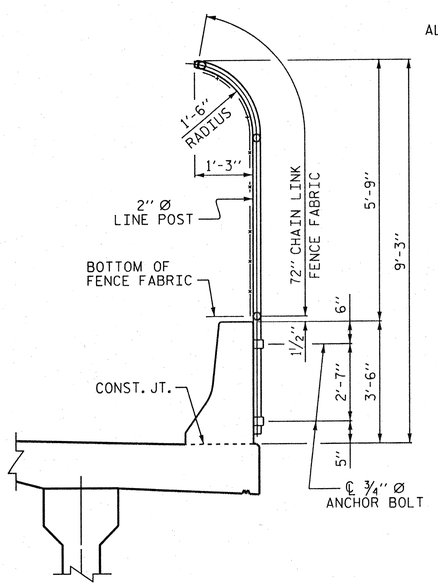

SECTION THRU FENCE

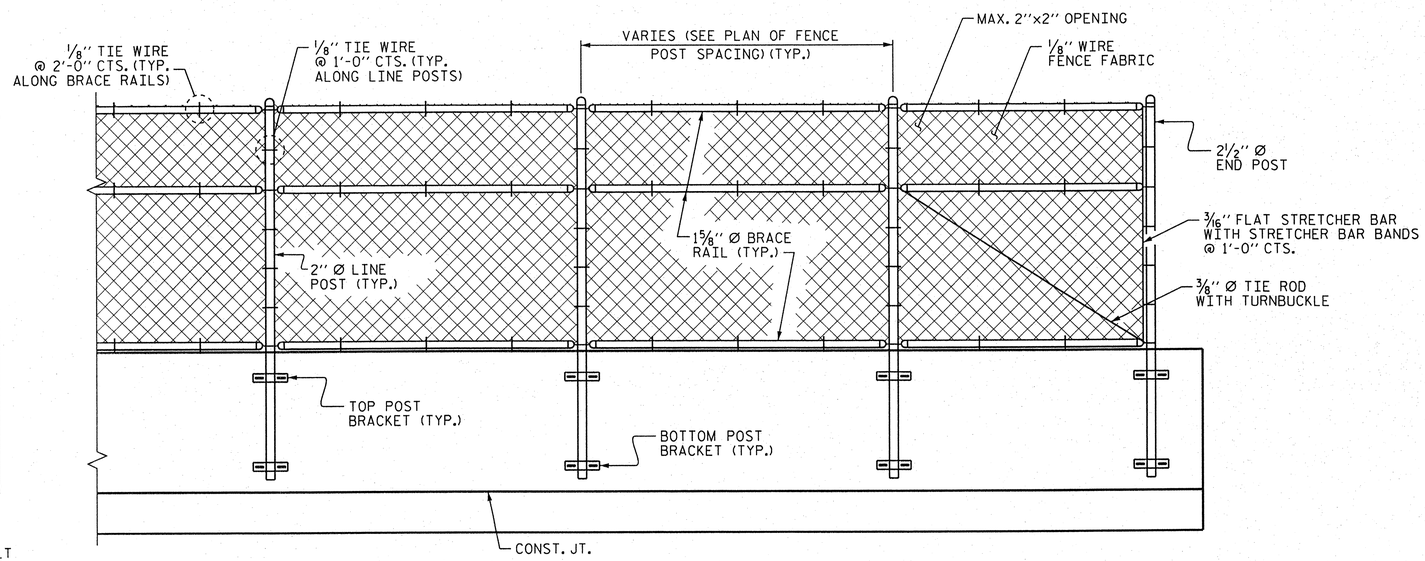

PARTIAL ELEVATION

PROJECT NO. R-2633BB

BRUNSWICK/NEW HANOVER COUNTY

STATION: 21+47.09 -RP B4-

STATE OF NORTH CAROLINA
DEPARTMENT OF TRANSPORTATION
RALEIGH

STANDARD

BRIDGE MOUNTED
72" CHAIN LINK FENCE

PLAN PREPARED BY:

ALPHA & OMEGA GROUP
CIVIL & STRUCTURAL ENGINEERS
4601 Lake Boone Trail, Ste. 3C Raleigh, NC 27607
Phone 919 981 0310 Fax 919 981 0451
Firm License No. C-1684 www.aogroup.com
A&O PROJECT NO. 2011.016

NOTE: THIS STANDARD DRAWING REVIEWED AND ADOPTED FOR USE AT THE REFERENCED LOCATION BY THE UNDERSIGNED.

NORTH CAROLINA PROFESSIONAL SEAL 032724 ENGINEER GLENN ZEBLO
4-1-13

REFERENCE NO. 10-13a

REVISIONS								
NO.	BY:	DATE:	NO.	BY:	DATE:		SHEET NO. S-688
1			3				TOTAL SHEETS 700
2			4				

STRUCTURE NO. 10

DRAWN BY :	JD GOODIN	DATE :	3/18/13
CHECKED BY :	TG ZEBLO	DATE :	3/19/13
QC / QA BY :	TL BARTELT	DATE :	3/20/13

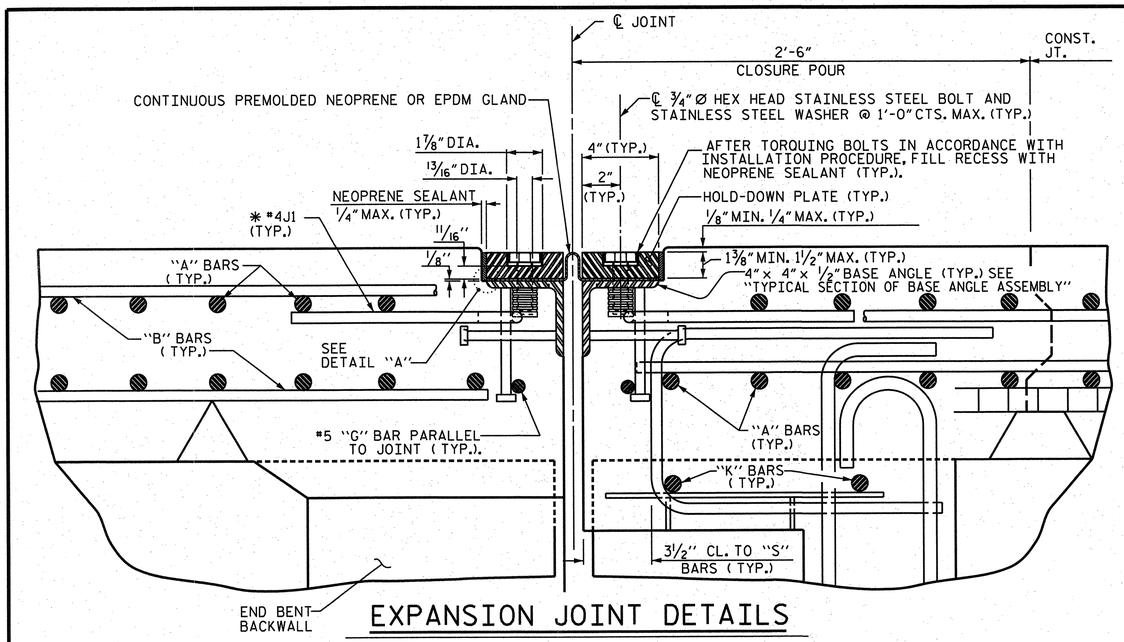

EXPANSION JOINT DETAILS

SECTION NORMAL TO JOINT -- PRESTRESSED GIRDER SUPERSTRUCTURE

* THE QUANTITY OF #4J1 BARS ON THE BILL OF MATERIAL IS BASED ON 1'-0" CENTERS. J1 BARS SHALL BE PLACED AT EACH VERTICAL STUD ANCHOR BOLT. IN THE EVENT THAT THE NUMBER OF VERTICAL STUD ANCHORS EXCEEDS THE NUMBER OF J1 BARS SPECIFIED, ADDITIONAL J1 BARS WILL NOT BE REQUIRED.

INSTALLATION PROCEDURE

1. A TEMPLATE OR OTHER SUITABLE DEVICE SHALL BE USED TO FORM THE TOP OF THE EXPANSION JOINT SEAL BLOCKOUT TO THE PROPER DEPTH AND WIDTH. THE TEMPLATE SHALL BE 4⅛" TO 4¼" WIDE AND OF SUCH THICKNESS AS TO PROVIDE FOR CORRECT FINAL ELEVATION OF TOP OF HOLD-DOWN PLATES. THE TEMPLATE SHALL BE ATTACHED TO THE BASE ANGLE ASSEMBLY WITH THE ¾"Ø HEX HEAD BOLTS PROVIDED FOR THE HOLD-DOWN PLATES. A 1"Ø HOLE SHALL BE PROVIDED IN THE TEMPLATE CENTERED OVER EACH WEEP HOLE IN THE 4" X 4" X ½" BASE ANGLE. OTHER METHODS OF INSURING DRAINAGE THROUGH WEEP HOLES MAY BE EMPLOYED SUBJECT TO ENGINEER'S APPROVAL.
2. AFTER THE CONCRETE HAS BEEN CAST ON BOTH SIDES OF THE JOINT, REMOVE THE TEMPLATE. THOROUGHLY CLEAN THE BOLT HOLES AND THE ANGLE PLATE. REMOVE ANY EXCESS CONCRETE THAT COMES OUT OF THE WEEP HOLES. ANY DAMAGED STEEL SHALL BE COATED WITH A MINIMUM THICKNESS OF 4 DRY MILS OF ZINC-RICH PAINT IN ACCORDANCE WITH THE STANDARD SPECIFICATIONS.
3. LAY THE GLAND ON THE BASE ANGLE AND FIELD MARK THE GLAND FOR THE BOLT HOLES. HOLES IN THE GLAND SHALL BE PUNCHED ⅞" IN DIAMETER WITH A HAND PUNCH.
4. IN ORDER TO CHECK FOR PROPER ALIGNMENT, PLACE THE GLAND AND HOLD-DOWN PLATES ON THE BASE ANGLE. DO NOT APPLY NEOPRENE SEALANT. BOLT THE HOLD-DOWN PLATES TO THE BASE ANGLE BUT DO NOT TIGHTEN. THE ENGINEER SHALL INSPECT THE JOINT SEAL DEVICE FOR PROPER ALIGNMENT.
5. AFTER INSPECTION, REMOVE THE HOLD-DOWN PLATES AND GLAND. APPLY NEOPRENE SEALANT TO THE BASE ANGLE IN ACCORDANCE WITH THE "INSTALLATION SKETCH". PLACE GLAND AND HOLD-DOWN PLATES ON THE BASE ANGLE. BOLT THE HOLD-DOWN PLATES TO THE BASE ANGLE ASSEMBLY AND TORQUE THE BOLTS TO 88 FT-LBS WITH A TORQUE WRENCH. CHECK THE TORQUE AFTER THREE (3) HOURS AND, IF NECESSARY, RETIGHTEN TO 88 FT-LBS. A FINAL CHECK SHALL BE MADE AT SEVEN (7) DAYS. TORQUE SHALL NOT BE LESS THAN 80 FT-LBS AFTER SEVEN (7) DAYS.
6. AFTER PROPER TORQUING, CLEAN THE BOLT HOLE RECESSES AND THE RECESS BETWEEN THE JOINT SEAL DEVICE AND CONCRETE, COMPLETELY FILL THESE RECESSES WITH NEOPRENE SEALANT.

GENERAL NOTES

1. FOR EXPANSION JOINT SEALS, SEE SPECIAL PROVISIONS.
2. ALL PLATES AND ANGLES SHALL CONFORM TO AASHTO M270 GRADE 36 STEEL OR APPROVED EQUAL. ALL HOLD-DOWN BOLTS SHALL CONFORM TO ASTM F593 ALLOY 304 STAINLESS STEEL AND WASHERS SHALL CONFORM TO ASTM F844 EXCEPT THEY SHALL BE MADE FROM ALLOY 304 STAINLESS STEEL. ALL STUD ANCHORS SHALL CONFORM TO AASHTO M169, GRADES 1010 THRU 1020 OR APPROVED EQUAL. ALL CONCRETE INSERTS SHALL BE CLOSED END AND SHALL CONFORM TO AASHTO M169, GRADE 12L14. TENSILE CAPACITY SHALL BE 3000 LBS. MIN.
3. A PREMOLDED CORRUGATED OR NON-CORRUGATED GLAND SHALL BE USED FOR JOINTS SKEWED BETWEEN 50° THRU 130°. FOR JOINTS SKEWED LESS THAN 50° OR MORE THAN 130°, ONLY A CORRUGATED GLAND SHALL BE USED.
4. CLOSED END FERRULES AND STUD ANCHORS SHALL BE SHOP WELDED AND ALL HOLES SHALL BE SHOP DRILLED AS SHOWN ON PLANS. STUD ANCHORS SHALL BE ELECTRIC ARC END WELDED WITH COMPLETE FUSION.
5. SURFACES COMING IN CONTACT WITH NEOPRENE SHALL BE GROUND SMOOTH PRIOR TO METALLIZING.
6. UPON COMPLETION OF SHOP FABRICATION, THE HOLD DOWN PLATE AND BASE ANGLE ASSEMBLY, AS SHOWN IN THE "TYPICAL SECTION OF BASE ANGLE ASSEMBLY", SHALL BE METALLIZED. SEE SPECIAL PROVISION FOR THERMAL SPRAYED COATINGS (METALLIZATION).
7. BASE ANGLE ASSEMBLY SHALL BE CONTINUOUS FOR THE LENGTH OF THE JOINT. AT CROWN BREAKS, THE ENDS OF THE BASE ANGLE ASSEMBLY SHALL BE CUT PARALLEL TO THE BRIDGE CENTERLINE FOR SKEWS LESS THAN 80° AND GREATER THAN 100°. FINISHED WELD SHALL BE GROUND SMOOTH AND COATED WITH A MINIMUM THICKNESS OF 4 DRY MILS OF ZINC-RICH PAINT IN ACCORDANCE WITH THE STANDARD SPECIFICATIONS.
8. FIELD SPLICES OF HOLD-DOWN PLATES SHALL BE KEPT TO A MINIMUM. CONTRACTOR SHALL FURNISH DETAILED PLANS SHOWING PROPOSED SPLICE LOCATIONS FOR APPROVAL. HOLD-DOWN PLATES SHALL NOT EXCEED 20' LENGTHS UNLESS APPROVED BY THE ENGINEER.
9. NO ALTERNATE JOINT DETAILS SHALL BE PERMITTED IN LIEU OF THOSE SHOWN ON THESE PLANS.
10. THE CONTRACTOR MAY, AT HIS OPTION, USE ADHESIVELY ANCHORED ANCHOR BOLTS IN PLACE OF CONCRETE INSERTS FOR COVER PLATES. THE YIELD LOAD OF THE ¾"Ø BOLT IS 10 KIPS. FIELD TESTING OF THE ADHESIVE BONDING SYSTEM IS NOT REQUIRED.

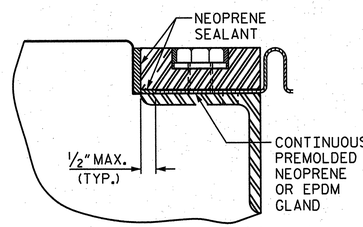

DETAIL "A"

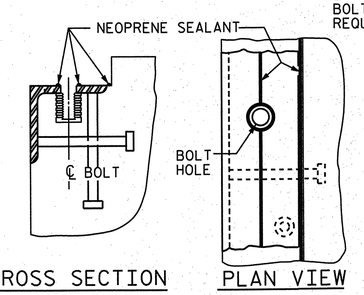

INSTALLATION SKETCH

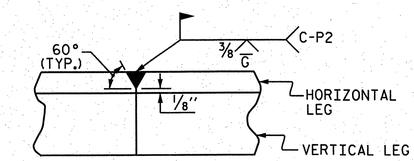

DETAIL- FIELD WELD SPLICE OF BASE ANGLE

MOVEMENT AND SETTING AT JOINT					
END BENT NO.	SKEW ANGLE	TOTAL MOVEMENT (ALONG ℄ RDWY)	PERPENDICULAR JOINT OPENING AT 45° F	PERPENDICULAR JOINT OPENING AT 60° F	PERPENDICULAR JOINT OPENING AT 90° F
1	137.58083°	0	1"	1"	1"
2	137.58083°	1 1/16"	1½"	1⅜"	1⅛"

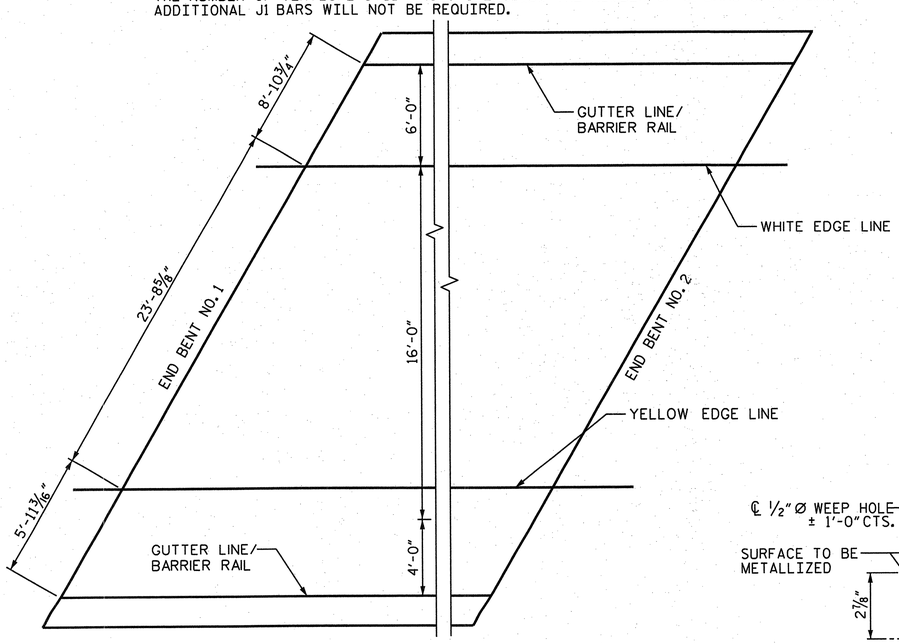

PAVEMENT MARKING ALIGNMENT

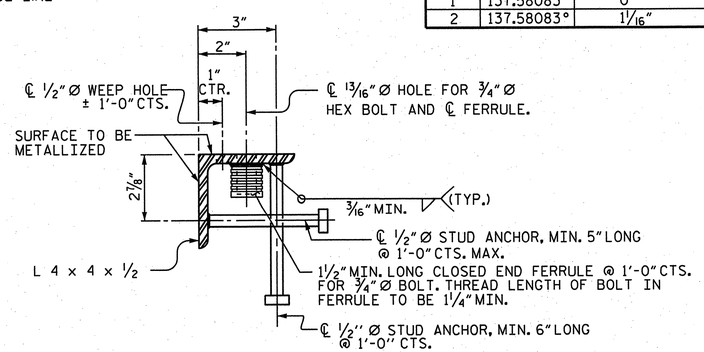

TYPICAL SECTION OF BASE ANGLE ASSEMBLY

PROJECT NO. R-2633BB

BRUNSWICK/ NEW HANOVER COUNTY

STATION: 21+47.09 -RP B4-

SHEET 1 OF 2

STATE OF NORTH CAROLINA
DEPARTMENT OF TRANSPORTATION
RALEIGH

STANDARD

EXPANSION JOINT SEAL DETAILS

ASSEMBLED BY :	JD GOODIN	DATE :	02/07/12
CHECKED BY :	TG ZEBLO	DATE :	02/08/12
QC / QA :	CD ROBINSON	DATE :	10/30/12

DRAWN BY : REK 9/87	REV. 5/7/03R	RWW/JTE
CHECKED BY : CRK 10/87	REV. 5/1/06R	TLA/GM
	REV. 10/1/11	MAA/GM

PLAN PREPARED BY:

ALPHA & OMEGA GROUP
CIVIL & STRUCTURAL ENGINEERS
4601 Lake Boone Trail, Ste. 3C Raleigh, NC 27607
Phone 919 981 0310 Fax 919 981 0451
Firm License No. C-1684 www.aogroup.com
A&O PROJECT NO. 2011.016

NOTE: THIS STANDARD DRAWING REVIEWED AND ADOPTED FOR USE AT THE REFERENCED LOCATION BY THE UNDERSIGNED.

NORTH CAROLINA PROFESSIONAL SEAL 032724 ENGINEER GLENN ZEBLO
T. Zeblo 12-5-12

REFERENCE NO. 10-14

REVISIONS								SHEET NO.
NO.	BY:	DATE:	NO.	BY:	DATE:			S-689
1			3					TOTAL SHEETS
2			4					700

STR. NO. 10 STD. NO. EJS1

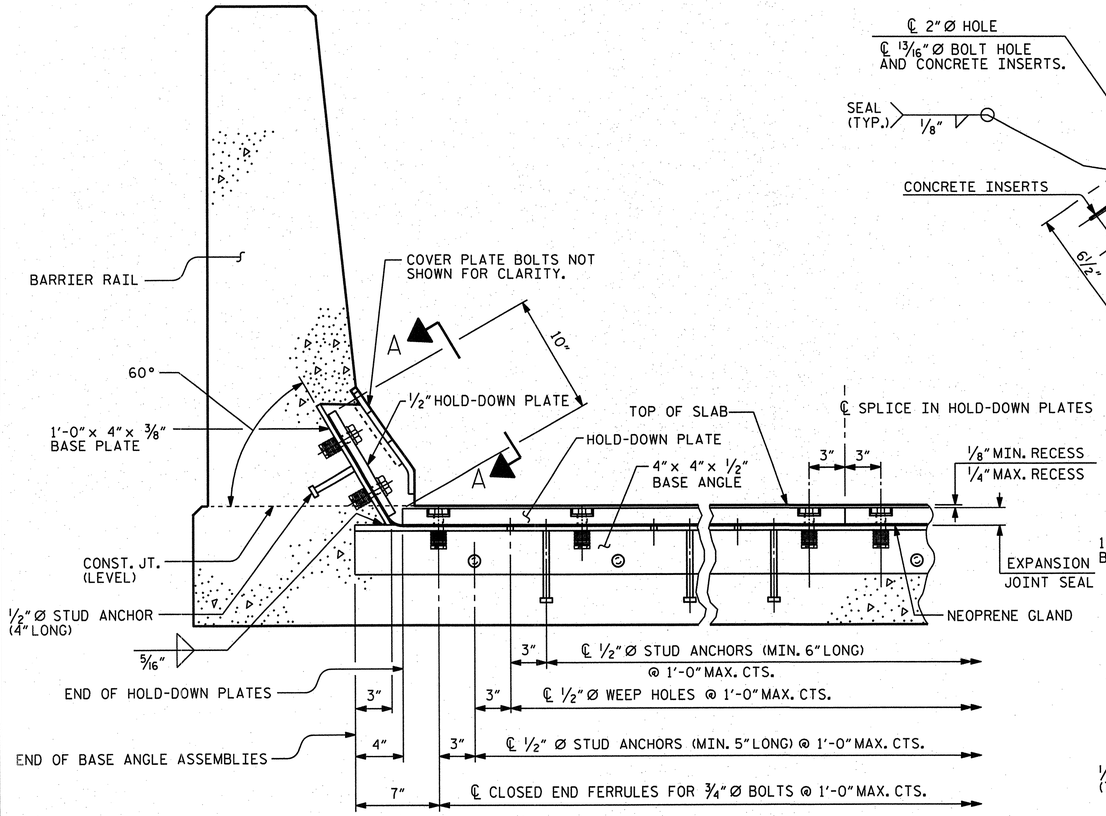

SECTION THRU RAIL NORMAL TO JOINT

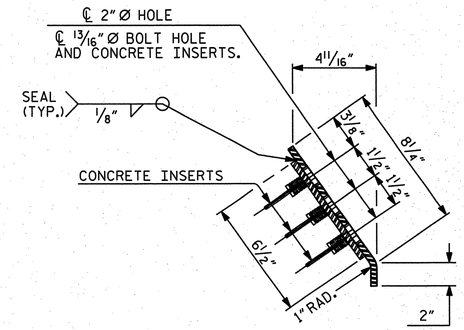

END VIEW

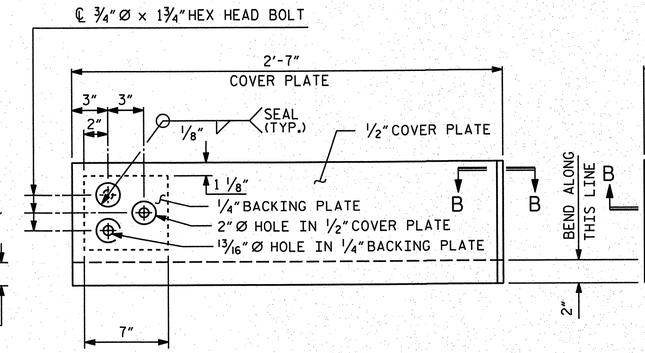

TYPE I - ELEVATION VIEW

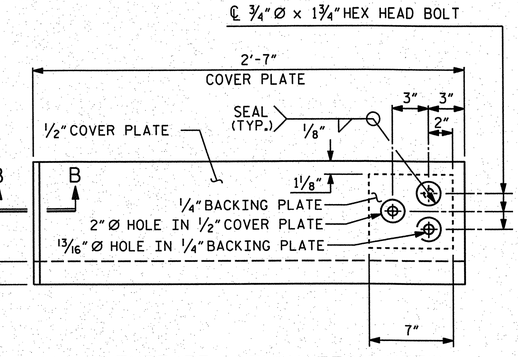

TYPE II - ELEVATION VIEW

COVER PLATE DETAILS

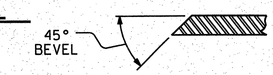

SECTION "B-B"

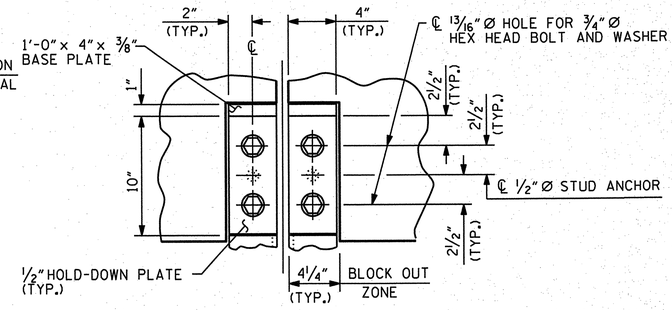

SECTION "A-A"

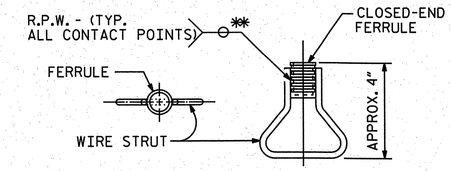

CONCRETE INSERT

** EACH WELDED ATTACHMENT OF WIRE TO FERRULE SHALL DEVELOP THE TENSILE STRENGTH OF THE WIRE.

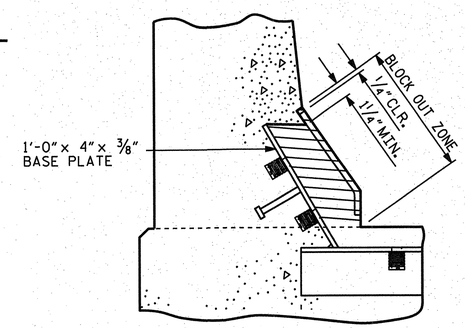

BLOCK OUT DETAIL

SEE "SECTION A - A" FOR OTHER DETAILS.

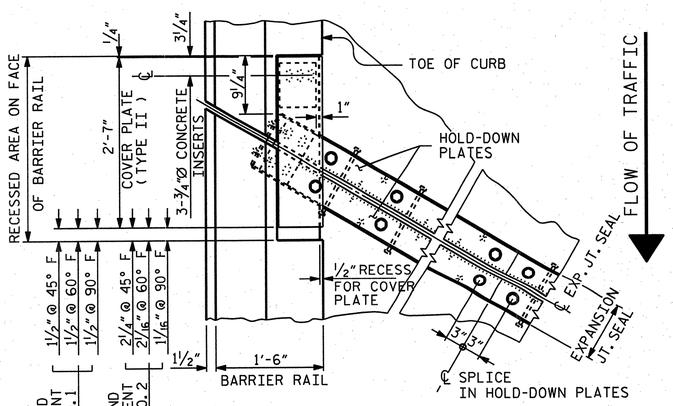

PLAN OF EXPANSION JOINT SEAL - LEFT SIDE

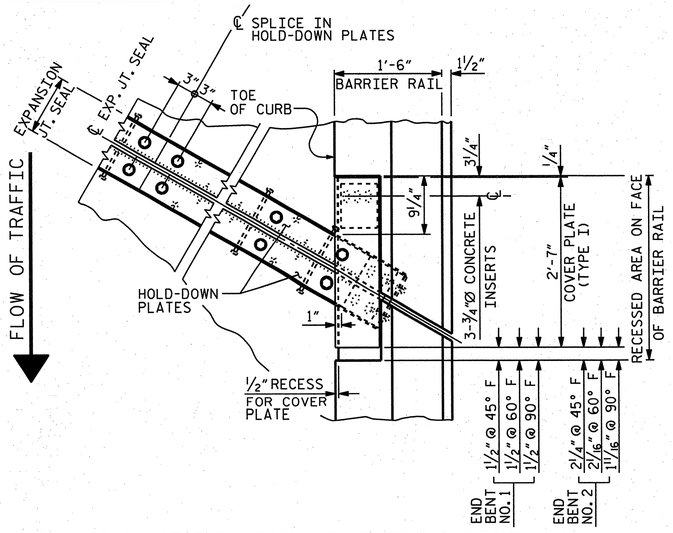

PLAN OF EXPANSION JOINT SEAL - RIGHT SIDE

PROJECT NO. R-2633BB

BRUNSWICK/ NEW HANOVER COUNTY

STATION: 21+47.09 -RP B4-

SHEET 2 OF 2

STATE OF NORTH CAROLINA
DEPARTMENT OF TRANSPORTATION
RALEIGH

STANDARD

EXPANSION JOINT SEAL DETAILS FOR BARRIER RAIL

ASSEMBLED BY :	JD GOODIN	DATE :	02/07/12
CHECKED BY :	TG ZEBLO	DATE :	02/08/12
QC / QA :	CD ROBINSON	DATE :	10/30/12

DRAWN BY :	REK	9/87	REV.	5/1/06	TLA/GM
CHECKED BY :	CRK	10/87	REV.	10/1/11	MAA/GM
			REV.	7/12	MAA/GM

PLAN PREPARED BY:

ALPHA & OMEGA GROUP
CIVIL & STRUCTURAL ENGINEERS
4601 Lake Boone Trail, Ste. 3C Raleigh, NC 27607
Phone 919 981 0310 Fax 919 981 0451
Firm License No. C-1684 www.aogroup.com
A&O PROJECT NO. 2011.016

NOTE: THIS STANDARD DRAWING REVIEWED AND ADOPTED FOR USE AT THE REFERENCED LOCATION BY THE UNDERSIGNED.

NORTH CAROLINA PROFESSIONAL ENGINEER SEAL 032724 T. GLENN ZEBLO 11-5-12

REFERENCE NO. 10-15

REVISIONS						
NO.	BY:	DATE:	NO.	BY:	DATE:	
1			3			
2			4			

SHEET NO. S-696

TOTAL SHEETS 700

STR. NO. 10 STD. NO. EJS2

REINFORCING BAR SCHEDULE

BAR	NO	SIZE	TYPE	LENGTH	WEIGHT
*A1	189	5	STR.	28'-11"	5700
*A2	2	5	STR.	28'-8"	60
*A3	2	5	STR.	28'-2"	59
*A4	2	5	STR.	27'-9"	58
*A5	2	5	STR.	27'-3"	57
*A6	2	5	STR.	26'-10"	56
*A7	2	5	STR.	26'-4"	55
*A8	2	5	STR.	25'-11"	54
*A9	2	5	STR.	25'-5"	53
*A10	2	5	STR.	25'-0"	52
*A11	2	5	STR.	24'-6"	51
*A12	2	5	STR.	24'-1"	50
*A13	2	5	STR.	23'-7"	49
*A14	2	5	STR.	23'-2"	48
*A15	2	5	STR.	22'-8"	47
*A16	2	5	STR.	22'-3"	46
*A17	2	5	STR.	21'-9"	45
*A18	2	5	STR.	21'-4"	45
*A19	2	5	STR.	20'-10"	43
*A20	2	5	STR.	20'-5"	43
*A21	2	5	STR.	19'-11"	42
*A22	2	5	STR.	19'-6"	41
*A23	2	5	STR.	19'-0"	40
*A24	2	5	STR.	18'-7"	39
*A25	2	5	STR.	18'-1"	38
*A26	2	5	STR.	17'-8"	37
*A27	2	5	STR.	17'-2"	36
*A28	2	5	STR.	16'-9"	35
*A29	2	5	STR.	16'-3"	34
*A30	2	5	STR.	15'-10"	33
*A31	2	5	STR.	15'-4"	32
*A32	2	5	STR.	14'-11"	31
*A33	2	5	STR.	14'-5"	30
*A34	2	5	STR.	14'-0"	29
*A35	2	5	STR.	13'-6"	28
*A36	2	5	STR.	13'-1"	27
*A37	2	5	STR.	12'-7"	26
*A38	2	5	STR.	12'-2"	25
*A39	2	5	STR.	11'-8"	24
*A40	2	5	STR.	11'-3"	23
*A41	2	5	STR.	10'-9"	22
*A42	2	5	STR.	10'-4"	22
*A43	2	5	STR.	9'-10"	21
*A44	2	5	STR.	9'-5"	20

BAR	NO	SIZE	TYPE	LENGTH	WEIGHT
*A45	2	5	STR.	8'-11"	19
*A46	2	5	STR.	8'-6"	18
*A47	2	5	STR.	8'-0"	17
*A48	2	5	STR.	7'-7"	16
*A49	2	5	STR.	7'-1"	15
*A50	2	5	STR.	6'-8"	14
*A51	2	5	STR.	6'-2"	13
*A52	2	5	STR.	5'-9"	12
*A53	2	5	STR.	5'-3"	11
*A54	2	5	STR.	4'-10"	10
*A55	2	5	STR.	4'-4"	9
*A56	2	5	STR.	3'-11"	8
*A57	2	5	STR.	3'-5"	7
*A58	2	5	STR.	3'-0"	6
*A59	2	5	STR.	2'-6"	5
*A60	2	5	STR.	2'-1"	4
A61	189	5	STR.	28'-11"	5700
A62	2	5	STR.	28'-8"	60
A63	2	5	STR.	28'-2"	59
A64	2	5	STR.	27'-9"	58
A65	2	5	STR.	27'-3"	57
A66	2	5	STR.	26'-10"	56
A67	2	5	STR.	26'-4"	55
A68	2	5	STR.	25'-11"	54
A69	2	5	STR.	25'-5"	53
A70	2	5	STR.	25'-0"	52
A71	2	5	STR.	24'-6"	51
A72	2	5	STR.	24'-1"	50
A73	2	5	STR.	23'-7"	49
A74	2	5	STR.	23'-2"	48
A75	2	5	STR.	22'-8"	47
A76	2	5	STR.	22'-3"	46
A77	2	5	STR.	21'-9"	45
A78	2	5	STR.	21'-4"	45
A79	2	5	STR.	20'-10"	43
A80	2	5	STR.	20'-5"	43
A81	2	5	STR.	19'-11"	42
A82	2	5	STR.	19'-6"	41
A83	2	5	STR.	19'-0"	40
A84	2	5	STR.	18'-7"	39
A85	2	5	STR.	18'-1"	38
A86	2	5	STR.	17'-8"	37
A87	2	5	STR.	17'-2"	36
A88	2	5	STR.	16'-9"	35
A89	2	5	STR.	16'-3"	34
A90	2	5	STR.	15'-10"	33

BAR	NO	SIZE	TYPE	LENGTH	WEIGHT
A91	2	5	STR.	15'-4"	32
A92	2	5	STR.	14'-11"	31
A93	2	5	STR.	14'-5"	30
A94	2	5	STR.	14'-0"	29
A95	2	5	STR.	13'-6"	28
A96	2	5	STR.	13'-1"	27
A97	2	5	STR.	12'-7"	26
A98	2	5	STR.	12'-2"	25
A99	2	5	STR.	11'-8"	24
A100	2	5	STR.	11'-3"	23
A101	2	5	STR.	10'-9"	22
A102	2	5	STR.	10'-4"	22
A103	2	5	STR.	9'-10"	21
A104	2	5	STR.	9'-5"	20
A105	2	5	STR.	8'-11"	19
A106	2	5	STR.	8'-6"	18
A107	2	5	STR.	8'-0"	17
A108	2	5	STR.	7'-7"	16
A109	2	5	STR.	7'-1"	15
A110	2	5	STR.	6'-8"	14
A111	2	5	STR.	6'-2"	13
A112	2	5	STR.	5'-9"	12
A113	2	5	STR.	5'-3"	11
A114	2	5	STR.	4'-10"	10
A115	2	5	STR.	4'-4"	9
A116	2	5	STR.	3'-11"	8
A117	2	5	STR.	3'-5"	7
A118	2	5	STR.	3'-0"	6
A119	2	5	STR.	2'-6"	5
A120	2	5	STR.	2'-1"	4
*A121	6	6	STR.	7'-2"	65
*B1	100	4	STR.	26'-10"	1792
B2	81	5	STR.	43'-6"	3675
*G1	2	5	STR.	42'-9"	89
*J1	74	4	5	1'-5"	70
*K1	8	8	3	24'-0"	513
*K2	8	8	4	18'-5"	393
*K3	6	6	STR.	7'-2"	65
*K4	6	6	STR.	5'-11"	53
*K5	6	6	STR.	4'-8"	42
*K6	12	4	STR.	9'-6"	76
*S1	36	4	1	4'-1"	98
*S2	36	5	2	5'-10	219
*S3	24	4	6	2'-10"	45

* EPOXY COATED REINFORCING STEEL

SUPERSTRUCTURE BILL OF MATERIAL

	CLASS AA CONCRETE	REINFORCING STEEL	EPOXY COATED REINFORCING STEEL
	(CU. YDS.)	(LBS.)	(LBS.)
SPAN "A"	108.91	11,249	11,092
TOTALS**	108.91	11,249	11,092

** QUANTITIES FOR BARRIER RAIL ARE NOT INCLUDED.

BAR TYPES

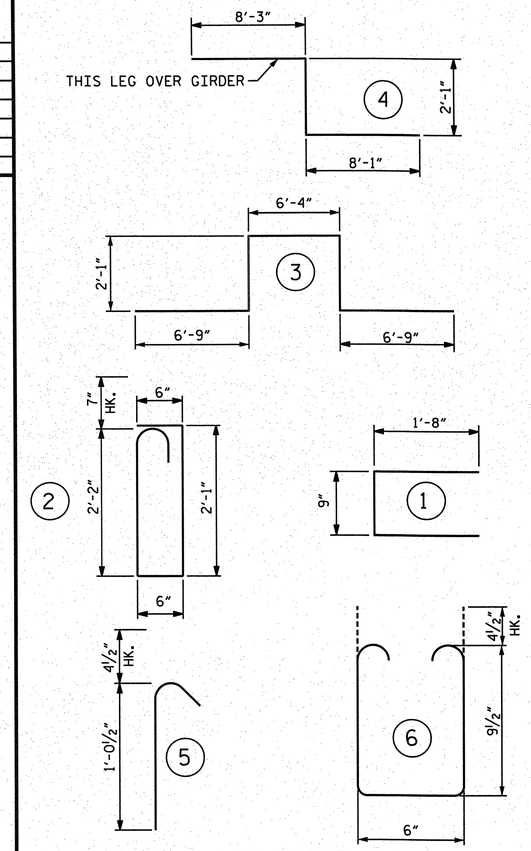

ALL BAR DIMENSIONS ARE OUT TO OUT.

SUPERSTRUCTURE REINFORCING STEEL LENGTHS ARE BASED ON THE FOLLOWING MINIMUM SPLICE LENGTHS					
BAR SIZE	SUPERSTRUCTURE EXCEPT APPROACH SLABS, PARAPET, AND BARRIER RAIL		APPROACH SLABS		PARAPET AND BARRIER RAIL
	EPOXY COATED	UNCOATED	EPOXY COATED	UNCOATED	
#4	2'-0"	1'-9"	2'-0"	1'-9"	2'-9"
#5	2'-6"	2'-2"	2'-6"	2'-2"	3'-5"
#6	3'-0"	2'-7"	3'-10"	2'-7"	4'-4"
#7	5'-3"	3'-6"			
#8	6'-10"	4'-7"			

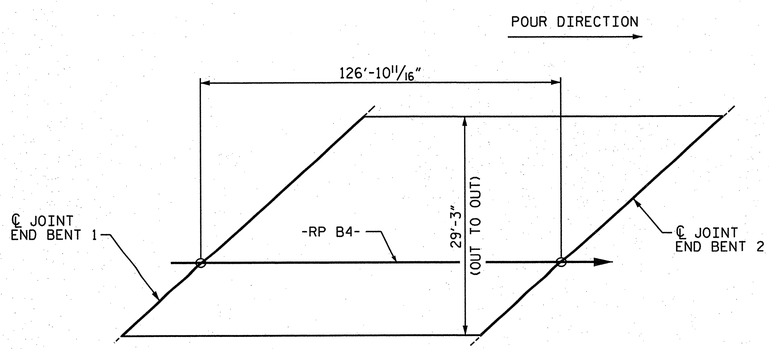

LAYOUT FOR COMPUTING AREA
REINFORCED CONCRETE DECK SLAB
(SQ. FT. = 3712)

GROOVING BRIDGE FLOORS		
APPROACH SLABS	1081	SQ.FT.
BRIDGE DECK	2857	SQ.FT.
TOTAL	3938	SQ.FT.

PROJECT NO. R-2633BB
BRUNSWICK/ NEW HANOVER COUNTY
STATION: 21+47.09 -RP B4-

STATE OF NORTH CAROLINA
DEPARTMENT OF TRANSPORTATION
RALEIGH

SUPERSTRUCTURE
BILL OF MATERIAL

ASSEMBLED BY : JD GOODIN DATE : 02/07/12
CHECKED BY : TG ZEBLO DATE : 02/08/12
QC / QA : CD ROBINSON DATE : 10/30/12

PLAN PREPARED BY:
ALPHA & OMEGA GROUP
CIVIL & STRUCTURAL ENGINEERS
4601 Lake Boone Trail, Ste. 3C Raleigh, NC 27607
Phone 919 981 0310 Fax 919 981 0451
Firm License No. C-1684 www.aogroup.com
A&O PROJECT NO. 2011.016

NOTE: THIS STANDARD DRAWING REVIEWED AND ADOPTED FOR USE AT THE REFERENCED LOCATION BY THE UNDERSIGNED.

NORTH CAROLINA PROFESSIONAL SEAL 032724 ENGINEER T. GLENN ZEBLO 1-5-12

REFERENCE NO. 10-16

REVISIONS							
NO.	BY:	DATE:	NO.	BY:	DATE:	SHEET NO.	S-691
1			3			TOTAL SHEETS	700
2			4				

STD. NO. BOM2 STR. NO. 10

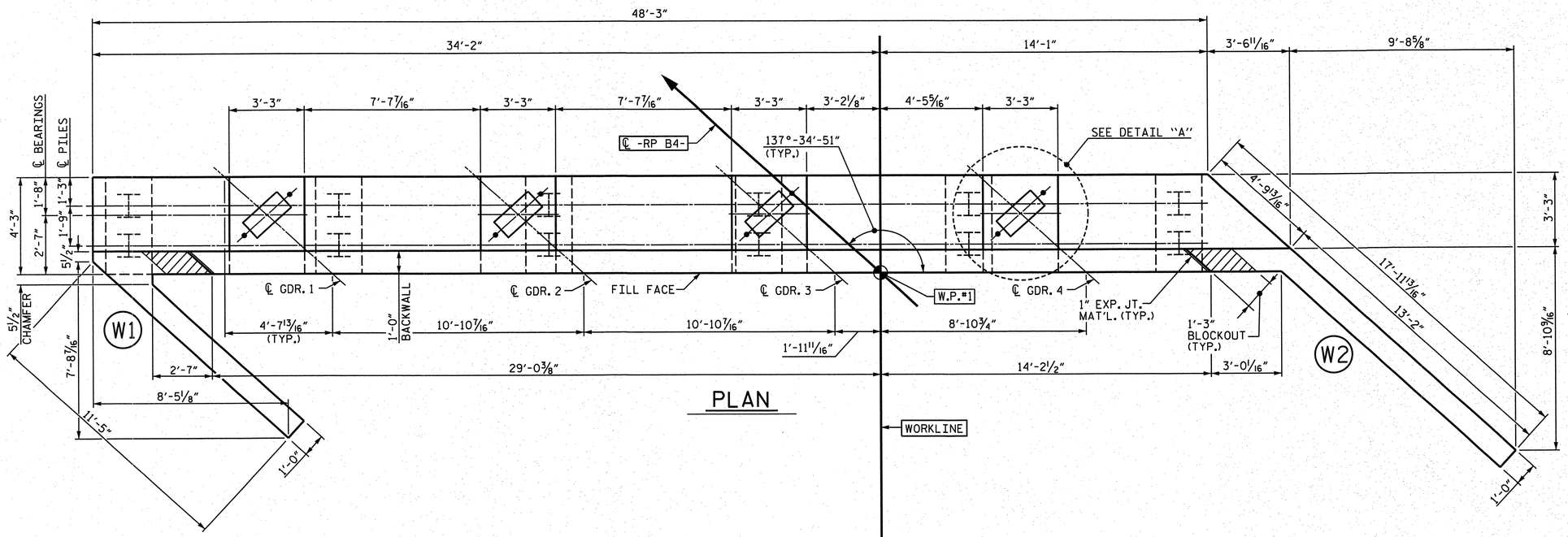

PLAN

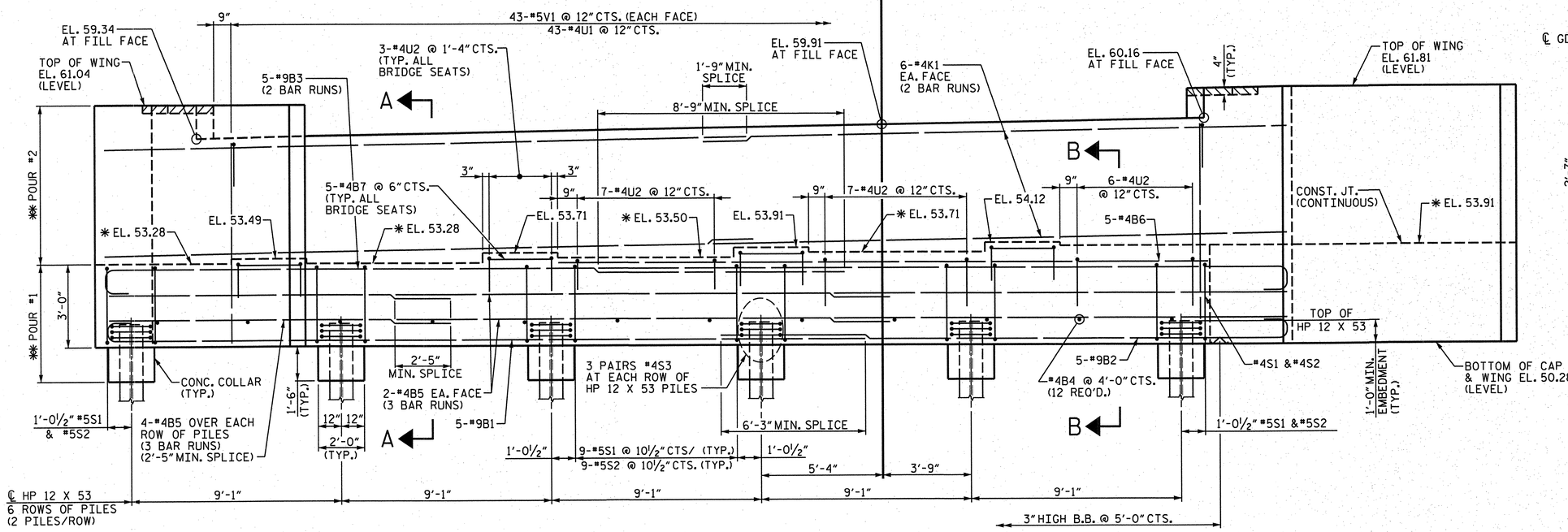

ELEVATION

POUR #1: CAP, CONCRETE COLLAR & LOWER PART OF WINGS.
POUR #2: BACKWALL & UPPER PART OF WINGS.

NOTES

STIRRUPS AND U2 BARS IN CAP MAY BE SHIFTED AS NECESSARY TO CLEAR ANCHOR BOLTS.

THE #5V1 BARS SHALL BE PLACED 2" CLEAR FROM THE TOP OF BACKWALL.

THE TOP SURFACE OF THE CAP EXCEPT THE BRIDGE SEAT BUILDUPS SHALL BE SLOPED TRANSVERSELY FROM THE FILL FACE AT A RATE OF 2%.

BACKWALL SHALL BE PLACED BEFORE APPLYING THE EPOXY PROTECTIVE COATING.

THE TOP SURFACE AREAS OF THE END BENT CAP SHALL BE CURED IN ACCORDANCE WITH THE STANDARD SPECIFICATIONS, EXCEPT THE MEMBRANE CURING COMPOUND METHOD SHALL NOT BE USED.

THE CONCRETE IN THE HATCHED AREA OF THE WING SHALL BE POURED AFTER THE JOINT BETWEEN THE DECK AND APPROACH SLAB HAS BEEN SAWED AND THE BARRIER RAIL IS CAST IF SLIP FORMING IS USED.

*SEE END BENT NO. 1, SHEET 3 OF 3 FOR ELEVATION LOCATION.

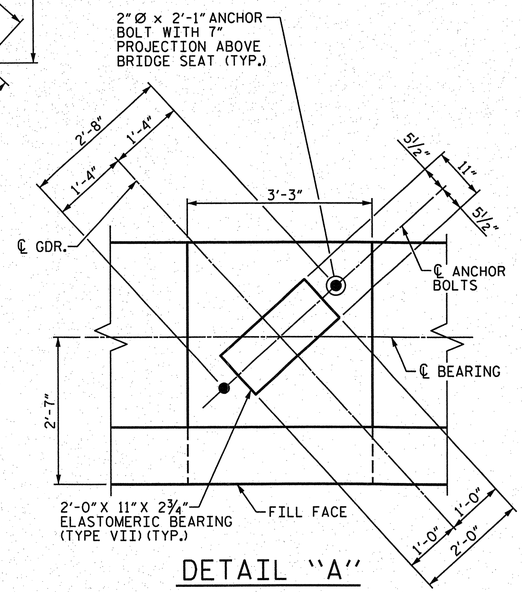

DETAIL "A"

PROJECT NO. R-2633BB

BRUNSWICK/NEW HANOVER COUNTY

STATION: 21+47.09 -RP B4-

SHEET 1 OF 3

STATE OF NORTH CAROLINA
DEPARTMENT OF TRANSPORTATION
RALEIGH

SUBSTRUCTURE
END BENT NO. 1

PLAN PREPARED BY:

ALPHA & OMEGA GROUP
CIVIL & STRUCTURAL ENGINEERS
4601 Lake Boone Trail, Ste. 3C Raleigh, NC 27607
Phone 919 981 0310 Fax 919 981 0451
Firm License No. C-1684 www.aogroup.com
A&O PROJECT NO. 2011.016

NORTH CAROLINA PROFESSIONAL SEAL 032724 ENGINEER T. GLENN ZEBLO 11-5-12

DRAWN BY :	J.R. FISHER	DATE :	09/12/12
CHECKED BY :	TG ZEBLO	DATE :	09/12/12
QC / QA :	CD ROBINSON	DATE :	11/04/12

REFERENCE NO. 10-17

REVISIONS						SHEET NO.
NO.	BY:	DATE:	NO.	BY:	DATE:	S-692
1			3			TOTAL SHEETS
2			4			700

Str No. 10

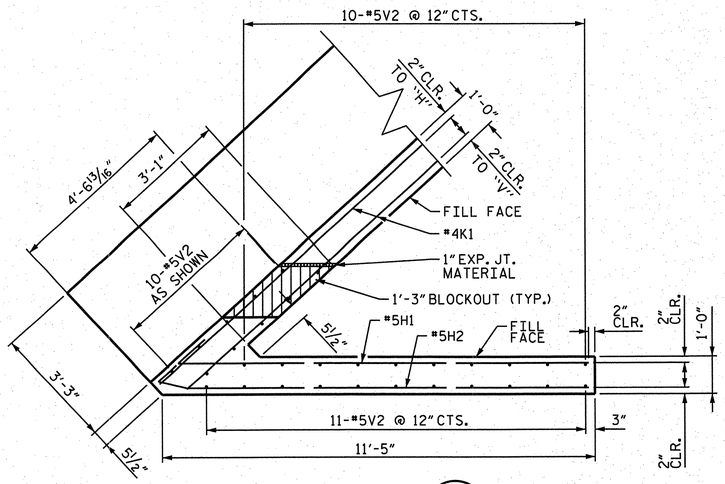

PLAN OF WING W1

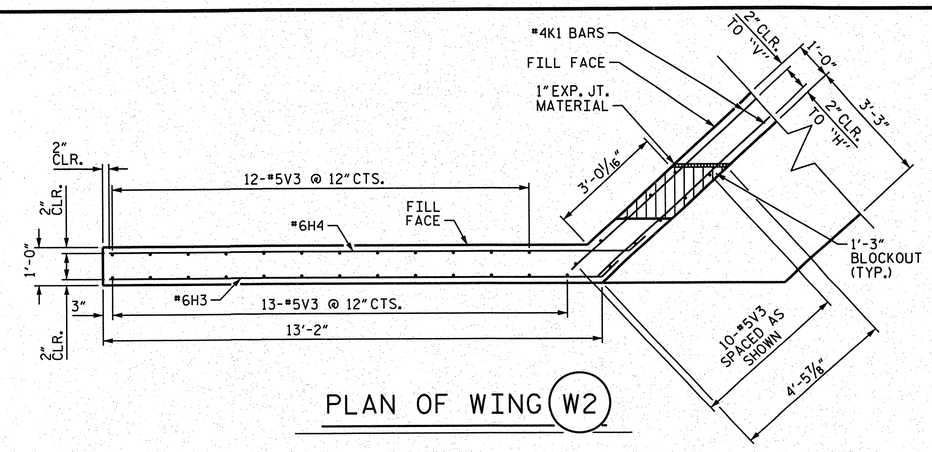

PLAN OF WING W2

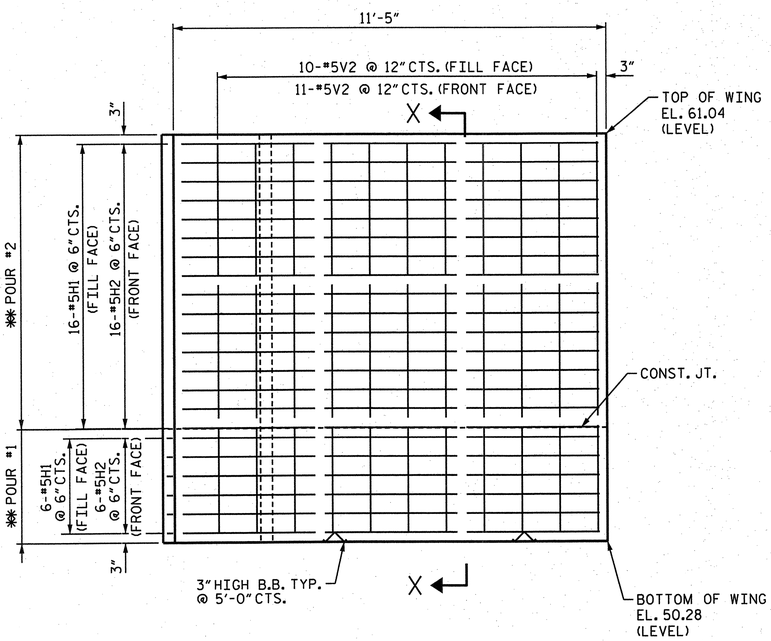

ELEVATION OF WING W1

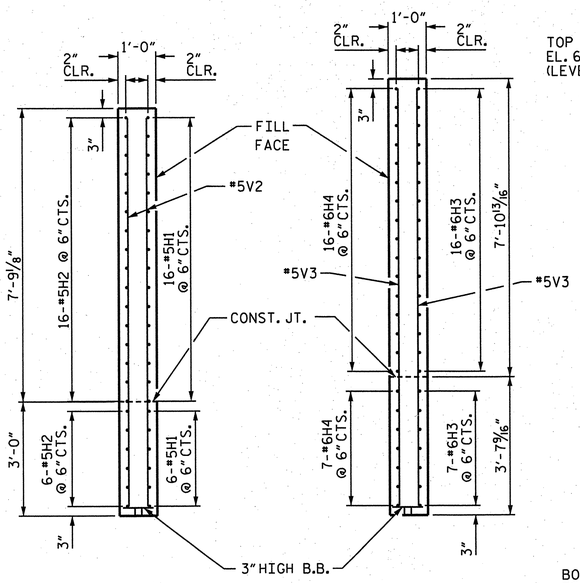

SECTION "X-X" SECTION "Y-Y"

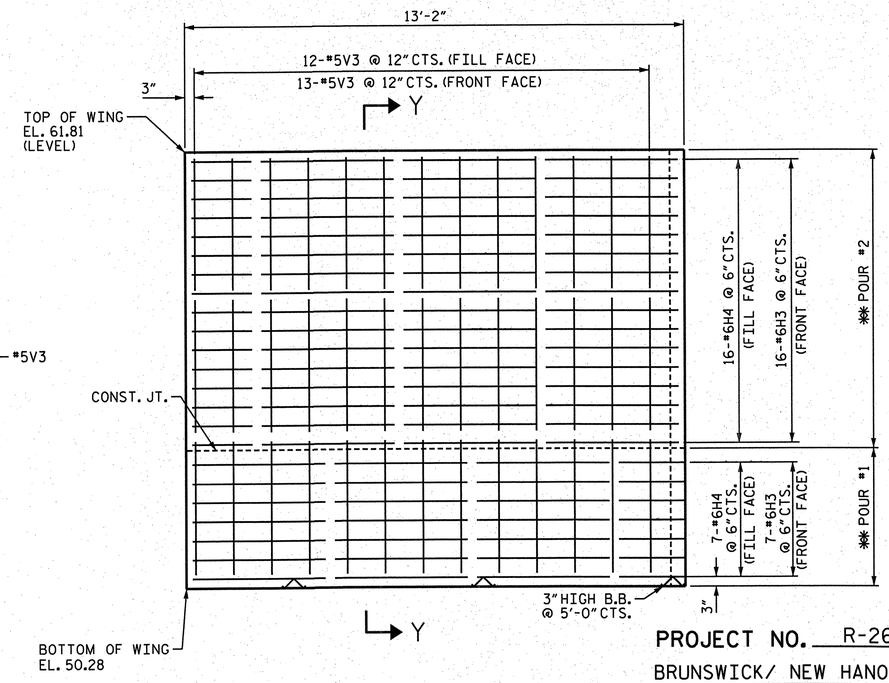

ELEVATION OF WING W2

** POUR #1: CAP, CONCRETE COLLAR & LOWER PART OF WINGS.
** POUR #2: BACKWALL & UPPER PART OF WINGS.

PROJECT NO. R-2633BB

BRUNSWICK/ NEW HANOVER COUNTY

STATION: 21+47.09 -RP B4-

SHEET 2 OF 3

STATE OF NORTH CAROLINA
DEPARTMENT OF TRANSPORTATION
RALEIGH

SUBSTRUCTURE END BENT NO. 1

PLAN PREPARED BY:

ALPHA & OMEGA GROUP
CIVIL & STRUCTURAL ENGINEERS
4601 Lake Boone Trail, Ste. 3C Raleigh, NC 27607
Phone 919 981 0310 Fax 919 981 0451
Firm License No. C-1684 www.aogroup.com
A&O PROJECT NO. 2011.016

NORTH CAROLINA PROFESSIONAL SEAL 032724 ENGINEER GLENN ZEBLO
11-5-12

REFERENCE NO. 10-18

REVISIONS						
NO.	BY:	DATE:	NO.	BY:	DATE:	
1			3			
2			4			

SHEET NO. S-693

TOTAL SHEETS 700

Str No. 10

DRAWN BY :	J.D. GOODIN	DATE :	02/07/12
CHECKED BY :	TG ZEBLO	DATE :	09/14/12
QC / QA :	CD ROBINSON	DATE :	11/04/12

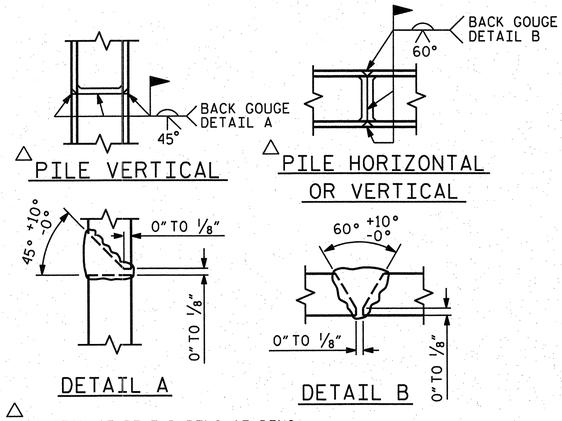

△ POSITION OF PILE DURING WELDING.

PILE SPLICE DETAILS

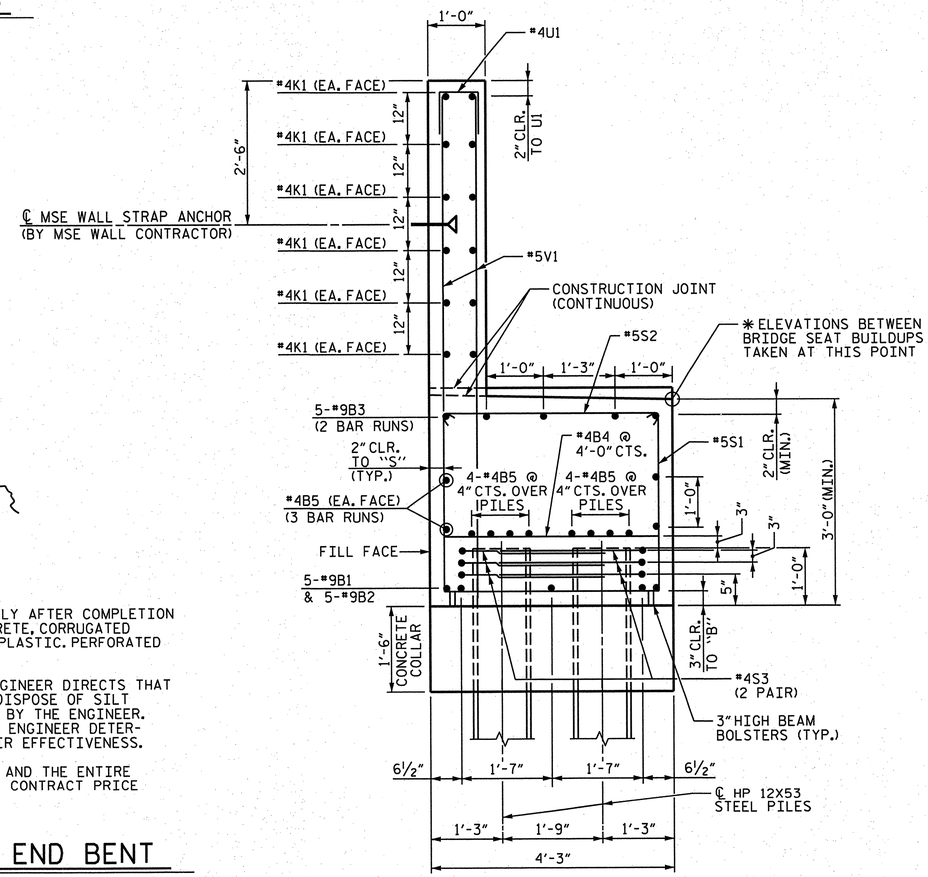

SECTION "A-A"

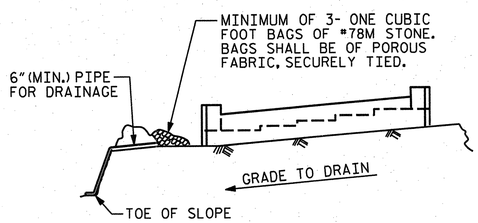

BAGGED STONE AND PIPE SHALL BE PLACED IMMEDIATELY AFTER COMPLETION OF END BENT EXCAVATION. PIPE MAY BE EITHER CONCRETE, CORRUGATED STEEL, CORRUGATED ALUMINUM ALLOY, OR CORRUGATED PLASTIC. PERFORATED PIPE WILL NOT BE ALLOWED.

BAGGED STONE SHALL REMAIN IN PLACE UNTIL THE ENGINEER DIRECTS THAT IT BE REMOVED. THE CONTRACTOR SHALL REMOVE AND DISPOSE OF SILT ACCUMULATIONS AT BAGGED STONE WHEN SO DIRECTED BY THE ENGINEER. BAGS SHALL BE REMOVED AND REPLACED WHENEVER THE ENGINEER DETERMINES THAT THEY HAVE DETERIORATED AND LOST THEIR EFFECTIVENESS.

NO SEPARATE PAYMENT WILL BE MADE FOR THIS WORK AND THE ENTIRE COST OF THIS WORK SHALL BE INCLUDED IN THE UNIT CONTRACT PRICE BID FOR THE SEVERAL PAY ITEMS.

TEMPORARY DRAINAGE AT END BENT

BAR TYPES

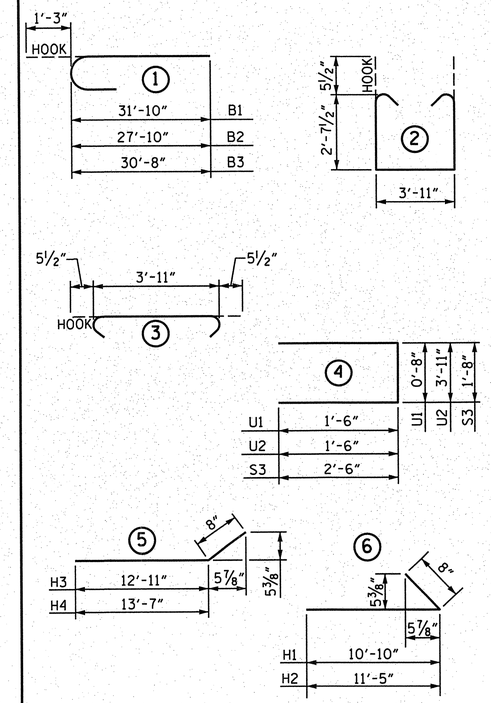

ALL BAR DIMENSIONS ARE OUT TO OUT.

BILL OF MATERIAL
END BENT NO. 1

BAR	NO.	SIZE	TYPE	LENGTH	WEIGHT
B1	5	#9	1	33'-1"	562
B2	5	#9	1	29'-1"	494
B3	10	#9	1	31'-11"	1085
B4	12	#4	STR	3'-11"	31
B5	36	#4	STR	19'-2"	461
B6	5	#4	STR	28'-1"	94
B7	20	#4	STR	2'-11"	39
S1	47	#5	2	10'-1"	494
S2	47	#5	3	4'-10"	237
S3	36	#4	4	6'-8"	160
U1	43	#4	4	3'-8"	105
U2	32	#4	4	6'-11"	148
K1	24	#4	STR	27'-2"	436
H1	22	#5	5	11'-6"	264
H2	22	#5	5	12'-1"	277
H3	23	#6	6	13'-7"	469
H4	23	#6	6	14'-3"	492
V1	86	#5	STR	8'-9"	785
V2	31	#5	STR	10'-5"	337
V3	35	#5	STR	11'-2"	408

REINFORCING STEEL 7378 LBS.

CLASS A CONCRETE BREAKDOWN:

POUR #1- CAP, LOWER PART OF WINGS & COLLARS 32.5 C.Y.

POUR #2- UPPER PART OF WINGS & BACKWALL 19.9 C.Y.

TOTAL CLASS A CONCRETE 52.4 C.Y.

HP 12 X 53 STEEL PILES NO. = 12 960 L.F.

PILE REDRIVES 6 EA.

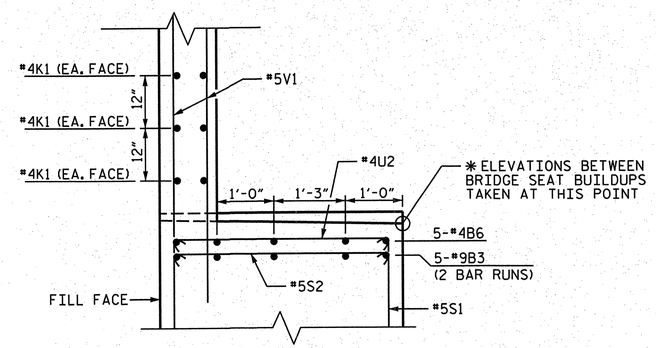

PARTIAL SECTION "B-B"

PROJECT NO. R-2633BB

BRUNSWICK/NEW HANOVER COUNTY

STATION: 21+47.09 -RP B4-

SHEET 3 OF 3

STATE OF NORTH CAROLINA
DEPARTMENT OF TRANSPORTATION
RALEIGH

SUBSTRUCTURE
END BENT NO. 1

REVISIONS						SHEET NO.
NO.	BY:	DATE:	NO.	BY:	DATE:	S-694
1			3			TOTAL SHEETS
2			4			700

REFERENCE NO. 10-19

PLAN PREPARED BY:

ALPHA & OMEGA GROUP
CIVIL & STRUCTURAL ENGINEERS
4601 Lake Boone Trail, Ste. 3C Raleigh, NC 27607
Phone 919 981 0310 Fax 919 981 0451
Firm License No. C-1684 www.aogroup.com
A&O PROJECT NO. 2011.016

NORTH CAROLINA PROFESSIONAL SEAL 032724 ENGINEER T. GLENN ZEBLO

DRAWN BY :	J.R. FISHER	DATE :	09/12/12
CHECKED BY :	TG ZEBLO	DATE :	09/12/12
QC / QA :	CD ROBINSON	DATE :	11/04/12

Str No. 10

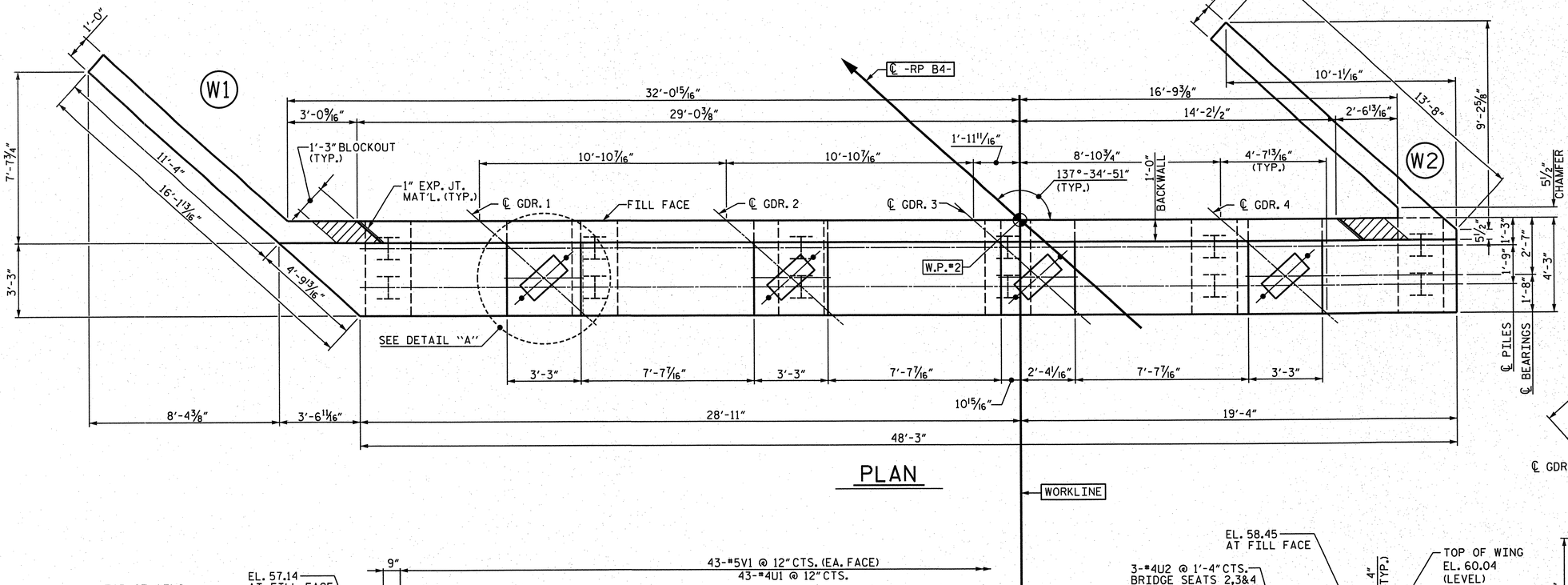

PLAN

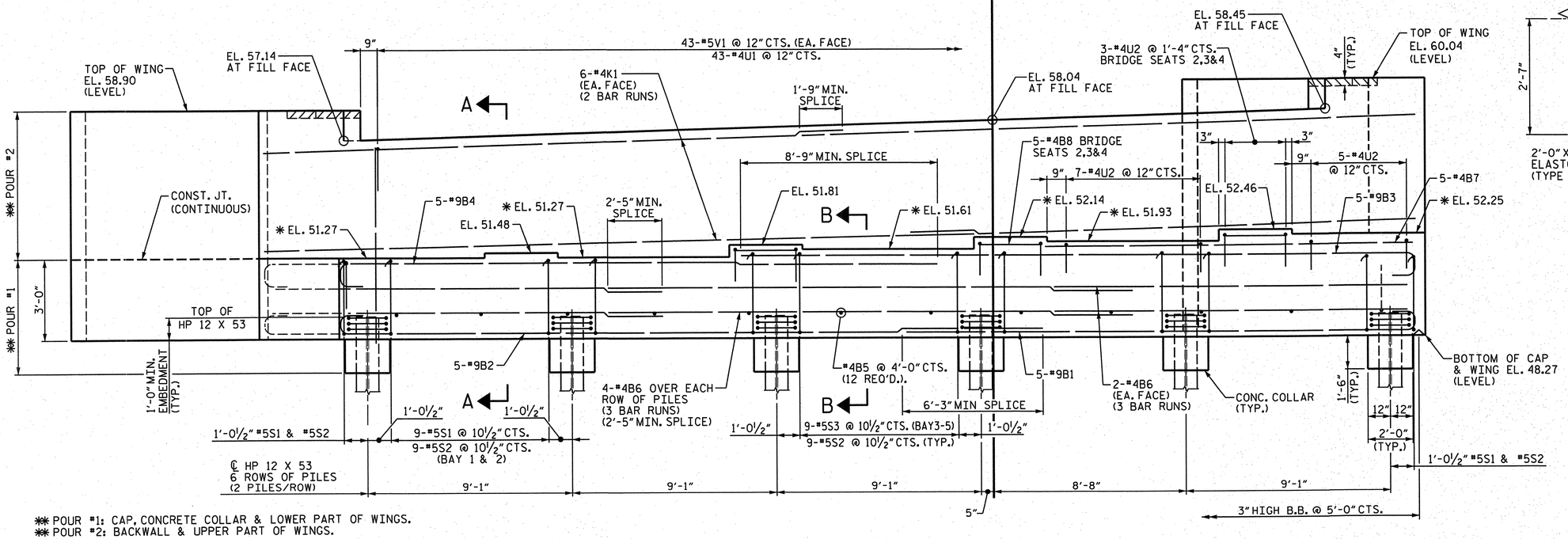

✱✱ POUR #1: CAP, CONCRETE COLLAR & LOWER PART OF WINGS.
✱✱ POUR #2: BACKWALL & UPPER PART OF WINGS.

ELEVATION

NOTES

STIRRUPS AND U2 BARS IN CAP MAY BE SHIFTED AS NECESSARY TO CLEAR ANCHOR BOLTS.

THE #5V1 BARS SHALL BE PLACED 2" CLEAR FROM THE TOP OF BACKWALL.

THE TOP SURFACE OF THE CAP EXCEPT THE BRIDGE SEAT BUILDUPS SHALL BE SLOPED TRANSVERSELY FROM THE FILL FACE AT A RATE OF 2%

BACKWALL SHALL BE PLACED BEFORE APPLYING THE EPOXY PROTECTIVE COATING.

THE TOP SURFACE AREAS OF THE END BENT CAP SHALL BE CURED IN ACCORDANCE WITH THE STANDARD SPECIFICATIONS. EXCEPT THE MEMBRANE CURING COMPOUND METHOD SHALL NOT BE USED.

THE CONCRETE IN THE HATCHED AREA OF THE WING SHALL BE POURED AFTER THE JOINT BETWEEN THE DECK AND APPROACH SLAB HAS BEEN SAWED AND THE BARRIER RAIL IS CAST IF SLIP FORMING IS USED.

✱SEE END BENT NO. 1, SHEET 3 OF 3 FOR ELEVATION LOCATION.

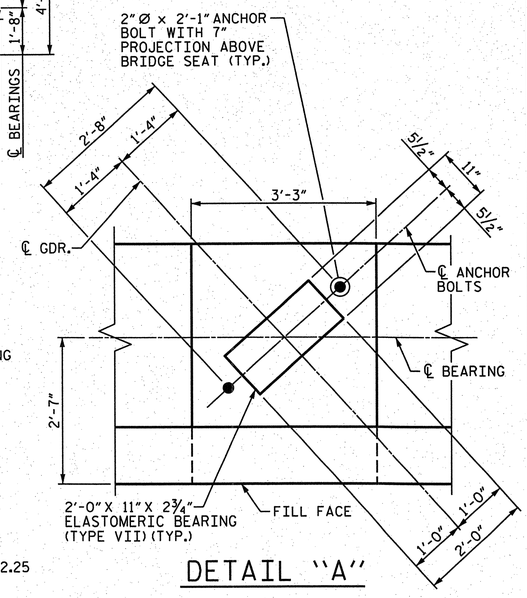

DETAIL "A"

PROJECT NO. R-2633BB

BRUNSWICK/NEW HANOVER COUNTY

STATION: 21+47.09 -RP B4-

SHEET 1 OF 3

STATE OF NORTH CAROLINA
DEPARTMENT OF TRANSPORTATION
RALEIGH

SUBSTRUCTURE END BENT NO. 2

REVISIONS						SHEET NO.
NO.	BY:	DATE:	NO.	BY:	DATE:	S-695
1			3			TOTAL SHEETS
2			4			700

REFERENCE NO. 10-20

PLAN PREPARED BY:

ALPHA & OMEGA GROUP
CIVIL & STRUCTURAL ENGINEERS
4601 Lake Boone Trail, Ste. 3C Raleigh, NC 27607
Phone 919 981 0310 Fax 919 981 0451
Firm License No. C-1684 www.aogroup.com
A&O PROJECT NO. 2011.016

NORTH CAROLINA PROFESSIONAL SEAL 032724 ENGINEER T. GLENN ZEBLO 11-5-12

DRAWN BY :	J.R. FISHER	DATE :	09/12/12
CHECKED BY :	TG ZEBLO	DATE :	09/12/12
QC / QA :	CD ROBINSON	DATE :	11/04/12

Str No. 10

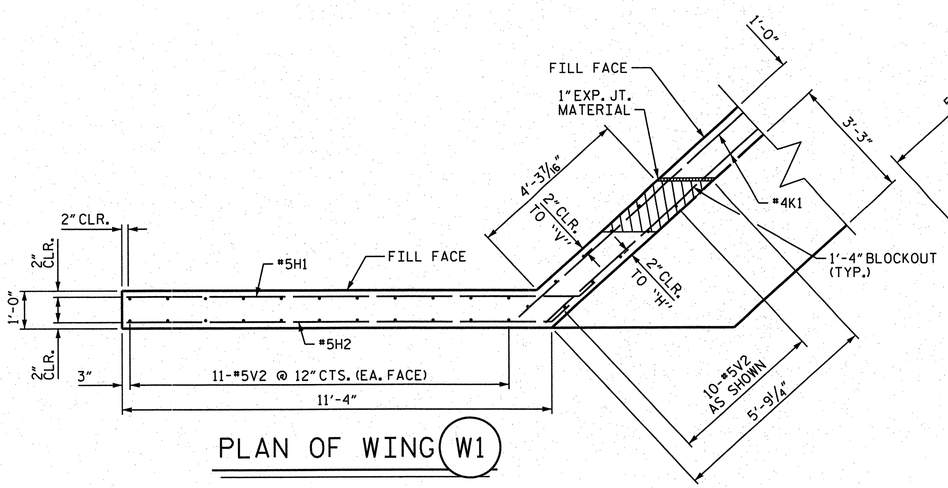

PLAN OF WING (W1)

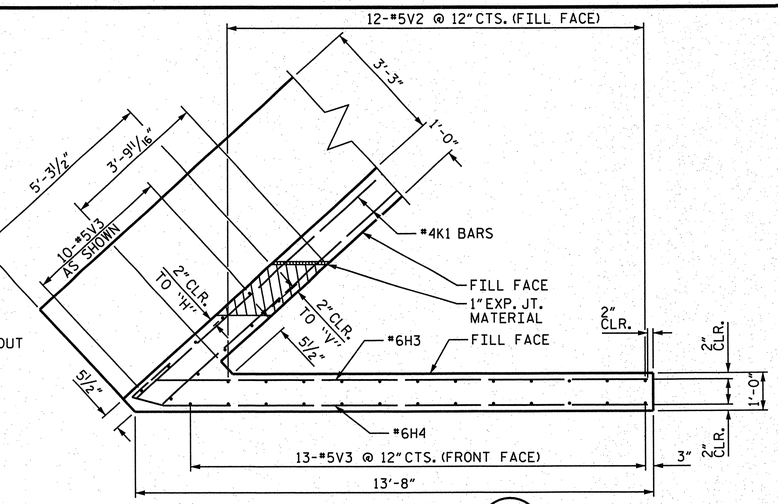

PLAN OF WING (W2)

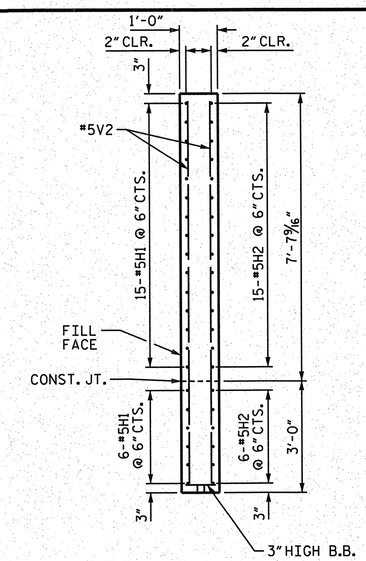

SECTION "Y-Y"

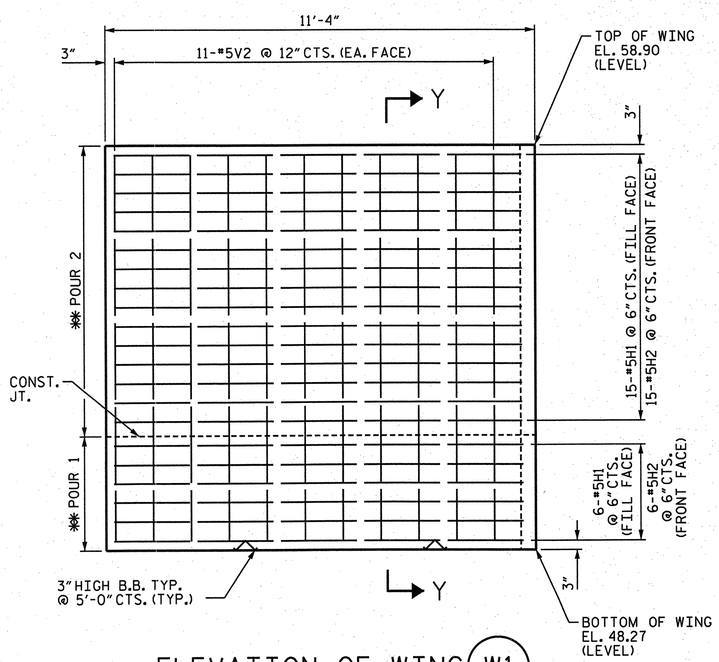

ELEVATION OF WING (W1)

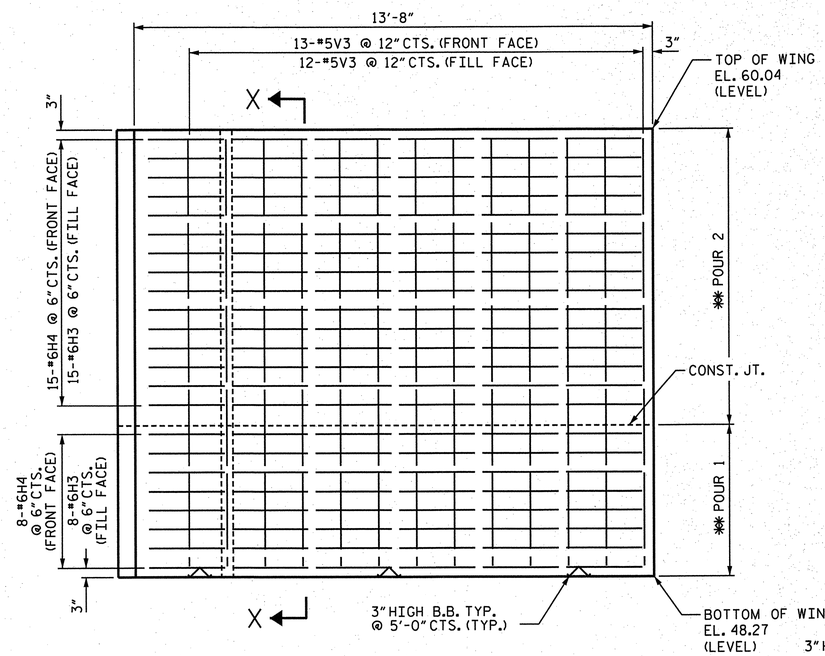

ELEVATION OF WING (W2)

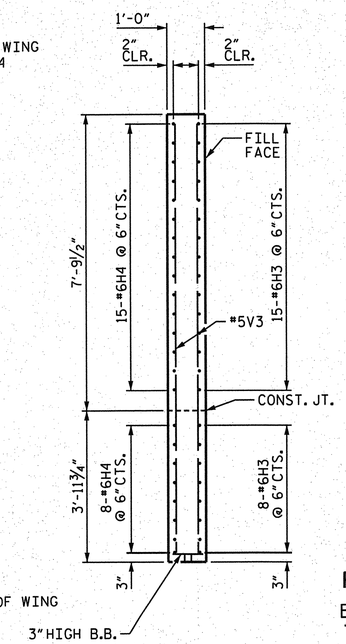

SECTION "X-X"

** POUR #1: CAP, CONCRETE COLLAR & LOWER PART OF WINGS.
** POUR #2: BACKWALL & UPPER PART OF WINGS.

PROJECT NO. R-2633BB

BRUNSWICK/ NEW HANOVER COUNTY

STATION: 21+47.09 -RP B4-

SHEET 2 OF 3

STATE OF NORTH CAROLINA
DEPARTMENT OF TRANSPORTATION
RALEIGH

SUBSTRUCTURE END BENT NO. 2

PLAN PREPARED BY:

ALPHA & OMEGA GROUP
CIVIL & STRUCTURAL ENGINEERS
4601 Lake Boone Trail, Ste. 3C Raleigh, NC 27607
Phone 919 981 0310 Fax 919 981 0451
Firm License No. C-1684 www.aogroup.com
A&O PROJECT NO. 2011.016

NORTH CAROLINA PROFESSIONAL SEAL 032724 ENGINEER GLENN ZEBLO
11-5-12

REFERENCE NO. 10-21

REVISIONS						SHEET NO.
NO.	BY:	DATE:	NO.	BY:	DATE:	S-696
1			3			TOTAL SHEETS
2			4			700

DRAWN BY :	J.D. GOODIN	DATE :	02/07/12
CHECKED BY :	TG ZEBLO	DATE :	09/14/12
QC / QA :	CD ROBINSON	DATE :	11/04/12

Str No. 10

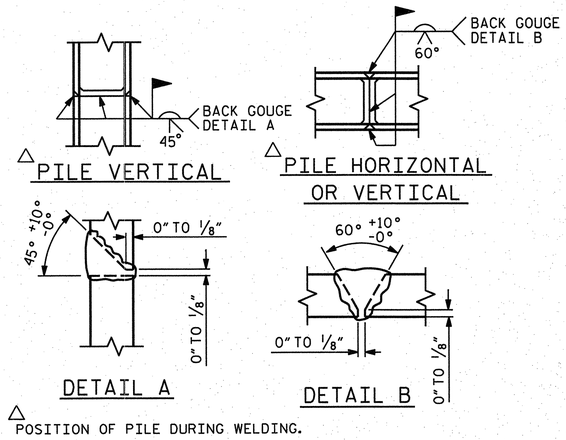

PILE SPLICE DETAILS

BAGGED STONE AND PIPE SHALL BE PLACED IMMEDIATELY AFTER COMPLETION OF END BENT EXCAVATION. PIPE MAY BE EITHER CONCRETE, CORRUGATED STEEL, CORRUGATED ALUMINUM ALLOY, OR CORRUGATED PLASTIC. PERFORATED PIPE WILL NOT BE ALLOWED.

BAGGED STONE SHALL REMAIN IN PLACE UNTIL THE ENGINEER DIRECTS THAT IT BE REMOVED. THE CONTRACTOR SHALL REMOVE AND DISPOSE OF SILT ACCUMULATIONS AT BAGGED STONE WHEN SO DIRECTED BY THE ENGINEER. BAGS SHALL BE REMOVED AND REPLACED WHENEVER THE ENGINEER DETERMINES THAT THEY HAVE DETERIORATED AND LOST THEIR EFFECTIVENESS.

NO SEPARATE PAYMENT WILL BE MADE FOR THIS WORK AND THE ENTIRE COST OF THIS WORK SHALL BE INCLUDED IN THE UNIT CONTRACT PRICE BID FOR THE SEVERAL PAY ITEMS.

TEMPORARY DRAINAGE AT END BENT

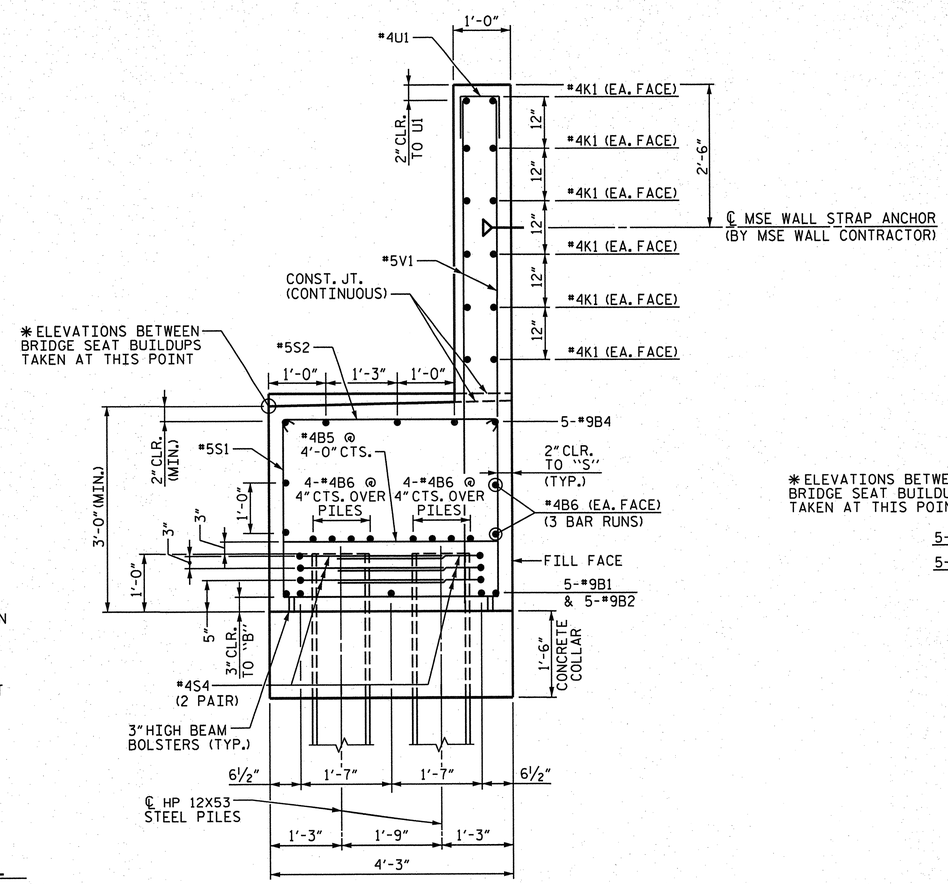

SECTION "A-A"

BAR TYPES

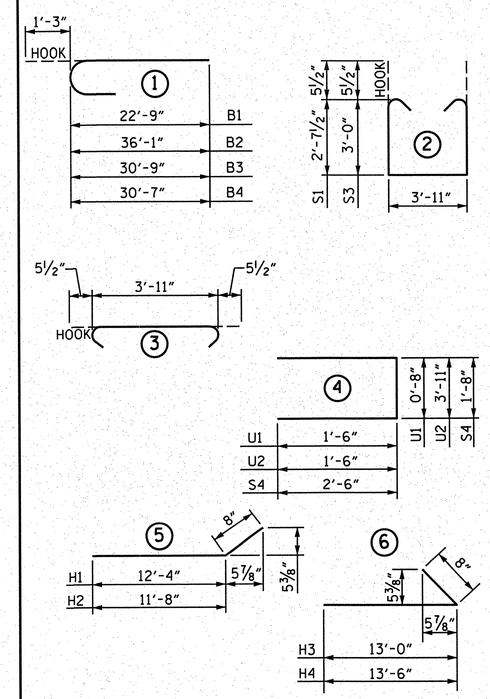

ALL BAR DIMENSIONS ARE OUT TO OUT.

BILL OF MATERIAL
END BENT NO. 2

BAR	NO.	SIZE	TYPE	LENGTH	WEIGHT
B1	5	#9	1	24'-0"	408
B2	5	#9	1	37'-4"	635
B3	5	#9	1	32'-0"	544
B4	5	#9	1	31'-11"	543
B5	12	#4	STR	3'-11"	31
B6	36	#4	STR	19'-2"	461
B7	5	#4	STR	16'-10"	56
B8	15	#4	STR	2'-9"	28
S1	19	#5	2	10'-1"	200
S2	47	#5	3	4'-10"	237
S3	28	#5	2	10'-10"	316
S4	36	#4	4	6'-8"	160
U1	43	#4	4	3'-8"	105
U2	28	#4	4	6'-11"	129
K1	24	#4	STR	27'-2"	436
H1	21	#5	5	13'-0"	285
H2	21	#5	5	12'-4"	270
H3	23	#6	6	13'-8"	472
H4	23	#6	6	14'-2"	490
V1	86	#5	STR	8'-6"	762
V2	32	#5	STR	10'-3"	342
V3	35	#5	STR	11'-5"	417

REINFORCING STEEL	7330 LBS.
CLASS A CONCRETE BREAKDOWN:	
POUR #1- CAP, LOWER PART OF WINGS & COLLARS	35.9 C.Y.
POUR #2- UPPER PART OF WINGS & BACKWALL	19.6 C.Y.
TOTAL CLASS A CONCRETE	55.5 C.Y.
HP 12 X 53 STEEL PILES NO. = 12	960 L.F.
PILE REDRIVES	6 EA.

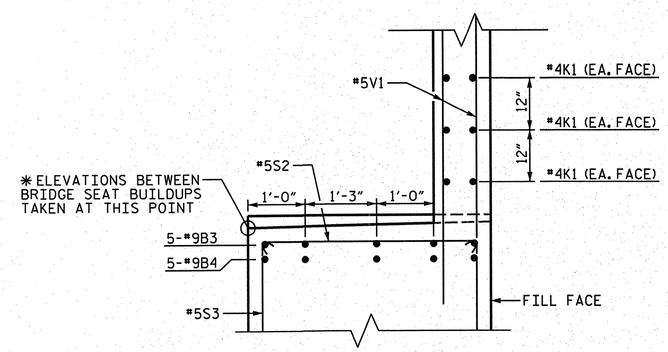

PARTIAL SECTION "B-B"

PROJECT NO. R-2633BB

BRUNSWICK/NEW HANOVER COUNTY

STATION: 21+47.09 -RP B4-

SHEET 3 OF 3

STATE OF NORTH CAROLINA
DEPARTMENT OF TRANSPORTATION
RALEIGH

SUBSTRUCTURE END BENT NO. 2

PLAN PREPARED BY:

ALPHA & OMEGA GROUP
CIVIL & STRUCTURAL ENGINEERS
4601 Lake Boone Trail, Ste. 3C Raleigh, NC 27607
Phone 919 981 0310 Fax 919 981 0451
Firm License No. C-1684 www.aogroup.com
A&O PROJECT NO. 2011.016

NORTH CAROLINA PROFESSIONAL SEAL 032724 ENGINEER T. GLENN ZEBLO
11-5-12

REFERENCE NO. 10-22

REVISIONS						SHEET NO.
NO.	BY:	DATE:	NO.	BY:	DATE:	S-697
1			3			TOTAL SHEETS
2			4			700

DRAWN BY :	J.R. FISHER	DATE :	09/12/12
CHECKED BY :	TG ZEBLO	DATE :	09/12/12
QC / QA :	CD ROBINSON	DATE :	11/04/12

Str No. 10

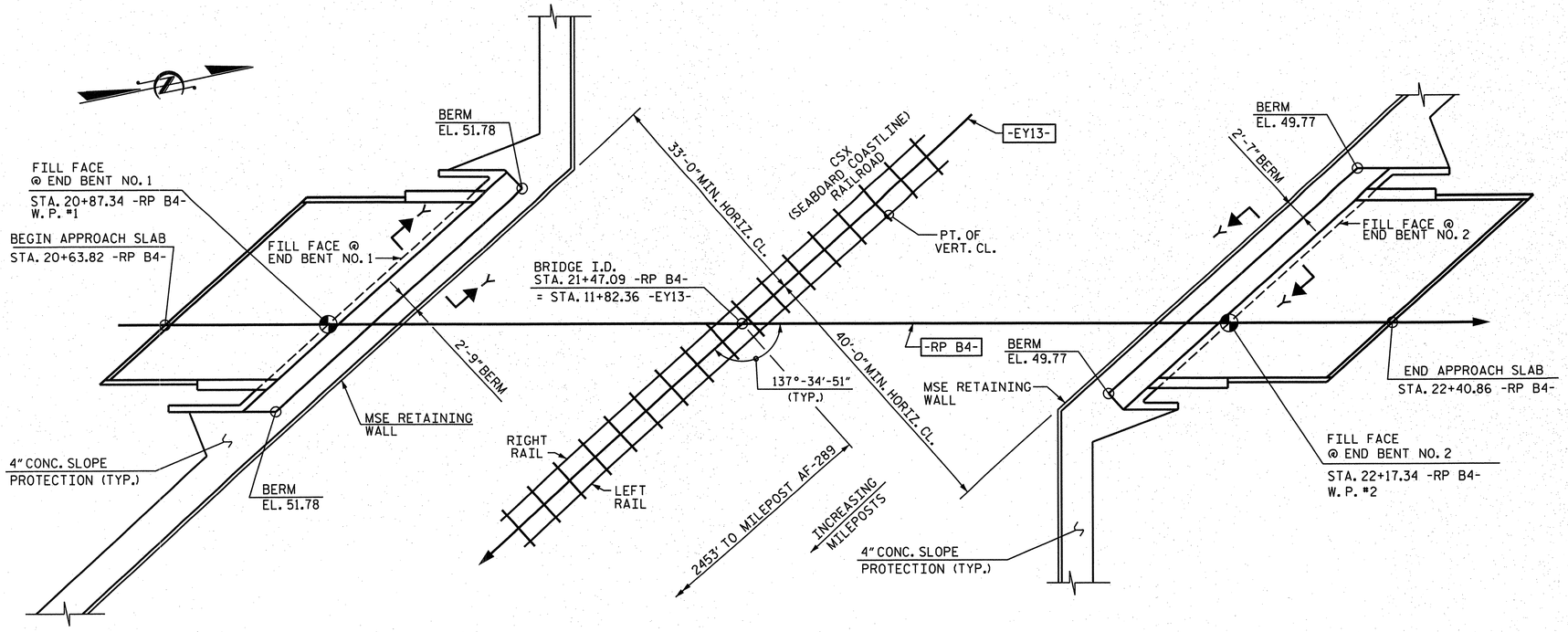

PLAN

GENERAL NOTES

SLOPE PROTECTION SHALL BE PLACED UNDER THE ENDS OF THE BRIDGE AS SHOWN IN THE DETAILS. THE CONTRACTOR, AT HIS OPTION, MAY USE ALTERNATE "B" ONLY FOR HIGHWAY OVER HIGHWAY GRADE SEPARATIONS WITH 2:1 END BENT SLOPE IN RURAL, UNPOPULATED AREAS. STRAIGHT EDGING WILL NOT BE REQUIRED UNLESS, IN THE OPINION OF THE ENGINEER, VISUAL INSPECTION INDICATES A NEED FOR IT. MEASUREMENT AND PAYMENT SHALL BE AS PRESCRIBED IN SECTION 462 OF THE STANDARD SPECIFICATIONS. FOR BERM WIDTH, SEE GENERAL DRAWING.

SLOPE PROTECTION SHALL CONSIST OF 4" POURED-IN-PLACE CONCRETE PAVING AS SHOWN IN THE DETAILS ON THIS SHEET. CONCRETE SHALL BE CLASS "B". THE CONCRETE SURFACE SHALL BE FLOATED WITH A WOODEN FLOAT AND FINISHED. WELDED WIRE FABRIC REINFORCING SHALL BE 6 X 6 - W1.4 X W1.4, 60" WIDE. SLOPE PROTECTION SHALL BE POURED IN 5' STRIPS AS SHOWN IN THE "POURING DETAIL" WITH 2'-0" LONG #4 BARS PLACED ALONG THE SLOPE BETWEEN STRIPS AT 1'-6" MAXIMUM SPACING. SLOPE PROTECTION MAY BE POURED IN ALTERNATE 4' AND 5' STRIPS AS SHOWN IN THE "OPTIONAL POURING DETAIL" WITH ADJACENT RUNS OF WELDED WIRE FABRIC LAPPING AT LEAST 6". THE COST OF THE WELDED WIRE FABRIC AND #4 BARS, IF USED, SHALL BE INCLUDED IN THE CONTRACT UNIT PRICE BID PER SQUARE YARD FOR SLOPE PROTECTION.

BRIDGE @ STA. 21+47.09 -RP B4-	4 INCH SLOPE PROTECTION	* WELDED WIRE FABRIC 60 INCHES WIDE
	SQUARE YARDS	APPROX. L.F.
END BENT NO. 1	86	155
END BENT NO. 2	67	121

* QUANTITY SHOWN IS BASED ON 5' POURS.

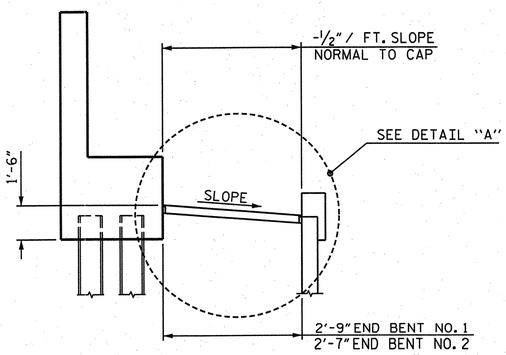

SECTION "Y-Y"

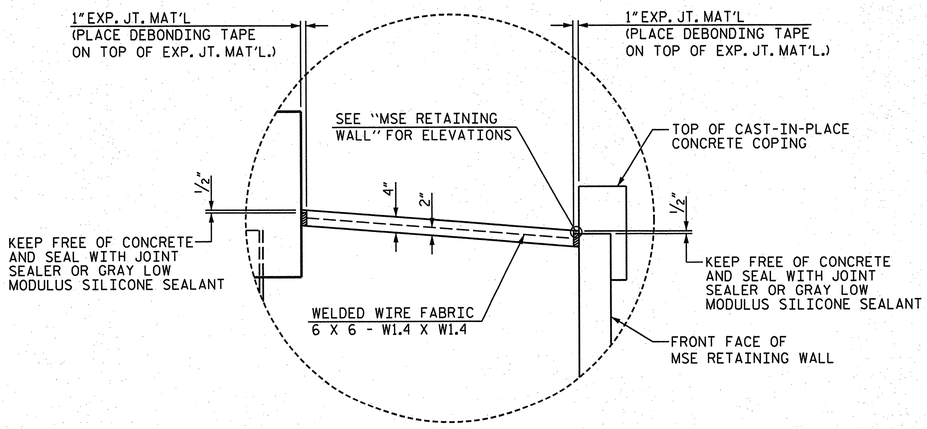

DETAIL "A"

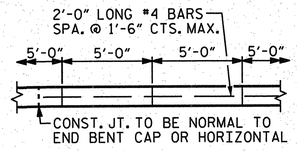

STRIP WIDTHS MAY VARY IN CURVED PORTION.

POURING DETAIL

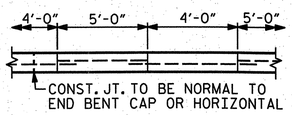

POUR A 4'-0" STRIP FIRST. STRIP WIDTHS MAY VARY IN CURVED PORTION.

OPTIONAL POURING DETAIL

PROJECT NO. R-2633BB
BRUNSWICK/NEW HANOVER COUNTY
STATION: 21+47.09 -RP B4-

STATE OF NORTH CAROLINA
DEPARTMENT OF TRANSPORTATION
RALEIGH

SLOPE PROTECTION

PLAN PREPARED BY:

ALPHA & OMEGA GROUP
CIVIL & STRUCTURAL ENGINEERS
4601 Lake Boone Trail, Ste. 3C Raleigh, NC 27607
Phone 919 981 0310 Fax 919 981 0451
Firm License No. C-1684 www.aogroup.com
A&O PROJECT NO. 2011.016

NORTH CAROLINA PROFESSIONAL ENGINEER SEAL 032724 11-5-12 T. GLENN ZEBLO

REFERENCE NO. 10-23

DRAWN BY :	J.D. GOODIN	DATE :	09/12/12
CHECKED BY :	TG ZEBLO	DATE :	09/12/12
QC / QA :	CD ROBINSON	DATE :	10/30/12

REVISIONS						SHEET NO.
NO.	BY:	DATE:	NO.	BY:	DATE:	S-698
1			3			TOTAL SHEETS
2			4			100

Str No. 10

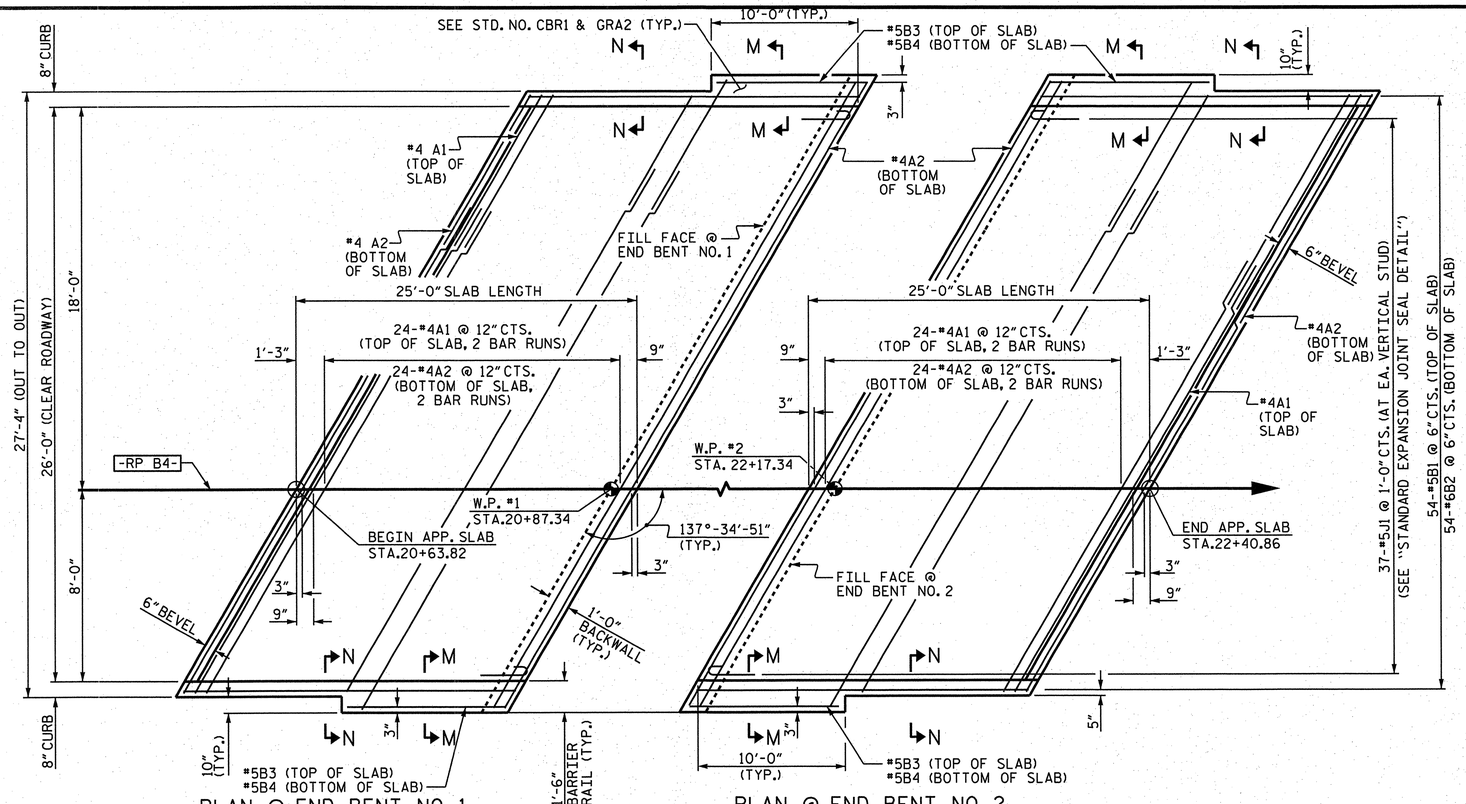

PLAN @ END BENT NO. 1

PLAN @ END BENT NO. 2

DIMENSIONS AND REINFORCING SHOWN ARE TYPICAL FOR BOTH APPROACH SLABS

NOTES

APPROACH SLAB SHALL NOT BE CONSTRUCTED PRIOR TO COMPLETION OF THE BRIDGE DECK.

AREA BETWEEN THE WING WALL AND APPROACH SLAB SHALL BE GRADED TO DRAIN THE WATER AWAY FROM THE FILL FACE OF THE BRIDGE AND SHALL BE PAVED. SEE ROADWAY PLANS.

FOR #4J1 BARS, SEE "EXPANSION JOINT SEAL DETAILS".

FOR BACKFILL MATERIAL, SEE MSE RETAINING WALL PLANS AND SPECIAL PROVISIONS.

THE COST OF THE BARRIER RAIL ON THE APPROACH SLAB SHALL BE INCLUDED IN THE CONTRACT PRICE FOR "CONCRETE BARRIER RAIL."

BILL OF MATERIAL

APPROACH SLAB AT END BENT NO. 1

BAR	NO.	SIZE	TYPE	LENGTH	WEIGHT
* A1	50	#4	STR	22'-4"	746
A2	52	#4	STR	22'-2"	770
* B1	54	#5	STR	23'-6"	1324
B2	54	#6	STR	24'-6"	1987
* B3	2	#5	STR	9'-8"	20
B4	2	#6	STR	9'-8"	29
* J1	37	#4	1	1'-5"	35

REINFORCING STEEL 2786 LBS.

* EPOXY COATED REINFORCING STEEL 2125 LBS.

CLASS AA CONCRETE 30.25 C.Y.

APPROACH SLAB AT END BENT NO. 2

BAR	NO.	SIZE	TYPE	LENGTH	WEIGHT
* A1	50	#4	STR	22'-4"	746
A2	52	#4	STR	22'-2"	770
* B1	54	#5	STR	23'-6"	1324
B2	54	#6	STR	24'-6"	1987
* B3	2	#5	STR	9'-8"	20
B4	2	#6	STR	9'-8"	29
* J1	37	#4	1	1'-5"	35

REINFORCING STEEL 2786 LBS.

* EPOXY COATED REINFORCING STEEL 2125 LBS.

CLASS AA CONCRETE 30.25 C.Y.

BAR TYPES

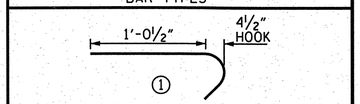

ALL BAR DIMENSIONS ARE OUT-TO-OUT.

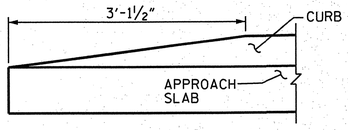

END OF CURB WITHOUT SHOULDER BERM GUTTER

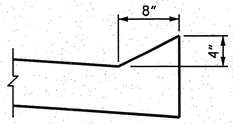

SECTION "N-N"

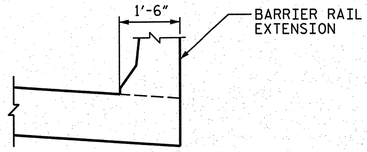

SECTION "M-M"

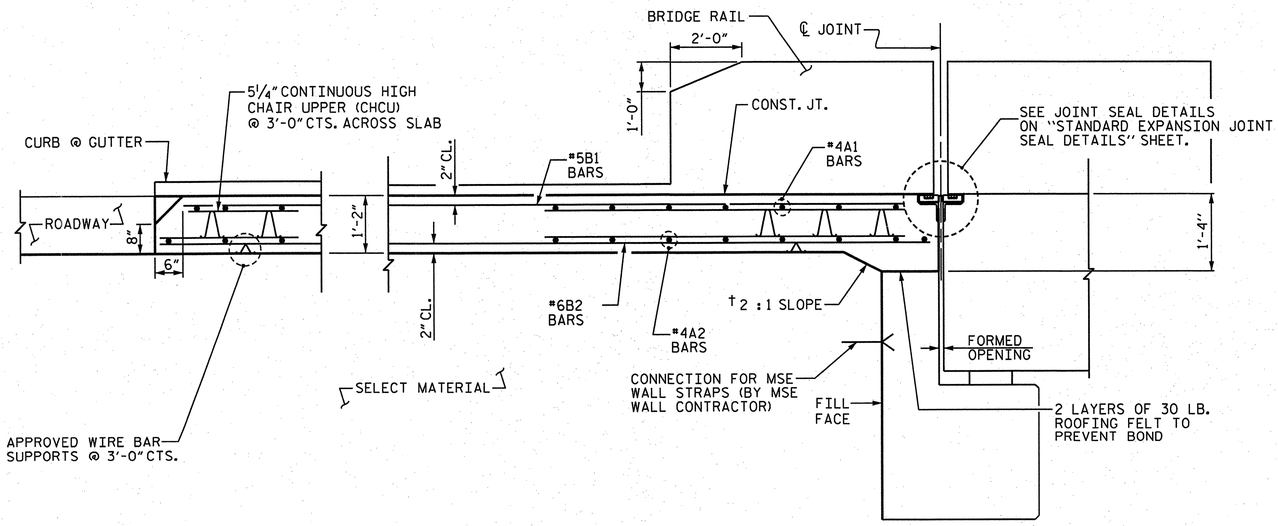

† NORMAL TO END BENT

SECTION THRU SLAB

PROJECT NO. R-2633BB

BRUNSWICK/ NEW HANOVER COUNTY

STATION: 21+47.09 -RP B4-

SHEET 1 OF 2

STATE OF NORTH CAROLINA
DEPARTMENT OF TRANSPORTATION
RALEIGH

STANDARD

BRIDGE APPROACH SLAB FOR FLEXIBLE PAVEMENT

DRAWN BY :	J.D. GOODIN	DATE :	02/07/12
CHECKED BY :	TG ZEBLO	DATE :	02/08/12
QC / QA :	CD ROBINSON	DATE :	10/30/12

DRAWN BY : EEM 3/95
CHECKED BY : VAP 3/95

REV. 5/1/06RR KMM/GM
REV. 10/1/11 MAA/GM
REV. 12/21/11 MAA/GM

PLAN PREPARED BY:

ALPHA & OMEGA GROUP
CIVIL & STRUCTURAL ENGINEERS
4601 Lake Boone Trail, Ste. 3C Raleigh, NC 27607
Phone 919 981 0310 Fax 919 981 0451
Firm License No. C-1684 www.aogroup.com
A&O PROJECT NO. 2011.016

NOTE: THIS STANDARD DRAWING REVIEWED AND ADOPTED FOR USE AT THE REFERENCED LOCATION BY THE UNDERSIGNED.

NORTH CAROLINA PROFESSIONAL SEAL 032724 ENGINEER GLENN ZEBLO
11-5-12

REFERENCE NO. 10-24

REVISIONS								SHEET NO.
NO.	BY:	DATE:	NO.	BY:	DATE:			S-699
1			3					TOTAL SHEETS
2			4					700

STR. NO. 10 STD. BAS2

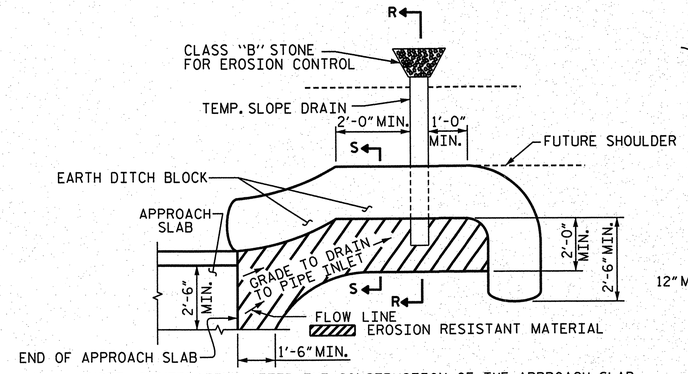

NOTE: IMMEDIATELY AFTER THE CONSTRUCTION OF THE APPROACH SLAB, THE CONTRACTOR SHALL PROVIDE TEMPORARY BERM AND SLOPE DRAIN. CONTRACTOR SHALL GRADE TO PIPE INLET AND PROVIDE EROSION RESISTANT MATERIAL AS SHOWN. THE EROSION RESISTANT MATERIAL SHALL BE EITHER 1) ASPHALT PLANT MIX, TYPE 1 OR TYPE 2, MIN. 2" DEPTH, 2) EROSION CONTROL MAT, OR 3) CONCRETE, AS DIRECTED BY THE ENGINEER. THE SLOPE DRAIN SHALL CONSIST OF A NON-PERFORATED TEMPORARY DRAINAGE PIPE, 12 INCHES IN DIAMETER.

PLAN VIEW

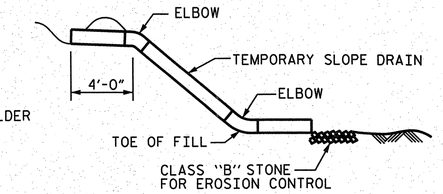

SECTION R-R

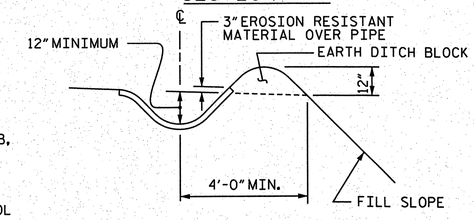

SECTION "S-S"

TEMPORARY BERM AND SLOPE DRAIN DETAILS

(TO BE USED WHEN SHOULDER BERM GUTTER IS REQUIRED)

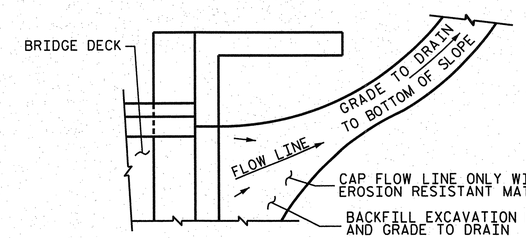

NOTE: IF THE APPROACH SLAB IS NOT CONSTRUCTED IMMEDIATELY AFTER THE BACKFILLING OF THE END BENT EXCAVATION, GRADE TO DRAIN TO THE BOTTOM OF THE SLOPE AND PROVIDE EROSION RESISTANT MATERIAL, SUCH AS FIBERGLASS ROVING OR AS DIRECTED BY THE ENGINEER TO PREVENT SOIL EROSION AND TO PROTECT THE AREA ADJACENT TO THE STRUCTURE. THE CONTRACTOR WILL BE REQUIRED TO REMOVE THESE MATERIALS PRIOR TO CONSTRUCTION OF THE APPROACH SLAB.

TEMPORARY DRAINAGE DETAIL

PROJECT NO. R-2633BB

BRUNSWICK/ NEW HANOVER COUNTY

STATION: 21+47.09 -RP B4-

SHEET 2 OF 2

STATE OF NORTH CAROLINA
DEPARTMENT OF TRANSPORTATION
RALEIGH

STANDARD

BRIDGE APPROACH SLAB DETAILS

DRAWN BY :	J.D. GOODIN	DATE :	08/24/12
CHECKED BY :	TG ZEBLO	DATE :	08/24/12
QC / QA :	CD ROBINSON	DATE :	10/30/12

DRAWN BY : FCJ 11/88	REV. 5/7/03	RWW/JTE
CHECKED BY : ARB 11/88	REV. 5/1/06	RRR MAA/KMM
	REV. 10/1/11	MAA/GM

PLAN PREPARED BY:

ALPHA & OMEGA GROUP
CIVIL & STRUCTURAL ENGINEERS
4601 Lake Boone Trail, Ste. 3C Raleigh, NC 27607
Phone 919 981 0310 Fax 919 981 0451
Firm License No. C-1684 www.aogroup.com
A&O PROJECT NO. 2011.016

NOTE: THIS STANDARD DRAWING REVIEWED AND ADOPTED FOR USE AT THE REFERENCED LOCATION BY THE UNDERSIGNED.

NORTH CAROLINA PROFESSIONAL SEAL 032724 ENGINEER T. GLENN ZEBLO
11-5-12

REFERENCE NO. 10-25

REVISIONS						SHEET NO.
NO.	BY:	DATE:	NO.	BY:	DATE:	S-700
1			3			TOTAL SHEETS
2			4			700

STD. BAS4 STR. NO. 10

GEOTECHNICAL ENGINEER	ENGINEER
NORTH CAROLINA PROFESSIONAL SEAL 30943 ENGINEER THEIN TUN ZAN	
SIGNATURE 6/27/13 DATE	SIGNATURE DATE

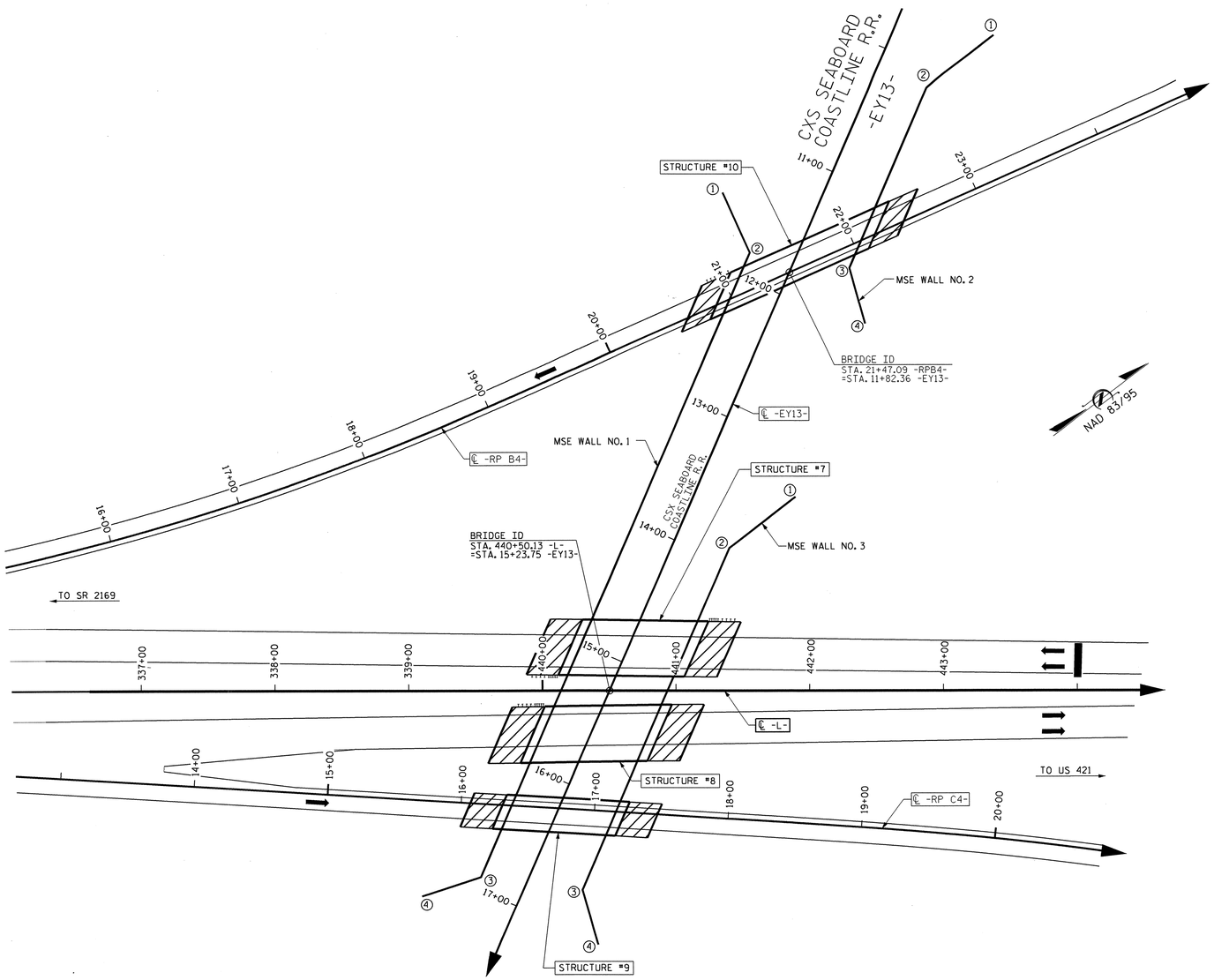

WALL NO. 1 LAYOUT

POINT NO.	-RP B4- OR -L-		-EY13-	
	STATION	OFFSET(FT)	STATION	OFFSET(FT)
1	21+26.284	75.11 LT	11+47.131	69.501 RT
2	21+26.284	25.58 LT	11+80.598	33.188 RT
3	339+54.175	139.88 RT	16+90.430	33.000 RT
4	339+10.033	154.46 RT	17+21.394	67.678 RT

WALL NO. 2 LAYOUT

POINT NO.	-RP B4-		-EY13-	
	STATION	OFFSET(FT)	STATION	OFFSET(FT)
1	23+59.690	98.58 LT	9+58.900	70.14 LT
2	22+98.031	83.71 LT	10+14.442	39.53 LT
3	21+89.536	15.56 RT	11+61.541	39.08 LT
4	21+83.064	58.33 RT	11+95.182	67.06 LT

WALL NO. 3 LAYOUT

POINT NO.	-L-		-EY13-	
	STATION	OFFSET(FT)	STATION	OFFSET(FT)
1	441+89.758	145.64 LT	13+34.608	70.232 LT
2	441+40.124	107.37 LT	13+89.455	39.899 LT
3	440+28.802	149.27 RT	16+69.036	40.086 LT
4	440+40.358	190.86 RT	17+02.551	67.298 LT

ESTIMATED MSE WALL QUANTITIES
(SQUARE FEET)

MSE RETAINING WALL NO. 1	15,039 SF
MSE RETAINING WALL NO. 2	4,729 SF
MSE RETAINING WALL NO. 3	8,463 SF

MSE RETAINING WALL NO. 1, NO. 2 & NO. 3 LAYOUT PLAN

PROJECT NO.: R-2633BB (34491.1.2)
BRUNSWICK/ NEW HANOVER ***COUNTY***
STATION: VARIES
SHEET 1 OF 6

PREPARED BY: THEIN T. ZAN	DATE: 6/2013
REVIEWED BY: JAMES R. BATTS	DATE: 6/2013

GEOTECHNICAL ENGINEERING UNIT

STATE OF NORTH CAROLINA DEPARTMENT OF TRANSPORTATION

- [X] ***EASTERN REGIONAL OFFICE***
- [ ] ***WESTERN REGIONAL OFFICE***
- [ ] ***CONTRACT OFFICE***

STATE OF NORTH CAROLINA
DEPARTMENT OF TRANSPORTATION
RALEIGH

R-2633BB
MSE RETAINING WALLS
LAYOUT PLAN

REVISIONS						SHEET NO.
NO.	BY	DATE	NO.	BY	DATE	W-1
1			3			TOTAL SHEETS
2			4			6

GEJ266083 6/27/2013 R2633BB_GEO_RWALL tzan RD-Oce860-34

GEOTECHNICAL ENGINEER	ENGINEER
NORTH CAROLINA PROFESSIONAL SEAL 30943 ENGINEER THEIN TUN ZAN	
SIGNATURE 6/27/13 DATE	SIGNATURE DATE

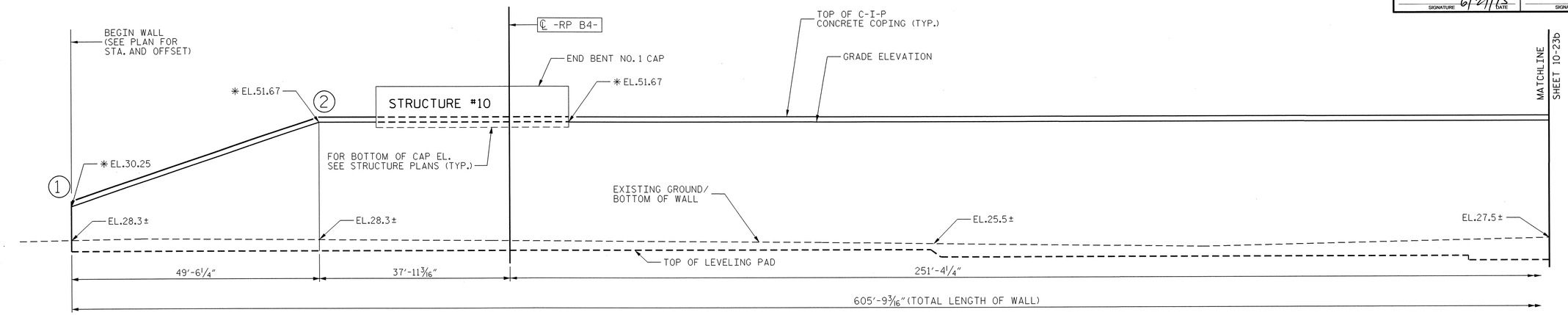

ELEVATION OF MSE WALL NO. 1

(LOOKING STATION AHEAD ALONG SURVEY LINE -L- AND GRADE LINE -RP B4-)

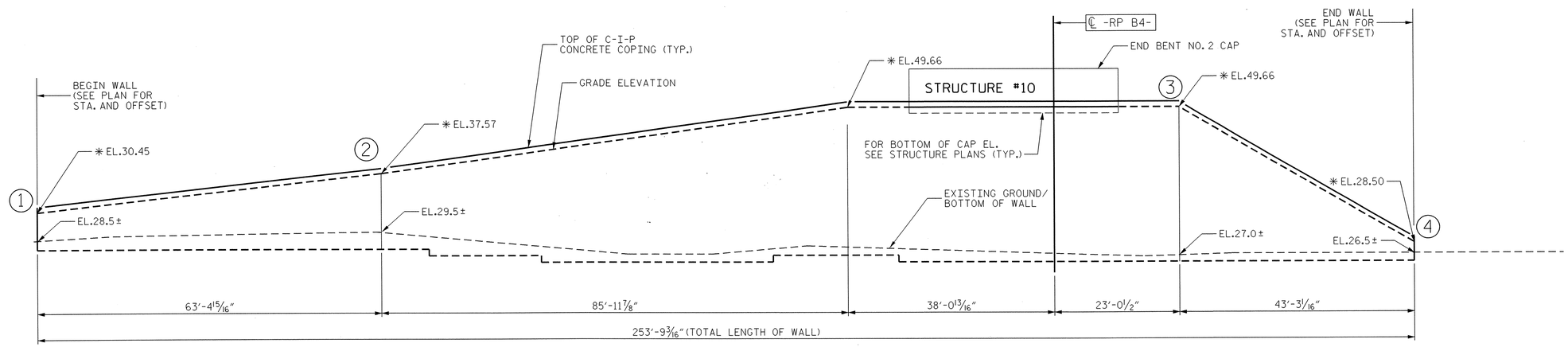

ELEVATION OF MSE WALL NO. 2

(LOOKING STATION AHEAD ALONG GRADE LINE -RP B4-)

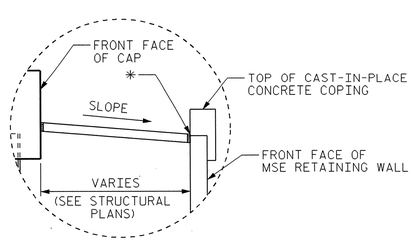

DETAIL "A"

NOTE: HORIZONTAL DIMENSIONS ARE ALONG THE FACE OF WALL.

PROJECT NO.: R-2633BB (34491.1.2)
BRUNSWICK/ NEW HANOVER ***COUNTY***
STATION: VARIES

SHEET 2 OF 6

GEOTECHNICAL ENGINEERING UNIT

☒ ***EASTERN REGIONAL OFFICE***
☐ ***WESTERN REGIONAL OFFICE***
☐ ***CONTRACT OFFICE***

STATE OF NORTH CAROLINA
DEPARTMENT OF TRANSPORTATION
RALEIGH

R-2633BB
MSE RETAINING WALLS
WALL NO. 1 & WALL NO. 2
ELEVATIONS

REVISIONS						SHEET NO.
NO.	BY	DATE	NO.	BY	DATE	W-2
1	–	–	3	–	–	TOTAL SHEETS
2	–	–	4	–	–	6

PREPARED BY: THEIN T. ZAN	DATE: 6/2013
REVIEWED BY: JAMES R. BATTS	DATE: 6/2013

GEOTECHNICAL ENGINEER

NORTH CAROLINA PROFESSIONAL SEAL 30943 ENGINEER THEIN TUN ZAN

SIGNATURE 6/27/13 DATE

ENGINEER

SIGNATURE DATE

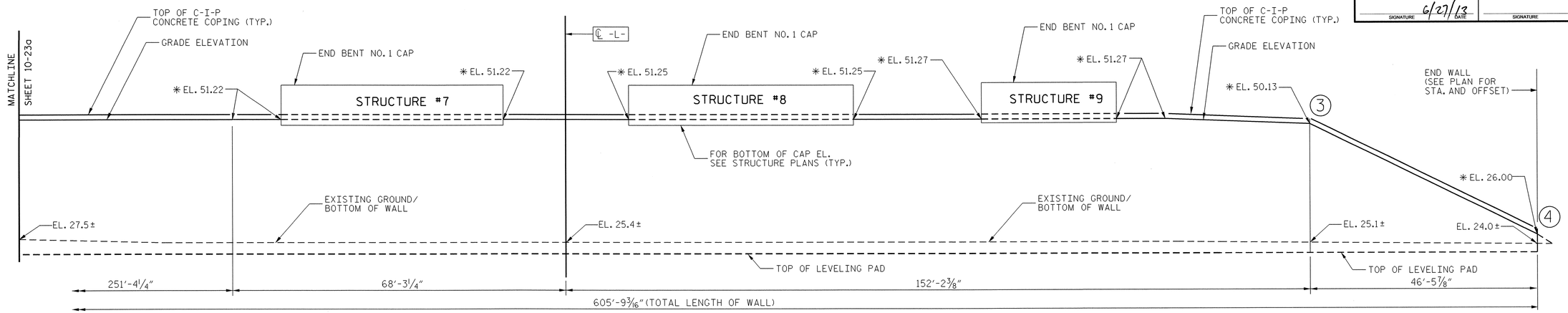

ELEVATION OF MSE WALL NO. 1

(LOOKING STATION AHEAD ALONG SURVEY LINE -L- AND GRADE LINE -RP B4-)

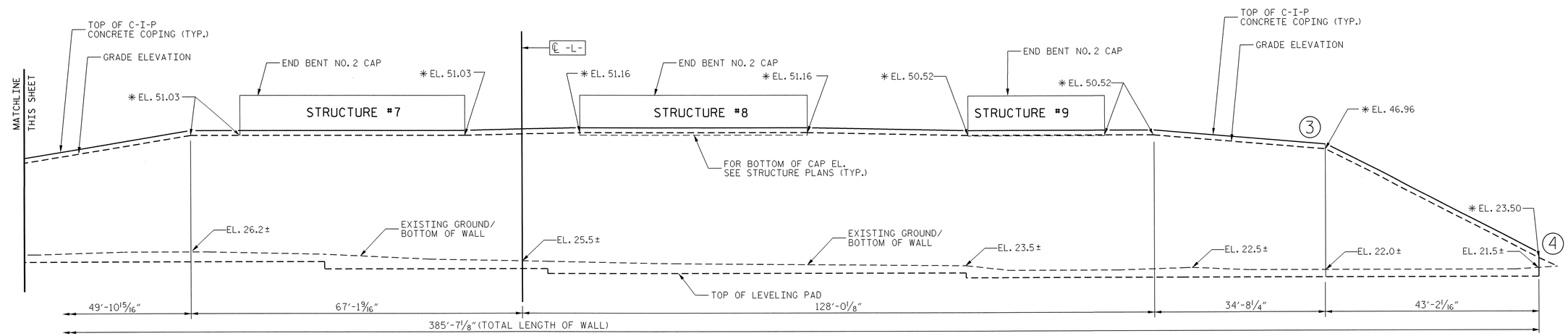

ELEVATION OF MSE WALL NO. 3

(LOOKING STATION AHEAD ALONG SURVEY LINE -L-)

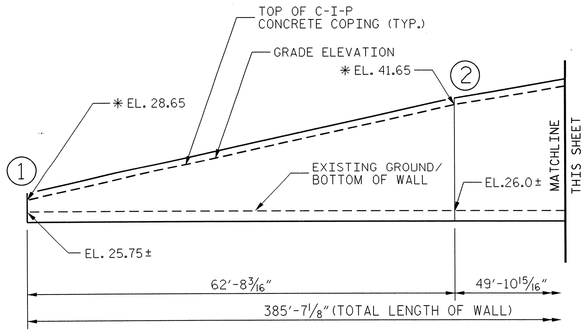

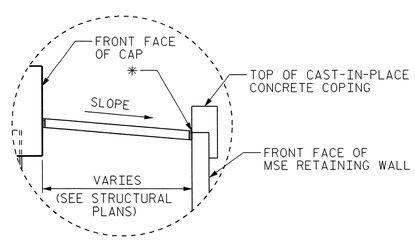

DETAIL "A"

NOTE: HORIZONTAL DIMENSIONS ARE ALONG THE FACE OF WALL.

PROJECT NO.: R-2633BB (34491.1.2)

BRUNSWICK/ NEW HANOVER ***COUNTY***

STATION: VARIES

SHEET 3 OF 6

GEOTECHNICAL ENGINEERING UNIT

☒ ***EASTERN REGIONAL OFFICE***

☐ ***WESTERN REGIONAL OFFICE***

☐ ***CONTRACT OFFICE***

STATE OF NORTH CAROLINA
DEPARTMENT OF TRANSPORTATION
RALEIGH

R-2633BB
MSE RETAINING WALLS
WALL NO. 1 & WALL NO. 3
ELEVATIONS

REVISIONS

NO.	BY	DATE	NO.	BY	DATE
1	–	–	3	–	–
2	–	–	4	–	–

SHEET NO. W-3

TOTAL SHEETS 6

PREPARED BY:	THEIN T. ZAN	DATE: 6/2013
REVIEWED BY:	JAMES R. BATTS	DATE: 6/2013

GEJ266083 6/27/2013 R2633BB_GEO_RWALL tzan RD-Oce860-34

GEOTECHNICAL ENGINEER	ENGINEER
NORTH CAROLINA PROFESSIONAL SEAL 30943 ENGINEER THEIN TUN ZAN	
SIGNATURE 6/27/13 DATE	SIGNATURE DATE

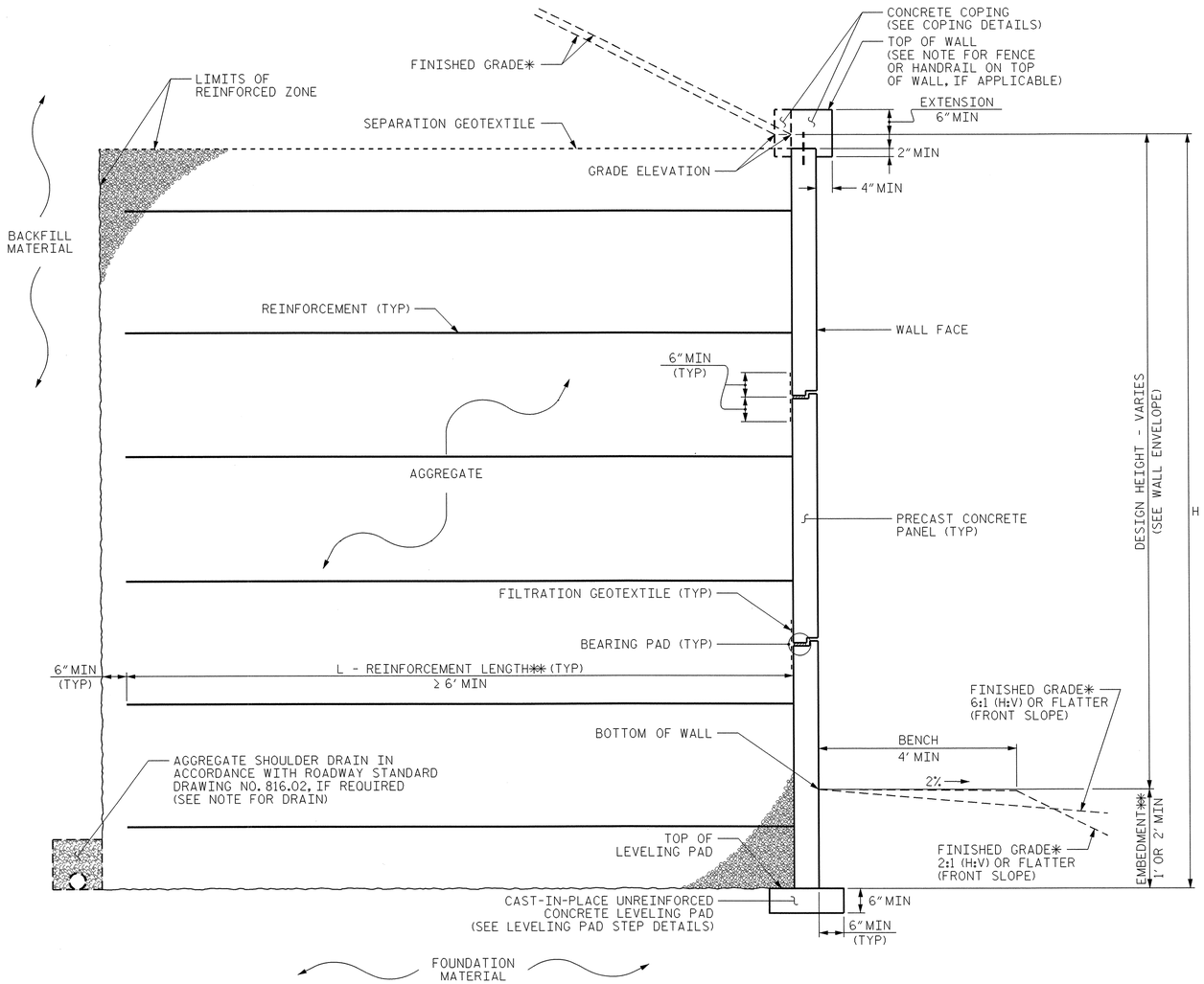

MSE WALL WITH PRECAST PANELS - TYPICAL SECTION

*SEE ROADWAY PLANS FOR FINISHED GRADE AND DITCH DETAILS.
**SEE MSE RETAINING WALLS PROVISION FOR EMBEDMENT AND REINFORCEMENT LENGTH REQUIREMENTS.

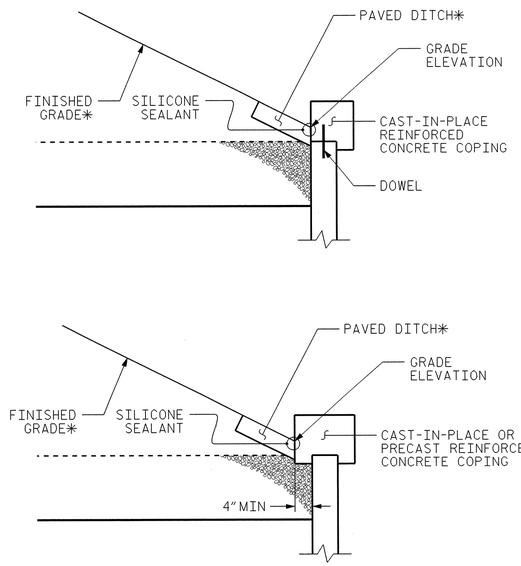

COPING DETAILS

AT THE CONTRACTOR'S OPTION, CONNECT COPING TO PANELS WITH DOWELS OR EXTEND COPING DOWN BACK OF PANELS.
*SEE ROADWAY PLANS FOR FINISHED GRADE AND DITCH DETAILS.

PROJECT NO.: R-2633BB (34491.1.2)
BRUNSWICK/ NEW HANOVER ***COUNTY***
STATION: VARIES

SHEET 4 OF 6

PREPARED BY: THEIN T. ZAN	DATE: 6/2013
REVIEWED BY: JAMES R. BATTS	DATE: 6/2013

GEOTECHNICAL ENGINEERING UNIT

- [X] ***EASTERN REGIONAL OFFICE***
- [ ] ***WESTERN REGIONAL OFFICE***
- [ ] ***CONTRACT OFFICE***

STATE OF NORTH CAROLINA
DEPARTMENT OF TRANSPORTATION
RALEIGH

R-2633BB
MSE RETAINING WALLS
TYPICAL SECTION & DETAILS

REVISIONS						SHEET NO.
NO.	BY	DATE	NO.	BY	DATE	W-4
1	-	-	3	-	-	TOTAL SHEETS
2	-	-	4	-	-	6

GEJ266083 6/27/2013 R2633BB_GEO_RWALL tzan RD-Oce860-34

GEOTECHNICAL ENGINEER	ENGINEER
NORTH CAROLINA PROFESSIONAL SEAL 30943 ENGINEER THEIN TUN ZAN	
SIGNATURE 6/27/13 DATE	SIGNATURE DATE

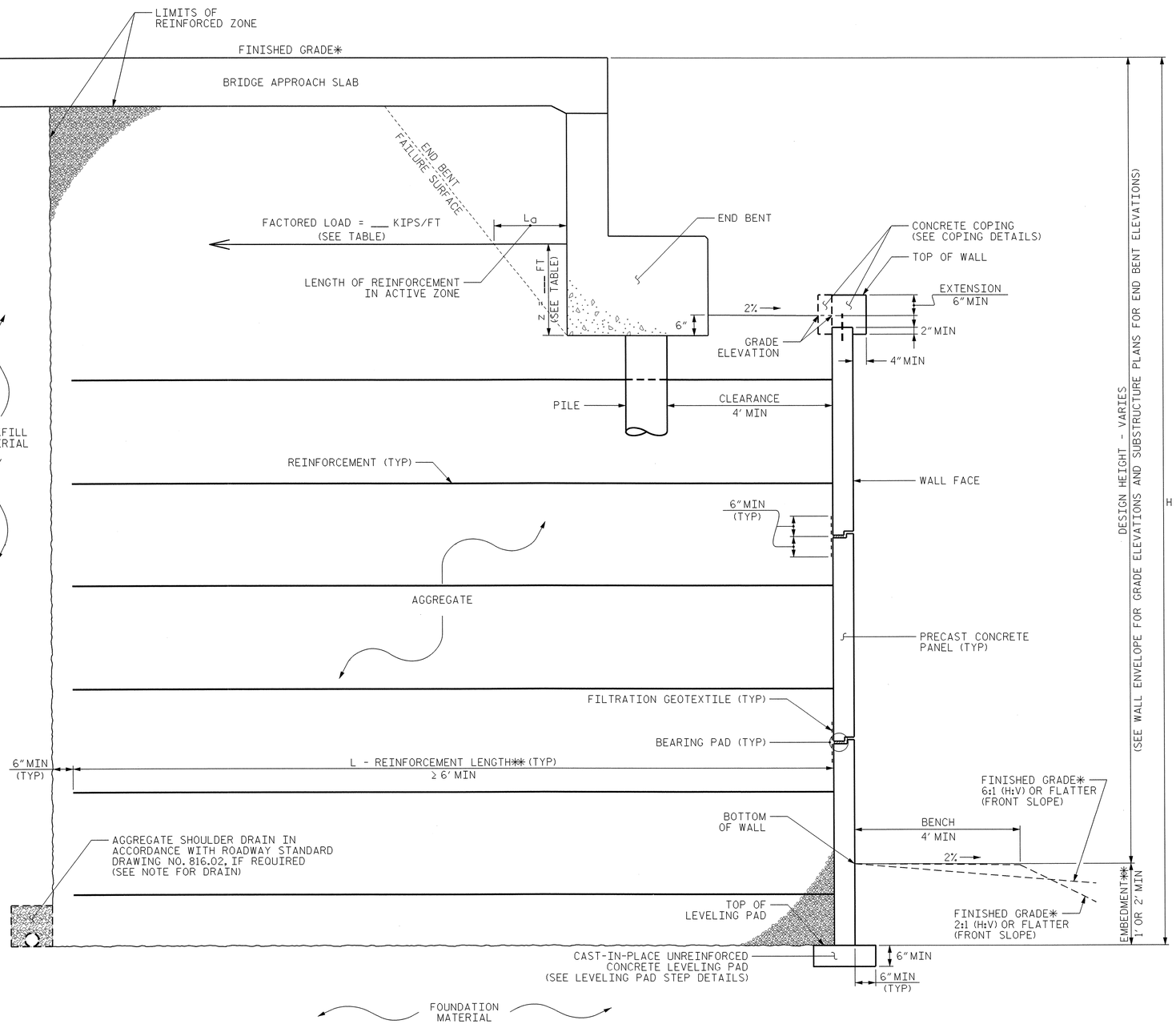

MSE ABUTMENT WALL WITH PRECAST PANELS - TYPICAL SECTION

*SEE ROADWAY PLANS FOR FINISHED GRADE DETAILS.
**SEE MSE RETAINING WALLS PROVISION FOR EMBEDMENT AND REINFORCEMENT LENGTH REQUIREMENTS.

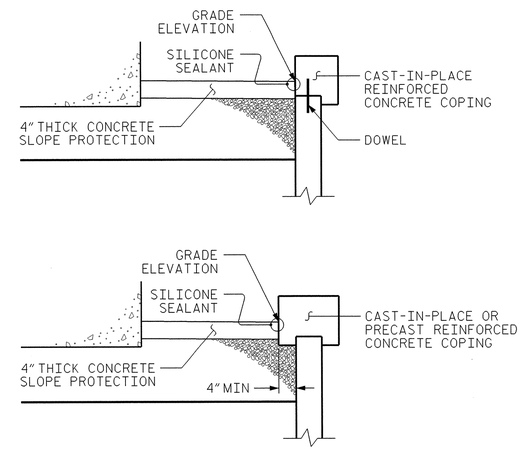

COPING DETAILS

AT THE CONTRACTOR'S OPTION, CONNECT COPING TO PANELS WITH DOWELS OR EXTEND COPING DOWN BACK OF PANELS.

FACTORED LOAD TABLE FOR END BENT STRAPS

STRUCTURE# (BRIDGE#)	END BENT#	STATION	FACTORED LOAD (KIP/FT)	DISTANCE FROM BOTTOM OF CAP (Z) (FT)
STR #7	EB1	440+14.66 -L-	2.12 KIP/FT	2.8 FT
STR #7	EB2	441+08.66 -L-	2.12 KIP/FT	2.8 FT
STR #8	EB1	439+99.08 -L-	2.17 KIP/FT	2.8 FT
STR #8	EB2	440+94.08 -L-	2.17 KIP/FT	2.8 FT
STR #9	EB1	16+30.92 -RP C4-	2.43 KIP/FT	3.0 FT
STR #9	EB2	17+22.92 -RP C4-	2.43 KIP/FT	3.0 FT
STR #10	EB1	20+87.34 -RP B4-	2.90 KIP/FT	6.5 FT
STR #10	EB2	22+17.34 -RP B4-	2.90 KIP/FT	6.5 FT

PROJECT NO.: R-2633BB (34491.1.2)
BRUNSWICK/ NEW HANOVER ***COUNTY***
STATION: VARIES

SHEET 5 OF 6

PREPARED BY: THEIN T. ZAN	DATE: 6/2013
REVIEWED BY: JAMES R. BATTS	DATE: 6/2013

GEOTECHNICAL ENGINEERING UNIT

☒ ***EASTERN REGIONAL OFFICE***
☐ ***WESTERN REGIONAL OFFICE***
☐ ***CONTRACT OFFICE***

STATE OF NORTH CAROLINA
DEPARTMENT OF TRANSPORTATION
RALEIGH

R-2633BB
MSE RETAINING WALLS
TYPICAL SECTION & DETAILS

REVISIONS

NO.	BY	DATE	NO.	BY	DATE
1	-	-	3	-	-
2	-	-	4	-	-

SHEET NO. W-5
TOTAL SHEETS 6

GEJ266083 6/27/2013 R2633BB_GEO_RWALL tzan RD-Oce860-34

GEOTECHNICAL ENGINEER	ENGINEER
NORTH CAROLINA PROFESSIONAL SEAL 30943 ENGINEER THEIN TUN ZAN	
6/27/13	
SIGNATURE DATE	SIGNATURE DATE

NOTES:

FOR MECHANICALLY STABILIZED EARTH (MSE) RETAINING WALLS, SEE MECHANICALLY STABILIZED EARTH RETAINING WALLS PROVISION.

USE AN MSE WALL SYSTEM WITH PRECAST CONCRETE PANELS THAT MEET SECTION 1077 OF THE STANDARD SPECIFICATIONS FOR RETAINING WALL NO. 1, WALL NO. 2 AND WALL NO. 3.

CAST-IN-PLACE REINFORCED CONCRETE COPING IS REQUIRED FOR RETAINING WALL NO 1, WALL NO. 2 AND WALL NO. 3.

A DRAIN IS REQUIRED FOR RETAINING WALL NO. 1, WALL NO. 2 AND WALL NO. 3.

BEFORE BEGINNING MSE WALL DESIGN FOR RETAINING WALL NO. 1, WALL NO. 2 AND WALL NO. 3, SURVEY WALL LOCATION AND SUBMIT A REVISED WALL PROFILE VIEW (WALL ENVELOPE) FOR REVIEW. DO NOT START WALL CONSTRUCTION UNTIL THE REVISED WALL ENVELOPE IS ACCEPTED.

DESIGN RETAINING WALL NO. 1, WALL NO. 2 AND WALL NO. 3 FOR THE FOLLOWING:
1) H = DESIGN HEIGHT + EMBEDMENT
2) DESIGN LIFE = 100 YEARS
3) MAXIMUM FACTORED VERTICAL STRESS ON FOUNDATION MATERIAL = 8,500 LB/SF
4) MINIMUM REINFORCEMENT LENGTH (L) = 1.0 X H FT

5) AGGREGATE PARAMETERS:

AGGREGATE TYPE*	UNIT WEIGHT (γ) LB/CF	FRICTION ANGLE (ϕ) DEGREES	COHESION (c) LB/SF
COARSE	110	38	0
FINE	125	34	0
*SEE MSE RETAINING WALLS PROVISION FOR COARSE AND FINE AGGREGATE MATERIAL REQUIREMENTS.			

6) IN-SITU ASSUMED MATERIAL PARAMETERS:

MATERIAL TYPE	UNIT WEIGHT (γ) LB/CF	FRICTION ANGLE (ϕ) DEGREES	COHESION (c) LB/SF
BACKFILL	120	30	0
FOUNDATION	120	30	0

DESIGN RETAINING WALL NO. 1, WALL NO. 2 AND WALL NO. 3 FOR A LIVE LOAD (TRAFFIC) SURCHARGE.

DESIGN REINFORCEMENT CONNECTED TO END BENT CAPS FOR FACTORED LOAD AND LENGTH OF REINFORCEMENT IN ACTIVE ZONE (L_a) SHOWN. CAST REINFORCEMENT CONNECTORS INTO CAP BACKWALL FOR END BENTS. MAINTAIN A CLEARANCE OF AT LEAST 3" BETWEEN CONNECTORS AND REINFORCING STEEL IN CAP.

EXISTING OR FUTURE OBSTRUCTIONS SUCH AS FOUNDATIONS, GUARDRAIL, FENCE OR HANDRAIL POSTS, PAVEMENTS, PIPES, INLETS OR UTILITIES MAY INTERFERE WITH REINFORCEMENT FOR RETAINING WALL NO. 1, WALL NO. 2, AND WALL NO. 3.

DO NOT PLACE LEVELING PAD CONCRETE, AGGREGATE OR REINFORCEMENT FOR RETAINING WALL NO. 1, WALL NO. 2 AND WALL NO. 3 UNTIL EXCAVATION DIMENSIONS AND FOUNDATION MATERIAL ARE APPROVED.

AT THE CONTRACTOR'S OPTION, "TEMPORARY SHORING FOR WALL CONSTRUCTION" MAY BE USED TO CONSTRUCT RETAINING WALL NO. 1, WALL NO. 2 AND WALL NO. 3. SEE MSE RETAINING WALLS PROVISION FOR TEMPORARY SHORING FOR WALL CONSTRUCTION.

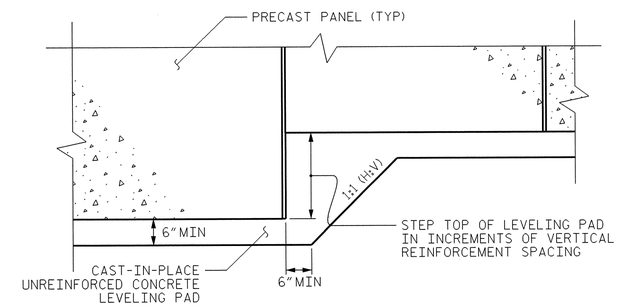

PRECAST CONCRETE PANELS

LEVELING PAD STEP DETAILS

PROJECT NO.: R-2633BB (34491.1.2)
BRUNSWICK/ NEW HANOVER ***COUNTY***
STATION: VARIES
SHEET 6 OF 6

GEOTECHNICAL ENGINEERING UNIT

☒ ***EASTERN REGIONAL OFFICE***
☐ ***WESTERN REGIONAL OFFICE***
☐ ***CONTRACT OFFICE***

STATE OF NORTH CAROLINA
DEPARTMENT OF TRANSPORTATION
RALEIGH

R-2633BB
MSE RETAINING WALLS
TYPICAL DETAILS & NOTES

REVISIONS						SHEET NO.
NO.	BY	DATE	NO.	BY	DATE	W-6
1	–	–	3	–	–	TOTAL SHEETS
2	–	–	4	–	–	6

PREPARED BY: THEIN T. ZAN	DATE: 6/2013
REVIEWED BY: JAMES R. BATTS	DATE: 6/2013

STANDARD NOTES

DESIGN DATA:

SPECIFICATIONS	A.A.S.H.T.O. (CURRENT)
LIVE LOAD	SEE PLANS
IMPACT ALLOWANCE	SEE A.A.S.H.T.O.
STRESS IN EXTREME FIBER OF	
STRUCTURAL STEEL - AASHTO M270 GRADE 36	20,000 LBS. PER SQ. IN.
- AASHTO M270 GRADE 50W	27,000 LBS. PER SQ. IN.
- AASHTO M270 GRADE 50	27,000 LBS. PER SQ. IN.
REINFORCING STEEL IN TENSION	
GRADE 60	24,000 LBS. PER SQ. IN.
CONCRETE IN COMPRESSION	1,200 LBS. PER SQ. IN.
CONCRETE IN SHEAR	SEE A.A.S.H.T.O.
STRUCTURAL TIMBER - TREATED OR	
UNTREATED - EXTREME FIBER STRESS	1,800 LBS. PER SQ. IN.
COMPRESSION PERPENDICULAR TO GRAIN OF TIMBER	375 LBS. PER SQ. IN.
EQUIVALENT FLUID PRESSURE OF EARTH	30 LBS. PER CU. FT. (MINIMUM)

MATERIAL AND WORKMANSHIP:

EXCEPT AS MAY OTHERWISE BE SPECIFIED ON PLANS OR IN THE SPECIAL PROVISIONS, ALL MATERIAL AND WORKMANSHIP SHALL BE IN ACCORDANCE WITH THE 2012 "STANDARD SPECIFICATIONS FOR ROADS AND STRUCTURES" OF THE N. C. DEPARTMENT OF TRANSPORTATION.

STEEL SHEET PILING FOR PERMANENT OR TEMPORARY APPLICATIONS SHALL BE HOT ROLLED.

CONCRETE:

UNLESS OTHERWISE REQUIRED ON PLANS, CLASS A CONCRETE SHALL BE USED FOR ALL PORTIONS OF ALL STRUCTURES WITH THE EXCEPTION THAT: CLASS AA CONCRETE SHALL BE USED IN BRIDGE SUPERSTRUCTURES, ABUTMENT BACKWALLS, AND APPROACH SLABS; AND CLASS B CONCRETE SHALL BE USED FOR SLOPE PROTECTION AND RIP RAP.

CONCRETE CHAMFERS:

UNLESS OTHERWISE NOTED ON THE PLANS, ALL EXPOSED CORNERS ON STRUCTURES SHALL BE CHAMFERED 3/4" WITH THE FOLLOWING EXCEPTIONS: TOP CORNERS OF CURBS MAY BE ROUNDED TO 1-1/2" RADIUS WHICH IS BUILT INTO CURB FORMS; CORNERS OF TRANSVERSE FLOOR EXPANSION JOINTS SHALL BE ROUNDED WITH A 1/4" FINISHING TOOL UNLESS OTHERWISE REQUIRED ON PLANS; AND CORNERS OF EXPANSION JOINTS IN THE ROADWAY FACES AND TOPS OF CURBS AND SIDEWALKS SHALL BE ROUNDED TO A 1/4" RADIUS WITH A FINISHING STONE OR TOOL UNLESS OTHERWISE REQUIRED ON PLANS.

DOWELS:

DOWELS WHEN INDICATED ON PLANS AS FOR CULVERT EXTENSIONS, SHALL BE EMBEDDED AT LEAST 12" INTO THE OLD CONCRETE AND GROUTED INTO PLACE WITH 1:2 CEMENT MORTAR.

ALLOWANCE FOR DEAD LOAD DEFLECTION, SETTLEMENT, ETC. IN CASTING SUPERSTRUCTURES:

BRIDGES SHALL BE BUILT ON THE GRADE OR VERTICAL CURVE SHOWN ON PLANS. SLABS, CURBS AND PARAPETS SHALL CONFORM TO THE GRADE OR CURVE.

ALL DIMENSIONS WHICH ARE GIVEN IN SECTION AND ARE AFFECTED BY DEAD LOAD DEFLECTIONS ARE DIMENSIONS AT CENTER LINE OF BEARING UNLESS OTHERWISE NOTED ON PLANS. IN SETTING FORMS FOR STEEL BEAM BRIDGES AND PRESTRESSED CONCRETE GIRDER BRIDGES, ADJUSTMENTS SHALL BE MADE DUE TO THE DEAD LOAD DEFLECTIONS FOR THE ELEVATIONS SHOWN. WHERE BLOCKS ARE SHOWN OVER BEAMS FOR BUILDING UP TO THE SLAB, THE VERTICAL DIMENSIONS OF THE BLOCKS SHALL BE ADJUSTED BETWEEN BEARINGS TO COMPENSATE FOR DEAD LOAD DEFLECTIONS, VERTICAL CURVE ORDINATE, AND ACTUAL BEAM CAMBER. WHERE BOTTOM OF SLAB IS IN LINE WITH BOTTOM OF TOP FLANGES, DEPTH OF SLAB BETWEEN BEARINGS SHALL BE ADJUSTED TO COMPENSATE FOR DEAD LOAD DEFLECTION, VERTICAL CURVE ORDINATE, AND ACTUAL BEAM CAMBER.

IN SETTING FALSEWORK AND FORMS FOR REINFORCED CONCRETE SPANS, AN ALLOWANCE SHALL BE MADE FOR DEAD LOAD DEFLECTIONS, SETTLEMENT OF FALSEWORK, AND PERMANENT CAMBER WHICH SHALL BE PROVIDED FOR IN ADDITION TO THE ELEVATIONS SHOWN. AFTER REMOVAL OF THE FALSEWORK, THE FINISHED STRUCTURES SHALL CONFORM TO THE PROFILE AND ELEVATIONS SHOWN ON THE PLANS AND CONSTRUCTION ELEVATIONS FURNISHED BY THE ENGINEER.

DETAILED DRAWINGS FOR FALSEWORK OR FORMS FOR BRIDGE SUPERSTRUCTURE AND ANY STRUCTURE OR PARTS OF A STRUCTURE AS NOTED ON THE PLANS SHALL BE SUBMITTED TO THE ENGINEER FOR APPROVAL BEFORE CONSTRUCTION OF THE FALSEWORK OR FORMS IS STARTED.

REINFORCING STEEL:

ALL REINFORCING STEEL SHALL BE DEFORMED. DIMENSIONS RELATIVE TO PLACEMENT OF REINFORCING ARE TO CENTERS OF BARS UNLESS OTHERWISE INDICATED IN THE PLANS. DIMENSIONS ON BAR DETAILS ARE TO CENTERS OF BARS OR ARE OUT TO OUT AS INDICATED ON PLANS.

WIRE BAR SUPPORTS SHALL BE PROVIDED FOR REINFORCING STEEL WHERE INDICATED ON THE PLANS. WHEN BAR SUPPORT PIECES ARE PLACED IN CONTINUOUS LINES, THEY SHALL BE SO PLACED THAT THE ENDS OF THE SUPPORTING WIRES SHALL BE LAPPED TO LOCK LEGS ON ADJOINING PIECES.

STRUCTURAL STEEL:

AT THE CONTRACTOR'S OPTION, HE MAY SUBSTITUTE 7/8" Ø SHEAR STUDS FOR THE 3/4" Ø STUDS SPECIFIED ON THE PLANS. THIS SUBSTITUTION SHALL BE MADE AT THE RATE OF 3 - 7/8" Ø STUDS FOR 4 - 3/4" Ø STUDS, AND STUD SPACING CHANGES SHALL BE MADE AS NECESSARY TO PROVIDE THE SAME EQUIVALENT NUMBER OF 7/8" Ø STUDS ALONG THE BEAM AS SHOWN FOR 3/4" Ø STUDS BASED ON THE RATIO OF 3 - 7/8" Ø STUDS FOR 4 - 3/4" Ø STUDS. STUDS OF THE LENGTH SPECIFIED ON THE PLANS MUST BE PROVIDED. THE MAXIMUM SPACING SHALL BE 2'-0".

EXCEPT AT THE INTERIOR SUPPORTS OF CONTINUOUS BEAMS WHERE THE COVER PLATE IS IN CONTACT WITH BEARING PLATE, THE CONTRACTOR MAY, AT HIS OPTION, SUBSTITUTE FOR THE COVER PLATES DESIGNATED ON THE PLANS COVER PLATES OF THE EQUIVALENT AREA PROVIDED THESE PLATES ARE AT LEAST 5/16" IN THICKNESS AND DO NOT EXCEED A WIDTH EQUAL TO THE FLANGE WIDTH LESS 2" OR A THICKNESS EQUAL TO 2 TIMES THE FLANGE THICKNESS. THE SIZE OF FILLET WELDS SHALL CONFORM TO THE REQUIREMENTS OF THE CURRENT ANSI/AASHTO/AWS "BRIDGE WELDING CODE". ELECTROSLAG WELDING WILL NOT BE PERMITTED.

WITH THE SOLE EXCEPTION OF EDGES AT SURFACES WHICH BEAR ON OTHER SURFACES, ALL SHARP EDGES AND ENDS OF SHAPES AND PLATES SHALL BE SLIGHTLY ROUNDED BY SUITABLE MEANS TO A RADIUS OF APPROXIMATELY 1/16 INCH OR EQUIVALENT FLAT SURFACE AT A SUITABLE ANGLE PRIOR TO PAINTING, GALVANIZING, OR METALLIZING.

HANDRAILS AND POSTS:

METAL STANDARDS AND FACES OF THE CONCRETE END POSTS FOR THE METAL RAIL SHALL BE SET NORMAL TO THE GRADE OF THE CURB, UNLESS OTHERWISE SHOWN ON PLANS. THE METAL RAIL AND TOPS OF CONCRETE POSTS USED WITH THE ALUMINUM RAIL SHALL BE BUILT PARALLEL TO THE GRADE OF THE CURB.

METAL HANDRAILS SHALL BE IN ACCORDANCE WITH THE PLANS. RAILS SHALL BE AS MANUFACTURED FOR BRIDGE RAILING. CASTINGS SHALL BE OF A UNIFORM APPEARANCE. FINS AND OTHER DEFORMATIONS RESULTING FROM CASTING OR OTHERWISE SHALL BE REMOVED IN A MANNER SO THAT A UNIFORM COLORING OF THE COMPLETED CASTING SHALL BE OBTAINED. CASTINGS WITH DISCOLORATIONS OR OF NON-UNIFORM COLORING WILL NOT BE ACCEPTED. CERTIFIED MILL REPORTS ARE REQUIRED FOR METAL RAILS AND POSTS.

SPECIAL NOTES:

GENERALLY, IN CASE OF DISCREPANCY, THIS STANDARD SHEET OF NOTES SHALL GOVERN OVER THE SPECIFICATIONS, BUT THE REMAINDER OF THE PLANS SHALL GOVERN OVER NOTES HEREON, AND SPECIAL PROVISIONS SHALL GOVERN OVER ALL. SEE SPECIFICATIONS ARTICLE 105-4.

ENGLISH

JANUARY, 1990