CONTRACT: C203198 TIP PROJECT: R-2633BB

STATE OF NORTH CAROLINA
DIVISION OF HIGHWAYS

BRUNSWICK & NEW HANOVER COUNTIES

STATE	STATE PROJECT REFERENCE NO.	SHEET NO.	TOTAL SHEETS
N.C.	R-2633BB		

STATE PROJ. NO.	F. A. PROJ. NO.	DESCRIPTION
34491.1.2	STPNHF-17(1)	P.E.
34491.2.3		R/W
34491.3.21	NHS-0017(125)	CONST.

LOCATION: US 17 (WILMINGTON BYPASS) FROM SR 1430 (CEDAR HILL ROAD) TO US 421 NORTH OF WILMINGTON

TYPE OF WORK: GRADING, DRAINAGE, PAVING, SIGNING, AND STRUCTURES

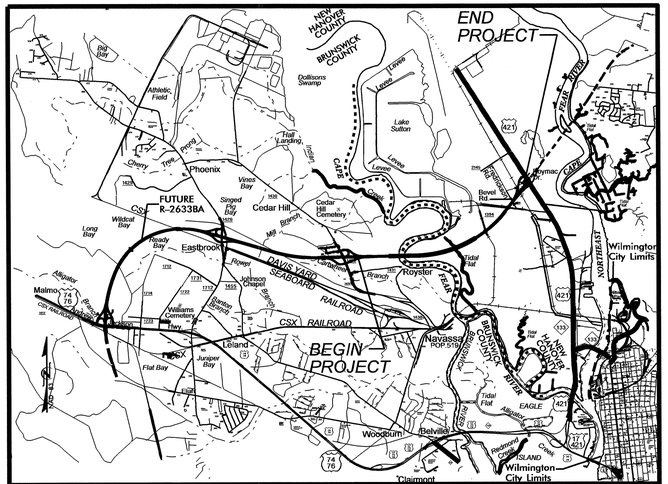

VICINITY MAP

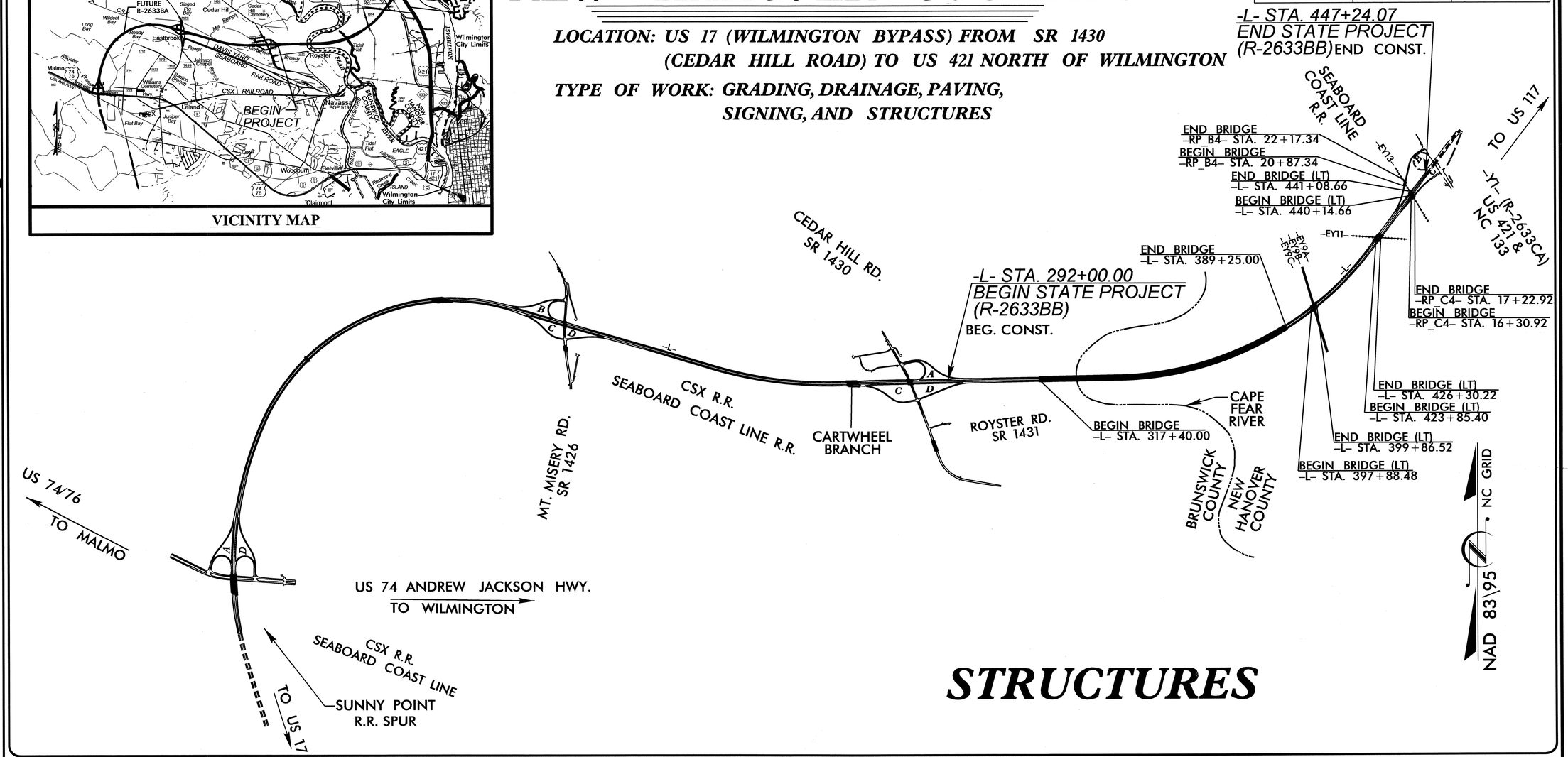

STRUCTURES

DESIGN DATA

ADT 2013 = 39,600
ADT 2035 = 80,800
DHV = 12 %
D = 60 %
T = 15 % *
V = 70 MPH
* TTST 10% DUAL 5%
FUNC. CLASS. = INTERSTATE
STATEWIDE TIER

PROJECT LENGTH

LENGTH ROADWAY TIP PROJECT R-2633BB = 1.478 Miles
LENGTH STRUCTURES TIP PROJECT R-2633BB = 1.462 Miles
TOTAL LENGTH STATE TIP PROJECT R-2633BB = 2.940 Miles

THIS IS A CONTROL ACCESS PROJECT WITH ACCESS BEING LIMITED TO THE INTERCHANGES

Prepared for the Office of:
DIVISION OF HIGHWAYS
1000 Birch Ridge Drive Raleigh, N.C. 27610

2012 STANDARD SPECIFICATIONS

LETTING DATE:
September 17, 2013

DIVISION OF HIGHWAYS
STATE OF NORTH CAROLINA

P.E.
STATE HIGHWAY DESIGN ENGINEER

03-JUL-2013 07:36
$$$$$$$$$$$$$$$$DGN$$$$$$$$$$$$$$$$$$
dcrutcher

INDEX			
STR.	STATION	DESCRIPTION	SHEETS
1	**353+32.50 -L-**	**BRIDGE ON US17 OVER CAPE FEAR RIVER (LEFT LANE)**	**S-1 THRU S-229**
2	353+32.50 -L-	BRIDGE ON US17 OVER CAPE FEAR RIVER (RIGHT LANE)	S-230 THRU S-459
3	398+75.47 -L-	BRIDGE ON US17 OVER 3 SPUR LINES (LEFT LANE)	S-460 THRU S-498
4	398+75.47 -L-	BRIDGE ON US17 OVER 3 SPUR LINES (RIGHT LANE)	S-499 THRU S-537
5	425+60.75 -L-	BRIDGE ON US17 OVER SPUR LINE (LEFT LANE)	S-538 THRU S-571
6	425+60.75 -L-	BRIDGE ON US17 OVER SPUR LINE (RIGHT LANE)	S-572 THRU S-605
7	440+50.13 -L-	BRIDGE ON US17 OVER CSX RAILROAD (LEFT LANE)	S-606 THRU S-628
8	440+50.13 -L-	BRIDGE ON US17 OVER CSX RAILROAD (RIGHT LANE)	S-629 THRU S-651
9	16+73.17 -RP C4-	BRIDGE ON US17 RAMP OVER CSX RAILROAD	S-652 THRU S-674
10	21+47.09 -RP B4-	BRIDGE ON US17 RAMP OVER CSX RAILROAD	S-675 THRU S-700
11	21+26.284 -RP B4-	MSE RETAINING WALL NO. 1	W-1 THRU W-6
12	23+59.690 -RP B4-	MSE RETAINING WALL NO. 2	
13	441+89.758 -L-	MSE RETAINING WALL NO. 3	

PART 1

PART 2

PART 3

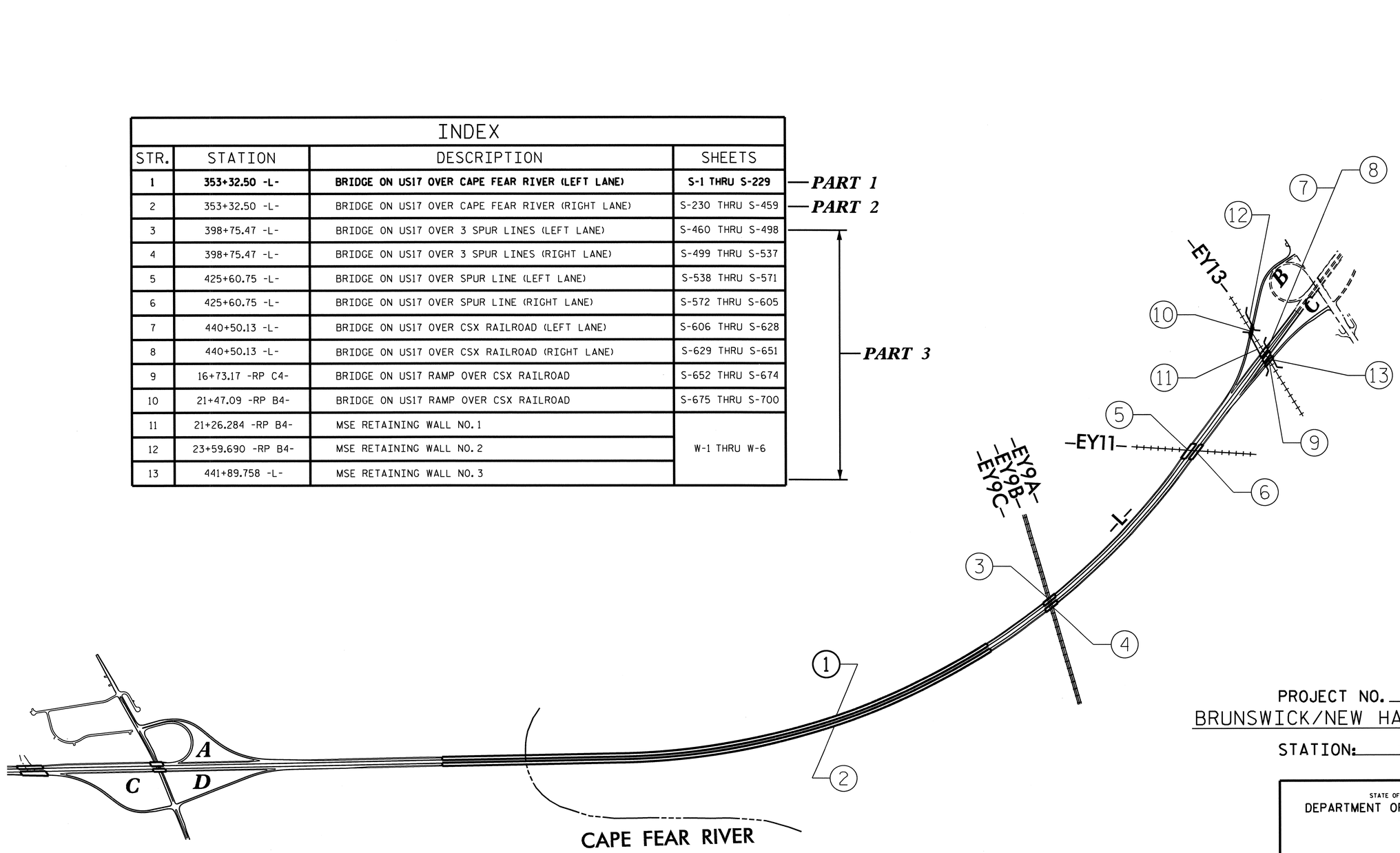

PROJECT NO. R-2633BB

BRUNSWICK/NEW HANOVER COUNTY

STATION: _____

STATE OF NORTH CAROLINA
DEPARTMENT OF TRANSPORTATION
RALEIGH

INDEX

REVISIONS					
NO.	BY:	DATE:	NO.	BY:	DATE:
1			3		
2			4		

PART 1 OF 3

DRAWN BY : W.D. CRUTCHER DATE : 6-27-13
CHECKED BY : R.D. MARTIN DATE : 7-4-13

03-JUL-2013 07:36
S:\PEF\Darrell\r2633bb_title_index.dgn

F.A. PROJECT NO: **STPNHF-0017(125)**

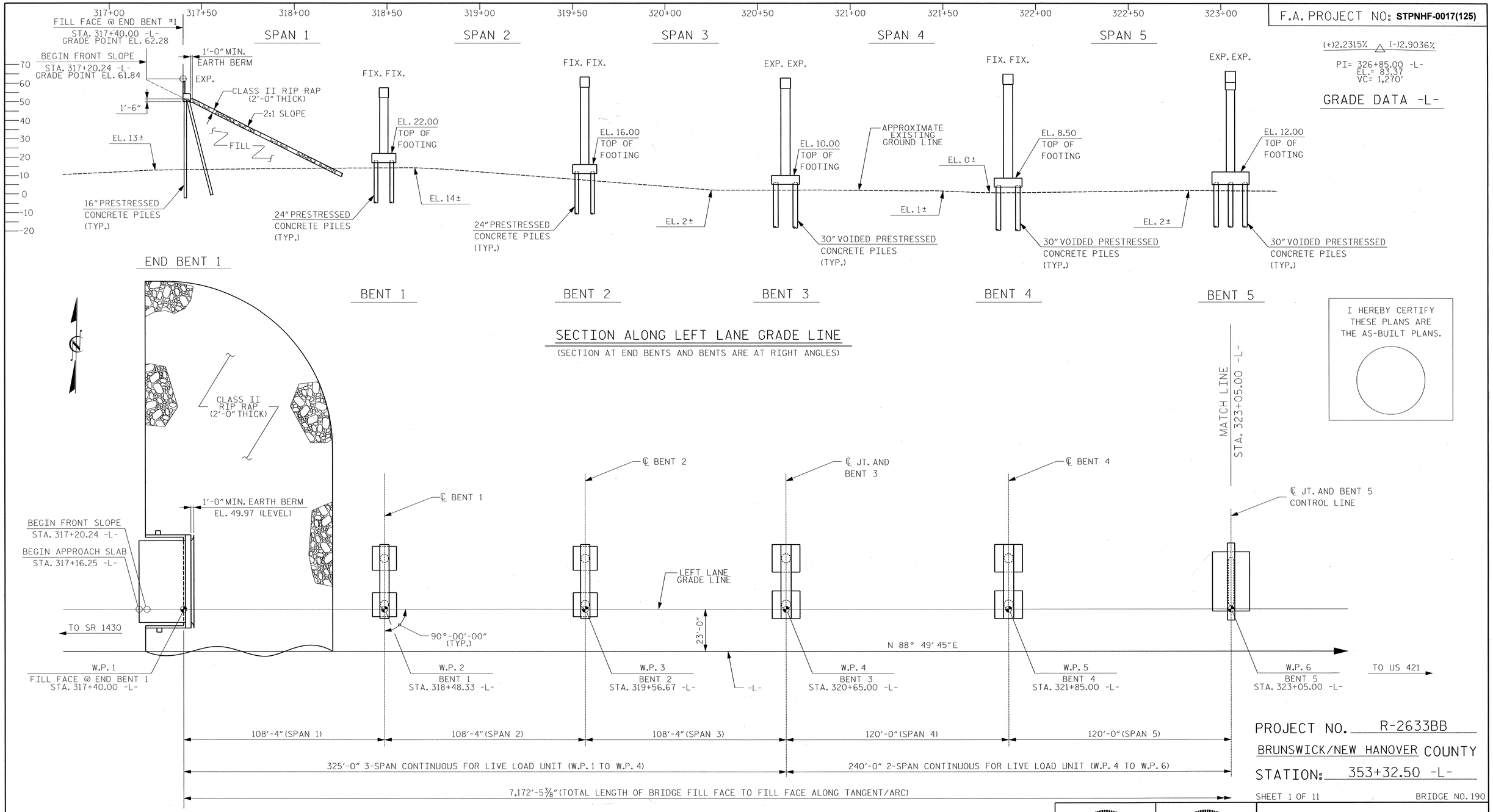

I HEREBY CERTIFY THESE PLANS ARE THE AS-BUILT PLANS.

PLAN

(PILES NOT SHOWN FOR CLARITY)

NOTE: DIMENSIONS ARE ALONG GRADE LINE, STATIONS ARE ALONG -L-

FOR TEMPORARY WORK BRIDGE, SEE LOCATION SKETCH

PROJECT NO. R-2633BB

BRUNSWICK/NEW HANOVER COUNTY

STATION: 353+32.50 -L-

SHEET 1 OF 11

BRIDGE NO. 190

DRAWN BY : R. J. DECOLA	DATE : 11/2011	
CHECKED BY : R. BOLLINGER	DATE : 02/2013	
DESIGN ENGINEER OF RECORD : R. BOLLINGER	DATE : 05/2013	

NORTH CAROLINA PROFESSIONAL SEAL 18442 ENGINEER RICHARD LEON BOLLINGER III
5-29-2013

RS&H IMPROVING YOUR WORLD

RS&H Architects-Engineers-Planners, Inc.
8601 Six Forks Road, Suite 260
Raleigh, NC 27615
919-846-5701 FAX 919-846-9080
www.rsandh.com
North Carolina License Nos. 50673 * F-0483 * C-28

NORTH CAROLINA PROFESSIONAL SEAL 22072 ENGINEER JOHN ARTHUR DILWORTH
5-29-13

WETHERILL ENGINEERING

TRANSPORTATION PLANNING/DESIGN
BRIDGE/STRUCTURE DESIGN
CIVIL/SITE DESIGN - GIS/GPS
CONSTRUCTION OBSERVATION

559 Jones Franklin Rd. Suite 164
Raleigh, N.C. 27606
Bus: 919 851 9077
Fax: 919 851 8107
LICENSE NO. F-0377

STATE OF NORTH CAROLINA
DEPARTMENT OF TRANSPORTATION
RALEIGH

GENERAL DRAWING

FOR BRIDGE ON US 17 (WILMINGTON BYPASS) OVER THE CAPE FEAR RIVER BETWEEN SR 1430 AND US 421 LEFT LANE

REVISIONS								SHEET NO.
NO.	BY:	DATE:	NO.	BY:	DATE:			S-1
1			3					TOTAL SHEETS
2			4					700

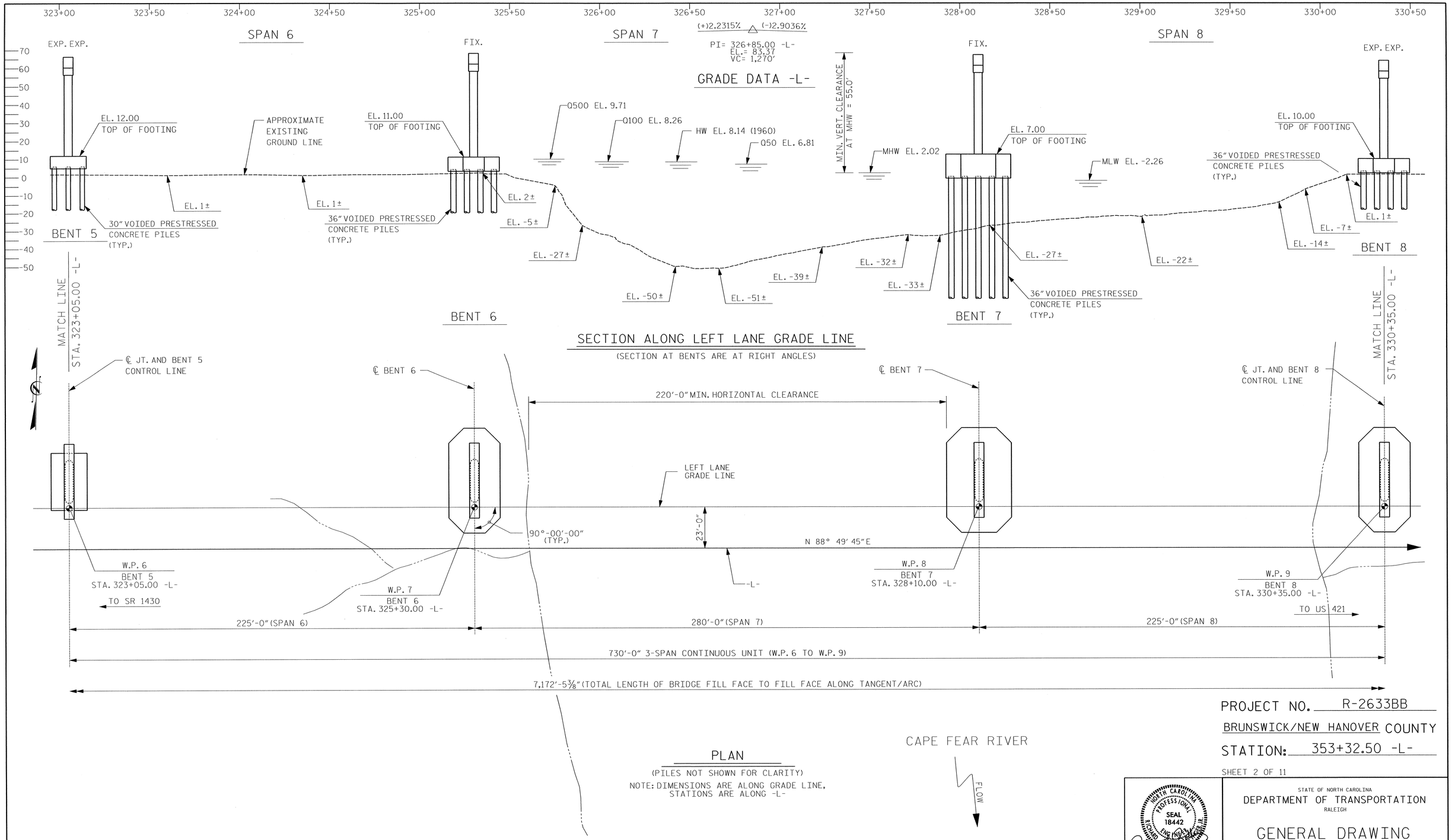

PLAN

(PILES NOT SHOWN FOR CLARITY)

NOTE: DIMENSIONS ARE ALONG GRADE LINE, STATIONS ARE ALONG -L-

PROJECT NO. R-2633BB

BRUNSWICK/NEW HANOVER COUNTY

STATION: 353+32.50 -L-

SHEET 2 OF 11

NORTH CAROLINA PROFESSIONAL SEAL 18442 ENGINEER

5-29-2013

RS&H IMPROVING YOUR WORLD

RS&H Architects-Engineers-Planners, Inc.
8601 Six Forks Road, Suite 260
Raleigh, NC 27615
919-846-6701 FAX 919-846-9080
www.rsandh.com
North Carolina License Nos. 50073 * F-0493 * C-28

STATE OF NORTH CAROLINA
DEPARTMENT OF TRANSPORTATION
RALEIGH

GENERAL DRAWING
FOR BRIDGE ON US 17
(WILMINGTON BYPASS) OVER
THE CAPE FEAR RIVER
BETWEEN SR 1430 AND US 421
LEFT LANE

REVISIONS						SHEET NO.
NO.	BY:	DATE:	NO.	BY:	DATE:	S-2
1			3			TOTAL SHEETS
2			4			700

DRAWN BY : R. J. DECOLA DATE : 11/2011
CHECKED BY : R. BOLLINGER DATE : 02/2013
DESIGN ENGINEER OF RECORD : R. BOLLINGER DATE : 05/2013

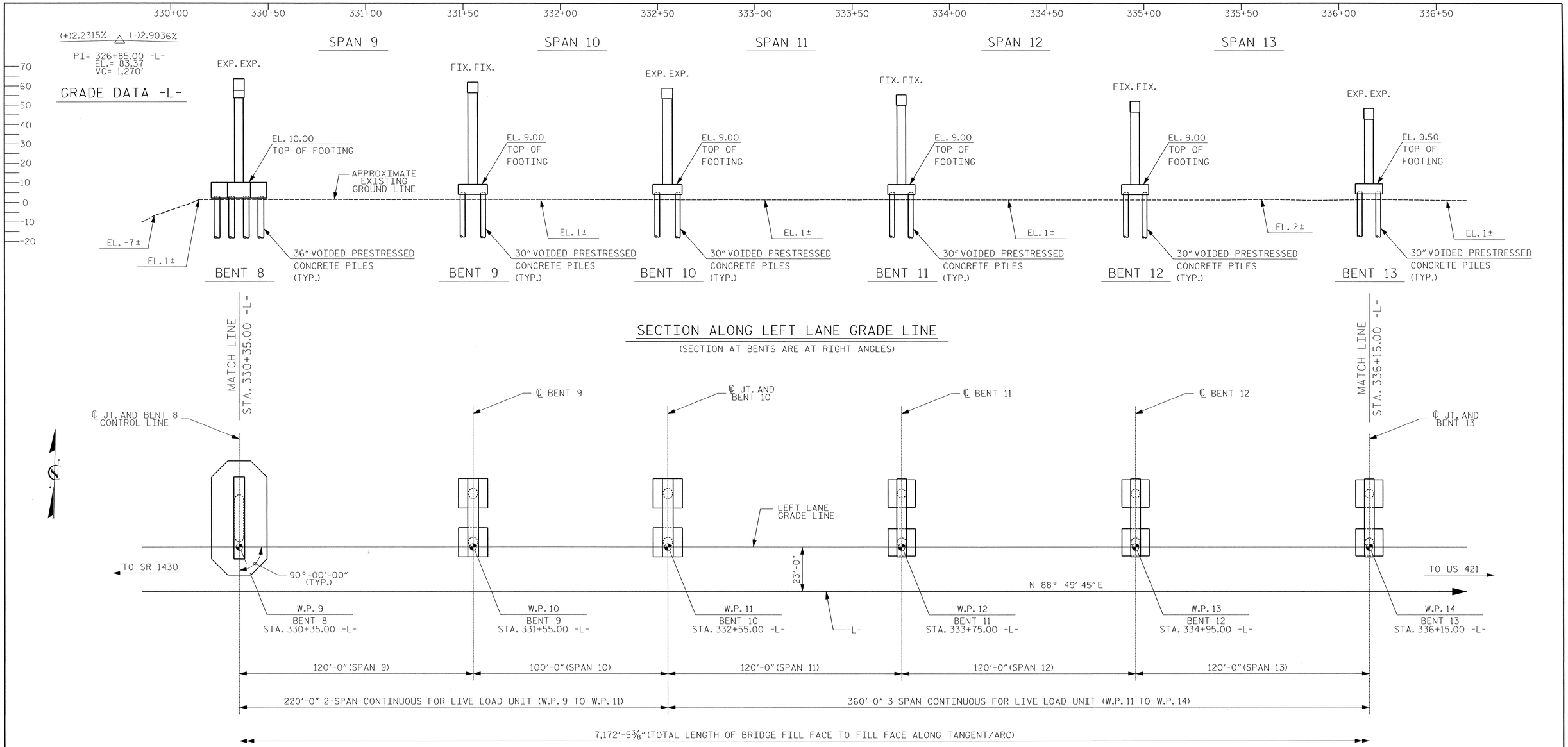

PLAN

(PILES NOT SHOWN FOR CLARITY)

NOTE: DIMENSIONS ARE ALONG GRADE LINE, STATIONS ARE ALONG -L-

PROJECT NO. R-2633BB

BRUNSWICK/NEW HANOVER COUNTY

STATION: 353+32.50 -L-

SHEET 3 OF 11

NORTH CAROLINA PROFESSIONAL SEAL 18442 ENGINEER RICHARD JON BOLLINGER

5-29-2013

RS&H IMPROVING YOUR WORLD

RS&H Architects-Engineers-Planners, Inc.
8601 Six Forks Road, Suite 260
Raleigh, NC 27615
919-846-6701 FAX 919-846-9080
www.rsandh.com
North Carolina License Nos. 50073 * F-0493 * C-28

STATE OF NORTH CAROLINA
DEPARTMENT OF TRANSPORTATION
RALEIGH

GENERAL DRAWING

FOR BRIDGE ON US 17 (WILMINGTON BYPASS) OVER THE CAPE FEAR RIVER BETWEEN SR 1430 AND US 421 LEFT LANE

REVISIONS						
NO.	BY:	DATE:	NO.	BY:	DATE:	
1			3			
2			4			

SHEET NO. S-3

TOTAL SHEETS 700

DRAWN BY : R. J. DECOLA DATE : 11/2011
CHECKED BY : R. BOLLINGER DATE : 02/2013
DESIGN ENGINEER OF RECORD : R. BOLLINGER DATE : 05/2013

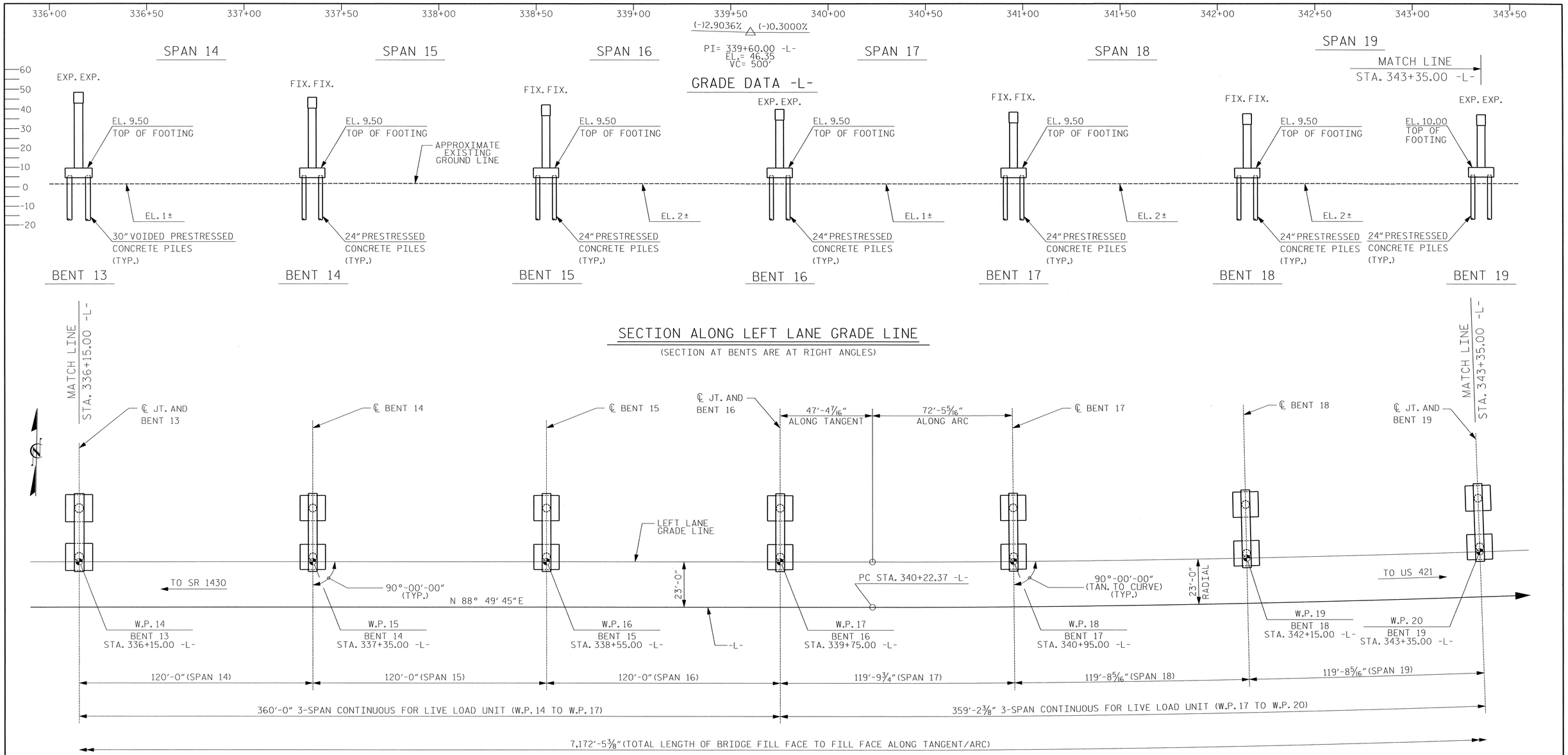

PROJECT NO. R-2633BB

BRUNSWICK/NEW HANOVER COUNTY

STATION: 353+32.50 -L-

SHEET 4 OF 11

PLAN

(PILES NOT SHOWN FOR CLARITY)

NOTE: DIMENSIONS ARE ALONG GRADE LINE, STATIONS ARE ALONG -L-

HORIZONTAL CURVE DATA -L-

PI= 383+94.77
△ = 51° 49' 22.8" (LT)
D = 0° 38' 11.8"
L = 8,140.34'
T = 4,372.40'
R = 9,000.00'
SE = 0.025

DRAWN BY :	R. J. DECOLA	DATE :	11/2011
CHECKED BY :	R. BOLLINGER	DATE :	02/2013
DESIGN ENGINEER OF RECORD :	R. BOLLINGER	DATE :	05/2013

NORTH CAROLINA PROFESSIONAL SEAL 18442 ENGINEER RICHARD LEON BOLLINGER, JR.
5-29-2013

RS&H IMPROVING YOUR WORLD

RS&H Architects-Engineers-Planners, Inc.
8601 Six Forks Road, Suite 260
Raleigh, NC 27615
919-846-6701 FAX 919-846-9080
www.rsandh.com
North Carolina License Nos. 50073 * F-0483 * C-28

STATE OF NORTH CAROLINA
DEPARTMENT OF TRANSPORTATION
RALEIGH

GENERAL DRAWING
FOR BRIDGE ON US 17 (WILMINGTON BYPASS) OVER THE CAPE FEAR RIVER BETWEEN SR 1430 AND US 421 LEFT LANE

REVISIONS						SHEET NO.
NO.	BY:	DATE:	NO.	BY:	DATE:	S-4
1			3			TOTAL SHEETS
2			4			700

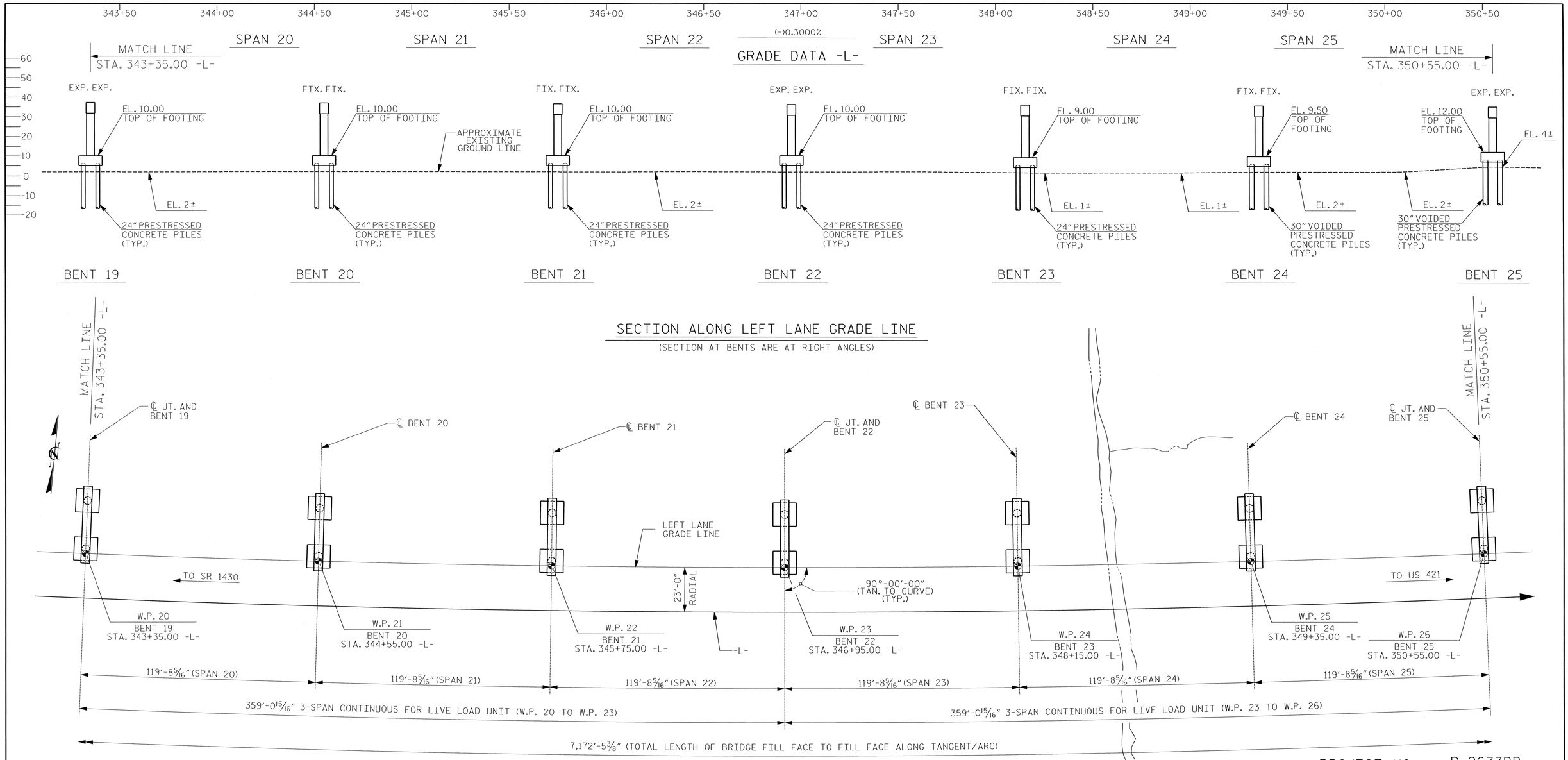

PROJECT NO. R-2633BB

BRUNSWICK/NEW HANOVER COUNTY

STATION: 353+32.50 -L-

SHEET 5 OF 11

HORIZONTAL CURVE DATA -L-

PI= 383+94.77
Δ = 51° 49' 22.8"(LT)
D = 0° 38' 11.8"
L = 8,140.34'
T = 4,372.40'
R = 9,000.00'
SE = 0.025

PLAN

(PILES NOT SHOWN FOR CLARITY)

NOTE: DIMENSIONS ARE ALONG GRADE LINE, STATIONS ARE ALONG -L-

NORTH CAROLINA PROFESSIONAL SEAL 18442 ENGINEER RICHARD LEON BOLLINGER, JR.
5-29-2013

RS&H IMPROVING YOUR WORLD

RS&H Architects-Engineers-Planners, Inc.
8601 Six Forks Road, Suite 260
Raleigh, NC 27615
919-846-6701 FAX 919-846-9080
www.rsandh.com
North Carolina License Nos. 50073 * F-0493 * C-28

NORTH CAROLINA PROFESSIONAL SEAL 22072 ENGINEER JOHN ARTHUR DILWORTH
5-29-13

WETHERILL ENGINEERING

TRANSPORTATION PLANNING/DESIGN
BRIDGE/STRUCTURE DESIGN
CIVIL/SITE DESIGN - GIS/GPS
CONSTRUCTION OBSERVATION

559 Jones Franklin Rd. Suite 164
Raleigh, N.C. 27606
Bus: 919 851 8077
Fax: 919 851 8107
LICENSE NO. F-0377

STATE OF NORTH CAROLINA
DEPARTMENT OF TRANSPORTATION
RALEIGH

GENERAL DRAWING
FOR BRIDGE ON US 17
(WILMINGTON BYPASS) OVER
THE CAPE FEAR RIVER
BETWEEN SR 1430 AND US 421
LEFT LANE

REVISIONS						SHEET NO.
NO.	BY:	DATE:	NO.	BY:	DATE:	S-5
1			3			TOTAL SHEETS
2			4			700

DRAWN BY : R. J. DECOLA DATE : 11/2011
CHECKED BY : R. BOLLINGER DATE : 02/2013
DESIGN ENGINEER OF RECORD : R. BOLLINGER DATE : 05/2013

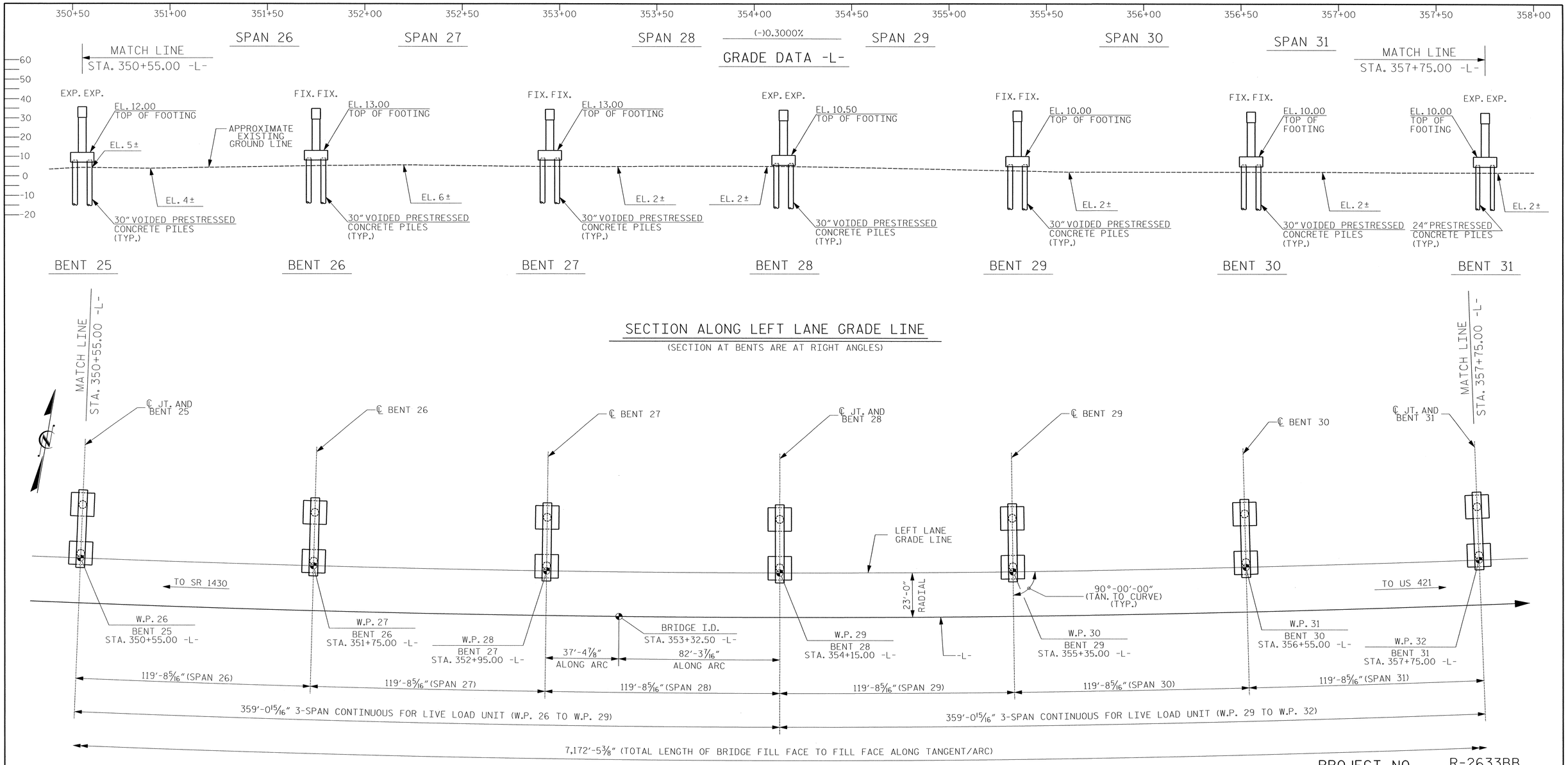

PROJECT NO. R-2633BB

BRUNSWICK/NEW HANOVER COUNTY

STATION: 353+32.50 -L-

SHEET 6 OF 11

HORIZONTAL CURVE DATA -L-

PI= 383+94.77
Δ = 51° 49' 22.8" (LT)
D = 0° 38' 11.8"
L = 8,140.34'
T = 4,372.40'
R = 9,000.00'
SE = 0.025

PLAN

(PILES NOT SHOWN FOR CLARITY)

NOTE: DIMENSIONS ARE ALONG GRADE LINE, STATIONS ARE ALONG -L-

DRAWN BY :	R. J. DECOLA	DATE :	11/2011
CHECKED BY :	R. BOLLINGER	DATE :	02/2013
DESIGN ENGINEER OF RECORD :	R. BOLLINGER	DATE :	05/2013

NORTH CAROLINA PROFESSIONAL SEAL 18442 ENGINEER RICHARD LEON BOLLINGER III
5-29-2013

RS&H IMPROVING YOUR WORLD

RS&H Architects-Engineers-Planners, Inc.
8601 Six Forks Road, Suite 260
Raleigh, NC 27615
919-846-5701 FAX 919-846-9080
www.rsandh.com
North Carolina License Nos. 50073 * F-0493 * C-28

NORTH CAROLINA PROFESSIONAL SEAL 22072 ENGINEER DAVID ARTHUR DILWORTH
5-29-13

WETHERILL ENGINEERING

TRANSPORTATION PLANNING/DESIGN
BRIDGE/STRUCTURE DESIGN
CIVIL/SITE DESIGN - GS/GPS
CONSTRUCTION OBSERVATION

559 Jones Franklin Rd. Suite 164
Raleigh, N.C. 27606
Bus: 919 851 8077
Fax: 919 851 8107
LICENSE NO. F-0377

STATE OF NORTH CAROLINA
DEPARTMENT OF TRANSPORTATION
RALEIGH

GENERAL DRAWING
FOR BRIDGE ON US 17
(WILMINGTON BYPASS) OVER
THE CAPE FEAR RIVER
BETWEEN SR 1430 AND US 421
LEFT LANE

REVISIONS						SHEET NO.
NO.	BY:	DATE:	NO.	BY:	DATE:	8-6
1			3			TOTAL SHEETS
2			4			700

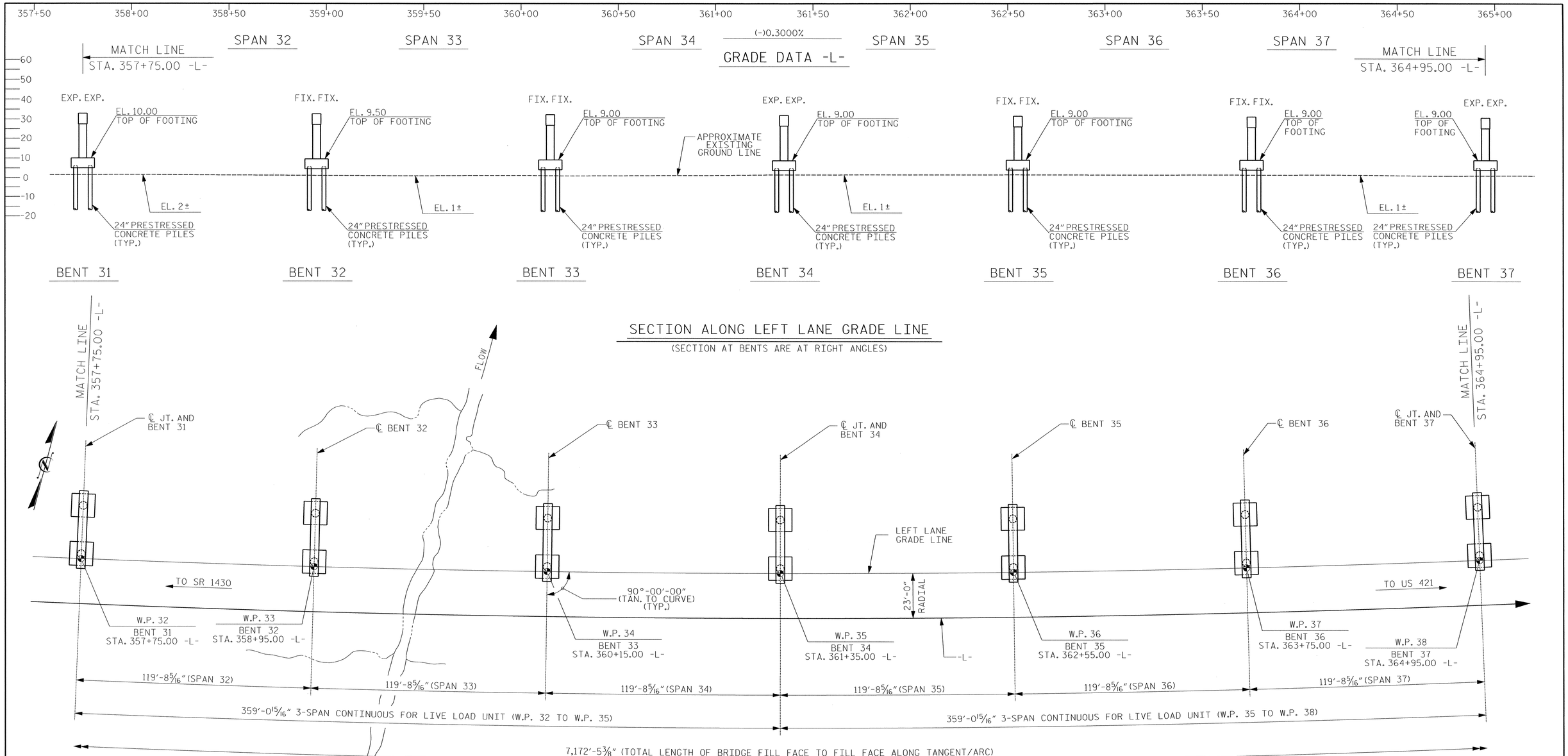

PROJECT NO. R-2633BB

BRUNSWICK/NEW HANOVER COUNTY

STATION: 353+32.50 -L-

SHEET 7 OF 11

PLAN

(PILES NOT SHOWN FOR CLARITY)

NOTE: DIMENSIONS ARE ALONG GRADE LINE, STATIONS ARE ALONG -L-

HORIZONTAL CURVE DATA -L-

PI= 383+94.77
Δ = 51° 49' 22.8"(LT)
D = 0° 38' 11.8"
L = 8,140.34'
T = 4,372.40'
R = 9,000.00'
SE = 0.025

DRAWN BY : R. J. DECOLA DATE : 11/2011
CHECKED BY : R. BOLLINGER DATE : 02/2013
DESIGN ENGINEER OF RECORD : R. BOLLINGER DATE : 05/2013

NORTH CAROLINA PROFESSIONAL SEAL 18442 ENGINEER RICHARD LEON BOLLINGER III
5-29-2013

RS&H IMPROVING YOUR WORLD

RS&H Architects-Engineers-Planners, Inc.
8601 Six Forks Road, Suite 260
Raleigh, NC 27615
919-846-6701 FAX 919-846-9080
www.rsandh.com
North Carolina License Nos. 50073 * F-0493 * C-28

NORTH CAROLINA PROFESSIONAL SEAL 22072 ENGINEER JOHN ARTHUR DILWORTH
5-29-13

WETHERILL ENGINEERING

TRANSPORTATION PLANNING/DESIGN
BRIDGE/STRUCTURE DESIGN
CIVIL/SITE DESIGN - GIS/GPS
CONSTRUCTION OBSERVATION

559 Jones Franklin Rd. Suite 164
Raleigh, N.C. 27606
Bus: 919 851 8077
Fax: 919 851 8107
LICENSE NO. F-0377

STATE OF NORTH CAROLINA
DEPARTMENT OF TRANSPORTATION
RALEIGH

GENERAL DRAWING
FOR BRIDGE ON US 17
(WILMINGTON BYPASS) OVER
THE CAPE FEAR RIVER
BETWEEN SR 1430 AND US 421
LEFT LANE

REVISIONS								
NO.	BY:	DATE:	NO.	BY:	DATE:			
1			3					
2			4					

SHEET NO. 8-7

TOTAL SHEETS 700

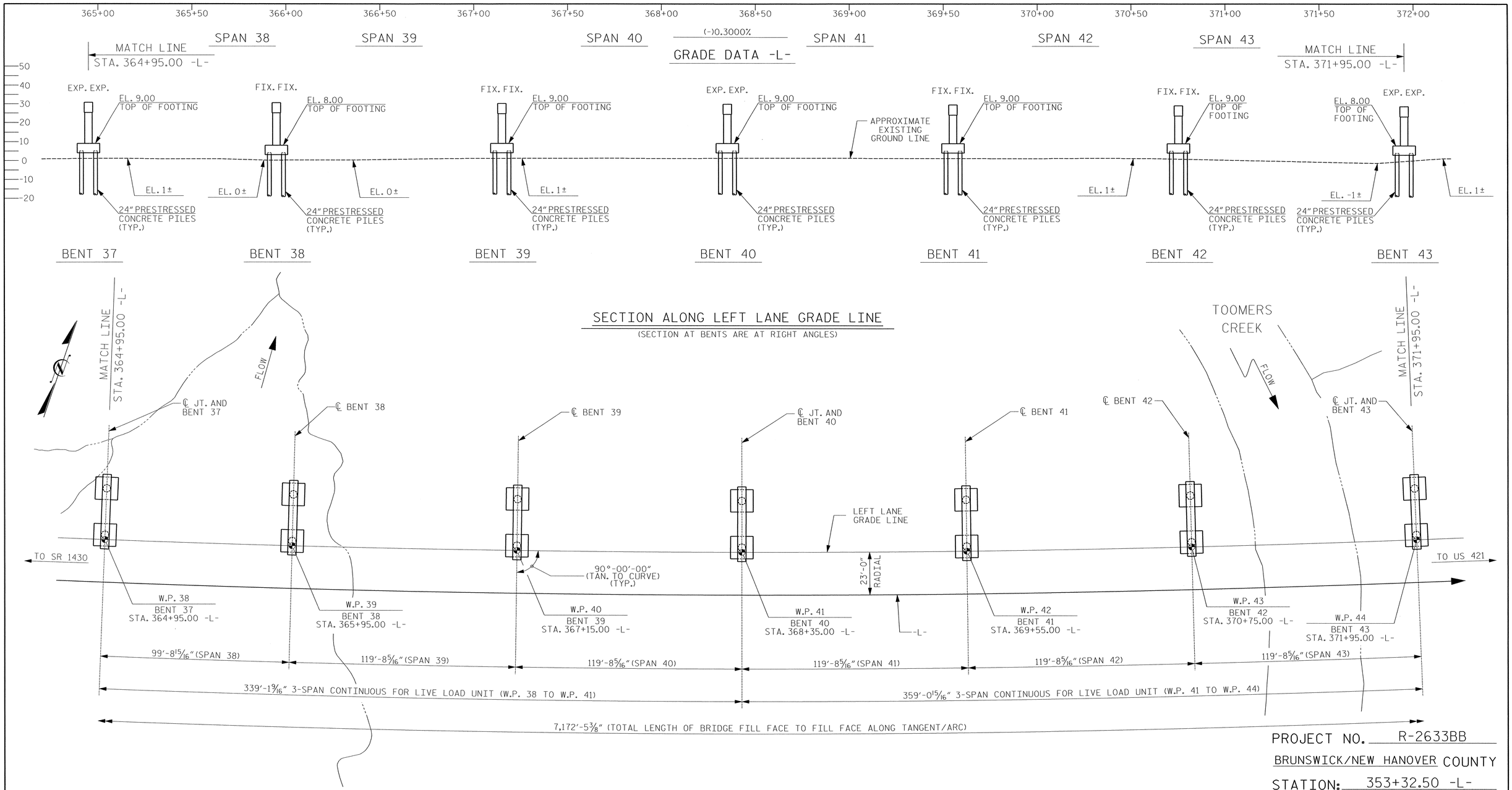

HORIZONTAL CURVE DATA -L-

PI= 383+94.77
Δ = 51° 49' 22.8" (LT)
D = 0° 38' 11.8"
L = 8,140.34'
T = 4,372.40'
R = 9,000.00'
SE = 0.025

PLAN

(PILES NOT SHOWN FOR CLARITY)

NOTE: DIMENSIONS ARE ALONG GRADE LINE, STATIONS ARE ALONG -L-

PROJECT NO. R-2633BB

BRUNSWICK/NEW HANOVER COUNTY

STATION: 353+32.50 -L-

SHEET 8 OF 11

NORTH CAROLINA PROFESSIONAL SEAL 18442 ENGINEER RICHARD LEONI BOLLINGER 5-29-2013

RS&H IMPROVING YOUR WORLD

RS&H Architects-Engineers-Planners, Inc.
8601 Six Forks Road, Suite 260
Raleigh, NC 27615
919-846-6701 FAX 919-846-0080
www.rsandh.com
North Carolina License Nos. 50673 * F-0483 * C-28

NORTH CAROLINA PROFESSIONAL SEAL 22072 ENGINEER JOHN ARTHUR DINWIDDIE 5-29-13

WETHERILL ENGINEERING
TRANSPORTATION PLANNING/DESIGN
BRIDGE/STRUCTURE DESIGN
CIVIL/SITE DESIGN - GIS/GPS
CONSTRUCTION OBSERVATION
559 Jones Franklin Rd. Suite 164
Raleigh, N.C. 27606
Bus: 919 851 8077
Fax: 919 851 8107
LICENSE NO. F-0377

STATE OF NORTH CAROLINA
DEPARTMENT OF TRANSPORTATION
RALEIGH

GENERAL DRAWING
FOR BRIDGE ON US 17
(WILMINGTON BYPASS) OVER
THE CAPE FEAR RIVER
BETWEEN SR 1430 AND US 421
LEFT LANE

REVISIONS						SHEET NO.
NO.	BY:	DATE:	NO.	BY:	DATE:	S-8
1			3			TOTAL SHEETS
2			4			700

DRAWN BY :	R. J. DECOLA	DATE :	11/2011
CHECKED BY :	R. BOLLINGER	DATE :	02/2013
DESIGN ENGINEER OF RECORD :	R. BOLLINGER	DATE :	05/2013

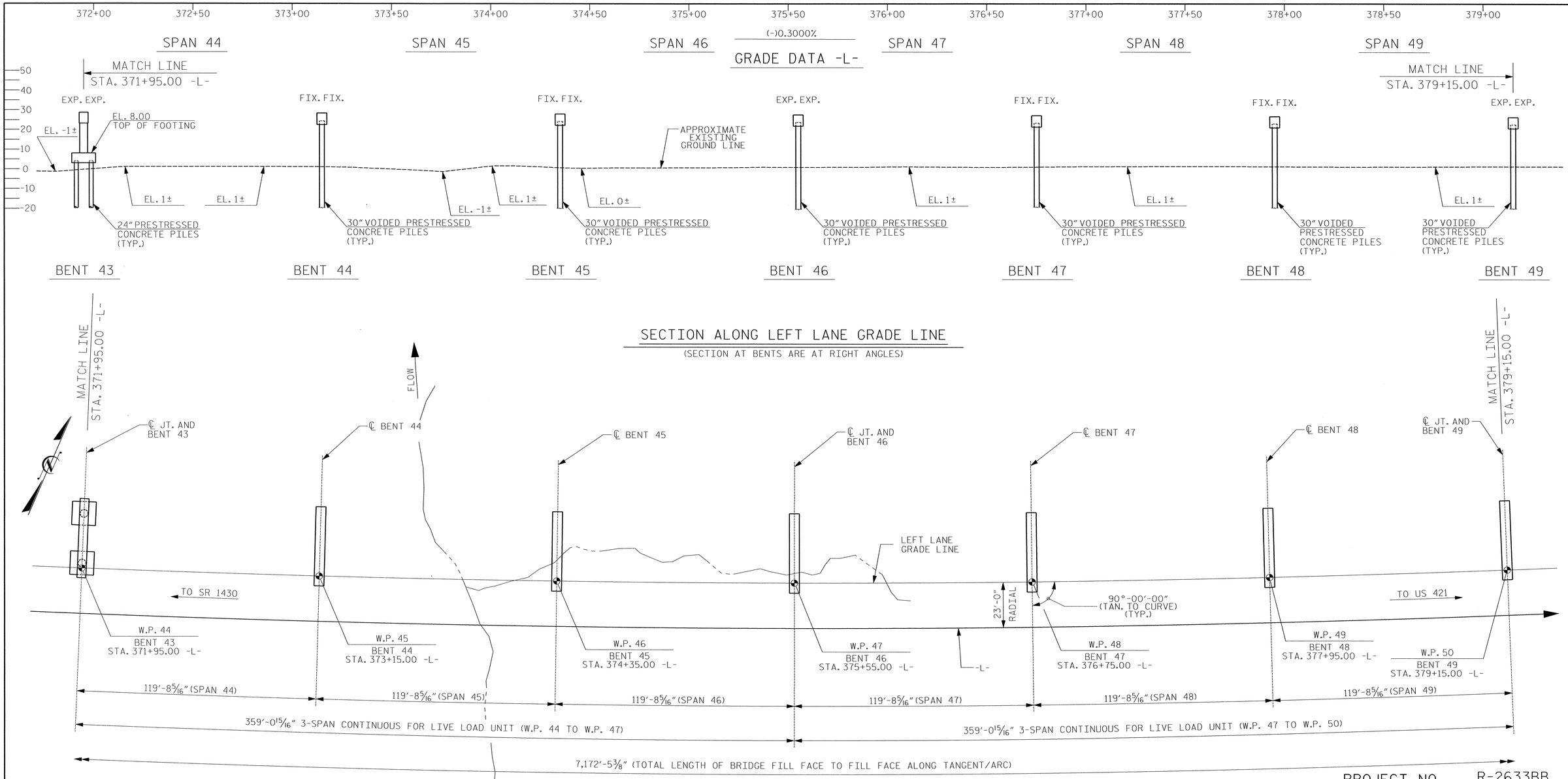

HORIZONTAL CURVE DATA -L-

PI= 383+94.77
Δ = 51° 49' 22.8"(LT)
D = 0° 38' 11.8"
L = 8,140.34'
T = 4,372.40'
R = 9,000.00'
SE = 0.025

PLAN

(PILES NOT SHOWN FOR CLARITY)

NOTE: DIMENSIONS ARE ALONG GRADE LINE, STATIONS ARE ALONG -L-

PROJECT NO. R-2633BB

BRUNSWICK/NEW HANOVER COUNTY

STATION: 353+32.50 -L-

SHEET 9 OF 11

NORTH CAROLINA PROFESSIONAL SEAL 18442 ENGINEER R. LEON BOLLINGER, JR. 5-29-2013

RS&H IMPROVING YOUR WORLD

RS&H Architects-Engineers-Planners, Inc.
8601 Six Forks Road, Suite 260
Raleigh, NC 27615
919-846-6701 FAX 919-846-9080
www.rsandh.com
North Carolina License Nos. 50073 * F-0483 * C-28

NORTH CAROLINA PROFESSIONAL SEAL 22072 ENGINEER ARTHUR DILWORTH 5-29-13

WETHERILL ENGINEERING

TRANSPORTATION PLANNING/DESIGN
BRIDGE/STRUCTURE DESIGN
CIVIL/SITE DESIGN - GIS/GPS
CONSTRUCTION OBSERVATION

559 Jones Franklin Rd. Suite 164
Raleigh, N.C. 27606
Bus: 919 851 8077
Fax: 919 851 8107
LICENSE NO. F-0377

STATE OF NORTH CAROLINA
DEPARTMENT OF TRANSPORTATION
RALEIGH

GENERAL DRAWING
FOR BRIDGE ON US 17
(WILMINGTON BYPASS) OVER
THE CAPE FEAR RIVER
BETWEEN SR 1430 AND US 421
LEFT LANE

REVISIONS								SHEET NO.
NO.	BY:	DATE:	NO.	BY:	DATE:			S-9
1			3					TOTAL SHEETS
2			4					700

DRAWN BY : R. J. DECOLA DATE : 11/2011
CHECKED BY : R. BOLLINGER DATE : 02/2013
DESIGN ENGINEER OF RECORD : R. BOLLINGER DATE : 05/2013

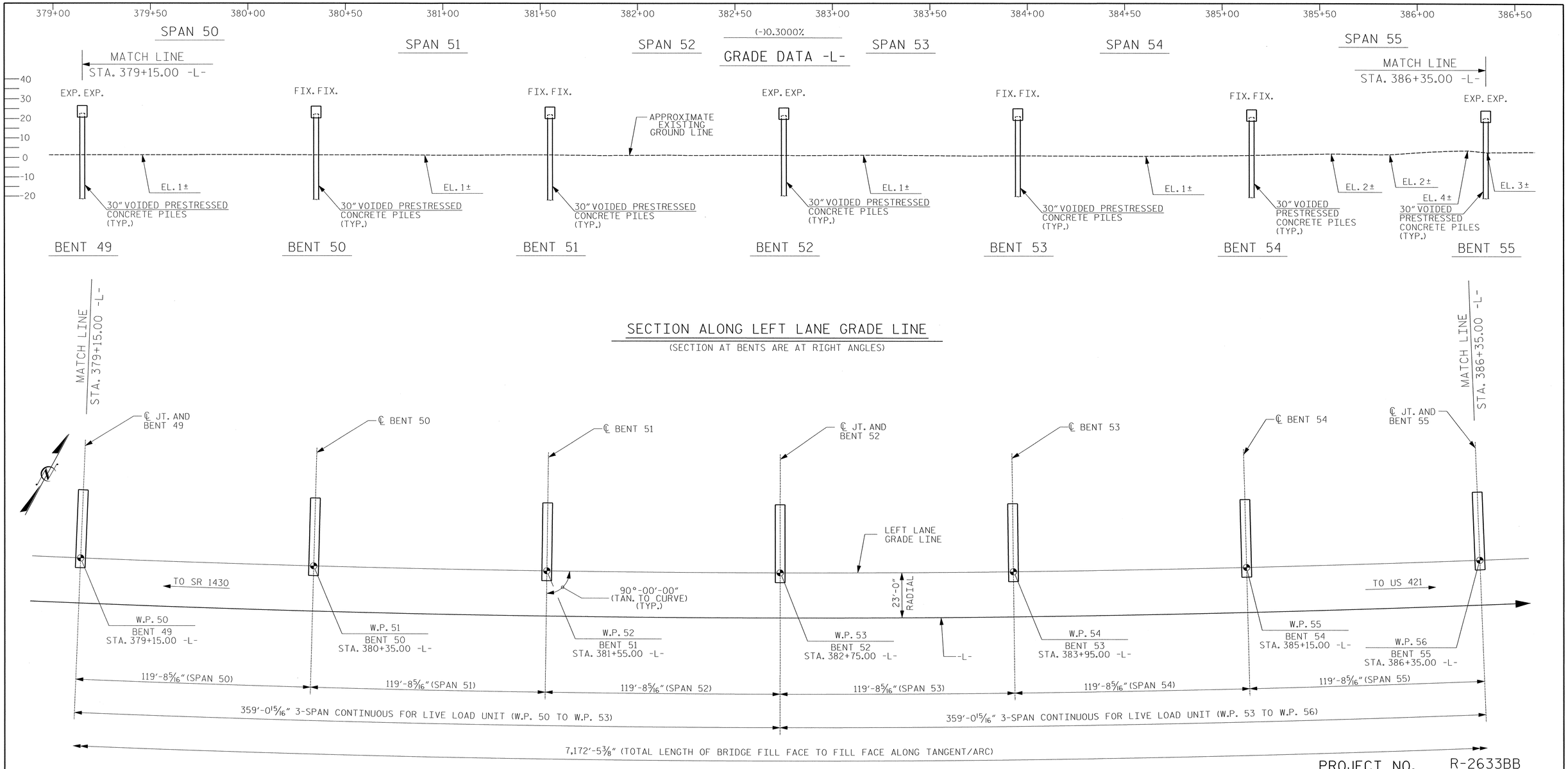

PROJECT NO. R-2633BB

BRUNSWICK/NEW HANOVER COUNTY

STATION: 353+32.50 -L-

SHEET 10 OF 11

HORIZONTAL CURVE DATA -L-

PI= 383+94.77
Δ = 51° 49' 22.8" (LT)
D = 0° 38' 11.8"
L = 8,140.34'
T = 4,372.40'
R = 9,000.00'
SE = 0.025

PLAN

(PILES NOT SHOWN FOR CLARITY)

NOTE: DIMENSIONS ARE ALONG GRADE LINE, STATIONS ARE ALONG -L-

DRAWN BY : R. J. DECOLA DATE : 11/2011
CHECKED BY : R. BOLLINGER DATE : 02/2013
DESIGN ENGINEER OF RECORD : R. BOLLINGER DATE : 05/2013

NORTH CAROLINA PROFESSIONAL SEAL 18442 ENGINEER RICHARD LEON BOLLINGER
5-29-2013

RS&H IMPROVING YOUR WORLD

RS&H Architects-Engineers-Planners, Inc.
8601 Six Forks Road, Suite 260
Raleigh, NC 27615
919-846-6701 FAX 919-846-9080
www.rsandh.com
North Carolina License Nos. 50073 * F-0481 * C-28

NORTH CAROLINA PROFESSIONAL SEAL 22072 ENGINEER JOHN ARTHUR DILWORTH
5-29-13

WETHERILL ENGINEERING
TRANSPORTATION PLANNING/DESIGN
BRIDGE/STRUCTURE DESIGN
CIVIL/SITE DESIGN – GIS/GPS
CONSTRUCTION OBSERVATION
559 Jones Franklin Rd. Suite 164
Raleigh, N.C. 27606
Bus: 919 851 8077
Fax: 919 851 8107
LICENSE NO. F-0377

STATE OF NORTH CAROLINA
DEPARTMENT OF TRANSPORTATION
RALEIGH

GENERAL DRAWING
FOR BRIDGE ON US 17 (WILMINGTON BYPASS) OVER THE CAPE FEAR RIVER BETWEEN SR 1430 AND US 421 LEFT LANE

REVISIONS						SHEET NO.
NO.	BY:	DATE:	NO.	BY:	DATE:	S-10
1			3			TOTAL SHEETS
2			4			700

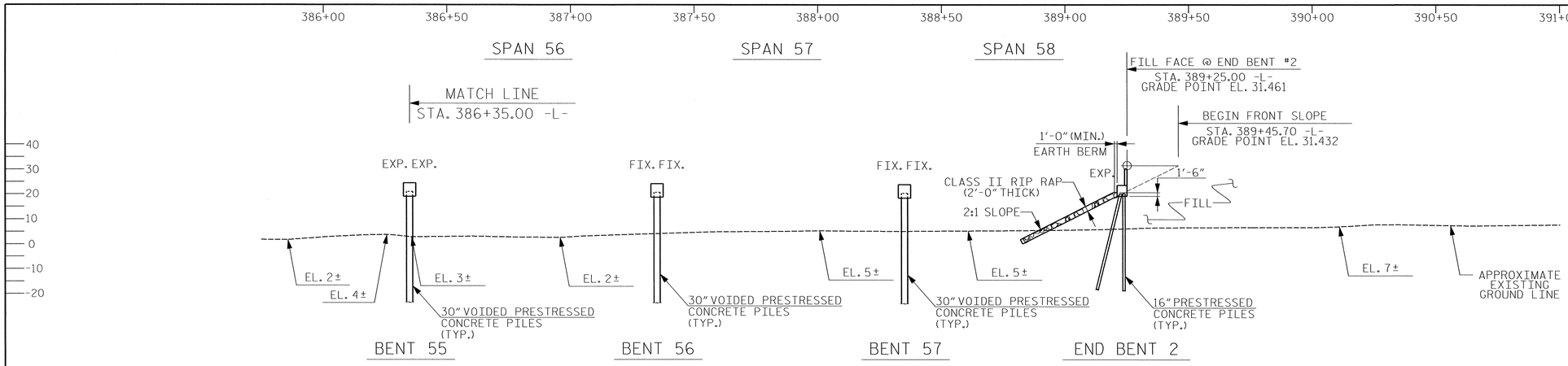

SECTION ALONG LEFT LANE GRADE LINE

(SECTION AT END BENTS AND BENTS ARE AT RIGHT ANGLES)

(-)0.3000% △ (+)2.7042%

PI= 391+80.00 -L-
EL.= 30.69
VC= 550'

GRADE DATA -L-

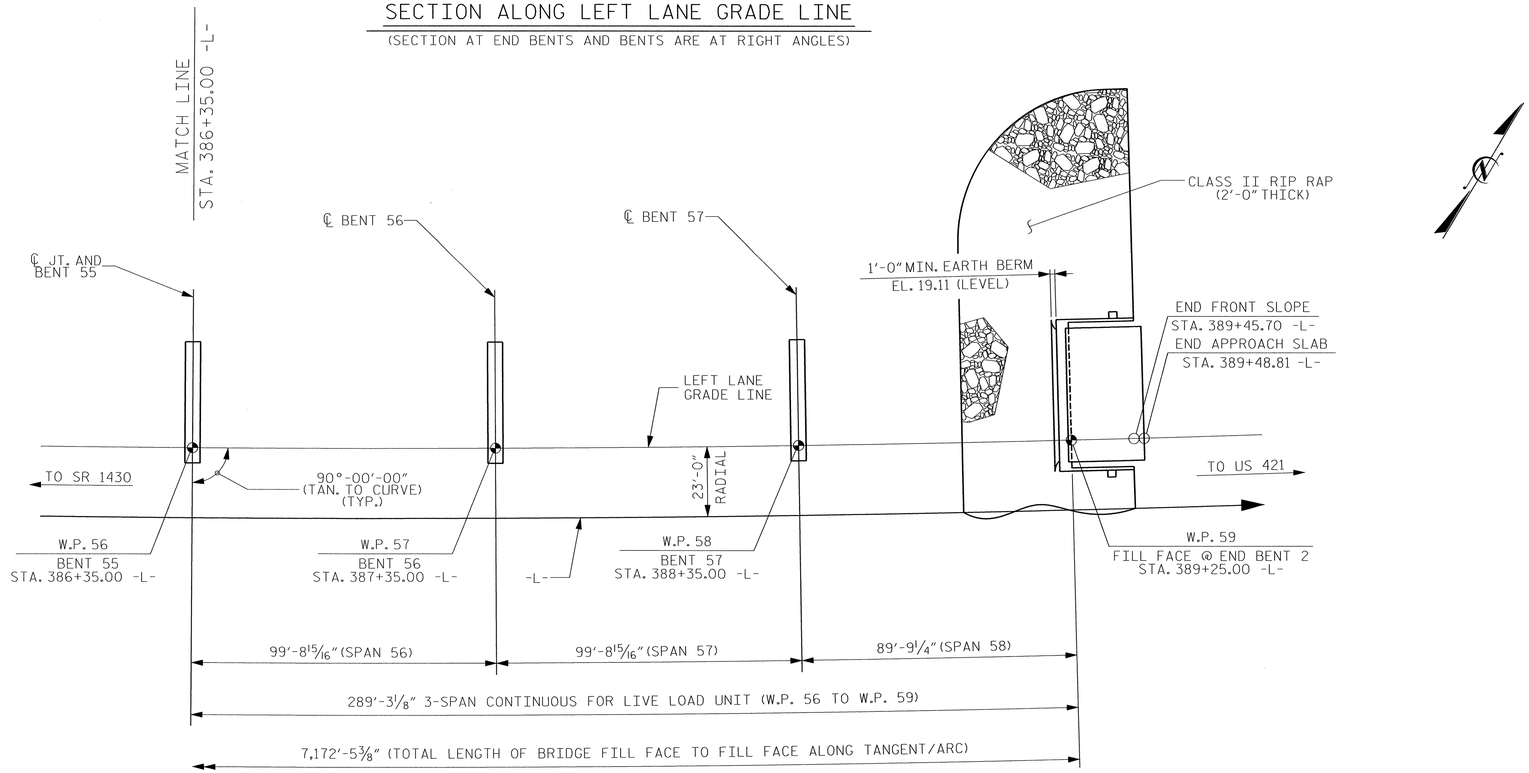

HORIZONTAL CURVE DATA -L-

PI= 383+94.77
Δ = 51° 49' 22.8" (LT)
D = 0° 38' 11.8"
L = 8,140.34'
T = 4,372.40'
R = 9,000.00'
SE = 0.025

PLAN

(PILES NOT SHOWN FOR CLARITY)

NOTE: DIMENSIONS ARE ALONG GRADE LINE, STATIONS ARE ALONG -L-

PROJECT NO. R-2633BB

BRUNSWICK/NEW HANOVER COUNTY

STATION: 353+32.50 -L-

SHEET 11 OF 11

DRAWN BY : R. J. DECOLA	DATE : 11/2011		
CHECKED BY : R. BOLLINGER	DATE : 02/2013		
DESIGN ENGINEER OF RECORD : R. BOLLINGER	DATE : 05/2013		

NORTH CAROLINA PROFESSIONAL SEAL 18442 ENGINEER RICHARD LEON BOLLINGER 5-29-2013

RS&H IMPROVING YOUR WORLD

RS&H Architects-Engineers-Planners, Inc.
8601 Six Forks Road, Suite 260
Raleigh, NC 27615
919-846-6701 FAX 919-846-9080
www.rsandh.com
North Carolina License Nos. 50073 * F-0493 * C-28

NORTH CAROLINA PROFESSIONAL SEAL 22072 ENGINEER MICHAEL ARTHUR DILWORTH 5-29-13

WETHERILL ENGINEERING

TRANSPORTATION PLANNING/DESIGN
BRIDGE/STRUCTURE DESIGN
CIVIL/SITE DESIGN - GIS/GPS
CONSTRUCTION OBSERVATION

559 Jones Franklin Rd. Suite 164
Raleigh, N.C. 27606
Bus: 919 851 8077
Fax: 919 851 8107
LICENSE NO. F-0377

STATE OF NORTH CAROLINA
DEPARTMENT OF TRANSPORTATION
RALEIGH

GENERAL DRAWING

FOR BRIDGE ON US 17
(WILMINGTON BYPASS) OVER
THE CAPE FEAR RIVER
BETWEEN SR 1430 AND US 421
LEFT LANE

REVISIONS						SHEET NO.
NO.	BY:	DATE:	NO.	BY:	DATE:	S-11
1			3			TOTAL SHEETS
2			4			700

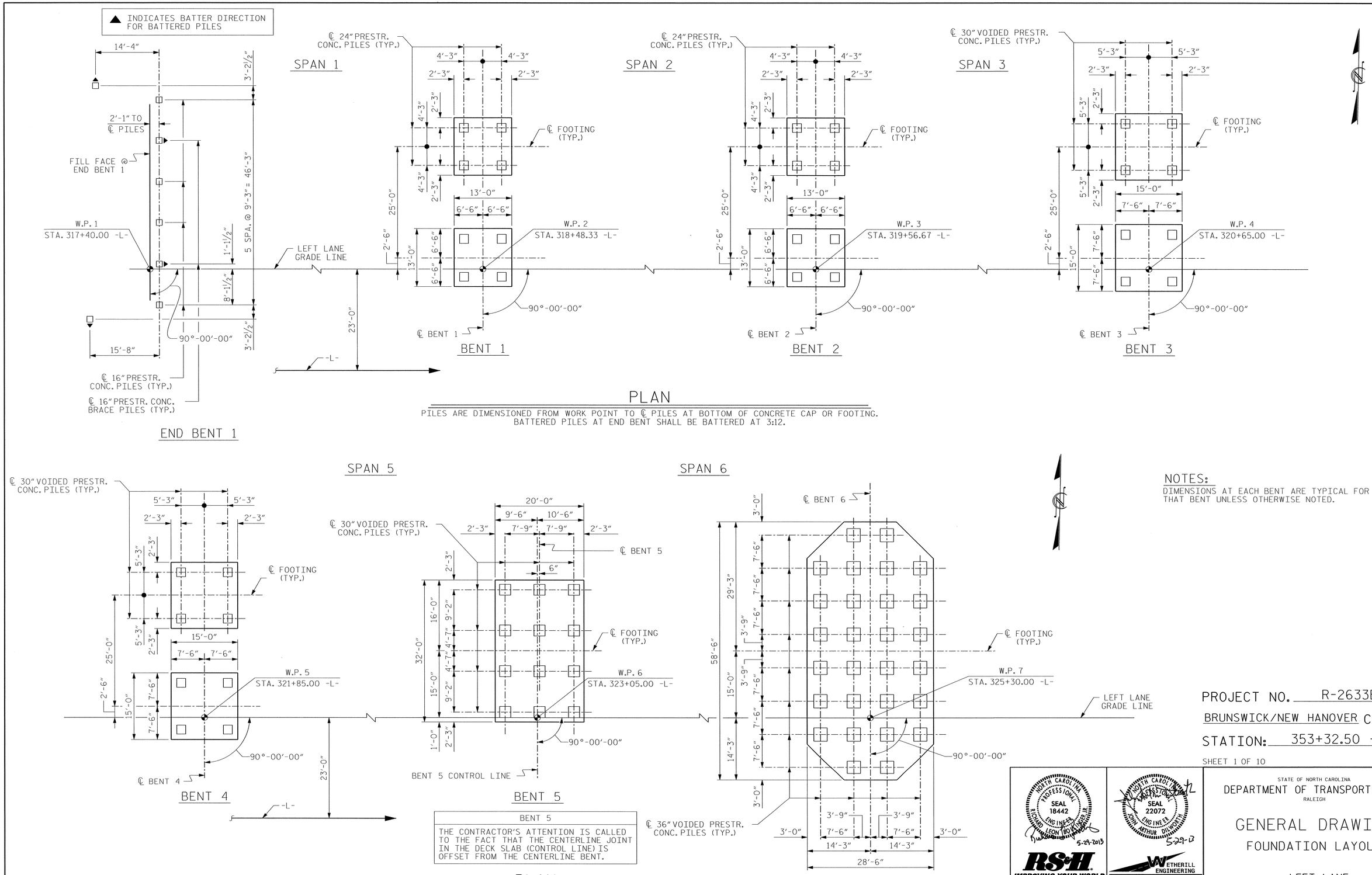

PLAN

PILES ARE DIMENSIONED FROM WORK POINT TO ℄ PILES AT BOTTOM OF CONCRETE CAP OR FOOTING.
BATTERED PILES AT END BENT SHALL BE BATTERED AT 3:12.

BENT 5
THE CONTRACTOR'S ATTENTION IS CALLED TO THE FACT THAT THE CENTERLINE JOINT IN THE DECK SLAB (CONTROL LINE) IS OFFSET FROM THE CENTERLINE BENT.

PLAN

PILES ARE DIMENSIONED FROM WORK POINT TO ℄ PILES AT BOTTOM OF FOOTING.

NOTES:

DIMENSIONS AT EACH BENT ARE TYPICAL FOR THAT BENT UNLESS OTHERWISE NOTED.

PROJECT NO. R-2633BB

BRUNSWICK/NEW HANOVER COUNTY

STATION: 353+32.50 -L-

SHEET 1 OF 10

STATE OF NORTH CAROLINA
DEPARTMENT OF TRANSPORTATION
RALEIGH

GENERAL DRAWING
FOUNDATION LAYOUT

LEFT LANE

NORTH CAROLINA PROFESSIONAL SEAL 18442 ENGINEER RICHARD LEON BOWLINGER JR. 5-29-2013

NORTH CAROLINA PROFESSIONAL SEAL 22072 ENGINEER JOHN ARTHUR DILWORTH 5-29-13

RS&H IMPROVING YOUR WORLD

RS&H Architects-Engineers-Planners, Inc.
8601 Six Forks Road, Suite 260
Raleigh, NC 27615
919-846-6701 FAX 919-846-9080
www.rsandh.com
North Carolina License Nos. 50073 * F-0483 * C-28

WETHERILL ENGINEERING
TRANSPORTATION PLANNING/DESIGN
BRIDGE/STRUCTURE DESIGN
CIVIL/SITE DESIGN - GIS/GPS
CONSTRUCTION OBSERVATION
559 Jones Franklin Rd. Suite 164
Raleigh, N.C. 27606
Bus: 919 851 8077
Fax: 919 851 8107
LICENSE NO. F-0377

REVISIONS						SHEET NO.
NO.	BY:	DATE:	NO.	BY:	DATE:	S-12
1			3			TOTAL SHEETS
2			4			700

DRAWN BY :	GAG, JML	DATE :	10/2012
CHECKED BY :	JMR	DATE :	3/2013
DESIGN ENGINEER OF RECORD :	J. ROBINSON	DATE :	5/2013

FILE: $FILE$
MODEL: $MODELNAME$
PLOT DRV: $PLTDRV$
DATE/TIME: $DATE$ $TIME$

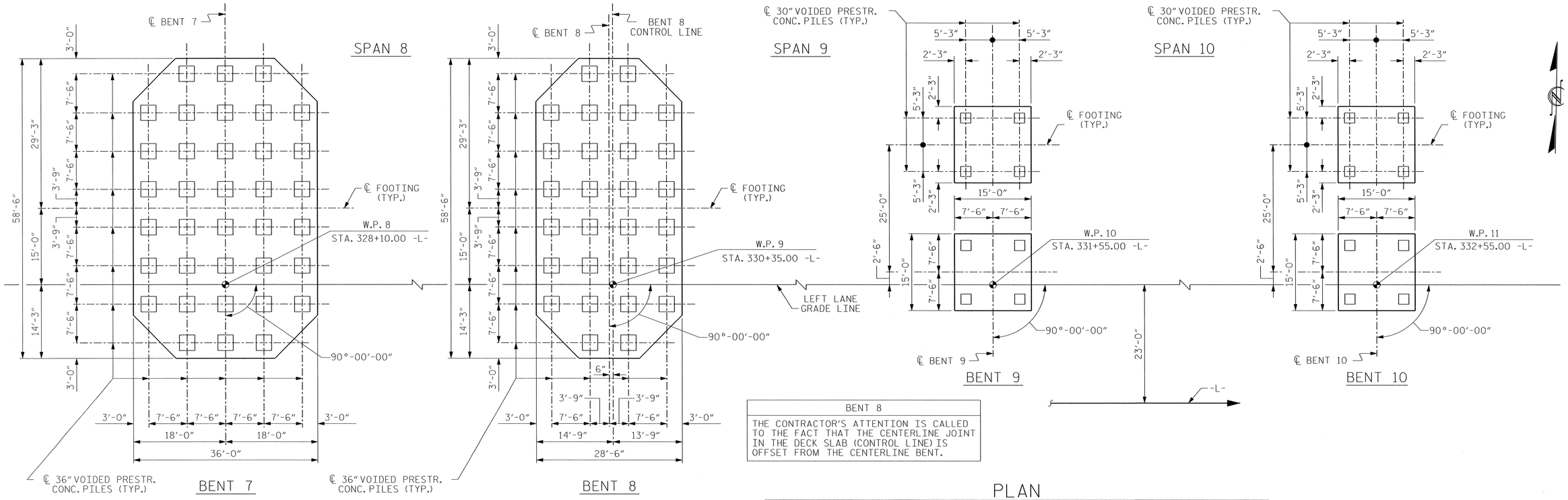

BENT 8

THE CONTRACTOR'S ATTENTION IS CALLED TO THE FACT THAT THE CENTERLINE JOINT IN THE DECK SLAB (CONTROL LINE) IS OFFSET FROM THE CENTERLINE BENT.

PLAN

PILES ARE DIMENSIONED FROM WORK POINT TO ℄ PILES AT BOTTOM OF FOOTING.

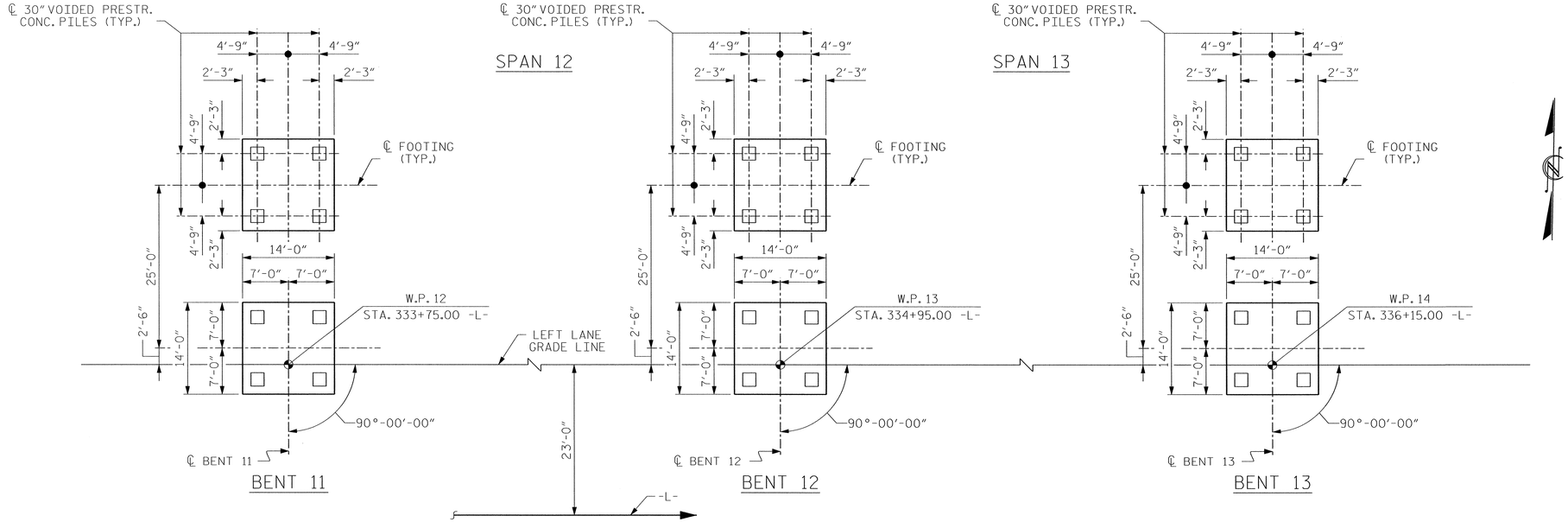

PLAN

PILES ARE DIMENSIONED FROM WORK POINT TO ℄ PILES AT BOTTOM OF FOOTING.

NOTES:

DIMENSIONS AT EACH BENT ARE TYPICAL FOR THAT BENT UNLESS OTHERWISE NOTED.

PROJECT NO. R-2633BB

BRUNSWICK/NEW HANOVER COUNTY

STATION: 353+32.50 -L-

SHEET 2 OF 10

STATE OF NORTH CAROLINA
DEPARTMENT OF TRANSPORTATION
RALEIGH

GENERAL DRAWING
FOUNDATION LAYOUT
LEFT LANE

NORTH CAROLINA PROFESSIONAL SEAL 18442 ENGINEER RICHARD LEON ROBINSON JR. 5-29-2013

RS&H IMPROVING YOUR WORLD

RS&H Architects-Engineers-Planners, Inc.
8601 Six Forks Road, Suite 260
Raleigh, NC 27615
919-846-6701 FAX 919-846-9080
www.rsandh.com
North Carolina License Nos. 50073 * F-0493 * C-28

REVISIONS						SHEET NO.
NO.	BY:	DATE:	NO.	BY:	DATE:	S-13
1			3			TOTAL SHEETS
2			4			700

DRAWN BY : GAG, JML DATE : 10/2012
CHECKED BY : JMR DATE : 3/2013
DESIGN ENGINEER OF RECORD : J. ROBINSON DATE : 5/2013

FILE: $FILE$
MODEL: $MODELNAME$
PLOT DRV: $PLTDRVS$
DATE/TIME: $DATE$ $TIME$

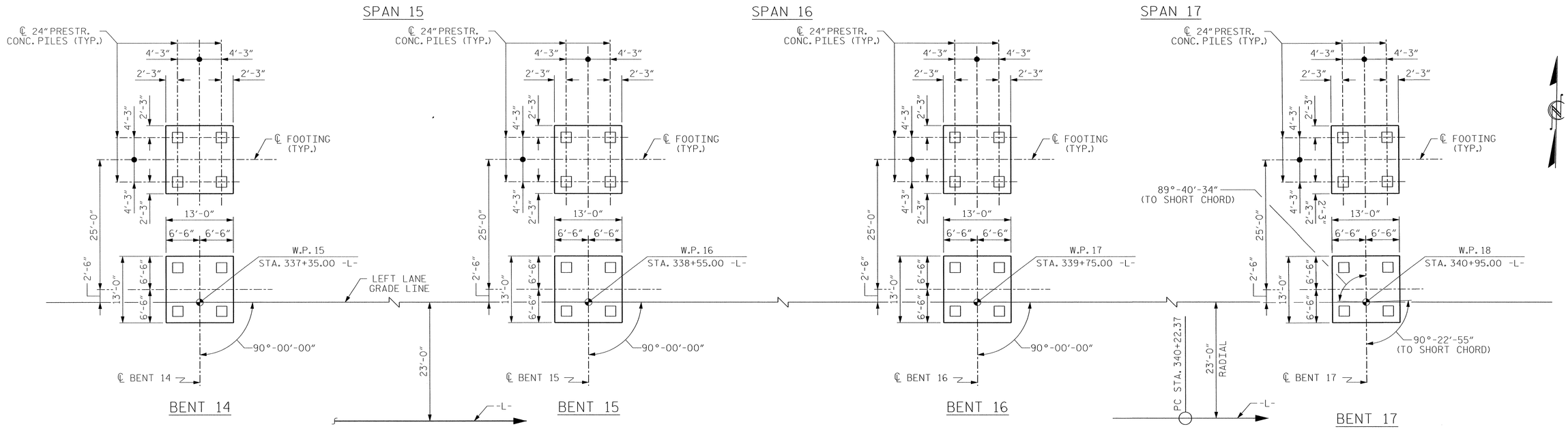

PLAN

PILES ARE DIMENSIONED FROM WORK POINT TO ℄ PILES AT BOTTOM OF FOOTING.

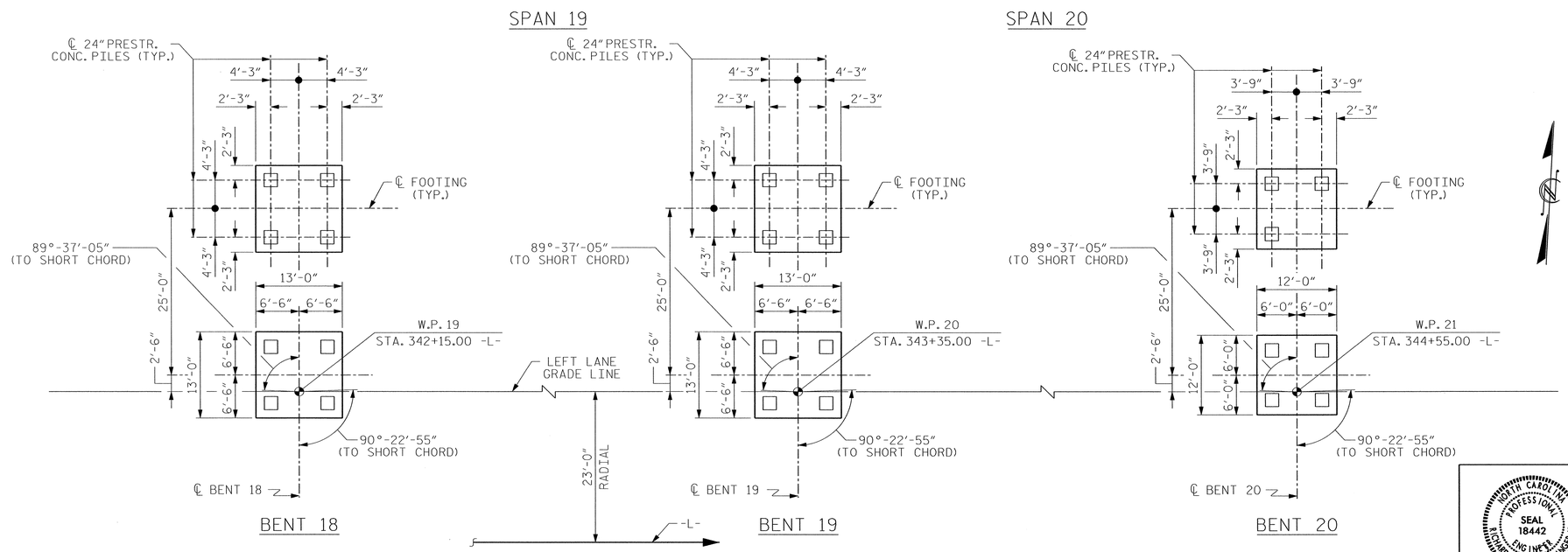

PLAN

PILES ARE DIMENSIONED FROM WORK POINT TO ℄ PILES AT BOTTOM OF FOOTING.

NOTES:

DIMENSIONS AT EACH BENT ARE TYPICAL FOR THAT BENT UNLESS OTHERWISE NOTED.

PROJECT NO. R-2633BB

BRUNSWICK/NEW HANOVER COUNTY

STATION: 353+32.50 -L-

SHEET 3 OF 10

NORTH CAROLINA PROFESSIONAL SEAL 18442 ENGINEER RICHARD LEON ROBINSON, JR. 5-29-2013

RS&H IMPROVING YOUR WORLD

RS&H Architects-Engineers-Planners, Inc.
8601 Six Forks Road, Suite 260
Raleigh, NC 27615
919-846-6701 FAX 919-846-9080
www.rsandh.com
North Carolina License Nos. 50073 * F-0403 * C-28

NORTH CAROLINA PROFESSIONAL SEAL 22072 ENGINEER JOHN ARTHUR DILWORTH 5-29-13

WETHERILL ENGINEERING
TRANSPORTATION PLANNING/DESIGN
BRIDGE/STRUCTURE DESIGN
CIVIL/SITE DESIGN - GIS/GPS
CONSTRUCTION OBSERVATION
559 Jones Franklin Rd. Suite 164
Raleigh, N.C. 27606
Bus: 919 851 8077
Fax: 919 851 8107
LICENSE NO. F-0377

STATE OF NORTH CAROLINA
DEPARTMENT OF TRANSPORTATION
RALEIGH

GENERAL DRAWING

FOUNDATION LAYOUT

LEFT LANE

REVISIONS						SHEET NO.
NO.	BY:	DATE:	NO.	BY:	DATE:	S-14
1			3			TOTAL SHEETS
2			4			700

DRAWN BY : GAG, JML DATE : 10/2012
CHECKED BY : JMR DATE : 3/2013
DESIGN ENGINEER OF RECORD : J. ROBINSON DATE : 5/2013

FILE: $FILE$
MODEL: $MODELNAME$
PLOT DRV: $PLTDRVS$
DATE/TIME: $DATE$ $TIME$

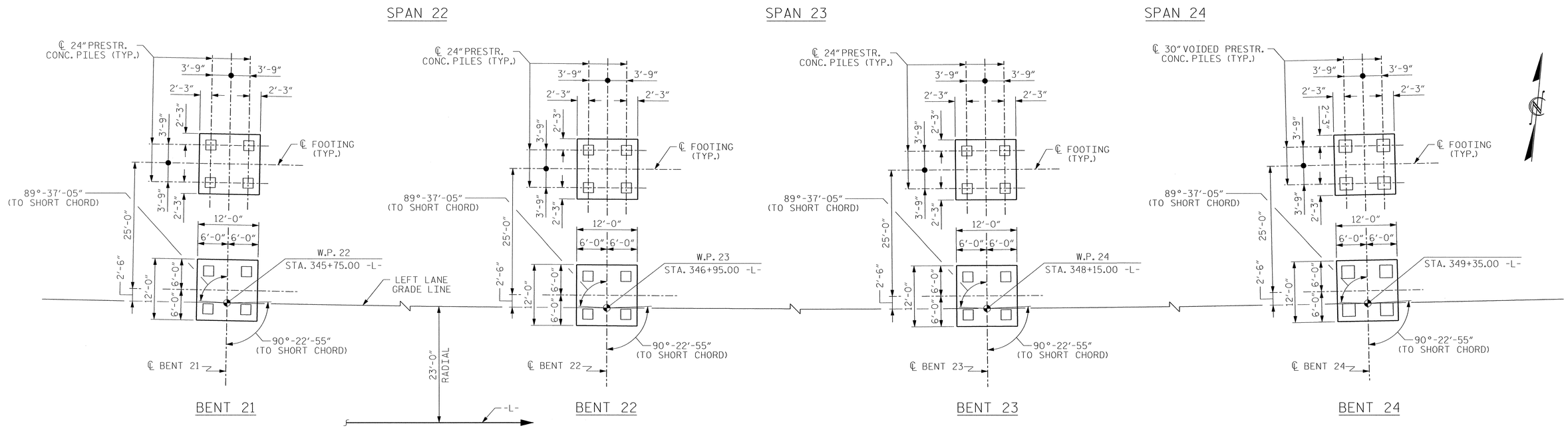

PLAN

PILES ARE DIMENSIONED FROM WORK POINT TO ℄ PILES AT BOTTOM OF FOOTING

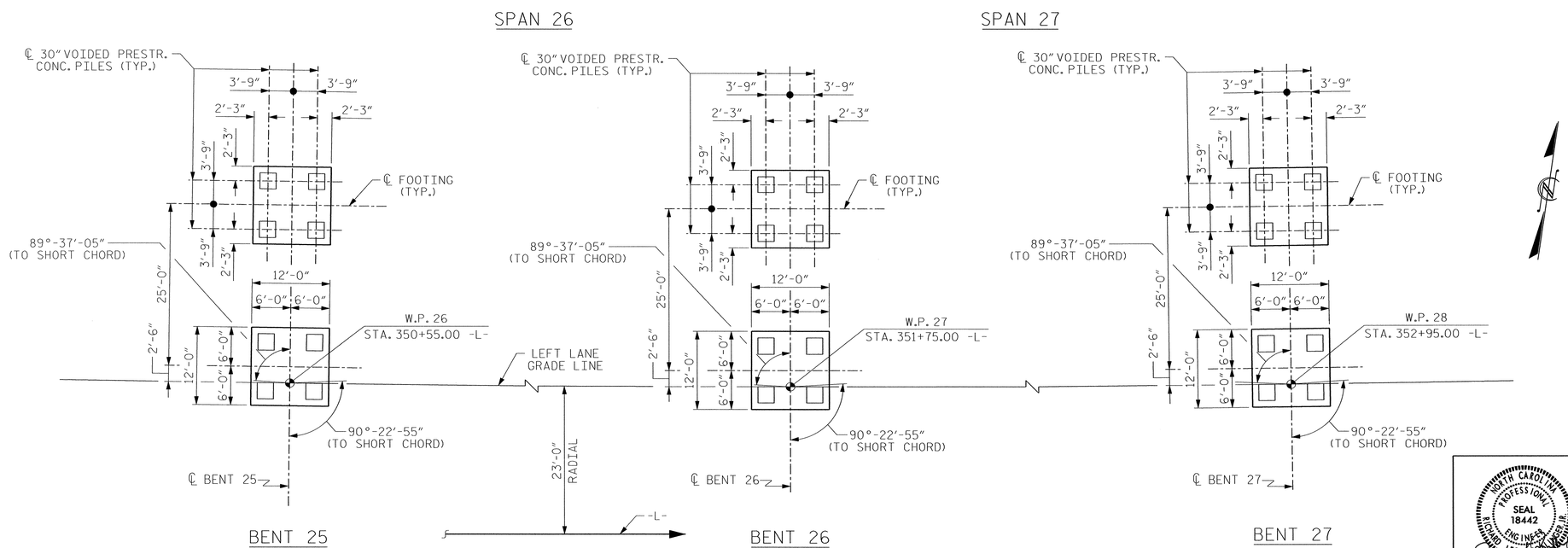

PLAN

PILES ARE DIMENSIONED FROM WORK POINT TO ℄ PILES AT BOTTOM OF FOOTING

NOTES:

DIMENSIONS AT EACH BENT ARE TYPICAL FOR THAT BENT UNLESS OTHERWISE NOTED.

PROJECT NO. R-2633BB

BRUNSWICK/NEW HANOVER COUNTY

STATION: 353+32.50 -L-

SHEET 4 OF 10

DRAWN BY : GAG, JML	DATE : 10/2012		
CHECKED BY : JMR	DATE : 3/2013		
DESIGN ENGINEER OF RECORD : J. ROBINSON	DATE : 5/2013		

NORTH CAROLINA PROFESSIONAL SEAL 18442 ENGINEER RICHARD LEONY BOBINSON JR. 5-29-2013

RS&H IMPROVING YOUR WORLD

RS&H Architects-Engineers-Planners, Inc.
8601 Six Forks Road, Suite 260
Raleigh, NC 27615
919-846-6701 FAX 919-846-9080
www.rsandh.com
North Carolina License Nos. 50073 * F-0453 * C-28

NORTH CAROLINA PROFESSIONAL SEAL 22072 ENGINEER JOHN ARTHUR DINWOODIE 5-29-13

WETHERILL ENGINEERING

TRANSPORTATION PLANNING/DESIGN
BRIDGE/STRUCTURE DESIGN
CIVIL/SITE DESIGN - GIS/GPS
CONSTRUCTION OBSERVATION

559 Jones Franklin Rd. Suite 164
Raleigh, N.C. 27606
Bus: 919 851 8077
Fax: 919 851 8107
LICENSE NO. F-0377

STATE OF NORTH CAROLINA
DEPARTMENT OF TRANSPORTATION
RALEIGH

GENERAL DRAWING
FOUNDATION LAYOUT
LEFT LANE

REVISIONS						SHEET NO.
NO.	BY:	DATE:	NO.	BY:	DATE:	S-15
1			3			TOTAL SHEETS
2			4			700

FILE: $FILE$
MODEL: $MODELNAME$
PLOT DRV: $PLTDRV$$
DATE/TIME: $DATE$ $TIME$

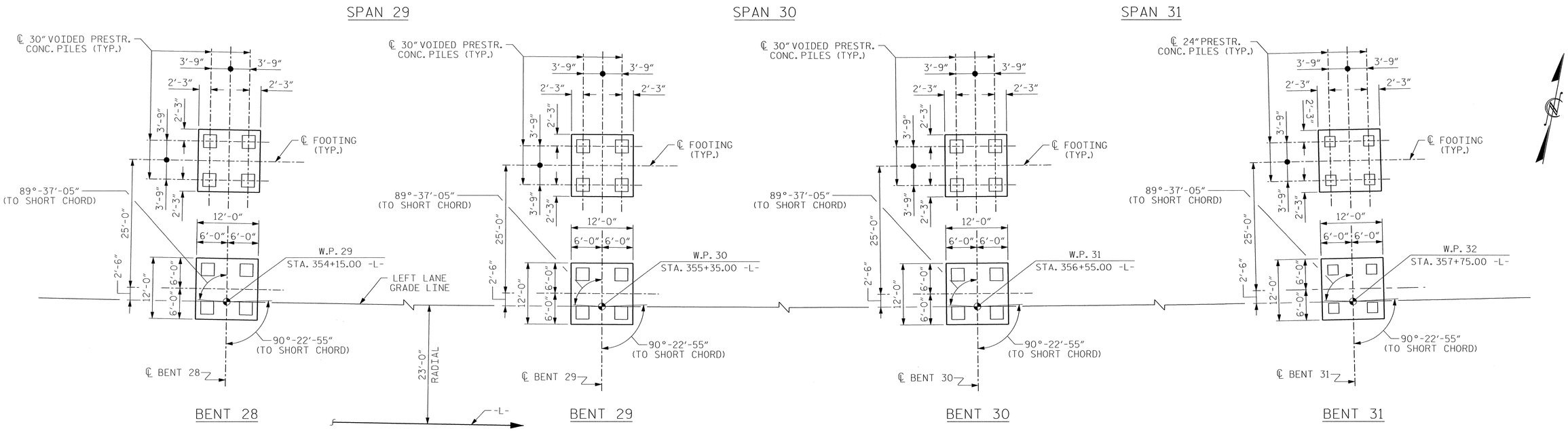

PLAN

PILES ARE DIMENSIONED FROM WORK POINT TO ℄ PILES AT BOTTOM OF FOOTING

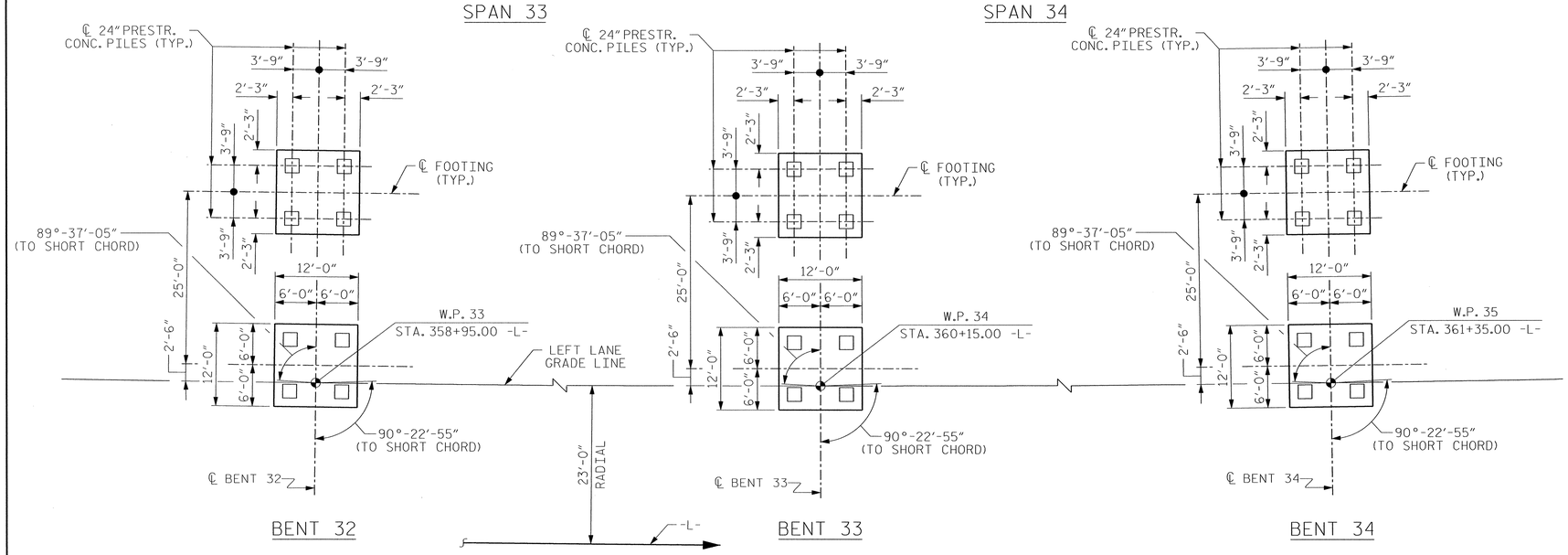

PLAN

PILES ARE DIMENSIONED FROM WORK POINT TO ℄ PILES AT BOTTOM OF FOOTING

NOTES:

DIMENSIONS AT EACH BENT ARE TYPICAL FOR THAT BENT UNLESS OTHERWISE NOTED.

PROJECT NO. R-2633BB

BRUNSWICK/NEW HANOVER COUNTY

STATION: 353+32.50 -L-

SHEET 5 OF 10

DRAWN BY : GAG, JML	DATE : 10/2012		
CHECKED BY : JMR	DATE : 3/2013		
DESIGN ENGINEER OF RECORD : J. ROBINSON	DATE : 5/2013		

NORTH CAROLINA PROFESSIONAL SEAL 18442 ENGINEER RICHARD LEON BOWLING, JR. 5-29-2013

RS&H IMPROVING YOUR WORLD

RS&H Architects-Engineers-Planners, Inc.
8601 Six Forks Road, Suite 260
Raleigh, NC 27615
919-846-6701 FAX 919-846-9080
www.rsandh.com
North Carolina License Nos. 50073 * F-0463 * C-28

NORTH CAROLINA PROFESSIONAL SEAL 22072 ENGINEER JOHN ARTHUR DILWORTH 5-29-13

WETHERILL ENGINEERING

TRANSPORTATION PLANNING/DESIGN
BRIDGE/STRUCTURE DESIGN
CIVIL/SITE DESIGN - GIS/GPS
CONSTRUCTION OBSERVATION

559 Jones Franklin Rd. Suite 164
Raleigh, N.C. 27606
Bus: 919 851 9077
Fax: 919 851 8107
LICENSE NO. F-0377

STATE OF NORTH CAROLINA
DEPARTMENT OF TRANSPORTATION
RALEIGH

GENERAL DRAWING
FOUNDATION LAYOUT

LEFT LANE

REVISIONS								SHEET NO.
NO.	BY:	DATE:	NO.	BY:	DATE:			S-16
1			3					TOTAL SHEETS
2			4					700

FILE: $FILE$
MODEL: $MODELNAME$
PLOT DRV: $PLTDRVS$
DATE/TIME: $DATE$ $TIME$

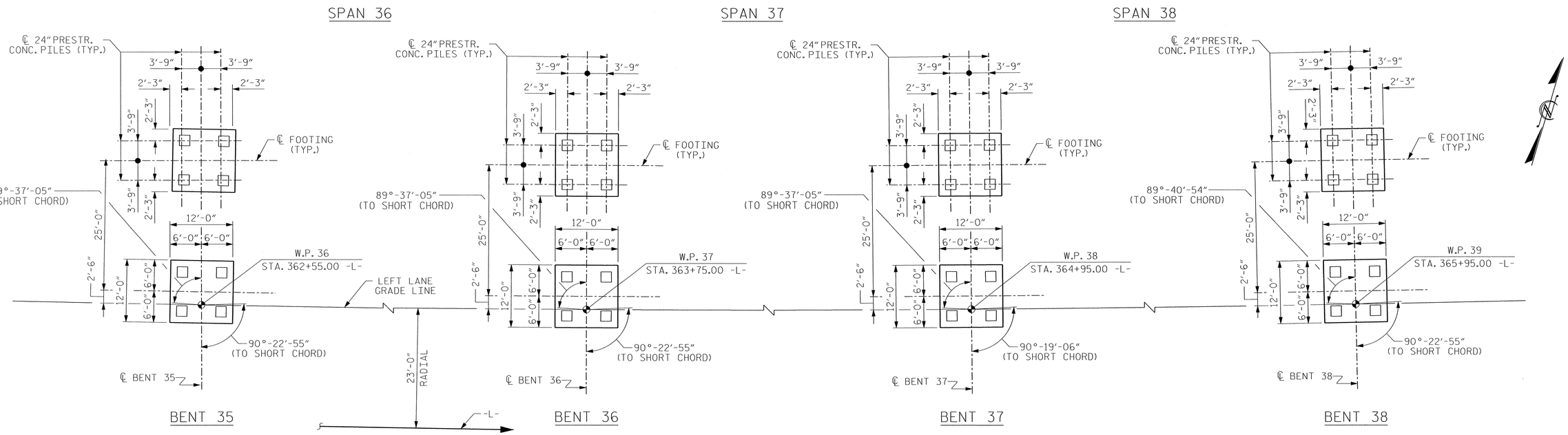

PLAN

PILES ARE DIMENSIONED FROM WORK POINT TO ℄ PILES AT BOTTOM OF FOOTING

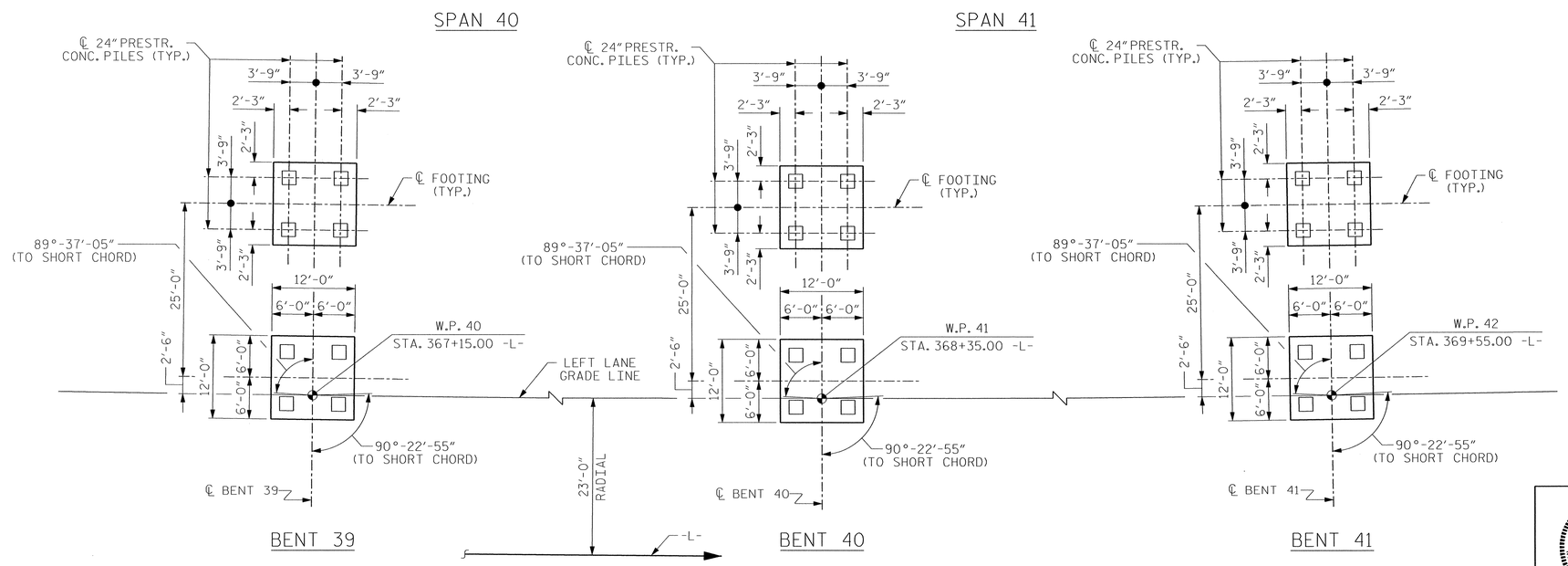

PLAN

PILES ARE DIMENSIONED FROM WORK POINT TO ℄ PILES AT BOTTOM OF FOOTING

NOTES:

DIMENSIONS AT EACH BENT ARE TYPICAL FOR THAT BENT UNLESS OTHERWISE NOTED.

PROJECT NO. R-2633BB

BRUNSWICK/NEW HANOVER COUNTY

STATION: 353+32.50 -L-

SHEET 6 OF 10

DRAWN BY : GAG, JML	DATE : 10/2012
CHECKED BY : JMR	DATE : 3/2013
DESIGN ENGINEER OF RECORD : J. ROBINSON	DATE : 5/2013

NORTH CAROLINA PROFESSIONAL SEAL 18442 ENGINEER RICHARD LEON BEALINGER JR. 5-29-2013

RS&H IMPROVING YOUR WORLD

RS&H Architects-Engineers-Planners, Inc.
8601 Six Forks Road, Suite 260
Raleigh, NC 27615
919-846-6701 FAX 919-846-9080
www.rsandh.com
North Carolina License Nos. 50073 * F-0453 * C-28

NORTH CAROLINA PROFESSIONAL SEAL 22072 ENGINEER JOHN ARTHUR DILWORTH 5-29-13

WETHERILL ENGINEERING

TRANSPORTATION PLANNING/DESIGN
BRIDGE/STRUCTURE DESIGN
CIVIL/SITE DESIGN - GIS/GPS
CONSTRUCTION OBSERVATION

559 Jones Franklin Rd. Suite 164
Raleigh, N.C. 27606
Bus: 919 851 9077
Fax: 919 851 9107
LICENSE NO. F-0377

STATE OF NORTH CAROLINA
DEPARTMENT OF TRANSPORTATION
RALEIGH

GENERAL DRAWING
FOUNDATION LAYOUT

LEFT LANE

REVISIONS								SHEET NO.
NO.	BY:	DATE:	NO.	BY:	DATE:			S-17
1			3					TOTAL SHEETS
2			4					700

FILE: $FILE$
MODEL: $MODELNAME$
PLOT DRV: $PLTDRVS$
DATE/TIME: $DATE$ $TIME$

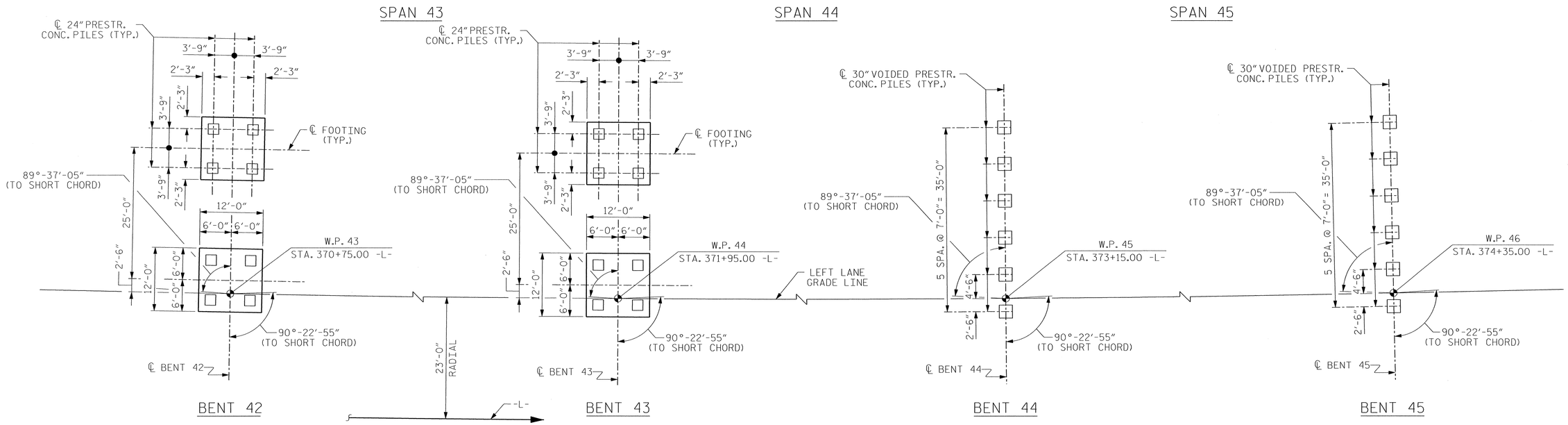

PLAN

PILES ARE DIMENSIONED FROM WORK POINT TO ℄ PILES AT BOTTOM OF FOOTING OR CONCRETE CAP.

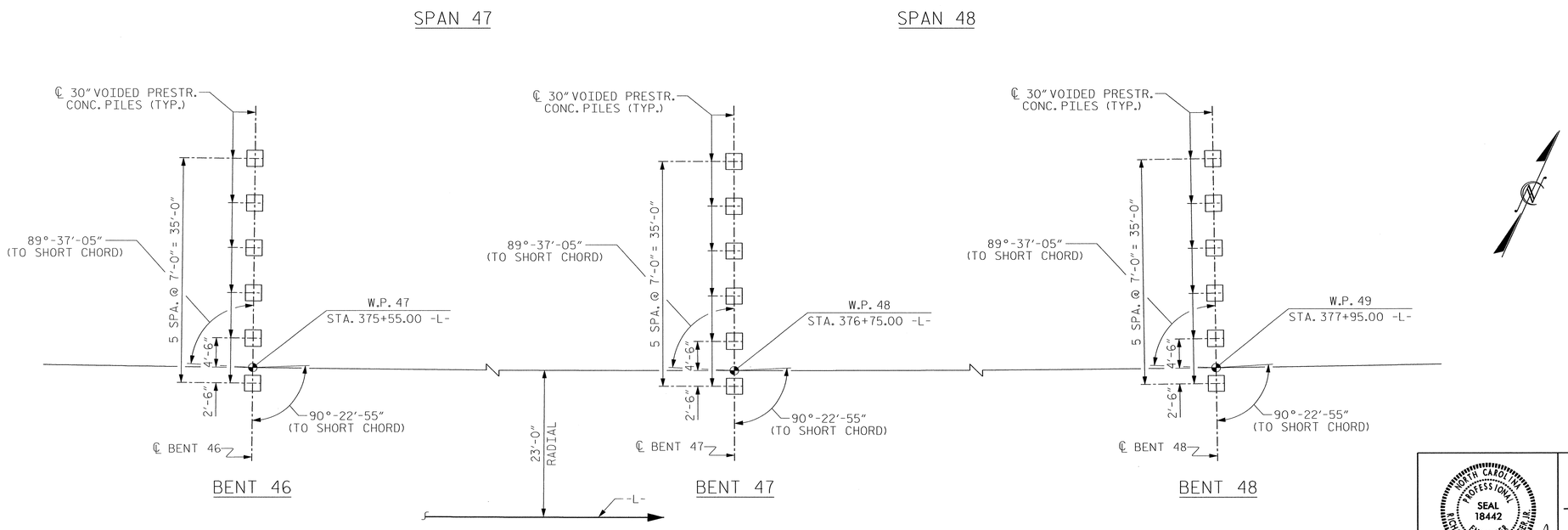

PLAN

PILES ARE DIMENSIONED FROM WORK POINT TO ℄ PILES AT BOTTOM OF CONCRETE CAP.

NOTES:

DIMENSIONS AT EACH BENT ARE TYPICAL FOR THAT BENT UNLESS OTHERWISE NOTED.

PROJECT NO. R-2633BB

BRUNSWICK/NEW HANOVER COUNTY

STATION: 353+32.50 -L-

SHEET 7 OF 10

DRAWN BY : GAG, JML	DATE : 10/2012		
CHECKED BY : JMR	DATE : 3/2013		
DESIGN ENGINEER OF RECORD : J. ROBINSON	DATE : 5/2013		

NORTH CAROLINA PROFESSIONAL SEAL 18442 ENGINEER RICHARD LEONT BOTTINGER JR. 5-29-2013

RS&H IMPROVING YOUR WORLD

RS&H Architects-Engineers-Planners, Inc.
8601 Six Forks Road, Suite 260
Raleigh, NC 27615
919-846-6701 FAX 919-846-9080
www.rsandh.com
North Carolina License Nos. 50073 * F-0493 * C-28

NORTH CAROLINA PROFESSIONAL SEAL 22072 ENGINEER ARTHUR DILWORTH 5-29-13

WETHERILL ENGINEERING

TRANSPORTATION PLANNING/DESIGN
BRIDGE/STRUCTURE DESIGN
CIVIL/SITE DESIGN - GIS/GPS
CONSTRUCTION OBSERVATION

559 Jones Franklin Rd. Suite 164
Raleigh, N.C. 27606
Bus: 919 851 8077
Fax: 919 851 8107
LICENSE NO. F-0377

STATE OF NORTH CAROLINA
DEPARTMENT OF TRANSPORTATION
RALEIGH

GENERAL DRAWING

FOUNDATION LAYOUT

LEFT LANE

REVISIONS						SHEET NO.
NO.	BY:	DATE:	NO.	BY:	DATE:	S-18
1			3			TOTAL SHEETS
2			4			700

FILE: $FILE$
MODEL: $MODELNAME$
PLOT DRV: $PLTDRVS$
DATE/TIME: $DATE$ $TIME$

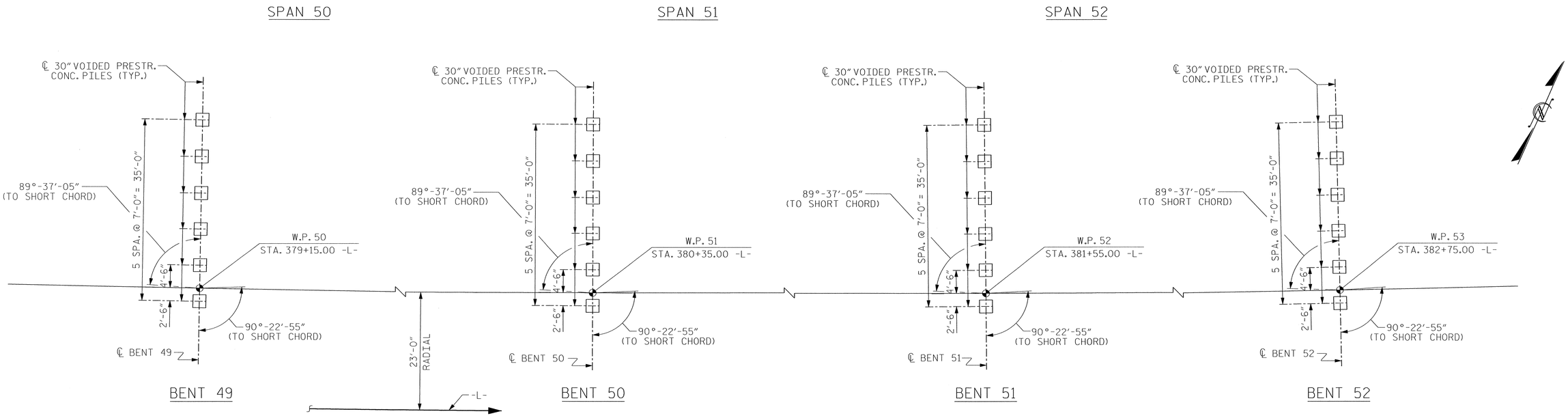

PLAN

PILES ARE DIMENSIONED FROM WORK POINT TO ℄ PILES AT BOTTOM OF CONCRETE CAP.

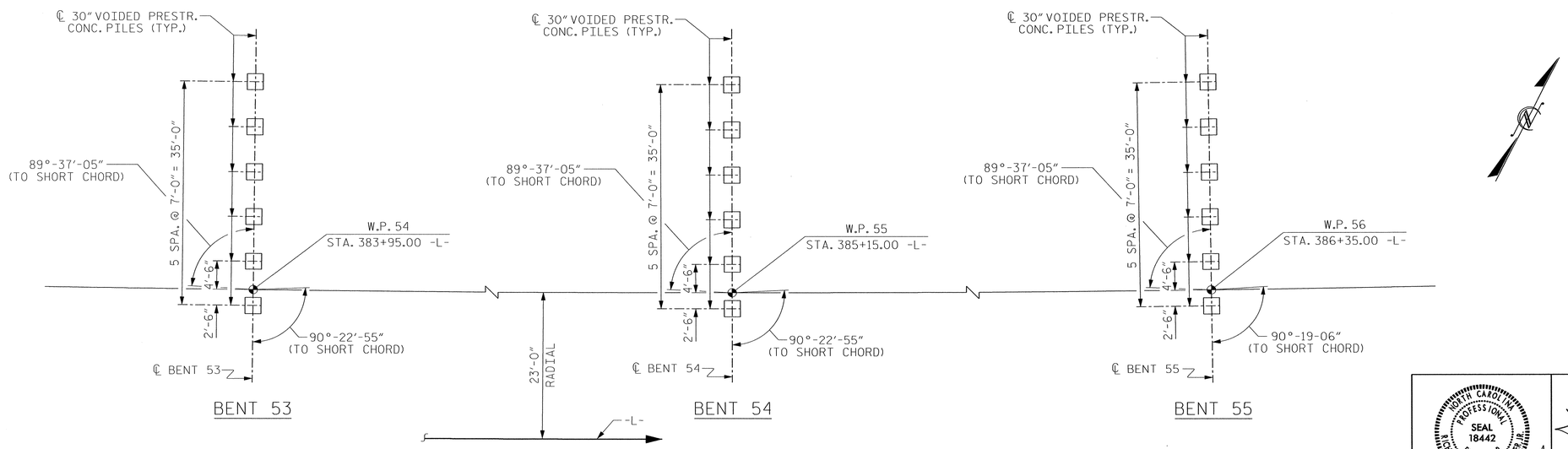

PLAN

PILES ARE DIMENSIONED FROM WORK POINT TO ℄ PILES AT BOTTOM OF CONCRETE CAP.

PROJECT NO. R-2633BB

BRUNSWICK/NEW HANOVER COUNTY

STATION: 353+32.50 -L-

SHEET 8 OF 10

NORTH CAROLINA PROFESSIONAL SEAL 18442 ENGINEER RICHARD LEON BOWLING, JR. 5-29-2013

NORTH CAROLINA PROFESSIONAL SEAL 22072 ENGINEER JOHN ARTHUR DILWORTH 5-29-13

RS&H IMPROVING YOUR WORLD

RS&H Architects-Engineers-Planners, Inc.
8601 Six Forks Road, Suite 260
Raleigh, NC 27615
919-846-6701 FAX 919-846-9080
www.rsandh.com
North Carolina License Nos. 50073 * F-0463 * C-28

WETHERILL ENGINEERING
TRANSPORTATION PLANNING/DESIGN
BRIDGE/STRUCTURE DESIGN
CIVIL/SITE DESIGN - GIS/GPS
CONSTRUCTION OBSERVATION
559 Jones Franklin Rd. Suite 164
Raleigh, N.C. 27606
Bus: 919 851 8077
Fax: 919 851 8107
LICENSE NO. F-0377

STATE OF NORTH CAROLINA
DEPARTMENT OF TRANSPORTATION
RALEIGH

GENERAL DRAWING
FOUNDATION LAYOUT

LEFT LANE

REVISIONS						SHEET NO.
NO.	BY:	DATE:	NO.	BY:	DATE:	S-19
1			3			TOTAL SHEETS
2			4			700

DRAWN BY :	GAG, JML	DATE :	10/2012
CHECKED BY :	JMR	DATE :	3/2013
DESIGN ENGINEER OF RECORD :	J. ROBINSON	DATE :	5/2013

FILE: $FILE$
MODEL: $MODELNAME$
PLOT DRV: $PLTDRV$
DATE/TIME: $DATE$ $TIME$

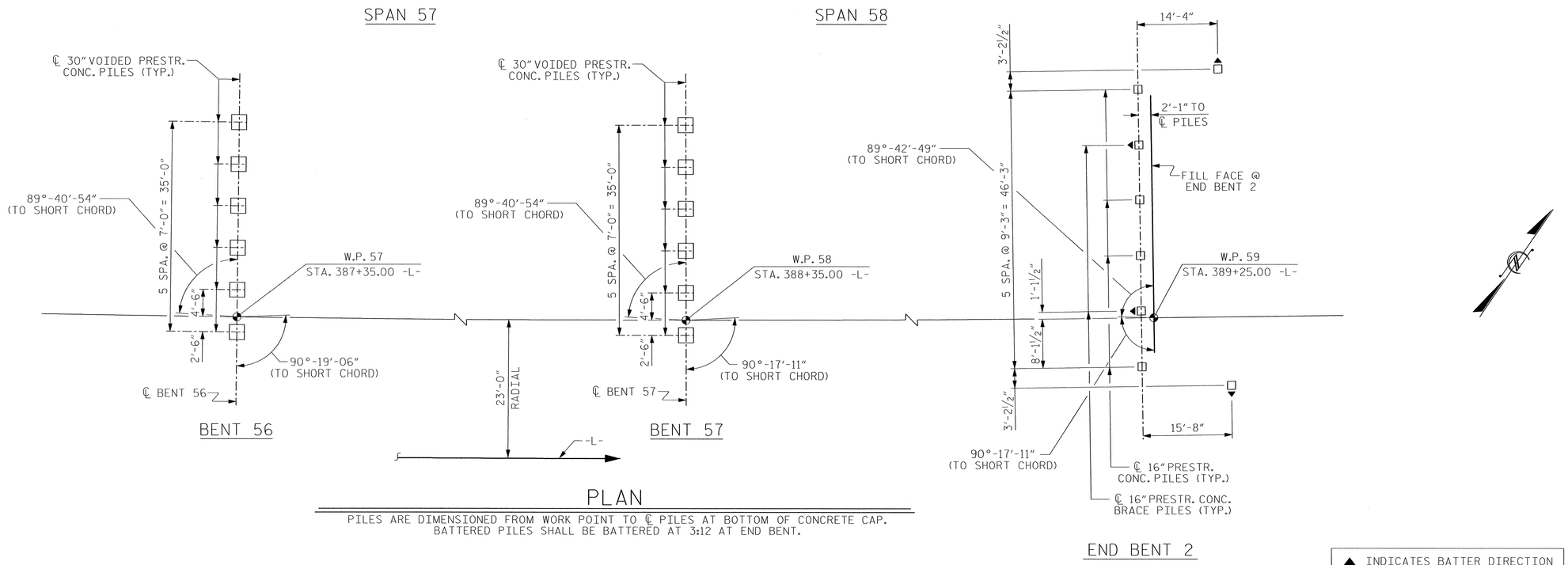

PLAN

PILES ARE DIMENSIONED FROM WORK POINT TO ℄ PILES AT BOTTOM OF CONCRETE CAP.
BATTERED PILES SHALL BE BATTERED AT 3:12 AT END BENT.

▲ INDICATES BATTER DIRECTION FOR BATTERED PILES

PROJECT NO. R-2633BB

BRUNSWICK/NEW HANOVER COUNTY

STATION: 353+32.50 -L-

SHEET 9 OF 10

STATE OF NORTH CAROLINA
DEPARTMENT OF TRANSPORTATION
RALEIGH

GENERAL DRAWING
FOUNDATION LAYOUT

LEFT LANE

NORTH CAROLINA PROFESSIONAL SEAL 18442 ENGINEER RICHARD LEON BOSTINGER JR. 5-29-2013

RS&H IMPROVING YOUR WORLD

RS&H Architects-Engineers-Planners, Inc.
8601 Six Forks Road, Suite 260
Raleigh, NC 27615
919-846-6701 FAX 919-846-9080
www.rsandh.com
North Carolina License Nos. 50073 * F-0493 * C-28

NORTH CAROLINA PROFESSIONAL SEAL 22072 ENGINEER JOHN ARTHUR DILWORTH 5-29-13

WETHERILL ENGINEERING

TRANSPORTATION PLANNING/DESIGN
BRIDGE/STRUCTURE DESIGN
CIVIL/SITE DESIGN - GIS/GPS
CONSTRUCTION OBSERVATION
559 Jones Franklin Rd. Suite 164
Raleigh, N.C. 27606
Bus: 919 851 8077
Fax: 919 851 8107
LICENSE NO. F-0377

REVISIONS						SHEET NO.
NO.	BY:	DATE:	NO.	BY:	DATE:	S-20
1			3			TOTAL SHEETS
2			4			700

DRAWN BY :	GAG, JML	DATE :	10/2012
CHECKED BY :	JMR	DATE :	3/2013
DESIGN ENGINEER OF RECORD :	J. ROBINSON	DATE :	5/2013

FILE: $FILE$
MODEL: $MODELNAME$
PLOT DRV: $PLTDRV$
DATE/TIME: $DATE$ $TIME$

BENT NO.	FACTORED RESISTANCE	REQUIRED DRIVING RESISTANCE	TIP NO HIGHER THAN ELEVATION	SCOUR CRITICAL ELEVATION
END BENT 1	205 TONS	365 TONS	NA	NA
BENT 1	345 TONS	465 TONS	-12.0 FT	NA
BENT 2	345 TONS	465 TONS	-12.0 FT	NA
BENT 3	415 TONS	565 TONS	-40.0 FT	-5.0 FT
BENT 4	415 TONS	565 TONS	-52.0 FT	-6.0 FT
BENT 5	375 TONS	510 TONS	-63.0 FT	-6.0 FT
BENT 6	325 TONS	460 TONS	-74.0 FT	-7.0 FT
BENT 7	280 TONS	465 TONS	-86.0 FT	-48.0 FT
BENT 8	220 TONS	305 TONS	-80.0 FT	-5.0 FT
BENT 9	390 TONS	530 TONS	-59.0 FT	-5.0 FT
BENT 10	390 TONS	530 TONS	-59.0 FT	-5.0 FT
BENT 11	400 TONS	540 TONS	-59.0 FT	-5.0 FT
BENT 12	400 TONS	540 TONS	-59.0 FT	-5.0 FT
BENT 13	400 TONS	540 TONS	-59.0 FT	-5.0 FT
BENT 14	340 TONS	460 TONS	-54.0 FT	-5.0 FT
BENT 15	340 TONS	460 TONS	-54.0 FT	-5.0 FT
BENT 16	340 TONS	460 TONS	-54.0 FT	-5.0 FT
BENT 17	325 TONS	440 TONS	-54.0 FT	-5.0 FT
BENT 18	325 TONS	440 TONS	-54.0 FT	-5.0 FT
BENT 19	325 TONS	440 TONS	-54.0 FT	-5.0 FT
BENT 20	320 TONS	430 TONS	-54.0 FT	-5.0 FT
BENT 21	320 TONS	430 TONS	-54.0 FT	-5.0 FT
BENT 22	320 TONS	430 TONS	-54.0 FT	-5.0 FT
BENT 23	320 TONS	430 TONS	-54.0 FT	-5.0 FT
BENT 24	315 TONS	425 TONS	-60.0 FT	-5.0 FT
BENT 25	315 TONS	425 TONS	-63.0 FT	-3.0 FT
BENT 26	315 TONS	425 TONS	-63.0 FT	-2.0 FT
BENT 27	315 TONS	425 TONS	-60.0 FT	-2.0 FT
BENT 28	315 TONS	425 TONS	-60.0 FT	-2.0 FT
BENT 29	315 TONS	425 TONS	-60.0 FT	-5.0 FT
BENT 30	315 TONS	425 TONS	-57.0 FT	-5.0 FT
BENT 31	280 TONS	380 TONS	-49.0 FT	-5.0 FT
BENT 32	280 TONS	380 TONS	-49.0 FT	-6.0 FT
BENT 33	280 TONS	380 TONS	-51.0 FT	-6.0 FT
BENT 34	280 TONS	380 TONS	-51.0 FT	-6.0 FT
BENT 35	280 TONS	380 TONS	-51.0 FT	-5.0 FT
BENT 36	280 TONS	380 TONS	-51.0 FT	-5.0 FT
BENT 37	280 TONS	380 TONS	-51.0 FT	-6.0 FT
BENT 38	280 TONS	380 TONS	-51.0 FT	-7.0 FT
BENT 39	280 TONS	380 TONS	-51.0 FT	-6.0 FT
BENT 40	295 TONS	400 TONS	-45.0 FT	-6.0 FT
BENT 41	295 TONS	400 TONS	-45.0 FT	-6.0 FT
BENT 42	295 TONS	400 TONS	-45.0 FT	-6.0 FT
BENT 43	295 TONS	400 TONS	-47.0 FT	-7.0 FT
BENT 44	340 TONS	475 TONS	-52.0 FT	-6.0 FT
BENT 45	340 TONS	475 TONS	-50.0 FT	-6.0 FT
BENT 46	340 TONS	475 TONS	-50.0 FT	-6.0 FT
BENT 47	340 TONS	475 TONS	-47.0 FT	-6.0 FT
BENT 48	320 TONS	445 TONS	-45.0 FT	-6.0 FT
BENT 49	320 TONS	445 TONS	-45.0 FT	-6.0 FT
BENT 50	320 TONS	445 TONS	-45.0 FT	-6.0 FT
BENT 51	320 TONS	445 TONS	-45.0 FT	-6.0 FT
BENT 52	320 TONS	445 TONS	-45.0 FT	-6.0 FT
BENT 53	320 TONS	445 TONS	-45.0 FT	-6.0 FT
BENT 54	335 TONS	470 TONS	-45.0 FT	-6.0 FT
BENT 55	335 TONS	465 TONS	-45.0 FT	-4.0 FT
BENT 56	335 TONS	460 TONS	-45.0 FT	-3.0 FT
BENT 57	335 TONS	460 TONS	-45.0 FT	-2.0 FT
END BENT 2	205 TONS	350 TONS	NA	NA

FOUNDATION NOTES

PILES AT END BENT NO. 1, BENT NO. 1 THROUGH BENT NO. 57 AND END BENT NO. 2 ARE DESIGNED FOR A FACTORED RESISTANCES AS SHOWN IN THE SUMMARY TABLE.

DRIVE PILES AT END BENT NO. 1, BENT NO. 1 THROUGH BENT NO. 57 AND END BENT NO. 2 TO A REQUIRED DRIVING RESISTANCES AS SHOWN IN THE SUMMARY TABLE.

INSTALL PILES AT BENT NO. 1 THROUGH BENT NO. 57 TO TIP ELEVATIONS NO HIGHER THAN AS SHOWN IN THE SUMMARY TABLE.

THE SCOUR CRITICAL ELEVATIONS FOR BENT NO. 3 THROUGH BENT NO. 57 ARE SHOWN IN THE SUMMARY TABLE. SCOUR CRITICAL ELEVATIONS ARE USED TO MONITOR POSSIBLE SCOUR PROBLEMS DURING THE LIFE OF THE STRUCTURE.

STEEL PILE TIPS ARE REQUIRED FOR PRESTRESSED CONCRETE PILES AT BENT NO. 1, 2, 5, 6, 7, 8, 17, 18, 24, 25, 26, 27, 28, 29, 30, 42, 43, 49 AND 56. FOR STEEL PILE TIPS, SEE SECTION 450 OF THE STANDARD SPECIFICATIONS.

TESTING THE FIRST PRODUCTION PILES WITH THE PDA DURING DRIVING, RESTRIKING OR REDRIVING IS REQUIRED AT BENT NO. 6, BENT NO. 7, BENT NO. 8 AND BETWEEN BENT NO. 1 - BENT NO. 2, BENT NO. 3 - BENT NO. 5, BENT NO. 9 - BENT NO. 13, BENT NO. 14 - BENT NO. 23, BENT NO. 24 - BENT NO. 30, BENT NO. 31 - BENT NO. 39, BENT NO. 40 - BENT NO. 43, BENT NO. 44 - BENT NO. 47, BENT NO. 48 - BENT NO. 53 AND BENT NO. 54 - BENT NO. 57 FOR BOTH LEFT LANE AND RIGHT LANE BRIDGES. FOR PDA TESTING, SEE SECTION 450 OF THE STANDARD SPECIFICATIONS.

IF NECESSARY, PREDRILL PILE LOCATIONS AT BENT NO. 1, BENT NO. 2, BENT NO. 14 THROUGH BENT NO. 23 AND BENT NO. 31 THROUGH BENT NO. 43 TO TIP ELEVATIONS NO HIGHER THAN AS SHOWN IN THE SUMMARY TABLE WITH EQUIPMENT THAT WILL RESULT IN A MAXIMUM PREDRILLING DIAMETER OF 24". FOR PREDRILLING FOR PILES, SEE SECTION 450 OF THE STANDARD SPECIFICATIONS.

FOR 16" AND 24" PRESTRESSED CONCRETE PILES, SEE SECTION 450 OF THE STANDARD SPECIFICATIONS. FOR 30" AND 36" VOIDED PRESTRESSED CONCRETE PILES, SEE SPECIAL PROVISIONS.

IF NECESSARY, PREDRILL PILE LOCATIONS AT BENT NO. 3 THROUGH BENT NO. 5, BENT NO. 9 THROUGH BENT NO. 13, BENT NO. 24 THROUGH BENT NO. 30, AND BENT NO. 44 THROUGH BENT NO. 57 TO THE TIP NO HIGHER THAN ELEVATIONS AS SHOWN IN THE SUMMARY TABLE WITH EQUIPMENT THAT WILL RESULT IN A MAXIMUM PREDRILLING DIAMETER OF 30". FOR PREDRILLING FOR PILES, SEE SECTION 450 OF THE STANDARD SPECIFICATIONS.

IF NECESSARY, PREDRILL PILE LOCATIONS AT BENT NO. 6 THROUGH BENT NO. 8, TO THE TIP NO HIGHER THAN ELEVATIONS AS SHOWN IN THE SUMMARY TABLE WITH EQUIPMENT THAT WILL RESULT IN A MAXIMUM PREDRILLING DIAMETER OF 36". FOR PREDRILLING FOR PILES, SEE SECTION 450 OF THE STANDARD SPECIFICATIONS.

SPUDDING MAY BE USED INSTEAD OF PREDRILLING AT BENT NO. 1 THROUGH BENT NO. 57.

IT HAS BEEN ESTIMATED THAT A HAMMER WITH AN EQUIVALENT RATED ENERGY IN THE RANGE OF 90-130 FT-KIPS PER BLOW WILL BE REQUIRED TO DRIVE PILES AT END BENT NO. 1 AND END BENT NO. 2. THIS ESTIMATED ENERGY RANGE DOES NOT RELEASE THE CONTRACTOR FROM PROVIDING DRIVING EQUIPMENT IN ACCORDANCE WITH SUBARTICLE 450-3(D)(2) OF THE STANDARD SPECIFICATIONS.

IT HAS BEEN ESTIMATED THAT A HAMMER WITH AN EQUIVALENT RATED ENERGY IN THE RANGE OF 180-350 FT-KIPS PER BLOW WILL BE REQUIRED TO DRIVE PILES AT BENT NO. 1 THROUGH BENT NO. 57. THIS ESTIMATED ENERGY RANGE DOES NOT RELEASE THE CONTRACTOR FROM PROVIDING DRIVING EQUIPMENT IN ACCORDANCE WITH SUBARTICLE 450-3(D)(2) OF THE STANDARD SPECIFICATIONS.

OBSERVE A ONE MONTH WAITING PERIOD AFTER CONSTRUCTING THE EMBANKMENT TO WITHIN 2 FT OF FINISHED GRADE BEFORE BEGINNING END BENT CONSTRUCTION AT BOTH END BENT NO. 1 AND END BENT NO. 2.

STATIC AXIAL COMPRESSIVE LOAD TEST IS REQUIRED ON A NON-PRODUCTION PILE AT STA. 324+00.00±, 60 FT.± RIGHT BETWEEN BENT NO. 5 AND BENT NO. 6. A STEEL PILE TIP IS REQUIRED FOR THIS PILE. FOR STATIC AXIAL COMPRESSIVE LOAD TEST, SEE STATIC AXIAL COMPRESSIVE LOAD TEST SPECIAL PROVISION.

PROJECT NO. R-2633BB
BRUNSWICK/NEW HANOVER COUNTY
STATION: 353+32.50 -L-

SHEET 10 OF 10

NORTH CAROLINA PROFESSIONAL SEAL 18442 ENGINEER RICHARD LEON BORCHINGER, III
7-01-2013

NORTH CAROLINA PROFESSIONAL SEAL 22072 ENGINEER JOHN ARTHUR DILWORTH
7-08-13

RS&H IMPROVING YOUR WORLD

RS&H Architects-Engineers-Planners, Inc.
8601 Six Forks Road, Suite 260
Raleigh, NC 27615
919-846-5701 FAX 919-846-0080
www.rsandh.com
North Carolina License Nos. 60073 * F-0493 * C-28

WETHERILL ENGINEERING

TRANSPORTATION PLANNING/DESIGN
BRIDGE/STRUCTURE DESIGN
CIVIL/SITE DESIGN ~ GIS/GPS
CONSTRUCTION OBSERVATION

559 Jones Franklin Rd. Suite 164
Raleigh, N.C. 27606
Bus: 919 851 8077
Fax: 919 851 8107
LICENSE NO. F-0377

STATE OF NORTH CAROLINA
DEPARTMENT OF TRANSPORTATION
RALEIGH

GENERAL DRAWING
FOUNDATION LAYOUT

LEFT LANE

REVISIONS								SHEET NO.
NO.	BY:	DATE:	NO.	BY:	DATE:			S-21
1			3					TOTAL SHEETS
2			4					700

DRAWN BY :	GAG, JML	DATE :	10/2012
CHECKED BY :	JMR	DATE :	3/2013
DESIGN ENGINEER OF RECORD :	J. ROBINSON	DATE :	5/2013

FILE: $FILE$
MODEL: $MODELNAME$
PLOT DRV: $PLTDRVS$
DATE/TIME: $DATE$ $TIME$

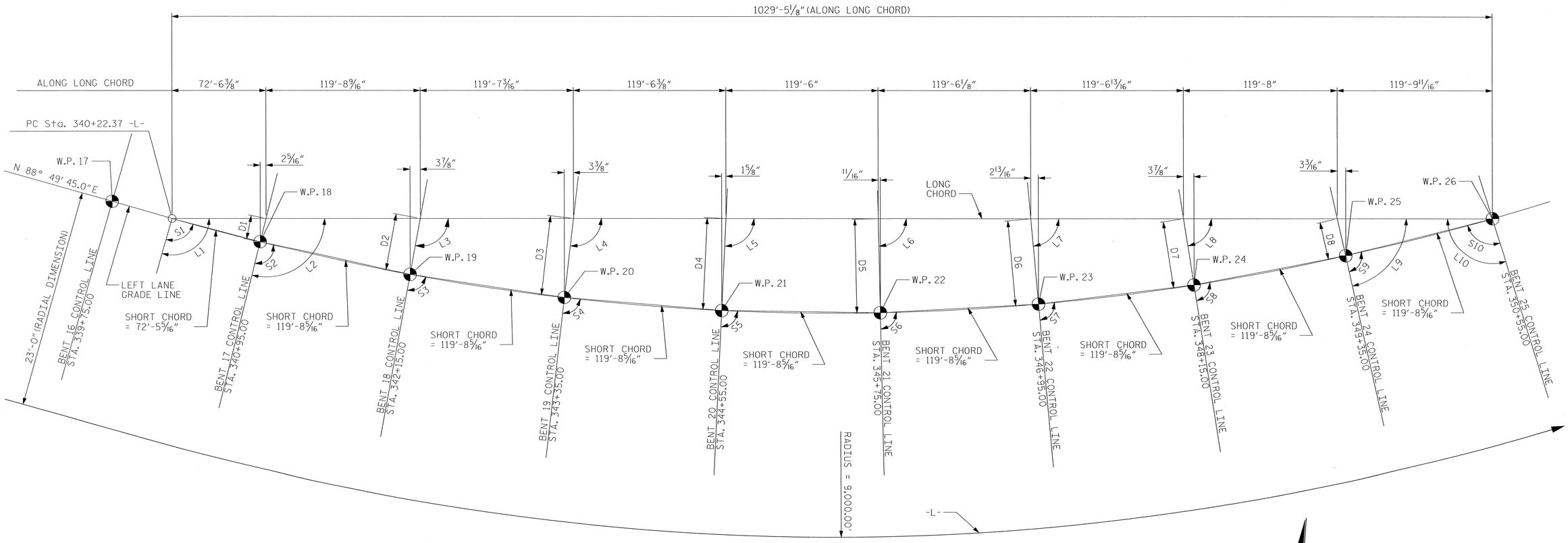

ANGLES				OFFSETS	
LONG CHORD		SHORT CHORD			
L1	93°-17'-14"	S1	90°-13'-53"	D1	3'-10 3/8"
L2	92°-49'-29"	S2	90°-22'-55"	D2	8'-11 5/8"
L3	92°-03'-38"	S3	90°-22'-55"	D3	12'-5 11/16"
L4	91°-17'-48"	S4	90°-22'-55"	D4	14'-4 9/16"
L5	90°-31'-58"	S5	90°-22'-55"	D5	14'-8 5/16"
L6	89°-46'-08"	S6	90°-22'-55"	D6	13'-5"
L7	89°-00'-18"	S7	90°-22'-55"	D7	10'-6 1/2"
L8	88°-14'-27"	S8	90°-22'-55"	D8	6'-7/8"
L9	87°-28'-37"	S9	90°-22'-55"		
L10	93°-17'-13"	S10	90°-22'-55"		

LONG CHORD LAYOUT

ALL BENT CONTROL LINES ARE PLACED RADIALLY TO -L-

HORIZONTAL CURVE DATA -L-

PI Sta = 383+94.77 -L-
Δ = 51° 49' 22.8" (LT)
D = 0° 38' 11.8"
L = 8,140.34'
T = 4,372.40'
R = 9,000.00'
e = 2.5%

PROJECT NO. R-2633BB
BRUNSWICK/NEW HANOVER COUNTY
STATION: 353+32.50 -L-

SHEET 1 OF 5

NORTH CAROLINA PROFESSIONAL SEAL 18442 ENGINEER RICHARD LEON BELLINGER III
5-29-2013

RS&H IMPROVING YOUR WORLD

RS&H Architects-Engineers-Planners, Inc.
8601 Six Forks Road, Suite 260
Raleigh, NC 27615
919-846-6701 FAX 919-846-9080
www.rsandh.com
North Carolina License Nos. 00673 * F-0493 * C-28

STATE OF NORTH CAROLINA
DEPARTMENT OF TRANSPORTATION
RALEIGH

GENERAL DRAWING

FOR BRIDGE ON US 17 (WILMINGTON BYPASS) OVER THE CAPE FEAR RIVER BETWEEN SR 1430 AND US 421 LEFT LANE

REVISIONS						SHEET NO.
NO.	BY:	DATE:	NO.	BY:	DATE:	S-22
1			3			TOTAL SHEETS
2			4			700

DRAWN BY : R. J. DECOLA DATE : 11/2011
CHECKED BY : R. BOLLINGER DATE : 02/2013
DESIGN ENGINEER OF RECORD : R. BOLLINGER DATE : 05/2013

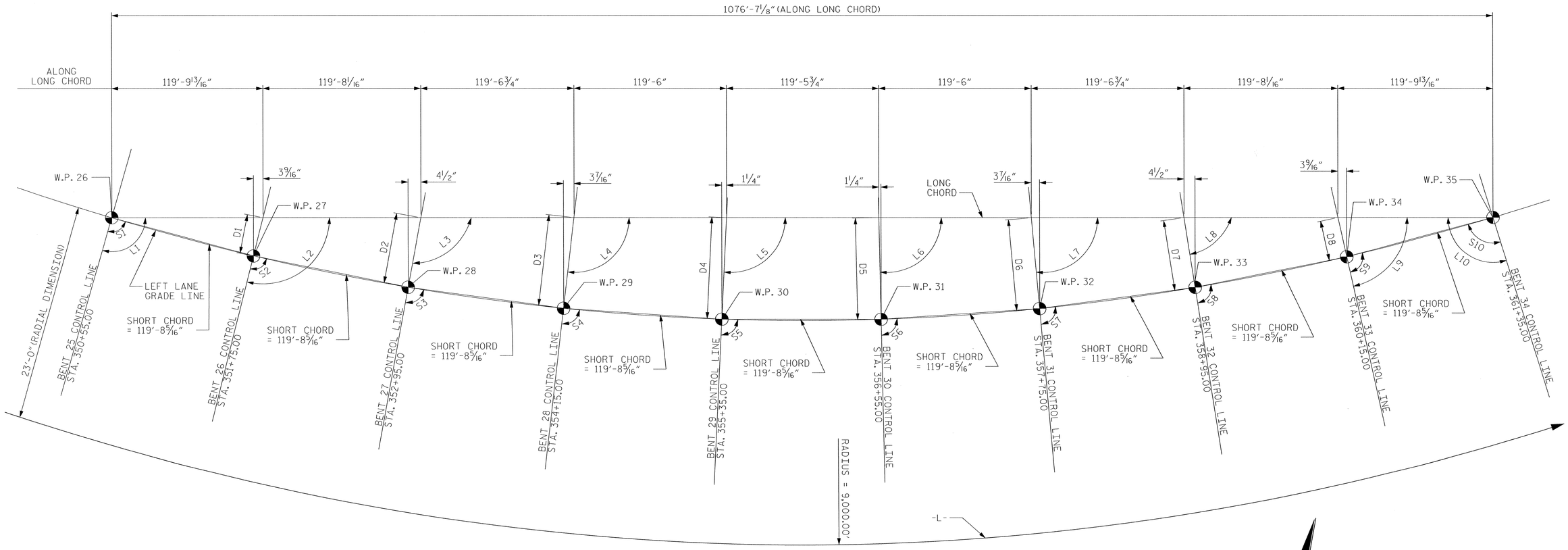

ANGLES				OFFSETS	
LONG CHORD		SHORT CHORD			
L1	93°-26'-16"	S1	90°-22'-55"	D1	6'-4 5/8"
L2	92°-40'-26"	S2	90°-22'-55"	D2	11'-2 1/16"
L3	91°-54'-35"	S3	90°-22'-55"	D3	14'-4 5/16"
L4	91°-08'-45"	S4	90°-22'-55"	D4	15'-11 7/16"
L5	90°-22'-55"	S5	90°-22'-55"	D5	15'-11 7/16"
L6	89°-37'-05"	S6	90°-22'-55"	D6	14'-4 5/16"
L7	88°-51'-15"	S7	90°-22'-55"	D7	11'-2 1/16"
L8	88°-05'-25"	S8	90°-22'-55"	D8	6'-4 5/8"
L9	87°-19'-34"	S9	90°-22'-55"		
L10	93°-26'-16"	S10	90°-22'-55"		

LONG CHORD LAYOUT

ALL BENT CONTROL LINES ARE PLACED RADIALLY TO -L-

HORIZONTAL CURVE DATA -L-

PI Sta = 383+94.77 -L-
Δ = 51° 49' 22.8" (LT)
D = 0° 38' 11.8"
L = 8,140.34'
T = 4,372.40'
R = 9,000.00'
e = 2.5%

PROJECT NO. R-2633BB
BRUNSWICK/NEW HANOVER COUNTY
STATION: 353+32.50 -L-

SHEET 2 OF 5

NORTH CAROLINA PROFESSIONAL SEAL 18442 ENGINEER RICHARD LEON BOLLINGER
5-28-2013

RS&H IMPROVING YOUR WORLD

RS&H Architects-Engineers-Planners, Inc.
8601 Six Forks Road, Suite 260
Raleigh, NC 27615
919-846-6701 FAX 919-846-9080
www.rsandh.com
North Carolina License Nos. 00673 * F-0493 * C-28

STATE OF NORTH CAROLINA
DEPARTMENT OF TRANSPORTATION
RALEIGH

GENERAL DRAWING

FOR BRIDGE ON US 17 (WILMINGTON BYPASS) OVER THE CAPE FEAR RIVER BETWEEN SR 1430 AND US 421 LEFT LANE

REVISIONS						SHEET NO.
NO.	BY:	DATE:	NO.	BY:	DATE:	S-23
1			3			TOTAL SHEETS
2			4			700

DRAWN BY : R. J. DECOLA DATE : 11/2011
CHECKED BY : R. BOLLINGER DATE : 02/2013
DESIGN ENGINEER OF RECORD : R. BOLLINGER DATE : 05/2013

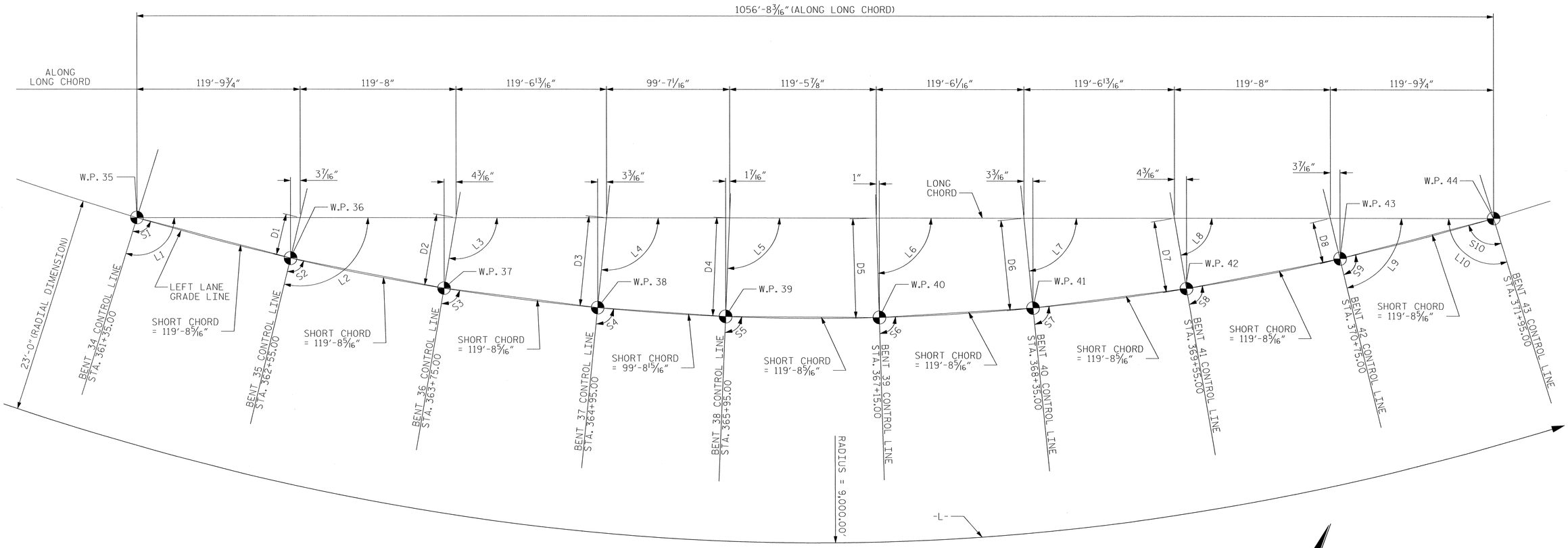

ANGLES				OFFSETS	
LONG CHORD		SHORT CHORD			
L1	93°-22'-27"	S1	90°-22'-55"	D1	6'-3 1/16"
L2	92°-36'-37"	S2	90°-22'-55"	D2	10'-10 7/8"
L3	91°-50'-46"	S3	90°-22'-55"	D3	13'-11 9/16"
L4	91°-04'-56"	S4	90°-19'-06"	D4	15'-3 1/2"
L5	90°-26'-44"	S5	90°-22'-55"	D5	15'-5 1/16"
L6	89°-40'-54"	S6	90°-22'-55"	D6	13'-11 9/16"
L7	88°-55'-04"	S7	90°-22'-55"	D7	10'-10 7/8"
L8	88°-09'-14"	S8	90°-22'-55"	D8	6'-3 1/16"
L9	87°-23'-23"	S9	90°-22'-55"		
L10	93°-22'-27"	S10	90°-22'-55"		

LONG CHORD LAYOUT

ALL BENT CONTROL LINES ARE PLACED RADIALLY TO -L-

HORIZONTAL CURVE DATA -L-

PI Sta = 383+94.77 -L-
Δ = 51° 49' 22.8" (LT)
D = 0° 38' 11.8"
L = 8,140.34'
T = 4,372.40'
R = 9,000.00'
e = 2.5%

PROJECT NO. R-2633BB
BRUNSWICK/NEW HANOVER COUNTY
STATION: 353+32.50 -L-

SHEET 3 OF 5

DRAWN BY : R. J. DECOLA DATE : 11/2011
CHECKED BY : R. BOLLINGER DATE : 02/2013
DESIGN ENGINEER OF RECORD : R. BOLLINGER DATE : 05/2013

NORTH CAROLINA PROFESSIONAL SEAL 18442 ENGINEER RICHARD LEON BOLLINGER 5-29-2013

RS&H IMPROVING YOUR WORLD

RS&H Architects-Engineers-Planners, Inc.
8601 Six Forks Road, Suite 260
Raleigh, NC 27615
919-846-6701 FAX 919-846-9088
www.rsandh.com
North Carolina License Nos. 50073 * F-0483 * C-28

STATE OF NORTH CAROLINA
DEPARTMENT OF TRANSPORTATION
RALEIGH

GENERAL DRAWING
FOR BRIDGE ON US 17 (WILMINGTON BYPASS) OVER THE CAPE FEAR RIVER BETWEEN SR 1430 AND US 421 LEFT LANE

REVISIONS						SHEET NO.
NO.	BY:	DATE:	NO.	BY:	DATE:	S-24
1			3			TOTAL SHEETS
2			4			700

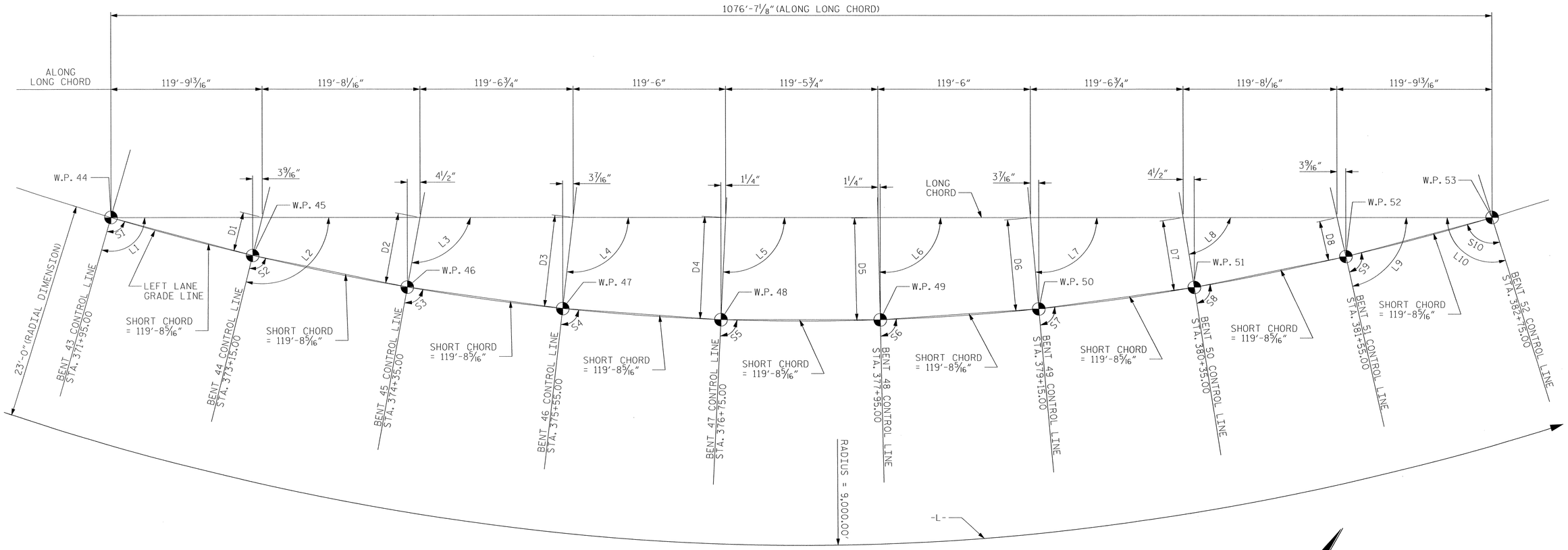

ANGLES				OFFSETS	
LONG CHORD		SHORT CHORD			
L1	93°-26'-16"	S1	90°-22'-55"	D1	6'-4 5/8"
L2	92°-40'-26"	S2	90°-22'-55"	D2	11'-2 1/16"
L3	91°-54'-35"	S3	90°-22'-55"	D3	14'-4 5/16"
L4	91°-08'-45"	S4	90°-22'-55"	D4	15'-11 7/16"
L5	90°-22'-55"	S5	90°-22'-55"	D5	15'-11 7/16"
L6	89°-37'-05"	S6	90°-22'-55"	D6	14'-4 5/16"
L7	88°-51'-15"	S7	90°-22'-55"	D7	11'-2 1/16"
L8	88°-05'-25"	S8	90°-22'-55"	D8	6'-4 5/8"
L9	87°-19'-34"	S9	90°-22'-55"		
L10	93°-26'-16"	S10	90°-22'-55"		

LONG CHORD LAYOUT

ALL BENT CONTROL LINES ARE PLACED RADIALLY TO -L-

HORIZONTAL CURVE DATA -L-

PI Sta = 383+94.77 -L-
△ = 51° 49' 22.8" (LT)
D = 0° 38' 11.8"
L = 8,140.34'
T = 4,372.40'
R = 9,000.00'
e = 2.5%

PROJECT NO. R-2633BB
BRUNSWICK/NEW HANOVER COUNTY
STATION: 353+32.50 -L-

SHEET 4 OF 5

NORTH CAROLINA PROFESSIONAL SEAL 18442 ENGINEER RICHARD LEON BOLLINGER III
5-28-2013

RS&H IMPROVING YOUR WORLD

RS&H Architects-Engineers-Planners, Inc.
8601 Six Forks Road, Suite 260
Raleigh, NC 27615
919-846-6701 FAX 919-846-9080
www.rsandh.com
North Carolina License Nos. 50073 * F-0493 * C-28

STATE OF NORTH CAROLINA
DEPARTMENT OF TRANSPORTATION
RALEIGH

GENERAL DRAWING
FOR BRIDGE ON US 17 (WILMINGTON BYPASS) OVER THE CAPE FEAR RIVER BETWEEN SR 1430 AND US 421 LEFT LANE

REVISIONS						SHEET NO.
NO.	BY:	DATE:	NO.	BY:	DATE:	S-25
1			3			TOTAL SHEETS
2			4			700

DRAWN BY : R. J. DECOLA DATE : 11/2011
CHECKED BY : R. BOLLINGER DATE : 02/2013
DESIGN ENGINEER OF RECORD : R. BOLLINGER DATE : 05/2013

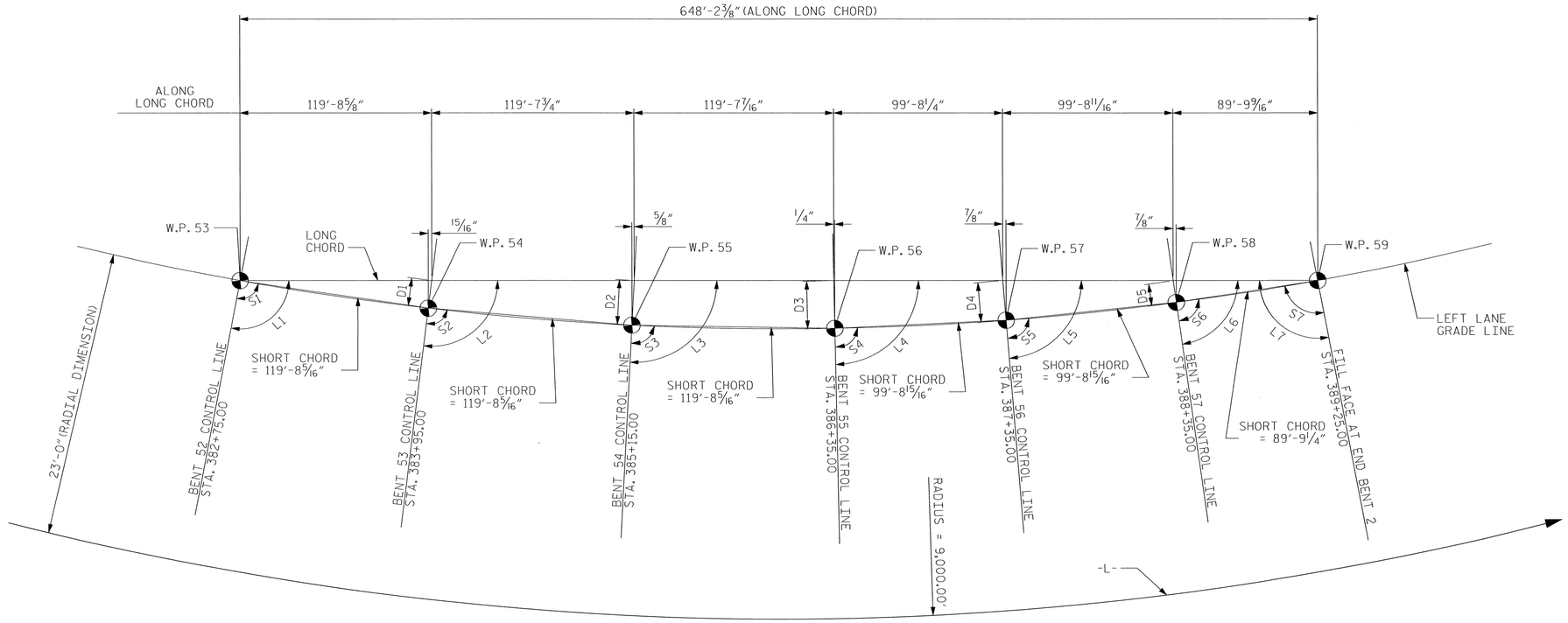

ANGLES				OFFSETS	
LONG CHORD		SHORT CHORD			
L1	92°-04'-08"	S1	90°-22'-55"	D1	3'-6 5/16"
L2	91°-18'-18"	S2	90°-22'-55"	D2	5'-5 7/16"
L3	90°-32'-28"	S3	90°-22'-55"	D3	5'-9 7/16"
L4	89°-46'-38"	S4	90°-19'-06"	D4	4'-10 1/8"
L5	89°-08'-26"	S5	90°-19'-06"	D5	2'-9 1/2"
L6	88°-30'-14"	S6	90°-17'-11"		
L7	92°-04'-08"	S7	90°-17'-11"		

LONG CHORD LAYOUT

ALL BENT CONTROL LINES AND END BENT FILL FACE LINES ARE PLACED RADIALLY TO -L-

HORIZONTAL CURVE DATA -L-

PI Sta = 383+94.77 -L-
Δ = 51° 49' 22.8" (LT)
D = 0° 38' 11.8"
L = 8,140.34'
T = 4,372.40'
R = 9,000.00'
e = 2.5%

PROJECT NO. R-2633BB
BRUNSWICK/NEW HANOVER COUNTY
STATION: 353+32.50 -L-

SHEET 5 OF 5

NORTH CAROLINA PROFESSIONAL SEAL 18442 ENGINEER RICHARD LEON BOLLINGER JR.
5-29-2013

RS&H IMPROVING YOUR WORLD

RS&H Architects-Engineers-Planners, Inc.
8601 Six Forks Road, Suite 260
Raleigh, NC 27615
919-846-6701 FAX 919-846-9080
www.rsandh.com
North Carolina License Nos. 50073 * F-0483 * C-28

STATE OF NORTH CAROLINA
DEPARTMENT OF TRANSPORTATION
RALEIGH

GENERAL DRAWING
FOR BRIDGE ON US 17 (WILMINGTON BYPASS) OVER THE CAPE FEAR RIVER BETWEEN SR 1430 AND US 421 LEFT LANE

REVISIONS						SHEET NO.
NO.	BY:	DATE:	NO.	BY:	DATE:	S-26
1			3			TOTAL SHEETS
2			4			700

DRAWN BY : R. J. DECOLA DATE : 11/2011
CHECKED BY : R. BOLLINGER DATE : 02/2013
DESIGN ENGINEER OF RECORD : R. BOLLINGER DATE : 05/2013

BENCH MARKS: #93 RRS SET IN 16" CYPRESS, 494.49' RT OF -L- STA. 327+76.81, EL.= 3.61'; #94 RRS SET IN 12" CYPRESS, 111.80' RT OF -L- STA. 330+45.74, EL.= 2.67'; #96 RRS SET IN 24" TWIN OAK, 220.01' RT OF -L- STA. 388+45.43, EL.= 7.55'

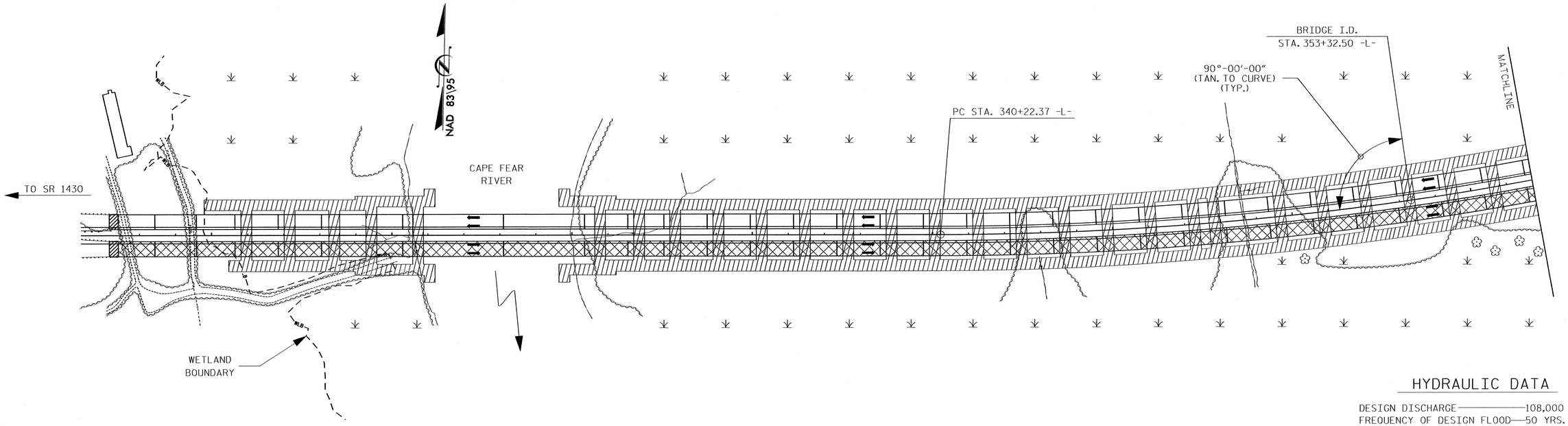

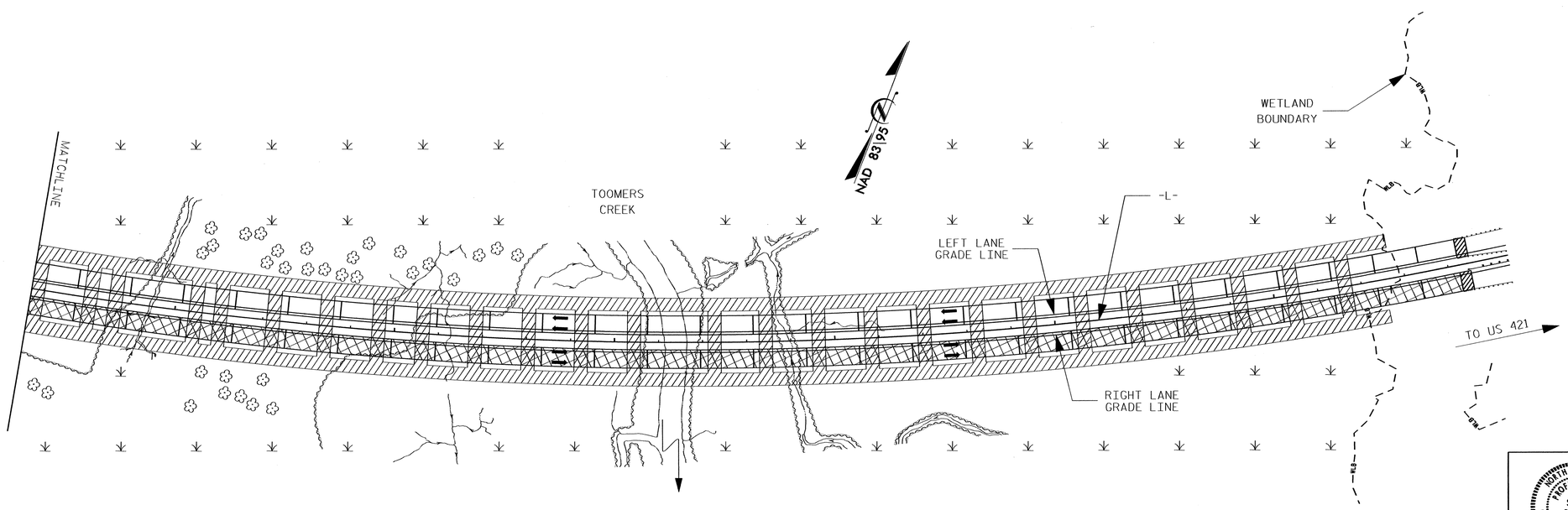

HYDRAULIC DATA

DESIGN DISCHARGE ——— 108,000 C.F.S.
FREQUENCY OF DESIGN FLOOD ——— 50 YRS.
DESIGN HIGHWATER ELEVATION ——— 6.81 FT.
DRAINAGE AREA ——— 7,060 SQ. MI.
BASE DISCHARGE (Q100) ——— 114,000 C.F.S.
BASE HIGHWATER ELEVATION ——— 8.26 FT.

OVERTOPPING FLOOD DATA

OVERTOPPING DISCHARGE ——— N/A
FREQUENCY OF OVERTOPPING FLOOD ——— > 500 YRS.
OVERTOPPING FLOOD ELEVATION ——— 31.46 FT.

GENERAL NOTES

FOR GENERAL DRAWING NOTES, SEE "GENERAL DRAWING NOTES" SHEET.

PROJECT NO. R-2633BB
BRUNSWICK/NEW HANOVER COUNTY
STATION: 353+32.50 -L-

LOCATION SKETCH

FOR UTILITY INFORMATION, SEE UTILITY PLANS AND SPECIAL PROVISIONS.

= WORK BRIDGE

DRAWN BY : R. J. DECOLA DATE : 10/2011
CHECKED BY : R. BOLLINGER DATE : 3/2013
DESIGN ENGINEER OF RECORD : R. BOLLINGER DATE : 5/2013

NORTH CAROLINA PROFESSIONAL SEAL 18442 ENGINEER RICHARD LEON BOLLINGER
8-21-2013

RS&H IMPROVING YOUR WORLD

RS&H Architects-Engineers-Planners, Inc.
8601 Six Forks Road, Suite 260
Raleigh, NC 27615
919-846-6701 FAX 919-846-9080
www.rsandh.com
North Carolina License No. 00672 * F-0493 * C-28

STATE OF NORTH CAROLINA
DEPARTMENT OF TRANSPORTATION
RALEIGH

GENERAL DRAWING

FOR BRIDGE ON US 17 (WILMINGTON BYPASS) OVER THE CAPE FEAR RIVER BETWEEN SR 1430 AND US 421 LEFT LANE

REVISIONS						
NO.	BY:	DATE:	NO.	BY:	DATE:	
1			3			
2			4			

SHEET NO. S-27
TOTAL SHEETS 700

GENERAL NOTES

ASSUMED LIVE LOAD = HL-93 OR ALTERNATIVE LOADING.

DESIGN WIND VELOCITY = 130 MPH.

THIS BRIDGE HAS BEEN DESIGNED IN ACCORDANCE WITH THE AASHTO LRFD BRIDGE DESIGN SPECIFICATIONS.

THIS BRIDGE IS LOCATED IN SEISMIC ZONE 1.

THIS BRIDGE HAS BEEN DESIGNED IN ACCORDANCE WITH "HEC 18 - EVALUATING SCOUR AT BRIDGES".

THIS BRIDGE HAS BEEN DESIGNED IN ACCORDANCE WITH AASHTO'S "GUIDE SPECIFICATION AND COMMENTARY FOR VESSEL COLLISION DESIGN OF HIGHWAY BRIDGES" USING METHOD I CRITERIA.

FOR SUBMITTAL OF WORKING DRAWINGS, SEE SPECIAL PROVISIONS.

FOR CRANE SAFETY, SEE SPECIAL PROVISIONS.

FOR OTHER DESIGN DATA AND GENERAL NOTES, SEE SHEET SN.

FOR EROSION CONTROL MEASURES SEE EROSION CONTROL PLANS.

FOR BRIDGE DECK RIDEABILITY AND GROOVING, SEE SPECIAL PROVISIONS.

FOR MASS CONCRETE AT BENT NOS. 5 THRU 8, SEE SPECIAL PROVISIONS.

THE CONTRACTOR WILL BE REQUIRED TO CONSTRUCT, MAINTAIN AND AFTERWARDS REMOVE A TEMPORARY ACCESS AT STATION 353+32.50 -L- FOR USE DURING CONSTRUCTION OF THE PROPOSED STRUCTURE.

FOR CONSTRUCTION, MAINTENANCE AND REMOVAL OF TEMPORARY ACCESS, SEE SPECIAL PROVISIONS.

FOR GROUT FOR STRUCTURES, SEE SPECIAL PROVISIONS.

FOR MAINTENANCE OF WATER TRAFFIC, SEE SPECIAL PROVISIONS.

FOR SECURING OF VESSELS, SEE SPECIAL PROVISIONS.

FOR WORK IN, OVER, OR ADJACENT TO NAVIGABLE WATERS, SEE SPECIAL PROVISIONS.

FOR VERTICAL CLEARANCE GAGES, SEE SPECIAL PROVISIONS.

FOR GIRDER BRACING REQUIREMENTS FOR DECK SLAB PLACEMENT, SEE SPECIAL PROVISIONS.

NEEDLE BEAMS WILL NOT BE ALLOWED UNLESS OTHERWISE CALLED FOR ON THE PLANS OR APPROVED BY THE ENGINEER.

THE CONTRACTOR SHALL PROVIDE INDEPENDENT ASSURANCE SAMPLES OF REINFORCING STEEL AS FOLLOWS: FOR PROJECTS REQUIRING UP TO 400 TONS OF REINFORCING STEEL, ONE 30 INCH SAMPLE OF EACH SIZE BAR USED, AND FOR PROJECTS REQUIRING OVER 400 TONS OF REINFORCING STEEL, TWO 30 INCH SAMPLES OF EACH SIZE BAR USED. THE BARS FROM WHICH THE SAMPLES ARE TAKEN MUST THEN BE SPLICED WITH REPLACEMENT BARS OF THE SIZE AND LENGTH OF THE SAMPLE, PLUS A MINIMUM LAP SPLICE OF THIRTY BAR DIAMETERS. PAYMENT FOR THE SAMPLES OF REINFORCING STEEL SHALL BE CONSIDERED INCIDENTAL TO VARIOUS PAY ITEMS.

THE COST OF THE MATERIALS, LABOR AND ANY INCIDENTAL ITEMS RELATED TO THE CONSTRUCTION, MAINTENANCE, AND REMOVAL OF TEMPORARY SUPPORTS AND STRONG-BACKS SHALL BE INCLUDED IN THE PAY ITEM "CONSTRUCTION, MAINTENANCE AND REMOVAL OF TEMPORARY ACCESS".

THE DECK CONCRETE FOR SPANS 1 THRU 5 AND 9 THRU 58 SHALL BE CLASS AA (NORMAL WEIGHT) CONCRETE.

THE DECK CONCRETE FOR SPANS 6 THRU 8 SHALL BE SAND LIGHTWEIGHT CONCRETE. FOR SAND LIGHTWEIGHT CONCRETE, SEE SPECIAL PROVISIONS.

CLASS AA (NORMAL WEIGHT) CONCRETE SHALL BE USED IN THE BENT DIAPHRAGMS AT BENTS 5 THRU 8. THE COST OF THIS CONCRETE SHALL BE INCLUDED IN THE PAY ITEM "REINFORCED CONCRETE DECK SLAB" (SAND LIGHTWEIGHT CONCRETE).

CLASS PRESTRESS +6000 (NORMAL WEIGHT) CONCRETE SHALL BE USED IN ALL CLOSURE SPLICE DIAPHRAGMS. THE MINIMUM COMPRESSIVE STRENGTH OF THE CLASS PRESTRESS +6000 CONCRETE SHALL BE 6500 PSI. THE COST OF THIS CONCRETE SHALL BE INCLUDED IN THE PAY ITEM "REINFORCED CONCRETE DECK SLAB" (SAND LIGHTWEIGHT CONCRETE).

PREVIOUSLY CAST CONCRETE IN A CONTINUOUS UNIT SHALL HAVE ATTAINED A MINIMUM COMPRESSIVE STRENGTH OF 3,000 PSI BEFORE ADDITIONAL CONCRETE IS CAST IN THE UNIT.

FOR EPOXY RESIN INJECTION, SEE SPECIAL PROVISIONS.

FOR TEMPORARY BENTS, SEE SPECIAL PROVISIONS.

FOR PLASTIC LUMBER FENDER BOARDS AT CHANNEL BENTS, SEE SPECIAL PROVISIONS.

GENERAL NOTES

STRUCTURAL STEEL DIAPHRAGM ERECTION SHALL BE COMPLETED BEFORE FALSEWORK OR FORMS ARE PLACED ON THE GIRDERS.

FOR UTILITY INFORMATION, SEE UTILITY PLANS AND SPECIAL PROVISIONS.

FOR FALSEWORK AND FORMWORK, SEE SPECIAL PROVISIONS.

REMOVABLE FORMS ARE TO BE USED IN SPAN 6 THROUGH SPAN 8.

ALL FALSEWORK AND FORMS FOR THE CAST-IN-PLACE DECK SLAB CONTINUOUS UNIT SHALL REMAIN IN PLACE UNTIL THE ENTIRE UNIT IS CAST AND CURED.

THE EXACT LOCATION, AND COMPLETE DESCRIPTION OF ALL INSERTS SHALL BE SHOWN ON WORKING DRAWINGS AND SUBMITTED TO THE DEPARTMENT FOR APPROVAL PRIOR TO THE CASTING OF THE CONCRETE MEMBER.

THE INSTALLATION, STRESSING AND GROUTING OF POST-TENSIONING TENDONS SHALL BE SUPERVISED, PERFORMED AND INSPECTED BY PERSONNEL WITH QUALIFICATIONS AND EXPERIENCE AS DESCRIBED IN APPENDIX B OF THE "POST-TENSIONING TENDON INSTALLATION AND GROUTING MANUAL" PUBLISHED BY THE FEDERAL HIGHWAY ADMINISTRATION. DOCUMENTATION OF THE QUALIFICATIONS AND EXPERIENCE SHALL BE SUBMITTED TO THE ENGINEER FOR APPROVAL.

FOR PLACING LOAD ON STRUCTURE MEMBERS, SEE SPECIAL PROVISIONS.

FOR ANCHOR BOLTS, SEE SPECIAL PROVISIONS.

FOR NAVIGATIONAL CLEARANCE VERIFICATION AND WATERWAY INSPECTION, SEE SPECIAL PROVISION.

CORROSION PROTECTION

FOR CORROSION PROTECTION OF BRIDGE, SEE SPECIAL PROVISIONS.

THIS STRUCTURE CONTAINS THE NECESSARY CORROSION PROTECTION REQUIRED FOR A CORROSIVE SITE.

PRESTRESSED CONCRETE GIRDERS ARE DESIGNED FOR 0 PSI TENSION IN THE PRECOMPRESSED TENSILE ZONE UNDER ALL LOADING CONDITIONS.

ALL BAR SUPPORTS USED IN THE BARRIER RAIL, DECK, BENT CAPS, COLUMNS, PILE CAPS, FOOTINGS AND ALL INCIDENTAL REINFORCING STEEL SHALL BE EPOXY COATED IN ACCORDANCE WITH THE STANDARD SPECIFICATIONS.

ALL INSERTS AND MISCELLANEOUS REINFORCING STEEL EMBEDDED IN CAST-IN-PLACE CONCRETE SHALL BE CORROSION PROTECTED. INSERTS MAY BE HOT DIP GALVANIZED OR OR EPOXY COATED. REINFORCING STEEL SHALL BE EPOXY COATED. ELECTROPLATING WILL NOT BE ALLOWED.

PRESTRESSED CONCRETE (GIRDERS, PRECAST DECK PANELS, PILES) SHALL CONTAIN CALCIUM NITRITE CORROSION INHIBITOR. FOR CALCIUM NITRITE CORROSION INHIBITOR, SEE STANDARD SPECIFICATIONS.

CLASS AA CONCRETE SHALL BE USED IN ALL CAST-CAST-IN PLACE COLUMNS, BENT CAPS, PILE CAPS, AND FOOTINGS, AND SHALL CONTAIN CALCIUM NITRITE CORROSION INHIBITOR. FOR CALCIUM NITRITE CORROSION INHIBITOR, SEE STANDARD SPECIFICATIONS.

THE CLASS AA CONCRETE IN THE BRIDGE DECK SHALL CONTAIN FLY ASH OR GROUND GRANULATED BLAST FURNACE SLAG AT THE SUBSTITUTION RATE SPECIFIED IN ARTICLE 1024-1 AND IN ACCORDANCE WITH ARTICLES 1024-5 AND 1024-6 OF THE STANDARD SPECIFICATIONS. NO PAYMENT WILL BE MADE FOR THIS SUBSTITUTION AS IT IS CONSIDERED INCIDENTAL TO THE COST OF THE REINFORCED CONCRETE DECK SLAB.

THE CONCRETE IN THE COLUMNS, BENT CAPS, FOOTINGS AND PILES OF ALL BENTS SHALL CONTAIN SILICA FUME. SILICA FUME SHALL BE SUBSTITUTED FOR 5% OF THE PORTLAND CEMENT BY WEIGHT. IF THE OPTION OF ARTICLE 1024-1 OF THE STANDARD SPECIFICATIONS TO PARTIALLY SUBSTITUTE CLASS F FLY ASH FOR PORTLAND CEMENT IS EXERCISED, THEN THE RATE FO FLY ASH SUBSTITUTION SHALL BE REDUCED TO 1.0 LB OF FLY ASH PER 1.0 LB. OF CEMENT NO PAYMENT WILL BE MADE FOR THIS SUBSTITUTION AS IT IS CONSIDERED INCIDENTAL TO THE VARIOUS PAY ITEMS.

ALL METALLIZED SURFACES SHALL RECEIVE A SEAL COATING AS SPECIFIED IN THE SPECIAL PROVISION FOR THERMAL SPRAYED COATINGS (METALIZATION).

PROJECT NO. R-2633BB

BRUNSWICK/NEW HANOVER COUNTY

STATION: 353+32.50 -L-

DRAWN BY :	JML	DATE :	10/2012
CHECKED BY :	R. BOLLINGER	DATE :	3/2013
DESIGN ENGINEER OF RECORD :	R. BOLLINGER	DATE :	5/2013

NORTH CAROLINA PROFESSIONAL SEAL 18442 ENGINEER RICHARD LEON BOLLINGER
8-21-2013

RS&H IMPROVING YOUR WORLD

RS&H Architects-Engineers-Planners, Inc.
8601 Six Forks Road, Suite 260
Raleigh, NC 27615
919-846-6701 FAX 919-846-9080
www.rsandh.com
North Carolina License Nos. 50973 * F-0493 * C-28

STATE OF NORTH CAROLINA
DEPARTMENT OF TRANSPORTATION
RALEIGH

GENERAL DRAWING

NOTES

LEFT LANE

REVISIONS						SHEET NO.
NO.	BY:	DATE:	NO.	BY:	DATE:	S-28
1			3			TOTAL SHEETS
2			4			700

TOTAL BILL OF MATERIAL

	CONSTRUCTION, MAINTENANCE & REMOVAL OF TEMP. ACCESS AT STA. 353+32.50 -L-	PDA TESTING	REINFORCED CONCRETE DECK SLAB	REINFORCED CONCRETE DECK SLAB (SAND LIGHT WEIGHT CONC.)	GROOVING BRIDGE FLOORS	CLASS AA CONCRETE	BRIDGE APPROACH SLABS	EPOXY COATED REINFORCING STEEL	EPOXY COATED SPIRAL COLUMN REINFORCING STEEL	78" PRESTRESSED CONC. GIRDERS		78" POST-TENSIONED PRESTRESSED CONC. GIRDERS		POST TENSIONING TENDONS	16" PRESTRESSED CONCRETE PILES		24" PRESTRESSED CONCRETE PILES		30" VOIDED PRESTRESSED CONCRETE PILES	
	LUMP SUM	EA.	SQ. FT.	SQ. FT.	SQ. FT.	CU. YD.	LUMP SUM	LBS.	LBS.	NO.	LIN. FT.	NO.	LIN. FT.	LUMP SUM	NO.	LIN. FT.	NO.	LIN. FT.	NO.	LIN. FT.
SUPERSTRUCTURE			284,603	32,303	280,510		LUMP SUM			220	25,542.7	25	3,605							
END BENT NO.1						60.2		9,438							8	480				
BENT NO.1		1				139.2		30,837	1,969								8	280		
BENT NO.2						149.2		33,163	2,526								8	280		
BENT NO.3		1				200.7		43,545	3,472										8	440
BENT NO.4						206.3		44,930	3,762										8	680
BENT NO.5						416.8		73,387											12	1,080
BENT NO.6		1				673.2		119,301											1	90
BENT NO.7		1				816.4		132,289												
BENT NO.8		1				688.6		122,220												
BENT NO.9		1				201.7		40,943	3,528										8	680
BENT NO.10						197.9		40,093	3,331										8	720
BENT NO.11						166.6		38,971	2,725										8	720
BENT NO.12						162.5		37,809	2,493										8	760
BENT NO.13						157.8		36,449	2,277										8	760
BENT NO.14		1				128.4		29,946	1,750								8	720		
BENT NO.15						125.7		29,202	1,576								8	600		
BENT NO.16						123.7		28,630	1,452								8	600		
BENT NO.17						122.3		24,527	1,365								8	600		
BENT NO.18						121.7		24,413	1,328								8	640		
BENT NO.19						120.9		24,272	1,278								8	640		
BENT NO.20						110.1		22,839	1,272								8	720		
BENT NO.21						109.8		22,783	1,250								8	720		
BENT NO.22						109.4		22,726	1,231								8	720		
BENT NO.23						110.0		22,825	1,267								8	760		
BENT NO.24		1				112.3		22,479	1,216										8	560
BENT NO.25						109.7		21,998	1,050										8	560
BENT NO.26						108.4		21,757	971										8	600
BENT NO.27						108.1		21,700	953										8	560
BENT NO.28						110.0		22,069	1,076										8	600
BENT NO.29						110.2		22,093	1,084										8	680
BENT NO.30						109.8		22,026	1,064										8	680
BENT NO.31		1				106.4		22,173	1,042								8	680		
BENT NO.32						106.5		22,188	1,049								8	560		

PROJECT NO. R-2633BB

BRUNSWICK/NEW HANOVER COUNTY

STATION: 353+32.50 -L-

SHEET 1 OF 4

DRAWN BY : SMK, JML, MKO DATE : 3/2013

CHECKED BY : JMR DATE : 3/2013

DESIGN ENGINEER OF RECORD : R. BOLLINGER DATE : 5/2013

NORTH CAROLINA PROFESSIONAL SEAL 18442 ENGINEER RICHARD LEON BOLLINGER, III

5-24-2013

RS&H IMPROVING YOUR WORLD

RS&H Architects-Engineers-Planners, Inc.
8601 Six Forks Road, Suite 260
Raleigh, NC 27615
919-846-6701 FAX 919-846-9080
www.rsandh.com
North Carolina License Nos. 50073 * F-0493 * C-28

NORTH CAROLINA PROFESSIONAL SEAL 22072 ENGINEER JOHN ARTHUR DILWORTH

5-29-13

WETHERILL ENGINEERING

TRANSPORTATION PLANNING/DESIGN
BRIDGE/STRUCTURE DESIGN
CIVIL/SITE DESIGN - GS/GPS
CONSTRUCTION OBSERVATION

559 Jones Franklin Rd. Suite 164
Raleigh, N.C. 27606
Bus: 919 851 8077
Fax: 919 851 8107
LICENSE NO. F-0377

STATE OF NORTH CAROLINA
DEPARTMENT OF TRANSPORTATION
RALEIGH

GENERAL DRAWING

TOTAL BILL OF MATERIAL

LEFT LANE

REVISIONS						SHEET NO.
NO.	BY:	DATE:	NO.	BY:	DATE:	S-29
1			3			TOTAL SHEETS
2			4			700

TOTAL BILL OF MATERIAL

	36" VOIDED PRESTRESSED CONCRETE PILES		PREDRILLING FOR PILES	PILE REDRIVES	VERTICAL CONCRETE BARRIER RAIL	RIP RAP, CLASS B	RIP RAP, CLASS II (2'-0" THICK)	GEOTEXTILE FOR DRAINAGE	ELASTOMERIC BEARINGS	EXPANSION JOINT SEALS	MODULAR EXPANSION JOINT SEALS	STRUCTURE DRAINAGE SYSTEM AT STA. 353+32.50 -L-	PLASTIC LUMBER FENDER BOARDS @ BENT 7
	NO.	LIN. FT.	LIN. FT.	EA.	LIN. FT.	TONS	TONS	SQ. YDS.	LUMP SUM	LUMP SUM	LUMP SUM	LUMP SUM	LUMP SUM
SUPERSTRUCTURE					14,363.3				LUMP SUM	LUMP SUM	LUMP SUM	LUMP SUM	LUMP SUM
END BENT NO.1				3			2060	2290					
BENT NO.1				4									
BENT NO.2				4									
BENT NO.3				4									
BENT NO.4				4									
BENT NO.5				6		5							
BENT NO.6	28	2,464		14									
BENT NO.7	36	3,204		18									
BENT NO.8	28	2,464		14									
BENT NO.9				4		5							
BENT NO.10				4									
BENT NO.11				4									
BENT NO.12				4									
BENT NO.13				4									
BENT NO.14				4									
BENT NO.15				4									
BENT NO.16				4									
BENT NO.17				4									
BENT NO.18				4									
BENT NO.19				4									
BENT NO.20				4									
BENT NO.21				4									
BENT NO.22				4									
BENT NO.23				4									
BENT NO.24				4									
BENT NO.25				4									
BENT NO.26				4									
BENT NO.27				4									
BENT NO.28				4									
BENT NO.29				4									
BENT NO.30				4									
BENT NO.31				4									
BENT NO.32				4									

PROJECT NO. R-2633BB

BRUNSWICK/NEW HANOVER COUNTY

STATION: 353+32.50 -L-

SHEET 2 OF 4

DRAWN BY : SMK, JML, MKO DATE : 3/2013

CHECKED BY : JMR DATE : 3/2013

DESIGN ENGINEER OF RECORD : R. BOLLINGER DATE : 5/2013

NORTH CAROLINA PROFESSIONAL SEAL 18442 ENGINEER RICHARD LEON BOLLINGER

7-01-2013

RS&H IMPROVING YOUR WORLD

RS&H Architects-Engineers-Planners, Inc.
8601 Six Forks Road, Suite 260
Raleigh, NC 27615
919-846-5701 FAX 919-846-9080
www.rsandh.com
North Carolina License Nos. 50073 * F-0493 * C-28

NORTH CAROLINA PROFESSIONAL SEAL 22072 ENGINEER JOHN ARTHUR DILWORTH

7-08-13

WETHERILL ENGINEERING

TRANSPORTATION PLANNING/DESIGN
BRIDGE/STRUCTURE DESIGN
CIVIL/SITE DESIGN - GIS/GPS
CONSTRUCTION OBSERVATION

559 Jones Franklin Rd. Suite 164
Raleigh, N.C. 27606
Bus: 919 851 8077
Fax: 919 851 6197
LICENSE NO. F-0377

STATE OF NORTH CAROLINA
DEPARTMENT OF TRANSPORTATION
RALEIGH

GENERAL DRAWING

TOTAL BILL OF MATERIAL

LEFT LANE

REVISIONS							
NO.	BY:	DATE:	NO.	BY:	DATE:	SHEET NO.	S-30
1			3			TOTAL SHEETS	700
2			4				

TOTAL BILL OF MATERIAL

	CONSTRUCTION, MAINTENANCE & REMOVAL OF TEMP. ACCESS AT STA. 353+32.50 -L-	PDA TESTING	REINFORCED CONCRETE DECK SLAB	REINFORCED CONCRETE DECK SLAB (SAND LIGHT WEIGHT CONC.)	GROOVING BRIDGE FLOORS	CLASS AA CONCRETE	BRIDGE APPROACH SLABS	EPOXY COATED REINFORCING STEEL	EPOXY COATED SPIRAL COLUMN REINFORCING STEEL	78" PRESTRESSED CONC. GIRDERS		78" POST-TENSIONED PRESTRESSED CONC. GIRDERS		POST TENSIONING TENDONS	16" PRESTRESSED CONCRETE PILES		24" PRESTRESSED CONCRETE PILES		30" VOIDED PRESTRESSED CONCRETE PILES	
	LUMP SUM	EA.	SQ. FT.	SQ. FT.	SQ. FT.	CU. YD.	LUMP SUM	LBS.	LBS.	NO.	LIN. FT.	NO.	LIN. FT.	LUMP SUM	NO.	LIN. FT.	NO.	LIN. FT.	NO.	LIN. FT.
BENT NO.33						106.7		22,216	1,058								8	600		
BENT NO.34						106.3		22,159	1,036								8	560		
BENT NO.35						106.0		22,088	1,015								8	520		
BENT NO.36						105.7		22,032	996								8	520		
BENT NO.37						105.3		21,975	975								8	520		
BENT NO.38						106.0		22,088	1,015								8	480		
BENT NO.39						104.7		21,862	935								8	480		
BENT NO.40		1				104.4		21,805	917								8	480		
BENT NO.41						104.0		21,734	895								8	440		
BENT NO.42						103.7		21,677	873								8	440		
BENT NO.43						104.3		21,791	911								8	440		
BENT NO.44		1				39.7		5,367											6	480
BENT NO.45						39.7		5,367											6	480
BENT NO.46						39.7		5,367											6	480
BENT NO.47						39.7		5,367											6	450
BENT NO.48		1				39.7		5,367											6	450
BENT NO.49						39.7		5,367											6	450
BENT NO.50						39.7		5,367											6	480
BENT NO.51						39.7		5,367											6	480
BENT NO.52						39.7		5,367											6	630
BENT NO.53						39.7		5,367											6	600
BENT NO.54		1				39.7		5,367											6	540
BENT NO.55						39.7		5,367											6	540
BENT NO.56						39.7		5,367											6	480
BENT NO.57						39.7		5,367											6	480
END BENT NO.2						60.8		9,485							8	560				
CONTINGENCY		5																		
TOTAL	LUMP SUM	18	284,603	32,303	280,510	8174.2	LUMP SUM	1,580,071	59,983	220	25,542.7	25	3,605	LUMP SUM	16	1,040	200	14,000	208	17,100

PROJECT NO. R-2633BB

BRUNSWICK/NEW HANOVER COUNTY

STATION: 353+32.50 -L-

SHEET 3 OF 4

NORTH CAROLINA PROFESSIONAL SEAL 18442 ENGINEER RICHARD LEON BOLLINGER 5-29-2013

NORTH CAROLINA PROFESSIONAL SEAL 22072 ENGINEER JOHN ARTHUR DINWORTH 5-29-13

RS&H IMPROVING YOUR WORLD

RS&H Architects-Engineers-Planners, Inc.
8601 Six Forks Road, Suite 260
Raleigh, NC 27615
919-846-6701 FAX 919-846-9080
www.rsandh.com
North Carolina License Nos. 50073 * F-0493 * C-28

WETHERILL ENGINEERING
TRANSPORTATION PLANNING/DESIGN
BRIDGE/STRUCTURE DESIGN
CIVIL/SITE DESIGN ~ GIS/GPS
CONSTRUCTION OBSERVATION
559 Jones Franklin Rd. Suite 164
Raleigh, N.C. 27606
Bus: 919 851 9077
Fax: 919 851 6107
LICENSE NO. F-0377

STATE OF NORTH CAROLINA
DEPARTMENT OF TRANSPORTATION
RALEIGH

GENERAL DRAWING

TOTAL BILL OF MATERIAL

LEFT LANE

REVISIONS						SHEET NO.
NO.	BY:	DATE:	NO.	BY:	DATE:	S-31
1			3			TOTAL SHEETS
2			4			700

DRAWN BY : SMK, JML, MKO DATE : 3/2013
CHECKED BY : JMR DATE : 3/2013
DESIGN ENGINEER OF RECORD : R. BOLLINGER DATE : 5/2013

	36" VOIDED PRESTRESSED CONCRETE PILES		PREDRILLING FOR PILES	PILE REDRIVES	VERTICAL CONCRETE BARRIER RAIL	RIP RAP, CLASS B	RIP RAP, CLASS II (2'-0" THICK)	GEOTEXTILE FOR DRAINAGE	ELASTOMERIC BEARINGS	EXPANSION JOINT SEALS	MODULAR EXPANSION JOINT SEALS	STRUCTURE DRAINAGE SYSTEM AT STA. 353+32.50 -L-	PLASTIC LUMBER FENDER BOARDS @ BENT 7
	NO.	LIN. FT.	LIN. FT.	EA.	LIN. FT.	TONS	TONS	SQ. YDS.	LUMP SUM	LUMP SUM	LUMP SUM	LUMP SUM	LUMP SUM
BENT NO.33				4									
BENT NO.34				4									
BENT NO.35				4									
BENT NO.36				4									
BENT NO.37				4									
BENT NO.38				4									
BENT NO.39				4									
BENT NO.40				4									
BENT NO.41				4									
BENT NO.42				4									
BENT NO.43				4									
BENT NO.44				3									
BENT NO.45				3									
BENT NO.46				3									
BENT NO.47				3									
BENT NO.48				3									
BENT NO.49				3									
BENT NO.50				3									
BENT NO.51				3									
BENT NO.52				3									
BENT NO.53				3									
BENT NO.54				3									
BENT NO.55				3									
BENT NO.56				3									
BENT NO.57				3									
END BENT NO.2				3			775	865					
CONTINGENCY			14,000										
TOTAL	92	8,132	14,000	256	14,363.3	10	2,835	3,155	LUMP SUM	LUMP SUM	LUMP SUM	LUMP SUM	LUMP SUM

PROJECT NO. R-2633BB

BRUNSWICK/NEW HANOVER COUNTY

STATION: 353+32.50 -L-

SHEET 4 OF 4

DRAWN BY : SMK, JML, MKO DATE : 3/2013

CHECKED BY : JMR DATE : 3/2013

DESIGN ENGINEER OF RECORD : R. BOLLINGER DATE : 5/2013

NORTH CAROLINA PROFESSIONAL SEAL 18442 ENGINEER RICHARD LEONI BOLLINGER

7-01-2013

RS&H IMPROVING YOUR WORLD

RS&H Architects-Engineers-Planners, Inc.
8601 Six Forks Road, Suite 260
Raleigh, NC 27615
919-846-6701 FAX 919-846-9080
www.rsandh.com
North Carolina License Nos. 50073 * F-0493 * C-28

NORTH CAROLINA PROFESSIONAL SEAL 22072 ENGINEER JOHN ARTHUR DINWORTH

7-08-13

WETHERILL ENGINEERING

TRANSPORTATION PLANNING/DESIGN
BRIDGE/STRUCTURE DESIGN
CIVIL/SITE DESIGN - GIS/GPS
CONSTRUCTION OBSERVATION

559 Jones Franklin Rd. Suite 164
Raleigh, N.C. 27606
Bus: 919 851 8077
Fax: 919 851 8107
LICENSE NO. F-0377

STATE OF NORTH CAROLINA
DEPARTMENT OF TRANSPORTATION
RALEIGH

GENERAL DRAWING

TOTAL BILL OF MATERIAL

LEFT LANE

REVISIONS						SHEET NO.
NO.	BY:	DATE:	NO.	BY:	DATE:	S-32
1			3			TOTAL SHEETS
2			4			700

LOAD AND RESISTANCE FACTOR RATING (LRFR) SUMMARY FOR PRESTRESSED CONCRETE GIRDERS

LEVEL		VEHICLE	WEIGHT (W) (TONS)	CONTROLLING LOAD RATING (#)	MINIMUM RATING FACTORS (RF)	TONS = W × RF	STRENGTH I LIMIT STATE											SERVICE III LIMIT STATE						COMMENT NUMBER
								MOMENT					SHEAR						MOMENT					
							LIVE-LOAD FACTORS (γ_{LL})	DISTRIBUTION FACTORS (DF)	RATING FACTOR	SPAN	GIRDER LOCATION	DISTANCE FROM LEFT END OF SPAN (ft)	DISTRIBUTION FACTORS (DF)	RATING FACTOR	SPAN	GIRDER LOCATION	DISTANCE FROM LEFT END OF SPAN (ft)	LIVE-LOAD FACTORS (γ_{LL})	DISTRIBUTION FACTORS (DF)	RATING FACTOR	SPAN	GIRDER LOCATION	DISTANCE FROM LEFT END OF SPAN (ft)	
DESIGN LOAD RATING		HL-93 (INVENTORY)	N/A	1	1.08	--	1.75	1.07	1.52	2	ER	53	1.08	1.28	1	I	21	0.80	1.07	1.08	2	ER	53	
		HL-93 (OPERATING)	N/A		1.70	--	1.35	1.07	1.97	2	ER	53	1.08	1.70	1	I	21	N/A	--	--	--	--	--	
		HS-20 (INVENTORY)	36.000	2	1.54	55	1.75	1.07	2.16	2	ER	53	1.08	1.73	1	I	21	0.80	1.07	1.54	2	ER	53	
		HS-20 (OPERATING)	36.000		2.28	82	1.35	1.07	2.80	2	ER	53	1.08	2.28	1	I	21	N/A	--	--	--	--	--	
LEGAL LOAD RATING	SINGLE VEHICLE (SV)	SH	12.500		4.00	50	1.40	1.07	7.02	2	ER	53	1.08	6.05	1	I	21	0.80	1.07	4.00	2	ER	53	
		S3C	21.500		2.33	50	1.40	1.07	4.10	2	ER	53	1.08	3.49	1	I	21	0.80	1.07	2.33	2	ER	53	
		S3A	22.750		2.21	50	1.40	1.07	3.88	2	ER	53	1.08	3.30	1	I	21	0.80	1.07	2.21	2	ER	53	
		S4A	26.750		1.93	52	1.40	1.07	3.39	2	ER	53	1.08	2.86	1	I	21	0.80	1.07	1.93	2	ER	53	
		S5A	30.500		1.70	52	1.40	1.07	2.99	2	ER	53	1.08	2.58	2	I	85	0.80	1.07	1.70	2	ER	53	
		S6A	34.500		1.54	53	1.40	1.07	2.70	2	ER	53	1.08	2.32	1	I	21	0.80	1.07	1.54	2	ER	53	
		S7B	38.500		1.39	54	1.40	1.07	2.45	2	ER	53	1.08	2.14	1	I	21	0.80	1.07	1.39	2	ER	53	
		S7A	40.000	3	1.37	55	1.40	1.07	2.40	2	ER	53	1.08	2.16	2	I	21	0.80	1.07	1.37	2	ER	53	
	TRUCK TRACTOR SEMI-TRAILER (TTST)	T4A	28.250		1.89	53	1.40	1.07	3.32	2	ER	53	1.08	2.76	1	I	21	0.80	1.07	1.89	2	ER	53	
		T5B	32.000		1.66	53	1.40	1.07	2.92	2	ER	53	1.08	2.59	1	I	21	0.80	1.07	1.66	2	ER	53	
		T6A	36.000		1.51	54	1.40	1.07	2.65	2	ER	53	1.08	2.34	2	I	21	0.80	1.07	1.51	2	ER	53	
		T7A	40.000		1.39	56	1.40	1.07	2.44	2	ER	53	1.08	2.16	2	I	21	0.80	1.07	1.39	2	ER	53	
		T7B	40.000		1.46	58	1.40	1.07	2.57	2	ER	53	1.08	2.04	2	I	21	0.80	1.07	1.46	2	ER	53	

LOAD FACTORS:

DESIGN LOAD RATING FACTORS	LIMIT STATE	γ_{DC}	γ_{DW}
	STRENGTH I	1.25	1.50
	SERVICE III	1.00	1.00

NOTES:

MINIMUM RATING FACTORS ARE BASED ON THE STRENGTH I AND SERVICE III LIMIT STATES.

ALLOWABLE STRESSES FOR SERVICE III LIMIT STATE ARE AS REQUIRED FOR DESIGN.

COMMENTS:

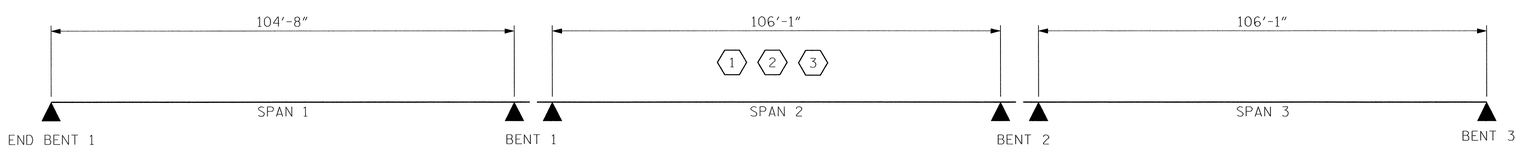

LRFR SUMMARY

SPAN LENGTHS ARE BEARING TO BEARING

SECTION PROPERTIES 78" MODIFIED BULB TEE

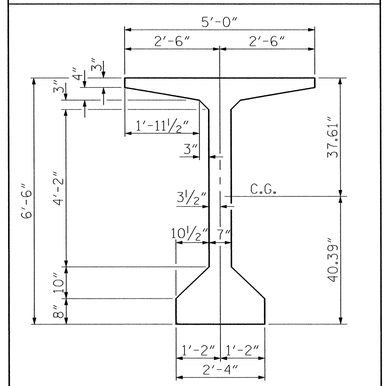

AREA = 1105 SQ. IN. = 7.6736 SQ. FT.
WEIGHT = 7.6736 X 150 = 1151.0 LBS/FT.
IXX = 935547 IN.4
IYY = 99295 IN.4
CT = 37.61 IN.
CB = 40.39 IN.
ST = 24875 IN.3
SB = 23163 IN.3

(#) CONTROLLING LOAD RATING
(1) DESIGN LOAD RATING (HL-93)
(2) DESIGN LOAD RATING (HS-20)
(3) LEGAL LOAD RATING **
** SEE CHART FOR VEHICLE TYPE
GIRDER LOCATION
I - INTERIOR GIRDER
EL - EXTERIOR LEFT GIRDER
ER - EXTERIOR RIGHT GIRDER

PROJECT NO. R-2633BB

BRUNSWICK/NEWHANOVER COUNTY

STATION: 353+32.50 -L-

SHEET 1 OF 10

DRAWN BY : SMK, JML DATE : 04/2012
CHECKED BY : RLB DATE : 03/2013
DESIGN ENGINEER OF RECORD : R. BOLLINGER DATE : 05/2013

NORTH CAROLINA PROFESSIONAL SEAL 18442 ENGINEER RICHARD LEON BOLLINGER JR.
5-29-2013

RS&H IMPROVING YOUR WORLD

RS&H Architects-Engineers-Planners, Inc.
8601 Six Forks Road, Suite 260
Raleigh, NC 27615
919-846-6701 FAX 919-846-9080
www.rsandh.com
North Carolina License Nos. 50073 * F-0493 * C-28

STATE OF NORTH CAROLINA
DEPARTMENT OF TRANSPORTATION
RALEIGH

STANDARD
LRFR SUMMARY FOR PRESTRESSED CONCRETE GIRDERS
(INTERSTATE TRAFFIC)
LEFT LANE SPANS 1-3

REVISIONS						SHEET NO.
NO.	BY:	DATE:	NO.	BY:	DATE:	S-33
1			3			TOTAL SHEETS
2			4			700

STD. NO. LRFR2

LOAD AND RESISTANCE FACTOR RATING (LRFR) SUMMARY FOR PRESTRESSED CONCRETE GIRDERS

LEVEL		VEHICLE	WEIGHT (W) (TONS)	CONTROLLING LOAD RATING (#)	MINIMUM RATING FACTORS (RF)	TONS = W × RF	STRENGTH I LIMIT STATE											SERVICE III LIMIT STATE						COMMENT NUMBER
								MOMENT					SHEAR						MOMENT					
							LIVE-LOAD FACTORS (γ_{LL})	DISTRIBUTION FACTORS (DF)	RATING FACTOR	SPAN	GIRDER LOCATION	DISTANCE FROM LEFT END OF SPAN (ft)	DISTRIBUTION FACTORS (DF)	RATING FACTOR	SPAN	GIRDER LOCATION	DISTANCE FROM LEFT END OF SPAN (ft)	LIVE-LOAD FACTORS (γ_{LL})	DISTRIBUTION FACTORS (DF)	RATING FACTOR	SPAN	GIRDER LOCATION	DISTANCE FROM LEFT END OF SPAN (ft)	
DESIGN LOAD RATING		HL-93 (INVENTORY)	N/A	1	1.21	--	1.75	1.05	1.61	4	ER	59	1.08	1.24	4	I	23	0.80	1.05	1.21	4	ER	59	
		HL-93 (OPERATING)	N/A		1.65	--	1.35	1.05	2.09	4	ER	59	1.08	1.65	4	I	23	N/A	--	--	--	--	--	
		HS-20 (INVENTORY)	36.000	2	1.76	63	1.75	1.05	2.36	4	ER	59	1.08	1.76	4	I	23	0.80	1.05	1.77	4	ER	59	
		HS-20 (OPERATING)	36.000		2.33	84	1.35	1.05	3.06	4	ER	59	1.08	2.33	4	I	23	N/A	--	--	--	--	--	
LEGAL LOAD RATING	SINGLE VEHICLE (SV)	SH	12.500		4.67	58	1.40	1.05	7.75	4	ER	59	1.08	6.59	4	I	23	0.80	1.05	4.67	4	ER	59	
		S3C	21.500		2.72	58	1.40	1.05	4.53	4	ER	59	1.08	3.70	4	I	23	0.80	1.05	2.72	4	ER	59	
		S3A	22.750		2.58	59	1.40	1.05	4.28	4	ER	59	1.08	3.50	4	I	23	0.80	1.05	2.58	4	ER	59	
		S4A	26.750		2.25	60	1.40	1.05	3.73	4	ER	59	1.08	2.88	4	I	23	0.80	1.05	2.25	4	ER	59	
		S5A	30.500		1.98	60	1.40	1.05	3.29	4	ER	59	1.08	2.57	4	I	23	0.80	1.05	1.98	4	ER	59	
		S6A	34.500		1.78	61	1.40	1.05	2.96	4	ER	59	1.08	2.32	4	I	23	0.80	1.05	1.78	4	ER	59	
		S7B	38.500		1.61	62	1.40	1.05	2.68	4	ER	59	1.08	2.14	4	I	23	0.80	1.05	1.61	4	ER	59	
		S7A	40.000	3	1.58	63	1.40	1.05	2.63	4	ER	59	1.08	2.10	4	I	23	0.80	1.05	1.58	4	ER	59	
	TRUCK TRACTOR SEMI-TRAILER (TTST)	T4A	28.250		2.19	62	1.40	1.05	3.64	4	ER	59	1.08	2.71	4	I	23	0.80	1.05	2.19	4	ER	59	
		T5B	32.000		1.93	62	1.40	1.05	3.20	4	ER	59	1.08	2.58	4	I	23	0.80	1.05	1.93	4	ER	59	
		T6A	36.000		1.75	63	1.40	1.05	2.90	4	ER	59	1.08	2.32	4	I	23	0.80	1.05	1.75	4	ER	59	
		T7A	40.000		1.61	64	1.40	1.05	2.67	4	ER	59	1.08	2.10	4	I	23	0.80	1.05	1.61	4	ER	59	
		T7B	40.000		1.68	67	1.40	1.05	2.79	4	ER	59	1.08	2.00	4	I	23	0.80	1.05	1.68	4	ER	59	

LOAD FACTORS:

DESIGN LOAD RATING FACTORS	LIMIT STATE	γ_{DC}	γ_{DW}
	STRENGTH I	1.25	1.50
	SERVICE III	1.00	1.00

NOTES:

MINIMUM RATING FACTORS ARE BASED ON THE STRENGTH I AND SERVICE III LIMIT STATES.

ALLOWABLE STRESSES FOR SERVICE III LIMIT STATE ARE AS REQUIRED FOR DESIGN.

COMMENTS:

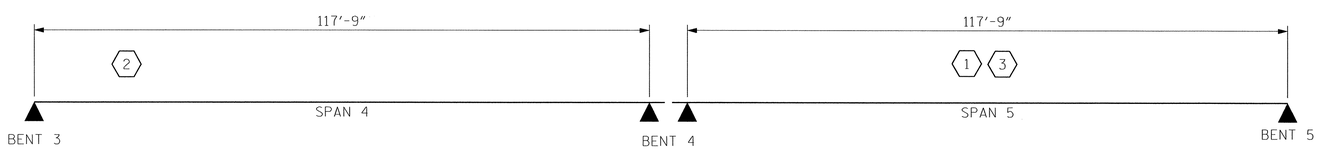

LRFR SUMMARY

SPAN LENGTHS ARE BEARING TO BEARING

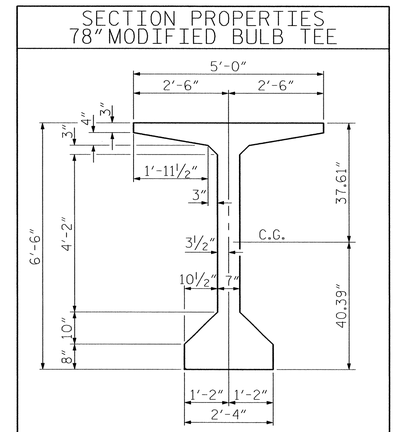

CONTROLLING LOAD RATING
1 DESIGN LOAD RATING (HL-93)
2 DESIGN LOAD RATING (HS-20)
3 LEGAL LOAD RATING **
** SEE CHART FOR VEHICLE TYPE
GIRDER LOCATION
I - INTERIOR GIRDER
EL - EXTERIOR LEFT GIRDER
ER - EXTERIOR RIGHT GIRDER

PROJECT NO. R-2633BB

BRUNSWICK/NEWHANOVER COUNTY

STATION: 353+32.50 -L-

SHEET 2 OF 10

NORTH CAROLINA PROFESSIONAL SEAL 18442 ENGINEER LEON BOLLINGER, JR.

5-29-2013

RS&H IMPROVING YOUR WORLD

RS&H Architects-Engineers-Planners, Inc.
8601 Six Forks Road, Suite 260
Raleigh, NC 27615
919-846-6701 FAX 919-846-9080
www.rsandh.com
North Carolina License Nos. 50073 * F-0483 * C-28

STATE OF NORTH CAROLINA
DEPARTMENT OF TRANSPORTATION
RALEIGH

STANDARD
LRFR SUMMARY FOR PRESTRESSED CONCRETE GIRDERS
(INTERSTATE TRAFFIC)
LEFT LANE SPANS 4-5

REVISIONS						SHEET NO.
NO.	BY:	DATE:	NO.	BY:	DATE:	S-34
1			3			TOTAL SHEETS
2			4			700

DRAWN BY : SMK, JML DATE : 04/2012
CHECKED BY : RLB DATE : 03/2013
DESIGN ENGINEER OF RECORD : R. BOLLINGER DATE : 05/2013

STD. NO. LRFR2

LOAD AND RESISTANCE FACTOR RATING (LRFR) SUMMARY FOR PRESTRESSED CONCRETE GIRDERS

LEVEL		VEHICLE	WEIGHT (W) (TONS)	CONTROLLING LOAD RATING (#)	MINIMUM RATING FACTORS (RF)	TONS = W × RF	STRENGTH I LIMIT STATE											SERVICE III LIMIT STATE						COMMENT NUMBER
								MOMENT					SHEAR						MOMENT					
							LIVE-LOAD FACTORS (γ_{LL})	DISTRIBUTION FACTORS (DF)	RATING FACTOR	SPAN	GIRDER LOCATION	DISTANCE FROM LEFT END OF SPAN (ft)	DISTRIBUTION FACTORS (DF)	RATING FACTOR	SPAN	GIRDER LOCATION	DISTANCE FROM LEFT END OF SPAN (ft)	LIVE-LOAD FACTORS (γ_{LL})	DISTRIBUTION FACTORS (DF)	RATING FACTOR	SPAN	GIRDER LOCATION	DISTANCE FROM LEFT END OF SPAN (ft)	
DESIGN LOAD RATING		HL-93 (INVENTORY)	N/A	1	1.11	N/A	1.75	0.481	1.11	7	ER/EL	62.00	0.581	1.45	8	ER/EL	211.13	0.80	0.484	1.11	7	ER/EL	59.00	1
		HL-93 (OPERATING)	N/A		1.44	N/A	1.35	0.481	1.44	7	ER/EL	62.00	0.581	1.87	8	ER/EL	211.13	N/A	N/A	N/A	N/A	N/A	N/A	1,2
		HS-20 (INVENTORY)	36.000	2	1.78	64.04	1.75	0.593	1.79	7	ER/EL	62.00	0.596	2.22	8	ER/EL	211.13	0.80	0.513	1.78	7	ER/EL	0.00	1
		HS-20 (OPERATING)	36.000		2.31	83.30	1.35	0.593	2.31	7	ER/EL	62.00	0.596	2.88	8	ER/EL	211.13	N/A	N/A	N/A	N/A	N/A	N/A	1,2
LEGAL LOAD RATING	SINGLE VEHICLE (SV)	SH	12.500		4.42	55.19	1.40	0.901	5.46	7	ER/EL	62.00	0.658	7.38	8	ER/EL	211.13	0.80	0.908	4.42	7	ER/EL	59.00	1
		S3C	21.500		2.58	55.38	1.40	0.897	3.18	7	ER/EL	62.00	0.663	4.27	8	ER/EL	211.13	0.80	0.904	2.58	7	ER/EL	59.00	1
		S3A	22.750		2.42	55.01	1.40	0.903	2.99	7	ER/EL	62.00	0.661	4.06	8	ER/EL	211.13	0.80	0.910	2.42	7	ER/EL	59.00	1
		S4A	26.750		2.09	55.83	1.40	0.891	2.58	7	ER/EL	62.00	0.648	3.56	8	ER/EL	211.13	0.80	0.899	2.09	7	ER/EL	59.00	1
		S5A	30.500		1.86	56.73	1.40	0.877	2.30	7	ER/EL	62.00	0.650	3.18	8	ER/EL	211.13	0.80	0.885	1.86	7	ER/EL	59.00	1
		S6A	34.500		1.67	57.72	1.40	0.864	2.07	7	ER/EL	62.00	0.647	2.85	8	ER/EL	211.13	0.80	0.871	1.67	7	ER/EL	59.00	1
		S7B	38.500		1.53	58.75	1.40	0.850	1.89	7	ER/EL	62.00	0.640	2.63	8	ER/EL	211.13	0.80	0.857	1.53	7	ER/EL	59.00	1
		S7A	40.000	3	1.51	60.20	1.40	0.831	1.86	7	ER/EL	62.00	0.624	2.67	8	ER/EL	211.13	0.80	0.838	1.51	7	ER/EL	59.00	1
	TRUCK TRACTOR SEMI-TRAILER (TTST)	T4A	28.250		2.02	57.04	1.40	0.874	2.50	7	ER/EL	62.00	0.643	3.44	8	ER/EL	211.13	0.80	0.882	2.02	7	ER/EL	59.00	1
		T5B	32.000		1.81	57.92	1.40	0.860	2.24	7	ER/EL	62.00	0.636	3.17	8	ER/EL	211.13	0.80	0.868	1.81	7	ER/EL	59.00	1
		T6A	36.000		1.64	59.08	1.40	0.846	2.03	7	ER/EL	62.00	0.630	2.89	8	ER/EL	211.13	0.80	0.853	1.64	7	ER/EL	59.00	1
		T7A	40.000	3	1.51	60.24	1.40	0.831	1.86	7	ER/EL	62.00	0.625	2.66	8	ER/EL	211.13	0.80	0.838	1.51	7	ER/EL	59.00	1
		T7B	40.000	3	1.51	60.44	1.40	0.831	1.87	7	ER/EL	62.00	0.632	2.56	8	ER/EL	211.13	0.80	0.839	1.51	7	ER/EL	59.00	1

COMMENTS:

1. ALL DISTANCES ARE MEASURED FROM THE CENTERLINE BEARING AT THE LEFT END OF SPAN.
2. SERVICE III LIMIT STATE NOT APPLICABLE AT THE OPERATING LEVEL.

LOAD FACTORS:

DESIGN LOAD RATING FACTORS	LIMIT STATE	γ_{DC}	γ_{DW}
	STRENGTH I	1.25	1.50
	SERVICE III	1.00	1.00

NOTES:

MINIMUM RATING FACTORS ARE BASED ON THE STRENGTH I AND SERVICE III LIMIT STATES.

ALLOWABLE STRESSES FOR SERVICE III LIMIT STATE ARE AS REQUIRED FOR DESIGN.

THIS TABLE IS BASED ON THE REQUIREMENTS ESTABLISHED IN THE "STRUCTURE DESIGN MANUAL" (MAY 2012) AND THE "AASHTO MANUAL FOR BRIDGE EVALUATION" (2012).

THE FORCE EFFECTS DUE TO LIVE-LOADS USED IN DESIGN WERE DETERMINED USING INFLUENCE LINES CREATED FROM A 3-D FINITE ELEMENT (FE) MODEL. STAAD.PRO V8I (RELEASE 20.07.04.12) WAS USED TO CONSTRUCT THE FE MODEL. DIAPHRAGMS AND BEARING PADS WERE INCLUDED IN THE ANALYSIS.

THE LIVE-LOAD DISTRIBUTION FACTORS (LLDFS) PROVIDED IN THIS TABLE ARE FOR USE IN A 2-D LINE-GIRDER ANALYSIS. THEY REPRESENT THE LOAD DISTRIBUTION WHICH WILL CREATE A MAXIMUM FORCE EFFECT EQUAL TO THAT DETERMINED USING THE FE ANALYSIS. THEY ARE APPLICABLE FOR THE LOCATION AND FORCE EFFECT STATED IN THE TABLE, AND CAN NOT BE USED TO DETERMINE THE FORCE EFFECTS AT ANY OTHER LOCATION.

(#) CONTROLLING LOAD RATING

- (1) DESIGN LOAD RATING (HL-93)
- (2) DESIGN LOAD RATING (HS-20)
- (3) LEGAL LOAD RATING **
- ** SEE CHART FOR VEHICLE TYPE

GIRDER LOCATION

- I - INTERIOR GIRDER
- EL - EXTERIOR LEFT GIRDER
- ER - EXTERIOR RIGHT GIRDER

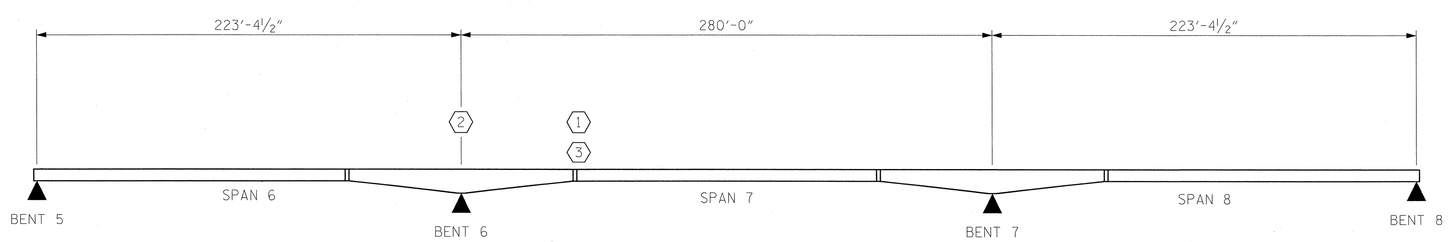

LRFR SUMMARY

PROJECT NO. R-2633BB

BRUNSWICK/NEW HANOVER COUNTY

STATION: 353+32.50 -L-

SHEET 3 OF 10

NORTH CAROLINA PROFESSIONAL SEAL 18591 ENGINEER ROBERT G. WOODRUFF

5/23/13

RS&H IMPROVING YOUR WORLD

RS&H Architects-Engineers-Planners, Inc.
8601 Six Forks Road, Suite 260
Raleigh, NC 27615
919-846-5701 FAX 919-846-9080
www.rsandh.com
North Carolina License Nos. 50073 * F-0493 * C-28

STATE OF NORTH CAROLINA
DEPARTMENT OF TRANSPORTATION
RALEIGH

STANDARD
LRFR SUMMARY FOR POST-TENSIONED CONCRETE GIRDERS
(INTERSTATE TRAFFIC)
LEFT LANE SPANS 6-8

REVISIONS						SHEET NO.
NO.	BY:	DATE:	NO.	BY:	DATE:	S-35
1			3			TOTAL SHEETS
2			4			700

DRAWN BY :	SOF	DATE :	11/2012
CHECKED BY :	GBL	DATE :	3/2013
DESIGN ENGINEER OF RECORD :	R. WOODRUFF	DATE :	5/2013

5/24/2013
$$$$$$$$$$$$$$$$$$$$$$$$DGN$$$$$$$$$$$$$$$$$$$$$$$$
1:53:33 PM

LOAD AND RESISTANCE FACTOR RATING (LRFR) SUMMARY FOR PRESTRESSED CONCRETE GIRDERS

LEVEL		VEHICLE	WEIGHT (W) (TONS)	CONTROLLING LOAD RATING (#)	MINIMUM RATING FACTORS (RF)	TONS = W × RF	STRENGTH I LIMIT STATE											SERVICE III LIMIT STATE						COMMENT NUMBER
								MOMENT					SHEAR						MOMENT					
							LIVE-LOAD FACTORS (γ_{LL})	DISTRIBUTION FACTORS (DF)	RATING FACTOR	SPAN	GIRDER LOCATION	DISTANCE FROM LEFT END OF SPAN (ft)	DISTRIBUTION FACTORS (DF)	RATING FACTOR	SPAN	GIRDER LOCATION	DISTANCE FROM LEFT END OF SPAN (ft)	LIVE-LOAD FACTORS (γ_{LL})	DISTRIBUTION FACTORS (DF)	RATING FACTOR	SPAN	GIRDER LOCATION	DISTANCE FROM LEFT END OF SPAN (ft)	
DESIGN LOAD RATING		HL-93 (INVENTORY)	N/A	1	1.11	--	1.75	1.10	1.52	10	ER	49	1.08	1.24	9	I	23	0.80	1.10	1.11	10	ER	49	
		HL-93 (OPERATING)	N/A		1.65	--	1.35	1.10	1.97	10	ER	49	1.08	1.65	9	I	23	N/A	--	--	--	--	--	
		HS-20 (INVENTORY)	36.000	2	1.55	56	1.75	1.10	2.12	10	ER	49	1.08	1.76	9	I	23	0.80	1.10	1.54	10	ER	49	
		HS-20 (OPERATING)	36.000		2.32	84	1.35	1.10	2.75	10	ER	49	1.08	2.32	9	I	23	N/A	--	--	--	--	--	
LEGAL LOAD RATING	SINGLE VEHICLE (SV)	SH	12.500		3.99	50	1.40	1.10	6.83	10	ER	49	1.08	6.56	9	I	23	0.80	1.10	3.97	10	ER	49	
		S3C	21.500		2.33	50	1.40	1.10	3.99	10	ER	49	1.08	3.69	9	I	23	0.80	1.10	2.32	10	ER	49	
		S3A	22.750		2.21	50	1.40	1.10	3.78	10	ER	49	1.08	3.49	9	I	23	0.80	1.10	2.20	10	ER	49	
		S4A	26.750		1.94	52	1.40	1.10	3.31	10	ER	49	1.08	2.87	9	I	23	0.80	1.10	1.93	10	ER	49	
		S5A	30.500		1.71	52	1.40	1.10	2.92	10	ER	49	1.08	2.56	9	I	23	0.80	1.10	1.70	10	ER	49	
		S6A	34.500		1.54	53	1.40	1.10	2.64	10	ER	49	1.08	2.31	9	I	23	0.80	1.10	1.54	10	ER	49	
		S7B	38.500		1.40	54	1.40	1.10	2.40	10	ER	49	1.08	2.13	9	I	23	0.80	1.10	1.39	10	ER	49	
		S7A	40.000	3	1.38	55	1.40	1.10	2.36	10	ER	49	1.08	2.10	9	I	23	0.80	1.10	1.37	10	ER	49	
	TRUCK TRACTOR SEMI-TRAILER (TTST)	T4A	28.250		1.90	54	1.40	1.10	3.24	10	ER	49	1.08	2.70	9	I	23	0.80	1.10	1.89	10	ER	49	
		T5B	32.000		1.67	53	1.40	1.10	2.85	10	ER	49	1.08	2.57	9	I	23	0.80	1.10	1.66	10	ER	49	
		T6A	36.000		1.52	55	1.40	1.10	2.60	10	ER	49	1.08	2.31	9	I	23	0.80	1.10	1.51	10	ER	49	
		T7A	40.000		1.40	56	1.40	1.10	2.40	10	ER	49	1.08	2.09	9	I	23	0.80	1.10	1.40	10	ER	49	
		T7B	40.000		1.48	59	1.40	1.10	2.54	10	ER	49	1.08	1.99	9	I	23	0.80	1.10	1.48	10	ER	49	

LOAD FACTORS:

DESIGN LOAD RATING FACTORS	LIMIT STATE	γ_{DC}	γ_{DW}
	STRENGTH I	1.25	1.50
	SERVICE III	1.00	1.00

NOTES:

MINIMUM RATING FACTORS ARE BASED ON THE STRENGTH I AND SERVICE III LIMIT STATES.

ALLOWABLE STRESSES FOR SERVICE III LIMIT STATE ARE AS REQUIRED FOR DESIGN.

COMMENTS:

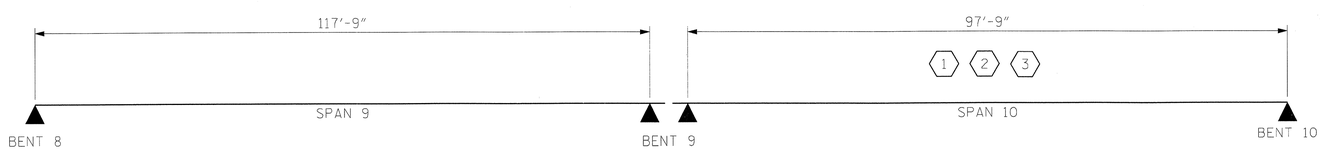

LRFR SUMMARY

SPAN LENGTHS ARE BEARING TO BEARING

SECTION PROPERTIES 78" MODIFIED BULB TEE

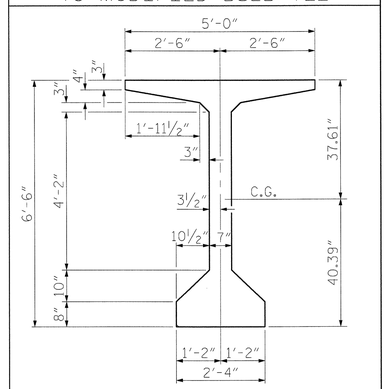

AREA = 1105 SQ. IN. = 7.6736 SQ. FT.
WEIGHT = 7.6736 X 150 = 1151.0 LBS/FT.
IXX = 935547 IN.4
IYY = 99295 IN.4
CT = 37.61 IN.
CB = 40.39 IN.
ST = 24875 IN.3
SB = 23163 IN.3

CONTROLLING LOAD RATING
1 DESIGN LOAD RATING (HL-93)
2 DESIGN LOAD RATING (HS-20)
3 LEGAL LOAD RATING **
** SEE CHART FOR VEHICLE TYPE
GIRDER LOCATION
I - INTERIOR GIRDER
EL - EXTERIOR LEFT GIRDER
ER - EXTERIOR RIGHT GIRDER

PROJECT NO. R-2633BB
BRUNSWICK/NEWHANOVER COUNTY
STATION: 353+32.50 -L-

SHEET 4 OF 10

NORTH CAROLINA PROFESSIONAL SEAL 18442 ENGINEER LEON BOLLINGER JR.
5-29-2013

RS&H IMPROVING YOUR WORLD

RS&H Architects-Engineers-Planners, Inc.
8601 Six Forks Road, Suite 260
Raleigh, NC 27615
919-846-6701 FAX 919-846-9080
www.rsandh.com
North Carolina License Nos. 50373 * F-0493 * C-28

STATE OF NORTH CAROLINA
DEPARTMENT OF TRANSPORTATION
RALEIGH

STANDARD
LRFR SUMMARY FOR PRESTRESSED CONCRETE GIRDERS
(INTERSTATE TRAFFIC)
LEFT LANE SPANS 9-10

REVISIONS						SHEET NO.
NO.	BY:	DATE:	NO.	BY:	DATE:	S-36
1			3			TOTAL SHEETS
2			4			700

DRAWN BY : SMK, JML DATE : 04/2012
CHECKED BY : RLB DATE : 03/2013
DESIGN ENGINEER OF RECORD : R. BOLLINGER DATE : 05/2013

STD. NO. LRFR2

LOAD AND RESISTANCE FACTOR RATING (LRFR) SUMMARY FOR PRESTRESSED CONCRETE GIRDERS

LEVEL		VEHICLE	WEIGHT (W) (TONS)	CONTROLLING LOAD RATING (#)	MINIMUM RATING FACTORS (RF)	TONS = W × RF	STRENGTH I LIMIT STATE											SERVICE III LIMIT STATE						COMMENT NUMBER
								MOMENT					SHEAR						MOMENT					
							LIVE-LOAD FACTORS (γ_{LL})	DISTRIBUTION FACTORS (DF)	RATING FACTOR	SPAN	GIRDER LOCATION	DISTANCE FROM LEFT END OF SPAN (ft)	DISTRIBUTION FACTORS (DF)	RATING FACTOR	SPAN	GIRDER LOCATION	DISTANCE FROM LEFT END OF SPAN (ft)	LIVE-LOAD FACTORS (γ_{LL})	DISTRIBUTION FACTORS (DF)	RATING FACTOR	SPAN	GIRDER LOCATION	DISTANCE FROM LEFT END OF SPAN (ft)	
DESIGN LOAD RATING		HL-93 (INVENTORY)	N/A	1	1.09	--	1.75	1.05	1.56	11	ER	59	1.08	1.21	11	I	23	0.80	1.05	1.09	11	ER	59	
		HL-93 (OPERATING)	N/A		1.60	--	1.35	1.05	2.02	11	ER	59	1.08	1.60	11	I	23	N/A	--	--	--	--	--	
		HS-20 (INVENTORY)	36.000	2	1.59	57	1.75	1.05	2.28	11	ER	59	1.08	1.71	11	I	23	0.80	1.05	1.59	11	ER	59	
		HS-20 (OPERATING)	36.000		2.26	81	1.35	1.05	2.95	11	ER	59	1.08	2.26	11	I	23	N/A	--	--	--	--	--	
LEGAL LOAD RATING	SINGLE VEHICLE (SV)	SH	12.500		4.19	52	1.40	1.05	7.48	11	ER	59	1.08	6.40	11	I	23	0.80	1.05	4.19	11	ER	59	
		S3C	21.500		2.45	53	1.40	1.05	4.37	11	ER	59	1.08	3.60	11	I	23	0.80	1.05	2.45	11	ER	59	
		S3A	22.750		2.32	53	1.40	1.05	4.14	11	ER	59	1.08	3.40	11	I	23	0.80	1.05	2.32	11	ER	59	
		S4A	26.750		2.02	54	1.40	1.05	3.61	11	ER	59	1.08	2.80	11	I	23	0.80	1.05	2.02	11	ER	59	
		S5A	30.500		1.78	54	1.40	1.05	3.18	11	ER	59	1.08	2.50	11	I	23	0.80	1.05	1.78	11	ER	59	
		S6A	34.500		1.60	55	1.40	1.05	2.86	11	ER	59	1.08	2.26	11	I	23	0.80	1.05	1.60	11	ER	59	
		S7B	38.500		1.45	56	1.40	1.05	2.59	11	ER	59	1.08	2.08	11	I	23	0.80	1.05	1.45	11	ER	59	
		S7A	40.000	3	1.42	57	1.40	1.05	2.54	11	ER	59	1.08	2.04	11	I	23	0.80	1.05	1.42	11	ER	59	
	TRUCK TRACTOR SEMI-TRAILER (TTST)	T4A	28.250		1.97	56	1.40	1.05	3.51	11	ER	59	1.08	2.63	11	I	23	0.80	1.05	1.97	11	ER	59	
		T5B	32.000		1.73	55	1.40	1.05	3.09	11	ER	59	1.08	2.50	11	I	23	0.80	1.05	1.73	11	ER	59	
		T6A	36.000		1.57	57	1.40	1.05	2.80	11	ER	59	1.08	2.25	11	I	23	0.80	1.05	1.57	11	ER	59	
		T7A	40.000		1.44	58	1.40	1.05	2.58	11	ER	59	1.08	2.04	11	I	23	0.80	1.05	1.44	11	ER	59	
		T7B	40.000		1.51	60	1.40	1.05	2.69	11	ER	59	1.08	1.94	11	I	23	0.80	1.05	1.51	11	ER	59	

LOAD FACTORS:

DESIGN LOAD RATING FACTORS	LIMIT STATE	γ_{DC}	γ_{DW}
	STRENGTH I	1.25	1.50
	SERVICE III	1.00	1.00

NOTES:

MINIMUM RATING FACTORS ARE BASED ON THE STRENGTH I AND SERVICE III LIMIT STATES.

ALLOWABLE STRESSES FOR SERVICE III LIMIT STATE ARE AS REQUIRED FOR DESIGN.

COMMENTS:

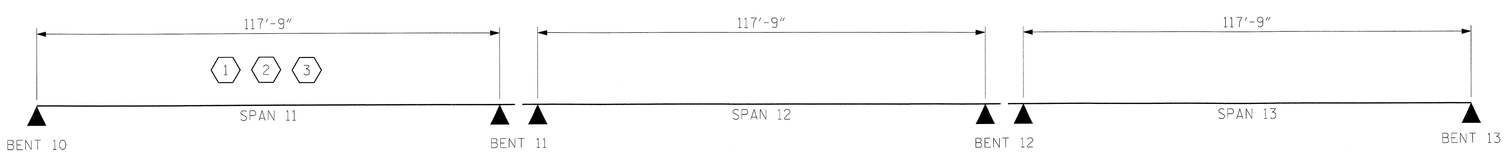

LRFR SUMMARY

SPAN LENGTHS ARE BEARING TO BEARING

SECTION PROPERTIES 78" MODIFIED BULB TEE

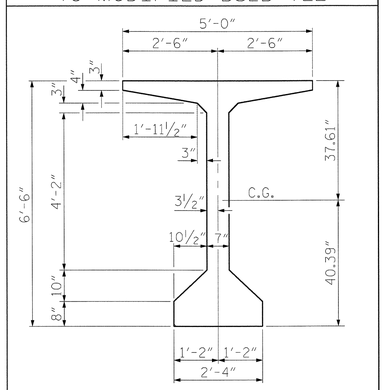

AREA = 1105 SQ. IN. = 7.6736 SQ. FT.
WEIGHT = 7.6736 X 150 = 1151.0 LBS/FT.
IXX = 935547 IN.4
IYY = 99295 IN.4
CT = 37.61 IN.
CB = 40.39 IN.
ST = 24875 IN.3
SB = 23163 IN.3

(#) CONTROLLING LOAD RATING
(1) DESIGN LOAD RATING (HL-93)
(2) DESIGN LOAD RATING (HS-20)
(3) LEGAL LOAD RATING **
** SEE CHART FOR VEHICLE TYPE

GIRDER LOCATION
I - INTERIOR GIRDER
EL - EXTERIOR LEFT GIRDER
ER - EXTERIOR RIGHT GIRDER

PROJECT NO. R-2633BB

BRUNSWICK/NEWHANOVER COUNTY

STATION: 353+32.50 -L-

SHEET 5 OF 10

NORTH CAROLINA PROFESSIONAL SEAL 18442 ENGINEER RICHARD LEON BOLLINGER, JR.
5-29-2013

RS&H IMPROVING YOUR WORLD

RS&H Architects-Engineers-Planners, Inc.
8601 Six Forks Road, Suite 260
Raleigh, NC 27615
919-846-6701 FAX 919-846-9080
www.rsandh.com
North Carolina License Nos. 50073 * F-0483 * C-28

STATE OF NORTH CAROLINA
DEPARTMENT OF TRANSPORTATION
RALEIGH

STANDARD
LRFR SUMMARY FOR PRESTRESSED CONCRETE GIRDERS
(INTERSTATE TRAFFIC)
LEFT LANE SPANS 11-13

REVISIONS						SHEET NO.
NO.	BY:	DATE:	NO.	BY:	DATE:	S-37
1			3			TOTAL SHEETS
2			4			700

DRAWN BY : SMK, JML DATE : 04/2012
CHECKED BY : RLB DATE : 03/2013
DESIGN ENGINEER OF RECORD : R. BOLLINGER DATE : 05/2013

STD. NO. LRFR2

LOAD AND RESISTANCE FACTOR RATING (LRFR) SUMMARY FOR PRESTRESSED CONCRETE GIRDERS

LEVEL		VEHICLE	WEIGHT (W) (TONS)	CONTROLLING LOAD RATING (#)	MINIMUM RATING FACTORS (RF)	TONS = W × RF	STRENGTH I LIMIT STATE											SERVICE III LIMIT STATE						COMMENT NUMBER
								MOMENT					SHEAR						MOMENT					
							LIVE-LOAD FACTORS (γ_{LL})	DISTRIBUTION FACTORS (DF)	RATING FACTOR	SPAN	GIRDER LOCATION	DISTANCE FROM LEFT END OF SPAN (ft)	DISTRIBUTION FACTORS (DF)	RATING FACTOR	SPAN	GIRDER LOCATION	DISTANCE FROM LEFT END OF SPAN (ft)	LIVE-LOAD FACTORS (γ_{LL})	DISTRIBUTION FACTORS (DF)	RATING FACTOR	SPAN	GIRDER LOCATION	DISTANCE FROM LEFT END OF SPAN (ft)	
DESIGN LOAD RATING		HL-93 (INVENTORY)	N/A	1	1.11	--	1.75	1.05	1.57	14	ER	59	1.08	1.21	14	I	23	0.80	1.05	1.11	14	ER	59	
		HL-93 (OPERATING)	N/A		1.61	--	1.35	1.05	2.03	14	ER	59	1.08	1.61	14	I	23	N/A	--	--	--	--	--	
		HS-20 (INVENTORY)	36.000	2	1.62	58	1.75	1.05	2.29	14	ER	59	1.08	1.72	14	I	23	0.80	1.05	1.62	14	ER	59	
		HS-20 (OPERATING)	36.000		2.27	82	1.35	1.05	2.97	14	ER	59	1.08	2.27	14	I	23	N/A	--	--	--	--	--	
LEGAL LOAD RATING	SINGLE VEHICLE (SV)	SH	12.500		4.25	53	1.40	1.05	7.52	14	ER	59	1.08	6.43	14	I	23	0.80	1.05	4.25	14	ER	59	
		S3C	21.500		2.48	53	1.40	1.05	4.39	14	ER	59	1.08	3.61	14	I	23	0.80	1.05	2.48	14	ER	59	
		S3A	22.750		2.35	53	1.40	1.05	4.16	14	ER	59	1.08	3.42	14	I	23	0.80	1.05	2.35	14	ER	59	
		S4A	26.750		2.05	55	1.40	1.05	3.62	14	ER	59	1.08	2.81	14	I	23	0.80	1.05	2.05	14	ER	59	
		S5A	30.500		1.81	55	1.40	1.05	3.19	14	ER	59	1.08	2.51	14	I	23	0.80	1.05	1.81	14	ER	59	
		S6A	34.500		1.62	56	1.40	1.05	2.87	14	ER	59	1.08	2.27	14	I	23	0.80	1.05	1.62	14	ER	59	
		S7B	38.500		1.47	57	1.40	1.05	2.60	14	ER	59	1.08	2.09	14	I	23	0.80	1.05	1.47	14	ER	59	
		S7A	40.000	3	1.44	58	1.40	1.05	2.55	14	ER	59	1.08	2.05	14	I	23	0.80	1.05	1.44	14	ER	59	
	TRUCK TRACTOR SEMI-TRAILER (TTST)	T4A	28.250		2.00	57	1.40	1.05	3.53	14	ER	59	1.08	2.64	14	I	23	0.80	1.05	2.00	14	ER	59	
		T5B	32.000		1.76	56	1.40	1.05	3.10	14	ER	59	1.08	2.52	14	I	23	0.80	1.05	1.76	14	ER	59	
		T6A	36.000		1.59	57	1.40	1.05	2.82	14	ER	59	1.08	2.26	14	I	23	0.80	1.05	1.59	14	ER	59	
		T7A	40.000		1.46	58	1.40	1.05	2.59	14	ER	59	1.08	2.05	14	I	23	0.80	1.05	1.46	14	ER	59	
		T7B	40.000		1.53	61	1.40	1.05	2.70	14	ER	59	1.08	1.95	14	I	23	0.80	1.05	1.53	14	ER	59	

LOAD FACTORS:

DESIGN LOAD RATING FACTORS	LIMIT STATE	γ_{DC}	γ_{DW}
	STRENGTH I	1.25	1.50
	SERVICE III	1.00	1.00

NOTES:

MINIMUM RATING FACTORS ARE BASED ON THE STRENGTH I AND SERVICE III LIMIT STATES.

ALLOWABLE STRESSES FOR SERVICE III LIMIT STATE ARE AS REQUIRED FOR DESIGN.

COMMENTS:

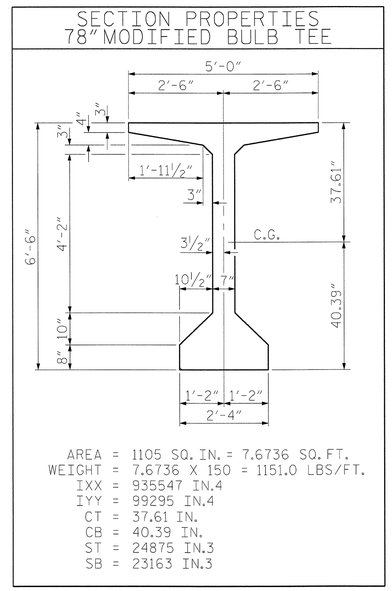

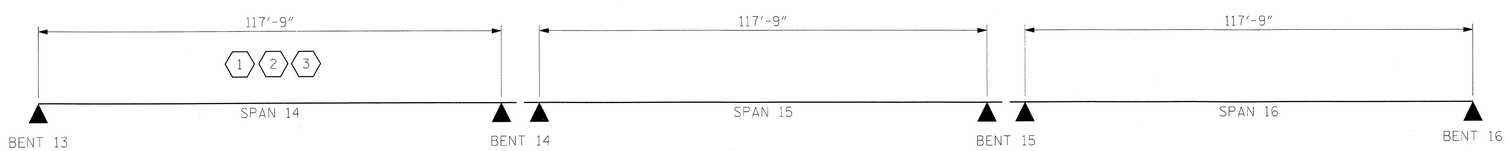

LRFR SUMMARY

SPAN LENGTHS ARE BEARING TO BEARING

CONTROLLING LOAD RATING
1 DESIGN LOAD RATING (HL-93)
2 DESIGN LOAD RATING (HS-20)
3 LEGAL LOAD RATING **
** SEE CHART FOR VEHICLE TYPE

GIRDER LOCATION
I - INTERIOR GIRDER
EL - EXTERIOR LEFT GIRDER
ER - EXTERIOR RIGHT GIRDER

PROJECT NO. R-2633BB

BRUNSWICK/NEWHANOVER COUNTY

STATION: 353+32.50 -L-

SHEET 6 OF 10

NORTH CAROLINA PROFESSIONAL SEAL 18442 ENGINEER RICHARD LEON BOLLINGER

5-29-2013

RS&H IMPROVING YOUR WORLD

RS&H Architects-Engineers-Planners, Inc.
8601 Six Forks Road, Suite 260
Raleigh, NC 27615
919-846-6701 FAX 919-846-9080
www.rsandh.com
North Carolina License Nos. 50073 * F-0493 * C-28

STATE OF NORTH CAROLINA
DEPARTMENT OF TRANSPORTATION
RALEIGH

STANDARD
LRFR SUMMARY FOR PRESTRESSED CONCRETE GIRDERS
(INTERSTATE TRAFFIC)
LEFT LANE SPANS 14-16

REVISIONS						SHEET NO.
NO.	BY:	DATE:	NO.	BY:	DATE:	S-38
1			3			TOTAL SHEETS
2			4			700

DRAWN BY : SMK, JML DATE : 04/2012
CHECKED BY : RLB DATE : 03/2013
DESIGN ENGINEER OF RECORD : R. BOLLINGER DATE : 05/2013

STD. NO. LRFR2

LOAD AND RESISTANCE FACTOR RATING (LRFR) SUMMARY FOR PRESTRESSED CONCRETE GIRDERS

LEVEL		VEHICLE	WEIGHT (W) (TONS)	CONTROLLING LOAD RATING (#)	MINIMUM RATING FACTORS (RF)	TONS = W × RF	STRENGTH I LIMIT STATE											SERVICE III LIMIT STATE						COMMENT NUMBER
								MOMENT					SHEAR						MOMENT					
							LIVE-LOAD FACTORS (γ_{LL})	DISTRIBUTION FACTORS (DF)	RATING FACTOR	SPAN	GIRDER LOCATION	DISTANCE FROM LEFT END OF SPAN (ft)	DISTRIBUTION FACTORS (DF)	RATING FACTOR	SPAN	GIRDER LOCATION	DISTANCE FROM LEFT END OF SPAN (ft)	LIVE-LOAD FACTORS (γ_{LL})	DISTRIBUTION FACTORS (DF)	RATING FACTOR	SPAN	GIRDER LOCATION	DISTANCE FROM LEFT END OF SPAN (ft)	
DESIGN LOAD RATING		HL-93 (INVENTORY)	N/A	1	1.09	--	1.75	1.07	1.54	19	ER	59	1.08	1.22	19	I	23	0.80	1.07	1.09	19	ER	59	1
		HL-93 (OPERATING)	N/A		1.62	--	1.35	1.07	2.00	19	ER	59	1.08	1.62	19	I	23	N/A	--	--	--	--	--	1
		HS-20 (INVENTORY)	36.000	2	1.59	58	1.75	1.07	2.25	19	ER	59	1.08	1.72	19	I	23	0.80	1.07	1.59	19	ER	59	1
		HS-20 (OPERATING)	36.000		2.29	82	1.35	1.07	2.92	19	ER	59	1.08	2.28	19	I	23	N/A	--	--	--	--	--	1
LEGAL LOAD RATING	SINGLE VEHICLE (SV)	SH	12.500		4.18	53	1.40	1.07	7.40	19	ER	59	1.08	6.45	19	I	23	0.80	1.07	4.18	19	ER	59	1
		S3C	21.500		2.44	53	1.40	1.07	4.32	19	ER	59	1.08	3.63	19	I	23	0.80	1.07	2.44	19	ER	59	1
		S3A	22.750		2.31	53	1.40	1.07	4.09	19	ER	59	1.08	3.43	19	I	23	0.80	1.07	2.31	19	ER	59	1
		S4A	26.750		2.01	54	1.40	1.07	3.57	19	ER	59	1.08	2.82	19	I	23	0.80	1.07	2.01	19	ER	59	1
		S5A	30.500		1.77	55	1.40	1.07	3.14	19	ER	59	1.08	2.52	19	I	23	0.80	1.07	1.77	19	ER	59	1
		S6A	34.500		1.60	56	1.40	1.07	2.83	19	ER	59	1.08	2.27	19	I	23	0.80	1.07	1.60	19	ER	59	1
		S7B	38.500		1.45	56	1.40	1.07	2.56	19	ER	59	1.08	2.10	19	I	23	0.80	1.07	1.45	19	ER	59	1
		S7A	40.000	3	1.42	57	1.40	1.07	2.51	19	ER	59	1.08	2.06	19	I	23	0.80	1.07	1.42	19	ER	59	1
	TRUCK TRACTOR SEMI-TRAILER (TTST)	T4A	28.250		1.96	56	1.40	1.07	3.47	19	ER	59	1.08	2.65	19	I	23	0.80	1.07	1.96	19	ER	59	1
		T5B	32.000		1.73	56	1.40	1.07	3.06	19	ER	59	1.08	2.52	19	I	23	0.80	1.07	1.73	19	ER	59	1
		T6A	36.000		1.57	57	1.40	1.07	2.78	19	ER	59	1.08	2.27	19	I	23	0.80	1.07	1.57	19	ER	59	1
		T7A	40.000		1.44	58	1.40	1.07	2.55	19	ER	59	1.08	2.06	19	I	23	0.80	1.07	1.44	19	ER	59	1
		T7B	40.000		1.50	61	1.40	1.07	2.66	19	ER	59	1.08	1.95	19	I	23	0.80	1.07	1.50	19	ER	59	1

LOAD FACTORS:

DESIGN LOAD RATING FACTORS	LIMIT STATE	γ_{DC}	γ_{DW}
	STRENGTH I	1.25	1.50
	SERVICE III	1.00	1.00

NOTES:

MINIMUM RATING FACTORS ARE BASED ON THE STRENGTH I AND SERVICE III LIMIT STATES.

ALLOWABLE STRESSES FOR SERVICE III LIMIT STATE ARE AS REQUIRED FOR DESIGN.

COMMENTS:

1. INTERIOR GIRDER #3 CONTROLS FOR SHEAR.
2.
3.
4.

SECTION PROPERTIES 78" MODIFIED BULB TEE

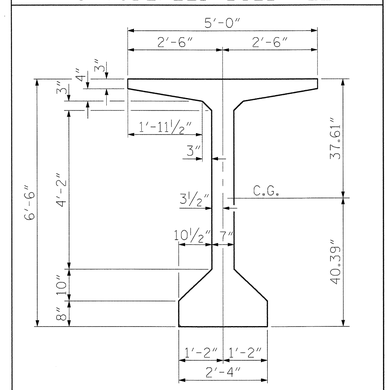

AREA = 1105 SQ. IN. = 7.6736 SQ. FT.
WEIGHT = 7.6736 X 150 = 1151.0 LBS/FT.
IXX = 935547 IN.4
IYY = 99295 IN.4
CT = 37.61 IN.
CB = 40.39 IN.
ST = 24875 IN.3
SB = 23163 IN.3

SPAN 17	
GIRDER 1	118'-8⅝"
GIRDER 2	118'-9¾"
GIRDER 3	118'-10⅞"
GIRDER 4	119'-0"

SPAN 18	
GIRDER 1	118'-5⅛"
GIRDER 2	118'-7"
GIRDER 3	118'-8⅞"
GIRDER 4	118'-10¾"

SPAN 19	
GIRDER 1	118'-5⅛"
GIRDER 2	118'-7"
GIRDER 3	118'-8⅞"
GIRDER 4	118'-10¾"

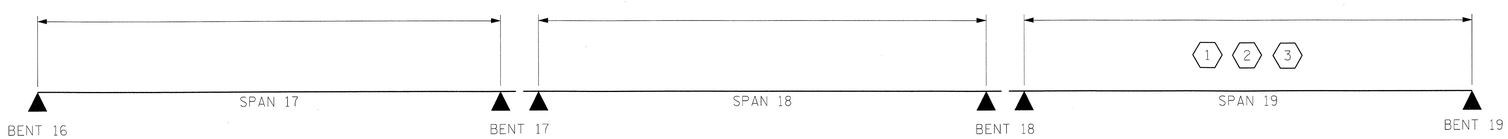

LRFR SUMMARY

SPAN LENGTHS ARE BEARING TO BEARING

(#) CONTROLLING LOAD RATING
(1) DESIGN LOAD RATING (HL-93)
(2) DESIGN LOAD RATING (HS-20)
(3) LEGAL LOAD RATING **
** SEE CHART FOR VEHICLE TYPE

GIRDER LOCATION
I - INTERIOR GIRDER
EL - EXTERIOR LEFT GIRDER
ER - EXTERIOR RIGHT GIRDER

PROJECT NO. R-2633BB

BRUNSWICK/NEWHANOVER COUNTY

STATION: 353+32.50 -L-

SHEET 7 OF 10

NORTH CAROLINA PROFESSIONAL SEAL 18442 ENGINEER LEON BOLLINGER
5-29-2013

RS&H IMPROVING YOUR WORLD

RS&H Architects-Engineers-Planners, Inc.
8601 Six Forks Road, Suite 260
Raleigh, NC 27615
919-846-6701 FAX 919-846-9080
www.rsandh.com
North Carolina License Nos. 50073 * F-0493 * C-28

STATE OF NORTH CAROLINA
DEPARTMENT OF TRANSPORTATION
RALEIGH

STANDARD
LRFR SUMMARY FOR PRESTRESSED CONCRETE GIRDERS
(INTERSTATE TRAFFIC)
LEFT LANE SPANS 17-19

REVISIONS						SHEET NO.
NO.	BY:	DATE:	NO.	BY:	DATE:	S-39
1			3			TOTAL SHEETS
2			4			700

STD. NO. LRFR2

DRAWN BY :	SMK, JML	DATE :	04/2012
CHECKED BY :	RLB	DATE :	03/2013
DESIGN ENGINEER OF RECORD :	R. BOLLINGER	DATE :	05/2013

LOAD AND RESISTANCE FACTOR RATING (LRFR) SUMMARY FOR PRESTRESSED CONCRETE GIRDERS

LEVEL		VEHICLE	WEIGHT (W) (TONS)	CONTROLLING LOAD RATING (#)	MINIMUM RATING FACTORS (RF)	TONS = W × RF	STRENGTH I LIMIT STATE											SERVICE III LIMIT STATE						COMMENT NUMBER
								MOMENT					SHEAR						MOMENT					
							LIVE-LOAD FACTORS (γ_{LL})	DISTRIBUTION FACTORS (DF)	RATING FACTOR	SPAN	GIRDER LOCATION	DISTANCE FROM LEFT END OF SPAN (ft)	DISTRIBUTION FACTORS (DF)	RATING FACTOR	SPAN	GIRDER LOCATION	DISTANCE FROM LEFT END OF SPAN (ft)	LIVE-LOAD FACTORS (γ_{LL})	DISTRIBUTION FACTORS (DF)	RATING FACTOR	SPAN	GIRDER LOCATION	DISTANCE FROM LEFT END OF SPAN (ft)	
DESIGN LOAD RATING		HL-93 (INVENTORY)	N/A	1	1.15	--	1.75	1.07	1.57	20	ER	58.74	1.08	1.23	22	I	94.28	0.80	1.07	1.15	20	ER	58.74	1
		HL-93 (OPERATING)	N/A		1.63	--	1.35	1.07	2.03	20	ER	58.74	1.08	1.63	22	I	94.28	N/A	--	--	--	--	--	1
		HS-20 (INVENTORY)	36.000	2	1.67	60	1.75	1.07	2.29	20	ER	58.74	1.08	1.74	20	I	23.04	0.80	1.07	1.67	20	ER	58.74	1
		HS-20 (OPERATING)	36.000		2.30	83	1.35	1.07	2.97	20	ER	58.74	1.08	2.30	20	I	23.04	N/A	--	--	--	--	--	1
LEGAL LOAD RATING	SINGLE VEHICLE (SV)	SH	12.500		4.39	55	1.40	1.07	7.52	20	ER	58.74	1.08	6.50	20	I	23.04	0.80	1.07	4.39	20	ER	58.74	1
		S3C	21.500		2.56	55	1.40	1.07	4.39	20	ER	58.74	1.08	3.66	20	I	23.04	0.80	1.07	2.56	20	ER	58.74	1
		S3A	22.750		2.43	55	1.40	1.07	4.16	20	ER	58.74	1.08	3.46	21	I	23.04	0.80	1.07	2.43	20	ER	58.74	1
		S4A	26.750		2.12	57	1.40	1.07	3.62	20	ER	58.74	1.08	2.84	20	I	23.04	0.80	1.07	2.12	20	ER	58.74	1
		S5A	30.500		1.86	57	1.40	1.07	3.19	20	ER	58.74	1.08	2.54	20	I	23.04	0.80	1.07	1.86	20	ER	58.74	1
		S6A	34.500		1.68	58	1.40	1.07	2.87	20	ER	58.74	1.08	2.29	21	I	23.04	0.80	1.07	1.68	20	ER	58.74	1
		S7B	38.500		1.52	59	1.40	1.07	2.60	20	ER	58.74	1.08	2.12	20	I	23.04	0.80	1.07	1.52	20	ER	58.74	1
		S7A	40.000	3	1.49	60	1.40	1.07	2.55	20	ER	58.74	1.08	2.08	22	I	94.28	0.80	1.07	1.49	20	ER	58.74	1
	TRUCK TRACTOR SEMI-TRAILER (TTST)	T4A	28.250		2.06	58	1.40	1.07	3.53	20	ER	58.74	1.08	2.67	21	I	23.04	0.80	1.07	2.06	20	ER	58.74	1
		T5B	32.000		1.81	58	1.40	1.07	3.11	20	ER	58.74	1.08	2.55	20	I	23.04	0.80	1.07	1.81	20	ER	58.74	1
		T6A	36.000		1.65	59	1.40	1.07	2.82	20	ER	58.74	1.08	2.29	20	I	23.04	0.80	1.07	1.65	20	ER	58.74	1
		T7A	40.000		1.51	60	1.40	1.07	2.59	20	ER	58.74	1.08	2.07	22	I	94.28	0.80	1.07	1.51	20	ER	58.74	1
		T7B	40.000		1.58	63	1.40	1.07	2.71	20	ER	58.74	1.08	1.97	21	I	23.04	0.80	1.07	1.58	20	ER	58.74	1

LOAD FACTORS:

	LIMIT STATE	γ_{DC}	γ_{DW}
DESIGN LOAD RATING FACTORS	STRENGTH I	1.25	1.50
	SERVICE III	1.00	1.00

NOTES:

MINIMUM RATING FACTORS ARE BASED ON THE STRENGTH I AND SERVICE III LIMIT STATES.

ALLOWABLE STRESSES FOR SERVICE III LIMIT STATE ARE AS REQUIRED FOR DESIGN.

COMMENTS:

1. INTERIOR GIRDER 3 CONTROLS FOR SHEAR.
2.
3.
4.

SPAN 20	
GIRDER 1	117'-0 1/8"
GIRDER 2	117'-2"
GIRDER 3	117'-3 7/8"
GIRDER 4	117'-5 3/4"

SPAN 21	
GIRDER 1	117'-0 1/8"
GIRDER 2	117'-2"
GIRDER 3	117'-3 7/8"
GIRDER 4	117'-5 3/4"

SPAN 22	
GIRDER 1	117'-0 1/8"
GIRDER 2	117'-2"
GIRDER 3	117'-3 7/8"
GIRDER 4	117'-5 3/4"

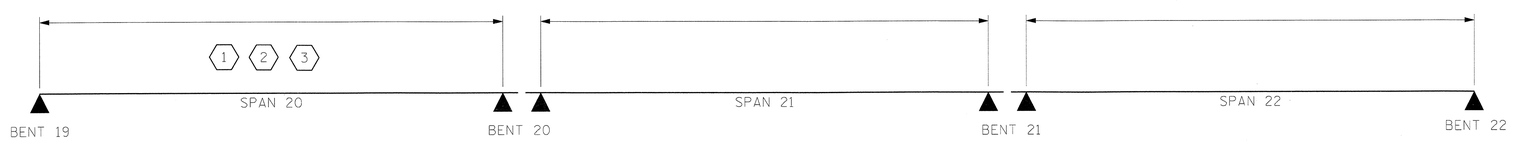

LRFR SUMMARY

(SPAN LENGTHS ARE BEARING TO BEARING)

SECTION PROPERTIES 78" MODIFIED BULB TEE

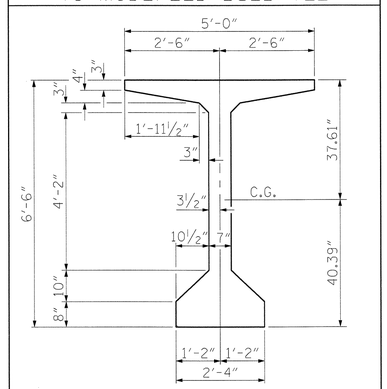

AREA = 1105 SQ. IN. = 7.6736 SQ. FT.
WEIGHT = 7.6736 X 150 = 1151.0 LBS/FT.
IXX = 935547 IN.4
IYY = 99295 IN.4
CT = 37.61 IN.
CB = 40.39 IN.
ST = 24875 IN3
SB = 23163 IN3

(#) CONTROLLING LOAD RATING
(1) DESIGN LOAD RATING (HL-93)
(2) DESIGN LOAD RATING (HS-20)
(3) LEGAL LOAD RATING **
** SEE CHART FOR VEHICLE TYPE

GIRDER LOCATION
I - INTERIOR GIRDER
EL - EXTERIOR LEFT GIRDER
ER - EXTERIOR RIGHT GIRDER

PROJECT NO. R-2633BB

BRUNSWICK/NEW HANOVER COUNTY

STATION: 353+32.50 -L-

SHEET 8 OF 10

NORTH CAROLINA PROFESSIONAL SEAL 22072 ENGINEER JOHN ARTHUR DILWORTH
5-29-13

WETHERILL ENGINEERING

TRANSPORTATION PLANNING/DESIGN
BRIDGE/STRUCTURE DESIGN
CIVIL/SITE DESIGN - GIS/GPS
CONSTRUCTION OBSERVATION

559 Jones Franklin Rd. Suite 164
Raleigh, N.C. 27606
Bus: 919 851 8077
Fax: 919 851 8107
LICENSE NO. F-0377

STATE OF NORTH CAROLINA
DEPARTMENT OF TRANSPORTATION
RALEIGH

LRFR SUMMARY FOR PRESTRESSED CONCRETE GIRDERS

(INTERSTATE TRAFFIC)
LEFT LANE SPANS 20-22
(SPANS 23, 24 & 25 THROUGH SPANS 35, 36 & 37, AND SPANS 41, 42 &43 THROUGH SPANS 53, 54 & 55 SIMILAR)

REVISIONS						SHEET NO.
NO.	BY:	DATE:	NO.	BY:	DATE:	S-40
1			3			TOTAL SHEETS
2			4			100

STD. NO. LRFR2

DRAWN BY : Z. PIATEK DATE : 10/2012
CHECKED BY : J. DILWORTH DATE : 10/2012
DESIGN ENGINEER OF RECORD : J. DILWORTH DATE : 5/2013

FILE: $FILE$
MODEL: $MODELNAME$
PLOT DRV: $PLTDRV$
DATE/TIME: $DATE$ $TIME$

LOAD AND RESISTANCE FACTOR RATING (LRFR) SUMMARY FOR PRESTRESSED CONCRETE GIRDERS

LEVEL		VEHICLE	WEIGHT (W) (TONS)	CONTROLLING LOAD RATING (#)	MINIMUM RATING FACTORS (RF)	TONS = W × RF	STRENGTH I LIMIT STATE											SERVICE III LIMIT STATE						COMMENT NUMBER
								MOMENT					SHEAR						MOMENT					
							LIVE-LOAD FACTORS (γ_{LL})	DISTRIBUTION FACTORS (DF)	RATING FACTOR	SPAN	GIRDER LOCATION	DISTANCE FROM LEFT END OF SPAN (ft)	DISTRIBUTION FACTORS (DF)	RATING FACTOR	SPAN	GIRDER LOCATION	DISTANCE FROM LEFT END OF SPAN (ft)	LIVE-LOAD FACTORS (γ_{LL})	DISTRIBUTION FACTORS (DF)	RATING FACTOR	SPAN	GIRDER LOCATION	DISTANCE FROM LEFT END OF SPAN (ft)	
DESIGN LOAD RATING		HL-93 (INVENTORY)	N/A	1	1.09	--	1.75	1.11	1.51	38	ER	48.76	1.08	1.23	40	I	94.28	0.80	1.11	1.09	38	ER	48.76	1
		HL-93 (OPERATING)	N/A		1.64	--	1.35	1.11	1.95	38	ER	48.76	1.08	1.64	40	I	94.28	N/A	--	--	--	--	--	1
		HS-20 (INVENTORY)	36.000	2	1.52	55	1.75	1.11	2.10	38	ER	48.76	1.08	1.74	39	I	23.04	0.80	1.11	1.52	38	ER	48.76	1
		HS-20 (OPERATING)	36.000		2.30	83	1.35	1.11	2.72	38	ER	48.76	1.08	2.30	39	I	23.04	N/A	--	--	--	--	--	1
LEGAL LOAD RATING	SINGLE VEHICLE (SV)	SH	12.500		3.92	49	1.40	1.11	6.76	38	ER	48.76	1.08	6.52	39	I	23.04	0.80	1.11	3.92	38	ER	48.76	1
		S3C	21.500		2.29	49	1.40	1.11	3.95	38	ER	48.76	1.08	3.67	39	I	23.04	0.80	1.11	2.29	38	ER	48.76	1
		S3A	22.750		2.17	49	1.40	1.11	3.74	38	ER	48.76	1.08	3.47	40	I	94.28	0.80	1.11	2.17	38	ER	48.76	1
		S4A	26.750		1.90	51	1.40	1.11	3.28	38	ER	48.76	1.08	2.85	39	I	23.04	0.80	1.11	1.90	38	ER	48.76	1
		S5A	30.500		1.68	51	1.40	1.11	2.89	38	ER	48.76	1.08	2.55	39	I	23.04	0.80	1.11	1.68	38	ER	48.76	1
		S6A	34.500		1.51	52	1.40	1.11	2.61	38	ER	48.76	1.08	2.30	39	I	23.04	0.80	1.11	1.51	38	ER	48.76	1
		S7B	38.500		1.37	53	1.40	1.11	2.37	38	ER	48.76	1.08	2.12	39	I	23.04	0.80	1.11	1.37	38	ER	48.76	1
		S7A	40.000	3	1.35	54	1.40	1.11	2.33	38	ER	48.76	1.08	2.08	40	I	94.28	0.80	1.11	1.35	38	ER	48.76	1
	TRUCK TRACTOR SEMI-TRAILER (TTST)	T4A	28.250		1.86	53	1.40	1.11	3.21	38	ER	48.76	1.08	2.68	39	I	23.04	0.80	1.11	1.86	38	ER	48.76	1
		T5B	32.000		1.64	53	1.40	1.11	2.82	38	ER	48.76	1.08	2.55	39	I	23.04	0.80	1.11	1.64	38	ER	48.76	1
		T6A	36.000		1.49	54	1.40	1.11	2.58	38	ER	48.76	1.08	2.29	39	I	23.04	0.80	1.11	1.49	38	ER	48.76	1
		T7A	40.000		1.38	55	1.40	1.11	2.38	38	ER	48.76	1.08	2.08	39	I	23.04	0.80	1.11	1.38	38	ER	48.76	1
		T7B	40.000		1.46	58	1.40	1.11	2.51	38	ER	48.76	1.08	1.98	40	I	94.28	0.80	1.11	1.46	38	ER	48.76	1

LOAD FACTORS:

DESIGN LOAD RATING FACTORS	LIMIT STATE	γ_{DC}	γ_{DW}
	STRENGTH I	1.25	1.50
	SERVICE III	1.00	1.00

NOTES:

MINIMUM RATING FACTORS ARE BASED ON THE STRENGTH I AND SERVICE III LIMIT STATES.

ALLOWABLE STRESSES FOR SERVICE III LIMIT STATE ARE AS REQUIRED FOR DESIGN.

COMMENTS:

1. INTERIOR GIRDER 3 CONTROLS FOR SHEAR.
2.
3.
4.

SECTION PROPERTIES 78" MODIFIED BULB TEE

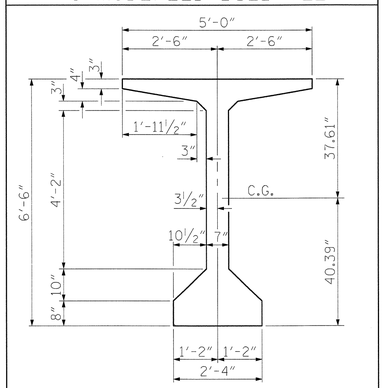

AREA = 1105 SQ. IN. = 7.6736 SQ. FT.
WEIGHT = 7.6736 X 150 = 1151.0 LBS/FT.
IXX = 935547 IN.4
IYY = 99295 IN.4
CT = 37.61 IN.
CB = 40.39 IN.
ST = 24875 IN3
SB = 23163 IN3

SPAN 38	
GIRDER 1	97'-1⅝"
GIRDER 2	97'-3⅛"
GIRDER 3	97'-4¾"
GIRDER 4	97'-6¼"

SPAN 39	
GIRDER 1	117'-0⅛"
GIRDER 2	117'-2"
GIRDER 3	117'-3⅞"
GIRDER 4	117'-5¾"

SPAN 40	
GIRDER 1	117'-0⅛"
GIRDER 2	117'-2"
GIRDER 3	117'-3⅞"
GIRDER 4	117'-5¾"

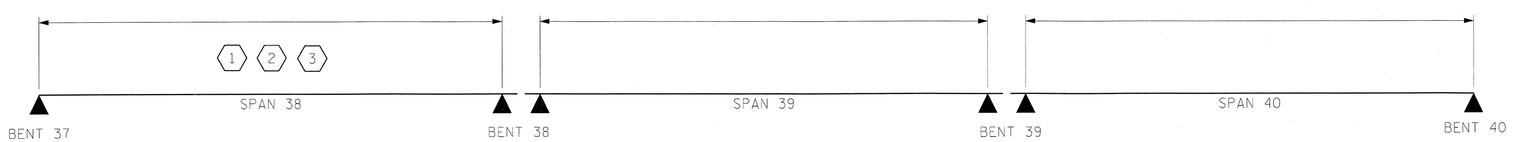

LRFR SUMMARY

(SPAN LENGTHS ARE BEARING TO BEARING)

CONTROLLING LOAD RATING
1 DESIGN LOAD RATING (HL-93)
2 DESIGN LOAD RATING (HS-20)
3 LEGAL LOAD RATING **
** SEE CHART FOR VEHICLE TYPE

GIRDER LOCATION
I - INTERIOR GIRDER
EL - EXTERIOR LEFT GIRDER
ER - EXTERIOR RIGHT GIRDER

PROJECT NO. R-2633BB

BRUNSWICK/NEW HANOVER COUNTY

STATION: 353+32.50 -L-

SHEET 9 OF 10

NORTH CAROLINA PROFESSIONAL SEAL 22072 ENGINEER JOHN ARTHUR DILWORTH 5-29-13

WETHERILL ENGINEERING

TRANSPORTATION PLANNING/DESIGN
BRIDGE/STRUCTURE DESIGN
CIVIL/SITE DESIGN - GIS/GPS
CONSTRUCTION OBSERVATION

559 Jones Franklin Rd. Suite 164
Raleigh, N.C. 27606
Bus: 919 851 8077
Fax: 919 851 8107
LICENSE NO. F-0377

STATE OF NORTH CAROLINA
DEPARTMENT OF TRANSPORTATION
RALEIGH

LRFR SUMMARY FOR PRESTRESSED CONCRETE GIRDERS (INTERSTATE TRAFFIC) LEFT LANE SPANS 38-40

REVISIONS						SHEET NO.
NO.	BY:	DATE:	NO.	BY:	DATE:	S-41
1			3			TOTAL SHEETS
2			4			100

DRAWN BY :	Z. PIATEK	DATE :	10/2012
CHECKED BY :	J. DILWORTH	DATE :	10/2012
DESIGN ENGINEER OF RECORD :	J. DILWORTH	DATE :	5/2013

FILE: $FILE$
MODEL: $MODELNAME$
PLOT DRV: $PLTDRVS$
DATE/TIME: $DATE$ $TIME$

LOAD AND RESISTANCE FACTOR RATING (LRFR) SUMMARY FOR PRESTRESSED CONCRETE GIRDERS

LEVEL		VEHICLE	WEIGHT (W) (TONS)	CONTROLLING LOAD RATING (#)	MINIMUM RATING FACTORS (RF)	TONS = W × RF	STRENGTH I LIMIT STATE											SERVICE III LIMIT STATE						COMMENT NUMBER
								MOMENT					SHEAR						MOMENT					
							LIVE-LOAD FACTORS (γ_{LL})	DISTRIBUTION FACTORS (DF)	RATING FACTOR	SPAN	GIRDER LOCATION	DISTANCE FROM LEFT END OF SPAN (ft)	DISTRIBUTION FACTORS (DF)	RATING FACTOR	SPAN	GIRDER LOCATION	DISTANCE FROM LEFT END OF SPAN (ft)	LIVE-LOAD FACTORS (γ_{LL})	DISTRIBUTION FACTORS (DF)	RATING FACTOR	SPAN	GIRDER LOCATION	DISTANCE FROM LEFT END OF SPAN (ft)	
DESIGN LOAD RATING		HL-93 (INVENTORY)	N/A	1	1.09	--	1.75	1.11	1.51	56	ER	48.76	1.08	1.41	56	I	19.05	0.80	1.11	1.09	56	ER	48.76	1
		HL-93 (OPERATING)	N/A		1.87	--	1.35	1.11	1.95	56	ER	48.76	1.08	1.87	56	I	19.05	N/A	--	--	--	--	--	1
		HS-20 (INVENTORY)	36.000	2	1.52	55	1.75	1.11	2.10	56	ER	48.76	1.08	1.89	56	I	19.05	0.80	1.11	1.52	56	ER	48.76	1
		HS-20 (OPERATING)	36.000		2.49	90	1.35	1.11	2.72	56	ER	48.76	1.08	2.49	56	I	19.05	N/A	--	--	--	--	--	1
LEGAL LOAD RATING	SINGLE VEHICLE (SV)	SH	12.500		3.92	49	1.40	1.11	6.76	56	ER	48.76	1.08	6.90	56	I	19.05	0.80	1.11	3.92	56	ER	48.76	1
		S3C	21.500		2.29	49	1.40	1.11	3.95	56	ER	48.76	1.08	3.94	56	I	19.05	0.80	1.11	2.29	56	ER	48.76	1
		S3A	22.750		2.17	49	1.40	1.11	3.74	56	ER	48.76	1.08	3.79	56	I	19.05	0.80	1.11	2.17	56	ER	48.76	1
		S4A	26.750		1.90	51	1.40	1.11	3.28	56	ER	48.76	1.08	3.10	56	I	19.05	0.80	1.11	1.90	56	ER	48.76	1
		S5A	30.500		1.68	51	1.40	1.11	2.89	56	ER	48.76	1.08	2.83	56	I	19.05	0.80	1.11	1.68	56	ER	48.76	1
		S6A	34.500		1.51	52	1.40	1.11	2.61	56	ER	48.76	1.08	2.53	56	I	19.05	0.80	1.11	1.51	56	ER	48.76	1
		S7B	38.500		1.37	53	1.40	1.11	2.37	56	ER	48.76	1.08	2.31	56	I	19.05	0.80	1.11	1.37	56	ER	48.76	1
		S7A	40.000	3	1.35	54	1.40	1.11	2.33	56	ER	48.76	1.08	2.37	56	I	19.05	0.80	1.11	1.35	56	ER	48.76	1
	TRUCK TRACTOR SEMI-TRAILER (TTST)	T4A	28.250		1.86	53	1.40	1.11	3.21	56	ER	48.76	1.08	3.19	56	I	19.05	0.80	1.11	1.86	56	ER	48.76	1
		T5B	32.000		1.64	52	1.40	1.11	2.82	56	ER	48.76	1.08	2.87	56	I	19.05	0.80	1.11	1.64	56	ER	48.76	1
		T6A	36.000		1.49	54	1.40	1.11	2.58	56	ER	48.76	1.08	2.62	57	I	19.05	0.80	1.11	1.49	56	ER	48.76	1
		T7A	40.000		1.38	55	1.40	1.11	2.38	56	ER	48.76	1.08	2.40	56	I	19.05	0.80	1.11	1.38	56	ER	48.76	1
		T7B	40.000		1.46	58	1.40	1.11	2.51	56	ER	48.76	1.08	2.26	56	I	19.05	0.80	1.11	1.46	56	ER	48.76	1

LOAD FACTORS:

DESIGN LOAD RATING FACTORS	LIMIT STATE	γ_{DC}	γ_{DW}
	STRENGTH I	1.25	1.50
	SERVICE III	1.00	1.00

NOTES:

MINIMUM RATING FACTORS ARE BASED ON THE STRENGTH I AND SERVICE III LIMIT STATES.

ALLOWABLE STRESSES FOR SERVICE III LIMIT STATE ARE AS REQUIRED FOR DESIGN.

COMMENTS:

1. INTERIOR GIRDER 3 CONTROLS FOR SHEAR.
2.
3.
4.

SECTION PROPERTIES 78" MODIFIED BULB TEE

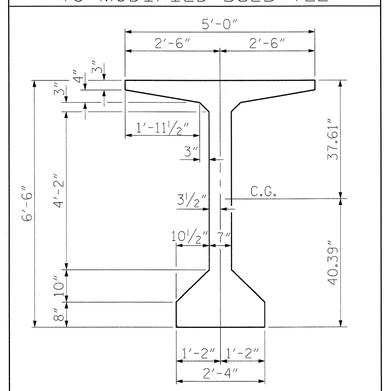

AREA = 1105 SQ. IN. = 7.6736 SQ. FT.
WEIGHT = 7.6736 X 150 = 1151.0 LBS/FT.
IXX = 935547 IN.4
IYY = 99295 IN.4
CT = 37.61 IN.
CB = 40.39 IN.
ST = 24875 IN3
SB = 23163 IN3

SPAN 56	
GIRDER 1	97'-1⅝"
GIRDER 2	97'-3⅛"
GIRDER 3	97'-4¾"
GIRDER 4	97'-6¼"

SPAN 57	
GIRDER 1	97'-1⅝"
GIRDER 2	97'-3⅛"
GIRDER 3	97'-4¾"
GIRDER 4	97'-6¼"

SPAN 58	
GIRDER 1	85'-9⅜"
GIRDER 2	85'-10¾"
GIRDER 3	86'-0⅛"
GIRDER 4	86'-1½"

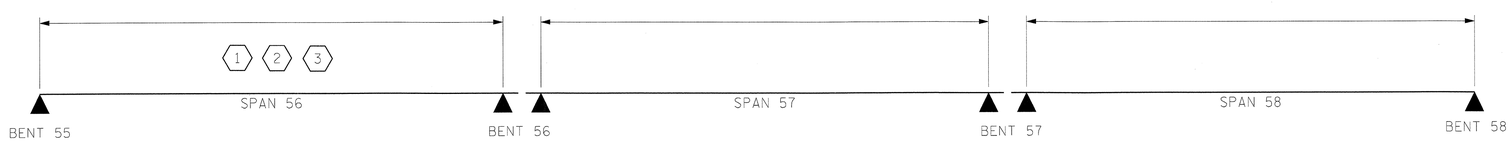

LRFR SUMMARY

(SPAN LENGTHS ARE BEARING TO BEARING)

#	CONTROLLING LOAD RATING
1	DESIGN LOAD RATING (HL-93)
2	DESIGN LOAD RATING (HS-20)
3	LEGAL LOAD RATING **
**	SEE CHART FOR VEHICLE TYPE

GIRDER LOCATION

I - INTERIOR GIRDER
EL - EXTERIOR LEFT GIRDER
ER - EXTERIOR RIGHT GIRDER

PROJECT NO. R-2633BB
BRUNSWICK/NEW HANOVER COUNTY
STATION: 353+32.50 -L-

SHEET 10 OF 10

NORTH CAROLINA PROFESSIONAL SEAL 22072 ENGINEER JOHN ARTHUR DILWORTH
5-29-13

WETHERILL ENGINEERING
TRANSPORTATION PLANNING/DESIGN
BRIDGE/STRUCTURE DESIGN
CIVIL/SITE DESIGN - GIS/GPS
CONSTRUCTION OBSERVATION
559 Jones Franklin Rd. Suite 164
Raleigh, N.C. 27606
Bus: 919 851 8077
Fax: 919 851 8107
LICENSE NO. F-0377

STATE OF NORTH CAROLINA
DEPARTMENT OF TRANSPORTATION
RALEIGH

LRFR SUMMARY FOR PRESTRESSED CONCRETE GIRDERS
(INTERSTATE TRAFFIC)
LEFT LANE SPANS 56-58

REVISIONS						SHEET NO.
NO.	BY:	DATE:	NO.	BY:	DATE:	S-42
1			3			TOTAL SHEETS
2			4			700

DRAWN BY : Z. PIATEK DATE : 10/2012
CHECKED BY : J. DILWORTH DATE : 10/2012
DESIGN ENGINEER OF RECORD : J. DILWORTH DATE : 5/2013

FILE: $FILE$
MODEL: $MODELNAME$
PLOT DRV: $PLTDRVS$
DATE/TIME: $DATE$ $TIME$

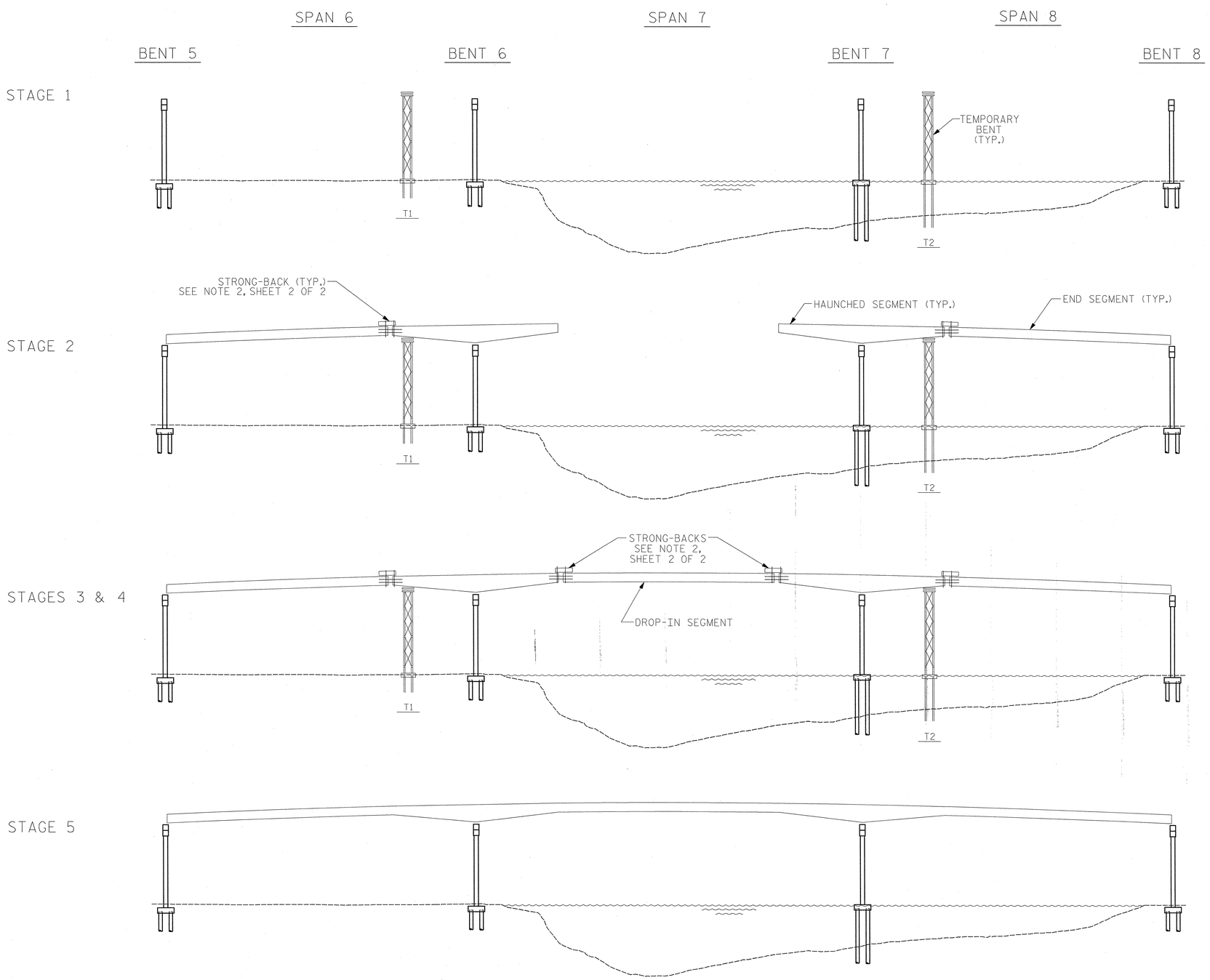

STAGE 1

1. CONSTRUCT BENTS 5 THRU 8 AND ERECT TEMPORARY BENTS IN SPANS 6 AND 8.

STAGE 2

1. ERECT HAUNCHED SEGMENTS OVER BENTS 6 AND 7. SECURE SEGMENTS TO PERMANENT BENTS AND TEMPORARY BENTS. INSTALL TEMPORARY LATERAL WIND BRACING BETWEEN SEGMENTS AS THEY ARE ERECTED. ENSURE SEGMENTS ARE SUFFICIENTLY BRACED AND SECURED TO TRANSMIT WIND FORCES ASSUMING THE BEARINGS PROVIDE NO TRANSVERSE SUPPORT. CHECK ALL SEGMENT ALIGNMENTS, AND ADJUST AS NECESSARY.
2. ATTACH STRONG-BACKS TO THE SPLICE END OF THE END SEGMENTS, AND ERECT END SEGMENTS. SECURE END SEGMENTS TO PERMANENT BENTS, AND CONNECT STRONG-BACKS TO HAUNCHED SEGMENTS. INSTALL TEMPORARY LATERAL WIND BRACING BETWEEN SEGMENTS AS THEY ARE ERECTED. ENSURE SEGMENTS ARE SUFFICIENTLY BRACED AND SECURED TO TRANSMIT WIND FORCES ASSUMING THE BEARINGS PROVIDE NO TRANSVERSE SUPPORT. CHECK ALL SEGMENT ALIGNMENTS, AND ADJUST AS NECESSARY.
3. ENSURE CONNECTION BETWEEN GIRDER SEGMENTS AND TEMPORARY BENTS WILL RESIST ANY ANTICIPATED FUTURE UPLIFT.
4. DEAD LOAD REACTIONS ON TEMPORARY BENTS AND STRONG-BACKS, PER GIRDER, AFTER THIS STAGE (ASSUMES THAT TEMPORARY BENT REACTIONS ARE LOCATED 3'-0" FROM THE ENDS OF THE HAUNCHED SEGMENTS, AND THE END SEGMENTS ARE SUPPORTED SOLELY BY THE STRONG-BACKS):
   END SEGMENT STRONG-BACKS = 105 KIPS (DOWNWARD) ✳
   TEMPORARY BENTS = 111 KIPS (DOWNWARD) ✳

STAGE 3

1. CAST DIAPHRAGMS AT BENTS 6 AND 7, AND ERECT INTERMEDIATE STEEL DIAPHRAGMS IN END AND HAUNCHED SEGMENTS.
2. ATTACH STRONG-BACKS TO THE ENDS OF THE DROP-IN SEGMENTS, AND ERECT DROP-IN SEGMENTS. CONNECT STRONG-BACKS TO HAUNCHED SEGMENTS. INSTALL TEMPORARY LATERAL WIND BRACING BETWEEN SEGMENTS AS THEY ARE ERECTED. ENSURE SEGMENTS ARE SUFFICIENTLY BRACED AND SECURED TO TRANSMIT WIND FORCES ASSUMING THE BEARINGS PROVIDE NO TRANSVERSE SUPPORT. CHECK ALL SEGMENT ALIGNMENTS, AND ADJUST AS NECESSARY.
3. ERECT REMAINING INTERMEDIATE STEEL DIAPHRAGMS IN SPAN 7.
4. DEAD LOAD REACTIONS ON TEMPORARY BENTS AND STRONG-BACKS, PER GIRDER, AFTER THIS STAGE (ASSUMES THAT TEMPORARY BENT REACTIONS ARE LOCATED 3'-0" FROM THE ENDS OF THE HAUNCHED SEGMENTS, AND THE END SEGMENTS AND DROP-IN SEGMENTS ARE SUPPORTED SOLELY BY THE STRONG-BACKS):
   END SEGMENT STRONG-BACKS = 126 KIPS (DOWNWARD) ✳
   DROP-IN SEGMENT STRONG-BACKS = 124 KIPS (DOWNWARD) ✳
   TEMPORARY BENTS = 2 KIPS (DOWNWARD)

STAGE 4

NO FALSEWORK SHALL BE PLACED PRIOR TO COMPLETING STEEL DIAPHRAGM ERECTION.

1. CAST CLOSURE SPLICE DIAPHRAGMS, AND ALLOW CONCRETE TO CURE UNTIL IT HAS REACHED A MINIMUM COMPRESSIVE STRENGTH OF 6500PSI.

STAGE 5

1. LOOSEN BOLTS CONNECTING INTERMEDIATE STEEL DIAPHRAGMS TO GIRDERS.
2. FIRST STAGE POST-TENSIONING: AFTER CLOSURE SPLICE DIAPHRAGMS HAVE ATTAINED A MINIMUM STRENGTH OF 6500 PSI, STRESS TENDON 1 TO 100% AS DETAILED IN THE "POST-TENSION GIRDER NOTES" SHEETS.
3. AFTER TENDON 1 HAS BEEN STRESSED IN ALL GIRDERS, RELEASE VERTICAL UPLIFT RESTRAINTS AT TEMPORARY BENTS. DO NOT REMOVE OR MAKE ANY OTHER ADJUSTMENTS TO THE TEMPORARY BENTS.
4. FIRST STAGE POST-TENSIONING: STRESS TENDON 2 TO 100% AS DETAILED IN THE "POST-TENSION GIRDER NOTES" SHEETS.
5. GROUT FIRST STAGE TENDONS (TENDONS 1 AND 2).
6. RETIGHTEN BOLTS CONNECTING INTERMEDIATE DIAPHRAGMS TO GIRDERS.
7. REMOVE STRONG-BACKS AND TEMPORARY BENTS.

✳ DEAD LOAD REACTIONS PROVIDED IN THE ERECTION SEQUENCE ARE SERVICE LOADS FOR SEGMENTS IN A THEORETICAL, BALANCED CONDITION.

LOADS DUE TO WIND, ERECTION, IMPACT, SEGMENT MIS-ALIGNMENT, VERTICAL GEOMETRY, CONSTRUCTION (INCLUDING SELF-WEIGHT OF FALSEWORK, STRONG-BACKS, AND TEMPORARY BRACING), OR ANY OTHER MISCELLANEOUS LOADS ARE NOT INCLUDED IN THE PROVIDED DEAD LOAD REACTIONS. THE CONTRACTOR IS RESPONSIBLE FOR ADJUSTING THE DEAD LOAD REACTIONS TO ACCOUNT FOR THESE LOADS AND ANY PROPOSED CHANGES TO THE TEMPORARY BENT LOCATIONS.

NOTES

1. FOR ERECTION SEQUENCE NOTES, SEE SHEET 2 OF 2.

PROJECT NO. R-2633BB

BRUNSWICK/NEW HANOVER COUNTY

STATION: 353+32.50 -L-

SHEET 1 OF 2

DRAWN BY :	SOF	DATE :	10/2012
CHECKED BY :	GBL	DATE :	3/2013
DESIGN ENGINEER OF RECORD :	R. WOODRUFF	DATE :	5/2013

NORTH CAROLINA PROFESSIONAL SEAL 18591 ENGINEER ROBERT G. WOODRUFF
5/28/13

RS&H IMPROVING YOUR WORLD

RS&H Architects-Engineers-Planners, Inc.
8601 Six Forks Road, Suite 260
Raleigh, NC 27615
919-846-6701 FAX 919-846-9080
www.rsandh.com
North Carolina License Nos. 50173 * F-0493 * C-28

STATE OF NORTH CAROLINA
DEPARTMENT OF TRANSPORTATION
RALEIGH

ERECTION SEQUENCE
FOR SPANS 6, 7 AND 8
LEFT LANE

REVISIONS						SHEET NO.
NO.	BY:	DATE:	NO.	BY:	DATE:	S-43
1			3			TOTAL SHEETS
2			4			700

5/24/2013
$$$$$$$$$$$$$$$$$$$$$$DGN$$$$$$$$$$$$$$$$$$$$$$
1:56:02 PM

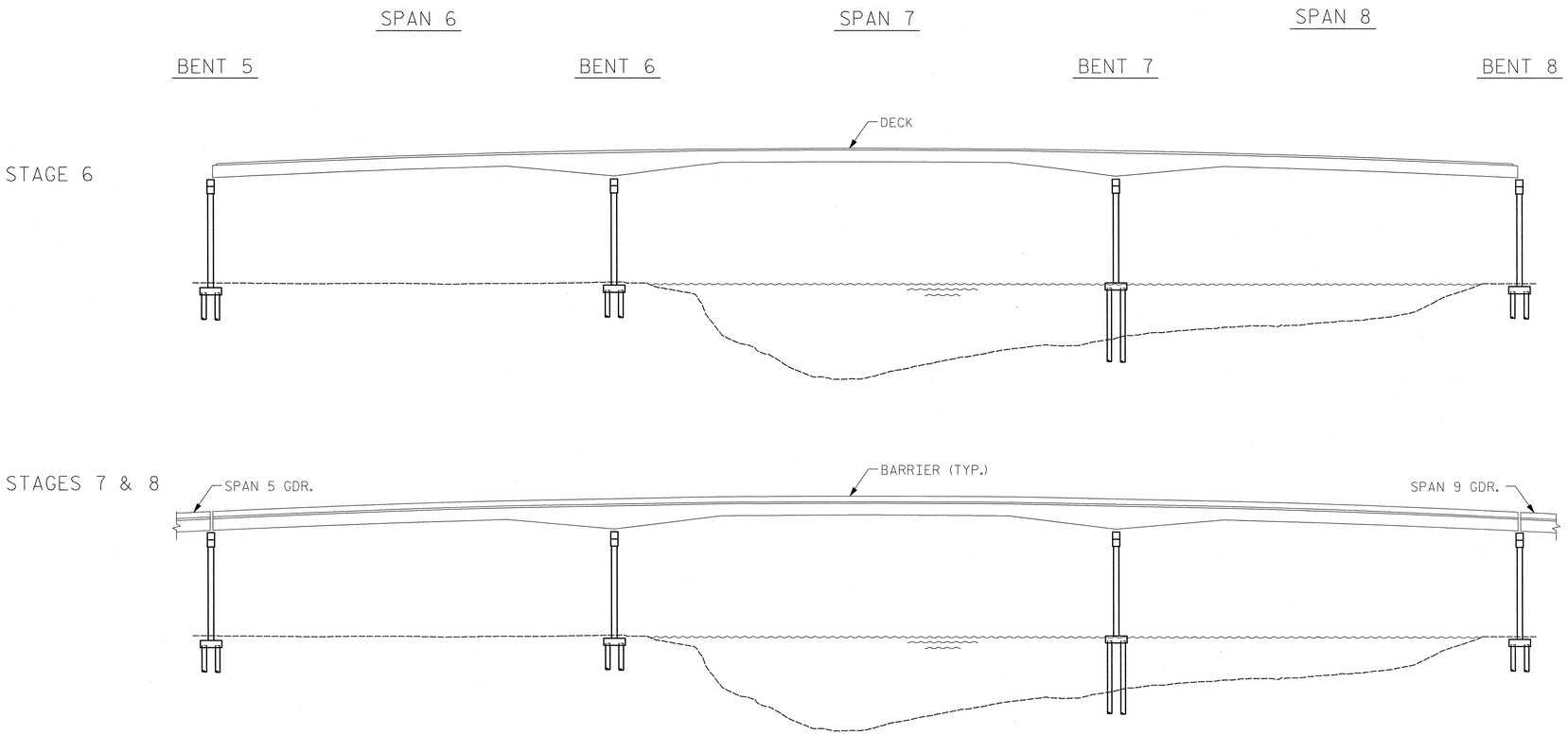

STAGE 6

1. ERECT TEMPORARY DECK FORMWORK IN SPANS 6 THRU 8. CAST DECK POURS #1 THRU #5 AS DETAILED IN DECK POURING SEQUENCE. (SEE SUPERSTRUCTURE DETAIL SHEET FOR DECK POURING SEQUENCE)
2. REMOVE TEMPORARY DECK FORMWORK AFTER DECK CONCRETE HAS ATTAINED A MINIMUM COMPRESSIVE STRENGTH OF 4000 PSI, AND A MINIMUM OF 14 DAYS HAD ELAPSED AFTER COMPLETION OF DECK POUR #5.

STAGE 7

1. SECOND STAGE POST-TENSIONING: STRESS TENDON 3 TO 100% AS DETAILED IN TENDON STRESSING NOTES.
2. GROUT SECOND STAGE TENDON (TENDON 3).
3. ENCASE POST-TENSIONING ANCHORAGES WITH EPOXY GROUT POUR-BACK. (THE GIRDERS FOR SPANS 5 AND 9 MAY BE ERECTED AFTER PLACEMENT OF THE POUR-BACKS HAS FINISHED.)

STAGE 8

1. CAST END DIAPHRAGMS AT BENTS 5 AND 8. (DECK POUR #6 MAY BE CAST AT ANY TIME AFTER THIS STEP, BUT PRIOR TO STEP 3, THIS STAGE. CAST DECK POUR AS DETAILED IN POURING SEQUENCE. SEE SUPERSTRUCTURE DETAIL SHEET FOR DECK POURING SEQUENCE)
2. AFTER END DIAPHRAGM CONCRETE HAS ATTAINED ITS MINIMUM 28-DAY COMPRESSIVE STRENGTH, JACK POST-TENSIONED GIRDERS AT BENTS 5, 6, 7, AND 8 TO RESET BEARING PADS. SEE NOTES ON "ELASTOMERIC BEARING DETAILS" SHEET 4 OF 4, FOR MORE DETAILS.
3. COMPLETE ANY REMAINING CONSTRUCTION ACTIVITIES (CAST BARRIER RAIL, ADD UTILITIES, INSTALL EXPANSION JOINTS, ETC.). ALLOW ALL CONCRETE TO CURE FOR A MINIMUM OF 28 DAYS PRIOR TO OPENING BRIDGE TO TRAFFIC, TO ENSURE CONCRETE HAS ATTAINED ITS MINIMUM DESIGN COMPRESSIVE STRENGTH.

NOTES

1. THIS BRIDGE IS DESIGNED FOR THE ERECTION SEQUENCE SHOWN. THE CONTRACTOR HAS THE OPTION TO DEVIATE FROM THE PROPOSED ERECTION SEQUENCE. IF THE CONTRACTOR CHOOSES TO DEVIATE FROM THE PROPOSED ERECTION SEQUENCE, HE WILL BE RESPONSIBLE FOR ANALYZING THE EFFECTS OF THE PROPOSED CHANGES TO THE PERMANENT STRUCTURE DURING THE CONSTRUCTION PHASE AND IN THE FINAL CONDITION. CALCULATIONS SHOWING REVISED EFFECTS MUST BE SUBMITTED FOR APPROVAL. ANY APPROVED CHANGES WILL BE REFLECTED IN REVISED CONTRACT PLANS FURNISHED BY THE CONTRACTOR. ALL ENGINEERING WORK FOR THE REVISION MUST BE PERFORMED, SIGNED AND SEALED BY A PROFESSIONAL ENGINEER REGISTERED IN NORTH CAROLINA. ANY WORK REQUIRED BY THE CONTRACTOR TO COMPLETE THE DEVIATION FROM THE PROPOSED ERECTION SEQUENCE SHALL BE PERFORMED AT NO ADDITIONAL COST TO THE DEPARTMENT.
2. THE CONTRACTOR IS RESPONSIBLE FOR DESIGNING THE TEMPORARY SUPPORTS, STRONG-BACKS, AND A CONNECTION THAT WILL PREVENT RELATIVE ROTATION BETWEEN THE DROP-IN SEGMENTS AND HAUNCHED SEGMENTS. THE DESIGNS SHALL FOLLOW THE AASHTO GUIDE DESIGN SPECIFICATIONS FOR BRIDGE TEMPORARY WORKS, 1995 WITH CURRENT INTERIMS, AND SHALL BE COMPLETED BY A PROFESSIONAL ENGINEER REGISTERED IN NORTH CAROLINA. THE CONTRACTOR SHALL SUBMIT SIGNED AND SEALED WORKING DRAWINGS AND CALCULATIONS FOR APPROVAL BY THE ENGINEER.
3. PROVIDE ERECTION DRAWINGS FOR ANY TEMPORARY DIAPHRAGMS USED BETWEEN SPLICED GIRDER SEGMENTS. THE CONTRACTOR SHALL TAKE CARE TO INSURE THAT THE TEMPORARY AND PERMANENT DIAPHRAGMS BETWEEN THE GIRDER SEGMENTS ARE INSTALLED IN THE PROPER POSITION AND ORIENTATION.
4. THE CONTRACTOR SHALL ENSURE THAT BEARINGS ARE PROPERLY SEATED AND FUNCTIONING AFTER POST-TENSIONING IS COMPLETED.
5. BEAMS SHALL NOT BE MORE THAN 1/4" OUT OF VERTICAL OR TRANSVERSE ALIGNMENT AT SPLICE LOCATIONS.
6. FOR DETAILS OF POST-TENSIONING OPERATIONS, SEE SHEET TITLED "POST-TENSION GIRDER NOTES".
7. THE COST OF THE MATERIALS, LABOR AND ANY INCIDENTAL ITEMS RELATED TO THE CONSTRUCTION, MAINTENANCE AND REMOVAL OF TEMPORARY BENTS AND STRONG-BACKS SHALL BE AS INDICATED IN THE SPECIAL PROVISION FOR TEMPORARY BENTS.
8. THE CONTRACTOR HAS THE OPTION TO MOVE THE TEMPORARY BENTS IF DESIRED. THE CONTRACTOR WILL BE RESPONSIBLE FOR CALCULATION OF ALL SUPPORT REACTIONS AND ANY OTHER MODIFICATIONS TO THE ERECTION SEQUENCE OR GIRDER SEGMENTS BASED ON THIS CHANGE.

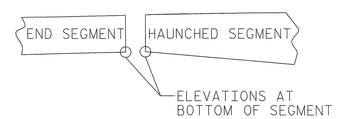

BOTTOM OF GIRDER DIAGRAM
(SHOWING ERECTION ELEVATION LOCATIONS)

BOTTOM OF SEGMENT ERECTION ELEVATIONS AT CLOSURE SPLICES

GIRDER NUMBER	GIRDER END SEGMENT (SPAN 6)	GIRDER HAUNCHED SEGMENT (SPAN 6)	GIRDER END SEGMENT (SPAN 8)	GIRDER HAUNCHED SEGMENT (SPAN 8)
1	66.727	66.727	65.742	65.742
2	66.946	66.946	65.960	65.960
3	67.164	67.164	66.179	66.179
4	67.383	67.383	66.398	66.398
5	67.602	67.602	66.617	66.617

PROJECT NO. R-2633BB
BRUNSWICK/NEW HANOVER COUNTY
STATION: 353+32.50 -L-
SHEET 2 OF 2

NORTH CAROLINA PROFESSIONAL SEAL 19659 ENGINEER ROBERT G. WOODRUFF
8/21/13

RS&H IMPROVING YOUR WORLD

RS&H Architects-Engineers-Planners, Inc.
8601 Six Forks Road, Suite 260
Raleigh, NC 27615
919-846-5701 FAX 919-846-9080
www.rsandh.com
North Carolina License Nos. 50073 * F-0493 * C-28

STATE OF NORTH CAROLINA
DEPARTMENT OF TRANSPORTATION
RALEIGH

ERECTION SEQUENCE
FOR SPANS 6, 7 AND 8
LEFT LANE

REVISIONS						SHEET NO.
NO.	BY:	DATE:	NO.	BY:	DATE:	S-44
1			3			TOTAL SHEETS
2			4			700

DRAWN BY : SOF DATE : 10/2012
CHECKED BY : GBL DATE : 3/2013
DESIGN ENGINEER OF RECORD : R. WOODRUFF DATE : 5/2013

8/21/2013
$$$$$$$$$$$$$$$$$$$$$$$$DGN$$$$$$$$$$$$$$$$$$$$$$$$
1:27:36 PM

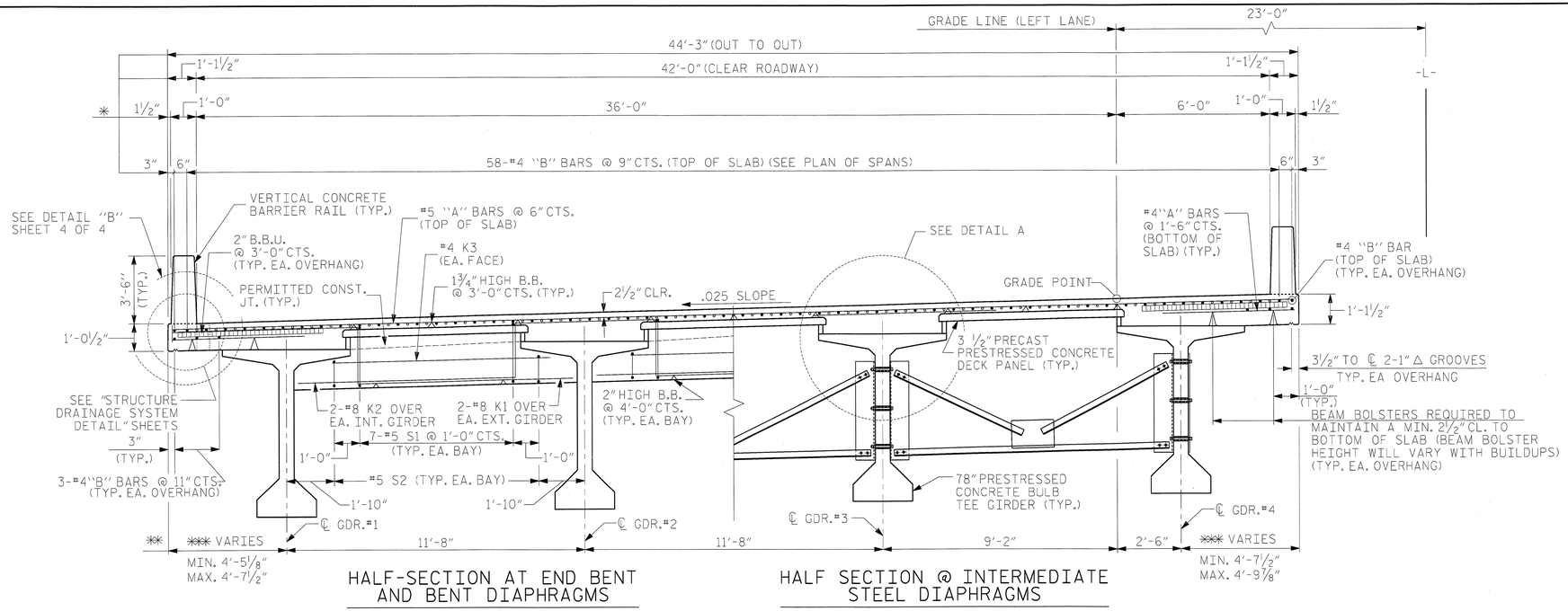

HALF-SECTION AT END BENT AND BENT DIAPHRAGMS

HALF SECTION @ INTERMEDIATE STEEL DIAPHRAGMS

TYPICAL SECTION - LEFT LANE

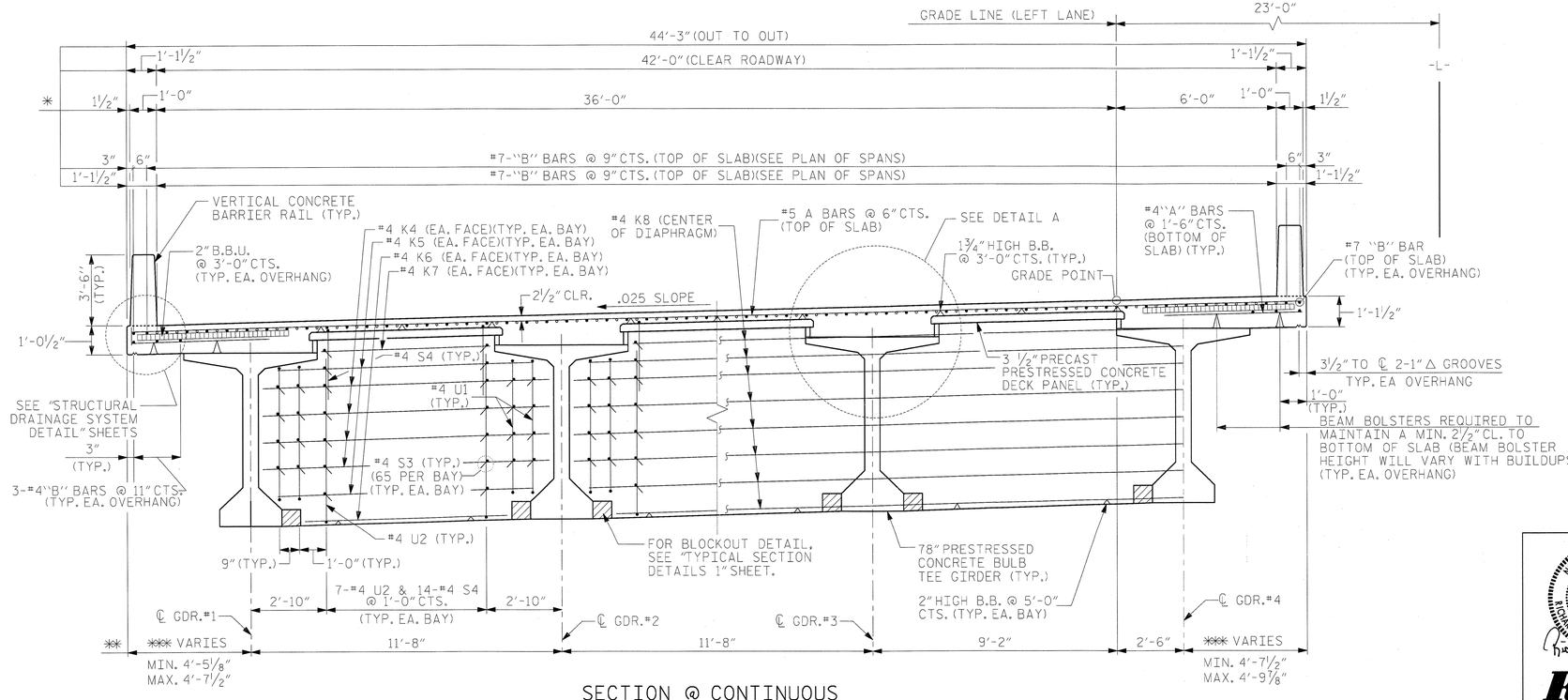

SECTION @ CONTINUOUS BENT DIAPHRAGMS

TYPICAL SECTION - LEFT LANE

NOTES

LONGITUDINAL STEEL MAY BE SHIFTED SLIGHTLY, AS NECESSARY, TO AVOID INTERFERENCE WITH STIRRUPS IN PRESTRESSED CONCRETE GIRDERS.

PREVIOUSLY CAST CONCRETE IN A CONTINUOUS UNIT SHALL HAVE ATTAINED A MINIMUM COMPRESSIVE STRENGTH OF 3,000 PSI BEFORE ADDITIONAL CONCRETE IS CAST IN THE UNIT.

BARRIER RAIL IN A CONTINUOUS UNIT SHALL NOT BE CAST UNTIL ALL SLAB CONCRETE IN THE UNIT HAS BEEN CAST AND HAS REACHED A MINIMUM COMPRESSIVE STRENGTH OF 3,000 PSI.

STRUCTURAL STEEL ERECTION IN A CONTINUOUS UNIT SHALL BE COMPLETE BEFORE FALSEWORK OR FORMS ARE PLACED ON THE UNIT.

FOR STRUCTURE DRAINAGE SYSTEM, SEE SPECIAL PROVISIONS.

FOR DECK DRAIN SPACING, SEE PLAN OF SPAN SHEETS.

FOR CLOSED DRAINAGE SYSTEM IN SPANS 6 THRU 9, SEE "STRUCTURE DRAINAGE SYSTEM" SHEETS.

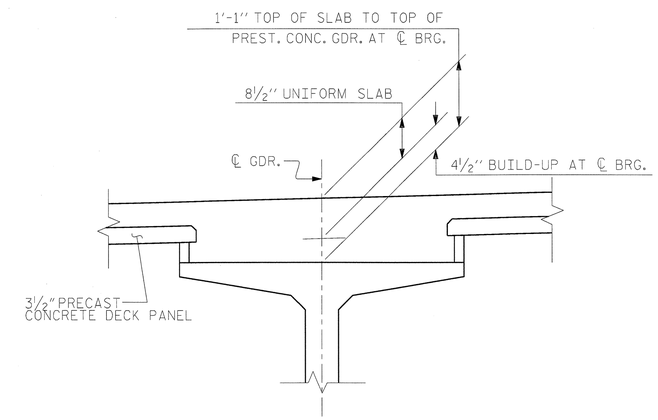

DETAIL A

* DIMENSIONS SHOWN ARE RADIAL TO ℄ -L- (IN HORIZONTAL CURVE)

** DIMENSIONS SHOWN ARE TO ARCS CONCENTRIC WITH THE ℄ -L-. GIRDERS ARE ON THE CHORDS OF CONCENTRIC ARCS (IN HORIZONTAL CURVE).

*** OVERHANG VARIES IN HORIZONTAL CURVE - SPANS 20-58.

PROJECT NO. R-2633BB

BRUNSWICK/NEW HANOVER COUNTY

STATION: 353+32.50 -L-

SHEET 1 OF 4

DRAWN BY : ZPN, SMK, JML, JTD	DATE : 01/2012		
CHECKED BY : RLB, JAD	DATE : 03/2013		
DESIGN ENGINEER OF RECORD : RLB, JAD	DATE : 05/2013		

NORTH CAROLINA PROFESSIONAL SEAL 18442 ENGINEER RICHARD LEON BOLLINGER 5-29-2013

RS&H IMPROVING YOUR WORLD

RS&H Architects-Engineers-Planners, Inc.
8601 Six Forks Road, Suite 260
Raleigh, NC 27615
919-846-6701 FAX 919-846-9080
www.rsandh.com
North Carolina License Nos. 50073 * F-0493 * C-28

NORTH CAROLINA PROFESSIONAL SEAL 22072 ENGINEER JOHN ARTHUR DILLWORTH 5-29-13

WETHERILL ENGINEERING

TRANSPORTATION PLANNING/DESIGN
BRIDGE/STRUCTURE DESIGN
CIVIL/SITE DESIGN - GIS/GPS
CONSTRUCTION OBSERVATION

559 Jones Franklin Rd. Suite 164
Raleigh, N.C. 27606
Bus: 919 851 9077
Fax: 919 851 8107
LICENSE NO. F-0377

STATE OF NORTH CAROLINA
DEPARTMENT OF TRANSPORTATION
RALEIGH

SUPERSTRUCTURE

TYPICAL SECTION
SPANS 1 THRU 5,
SPANS 9-10 AND
SPANS 20 THRU 58
LEFT LANE

REVISIONS						SHEET NO.
NO.	BY:	DATE:	NO.	BY:	DATE:	S-45
1			3			TOTAL SHEETS
2			4			700

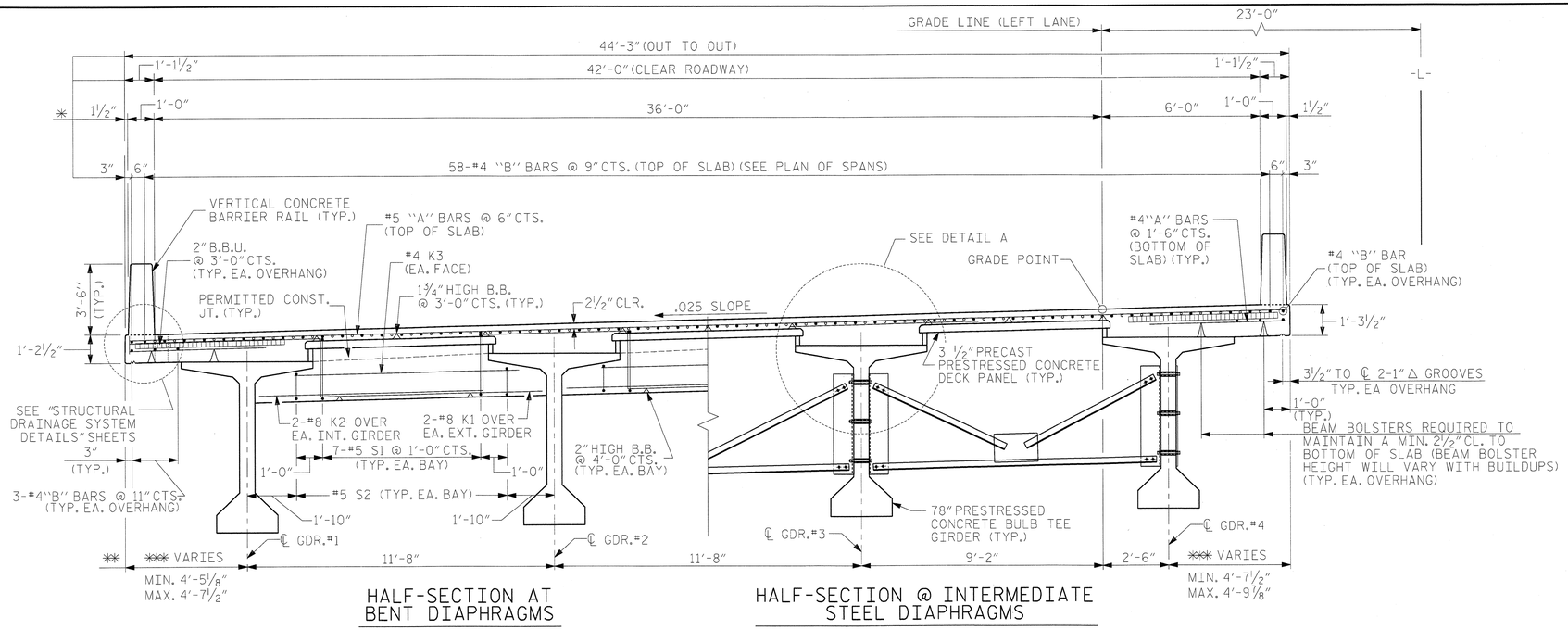

HALF-SECTION AT BENT DIAPHRAGMS

HALF-SECTION @ INTERMEDIATE STEEL DIAPHRAGMS

TYPICAL SECTION - LEFT LANE

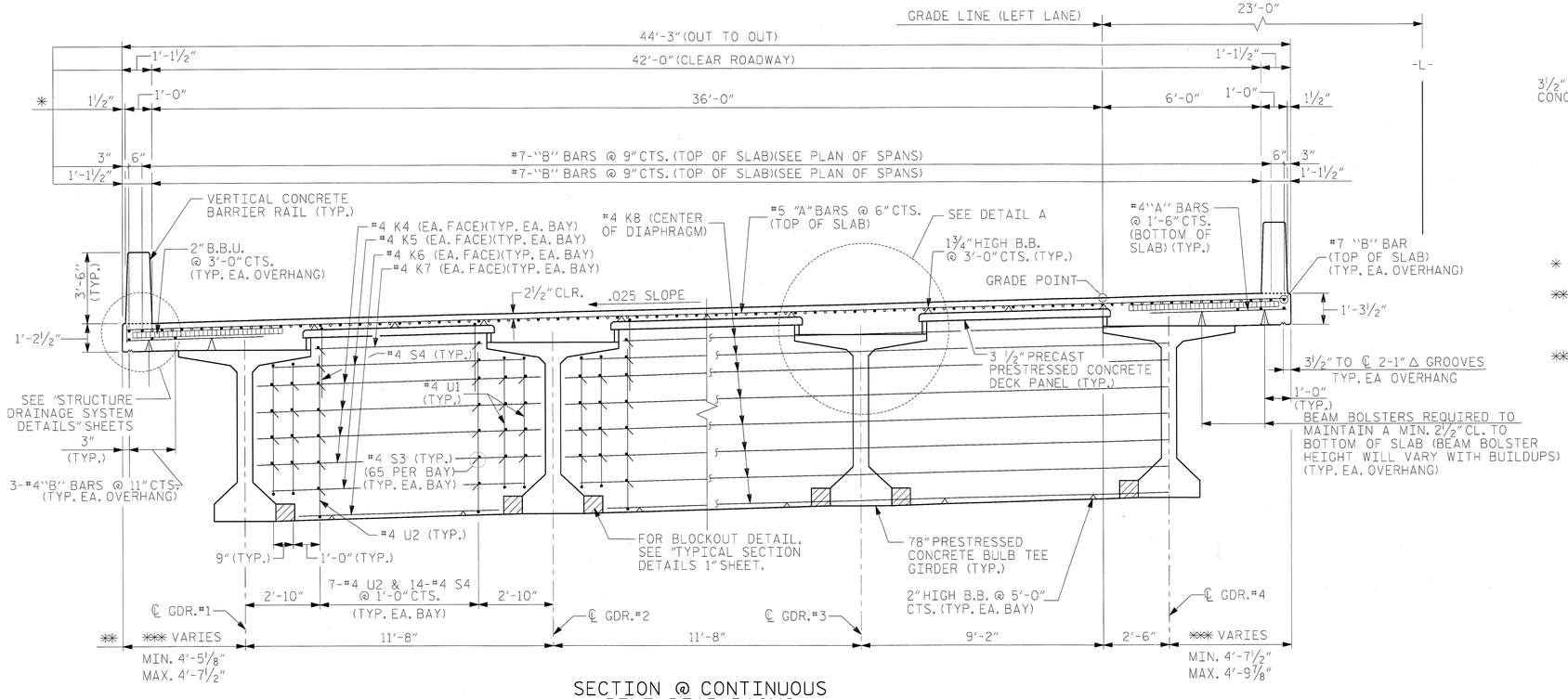

SECTION @ CONTINUOUS BENT DIAPHRAGMS

TYPICAL SECTION - LEFT LANE

NOTES

LONGITUDINAL STEEL MAY BE SHIFTED SLIGHTLY, AS NECESSARY, TO AVOID INTERFERENCE WITH STIRRUPS IN PRESTRESSED CONCRETE GIRDERS.

PREVIOUSLY CAST CONCRETE IN A CONTINUOUS UNIT SHALL HAVE ATTAINED A MINIMUM COMPRESSIVE STRENGTH OF 3,000 PSI BEFORE ADDITIONAL CONCRETE IS CAST IN THE UNIT.

BARRIER RAIL IN A CONTINUOUS UNIT SHALL NOT BE CAST UNTIL ALL SLAB CONCRETE IN THE UNIT HAS BEEN CAST AND HAS REACHED A MINIMUM COMPRESSIVE STRENGTH OF 3,000 PSI.

STRUCTURAL STEEL ERECTION IN A CONTINUOUS UNIT SHALL BE COMPLETE BEFORE FALSEWORK OR FORMS ARE PLACED ON THE UNIT.

FOR STRUCTURE DRAINAGE SYSTEM, SEE SPECIAL PROVISIONS.

FOR DECK DRAIN SPACING, SEE PLAN OF SPAN SHEETS.

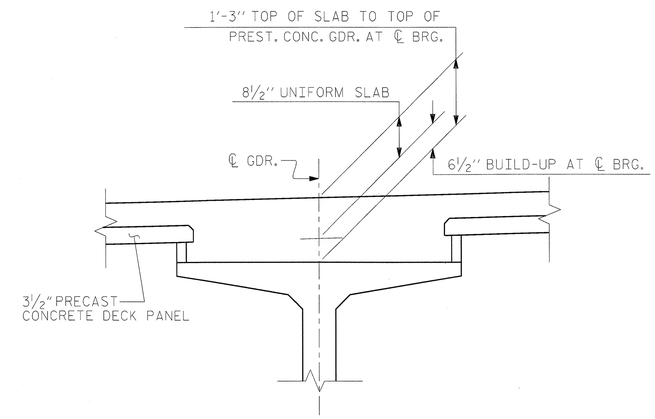

DETAIL A

✳ DIMENSIONS SHOWN ARE RADIAL TO ℄ -L- (IN HORIZONTAL CURVE)

✳✳ DIMENSIONS SHOWN ARE TO ARCS CONCENTRIC WITH THE ℄ -L-. GIRDERS ARE ON THE CHORDS OF CONCENTRIC ARCS (IN HORIZONTAL CURVE).

✳✳✳ OVERHANG VARIES IN HORIZONTAL CURVE - SPANS 17-19.

PROJECT NO. R-2633BB

BRUNSWICK/NEW HANOVER COUNTY

STATION: 353+32.50 -L-

SHEET 2 OF 4

DRAWN BY : SMK, JML	DATE : 01/2012		
CHECKED BY : RLB	DATE : 03/2013		
DESIGN ENGINEER OF RECORD : RLB	DATE : 05/2013		

NORTH CAROLINA PROFESSIONAL SEAL 18442 ENGINEER RICHARD LEON BOLLINGER JR.
5-29-2013

RS&H IMPROVING YOUR WORLD

RS&H Architects-Engineers-Planners, Inc.
8601 Six Forks Road, Suite 260
Raleigh, NC 27615
919-846-6701 FAX 919-846-9080
www.rsandh.com
North Carolina License Nos. 00075 * F-0493 * C-28

STATE OF NORTH CAROLINA
DEPARTMENT OF TRANSPORTATION
RALEIGH

SUPERSTRUCTURE

TYPICAL SECTION

SPANS 11 THRU 19
LEFT LANE

REVISIONS						
NO.	BY:	DATE:	NO.	BY:	DATE:	
1			3			
2			4			

SHEET NO. S-46

TOTAL SHEETS 700

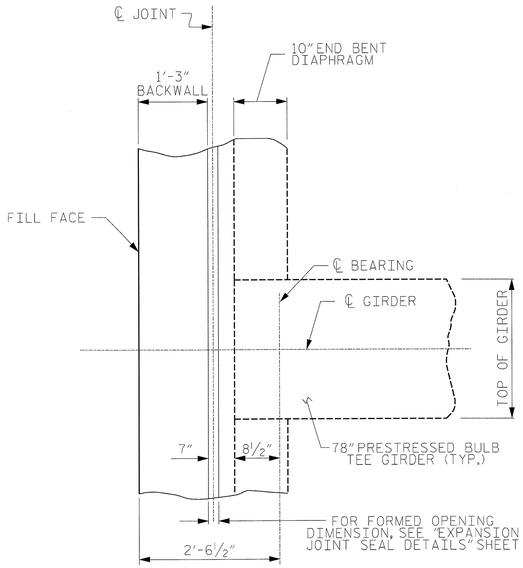

PLAN VIEW AT END BENT DIAPHRAGM

(END BENT 1 SHOWN, END BENT 2 SIMILAR)

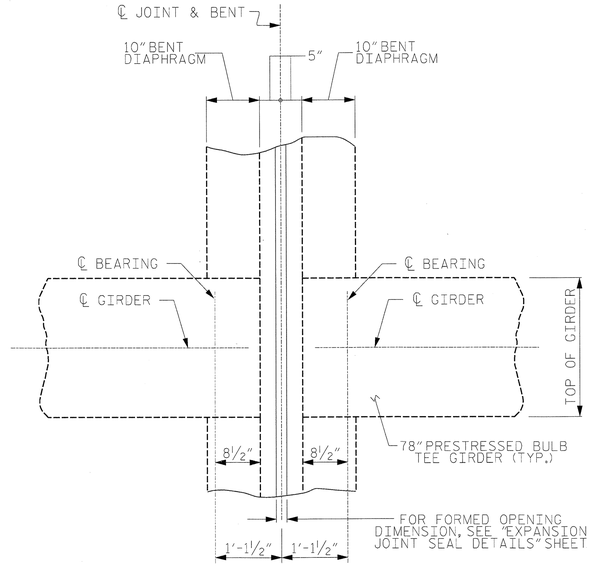

PLAN VIEW AT INTERIOR BENT DIAPHRAGM - EXPANSION

(BENTS 3, 10, 13, 16, 19, 22, 25, 28, 31, 34, 37, 40, 43, 46, 49, 52 & 55)

PLAN OF DIAPHRAGMS

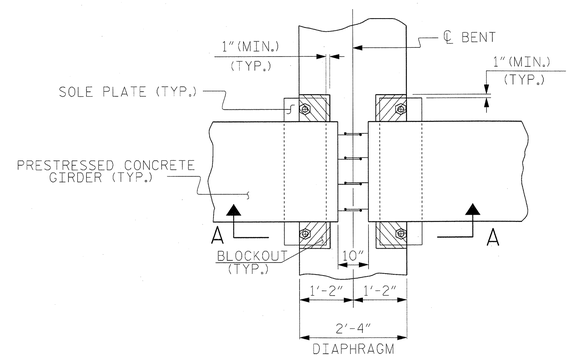

PLAN VIEW

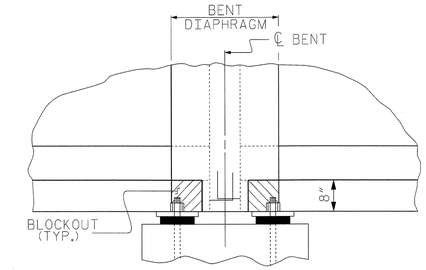

SECTION A-A

CONTINUOUS BENT DIAPHRAGM BLOCKOUT DETAIL

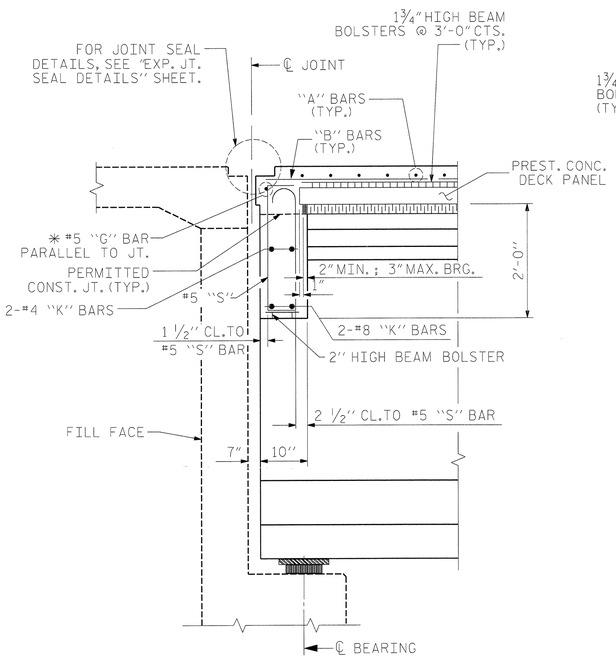

SECTION AT END BENT DIAPHRAGM

✱ #5G BAR MAY BE SHIFTED SLIGHTLY, AS NECESSARY, TO CLEAR REINFORCING STEEL AND STIRRUPS.

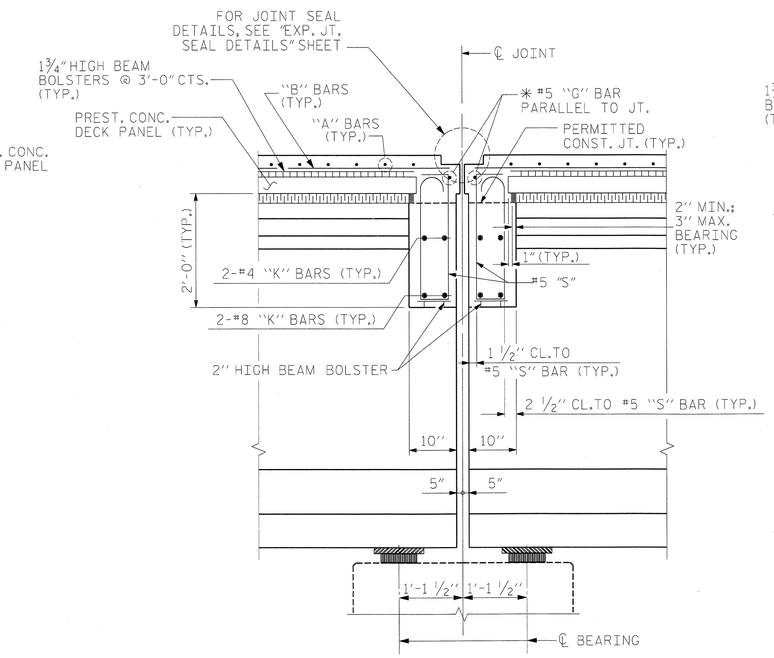

SECTION AT INTERIOR BENT DIAPHRAGM - EXPANSION

#5G BAR MAY BE SHIFTED SLIGHTLY, AS NECESSARY, TO CLEAR REINFORCING STEEL AND STIRRUPS.

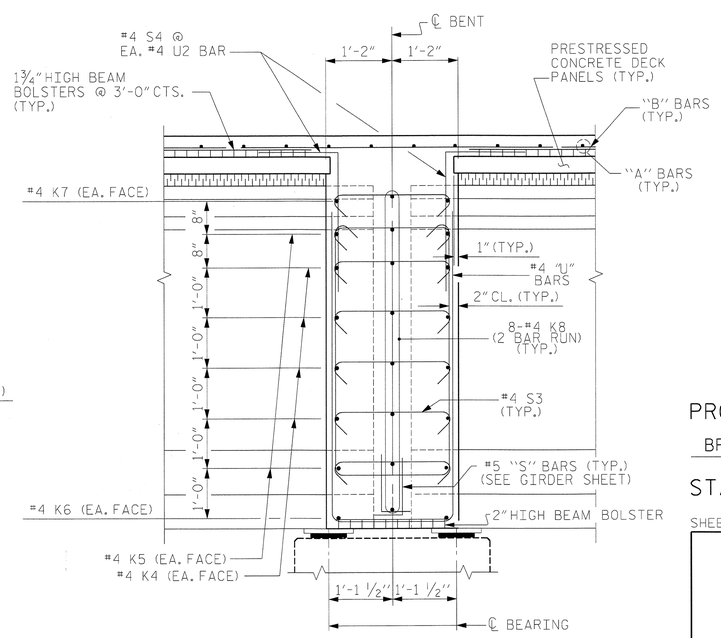

SECTION AT INTERIOR CONTINUOUS BENT DIAPHRAGM - FIXED

(BENTS 1, 2, 4, 9, 11, 12, 14, 15, 17, 18, 20, 21, 23, 24, 26, 27, 29, 30, 32, 33, 35, 36, 38, 39, 41, 42, 44, 45, 47, 48, 50, 51, 53 & 54)

NORTH CAROLINA PROFESSIONAL SEAL 18442 ENGINEER RICHARD LEON BOWMAN
5-29-2013
RS&H IMPROVING YOUR WORLD
RS&H Architects-Engineers-Planners, Inc.
8601 Six Forks Road, Suite 260
Raleigh, NC 27615
919-846-6701 FAX 919-846-9080
www.rsandh.com
North Carolina License Nos. 50073 * F-0493 * C-28

NORTH CAROLINA PROFESSIONAL SEAL 22072 ENGINEER JOHN ARTHUR DILWORTH
5-29-13
WETHERILL ENGINEERING
TRANSPORTATION PLANNING/DESIGN
BRIDGE/STRUCTURE DESIGN
CIVIL/SITE DESIGN - GIS/GPS
CONSTRUCTION OBSERVATION
559 Jones Franklin Rd. Suite 164
Raleigh, N.C. 27606
Bus: 919 851 8077
Fax: 919 851 8107
LICENSE NO. F-0377

PROJECT NO. R-2633BB

BRUNSWICK/NEW HANOVER COUNTY

STATION: 353+32.50 -L-

SHEET 3 OF 4

STATE OF NORTH CAROLINA
DEPARTMENT OF TRANSPORTATION
RALEIGH

SUPERSTRUCTURE
TYPICAL SECTION
DETAILS 1
SPANS 1 THRU 5 AND
SPANS 9 THRU 58
LEFT LANE

REVISIONS								SHEET NO.
		DATE:	NO.	BY:	DATE:			S-47
1			3					TOTAL SHEETS
2			4					700

DRAWN BY : SMK, JML, ZPN DATE : 01/2012
CHECKED BY : RLB, JAD DATE : 03/2013
DESIGN ENGINEER OF RECORD : RLB, JAD DATE : 05/2013

NOTES FOR OPTIONAL CONCRETE DIAPHRAGMS:

TEMPORARY STRUTS SHALL BE PLACED BETWEEN PRESTRESSED GIRDERS ADJACENT TO THE DIAPHRAGMS, AND THE NUTS ON THE 1¼" DIA. TIE RODS SHALL BE FULLY TIGHTENED BEFORE THE DIAPHRAGMS ARE CAST. STRUTS SHALL REMAIN IN PLACE 3 DAYS AFTER CONCRETE IS PLACED. THE TIE RODS SHALL BE RE-TIGHTENED AFTER THE STRUTS HAVE BEEN REMOVED.

CONCRETE IN INTERMEDIATE DIAPHRAGMS MAY BE CLASS A IN LIEU OF CLASS AA. PAYMENT SHALL BE MADE UNDER THE UNIT CONTRACT PRICE FOR REINFORCED CONCRETE DECK SLAB. (CONTINUOUS FOR LIVE LOAD SPANS)

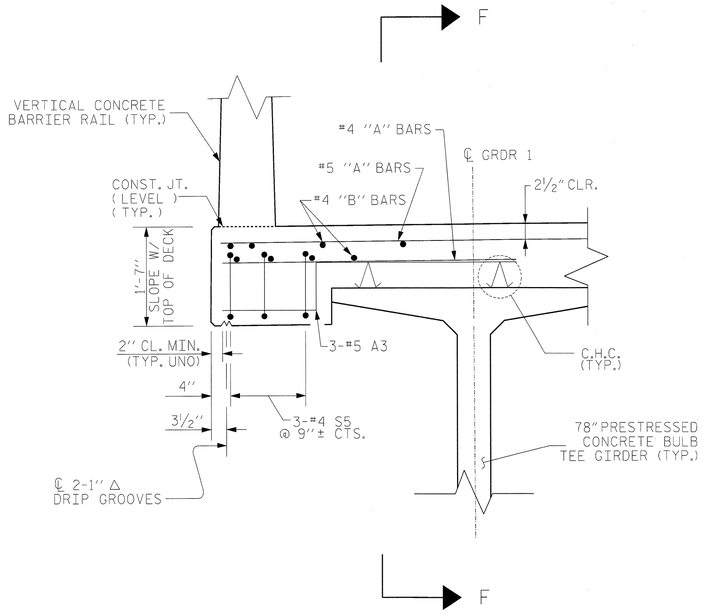

DETAIL "B"

(LEFT OVERHANG SHOWN, RIGHT OVERHAND SIMILAR)

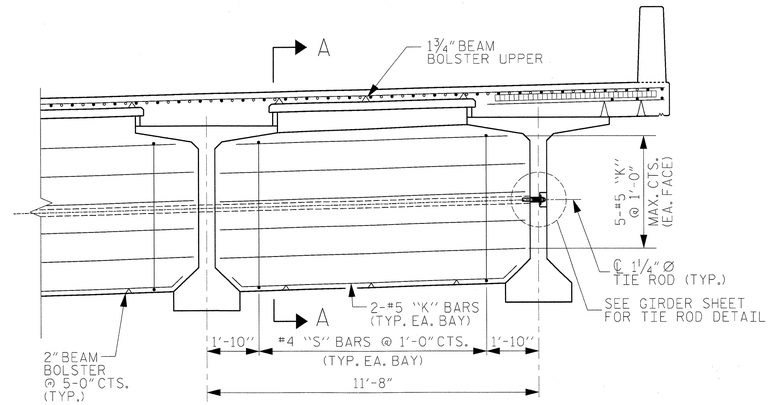

SECTION AT OPTIONAL INTERMEDIATE CONCRETE DIAPHRAGM

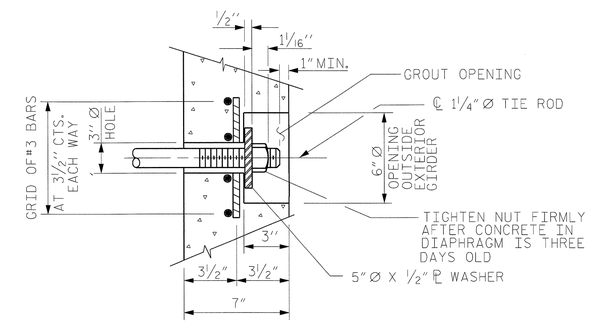

DETAIL "A"

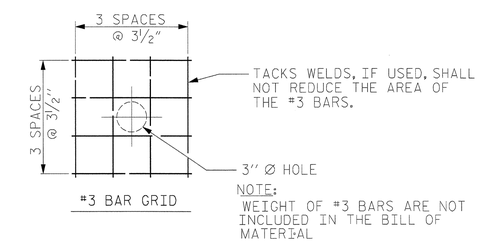

GROUTED RECESS FOR END OF TIE ROD

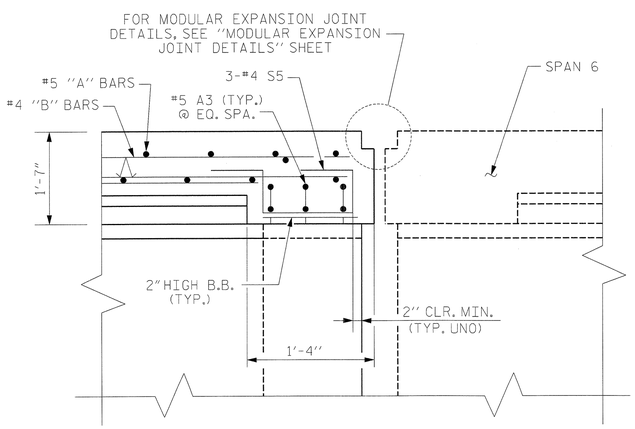

SECTION F-F

(OVERHANG SLAB THICKENING FOR MODULAR JOINT AT BENT 5, BENT 8 SIMILAR)

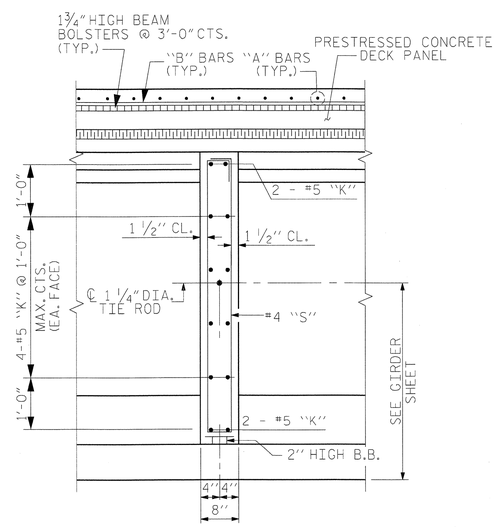

SECTION A-A THRU OPTIONAL INTERMEDIATE CONCRETE DIAPHRAGM

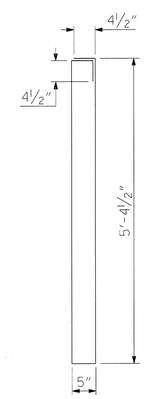

#4 "S" BAR

PROJECT NO. R-2633BB

BRUNSWICK/NEW HANOVER COUNTY

STATION: 353+32.50 -L-

SHEET 4 OF 4

NORTH CAROLINA PROFESSIONAL SEAL 18442 ENGINEER RICHARD LEON BRINKLEY JR. 5-29-2013

RS&H IMPROVING YOUR WORLD

RS&H Architects-Engineers-Planners, Inc.
8601 Six Forks Road, Suite 260
Raleigh, NC 27615
919-846-6701 FAX 919-846-9080
www.rsandh.com
North Carolina License Nos. 50073 * F-0493 * C-28

NORTH CAROLINA PROFESSIONAL SEAL 22072 ENGINEER JOHN ARTHUR DILLNER JR. 5-29-13

WETHERILL ENGINEERING

TRANSPORTATION PLANNING/DESIGN
BRIDGE/STRUCTURE DESIGN
CIVIL/SITE DESIGN - GIS/GPS
CONSTRUCTION OBSERVATION

559 Jones Franklin Rd. Suite 164
Raleigh, N.C. 27606
Bus: 919 851 8077
Fax: 919 851 8107
LICENSE NO. F-0377

STATE OF NORTH CAROLINA
DEPARTMENT OF TRANSPORTATION
RALEIGH

SUPERSTRUCTURE TYPICAL SECTION DETAILS 2

SPANS 1 THRU 5 AND SPANS 9 THRU 58 LEFT LANE

REVISIONS						SHEET NO.
NO.	BY:	DATE:	NO.	BY:	DATE:	5-48
1			3			TOTAL SHEETS
2			4			700

DRAWN BY : SMK, JML, ZPN DATE : 01/2012
CHECKED BY : RLB, JAD DATE : 03/2013
DESIGN ENGINEER OF RECORD : RLB, JAD DATE : 05/2013

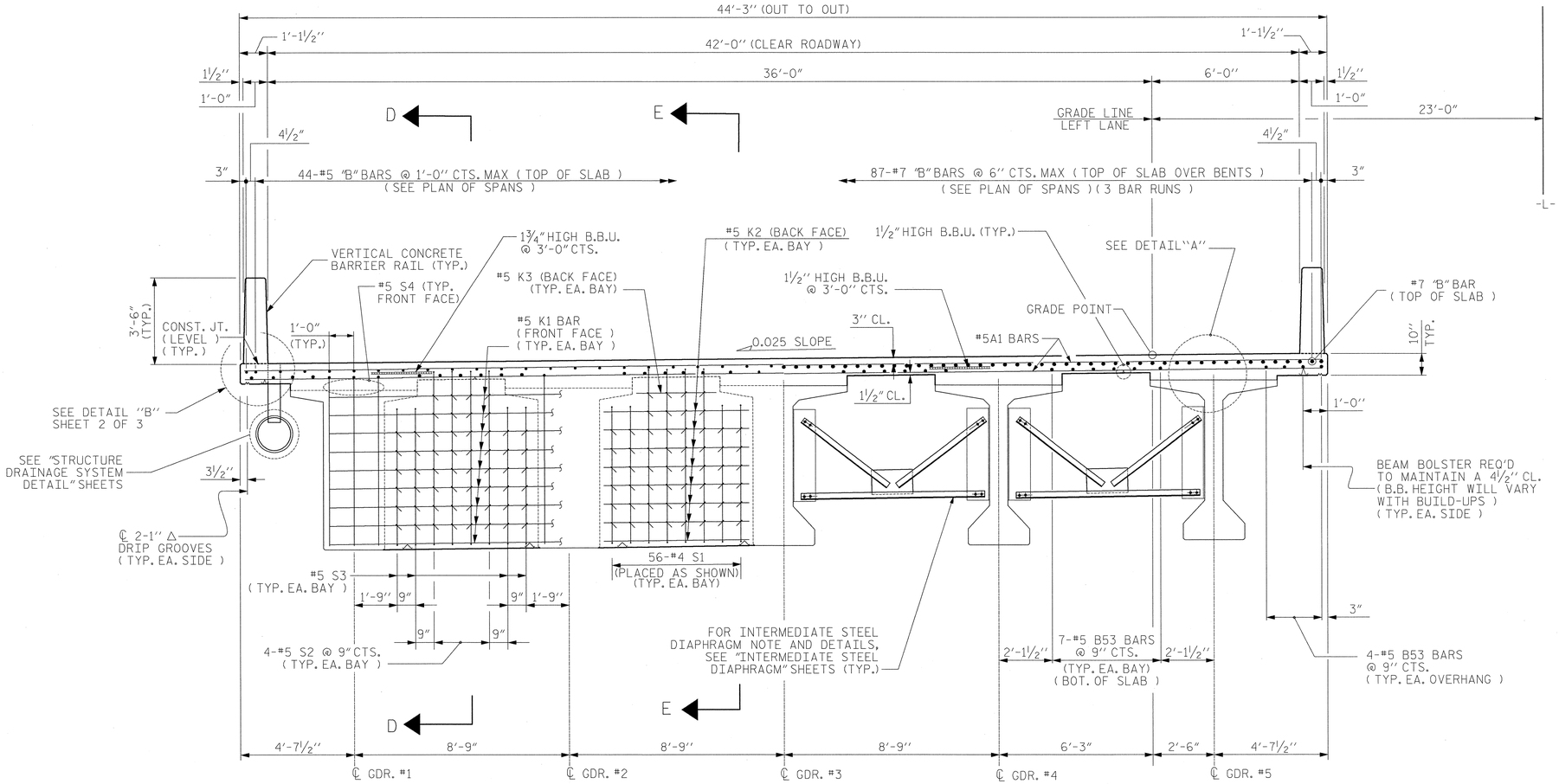

HALF-SECTION @ END DIAPHRAGM

(AT BENTS NO. 5 & NO. 8)
(DECK REINFORCING STEEL DEPICTED IN THIS SECTION IS TYPICAL OVER END AND DROP-IN SEGMENTS)
(SEE "PLAN OF SPAN" SHEETS FOR SPANS 6 THRU 8 FOR MORE DETAILS)

HALF-SECTION @ INTERMEDIATE STEEL DIAPHRAGM

(DECK REINFORCING STEEL DEPICTED IN THIS SECTION IS TYPICAL OVER HAUNCHED SEGMENTS)
(SEE "PLAN OF SPAN" SHEETS FOR SPANS 6 THRU 8 FOR MORE DETAILS)

NOTES

LONGITUDINAL STEEL MAY BE SHIFTED SLIGHTLY, AS NECESSARY, TO AVOID INTERFERENCE WITH STIRRUPS IN PRESTRESSED CONCRETE GIRDERS.

PREVIOUSLY CAST CONCRETE IN A CONTINUOUS UNIT SHALL HAVE ATTAINED A MINIMUM COMPRESSIVE STRENGTH OF 3,000 PSI BEFORE ADDITIONAL CONCRETE IS CAST IN THE UNIT.

BARRIER RAIL IN A CONTINUOUS UNIT SHALL NOT BE CAST UNTIL ALL SLAB CONCRETE IN THE UNIT HAS BEEN CAST AND HAS REACHED A MINIMUM COMPRESSIVE STRENGTH OF 3,000 PSI.

STRUCTURAL STEEL ERECTION IN A CONTINUOUS UNIT SHALL BE COMPLETE BEFORE FALSEWORK OR FORMS ARE PLACED ON THE UNIT.

FOR STRUCTURE DRAINAGE SYSTEM, SEE SPECIAL PROVISIONS.

FOR DECK DRAIN SPACING, SEE PLAN OF SPANS.

FOR CLOSED DRAINAGE SYSTEM IN SPANS 6 THROUGH 9, SEE "STRUCTURE DRAINAGE SYSTEM" SHEETS

PROVIDE 1½" HIGH BEAM BOLSTERS AT 4'-0" CTS. ATOP THE REMOVABLE FORMS TO SUPPORT THE BOTTOM MAT OF "A" BARS.

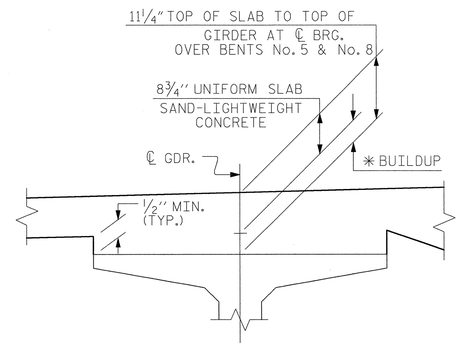

DETAIL "A"

* BUILDUP VARIES ALONG GIRDER
(SEE "DEAD LOAD DEFLECTIONS" PLANSHEETS)

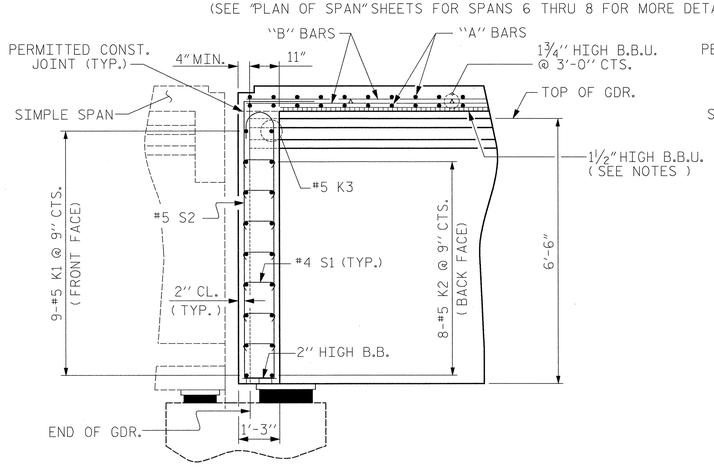

SECTION D-D

SHOWING PARTIAL REINFORCING STEEL
FOR ADDITIONAL TYPICAL REINFORCING STEEL,
SEE SECTION E-E

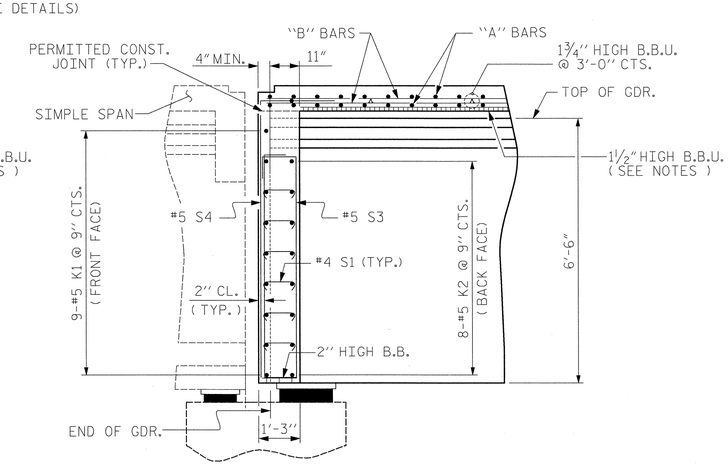

SECTION E-E

SHOWING PARTIAL REINFORCING STEEL
FOR ADDITIONAL TYPICAL REINFORCING STEEL,
SEE SECTION D-D

PROJECT NO. R-2633BB
BRUNSWICK/NEW HANOVER COUNTY
STATION: 353+32.50 -L-

SHEET 1 OF 3

DRAWN BY : SMK DATE : 10/12
CHECKED BY : SOF DATE : 3/2013
DESIGN ENGINEER OF RECORD : R. WOODRUFF DATE : 5/2013

NORTH CAROLINA PROFESSIONAL SEAL 18591 ENGINEER ROBERT G. WOODRUFF
8/21/13

RS&H IMPROVING YOUR WORLD

RS&H Architects-Engineers-Planners, Inc.
8601 Six Forks Road, Suite 260
Raleigh, NC 27615
919-846-6701 FAX 919-846-0080
www.rsandh.com
North Carolina License Nos. 50073 * F-0483 * C-28

STATE OF NORTH CAROLINA
DEPARTMENT OF TRANSPORTATION
RALEIGH

SUPERSTRUCTURE
TYPICAL SECTION & DETAILS
SPANS 6 THRU 8
LEFT LANE

REVISIONS						SHEET NO.
NO.	BY:	DATE:	NO.	BY:	DATE:	S-49
1			3			TOTAL SHEETS
2			4			700

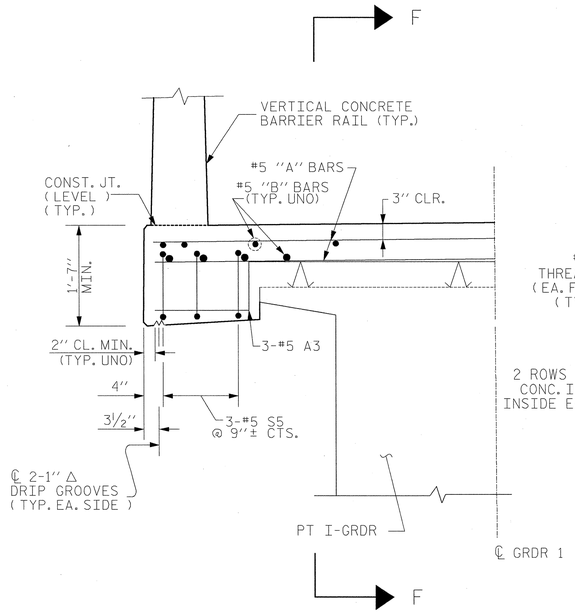

DETAIL "B"

(LEFT OVERHANG SHOWN, RIGHT OVERHANG SIMILAR)

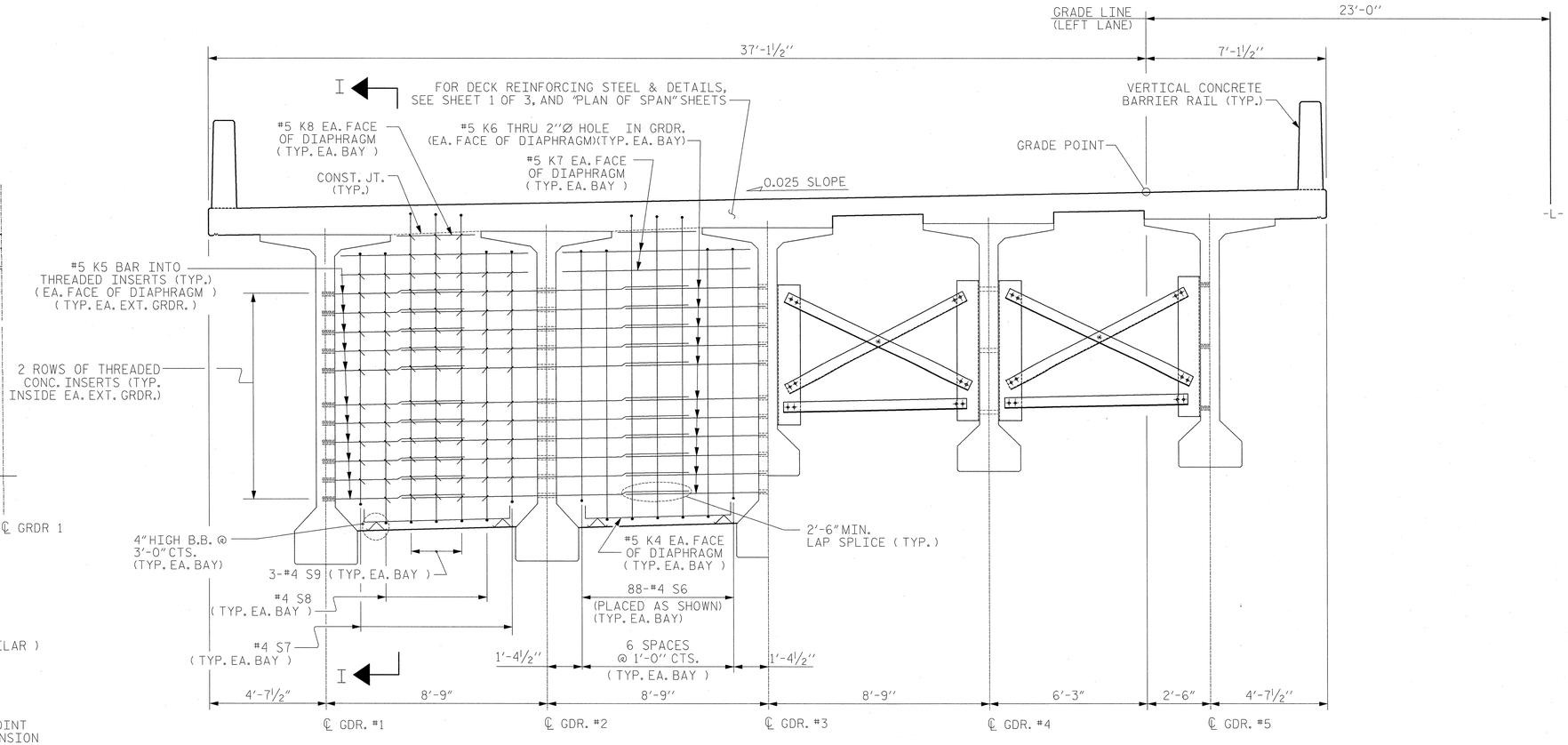

HALF SECTION @ BENT DIAPHRAGM

(AT BENTS No. 6 & No. 7)

HALF SECTION @ INTERMEDIATE STEEL DIAPHRAGM

(AT HAUNCHED GIRDER)

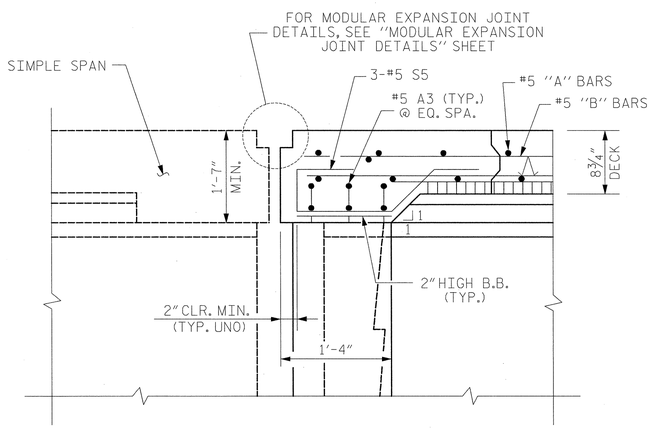

SECTION F-F

(OVERHANG SLAB THICKENING FOR MODULAR JOINT AT BENT 5, BENT 8 SIMILAR)

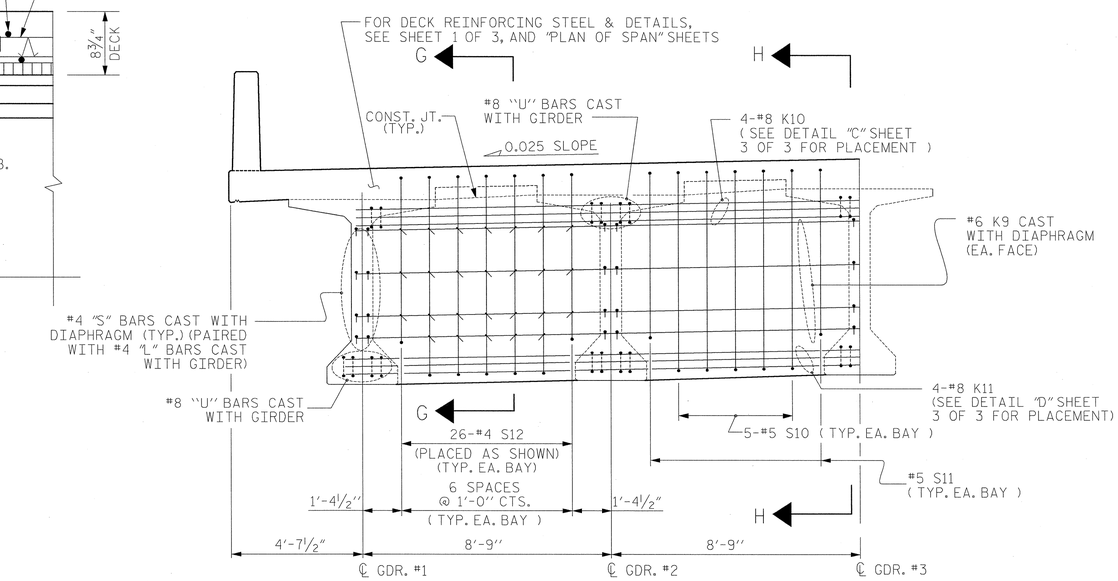

HALF-SECTION @ CLOSURE SPLICE DIAPHRAGM

(FOR PLACEMENT OF "K" BARS, SEE SHEET 3 OF 3)

NOTES

FOR SECTIONS G-G, H-H & I-I SEE "TYPICAL SECTION & DETAILS FOR SPANS 6 THRU 8", SHEET 3 OF 3

PROJECT NO. R-2633BB

BRUNSWICK/NEW HANOVER COUNTY

STATION: 353+32.50 -L-

SHEET 2 OF 3

NORTH CAROLINA PROFESSIONAL SEAL 18594 ENGINEER ROBERT G. WOODRUFF
5/28/13

RS&H IMPROVING YOUR WORLD

RS&H Architects-Engineers-Planners, Inc.
8601 Six Forks Road, Suite 260
Raleigh, NC 27615
919-846-6701 FAX 919-846-9080
www.rsandh.com
North Carolina License Nos. 50073 * F-0493 * C-28

STATE OF NORTH CAROLINA
DEPARTMENT OF TRANSPORTATION
RALEIGH

SUPERSTRUCTURE
TYPICAL SECTION & DETAILS
SPANS 6 THRU 8
LEFT LANE

REVISIONS						
NO.	BY:	DATE:	NO.	BY:	DATE:	
1			3			
2			4			

SHEET NO. S-50

TOTAL SHEETS 700

DRAWN BY :	SMK	DATE :	10/12
CHECKED BY :	SOF	DATE :	3/2013
DESIGN ENGINEER OF RECORD :	R. WOODRUFF	DATE :	5/2013

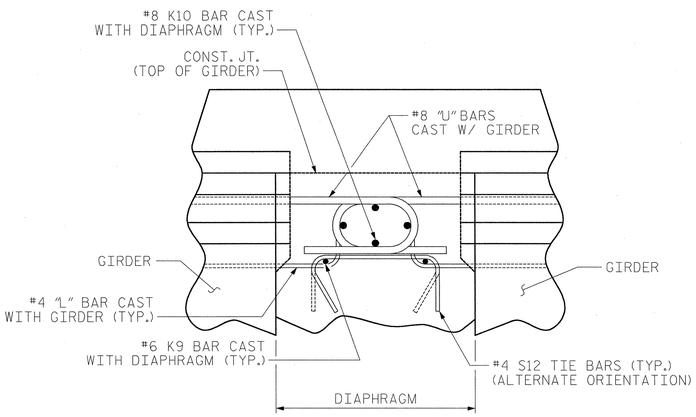

DETAIL "C"

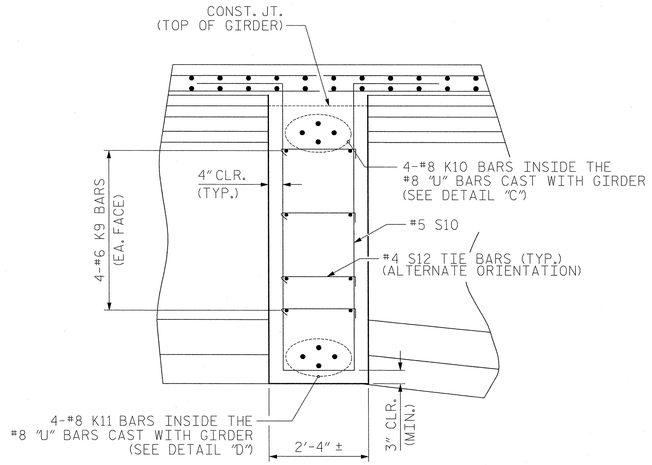

SECTION G-G

SHOWING CLOSURE SPLICE DIAPHRAGM
IN BAY BETWEEN GDR.'s

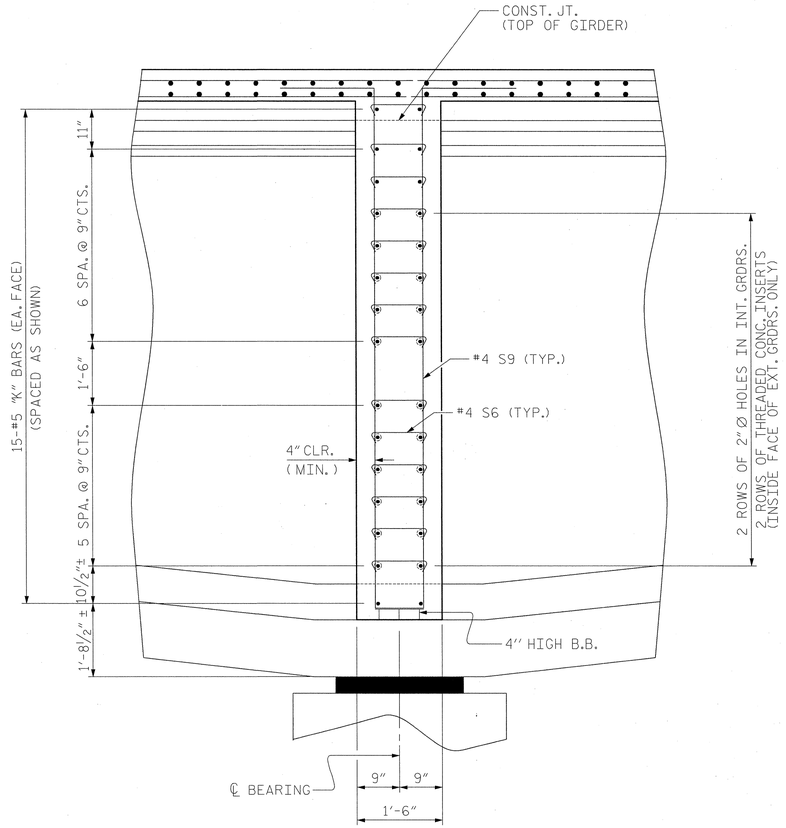

SECTION I-I

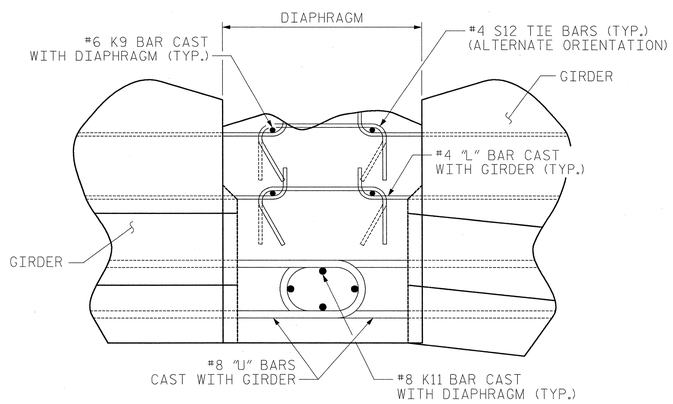

DETAIL "D"

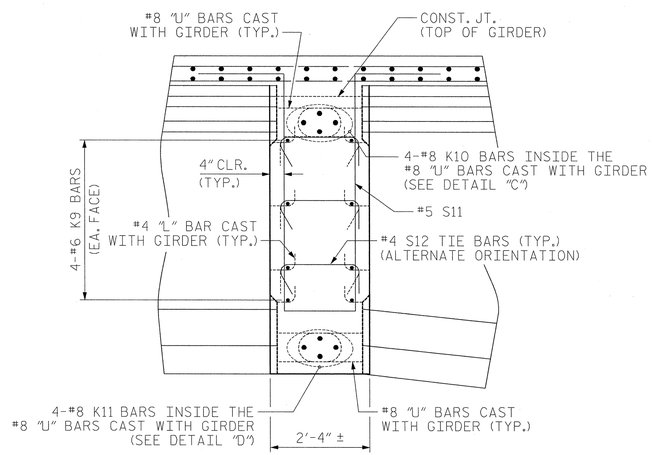

SECTION H-H

SHOWING CLOSURE SPLICE DIAPHRAGM
BETWEEN ENDS OF GDR.'s

NOTES

LONGITUDINAL STEEL IN DIAPHRAGMS, "K" BARS, MAY BE SHIFTED SLIGHTLY, AS NECESSARY, TO AVOID INTERFERENCE WITH STEEL PROTRUDING FROM PRECAST SEGMENT ENDS.

PROJECT NO. R-2633BB
BRUNSWICK/NEW HANOVER COUNTY
STATION: 353+32.50 -L-

SHEET 3 OF 3

NORTH CAROLINA PROFESSIONAL SEAL 18891 ENGINEER ROBERT G. WOODRUFF
5/28/13

RS&H
IMPROVING YOUR WORLD

RS&H Architects-Engineers-Planners, Inc.
8601 Six Forks Road, Suite 260
Raleigh, NC 27615
919-846-5701 FAX 919-846-9080
www.rsandh.com
North Carolina License Nos. 50073 * F-0493 * C-28

STATE OF NORTH CAROLINA
DEPARTMENT OF TRANSPORTATION
RALEIGH

SUPERSTRUCTURE
TYPICAL SECTION
& DETAILS

SPANS 6 THRU 8
LEFT LANE

REVISIONS						
NO.	BY:	DATE:	NO.	BY:	DATE:	
1			3			
2			4			

SHEET NO. S-51
TOTAL SHEETS 700

DRAWN BY : SMK DATE : 10/12
CHECKED BY : SOF DATE : 3/2013
DESIGN ENGINEER OF RECORD : R. WOODRUFF DATE : 5/2013

DECK PANEL SUPPORTS

THE CONTRACTOR SHALL PROVIDE THE DECK PANEL SUPPORT SYSTEM SHOWN OR HE MAY SUBMIT A DECK PANEL SUPPORT SYSTEM OF HIS OWN DESIGN TO THE ENGINEER FOR APPROVAL.

POLYSTYRENE SUPPORT SYSTEM

1. ALL POLYSTYRENE SHALL BE DOW STYROFOAM 60 HIGH-LOAD, UC INDUSTRIES FOAMULAR 600 OR APPROVED EQUAL.
2. THE POLYSTYRENE SUPPORT SYSTEM SHALL CONSIST OF TWO LAYERS WITH A MINIMUM WIDTH OF 1½" AND A MAXIMUM WIDTH OF 2" PER LAYER. THE POLYSTYRENE SHALL HAVE ½" X ½" WIDE SLOTS OR ½" DIAMETER HOLES AT 4'-0" CENTERS STAGGERED ALONG THE TOP AND BOTTOM.
3. THE POLYSTYRENE MAY BE CUT AND PLACED ON EDGE AS NECESSARY TO MATCH THE REQUIRED BUILDUP PROFILE ALONG THE GIRDER.
4. ADHESIVE, AS APPROVED BY THE ENGINEER, SHALL BE APPLIED TO THE TOP OF THE GIRDER IN A CONTINUOUS BEAD AND IN SUFFICIENT AMOUNT TO PREVENT THE POLYSTYRENE FROM BLOWING OUT AND TO PREVENT GAPS FROM FORMING BETWEEN THE POLYSTYRENE AND THE GIRDER. PRIOR TO PLACEMENT OF THE DECK PANELS, THE ADHESIVE SHALL ALSO BE APPLIED TO THE TOP OF THE POLYSTYRENE.
5. CONCRETE-FILLED BUCKETS, STACKS OF DECK PANELS, BUNDLED REINFORCING BARS OR OTHER HEAVY CONCENTRATED LOADS WILL NOT BE PERMITTED ON THE DECK PANEL ONCE THE PANEL HAS BEEN PLACED ON THE POLYSTYRENE SUPPORT SYSTEM.

GENERAL NOTES

1. THE DESIGN COMPRESSIVE STRENGTH (f'c) FOR THE CONCRETE IN PRESTRESSED PANELS SHALL BE 5000 PSI MINIMUM AT 28 DAYS. COMPRESSIVE STRENGTH OF CONCRETE AT TIME OF RELEASE OF STRANDS SHALL BE 4000 PSI MINIMUM.
2. THE PRECAST PRESTRESSED PANEL SHALL HAVE A THICKNESS OF 3 ½" WITH THE PRESTRESSED STRANDS LOCATED AT HALF THE DEPTH OF THE PANEL.
3. FOR SKEWED SPANS, TRAPEZOIDAL CLOSURE PANELS SHALL HAVE A MINIMUM WIDTH OF 2 FEET ON THE SHORT SIDE.
4. ALL PRESTRESSING STRANDS SHALL EXTEND 2" BEYOND THE PANEL EDGES.
5. SHEAR REINFORCING OF 0.60 SQ. INCHES OF REINFORCING STEEL PER 10 SQ. FEET OF PANEL SURFACE SHALL BE PROVIDED IN THE PANEL TO ENSURE COMPOSITE ACTION BETWEEN PANEL AND THE CAST-IN-PLACE CONCRETE. SHEAR REINFORCEMENT SHALL BE MADE OF WELDED WIRE HAVING A MINIMUM YIELD STRENGTH OF 60 KSI.
6. SHEAR REINFORCEMENT AND LIFTING DEVICES SHALL BE CONSTRUCTED AND PLACED SO AS TO AVOID ANY INTERFERENCE WITH REINFORCING STEEL IN THE CAST-IN-PLACE DECK SLAB AND TO ALLOW FOR PROPER CONCRETE CONSOLIDATION IN THE DECK PANEL.
7. SHIFT LONGITUDINAL "B" BARS AS NECESSARY TO OBTAIN A MINIMUM CLEAR DISTANCE OF 2 ½" TO THE RIGHT OR LEFT OF THE EDGE OF THE DECK PANEL. IF, IN SHIFTING TO OBTAIN THIS CLEARANCE, THE "B" BAR INTERFERES WITH THE STIRRUP IN THE TOP OF THE GIRDER THE "B" BAR MAY BE ELIMINATED.
8. WHEN CASTING THE DECK, PLACE CONCRETE FIRST OVER THE GIRDERS IN CONTINUOUS STRIPS A MINIMUM OF THREE PANEL LENGTHS AHEAD OF THE REST OF THE CONCRETE. CAREFULLY VIBRATE THE CONCRETE OVER THE GIRDERS SO THAT CONCRETE COMPLETELY FILLS THE AREA UNDER THE DECK PANEL OVERHANGS. THEN PLACE AND VIBRATE THE REMAINING DECK CONCRETE.
9. PRECAST PANELS SHALL BE DESIGNED FOR AN ALLOWABLE TENSILE STRESS OF 0 PSI IN THE PRECOMPRESSED TENSILE ZONE UNDER ALL LOADING CONDITIONS.
10. PRECAST PANELS SHALL CONTAIN CALCIUM NITRITE CORROSION INHIBITORS.
11. FOR CALCIUM NITRITE CORROSION INHIBITOR, SEE STANDARD SPECIFICATIONS.

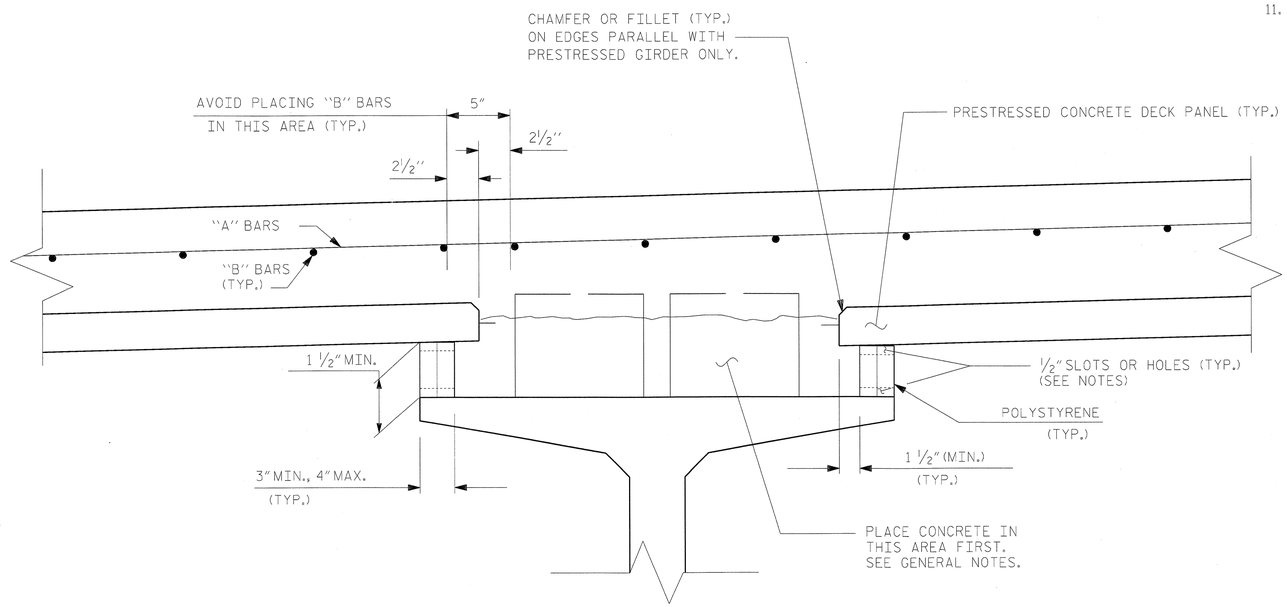

POLYSTYRENE SUPPORT

PROJECT NO. R-2633BB

BRUNSWICK/NEW HANOVER COUNTY

STATION: 353+32.50 -L-

NORTH CAROLINA PROFESSIONAL SEAL 18442 ENGINEER RICHARD LEON BOLANDER III 5-29-2013

RS&H IMPROVING YOUR WORLD

RS&H Architects-Engineers-Planners, Inc.
8601 Six Forks Road, Suite 260
Raleigh, NC 27615
919-846-5701 FAX 919-846-9080
www.rsandh.com
North Carolina License Nos. 50073 * F-0493 * C-28

NORTH CAROLINA PROFESSIONAL SEAL 22072 ENGINEER JOHN ARTHUR DILWORTH 5-29-13

WETHERILL ENGINEERING
TRANSPORTATION PLANNING/DESIGN
BRIDGE/STRUCTURE DESIGN
CIVIL/SITE DESIGN - GS/SPS
CONSTRUCTION OBSERVATION
559 Jones Franklin Rd. Suite 164
Raleigh, N.C. 27606
Bus: 919 851 8077
Fax: 919 851 8107
LICENSE NO. F-0377

STATE OF NORTH CAROLINA
DEPARTMENT OF TRANSPORTATION
RALEIGH

PRECAST PRESTRESSED CONCRETE DECK PANELS
LEFT LANE

REVISIONS						SHEET NO.
NO.	BY:	DATE:	NO.	BY:	DATE:	S-52
1			3			TOTAL SHEETS
2			4			700

DRAWN BY :	JML, ZPN	DATE :	2/2012
CHECKED BY :	RLB, JAD	DATE :	3/2013
DESIGN ENGINEER OF RECORD :	RLB, JAD	DATE :	5/2013

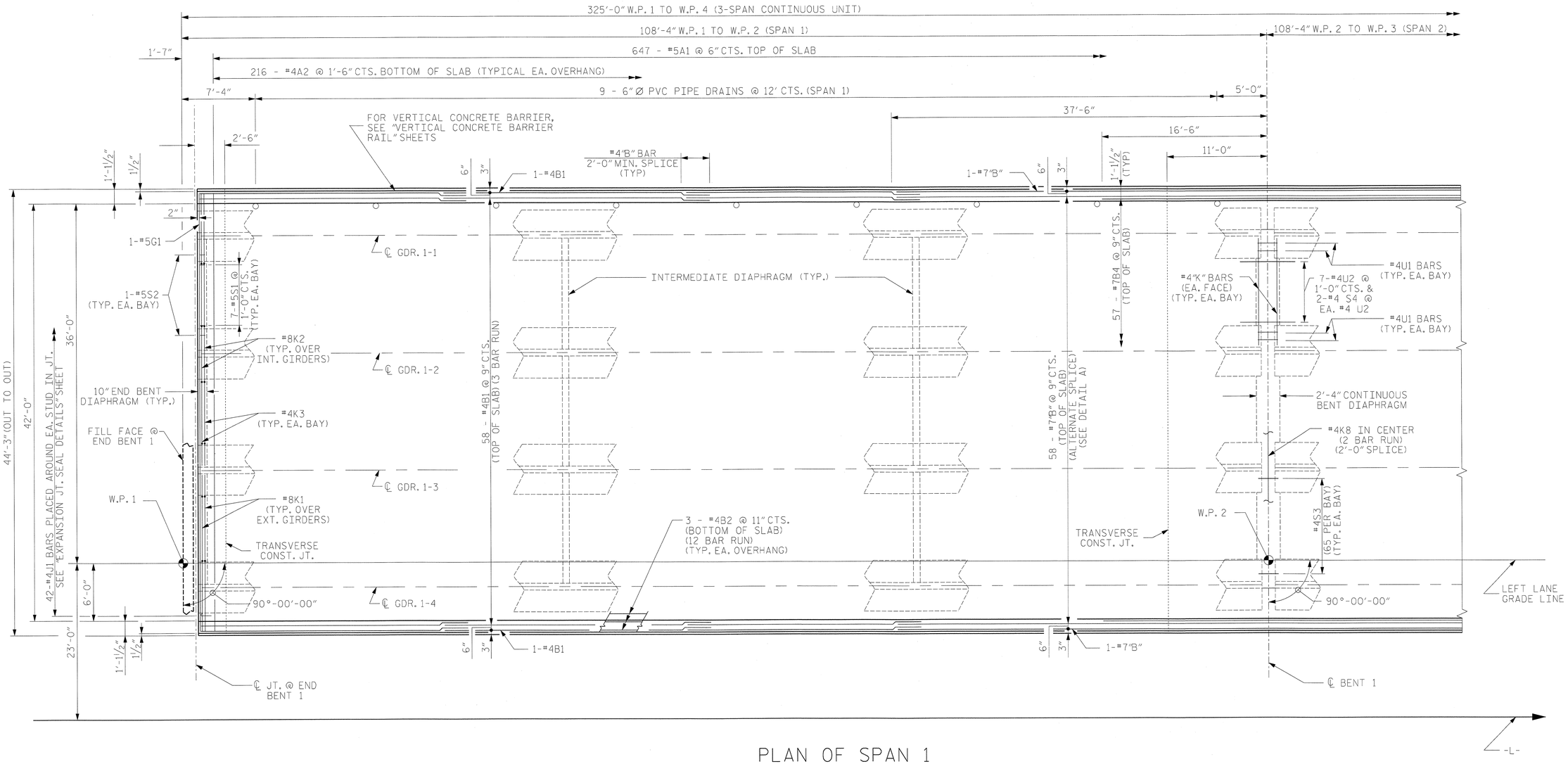

PLAN OF SPAN 1

FOR SECTION VIEWS, SEE "TYPICAL SECTION AND DETAILS"

NOTES

FOR POUR SEQUENCE AND LOCATION OF CONSTRUCTION JOINTS, SEE SUPERSTRUCTURE "BILL OF MATERIAL SPANS 1, 2 & 3" SHEET.

FOR TRANSVERSE CONSTRUCTION JOINT DETAIL SEE "PLAN OF SPAN 3" SHEET.

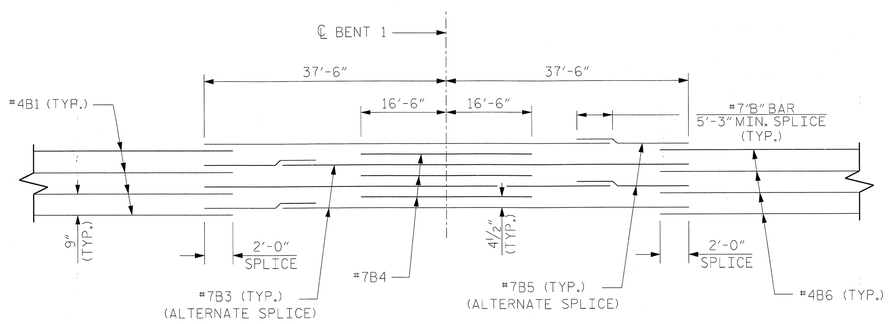

DETAIL A

PROJECT NO. R-2633BB

BRUNSWICK/NEW HANOVER COUNTY

STATION: 353+32.50 -L-

SHEET 1 OF 29

NORTH CAROLINA PROFESSIONAL SEAL 18442 ENGINEER LEON BOLLINGER 5-29-2013

RS&H IMPROVING YOUR WORLD

RS&H Architects-Engineers-Planners, Inc.
8601 Six Forks Road, Suite 260
Raleigh, NC 27615
919-846-6701 FAX 919-846-9080
www.rsandh.com
North Carolina License Nos. 50073 * F-0493 * C-28

STATE OF NORTH CAROLINA
DEPARTMENT OF TRANSPORTATION
RALEIGH

SUPERSTRUCTURE

PLAN OF SPAN 1
LEFT LANE

REVISIONS								SHEET NO.
NO.	BY:	DATE:	NO.	BY:	DATE:			S-53
1			3					TOTAL SHEETS
2			4					700

DRAWN BY :	SMK, RJD	DATE :	11/2011
CHECKED BY :	JMR	DATE :	3/2013
DESIGN ENGINEER OF RECORD :	R. BOLLINGER	DATE :	5/2013

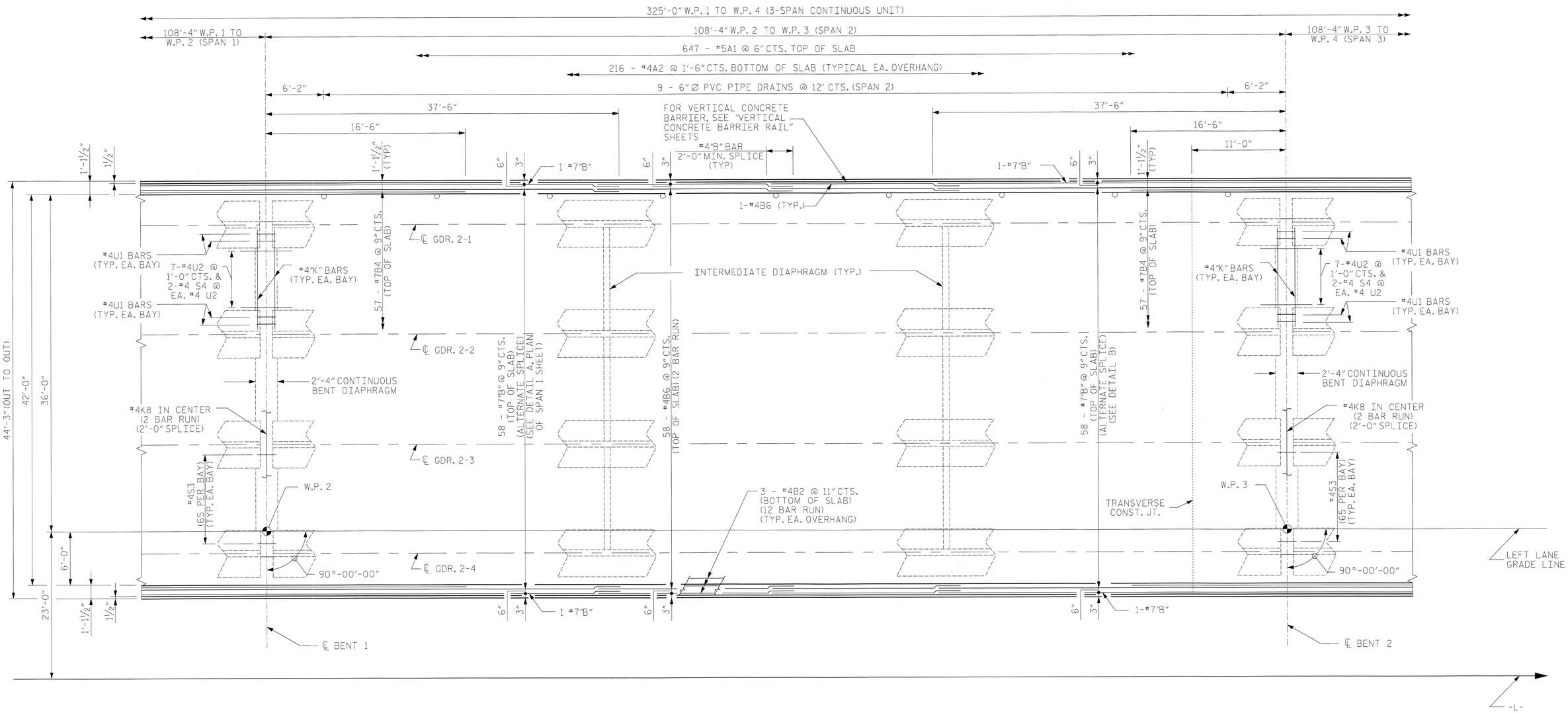

PLAN OF SPAN 2

FOR SECTION VIEWS, SEE "TYPICAL SECTION AND DETAILS"

NOTES

FOR POUR SEQUENCE AND LOCATION OF CONSTRUCTION JOINTS, SEE SUPERSTRUCTURE "BILL OF MATERIAL SPANS 1, 2 & 3" SHEET.

FOR TRANSVERSE CONSTRUCTION JOINT DETAIL SEE "PLAN OF SPAN 3" SHEET.

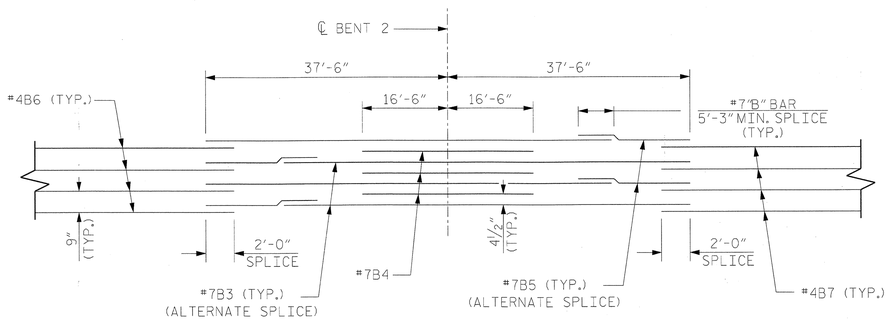

DETAIL B

PROJECT NO. R-2633BB

BRUNSWICK/NEW HANOVER COUNTY

STATION: 353+32.50 -L-

SHEET 2 OF 29

NORTH CAROLINA PROFESSIONAL SEAL 18442 ENGINEER RICHARD LEON BOLLINGER 5-29-2013

RS&H IMPROVING YOUR WORLD

RS&H Architects-Engineers-Planners, Inc.
8601 Six Forks Road, Suite 260
Raleigh, NC 27615
919-846-5701 FAX 919-846-9080
www.rsandh.com
North Carolina License Nos. 50073 * F-0493 * C-28

STATE OF NORTH CAROLINA
DEPARTMENT OF TRANSPORTATION
RALEIGH

SUPERSTRUCTURE

PLAN OF SPAN 2
LEFT LANE

REVISIONS						SHEET NO.
NO.	BY:	DATE:	NO.	BY:	DATE:	S-54
1			3			TOTAL SHEETS
2			4			700

DRAWN BY : SMK, RJD DATE : 11/2011
CHECKED BY : JMR DATE : 3/2013
DESIGN ENGINEER OF RECORD : R. BOLLINGER DATE : 5/2013

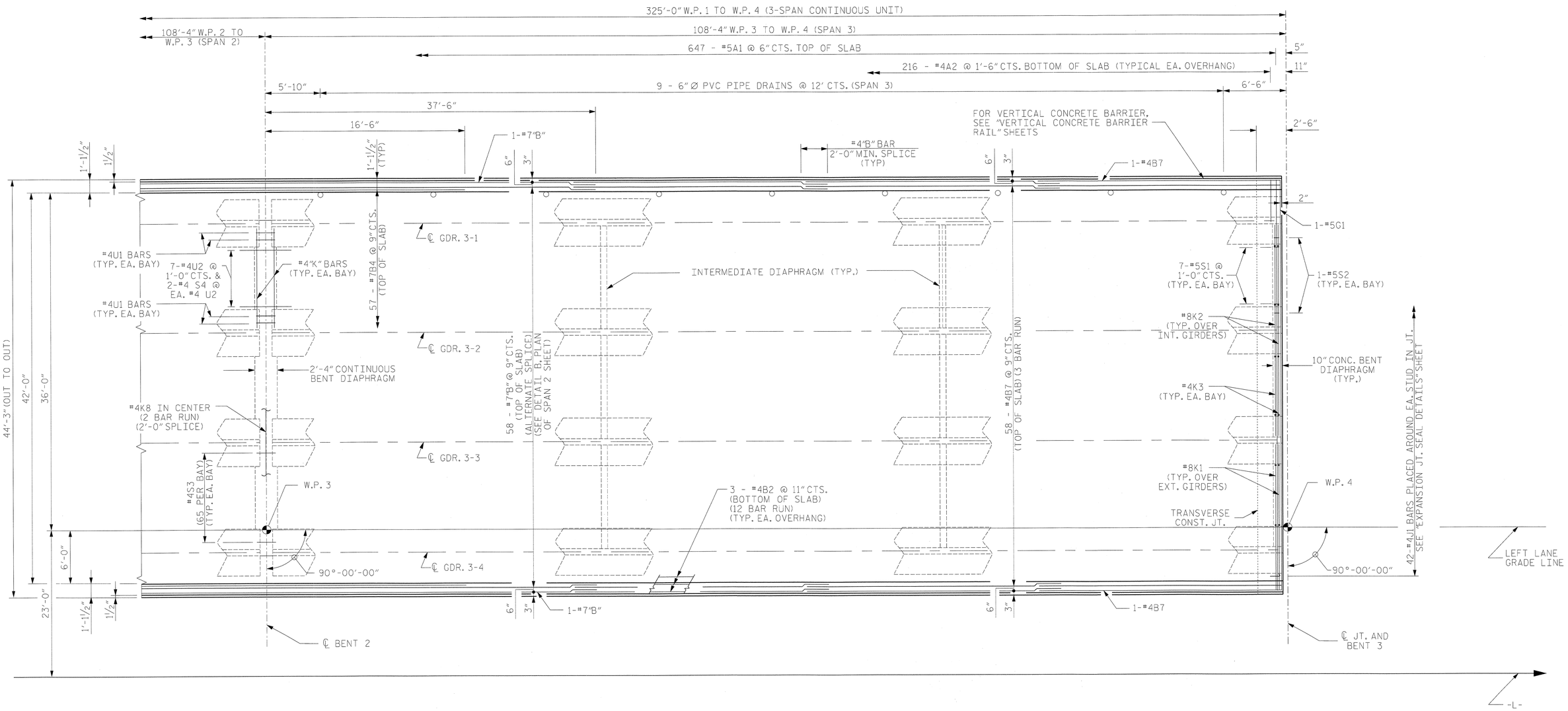

PLAN OF SPAN 3

FOR SECTION VIEWS, SEE "TYPICAL SECTION AND DETAILS"

NOTES

FOR POUR SEQUENCE AND LOCATION OF CONSTRUCTION JOINT, SEE SUPERSTRUCTURE "BILL OF MATERIAL SPANS 1, 2 & 3" SHEET.

FOR LAP SPLICE DETAIL OF LONGITUDINAL REINFORCEMENT, SEE "PLAN OF SPAN 2" SHEET.

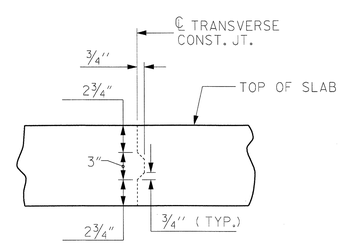

TRANSVERSE CONSTRUCTION JOINT DETAIL

NOTE: REINFORCING STEEL IN SLAB NOT SHOWN. LONGITUDINAL REINFORCING STEEL SHALL BE CONTINUOUS THRU JOINT

PROJECT NO. R-2633BB

BRUNSWICK/NEW HANOVER COUNTY

STATION: 353+32.50 -L-

SHEET 3 OF 29

DRAWN BY :	SMK, RJD	DATE :	11/2011
CHECKED BY :	JMR	DATE :	3/2013
DESIGN ENGINEER OF RECORD :	R. BOLLINGER	DATE :	5/2013

NORTH CAROLINA PROFESSIONAL SEAL 18442 ENGINEER RICHARD LEON BOLLINGER 5-29-2013

RS&H IMPROVING YOUR WORLD

RS&H Architects-Engineers-Planners, Inc.
8601 Six Forks Road, Suite 260
Raleigh, NC 27615
919-846-5701 FAX 919-846-9080
www.rsandh.com
North Carolina License Nos. 50073 * F-0493 * C-28

STATE OF NORTH CAROLINA
DEPARTMENT OF TRANSPORTATION
RALEIGH

SUPERSTRUCTURE

PLAN OF SPAN 3
LEFT LANE

REVISIONS								SHEET NO.
NO.	BY:	DATE:	NO.	BY:	DATE:			S-55
1			3					TOTAL SHEETS
2			4					700

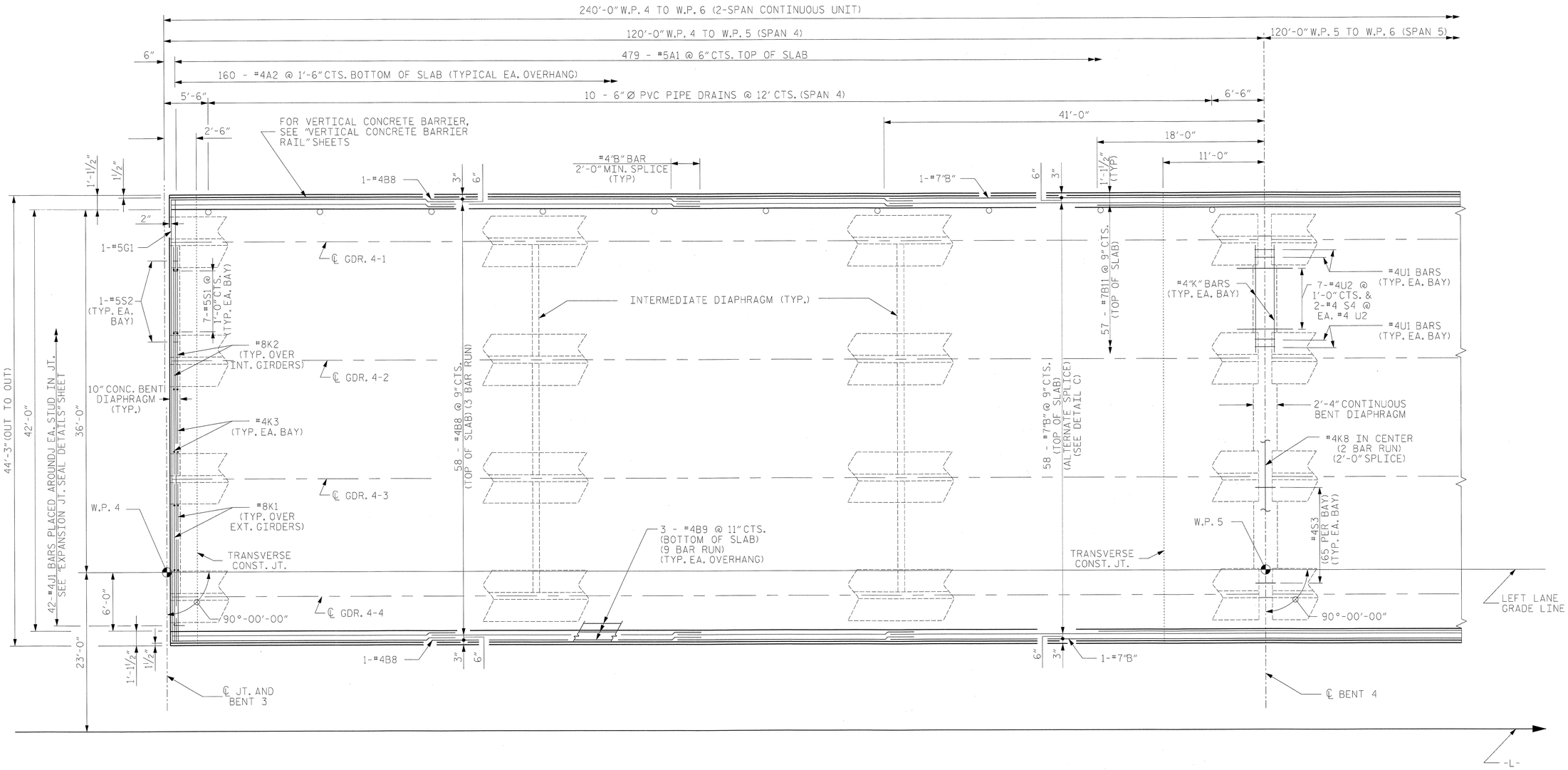

PLAN OF SPAN 4

FOR SECTION VIEWS, SEE "TYPICAL SECTION AND DETAILS"

NOTES

FOR POUR SEQUENCE AND LOCATION OF CONSTRUCTION JOINTS, SEE SUPERSTRUCTURE "BILL OF MATERIAL SPANS 4 & 5" SHEET.

FOR TRANSVERSE CONSTRUCTION JOINT DETAIL SEE "PLAN OF SPAN 5" SHEET.

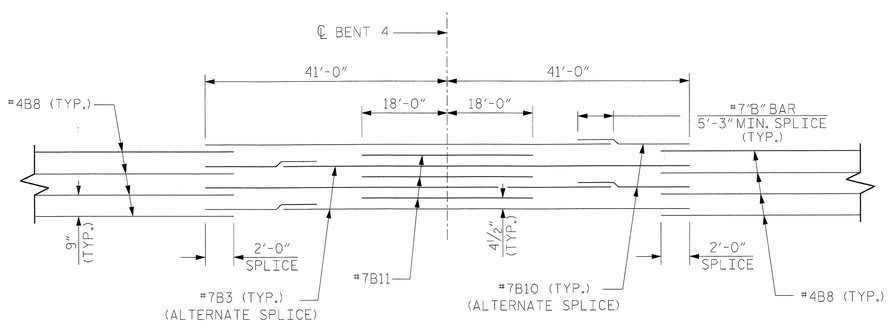

DETAIL C

PROJECT NO. R-2633BB

BRUNSWICK/NEW HANOVER COUNTY

STATION: 353+32.50 -L-

SHEET 4 OF 29

STATE OF NORTH CAROLINA
DEPARTMENT OF TRANSPORTATION
RALEIGH

SUPERSTRUCTURE

PLAN OF SPAN 4
LEFT LANE

NORTH CAROLINA PROFESSIONAL SEAL 18442 ENGINEER RICHARD BOLLINGER
5-29-2013

RS&H IMPROVING YOUR WORLD

RS&H Architects-Engineers-Planners, Inc.
8601 Six Forks Road, Suite 260
Raleigh, NC 27615
919-846-6701 FAX 919-846-9080
www.rsandh.com
North Carolina License Nos. 50073 * F-0493 * C-28

REVISIONS						SHEET NO.
NO.	BY:	DATE:	NO.	BY:	DATE:	S-56
1			3			TOTAL SHEETS
2			4			700

DRAWN BY : SMK, RJD DATE : 11/2011
CHECKED BY : JMR DATE : 3/2013
DESIGN ENGINEER OF RECORD : R. BOLLINGER DATE : 5/2013

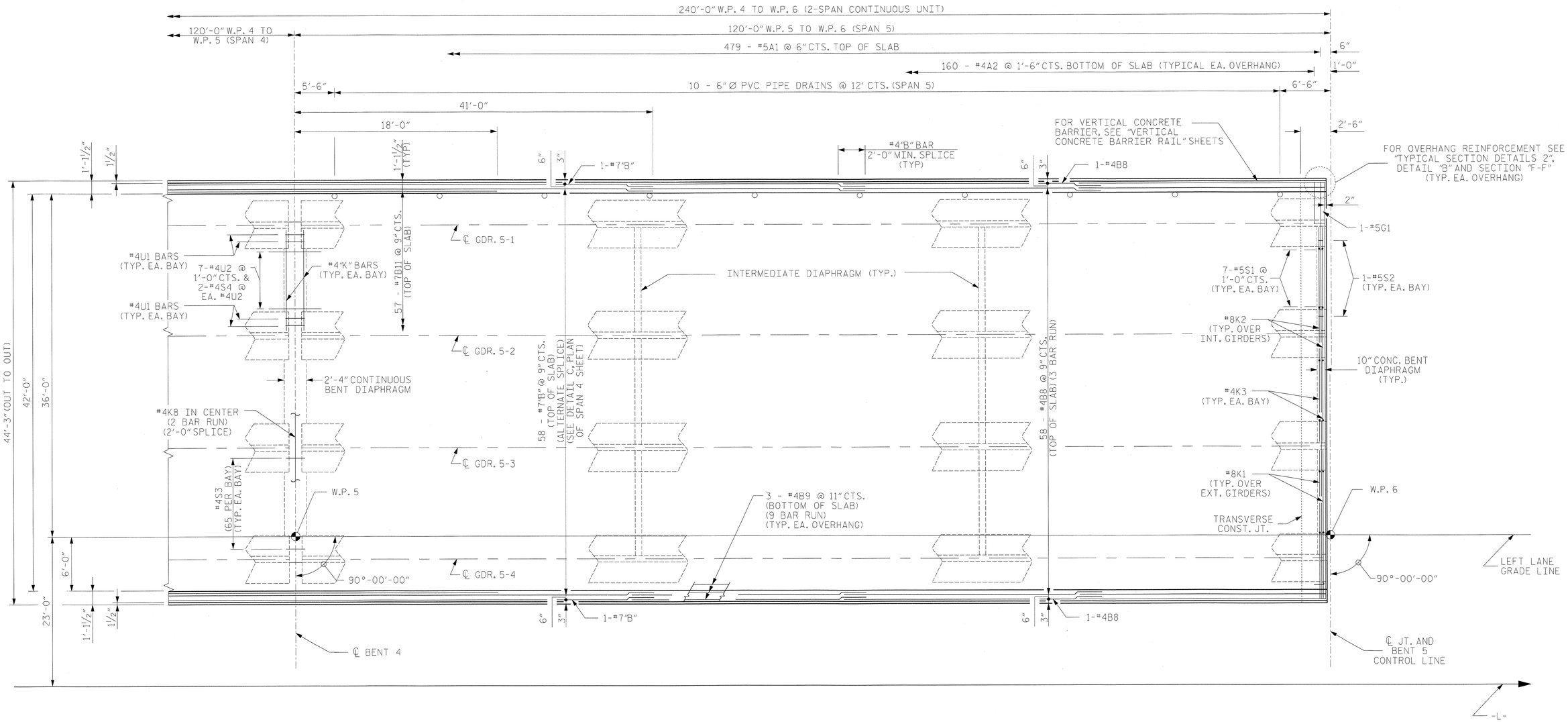

PLAN OF SPAN 5

FOR SECTION VIEWS, SEE "TYPICAL SECTION AND DETAILS"

NOTES

FOR POUR SEQUENCE AND LOCATION OF CONSTRUCTION JOINTS, SEE SUPERSTRUCTURE "BILL OF MATERIAL SPANS 4 & 5" SHEET.

FOR LAP SPLICE DETAIL OF LONGITUDINAL REINFORCEMENT, SEE "PLAN OF SPAN 4" SHEET.

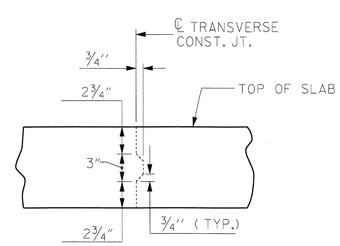

TRANSVERSE CONSTRUCTION JOINT DETAIL

NOTE: REINFORCING STEEL IN SLAB NOT SHOWN. LONGITUDINAL REINFORCING STEEL SHALL BE CONTINUOUS THRU JOINT

PROJECT NO. R-2633BB

BRUNSWICK/NEW HANOVER COUNTY

STATION: 353+32.50 -L-

SHEET 5 OF 29

STATE OF NORTH CAROLINA
DEPARTMENT OF TRANSPORTATION
RALEIGH

SUPERSTRUCTURE

PLAN OF SPAN 5
LEFT LANE

NORTH CAROLINA PROFESSIONAL SEAL 18442 ENGINEER RICHARD LEON BOLLINGER, JR.
5-29-2013

RS&H IMPROVING YOUR WORLD

RS&H Architects-Engineers-Planners, Inc.
8601 Six Forks Road, Suite 260
Raleigh, NC 27615
919-846-5701 FAX 919-846-0080
www.rsandh.com
North Carolina License Nos. 50073 * F-0453 * C-28

REVISIONS						
NO.	BY:	DATE:	NO.	BY:	DATE:	
1			3			
2			4			

SHEET NO. S-57
TOTAL SHEETS 700

DRAWN BY : SMK, RJD DATE : 11/2011
CHECKED BY : JMR DATE : 3/2013
DESIGN ENGINEER OF RECORD : R. BOLLINGER DATE : 5/2013

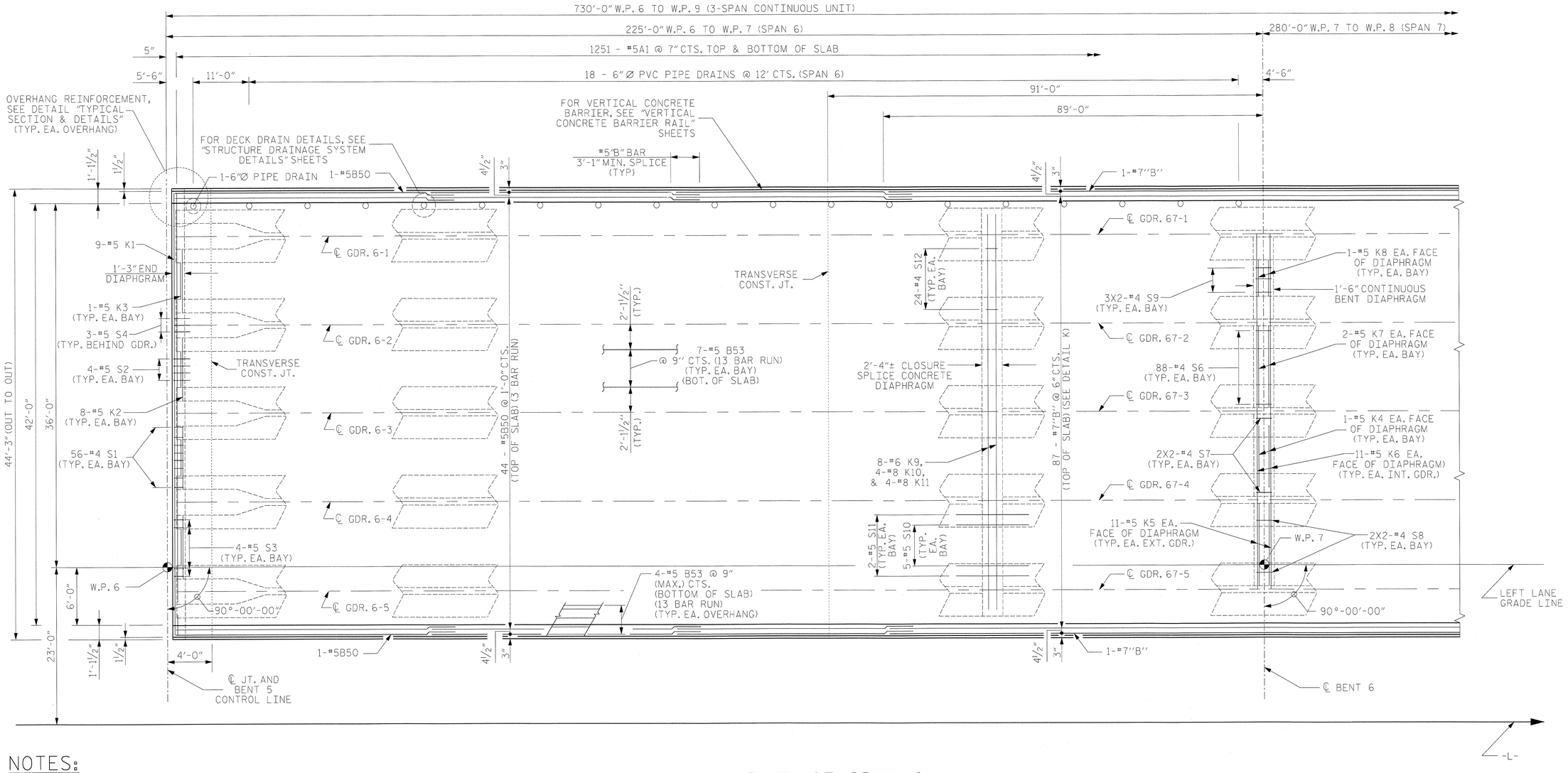

NOTES:

FOR POUR SEQUENCE AND TRANSVERSE CONSTRUCTION JOINT DETAILS AND LOCATIONS, SEE SUPERSTRUCTURE "BILL OF MATERIAL SPAN 6, 7 & 8" SHEET.

FOR REINFORCING IN DIAPHRAGMS, SEE "TYPICAL SECTION & DETAILS" SHEETS.

INTERMEDIATE DIAPHRAGMS NOT SHOW FOR CLARITY. SEE "FRAMING PLAN" SHEETS.

FOR LOCATION OF 1"Ø RIGID CONDUIT, SEE "NAVIGATIONAL LIGHTING AND CODUIT SYSTEM" SHEET.

PLAN OF SPAN 6

FOR SECTION VIEWS, SEE "TYPICAL SECTION AND DETAILS FOR SPANS 6 THRU 8" SHEETS

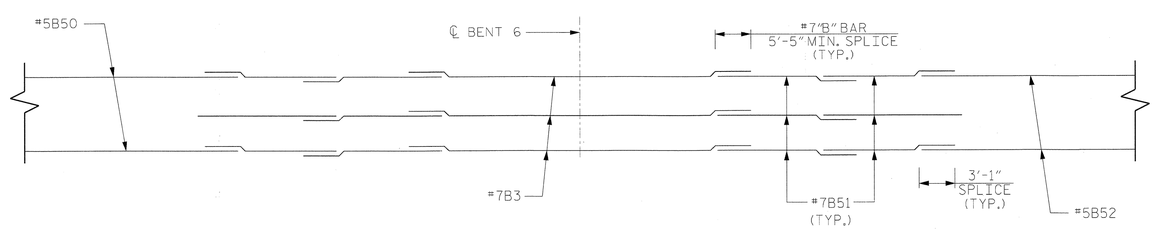

DETAIL K

PROJECT NO. R-2633BB

BRUNSWICK/NEW HANOVER COUNTY

STATION: 353+32.50 -L-

SHEET 6 OF 29

NORTH CAROLINA PROFESSIONAL SEAL 18442 ENGINEER RICHARD LEON BOLLINGER, JR.

RS&H IMPROVING YOUR WORLD

RS&H Architects-Engineers-Planners, Inc.
8601 Six Forks Road, Suite 260
Raleigh, NC 27615
919-846-6701 FAX 919-846-9080
www.rsandh.com
North Carolina License Nos. 50073 * F-0493 * C-28

STATE OF NORTH CAROLINA
DEPARTMENT OF TRANSPORTATION
RALEIGH

SUPERSTRUCTURE

PLAN OF SPAN 6
LEFT LANE

REVISIONS						SHEET NO.
NO.	BY:	DATE:	NO.	BY:	DATE:	S-58
1			3			TOTAL SHEETS
2			4			700

DRAWN BY :	JML	DATE :	6/2012
CHECKED BY :	JMR	DATE :	03/2013
DESIGN ENGINEER OF RECORD :	R. BOLLINGER	DATE :	05/2013

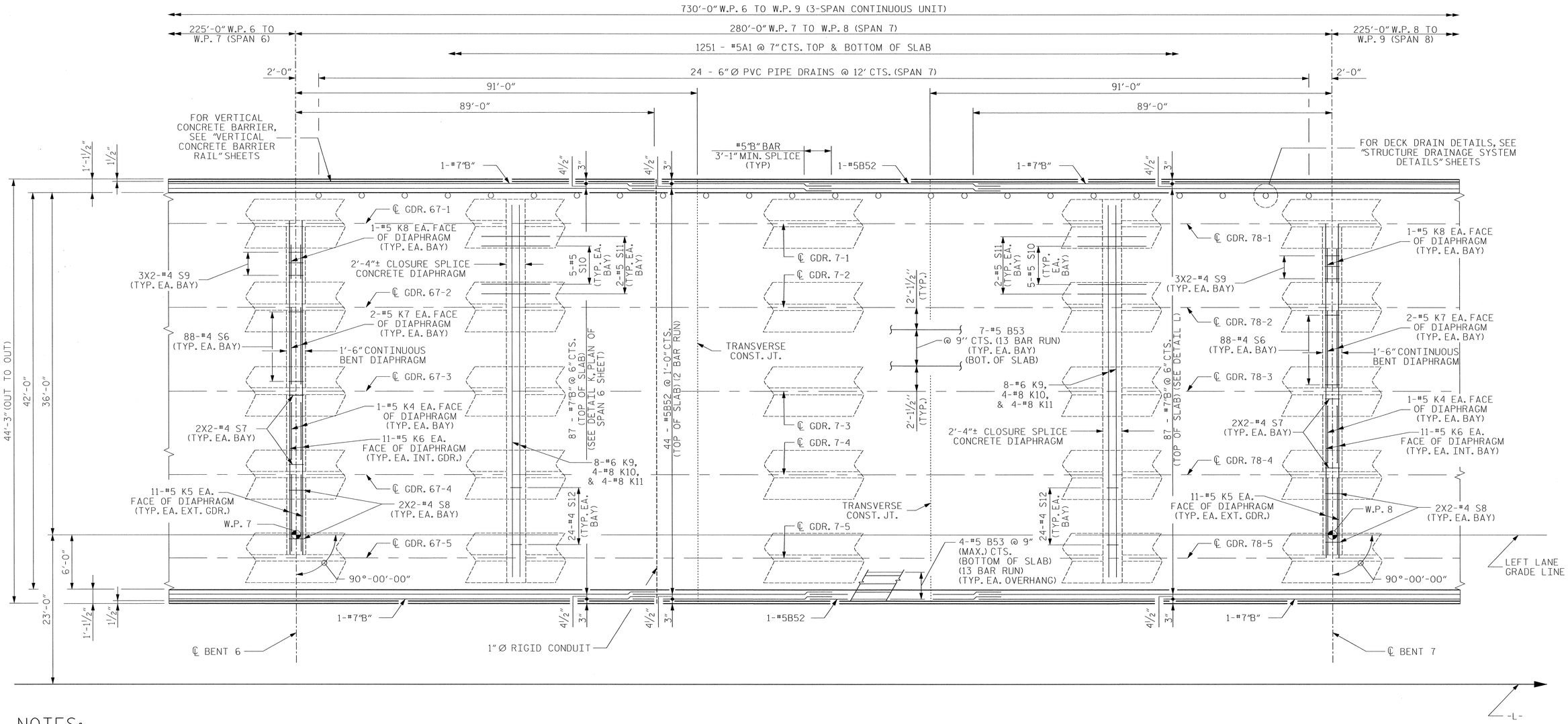

NOTES:

FOR POUR SEQUENCE AND TRANSVERSE CONSTRUCTION JOINT DETAILS AND LOCATIONS, SEE SUPERSTRUCTURE "BILL OF MATERIAL SPAN 6, 7 & 8" SHEET.

FOR LOCATION OF 1" Ø RIGID CONDUIT, SEE "NAVIGATIONAL LIGHTING AND CONDUIT SYSTEM" SHEET.

FOR REINFORCING IN DIAPHRAGMS, SEE "TYPICAL SECTION & DETAILS" SHEETS.

INTERMEDIATE DIAPHRAGMS NOT SHOWN FOR CLARITY. SEE "FRAMING PLAN" SHEETS.

PLAN OF SPAN 7

FOR SECTION VIEWS, SEE "TYPICAL SECTION AND DETAILS FOR SPANS 6 THRU 8" SHEETS

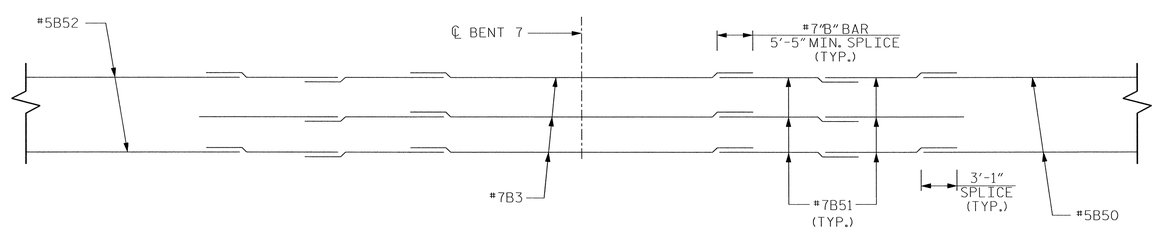

DETAIL L

PROJECT NO. R-2633BB

BRUNSWICK/NEW HANOVER COUNTY

STATION: 353+32.50 -L-

SHEET 7 OF 29

NORTH CAROLINA PROFESSIONAL SEAL 18442 ENGINEER RICHARD LEON BOLLINGER JR.

5-29-2013

RS&H IMPROVING YOUR WORLD

RS&H Architects-Engineers-Planners, Inc.
8601 Six Forks Road, Suite 260
Raleigh, NC 27615
919-846-6701 FAX 919-846-9080
www.rsandh.com
North Carolina License Nos. 00073 * F-0493 * C-28

STATE OF NORTH CAROLINA
DEPARTMENT OF TRANSPORTATION
RALEIGH

SUPERSTRUCTURE

PLAN OF SPAN 7
LEFT LANE

REVISIONS						SHEET NO.
NO.	BY:	DATE:	NO.	BY:	DATE:	8-59
1			3			TOTAL SHEETS
2			4			700

DRAWN BY : JML DATE : 6/2012
CHECKED BY : JMR DATE : 03/2013
DESIGN ENGINEER OF RECORD : R. BOLLINGER DATE : 05/2013

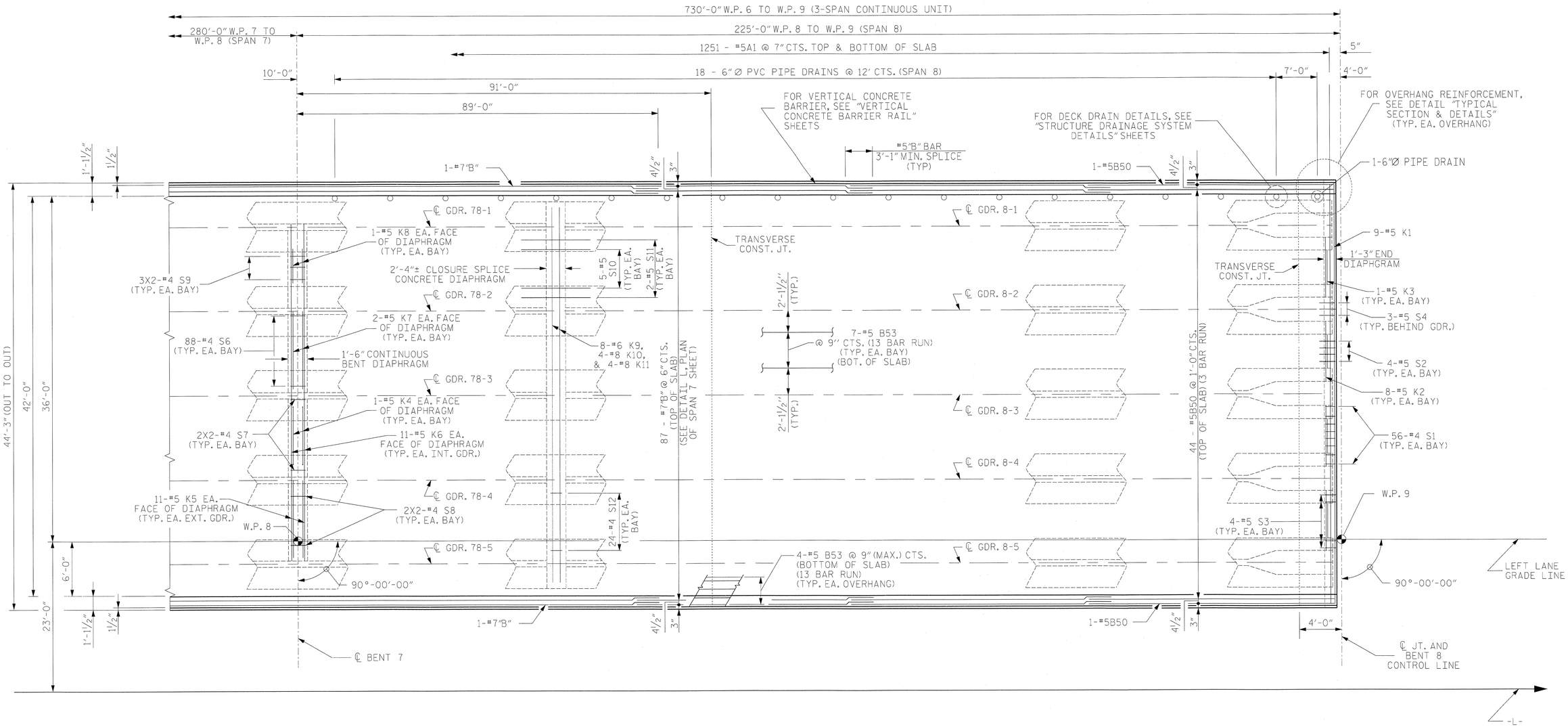

PLAN OF SPAN 8

FOR SECTION VIEWS, SEE "TYPICAL SECTION AND DETAILS FOR SPANS 6 THRU 8" SHEETS

PROJECT NO. R-2633BB

BRUNSWICK/NEW HANOVER COUNTY

STATION: 353+32.50 -L-

SHEET 8 OF 29

NOTES:

FOR POUR SEQUENCE AND TRANSVERSE CONSTRUCTION JOINT DETAILS AND LOCATIONS, SEE SUPERSTRUCTURE "BILL OF MATERIAL SPAN 6, 7 & 8" SHEET.

FOR REINFORCING IN DIAPHRAGMS, SEE "TYPICAL SECTION & DETAILS" SHEETS.

INTERMEDIATE DIAPHRAGMS NOT SHOWN FOR CLARITY. SEE "FRAMING PLAN" SHEETS

NORTH CAROLINA PROFESSIONAL SEAL 18442 ENGINEER RICHARD LEON BOLLINGER
5-29-2013

RS&H IMPROVING YOUR WORLD

RS&H Architects-Engineers-Planners, Inc.
8601 Six Forks Road, Suite 260
Raleigh, NC 27615
919-846-6701 FAX 919-846-9080
www.rsandh.com
North Carolina License Nos. 50073 * F-0493 * C-28

STATE OF NORTH CAROLINA
DEPARTMENT OF TRANSPORTATION
RALEIGH

SUPERSTRUCTURE

PLAN OF SPAN 8
LEFT LANE

REVISIONS						SHEET NO.
NO.	BY:	DATE:	NO.	BY:	DATE:	S-60
1			3			TOTAL SHEETS
2			4			700

DRAWN BY : JML DATE : 06/2012
CHECKED BY : JMR DATE : 03/2013
DESIGN ENGINEER OF RECORD : R. BOLLINGER DATE : 05/2013

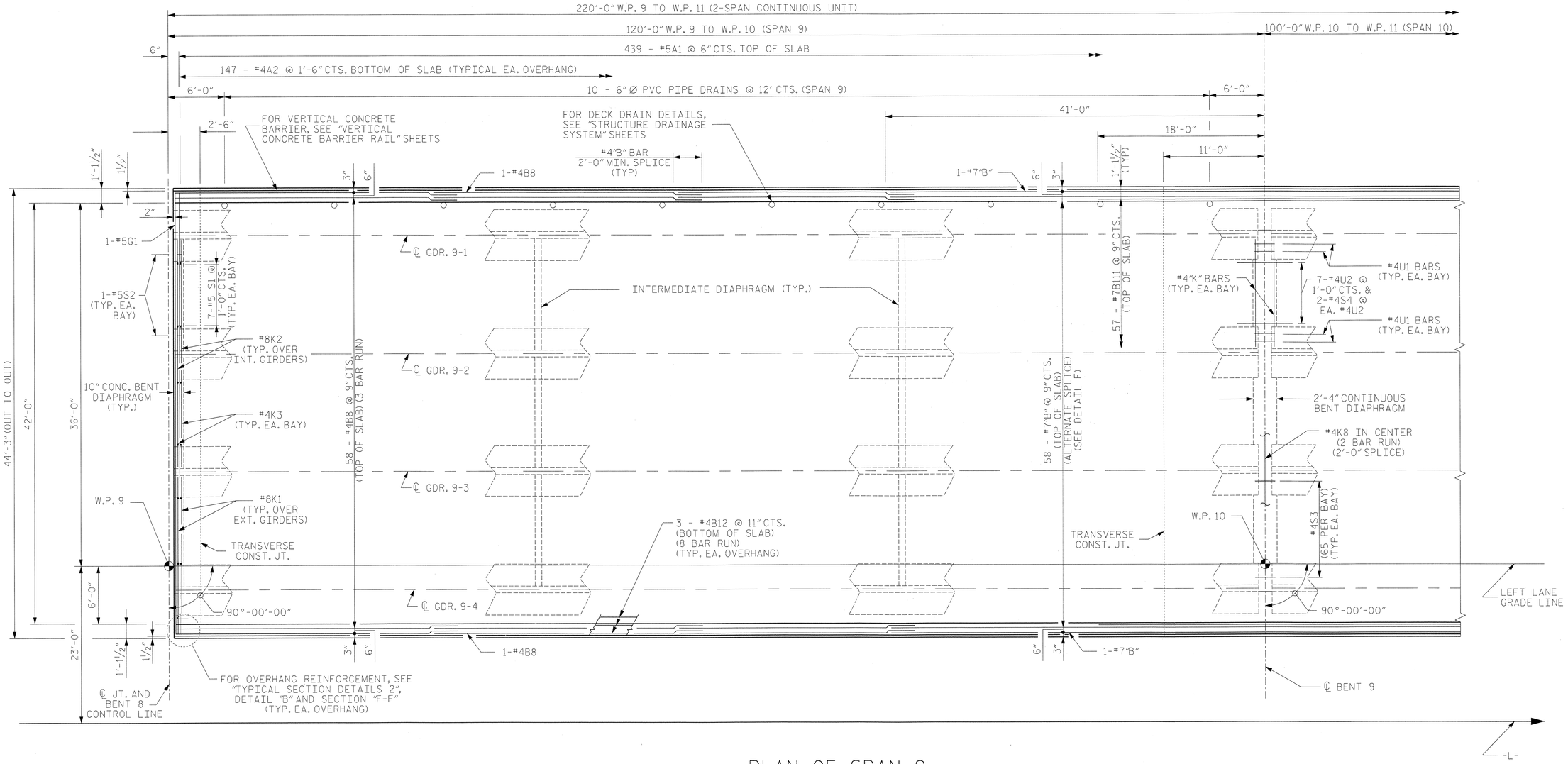

PLAN OF SPAN 9

FOR SECTION VIEWS, SEE "TYPICAL SECTION AND DETAILS"

NOTES

FOR POUR SEQUENCE AND LOCATION OF CONSTRUCTION JOINTS, SEE SUPERSTRUCTURE "BILL OF MATERIAL SPANS 9, & 10" SHEET.

FOR TRANSVERSE CONSTRUCTION JOINT DETAIL, SEE "PLAN OF SPAN 10" SHEET.

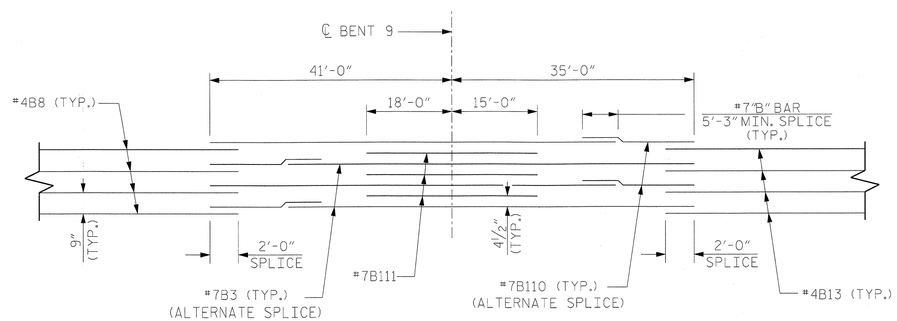

DETAIL F

PROJECT NO. R-2633BB

BRUNSWICK/NEW HANOVER COUNTY

STATION: 353+32.50 -L-

SHEET 9 OF 29

DRAWN BY :	SMK, RJD	DATE :	11/2011
CHECKED BY :	JMR	DATE :	3/2013
DESIGN ENGINEER OF RECORD :	R. BOLLINGER	DATE :	05/2013

NORTH CAROLINA PROFESSIONAL SEAL 18442 ENGINEER RICHARD LEON BOLLINGER 5-29-2013

RS&H IMPROVING YOUR WORLD

RS&H Architects-Engineers-Planners, Inc.
8601 Six Forks Road, Suite 260
Raleigh, NC 27615
919-846-6701 FAX 919-846-8080
www.rsandh.com
North Carolina License Nos. 50071 * F-0493 * C-28

STATE OF NORTH CAROLINA
DEPARTMENT OF TRANSPORTATION
RALEIGH

SUPERSTRUCTURE

PLAN OF SPAN 9
LEFT LANE

REVISIONS						SHEET NO.
NO.	BY:	DATE:	NO.	BY:	DATE:	S-61
1			3			TOTAL SHEETS
2			4			700

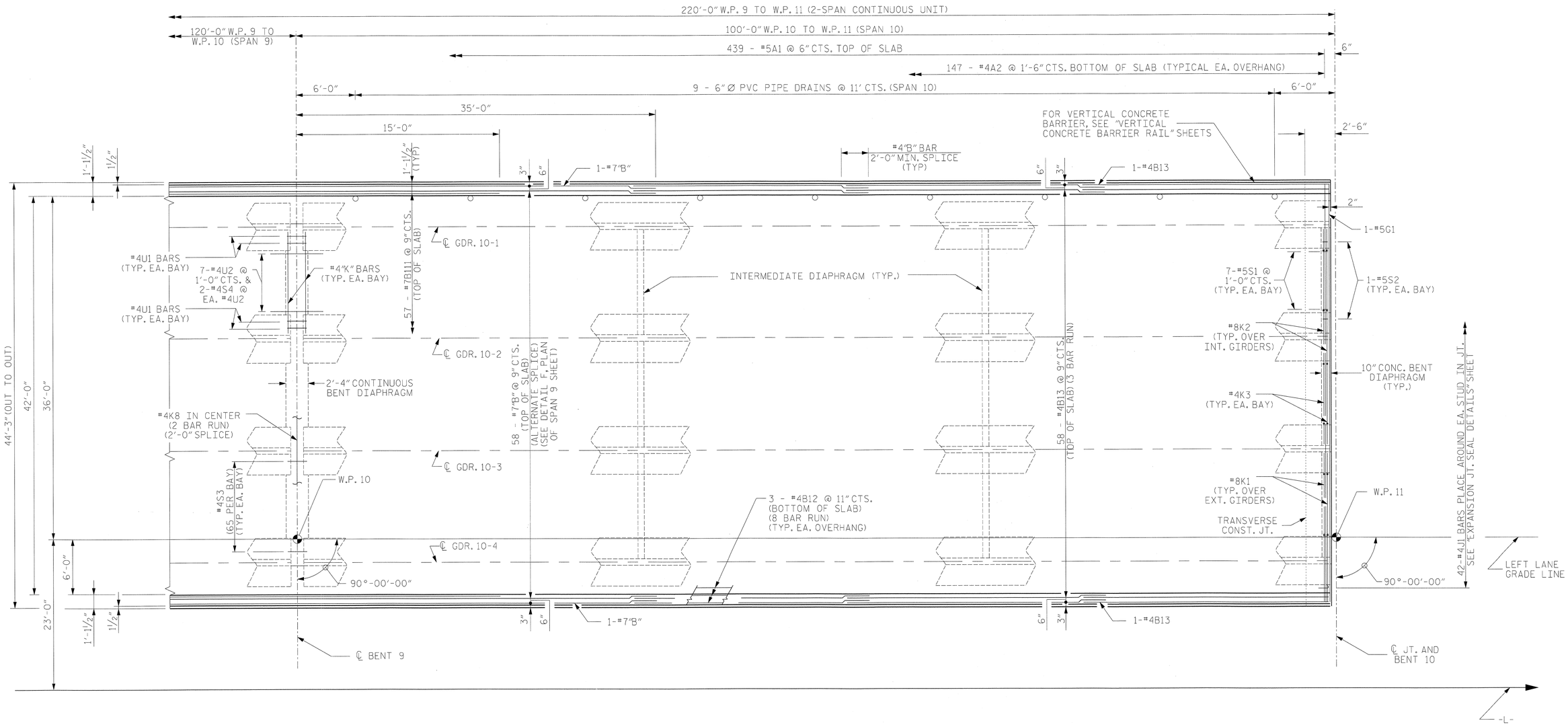

PLAN OF SPAN 10

FOR SECTION VIEWS, SEE "TYPICAL SECTION AND DETAILS"

NOTES

FOR POUR SEQUENCE AND LOCATION OF CONSTRUCTION JOINTS, SEE SUPERSTRUCTURE "BILL OF MATERIAL SPANS 9, & 10" SHEET.

FOR LAP SPLICE DETAIL OF LONGITUDINAL REINFORCEMENT, SEE "PLAN OF SPAN 9" SHEET.

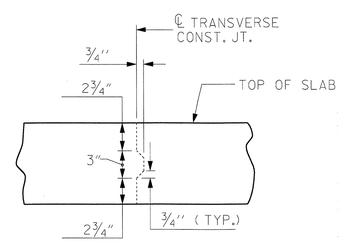

TRANSVERSE CONSTRUCTION JOINT DETAIL

NOTE: REINFORCING STEEL IN SLAB NOT SHOWN. LONGITUDINAL REINFORCING STEEL SHALL BE CONTINUOUS THRU JOINT

PROJECT NO. R-2633BB

BRUNSWICK/NEW HANOVER COUNTY

STATION: 353+32.50 -L-

SHEET 10 OF 29

NORTH CAROLINA PROFESSIONAL SEAL 18442 ENGINEER RICHARD LEON BOLLINGER JR. 5-29-2013

RS&H IMPROVING YOUR WORLD

RS&H Architects-Engineers-Planners, Inc.
8601 Six Forks Road, Suite 260
Raleigh, NC 27615
919-846-6701 FAX 919-846-9080
www.rsandh.com
North Carolina License Nos. 50073 * F-0483 * C-28

STATE OF NORTH CAROLINA
DEPARTMENT OF TRANSPORTATION
RALEIGH

SUPERSTRUCTURE

PLAN OF SPAN 10
LEFT LANE

REVISIONS						SHEET NO.
NO.	BY:	DATE:	NO.	BY:	DATE:	8-62
1			3			TOTAL SHEETS
2			4			700

DRAWN BY : SMK, RJD DATE : 11/2011
CHECKED BY : JMR DATE : 3/2013
DESIGN ENGINEER OF RECORD : R. BOLLINGER DATE : 05/2013

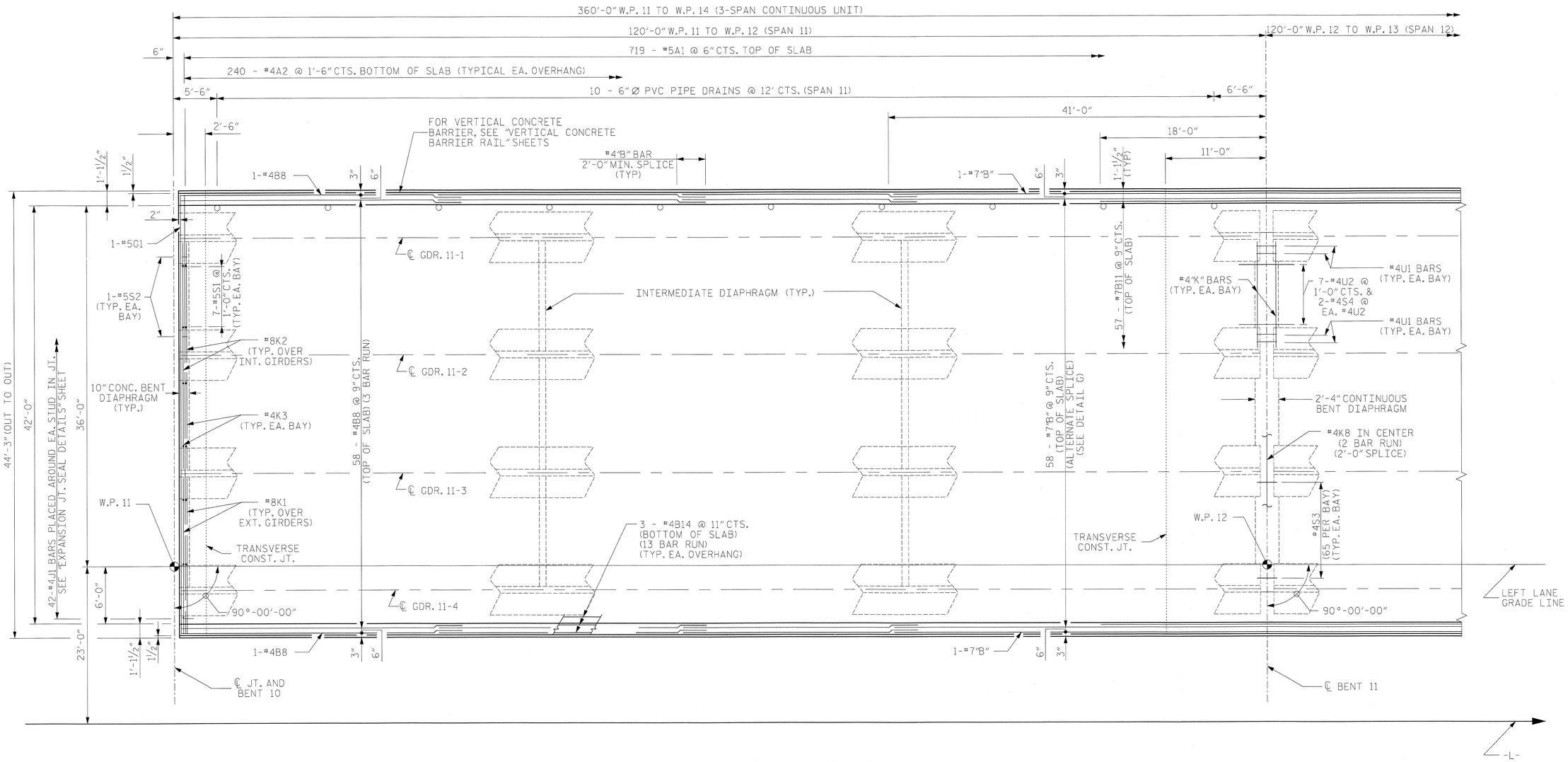

PLAN OF SPAN 11

FOR SECTION VIEWS, SEE "TYPICAL SECTION AND DETAILS"

NOTES

FOR POUR SEQUENCE AND LOCATION OF CONSTRUCTION JOINTS, SEE SUPERSTRUCTURE "BILL OF MATERIAL SPANS 11, 12 & 13" SHEET.

FOR TRANSVERSE CONSTRUCTION JOINT DETAIL, SEE "PLAN OF SPAN 13" SHEET.

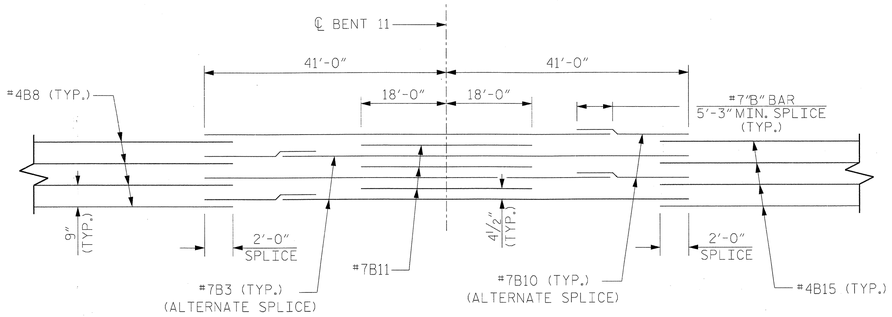

DETAIL G

PROJECT NO. R-2633BB

BRUNSWICK/NEW HANOVER COUNTY

STATION: 353+32.50 -L-

SHEET 11 OF 29

NORTH CAROLINA PROFESSIONAL SEAL 18442 ENGINEER RICHARD LEON BOLLINGER JR. 5-29-2013

RS&H IMPROVING YOUR WORLD

RS&H Architects-Engineers-Planners, Inc.
8601 Six Forks Road, Suite 260
Raleigh, NC 27615
919-846-6701 FAX 919-846-9080
www.rsandh.com
North Carolina License Nos. 50073 * F-0493 * C-28

STATE OF NORTH CAROLINA
DEPARTMENT OF TRANSPORTATION
RALEIGH

SUPERSTRUCTURE
PLAN OF SPAN 11
(SPAN 14 SIMILAR)
LEFT LANE

REVISIONS						SHEET NO.
NO.	BY:	DATE:	NO.	BY:	DATE:	S-63
1			3			TOTAL SHEETS
2			4			700

DRAWN BY :	SMK, RJD	DATE :	11/2011
CHECKED BY :	JMR	DATE :	3/2013
DESIGN ENGINEER OF RECORD :	R. BOLLINGER	DATE :	05/2013

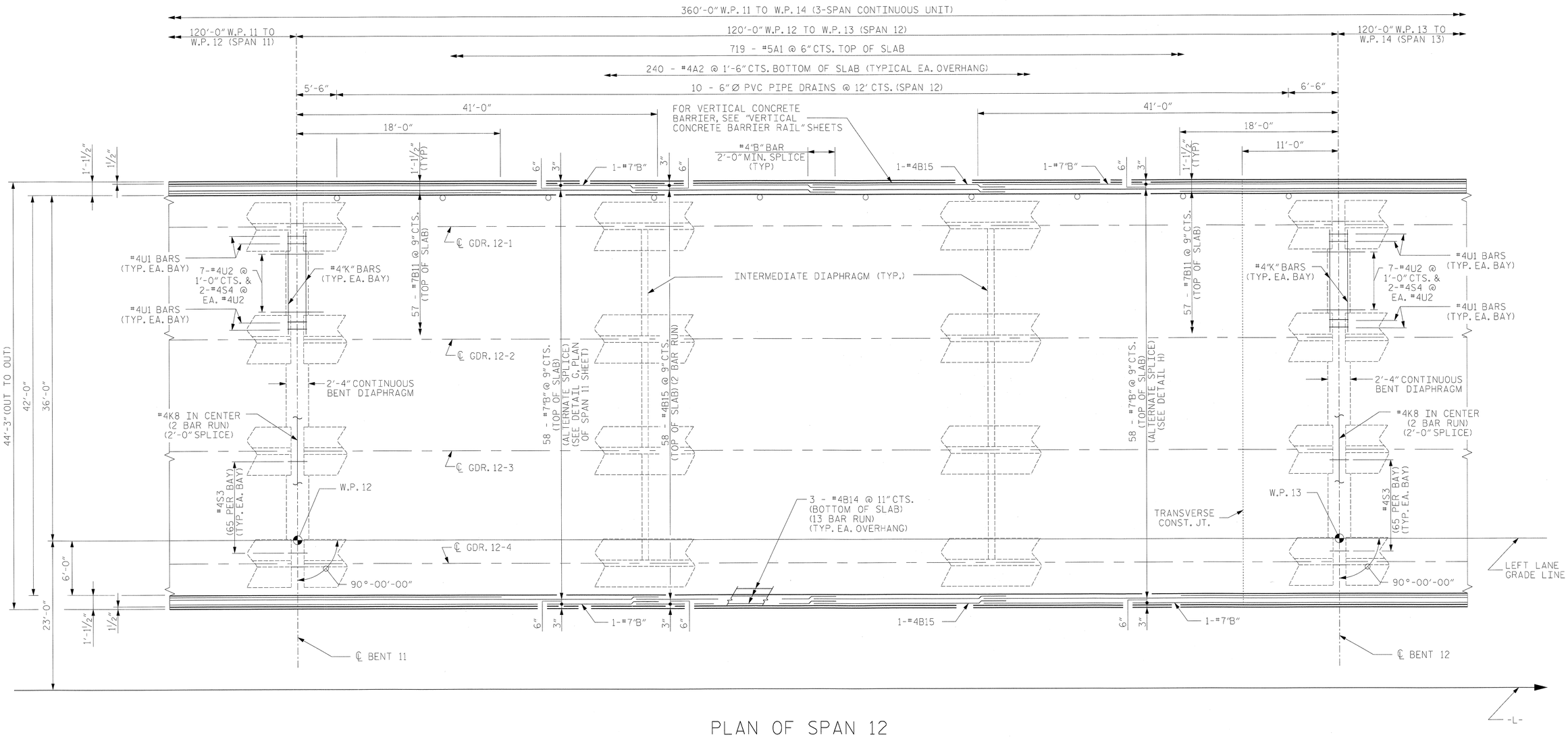

PLAN OF SPAN 12

FOR SECTION VIEWS, SEE "TYPICAL SECTION AND DETAILS"

NOTES

FOR POUR SEQUENCE AND LOCATION OF CONSTRUCTION JOINTS, SEE SUPERSTRUCTURE "BILL OF MATERIAL SPANS 11, 12 & 13" SHEET.

FOR TRANSVERSE CONSTRUCTION JOINT DETAIL, SEE "PLAN OF SPAN 13" SHEET.

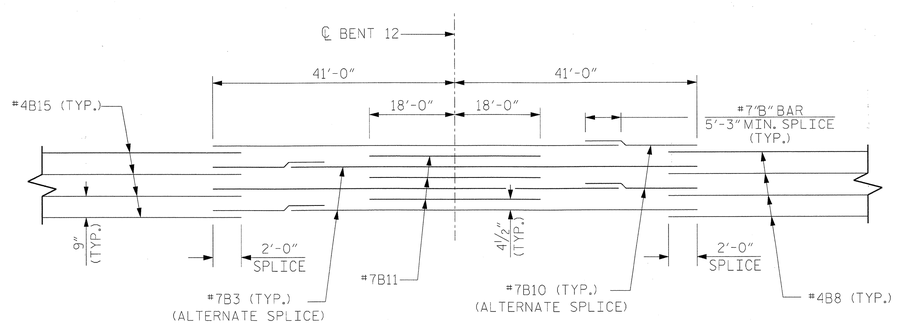

DETAIL H

PROJECT NO. R-2633BB

BRUNSWICK/NEW HANOVER COUNTY

STATION: 353+32.50 -L-

SHEET 12 OF 29

NORTH CAROLINA PROFESSIONAL SEAL 18442 ENGINEER RICHARD J. BOLLINGER 5-29-2013

RS&H IMPROVING YOUR WORLD

RS&H Architects-Engineers-Planners, Inc.
8601 Six Forks Road, Suite 260
Raleigh, NC 27615
919-846-6701 FAX 919-846-9080
www.rsandh.com
North Carolina Licenses Nos. 50073 * F-0483 * C-28

STATE OF NORTH CAROLINA
DEPARTMENT OF TRANSPORTATION
RALEIGH

SUPERSTRUCTURE
PLAN OF SPAN 12
(SPAN 15 SIMILAR)
LEFT LANE

REVISIONS						SHEET NO.
NO.	BY:	DATE:	NO.	BY:	DATE:	S-C4
1			3			TOTAL SHEETS
2			4			700

DRAWN BY :	SMK, RJD	DATE :	11/2011
CHECKED BY :	JMR	DATE :	3/2013
DESIGN ENGINEER OF RECORD :	R. BOLLINGER	DATE :	05/2013

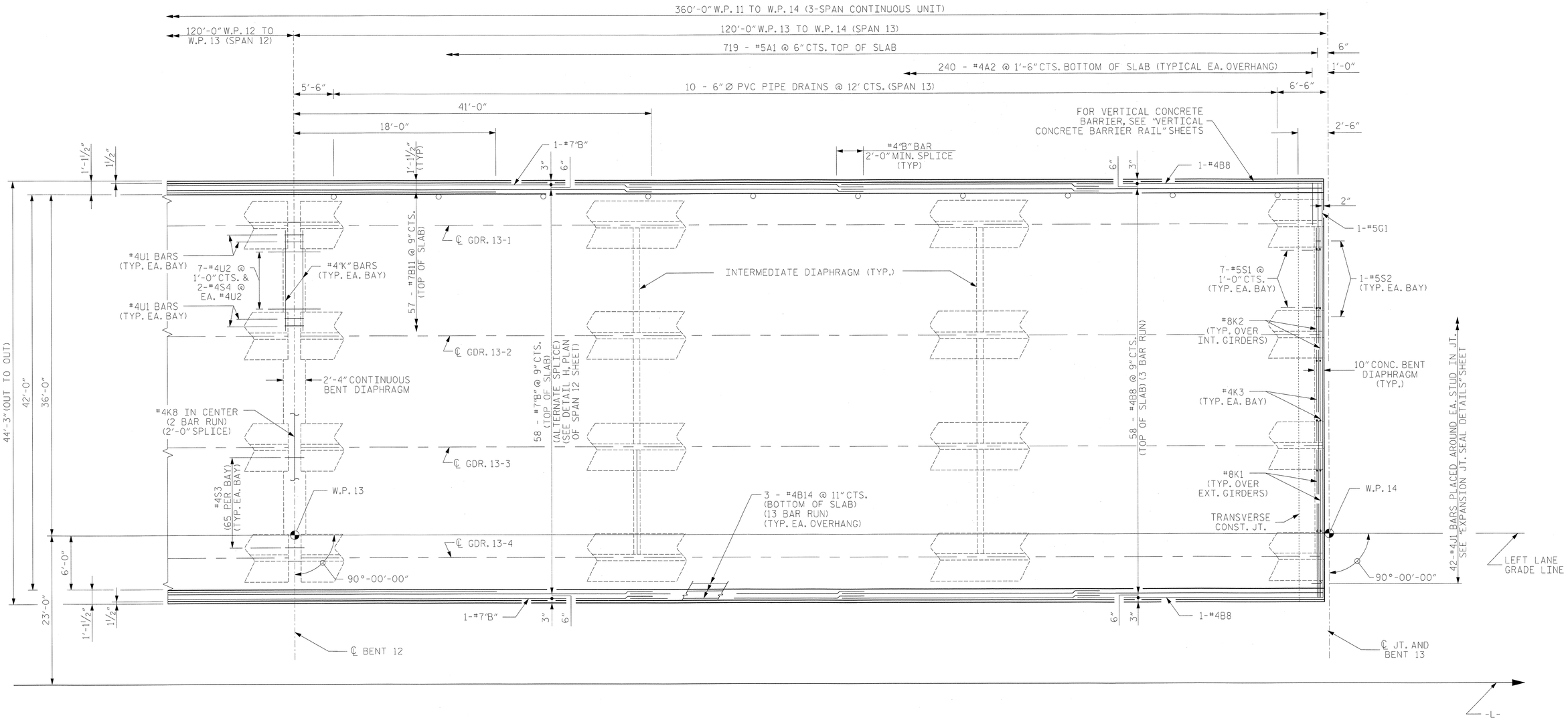

PLAN OF SPAN 13

FOR SECTION VIEWS, SEE "TYPICAL SECTION AND DETAILS"

NOTES

FOR POUR SEQUENCE AND LOCATION OF CONSTRUCTION JOINTS, SEE SUPERSTRUCTURE "BILL OF MATERIAL SPANS 11, 12 & 13" SHEET.

FOR LAP SPLICE DETAIL OF LONGITUDINAL REINFORCEMENT, SEE "PLAN OF SPAN 12" SHEET.

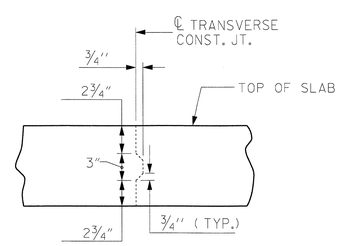

TRANSVERSE CONSTRUCTION JOINT DETAIL

NOTE: REINFORCING STEEL IN SLAB NOT SHOWN. LONGITUDINAL REINFORCING STEEL SHALL BE CONTINUOUS THRU JOINT

PROJECT NO. R-2633BB

BRUNSWICK/NEW HANOVER COUNTY

STATION: 353+32.50 -L-

SHEET 13 OF 29

NORTH CAROLINA PROFESSIONAL SEAL 18442 ENGINEER RICHARD LEON BOLLINGER JR. 5-29-2013

RS&H IMPROVING YOUR WORLD

RS&H Architects-Engineers-Planners, Inc.
8601 Six Forks Road, Suite 260
Raleigh, NC 27615
919-846-6701 FAX 919-846-8080
www.rsandh.com
North Carolina Licenses Nos. 50073 * F-0493 * C-28

STATE OF NORTH CAROLINA
DEPARTMENT OF TRANSPORTATION
RALEIGH

SUPERSTRUCTURE
PLAN OF SPAN 13
(SPAN 16 SIMILAR)
LEFT LANE

REVISIONS								SHEET NO.
NO.	BY:	DATE:	NO.	BY:	DATE:			5-65
1			3					TOTAL SHEETS
2			4					700

DRAWN BY :	SMK, RJD	DATE :	11/2011
CHECKED BY :	JMR	DATE :	3/2013
DESIGN ENGINEER OF RECORD :	R. BOLLINGER	DATE :	05/2013

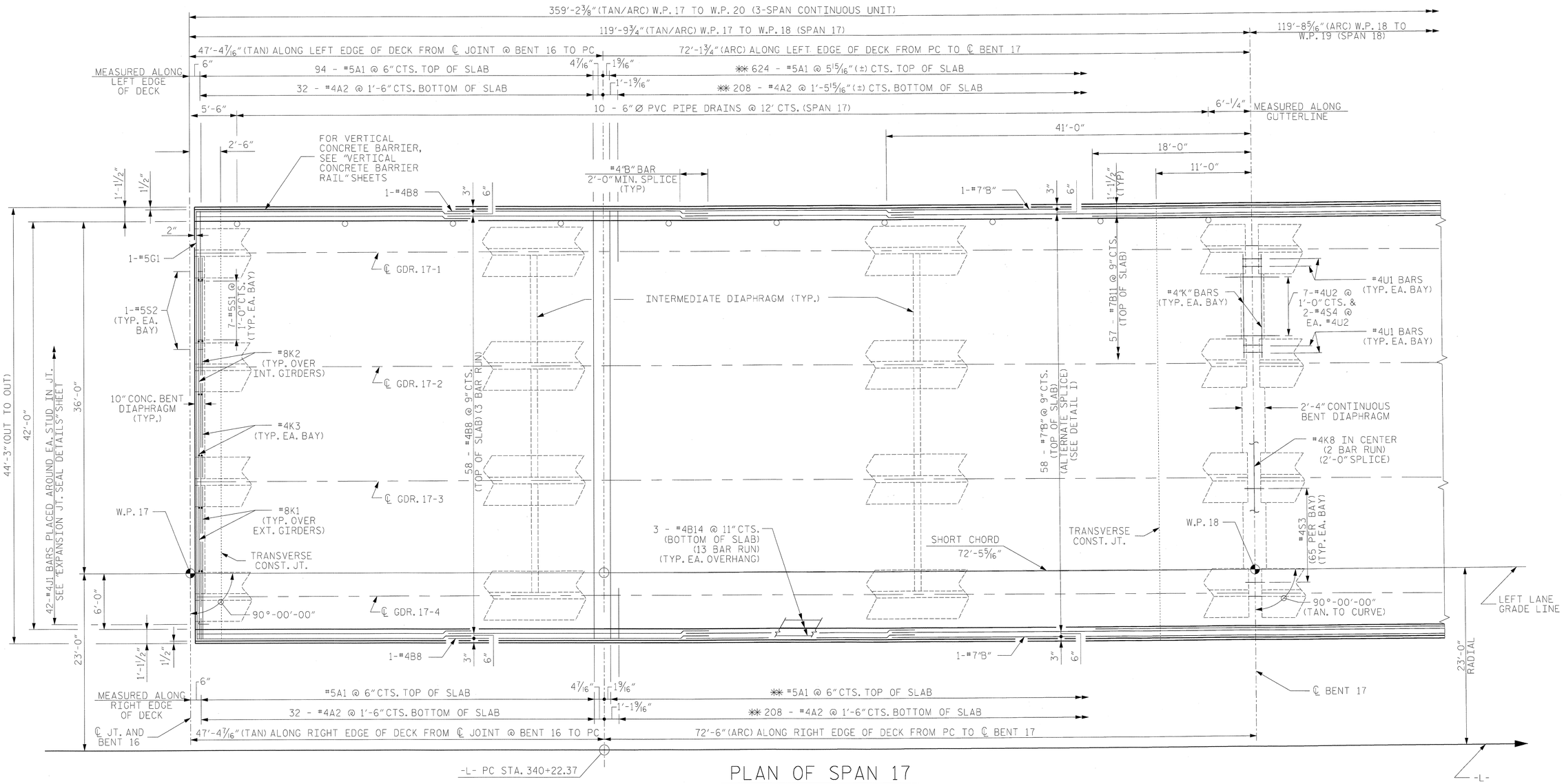

PLAN OF SPAN 17

FOR SECTION VIEWS, SEE "TYPICAL SECTION AND DETAILS"

NOTES

FOR POUR SEQUENCE AND LOCATION OF CONSTRUCTION JOINTS, SEE SUPERSTRUCTURE "BILL OF MATERIAL SPANS 17, 18 & 19" SHEET.

✱✱ "A" BARS TO BE PLACED RADIALLY. SPACING IS ALONG EDGE OF DECK AS SHOWN.

FOR TRANSVERSE CONSTRUCTION JOINT DETAIL SEE "PLAN OF SPAN 19" SHEET.

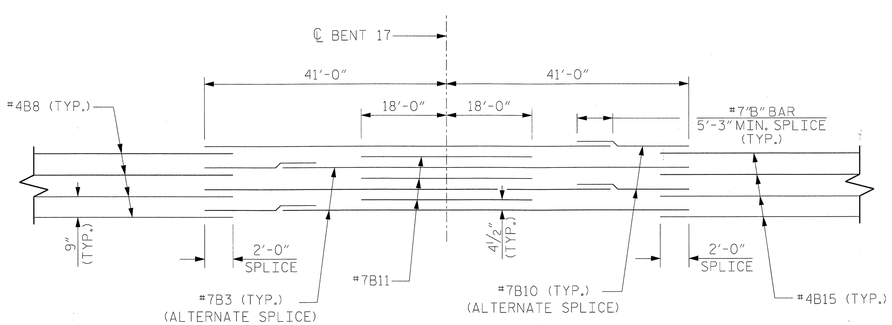

DETAIL I

PROJECT NO. R-2633BB

BRUNSWICK/NEW HANOVER COUNTY

STATION: 353+32.50 -L-

SHEET 14 OF 29

NORTH CAROLINA PROFESSIONAL SEAL 18442 ENGINEER RICHARD JOSEPH BOLLINGER III 5-29-2013

RS&H IMPROVING YOUR WORLD

RS&H Architects-Engineers-Planners, Inc.
8601 Six Forks Road, Suite 260
Raleigh, NC 27615
919-846-5701 FAX 919-846-9080
www.rsandh.com
North Carolina License Nos. 50073 * F-0493 * C-28

STATE OF NORTH CAROLINA
DEPARTMENT OF TRANSPORTATION
RALEIGH

SUPERSTRUCTURE
PLAN OF SPAN 17

LEFT LANE

REVISIONS						SHEET NO.
NO.	BY:	DATE:	NO.	BY:	DATE:	S-66
1			3			TOTAL SHEETS
2			4			700

DRAWN BY :	SMK, RJD	DATE :	11/2011
CHECKED BY :	JMR	DATE :	3/2013
DESIGN ENGINEER OF RECORD :	R. BOLLINGER	DATE :	05/2013

359'-2 3/8" (TAN/ARC) W.P. 17 TO W.P. 20 (3-SPAN CONTINUOUS UNIT)

119'-9 3/4" (ARC) W.P. 17 TO W.P. 18 (SPAN 17)

119'-8 5/16" (ARC) W.P. 18 TO W.P. 19 (SPAN 18)

119'-8 5/16" (ARC) W.P. 19 TO W.P. 20 (SPAN 19)

119'-2 3/8" (ARC) ALONG LEFT EDGE OF DECK FROM ℄ BENT 17 TO ℄ BENT 18

✱✱ 624 - #5A1 @ 5 15/16" (±) CTS. TOP OF SLAB (MEASURED ALONG LEFT EDGE OF DECK)

✱✱ 208 - #4A2 @ 1'-5 15/16" (±) CTS. BOTTOM OF SLAB (MEASURED ALONG LEFT EDGE OF DECK)

5'-10" | 10 - 6" Ø PVC PIPE DRAINS @ 12' CTS. (SPAN 18) | 5'-4 1/8" MEASURED ALONG GUTTERLINE

41'-0" | 18'-0" | 41'-0" | 18'-0" | 11'-0"

FOR VERTICAL CONCRETE BARRIER, SEE "VERTICAL CONCRETE BARRIER RAIL" SHEETS

#4"B" BAR 2'-0" MIN. SPLICE (TYP)

1-#7"B" | 1-#4B15 | 1-#7"B"

6" | 3" | 1'-1 1/2" (TYP) | 1 1/2"

44'-3" (OUT TO OUT) | 42'-0" | 36'-0" | 6'-0" | 23'-0" RADIAL

℄ GDR. 18-1

℄ GDR. 18-2

℄ GDR. 18-3

℄ GDR. 18-4

#4U1 BARS (TYP. EA. BAY)

7-#4U2 @ 1'-0" CTS. & 2-#4S4 @ EA. #4U2

#4"K" BARS (TYP. EA. BAY)

57 - #7B11 @ 9" CTS. (TOP OF SLAB)

INTERMEDIATE DIAPHRAGM (TYP.)

2'-4" CONTINUOUS BENT DIAPHRAGM

#4K8 IN CENTER (2 BAR RUN) (2'-0" SPLICE)

58 - #7"B" @ 9" CTS. (TOP OF SLAB) (ALTERNATE SPLICE) (SEE DETAIL I, PLAN OF SPAN 17 SHEET)

58 - #4B15 @ 9" CTS. (TOP OF SLAB) (2 BAR RUN)

58 - #7"B" @ 9" CTS. (TOP OF SLAB) (ALTERNATE SPLICE) (SEE DETAIL J)

#4S3 (65 PER BAY) (TYP. EA. BAY)

W.P. 18

W.P. 19

3 - #4B14 @ 11" CTS. (BOTTOM OF SLAB) (13 BAR RUN) (TYP. EA. OVERHANG)

SHORT CHORD 119'-8 5/16"

TRANSVERSE CONST. JT.

90°-00'-00" (TAN. TO CURVE)

LEFT LANE GRADE LINE

✱✱ #5A1 @ 6" CTS. TOP OF SLAB (MEASURED ALONG RIGHT EDGE OF DECK)

✱✱ 208 - #4A2 @ 1'-6" CTS. BOTTOM OF SLAB (MEASURED ALONG RIGHT EDGE OF DECK)

119'-9 7/16" (ARC) ALONG RIGHT EDGE OF DECK FROM ℄ BENT 17 TO ℄ BENT 18

℄ BENT 17 | ℄ BENT 18 | -L-

PLAN OF SPAN 18

NOTES

FOR POUR SEQUENCE AND LOCATION OF CONSTRUCTION JOINTS, SEE SUPERSTRUCTURE "BILL OF MATERIAL SPANS 17, 18 & 19" SHEET.

✱✱ "A" BARS TO BE PLACED RADIALLY. SPACING IS ALONG EDGE OF DECK AS SHOWN.

FOR TRANSVERSE CONSTRUCTION JOINT DETAIL, SEE "PLAN OF SPAN 19" SHEET.

FOR SECTION VIEWS, SEE "TYPICAL SECTION AND DETAILS"

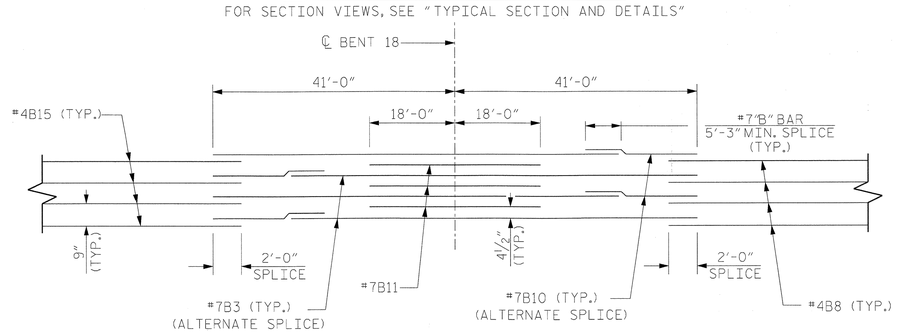

DETAIL J

PROJECT NO. R-2633BB

BRUNSWICK/NEW HANOVER COUNTY

STATION: 353+32.50 -L-

SHEET 15 OF 29

NORTH CAROLINA PROFESSIONAL SEAL 18442 ENGINEER RICHARD LEON BOLLINGER JR. 5-29-2013

RS&H IMPROVING YOUR WORLD

RS&H Architects-Engineers-Planners, Inc.
8601 Six Forks Road, Suite 260
Raleigh, NC 27615
919-846-6701 FAX 919-846-9080
www.rsandh.com
North Carolina License Nos. 50073 * F-0493 * C-28

STATE OF NORTH CAROLINA
DEPARTMENT OF TRANSPORTATION
RALEIGH

SUPERSTRUCTURE
PLAN OF SPAN 18

LEFT LANE

REVISIONS								SHEET NO.
NO.	BY:	DATE:	NO.	BY:	DATE:			8-67
1			3					TOTAL SHEETS
2			4					700

DRAWN BY : SMK, RJD DATE : 11/2011
CHECKED BY : JMR DATE : 3/2013
DESIGN ENGINEER OF RECORD : R. BOLLINGER DATE : 05/2013

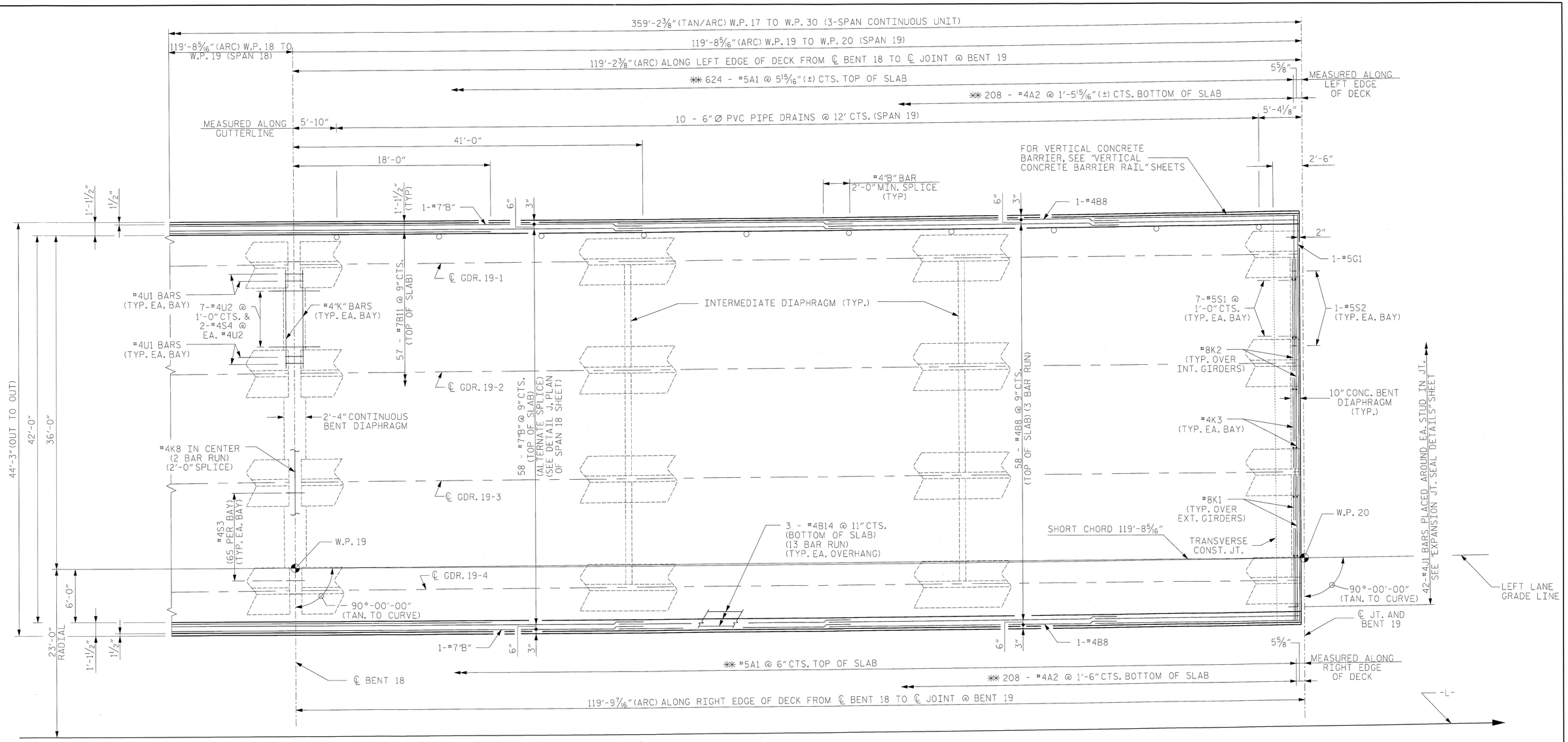

PLAN OF SPAN 19

FOR SECTION VIEWS, SEE "TYPICAL SECTION AND DETAILS"

NOTES

FOR POUR SEQUENCE AND LOCATION OF CONSTRUCTION JOINTS, SEE SUPERSTRUCTURE "BILL OF MATERIAL SPANS 17, 18 & 19" SHEET.

** "A" BARS TO BE PLACED RADIALLY. SPACING IS ALONG EDGE OF DECK AS SHOWN.

FOR LAP SPICE DETAIL OF LONGITUDINAL REINFORCEMENT, SEE "PLAN OF SPANS 18" SHEET.

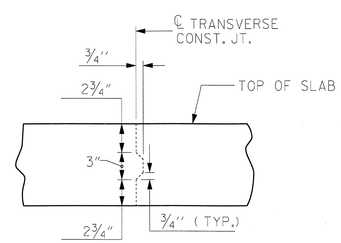

TRANSVERSE CONSTRUCTION JOINT DETAIL

NOTE: REINFORCING STEEL IN SLAB NOT SHOWN. LONGITUDINAL REINFORCING STEEL SHALL BE CONTINUOUS THRU JOINT

PROJECT NO. R-2633BB

BRUNSWICK/NEW HANOVER COUNTY

STATION: 353+32.50 -L-

SHEET 16 OF 29

NORTH CAROLINA PROFESSIONAL SEAL 18442 ENGINEER RICHARD LEON BOLLINGER, JR.

5-29-2013

RS&H IMPROVING YOUR WORLD

RS&H Architects-Engineers-Planners, Inc.
8601 Six Forks Road, Suite 260
Raleigh, NC 27615
919-846-6701 FAX 919-846-9080
www.rsandh.com
North Carolina License Nos. 50073 * F-0493 * C-28

STATE OF NORTH CAROLINA
DEPARTMENT OF TRANSPORTATION
RALEIGH

SUPERSTRUCTURE
PLAN OF SPAN 19

LEFT LANE

REVISIONS						SHEET NO.
NO.	BY:	DATE:	NO.	BY:	DATE:	8-68
1			3			TOTAL SHEETS
2			4			700

DRAWN BY : SMK, RJD DATE : 11/2011
CHECKED BY : JMR DATE : 3/2013
DESIGN ENGINEER OF RECORD : R. BOLLINGER DATE : 05/2013

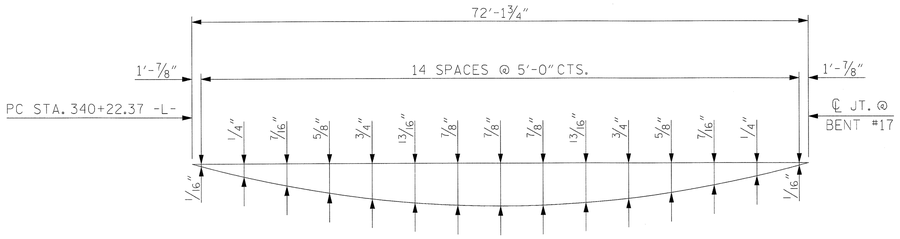

ARC OFFSETS - LEFT SIDE

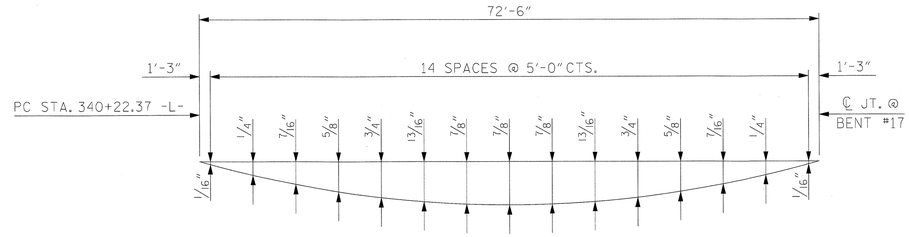

ARC OFFSETS - RIGHT SIDE

SPAN 17

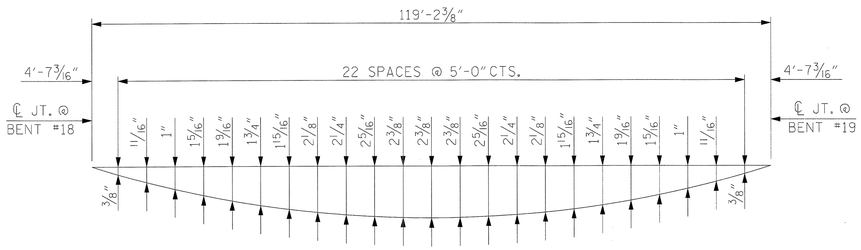

ARC OFFSETS - LEFT SIDE

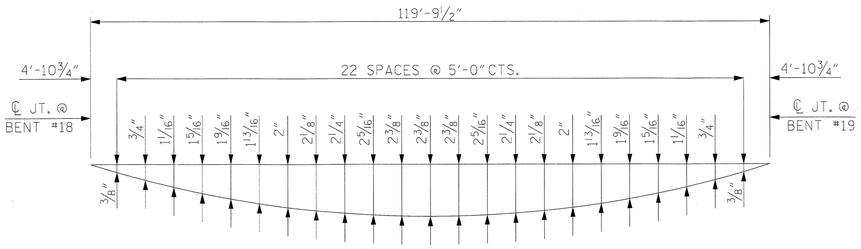

ARC OFFSETS - RIGHT SIDE

SPAN 18

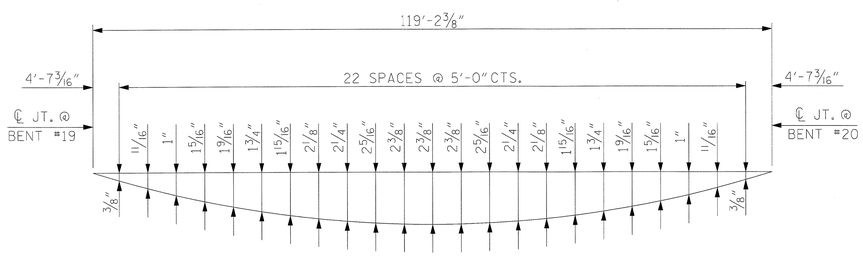

ARC OFFSETS - LEFT SIDE

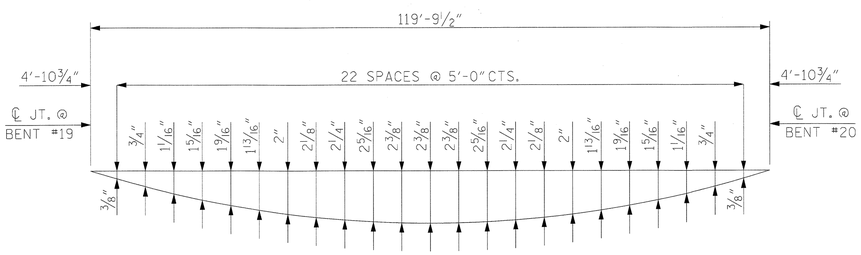

ARC OFFSETS - RIGHT SIDE

SPAN 19

PROJECT NO. R-2633BB

BRUNSWICK/NEW HANOVER COUNTY

STATION: 353+32.50 -L-

SHEET 17 OF 29

NORTH CAROLINA PROFESSIONAL SEAL 18442 ENGINEER RICHARD LEON BOLLINGER
5-29-2013

RS&H IMPROVING YOUR WORLD

RS&H Architects-Engineers-Planners, Inc.
8601 Six Forks Road, Suite 260
Raleigh, NC 27615
919-846-6701 FAX 919-846-9080
www.rsandh.com
North Carolina License Nos. 50073 * F-0493 * C-28

STATE OF NORTH CAROLINA
DEPARTMENT OF TRANSPORTATION
RALEIGH

SUPERSTRUCTURE
ARC OFFSETS
SPAN 17, SPAN 18
AND SPAN 19
LEFT LANE

REVISIONS						SHEET NO.
NO.	BY:	DATE:	NO.	BY:	DATE:	S-69
1			3			TOTAL SHEETS
2			4			700

DRAWN BY :	SMK, RJD	DATE :	11/2011
CHECKED BY :	JMR	DATE :	3/2013
DESIGN ENGINEER OF RECORD :	R. BOLLINGER	DATE :	05/2013

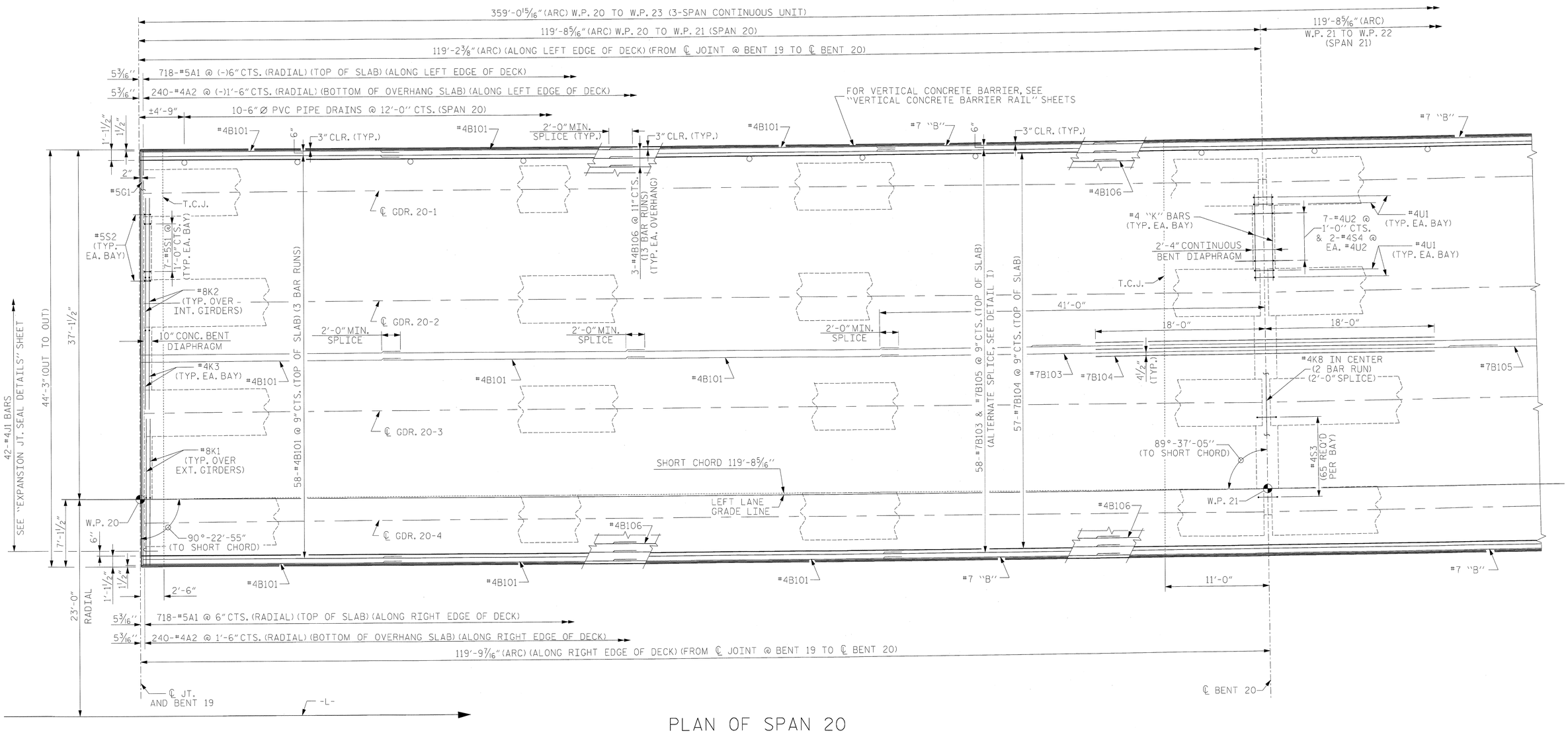

PLAN OF SPAN 20

FOR SECTION VIEWS, SEE "TYPICAL SECTION AND DETAILS"

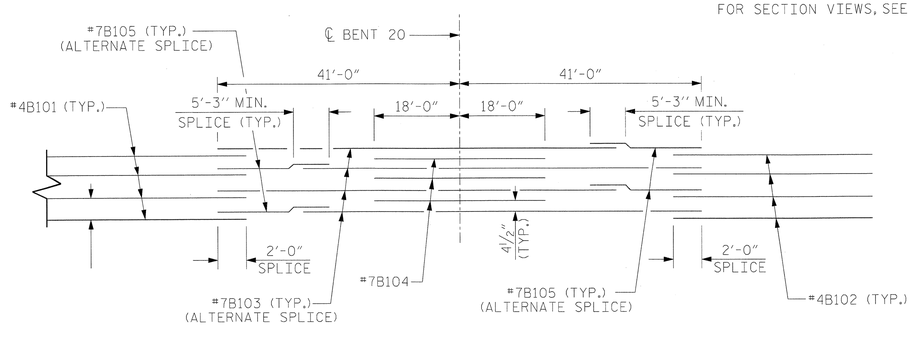

DETAIL I

NOTES

FOR POUR SEQUENCE AND LOCATION OF CONSTRUCTION JOINT, SEE SUPERSTRUCTURE "BILL OF MATERIAL SPANS 20, 21 & 22" SHEET.

"A" BARS TO BE PLACED RADIALLY. SPACING IS ALONG EDGE OF DECK AS SHOWN.

FOR TRANSVERSE CONSTRUCTION JOINT DETAIL SEE PLAN OF SPAN 22 SHEET.

INTERMEDIATE DIAPHRAGMS NOT SHOWN FOR CLARITY, SEE "FRAMING PLAN" SHEETS.

T.C.J. - TRANSVERSE CONSTRUCTION JOINTS

PROJECT NO. R-2633BB

BRUNSWICK/NEW HANOVER COUNTY

STATION: 353+32.50 -L-

SHEET 18 OF 29

NORTH CAROLINA PROFESSIONAL SEAL 22072 ENGINEER JOHN ARTHUR DILWORTH
5-29-13

WETHERILL ENGINEERING

TRANSPORTATION PLANNING/DESIGN
BRIDGE/STRUCTURE DESIGN
CIVIL/SITE DESIGN - GIS/GPS
CONSTRUCTION OBSERVATION

559 Jones Franklin Rd. Suite 164
Raleigh, N.C. 27606
Bus: 919 851 8077
Fax: 919 851 8107
LICENSE NO. F-0377

STATE OF NORTH CAROLINA
DEPARTMENT OF TRANSPORTATION
RALEIGH

SUPERSTRUCTURE
PLAN OF SPAN 20
(SPANS 23,26,29,32,35, 41,44,47,50 & 53 SIMILAR)
LEFT LANE

REVISIONS						SHEET NO.
NO.	BY:	DATE:	NO.	BY:	DATE:	S-70
1			3			TOTAL SHEETS
2			4			700

DRAWN BY :	Z. PIATEK	DATE :	10/2012
CHECKED BY :	J. DILWORTH	DATE :	10/2012
DESIGN ENGINEER OF RECORD :	J. DILWORTH	DATE :	5/2013

FILE: $FILE$
MODEL: $MODELNAME$
PLOT DRV: $PLTDRVS$
DATE/TIME: $DATE$ $TIME$

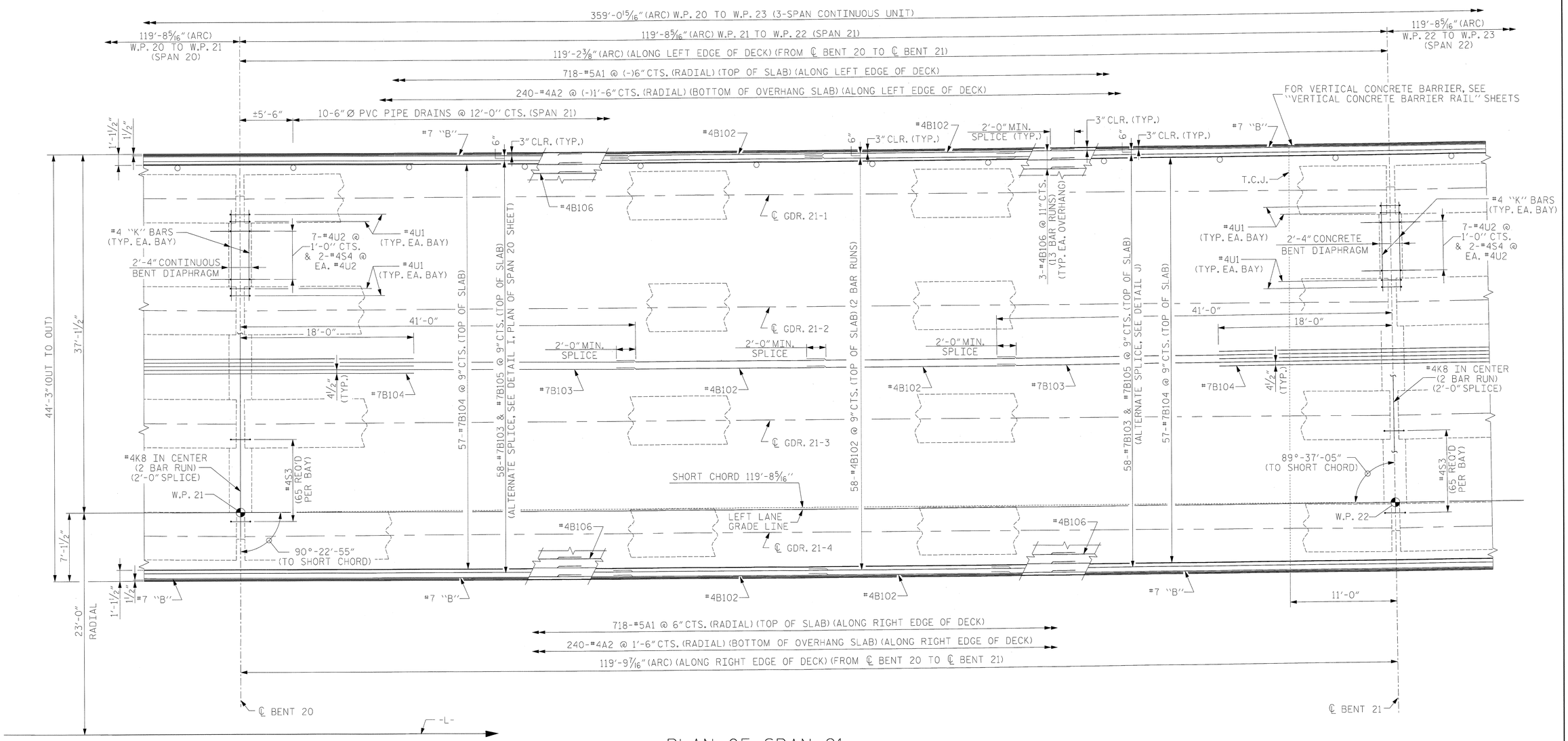

PLAN OF SPAN 21

FOR SECTION VIEWS, SEE "TYPICAL SECTION AND DETAILS"

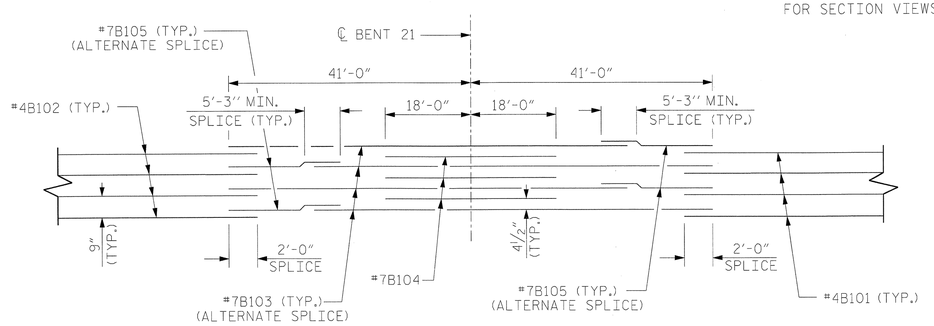

DETAIL J

NOTES

FOR POUR SEQUENCE AND LOCATION OF CONSTRUCTION JOINT, SEE SUPERSTRUCTURE "BILL OF MATERIAL SPANS 20, 21 & 22" SHEET.

"A" BARS TO BE PLACED RADIALLY. SPACING IS ALONG EDGE OF DECK AS SHOWN.

FOR TRANSVERSE CONSTRUCTION JOINT DETAIL SEE PLAN OF SPAN 22 SHEET.

INTERMEDIATE DIAPHRAGMS NOT SHOWN FOR CLARITY, SEE "FRAMING PLAN" SHEETS.

T.C.J. - TRANSVERSE CONSTRUCTION JOINTS

PROJECT NO. R-2633BB

BRUNSWICK/NEW HANOVER COUNTY

STATION: 353+32.50 -L-

SHEET 19 OF 29

NORTH CAROLINA PROFESSIONAL SEAL 22072 ENGINEER JOHN ARTHUR DILWORTH 5-29-13

WETHERILL ENGINEERING

TRANSPORTATION PLANNING/DESIGN
BRIDGE/STRUCTURE DESIGN
CIVIL/SITE DESIGN - GIS/GPS
CONSTRUCTION OBSERVATION

559 Jones Franklin Rd. Suite 164
Raleigh, N.C. 27606
Bus: 919 851 8077
Fax: 919 851 8107
LICENSE NO. F-0377

STATE OF NORTH CAROLINA
DEPARTMENT OF TRANSPORTATION
RALEIGH

SUPERSTRUCTURE
PLAN OF SPAN 21
(SPANS 24,27,30,33,36, 42,45,48,51 & 54 SIMILAR)
LEFT LANE

REVISIONS						SHEET NO.
NO.	BY:	DATE:	NO.	BY:	DATE:	S-71
1			3			TOTAL SHEETS
2			4			700

DRAWN BY : Z. PIATEK DATE : 10/2012
CHECKED BY : J. DILWORTH DATE : 10/2012
DESIGN ENGINEER OF RECORD : J. DILWORTH DATE : 5/2013

FILE: $FILE$
MODEL: $MODELNAME$
PLOT DRV: $PLTDRV$
DATE/TIME: $DATE$ $TIME$

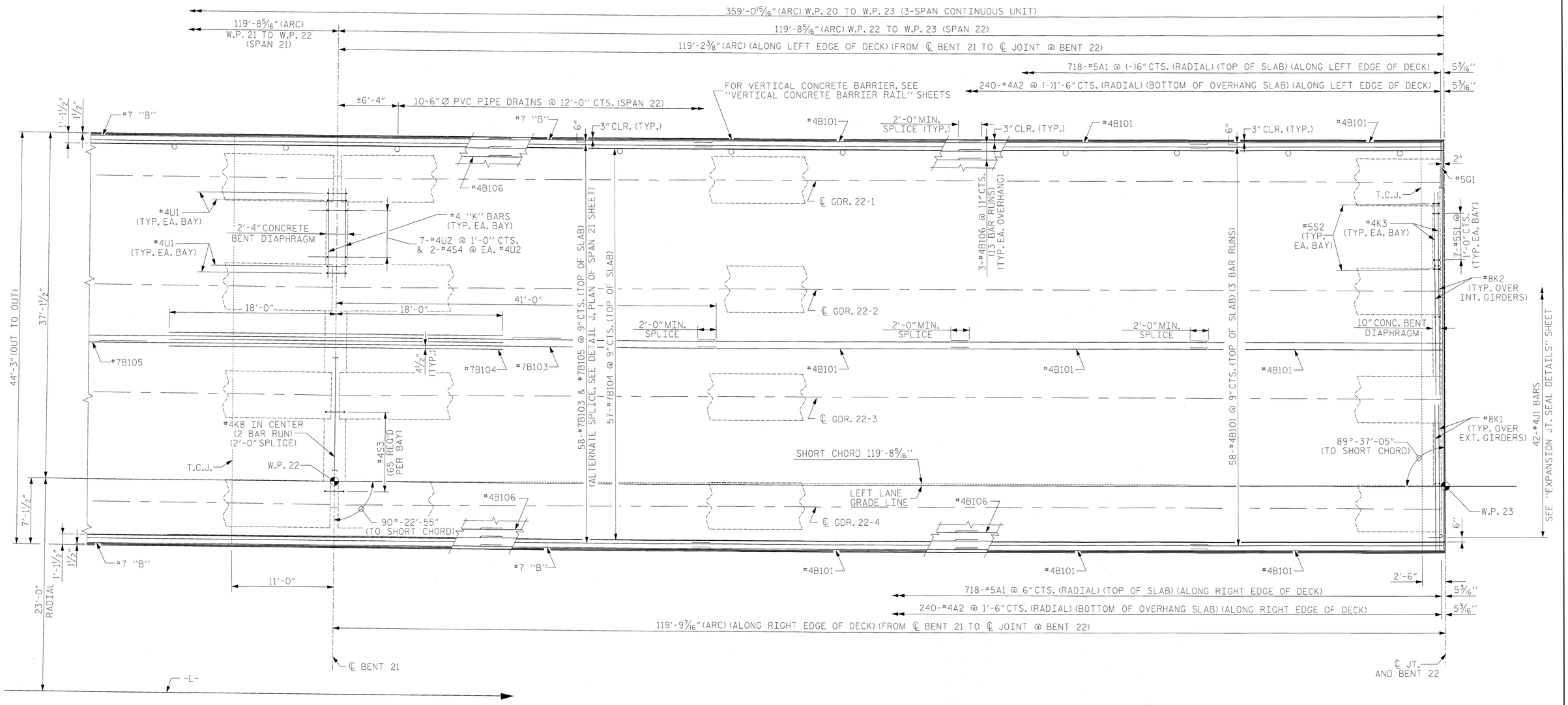

PLAN OF SPAN 22

FOR SECTION VIEWS, SEE "TYPICAL SECTION AND DETAILS"

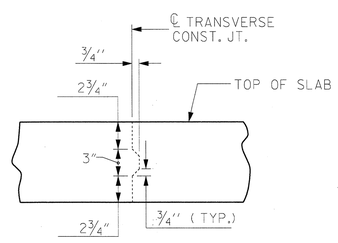

TRANSVERSE CONSTRUCTION JOINT DETAIL

NOTE: REINFORCING STEEL IN SLAB NOT SHOWN. LONGITUDINAL REINFORCING STEEL SHALL BE CONTINUOUS THRU JOINT

NOTES

FOR POUR SEQUENCE AND LOCATION OF CONSTRUCTION JOINT, SEE SUPERSTRUCTURE "BILL OF MATERIAL SPANS 20, 21 & 22" SHEET.

"A" BARS TO BE PLACED RADIALLY. SPACING IS ALONG EDGE OF DECK AS SHOWN.

FOR TRANSVERSE CONSTRUCTION JOINT DETAIL SEE PLAN OF SPAN 22 SHEET.

INTERMEDIATE DIAPHRAGMS NOT SHOWN FOR CLARITY, SEE "FRAMING PLAN" SHEETS.

T.C.J. - TRANSVERSE CONSTRUCTION JOINTS

PROJECT NO. R-2633BB

BRUNSWICK/NEW HANOVER COUNTY

STATION: 353+32.50 -L-

SHEET 20 OF 29

NORTH CAROLINA PROFESSIONAL SEAL 22072 ENGINEER JOHN ARTHUR DILWORTH 5-29-13

WETHERILL ENGINEERING

TRANSPORTATION PLANNING/DESIGN
BRIDGE/STRUCTURE DESIGN
CIVIL/SITE DESIGN - GIS/GPS
CONSTRUCTION OBSERVATION

559 Jones Franklin Rd. Suite 164
Raleigh, N.C. 27606
Bus: 919 851 8077
Fax: 919 851 8107
LICENSE NO. F-0377

STATE OF NORTH CAROLINA
DEPARTMENT OF TRANSPORTATION
RALEIGH

SUPERSTRUCTURE PLAN OF SPAN 22

(SPANS 25,28,31,34,37, 43,46,49,52 & 55 SIMILAR)

LEFT LANE

REVISIONS								SHEET NO.
NO.	BY:	DATE:	NO.	BY:	DATE:			S-72
1			3					TOTAL SHEETS
2			4					200

DRAWN BY :	Z. PIATEK	DATE :	10/2012
CHECKED BY :	J. DILWORTH	DATE :	10/2012
DESIGN ENGINEER OF RECORD :	J. DILWORTH	DATE :	5/2013

FILE: $FILE$
MODEL: $MODELNAME$
PLOT DRV: $PLTDRV$
DATE/TIME: $DATE$ $TIME$

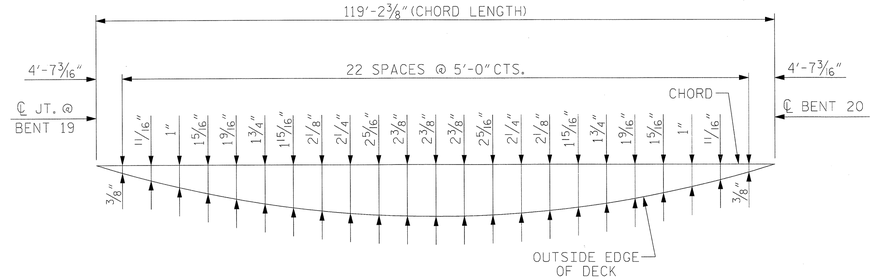

ARC OFFSETS - LEFT SIDE

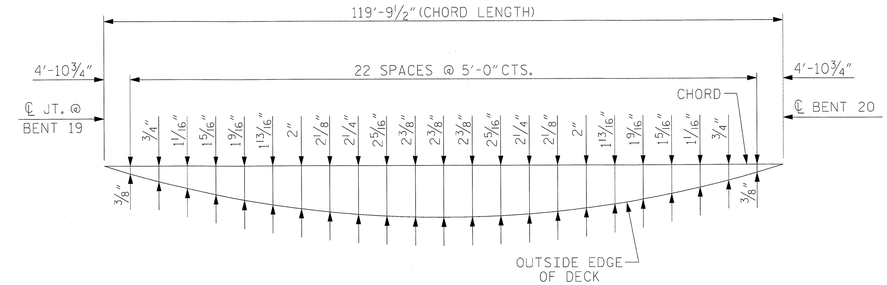

ARC OFFSETS - RIGHT SIDE

SPAN 20

(SPANS 23,26,29,32,35,41,44,47,50,53 SIMILAR)

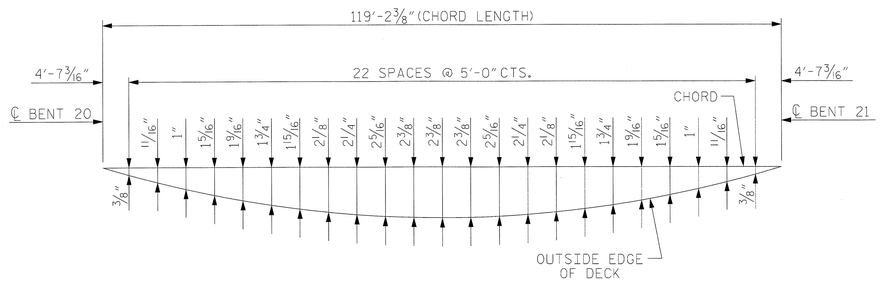

ARC OFFSETS - LEFT SIDE

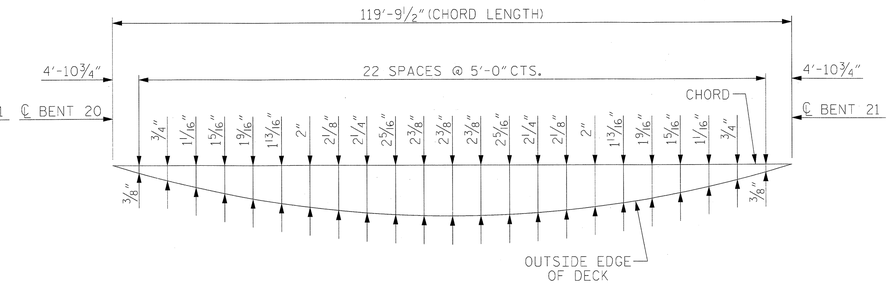

ARC OFFSETS - RIGHT SIDE

SPAN 21

(SPANS 24,27,30,33,36,42,45,48,51,54 SIMILAR)

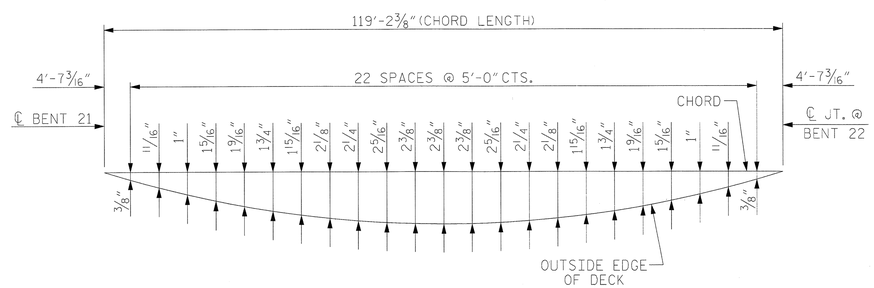

ARC OFFSETS - LEFT SIDE

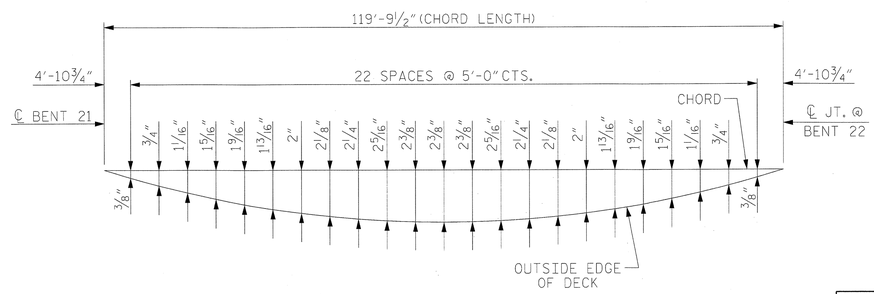

ARC OFFSETS - RIGHT SIDE

SPAN 22

(SPANS 25,28,31,34,37,43,46,49,52,55 SIMILAR)

PROJECT NO. R-2633BB

BRUNSWICK/NEW HANOVER COUNTY

STATION: 353+32.50 -L-

SHEET 21 OF 29

NORTH CAROLINA PROFESSIONAL SEAL 22072 ENGINEER JOHN ARTHUR DILWORTH
5-29-13

WETHERILL ENGINEERING

TRANSPORTATION PLANNING/DESIGN
BRIDGE/STRUCTURE DESIGN
CIVIL/SITE DESIGN - GIS/GPS
CONSTRUCTION OBSERVATION

559 Jones Franklin Rd. Suite 164
Raleigh, N.C. 27606
Bus: 919 851 8077
Fax: 919 851 8107
LICENSE NO. F-0377

STATE OF NORTH CAROLINA
DEPARTMENT OF TRANSPORTATION
RALEIGH

SUPERSTRUCTURE
ARC OFFSETS
SPANS 20, 21 & 22
(SPANS 23-25 TO 35-37 AND 41-43 TO 53-55 SIMILAR)
LEFT LANE

REVISIONS						SHEET NO.
NO.	BY:	DATE:	NO.	BY:	DATE:	S-73
1			3			TOTAL SHEETS
2			4			700

DRAWN BY :	Z. PIATEK	DATE :	10/2012
CHECKED BY :	J. DILWORTH	DATE :	10/2012
DESIGN ENGINEER OF RECORD :	J. DILWORTH	DATE :	5/2013

FILE: $FILE$
MODEL: $MODELNAME$
PLOT DRV: $PLTDRVS$
DATE/TIME: $DATE$ $TIME$

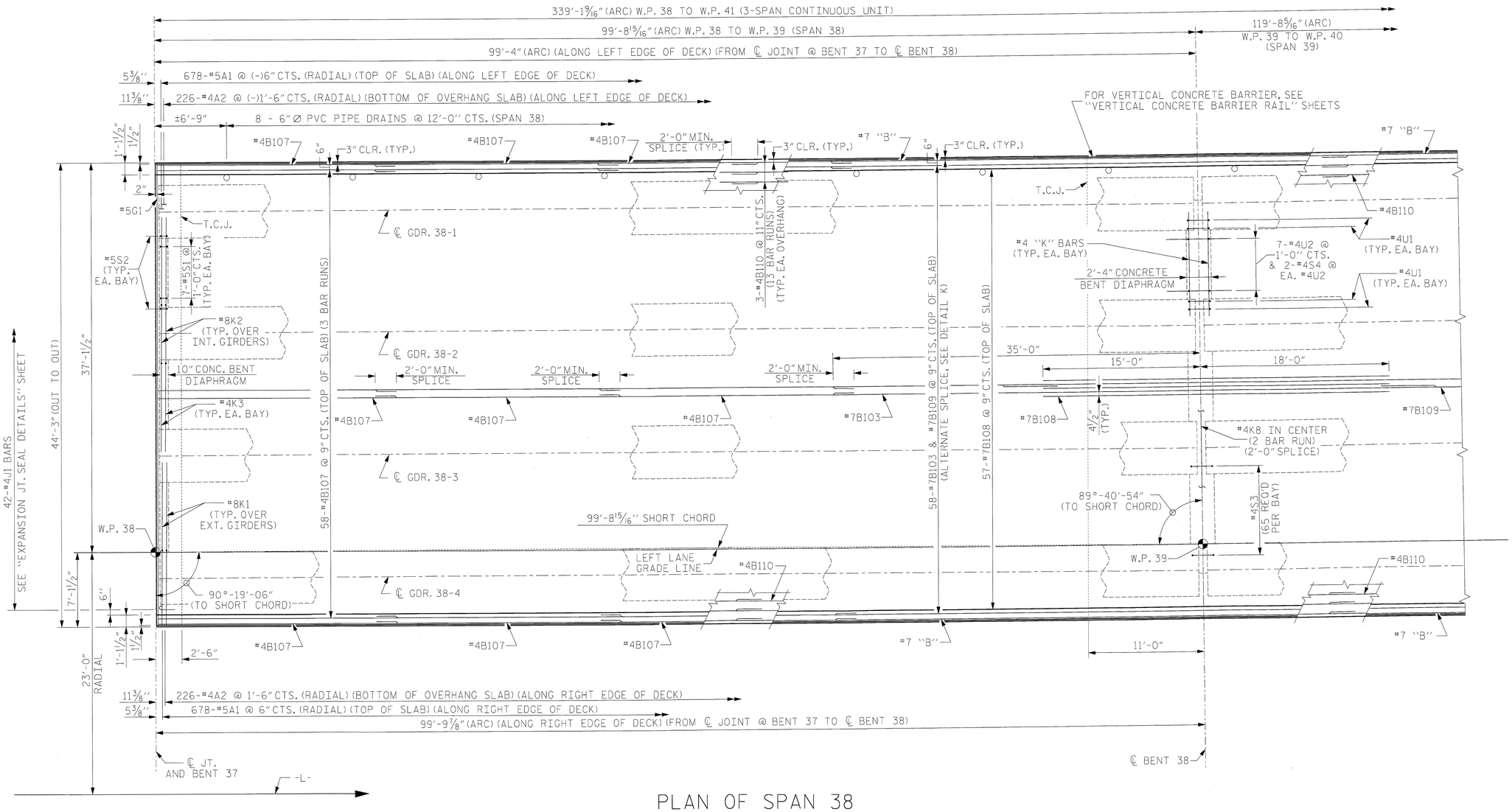

PLAN OF SPAN 38

FOR SECTION VIEWS, SEE "TYPICAL SECTION AND DETAILS"

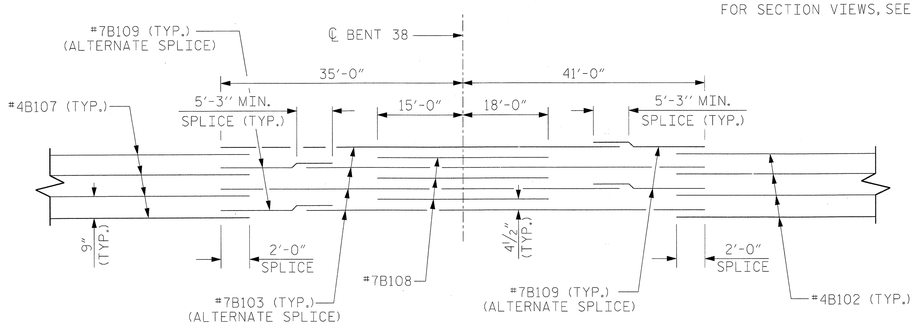

DETAIL K

NOTES

FOR POUR SEQUENCE AND LOCATION OF CONSTRUCTION JOINT, SEE SUPERSTRUCTURE "BILL OF MATERIAL SPANS 20, 21 & 22" SHEET.

"A" BARS TO BE PLACED RADIALLY. SPACING IS ALONG EDGE OF DECK AS SHOWN.

FOR TRANSVERSE CONSTRUCTION JOINT DETAIL SEE PLAN OF SPAN 22 SHEET.

INTERMEDIATE DIAPHRAGMS NOT SHOWN FOR CLARITY, SEE "FRAMING PLAN" SHEETS.

T.C.J. - TRANSVERSE CONSTRUCTION JOINTS

PROJECT NO. R-2633BB

BRUNSWICK/NEW HANOVER COUNTY

STATION: 353+32.50 -L-

SHEET 22 OF 29

NORTH CAROLINA PROFESSIONAL ENGINEER SEAL 22072 JOHN ARTHUR DILWORTH
5-29-13

WETHERILL ENGINEERING

TRANSPORTATION PLANNING/DESIGN
BRIDGE/STRUCTURE DESIGN
CIVIL/SITE DESIGN - GIS/GPS
CONSTRUCTION OBSERVATION

559 Jones Franklin Rd. Suite 164
Raleigh, N.C. 27606
Bus: 919 851 8077
Fax: 919 851 8107
LICENSE NO. F-0377

STATE OF NORTH CAROLINA
DEPARTMENT OF TRANSPORTATION
RALEIGH

SUPERSTRUCTURE
PLAN OF SPAN 38

LEFT LANE

REVISIONS						SHEET NO.
NO.	BY:	DATE:	NO.	BY:	DATE:	S-74
1			3			TOTAL SHEETS
2			4			700

DRAWN BY :	Z. PIATEK	DATE :	10/2012
CHECKED BY :	J. DILWORTH	DATE :	10/2012
DESIGN ENGINEER OF RECORD :	J. DILWORTH	DATE :	5/2013

FILE: $FILE$
MODEL: $MODELNAME$
PLOT DRV: $PLTDRVS$
DATE/TIME: $DATE$ $TIME$

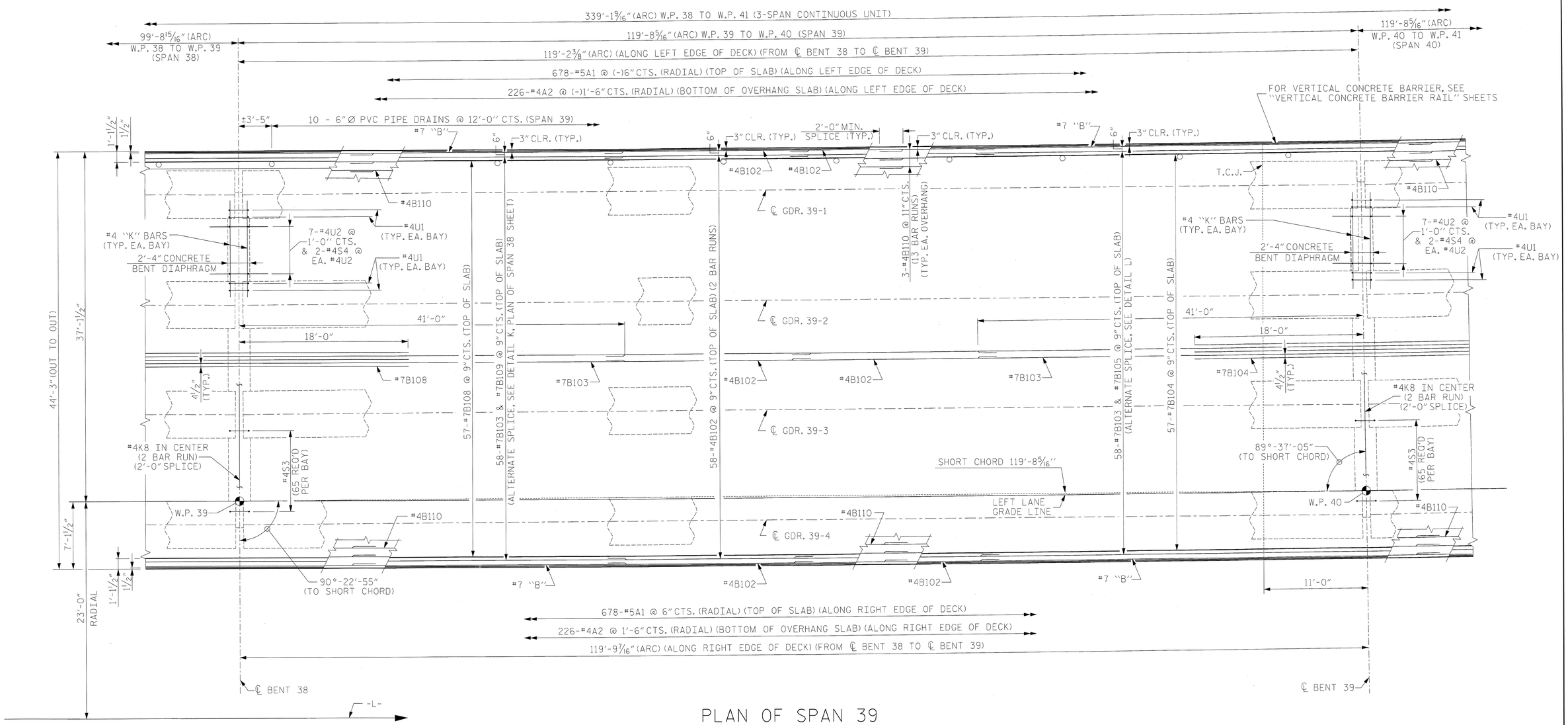

PLAN OF SPAN 39

FOR SECTION VIEWS, SEE "TYPICAL SECTION AND DETAILS"

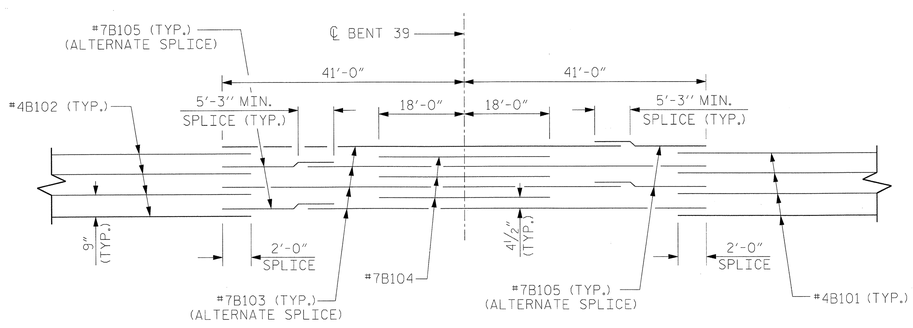

DETAIL L

NOTES

FOR POUR SEQUENCE AND LOCATION OF CONSTRUCTION JOINT, SEE SUPERSTRUCTURE "BILL OF MATERIAL SPANS 20, 21 & 22" SHEET.

"A" BARS TO BE PLACED RADIALLY. SPACING IS ALONG EDGE OF DECK AS SHOWN.

FOR TRANSVERSE CONSTRUCTION JOINT DETAIL SEE PLAN OF SPAN 22 SHEET.

INTERMEDIATE DIAPHRAGMS NOT SHOWN FOR CLARITY, SEE "FRAMING PLAN" SHEETS.

T.C.J. - TRANSVERSE CONSTRUCTION JOINTS

PROJECT NO. R-2633BB

BRUNSWICK/NEW HANOVER COUNTY

STATION: 353+32.50 -L-

SHEET 23 OF 29

NORTH CAROLINA PROFESSIONAL SEAL 22072 ENGINEER JOHN ARTHUR DILWORTH

5-29-13

WETHERILL ENGINEERING

TRANSPORTATION PLANNING/DESIGN
BRIDGE/STRUCTURE DESIGN
CIVIL/SITE DESIGN - GIS/GPS
CONSTRUCTION OBSERVATION

559 Jones Franklin Rd. Suite 164
Raleigh, N.C. 27606
Bus: 919 851 8077
Fax: 919 851 8107
LICENSE NO. F-0377

STATE OF NORTH CAROLINA
DEPARTMENT OF TRANSPORTATION
RALEIGH

SUPERSTRUCTURE
PLAN OF SPAN 39

LEFT LANE

REVISIONS						SHEET NO.
NO.	BY:	DATE:	NO.	BY:	DATE:	S-75
1			3			TOTAL SHEETS
2			4			700

DRAWN BY :	Z. PIATEK	DATE :	10/2012
CHECKED BY :	J. DILWORTH	DATE :	10/2012
DESIGN ENGINEER OF RECORD :	J. DILWORTH	DATE :	5/2013

FILE: $FILE$
MODEL: $MODELNAME$
PLOT DRV: $PLTDRVS$
DATE/TIME: $DATE$ $TIME$

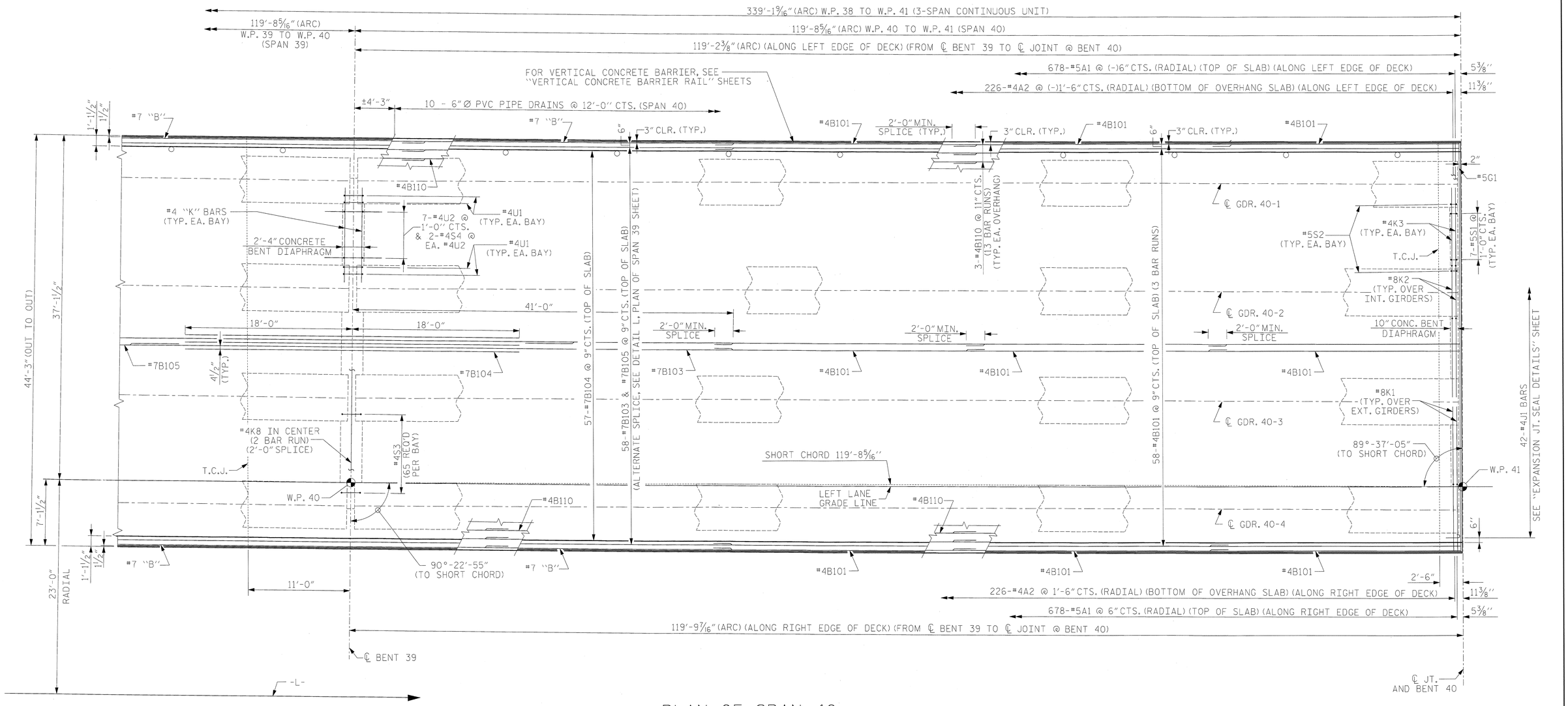

PLAN OF SPAN 40

FOR SECTION VIEWS, SEE "TYPICAL SECTION AND DETAILS"

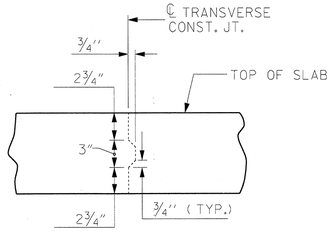

TRANSVERSE CONSTRUCTION JOINT DETAIL

NOTE: REINFORCING STEEL IN SLAB NOT SHOWN. LONGITUDINAL REINFORCING STEEL SHALL BE CONTINUOUS THRU JOINT

NOTES

FOR POUR SEQUENCE AND LOCATION OF CONSTRUCTION JOINT, SEE SUPERSTRUCTURE "BILL OF MATERIAL SPANS 20, 21 & 22" SHEET.

"A" BARS TO BE PLACED RADIALLY. SPACING IS ALONG EDGE OF DECK AS SHOWN.

FOR TRANSVERSE CONSTRUCTION JOINT DETAIL SEE PLAN OF SPAN 22 SHEET.

INTERMEDIATE DIAPHRAGMS NOT SHOWN FOR CLARITY, SEE "FRAMING PLAN" SHEETS.

T.C.J. - TRANSVERSE CONSTRUCTION JOINTS

PROJECT NO. R-2633BB

BRUNSWICK/NEW HANOVER COUNTY

STATION: 353+32.50 -L-

SHEET 24 OF 29

NORTH CAROLINA PROFESSIONAL SEAL 22072 ENGINEER JOHN ARTHUR DILWORTH
5-29-13

WETHERILL ENGINEERING

TRANSPORTATION PLANNING/DESIGN
BRIDGE/STRUCTURE DESIGN
CIVIL/SITE DESIGN - GIS/GPS
CONSTRUCTION OBSERVATION

559 Jones Franklin Rd. Suite 164
Raleigh, N.C. 27606
Bus: 919 851 9077
Fax: 919 851 8107
LICENSE NO. F-0377

STATE OF NORTH CAROLINA
DEPARTMENT OF TRANSPORTATION
RALEIGH

SUPERSTRUCTURE
PLAN OF SPAN 40

LEFT LANE

REVISIONS						SHEET NO.
NO.	BY:	DATE:	NO.	BY:	DATE:	S-76
1			3			TOTAL SHEETS
2			4			700

DRAWN BY : Z. PIATEK DATE : 10/2012
CHECKED BY : J. DILWORTH DATE : 10/2012
DESIGN ENGINEER OF RECORD : J. DILWORTH DATE : 5/2013

FILE: $FILE$
MODEL: $MODELNAME$
PLOT DRV: $PLTDRV$
DATE/TIME: $DATE$ $TIME$

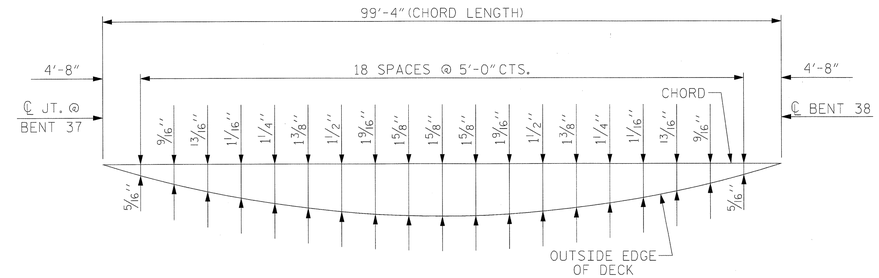

ARC OFFSETS - LEFT SIDE

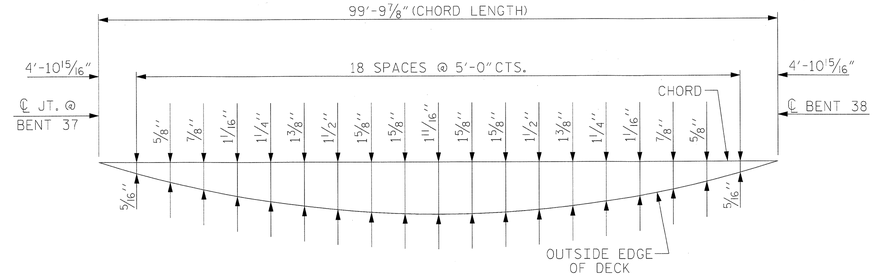

ARC OFFSETS - RIGHT SIDE

SPAN 38

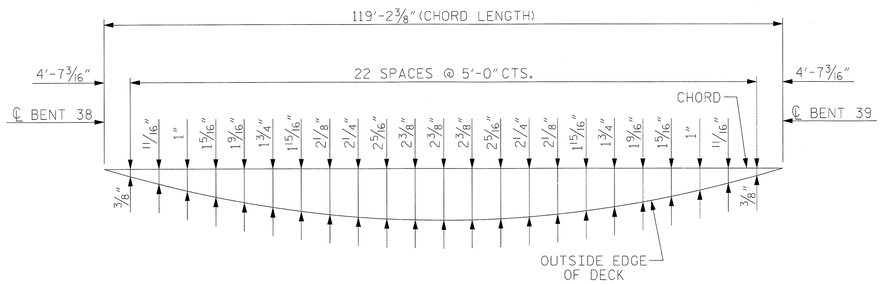

ARC OFFSETS - LEFT SIDE

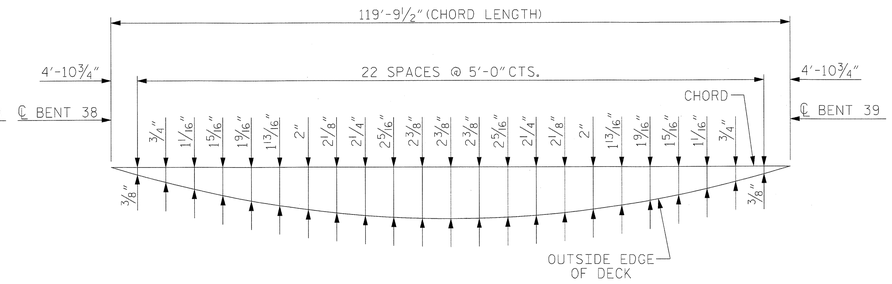

ARC OFFSETS - RIGHT SIDE

SPAN 39

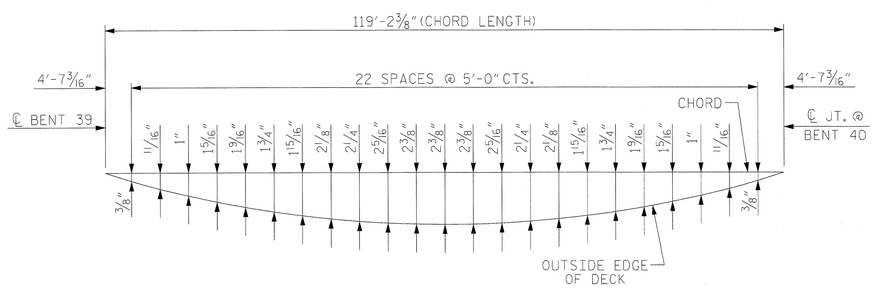

ARC OFFSETS - LEFT SIDE

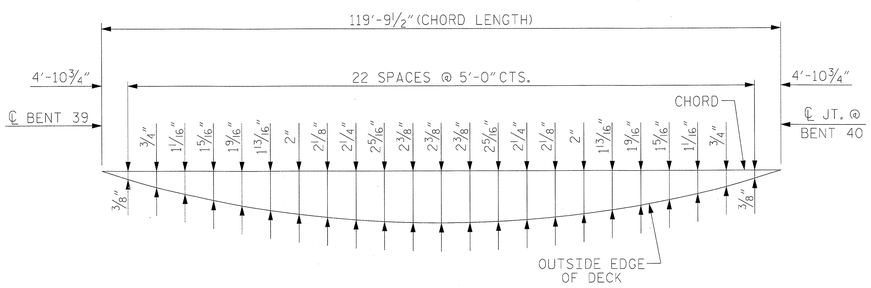

ARC OFFSETS - RIGHT SIDE

SPAN 40

PROJECT NO. R-2633BB

BRUNSWICK/NEW HANOVER COUNTY

STATION: 353+32.50 -L-

SHEET 25 OF 29

NORTH CAROLINA PROFESSIONAL SEAL 22072 ENGINEER JOHN ARTHUR DILWORTH

5-29-13

WETHERILL ENGINEERING

TRANSPORTATION PLANNING/DESIGN
BRIDGE/STRUCTURE DESIGN
CIVIL/SITE DESIGN - GIS/GPS
CONSTRUCTION OBSERVATION

559 Jones Franklin Rd. Suite 164
Raleigh, N.C. 27606
Bus: 919 851 8077
Fax: 919 851 8107
LICENSE NO. F-0377

STATE OF NORTH CAROLINA
DEPARTMENT OF TRANSPORTATION
RALEIGH

SUPERSTRUCTURE
ARC OFFSETS
SPANS 38, 39 & 40

LEFT LANE

REVISIONS							SHEET NO.
NO.	BY:	DATE:	NO.	BY:	DATE:		S-77
1			3				TOTAL SHEETS
2			4				700

DRAWN BY :	Z. PIATEK	DATE :	10/2012
CHECKED BY :	J. DILWORTH	DATE :	10/2012
DESIGN ENGINEER OF RECORD :	J. DILWORTH	DATE :	5/2013

FILE: $FILE$
MODEL: $MODELNAME$
PLOT DRV: $PLTDRVS$
DATE/TIME: $DATE$ $TIME$

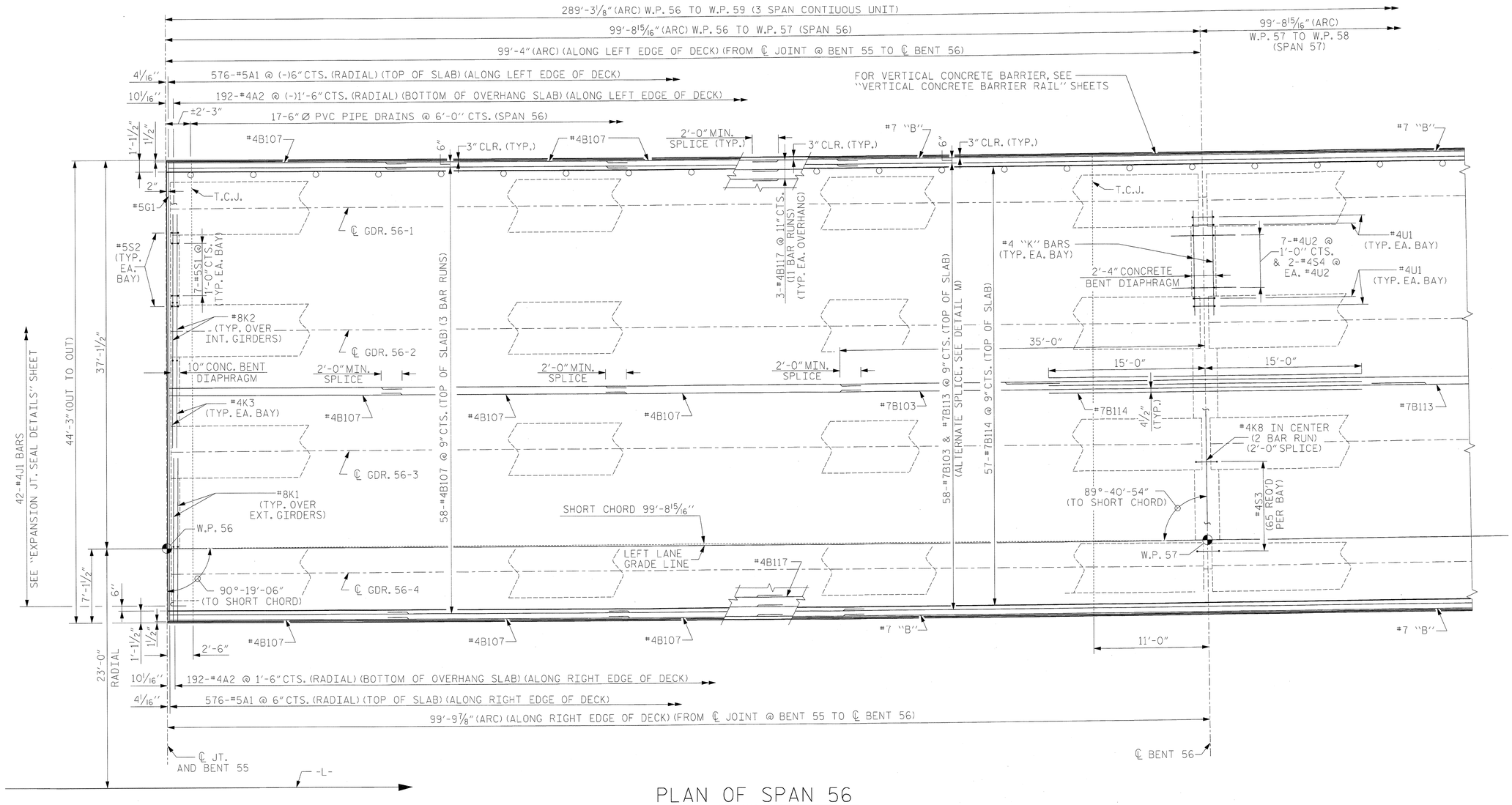

PLAN OF SPAN 56

FOR SECTION VIEWS, SEE "TYPICAL SECTION AND DETAILS"

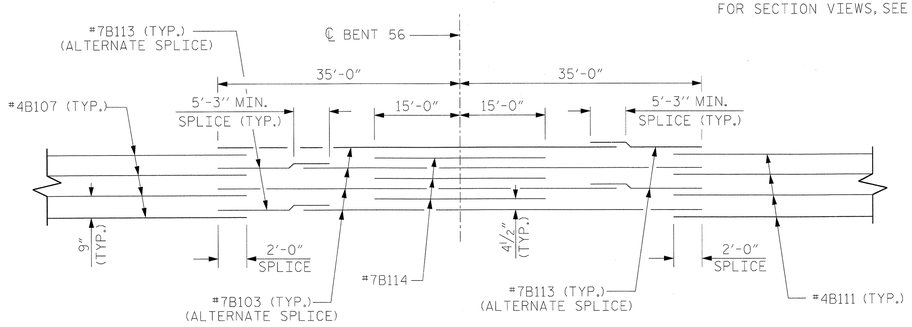

DETAIL M

NOTES

FOR POUR SEQUENCE AND LOCATION OF CONSTRUCTION JOINT, SEE SUPERSTRUCTURE "BILL OF MATERIAL SPANS 20, 21 & 22" SHEET.

"A" BARS TO BE PLACED RADIALLY. SPACING IS ALONG EDGE OF DECK AS SHOWN.

FOR TRANSVERSE CONSTRUCTION JOINT DETAIL SEE PLAN OF SPAN 22 SHEET.

INTERMEDIATE DIAPHRAGMS NOT SHOWN FOR CLARITY, SEE "FRAMING PLAN" SHEETS.

T.C.J. - TRANSVERSE CONSTRUCTION JOINTS

PROJECT NO. R-2633BB

BRUNSWICK/NEW HANOVER COUNTY

STATION: 353+32.50 -L-

SHEET 26 OF 29

NORTH CAROLINA PROFESSIONAL ENGINEER SEAL 22072 JOHN ARTHUR DILWORTH 5-29-13

WETHERILL ENGINEERING

TRANSPORTATION PLANNING/DESIGN
BRIDGE/STRUCTURE DESIGN
CIVIL/SITE DESIGN - GIS/GPS
CONSTRUCTION OBSERVATION

559 Jones Franklin Rd. Suite 164
Raleigh, N.C. 27606
Bus: 919 851 8077
Fax: 919 851 8107
LICENSE NO. F-0377

STATE OF NORTH CAROLINA
DEPARTMENT OF TRANSPORTATION
RALEIGH

SUPERSTRUCTURE
PLAN OF SPAN 56

LEFT LANE

REVISIONS						SHEET NO.
NO.	BY:	DATE:	NO.	BY:	DATE:	S-78
1			3			TOTAL SHEETS
2			4			700

DRAWN BY :	Z. PIATEK	DATE :	10/2012
CHECKED BY :	J. DILWORTH	DATE :	10/2012
DESIGN ENGINEER OF RECORD :	J. DILWORTH	DATE :	5/2013

FILE: $FILE$
MODEL: $MODELNAME$
PLOT DRV: $PLTDRVS$
DATE/TIME: $DATE$ $TIME$

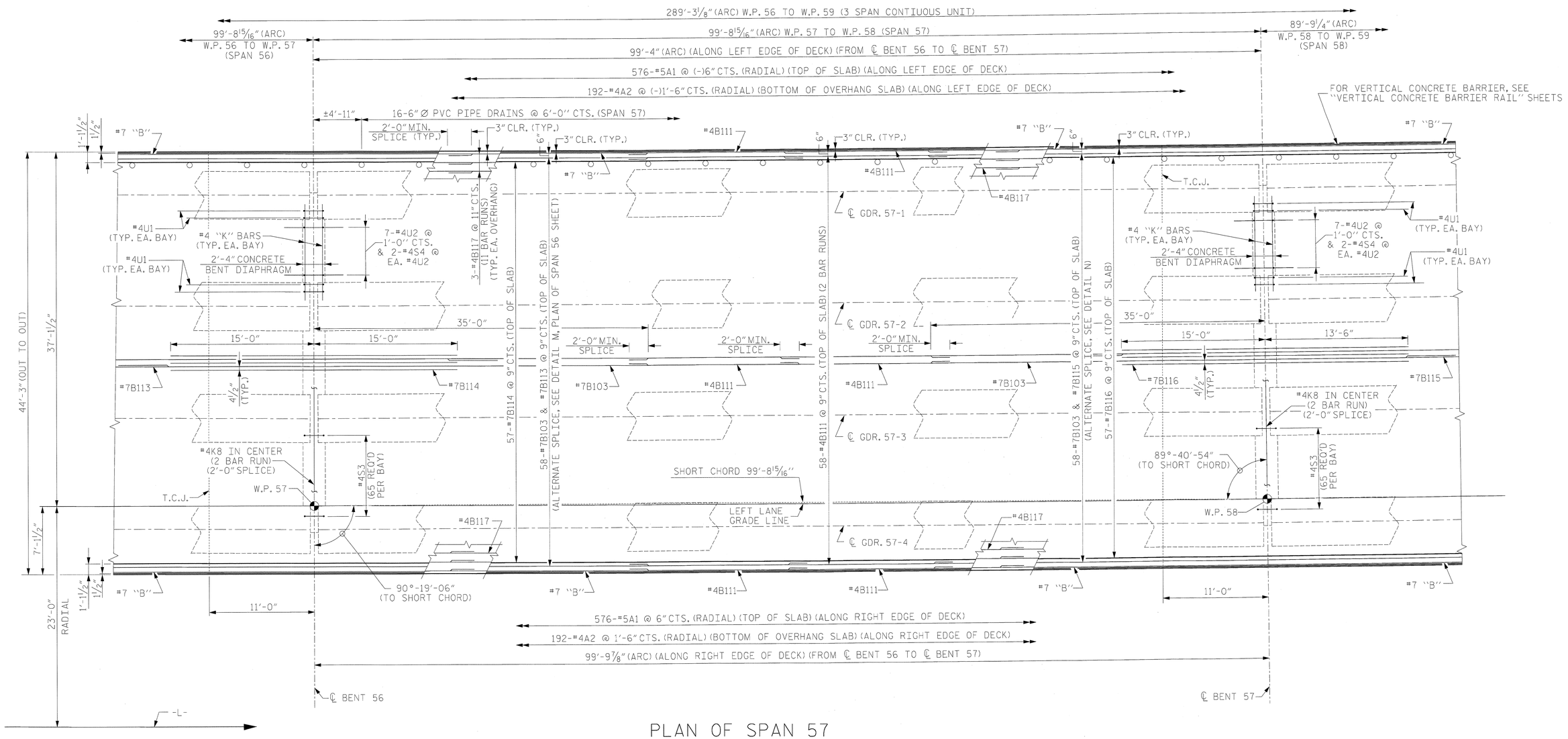

PLAN OF SPAN 57

FOR SECTION VIEWS, SEE "TYPICAL SECTION AND DETAILS"

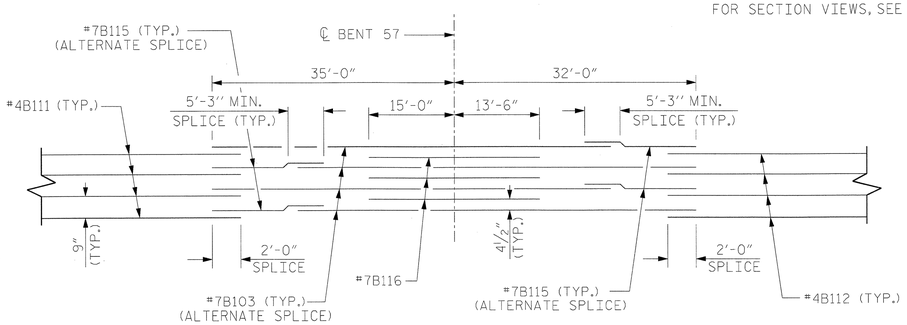

DETAIL N

NOTES

FOR POUR SEQUENCE AND LOCATION OF CONSTRUCTION JOINT, SEE SUPERSTRUCTURE "BILL OF MATERIAL SPANS 20, 21 & 22" SHEET.

"A" BARS TO BE PLACED RADIALLY. SPACING IS ALONG EDGE OF DECK AS SHOWN.

FOR TRANSVERSE CONSTRUCTION JOINT DETAIL SEE PLAN OF SPAN 22 SHEET.

INTERMEDIATE DIAPHRAGMS NOT SHOWN FOR CLARITY, SEE "FRAMING PLAN" SHEETS.

T.C.J. - TRANSVERSE CONSTRUCTION JOINTS

PROJECT NO. R-2633BB

BRUNSWICK/NEW HANOVER COUNTY

STATION: 353+32.50 -L-

SHEET 27 OF 29

NORTH CAROLINA PROFESSIONAL SEAL 22072 ENGINEER JOHN ARTHUR DILWORTH 5-29-13

WETHERILL ENGINEERING

TRANSPORTATION PLANNING/DESIGN
BRIDGE/STRUCTURE DESIGN
CIVIL/SITE DESIGN - GIS/GPS
CONSTRUCTION OBSERVATION

559 Jones Franklin Rd. Suite 164
Raleigh, N.C. 27606
Bus: 919 851 8077
Fax: 919 851 8107
LICENSE NO. F-0377

STATE OF NORTH CAROLINA
DEPARTMENT OF TRANSPORTATION
RALEIGH

SUPERSTRUCTURE
PLAN OF SPAN 57

LEFT LANE

REVISIONS						SHEET NO.
NO.	BY:	DATE:	NO.	BY:	DATE:	S-79
1			3			TOTAL SHEETS
2			4			700

DRAWN BY : Z. PIATEK DATE : 10/2012
CHECKED BY : J. DILWORTH DATE : 10/2012
DESIGN ENGINEER OF RECORD : J. DILWORTH DATE : 5/2013

FILE: $FILE$
MODEL: $MODELNAME$
PLOT DRV: $PLTDRVS$
DATE/TIME: $DATE$ $TIME$

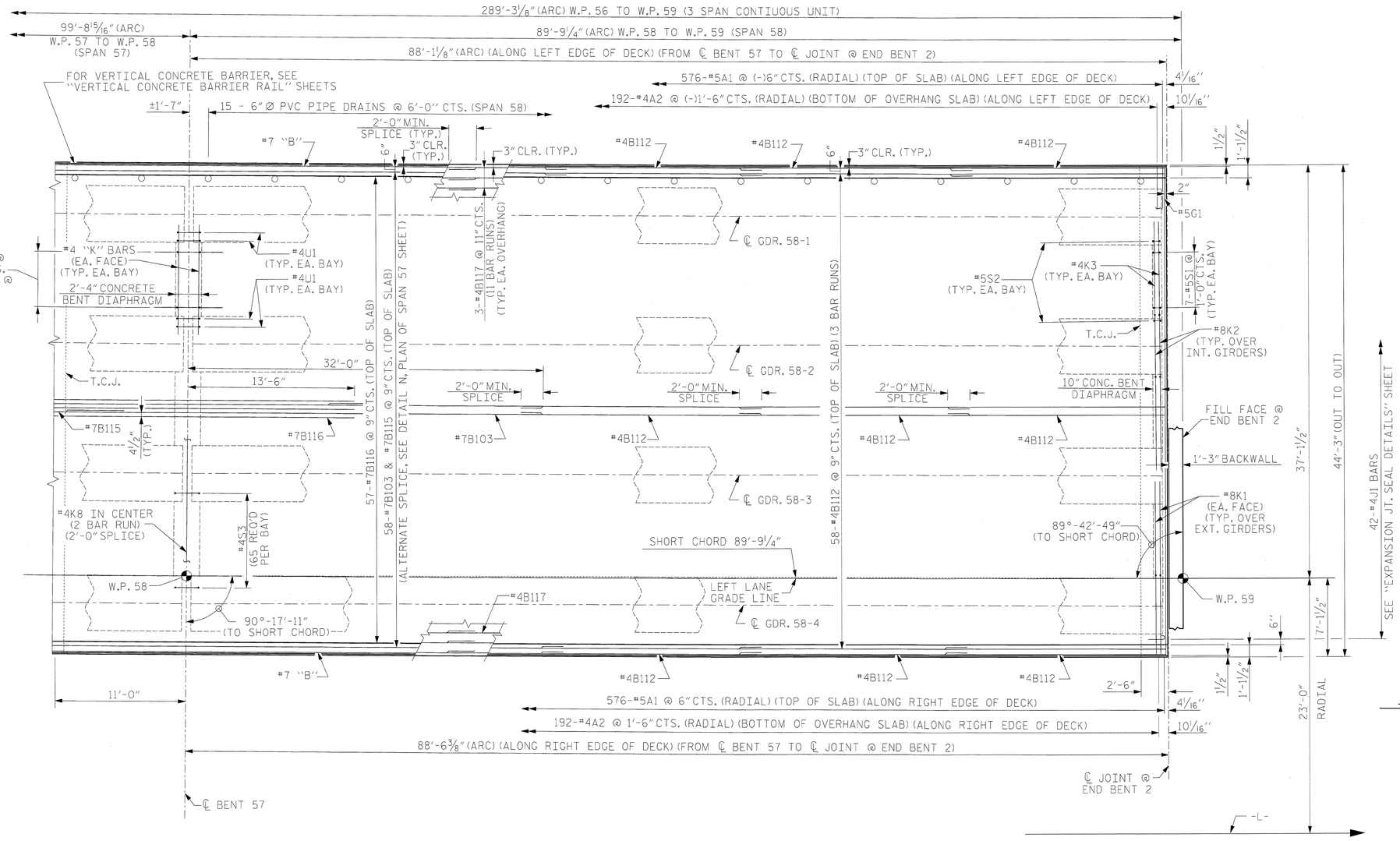

PLAN OF SPAN 58

FOR SECTION VIEWS, SEE "TYPICAL SECTION AND DETAILS"

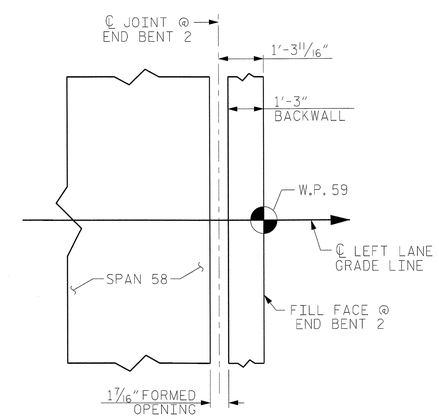

END BENT DETAIL

FOR JOINT DETAILS AT END BENT, SEE "STANDARD EXPANSION JOINT SEAL DETAILS" SHEET.

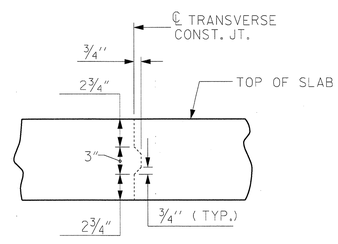

TRANSVERSE CONSTRUCTION JOINT DETAIL

NOTE: REINFORCING STEEL IN SLAB NOT SHOWN. LONGITUDINAL REINFORCING STEEL SHALL BE CONTINUOUS THRU JOINT

NOTES

FOR POUR SEQUENCE AND LOCATION OF CONSTRUCTION JOINT, SEE SUPERSTRUCTURE "BILL OF MATERIAL SPANS 20, 21 & 22" SHEET.

"A" BARS TO BE PLACED RADIALLY. SPACING IS ALONG EDGE OF DECK AS SHOWN.

FOR TRANSVERSE CONSTRUCTION JOINT DETAIL SEE PLAN OF SPAN 22 SHEET.

INTERMEDIATE DIAPHRAGMS NOT SHOWN FOR CLARITY, SEE "FRAMING PLAN" SHEETS.

T.C.J. - TRANSVERSE CONSTRUCTION JOINTS

PROJECT NO. R-2633BB

BRUNSWICK/NEW HANOVER COUNTY

STATION: 353+32.50 -L-

SHEET 28 OF 29

NORTH CAROLINA PROFESSIONAL SEAL 22072 ENGINEER JOHN ARTHUR DILWORTH 5-29-13

WETHERILL ENGINEERING

TRANSPORTATION PLANNING/DESIGN
BRIDGE/STRUCTURE DESIGN
CIVIL/SITE DESIGN - GIS/GPS
CONSTRUCTION OBSERVATION

559 Jones Franklin Rd. Suite 164
Raleigh, N.C. 27606
Bus: 919 851 8077
Fax: 919 851 8107
LICENSE NO. F-0377

STATE OF NORTH CAROLINA
DEPARTMENT OF TRANSPORTATION
RALEIGH

SUPERSTRUCTURE
PLAN OF SPAN 58

LEFT LANE

REVISIONS						SHEET NO.
NO.	BY:	DATE:	NO.	BY:	DATE:	S-80
1			3			TOTAL SHEETS
2			4			700

DRAWN BY : Z. PIATEK DATE : 10/2012
CHECKED BY : J. DILWORTH DATE : 10/2012
DESIGN ENGINEER OF RECORD : J. DILWORTH DATE : 5/2013

FILE: $FILE$
MODEL: $MODELNAME$
PLOT DRV: $PLTDRVS$
DATE/TIME: $DATE$ $TIME$

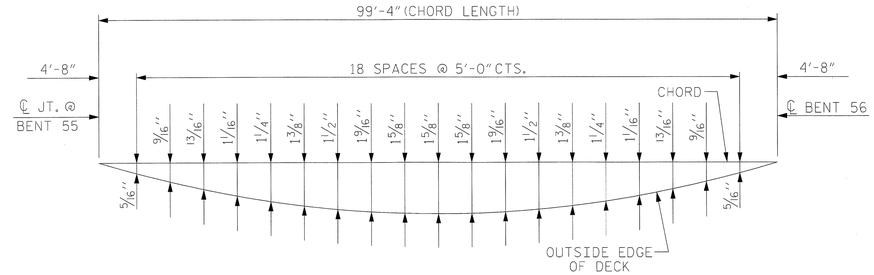

ARC OFFSETS - LEFT SIDE

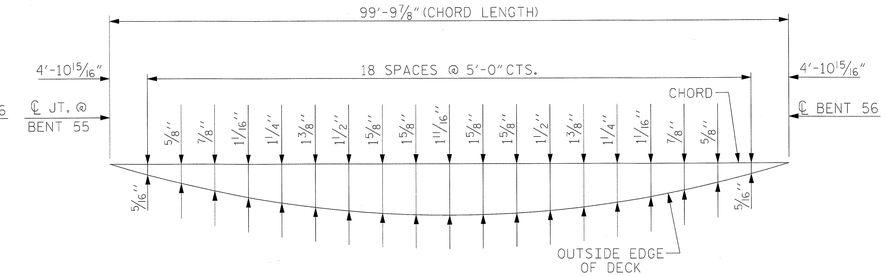

ARC OFFSETS - RIGHT SIDE

SPAN 56

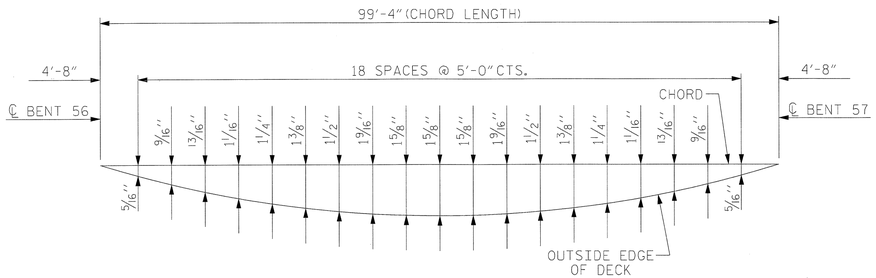

ARC OFFSETS - LEFT SIDE

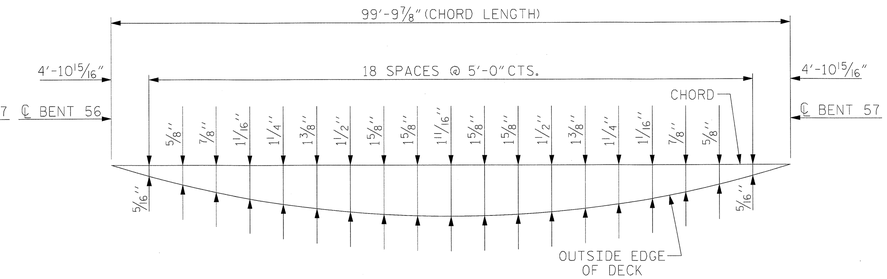

ARC OFFSETS - RIGHT SIDE

SPAN 57

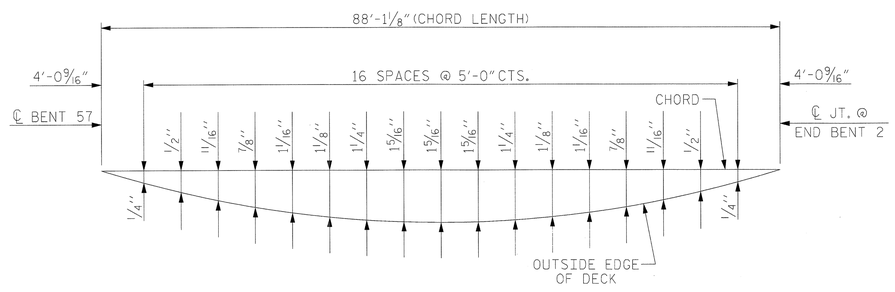

ARC OFFSETS - LEFT SIDE

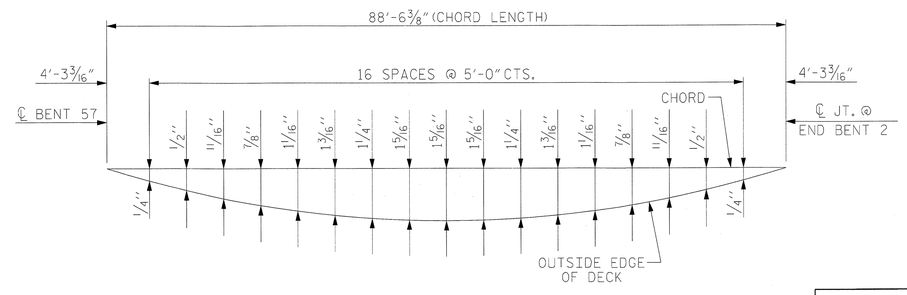

ARC OFFSETS - RIGHT SIDE

SPAN 58

PROJECT NO. R-2633BB

BRUNSWICK/NEW HANOVER COUNTY

STATION: 353+32.50 -L-

SHEET 29 OF 29

NORTH CAROLINA PROFESSIONAL SEAL 22072 ENGINEER JOHN ARTHUR DILWORTH 5-29-13

WETHERILL ENGINEERING

TRANSPORTATION PLANNING/DESIGN
BRIDGE/STRUCTURE DESIGN
CIVIL/SITE DESIGN - RS/DPS
CONSTRUCTION OBSERVATION

559 Jones Franklin Rd. Suite 164
Raleigh, N.C. 27606
Bus: 919 851 8077
Fax: 919 851 8107
LICENSE NO. F-0377

STATE OF NORTH CAROLINA
DEPARTMENT OF TRANSPORTATION
RALEIGH

SUPERSTRUCTURE
ARC OFFSETS
SPANS 56, 57 & 58

LEFT LANE

REVISIONS						SHEET NO.
NO.	BY:	DATE:	NO.	BY:	DATE:	S-81
1			3			TOTAL SHEETS
2			4			700

DRAWN BY : Z. PIATEK DATE : 10/2012
CHECKED BY : J. DILWORTH DATE : 10/2012
DESIGN ENGINEER OF RECORD : J. DILWORTH DATE : 5/2013

FILE: $FILE$
MODEL: $MODELNAME$
PLOT DRV: $PLTDRV$
DATE/TIME:$DATE$ $TIME$

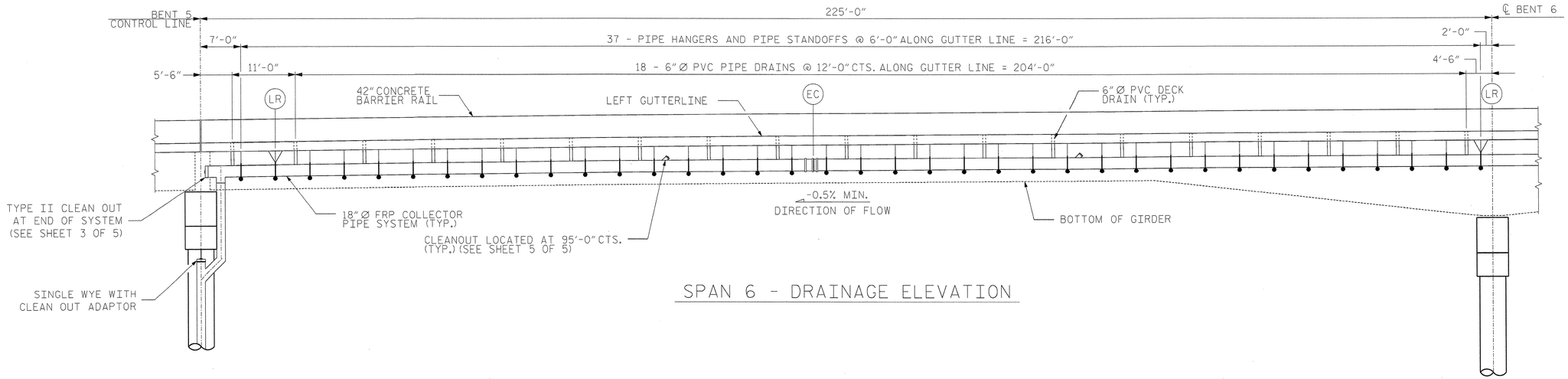

SPAN 6 - DRAINAGE ELEVATION

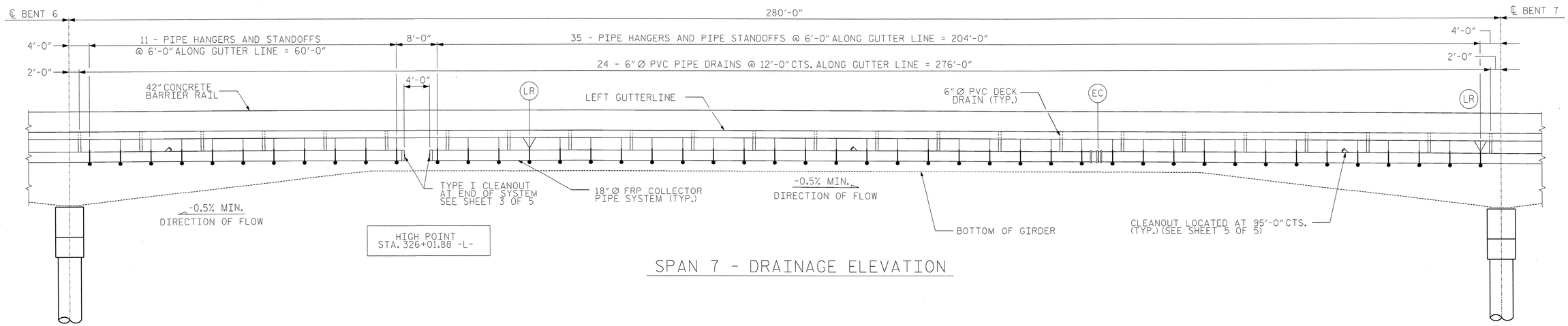

SPAN 7 - DRAINAGE ELEVATION

PROJECT NO. R-2633BB

BRUNSWICK/NEW HANOVER COUNTY

STATION: 353+32.50 -L-

SHEET 1 OF 5

NOTES:

EC = EXPANSION COUPLER (SEE SHEET 5 OF 5)
LR = LONGITUDINAL RESTRAINT (SEE SHEET 3 OF 5)

DISTANCE BETWEEN THE LONGITUDINAL RESTRAINT AND EXPANSION COUPLER SHALL NOT EXCEED 120'-0".

NORTH CAROLINA PROFESSIONAL SEAL 18442 ENGINEER RICHARD LEON BOLLINGER, JR.
7-01-2013

RS&H IMPROVING YOUR WORLD

RS&H Architects-Engineers-Planners, Inc.
8601 Six Forks Road, Suite 260
Raleigh, NC 27615
919-846-6701 FAX 919-846-8080
www.rsandh.com
North Carolina License Nos. 50073 * F-0453 * C-28

STATE OF NORTH CAROLINA
DEPARTMENT OF TRANSPORTATION
RALEIGH

SUPERSTRUCTURE

STRUCTURE DRAINAGE SYSTEM
ELEVATION OF DRAINAGE SYSTEM

LEFT LANE

REVISIONS						SHEET NO.
NO.	BY:	DATE:	NO.	BY:	DATE:	S-82
1			3			TOTAL SHEETS
2			4			700

DRAWN BY : JML DATE : 06/2013
CHECKED BY : RLB DATE : 06/2013
DESIGN ENGINEER OF RECORD : R. BOLLINGER DATE : 06/2013

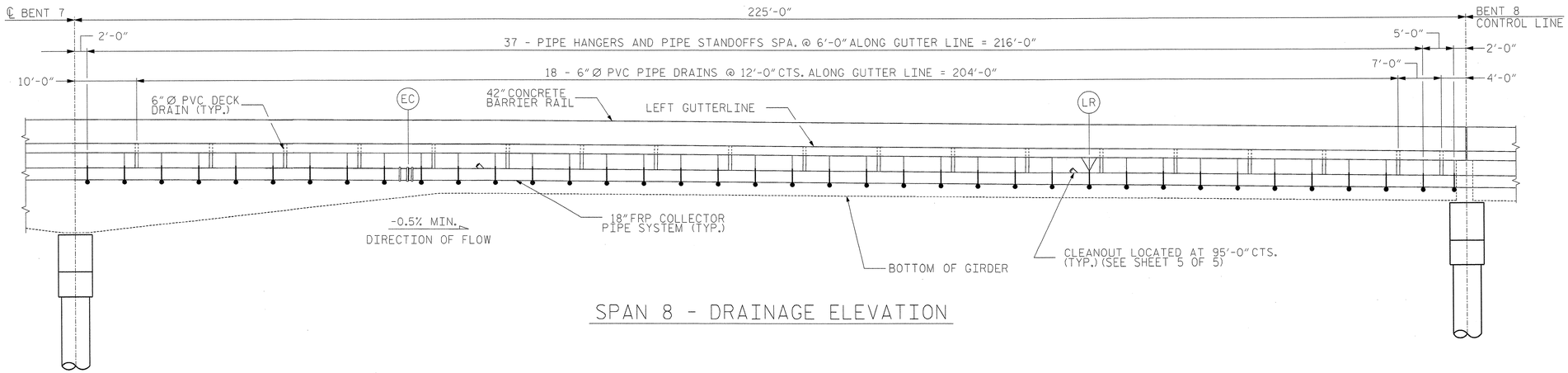

SPAN 8 - DRAINAGE ELEVATION

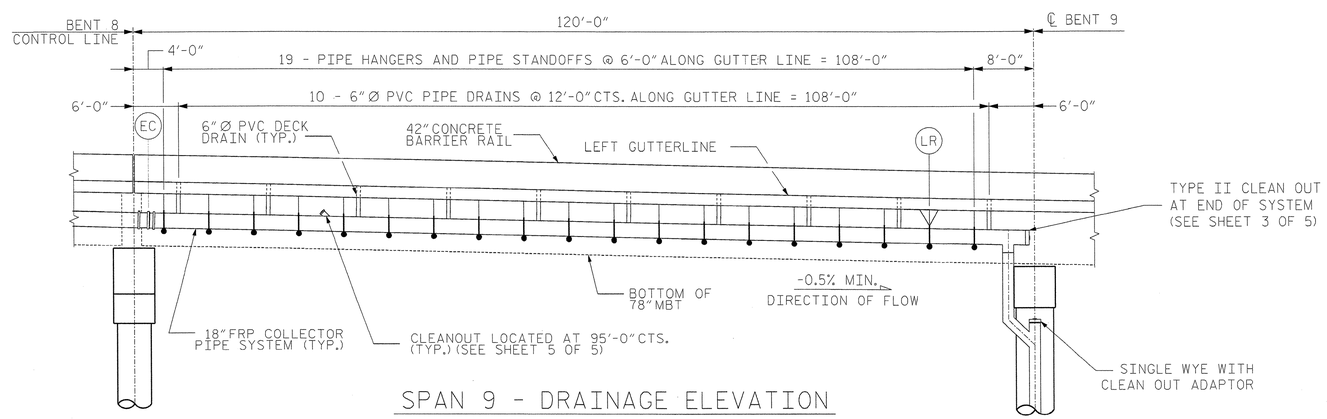

SPAN 9 - DRAINAGE ELEVATION

PROJECT NO. R-2633BB

BRUNSWICK/NEW HANOVER COUNTY

STATION: 353+32.50 -L-

SHEET 2 OF 5

NOTES:

EC = EXPANSION COUPLER (SEE SHEET 5 OF 5)
LR = LONGITUDINAL RESTRAINT (SEE SHEET 3 OF 5)

DISTANCE BETWEEN THE LONGITUDINAL RESTRAINT AND EXPANSION COUPLER SHALL NOT EXCEED 120'-0".

NORTH CAROLINA PROFESSIONAL SEAL 18442 ENGINEER RICHARD LEON BOLLINGER JR.
7-01-2013

RS&H IMPROVING YOUR WORLD

RS&H Architects-Engineers-Planners, Inc.
8601 Six Forks Road, Suite 260
Raleigh, NC 27615
919-846-6761 FAX 919-846-9080
www.rsandh.com
North Carolina Licenses Nos. 50073 * F-0483 * C-28

STATE OF NORTH CAROLINA
DEPARTMENT OF TRANSPORTATION
RALEIGH

SUPERSTRUCTURE

STRUCTURE DRAINAGE SYSTEM
ELEVATION OF DRAINAGE SYSTEM

LEFT LANE

REVISIONS						SHEET NO.
NO.	BY:	DATE:	NO.	BY:	DATE:	S-83
1			3			TOTAL SHEETS
2			4			700

DRAWN BY : JML DATE : 06/2013
CHECKED BY : RLB DATE : 06/2013
DESIGN ENGINEER OF RECORD : R. BOLLINGER DATE : 06/2013

NOTES:

1. FOR ADDITIONAL NOTES, SEE SHEET 5 OF 5.
2. FOR ADDITIONAL COLLECTOR PIPE SUPPORT DETAILS, SEE SHEET 4 OF 5.
3. CONTRACTOR SHALL ENSURE PIPE WALL BUILDUP IS SUFFICIENT TO ENGAGE PIPE RESTRAINT CLAMP AT LONGITUDINAL RESTRAINT LOCATIONS.
4. PAYMENT FOR DISSIPATOR PAD SHOULD BE PAID PER TON UNDER THE PAYMENT ITEM "RIP RAP, CLASS B".

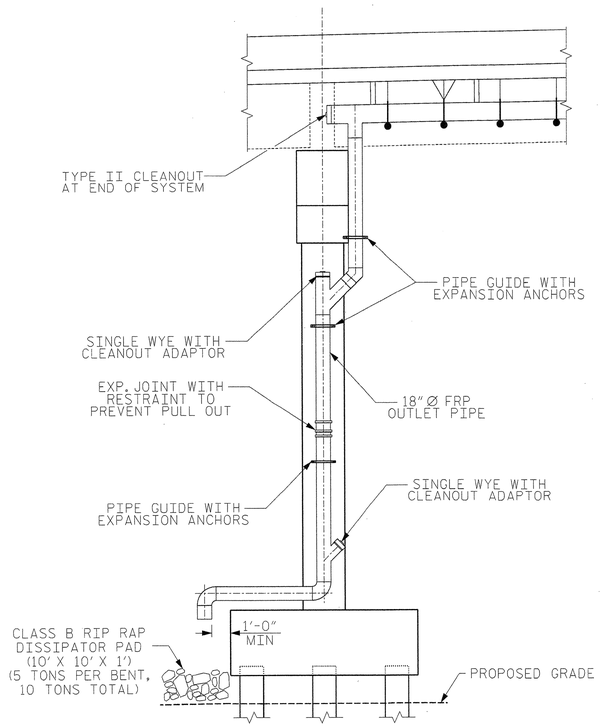

BENT 5 ELEVATION SHOWING DRAINAGE DETAILS

NOTE: BENT 9 SIMILAR BUT OPPOSITE HAND

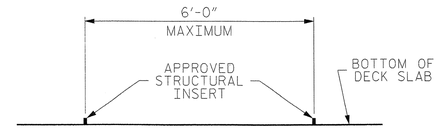

LOCATION OF INSERTS FOR HANGERS

EXACT SPACING MAY VARY SLIGHTLY TO ENSURE THAT INSERTS AVOID DECK DRAINS AND DRAINAGE ELEMENTS THAT PREVENT PROPER FIT UP OF HANGERS

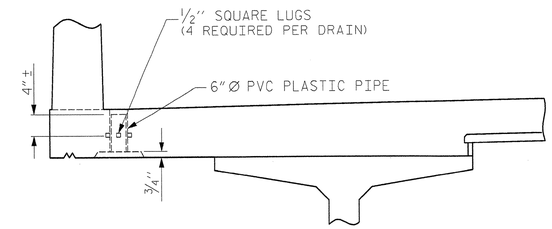

ELEVATION

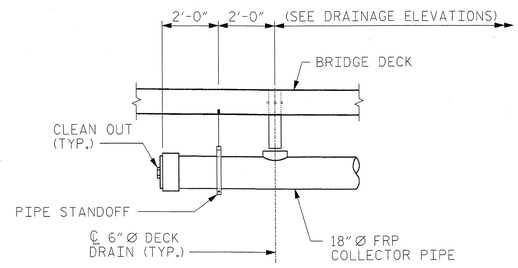

TYPE I

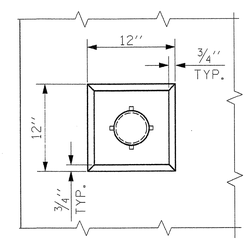

PLAN OF RECESS

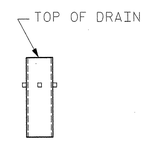

PIPE DETAIL

4 - 1/2" SQUARE LUGS TO BE GLUED TO THE P.V.C. PLASTIC PIPE AT EQUAL SPACES AROUND THE PIPE DRAIN APPROXIMATELY 4" FROM THE TOP OF THE PIPE.

DRAIN DETAILS

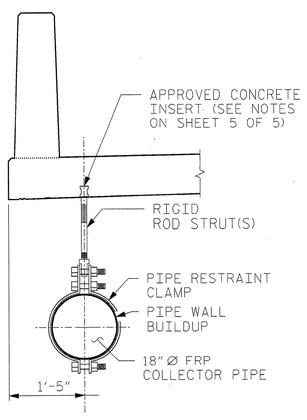

SECTION A-A

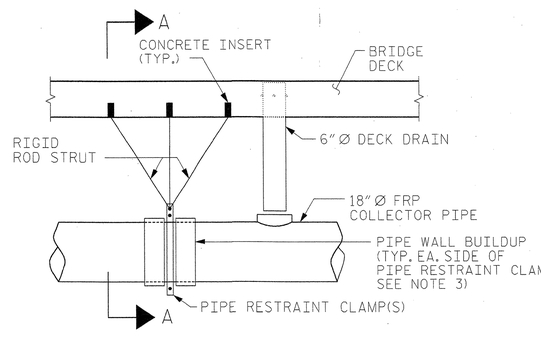

ELEVATION VIEW

LONGITUDINAL RESTRAINT DETAIL

* STANDOFF NOT REQUIRED AT LONGITUDINAL RESTRAINT

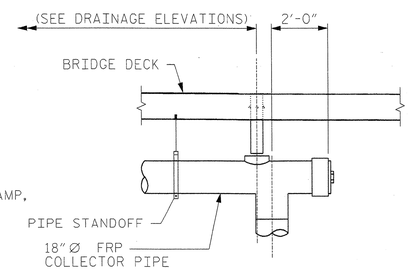

TYPE II

SYSTEM ENDS DETAIL

PROJECT NO. R-2633BB

BRUNSWICK/NEW HANOVER COUNTY

STATION: 353+32.50 -L-

SHEET 3 OF 5

NORTH CAROLINA PROFESSIONAL SEAL 18442 ENGINEER RICHARD LEON BOLLINGER

7-02-2013

RS&H IMPROVING YOUR WORLD

RS&H Architects-Engineers-Planners, Inc.
8601 Six Forks Road, Suite 260
Raleigh, NC 27615
919-846-6701 FAX 919-846-9080
www.rsandh.com
North Carolina License Nos. 50073 * F-0493 * C-28

STATE OF NORTH CAROLINA
DEPARTMENT OF TRANSPORTATION
RALEIGH

SUPERSTRUCTURE

STRUCTURE DRAINAGE SYSTEM DETAILS

LEFT LANE

REVISIONS								SHEET NO.
NO.	BY:	DATE:	NO.	BY:	DATE:			S-84
1			3					TOTAL SHEETS
2			4					700

DRAWN BY :	JML, MKO	DATE :	06/2013
CHECKED BY :	RLB	DATE :	06/2013
DESIGN ENGINEER OF RECORD :	R. BOLLINGER	DATE :	06/2013

NOTES:

FOR ADDITIONAL NOTES, SEE SHEET 5 OF 5.

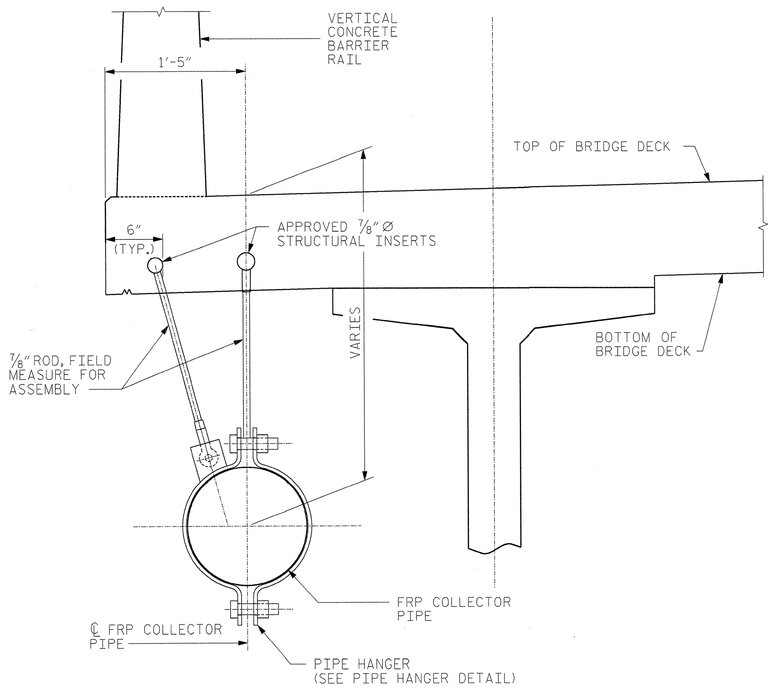

PIPE STANDOFF & HANGER

ALL COMPONENTS SHALL BE GALVANIZED AFTER FABRICATION.

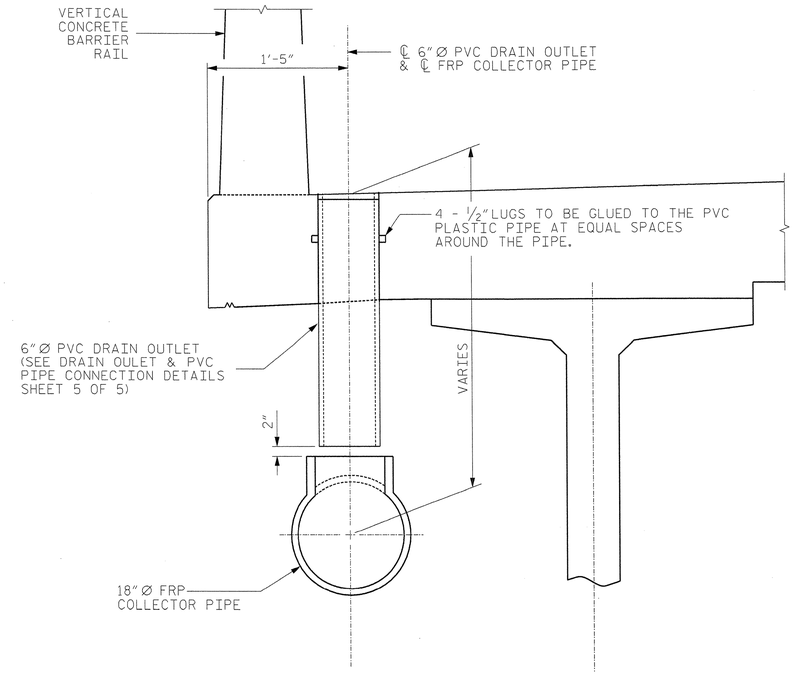

OVERHANG DRAINAGE DETAIL

(CLOSED DRAINAGE SYSTEM SPANS)

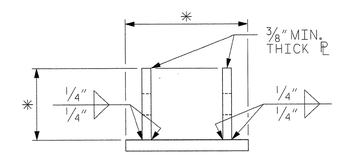

SECTION A-A

(STEEL CLEVIS & 7/8" Ø HANGER ROD NOT SHOWN FOR CLARITY)

* DIMENSIONS TO BE DETERMINED BY MANUFACTURER.

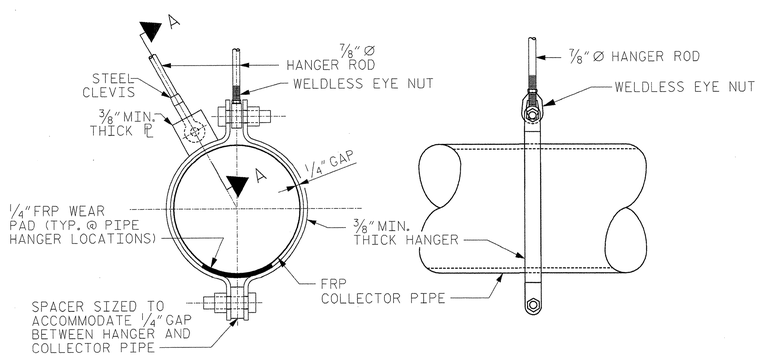

PIPE HANGER DETAIL

ALL COMPONENTS SHALL BE GALVANIZED AFTER FABRICATION

PROJECT NO. R-2633BB

BRUNSWICK/NEW HANOVER COUNTY

STATION: 353+32.50 -L-

SHEET 4 OF 5

NORTH CAROLINA PROFESSIONAL SEAL 18442 ENGINEER RICHARD LEON BOLLINGER JR.

7-01-2013

RS&H IMPROVING YOUR WORLD

RS&H Architects-Engineers-Planners, Inc.
8601 Six Forks Road, Suite 260
Raleigh, NC 27615
919-846-5701 FAX 919-846-9080
www.rsandh.com
North Carolina Licenses Nos. 00073 * F-0483 * C-28

STATE OF NORTH CAROLINA
DEPARTMENT OF TRANSPORTATION
RALEIGH

SUPERSTRUCTURE

STRUCTURE DRAINAGE SYSTEM DETAILS

LEFT LANE

REVISIONS						
NO.	BY:	DATE:	NO.	BY:	DATE:	
1			3			
2			4			

SHEET NO. S-84a

TOTAL SHEETS 700

DRAWN BY : JML DATE : 06/2013

CHECKED BY : JMR DATE : 06/2013

DESIGN ENGINEER OF RECORD : R. BOLLINGER DATE : 06/2013

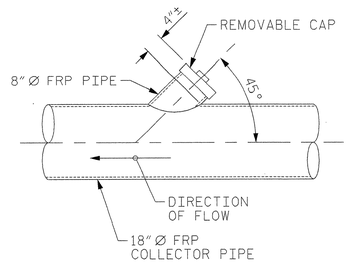

CLEANOUT DETAIL

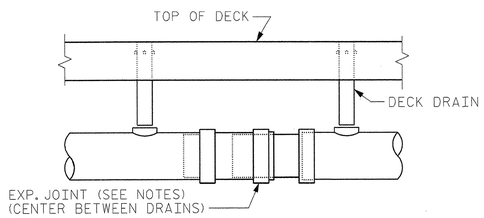

EXPANSION COUPLER

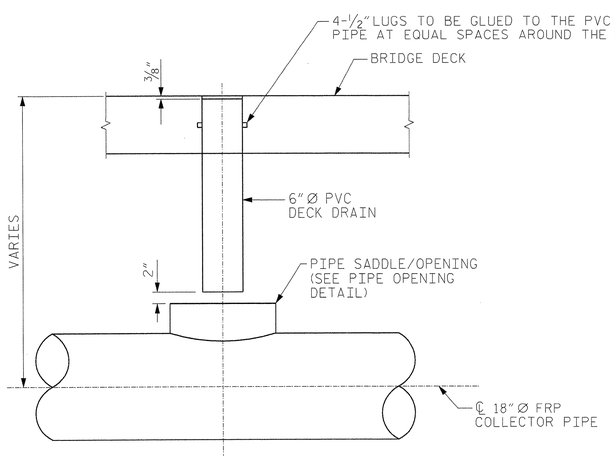

DRAIN OUTLET & PIPE CONNECTION

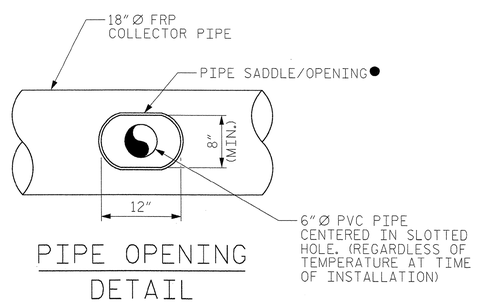

PIPE OPENING DETAIL

● FABRICATOR SHALL DETERMINE PIPE SADDLE/REINFORCEMENT FOR OPENING SIZE INDICATED. FABRICATOR SHALL SUBMIT SHOP DRAWINGS OF PIPE SADDLE/OPENING FOR REVIEW PRIOR TO BEGINNING FABRICATION.

DRAINAGE SYSTEM NOTES

THE ENTIRE COST FOR THE LABOR AND MATERIALS NECESSARY TO FABRICATE AND INSTALL FRP PIPE, PIPE SUPPORT AND PIPE ANCHOR ASSEMBLIES SHALL BE INCLUDED IN THE LUMP SUM PRICE BID FOR THE "STRUCTURE DRAINAGE SYSTEM." SEE SPECIAL PROVISIONS FOR STRUCTURE DRAINAGE SYSTEM.

ALL COLLECTOR PIPES, ELBOWS, COUPLERS, AND TEES SHALL BE FIBERGLASS REINFORCED PLASTIC PIPE MEETING THE SPECIFICATIONS OF ASTM D2996 AND THE ACCELERATED UV WEATHERING PERFORMANCE REQUIREMENTS OF ASTM D4329-05 PER PROCEDURE ASTM G154.

EACH PIPE SECTION SHALL HAVE A MINIMUM OF TWO HANGERS.

COLLECTOR PIPE SHALL BE SUPPORTED FROM THE CONCRETE DECK SLAB. NO ATTACHMENT TO THE GIRDERS WILL BE PERMITTED.

CONTRACTOR SHALL PROVIDE FRP COUPLINGS CAPABLE OF HANDLING THE ANTICIPATED MOVEMENTS. ADDITIONALLY FRP COUPLINGS SHALL PROVIDE HORIZONTAL ALIGNMENT TOLERANCES SUCH THAT THE 18" Ø FRP COLLECTOR PIPE AND COUPLINGS CAN CLOSELY FOLLOW THE VERTICAL CURVE OF THE STRUCTURE.

THE CONTRACTOR SHALL BE RESPONSIBLE FOR DETERMINING THE HORIZONTAL AND VERTICAL ALIGNMENT OF THE DRAINAGE SYSTEM USING NECESSARY FITTINGS, TEES, AND WYES TO PROVIDE A CONTINUOUS DRAINAGE SYSTEM.

CONCRETE INSERTS SHALL HAVE A MINIMUM WORKING LOAD TENSION CAPACITY OF 4.5 KIPS.

CONTRACTOR SHALL VERIFY LOCATION OF CONCRETE INSERTS IN REGARD TO ADJACENT INSERTS AND DECK DRAINS. IF SPACING/LOCATION OF INSERTS RESULTS IN REDUCED INSERT CAPACITY, CONTRACTOR SHALL SUBMIT INSERT SYSTEM WITH APPROPRIATE CAPACITY, GIVEN CONSTRAINTS, OR PROVIDED ALTERNATE CONNECTION/SUPPORT DETAIL FOR REVIEW AND APPROVAL OF THE ENGINEER PRIOR TO INSTALLATION.

DECK DRAIN PIPE SHALL BE ASTM D1785, SCHEDULE 40. ALL PVC FITTINGS SHALL BE MINIMUM ASTM D2665, SCHEDULE 40.

EXPANSION JOINT COUPLERS IN THE COLLECTOR PIPE SHALL HAVE A MINIMUM CAPACITY TO ACCOMMODATE 6-INCHES OF TOTAL MOVEMENT (3-INCHES EXPANSION/3-INCHES CONTRACTION).

AN OPTIONAL DETAIL FOR THE LONGITUDINAL RESTRAINTS AND THE LATERAL GUIDE MAY BE SUBMITTED FOR APPROVAL.

COLLECTOR PIPE SUPPORTS SHALL BE LOCATED WITHIN 12-INCHES, ± 4-INCHES, OF A COLLECTOR PIPE JOINT.

DECK DOWN-DRAIN PIPES SHALL BE CENTERED IN SLOTTED OPENING IN COLLECTOR PIPE REGARDLESS OF TEMPERATURE AT TIME OF INSTALLATION.

HANGER RODS SHALL BE ASTM A193, GRADE B7 OR CARBON STEEL ALL-THREAD HANGER RODS.

NUTS SHALL BE ASTM A194, GRADE 2H, HEAVY HEX NUTS.

THE DETAILS OF ALL PIPING, HARDWARE, OR OTHER MATERIAL SHALL BE PROVIDED BY THE CONTRACTOR AND IS SUBJECT TO THE APPROVAL OF THE ENGINEER.

WORKING DRAWINGS FOR THE DRAINAGE SYSTEM AND LAYOUT PLANS INCLUDING, BUT NOT LIMITED TO, PIPE SUPPORT BRACKETS, PIPE ALIGNMENT, PIPE LENGTHS, AND ALL NECESSARY FITTINGS, ELBOWS, WYES, ADAPTERS, GUIDES, RESTRAINTS, WEAR PADS, COUPLERS AND JOINTS SHALL BE DESIGNED AND SEALED BY A PROFESSIONAL ENGINEER LICENSED IN NORTH CAROLINA AND SUBMITTED FOR APPROVAL PRIOR TO ORDERING MATERIALS.

PIPE MANUFACTURER SHALL ENSURE THE PIPE AND THE PIPE SUPPORT BEARING AREA IS DESIGNED IN ACCORDANCE WITH THE HANGER SPACING PROVIDED IN THESE PLANS.

PIPE DESIGN MUST ALLOW VERTICAL FLEXURE FROM THE SUPERSTRUCTURE.

THE COLLECTOR PIPE SHALL CLOSELY FOLLOW THE LONGITUDINAL GRADE OF THE STRUCTURE WHILE MAINTAINING A MINIMUM OF 0.5% SLOPE AT ALL TIMES.

COUPLERS SHALL BE DESIGNED TO ACCOMMODATE A TURN AT EACH BENT IN ORDER TO FOLLOW THE HORIZONTAL AND VERTICAL CURVATURE OF THE BRIDGE OVERHANG.

THE PIPE MANUFACTURER SHALL ENSURE THE FRICTIONAL FORCE REQUIRED TO ACTIVATE THE EXPANSION COUPLERS DOES NOT OVERSTRESS THE COUPLER WALL BUILD-UP, DRAINAGE SYSTEM BRACKETS SUPPORTS OR LATERAL RESTRAINTS.

WASHERS SHALL BE ASTM F436 OR APPROVED EQUIVALENT.

BOLTS, NUTS, AND WASHERS SHALL BE GALVANIZED IN ACCORDANCE WITH THE STANDARD SPECIFICATIONS.

BOLT THREADS SHALL BE BURRED TO PREVENT LOOSENING.

PVC PIPE SHALL BE PAINTED TO MATCH THE FINAL SURFACE FINISH OF THE STRUCTURE WITH TWO COATS OF AN ACRYLIC OR LATEX PAINT THAT IS CHEMICALLY COMPATIBLE WITH PVC PRODUCTS AND MEETS THE REQUIREMENTS OF ARTICLE 1080-12 OF THE STANDARD SPECIFICATIONS. EACH COAT SHALL BE 2 DRY MILS THICK. DECK DRAINS SHALL BE ROUGHENED PRIOR TO PAINTING.

ALL METALLIC COMPONENTS IN THE DRAINAGE SYSTEM, EXCEPT STAINLESS STEEL AND MALLEABLE IRON PARTS, ARE REQUIRED TO BE HOT-DIPPED GALVANIZED PER NCDOT STANDARD SPECIFICATIONS. ELECTRO-PLATE COATING ON STEEL RODS, STEEL YOKE TYPE PIPE ROLLS, BRACKETS, OTHER STEEL HARDWARE IS CONSIDERED BY NCDOT AS TOO THIN FOR OUTDOOR APPLICATIONS.

ALL FRP AND PVC PIPE SHALL BE INSTALLED PER MANUFACTURER'S RECOMMENDATIONS.

ALL STRUCTURAL STEEL SHALL BE ASTM A36 OR APPROVED EQUAL UNLESS NOTED OTHERWISE.

THE GALVANIZED SURFACE SHALL BE CLEANED TO (SSPC SP-1) PRIOR TO COATING.

ALL FABRICATION SHALL CONFORM TO THE APPLICABLE SECTION OF THE NORTH CAROLINA DEPARTMENT OF TRANSPORTATION STANDARD SPECIFICATIONS FOR ROADS AND STRUCTURES.

ALL FRP SHALL BE PIGMENTED TO MATCH THE FINAL SURFACE FINISH OF THE STRUCTURE.

ALL FRP PIPE SIZES ARE SHOWN AS INSIDE DIAMETER SIZES.

FRP = FIBERGLASS REINFORCED PLASTIC

PROJECT NO. R-2633BB
BRUNSWICK/NEW HANOVER COUNTY
STATION: 353+32.50 -L-

SHEET 5 OF 5

NORTH CAROLINA PROFESSIONAL SEAL 18442 ENGINEER RICHARD LEON BOLLINGER
7-01-2013

RS&H IMPROVING YOUR WORLD

RS&H Architects-Engineers-Planners, Inc.
8601 Six Forks Road, Suite 260
Raleigh, NC 27615
919-846-5701 FAX 919-846-0080
www.rsandh.com
North Carolina License Nos. 00073 * F-0493 * C-28

STATE OF NORTH CAROLINA
DEPARTMENT OF TRANSPORTATION
RALEIGH

SUPERSTRUCTURE
STRUCTURE DRAINAGE SYSTEM DETAILS

LEFT LANE

REVISIONS						SHEET NO.
NO.	BY:	DATE:	NO.	BY:	DATE:	S-846
1			3			TOTAL SHEETS
2			4			700

DRAWN BY :	JML	DATE :	06/2013
CHECKED BY :	JMR	DATE :	06/2013
DESIGN ENGINEER OF RECORD :	R. BOLLINGER	DATE :	06/2013

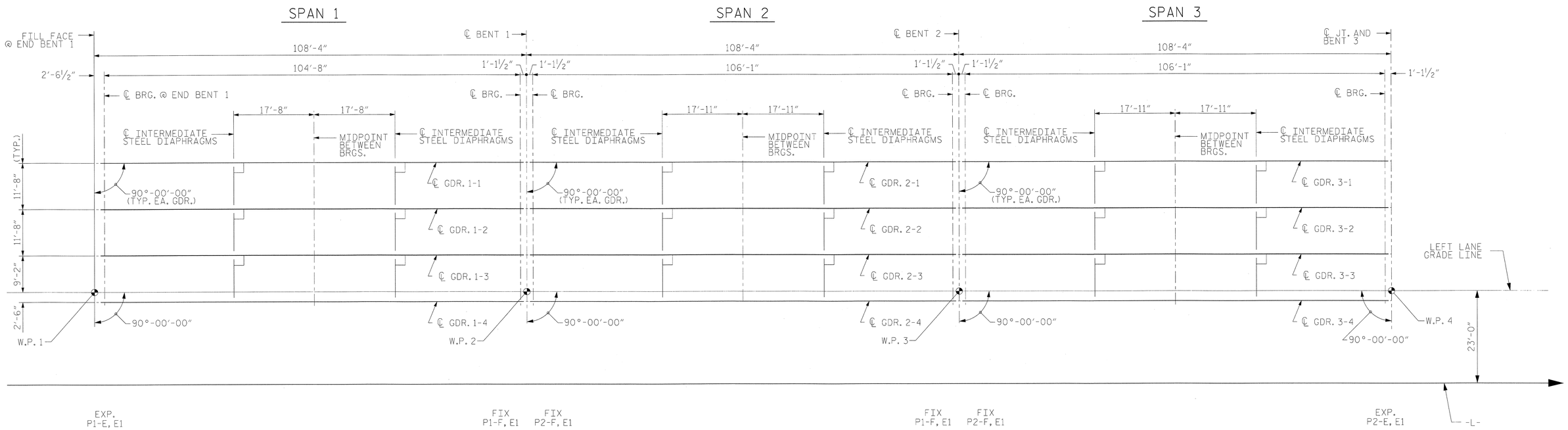

FRAMING PLAN - SPANS 1, 2 & 3

FOR SECTION VIEWS, SEE TYPICAL SECTIONS

PROJECT NO. R-2633BB

BRUNSWICK/NEW HANOVER COUNTY

STATION: 353+32.50 -L-

SHEET 1 OF 11

NORTH CAROLINA PROFESSIONAL SEAL 18442 ENGINEER RICHARD E. BOLLINGER, JR.

5-29-2013

RS&H IMPROVING YOUR WORLD

RS&H Architects-Engineers-Planners, Inc.
8601 Six Forks Road, Suite 260
Raleigh, NC 27615
919-846-6701 FAX 919-846-0080
www.rsandh.com
North Carolina License Nos. 00073 * F-0493 * C-28

STATE OF NORTH CAROLINA
DEPARTMENT OF TRANSPORTATION
RALEIGH

SUPERSTRUCTURE
FRAMING PLAN
SPANS 1, 2 & 3

LEFT LANE

REVISIONS						SHEET NO.
NO.	BY:	DATE:	NO.	BY:	DATE:	S-85
1			3			TOTAL SHEETS
2			4			700

DRAWN BY : RJD DATE : 11/2011
CHECKED BY : RLB DATE : 03/2013
DESIGN ENGINEER OF RECORD : R. BOLLINGER DATE : 05/2013

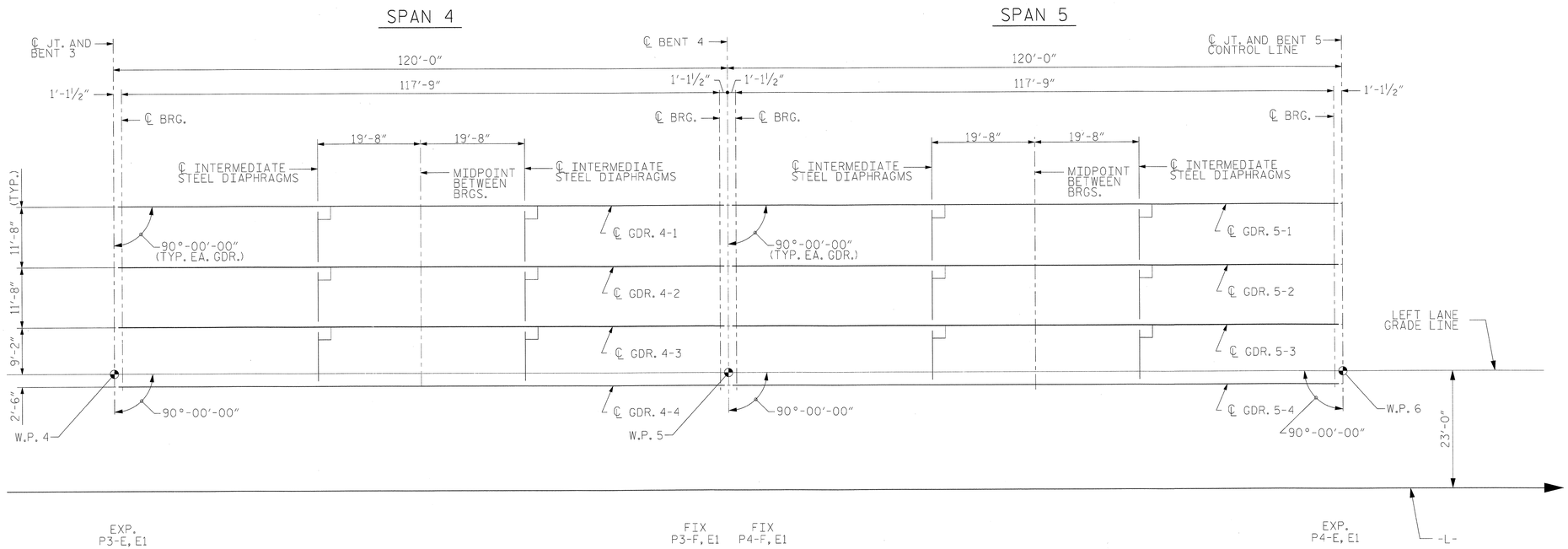

FRAMING PLAN - SPANS 4 & 5

FOR SECTION VIEWS, SEE TYPICAL SECTIONS

PROJECT NO. R-2633BB

BRUNSWICK/NEW HANOVER COUNTY

STATION: 353+32.50 -L-

SHEET 2 OF 11

NORTH CAROLINA PROFESSIONAL SEAL 18442 ENGINEER RICHARD LEON BOLLINGER III

5-29-2013

RS&H IMPROVING YOUR WORLD

RS&H Architects-Engineers-Planners, Inc.
8601 Six Forks Road, Suite 260
Raleigh, NC 27615
919-846-6701 FAX 919-846-9080
www.rsandh.com
North Carolina License Nos. 50073 * F-0493 * C-28

STATE OF NORTH CAROLINA
DEPARTMENT OF TRANSPORTATION
RALEIGH

SUPERSTRUCTURE FRAMING PLAN

SPANS 4 & 5

LEFT LANE

REVISIONS						SHEET NO.
NO.	BY:	DATE:	NO.	BY:	DATE:	S-86
1			3			TOTAL SHEETS
2			4			700

DRAWN BY : RJD DATE : 11/2011
CHECKED BY : RLB DATE : 03/2013
DESIGN ENGINEER OF RECORD : R. BOLLINGER DATE : 05/2013

SPAN 6

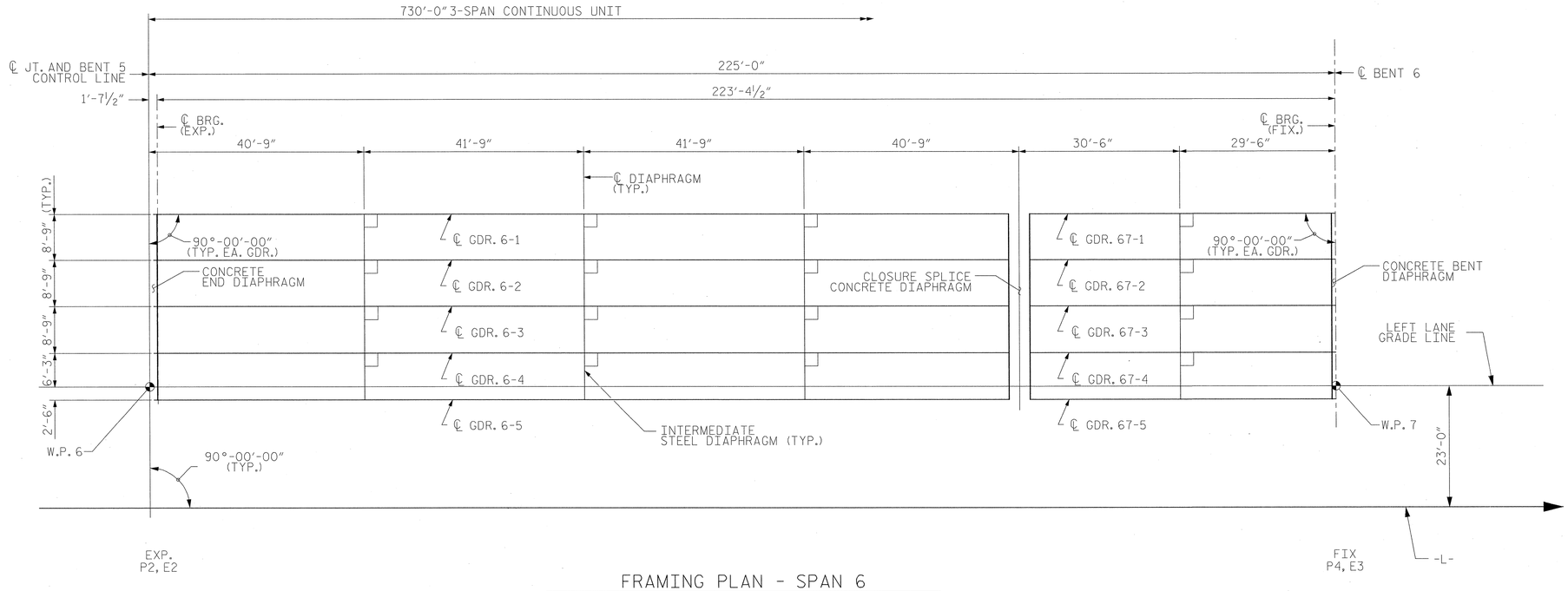

FRAMING PLAN - SPAN 6

FOR SECTION VIEWS, SEE TYPICAL SECTIONS

NOTES:

ALL DIMENSIONS GIVEN ON THE FRAMING PLAN ARE HORIZONTAL.

ALL GIRDERS ARE PLACED PARALLEL TO ℄ -L-.

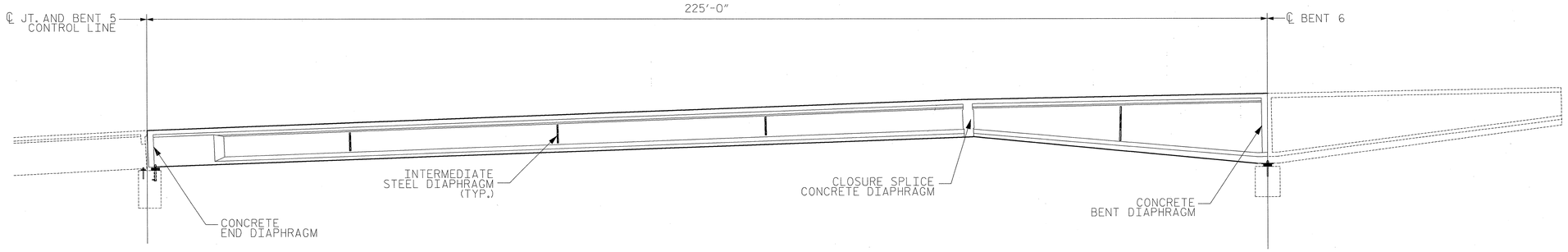

ELEVATION - SPAN 6

PROJECT NO. R-2633BB

BRUNSWICK/NEW HANOVER COUNTY

STATION: 353+32.50 -L-

SHEET 3 OF 11

NORTH CAROLINA PROFESSIONAL SEAL 18591 ENGINEER ROBERT G. WOODRUFF

5/28/13

RS&H IMPROVING YOUR WORLD

RS&H Architects-Engineers-Planners, Inc.
8601 Six Forks Road, Suite 260
Raleigh, NC 27615
919-846-6701 FAX 919-846-9080
www.rsandh.com
North Carolina License Nos. 00073 * F-0493 * C-28

STATE OF NORTH CAROLINA
DEPARTMENT OF TRANSPORTATION
RALEIGH

SUPERSTRUCTURE FRAMING PLAN

SPAN 6

LEFT LANE

REVISIONS						
NO.	BY:	DATE:	NO.	BY:	DATE:	
1			3			
2			4			

SHEET NO. S-87

TOTAL SHEETS 700

DRAWN BY : RJD DATE : 11/2011
CHECKED BY : SOF DATE : 10/2012
DESIGN ENGINEER OF RECORD : R. WOODRUFF DATE : 5/2013

SPAN 7

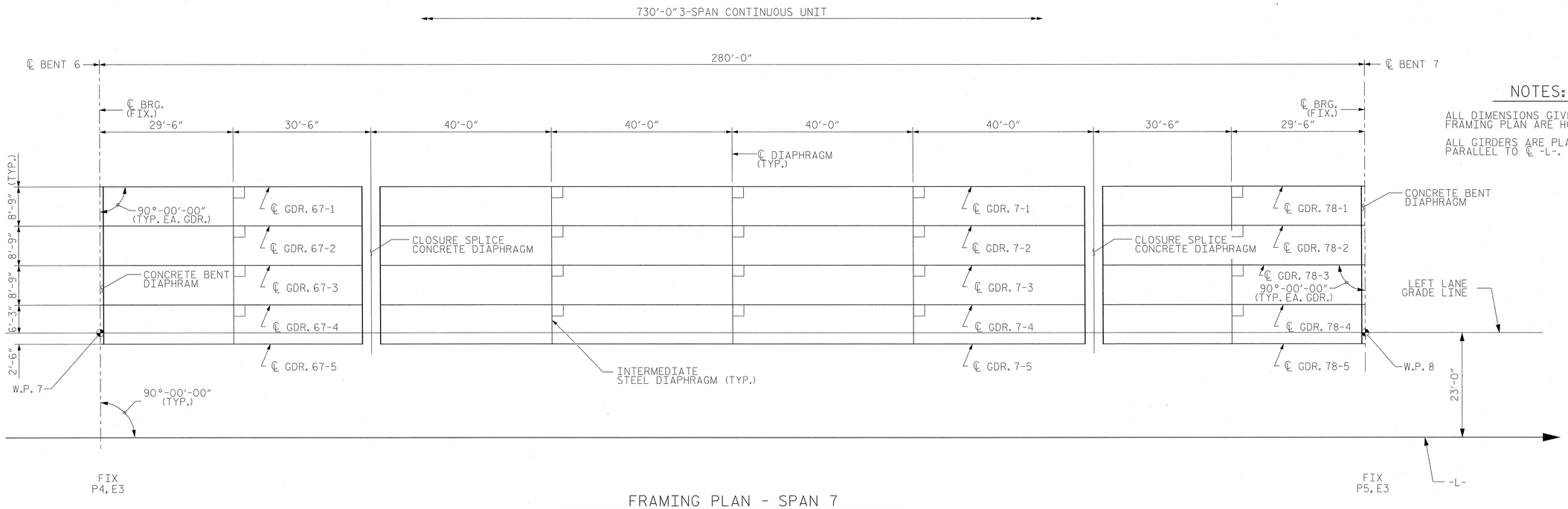

FRAMING PLAN - SPAN 7

FOR SECTION VIEWS, SEE TYPICAL SECTIONS

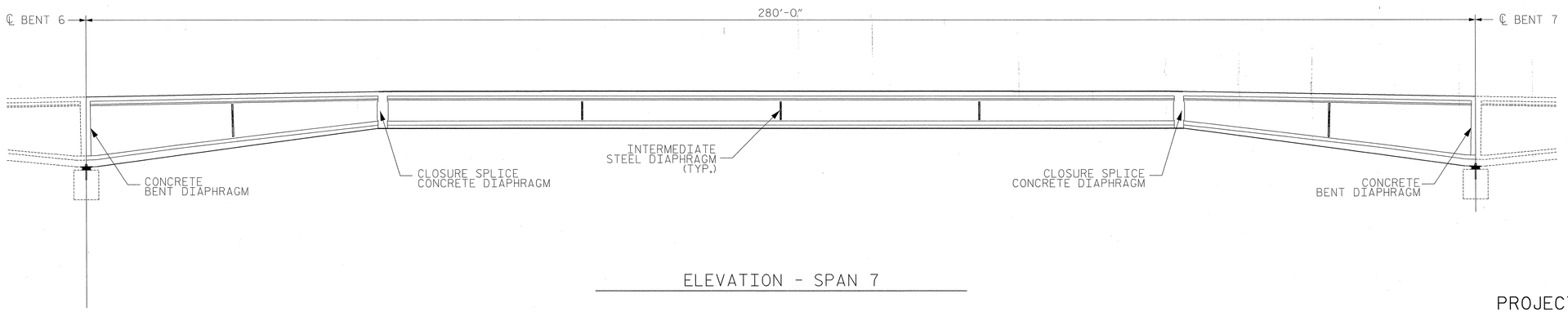

ELEVATION - SPAN 7

NOTES:

ALL DIMENSIONS GIVEN ON THE FRAMING PLAN ARE HORIZONTAL.

ALL GIRDERS ARE PLACED PARALLEL TO ℄ -L-.

PROJECT NO. R-2633BB

BRUNSWICK/NEW HANOVER COUNTY

STATION: 353+32.50 -L-

SHEET 4 OF 11

NORTH CAROLINA PROFESSIONAL SEAL 18591 ENGINEER ROBERT G. WOODRUFF

5/28/13

RS&H IMPROVING YOUR WORLD

RS&H Architects-Engineers-Planners, Inc.
8601 Six Forks Road, Suite 260
Raleigh, NC 27615
919-846-0701 FAX 919-846-9080
www.rsandh.com
North Carolina License Nos. 50073 * F-0493 * C-28

STATE OF NORTH CAROLINA
DEPARTMENT OF TRANSPORTATION
RALEIGH

SUPERSTRUCTURE FRAMING PLAN

SPAN 7

LEFT LANE

REVISIONS						SHEET NO.
NO.	BY:	DATE:	NO.	BY:	DATE:	S-88
1			3			TOTAL SHEETS
2			4			700

DRAWN BY : RJD DATE : 11/2011
CHECKED BY : SOF DATE : 10/2012
DESIGN ENGINEER OF RECORD : R. WOODRUFF DATE : 5/2013

SPAN 8

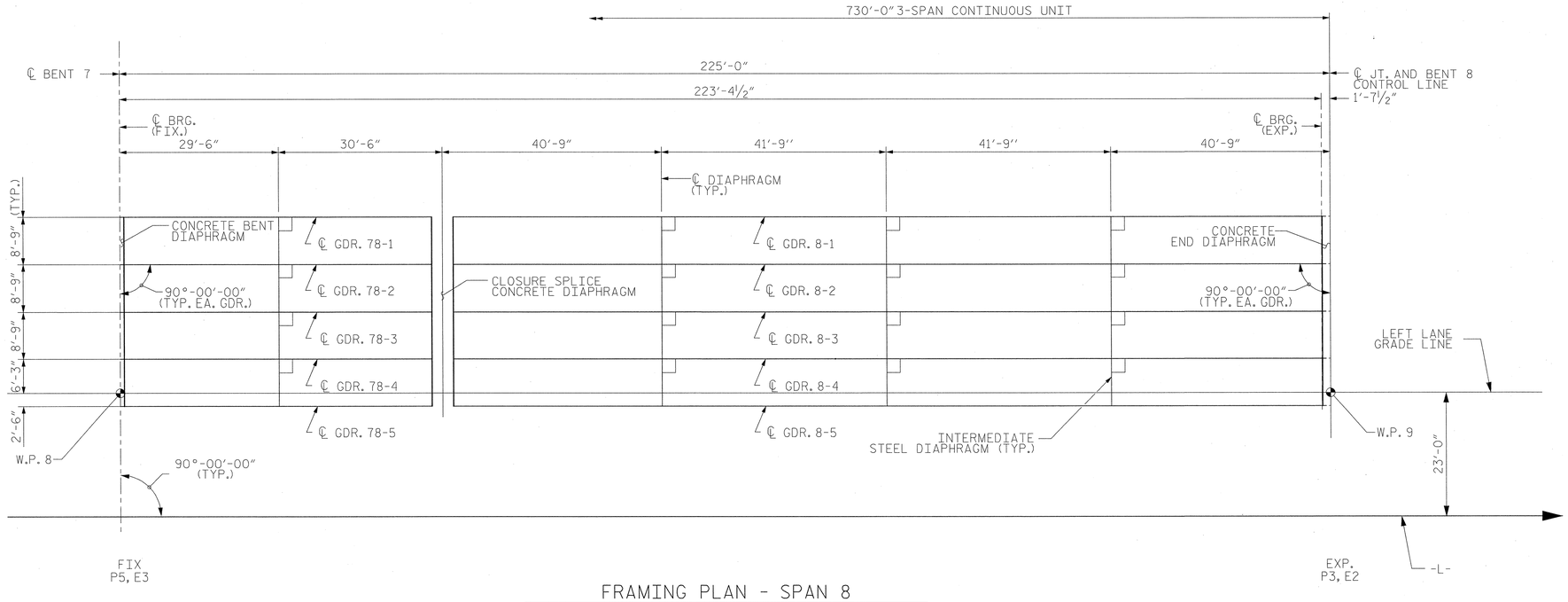

FRAMING PLAN - SPAN 8

FOR SECTION VIEWS, SEE TYPICAL SECTIONS

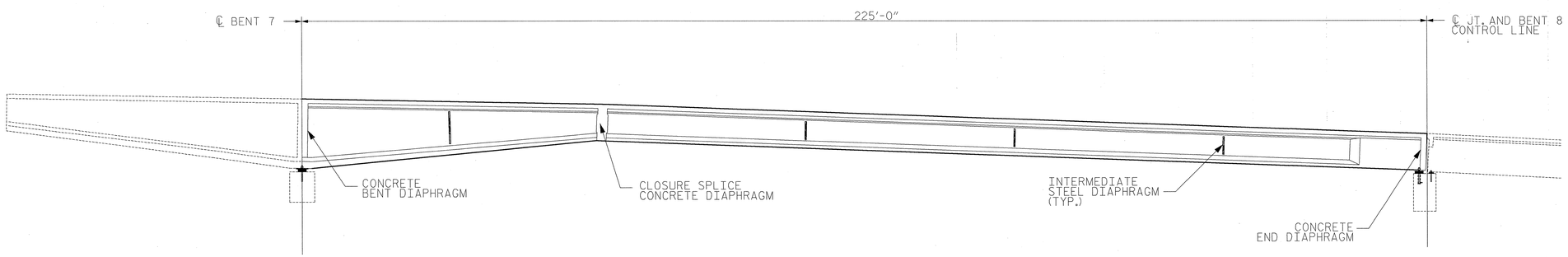

ELEVATION - SPAN 8

NOTES:

ALL DIMENSIONS GIVEN ON THE FRAMING PLAN ARE HORIZONTAL.

ALL GIRDERS ARE PLACED PARALLEL TO ℄ -L-.

PROJECT NO. R-2633BB

BRUNSWICK/NEW HANOVER COUNTY

STATION: 353+32.50 -L-

SHEET 5 OF 11

NORTH CAROLINA PROFESSIONAL SEAL 18591 ENGINEER ROBERT G. WOODRUFF

5/28/13

RS&H IMPROVING YOUR WORLD

RS&H Architects-Engineers-Planners, Inc.
8601 Six Forks Road, Suite 260
Raleigh, NC 27615
919-846-6701 FAX 919-846-0080
www.rsandh.com
North Carolina License Nos. 00073 * F-0493 * C-28

STATE OF NORTH CAROLINA
DEPARTMENT OF TRANSPORTATION
RALEIGH

SUPERSTRUCTURE FRAMING PLAN

SPAN 8

LEFT LANE

REVISIONS						
NO.	BY:	DATE:	NO.	BY:	DATE:	
1			3			
2			4			

SHEET NO. 8-89

TOTAL SHEETS 700

DRAWN BY : RJD DATE : 11/2011
CHECKED BY : SOF DATE : 10/2012
DESIGN ENGINEER OF RECORD : R. WOODRUFF DATE : 5/2013

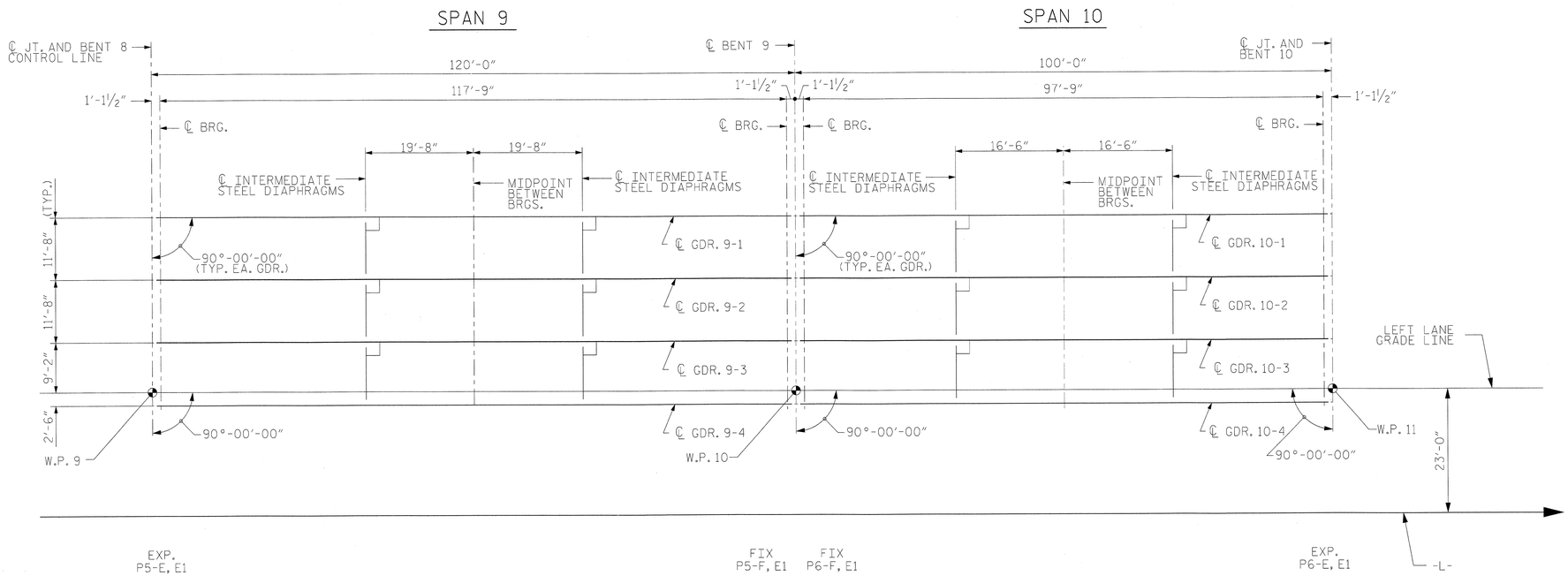

FRAMING PLAN - SPANS 9 & 10

FOR SECTION VIEWS, SEE TYPICAL SECTIONS

PROJECT NO. R-2633BB

BRUNSWICK/NEW HANOVER COUNTY

STATION: 353+32.50 -L-

SHEET 6 OF 11

NORTH CAROLINA PROFESSIONAL SEAL 18442 ENGINEER RICHARD LEON BOLLINGER

5-29-2013

RS&H IMPROVING YOUR WORLD

RS&H Architects-Engineers-Planners, Inc.
8601 Six Forks Road, Suite 260
Raleigh, NC 27615
919-846-6701 FAX 919-846-9080
www.rsandh.com
North Carolina License Nos. 50073 * F-0493 * C-28

STATE OF NORTH CAROLINA
DEPARTMENT OF TRANSPORTATION
RALEIGH

SUPERSTRUCTURE FRAMING PLAN

SPANS 9 & 10

LEFT LANE

REVISIONS						SHEET NO.
NO.	BY:	DATE:	NO.	BY:	DATE:	S-90
1			3			TOTAL SHEETS
2			4			700

DRAWN BY : RJD DATE : 11/2011
CHECKED BY : RLB DATE : 03/2013
DESIGN ENGINEER OF RECORD : R. BOLLINGER DATE : 05/2013

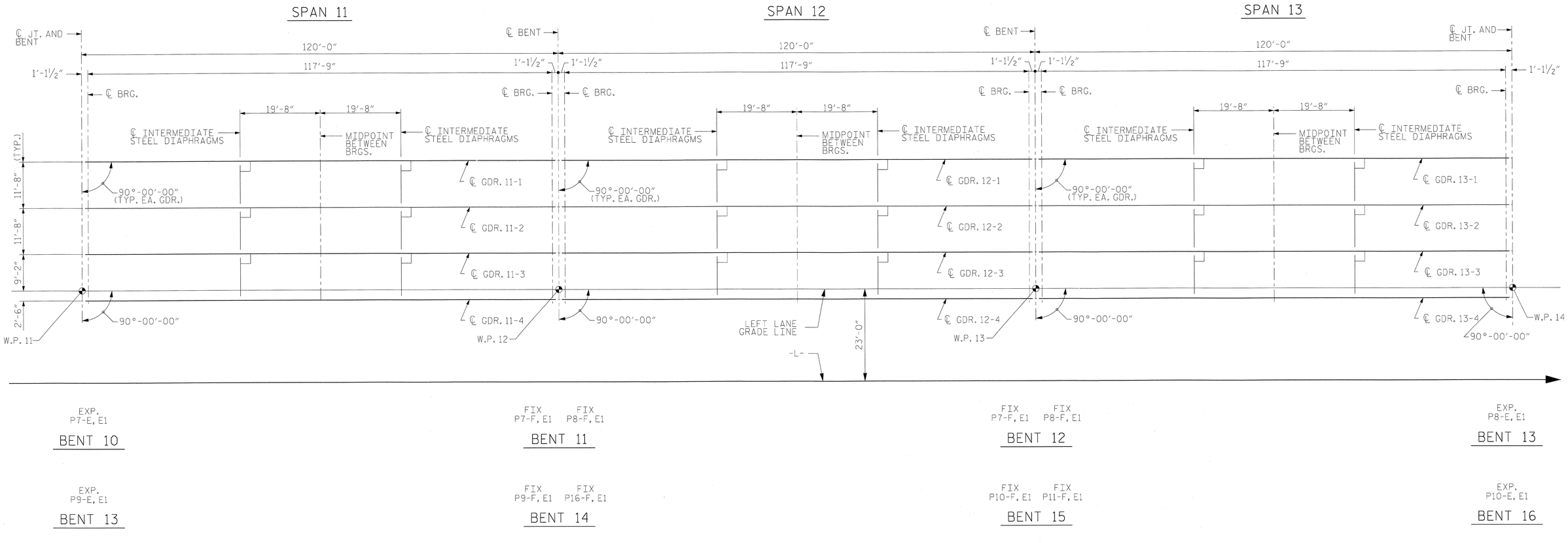

FRAMING PLAN - SPANS 11, 12 & 13

SPANS 11, 12 & 13 SHOWN (SPANS 14, 15 & 16 SIMILAR)
FOR SECTION VIEWS, SEE TYPICAL SECTIONS

PROJECT NO. R-2633BB

BRUNSWICK/NEW HANOVER COUNTY

STATION: 353+32.50 -L-

SHEET 7 OF 11

NORTH CAROLINA PROFESSIONAL SEAL 18442 ENGINEER LEON BOLLINGER
5-21-2013

RS&H IMPROVING YOUR WORLD

RS&H Architects-Engineers-Planners, Inc.
8601 Six Forks Road, Suite 260
Raleigh, NC 27615
919-846-6701 FAX 919-846-9080
www.rsandh.com
North Carolina License Nos. 50073 * F-0493 * C-28

STATE OF NORTH CAROLINA
DEPARTMENT OF TRANSPORTATION
RALEIGH

SUPERSTRUCTURE FRAMING PLAN

SPANS 11, 12 & 13 (SHOWN)
(SPANS 14, 15 & 16 SIMILAR)
LEFT LANE

REVISIONS						SHEET NO.
NO.	BY:	DATE:	NO.	BY:	DATE:	S-91
1			3			TOTAL SHEETS
2			4			700

DRAWN BY : RJD DATE : 11/2011
CHECKED BY : RLB DATE : 03/2013
DESIGN ENGINEER OF RECORD : R. BOLLINGER DATE : 05/2013

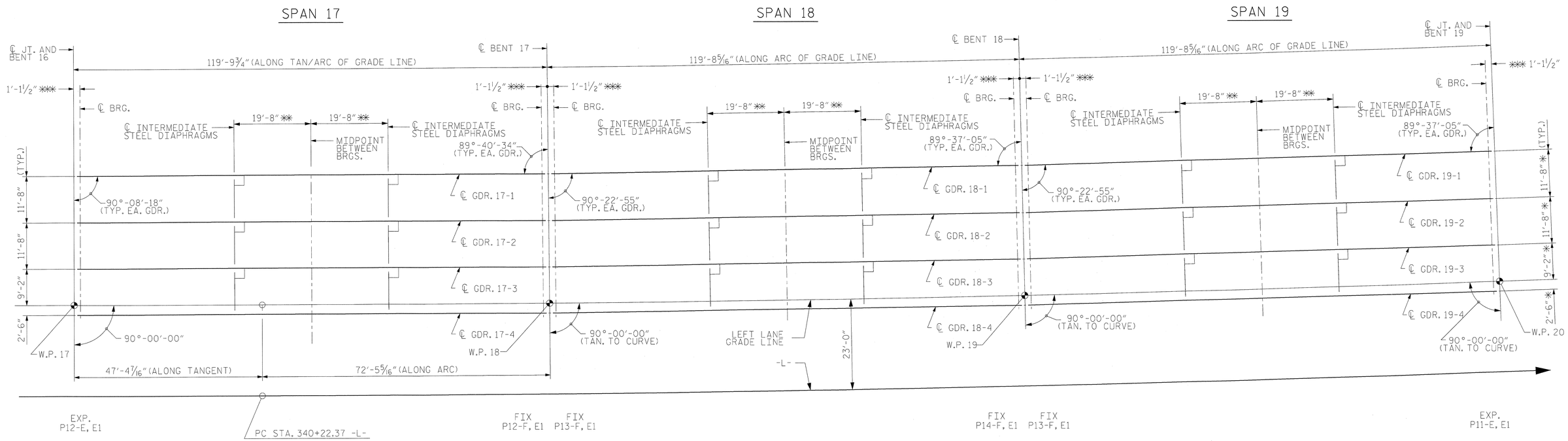

* RADIAL THRU WORK POINT
** DIMENSION ALONG GIRDER
*** NORMAL TO CENTERLINE OF BENT

FRAMING PLAN - SPANS 17, 18 & 19

FOR SECTION VIEWS, SEE TYPICAL SECTIONS

PROJECT NO. R-2633BB

BRUNSWICK/NEW HANOVER COUNTY

STATION: 353+32.50 -L-

SHEET 8 OF 11

NORTH CAROLINA PROFESSIONAL SEAL 18442 ENGINEER RICHARD LEON BOLLINGER, JR.

5-29-2013

RS&H IMPROVING YOUR WORLD

RS&H Architects-Engineers-Planners, Inc.
8601 Six Forks Road, Suite 260
Raleigh, NC 27615
919-846-5701 FAX 919-846-9080
www.rsandh.com
North Carolina License Nos. 50073 * F-0493 * C-28

STATE OF NORTH CAROLINA
DEPARTMENT OF TRANSPORTATION
RALEIGH

SUPERSTRUCTURE FRAMING PLAN

SPANS 17, 18 & 19

LEFT LANE

REVISIONS						SHEET NO.
NO.	BY:	DATE:	NO.	BY:	DATE:	S-92
1			3			TOTAL SHEETS
2			4			700

DRAWN BY : RJD DATE : 11/2011
CHECKED BY : RLB DATE : 03/2013
DESIGN ENGINEER OF RECORD : R. BOLLINGER DATE : 05/2013

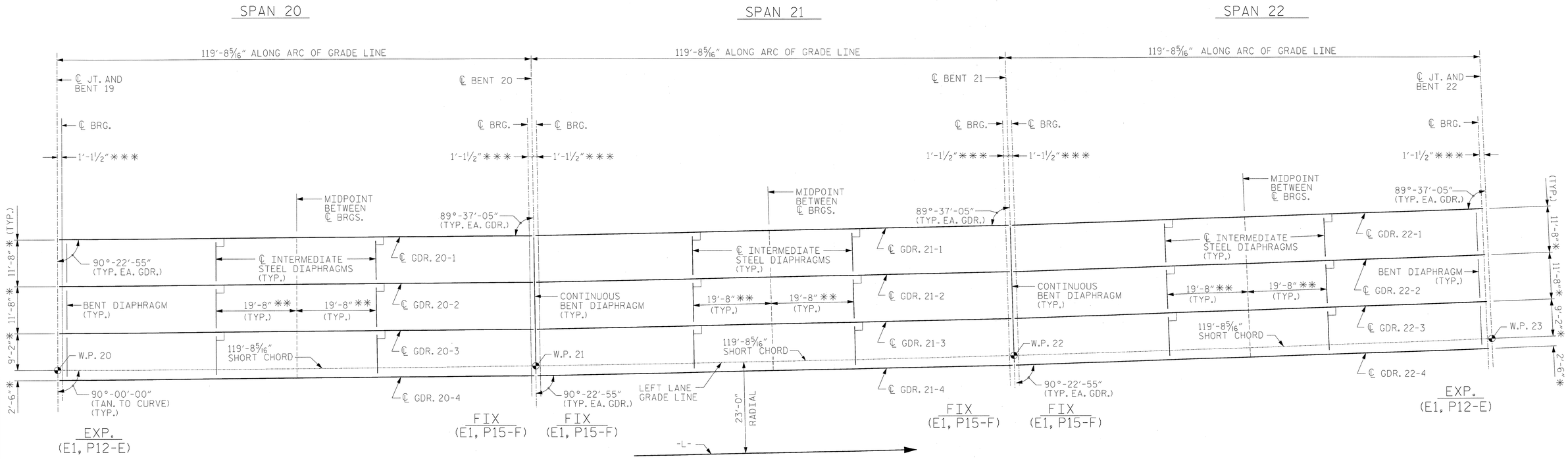

* RADIAL THRU WORK POINT

** DIM. ALONG GIRDER

*** NORMAL TO CENTERLINE OF BENT

FRAMING PLAN - SPANS 20, 21 & 22

(SPANS 23, 24 & 25 THROUGH SPANS 35, 36 & 37, AND SPANS 41, 42 &43 THROUGH SPANS 53, 54 & 55 SIMILAR)

FOR SECTION VIEWS, SEE TYPICAL SECTIONS

PROJECT NO. R-2633BB

BRUNSWICK/NEW HANOVER COUNTY

STATION: 353+32.50 -L-

SHEET 9 OF 11

NORTH CAROLINA PROFESSIONAL SEAL 22072 ENGINEER JOHN ARTHUR DILWORTH

5-29-13

WETHERILL ENGINEERING

TRANSPORTATION PLANNING/DESIGN
BRIDGE/STRUCTURE DESIGN
CIVIL/SITE DESIGN - GIS/GPS
CONSTRUCTION OBSERVATION

559 Jones Franklin Rd. Suite 164
Raleigh, N.C. 27606
Bus: 919 851 8077
Fax: 919 851 8107
LICENSE NO. F-0377

STATE OF NORTH CAROLINA
DEPARTMENT OF TRANSPORTATION
RALEIGH

SUPERSTRUCTURE FRAMING PLAN

SPANS 20, 21 & 22

(SPANS 23, 24 & 25 THROUGH SPANS 35, 36 & 37, AND SPANS 41, 42 &43 THROUGH SPANS 53, 54 & 55 SIMILAR)

LEFT LANE

REVISIONS						SHEET NO.
NO.	BY:	DATE:	NO.	BY:	DATE:	S-93
1			3			TOTAL SHEETS
2			4			700

DRAWN BY :	Z. PIATEK	DATE :	10/2012
CHECKED BY :	J. DILWORTH	DATE :	10/2012
DESIGN ENGINEER OF RECORD :	J. DILWORTH	DATE :	05/2013

FILE: $FILE$
MODEL: $MODELNAME$
PLOT DRV: $PLTDRVS$
DATE/TIME: $DATE$ $TIME$

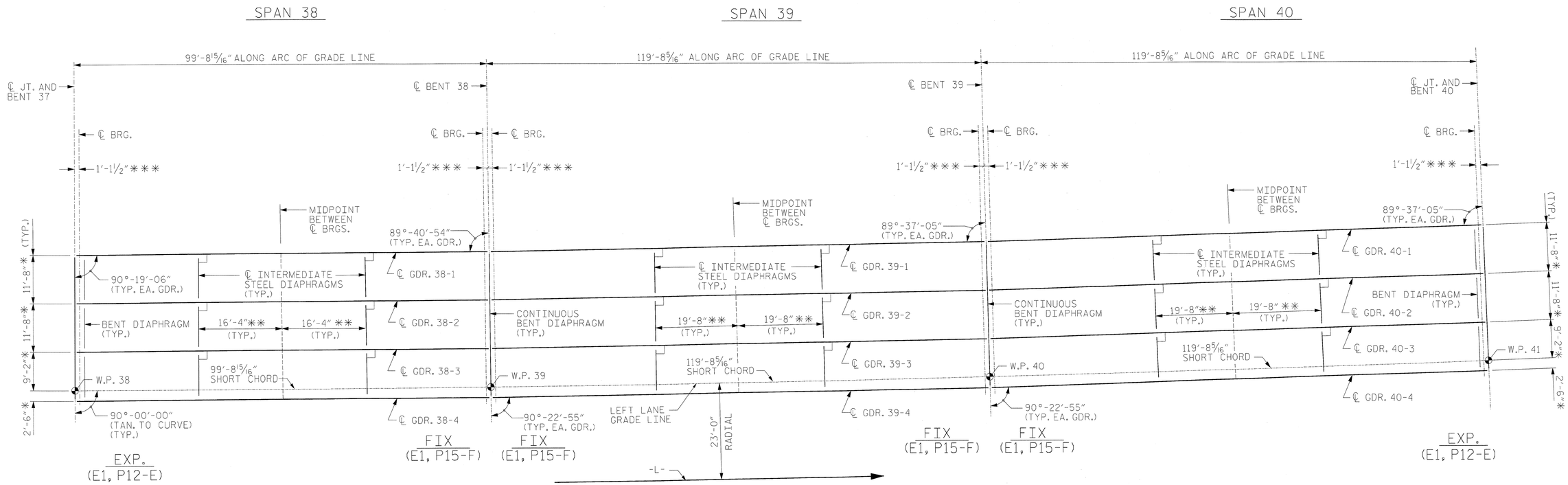

FRAMING PLAN - SPANS 38, 39 & 40

FOR SECTION VIEWS, SEE TYPICAL SECTIONS

* RADIAL THRU WORK POINT

** DIM. ALONG GIRDER

*** NORMAL TO CENTERLINE OF BENT

PROJECT NO. R-2633BB

BRUNSWICK/NEW HANOVER COUNTY

STATION: 353+32.50 -L-

SHEET 10 OF 11

NORTH CAROLINA PROFESSIONAL SEAL 22072 ENGINEER JOHN ARTHUR DILWORTH

5-29-13

WETHERILL ENGINEERING

TRANSPORTATION PLANNING/DESIGN
BRIDGE/STRUCTURE DESIGN
CIVIL/SITE DESIGN - GS/GPS
CONSTRUCTION OBSERVATION

559 Jones Franklin Rd. Suite 164
Raleigh, N.C. 27606
Bus: 919 851 8077
Fax: 919 851 8107
LICENSE NO. F-0377

STATE OF NORTH CAROLINA
DEPARTMENT OF TRANSPORTATION
RALEIGH

SUPERSTRUCTURE FRAMING PLAN

SPANS 38, 39 & 40

LEFT LANE

REVISIONS						SHEET NO.
NO.	BY:	DATE:	NO.	BY:	DATE:	S-94
1			3			TOTAL SHEETS
2			4			700

DRAWN BY : Z. PIATEK DATE : 10/2012
CHECKED BY : J. DILWORTH DATE : 10/2012
DESIGN ENGINEER OF RECORD : J. DILWORTH DATE : 05/2013

FILE: $FILE$
MODEL: $MODELNAME$
PLOT DRV: $PLTDRVS$
DATE/TIME: $DATE$ $TIME$

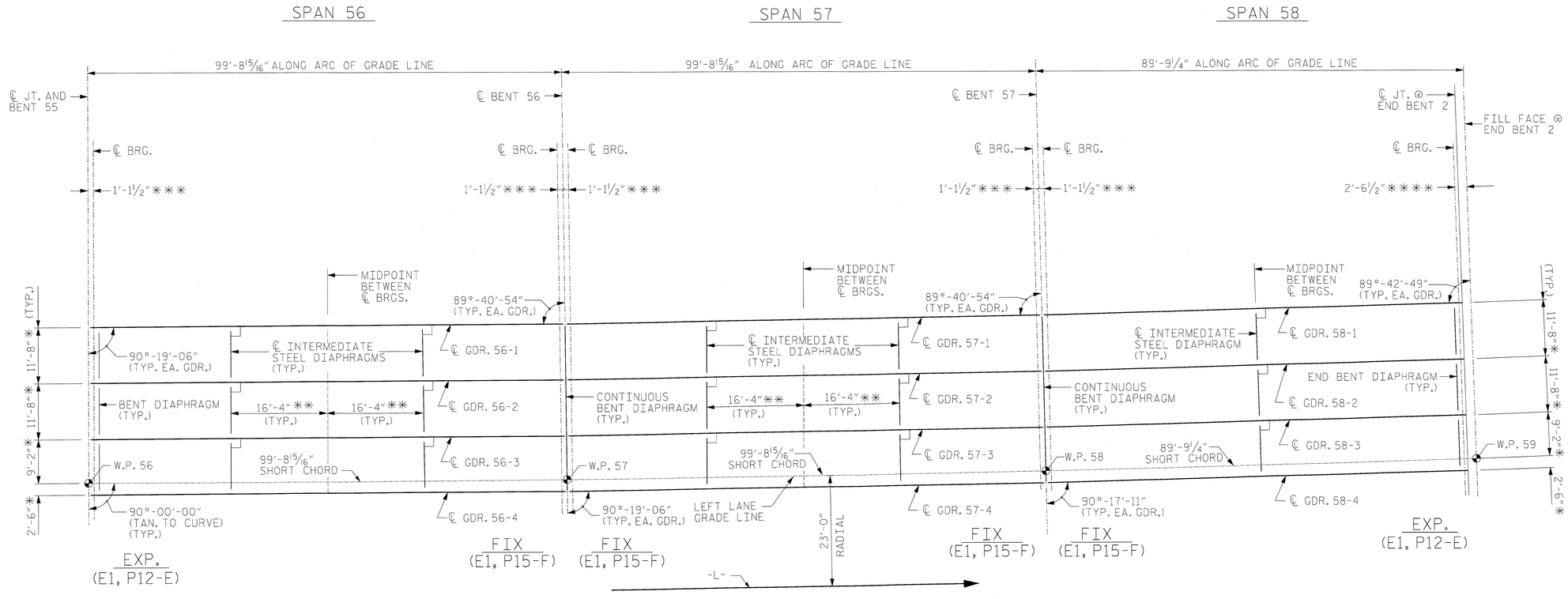

FRAMING PLAN - SPANS 56, 57 & 58

FOR SECTION VIEWS, SEE TYPICAL SECTIONS

* RADIAL THRU WORK POINT

** DIM. ALONG GIRDER

*** NORMAL TO CENTERLINE OF BENT

**** NORMAL TO FILL FACE

PROJECT NO. R-2633BB

BRUNSWICK/NEW HANOVER COUNTY

STATION: 353+32.50 -L-

SHEET 11 OF 11

NORTH CAROLINA SEAL 22072 ENGINEER JOHN ARTHUR DILWORTH 5-29-13

WETHERILL ENGINEERING

TRANSPORTATION PLANNING/DESIGN
BRIDGE/STRUCTURE DESIGN
CIVIL/SITE DESIGN - GIS/GPS
CONSTRUCTION OBSERVATION

559 Jones Franklin Rd. Suite 164
Raleigh, N.C. 27606
Bus: 919 851 8077
Fax: 919 851 8107
LICENSE NO: F-0377

STATE OF NORTH CAROLINA
DEPARTMENT OF TRANSPORTATION
RALEIGH

SUPERSTRUCTURE FRAMING PLAN

SPANS 56, 57 & 58

LEFT LANE

REVISIONS						SHEET NO.
NO.	BY:	DATE:	NO.	BY:	DATE:	S-95
1			3			TOTAL SHEETS
2			4			700

DRAWN BY : Z. PIATEK DATE : 10/2012
CHECKED BY : J. DILWORTH DATE : 10/2012
DESIGN ENGINEER OF RECORD : J. DILWORTH DATE : 05/2013

FILE: $FILE$
MODEL: $MODELNAME$
PLOT DRV: $PLTDRVS$
DATE/TIME: $DATE$ $TIME$

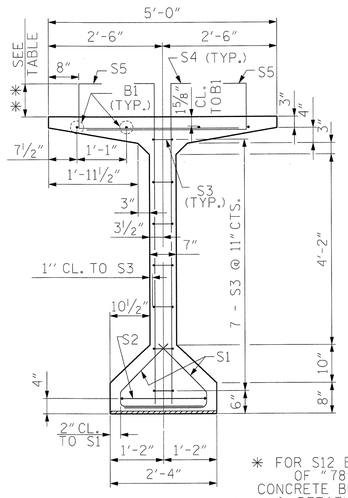

SECTION A-A

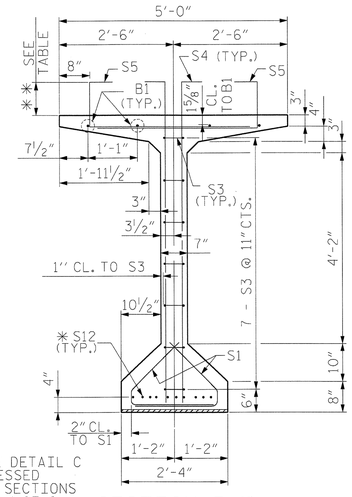

SECTION B-B

* FOR S12 BARS SEE DETAIL C OF "78" PRESTRESSED CONCRETE BULB TEE SECTIONS & DETAILS" SHEET 1 OF 2

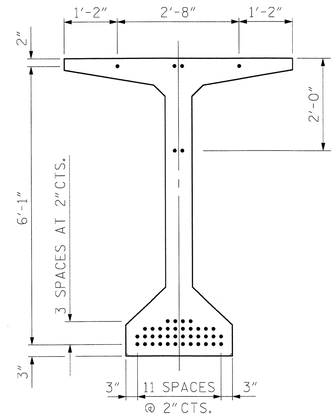

0.6" Ø LOW RELAXATION STRAND LAYOUT

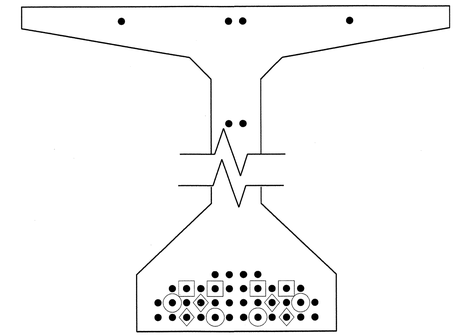

DEBONDING LEGEND

- ● FULLY BONDED STRANDS
- STRANDS DEBONDED FOR 6'-0" FROM END OF GIRDER
- STRANDS DEBONDED FOR 8'-0" FROM END OF GIRDER
- STRANDS DEBONDED FOR 10'-0" FROM END OF GIRDER

0.6" Ø L. R. GRADE 270 STRANDS

AREA (SQUARE INCHES)	ULTIMATE STRENGTH (LBS. PER STRAND)	APPLIED PRESTRESS (LBS. PER STRAND)
0.217	58,600	43,950

REINFORCING STEEL FOR ONE GIRDER

BAR	NUMBER	SIZE	TYPE	LENGTH	WEIGHT
B1	8	#5	STR	54'-2"	452
S1	92	#4	1	3'-8"	225
S2	1	#5	2	10'-7"	11
S3	14	#4	2	9'-1"	85
S4	24	#5	3	7'-5"	186
S5	24	#5	4	4'-10"	121
S6	68	#5	3	7'-4"	520
S7	68	#5	4	4'-9"	337
S8	100	#4	3	7'-2"	479
S9	32	#5	4	4'-8"	156
S10	34	#5	STR	4'-6"	160
* S12	10	#5	STR	3'-8"	38
S13	8	#5	2	12'-0'	100
S14	16	#5	STR	8'-0"	134

* NOTE: S12 BAR SHALL BE BENT BEFORE SHIPMENT, HEAT BENDING SHALL NOT BE ALLOWED.

BAR TYPES

ALL BAR DIMENSIONS ARE OUT-TO-OUT

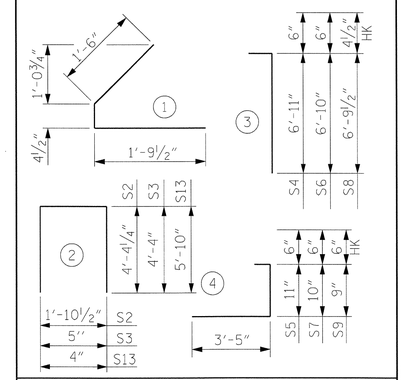

QUANTITIES FOR ONE GIRDER

	REINFORCING STEEL	8500 PSI CONCRETE	0.6" Ø L.R. STRANDS
	LB.	C.Y.	No.
	3004	30.2	44

GIRDERS REQUIRED

NUMBER	LENGTH	TOTAL LENGTH
4	106'-1"	424'-4"

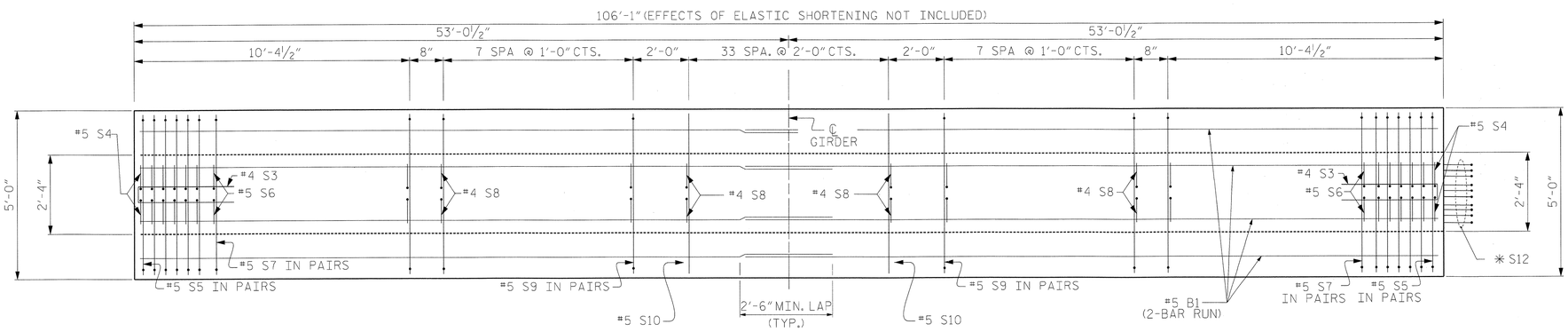

PLAN OF GIRDER

TABLE	
BAR TYPE	**
S4 & S5	8"
S6 & S7	7"
S8 & S9	6"

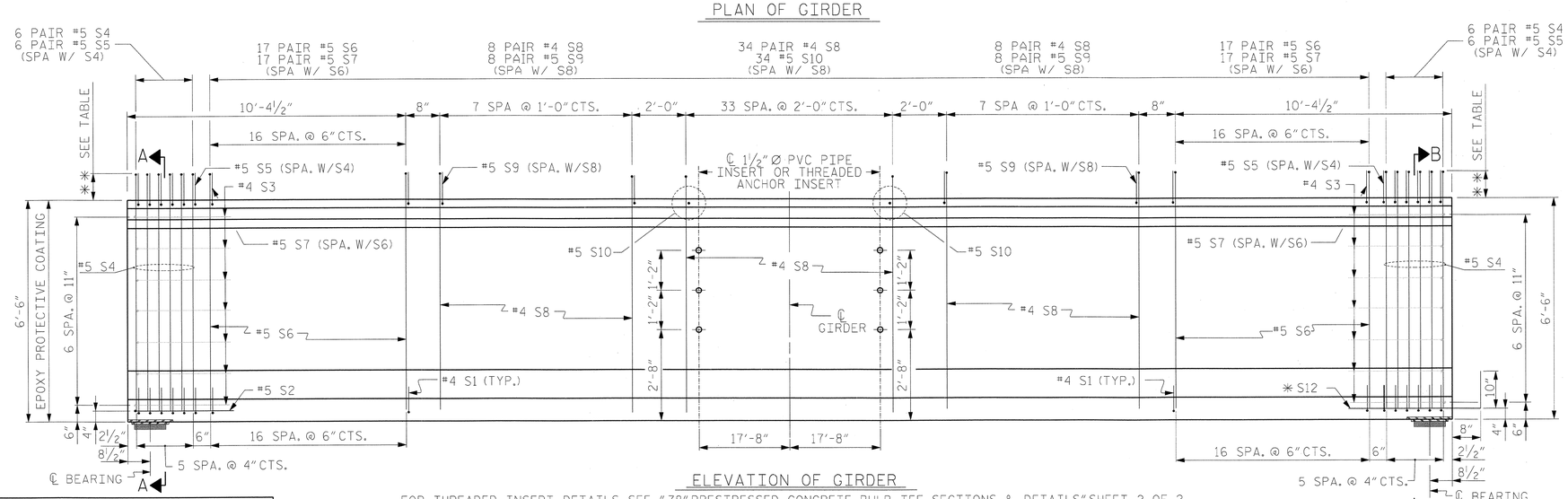

ELEVATION OF GIRDER

FOR THREADED INSERT DETAILS, SEE "78" PRESTRESSED CONCRETE BULB TEE SECTIONS & DETAILS" SHEET 2 OF 2.
FOR REINFORCING STEEL AROUND INSERT, SEE "78" PRESTRESSED CONCRETE BULB TEE SECTIONS & DETAILS" SHEET 2 OF 2.
USE THREADED INSERTS ON EXTERIOR GIRDERS AND PVC PIPE INSERTS ON INTERIOR GIRDERS.

PROJECT NO. R-2633BB
BRUNSWICK/NEW HANOVER COUNTY
STATION: 353+32.50 -L-

SHEET 1 OF 22

NORTH CAROLINA PROFESSIONAL SEAL 18442 ENGINEER RICHARD LEON BOLLINGER, JR. 5-24-2013

RS&H IMPROVING YOUR WORLD

RS&H Architects-Engineers-Planners, Inc.
8601 Six Forks Road, Suite 260
Raleigh, NC 27615
919-846-5701 FAX 919-846-9080
www.rsandh.com
North Carolina License Nos. 00673 * F-0493 * C-28

STATE OF NORTH CAROLINA
DEPARTMENT OF TRANSPORTATION
RALEIGH

SUPERSTRUCTURE

78" PRESTRESSED CONCRETE BULB TEE
SPAN 1
LEFT LANE

REVISIONS						SHEET NO.
NO.	BY:	DATE:	NO.	BY:	DATE:	S-96
1			3			TOTAL SHEETS
2			4			700

DRAWN BY : SMK, JML DATE : 2/2012
CHECKED BY : RLB DATE : 12/2012
DESIGN ENGINEER OF RECORD : R. BOLLINGER DATE : 05/2013

5/24/2013
$$$$$$$$$$$$$$$$$$$$$$$$$$$$DGN$$$$$$$$$$$$$$$$$$$$$$$$$$$$
2:24:02 PM

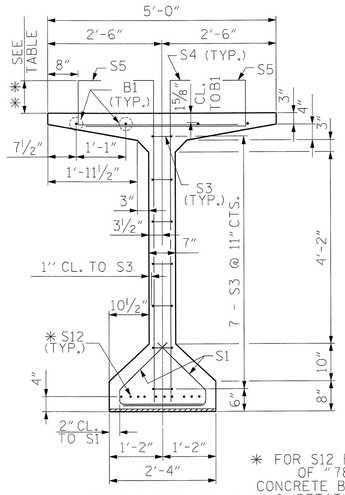

SECTION A-A

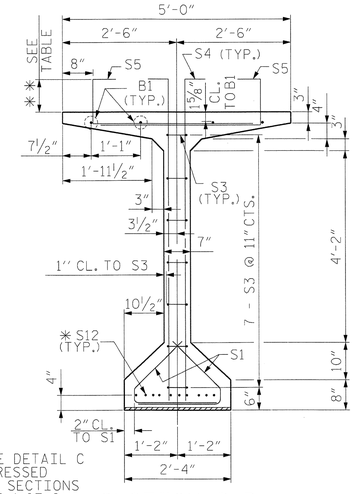

SECTION B-B

* FOR S12 BARS SEE DETAIL C OF "78" PRESTRESSED CONCRETE BULB TEE SECTIONS & DETAILS" SHEET 1 OF 2

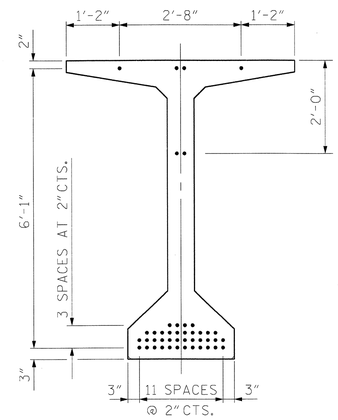

0.6" Ø LOW RELAXATION STRAND LAYOUT

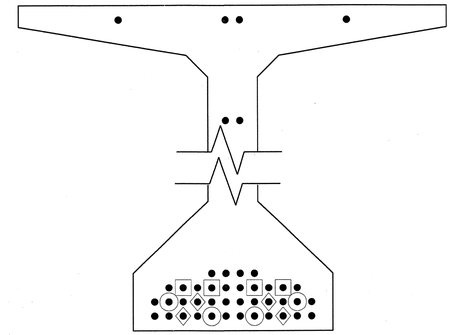

DEBONDING LEGEND

- FULLY BONDED STRANDS
- STRANDS DEBONDED FOR 6'-0" FROM END OF GIRDER
- STRANDS DEBONDED FOR 8'-0" FROM END OF GIRDER
- STRANDS DEBONDED FOR 10'-0" FROM END OF GIRDER

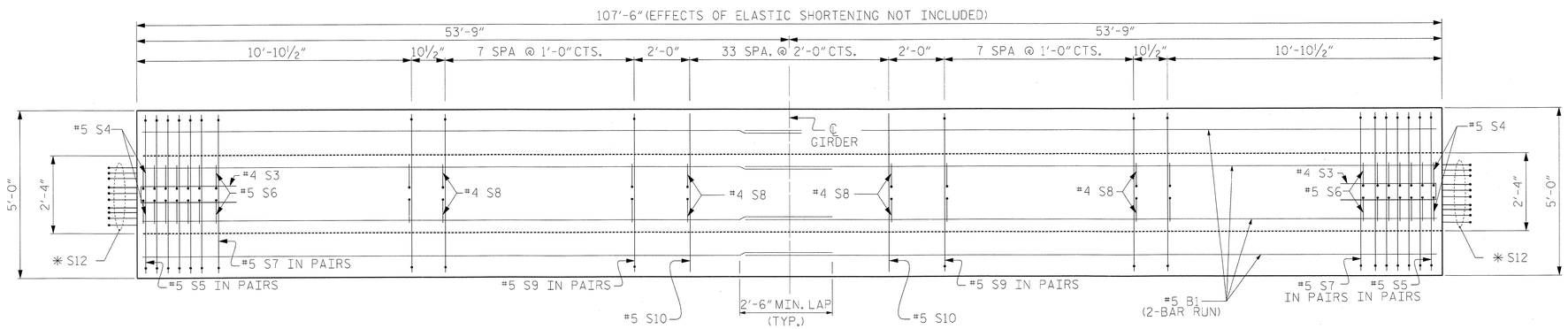

PLAN OF GIRDER

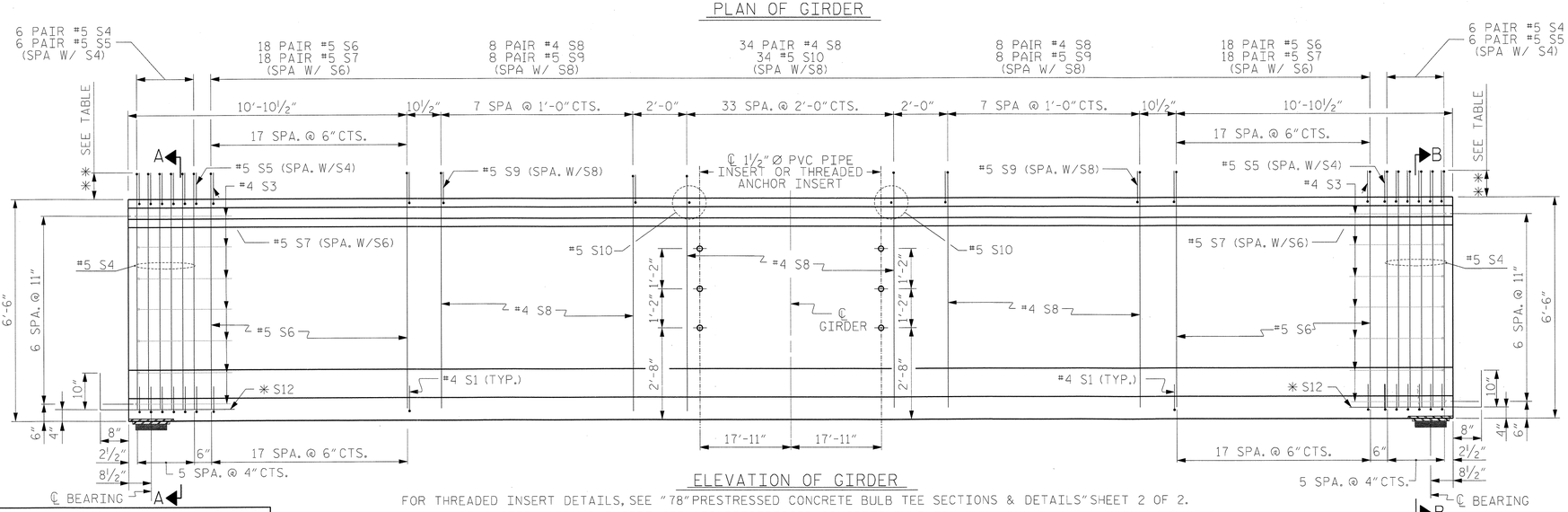

ELEVATION OF GIRDER

FOR THREADED INSERT DETAILS, SEE "78" PRESTRESSED CONCRETE BULB TEE SECTIONS & DETAILS" SHEET 2 OF 2.
FOR REINFORCING STEEL AROUND INSERT, SEE "78" PRESTRESSED CONCRETE BULB TEE SECTIONS & DETAILS" SHEET 2 OF 2.
USE THREADED INSERTS ON EXTERIOR GIRDERS AND PVC PIPE INSERTS ON INTERIOR GIRDERS.

TABLE	
BAR TYPE	**
S4 & S5	8"
S6 & S7	7"
S8 & S9	6"

0.6" Ø L. R. GRADE 270 STRANDS

AREA (SQUARE INCHES)	ULTIMATE STRENGTH (LBS. PER STRAND)	APPLIED PRESTRESS (LBS. PER STRAND)
0.217	58,600	43,950

REINFORCING STEEL FOR ONE GIRDER

BAR	NUMBER	SIZE	TYPE	LENGTH	WEIGHT
B1	8	#5	STR	54'-11"	458
S1	96	#4	1	3'-8"	235
S3	14	#4	2	9'-1"	85
S4	24	#5	3	7'-5"	186
S5	24	#5	4	4'-10"	121
S6	72	#5	3	7'-4"	551
S7	72	#5	4	4'-9"	357
S8	100	#4	3	7'-2"	479
S9	32	#5	4	4'-8"	156
S10	34	#5	STR	4'-6"	160
* S12	20	#5	STR	3'-8"	76
S13	8	#5	2	12'-0"	100
S14	16	#5	STR	8'-0"	134

* NOTE: S12 BAR SHALL BE BENT BEFORE SHIPMENT, HEAT BENDING SHALL NOT BE ALLOWED.

BAR TYPES

ALL BAR DIMENSIONS ARE OUT-TO-OUT

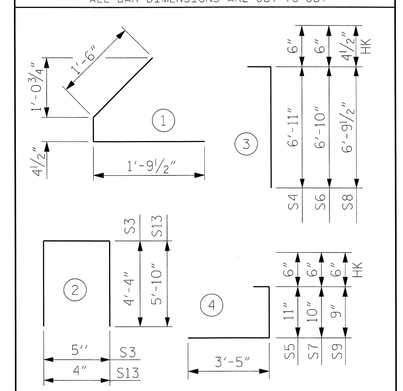

QUANTITIES FOR ONE GIRDER

	REINFORCING STEEL	8500 PSI CONCRETE	0.6" Ø L.R. STRANDS
	LB.	C.Y.	No.
	3283	30.6	44

GIRDERS REQUIRED

NUMBER	LENGTH	TOTAL LENGTH
4	107'-6"	430'-0"

PROJECT NO. R-2633BB

BRUNSWICK/NEW HANOVER COUNTY

STATION: 353+32.50 -L-

SHEET 2 OF 22

STATE OF NORTH CAROLINA
DEPARTMENT OF TRANSPORTATION
RALEIGH

SUPERSTRUCTURE

78" PRESTRESSED CONCRETE BULB TEE

SPAN 2
LEFT LANE

NORTH CAROLINA PROFESSIONAL SEAL 18442 ENGINEER RICHARD LEON BOLLINGER JR. 5-24-2013

RS&H IMPROVING YOUR WORLD

RS&H Architects-Engineers-Planners, Inc.
8601 Six Forks Road, Suite 260
Raleigh, NC 27615
919-846-6701 FAX 919-846-9080
www.rsandh.com
North Carolina License Nos. 50073 * F-0493 * C-28

REVISIONS						
NO.	BY:	DATE:	NO.	BY:	DATE:	
1			3			
2			4			

SHEET NO. S-97
TOTAL SHEETS 700

DRAWN BY :	SMK, JML	DATE :	2/2012
CHECKED BY :	RLB	DATE :	12/2012
DESIGN ENGINEER OF RECORD :	R. BOLLINGER	DATE :	05/2013

5/24/2013
$$$$$$$$$$$$$$$$$$$$$$DGN$$$$$$$$$$$$$$$$$$$$$$$$
2:24:19 PM

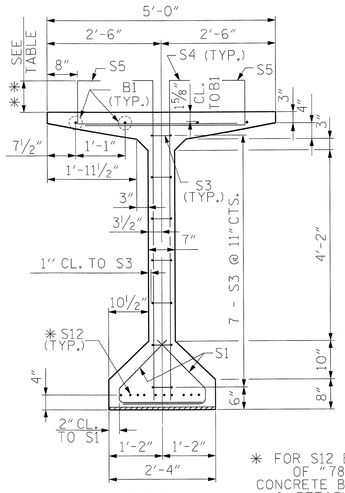

✱ FOR S12 BARS SEE DETAIL C OF "78" PRESTRESSED CONCRETE BULB TEE SECTIONS & DETAILS" SHEET 1 OF 2

SECTION A-A

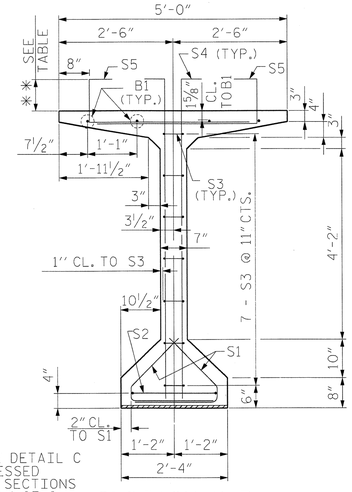

SECTION B-B

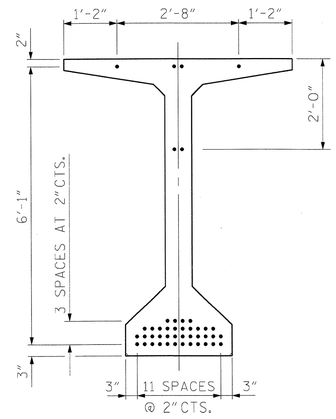

0.6" Ø LOW RELAXATION STRAND LAYOUT

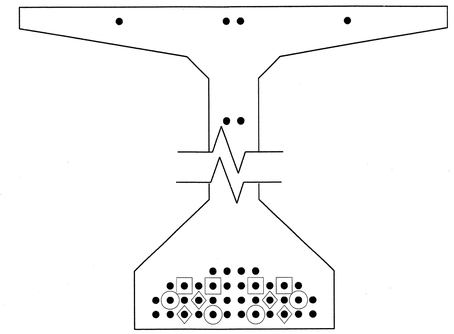

DEBONDING LEGEND

- ● FULLY BONDED STRANDS
- ▣ STRANDS DEBONDED FOR 6'-0" FROM END OF GIRDER
- ⊙ STRANDS DEBONDED FOR 8'-0" FROM END OF GIRDER
- ◈ STRANDS DEBONDED FOR 10'-0" FROM END OF GIRDER

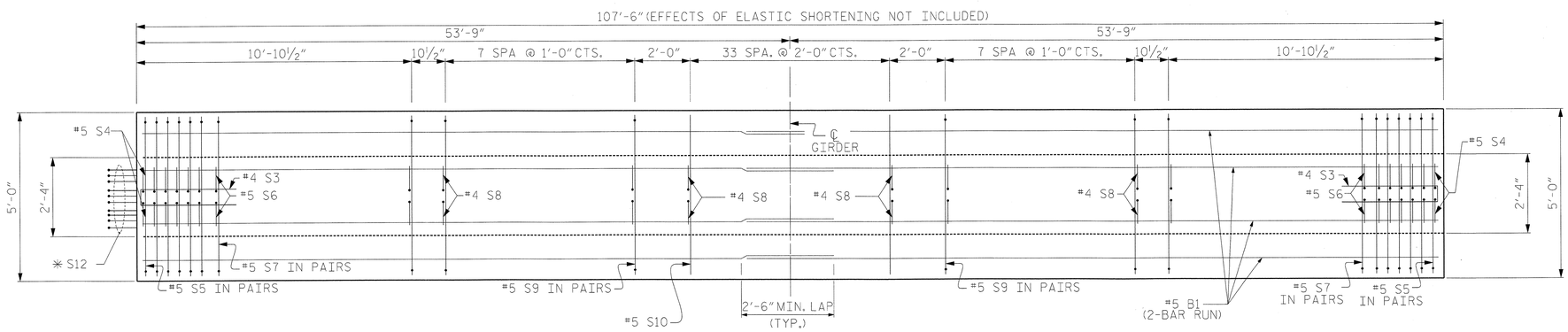

PLAN OF GIRDER

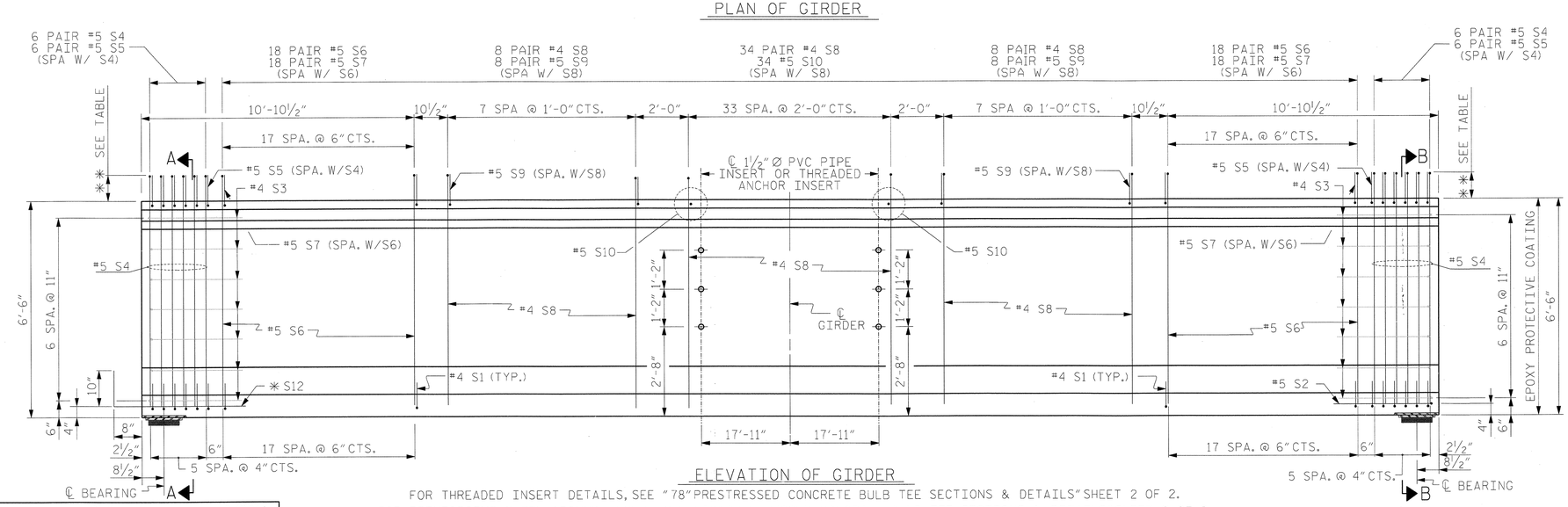

ELEVATION OF GIRDER

FOR THREADED INSERT DETAILS, SEE "78" PRESTRESSED CONCRETE BULB TEE SECTIONS & DETAILS" SHEET 2 OF 2.
FOR REINFORCING STEEL AROUND INSERT, SEE "78" PRESTRESSED CONCRETE BULB TEE SECTIONS & DETAILS" SHEET 2 OF 2.
USE THREADED INSERTS ON EXTERIOR GIRDERS AND PVC PIPE INSERTS ON INTERIOR GIRDERS.

TABLE	
BAR TYPE	✱✱
S4 & S5	8"
S6 & S7	7"
S8 & S9	6"

0.6" Ø L. R. GRADE 270 STRANDS

AREA (SQUARE INCHES)	ULTIMATE STRENGTH (LBS. PER STRAND)	APPLIED PRESTRESS (LBS. PER STRAND)
0.217	58,600	43,950

REINFORCING STEEL FOR ONE GIRDER

BAR	NUMBER	SIZE	TYPE	LENGTH	WEIGHT
B1	8	#5	STR	54'-11"	458
S1	96	#4	1	3'-8"	235
S2	1	#5	2	10'-7"	11
S3	14	#4	2	9'-1"	85
S4	24	#5	3	7'-5"	186
S5	24	#5	4	4'-10"	121
S6	72	#5	3	7'-4"	551
S7	72	#5	4	4'-9"	357
S8	32	#4	3	7'-2"	479
S9	32	#5	4	4'-8"	156
S10	34	#5	STR	4'-6"	160
✱ S12	10	#5	STR	3'-8"	38
S13	8	#5	2	12'-0'	100
S14	16	#5	STR	8'-0"	134

✱ NOTE: S12 BAR SHALL BE BENT BEFORE SHIPMENT, HEAT BENDING SHALL NOT BE ALLOWED.

BAR TYPES

ALL BAR DIMENSIONS ARE OUT-TO-OUT

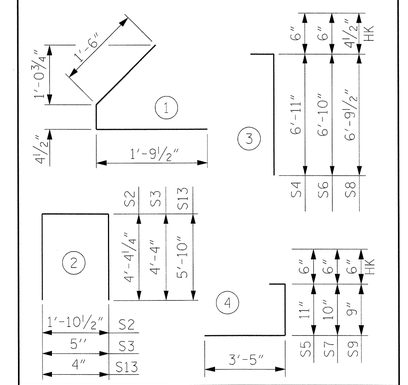

QUANTITIES FOR ONE GIRDER

	REINFORCING STEEL	8500 PSI CONCRETE	0.6" Ø L.R. STRANDS
	LB.	C.Y.	No.
	3071	30.6	44

GIRDERS REQUIRED

NUMBER	LENGTH	TOTAL LENGTH
4	107'-6"	430'-0"

PROJECT NO. R-2633BB

BRUNSWICK/NEW HANOVER COUNTY

STATION: 353+32.50 -L-

SHEET 3 OF 22

NORTH CAROLINA PROFESSIONAL SEAL 18442 ENGINEER RICHARD LEON BOLLINGER III

5-23-2013

RS&H IMPROVING YOUR WORLD

RS&H Architects-Engineers-Planners, Inc.
8601 Six Forks Road, Suite 260
Raleigh, NC 27615
919-846-6701 FAX 919-846-9080
www.raandh.com
North Carolina License Nos. 00075 * F-0403 * C-28

STATE OF NORTH CAROLINA
DEPARTMENT OF TRANSPORTATION
RALEIGH

SUPERSTRUCTURE

78" PRESTRESSED CONCRETE BULB TEE

SPAN 3
LEFT LANE

REVISIONS						SHEET NO.
NO.	BY:	DATE:	NO.	BY:	DATE:	S-98
1			3			TOTAL SHEETS
2			4			700

DRAWN BY :	SMK, JML	DATE :	2/2012
CHECKED BY :	RLB	DATE :	12/2012
DESIGN ENGINEER OF RECORD :	R. BOLLINGER	DATE :	05/2013

5/24/2013
$$$$$$$$$$$$$$$$$$$$$$$$DGN$$$$$$$$$$$$$$$$$$$$$$$$
2:24:34 PM

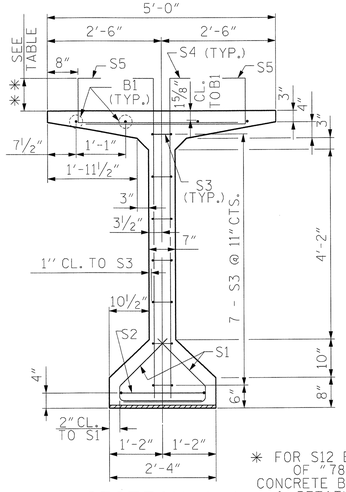

* FOR S12 BARS SEE DETAIL C OF "78" PRESTRESSED CONCRETE BULB TEE SECTIONS & DETAILS" SHEET 1 OF 2

SECTION A-A

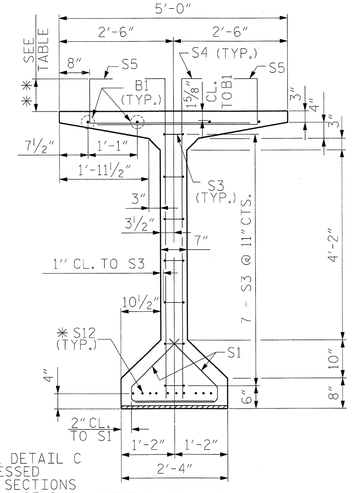

SECTION B-B

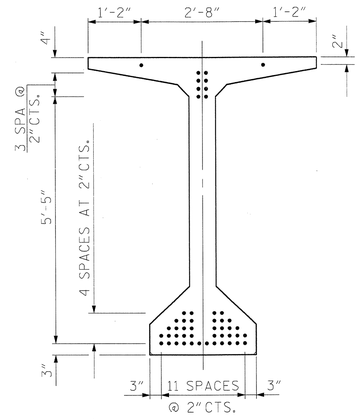

AT END OF GIRDER

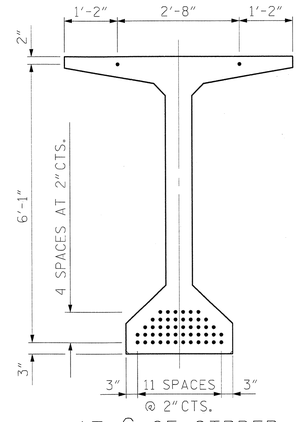

AT ℄ OF GIRDER

0.6" Ø LOW RELAXATION STRAND LAYOUT

THE UPLIFT FORCE DUE TO DRAPED STRANDS IS 33.7 KIPS

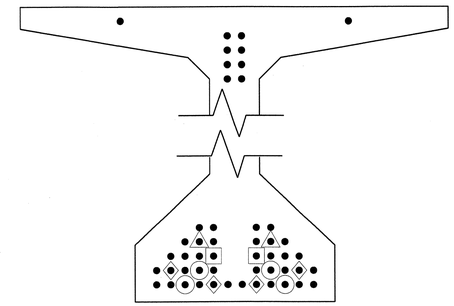

DEBONDING LEGEND

- ● FULLY BONDED STRANDS
- STRANDS DEBONDED FOR 4'-0" FROM END OF GIRDER
- STRANDS DEBONDED FOR 6'-0" FROM END OF GIRDER
- STRANDS DEBONDED FOR 8'-0" FROM END OF GIRDER
- STRANDS DEBONDED FOR 10'-0" FROM END OF GIRDER

0.6" Ø L. R. GRADE 270 STRANDS

AREA (SQUARE INCHES)	ULTIMATE STRENGTH (LBS. PER STRAND)	APPLIED PRESTRESS (LBS. PER STRAND)
0.217	58,600	43,950

REINFORCING STEEL FOR ONE GIRDER

BAR	NUMBER	SIZE	TYPE	LENGTH	WEIGHT
B1	12	#5	STR	41'-4"	517
S1	104	#4	1	3'-9"	261
S2	1	#5	2	10'-7"	11
S3	14	#4	2	9'-1"	85
S4	36	#5	3	7'-5"	278
S5	36	#5	4	4'-10"	181
S6	68	#5	3	7'-4"	520
S7	68	#5	4	4'-9"	337
S8	112	#4	3	7'-2"	536
S9	32	#5	4	4'-8"	156
S10	40	#5	STR	4'-6"	188
* S12	10	#5	STR	3'-8"	38
S13	8	#5	2	12'-0"	100
S14	16	#5	STR	8'-0"	134

* NOTE: S12 BAR SHALL BE BENT BEFORE SHIPMENT, HEAT BENDING SHALL NOT BE ALLOWED.

BAR TYPES

ALL BAR DIMENSIONS ARE OUT-TO-OUT

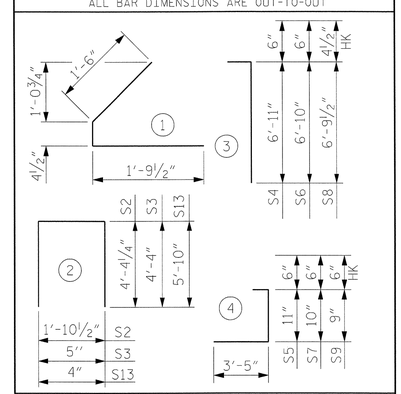

TABLE	
BAR TYPE	**
S4 & S5	8"
S6 & S7	7"
S8 & S9	6"

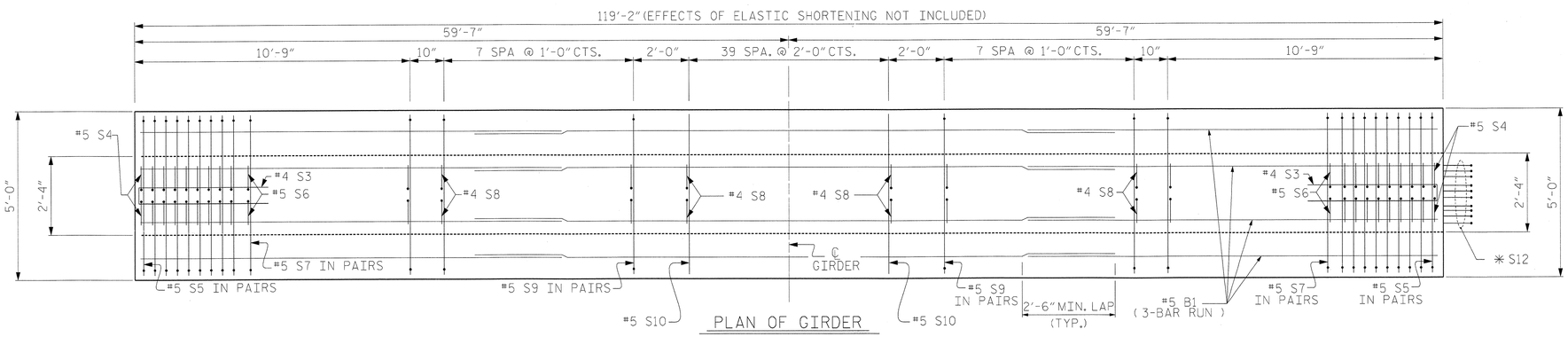

PLAN OF GIRDER

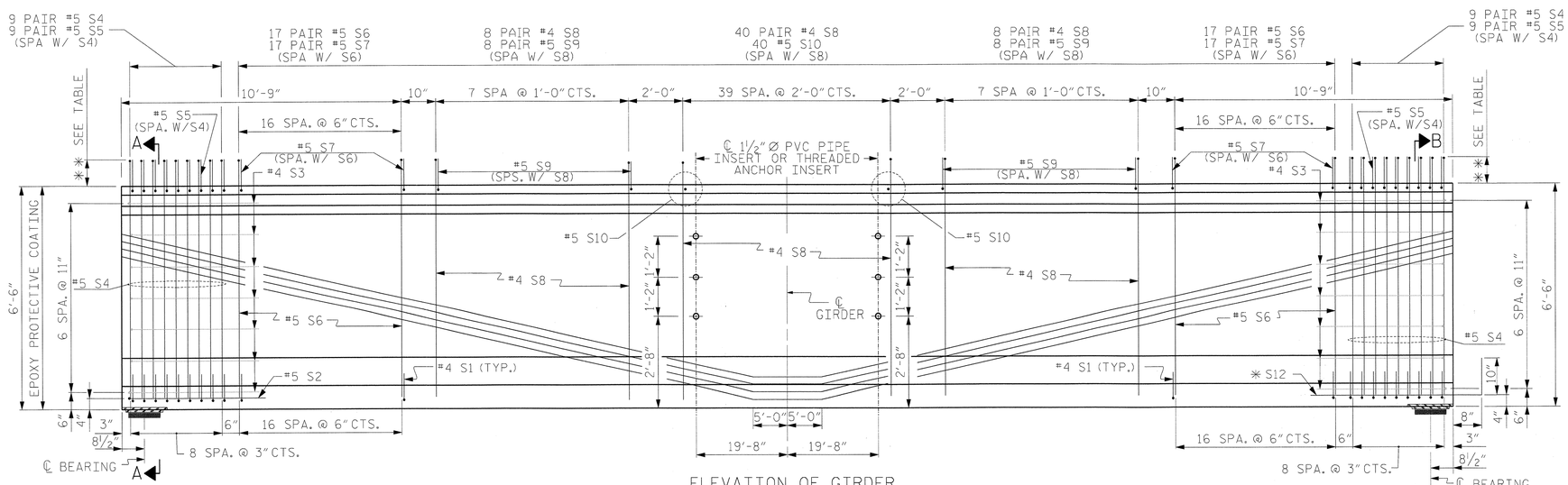

ELEVATION OF GIRDER

FOR THREADED INSERT DETAILS, SEE "78" PRESTRESSED CONCRETE BULB TEE SECTIONS & DETAILS" SHEET 2 OF 2.
FOR REINFORCING STEEL AROUND INSERT, SEE "78" PRESTRESSED CONCRETE BULB TEE SECTIONS & DETAILS" SHEET 2 OF 2.
USE THREADED INSERTS ON EXTERIOR GIRDERS AND PVC PIPE INSERTS ON INTERIOR GIRDERS.

QUANTITIES FOR ONE GIRDER

	REINFORCING STEEL	8500 PSI CONCRETE	0.6" Ø L.R. STRANDS
	LB.	C.Y.	No.
	3342	33.9	50

GIRDERS REQUIRED

NUMBER	LENGTH	TOTAL LENGTH
4	119'-2"	476'-8"

PROJECT NO. R-2633BB

BRUNSWICK/NEW HANOVER COUNTY

STATION: 353+32.50 -L-

SHEET 4 OF 22

NORTH CAROLINA PROFESSIONAL SEAL 18442 ENGINEER LEON BOLLINGER JR. RICHARD
5-24-2013

RS&H IMPROVING YOUR WORLD

RS&H Architects-Engineers-Planners, Inc.
8601 Six Forks Road, Suite 260
Raleigh, NC 27615
919-846-6701 FAX 919-846-9080
www.rsandh.com
North Carolina License Nos. 50073 * F-0493 * C-28

STATE OF NORTH CAROLINA
DEPARTMENT OF TRANSPORTATION
RALEIGH

SUPERSTRUCTURE

78" PRESTRESSED CONCRETE BULB TEE

SPAN 4
LEFT LANE

REVISIONS						SHEET NO.
NO.	BY:	DATE:	NO.	BY:	DATE:	S-99
1			3			TOTAL SHEETS
2			4			700

DRAWN BY :	SMK, JML	DATE :	2/2012
CHECKED BY :	RLB	DATE :	12/2012
DESIGN ENGINEER OF RECORD :	R. BOLLINGER	DATE :	05/2013

5/24/2013
2:24:53 PM

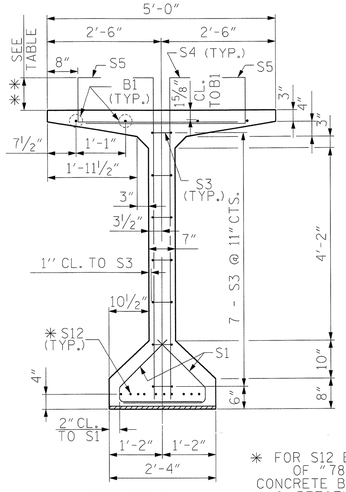

SECTION A-A

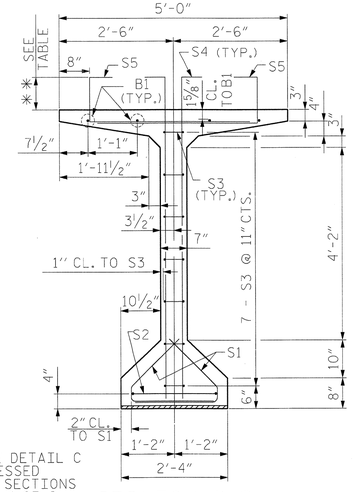

SECTION B-B

* FOR S12 BARS SEE DETAIL C OF "78" PRESTRESSED CONCRETE BULB TEE SECTIONS & DETAILS" SHEET 1 OF 2

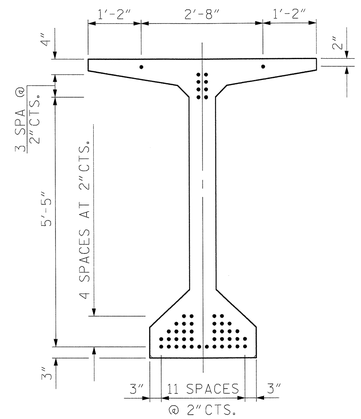

AT END OF GIRDER

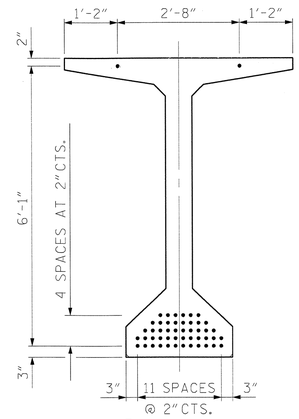

AT ℄ OF GIRDER

0.6" Ø LOW RELAXATION STRAND LAYOUT

THE UPLIFT FORCE DUE TO DRAPED STRANDS IS 33.7 KIPS

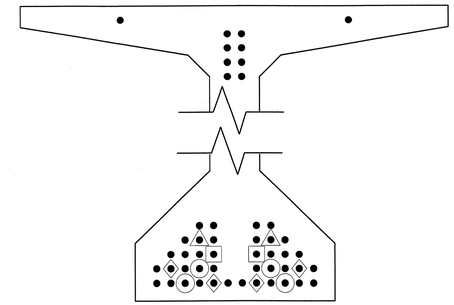

DEBONDING LEGEND

- ● FULLY BONDED STRANDS
- △ STRANDS DEBONDED FOR 4'-0" FROM END OF GIRDER
- ▣ STRANDS DEBONDED FOR 6'-0" FROM END OF GIRDER
- ⊙ STRANDS DEBONDED FOR 8'-0" FROM END OF GIRDER
- ◇ STRANDS DEBONDED FOR 10'-0" FROM END OF GIRDER

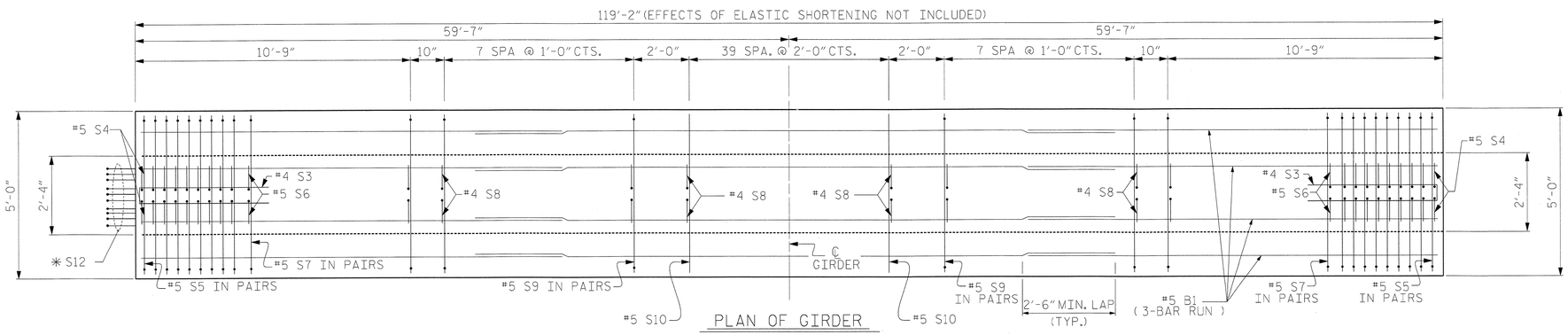

PLAN OF GIRDER

TABLE	
BAR TYPE	**
S4 & S5	8"
S6 & S7	7"
S8 & S9	6"

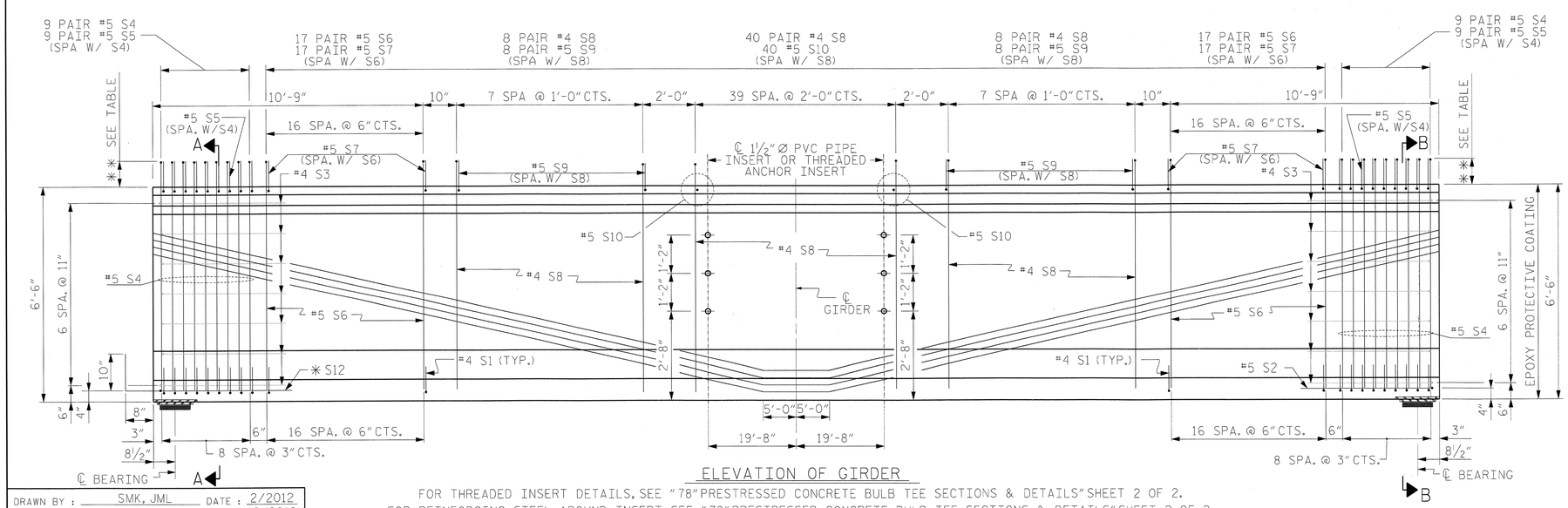

ELEVATION OF GIRDER

FOR THREADED INSERT DETAILS, SEE "78" PRESTRESSED CONCRETE BULB TEE SECTIONS & DETAILS" SHEET 2 OF 2.
FOR REINFORCING STEEL AROUND INSERT, SEE "78" PRESTRESSED CONCRETE BULB TEE SECTIONS & DETAILS" SHEET 2 OF 2.
USE THREADED INSERTS ON EXTERIOR GIRDERS AND PVC PIPE INSERTS ON INTERIOR GIRDERS.

0.6" Ø L. R. GRADE 270 STRANDS

AREA (SQUARE INCHES)	ULTIMATE STRENGTH (LBS. PER STRAND)	APPLIED PRESTRESS (LBS. PER STRAND)
0.217	58,600	43,950

REINFORCING STEEL FOR ONE GIRDER

BAR	NUMBER	SIZE	TYPE	LENGTH	WEIGHT
B1	12	#5	STR	41'-4"	517
S1	104	#4	1	3'-8"	255
S2	1	#5	2	10'-7"	11
S3	14	#4	2	9'-1"	85
S4	36	#5	3	7'-5"	278
S5	36	#5	4	4'-10"	181
S6	68	#5	3	7'-4"	520
S7	68	#5	4	4'-9"	337
S8	112	#4	3	7'-2"	153
S9	32	#5	4	4'-8"	156
S10	40	#5	STR	4'-6"	188
* S12	10	#5	STR	3'-8"	38
S13	8	#5	2	12'-0"	100
S14	16	#5	STR	8'-0"	134

* NOTE: S12 BAR SHALL BE BENT BEFORE SHIPMENT. HEAT BENDING SHALL NOT BE ALLOWED.

BAR TYPES

ALL BAR DIMENSIONS ARE OUT-TO-OUT

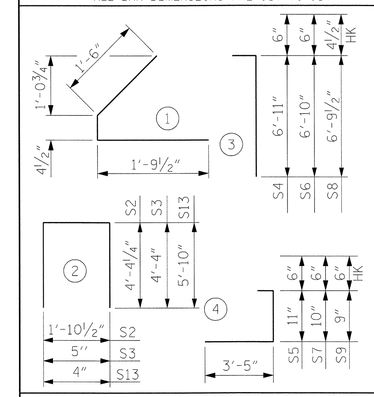

QUANTITIES FOR ONE GIRDER

	REINFORCING STEEL	8500 PSI CONCRETE	0.6" Ø L.R. STRANDS
	LB.	C.Y.	No.
	2953	33.9	50

GIRDERS REQUIRED

NUMBER	LENGTH	TOTAL LENGTH
4	119'-2"	476'-8"

PROJECT NO. R-2633BB

BRUNSWICK/NEW HANOVER COUNTY

STATION: 353+32.50 -L-

SHEET 5 OF 22

NORTH CAROLINA PROFESSIONAL SEAL 18442 ENGINEER RICHARD LEON BOLLINGER, JR. 5-24-2013

RS&H IMPROVING YOUR WORLD

RS&H Architects-Engineers-Planners, Inc.
8601 Six Forks Road, Suite 260
Raleigh, NC 27615
919-846-6701 FAX 919-846-9080
www.rsandh.com
North Carolina License Nos. 50073 * F-0493 * C-28

STATE OF NORTH CAROLINA
DEPARTMENT OF TRANSPORTATION
RALEIGH

SUPERSTRUCTURE

78" PRESTRESSED CONCRETE BULB TEE
SPAN 5
LEFT LANE

REVISIONS						SHEET NO.
NO.	BY:	DATE:	NO.	BY:	DATE:	S-100
1			3			TOTAL SHEETS
2			4			700

DRAWN BY :	SMK, JML	DATE :	2/2012
CHECKED BY :	RLB	DATE :	12/2012
DESIGN ENGINEER OF RECORD :	R. BOLLINGER	DATE :	05/2013

5/24/2013
$$$$$$$$$$$$$$$$$$$$$$$$DGN$$$$$$$$$$$$$$$$$$$$$$$$
2:25:11 PM

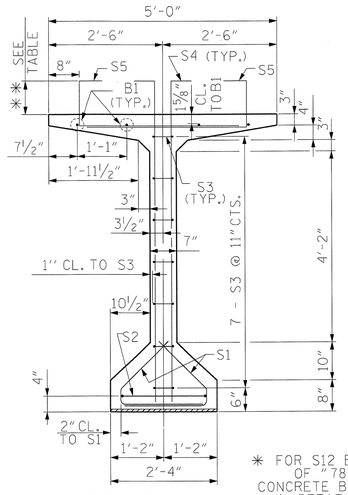

SECTION A-A

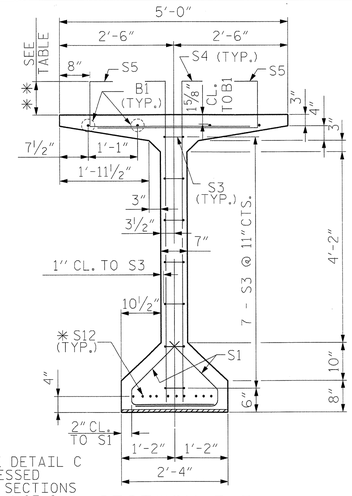

SECTION B-B

* FOR S12 BARS SEE DETAIL C OF "78" PRESTRESSED CONCRETE BULB TEE SECTIONS & DETAILS" SHEET 1 OF 2

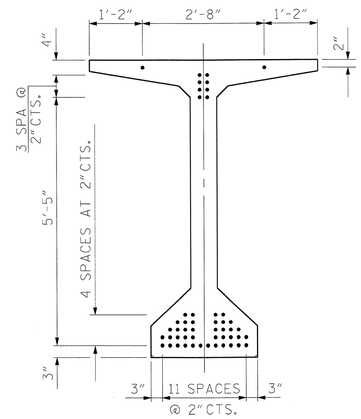

AT END OF GIRDER

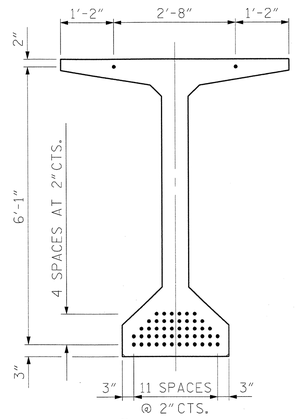

AT ℄ OF GIRDER

0.6" Ø LOW RELAXATION STRAND LAYOUT

THE UPLIFT FORCE DUE TO DRAPED STRANDS IS 33.7 KIPS

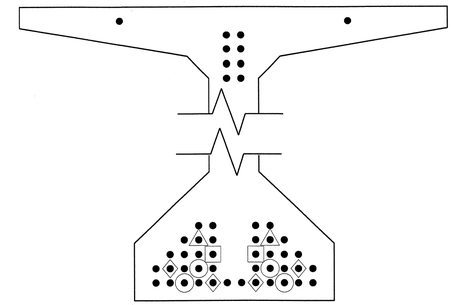

DEBONDING LEGEND

- ● FULLY BONDED STRANDS
- △ STRANDS DEBONDED FOR 4'-0" FROM END OF GIRDER
- ▣ STRANDS DEBONDED FOR 6'-0" FROM END OF GIRDER
- ⊙ STRANDS DEBONDED FOR 8'-0" FROM END OF GIRDER
- ◇ STRANDS DEBONDED FOR 10'-0" FROM END OF GIRDER

0.6" Ø L. R. GRADE 270 STRANDS

AREA (SQUARE INCHES)	ULTIMATE STRENGTH (LBS. PER STRAND)	APPLIED PRESTRESS (LBS. PER STRAND)
0.217	58,600	43,950

REINFORCING STEEL FOR ONE GIRDER

BAR	NUMBER	SIZE	TYPE	LENGTH	WEIGHT
B1	12	#5	STR	41'-4"	517
S1	104	#4	1	3'-8"	255
S2	1	#5	2	10'-7"	11
S3	14	#4	2	9'-1"	85
S4	36	#5	3	7'-5"	278
S5	36	#5	4	4'-10"	181
S6	68	#5	3	7'-4"	520
S7	100	#5	4	4'-9"	495
S8	32	#4	3	7'-3"	155
S9	80	#4	3	7'-2"	383
S10	40	#5	STR	4'-6"	188
* S12	10	#5	STR	3'-8"	38
S13	8	#5	2	12'-0"	100
S14	16	#5	STR	8'-0"	134

* NOTE: S12 BAR SHALL BE BENT BEFORE SHIPMENT. HEAT BENDING SHALL NOT BE ALLOWED.

BAR TYPES

ALL BAR DIMENSIONS ARE OUT-TO-OUT

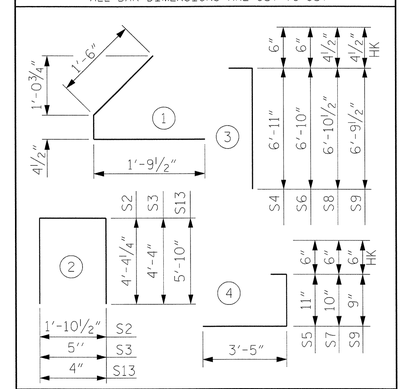

QUANTITIES FOR ONE GIRDER

	REINFORCING STEEL	8500 PSI CONCRETE	0.6" Ø L.R. STRANDS
	LB.	C.Y.	No.
	3340	33.9	50

GIRDERS REQUIRED

NUMBER	LENGTH	TOTAL LENGTH
4	119'-2"	476'-8"

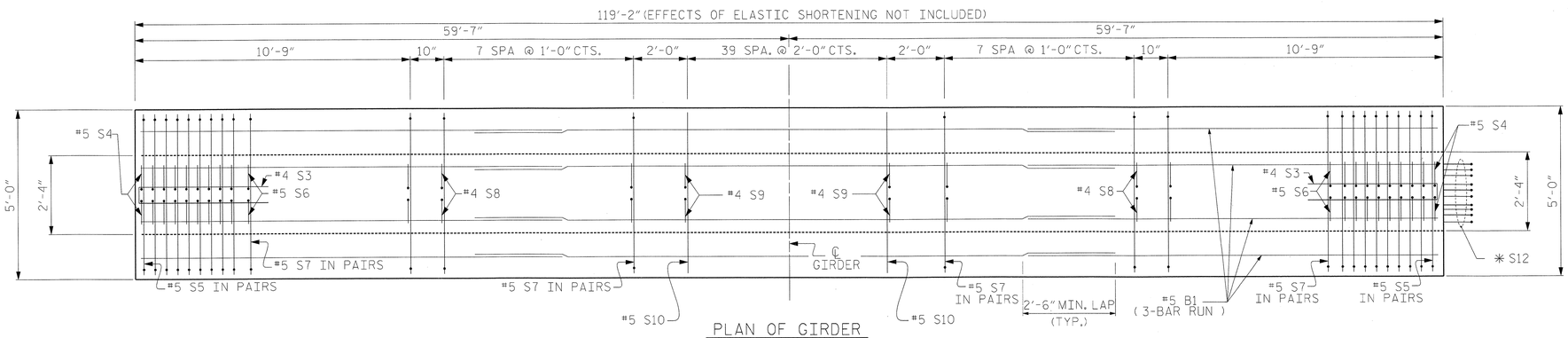

PLAN OF GIRDER

TABLE	
BAR TYPE	**
S4 & S5	8"
S6 & S7	7"
S8 & S7	7"
S9	6"

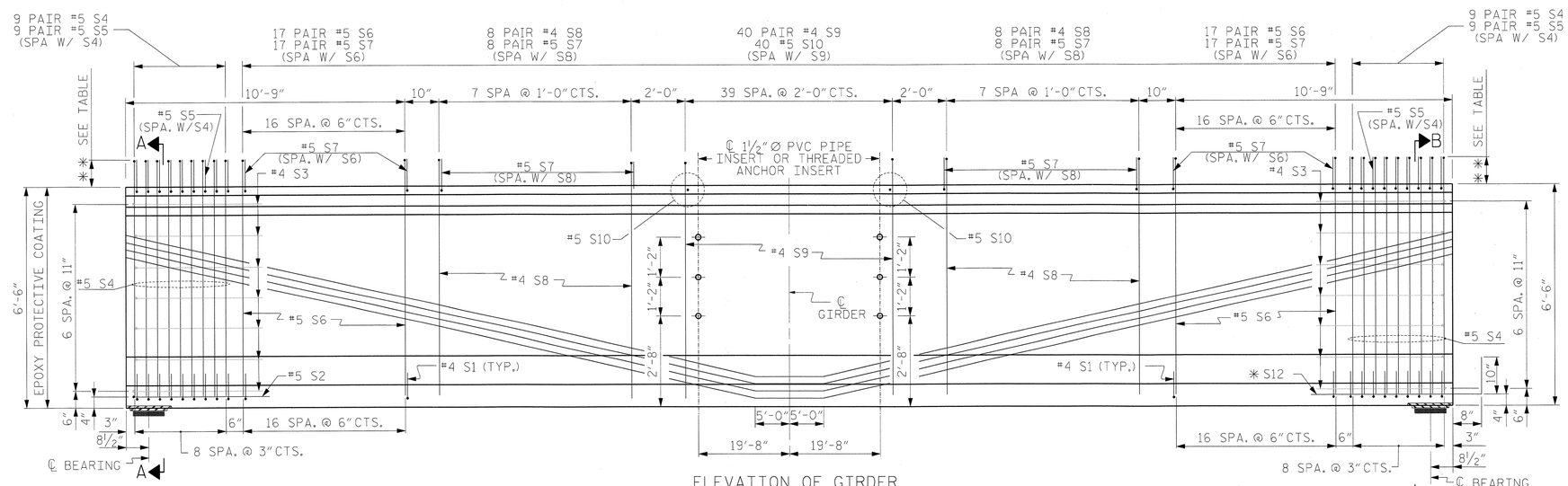

ELEVATION OF GIRDER

FOR THREADED INSERT DETAILS, SEE "78" PRESTRESSED CONCRETE BULB TEE SECTIONS & DETAILS" SHEET 2 OF 2.
FOR REINFORCING STEEL AROUND INSERT, SEE "78" PRESTRESSED CONCRETE BULB TEE SECTIONS & DETAILS" SHEET 2 OF 2.
USE THREADED INSERTS ON EXTERIOR GIRDERS AND PVC PIPE INSERTS ON INTERIOR GIRDERS.

PROJECT NO. R-2633BB
BRUNSWICK/NEW HANOVER COUNTY
STATION: 353+32.50 -L-

SHEET 6 OF 22

NORTH CAROLINA PROFESSIONAL SEAL 18442 ENGINEER RICHARD LEON BOLLINGER JR.
5-24-2013

RS&H IMPROVING YOUR WORLD

RS&H Architects-Engineers-Planners, Inc.
8601 Six Forks Road, Suite 260
Raleigh, NC 27615
919-846-6701 FAX 919-846-9080
www.rsandh.com
North Carolina License Nos. 50073 * F-0493 * C-28

STATE OF NORTH CAROLINA
DEPARTMENT OF TRANSPORTATION
RALEIGH

SUPERSTRUCTURE

78" PRESTRESSED CONCRETE BULB TEE
SPAN 9
LEFT LANE

REVISIONS						SHEET NO.
NO.	BY:	DATE:	NO.	BY:	DATE:	S-101
1			3			TOTAL SHEETS
2			4			700

DRAWN BY : SMK, JML DATE : 2/2012
CHECKED BY : RLB DATE : 12/2012
DESIGN ENGINEER OF RECORD : R. BOLLINGER DATE : 05/2013

5/24/2013
$$$$$$$$$$$$$$$$$$$$$$$$DGN$$$$$$$$$$$$$$$$$$$$$$$$
2:25:35 PM

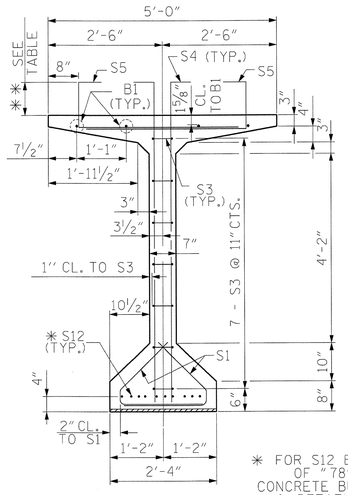

SECTION A-A

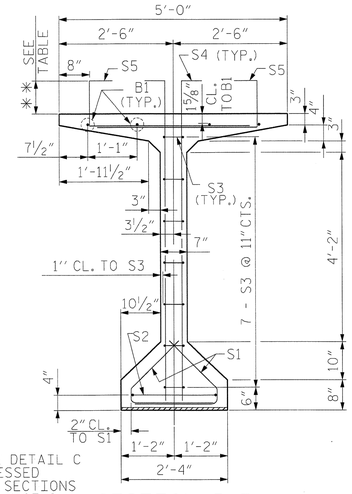

SECTION B-B

* FOR S12 BARS SEE DETAIL C OF "78" PRESTRESSED CONCRETE BULB TEE SECTIONS & DETAILS" SHEET 1 OF 2

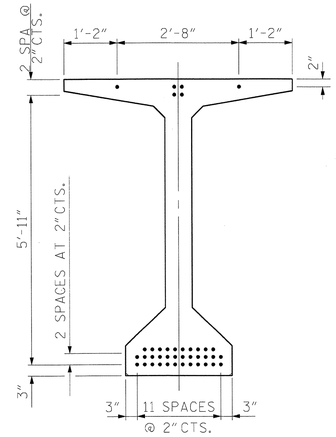

0.6" Ø LOW RELAXATION STRAND LAYOUT

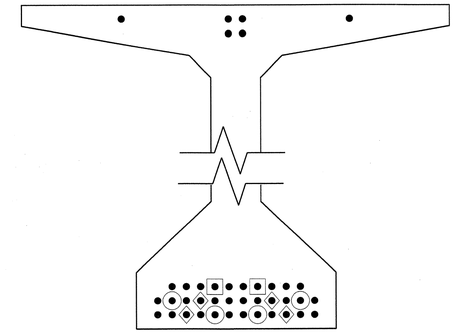

DEBONDING LEGEND

- ● FULLY BONDED STRANDS
- ▣ STRANDS DEBONDED FOR 6'-0" FROM END OF GIRDER
- ⊙ STRANDS DEBONDED FOR 8'-0" FROM END OF GIRDER
- ◈ STRANDS DEBONDED FOR 10'-0" FROM END OF GIRDER

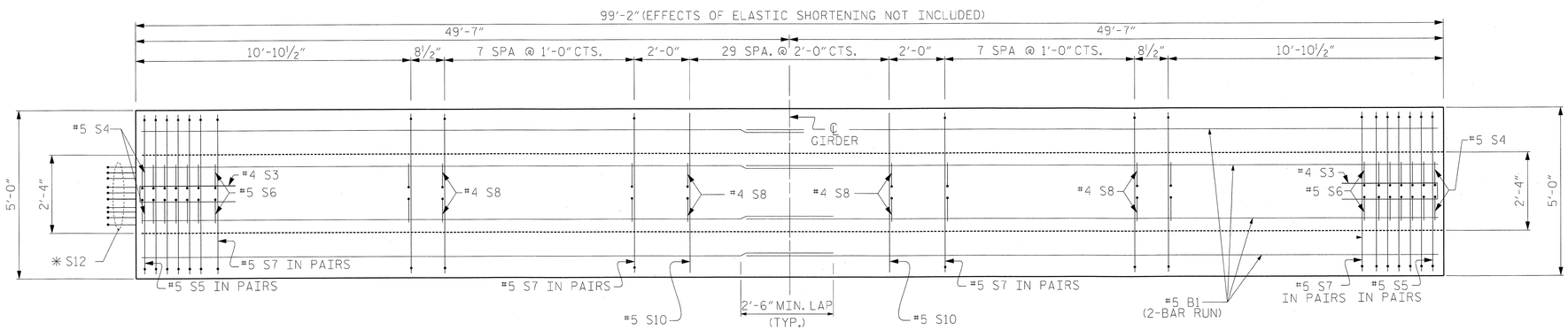

PLAN OF GIRDER

TABLE	
BAR TYPE	**
S4 & S5	8"
S6 & S7	7"
S8 & S7	7"

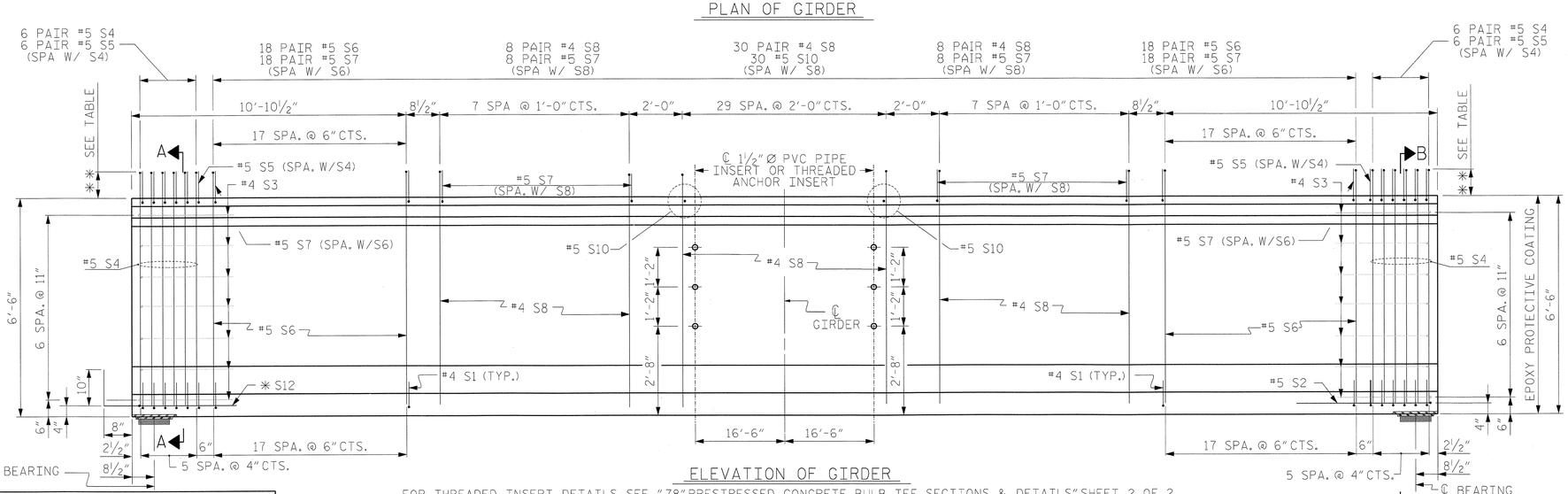

ELEVATION OF GIRDER

FOR THREADED INSERT DETAILS, SEE "78" PRESTRESSED CONCRETE BULB TEE SECTIONS & DETAILS" SHEET 2 OF 2.
FOR REINFORCING STEEL AROUND INSERT, SEE "78" PRESTRESSED CONCRETE BULB TEE SECTIONS & DETAILS" SHEET 2 OF 2.
USE THREADED INSERTS ON EXTERIOR GIRDERS AND PVC PIPE INSERTS ON INTERIOR GIRDERS.

0.6" Ø L. R. GRADE 270 STRANDS

AREA (SQUARE INCHES)	ULTIMATE STRENGTH (LBS. PER STRAND)	APPLIED PRESTRESS (LBS. PER STRAND)
0.217	58,600	43,950

REINFORCING STEEL FOR ONE GIRDER

BAR	NUMBER	SIZE	TYPE	LENGTH	WEIGHT
B1	8	#5	STR	50'-9"	423
S1	96	#4	1	3'-8"	235
S2	1	#5	2	10'-7"	11
S3	14	#4	2	9'-1"	85
S4	24	#5	3	7'-5"	186
S5	24	#5	4	4'-10"	121
S6	72	#5	3	7'-4"	551
S7	104	#5	4	4'-9"	515
S8	92	#4	3	7'-3"	446
S10	30	#5	STR	4'-6"	141
* S12	10	#5	STR	3'-8"	38
S13	8	#5	2	12'-0"	100
S14	16	#5	STR	8'-0"	134

* NOTE: S12 BAR SHALL BE BENT BEFORE SHIPMENT, HEAT BENDING SHALL NOT BE ALLOWED.

BAR TYPES

ALL BAR DIMENSIONS ARE OUT-TO-OUT

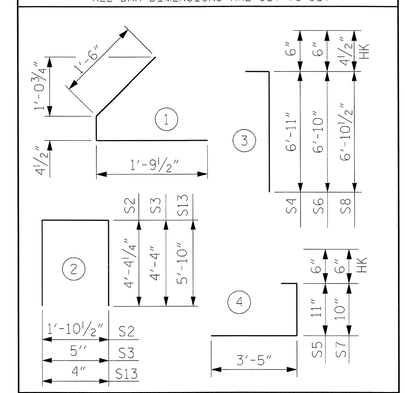

QUANTITIES FOR ONE GIRDER

REINFORCING STEEL	8500 PSI CONCRETE	0.6" Ø L.R. STRANDS
LB.	C.Y.	No.
2986	28.2	40

GIRDERS REQUIRED

NUMBER	LENGTH	TOTAL LENGTH
4	99'-2"	396'-8"

PROJECT NO. R-2633BB

BRUNSWICK/NEW HANOVER COUNTY

STATION: 353+32.50 -L-

SHEET 7 OF 22

NORTH CAROLINA PROFESSIONAL SEAL 18442 ENGINEER RICHARD LEON BOLLINGER JR. 5-24-2013

RS&H IMPROVING YOUR WORLD

RS&H Architects-Engineers-Planners, Inc.
8601 Six Forks Road, Suite 260
Raleigh, NC 27615
919-846-6701 FAX 919-846-9080
www.rsandh.com
North Carolina License Nos. 50073 * F-0493 * C-28

STATE OF NORTH CAROLINA
DEPARTMENT OF TRANSPORTATION
RALEIGH

SUPERSTRUCTURE

78" PRESTRESSED CONCRETE BULB TEE

SPAN 10
LEFT LANE

REVISIONS					
NO.	BY:	DATE:	NO.	BY:	DATE:
1			3		
2			4		

SHEET NO. S-102

TOTAL SHEETS 700

DRAWN BY :	SMK, JML	DATE :	2/2012
CHECKED BY :	RLB	DATE :	12/2012
DESIGN ENGINEER OF RECORD :	R. BOLLINGER	DATE :	05/2013

5/24/2013
2:25:53 PM

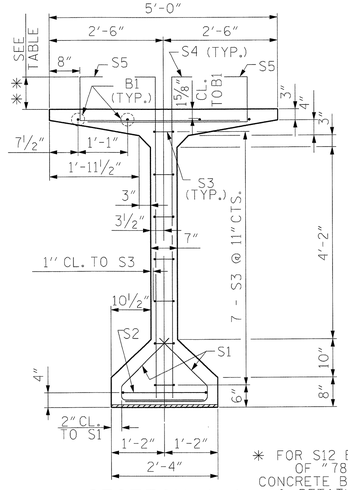

SECTION A-A

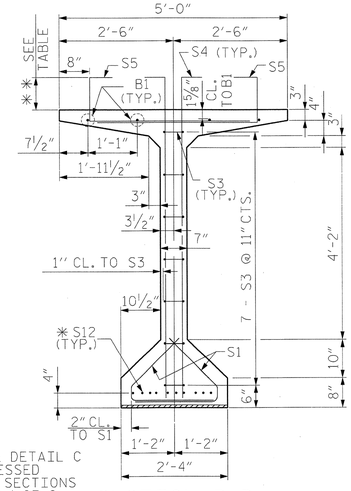

SECTION B-B

* FOR S12 BARS SEE DETAIL C OF "78" PRESTRESSED CONCRETE BULB TEE SECTIONS & DETAILS" SHEET 1 OF 2

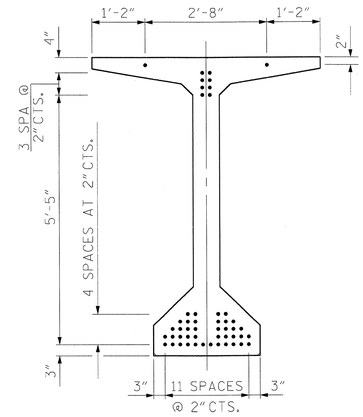

AT END OF GIRDER

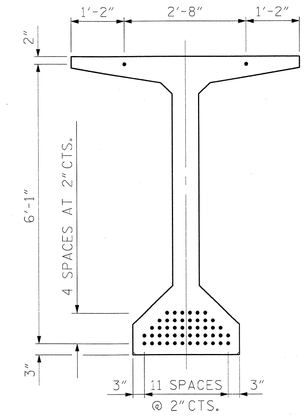

AT ℄ OF GIRDER

0.6" Ø LOW RELAXATION STRAND LAYOUT

THE UPLIFT FORCE DUE TO DRAPED STRANDS IS 33.7 KIPS

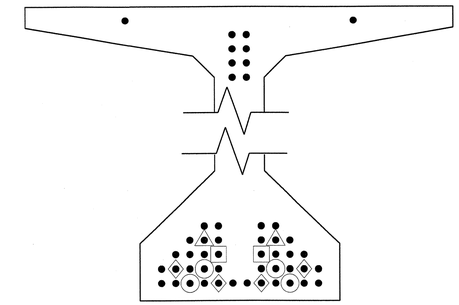

DEBONDING LEGEND

- ● FULLY BONDED STRANDS
- △ STRANDS DEBONDED FOR 4'-0" FROM END OF GIRDER
- ▣ STRANDS DEBONDED FOR 6'-0" FROM END OF GIRDER
- ⊙ STRANDS DEBONDED FOR 8'-0" FROM END OF GIRDER
- ◇ STRANDS DEBONDED FOR 10'-0" FROM END OF GIRDER

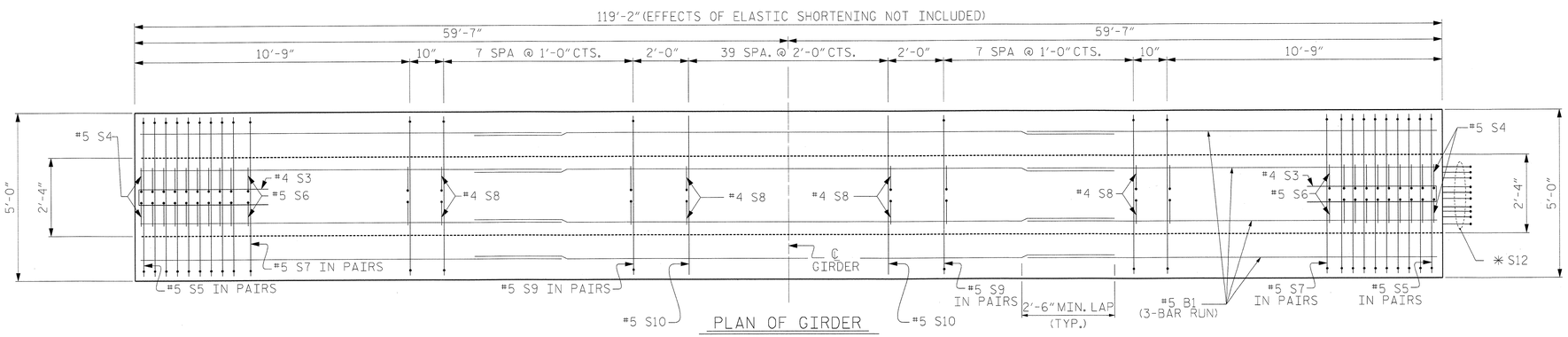

PLAN OF GIRDER

TABLE	
BAR TYPE	**
S4 & S5	10"
S6 & S7	9"
S8 & S9	8"

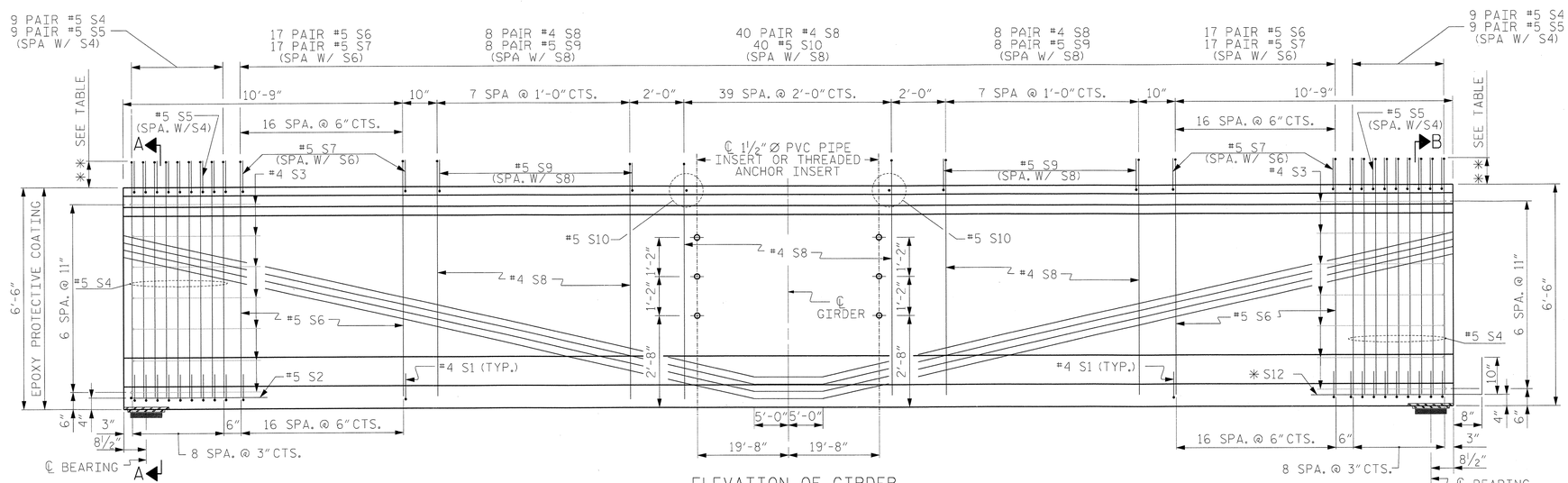

ELEVATION OF GIRDER

FOR THREADED INSERT DETAILS, SEE "78" PRESTRESSED CONCRETE BULB TEE SECTIONS & DETAILS" SHEET 2 OF 2.
FOR REINFORCING STEEL AROUND INSERT, SEE "78" PRESTRESSED CONCRETE BULB TEE SECTIONS & DETAILS" SHEET 2 OF 2.
USE THREADED INSERTS ON EXTERIOR GIRDERS AND PVC PIPE INSERTS ON INTERIOR GIRDERS.

0.6" Ø L. R. GRADE 270 STRANDS

AREA (SQUARE INCHES)	ULTIMATE STRENGTH (LBS. PER STRAND)	APPLIED PRESTRESS (LBS. PER STRAND)
0.217	58,600	43,950

REINFORCING STEEL FOR ONE GIRDER

BAR	NUMBER	SIZE	TYPE	LENGTH	WEIGHT
B1	12	#5	STR	41'-4"	517
S1	104	#4	1	3'-8"	255
S2	1	#5	2	10'-7"	11
S3	14	#4	2	9'-1"	85
S4	36	#5	3	7'-7"	285
S5	36	#5	4	5'-0"	188
S6	68	#5	3	7'-6"	532
S7	68	#5	4	4'-11"	349
S8	32	#4	3	7'-4"	549
S9	32	#5	4	4'-10"	161
S10	40	#5	STR	4'-6"	188
* S12	10	#5	STR	3'-8"	38
S13	8	#5	2	12'-0"	100
S14	16	#5	STR	8'-0"	134

* NOTE: S12 BAR SHALL BE BENT BEFORE SHIPMENT, HEAT BENDING SHALL NOT BE ALLOWED.

BAR TYPES

ALL BAR DIMENSIONS ARE OUT-TO-OUT

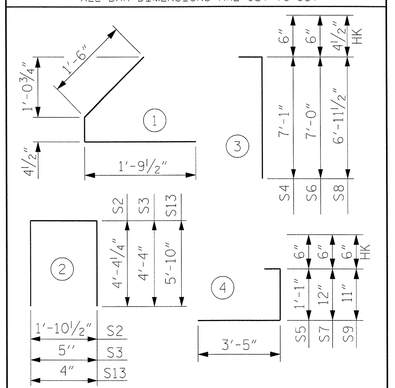

QUANTITIES FOR ONE GIRDER

	REINFORCING STEEL	8500 PSI CONCRETE	0.6" Ø L.R. STRANDS
	LB.	C.Y.	No.
	3392	33.9	50

GIRDERS REQUIRED

NUMBER	LENGTH	TOTAL LENGTH
4	119'-2"	476'-8"

PROJECT NO. R-2633BB

BRUNSWICK/NEW HANOVER COUNTY

STATION: 353+32.50 -L-

SHEET 8 OF 22

NORTH CAROLINA PROFESSIONAL SEAL 18442 ENGINEER RICHARD LEON BOLLINGER III

5-29-2013

RS&H IMPROVING YOUR WORLD

RS&H Architects-Engineers-Planners, Inc.
8601 Six Forks Road, Suite 260
Raleigh, NC 27615
919-846-6701 FAX 919-846-9080
www.rsandh.com
North Carolina License Nos. 50073 * F-0493 * C-28

STATE OF NORTH CAROLINA
DEPARTMENT OF TRANSPORTATION
RALEIGH

SUPERSTRUCTURE

78" PRESTRESSED CONCRETE BULB TEE

SPAN 11
LEFT LANE

REVISIONS						
NO.	BY:	DATE:	NO.	BY:	DATE:	
1			3			
2			4			

SHEET NO. S-103

TOTAL SHEETS 700

DRAWN BY :	SMK, JML	DATE :	2/2012
CHECKED BY :	RLB	DATE :	12/2012
DESIGN ENGINEER OF RECORD :	R. BOLLINGER	DATE :	05/2013

5/24/2013
2:26:55 PM
$$$$$$$$$$$$$$$$$$$$$$$$DGN$$$$$$$$$$$$$$$$$$$$$$$$

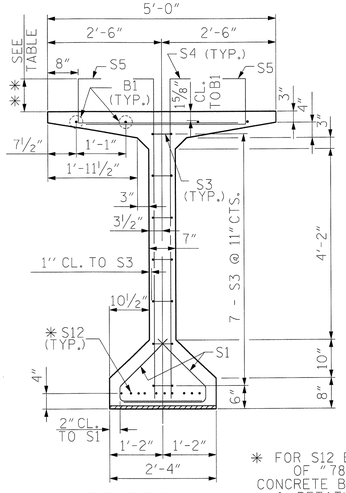

SECTION A-A

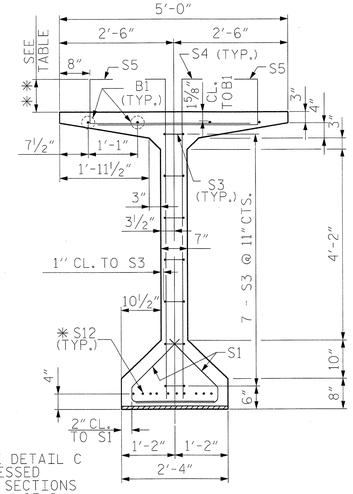

SECTION B-B

* FOR S12 BARS SEE DETAIL C OF "78" PRESTRESSED CONCRETE BULB TEE SECTIONS & DETAILS" SHEET 1 OF 2

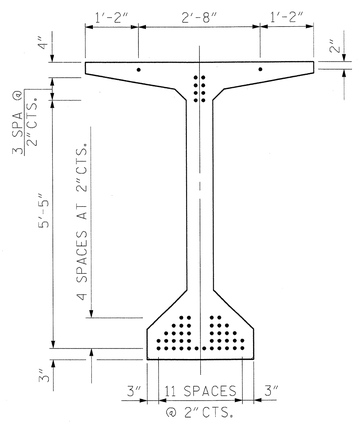

AT END OF GIRDER

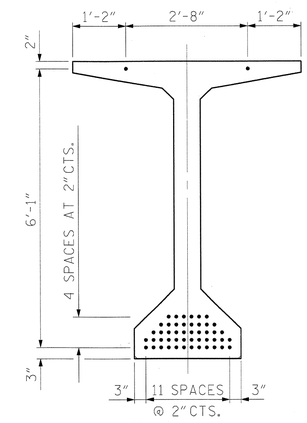

AT ℄ OF GIRDER

0.6" Ø LOW RELAXATION STRAND LAYOUT

THE UPLIFT FORCE DUE TO DRAPED STRANDS IS 33.7 KIPS

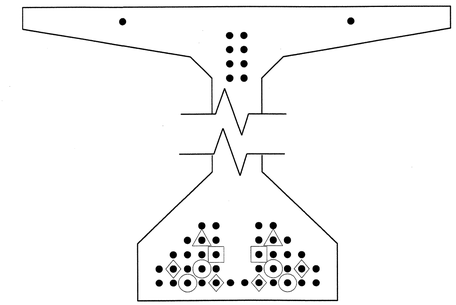

DEBONDING LEGEND

- ● FULLY BONDED STRANDS
- △ STRANDS DEBONDED FOR 4'-0" FROM END OF GIRDER
- ▣ STRANDS DEBONDED FOR 6'-0" FROM END OF GIRDER
- ⊙ STRANDS DEBONDED FOR 8'-0" FROM END OF GIRDER
- ◇ STRANDS DEBONDED FOR 10'-0" FROM END OF GIRDER

0.6" Ø L. R. GRADE 270 STRANDS

AREA (SQUARE INCHES)	ULTIMATE STRENGTH (LBS. PER STRAND)	APPLIED PRESTRESS (LBS. PER STRAND)
0.217	58,600	43,950

REINFORCING STEEL FOR ONE GIRDER

BAR	NUMBER	SIZE	TYPE	LENGTH	WEIGHT
B1	12	#5	STR	41'-4"	517
S1	104	#4	1	3'-8"	255
S3	14	#4	2	9'-1"	85
S4	36	#5	3	7'-7"	285
S5	36	#5	4	5'-0"	188
S6	68	#5	3	7'-6"	532
S7	68	#5	4	4'-11"	349
S8	32	#4	3	7'-4"	157
S9	32	#5	4	4'-10"	161
S10	40	#5	STR	4'-6"	188
S11	80	#4	3	7'-3"	387
* S12	20	#5	STR	3'-8"	76
S13	8	#5	2	12'-0"	100
S14	16	#5	STR	8'-0"	134

* NOTE: S12 BAR SHALL BE BENT BEFORE SHIPMENT. HEAT BENDING SHALL NOT BE ALLOWED.

BAR TYPES

ALL BAR DIMENSIONS ARE OUT-TO-OUT

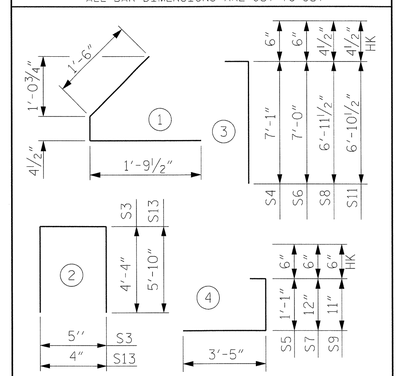

QUANTITIES FOR ONE GIRDER

	REINFORCING STEEL	8500 PSI CONCRETE	0.6" Ø L.R. STRANDS
	LB.	C.Y.	No.
	3414	33.9	50

GIRDERS REQUIRED

NUMBER	LENGTH	TOTAL LENGTH
4	119'-2"	476'-8"

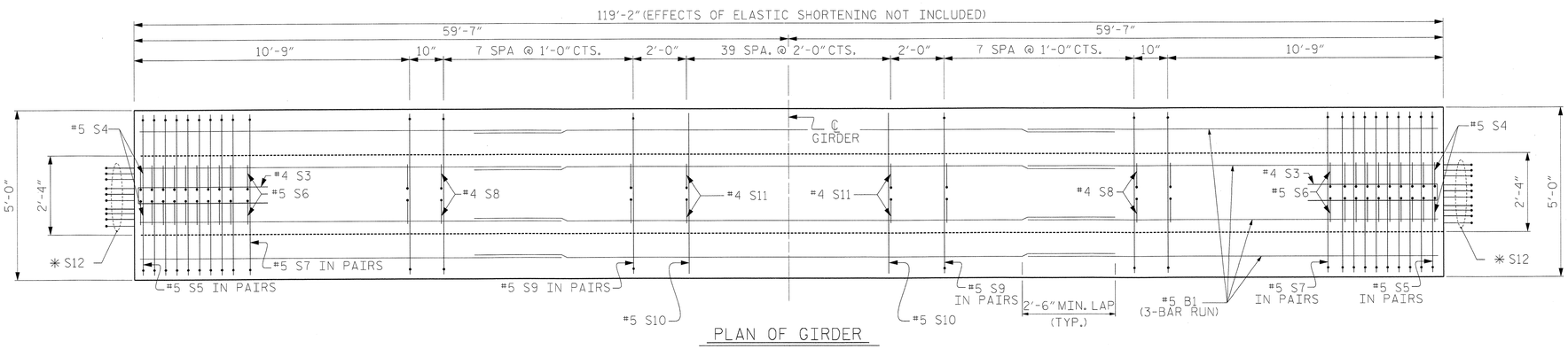

PLAN OF GIRDER

TABLE	
BAR TYPE	**
S4 & S5	10"
S6 & S7	9"
S8 & S9	8"
S11	7"

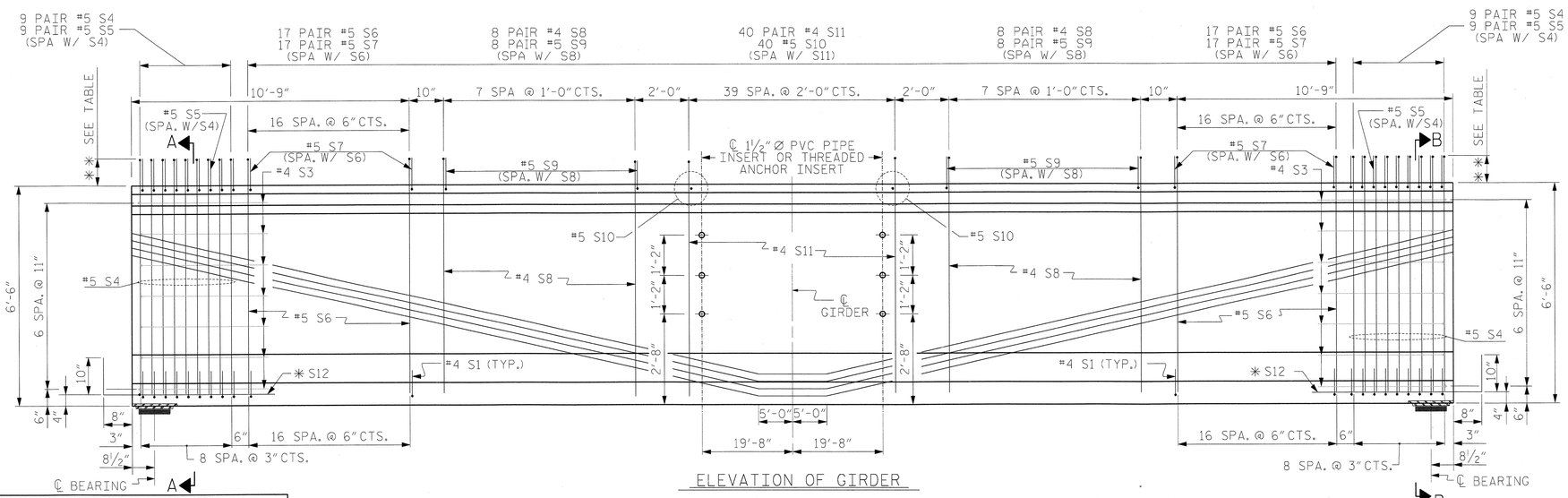

ELEVATION OF GIRDER

FOR THREADED INSERT DETAILS, SEE "78" PRESTRESSED CONCRETE BULB TEE SECTIONS & DETAILS" SHEET 2 OF 2.
FOR REINFORCING STEEL AROUND INSERT, SEE "78" PRESTRESSED CONCRETE BULB TEE SECTIONS & DETAILS" SHEET 2 OF 2.
USE THREADED INSERTS ON EXTERIOR GIRDERS AND PVC PIPE INSERTS ON INTERIOR GIRDERS.

PROJECT NO. R-2633BB
BRUNSWICK/NEW HANOVER COUNTY
STATION: 353+32.50 -L-

SHEET 9 OF 22

NORTH CAROLINA PROFESSIONAL SEAL 18442 ENGINEER RICHARD LEON BOLLINGER JR. 5-29-2013

RS&H IMPROVING YOUR WORLD

RS&H Architects-Engineers-Planners, Inc.
8601 Six Forks Road, Suite 260
Raleigh, NC 27615
919-846-6701 FAX 919-846-9080
www.rsandh.com
North Carolina License Nos. 50073 * F-0403 * C-28

STATE OF NORTH CAROLINA
DEPARTMENT OF TRANSPORTATION
RALEIGH

SUPERSTRUCTURE

78" PRESTRESSED CONCRETE BULB TEE

SPAN 12
LEFT LANE

REVISIONS						SHEET NO.
NO.	BY:	DATE:	NO.	BY:	DATE:	S-104
1			3			TOTAL SHEETS
2			4			700

DRAWN BY :	SMK, JML	DATE :	2/2012
CHECKED BY :	RLB	DATE :	12/2012
DESIGN ENGINEER OF RECORD :	R. BOLLINGER	DATE :	05/2013

5/24/2013
$$$$$$$$$$$$$$$$$$$$$$$$DGN$$$$$$$$$$$$$$$$$$$$$$$$
2:27:13 PM

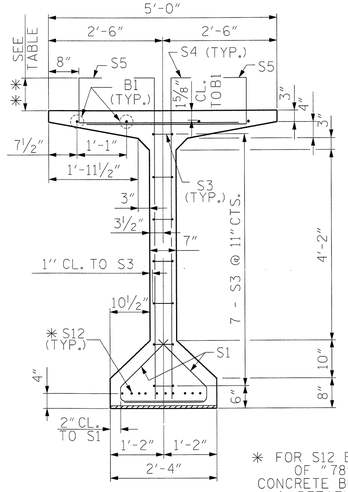

SECTION A-A

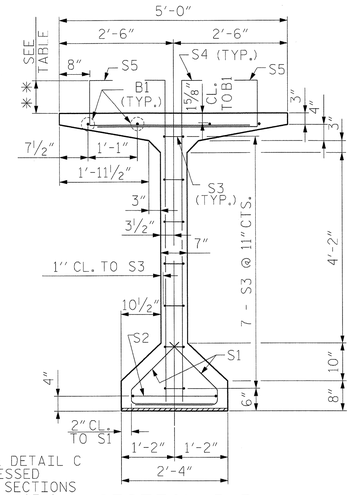

SECTION B-B

* FOR S12 BARS SEE DETAIL C OF "78" PRESTRESSED CONCRETE BULB TEE SECTIONS & DETAILS" SHEET 1 OF 2

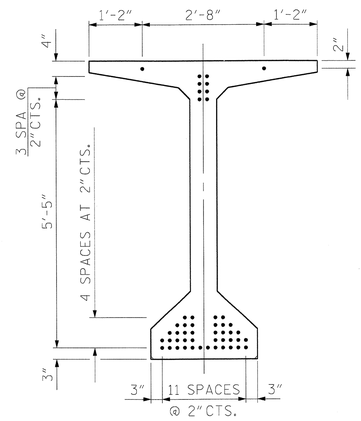

AT END OF GIRDER

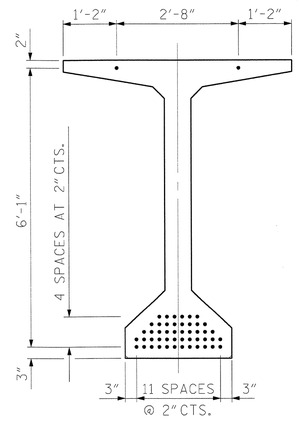

AT ℄ OF GIRDER

0.6" Ø LOW RELAXATION STRAND LAYOUT

THE UPLIFT FORCE DUE TO DRAPED STRANDS IS 33.7 KIPS

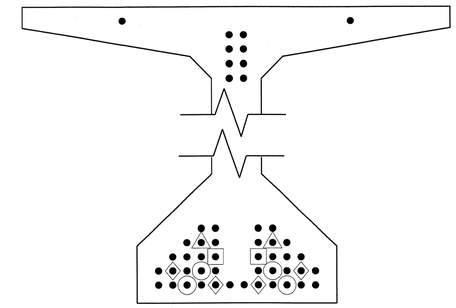

DEBONDING LEGEND

- ● FULLY BONDED STRANDS
- △ STRANDS DEBONDED FOR 4'-0" FROM END OF GIRDER
- ▣ STRANDS DEBONDED FOR 6'-0" FROM END OF GIRDER
- ⊙ STRANDS DEBONDED FOR 8'-0" FROM END OF GIRDER
- ◇ STRANDS DEBONDED FOR 10'-0" FROM END OF GIRDER

0.6" Ø L. R. GRADE 270 STRANDS

AREA (SQUARE INCHES)	ULTIMATE STRENGTH (LBS. PER STRAND)	APPLIED PRESTRESS (LBS. PER STRAND)
0.217	58,600	43,950

REINFORCING STEEL FOR ONE GIRDER

BAR	NUMBER	SIZE	TYPE	LENGTH	WEIGHT
B1	12	#5	STR	41'-4"	517
S1	104	#4	1	3'-8"	255
S2	1	#5	2	10'-7"	11
S3	14	#4	2	9'-1"	85
S4	36	#5	3	7'-7"	285
S5	36	#5	4	5'-0"	188
S6	68	#5	3	7'-6"	532
S7	68	#5	4	4'-11"	349
S8	32	#4	3	7'-4"	157
S9	32	#5	4	4'-10"	161
S10	40	#5	STR	4'-6"	188
S11	80	#4	3	7'-3"	387
* S12	10	#5	STR	3'-8"	38
S13	8	#5	2	12'-0"	100
S14	16	#5	STR	8'-0"	134

* NOTE: S12 BAR SHALL BE BENT BEFORE SHIPMENT. HEAT BENDING SHALL NOT BE ALLOWED.

BAR TYPES

ALL BAR DIMENSIONS ARE OUT-TO-OUT

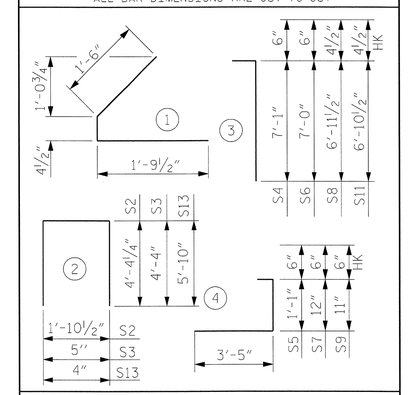

TABLE	
BAR TYPE	**
S4 & S5	10"
S6 & S7	9"
S8 & S9	8"
S11	7"

QUANTITIES FOR ONE GIRDER

	REINFORCING STEEL	8500 PSI CONCRETE	0.6" Ø L.R. STRANDS
	LB.	C.Y.	No.
	3387	33.9	50

GIRDERS REQUIRED

NUMBER	LENGTH	TOTAL LENGTH
4	119'-2"	476'-8"

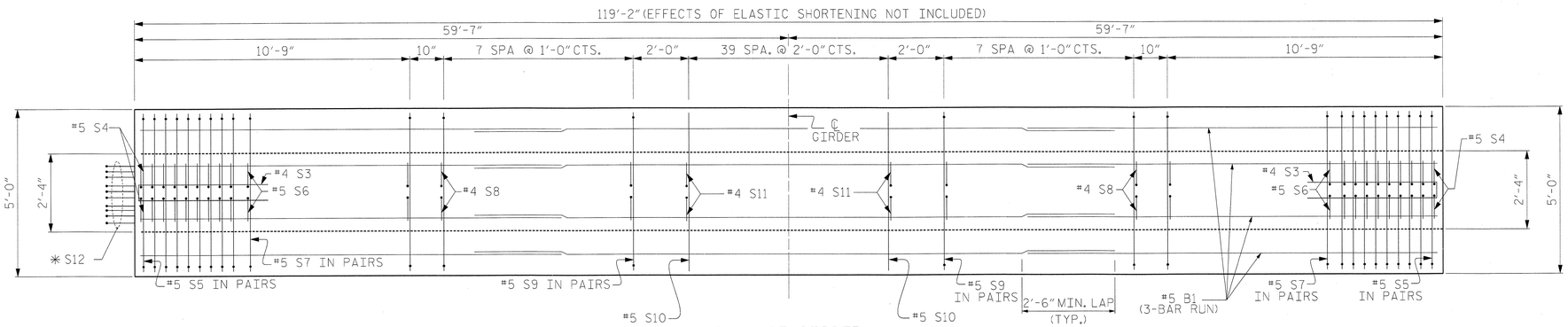

PLAN OF GIRDER

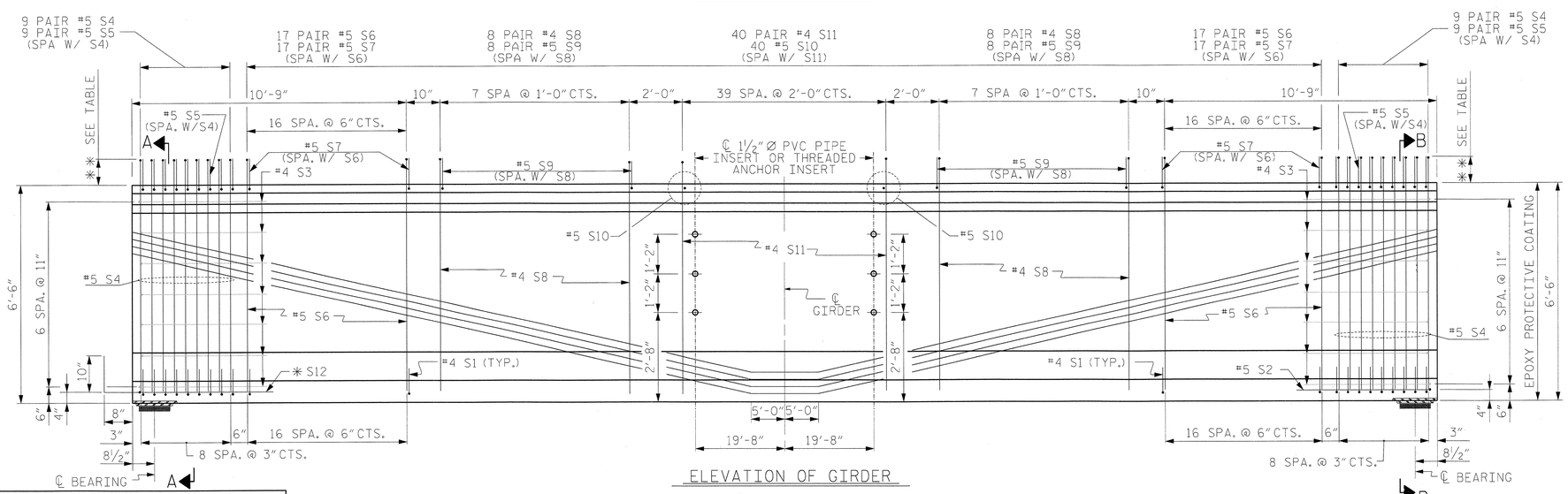

ELEVATION OF GIRDER

FOR THREADED INSERT DETAILS, SEE "78" PRESTRESSED CONCRETE BULB TEE SECTIONS & DETAILS" SHEET 2 OF 2.
FOR REINFORCING STEEL AROUND INSERT, SEE "78" PRESTRESSED CONCRETE BULB TEE SECTIONS & DETAILS" SHEET 2 OF 2.
USE THREADED INSERTS ON EXTERIOR GIRDERS AND PVC PIPE INSERTS ON INTERIOR GIRDERS.

PROJECT NO. R-2633BB

BRUNSWICK/NEW HANOVER COUNTY

STATION: 353+32.50 -L-

SHEET 10 OF 22

NORTH CAROLINA PROFESSIONAL SEAL 18442 ENGINEER RICHARD LEON BOLLINGER JR.
5-29-2013

RS&H IMPROVING YOUR WORLD

RS&H Architects-Engineers-Planners, Inc.
8601 Six Forks Road, Suite 260
Raleigh, NC 27615
919-846-6701 FAX 919-846-9080
www.rsandh.com
North Carolina License Nos. 50073 * F-0403 * C-28

STATE OF NORTH CAROLINA
DEPARTMENT OF TRANSPORTATION
RALEIGH

SUPERSTRUCTURE

78" PRESTRESSED CONCRETE BULB TEE

SPAN 13
LEFT LANE

REVISIONS						SHEET NO.
NO.	BY:	DATE:	NO.	BY:	DATE:	S-105
1			3			TOTAL SHEETS
2			4			700

DRAWN BY :	SMK, JML	DATE :	2/2012
CHECKED BY :	RLB	DATE :	12/2012
DESIGN ENGINEER OF RECORD :	R. BOLLINGER	DATE :	05/2013

5/24/2013
2:27:28 PM
$$$$$$$$$$$$$$$$$$$$$$$$DGN$$$$$$$$$$$$$$$$$$$$$$$$

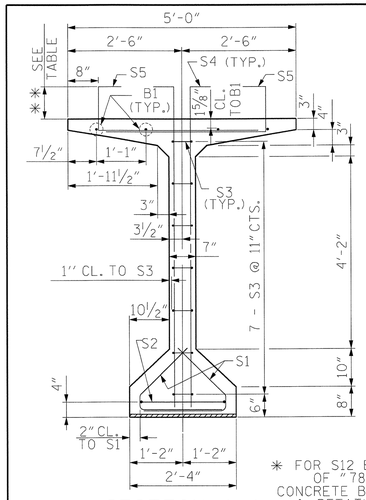

SECTION A-A

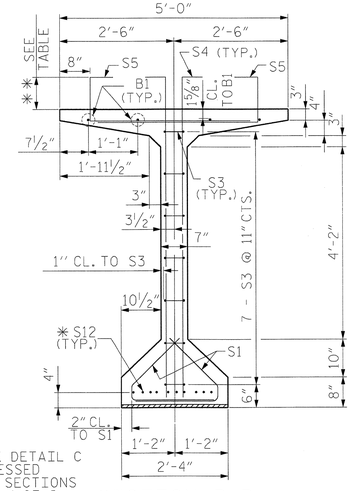

SECTION B-B

* FOR S12 BARS SEE DETAIL C OF "78" PRESTRESSED CONCRETE BULB TEE SECTIONS & DETAILS" SHEET 1 OF 2

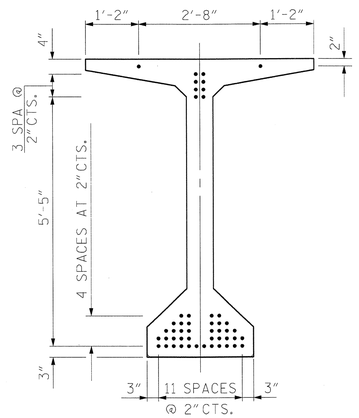

AT END OF GIRDER

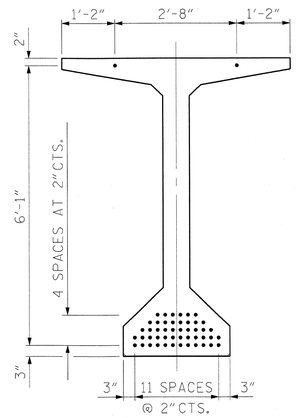

AT ℄ OF GIRDER

0.6" Ø LOW RELAXATION STRAND LAYOUT

THE UPLIFT FORCE DUE TO DRAPED STRANDS IS 33.7 KIPS

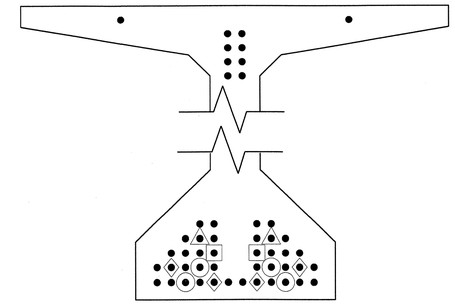

DEBONDING LEGEND

- ● FULLY BONDED STRANDS
- △ STRANDS DEBONDED FOR 4'-0" FROM END OF GIRDER
- ▣ STRANDS DEBONDED FOR 6'-0" FROM END OF GIRDER
- ◉ STRANDS DEBONDED FOR 8'-0" FROM END OF GIRDER
- ◈ STRANDS DEBONDED FOR 10'-0" FROM END OF GIRDER

0.6" Ø L. R. GRADE 270 STRANDS

AREA (SQUARE INCHES)	ULTIMATE STRENGTH (LBS. PER STRAND)	APPLIED PRESTRESS (LBS. PER STRAND)
0.217	58,600	43,950

REINFORCING STEEL FOR ONE GIRDER

BAR	NUMBER	SIZE	TYPE	LENGTH	WEIGHT
B1	12	#5	STR	41'-4"	517
S1	104	#4	1	3'-8"	255
S2	1	#5	2	10'-7"	11
S3	14	#4	2	9'-1"	85
S4	36	#5	3	7'-7"	285
S5	36	#5	4	5'-0"	188
S6	68	#5	3	7'-6"	532
S7	68	#5	4	4'-11"	349
S8	32	#4	3	7'-4"	157
S9	32	#5	4	4'-10"	161
S10	40	#5	STR	4'-6"	188
S11	80	#4	3	7'-3"	387
* S12	10	#5	STR	3'-8"	38
S13	8	#5	2	12'-0"	100
S14	16	#5	STR	8'-0"	134

* NOTE: S12 BAR SHALL BE BENT BEFORE SHIPMENT. HEAT BENDING SHALL NOT BE ALLOWED.

BAR TYPES

ALL BAR DIMENSIONS ARE OUT-TO-OUT

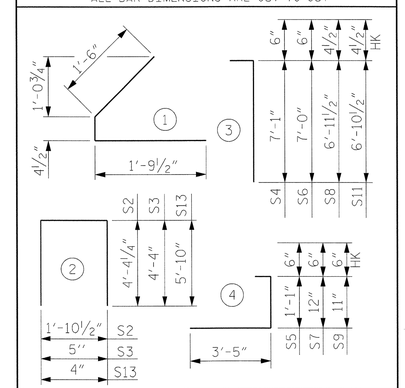

QUANTITIES FOR ONE GIRDER

	REINFORCING STEEL	8500 PSI CONCRETE	0.6" Ø L.R. STRANDS
	LB.	C.Y.	No.
	3387	33.9	50

GIRDERS REQUIRED

NUMBER	LENGTH	TOTAL LENGTH
4	119'-2"	476'-8"

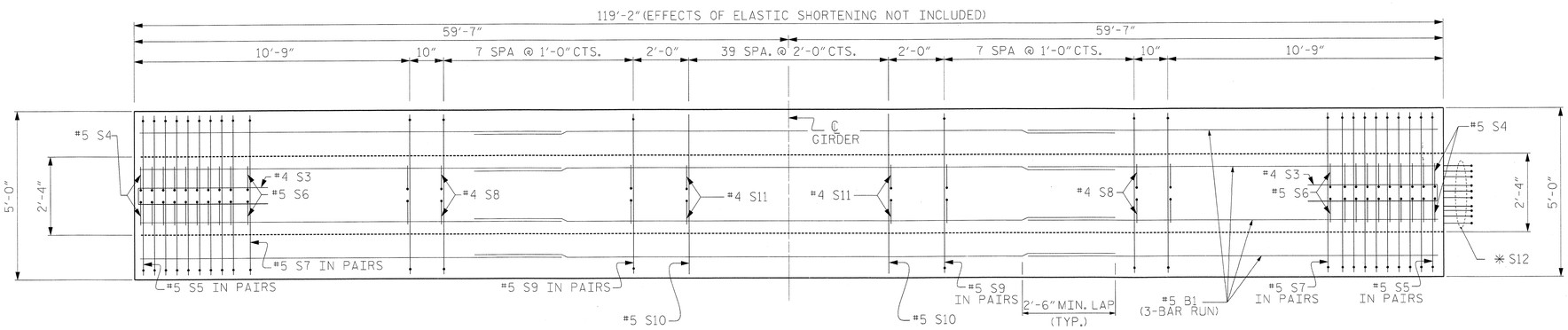

PLAN OF GIRDER

TABLE	
BAR TYPE	**
S4 & S5	10"
S6 & S7	9"
S8 & S9	8"
S11	7"

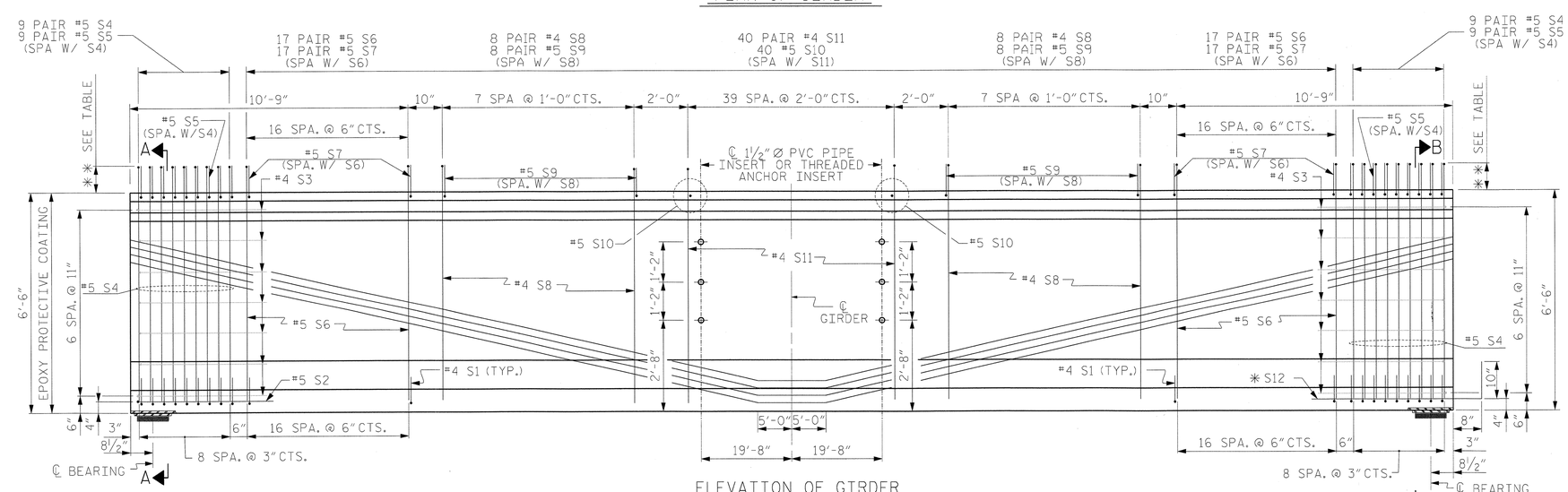

ELEVATION OF GIRDER

FOR THREADED INSERT DETAILS, SEE "78" PRESTRESSED CONCRETE BULB TEE SECTIONS & DETAILS" SHEET 2 OF 2.
FOR REINFORCING STEEL AROUND INSERT, SEE "78" PRESTRESSED CONCRETE BULB TEE SECTIONS & DETAILS" SHEET 2 OF 2.
USE THREADED INSERTS ON EXTERIOR GIRDERS AND PVC PIPE INSERTS ON INTERIOR GIRDERS.

PROJECT NO. R-2633BB
BRUNSWICK/NEW HANOVER COUNTY
STATION: 353+32.50 -L-

SHEET 11 OF 22

NORTH CAROLINA PROFESSIONAL SEAL 18442 ENGINEER RICHARD LEON BOLLINGER, JR. 5-24-2013

RS&H IMPROVING YOUR WORLD

RS&H Architects-Engineers-Planners, Inc.
8601 Six Forks Road, Suite 260
Raleigh, NC 27615
919-846-6701 FAX 919-846-9080
www.rsandh.com
North Carolina License Nos. 50073 * F-0493 * C-28

STATE OF NORTH CAROLINA
DEPARTMENT OF TRANSPORTATION
RALEIGH

SUPERSTRUCTURE

78" PRESTRESSED CONCRETE BULB TEE

SPAN 14
LEFT LANE

REVISIONS						SHEET NO.
NO.	BY:	DATE:	NO.	BY:	DATE:	S-106
1			3			TOTAL SHEETS
2			4			700

DRAWN BY :	SMK, JML	DATE :	2/2012
CHECKED BY :	RLB	DATE :	12/2012
DESIGN ENGINEER OF RECORD :	R. BOLLINGER	DATE :	05/2013

5/24/2013
$$$$$$$$$$$$$$$$$$$$$$$$DGN$$$$$$$$$$$$$$$$$$$$$$$$
2:27:46 PM

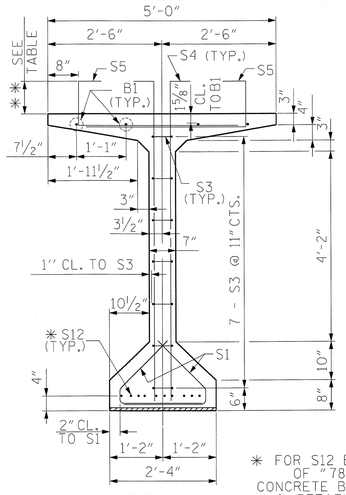

SECTION A-A

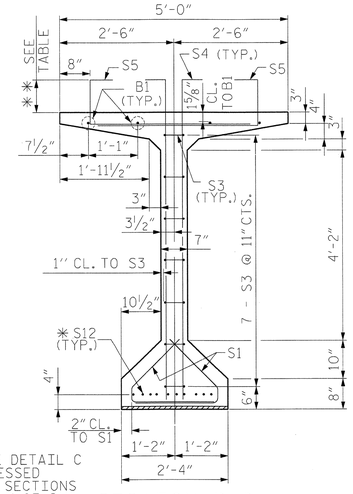

SECTION B-B

* FOR S12 BARS SEE DETAIL C OF "78" PRESTRESSED CONCRETE BULB TEE SECTIONS & DETAILS" SHEET 1 OF 2

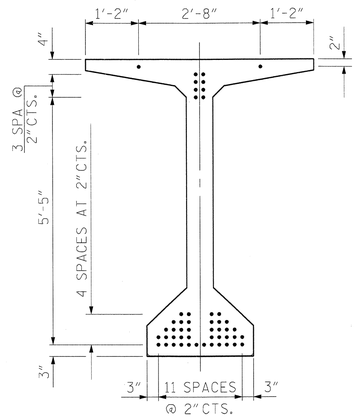

AT END OF GIRDER

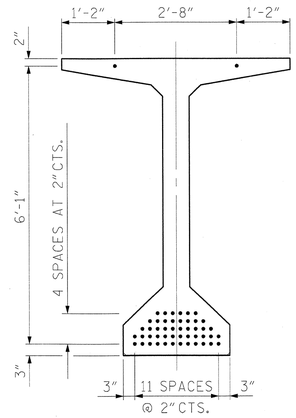

AT ℄ OF GIRDER

0.6" Ø LOW RELAXATION STRAND LAYOUT

THE UPLIFT FORCE DUE TO DRAPED STRANDS IS 33.7 KIPS

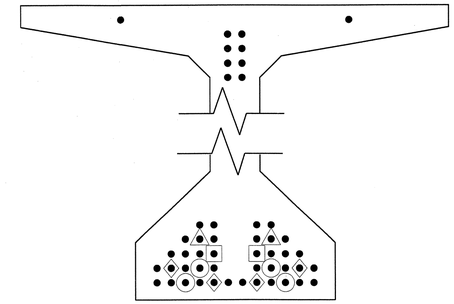

DEBONDING LEGEND

- ● FULLY BONDED STRANDS
- △ STRANDS DEBONDED FOR 4'-0" FROM END OF GIRDER
- ▣ STRANDS DEBONDED FOR 6'-0" FROM END OF GIRDER
- ⊙ STRANDS DEBONDED FOR 8'-0" FROM END OF GIRDER
- ◇ STRANDS DEBONDED FOR 10'-0" FROM END OF GIRDER

0.6" Ø L. R. GRADE 270 STRANDS

AREA (SQUARE INCHES)	ULTIMATE STRENGTH (LBS. PER STRAND)	APPLIED PRESTRESS (LBS. PER STRAND)
0.217	58,600	43,950

REINFORCING STEEL FOR ONE GIRDER

BAR	NUMBER	SIZE	TYPE	LENGTH	WEIGHT
B1	12	#5	STR	41'-4"	517
S1	104	#4	1	3'-8"	255
S3	14	#4	2	9'-1"	85
S4	36	#5	3	7'-7"	285
S5	36	#5	4	5'-0"	188
S6	68	#5	3	7'-5"	526
S7	68	#5	4	4'-10"	343
S8	32	#4	3	7'-3"	155
S9	32	#5	4	4'-9"	159
S10	40	#5	STR	4'-6"	188
S11	80	#4	3	7'-2"	383
* S12	20	#5	STR	3'-8"	76
S13	8	#5	2	12'-0"	100
S14	16	#5	STR	8'-0"	134

* NOTE: S12 BAR SHALL BE BENT BEFORE SHIPMENT. HEAT BENDING SHALL NOT BE ALLOWED.

BAR TYPES

ALL BAR DIMENSIONS ARE OUT-TO-OUT

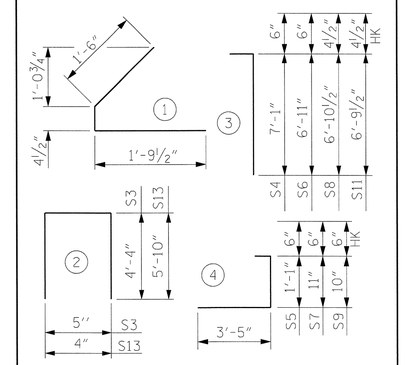

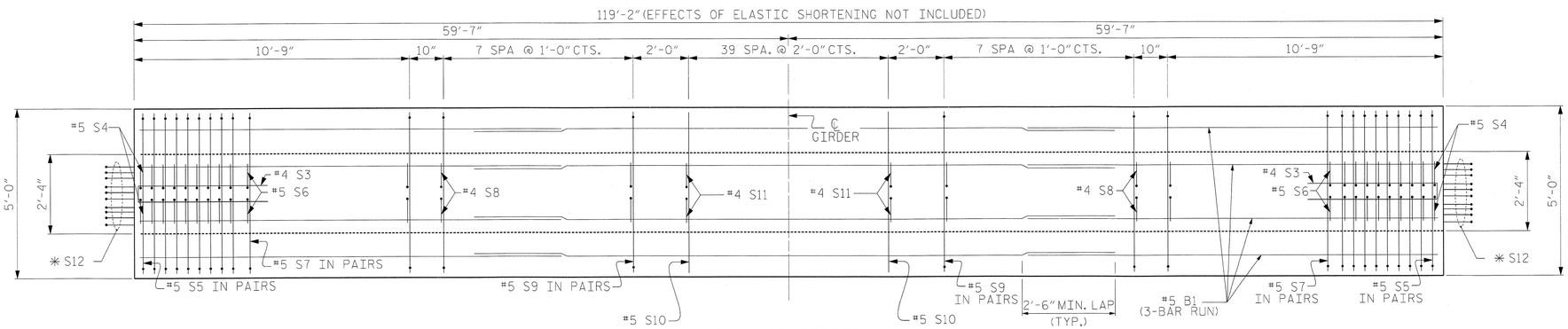

PLAN OF GIRDER

TABLE	
BAR TYPE	**
S4 & S5	10"
S6 & S7	8"
S8 & S9	7"
S11	6"

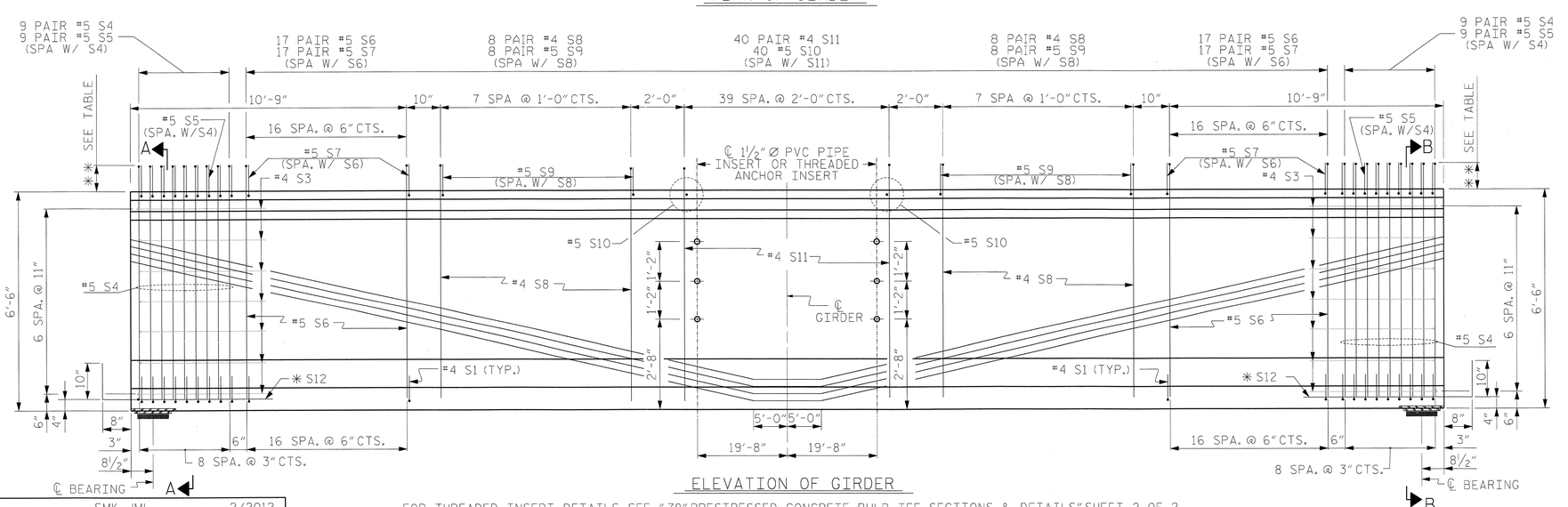

ELEVATION OF GIRDER

FOR THREADED INSERT DETAILS, SEE "78" PRESTRESSED CONCRETE BULB TEE SECTIONS & DETAILS" SHEET 2 OF 2.
FOR REINFORCING STEEL AROUND INSERT, SEE "78" PRESTRESSED CONCRETE BULB TEE SECTIONS & DETAILS" SHEET 2 OF 2.
USE THREADED INSERTS ON EXTERIOR GIRDERS AND PVC PIPE INSERTS ON INTERIOR GIRDERS.

QUANTITIES FOR ONE GIRDER

	REINFORCING STEEL	8500 PSI CONCRETE	0.6" Ø L.R. STRANDS
	LB.	C.Y.	No.
	3611	33.9	50

GIRDERS REQUIRED

NUMBER	LENGTH	TOTAL LENGTH
4	119'-2"	476'-8"

PROJECT NO. R-2633BB

BRUNSWICK/NEW HANOVER COUNTY

STATION: 353+32.50 -L-

SHEET 12 OF 22

DRAWN BY : SMK, JML	DATE : 2/2012		
CHECKED BY : RLB	DATE : 12/2012		
DESIGN ENGINEER OF RECORD : R. BOLLINGER	DATE : 05/2013		

NORTH CAROLINA PROFESSIONAL SEAL 18442 ENGINEER RICHARD LEON BOLLINGER JR.
5-31-2013

RS&H IMPROVING YOUR WORLD

RS&H Architects-Engineers-Planners, Inc.
8601 Six Forks Road, Suite 260
Raleigh, NC 27615
919-846-6701 FAX 919-846-9080
www.rsandh.com
North Carolina License Nos. 50073 * F-0493 * C-28

STATE OF NORTH CAROLINA
DEPARTMENT OF TRANSPORTATION
RALEIGH

SUPERSTRUCTURE

78" PRESTRESSED CONCRETE BULB TEE

SPAN 15
LEFT LANE

REVISIONS							
NO.	BY:	DATE:	NO.	BY:	DATE:	SHEET NO.	
1			3			S-107	
2			4			TOTAL SHEETS	
						700	

5/24/2013
$$$$$$$$$$$$$$$$$$$$$$$$DGN$$$$$$$$$$$$$$$$$$$$$$$$
2:28:01 PM

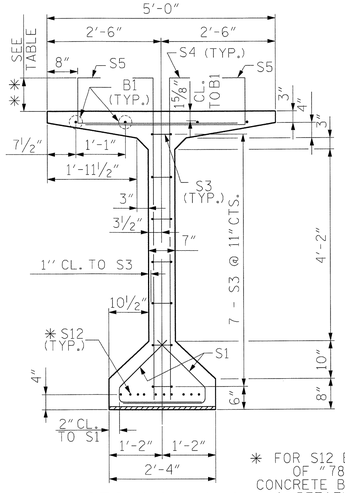

SECTION A-A

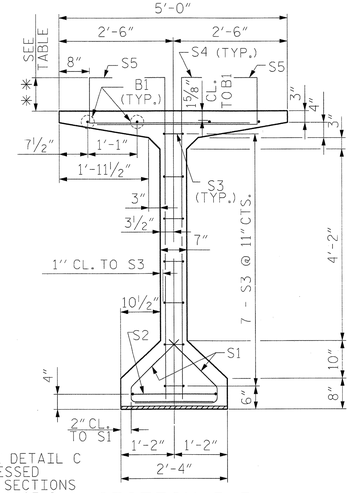

SECTION B-B

* FOR S12 BARS SEE DETAIL C OF "78" PRESTRESSED CONCRETE BULB TEE SECTIONS & DETAILS" SHEET 1 OF 2

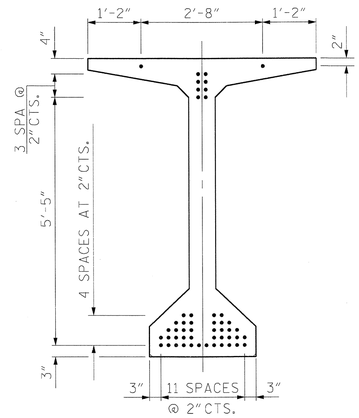

AT END OF GIRDER

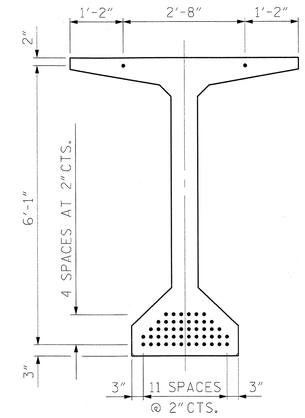

AT ℄ OF GIRDER

0.6" Ø LOW RELAXATION STRAND LAYOUT

THE UPLIFT FORCE DUE TO DRAPED STRANDS IS 33.7 KIPS

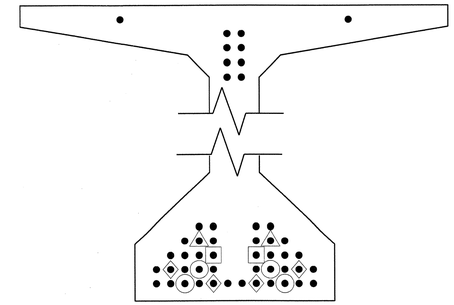

DEBONDING LEGEND

- ● FULLY BONDED STRANDS
- ▲ STRANDS DEBONDED FOR 4'-0" FROM END OF GIRDER
- ▣ STRANDS DEBONDED FOR 6'-0" FROM END OF GIRDER
- ◉ STRANDS DEBONDED FOR 8'-0" FROM END OF GIRDER
- ◆ STRANDS DEBONDED FOR 10'-0" FROM END OF GIRDER

0.6" Ø L. R. GRADE 270 STRANDS

AREA (SQUARE INCHES)	ULTIMATE STRENGTH (LBS. PER STRAND)	APPLIED PRESTRESS (LBS. PER STRAND)
0.217	58,600	43,950

REINFORCING STEEL FOR ONE GIRDER

BAR	NUMBER	SIZE	TYPE	LENGTH	WEIGHT
B1	12	#5	STR	41'-4"	517
S1	104	#4	1	3'-8"	255
S2	1	#5	2	10'-7"	11
S3	14	#4	2	9'-1"	85
S4	36	#5	3	7'-7"	285
S5	36	#5	4	5'-0"	188
S6	68	#5	3	7'-5"	526
S7	68	#5	4	4'-10"	343
S8	32	#4	3	7'-3"	155
S9	32	#5	4	4'-9"	159
S10	40	#5	STR	4'-6"	188
S11	80	#4	3	7'-2"	383
* S12	10	#5	STR	3'-8"	38
S13	8	#5	2	12'-0"	100
S14	16	#5	STR	8'-0"	134

* NOTE: S12 BAR SHALL BE BENT BEFORE SHIPMENT. HEAT BENDING SHALL NOT BE ALLOWED.

BAR TYPES

ALL BAR DIMENSIONS ARE OUT-TO-OUT

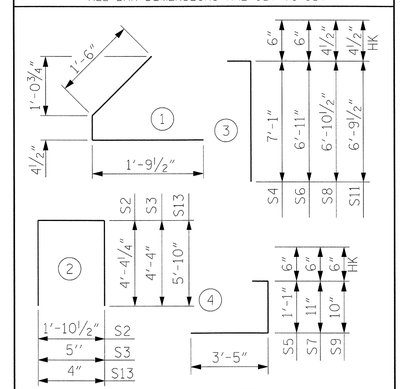

QUANTITIES FOR ONE GIRDER

	REINFORCING STEEL	8500 PSI CONCRETE	0.6" Ø L.R. STRANDS
	LB.	C.Y.	No.
	3367	33.9	50

GIRDERS REQUIRED

NUMBER	LENGTH	TOTAL LENGTH
4	119'-2"	476'-8"

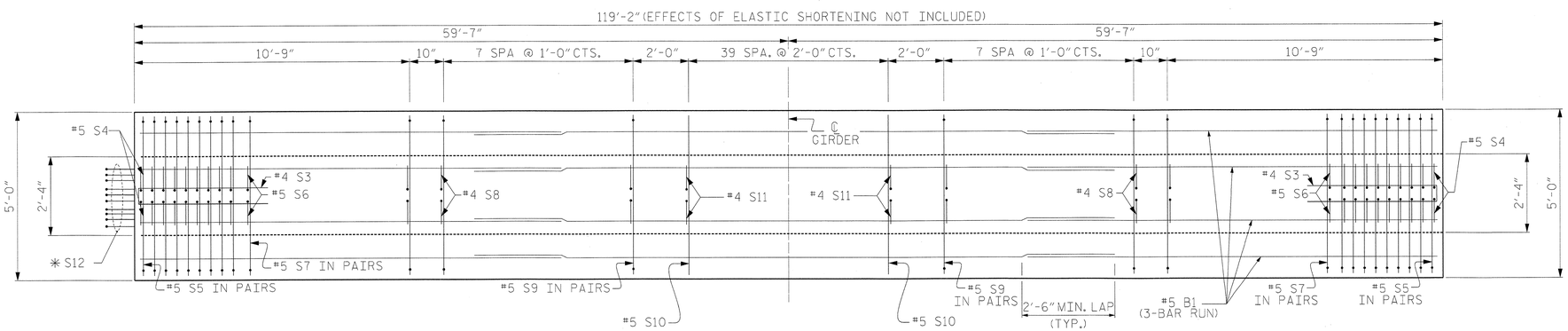

PLAN OF GIRDER

TABLE	
BAR TYPE	**
S4 & S5	10"
S6 & S7	8"
S8 & S9	7"
S11	6"

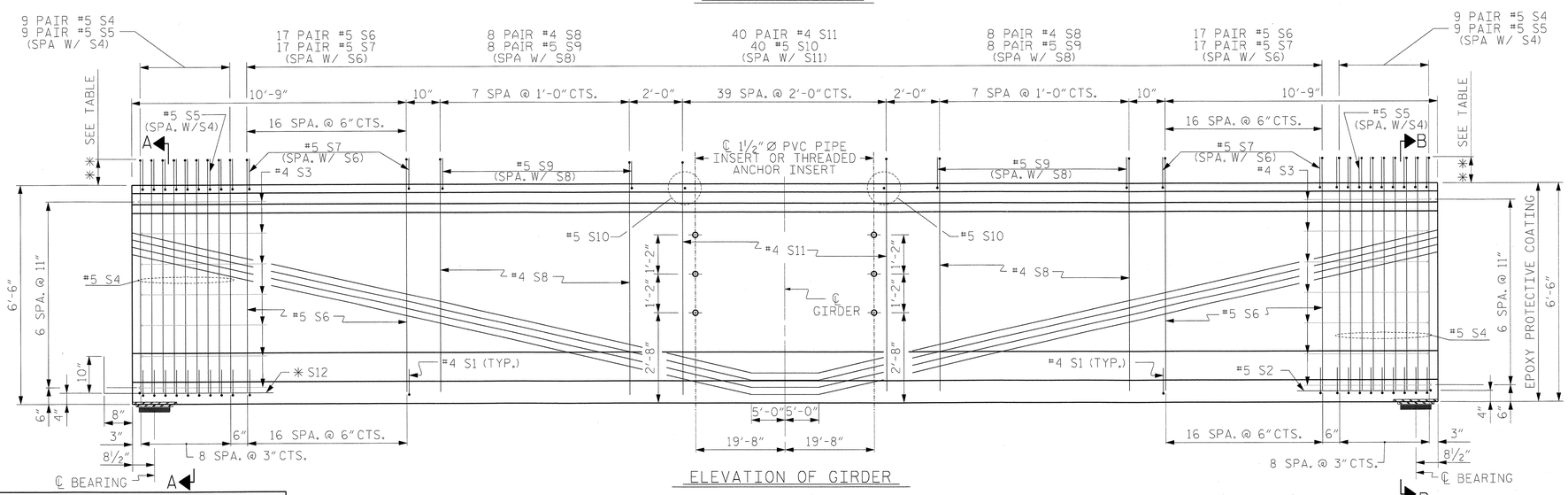

ELEVATION OF GIRDER

FOR THREADED INSERT DETAILS, SEE "78" PRESTRESSED CONCRETE BULB TEE SECTIONS & DETAILS" SHEET 2 OF 2.
FOR REINFORCING STEEL AROUND INSERT, SEE "78" PRESTRESSED CONCRETE BULB TEE SECTIONS & DETAILS" SHEET 2 OF 2.
USE THREADED INSERTS ON EXTERIOR GIRDERS AND PVC PIPE INSERTS ON INTERIOR GIRDERS.

PROJECT NO. R-2633BB
BRUNSWICK/NEW HANOVER COUNTY
STATION: 353+32.50 -L-

SHEET 13 OF 22

NORTH CAROLINA PROFESSIONAL SEAL 18442 ENGINEER RICHARD LEON BOLLINGER III
5-24-2013

RS&H IMPROVING YOUR WORLD

RS&H Architects-Engineers-Planners, Inc.
8601 Six Forks Road, Suite 260
Raleigh, NC 27615
919-846-6701 FAX 919-846-9080
www.rsandh.com
North Carolina License Nos. 50073 * F-0493 * C-28

STATE OF NORTH CAROLINA
DEPARTMENT OF TRANSPORTATION
RALEIGH

SUPERSTRUCTURE

78" PRESTRESSED CONCRETE BULB TEE

SPAN 16
LEFT LANE

REVISIONS						SHEET NO.
NO.	BY:	DATE:	NO.	BY:	DATE:	S-108
1			3			TOTAL SHEETS
2			4			700

DRAWN BY :	SMK, JML	DATE :	2/2012
CHECKED BY :	RLB	DATE :	12/2012
DESIGN ENGINEER OF RECORD :	R. BOLLINGER	DATE :	05/2013

5/24/2013
2:28:18 PM

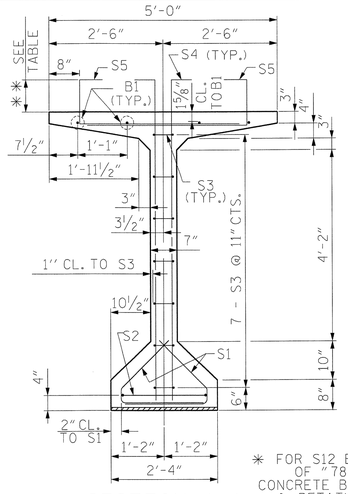

SECTION A-A

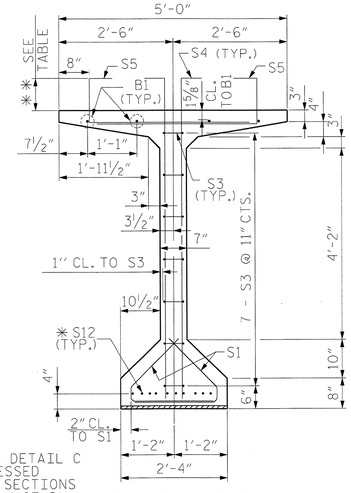

SECTION B-B

* FOR S12 BARS SEE DETAIL C OF "78" PRESTRESSED CONCRETE BULB TEE SECTIONS & DETAILS" SHEET 1 OF 2

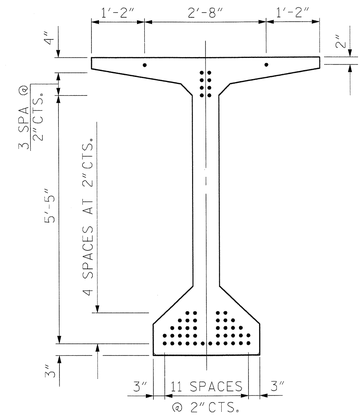

AT END OF GIRDER

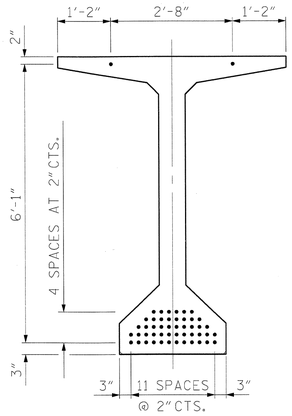

AT ℄ OF GIRDER

0.6" Ø LOW RELAXATION STRAND LAYOUT

THE UPLIFT FORCE DUE TO DRAPED STRANDS IS 33.7 KIPS

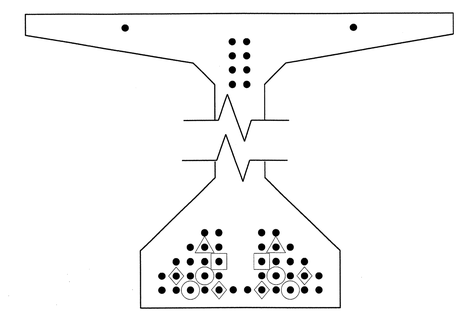

DEBONDING LEGEND

- ● FULLY BONDED STRANDS
- STRANDS DEBONDED FOR 4'-0" FROM END OF GIRDER
- STRANDS DEBONDED FOR 6'-0" FROM END OF GIRDER
- STRANDS DEBONDED FOR 8'-0" FROM END OF GIRDER
- STRANDS DEBONDED FOR 10'-0" FROM END OF GIRDER

* NOTE:
S12 BAR SHALL BE BENT BEFORE SHIPMENT, HEAT BENDING SHALL NOT BE ALLOWED.

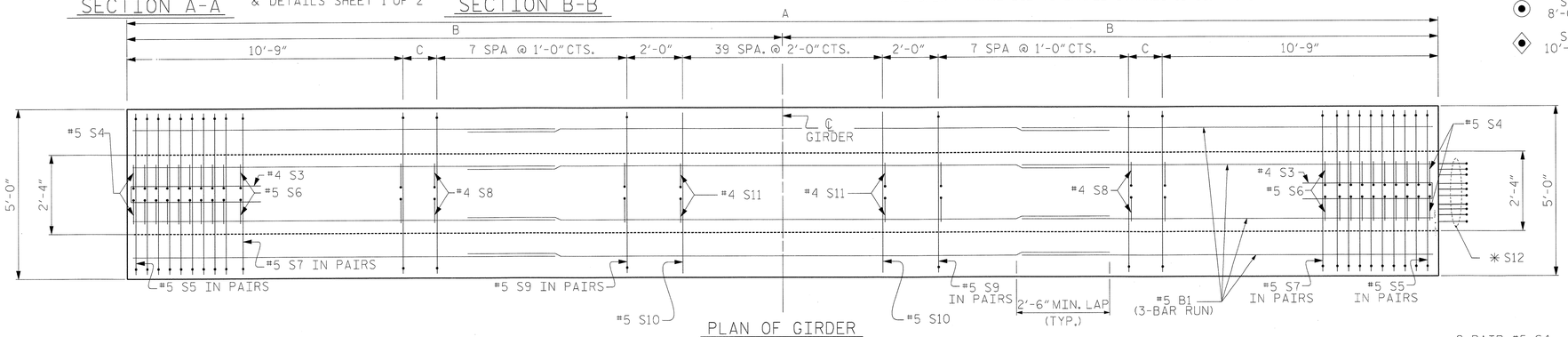

PLAN OF GIRDER

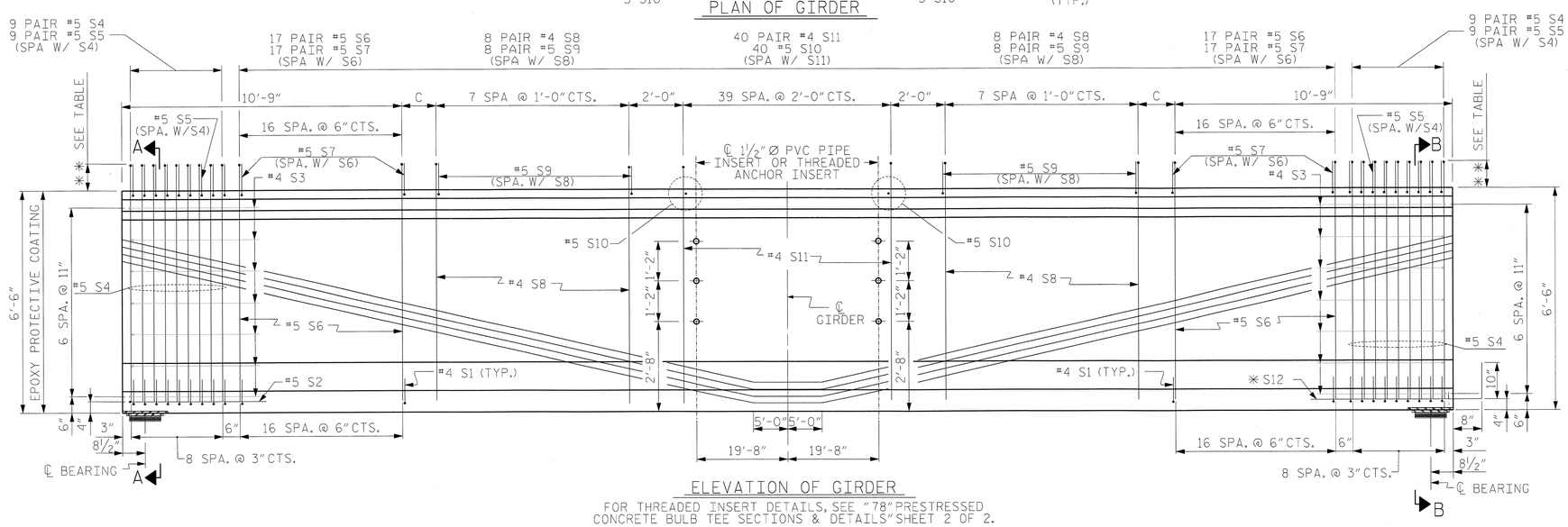

ELEVATION OF GIRDER

FOR THREADED INSERT DETAILS, SEE "78" PRESTRESSED CONCRETE BULB TEE SECTIONS & DETAILS" SHEET 2 OF 2.

FOR REINFORCING STEEL AROUND INSERT, SEE "78" PRESTRESSED CONCRETE BULB TEE SECTIONS & DETAILS" SHEET 2 OF 2.

USE THREADED INSERTS ON EXTERIOR GIRDERS AND PVC PIPE INSERTS ON INTERIOR GIRDERS.

GDR	A	B	C
1	118'-8 5/8"	59'-4 5/16"	7 5/16"
2	118'-9 3/4"	59'-4 7/8"	7 7/8"
3	118'-10 7/8"	59'-5 7/16"	8 7/16"
4	119'-0"	59'-6"	9"

TABLE	
BAR TYPE	**
S4 & S5	10"
S6 & S7	8"
S8 & S9	7"
S11	6"

0.6" Ø L. R. GRADE 270 STRANDS

AREA (SQUARE INCHES)	ULTIMATE STRENGTH (LBS. PER STRAND)	APPLIED PRESTRESS (LBS. PER STRAND)
0.217	58,600	43,950

REINFORCING STEEL FOR ONE GIRDER

BAR	NUMBER	SIZE	TYPE	LENGTH	WEIGHT
B1	12	#5	STR	41'-3"	516
S1	104	#4	1	3'-8"	255
S2	1	#5	2	10'-7"	11
S3	14	#4	2	9'-1"	85
S4	36	#5	3	7'-7"	285
S5	36	#5	4	5'-0"	188
S6	68	#5	3	7'-5"	526
S7	68	#5	4	4'-10"	343
S8	32	#4	3	7'-3"	155
S9	32	#5	4	4'-9"	159
S10	40	#5	STR	4'-6"	188
S11	80	#4	3	7'-2"	383
* S12	10	#5	STR	3'-8"	38
S13	8	#5	2	12'-0"	100
S14	16	#5	STR	8'-0"	134

BAR TYPES

ALL BAR DIMENSIONS ARE OUT-TO-OUT

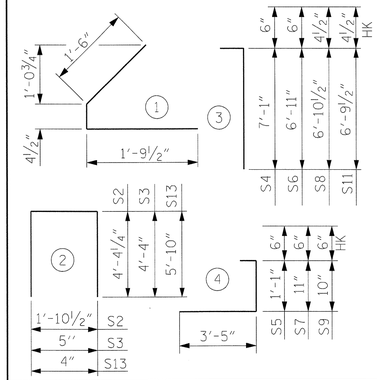

QUANTITIES FOR ONE GIRDER

	REINFORCING STEEL LB.	8500 PSI CONCRETE C.Y.	0.6" Ø L.R. STRANDS No.
EXTERIOR-1	3366	33.8	50
INTERIOR-2	3366	33.8	50
INTERIOR-3	3366	33.8	50
EXTERIOR-4	3366	33.8	50

GIRDERS REQUIRED

NUMBER	LENGTH	TOTAL LENGTH
4	VARIES	475'-5 1/4"

PROJECT NO. R-2633BB

BRUNSWICK/NEW HANOVER COUNTY

STATION: 353+32.50 -L-

SHEET 14 OF 22

NORTH CAROLINA PROFESSIONAL SEAL 18442 ENGINEER RICHARD LEON BOLLINGER III

5-24-2013

RS&H IMPROVING YOUR WORLD

RS&H Architects-Engineers-Planners, Inc.
8601 Six Forks Road, Suite 260
Raleigh, NC 27615
919-846-6701 FAX 919-846-9080
www.rsandh.com
North Carolina License Nos. 50073 * F-0493 * C-28

STATE OF NORTH CAROLINA
DEPARTMENT OF TRANSPORTATION
RALEIGH

SUPERSTRUCTURE

78" PRESTRESSED CONCRETE BULB TEE
SPAN 17
LEFT LANE

REVISIONS						SHEET NO.
NO.	BY:	DATE:	NO.	BY:	DATE:	S-109
1			3			TOTAL SHEETS
2			4			700

DRAWN BY :	SMK, JML	DATE :	2/2012
CHECKED BY :	RLB	DATE :	12/2012
DESIGN ENGINEER OF RECORD :	R. BOLLINGER	DATE :	05/2013

5/24/2013
$$$$$$$$$$$$$$$$$$$$$$$$DGN$$$$$$$$$$$$$$$$$$$$$$$$
2:28:37 PM

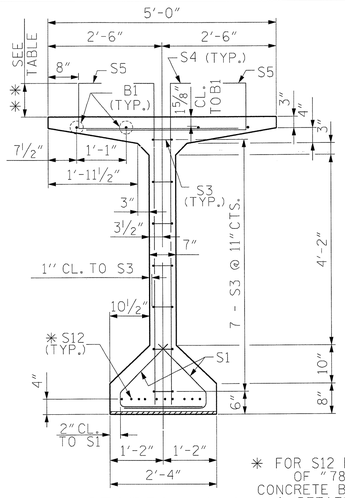

SECTION A-A

✱ FOR S12 BARS SEE DETAIL C OF "78" PRESTRESSED CONCRETE BULB TEE SECTIONS & DETAILS" SHEET 1 OF 2

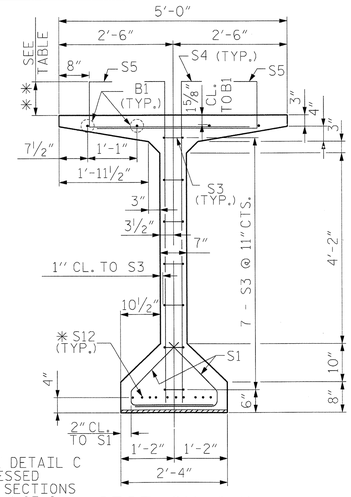

SECTION B-B

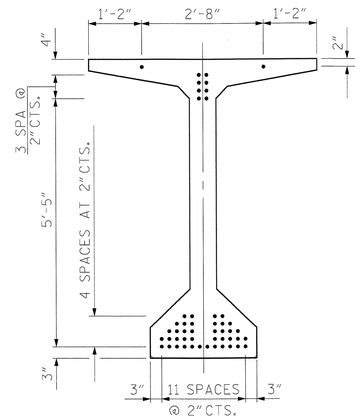

AT END OF GIRDER

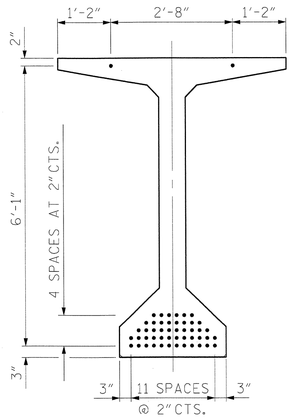

AT ℄ OF GIRDER

0.6" Ø LOW RELAXATION STRAND LAYOUT

THE UPLIFT FORCE DUE TO DRAPED STRANDS IS 33.7 KIPS

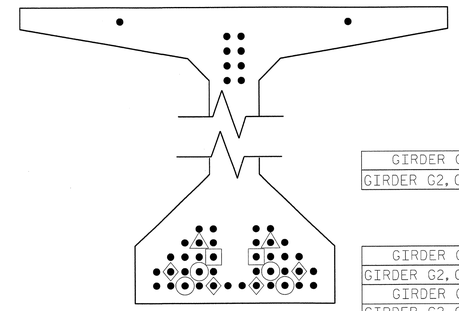

GIRDER G1	
GIRDER G2, G3, G4	
GIRDER G1	
GIRDER G2, G3, G4	
GIRDER G1	
GIRDER G2, G3, G4	

DEBONDING LEGEND

- ● FULLY BONDED STRANDS
- STRANDS DEBONDED FOR 4'-0" FROM END OF GIRDER
- STRANDS DEBONDED FOR 6'-0" FROM END OF GIRDER
- STRANDS DEBONDED FOR 8'-0" FROM END OF GIRDER
- STRANDS DEBONDED FOR 10'-0" FROM END OF GIRDER

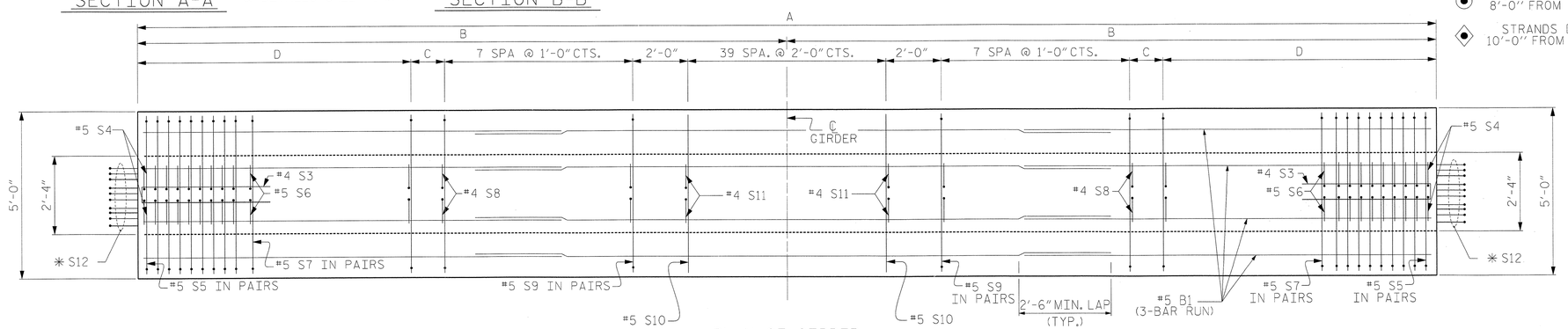

PLAN OF GIRDER

✱ NOTE:
S12 BAR SHALL BE BENT BEFORE SHIPMENT, HEAT BENDING SHALL NOT BE ALLOWED.

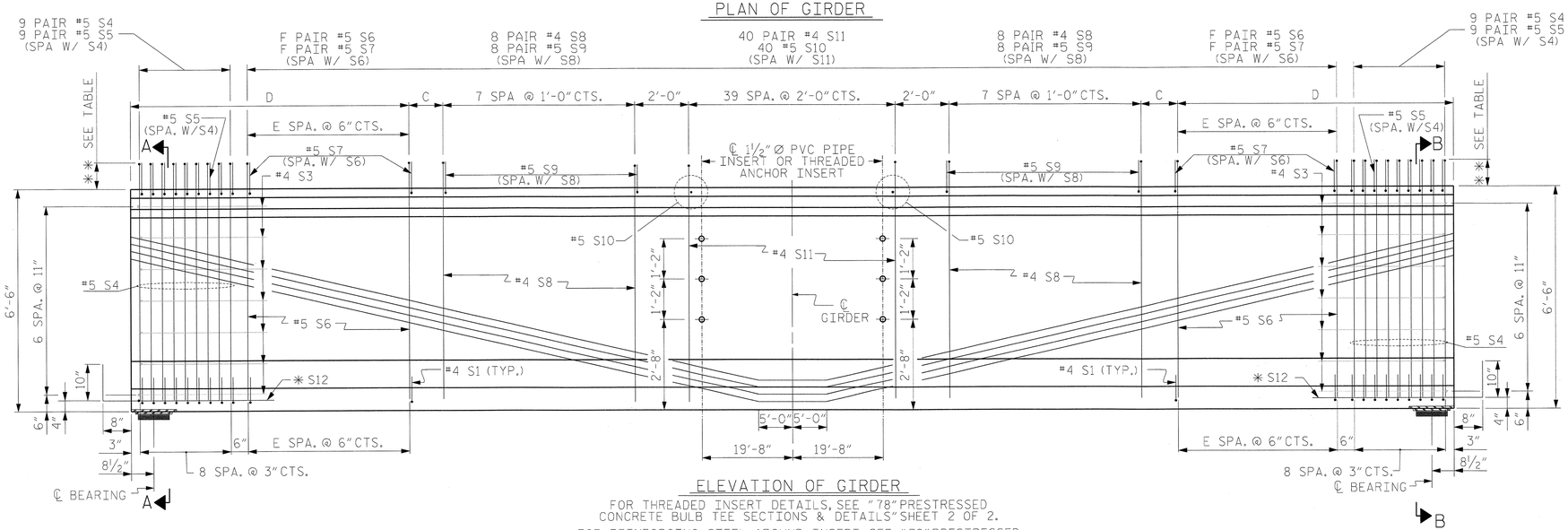

ELEVATION OF GIRDER

FOR THREADED INSERT DETAILS, SEE "78" PRESTRESSED CONCRETE BULB TEE SECTIONS & DETAILS" SHEET 2 OF 2.

FOR REINFORCING STEEL AROUND INSERT, SEE "78" PRESTRESSED CONCRETE BULB TEE SECTIONS & DETAILS" SHEET 2 OF 2.

USE THREADED INSERTS ON EXTERIOR GIRDERS AND PVC PIPE INSERTS ON INTERIOR GIRDERS.

GDR	A	B	C	D	E	F
1	118'-5 1/8"	59'-2 9/16"	11 9/16"	10'-3"	15	16
2	118'-7"	59'-3 1/2"	6 1/2"	10'-9"	16	17
3	118'-8 7/8"	59'-4 7/16"	7 7/16"	10'-9"	16	17
4	118'-10 3/4"	59'-5 3/8"	8 3/8"	10'-9"	16	17

0.6" Ø L. R. GRADE 270 STRANDS

AREA (SQUARE INCHES)	ULTIMATE STRENGTH (LBS. PER STRAND)	APPLIED PRESTRESS (LBS. PER STRAND)
0.217	58,600	43,950

REINFORCING STEEL FOR ONE GIRDER

BAR	NUMBER	SIZE	TYPE	LENGTH	WEIGHT
B1	12	#5	STR	41'-3"	516
S1	100	#4	1	3'-8"	245
S1	104	#4	1	3'-8"	255
S3	14	#4	2	9'-1"	85
S4	36	#5	3	7'-7"	285
S5	36	#5	4	5'-0"	188
S6	64	#5	3	7'-5"	495
S6	68	#5	3	7'-5"	526
S7	64	#5	4	4'-10"	323
S7	68	#5	4	4'-10"	343
S8	32	#4	3	7'-3"	155
S9	32	#5	4	4'-9"	159
S10	40	#5	STR	4'-6"	188
S11	80	#4	3	7'-2"	383
✱ S12	20	#5	STR	3'-8"	38
S13	8	#5	2	12'-0"	100
S14	16	#5	STR	8'-0"	134

BAR TYPES

ALL BAR DIMENSIONS ARE OUT-TO-OUT

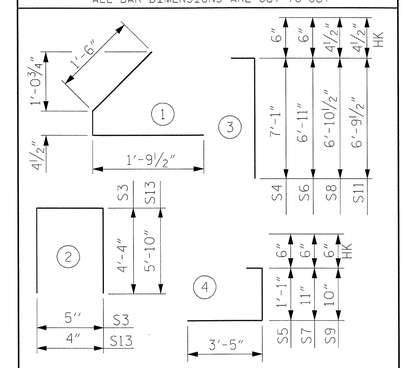

QUANTITIES FOR ONE GIRDER

	REINFORCING STEEL LB.	8500 PSI CONCRETE C.Y.	0.6" Ø L.R. STRANDS No.
EXTERIOR-1	3294	33.7	50
INTERIOR-2	3355	33.7	50
INTERIOR-3	3355	33.8	50
EXTERIOR-4	3355	33.8	50

GIRDERS REQUIRED

NUMBER	LENGTH	TOTAL LENGTH
4	VARIES	474'-7 3/4"

TABLE	
BAR TYPE	✱✱
S4 & S5	10"
S6 & S7	8"
S8 & S9	7"
S10 & S11	6"

PROJECT NO. R-2633BB

BRUNSWICK/NEW HANOVER COUNTY

STATION: 353+32.50 -L-

SHEET 15 OF 22

NORTH CAROLINA PROFESSIONAL SEAL 18442 ENGINEER RICHARD LEONE BOLLINGER
5-29-2013

RS&H IMPROVING YOUR WORLD

RS&H Architects-Engineers-Planners, Inc.
8601 Six Forks Road, Suite 260
Raleigh, NC 27615
919-846-6701 FAX 919-846-9080
www.rsandh.com
North Carolina License Nos. 50873 * F-0403 * C-28

STATE OF NORTH CAROLINA
DEPARTMENT OF TRANSPORTATION
RALEIGH

SUPERSTRUCTURE

78" PRESTRESSED CONCRETE BULB TEE

SPAN 18
LEFT LANE

REVISIONS						
NO.	BY:	DATE:	NO.	BY:	DATE:	
1			3			
2			4			

SHEET NO. S-110

TOTAL SHEETS 700

DRAWN BY : SMK, JML DATE : 2/2012
CHECKED BY : RLB DATE : 12/2012
DESIGN ENGINEER OF RECORD : R. BOLLINGER DATE : 05/2013

5/24/2013
$$$$$$$$$$$$$$$$$$$$$$DGN$$$$$$$$$$$$$$$$$$$$$$
2:28:55 PM

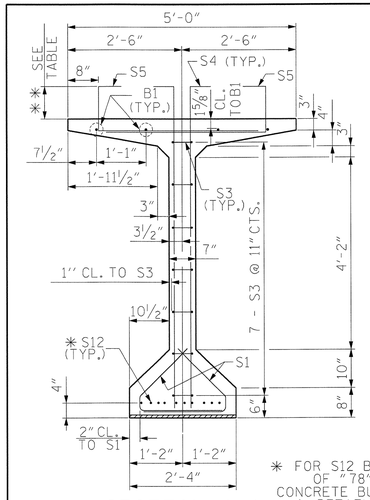

SECTION A-A

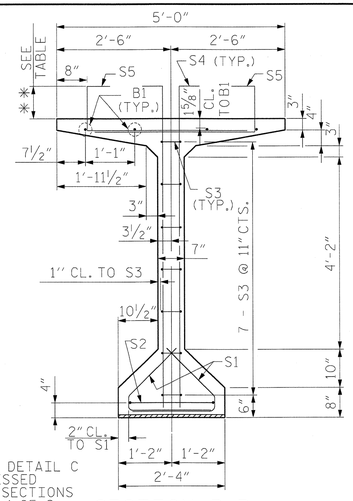

SECTION B-B

✱ FOR S12 BARS SEE DETAIL C OF "78" PRESTRESSED CONCRETE BULB TEE SECTIONS & DETAILS" SHEET 1 OF 2

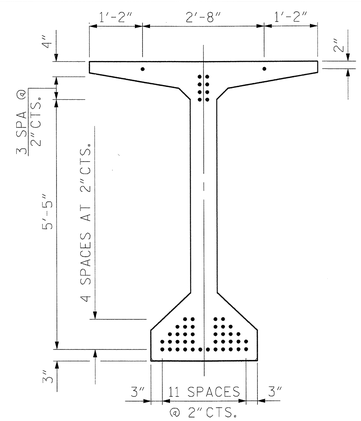

AT END OF GIRDER

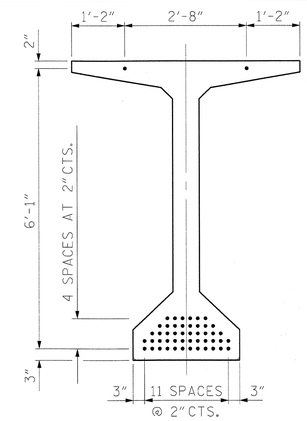

AT ℄ OF GIRDER

0.6" Ø LOW RELAXATION STRAND LAYOUT

THE UPLIFT FORCE DUE TO DRAPED STRANDS IS 33.7 KIPS

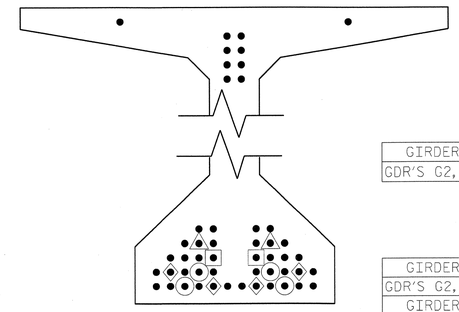

DEBONDING LEGEND

- ● FULLY BONDED STRANDS
- ▲ STRANDS DEBONDED FOR 4'-0" FROM END OF GIRDER
- ▣ STRANDS DEBONDED FOR 6'-0" FROM END OF GIRDER
- ◉ STRANDS DEBONDED FOR 8'-0" FROM END OF GIRDER
- ◆ STRANDS DEBONDED FOR 10'-0" FROM END OF GIRDER

0.6" Ø L. R. GRADE 270 STRANDS		
AREA (SQUARE INCHES)	ULTIMATE STRENGTH (LBS. PER STRAND)	APPLIED PRESTRESS (LBS. PER STRAND)
0.217	58,600	43,950

REINFORCING STEEL FOR ONE GIRDER

	BAR	NUMBER	SIZE	TYPE	LENGTH	WEIGHT
	B1	12	#5	STR	41'-3"	516
GIRDER G1	S1	100	#4	1	3'-8"	245
GDR'S G2, G3, G4	S1	104	#4	1	3'-8"	255
	S2	1	#5	2	10'-7"	11
	S3	14	#4	2	9'-1"	85
	S4	36	#5	3	7'-7"	285
	S5	36	#5	4	5'-0"	188
GIRDER G1	S6	64	#5	3	7'-6"	501
GDR'S G2, G3, G4	S6	68	#5	3	7'-6"	532
GIRDER G1	S7	64	#5	4	4'-11"	328
GDR'S G2, G3, G4	S7	68	#5	4	4'-11"	349
	S8	32	#4	3	7'-4"	157
	S9	32	#5	4	4'-10"	161
	S10	40	#5	STR	4'-6"	188
	S11	80	#4	3	7'-3"	387
	✱ S12	10	#5	STR	3'-8"	38
	S13	8	#5	2	12'-0"	100
	S14	16	#5	STR	8'-0"	134

BAR TYPES

ALL BAR DIMENSIONS ARE OUT-TO-OUT

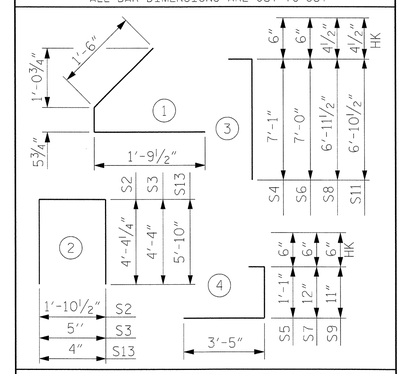

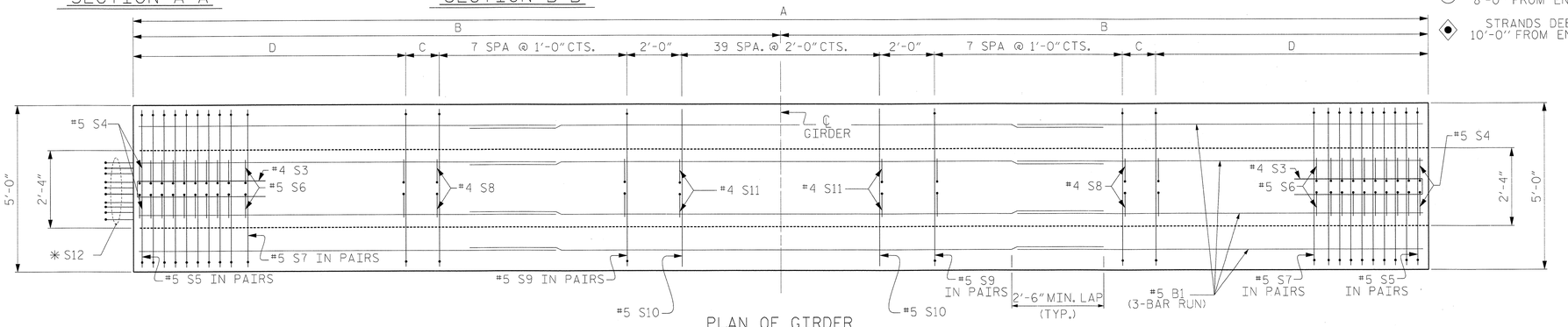

PLAN OF GIRDER

✱ NOTE:
S12 BAR SHALL BE BENT BEFORE SHIPMENT, HEAT BENDING SHALL NOT BE ALLOWED.

TABLE	
BAR TYPE	✱✱
S4 & S5	10"
S6 & S7	9"
S8 & S9	8"
S11	7"

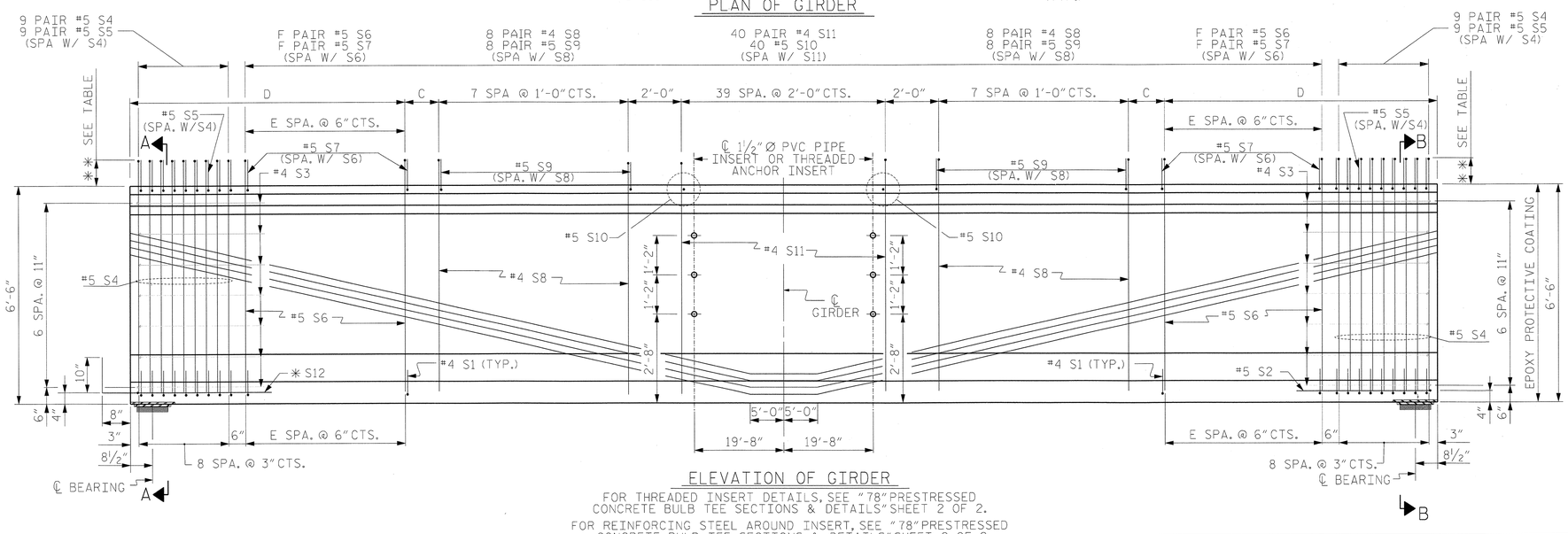

ELEVATION OF GIRDER

FOR THREADED INSERT DETAILS, SEE "78" PRESTRESSED CONCRETE BULB TEE SECTIONS & DETAILS" SHEET 2 OF 2.

FOR REINFORCING STEEL AROUND INSERT, SEE "78" PRESTRESSED CONCRETE BULB TEE SECTIONS & DETAILS" SHEET 2 OF 2.

USE THREADED INSERTS ON EXTERIOR GIRDERS AND PVC PIPE INSERTS ON INTERIOR GIRDERS.

GDR	A	B	C	D	E	F
1	118'-5 1/8"	59'-2 9/16"	11 9/16"	10'-3"	15	16
2	118'-7"	59'-3 1/2"	6 1/2"	10'-9"	16	17
3	118'-8 7/8"	59'-4 7/16"	7 7/16"	10'-9"	16	17
4	118'-10 3/4"	59'-5 3/8"	8 3/8"	10'-9"	16	17

QUANTITIES FOR ONE GIRDER

	REINFORCING STEEL	8500 PSI CONCRETE	0.6" Ø L.R. STRANDS
	LB.	C.Y.	No.
EXTERIOR-1	3324	33.7	50
INTERIOR-2	3386	33.7	50
INTERIOR-3	3386	33.8	50
EXTERIOR-4	3386	33.8	50

GIRDERS REQUIRED

NUMBER	LENGTH	TOTAL LENGTH
4	VARIES	474'-7 3/4"

PROJECT NO. R-2633BB

BRUNSWICK/NEW HANOVER COUNTY

STATION: 353+32.50 -L-

SHEET 16 OF 22

NORTH CAROLINA PROFESSIONAL SEAL 18442 ENGINEER RICHARD LEON BOLLINGER III

5-29-2013

RS&H IMPROVING YOUR WORLD

RS&H Architects-Engineers-Planners, Inc.
8601 Six Forks Road, Suite 260
Raleigh, NC 27615
919-846-6701 FAX 919-846-9080
www.rsandh.com
North Carolina License Nos. 00073 * F-0493 * C-28

STATE OF NORTH CAROLINA
DEPARTMENT OF TRANSPORTATION
RALEIGH

SUPERSTRUCTURE

78" PRESTRESSED CONCRETE BULB TEE

SPAN 19
LEFT LANE

REVISIONS						SHEET NO.
NO.	BY:	DATE:	NO.	BY:	DATE:	S-111
1			3			TOTAL SHEETS
2			4			700

DRAWN BY : SMK, JML DATE : 2/2012
CHECKED BY : RLB DATE : 12/2012
DESIGN ENGINEER OF RECORD : R. BOLLINGER DATE : 05/2013

5/24/2013
2:29:10 PM

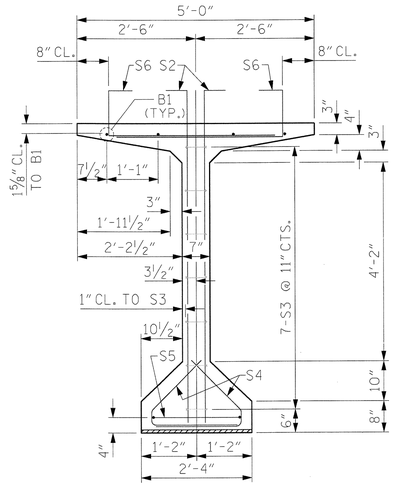

SECTION A-A

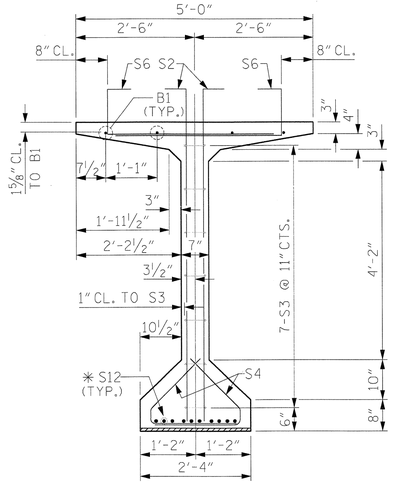

SECTION B-B

* FOR S12 BARS SEE DETAIL C OF "78" PRESTRESSED CONCRETE BULB TEE SECTIONS & DETAILS" SHEET 1 OF 2

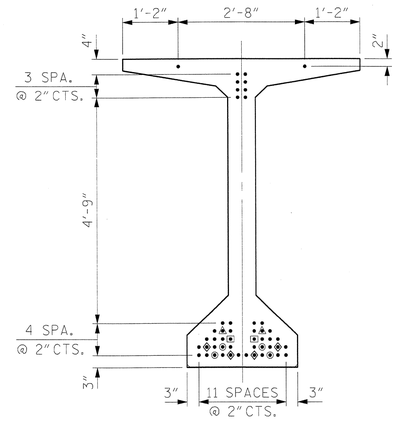

AT END OF GIRDER

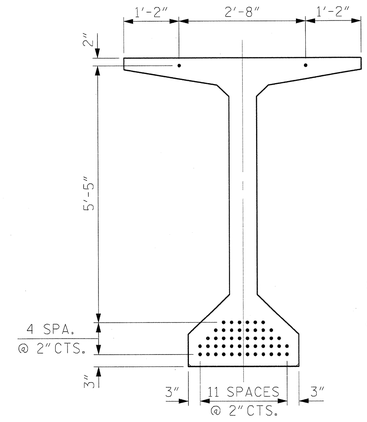

AT ℄ OF GIRDER

0.6" Ø LOW RELAXATION STRAND LAYOUT

THE UPLIFT FORCE DUE TO DRAPED STRANDS IS 34.0 KIPS

DEBONDING LEGEND

- ● FULLY BONDED STRANDS
- STRANDS DEBONDED FOR 4'-0" FROM END OF GIRDER
- STRANDS DEBONDED FOR 6'-0" FROM END OF GIRDER
- STRANDS DEBONDED FOR 8'-0" FROM END OF GIRDER
- STRANDS DEBONDED FOR 10'-0" FROM END OF GIRDER

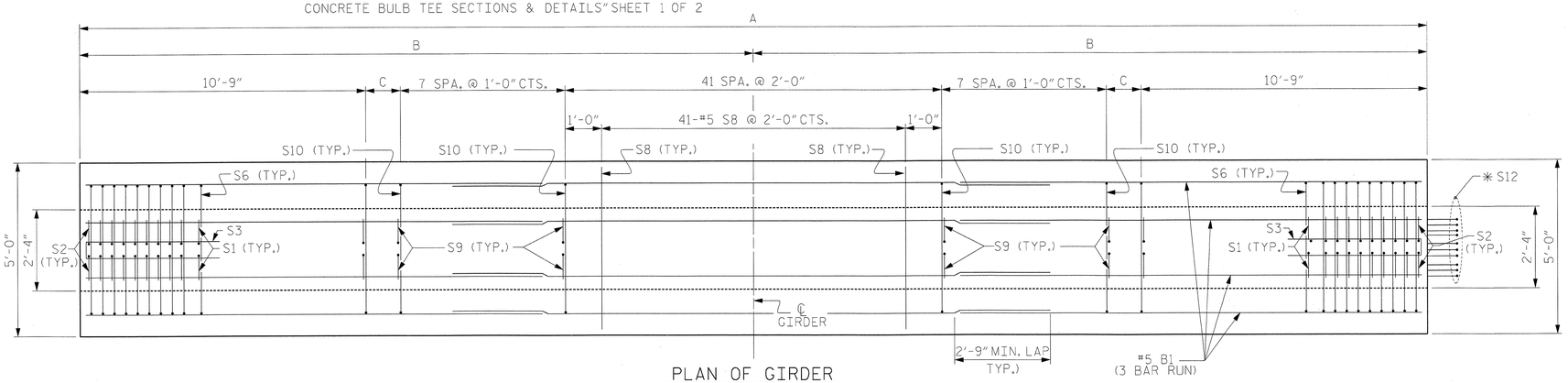

PLAN OF GIRDER

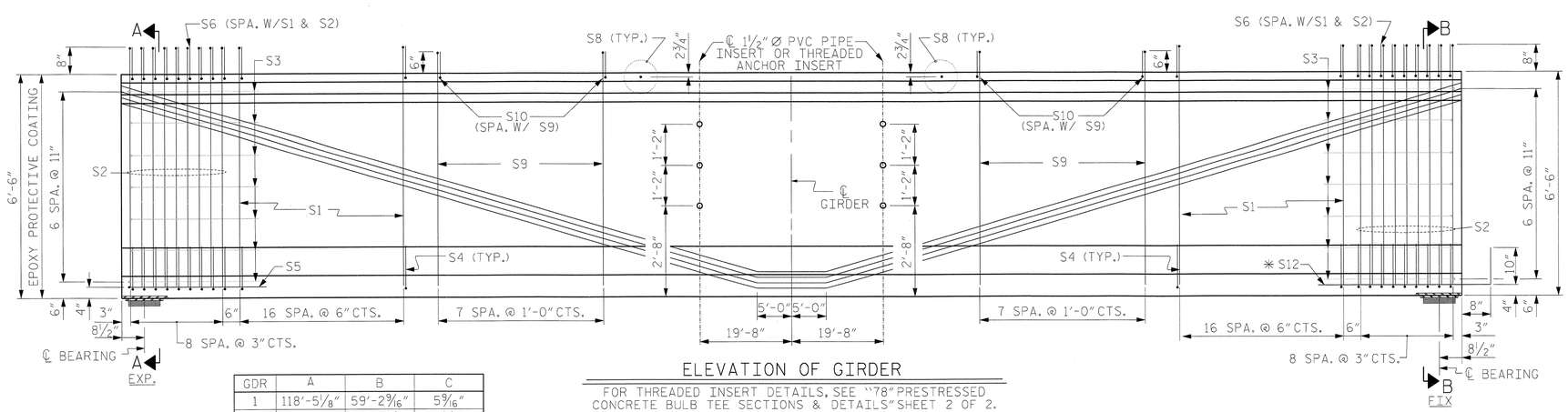

ELEVATION OF GIRDER

GDR	A	B	C
1	118'-5 1/8"	59'-2 9/16"	5 9/16"
2	118'-7"	59'-3 1/2"	6 1/2"
3	118'-8 7/8"	59'-4 7/16"	7 7/16"
4	118'-10 3/4"	59'-5 3/8"	8 3/8"

FOR THREADED INSERT DETAILS, SEE "78" PRESTRESSED CONCRETE BULB TEE SECTIONS & DETAILS" SHEET 2 OF 2.

FOR REINFORCING STEEL AROUND INSERT, SEE "78" PRESTRESSED CONCRETE BULB TEE SECTIONS & DETAILS" SHEET 2 OF 2.

USE THREADED INSERTS ON EXTERIOR GIRDERS AND PVC PIPE INSERTS ON INTERIOR GIRDERS.

0.6" Ø L. R. GRADE 270 STRANDS

AREA (SQUARE INCHES)	ULTIMATE STRENGTH (LBS. PER STRAND)	APPLIED PRESTRESS (LBS. PER STRAND)
0.217	58,600	43,950

REINFORCING STEEL FOR ONE GIRDER

BAR	NUMBER	SIZE	TYPE	LENGTH	WEIGHT
B1	12	#5	STR	41'-5"	518
S1	68	#4	1	7'-6"	341
S2	36	#5	1	7'-6"	282
S3	14	#4	2	9'-1"	85
S4	104	#4	3	3'-8"	255
S5	1	#5	2	10'-7"	11
S6	104	#5	4	4'-10"	524
S8	41	#5	STR	4'-6"	192
S9	112	#4	1	7'-4"	549
S10	112	#5	4	4'-8"	545
* S12	10	#5	STR	3'-8"	38
S13	8	#5	2	12'-0"	100
S14	16	#5	STR.	8'-0"	134

* NOTE: S12 BARS SHALL BE BENT BEFORE SHIPMENT. HEAT BENDING SHALL NOT BE ALLOWED.

BAR TYPES

ALL BAR DIMENSIONS ARE OUT-TO-OUT

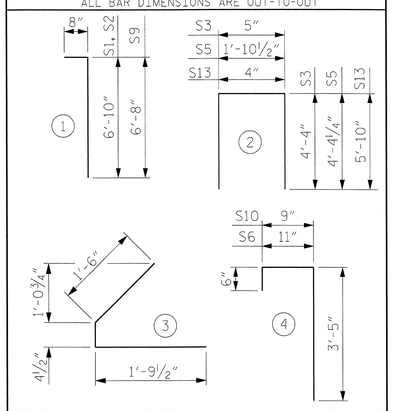

QUANTITIES FOR ONE GIRDER

	REINFORCING STEEL LB.	8500 PSI CONCRETE C.Y.	0.6" Ø L.R. STRANDS No.
EXTERIOR-1	3574	33.7	50
INTERIOR-2	3574	33.7	50
INTERIOR-3	3574	33.7	50
EXTERIOR-4	3574	33.8	50

GIRDERS REQUIRED

NUMBER	LENGTH	TOTAL LENGTH
4	VARIES	474'-7 3/4"

PROJECT NO. R-2633BB

BRUNSWICK/NEW HANOVER COUNTY

STATION: 353+32.50 -L-

SHEET 17 OF 22

NORTH CAROLINA PROFESSIONAL SEAL 22072 ENGINEER JOHN ARTHUR DILWORTH 5-29-13

WETHERILL ENGINEERING

TRANSPORTATION PLANNING/DESIGN
BRIDGE/STRUCTURE DESIGN
CIVIL/SITE DESIGN - GIS/GPS
CONSTRUCTION OBSERVATION

559 Jones Franklin Rd. Suite 164
Raleigh, N.C. 27606
Bus: 919 851 8077
Fax: 919 851 8107
LICENSE NO. F-0377

STATE OF NORTH CAROLINA
DEPARTMENT OF TRANSPORTATION
RALEIGH

SUPERSTRUCTURE 78" PRESTRESSED CONCRETE BULB TEE CONTINUOUS FOR LIVE LOAD

LEFT LANE

SPANS 20, 23, 26, 29, 32, 35, 41, 44, 47, 50, & 53

REVISIONS							
NO.	BY:	DATE:	NO.	BY:	DATE:	SHEET NO.	S-112
1			3			TOTAL SHEETS	700
2			4				

DRAWN BY :	G. GILLAND	DATE :	10/2012
CHECKED BY :	J. DILWORTH	DATE :	10/2012
DESIGN ENGINEER OF RECORD :	J. DILWORTH	DATE :	05/2013

FILE: $FILE$
MODEL: $MODELNAME$
PLOT DRV: $PLTDRVS$
DATE/TIME: $DATE$ $TIME$

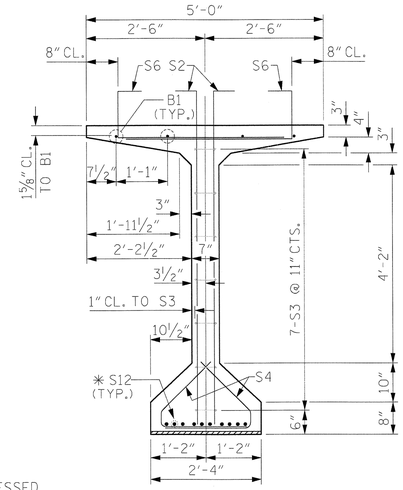

✱ FOR S12 BARS SEE DETAIL C OF "78" PRESTRESSED CONCRETE BULB TEE SECTIONS & DETAILS" SHEET 1 OF 2

SECTION B-B

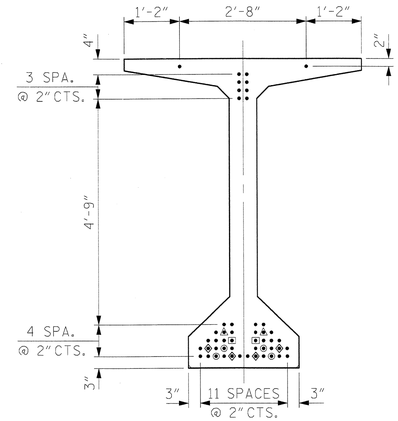

AT END OF GIRDER

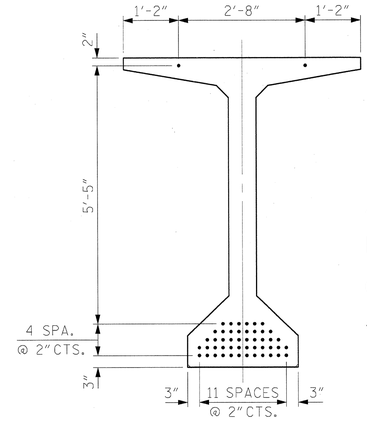

AT ℄ OF GIRDER

DEBONDING LEGEND

- ● FULLY BONDED STRANDS
- STRANDS DEBONDED FOR 4'-0" FROM END OF GIRDER
- STRANDS DEBONDED FOR 6'-0" FROM END OF GIRDER
- STRANDS DEBONDED FOR 8'-0" FROM END OF GIRDER
- STRANDS DEBONDED FOR 10'-0" FROM END OF GIRDER

0.6" Ø LOW RELAXATION STRAND LAYOUT

THE UPLIFT FORCE DUE TO DRAPED STRANDS IS 34.0 KIPS

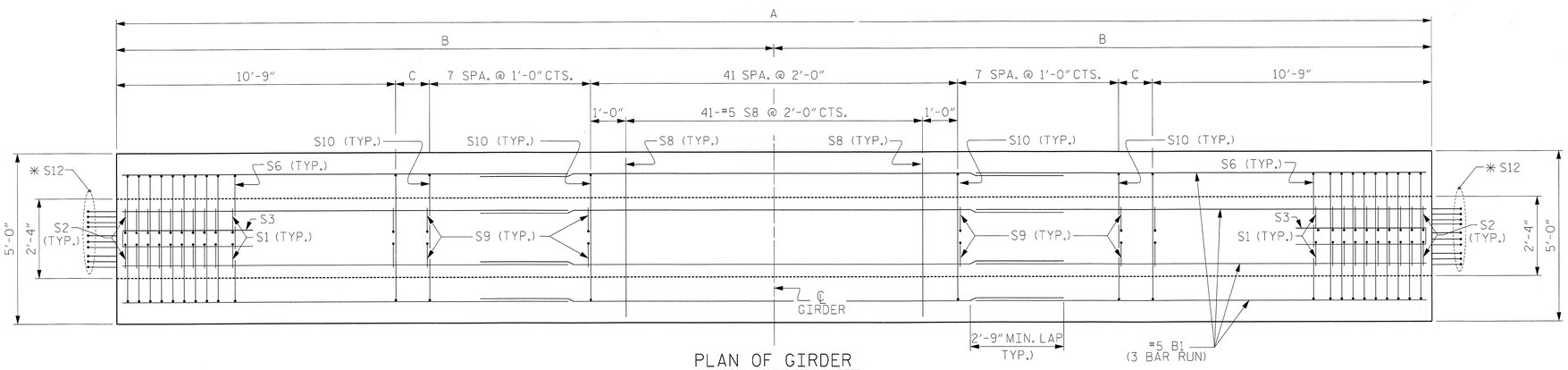

PLAN OF GIRDER

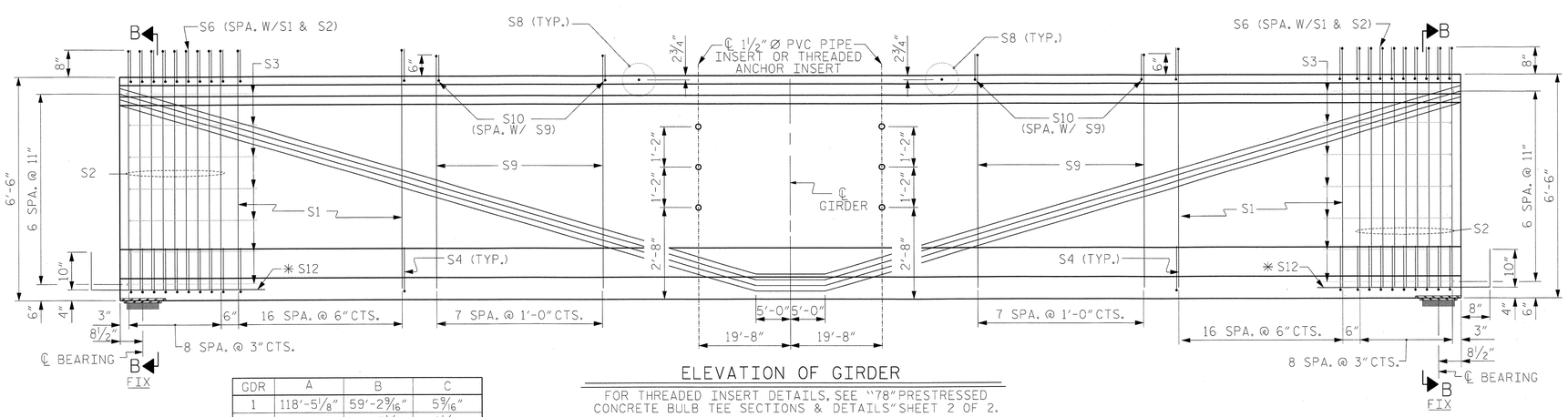

GDR	A	B	C
1	118'-5⅛"	59'-2⁹⁄₁₆"	5⁹⁄₁₆"
2	118'-7"	59'-3½"	6½"
3	118'-8⅞"	59'-4⁷⁄₁₆"	7⁷⁄₁₆"
4	118'-10¾"	59'-5⅜"	8⅜"

ELEVATION OF GIRDER

FOR THREADED INSERT DETAILS, SEE "78" PRESTRESSED CONCRETE BULB TEE SECTIONS & DETAILS" SHEET 2 OF 2.

FOR REINFORCING STEEL AROUND INSERT, SEE "78" PRESTRESSED CONCRETE BULB TEE SECTIONS & DETAILS" SHEET 2 OF 2.

USE THREADED INSERTS ON EXTERIOR GIRDERS AND PVC PIPE INSERTS ON INTERIOR GIRDERS.

0.6" Ø L. R. GRADE 270 STRANDS

AREA (SQUARE INCHES)	ULTIMATE STRENGTH (LBS. PER STRAND)	APPLIED PRESTRESS (LBS. PER STRAND)
0.217	58,600	43,950

REINFORCING STEEL FOR ONE GIRDER

BAR	NUMBER	SIZE	TYPE	LENGTH	WEIGHT
B1	12	#5	STR	41'-5"	518
S1	68	#4	1	7'-6"	341
S2	36	#5	1	7'-6"	282
S3	14	#4	2	9'-1"	85
S4	104	#4	3	3'-8"	255
S6	104	#5	4	4'-10"	524
S8	41	#5	STR	4'-6"	192
S9	112	#4	1	7'-4"	549
S10	112	#5	4	4'-8"	545
✱ S12	20	#5	STR	3'-8"	76
S13	8	#5	2	12'-0"	100
S14	16	#5	STR.	8'-0"	134

✱ NOTE: S12 BARS SHALL BE BENT BEFORE SHIPMENT. HEAT BENDING SHALL NOT BE ALLOWED.

BAR TYPES

ALL BAR DIMENSIONS ARE OUT-TO-OUT

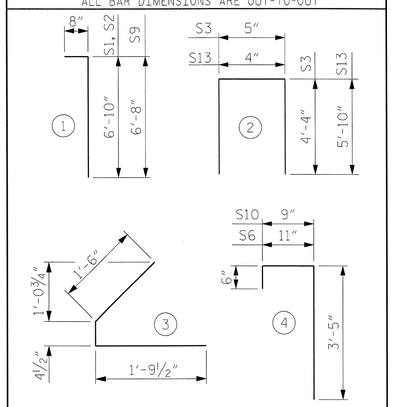

QUANTITIES FOR ONE GIRDER

	REINFORCING STEEL LB.	8500 PSI CONCRETE C.Y.	0.6" Ø L.R. STRANDS No.
EXTERIOR-1	3601	33.7	50
INTERIOR-2	3601	33.7	50
INTERIOR-3	3601	33.7	50
EXTERIOR-4	3601	33.8	50

GIRDERS REQUIRED

NUMBER	LENGTH	TOTAL LENGTH
4	VARIES	474'-7¾"

PROJECT NO. R-2633BB

BRUNSWICK/NEW HANOVER COUNTY

STATION: 353+32.50 -L-

SHEET 18 OF 22

NORTH CAROLINA PROFESSIONAL SEAL 22072 ENGINEER JOHN ARTHUR DILWORTH
5-29-13

WETHERILL ENGINEERING

TRANSPORTATION PLANNING/DESIGN
BRIDGE/STRUCTURE DESIGN
CIVIL/SITE DESIGN - GIS/GPS
CONSTRUCTION OBSERVATION

559 Jones Franklin Rd. Suite 164
Raleigh, N.C. 27606
Bus: 919 851 8077
Fax: 919 851 8107
LICENSE NO. F-0377

STATE OF NORTH CAROLINA
DEPARTMENT OF TRANSPORTATION
RALEIGH

SUPERSTRUCTURE 78" PRESTRESSED CONCRETE BULB TEE CONTINUOUS FOR LIVE LOAD

LEFT LANE

SPANS 21, 24, 27, 30, 33, 36, 39, 42, 45, 48, 51, & 54

REVISIONS							
NO.	BY:	DATE:	NO.	BY:	DATE:	SHEET NO.	S-113
1			3			TOTAL SHEETS	700
2			4				

DRAWN BY : G. GILLAND DATE : 10/2012
CHECKED BY : J. DILWORTH DATE : 10/2012
DESIGN ENGINEER OF RECORD : J. DILWORTH DATE : 05/2013

FILE: $FILE$
MODEL: $MODELNAME$
PLOT DRV: $PLTDRVS$
DATE/TIME: $DATE$ $TIME$

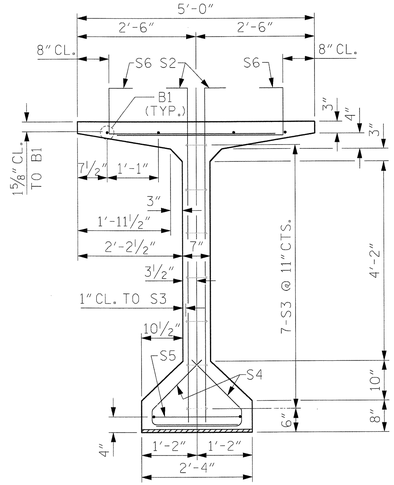

SECTION A-A

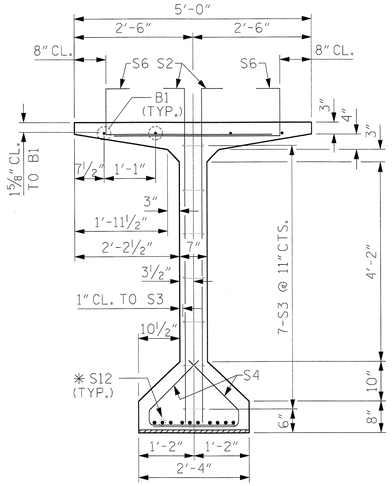

SECTION B-B

* FOR S12 BARS SEE DETAIL C OF "78" PRESTRESSED CONCRETE BULB TEE SECTIONS & DETAILS" SHEET 1 OF 2

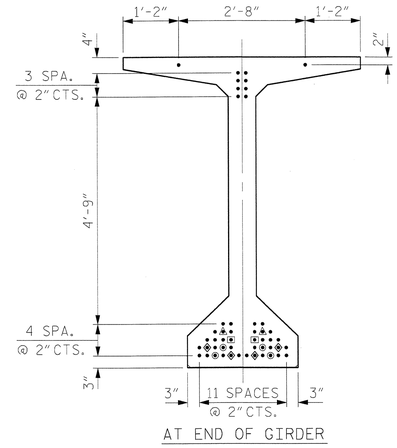

AT END OF GIRDER

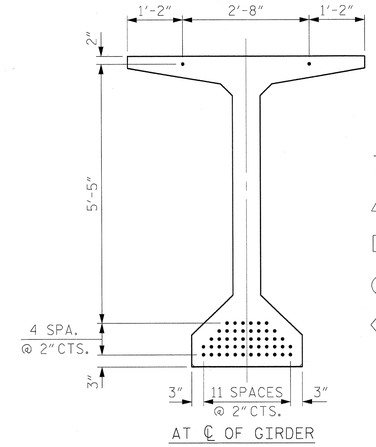

AT ℄ OF GIRDER

0.6" Ø LOW RELAXATION STRAND LAYOUT

THE UPLIFT FORCE DUE TO DRAPED STRANDS IS 34.0 KIPS

DEBONDING LEGEND

- ● FULLY BONDED STRANDS
- STRANDS DEBONDED FOR 4'-0" FROM END OF GIRDER
- STRANDS DEBONDED FOR 6'-0" FROM END OF GIRDER
- STRANDS DEBONDED FOR 8'-0" FROM END OF GIRDER
- STRANDS DEBONDED FOR 10'-0" FROM END OF GIRDER

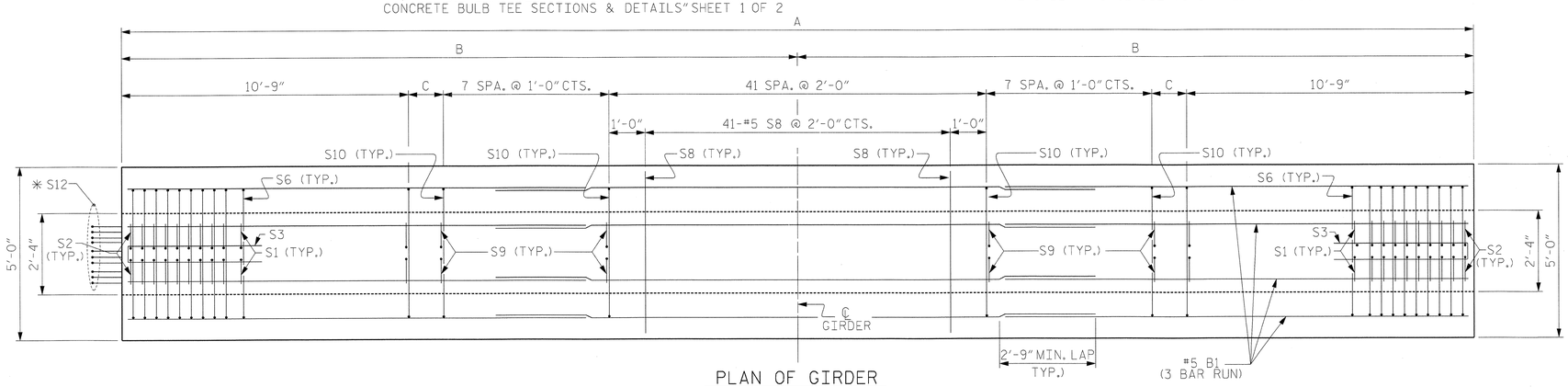

PLAN OF GIRDER

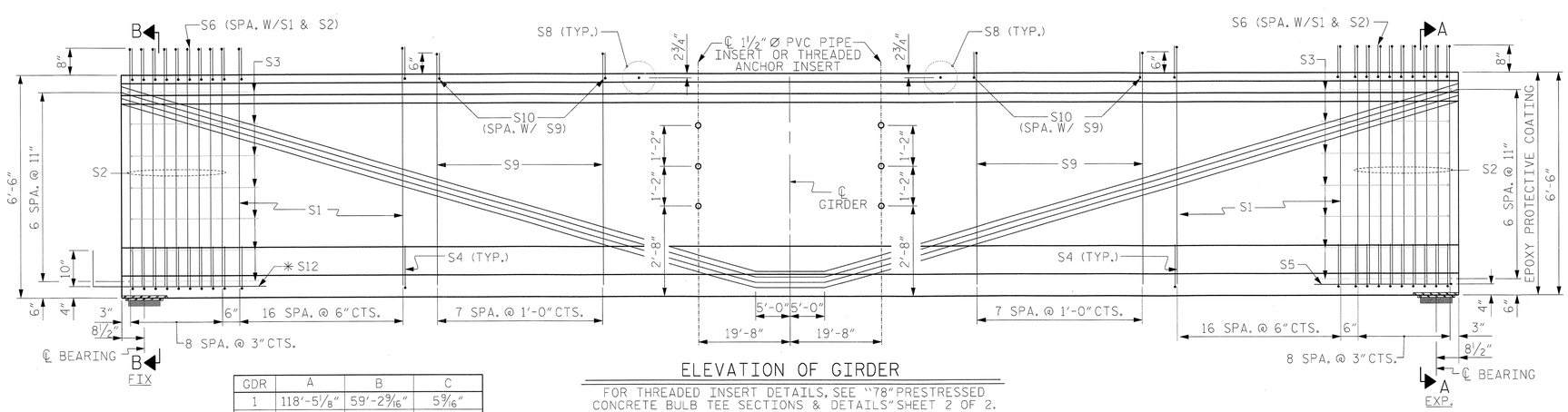

GDR	A	B	C
1	118'-5 1/8"	59'-2 9/16"	5 9/16"
2	118'-7"	59'-3 1/2"	6 1/2"
3	118'-8 7/8"	59'-4 7/16"	7 7/16"
4	118'-10 3/4"	59'-5 3/8"	8 3/8"

ELEVATION OF GIRDER

FOR THREADED INSERT DETAILS, SEE "78" PRESTRESSED CONCRETE BULB TEE SECTIONS & DETAILS" SHEET 2 OF 2.

FOR REINFORCING STEEL AROUND INSERT, SEE "78" PRESTRESSED CONCRETE BULB TEE SECTIONS & DETAILS" SHEET 2 OF 2.

USE THREADED INSERTS ON EXTERIOR GIRDERS AND PVC PIPE INSERTS ON INTERIOR GIRDERS.

0.6" Ø L. R. GRADE 270 STRANDS

AREA (SQUARE INCHES)	ULTIMATE STRENGTH (LBS. PER STRAND)	APPLIED PRESTRESS (LBS. PER STRAND)
0.217	58,600	43,950

REINFORCING STEEL FOR ONE GIRDER

BAR	NUMBER	SIZE	TYPE	LENGTH	WEIGHT
B1	12	#5	STR	41'-5"	518
S1	68	#4	1	7'-6"	341
S2	36	#5	1	7'-6"	282
S3	14	#4	2	9'-1"	85
S4	104	#4	3	3'-8"	255
S5	1	#5	2	10'-7"	11
S6	104	#5	4	4'-10"	524
S8	41	#5	STR	4'-6"	192
S9	112	#4	1	7'-4"	549
S10	112	#5	4	4'-8"	545
* S12	10	#5	STR	3'-8"	38
S13	8	#5	2	12'-0"	100
S14	16	#5	STR.	8'-0"	134

* NOTE: S12 BARS SHALL BE BENT BEFORE SHIPMENT. HEAT BENDING SHALL NOT BE ALLOWED.

BAR TYPES

ALL BAR DIMENSIONS ARE OUT-TO-OUT

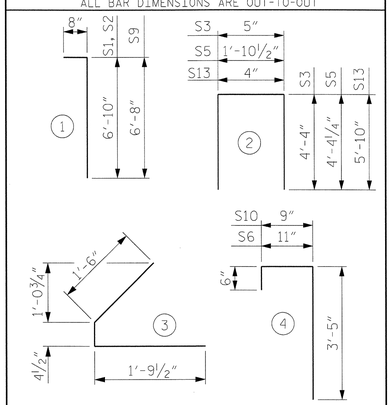

QUANTITIES FOR ONE GIRDER

	REINFORCING STEEL LB.	8500 PSI CONCRETE C.Y.	0.6" Ø L.R. STRANDS No.
EXTERIOR-1	3574	33.7	50
INTERIOR-2	3574	33.7	50
INTERIOR-3	3574	33.7	50
EXTERIOR-4	3574	33.8	50

GIRDERS REQUIRED

NUMBER	LENGTH	TOTAL LENGTH
4	VARIES	474'-7 3/4"

PROJECT NO. R-2633BB

BRUNSWICK/NEW HANOVER COUNTY

STATION: 353+32.50 -L-

SHEET 19 OF 22

NORTH CAROLINA PROFESSIONAL SEAL 22072 ENGINEER JOHN ARTHUR DILWORTH 5-29-13

ETHERILL ENGINEERING

TRANSPORTATION PLANNING/DESIGN
BRIDGE/STRUCTURE DESIGN
CIVIL/SITE DESIGN - GIS/GPS
CONSTRUCTION OBSERVATION

559 Jones Franklin Rd. Suite 164
Raleigh, N.C. 27606
Bus: 919 851 8077
Fax: 919 851 8107
LICENSE NO. F-0377

STATE OF NORTH CAROLINA
DEPARTMENT OF TRANSPORTATION
RALEIGH

SUPERSTRUCTURE 78" PRESTRESSED CONCRETE BULB TEE CONTINUOUS FOR LIVE LOAD

LEFT LANE

SPANS 22, 25, 28, 31, 34, 37, 40, 43, 46, 49, 52, & 55

REVISIONS						SHEET NO.
NO.	BY:	DATE:	NO.	BY:	DATE:	S-114
1			3			TOTAL SHEETS
2			4			700

DRAWN BY : G. GILLAND DATE : 10/2012
CHECKED BY : J. DILWORTH DATE : 10/2012
DESIGN ENGINEER OF RECORD : J. DILWORTH DATE : 05/2013

FILE: $FILE$
MODEL: $MODELNAME$
PLOT DRV: $PLTDRVS$
DATE/TIME: $DATE$ $TIME$

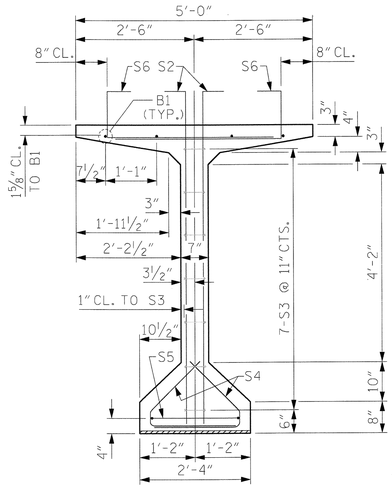

SECTION A-A

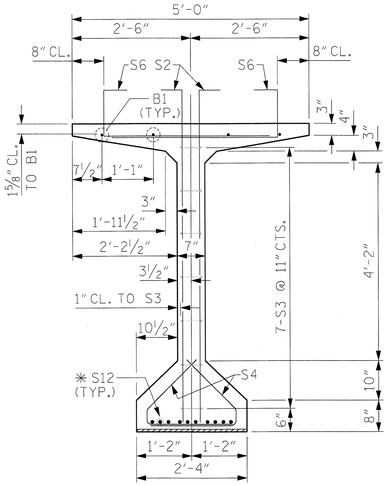

SECTION B-B

✳ FOR S12 BARS SEE DETAIL C OF "78" PRESTRESSED CONCRETE BULB TEE SECTIONS & DETAILS" SHEET 1 OF 2

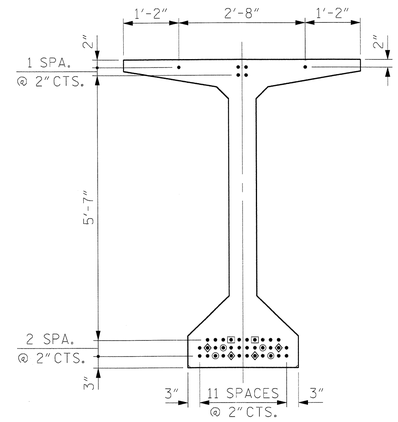

AT END OF GIRDER

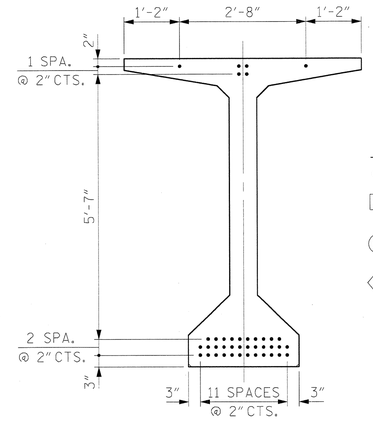

AT ℄ OF GIRDER

0.6" Ø LOW RELAXATION STRAND LAYOUT

DEBONDING LEGEND

- ● FULLY BONDED STRANDS
- ▣ STRANDS DEBONDED FOR 6'-0" FROM END OF GIRDER
- ◉ STRANDS DEBONDED FOR 8'-0" FROM END OF GIRDER
- ◈ STRANDS DEBONDED FOR 10'-0" FROM END OF GIRDER

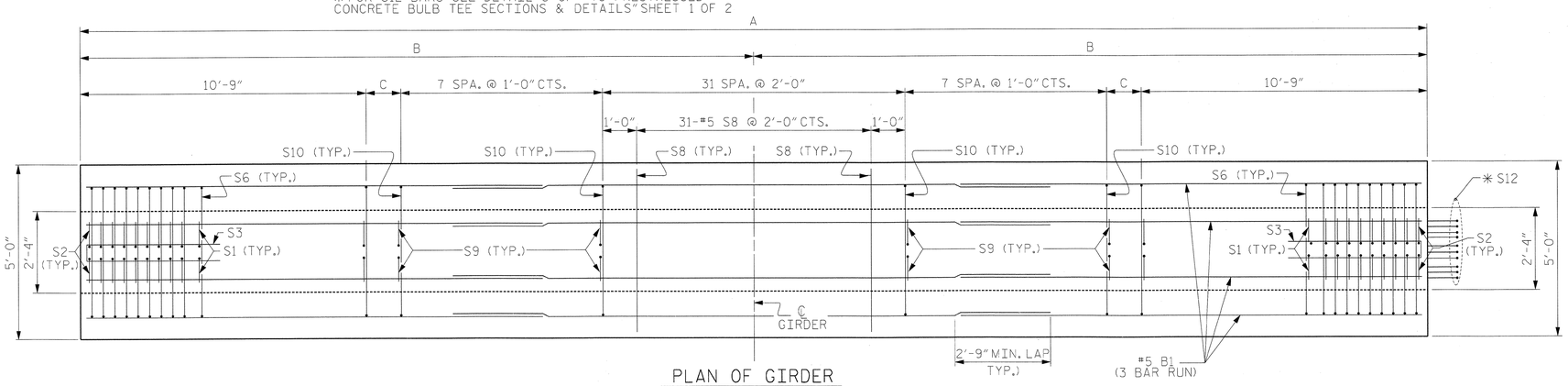

PLAN OF GIRDER

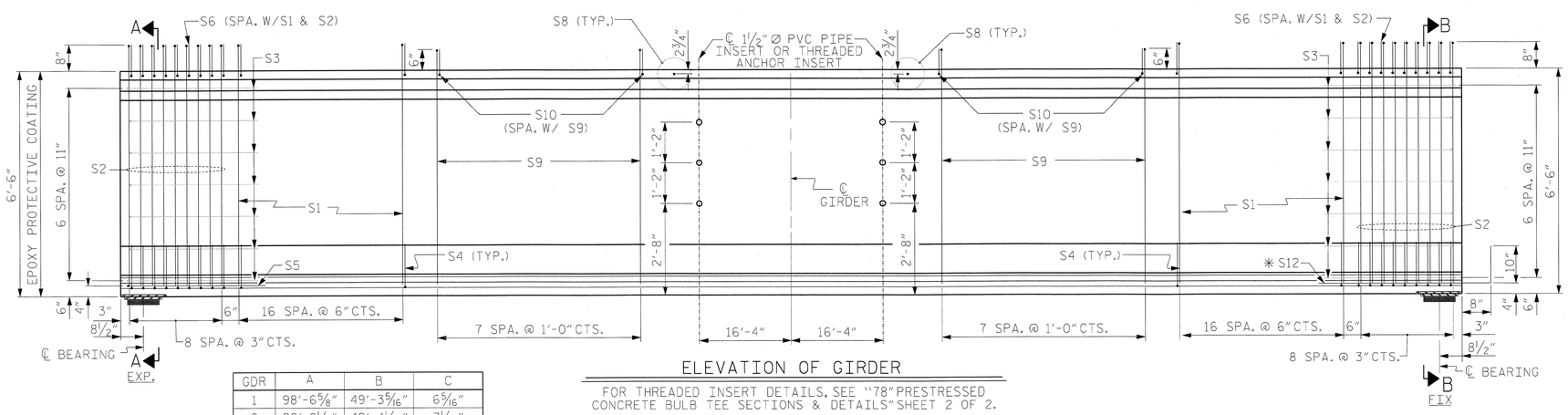

GDR	A	B	C
1	98'-6 5/8"	49'-3 5/16"	6 5/16"
2	98'-8 1/8"	49'-4 1/16"	7 1/16"
3	98'-9 3/4"	49'-4 7/8"	7 7/8"
4	98'-11 1/4"	49'-5 5/8"	8 5/8"

ELEVATION OF GIRDER

FOR THREADED INSERT DETAILS, SEE "78" PRESTRESSED CONCRETE BULB TEE SECTIONS & DETAILS" SHEET 2 OF 2.

FOR REINFORCING STEEL AROUND INSERT, SEE "78" PRESTRESSED CONCRETE BULB TEE SECTIONS & DETAILS" SHEET 2 OF 2.

USE THREADED INSERTS ON EXTERIOR GIRDERS AND PVC PIPE INSERTS ON INTERIOR GIRDERS.

0.6" Ø L. R. GRADE 270 STRANDS

AREA (SQUARE INCHES)	ULTIMATE STRENGTH (LBS. PER STRAND)	APPLIED PRESTRESS (LBS. PER STRAND)
0.217	58,600	43,950

REINFORCING STEEL FOR ONE GIRDER

BAR	NUMBER	SIZE	TYPE	LENGTH	WEIGHT
B1	12	#5	STR	34'-9"	435
S1	68	#4	1	7'-6"	341
S2	36	#5	1	7'-6"	282
S3	14	#4	2	9'-1"	85
S4	104	#4	3	3'-8"	255
S5	1	#5	2	10'-7"	11
S6	104	#5	4	4'-10"	524
S8	31	#5	STR	4'-6"	145
S9	92	#4	1	7'-4"	451
S10	92	#5	4	4'-8"	448
✳ S12	10	#5	STR	3'-8"	38
S13	8	#5	2	12'-0"	100
S14	16	#5	STR.	8'-0"	134

✳ NOTE: S12 BARS SHALL BE BENT BEFORE SHIPMENT. HEAT BENDING SHALL NOT BE ALLOWED.

BAR TYPES

ALL BAR DIMENSIONS ARE OUT-TO-OUT

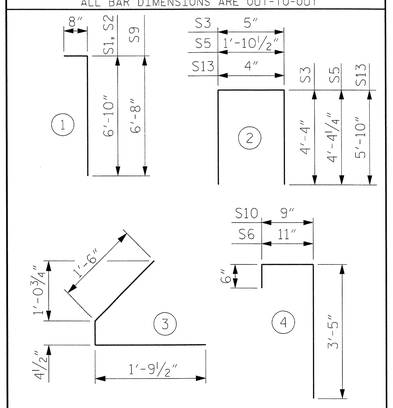

QUANTITIES FOR ONE GIRDER

	REINFORCING STEEL LB.	8500 PSI CONCRETE C.Y.	0.6" Ø L.R. STRANDS No.
EXTERIOR-1	3249	28.0	40
INTERIOR-2	3249	28.0	40
INTERIOR-3	3249	28.1	40
EXTERIOR-4	3249	28.1	40

GIRDERS REQUIRED

NUMBER	LENGTH	TOTAL LENGTH
4	VARIES	394'-11 3/4"

PROJECT NO. R-2633BB

BRUNSWICK/NEW HANOVER COUNTY

STATION: 353+32.50 -L-

SHEET 20 OF 22

NORTH CAROLINA PROFESSIONAL SEAL 22072 ENGINEER JOHN ARTHUR DILWORTH
5-29-13

WETHERILL ENGINEERING

TRANSPORTATION PLANNING/DESIGN
BRIDGE/STRUCTURE DESIGN
CIVIL/SITE DESIGN - GIS/GPS
CONSTRUCTION OBSERVATION

559 Jones Franklin Rd. Suite 164
Raleigh, N.C. 27606
Bus: 919 851 8077
Fax: 919 851 8107
LICENSE NO. F-0377

STATE OF NORTH CAROLINA
DEPARTMENT OF TRANSPORTATION
RALEIGH

SUPERSTRUCTURE 78" PRESTRESSED CONCRETE BULB TEE CONTINUOUS FOR LIVE LOAD

LEFT LANE
SPANS 38 & 56

REVISIONS							SHEET NO.
NO.	BY:	DATE:	NO.	BY:	DATE:		S-115
1			3				TOTAL SHEETS
2			4				700

DRAWN BY :	G. GILLAND	DATE :	10/2012
CHECKED BY :	J. DILWORTH	DATE :	10/2012
DESIGN ENGINEER OF RECORD :	J. DILWORTH	DATE :	05/2013

FILE: $FILE$
MODEL: $MODELNAME$
PLOT DRV: $PLTDRVS$
DATE/TIME: $DATE$ $TIME$

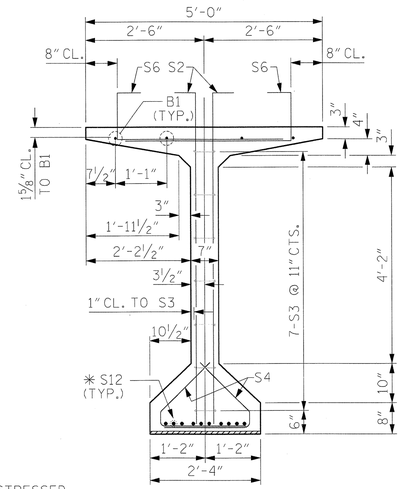

SECTION B-B

*FOR S12 BARS SEE DETAIL C OF "78" PRESTRESSED CONCRETE BULB TEE SECTIONS & DETAILS" SHEET 1 OF 2

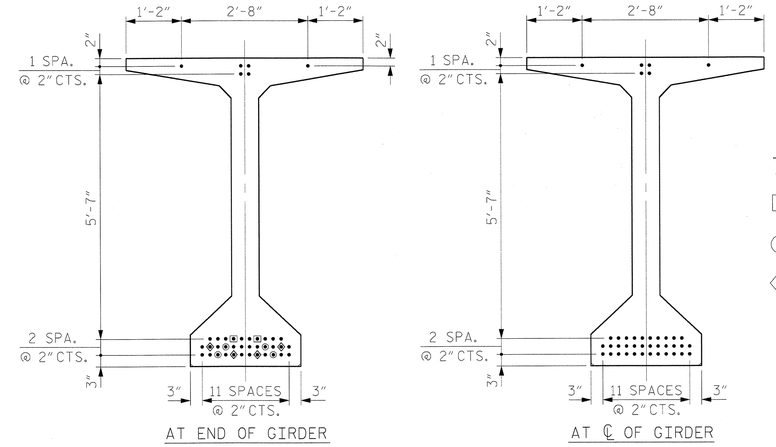

0.6" Ø LOW RELAXATION STRAND LAYOUT

DEBONDING LEGEND

- FULLY BONDED STRANDS
- STRANDS DEBONDED FOR 6'-0" FROM END OF GIRDER
- STRANDS DEBONDED FOR 8'-0" FROM END OF GIRDER
- STRANDS DEBONDED FOR 10'-0" FROM END OF GIRDER

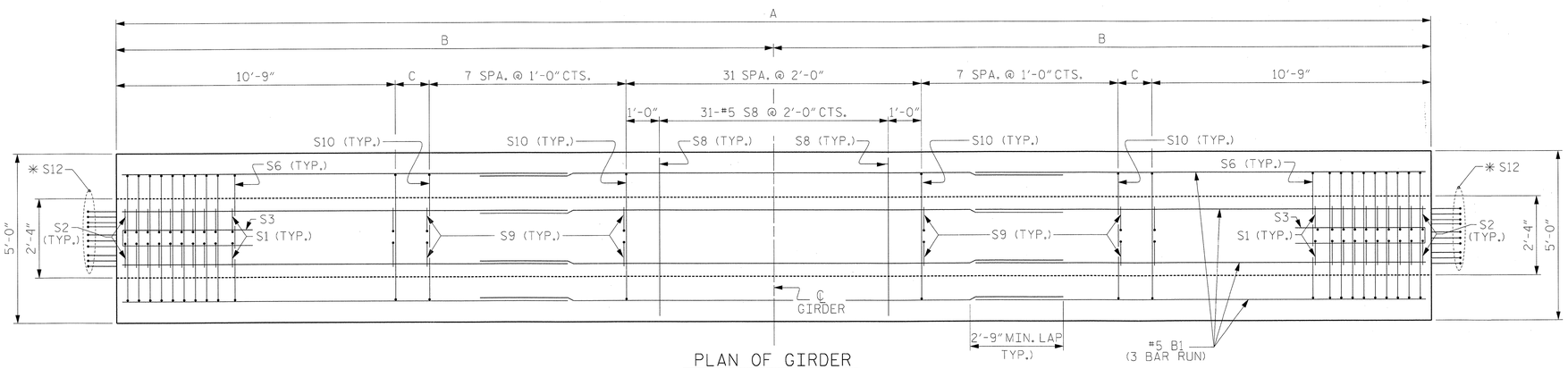

PLAN OF GIRDER

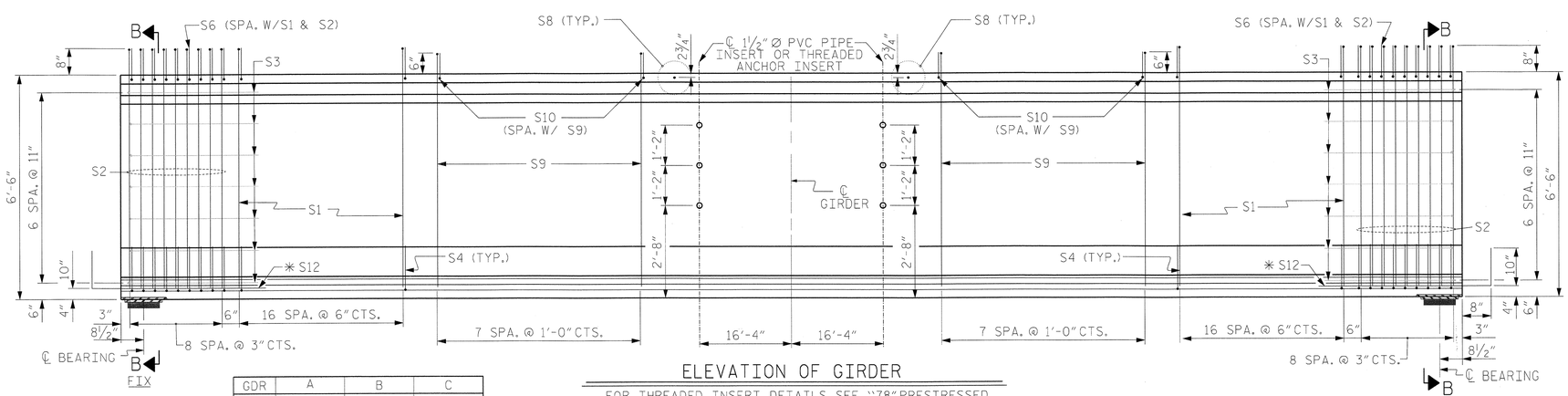

ELEVATION OF GIRDER

GDR	A	B	C
1	98'-6⅝"	49'-3⅝/16"	6⅝/16"
2	98'-8⅛"	49'-4 1/16"	7 1/16"
3	98'-9¾"	49'-4⅞"	7⅞"
4	98'-11¼"	49'-5⅝"	8⅝"

FOR THREADED INSERT DETAILS, SEE "78" PRESTRESSED CONCRETE BULB TEE SECTIONS & DETAILS" SHEET 2 OF 2.

FOR REINFORCING STEEL AROUND INSERT, SEE "78" PRESTRESSED CONCRETE BULB TEE SECTIONS & DETAILS" SHEET 2 OF 2.

USE THREADED INSERTS ON EXTERIOR GIRDERS AND PVC PIPE INSERTS ON INTERIOR GIRDERS.

0.6" Ø L. R. GRADE 270 STRANDS

AREA (SQUARE INCHES)	ULTIMATE STRENGTH (LBS. PER STRAND)	APPLIED PRESTRESS (LBS. PER STRAND)
0.217	58,600	43,950

REINFORCING STEEL FOR ONE GIRDER

BAR	NUMBER	SIZE	TYPE	LENGTH	WEIGHT
B1	12	#5	STR	34'-9"	435
S1	68	#4	1	7'-6"	341
S2	36	#5	1	7'-6"	282
S3	14	#4	2	9'-1"	85
S4	104	#4	3	3'-8"	255
S6	104	#5	4	4'-10"	524
S8	31	#5	STR	4'-6"	145
S9	92	#4	1	7'-4"	451
S10	92	#5	4	4'-8"	448
* S12	20	#5	STR	3'-8"	76
S13	8	#5	2	12'-0"	100
S14	16	#5	STR.	8'-0"	134

* NOTE: S12 BARS SHALL BE BENT BEFORE SHIPMENT. HEAT BENDING SHALL NOT BE ALLOWED.

BAR TYPES

ALL BAR DIMENSIONS ARE OUT-TO-OUT

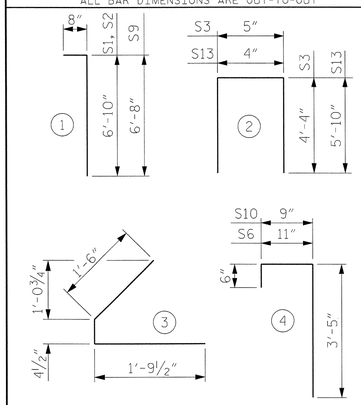

QUANTITIES FOR ONE GIRDER

	REINFORCING STEEL LB.	8500 PSI CONCRETE C.Y.	0.6" Ø L.R. STRANDS NO.
EXTERIOR-1	3276	28.0	40
INTERIOR-2	3276	28.0	40
INTERIOR-3	3276	28.1	40
EXTERIOR-4	3276	28.1	40

GIRDERS REQUIRED

NUMBER	LENGTH	TOTAL LENGTH
4	VARIES	394'-11¾"

PROJECT NO. R-2633BB

BRUNSWICK/NEW HANOVER COUNTY

STATION: 353+32.50 -L-

SHEET 21 OF 22

NORTH CAROLINA PROFESSIONAL SEAL 22072 ENGINEER JOHN ARTHUR DILWORTH
5-29-13

WETHERILL ENGINEERING

TRANSPORTATION PLANNING/DESIGN
BRIDGE/STRUCTURE DESIGN
CIVIL/SITE DESIGN - GIS/GPS
CONSTRUCTION OBSERVATION

559 Jones Franklin Rd. Suite 164
Raleigh, N.C. 27606
Bus: 919 851 8077
Fax: 919 851 8107
LICENSE NO. F-0377

STATE OF NORTH CAROLINA
DEPARTMENT OF TRANSPORTATION
RALEIGH

SUPERSTRUCTURE 78" PRESTRESSED CONCRETE BULB TEE CONTINUOUS FOR LIVE LOAD LEFT LANE

SPAN 57

REVISIONS						SHEET NO.
NO.	BY:	DATE:	NO.	BY:	DATE:	S-116
1			3			TOTAL SHEETS
2			4			700

DRAWN BY :	G. GILLAND	DATE :	10/2012
CHECKED BY :	J. DILWORTH	DATE :	10/2012
DESIGN ENGINEER OF RECORD :	J. DILWORTH	DATE :	05/2013

FILE: $FILE$
MODEL: $MODELNAME$
PLOT DRV: $PLTDRVS$
DATE/TIME: $DATE$ $TIME$

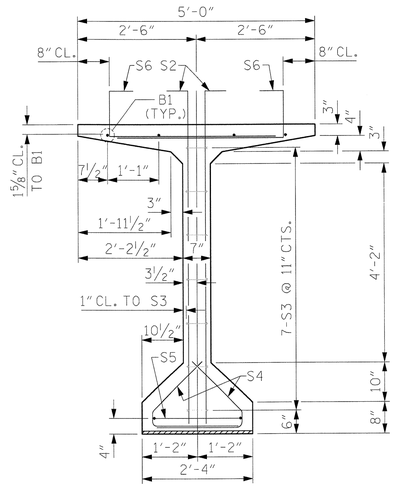

SECTION A-A

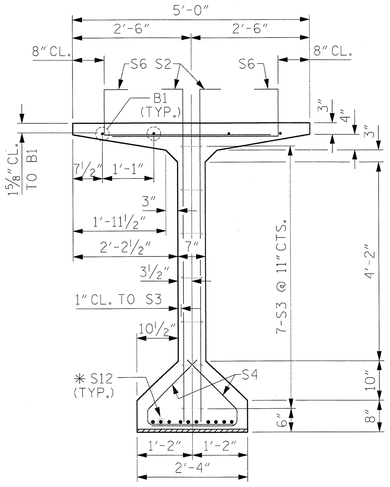

SECTION B-B

✳ FOR S12 BARS SEE DETAIL C OF "78" PRESTRESSED CONCRETE BULB TEE SECTIONS & DETAILS" SHEET 1 OF 2

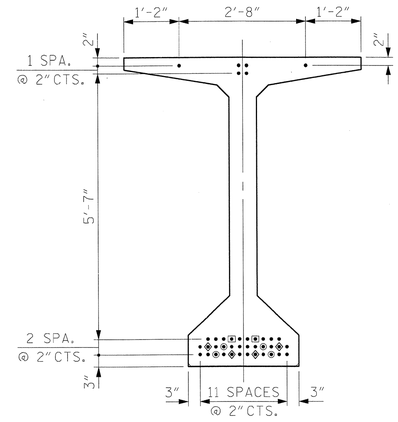

AT END OF GIRDER

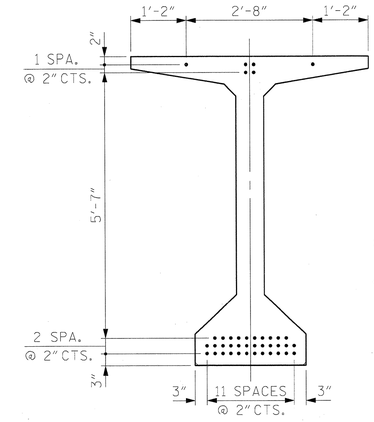

AT ℄ OF GIRDER

0.6" Ø LOW RELAXATION STRAND LAYOUT

DEBONDING LEGEND

- ● FULLY BONDED STRANDS
- ▣ STRANDS DEBONDED FOR 6'-0" FROM END OF GIRDER
- ⊙ STRANDS DEBONDED FOR 8'-0" FROM END OF GIRDER
- ◈ STRANDS DEBONDED FOR 10'-0" FROM END OF GIRDER

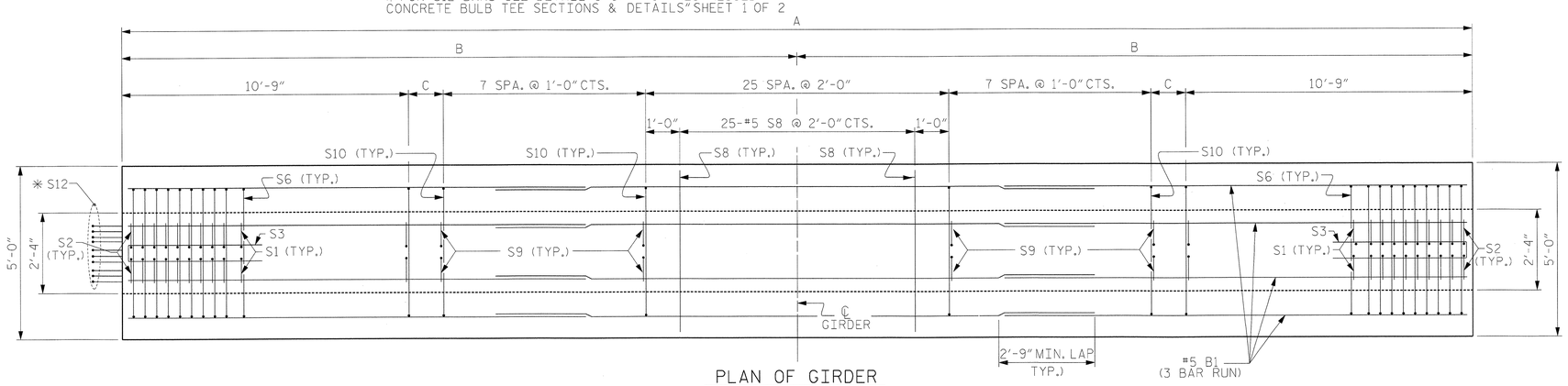

PLAN OF GIRDER

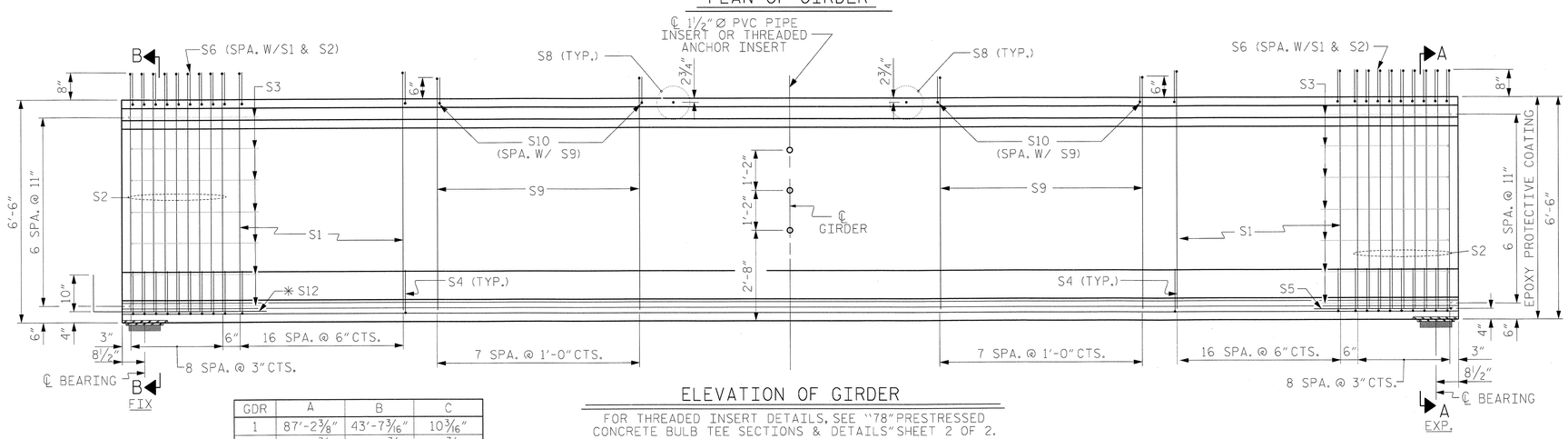

ELEVATION OF GIRDER

GDR	A	B	C
1	87'-2⅜"	43'-7 3/16"	10 3/16"
2	87'-3¾"	43'-7⅛"	10⅞"
3	87'-5⅛"	43'-8 9/16"	11 9/16"
4	87'-6½"	43'-9¼"	1'-0¼"

FOR THREADED INSERT DETAILS, SEE "78" PRESTRESSED CONCRETE BULB TEE SECTIONS & DETAILS" SHEET 2 OF 2.

FOR REINFORCING STEEL AROUND INSERT, SEE "78" PRESTRESSED CONCRETE BULB TEE SECTIONS & DETAILS" SHEET 2 OF 2.

USE THREADED INSERTS ON EXTERIOR GIRDERS AND PVC PIPE INSERTS ON INTERIOR GIRDERS.

0.6" Ø L. R. GRADE 270 STRANDS

AREA (SQUARE INCHES)	ULTIMATE STRENGTH (LBS. PER STRAND)	APPLIED PRESTRESS (LBS. PER STRAND)
0.217	58,600	43,950

REINFORCING STEEL FOR ONE GIRDER

BAR	NUMBER	SIZE	TYPE	LENGTH	WEIGHT
B1	12	#5	STR	30'-11"	387
S1	68	#4	1	7'-6"	341
S2	36	#5	1	7'-6"	282
S3	14	#4	2	9'-1"	85
S4	104	#4	3	3'-8"	255
S5	1	#5	2	10'-7"	11
S6	104	#5	4	4'-10"	524
S8	25	#5	STR	4'-6"	117
S9	80	#4	1	7'-4"	392
S10	80	#5	4	4'-8"	389
✳ S12	10	#5	STR	3'-8"	38
S13	8	#5	2	12'-0"	100
S14	16	#5	STR.	8'-0"	134

✳ NOTE: S12 BARS SHALL BE BENT BEFORE SHIPMENT. HEAT BENDING SHALL NOT BE ALLOWED.

BAR TYPES

ALL BAR DIMENSIONS ARE OUT-TO-OUT

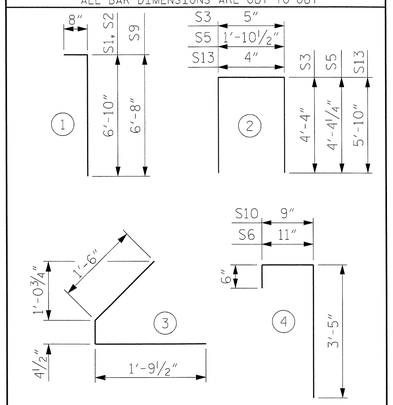

QUANTITIES FOR ONE GIRDER

	REINFORCING STEEL LB.	8500 PSI CONCRETE C.Y.	0.6" Ø L.R. STRANDS No.
EXTERIOR-1	3055	24.8	40
INTERIOR-2	3055	24.8	40
INTERIOR-3	3055	24.8	40
EXTERIOR-4	3055	24.9	40

GIRDERS REQUIRED

NUMBER	LENGTH	TOTAL LENGTH
4	VARIES	349'-5¾"

PROJECT NO. R-2633BB

BRUNSWICK/NEW HANOVER COUNTY

STATION: 353+32.50 -L-

SHEET 22 OF 22

NORTH CAROLINA PROFESSIONAL SEAL 22072 ENGINEER JOHN ARTHUR DILWORTH
5-29-13

WETHERILL ENGINEERING

TRANSPORTATION PLANNING/DESIGN
BRIDGE/STRUCTURE DESIGN
CIVIL/SITE DESIGN - GIS/GPS
CONSTRUCTION OBSERVATION

559 Jones Franklin Rd. Suite 164
Raleigh, N.C. 27606
Bus: 919 851 8077
Fax: 919 851 8107
LICENSE NO. F-0377

STATE OF NORTH CAROLINA
DEPARTMENT OF TRANSPORTATION
RALEIGH

SUPERSTRUCTURE 78" PRESTRESSED CONCRETE BULB TEE CONTINUOUS FOR LIVE LOAD LEFT LANE

SPAN 58

REVISIONS						
NO.	BY:	DATE:	NO.	BY:	DATE:	
1			3			
2			4			

SHEET NO. S-117

TOTAL SHEETS 700

DRAWN BY :	G. GILLAND	DATE :	10/2012
CHECKED BY :	J. DILWORTH	DATE :	10/2012
DESIGN ENGINEER OF RECORD :	J. DILWORTH	DATE :	05/2013

FILE: $FILE$
MODEL: $MODELNAME$
PLOT DRV: $PLTDRVS$
DATE/TIME: $DATE$ $TIME$

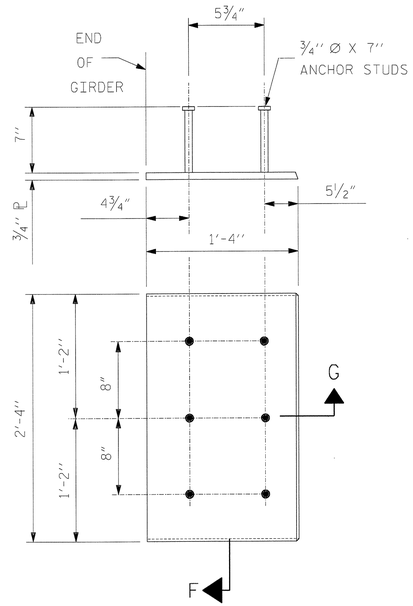

EMBEDDED PLATE "B-1" DETAILS

(2 REQ'D PER GIRDER)

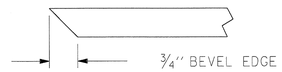

SECTION "F"

(SEE NOTES)

SECTION "G"

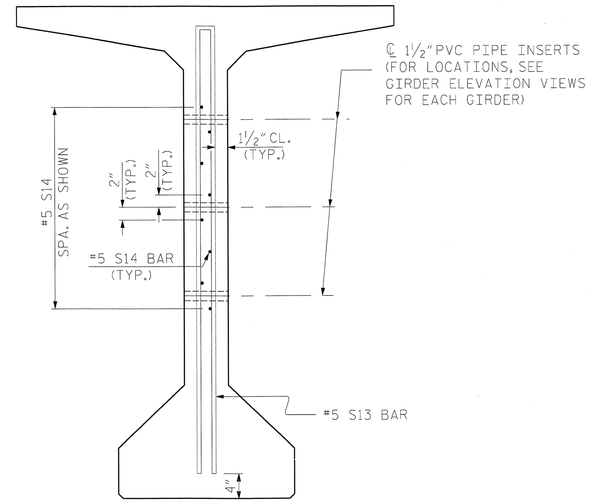

SECTION VIEW

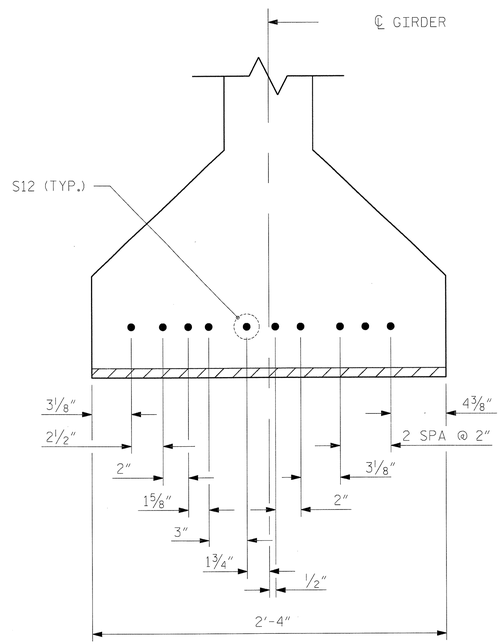

DETAIL C

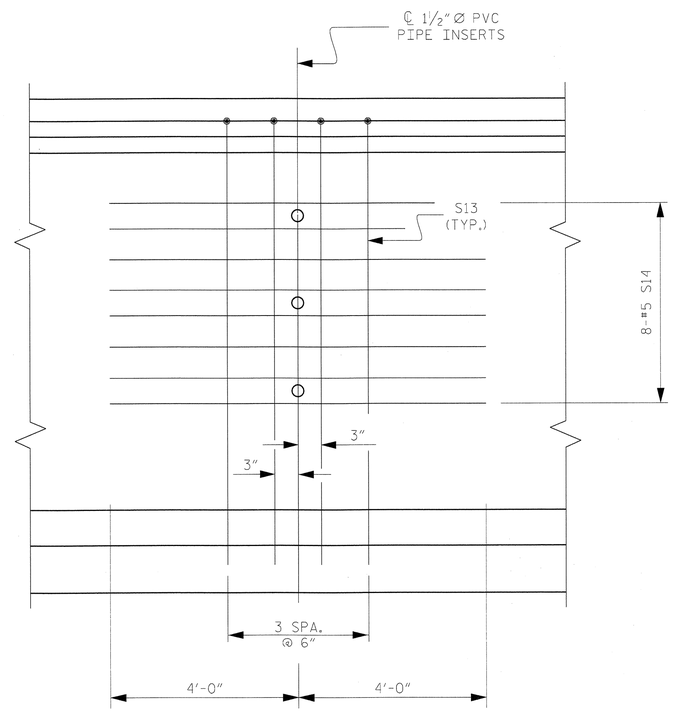

PARTIAL ELEVATION

SHOWING INTERMEDIATE STEEL
DIAPHRAGM REINFORCING STEEL

PVC PIPE INSERT DETAILS

NOTES

ALL PRESTRESSING STRANDS SHALL BE 7-WIRE LOW-RELAXATION GRADE 270 STRANDS AND SHALL CONFORM TO AASHTO M203 EXCEPT FOR SAMPLING REQUIREMENTS WHICH SHALL BE IN ACCORDANCE WITH THE STANDARD SPECIFICATIONS.

ALL REINFORCING STEEL SHALL BE GRADE 60.

APPLY EPOXY PROTECTIVE COATING TO END OF GIRDER SURFACES INDICATED IN ELEVATION VIEW.

EMBEDDED PLATE "B-1" SHALL BE GALVANIZED IN ACCORDANCE WITH THE STANDARD SPECIFICATIONS. BEVEL EDGES OF PLATE "B-1" TO GIVE CLOSE FIT BUT NOT TIGHT FIT TO STEEL CASTING FORM.

ANCHOR STUDS SHALL CONFORM TO AASHTO M169 GRADES 1010 THROUGH 1020 OR APPROVED EQUAL, AND SHALL MEET THE TYPE "B" REQUIREMENTS OF SUBSECTION 7.3 OF THE ANSI/AASHTO/AWS D1.5 BRIDGE WELDING CODE.

AT ENDS OF GIRDERS TO BE EMBEDDED IN CONCRETE DIAPHRAGMS OR END WALLS, PRESTRESSING STRANDS MAY EXTEND A MAXIMUM OF 2" BEYOND THE GIRDER ENDS. OTHERWISE, PRESTRESSING STRANDS SHALL BE CUT FLUSH WITH THE GIRDER ENDS.

THE TRANSFER OF LOAD FROM THE ANCHORAGES TO THE GIRDER SHALL BE DONE WHEN CONCRETE HAS REACHED A COMPRESSIVE STRENGTH OF NOT LESS THAN 6000 PSI.

DEPENDING ON THE TYPE OF SYSTEM USED TO SUPPORT THE DECK SLAB FORMS, PRESET ANCHORS MAY BE NECESSARY IN THE PRESTRESSED CONCRETE GIRDER.

THE TOP SURFACE OF THE GIRDER, EXCLUDING THE OUTSIDE 4", SHALL BE RAKED TO A DEPTH OF ¼".

WHEN DRAPED STRANDS ARE DETAILED, THE LONGITUDINAL LOCATION OF THE HOLD DOWN DEVICES SHALL BE WITHIN 6" OF THE LOCATION SHOWN AND THE CENTER OF GRAVITY OF THE GROUP OF DRAPED STRANDS SHALL BE LOCATED WITHIN ½" OF THE THEORETICAL LOCATION SHOWN.

PRESTRESSED CONCRETE GIRDERS ARE DESIGNED FOR 0 PSI TENSION IN THE PRECOMPRESSED TENSILE ZONE UNDER ALL LOADING CONDITIONS.

PRESTRESSED CONCRETE GIRDERS SHALL CONTAIN CALCIUM NITRITE CORROSION INHIBITOR. FOR CALCIUM NITRITE CORROSION INHIBITOR, SEE STANDARD SPECIFICATIONS.

THE COST OF ALL CONCRETE, REINFORCING STEEL, PRESTRESSED STRANDS, INSERTS EMBEDDED IN THE CONCRETE, EMBEDDED PLATES, TEMPORARY BRACING AND INCIDENTAL ITEMS SHALL BE INCLUDED IN THE CONTRACT UNIT PRICE FOR "78" PRESTRESSED CONCRETE GIRDERS".

PRIOR TO CASTING THE GIRDERS, THE CONTRACTOR SHALL SUBMIT COMPLETE WORKING DRAWINGS WITH THE EXACT LOCATION, AND COMPLETE DESCRIPTION OF ALL INSERTS CAST IN THE GIRDERS, TO THE DEPARTMENT FOR APPROVAL. SUCH INSERTS INCLUDE BUT ARE NOT LIMITED TO, INSERTS FOR SUPPORTING FALSEWORK AND FORMWORK, INSERTS FOR ATTACHING DIAPHRAGMS, INSERTS FOR CONNECTING TEMPORARY BRACING, AND LIFTING INSERTS.

THE CONTRACTOR IS RESPONSIBLE FOR THE INTEGRITY AND STABILITY OF THE GIRDERS IN HANDLING THE 78" PRESTRESSED CONCRETE GIRDERS, THEY SHALL BE MAINTAINED IN AN UPRIGHT POSITION AT ALL TIMES AND THE PROPOSED METHOD FOR ERECTING, STORING AND TRANSPORTING THE GIRDERS SHALL BE SUBMITTED TO THE ENGINEER FOR APPROVAL. THE SUBMITTAL SHALL INCLUDE DESIGN CALCULATIONS FOR LOCATIONS OF PICK-UP POINTS AND SUPPORT POINTS AS NEEDED TO MAINTAIN THE GIRDERS STABILITY DURING ERECTION, STORAGE AND TRANSPORTATION.

FOR 78" PRESTRESSED CONCRETE GIRDERS, SEE SPECIAL PROVISIONS.

PROJECT NO. R-2633BB
BRUNSWICK/NEW HANOVER COUNTY
STATION: 353+32.50 -L-

DRAWN BY :	JML	DATE :	10/2012
CHECKED BY :	RLB	DATE :	3/2013
DESIGN ENGINEER OF RECORD :	RLB, JAD	DATE :	3/2013

NORTH CAROLINA PROFESSIONAL SEAL 18442 ENGINEER RICHARD LEON BOLINGER, III
5-29-2013

RS&H IMPROVING YOUR WORLD
RS&H Architects-Engineers-Planners, Inc.
8601 Six Forks Road, Suite 260
Raleigh, NC 27615
919-846-6701 FAX 919-846-8080
www.rsandh.com
North Carolina License Nos. 50073 * F-0493 * C-28

NORTH CAROLINA PROFESSIONAL SEAL 22072 ENGINEER JOHN ARTHUR DILNOTH
5-29-13

WETHERILL ENGINEERING
TRANSPORTATION PLANNING/DESIGN
BRIDGE/STRUCTURE DESIGN
CIVIL/SITE DESIGN - GIS/GPS
CONSTRUCTION OBSERVATION
559 Jones Franklin Rd. Suite 164
Raleigh, N.C. 27606
Bus: 919 851 8077
Fax: 919 851 8107
LICENSE NO. F-0377

STATE OF NORTH CAROLINA
DEPARTMENT OF TRANSPORTATION
RALEIGH

78" PRESTRESSED CONCRETE BULB TEE SECTIONS & DETAILS

LEFT LANE

REVISIONS						SHEET NO.
NO.	BY:	DATE:	NO.	BY:	DATE:	S-118
1			3			TOTAL SHEETS
2			4			700

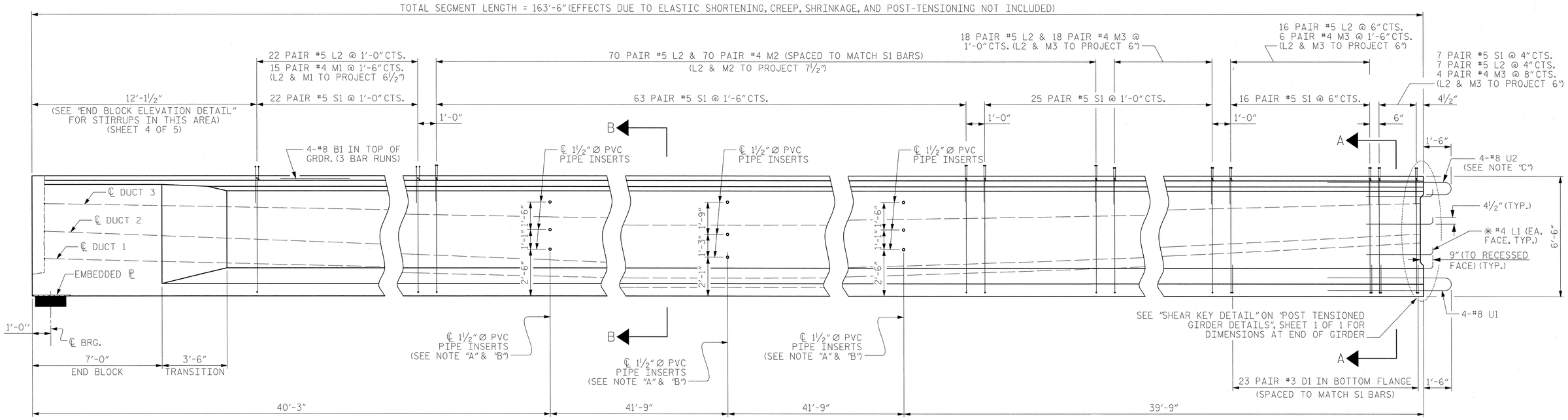

ELEVATION OF GIRDER END SEGMENT

SHOWING REINFORCING STEEL & DIAPHRAGM HOLE PLACEMENT

FOR REINFORCING STEEL DETAILS, SEE "BILL OF MATERIAL FOR POST TENSIONED GIRDERS" SHEET

NOTE "A"
USE THREADED INSERTS ON EXTERIOR GIRDERS INSTEAD OF PVC PIPE INSERTS.
FOR DETAILS, SEE "POST TENSIONED GIRDER DETAILS", SHEET 1 OF 1.

NOTE "B"
FOR REINFORCING AROUND THE PVC PIPE INSERTS, SEE "POST TENSIONED GIRDER DETAILS", SHEET 1 OF 1.

NOTE "C"
OMIT 2-#8 U2 BARS ON EXTERIOR SIDE OF EXTERIOR GIRDERS.

✱ #4 L1 BARS SHALL BE BENT TO VERTICAL AFTER GIRDER FABRICATION AND BEFORE SHIPMENT. HEAT BENDING SHALL NOT BE ALLOWED.

NOTE :
FOR SECTIONS A-A & B-B, SEE "GIRDER END SEGMENT DETAILS", SHEET 2 OF 5.

PROJECT NO. R-2633BB
BRUNSWICK/NEW HANOVER COUNTY
STATION: 353+32.50 -L-

SHEET 1 OF 5

NORTH CAROLINA PROFESSIONAL SEAL 28871 ENGINEER ROBERT G. WOODRUFF
5/28/13

RS&H IMPROVING YOUR WORLD

RS&H Architects-Engineers-Planners, Inc.
8601 Six Forks Road, Suite 260
Raleigh, NC 27615
919-846-6701 FAX 919-846-9080
www.rsandh.com
North Carolina License Nos. 50073 * F-0493 * C-28

STATE OF NORTH CAROLINA
DEPARTMENT OF TRANSPORTATION
RALEIGH

SUPERSTRUCTURE
GIRDER END SEGMENT DETAILS
MODIFIED 78" BULB TEE
LEFT LANE

REVISIONS						
NO.	BY:	DATE:	NO.	BY:	DATE:	
1			3			
2			4			

SHEET NO. S-119
TOTAL SHEETS 700

DRAWN BY : SOF DATE : 12/11
CHECKED BY : GBL DATE : 11/12
DESIGN ENGINEER OF RECORD : R. WOODRUFF DATE : 5/2013

5/24/2013
$$$$$$$$$$$$$$$$$$$$$$$$DGN$$$$$$$$$$$$$$$$$$$$$$$$
3:20:18 PM

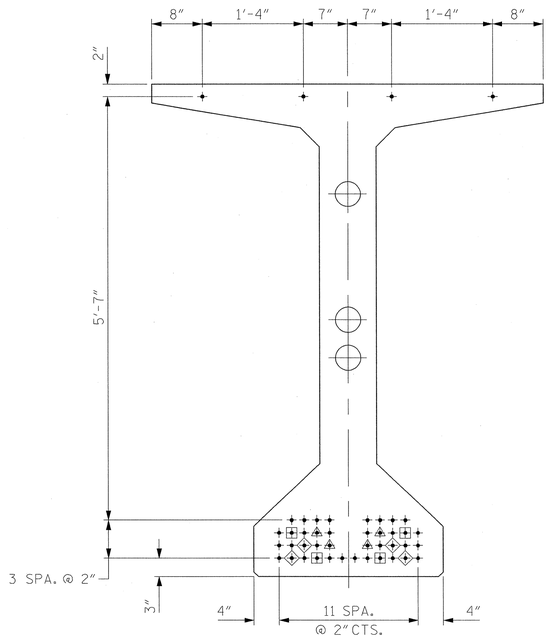

0.6'' Ø LOW RELAXATION STRAND LAYOUT

44 TOTAL STRANDS, ALL STRAIGHT
(12 DEBONDED AS SHOWN)

- ● FULLY BONDED STRANDS
- ◈ STRANDS DEBONDED FOR 16'-0'' FROM END OF GIRDER
- ▣ STRANDS DEBONDED FOR 24'-0'' FROM END OF GIRDER
- ◬ STRANDS DEBONDED FOR 32'-0'' FROM END OF GIRDER

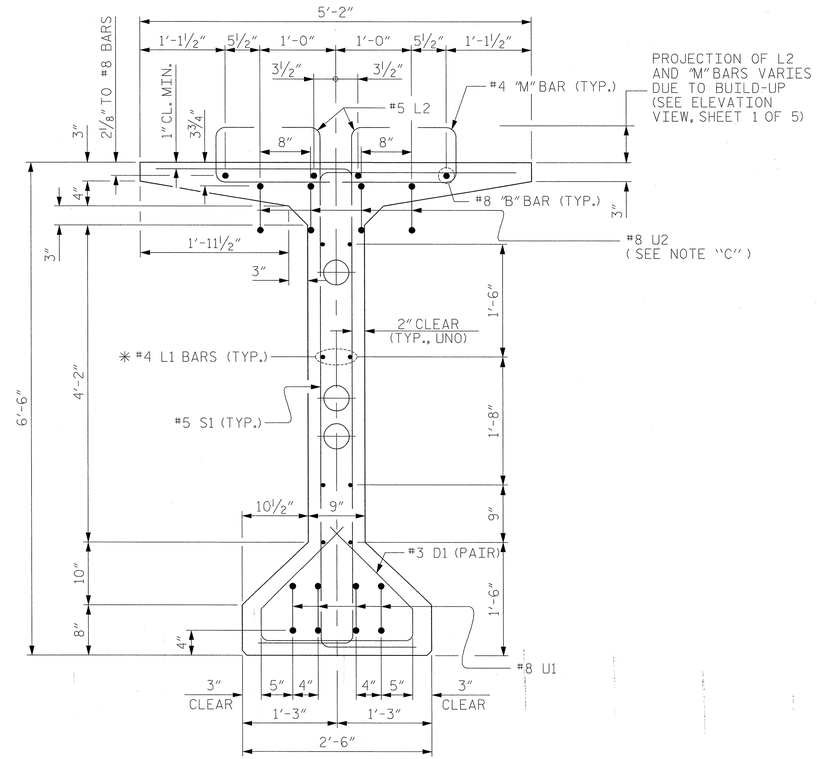

SECTION A-A

SEE STRAND LAYOUT DETAIL FOR STRAND LOCATIONS

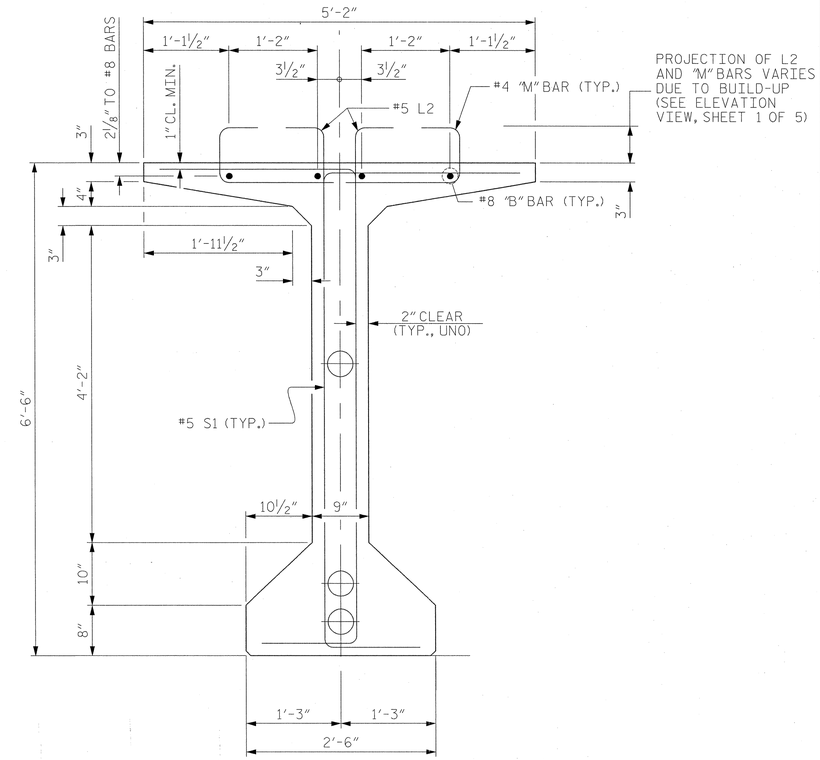

SECTION B-B

SEE STRAND LAYOUT DETAIL FOR STRAND LOCATIONS

NOTE "C"
OMIT 2-#8 U2 BARS ON EXTERIOR SIDE OF EXTERIOR GIRDERS

#4 L1 SHALL BE BENT AFTER GIRDER FABRICATION AND BEFORE SHIPMENT. HEAT BENDING SHALL NOT BE ALLOWED.

PROJECT NO. R-2633BB
BRUNSWICK/NEW HANOVER COUNTY
STATION: 353+32.50 -L-

SHEET 2 OF 5

NORTH CAROLINA PROFESSIONAL SEAL 18591 ENGINEER ROBERT G. WOODRUFF
5/28/13

RS&H IMPROVING YOUR WORLD

RS&H Architects-Engineers-Planners, Inc.
8601 Six Forks Road, Suite 260
Raleigh, NC 27615
919-846-6701 FAX 919-846-9080
www.rsandh.com
North Carolina License Nos. 50073 * F-0481 * C-28

STATE OF NORTH CAROLINA
DEPARTMENT OF TRANSPORTATION
RALEIGH

SUPERSTRUCTURE
GIRDER END SEGMENT DETAILS
MODIFIED 78" BULB TEE
LEFT LANE

REVISIONS						SHEET NO.
NO.	BY:	DATE:	NO.	BY:	DATE:	S-120
1			3			TOTAL SHEETS
2			4			700

DRAWN BY : SOF DATE : 01/12
CHECKED BY : GBL DATE : 11/12
DESIGN ENGINEER OF RECORD : R. WOODRUFF DATE : 5/2013

5/24/2013
$$$$$$$$$$$$$$$$$$$$$$$$DGN$$$$$$$$$$$$$$$$$$$$$$$$
3:23:46 PM

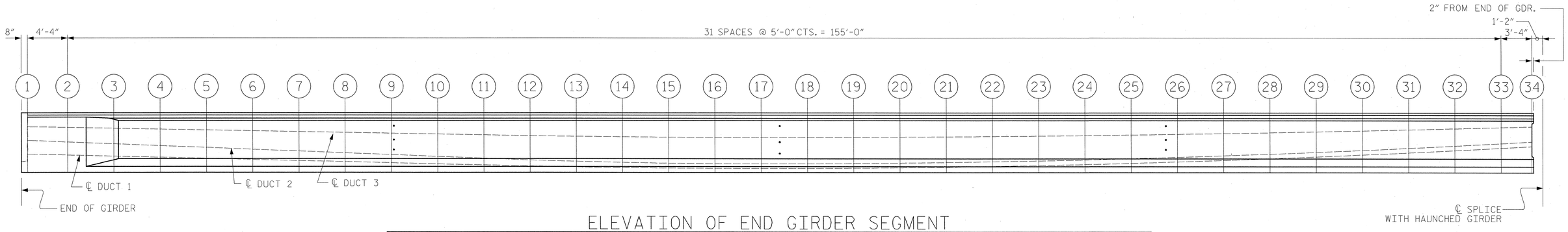

ELEVATION OF END GIRDER SEGMENT

SHOWING POST TENSIONING DUCT PROFILE

END GIRDER SEGMENT POST TENSIONING DUCT PROFILE TABLE

POINT	1	2	3	4	5	6	7	8	9	10	11	12	13	14	15	16	17	18	19	20	21	22	23	24	25	26	27	28	29	30	31	32	33	34
℄ DUCT 1	2.000	1.896	1.776	1.657	1.537	1.417	1.297	1.177	1.057	0.938	0.818	0.708	0.618	0.548	0.498	0.468	0.458	0.467	0.493	0.537	0.598	0.676	0.772	0.885	1.016	1.164	1.329	1.512	1.713	1.931	2.166	2.418	2.688	2.878
℄ DUCT 2	3.500	3.329	3.131	2.934	2.736	2.539	2.341	2.144	1.946	1.749	1.551	1.370	1.222	1.107	1.024	0.975	0.958	0.967	0.993	1.037	1.098	1.176	1.272	1.385	1.516	1.664	1.829	2.012	2.213	2.431	2.666	2.918	3.188	3.378
℄ DUCT 3	5.000	4.921	4.831	4.740	4.649	4.559	4.468	4.377	4.287	4.196	4.105	4.022	3.954	3.901	3.864	3.841	3.833	3.838	3.851	3.872	3.903	3.942	3.989	4.046	4.111	4.185	4.267	4.358	4.458	4.566	4.683	4.809	4.943	5.038

NOTES:
1. DIMENSIONS ARE MEASURED FROM THE BOTTOM OF GIRDER TO CENTERLINE OF DUCT IN FEET.
2. DIMENSIONS PROVIDED AT POINT 1 ARE FOR ANCHOR WORKING POINTS, 8" FROM THE END OF SEGMENT.
3. DIMENSIONS PROVIDED AT POINT 34 ARE ALONG THE RECESSED FACE, 2" FROM THE END OF SEGMENT.

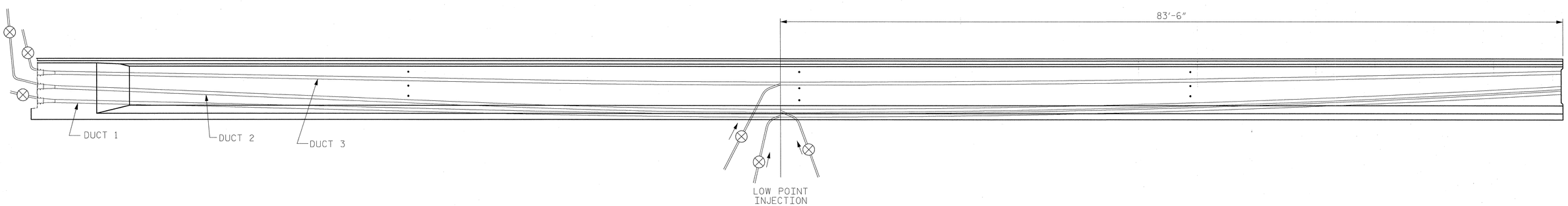

PROPOSED GROUT VENT LOCATION SKETCH

-- INDICATES GROUT VENT

PROJECT NO. R-2633BB

BRUNSWICK/NEW HANOVER COUNTY

STATION: 353+32.50 -L-

SHEET 3 OF 5

NORTH CAROLINA PROFESSIONAL SEAL 18591 ENGINEER ROBERT G. WOODRUFF

5/28/13

RS&H IMPROVING YOUR WORLD

RS&H Architects-Engineers-Planners, Inc.
8601 Six Forks Road, Suite 260
Raleigh, NC 27615
919-846-6701 FAX 919-846-9080
www.rsandh.com
North Carolina License Nos. 50073 * F-0493 * C-28

STATE OF NORTH CAROLINA
DEPARTMENT OF TRANSPORTATION
RALEIGH

SUPERSTRUCTURE

GIRDER END SEGMENT DETAILS

MODIFIED 78" BULB TEE
LEFT LANE

REVISIONS						
NO.	BY:	DATE:	NO.	BY:	DATE:	
1			3			
2			4			

SHEET NO. S-121

TOTAL SHEETS 700

DRAWN BY : SOF DATE : 12/11
CHECKED BY : GBL DATE : 11/12
DESIGN ENGINEER OF RECORD : R. WOODRUFF DATE : 5/2013

5/24/2013
$$$$$$$$$$$$$$$$$$$$$$$$DGN$$$$$$$$$$$$$$$$$$$$$$$$
3:24:07 PM

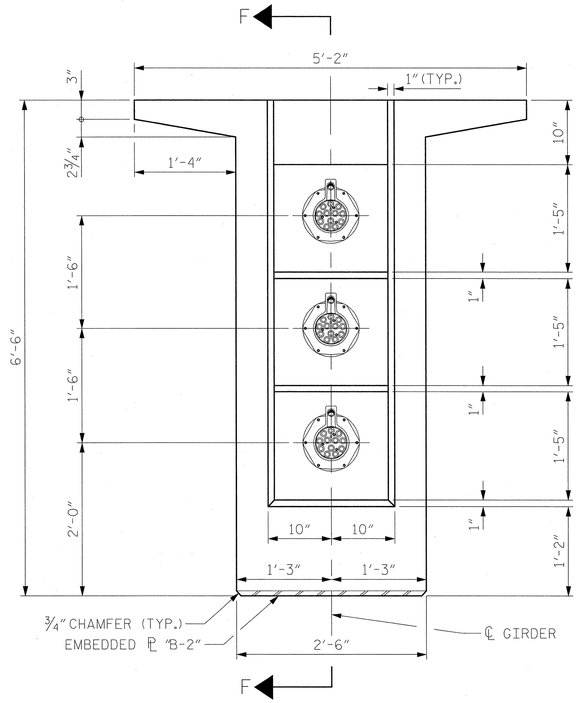

SEGMENT END VIEW

POUR BACK NOT SHOWN FOR CLARITY

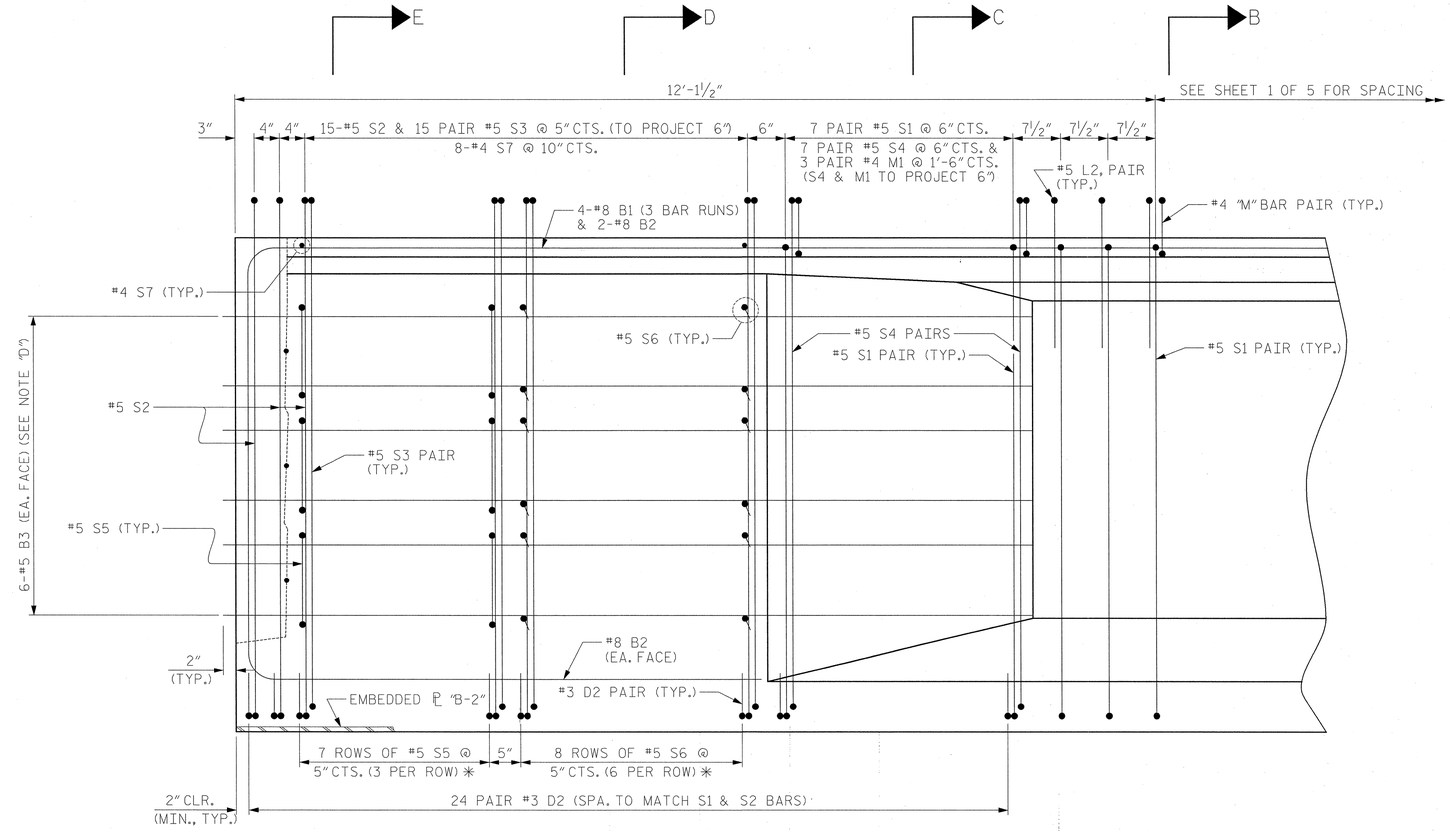

END BLOCK ELEVATION DETAIL

FOR SECTION B-B, SEE SHEET 2 OF 5
FOR SECTIONS C-C THRU E-E, SEE SHEET 5 OF 5

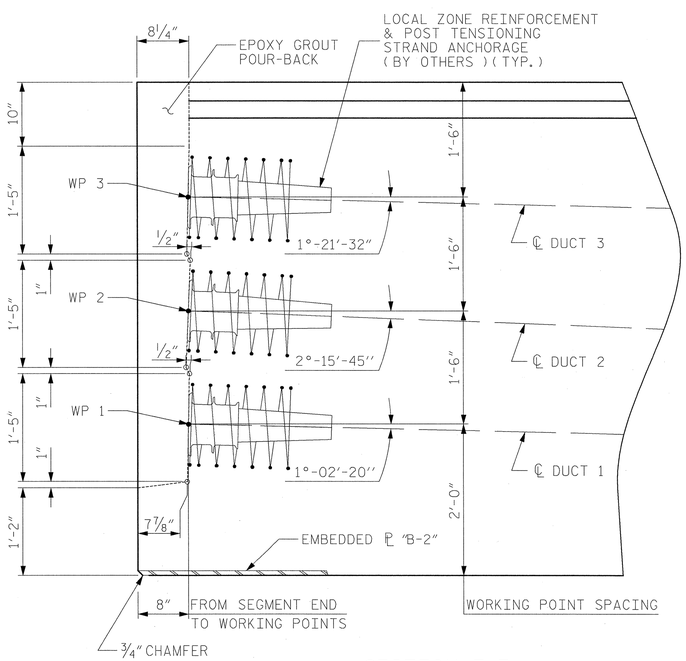

SECTION F-F

END BLOCK RECESS DETAILS

NOTE "D"
#5 B3 BARS SHALL EXTEND 2" FROM END OF GIRDER AND SHALL BE FIELD BENT ALONG FACE OF TRANSITION TO MAINTAIN COVER.

* SEE SHEET 5 OF 5 FOR PLACEMENT OF BARS

PROJECT NO. R-2633BB

BRUNSWICK/NEW HANOVER COUNTY

STATION: 353+32.50 -L-

SHEET 4 OF 5

DRAWN BY : SOF	DATE : 04/12
CHECKED BY : GBL	DATE : 11/12
DESIGN ENGINEER OF RECORD : R. WOODRUFF	DATE : 5/2013

NORTH CAROLINA PROFESSIONAL SEAL 18598 ENGINEER ROBERT G. WOODRUFF
5/28/13

RS&H IMPROVING YOUR WORLD

RS&H Architects-Engineers-Planners, Inc.
8601 Six Forks Road, Suite 260
Raleigh, NC 27615
919-846-6701 FAX 919-846-9080
www.rsandh.com
North Carolina License Nos. 00073 * F-0481 * C-28

STATE OF NORTH CAROLINA
DEPARTMENT OF TRANSPORTATION
RALEIGH

SUPERSTRUCTURE
GIRDER END
SEGMENT DETAILS
MODIFIED 78" BULB TEE
LEFT LANE

REVISIONS						SHEET NO.
NO.	BY:	DATE:	NO.	BY:	DATE:	S-122
1			3			TOTAL SHEETS
2			4			700

5/24/2013
$$$$$$$$$$$$$$$$$$$$$$$$DGN$$$$$$$$$$$$$$$$$$$$$$$$
3:24:26 PM

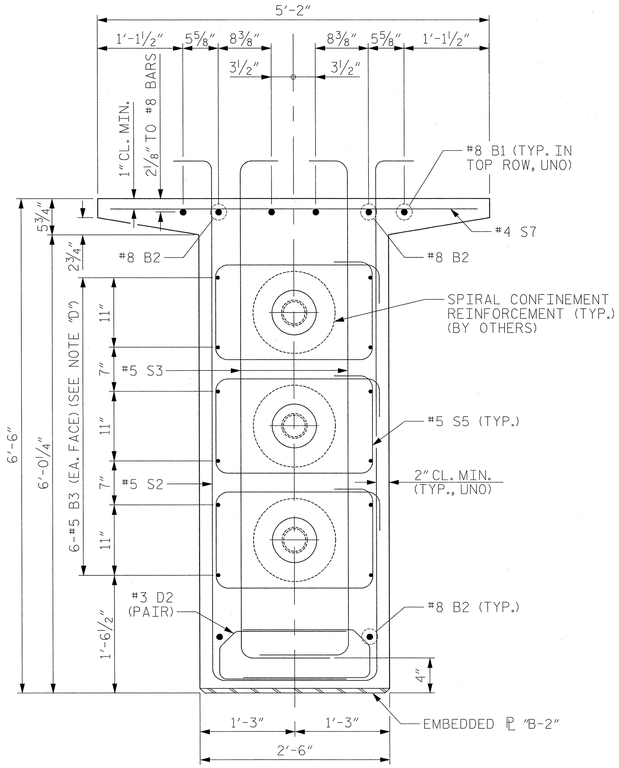

SECTION E-E

SEE STRAND LAYOUT DESIGN FOR STRAND LOCATION
(SHEET 2 OF 5)

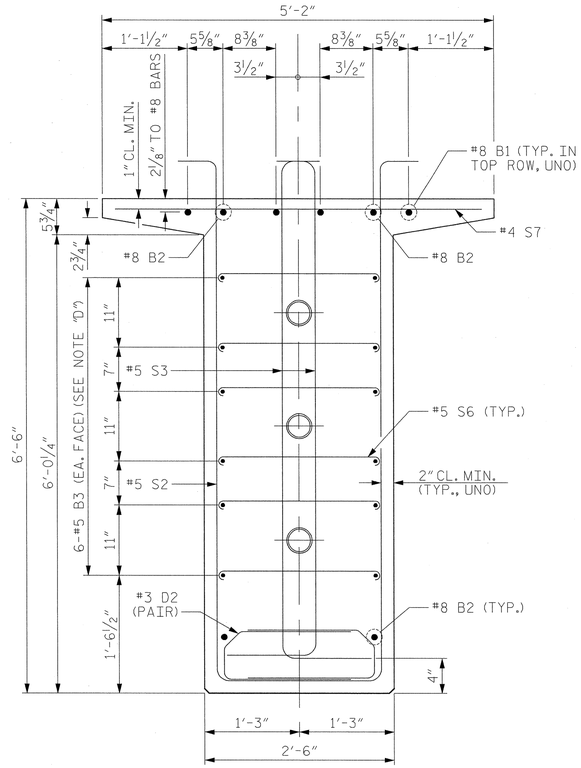

SECTION D-D

SEE STRAND LAYOUT DESIGN FOR STRAND LOCATION
(SHEET 2 OF 5)

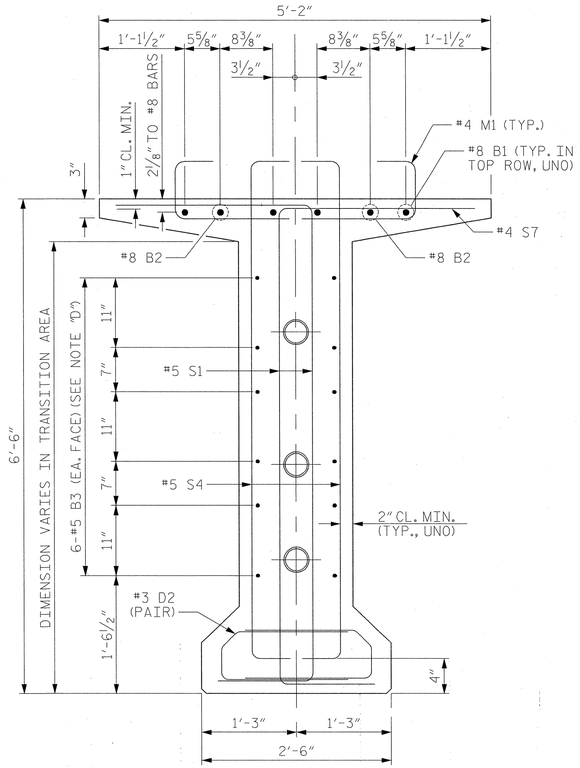

SECTION C-C

SEE STRAND LAYOUT DESIGN FOR STRAND LOCATION
(SHEET 2 OF 5)

NOTE "D"
#5 B3 BARS SHALL EXTEND 2" FROM END OF GIRDER AND SHALL BE FIELD BENT ALONG FACE OF TRANSITION TO MAINTAIN COVER.

PROJECT NO. R-2633BB
BRUNSWICK/NEW HANOVER COUNTY
STATION: 353+32.50 -L-

SHEET 5 OF 5

NORTH CAROLINA PROFESSIONAL ENGINEER SEAL 16594 ROBERT G. WOODRUFF
5/28/13

RS&H IMPROVING YOUR WORLD

RS&H Architects-Engineers-Planners, Inc.
8601 Six Forks Road, Suite 260
Raleigh, NC 27615
919-846-6701 FAX 919-846-9080
www.rsandh.com
North Carolina License Nos. 50073 * F-0493 * C-28

STATE OF NORTH CAROLINA
DEPARTMENT OF TRANSPORTATION
RALEIGH

SUPERSTRUCTURE
GIRDER END
SEGMENT DETAILS
MODIFIED 78" BULB TEE
LEFT LANE

REVISIONS						SHEET NO.
NO.	BY:	DATE:	NO.	BY:	DATE:	S-123
1			3			TOTAL SHEETS
2			4			700

DRAWN BY :	SOF	DATE :	04/12
CHECKED BY :	GBL	DATE :	11/12
DESIGN ENGINEER OF RECORD :	R. WOODRUFF	DATE :	5/2013

5/24/2013
$$$$$$$$$$$$$$$$$$$$$$$$DGN$$$$$$$$$$$$$$$$$$$$$$$$
3:24:47 PM

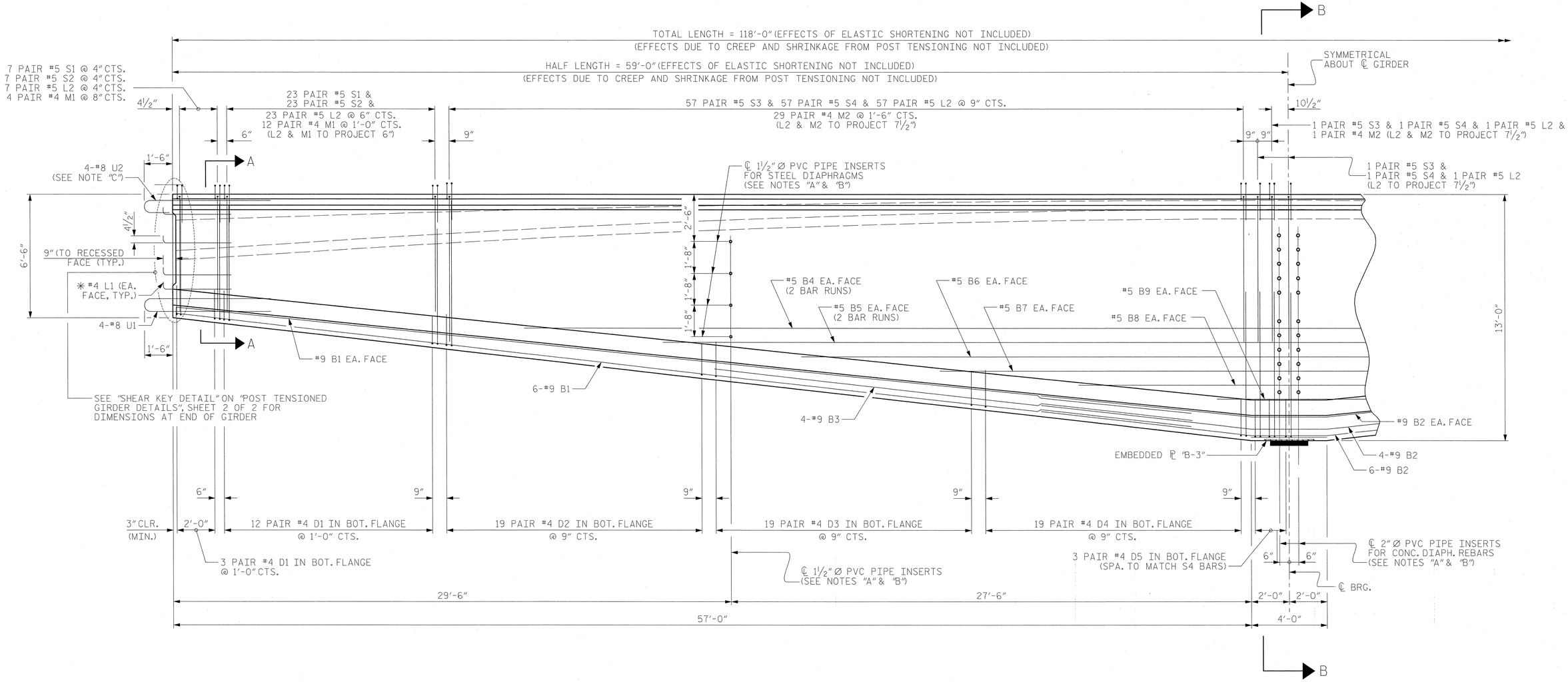

HALF ELEVATION OF GIRDER HAUNCHED SEGMENT

SHOWING REINFORCING STEEL & DIAPHRAGM HOLE PLACEMENT

FOR REINFORCING STEEL DETAILS, SEE "BILL OF MATERIAL FOR POST TENSIONED GIRDERS" SHEET

PROJECT NO. R-2633BB

BRUNSWICK/NEW HANOVER COUNTY

STATION: 353+32.50 -L-

SHEET 1 OF 3

NOTES

NOTE "A"
USE THREADED INSERTS ON EXTERIOR GIRDERS INSTEAD OF PVC PIPE INSERTS. FOR DETAILS, SEE "POST TENSIONED GIRDER DETAILS", SHEET 1 OF 1.

NOTE "B"
FOR REINFORCING AROUND THE PVC PIPE INSERTS, SEE "POST TENSIONED GIRDER DETAILS", SHEET 1 OF 1.

NOTE "C"
OMIT 1-#8 U2 BAR ON EXTERIOR SIDE OF EXTERIOR GIRDERS.

✳ #4 L1 BARS SHALL BE BENT TO VERTICAL AFTER GIRDER FABRICATION AND BEFORE SHIPMENT. HEAT BENDING SHALL NOT BE ALLOWED.

NOTE:
FOR SECTIONS A-A & B-B, SEE "GIRDER HAUNCHED SEGMENT DETAILS", SHEET 2 OF 3.

DRAWN BY :	SOF	DATE :	04/12
CHECKED BY :	GBL	DATE :	11/12
DESIGN ENGINEER OF RECORD :	R. WOODRUFF	DATE :	5/2013

5/24/2013
$$$$$$$$$$$$$$$$$$$$$$$$DGN$$$$$$$$$$$$$$$$$$$$$$$$
3:25:32 PM

NORTH CAROLINA PROFESSIONAL SEAL 18591 ENGINEER ROBERT G. WOODRUFF
5/28/13

RS&H IMPROVING YOUR WORLD

RS&H Architects-Engineers-Planners, Inc.
8601 Six Forks Road, Suite 260
Raleigh, NC 27615
919-846-6701 FAX 919-846-9080
www.rsandh.com
North Carolina License Nos. 50072 * F-0493 * C-28

STATE OF NORTH CAROLINA
DEPARTMENT OF TRANSPORTATION
RALEIGH

SUPERSTRUCTURE
GIRDER HAUNCHED SEGMENT DETAILS
MODIFIED 78" BULB TEE
LEFT LANE

REVISIONS						SHEET NO.
NO.	BY:	DATE:	NO.	BY:	DATE:	S-124
1			3			TOTAL SHEETS
2			4			700

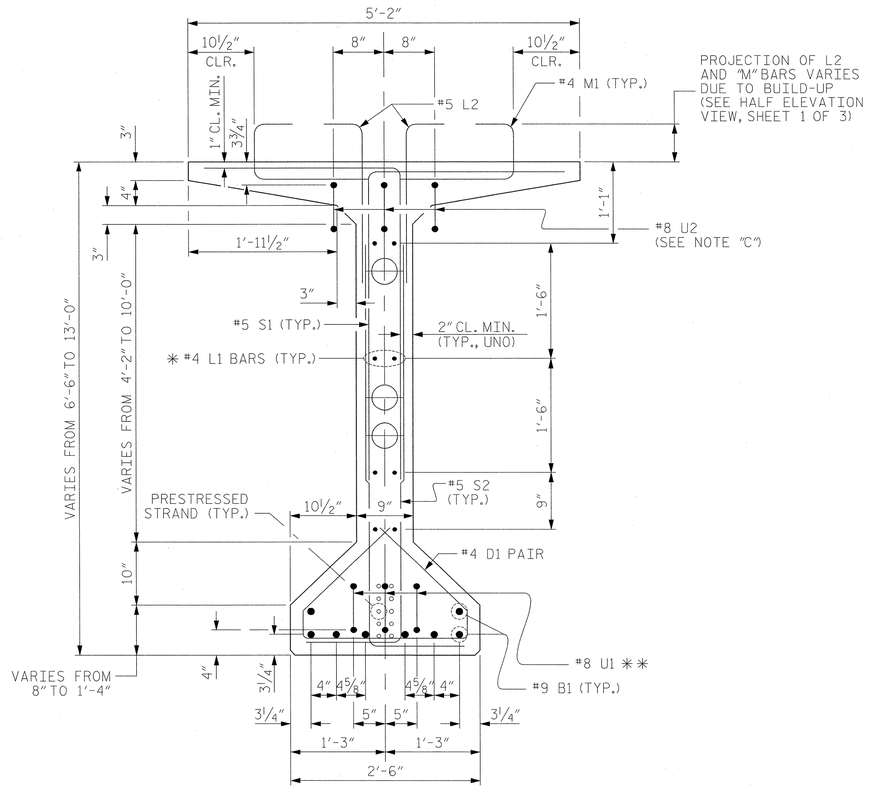

SECTION A-A

TOP FLANGE PRESTRESSED STRANDS OMITTED FOR CLARITY
SEE STRAND LAYOUT DETAIL FOR STRAND LOCATIONS

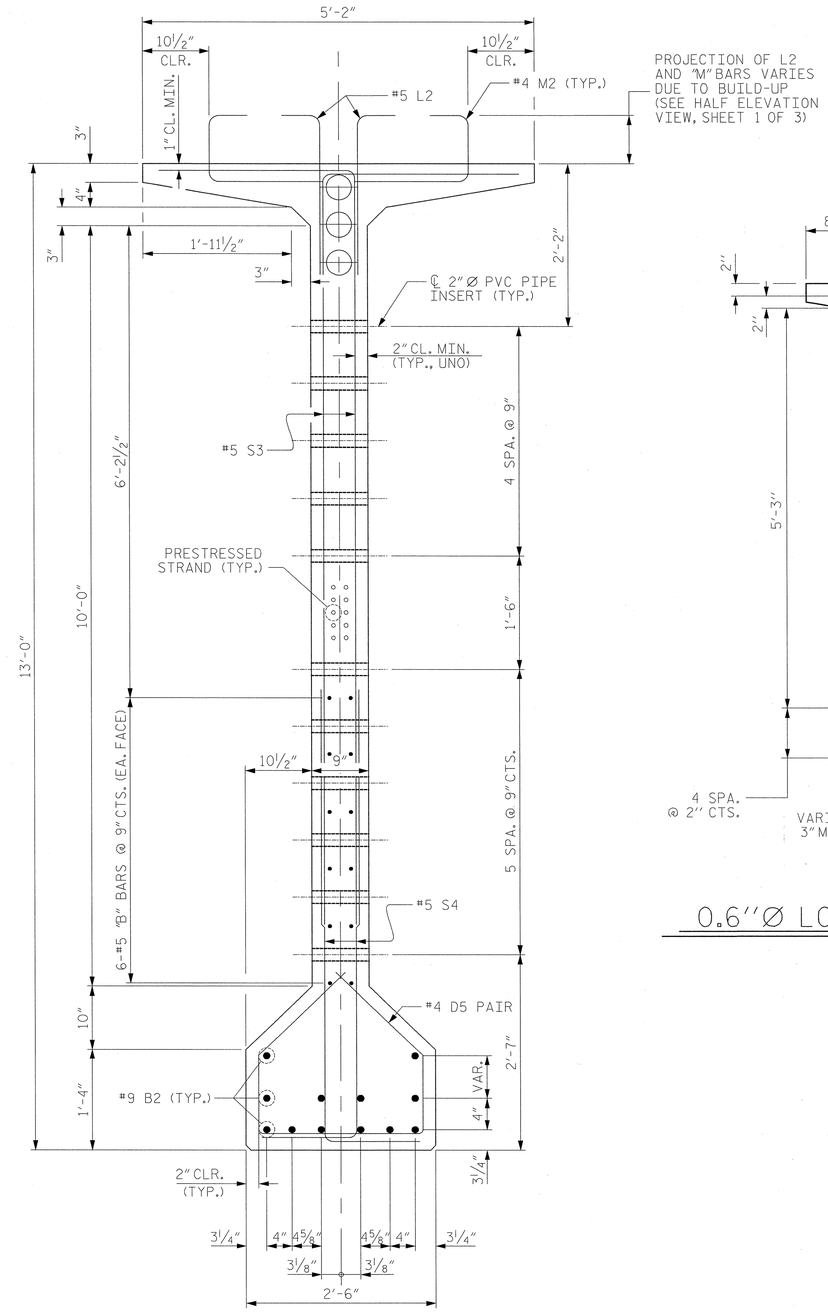

SECTION B-B

TOP FLANGE PRESTRESSED STRANDS OMITTED FOR CLARITY
SEE STRAND LAYOUT DETAIL FOR STRAND LOCATIONS

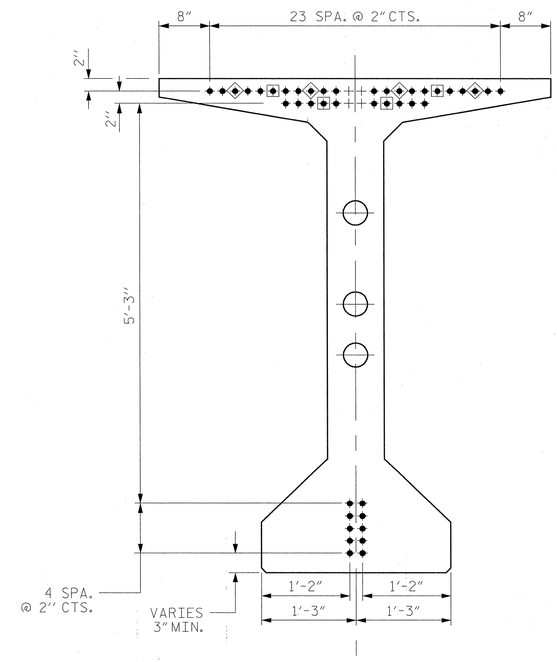

0.6"Ø LOW RELAXATION STRAND LAYOUT

42 STRANDS, ALL STRAIGHT
(8 DEBONDED AS SHOWN)

- ● FULLY BONDED STRANDS
- ◈ STRANDS DEBONDED FOR 16'-0" FROM END OF GIRDER
- ▣ STRANDS DEBONDED FOR 24'-0" FROM END OF GIRDER

NOTES

NOTE "C"
OMIT 1-#8 U2 BAR ON EXTERIOR SIDE OF EXTERIOR GIRDERS.

✳ #4 L1 SHALL BE BENT AFTER GIRDER FABRICATION AND BEFORE SHIPMENT. HEAT BENDING SHALL NOT BE ALLOWED.

✳✳ ENSURE #8 U1 BARS MAINTAIN 2" MINIMUM CLEARANCE.

NOTE:
CLEARANCE BETWEEN #4 "D" BARS AND TOP OF BOTTOM FLANGE VARIES. ENSURE 2" MINIMUM CLEARANCE IS MAINTAINED.

PROJECT NO. R-2633BB
BRUNSWICK/NEW HANOVER COUNTY
STATION: 353+32.50 -L-

SHEET 2 OF 3

DRAWN BY : SOF	DATE : 04/12
CHECKED BY : GBL	DATE : 11/12
DESIGN ENGINEER OF RECORD : R. WOODRUFF	DATE : 05/2013

NORTH CAROLINA PROFESSIONAL SEAL 18594 ENGINEER ROBERT G. WOODRUFF
5/28/13

RS&H IMPROVING YOUR WORLD

RS&H Architects-Engineers-Planners, Inc.
8601 Six Forks Road, Suite 260
Raleigh, NC 27615
919-846-6701 FAX 919-846-9080
www.rsandh.com
North Carolina License Nos. 50073 * F-0493 * C-28

STATE OF NORTH CAROLINA
DEPARTMENT OF TRANSPORTATION
RALEIGH

SUPERSTRUCTURE
GIRDER HAUNCHED SEGMENT DETAILS
MODIFIED 78" BULB TEE
LEFT LANE

REVISIONS						SHEET NO.
NO.	BY:	DATE:	NO.	BY:	DATE:	S-125
1			3			TOTAL SHEETS
2			4			700

5/24/2013
$$$$$$$$$$$$$$$$$$$$$$$$DGN$$$$$$$$$$$$$$$$$$$$$$$$
3:25:51 PM

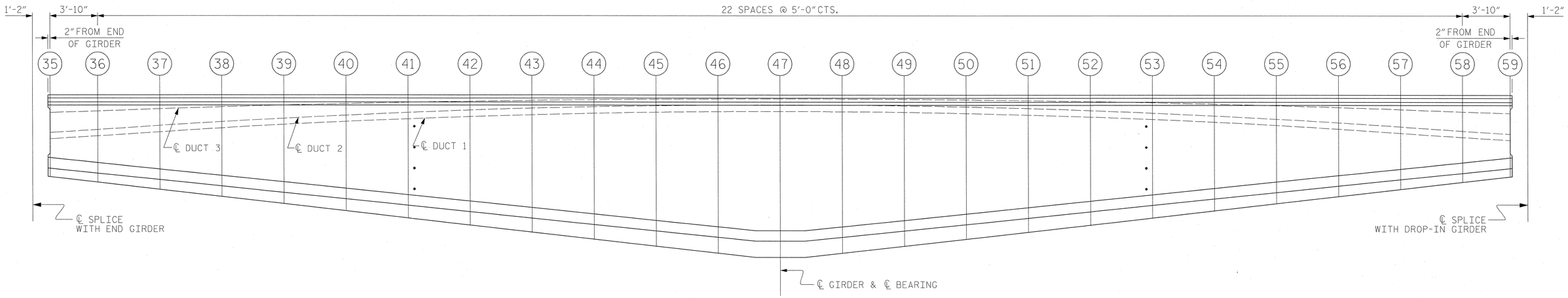

ELEVATION OF HAUNCHED GIRDER SEGMENT

SHOWING POST TENSIONING DUCT PROFILE

HAUNCHED GIRDER SEGMENT POST TENSIONING DUCT PROFILE TABLE

POINT	35	36	37	38	39	40	41	42	43	44	45	46	47	48	49	50	51	52	53	54	55	56	57	58	59
℄ DUCT 1	3.484	3.250	2.930	2.623	2.348	2.105	1.895	1.717	1.571	1.458	1.377	1.329	1.313	1.330	1.382	1.468	1.588	1.744	1.933	2.157	2.416	2.709	3.035	3.360	3.596
℄ DUCT 2	2.984	2.750	2.430	2.123	1.848	1.605	1.395	1.217	1.071	0.958	0.877	0.829	0.813	0.830	0.882	0.968	1.088	1.244	1.433	1.657	1.916	2.209	2.535	2.860	3.096
℄ DUCT 3	1.394	1.277	1.118	0.965	0.828	0.707	0.603	0.514	0.441	0.385	0.345	0.321	0.313	0.321	0.347	0.390	0.450	0.527	0.621	0.733	0.862	1.008	1.170	1.332	1.449

NOTES:
1. DIMENSIONS ARE MEASURED FROM THE TOP OF GIRDER TO CENTERLINE OF DUCT IN FEET.
2. DIMENSIONS PROVIDED AT POINTS 35 & 59 ARE ALONG THE RECESSED FACE, 2" FROM THE END OF SEGMENT.

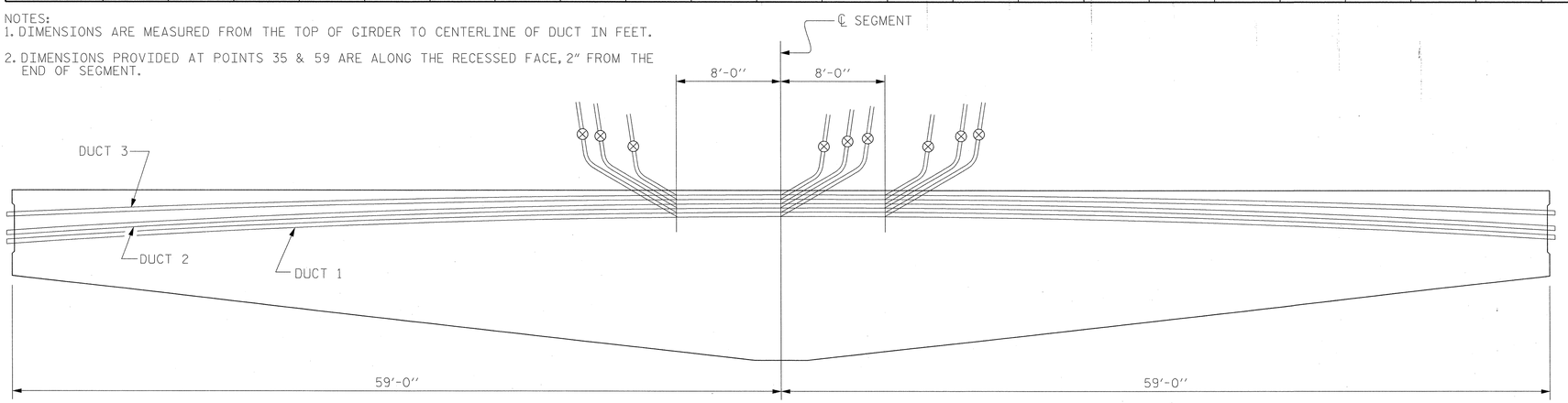

PROPOSED GROUT VENT LOCATION SKETCH

-- INDICATES GROUT VENT

PROJECT NO. R-2633BB

BRUNSWICK/NEW HANOVER COUNTY

STATION: 353+32.50 -L-

SHEET 3 OF 3

NORTH CAROLINA PROFESSIONAL SEAL 18591 ENGINEER ROBERT G. WOODRUFF

5/28/13

RS&H IMPROVING YOUR WORLD

RS&H Architects-Engineers-Planners, Inc.
8601 Six Forks Road, Suite 260
Raleigh, NC 27615
919-846-6701 FAX 919-846-9080
www.rsandh.com
North Carolina License Nos. 50073 * F-0493 * C-28

STATE OF NORTH CAROLINA
DEPARTMENT OF TRANSPORTATION
RALEIGH

SUPERSTRUCTURE
GIRDER HAUNCHED SEGMENT DETAILS
MODIFIED 78" BULB TEE
LEFT LANE

REVISIONS						
NO.	BY:	DATE:	NO.	BY:	DATE:	
1			3			
2			4			

SHEET NO. S-126

TOTAL SHEETS 700

DRAWN BY :	SOF	DATE :	04/12
CHECKED BY :	GBL	DATE :	11/12
DESIGN ENGINEER OF RECORD :	R. WOODRUFF	DATE :	5/2013

5/24/2013
$$$$$$$$$$$$$$$$$$$$$$$$DGN$$$$$$$$$$$$$$$$$$$$$$$$
3:27:47 PM

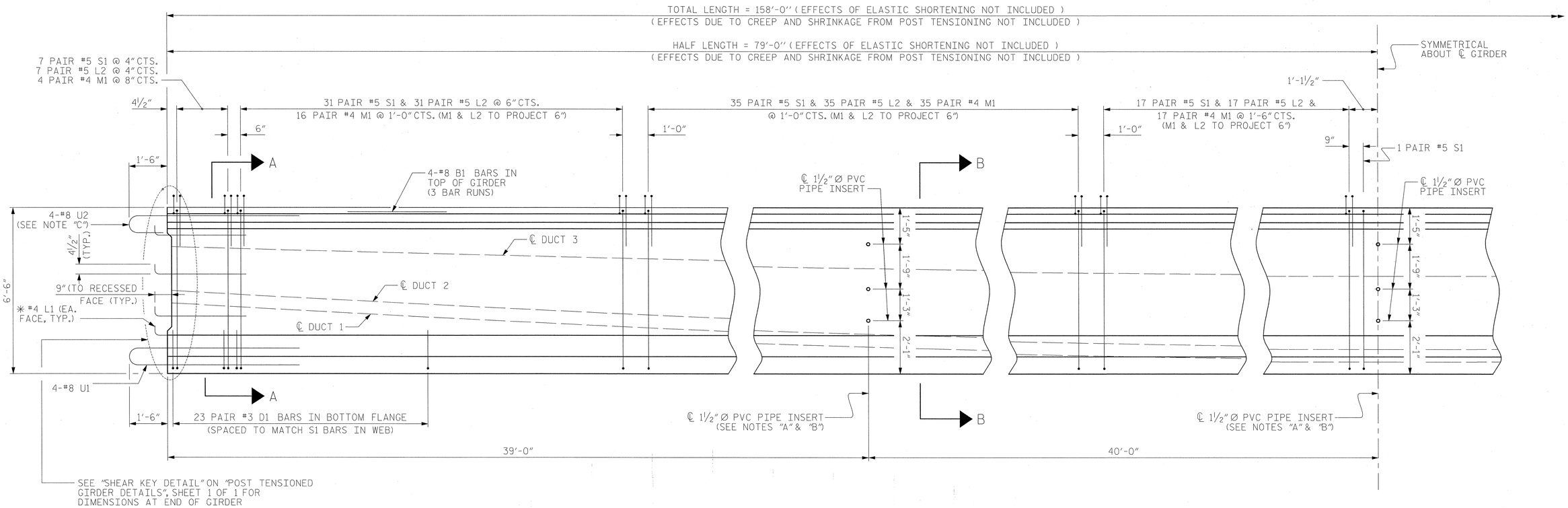

HALF ELEVATION OF GIRDER DROP-IN SEGMENT

SHOWING REINFORCING STEEL & DIAPHRAGM HOLE PLACEMENT

FOR REINFORCING STEEL DETAILS, SEE "BILL OF MATERIAL FOR POST TENSIONED GIRDERS" SHEET

NOTE "A"
USE THREADED INSERTS ON EXTERIOR GIRDERS INSTEAD OF PVC PIPE INSERTS. FOR DETAILS, SEE "POST TENSIONED GIRDER DETAILS", SHEET 1 OF 1.

NOTE "B"
FOR REINFORCING AROUND THE PVC PIPE INSERTS, SEE "POST TENSIONED GIRDER DETAILS", SHEET 1 OF 1.

NOTE "C"
OMIT 2-#8 U2 BARS ON EXTERIOR SIDE OF EXTERIOR GIRDERS.

* #4 L1 BARS SHALL BE BENT TO VERTICAL AFTER GIRDER FABRICATION AND BEFORE SHIPMENT. HEAT BENDING SHALL NOT BE ALLOWED.

NOTE :
FOR SECTIONS A-A & B-B, SEE "GIRDER DROP-IN SEGMENT DETAILS", SHEET 2 OF 3.

PROJECT NO. R-2633BB
BRUNSWICK/NEW HANOVER COUNTY
STATION: 353+32.50 -L-

SHEET 1 OF 3

NORTH CAROLINA PROFESSIONAL SEAL 18591 ENGINEER ROBERT G. WOODRUFF
5/28/13

RS&H IMPROVING YOUR WORLD

RS&H Architects-Engineers-Planners, Inc.
8601 Six Forks Road, Suite 260
Raleigh, NC 27615
919-846-6701 FAX 919-846-9080
www.rsandh.com
North Carolina License Nos. 50071 * F-0403 * C-28

STATE OF NORTH CAROLINA
DEPARTMENT OF TRANSPORTATION
RALEIGH

SUPERSTRUCTURE
GIRDER DROP-IN SEGMENT DETAILS
MODIFIED 78" BULB TEE
LEFT LANE

REVISIONS						SHEET NO.
NO.	BY:	DATE:	NO.	BY:	DATE:	S-127
1			3			TOTAL SHEETS
2			4			700

DRAWN BY : SOF DATE : 04/12
CHECKED BY : GBL DATE : 11/12
DESIGN ENGINEER OF RECORD : R. WOODRUFF DATE : 5/2013

5/24/2013
$$$$$$$$$$$$$$$$$$$$$$DGN$$$$$$$$$$$$$$$$$$$$$$
3:28:47 PM

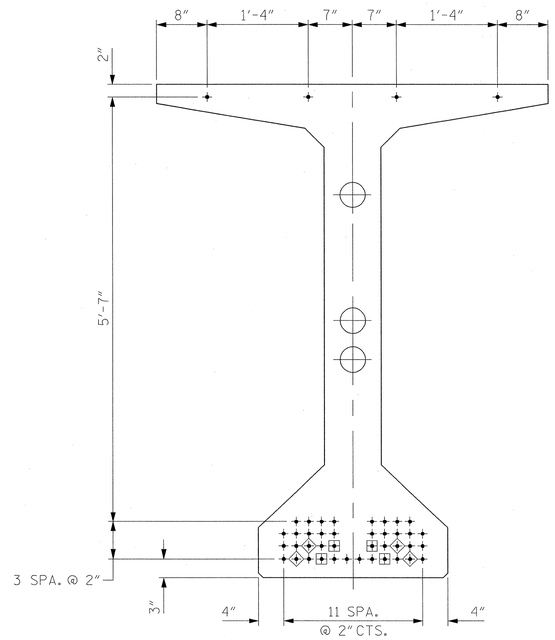

0.6'' Ø LOW RELAXATION STRAND LAYOUT

44 TOTAL STRANDS, ALL STRAIGHT
(8 DEBONDED AS SHOWN)

- ● FULLY BONDED STRANDS
- ◈ STRANDS DEBONDED FOR 16'-0'' FROM END OF GIRDER
- ▣ STRANDS DEBONDED FOR 24'-0'' FROM END OF GIRDER

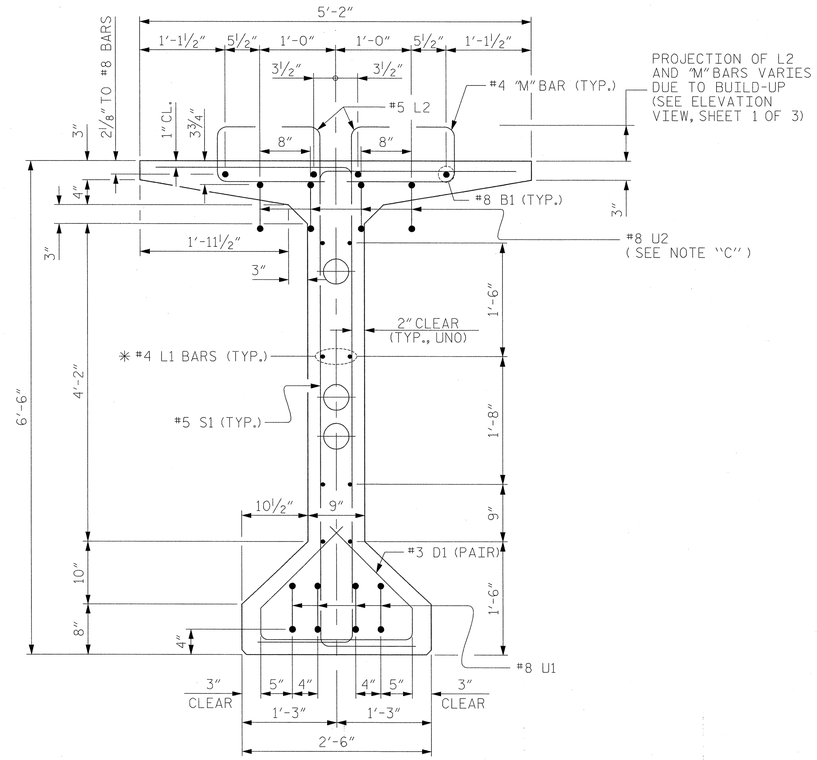

SECTION A-A

SEE STRAND LAYOUT DETAIL FOR STRAND LOCATIONS

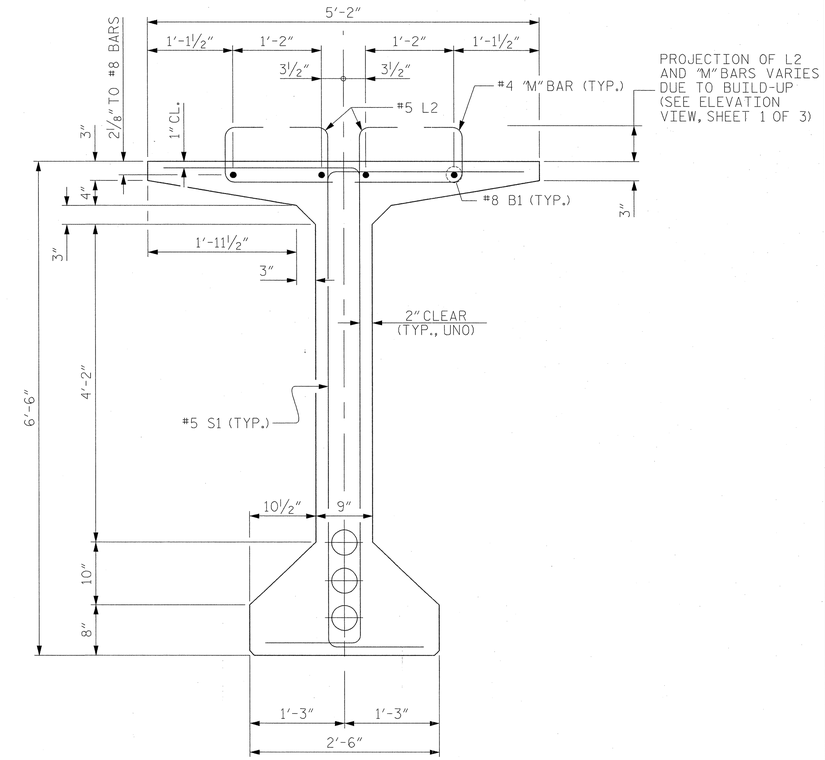

SECTION B-B

SEE STRAND LAYOUT DETAIL FOR STRAND LOCATIONS

NOTE "C"
OMIT 2-#8 U2 BARS ON EXTERIOR SIDE OF EXTERIOR GIRDERS

#4 L1 SHALL BE BENT AFTER GIRDER FABRICATION AND BEFORE SHIPMENT. HEAT BENDING SHALL NOT BE ALLOWED.

PROJECT NO. R-2633BB
BRUNSWICK/NEW HANOVER COUNTY
STATION: 353+32.50 -L-

SHEET 2 OF 3

NORTH CAROLINA PROFESSIONAL SEAL 14654 ENGINEER ROBERT G. WOODRUFF
5/28/13

RS&H IMPROVING YOUR WORLD

RS&H Architects-Engineers-Planners, Inc.
8601 Six Forks Road, Suite 260
Raleigh, NC 27615
919-846-6701 FAX 919-846-9080
www.rsandh.com
North Carolina License Nos. 50073 * F-0493 * C-28

STATE OF NORTH CAROLINA
DEPARTMENT OF TRANSPORTATION
RALEIGH

SUPERSTRUCTURE
GIRDER DROP-IN SEGMENT DETAILS
MODIFIED 78" BULB TEE
LEFT LANE

REVISIONS						
NO.	BY:	DATE:	NO.	BY:	DATE:	
1			3			
2			4			

SHEET NO. S-128
TOTAL SHEETS 700

DRAWN BY :	SOF	DATE :	04/12
CHECKED BY :	GBL	DATE :	11/12
DESIGN ENINGEER OF RECORD :	R. WOODRUFF	DATE :	5/2013

5/28/2013
$$$$$$$$$$$$$$$$$$$$$$$$DGN$$$$$$$$$$$$$$$$$$$$$$$$
8:20:00 AM

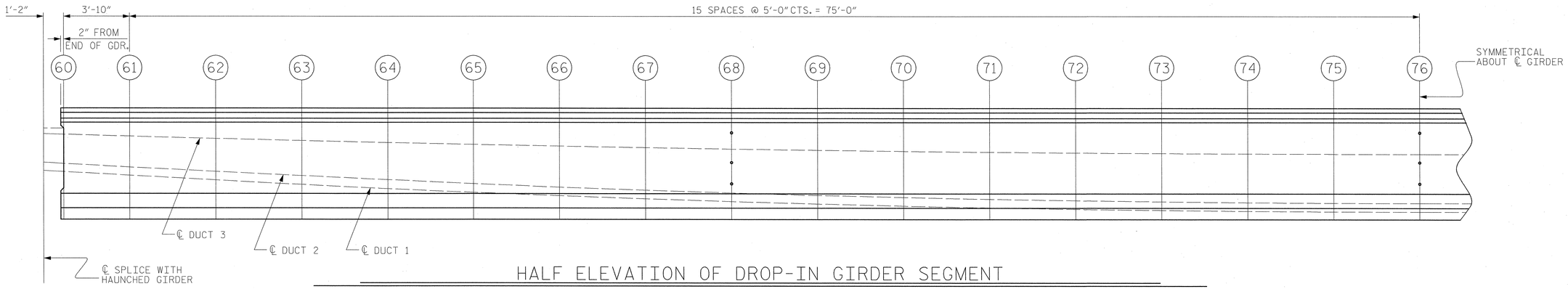

HALF ELEVATION OF DROP-IN GIRDER SEGMENT

SHOWING POST TENSIONING DUCT PROFILE

DROP-IN GIRDER SEGMENT POST TENSIONING DUCT PROFILE TABLE																	
POINT	60	61	62	63	64	65	66	67	68	69	70	71	72	73	74	75	76
℄ DUCT 1	2.765	2.546	2.277	2.072	1.795	1.581	1.386	1.210	1.052	0.913	0.793	0.690	0.607	0.542	0.496	0.468	0.458
℄ DUCT 2	3.265	3.046	2.777	2.572	2.295	2.081	1.886	1.710	1.552	1.413	1.293	1.190	1.107	1.042	0.996	0.968	0.958
℄ DUCT 3	4.982	4.873	4.739	4.614	4.499	4.392	4.295	4.208	4.129	4.060	4.000	3.949	3.907	3.875	3.852	3.838	3.833

NOTES:
1. DIMENSIONS ARE MEASURED FROM THE BOTTOM OF GIRDER TO CENTERLINE OF DUCT IN FEET.
2. DIMENSIONS ARE SYMMETRICAL ABOUT THE CENTERLINE OF GIRDER.
3. DIMENSIONS PROVIDED AT POINT 60 ARE ALONG THE RECESSED FACE, 2" FROM THE END OF SEGMENT.

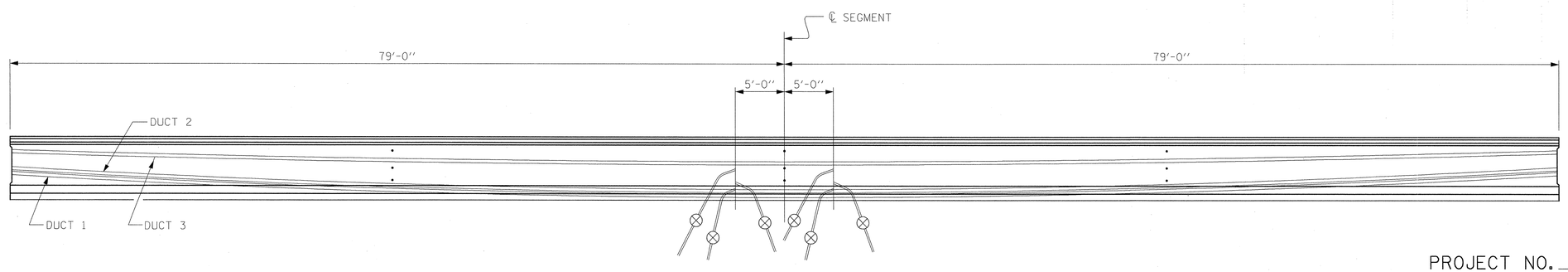

PROPOSED GROUT VENT LOCATION SKETCH

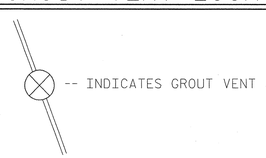

PROJECT NO. R-2633BB

BRUNSWICK/NEW HANOVER COUNTY

STATION: 353+32.50 -L-

SHEET 3 OF 3

NORTH CAROLINA PROFESSIONAL SEAL 18591 ENGINEER ROBERT G. WOODRUFF

5/28/13

RS&H IMPROVING YOUR WORLD

RS&H Architects-Engineers-Planners, Inc.
8601 Six Forks Road, Suite 260
Raleigh, NC 27615
919-846-6701 FAX 919-846-9080
www.rsandh.com
North Carolina License Nos. 50073 * F-0493 * C-28

STATE OF NORTH CAROLINA
DEPARTMENT OF TRANSPORTATION
RALEIGH

SUPERSTRUCTURE
GIRDER DROP-IN SEGMENT DETAILS
MODIFIED 78" BULB TEE
LEFT LANE

REVISIONS						SHEET NO.
NO.	BY:	DATE:	NO.	BY:	DATE:	S-129
1			3			TOTAL SHEETS
2			4			700

DRAWN BY : SOF DATE : 01/12
CHECKED BY : GBL DATE : 11/12
DESIGN ENGINEER OF RECORD : R. WOODRUFF DATE : 5/2013

5/24/2013
$$$$$$$$$$$$$$$$$$$$$$$$DGN$$$$$$$$$$$$$$$$$$$$$$$$
3:29:25 PM

END SEGMENT BILL OF MATERIAL

0.6'' Ø L. R. GRADE 270 STRANDS

AREA (SQUARE INCHES)	ULTIMATE STRENGTH (LBS. PER STRAND)	APPLIED PRESTRESS (LBS. PER STRAND)
0.217	58,600	43,950

REINFORCING STEEL FOR ONE END SEGMENT

BAR	NUMBER	SIZE	TYPE	LENGTH	WEIGHT
B1	12	#8	STR	57'-8"	1860
B2	2	#8	2	40'-5"	217
B3	12	#5	STR	10'-8"	135
D1	46	#3	4	3'-11"	67
D2	48	#3	3	3'-11"	70
✱L1	8	#4	STR	3'-3"	18
L2	270	#5	1	2'-6"	712
M1	36	#4	2	2'-10"	69
M2	140	#4	2	2'-11"	278
M3	56	#4	2	2'-9"	105
S1	284	#5	5	10'-1"	3021
S2	17	#5	8	16'-10"	302
S3	30	#5	5	8'-4"	264
S4	14	#5	5	7'-7"	112
S5	21	#5	10	7'-10"	174
S6	48	#5	9	3'-1"	156
S7	8	#4	STR	4'-10"	26
U1	4	#8	7	13'-7"	146
U2	4	#8	6	8'-3"	89

NOTES:
1. TREAT THE FOLLOWING BARS AS STIRRUPS: "D", "L", "M", & "S" BARS.

✱L1 BARS SHALL BE BENT AFTER GIRDER FABRICATION AND BEFORE SHIPMENT. HEAT BENDING SHALL NOT BE ALLOWED.

BAR TYPES

ALL BAR DIMENSIONS ARE OUT-TO-OUT

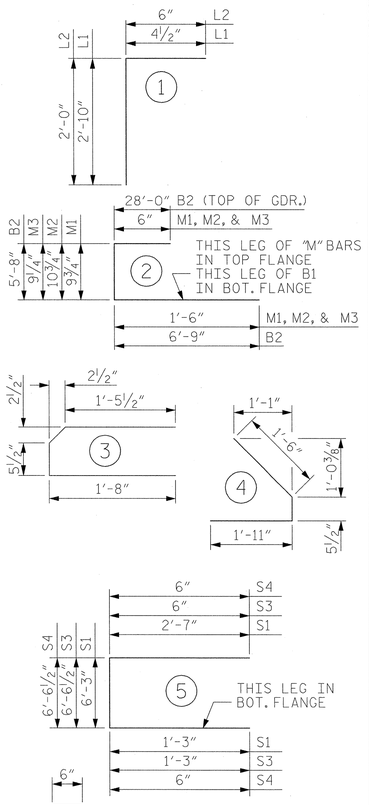

HAUNCHED SEGMENT BILL OF MATERIAL

0.6'' Ø L. R. GRADE 270 STRANDS

AREA (SQUARE INCHES)	ULTIMATE STRENGTH (LBS. PER STRAND)	APPLIED PRESTRESS (LBS. PER STRAND)
0.217	58,600	43,950

REINFORCING STEEL FOR ONE HAUNCHED SEGMENT

BAR	NUMBER	SIZE	TYPE	LENGTH	WEIGHT
B1	16	#9	STR	54'-0"	2940
B2	12	#9	6	26'-0"	1062
B3	8	#9	STR	25'-5"	692
B4	4	#5	STR	42'-7"	180
B5	4	#5	STR	35'-3"	149
B6	2	#5	STR	51'-6"	109
B7	2	#5	STR	37'-0"	78
B8	2	#5	STR	22'-3"	47
B9	2	#5	STR	7'-8"	16
D1	60	#4	3	4'-0"	163
D2	76	#4	3	4'-2"	216
D3	76	#4	3	4'-4"	224
D4	76	#4	3	4'-6"	233
D5	10	#4	3	4'-8"	32
✱L1	16	#4	STR	3'-3"	35
L2	358	#5	1	2'-6"	934
M1	64	#4	2	2'-9"	120
M2	120	#4	2	2'-10"	228
S1	120	#5	1	8'-8"	1097
S2	120	#5	1	7'-4"	929
S3	238	#5	1	10'-3"	2574
S4	238	#5	1	8'-11"	2239
U1	6	#8	5	13'-7"	219
U2	6	#8	4	8'-3"	133

NOTES:
1. TREAT THE FOLLOWING BARS AS STIRRUPS: "D", "L", "M", & "S" BARS.

✱L1 BARS SHALL BE BENT AFTER GIRDER FABRICATION AND BEFORE SHIPMENT. HEAT BENDING SHALL NOT BE ALLOWED.

BAR TYPES

ALL BAR DIMENSIONS ARE OUT-TO-OUT

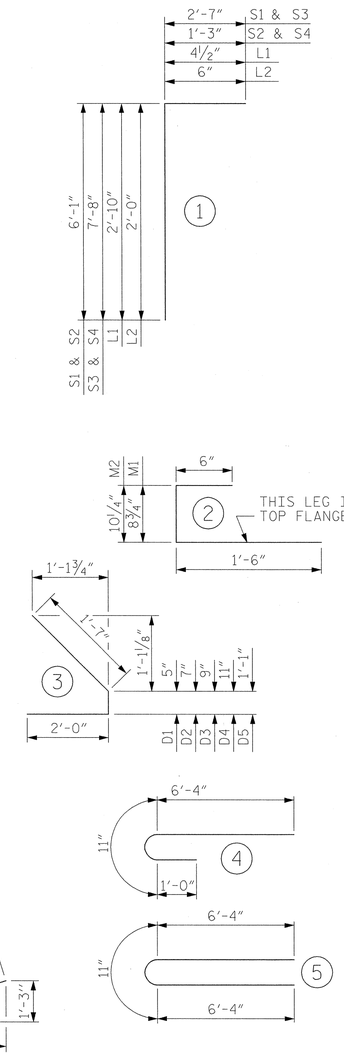

DROP-IN SEGMENT BILL OF MATERIAL

0.6'' Ø L. R. GRADE 270 STRANDS

AREA (SQUARE INCHES)	ULTIMATE STRENGTH (LBS. PER STRAND)	APPLIED PRESTRESS (LBS. PER STRAND)
0.217	58,600	43,950

REINFORCING STEEL FOR ONE DROP-IN SEGMENT

BAR	NUMBER	SIZE	TYPE	LENGTH	WEIGHT
B1	12	#8	STR	55'-10"	1801
D1	92	#3	3	3'-11"	135
✱L1	16	#4	STR	3'-3"	35
L2	364	#5	1	2'-6"	960
M1	292	#4	2	2'-9"	547
S1	364	#5	2	10'-1"	3872
U1	8	#8	5	13'-7"	292
U2	8	#8	4	8'-3"	177

NOTES:
1. TREAT THE FOLLOWING BARS AS STIRRUPS: "D", "L", "M", & "S" BARS.

✱L1 BARS SHALL BE BENT AFTER GIRDER FABRICATION AND BEFORE SHIPMENT. HEAT BENDING SHALL NOT BE ALLOWED.

BAR SIZE	SPLICE LENGTH
#5	2'-2"
#8	4'-11"
#9	6'-3"

BAR TYPES

ALL BAR DIMENSIONS ARE OUT-TO-OUT

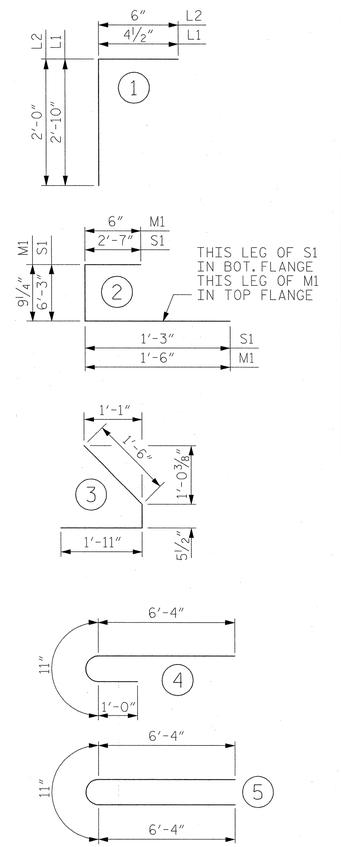

QUANTITIES FOR ONE END SEGMENT		
REINFORCING STEEL	8,500 PSI CONCRETE	0.6'' Ø L.R. STRANDS
LBS.	C.Y.	No.
7,821	55.5	44

QUANTITIES FOR ONE HAUNCHED SEGMENT		
REINFORCING STEEL	8,500 PSI CONCRETE	0.6'' Ø L.R. STRANDS
LBS.	C.Y.	No.
14,572	51.9	42

QUANTITIES FOR ONE DROP-IN SEGMENT		
REINFORCING STEEL	8,500 PSI CONCRETE	0.6'' Ø L.R. STRANDS
LBS.	C.Y.	No.
7819	51.2	44

END SEGMENTS REQUIRED		
GIRDERS REQ'D	LENGTH	TOTAL LENGTH
10	163'-6"	1,635.00'

HAUNCHED SEGMENTS REQUIRED		
GIRDERS REQ'D	LENGTH	TOTAL LENGTH
10	118'-0"	1,180.00'

DROP-IN SEGMENTS REQUIRED		
GIRDERS REQ'D	LENGTH	TOTAL LENGTH
5	158'-0"	790.00'

PROJECT NO. R-2633BB
BRUNSWICK/NEW HANOVER COUNTY
STATION: 353+32.50 -L-

SHEET 1 OF 1

NORTH CAROLINA PROFESSIONAL SEAL 18659 ENGINEER ROBERT G. WOODRUFF
5/28/13

RS&H IMPROVING YOUR WORLD

RS&H Architects-Engineers-Planners, Inc.
8601 Six Forks Road, Suite 260
Raleigh, NC 27615
919-846-5701 FAX 919-846-9080
www.rsandh.com
North Carolina License Nos. 00073 * F-0403 * C-28

STATE OF NORTH CAROLINA
DEPARTMENT OF TRANSPORTATION
RALEIGH

SUPERSTRUCTURE
BILL OF MATERIAL FOR POST TENSIONED GIRDERS
LEFT LANE

REVISIONS						
NO.	BY:	DATE:	NO.	BY:	DATE:	
1			3			
2			4			

SHEET NO. S-130
TOTAL SHEETS 700

DRAWN BY : SOF DATE : 11/12
CHECKED BY : GBL DATE : 11/12
DESIGN ENGINEER OF RECORD : R. WOODRUFF DATE : 5/2013

5/24/2013
3:30:42 PM

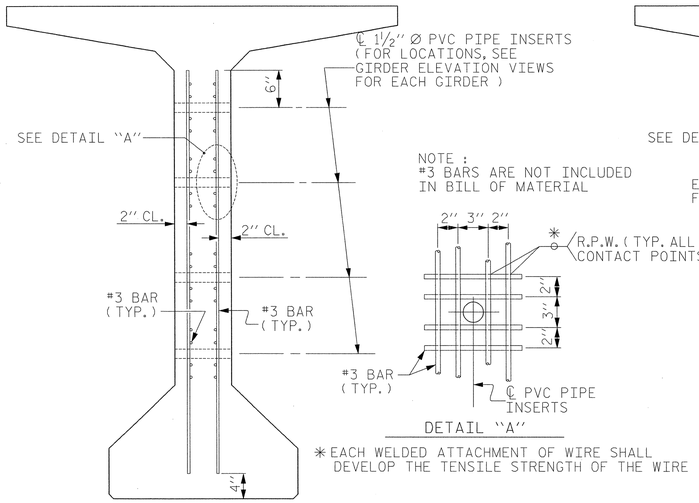

INTERIOR GIRDER ONLY

DETAIL "A"

* EACH WELDED ATTACHMENT OF WIRE SHALL DEVELOP THE TENSILE STRENGTH OF THE WIRE

PVC PIPE INSERT DETAILS

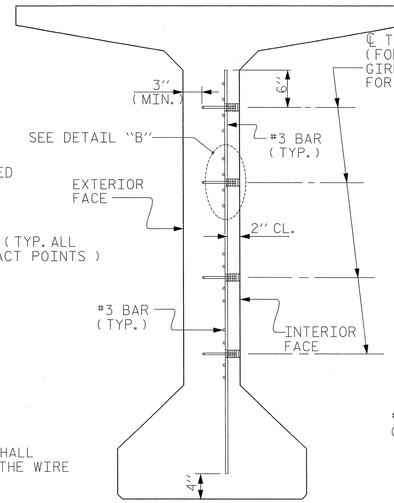

EXTERIOR GIRDER ONLY

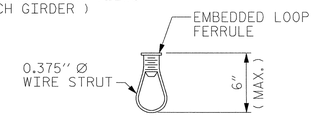

INSERT ELEVATION

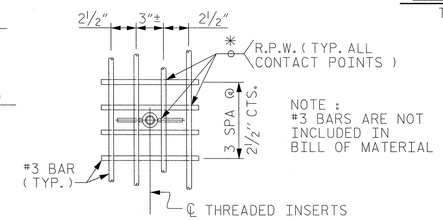

DETAIL "B"

* EACH WELDED ATTACHMENT OF WIRE TO FERRULE SHALL DEVELOP THE TENSILE STRENGTH OF THE WIRE

THREADED INSERT DETAILS

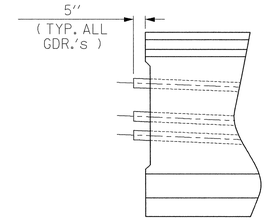

DUCT PROJECTION DETAIL

TYPICAL AT EACH SPLICE LOCATION

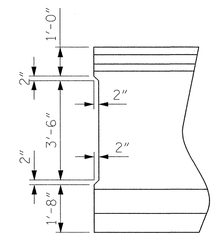

SHEAR KEY DETAIL

NOTES

FOR STRUCTURAL CONCRETE INSERT FOR STEEL DIAPHRAGMS AND SOLAR ARRAY PLATFORM

THE STRUCTURAL CONCRETE INSERT ASSEMBLY FOR STEEL DIAPHRAGMS AND SOLAR ARRAY PLATFORM SHALL CONSIST OF THE FOLLOWING :

A. FERRULES SHALL BE MADE FROM STEEL MEETING THE REQUIREMENTS OF AASHTO M169, GRADE 12L14 AND SHALL HAVE A MINIMUM LENGTH OF THREADS OF 1½".

B. 1-⅞"Ø × 1⅝" OR 1- 1"Ø × 2¼" BOLT WITH WASHER. BOLT SHALL CONFORM TO THE REQUIREMENTS OF ASTM A449. BOLT AND WASHER SHALL BE GALVANIZED. TENSION ON THE ASTM A449 BOLTS IN THE INSERTS SHALL BE SNUG TIGHTENED FOLLOWED BY AN ADDITIONAL ¼ TURN.

C. WIRE STRUT SHOWN IN THE CONCRETE INSERT ASSEMBLY DETAIL IS THE MINIMUM ALLOWABLE SIZE AND SHALL HAVE A MINIMUM TENSILE STRENGTH OF 100,000 PSI. AS AN OPTION, A 7/16"Ø WIRE STRUT WITH A MINIMUM TENSILE STRENGTH OF 90,000 PSI IS ACCEPTABLE.

D. IT IS THE CONTRACTOR'S RESPONSIBLITY TO ENSURE HIGH STRENGTH BOLTS AND FERRULES HAVE MATCHING THREAD TYPES AND PROVIDE A PROPER FIT UP.

NOTES

FOR STRUCTURAL CONCRETE INSERT FOR CONCRETE DIAPHRAGM REBARS

THE STRUCTURAL CONCRETE INSERT ASSEMBLY FOR CONCRETE DIAPHRAGM REBARS SHALL CONSIST OF THE FOLLOWING :

A. FERRULES SHALL BE MADE FROM STEEL MEETING THE REQUIREMENTS OF AASHTO M169, GRADE 12L14 AND SHALL HAVE A MINIMUM LENGTH OF THREADS OF 1½".

B. WIRE STRUT SHOWN IN THE CONCRETE INSERT ASSEMBLY DETAIL IS THE MINIMUM ALLOWABLE SIZE AND SHALL HAVE A MINIMUM TENSILE STRENGTH OF 100,000 PSI. AS AN OPTION, A 7/16"Ø WIRE STRUT WITH A MINIMUM TENSILE STRENGTH OF 90,000 PSI IS ACCEPTABLE.

C. ALL MECHANICAL SPLICERS SHALL BE POSITIVE LOCKING TAPER TYPE WITH A MINIMUM TENSILE STRENGTH OF 125 PERCENT OF SPECIFIED YIELD OF REINFORCEMENT STEEL CONFORMING TO ASTM A-615M GRADE 50.

D. REBAR ENDS SHALL BE MACHINED USING THE MANUFACTURERS BAR THREADER TO ENSURE PROPER THREADING. THE BARS SHALL BE TIGHTENED TO THE MANUFACTURERS RECOMMENDED WRENCH SETTING.

E. DETAILS SHOWING MECHANICAL SPLICERS AND THEIR LOCATIONS SHALL BE SHOWN ON THE SHOP DRAWINGS AND SHALL BE APPROVED BY THE ENGINEER PRIOR TO CASTING THE GIRDER.

THE COST OF THE THREADED INSERTS AND PVC PIPE INSERTS SHALL BE INCLUDED IN THE VARIOUS PAY ITEMS.

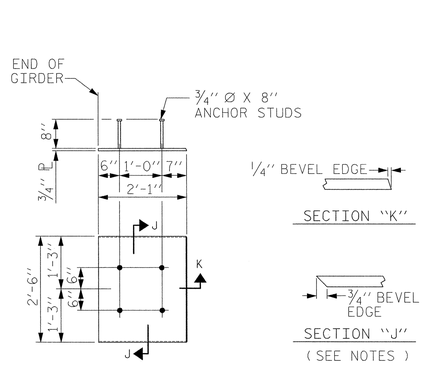

EMBEDDED PLATE "B-2" DETAILS

(1 REQ'D PER END GIRDER SEGMENT)

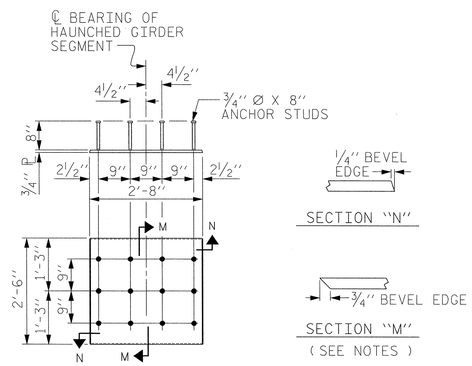

EMBEDDED PLATE "B-3" DETAILS

(1 REQ'D PER HAUNCHED GIRDER SEGMENT)

EMBEDDED PLATE NOTES

EMBEDDED PLATE "B-2" AND "B-3" SHALL BE GALVANIZED IN ACCORDANCE WITH THE STANDARD SPECIFICATIONS. BEVEL EDGES OF PLATE "B-2" AND "B-3" TO GIVE CLOSE FIT BUT NOT TIGHT FIT TO STEEL CASTING FORM.

ANCHOR STUDS SHALL CONFORM TO AASHTO M169 GRADES 1010 THROUGH 1020 OR APPROVED EQUAL, AND SHALL MEET THE TYPE "B" REQUIREMENTS OF SUBSECTION 7.3 OF THE ANSI/AASHTO/AWS D1.5 BRIDGE WELDING CODE.

EMBEDDED PLATES TO BE INCLUDED IN THE UNIT PRICE BID FOR "78" POST-TENSIONED CONCRETE GIRDERS"

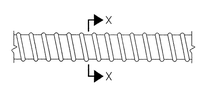

PLAN VIEW

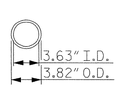

SECTION X-X

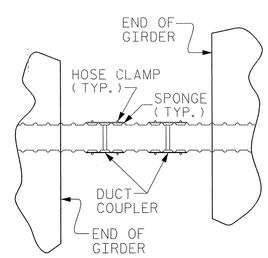

POST-TENSIONING CLOSURE SPLICE DUCT DETAILS

(TO BE INCLUDED IN THE UNIT PRICE BID FOR "POST-TENSIONING TENDONS")

PROJECT NO. R-2633BB

BRUNSWICK/NEW HANOVER COUNTY

STATION: 353+32.50 -L-

SHEET 1 OF 1

NORTH CAROLINA PROFESSIONAL SEAL 18591 ENGINEER ROBERT G. WOODRUFF

5/28/13

RS&H IMPROVING YOUR WORLD

RS&H Architects-Engineers-Planners, Inc.
8601 Six Forks Road, Suite 260
Raleigh, NC 27615
919-846-6701 FAX 919-846-9080
www.rsandh.com
North Carolina License Nos. 50071 * F-0493 * C-28

STATE OF NORTH CAROLINA
DEPARTMENT OF TRANSPORTATION
RALEIGH

SUPERSTRUCTURE

POST-TENSIONED GIRDER DETAILS

MODIFIED 78" BULB TEE
LEFT LANE

REVISIONS						SHEET NO.
NO.	BY:	DATE:	NO.	BY:	DATE:	S-131
1			3			TOTAL SHEETS
2			4			700

DRAWN BY : RLV DATE : 05/12
CHECKED BY : SOF DATE : 05/12
DESIGN ENGINEER OF RECORD : R. WOODRUFF DATE : 05/2013

5/30/2013
$$$$$$$$$$$$$$$$$$$$$$$$DGN$$$$$$$$$$$$$$$$$$$$$$$$
10:25:20 AM

MATERIAL PROPERTIES

CONCRETE :

1. FOR CORROSION PROTECTION OF BRIDGE, SEE SPECIAL PROVISIONS.
2. THE TRANSFER OF LOAD FROM THE ANCHORAGES TO THE GIRDER SHALL BE DONE WHEN CONCRETE HAS REACHED A COMPRESSIVE STRENGTH OF NOT LESS THAN 6500 psi.
3. THE CONCRETE IN THE GIRDER CLOSURE SPLICE DIAPHRAGMS SHALL BE CLASS PRESTRESS +6000 (NORMAL WEIGHT) WITH A MINIMUM CONCRETE COMPRESSIVE STRENGTH AT 28 DAYS OF 6500 psi.
4. THE CONCRETE IN THE DIAPHRAGMS OVER BENT 6 AND BENT 7 SHALL BE CLASS AA CONCRETE (NORMAL WEIGHT).
5. DECK SLAB CONCRETE SHALL ATTAIN A MINIMUM CONCRETE COMPRESSIVE STRENGTH OF 4000 psi PRIOR TO STRESSING OF STAGE 2 POST-TENSIONING TENDONS.
6. CONCRETE IN PRESTRESSED CONCRETE GIRDERS SHALL BE AT LEAST 60 DAYS OLD PRIOR TO STRESSING OF POST TENSIONING TENDONS.
7. ALL CONCRETE BEING STRESSED SHALL BE AT LEAST 10 DAYS OLD PRIOR TO STRESSING OF POST-TENSIONING TENDONS.
8. DEPENDING ON THE TYPE OF SYSTEM USED TO SUPPORT THE DECK SLAB FORMS, PRESET ANCHORS MAY BE NECESSARY IN THE PRESTRESSED CONCRETE GIRDER.
9. THE TOP SURFACE OF THE GIRDER, EXCLUDING THE OUTSIDE 4", SHALL BE RAKED TO A DEPTH OF 1/4".
10. PRESTRESSED CONCRETE GIRDERS ARE DESIGNED FOR 0 PSI TENSION IN THE PRECOMPRESSED TENSILE ZONE UNDER ALL LOADING CONDITIONS.
11. PRESTRESSED CONCRETE GIRDERS SHALL CONTAIN NITRITE CORROSION INHIBITOR.
12. THE CONTRACTOR IS RESPONSIBLE FOR THE INTEGRITY AND STABILITY OF THE GIRDERS. IN HANDLING THE 78"POST-TENSIONED PRESTRESSED GIRDERS, THEY SHALL BE MAINTAINED IN AN UPRIGHT POSITION AT ALL TIMES AND THE PROPOSED METHOD FOR ERECTING, STORING AND TRANSPORTING THE GIRDERS SHALL BE SUBMITTED TO THE ENGINEER FOR APPROVAL. THE SUBMITTAL SHALL INCLUDED DESIGN CALCULATIONS FOR LOCATIONS OF PICK-UP POINTS AND SUPPORT POINTS AS NEEDED TO MAINTAIN THE GIRDERS STABLITY DURING ERECTION, STORAGE AND TRANSPORTATION.

PRESTRESSING STEEL :

1. ALL PRESTRESSING STRANDS SHALL BE 7-WIRE LOW-RELAXATION GRADE 270 STRANDS AND SHALL CONFORM TO AASHTO M203 EXCEPT FOR SAMPLING REQUIREMENTS WHICH SHALL BE IN ACCORDANCE WITH THE STANDARD SPECIFICATIONS.
2. AT ENDS OF GIRDERS TO BE EMBEDDED IN CONCRETE DIAPHRAGMS OR END WALLS, PRESTRESSING STRANDS MAY EXTEND A MAXIMUM OF 2" BEYOND THE GIRDER ENDS. OTHERWISE, PRESTRESSING STRANDS SHALL BE CUT FLUSH WITH THE GIRDER ENDS.

REINFORCING STEEL :

1. ALL REINFORCING STEEL SHALL BE GRADE 60.

DESIGN ASSUMPTIONS

CONSTRUCTION SEQUENCE

1. SEE "ERECTION SEQUENCE FOR SPANS 6 THRU 8 PLAN SHEETS FOR NOTES AND DETAILS.
2. THE DESIGN SHOWN IN THESE PLANS IS BASED ON A CONSTRUCTION SEQUENCE FOR WHICH THE GIRDERS WERE ASSUMED TO BE FROM 60 TO 365 DAYS OLD WHEN ERECTED.

COEFFICIENTS FOR PRESTRESSING STEEL AND PRESTRESS LOSSES :

1. MODULUS OF ELASTICITY = 28,500,000 psi
2. ANCHOR SET = 0.375 INCHES ※
3. FRICTION COEFFICIENT (GALVANIZED DUCT) = 0.25
4. WOBBLE COEFFICIENT = 0.0002
5. CONSPLICE® BY LEAP SOFTWARE, INC., TANGO BY DRC INTERNATIONAL, LTD., AND ACI-209R-92 CODES WERE USED IN PERFORMING THE TIME-DEPENDENT ANALYSIS ON THE POST-TENSIONED PRESTRESSED CONCRETE MEMBERS

※ - ACTUAL ANCHOR SET LOSSES SHALL BE DETERMINED DURING CONSTRUCTION. THE CONTRACTOR MAY REQUIRE ADJUSTMENT OF JACKING FORCES TO COMPENSATE FOR DIFFERENT AMOUNTS OF ANCHOR SET.

POST-TENSIONING TENDONS :

1. THREE POST-TENSIONING TENDONS CONSISTING OF 15 - 0.6 INCH DIAMETER LOW-RELAXATION PRESTRESSING STRANDS ARE USED IN EACH GIRDER LINE.
2. TENDONS ARE STRESSED IN TWO STAGES :
   FIRST STAGE POST-TENSIONING TENDONS (TENDONS 1 AND 2) ARE STRESSED AFTER GIRDERS ARE SPLICED BUT BEFORE COMPOSITE DECK SLAB IS PLACED.
   SECOND STAGE POST-TENSIONING TENDON (TENDON 3) IS STRESSED AFTER THE COMPOSITE DECK SLAB IS PLACED.
3. ALL POST-TENSIONING TENDONS ARE STRESSED FROM BOTH ENDS.

POST-TENSIONING STRESS LIMITS AND DESIGN JACKING STRESSES :

1. MAXIMUM JACKING STRESS = 0.81 Fpu (218.7 ksi)
   DESIGN JACKING STRESS = 0.75 Fpu (202.5 ksi) FOR TENDONS 1, 2, AND 3
2. MAXIMUM STRESSES AFTER ANCHORING TENDONS :
   AT END OF SEATING ZONE = 0.75 Fpu (202.5 ksi)
   AT ANCHOR = 0.70 Fpu (189.0 ksi)

WORKING DRAWINGS

1. THE CONTRACTOR SHALL SUBMIT WORKING DRAWINGS SHOWING COMPLETE DETAILS OF THE POST-TENSIONING SYSTEM TO THE ENGINEER FOR APPROVAL.
2. THE CONTRACTOR SHALL SUBMIT WORKING DRAWINGS SHOWING COMPLETE DETAILS OF THE DUCT AND DUCT SPLICE FOR APPROVAL BY THE ENGINEER. THESE WORKING DRAWINGS SHALL SHOW COMPLETE DIMENSIONS OF THE DUCT AND DUCT SPLICE, A THOROUGH SEQUENCE OF INSTALLATION OF THE DUCT SPLICE, DETAILS FOR SUPPORT OF THE DUCT, DETAILS OF GROUT VENTS AND THEIR CONNECTION TO THE DUCT, LOCATION OF GROUT VENTS AND OTHER RELATED DETAILS. THE DUCT SHALL NOT BE SHIPPED TO THE PRECASTER UNTIL THIS SUBMITTAL IS APPROVED BY THE ENGINEER.
3. THE CONTRACTOR SHALL SUBMIT INTEGRATED WORKING DRAWINGS IN AREAS OF POST-TENSIONING ANCHORAGES DUE TO CONGESTION WITH REINFORCING STEEL. THESE WORKING DRAWINGS WILL SHOW COMPLETE DETAILS OF THE ANCHORAGE SYSTEM, INCLUDING ANCHORAGE PROTECTION DETAILS, AND RECESSES REQUIRED TO ACCOMMODATE STRESSING EQUIPMENT. LOCAL ANCHORAGE ZONE REINFORCEMENT SHALL BE DESIGNED BY THE POST-TENSIONING SUPPLIER AND SHOWN ON THE WORKING DRAWINGS. THE CONTRACTOR SHALL BE RESPONSIBLE FOR RESOLVING CONFLICTS OF LOCAL ANCHORAGE ZONE REINFORCEMENT AND ANCHORAGE WITH OTHER REINFORCEMENT. ANY SHIFTING OF REINFORCING STEEL TO ACCOMODATE PLACEMENT OF LOCAL ANCHORAGE ZONE REINFORCEMENT SHALL BE APPROVED BY THE ENGINEER.
4. PRIOR TO CASTING THE GIRDERS, THE CONTRACTOR SHALL SUBMIT COMPLETE WORKING DRAWINGS WITH THE EXACT LOCATION AND A COMPLETE DESCRIPTION OF ALL INSERTS CAST IN THE GIRDERS TO THE DEPARTMENT FOR APPROVAL. SUCH INSERTS INCLUDE, BUT ARE NOT LIMITED TO, INSERTS FOR SUPPORTING FALSEWORK AND FORMWORK, INSERTS FOR ATTACHING DIAPHRAGMS, INSERTS FOR CONNECTING STRONGBACKS, INSERTS FOR CONNECTING TEMPORARY BENTS, INSERTS FOR CONNECTING TEMPORARY BRACING, AND LIFTING INSERTS.
5. THE CONTRACTOR SHALL SUBMIT WORKING DRAWINGS AND CALCULATIONS SHOWING COMPLETE DETAILS OF TENDON STRESSING FOR APPROVAL BY THE ENGINEER. THESE DETAILS SHALL INDICATE JACKING FORCES, THE SEQUENCE OF STRESSING, CALCULATED TENDON ELONGATIONS, GAUGE PRESSURES, JACK CALIBRATIONS, FRICTION COEFFICIENT, WOBBLE COEFFICIENT AND ANCHOR SET LOSS.
6. THE CONTRACTOR SHALL SUBMIT COMPLETE DETAILS OF TENDON GROUTING MATERIALS AND PROCEDURES FOR APPROVAL BY THE ENGINEER.

DUCTS

1. DUCTS FOR POST-TENSION TENDONS SHALL BE GALVANIZED CORRUGATED METAL SHEATHING WITH AN INSIDE CLEAR DIAMETER OF 3.63" AND AN OUTSIDE DIAMETER OF 3.82". THE CONTRACTOR HAS THE OPTION OF USING AN ALTERNATE DUCT SIZE AS LONG AS THE ALTERNATE DUCT DOES NOT DECREASE THE 2" OF COVER REQUIRED FOR THE STIRRUPS.
2. DUCTS SHALL BE SECURELY TIED TO STIRRUPS AT A MAXIMUM INTERVAL OF 1'-6" CTS. TO PREVENT DISPLACEMENT OF DUCTS DURING CONCRETE PLACEMENT.
3. DURING STORAGE AND AFTER INSTALLATION, DUCTS AND GROUT VENTS SHALL BE SEALED AT ALL TIMES TO PREVENT ENTRANCE OF WATER AND DEBRIS. DUCTS SHALL BE PROTECTED AND HANDLED WITH CARE TO PREVENT DAMAGE OR UNINTENDED BENDING, CRIMPING OR FLATTENING DURING STORAGE, INSTALLATION, AND PLACEMENT OF GIRDER CONCRETE.
4. THE GIRDER SIDE FORMS SHALL NOT BE SET IN PLACE UNTIL THE ENGINEER HAS VISUALLY INSPECTED AND APPROVED THE DUCT PROFILE, ANCHORAGE DETAILS, REINFORCING CAGE AND OTHER GIRDER FABRICATION DETAILS. THE DUCTS SHALL ALSO BE PRESSURE TESTED FOR POSSIBLE LEAKS BEFORE SIDE FORMS ARE PLACED.
5. THE CONTRACTOR SHALL BE RESPONSIBLE FOR THE DETAILED DESIGN OF THE DUCT AND THE DUCT SPLICE. A SUGGESTED CONCEPTUAL DESIGN OF THE DUCT SPLICE IS GIVEN ON THE SHEET TITLED "POST-TENSIONED GIRDER DETAILS" SHEET 1 OF 1.
6. DUCTS SHALL HAVE GROUT VENTS AT EACH INTERIOR SUPPORT (HIGH POINT) AND AT EACH LOW POINT ALONG THE TENDON PROFILE, AND AT OTHER LOCATIONS. SEE PROPOSED GROUT VENT LOCATION SKETCHES ON THE "MODIFIED 78" BULB TEE" PLAN SHEETS.
7. DUCT SPLICES SHALL BE WATERTIGHT AND PROVIDE A SMOOTH INTERIOR ALIGNMENT WITH NO LIPS OR KINKS. THEY SHALL BE INSTALLED TO THE SAME PLACEMENT TOLERANCE AS CONTINUOUS RUNS OF THE DUCT. STIRRUP SPACING AT DUCT SPLICES MAY BE ADJUSTED UP TO 4 INCHES PROVIDED THE TOTAL NUMBER OF STIRRUPS WITHIN 3 FEET ON EITHER SIDE OF THE SPLICE IS THE SAME AS REQUIRED BY THE PLANS.
8. FOLLOWING COMPLETION OF CONCRETE PLACEMENT IN GIRDERS AND BEFORE TRANSPORTING GIRDERS TO THE JOB SITE, DUCTS SHALL BE TESTED FOR OBSTRUCTIONS BY RUNNING A ROUND TORPEDO THROUGH THE DUCT. SEE NOTE 12.
9. DUCT SPLICES IN CLOSURE SPLICE DIAPHRAGMS SHALL BE PRESSURE TESTED FOR ANY LEAKS THAT MAY ALLOW GROUT TO ENTER DUCT BEFORE CONCRETE PLACEMENT.
10. FOLLOWING COMPLETION OF CONCRETE PLACEMENT FOR EACH CLOSURE SPLICE DIAPHRAGM, THE DUCTS SHALL BE TESTED FOR OBSTRUCTIONS BY RUNNING A ROUND TORPEDO THROUGH THE DUCT. SEE NOTE 12. THIS STEP SHALL BE PERFORMED BEFORE CONCRETE HAS TAKEN ITS INITIAL SET.
11. FOLLOWING COMPLETION OF GROUTING DUCTS 1 AND 2, DUCT 3 SHALL BE TESTED FOR OBSTRUCTIONS BY RUNNING A ROUND TORPEDO THROUGH THE DUCT. SEE NOTE 12.
12. TO DEMONSTRATE THAT THE DUCTS ARE NOT BLOCKED, THE CONTRACTOR SHALL PASS A TORPEDO THROUGH THE DUCTS. THE TORPEDO SHALL HAVE DIMENSIONS NOT LESS THAN 1/4" SMALLER THAN THE INSIDE DIAMETER OF THE DUCT.
13. DUCT PLACEMENT TOLERANCE SHALL BE 1/4" ± IN THE HORIZONTAL DIRECTION AND 1/4" ± IN THE VERTICAL DIRECTION.

GENERAL NOTES

FOR POST-TENSIONING TENDONS, SEE SPECIAL PROVISIONS.

IN ADDITION TO THE "POST-TENSIONING TENDONS" SPECIAL PROVISION, THE CONTRACTOR SHALL ADHERE TO THE GUIDELINES FOR TENDON INSTALLATION AND GROUTING AS DESCRIBED IN THE FEDERAL HIGHWAY ADMINISTRATION'S PUBLICATION "POST-TENSIONING TENDON INSTALLATION AND GROUTING MANUAL".

FOR 78" POST-TENSIONED PRESTRESSED CONCRETE GIRDERS, SEE SPECIAL PROVISIONS.

PROJECT NO. R-2633BB
BRUNSWICK/NEW HANOVER COUNTY
STATION: 353+32.50 -L-

SHEET 1 OF 2

NORTH CAROLINA PROFESSIONAL SEAL 18891 ENGINEER ROBERT G. WOODRUFF
7/1/13

RS&H IMPROVING YOUR WORLD

RS&H Architects-Engineers-Planners, Inc.
8601 Six Forks Road, Suite 260
Raleigh, NC 27615
919-846-6701 FAX 919-846-9090
www.rsandh.com
North Carolina License Nos. 50073 * F-0493 * C-28

STATE OF NORTH CAROLINA
DEPARTMENT OF TRANSPORTATION
RALEIGH

POST-TENSION SEGMENT NOTES

LEFT LANE

REVISIONS										SHEET NO.
NO.	BY:	DATE:	NO.	BY:	DATE:	NO.	BY:	DATE:	NO.	BY:	DATE:	S-132
1			3									TOTAL SHEETS
2			4									700

DRAWN BY :	SOF	DATE :	04/12
CHECKED BY :	RLB	DATE :	06/12
DESIGN ENGINEER OF RECORD :	R. WOODRUFF	DATE :	5/2013

6/28/2013
9:23:36 AM

POST-TENSIONING OPERATIONS

1. THE POST-TENSIONING OPERATION SHALL BE PERFORMED ACCORDING TO THE REQUIREMENTS OF THE POST-TENSIONING TENDONS SPECIAL PROVISION AND TO THE "POST-TENSIONING TENDON INSTALLATION AND GROUTING MANUAL" PUBLISHED BY THE FEDERAL HIGHWAY ADMINISTRATION.

2. THE PERSON IN RESPONSIBLE CHARGE OF THE POST-TENSIONING OPERATION SHALL MEET THE QUALIFICATIONS DESCRIBED IN THE "POST-TENSIONING TENDON INSTALLATION AND GROUTING MANUAL" PUBLISHED BY THE FEDERAL HIGHWAY ADMINISTRATION. DOCUMENTATION OF THIS EXPERIENCE SHALL BE SUBMITTED TO THE ENGINEER FOR APPROVAL.

3. A MEETING BETWEEN THE CONTRACTOR, POST-TENSIONING SUPPLIER, NCDOT REPRESENTATIVES AND THE ENGINEER OF RECORD SHALL BE SCHEDULED AT LEAST (30) DAYS PRIOR TO POST-TENSIONING OPERATIONS TO REVIEW THE MEANS AND METHODS OF POST-TENSIONING, DUCT SPLICING AND TESTING TENDON GROUTING AND ALL ASSOCIATED FIELD ACTIVITIES. COMPLETE DETAILS OF THE POST-TENSIONING SYSTEM, TENDON STRESSING DETAILS, STRESSING SEQUENCES, CALCULATED EXTENSIONS OF EACH JACK, FRICTION COEFFICIENT, AND ANCHOR SET LOSSES SHALL BE REVIEWED. TEMPORARY SUPPORT PLATFORM REQUIREMENTS AND DETAILS SHALL BE REVIEWED AT THIS TIME.

4. THE CONTRACTOR SHALL NOT STRESS ANY POST-TENSIONING TENDONS UNTIL THE ENGINEER IS SATISFIED THAT THE REQUIREMENTS STATED IN THE SPECIAL PROVISIONS AND THE GUIDELINES OF THE "POST-TENSION TENDON INSTALLATION AND GROUTING MANUAL" HAVE BEEN MET.

5. STRESSING OF POST-TENSIONING TENDONS SHALL BE ACCOMPLISHED FOR EACH TENDON USING AN ALTERNATING SYMMETRICAL PATTERN ACROSS THE ROADWAY, BEGINNING AT THE CENTER GIRDER AND WORKING OUTWARD ALTERNATING SIDES.

6. FOR FIRST STAGE POST-TENSIONING, TENDON 1 SHALL BE STRESSED IN ALL GIRDERS ACROSS THE WIDTH OF THE BRIDGE AT BOTH ENDS PRIOR TO STRESSING TENDON 2 IN EACH GIRDER.

7. ALL TENDONS SHALL BE STRESSED FROM BOTH ENDS.

8. IT IS THE CONTRACTOR'S RESPONSIBLITY TO MAINTAIN THE INTEGRITY OF THE POST-TENSIONING STRANDS. STRANDS SHALL BE PROTECTED AND HANDLED WITH CARE TO PREVENT DAMAGE OR RUST DURING STORAGE, INSTALLATION, AND PLACEMENT OF GROUT.

TENDON GROUTING

1. GROUTING OF POST-TENSIONING TENDONS SHALL BE PERFORMED ACCORDING TO THE REQUIREMENTS OF THE POST-TENSIONING TENDONS SPECIAL PROVISION AND TO THE "POST-TENSIONING TENDON INSTALLATION AND GROUTING MANUAL" PUBLISHED BY THE FEDERAL HIGHWAY ADMINISTRATION.

2. THE PERSON IN RESPONSIBLE CHARGE OF THE GROUTING OPERATION SHALL MEET THE QUALIFICATIONS DESCRIBED IN THE "POST-TENSIONING TENDON INSTALLATION AND GROUTING MANUAL" PUBLISHED BY THE FEDERAL HIGHWAY ADMINISTRATION. DOCUMENTATION OF EXPERIENCE SHALL BE SUBMITTED TO THE ENGINEER FOR APPROVAL.

3. A MEETING BETWEEN THE CONTRACTOR, POST-TENSION SUPPLIER, NCDOT REPRESENTATIVES AND THE ENGINEER OF RECORD SHALL BE SCHEDULED AT LEAST THIRTY (30) DAYS PRIOR TO THE FIRST GROUTING OPERATIONS. AT THE MEETING, THE GROUTING OPERATION, REQUIRED TESTING, CORRECTIVE PROCEDURES AND ANY OTHER RELEVANT ISSUES SHALL BE DISCUSSED.

4. AFTER TENDONS HAVE BEEN STRESSED, DUCTS SHALL BE GROUTED. GROUTING OF POST-TENSIONING TENDONS SHALL BE COMPLETED AS SOON AS POSSIBLE AFTER TENSIONING, SEE POST-TENSIONING TENDON SPECIAL PROVISION.

5. TO THE MAXIMUM EXTENT POSSIBLE, GROUT SHALL BE PUMPED FROM THE LOW POINTS IN THE TENDON PROFILE AND VENTED AT THE HIGH POINTS IN THE TENDON PROFILE.

6. AFTER TENDONS ARE GROUTED, ANCHORAGES AND DUCTS SHALL BE INSPECTED TO DETERMINE IF THEY HAVE BEEN COMPLETELY FILLED WITH GROUT.

APPROXIMATE GROUT QUANTITIES:

DUCT 1:	36.0 FT3
DUCT 2:	36.0 FT3
DUCT 3:	35.9 FT3

QUANTITIES SHOWN ARE BASED ON DUCTS WITH LENGTHS OF 730.54', 730.60', AND 729.72', RESPECTIVELY, HAVING AN INSIDE DIAMETER OF 3.63" AND EACH TENDON CONTAINING 15-0.6" Ø STRANDS.

THE QUANTITIES SHOWN ARE INTENDED TO ASSIST THE CONTRACTOR AND ENGINEER IN DETERMINING THE AMOUNT OF GROUT NEEDED TO COMPLETELY FILL THE POST-TENSIONING DUCT.

PAYMENT

1. THE COST OF MATERIALS AND INSTALLATION OF POST-TENSIONING TENDONS, WEDGES, ANCHOR DEVICES, GROUTING OF TENDONS, EPOXY GROUT POUR-BACKS, AND INCIDENTAL ITEMS RELATED TO POST-TENSIONING SHALL BE INCLUDED IN THE LUMP SUM PRICE BID FOR "POST-TENSIONING TENDONS".

2. THE COST OF ALL CONCRETE, REINFORCING STEEL, PRESTRESSING STRANDS, POST-TENSION MATERIALS EMBEDDED IN THE CONCRETE, INSERTS EMBEDDED IN THE CONCRETE, BEARING PLATE ASSEMBLIES, ANCHOR DEVICES, TEMPORARY BRACING AND INCIDENTAL ITEMS SHALL BE INCLUDED IN THE CONTRACT UNIT PRICE FOR "78" POST-TENSIONED CONCRETE GIRDERS".

EPOXY GROUT POUR-BACK FOR POST-TENSIONING ANCHORAGES

1. AFTER TENDONS HAVE BEEN STRESSED, GROUTED AND INSPECTED, POST-TENSIONING ANCHORAGES SHALL BE ENCAPSULATED IN AN EPOXY GROUT POUR-BACK USING THE FOLLOWING PROCEDURE:

   a. CONCRETE SURFACES OF RECESSES AT POST-TENSIONING ANCHORAGES SHALL BE CLEANED AND ROUGHENED PRIOR TO CASTING POUR-BACKS.

   b. ENCAPSULATE ANCHORAGE AND PERMANENT GROUT CAP WITH A POUR-BACK OF AN APPROVED, HIGH-STRENGTH, HIGH-BOND, LOW-SHRINKAGE, SAND-FILLED EPOXY GROUT. SEE POST-TENSIONING TENDON SPECIAL PROVISION. FILL ANCHORAGE RECESS TO MATCH ADJACENT SURFACES OF CONCRETE GIRDER, PROVIDING A MINIMUM COVER OF 2 INCHES OVER ANCHORAGE AND PERMANENT GROUT CAPS.

   c. COMPLETELY ENCASE GIRDER ENDS BY PLACING END DIAPHRAGMS.

   d. THE PAYMENT OF EPOXY GROUT POUR-BACK SHALL BE INCLUDED IN THE LUMP SUM PRICE BID FOR "POST-TENSIONING TENDONS".

PROJECT NO. R-2633BB

BRUNSWICK/NEW HANOVER COUNTY

STATION: 353+32.50 -L-

SHEET 2 OF 2

NORTH CAROLINA PROFESSIONAL SEAL 16597 ENGINEER ROBERT G. WOODRUFF

5/28/13

RS&H IMPROVING YOUR WORLD

RS&H Architects-Engineers-Planners, Inc.
8601 Six Forks Road, Suite 260
Raleigh, NC 27615
919-846-6701 FAX 919-846-8080
www.rsandh.com
North Carolina License Nos. 00073 * F-0493 * C-28

STATE OF NORTH CAROLINA
DEPARTMENT OF TRANSPORTATION
RALEIGH

POST-TENSION SEGMENT NOTES

LEFT LANE

REVISIONS						
NO.	BY:	DATE:	NO.	BY:	DATE:	
1			3			
2			4			

SHEET NO. S-133

TOTAL SHEETS 700

DRAWN BY : SOF DATE : 04/12
CHECKED BY : RLB DATE : 06/12
DESIGN ENGINEER OF RECORD : R. WOODRUFF DATE : 5/2013

5/24/2013
$$$$$$$$$$$$$$$$$$$$$$DGN$$$$$$$$$$$$$$$$$$$$$$
3:34:01 PM

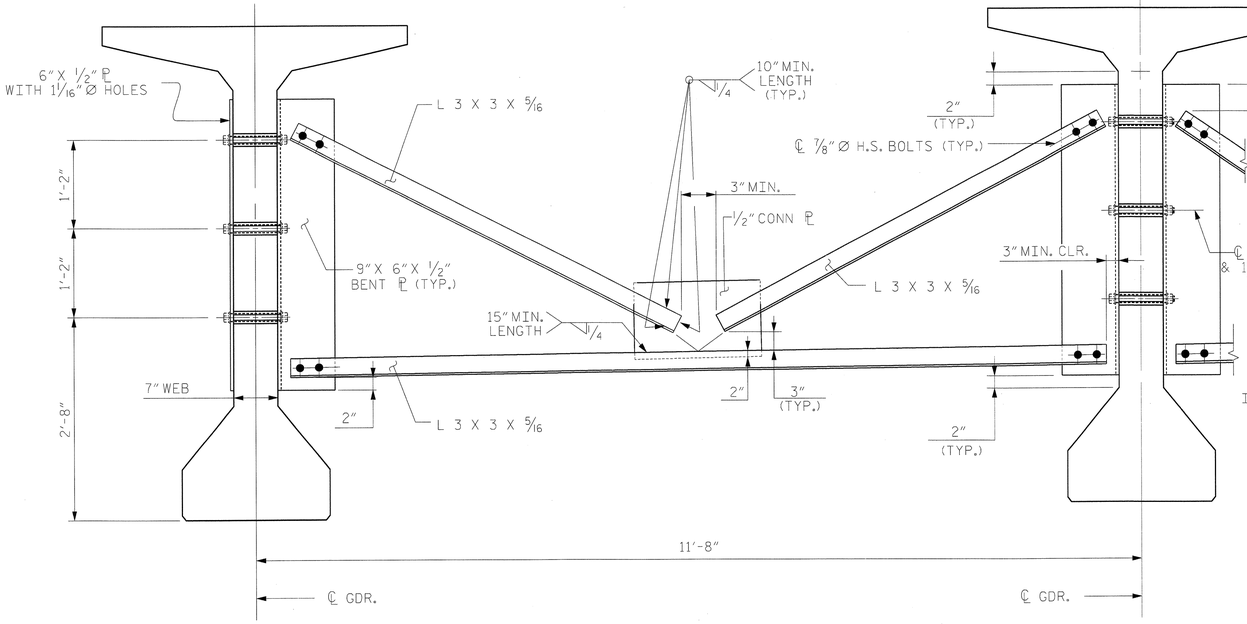

EXTERIOR GIRDER

INTERIOR GIRDER

PART SECTION AT INTERMEDIATE DIAPHRAGM

FOR 78" BULB TEE (SPANS 1-5 AND 9-58)

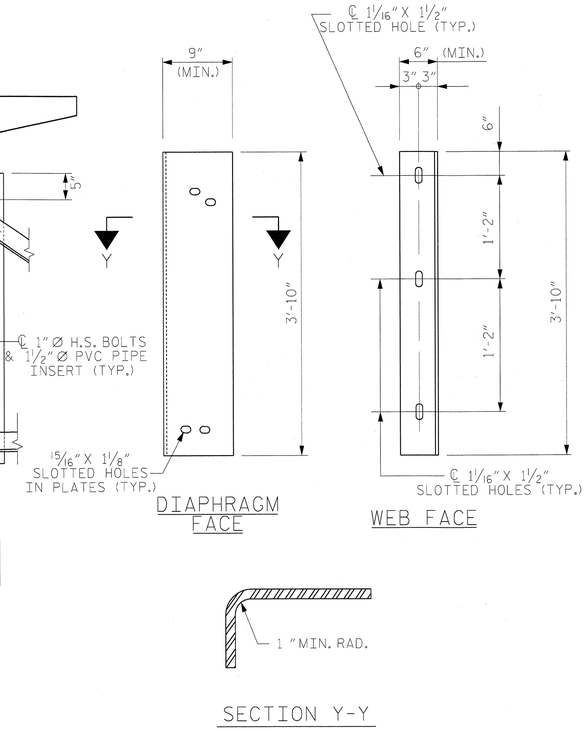

DIAPHRAGM FACE

WEB FACE

SECTION Y-Y

CONNECTOR PLATE DETAILS

STRUCTURAL STEEL NOTES

ALL INTERMEDIATE DIAPHRAGM STEEL, CONNECTOR PLATES AND PLATE WASHERS SHALL BE AASHTO M270 GRADE 50 OR APPROVED EQUAL.

TENSION ON THE ASTM A325 BOLTS THROUGH THE ANGLE MEMBER SHALL BE CALIBRATED USING DIRECT TENSION INDICATOR WASHERS IN ACCORDANCE WITH THE STANDARD SPECIFICATIONS.

TENSION ON THE ASTM A449 BOLTS THROUGH THE GIRDER WEB SHALL BE SNUG TIGHTENED FOLLOWED BY AN ADDITIONAL 1/4 TURN.

THE PLATES, BENT PLATES, ANGLES, AND PLATE WASHERS SHALL BE METALLIZED IN ACCORDANCE WITH THE STANDARD SPECIFICATIONS. FOR THERMAL SPRAYED COATINGS (METALLIZATION), SEE SPECIAL PROVISIONS.

FOR METALLIZATION, APPLY AN 8 MIL THICK 99.50 PERCENT 1350 ALUMINUM (W-A1-1350) THERMAL SPRAYED COATING WITH A 0.5 mil THICK SEAL COAT TO ALL PLATES, CONNECTOR PLATES, ANGLES, AND PLATE WASHERS IN ACCORDANCE WITH THE THERMAL SPRAYED COATINGS SPECIAL PROVISION AND SECTION 442 OF THE STANDARD SPECIFICATIONS. FOR THERMAL SPRAYED COATINGS (METALLIZATION), SEE SPECIAL PROVISTIONS.

APPLY 1 COAT EACH OF 1080-12 BROWN AND 1080-12 GRAY PAINT ON THE EDGES AND THE WEB FACE OF THE CONNECTOR PLATE WHICH COMES IN CONTACT WITH THE CONCRETE GIRDER IN ACCORDANCE WITH SECTION 442 OF THE STANDARD SPECIFICATIONS.

USE AN ASTM F436 HARDENED WASHER WITH STANDARD AND SLOTTED HOLES UNDER EACH BOLT HEAD AND NUT.

FOR BOLTS THROUGH THE GIRDER WEB, PROVIDE SUFFICIENT LENGTH OF THREADS ON ALL BOLTS TO ACCOMMODATE WASHERS AND THE THICKNESS OF CONNECTING MEMBER PLUS AT LEAST 1/4" PROJECTION BEYOND THE NUT.

INTERMEDIATE DIAPHRAGM ASSEMBLY SHALL COMPLY WITH SECTION 1072 OF THE STANDARD SPECIFICATIONS.

SUBMIT TWO SETS OF WORKING DRAWINGS FOR THE INTERMEDIATE DIAPHRAGM ASSEMBLY FOR REVIEW, COMMENTS AND ACCEPTANCE. AFTER REVIEW, COMMENTS, AND ACCEPTANCE, SUBMIT SEVEN SETS FOR DISTRIBUTION.

IN THE EXTERIOR BAYS, PLACE TEMPORARY STRUTS BETWEEN PRESTRESSED GIRDERS ADJACENT TO THE STEEL DIAPHRAGMS. STRUTS SHALL REMAIN IN PLACE 3 DAYS AFTER CONCRETE IS PLACED.

ALL DIMENSIONS SHOWN ARE HORIZONTAL OR VERTICAL UNLESS OTHERWISE NOTED.

THE HIGH STRENGTH BOLTS, NUTS, DIRECT TENSION INDICATORS, AND WASHERS SHALL BE GALVANIZED IN ACCORDANCE WITH THE STANDARD SPECIFICATIONS.

THE COST OF THE STEEL DIAPHRAGMS AND ASSEMBLIES SHALL BE INCLUDED IN THE UNIT PRICE BID FOR PRESTRESSED CONCRETE GIRDERS.

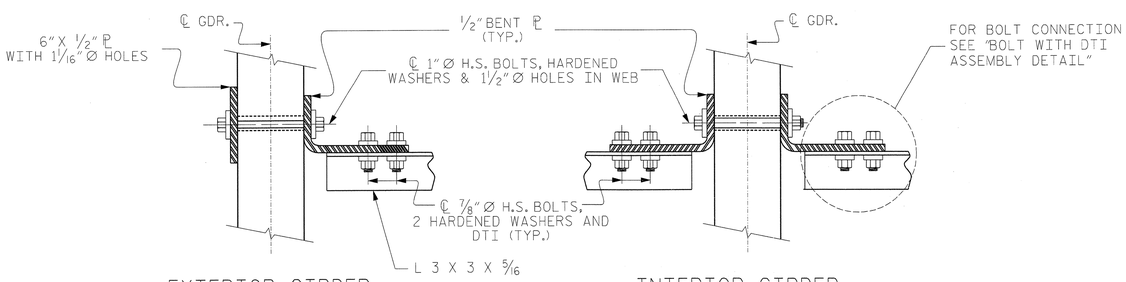

EXTERIOR GIRDER SECTION

INTERIOR GIRDER SECTION

CONNECTION DETAILS

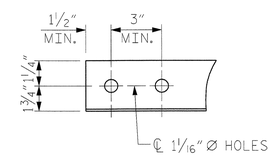

ANGLE END

(L 3 X 3 X 5/16)

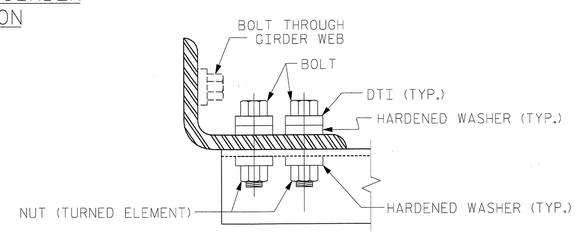

BOLT WITH DTI ASSEMBLY DETAIL

PROJECT NO. R-2633BB

BRUNSWICK/NEW HANOVER COUNTY

STATION: 353+32.50 -L-

SHEET 1 OF 3

NORTH CAROLINA PROFESSIONAL SEAL 18442 ENGINEER RICHARD LEON BOWLINGER JR. 5-29-2013

RS&H IMPROVING YOUR WORLD

RS&H Architects-Engineers-Planners, Inc.
8601 Six Forks Road, Suite 260
Raleigh, NC 27615
919-846-6701 FAX 919-846-9080
www.rsandh.com
North Carolina License Nos. 50073 * F-0493 * C-28

NORTH CAROLINA PROFESSIONAL SEAL 22072 ENGINEER JOHN ARTHUR DILWORTH 5-29-13

WETHERILL ENGINEERING

TRANSPORTATION PLANNING/DESIGN
BRIDGE/STRUCTURE DESIGN
CIVIL/SITE DESIGN - GIS/GPS
CONSTRUCTION OBSERVATION

559 Jones Franklin Rd. Suite 164
Raleigh, N.C. 27606
Bus: 919 851 8077
Fax: 919 851 8107
LICENSE NO. F-0377

STATE OF NORTH CAROLINA
DEPARTMENT OF TRANSPORTATION
RALEIGH

SUPERSTRUCTURE

INTERMEDIATE STEEL DIAPHRAGMS

LEFT LANE

REVISIONS						SHEET NO.
NO.	BY:	DATE:	NO.	BY:	DATE:	S-134
1			3			TOTAL SHEETS
2			4			700

DRAWN BY :	JML	DATE :	3/2012
CHECKED BY :	RLB	DATE :	10/2012
DESIGN ENGINEER OF RECORD :	J. ROBINSON	DATE :	5/2013

STRUCTURAL STEEL NOTES

FOR INTERMEDIATE STEEL DIAPHRAGM NOTES, SEE SHEET 1 OF 3

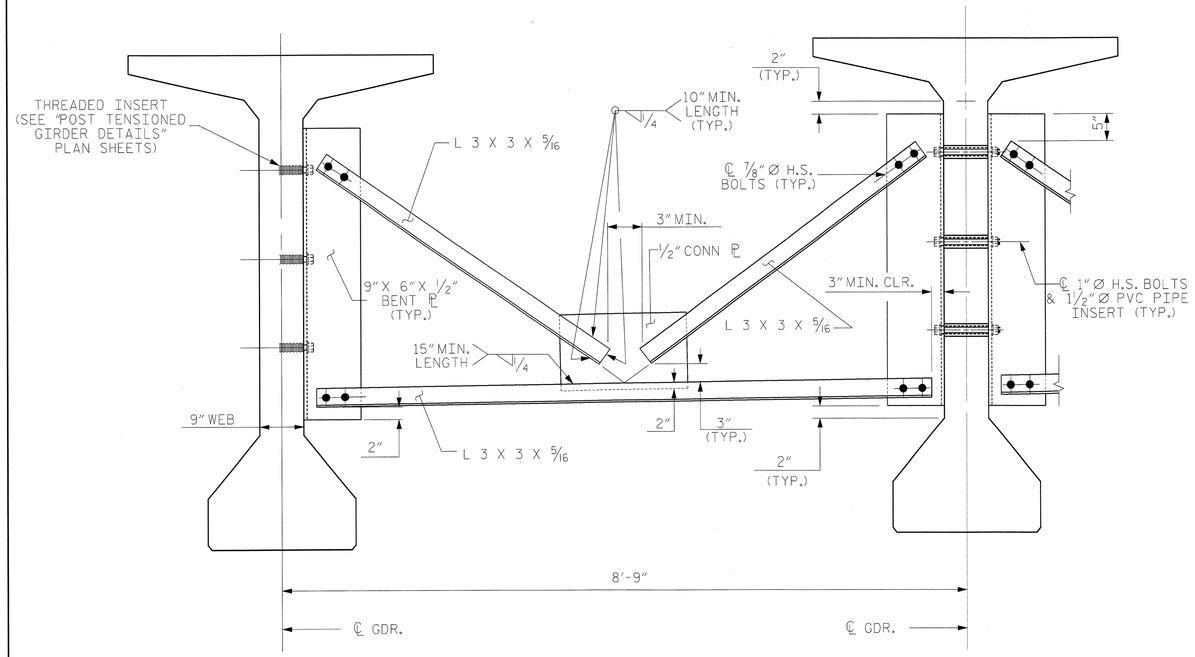

EXTERIOR GIRDER

INTERIOR GIRDER

PART SECTION AT INTERMEDIATE DIAPHRAGM

FOR MODIFIED 78" BULB TEE END GIRDER & DROP-INS GIRDER SEGMENTS

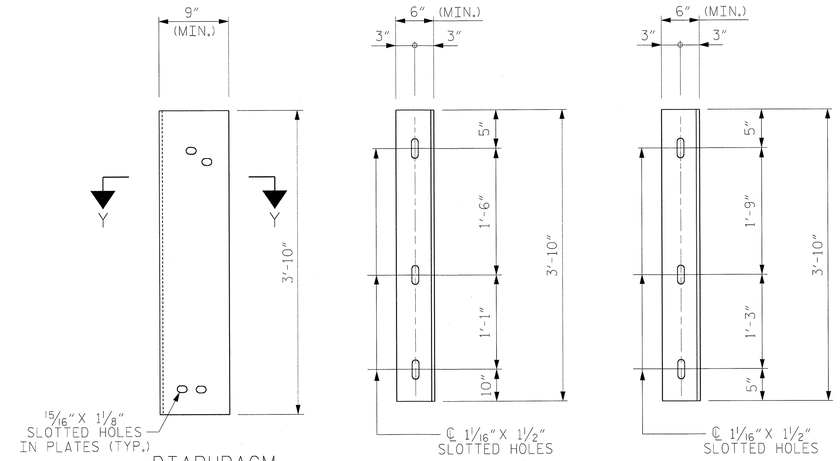

DIAPHRAGM FACE

WEB FACE

NOTE: FOR MODIFIED 78" BULB TEE GIRDER END SEGMENT

WEB FACE

NOTE: FOR MODIFIED 78" BULB TEE DROP-IN SEGMENT

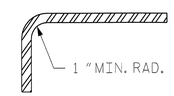

SECTION Y-Y

CONNECTOR PLATE DETAILS

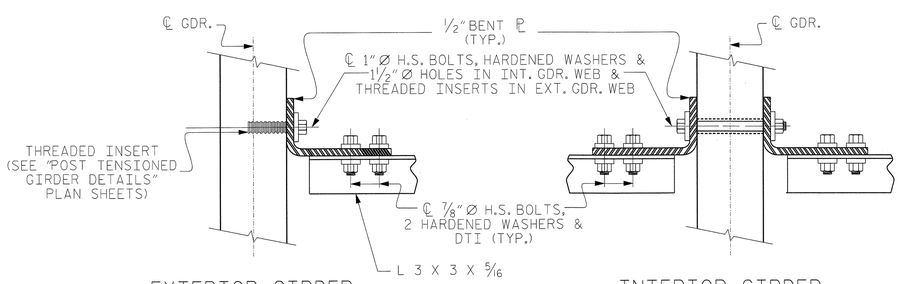

EXTERIOR GIRDER SECTION

INTERIOR GIRDER SECTION

CONNECTION DETAILS

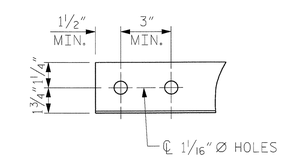

ANGLE END

(L 3 X 3 X 5/16)

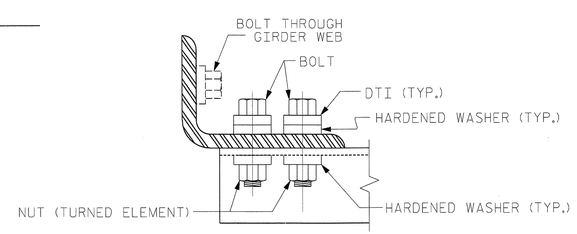

BOLT WITH DTI ASSEMBLY DETAIL

PROJECT NO. R-2633BB

BRUNSWICK/NEW HANOVER COUNTY

STATION: 353+32.50 -L-

SHEET 2 OF 3

NORTH CAROLINA PROFESSIONAL SEAL 18442 ENGINEER RICHARD ANTHONY BOLLINGER, JR.

5-29-2013

RS&H IMPROVING YOUR WORLD

RS&H Architects-Engineers-Planners, Inc.
8601 Six Forks Road, Suite 260
Raleigh, NC 27615
919-846-6701 FAX 919-846-9080
www.rsandh.com
North Carolina License Nos. 50073 * F-0493 * C-28

STATE OF NORTH CAROLINA
DEPARTMENT OF TRANSPORTATION
RALEIGH

SUPERSTRUCTURE

INTERMEDIATE STEEL DIAPHRAGMS

LEFT LANE

REVISIONS						SHEET NO.
NO.	BY:	DATE:	NO.	BY:	DATE:	S-135
1			3			TOTAL SHEETS
2			4			700

DRAWN BY :	JML	DATE :	3/2012
CHECKED BY :	SOF	DATE :	3/2013
DESIGN ENGINEER OF RECORD :	J. ROBINSON	DATE :	5/2013

STRUCTURAL STEEL NOTES

FOR INTERMEDIATE STEEL DIAPHRAGM NOTES, SEE SHEET 1 OF 3

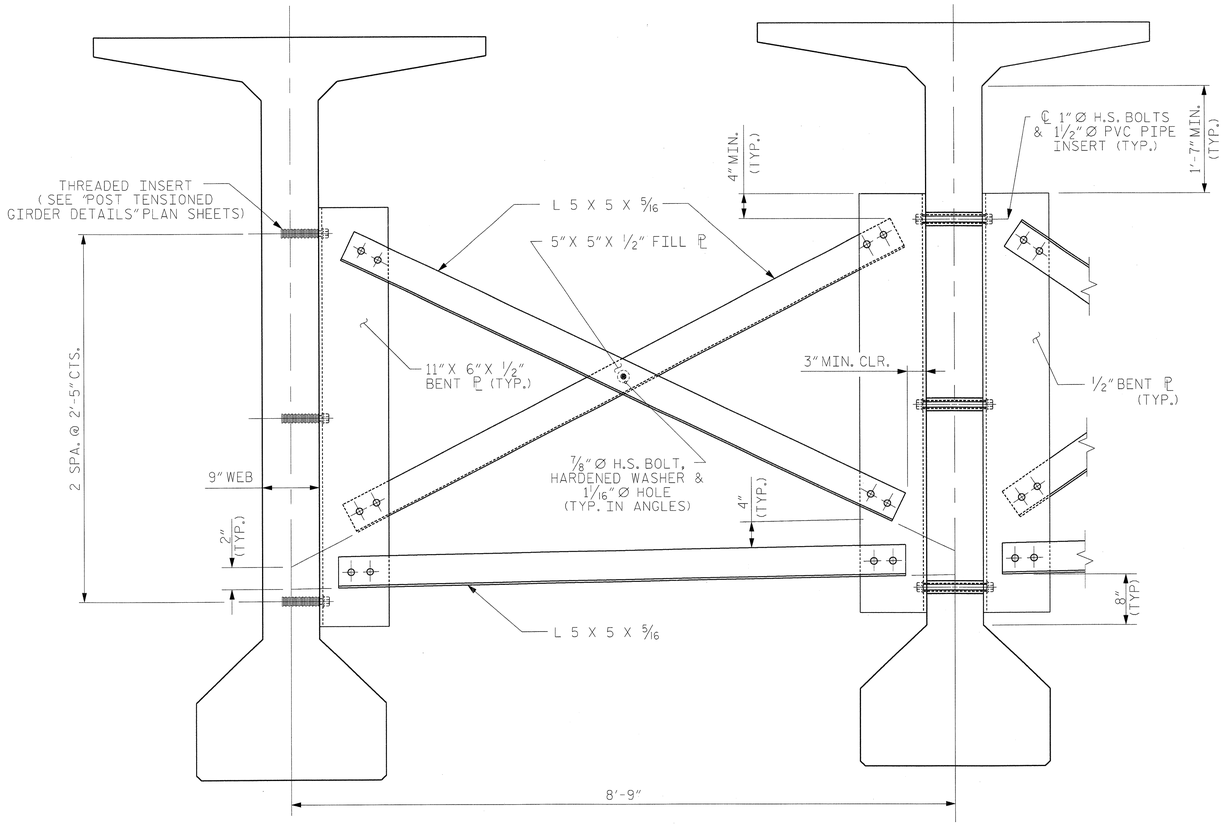

EXTERIOR GIRDER

INTERIOR GIRDER

PART SECTION AT INTERMEDIATE DIAPHRAGM

FOR MODIFIED 78" BULB HAUNCHED GIRDER SEGMENTS

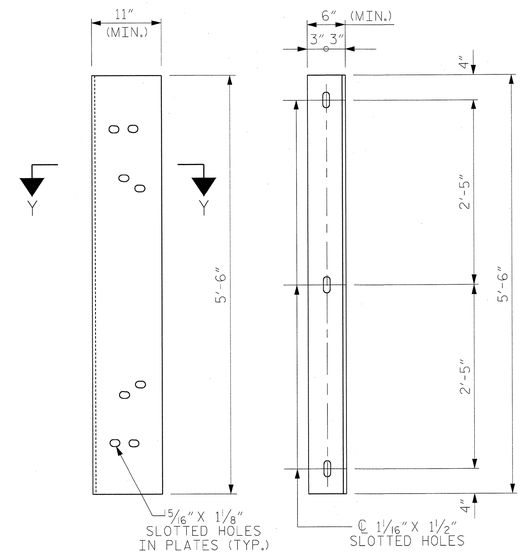

DIAPHRAGM FACE

WEB FACE

CONNECTOR PLATE DETAILS

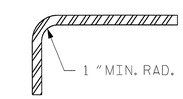

SECTION Y-Y

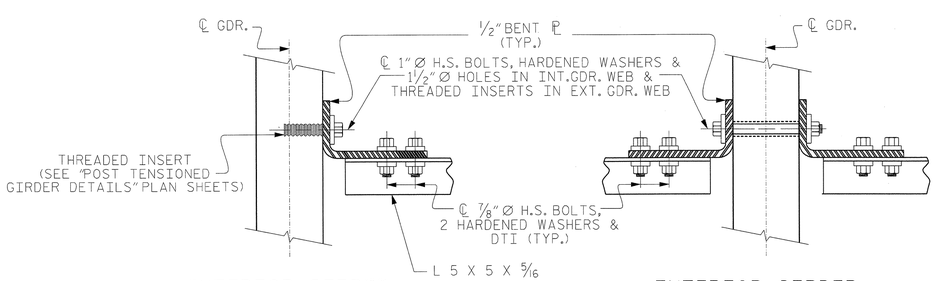

EXTERIOR GIRDER SECTION

INTERIOR GIRDER SECTION

CONNECTION DETAILS

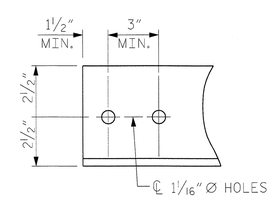

ANGLE END

(L 5 X 5 X 5/16)

PROJECT NO. R-2633BB

BRUNSWICK/NEW HANOVER COUNTY

STATION: 353+32.50 -L-

SHEET 3 OF 3

NORTH CAROLINA PROFESSIONAL SEAL 18442 ENGINEER JEFFERSON ROBINSON

5-29-2013

RS&H IMPROVING YOUR WORLD

RS&H Architects-Engineers-Planners, Inc.
8601 Six Forks Road, Suite 260
Raleigh, NC 27615
919-846-6701 FAX 919-846-9080
www.rsandh.com
North Carolina License Nos. 50073 * F-0493 * C-28

STATE OF NORTH CAROLINA
DEPARTMENT OF TRANSPORTATION
RALEIGH

SUPERSTRUCTURE

INTERMEDIATE STEEL DIAPHRAGMS

LEFT LANE

REVISIONS						SHEET NO.
NO.	BY:	DATE:	NO.	BY:	DATE:	S-136
1			3			TOTAL SHEETS
2			4			700

DRAWN BY :	RLV	DATE :	05/12
CHECKED BY :	SOF	DATE :	3/2013
DESIGN ENGINEER OF RECORD :	J. ROBINSON	DATE :	5/2013

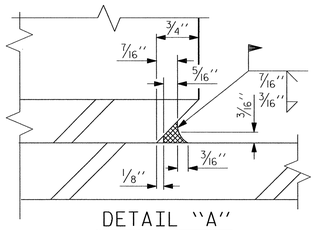

DETAIL "A"

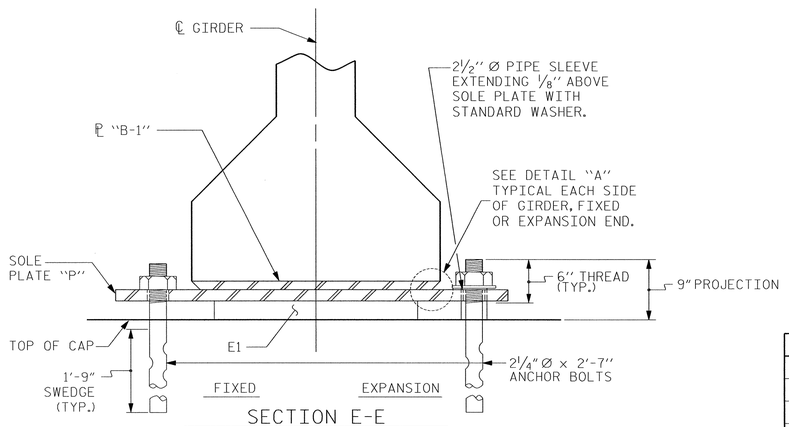

SECTION E-E

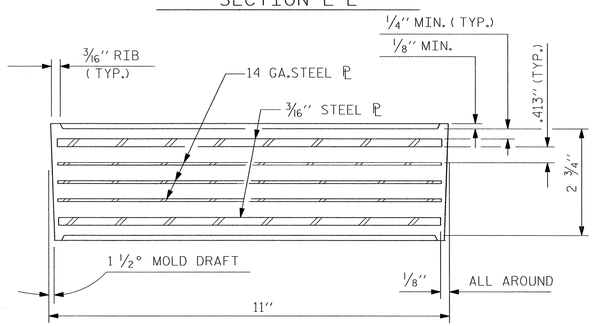

TYPICAL SECTION OF ELASTOMERIC BEARINGS

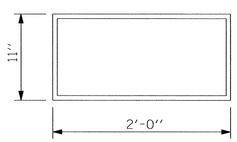

E1 (440 REQ'D)

PLAN VIEW OF ELASTOMERIC BEARING

TYPE VII

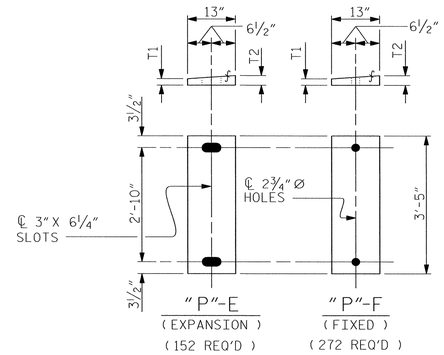

SOLE PLATE "P" DETAILS

SOLE PLATE SCHEDULE (FIX.)			
MARK	T1 (IN.)	T2 (IN.)	# REQ.
P1-F	1 1/4"	1 7/16"	8
P2-F	1 7/8"	2 3/16"	8
P7-F	2 1/2"	2 1/16"	8
P8-F	1 9/16"	1 1/4"	8
P9-F	2 7/16"	2"	4
P10-F	2 1/4"	1 13/16"	4
P11-F	1 3/8"	1 1/4"	4
P12-F	1 3/4"	1 1/2"	4
P13-F	1 1/4"	1 1/4"	8
P14-F	1 3/8"	1 5/16"	4
P15-F	1 1/4"	1 1/4"	208
P16-F	1 1/2"	1 1/4"	4

SOLE PLATE SCHEDULE (EXP.)			
MARK	T1 (IN.)	T2 (IN.)	# REQ.
P1-E	1 1/4"	1 5/8"	4
P2-E	1 1/4"	1 7/16"	4
P3-E	1 13/16"	2 3/16"	4
P4-E	1 5/8"	1 3/4"	4
P5-E	1 7/16"	1 1/4"	4
P6-E	2 5/16"	1 15/16"	4
P7-E	1 1/2"	1 1/4"	4
P8-E	2 1/2"	2 1/16"	4
P9-E	1 9/16"	1 1/4"	4
P10-E	2"	1 11/16"	4
P11-E	1 7/16"	1 5/16"	4
P12-E	1 1/4"	1 1/4"	108

LOAD RATINGS	
	MAX. D.L. + L.L.
TYPE VII	349 K

NOTES

AT ALL FIXED POINTS OF SUPPORT, NUTS FOR ANCHOR BOLTS ARE TO BE TIGHTENED FINGER TIGHT AND THEN BACKED OFF 1/2 TURN. THE THREAD OF THE NUT AND BOLT SHALL THEN BE BURRED WITH A SHARP POINTED TOOL.

THE 2 1/2" Ø PIPE SLEEVE SHALL BE CUT FROM SCHEDULE 40 PVC PLASTIC PIPE. THE PVC PLASTIC PIPE SHALL MEET THE REQUIREMENTS OF ASTM D1785.

STEEL SOLE PLATES, ANCHOR BOLTS, NUTS, AND WASHERS SHALL BE GALVANIZED IN ACCORDANCE WITH THE STANDARD SPECIFICATIONS.

PRIOR TO WELDING, GRIND THE GALVANIZED SURFACE OF THE PORTION OF THE EMBEDDED PLATE AND SOLE PLATE THAT ARE TO BE WELDED. AFTER WELDING, DAMAGED GALVANIZED SURFACES SHALL BE REPAIRED IN ACCORDANCE WITH THE STANDARD SPECIFICATIONS.

WHEN WELDING THE SOLE PLATE TO THE EMBEDDED PLATE IN THE GIRDER, USE TEMPERATURE INDICATING WAX PENS, OR OTHER SUITABLE MEANS, TO ENSURE THAT THE TEMPERATURE OF THE SOLE PLATE DOES NOT EXCEED 300°F. TEMPERATURES ABOVE THIS MAY DAMAGE THE ELASTOMER.

SOLE PLATE "P", BOLTS, NUTS, WASHERS, AND PIPE SLEEVES USED WITH 78" PRESTRESSED CONCRETE GIRDERS SHALL BE INCLUDED IN THE PAY ITEM FOR 78" PRESTRESSED CONCRETE GIRDERS.

ANCHOR BOLTS SHALL MEET THE REQUIREMENTS OF ASTM F1554 GRADE 105. NUTS SHALL MEET THE REQUIREMENTS OF ASTM A563DH. WASHERS SHALL MEET THE REQUIREMENTS OF ASTM F436. NO SHOP DRAWINGS ARE REQUIRED FOR ANCHOR BOLTS, NUTS AND WASHERS. SHOP INSPECTION IS REQUIRED.

ALL SURFACES OF BEARING PLATES SHALL BE SMOOTH AND STRAIGHT.

THE ELASTOMER IN THE STEEL REINFORCED BEARINGS SHALL HAVE A SHEAR MODULUS OF 0.160 KSI. IN ACCORDANCE WITH AASHTO M251.

FOR STEEL REINFORCED ELASTOMERIC BEARINGS, SEE SPECIAL PROVISIONS.

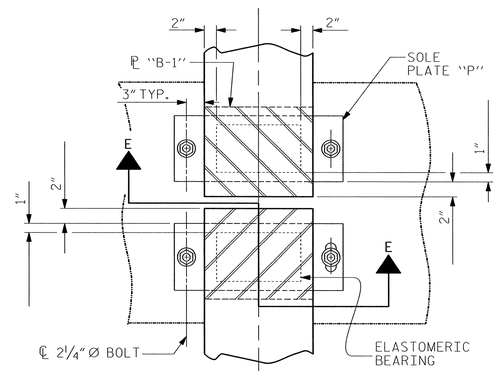

TYPICAL HALF-PLAN (SHOWING CONTINUOUS BENT)

TYPICAL HALF-PLAN (SHOWING SIMPLE SPAN BENT)

PROJECT NO. R-2633BB

BRUNSWICK/NEW HANOVER COUNTY

STATION: 353+32.50 -L-

SHEET 1 OF 4

DRAWN BY : JML	DATE : 3/2012		
CHECKED BY : RLB	DATE : 3/2013		
DESIGN ENGINEER OF RECORD : J. ROBINSON	DATE : 5/2013		

NORTH CAROLINA PROFESSIONAL SEAL 18442 ENGINEER RICHARD LEON BRZUSKIEWICZ JR. 6-03-2013

RS&H IMPROVING YOUR WORLD

RS&H Architects-Engineers-Planners, Inc.
8601 Six Forks Road, Suite 260
Raleigh, NC 27615
919-846-6701 FAX 919-846-8080
www.rsandh.com
North Carolina License Nos. 00073 * F-0463 * C-28

NORTH CAROLINA PROFESSIONAL SEAL 22072 ENGINEER JOHN ARTHUR DILWORTH 6-03-13

WETHERILL ENGINEERING

TRANSPORTATION PLANNING/DESIGN
BRIDGE/STRUCTURE DESIGN
CIVIL/SITE DESIGN - GIS/GPS
CONSTRUCTION OBSERVATION

559 Jones Franklin Rd. Suite 164
Raleigh, N.C. 27606
Bus: 919 851 8077
Fax: 919 851 8107
LICENSE NO. F-0377

STATE OF NORTH CAROLINA
DEPARTMENT OF TRANSPORTATION
RALEIGH

ELASTOMERIC BEARING DETAILS
LEFT LANE

REVISIONS						SHEET NO.
NO.	BY:	DATE:	NO.	BY:	DATE:	S-137
1			3			TOTAL SHEETS
2			4			700

STD. NO. EB4

NOTES

FOR NOTES, ELASTOMERIC BEARING DETAILS AND DETAIL "A", SEE SHEET 1 OF 4.

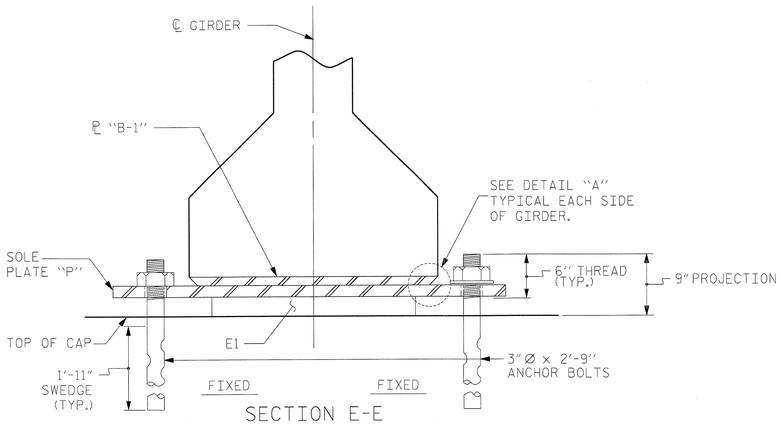

SECTION E-E

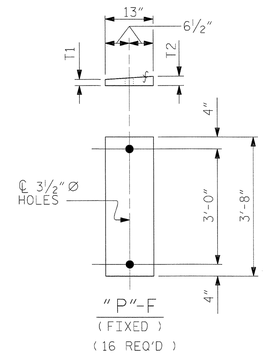

"P"-F
(FIXED)
(16 REQ'D)

SOLE PLATE "P" DETAILS

SOLE PLATE SCHEDULE (FIX.)			
MARK	T1 (IN.)	T2 (IN.)	# REQ.
P3-F	1¼"	1⅜"	4
P4-F	1 11/16"	2"	4
P5-F	2 3/16"	1⅞"	4
P6-F	1½"	1¼"	4

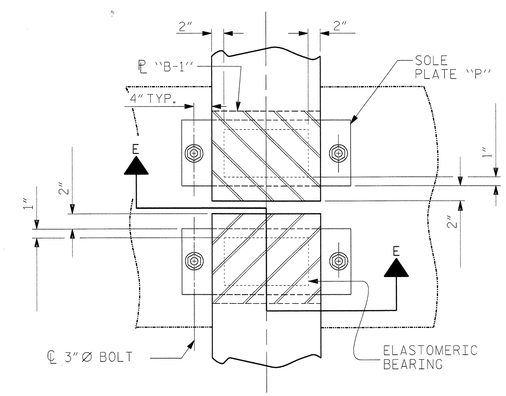

TYPICAL PLAN
(SHOWING CONTINUOUS BENT)

PROJECT NO. R-2633BB

BRUNSWICK/NEW HANOVER COUNTY

STATION: 353+32.50 -L-

SHEET 2 OF 4

NORTH CAROLINA PROFESSIONAL SEAL 18442 ENGINEER RICHARD LEON BOLLINGER, JR.

5-29-2013

RS&H IMPROVING YOUR WORLD

RS&H Architects-Engineers-Planners, Inc.
8601 Six Forks Road, Suite 260
Raleigh, NC 27615
919-846-6701 FAX 919-846-9080
www.rsandh.com
North Carolina License Nos. 50073 * F-0483 * C-28

STATE OF NORTH CAROLINA
DEPARTMENT OF TRANSPORTATION
RALEIGH

ELASTOMERIC BEARING DETAILS
LEFT LANE

REVISIONS						SHEET NO.
NO.	BY:	DATE:	NO.	BY:	DATE:	S-138
1			3			TOTAL SHEETS
2			4			700

DRAWN BY : JML DATE : 3/2012
CHECKED BY : RLB DATE : 3/2013
DESIGN ENGINEER OF RECORD : J. ROBINSON DATE : 5/2013

STD. NO. EB4

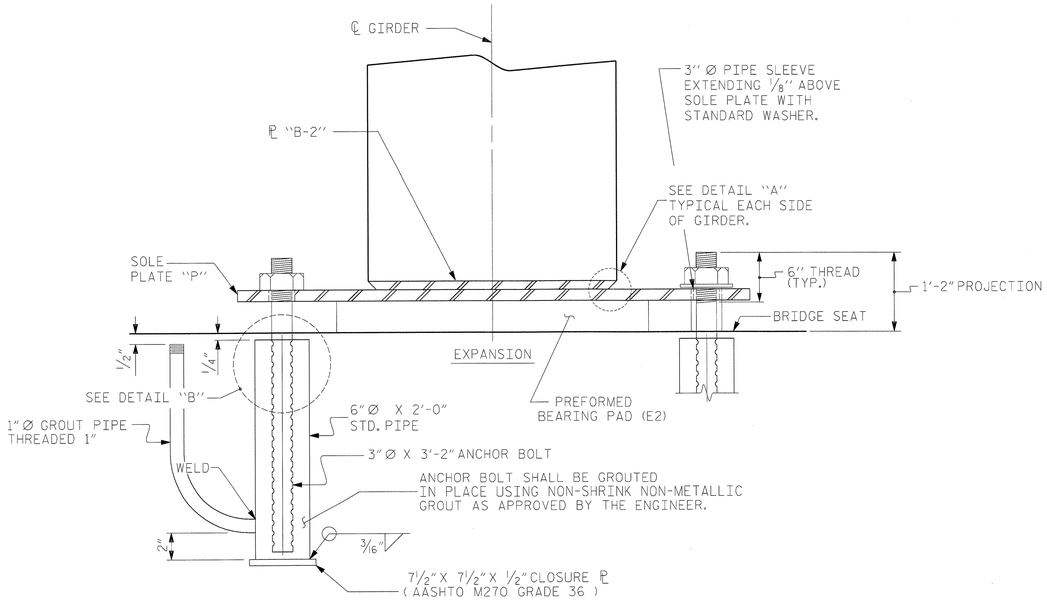

SECTION VIEW

(OVER BENTS 5 AND 8 SPANS 6 AND 8 GIRDERS)

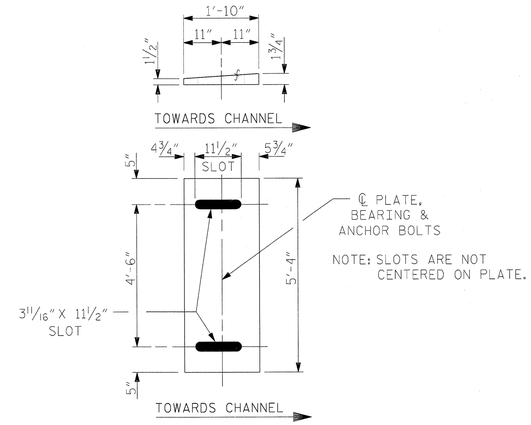

P 2

(EXPANSION)

(5 REQ'D)

SOLE PLATE DETAILS ("P 2")

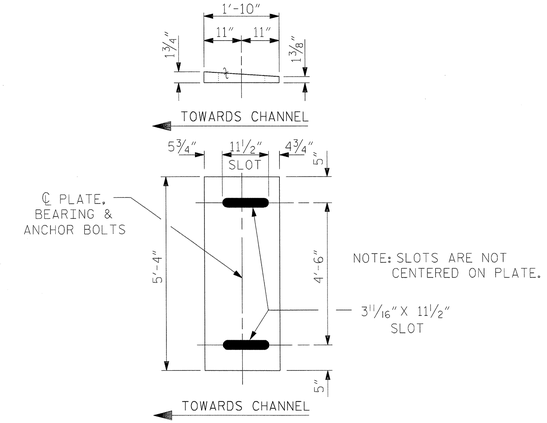

P 3

(EXPANSION)

(5 REQ'D)

SOLE PLATE DETAILS ("P 3")

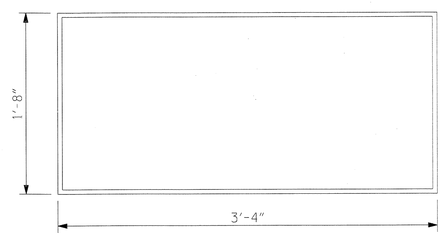

E2 (10 REQ'D)

PLAN VIEW OF ELASTOMERIC BEARING

TYPE VIII

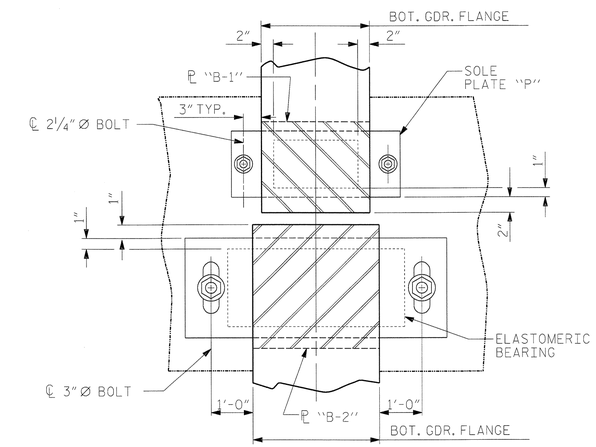

TYPICAL PLAN

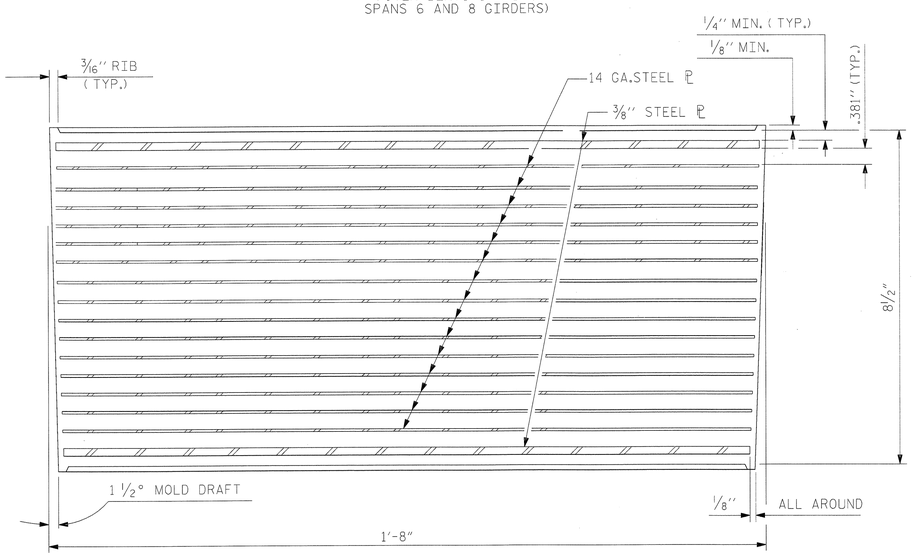

TYPICAL SECTION OF ELASTOMERIC BEARINGS

LOAD RATINGS	
	MAX. D.L. + L.L.
TYPE VIII	453 K

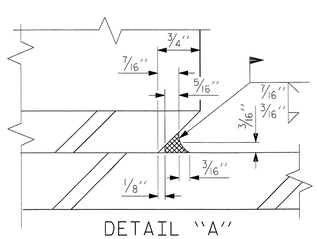

DETAIL "A"

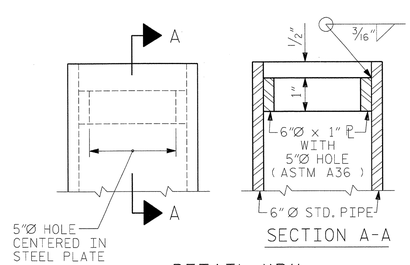

SECTION A-A

DETAIL "B"

PROJECT NO. R-2633BB

BRUNSWICK/NEW HANOVER COUNTY

STATION: 353+32.50 -L-

SHEET 3 OF 4

DRAWN BY : JML	DATE : 3/2012		
CHECKED BY : RLB	DATE : 3/2013		
DESIGN ENGINEER OF RECORD : J. ROBINSON	DATE : 5/2013		

NORTH CAROLINA PROFESSIONAL SEAL 18442 ENGINEER LEON ROBINSON, JR.

5-29-2013

RS&H IMPROVING YOUR WORLD

RS&H Architects-Engineers-Planners, Inc.
8601 Six Forks Road, Suite 260
Raleigh, NC 27615
919-846-6701 FAX 919-846-9080
www.rsandh.com
North Carolina License Nos. 50073 * F-0485 * C-28

STATE OF NORTH CAROLINA
DEPARTMENT OF TRANSPORTATION
RALEIGH

ELASTOMERIC BEARING DETAILS

LEFT LANE

REVISIONS						SHEET NO.
NO.	BY:	DATE:	NO.	BY:	DATE:	S-139
1			3			TOTAL SHEETS
2			4			700

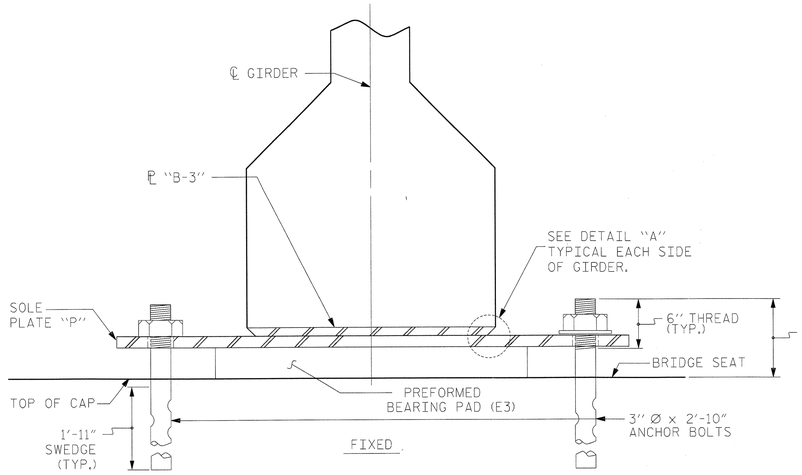

SECTION VIEW
(OVER BENTS 6 AND 7)

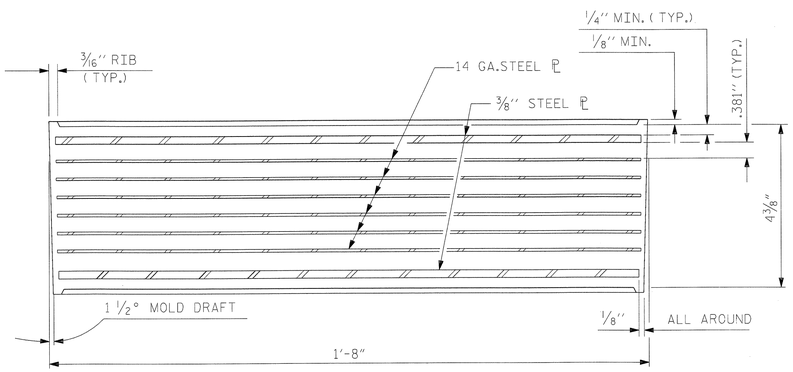

TYPICAL SECTION OF ELASTOMERIC BEARINGS

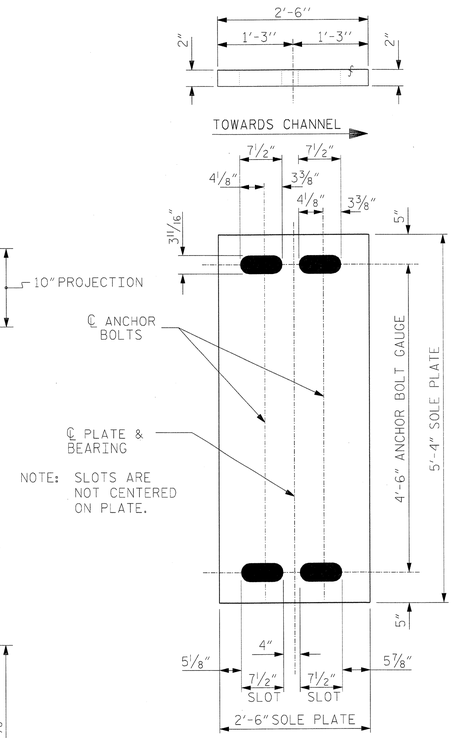

P 4
(FIXED)
(5 REQ'D)

SOLE PLATE DETAILS ("P 4")

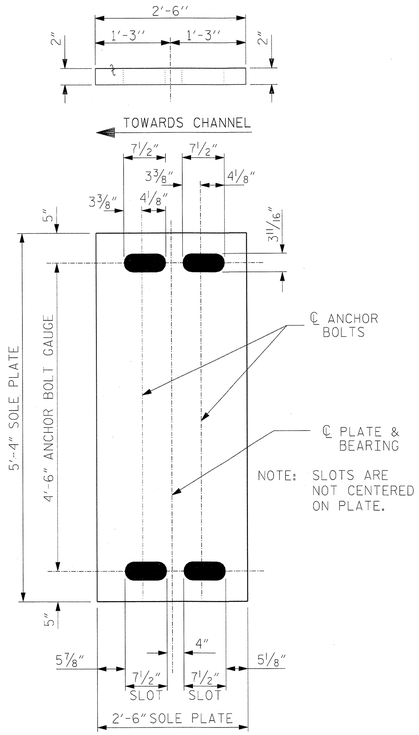

P 5
(FIXED)
(5 REQ'D)

SOLE PLATE DETAILS ("P 5")

NOTES

ANCHOR BOLTS SHALL MEET THE REQUIREMENTS OF ASTM F1554 GRADE 105. NUTS SHALL MEET THE REQUIREMENTS OF ASTM A563DH. WASHERS SHALL MEET THE REQUIREMENTS OF ASTM F436. NO SHOP DRAWINGS ARE REQUIRED FOR ANCHOR BOLTS, NUTS AND WASHERS. SHOP INSPECTION IS REQUIRED.

ALL SURFACES OF BEARING PLATES SHALL BE SMOOTH AND STRAIGHT.

BEFORE POURING THE FINAL 4'-0" OF SPAN 6 AND SPAN 8, THE GIRDERS SHALL BE JACKED AND THE ANCHOR BOLTS, SOLE PLATE, AND ELASTOMERIC BEARING SHALL BE CENTERED AS NEARLY AS PRACTICAL ABOUT THE EMBEDDED PLATE "B-2". THIS OPERATION SHALL BE PERFORMED AT APPROXIMATELY 60°F.

AFTER BEARING ASSEMBLY IS IN PLACE AND ANCHOR BOLTS HAVE FINALLY BEEN POSITIONED, THEY SHALL BE GROUTED IN PLACE AS SHOWN.

THE CONTRACTOR MAY PROPOSE ALTERNATE METHODS FOR ADJUSTING THE BEARING ASSEMBLY PROVIDED DETAILS ARE SUBMITTED TO THE ENGINEER FOR REVIEW AND APPROVAL.

THE CLOSURE PLATE, GROUT PIPE AND STANDARD PIPE FOR THIS ASSEMBLY SHALL BE GALVANIZED IN ACCORDANCE WITH STANDARD SPECIFICATIONS.

AT ALL FIXED POINTS OF SUPPORT, NUTS FOR ANCHOR BOLTS ARE TO BE TIGHTENED FINGER TIGHT AND THEN BACKED OFF 1/2 TURN. THE THREAD OF THE NUT AND BOLT SHALL THEN BE BURRED WITH A SHARP POINTED TOOL.

THE 3" Ø PIPE SLEEVE SHALL BE CUT FROM SCHEDULE 40 PVC PLASTIC SCHEDULE 40 PVC PLASTIC PIPE. THE PVC PLASTIC PIPE SHALL MEET THE REQUIREMENTS OF ASTM D1785.

STEEL SOLE PLATES, ANCHOR BOLTS, NUTS, AND WASHERS SHALL BE GALVANIZED IN ACCORDANCE WITH THE STANDARD SPECIFICATIONS.

PRIOR TO WELDING, GRIND THE GALVANIZED SURFACE OF THE PORTION OF THE EMBEDDED PLATE AND SOLE PLATE THAT ARE TO BE WELDED. AFTER WELDING, DAMAGED GALVANIZED SURFACES SHALL BE REPAIRED IN ACCORDANCE WITH THE STANDARD SPECIFICATIONS.

WHEN WELDING THE SOLE PLATE TO THE EMBEDDED PLATE IN THE GIRDER, USE TEMPERATURE INDICATING WAX PENS, OR OTHER SUITABLE MEANS, TO ENSURE THAT THE TEMPERATURE OF THE SOLE PLATE DOES NOT EXCEED 300°F. TEMPERATURES ABOVE THIS MAY DAMAGE THE ELASTOMER.

SOLE PLATE "P", BOLTS, NUTS, WASHERS, AND PIPE SLEEVES USED WITH 78" POST-TENSIONED PRESTRESSED CONCRETE GIRDERS SHALL BE INCLUDED IN THE PAY ITEM FOR 78" POST-TENSIONED PRESTRESSED CONCRETE GIRDER.

THE ELASTOMER IN THE STEEL REINFORCED BEARINGS SHALL HAVE A SHEAR MODULUS OF 0.160 KSI. IN ACCORDANCE WITH AASHTO M251.

FOR STEEL REINFORCED ELASTOMERIC BEARINGS, SEE SPECIAL PROVISIONS.

LOAD RATINGS	
	MAX. D.L. + L.L.
TYPE IX	1178 K

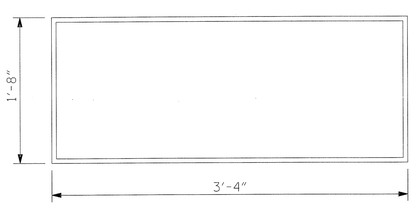

E3 (10 REQ'D)

PLAN VIEW OF ELASTOMERIC BEARING

TYPE IX

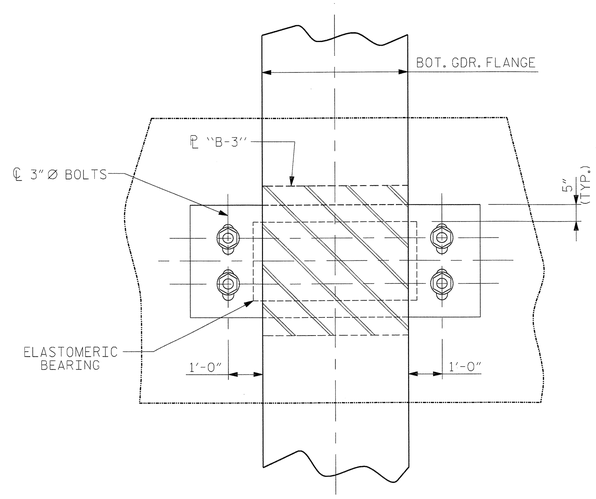

TYPICAL PLAN
(SHOWING BENTS #6 AND #7)

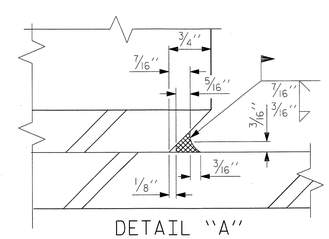

DETAIL "A"

PROJECT NO. R-2633BB
BRUNSWICK/NEW HANOVER COUNTY
STATION: 353+32.50 -L-

SHEET 4 OF 4

NORTH CAROLINA PROFESSIONAL SEAL 18442 ENGINEER RICHARD LEON ROBINSON JR.
5-24-2013

RS&H IMPROVING YOUR WORLD

RS&H Architects-Engineers-Planners, Inc.
8601 Six Forks Road, Suite 260
Raleigh, NC 27615
919-846-6701 FAX 919-846-9080
www.rsandh.com
North Carolina License Nos. 50073 * F-0493 * C-28

STATE OF NORTH CAROLINA
DEPARTMENT OF TRANSPORTATION
RALEIGH

ELASTOMERIC BEARING DETAILS

LEFT LANE

REVISIONS						
NO.	BY:	DATE:	NO.	BY:	DATE:	
1			3			
2			4			

SHEET NO. S-140
TOTAL SHEETS 700

DRAWN BY :	JML	DATE :	3/2012
CHECKED BY :	RLB	DATE :	3/2013
DESIGN ENGINEER OF RECORD :	J. ROBINSON	DATE :	5/2013

DEAD LOAD DEFLECTION TABLE FOR GIRDERS

0.6"Ø LOW RELAXATION	SPAN 1																					
	GIRDER 1 (EXTERIOR)											GIRDER 2 (INTERIOR)										
TENTH POINTS	0	.1	.2	.3	.4	.5	.6	.7	.8	.9	0	0	.1	.2	.3	.4	.5	.6	.7	.8	.9	0
CAMBER (GIRDER ALONE IN PLACE) ↑	0.000	0.091	0.153	0.199	0.225	0.234	0.225	0.199	0.153	0.091	0.000	0.000	0.091	0.153	0.199	0.225	0.234	0.225	0.199	0.153	0.077	0.000
* DEFLECTION DUE TO SUPERIMPOSED D.L. ↓	0.000	0.024	0.046	0.063	0.075	0.078	0.075	0.064	0.046	0.024	0.000	0.000	0.024	0.047	0.065	0.076	0.080	0.076	0.065	0.047	0.010	0.000
FINAL CAMBER ↑	0	13/16	1 5/16	1 5/8	1 13/16	1 7/8	1 13/16	1 5/8	1 5/16	13/16	0	0	13/16	1 1/4	1 5/8	1 13/16	1 7/8	1 13/16	1 5/8	1 1/4	13/16	0
0.6"Ø LOW RELAXATION	GIRDER 4 (EXTERIOR)											GIRDER 3 (INTERIOR)										
TENTH POINTS	0	.1	.2	.3	.4	.5	.6	.7	.8	.9	0	0	.1	.2	.3	.4	.5	.6	.7	.8	.9	0
CAMBER (GIRDER ALONE IN PLACE) ↑	0.000	0.091	0.153	0.199	0.225	0.234	0.225	0.199	0.153	0.077	0.000	0.000	0.091	0.153	0.199	0.225	0.234	0.225	0.199	0.153	0.077	0.000
* DEFLECTION DUE TO SUPERIMPOSED D.L. ↓	0.000	0.024	0.047	0.065	0.076	0.080	0.076	0.065	0.047	0.010	0.000	0.000	0.024	0.047	0.065	0.076	0.080	0.076	0.065	0.047	0.010	0.000
FINAL CAMBER ↑	0	13/16	1 1/4	1 5/8	1 13/16	1 7/8	1 13/16	1 5/8	1 1/4	13/16	0	0	13/16	1 1/4	1 5/8	1 13/16	1 7/8	1 13/16	1 5/8	1 1/4	13/16	0

DEAD LOAD DEFLECTION TABLE FOR GIRDERS

0.6"Ø LOW RELAXATION	SPAN 2																					
	GIRDER 1 (EXTERIOR)											GIRDER 2 (INTERIOR)										
TENTH POINTS	0	.1	.2	.3	.4	.5	.6	.7	.8	.9	0	0	.1	.2	.3	.4	.5	.6	.7	.8	.9	0
CAMBER (GIRDER ALONE IN PLACE) ↑	0.000	0.092	0.156	0.202	0.228	0.237	0.228	0.202	0.156	0.092	0.000	0.000	0.092	0.156	0.202	0.228	0.237	0.228	0.202	0.156	0.092	0.000
* DEFLECTION DUE TO SUPERIMPOSED D.L. ↓	0.000	0.025	0.049	0.067	0.079	0.083	0.079	0.067	0.049	0.025	0.000	0.000	0.026	0.050	0.069	0.081	0.085	0.081	0.069	0.050	0.026	0.000
FINAL CAMBER ↑	0	13/16	1 1/4	1 5/8	1 13/16	1 7/8	1 13/16	1 5/8	1 1/4	13/16	0	0	13/16	1 1/4	1 5/8	1 3/4	1 13/16	1 3/4	1 5/8	1 1/4	13/16	0
0.6"Ø LOW RELAXATION	GIRDER 4 (EXTERIOR)											GIRDER 3 (INTERIOR)										
TENTH POINTS	0	.1	.2	.3	.4	.5	.6	.7	.8	.9	0	0	.1	.2	.3	.4	.5	.6	.7	.8	.9	0
CAMBER (GIRDER ALONE IN PLACE) ↑	0.000	0.092	0.156	0.202	0.228	0.237	0.228	0.202	0.156	0.092	0.000	0.000	0.092	0.156	0.202	0.228	0.237	0.228	0.202	0.156	0.092	0.000
* DEFLECTION DUE TO SUPERIMPOSED D.L. ↓	0.000	0.026	0.050	0.069	0.081	0.085	0.081	0.069	0.050	0.026	0.000	0.000	0.026	0.050	0.069	0.081	0.085	0.081	0.069	0.050	0.026	0.000
FINAL CAMBER ↑	0	13/16	1 1/4	1 5/8	1 3/4	1 13/16	1 3/4	1 5/8	1 1/4	13/16	0	0	13/16	1 1/4	1 5/8	1 3/4	1 13/16	1 3/4	1 5/8	1 1/4	13/16	0

DEAD LOAD DEFLECTION TABLE FOR GIRDERS

0.6"Ø LOW RELAXATION	SPAN 3																					
	GIRDER 1 (EXTERIOR)											GIRDER 2 (INTERIOR)										
TENTH POINTS	0	.1	.2	.3	.4	.5	.6	.7	.8	.9	0	0	.1	.2	.3	.4	.5	.6	.7	.8	.9	0
CAMBER (GIRDER ALONE IN PLACE) ↑	0.000	0.092	0.156	0.202	0.228	0.237	0.228	0.202	0.156	0.092	0.000	0.000	0.092	0.156	0.202	0.228	0.237	0.228	0.202	0.156	0.092	0.000
DEFLECTION DUE TO SUMPERIMPOSED D.L.* ↓	0.000	0.025	0.049	0.067	0.079	0.083	0.079	0.067	0.049	0.025	0.000	0.000	0.026	0.050	0.069	0.081	0.085	0.081	0.069	0.050	0.026	0.000
FINAL CAMBER (IN.) ↑	0	13/16	1 1/4	1 5/8	1 13/16	1 7/8	1 13/16	1 5/8	1 1/4	13/16	0	0	13/16	1 1/4	1 5/8	1 3/4	1 13/16	1 3/4	1 5/8	1 1/4	13/16	0
0.6"Ø LOW RELAXATION	GIRDER 4 (EXTERIOR)											GIRDER 3 (INTERIOR)										
TENTH POINTS	0	.1	.2	.3	.4	.5	.6	.7	.8	.9	0	0	.1	.2	.3	.4	.5	.6	.7	.8	.9	0
CAMBER (GIRDER ALONE IN PLACE) ↑	0.000	0.092	0.156	0.202	0.228	0.237	0.228	0.202	0.156	0.092	0.000	0.000	0.092	0.156	0.202	0.228	0.237	0.228	0.202	0.156	0.092	0.000
DEFLECTION DUE TO SUMPERIMPOSED D.L.* ↓	0.000	0.026	0.050	0.069	0.081	0.085	0.081	0.069	0.050	0.026	0.000	0.000	0.026	0.050	0.069	0.081	0.085	0.081	0.069	0.050	0.026	0.000
FINAL CAMBER (IN.) ↑	0	13/16	1 1/4	1 5/8	1 3/4	1 13/16	1 3/4	1 5/8	1 1/4	13/16	0	0	13/16	1 1/4	1 5/8	1 3/4	1 13/16	1 3/4	1 5/8	1 1/4	13/16	0

* INCLUDES FUTURE WEARING SURFACE
ALL VALUES ARE SHOWN IN FEET (DECIMAL FORM), EXCEPT "FINAL CAMBER", WHICH IS GIVEN IN INCHES (FRACTION FORM).

PROJECT NO. R-2633BB
BRUNSWICK/NEW HANOVER COUNTY
STATION: 353+32.50 -L-

SHEET 1 OF 9

DRAWN BY : SMK, JML DATE : 01/2012
CHECKED BY : RLB DATE : 10/2012
DESIGN ENGINEER OF RECORD : R. BOLLINGER DATE : 05/2013

NORTH CAROLINA PROFESSIONAL SEAL 18442 ENGINEER RICHARD LEON BOLLINGER JR.
5-29-2013

RS&H IMPROVING YOUR WORLD

RS&H Architects-Engineers-Planners, Inc.
8601 Six Forks Road, Suite 260
Raleigh, NC 27615
919-846-6701 FAX 919-846-9080
www.rsandh.com
North Carolina License Nos. 50073 * F-0493 * C-28

STATE OF NORTH CAROLINA
DEPARTMENT OF TRANSPORTATION
RALEIGH

SUPERSTRUCTURE
CAMBER
(APPROACH SPANS 1-3)

LEFT LANE

REVISIONS						SHEET NO.
NO.	BY:	DATE:	NO.	BY:	DATE:	S-141
1			3			TOTAL SHEETS
2			4			700

DEAD LOAD DEFLECTION TABLE FOR GIRDERS

0.6" Ø LOW RELAXATION	SPAN 4																					
	GIRDER 1 (EXTERIOR)											GIRDER 2 (INTERIOR)										
TENTH POINTS	0	.1	.2	.3	.4	.5	.6	.7	.8	.9	0	0	.1	.2	.3	.4	.5	.6	.7	.8	.9	0
CAMBER (GIRDER ALONE IN PLACE) ↑	0.000	0.129	0.226	0.295	0.334	0.346	0.334	0.295	0.226	0.129	0.000	0.000	0.129	0.226	0.295	0.334	0.346	0.334	0.295	0.226	0.129	0.000
DEFLECTION DUE TO SUMPERIMPOSED D.L.* ↓	0.000	0.038	0.074	0.101	0.118	0.123	0.118	0.101	0.074	0.062	0.000	0.000	0.039	0.075	0.103	0.120	0.126	0.120	0.103	0.075	0.039	0.000
FINAL CAMBER (IN.) ↑	0	1 1/16	1 13/16	2 5/16	2 9/16	2 11/16	2 9/16	2 5/16	1 13/16	1 1/16	0	0	1 1/16	1 13/16	2 5/16	2 9/16	2 5/8	2 9/16	2 5/16	1 13/16	1 1/16	0
0.6" Ø LOW RELAXATION	GIRDER 4 (EXTERIOR)											GIRDER 3 (INTERIOR)										
TENTH POINTS	0	.1	.2	.3	.4	.5	.6	.7	.8	.9	0	0	.1	.2	.3	.4	.5	.6	.7	.8	.9	0
CAMBER (GIRDER ALONE IN PLACE) ↑	0.000	0.129	0.226	0.295	0.334	0.346	0.334	0.295	0.226	0.129	0.000	0.000	0.129	0.226	0.295	0.334	0.346	0.334	0.295	0.226	0.129	0.000
DEFLECTION DUE TO SUMPERIMPOSED D.L.* ↓	0.000	0.039	0.075	0.103	0.120	0.126	0.120	0.103	0.075	0.039	0.000	0.000	0.039	0.075	0.103	0.120	0.126	0.120	0.103	0.075	0.039	0.000
FINAL CAMBER (IN.) ↑	0	1 1/16	1 13/16	2 5/16	2 9/16	2 5/8	2 9/16	2 5/16	1 13/16	1 1/16	0	0	1 1/16	1 13/16	2 5/16	2 9/16	2 5/8	2 9/16	2 5/16	1 13/16	1 1/16	0

DEAD LOAD DEFLECTION TABLE FOR GIRDERS

0.6" Ø LOW RELAXATION	SPAN 5																					
	GIRDER 1 (EXTERIOR)											GIRDER 2 (INTERIOR)										
TENTH POINTS	0	.1	.2	.3	.4	.5	.6	.7	.8	.9	0	0	.1	.2	.3	.4	.5	.6	.7	.8	.9	0
CAMBER (GIRDER ALONE IN PLACE) ↑	0.000	0.129	0.226	0.295	0.334	.346	0.334	0.295	0.226	0.129	0.000	0.000	0.129	0.226	0.295	0.334	0.346	0.334	0.295	0.226	0.129	0.000
DEFLECTION DUE TO SUMPERIMPOSED D.L.* ↓	0.000	0.038	0.074	0.101	0.118	0.123	0.118	0.101	0.074	0.038	0.000	0.000	0.039	0.075	0.103	0.120	0.126	0.120	0.103	0.075	0.039	0.000
FINAL CAMBER (IN.) ↑	0	1 1/16	1 13/16	2 5/16	2 9/16	2 11/16	2 9/16	2 5/16	1 13/16	1 1/16	0	0	1 1/16	1 13/16	2 5/16	2 9/16	2 5/8	2 9/16	2 5/16	1 13/16	1 1/16	0
0.6" Ø LOW RELAXATION	GIRDER 4 (EXTERIOR)											GIRDER 3 (INTERIOR)										
TENTH POINTS	0	.1	.2	.3	.4	.5	.6	.7	.8	.9	0	0	.1	.2	.3	.4	.5	.6	.7	.8	.9	0
CAMBER (GIRDER ALONE IN PLACE) ↑	0.000	0.129	0.226	0.295	0.334	0.346	0.334	0.295	0.226	0.129	0.000	0.000	0.129	0.226	0.295	0.334	0.346	0.334	0.295	0.226	0.129	0.000
DEFLECTION DUE TO SUMPERIMPOSED D.L.* ↓	0.000	0.039	0.075	0.103	0.120	0.126	0.120	0.103	0.075	0.039	0.000	0.000	0.039	0.075	0.103	0.120	0.126	0.120	0.103	0.075	0.039	0.000
FINAL CAMBER (IN.) ↑	0	1 1/16	1 13/16	2 5/16	2 9/16	2 5/8	2 9/16	2 5/16	1 13/16	1 1/16	0	0	1 1/16	1 13/16	2 5/16	2 9/16	2 5/8	2 9/16	2 5/16	1 13/16	1 1/16	0

* INCLUDES FUTURE WEARING SURFACE
ALL VALUES ARE SHOWN IN FEET (DECIMAL FORM), EXCEPT "FINAL CAMBER", WHICH IS GIVEN IN INCHES (FRACTION FORM).

PROJECT NO. R-2633BB
BRUNSWICK/NEW HANOVER COUNTY
STATION: 353+32.50 -L-

SHEET 2 OF 9

NORTH CAROLINA PROFESSIONAL SEAL 18442 ENGINEER RICHARD LEON BOLLINGER JR.
5-24-2013

RS&H IMPROVING YOUR WORLD

RS&H Architects-Engineers-Planners, Inc.
8601 Six Forks Road, Suite 260
Raleigh, NC 27615
919-846-6701 FAX 919-846-9080
www.rsandh.com
North Carolina License Nos. 50073 * F-0493 * C-28

STATE OF NORTH CAROLINA
DEPARTMENT OF TRANSPORTATION
RALEIGH

SUPERSTRUCTURE
CAMBER
(APPROACH SPANS 4-5)

LEFT LANE

REVISIONS						SHEET NO.
NO.	BY:	DATE:	NO.	BY:	DATE:	S-142
1			3			TOTAL SHEETS
2			4			700

DRAWN BY : SMK, JML DATE : 01/2012
CHECKED BY : RLB DATE : 10/2012
DESIGN ENGINEER OF RECORD : R. BOLLINGER DATE : 05/2013

DEAD LOAD DEFLECTION TABLE FOR GIRDER END SEGMENT (SPAN 6)

	TWENTIETH POINTS	℄ BEARING	0.05	0.10	0.15	0.20	0.25	0.30	0.35	0.40	0.45	0.50	0.55	0.60	0.65	0.70	0.75	0.80	0.85	0.90	0.95	℄ SPLICE
A	DEFLECTION DUE TO GIRDER CAMBER AND FIRST STAGE P-T	0.000	0.066	0.121	0.169	0.210	0.243	0.271	0.293	0.311	0.326	0.337	0.346	0.352	0.354	0.353	0.347	0.335	0.318	0.295	0.265	0.232
B	DEFLECTION DUE TO DECK PLACEMENT	0.000	-0.048	-0.097	-0.144	-0.188	-0.229	-0.264	-0.294	-0.318	-0.336	-0.347	-0.351	-0.349	-0.340	-0.325	-0.305	-0.281	-0.254	-0.224	-0.193	-0.163
C	DEFLECTION DUE TO SECOND STAGE P-T	0.000	0.002	0.004	0.006	0.008	0.011	0.013	0.015	0.017	0.018	0.019	0.019	0.019	0.018	0.017	0.015	0.013	0.011	0.008	0.006	0.003
D	DEFLECTION DUE TO REMAINING CONST. DEAD LOADS	0.000	-0.006	-0.012	-0.018	-0.024	-0.029	-0.034	-0.037	-0.040	-0.042	-0.044	-0.044	-0.043	-0.042	-0.039	-0.036	-0.033	-0.029	-0.025	-0.020	-0.017
E	FINAL DEFLECTION	0.000	0.013	0.016	0.013	0.006	-0.003	-0.014	-0.023	-0.031	-0.035	-0.034	-0.030	-0.021	-0.009	0.005	0.020	0.034	0.046	0.054	0.058	0.055
F	VERTICAL CURVE ORDINATE	0.000	0.026	0.049	0.069	0.086	0.101	0.113	0.123	0.130	0.134	0.135	0.134	0.130	0.123	0.113	0.101	0.086	0.069	0.049	0.026	0.003
BU	BUILD-UP REQUIRED	2 1/2"	2 11/16"	2 15/16"	3 3/16"	3 1/2"	3 13/16"	4 1/16"	4 5/16"	4 1/2"	4 5/8"	4 5/8"	4 9/16"	4 7/16"	4 1/4"	3 15/16"	3 5/8"	3 5/16"	2 15/16"	2 5/8"	2 5/16"	2 1/8"

ALL VALUES ARE SHOWN IN FEET (DECIMAL FORM), EXCEPT "BUILD-UP REQUIRED", WHICH IS GIVEN IN INCHES (FRACTION FORM).

DEAD LOAD DEFLECTION TABLE FOR GIRDER HAUNCHED SEGMENT (BENT 6)

	TWENTIETH POINTS	℄ SPLICE	0.05	0.10	0.15	0.20	0.25	0.30	0.35	0.40	0.45	℄ BEARING	0.55	0.60	0.65	0.70	0.75	0.80	0.85	0.90	0.95	℄ SPLICE
A	DEFLECTION DUE TO GIRDER CAMBER AND FIRST STAGE P-T	0.232	0.194	0.154	0.119	0.088	0.063	0.043	0.027	0.015	0.006	0.000	-0.003	-0.004	-0.002	0.004	0.015	0.029	0.049	0.073	0.101	0.130
B	DEFLECTION DUE TO DECK PLACEMENT	-0.163	-0.141	-0.121	-0.101	-0.083	-0.066	-0.050	-0.036	-0.023	-0.011	0.000	0.009	0.017	0.023	0.028	0.032	0.034	0.035	0.035	0.032	0.028
C	DEFLECTION DUE TO SECOND STAGE P-T	0.003	0.001	0.000	-0.001	-0.002	-0.003	-0.003	-0.003	-0.002	-0.001	0.000	0.002	0.003	0.006	0.008	0.011	0.014	0.018	0.022	0.026	0.030
D	DEFLECTION DUE TO REMAINING CONST. DEAD LOADS	-0.017	-0.014	-0.011	-0.009	-0.007	-0.005	-0.004	-0.002	-0.001	-0.001	0.000	0.000	0.000	0.000	-0.001	-0.001	-0.002	-0.004	-0.005	-0.007	-0.009
E	FINAL DEFLECTION	0.055	0.040	0.021	0.007	-0.004	-0.011	-0.014	-0.014	-0.011	-0.006	0.000	0.008	0.016	0.027	0.040	0.056	0.075	0.098	0.124	0.152	0.179
F	VERTICAL CURVE ORDINATE	0.003	0.014	0.026	0.037	0.047	0.055	0.061	0.066	0.070	0.072	0.073	0.072	0.070	0.066	0.061	0.055	0.047	0.037	0.026	0.014	0.003
BU	BUILD-UP REQUIRED	2 1/8"	2 5/8"	3 1/16"	3 7/16"	3 3/4"	4 1/16"	4 1/4"	4 3/8"	4 7/16"	4 1/2"	4 9/16"	4 1/2"	4 7/16"	4 3/8"	4 1/4"	4 1/16"	3 13/16"	3 1/2"	3 1/8"	2 3/4"	2 3/8"

ALL VALUES ARE SHOWN IN FEET (DECIMAL FORM), EXCEPT "BUILD-UP REQUIRED", WHICH IS GIVEN IN INCHES (FRACTION FORM).

DEAD LOAD DEFLECTION TABLE FOR GIRDER DROP-IN SEGMENT (SPAN 7)

	TWENTIETH POINTS	℄ SPLICE	0.05	0.10	0.15	0.20	0.25	0.30	0.35	0.40	0.45	0.50	0.55	0.60	0.65	0.70	0.75	0.80	0.85	0.90	0.95	℄ SPLICE
A	DEFLECTION DUE TO GIRDER CAMBER AND FIRST STAGE P-T	0.130	0.173	0.213	0.245	0.271	0.289	0.302	0.312	0.318	0.321	0.322	0.321	0.318	0.313	0.304	0.291	0.273	0.248	0.216	0.177	0.134
B	DEFLECTION DUE TO DECK PLACEMENT	0.028	0.020	0.009	-0.004	-0.017	-0.030	-0.042	-0.052	-0.060	-0.065	-0.067	-0.066	-0.062	-0.055	-0.046	-0.035	-0.022	-0.009	0.003	0.015	0.023
C	DEFLECTION DUE TO SECOND STAGE P-T	0.030	0.035	0.040	0.045	0.050	0.054	0.057	0.060	0.062	0.063	0.063	0.063	0.062	0.060	0.057	0.054	0.050	0.045	0.040	0.035	0.030
D	DEFLECTION DUE TO REMAINING CONST. DEAD LOADS	-0.009	-0.012	-0.016	-0.019	-0.023	-0.026	-0.029	-0.032	-0.033	-0.034	-0.035	-0.034	-0.033	-0.031	-0.029	-0.026	-0.022	-0.019	-0.015	-0.011	-0.008
E	FINAL DEFLECTION	0.179	0.216	0.246	0.267	0.280	0.287	0.288	0.288	0.286	0.284	0.283	0.283	0.284	0.286	0.286	0.285	0.278	0.265	0.245	0.215	0.178
F	VERTICAL CURVE ORDINATE	0.003	0.025	0.047	0.066	0.083	0.097	0.109	0.118	0.124	0.128	0.129	0.128	0.124	0.118	0.109	0.097	0.083	0.066	0.047	0.025	0.003
BU	BUILD-UP REQUIRED	2 3/8"	2 3/16"	2 1/16"	2 1/16"	2 1/8"	2 1/4"	2 3/8"	2 1/2"	2 9/16"	2 11/16"	2 11/16"	2 11/16"	2 5/8"	2 9/16"	2 7/16"	2 5/16"	2 1/4"	2 3/16"	2 3/16"	2 5/16"	2 7/16"

ALL VALUES ARE SHOWN IN FEET (DECIMAL FORM), EXCEPT "BUILD-UP REQUIRED", WHICH IS GIVEN IN INCHES (FRACTION FORM).

NOTES

1. ITEMS A, B, C AND D ARE INTENDED TO ASSIST THE CONTRACTOR AND ENGINEER IN DETECTING ANY UNINTENDED DEFLECTIONS THAT MAY OCCUR DURING CONSTRUCTION.
2. THE GIRDER BUILD-UPS ARE USED FOR ESTIMATING QUANTITIES AND PLATFORM SETTING. THEY ARE NOT INTENDED TO BE USED AS A GRADE SETTING TOOL.
3. PRIOR TO CASTING THE DECK, THE CONTRACTOR SHALL SUBMIT TO THE ENGINEER FOR APPROVAL, THE CALCULATIONS USED FOR DETERMINING THE BUILD-UP.
4. THE CONTRACTOR SHALL CAST THE DECK OF SPANS 6-8 WITHIN 30 DAYS OF DETERMINING THE REQUIRED BUILD-UPS. THE WORK TO BE DONE WITHIN THE 30 DAYS DOES NOT INCLUDE STAGE 2 POST-TENSIONING OR CASTING THE FINAL PORTION OF DECK AT EACH END OF SPANS 6 & 8.
5. POSITIVE DEFLECTION IS UPWARD, NEGATIVE DEFLECTION IS DOWNWARD.
6. THE PROVIDED DEFLECTIONS ARE FOR AN INTERIOR GIRDER. EXTERIOR GIRDER DEFLECTIONS ARE ANTICIPATED TO BE WITHIN ±1/8" OF THOSE FOR AN INTERIOR GIRDER.

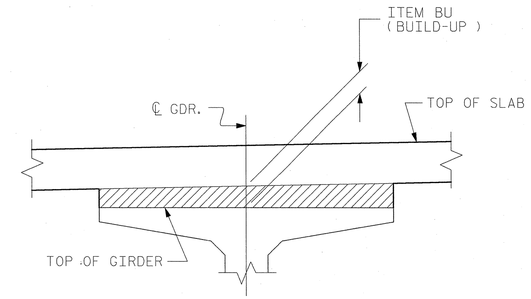

DETAIL SHOWING BUILD-UP OVER GIRDER

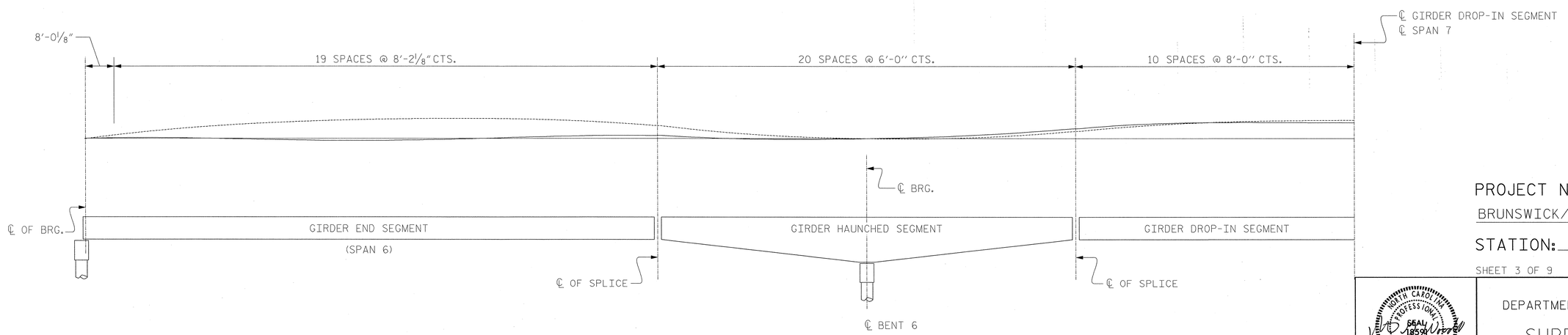

DENOTES GIRDER AND STAGE #1 PT DEFLECTION (DEFLECTION A)

DENOTES FINAL DEFLECTION (DEFLECTION E)

CAMBER DIAGRAM

PROJECT NO. R-2633BB

BRUNSWICK/NEW HANOVER COUNTY

STATION: 353+32.50 -L-

SHEET 3 OF 9

NORTH CAROLINA PROFESSIONAL SEAL 18594 ENGINEER ROBERT G. WOODRUFF

5/28/13

RS&H IMPROVING YOUR WORLD

RS&H Architects-Engineers-Planners, Inc.
8601 Six Forks Road, Suite 260
Raleigh, NC 27615
919-846-5701 FAX 919-846-9080
www.rsandh.com
North Carolina License Nos. 50073 * F-0493 * C-28

STATE OF NORTH CAROLINA
DEPARTMENT OF TRANSPORTATION
RALEIGH

SUPERSTRUCTURE
CAMBER & DEFLECTIONS SPANS 6, 7 & 8

LEFT LANE

REVISIONS						SHEET NO.
NO.	BY:	DATE:	NO.	BY:	DATE:	S-143
1			3			TOTAL SHEETS
2			4			700

DRAWN BY : SOF DATE : 11/2012
CHECKED BY : GBL DATE : 11/2012
DESIGN ENGINEER OF RECORD : R. WOODRUFF DATE : 05/2013

DEAD LOAD DEFLECTION TABLE FOR GIRDER HAUNCHED SEGMENT (BENT 7)

	TWENTIETH POINTS	℄ SPLICE	0.05	0.10	0.15	0.20	0.25	0.30	0.35	0.40	0.45	℄ BEARING	0.55	0.60	0.65	0.70	0.75	0.80	0.85	0.90	0.95	℄ SPLICE
A	DEFLECTION DUE TO GIRDER CAMBER AND FIRST STAGE P-T	0.134	0.104	0.074	0.049	0.029	0.014	0.004	-0.002	-0.005	-0.004	0.000	0.006	0.016	0.028	0.044	0.064	0.089	0.118	0.152	0.191	0.228
B	DEFLECTION DUE TO DECK PLACEMENT	0.023	0.028	0.030	0.032	0.031	0.030	0.026	0.022	0.016	0.009	0.000	-0.010	-0.021	-0.034	-0.048	-0.064	-0.080	-0.098	-0.117	-0.137	-0.158
C	DEFLECTION DUE TO SECOND STAGE P-T	0.030	0.026	0.022	0.018	0.014	0.011	0.008	0.006	0.003	0.002	0.000	-0.001	-0.002	-0.003	-0.003	-0.003	-0.003	-0.002	-0.001	0.001	0.002
D	DEFLECTION DUE TO REMAINING CONST. DEAD LOADS	-0.008	-0.006	-0.005	-0.003	-0.002	-0.001	0.000	0.000	0.000	0.000	0.000	-0.001	-0.002	-0.003	-0.004	-0.006	-0.008	-0.010	-0.012	-0.014	-0.017
E	FINAL DEFLECTION	0.178	0.151	0.122	0.096	0.073	0.054	0.038	0.025	0.015	0.007	0.000	-0.005	-0.010	-0.012	-0.011	-0.008	-0.002	0.009	0.023	0.040	0.055
F	VERTICAL CURVE ORDINATE	0.003	0.014	0.026	0.037	0.047	0.055	0.061	0.066	0.070	0.072	0.073	0.072	0.070	0.066	0.061	0.055	0.047	0.037	0.026	0.014	0.003
BU	BUILD-UP REQUIRED	2 7/16"	2 3/4"	3 3/16"	3 9/16"	3 7/8"	4 1/8"	4 5/16"	4 7/16"	4 9/16"	4 9/16"	4 5/8"	4 9/16"	4 1/2"	4 7/16"	4 5/16"	4 1/8"	3 7/8"	3 9/16"	3 3/16"	2 3/4"	2 3/16"

ALL VALUES ARE SHOWN IN FEET (DECIMAL FORM), EXCEPT "BUILD-UP REQUIRED", WHICH IS GIVEN IN INCHES (FRACTION FORM).

DEAD LOAD DEFLECTION TABLE FOR GIRDER END SEGMENT (SPAN 8)

	TWENTIETH POINTS	℄ SPLICE	0.05	0.10	0.15	0.20	0.25	0.30	0.35	0.40	0.45	0.50	0.55	0.60	0.65	0.70	0.75	0.80	0.85	0.90	0.95	℄ BEARING
A	DEFLECTION DUE TO GIRDER CAMBER AND FIRST STAGE P-T	0.228	0.262	0.291	0.315	0.332	0.344	0.351	0.352	0.350	0.344	0.336	0.325	0.310	0.292	0.270	0.243	0.209	0.169	0.121	0.066	0.000
B	DEFLECTION DUE TO DECK PLACEMENT	-0.158	-0.187	-0.218	-0.247	-0.275	-0.298	-0.318	-0.332	-0.341	-0.343	-0.339	-0.328	-0.311	-0.287	-0.258	-0.223	-0.184	-0.141	-0.095	-0.047	0.000
C	DEFLECTION DUE TO SECOND STAGE P-T	0.002	0.005	0.007	0.009	0.011	0.013	0.015	0.016	0.017	0.017	0.016	0.016	0.015	0.013	0.011	0.009	0.007	0.005	0.003	0.001	0.000
D	DEFLECTION DUE TO REMAINING CONST. DEAD LOADS	-0.017	-0.021	-0.025	-0.030	-0.034	-0.037	-0.040	-0.043	-0.044	-0.045	-0.045	-0.044	-0.041	-0.038	-0.034	-0.030	-0.024	-0.019	-0.012	-0.006	0.000
E	FINAL DEFLECTION	0.055	0.058	0.055	0.047	0.036	0.022	0.007	-0.007	-0.019	-0.027	-0.031	-0.031	-0.028	-0.020	-0.011	-0.001	0.008	0.015	0.017	0.014	0.000
F	VERTICAL CURVE ORDINATE	0.003	0.026	0.049	0.069	0.086	0.101	0.113	0.123	0.130	0.134	0.135	0.134	0.130	0.123	0.113	0.101	0.086	0.069	0.049	0.026	0.000
BU	BUILD-UP REQUIRED	2 3/16"	2 5/16"	2 5/8"	2 15/16"	3 1/4"	3 5/8"	3 15/16"	4 3/16"	4 7/16"	4 9/16"	4 5/8"	4 9/16"	4 1/2"	4 5/16"	4 1/16"	3 3/4"	3 1/2"	3 3/16"	2 7/8"	2 5/8"	2 1/2"

ALL VALUES ARE SHOWN IN FEET (DECIMAL FORM), EXCEPT "BUILD-UP REQUIRED", WHICH IS GIVEN IN INCHES (FRACTION FORM).

NOTES

1. ITEMS A, B, C AND D ARE INTENDED TO ASSIST THE CONTRACTOR AND ENGINEER IN DETECTING ANY UNINTENDED DEFLECTIONS THAT MAY OCCUR DURING CONSTRUCTION.
2. THE GIRDER BUILD-UPS ARE USED FOR ESTIMATING QUANTITIES AND PLATFORM SETTING. THEY ARE NOT INTENDED TO BE USED AS A GRADE SETTING TOOL.
3. PRIOR TO CASTING THE DECK, THE CONTRACTOR SHALL SUBMIT TO THE ENGINEER FOR APPROVAL, THE CALCULATIONS USED FOR DETERMINING THE BUILD-UP.
4. THE CONTRACTOR SHALL CAST THE DECK OF SPANS 6-8 WITHIN 30 DAYS OF DETERMINING THE REQUIRED BUILD-UPS. THE WORK TO BE DONE WITHIN THE 30 DAYS DOES NOT INCLUDE STAGE 2 POST-TENSIONING OR CASTING THE FINAL PORTION OF DECK AT EACH END OF SPANS 6 & 8.
5. POSITIVE DEFLECTION IS UPWARD, NEGATIVE DEFLECTION IS DOWNWARD.
6. THE PROVIDED DEFLECTIONS ARE FOR AN INTERIOR GIRDER. EXTERIOR GIRDER DEFLECTIONS ARE ANTICIPATED TO BE WITHIN ±1/8" OF THOSE FOR AN INTERIOR GIRDER.

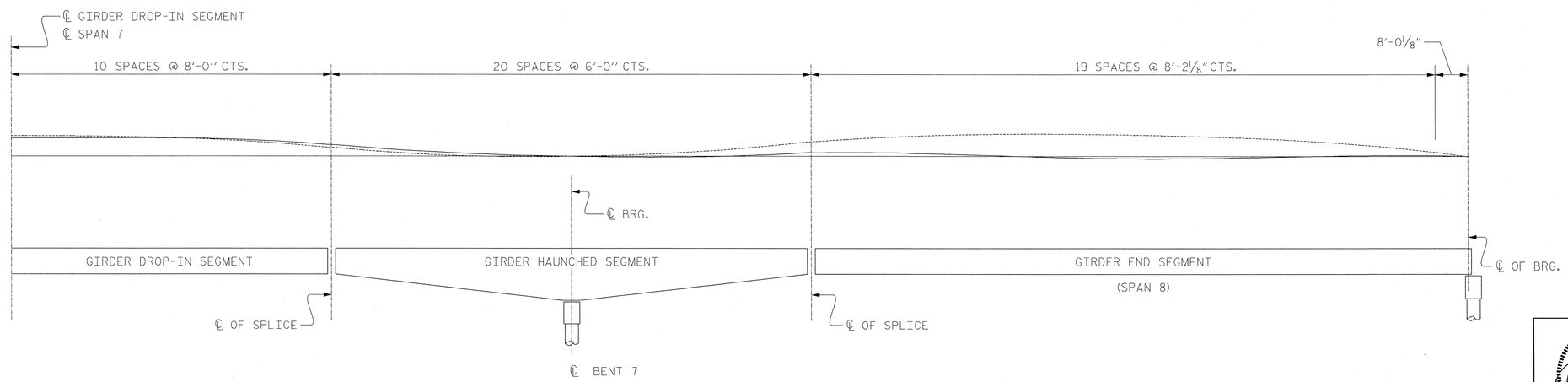

DENOTES GIRDER AND STAGE #1 PT DEFLECTION (DEFLECTION A)

DENOTES FINAL DEFLECTION (DEFLECTION E)

CAMBER DIAGRAM

PROJECT NO. R-2633BB

BRUNSWICK/NEW HANOVER COUNTY

STATION: 353+32.50 -L-

SHEET 4 OF 9

NORTH CAROLINA PROFESSIONAL SEAL 18591 ENGINEER ROBERT G. WOODRUFF

5/28/13

RS&H IMPROVING YOUR WORLD

RS&H Architects-Engineers-Planners, Inc.
8601 Six Forks Road, Suite 260
Raleigh, NC 27615
919-846-6701 FAX 919-846-9080
www.rsandh.com
North Carolina License Nos. 50473 * F-0493 * C-28

STATE OF NORTH CAROLINA
DEPARTMENT OF TRANSPORTATION
RALEIGH

SUPERSTRUCTURE
CAMBER & DEFLECTIONS
SPANS 6, 7 & 8

LEFT LANE

REVISIONS						SHEET NO.
NO.	BY:	DATE:	NO.	BY:	DATE:	S-144
1			3			TOTAL SHEETS
2			4			700

DRAWN BY :	SOF	DATE :	11/2012
CHECKED BY :	GBL	DATE :	11/2012
DESIGN ENGINEER OF RECORD :	R. WOODRUFF	DATE :	05/2013

DEAD LOAD DEFLECTION TABLE FOR GIRDERS

0.6"Ø LOW RELAXATION	SPAN 9																					
	GIRDER 1 (EXTERIOR)											GIRDER 2 (INTERIOR)										
TENTH POINTS	0	.1	.2	.3	.4	.5	.6	.7	.8	.9	0	0	.1	.2	.3	.4	.5	.6	.7	.8	.9	0
CAMBER (GIRDER ALONE IN PLACE) ↑	0.000	0.129	0.226	0.295	0.334	0.346	0.334	0.295	0.226	0.129	0.000	0.000	0.129	0.226	0.295	0.334	0.346	0.334	0.295	0.226	0.129	0.000
DEFLECTION DUE TO SUMPERIMPOSED D.L.* ↓	0.000	0.039	0.075	0.102	0.119	0.125	0.119	0.102	0.075	0.039	0.000	0.000	0.040	0.076	0.104	0.121	0.127	0.121	0.104	0.076	0.040	0.000
FINAL CAMBER (IN.) ↑	0	1 1/16	1 13/16	2 5/16	2 9/16	2 5/8	2 9/16	2 5/16	1 13/16	1 1/16	0	0	1 1/16	1 13/16	2 5/16	2 9/16	2 5/8	2 9/16	2 5/16	1 13/16	1 1/16	0
0.6"Ø LOW RELAXATION	GIRDER 4 (EXTERIOR)											GIRDER 3 (INTERIOR)										
TENTH POINTS	0	.1	.2	.3	.4	.5	.6	.7	.8	.9	0	0	.1	.2	.3	.4	.5	.6	.7	.8	.9	0
CAMBER (GIRDER ALONE IN PLACE) ↑	0.000	0.129	0.226	0.295	0.334	0.346	0.334	0.295	0.226	0.129	0.000	0.000	0.129	0.226	0.295	0.334	0.346	0.334	0.295	0.226	0.129	0.000
DEFLECTION DUE TO SUMPERIMPOSED D.L.* ↓	0.000	0.040	0.076	0.104	0.122	0.127	0.122	0.104	0.076	0.040	0.000	0.000	0.040	0.076	0.104	0.121	0.127	0.121	0.104	0.076	0.040	0.000
FINAL CAMBER (IN.) ↑	0	1 1/16	1 13/16	2 5/16	2 9/16	2 5/8	2 9/16	2 5/16	1 13/16	1 1/16	0	0	1 1/16	1 13/16	2 5/16	2 9/16	2 5/8	2 9/16	2 5/16	1 13/16	1 1/16	0

DEAD LOAD DEFLECTION TABLE FOR GIRDERS

0.6"Ø LOW RELAXATION	SPAN 10																					
	GIRDER 1 (EXTERIOR)											GIRDER 2 (INTERIOR)										
TENTH POINTS	0	.1	.2	.3	.4	.5	.6	.7	.8	.9	0	0	.1	.2	.3	.4	.5	.6	.7	.8	.9	0
CAMBER (GIRDER ALONE IN PLACE) ↑	0.000	0.067	0.115	0.149	0.169	0.175	0.169	0.149	0.115	0.067	0.000	0.000	0.067	0.115	0.149	0.169	0.175	0.169	0.149	0.115	0.067	0.000
DEFLECTION DUE TO SUMPERIMPOSED D.L.* ↓	0.000	0.019	0.036	0.050	0.059	0.062	0.059	0.050	0.036	0.019	0.000	0.000	0.019	0.037	0.051	0.060	0.063	0.060	0.051	0.037	0.019	0.000
FINAL CAMBER (IN.) ↑	0	9/16	15/16	1 3/16	1 5/16	1 3/8	1 5/16	1 3/16	15/16	9/16	0	0	9/16	15/16	1 3/16	1 5/16	1 3/8	1 5/16	1 3/16	15/16	9/16	0
0.6"Ø LOW RELAXATION	GIRDER 4 (EXTERIOR)											GIRDER 3 (INTERIOR)										
TENTH POINTS	0	.1	.2	.3	.4	.5	.6	.7	.8	.9	0	0	.1	.2	.3	.4	.5	.6	.7	.8	.9	0
CAMBER (GIRDER ALONE IN PLACE) ↑	0.000	0.067	0.115	0.149	0.169	0.175	0.169	0.149	0.115	0.067	0.000	0.000	0.067	0.115	0.149	0.169	0.175	0.169	0.149	0.115	0.067	0.000
DEFLECTION DUE TO SUMPERIMPOSED D.L.* ↓	0.000	0.019	0.037	0.051	0.060	0.063	0.060	0.051	0.037	0.019	0.000	0.000	0.019	0.037	0.051	0.060	0.063	0.060	0.051	0.037	0.019	0.000
FINAL CAMBER (IN.) ↑	0	9/16	15/16	1 3/16	1 5/16	1 3/8	1 5/16	1 3/16	15/16	9/16	0	0	9/16	15/16	1 3/16	1 5/16	1 3/8	1 5/16	1 3/16	15/16	9/16	0

* INCLUDES FUTURE WEARING SURFACE
ALL VALUES ARE SHOWN IN FEET (DECIMAL FORM), EXCEPT "FINAL CAMBER", WHICH IS GIVEN IN INCHES (FRACTION FORM).

PROJECT NO. R-2633BB
BRUNSWICK/NEW HANOVER COUNTY
STATION: 353+32.50 -L-

SHEET 5 OF 9

NORTH CAROLINA PROFESSIONAL SEAL 18442 ENGINEER LEONI BOLLINGER JR.
5-29-2013

RS&H IMPROVING YOUR WORLD

RS&H Architects-Engineers-Planners, Inc.
8601 Six Forks Road, Suite 260
Raleigh, NC 27615
919-846-5701 FAX 919-846-9080
www.rsandh.com
North Carolina License Nos. 00073 * F-0493 * C-28

STATE OF NORTH CAROLINA
DEPARTMENT OF TRANSPORTATION
RALEIGH

SUPERSTRUCTURE
CAMBER
(APPROACH SPANS 9-10)

LEFT LANE

REVISIONS						SHEET NO.
NO.	BY:	DATE:	NO.	BY:	DATE:	S-145
1			3			TOTAL SHEETS
2			4			700

DRAWN BY : SMK, JML DATE : 02/2012
CHECKED BY : RLB DATE : 10/2012
DESIGN ENGINEER OF RECORD : R. BOLLINGER DATE : 05/2013

DEAD LOAD DEFLECTION TABLE FOR GIRDERS

0.6" Ø LOW RELAXATION	SPAN 11																					
	GIRDER 1 (EXTERIOR)											GIRDER 2 (INTERIOR)										
TENTH POINTS	0	.1	.2	.3	.4	.5	.6	.7	.8	.9	0	0	.1	.2	.3	.4	.5	.6	.7	.8	.9	0
CAMBER (GIRDER ALONE IN PLACE) ↑	0.000	0.129	0.226	0.295	0.334	0.346	0.334	0.295	0.226	0.129	0.000	0.000	0.129	0.226	0.295	0.334	0.346	0.334	0.295	0.226	0.129	0.000
DEFLECTION DUE TO SUMPERIMPOSED D.L.* ↓	0.000	0.042	0.081	0.111	0.129	0.135	0.129	0.111	0.081	0.042	0.000	0.000	0.042	0.080	0.110	0.128	0.134	0.128	0.110	0.080	0.042	0.000
FINAL CAMBER (IN.) ↑	0	1 1/16	1 3/4	2 3/16	2 7/16	2 1/2	2 7/16	2 3/16	1 3/4	1 1/16	0	0	1 1/16	1 3/4	2 3/16	2 7/16	2 9/16	2 7/16	2 3/16	1 3/4	1 1/16	0
0.6" Ø LOW RELAXATION	GIRDER 4 (EXTERIOR)											GIRDER 3 (INTERIOR)										
TENTH POINTS	0	.1	.2	.3	.4	.5	.6	.7	.8	.9	0	0	.1	.2	.3	.4	.5	.6	.7	.8	.9	0
CAMBER (GIRDER ALONE IN PLACE) ↑	0.000	0.129	0.226	0.295	0.334	0.346	0.334	0.295	0.226	0.129	0.000	0.000	0.129	0.226	0.295	0.334	0.346	0.334	0.295	0.226	0.129	0.000
DEFLECTION DUE TO SUMPERIMPOSED D.L.* ↓	0.000	0.043	0.083	0.113	0.132	0.138	0.132	0.113	0.083	0.043	0.000	0.000	0.042	0.080	0.110	0.128	0.134	0.128	0.110	0.080	0.042	0.000
FINAL CAMBER (IN.) ↑	0	1 1/16	1 3/4	2 3/16	2 7/16	2 1/2	2 7/16	2 3/16	1 3/4	1 1/16	0	0	1 1/16	1 3/4	2 3/16	2 7/16	2 9/16	2 7/16	2 3/16	1 3/4	1 1/16	0

DEAD LOAD DEFLECTION TABLE FOR GIRDERS

0.6" Ø LOW RELAXATION	SPAN 12																					
	GIRDER 1 (EXTERIOR)											GIRDER 2 (INTERIOR)										
TENTH POINTS	0	.1	.2	.3	.4	.5	.6	.7	.8	.9	0	0	.1	.2	.3	.4	.5	.6	.7	.8	.9	0
CAMBER (GIRDER ALONE IN PLACE) ↑	0.000	0.129	0.226	0.295	0.334	0.346	0.334	0.295	0.226	0.129	0.000	0.000	0.129	0.226	0.295	0.334	0.346	0.334	0.295	0.226	0.129	0.000
* DEFLECTION DUE TO SUPERIMPOSED D.L. ↓	0.000	0.042	0.080	0.110	0.128	0.134	0.128	0.110	0.080	0.042	0.000	0.000	0.041	0.080	0.109	0.127	0.133	0.127	0.109	0.080	0.041	0.000
FINAL CAMBER ↑	0	1 1/16	1 3/4	2 3/16	2 1/2	2 9/16	2 1/2	2 3/16	1 3/4	1 1/16	0	0	1 1/16	1 3/4	2 1/4	2 1/2	2 9/16	2 1/2	2 1/4	1 3/4	1 1/16	0
0.6" Ø LOW RELAXATION	GIRDER 4 (EXTERIOR)											GIRDER 3 (INTERIOR)										
TENTH POINTS	0	.1	.2	.3	.4	.5	.6	.7	.8	.9	0	0	.1	.2	.3	.4	.5	.6	.7	.8	.9	0
CAMBER (GIRDER ALONE IN PLACE) ↑	0.000	0.129	0.226	0.295	0.334	0.346	0.334	0.295	0.226	0.129	0.000	0.000	0.129	0.226	0.295	0.334	0.346	0.334	0.295	0.226	0.129	0.000
* DEFLECTION DUE TO SUPERIMPOSED D.L. ↓	0.000	0.043	0.082	0.112	0.131	0.137	0.131	0.112	0.082	0.043	0.000	0.000	0.041	0.080	0.109	0.127	0.133	0.127	0.109	0.080	0.041	0.000
FINAL CAMBER ↑	0	1 1/16	1 3/4	2 3/16	2 7/16	2 1/2	2 7/16	2 3/16	1 3/4	1 1/16	0	0	1 1/16	1 3/4	2 1/4	2 1/2	2 9/16	2 1/2	2 1/4	1 3/4	1 1/16	0

DEAD LOAD DEFLECTION TABLE FOR GIRDERS

0.6" Ø LOW RELAXATION	SPAN 13																					
	GIRDER 1 (EXTERIOR)											GIRDER 2 (INTERIOR)										
TENTH POINTS	0	.1	.2	.3	.4	.5	.6	.7	.8	.9	0	0	.1	.2	.3	.4	.5	.6	.7	.8	.9	0
CAMBER (GIRDER ALONE IN PLACE) ↑	0.000	0.129	0.226	0.295	0.334	0.346	0.334	0.295	0.226	0.129	0.000	0.000	0.129	0.226	0.295	0.334	0.346	0.334	0.295	0.226	0.129	0.000
* DEFLECTION DUE TO SUPERIMPOSED D.L. ↓	0.000	0.042	0.080	0.110	0.128	0.134	0.128	0.110	0.080	0.042	0.000	0.000	0.041	0.080	0.109	0.127	0.133	0.127	0.109	0.080	0.041	0.000
FINAL CAMBER ↑	0	1 1/16	1 3/4	2 3/16	2 1/2	2 9/16	2 1/2	2 3/16	1 3/4	1 1/16	0	0	1 1/16	1 3/4	2 1/4	2 1/2	2 9/16	2 1/2	2 1/4	1 3/4	1 1/16	0
0.6" Ø LOW RELAXATION	GIRDER 4 (EXTERIOR)											GIRDER 3 (INTERIOR)										
TENTH POINTS	0	.1	.2	.3	.4	.5	.6	.7	.8	.9	0	0	.1	.2	.3	.4	.5	.6	.7	.8	.9	0
CAMBER (GIRDER ALONE IN PLACE) ↑	0.000	0.129	0.226	0.295	0.334	0.346	0.334	0.295	0.226	0.129	0.000	0.000	0.129	0.226	0.295	0.334	0.346	0.334	0.295	0.226	0.129	0.000
* DEFLECTION DUE TO SUPERIMPOSED D.L. ↓	0.000	0.043	0.082	0.112	0.131	0.137	0.131	0.112	0.082	0.043	0.000	0.000	0.041	0.080	0.109	0.127	0.133	0.127	0.109	0.080	0.041	0.000
FINAL CAMBER ↑	0	1 1/16	1 3/4	2 3/16	2 7/16	2 1/2	2 7/16	2 3/16	1 3/4	1 1/16	0	0	1 1/16	1 3/4	2 1/4	2 1/2	2 9/16	2 1/2	2 1/4	1 3/4	1 1/16	0

* INCLUDES FUTURE WEARING SURFACE
ALL VALUES ARE SHOWN IN FEET (DECIMAL FORM), EXCEPT "FINAL CAMBER", WHICH IS GIVEN IN INCHES (FRACTION FORM).

PROJECT NO. R-2633BB
BRUNSWICK/NEW HANOVER COUNTY
STATION: 353+32.50 -L-

SHEET 6 OF 9

NORTH CAROLINA PROFESSIONAL SEAL 18442 ENGINEER RICHARD LEON BOLLINGER, JR.
5-29-2013

RS&H IMPROVING YOUR WORLD

RS&H Architects-Engineers-Planners, Inc.
8601 Six Forks Road, Suite 260
Raleigh, NC 27615
919-846-5701 FAX 919-846-9080
www.rsandh.com
North Carolina License Nos. 50073 * F-0493 * C-28

STATE OF NORTH CAROLINA
DEPARTMENT OF TRANSPORTATION
RALEIGH

SUPERSTRUCTURE
CAMBER
(APPROACH SPANS 11-13)

LEFT LANE

REVISIONS						SHEET NO.
NO.	BY:	DATE:	NO.	BY:	DATE:	S-106
1			3			TOTAL SHEETS
2			4			700

DRAWN BY : SMK, JML DATE : 02/2012
CHECKED BY : RLB DATE : 10/2012
DESIGN ENGINEER OF RECORD : R. BOLLINGER DATE : 05/2013

DEAD LOAD DEFLECTION TABLE FOR GIRDERS

SPAN 14

0.6" Ø LOW RELAXATION	GIRDER 1 (EXTERIOR)											GIRDER 2 (INTERIOR)										
TENTH POINTS	0	.1	.2	.3	.4	.5	.6	.7	.8	.9	0	0	.1	.2	.3	.4	.5	.6	.7	.8	.9	0
CAMBER (GIRDER ALONE IN PLACE) ↑	0.000	0.129	0.226	0.295	0.334	0.346	0.334	0.295	0.226	0.129	0.000	0.000	0.129	0.226	0.295	0.334	0.346	0.334	0.295	0.226	0.129	0.000
DEFLECTION DUE TO SUMPERIMPOSED D.L.* ↓	0.000	0.042	0.080	0.110	0.128	0.134	0.128	0.110	0.080	0.042	0.000	0.000	0.041	0.079	0.109	0.127	0.133	0.127	0.109	0.079	0.041	0.000
FINAL CAMBER (IN.) ↑	0	1 1/16	1 3/4	2 1/4	2 1/2	2 9/16	2 1/2	2 1/4	1 3/4	1 1/16	0	0	1 1/16	1 3/4	2 1/4	2 1/2	2 9/16	2 1/2	2 1/4	1 3/4	1 1/16	0

0.6" Ø LOW RELAXATION	GIRDER 4 (EXTERIOR)											GIRDER 3 (INTERIOR)										
TENTH POINTS	0	.1	.2	.3	.4	.5	.6	.7	.8	.9	0	0	.1	.2	.3	.4	.5	.6	.7	.8	.9	0
CAMBER (GIRDER ALONE IN PLACE) ↑	0.000	0.129	0.226	0.295	0.334	0.346	0.334	0.295	0.226	0.129	0.000	0.000	0.129	0.226	0.295	0.334	0.346	0.334	0.295	0.226	0.129	0.000
DEFLECTION DUE TO SUMPERIMPOSED D.L.* ↓	0.000	0.042	0.082	0.112	0.130	0.136	0.130	0.112	0.082	0.042	0.000	0.000	0.041	0.079	0.109	0.127	0.133	0.127	0.109	0.079	0.041	0.000
FINAL CAMBER (IN.) ↑	0	1 1/16	1 3/4	2 3/16	2 7/16	2 1/2	2 7/16	2 3/16	1 3/4	1 1/16	0	0	1 1/16	1 3/4	2 1/4	2 1/2	2 9/16	2 1/2	2 1/4	1 3/4	1 1/16	0

DEAD LOAD DEFLECTION TABLE FOR GIRDERS

SPAN 15

0.6" Ø LOW RELAXATION	GIRDER 1 (EXTERIOR)											GIRDER 2 (INTERIOR)										
TENTH POINTS	0	.1	.2	.3	.4	.5	.6	.7	.8	.9	0	0	.1	.2	.3	.4	.5	.6	.7	.8	.9	0
CAMBER (GIRDER ALONE IN PLACE) ↑	0.000	0.129	0.226	0.295	0.334	0.346	0.334	0.295	0.226	0.129	0.000	0.000	0.129	0.226	0.295	0.334	0.346	0.334	0.295	0.226	0.129	0.000
DEFLECTION DUE TO SUMPERIMPOSED D.L.* ↓	0.000	0.041	0.078	0.107	0.125	0.131	0.125	0.107	0.078	0.041	0.000	0.000	0.041	0.078	0.107	0.125	0.131	0.125	0.107	0.078	0.041	0.000
FINAL CAMBER (IN.) ↑	0	1 1/16	1 3/4	2 1/4	2 1/2	2 9/16	2 1/2	2 1/4	1 3/4	1 1/16	0	0	1 1/16	1 3/4	2 1/4	2 1/2	2 9/16	2 1/2	2 1/4	1 3/4	1 1/16	0

0.6" Ø LOW RELAXATION	GIRDER 4 (EXTERIOR)											GIRDER 3 (INTERIOR)										
TENTH POINTS	0	.1	.2	.3	.4	.5	.6	.7	.8	.9	0	0	.1	.2	.3	.4	.5	.6	.7	.8	.9	0
CAMBER (GIRDER ALONE IN PLACE) ↑	0.000	0.129	0.226	0.295	0.334	0.346	0.334	0.295	0.226	0.129	0.000	0.000	0.129	0.226	0.295	0.334	0.346	0.334	0.295	0.226	0.129	0.000
DEFLECTION DUE TO SUMPERIMPOSED D.L.* ↓	0.000	0.041	0.078	0.107	0.125	0.131	0.125	0.107	0.078	0.041	0.000	0.000	0.041	0.078	0.107	0.125	0.131	0.125	0.107	0.078	0.041	0.000
FINAL CAMBER (IN.) ↑	0	1 1/16	1 3/4	2 1/4	2 1/2	2 9/16	2 1/2	2 1/4	1 3/4	1 1/16	0	0	1 1/16	1 3/4	2 1/4	2 1/2	2 9/16	2 1/2	2 1/4	1 3/4	1 1/16	0

DEAD LOAD DEFLECTION TABLE FOR GIRDERS

SPAN 16

0.6" Ø LOW RELAXATION	GIRDER 1 (EXTERIOR)											GIRDER 2 (INTERIOR)										
TENTH POINTS	0	.1	.2	.3	.4	.5	.6	.7	.8	.9	0	0	.1	.2	.3	.4	.5	.6	.7	.8	.9	0
CAMBER (GIRDER ALONE IN PLACE) ↑	0.000	0.128	0.222	0.291	0.330	0.342	0.330	0.291	0.222	0.128	0.000	0.000	0.129	0.226	0.295	0.334	0.346	0.334	0.295	0.226	0.129	0.000
DEFLECTION DUE TO SUMPERIMPOSED D.L.* ↓	0.000	0.040	0.075	0.104	0.121	0.127	0.121	0.104	0.075	0.040	0.000	0.000	0.041	0.078	0.107	0.125	0.131	0.125	0.107	0.078	0.041	0.000
FINAL CAMBER (IN.) ↑	0	1 1/16	1 3/4	2 1/4	2 1/2	2 9/16	2 1/2	2 1/4	1 3/4	1 1/16	0	0	1 1/16	1 3/4	2 1/4	2 1/2	2 9/16	2 1/2	2 1/4	1 3/4	1 1/16	0

0.6" Ø LOW RELAXATION	GIRDER 4 (EXTERIOR)											GIRDER 3 (INTERIOR)										
TENTH POINTS	0	.1	.2	.3	.4	.5	.6	.7	.8	.9	0	0	.1	.2	.3	.4	.5	.6	.7	.8	.9	0
CAMBER (GIRDER ALONE IN PLACE) ↑	0.000	0.129	0.226	0.295	0.334	0.346	0.334	0.295	0.226	0.129	0.000	0.000	0.129	0.226	0.295	0.334	0.346	0.334	0.295	0.226	0.129	0.000
DEFLECTION DUE TO SUMPERIMPOSED D.L.* ↓	0.000	0.042	0.080	0.109	0.128	0.134	0.128	0.109	0.080	0.042	0.000	0.000	0.041	0.078	0.107	0.125	0.131	0.125	0.107	0.078	0.041	0.000
FINAL CAMBER (IN.) ↑	0	1 1/16	1 3/4	2 1/4	2 1/2	2 9/16	2 1/2	2 1/4	1 3/4	1 1/16	0	0	1 1/16	1 3/4	2 1/4	2 1/2	2 9/16	2 1/2	2 1/4	1 3/4	1 1/16	0

* INCLUDES FUTURE WEARING SURFACE
ALL VALUES ARE SHOWN IN FEET (DECIMAL FORM), EXCEPT "FINAL CAMBER", WHICH IS GIVEN IN INCHES (FRACTION FORM).

PROJECT NO. R-2633BB
BRUNSWICK/NEW HANOVER COUNTY
STATION: 353+32.50 -L-

SHEET 7 OF 9

NORTH CAROLINA PROFESSIONAL SEAL 18442 ENGINEER RICHARD LEON BOLLINGER III
5-29-2013

RS&H IMPROVING YOUR WORLD

RS&H Architects-Engineers-Planners, Inc.
8601 Six Forks Road, Suite 260
Raleigh, NC 27615
919-846-6701 FAX 919-846-9080
www.rsandh.com
North Carolina License Nos. 50073 * F-0493 * C-28

STATE OF NORTH CAROLINA
DEPARTMENT OF TRANSPORTATION
RALEIGH

SUPERSTRUCTURE
CAMBER
(APPROACH SPANS 14-16)

LEFT LANE

REVISIONS						SHEET NO.
NO.	BY:	DATE:	NO.	BY:	DATE:	S-147
1			3			TOTAL SHEETS
2			4			700

DRAWN BY : SMK, JML DATE : 02/2012
CHECKED BY : RLB DATE : 10/2012
DESIGN ENGINEER OF RECORD : R. BOLLINGER DATE : 05/2013

DEAD LOAD DEFLECTION TABLE FOR GIRDERS

SPAN 17

0.6"Ø LOW RELAXATION	GIRDER 1 (EXTERIOR)											GIRDER 2 (INTERIOR)										
TENTH POINTS	0	.1	.2	.3	.4	.5	.6	.7	.8	.9	0	0	.1	.2	.3	.4	.5	.6	.7	.8	.9	0
CAMBER (GIRDER ALONE IN PLACE) ↑	0.000	0.129	0.225	0.293	0.333	0.345	0.333	0.293	0.225	0.129	0.000	0.000	0.129	0.225	0.294	0.333	0.345	0.333	0.294	0.225	0.129	0.000
DEFLECTION DUE TO SUMPERIMPOSED D.L.* ↓	0.000	0.040	0.077	0.105	0.123	0.129	0.123	0.105	0.077	0.040	0.000	0.000	0.040	0.077	0.106	0.123	0.129	0.123	0.106	0.077	0.040	0.000
FINAL CAMBER (IN.) ↑	0	1 1/16	1 3/4	2 1/4	2 1/2	2 5/8	2 1/2	2 1/4	1 3/4	1 1/16	0	0	1 1/16	1 3/4	2 1/4	2 1/2	2 9/16	2 1/2	2 1/4	1 3/4	1 1/16	0
0.6"Ø LOW RELAXATION	GIRDER 4 (EXTERIOR)											GIRDER 3 (INTERIOR)										
TENTH POINTS	0	.1	.2	.3	.4	.5	.6	.7	.8	.9	0	0	.1	.2	.3	.4	.5	.6	.7	.8	.9	0
CAMBER (GIRDER ALONE IN PLACE) ↑	0.000	0.129	0.225	0.294	0.333	0.346	0.333	0.294	0.225	0.129	0.000	0.000	0.129	0.225	0.294	0.333	0.345	0.333	0.294	0.225	0.129	0.000
DEFLECTION DUE TO SUMPERIMPOSED D.L.* ↓	0.000	0.042	0.080	0.109	0.128	0.134	0.128	0.109	0.080	0.042	0.000	0.000	0.040	0.077	0.106	0.123	0.129	0.123	0.106	0.077	0.040	0.000
FINAL CAMBER (IN.) ↑	0	1 1/16	1 3/4	2 3/16	2 1/2	2 9/16	2 1/2	2 3/16	1 3/4	1 1/16	0	0	1 1/16	1 3/4	2 1/4	2 1/2	2 9/16	2 1/2	2 1/4	1 3/4	1 1/16	0

DEAD LOAD DEFLECTION TABLE FOR GIRDERS

SPAN 18

0.6"Ø LOW RELAXATION	GIRDER 1 (EXTERIOR)											GIRDER 2 (INTERIOR)										
TENTH POINTS	0	.1	.2	.3	.4	.5	.6	.7	.8	.9	0	0	.1	.2	.3	.4	.5	.6	.7	.8	.9	0
CAMBER (GIRDER ALONE IN PLACE) ↑	0.000	0.128	0.224	0.293	0.332	0.344	0.332	0.293	0.224	0.128	0.000	0.000	0.129	0.225	0.293	0.332	0.344	0.332	0.293	0.225	0.129	0.000
DEFLECTION DUE TO SUMPERIMPOSED D.L.* ↓	0.000	0.040	0.076	0.104	0.121	0.127	0.121	0.104	0.076	0.040	0.000	0.000	0.040	0.077	0.105	0.122	0.128	0.122	0.105	0.077	0.040	0.000
FINAL CAMBER (IN.) ↑	0	1 1/16	1 3/4	2 1/4	2 1/2	2 5/8	2 1/2	2 1/4	1 3/4	1 1/16	0	0	1 1/16	1 3/4	2 1/4	2 1/2	2 5/8	2 1/2	2 1/4	1 3/4	1 1/16	0
0.6"Ø LOW RELAXATION	GIRDER 4 (EXTERIOR)											GIRDER 3 (INTERIOR)										
TENTH POINTS	0	.1	.2	.3	.4	.5	.6	.7	.8	.9	0	0	.1	.2	.3	.4	.5	.6	.7	.8	.9	0
CAMBER (GIRDER ALONE IN PLACE) ↑	0.000	0.129	0.225	0.294	0.333	0.345	0.333	0.294	0.225	0.129	0.000	0.000	0.129	0.225	0.293	0.333	0.345	0.333	0.293	0.225	0.129	0.000
DEFLECTION DUE TO SUMPERIMPOSED D.L.* ↓	0.000	0.042	0.080	0.109	0.127	0.133	0.127	0.109	0.080	0.042	0.000	0.000	0.040	0.077	0.105	0.123	0.129	0.123	0.105	0.077	0.040	0.000
FINAL CAMBER (IN.) ↑	0	1 1/16	1 3/4	2 3/16	2 7/16	2 9/16	2 7/16	2 3/16	1 3/4	1 1/16	0	0	1 1/16	1 3/4	2 1/4	2 1/2	2 5/8	2 1/2	2 1/4	1 3/4	1 1/16	0

DEAD LOAD DEFLECTION TABLE FOR GIRDERS

SPAN 19

0.6"Ø LOW RELAXATION	GIRDER 1 (EXTERIOR)											GIRDER 2 (INTERIOR)										
TENTH POINTS	0	.1	.2	.3	.4	.5	.6	.7	.8	.9	0	0	.1	.2	.3	.4	.5	.6	.7	.8	.9	0
CAMBER (GIRDER ALONE IN PLACE) ↑	0.000	0.128	0.224	0.293	0.332	0.344	0.332	0.293	0.224	0.128	0.000	0.000	0.129	0.225	0.293	0.332	0.344	0.332	0.293	0.225	0.129	0.000
* DEFLECTION DUE TO SUPERIMPOSED D.L. ↓	0.000	0.040	0.078	0.106	0.124	0.130	0.124	0.106	0.078	0.040	0.000	0.000	0.041	0.078	0.107	0.125	0.130	0.125	0.107	0.078	0.041	0.000
FINAL CAMBER ↑	0	1 1/16	1 3/4	2 1/4	2 1/2	2 9/16	2 1/2	2 1/4	1 3/4	1 1/16	0	0	1 1/16	1 3/4	2 1/4	2 1/2	2 9/16	2 1/2	2 1/4	1 3/4	1 1/16	0
0.6"Ø LOW RELAXATION	GIRDER 4 (EXTERIOR)											GIRDER 3 (INTERIOR)										
TENTH POINTS	0	.1	.2	.3	.4	.5	.6	.7	.8	.9	0	0	.1	.2	.3	.4	.5	.6	.7	.8	.9	0
CAMBER (GIRDER ALONE IN PLACE) ↑	0.000	0.129	0.225	0.294	0.333	0.345	0.333	0.294	0.225	0.129	0.000	0.000	0.129	0.225	0.293	0.333	0.345	0.333	0.293	0.225	0.129	0.000
* DEFLECTION DUE TO SUPERIMPOSED D.L. ↓	0.000	0.043	0.082	0.112	0.130	0.136	0.130	0.112	0.082	0.043	0.000	0.000	0.041	0.078	0.107	0.125	0.131	0.125	0.107	0.078	0.041	0.000
FINAL CAMBER ↑	0	1 1/16	1 3/4	2 3/16	2 7/16	2 1/2	2 7/16	2 3/16	1 3/4	1 1/16	0	0	1 1/16	1 3/4	2 1/4	2 1/2	2 9/16	2 1/2	2 1/4	1 3/4	1 1/16	0

* INCLUDES FUTURE WEARING SURFACE
ALL VALUES ARE SHOWN IN FEET (DECIMAL FORM), EXCEPT "FINAL CAMBER", WHICH IS GIVEN IN INCHES (FRACTION FORM).

PROJECT NO. R-2633BB
BRUNSWICK/NEW HANOVER COUNTY
STATION: 353+32.50 -L-

SHEET 8 OF 9

NORTH CAROLINA PROFESSIONAL SEAL 18442 ENGINEER RICHARD LEON BOLLINGER III
5-29-2013

RS&H IMPROVING YOUR WORLD

RS&H Architects-Engineers-Planners, Inc.
8601 Six Forks Road, Suite 260
Raleigh, NC 27615
919-846-6701 FAX 919-846-9080
www.rsandh.com
North Carolina License Nos. 50073 * F-0493 * C-28

STATE OF NORTH CAROLINA
DEPARTMENT OF TRANSPORTATION
RALEIGH

SUPERSTRUCTURE
CAMBER
(APPROACH SPANS 17-19)

LEFT LANE

REVISIONS						SHEET NO.
NO.	BY:	DATE:	NO.	BY:	DATE:	S-148
1			3			TOTAL SHEETS
2			4			700

DRAWN BY : SMK, JML DATE : 03/2012
CHECKED BY : RLB DATE : 10/2012
DESIGN ENGINEER OF RECORD : R. BOLLINGER DATE : 05/2013

DEAD LOAD DEFLECTION TABLE FOR GIRDERS

0.6"Ø LOW RELAXATION	SPAN 20 (SPANS 21,22,23,24,25,26,27,28,29,30,31,32,33,34,35,36,37,39,40,41,42,43,44,45,46,47,48,49,50,51,52,53,54&55 SIMILAR)																					
	GIRDER 1 (EXTERIOR)											GIRDER 2 (INTERIOR)										
TENTH POINTS	0	.1	.2	.3	.4	.5	.6	.7	.8	.9	0	0	.1	.2	.3	.4	.5	.6	.7	.8	.9	0
CAMBER (GIRDER ALONE IN PLACE) ↑	0.000	0.128	0.223	0.291	0.330	0.342	0.330	0.291	0.223	0.128	0.000	0.000	0.128	0.224	0.292	0.331	0.343	0.331	0.292	0.224	0.128	0.000
✳ DEFLECTION DUE TO SUPERIMPOSED D.L. ↓	0.000	0.037	0.071	0.097	0.113	0.118	0.113	0.097	0.071	0.037	0.000	0.000	0.038	0.073	0.100	0.116	0.122	0.116	0.100	0.073	0.038	0.000
FINAL CAMBER ↑	0	1 1/16	1 13/16	2 5/16	2 5/8	2 11/16	2 5/8	2 5/16	1 13/16	1 1/16	0	0	1 1/16	1 13/16	2 5/16	2 9/16	2 5/8	2 9/16	2 5/16	1 13/16	1 1/16	0
0.6"Ø LOW RELAXATION	GIRDER 4 (EXTERIOR)											GIRDER 3 (INTERIOR)										
TENTH POINTS	0	.1	.2	.3	.4	.5	.6	.7	.8	.9	0	0	.1	.2	.3	.4	.5	.6	.7	.8	.9	0
CAMBER (GIRDER ALONE IN PLACE) ↑	0.000	0.128	0.224	0.292	0.332	0.344	0.332	0.292	0.224	0.128	0.000	0.000	0.128	0.224	0.292	0.331	0.343	0.331	0.292	0.224	0.128	0.000
✳ DEFLECTION DUE TO SUPERIMPOSED D.L. ↓	0.000	0.039	0.074	0.102	0.119	0.124	0.119	0.102	0.074	0.039	0.000	0.000	0.038	0.073	0.100	0.117	0.122	0.117	0.100	0.073	0.038	0.000
FINAL CAMBER ↑	0	1 1/16	1 13/16	2 5/16	2 9/16	2 5/8	2 9/16	2 5/16	1 13/16	1 1/16	0	0	1 1/16	1 13/16	2 5/16	2 9/16	2 5/8	2 9/16	2 5/16	1 13/16	1 1/16	0

DEAD LOAD DEFLECTION TABLE FOR GIRDERS

0.6"Ø LOW RELAXATION	SPAN 38 (SPANS 56 & 57 SIMILAR)																					
	GIRDER 1 (EXTERIOR)											GIRDER 2 (INTERIOR)										
TENTH POINTS	0	.1	.2	.3	.4	.5	.6	.7	.8	.9	0	0	.1	.2	.3	.4	.5	.6	.7	.8	.9	0
CAMBER (GIRDER ALONE IN PLACE) ↑	0.000	0.067	0.114	0.148	0.168	0.174	0.168	0.148	0.114	0.067	0.000	0.000	0.067	0.114	0.148	0.168	0.174	0.168	0.148	0.114	0.067	0.000
✳ DEFLECTION DUE TO SUPERIMPOSED D.L. ↓	0.000	0.018	0.035	0.048	0.056	0.059	0.056	0.048	.035	0.018	0.000	0.000	0.018	0.036	0.049	0.058	0.061	0.058	0.049	0.036	0.018	0.000
FINAL CAMBER ↑	0	9/16	15/16	1 3/16	1 5/16	1 3/8	1 5/16	1 3/16	15/16	9/16	0	0	9/16	15/16	1 3/16	1 5/16	1 3/8	1 5/16	1 3/16	15/16	9/16	0
0.6"Ø LOW RELAXATION	GIRDER 4 (EXTERIOR)											GIRDER 3 (INTERIOR)										
TENTH POINTS	0	.1	.2	.3	.4	.5	.6	.7	.8	.9	0	0	.1	.2	.3	.4	.5	.6	.7	.8	.9	0
CAMBER (GIRDER ALONE IN PLACE) ↑	0.000	0.067	0.114	0.148	0.168	0.175	0.168	0.148	0.114	0.067	0.000	0.000	0.067	0.114	0.148	0.168	0.175	0.168	0.148	0.114	0.067	0.000
✳ DEFLECTION DUE TO SUPERIMPOSED D.L. ↓	0.000	0.019	0.036	0.050	0.059	0.062	0.059	0.050	0.036	0.019	0.000	0.000	0.019	0.036	0.049	0.058	0.061	0.058	0.049	0.036	0.019	0.000
FINAL CAMBER ↑	0	9/16	15/16	1 3/16	1 5/16	1 3/8	1 5/16	1 3/16	15/16	9/16	0	0	9/16	15/16	1 3/16	1 5/16	1 3/8	1 5/16	1 3/16	15/16	9/16	0

DEAD LOAD DEFLECTION TABLE FOR GIRDERS

0.6"Ø LOW RELAXATION	SPAN 58																					
	GIRDER 1 (EXTERIOR)											GIRDER 2 (INTERIOR)										
TENTH POINTS	0	.1	.2	.3	.4	.5	.6	.7	.8	.9	0	0	.1	.2	.3	.4	.5	.6	.7	.8	.9	0
CAMBER (GIRDER ALONE IN PLACE) ↑	0.000	0.058	0.097	0.127	0.144	0.150	0.144	0.127	0.097	0.058	0.000	0.000	0.058	0.097	0.127	0.144	0.150	0.144	0.127	0.097	0.058	0.000
✳ DEFLECTION DUE TO SUPERIMPOSED D.L. ↓	0.000	0.011	0.021	0.029	0.034	0.036	0.034	0.029	0.21	0.011	0.000	0.000	0.011	0.022	0.030	0.035	0.037	0.035	0.030	0.022	0.011	0.000
FINAL CAMBER ↑	0	9/16	7/8	1 3/16	1 5/16	1 3/8	1 5/16	1 3/16	7/8	9/16	0	0	9/16	7/8	1 3/16	1 5/16	1 3/8	1 5/16	1 3/16	7/8	9/16	0
0.6"Ø LOW RELAXATION	GIRDER 4 (EXTERIOR)											GIRDER 3 (INTERIOR)										
TENTH POINTS	0	.1	.2	.3	.4	.5	.6	.7	.8	.9	0	0	.1	.2	.3	.4	.5	.6	.7	.8	.9	0
CAMBER (GIRDER ALONE IN PLACE) ↑	0.000	0.058	0.097	0.127	0.145	0.151	0.145	0.127	0.097	0.058	0.000	0.000	0.058	0.097	0.127	0.145	0.150	0.145	0.127	0.097	0.058	0.000
✳ DEFLECTION DUE TO SUPFRIMPOSED D.L. ↓	0.000	0.011	0.022	0.031	0.036	0.038	0.036	0.031	0.022	0.011	0.000	0.000	0.011	0.022	0.030	0.035	0.037	0.035	0.030	0.022	0.011	0.000
FINAL CAMBER ↑	0	9/16	7/8	1 3/16	1 5/16	1 3/8	1 5/16	1 3/16	7/8	9/16	0	0	9/16	7/8	1 3/16	1 5/16	1 3/8	1 5/16	1 3/16	7/8	9/16	0

✳ INCLUDES FUTURE WEARING SURFACE
ALL VALUES ARE SHOWN IN FEET (DECIMAL FORM), EXCEPT "FINAL CAMBER", WHICH IS GIVEN IN INCHES (FRACTION FORM).

PROJECT NO. R-2633BB
BRUNSWICK/NEW HANOVER COUNTY
STATION: 353+32.50 -L-

SHEET 9 OF 9

NORTH CAROLINA PROFESSIONAL SEAL 22072 ENGINEER JOHN ARTHUR DILWORTH
5-29-13

WETHERILL ENGINEERING
TRANSPORTATION PLANNING/DESIGN
BRIDGE/STRUCTURE DESIGN
CIVIL/SITE DESIGN - GIS/GPS
CONSTRUCTION OBSERVATION
559 Jones Franklin Rd. Suite 164
Raleigh, N.C. 27606
Bus: 919 851 8077
Fax: 919 851 8107
LICENSE NO. F-0377

STATE OF NORTH CAROLINA
DEPARTMENT OF TRANSPORTATION
RALEIGH

SUPERSTRUCTURE
CAMBER (APPROACH SPANS)
SPANS 20 THROUGH 58

LEFT LANE

REVISIONS						SHEET NO.
NO.	BY:	DATE:	NO.	BY:	DATE:	S-149
1			3			TOTAL SHEETS
2			4			700

DRAWN BY : G. WILSON DATE : 10/2012
CHECKED BY : J. DILWORTH DATE : 10/2012
DESIGN ENGINEER OF RECORD : J. DILWORTH DATE : 05/2013

FILE: $FILE$
MODEL: $MODELNAME$
PLOT DRV: $PLTDRVS$
DATE/TIME: $DATE$ $TIME$

NOTES

THE BARRIER RAIL IN EACH SPAN SHALL NOT BE CAST UNTIL ALL SLAB CONCRETE IN THAT SPAN HAS BEEN CAST AND HAS REACHED A MINIMUM COMPRESSIVE STRENGTH OF 3,000 PSI.

ALL REINFORCING STEEL IN BARRIER RAILS SHALL BE EPOXY COATED.

GROOVED CONTRACTION JOINTS, 1/2" IN DEPTH, SHALL BE TOOLED IN ALL EXPOSED FACES OF THE BARRIER RAIL AND IN ACCORDANCE WITH ARTICLE 825-10(B) OF THE STANDARD SPECIFICATIONS. THE CONTRACTION JOINT SHALL BE LOCATED AT EACH THIRD POINT BETWEEN BARRIER RAIL EXPANSION JOINTS. ONLY ONE CONTRACTION JOINT IS REQUIRED AT MIDPOINT OF BARRIER RAIL SEGMENTS LESS THAN 20 FEET IN LENGTH AND NO CONTRACTION JOINTS ARE REQUIRED FOR THOSE SEGMENTS LESS THAN 10 FEET IN LENGTH.

FOR END OF RAIL ELEVATION VIEWS, SEE APPROACH SLAB SHEETS.

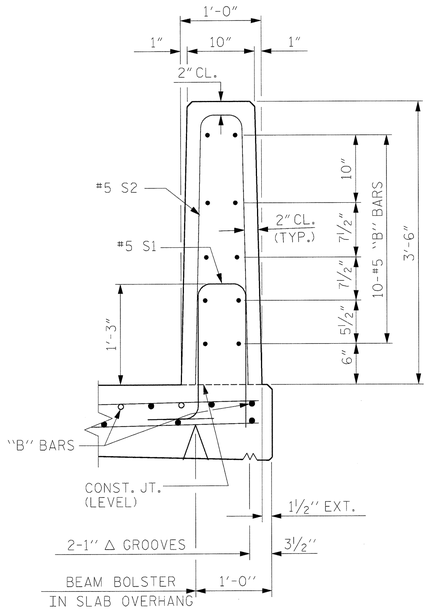

SECTION THRU RAIL

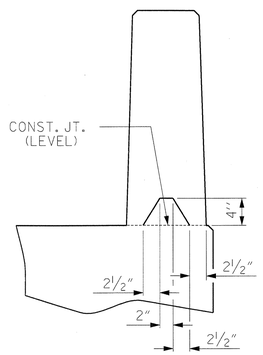

SECTION S-S

AT DAM IN OPEN JOINT
(THIS IS TO BE USED ONLY WHEN SLIP FORM IS USED)

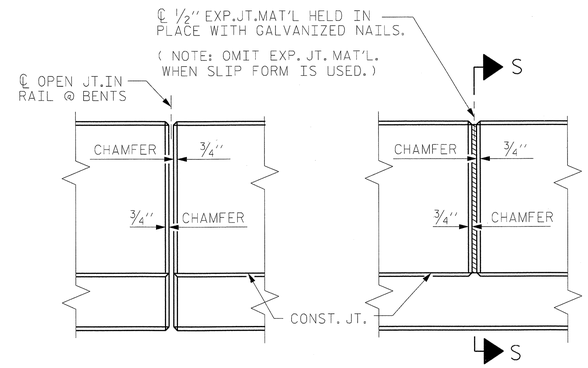

ELEVATION AT EXPANSION JOINTS

BARRIER RAIL DETAILS

PROJECT NO. R-2633BB

BRUNSWICK/NEW HANOVER COUNTY

STATION: 353+32.50 -L-

SHEET 1 OF 10

NORTH CAROLINA PROFESSIONAL SEAL 18442 ENGINEER RICHARD LEON BOLLINGER III
5-29-2013

RS&H IMPROVING YOUR WORLD

RS&H Architects-Engineers-Planners, Inc.
8601 Six Forks Road, Suite 260
Raleigh, NC 27615
919-846-6701 FAX 919-846-9080
www.rsandh.com
North Carolina Licenses Nos. 50073 * F-0493 * C-28

NORTH CAROLINA PROFESSIONAL SEAL 22072 ENGINEER JOHN ARTHUR DILWORTH
5-29-13

WETHERILL ENGINEERING

TRANSPORTATION PLANNING/DESIGN
BRIDGE/STRUCTURE DESIGN
CIVIL/SITE DESIGN - GS/GPS
CONSTRUCTION OBSERVATION

559 Jones Franklin Rd. Suite 164
Raleigh, N.C. 27606
Bus: 919 851 9077
Fax: 919 851 6107
LICENSE NO. F-0377

STATE OF NORTH CAROLINA
DEPARTMENT OF TRANSPORTATION
RALEIGH

VERTICAL CONCRETE BARRIER RAIL DETAILS

LEFT LANE

REVISIONS							SHEET NO.
NO.	BY:	DATE:	NO.	BY:	DATE:		S-150
1			3				TOTAL SHEETS
2			4				700

DRAWN BY :	RJD	DATE :	12/2011
CHECKED BY :	RLB	DATE :	10/2012
DESIGN ENGINEER OF RECORD :	R. BOLLINGER	DATE :	05/2013

STD. NO. CBR2

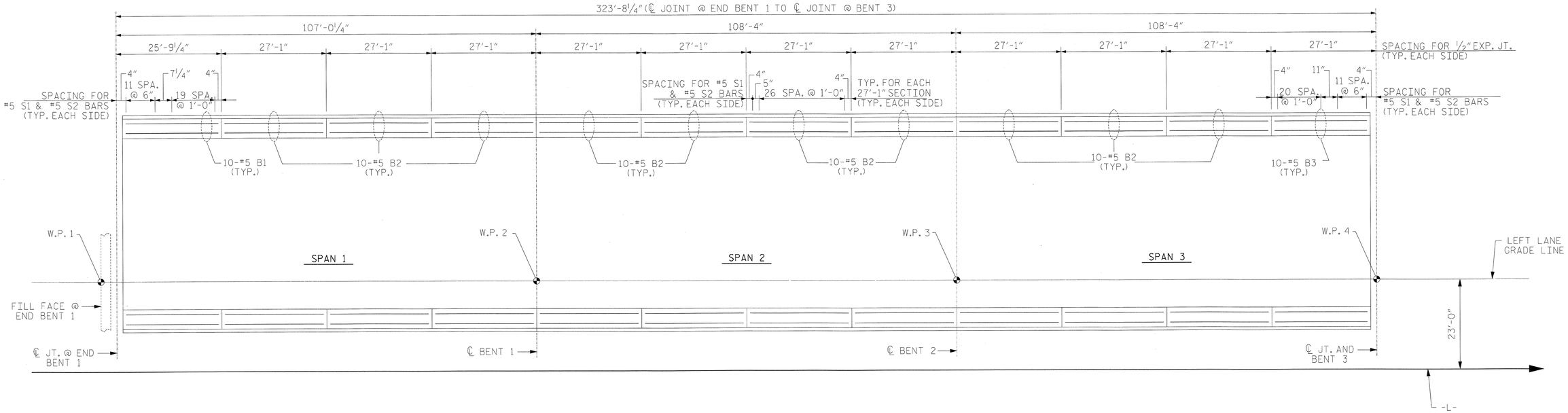

PLAN - SPANS 1, 2 & 3

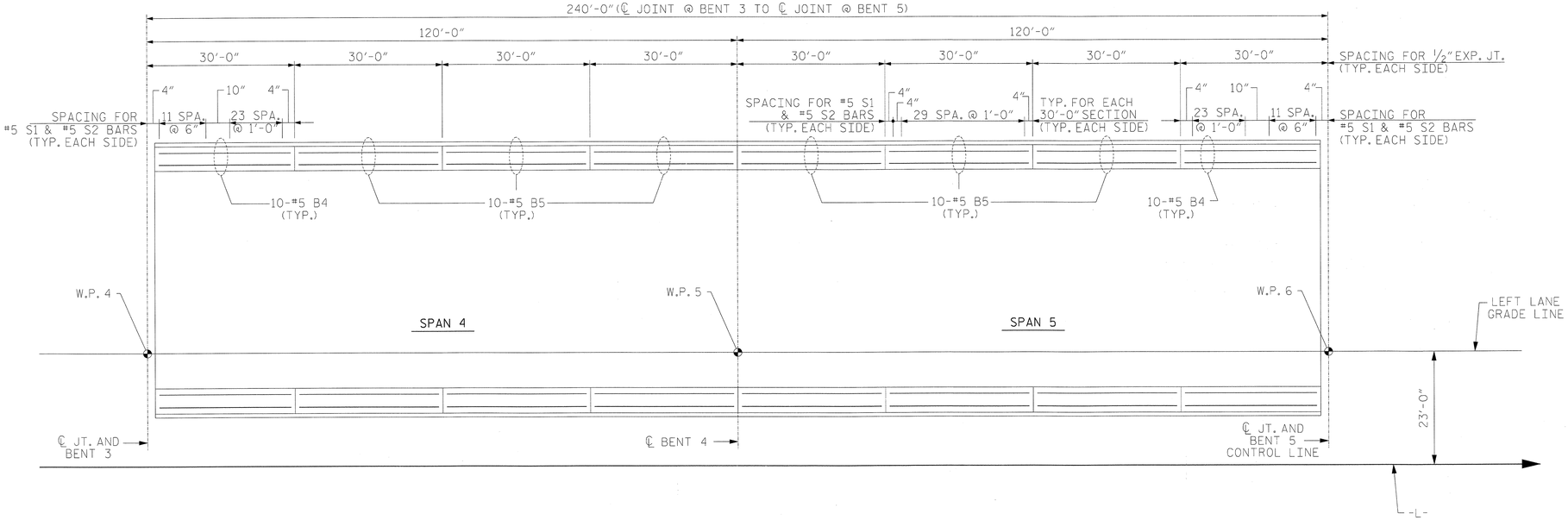

PLAN - SPANS 4 & 5

PROJECT NO. R-2633BB

BRUNSWICK/NEW HANOVER COUNTY

STATION: 353+32.50 -L-

SHEET 2 OF 10

NORTH CAROLINA PROFESSIONAL SEAL 18442 ENGINEER RICHARD LEON BOLLINGER III

5-29-2013

RS&H IMPROVING YOUR WORLD

RS&H Architects-Engineers-Planners, Inc.
8601 Six Forks Road, Suite 260
Raleigh, NC 27615
919-846-6701 FAX 919-846-9080
www.rsandh.com
North Carolina License Nos. 00073 * F-0493 * C-28

STATE OF NORTH CAROLINA
DEPARTMENT OF TRANSPORTATION
RALEIGH

VERTICAL CONCRETE BARRIER RAIL
SPANS 1, 2 & 3
SPANS 4 & 5

LEFT LANE

REVISIONS						SHEET NO.
NO.	BY:	DATE:	NO.	BY:	DATE:	S-151
1			3			TOTAL SHEETS
2			4			700

DRAWN BY :	RJD	DATE :	11/2011
CHECKED BY :	RLB	DATE :	12/2012
DESIGN ENGINEER OF RECORD :	R. BOLLINGER	DATE :	05/2013

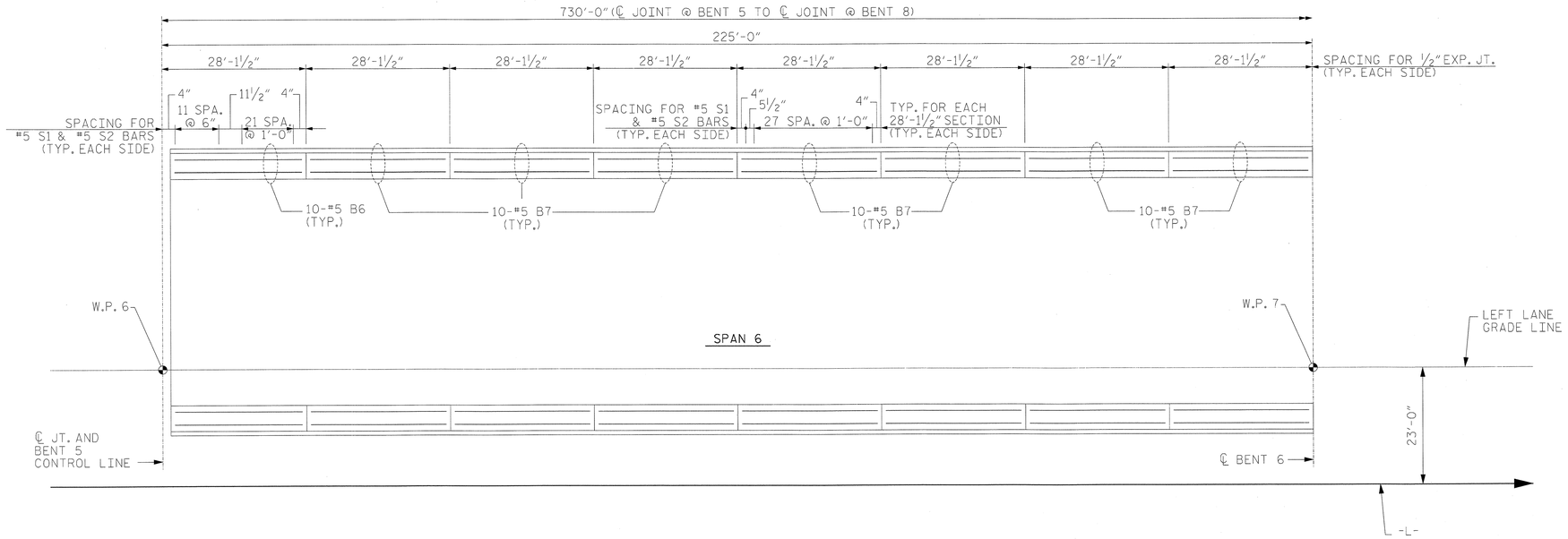

PLAN - SPAN 6

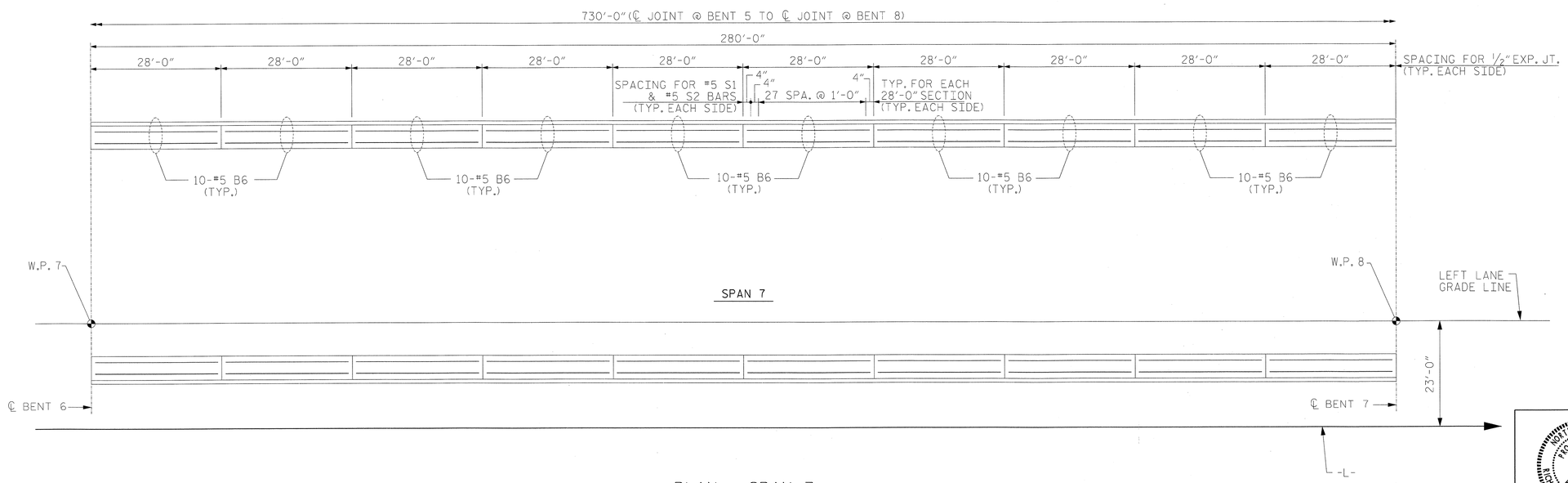

PLAN - SPAN 7

PROJECT NO. R-2633BB

BRUNSWICK/NEW HANOVER COUNTY

STATION: 353+32.50 -L-

SHEET 3 OF 10

NORTH CAROLINA PROFESSIONAL SEAL 18442 ENGINEER RICHARD LEON BOLLINGER JR.

5-29-2013

RS&H IMPROVING YOUR WORLD

RS&H Architects-Engineers-Planners, Inc.
8601 Six Forks Road, Suite 260
Raleigh, NC 27615
919-846-5701 FAX 919-846-9080
www.rsandh.com
North Carolina License Nos. 50073 * F-0493 * C-28

STATE OF NORTH CAROLINA
DEPARTMENT OF TRANSPORTATION
RALEIGH

VERTICAL CONCRETE BARRIER RAIL
SPAN 6
SPAN 7

LEFT LANE

REVISIONS						SHEET NO.
NO.	BY:	DATE:	NO.	BY:	DATE:	S-152
1			3			TOTAL SHEETS
2			4			700

DRAWN BY :	RJD	DATE :	11/2011
CHECKED BY :	RLB	DATE :	12/2012
DESIGN ENGINEER OF RECORD :	R. BOLLINGER	DATE :	05/2013

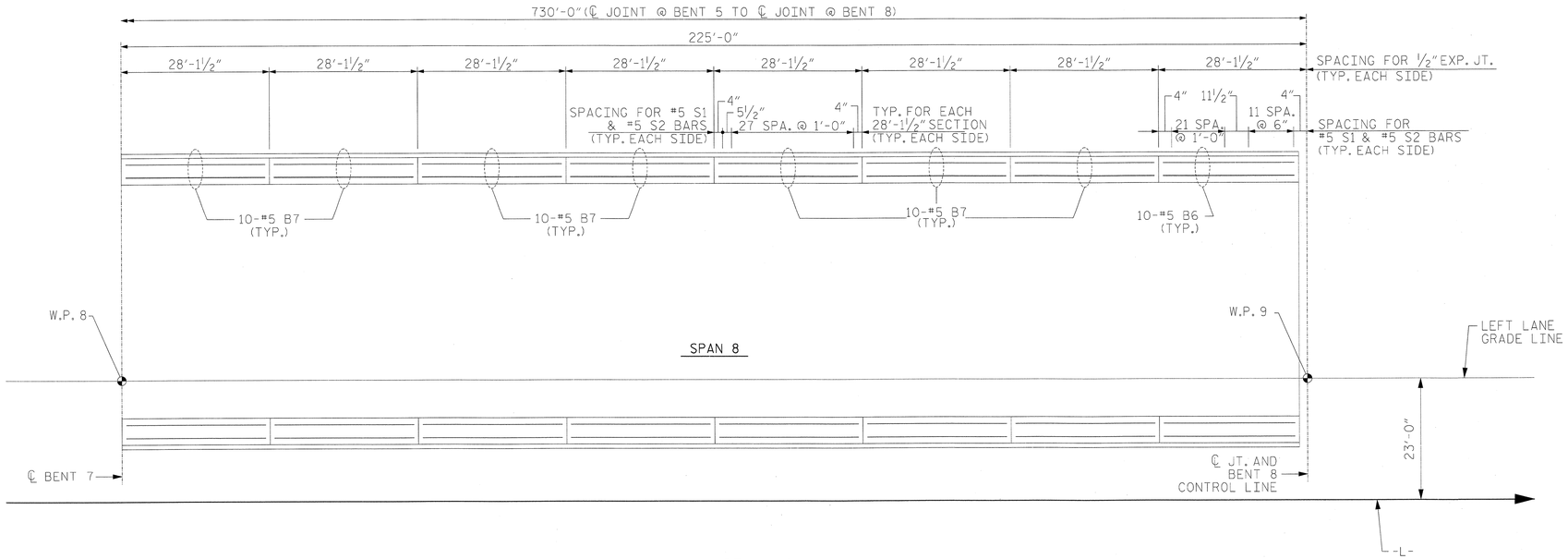

PLAN - SPAN 8

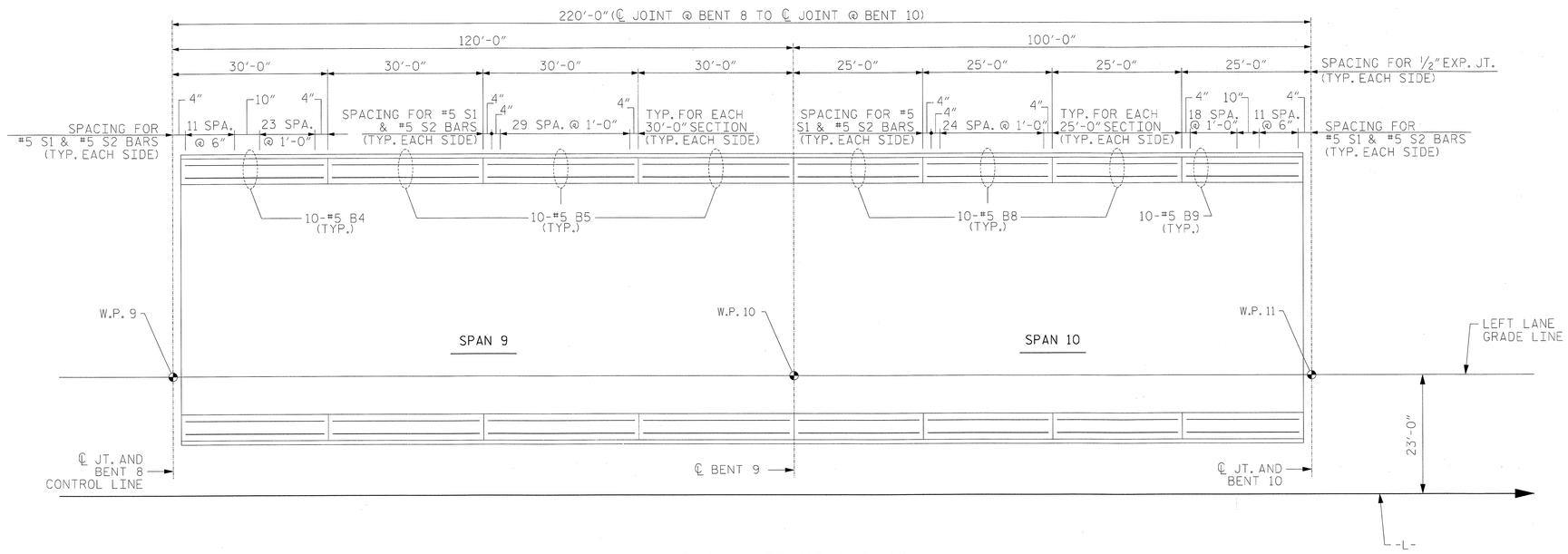

PLAN - SPANS 9 & 10

PROJECT NO. R-2633BB

BRUNSWICK/NEW HANOVER COUNTY

STATION: 353+32.50 -L-

SHEET 4 OF 10

NORTH CAROLINA PROFESSIONAL SEAL 18442 ENGINEER RICHARD LEON BOLLINGER, JR.

5-29-2013

RS&H IMPROVING YOUR WORLD

RS&H Architects-Engineers-Planners, Inc.
8601 Six Forks Road, Suite 260
Raleigh, NC 27615
919-846-6701 FAX 919-846-9080
www.rsandh.com
North Carolina License Nos. 50073 * F-0483 * C-28

STATE OF NORTH CAROLINA
DEPARTMENT OF TRANSPORTATION
RALEIGH

VERTICAL CONCRETE BARRIER RAIL
SPAN 8
SPANS 9 & 10
LEFT LANE

REVISIONS						SHEET NO.
NO.	BY:	DATE:	NO.	BY:	DATE:	S-153
1			3			TOTAL SHEETS
2			4			700

DRAWN BY :	RJD	DATE :	11/2011
CHECKED BY :	RLB	DATE :	12/2012
DESIGN ENGINEER OF RECORD :	R. BOLLINGER	DATE :	05/2013

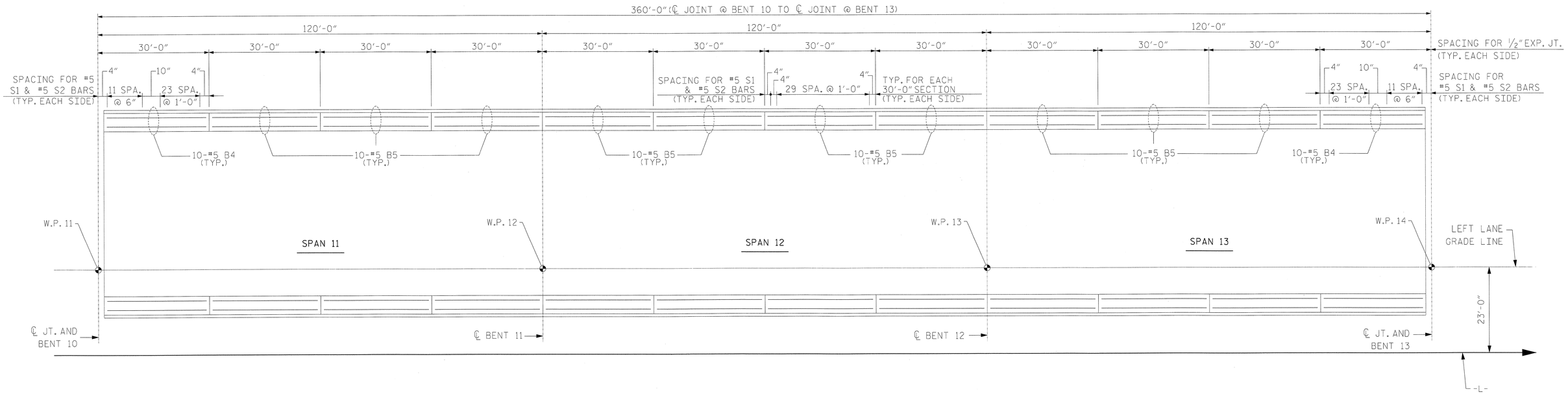

PLAN - SPANS 11, 12 & 13

SPANS 14, 15 & 16 SIMILAR

PROJECT NO. R-2633BB

BRUNSWICK/NEW HANOVER COUNTY

STATION: 353+32.50 -L-

SHEET 5 OF 10

NORTH CAROLINA PROFESSIONAL SEAL 18442 ENGINEER RICHARD LEON BOLLINGER JR.

5-29-2013

RS&H IMPROVING YOUR WORLD

RS&H Architects-Engineers-Planners, Inc.
8601 Six Forks Road, Suite 260
Raleigh, NC 27615
919-846-6701 FAX 919-846-9080
www.rsandh.com
North Carolina License Nos. 10073 * F-0493 * C-28

STATE OF NORTH CAROLINA
DEPARTMENT OF TRANSPORTATION
RALEIGH

VERTICAL CONCRETE BARRIER RAIL
SPANS 11, 12 & 13 (SHOWN)
(SPANS 14, 15 & 16 SIMILAR)

LEFT LANE

REVISIONS						SHEET NO.
NO.	BY:	DATE:	NO.	BY:	DATE:	S-154
1			3			TOTAL SHEETS
2			4			700

DRAWN BY : RJD DATE : 11/2011
CHECKED BY : RLB DATE : 12/2012
DESIGN ENGINEER OF RECORD : R. BOLLINGER DATE : 05/2013

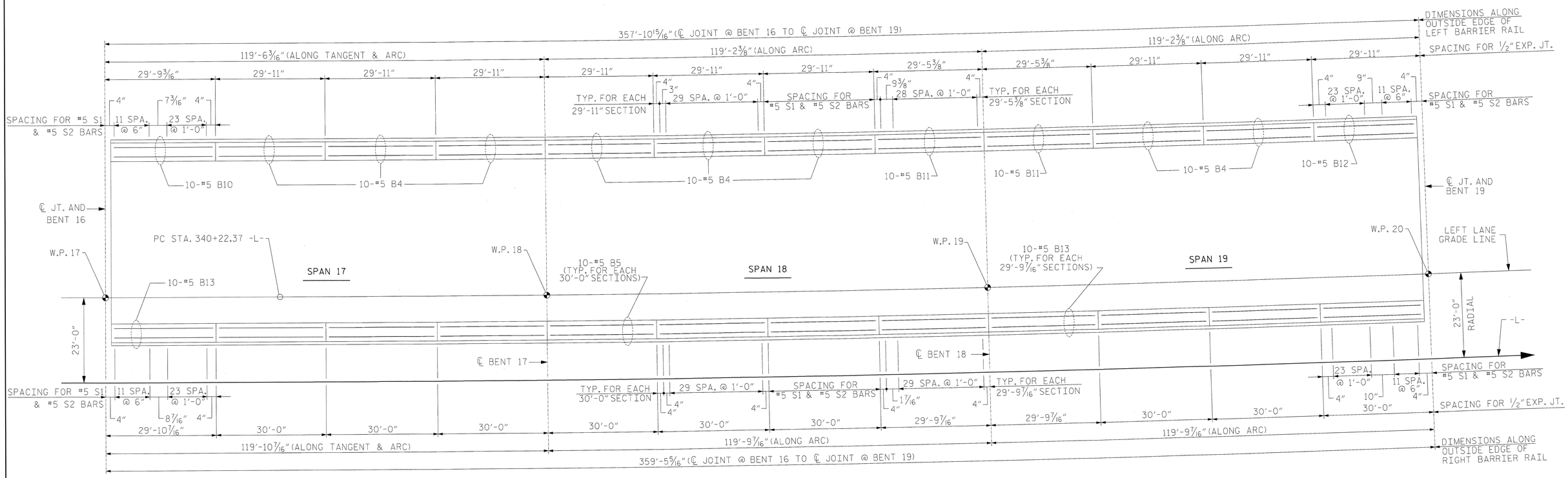

PLAN - SPANS 17, 18 & 19

PROJECT NO. R-2633BB

BRUNSWICK/NEW HANOVER COUNTY

STATION: 353+32.50 -L-

SHEET 6 OF 10

NORTH CAROLINA PROFESSIONAL SEAL 18442 ENGINEER RICHARD LEON BOLLINGER

5-29-2013

RS&H IMPROVING YOUR WORLD

RS&H Architects-Engineers-Planners, Inc.
8601 Six Forks Road, Suite 260
Raleigh, NC 27615
919-846-6701 FAX 919-846-9080
www.rsandh.com
North Carolina License Nos. 00073 * F-0493 * C-28

STATE OF NORTH CAROLINA
DEPARTMENT OF TRANSPORTATION
RALEIGH

VERTICAL CONCRETE BARRIER RAIL
SPANS 17, 18 & 19

LEFT LANE

REVISIONS						SHEET NO.
NO.	BY:	DATE:	NO.	BY:	DATE:	S-155
1			3			TOTAL SHEETS
2			4			700

DRAWN BY : RJD DATE : 11/2011
CHECKED BY : RLB DATE : 12/2012
DESIGN ENGINEER OF RECORD : R. BOLLINGER DATE : 05/2013

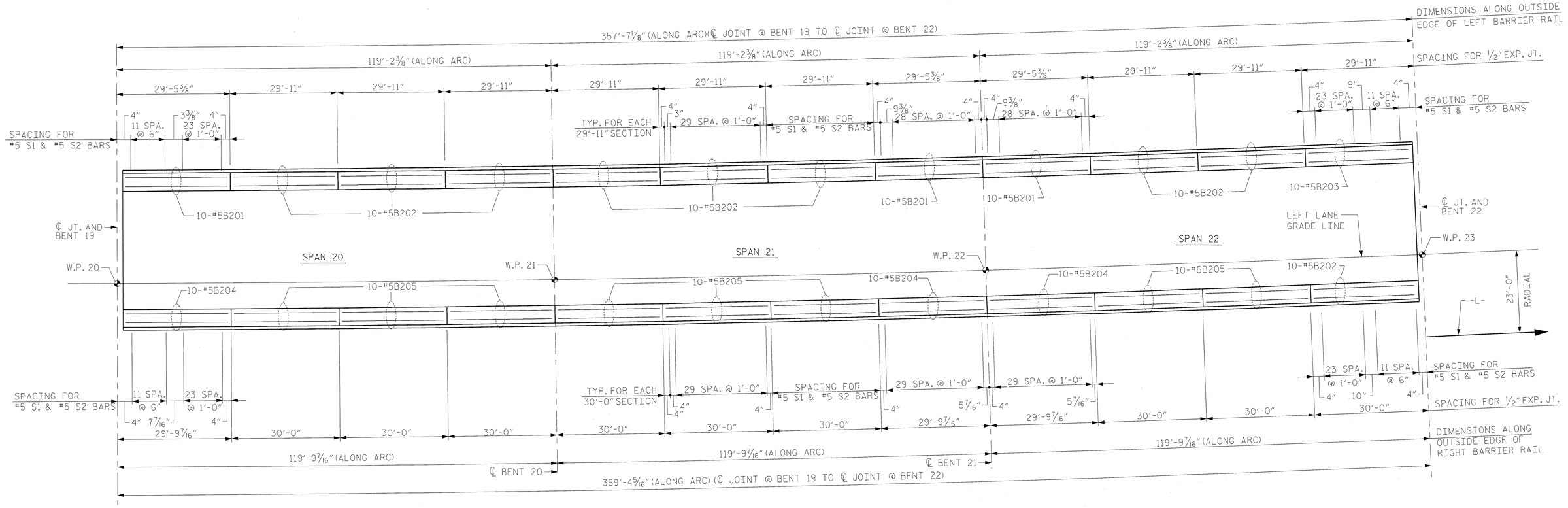

PLAN - SPANS 20, 21 & 22

SPANS 23, 24, & 25 THROUGH SPANS 35, 36, & 37 AND
SPANS 41, 42, & 43 THROUGH 53, 54, & 55 SIMILAR

PROJECT NO. R-2633BB

BRUNSWICK/NEW HANOVER COUNTY

STATION: 353+32.50 -L-

SHEET 7 OF 10

STATE OF NORTH CAROLINA
DEPARTMENT OF TRANSPORTATION
RALEIGH

VERTICAL CONCRETE BARRIER RAIL SPANS 20, 21 & 22

SPANS 23, 24, & 25 THROUGH SPANS 35, 36, & 37
AND SPANS 41, 42, & 43
THROUGH 53, 54, & 55 SIMILAR

LEFT LANE

NORTH CAROLINA PROFESSIONAL SEAL 22072 ENGINEER JOHN ARTHUR DILWORTH
5-29-13

WETHERILL ENGINEERING
TRANSPORTATION PLANNING/DESIGN
BRIDGE/STRUCTURE DESIGN
CIVIL/SITE DESIGN - GIS/GPS
CONSTRUCTION OBSERVATION
559 Jones Franklin Rd. Suite 164
Raleigh, N.C. 27606
Bus: 919 851 8077
Fax: 919 851 8107
LICENSE NO. F-0377

REVISIONS						SHEET NO.
NO.	BY:	DATE:	NO.	BY:	DATE:	S-156
1			3			TOTAL SHEETS
2			4			700

DRAWN BY : J. PENDERGRAFT DATE : 10/2012
CHECKED BY : J. DILWORTH DATE : 10/2012
DESIGN ENGINEER OF RECORD : J. DILWORTH DATE : 05/2013

FILE: $FILE$
MODEL: $MODELNAME$
PLOT DRV: $PLTDRVS$
DATE/TIME: $DATE$ $TIME$

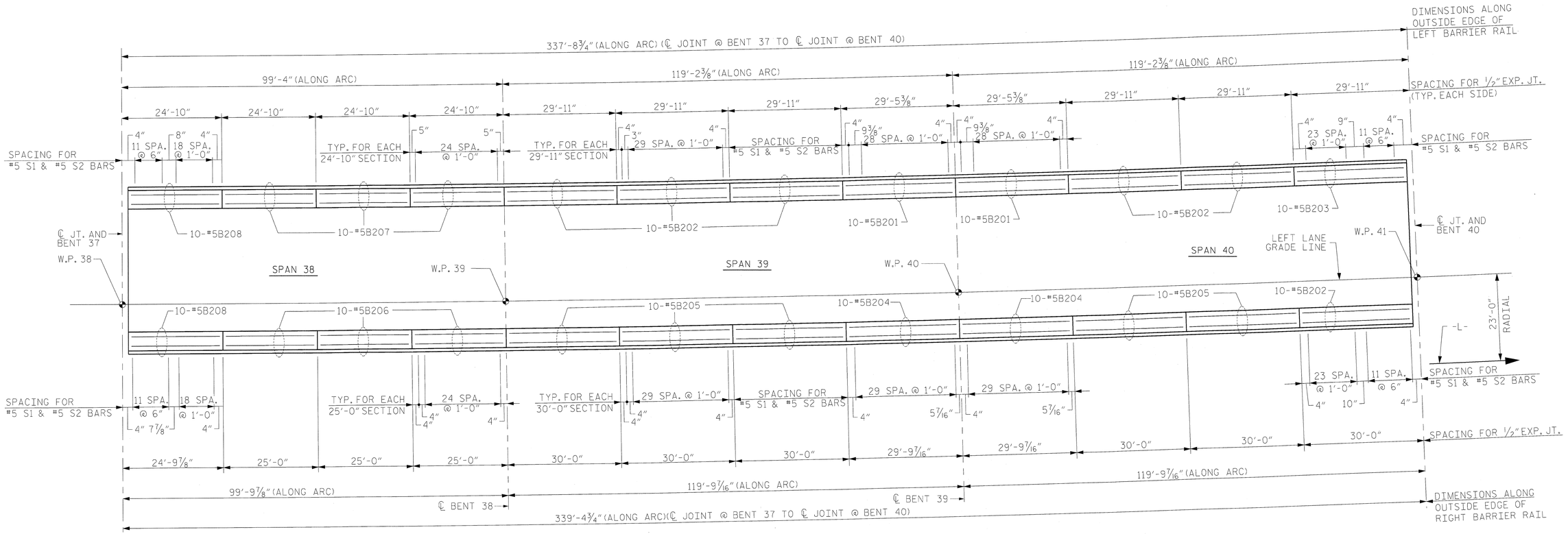

PLAN - SPANS 38, 39 & 40

PROJECT NO. R-2633BB

BRUNSWICK/NEW HANOVER COUNTY

STATION: 353+32.50 -L-

SHEET 8 OF 10

NORTH CAROLINA PROFESSIONAL SEAL 22072 ENGINEER JOHN ARTHUR DILWORTH

5-29-13

WETHERILL ENGINEERING

TRANSPORTATION PLANNING/DESIGN
BRIDGE/STRUCTURE DESIGN
CIVIL/SITE DESIGN - GIS/GPS
CONSTRUCTION OBSERVATION

559 Jones Franklin Rd. Suite 164
Raleigh, N.C. 27606
Bus: 919 851 8077
Fax: 919 851 8107
LICENSE NO. F-0377

STATE OF NORTH CAROLINA
DEPARTMENT OF TRANSPORTATION
RALEIGH

VERTICAL CONCRETE BARRIER RAIL
SPANS 38, 39 & 40

LEFT LANE

REVISIONS						SHEET NO.
NO.	BY:	DATE:	NO.	BY:	DATE:	S-157
1			3			TOTAL SHEETS
2			4			700

DRAWN BY : J. PENDERGRAFT DATE : 10/2012
CHECKED BY : J. DILWORTH DATE : 10/2012
DESIGN ENGINEER OF RECORD : J. DILWORTH DATE : 05/2013

FILE: $FILE$
MODEL: $MODELNAME$
PLOT DRV: $PLTDRVS$
DATE/TIME: $DATE$ $TIME$

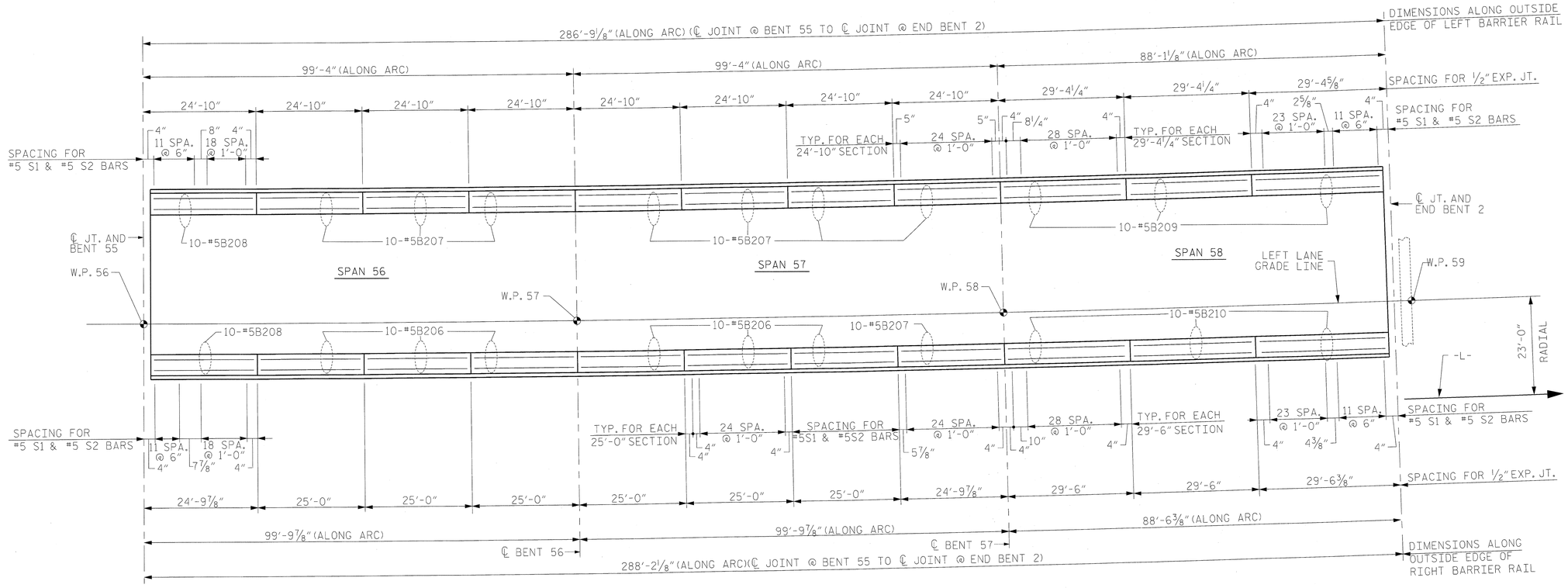

PLAN - SPANS 56, 57 & 58

PROJECT NO. R-2633BB

BRUNSWICK/NEW HANOVER COUNTY

STATION: 353+32.50 -L-

SHEET 9 OF 10

NORTH CAROLINA PROFESSIONAL SEAL 22072 ENGINEER JOHN ARTHUR DILWORTH

5-29-13

WETHERILL ENGINEERING

TRANSPORTATION PLANNING/DESIGN
BRIDGE/STRUCTURE DESIGN
CIVIL/SITE DESIGN - GIS/GPS
CONSTRUCTION OBSERVATION

559 Jones Franklin Rd. Suite 164
Raleigh, N.C. 27606
Bus: 919 851 8077
Fax: 919 851 8107
LICENSE NO. F-0377

STATE OF NORTH CAROLINA
DEPARTMENT OF TRANSPORTATION
RALEIGH

VERTICAL CONCRETE BARRIER RAIL
SPANS 56, 57 & 58

LEFT LANE

REVISIONS						SHEET NO.
NO.	BY:	DATE:	NO.	BY:	DATE:	S-158
1			3			TOTAL SHEETS
2			4			700

DRAWN BY : J. PENDERGRAFT DATE : 10/2012
CHECKED BY : J. DILWORTH DATE : 10/2012
DESIGN ENGINEER OF RECORD : J. DILWORTH DATE : 05/2013

FILE: $FILE$
MODEL: $MODELNAME$
PLOT DRV: $PLTDRVS$
DATE/TIME: $DATE$ $TIME$

BILL OF MATERIAL
FOR VERTICAL CONCRETE BARRIER RAIL ONLY
SPANS 1, 2 & 3

BAR	NO.	SIZE	TYPE	LENGTH	WEIGHT
* B1	20	#5	STR	25'-4"	528
* B2	200	#5	STR	26'-9"	5580
* B3	20	#5	STR	26'-8"	556
* S1	690	#5	1	5'-1"	3658
* S2	690	#5	2	7'-2"	5158

* EPOXY COATED REINFORCING STEEL 15480 LBS.
CLASS AA CONCRETE 76.7 CU. YDS.
VERTICAL CONCRETE BARRIER RAIL 647.38 LIN. FT.

BILL OF MATERIAL
FOR VERTICAL CONCRETE BARRIER RAIL ONLY
SPANS 4 & 5

BAR	NO.	SIZE	TYPE	LENGTH	WEIGHT
* B4	40	#5	STR	29'-7"	1234
* B5	120	#5	STR	29'-8"	3713
* S1	516	#5	1	5'-1"	2736
* S2	516	#5	2	7'-2"	3857

* EPOXY COATED REINFORCING STEEL 11540 LBS.
CLASS AA CONCRETE 56.9 CU. YDS.
VERTICAL CONCRETE BARRIER RAIL 480.00 LIN. FT.

BILL OF MATERIAL
FOR VERTICAL CONCRETE BARRIER RAIL ONLY
SPANS 6, 7 & 8

BAR	NO.	SIZE	TYPE	LENGTH	WEIGHT
* B6	240	#5	STR	27'-8"	6926
* B7	280	#5	STR	27'-9"	8104
* S1	1528	#5	1	5'-1"	8101
* S2	1528	#5	2	7'-2"	11422

* EPOXY COATED REINFORCING STEEL 34553 LBS.
CLASS AA CONCRETE 173.0 CU. YDS.
VERTICAL CONCRETE BARRIER RAIL 1460.00 LIN. FT.

BILL OF MATERIAL
FOR VERTICAL CONCRETE BARRIER RAIL ONLY
SPANS 9 & 10

BAR	NO.	SIZE	TYPE	LENGTH	WEIGHT
* B4	20	#5	STR	29'-7"	617
* B5	60	#5	STR	29'-8"	1857
* B8	60	#5	STR	24'-8"	1544
* B9	20	#5	STR	24'-7"	513
* S1	476	#5	1	5'-1"	2524
* S2	476	#5	2	7'-2"	3558

* EPOXY COATED REINFORCING STEEL 10613 LBS.
CLASS AA CONCRETE 52.1 CU. YDS.
VERTICAL CONCRETE BARRIER RAIL 440.00 LIN. FT.

BILL OF MATERIAL
FOR VERTICAL CONCRETE BARRIER RAIL ONLY
SPANS 11, 12 & 13

BAR	NO.	SIZE	TYPE	LENGTH	WEIGHT
* B4	40	#5	STR	29'-7"	1234
* B5	200	#5	STR	29'-8"	6188
* S1	764	#5	1	5'-1"	4051
* S2	764	#5	2	7'-2"	5711

* EPOXY COATED REINFORCING STEEL 17184 LBS.
CLASS AA CONCRETE 85.3 CU. YDS.
VERTICAL CONCRETE BARRIER RAIL 720.00 LIN. FT.

BILL OF MATERIAL
FOR VERTICAL CONCRETE BARRIER RAIL ONLY
SPANS 14, 15 & 16

BAR	NO.	SIZE	TYPE	LENGTH	WEIGHT
* B4	40	#5	STR	29'-7"	1234
* B5	200	#5	STR	29'-8"	6188
* S1	764	#5	1	5'-1"	4051
* S2	764	#5	2	7'-2"	5711

* EPOXY COATED REINFORCING STEEL 17184 LBS.
CLASS AA CONCRETE 85.3 CU. YDS.
VERTICAL CONCRETE BARRIER RAIL 720.00 LIN. FT.

BILL OF MATERIAL
FOR VERTICAL CONCRETE BARRIER RAIL ONLY
SPANS 17, 18 & 19

BAR	NO.	SIZE	TYPE	LENGTH	WEIGHT
* B4	80	#5	STR	29'-7"	2468
* B5	90	#5	STR	29'-8"	2785
* B10	10	#5	STR	29'-4"	306
* B11	20	#5	STR	29'-1"	607
* B12	10	#5	STR	29'-6"	308
* B13	30	#5	STR	29'-5"	920
* S1	762	#5	1	5'-1"	4040
* S2	762	#5	2	7'-2"	5696

* EPOXY COATED REINFORCING STEEL 17130 LBS.
CLASS AA CONCRETE 85.0 CU. YDS.
VERTICAL CONCRETE BARRIER RAIL 717.35 LIN. FT.

BILL OF MATERIAL
FOR VERTICAL CONCRETE BARRIER RAIL ONLY
SPANS 20, 21 & 22
(SPANS 23, 24, & 25 THROUGH SPANS 35, 36, & 37 AND SPANS 41, 42, & 43 THROUGH 53, 54, & 55 SIMILAR)

BAR	NO.	SIZE	TYPE	LENGTH	WEIGHT
*B201	30	#5	STR	29'-0"	907
*B202	90	#5	STR	29'-6"	2769
*B203	10	#5	STR	29'-5"	307
*B204	30	#5	STR	29'-4"	918
*B205	80	#5	STR	29'-7"	2468
* S1	760	#5	1	5'-1"	4030
* S2	760	#5	2	7'-2"	5681

* EPOXY COATED REINFORCING STEEL 17080 LBS.
CLASS AA CONCRETE 85.2 CU. YDS.
VERTICAL CONCRETE BARRIER RAIL 716.95 LIN. FT.

BILL OF MATERIAL
FOR VERTICAL CONCRETE BARRIER RAIL ONLY
SPANS 38, 39 & 40

BAR	NO.	SIZE	TYPE	LENGTH	WEIGHT
*B201	20	#5	STR	29'-0"	605
*B202	60	#5	STR	29'-6"	1846
*B203	10	#5	STR	29'-5"	307
*B204	20	#5	STR	29'-4"	612
*B205	50	#5	STR	29'-7"	1543
*B206	30	#5	STR	24'-7"	769
*B207	30	#5	STR	24'-5"	764
*B208	20	#5	STR	24'-4"	508
* S1	717	#5	1	5'-1"	3801
* S2	717	#5	2	7'-2"	5360

* EPOXY COATED REINFORCING STEEL 16115 LBS.
CLASS AA CONCRETE 80.5 CU. YDS.
VERTICAL CONCRETE BARRIER RAIL 677.13 LIN. FT.

BILL OF MATERIAL
FOR VERTICAL CONCRETE BARRIER RAIL ONLY
SPANS 56, 57 & 58

BAR	NO.	SIZE	TYPE	LENGTH	WEIGHT
*B206	60	#5	STR	24'-7"	1538
*B207	80	#5	STR	24'-5"	2037
*B208	20	#5	STR	24'-4"	508
*B209	10	#5	STR	28'-11"	905
*B210	30	#5	STR	29'-1"	910
* S1	610	#5	1	5'-1"	3234
* S2	610	#5	2	7'-2"	4560

* EPOXY COATED REINFORCING STEEL 13692 LBS.
CLASS AA CONCRETE 68.3 CU. YDS.
VERTICAL CONCRETE BARRIER RAIL 574.94 LIN. FT.

BAR TYPES

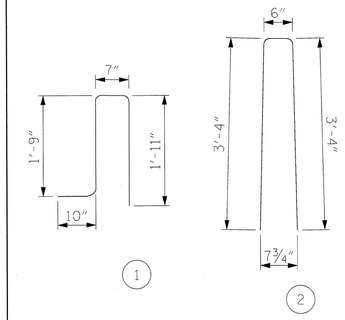

ALL BAR DIMENSIONS ARE OUT TO OUT

BILL OF MATERIAL
FOR VERTICAL CONCRETE BARRIER RAIL ONLY
SPANS 1 THROUGH 58

* EPOXY COATED REINFORCING STEEL 341371 LBS.
CLASS AA CONCRETE 1700.3 CU. YDS.
VERTICAL CONCRETE BARRIER RAIL 14323.25 LIN. FT.

PROJECT NO. R-2633BB
BRUNSWICK/NEW HANOVER COUNTY
STATION: 353+32.50 -L-

SHEET 10 OF 10

DRAWN BY : RJD, JML DATE : 12/2011
CHECKED BY : RLB DATE : 12/2012
DESIGN ENGINEER OF RECORD : R. BOLLINGER DATE : 05/2013

NORTH CAROLINA PROFESSIONAL SEAL 18442 ENGINEER RICHARD LEON BOLLINGER JR. 5-29-2013

RS&H IMPROVING YOUR WORLD
RS&H Architects-Engineers-Planners, Inc.
8601 Six Forks Road, Suite 260
Raleigh, NC 27615
919-846-5701 FAX 919-846-9080
www.rsandh.com
North Carolina License Nos. 50073 * F-0451 * C-28

NORTH CAROLINA PROFESSIONAL SEAL 22072 ENGINEER JOHN ARTHUR DILWORTH 5-29-13

WETHERILL ENGINEERING
TRANSPORTATION PLANNING/DESIGN
BRIDGE/STRUCTURE DESIGN
CIVIL/SITE DESIGN - GIS/GPS
CONSTRUCTION OBSERVATION
559 Jones Franklin Rd. Suite 164
Raleigh, N.C. 27606
Bus: 919 851 8077
Fax: 919 851 8107
LICENSE NO. F-0377

STATE OF NORTH CAROLINA
DEPARTMENT OF TRANSPORTATION
RALEIGH

VERTICAL CONCRETE BARRIER RAIL BILL OF MATERIALS

LEFT LANE

REVISIONS						SHEET NO.
NO.	BY:	DATE:	NO.	BY:	DATE:	S-159
1			3			TOTAL SHEETS
2			4			700

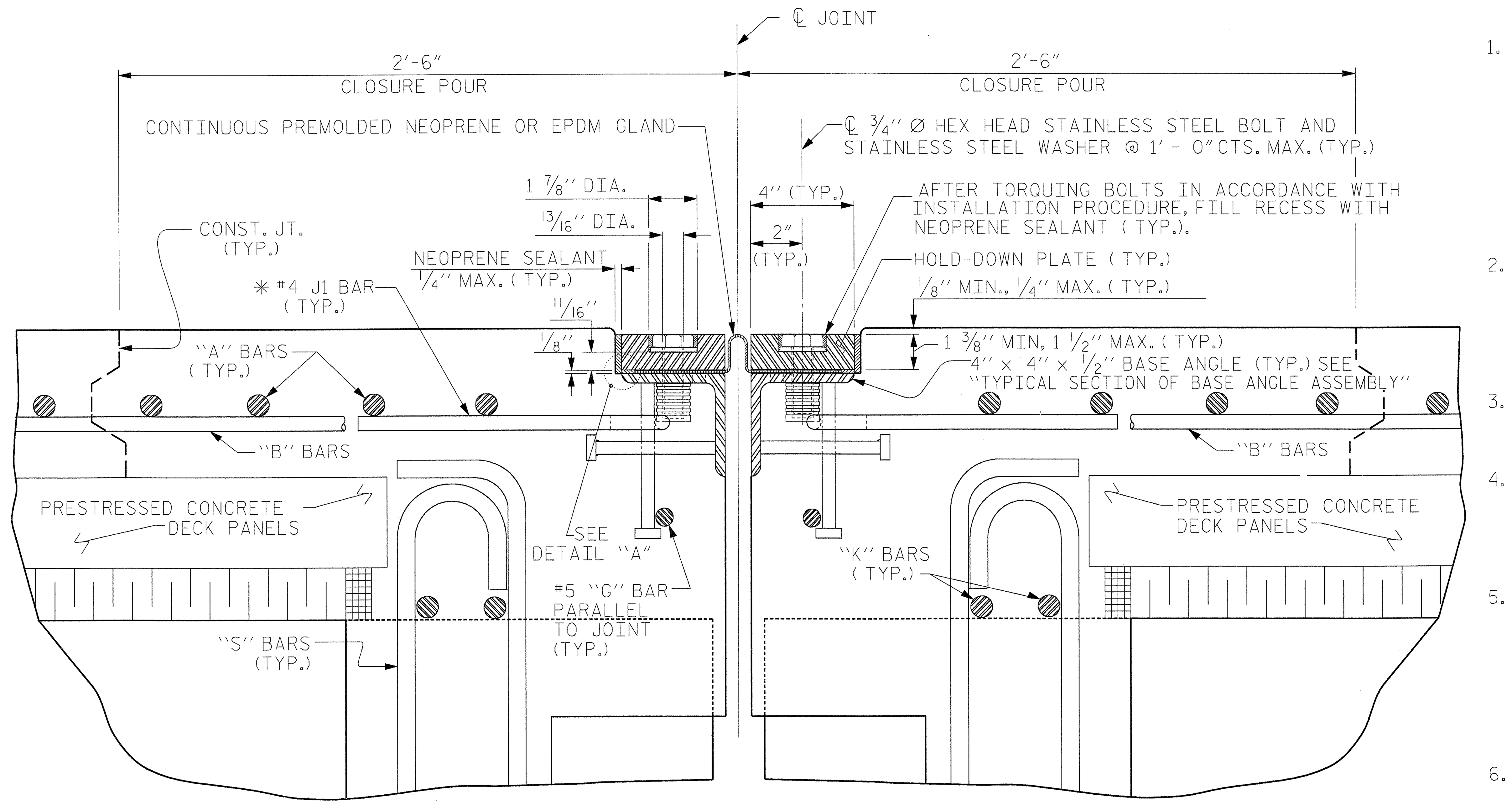

EXPANSION JOINT DETAILS

SECTION NORMAL TO JOINT -- PRESTRESSED GIRDER SUPERSTRUCTURE

✳ THE QUANTITY OF #4 J1 BARS ON THE BILL OF MATERIAL IS BASED ON 1'-0" CENTERS. J1 BARS SHALL BE PLACED AT EACH VERTICAL STUD ANCHOR BOLT. IN THE EVENT THAT THE NUMBER OF VERTICAL STUD ANCHORS EXCEEDS THE NUMBER OF J1 BARS SPECIFIED, ADDITIONAL J1 BARS WILL NOT BE REQUIRED.

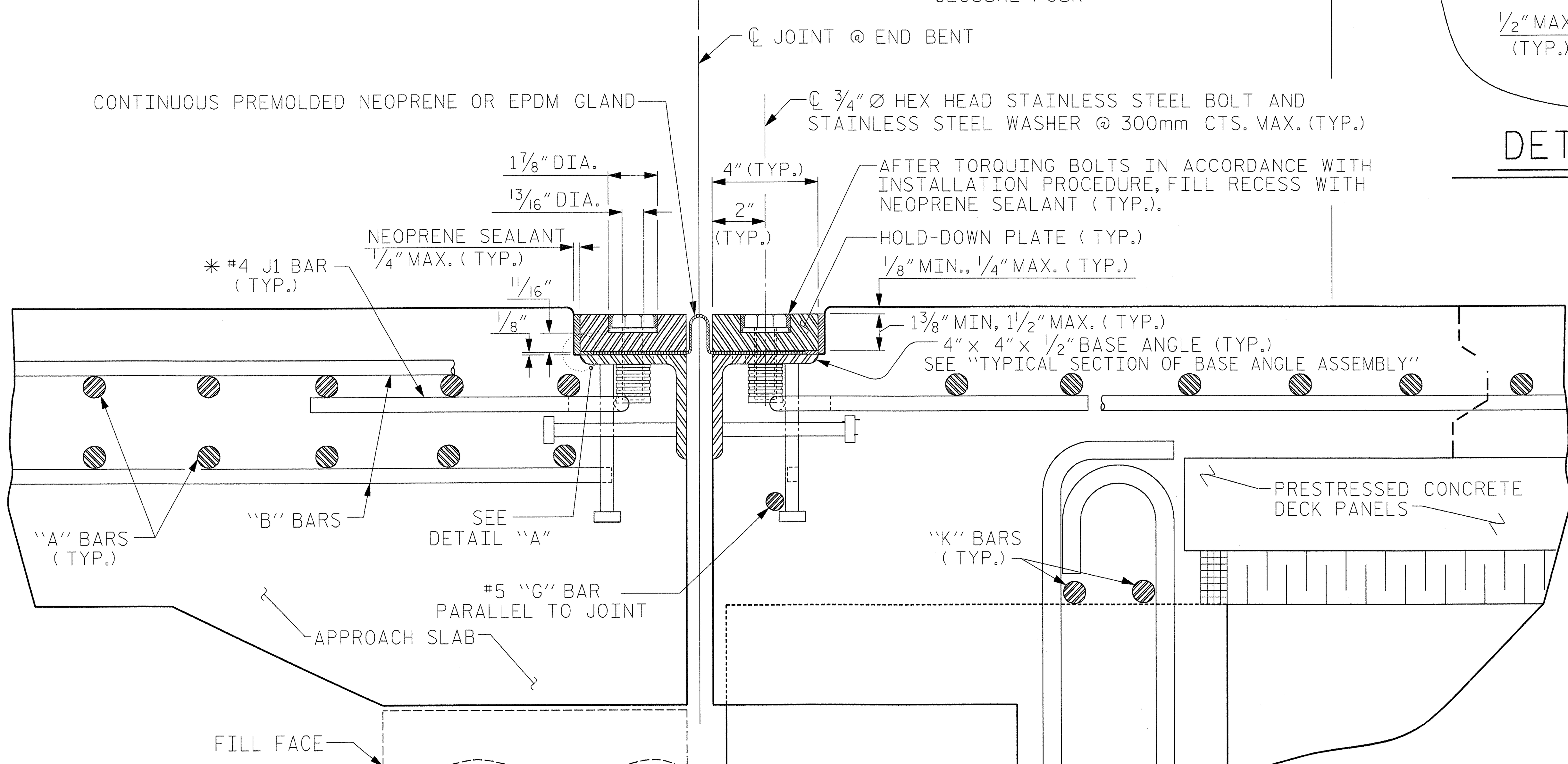

EXPANSION JOINT DETAILS

SECTION NORMAL TO JOINT -- PRESTRESSED GIRDER SUPERSTRUCTURE

✳ THE QUANTITY OF #4 J1 BARS ON THE BILL OF MATERIAL IS BASED ON 1'-0" CENTERS. J1 BARS SHALL BE PLACED AT EACH VERTICAL STUD ANCHOR BOLT. IN THE EVENT THAT THE NUMBER OF VERTICAL STUD ANCHORS EXCEEDS THE NUMBER OF J1 BARS SPECIFIED, ADDITIONAL J1 BARS WILL NOT BE REQUIRED.

INSTALLATION PROCEDURE

1. A TEMPLATE OR OTHER SUITABLE DEVICE SHALL BE USED TO FORM THE TOP OF THE EXPANSION JOINT SEAL BLOCKOUT TO THE PROPER DEPTH AND WIDTH. THE TEMPLATE SHALL BE 4 1/8" TO 4 1/4" WIDE AND OF SUCH THICKNESS AS TO PROVIDE FOR CORRECT FINAL ELEVATION OF TOP OF HOLD-DOWN PLATES. THE TEMPLATE SHALL BE ATTACHED TO THE BASE ANGLE ASSEMBLY WITH THE 3/4" Ø HEX HEAD BOLTS PROVIDED FOR THE HOLD-DOWN PLATES. A 1" Ø HOLE SHALL BE PROVIDED IN THE TEMPLATE CENTERED OVER EACH WEEP HOLE IN THE 4" X 4" X 1/2" BASE ANGLE. OTHER METHODS OF INSURING DRAINAGE THROUGH WEEP HOLES MAY BE EMPLOYED SUBJECT TO ENGINEER'S APPROVAL.
2. AFTER THE CONCRETE HAS BEEN CAST ON BOTH SIDES OF THE JOINT, REMOVE THE TEMPLATE. THOROUGHLY CLEAN THE BOLT HOLES AND THE ANGLE PLATE. REMOVE ANY EXCESS CONCRETE THAT COMES OUT OF THE WEEP HOLES. ANY DAMAGED STEEL SHALL BE COATED WITH A MINIMUM THICKNESS OF 4 DRY MILS OF ZINC-RICH PAINT IN ACCORDANCE WITH THE STANDARD SPECIFICATIONS.
3. LAY THE GLAND ON THE BASE ANGLE AND FIELD MARK THE GLAND FOR THE BOLT HOLES. HOLES IN THE GLAND SHALL BE PUNCHED 7/8" IN DIAMETER WITH A HAND PUNCH.
4. IN ORDER TO CHECK FOR PROPER ALIGNMENT, PLACE THE GLAND AND HOLD-DOWN PLATES ON THE BASE ANGLE. DO NOT APPLY NEOPRENE SEALANT. BOLT THE HOLD-DOWN PLATES TO THE BASE ANGLE BUT DO NOT TIGHTEN. THE ENGINEER SHALL INSPECT THE JOINT SEAL DEVICE FOR PROPER ALIGNMENT.
5. AFTER INSPECTION, REMOVE THE HOLD-DOWN PLATES AND GLAND. APPLY NEOPRENE SEALANT TO THE BASE ANGLE IN ACCORDANCE WITH THE "INSTALLATION SKETCH". PLACE GLAND AND HOLD-DOWN PLATES ON THE BASE ANGLE. BOLT THE HOLD-DOWN PLATES TO THE BASE ANGLE ASSEMBLY AND TORQUE THE BOLTS TO 88 FT-LBS WITH A TORQUE WRENCH. CHECK THE TORQUE AFTER THREE (3) HOURS AND, IF NECESSARY, RETIGHTEN TO 88 FT-LBS. A FINAL CHECK SHALL BE MADE AT SEVEN (7) DAYS. TORQUE SHALL NOT BE LESS THAN 80 FT-LBS AFTER SEVEN (7) DAYS.
6. AFTER PROPER TORQUING, CLEAN THE BOLT HOLE RECESSES AND THE RECESS BETWEEN THE JOINT SEAL DEVICE AND CONCRETE, COMPLETELY FILL THESE RECESSES WITH NEOPRENE SEALANT.

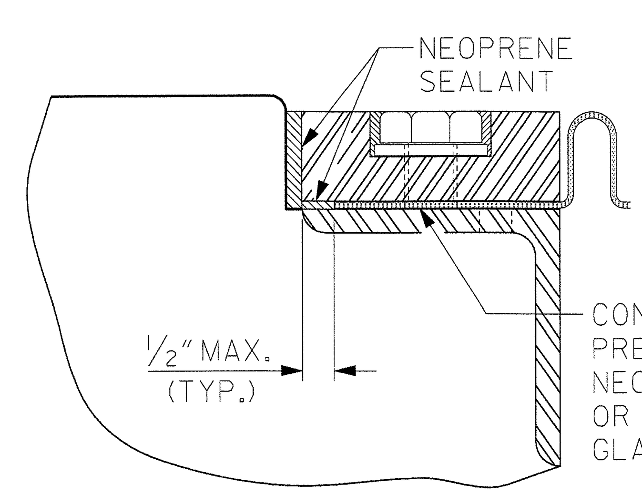

DETAIL "A"

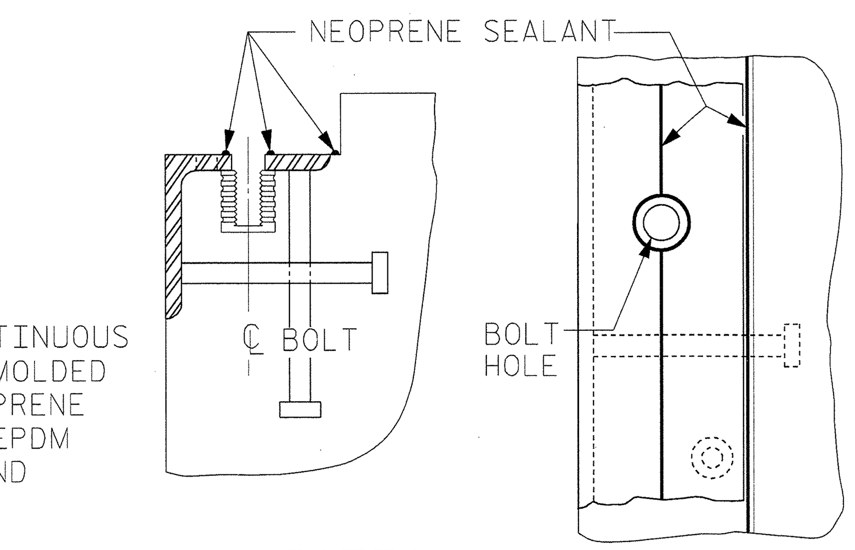

INSTALLATION SKETCH

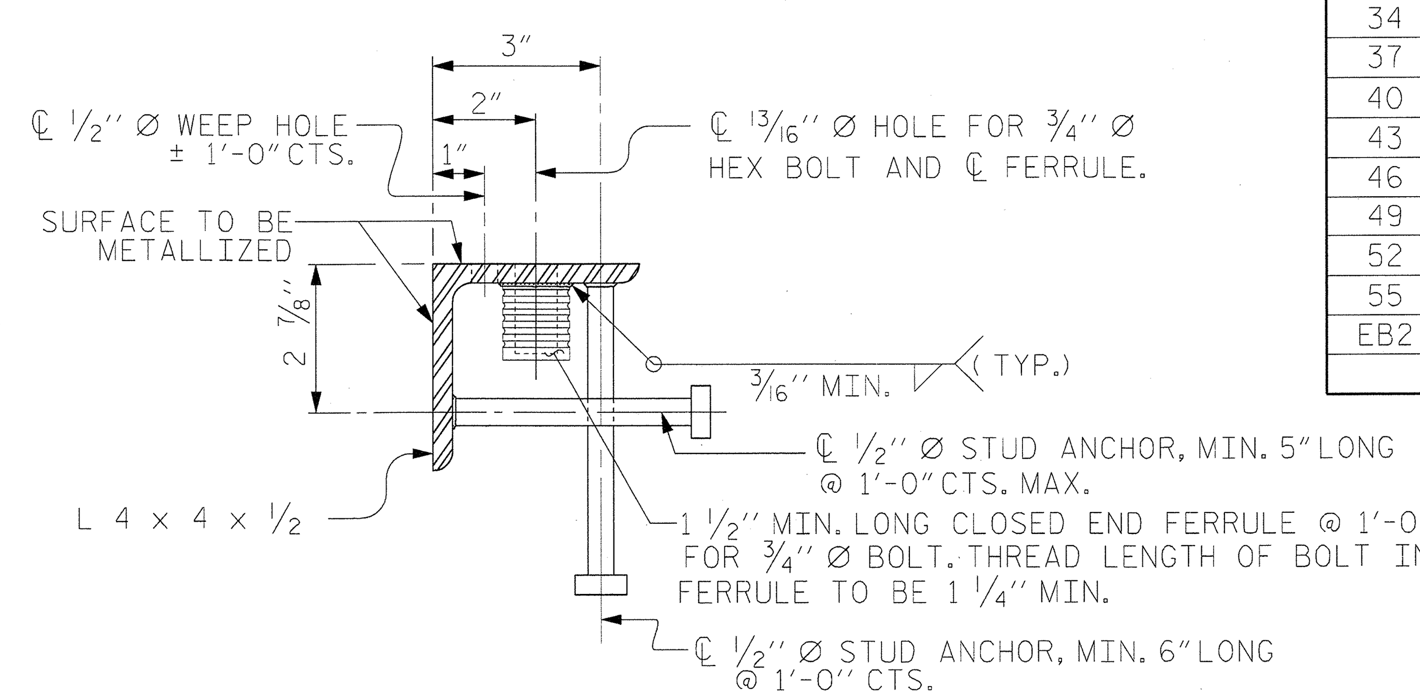

TYPICAL SECTION OF BASE ANGLE ASSEMBLY

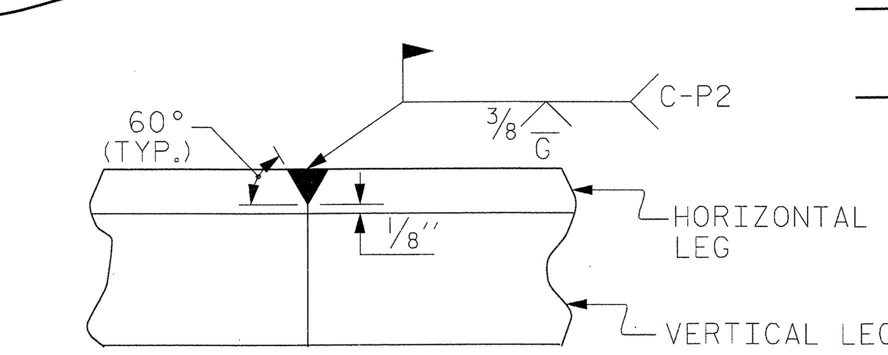

DETAIL- FIELD WELD SPLICE OF BASE ANGLE

GENERAL NOTES

1. FOR EXPANSION JOINT SEALS, SEE SPECIAL PROVISIONS.
2. ALL PLATES AND ANGLES SHALL CONFORM TO AASHTO M270 GRADE 36 STEEL OR APPROVED EQUAL. ALL HOLD-DOWN BOLTS SHALL CONFORM TO ASTM F593 ALLOY 304 STAINLESS STEEL AND WASHERS SHALL CONFORM TO ASTM F844 EXCEPT THEY SHALL BE MADE FROM ALLOY 304 STAINLESS STEEL. ALL STUD ANCHORS SHALL CONFORM TO AASHTO M169, GRADES 1010 THRU 1020 OR APPROVED EQUAL. ALL CONCRETE INSERTS SHALL BE CLOSED END AND SHALL CONFORM TO AASHTO M169, GRADE 12L14. TENSILE CAPACITY SHALL BE 3000 LBS. MIN.
3. A PREMOLDED CORRUGATED OR NON-CORRUGATED GLAND SHALL BE USED FOR JOINTS SKEWED BETWEEN 50° THRU 130°. FOR JOINTS SKEWED LESS THAN 50° OR MORE THAN 130°, ONLY A CORRUGATED GLAND SHALL BE USED.
4. CLOSED END FERRULES AND STUD ANCHORS SHALL BE SHOP WELDED AND ALL HOLES SHALL BE SHOP DRILLED AS SHOWN ON PLANS. STUD ANCHORS SHALL BE ELECTRIC ARC END WELDED WITH COMPLETE FUSION.
5. SURFACES COMING IN CONTACT WITH NEOPRENE SHALL BE GROUND SMOOTH PRIOR TO METALLIZING.
6. UPON COMPLETION OF SHOP FABRICATION, THE HOLD DOWN PLATE AND BASE ANGLE ASSEMBLY, AS SHOWN IN THE "TYPICAL SECTION OF BASE ANGLE ASSEMBLY", SHALL BE METALLIZED. SEE SPECIAL PROVISION FOR THERMAL SPRAYED COATINGS (METALLIZATION).
7. BASE ANGLE ASSEMBLY SHALL BE CONTINUOUS FOR THE LENGTH OF THE JOINT. AT CROWN BREAKS, THE ENDS OF THE BASE ANGLE ASSEMBLY SHALL BE CUT PARALLEL TO THE BRIDGE CENTERLINE FOR SKEWS LESS THAN 80° AND GREATER THAN 100°. FINISHED WELD SHALL BE GROUND SMOOTH AND COATED WITH A MINIMUM THICKNESS OF 4 DRY MILS OF ZINC-RICH PAINT IN ACCORDANCE WITH THE STANDARD SPECIFICATIONS.
8. FIELD SPLICES OF HOLD-DOWN PLATES SHALL BE KEPT TO A MINIMUM. CONTRACTOR SHALL FURNISH DETAILED PLANS SHOWING PROPOSED SPLICE LOCATIONS FOR APPROVAL. HOLD-DOWN PLATES SHALL NOT EXCEED 20' LENGTHS UNLESS APPROVED BY THE ENGINEER.
9. NO ALTERNATE JOINT DETAILS SHALL BE PERMITTED IN LIEU OF THOSE SHOWN ON THESE PLANS.
10. THE CONTRACTOR MAY, AT HIS OPTION, USE ADHESIVELY ANCHORED ANCHOR BOLTS IN PLACE OF CONCRETE INSERTS FOR COVER PLATES. THE YIELD LOAD OF THE 3/4" Ø BOLT IS 10 KIPS. FIELD TESTING OF THE ADHESIVE BONDING SYSTEM IS NOT REQUIRED.

MOVEMENT AND SETTING AT JOINT

BENT NO.	SKEW ANGLE	TOTAL MOVEMENT (ALONG ℄ RDWY)	PERPENDICULAR JOINT OPENING AT 45° F	PERPENDICULAR JOINT OPENING AT 60° F	PERPENDICULAR JOINT OPENING AT 90° F
EB1	90°	1"	1 11/16"	1 1/2"	1 3/16"
3	90°	1 3/4"	2 3/16"	1 15/16"	1 5/16"
10	90°	1 11/16"	2 3/16"	1 15/16"	1 5/16"
13	90°	2 3/16"	2 9/16"	2 3/16"	1 3/8"
16	90°	2 3/16"	2 9/16"	2 3/16"	1 3/8"
19	90°	2 3/16"	2 9/16"	2 3/16"	1 3/8"
22	90°	2 3/16"	2 9/16"	2 3/16"	1 3/8"
25	90°	2 3/16"	2 3/16"	2 3/16"	1 3/8"
28	90°	2 3/16"	2 9/16"	2 3/16"	1 3/8"
31	90°	2 3/16"	2 9/16"	2 3/16"	1 3/8"
34	90°	2 3/16"	2 9/16"	2 3/16"	1 3/8"
37	90°	2 1/8"	2 1/2"	2 1/8"	1 3/8"
40	90°	2 1/8"	2 1/2"	2 1/8"	1 3/8"
43	90°	2 3/16"	2 9/16"	2 3/16"	1 3/8"
46	90°	2 3/16"	2 9/16"	2 3/16"	1 3/8"
49	90°	2 3/16"	2 9/16"	2 3/16"	1 3/8"
52	90°	2 3/16"	2 9/16"	2 3/16"	1 3/8"
55	90°	2"	2 3/8"	2 1/16"	1 3/8"
EB2	90°	7/8"	1 5/8"	1 7/16"	1 1/8"

PROJECT NO. R-2633BB

BRUNSWICK/ NEW HANOVER COUNTY

STATION: 353+32.50 -L-

SHEET 1 OF 2

NORTH CAROLINA PROFESSIONAL SEAL 18442 ENGINEER RICHARD LEON BOLLINGER JR. 5-29-2013

NORTH CAROLINA PROFESSIONAL SEAL 22072 ENGINEER JOHN ARTHUR DILWORTH 5-29-13

IMPROVING YOUR WORLD

RS&H Architects-Engineers-Planners, Inc.
8601 Six Forks Road, Suite 260
Raleigh, NC 27615
919-846-6701 FAX 919-846-9080
www.rsandh.com
North Carolina License Nos. 50073 * F-0493 * C-28

WETHERILL ENGINEERING
TRANSPORTATION PLANNING/DESIGN
BRIDGE/STRUCTURE DESIGN
CIVIL/SITE DESIGN - GIS/GPS
CONSTRUCTION OBSERVATION
559 Jones Franklin Rd. Suite 164
Raleigh, N.C. 27606
Bus: 919 851 8077
Fax: 919 851 8107
LICENSE NO. F-0377

STATE OF NORTH CAROLINA
DEPARTMENT OF TRANSPORTATION
RALEIGH

STANDARD

EXPANSION JOINT SEAL DETAILS

LEFT LANE

REVISIONS					
NO.	BY:	DATE:	NO.	BY:	DATE:
1			3		
2			4		

SHEET NO. S-160

TOTAL SHEETS 700

DRAWN BY : J PENDERGRAFT DATE : 2/2012
CHECKED BY : J DILWORTH DATE : 2/2012
DESIGN ENGINEER OF RECORD : J DILWORTH DATE : 5/2013

STD. NO. EJS1 (SHT 1)

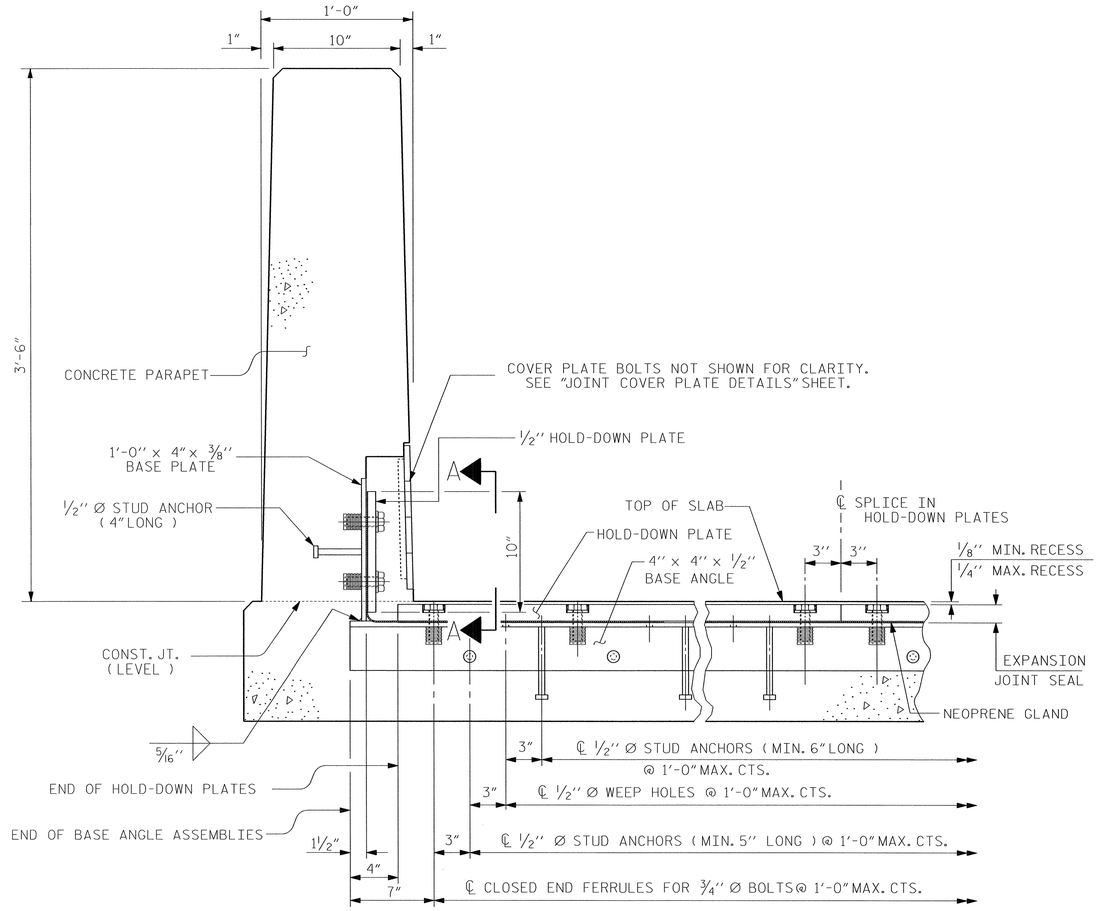

SECTION THRU PARAPET NORMAL TO JOINT

JOINT OPENING TABLE			
BENT NO.	Ⓐ	Ⓑ	Ⓒ
EB1	1 11/16"	1 1/2"	1 3/16"
3	2 3/16"	1 15/16"	1 5/16"
10	2 3/16"	1 15/16"	1 5/16"
13	2 9/16"	2 3/16"	1 3/8"
16	2 9/16"	2 3/16"	1 3/8"
19	2 9/16"	2 3/16"	1 3/8"
22	2 9/16"	2 3/16"	1 3/8"
25	2 3/16"	2 3/16"	1 3/8"
28	2 9/16"	2 3/16"	1 3/8"
31	2 9/16"	2 3/16"	1 3/8"
34	2 9/16"	2 3/16"	1 3/8"
37	2 1/2"	2 1/8"	1 3/8"
40	2 1/2"	2 1/8"	1 3/8"
43	2 9/16"	2 3/16"	1 3/8"
46	2 9/16"	2 3/16"	1 3/8"
49	2 9/16"	2 3/16"	1 3/8"
52	2 9/16"	2 3/16"	1 3/8"
55	2 3/8"	2 1/16"	1 3/16"
EB2	1 5/8"	1 7/16"	1 1/8"

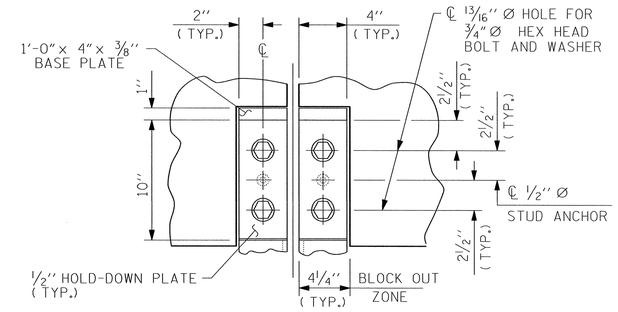

SECTION A - A

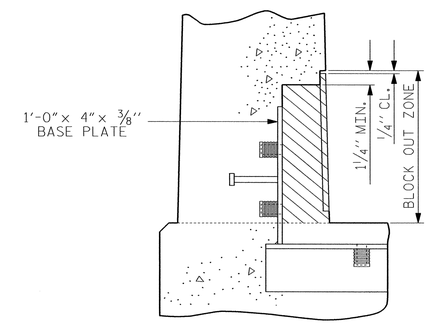

BLOCK OUT DETAIL

SEE "SECTION A - A" FOR OTHER DETAILS.

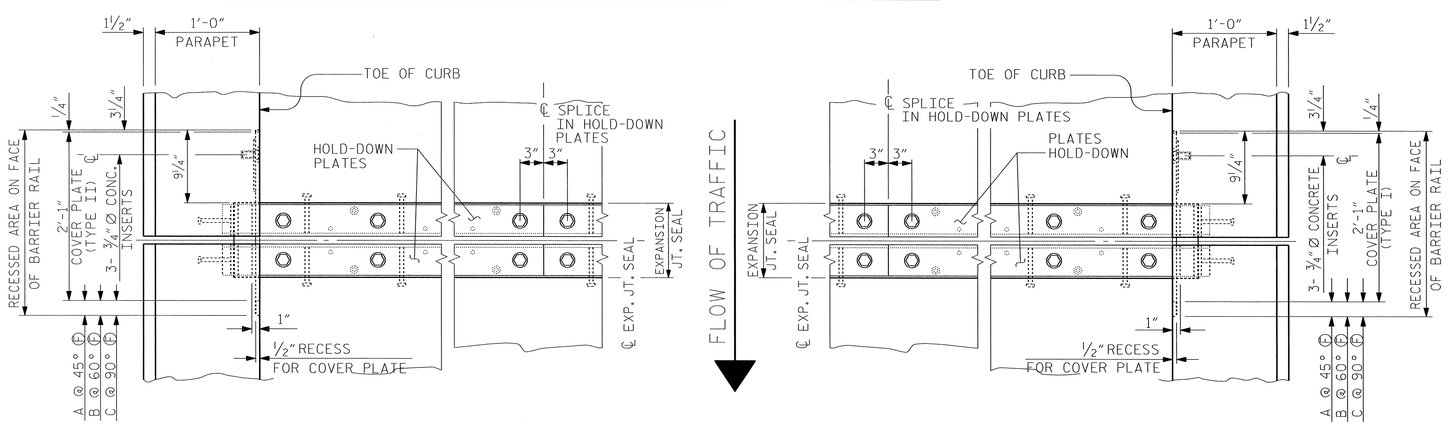

PLAN OF EXPANSION JOINT SEAL

PROJECT NO. R-2633BB

BRUNSWICK/NEW HANOVER COUNTY

STATION: 353+32.50 -L-

SHEET 2 OF 2

NORTH CAROLINA PROFESSIONAL SEAL 18442 ENGINEER RICHARD LEON ROBLEDGER JR. 5-29-2013

RS&H IMPROVING YOUR WORLD

RS&H Architects-Engineers-Planners, Inc.
8601 Six Forks Road, Suite 260
Raleigh, NC 27615
919-846-6701 FAX 919-846-0080
www.rsandh.com
North Carolina License Nos. 00073 * F-0481 * C-28

NORTH CAROLINA PROFESSIONAL SEAL 22072 ENGINEER JOHN ARTHUR DILWORTH 5-29-13

WETHERILL ENGINEERING

TRANSPORTATION PLANNING/DESIGN
BRIDGE/STRUCTURE DESIGN
CIVIL/SITE DESIGN - GIS/GPS
CONSTRUCTION OBSERVATION

559 Jones Franklin Rd. Suite 164
Raleigh, N.C. 27606
Bus: 919 851 8077
Fax: 919 851 8107
LICENSE NO. F-0377

STATE OF NORTH CAROLINA
DEPARTMENT OF TRANSPORTATION
RALEIGH

STANDARD
EXPANSION JOINT SEAL DETAILS FOR VERTICAL CONCRETE BARRIER RAIL
LEFT LANE

REVISIONS						SHEET NO.
NO.	BY:	DATE:	NO.	BY:	DATE:	S-161
1			3			TOTAL SHEETS
2			4			700

DRAWN BY : J PENDERGRAFT DATE : 10/2012
CHECKED BY : J. A. DILWORTH DATE : 10/2012
DESIGN ENGINEER OF RECORD : J. DILWORTH DATE : 5/2013

STD. NO. EJS2

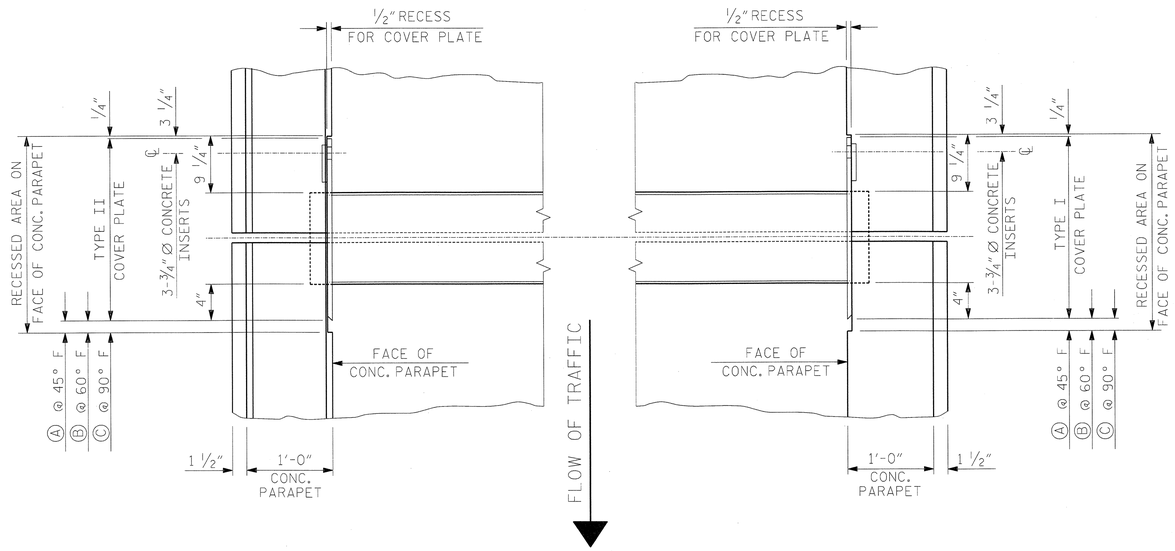

PLAN OF MODULAR EXPANSION JOINT SEAL

NOTES

FOR MODULAR EXPANSION JOINT SEALS, SEE SPECIAL PROVISIONS.

THE STEEL PLATES SHALL CONFORM TO AASHTO M270 GRADE 36 OR APPROVED EQUAL AND BE PAINTED IN ACCORDANCE WITH THE STANDARD SPECIFICATIONS. AT THE CONTRACTOR'S OPTION, THE PLATES MAY BE METALLIZED AFTER FABRICATION. SEE SPECIAL PROVISIONS FOR THERMAL SPRAYED COATINGS (METALLIZATION).

THE 3/4" Ø HEX HEAD BOLTS SHALL CONFORM TO ASTM F593 ALLOY 304 STAINLESS STEEL.

THE 3/4" CONCRETE INSERTS SHALL BE CLOSED-END FERRULES WITH LOOPED WIRE STRUTS ATTACHED TO THEM. THE INSERTS SHALL CONFORM TO AASHTO M169, GRADE 12L14 AND SHALL HAVE A TENSILE WORKING LOAD CAPACITY OF 3000 LBS.

NO SEPARATE PAYMENT WILL BE MADE FOR FURNISHING AND INSTALLING THE COVER PLATE. THE ENTIRE COST OF THIS WORK SHALL BE INCLUDED IN THE LUMP SUM PRICE FOR "MODULAR EXPANSION JOINT SEALS".

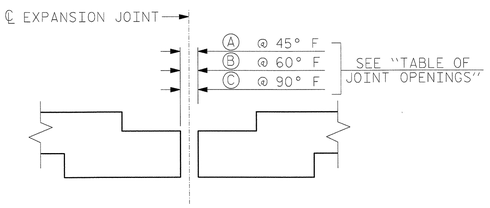

SECTION THRU SLAB

NORMAL TO JOINT

NOTE: MODULAR EXPANSION JOINT SEAL IS REQUIRED AT THIS JOINT BUT NOT SHOWN, SEE SKETCH SHOWING LIMITS OF MODULAR EXPANSION JOINT SEAL.

TABLE OF JOINT OPENINGS					
	SKEW ANGLE	TOTAL MOVEMENT ALONG ℄ ROADWAY *	Ⓐ	Ⓑ	Ⓒ
BENT 5	90°-00'-00"	4 9/16"	3 1/2"	2 7/8"	1 5/8"
BENT 8	90°-00'-00"	4 9/16"	3 1/2"	2 7/8"	1 5/8"

* INCLUDES 1" CREEP AND SHRINKAGE

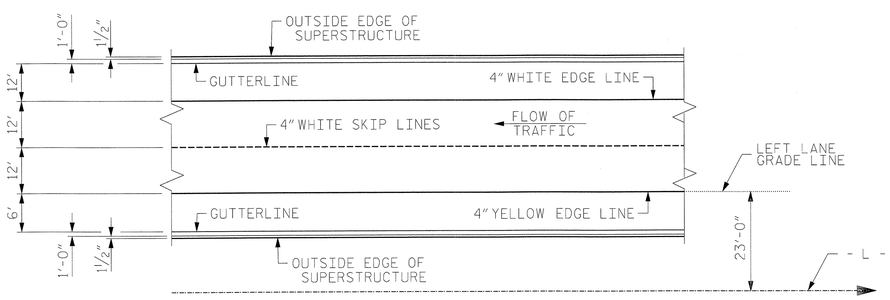

PAVEMENT MARKING ALIGNMENT

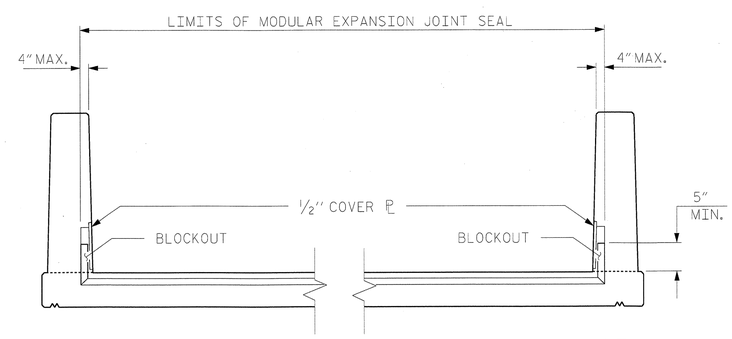

SKETCH SHOWING LIMITS OF MODULAR EXPANSION JOINT SEAL-BARRIER RAIL

PROJECT NO. R-2633BB

BRUNSWICK/NEW HANOVER COUNTY

STATION: 353+32.50 -L-

NORTH CAROLINA PROFESSIONAL SEAL 18442 ENGINEER RICHARD LEON BOLLINGER III

5-24-2013

RS&H IMPROVING YOUR WORLD

RS&H Architects-Engineers-Planners, Inc.
8601 Six Forks Road, Suite 260
Raleigh, NC 27615
919-846-6701 FAX 919-846-9080
www.rsandh.com
North Carolina License Nos. 50173 * F-0493 * C-28

STATE OF NORTH CAROLINA
DEPARTMENT OF TRANSPORTATION
RALEIGH

SUPERSTRUCTURE

MODULAR EXPANSION JOINT DETAILS

LEFT LANE

REVISIONS						
NO.	BY:	DATE:	NO.	BY:	DATE:	
1			3			
2			4			

SHEET NO. S-162

TOTAL SHEETS 700

DRAWN BY :	JML	DATE :	06/12
CHECKED BY :	RLB	DATE :	3/2013
DESIGN ENGINEER OF RECORD :	R. BOLLINGER	DATE :	5/2013

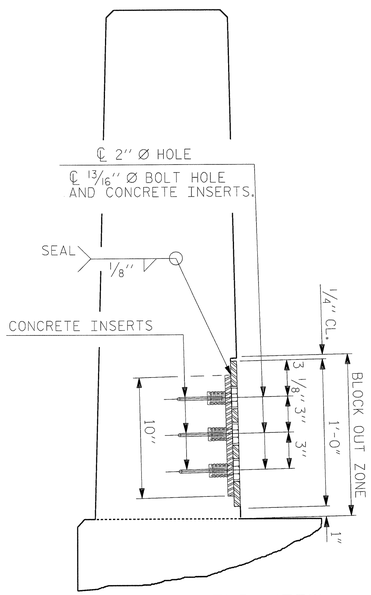

END VIEW

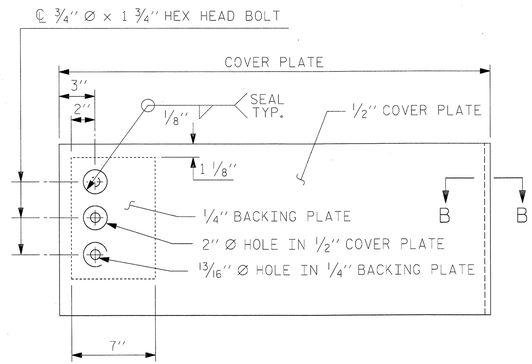

TYPE I - ELEVATION VIEW

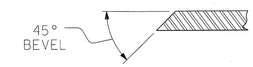

SECTION B-B

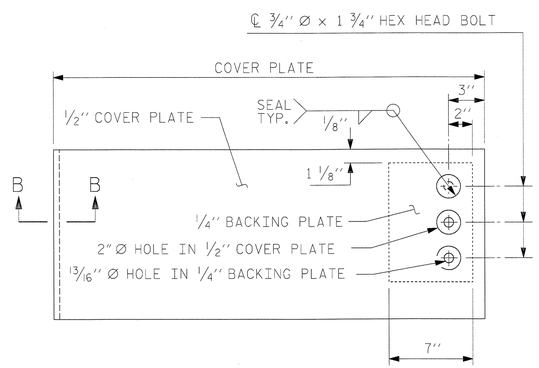

TYPE II - ELEVATION VIEW

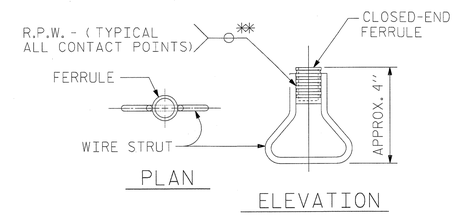

CONCRETE INSERT

** EACH WELDED ATTACHMENT OF WIRE TO FERRULE SHALL DEVELOP THE TENSILE STRENGTH OF THE WIRE.

COVER PLATE DETAILS

PROJECT NO. R-2633BB

BRUNSWICK/NEW HANOVER COUNTY

STATION: 353+32.50 -L-

DRAWN BY :	JML	DATE :	06/12
CHECKED BY :	RLB	DATE :	3/2013
DESIGN ENGINEER OF RECORD :	R. BOLLINGER	DATE :	5/2013

NORTH CAROLINA PROFESSIONAL SEAL 18442 ENGINEER RICHARD LEON BOLLINGER 5-29-2013

RS&H IMPROVING YOUR WORLD

RS&H Architects-Engineers-Planners, Inc.
8601 Six Forks Road, Suite 260
Raleigh, NC 27615
919-846-6701 FAX 919-846-9080
www.rsandh.com
North Carolina License Nos. 00013 * F-0493 * C-28

NORTH CAROLINA PROFESSIONAL SEAL 22072 ENGINEER JOHN ARTHUR DILWORTH 5-29-13

WETHERILL ENGINEERING
TRANSPORTATION PLANNING/DESIGN
BRIDGE/STRUCTURE DESIGN
CIVIL/SITE DESIGN - GIS/GPS
CONSTRUCTION OBSERVATION
559 Jones Franklin Rd. Suite 164
Raleigh, N.C. 27606
Bus: 919 851 8077
Fax: 919 851 8107
LICENSE NO. F-0377

STATE OF NORTH CAROLINA
DEPARTMENT OF TRANSPORTATION
RALEIGH

SUPERSTRUCTURE

JOINT COVER PLATE DETAILS

LEFT LANE

REVISIONS						SHEET NO.
NO.	BY:	DATE:	NO.	BY:	DATE:	S-163
1			3			TOTAL SHEETS
2			4			700

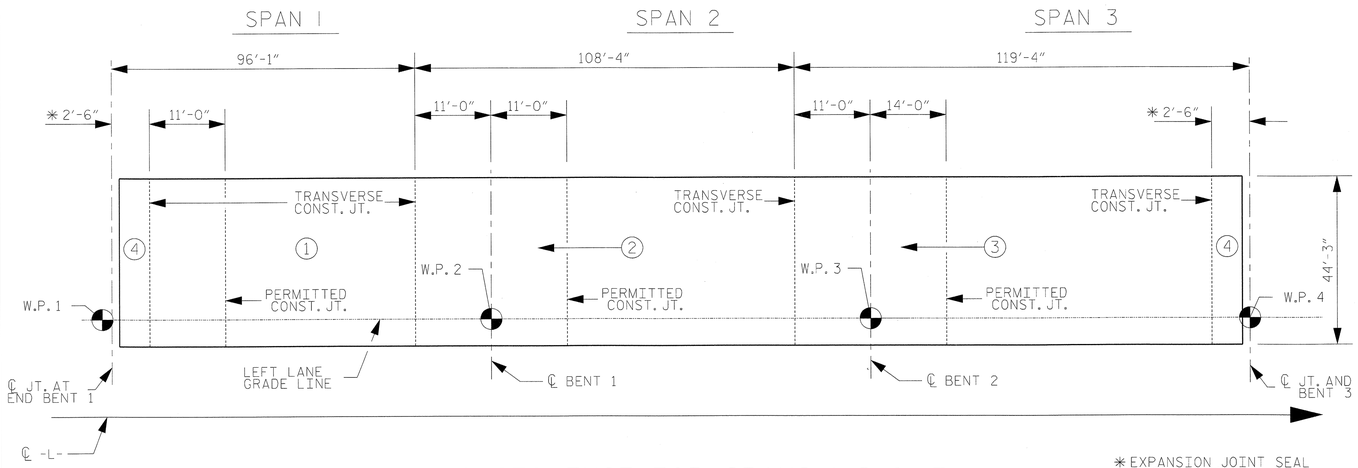

POURING SEQUENCE FOR SPANS 1, 2 & 3

THE SEQUENCE OF POURS SHALL PROCEED AS SHOWN IN ORDER OF ASCENDING NUMBERS.

← (#) INDICATES POUR NUMBER AND DIRECTION OF POUR.

* EXPANSION JOINT SEAL CLOSURE POUR.

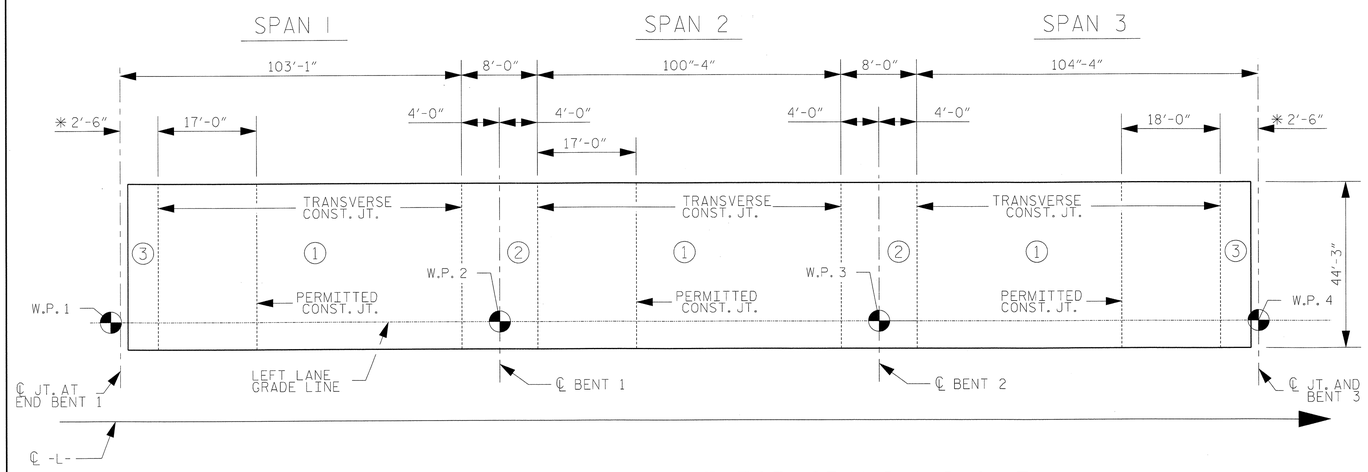

OPTIONAL POURING SEQUENCE FOR SPANS 1, 2 & 3

POUR ② CANNOT BE STARTED UNTIL BOTH ADJACENT POURS ① REACH A MINIMUM OF 3000 PSI.

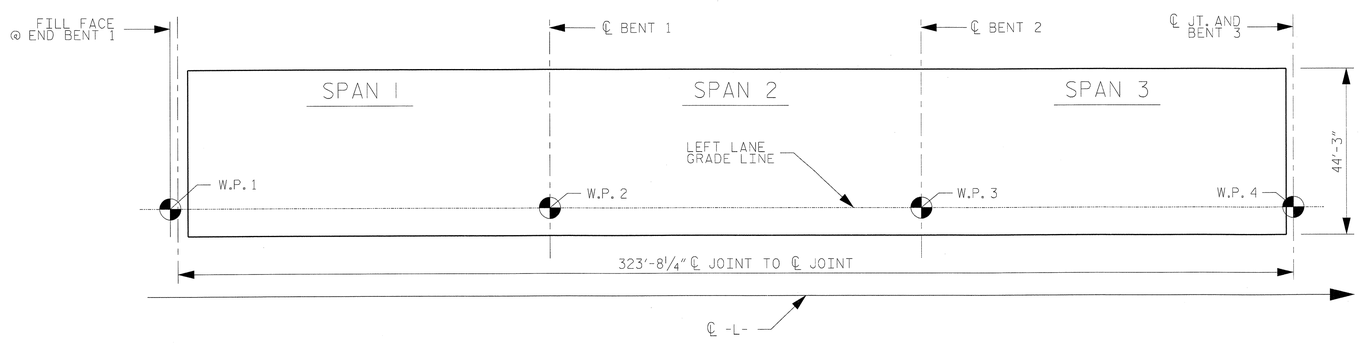

LAYOUT FOR COMPUTING AREA REINFORCED CONCRETE DECK SLAB (SQ. FT. = 14,323)

SPANS 1, 2 & 3

REINFORCING BAR SCHEDULE

BAR	NUMBER	SIZE	TYPE	LENGTH	WEIGHT
A1	647	#5	STR	43'-11"	29636
A2	432	#4	STR	5'-2"	1491
B1	180	#4	STR	25'-2"	3026
B2	72	#4	STR	28'-10"	1387
B3	120	#7	STR	60'-0"	14717
B4	114	#7	STR	33'-0"	7690
B5	120	#7	STR	20'-3"	4967
B6	120	#4	STR	19'-8"	1576
B7	180	#4	STR	25'-7"	3076
G1	2	#5	STR	43'-11"	92
J1	84	#4	9	1'-5"	79
U1	24	#4	7	12'-3"	196
U2	42	#4	8	14'-6"	407
K1	8	#8	1	17'-8"	377
K2	8	#8	2	26'-9"	571
K3	12	#4	STR	8'-6"	68
K4	48	#4	STR	10'-7"	339
K5	24	#4	STR	9'-8"	155
K6	12	#4	STR	7'-9"	62
K7	12	#4	STR	6'-2"	49
K8	32	#4	STR	18'-6"	395
S1	42	#5	3	5'-9"	252
S2	12	#5	4	3'-7"	45
S3	390	#4	5	2'-9"	716
S4	84	#4	6	4'-9"	267

REINFORCING STEEL SPLICE LENGTHS

BAR SIZE	SUPERSTRUCTURE EXCEPT APPROACH SLABS, PARAPET, AND BARRIER RAIL UNLESS NOTED OTHERWISE
	EPOXY COATED
#4	2'-0"
#5	2'-6"
#6	3'-0"
#7	5'-3"
#8	6'-10"

BAR TYPES

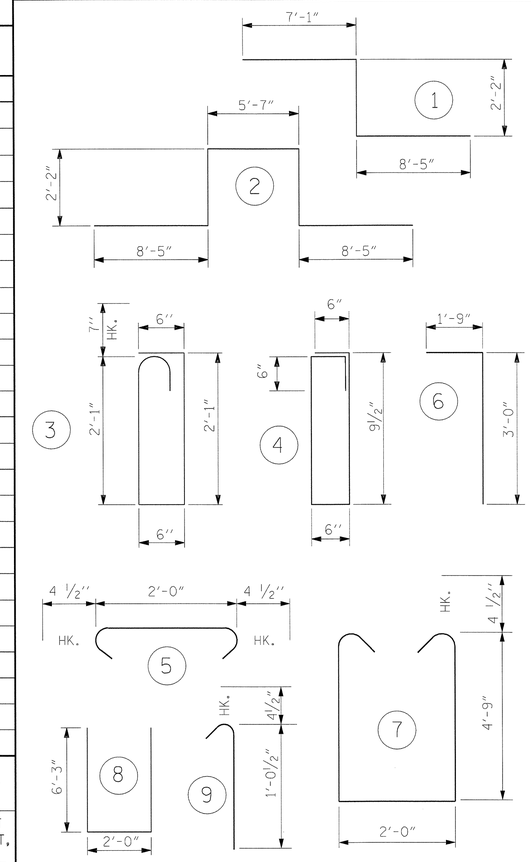

ALL BAR DIMENSIONS ARE OUT TO OUT

SUPERSTRUCTURE BILL OF MATERIAL

	CLASS AA CONCRETE	REINFORCING STEEL	EPOXY COATED REINFORCING STEEL
	(CU. YDS.)	(LBS.)	(LBS.)
TOTAL**	419.6	—	71636

** QUANTITIES FOR BARRIER RAIL ARE NOT INCLUDED

GROOVING BRIDGE FLOORS

APPROACH SLAB @ END BENT 1	929	SQ.FT.
BRIDGE DECK	12610	SQ.FT.
TOTAL	13539	SQ.FT.

CLASS "AA" CONCRETE

POUR NO.	CUBIC YDS
1	110.3
2	145.1
3	155.1
4	9.05
TOTAL	419.6

PROJECT NO. R-2633BB

BRUNSWICK/NEW HANOVER COUNTY

STATION: 353+32.50 -L-

SHEET 1 OF 9

NORTH CAROLINA PROFESSIONAL SEAL 18442 ENGINEER RICHARD LEON BOLLINGER, JR. 5-29-2013

RS&H IMPROVING YOUR WORLD

RS&H Architects-Engineers-Planners, Inc.
8601 Six Forks Road, Suite 260
Raleigh, NC 27615
919-846-6701 FAX 919-846-9080
www.rsandh.com
North Carolina License Nos. 50073 * F-0403 * C-28

STATE OF NORTH CAROLINA
DEPARTMENT OF TRANSPORTATION
RALEIGH

STANDARD
SUPERSTRUCTURE
BILL OF MATERIAL
LEFT LANE
SPANS 1, 2 & 3

REVISIONS						SHEET NO.
NO.	BY:	DATE:	NO.	BY:	DATE:	S-164
1			3			TOTAL SHEETS
2			4			700

STD. NO. BOM2

DRAWN BY : SMK, JML DATE : 08/2012
CHECKED BY : JMR DATE : 04/2013
DESIGN ENGINEER OF RECORD : R. BOLLINGER DATE : 05/2013

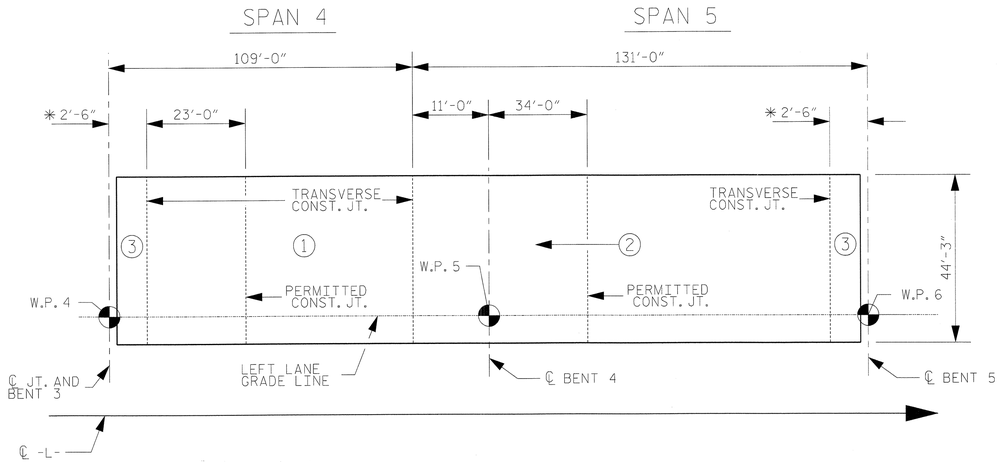

POURING SEQUENCE FOR SPANS 4 & 5

THE SEQUENCE OF POURS SHALL PROCEED AS SHOWN IN ORDER OF ASCENDING NUMBERS.

← (#) INDICATES POUR NUMBER AND DIRECTION OF POUR.

*EXPANSION JOINT SEAL CLOSURE POUR.

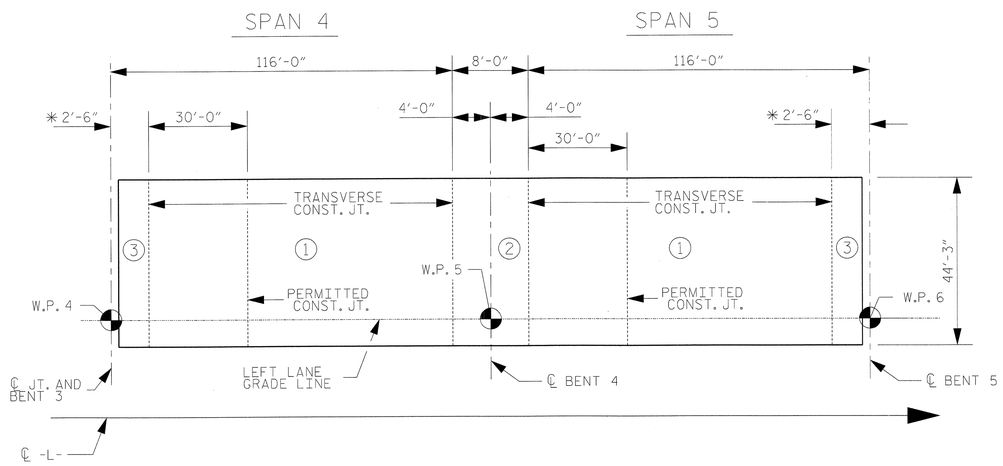

OPTIONAL POURING SEQUENCE FOR SPANS 4 & 5

THE SEQUENCE OF POURS SHALL PROCEED AS SHOWN IN ORDER OF ASCENDING NUMBERS.

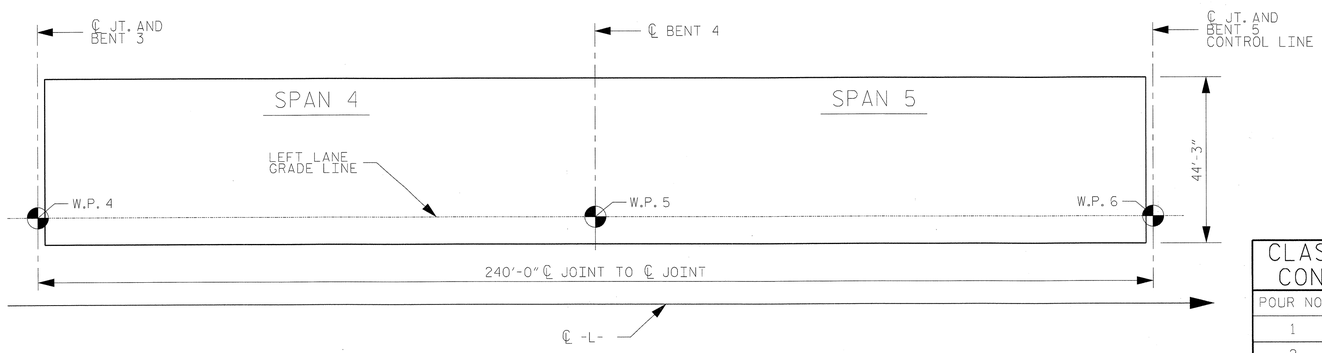

LAYOUT FOR COMPUTING AREA REINFORCED CONCRETE DECK SLAB (SQ. FT. = 10,620)

SPANS 4 & 5

REINFORCING BAR SCHEDULE

BAR	NUMBER	SIZE	TYPE	LENGTH	WEIGHT
A1	479	#5	STR	43'-11"	21941
A2	320	#4	STR	5'-2"	1104
A3	6	#4	1	5'-11"	24
B3	60	#7	STR	60'-0"	7358
B8	360	#4	STR	28'-3"	6794
B9	54	#4	STR	28'-5"	1025
B10	60	#7	STR	27'-3"	3342
B11	57	#7	STR	36'-0"	4194
G1	2	#5	STR	43'-11"	92
J1	42	#4	9	1'-5"	40
U1	12	#4	7	12'-3"	98
U2	21	#4	8	14'-6"	203
K1	8	#8	1	17'-8"	377
K2	8	#8	2	26'-9"	571
K3	12	#4	STR	8'-6"	68
K4	24	#4	STR	10'-7"	170
K5	12	#4	STR	9'-8"	77
K6	6	#4	STR	7'-9"	31
K7	6	#4	STR	6'-2"	25
K8	16	#4	STR	18'-6"	198
S1	42	#5	3	5'-9"	252
S2	12	#5	4	3'-7"	45
S3	195	#4	5	2'-9"	358
S4	42	#4	6	4'-9"	133
S5	6	#4	10	2'-8"	11

REINFORCING STEEL SPLICE LENGTHS

BAR SIZE	SUPERSTRUCTURE EXCEPT APPROACH SLABS, PARAPET, AND BARRIER RAIL UNLESS NOTED OTHERWISE
	EPOXY COATED
#4	2'-0"
#5	2'-6"
#6	3'-0"
#7	5'-3"
#8	6'-10"

BAR TYPES

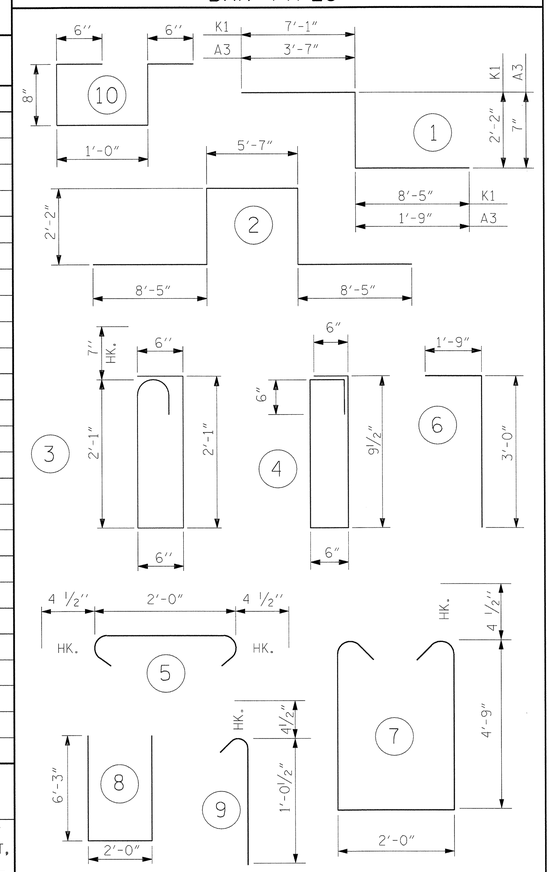

ALL BAR DIMENSIONS ARE OUT TO OUT

SUPERSTRUCTURE BILL OF MATERIAL

	CLASS AA CONCRETE	REINFORCING STEEL	EPOXY COATED REINFORCING STEEL
	(CU. YDS.)	(LBS.)	(LBS.)
TOTALS**	303.8	—	48531

**QUANTITIES FOR BARRIER RAIL ARE NOT INCLUDED

GROOVING BRIDGE FLOORS

BRIDGE DECK	9332	SQ.FT.
TOTAL	9332	SQ.FT.

CLASS "AA" CONCRETE

POUR NO.	CUBIC YDS
1	125.6
2	169.1
3	9.1
TOTAL	303.8

PROJECT NO. R-2633BB

BRUNSWICK/NEW HANOVER COUNTY

STATION: 353+32.50 -L-

SHEET 2 OF 9

NORTH CAROLINA PROFESSIONAL SEAL 18442 ENGINEER RICHARD LEON BOLLINGER JR. 5-29-2013

RS&H IMPROVING YOUR WORLD

RS&H Architects-Engineers-Planners, Inc.
8601 Six Forks Road, Suite 260
Raleigh, NC 27615
919-846-6701 FAX 919-846-9080
www.rsandh.com
North Carolina Licenses Nos. 50073 * F-0483 * C-28

STATE OF NORTH CAROLINA
DEPARTMENT OF TRANSPORTATION
RALEIGH

STANDARD
SUPERSTRUCTURE
BILL OF MATERIAL
LEFT LANE
SPANS 4 & 5

REVISIONS						SHEET NO.
NO.	BY:	DATE:	NO.	BY:	DATE:	S-165
1			3			TOTAL SHEETS
2			4			700

DRAWN BY : SMK, JML DATE : 08/2012
CHECKED BY : JMR DATE : 04/2013
DESIGN ENGINEER OF RECORD : R. BOLLINGER DATE : 05/2013

STD. NO. BOM2

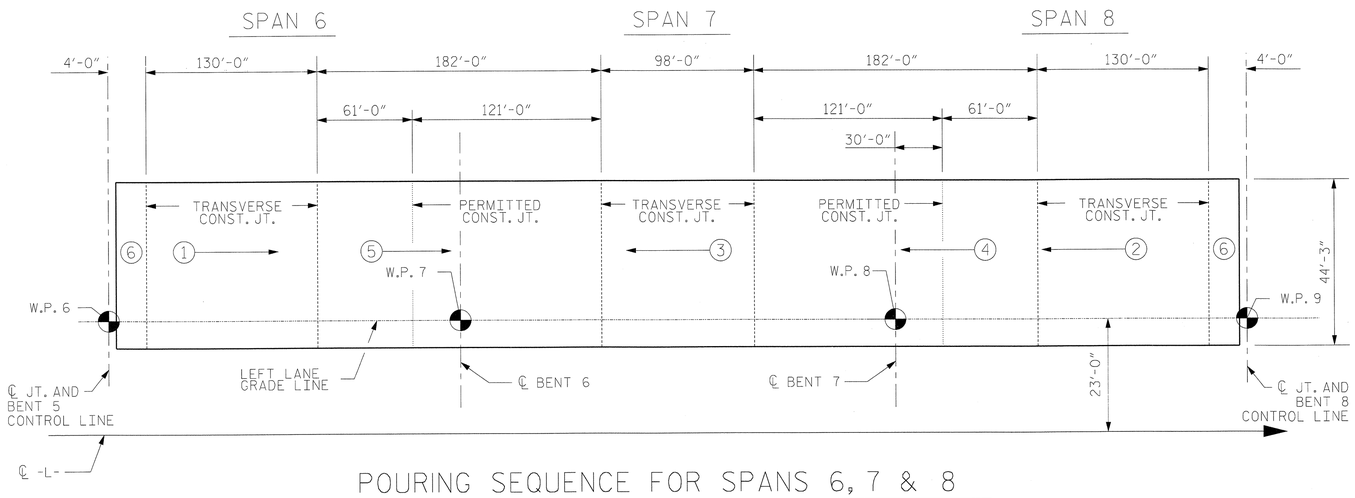

POURING SEQUENCE FOR SPANS 6, 7 & 8

THE SEQUENCE OF POURS SHALL PROCEED AS SHOWN IN ORDER OF ASCENDING NUMBERS.

(#) INDICATES POUR NUMBER AND DIRECTION OF POUR.

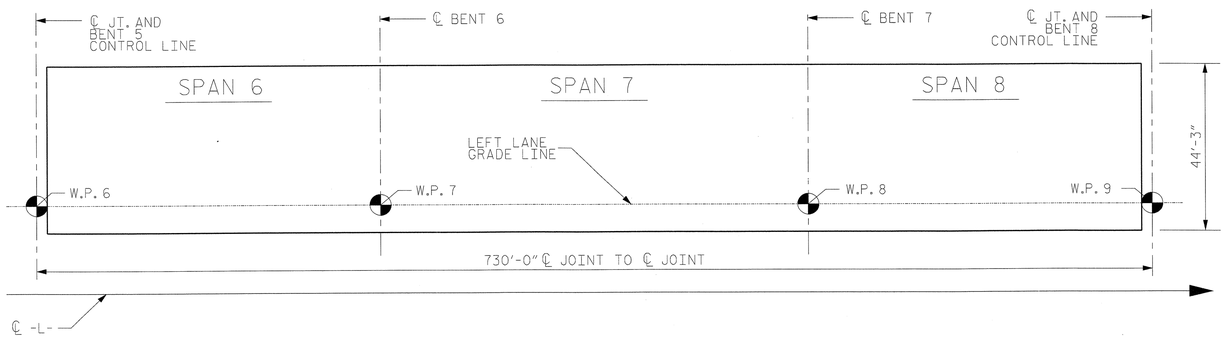

LAYOUT FOR COMPUTING AREA
REINFORCED CONCRETE DECK SLAB (SAND-LIGHTWEIGHT CONCRETE)
(SQ. FT. = 32,303)

SAND-LIGHTWEIGHT CONCRETE	
POUR NO.	CUBIC YDS
1	198.5
2	198.2
3	138.0
4	270.3
5	269.4
6	11.4
TOTAL	1085.8

GROOVING BRIDGE FLOORS		
BRIDGE DECK	28449	SQ.FT.
TOTAL	28449	SQ.FT.

SPANS 6, 7 & 8

REINFORCING BAR SCHEDULE

BAR	NUMBER	SIZE	TYPE	LENGTH	WEIGHT
A1	2502	#5	STR	43'-11"	114604
A3	12	#5	10	5'-11"	74
B3	178	#7	STR	60'-0"	21830
B50	276	#5	STR	48'-4"	13914
B51	712	#7	STR	34'-11"	50815
B52	92	#5	STR	55'-8"	5342
B53	468	#5	STR	59'-0"	28799
K1	18	#5	STR	37'-0"	695
K2	64	#5	STR	5'-11"	395
K3	8	#5	STR	3'-3"	27
K4	16	#5	1	6'-9"	113
K5	88	#5	STR	6'-0"	551
K6	132	#5	STR	11'-3"	1549
K7	32	#5	STR	7'-5"	248
K8	16	#5	STR	3'-1"	51
K9	32	#6	STR	35'-5"	1702
K10	16	#8	STR	35'-5"	1513
K11	16	#8	STR	36'-2"	1545
S1	448	#4	2	1'-8"	499
S2	32	#5	3	17'-3"	576
S3	32	#5	4	13'-0"	434
S4	30	#5	5	9'-5"	295
S5	12	#5	6	5'-5"	68
S6	704	#4	2	1'-7"	745
S7	16	#4	7	21'-3"	227
S8	16	#4	7	23'-0"	246
S9	24	#4	8	29'-6"	473
S10	80	#5	8	19'-10"	1655
S11	32	#5	8	17'-4"	579
S12	384	#4	9	2'-5"	620

REINFORCING STEEL SPLICE LENGTHS

BAR SIZE	SUPERSTRUCTURE EXCEPT APPROACH SLABS, PARAPET, AND BARRIER RAIL UNLESS NOTED OTHERWISE
	EPOXY COATED
#4	2'-6"
#5	3'-1"
#6	3'-9"
#7	5'-5"
#8	6'-6"

BAR TYPES

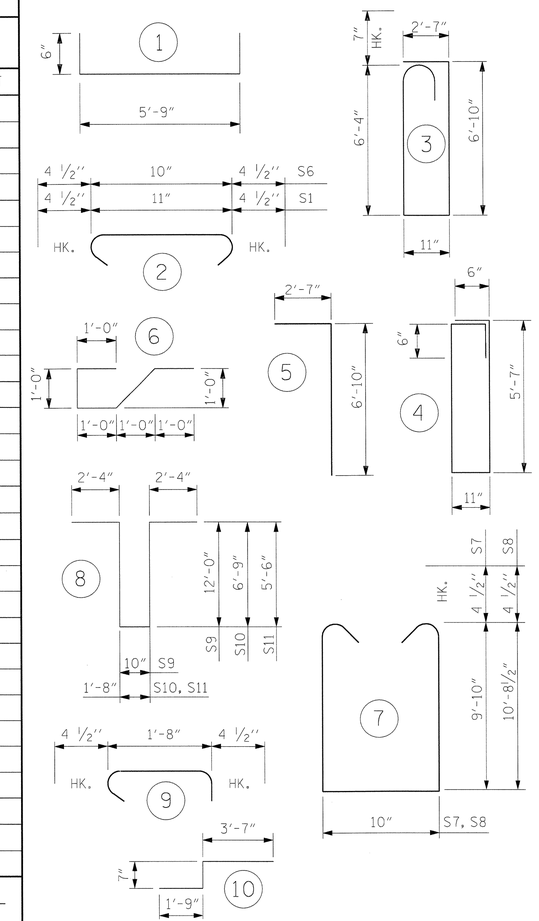

ALL BAR DIMENSIONS ARE OUT TO OUT

SUPERSTRUCTURE BILL OF MATERIAL

	SAND LIGHTWEIGHT CONCRETE	CLASS "AA" CONCRETE	PRESTRESS +6000 CONCRETE	EPOXY COATED REINFORCING STEEL
	(CU. YDS.)	(CU. YDS.)	(CU. YDS.)	(LBS.)
TOTALS**	1085.8	55.2	81.7	250184

** QUANTITIES FOR BARRIER RAIL ARE NOT INCLUDED

PROJECT NO. R-2633BB

BRUNSWICK/NEW HANOVER COUNTY

STATION: 353+32.50 -L-

SHEET 3 OF 9

NORTH CAROLINA PROFESSIONAL SEAL 18442 ENGINEER RICHARD LEON BOWLANDER III
5-24-2013

RS&H IMPROVING YOUR WORLD

RS&H Architects-Engineers-Planners, Inc.
8601 Six Forks Road, Suite 260
Raleigh, NC 27615
919-846-6701 FAX 919-846-9080
www.rsandh.com
North Carolina License Nos. 50072 * F-0493 * C-28

STATE OF NORTH CAROLINA
DEPARTMENT OF TRANSPORTATION
RALEIGH
STANDARD

SUPERSTRUCTURE BILL OF MATERIAL

LEFT LANE
SPANS 6, 7 & 8

REVISIONS							
NO.	BY:	DATE:	NO.	BY:	DATE:		
1			3				
2			4				

SHEET NO. S-166

TOTAL SHEETS 700

STD. NO. BOM2

DRAWN BY : MKO DATE : 08/2012
CHECKED BY : JMR DATE : 4/2013
DESIGN ENGINEER OF RECORD : R. WOODRUFF DATE : 5/2013

5/24/2013
3:56:37 PM

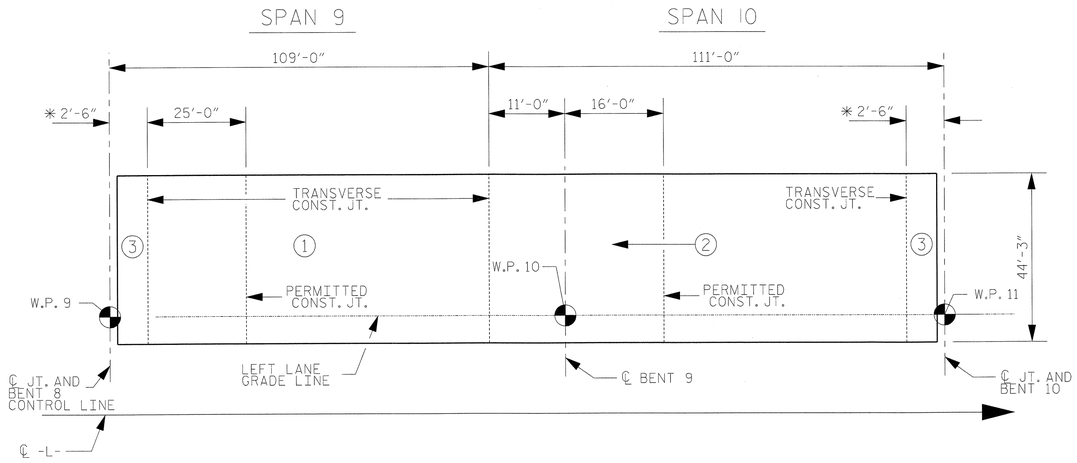

POURING SEQUENCE FOR SPANS 9 & 10

THE SEQUENCE OF POURS SHALL PROCEED AS SHOWN IN ORDER OF ASCENDING NUMBERS.

(#) INDICATES POUR NUMBER AND DIRECTION OF POUR.

* EXPANSION JOINT SEAL CLOSURE POUR.

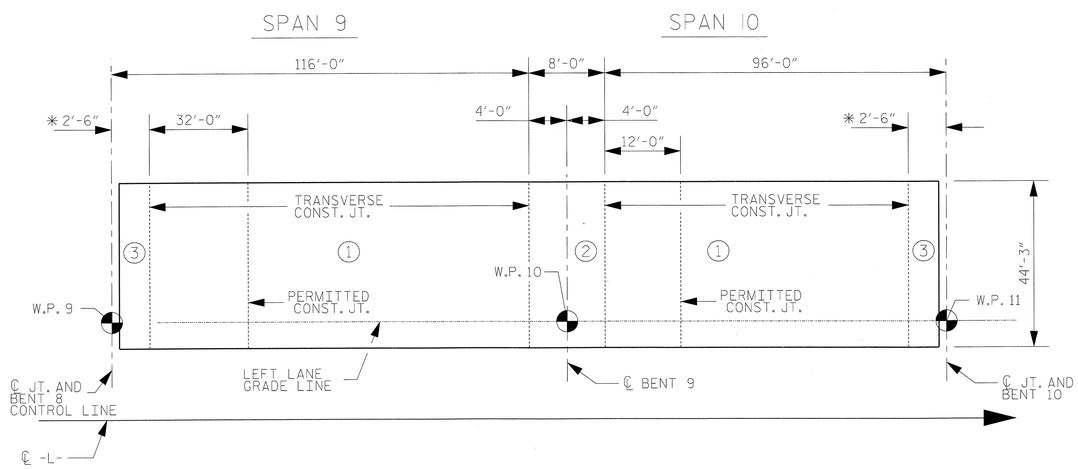

OPTIONAL POURING SEQUENCE FOR SPANS 9 & 10

THE SEQUENCE OF POURS SHALL PROCEED AS SHOWN IN ORDER OF ASCENDING NUMBERS.

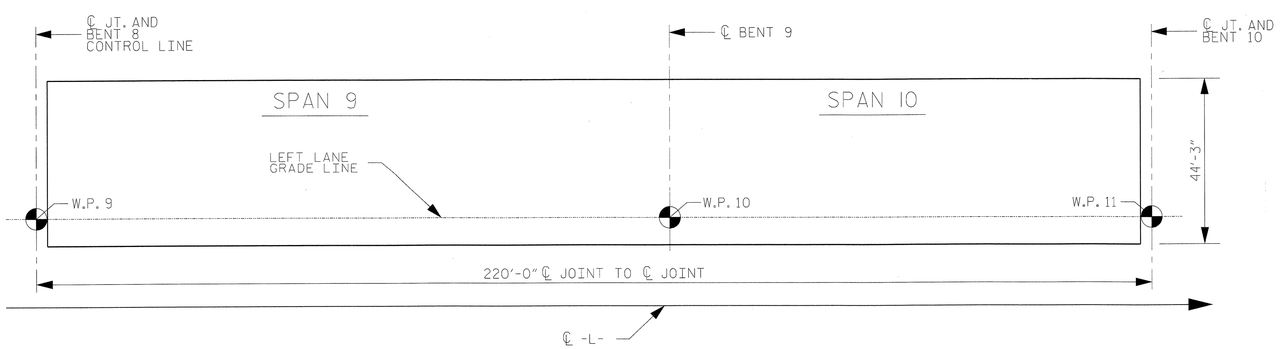

LAYOUT FOR COMPUTING AREA REINFORCED CONCRETE DECK SLAB (SQ. FT. = 9,735)

SPANS 9 & 10

REINFORCING BAR SCHEDULE

BAR	NUMBER	SIZE	TYPE	LENGTH	WEIGHT
A1	439	#5	STR	43'-11"	20108
A2	294	#4	STR	5'-2"	1015
A3	6	#4	1	5'-11"	24
B3	60	#7	STR	60'-0"	7358
B8	180	#4	STR	28'-3"	3397
B110	60	#7	STR	21'-3"	2606
B111	57	#7	STR	33'-0"	3845
B12	48	#4	STR	29'-3"	938
B13	180	#4	STR	23'-8"	2846
G1	2	#5	STR	43'-11"	92
J1	42	#4	9	1'-5"	40
U1	12	#4	7	12'-3"	98
U2	21	#4	8	14'-6"	203
K1	8	#8	1	17'-8"	377
K2	8	#8	2	26'-9"	571
K3	12	#4	STR	8'-6"	68
K4	24	#4	STR	10'-7"	170
K5	12	#4	STR	9'-8"	77
K6	6	#4	STR	7'-9"	31
K7	6	#4	STR	6'-2"	25
K8	16	#4	STR	18'-6"	198
S1	42	#5	3	5'-9"	252
S2	12	#5	4	3'-7"	45
S3	195	#4	5	2'-9"	358
S4	42	#4	6	4'-9"	133
S5	6	#4	10	2'-8"	11

REINFORCING STEEL SPLICE LENGTHS

BAR SIZE	SUPERSTRUCTURE EXCEPT APPROACH SLABS, PARAPET, AND BARRIER RAIL UNLESS NOTED OTHERWISE
	EPOXY COATED
#4	2'-0"
#5	2'-6"
#6	3'-0"
#7	5'-3"
#8	6'-10"

BAR TYPES

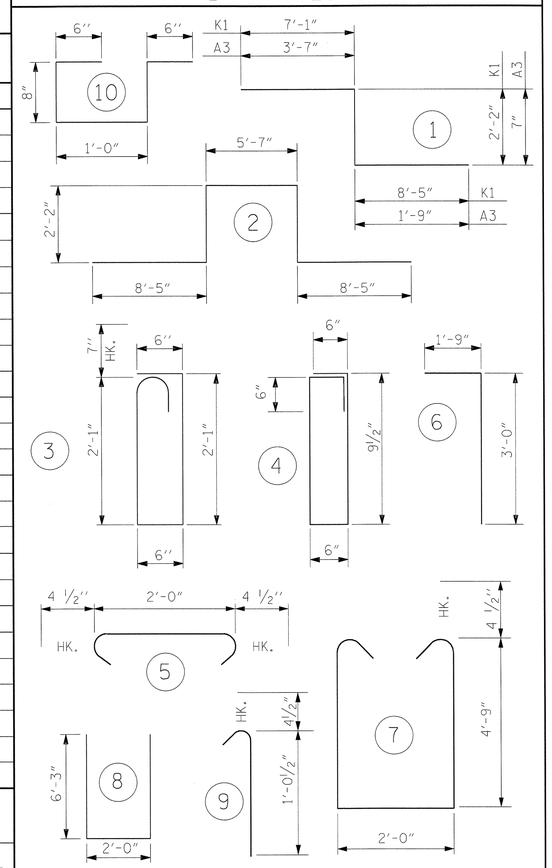

ALL BAR DIMENSIONS ARE OUT TO OUT

SUPERSTRUCTURE BILL OF MATERIAL

	CLASS AA CONCRETE	REINFORCING STEEL	EPOXY COATED REINFORCING STEEL
	(CU. YDS.)	(LBS.)	(LBS.)
TOTALS**	285.7	—	44886

** QUANTITIES FOR BARRIER RAIL ARE NOT INCLUDED

GROOVING BRIDGE FLOORS

BRIDGE DECK	8552	SQ.FT.
TOTAL	8552	SQ.FT.

CLASS "AA" CONCRETE

POUR NO.	CUBIC YDS
1	128.3
2	148.2
3	9.2
TOTAL	285.7

PROJECT NO. R-2633BB

BRUNSWICK/NEW HANOVER COUNTY

STATION: 353+32.50 -L-

SHEET 4 OF 9

NORTH CAROLINA PROFESSIONAL SEAL 18442 ENGINEER RICHARD LEON BOLLINGER, JR.

5-29-2013

RS&H IMPROVING YOUR WORLD

RS&H Architects-Engineers-Planners, Inc.
8601 Six Forks Road, Suite 260
Raleigh, NC 27615
919-846-6701 FAX 919-846-9080
www.rsandh.com
North Carolina License Nos. 50073 * F-0493 * C-28

STATE OF NORTH CAROLINA
DEPARTMENT OF TRANSPORTATION
RALEIGH

STANDARD
SUPERSTRUCTURE
BILL OF MATERIAL
LEFT LANE
SPANS 9 & 10

REVISIONS						SHEET NO.
NO.	BY:	DATE:	NO.	BY:	DATE:	S-167
1			3			TOTAL SHEETS
2			4			700

STD. NO. BOM2

DRAWN BY : SMK, JML DATE : 08/2012
CHECKED BY : JMR DATE : 04/2013
DESIGN ENGINEER OF RECORD : R. BOLLINGER DATE : 05/2013

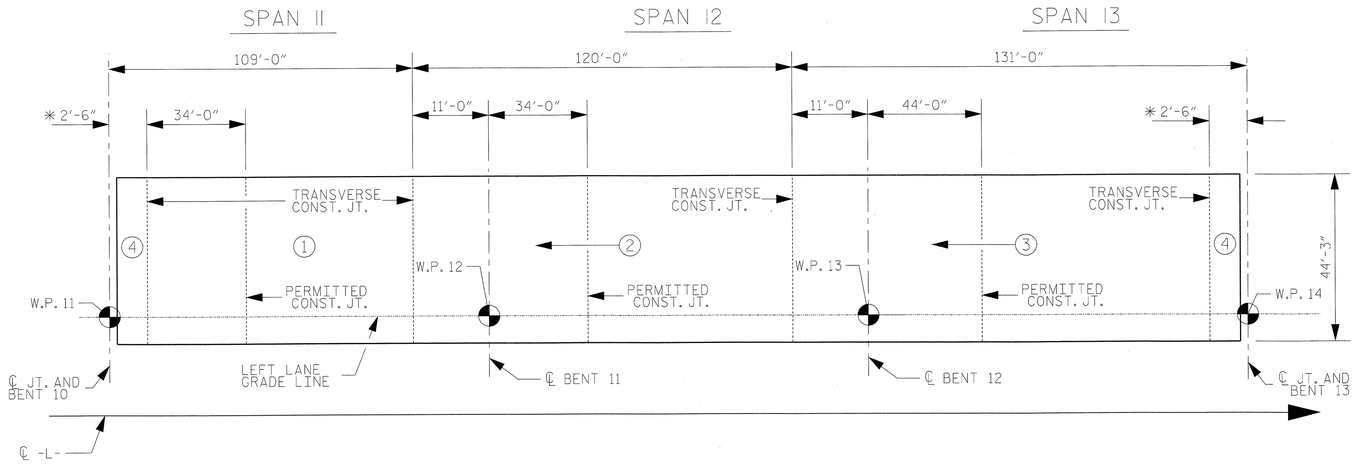

POURING SEQUENCE FOR SPANS 11, 12 & 13

THE SEQUENCE OF POURS SHALL PROCEED AS SHOWN IN ORDER OF ASCENDING NUMBERS.

(#) INDICATES POUR NUMBER AND DIRECTION OF POUR.

* EXPANSION JOINT SEAL CLOSURE POUR.

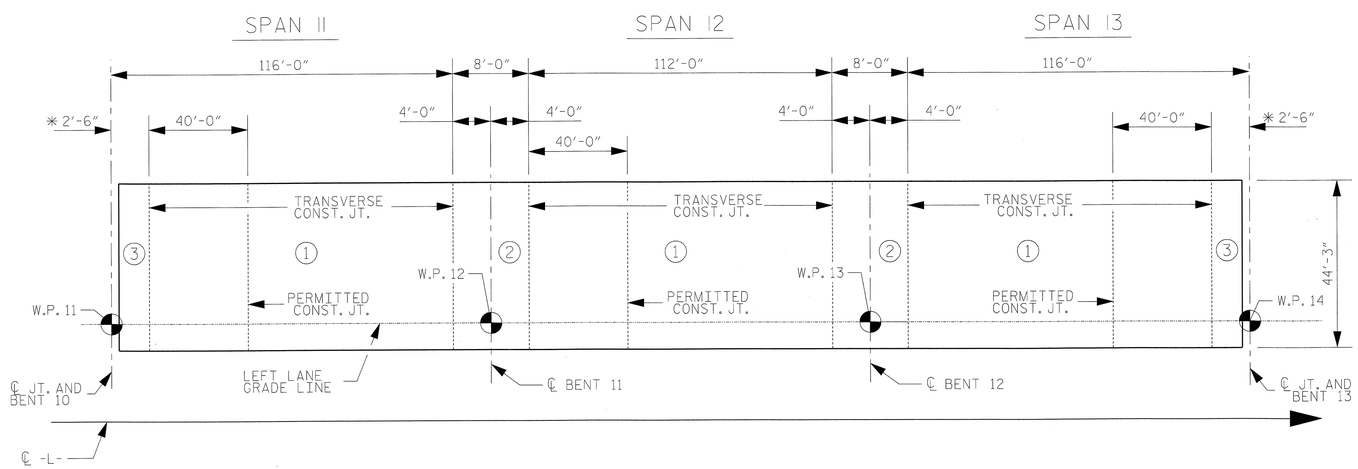

OPTIONAL POURING SEQUENCE FOR SPANS 11, 12 & 13

POUR (2) CANNOT BE STARTED UNTIL BOTH ADJACENT POURS (1) REACH A MINIMUM OF 3000 PSI.

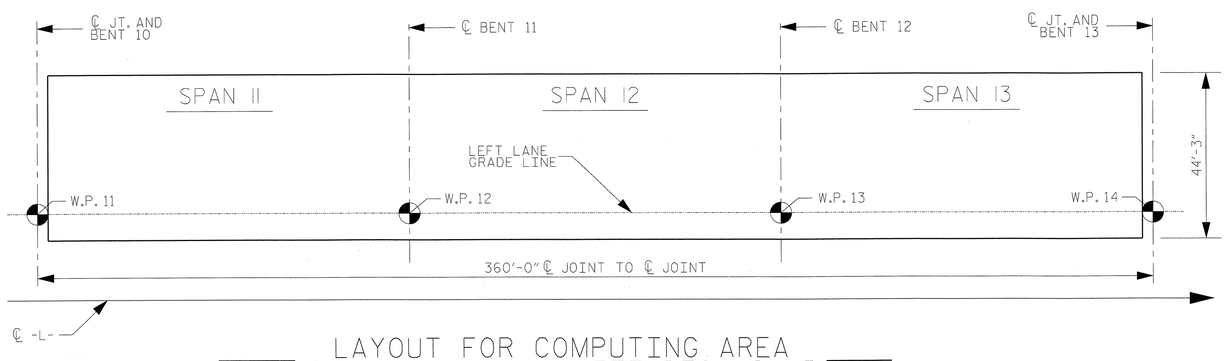

LAYOUT FOR COMPUTING AREA
REINFORCED CONCRETE DECK SLAB
(SQ. FT. = 15,930)

DRAWN BY :	SMK, JML	DATE :	08/2012
CHECKED BY :	JMR	DATE :	04/2013
DESIGN ENGINEER OF RECORD :	R. BOLLINGER	DATE :	05/2013

SPANS 11, 12 & 13
(SPANS 14, 15 & 16 SIMILAR)

REINFORCING BAR SCHEDULE

BAR	NUMBER	SIZE	TYPE	LENGTH	WEIGHT
A1	719	#5	STR	43'-11"	32934
A2	480	#4	STR	5'-2"	1657
B3	120	#7	STR	60'-0"	14717
B8	360	#4	STR	28'-3"	6794
B10	120	#7	STR	27'-3"	6684
B11	114	#7	STR	36'-0"	8389
B14	78	#4	STR	29'-6"	1537
B15	120	#4	STR	22'-0"	1764
G1	2	#5	STR	43'-11"	92
J1	84	#4	9	1'-5"	79
U1	24	#4	7	12'-3"	196
U2	42	#4	8	14'-6"	407
K1	8	#8	1	17'-8"	377
K2	8	#8	2	26'-9"	571
K3	12	#4	STR	8'-6"	68
K4	48	#4	STR	10'-7"	339
K5	24	#4	STR	9'-8"	155
K6	12	#4	STR	7'-9"	62
K7	12	#4	STR	6'-2"	49
K8	32	#4	STR	18'-6"	395
S1	42	#5	3	5'-9"	252
S2	12	#5	4	3'-3"	41
S3	390	#4	5	2'-9"	716
S4	84	#4	6	4'-9"	267

REINFORCING STEEL SPLICE LENGTHS

BAR SIZE	SUPERSTRUCTURE EXCEPT APPROACH SLABS, PARAPET, AND BARRIER RAIL UNLESS NOTED OTHERWISE
	EPOXY COATED
#4	2'-0"
#5	2'-6"
#6	3'-0"
#7	5'-3"
#8	6'-10"

BAR TYPES

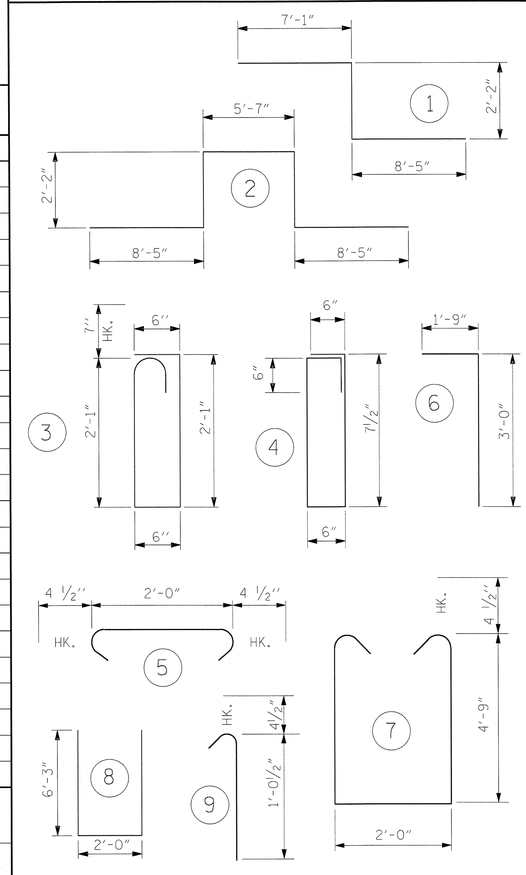

ALL BAR DIMENSIONS ARE OUT TO OUT

SUPERSTRUCTURE BILL OF MATERIAL

	CLASS AA CONCRETE	REINFORCING STEEL	EPOXY COATED REINFORCING STEEL
	(CU. YDS.)	(LBS.)	(LBS.)
TOTALS**	507.0	—	78542

** QUANTITIES FOR BARRIER RAIL ARE NOT INCLUDED

GROOVING BRIDGE FLOORS

BRIDGE DECK	14014	SQ.FT.
TOTAL	14014	SQ.FT.

CLASS "AA" CONCRETE

POUR NO.	CUBIC YDS
1	138.7
2	173.8
3	184.8
4	9.7
TOTAL	507.0

PROJECT NO. R-2633BB

BRUNSWICK/NEW HANOVER COUNTY

STATION: 353+32.50 -L-

SHEET 5 OF 9

NORTH CAROLINA PROFESSIONAL SEAL 18442 ENGINEER RICHARD LEON BOLLINGER III
5-29-2013

RS&H IMPROVING YOUR WORLD

RS&H Architects-Engineers-Planners, Inc.
8601 Six Forks Road, Suite 260
Raleigh, NC 27615
919-846-5701 FAX 919-846-9080
www.rsandh.com
North Carolina License Nos. 50072 * F-0493 * C-28

STATE OF NORTH CAROLINA
DEPARTMENT OF TRANSPORTATION
RALEIGH

STANDARD
SUPERSTRUCTURE
BILL OF MATERIAL
LEFT LANE
SPANS 11, 12 & 13
(SPANS 14, 15 & 16 SIMILAR)

REVISIONS						SHEET NO.
NO.	BY:	DATE:	NO.	BY:	DATE:	S-168
1			3			TOTAL SHEETS
2			4			700

STD. NO. BOM2

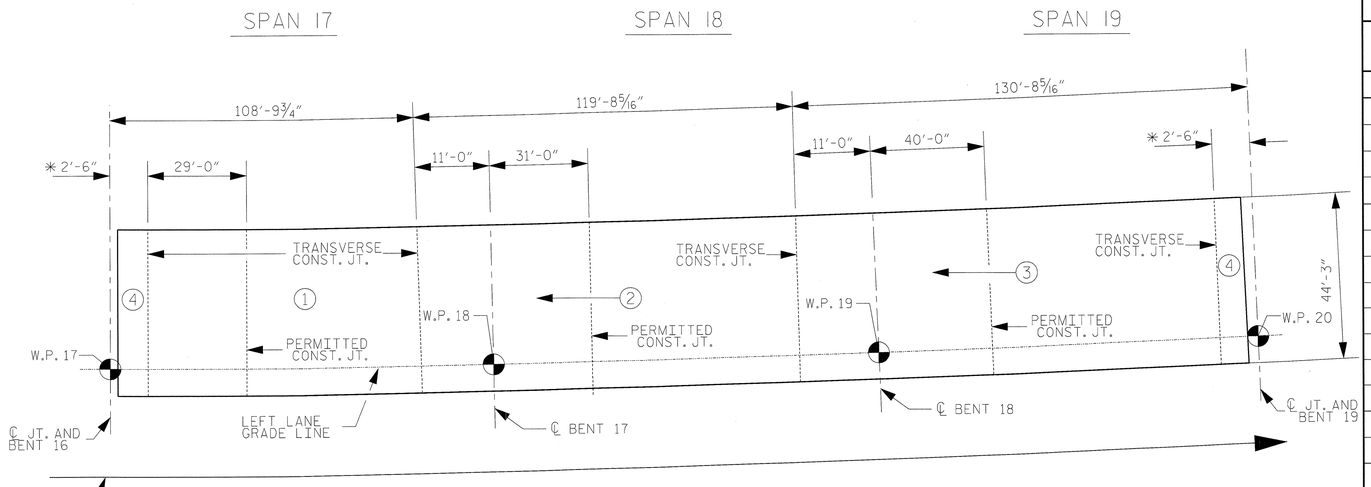

POURING SEQUENCE FOR SPANS 17, 18 & 19

THE SEQUENCE OF POURS SHALL PROCEED AS SHOWN IN ORDER OF ASCENDING NUMBERS.

← (#) INDICATES POUR NUMBER AND DIRECTION OF POUR.

* EXPANSION JOINT SEAL CLOSURE POUR.

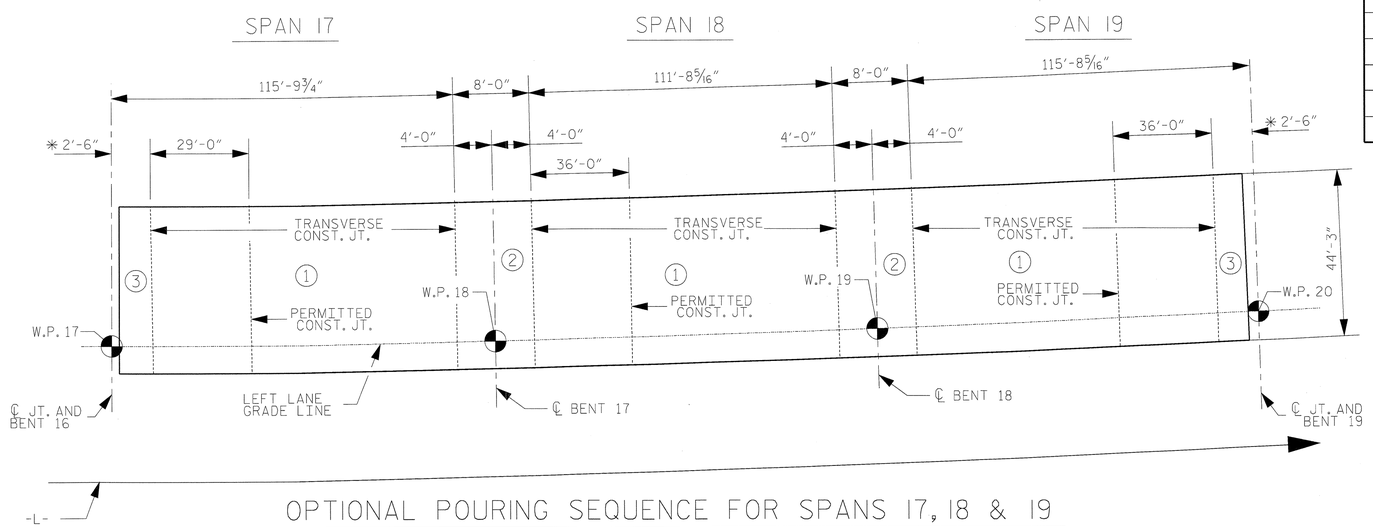

OPTIONAL POURING SEQUENCE FOR SPANS 17, 18 & 19

POUR ② CANNOT BE STARTED UNTIL BOTH ADJACENT POURS ① REACH A MINIMUM OF 3000 PSI.

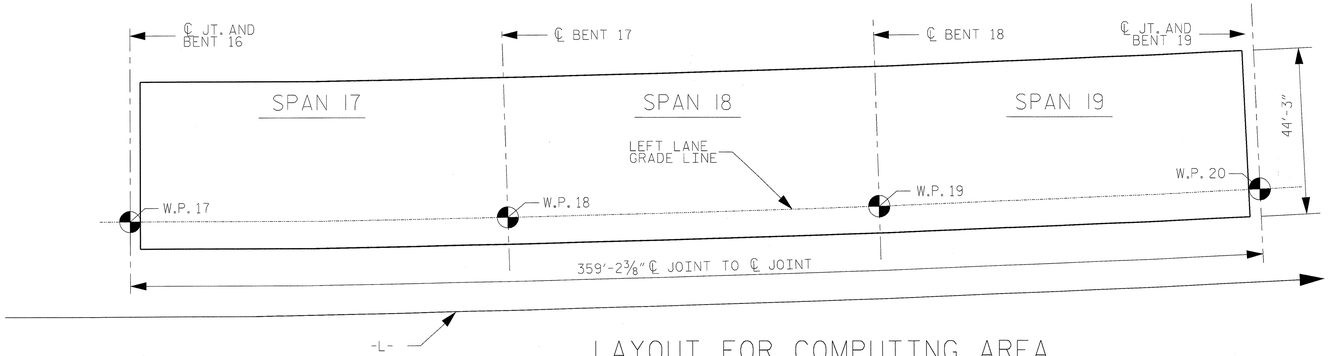

LAYOUT FOR COMPUTING AREA REINFORCED CONCRETE DECK SLAB (SQ. FT. = 15,871)

SPANS 17, 18 & 19

REINFORCING BAR SCHEDULE

BAR	NUMBER	SIZE	TYPE	LENGTH	WEIGHT
A1	718	#5	STR	43'-11"	32888
A2	480	#4	STR	5'-2"	1657
B3	120	#7	STR	60'-0"	14717
B8	360	#4	STR	28'-3"	6794
B10	120	#7	STR	27'-3"	6684
B11	114	#7	STR	36'-0"	8389
B14	78	#4	STR	29'-6"	1537
B15	120	#4	STR	22'-0"	1764
G1	2	#5	STR	43'-11"	92
J1	84	#4	9	1'-5"	79
U1	24	#4	7	12'-3"	196
U2	42	#4	8	14'-6"	407
K1	8	#8	1	17'-8"	377
K2	8	#8	2	26'-9"	571
K3	12	#4	STR	8'-6"	68
K4	48	#4	STR	10'-7"	339
K5	24	#4	STR	9'-8"	155
K6	12	#4	STR	7'-9"	62
K7	12	#4	STR	6'-2"	49
K8	32	#4	STR	18'-6"	395
S1	42	#5	3	5'-9"	252
S2	12	#5	4	3'-8"	46
S3	390	#4	5	2'-9"	716
S4	84	#4	6	4'-9"	267

REINFORCING STEEL SPLICE LENGTHS

BAR SIZE	SUPERSTRUCTURE EXCEPT APPROACH SLABS, PARAPET, AND BARRIER RAIL UNLESS NOTED OTHERWISE
	EPOXY COATED
#4	2'-0"
#5	2'-6"
#6	3'-0"
#7	5'-3"
#8	6'-10"

BAR TYPES

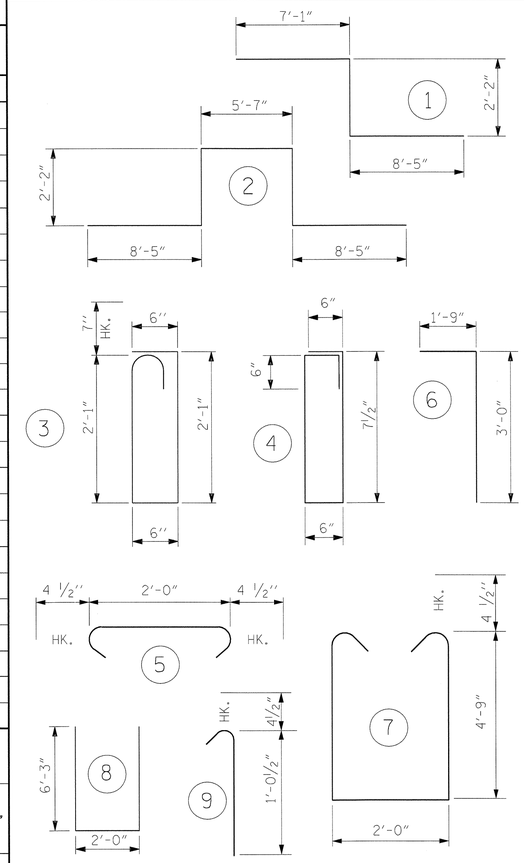

ALL BAR DIMENSIONS ARE OUT TO OUT

SUPERSTRUCTURE BILL OF MATERIAL

	CLASS AA CONCRETE	REINFORCING STEEL	EPOXY COATED REINFORCING STEEL
	(CU. YDS.)	(LBS.)	(LBS.)
TOTALS**	495.5	—	78495

** QUANTITIES FOR BARRIER RAIL ARE NOT INCLUDED

GROOVING BRIDGE FLOORS

BRIDGE DECK	13982	SQ.FT.
TOTAL	13982	SQ.FT.

CLASS "AA" CONCRETE

POUR NO.	CUBIC YDS
1	135.4
2	169.9
3	180.7
4	9.5
TOTAL	495.5

PROJECT NO. R-2633BB

BRUNSWICK/NEW HANOVER COUNTY

STATION: 353+32.50 -L-

SHEET 6 OF 9

NORTH CAROLINA PROFESSIONAL SEAL 18442 ENGINEER RICHARD LEON BOLLINGER III
5-29-2013

RS&H IMPROVING YOUR WORLD

RS&H Architects-Engineers-Planners, Inc.
8601 Six Forks Road, Suite 260
Raleigh, NC 27615
919-846-6701 FAX 919-846-0080
www.rsandh.com
North Carolina License Nos. 50073 * F-0493 * C-28

STATE OF NORTH CAROLINA
DEPARTMENT OF TRANSPORTATION
RALEIGH

STANDARD
SUPERSTRUCTURE BILL OF MATERIAL
LEFT LANE
SPANS 17, 18 & 19

REVISIONS							SHEET NO.
NO.	BY:	DATE:	NO.	BY:	DATE:		S-169
1			3				TOTAL SHEETS
2			4				700

DRAWN BY :	SMK, JML	DATE :	08/2012
CHECKED BY :	JMR	DATE :	04/2013
DESIGN ENGINEER OF RECORD :	R. BOLLINGER	DATE :	05/2013

STD. NO. BOM2

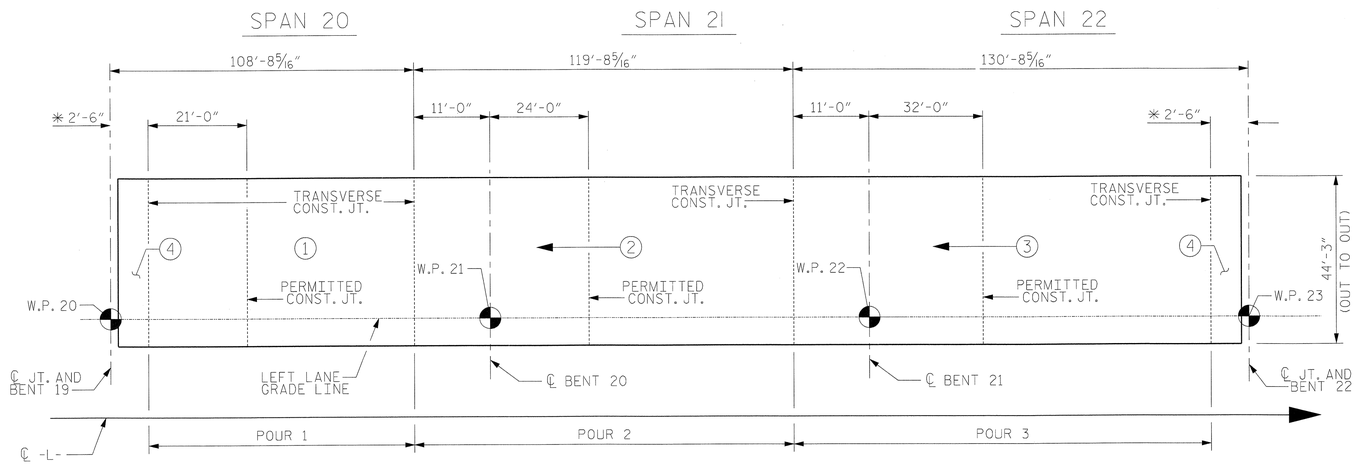

POURING SEQUENCE FOR SPANS 20, 21 & 22

THE SEQUENCE OF POURS SHALL PROCEED AS SHOWN IN ORDER OF ASCENDING NUMBERS.

← (#) INDICATES POUR NUMBER AND DIRECTION OF POUR.

* EXPANSION JOINT SEAL CLOSURE POUR

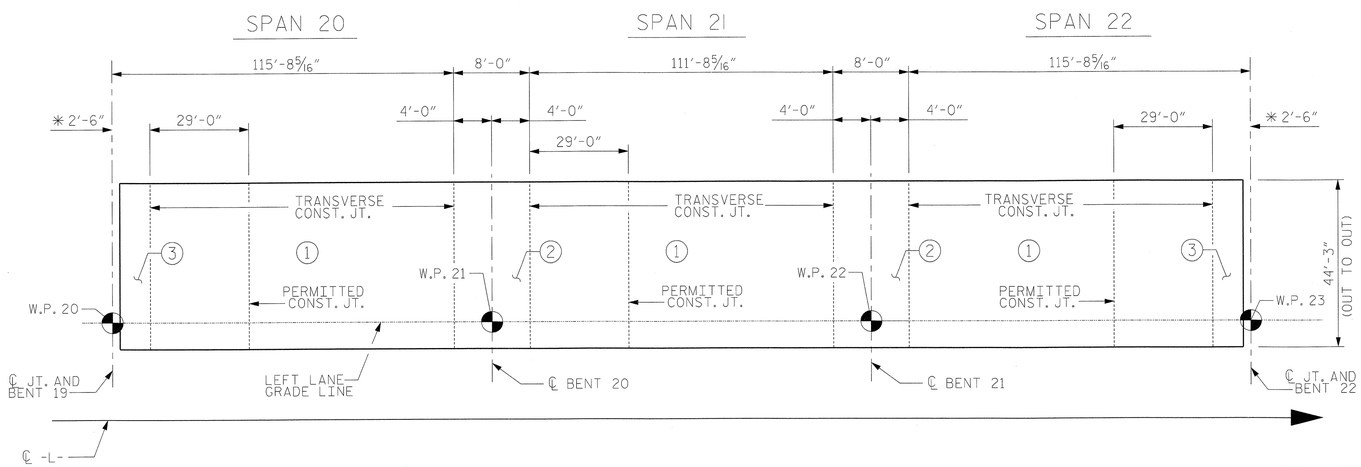

OPTIONAL POURING SEQUENCE FOR SPANS 20, 21 & 22

POUR ② CANNOT BE STARTED UNTIL BOTH ADJACENT POURS ① REACH A MINIMUM OF 3000 PSI.

SPANS 20, 21 & 22

(SPANS 23-25 TO 35-37 AND 41-43 TO 53-55 SIMILAR)

LEFT LANE

REINFORCING BAR SCHEDULE

BAR	NUMBER	SIZE	TYPE	LENGTH	WEIGHT
A1	718	#5	STR	43'-11"	32888
A2	480	#4	STR	5'-2"	1657
B101	360	#4	STR	28'-3"	6794
B102	120	#4	STR	22'-0"	1764
B103	120	#7	STR	60'-0"	14717
B104	114	#7	STR	36'-0"	8389
B105	120	#7	STR	27'-3"	6684
B106	78	#4	STR	29'-6"	1537
G1	2	#5	STR	43'-11"	92
J1	84	#4	9	1'-5"	79
U1	24	#4	7	12'-3"	196
U2	42	#4	8	14'-6"	407
K1	8	#8	1	17'-8"	377
K2	8	#8	2	26'-9"	571
K3	12	#4	STR	8'-6"	68
K4	48	#4	STR	10'-7"	339
K5	24	#4	STR	9'-8"	155
K6	12	#4	STR	7'-9"	62
K7	12	#4	STR	6'-2"	49
K8	32	#4	STR	18'-6"	395
S1	42	#5	3	5'-9"	252
S2	12	#5	4	3'-7"	45
S3	390	#4	5	2'-9"	716
S4	84	#4	6	4'-9"	267

BAR TYPES

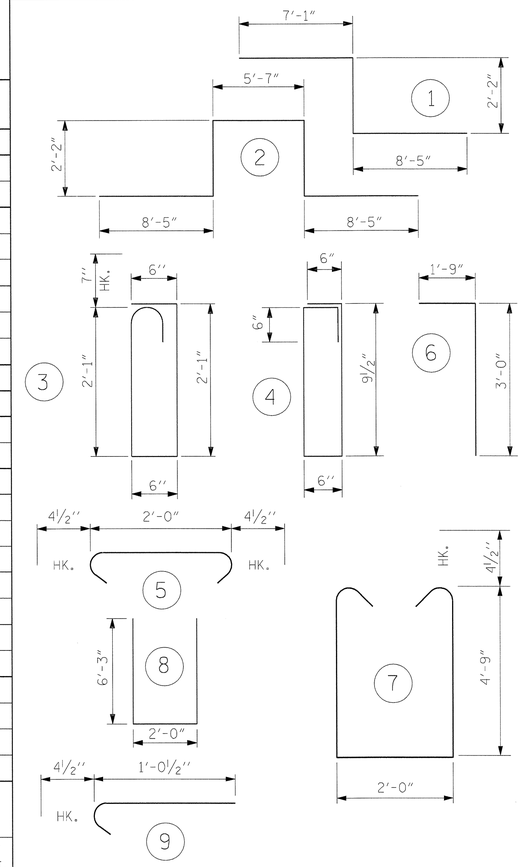

ALL BAR DIMENSIONS ARE OUT TO OUT

REINFORCING STEEL SPLICE LENGTHS

BAR SIZE	SUPERSTRUCTURE EXCEPT APPROACH SLABS, PARAPET, AND BARRIER RAIL — EPOXY COATED
#4	2'-0"
#5	2'-6"
#6	3'-0"
#7	5'-3"
#8	6'-10"

SUPERSTRUCTURE BILL OF MATERIAL

	CLASS AA CONCRETE	EPOXY COATED REINFORCING STEEL
LEFT LANE	(CU. YDS.)	(LBS.)
TOTALS*	457.6	78,500

*QUANTITIES FOR BARRIER RAIL ARE NOT INCLUDED

GROOVING BRIDGE FLOORS

BRIDGE DECK	13,942 SQ.FT.
TOTAL	13,942 SQ.FT.

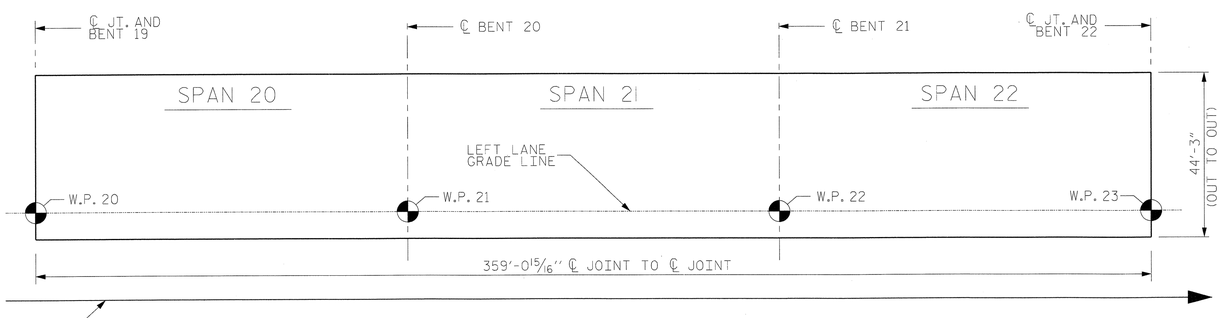

LAYOUT FOR COMPUTING AREA REINFORCED CONCRETE DECK SLAB

(SQ. FT. = 15,863)

CLASS "AA" CONCRETE

POUR No.	CUBIC YDS
1	122.5
2	157.9
3	167.7
4	9.5
TOTAL	456.7

PROJECT NO. R-2633BB

BRUNSWICK/NEW HANOVER COUNTY

STATION: 353+32.50 -L-

SHEET 7 OF 9

STATE OF NORTH CAROLINA
DEPARTMENT OF TRANSPORTATION
RALEIGH

SUPERSTRUCTURE
BILL OF MATERIAL
SPANS 20, 21 & 22
(SPANS 23-25 TO 35-37 AND 41-43 TO 53-55 SIMILAR)
LEFT LANE

NORTH CAROLINA PROFESSIONAL SEAL 22072 ENGINEER JOHN ARTHUR DILWORTH
5-29-13

WETHERILL ENGINEERING
TRANSPORTATION PLANNING/DESIGN
BRIDGE/STRUCTURE DESIGN
CIVIL/SITE DESIGN - GIS/GPS
CONSTRUCTION OBSERVATION
559 Jones Franklin Rd. Suite 164
Raleigh, N.C. 27606
Bus: 919 851 8077
Fax: 919 851 8107
LICENSE NO. F-0377

REVISIONS							
NO.	BY:	DATE:	NO.	BY:	DATE:	SHEET NO.	
1			3			S-170	
2			4			TOTAL SHEETS	
						700	

DRAWN BY :	JMB	DATE :	9/2012
CHECKED BY :	J. DILWORTH	DATE :	9/2012
DESIGN ENGINEER OF RECORD :	J. DILWORTH	DATE :	5/2013

FILE: $FILE$
MODEL: $MODELNAME$
PLOT DRV: $PLTDRVS$
DATE/TIME: $DATE$ $TIME$

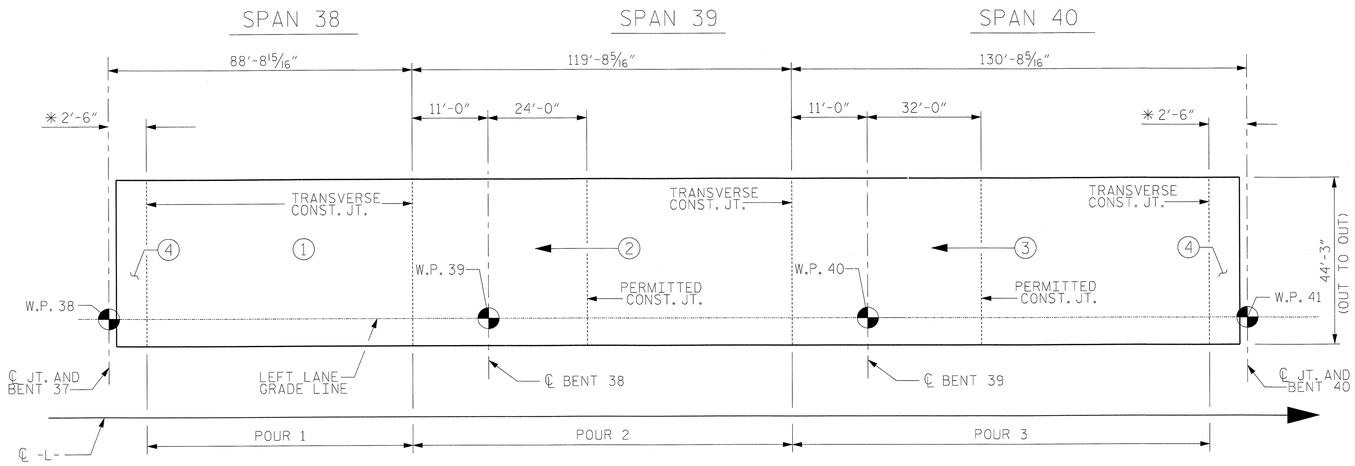

POURING SEQUENCE FOR SPANS 38, 39 & 40

THE SEQUENCE OF POURS SHALL PROCEED AS SHOWN IN ORDER OF ASCENDING NUMBERS.

← (#) INDICATES POUR NUMBER AND DIRECTION OF POUR.

*EXPANSION JOINT SEAL CLOSURE POUR

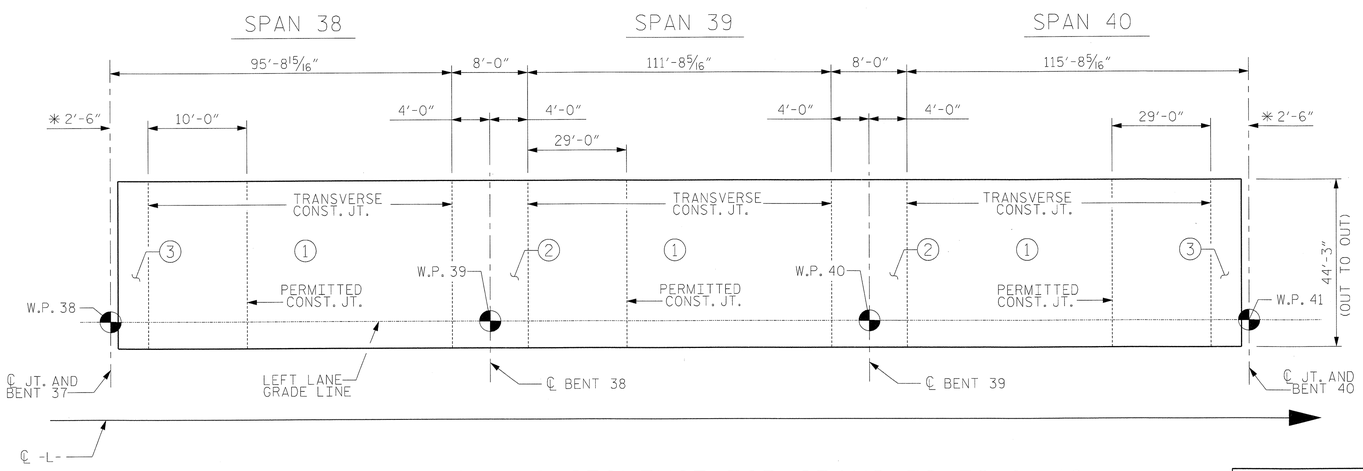

OPTIONAL POURING SEQUENCE FOR SPANS 38, 39 & 40

POUR ② CANNOT BE STARTED UNTIL BOTH ADJACENT POURS ① REACH A MINIMUM OF 3000 PSI.

SPANS 38, 39 & 40

LEFT LANE

REINFORCING BAR SCHEDULE

BAR	NUMBER	SIZE	TYPE	LENGTH	WEIGHT
A1	678	#5	STR	43'-11"	31056
A2	452	#4	STR	5'-2"	1560
B101	180	#4	STR	28'-3"	3397
B102	120	#4	STR	21'-11"	1757
B103	120	#7	STR	60'-0"	14717
B104	57	#7	STR	36'-0"	4194
B105	60	#7	STR	27'-3"	3342
B107	180	#4	STR	23'-7"	2836
B108	57	#7	STR	33'-0"	3845
B109	60	#7	STR	21'-3"	2606
B110	78	#4	STR	27'-11"	1455
G1	2	#5	STR	43'-11"	92
J1	84	#4	9	1'-5"	79
U1	24	#4	7	12'-3"	196
U2	42	#4	8	14'-6"	407
K1	8	#8	1	17'-8"	377
K2	8	#8	2	26'-9"	571
K3	12	#4	STR	8'-6"	68
K4	48	#4	STR	10'-7"	339
K5	24	#4	STR	9'-8"	155
K6	12	#4	STR	7'-9"	62
K7	12	#4	STR	6'-2"	49
K8	32	#4	STR	18'-6"	395
S1	42	#5	3	5'-9"	252
S2	12	#5	4	3'-7"	45
S3	390	#4	5	2'-9"	716
S4	84	#4	6	4'-9"	267

BAR TYPES

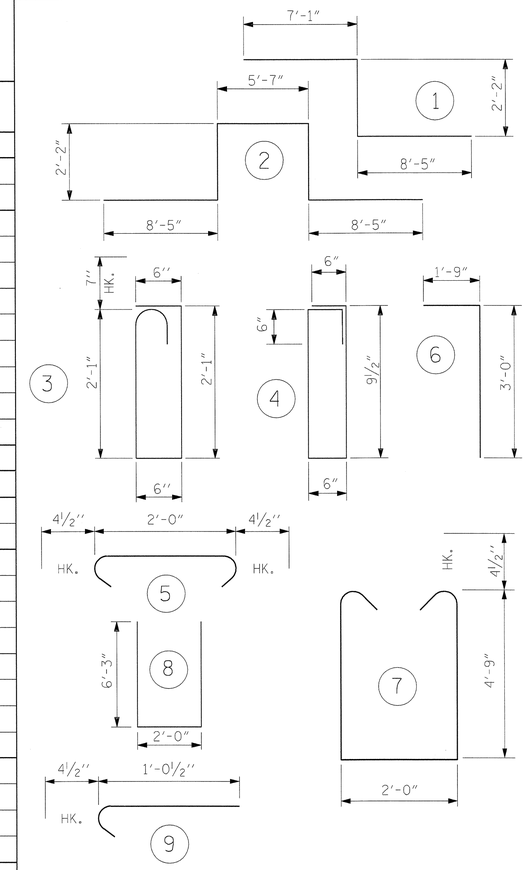

ALL BAR DIMENSIONS ARE OUT TO OUT

REINFORCING STEEL SPLICE LENGTHS

BAR SIZE	SUPERSTRUCTURE EXCEPT APPROACH SLABS, PARAPET, AND BARRIER RAIL
	EPOXY COATED
#4	2'-0"
#5	2'-6"
#6	3'-0"
#7	5'-3"
#8	6'-10"

SUPERSTRUCTURE BILL OF MATERIAL

LEFT LANE	CLASS AA CONCRETE	EPOXY COATED REINFORCING STEEL
	(CU. YDS.)	(LBS.)
TOTALS*	438.5	74,835

*QUANTITIES FOR BARRIER RAIL ARE NOT INCLUDED

GROOVING BRIDGE FLOORS

BRIDGE DECK	13,165	SQ.FT.
TOTAL	13,165	SQ.FT.

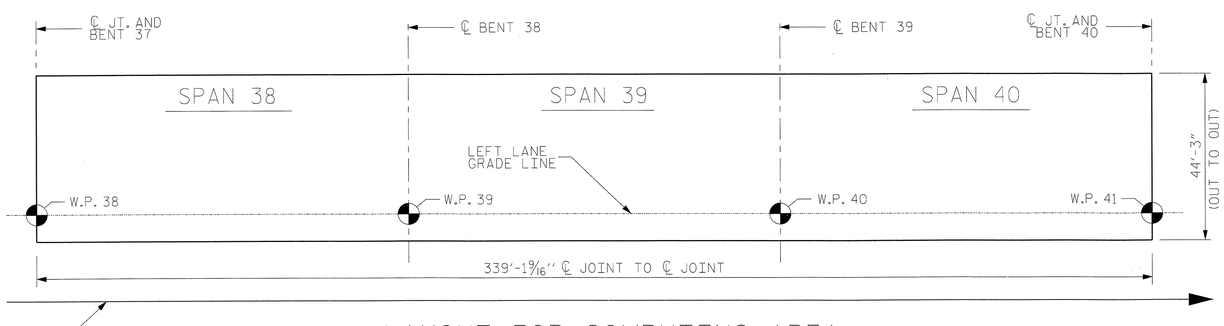

LAYOUT FOR COMPUTING AREA REINFORCED CONCRETE DECK SLAB

(SQ. FT. = 14,981)

CLASS "AA" CONCRETE

POUR No.	CUBIC YDS
1	100.5
2	159.3
3	169.2
4	9.5
TOTAL	438.5

PROJECT NO. R-2633BB

BRUNSWICK/NEW HANOVER COUNTY

STATION: 353+32.50 -L-

SHEET 8 OF 9

DRAWN BY : JMB	DATE : 9/2012		
CHECKED BY : J. DILWORTH	DATE : 9/2012		
DESIGN ENGINEER OF RECORD : J. DILWORTH	DATE : 5/2013		

NORTH CAROLINA PROFESSIONAL SEAL 22072 ENGINEER JOHN ARTHUR DILWORTH

5-29-13

WETHERILL ENGINEERING

TRANSPORTATION PLANNING/DESIGN
BRIDGE/STRUCTURE DESIGN
CIVIL/SITE DESIGN - GIS/GPS
CONSTRUCTION OBSERVATION

559 Jones Franklin Rd. Suite 164
Raleigh, N.C. 27606
Bus: 919 851 8077
Fax: 919 851 8107
LICENSE NO. F-0377

STATE OF NORTH CAROLINA
DEPARTMENT OF TRANSPORTATION
RALEIGH

SUPERSTRUCTURE
BILL OF MATERIAL
SPANS 38, 39 & 40
LEFT LANE

REVISIONS						SHEET NO.
NO.	BY:	DATE:	NO.	BY:	DATE:	S-171
1			3			TOTAL SHEETS
2			4			700

FILE: $FILE$
MODEL: $MODELNAME$
PLOT DRV: $PLTDRVS$
DATE/TIME: $DATE$ $TIME$

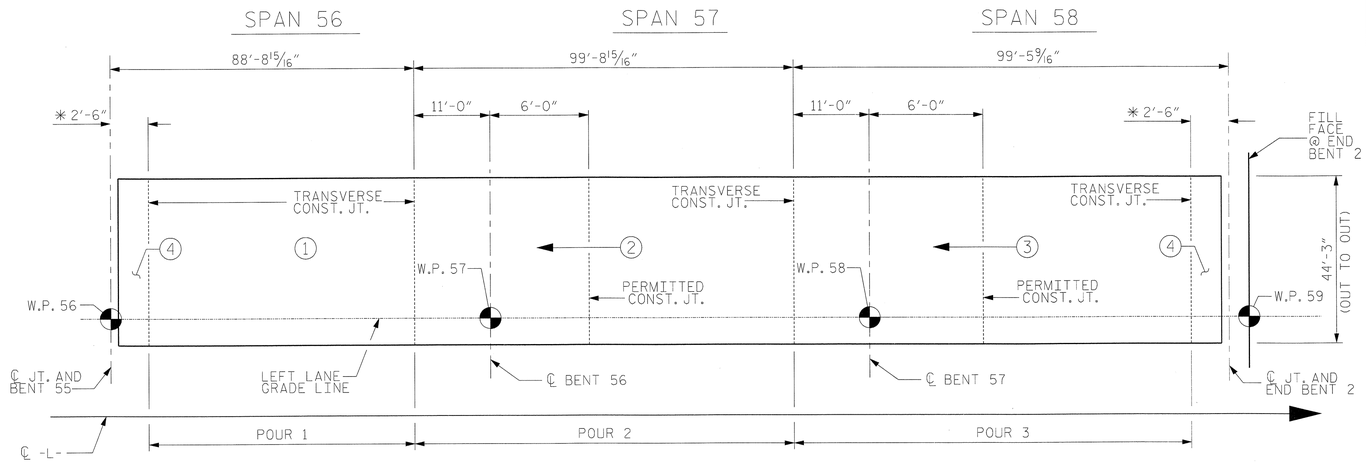

POURING SEQUENCE FOR SPANS 56, 57 & 58

THE SEQUENCE OF POURS SHALL PROCEED AS SHOWN IN ORDER OF ASCENDING NUMBERS.

← (#) INDICATES POUR NUMBER AND DIRECTION OF POUR.

* EXPANSION JOINT SEAL CLOSURE POUR

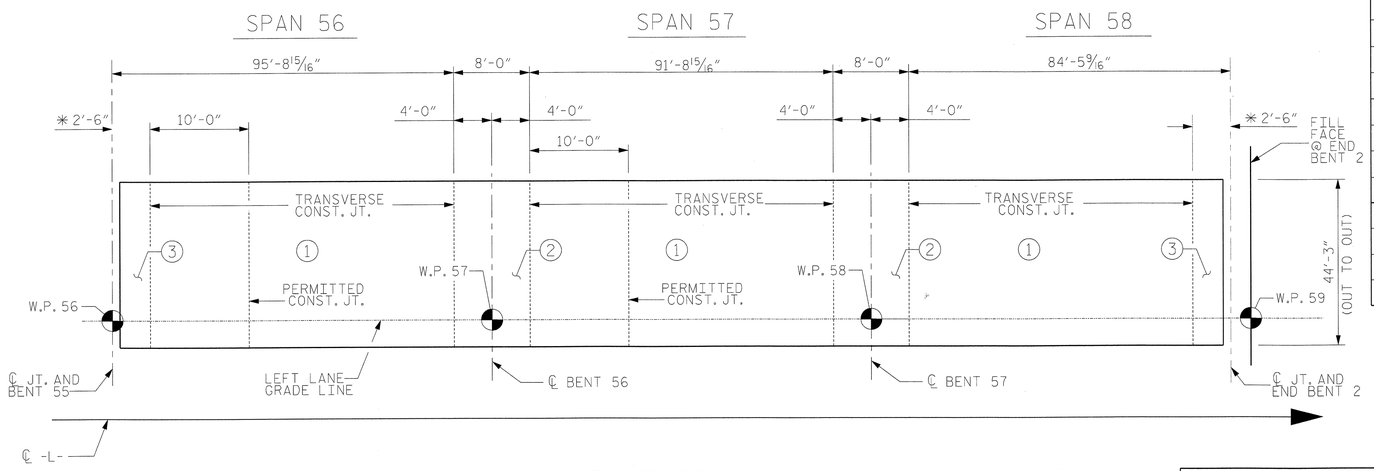

OPTIONAL POURING SEQUENCE FOR SPANS 56, 57 & 58

POUR (2) CANNOT BE STARTED UNTIL BOTH ADJACENT POURS (1) REACH A MINIMUM OF 3000 PSI.

SPANS 56, 57 & 58

LEFT LANE

REINFORCING BAR SCHEDULE

BAR	NUMBER	SIZE	TYPE	LENGTH	WEIGHT
A1	576	#5	STR	43'-11"	26384
A2	384	#4	STR	5'-2"	1325
B103	120	#7	STR	60'-0"	14717
B107	180	#4	STR	23'-7"	2836
B111	120	#4	STR	17'-11"	1436
B112	180	#4	STR	20'-10"	2505
B113	60	#7	STR	15'-3"	1870
B114	57	#7	STR	30'-0"	3495
B115	60	#7	STR	12'-3"	1502
B116	57	#7	STR	28'-6"	3320
B117	66	#4	STR	28'-0"	1234
C1	2	#5	STR	43'-11"	92
J1	84	#4	9	1'-5"	79
U1	24	#4	7	12'-3"	196
U2	42	#4	8	14'-6"	407
K1	8	#8	1	17'-8"	377
K2	8	#8	2	26'-9"	571
K3	12	#4	STR	8'-6"	68
K4	48	#4	STR	10'-7"	339
K5	24	#4	STR	9'-8"	155
K6	12	#4	STR	7'-9"	62
K7	12	#4	STR	6'-2"	49
K8	32	#4	STR	18'-6"	395
S1	42	#5	3	5'-9"	252
S2	12	#5	4	3'-7"	45
S3	390	#4	5	2'-9"	716
S4	84	#4	6	4'-9"	267

BAR TYPES

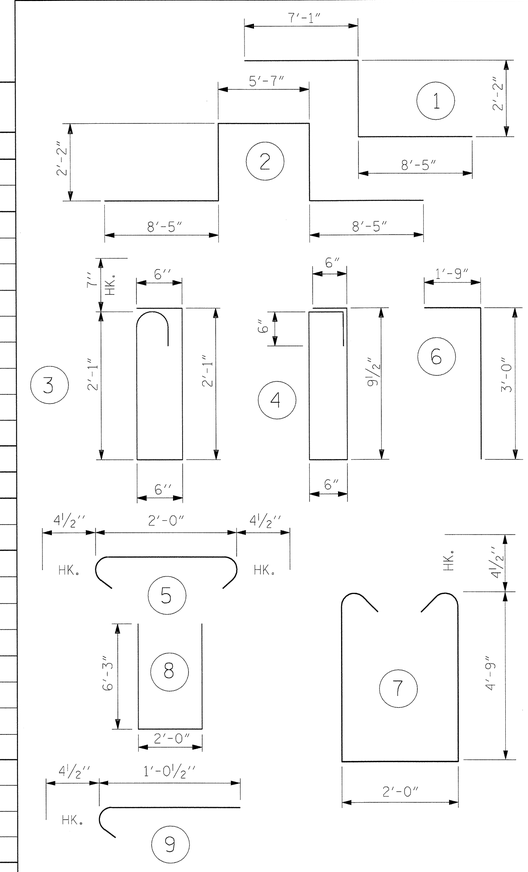

ALL BAR DIMENSIONS ARE OUT TO OUT

REINFORCING STEEL SPLICE LENGTHS

BAR SIZE	SUPERSTRUCTURE EXCEPT APPROACH SLABS, PARAPET, AND BARRIER RAIL
	EPOXY COATED
#4	2'-0"
#5	2'-6"
#6	3'-0"
#7	5'-3"
#8	6'-10"

SUPERSTRUCTURE BILL OF MATERIAL

LEFT LANE	CLASS AA CONCRETE	EPOXY COATED REINFORCING STEEL
	(CU. YDS.)	(LBS.)
TOTALS*	385.6	64691

* QUANTITIES FOR BARRIER RAIL ARE NOT INCLUDED

GROOVING BRIDGE FLOORS

BRIDGE DECK	11,172	SQ.FT.
APPROACH SLAB @ END BENT 2	929	SQ.FT.
TOTAL	12,101	SQ.FT.

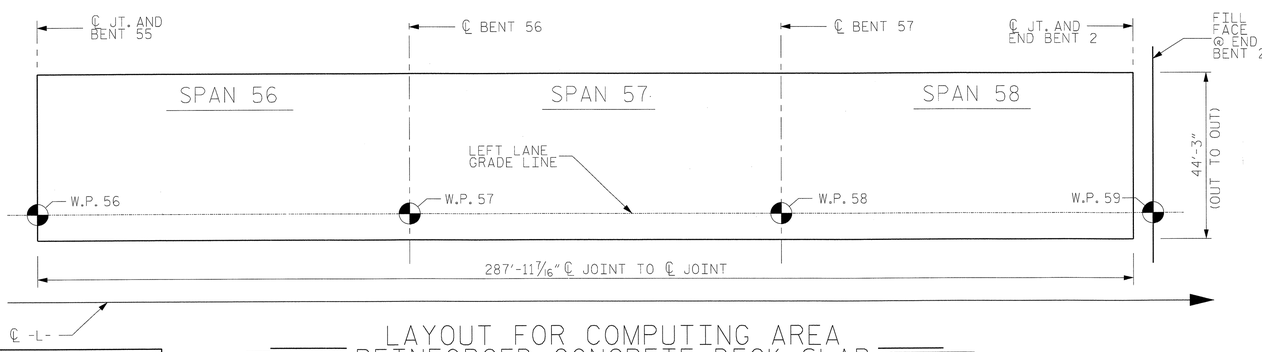

LAYOUT FOR COMPUTING AREA REINFORCED CONCRETE DECK SLAB

(SQ. FT. = 12,720)

CLASS "AA" CONCRETE

POUR No.	CUBIC YDS
1	102.5
2	138.4
3	135.1
4	9.6
TOTAL	385.6

PROJECT NO. R-2633BB

BRUNSWICK/NEW HANOVER COUNTY

STATION: 353+32.50 -L-

SHEET 9 OF 9

NORTH CAROLINA PROFESSIONAL SEAL 22072 ENGINEER JOHN ARTHUR DILWORTH
5-29-13

WETHERILL ENGINEERING

TRANSPORTATION PLANNING/DESIGN
BRIDGE/STRUCTURE DESIGN
CIVIL/SITE DESIGN - GIS/GPS
CONSTRUCTION OBSERVATION

559 Jones Franklin Rd. Suite 164
Raleigh, N.C. 27606
Bus: 919 851 8077
Fax: 919 851 8107
LICENSE NO. F-0377

STATE OF NORTH CAROLINA
DEPARTMENT OF TRANSPORTATION
RALEIGH

SUPERSTRUCTURE
BILL OF MATERIAL
SPANS 56, 57 & 58
LEFT LANE

REVISIONS						SHEET NO.
NO.	BY:	DATE:	NO.	BY:	DATE:	S-172
1			3			TOTAL SHEETS
2			4			700

DRAWN BY :	JMB	DATE :	9/2012
CHECKED BY :	J. DILWORTH	DATE :	9/2012
DESIGN ENGINEER OF RECORD :	J. DILWORTH	DATE :	5/2013

FILE: $FILE$
MODEL: $MODELNAME$
PLOT DRV: $PLTDRVS$
DATE/TIME: $DATE$ $TIME$

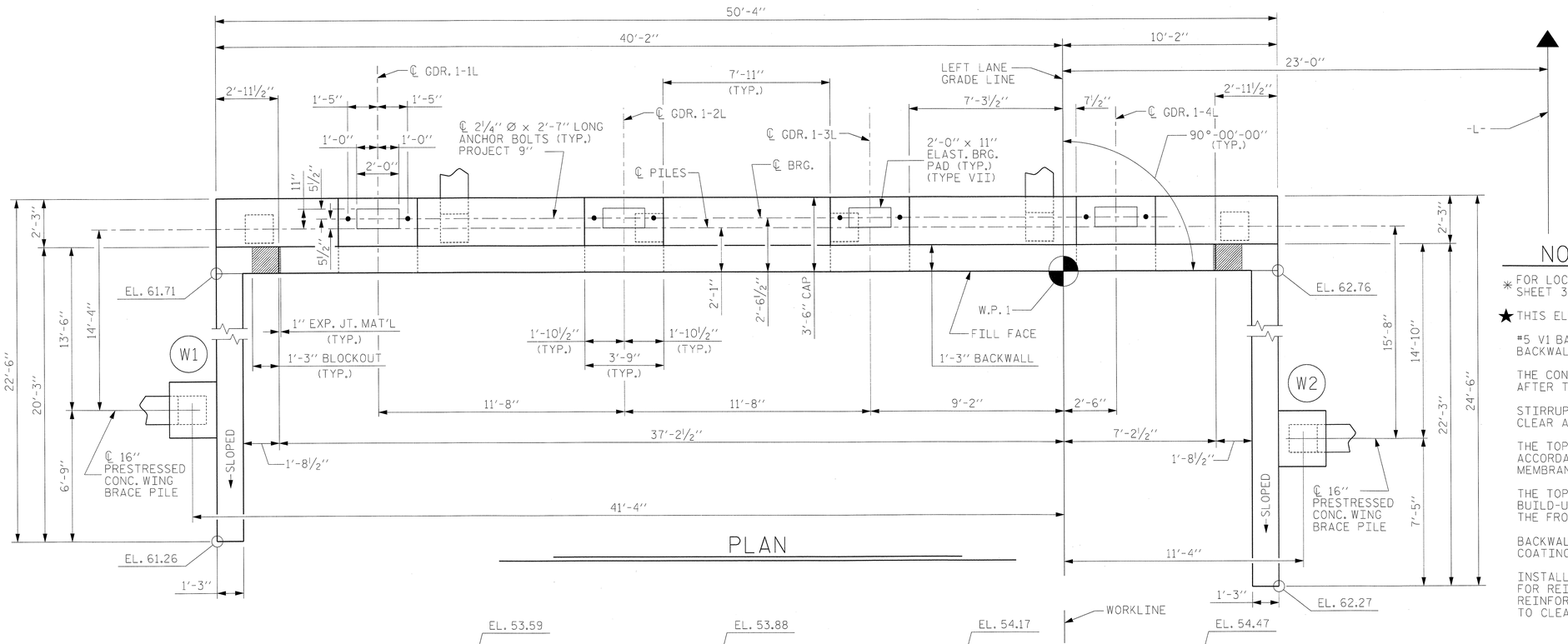

PLAN

NOTES :

✳ FOR LOCATION OF ELEVATIONS BETWEEN BUILD-UPS, SEE SECTION A-A, SHEET 3 OF 3.

★ THIS ELEVATION IS TAKEN ON FILL FACE OF BACKWALL.

#5 V1 BARS IN BACKWALL SHALL BE PLACED 3" CLEAR FROM TOP OF BACKWALL.

THE CONCRETE IN THE SHADED AREA OF THE WING SHALL BE POURED AFTER THE BARRIER RAIL IS CAST IF SLIP FORMING IS USED.

STIRRUPS AND U2 BARS IN CAP MAY BE SHIFTED AS NECESSARY TO CLEAR ANCHOR BOLTS.

THE TOP SURFACE AREA OF THE END BENT CAP SHALL BE CURED IN ACCORDANCE WITH THE STANDARD SPECIFICATIONS EXCEPT THAT THE MEMBRANE CURING COMPOUND METHOD SHALL NOT BE USED.

THE TOP SURFACE OF THE END BENT CAP EXCEPT THE BRIDGE SEAT BUILD-UPS SHALL BE SLOPED TRANSVERSELY FROM THE FILL FACE TO THE FRONT FACE AT THE RATE OF 2%.

BACKWALL SHALL BE PLACED BEFORE APPLYING THE EPOXY PROTECTIVE COATING.

INSTALL THE 4" Ø DRAIN PIPE THROUGH THE WING WALL AS REQUIRED FOR REINFORCED BRIDGE APPROACH FILLS. SEE THE ROADWAY PLANS. REINFORCING STEEL IN THE WING WALL MAY BE SHIFTED AS NECESSARY TO CLEAR THE DRAIN PIPE.

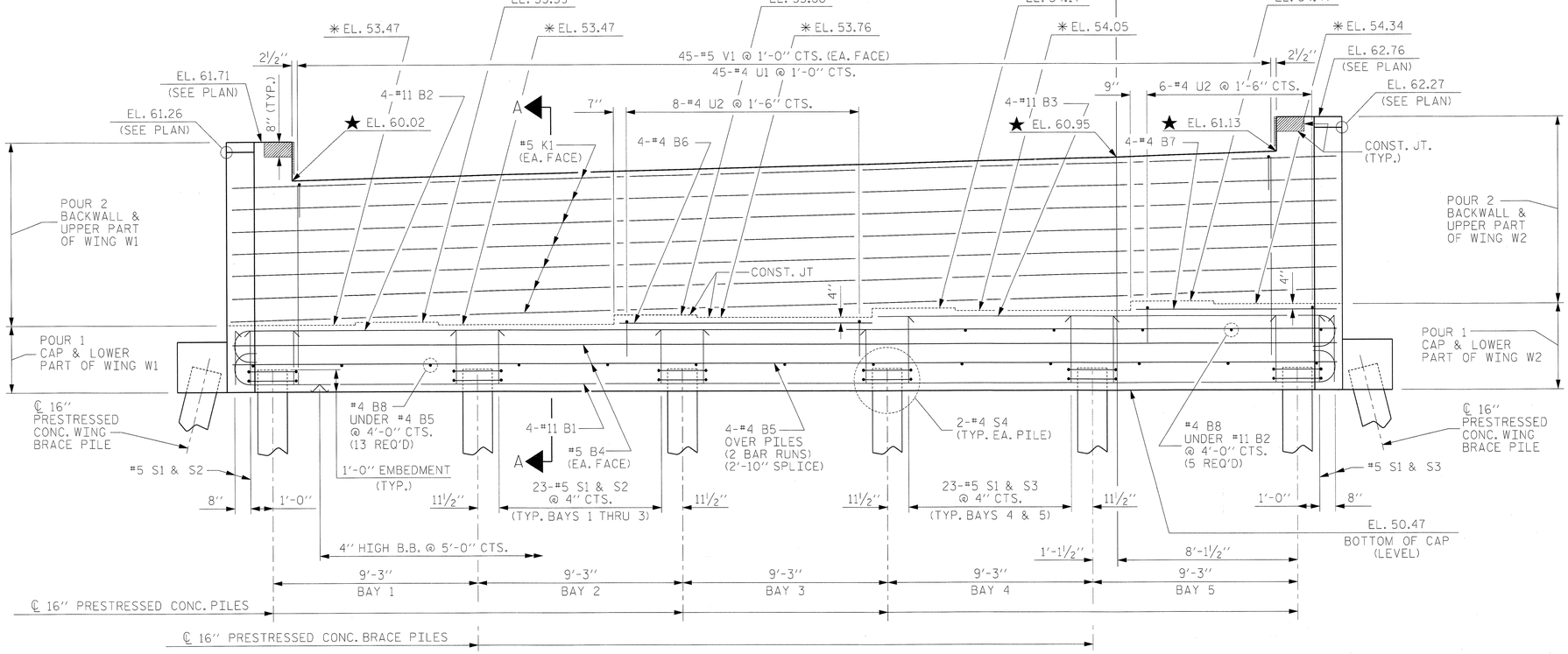

ELEVATION

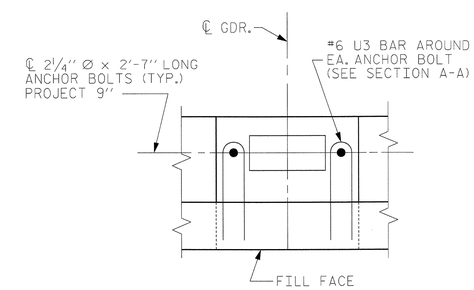

#6 U3 PLACEMENT DETAIL

PROJECT NO. R-2633BB

BRUNSWICK/NEW HANOVER COUNTY

STATION: 353+32.50 -L-

SHEET 1 OF 3

DRAWN BY : J.M. BRITT DATE : 9-18-12

CHECKED BY : J. DILWORTH DATE : 9-26-12

DESIGN ENGINEER OF RECORD : J. DILWORTH DATE : 05/2013

NORTH CAROLINA PROFESSIONAL SEAL 22072 ENGINEER JOHN ARTHUR DILWORTH 5-29-13

WETHERILL ENGINEERING

TRANSPORTATION PLANNING/DESIGN
BRIDGE/STRUCTURE DESIGN
CIVIL/SITE DESIGN - GIS/GPS
CONSTRUCTION OBSERVATION

559 Jones Franklin Rd. Suite 164
Raleigh, N.C. 27606
Bus: 919 851 9077
Fax: 919 851 8107
LICENSE NO. F-0377

STATE OF NORTH CAROLINA
DEPARTMENT OF TRANSPORTATION
RALEIGH

SUBSTRUCTURE

END BENT 1

LEFT LANE

REVISIONS						SHEET NO.
NO.	BY:	DATE:	NO.	BY:	DATE:	S-173
1			3			TOTAL SHEETS
2			4			700

FILE: $FILE$
MODEL: $MODELNAME$
PLOT DRV: $PLTDRVS$
DATE/TIME: $DATE$ $TIME$

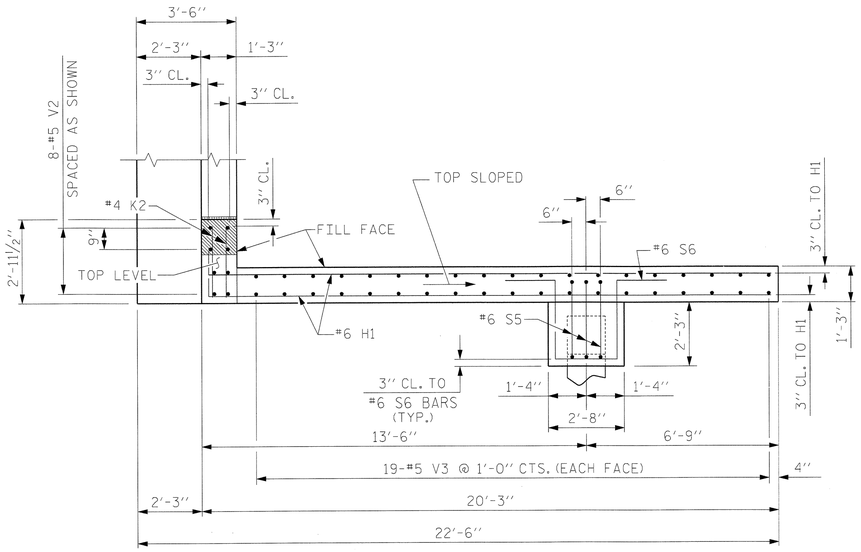

PLAN OF WING (W1)

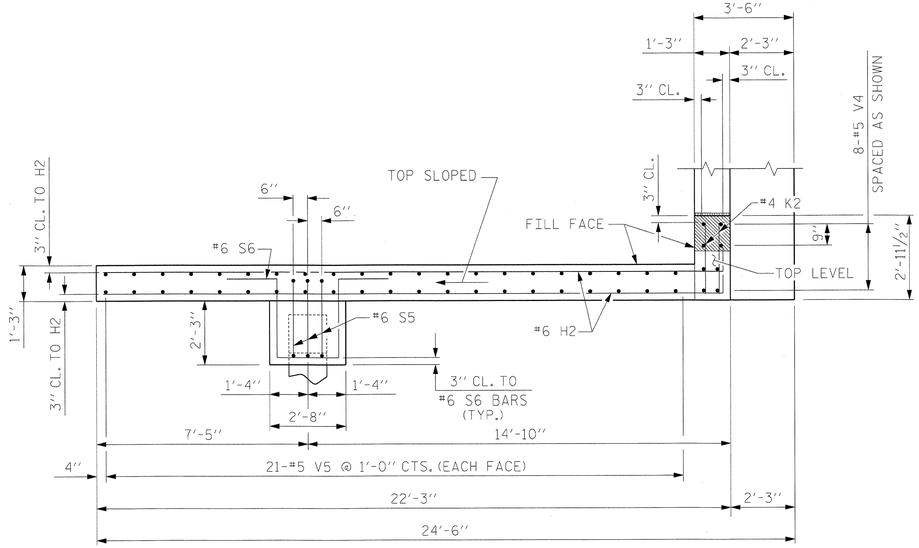

PLAN OF WING (W2)

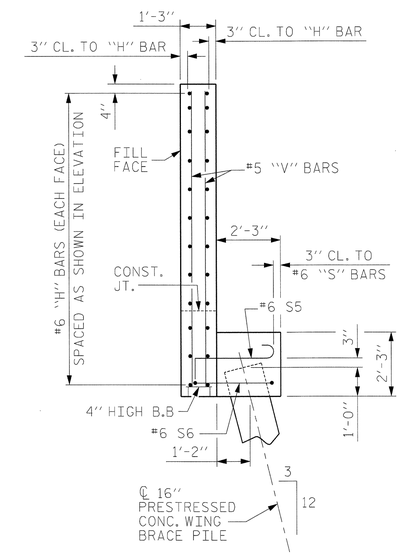

SECTION X-X

WING W1 SHOWN, WING W2 SIMILAR

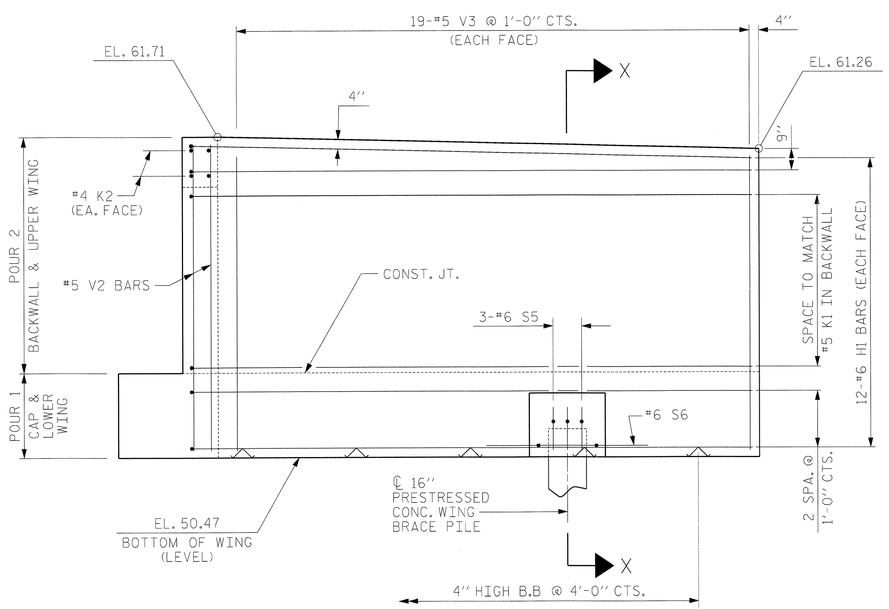

ELEVATION OF WING (W1)

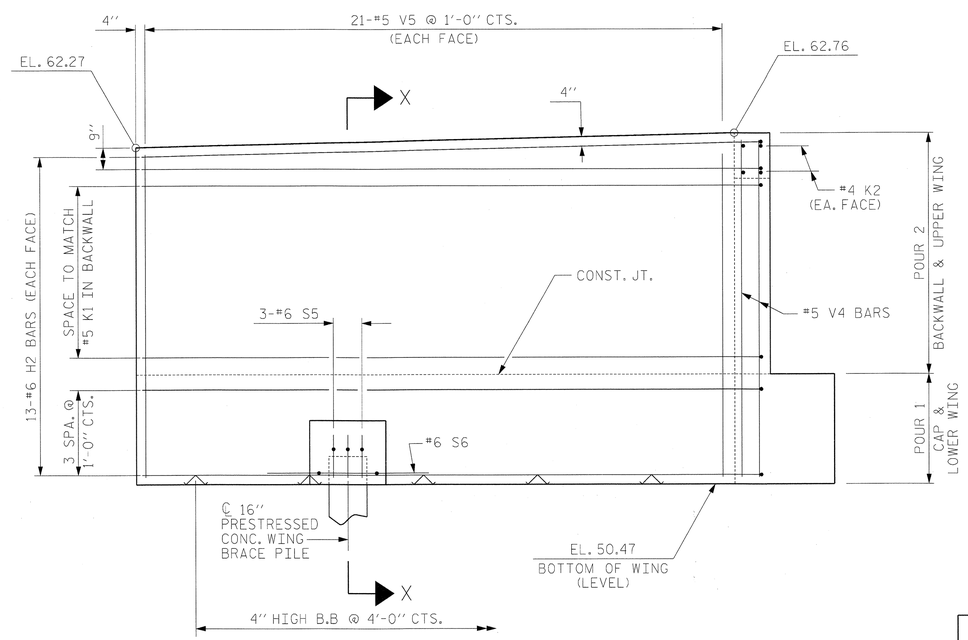

ELEVATION OF WING (W2)

PROJECT NO. R-2633BB

BRUNSWICK/NEW HANOVER COUNTY

STATION: 353+32.50 -L-

SHEET 2 OF 3

NORTH CAROLINA PROFESSIONAL SEAL 22072 ENGINEER JOHN ARTHUR DILWORTH
5-29-13

WETHERILL ENGINEERING

TRANSPORTATION PLANNING/DESIGN
BRIDGE/STRUCTURE DESIGN
CIVIL/SITE DESIGN - GS/GPS
CONSTRUCTION OBSERVATION

559 Jones Franklin Rd. Suite 164
Raleigh, N.C. 27606
Bus: 919 851 8077
Fax: 919 851 8107
LICENSE NO. F-0377

STATE OF NORTH CAROLINA
DEPARTMENT OF TRANSPORTATION
RALEIGH

SUBSTRUCTURE

END BENT 1

LEFT LANE

REVISIONS						SHEET NO.
NO.	BY:	DATE:	NO.	BY:	DATE:	S-17A
1			3			TOTAL SHEETS
2			4			700

DRAWN BY :	J.M. BRITT	DATE :	9-18-12
CHECKED BY :	J. DILWORTH	DATE :	9-26-12
DESIGN ENGINEER OF RECORD :	J. DILWORTH	DATE :	05/2013

FILE: $FILE$
MODEL: $MODELNAME$
PLOT DRV: $PLTDRVS$
DATE/TIME: $DATE$ $TIME$

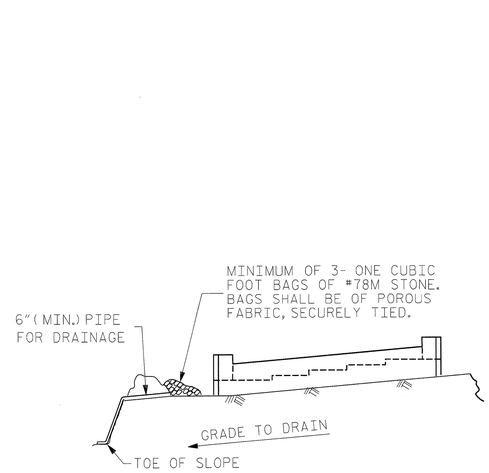

BAGGED STONE AND PIPE SHALL BE PLACED IMMEDIATELY AFTER COMPLETION OF END BENT EXCAVATION. PIPE MAY BE EITHER CONCRETE, CORRUGATED STEEL, CORRUGATED ALUMINUM ALLOY, OR CORRUGATED PLASTIC. PERFORATED PIPE WILL NOT BE ALLOWED.

BAGGED STONE SHALL REMAIN IN PLACE UNTIL THE ENGINEER DIRECTS THAT IT BE REMOVED. THE CONTRACTOR SHALL REMOVE AND DISPOSE OF SILT ACCUMULATIONS AT BAGGED STONE WHEN SO DIRECTED BY THE ENGINEER. BAGS SHALL BE REMOVED AND REPLACED WHENEVER THE ENGINEER DETERMINES THAT THEY HAVE DETERIORATED AND LOST THEIR EFFECTIVENESS.

NO SEPARATE PAYMENT WILL BE MADE FOR THIS WORK AND THE ENTIRE COST OF THIS WORK SHALL BE INCLUDED IN THE UNIT CONTRACT PRICE BID FOR THE SEVERAL PAY ITEMS.

TEMPORARY DRAINAGE AT END BENT

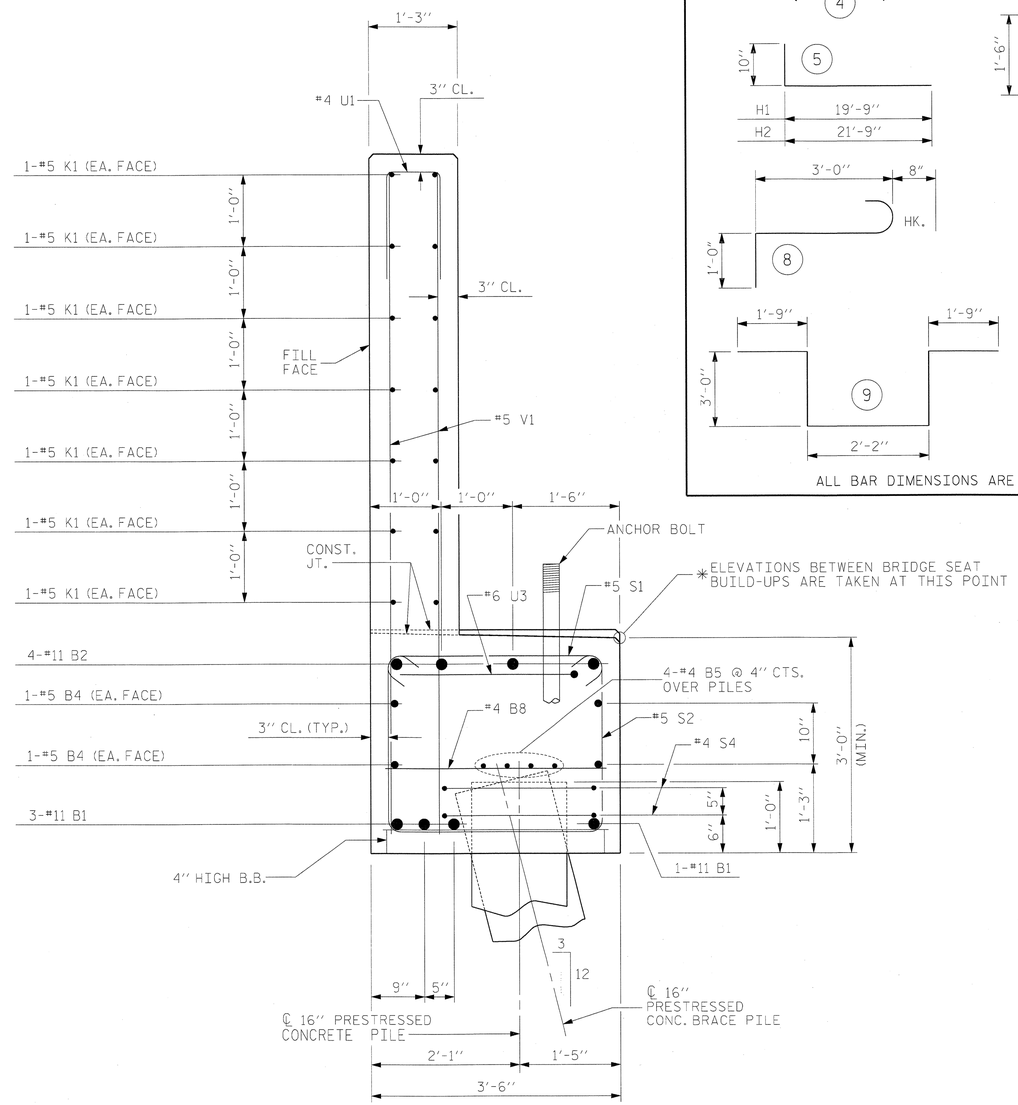

SECTION A-A

(SEE SHEET 1 OF 3)

BAR TYPES

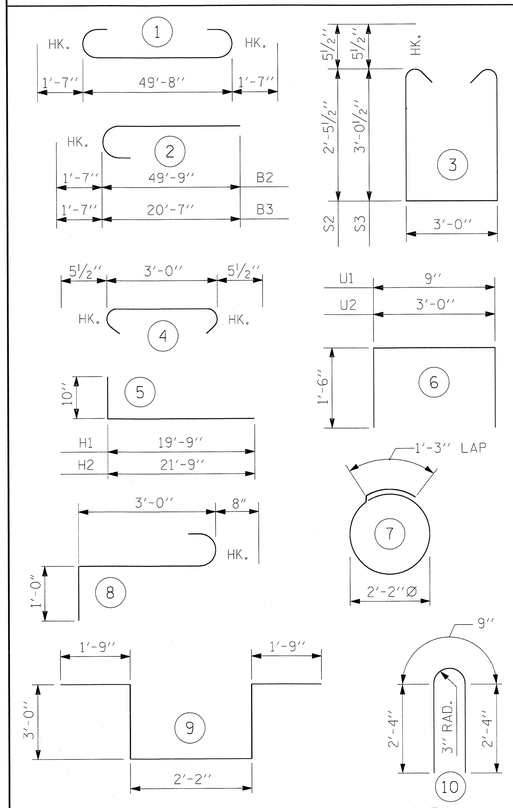

ALL BAR DIMENSIONS ARE OUT TO OUT.

BILL OF MATERIAL

END BENT 1 LEFT LANE

BAR	No.	SIZE	TYPE	LENGTH	WEIGHT
B1	4	#11	1	52'-10"	1123
B2	4	#11	2	51'-4"	1091
B3	4	#11	2	22'-2"	471
B4	4	#5	STR	49'-10"	208
B5	8	#4	STR	26'-4"	141
B6	4	#4	STR	11'-5"	31
B7	4	#4	STR	9'-0"	24
B8	18	#4	STR	3'-0"	36
H1	24	#6	5	20'-7"	742
H2	26	#6	5	22'-7"	882
K1	14	#5	STR	49'-10"	728
K2	8	#4	STR	2'-5"	13
S1	119	#5	4	3'-11"	486
S2	71	#5	3	8'-10"	654
S3	48	#5	3	10'-0"	501
S4	12	#4	7	8'-1"	65
S5	6	#6	8	4'-8"	42
S6	2	#6	9	11'-8"	35
U1	45	#4	6	3'-9"	113
U2	14	#4	6	6'-0"	56
U3	8	#6	10	5'-5"	65
V1	90	#5	STR	9'-0"	845
V2	8	#5	STR	10'-8"	89
V3	38	#5	STR	10'-3"	406
V4	8	#5	STR	11'-9"	98
V5	42	#5	STR	11'-3"	493

EPOXY COATED REINFORCING STEEL = 9,438 LBS.

CLASS AA CONCRETE BREAKDOWN

POUR 1 CAP & LOWER PART OF WINGS C.Y. 29.2

POUR 2 BACKWALL & UPPER PART PART OF WINGS C.Y. 31.0

TOTAL CLASS AA CONCRETE C.Y. 60.2

16" PRESTRESSED CONC. PILES No.=8 (LIN. FT.) 480

PILE REDRIVES 3 EA.

PROJECT NO. R-2633BB

BRUNSWICK/NEW HANOVER COUNTY

STATION: 353+32.50 -L-

SHEET 3 OF 3

STATE OF NORTH CAROLINA
DEPARTMENT OF TRANSPORTATION
RALEIGH

SUBSTRUCTURE

END BENT 1

LEFT LANE

NORTH CAROLINA SEAL 22072 ENGINEER JOHN ARTHUR DILWORTH
5-29-13

WETHERILL ENGINEERING

TRANSPORTATION PLANNING/DESIGN
BRIDGE/STRUCTURE DESIGN
CIVIL/SITE DESIGN - GIS/GPS
CONSTRUCTION OBSERVATION

559 Jones Franklin Rd. Suite 164
Raleigh, N.C. 27606
Bus: 919 851 8077
Fax: 919 851 8107
LICENSE NO. F-0377

REVISIONS							SHEET NO.
NO.	BY:	DATE:	NO.	BY:	DATE:		S-175
1			3				TOTAL SHEETS
2			4				700

DRAWN BY : J.M. BRITT DATE : 9-19-12
CHECKED BY : J. DILWORTH DATE : 9-28-12
DESIGN ENGINEER OF RECORD : J. DILWORTH DATE : 05/2013

FILE: $FILE$
MODEL: $MODELNAME$
PLOT DRV: $PLTDRVS$
DATE/TIME: $DATE$ $TIME$

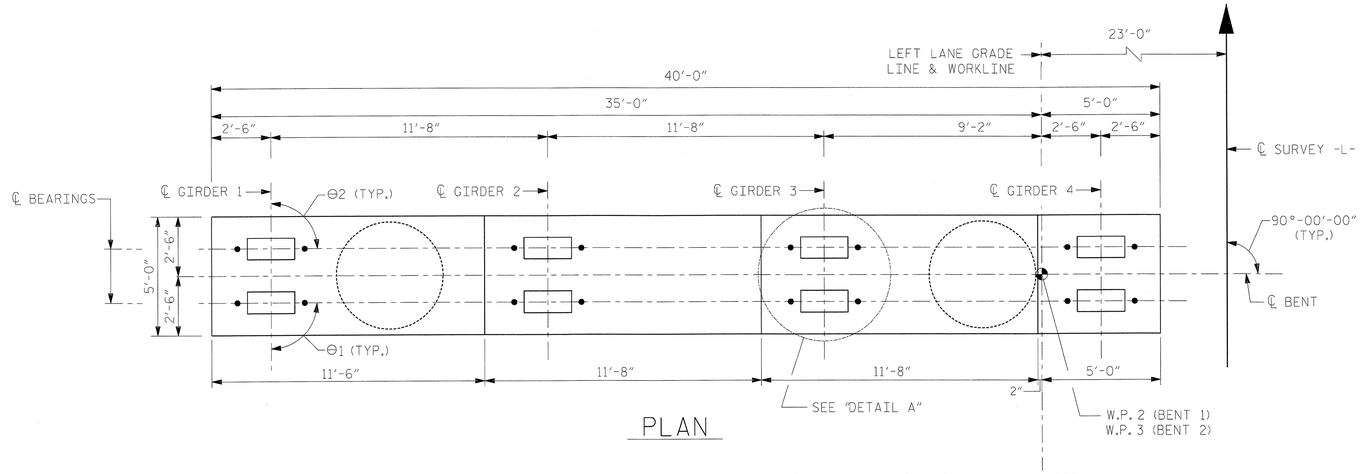

PLAN

NOTES:

STIRRUPS & "U" BARS IN CAP MAY BE SHIFTED AS NECESSARY TO CLEAR ANCHOR BOLTS.

HOOKS ON "V" BARS MAY BE TURNED AS NECESSARY FOR PLACING REINFORCING STEEL.

ALTERNATELY INVERT STIRRUP PAIRS AS NOTED.

FOR FOOTING REINFORCING DETAILS, SEE SHEET 2 OF 2.

FOR SECTION A-A, VIEW B-B, SECTION C-C, AND SECTION D-D, SEE SHEET 2 OF 2.

✳ THE FOOTING HAS A DROP OF 2" FROM THE CENTER OF THE FOOTING TO THE EDGE OF FOOTING TO ACCOMODATE DRAINAGE.

FOR FOUNDATION NOTES, SEE "GENERAL DRAWINGS FOUNDATION LAYOUT" SHEET 10 OF 10.

ELEVATION TABLE									
BENT	A	B	C	D	E	F	G	H	I
1	55.93	56.22	56.51	56.80	50.14	50.33	50.95	51.14	22.00
2	58.35	58.64	58.93	59.22	52.56	52.75	53.37	53.56	16.00

BEARING ANGLES		
BENT	Θ1	Θ2
1 & 2	90°-00'-00"	90°-00'-00"

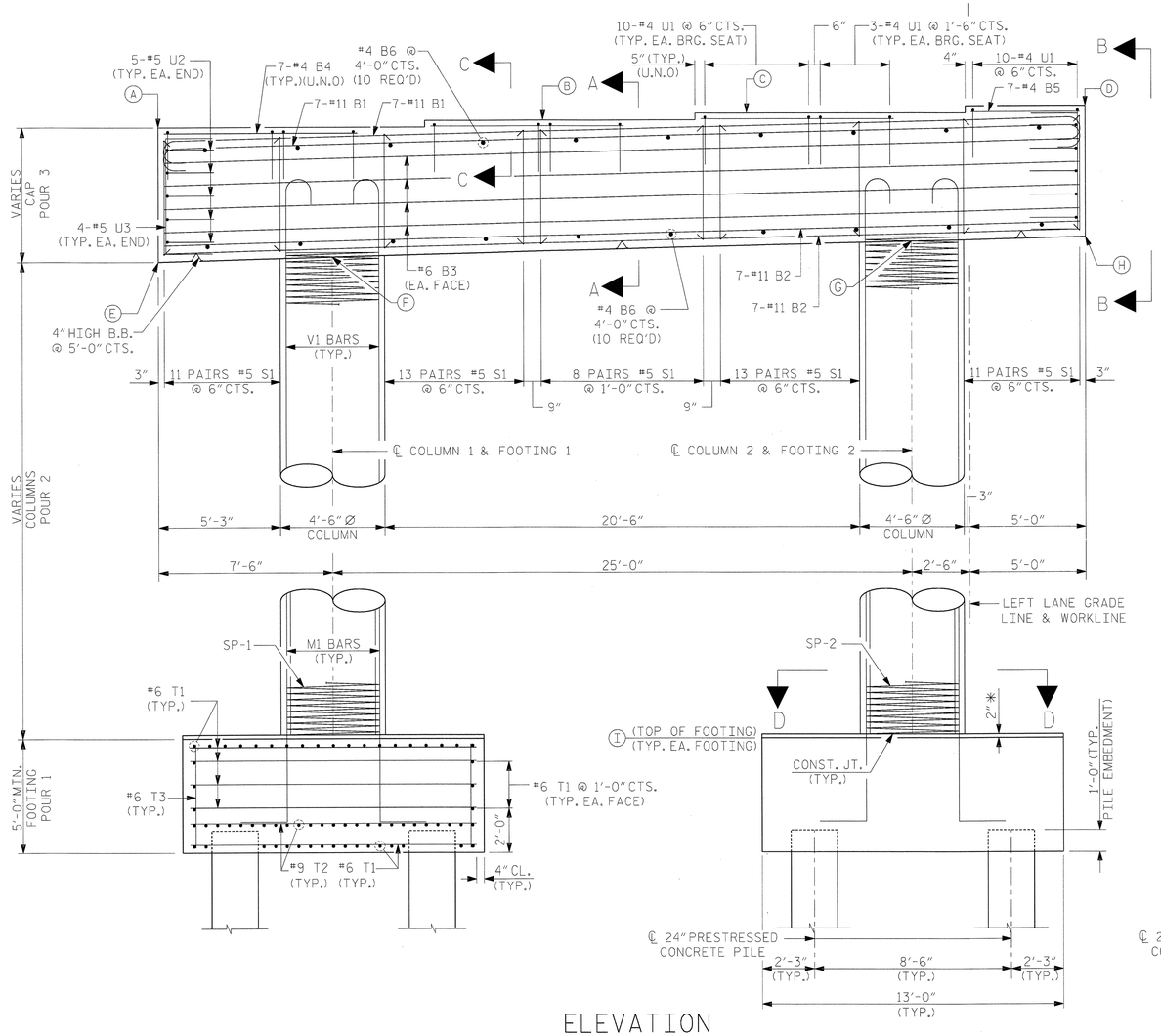

ELEVATION

LOOKING AHEAD ON STATION

ALL DIMENSIONS AND DETAILS SHOWN FOR FOOTINGS ARE TYPICAL FOR EACH FOOTING UNLESS NOTED OTHERWISE.

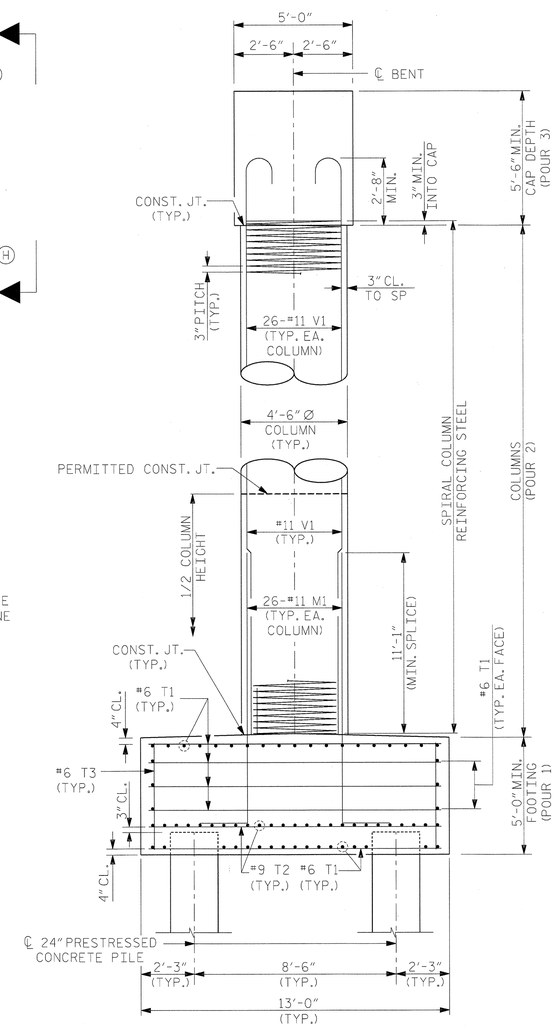

END VIEW

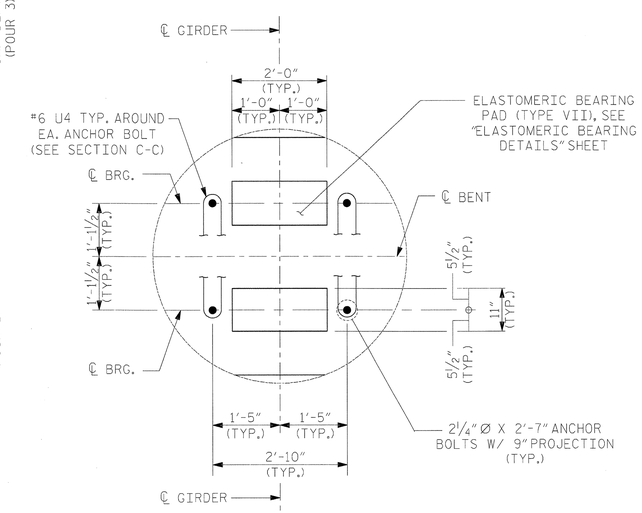

DETAIL A

PROJECT NO. R-2633BB

BRUNSWICK/NEW HANOVER COUNTY

STATION: 353+32.50 -L-

SHEET 1 OF 2

NORTH CAROLINA PROFESSIONAL SEAL 18442 ENGINEER LEONI BOLINGER JR. RICHARD

5-29-2013

RS&H IMPROVING YOUR WORLD

RS&H Architects-Engineers-Planners, Inc.
8601 Six Forks Road, Suite 260
Raleigh, NC 27615
919-846-6701 FAX 919-846-9080
www.rsandh.com
North Carolina License Nos. 50073 * F-0493 * C-28

STATE OF NORTH CAROLINA
DEPARTMENT OF TRANSPORTATION
RALEIGH

SUBSTRUCTURE

BENT 1 & 2
PLAN AND ELEVATION
LEFT LANE

REVISIONS						SHEET NO.
NO.	BY:	DATE:	NO.	BY:	DATE:	S-176
1			3			TOTAL SHEETS
2			4			700

DRAWN BY :	MKO	DATE :	09/2012
CHECKED BY :	JMR	DATE :	03/2013
DEISGN ENGINEER OR RECORD :	J. ROBINSON	DATE :	05/2013

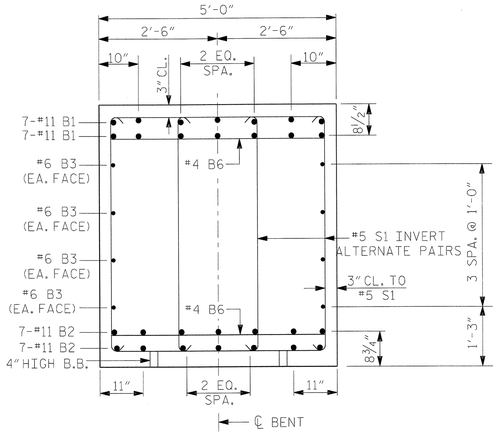

SECTION A-A

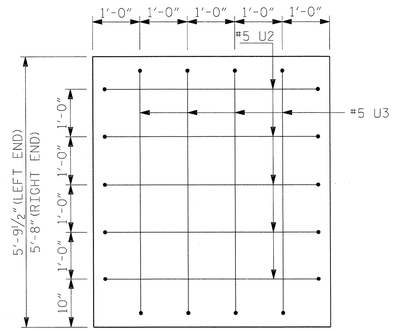

VIEW B-B

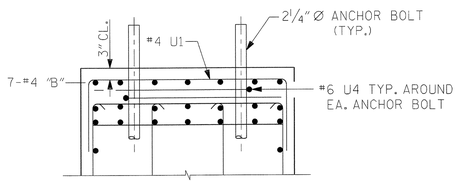

SECTION C-C

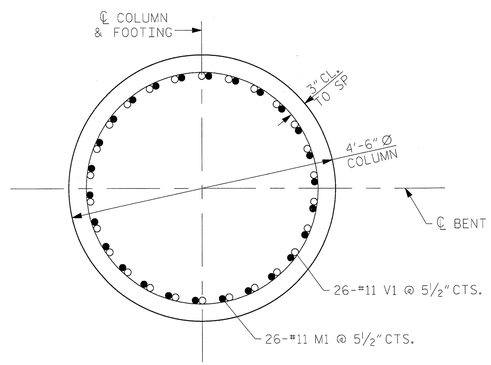

SECTION D-D

BAR TYPES

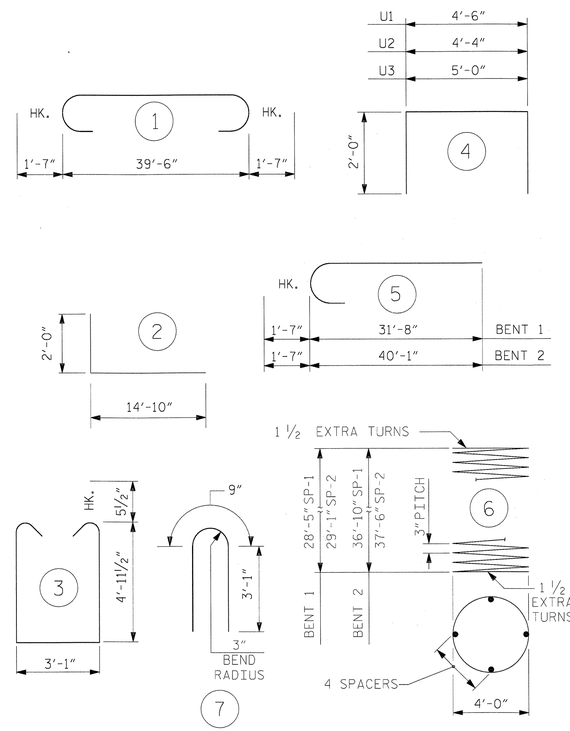

ALL BAR DIMENSIONS ARE OUT TO OUT.

BILL OF MATERIAL

BENT 1

BAR	NO.	SIZE	TYPE	LENGTH (ft)	WEIGHT (lb)
B1	14	11	1	42'-8"	3174
B2	14	11	STR.	39'-6"	2938
B3	8	6	STR.	39'-6"	475
B4	21	4	STR.	8'-4"	117
B5	7	4	STR.	4'-8"	22
B6	20	4	STR.	4'-6"	60
M1	52	11	2	16'-10"	4651
S1	112	5	3	13'-11"	1626
T1	168	6	STR.	12'-4"	3112
T2	100	9	STR.	12'-4"	4193
T3	104	6	STR.	4'-4"	677
U1	49	4	4	8'-6"	278
U2	10	5	4	8'-4"	87
U3	8	5	4	9'-0"	75
U4	16	6	7	6'-11"	166
V1	52	11	5	33'-3"	9186

EPOXY COATED REINFORCING STEEL 30837 LB.

SP1	1	**	6	1455'-3"	972
SP2	1	**	6	1492'-7"	997

TOTAL EPOXY COATED SPIRAL COLUMN REINFORCING STEEL 1969 LB.

CLASS "AA" CONCRETE BREAKDOWN

POUR 1 - FOOTING	63.6 CU. YDS.
POUR 2 - COLUMN	33.7 CU. YDS.
POUR 3 - CAP	41.9 CU. YDS.
TOTAL CLASS "AA" CONCRETE	139.2 CU. YDS.

24" PRESTRESSED CONCRETE PILES
NO. 8 280 LIN. FT.

PILE REDRIVES NO. 4

BENT 2

BAR	NO.	SIZE	TYPE	LENGTH (ft)	WEIGHT (lb)
B1	14	11	1	42'-8"	3174
B2	14	11	STR.	39'-6"	2938
B3	8	6	STR.	39'-6"	475
B4	21	4	STR.	8'-4"	117
B5	7	4	STR.	4'-8"	22
B6	20	4	STR.	4'-6"	60
M1	52	11	2	16'-10"	4651
S1	112	5	3	13'-11"	1626
T1	168	6	STR.	12'-4"	3112
T2	100	9	STR.	12'-4"	4193
T3	104	6	STR.	4'-4"	677
U1	49	4	4	8'-6"	278
U2	10	5	4	8'-4"	87
U3	8	5	4	9'-0"	75
U4	16	6	7	6'-11"	166
V1	52	11	5	41'-8"	11512

EPOXY COATED REINFORCING STEEL 33163 LB.

SP1	1	**	6	1878'-2"	1255
SP2	1	**	6	1903'-1"	1271

TOTAL EPOXY COATED SPIRAL COLUMN REINFORCING STEEL 2526 LB.

CLASS "AA" CONCRETE BREAKDOWN

POUR 1 - FOOTING	63.6 CU. YDS.
POUR 2 - COLUMN	43.7 CU. YDS.
POUR 3 - CAP	41.9 CU. YDS.
TOTAL CLASS "AA" CONCRETE	149.2 CU. YDS.

24" PRESTRESSED CONCRETE PILES
NO. 8 280 LIN. FT.

PILE REDRIVES NO. 4

** THE SP1 & SP2 SPIRAL REINFORCING STEEL SHALL BE W20 OR D-20 COLD DRAWN WIRE OR #4 PLAIN OR DEFORMED BAR.

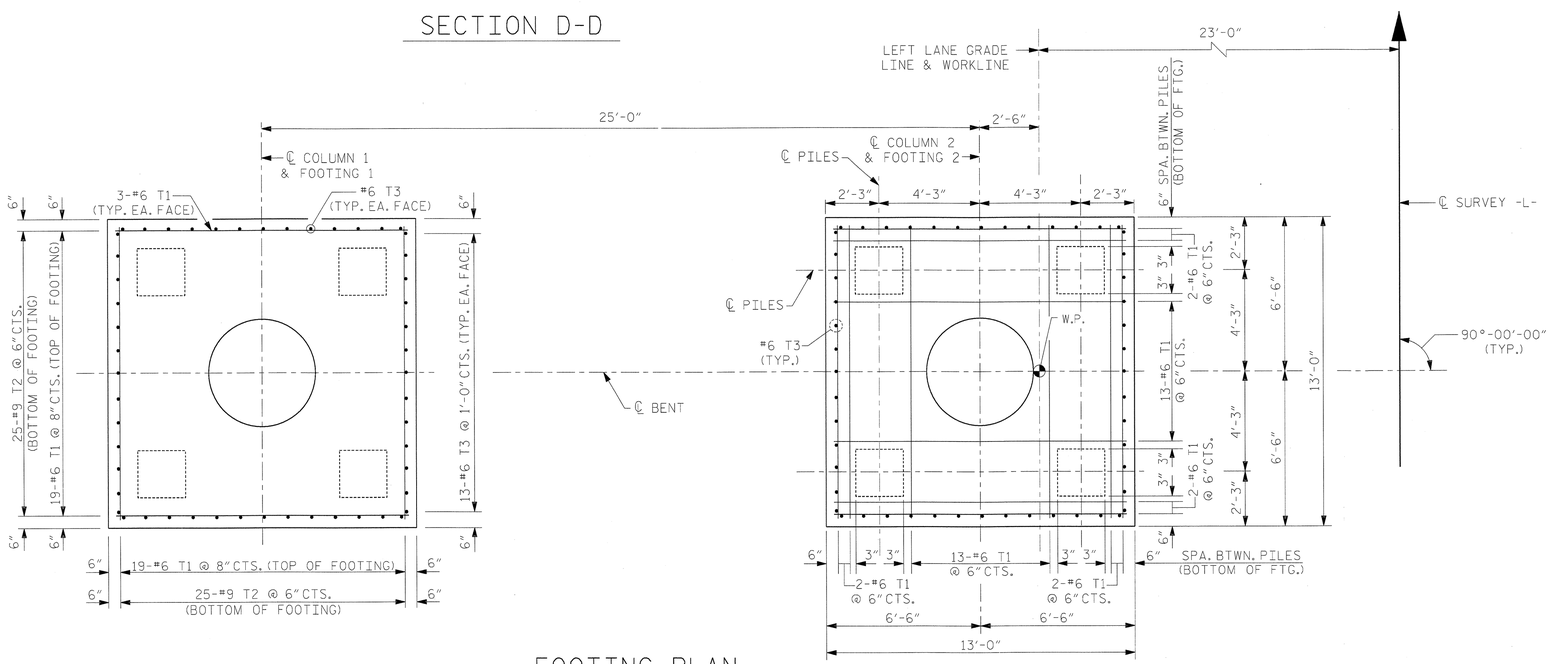

FOOTING PLAN

ALL DIMENSIONS AND DETAILS SHOWN FOR FOOTINGS ARE TYPICAL FOR EACH FOOTING UNLESS NOTED OTHERWISE.

PROJECT NO. R-2633BB
BRUNSWICK/NEW HANOVER COUNTY
STATION: 353+32.50 -L-

SHEET 2 OF 2

NORTH CAROLINA PROFESSIONAL SEAL 18442 ENGINEER RICHARD LEON BOLDINGER III
5-29-2013

RS&H IMPROVING YOUR WORLD

RS&H Architects-Engineers-Planners, Inc.
8601 Six Forks Road, Suite 260
Raleigh, NC 27615
919-846-5701 FAX 919-846-9080
www.rsandh.com
North Carolina Licenses Nos. 50073 * F-0493 * C-28

STATE OF NORTH CAROLINA
DEPARTMENT OF TRANSPORTATION
RALEIGH

SUBSTRUCTURE
BENT 1 & 2
DETAILS AND
BILL OF MATERIAL
LEFT LANE

REVISIONS						SHEET NO.
NO.	BY:	DATE:	NO.	BY:	DATE:	S-177
1			3			TOTAL SHEETS
2			4			700

DRAWN BY :	MKO	DATE :	09/2012
CHECKED BY :	JMR	DATE :	03/2013
DEISGN ENGINEER OR RECORD :	J. ROBINSON	DATE :	05/2013

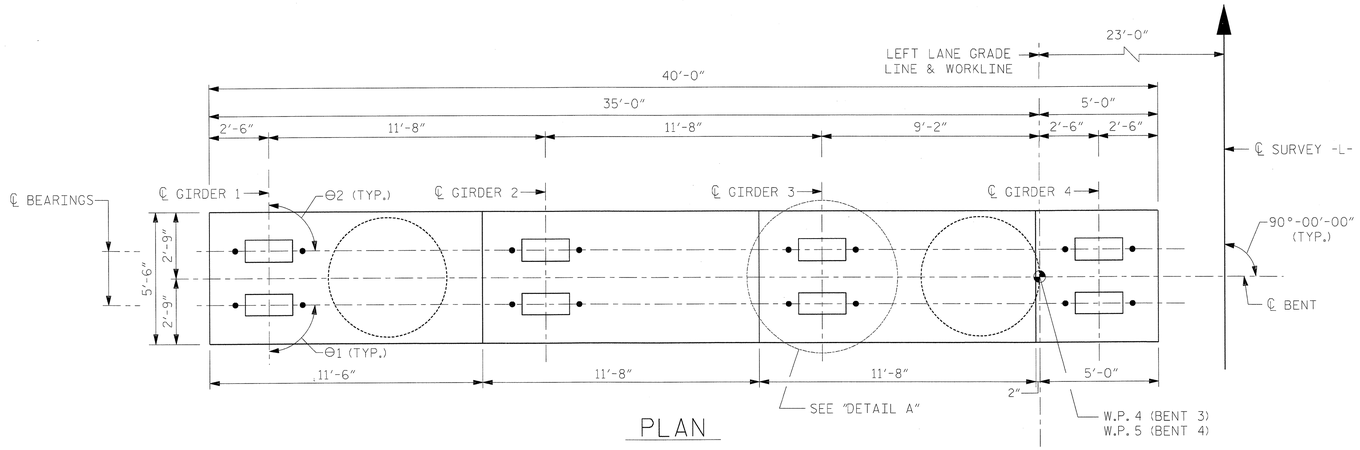

PLAN

NOTES:

STIRRUPS AND "U" BARS IN CAP MAY BE SHIFTED AS NECESSARY TO CLEAR ANCHOR BOLTS.

HOOKS ON "V" BARS MAY BE TURNED AS NECESSARY FOR PLACING REINFORCING STEEL.

ALTERNATELY INVERT STIRRUP PAIRS AS NOTED.

FOR FOOTING REINFORCING DETAILS, SEE SHEET 2 OF 2.

FOR SECTION A-A, VIEW B-B, SECTION C-C, AND SECTION D-D, SEE SHEET 2 OF 2.

* THE FOOTING HAS A DROP OF 2" FROM THE CENTER OF THE FOOTING TO THE EDGE OF FOOTING TO ACCOMODATE DRAINAGE.

FOR FOUNDATION NOTES, SEE "GENERAL DRAWINGS FOUNDATION LAYOUT" SHEET 10 OF 10.

THE TOP SURFACE AREAS OF BENT 3 CAP SHALL BE CURED IN ACCORDANCE WITH THE STANDARD SPECIFICATIONS EXCEPT THE MEMBRANE CURING COMPOUND METHOD SHALL NOT BE USED.

ELEVATION TABLE

BENT	A	B	C	D	E	F	G	H	I
3	60.76	61.05	61.34	61.63	54.97	55.16	55.78	55.97	10.00
4	63.09	63.38	63.67	63.96	57.30	57.49	58.11	58.30	8.50

BEARING ANGLES

BENT	Θ1	Θ2
3 & 4	90°-00'-00"	90°-00'-00"

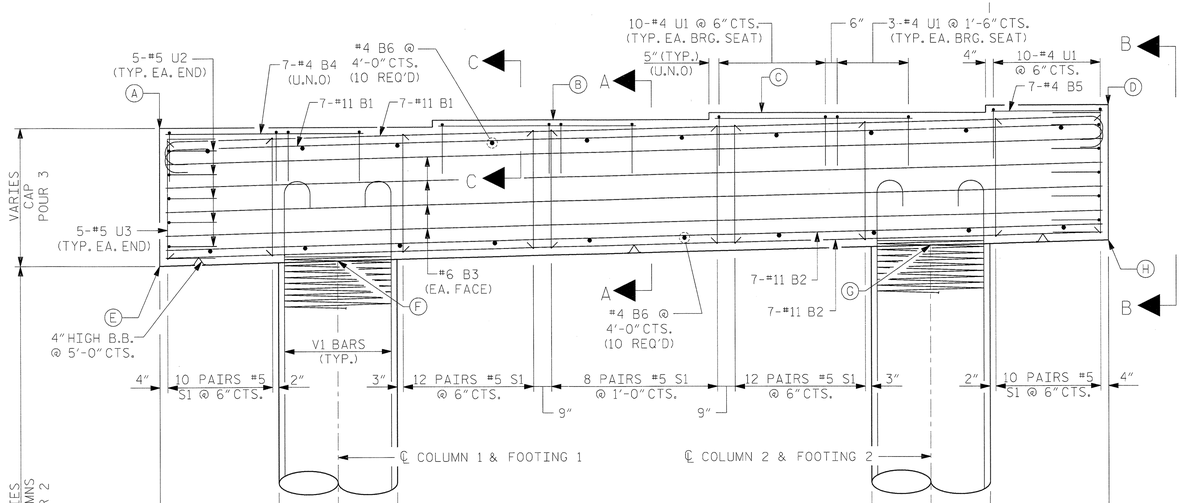

ELEVATION

LOOKING AHEAD ON STATION

ALL DIMENSIONS AND DETAILS SHOWN FOR FOOTINGS ARE TYPICAL FOR EACH FOOTING UNLESS NOTED OTHERWISE.

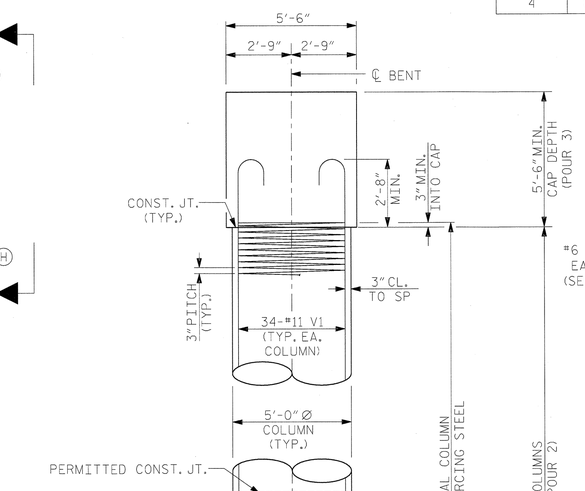

END VIEW

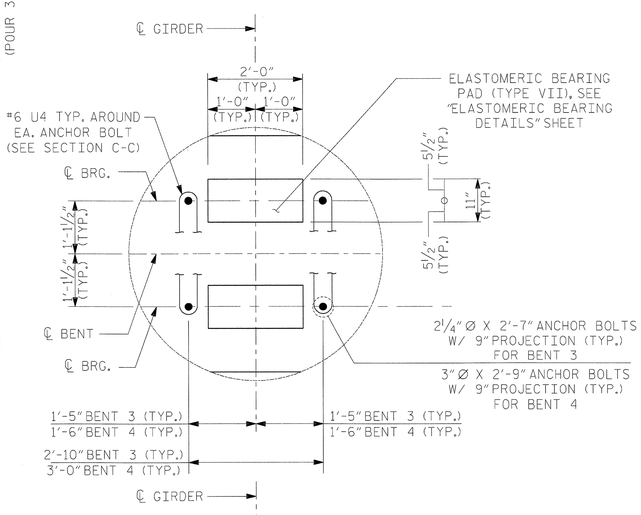

DETAIL A

PROJECT NO. R-2633BB

BRUNSWICK/NEW HANOVER COUNTY

STATION: 353+32.50 -L-

SHEET 1 OF 2

NORTH CAROLINA PROFESSIONAL SEAL 18442 ENGINEER RICHARD LEON BOLINGER, JR.

5-29-2013

RS&H IMPROVING YOUR WORLD

RS&H Architects-Engineers-Planners, Inc.
8601 Six Forks Road, Suite 260
Raleigh, NC 27615
919-846-6701 FAX 919-846-9080
www.rsandh.com
North Carolina License Nos. 50073 * F-0403 * C-28

STATE OF NORTH CAROLINA
DEPARTMENT OF TRANSPORTATION
RALEIGH

SUBSTRUCTURE

BENT 3 & 4
PLAN AND ELEVATION
LEFT LANE

REVISIONS						SHEET NO.
NO.	BY:	DATE:	NO.	BY:	DATE:	S-178
1			3			TOTAL SHEETS
2			4			700

DRAWN BY :	MKO	DATE :	09/2012
CHECKED BY :	JMR	DATE :	03/2013
DEISGN ENGINEER OR RECORD :	J. ROBINSON	DATE :	05/2013

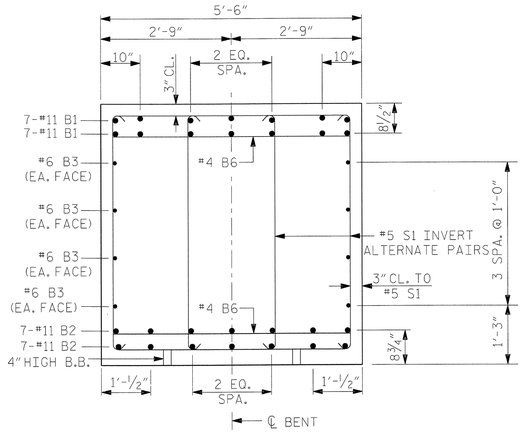

SECTION A-A

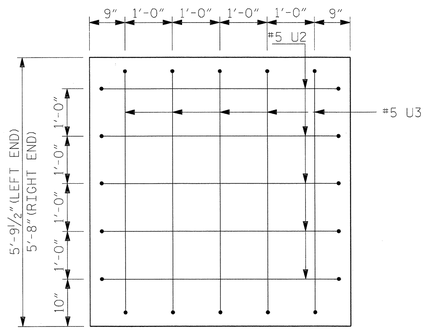

VIEW B-B

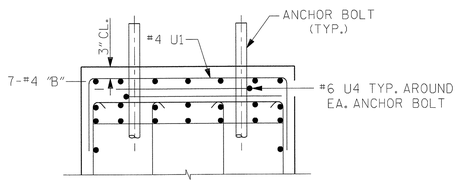

SECTION C-C

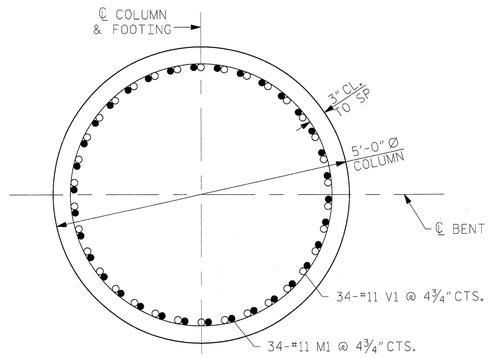

SECTION D-D

BAR TYPES

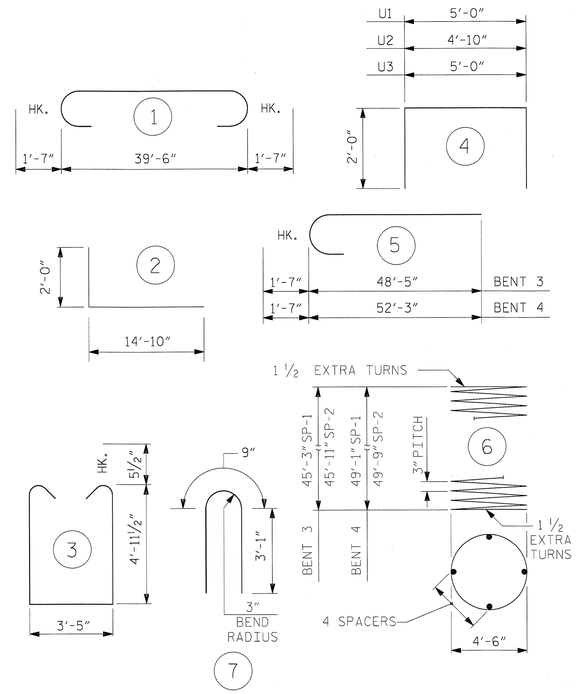

ALL BAR DIMENSIONS ARE OUT TO OUT.

BILL OF MATERIAL

BENT 3

BAR	NO.	SIZE	TYPE	LENGTH (ft)	WEIGHT (lb)
B1	14	11	1	42'-8"	3174
B2	14	11	STR.	39'-6"	2938
B3	8	6	STR.	39'-6"	475
B4	21	4	STR.	8'-4"	117
B5	7	4	STR.	4'-8"	22
B6	20	4	STR.	5'-0"	67
M1	68	11	2	16'-10"	6082
S1	104	5	3	14'-3"	1546
T1	180	6	STR.	14'-4"	3875
T2	116	9	STR.	14'-4"	5653
T3	136	6	STR.	4'-4"	885
U1	49	4	4	9'-0"	295
U2	10	5	4	8'-10"	92
U3	10	5	4	9'-0"	94
U4	16	6	7	6'-11"	166
V1	68	11	5	50'-0"	18064

EPOXY COATED REINFORCING STEEL 43545 LB.

SP1	1	**	6	2577'-7"	1722
SP2	1	**	6	2619'-7"	1750

TOTAL EPOXY COATED SPIRAL COLUMN REINFORCING STEEL 3472 LB.

CLASS "AA" CONCRETE BREAKDOWN

POUR 1 - FOOTING △	88.5 CU. YDS.
POUR 2 - COLUMN	66.1 CU. YDS.
POUR 3 - CAP	46.1 CU. YDS.
TOTAL CLASS "AA" CONCRETE	200.7 CU. YDS.

30" VOIDED PRESTRESSED CONCRETE PILES
NO. 8 440 LIN. FT.

PILE REDRIVES NO. 4

BENT 4

BAR	NO.	SIZE	TYPE	LENGTH (ft)	WEIGHT (lb)
B1	14	11	1	42'-8"	3174
B2	14	11	STR.	39'-6"	2938
B3	8	6	STR.	39'-6"	475
B4	21	4	STR.	8'-4"	117
B5	7	4	STR.	4'-8"	22
B6	20	4	STR.	5'-0"	67
M1	68	11	2	16'-10"	6082
S1	104	5	3	14'-3"	1546
T1	180	6	STR.	14'-4"	3875
T2	116	9	STR.	14'-4"	5653
T3	136	6	STR.	4'-4"	885
U1	49	4	4	9'-0"	295
U2	10	5	4	8'-10"	92
U3	8	5	4	9'-0"	94
U4	16	6	7	6'-11"	166
V1	68	11	5	53'-10"	19449

EPOXY COATED REINFORCING STEEL 44930 LB.

SP1	1	**	6	2801'-9"	1872
SP2	1	**	6	2829'-9"	1890

TOTAL EPOXY COATED SPIRAL COLUMN REINFORCING STEEL 3762 LB.

CLASS "AA" CONCRETE BREAKDOWN

POUR 1 - FOOTING △	88.5 CU. YDS.
POUR 2 - COLUMN	71.7 CU. YDS.
POUR 3 - CAP	46.1 CU. YDS.
TOTAL CLASS "AA" CONCRETE	206.3 CU. YDS.

30" VOIDED PRESTRESSED CONCRETE PILES
NO. 8 680 LIN. FT.

PILE REDRIVES NO. 4

** THE SP1 & SP2 SPIRAL REINFORCING STEEL SHALL BE W20 OR D-20 COLD DRAWN WIRE OR #4 PLAIN OR DEFORMED BAR.

△ INCLUDES CONCRETE IN THE 30" VOIDED PRESTRESSED CONCRETE PILES. SEE "30" VOIDED PRESTRESSED CONCRETE PILE" SHEETS FOR DETAIL AND NOTE.

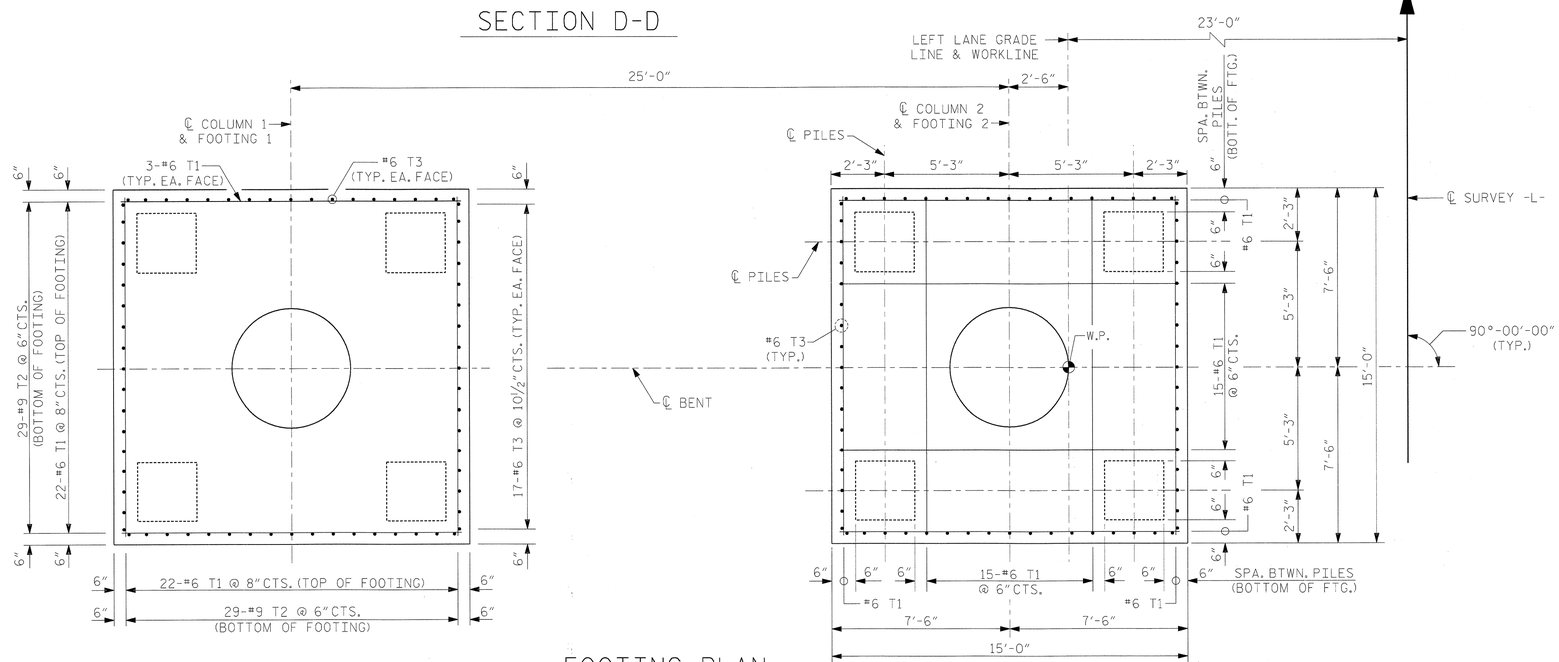

FOOTING PLAN

ALL DIMENSIONS AND DETAILS SHOWN FOR FOOTINGS ARE TYPICAL FOR EACH FOOTING UNLESS OTHERWISE NOTED.

PROJECT NO. R-2633BB
BRUNSWICK/NEW HANOVER COUNTY
STATION: 353+32.50 -L-

SHEET 2 OF 2

NORTH CAROLINA PROFESSIONAL SEAL 18442 ENGINEER RICHARD LEON ROBINSON, JR.
5-24-2013

RS&H IMPROVING YOUR WORLD

RS&H Architects-Engineers-Planners, Inc.
8601 Six Forks Road, Suite 260
Raleigh, NC 27615
919-846-6701 FAX 919-846-9080
www.rsandh.com
North Carolina License Nos. 50073 * F-0483 * C-28

STATE OF NORTH CAROLINA
DEPARTMENT OF TRANSPORTATION
RALEIGH

SUBSTRUCTURE
BENT 3 & 4
DETAILS AND
BILL OF MATERIAL
LEFT LANE

REVISIONS						SHEET NO.
NO.	BY:	DATE:	NO.	BY:	DATE:	S-179
1			3			TOTAL SHEETS
2			4			700

DRAWN BY :	MKO	DATE :	09/2012
CHECKED BY :	JMR	DATE :	03/2013
DEISGN ENGINEER OR RECORD :	J. ROBINSON	DATE :	05/2013

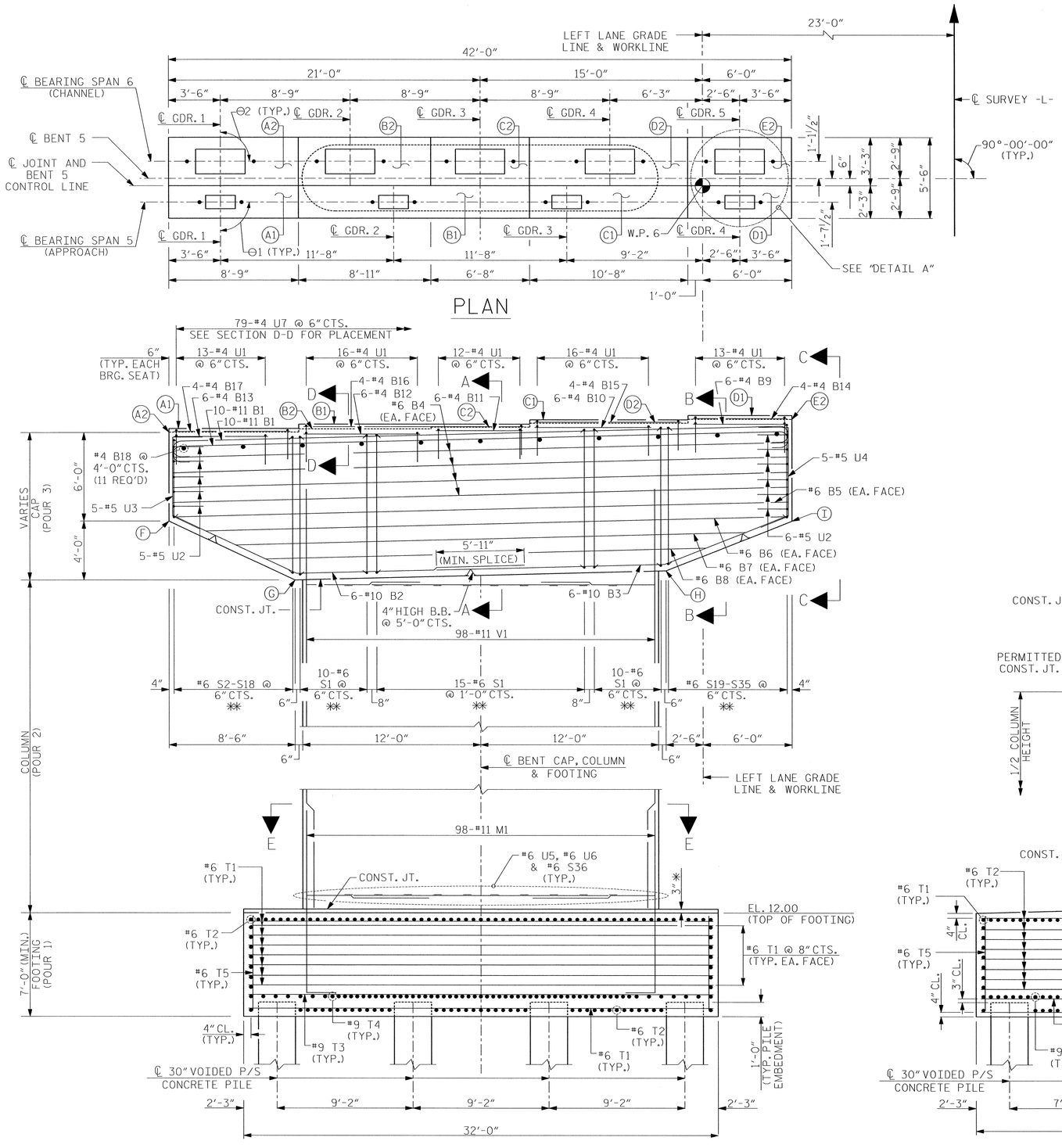

BEARING ANGLES		
BENT	Θ1	Θ2
5	90°-00'-00"	90°-00'-00"

NOTES:

THE CONTRACTOR'S ATTENTION IS CALLED TO THE FACT THAT THE CENTERLINE JOINT IN THE DECK SLAB (CONTROL LINE) IS OFFSET FROM THE CENTERLINE BENT.

STIRRUPS AND "U" BARS IN CAP MAY BE SHIFTED AS NECESSARY TO CLEAR ANCHOR BOLTS.

ALTERNATELY INVERT STIRRUP PAIRS AS NOTED.

FOR FOOTING REINFORCING DETAILS, SEE SHEET 2 OF 3.

FOR SECTION A-A, SECTION B-B, VIEW C-C, SECTION D-D AND SECTION E-E, SEE SHEET 2 OF 3.

* THE FOOTING HAS A DROP OF 3" FROM THE CENTER OF THE FOOTING TO THE EDGE OF FOOTING TO ACCOMODATE DRAINAGE.

FOR FOUNDATION NOTES, SEE "GENERAL DRAWINGS FOUNDATION LAYOUT" SHEET 10 OF 10.

** STIRRUPS S1-S35 IN CAP TO BE PLACED IN PAIRS. SEE SECTION A-A AND SECTION B-B ON SHEET 2 OF 3 FOR DETAILS.

FOR PIPE INSERT DETAILS, SEE BEARING SHEET.

THE TOP SURFACE AREAS OF THE BENT CAP SHALL BE CURED IN ACCORDANCE WITH THE STANDARD SPECIFICATIONS EXCEPT THE MEMBRANE CURING COMPOUND SHALL NOT BE USED.

DETAILED DRAWINGS FOR FALSEWORK AND FORMS FOR THIS BENT SHALL BE SUBMITTED. SEE SHEET SN.

FOR MASS CONCRETE, SEE SPECTIAL PROVISIONS.

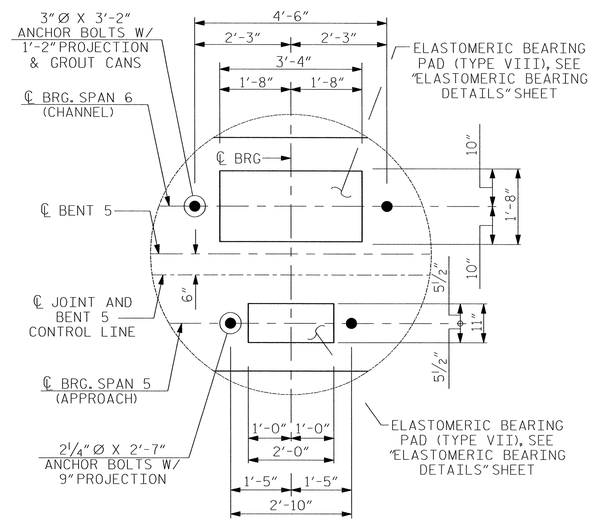

DETAIL A

PROJECT NO. R-2633BB

BRUNSWICK/NEW HANOVER COUNTY

STATION: 353+32.50 -L-

SHEET 1 OF 3

BENT 5 ELEVATION TABLE													
BENT	A1	A2	B1	B2	C1	C2	D1	D2	E2	F	G	H	I
5	64.79	64.50	65.09	64.72	65.38	64.94	65.67	65.16	65.38	58.50	54.50	55.13	58.50

DRAWN BY : MKO DATE : 01/2013
CHECKED BY : JMR, RLB DATE : 01/2013
DESIGN ENGINEER OF RECORD : J. ROBINSON DATE : 05/2013

NORTH CAROLINA PROFESSIONAL SEAL 18442 ENGINEER RICHARD LEON BRUNSON JR.
6-03-2013

RS&H IMPROVING YOUR WORLD

RS&H Architects-Engineers-Planners, Inc.
8601 Six Forks Road, Suite 260
Raleigh, NC 27615
919-846-6701 FAX 919-846-9080
www.rsandh.com
North Carolina License Nos. 50073 * F-0493 * C-28

STATE OF NORTH CAROLINA
DEPARTMENT OF TRANSPORTATION
RALEIGH

SUBSTRUCTURE

BENT 5
PLAN AND ELEVATION
LEFT LANE

REVISIONS						
NO.	BY:	DATE:	NO.	BY:	DATE:	
1			3			
2			4			

SHEET NO. S-180

TOTAL SHEETS 700

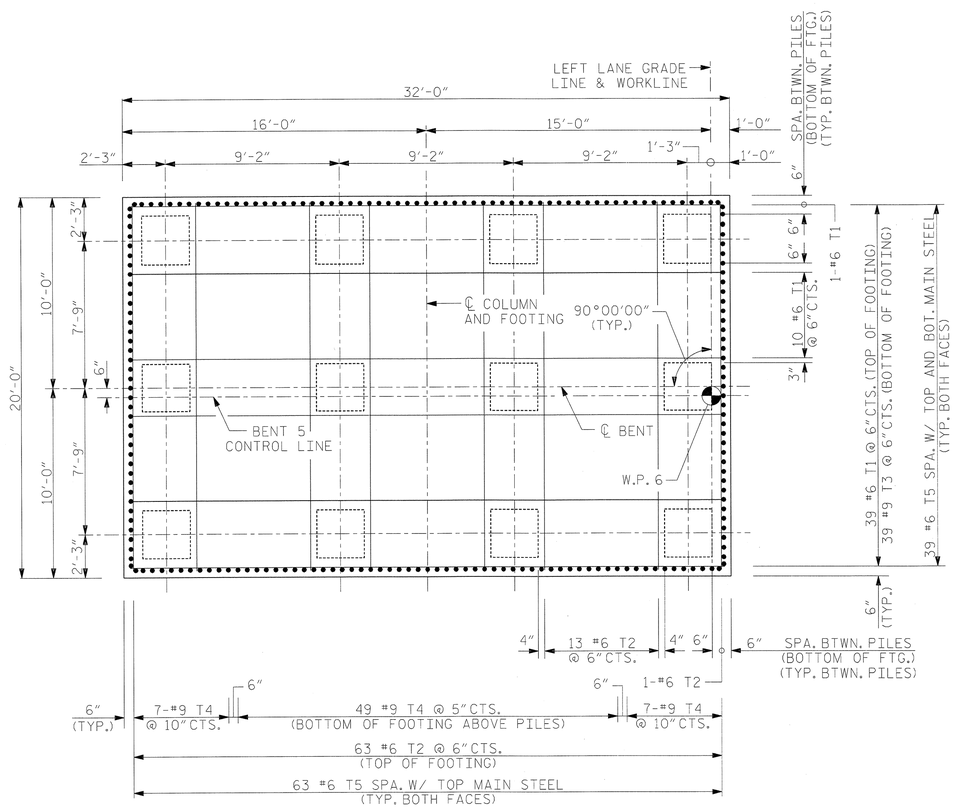

PLAN OF FOOTING

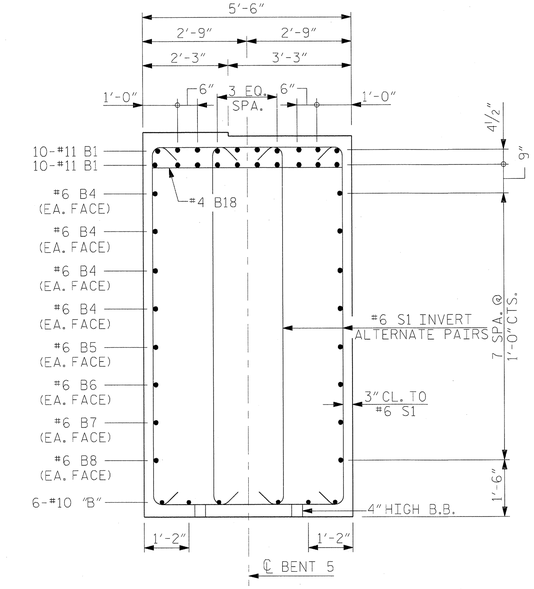

SECTION A-A

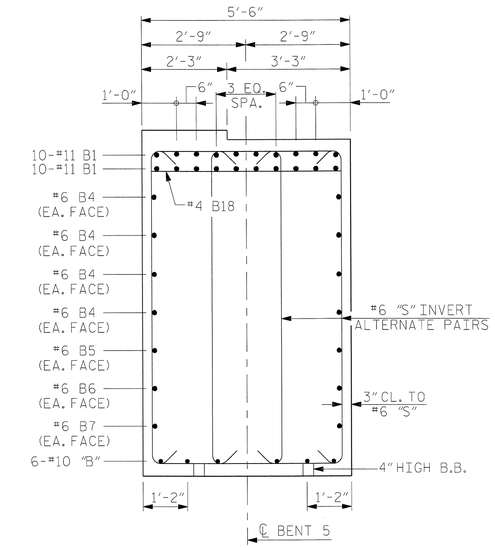

SECTION B-B

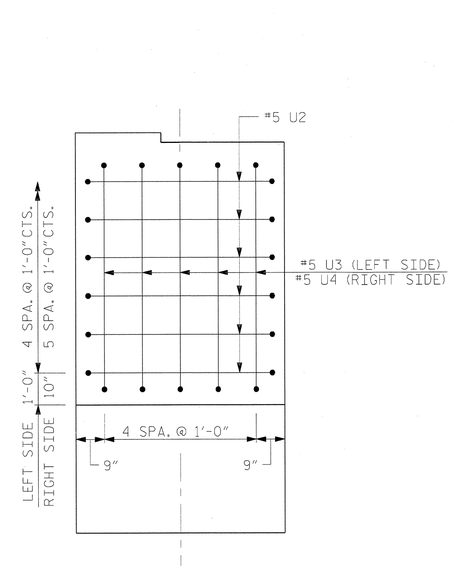

VIEW C-C

RIGHT SIDE VIEW SHOWN

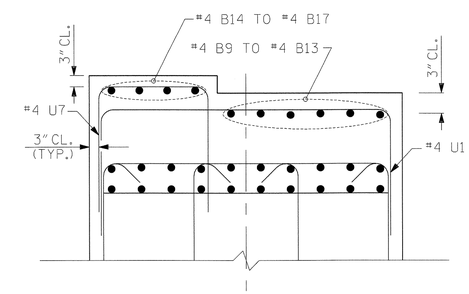

SECTION D-D

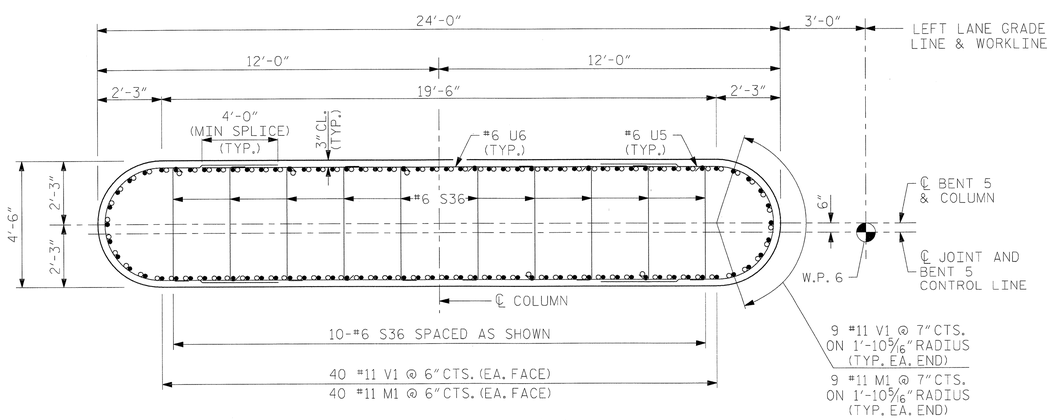

SECTION E-E

WHEN PLACING CROSS-TIES, ALTERNATE POSITION OF 135° HK HORIZONTALLY AND VERTICALLY

○ #11 V1

● #11 M1

PROJECT NO. R-2633BB

BRUNSWICK/NEW HANOVER COUNTY

STATION: 353+32.50 -L-

SHEET 2 OF 3

STATE OF NORTH CAROLINA
DEPARTMENT OF TRANSPORTATION
RALEIGH

SUBSTRUCTURE

BENT 5 SECTION AND DETAILS LEFT LANE

NORTH CAROLINA PROFESSIONAL SEAL 18442 ENGINEER LEON BOYNTON ROBINSON
5-29-2013

RS&H IMPROVING YOUR WORLD

RS&H Architects-Engineers-Planners, Inc.
8601 Six Forks Road, Suite 260
Raleigh, NC 27615
919-846-6701 FAX 919-846-9080
www.rsandh.com
North Carolina License Nos. 50073 * F-0493 * C-28

REVISIONS						SHEET NO.
NO.	BY:	DATE:	NO.	BY:	DATE:	S-181
1			3			TOTAL SHEETS
2			4			700

DRAWN BY : MKO DATE : 01/2013
CHECKED BY : JMR, RLB DATE : 01/2013
DESIGN ENGINEER OF RECORD : J. ROBINSON DATE : 05/2013

BAR TYPES

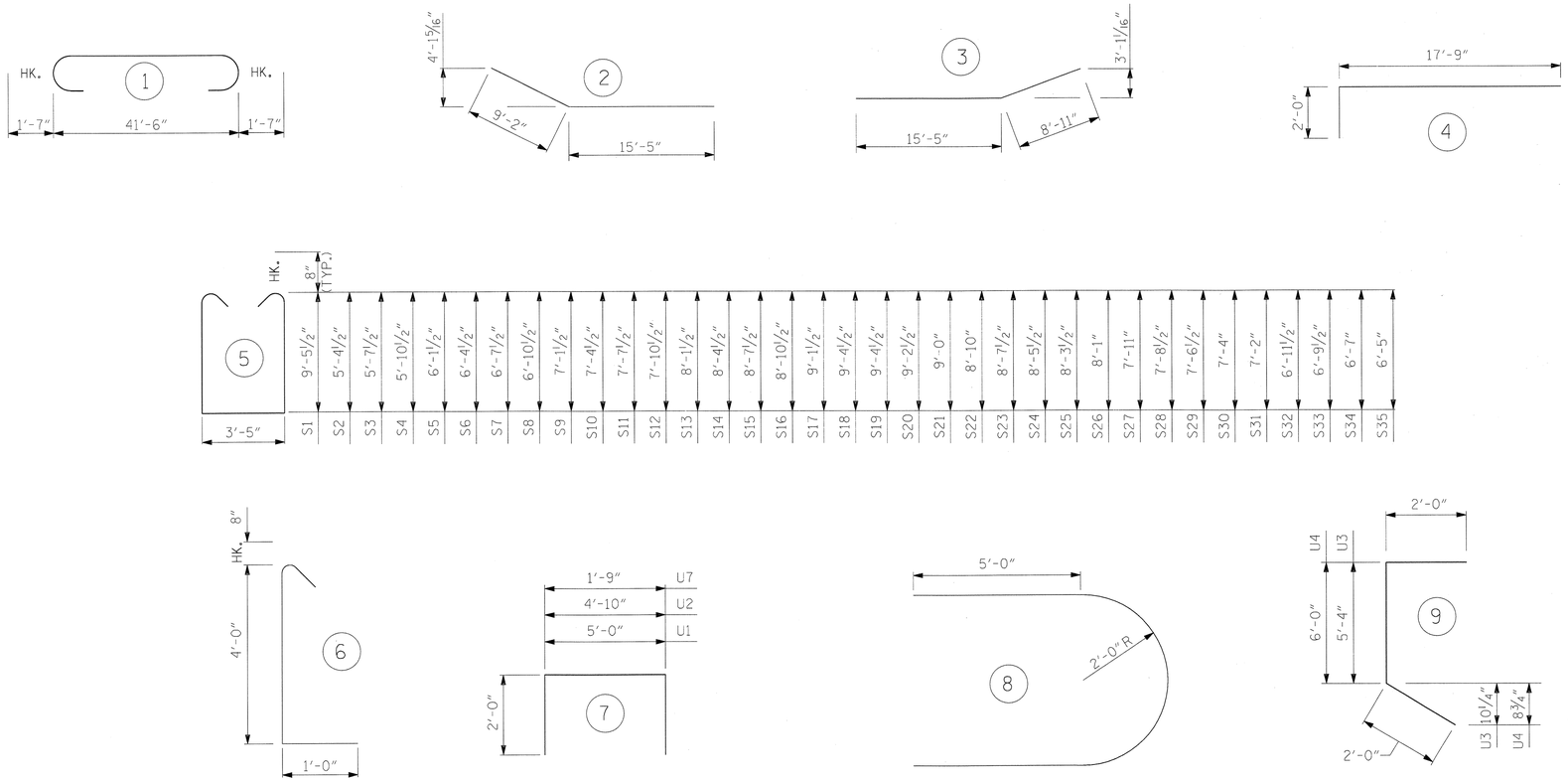

ALL BAR DIMENSIONS ARE OUT TO OUT.

BILL OF MATERIAL

BENT 5

BAR	NO.	SIZE	TYPE	LENGTH (ft)	WEIGHT (lb)	BAR	NO.	SIZE	TYPE	LENGTH (ft)	WEIGHT (lb)
B1	20	11	1	44'-8"	4746	T1	75	6	STR	31'-4"	3530
B2	6	10	2	24'-7"	635	T2	118	6	STR	19'-4"	3427
B3	6	10	3	24'-4"	628	T3	39	9	STR	31'-4"	4155
B4	8	6	STR	41'-6"	499	T4	63	9	STR	19'-4"	4141
B5	2	6	STR	41'-3"	124	T5	204	6	STR	6'-4"	1941
B6	2	6	STR	39'-5"	118						
B7	2	6	STR	34'-8"	104	U1	70	4	7	9'-0"	421
B8	2	6	STR	30'-0"	90	U2	11	5	7	8'-10"	101
B9	6	4	STR	6'-4"	25	U3	5	5	9	9'-4"	49
B10	6	4	STR	7'-10"	31	U4	5	5	9	10'-0"	52
B11	6	4	STR	5'-10"	23	U5	84	6	8	16'-4"	2061
B12	6	4	STR	7'-10"	31	U6	84	6	STR	17'-6"	2208
B13	6	4	STR	6'-4"	25	U7	79	4	7	5'-9"	303
B14	4	4	STR	6'-4"	17						
B15	4	4	STR	9'-10"	26	V1	98	11	STR	48'-9"	25383
B16	4	4	STR	14'-10"	40						
B17	4	4	STR	7'-10"	21	EPOXY COATED					
B18	11	4	STR	5'-0"	37	REINFORCING STEEL					73387 LB.
M1	98	11	4	19'-9"	10283	CLASS "AA" CONCRETE BREAKDOWN					
						POUR 1 - FOOTING △					171.7 CU. YDS.
S1	70	6	5	23'-8"	2488	POUR 2 - COLUMN					163.7 CU. YDS.
S2	2	6	5	15'-6"	47	POUR 3 - CAP					81.4 CU. YDS.
S3	2	6	5	16'-0"	48						
S4	2	6	5	16'-6"	50	TOTAL CLASS "AA" CONCRETE					416.8 CU. YDS.
S5	2	6	5	17'-0"	51						
S6	2	6	5	17'-6"	53	30" VOIDED PRESTRESSED CONCRETE PILES					
S7	2	6	5	18'-0"	54	NO. = 12					1080 LIN. FT.
S8	2	6	5	18'-6"	56						
S9	2	6	5	19'-0"	57						
S10	2	6	5	19'-6"	59						
S11	2	6	5	20'-0"	60	PILE REDRIVES					NO. = 6
S12	2	6	5	20'-6"	62						
S13	2	6	5	21'-0"	63						
S14	2	6	5	21'-6"	65						
S15	2	6	5	22'-0"	66						
S16	2	6	5	22'-6"	68						
S17	2	6	5	23'-0"	69						
S18	2	6	5	23'-6"	71						
S19	2	6	5	23'-6"	71						
S20	2	6	5	23'-2"	70						
S21	2	6	5	22'-9"	68						
S22	2	6	5	22'-5"	67						
S23	2	6	5	22'-0"	66						
S24	2	6	5	21'-8"	65						
S25	2	6	5	21'-4"	64						
S26	2	6	5	20'-11"	63						
S27	2	6	5	20'-7"	62						
S28	2	6	5	20'-2"	61						
S29	2	6	5	19'-10"	60						
S30	2	6	5	19'-5"	58						
S31	2	6	5	19'-1"	57						
S32	2	6	5	18'-8"	56						
S33	2	6	5	18'-4"	55						
S34	2	6	5	17'-11"	54						
S35	2	6	5	17'-7"	53						
S36	420	6	6	5'-8"	3575						

△ INCLUDES CONCRETE IN THE 30" VOIDED PRESTRESSED CONCRETE PILES. SEE "30" VOIDED PRESTRESSED CONCRETE PILE" SHEETS FOR DETAIL AND NOTE.

PROJECT NO. R-2633BB
BRUNSWICK/NEW HANOVER COUNTY
STATION: 353+32.50 -L-

SHEET 3 OF 3

NORTH CAROLINA PROFESSIONAL SEAL 18442 ENGINEER LEON T. ROBINSON, JR.
5-29-2013

RS&H IMPROVING YOUR WORLD

RS&H Architects-Engineers-Planners, Inc.
8601 Six Forks Road, Suite 260
Raleigh, NC 27615
919-846-6701 FAX 919-846-9080
www.rsandh.com
North Carolina License Nos. 50073 * F-0493 * C-28

STATE OF NORTH CAROLINA
DEPARTMENT OF TRANSPORTATION
RALEIGH

SUBSTRUCTURE

BENT 5
BILL OF MATERIALS

LEFT LANE

REVISIONS						
NO.	BY:	DATE:	NO.	BY:	DATE:	
1			3			
2			4			

SHEET NO. S-182
TOTAL SHEETS 700

DRAWN BY : MKO DATE : 01/2013
CHECKED BY : JMR, RLB DATE : 01/2013
DESIGN ENGINEER OF RECORD : J. ROBINSON DATE : 05/2013

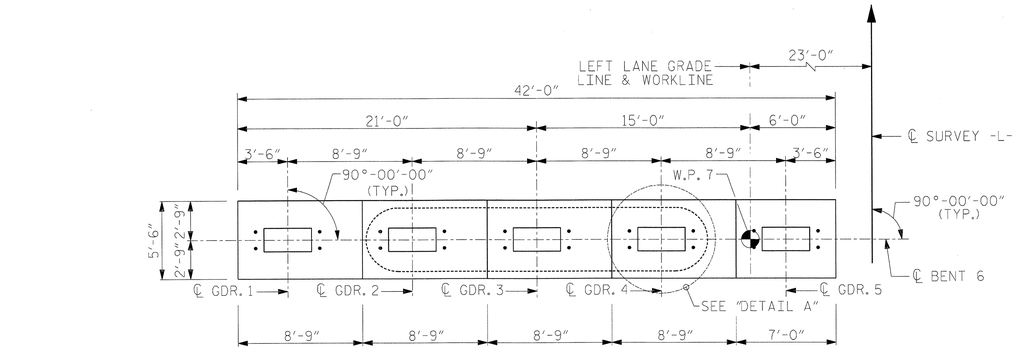

PLAN

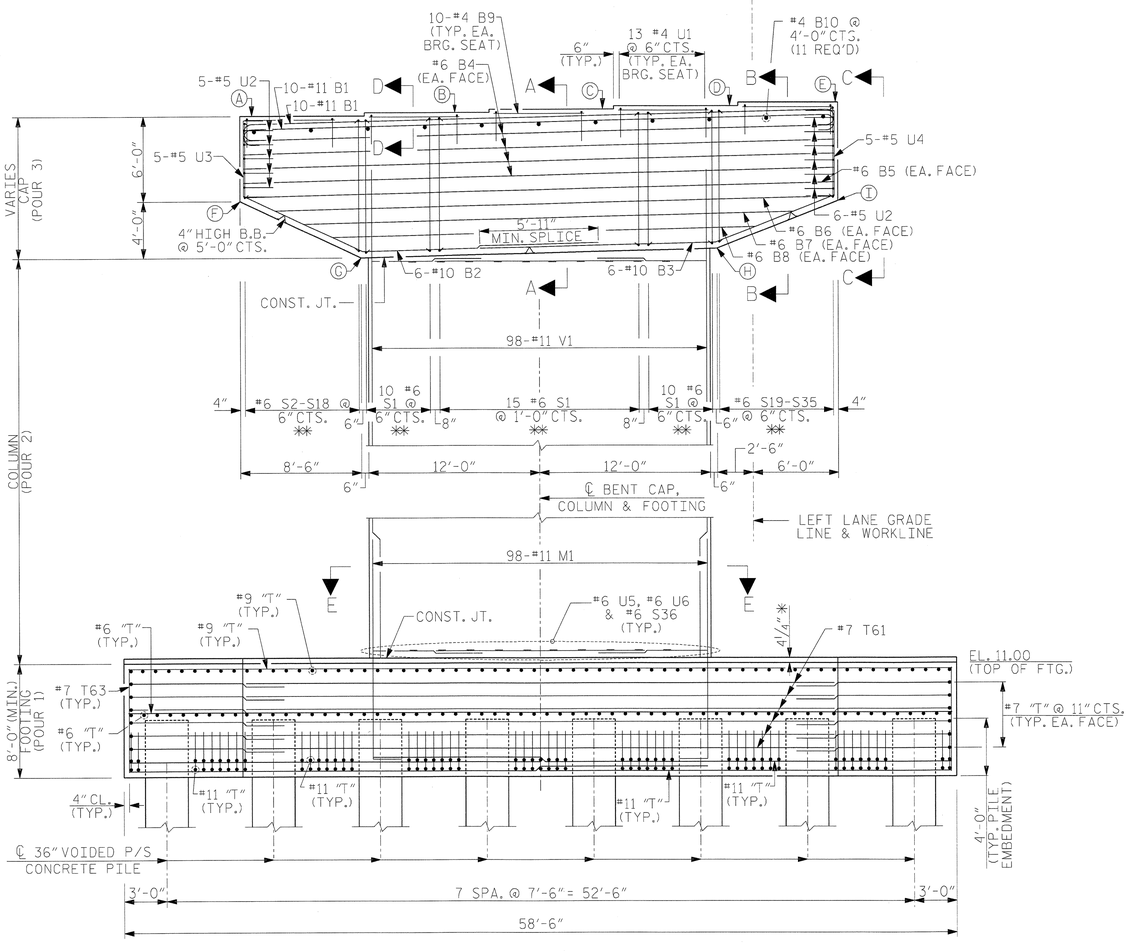

ELEVATION

LOOKING AHEAD ON STATION

NOTES:

STIRRUPS IN CAP MAY BE SHIFTED AS NECESSARY TO CLEAR ANCHOR BOLTS.

ALTERNATELY INVERT STIRRUP PAIRS AS NOTED.

FOR FOOTING REINFORCING DETAILS, SEE SHEET 2 OF 4 AND SHEET 3 OF 4.

FOR SECTION A-A, SECTION B-B, VIEW C-C, SECTION D-D, SEE SHEET 2 OF 4. FOR SECTION E-E, SEE SHEET 3 OF 4.

* THE FOOTING HAS A DROP OF 4 1/4" FROM THE CENTER OF THE FOOTING TO THE EDGE OF FOOTING TO ACCOMODATE DRAINAGE.

FOR FOUNDATION NOTES, SEE "GENERAL DRAWINGS FOUNDATION LAYOUT" SHEET 10 OF 10.

** STIRRUPS S1-S35 IN CAP TO BE PLACED IN PAIRS. SEE SECTION A-A AND SECTION B-B ON SHEET 2 OF 4 FOR DETAILS.

"T" BARS IN FOOTING MAY BE SHIFTED AS NECESARY TO CLEAR M1 BARS.

HOOKS ON M1 BARS MAY BE SHIFTED AS NECESSARY FOR PLACING STEEL.

DETAILED DRAWINGS FOR FALSEWORK AND FORMS FOR THIS BENT SHALL BE SUBMITTED. SEE SHEET SN.

FOR MASS CONCRETE, SEE SPECTIAL PROVISIONS.

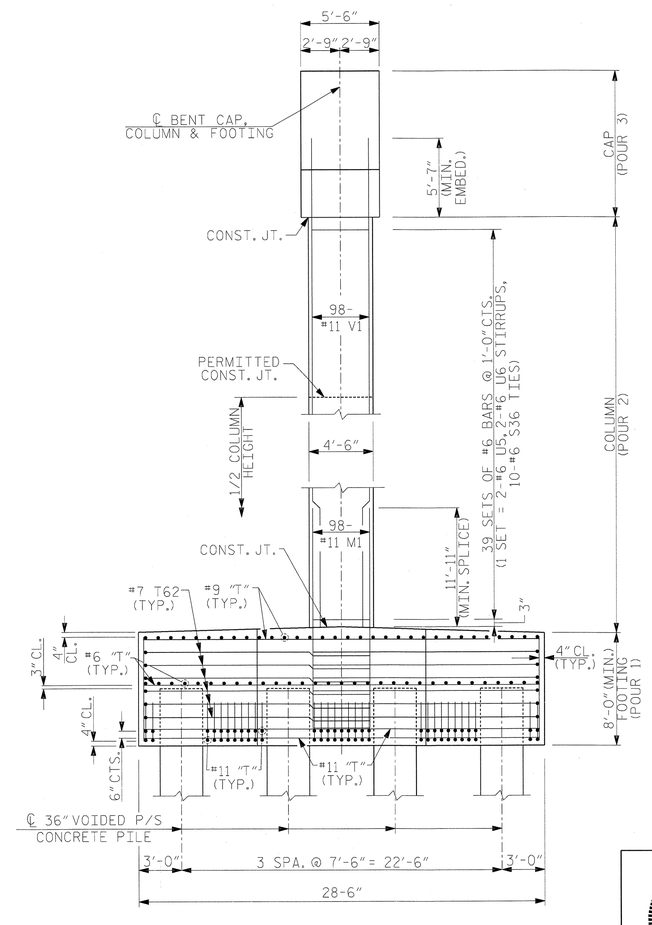

END VIEW

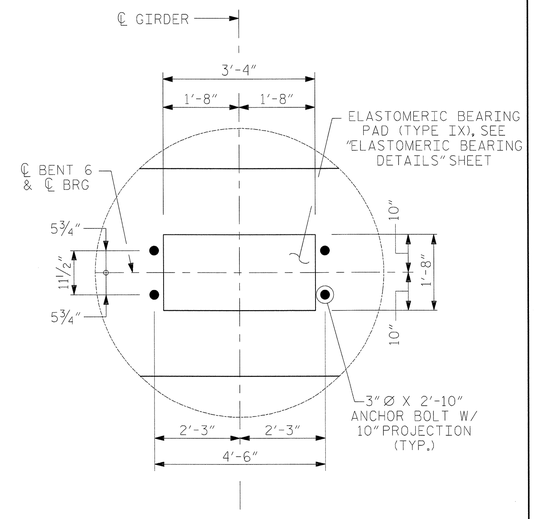

DETAIL A

PROJECT NO. R-2633BB

BRUNSWICK/NEW HANOVER COUNTY

STATION: 353+32.50 -L-

SHEET 1 OF 4

BENT 6 ELEVATION TABLE									
BENT	A	B	C	D	E	F	G	H	I
6	59.80	60.02	60.24	60.46	60.67	53.80	49.80	50.42	53.80

DRAWN BY : MKO DATE : 01/2013

CHECKED BY : JMR, RLB DATE : 01/2013

DESIGN ENGINEER OF RECORD : J. ROBINSON DATE : 05/2013

NORTH CAROLINA PROFESSIONAL SEAL 18442 ENGINEER RICHARD LEON BOWINGER JR.

5-29-2013

RS&H IMPROVING YOUR WORLD

RS&H Architects-Engineers-Planners, Inc.
8601 Six Forks Road, Suite 260
Raleigh, NC 27615
919-846-5701 FAX 919-846-9080
www.rsandh.com
North Carolina License Nos. 50073 * F-0493 * C-28

STATE OF NORTH CAROLINA
DEPARTMENT OF TRANSPORTATION
RALEIGH

SUBSTRUCTURE

BENT 6
PLAN AND ELEVATION
LEFT LANE

REVISIONS						
NO.	BY:	DATE:	NO.	BY:	DATE:	
1			3			
2			4			

SHEET NO. S-183

TOTAL SHEETS 700

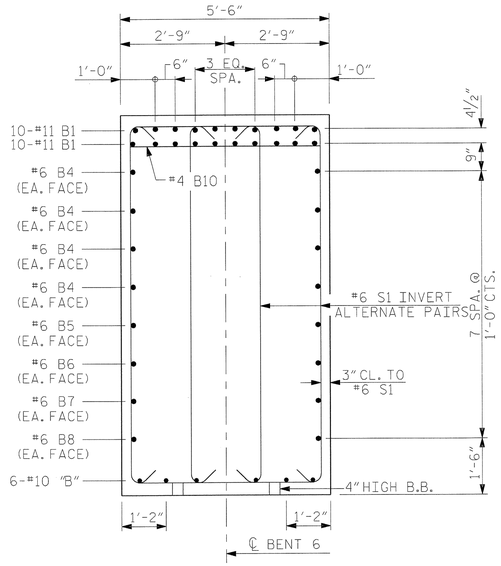

SECTION A-A

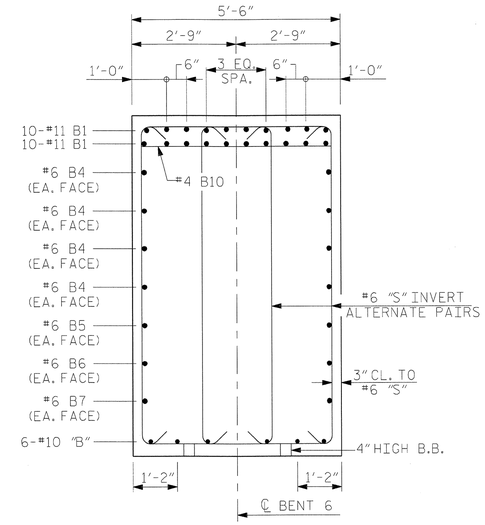

SECTION B-B

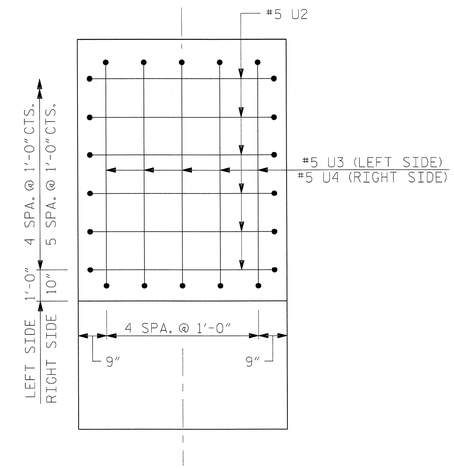

VIEW C-C

RIGHT SIDE VIEW SHOWN

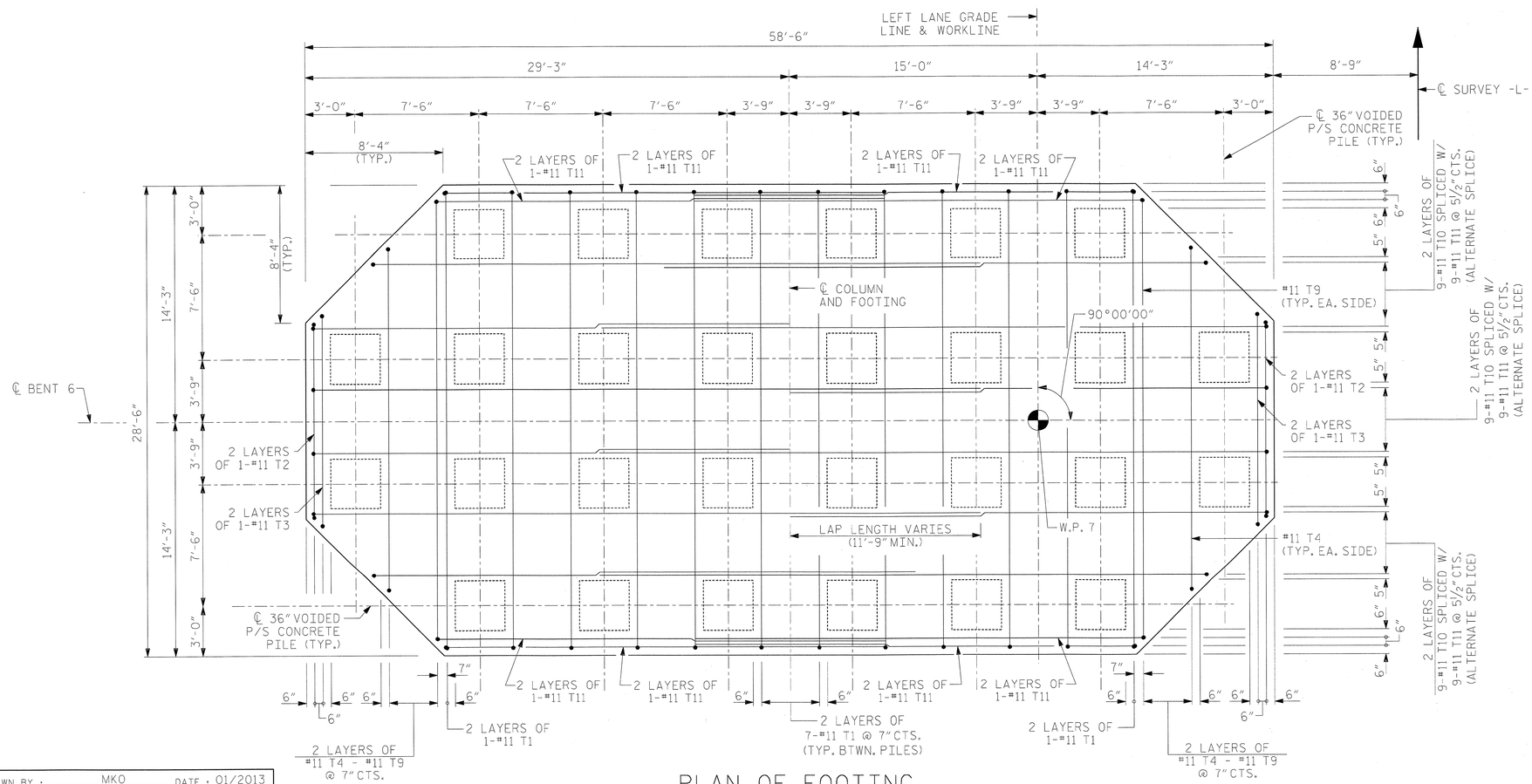

PLAN OF FOOTING

BOTTOM OF FOOTING BETWEEN PILES

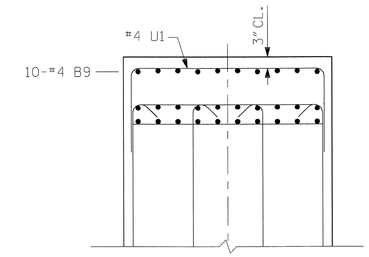

SECTION D-D

PROJECT NO. R-2633BB

BRUNSWICK/NEW HANOVER COUNTY

STATION: 353+32.50 -L-

SHEET 2 OF 4

NORTH CAROLINA PROFESSIONAL SEAL 18442 ENGINEER RICHARD LEON BOWMAN 5-24-2013

RS&H IMPROVING YOUR WORLD

RS&H Architects-Engineers-Planners, Inc.
8601 Six Forks Road, Suite 260
Raleigh, NC 27615
919-846-6701 FAX 919-846-9080
www.rsandh.com
North Carolina License Nos. 50073 * F-0493 * C-28

STATE OF NORTH CAROLINA
DEPARTMENT OF TRANSPORTATION
RALEIGH

SUBSTRUCTURE

BENT 6
SECTION AND DETAILS
LEFT LANE

REVISIONS						SHEET NO.
NO.	BY:	DATE:	NO.	BY:	DATE:	S-184
1			3			TOTAL SHEETS
2			4			700

DRAWN BY :	MKO	DATE :	01/2013
CHECKED BY :	JMR, RLB	DATE :	01/2013
DESIGN ENGINEER OF RECORD :	J. ROBINSON	DATE :	05/2013

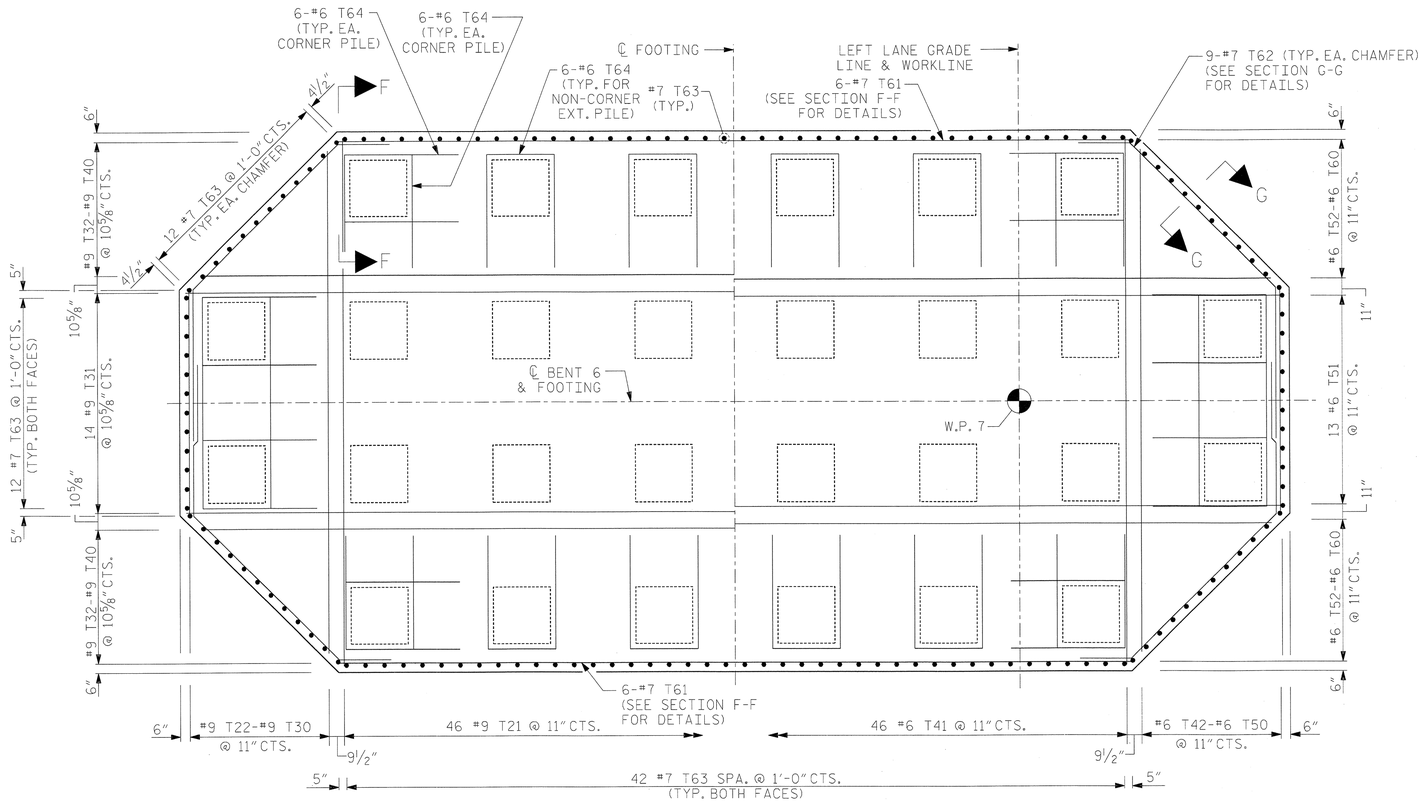

PARTIAL FOOTING PLAN

(TOP OF FOOTING REINFORCING AND TEMPERATURE REINFORCING SHOWN)

PARTIAL FOOTING PLAN

(FOOTING REINFORCING ABOVE PILES AND TEMPERATURE REINFORCING SHOWN)

NOTES:

#7 T63 IN FOOTING MAY BE SHIFTED AS NECESSARY TO CLEAR LONGITUDINAL AND TRANSVERSE REINFORCEMENT. SPACING OF #7 T63 SHALL HAVE A MAXIMUM OF 1'-0" CTS.

EMBEDDED SURFACES OF PILE SHALL BE ROUGHENED TO AN AMPLITUDE OF ¼".

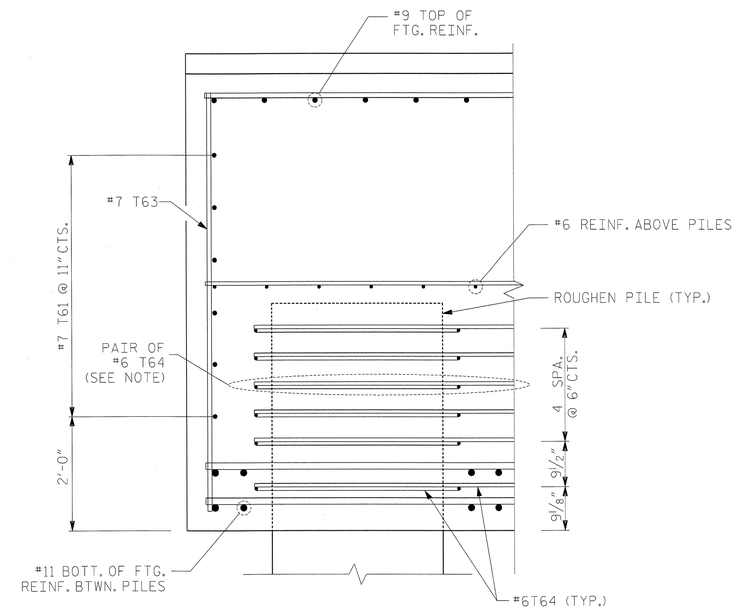

SECTION F-F

NOTE: #6T64 BARS TO BE PLACED AS SHOWN IN PLAN VIEW

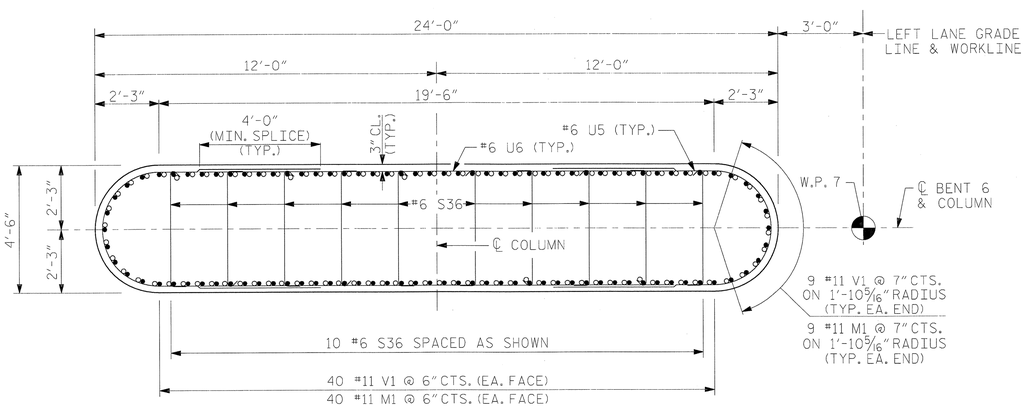

SECTION E-E

WHEN PLACING CROSS-TIES, ALTERNATE POSITION OF 135° HK HORIZONTALLY AND VERTICALLY

○ #11 V1

● #11 M1

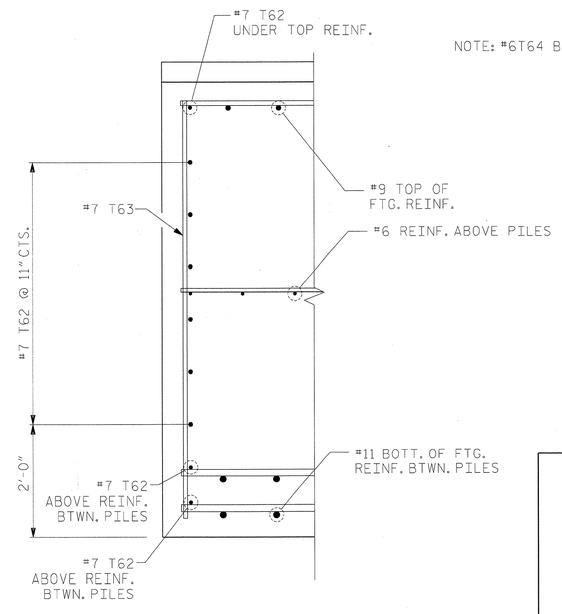

SECTION G-G

PROJECT NO. R-2633BB

BRUNSWICK/NEW HANOVER COUNTY

STATION: 353+32.50 -L-

SHEET 3 OF 4

NORTH CAROLINA PROFESSIONAL SEAL 18442 ENGINEER RICHARD LEON BOLLINGER, JR. 5-29-2013

RS&H IMPROVING YOUR WORLD

RS&H Architects-Engineers-Planners, Inc.
8601 Six Forks Road, Suite 260
Raleigh, NC 27615
919-846-6701 FAX 919-846-9080
www.rsandh.com
North Carolina License Nos. 00073 * F-0493 * C-28

STATE OF NORTH CAROLINA
DEPARTMENT OF TRANSPORTATION
RALEIGH

SUBSTRUCTURE

BENT 6
SECTION AND DETAILS
LEFT LANE

REVISIONS						SHEET NO.
NO.	BY:	DATE:	NO.	BY:	DATE:	S-185
1			3			TOTAL SHEETS
2			4			700

DRAWN BY :	MKO	DATE :	01/2013
CHECKED BY :	JMR, RLB	DATE :	01/2013
DESIGN ENGINEER OF RECORD :	J. ROBINSON	DATE :	05/2013

BAR TYPES

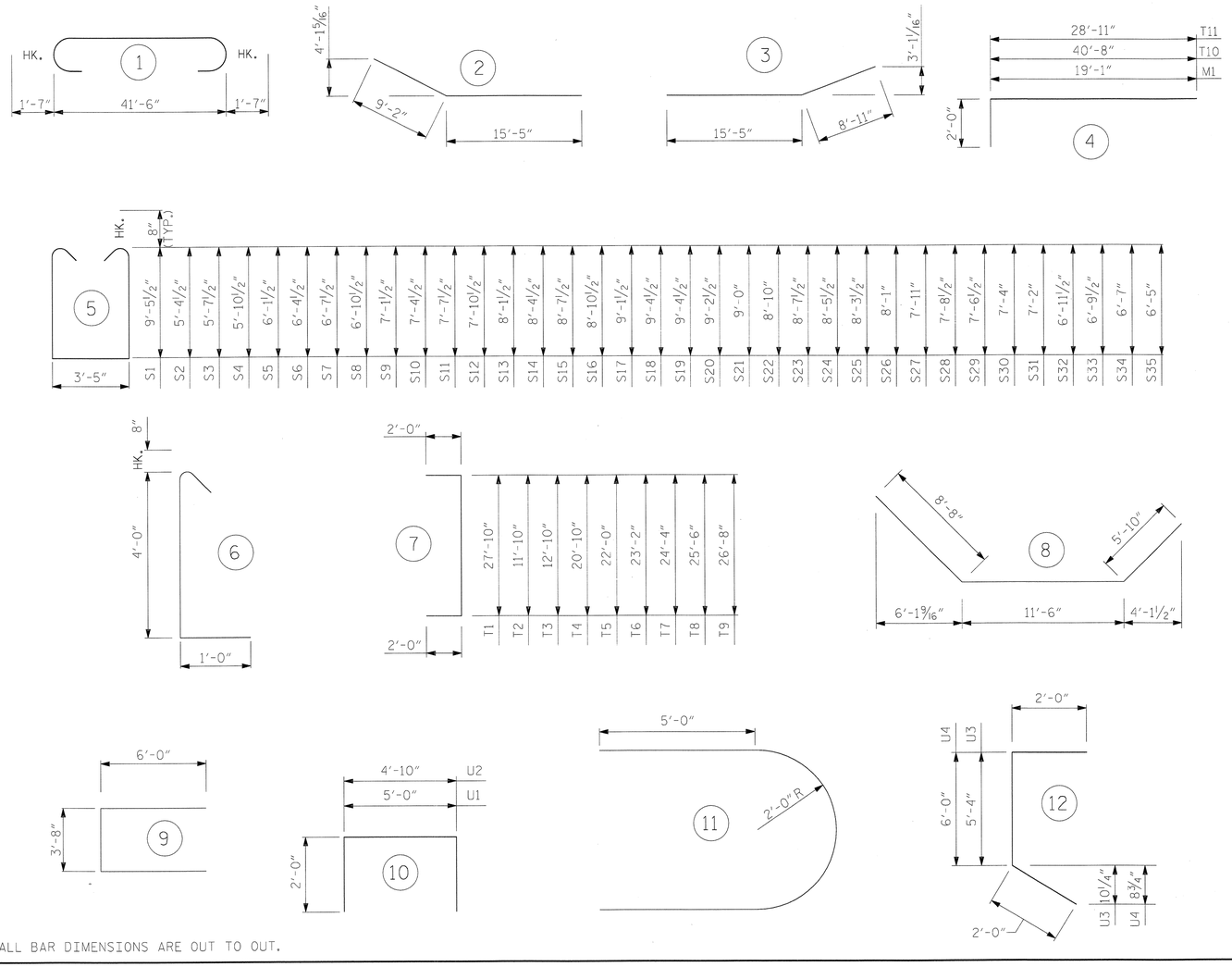

ALL BAR DIMENSIONS ARE OUT TO OUT.

BILL OF MATERIAL

BENT 6

BAR	NO.	SIZE	TYPE	LENGTH (ft)	WEIGHT (lb)
B1	20	11	1	44'-8"	4746
B2	6	10	2	24'-7"	635
B3	6	10	3	24'-4"	628
B4	8	6	STR	41'-6"	499
B5	2	6	STR	41'-3"	124
B6	2	6	STR	39'-5"	118
B7	2	6	STR	34'-8"	104
B8	2	6	STR	30'-0"	90
B9	50	4	STR	6'-4"	212
B10	11	4	STR	5'-0"	37
M1	98	11	4	21'-1"	10978
S1	70	6	5	23'-8"	2488
S2	2	6	5	15'-6"	47
S3	2	6	5	16'-0"	48
S4	2	6	5	16'-6"	50
S5	2	6	5	17'-0"	51
S6	2	6	5	17'-6"	53
S7	2	6	5	18'-0"	54
S8	2	6	5	18'-6"	56
S9	2	6	5	19'-0"	57
S10	2	6	5	19'-6"	59
S11	2	6	5	20'-0"	60
S12	2	6	5	20'-6"	62
S13	2	6	5	21'-0"	63
S14	2	6	5	21'-6"	65
S15	2	6	5	22'-0"	66
S16	2	6	5	22'-6"	68
S17	2	6	5	23'-0"	69
S18	2	6	5	23'-6"	71
S19	2	6	5	23'-6"	71
S20	2	6	5	23'-2"	70
S21	2	6	5	22'-9"	68
S22	2	6	5	22'-5"	67
S23	2	6	5	22'-0"	66
S24	2	6	5	21'-8"	65
S25	2	6	5	21'-4"	64
S26	2	6	5	20'-11"	63
S27	2	6	5	20'-7"	62
S28	2	6	5	20'-2"	61
S29	2	6	5	19'-10"	60
S30	2	6	5	19'-5"	58
S31	2	6	5	19'-1"	57
S32	2	6	5	18'-8"	56
S33	2	6	5	18'-4"	55
S34	2	6	5	17'-11"	54
S35	2	6	5	17'-7"	53
S36	390	6	6	5'-8"	3319

BAR	NO.	SIZE	TYPE	LENGTH (ft)	WEIGHT (lb)
T1	74	11	7	31'-10"	12516
T2	4	11	7	15'-10"	336
T3	4	11	7	16'-10"	358
T4	4	11	7	24'-10"	528
T5	4	11	7	26'-0"	553
T6	4	11	7	27'-2"	577
T7	4	11	7	28'-4"	602
T8	4	11	7	29'-6"	627
T9	4	11	7	30'-8"	652
T10	54	11	4	42'-8"	12241
T11	70	11	4	30'-11"	11498
T21	46	9	STR	27'-10"	4353
T22	2	9	STR	11'-10"	80
T23	2	9	STR	13'-8"	93
T24	2	9	STR	15'-6"	105
T25	2	9	STR	17'-4"	118
T26	2	9	STR	19'-2"	130
T27	2	9	STR	21'-0"	143
T28	2	9	STR	22'-10"	155
T29	2	9	STR	24'-8"	168
T30	2	9	STR	26'-6"	180
T31	14	9	STR	57'-10"	2753
T32	2	9	STR	41'-8"	283
T33	2	9	STR	43'-8"	297
T34	2	9	STR	45'-5"	309
T35	2	9	STR	47'-2"	321
T36	2	9	STR	48'-11"	333
T37	2	9	STR	50'-9"	345
T38	2	9	STR	52'-6"	357
T39	2	9	STR	54'-3"	369
T40	2	9	STR	56'-1"	381
T41	46	6	STR	27'-10"	1923
T42	2	6	STR	11'-10"	36
T43	2	6	STR	13'-8"	41
T44	2	6	STR	15'-6"	47
T45	2	6	STR	17'-4"	52
T46	2	6	STR	19'-2"	58
T47	2	6	STR	21'-0"	63
T48	2	6	STR	22'-10"	69
T49	2	6	STR	24'-8"	74
T50	2	6	STR	26'-6"	80
T51	13	6	STR	57'-10"	1129
T52	2	6	STR	41'-10"	126
T53	2	6	STR	43'-8"	131
T54	2	6	STR	45'-6"	137
T55	2	6	STR	47'-4"	142
T56	2	6	STR	49'-2"	148
T57	2	6	STR	51'-0"	153
T58	2	6	STR	52'-10"	159
T59	2	6	STR	54'-8"	164
T60	2	6	STR	56'-6"	170

BAR	NO.	SIZE	TYPE	LENGTH (ft)	WEIGHT (lb)
T61	12	7	STR	41'-10"	1026
T62	36	7	8	26'-0"	1913
T63	156	7	STR	7'-4"	2338
T64	144	6	9	15'-8"	3389
U1	65	4	10	9'-0"	391
U2	11	5	10	8'-10"	101
U3	5	5	12	9'-4"	49
U4	5	5	12	10'-0"	52
U5	78	6	11	16'-4"	1914
U6	78	6	STR	17'-6"	2050
V1	98	11	STR	45'-1"	23474

EPOXY COATED
REINFORCING STEEL 119301 LB.

CLASS "AA" CONCRETE BREAKDOWN

POUR 1 - FOOTING △	444.0 CU. YDS.
POUR 2 - COLUMN	149.1 CU. YDS.
POUR 3 - CAP	80.1 CU. YDS.
TOTAL CLASS "AA" CONCRETE	673.2 CU. YDS.

36" VOIDED PRESTRESSED CONCRETE PILES
NO. = 28 2464 LIN. FT.

PILE REDRIVES NO. = 14

△ INCLUDES CONCRETE IN THE 36" VOIDED PRESTRESSED CONCRETE PILES. SEE "36" VOIDED PRESTRESSED CONCRETE PILE" SHEETS FOR DETAIL AND NOTE.

PROJECT NO. R-2633BB
BRUNSWICK/NEW HANOVER COUNTY
STATION: 353+32.50 -L-

SHEET 4 OF 4

NORTH CAROLINA PROFESSIONAL SEAL 18442 ENGINEER RICHARD LEON ROBINSON JR.
5-29-2013

RS&H IMPROVING YOUR WORLD

RS&H Architects-Engineers-Planners, Inc.
8601 Six Forks Road, Suite 260
Raleigh, NC 27615
919-846-6701 FAX 919-846-8080
www.rsandh.com
North Carolina License Nos. 50073 * F-0493 * C-28

STATE OF NORTH CAROLINA
DEPARTMENT OF TRANSPORTATION
RALEIGH

SUBSTRUCTURE

BENT 6
BILL OF MATERIALS

LEFT LANE

REVISIONS						SHEET NO.
NO.	BY:	DATE:	NO.	BY:	DATE:	S-18C
1			3			TOTAL SHEETS
2			4			700

DRAWN BY : MKO DATE : 01/2013
CHECKED BY : JMR, RLB DATE : 01/2013
DESIGN ENGINEER OF RECORD : J. ROBINSON DATE : 05/2013

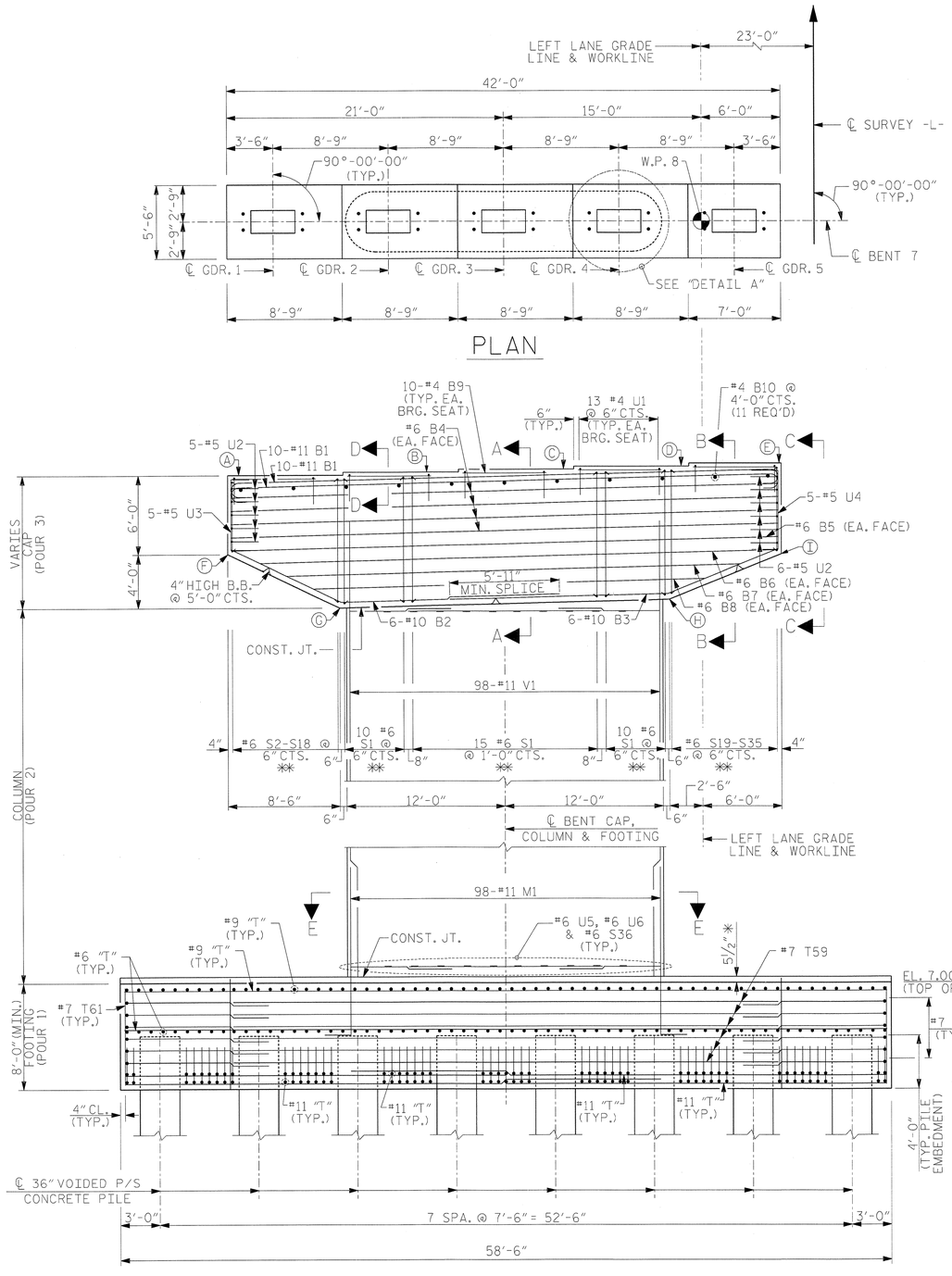

ELEVATION

LOOKING AHEAD ON STATION

NOTES:

STIRRUPS AND "U" BARS IN CAP MAY BE SHIFTED AS NECESSARY TO CLEAR ANCHOR BOLTS.

ALTERNATELY INVERT STIRRUP PAIRS AS NOTED.

FOR FOOTING REINFORCING DETAILS, SEE SHEET 2 OF 4 AND SHEET 3 OF 4.

FOR SECTION A-A, SECTION B-B, VIEW C-C, SECTION D-D, SEE SHEET 2 OF 4. FOR SECTION E-E, SEE SHEET 3 OF 4.

✳ THE FOOTING HAS A DROP OF 5½" FROM THE CENTER OF THE FOOTING TO THE EDGE OF FOOTING TO ACCOMODATE DRAINAGE.

FOR FOUNDATION NOTES, SEE "GENERAL DRAWINGS FOUNDATION LAYOUT" SHEET 10 OF 10.

✳✳ STIRRUPS S1-S35 IN CAP TO BE PLACED IN PAIRS. SEE SECTION A-A AND SECTION B-B ON SHEET 2 OF 4 FOR DETAILS.

M1 BARS TO BE PLACED ATOP #11 MAT AT BOTTOM OF FOOTING AS SHOWN IN END VIEW. WHERE M1 BARS ARE DIRECTLY ABOVE A PILE, BARS MAY REST BELOW #6 MAT AS SHOWN IN ELEVATION VIEW. HOOKS ON M1 BARS MAY BE SHIFTED AS NECESSARY FOR PLACING STEEL.

"T" BARS IN FOOTING MAY BE SHIFTED AS NECESARY TO CLEAR M1 BARS.

DETAILED DRAWINGS FOR FALSEWORK AND FORMS FOR THIS BENT SHALL BE SUBMITTED. SEE SHEET SN.

FOR MASS CONCRETE, SEE SPECTIAL PROVISIONS.

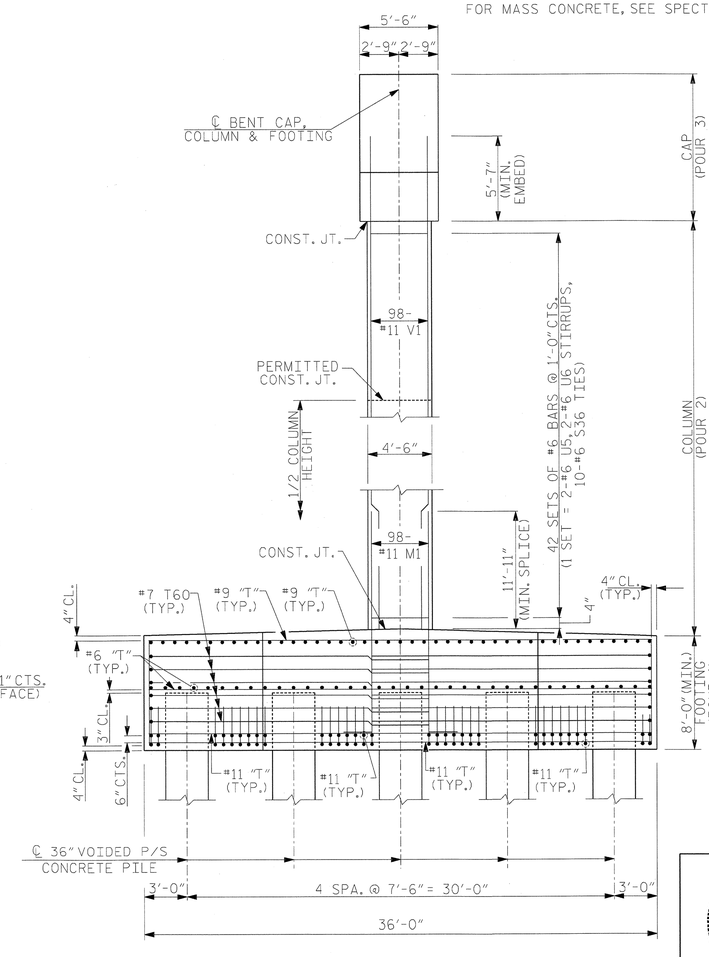

END VIEW

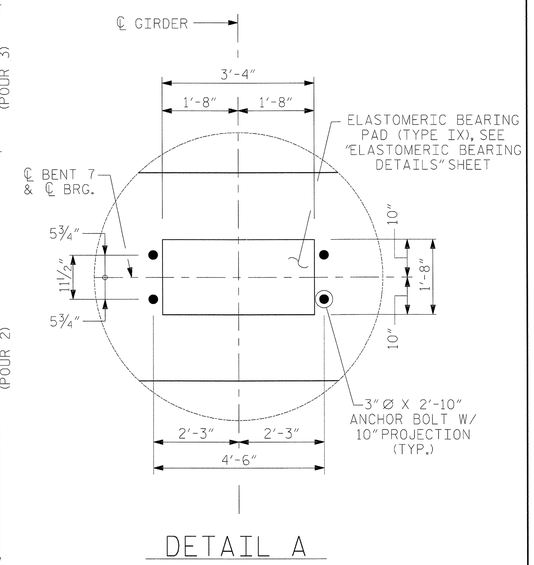

DETAIL A

PROJECT NO. R-2633BB

BRUNSWICK/NEW HANOVER COUNTY

STATION: 353+32.50 -L-

SHEET 1 OF 4

BENT 7 ELEVATION TABLE									
BENT	A	B	C	D	E	F	G	H	I
7	59.02	59.24	59.46	59.68	59.90	53.02	49.02	49.65	53.02

NORTH CAROLINA PROFESSIONAL SEAL 18442 ENGINEER RICHARD LEON ROBINSON JR.

5-29-2013

RS&H IMPROVING YOUR WORLD

RS&H Architects-Engineers-Planners, Inc.
8601 Six Forks Road, Suite 260
Raleigh, NC 27615
919-846-6701 FAX 919-846-9080
www.rsandh.com
North Carolina License Nos. 50073 * F-0493 * C-28

STATE OF NORTH CAROLINA
DEPARTMENT OF TRANSPORTATION
RALEIGH

SUBSTRUCTURE

BENT 7
PLAN AND ELEVATION
LEFT LANE

REVISIONS						
NO.	BY:	DATE:	NO.	BY:	DATE:	
1			3			
2			4			

SHEET NO. S-187

TOTAL SHEETS 700

DRAWN BY :	MKO	DATE :	01/2013
CHECKED BY :	JMR, RLB	DATE :	01/2013
DESIGN ENGINEER OF RECORD :	J. ROBINSON	DATE :	05/2013

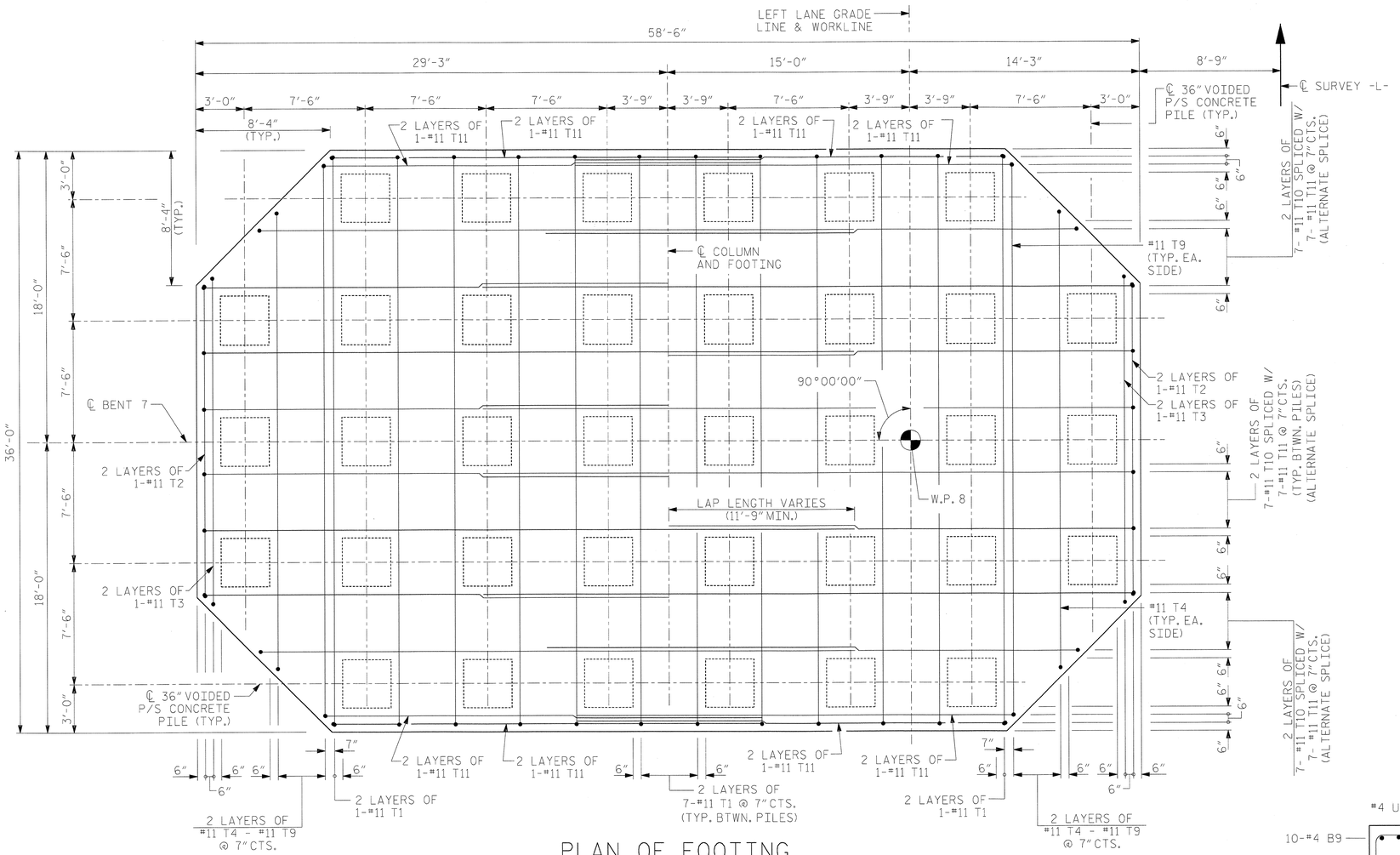

PLAN OF FOOTING

BOTTOM OF FOOTING BETWEEN PILES

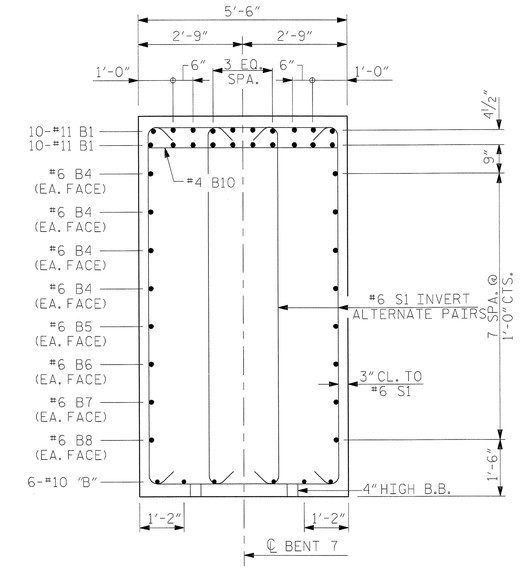

SECTION A-A

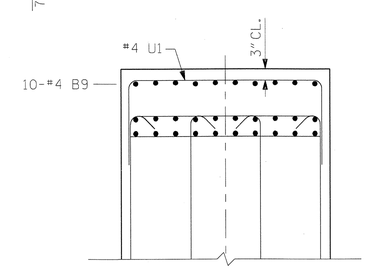

SECTION D-D

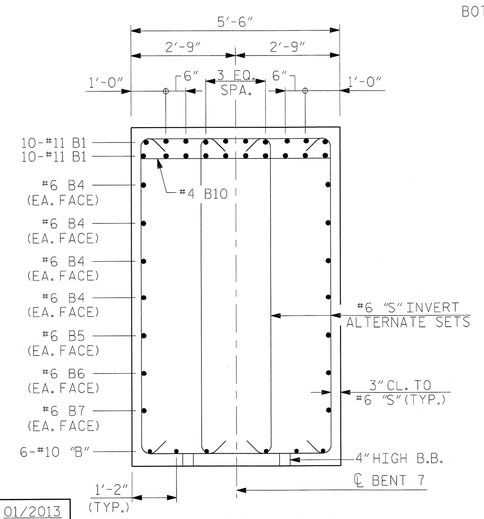

SECTION B-B

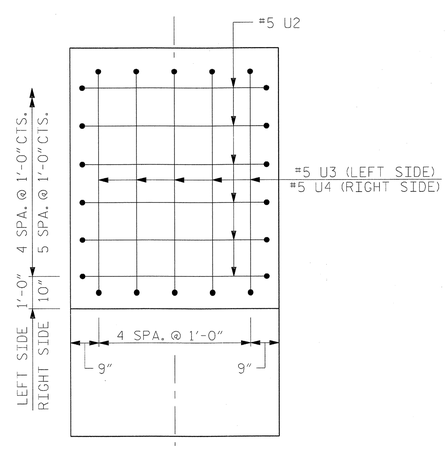

VIEW C-C

RIGHT SIDE VIEW SHOWN

PROJECT NO. R-2633BB

BRUNSWICK/NEW HANOVER COUNTY

STATION: 353+32.50 -L-

SHEET 2 OF 4

NORTH CAROLINA PROFESSIONAL SEAL 18442 ENGINEER RICHARD LEON BOLLINGER, JR.

5-29-2013

RS&H IMPROVING YOUR WORLD

RS&H Architects-Engineers-Planners, Inc.
8601 Six Forks Road, Suite 260
Raleigh, NC 27615
919-846-6701 FAX 919-846-9080
www.rsandh.com
North Carolina License Nos. 50073 * F-0453 * C-28

STATE OF NORTH CAROLINA
DEPARTMENT OF TRANSPORTATION
RALEIGH

SUBSTRUCTURE

BENT 7
SECTION AND DETAILS
LEFT LANE

REVISIONS						SHEET NO.
NO.	BY:	DATE:	NO.	BY:	DATE:	S-188
1			3			TOTAL SHEETS
2			4			700

DRAWN BY : MKO DATE : 01/2013
CHECKED BY : JMR, RLB DATE : 01/2013
DESIGN ENGINEER OF RECORD : J. ROBINSON DATE : 05/2013

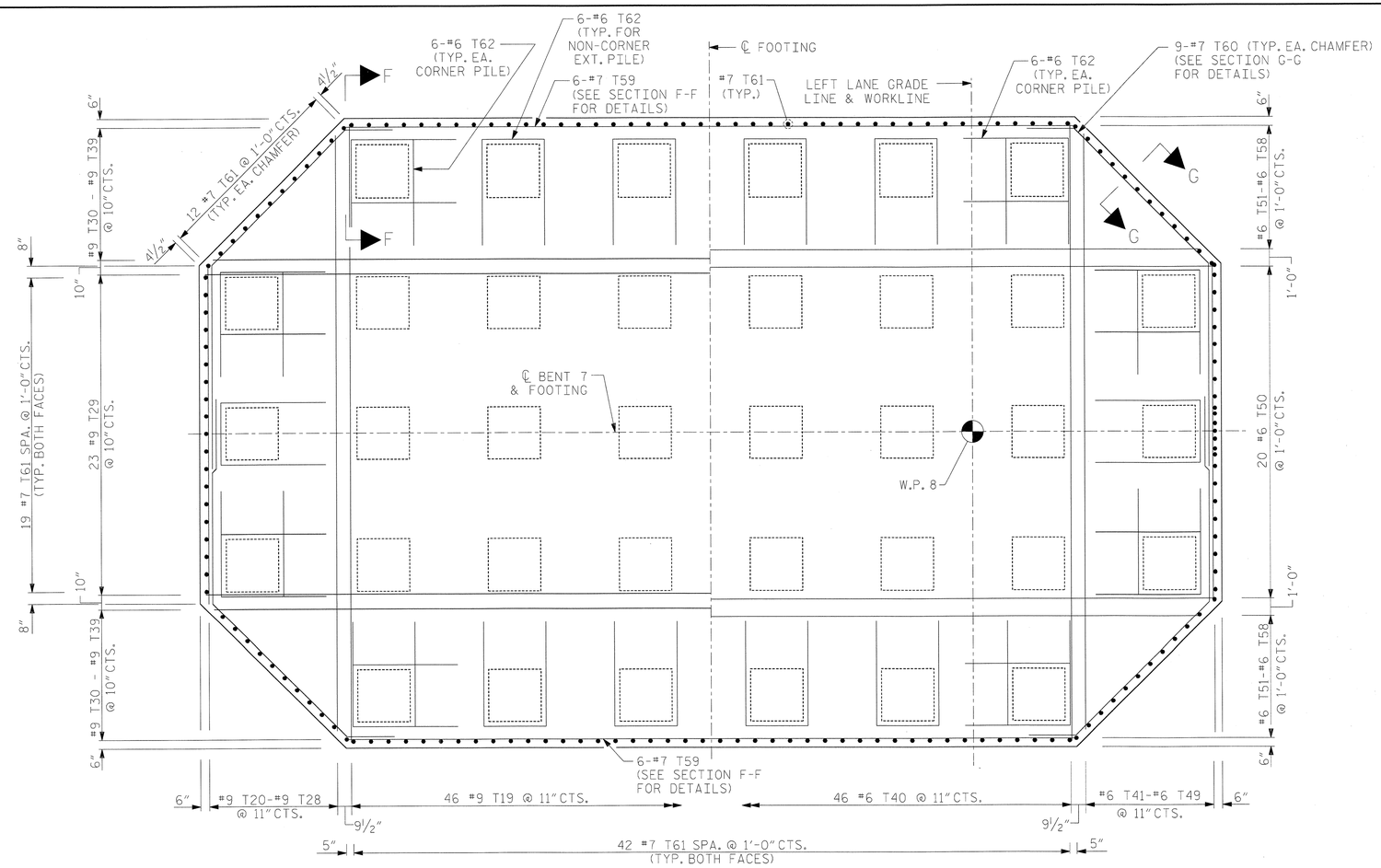

PARTIAL FOOTING PLAN

(TOP OF FOOTING REINFORCING AND TEMPERATURE REINFORCING SHOWN)

PARTIAL FOOTING PLAN

(FOOTING REINFORCING ABOVE PILES AND TEMPERATURE REINFORCING SHOWN)

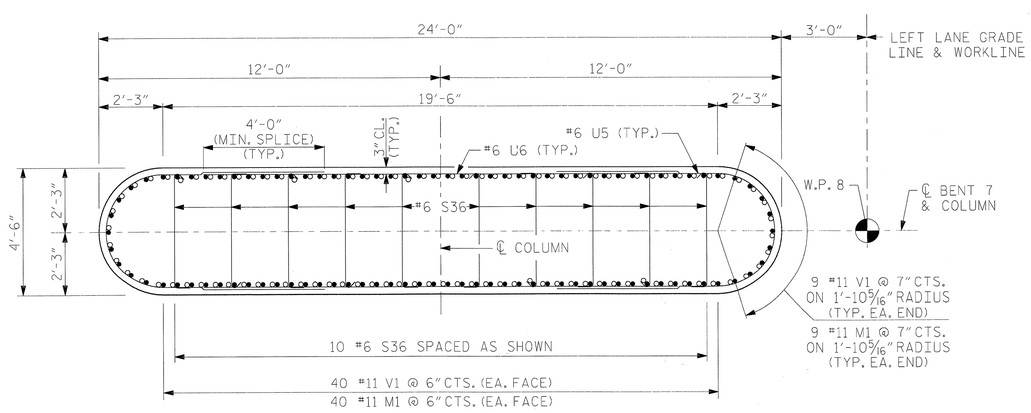

SECTION E-E

WHEN PLACING CROSS-TIES, ALTERNATE POSITION OF 135° HK HORIZONTALLY AND VERTICALLY

○ #11 V1

● #11 M1

NOTES:

#7 T61 IN FOOTING MAY BE SHIFTED AS NECESSARY TO CLEAR LONGITUDINAL AND TRANSVERSE REINFORCEMENT. SPACING OF #7 T61 SHALL HAVE A MAXIMUM OF 1'-0"CTS.

EMBEDDED SURFACES OF PILE SHALL BE ROUGHENED TO AN AMPLITUDE OF ¼".

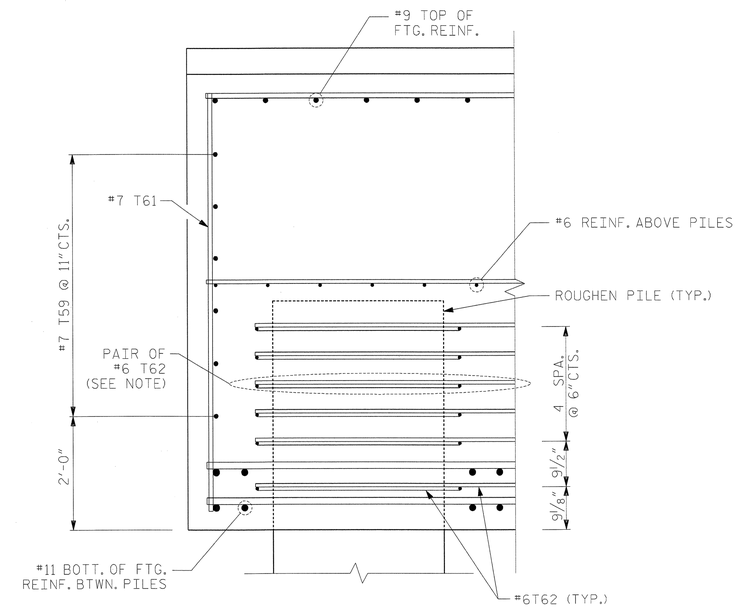

SECTION F-F

NOTE: #6T62 BARS TO BE PLACED AS SHOWN IN PLAN VIEW

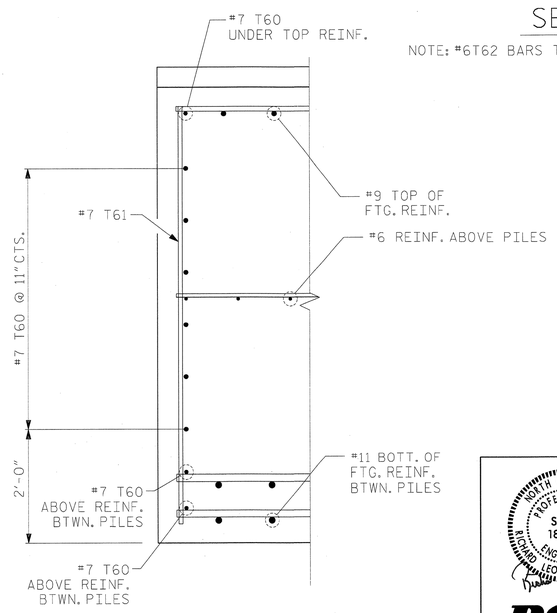

SECTION G-G

PROJECT NO. R-2633BB

BRUNSWICK/NEW HANOVER COUNTY

STATION: 353+32.50 -L-

SHEET 3 OF 4

NORTH CAROLINA PROFESSIONAL SEAL 18442 ENGINEER RICHARD LEON BOBINSON JR. 5-29-2013

RS&H IMPROVING YOUR WORLD

RS&H Architects-Engineers-Planners, Inc.
8601 Six Forks Road, Suite 260
Raleigh, NC 27615
919-846-6701 FAX 919-846-9080
www.rsandh.com
North Carolina License Nos. 50073 * F-0493 * C-28

STATE OF NORTH CAROLINA
DEPARTMENT OF TRANSPORTATION
RALEIGH

SUBSTRUCTURE

BENT 7
SECTION AND DETAILS
LEFT LANE

REVISIONS									SHEET NO.
NO.	BY:	DATE:	NO.	BY:	DATE:				8189
1			3						TOTAL SHEETS
2			4						700

DRAWN BY : MKO DATE : 01/2013
CHECKED BY : JMR, RLB DATE : 01/2013
DESIGN ENGINEER OF RECORD : J. ROBINSON DATE : 05/2013

BAR TYPES

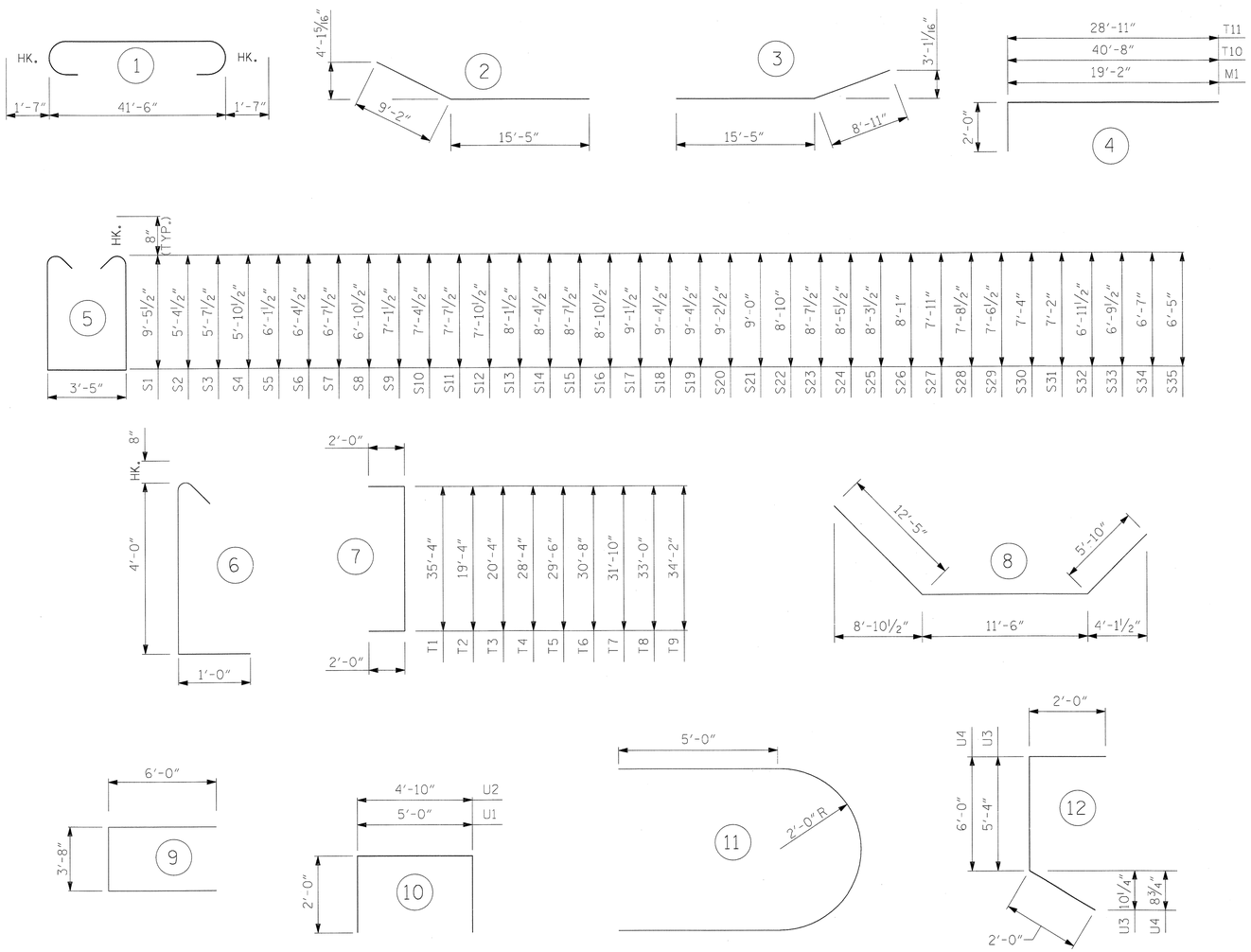

ALL BAR DIMENSIONS ARE OUT TO OUT.

BILL OF MATERIAL

BENT 7

BAR	NO.	SIZE	TYPE	LENGTH (ft)	WEIGHT (lb)
B1	20	11	1	44'-8"	4746
B2	6	10	2	24'-7"	635
B3	6	10	3	24'-4"	628
B4	8	6	STR	41'-6"	499
B5	2	6	STR	41'-3"	124
B6	2	6	STR	39'-5"	118
B7	2	6	STR	34'-8"	104
B8	2	6	STR	30'-0"	90
B9	50	4	STR	6'-4"	212
B10	11	4	STR	5'-0"	37
M1	98	11	4	21'-2"	11021
S1	70	6	5	23'-8"	2488
S2	2	6	5	15'-6"	47
S3	2	6	5	16'-0"	48
S4	2	6	5	16'-6"	50
S5	2	6	5	17'-0"	51
S6	2	6	5	17'-6"	53
S7	2	6	5	18'-0"	54
S8	2	6	5	18'-6"	56
S9	2	6	5	19'-0"	57
S10	2	6	5	19'-6"	59
S11	2	6	5	20'-0"	60
S12	2	6	5	20'-6"	62
S13	2	6	5	21'-0"	63
S14	2	6	5	21'-6"	65
S15	2	6	5	22'-0"	66
S16	2	6	5	22'-6"	68
S17	2	6	5	23'-0"	69
S18	2	6	5	23'-6"	71
S19	2	6	5	23'-6"	71
S20	2	6	5	23'-2"	70
S21	2	6	5	22'-9"	68
S22	2	6	5	22'-5"	67
S23	2	6	5	22'-0"	66
S24	2	6	5	21'-8"	65
S25	2	6	5	21'-4"	64
S26	2	6	5	20'-11"	63
S27	2	6	5	20'-7"	62
S28	2	6	5	20'-2"	61
S29	2	6	5	19'-10"	60
S30	2	6	5	19'-5"	58
S31	2	6	5	19'-1"	57
S32	2	6	5	18'-8"	56
S33	2	6	5	18'-4"	55
S34	2	6	5	17'-11"	54
S35	2	6	5	17'-7"	53
S36	420	6	6	5'-8"	3575

BAR	NO.	SIZE	TYPE	LENGTH (ft)	WEIGHT (lb)
T1	74	11	7	39'-4"	15464
T2	4	11	7	23'-4"	496
T3	4	11	7	24'-4"	517
T4	4	11	7	32'-4"	687
T5	4	11	7	33'-6"	712
T6	4	11	7	34'-8"	737
T7	4	11	7	35'-10"	762
T8	4	11	7	37'-0"	786
T9	4	11	7	38'-2"	811
T10	56	11	4	42'-8"	12695
T11	72	11	4	30'-11"	11827
T19	46	9	STR	35'-4"	5526
T20	2	9	STR	19'-4"	131
T21	2	9	STR	21'-2"	144
T22	2	9	STR	23'-0"	156
T23	2	9	STR	24'-10"	169
T24	2	9	STR	26'-8"	181
T25	2	9	STR	28'-6"	194
T26	2	9	STR	30'-4"	206
T27	2	9	STR	32'-2"	219
T28	2	9	STR	34'-0"	231
T29	23	9	STR	57'-10"	4523
T30	2	9	STR	41'-10"	284
T31	2	9	STR	43'-6"	296
T32	2	9	STR	45'-2"	307
T33	2	9	STR	46'-10"	318
T34	2	9	STR	48'-6"	330
T35	2	9	STR	50'-2"	341
T36	2	9	STR	51'-10"	352
T37	2	9	STR	53'-6"	364
T38	2	9	STR	55'-2"	375
T39	2	9	STR	56'-10"	386
T40	46	6	STR	35'-4"	2441
T41	2	6	STR	19'-4"	58
T42	2	6	STR	21'-2"	64
T43	2	6	STR	23'-0"	69
T44	2	6	STR	24'-10"	75
T45	2	6	STR	26'-8"	80
T46	2	6	STR	28'-6"	86
T47	2	6	STR	30'-4"	91
T48	2	6	STR	32'-2"	97
T49	2	6	STR	34'-0"	102
T50	20	6	STR	57'-10"	1737
T51	2	6	STR	41'-10"	126
T52	2	6	STR	43'-10"	132
T53	2	6	STR	45'-10"	138
T54	2	6	STR	47'-10"	144
T55	2	6	STR	49'-10"	150
T56	2	6	STR	51'-10"	156
T57	2	6	STR	53'-10"	162
T58	2	6	STR	55'-10"	168
T59	12	7	STR	41'-10"	1026
T60	36	7	8	29'-9"	2189

BAR	NO.	SIZE	TYPE	LENGTH (ft)	WEIGHT (lb)
T61	170	7	STR	7'-4"	2548
T62	156	6	9	15'-8"	3671
U1	65	4	10	9'-0"	391
U2	11	5	10	8'-10"	101
U3	5	5	12	9'-4"	49
U4	5	5	12	10'-0"	52
U5	84	6	11	16'-4"	2061
U6	84	6	STR	17'-6"	2208
V1	98	11	STR	48'-4"	25166

EPOXY COATED
REINFORCING STEEL 132289 LB.

CLASS "AA" CONCRETE BREAKDOWN

POUR 1 - FOOTING △	575.1 CU. YDS.
POUR 2 - COLUMN	161.2 CU. YDS.
POUR 3 - CAP	80.1 CU. YDS.
TOTAL CLASS "AA" CONCRETE	816.4 CU. YDS.

36" VOIDED PRESTRESSED CONCRETE PILES
NO. = 36 3204 LIN. FT.

PILE REDRIVES NO. = 18

△ INCLUDES CONCRETE IN THE 36" VOIDED PRESTRESSED CONCRETE PILES. SEE "36" VOIDED PRESTRESSED CONCRETE PILE" SHEETS FOR DETAIL AND NOTE.

PROJECT NO. R-2633BB
BRUNSWICK/NEW HANOVER COUNTY
STATION: 353+32.50 -L-

SHEET 4 OF 4

NORTH CAROLINA PROFESSIONAL SEAL 18442 ENGINEER LEON ROBINSON JR.
5-29-2013

RS&H IMPROVING YOUR WORLD

RS&H Architects-Engineers-Planners, Inc.
8601 Six Forks Road, Suite 260
Raleigh, NC 27615
919-846-6701 FAX 919-846-9080
www.rsandh.com
North Carolina License Nos. 50073 * F-0493 * C-28

STATE OF NORTH CAROLINA
DEPARTMENT OF TRANSPORTATION
RALEIGH

SUBSTRUCTURE

BENT 7
BILL OF MATERIALS

LEFT LANE

REVISIONS						
NO.	BY:	DATE:	NO.	BY:	DATE:	
1			3			
2			4			

SHEET NO. S-190
TOTAL SHEETS 700

DRAWN BY : MKO DATE : 01/2013
CHECKED BY : JMR, RLB DATE : 01/2013
DESIGN ENGINEER OF RECORD : J. ROBINSON DATE : 05/2013

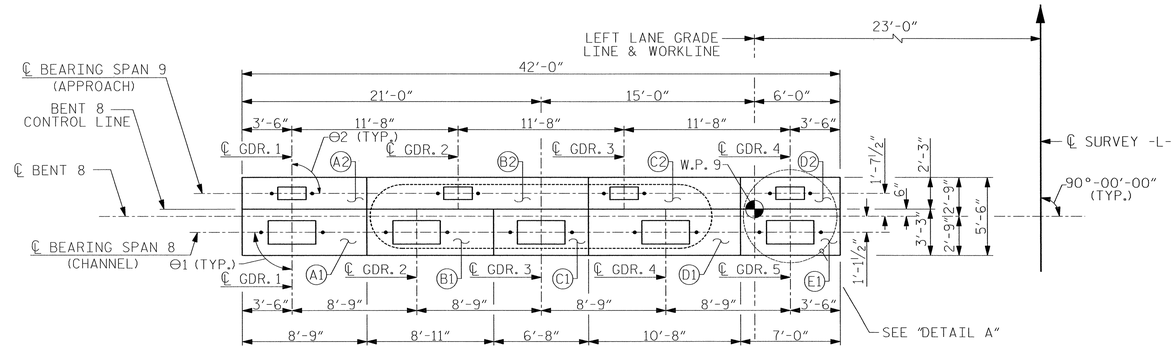

PLAN

BEARING ANGLES		
BENT	Θ1	Θ2
8	90°-00'-00"	90°-00'-00"

NOTES:

THE CONTRACTOR'S ATTENTION IS CALLED TO THE FACT THAT THE CENTERLINE JOINT IN THE DECK SLAB (CONTROL LINE) IS OFFSET FROM THE CENTERLINE BENT.

STIRRUPS AND "U" BARS IN CAP MAY BE SHIFTED AS NECESSARY TO CLEAR ANCHOR BOLTS.

ALTERNATELY INVERT STIRRUP PAIRS AS NOTED.

FOR FOOTING REINFORCING DETAILS, SEE SHEET 2 OF 4 AND SHEET 3 OF 4.

FOR SECTION A-A, SECTION B-B, VIEW C-C, SECTION D-D, SEE SHEET 2 OF 4. FOR SECTION E-E, SEE SHEET 3 OF 4.

* THE FOOTING HAS A DROP OF 4¼" FROM THE CENTER OF THE FOOTING TO THE EDGE OF FOOTING TO ACCOMODATE DRAINAGE.

FOR FOUNDATION NOTES, SEE "GENERAL DRAWINGS FOUNDATION LAYOUT" SHEET 10 OF 10.

** STIRRUPS S1-S35 IN CAP TO BE PLACED IN PAIRS. SEE SECTION A-A AND SECTION B-B ON SHEET 2 OF 4 FOR DETAILS.

FOR PIPE INSERT DETAILS, SEE BEARING SHEET.

"T" BARS IN FOOTING MAY BE SHIFTED AS NECESARY TO CLEAR M1 BARS.

HOOKS ON M1 BARS MAY BE SHIFTED AS NECESSARY FOR PLACING STEEL.

THE TOP SURFACE AREAS OF THE BENT CAP SHALL BE CURED IN ACCORDANCE WITH THE STANDARD SPECIFICATIONS EXCEPT THE MEMBRANE CURING COMPOUND METHOD SHALL NOT BE USED.

DETAILED DRAWINGS FOR FALSEWORK AND FORMS FOR THIS BENT SHALL BE SUBMITTED. SEE SHEET SN.

FOR MASS CONCRETE, SEE SPECTIAL PROVISIONS.

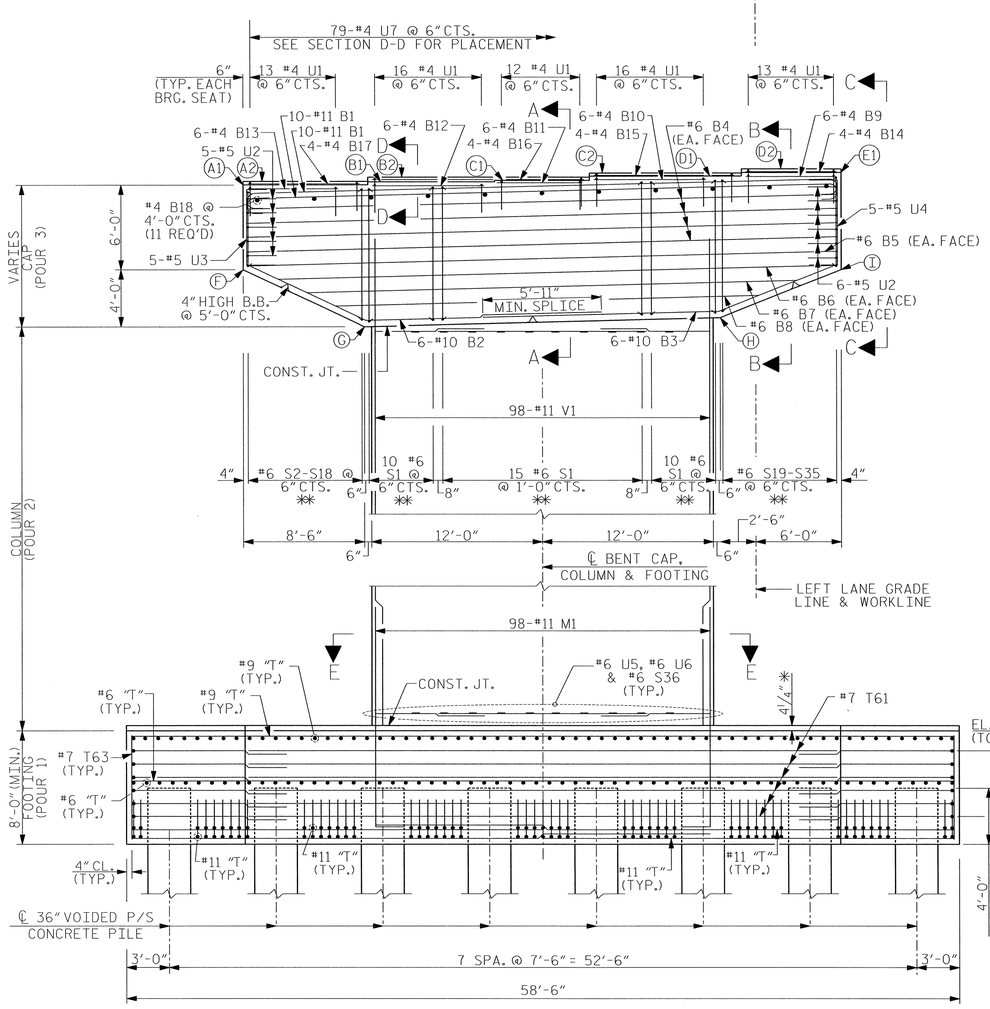

ELEVATION

LOOKING AHEAD ON STATION

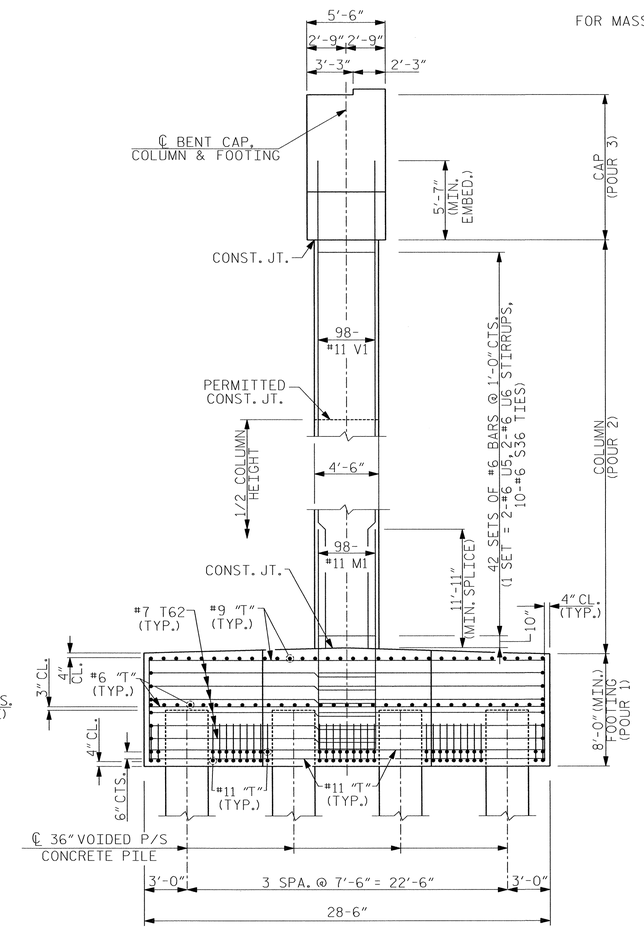

END VIEW

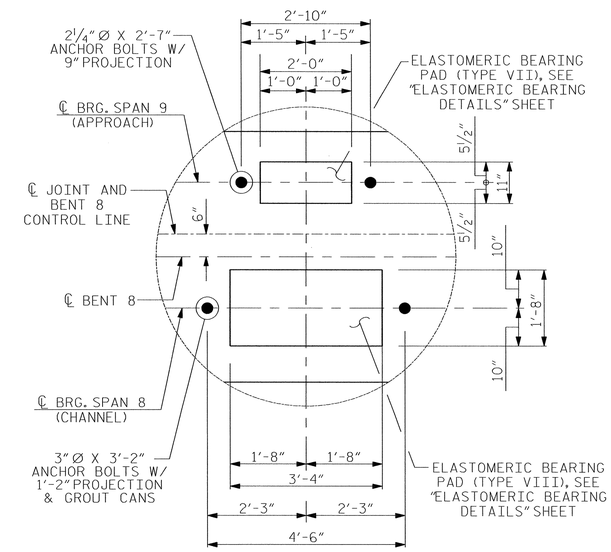

DETAIL A

PROJECT NO. R-2633BB

BRUNSWICK/NEW HANOVER COUNTY

STATION: 353+32.50 -L-

SHEET 1 OF 4

BENT 8 ELEVATION TABLE													
BENT	A1	A2	B1	B2	C1	C2	D1	D2	E1	F	G	H	I
8	62.50	62.79	62.72	63.09	62.94	63.38	63.16	63.67	63.38	56.50	52.50	53.13	56.50

DRAWN BY : MKO DATE : 01/2013
CHECKED BY : JMR, RLB DATE : 01/2013
DESIGN ENGINEER OF RECORD : J. ROBINSON DATE : 05/2013

NORTH CAROLINA PROFESSIONAL SEAL 18442 ENGINEER RICHARD LEON ROBINSON JR.
6-03-2013

RS&H IMPROVING YOUR WORLD

RS&H Architects-Engineers-Planners, Inc.
8601 Six Forks Road, Suite 260
Raleigh, NC 27615
919-846-6701 FAX 919-846-9080
www.rsandh.com
North Carolina Licenses Nos. 50073 * F-0493 * C-28

STATE OF NORTH CAROLINA
DEPARTMENT OF TRANSPORTATION
RALEIGH

SUBSTRUCTURE

BENT 8
PLAN AND ELEVATION
LEFT LANE

REVISIONS						SHEET NO.
NO.	BY:	DATE:	NO.	BY:	DATE:	S-191
1			3			TOTAL SHEETS
2			4			700

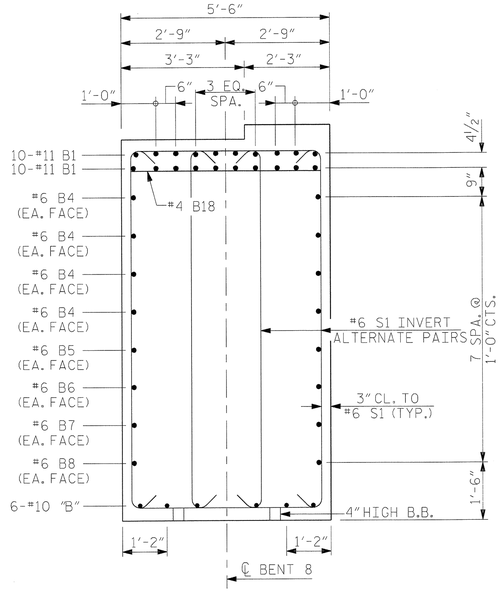

SECTION A-A

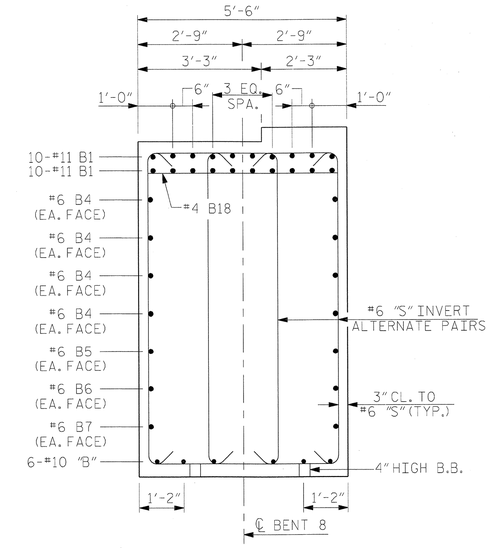

SECTION B-B

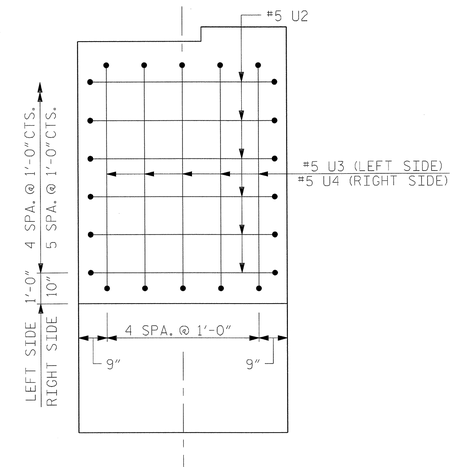

VIEW C-C

RIGHT SIDE VIEW SHOWN

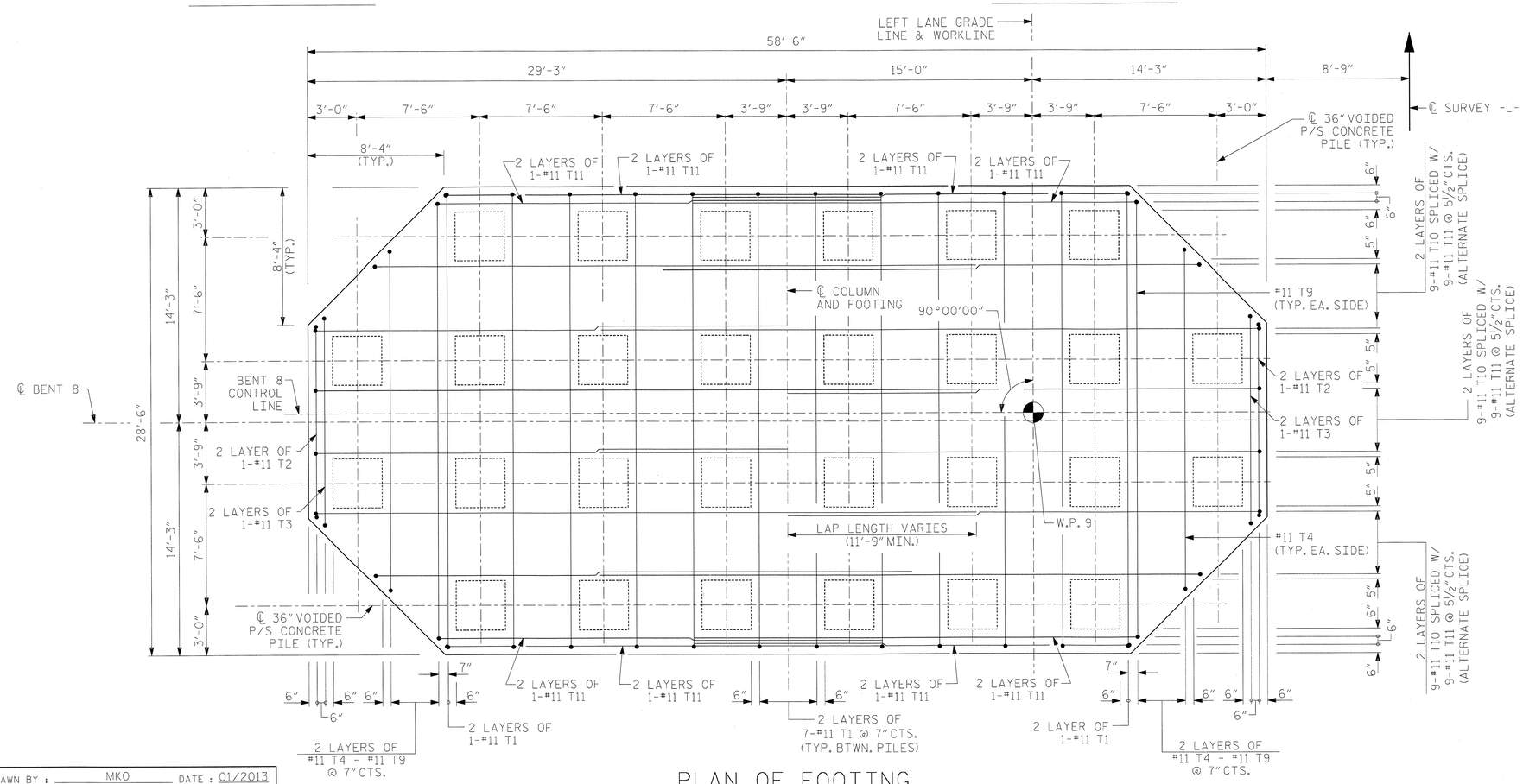

PLAN OF FOOTING

BOTTOM OF FOOTING BETWEEN PILES

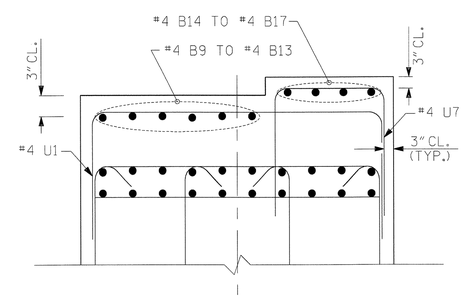

SECTION D-D

PROJECT NO. R-2633BB

BRUNSWICK/NEW HANOVER COUNTY

STATION: 353+32.50 -L-

SHEET 2 OF 4

STATE OF NORTH CAROLINA
DEPARTMENT OF TRANSPORTATION
RALEIGH

SUBSTRUCTURE

BENT 8
SECTION AND DETAILS
LEFT LANE

NORTH CAROLINA PROFESSIONAL SEAL 18442 ENGINEER RICHARD LEONI BOLDING, JR.
5-29-2013

RS&H IMPROVING YOUR WORLD

RS&H Architects-Engineers-Planners, Inc.
8601 Six Forks Road, Suite 260
Raleigh, NC 27615
919-846-6701 FAX 919-846-9080
www.rsandh.com
North Carolina License Nos. 50073 * F-0493 * C-28

REVISIONS						SHEET NO.
NO.	BY:	DATE:	NO.	BY:	DATE:	S-192
1			3			TOTAL SHEETS
2			4			700

DRAWN BY : MKO DATE : 01/2013
CHECKED BY : JMR, RLB DATE : 01/2013
DESIGN ENGINEER OF RECORD : J. ROBINSON DATE : 05/2013

NOTES:

#7 T63 IN FOOTING MAY BE SHIFTED AS NECESSARY TO CLEAR LONGITUDINAL AND TRANSVERSE REINFORCEMENT. SPACING OF #7 T63 SHALL HAVE A MAXIMUM OF 1'-0" CTS.

EMBEDDED SURFACES OF PILE SHALL BE ROUGHENED TO AN AMPLITUDE OF 1/4".

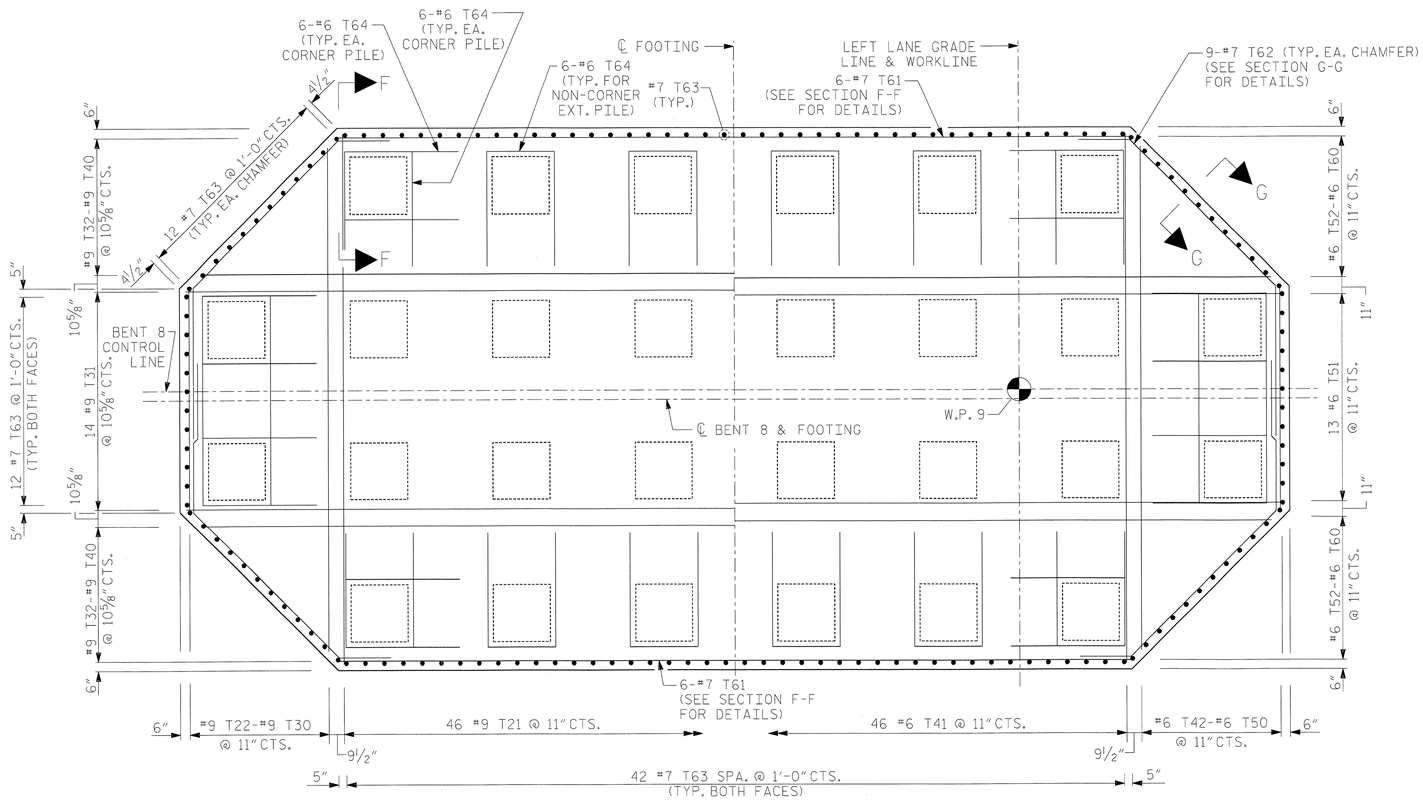

PARTIAL FOOTING PLAN

(TOP OF FOOTING REINFORCING AND TEMPERATURE REINFORCING SHOWN)

PARTIAL FOOTING PLAN

(FOOTING REINFORCING ABOVE PILES AND TEMPERATURE REINFORCING SHOWN)

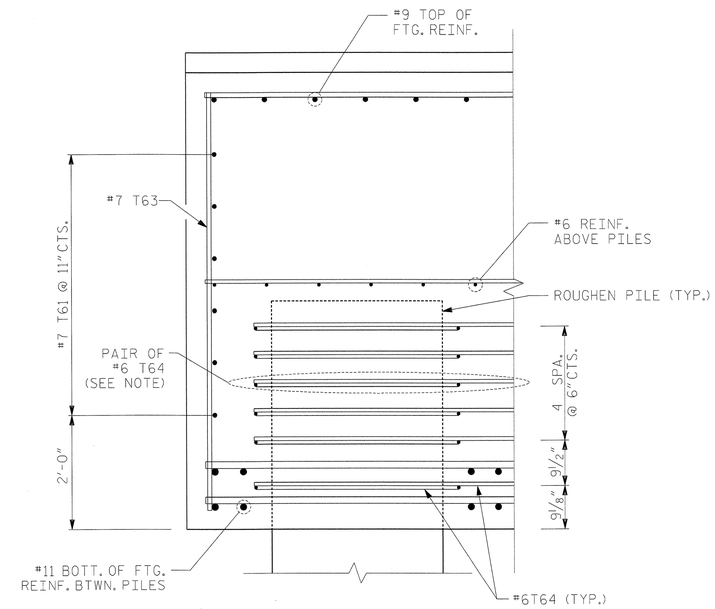

SECTION F-F

NOTE: #6T64 BARS TO BE PLACED AS SHOWN IN PLAN VIEW

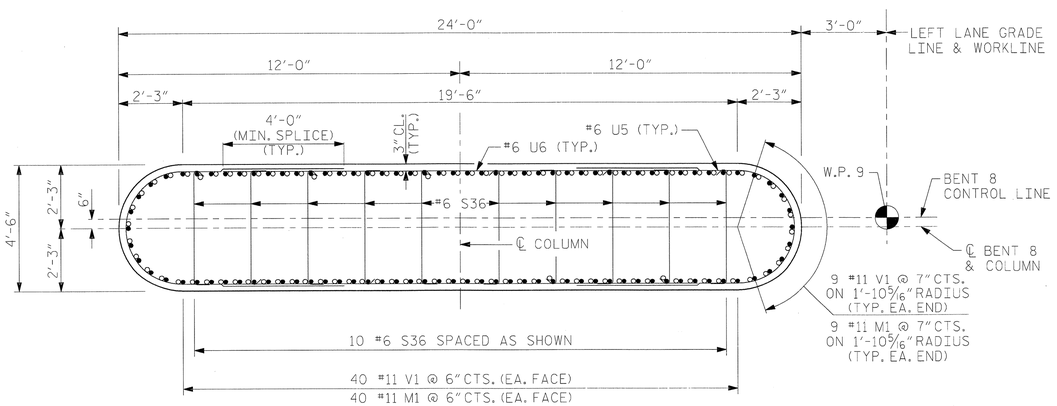

SECTION E-E

WHEN PLACING CROSS-TIES, ALTERNATE POSITION OF 135° HK HORIZONTALLY AND VERTICALLY

○ #11 V1

● #11 M1

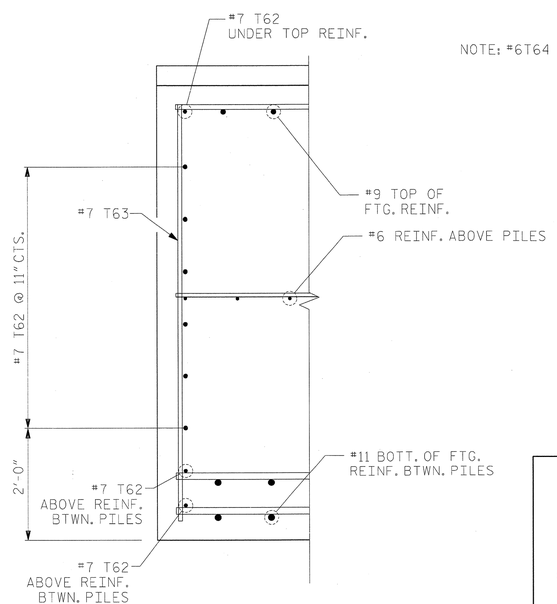

SECTION G-G

PROJECT NO. R-2633BB

BRUNSWICK/NEW HANOVER COUNTY

STATION: 353+32.50 -L-

SHEET 3 OF 4

NORTH CAROLINA PROFESSIONAL SEAL 18442 ENGINEER

5-23-2013

RS&H IMPROVING YOUR WORLD

RS&H Architects-Engineers-Planners, Inc.
8601 Six Forks Road, Suite 260
Raleigh, NC 27615
919-846-6701 FAX 919-846-9080
www.rsandh.com
North Carolina License Nos. 50073 * F-0493 * C-28

STATE OF NORTH CAROLINA
DEPARTMENT OF TRANSPORTATION
RALEIGH

SUBSTRUCTURE

BENT 8
SECTION AND DETAILS
LEFT LANE

REVISIONS						SHEET NO.
NO.	BY:	DATE:	NO.	BY:	DATE:	S-193
1			3			TOTAL SHEETS
2			4			700

DRAWN BY : MKO DATE : 01/2013
CHECKED BY : JMR, RLB DATE : 01/2013
DESIGN ENGINEER OF RECORD : J. ROBINSON DATE : 05/2013

BAR TYPES

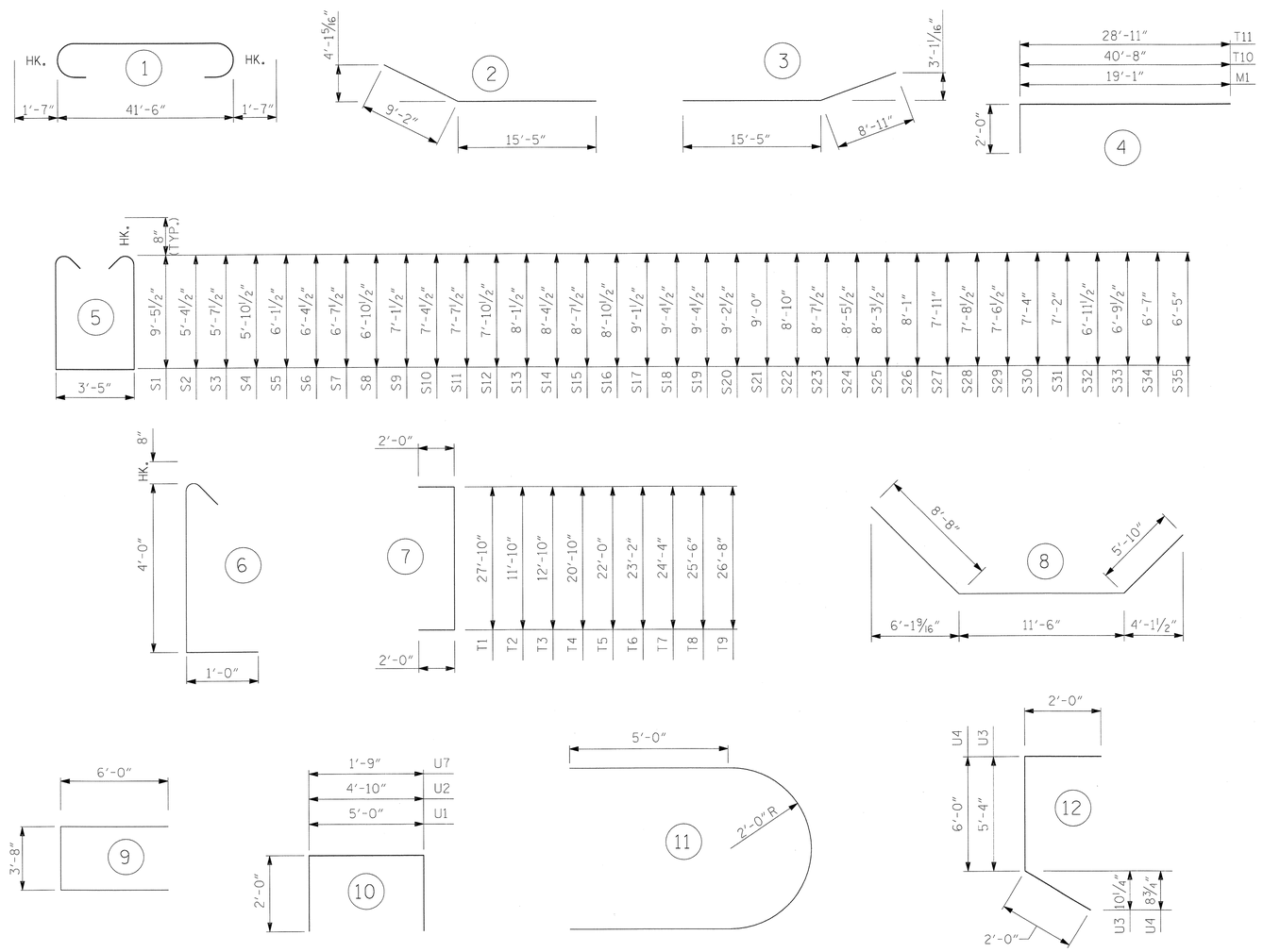

ALL BAR DIMENSIONS ARE OUT TO OUT.

BILL OF MATERIAL

BENT 8

BAR	NO.	SIZE	TYPE	LENGTH (ft)	WEIGHT (lb)
B1	20	11	1	44'-8"	4746
B2	6	10	2	24'-7"	635
B3	6	10	3	24'-4"	628
B4	8	6	STR	41'-6"	499
B5	2	6	STR	41'-3"	124
B6	2	6	STR	39'-5"	118
B7	2	6	STR	34'-8"	104
B8	2	6	STR	30'-0"	90
B9	6	4	STR	6'-4"	25
B10	6	4	STR	7'-10"	31
B11	6	4	STR	5'-10"	23
B12	6	4	STR	7'-10"	31
B13	6	4	STR	6'-4"	25
B14	4	4	STR	6'-4"	17
B15	4	4	STR	9'-10"	26
B16	4	4	STR	14'-10"	40
B17	4	4	STR	7'-10"	21
B18	11	4	STR	5'-0"	37
M1	98	11	4	21'-1"	10978
S1	70	6	5	23'-8"	2488
S2	2	6	5	15'-6"	47
S3	2	6	5	16'-0"	48
S4	2	6	5	16'-6"	50
S5	2	6	5	17'-0"	51
S6	2	6	5	17'-6"	53
S7	2	6	5	18'-0"	54
S8	2	6	5	18'-6"	56
S9	2	6	5	19'-0"	57
S10	2	6	5	19'-6"	59
S11	2	6	5	20'-0"	60
S12	2	6	5	20'-6"	62
S13	2	6	5	21'-0"	63
S14	2	6	5	21'-6"	65
S15	2	6	5	22'-0"	66
S16	2	6	5	22'-6"	68
S17	2	6	5	23'-0"	69
S18	2	6	5	23'-6"	71
S19	2	6	5	23'-6"	71
S20	2	6	5	23'-2"	70
S21	2	6	5	22'-9"	68
S22	2	6	5	22'-5"	67
S23	2	6	5	22'-0"	66
S24	2	6	5	21'-8"	65
S25	2	6	5	21'-4"	64
S26	2	6	5	20'-11"	63
S27	2	6	5	20'-7"	62
S28	2	6	5	20'-2"	61
S29	2	6	5	19'-10"	60
S30	2	6	5	19'-5"	58
S31	2	6	5	19'-1"	57
S32	2	6	5	18'-8"	56
S33	2	6	5	18'-4"	55
S34	2	6	5	17'-11"	54
S35	2	6	5	17'-7"	53
S36	420	6	6	5'-8"	3575

BAR	NO.	SIZE	TYPE	LENGTH (ft)	WEIGHT (lb)
T1	74	11	7	31'-10"	12516
T2	4	11	7	15'-10"	336
T3	4	11	7	16'-10"	358
T4	4	11	7	24'-10"	528
T5	4	11	7	26'-0"	553
T6	4	11	7	27'-2"	577
T7	4	11	7	28'-4"	602
T8	4	11	7	29'-6"	627
T9	4	11	7	30'-8"	652
T10	54	11	4	42'-8"	12241
T11	70	11	4	30'-11"	11498
T21	46	9	STR	27'-10"	4353
T22	2	9	STR	11'-10"	80
T23	2	9	STR	13'-8"	93
T24	2	9	STR	15'-6"	105
T25	2	9	STR	17'-4"	118
T26	2	9	STR	19'-2"	130
T27	2	9	STR	21'-0"	143
T28	2	9	STR	22'-10"	155
T29	2	9	STR	24'-8"	168
T30	2	9	STR	26'-6"	180
T31	14	9	STR	57'-10"	2753
T32	2	9	STR	41'-8"	283
T33	2	9	STR	43'-8"	297
T34	2	9	STR	45'-5"	309
T35	2	9	STR	47'-2"	321
T36	2	9	STR	48'-11"	333
T37	2	9	STR	50'-9"	345
T38	2	9	STR	52'-6"	357
T39	2	9	STR	54'-3"	369
T40	2	9	STR	56'-1"	381
T41	46	6	STR	27'-10"	1923
T42	2	6	STR	11'-10"	36
T43	2	6	STR	13'-8"	41
T44	2	6	STR	15'-6"	47
T45	2	6	STR	17'-4"	52
T46	2	6	STR	19'-2"	58
T47	2	6	STR	21'-0"	63
T48	2	6	STR	22'-10"	69
T49	2	6	STR	24'-8"	74
T50	2	6	STR	26'-6"	80
T51	13	6	STR	57'-10"	1129
T52	2	6	STR	41'-10"	126
T53	2	6	STR	43'-8"	131
T54	2	6	STR	45'-6"	137
T55	2	6	STR	47'-4"	142
T56	2	6	STR	49'-2"	148
T57	2	6	STR	51'-0"	153
T58	2	6	STR	52'-10"	159
T59	2	6	STR	54'-8"	164
T60	2	6	STR	56'-6"	170

BAR	NO.	SIZE	TYPE	LENGTH (ft)	WEIGHT (lb)
T61	12	7	STR	41'-10"	1026
T62	36	7	8	26'-0"	1913
T63	156	7	STR	7'-4"	2338
T64	144	6	9	15'-8"	3389
U1	70	4	10	9'-0"	421
U2	11	5	10	8'-10"	101
U3	5	5	12	9'-4"	49
U4	5	5	12	10'-0"	52
U5	84	6	11	16'-4"	2061
U6	84	6	STR	17'-6"	2208
U7	79	4	10	5'-9"	303
V1	98	11	STR	48'-9"	25383

EPOXY COATED
REINFORCING STEEL 122220 LB.

CLASS "AA" CONCRETE BREAKDOWN

POUR 1 - FOOTING △ 444.0 CU. YDS.
POUR 2 - COLUMN 163.2 CU. YDS.
POUR 3 - CAP 81.4 CU. YDS.

TOTAL CLASS "AA" CONCRETE 688.6 CU. YDS.

36" VOIDED PRESTRESSED CONCRETE PILES
NO. = 28 2464 LIN. FT.

PILE REDRIVES NO. = 14

△ INCLUDES CONCRETE IN THE 36" VOIDED PRESTRESSED CONCRETE PILES. SEE "36" VOIDED PRESTRESSED CONCRETE PILE" SHEETS FOR DETAIL AND NOTE.

PROJECT NO. R-2633BB
BRUNSWICK/NEW HANOVER COUNTY
STATION: 353+32.50 -L-

SHEET 4 OF 4

NORTH CAROLINA PROFESSIONAL SEAL 18442 ENGINEER RICHARD LEON ROBINSON III
5-29-2013

RS&H IMPROVING YOUR WORLD

RS&H Architects-Engineers-Planners, Inc.
8601 Six Forks Road, Suite 260
Raleigh, NC 27615
919-846-6701 FAX 919-846-9080
www.rsandh.com
North Carolina License Nos. 50073 * F-0493 * C-28

STATE OF NORTH CAROLINA
DEPARTMENT OF TRANSPORTATION
RALEIGH

SUBSTRUCTURE

BENT 8
BILL OF MATERIALS

LEFT LANE

REVISIONS						
NO.	BY:	DATE:	NO.	BY:	DATE:	
1			3			
2			4			

SHEET NO. S-194
TOTAL SHEETS 700

DRAWN BY : MKO DATE : 01/2013
CHECKED BY : JMR, RLB DATE : 01/2013
DESIGN ENGINEER OF RECORD : J. ROBINSON DATE : 05/2013

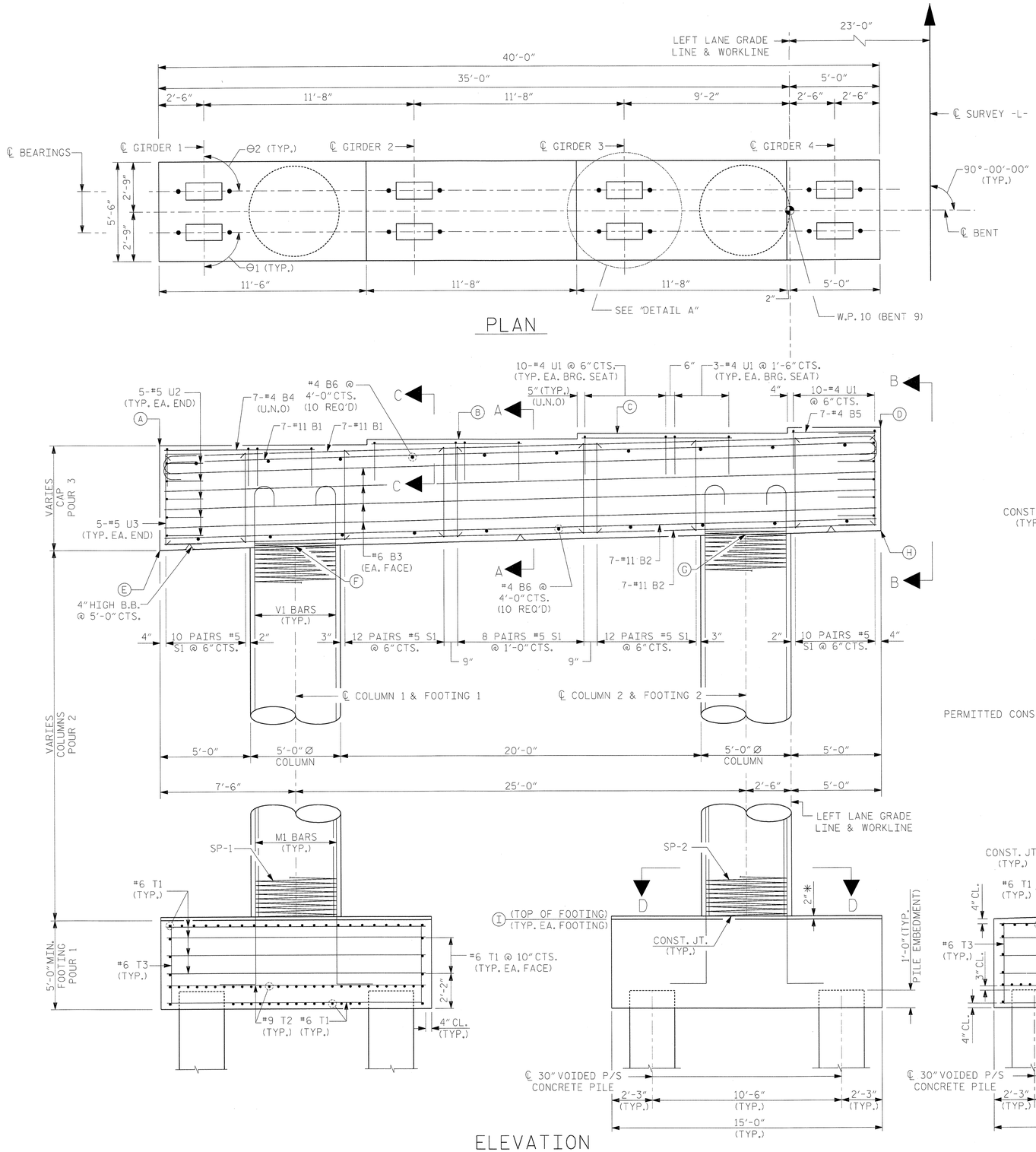

ELEVATION

LOOKING AHEAD ON STATION

ALL DIMENSIONS AND DETAILS SHOWN FOR FOOTINGS ARE TYPICAL FOR EACH FOOTING UNLESS NOTED OTHERWISE.

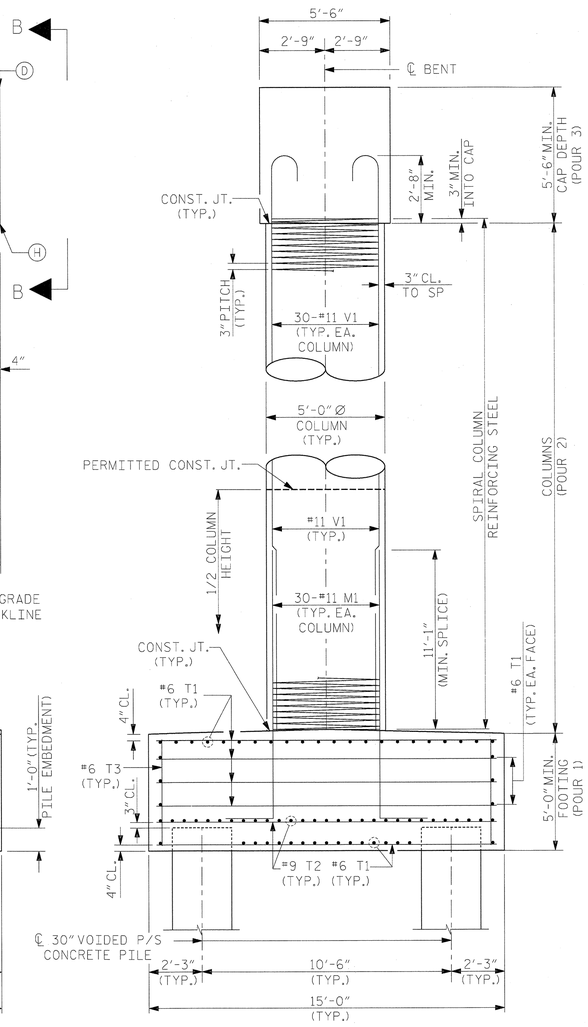

END VIEW

NOTES:

STIRRUPS AND "U" BARS IN CAP MAY BE SHIFTED AS NECESSARY TO CLEAR ANCHOR BOLTS.

HOOKS ON "V" BARS MAY BE TURNED AS NECESSARY FOR PLACING REINFORCING STEEL.

ALTERNATELY INVERT STIRRUP PAIRS AS NOTED.

FOR FOOTING REINFORCING DETAILS, SEE SHEET 2 OF 2.

FOR SECTION A-A, VIEW B-B, SECTION C-C, AND SECTION D-D, SEE SHEET 2 OF 2.

* THE FOOTING HAS A DROP OF 2" FROM THE CENTER OF THE FOOTING TO THE EDGE OF FOOTING TO ACCOMODATE DRAINAGE.

FOR FOUNDATION NOTES, SEE "GENERAL DRAWINGS FOUNDATION LAYOUT" SHEET 10 OF 10.

ELEVATION TABLE

BENT	A	B	C	D	E	F	G	H	I
9	60.40	60.69	60.98	61.28	54.61	54.80	55.43	55.61	9.00

BEARING ANGLES

BENT	Θ1	Θ2
9	90°-00'-00"	90°-00'-00"

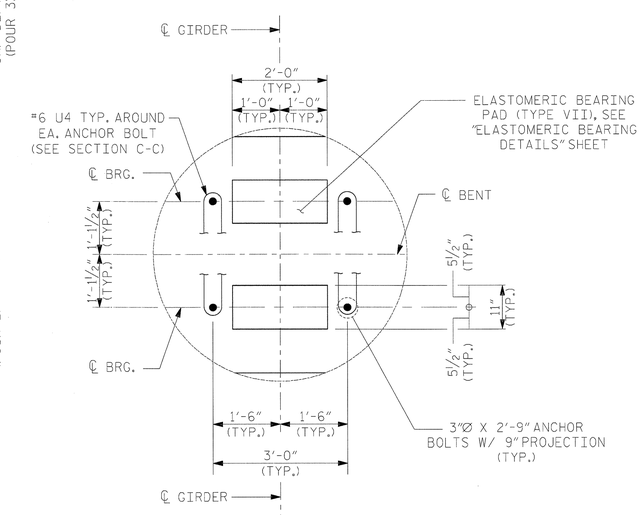

DETAIL A

PROJECT NO. R-2633BB

BRUNSWICK/NEW HANOVER COUNTY

STATION: 353+32.50 -L-

SHEET 1 OF 2

DRAWN BY : MKO DATE : 09/2012
CHECKED BY : JMR DATE : 03/2013
DEISGN ENGINEER OR RECORD : J. ROBINSON DATE : 05/2013

NORTH CAROLINA PROFESSIONAL SEAL 18442 ENGINEER RICHARD LEONI BOBINSON JR.
5-29-2013

RS&H IMPROVING YOUR WORLD

RS&H Architects-Engineers-Planners, Inc.
8601 Six Forks Road, Suite 260
Raleigh, NC 27615
919-846-6701 FAX 919-846-9080
www.rsandh.com
North Carolina License Nos. 50073 * F-0403 * C-28

STATE OF NORTH CAROLINA
DEPARTMENT OF TRANSPORTATION
RALEIGH

SUBSTRUCTURE
BENT 9
PLAN AND ELEVATION
LEFT LANE

REVISIONS						SHEET NO.
NO.	BY:	DATE:	NO.	BY:	DATE:	S-195
1			3			TOTAL SHEETS
2			4			700

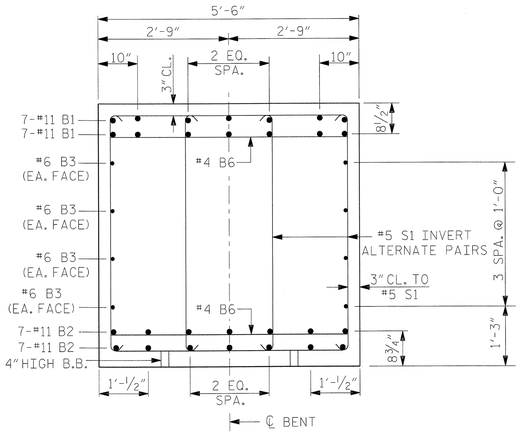

SECTION A-A

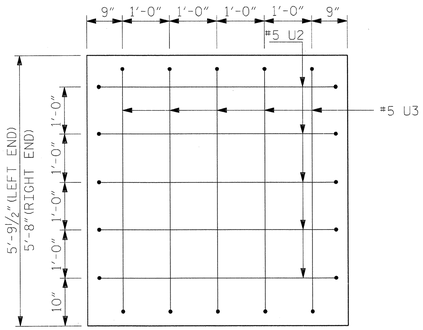

VIEW B-B

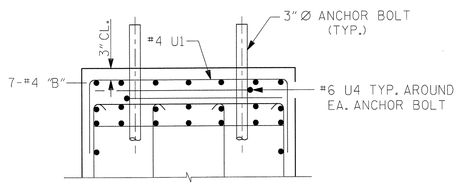

SECTION C-C

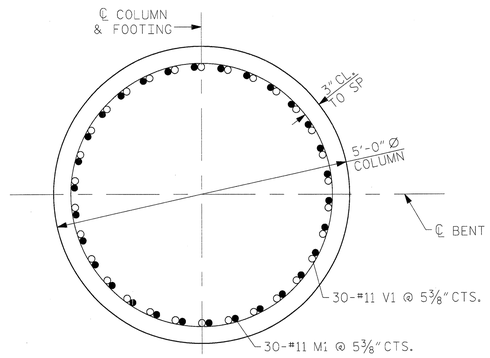

SECTION D-D

BAR TYPES

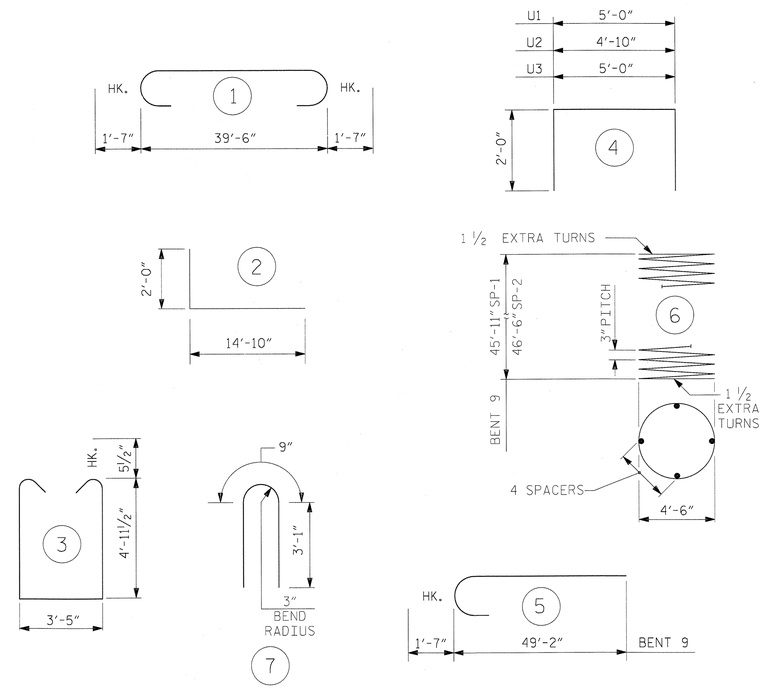

ALL BAR DIMENSIONS ARE OUT TO OUT.

BILL OF MATERIAL

BENT 9

BAR	NO.	SIZE	TYPE	LENGTH (ft)	WEIGHT (lb)
B1	14	11	1	42'-8"	3174
B2	14	11	STR.	39'-6"	2938
B3	8	6	STR.	39'-6"	475
B4	21	4	STR.	8'-4"	117
B5	7	4	STR.	4'-8"	22
B6	20	4	STR.	5'-0"	67
M1	60	11	2	16'-10"	5366
S1	104	5	3	14'-3"	1546
T1	180	6	STR.	14'-4"	3875
T2	116	9	STR.	14'-4"	5653
T3	136	6	STR.	4'-4"	885
U1	49	4	4	9'-0"	295
U2	10	5	4	8'-10"	92
U3	10	5	4	9'-0"	94
U4	16	6	7	6'-11"	166
V1	60	11	5	50'-9"	16178
EPOXY COATED REINFORCING STEEL					40943 LB.
SP1	1	✱✱	6	2619'-7"	1750
SP2	1	✱✱	6	2661'-8"	1778
TOTAL EPOXY COATED SPIRAL COLUMN REINFORCING STEEL					3528 LB.
CLASS "AA" CONCRETE BREAKDOWN					
POUR 1 - FOOTING △					88.5 CU. YDS.
POUR 2 - COLUMN					67.1 CU. YDS.
POUR 3 - CAP					46.1 CU. YDS.
TOTAL CLASS "AA" CONCRETE					201.7 CU. YDS.
30" VOIDED PRESTRESSED CONCRETE PILES					
NO. 8					680 LIN. FT.
PILE REDRIVES					NO. 4

✱✱ THE SP1 & SP2 SPIRAL REINFORCING STEEL SHALL BE W20 OR D-20 COLD DRAWN WIRE OR #4 PLAIN OR DEFORMED BAR.

△ INCLUDES CONCRETE IN THE 30" VOIDED PRESTRESSED CONCRETE PILES. SEE "30" VOIDED PRESTRESSED CONCRETE PILE" SHEETS FOR DETAIL AND NOTE.

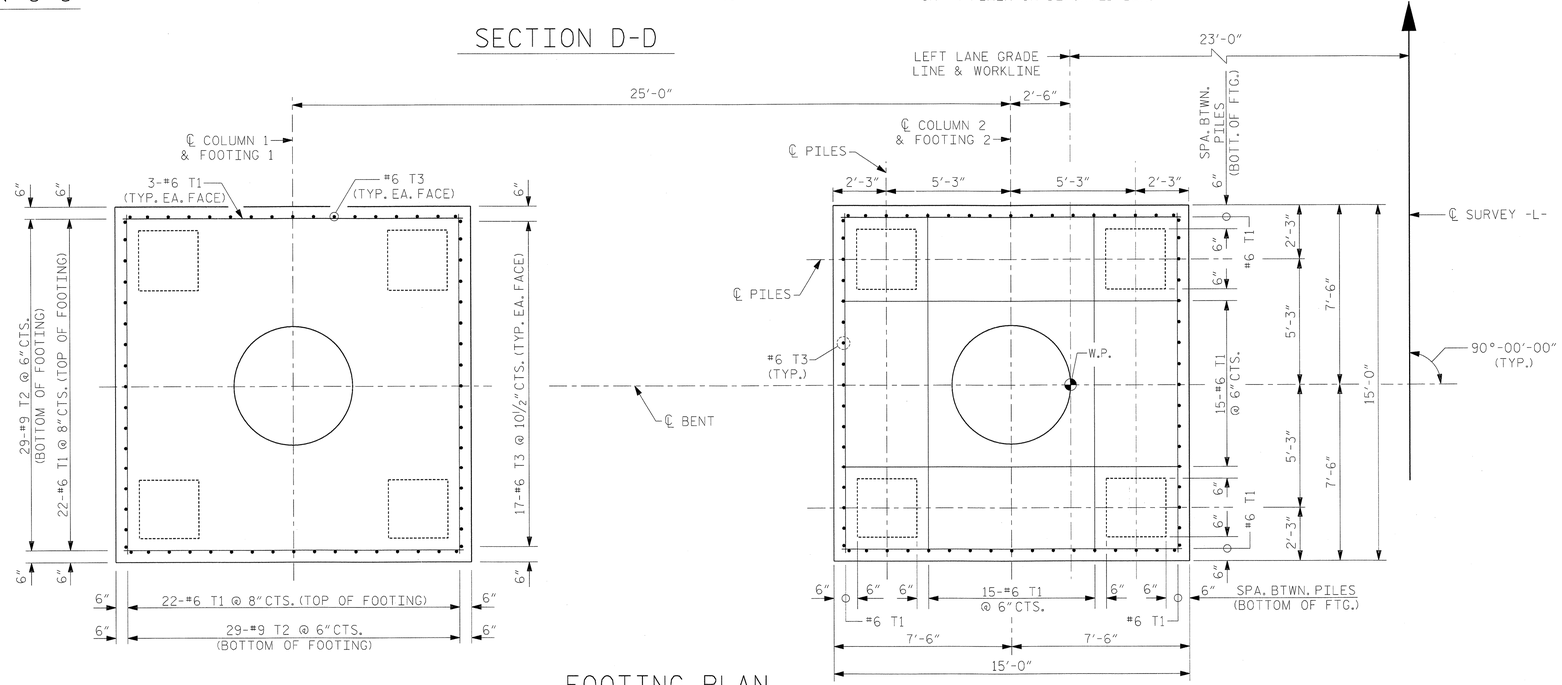

FOOTING PLAN

ALL DIMENSIONS AND DETAILS SHOWN FOR FOOTINGS ARE TYPICAL FOR EACH FOOTING UNLESS OTHERWISE NOTED.

PROJECT NO. R-2633BB

BRUNSWICK/NEW HANOVER COUNTY

STATION: 353+32.50 -L-

SHEET 2 OF 2

STATE OF NORTH CAROLINA
DEPARTMENT OF TRANSPORTATION
RALEIGH

SUBSTRUCTURE
BENT 9
DETAILS AND
BILL OF MATERIAL
LEFT LANE

NORTH CAROLINA PROFESSIONAL SEAL 18442 ENGINEER JEON BO KIM
5-29-2013

RS&H IMPROVING YOUR WORLD

RS&H Architects-Engineers-Planners, Inc.
8601 Six Forks Road, Suite 260
Raleigh, NC 27615
919-846-0701 FAX 919-846-9080
www.rsandh.com
North Carolina License Nos. 50073 * F-0493 * C-28

REVISIONS							SHEET NO.
NO.	BY:	DATE:	NO.	BY:	DATE:		S-196
1			3				TOTAL SHEETS
2			4				700

DRAWN BY :	MKO	DATE :	09/2012
CHECKED BY :	JMR	DATE :	03/2013
DEISGN ENGINEER OR RECORD :	J. ROBINSON	DATE :	05/2013

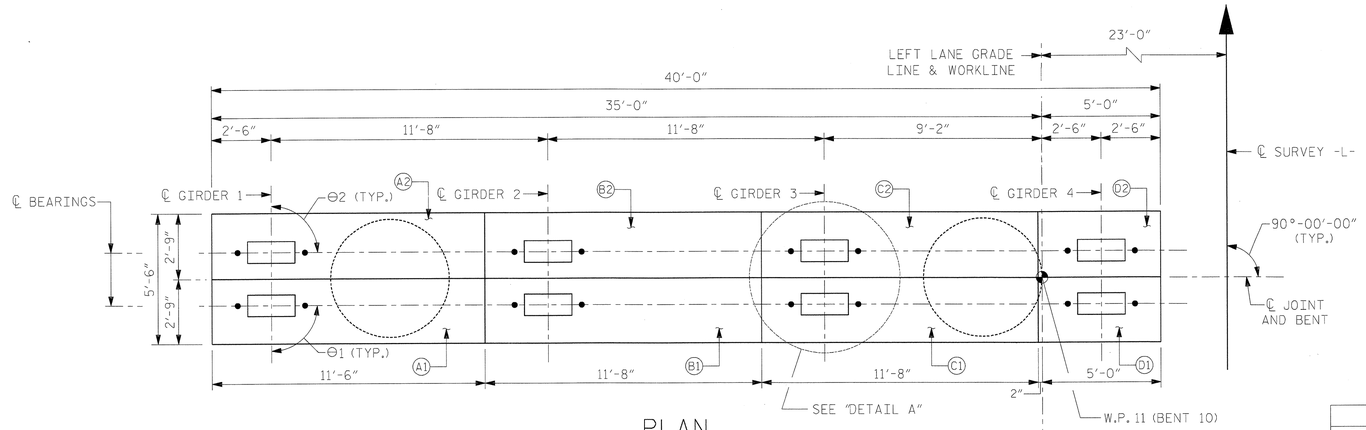

PLAN

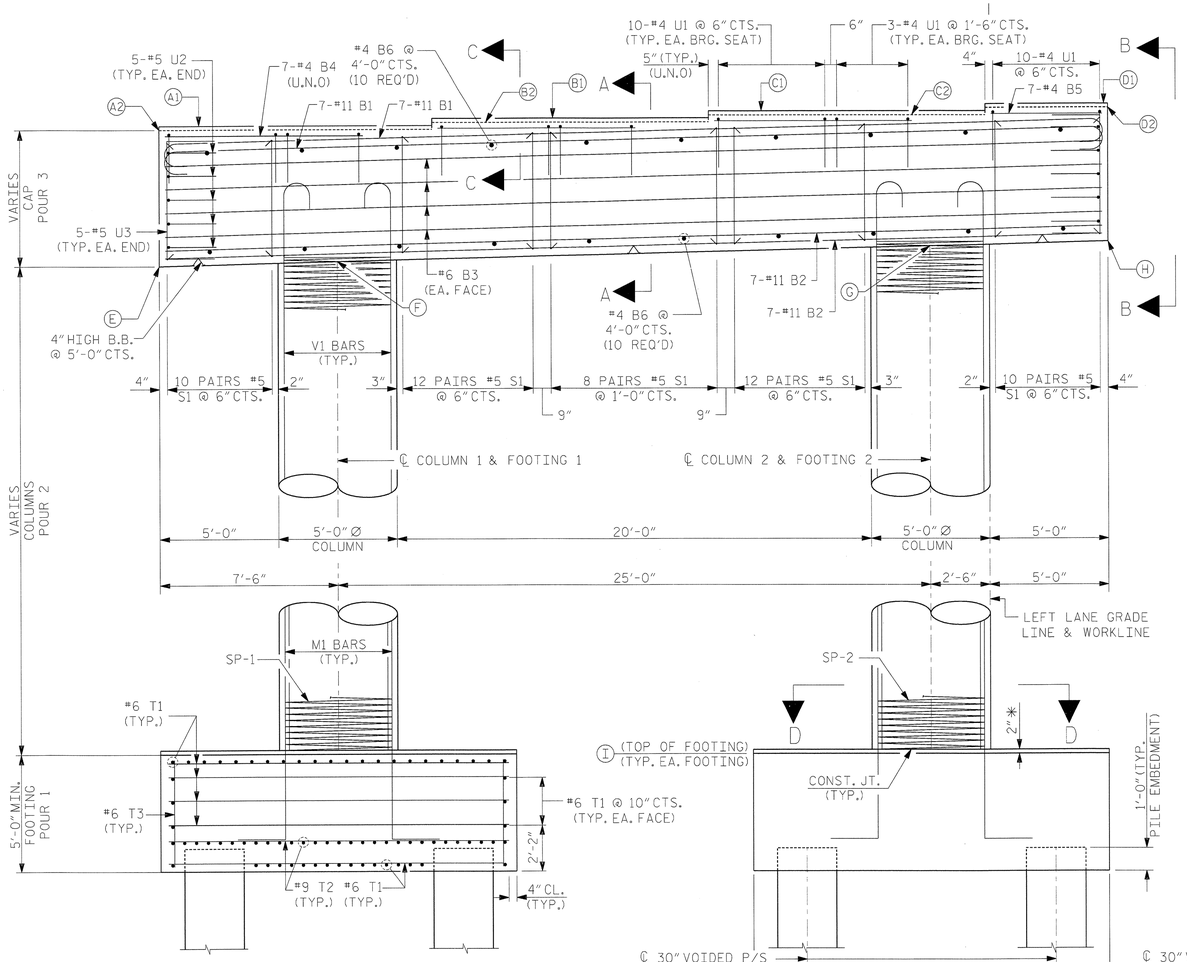

ELEVATION

LOOKING AHEAD ON STATION
ALL DIMENSIONS AND DETAILS SHOWN FOR FOOTINGS ARE TYPICAL FOR EACH FOOTING UNLESS NOTED OTHERWISE.

NOTES:

STIRRUPS AND "U" BARS IN CAP MAY BE SHIFTED AS NECESSARY TO CLEAR ANCHOR BOLTS.

HOOKS ON "V" BARS MAY BE TURNED AS NECESSARY FOR PLACING REINFORCING STEEL.

ALTERNATELY INVERT STIRRUP PAIRS AS NOTED.

FOR FOOTING REINFORCING DETAILS, SEE SHEET 2 OF 2.

FOR SECTION A-A, VIEW B-B, SECTION C-C, AND SECTION D-D, SEE SHEET 2 OF 2.

* THE FOOTING HAS A DROP OF 2" FROM THE CENTER OF THE FOOTING TO THE EDGE OF FOOTING TO ACCOMODATE DRAINAGE.

FOR FOUNDATION NOTES, SEE "GENERAL DRAWINGS FOUNDATION LAYOUT" SHEET 10 OF 10.

THE TOP SURFACE AREAS OF BENT 10 CAP SHALL BE CURED IN ACCORDANCE WITH THE STANDARD SPECIFICATIONS EXCEPT THE MEMBRANE CURING COMPOUND SHALL NOT BE USED.

ELEVATION TABLE													
BENT	A1	A2	B1	B2	C1	C2	D1	D2	E	F	G	H	I
10	57.96	57.79	58.25	58.09	58.54	58.38	58.84	58.67	52.01	52.19	52.82	53.01	9.00

BEARING ANGLES		
BENT	Θ1	Θ2
10	90°-00'-00"	90°-00'-00"

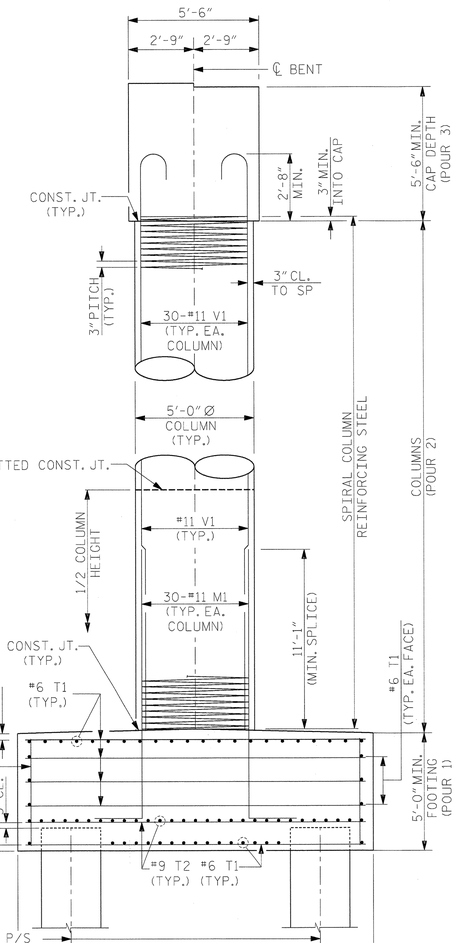

END VIEW

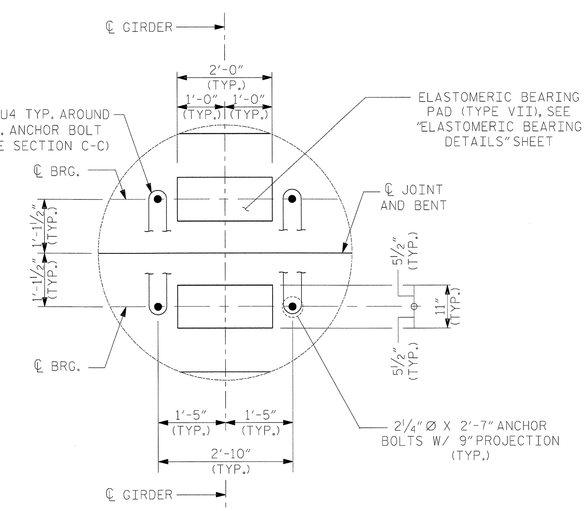

DETAIL A

PROJECT NO. R-2633BB
BRUNSWICK/NEW HANOVER COUNTY
STATION: 353+32.50 -L-

SHEET 1 OF 2

DRAWN BY : MKO	DATE : 09/2012		
CHECKED BY : JMR	DATE : 03/2013		
DEISGN ENGINEER OR RECORD : J. ROBINSON	DATE : 05/2013		

NORTH CAROLINA PROFESSIONAL SEAL 18442 ENGINEER RICHARD LEONT BUCKINGHAM III
5-23-2013

RS&H IMPROVING YOUR WORLD

RS&H Architects-Engineers-Planners, Inc.
8601 Six Forks Road, Suite 260
Raleigh, NC 27615
919-846-6701 FAX 919-846-9080
www.rsandh.com
North Carolina License Nos. 50073 * F-0403 * C-28

STATE OF NORTH CAROLINA
DEPARTMENT OF TRANSPORTATION
RALEIGH

SUBSTRUCTURE
BENT 10
PLAN AND ELEVATION
LEFT LANE

REVISIONS						SHEET NO.
NO.	BY:	DATE:	NO.	BY:	DATE:	S-197
1			3			TOTAL SHEETS
2			4			700

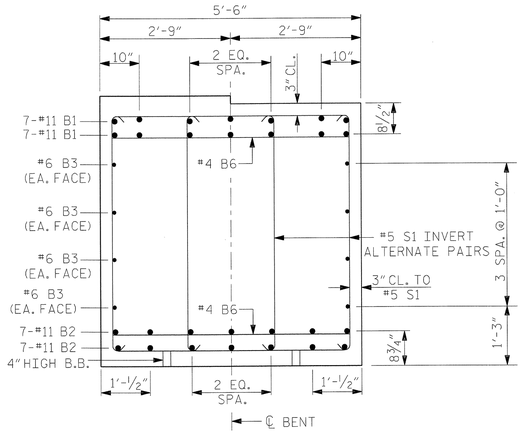

SECTION A-A

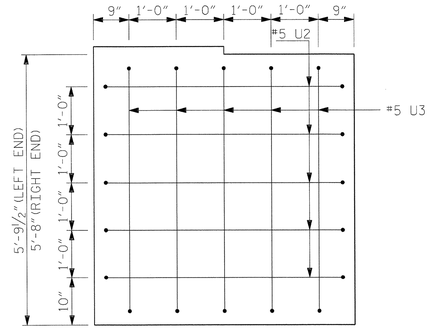

VIEW B-B

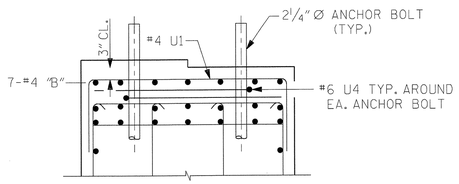

SECTION C-C

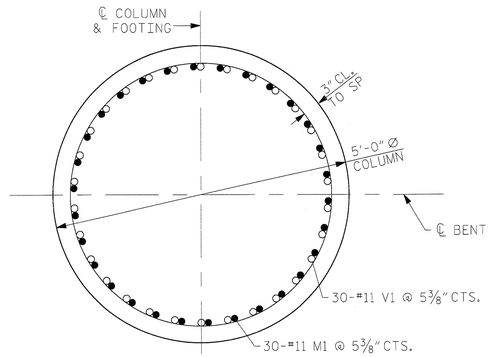

SECTION D-D

BAR TYPES

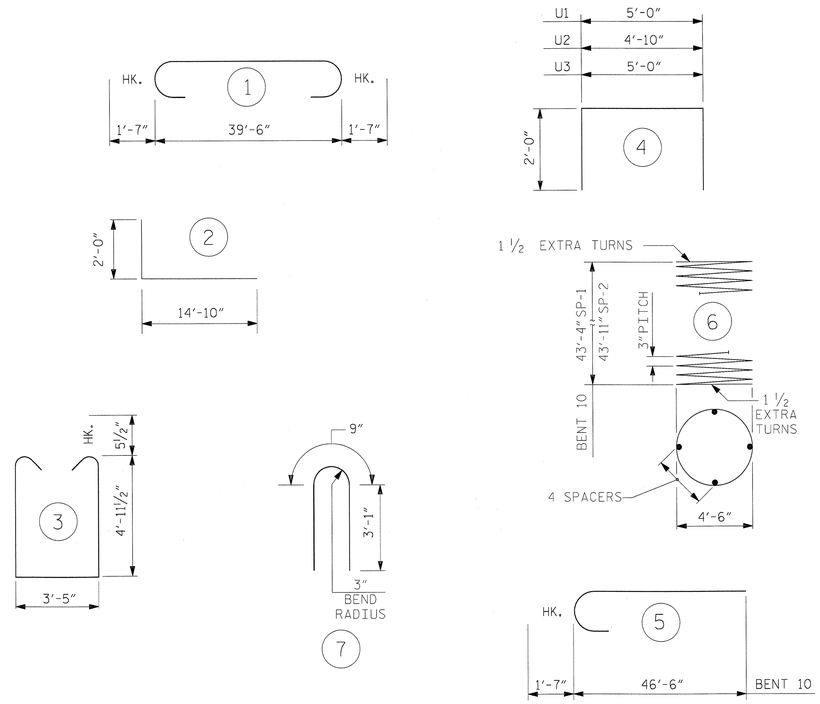

ALL BAR DIMENSIONS ARE OUT TO OUT.

BILL OF MATERIAL

BENT 10

BAR	NO.	SIZE	TYPE	LENGTH (ft)	WEIGHT (lb)
B1	14	11	1	42'-8"	3174
B2	14	11	STR.	39'-6"	2938
B3	8	6	STR.	39'-6"	475
B4	21	4	STR.	8'-4"	117
B5	7	4	STR.	4'-8"	22
B6	20	4	STR.	5'-0"	67
M1	60	11	2	16'-10"	5366
S1	104	5	3	14'-3"	1546
T1	180	6	STR.	14'-4"	3875
T2	116	9	STR.	14'-4"	5653
T3	136	6	STR.	4'-4"	885
U1	49	4	4	9'-0"	295
U2	10	5	4	8'-10"	92
U3	10	5	4	9'-0"	94
U4	16	6	7	6'-11"	166
V1	60	11	5	48'-1"	15328
EPOXY COATED REINFORCING STEEL					40093 LB.
SP1	1	**	6	2479'-6"	1656
SP2	1	**	6	2507'-7"	1675
TOTAL EPOXY COATED SPIRAL COLUMN REINFORCING STEEL					3331 LB.

CLASS "AA" CONCRETE BREAKDOWN	
POUR 1 - FOOTING △	88.5 CU. YDS.
POUR 2 - COLUMN	63.3 CU. YDS.
POUR 3 - CAP	46.1 CU. YDS.
TOTAL CLASS "AA" CONCRETE	197.9 CU. YDS.
30" VOIDED PRESTRESSED CONCRETE PILES	
NO. 8	720 LIN. FT.
PILE REDRIVES	NO. 4

** THE SP1 & SP2 SPIRAL REINFORCING STEEL SHALL BE W20 OR D-20 COLD DRAWN WIRE OR #4 PLAIN OR DEFORMED BAR.

△ INCLUDES CONCRETE IN THE 30" VOIDED PRESTRESSED CONCRETE PILES. SEE "30" VOIDED PRESTRESSED CONCRETE PILE" SHEETS FOR DETAIL AND NOTE.

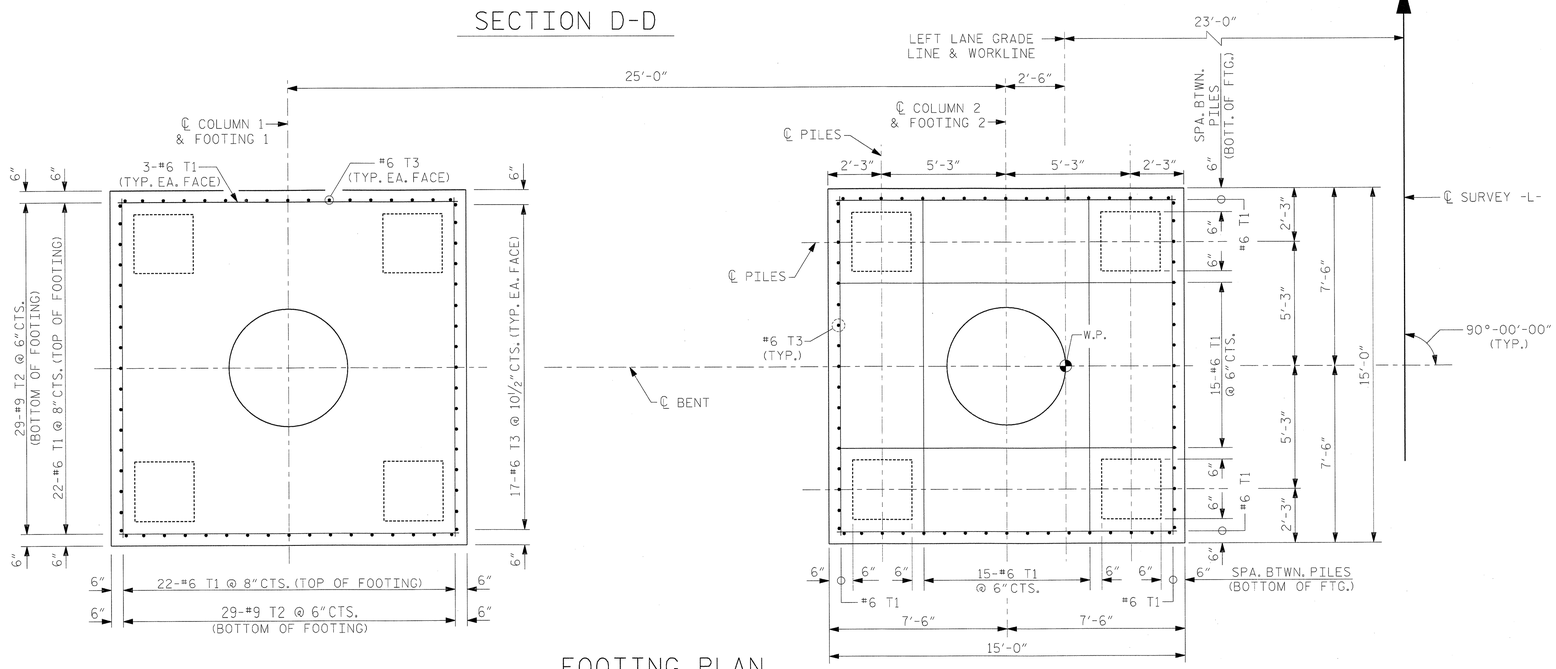

FOOTING PLAN

ALL DIMENSIONS AND DETAILS SHOWN FOR FOOTINGS ARE TYPICAL FOR EACH FOOTING UNLESS OTHERWISE NOTED.

PROJECT NO. R-2633BB

BRUNSWICK/NEW HANOVER COUNTY

STATION: 353+32.50 -L-

SHEET 2 OF 2

STATE OF NORTH CAROLINA
DEPARTMENT OF TRANSPORTATION
RALEIGH

SUBSTRUCTURE
BENT 10
DETAILS AND
BILL OF MATERIAL
LEFT LANE

NORTH CAROLINA PROFESSIONAL SEAL 18442 ENGINEER RICHARD LEON BOWLAGEN 5-29-2013

RS&H IMPROVING YOUR WORLD

RS&H Architects-Engineers-Planners, Inc.
8601 Six Forks Road, Suite 260
Raleigh, NC 27615
919-846-6701 FAX 919-846-9080
www.rsandh.com
North Carolina License Nos. 50073 * F-0493 * C-28

REVISIONS							SHEET NO.
NO.	BY:	DATE:	NO.	BY:	DATE:		S-198
1			3				TOTAL SHEETS
2			4				700

DRAWN BY :	MKO	DATE :	09/2012
CHECKED BY :	JMR	DATE :	03/2013
DEISGN ENGINEER OR RECORD :	J. ROBINSON	DATE :	05/2013

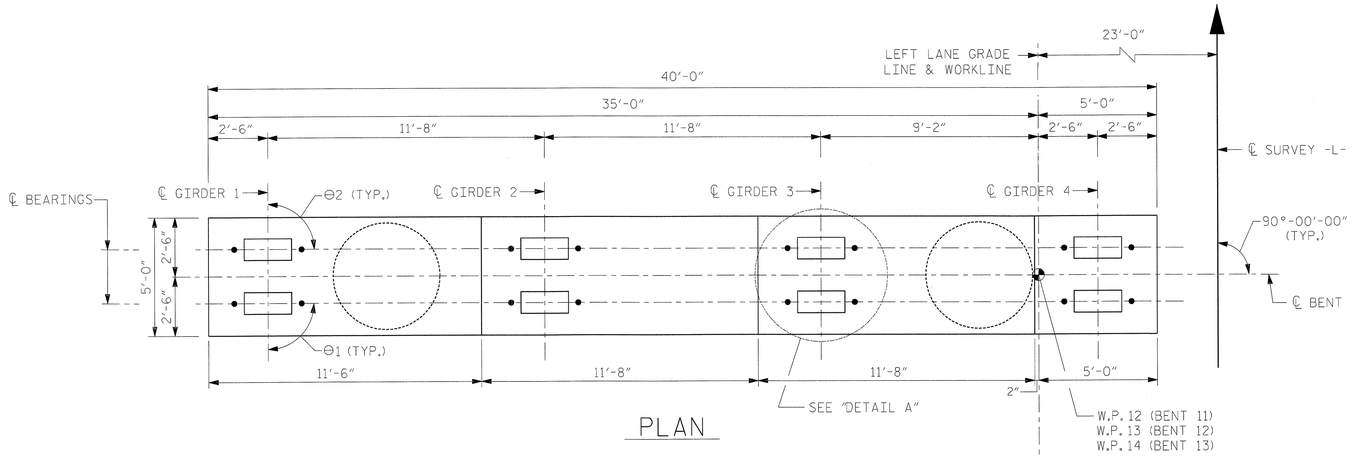

PLAN

NOTES:

STIRRUPS AND "U" BARS IN CAP MAY BE SHIFTED AS NECESSARY TO CLEAR ANCHOR BOLTS.

HOOKS ON "V" BARS MAY BE TURNED AS NECESSARY FOR PLACING REINFORCING STEEL.

ALTERNATELY INVERT STIRRUP PAIRS AS NOTED.

FOR FOOTING REINFORCING DETAILS, SEE SHEET 2 OF 2.

* FOR SECTION A-A, VIEW B-B, SECTION C-C, AND SECTION D-D, SEE SHEET 2 OF 2.

THE FOOTING HAS A DROP OF 2" FROM THE CENTER OF THE FOOTING TO THE EDGE OF FOOTING TO ACCOMODATE DRAINAGE.

FOR FOUNDATION NOTES, SEE "GENERAL DRAWINGS FOUNDATION LAYOUT" SHEET 10 OF 10.

THE TOP SUFACE OF BENT 13 CAP SHALL BE CURED IN ACCORDANCE WITH THE STANDARD SPECIFICATIONS EXCEPT THE MEMBRANE COMPOUND METHOD SHALL NOT BE USED.

ELEVATION TABLE									
BENT	A	B	C	D	E	F	G	H	I
11	54.39	54.68	54.97	55.26	48.60	48.79	49.41	49.60	9.00
12	50.90	51.19	51.48	51.78	45.11	45.30	45.93	46.11	9.00
13	47.41	47.71	48.00	48.29	41.63	41.81	42.44	42.63	9.50

BEARING ANGLES		
BENT	Θ1	Θ2
11, 12 & 13	90°-00'-00"	90°-00'-00"

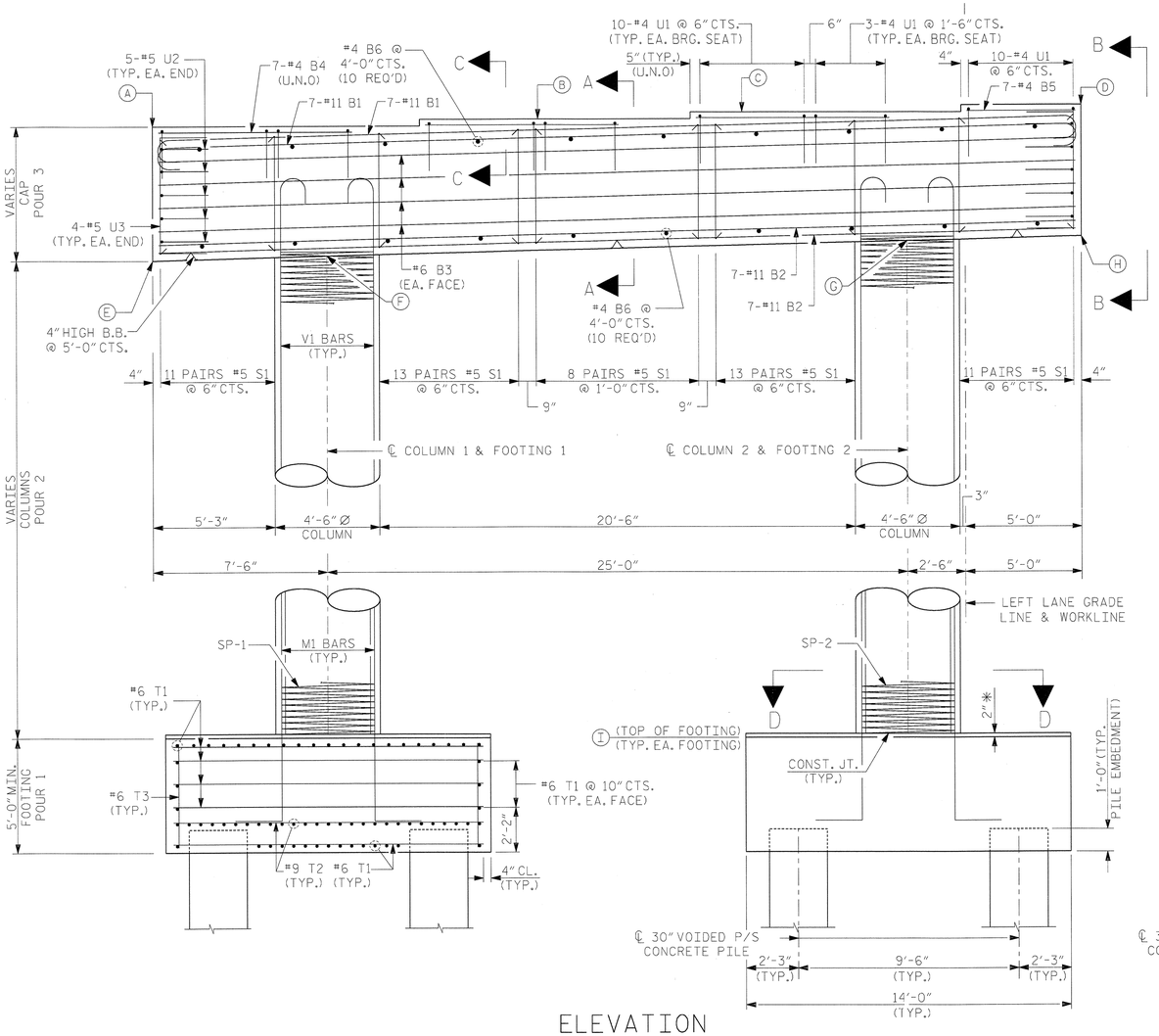

ELEVATION

LOOKING AHEAD ON STATION
ALL DIMENSIONS AND DETAILS SHOWN FOR FOOTINGS ARE TYPICAL FOR EACH FOOTING UNLESS NOTED OTHERWISE.

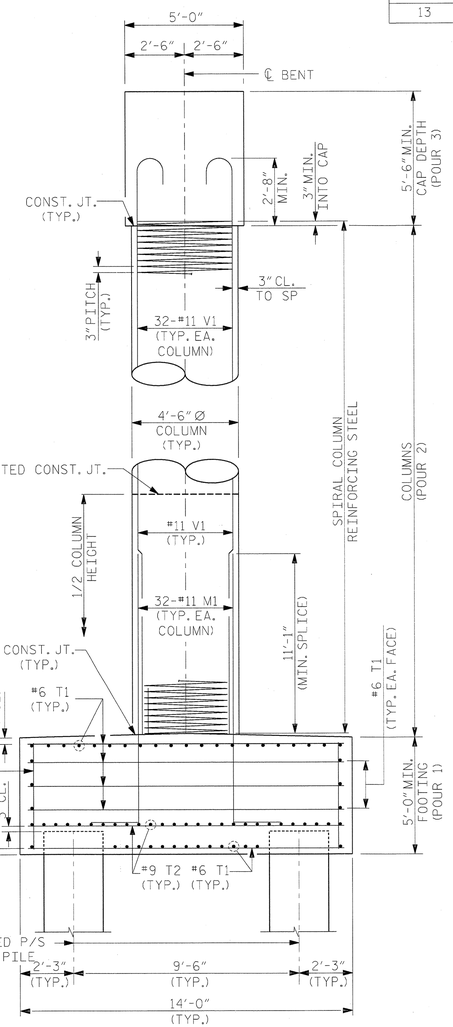

END VIEW

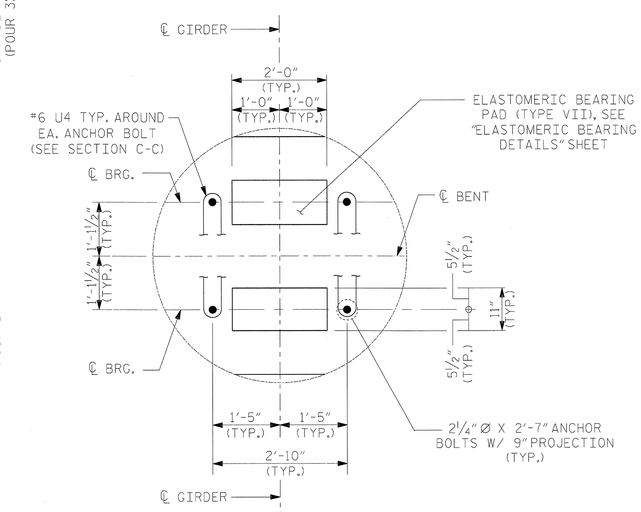

DETAIL A

PROJECT NO. R-2633BB

BRUNSWICK/NEW HANOVER COUNTY

STATION: 353+32.50 -L-

SHEET 1 OF 2

DRAWN BY : MKO	DATE : 09/2012		
CHECKED BY : JMR	DATE : 03/2013		
DEISGN ENGINEER OR RECORD : J. ROBINSON	DATE : 05/2013		

NORTH CAROLINA PROFESSIONAL SEAL 18442 ENGINEER RICHARD JAMESON ROBINSON III
5-28-2013

RS&H IMPROVING YOUR WORLD

RS&H Architects-Engineers-Planners, Inc.
8601 Six Forks Road, Suite 260
Raleigh, NC 27615
919-846-6701 FAX 919-846-9080
www.rsandh.com
North Carolina License Nos. 50073 * F-0493 * C-28

STATE OF NORTH CAROLINA
DEPARTMENT OF TRANSPORTATION
RALEIGH

SUBSTRUCTURE

BENT 11, 12 & 13
PLAN AND ELEVATION
LEFT LANE

REVISIONS						
NO.	BY:	DATE:	NO.	BY:	DATE:	
1			3			
2			4			

SHEET NO. S-199

TOTAL SHEETS 700

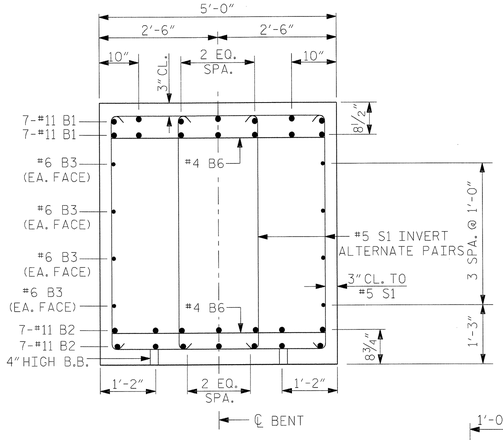

SECTION A-A

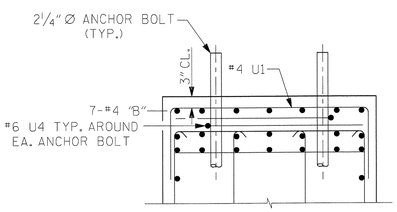

SECTION C-C

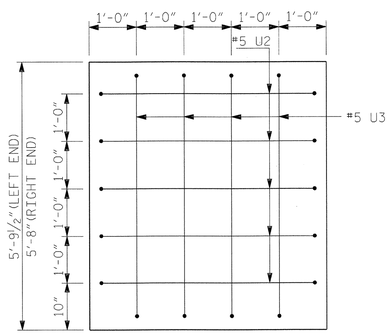

VIEW B-B

BAR TYPES

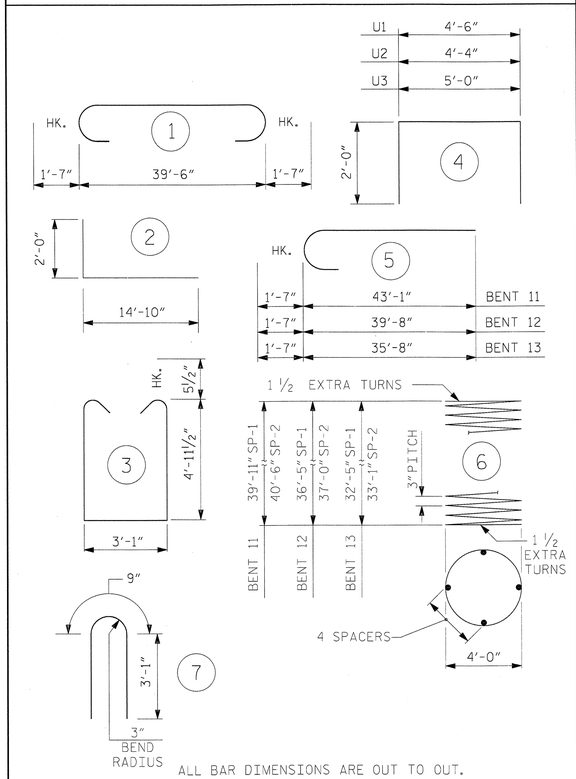

ALL BAR DIMENSIONS ARE OUT TO OUT.

BILL OF MATERIAL

BENT 11

BAR	NO.	SIZE	TYPE	LENGTH (ft)	WEIGHT (lb)
B1	14	11	1	42'-8"	3174
B2	14	11	STR.	39'-6"	2938
B3	8	6	STR.	39'-6"	475
B4	21	4	STR.	8'-4"	117
B5	7	4	STR.	4'-8"	22
B6	20	4	STR.	4'-6"	60
M1	64	11	2	16'-10"	5724
S1	112	5	3	13'-11"	1626
T1	168	6	STR.	13'-4"	3364
T2	108	9	STR.	13'-4"	4896
T3	120	6	STR.	4'-4"	781
U1	49	4	4	8'-6"	278
U2	10	5	4	8'-4"	87
U3	8	5	4	9'-0"	75
U4	16	6	7	6'-11"	166
V1	64	11	5	44'-8"	15188

EPOXY COATED REINFORCING STEEL 38971 LB.

SP1	1	**	6	2027'-5"	1354
SP2	1	**	6	2052'-4"	1371

TOTAL EPOXY COATED SPIRAL COLUMN REINFORCING STEEL 2725 LB.

CLASS "AA" CONCRETE BREAKDOWN

POUR 1 - FOOTING △	77.5 CU. YDS.
POUR 2 - COLUMN	47.2 CU. YDS.
POUR 3 - CAP	41.9 CU. YDS.
TOTAL CLASS "AA" CONCRETE	166.6 CU. YDS.

30" VOIDED PRESTRESSED CONCRETE PILES NO. 8 720 LIN. FT.

PILE REDRIVES NO. 4

BENT 12

BAR	NO.	SIZE	TYPE	LENGTH (ft)	WEIGHT (lb)
B1	14	11	1	42'-8"	3174
B2	14	11	STR.	39'-6"	2938
B3	8	6	STR.	39'-6"	475
B4	21	4	STR.	8'-4"	117
B5	7	4	STR.	4'-8"	22
B6	20	4	STR.	4'-6"	60
M1	64	11	2	16'-10"	5724
S1	112	5	3	13'-11"	1626
T1	168	6	STR.	13'-4"	3364
T2	108	9	STR.	13'-4"	4896
T3	120	6	STR.	4'-4"	781
U1	49	4	4	8'-6"	278
U2	10	5	4	8'-4"	87
U3	8	5	4	9'-0"	75
U4	16	6	7	6'-11"	166
V1	64	11	5	41'-3"	14026

EPOXY COATED REINFORCING STEEL 37809 LB.

SP1	1	**	6	1853'-4"	1238
SP2	1	**	6	1878'-2"	1255

TOTAL EPOXY COATED SPIRAL COLUMN REINFORCING STEEL 2493 LB.

CLASS "AA" CONCRETE BREAKDOWN

POUR 1 - FOOTING △	77.5 CU. YDS.
POUR 2 - COLUMN	43.1 CU. YDS.
POUR 3 - CAP	41.9 CU. YDS.
TOTAL CLASS "AA" CONCRETE	162.5 CU. YDS.

30" VOIDED PRESTRESSED CONCRETE PILES NO. 8 760 LIN. FT.

PILE REDRIVES NO. 4

BENT 13

BAR	NO.	SIZE	TYPE	LENGTH (ft)	WEIGHT (lb)
B1	14	11	1	42'-8"	3174
B2	14	11	STR.	39'-6"	2938
B3	8	6	STR.	39'-6"	475
B4	21	4	STR.	8'-4"	117
B5	7	4	STR.	4'-8"	22
B6	20	4	STR.	4'-6"	60
M1	64	11	2	16'-10"	5724
S1	112	5	3	13'-11"	1626
T1	168	6	STR.	13'-4"	3364
T2	108	9	STR.	13'-4"	4896
T3	120	6	STR.	4'-4"	781
U1	49	4	4	8'-6"	278
U2	10	5	4	8'-4"	87
U3	8	5	4	9'-0"	75
U4	16	6	7	6'-11"	166
V1	64	11	5	37'-3"	12666

EPOXY COATED REINFORCING STEEL 36449 LB.

SP1	1	**	6	1654'-3"	1105
SP2	1	**	6	1679'-2"	1122

TOTAL EPOXY COATED SPIRAL COLUMN REINFORCING STEEL 2277 LB.

CLASS "AA" CONCRETE BREAKDOWN

POUR 1 - FOOTING △	77.5 CU. YDS.
POUR 2 - COLUMN	38.4 CU. YDS.
POUR 3 - CAP	41.9 CU. YDS.
TOTAL CLASS "AA" CONCRETE	157.8 CU. YDS.

30" VOIDED PRESTRESSED CONCRETE PILES NO. 8 760 LIN. FT.

PILE REDRIVES NO. 4

** THE SP1 & SP2 SPIRAL REINFORCING STEEL SHALL BE W20 OR D-20 COLD DRAWN WIRE OR #4 PLAIN OR DEFORMED BAR.

△ INCLUDES CONCRETE IN THE 30" VOIDED PRESTRESSED CONCRETE PILES. SEE "30" VOIDED PRESTRESSED CONCRETE PILE" SHEETS FOR DETAIL AND NOTE.

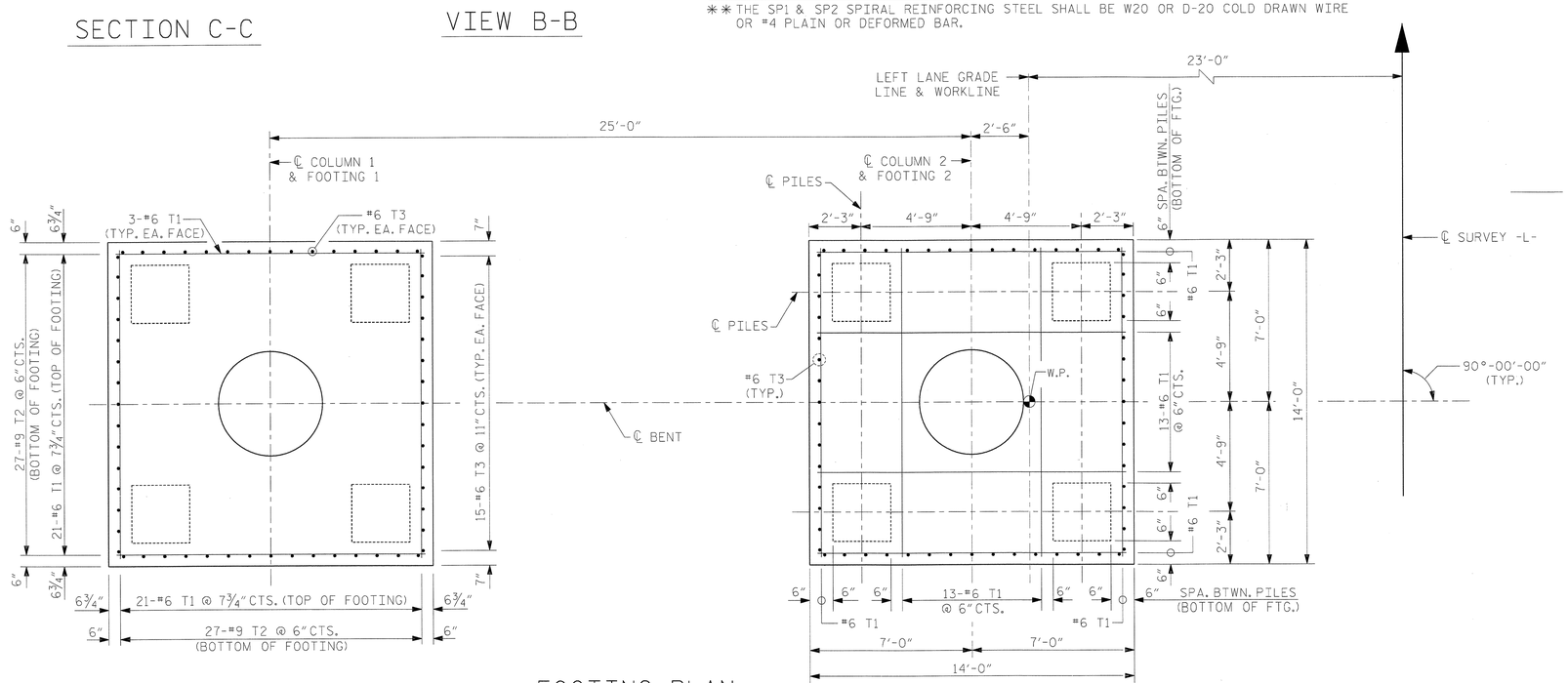

FOOTING PLAN

ALL DIMENSIONS AND DETAILS SHOWN FOR FOOTINGS ARE TYPICAL FOR EACH FOOTING UNLESS NOTED OTHERWISE.

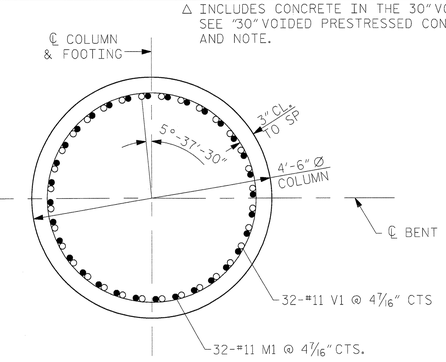

SECTION D-D

PROJECT NO. R-2633BB

BRUNSWICK/NEW HANOVER COUNTY

STATION: 353+32.50 -L-

SHEET 2 OF 2

DRAWN BY : MKO DATE : 09/2012
CHECKED BY : JMR DATE : 03/2013
DEISGN ENGINEER OR RECORD : J. ROBINSON DATE : 05/2013

NORTH CAROLINA PROFESSIONAL SEAL 18442 ENGINEER JEFFREY LEON BOLLINGER
5-28-2013

RS&H IMPROVING YOUR WORLD

RS&H Architects-Engineers-Planners, Inc.
8601 Six Forks Road, Suite 260
Raleigh, NC 27615
919-846-5701 FAX 919-846-9080
www.rsandh.com
North Carolina License Nos. 50073 * F-0493 * C-28

STATE OF NORTH CAROLINA
DEPARTMENT OF TRANSPORTATION
RALEIGH

SUBSTRUCTURE
BENT 11, 12 & 13
DETAILS AND
BILL OF MATERIAL
LEFT LANE

REVISIONS						SHEET NO.
NO.	BY:	DATE:	NO.	BY:	DATE:	S-200
1			3			TOTAL SHEETS
2			4			700

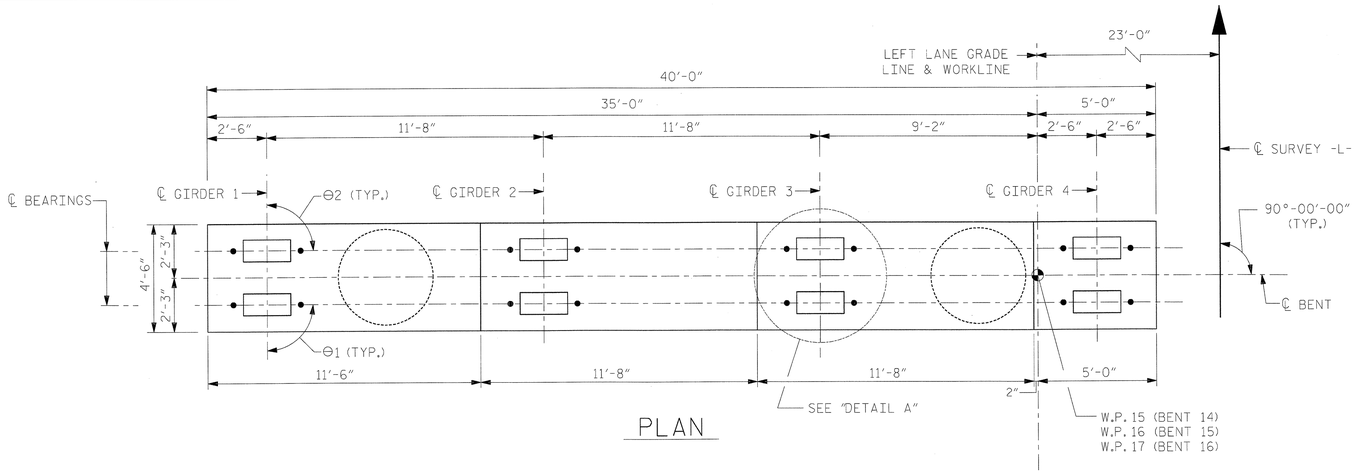

PLAN

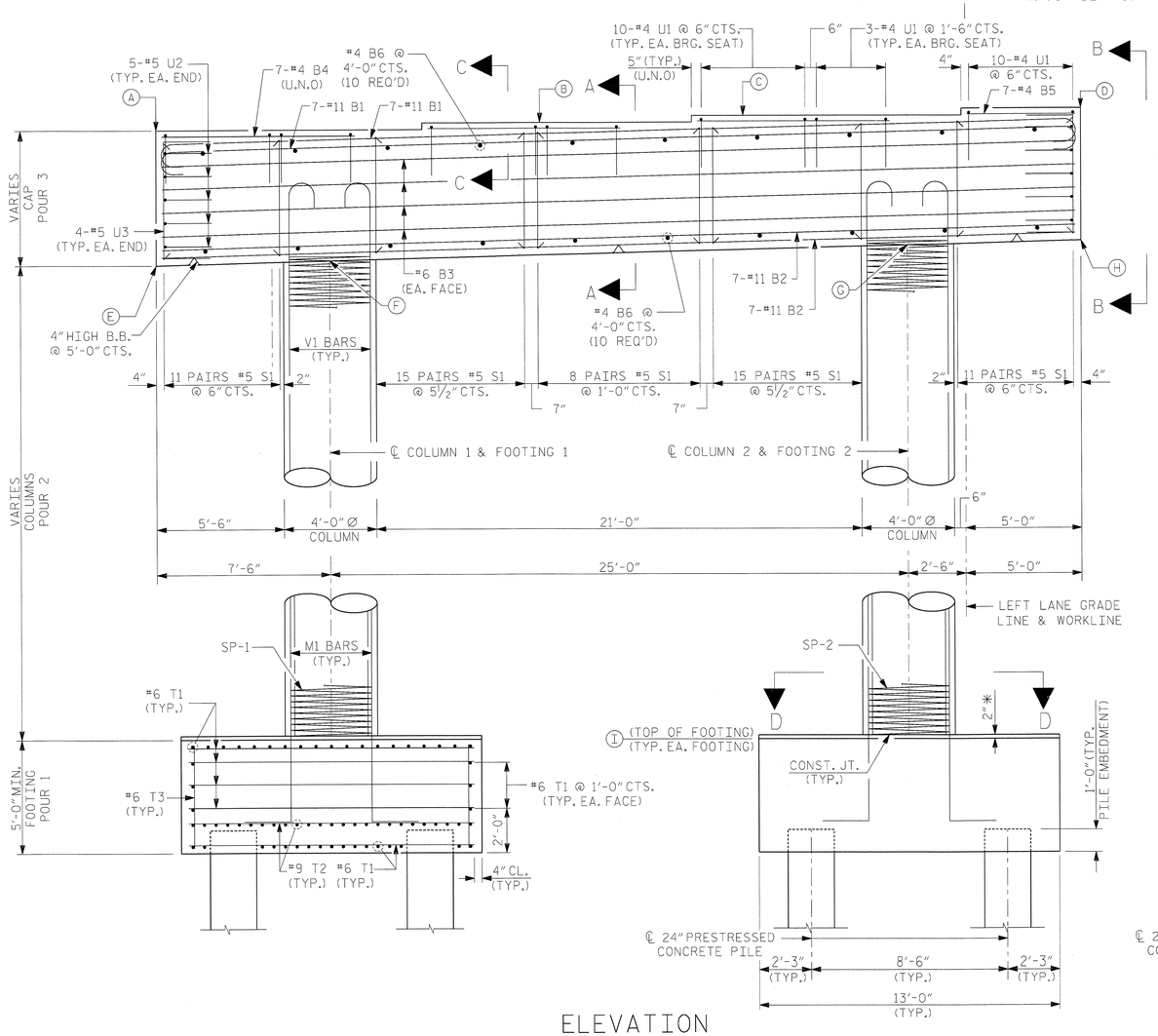

ELEVATION

LOOKING AHEAD ON STATION
ALL DIMENSIONS AND DETAILS SHOWN FOR FOOTINGS ARE TYPICAL FOR EACH FOOTING UNLESS NOTED OTHERWISE.

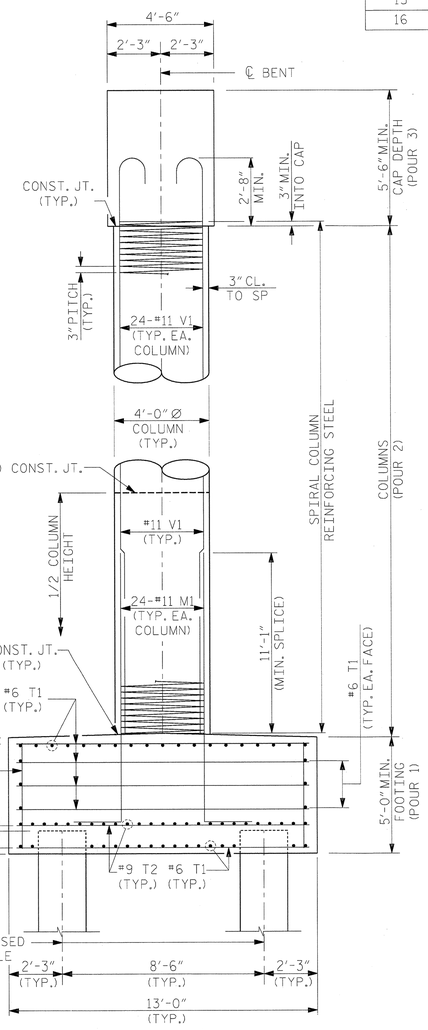

END VIEW

NOTES:

STIRRUPS AND "U" BARS IN CAP MAY BE SHIFTED AS NECESSARY TO CLEAR ANCHOR BOLTS.

HOOKS ON "V" BARS MAY BE TURNED AS NECESSARY FOR PLACING REINFORCING STEEL.

ALTERNATELY INVERT STIRRUP PAIRS AS NOTED.

FOR FOOTING REINFORCING DETAILS, SEE SHEET 2 OF 2.

FOR SECTION A-A, VIEW B-B, SECTION C-C, AND SECTION D-D, SEE SHEET 2 OF 2.

* THE FOOTING HAS A DROP OF 2" FROM THE CENTER OF THE FOOTING TO THE EDGE OF FOOTING TO ACCOMODATE DRAINAGE.

FOR FOUNDATION NOTES, SEE "GENERAL DRAWINGS FOUNDATION LAYOUT" SHEET 10 OF 10.

THE TOP SURFACE AREAS OF BENT 16 SHALL BE CURED IN ACCORDANCE WITH THE STANDARD SPECIFICATIONS EXCEPT THE MEMBRANE CURING COMPOUND METHOD SHALL NOT BE USED.

ELEVATION TABLE

BENT	A	B	C	D	E	F	G	H	I
14	43.95	44.24	44.53	44.82	38.16	38.35	38.97	39.16	9.50
15	41.00	41.30	41.59	41.88	35.22	35.40	36.03	36.22	9.50
16	38.81	39.10	39.39	39.69	33.02	33.21	33.84	34.02	9.50

BEARING ANGLES

BENT	Θ1	Θ2
14, 15 & 16	90°-00'-00"	90°-00'-00"

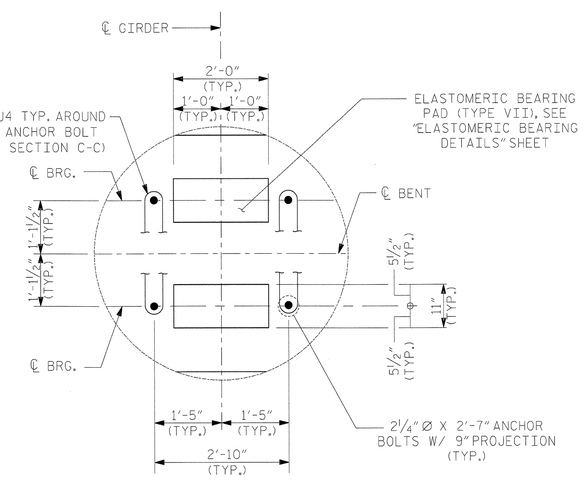

DETAIL A

PROJECT NO. R-2633BB

BRUNSWICK/NEW HANOVER COUNTY

STATION: 353+32.50 -L-

SHEET 1 OF 2

NORTH CAROLINA PROFESSIONAL SEAL 18442 ENGINEER RICHARD LEON BOWLES JR. 5-21-2013

RS&H IMPROVING YOUR WORLD

RS&H Architects-Engineers-Planners, Inc.
8601 Six Forks Road, Suite 260
Raleigh, NC 27615
919-846-6701 FAX 919-846-9080
www.rsandh.com
North Carolina License Nos. 50073 * F-0493 * C-28

STATE OF NORTH CAROLINA
DEPARTMENT OF TRANSPORTATION
RALEIGH

SUBSTRUCTURE
BENT 14, 15 & 16
PLAN AND ELEVATION
LEFT LANE

REVISIONS						SHEET NO.
NO.	BY:	DATE:	NO.	BY:	DATE:	S-201
1			3			TOTAL SHEETS
2			4			700

DRAWN BY : MKO DATE : 09/2012
CHECKED BY : JMR DATE : 03/2013
DEISGN ENGINEER OR RECORD : J. ROBINSON DATE : 05/2013

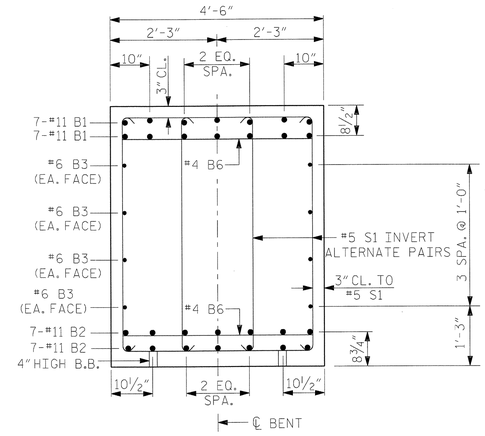

SECTION A-A

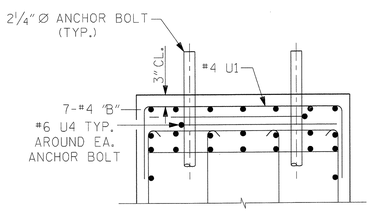

SECTION C-C

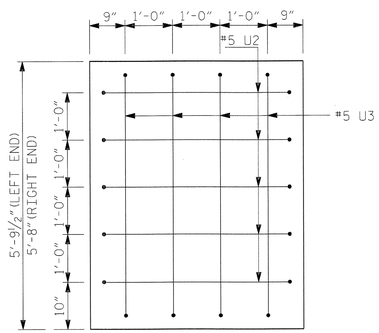

VIEW B-B

BAR TYPES

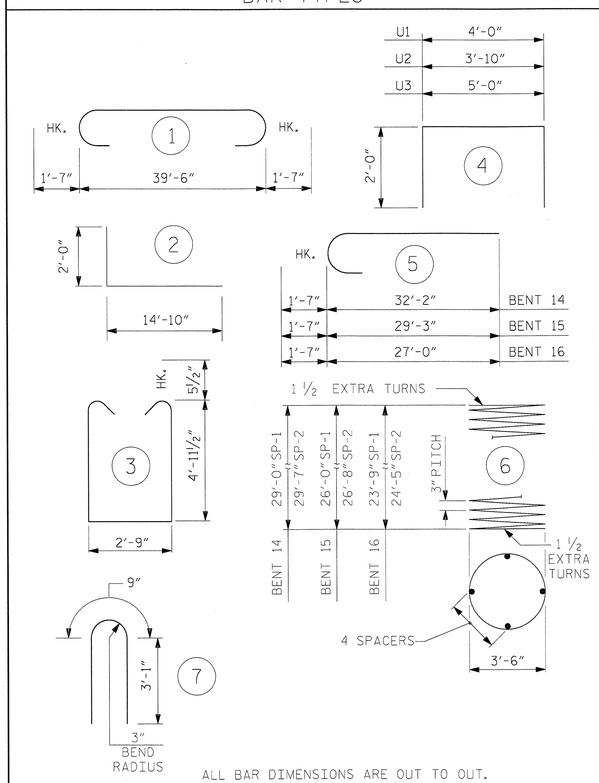

ALL BAR DIMENSIONS ARE OUT TO OUT.

BILL OF MATERIAL

BENT 14

BAR	NO.	SIZE	TYPE	LENGTH (ft)	WEIGHT (lb)
B1	14	11	1	42'-8"	3174
B2	14	11	STR.	39'-6"	2938
B3	8	6	STR.	39'-6"	475
B4	21	4	STR.	8'-4"	117
B5	7	4	STR.	4'-8"	22
B6	20	4	STR.	4'-0"	53
M1	48	11	2	16'-10"	4293
S1	120	5	3	13'-7"	1700
T1	168	6	STR.	12'-4"	3112
T2	100	9	STR.	12'-4"	4193
T3	104	6	STR.	4'-4"	677
U1	49	4	4	8'-0"	262
U2	10	5	4	7'-10"	82
U3	8	5	4	9'-0"	75
U4	16	6	7	6'-11"	166
V1	48	11	5	33'-9"	8607

EPOXY COATED REINFORCING STEEL 29946 LB.

SP1	1	**	6	1293'-3"	864
SP2	1	**	6	1325'-10"	886

TOTAL EPOXY COATED SPIRAL COLUMN REINFORCING STEEL 1750 LB.

CLASS "AA" CONCRETE BREAKDOWN

POUR 1 - FOOTING	63.6 CU. YDS.
POUR 2 - COLUMN	27.1 CU. YDS.
POUR 3 - CAP	37.7 CU. YDS.
TOTAL CLASS "AA" CONCRETE	128.4 CU. YDS.

24" PRESTRESSED CONCRETE PILES
NO. 8 720 LIN. FT.

PILE REDRIVES NO. 4

BENT 15

BAR	NO.	SIZE	TYPE	LENGTH (ft)	WEIGHT (lb)
B1	14	11	1	42'-8"	3174
B2	14	11	STR.	39'-6"	2938
B3	8	6	STR.	39'-6"	475
B4	21	4	STR.	8'-4"	117
B5	7	4	STR.	4'-8"	22
B6	20	4	STR.	4'-0"	53
M1	48	11	2	16'-10"	4293
S1	120	5	3	13'-7"	1700
T1	168	6	STR.	12'-4"	3112
T2	100	9	STR.	12'-4"	4193
T3	104	6	STR.	4'-4"	677
U1	49	4	4	8'-0"	262
U2	10	5	4	7'-10"	82
U3	8	5	4	9'-0"	75
U4	16	6	7	6'-11"	166
V1	48	11	5	30'-10"	7863

EPOXY COATED REINFORCING STEEL 29202 LB.

SP1	1	**	6	1162'-10"	777
SP2	1	**	6	1195'-6"	799

TOTAL EPOXY COATED SPIRAL COLUMN REINFORCING STEEL 1576 LB.

CLASS "AA" CONCRETE BREAKDOWN

POUR 1 - FOOTING	63.6 CU. YDS.
POUR 2 - COLUMN	24.4 CU. YDS.
POUR 3 - CAP	37.7 CU. YDS.
TOTAL CLASS "AA" CONCRETE	125.7 CU. YDS.

24" PRESTRESSED CONCRETE PILES
NO. 8 600 LIN. FT.

PILE REDRIVES NO. 4

BENT 16

BAR	NO.	SIZE	TYPE	LENGTH (ft)	WEIGHT (lb)
B1	14	11	1	42'-8"	3174
B2	14	11	STR.	39'-6"	2938
B3	8	6	STR.	39'-6"	475
B4	21	4	STR.	8'-4"	117
B5	7	4	STR.	4'-8"	22
B6	20	4	STR.	4'-0"	53
M1	48	11	2	16'-10"	4293
S1	120	5	3	13'-7"	1700
T1	168	6	STR.	12'-4"	3112
T2	100	9	STR.	12'-4"	4193
T3	104	6	STR.	4'-4"	677
U1	49	4	4	8'-0"	262
U2	10	5	4	7'-10"	82
U3	8	5	4	9'-0"	75
U4	16	6	7	6'-11"	166
V1	48	11	5	28'-7"	7289

EPOXY COATED REINFORCING STEEL 28630 LB.

SP1	1	**	6	1075'-10"	719
SP2	1	**	6	1097'-8"	733

TOTAL EPOXY COATED SPIRAL COLUMN REINFORCING STEEL 1452 LB.

CLASS "AA" CONCRETE BREAKDOWN

POUR 1 - FOOTING	63.6 CU. YDS.
POUR 2 - COLUMN	22.4 CU. YDS.
POUR 3 - CAP	37.7 CU. YDS.
TOTAL CLASS "AA" CONCRETE	123.7 CU. YDS.

24" PRESTRESSED CONCRETE PILES
NO. 8 600 LIN. FT.

PILE REDRIVES NO. 4

** THE SP1 & SP2 SPIRAL REINFORCING STEEL SHALL BE W20 OR D-20 COLD DRAWN WIRE OR #4 PLAIN OR DEFORMED BAR.

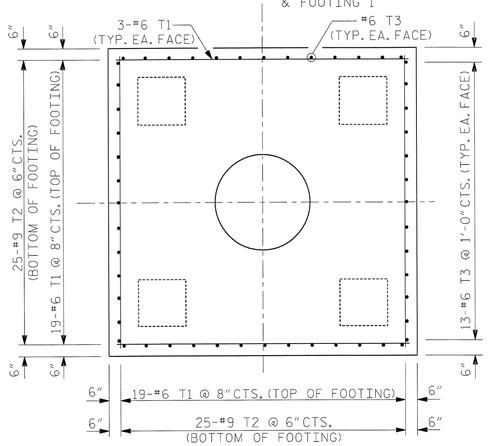

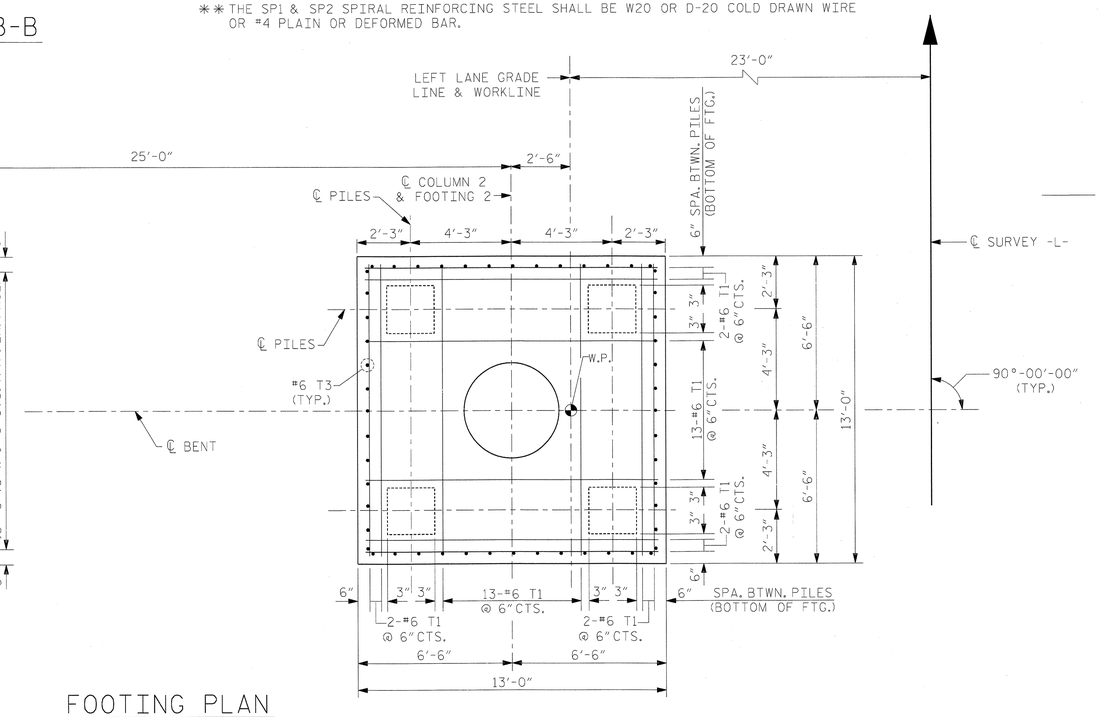

FOOTING PLAN

ALL DIMENSIONS AND DETAILS SHOWN FOR FOOTINGS ARE TYPICAL FOR EACH FOOTING UNLESS NOTED OTHERWISE.

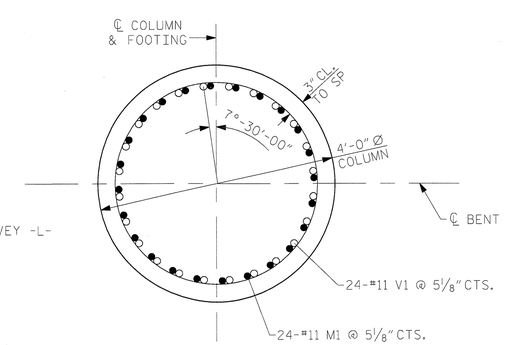

SECTION D-D

PROJECT NO. R-2633BB
BRUNSWICK/NEW HANOVER COUNTY
STATION: 353+32.50 -L-

SHEET 2 OF 2

STATE OF NORTH CAROLINA
DEPARTMENT OF TRANSPORTATION
RALEIGH

SUBSTRUCTURE
BENT 14, 15 & 16
DETAILS AND
BILL OF MATERIAL
LEFT LANE

NORTH CAROLINA PROFESSIONAL SEAL 18442 ENGINEER LEON BOLINGER JR. 5-29-2013

RS&H IMPROVING YOUR WORLD

RS&H Architects-Engineers-Planners, Inc.
8601 Six Forks Road, Suite 260
Raleigh, NC 27615
919-846-6701 FAX 919-846-9080
www.rsandh.com
North Carolina License Nos. 50073 * F-0493 * C-28

REVISIONS								SHEET NO.
NO.	BY:	DATE:	NO.	BY:	DATE:			S-202
1			3					TOTAL SHEETS
2			4					700

DRAWN BY :	MKO	DATE :	09/2012
CHECKED BY :	JMR	DATE :	03/2013
DEISGN ENGINEER OR RECORD :	J. ROBINSON	DATE :	05/2013

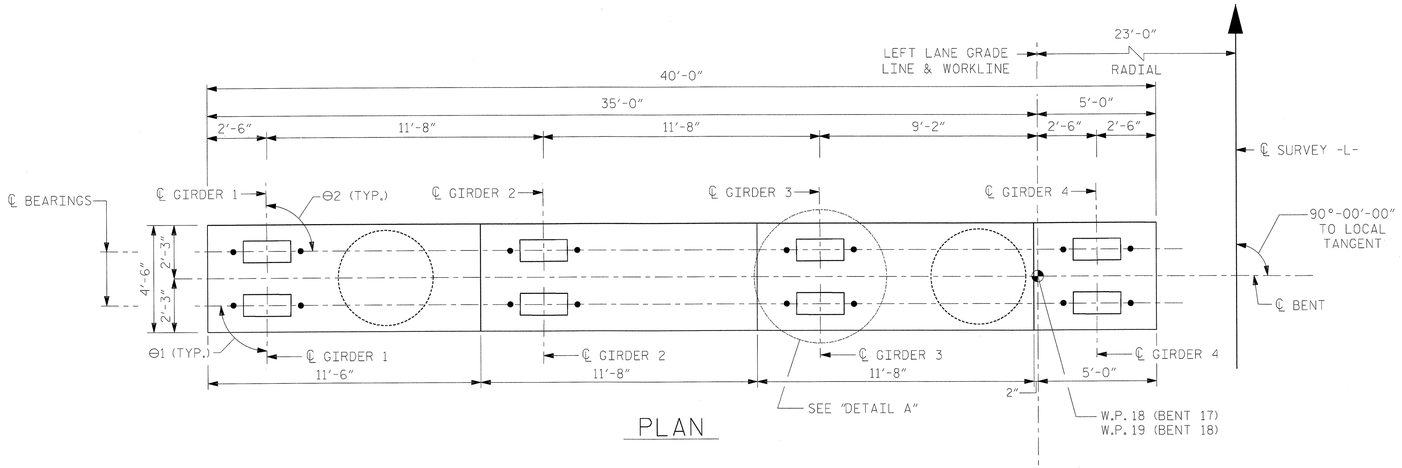

PLAN

NOTES:

STIRRUPS AND "U" BARS IN CAP MAY BE SHIFTED AS NECESSARY TO CLEAR ANCHOR BOLTS.

HOOKS ON "V" BARS MAY BE TURNED AS NECESSARY FOR PLACING REINFORCING STEEL.

ALTERNATELY INVERT STIRRUP PAIRS AS NOTED.

FOR FOOTING REINFORCING DETAILS, SEE SHEET 2 OF 2.

FOR SECTION A-A, VIEW B-B, SECTION C-C, AND SECTION D-D, SEE SHEET 2 OF 2.

* THE FOOTING HAS A DROP OF 2" FROM THE CENTER OF THE FOOTING TO THE EDGE OF FOOTING TO ACCOMODATE DRAINAGE.

FOR FOUNDATION NOTES, SEE "GENERAL DRAWINGS FOUNDATION LAYOUT" SHEET 10 OF 10.

ELEVATION TABLE									
BENT	A	B	C	D	E	F	G	H	I
17	37.37	37.66	37.95	38.24	31.58	31.77	32.39	32.58	9.50
18	36.67	36.97	37.26	37.55	30.89	31.07	31.70	31.89	9.50

BEARING ANGLES		
BENT	Θ1	Θ2
17	89°-40'-36"	90°-22'-55"
18	89°-37'-05"	90°-22'-55"

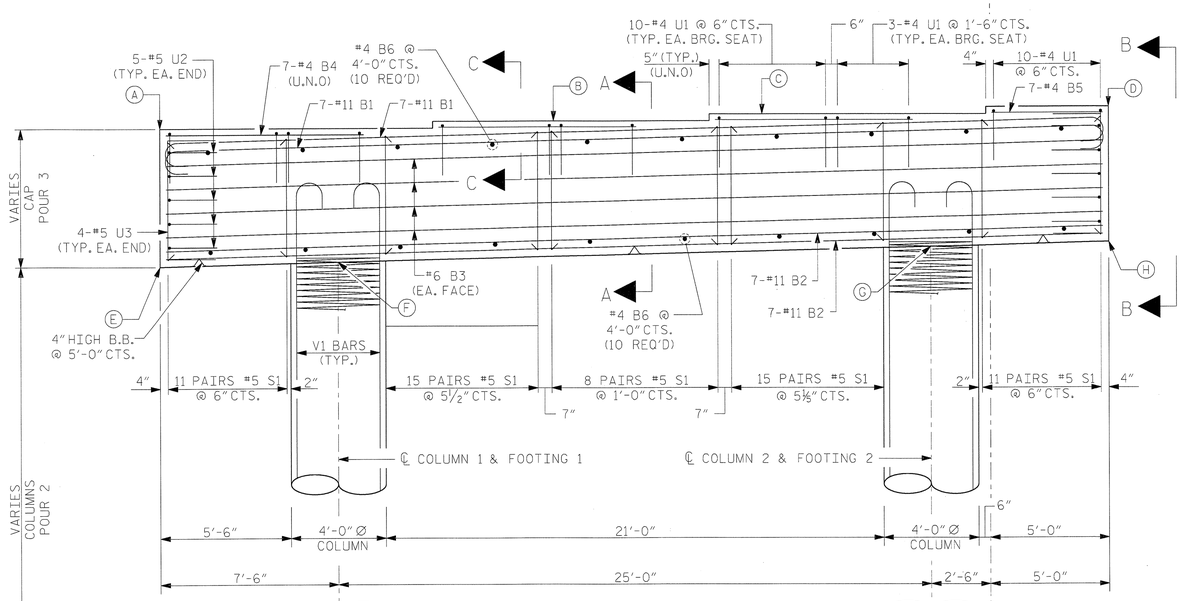

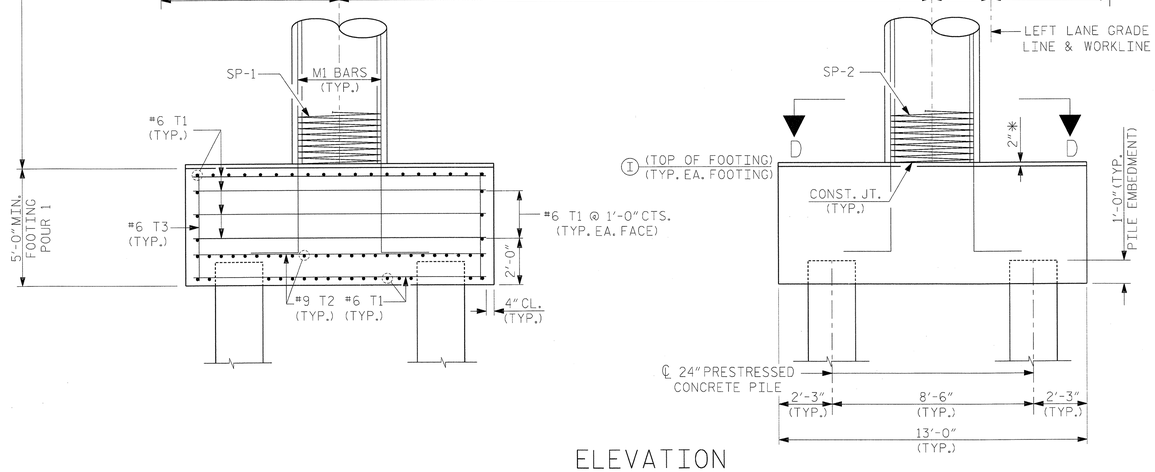

ELEVATION

LOOKING AHEAD ON STATION

ALL DIMENSIONS AND DETAILS SHOWN FOR FOOTINGS ARE TYPICAL FOR EACH FOOTING UNLESS NOTED OTHERWISE.

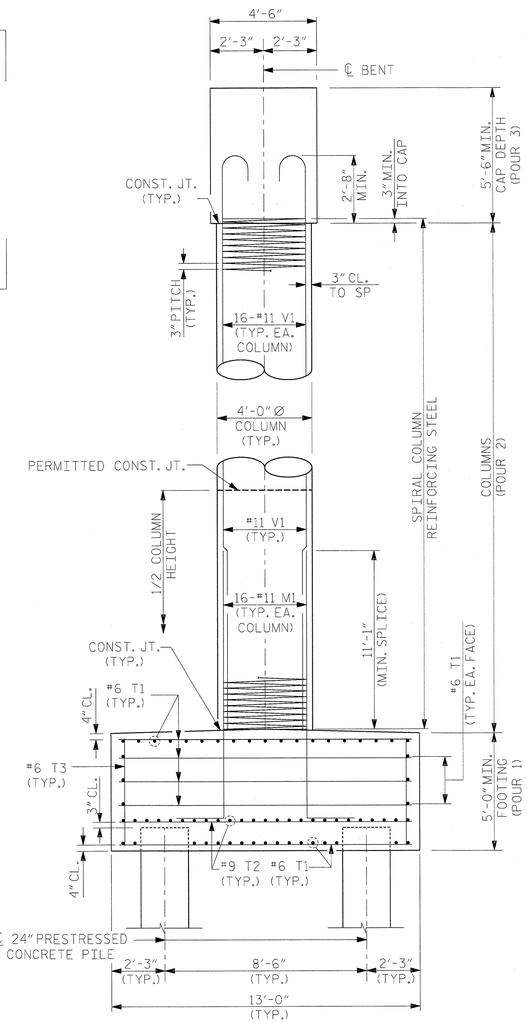

END VIEW

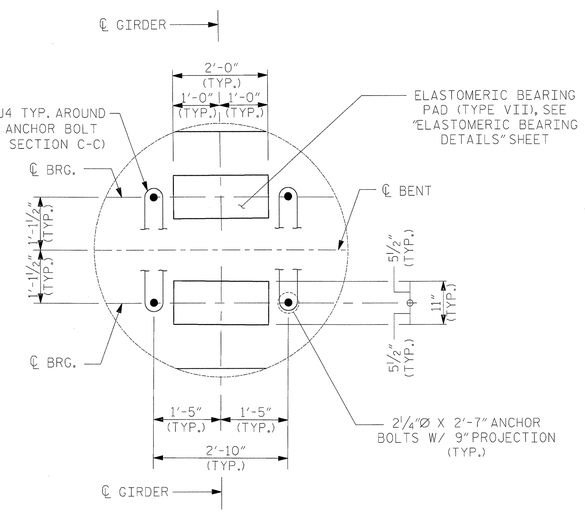

DETAIL A

PROJECT NO. R-2633BB

BRUNSWICK/NEW HANOVER COUNTY

STATION: 353+32.50 -L-

SHEET 1 OF 2

NORTH CAROLINA PROFESSIONAL SEAL 18442 ENGINEER RICHARD LEONI BOZEMAN, JR. 5-29-2013

RS&H IMPROVING YOUR WORLD

RS&H Architects-Engineers-Planners, Inc.
8601 Six Forks Road, Suite 260
Raleigh, NC 27615
919-846-6701 FAX 919-846-9080
www.rsandh.com
North Carolina License Nos. 50173 * F-0493 * C-28

STATE OF NORTH CAROLINA
DEPARTMENT OF TRANSPORTATION
RALEIGH

SUBSTRUCTURE

BENT 17 & 18
PLAN AND ELEVATION
LEFT LANE

REVISIONS						SHEET NO.
NO.	BY:	DATE:	NO.	BY:	DATE:	S-203
1			3			TOTAL SHEETS
2			4			200

DRAWN BY :	MKO	DATE :	09/2012
CHECKED BY :	JMR	DATE :	03/2013
DEISGN ENGINEER OR RECORD :	J. ROBINSON	DATE :	05/2013

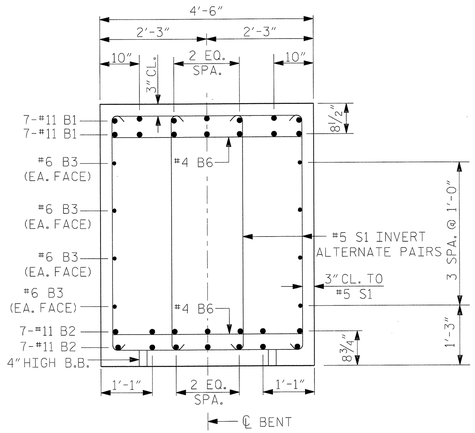

SECTION A-A

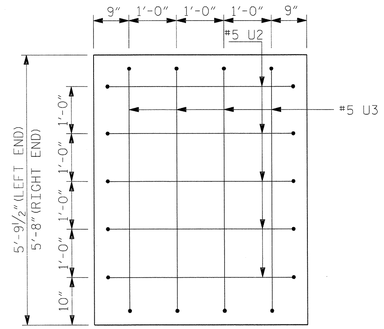

VIEW B-B

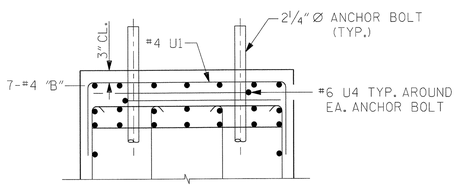

SECTION C-C

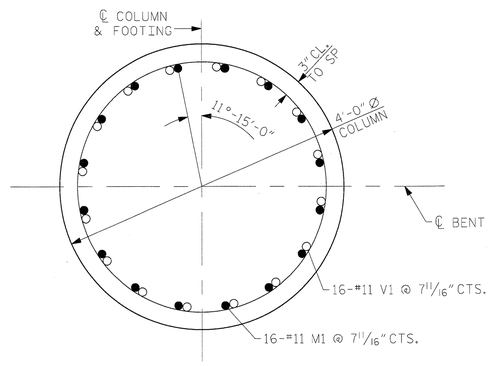

SECTION D-D

BAR TYPES

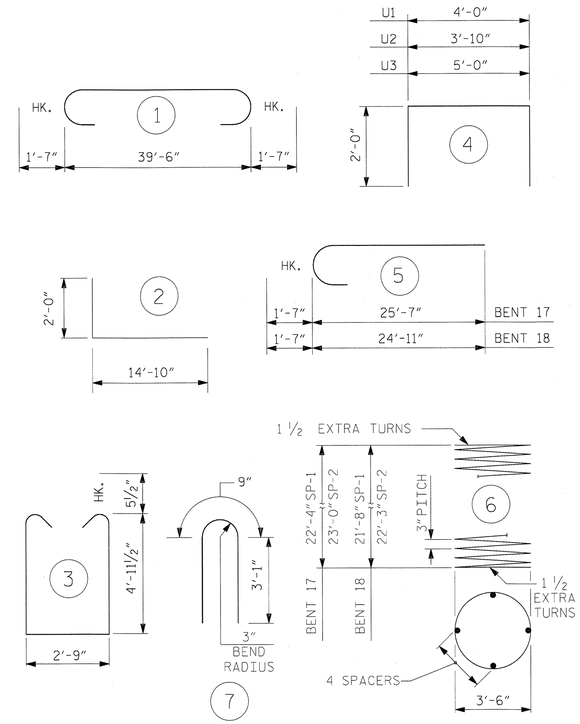

ALL BAR DIMENSIONS ARE OUT TO OUT.

BILL OF MATERIAL

BENT 17

BAR	NO.	SIZE	TYPE	LENGTH (ft)	WEIGHT (lb)
B1	14	11	1	42'-8"	3174
B2	14	11	STR.	39'-6"	2938
B3	8	6	STR.	39'-6"	475
B4	21	4	STR.	8'-4"	117
B5	7	4	STR.	4'-8"	22
B6	20	4	STR.	4'-0"	53
M1	32	11	2	16'-10"	2862
S1	120	5	3	13'-7"	1700
T1	168	6	STR.	12'-4"	3112
T2	100	9	STR.	12'-4"	4193
T3	104	6	STR.	4'-4"	677
U1	49	4	4	8'-0"	262
U2	10	5	4	7'-10"	82
U3	8	5	4	9'-0"	75
U4	16	6	7	6'-11"	166
V1	32	11	5	27'-2"	4619
EPOXY COATED REINFORCING STEEL					24527 LB.
SP1	1	**	6	1010'-9"	675
SP2	1	**	6	1032'-5"	690
TOTAL EPOXY COATED SPIRAL COLUMN REINFORCING STEEL					1365 LB.
CLASS "AA" CONCRETE BREAKDOWN					
POUR 1 - FOOTING					63.6 CU. YDS.
POUR 2 - COLUMN					21.0 CU. YDS.
POUR 3 - CAP					37.7 CU. YDS.
TOTAL CLASS "AA" CONCRETE					122.3 CU. YDS.
24" PRESTRESSED CONCRETE PILES					
NO. 8					600 LIN. FT.
PILE REDRIVES					NO. 4

BENT 18

BAR	NO.	SIZE	TYPE	LENGTH (ft)	WEIGHT (lb)
B1	14	11	1	42'-8"	3174
B2	14	11	STR.	39'-6"	2938
B3	8	6	STR.	39'-6"	475
B4	21	4	STR.	8'-4"	117
B5	7	4	STR.	4'-8"	22
B6	20	4	STR.	4'-0"	53
M1	32	11	2	16'-10"	2862
S1	120	5	3	13'-7"	1700
T1	168	6	STR.	12'-4"	3112
T2	100	9	STR.	12'-4"	4193
T3	104	6	STR.	4'-4"	677
U1	49	4	4	8'-0"	262
U2	10	5	4	7'-10"	82
U3	8	5	4	9'-0"	75
U4	16	6	7	6'-11"	166
V1	32	11	5	26'-6"	4505
EPOXY COATED REINFORCING STEEL					24413 LB.
SP1	1	**	6	978'-1"	653
SP2	1	**	6	1010'-9"	675
TOTAL EPOXY COATED SPIRAL COLUMN REINFORCING STEEL					1328 LB.
CLASS "AA" CONCRETE BREAKDOWN					
POUR 1 - FOOTING					63.6 CU. YDS.
POUR 2 - COLUMN					20.4 CU. YDS.
POUR 3 - CAP					37.7 CU. YDS.
TOTAL CLASS "AA" CONCRETE					121.7 CU. YDS.
24" PRESTRESSED CONCRETE PILES					
NO. 8					640 LIN. FT.
PILE REDRIVES					NO. 4

** THE SP1 & SP2 SPIRAL REINFORCING STEEL SHALL BE W20 OR D-20 COLD DRAWN WIRE OR #4 PLAIN OR DEFORMED BAR.

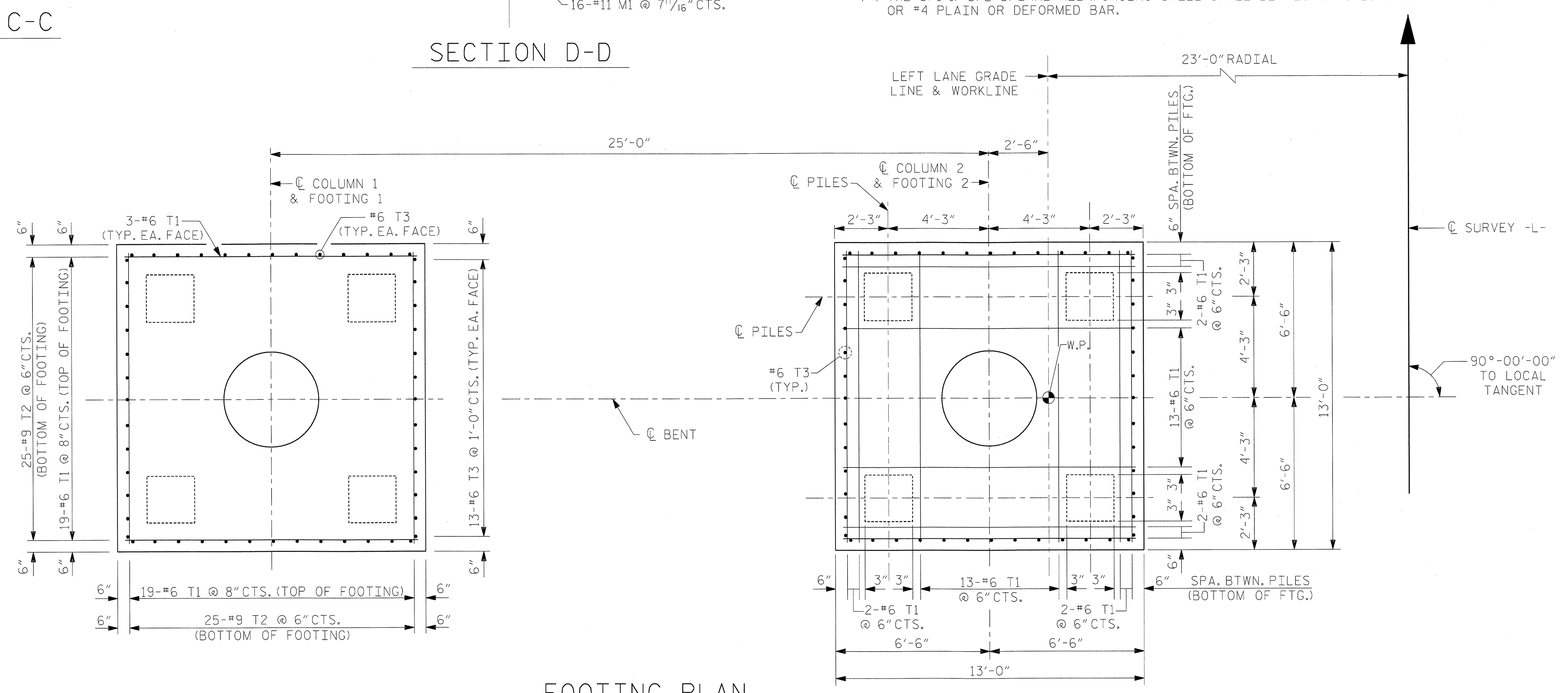

FOOTING PLAN

ALL DIMENSIONS AND DETAILS SHOWN FOR FOOTINGS ARE TYPICAL FOR EACH FOOTING UNLESS NOTED OTHERWISE.

PROJECT NO. R-2633BB

BRUNSWICK/NEW HANOVER COUNTY

STATION: 353+32.50 -L-

SHEET 2 OF 2

NORTH CAROLINA PROFESSIONAL SEAL 18442 ENGINEER RICHARD LEON ROBINSON, JR. 5-23-2013

RS&H IMPROVING YOUR WORLD

RS&H Architects-Engineers-Planners, Inc.
8601 Six Forks Road, Suite 260
Raleigh, NC 27615
919-846-6701 FAX 919-846-9080
www.rsandh.com
North Carolina Licenses Nos. 50073 * F-0493 * C-28

STATE OF NORTH CAROLINA
DEPARTMENT OF TRANSPORTATION
RALEIGH

SUBSTRUCTURE
BENT 17 & 18
DETAILS AND
BILL OF MATERIAL
LEFT LANE

REVISIONS						SHEET NO.
NO.	BY:	DATE:	NO.	BY:	DATE:	S-204
1			3			TOTAL SHEETS
2			4			700

DRAWN BY :	MKO	DATE :	09/2012
CHECKED BY :	JMR	DATE :	03/2013
DEISGN ENGINEER OR RECORD :	J. ROBINSON	DATE :	05/2013

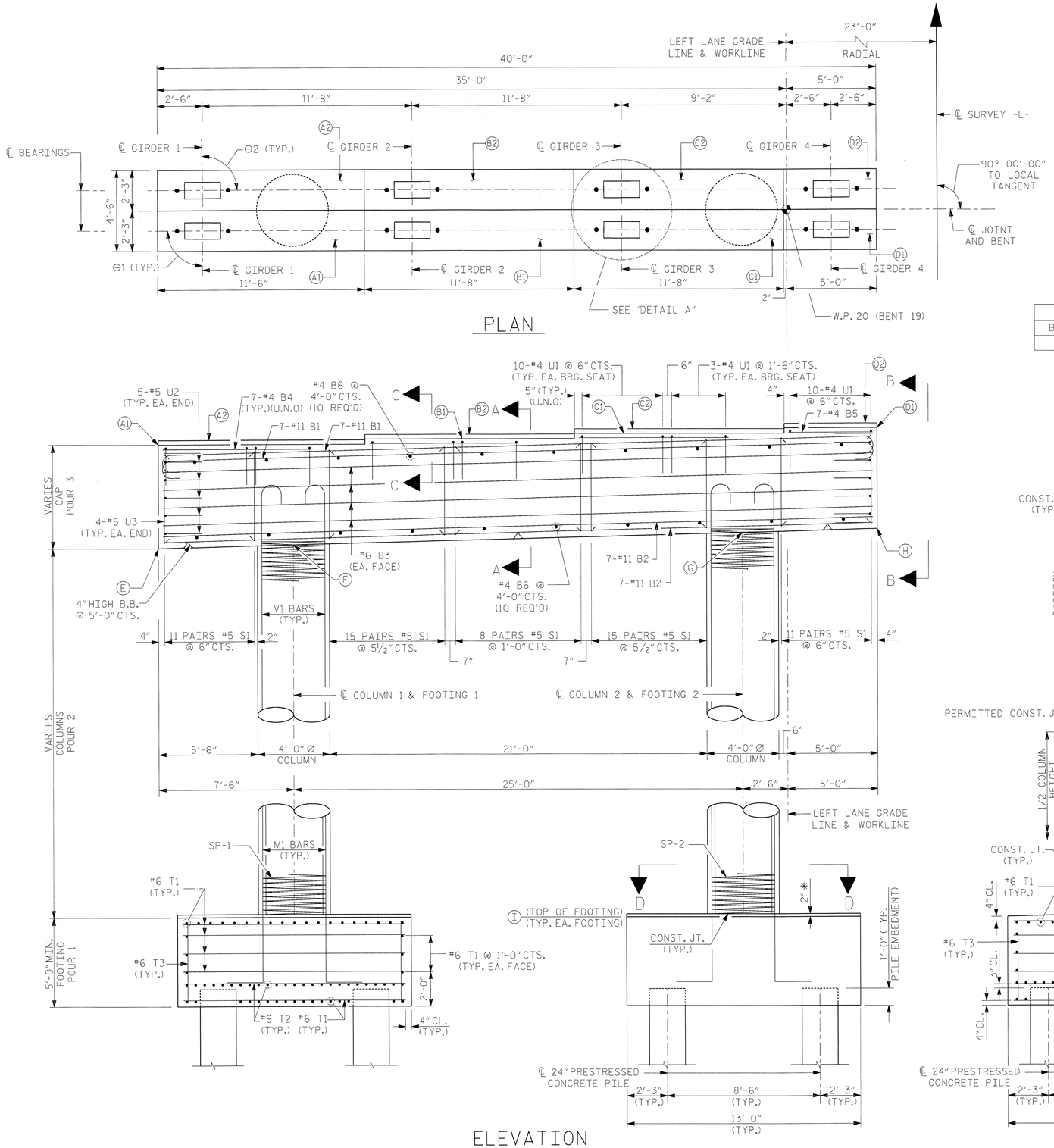

NOTES:

STIRRUPS AND "U" BARS IN CAP MAY BE SHIFTED AS NECESSARY TO CLEAR ANCHOR BOLTS.

HOOKS ON "V" BARS MAY BE TURNED AS NECESSARY FOR PLACING REINFORCING STEEL.

ALTERNATELY INVERT STIRRUP PAIRS AS NOTED.

FOR FOOTING REINFORCING DETAILS, SEE SHEET 2 OF 2.

FOR SECTION A-A, VIEW B-B, SECTION C-C, AND SECTION D-D, SEE SHEET 2 OF 2.

* THE FOOTING HAS A DROP OF 2" FROM THE CENTER OF THE FOOTING TO THE EDGE OF FOOTING TO ACCOMODATE DRAINAGE.

FOR FOUNDATION NOTES, SEE "GENERAL DRAWINGS FOUNDATION LAYOUT" SHEET 10 OF 10.

THE TOP SURFACE AREAS OF BENT 19 SHALL BE CURED IN ACCORDANCE WITH THE STANDARD SPECIFICATIONS EXCEPT THE MEMBRANE CURING COMPOUND METHOD SHALL NOT BE USED.

ELEVATION TABLE

BENT	A1	A2	B1	B2	C1	C2	D1	D2	E	F	G	H	I
19	36.32	36.48	36.61	36.77	36.90	37.07	37.19	37.36	30.53	30.72	31.34	31.53	10.00

BEARING ANGLES

BENT	Θ1	Θ2
19	89°-37'-05"	90°-22'-55"

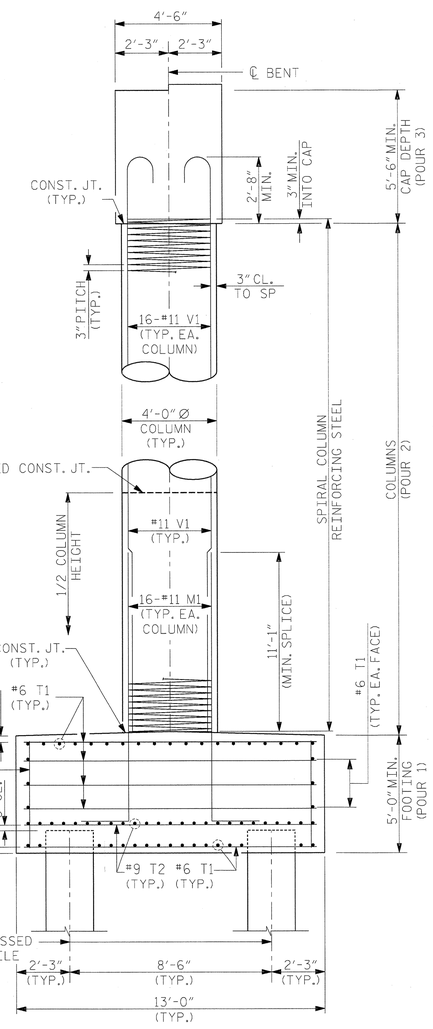

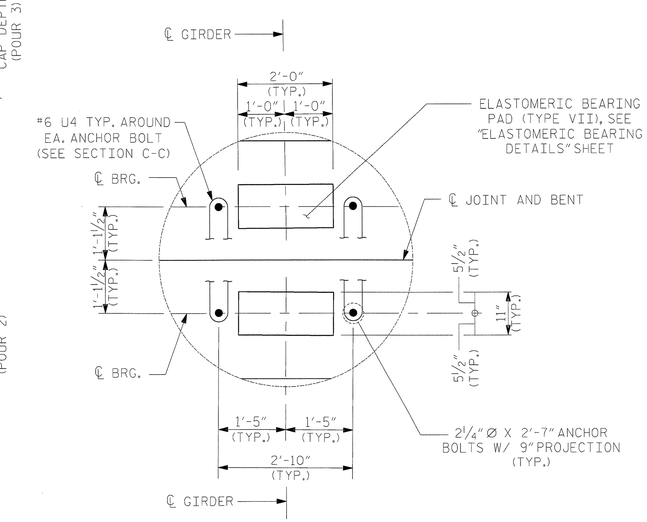

PROJECT NO. R-2633BB

BRUNSWICK/NEW HANOVER COUNTY

STATION: 353+32.50 -L-

SHEET 1 OF 2

DRAWN BY :	MKO	DATE :	09/2012
CHECKED BY :	JMR	DATE :	03/2013
DEISGN ENGINEER OR RECORD :	J. ROBINSON	DATE :	05/2013

NORTH CAROLINA PROFESSIONAL SEAL 18442 ENGINEER RICHARD LEON ROBINSON, JR. 5-24-2013

RS&H IMPROVING YOUR WORLD

RS&H Architects-Engineers-Planners, Inc.
8601 Six Forks Road, Suite 260
Raleigh, NC 27615
919-846-6701 FAX 919-846-9080
www.rsandh.com
North Carolina License Nos. 50073 * F-0493 * C-28

STATE OF NORTH CAROLINA
DEPARTMENT OF TRANSPORTATION
RALEIGH

SUBSTRUCTURE
BENT 19
PLAN AND ELEVATION
LEFT LANE

REVISIONS						SHEET NO.
NO.	BY:	DATE:	NO.	BY:	DATE:	S-205
1			3			TOTAL SHEETS
2			4			700

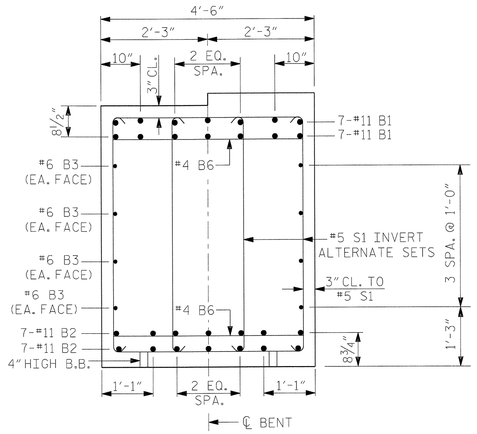

SECTION A-A

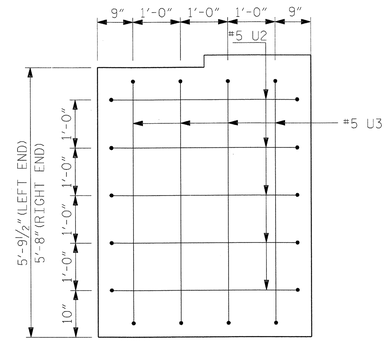

VIEW B-B

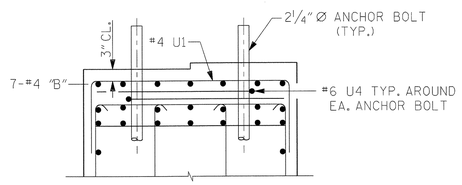

SECTION C-C

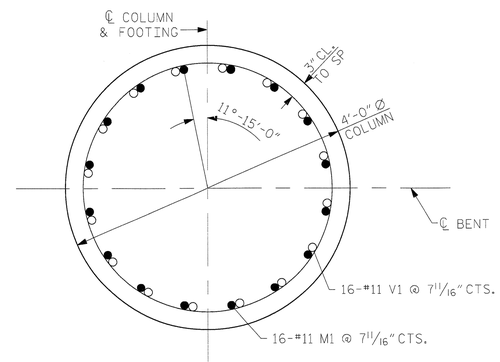

SECTION D-D

BAR TYPES

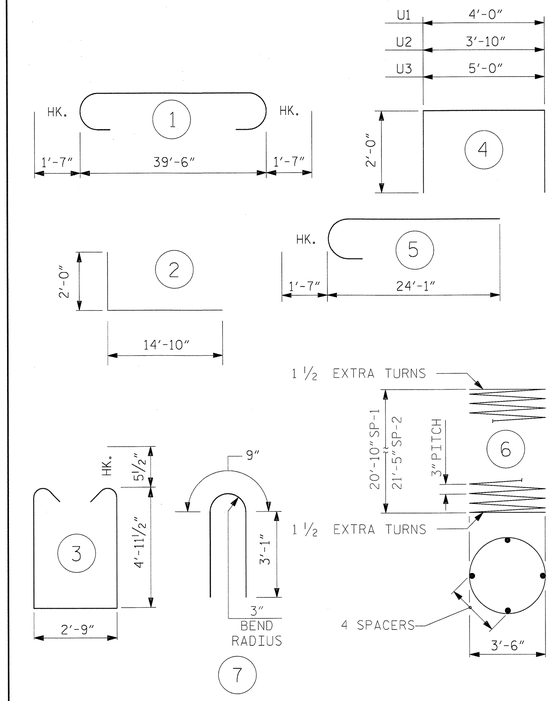

ALL BAR DIMENSIONS ARE OUT TO OUT.

BILL OF MATERIAL

BENT 19

BAR	NO.	SIZE	TYPE	LENGTH (ft)	WEIGHT (lb)
B1	14	11	1	42'-8"	3174
B2	14	11	STR.	39'-6"	2938
B3	8	6	STR.	39'-6"	475
B4	21	4	STR.	8'-4"	117
B5	7	4	STR.	4'-8"	22
B6	20	4	STR.	4'-0"	53
M1	32	11	2	16'-10"	2862
S1	120	5	3	13'-7"	1700
T1	168	6	STR.	12'-4"	3112
T2	100	9	STR.	12'-4"	4193
T3	104	6	STR.	4'-4"	677
U1	49	4	4	8'-0"	262
U2	10	5	4	7'-10"	82
U3	8	5	4	9'-0"	75
U4	16	6	7	6'-11"	166
V1	32	11	5	25'-8"	4364
EPOXY COATED REINFORCING STEEL					24272 LB.
SP1	1	**	6	945'-6"	632
SP2	1	**	6	967'-3"	646
TOTAL EPOXY COATED SPIRAL COLUMN REINFORCING STEEL					1278 LB.

CLASS "AA" CONCRETE BREAKDOWN	
POUR 1 - FOOTING	63.6 CU. YDS.
POUR 2 - COLUMN	19.6 CU. YDS.
POUR 3 - CAP	37.7 CU. YDS.
TOTAL CLASS "AA" CONCRETE	120.9 CU. YDS.
24" PRESTRESSED CONCRETE PILES NO. 8	640 LIN. FT.
PILE REDRIVES	NO. 4

** THE SP1 & SP2 SPIRAL REINFORCING STEEL SHALL BE W20 OR D-20 COLD DRAWN WIRE OR #4 PLAIN OR DEFORMED BAR.

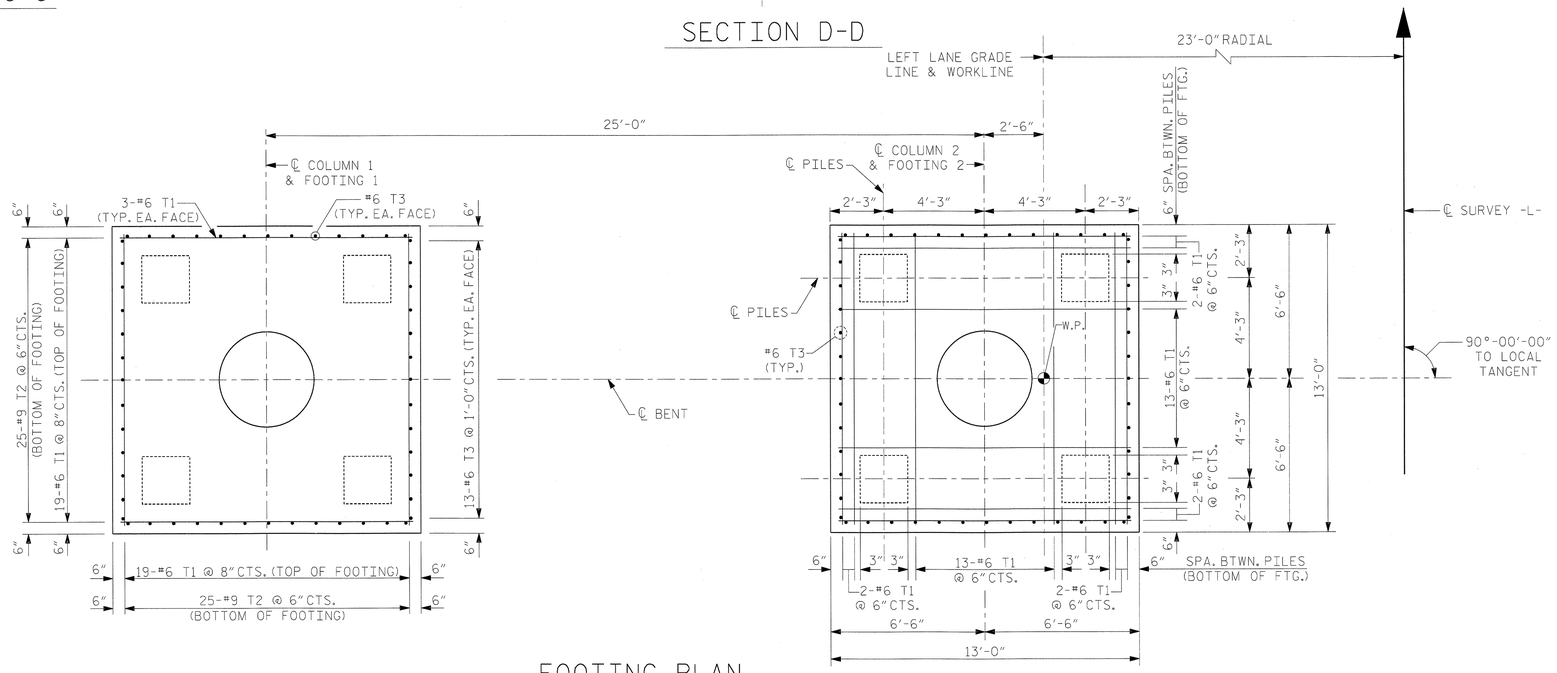

FOOTING PLAN

ALL DIMENSIONS AND DETAILS SHOWN FOR FOOTINGS ARE TYPICAL FOR EACH FOOTING UNLESS NOTED OTHERWISE.

PROJECT NO. R-2633BB

BRUNSWICK/NEW HANOVER COUNTY

STATION: 353+32.50 -L-

SHEET 2 OF 2

NORTH CAROLINA PROFESSIONAL SEAL 18442 ENGINEER RICHARD LEON BOLINGER JR. 5-24-2013

RS&H IMPROVING YOUR WORLD

RS&H Architects-Engineers-Planners, Inc.
8601 Six Forks Road, Suite 260
Raleigh, NC 27615
919-846-6701 FAX 919-846-8080
www.rsandh.com
North Carolina Licenses Nos. 50073 * F-0493 * C-28

STATE OF NORTH CAROLINA
DEPARTMENT OF TRANSPORTATION
RALEIGH

SUBSTRUCTURE
BENT 19
DETAILS AND
BILL OF MATERIAL
LEFT LANE

REVISIONS						SHEET NO.
NO.	BY:	DATE:	NO.	BY:	DATE:	S-206
1			3			TOTAL SHEETS
2			4			700

DRAWN BY :	MKO	DATE :	09/2012
CHECKED BY :	JMR	DATE :	03/2013
DEISGN ENGINEER OR RECORD :	J. ROBINSON	DATE :	05/2013

NOTES:

STIRRUPS AND "U" BARS IN CAP MAY BE SHIFTED AS NECESSARY TO CLEAR ANCHOR BOLTS.

HOOKS ON "V" BARS MAY BE TURNED AS NECESSARY FOR PLACING REINFORCING STEEL.

ALTERNATELY INVERT STIRRUP PAIRS AS NOTED.

FOR ADDITIONAL FOOTING REINFORCING DETAILS, SEE SHEET 2 OF 4.

FOR SECTION A-A, VIEW B-B, AND SECTION C-C, SEE SHEET 2 OF 4.

* THE FOOTING HAS A DROP OF 2" FROM THE CENTER OF THE FOOTING TO THE EDGE OF FOOTING TO ACCOMMODATE DRAINAGE.

FOR FOUNDATION NOTES, SEE "GENERAL DRAWINGS FOUNDATION LAYOUT", SEE SHEET 10 OF 10.

FOR WORKPOINTS, ELEVATIONS, AND BEARING ANGLES, SEE FOOTING ON PILE REFERENCE CHART, SHEET 2 OF 4.

A CONSTRUCTION JOINT IS PERMITTED IN ALL COLUMNS AT APPROXIMATELY MID HEIGHT OF THE COLUMN.

GIRDER OFFSETS ARE NEGLIGIBLE FOR EACH GIRDER.

THE TOP SURFACE AREAS OF THE BENT 22, 31, 34, 37, 40 AND 43 CAPS SHALL BE CURED IN ACCORDANCE WITH THE STANDARD SPECIFICATIONS EXCEPT THE MEMBRANE CURING COMPOUND METHOD SHALL NOT BE USED.

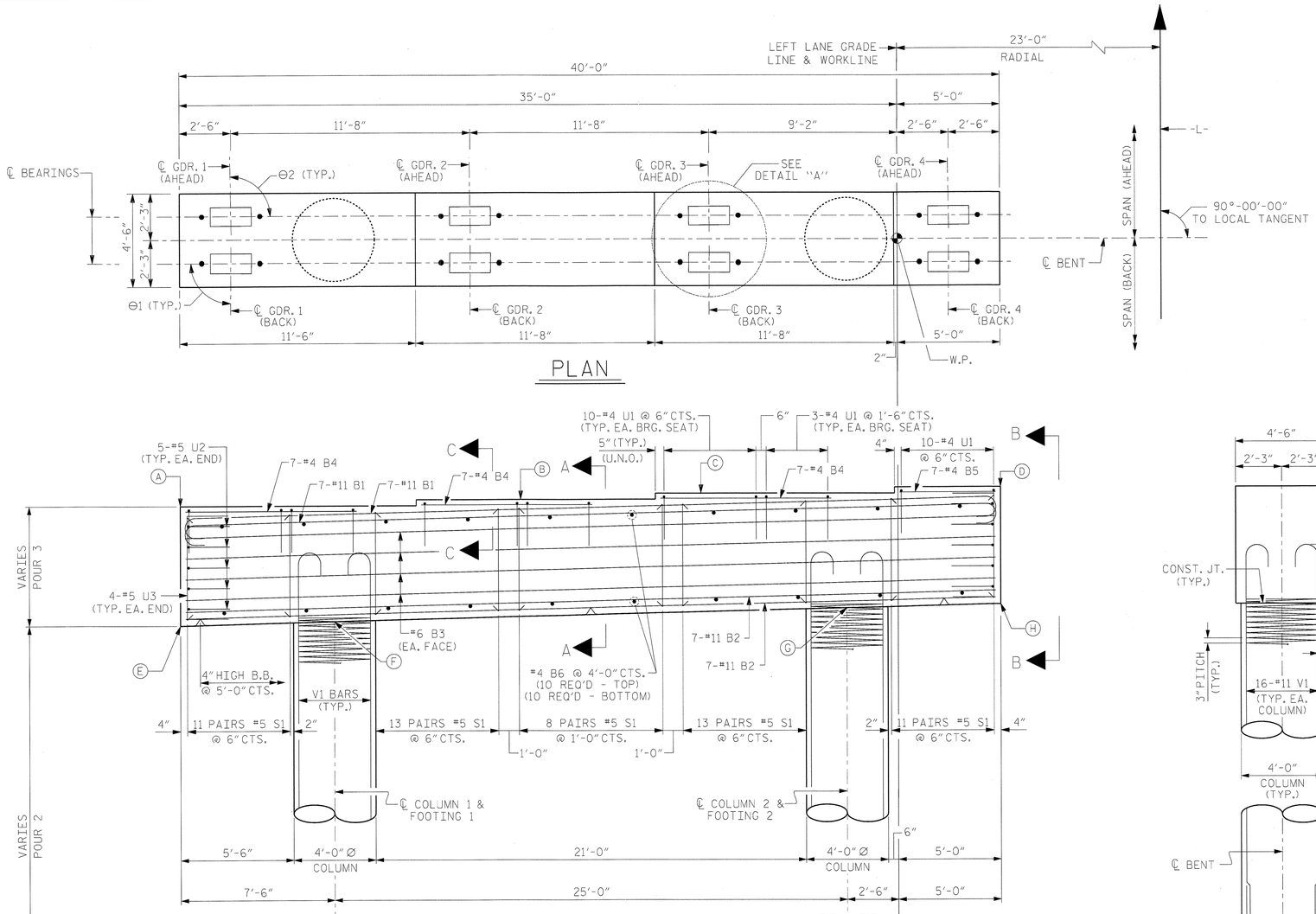

PLAN

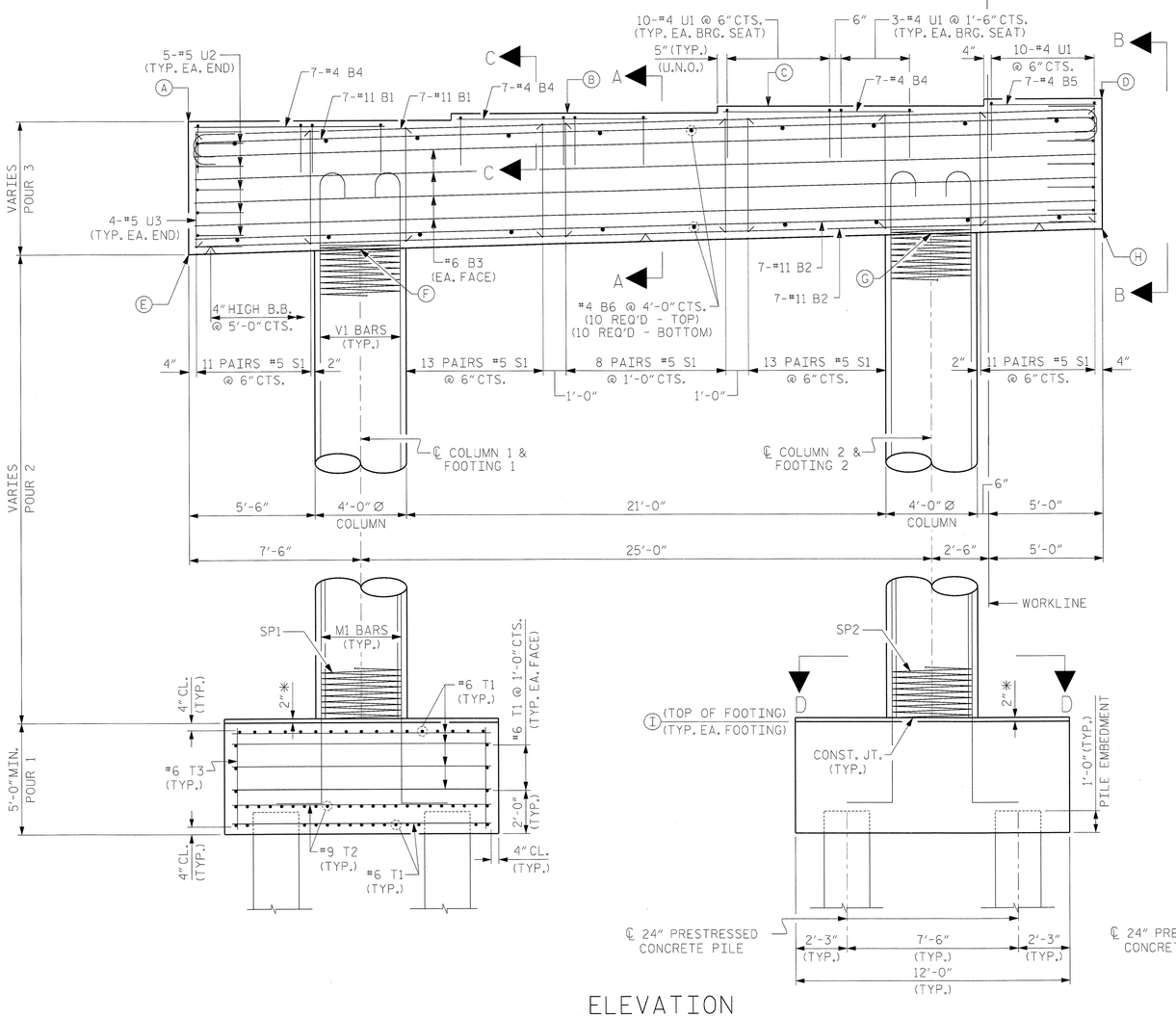

ELEVATION

LOOKING AHEAD ON STATION
ALL DIMENSIONS AND DETAILS SHOWN FOR FOOTINGS ARE TYPICAL FOR EACH FOOTING UNLESS OTHERWISE NOTED.

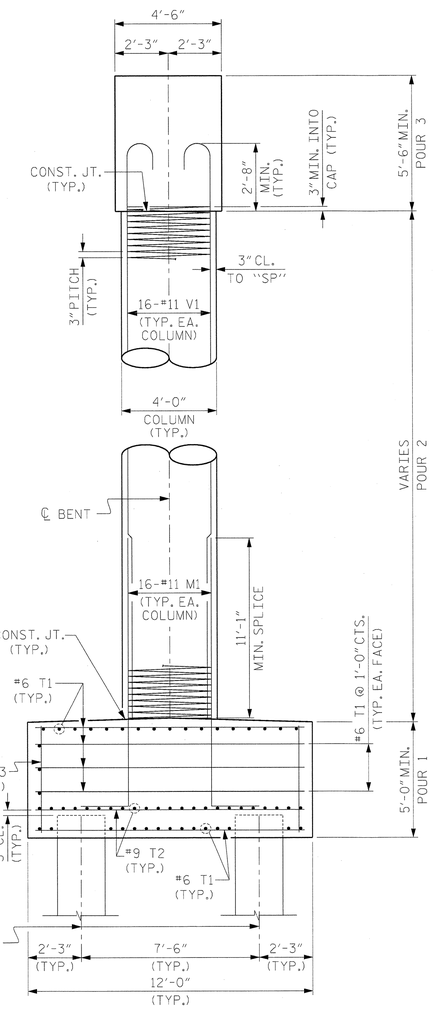

END VIEW

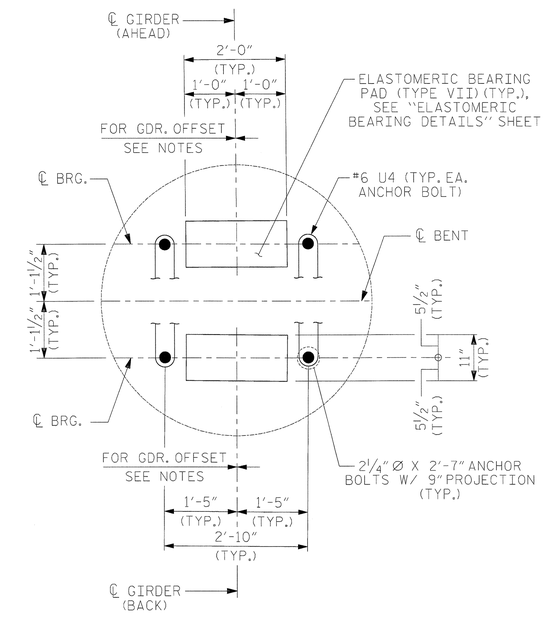

DETAIL "A"

PROJECT NO. R-2633BB

BRUNSWICK/NEW HANOVER COUNTY

STATION: 353+32.50 -L-

SHEET 1 OF 4

NORTH CAROLINA PROFESSIONAL SEAL 22072 ENGINEER JOHN ARTHUR DILWORTH

5-29-13

WETHERILL ENGINEERING

TRANSPORTATION PLANNING/DESIGN
BRIDGE/STRUCTURE DESIGN
CIVIL/SITE DESIGN - GIS/GPS
CONSTRUCTION OBSERVATION

559 Jones Franklin Rd. Suite 164
Raleigh, N.C. 27606
Bus: 919 851 8077
Fax: 919 851 8107
LICENSE NO. F-0377

STATE OF NORTH CAROLINA
DEPARTMENT OF TRANSPORTATION
RALEIGH

SUBSTRUCTURE

BENT 20 TO BENT 23 & BENT 31 TO BENT 43 PLAN AND ELEVATION

LEFT LANE

REVISIONS						SHEET NO.
NO.	BY:	DATE:	NO.	BY:	DATE:	S-207
1			3			TOTAL SHEETS
2			4			700

DRAWN BY :	G. GILLAND	DATE :	10/2012
CHECKED BY :	J. DILWORTH	DATE :	10/2012
DESIGN ENGINEER OF RECORD :	J. DILWORTH	DATE :	5/2013

FILE: $FILE$
MODEL: $MODELNAME$
PLOT DRV: $PLTDRV$
DATE/TIME: $DATE$ $TIME$

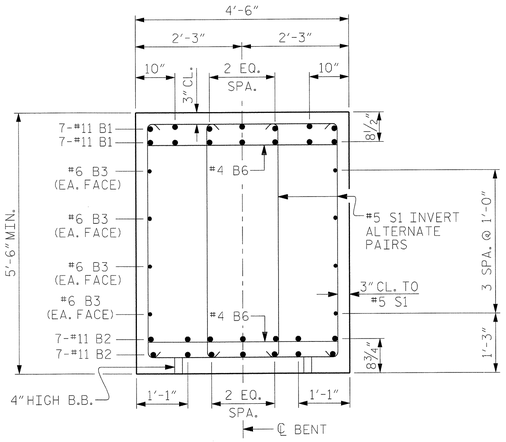

SECTION A-A

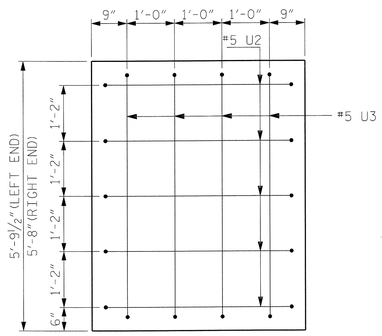

VIEW B-B

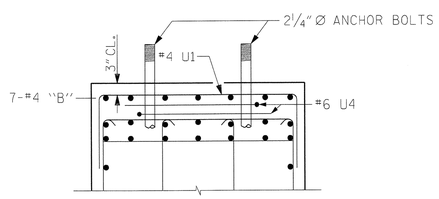

SECTION C-C

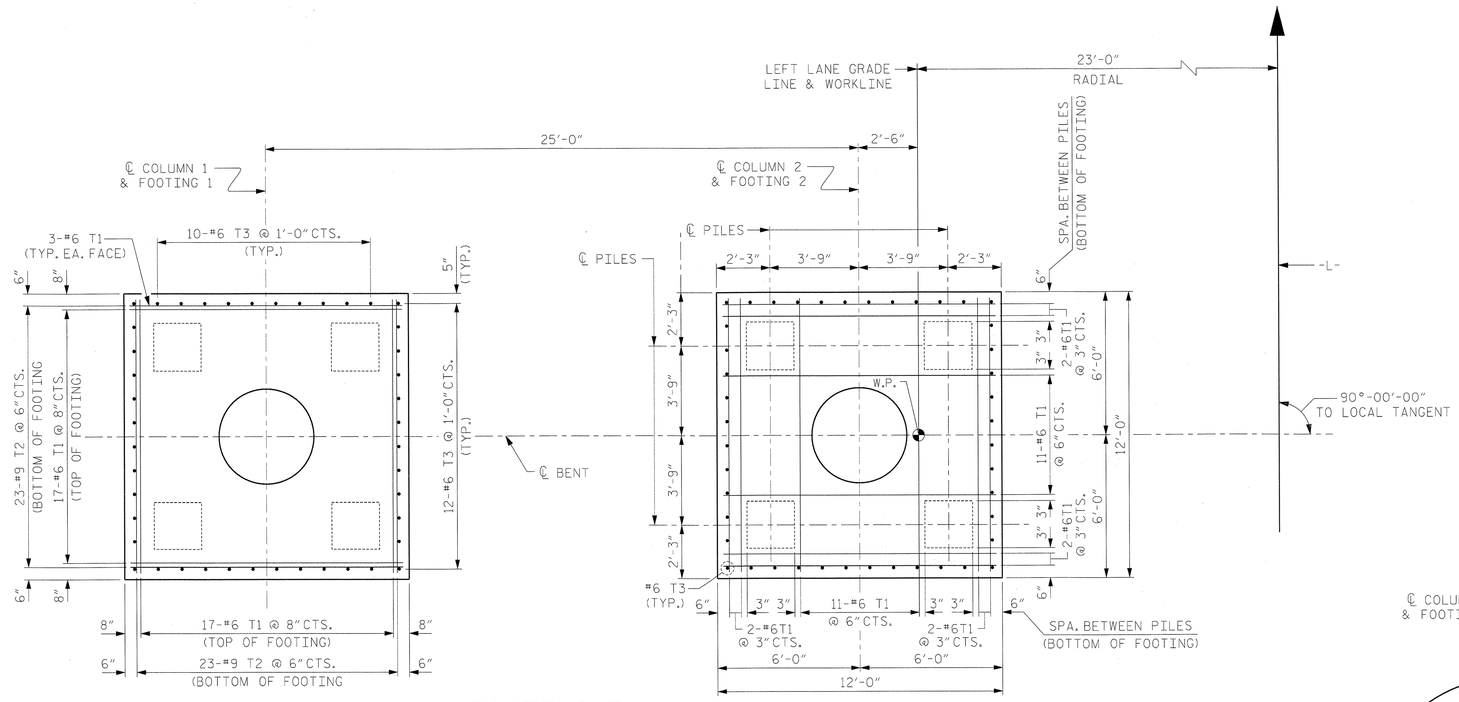

FOOTING PLAN

ALL DIMENSIONS AND DETAILS SHOWN FOR FOOTINGS ARE TYPICAL FOR EACH FOOTING UNLESS OTHERWISE NOTED.

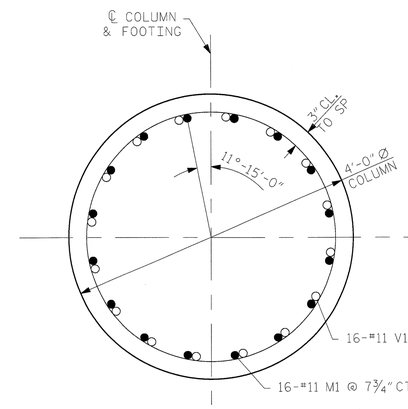

SECTION D-D

FOOTING ON PILE REFERENCE

BENT	W.P. NO.	SPAN (AHEAD)	SPAN (BACK)	A	B	C	D	E	F	G	H	I	Θ1	Θ2
20	21	21	20	36.13	36.42	36.71	37.00	30.34	30.52	31.15	31.34	10.00	89°-37'-05"	90°-22'-55"
21	22	22	21	35.77	36.06	36.35	36.64	29.98	30.16	30.79	30.98	10.00	89°-37'-05"	90°-22'-55"
22	23	23	22	35.41	35.70	35.99	36.28	29.62	29.80	30.43	30.62	10.00	89°-37'-05"	90°-22'-55"
23	24	24	23	35.05	35.34	35.63	35.92	29.26	29.44	30.07	30.25	9.00	89°-37'-05"	90°-22'-55"
31	32	32	31	32.17	32.46	32.75	33.04	26.38	26.56	27.19	27.38	10.00	89°-37'-05"	90°-22'-55"
32	33	33	32	31.81	32.10	32.39	32.68	26.02	26.20	26.83	27.02	9.50	89°-37'-05"	90°-22'-55"
33	34	34	33	31.45	31.74	32.03	32.32	25.66	25.84	26.47	26.66	9.00	89°-37'-05"	90°-22'-55"
34	35	35	34	31.09	31.38	31.67	31.96	25.30	25.48	26.11	26.30	9.00	89°-37'-05"	90°-22'-55"
35	36	36	35	30.73	31.02	31.31	31.60	24.94	25.12	25.75	25.94	9.00	89°-37'-05"	90°-22'-55"
36	37	37	36	30.37	30.66	30.95	31.24	24.58	24.76	25.39	25.58	9.00	89°-37'-05"	90°-22'-55"
37	38	38	37	30.01	30.30	30.59	30.88	24.22	24.40	25.03	25.22	9.00	89°-37'-05"	90°-19'-06"
38	39	39	38	29.71	30.00	30.29	30.58	23.92	24.10	24.73	24.92	8.00	89°-40'-54"	90°-22'-55"
39	40	40	39	29.35	29.64	29.93	30.22	23.56	23.74	24.37	24.56	9.00	89°-37'-05"	90°-22'-55"
40	41	41	40	28.99	29.28	29.57	29.86	23.20	23.38	24.01	24.20	9.00	89°-37'-05"	90°-22'-55"
41	42	42	41	28.63	28.92	29.21	29.50	22.84	23.02	23.65	23.84	9.00	89°-37'-05"	90°-22'-55"
42	43	43	42	28.27	28.56	28.85	29.14	22.48	22.66	23.29	23.48	9.00	89°-37'-05"	90°-22'-55"
43	44	44	43	27.91	28.20	28.49	28.78	22.12	22.30	22.93	23.12	8.00	89°-37'-05"	90°-22'-55"

PROJECT NO. R-2633BB

BRUNSWICK/NEW HANOVER COUNTY

STATION: 353+32.50 -L-

SHEET 2 OF 4

NORTH CAROLINA PROFESSIONAL SEAL 22072 ENGINEER JOHN ARTHUR DILWORTH

5-29-13

WETHERILL ENGINEERING

TRANSPORTATION PLANNING/DESIGN
BRIDGE/STRUCTURE DESIGN
CIVIL/SITE DESIGN - GIS/GPS
CONSTRUCTION OBSERVATION

559 Jones Franklin Rd. Suite 164
Raleigh, N.C. 27606
Bus: 919 851 8077
Fax: 919 851 8107
LICENSE NO. F-0377

STATE OF NORTH CAROLINA
DEPARTMENT OF TRANSPORTATION
RALEIGH

SUBSTRUCTURE

BENT 20 TO BENT 23 & BENT 31 TO BENT 43 DETAILS

LEFT LANE

REVISIONS						SHEET NO.
NO.	BY:	DATE:	NO.	BY:	DATE:	S-208
1			3			TOTAL SHEETS
2			4			700

DRAWN BY : G. GILLAND DATE : 10/2012
CHECKED BY : J. DILWORTH DATE : 10/2012
DESIGN ENGINEER OF RECORD : J. DILWORTH DATE : 5/2013

FILE: $FILE$
MODEL: $MODELNAME$
PLOT DRV: $PLTDRVS$
DATE/TIME: $DATE$ $TIME$

BILL OF MATERIAL

BENT 20

BAR	NO.	SIZE	TYPE	LENGTH	WEIGHT (lb)
B1	14	#11	1	42'-8"	3174
B2	14	#11	STR.	39'-6"	2938
B3	8	#6	STR.	39'-6"	475
B4	21	#4	STR.	8'-4"	117
B5	7	#4	STR.	4'-8"	22
B6	20	#4	STR.	4'-0"	53
M1	32	#11	2	16'-10"	2862
S1	112	#5	3	13'-7"	1587
T1	152	#6	STR.	11'-4"	2587
T2	92	#9	STR.	11'-4"	3545
T3	88	#6	STR.	4'-4"	573
U1	49	#4	4	8'-0"	262
U2	10	#5	4	7'-10"	82
U3	8	#5	4	9'-0"	75
U4	16	#6	7	6'-11"	166
V1	32	#11	5	25'-5"	4321

EPOXY COATED REINFORCING STEEL 22839 LB.

SP1	1	**	6	940'-1"	628
SP2	1	**	6	964'-6"	644

TOTAL EPOXY COATED SPIRAL COLUMN REINFORCING STEEL 1272 LB.

CLASS "AA" CONCRETE BREAKDOWN

POUR 1 - FOOTING	53.0 CU. YDS.
POUR 2 - COLUMN	19.4 CU. YDS.
POUR 3 - CAP	37.7 CU. YDS.
TOTAL CLASS "AA" CONCRETE	110.1 CU. YDS.

24" PRESTRESSED CONCRETE PILES

NO. 8	720 LIN. FT.
PILE REDRIVES	4 EA.

BENT 21

BAR	NO.	SIZE	TYPE	LENGTH	WEIGHT (lb)
B1	14	#11	1	42'-8"	3174
B2	14	#11	STR.	39'-6"	2938
B3	8	#6	STR.	39'-6"	475
B4	21	#4	STR.	8'-4"	117
B5	7	#4	STR.	4'-8"	22
B6	20	#4	STR.	4'-0"	53
M1	32	#11	2	16'-10"	2862
S1	112	#5	3	13'-7"	1587
T1	152	#6	STR.	11'-4"	2587
T2	92	#9	STR.	11'-4"	3545
T3	88	#6	STR.	4'-4"	573
U1	49	#4	4	8'-0"	262
U2	10	#5	4	7'-10"	82
U3	8	#5	4	9'-0"	75
U4	16	#6	7	6'-11"	166
V1	32	#11	5	25'-1"	4265

EPOXY COATED REINFORCING STEEL 22783 LB.

SP1	1	**	6	921'-1"	615
SP2	1	**	6	950'-11"	635

TOTAL EPOXY COATED SPIRAL COLUMN REINFORCING STEEL 1250 LB.

CLASS "AA" CONCRETE BREAKDOWN

POUR 1 - FOOTING	53.0 CU. YDS.
POUR 2 - COLUMN	19.1 CU. YDS.
POUR 3 - CAP	37.7 CU. YDS.
TOTAL CLASS "AA" CONCRETE	109.8 CU. YDS.

24" PRESTRESSED CONCRETE PILES

NO. 8	720 LIN. FT.
PILE REDRIVES	4 EA.

BENT 22

BAR	NO.	SIZE	TYPE	LENGTH	WEIGHT (lb)
B1	14	#11	1	42'-8"	3174
B2	14	#11	STR.	39'-6"	2938
B3	8	#6	STR.	39'-6"	475
B4	21	#4	STR.	8'-4"	117
B5	7	#4	STR.	4'-8"	22
B6	20	#4	STR.	4'-0"	53
M1	32	#11	2	16'-10"	2862
S1	112	#5	3	13'-7"	1587
T1	152	#6	STR.	11'-4"	2587
T2	92	#9	STR.	11'-4"	3545
T3	88	#6	STR.	4'-4"	573
U1	49	#4	4	8'-0"	262
U2	10	#5	4	7'-10"	82
U3	8	#5	4	9'-0"	75
U4	16	#6	7	6'-11"	166
V1	32	#11	5	24'-9"	4208

EPOXY COATED REINFORCING STEEL 22726 LB.

SP1	1	**	6	907'-6"	606
SP2	1	**	6	934'-8"	624

TOTAL EPOXY COATED SPIRAL COLUMN REINFORCING STEEL 1231 LB.

CLASS "AA" CONCRETE BREAKDOWN

POUR 1 - FOOTING	53.0 CU. YDS.
POUR 2 - COLUMN	18.7 CU. YDS.
POUR 3 - CAP	37.7 CU. YDS.
TOTAL CLASS "AA" CONCRETE	109.4 CU. YDS.

24" PRESTRESSED CONCRETE PILES

NO. 8	720 LIN. FT.
PILE REDRIVES	4 EA.

BENT 23

BAR	NO.	SIZE	TYPE	LENGTH	WEIGHT (lb)
B1	14	#11	1	42'-8"	3174
B2	14	#11	STR.	39'-6"	2938
B3	8	#6	STR.	39'-6"	475
B4	21	#4	STR.	8'-4"	117
B5	7	#4	STR.	4'-8"	22
B6	20	#4	STR.	4'-0"	53
M1	32	#11	2	16'-10"	2862
S1	112	#5	3	13'-7"	1587
T1	152	#6	STR.	11'-4"	2587
T2	92	#9	STR.	11'-4"	3545
T3	88	#6	STR.	4'-4"	573
U1	49	#4	4	8'-0"	262
U2	10	#5	4	7'-10"	82
U3	8	#5	4	9'-0"	75
U4	16	#6	7	6'-11"	166
V1	32	#11	5	25'-4"	4307

EPOXY COATED REINFORCING STEEL 22825 LB.

SP1	1	**	6	934'-8"	624
SP2	1	**	6	961'-10"	643

TOTAL EPOXY COATED SPIRAL COLUMN REINFORCING STEEL 1267 LB.

CLASS "AA" CONCRETE BREAKDOWN

POUR 1 - FOOTING	53.0 CU. YDS.
POUR 2 - COLUMN	19.3 CU. YDS.
POUR 3 - CAP	37.7 CU. YDS.
TOTAL CLASS "AA" CONCRETE	110.0 CU. YDS.

24" PRESTRESSED CONCRETE PILES

NO. 8	760 LIN. FT.
PILE REDRIVES	4 EA.

BENT 31

BAR	NO.	SIZE	TYPE	LENGTH	WEIGHT (lb)
B1	14	#11	1	42'-8"	3174
B2	14	#11	STR.	39'-6"	2938
B3	8	#6	STR.	39'-6"	475
B4	21	#4	STR.	8'-4"	117
B5	7	#4	STR.	4'-8"	22
B6	20	#4	STR.	4'-0"	53
M1	32	#11	2	16'-10"	2862
S1	112	#5	3	13'-7"	1587
T1	152	#6	STR.	11'-4"	2587
T2	92	#9	STR.	11'-4"	3545
T3	88	#6	STR.	4'-4"	573
U1	49	#4	4	8'-0"	262
U2	10	#5	4	7'-10"	82
U3	8	#5	4	9'-0"	75
U4	16	#6	7	6'-11"	166
V1	32	#11	5	21'-6"	3655

EPOXY COATED REINFORCING STEEL 22173 LB.

SP1	1	**	6	766'-2"	512
SP2	1	**	6	793'-4"	530

TOTAL EPOXY COATED SPIRAL COLUMN REINFORCING STEEL 1042 LB.

CLASS "AA" CONCRETE BREAKDOWN

POUR 1 - FOOTING	53.0 CU. YDS.
POUR 2 - COLUMN	15.7 CU. YDS.
POUR 3 - CAP	37.7 CU. YDS.
TOTAL CLASS "AA" CONCRETE	106.4 CU. YDS.

24" PRESTRESSED CONCRETE PILES

NO. 8	680 LIN. FT.
PILE REDRIVES	4 EA.

BENT 32

BAR	NO.	SIZE	TYPE	LENGTH	WEIGHT (lb)
B1	14	#11	1	42'-8"	3174
B2	14	#11	STR.	39'-6"	2938
B3	8	#6	STR.	39'-6"	475
B4	21	#4	STR.	8'-4"	117
B5	7	#4	STR.	4'-8"	22
B6	20	#4	STR.	4'-0"	53
M1	32	#11	2	16'-10"	2862
S1	112	#5	3	13'-7"	1587
T1	152	#6	STR.	11'-4"	2587
T2	92	#9	STR.	11'-4"	3545
T3	88	#6	STR.	4'-4"	573
U1	49	#4	4	8'-0"	262
U2	10	#5	4	7'-10"	82
U3	8	#5	4	9'-0"	75
U4	16	#6	7	6'-11"	166
V1	32	#11	5	21'-7"	3670

EPOXY COATED REINFORCING STEEL 22188 LB.

SP1	1	**	6	771'-8"	515
SP2	1	**	6	798'-10"	534

TOTAL EPOXY COATED SPIRAL COLUMN REINFORCING STEEL 1049 LB.

CLASS "AA" CONCRETE BREAKDOWN

POUR 1 - FOOTING	53.0 CU. YDS.
POUR 2 - COLUMN	15.8 CU. YDS.
POUR 3 - CAP	37.7 CU. YDS.
TOTAL CLASS "AA" CONCRETE	106.5 CU. YDS.

24" PRESTRESSED CONCRETE PILES

NO. 8	560 LIN. FT.
PILE REDRIVES	4 EA.

BENT 33

BAR	NO.	SIZE	TYPE	LENGTH	WEIGHT (lb)
B1	14	#11	1	42'-8"	3174
B2	14	#11	STR.	39'-6"	2938
B3	8	#6	STR.	39'-6"	475
B4	21	#4	STR.	8'-4"	117
B5	7	#4	STR.	4'-8"	22
B6	20	#4	STR.	4'-0"	53
M1	32	#11	2	16'-10"	2862
S1	112	#5	3	13'-7"	1587
T1	152	#6	STR.	11'-4"	2587
T2	92	#9	STR.	11'-4"	3545
T3	88	#6	STR.	4'-4"	573
U1	49	#4	4	8'-0"	262
U2	10	#5	4	7'-10"	82
U3	8	#5	4	9'-0"	75
U4	16	#6	7	6'-11"	166
V1	32	#11	5	21'-9"	3698

EPOXY COATED REINFORCING STEEL 22216 LB.

SP1	1	**	6	779'-9"	521
SP2	1	**	6	804'-3"	537

TOTAL EPOXY COATED SPIRAL COLUMN REINFORCING STEEL 1058 LB.

CLASS "AA" CONCRETE BREAKDOWN

POUR 1 - FOOTING	53.0 CU. YDS.
POUR 2 - COLUMN	16.0 CU. YDS.
POUR 3 - CAP	37.7 CU. YDS.
TOTAL CLASS "AA" CONCRETE	106.7 CU. YDS.

24" PRESTRESSED CONCRETE PILES

NO. 8	600 LIN. FT.
PILE REDRIVES	4 EA.

BENT 34

BAR	NO.	SIZE	TYPE	LENGTH	WEIGHT (lb)
B1	14	#11	1	42'-8"	3174
B2	14	#11	STR.	39'-6"	2938
B3	8	#6	STR.	39'-6"	475
B4	21	#4	STR.	8'-4"	117
B5	7	#4	STR.	4'-8"	22
B6	20	#4	STR.	4'-0"	53
M1	32	#11	2	16'-10"	2862
S1	112	#5	3	13'-7"	1587
T1	152	#6	STR.	11'-4"	2587
T2	92	#9	STR.	11'-4"	3545
T3	88	#6	STR.	4'-4"	573
U1	49	#4	4	8'-0"	262
U2	10	#5	4	7'-10"	82
U3	8	#5	4	9'-0"	75
U4	16	#6	7	6'-11"	166
V1	32	#11	5	21'-5"	3641

EPOXY COATED REINFORCING STEEL 22159 LB.

SP1	1	**	6	760'-9"	508
SP2	1	**	6	790'-8"	528

TOTAL EPOXY COATED SPIRAL COLUMN REINFORCING STEEL 1036 LB.

CLASS "AA" CONCRETE BREAKDOWN

POUR 1 - FOOTING	53.0 CU. YDS.
POUR 2 - COLUMN	15.6 CU. YDS.
POUR 3 - CAP	37.7 CU. YDS.
TOTAL CLASS "AA" CONCRETE	106.3 CU. YDS.

24" PRESTRESSED CONCRETE PILES

NO. 8	560 LIN. FT.
PILE REDRIVES	4 EA.

BENT 35

BAR	NO.	SIZE	TYPE	LENGTH	WEIGHT (lb)
B1	14	#11	1	42'-8"	3174
B2	14	#11	STR.	39'-6"	2938
B3	8	#6	STR.	39'-6"	475
B4	21	#4	STR.	8'-4"	117
B5	7	#4	STR.	4'-8"	22
B6	20	#4	STR.	4'-0"	53
M1	32	#11	2	16'-10"	2862
S1	112	#5	3	13'-7"	1587
T1	152	#6	STR.	11'-4"	2587
T2	92	#9	STR.	11'-4"	3545
T3	88	#6	STR.	4'-4"	573
U1	49	#4	4	8'-0"	262
U2	10	#5	4	7'-10"	82
U3	8	#5	4	9'-0"	75
U4	16	#6	7	6'-11"	166
V1	32	#11	5	21'-0"	3570

EPOXY COATED REINFORCING STEEL 22088 LB.

SP1	1	**	6	747'-2"	499
SP2	1	**	6	771'-8"	515

TOTAL EPOXY COATED SPIRAL COLUMN REINFORCING STEEL 1015 LB.

CLASS "AA" CONCRETE BREAKDOWN

POUR 1 - FOOTING	53.0 CU. YDS.
POUR 2 - COLUMN	15.3 CU. YDS.
POUR 3 - CAP	37.7 CU. YDS.
TOTAL CLASS "AA" CONCRETE	106.0 CU. YDS.

24" PRESTRESSED CONCRETE PILES

NO. 8	520 LIN. FT.
PILE REDRIVES	4 EA.

** THE SP1 & SP2 SPIRAL REINFORCING STEEL SHALL BE W20 OR D-20 COLD DRAWN WIRE OR #4 PLAIN OR DEFORMED BAR.

PROJECT NO. R-2633BB

BRUNSWICK/NEW HANOVER COUNTY

STATION: 353+32.50 -L-

SHEET 3 OF 4

NORTH CAROLINA PROFESSIONAL SEAL 22072 ENGINEER JOHN ARTHUR DILWORTH 5-29-13

WETHERILL ENGINEERING

TRANSPORTATION PLANNING/DESIGN
BRIDGE/STRUCTURE DESIGN
CIVIL/SITE DESIGN - GIS/GPS
CONSTRUCTION OBSERVATION

559 Jones Franklin Rd. Suite 164
Raleigh, N.C. 27606
Bus: 919 851 8077
Fax: 919 851 8107
LICENSE NO. F-0377

STATE OF NORTH CAROLINA
DEPARTMENT OF TRANSPORTATION
RALEIGH

SUBSTRUCTURE

BENT 20 TO BENT 23 & BENT 31 TO BENT 43
BILL OF MATERIALS
LEFT LANE

REVISIONS						SHEET NO.
NO.	BY:	DATE:	NO.	BY:	DATE:	S-209
1			3			TOTAL SHEETS
2			4			700

DRAWN BY :	G. GILLAND	DATE :	10/2012
CHECKED BY :	J. DILWORTH	DATE :	10/2012
DESIGN ENGINEER OF RECORD :	J. DILWORTH	DATE :	5/2013

FILE: $FILE$
MODEL: $MODELNAME$
PLOT DRV: $PLTDRVS$
DATE/TIME: $DATE$ $TIME$

BILL OF MATERIAL

BENT 36

BAR	NO.	SIZE	TYPE	LENGTH	WEIGHT (lb)
B1	14	#11	1	42'-8"	3174
B2	14	#11	STR.	39'-6"	2938
B3	8	#6	STR.	39'-6"	475
B4	21	#4	STR.	8'-4"	117
B5	7	#4	STR.	4'-8"	22
B6	20	#4	STR.	4'-0"	53
M1	32	#11	2	16'-10"	2862
S1	112	#5	3	13'-7"	1587
T1	152	#6	STR.	11'-4"	2587
T2	92	#9	STR.	11'-4"	3545
T3	88	#6	STR.	4'-4"	573
U1	49	#4	4	8'-0"	262
U2	10	#5	4	7'-10"	82
U3	8	#5	4	9'-0"	75
U4	16	#6	7	6'-11"	166
V1	32	#11	5	20'-8"	3514

EPOXY COATED REINFORCING STEEL 22032 LB.

SP1	1	**	6	733'-7"	490
SP2	1	**	6	758'-1"	506

TOTAL EPOXY COATED SPIRAL COLUMN REINFORCING STEEL 996 LB.

CLASS "AA" CONCRETE BREAKDOWN

POUR 1 - FOOTING	53.0 CU. YDS.
POUR 2 - COLUMN	15.0 CU. YDS.
POUR 3 - CAP	37.7 CU. YDS.
TOTAL CLASS "AA" CONCRETE	105.7 CU. YDS.

24" PRESTRESSED CONCRETE PILES

NO. 8	520 LIN. FT.
PILE REDRIVES	4 EA.

BENT 37

BAR	NO.	SIZE	TYPE	LENGTH	WEIGHT (lb)
B1	14	#11	1	42'-8"	3174
B2	14	#11	STR.	39'-6"	2938
B3	8	#6	STR.	39'-6"	475
B4	21	#4	STR.	8'-4"	117
B5	7	#4	STR.	4'-8"	22
B6	20	#4	STR.	4'-0"	53
M1	32	#11	2	16'-10"	2862
S1	112	#5	3	13'-7"	1587
T1	152	#6	STR.	11'-4"	2587
T2	92	#9	STR.	11'-4"	3545
T3	88	#6	STR.	4'-4"	573
U1	49	#4	4	8'-0"	262
U2	10	#5	4	7'-10"	82
U3	8	#5	4	9'-0"	75
U4	16	#6	7	6'-11"	166
V1	32	#11	5	20'-4"	3457

EPOXY COATED REINFORCING STEEL 21975 LB.

SP1	1	**	6	714'-7"	477
SP2	1	**	6	744'-6"	497

TOTAL EPOXY COATED SPIRAL COLUMN REINFORCING STEEL 975 LB.

CLASS "AA" CONCRETE BREAKDOWN

POUR 1 - FOOTING	53.0 CU. YDS.
POUR 2 - COLUMN	14.6 CU. YDS.
POUR 3 - CAP	37.7 CU. YDS.
TOTAL CLASS "AA" CONCRETE	105.3 CU. YDS.

24" PRESTRESSED CONCRETE PILES

NO. 8	520 LIN. FT.
PILE REDRIVES	4 EA.

BENT 38

BAR	NO.	SIZE	TYPE	LENGTH	WEIGHT (lb)
B1	14	#11	1	42'-8"	3174
B2	14	#11	STR.	39'-6"	2938
B3	8	#6	STR.	39'-6"	475
B4	21	#4	STR.	8'-4"	117
B5	7	#4	STR.	4'-8"	22
B6	20	#4	STR.	4'-0"	53
M1	32	#11	2	16'-10"	2862
S1	112	#5	3	13'-7"	1587
T1	152	#6	STR.	11'-4"	2587
T2	92	#9	STR.	11'-4"	3545
T3	88	#6	STR.	4'-4"	573
U1	49	#4	4	8'-0"	262
U2	10	#5	4	7'-10"	82
U3	8	#5	4	9'-0"	75
U4	16	#6	7	6'-11"	166
V1	32	#11	5	21'-0"	3570

EPOXY COATED REINFORCING STEEL 22088 LB.

SP1	1	**	6	747'-2"	499
SP2	1	**	6	771'-8"	515

TOTAL EPOXY COATED SPIRAL COLUMN REINFORCING STEEL 1015 LB.

CLASS "AA" CONCRETE BREAKDOWN

POUR 1 - FOOTING	53.0 CU. YDS.
POUR 2 - COLUMN	15.3 CU. YDS.
POUR 3 - CAP	37.7 CU. YDS.
TOTAL CLASS "AA" CONCRETE	106.0 CU. YDS.

24" PRESTRESSED CONCRETE PILES

NO. 8	480 LIN. FT.
PILE REDRIVES	4 EA.

BENT 39

BAR	NO.	SIZE	TYPE	LENGTH	WEIGHT (lb)
B1	14	#11	1	42'-8"	3174
B2	14	#11	STR.	39'-6"	2938
B3	8	#6	STR.	39'-6"	475
B4	21	#4	STR.	8'-4"	117
B5	7	#4	STR.	4'-8"	22
B6	20	#4	STR.	4'-0"	53
M1	32	#11	2	16'-10"	2862
S1	112	#5	3	13'-7"	1587
T1	152	#6	STR.	11'-4"	2587
T2	92	#9	STR.	11'-4"	3545
T3	88	#6	STR.	4'-4"	573
U1	49	#4	4	8'-0"	262
U2	10	#5	4	7'-10"	82
U3	8	#5	4	9'-0"	75
U4	16	#6	7	6'-11"	166
V1	32	#11	5	19'-8"	3344

EPOXY COATED REINFORCING STEEL 21862 LB.

SP1	1	**	6	684'-8"	457
SP2	1	**	6	714'-7"	477

TOTAL EPOXY COATED SPIRAL COLUMN REINFORCING STEEL 935 LB.

CLASS "AA" CONCRETE BREAKDOWN

POUR 1 - FOOTING	53.0 CU. YDS.
POUR 2 - COLUMN	14.0 CU. YDS.
POUR 3 - CAP	37.7 CU. YDS.
TOTAL CLASS "AA" CONCRETE	104.7 CU. YDS.

24" PRESTRESSED CONCRETE PILES

NO. 8	480 LIN. FT.
PILE REDRIVES	4 EA.

BENT 40

BAR	NO.	SIZE	TYPE	LENGTH	WEIGHT (lb)
B1	14	#11	1	42'-8"	3174
B2	14	#11	STR.	39'-6"	2938
B3	8	#6	STR.	39'-6"	475
B4	21	#4	STR.	8'-4"	117
B5	7	#4	STR.	4'-8"	22
B6	20	#4	STR.	4'-0"	53
M1	32	#11	2	16'-10"	2862
S1	112	#5	3	13'-7"	1587
T1	152	#6	STR.	11'-4"	2587
T2	92	#9	STR.	11'-4"	3545
T3	88	#6	STR.	4'-4"	573
U1	49	#4	4	8'-0"	262
U2	10	#5	4	7'-10"	82
U3	8	#5	4	9'-0"	75
U4	16	#6	7	6'-11"	166
V1	32	#11	5	19'-4"	3287

EPOXY COATED REINFORCING STEEL 21805 LB.

SP1	1	**	6	671'-1"	448
SP2	1	**	6	701'-0"	468

TOTAL EPOXY COATED SPIRAL COLUMN REINFORCING STEEL 917 LB.

CLASS "AA" CONCRETE BREAKDOWN

POUR 1 - FOOTING	53.0 CU. YDS.
POUR 2 - COLUMN	13.7 CU. YDS.
POUR 3 - CAP	37.7 CU. YDS.
TOTAL CLASS "AA" CONCRETE	104.4 CU. YDS.

24" PRESTRESSED CONCRETE PILES

NO. 8	480 LIN. FT.
PILE REDRIVES	4 EA.

BENT 41

BAR	NO.	SIZE	TYPE	LENGTH	WEIGHT (lb)
B1	14	#11	1	42'-8"	3174
B2	14	#11	STR.	39'-6"	2938
B3	8	#6	STR.	39'-6"	475
B4	21	#4	STR.	8'-4"	117
B5	7	#4	STR.	4'-8"	22
B6	20	#4	STR.	4'-0"	53
M1	32	#11	2	16'-10"	2862
S1	112	#5	3	13'-7"	1587
T1	152	#6	STR.	11'-4"	2587
T2	92	#9	STR.	11'-4"	3545
T3	88	#6	STR.	4'-4"	573
U1	49	#4	4	8'-0"	262
U2	10	#5	4	7'-10"	82
U3	8	#5	4	9'-0"	75
U4	16	#6	7	6'-11"	166
V1	32	#11	5	18'-11"	3216

EPOXY COATED REINFORCING STEEL 21734 LB.

SP1	1	**	6	657'-6"	439
SP2	1	**	6	682'-0"	456

TOTAL EPOXY COATED SPIRAL COLUMN REINFORCING STEEL 895 LB.

CLASS "AA" CONCRETE BREAKDOWN

POUR 1 - FOOTING	53.0 CU. YDS.
POUR 2 - COLUMN	13.3 CU. YDS.
POUR 3 - CAP	37.7 CU. YDS.
TOTAL CLASS "AA" CONCRETE	104.0 CU. YDS.

24" PRESTRESSED CONCRETE PILES

NO. 8	440 LIN. FT.
PILE REDRIVES	4 EA.

BENT 42

BAR	NO.	SIZE	TYPE	LENGTH	WEIGHT (lb)
B1	14	#11	1	42'-8"	3174
B2	14	#11	STR.	39'-6"	2938
B3	8	#6	STR.	39'-6"	475
B4	21	#4	STR.	8'-4"	117
B5	7	#4	STR.	4'-8"	22
B6	20	#4	STR.	4'-0"	53
M1	32	#11	2	16'-10"	2862
S1	112	#5	3	13'-7"	1587
T1	152	#6	STR.	11'-4"	2587
T2	92	#9	STR.	11'-4"	3545
T3	88	#6	STR.	4'-4"	573
U1	49	#4	4	8'-0"	262
U2	10	#5	4	7'-10"	82
U3	8	#5	4	9'-0"	75
U4	16	#6	7	6'-11"	166
V1	32	#11	5	18'-7"	3159

EPOXY COATED REINFORCING STEEL 21677 LB.

SP1	1	**	6	638'-6"	427
SP2	1	**	6	668'-5"	447

TOTAL EPOXY COATED SPIRAL COLUMN REINFORCING STEEL 873 LB.

CLASS "AA" CONCRETE BREAKDOWN

POUR 1 - FOOTING	53.0 CU. YDS.
POUR 2 - COLUMN	13.0 CU. YDS.
POUR 3 - CAP	37.7 CU. YDS.
TOTAL CLASS "AA" CONCRETE	103.7 CU. YDS.

24" PRESTRESSED CONCRETE PILES

NO. 8	440 LIN. FT.
PILE REDRIVES	4 EA.

BENT 43

BAR	NO.	SIZE	TYPE	LENGTH	WEIGHT (lb)
B1	14	#11	1	42'-8"	3174
B2	14	#11	STR.	39'-6"	2938
B3	8	#6	STR.	39'-6"	475
B4	21	#4	STR.	8'-4"	117
B5	7	#4	STR.	4'-8"	22
B6	20	#4	STR.	4'-0"	53
M1	32	#11	2	16'-10"	2862
S1	112	#5	3	13'-7"	1587
T1	152	#6	STR.	11'-4"	2587
T2	92	#9	STR.	11'-4"	3545
T3	88	#6	STR.	4'-4"	573
U1	49	#4	4	8'-0"	262
U2	10	#5	4	7'-10"	82
U3	8	#5	4	9'-0"	75
U4	16	#6	7	6'-11"	166
V1	32	#11	5	19'-3"	3273

EPOXY COATED REINFORCING STEEL 21791 LB.

SP1	1	**	6	668'-5"	447
SP2	1	**	6	695'-7"	465

TOTAL EPOXY COATED SPIRAL COLUMN REINFORCING STEEL 911 LB.

CLASS "AA" CONCRETE BREAKDOWN

POUR 1 - FOOTING	53.0 CU. YDS.
POUR 2 - COLUMN	13.6 CU. YDS.
POUR 3 - CAP	37.7 CU. YDS.
TOTAL CLASS "AA" CONCRETE	104.3 CU. YDS.

24" PRESTRESSED CONCRETE PILES

NO. 8	440 LIN. FT.
PILE REDRIVES	4 EA.

BAR TYPES

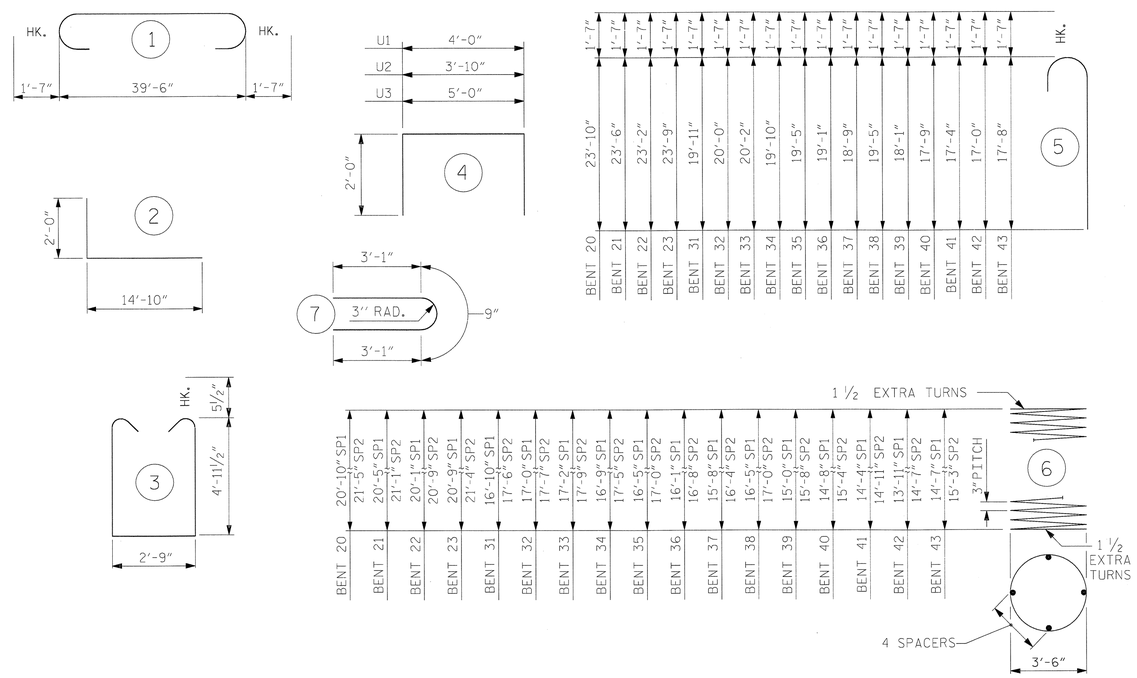

ALL BAR DIMENSIONS ARE OUT TO OUT.

** THE SP1 & SP2 SPIRAL REINFORCING STEEL SHALL BE W20 OR D-20 COLD DRAWN WIRE OR #4 PLAIN OR DEFORMED BAR.

PROJECT NO. R-2633BB

BRUNSWICK/NEW HANOVER COUNTY

STATION: 353+32.50 -L-

SHEET 4 OF 4

NORTH CAROLINA PROFESSIONAL SEAL 22072 ENGINEER JOHN ARTHUR DILWORTH 5-29-13

WETHERILL ENGINEERING

TRANSPORTATION PLANNING/DESIGN
BRIDGE/STRUCTURE DESIGN
CIVIL/SITE DESIGN - GIS/GPS
CONSTRUCTION OBSERVATION

559 Jones Franklin Rd. Suite 164
Raleigh, N.C. 27606
Bus: 919 851 8077
Fax: 919 851 8107
LICENSE NO. F-0377

STATE OF NORTH CAROLINA
DEPARTMENT OF TRANSPORTATION
RALEIGH

SUBSTRUCTURE

BENT 20 TO BENT 23 & BENT 31 TO BENT 43 BILL OF MATERIALS

LEFT LANE

REVISIONS								SHEET NO.
NO.	BY:	DATE:	NO.	BY:	DATE:			S-210
1			3					TOTAL SHEETS
2			4					700

DRAWN BY :	G. GILLAND	DATE :	10/2012
CHECKED BY :	J. DILWORTH	DATE :	10/2012
DESIGN ENGINEER OF RECORD :	J. DILWORTH	DATE :	5/2013

FILE: $FILE$
MODEL: $MODELNAME$
PLOT DRV: $PLTDRVS$
DATE/TIME: $DATE$ $TIME$

NOTES:

STIRRUPS AND "U" BARS IN CAP MAY BE SHIFTED AS NECESSARY TO CLEAR ANCHOR BOLTS.

HOOKS ON "V" BARS MAY BE TURNED AS NECESSARY FOR PLACING REINFORCING STEEL.

ALTERNATELY INVERT STIRRUP PAIRS AS NOTED.

FOR ADDITIONAL FOOTING REINFORCING DETAILS, SEE SHEET 2 OF 3.

FOR SECTION A-A, VIEW B-B, AND SECTION C-C, SEE SHEET 2 OF 3.

* THE FOOTING HAS A DROP OF 2" FROM THE CENTER OF THE FOOTING TO THE EDGE OF FOOTING TO ACCOMMODATE DRAINAGE.

FOR FOUNDATION NOTES, SEE "GENERAL DRAWINGS FOUNDATION LAYOUT", SEE SHEET 10 OF 10.

FOR WORKPOINTS, ELEVATIONS, AND BEARING ANGLES, SEE FOOTING ON PILE REFERENCE CHART, SHEET 2 OF 3.

A CONSTRUCTION JOINT IS PERMITTED IN ALL COLUMNS AT APPROXIMATELY MID HEIGHT OF THE COLUMN.

GIRDER OFFSETS ARE NEGLIGIBLE FOR EACH GIRDER.

THE TOP SURFACE AREAS OF THE BENT 25 AND 28 CAPS SHALL BE CURED IN ACCORDANCE WITH THE STANDARD SPECIFICATIONS EXCEPT THE MEMBRANE CURING COMPOUND METHOD SHALL NOT BE USED.

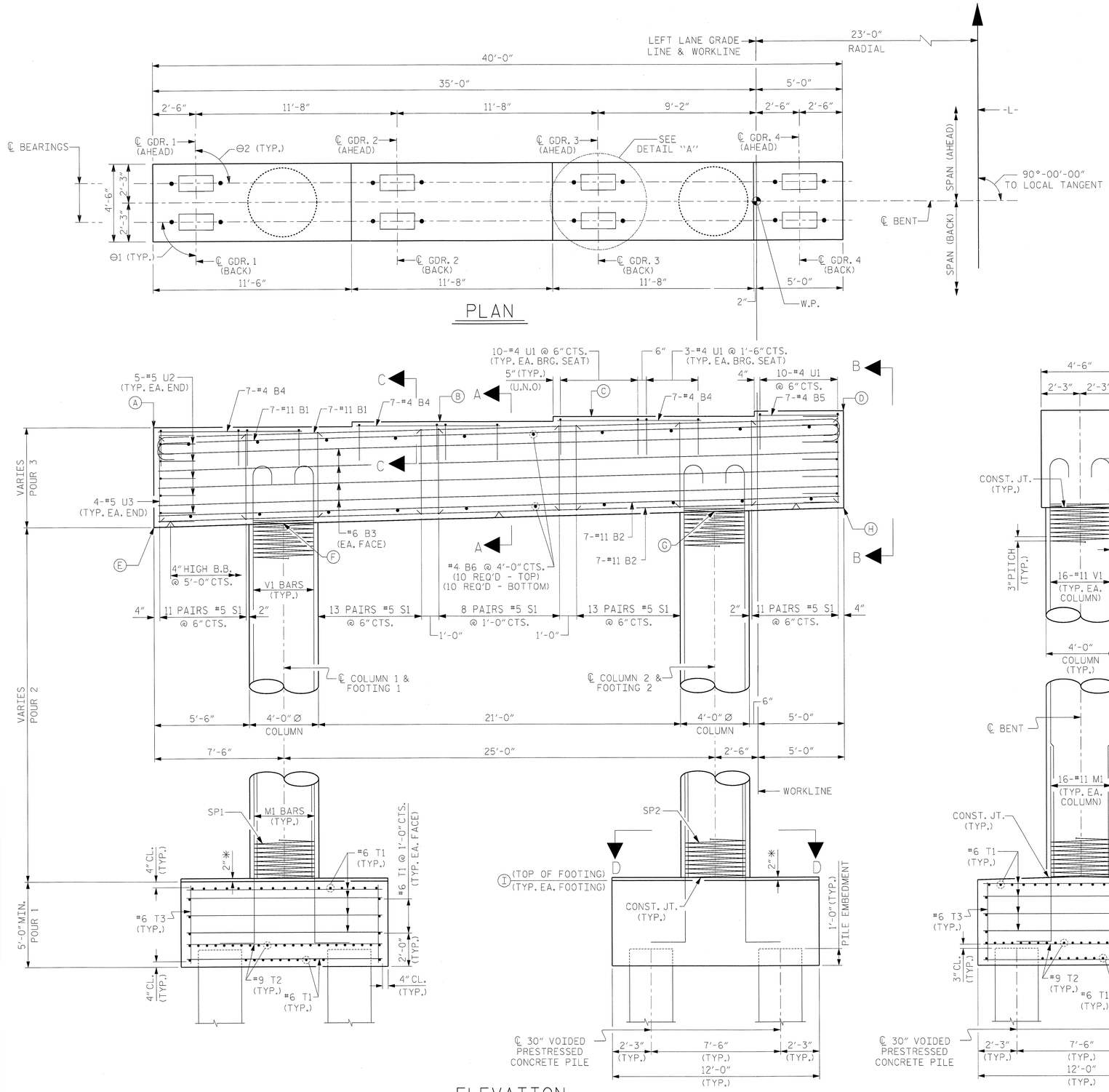

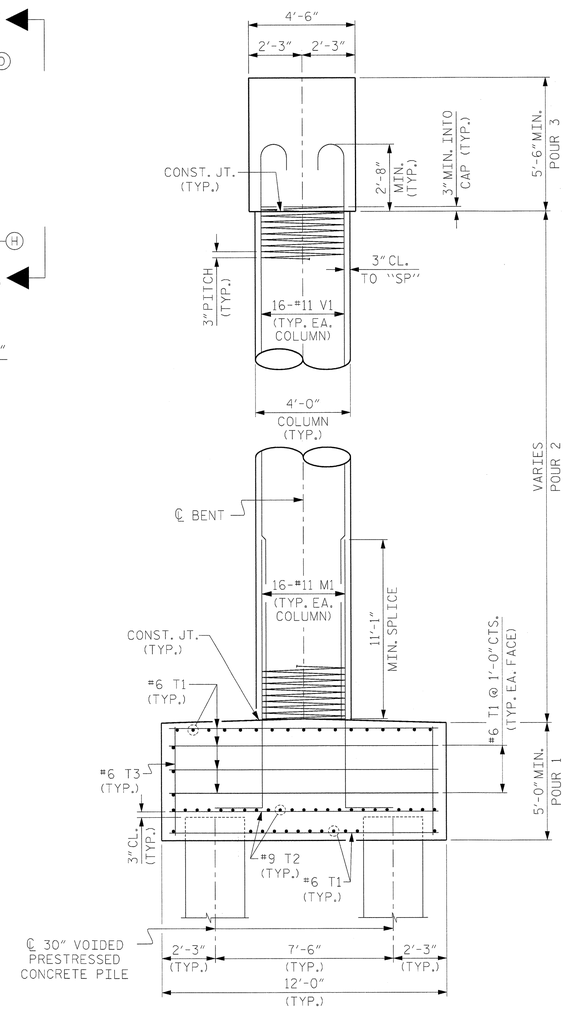

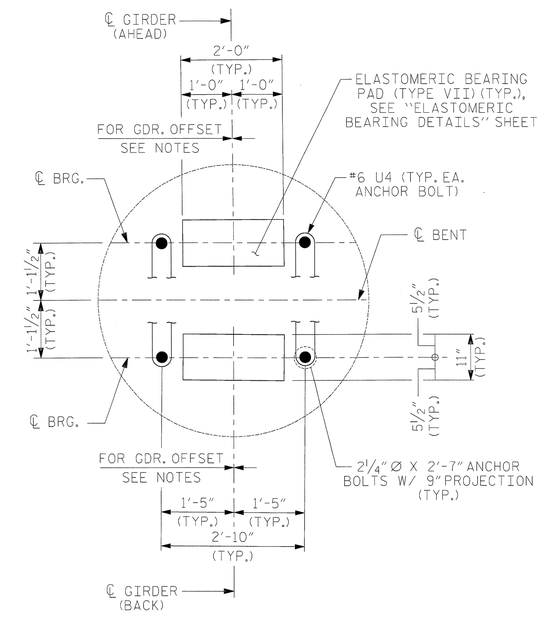

PROJECT NO. R-2633BB

BRUNSWICK/NEW HANOVER COUNTY

STATION: 353+32.50 -L-

SHEET 1 OF 3

NORTH CAROLINA PROFESSIONAL SEAL 22072 ENGINEER JOHN ARTHUR DILWORTH 5-29-13

WETHERILL ENGINEERING

TRANSPORTATION PLANNING/DESIGN
BRIDGE/STRUCTURE DESIGN
CIVIL/SITE DESIGN - GIS/GPS
CONSTRUCTION OBSERVATION

559 Jones Franklin Rd. Suite 164
Raleigh, N.C. 27606
Bus: 919 851 8077
Fax: 919 851 8107
LICENSE NO. F-0377

STATE OF NORTH CAROLINA
DEPARTMENT OF TRANSPORTATION
RALEIGH

SUBSTRUCTURE

BENT 24 TO BENT 30
PLAN AND ELEVATION

LEFT LANE

REVISIONS						SHEET NO.
NO.	BY:	DATE:	NO.	BY:	DATE:	S-211
1			3			TOTAL SHEETS
2			4			700

DRAWN BY :	G. GILLAND	DATE :	10/2012
CHECKED BY :	J. DILWORTH	DATE :	10/2012
DESIGN ENGINEER OF RECORD :	J. DILWORTH	DATE :	5/2013

FILE: $FILE$
MODEL: $MODELNAME$
PLOT DRV: $PLTDRV$
DATE/TIME: $DATE$ $TIME$

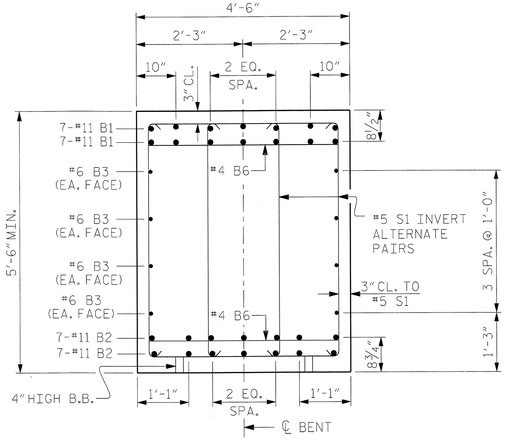

SECTION A-A

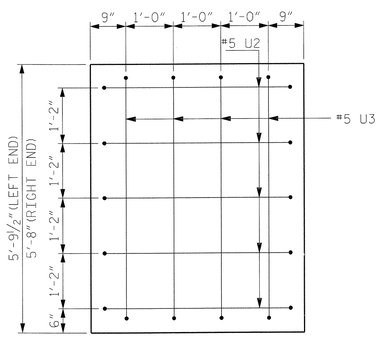

VIEW B-B

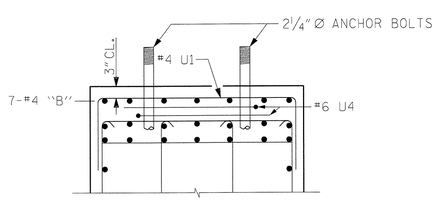

SECTION C-C

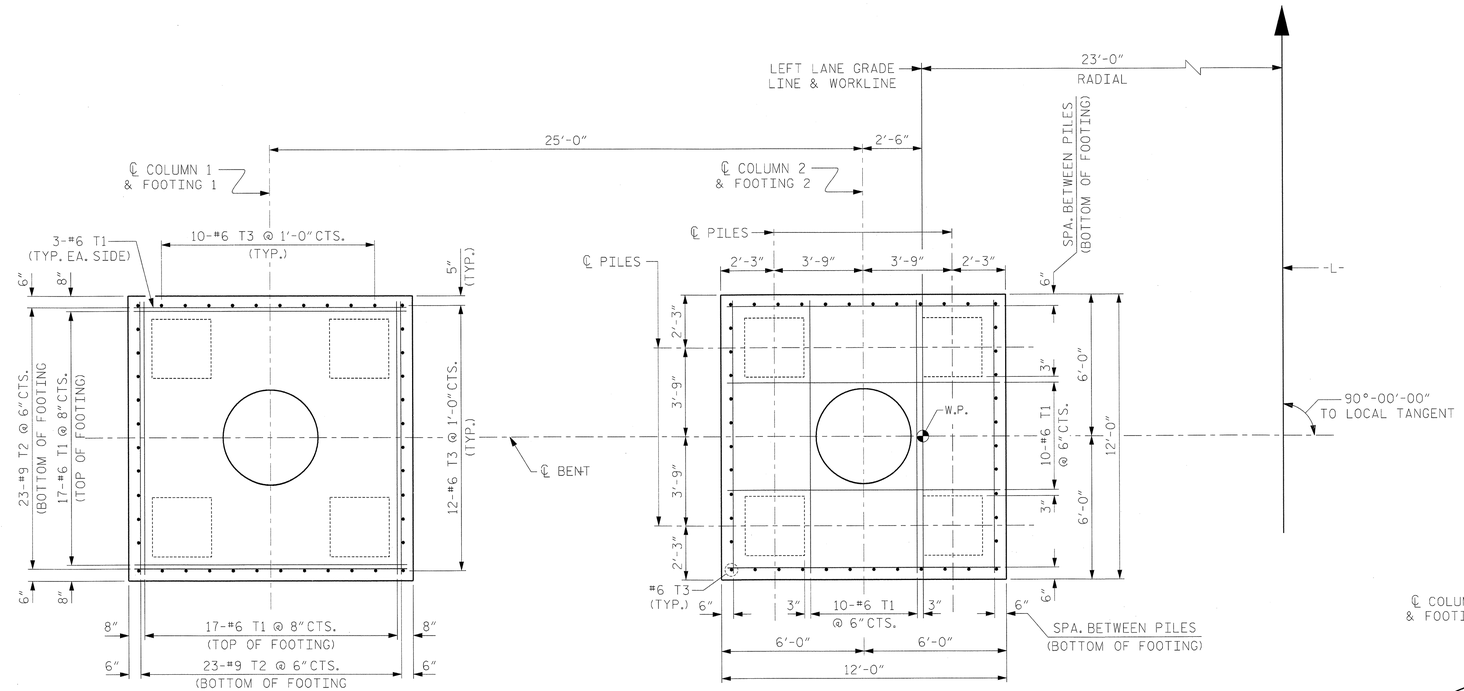

FOOTING PLAN

ALL DIMENSIONS AND DETAILS SHOWN FOR FOOTINGS ARE TYPICAL FOR EACH FOOTING UNLESS OTHERWISE NOTED.

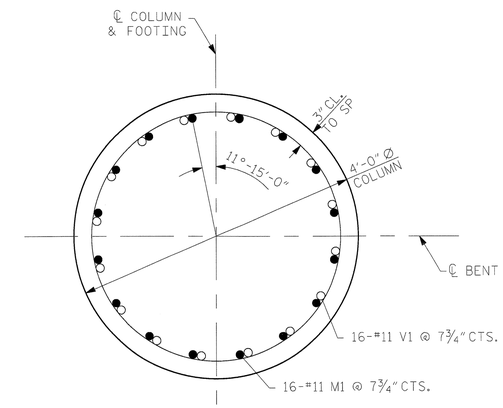

SECTION D-D

FOOTING ON PILE REFERENCE

BENT	W.P. NO.	SPAN (AHEAD)	SPAN (BACK)	A	B	C	D	E	F	G	H	I	Θ1	Θ2
24	25	25	24	34.69	34.98	35.27	35.56	28.90	29.08	29.71	29.90	9.50	89°-37'-05"	90°-22'-55"
25	26	26	25	34.33	34.62	34.91	35.20	28.54	28.72	29.35	29.54	12.00	89°-37'-05"	90°-22'-55"
26	27	27	26	33.97	34.26	34.55	34.84	28.18	28.36	28.99	29.18	13.00	89°-37'-05"	90°-22'-55"
27	28	28	27	33.61	33.90	34.19	34.48	27.82	28.00	28.63	28.82	13.00	89°-37'-05"	90°-22'-55"
28	29	29	28	33.25	33.54	33.83	34.12	27.46	27.64	28.27	28.46	10.50	89°-37'-05"	90°-22'-55"
29	30	30	29	32.89	33.18	33.47	33.76	27.10	27.28	27.91	28.10	10.00	89°-37'-05"	90°-22'-55"
30	31	31	30	32.53	32.82	33.11	33.40	26.74	26.92	27.55	27.74	10.00	89°-37'-05"	90°-22'-55"

PROJECT NO. R-2633BB

BRUNSWICK/NEW HANOVER COUNTY

STATION: 353+32.50 -L-

SHEET 2 OF 3

NORTH CAROLINA PROFESSIONAL SEAL 22072 ENGINEER JOHN ARTHUR DILWORTH 5-29-13

WETHERILL ENGINEERING

TRANSPORTATION PLANNING/DESIGN
BRIDGE/STRUCTURE DESIGN
CIVIL/SITE DESIGN - GIS/GPS
CONSTRUCTION OBSERVATION

559 Jones Franklin Rd. Suite 164
Raleigh, N.C. 27606
Bus: 919 851 8077
Fax: 919 851 8107
LICENSE NO. F-0377

STATE OF NORTH CAROLINA
DEPARTMENT OF TRANSPORTATION
RALEIGH

SUBSTRUCTURE

BENT 24 TO BENT 30 DETAILS

LEFT LANE

REVISIONS						SHEET NO.
NO.	BY:	DATE:	NO.	BY:	DATE:	S-212
1			3			TOTAL SHEETS
2			4			700

DRAWN BY : G. GILLAND DATE : 10/2012
CHECKED BY : J. DILWORTH DATE : 10/2012
DESIGN ENGINEER OF RECORD : J. DILWORTH DATE : 5/2013

FILE: $FILE$
MODEL: $MODELNAME$
PLOT DRV: $PLTDRVS$
DATE/TIME: $DATE$ $TIME$

BILL OF MATERIAL

BENT 24

BAR	NO.	SIZE	TYPE	LENGTH	WEIGHT (lb)
B1	14	#11	1	42'-8"	3174
B2	14	#11	STR.	39'-6"	2938
B3	8	#6	STR.	39'-6"	475
B4	21	#4	STR.	8'-4"	117
B5	7	#4	STR.	4'-8"	22
B6	20	#4	STR.	4'-0"	53
M1	32	#11	2	16'-10"	2862
S1	112	#5	3	13'-7"	1587
T1	140	#6	STR.	11'-4"	2383
T2	92	#9	STR.	11'-4"	3545
T3	88	#6	STR.	4'-4"	573
U1	49	#4	4	8'-0"	262
U2	10	#5	4	7'-10"	82
U3	8	#5	4	9'-0"	75
U4	16	#6	7	6'-11"	166
V1	32	#11	5	24'-6"	4165

EPOXY COATED REINFORCING STEEL 22479 LB.

SP1	1	**	6	896'-7"	599
SP2	1	**	6	923'-9"	617

TOTAL EPOXY COATED SPIRAL COLUMN REINFORCING STEEL 1216 LB.

CLASS "AA" CONCRETE BREAKDOWN

POUR 1 - FOOTING △	56.1 CU. YDS.
POUR 2 - COLUMN	18.5 CU. YDS.
POUR 3 - CAP	37.7 CU. YDS.
TOTAL CLASS "AA" CONCRETE	112.3 CU. YDS.

30" VOIDED PRESTRESSED CONCRETE PILE

NO. 8	560 LIN. FT.
PILE REDRIVES	4 EA.

BENT 25

BAR	NO.	SIZE	TYPE	LENGTH	WEIGHT (lb)
B1	14	#11	1	42'-8"	3174
B2	14	#11	STR.	39'-6"	2938
B3	8	#6	STR.	39'-6"	475
B4	21	#4	STR.	8'-4"	117
B5	7	#4	STR.	4'-8"	22
B6	20	#4	STR.	4'-0"	53
M1	32	#11	2	16'-10"	2862
S1	112	#5	3	13'-7"	1587
T1	140	#6	STR.	11'-4"	2383
T2	92	#9	STR.	11'-4"	3545
T3	88	#6	STR.	4'-4"	573
U1	49	#4	4	8'-0"	262
U2	10	#5	4	7'-10"	82
U3	8	#5	4	9'-0"	75
U4	16	#6	7	6'-11"	166
V1	32	#11	5	21'-8"	3684

EPOXY COATED REINFORCING STEEL 21998 LB.

SP1	1	**	6	771'-8"	515
SP2	1	**	6	801'-6"	535

TOTAL EPOXY COATED SPIRAL COLUMN REINFORCING STEEL 1050 LB.

CLASS "AA" CONCRETE BREAKDOWN

POUR 1 - FOOTING △	56.1 CU. YDS.
POUR 2 - COLUMN	15.9 CU. YDS.
POUR 3 - CAP	37.7 CU. YDS.
TOTAL CLASS "AA" CONCRETE	109.7 CU. YDS.

30" VOIDED PRESTRESSED CONCRETE PILE

NO. 8	560 LIN. FT.
PILE REDRIVES	4 EA.

BENT 26

BAR	NO.	SIZE	TYPE	LENGTH	WEIGHT (lb)
B1	14	#11	1	42'-8"	3174
B2	14	#11	STR.	39'-6"	2938
B3	8	#6	STR.	39'-6"	475
B4	21	#4	STR.	8'-4"	117
B5	7	#4	STR.	4'-8"	22
B6	20	#4	STR.	4'-0"	53
M1	32	#11	2	16'-10"	2862
S1	112	#5	3	13'-7"	1587
T1	140	#6	STR.	11'-4"	2383
T2	92	#9	STR.	11'-4"	3545
T3	88	#6	STR.	4'-4"	573
U1	49	#4	4	8'-0"	262
U2	10	#5	4	7'-10"	82
U3	8	#5	4	9'-0"	75
U4	16	#6	7	6'-11"	166
V1	32	#11	5	20'-3"	3443

EPOXY COATED REINFORCING STEEL 21757 LB.

SP1	1	**	6	714'-7"	477
SP2	1	**	6	739'-0"	494

TOTAL EPOXY COATED SPIRAL COLUMN REINFORCING STEEL 971 LB.

CLASS "AA" CONCRETE BREAKDOWN

POUR 1 - FOOTING △	56.1 CU. YDS.
POUR 2 - COLUMN	14.6 CU. YDS.
POUR 3 - CAP	37.7 CU. YDS.
TOTAL CLASS "AA" CONCRETE	108.4 CU. YDS.

30" VOIDED PRESTRESSED CONCRETE PILE

NO. 8	600 LIN. FT.
PILE REDRIVES	4 EA.

BENT 27

BAR	NO.	SIZE	TYPE	LENGTH	WEIGHT (lb)
B1	14	#11	1	42'-8"	3174
B2	14	#11	STR.	39'-6"	2938
B3	8	#6	STR.	39'-6"	475
B4	21	#4	STR.	8'-4"	117
B5	7	#4	STR.	4'-8"	22
B6	20	#4	STR.	4'-0"	53
M1	32	#11	2	16'-10"	2862
S1	112	#5	3	13'-7"	1587
T1	140	#6	STR.	11'-4"	2383
T2	92	#9	STR.	11'-4"	3545
T3	88	#6	STR.	4'-4"	573
U1	49	#4	4	8'-0"	262
U2	10	#5	4	7'-10"	82
U3	8	#5	4	9'-0"	75
U4	16	#6	7	6'-11"	166
V1	32	#11	5	19'-11"	3386

EPOXY COATED REINFORCING STEEL 21700 LB.

SP1	1	**	6	701'-0"	468
SP2	1	**	6	725'-5"	485

TOTAL EPOXY COATED SPIRAL COLUMN REINFORCING STEEL 953 LB.

CLASS "AA" CONCRETE BREAKDOWN

POUR 1 - FOOTING △	56.1 CU. YDS.
POUR 2 - COLUMN	14.3 CU. YDS.
POUR 3 - CAP	37.7 CU. YDS.
TOTAL CLASS "AA" CONCRETE	108.1 CU. YDS.

30" VOIDED PRESTRESSED CONCRETE PILE

NO. 8	560 LIN. FT.
PILE REDRIVES	4 EA.

BENT 28

BAR	NO.	SIZE	TYPE	LENGTH	WEIGHT (lb)
B1	14	#11	1	42'-8"	3174
B2	14	#11	STR.	39'-6"	2938
B3	8	#6	STR.	39'-6"	475
B4	21	#4	STR.	8'-4"	117
B5	7	#4	STR.	4'-8"	22
B6	20	#4	STR.	4'-0"	53
M1	32	#11	2	16'-10"	2862
S1	112	#5	3	13'-7"	1587
T1	140	#6	STR.	11'-4"	2383
T2	92	#9	STR.	11'-4"	3545
T3	88	#6	STR.	4'-4"	573
U1	49	#4	4	8'-0"	262
U2	10	#5	4	7'-10"	82
U3	8	#5	4	9'-0"	75
U4	16	#6	7	6'-11"	166
V1	32	#11	5	22'-1"	3755

EPOXY COATED REINFORCING STEEL 22069 LB.

SP1	1	**	6	790'-8"	528
SP2	1	**	6	820'-7"	548

TOTAL EPOXY COATED SPIRAL COLUMN REINFORCING STEEL 1076 LB.

CLASS "AA" CONCRETE BREAKDOWN

POUR 1 - FOOTING △	56.1 CU. YDS.
POUR 2 - COLUMN	16.2 CU. YDS.
POUR 3 - CAP	37.7 CU. YDS.
TOTAL CLASS "AA" CONCRETE	110.0 CU. YDS.

30" VOIDED PRESTRESSED CONCRETE PILE

NO. 8	600 LIN. FT.
PILE REDRIVES	4 EA.

BENT 29

BAR	NO.	SIZE	TYPE	LENGTH	WEIGHT (lb)
B1	14	#11	1	42'-8"	3174
B2	14	#11	STR.	39'-6"	2938
B3	8	#6	STR.	39'-6"	475
B4	21	#4	STR.	8'-4"	117
B5	7	#4	STR.	4'-8"	22
B6	20	#4	STR.	4'-0"	53
M1	32	#11	2	16'-10"	2862
S1	112	#5	3	13'-7"	1587
T1	140	#6	STR.	11'-4"	2383
T2	92	#9	STR.	11'-4"	3545
T3	88	#6	STR.	4'-4"	573
U1	49	#4	4	8'-0"	262
U2	10	#5	4	7'-10"	82
U3	8	#5	4	9'-0"	75
U4	16	#6	7	6'-11"	166
V1	32	#11	5	22'-2"	3769

EPOXY COATED REINFORCING STEEL 22093 LB.

SP1	1	**	6	798'-10"	534
SP2	1	**	6	823'-3"	550

TOTAL EPOXY COATED SPIRAL COLUMN REINFORCING STEEL 1084 LB.

CLASS "AA" CONCRETE BREAKDOWN

POUR 1 - FOOTING △	56.1 CU. YDS.
POUR 2 - COLUMN	16.4 CU. YDS.
POUR 3 - CAP	37.7 CU. YDS.
TOTAL CLASS "AA" CONCRETE	110.2 CU. YDS.

30" VOIDED PRESTRESSED CONCRETE PILE

NO. 8	680 LIN. FT.
PILE REDRIVES	4 EA.

BENT 30

BAR	NO.	SIZE	TYPE	LENGTH	WEIGHT (lb)
B1	14	#11	1	42'-8"	3174
B2	14	#11	STR.	39'-6"	2938
B3	8	#6	STR.	39'-6"	475
B4	21	#4	STR.	8'-4"	117
B5	7	#4	STR.	4'-8"	22
B6	20	#4	STR.	4'-0"	53
M1	32	#11	2	16'-10"	2862
S1	112	#5	3	13'-7"	1587
T1	140	#6	STR.	11'-4"	2383
T2	92	#9	STR.	11'-4"	3545
T3	88	#6	STR.	4'-4"	573
U1	49	#4	4	8'-0"	262
U2	10	#5	4	7'-10"	82
U3	8	#5	4	9'-0"	75
U4	16	#6	7	6'-11"	166
V1	32	#11	5	21'-10"	3712

EPOXY COATED REINFORCING STEEL 22026 LB.

SP1	1	**	6	782'-6"	523
SP2	1	**	6	809'-8"	541

TOTAL EPOXY COATED SPIRAL COLUMN REINFORCING STEEL 1064 LB.

CLASS "AA" CONCRETE BREAKDOWN

POUR 1 - FOOTING △	56.1 CU. YDS.
POUR 2 - COLUMN	16.0 CU. YDS.
POUR 3 - CAP	37.7 CU. YDS.
TOTAL CLASS "AA" CONCRETE	109.8 CU. YDS.

30" PRESTRESSED CONCRETE PILES

NO. 8	680 LIN. FT.
PILE REDRIVES	4 EA.

△ INCLUDES CONCRETE IN 30" VOIDED PRESTRESSED CONCRETE PILES. SEE "30" VOIDED PRESTRESSED CONCRETE PILE" SHEETS FOR DETAIL AND NOTE.

BAR TYPES

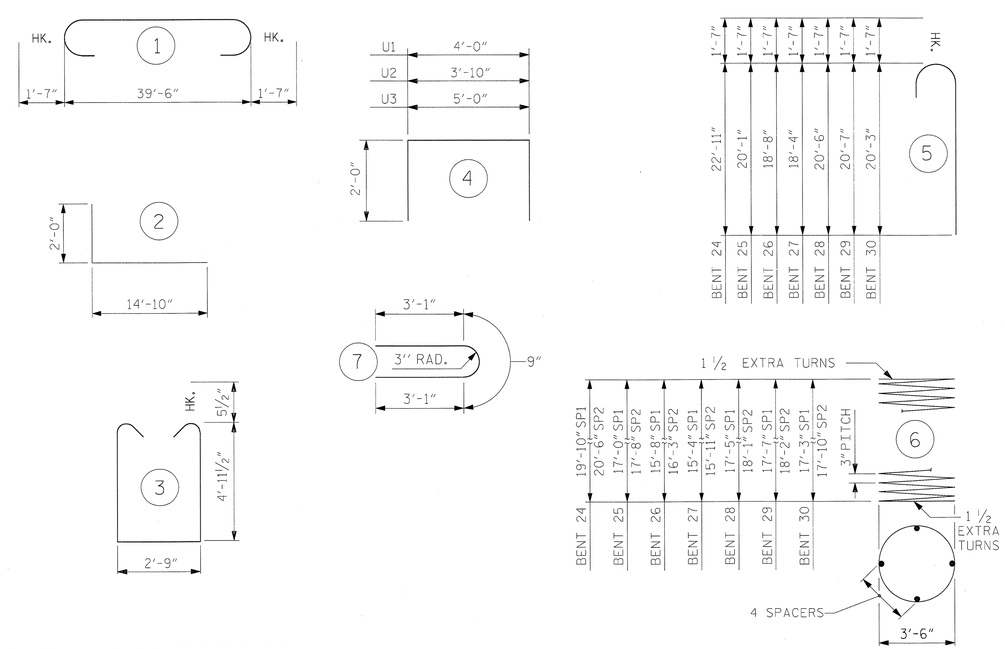

ALL BAR DIMENSIONS ARE OUT TO OUT.

** THE SP1 & SP2 SPIRAL REINFORCING STEEL SHALL BE W20 OR D-20 COLD DRAWN WIRE OR #4 PLAIN OR DEFORMED BAR.

PROJECT NO. R-2633BB

BRUNSWICK/NEW HANOVER COUNTY

STATION: 353+32.50 -L-

SHEET 3 OF 3

NORTH CAROLINA PROFESSIONAL SEAL 22072 ENGINEER JOHN ARTHUR DILWORTH

5-29-13

WETHERILL ENGINEERING

TRANSPORTATION PLANNING/DESIGN
BRIDGE/STRUCTURE DESIGN
CIVIL/SITE DESIGN - GIS/GPS
CONSTRUCTION OBSERVATION

559 Jones Franklin Rd. Suite 164
Raleigh, N.C. 27606
Bus: 919 851 8077
Fax: 919 851 8107
LICENSE NO. F-0377

STATE OF NORTH CAROLINA
DEPARTMENT OF TRANSPORTATION
RALEIGH

SUBSTRUCTURE

BENT 24 TO BENT 30 BILL OF MATERIALS

LEFT LANE

REVISIONS						SHEET NO.
NO.	BY:	DATE:	NO.	BY:	DATE:	S-213
1			3			TOTAL SHEETS
2			4			700

DRAWN BY :	G. GILLAND	DATE :	10/2012
CHECKED BY :	J. DILWORTH	DATE :	10/2012
DESIGN ENGINEER OF RECORD :	J. DILWORTH	DATE :	5/2013

FILE: $FILE$
MODEL: $MODELNAME$
PLOT DRV: $PLTDRVS$
DATE/TIME: $DATE$ $TIME$

NOTES:

STIRRUPS AND "U" BARS IN CAP MAY BE SHIFTED AS NECESSARY TO CLEAR ANCHOR BOLTS.

FOR SECTION A-A, SECTION B-B, VIEW C-C AND VIEW D-D, SEE SHEET 2 OF 2.

FOR WORKPOINTS, ELEVATIONS, AND BEARING ANGLES, SEE PILE BENT REFERENCE CHART, SHEET 2 OF 2.

FOR FOUNDATION NOTES, SEE "GENERAL DRAWINGS FOUNDATIONLAYOUT" SHEET 10 OF 10.

GIRDER OFFSETS ARE NEGLIGIBLE FOR EACH GIRDER.

ALTERNATELY INVERT STIRRUPS.

THE TOP SURFACE AREAS OF THE BENT 46, 49, 52 AND 55 CAPS SHALL BE CURED IN ACCORDANCE WITH THE STANDARD SPECIFICATIONS EXCEPT THE MEMBRANE CURING COMPOUND METHOD SHALL NOT BE USED.

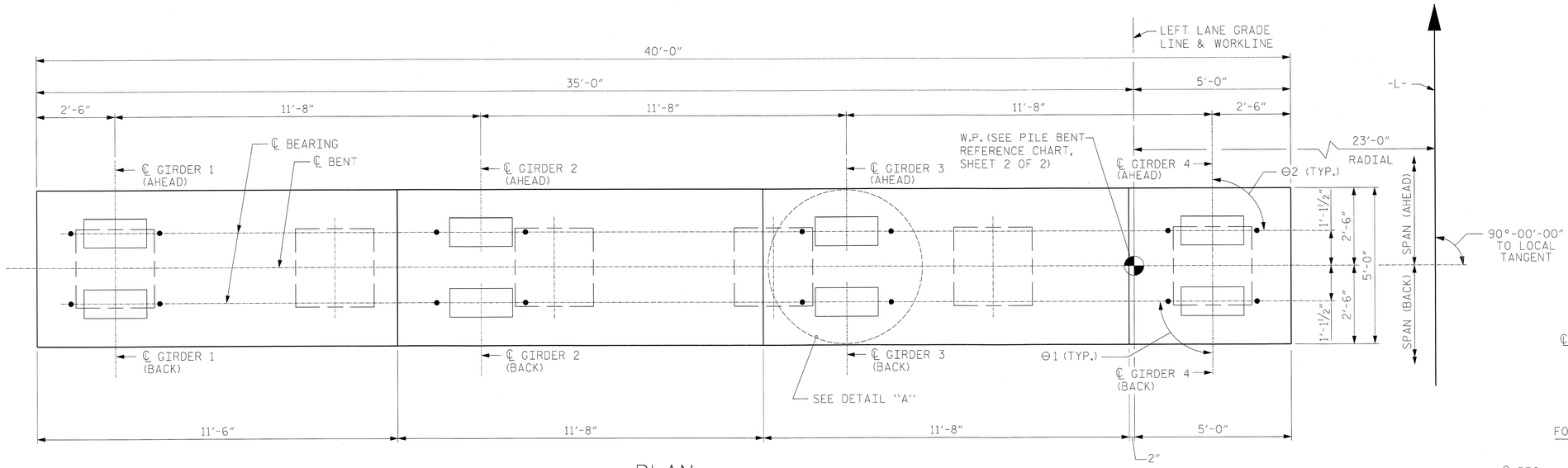

PLAN

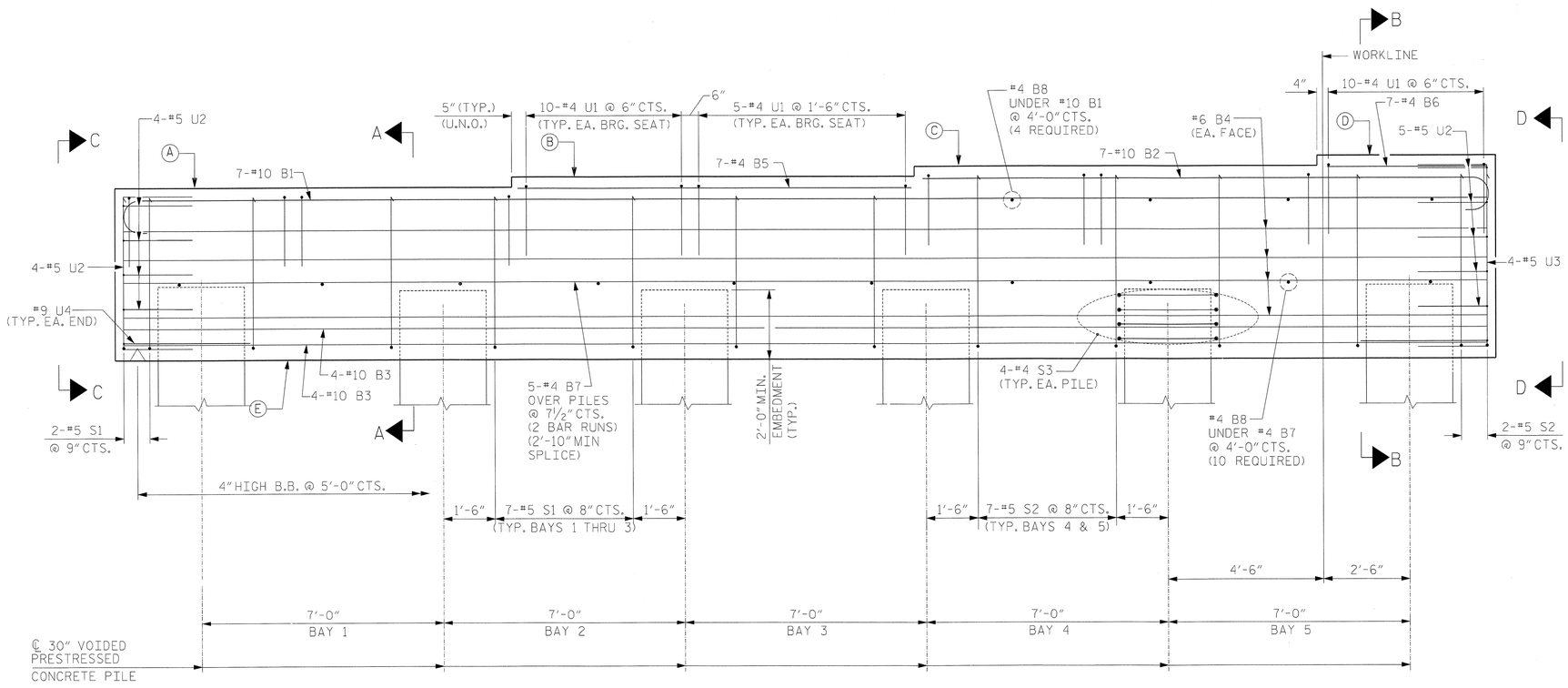

ELEVATION

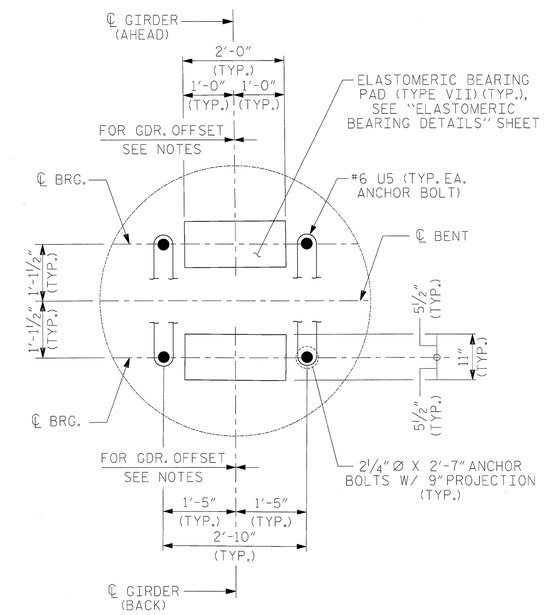

DETAIL "A"

PROJECT NO. R-2633BB

BRUNSWICK/NEW HANOVER COUNTY

STATION: 353+32.50 -L-

SHEET 1 OF 2

NORTH CAROLINA PROFESSIONAL SEAL 22072 ENGINEER JOHN ARTHUR DILWORTH

5-29-13

WETHERILL ENGINEERING

TRANSPORTATION PLANNING/DESIGN
BRIDGE/STRUCTURE DESIGN
CIVIL/SITE DESIGN - GIS/GPS
CONSTRUCTION OBSERVATION

559 Jones Franklin Rd. Suite 164
Raleigh, N.C. 27606
Bus: 919 851 8077
Fax: 919 851 8107
LICENSE NO. F-0377

STATE OF NORTH CAROLINA
DEPARTMENT OF TRANSPORTATION
RALEIGH

SUBSTRUCTURE

BENT 44 TO BENT 57 PLAN AND ELEVATION

LEFT LANE

REVISIONS								SHEET NO.
NO.	BY:	DATE:	NO.	BY:	DATE:			S-24
1			3					TOTAL SHEETS
2			4					100

DRAWN BY :	J. PENDERGRAFT	DATE :	10/2012
CHECKED BY :	J. DILWORTH	DATE :	10/2012
DESIGN ENGINEER OF RECORD :	J. DILWORTH	DATE :	5/2013

FILE: $FILE$
MODEL: $MODELNAME$
PLOT DRV: $PLTDRVS$
DATE/TIME: $DATE$ $TIME$

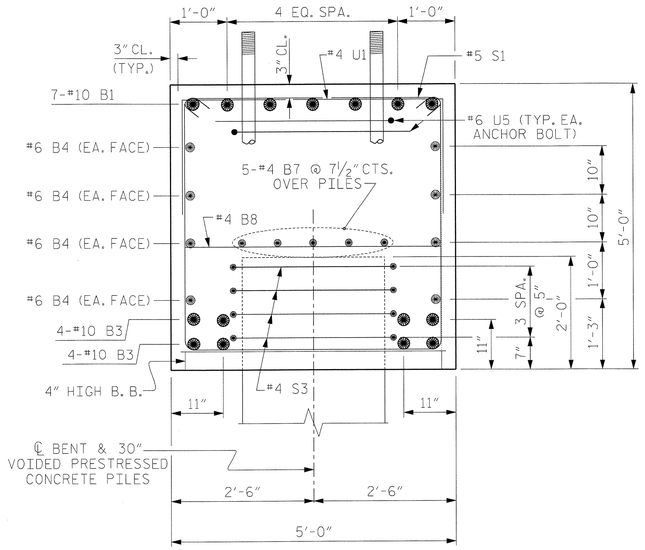

SECTION A-A

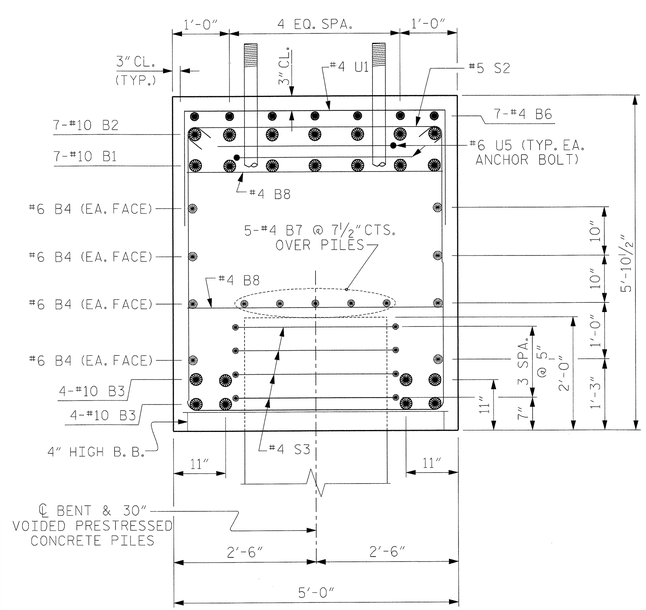

SECTION B-B

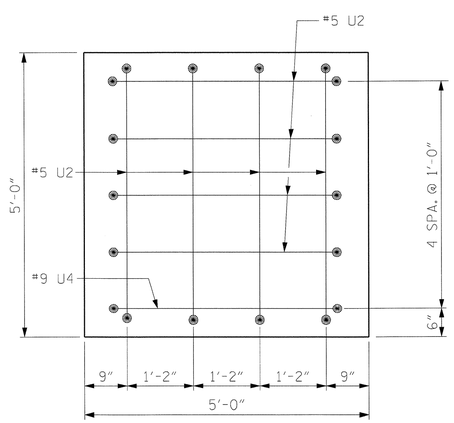

VIEW C-C

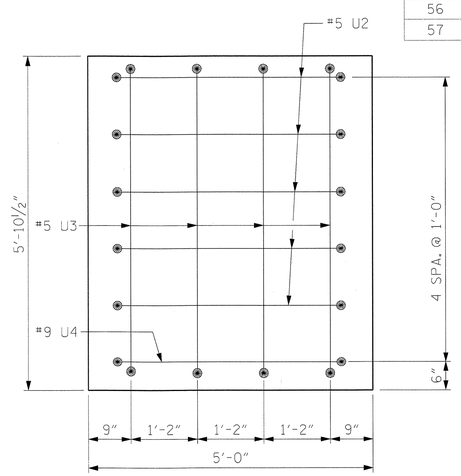

VIEW D-D

BAR TYPES

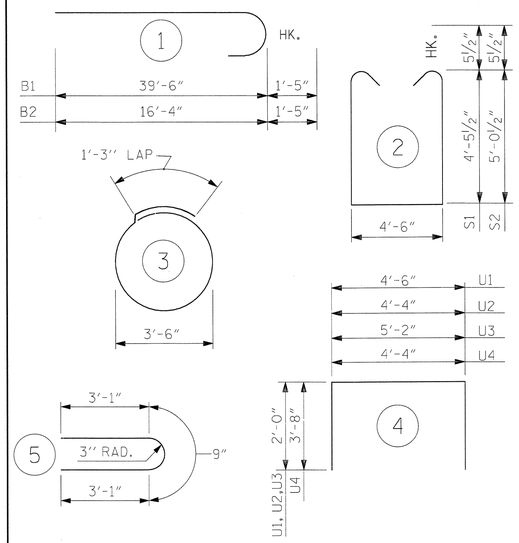

(ALL BAR DIMENSIONS ARE OUT TO OUT.)

BILL OF MATERIAL

BENT		BENT	
44	30" VOIDED PRESTRESSED CONCRETE PILE NO. 6 480 LIN. FT. PILE REDRIVES 3 EA.	51	30" VOIDED PRESTRESSED CONCRETE PILE NO. 6 480 LIN. FT. PILE REDRIVES 3 EA.
45	30" VOIDED PRESTRESSED CONCRETE PILE NO. 6 480 LIN. FT. PILE REDRIVES 3 EA.	52	30" VOIDED PRESTRESSED CONCRETE PILE NO. 6 630 LIN. FT. PILE REDRIVES 3 EA.
46	30" VOIDED PRESTRESSED CONCRETE PILE NO. 6 480 LIN. FT. PILE REDRIVES 3 EA.	53	30" VOIDED PRESTRESSED CONCRETE PILE NO. 6 600 LIN. FT. PILE REDRIVES 3 EA.
47	30" VOIDED PRESTRESSED CONCRETE PILE NO. 6 450 LIN. FT. PILE REDRIVES 3 EA.	54	30" VOIDED PRESTRESSED CONCRETE PILE NO. 6 540 LIN. FT. PILE REDRIVES 3 EA.
48	30" VOIDED PRESTRESSED CONCRETE PILE NO. 6 450 LIN. FT. PILE REDRIVES 3 EA.	55	30" VOIDED PRESTRESSED CONCRETE PILE NO. 6 540 LIN. FT. PILE REDRIVES 3 EA.
49	30" VOIDED PRESTRESSED CONCRETE PILE NO. 6 450 LIN. FT. PILE REDRIVES 3 EA.	56	30" VOIDED PRESTRESSED CONCRETE PILE NO. 6 480 LIN. FT. PILE REDRIVES 3 EA.
50	30" VOIDED PRESTRESSED CONCRETE PILE NO. 6 480 LIN. FT. PILE REDRIVES 3 EA.	57	30" VOIDED PRESTRESSED CONCRETE PILE NO. 6 480 LIN. FT. PILE REDRIVES 3 EA.

BENT 44 THRU BENT 57

BAR	NO.	SIZE	TYPE	LENGTH	WEIGHT
B1	7	#10	1	40'-11"	1232
B2	7	#10	1	17'-9"	535
B3	8	#10	STR.	39'-6"	1360
B4	8	#6	STR.	39'-6"	475
B5	7	#4	STR.	11'-5"	53
B6	7	#4	STR.	4'-8"	22
B7	10	#4	STR.	21'-2"	141
B8	14	#4	STR.	4'-6"	42
S1	23	#5	2	14'-4"	344
S2	16	#5	2	15'-6"	259
S3	24	#4	3	12'-3"	196
U1	55	#4	4	8'-6"	312
U2	13	#5	4	8'-4"	113
U3	4	#5	4	9'-2"	38
U4	2	#9	4	11'-8"	79
U5	16	#6	5	6'-11"	166

EPOXY COATED REINFORCING STEEL (PER BENT) 5367 LBS.

△CLASS AA CONCRETE (PER BENT) 39.7 C.Y.

△ INCLUDES CONCRETE IN 30" VOIDED PRESTRESSED CONCRETE PILES. SEE "30" VOIDED PRESTRESSED CONCRETE PILE" SHEETS FOR DETAIL AND NOTE.

PILE BENT REFERENCE

BENT	W.P. NO.	SPAN (AHEAD)	SPAN (BACK)	A	B	C	D	E	Θ1	Θ2
44	45	45	44	27.55	27.84	28.13	28.42	22.55	89°-37'-05"	90°-22'-55"
45	46	46	45	27.19	27.48	27.77	28.06	22.19	89°-37'-05"	90°-22'-55"
46	47	47	46	26.83	27.12	27.41	27.70	21.83	89°-37'-05"	90°-22'-55"
47	48	48	47	26.47	26.76	27.05	27.34	21.47	89°-37'-05"	90°-22'-55"
48	49	49	48	26.11	26.40	26.69	26.98	21.11	89°-37'-05"	90°-22'-55"
49	50	50	49	25.75	26.04	26.33	26.62	20.75	89°-37'-05"	90°-22'-55"
50	51	51	50	25.39	25.68	25.97	26.26	20.39	89°-37'-05"	90°-22'-55"
51	52	52	51	25.03	25.32	25.61	25.90	20.03	89°-37'-05"	90°-22'-55"
52	53	53	52	24.67	24.96	25.25	25.54	19.67	89°-37'-05"	90°-22'-55"
53	54	54	53	24.31	24.60	24.89	25.18	19.31	89°-37'-05"	90°-22'-55"
54	55	55	54	23.95	24.24	24.53	24.82	18.95	89°-37'-05"	90°-22'-55"
55	56	56	55	23.59	23.88	24.17	24.46	18.59	89°-37'-05"	90°-19'-06"
56	57	57	56	23.29	23.58	23.87	24.16	18.29	89°-40'-54"	90°-19'-06"
57	58	58	57	22.99	23.28	23.57	23.86	17.99	89°-40'-54"	90°-17'-11"

PROJECT NO. R-2633BB

BRUNSWICK/NEW HANOVER COUNTY

STATION: 353+32.50 -L-

SHEET 2 OF 2

NORTH CAROLINA PROFESSIONAL SEAL 22072 ENGINEER JOHN ARTHUR DILWORTH 5-29-13

WETHERILL ENGINEERING

TRANSPORTATION PLANNING/DESIGN
BRIDGE/STRUCTURE DESIGN
CIVIL/SITE DESIGN - GS/OPS
CONSTRUCTION OBSERVATION

559 Jones Franklin Rd. Suite 164
Raleigh, N.C. 27606
Bus: 919 851 9077
Fax: 919 851 8107
LICENSE NO. F-0377

STATE OF NORTH CAROLINA
DEPARTMENT OF TRANSPORTATION
RALEIGH

SUBSTRUCTURE

BENT 44 TO BENT 57 DETAILS AND BILL OF MATERIALS

LEFT LANE

REVISIONS						SHEET NO.
NO.	BY:	DATE:	NO.	BY:	DATE:	S-215
1			3			TOTAL SHEETS
2			4			700

DRAWN BY : J. PENDERGRAFT DATE : 10/2012
CHECKED BY : J. DILWORTH DATE : 10/2012
DESIGN ENGINEER OF RECORD : J. DILWORTH DATE : 5/2013

FILE: $FILE$
MODEL: $MODELNAME$
PLOT DRV: $PLTDRV$
DATE/TIME: $DATE$ $TIME$

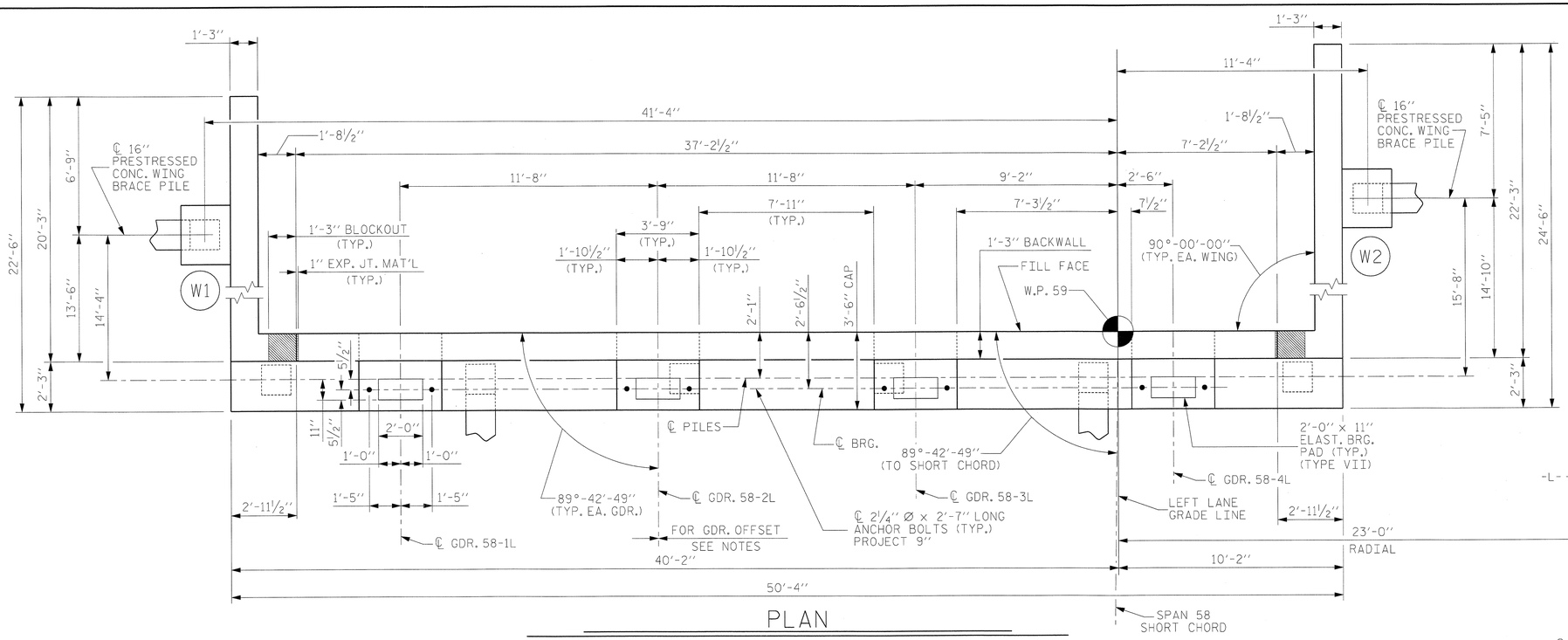

PLAN

NOTES :

✳ FOR LOCATION OF ELEVATIONS BETWEEN BUILD-UPS, SEE SECTION A-A, SHEET 3 OF 3.

★ THIS ELEVATION IS TAKEN ON FILL FACE OF BACKWALL.

#5 V1 BARS IN BACKWALL SHALL BE PLACED 3" CLEAR FROM TOP OF BACKWALL.

THE CONCRETE IN THE SHADED AREA OF THE WING SHALL BE POURED AFTER THE BARRIER RAIL IS CAST IF SLIP FORMING IS USED.

STIRRUPS AND U2 BARS IN CAP MAY BE SHIFTED AS NECESSARY TO CLEAR ANCHOR BOLTS.

THE TOP SURFACE AREA OF THE END BENT CAP SHALL BE CURED IN ACCORDANCE WITH THE STANDARD SPECIFICATIONS EXCEPT THAT THE MEMBRANE CURING COMPOUND METHOD SHALL NOT BE USED.

THE TOP SURFACE OF THE END BENT CAP EXCEPT THE BRIDGE SEAT BUILD-UPS SHALL BE SLOPED TRANSVERSELY FROM THE FILL FACE TO THE FRONT FACE AT THE RATE OF 2%.

BACKWALL SHALL BE PLACED BEFORE APPLYING THE EPOXY PROTECTIVE COATING.

INSTALL THE 4" Ø DRAIN PIPE THROUGH THE WING WALL AS REQUIRED FOR REINFORCED BRIDGE APPROACH FILLS, SEE THE ROADWAY PLANS. REINFORCING STEEL IN THE WING WALL MAY BE SHIFTED AS NECESSARY TO CLEAR THE DRAIN PIPE.

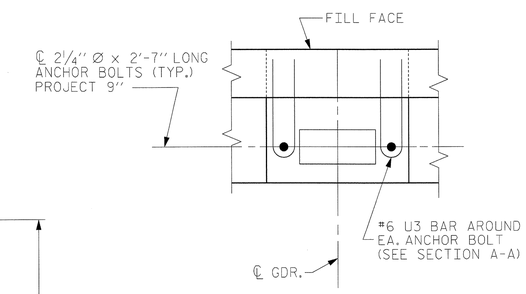

#6 U3 PLACEMENT DETAIL

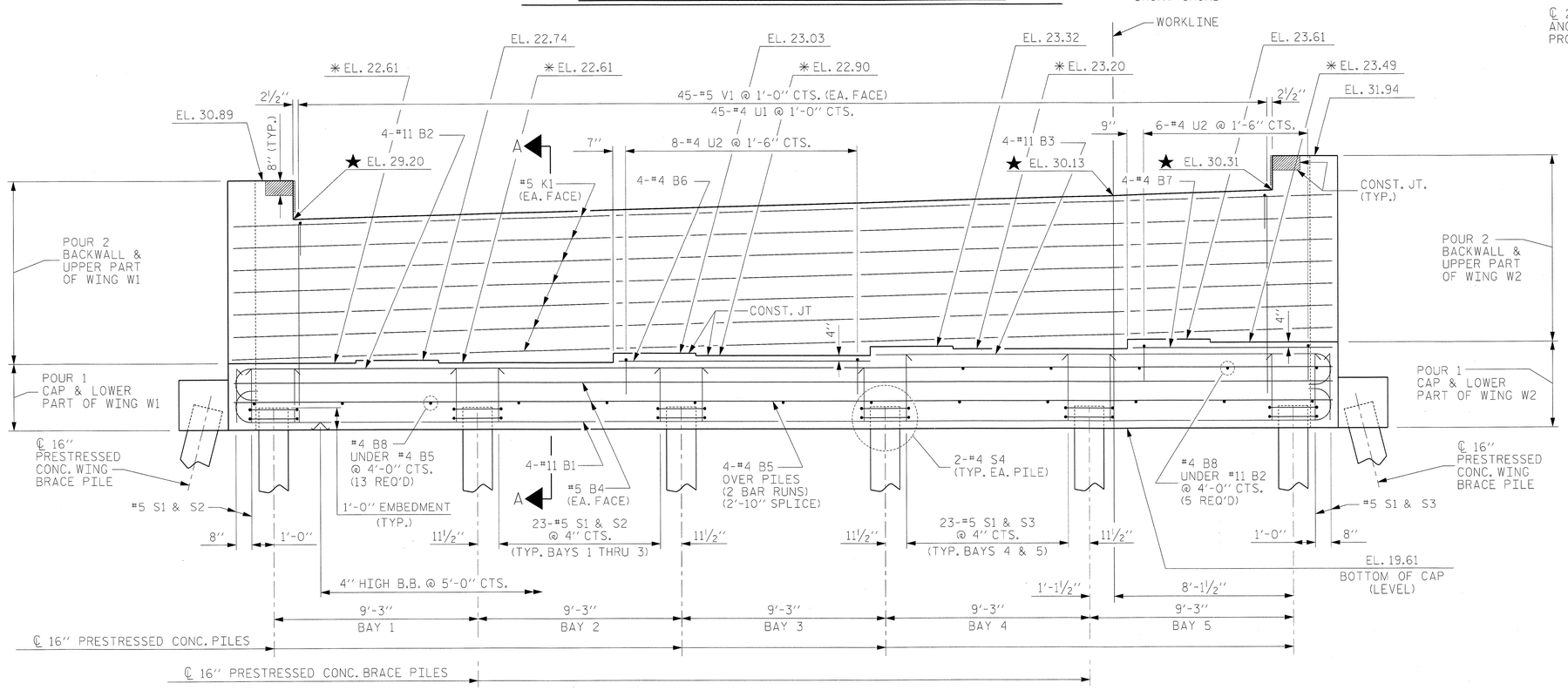

ELEVATION

PROJECT NO. R-2633BB

BRUNSWICK/NEW HANOVER COUNTY

STATION: 353+32.50 -L-

SHEET 1 OF 3

DRAWN BY : J.M. BRITT	DATE : 9-20-12
CHECKED BY : J. DILWORTH	DATE : 9-27-12
DESIGN ENGINEER OF RECORD : J. DILWORTH	DATE : 5/2013

NORTH CAROLINA PROFESSIONAL SEAL 22072 ENGINEER JOHN ARTHUR DILWORTH 5-29-13

WETHERILL ENGINEERING

TRANSPORTATION PLANNING/DESIGN
BRIDGE/STRUCTURE DESIGN
CIVIL/SITE DESIGN - GIS/GPS
CONSTRUCTION OBSERVATION

559 Jones Franklin Rd. Suite 164
Raleigh, N.C. 27606
Bus: 919 851 8077
Fax: 919 851 8107
LICENSE NO. F-0377

STATE OF NORTH CAROLINA
DEPARTMENT OF TRANSPORTATION
RALEIGH

SUBSTRUCTURE

END BENT 2

LEFT LANE

REVISIONS								SHEET NO.
NO.	BY:	DATE:	NO.	BY:	DATE:			S-216
1			3					TOTAL SHEETS
2			4					700

FILE: $FILE$
MODEL: $MODELNAME$
PLOT DRV: $PLTDRVS$
DATE/TIME: $DATE$ $TIME$

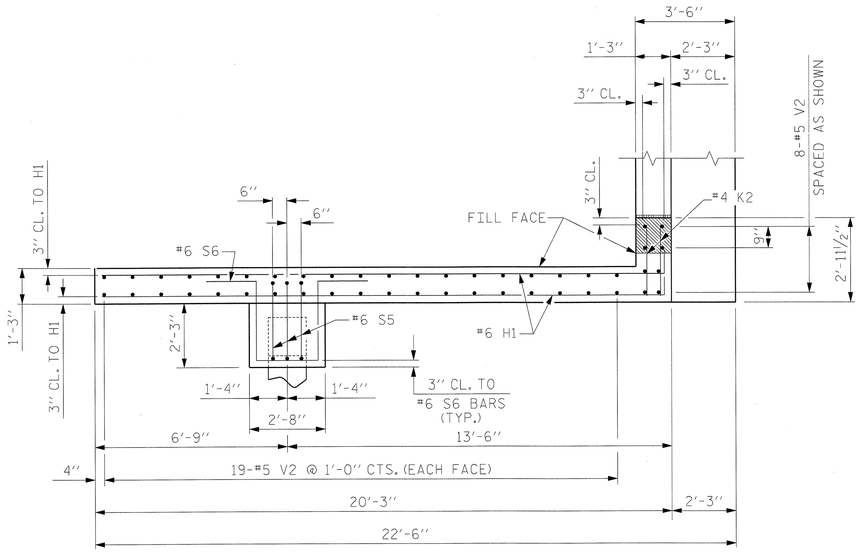

PLAN OF WING (W1)

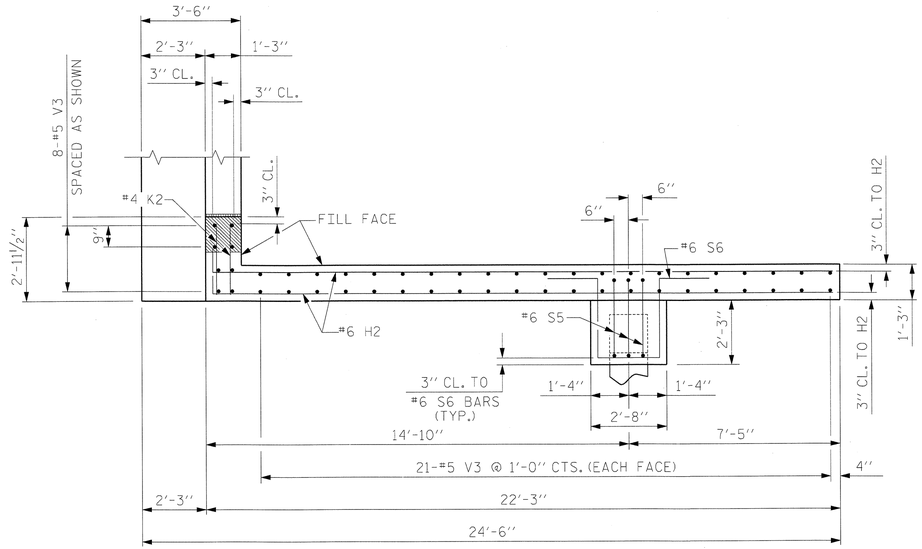

PLAN OF WING (W2)

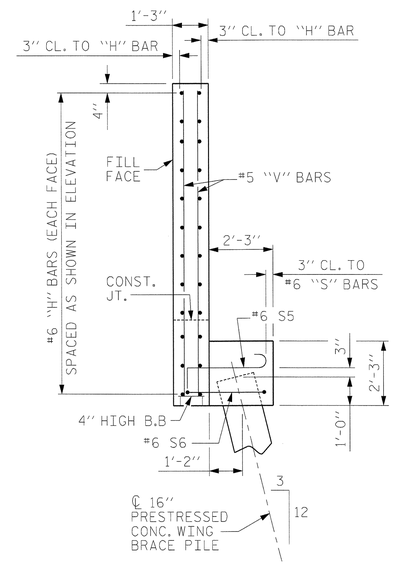

SECTION X-X

WING W1 SHOWN, WING W2 SIMILAR

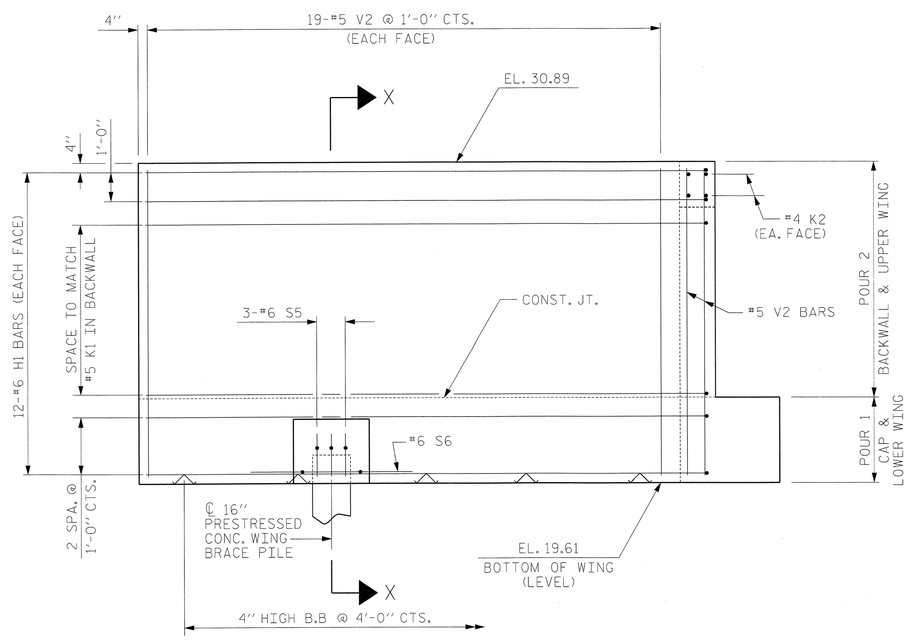

ELEVATION OF WING (W1)

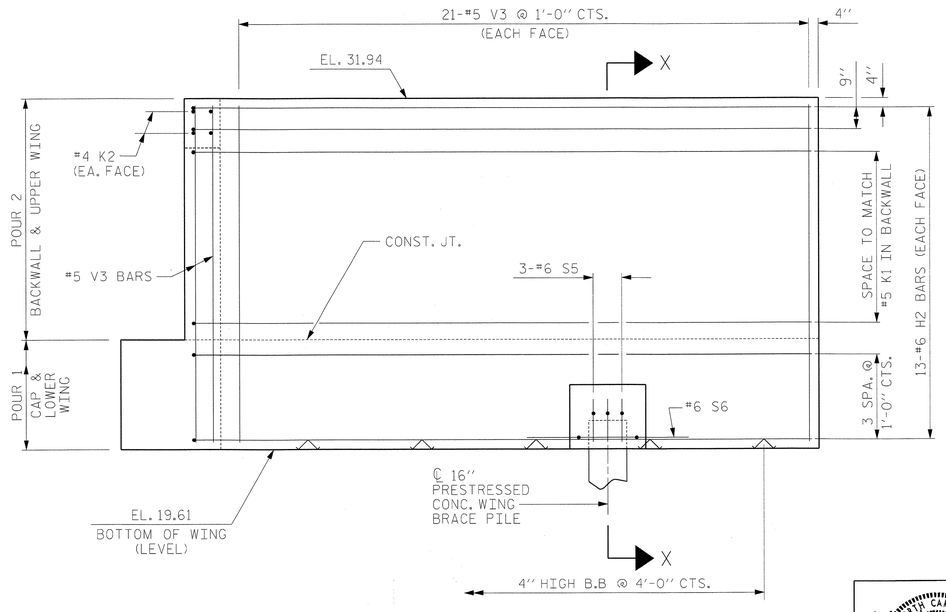

ELEVATION OF WING (W2)

PROJECT NO. R-2633BB

BRUNSWICK/NEW HANOVER COUNTY

STATION: 353+32.50 -L-

SHEET 2 OF 3

NORTH CAROLINA PROFESSIONAL SEAL 22072 ENGINEER JOHN ARTHUR DILWORTH

5-29-13

WETHERILL ENGINEERING

TRANSPORTATION PLANNING/DESIGN
BRIDGE/STRUCTURE DESIGN
CIVIL/SITE DESIGN - GIS/GPS
CONSTRUCTION OBSERVATION

559 Jones Franklin Rd. Suite 164
Raleigh, N.C. 27606
Bus: 919 851 8077
Fax: 919 851 8107
LICENSE NO. F-0377

STATE OF NORTH CAROLINA
DEPARTMENT OF TRANSPORTATION
RALEIGH

SUBSTRUCTURE

END BENT 2

LEFT LANE

REVISIONS								SHEET NO.
NO.	BY:	DATE:	NO.	BY:	DATE:			S-217
1			3					TOTAL SHEETS
2			4					700

DRAWN BY :	J.M. BRITT	DATE :	9-20-12
CHECKED BY :	J. DILWORTH	DATE :	9-27-12
DESIGN ENGINEER OF RECORD :	J. DILWORTH	DATE :	5/2013

FILE: $FILE$
MODEL: $MODELNAME$
PLOT DRV: $PLTDRVS$
DATE/TIME: $DATE$ $TIME$

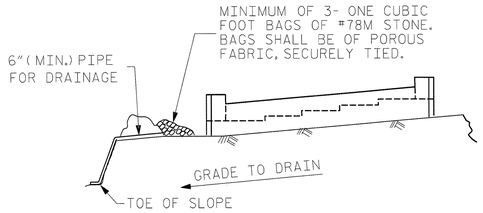

BAGGED STONE AND PIPE SHALL BE PLACED IMMEDIATELY AFTER COMPLETION OF END BENT EXCAVATION. PIPE MAY BE EITHER CONCRETE, CORRUGATED STEEL, CORRUGATED ALUMINUM ALLOY, OR CORRUGATED PLASTIC. PERFORATED PIPE WILL NOT BE ALLOWED.

BAGGED STONE SHALL REMAIN IN PLACE UNTIL THE ENGINEER DIRECTS THAT IT BE REMOVED. THE CONTRACTOR SHALL REMOVE AND DISPOSE OF SILT ACCUMULATIONS AT BAGGED STONE WHEN SO DIRECTED BY THE ENGINEER. BAGS SHALL BE REMOVED AND REPLACED WHENEVER THE ENGINEER DETERMINES THAT THEY HAVE DETERIORATED AND LOST THEIR EFFECTIVENESS.

NO SEPARATE PAYMENT WILL BE MADE FOR THIS WORK AND THE ENTIRE COST OF THIS WORK SHALL BE INCLUDED IN THE UNIT CONTRACT PRICE BID FOR THE SEVERAL PAY ITEMS.

TEMPORARY DRAINAGE AT END BENT

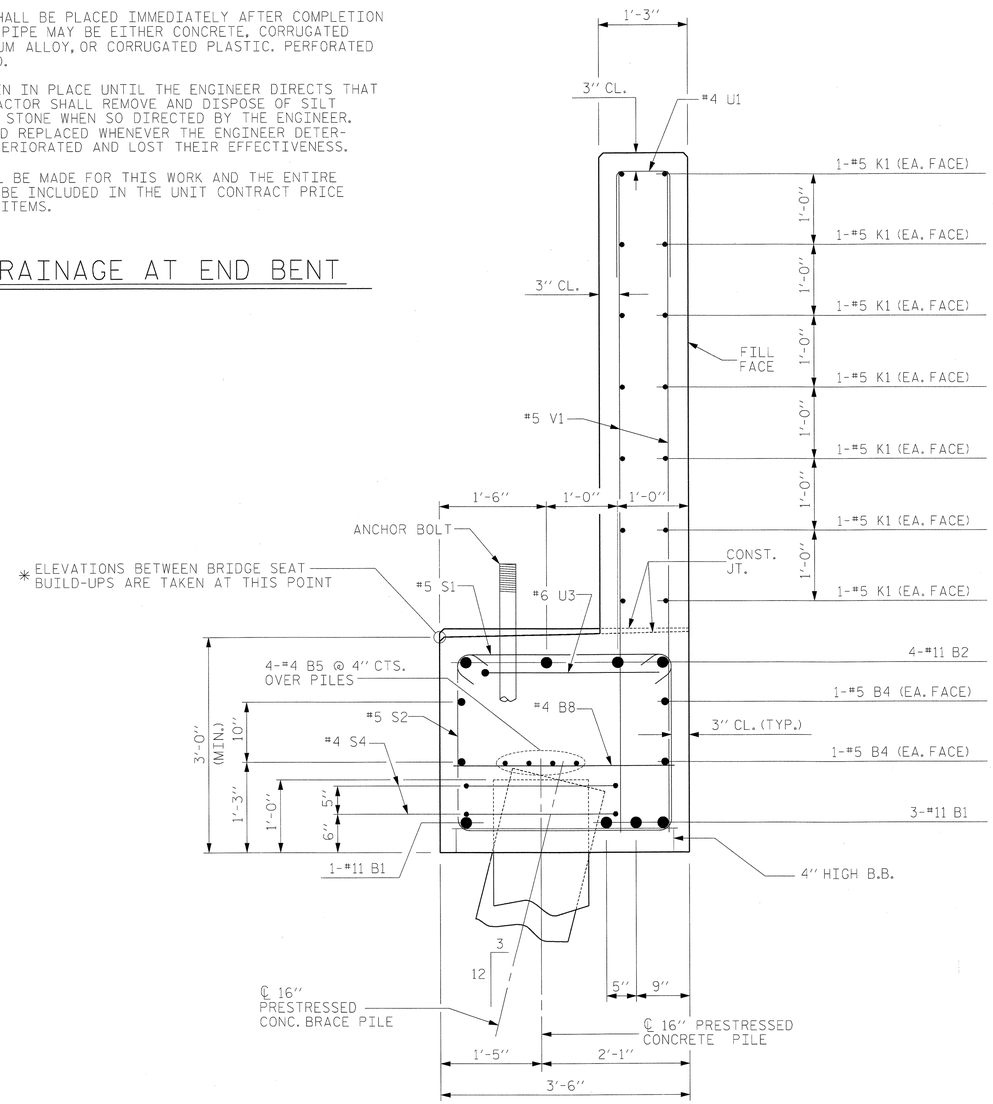

SECTION A-A

(SEE SHEET 1 OF 3)

BAR TYPES

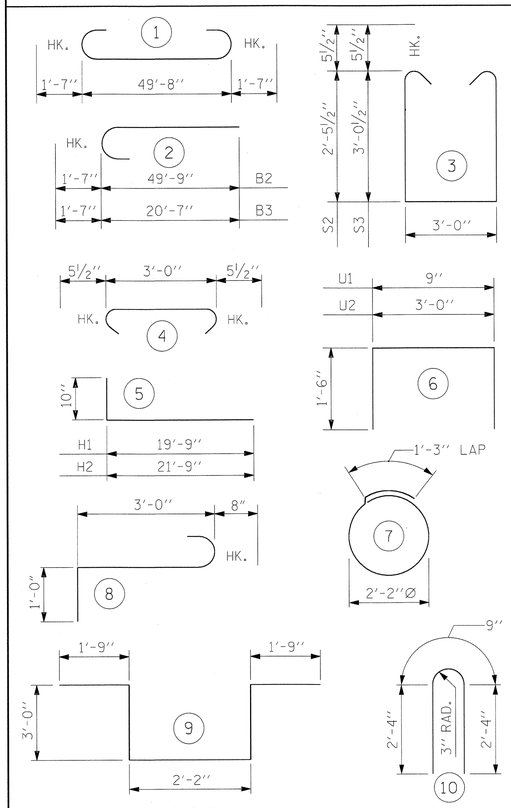

ALL BAR DIMENSIONS ARE OUT TO OUT.

BILL OF MATERIAL

END BENT 2
LEFT LANE

BAR	No.	SIZE	TYPE	LENGTH	WEIGHT
B1	4	#11	1	52'-10"	1123
B2	4	#11	2	51'-4"	1091
B3	4	#11	2	22'-2"	471
B4	4	#5	STR	49'-10"	208
B5	8	#4	STR	26'-4"	141
B6	4	#4	STR	11'-5"	31
B7	4	#4	STR	9'-0"	24
B8	18	#4	STR	3'-0"	36
H1	24	#6	5	20'-7"	742
H2	26	#6	5	22'-7"	882
K1	14	#5	STR	49'-10"	728
K2	8	#4	STR	2'-5"	13
S1	119	#5	4	3'-11"	486
S2	71	#5	3	8'-10"	654
S3	48	#5	3	10'-0"	501
S4	12	#4	7	8'-1"	65
S5	6	#6	8	4'-8"	42
S6	2	#6	9	11'-8"	35
U1	45	#4	6	3'-9"	113
U2	14	#4	6	6'-0"	56
U3	8	#6	10	5'-5"	65
V1	90	#5	STR	9'-0"	845
V2	46	#5	STR	10'-9"	516
V3	50	#5	STR	11'-10"	617

EPOXY COATED REINFORCING STEEL = 9,485 LBS.

CLASS AA CONCRETE BREAKDOWN

POUR 1 CAP & LOWER PART OF WINGS C.Y. 29.2

POUR 2 BACKWALL & UPPER PART PART OF WINGS C.Y. 31.6

TOTAL CLASS AA CONCRETE C.Y. 60.8

16" PRESTRESSED CONC. PILES No.=8 (LIN. FT.) 560

PILE REDRIVES 3 EA.

PROJECT NO. R-2633BB

BRUNSWICK/NEW HANOVER COUNTY

STATION: 353+32.50 -L-

SHEET 3 OF 3

STATE OF NORTH CAROLINA
DEPARTMENT OF TRANSPORTATION
RALEIGH

SUBSTRUCTURE

END BENT 2

LEFT LANE

NORTH CAROLINA PROFESSIONAL SEAL 22072 ENGINEER JOHN ARTHUR DILWORTH
5-28-13

WETHERILL ENGINEERING

TRANSPORTATION PLANNING/DESIGN
BRIDGE/STRUCTURE DESIGN
CIVIL/SITE DESIGN - GIS/GPS
CONSTRUCTION OBSERVATION

559 Jones Franklin Rd. Suite 164
Raleigh, N.C. 27606
Bus: 919 851 8077
Fax: 919 851 8107
LICENSE NO. F-0377

REVISIONS						SHEET NO.
NO.	BY:	DATE:	NO.	BY:	DATE:	S-218
1			3			TOTAL SHEETS
2			4			700

DRAWN BY :	J.M. BRITT	DATE :	9-25-12
CHECKED BY :	J. DILWORTH	DATE :	9-27-12
DESIGN ENGINEER OF RECORD :	J. DILWORTH	DATE :	5/2013

FILE: $FILE$
MODEL: $MODELNAME$
PLOT DRV: $PLTDRV$
DATE/TIME: $DATE$ $TIME$

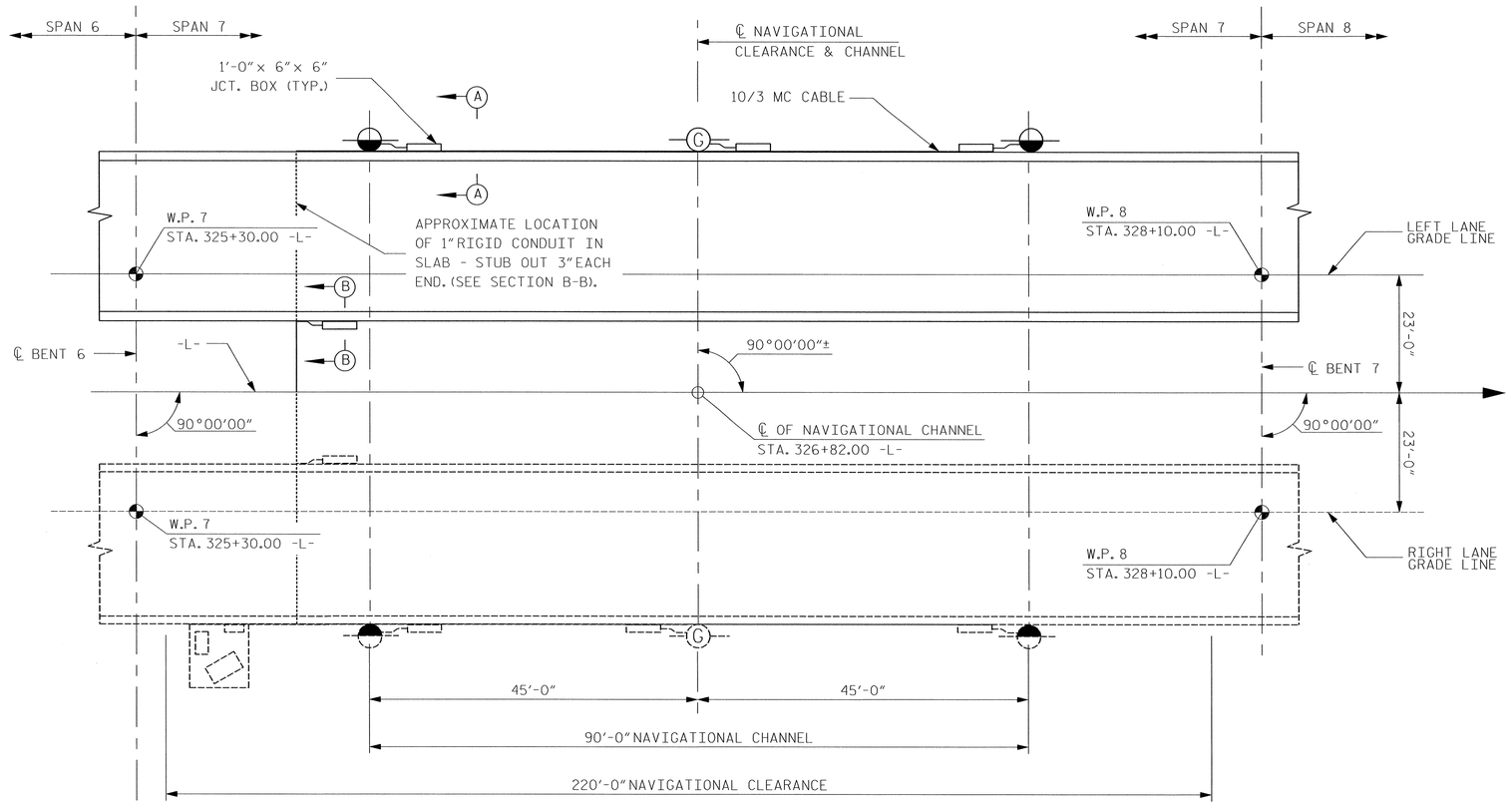

PLAN
(NOT TO SCALE)

NOTES:

FOR NAVIGATIONAL LIGHTING SYSTEM, SEE SPECIAL PROVISIONS.

1" RIGID CONDUIT TO BE PLACED DURING SPAN "7" CONSTRUCTION.

G — 360° GREEN NAVIGATIONAL LIGHT - CHANNEL CENTERLINE

180° RED NAVIGATIONAL LIGHT - CHANNEL MARGIN

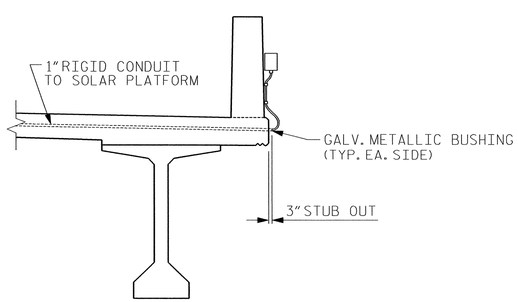

SECTION A-A

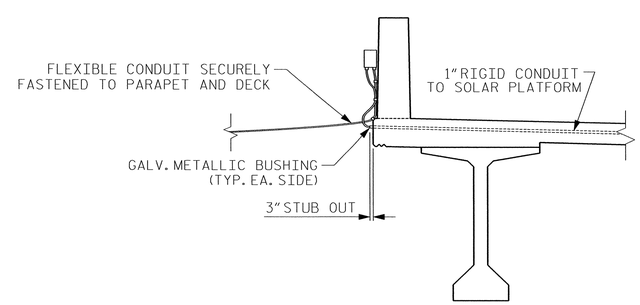

SECTION B-B

PROJECT NO. R-2633BB

BRUNSWICK/NEW HANOVER COUNTY

STATION: 353+32.50 -L-

DRAWN BY : JML	DATE : 10/2012		
CHECKED BY : JMR	DATE : 3/2013		
DESIGN ENGINEER OF RECORD : J. ROBINSON	DATE : 5/2013		

NORTH CAROLINA PROFESSIONAL SEAL 18442 ENGINEER RICHARD ROBINSON, JR.
5-29-2013

RS&H IMPROVING YOUR WORLD

RS&H Architects-Engineers-Planners, Inc.
8601 Six Forks Road, Suite 260
Raleigh, NC 27615
919-846-5701 FAX 919-846-9080
www.rsandh.com
North Carolina License Nos. 50073 * F-0493 * C-28

STATE OF NORTH CAROLINA
DEPARTMENT OF TRANSPORTATION
RALEIGH

NAVIGATIONAL LIGHTING AND CONDUIT SYSTEM

LEFT LANE

REVISIONS						SHEET NO.
NO.	BY:	DATE:	NO.	BY:	DATE:	S-219
1			3			TOTAL SHEETS
2			4			700

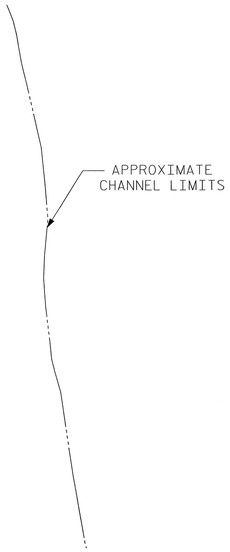

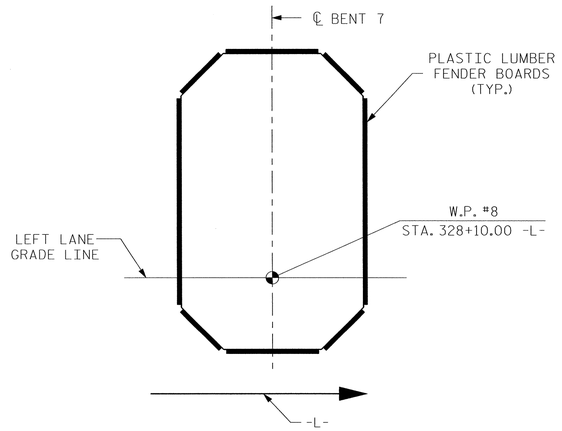

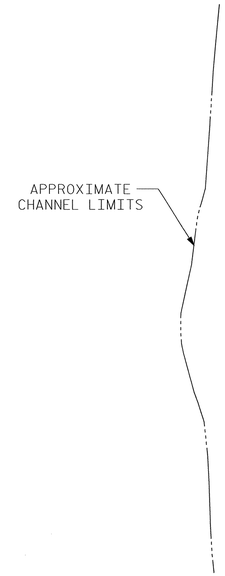

CHANNEL BENT FOOTING LAYOUT

BENT COLUMNS AND PILES NOT SHOWN FOR CLARITY.
SEE BENT DRAWINGS FOR SIZE OF FOOTINGS.
WIDTH OF CHANNEL NOT DRAWN TO SCALE.

NOTES:

THE STRUCTURAL CONCRETE INSERT ASSEMBLY SHALL CONSIST OF THE FOLLOWING COMPONENTS:

A. FERRULES SHALL BE MADE FROM STEEL MEETING THE REQUIREMENTS OF AASHTO M169, GRADE 12L14 AND SHALL HAVE A MINIMUM LENGTH OF THREADS OF 1½".

B. 1 - ¾" Ø X 4" BOLT WITH WASHER. BOLT SHALL CONFORM TO THE REQUIREMENTS OF ASTM A307. BOLT AND WASHER SHALL BE GALVANIZED. (AT THE CONTRACTOR'S OPTION, STAINLESS STEEL BOLT AND WASHER MAY BE USED AS AN ALTERNATE FOR THE ¾" Ø X 4" GALVANIZED BOLT AND WASHER. THEY SHALL CONFORM TO OR EXCEED THE MECHANICAL REQUIREMENTS OF ASTM A307. THE USE OF THIS ALTERNATE SHALL BE APPROVED BY THE ENGINEER.)

C. WIRE STRUT SHOWN IN THE CONCRETE INSERT ASSEMBLY DETAIL IS THE MINIMUM ALLOWABLE SIZE AND SHALL HAVE A MINIMUM TENSILE STRENGTH OF 100,000 PSI. AS AN OPTION, A 7/16" Ø WIRE STRUT WITH A MINIMUM TENSILE STRENGTH OF 90,000 PSI IS ACCEPTABLE.

EACH PLASTIC LUMBER BOARD SHALL NOT EXCEED 16'-0" IN LENGTH AND SHALL CONTAIN AT LEAST THREE SETS OF FASTENERS SPACED AT A MAXIMUM OF 5'-0"

THE ¾" STRUCTURAL CONCRETE INSERT WITH BOLT SHALL BE ASSEMBLED IN THE SHOP.

THE COST OF THE ¾" STRUCTURAL CONCRETE INSERT ASSEMBLY COMPLETE IN PLACE SHALL BE INCLUDED IN THE VARIOUS PAY ITEMS.

THE CONTRACTOR, AT HIS OPTION, MAY USE AN ADHESIVE BONDING SYSTEM IN LIEU OF THE STRUCTURAL CONCRETE INSERT EMBEDDED IN THE BENT FOOTING. IF THE ADHESIVE BONDING SYSTEM IS USED, THE ¾" Ø X 4" BOLT WITH WASHER SHALL BE REPLACED WITH A ¾" Ø X 6½" BOLT AND 2" O.D. WASHER. ALL SPECIFICATIONS THAT APPLY TO THE ¾" Ø X 4" BOLT SHALL APPLY TO THE ¾" Ø X 6 ½" BOLT. FIELD TESTING OF THE ADHESIVE BONDING SYSTEM IS NOT REQUIRED.

PLASTIC LUMBER DIMENSIONS AND QUANTITES SHOWN ARE BASED ON NOMINAL LUMBER DIMENSIONS AND MAY VARY DEPENDING ON ACTUAL LUMBER DIMENSIONS.

FOR PLASTIC LUMBER BOARDS AT CHANNEL BENTS, SEE SPECIAL PROVISIONS.

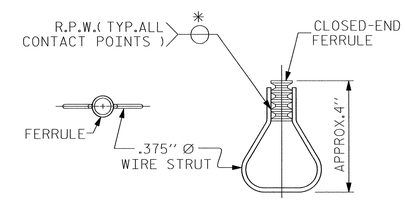

PLAN ELEVATION

STRUCTURAL CONCRETE INSERT

* EACH WELDED ATTACHMENT OF WIRE TO FERRULE SHALL DEVELOP THE TENSILE STRENGTH OF THE WIRE.

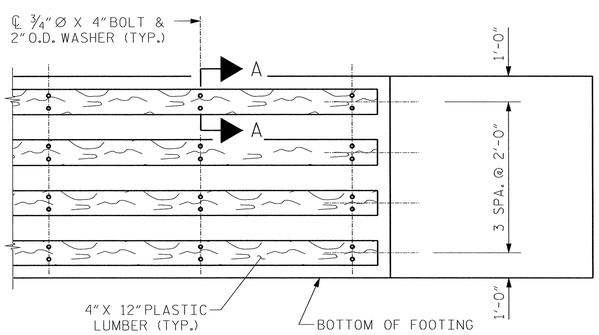

ELEVATION

TYPICAL FOR ALL FACES OF FOOTING INCLUDING CHAMFERED FACES. PLASTIC LUMBER FENDER BOADS NOT SHOWN ON OTHER FACES FOR CLARITY.

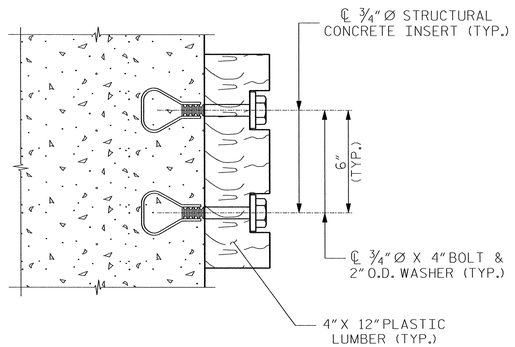

SECTION A-A

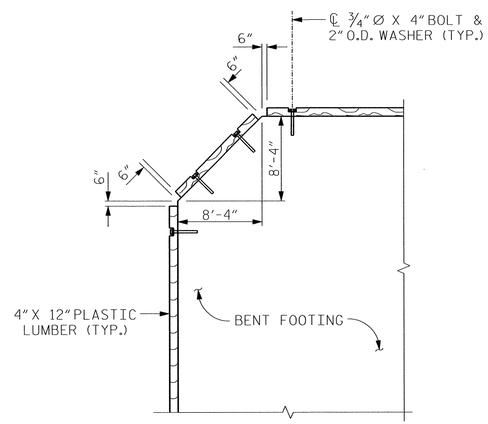

CORNER DETAIL

TYP. AT EACH CORNER

PROJECT NO. R-2633BB
BRUNSWICK/NEW HANOVER COUNTY
STATION: 353+32.50 -L-

NORTH CAROLINA PROFESSIONAL SEAL 18442 ENGINEER RICHARD LEON ROBINSON
5-29-2013

RS&H IMPROVING YOUR WORLD

RS&H Architects-Engineers-Planners, Inc.
8601 Six Forks Road, Suite 260
Raleigh, NC 27615
919-846-6701 FAX 919-846-9080
www.rsandh.com
North Carolina License Nos. 00073 * F-0483 * C-28

STATE OF NORTH CAROLINA
DEPARTMENT OF TRANSPORTATION
RALEIGH

PLASTIC LUMBER FENDER SYSTEM

LEFT LANE

REVISIONS						SHEET NO.
NO.	BY:	DATE:	NO.	BY:	DATE:	S-220
1			3			TOTAL SHEETS
2			4			100

DRAWN BY :	MKO	DATE :	05/2013
CHECKED BY :	JMR	DATE :	05/2013
DESIGN ENGINEER OF RECORD :	J. ROBINSON	DATE :	05/2013

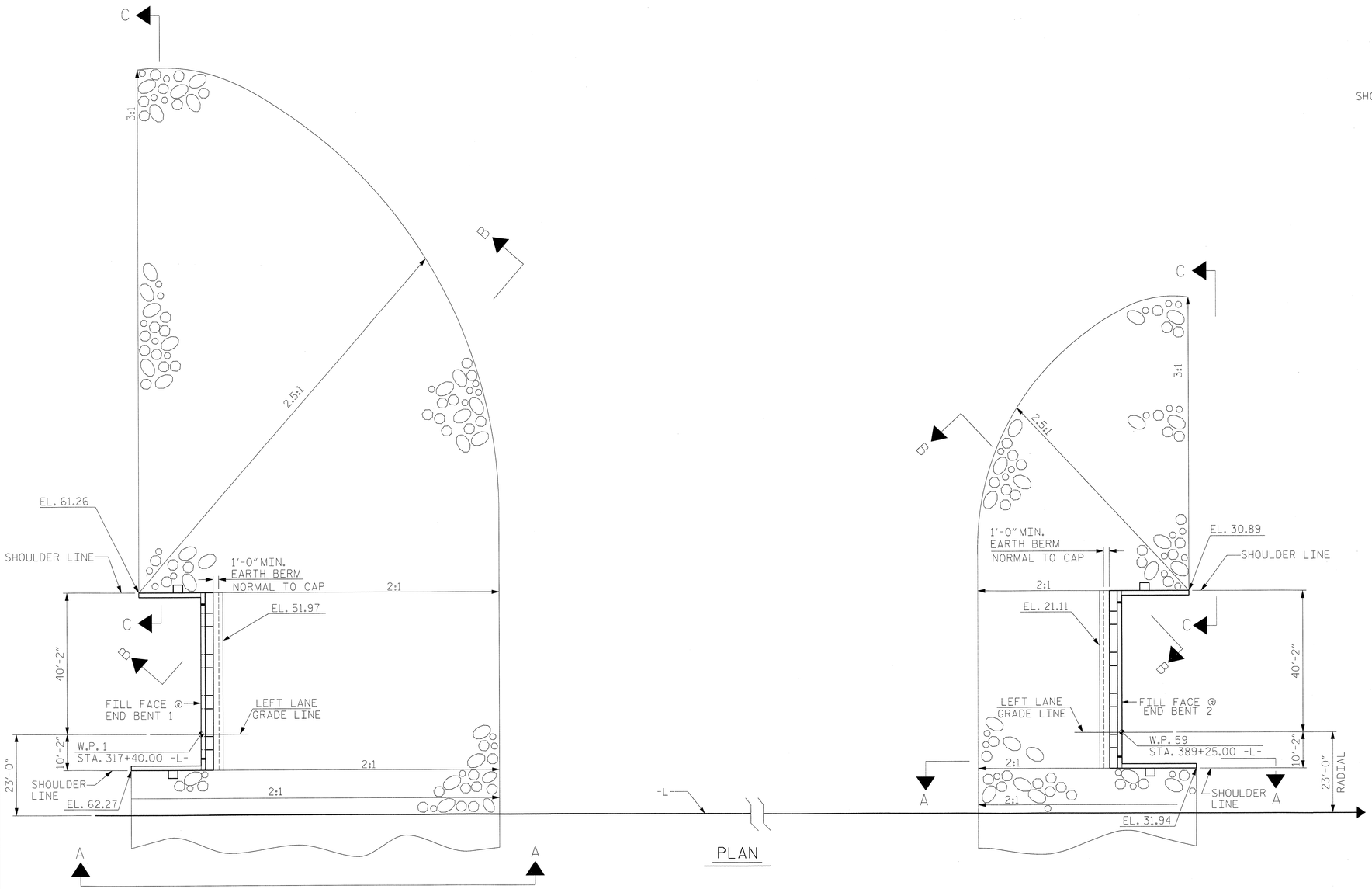

PLAN

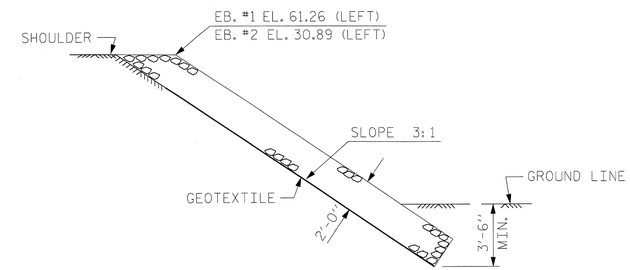

SECTION C-C

ESTIMATED QUANTITIES		
BRIDGE @ 353+32.50 -L- STA.	RIP RAP CLASS II (2'-0" THICK)	GEOTEXTILE FOR DRAINAGE
	TONS	SQUARE YARDS
END BENT 1	2060	2290
END BENT 2	775	865

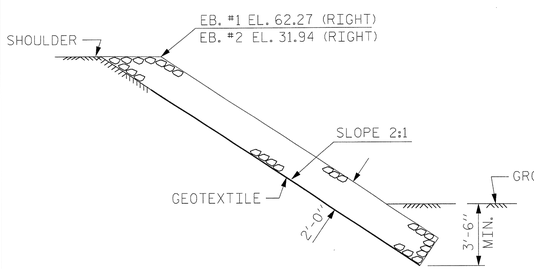

SECTION A-A

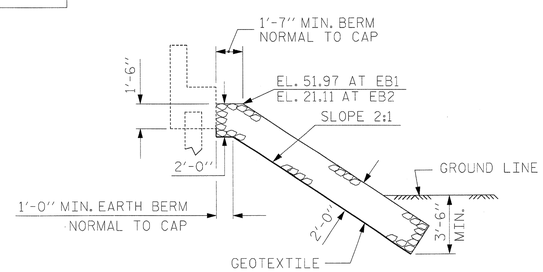

℄ SECTION
BERM RIP RAPPED

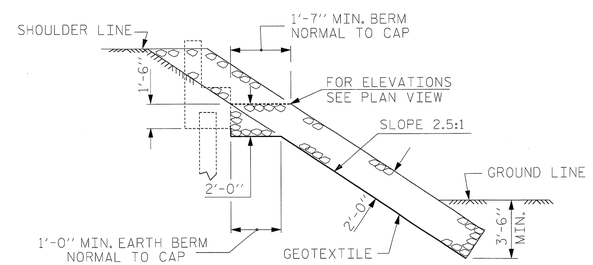

SECTION B-B

PROJECT NO. R-2633BB

BRUNSWICK/NEW HANOVER COUNTY

STATION: 353+32.50 -L-

NORTH CAROLINA PROFESSIONAL ENGINEER SEAL 22072 JOHN ARTHUR DILWORTH
5-29-13

WETHERILL ENGINEERING

TRANSPORTATION PLANNING/DESIGN
BRIDGE/STRUCTURE DESIGN
CIVIL/SITE DESIGN - GIS/GPS
CONSTRUCTION OBSERVATION

559 Jones Franklin Rd. Suite 164
Raleigh, N.C. 27606
Bus: 919 851 8077
Fax: 919 851 8107
LICENSE NO. F-0377

STATE OF NORTH CAROLINA
DEPARTMENT OF TRANSPORTATION
RALEIGH

STANDARD
RIP RAP DETAIL

LEFT LANE

REVISIONS						SHEET NO.
NO.	BY:	DATE:	NO.	BY:	DATE:	S-221
1			3			TOTAL SHEETS
2			4			700

DRAWN BY : C.WILSON DATE : 10/2012
CHECKED BY : J. DILWORTH DATE : 10/2012
DESIGN ENGINEER OF RECORD : J. DILWORTH DATE : 05/2013

FILE: $FILE$
MODEL: $MODELNAME$
PLOT DRV: $PLTDRVS$
DATE/TIME:$DATE$ $TIME$

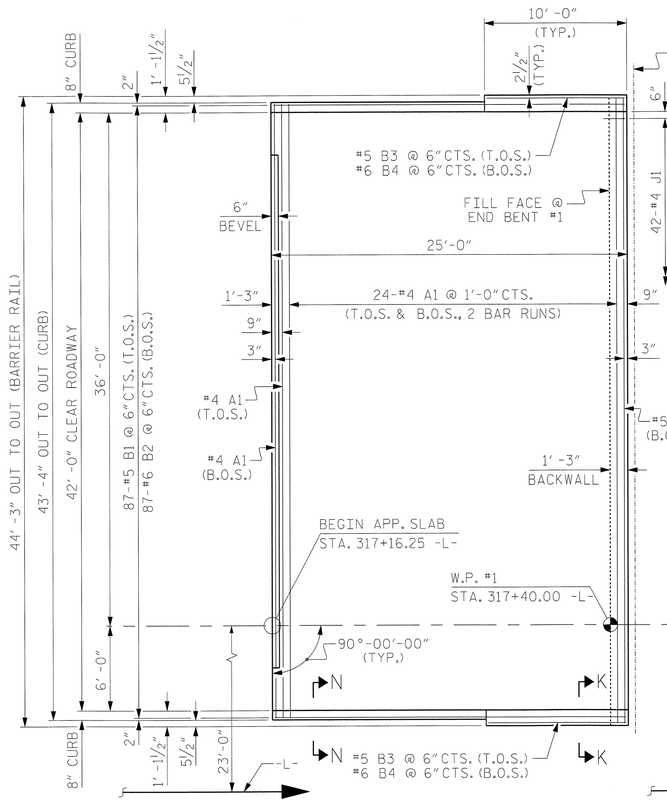

PLAN @ END BENT #1

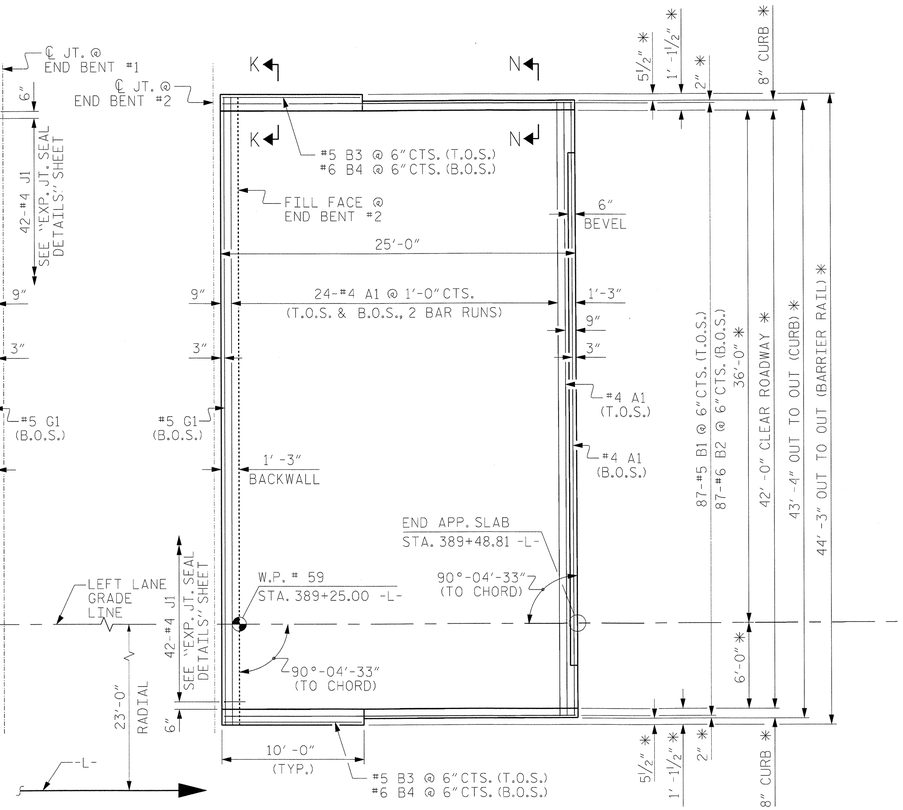

PLAN @ END BENT #2

NOTES

T.O.S. - DENOTES TOP OF SLAB

B.O.S. - DENOTES BOTTOM OF SLAB

"A" BARS ARE PERPENDICULAR TO SHORT CHORD.

* RADIAL DIMENSIONS

APPROACH SLAB SHALL NOT BE CONSTRUCTED PRIOR TO COMPLETION OF THE BRIDGE DECK.

FOR REINFORCED BRIDGE APPROACH FILL INCLUDING GEOTEXTILE, IMPERMEABLE GEOMEMBRANE, 4" Ø DRAINAGE PIPE, #78M STONE, AND SELECT MATERIAL, SEE ROADWAY PLANS.

AREA BETWEEN THE WINGWALL AND APPROACH SLAB SHALL BE GRADED TO DRAIN THE WATER AWAY FROM THE FILL FACE OF THE BRIDGE AND SHALL BE PAVED. SEE ROADWAY PLANS.

ARC OFFSETS AT END BENT 2 ARE NEGLIGIBLE AND THEREFORE ARE NOT SHOWN.

FOR EXPANSION JOINT SEALS, SEE SPECIAL PROVISIONS.

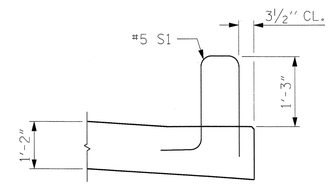

SECTION K-K

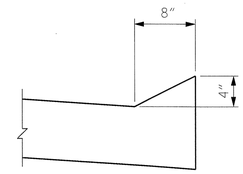

SECTION N-N

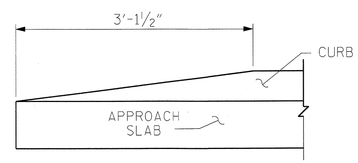

END OF CURB WITHOUT SHOULDER BERM GUTTER

CURB DETAILS

BILL OF MATERIAL

APPROACH SLAB AT EB #1

BAR	NO.	SIZE	TYPE	LENGTH	WEIGHT
* A1	100	#4	STR	23'-0"	1536
* B1	87	#5	STR	24'-2"	2193
* B2	87	#6	STR	24'-8"	3223
* B3	4	#5	STR	9'-7"	40
* B4	4	#6	STR	9'-7"	58
* G1	1	5	STR	43'-11"	46
* J1	42	#4	1	1'-5"	40

* EPOXY COATED REINFORCING STEEL 7136 LBS.

CLASS AA CONCRETE 47.4 C. Y.

APPROACH SLAB AT EB #2

BAR	NO.	SIZE	TYPE	LENGTH	WEIGHT
* A1	100	#4	STR	23'-0"	1536
* B1	87	#5	STR	24'-2"	2193
* B2	87	#6	STR	24'-8"	3223
* B3	4	#5	STR	9'-7"	40
* B4	4	#6	STR	9'-7"	58
* G1	1	5	STR	43'-11"	46
* J1	42	#4	1	1'-5"	40

* EPOXY COATED REINFORCING STEEL 7136 LBS.

CLASS AA CONCRETE 47.4 C. Y.

BAR TYPE

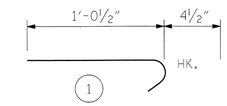

ALL BAR DIMENSIONS ARE OUT TO OUT

** QUANTITIES FOR BARRIER RAIL ARE NOT INCLUDED. SEE SHEET 2 OF 2.

SPLICE LENGTHS

BAR SIZE	EPOXY COATED
#4	2'-0"
#5	2'-6"
#6	3'-10"

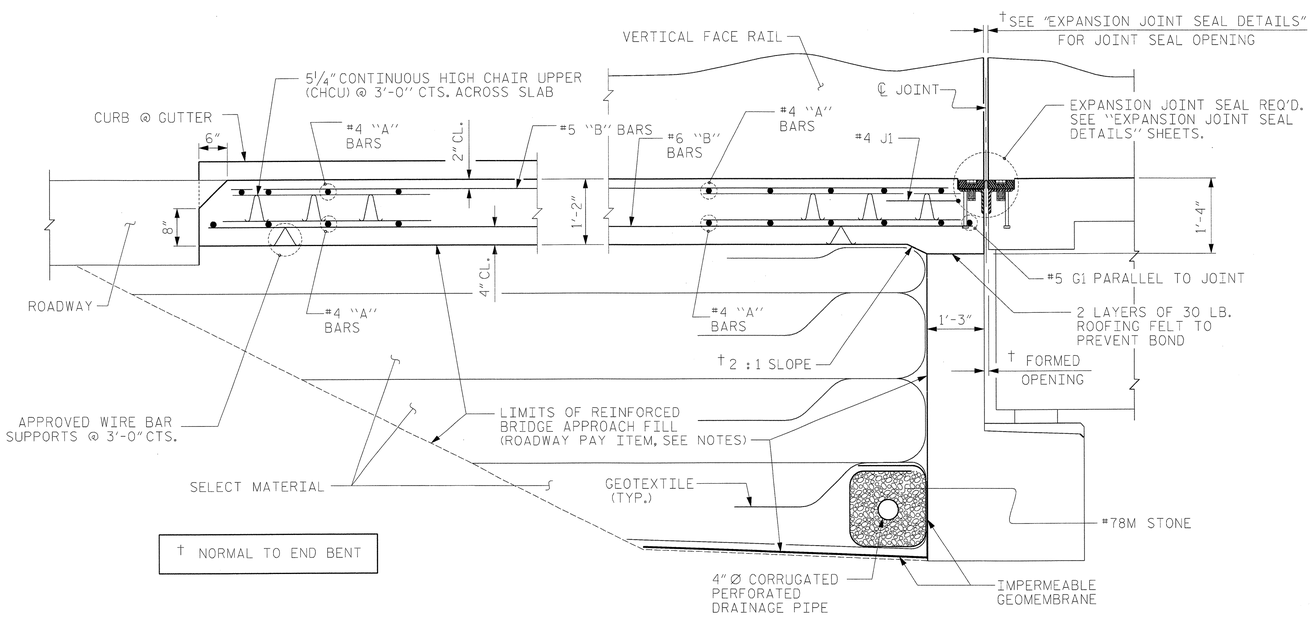

† NORMAL TO END BENT

SECTION THRU SLAB

PROJECT NO. R-2633BB

BRUNSWICK/NEW HANOVER COUNTY

STATION: 353+32.50 -L-

SHEET 1 OF 3

STATE OF NORTH CAROLINA
DEPARTMENT OF TRANSPORTATION
RALEIGH

BRIDGE APPROACH SLAB

LEFT LANE

NORTH CAROLINA PROFESSIONAL SEAL 22072 ENGINEER JOHN ARTHUR DILWORTH
5-29-13

WETHERILL ENGINEERING

TRANSPORTATION PLANNING/DESIGN
BRIDGE/STRUCTURE DESIGN
CIVIL/SITE DESIGN - GIS/GPS
CONSTRUCTION OBSERVATION

559 Jones Franklin Rd. Suite 164
Raleigh, N.C. 27606
Bus: 919 851 8077
Fax: 919 851 8107
LICENSE NO. F-0377

REVISIONS						SHEET NO.
NO.	BY:	DATE:	NO.	BY:	DATE:	S-222
1			3			TOTAL SHEETS
2			4			700

DRAWN BY : J. PENDERGRAFT DATE : 10/2012
CHECKED BY : J. DILWORTH DATE : 10/2012
DESIGN ENGINEER OF RECORD : J. DILWORTH DATE : 05/2013

FILE: $FILE$
MODEL: $MODELNAME$
PLOT DRV: $PLTDRVS$
DATE/TIME: $DATE$ $TIME$

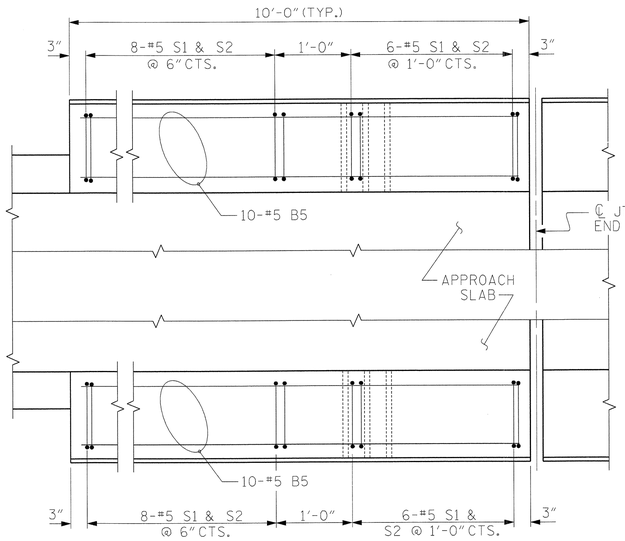

END BENT #1

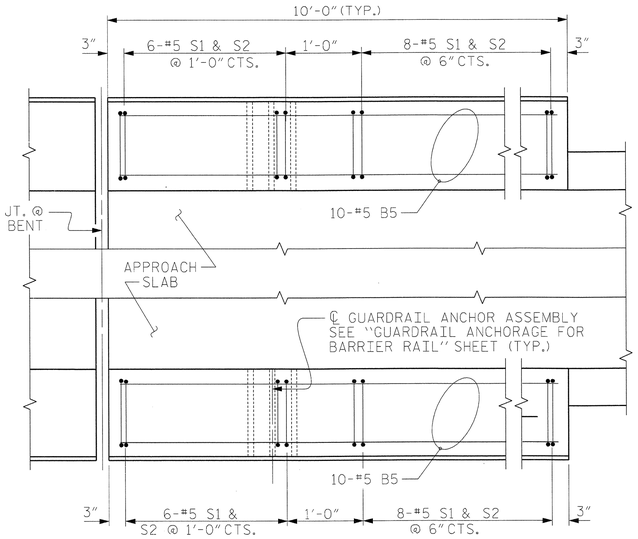

END BENT #2

PLAN OF BARRIER RAIL

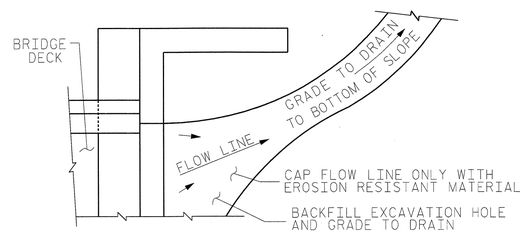

NOTE: IF THE APPROACH SLAB IS NOT CONSTRUCTED IMMEDIATELY AFTER THE BACKFILLING OF THE END BENT EXCAVATION, GRADE TO DRAIN TO THE BOTTOM OF THE SLOPE AND PROVIDE EROSION RESISTANT MATERIAL, SUCH AS FIBERGLASS ROVING OR AS DIRECTED BY THE ENGINEER TO PREVENT SOIL EROSION AND TO PROTECT THE AREA ADJACENT TO THE STRUCTURE. THE CONTRACTOR WILL BE REQUIRED TO REMOVE THESE MATERIALS PRIOR TO CONSTRUCTION OF THE APPROACH SLAB.

TEMPORARY DRAINAGE DETAIL

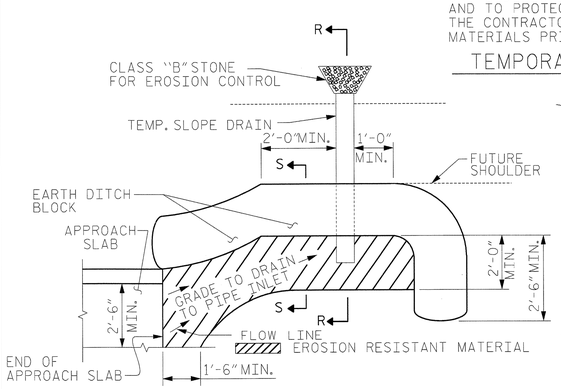

NOTE: IMMEDIATELY AFTER THE CONSTRUCTION OF THE APPROACH SLAB, THE CONTRACTOR SHALL PROVIDE TEMPORARY BERM AND SLOPE DRAIN. CONTRACTOR SHALL GRADE TO PIPE INLET AND PROVIDE EROSION RESISTANT MATERIAL AS SHOWN. THE EROSION RESISTANT MATERIAL SHALL BE EITHER 1) ASPHALT PLANT MIX, TYPE 1 OR TYPE 2, MIN. 2" DEPTH, 2) EROSION CONTROL MAT, OR 3) CONCRETE, AS DIRECTED BY THE ENGINEER. THE SLOPE DRAIN SHALL CONSIST OF A NON-PERFORATED TEMPORARY DRAINAGE PIPE, 12 INCHES IN DIAMETER.

PLAN VIEW

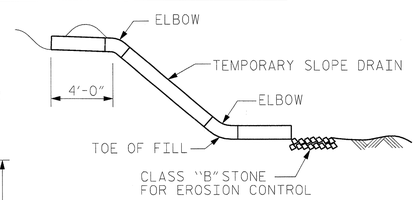

SECTION R-R

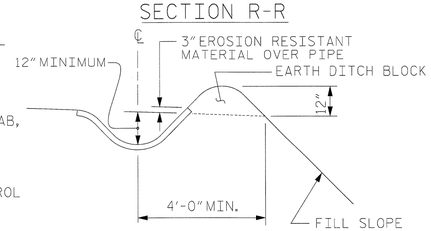

SECTION S-S

TEMPORARY BERM AND SLOPE DRAIN DETAILS

(TO BE USED WHEN SHOULDER BERM GUTTER IS REQUIRED)

DRAWN BY :	G. GILLAND	DATE :	10/2012
CHECKED BY :	J. DILWORTH	DATE :	10/2012
DESIGN ENGINEER OF RECORD :	J. DILWORTH	DATE :	05/2013

NOTES

THE COST OF THE BARRIER RAIL ON THE APPROACH SLAB SHALL BE INCLUDED IN THE LINEAR FOOT CONTRACT PRICE BID FOR "VERTICAL CONCRETE BARRIER RAIL".

THE BARRIER RAIL ON EACH APPROACH SLAB SHALL NOT BE CAST UNTIL ALL APPROACH SLAB CONCRETE HAS BEEN CAST AND HAS REACHED A MINIMUM COMPRESSIVE STRENGTH OF 3,000 PSI.

ALL REINFORCING STEEL IN BARRIER RAILS SHALL BE EPOXY COATED.

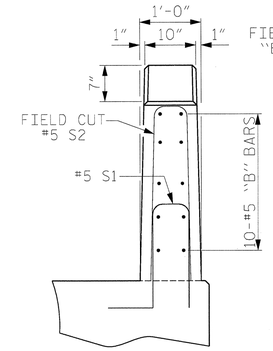

END VIEW

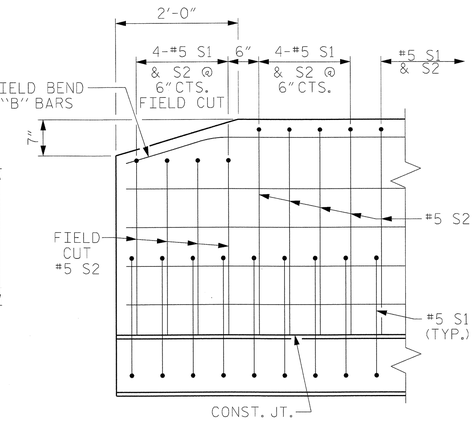

SIDE VIEW

END OF RAIL DETAILS

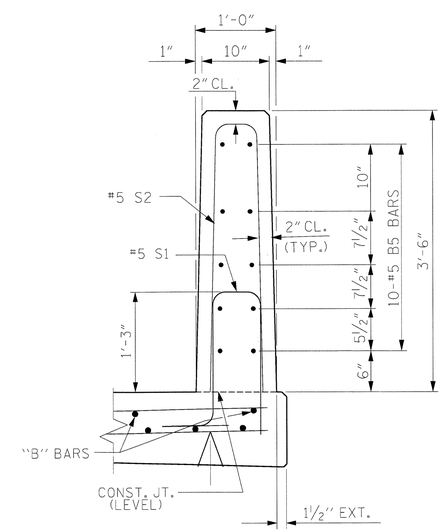

SECTION THRU RAIL

BAR TYPES

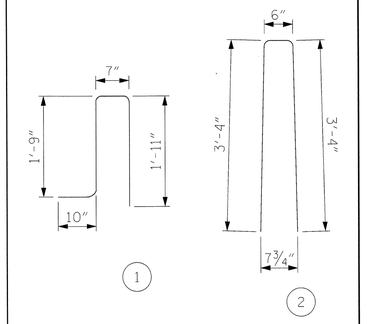

ALL BAR DIMENSIONS ARE OUT TO OUT

BILL OF MATERIAL

FOR VERTICAL CONCRETE BARRIER RAIL ONLY

BAR	NO.	SIZE	TYPE	LENGTH	WEIGHT
* B5	40	#5	STR	9'-8"	403
* S1	56	#5	1	5'-1"	297
* S2	56	#5	2	7'-2"	419

* EPOXY COATED REINFORCING STEEL	1119 LBS.
CLASS AA CONCRETE	4.8 CU. YDS.
VERTICAL CONCRETE BARRIER RAIL	40.00 LIN. FT.

PROJECT NO. R-2633BB

BRUNSWICK/NEW HANOVER COUNTY

STATION: 353+32.50 -L-

SHEET 2 OF 3

NORTH CAROLINA PROFESSIONAL SEAL 22072 ENGINEER JOHN ARTHUR DILWORTH
5-29-13

WETHERILL ENGINEERING

TRANSPORTATION PLANNING/DESIGN
BRIDGE/STRUCTURE DESIGN
CIVIL/SITE DESIGN - GIS/GPS
CONSTRUCTION OBSERVATION

559 Jones Franklin Rd. Suite 164
Raleigh, N.C. 27606
Bus: 919 851 8077
Fax: 919 851 8107
LICENSE NO. F-0377

STATE OF NORTH CAROLINA
DEPARTMENT OF TRANSPORTATION
RALEIGH

BRIDGE APPROACH SLAB DETAILS

LEFT LANE

REVISIONS								SHEET NO.
NO.	BY:	DATE:	NO.	BY:	DATE:			S-223
1			3					TOTAL SHEETS
2			4					700

FILE: $FILE$
MODEL: $MODELNAME$
PLOT DRV: $PLTDRVS$
DATE/TIME: $DATE$ $TIME$

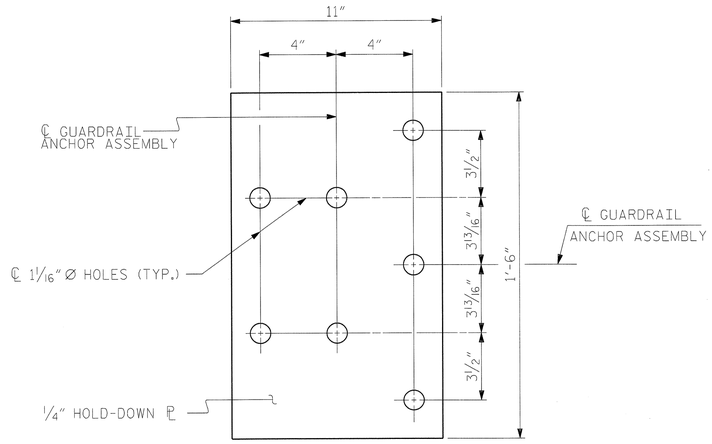

PLAN

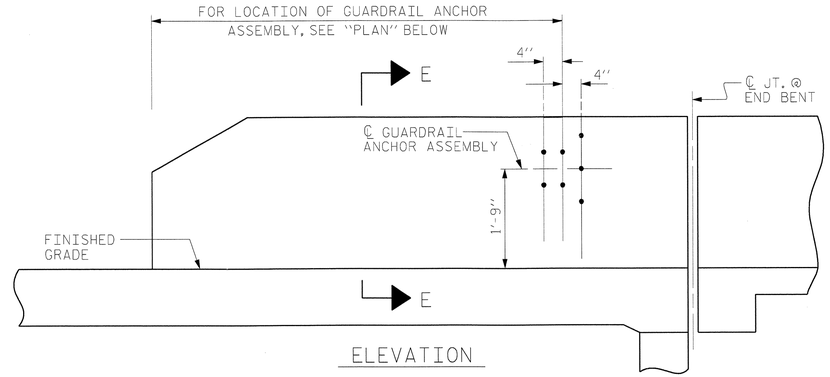

ELEVATION

NOTES

THE GUARDRAIL ANCHOR ASSEMBLY SHALL CONSIST OF A 1/4" HOLD DOWN PLATE AND 7 - 7/8" Ø BOLTS WITH NUTS AND WASHERS.

THE HOLD-DOWN PLATE SHALL CONFORM TO AASHTO M270 GRADE 36. AFTER FABRICATION, THE HOLD-DOWN PLATE SHALL BE HOT-DIP GALVANIZED IN ACCORDANCE WITH AASHTO M111.

BOLTS SHALL CONFORM TO THE REQUIREMENTS OF ASTM A307 AND NUTS SHALL CONFORM TO THE REQUIREMENTS OF AASHTO M291. BOLTS, NUTS AND WASHERS SHALL BE GALVANIZED. (AT THE CONTRACTOR'S OPTION, STAINLESS STEEL BOLTS, NUTS AND WASHERS MAY BE USED AS AN ALTERNATE FOR THE 7/8" Ø GALVANIZED BOLTS, NUTS AND WASHERS. THEY SHALL CONFORM TO OR EXCEED THE MECHANICAL REQUIREMENTS OF ASTM A307. THE USE OF THIS ALTERNATE SHALL BE APPROVED BY THE ENGINEER.)

THE GUARDRAIL ANCHOR ASSEMBLY IS REQUIRED AT ALL POINTS WHERE APPROACH GUARDRAIL IS TO BE ATTACHED TO THE END OF BARRIER RAIL. FOR POINTS OF ATTACHMENT, SEE SKETCH.

AFTER INSTALLATION, THE EXPOSED THREAD OF THE BOLT SHALL BE BURRED WITH A SHARP POINTED TOOL.

THE COST OF THE GUARDRAIL ANCHOR ASSEMBLY SHALL BE INCLUDED IN THE UNIT CONTRACT PRICE BID FOR VERTICAL CONCRETE BARRIER RAIL.

THE VERTICAL REINFORCING BARS MAY BE SHIFTED SLIGHTLY IN THE VERTICAL CONCRETE BARRIER RAIL TO CLEAR ASSEMBLY BOLTS.

THE 1 1/4" Ø HOLES SHALL BE FORMED OR DRILLED WITH A CORE BIT. IMPACT TOOLS WILL NOT BE PERMITTED. ANY CONCRETE DAMAGED BY THIS WORK SHALL BE REPAIRED TO THE SATISFACTION OF THE ENGINEER.

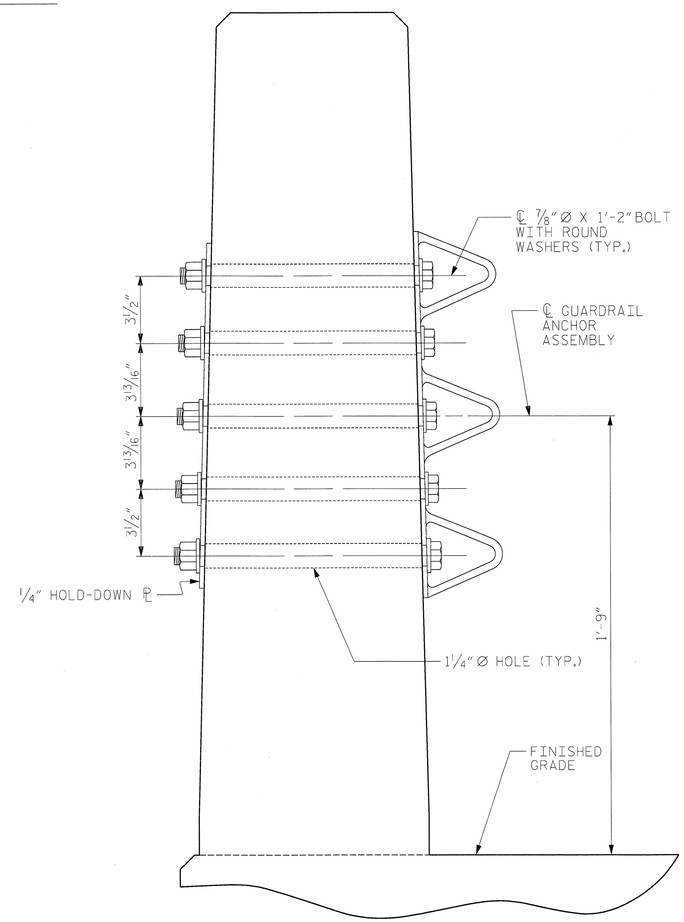

SECTION E-E

GUARDRAIL ANCHOR ASSEMBLY DETAILS

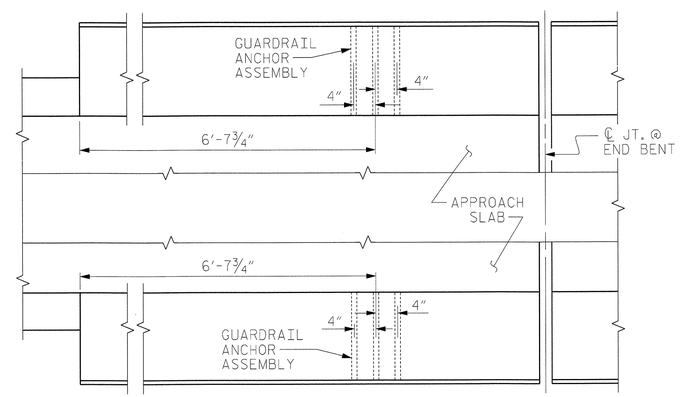

PLAN

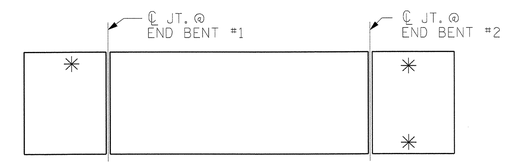

SKETCH SHOWING POINTS OF ATTACHMENTS

✳ DENOTES GUARDRAIL ANCHOR ASSEMBLY

LOCATION OF ANCHORS FOR GUARDRAIL

END BENT #1 SHOWN, END BENT #2 SIMILAR.

PROJECT NO. R-2633BB

BRUNSWICK/NEW HANOVER COUNTY

STATION: 353+32.50 -L-

SHEET 3 OF 3

NORTH CAROLINA PROFESSIONAL SEAL 22072 ENGINEER JOHN ARTHUR DILWORTH

5-29-13

WETHERILL ENGINEERING

TRANSPORTATION PLANNING/DESIGN
BRIDGE/STRUCTURE DESIGN
CIVIL/SITE DESIGN - GIS/GPS
CONSTRUCTION OBSERVATION

559 Jones Franklin Rd. Suite 164
Raleigh, N.C. 27606
Bus: 919 851 8077
Fax: 919 851 8107
LICENSE NO. F-0377

STATE OF NORTH CAROLINA
DEPARTMENT OF TRANSPORTATION
RALEIGH

STANDARD

GUARDRAIL ANCHORAGE FOR VERTICAL CONCRETE BARRIER RAIL

LEFT LANE

REVISIONS						SHEET NO.
NO.	BY:	DATE:	NO.	BY:	DATE:	S-224
1			3			TOTAL SHEETS
2			4			700

ASSEMBLED BY : J PENDERGRAFT		DATE : 2-12	
CHECKED BY : J DILWORTH		DATE : 2-12	
DESIGN ENGINEER OF RECORD : J DILWORTH		DATE : 5/2013	
DRAWN BY : MAA 5/10	ADDED 5/6/10		
CHECKED BY : GM 5/10	REV. 10/1/11	MAA/GM	
	REV. 12/5/11	MAA/GM	

FILE: $FILE$
MODEL: $MODELNAME$
PLOT DRV: $PLTDRVS$
DATE/TIME: $DATE$ $TIME$

STD. NO. GRA3

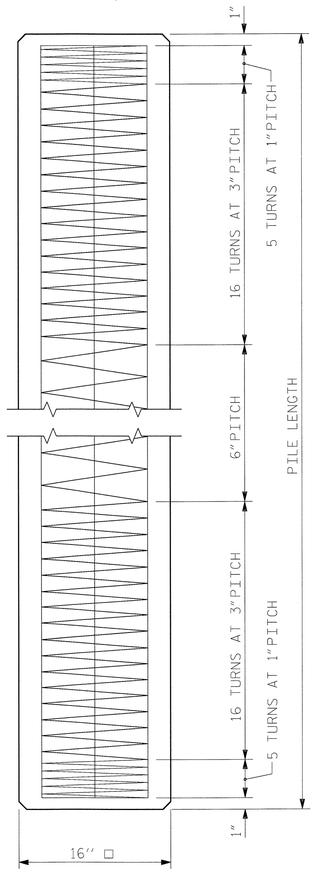

ELEVATION

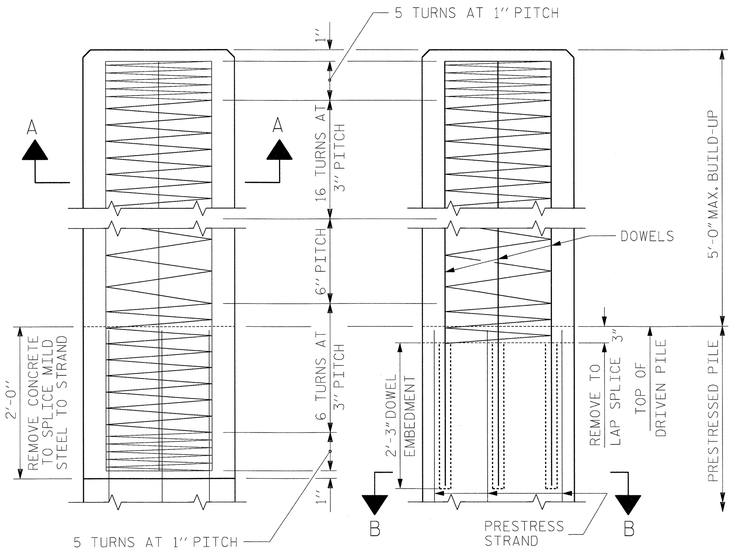

BUILD-UP AND SPIRAL REINFORCING

OPTIONAL BUILD-UP WITH DOWELS

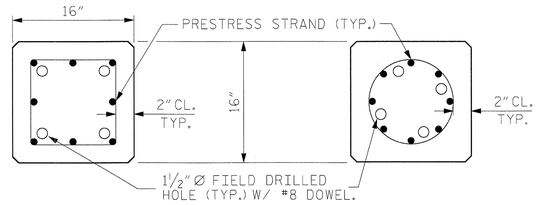

SECTION "B-B"

(AT THE CONTRACTOR'S OPTION, PILE BUILD-UP MAY BE CONSTRUCTED WITH DOWELS.)

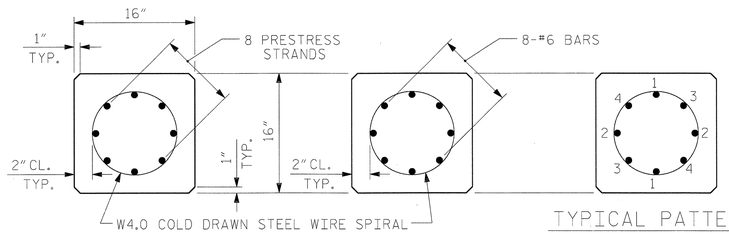

TYPICAL SECTION

SECTION "A-A"

TYPICAL PATTERN FOR BURNING STRANDS

½" OR 0.6" Ø GRADE 270 L.R. PRESTRESS STRANDS

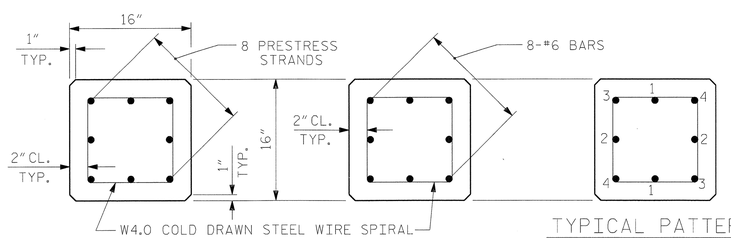

TYPICAL SECTION

SECTION "A-A"

TYPICAL PATTERN FOR BURNING STRANDS

½" OR 0.6" Ø GRADE 270 L.R. PRESTRESS STRANDS

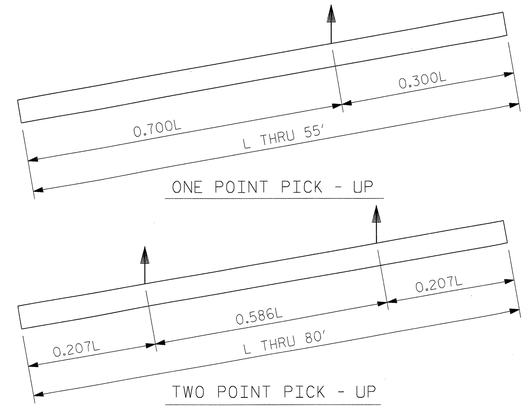

PICK - UP POINTS

QUANTITIES FOR ONE 16" PRESTRESSED PILE

LENGTH	CONCRETE CU. YDS.	PILE WT. TONS	ONE POINT PICK-UP 0.300L	ONE POINT PICK-UP 0.700L	TWO POINT PICK-UP 0.207L	TWO POINT PICK-UP 0.586L
25'-0"	1.63	3.31	7'-6"	17'-6"	5'-2"	14'-8"
30'-0"	1.96	3.97	9'-0"	21'-0"	6'-2½"	17'-7"
35'-0"	2.29	4.63	10'-6"	24'-6"	7'-3"	20'-6"
40'-0"	2.61	5.29	12'-0"	28'-0"	8'-3½"	23'-5"
45'-0"	2.94	5.95	13'-6"	31'-6"	9'-4"	26'-4"
50'-0"	3.27	6.61	15'-0"	35'-0"	10'-4"	29'-4"
55'-0"	3.59	7.28	16'-6"	38'-6"	11'-4½"	32'-3"
60'-0"	3.92	7.94			12'-5"	35'-2"
65'-0"	4.25	8.60			13'-5½"	38'-1"
70'-0"	4.57	9.26			14'-6"	41'-0"
75'-0"	4.90	9.92			15'-6½"	43'-11"
80'-0"	5.23	10.58			16'-7"	46'-10"

DOWEL INSTALLATION FOR OPTIONAL BUILD-UP

GROUT COMPRESSIVE STRENGTH: f'c= 5,000 PSI

BEFORE DRILLING DOWEL HOLES, REMOVE THE UPPER 3" OF CONCRETE FROM THE TOP OF THE PILE WITHOUT DAMAGE TO THE REINFORCING STEEL. THE REMOVAL PLANE SHOULD BE NORMAL TO THE EDGE OF THE PILE.

DOWEL HOLES SHALL BE POSITIONED TO MAINTAIN ½" CLEAR TO ALL EXISTING PRESTRESSING STRANDS IN THE CONCRETE PILE.

FIELD DRILLED HOLES SHALL BE CLEAN AND FREE OF ANY OBSTRUCTIONS BEFORE GROUTING OF DOWELS. DOWEL BARS SHALL BE INSTALLED AND GROUTED WITH AN APPROVED NON-SHRINK GROUT.

THE SPIRAL REINFORCING IN ALL BUILD-UPS SHALL BE W4.0 COLD DRAWN WIRE WHICH SHALL BE SECURED TO THE LONGITUDINAL REINFORCEMENT TO MAINTAIN PITCH.

THE SPIRAL REINFORCING IN THE BUILD-UP AND THE PRESTRESSED CONCRETE PILE SHALL BE SPLICED BY OVERLAPPING A MIN. OF ONE TURN.

NOTES

PRESTRESSED CONCRETE STRENGTH : f'c= 7,500 PSI

BUILD-UP CONCRETE STRENGTH : f'c= 7,500 PSI

STRAND DATA:

SIZE	GRADE	AREA	ULTIMATE STRENGTH	APPLIED PRESTRESS FORCE
½"	270 L.R.	0.153	41,300# PER STRAND	30,980# PER STRAND
0.6"	270 L.R.	0.217	58,600# PER STRAND	43,940# PER STRAND

ALL PRESTRESSING STRANDS SHALL BE 7-WIRE LOW-RELAXATION GRADE 270 STRANDS CONFORMING TO AASHTO M203. STRAND SAMPLING REQUIREMENTS SHALL BE IN ACCORDANCE WITH THE STANDARD SPECIFICATIONS.

AT THE CONTRACTOR'S OPTION, ½" OR 0.6" STRANDS MAY BE USED IN EITHER STRAND CONFIGURATION SHOWN IN THE TYPICAL SECTION DETAIL. MIXING OF STRAND SIZE IS NOT ALLOWED.

THE SLIP-FORM METHOD OF CASTING PILES WILL NOT BE PERMITTED.

TRANSFER THE LOAD FROM THE ANCHORAGES TO THE PILE AFTER THE CONCRETE HAS ATTAINED A MINIMUM COMPRESSIVE STRENGTH OF 4,000 PSI.

IF STRAND STRESS IS RELIEVED BY BURNING, THE STRANDS SHALL BE BURNED IN OPPOSITE PAIRS AS INDICATED IN THE TYPICAL PATTERN SHOWN. FOR ANY NUMBER OF STRANDS, BURN IN OPPOSITE PAIRS AND SYMMETRICALLY ABOUT BOTH THE VERTICAL AND HORIZONTAL AXES. STRANDS 1-1 SHALL BE BURNED BEFORE 2-2, ETC. NOT MORE THAN 4 STRANDS, SAY 3-3 AND 4-4, MAY BE BURNED AT ANY ONE SECTION BEFORE THESE SAME PAIRS OF STRANDS ARE BURNED AT BOTH ENDS OF THE BED AND BETWEEN EACH PAIR OF PILES IN THE BED.

PROPOSED DEVICES FOR LIFTING PILES, RECESS DETAILS, AND PATCHING MATERIAL SHALL BE DETAILED IN SHOP DRAWINGS. AFTER ATTACHMENTS HAVE BEEN REMOVED, OPENINGS SHALL BE REPAIRED SUCH THAT THE APPEARANCE OF THE PILE IS UNIFORM.

WHERE CAST-IN-PLACE LIFTING DEVICES ARE NOT USED, PICK-UP POINTS ARE TO BE INDICATED WITH A 2" WIDE BLACK MARK.

DRIVE PILES USING A METHOD APPROVED BY THE ENGINEER, WHEREBY THE HEAD OF THE PILE IS NOT DAMAGED.

DRIVING OF THE BUILT-UP PILE WILL NOT BE PERMITTED UNTIL THE CONCRETE HAS REACHED A COMPRESSIVE STRENGTH OF 5,000 PSI AND UNTIL A PERIOD OF SEVEN DAYS HAS ELAPSED SINCE CASTING OF THE BUILD-UP.

THE WATER/CEMENT RATIO FOR CONCRETE PILES SHALL NOT EXCEED 0.40.

PRESTRESSED CONCRETE PILES SHALL CONTAIN CALCIUM NITRITE CORROSION INHIBITOR. SEE STANDARD SPECIFICATIONS FOR CALCIUM NITRITE CORROSION INHIBITOR.

THE CONCRETE IN THE PILES SHALL CONTAIN SILICA FUME. SILICA FUME SHALL BE SUBSTITUTED FOR 5% OF THE PORTLAND CEMENT BY WEIGHT. IF THE OPTION OF ARTICLE 1024-1 OF THE STANDARD SPECIFICATIONS TO PARTIALLY SUBSTITUTE CLASS F FLY ASH FOR PORTLAND CEMENT IS EXERCISED, THEN THE RATE OF FLY ASH SUBSTITUTION SHALL BE REDUCED TO 1.0 LB OF FLY ASH PER 1.0 LB. NO PAYMENT WILL BE MADE FOR THIS SUBSTITUTION AS IT IS CONSIDERED INCIDENTAL TO THE VARIOUS PAY ITEMS.

PROJECT NO. R-2633BB

BRUNSWICK/NEW HANOVER COUNTY

STATION: 353+32.50

NORTH CAROLINA PROFESSIONAL SEAL 22072 ENGINEER JOHN ARTHUR DILWORTH
5-29-13

WETHERILL ENGINEERING

TRANSPORTATION PLANNING/DESIGN
BRIDGE/STRUCTURE DESIGN
CIVIL/SITE DESIGN - GIS/GPS
CONSTRUCTION OBSERVATION

559 Jones Franklin Rd. Suite 164
Raleigh, N.C. 27606
Bus: 919 851 9077
Fax: 919 851 8107
LICENSE NO. F-0377

STATE OF NORTH CAROLINA
DEPARTMENT OF TRANSPORTATION
RALEIGH

STANDARD

16" PRESTRESSED CONCRETE PILE

REVISIONS						
NO.	BY:	DATE:	NO.	BY:	DATE:	
1			3			
2			4			

SHEET NO. S-225

TOTAL SHEETS 700

DRAWN BY :	MKO	DATE :	03/2013
CHECKED BY :	RLB	DATE :	03/2013
DESIGN ENGINEER OF RECORD :	J. DILWORTH	DATE :	05/2013

STD. NO. PCP2

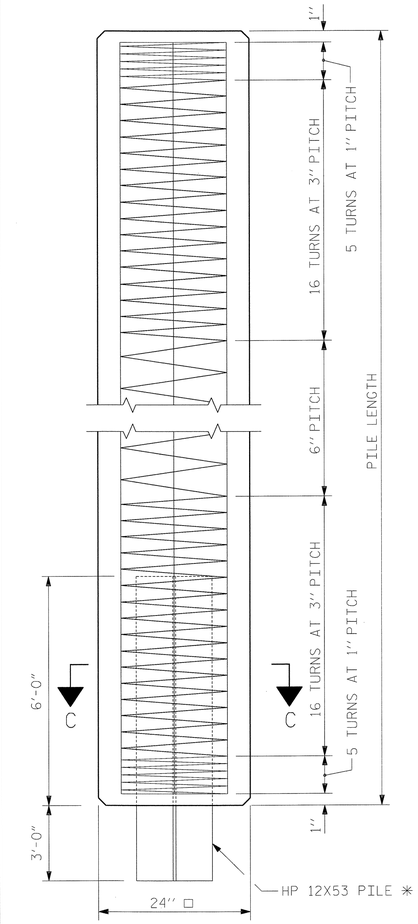

ELEVATION

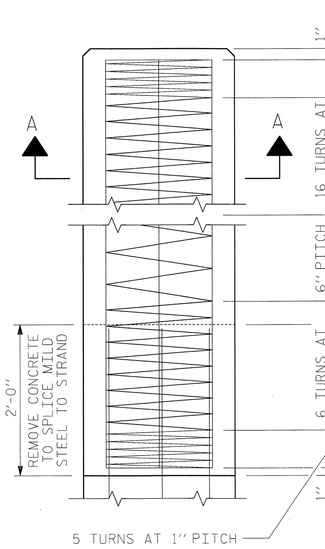

BUILD-UP AND SPIRAL REINFORCING

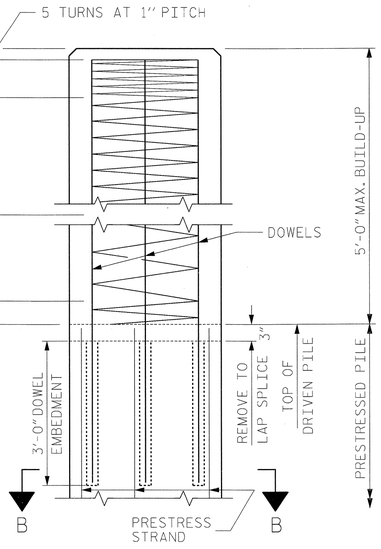

OPTIONAL BUILD-UP WITH DOWELS

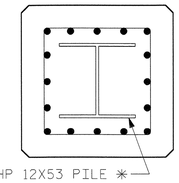

SECTION C-C

✳ HP12X53 STEEL PILE POINT USED ON BENTS 1, 2, 17, 18, 42 & 43.

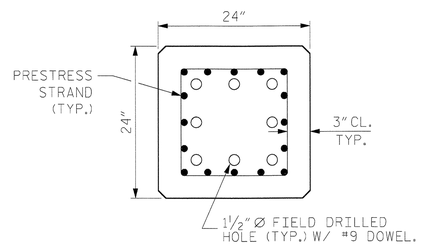

SECTION "B-B"

(AT THE CONTRACTOR'S OPTION, PILE BUILD-UP MAY BE CONSTRUCTED WITH DOWELS.)

DOWEL INSTALLATION FOR OPTIONAL BUILD-UP

GROUT COMPRESSIVE STRENGTH: f'c= 5,000 PSI

BEFORE DRILLING DOWEL HOLES, REMOVE THE UPPER 3" OF CONCRETE FROM THE TOP OF THE PILE WITHOUT DAMAGE TO THE REINFORCING STEEL. THE REMOVAL PLANE SHOULD BE NORMAL TO THE EDGE OF THE PILE.

DOWEL HOLES SHALL BE POSITIONED TO MAINTAIN ½" CLEAR TO ALL EXISTING PRESTRESSING STRANDS IN THE CONCRETE PILE.

FIELD DRILLED HOLES SHALL BE CLEAN AND FREE OF ANY OBSTRUCTIONS BEFORE GROUTING OF DOWELS. DOWEL BARS SHALL BE INSTALLED AND GROUTED WITH AN APPROVED NON-SHRINK GROUT.

THE SPIRAL REINFORCING IN ALL BUILD-UPS SHALL BE W4.0 COLD DRAWN WIRE WHICH SHALL BE SECURED TO THE LONGITUDINAL REINFORCEMENT TO MAINTAIN PITCH.

THE SPIRAL REINFORCING IN THE BUILD-UP AND THE PRESTRESSED CONCRETE PILE SHALL BE SPLICED BY OVERLAPPING A MIN. OF ONE TURN.

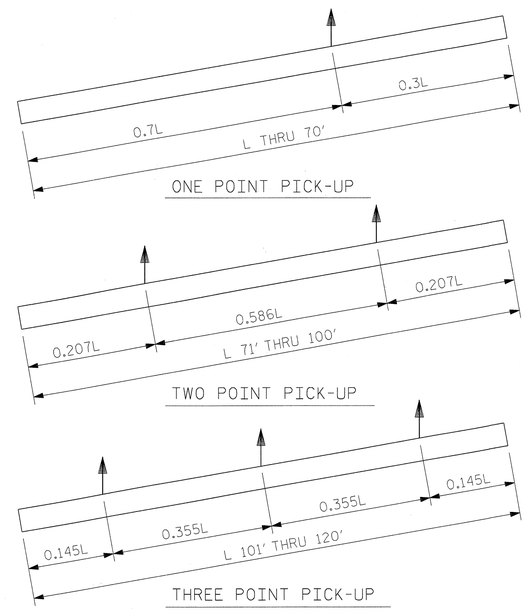

PICK-UP POINTS

NOTES

PRESTRESSED CONCRETE STRENGTH : f'c= 7,500 PSI

BUILD-UP CONCRETE STRENGTH : f'c= 7,500 PSI

STRAND DATA:

SIZE	GRADE	AREA	ULTIMATE STRENGTH	APPLIED PRESTRESS FORCE
½"	270 L.R.	0.153	41,300# PER STRAND	30,980# PER STRAND
0.6"	270 L.R.	0.217	58,600# PER STRAND	43,940# PER STRAND

ALL PRESTRESSING STRANDS SHALL BE 7-WIRE LOW-RELAXATION GRADE 270 STRANDS CONFORMING TO AASHTO M203. STRAND SAMPLING REQUIREMENTS SHALL BE IN ACCORDANCE WITH THE STANDARD SPECIFICATIONS.

AT THE CONTRACTOR'S OPTION, ½" OR 0.6" STRANDS MAY BE USED IN THE STRAND CONFIGURATION SHOWN IN THE TYPICAL SECTION DETAIL. MIXING OF STRAND SIZE IS NOT ALLOWED.

THE SLIP-FORM METHOD OF CASTING PILES WILL NOT BE PERMITTED.

TRANSFER THE LOAD FROM THE ANCHORAGES TO THE PILE AFTER THE CONCRETE HAS ATTAINED A MINIMUM COMPRESSIVE STRENGTH OF 4,000 PSI.

IF STRAND STRESS IS RELIEVED BY BURNING, THE STRANDS SHALL BE BURNED IN OPPOSITE PAIRS AS INDICATED IN THE TYPICAL PATTERN SHOWN. FOR ANY NUMBER OF STRANDS, BURN IN OPPOSITE PAIRS AND SYMMETRICALLY ABOUT BOTH THE VERTICAL AND HORIZONTAL AXES, STRANDS 1-1 SHALL BE BURNED BEFORE 2-2, ETC. NOT MORE THAN 4 STRANDS, SAY 5-5 AND 6-6, MAY BE BURNED AT ANY ONE SECTION BEFORE THESE SAME PAIRS OF STRANDS ARE BURNED AT BOTH ENDS OF THE BED AND BETWEEN EACH PAIR OF PILES IN THE BED.

PROPOSED DEVICES FOR LIFTING PILES, RECESS DETAILS, AND PATCHING MATERIAL SHALL BE DETAILED IN SHOP DRAWINGS. AFTER ATTACHMENTS HAVE BEEN REMOVED, OPENINGS SHALL BE REPAIRED SUCH THAT THE APPEARANCE OF THE PILE IS UNIFORM.

WHERE CAST-IN-PLACE LIFTING DEVICES ARE NOT USED, PICK-UP POINTS ARE TO BE INDICATED WITH A 2" WIDE BLACK MARK.

DRIVE PILES USING A METHOD APPROVED BY THE ENGINEER, WHEREBY THE HEAD OF THE PILE IS NOT DAMAGED.

DRIVING OF THE BUILT-UP PILE WILL NOT BE PERMITTED UNTIL THE CONCRETE HAS REACHED A COMPRESSIVE STRENGTH OF 5,000 PSI AND UNTIL A PERIOD OF SEVEN DAYS HAS ELAPSED SINCE CASTING OF THE BUILD-UP.

THE WATER/CEMENT RATIO FOR CONCRETE PILES SHALL NOT EXCEED 0.40.

PRESTRESSED CONCRETE PILES SHALL CONTAIN CALCIUM NITRITE CORROSION INHIBITOR. SEE STANDARD SPECIFICATIONS FOR CALCIUM NITRITE CORROSION INHIBITOR.

THE CONCRETE IN THE PILES SHALL CONTAIN SILICA FUME. SILICA FUME SHALL BE SUBSITUTED FOR 5% OF THE PORTLAND CEMENT BY WEIGHT. IF THE OPTION OF ARTICLE 1024-1 OF THE STANDARD SPECIFICATIONS TO PARTIALLY SUBSTITUTE CLASS F FLY ASH FOR PORTLAND CEMENT IS EXERCISED, THEN THE RATE OF FLY ASH SUBSTITUTION SHALL BE REDUCED TO 1.0 LB OF FLY ASH PER 1.0 LB. NO PAYMENT WILL BE MADE FOR THIS SUBSTITUTION AS IT IS CONSIDERED INCIDENTAL TO THE VARIOUS PAY ITEMS.

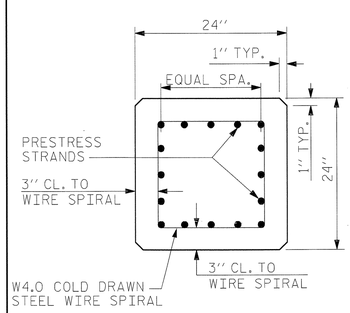

TYPICAL SECTION

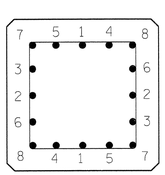

TYPICAL PATTERN FOR BURNING STRANDS

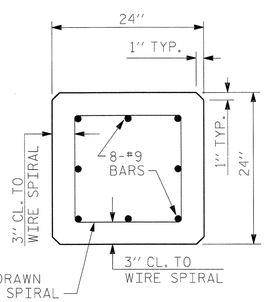

SECTION A-A

½" OR 0.6" Ø GRADE 270 L.R. PRESTRESS STRANDS

QUANTITIES FOR ONE 24" SQUARE PILE

LENGTH	CONCRETE CU. YDS.	PILE WT. TONS	ONE POINT PICK-UP 0.3L	ONE POINT PICK-UP 0.7L	TWO POINT PICK-UP 0.207L	TWO POINT PICK-UP 0.586L	THREE POINT PICK-UP 0.145L	THREE POINT PICK-UP 0.355L
25'-0"	3.69	7.47	7'-6"	17'-6"				
30'-0"	4.43	8.97	9'-0"	21'-0"				
35'-0"	5.17	10.46	10'-6"	24'-6"				
40'-0"	5.91	11.96	12'-0"	28'-0"				
45'-0"	6.64	13.45	13'-6"	31'-6"				
50'-0"	7.38	14.95	15'-0"	35'-0"				
55'-0"	8.12	16.44	16'-6"	38'-6"				
60'-0"	8.86	17.94	18'-0"	42'-0"				
65'-0"	9.60	19.43	19'-6"	45'-6"				
70'-0"	10.33	20.93	21'-0"	49'-0"				
75'-0"	11.07	22.42			15'-6½"	43'-11"		
80'-0"	11.81	23.92			16'-6½"	46'-11"		
85'-0"	12.55	25.41			17'-7"	49'-10"		
90'-0"	13.29	26.91			18'-7½"	52'-9"		
95'-0"	14.03	28.40			19'-8"	55'-8"		
100'-0"	14.76	29.90			20'-8½"	58'-7"		
105'-0"	15.50	31.39					15'-3"	37'-3"
110'-0"	16.24	32.89					15'-11½"	39'-0½"
115'-0"	16.98	34.38					16'-8"	40'-10"
120'-0"	17.72	35.87					17'-5"	42'-7"

PROJECT NO. R-2633BB

BRUNSWICK/NEW HANOVER COUNTY

STATION: 353+32.50

NORTH CAROLINA PROFESSIONAL SEAL 22072 ENGINEER JOHN ARTHUR DINWIDDIE 5-29-13

WETHERILL ENGINEERING

TRANSPORTATION PLANNING/DESIGN
BRIDGE/STRUCTURE DESIGN
CIVIL/SITE DESIGN - GIS/GPS
CONSTRUCTION OBSERVATION

559 Jones Franklin Rd. Suite 164
Raleigh, N.C. 27606
Bus: 919 851 8077
Fax: 919 851 8107
LICENSE NO. F-0377

NORTH CAROLINA PROFESSIONAL SEAL 18442 ENGINEER RICHARD LEONTI BOLLINGER, JR. 5-29-2013

RS&H IMPROVING YOUR WORLD

RS&H Architects-Engineers-Planners, Inc.

8601 Six Forks Road, Suite 260
Raleigh, NC 27615
919-846-6701 FAX 919-846-9080
www.rsandh.com
North Carolina License Nos. 50073 * F-0493 * C-28

STATE OF NORTH CAROLINA
DEPARTMENT OF TRANSPORTATION
RALEIGH

SUBSTRUCTURE STANDARD

24" PRESTRESSED CONCRETE PILE

REVISIONS								SHEET NO.
NO.	BY:	DATE:	NO.	BY:	DATE:			S-226
1			3					TOTAL SHEETS
2			4					700

STD. NO. PCP4

DRAWN BY :	MKO	DATE :	02/2013
CHECKED BY :	JMR	DATE :	02/2013
DESIGN ENGINEER OF RECORD :	J. ROBINSON	DATE :	05/2013

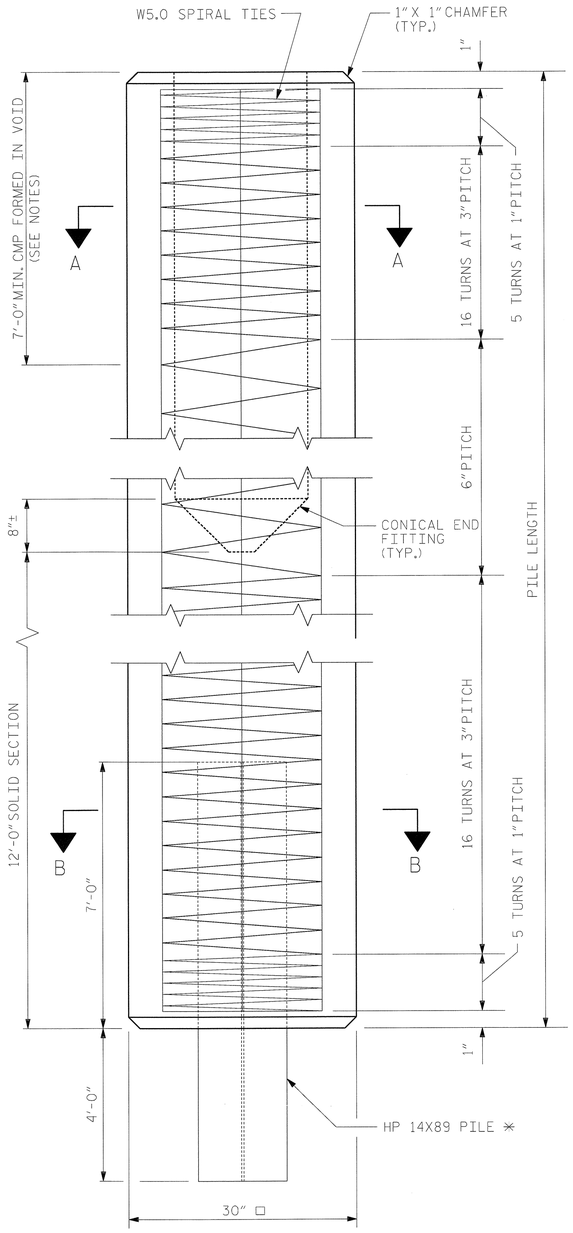

ELEVATION

QUANTITIES FOR ONE 30" SQUARE PILE								
	CONCRETE	PILE WT.	ONE POINT PICK-UP		TWO POINT PICK-UP		THREE POINT PICK-UP	
LENGTH	CU. YDS.	TONS	0.3L	0.7L	0.207L	0.586L	0.145L	0.355L
25'-0"	4.97	10.06	7'-6"	17'-6"				
30'-0"	5.79	11.73	9'-0"	21'-0"				
35'-0"	6.62	13.41	10'-6"	24'-6"				
40'-0"	7.45	15.09	12'-0"	28'-0"				
45'-0"	8.28	16.76	13'-6"	31'-6"				
50'-0"	9.10	18.44	15'-0"	35'-0"				
55'-0"	9.93	20.11	16'-6"	38'-6"				
60'-0"	10.76	21.79	18'-0"	42'-0"				
65'-0"	11.59	23.46	19'-6"	45'-6"				
70'-0"	12.42	25.14	21'-0"	49'-0"				
75'-0"	13.24	26.82			15'-6½"	43'-11"		
80'-0"	14.07	28.49			16'-6½"	46'-11"		
85'-0"	14.90	30.17			17'-7"	49'-10"		
90'-0"	15.73	31.84			18'-7½"	52'-9"		
95'-0"	16.55	33.52			19'-8"	55'-8"		
100'-0"	17.38	35.20			20'-8½"	58'-7"		
105'-0"	18.21	36.87					15'-3"	37'-3"
110'-0"	19.04	38.55					15'-11½"	39'-0½"
115'-0"	19.86	40.22					16'-8"	40'-10"
120'-0"	20.69	41.90					17'-5"	42'-7"

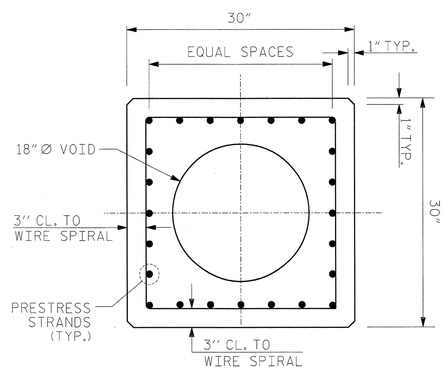

SECTION A-A

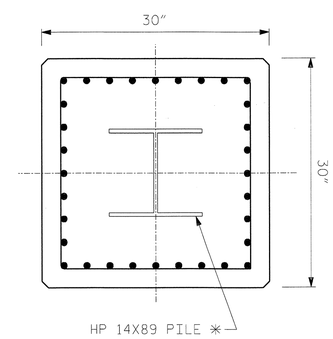

SECTION B-B

✳ HP14X89 STEEL PILE POINT USED ON BENTS 5, 24-30, 49 & 56.

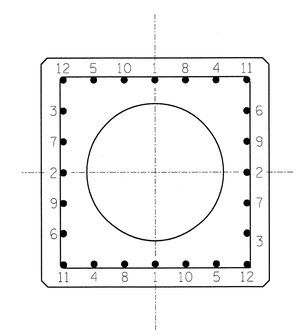

TYPICAL PATTERN FOR BURNING STRANDS

24 - 0.6" Ø GRADE 270 L.R. PRESTRESS STRANDS

NOTES

PRESTRESSED CONCRETE STRENGTH : f'c = 7,500 PSI

BUILD-UP CONCRETE STRENGTH : f'c = 7,500 PSI

STRAND DATA:

SIZE	GRADE	AREA	ULTIMATE STRENGTH	APPLIED PRESTRESS FORCE
0.6"	270 L.R.	0.217	58,600# PER STRAND	43,940# PER STRAND

ALL PRESTRESSING STRANDS SHALL BE 7-WIRE LOW-RELAXATION GRADE 270 STANDS CONFORMING TO AASHTO M203. STAND SAMPLING REQUIREMENTS SHALL BE IN ACCORDANCE WITH THE STANDARD SPECIFICATIONS.

THE SLIP-FORM METHOD OF CASTING PILES WILL NOT BE PERMITTED.

TRANSFER THE LOAD FROM THE ANCHORAGES TO THE PILE AFTER THE CONCRETE HAS ATTAINED A MINIMUM COMPRESSIVE STRENGTH OF 4,000 PSI.

IF STRAND STRESS IS RELIEVED BY BURNING, THE STRANDS SHALL BE BURNED IN OPPOSITE PAIRS AS INDICATED IN THE TYPICAL PATTERN SHOWN. FOR ANY NUMBER OF STRANDS, BURN IN OPPOSITE PAIRS AND SYMMETRICALLY ABOUT BOTH THE VERTICAL AND HORIZONTAL AXES, STRANDS 1-1 SHALL BE BURNED BEFORE 2-2, ETC. NOT MORE THAN 4 STRANDS, SAY 5-5 AND 6-6, MAY BE BURNED AT ANY ONE SECTION BEFORE THESE SAME PAIRS OF STRANDS ARE BURNED AT BOTH ENDS OF THE BED AND BETWEEN EACH PAIR OF PILES IN THE BED.

PROPOSED DEVICES FOR LIFTING PILES, RECESS DETAILS, AND PATCHING MATERIAL SHALL BE DETAILED IN SHOP DRAWINGS. AFTER ATTACHMENTS HAVE BEEN REMOVED, OPENINGS SHALL BE REPAIRED SUCH THAT THE APPEARANCE OF THE PILE IS UNIFORM.

WHERE CAST-IN-PLACE LIFTING DEVICES ARE NOT USED, PICK-UP POINTS ARE TO BE INDICATED WITH A 2" WIDE BLACK MARK.

DRIVE PILES USING A METHOD APPROVED BY THE ENGINEER, WHEREBY THE HEAD OF THE PILE IS NOT DAMAGED.

THE WATER/CEMENT RATIO FOR CONCRETE PILES SHALL NOT EXCEED 0.40.

PRESTRESSED CONCRETE PILES SHALL CONTAIN CALCIUM NITRITE CORROSION INHIBITOR. SEE STANDARD SPECIFICATIONS FOR CALCIUM NITRITE CORROSION INHIBITOR.

CORRUGATED METAL PIPE (CMP) SHALL BE FORMED IN VOID AS SHOWN. CMP SHALL BE GALVANIZED AND SHALL HAVE AN AMPLITUDE OF ½".

THE CONCRETE IN THE PILES SHALL CONTAIN SILICA FUME. SILICA FUME SHALL BE SUBSITUTED FOR 5% OF THE PORTLAND CEMENT BY WEIGHT. IF THE OPTION OF ARTICLE 1024-1 OF THE STANDARD SPECIFICATIONS TO PARTIALLY SUBSTITUTE CLASS F FLY ASH FOR PORTLAND CEMENT IS EXERCISED, THEN THE RATE OF FLY ASH SUBSTITUTION SHALL BE REDUCED TO 1.0 LB OF FLY ASH PER 1.0 LB. NO PAYMENT WILL BE MADE FOR THIS SUBSTITUTION AS IT IS CONSIDERED INCIDENTAL TO THE VARIOUS PAY ITEMS.

THE 18" Ø VOID IN THE PILE SHALL BE POSITIVELY VENTED TO WATER OR AIR AFTER THE FINAL PILE INSTALLATION. IF THE 1½" Ø VENTS ARE INCLUDED IN THE PILE CUT-OFF SECTION, TWO (2) NEW HOLES, 1½" Ø, SHALL BE DRILLED ON TWO (2) OPPOSITE FACES OF THE PILE BELOW THE BOTTOM OF SUBSTRUCTURE ELEVATION. IF THE PILE VOID CAN NOT BE VENTED DIRECTLY TO WATER OR AIR, THEN VENTING SHALL BE PROVIDED BY THE USE OF 1" Ø PVC CONDUIT THROUGH A SUBSTRUCTURE CAP OR COLUMN.

AFTER THE PILE IS DRIVEN AND CUT TO GRADE, THE TOP 7'-0" OF THE 18" Ø VOID SHALL BE FILLED WITH CONCRETE. PRIOR TO FILLING THE TOP 7'-0" OF THE 18" Ø VOID WITH CONCRETE, STRIP THE CARDBOARD FORM MATERIAL FROM THE VOID. A STAY-IN-PLACE CORRUGATED THIN WALL GALVANIZED PIPE MAY BE USED TO FORM THE VOID IN LIEU OF THE CARDBOARD FORM MATERIAL. THE CONCRETE FILL MATERIAL SHALL BE OF THE SAME TYPE AND STRENGTH AS CALLED FOR IN THE PILE CAP AND PAID FOR AS SUBSTRUCTURE CONCRETE.

PROJECT NO. R-2633BB

BRUNSWICK/NEW HANOVER COUNTY

STATION: 353+32.50

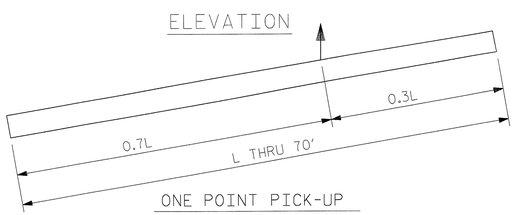

ONE POINT PICK-UP

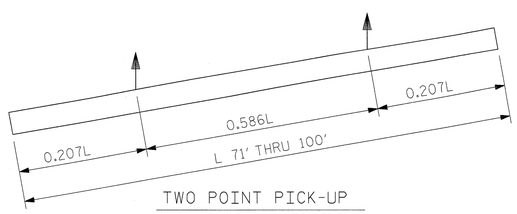

TWO POINT PICK-UP

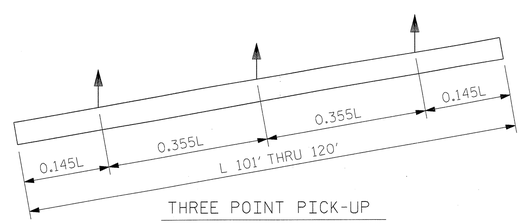

THREE POINT PICK-UP

PICK-UP POINTS

DRAWN BY :	MKO	DATE :	02/2013
CHECKED BY :	JMR	DATE :	02/2013
DESIGN ENGINEER OF RECORD :	J. ROBINSON	DATE :	05/2013

NORTH CAROLINA PROFESSIONAL SEAL 22072 ENGINEER JOHN ARTHUR DILWORTH 5-29-13

WETHERILL ENGINEERING
TRANSPORTATION PLANNING/DESIGN
BRIDGE/STRUCTURE DESIGN
CIVIL/SITE DESIGN ~ GIS/GPS
CONSTRUCTION OBSERVATION
559 Jones Franklin Rd. Suite 164
Raleigh, N.C. 27606
Bus: 919 851 8077
Fax: 919 851 8107
LICENSE NO. F-0377

NORTH CAROLINA PROFESSIONAL SEAL 18442 ENGINEER RICHARD LEON BELLINGER JR. 5-29-2013

RS&H IMPROVING YOUR WORLD
RS&H Architects-Engineers-Planners, Inc.
8601 Six Forks Road, Suite 260
Raleigh, NC 27615
919-846-6701 FAX 919-846-9080
www.rsandh.com
North Carolina License Nos. 50173 * F-0403 * C-28

STATE OF NORTH CAROLINA
DEPARTMENT OF TRANSPORTATION
RALEIGH

SUBSTRUCTURE

30" VOIDED PRESTRESSED CONCRETE PILE

REVISIONS						SHEET NO.
NO.	BY:	DATE:	NO.	BY:	DATE:	S-227
1			3			TOTAL SHEETS
2			4			700

GEOTECHNICAL ENGINEER	ENGINEER
NORTH CAROLINA PROFESSIONAL SEAL 32171 ENGINEER JINYOUNG PARK	
SIGNATURE DATE	SIGNATURE DATE

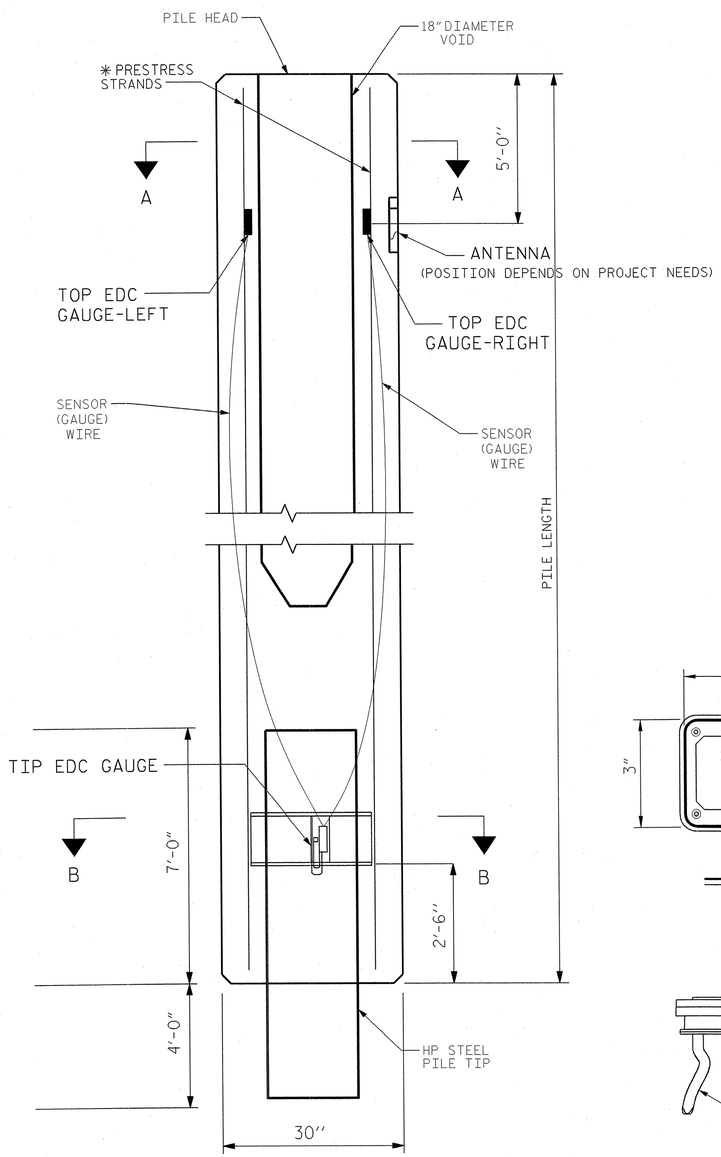

ELEVATION

(SPIRAL REIFORCEMENT NOT SHOWN FOR CLARITY.)

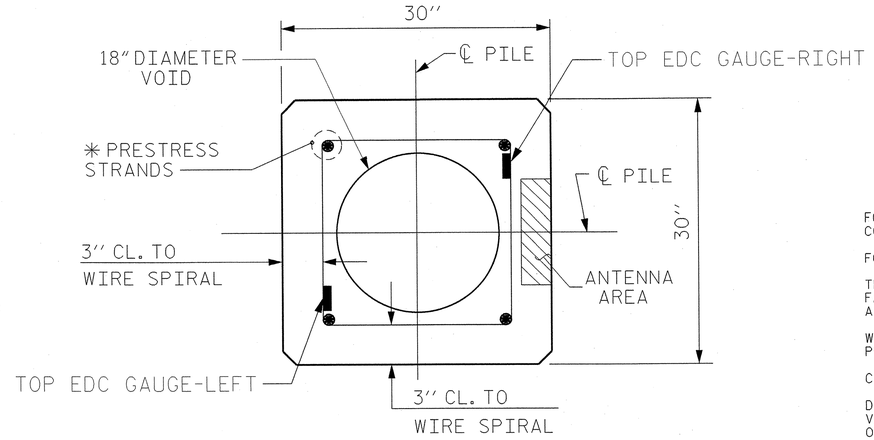

SECTION A-A

✳ ALL PRESTRESS STRANDS NOT SHOWN FOR CLARITY.

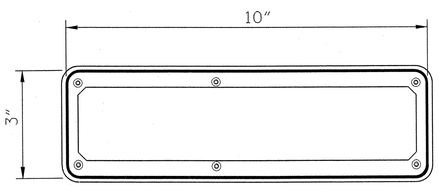

ANTENNA TOP VIEW

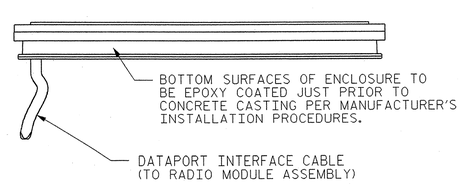

ANTENNA SIDE VIEW

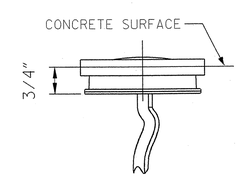

ANTENNA END VIEW

NOTES

FOR ADDITIONAL NOTES AND DETAILS, SEE "30" VOIDED PRESTRESSED CONCRETE PILE" SHEET. BUILD-UP OF TEST PILES IS NOT PERMITTED.

FOR EMBEDDED DATA COLLECTORS (EDC), SEE SPECIAL PROVISIONS.

THE EDC CONSULTANT WILL PROVIDE AND INSTALL THE EDC DURING PILE FABRICATION. NOTIFY THE ENGINEER OF THE PILE FABRICATION SCHEDULE A MINIMUM OF 14 CALENDAR DAYS IN ADVANCE.

WRAP THE SENSOR (GAUGE) WIRES, USING PLASTIC TIES, AGAINST THE PRESTRESS STRANDS EVERY 12" WHERE APPROPRIATE.

CLEARLY MARK THE TOP AND TIP EDC GAUGE LOCATIONS ON THE PILE FORM.

DURING THE PLACEMENT AND SETTING OF THE CONCRETE, ENSURE THAT VIBRATION SETTLING IS NOT PERFORMED WITHIN 4" ON EITHER SIDE OF THE ANTENNA AND TRANSDUCER PACKAGES. (CAUTION : DO NOT ALLOW VIBRATOR TO COME IN CONTACT WITH EMBEDDED DATA COLLECTORS.)

COMPLETE THE PILE FINISHING PROCESS BY PLACING AND SCRIBING / MARKING EMBEDDED DATA COLLECTOR RADIO IDENTIFICATION CODE (LAST FOUR DIGITS ONLY) ALONG WITH OTHER PILE DETAILS (E.G. PILE LENGTH, CASTING DATA, JOB NUMBERS) ON THE HAND-FINISHED SURFACE AT THE TOP OF THE PILE.

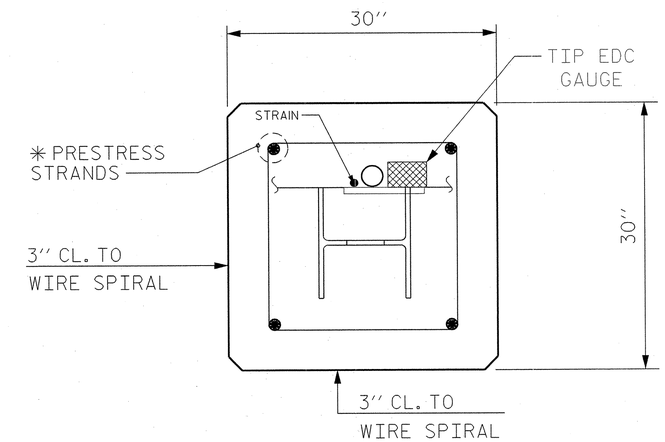

SECTION B-B

✳ ALL PRESTRESS STRANDS NOT SHOWN FOR CLARITY.

PROJECT NO.: R-2633BB
BRUNSWICK/NEW HANOVER ***COUNTY***
STATION: 353+32.50

SHEET 1 OF 1

PREPARED BY: TTW	DATE: 06 / 2013
REVIEWED BY: JYP / JRB	DATE: 06 / 2013

GEOTECHNICAL ENGINEERING UNIT

☒ ***EASTERN REGIONAL OFFICE***
☐ ***WESTERN REGIONAL OFFICE***
☐ ***CONTRACT OFFICE***

STATE OF NORTH CAROLINA
DEPARTMENT OF TRANSPORTATION
RALEIGH

EMBEDDED DATA COLLECTORS (EDC) FOR 30" SQUARE VOIDED PRESTRESSED CONCRETE PILE

REVISIONS

NO.	BY	DATE	NO.	BY	DATE
1			3		
2			4		

SHEET NO. S-228
TOTAL SHEETS 700

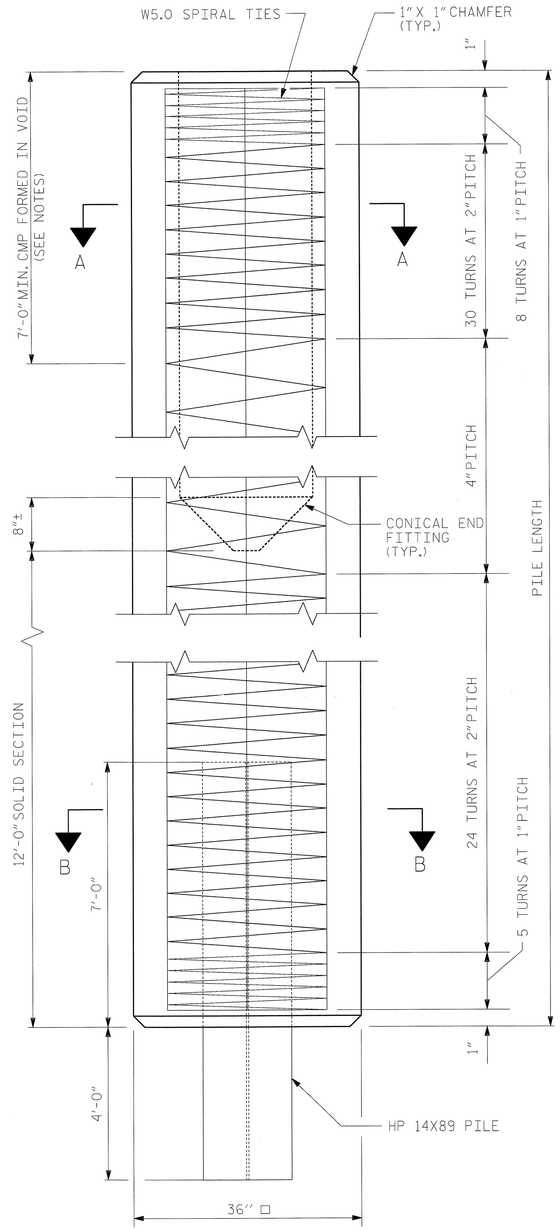

ELEVATION

QUANTITIES FOR ONE 36" SQUARE PILE								
	CONCRETE	PILE WT.	ONE POINT PICK-UP		TWO POINT PICK-UP		THREE POINT PICK-UP	
LENGTH	CU. YDS.	TONS	0.3L	0.7L	0.207L	0.586L	0.145L	0.355L
25'-0"	7.22	14.62	7'-6"	17'-6"				
30'-0"	8.44	17.09	9'-0"	21'-0"				
35'-0"	9.66	19.56	10'-6"	24'-6"				
40'-0"	10.88	22.03	12'-0"	28'-0"				
45'-0"	12.10	24.50	13'-6"	31'-6"				
50'-0"	13.32	26.96	15'-0"	35'-0"				
55'-0"	14.53	29.43	16'-6"	38'-6"				
60'-0"	15.75	31.90			12'-5"	35'-2"		
65'-0"	16.97	34.37			13'-5½"	38'-1"		
70'-0"	18.19	36.83			14'-6"	41'-0"		
75'-0"	19.41	39.30			15'-6½"	43'-11"		
80'-0"	20.63	41.77			16'-6½"	46'-11"		
85'-0"	21.85	44.24			17'-7"	49'-10"		
90'-0"	23.06	46.71			18'-7½"	52'-9"		
95'-0"	24.28	49.17			19'-8"	55'-8"		
100'-0"	25.50	51.64			20'-8½"	58'-7"		
105'-0"	26.72	54.11					15'-3"	37'-3"
110'-0"	27.94	56.58					15'-11½"	39'-0½"
115'-0"	29.16	59.04					16'-8"	40'-10"
120'-0"	30.38	61.51					17'-5"	42'-7"

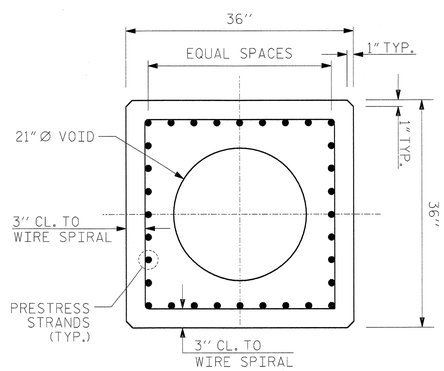

SECTION A-A

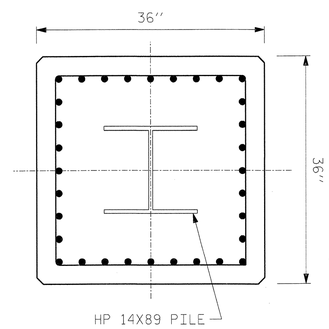

SECTION B-B

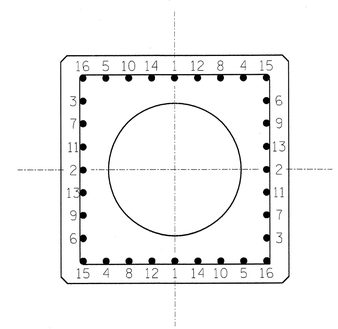

TYPICAL PATTERN FOR BURNING STRANDS

32 - 0.6"Ø GRADE 270 L.R. PRESTRESS STRANDS

NOTES

PRESTRESSED CONCRETE STRENGTH : f'c = 7,500 PSI

BUILD-UP CONCRETE STRENGTH : f'c = 7,500 PSI

STRAND DATA:

SIZE	GRADE	AREA	ULTIMATE STRENGTH	APPLIED PRESTRESS FORCE
0.6"	270 L.R.	0.217	58,600# PER STRAND	43,940# PER STRAND

ALL PRESTRESSING STRANDS SHALL BE 7-WIRE LOW-RELAXATION GRADE 270 STANDS CONFORMING TO AASHTO M203. STAND SAMPLING REQUIREMENTS SHALL BE IN ACCORDANCE WITH THE STANDARD SPECIFICATIONS.

THE SLIP-FORM METHOD OF CASTING PILES WILL NOT BE PERMITTED.

TRANSFER THE LOAD FROM THE ANCHORAGES TO THE PILE AFTER THE CONCRETE HAS ATTAINED A MINIMUM COMPRESSIVE STRENGTH OF 4,000 PSI.

IF STRAND STRESS IS RELIEVED BY BURNING, THE STRANDS SHALL BE BURNED IN OPPOSITE PAIRS AS INDICATED IN THE TYPICAL PATTERN SHOWN. FOR ANY NUMBER OF STRANDS, BURN IN OPPOSITE PAIRS AND SYMMETRICALLY ABOUT BOTH THE VERTICAL AND HORIZONTAL AXES. STRANDS 1-1 SHALL BE BURNED BEFORE 2-2, ETC. NOT MORE THAN 4 STRANDS, SAY 5-5 AND 6-6, MAY BE BURNED AT ANY ONE SECTION BEFORE THESE SAME PAIRS OF STRANDS ARE BURNED AT BOTH ENDS OF THE BED AND BETWEEN EACH PAIR OF PILES IN THE BED.

PROPOSED DEVICES FOR LIFTING PILES, RECESS DETAILS, AND PATCHING MATERIAL SHALL BE DETAILED IN SHOP DRAWINGS. AFTER ATTACHMENTS HAVE BEEN REMOVED, OPENINGS SHALL BE REPAIRED SUCH THAT THE APPEARANCE OF THE PILE IS UNIFORM.

WHERE CAST-IN-PLACE LIFTING DEVICES ARE NOT USED, PICK-UP POINTS ARE TO BE INDICATED WITH A 2" WIDE BLACK MARK.

DRIVE PILES USING A METHOD APPROVED BY THE ENGINEER, WHEREBY THE HEAD OF THE PILE IS NOT DAMAGED.

THE WATER/CEMENT RATIO FOR CONCRETE PILES SHALL NOT EXCEED 0.40.

PRESTRESSED CONCRETE PILES SHALL CONTAIN CALCIUM NITRITE CORROSION INHIBITOR. SEE STANDARD SPECIFICATIONS FOR CALCIUM NITRITE CORROSION INHIBITOR.

CORRUGATED METAL PIPE (CMP) SHALL BE FORMED IN VOID AS SHOWN. CMP SHALL BE GALVANIZED AND SHALL HAVE AN AMPLITUDE OF ½".

THE CONCRETE IN THE PILES SHALL CONTAIN SILICA FUME. SILICA FUME SHALL BE SUBSITUTED FOR 5% OF THE PORTLAND CEMENT BY WEIGHT. IF THE OPTION OF ARTICLE 1024-1 OF THE STANDARD SPECIFICATIONS TO PARTIALLY SUBSTITUTE CLASS F FLY ASH FOR PORTLAND CEMENT IS EXERCISED, THEN THE RATE OF FLY ASH SUBSTITUTION SHALL BE REDUCED TO 1.0 LB OF FLY ASH PER 1.0 LB. NO PAYMENT WILL BE MADE FOR THIS SUBSTITUTION AS IT IS CONSIDERED INCIDENTAL TO THE VARIOUS PAY ITEMS.

THE 21"Ø VOID IN THE PILE SHALL BE POSITIVELY VENTED TO WATER OR AIR AFTER THE FINAL PILE INSTALLATION. IF THE 1½"Ø VENTS ARE INCLUDED IN THE PILE CUT-OFF SECTION, TWO (2) NEW HOLES, 1½"Ø, SHALL BE DRILLED ON TWO (2) OPPOSITE FACES OF THE PILE BELOW THE BOTTOM OF SUBSTRUCTURE ELEVATION. IF THE PILE VOID CAN NOT BE VENTED DIRECTLY TO WATER OR AIR, THEN VENTING SHALL BE PROVIDED BY THE USE OF 1"Ø PVC CONDUIT THROUGH A SUBSTRUCTURE CAP OR COLUMN.

AFTER THE PILE IS DRIVEN AND CUT TO GRADE, THE TOP 7'-0" OF THE 21"Ø VOID SHALL BE FILLED WITH CONCRETE. PRIOR TO FILLING THE TOP 7'-0" OF THE 21"Ø VOID WITH CONCRETE, STRIP THE CARDBOARD FORM MATERIAL FROM THE VOID. A STAY-IN-PLACE CORRUGATED THIN WALL GALVANIZED PIPE MAY BE USED TO FORM THE VOID IN LIEU OF THE CARDBOARD FORM MATERIAL. THE CONCRETE FILL MATERIAL SHALL BE OF THE SAME TYPE AND STRENGTH AS CALLED FOR IN THE PILE CAP AND PAID FOR AS SUBSTRUCTURE CONCRETE.

PROJECT NO. R-2633BB

BRUNSWICK/NEW HANOVER COUNTY

STATION: 353+32.50

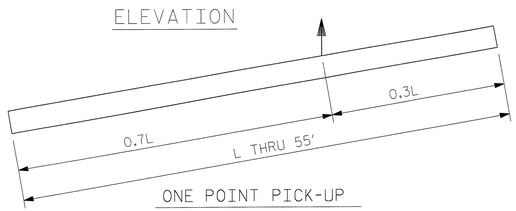

ONE POINT PICK-UP

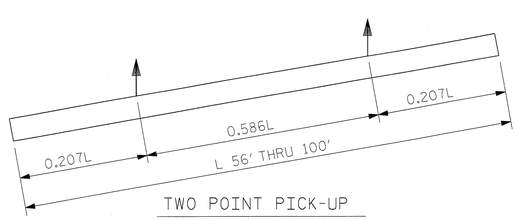

TWO POINT PICK-UP

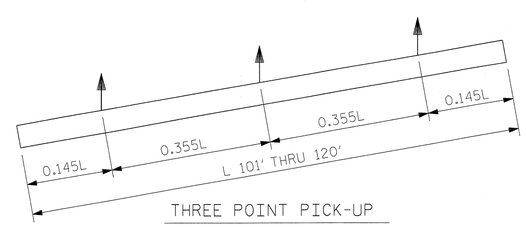

THREE POINT PICK-UP

PICK-UP POINTS

DRAWN BY :	MKO	DATE :	02/2013
CHECKED BY :	JMR	DATE :	02/2013
DESIGN ENGINEER OF RECORD :	J. ROBINSON	DATE :	05/2013

NORTH CAROLINA PROFESSIONAL SEAL 18442 ENGINEER RICHARD LEON BOLINGER, JR.

5-29-2013

RS&H IMPROVING YOUR WORLD

RS&H Architects-Engineers-Planners, Inc.
8601 Six Forks Road, Suite 260
Raleigh, NC 27615
919-846-6701 FAX 919-846-9080
www.rsandh.com
North Carolina License Nos. 50073 * F-0483 * C-28

STATE OF NORTH CAROLINA
DEPARTMENT OF TRANSPORTATION
RALEIGH

SUBSTRUCTURE

36" VOIDED PRESTRESSED CONCRETE PILE

REVISIONS							SHEET NO.
NO.	BY:	DATE:	NO.	BY:	DATE:		S-229
1			3				TOTAL SHEETS
2			4				700