CONTRACT: C203206 TIP PROJECT: P-5208A, P-5208C, P-5208G

STATE OF NORTH CAROLINA
NCDOT RAIL DIVISION

CABARRUS AND MECKLENBURG COUNTIES

STATE	STATE PROJECT REFERENCE NO.	SHEET NO.	TOTAL SHEETS
N.C.	P-5208A, P-5208C, P-5208G		

STATE PROJ. NO.	F. A. PROJ. NO.	DESCRIPTION
50000.1.STR03T1B		PE/UTIL PE
50000.1.STR04T3		PE/UTIL PE
50000.1.STR07T1B		PE/UTIL PE
50000.1.STR08T3		PE/UTIL PE
50000.1.STR11T1B		PE/UTIL PE
50000.1.STR12T3		PE/UTIL PE
43219.2.STR09P5208		ROW
50000.3.STR01T4A	FRA-FR-0006-10-01-00	CONST/UTIL CONST

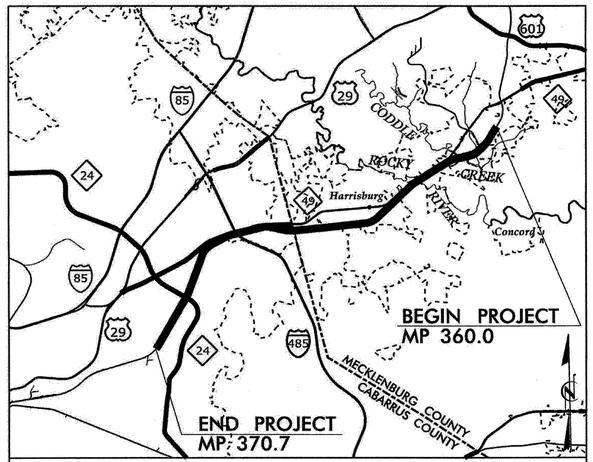

LOCATION: NCRR /NS MAINLINE HAYDOCK TO JUNKER RAILROAD ROADBED (MP 360.0 TO MP 370.7)

TYPE OF WORK: RAILROAD ROADBED, GRADING, DRAINAGE, PAVING, STRUCTURES, AND RETAINING WALLS

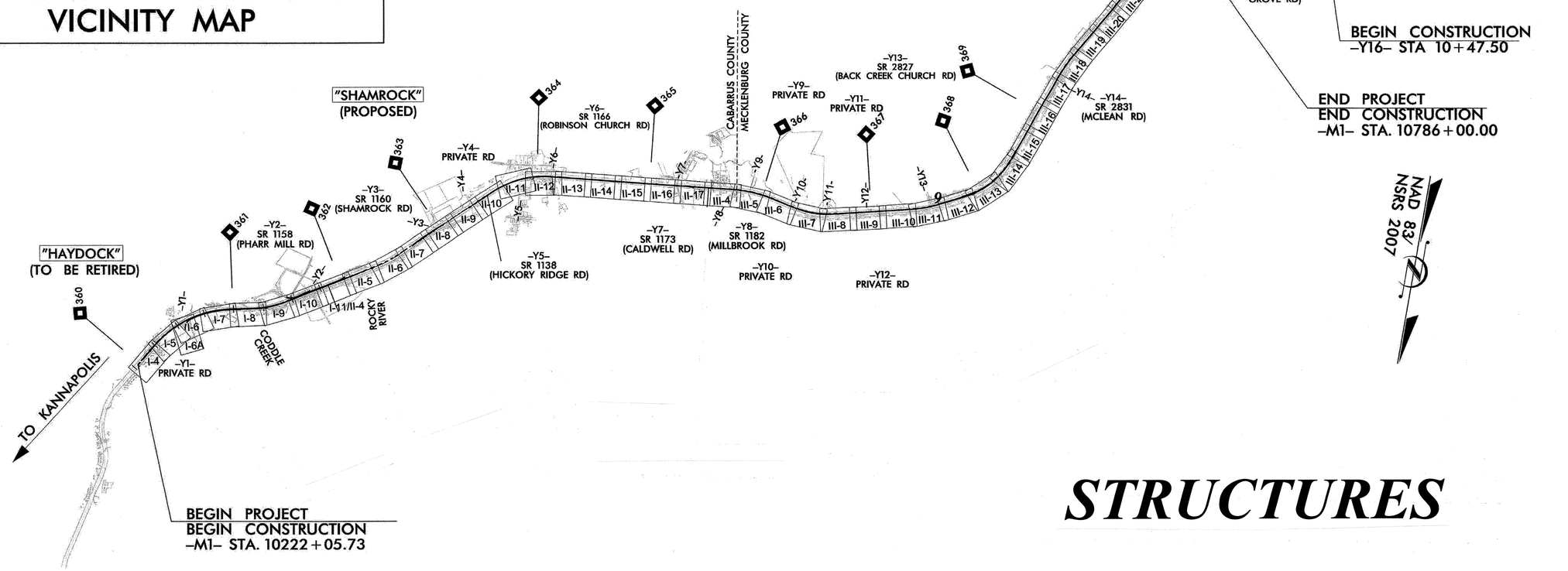

STRUCTURES

PROJECT LENGTH

LENGTH OF RAIL TIP PROJECT P-5208A	1.882 mi.
LENGTH OF STRUCTURES TIP PROJECT P-5208A	0.030 mi.
TOTAL LENGTH OF TIP PROJECT P-5208A	1.912 mi.
LENGTH OF RAIL TIP PROJECT P-5208C	3.013 mi.
LENGTH OF STRUCTURES TIP PROJECT P-5208C	0.020 mi.
TOTAL LENGTH OF TIP PROJECT P-5208C	3.033 mi.
LENGTH OF RAIL TIP PROJECT P-5208G	5.107 mi.
LENGTH OF STRUCTURES TIP PROJECT P-5208G	0.038 mi.
TOTAL LENGTH OF TIP PROJECT P-5208G	5.145 mi.
LENGTH OF RAIL TIP PROJECT P-5208	10.002 mi.
LENGTH OF STRUCTURES TIP PROJECT P-5208	0.088 mi.
TOTAL LENGTH OF TIP PROJECT P-5208	10.090 mi.

2012 STANDARD SPECIFICATIONS

LETTING DATE:
JULY 16, 2013

Prepared in the Office of:
HDR Engineering, Inc. of the Carolinas
440 S. Church Street, Suite 1000, Charlotte, NC 28202
N.C.B.E.L.S. License Number: F-0116

E. LEICHT, PE
RAIL PROJECT ENGINEER
B. SMYTHE, PE
NCDOT RAIL DIVISION CONTACT

Prepared in the Office of:
HNTB NORTH CAROLINA, P.C.
343 E. Six Forks Road, Suite 200
Raleigh, North Carolina 27609
NC License No: C-1554

C. VERNIER, PE
RAIL PROJECT ENGINEER
B. SMYTHE, PE
NCDOT RAIL DIVISION CONTACT

Prepared in the Office of:
AECOM
NC FIRM LICENSE No: F-0342
701 Corporate Center Drive, Suite 475
Raleigh, NC 27607
(919) 854-6200 - (919) 854-6259(FAX)

R. BIRMINGHAM, PE
RAIL PROJECT ENGINEER
B. SMYTHE, PE
NCDOT RAIL DIVISION CONTACT

NC DEPARTMENT OF TRANSPORTATION
RAIL DIVISION

DESIGN AND CONSTRUCTION BRANCH
CAPITAL YARD
1556 MAIL SERVICE CENTER
RALEIGH, NC 27699-1556

TIP PROJECT: *P-5208A*

CONTRACT: C203206

STATE OF NORTH CAROLINA
NCDOT RAIL DIVISION

STATE	STATE PROJECT REFERENCE NO.	SHEET NO.	TOTAL SHEETS
N.C.	P-5208A	1	35

STATE PROJ. NO.	F.A. PROJ. NO.	DESCRIPTION
50000.1.STR03T1B		PE/UTIL PE
50000.1.STR04T3		PE/UTIL PE
43219.2.STR09P5208		ROW
50000.3.STR01T4A	FRA-FR-HSR-0006-10-01-00	CONST/UTIL CONST

CABARRUS COUNTY

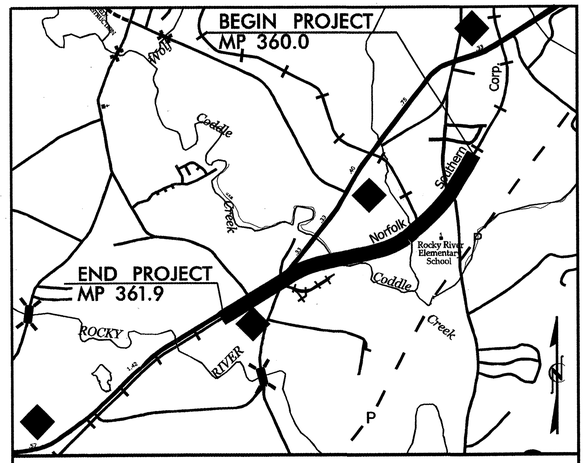

VICINITY MAP

LOCATION: ***NCRR BRIDGE NO. 361.10 OVER CODDLE CREEK AND BRIDGE NO. 360.60 CULVERT EXTENSION***

TYPE OF WORK: STRUCTURES

NORTH CAROLINA RAILROAD (NCRR) BRIDGE NO. 361.10 OVER CODDLE CREEK AND BRIDGE NO. 360.60 CULVERT EXTENSION – RFC BRIDGE PLANS

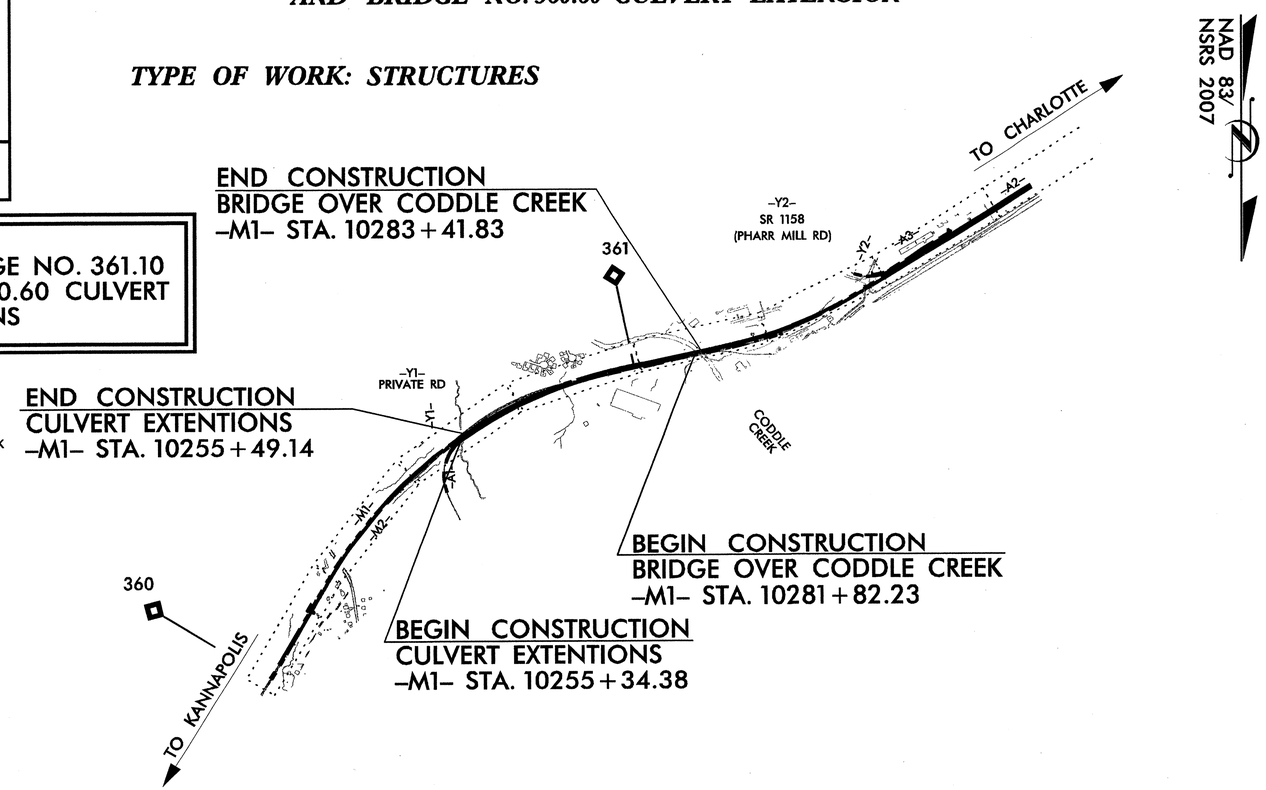

LIST OF DRAWINGS:

SHEET NO.	DESCRIPTION
1.	COVER SHEET
2.	GENERAL DRAWING – BRIDGE ON NCRR MAINLINE OVER CODDLE CREEK
3.	GENERAL DRAWING – FOUNDATION LAYOUT
4.	GENERAL DRAWING – LOCATION SKETCH
5.	GENERAL DRAWING – GENERAL NOTES AND TOTAL BILL OF MATERIAL
6.	SUPERSTRUCTURE – TYPICAL SECTIONS
7.	SUPERSTRUCTURE – PLAN OF SPANS
8.	SUPERSTRUCTURE – FRAMING PLAN AND GIRDER ELEVATION SPAN A
9.	SUPERSTRUCTURE – FRAMING PLAN AND GIRDER ELEVATION SPAN B
10.	SUPERSTRUCTURE – FRAMING PLAN AND GIRDER ELEVATION SPAN C
11.	SUPERSTRUCTURE – STRUCTURAL STEEL NOTES
12.	SUPERSTRUCTURE – STEEL DETAILS
13.	SUPERSTRUCRURE – STEEL DETAILS
14.	SUPERSTRUCTURE – BEARING DETAILS
15.	SUPERSTRUCTURE – HANDRAIL DETAILS
16.	SUPERSTRUCTURE – BILL OF MATERIAL
17.	SUBSTRUCTURE – END BENT 1
18.	SUBSTRUCTURE – END BENT 1 PILE CAP PLAN
19.	SUBSTRUCTURE – END BENT 1 WINGWALL DETAILS
20.	SUBSTRUCTURE – END BENT 1 WINGWALL DETAILS
21.	SUBSTRUCTURE – END BENT 1 BILL OF MATERIAL
22.	SUBSTRUCTURE – BENT 1
23.	SUBSTRUCTURE – BENT 1 PILE CAP AND DETAILS
24.	SUBSTRUCTURE – BENT 2
25.	SUBSTRUCTURE – BENT 2 PILE CAP AND DETAILS
26	SUBSTRUCTURE – END BENT 2
27.	SUBSTRUCTURE – END BENT 2 PILE CAP PLAN
28.	SUBSTRUCTURE – END BENT 2 WINGWALL DETAILS
29.	RIP RAP DETAILS
30.	16' ARCH CULVERT FOR CULVERT EXTENSION UNDER RAILROAD
31.	16' ARCH CULVERT
32.	16' ARCH CULVERT DETAILS
33.	16' ARCH CULVERT – DETAILS FOR W1
34.	16' ARCH CULVERT – DETAILS FOR W2
35.	16' ARCH CULVERT BILL OF MATERIAL

SUBMITTAL: ***RFC***
DATE: ***MAY 24, 2013***

Prepared In the Office of:
HDR Engineering, Inc. of the Carolinas
440 S. Church Street, Suite 1000, Charlotte, NC 28202
N.C.B.E.L.S. License Number: F-0116

2012 STANDARD SPECIFICATIONS

RIGHT OF WAY DATE:
SEPTEMBER 2012

LETTING DATE:
JULY 16, 2013

E. LEICHT, PE
RAIL PROJECT ENGINEER
E. LEICHT, PE
RAIL PROJECT DESIGN ENGINEER
M. DARBY, PE
HYDRAULICS PROJECT DESIGN ENGINEER
D. STATON, PE
STRUCTURAL PROJECT DESIGN ENGINEER
B. SMYTHE, PE
NCDOT PROJECT MANAGER

STRUCTURAL ENGINEER

NORTH CAROLINA PROFESSIONAL SEAL 027252 ENGINEER DEREK C. STATON

SIGNATURE: P.E.

NC DEPARTMENT OF TRANSPORTATION
RAIL DIVISION

PLANNING AND DEVELOPMENT BRANCH
CAPITAL YARD
1556 MAIL SERVICE CENTER
RALEIGH, NC 27699-1556

5/31/2013
c:\pwworking\tpa\d0370696\P-5208A_1.dgn

0041DEL_P10a1
0001ADD_P10a1

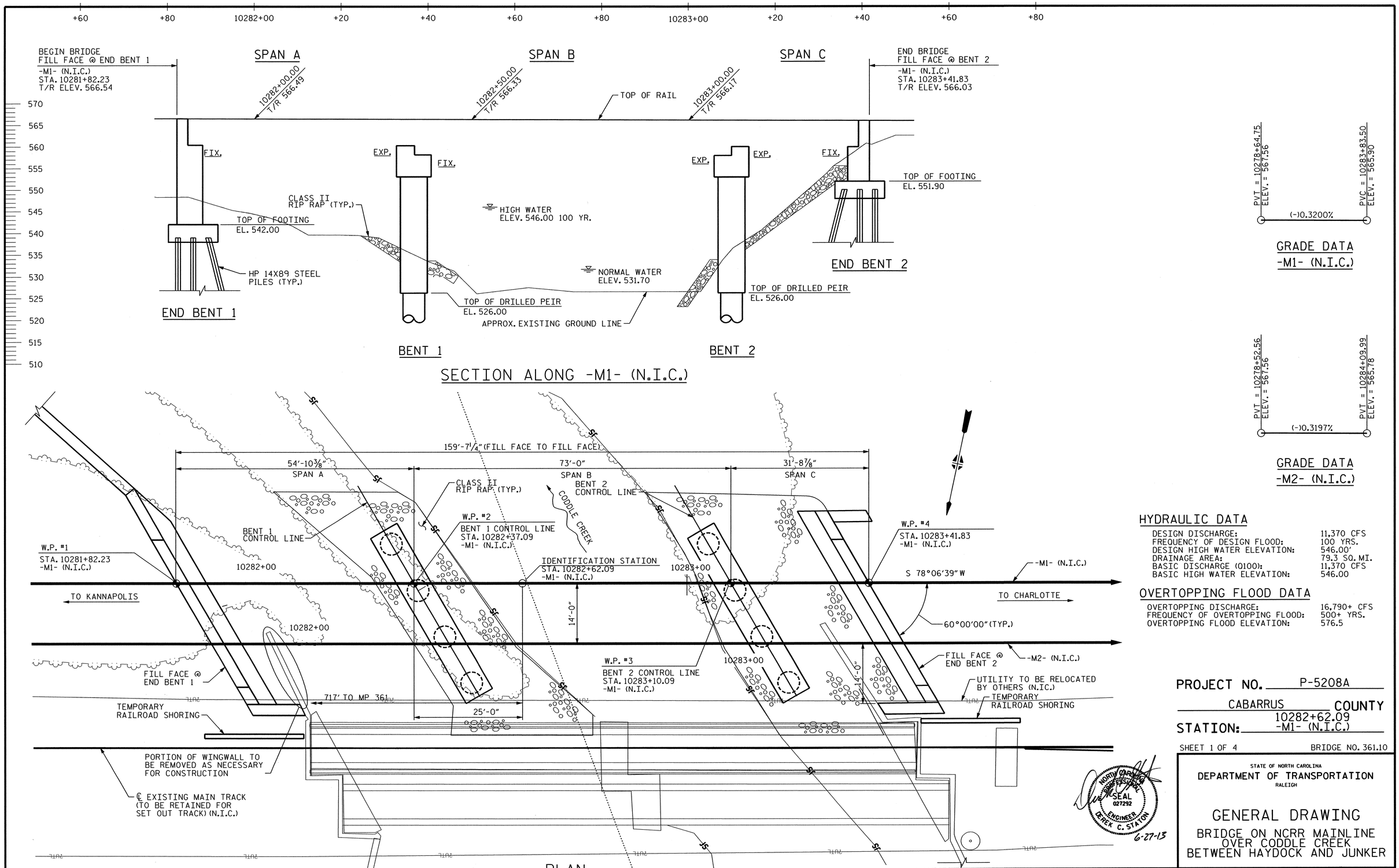

HYDRAULIC DATA

DESIGN DISCHARGE:	11,370 CFS
FREQUENCY OF DESIGN FLOOD:	100 YRS.
DESIGN HIGH WATER ELEVATION:	546.00'
DRAINAGE AREA:	79.3 SQ. MI.
BASIC DISCHARGE (Q100):	11,370 CFS
BASIC HIGH WATER ELEVATION:	546.00

OVERTOPPING FLOOD DATA

OVERTOPPING DISCHARGE:	16,790+ CFS
FREQUENCY OF OVERTOPPING FLOOD:	500+ YRS.
OVERTOPPING FLOOD ELEVATION:	576.5

PROJECT NO. P-5208A

CABARRUS COUNTY

STATION: 10282+62.09 -M1- (N.I.C.)

SHEET 1 OF 4 BRIDGE NO. 361.10

NORTH CAROLINA PROFESSIONAL SEAL 027292 ENGINEER DEREK C. STATON

6-27-13

STATE OF NORTH CAROLINA
DEPARTMENT OF TRANSPORTATION
RALEIGH

GENERAL DRAWING

BRIDGE ON NCRR MAINLINE
OVER CODDLE CREEK
BETWEEN HAYDOCK AND JUNKER

HDR Engineering, Inc. of the Carolinas
440 S. Church Street, Suite 1000, Charlotte, NC 28202
N.C.B.E.L.S. License Number: F-0116

REVISIONS						SHEET NO.
NO.	BY:	DATE:	NO.	BY:	DATE:	ST-02
1	--	--	3	--	--	TOTAL SHEETS
2	--	--	4	--	--	35

DRAWN BY : LNM DATE : 03/13
CHECKED BY : KKM DATE : 03/13

$$$$$$SYSTIME$$$$$
$$$$$$$$$$$$$$$$$$$$$$DGN$$$$$$$$$$$$$$$$$$$$$$
USERNAME

0041DEL_P10a1
0001ADD_P10a1

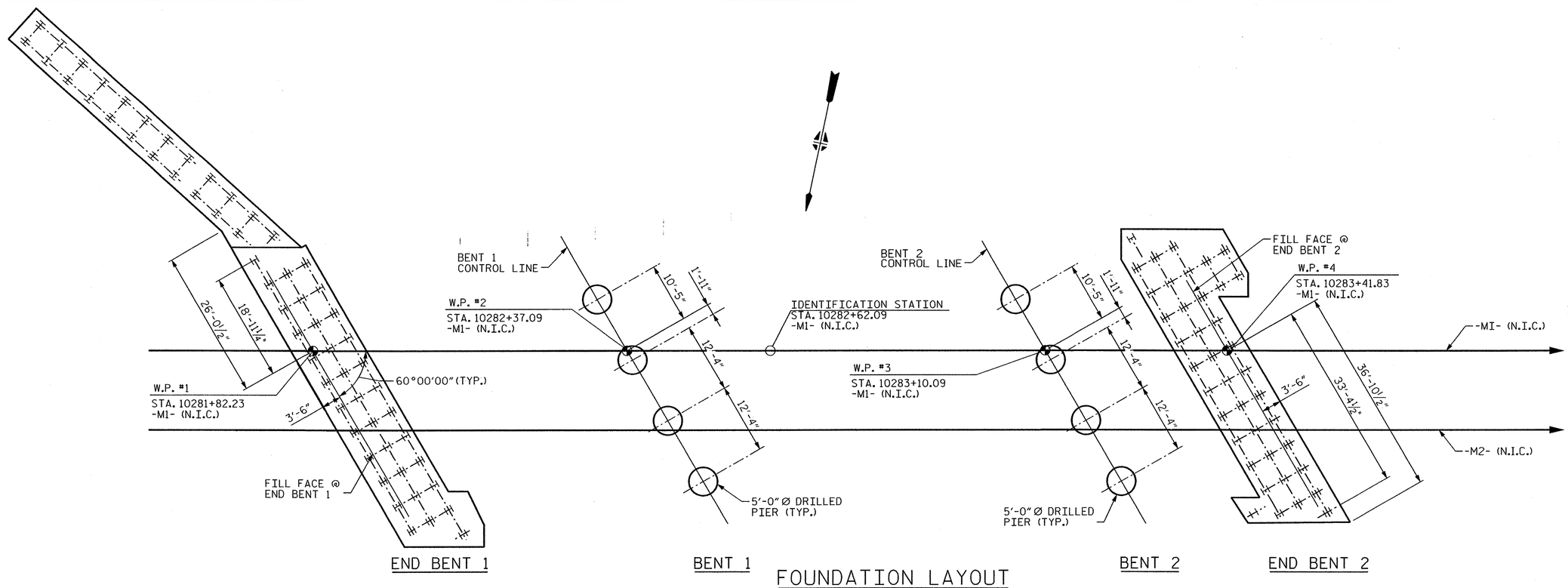

FOUNDATION LAYOUT

SEE SHEETS ST-18, ST-23, ST-25 AND ST-27 FOR PILE LAYOUT AND FOOTING INFORMATION.

FOUNDATION NOTES

FOR PILES, SEE SECTION 450 OF THE STANDARD SPECIFICATIONS.

THE ALLOWABLE BEARING CAPACITY FOR PILES AT END BENT NO. 1 AND END BENT NO. 2 IS 125 TONS PER PILE.

DRIVE PILES AT END BENT NO. 1 AND END BENT NO. 2 TO A REQUIRED BEARING CAPACITY OF 250 TONS PER PILE. THE REQUIRED BEARING CAPACITY IS EQUAL TO THE ALLOWABLE BEARING CAPACITY WITH A MINIMUM FACTOR OF SAFETY OF TWO.

STEEL PILE POINTS ARE REQUIRED FOR STEEL PILES AT END BENT NO. 1 AND END BENT NO. 2.

IT HAS BEEN ESTIMATED THAT A HAMMER WITH AN EQUIVALENT RATED ENERGY IN THE RANGE OF 30,000 TO 55,000 FT-LBS PER BLOW WILL BE REQUIRED TO DRIVE PILES. THIS ESTIMATED ENERGY RANGE DOES NOT RELEASE THE CONTRACTOR FROM PROVIDING DRIVING EQUIPMENT IN ACCORDANCE WITH SUBARTICLE 450-3(D)(2) OF THE STANDARD SPECIFICATIONS.

FOR DRILLED PIERS, SEE SECTION 411 OF THE STANDARD SPECIFICATIONS.

DRILLED PIERS AT BENT NO. 1 ARE DESIGNED FOR BOTH SKIN FRICTION AND END BEARING. CHECK FIELD CONDITIONS FOR THE REQUIRED END BEARING CAPACITY OF 5 TSF.

DRILLED PIERS AT BENT NO. 2 ARE DESIGNED FOR BOTH SKIN FRICTION AND END BEARING. CHECK FIELD CONDITIONS FOR THE REQUIRED END BEARING CAPACITY OF 12 TSF.

INSTALL DRILLED PIERS AT BENT NO. 1 THAT EXTEND TO AN ELEVATION NO HIGHER THAN 492.0 FT. SATISFY THE REQUIRED END BEARING CAPACITY AND HAVE A MINIMUM PENETRATION OF 15.3 FT INTO ROCK AS DEFINED BY ARTICLE 411-1 OF THE STANDARD SPECIFICATIONS.

INSTALL DRILLED PIERS AT BENT NO. 2 THAT EXTEND TO AN ELEVATION NO HIGHER THAN 492.0 FT. SATISFY THE REQUIRED END BEARING CAPACITY AND HAVE A MINIMUM PENETRATION OF 11.8 FT INTO ROCK AS DEFINED BY ARTICLE 411-1 OF THE STANDARD SPECIFICATIONS.

THE SCOUR CRITICAL ELEVATION FOR BENT NO. 1 IS 525.1 FT AND FOR BENT NO. 2 IS 511.2 FT. SCOUR CRITICAL ELEVATIONS ARE USED TO MONITOR POSSIBLE SCOUR PROBLEMS DURING THE LIFE OF THE STRUCTURE.

SID INSPECTIONS MAY BE REQUIRED FOR DRILLED PIERS. THE ENGINEER WILL DETERMINE THE NEED FOR SID INSPECTIONS.

CSL TUBES AND TESTING ARE REQUIRED FOR DRILLED PIERS AT BENT NO. 1 AND BENT NO. 2. FOR CROSSHOLE SONIC LOGGING, SEE THE STANDARD SPECIFICATIONS.

GEOGRID REINFORCED BACKFILL IS REQUIRED BEHIND END BENT 2. REFER TO THE SPECIAL PROVISION AND STRUCTURE PLANS FOR DETAILS.

TENCATE MIRAFI MIRAGRID 20XT, OR APPROVED EQUIVALENT, SHALL BE USED AS THE GEOGRID REINFORCEMENT. THE GEOGRID SHOULD EXTEND A MINIMUM DISTANCE OF 35 FEET BEHIND END BENT 2 AND HAVE NO LESS THAN 10 LAYERS OF REINFORECMENT.

SELECT GRANULAR MATERIAL (CLASS IV, V OR VI) IN ACCORDANCE WITH SECTION 1016 OF THE NCDOT STANDARD SPECIFICATIONS SHOULD BE USED AS BACKFILL IN THE REINFORCED ZONE.

A DELMAG D19-32 PILE HAMMER WAS UTILIZED AS A COMMON HAMMER TYPE TO DETERMINE POTENTIAL PILE DRIVING STRESSES. THIS HAMMER SHOULD PROVIDE SUFFICIENT ENERGY TO DRIVE THE PILES TO THE REQUIRED DRIVING RESISTANCE AT THE END BENTS. THE ACTUAL HAMMER TO BE UTILIZED WILL BE SUBMITTED BY THE CONTRACTOR AND ANALYZED AFTER LETTING.

RIP RAP SLOPE PROTECTION AS SHOWN ON THE GENERAL DRAWING WILL BE USED AT BENT NO. 1, BENT NO. 2 AND END BENT 2.

PROJECT NO. P-5208A

CABARRUS COUNTY

STATION: 10282+62.09 -M1- (N.I.C.)

SHEET 2 OF 4 MILE POST: 361.10

NORTH CAROLINA PROFESSIONAL SEAL 027292 ENGINEER DEREK C. STATON

7-8-13

HDR Engineering, Inc. of the Carolinas
440 S. Church Street, Suite 1000, Charlotte, NC 28202
N.C.B.E.L.S. License Number: F-0116

STATE OF NORTH CAROLINA
DEPARTMENT OF TRANSPORTATION
RALEIGH

GENERAL DRAWING

FOUNDATION LAYOUT

REVISIONS						SHEET NO.
NO.	BY:	DATE:	NO.	BY:	DATE:	ST-03
1	--	--	3	--	--	TOTAL SHEETS
2	--	--	4	--	--	35

DRAWN BY : KKM DATE : 03/13
CHECKED BY : LNM DATE : 03/13

$$$$$$SYSTIME$$$$$
$$$$$$$$$$$$$$$$$$$$$$DGN$$$$$$$$$$$$$$$$$$$$$$
USERNAME

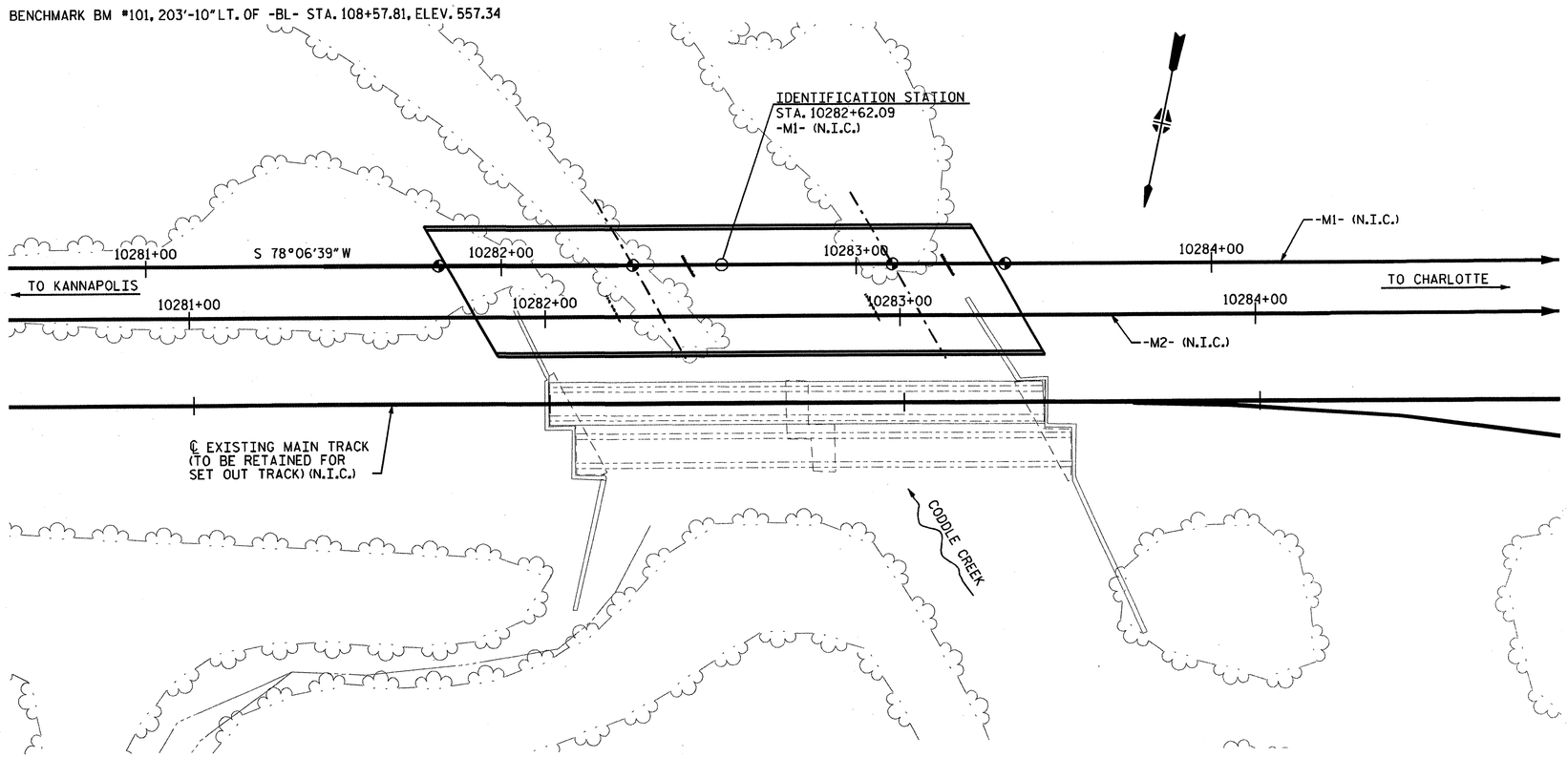

LOCATION SKETCH

NOTES

ASSUMED LIVE LOAD: AREMA E80 OR ALTERNATE LIVE LOAD

FOR DESIGN DATA AND GENERAL NOTES, SEE SHEET SN.

FOR SUBMITTAL OF WORKING DRAWINGS, SEE SPECIAL PROVISIONS.

FOR FALSEWORK AND FORMWORK, SEE SPECIAL PROVISIONS.

FOR CRANE SAFETY, SEE SPECIAL PROVISIONS.

FOR TEMPORARY RAILROAD SHORING, SEE SPECIAL PROVISIONS.

FOR WATERPROOFING, SEE SPECIAL PROVISIONS.

FOR GROUT FOR STRUCTURES, SEE SPECIAL PROVISIONS.

FOR PORTLAND CEMENT, SEE SPECIAL PROVISIONS.

FOR FINE AND COARSE AGGREGATE, SEE SPECIAL PROVISIONS.

FOR STRUCTURE DRAINAGE SYSTEM, SEE SPECIAL PROVISIONS.

FOR BACKFILLING AROUND STRUCTURES, SEE SPECIAL PROVISIONS.

FOR CONCRETE PARAPET, SEE SPECIAL PROVISIONS.

FOR STRUCTURAL STEEL, SEE SPECIAL PROVISIONS.

FOR PAINTING STRUCUTRAL STEEL, SEE SPECIAL PROVISIONS.

THE CONTRACTOR SHALL PROVIDE INDEPENDENT ASSURANCE SAMPLES OF REINFORCING STEEL AS FOLLOWS: FOR PROJECTS REQUIRING UP TO 400 TONS OF REINFORCING STEEL, ONE 30 INCH SAMPLE OF EACH SIZE BAR USED, AND FOR PROJECTS REQUIRING OVER 400 TONS OF REINFORCING STEEL, TWO 30 INCH SAMPLES OF EACH SIZE BAR USED. THE BARS FROM WHICH THE SAMPLES ARE TAKEN MUST THEN BE SPLICED WITH REPLACEMENT BARS OF THE SIZE AND LENGTH OF THE SAMPLE, PLUS A MINIMUM LAP SPLICE OF THIRTY BAR DIAMETERS. PAYMENT FOR THE SAMPLES OF REINFORCING STEEL SHALL BE CONSIDERED INCIDENTAL TO VARIOUS PAY ITEMS.

FOR UTILITY INFORMATION, SEE UTILITY PLANS AND SPECIFICATIONS.

FOR RIP RAP, SEE "RIP RAP DETAILS" SHEET.

THE SUBSTRUCTURE OF THE EXISTING BRIDGE INDICATED ON THE PLANS IS FROM THE BEST INFORMATION AVAILABLE. SINCE THIS INFORMATION IS SHOWN FOR THE CONVENIENCE OF THE CONTRACTOR, THE CONTRACTOR SHALL HAVE NO CLAIM WHATSOEVER AGAINST THE DEPARTMENT OF TRANSPORTATION FOR ANY DELAYS OR ADDITIONAL COST INCURRED BASED ON DIFFERENCES BETWEEN THE EXISTING BRIDGE SUBSTRUCTURE SHOWN ON THE PLANS AND THE ACTUAL CONDITIONS AT THE PROJECT SITE.

MODIFICATION OF THE EXISTING BRIDGE WINGWALL SHALL BE PERFORMED SO AS NOT TO ALLOW DEBRIS TO FALL INTO THE WATER. THE CONTRACTOR SHALL SUBMIT PLANS FOR DEMOLITION IN ACCORDANCE WITH THE ARTICLE 402-2 OF THE STANDARD SPECIFICATIONS.

PAYMENT FOR PARTIAL REMOVAL OF EXISTING WINGWALL AT END BENT 1 SHALL BE INCLUDED IN THE VARIOUS PAY ITEMS.

PROJECT NO. P-5208A

CABARRUS **COUNTY**

STATION: 10282+62.09 -M1- (N.I.C.)

SHEET 3 OF 4 MILE POST: 361.10

NORTH CAROLINA PROFESSIONAL SEAL 027292 ENGINEER DEREK C. STATON

6-3-13

STATE OF NORTH CAROLINA
DEPARTMENT OF TRANSPORTATION
RALEIGH

GENERAL DRAWING

LOCATION SKETCH

HDR Engineering, Inc. of the Carolinas
440 S. Church Street, Suite 1000, Charlotte, NC 28202
N.C.B.E.L.S. License Number: F-0116

REVISIONS						SHEET NO.
NO.	BY:	DATE:	NO.	BY:	DATE:	ST-04
1	--	--	3	--	--	TOTAL SHEETS
2	--	--	4	--	--	35

DRAWN BY : LNM DATE : 03/13
CHECKED BY : KKM DATE : 03/13

$$$$$$$SYSTIME$$$$$
$$$$$$$$$$$$$$$$$$$$$$DGN$$$$$$$$$$$$$$$$$$$$$$$
USERNAME

0041DEL_P10a1
0001ADD_P10a1

TOTAL BILL OF MATERIAL

		TEMPORARY RAILROAD SHORING	FOUNDATION EXCAVATION	5'-0" DIA. DRILLED PIER NOT IN SOIL	5'-0" DIA. DRILLED PIER IN SOIL	SID INSPECTION	CSL TESTING	SPIRAL COLUMN REINFORCING STEEL	REINFORCED CONCRETE DECK SLAB	CLASS AA CONCRETE (BRIDGE)	REINFORCING STEEL (BRIDGE)	APPROX. 580,580 LBS STRUCTURAL STEEL	PAINTING OF STRUCTURAL STEEL	HP 14x89 STEEL PILES		STEEL PILE POINTS	WATER-PROOFING	METHOD B DAMP-PROOFING	METAL RAIL	CONCRETE PARAPET	RIP RAP CLASS II (2'-0" THICK)	GEOTEXTILE FOR DRAINAGE	STURCTURE DRAINAGE SYSTEM	REINFORCED BACKFILL
		LUMP SUM	LUMP SUM	LF	LF	EACH	EACH	LBS	SF	CY	LBS	LUMP SUM	LUMP SUM	NO.	LF	NO.	SY	SY	LF	LF	TONS	SY	LUMP SUM	SY
BRIDGE	SUPERSTRUCTURE								5,508			LUMP SUM	LUMP SUM				530		321	306			LUMP SUM	
	END BENT 1	LUMP SUM	LUMP SUM							437.4	72,486			58	1,943	58		385						
	BENT 1			72	64	4	1	5,801		350.9	89,646							98			238	160		
	BENT 2			67	69	4	1	5,801		350.9	89,646							108			253	107		
	END BENT 2	LUMP SUM	LUMP SUM							256.8	44,568			40	1,100	40		103			211	97		210
	BRIDGE TOTAL	LUMP SUM	LUMP SUM	139	133	8	2	11,602	5,508	1,396.0	296,346	LUMP SUM	LUMP SUM	98	3,043	98	530	694	321	306	702	364	LUMP SUM	210

GENERAL NOTES:*

STANDARD SPECIFICATIONS:

2012 EDITION OF THE AMERICAN RAILWAY ENGINEERING AND MAINTENANCE OF WAY ASSOCIATION (AREMA) "MANUAL FOR RAILWAY ENGINEERING".

NORFOLK SOUTHERN UNDERPASS GRADE SEPARATION DESIGN CRITERIA

NORFOLK SOUTHERN RAIL DIVISION - RAILROAD DESIGN CRITERIA VERSION 1.0

DESIGN CRITERIA:

ALL STEEL SUPERSTRUCTURE MEMBERS ARE DESIGNED BY THE ALLOWABLE STRESS DESIGN METHOD.
DEAD LOAD: WEIGHT OF RAIL AND FASTENINGS, CONCRETE DECK, BALLAST (INCLUDING 6" FUTURE BALLAST).
LIVE LOAD: COOPER E-80 LOADING
IMPACT: APPLICABLE PERCENTAGE FOR ROLLING EQUIPMENT WITHOUT HAMMER BLOW
WIND LOAD: PER AREMA CHAPTER 8-2.2.3
LIVE LOAD: 85 PSF
ON WALKWAY

DESIGN STRESSES:

STEEL (SUPERSTRUCTURE) Fy = 50 KSI

CAST-IN-PLACE CONCRETE (SUBSTRUCTURE) F'c = 4500 PSI AT 28 DAYS CLASS AA
CAST-IN-PLACE CONCRETE (DECK & CURB) F'c = 5000 PSI AT 28 DAYS
REINFORCEMENT STEEL (A775) Fy = 60 KSI
REINFORCEMENT STEEL (A615) Fy = 60 KSI

MATERIALS:

WATERPROOFING:

CONTRACTOR SHALL APPLY AN ELASTOMERIC WATERPROOFING MEMBRANE TO THE TOP SURFACE OF THE BRIDGE DECK AND THE INSIDE FACE OF THE CURBS USING THE ELIMINATOR SPRAY-ON SYSTEM AS MANUFACTIRED BY STIRLING LLOYD OR AN APPROVED EQUAL. CONTRACTOR TO SUBMIT TO ENGINEER FOR APPROVAL PRIOR TO APPLICATION.

DAMPPROOFING:

DAMPPROOF BENTS UP TO GROUND LINE. BACK OF WINGWALLS, BACKWALLS & ABUTMENT SURFACE WITH METHOD "B" DAMPPROOFING.

GROUT:

FOR GROUT FOR STRUCTURE, SEE SPECIAL PROVISIONS.

CONCRETE:

CONCRETE SHALL BE IN ACCORDANCE WITH CHAPTER 8, CONCRETE STRUCTURES, OF THE AREMA SPECIFICATIONS

UNLESS OTHERWISE REQUIRED ON PLANS, CLASS AA CONCRETE SHALL BE USED FOR ALL PORTIONS OF SUBSTRUCTURES AND 5,000 PSI CONCRETE SHALL BE USED FOR ALL PORTIONS OF SUPERSTRUCUTRE. CLASS II CONCRETE SHALL BE USED FOR SLOPE PROTECTION AND RIP RAP.

UNLESS OTHERWISE NOTED ON THE PLANS, ALL EXPOSED CORNERS ON STRUCTURES SHALL BE CHAMFERED 3/4" WITH THE FOLLOWING EXCEPTIONS: TOP CORNERS OF CURBS MAY BE ROUNDED TO 1-1/2" RADIUS WHICH IS BUILT INTO CURB FORMS; CORNERS OF TRANSVERSE FLOOR EXPANSION JOINTS SHALL BE ROUNDED A 1/4" FINISHING TOOL UNLESS OTHERWISE REQUIRED ON PLANS, AND CORNERS OF EXPANSION JOINTS IN THE ROADWAY FACES AND TOPS OF CURBS AND SIDEWALKS SHALL BE ROUNDED TO A 1/4" RADIUS WITH A FINISHING STONE OR TOOL UNLESS OTHERWISE REQUIRED ON PLANS

DOWEL INSTALLATION:

DOWELS WHEN INDICATED ON PLANS AS FOR CULVERT EXTENSIONS, SHALL BE EMBEDDED AT LEAST 12" INTO THE OLD CONCRETE AND GROUTED INTO PLACE WITH 1:2 CEMENT MORTAR.

WELDING:

ALL WELDING SHALL BE IN ACCORDANCE WITH CURRENT AREMA SPECIFICATIONS AND THE PROJECT SPECIFICATIONS. WELDING TO BE IN ACCORDANCE WITH AMERICAN WELDING SOCIETY STRUCTURAL WELDING CODE D1.5, CURRENT ISSUE. ALL WELDS TO BE CONTINUOUS UNLESS OTHERWISE SHOWN. ALL WELDERS TO BE QUALIFIED IN ACCORDANCE WITH AWS. STRUCTURAL WELDING CODE OR OTHER REGULATIONS MEETING WITH THE APPROVAL OF THE ENGINEER. ALL FIELD WELDS TO BE MADE WITH E7018 LOW HYDROGEN ELECTRODES WITH ON-SITE PROTECTION AND USE OF ELECTRODE HEATING UNITS PER CURRENT AWS SPECIFICATIONS.

CONTROL OF ALL WORK:

ALL WORK INVOLVED IN THE CONSTRUCTION OF THE RAILWAY STRUCTURE SHALL BE PERFORMED SATISFACTORY TO THE ENGINEER AND NORFOLK SOUTHERN RAILWAY COMPANY. ALL METHODS OF HANDLING WORK AFFECTING THE SAFETY OF RAIL OPERATIONS MUST BE APPROVED BY THE RAILWAY ENGINEER BEFORE PROCEEDING WITH THAT PORTION OF THE WORK. RAIL TRAFFIC SHALL AT ALL TIMES SHALL BE MAINTAINED AND PROTECTED. THE CONTRACTOR SHALL NOT AT ANY TIME DELAYOR INTERFERE WITH RAIL OPERATIONS.

CONSTRUCTION REQUIREMENTS:

ALL WORK SHALL BE IN ACCORDANCE WITH CURRENT AREMA MANUAL FOR RAILWAY ENGINEERING AND THE PROJECT SPECIFICATIONS FOR THIS CONTRACT.

THE CONTRACTOR SHALL NOT INTERFERE WITH OR PERFORM ANY CONSTRUCTION ON OR NEAR OPERATING TRACKS WITHOUT THE RAILROAD'S PERMISSION. WHEN THE CONTRACTOR IS WORKING NEAR ANY TRACK, HE WILL BE REQUIRED TO HAVE A FLAGMAN FROM THE RAILROAD ON DUTY. CONTRACTOR SHALL NOT SCALE DIMENSIONS FROM THE CONTRACT PLANS FOR CONSTRUCTION PURPOSES. SCALES ARE SHOWN FOR INFORMATION ONLY. NO CONSTRUCTION JOINTS, EXCEPT THOSE SHOWN ON THE PLANS, WILL BE ALLOWED UNLESS APPROVED BY THE ENGINEER.

ALLOWANCE FOR DEAD LOAD DEFLECTION, SETTLEMENT, ETC. IN CASTING SUPERSTRUCTURES:

BRIDGES SHALL BE BUILT ON THE GRADE OR VERTICAL CURVE SHOWN ON PLANS. SLABS, CURBS AND PARAPETS SHALL CONFORM TO THE GRADE OR CURVE.

ALL DIMENSIONS WHICH ARE GIVEN IN SECTION AND ARE AFFECTED BY DEAD LOAD DEFLECTIONS ARE DIMENSIONS AT CENTER LINE OF BEARING UNLESS OTHERWISE NOTED ON PLANS. IN SETTING FORMS FOR STEEL BEAM BRIDGES AND PRESTRESSED CONCRETE GIRDER BRIDGES, ADJUSTMENTS SHALL BE MADE DUE TO THE DEAD LOAD DEFLECTIONS FOR THE ELEVATIONS SHOWN. WHERE BLOCKS ARE SHOWN OVER BEAMS FOR BUILDING UP THE SLAB, THE VERTICAL DIMENSIONS OF THE BLOCKS SHALL BE ADJUSTED BETWEEN BEARINGS TO COMPENSATE FOR DEAD LOAD DEFLECTIONS, VERTICAL CURVE ORDINATE, AND ACTUAL BEAM CAMBER. WHERE BOTTOM OF SLAB IS IN LINE WITH BOTTOM OF TOP FLANGES, DEPTH OF SLAB BETWEEN BEARINGS SHALL BE ADJUSTED TO COMPENSATE FOR DEAD LOAD DEFLECTION, VERTICAL CURVE ORDINATE, AND ACTUAL BEAM CAMBER.

IN SETTING FALSEWORK AND FORMS FOR REINFORCED CONCRETE SPANS, AN ALLOWANCE SHALL BE MADE FOR DEAD LOAD DEFLECTIONS, SETTLEMENT OF FALSEWORK, AND PERMANENT CAMBER WHICH SHALL BE PROVIDED FOR IN ADDITION TO THE ELEVATIONS SHOWN. AFTER REMOVAL OF THE FALSEWORK, THE FINISHED STRUCTURES SHALL CONFORM TO THE PROFILE AND ELEVATIONS SHOWN ON THE PLANS AND CONSTRUCTION ELEVATIONS FURNISHED BY THE ENGINEER.

DETAILED DRAWINGS FOR FALSEWORK OR FORMS FOR BRIDGE SUPERSTRUCTURE AND STRUCTURE OR PARTS OF A STRUCTURE AS NOTED ON THE PLANS SHALL BE SUBMITTED TO THE ENGINEER FOR APPROVAL BEFORE CONSTRUCTION OF THE FALSEWORK OR FORMS IS STARTED.

REINFORCING STEEL:

ALL REINFORCEMENT BARS SHALL BE IN ACCORDANCE WITH CHAPTER 8, CONCRETE STRUCTURES, OF THE AREMA SPECIFICATIONS.

REINFORCING BAR STEEL FOR CAST-IN-PLACE CONCRETE DECKS AND CURB SHALL BE NEW BILLET STEEL CONFORMING TO ASTM SPECIFICATION A775, GRADE 60, FOR EXPOXY-COATED REINFORCING BARS.

REINFORCING BAR STEEL FOR CONCRETE SUBSTRUCTURE MODIFICATIONS SHALL BE NEW BILLET STEEL CONFORMING TO ASTM SPECIFICATION A615, GRADE 60, FOR UNCOATED REINFORCING BARS.

REINFORCING BARS SHALL MEET THE LAP REQUIREMENTS AS SPECIFED.

ALL BAR SUPPORTS USED IN THE CURBS AND DECKS SHALL BE EPOXY-COATED IN ACCORDANCE WITH THE PROJECT SPECIFICATIONS.

ALL DIMENSIONS FOR REINFORCING BARS REFER TO THE CENTERLINE OF BAR EXCEPT IN THE BAR BENDING DETAILS WHERE DIMENSIONS ARE OUT-TO-OUT.

THE MINIMUM CLEAR DISTANCE FROM THE REINFORCING STEEL TO SURFACE OF THE CONCRETE SHALL BE IN ACCORDANCE WITH AREMA CHAPTER 8 - CONCRETE STRUCTURES, SECTION 2.6.1 - MINIMUM CONCRETE COVER.

FABRICATION, BENDING, AND PLACEMENT OF REINFORCING STEEL SHALL BE IN ACCORDANCE WITH CURRENT AREMA GUIDELINES FOR CONCRETE STRUCTURES AND FOUNDATIONS.

HANDRAIL AND POSTS:

METAL STANDARDS AND FACES OF THE CONCRETE END POSTS FOR THE METAL RAIL SHALL BE SET NORMAL TO THE GRADE OF THE CURB, UNLESS OTHERWISE SHOWN ON PLANS. THE METAL RAIL AND TOPS OF CONCRETE POSTS USED WITH THE ALUMINUM RAIL SHALL BE BUILT PARALLEL TO THE GRADE OF THE CURB.

METAL HANDRAILS SHALL BE IN ACCORDANCE WITH THE PLANS. RAILS SHALL BE AS MANUFACTURED FOR BRIDGE RAILING. CASTING SHALL BE IN A UNIFORM APPEARANCE. FINS AND OTHER DEFORMATIONS RESULTING FROM CASTING OR OTHERWISE SHALL BE REMOVED IN A MANNER SO THAT A UNIFORM COLORING OF THE COMPLETED CASTING SHALL BE OBTAINED. CASTING WITH DISCOLORATIONS OR NON-UNIFORM COLORING WILL NOT BE ACCEPTED. CERTIFIED MILL REPORTS ARE REQUIRED FOR METAL RAILS AND POSTS.

SPECIAL NOTES:

GENERALLY, IN CASE OF DISCREPANCY, THIS STANDARD SHEET OF NOTES SHALL GOVERN OVER THE SPECIFICATIONS, BUT THE REMAINDER OF THE PLANS SHALL GOVERN OVER NOTES HERON, AND SPECIAL PROVISIONS SHALL GOVERN OVER ALL. SEE SPECIFICATIONS ARTICLE 105-4

(*) FOR ADDITIONAL NOTES, SEE "LOCATION SKETCH" SHEET.

ABBREVIATIONS

ABT.	ABOUT	F.S.	FAR SIDE
APPROX.	APPROXIMATE	GALV.	GALVANIZED
&	AND	IF	INSIDE FACE
BF	BACK FACE	INT.	INTERMEDIATE
BRG.	BEARING	LBS.	POUNDS
C/C	CENTER TO CENTER	MAX.	MAXIMUM
CL	CENTERLINE	MIN.	MINIMUM
CLR.	CLEAR	NO.	NUMBER
CONC.	CONCRETE	N.S.	NEAR SIDE
CONN.	CONNECTION	OF	OUTSIDE FACE
CY	CUBIC YARDS	PL	PLATE
DIA.	DIAMETER	PROP.	PROPOSED
DIM.	DIMENSION	SHT.	SHEET
DWG.	DRAWING	SIM.	SIMILAR
EA.	EACH	SPA.	SPACE
E.F.	EACH FACE	STA.	STATION
ELEV.	ELEVATION	STD.	STANDARD
ENC.	ENCASEMENT	TYP.	TYPICAL
EQ.	EQUAL	T/R	TOP OF RAIL
E.S.	EACH SIDE		
EXIST.	EXISTING		
FF	FRONT FACE		

MINIMUM SPLICE LENGTHS

BAR SIZE	EPOXY COATED	UNCOATED
#4	2'-0"	1'-9"
#5	2'-6"	2'-2"
#6	3'-10"	2'-7"
#7	4'-11"	3'-3"
#8	6'-5"	4'-3"
#9	8'-2"	5'-5"
#10	10'-3"	6'-10"
#11	12'-9"	8'-5"

NORTH CAROLINA PROFESSIONAL SEAL 027292 ENGINEER DEREK C. STATON
7-8-13

PROJECT NO. P-5208A
CABARRUS COUNTY
STATION: 10282+62.09 -M1- (N.I.C.)
SHEET 4 OF 4 MILE POST: 361.10

STATE OF NORTH CAROLINA
DEPARTMENT OF TRANSPORTATION
RALEIGH

GENERAL DRAWING

GENERAL NOTES AND TOTAL BILL OF MATERIAL

HDR Engineering, Inc. of the Carolinas
440 S. Church Street, Suite 1000, Charlotte, NC 28202
N.C.B.E.L.S. License Number: F-0116

REVISIONS						SHEET NO.
NO.	BY:	DATE:	NO.	BY:	DATE:	ST-05
1	--	--	3	--	--	TOTAL SHEETS
2	--	--	4	--	--	35

DRAWN BY : KKM DATE : 03/13
CHECKED BY : KKM DATE : 03/13

$$$$$$SYSTIME$$$$$
$$$$$$$$$$$$$$$$$$$$$$DGN$$$$$$$$$$$$$$$$$$$$$$$$
USERNAME

NOTES

ALL REINFORCING STEEL FOR DECK SHALL BE EPOXY COATED.

FOR DECK REINFORCING STEEL DETAIL AND DRAINAGE DETAILS, SEE "PLAN OF SPANS" SHEET.

SHIFT REINFORCING STEEL SLIGHTLY TO AVOID SHEAR CONNECTORS.

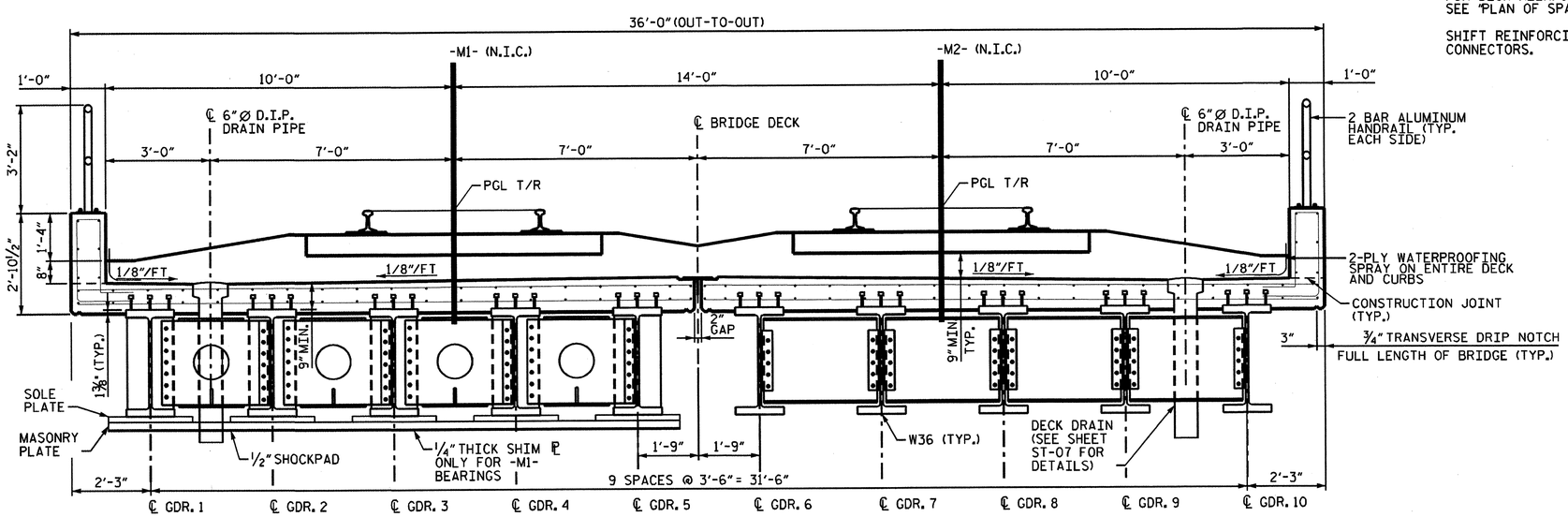

HALF SECTION AT BENT
(TYP. FOR -M1- & -M2- U.N.O.)

TYPICAL SECTION
SPANS A AND C

HALF SECTION AT MID-SPAN
(TYP. FOR -M1- & -M2- U.N.O.)

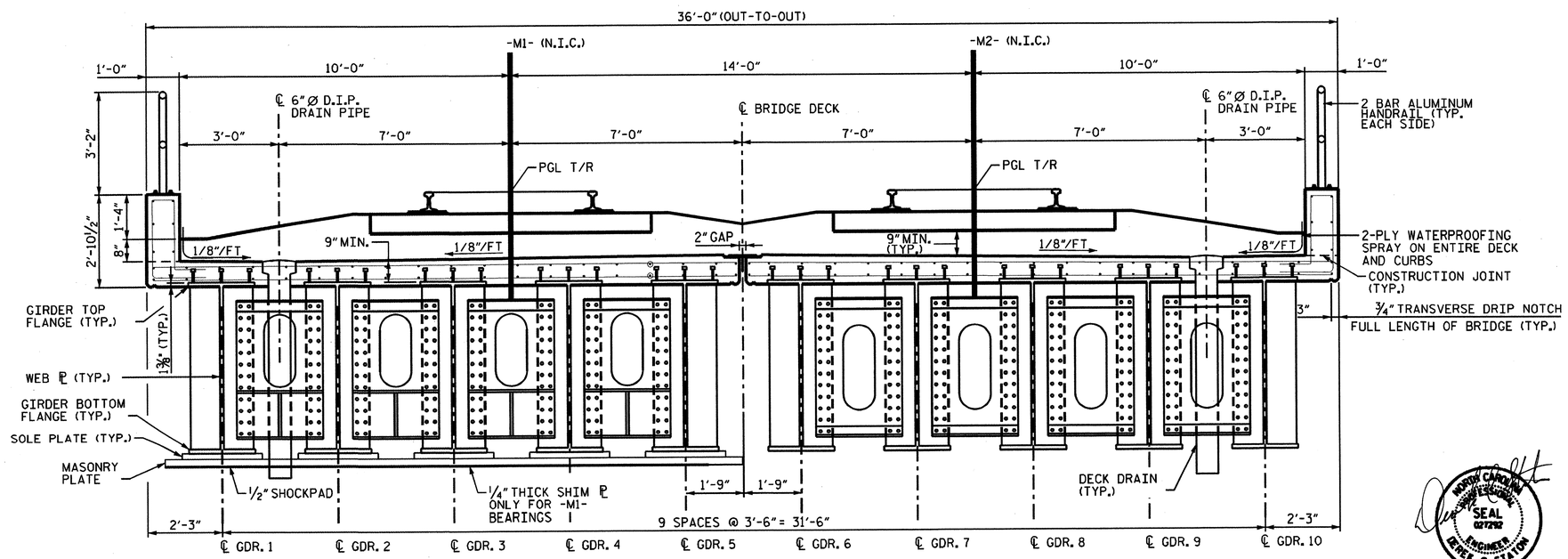

HALF SECTION AT BENT
(TYP. FOR -M1- & -M2- U.N.O.)

TYPICAL SECTION
SPAN B

HALF SECTION AT MID-SPAN
(TYP. FOR -M1- & -M2- U.N.O.)

NORTH CAROLINA PROFESSIONAL SEAL 027212 ENGINEER DEREK C. STATON
6-3-13

PROJECT NO. P-5208A
CABARRUS COUNTY
STATION: 10282+62.09 -M1-(N.I.C.)
MILE POST: 361.10

STATE OF NORTH CAROLINA
DEPARTMENT OF TRANSPORTATION
RALEIGH

SUPERSTRUCTURE
TYPICAL SECTIONS

HDR Engineering, Inc. of the Carolinas
440 S. Church Street, Suite 1000, Charlotte, NC 28202
N.C.B.E.L.S. License Number: F-0116

REVISIONS							SHEET NO.
NO.	BY:	DATE:	NO.	BY:	DATE:		ST-06
1	--	--	3	--	--		TOTAL SHEETS
2	--	--	4	--	--		35

DRAWN BY : LNM DATE : 03/13
CHECKED BY : KKM DATE : 03/13

\$\$\$\$\$\$SYSTIME\$\$\$\$\$
\$DGN\$
USERNAME

0041DEL_P10a1
0001ADD_P10a1

NOTE

1. ALL REINFORCING STEEL SHALL BE EPOXY COATED.
2. SLAB BARS MAY BE SHIFTED SLIGHTLY TO AVOID DECK DRAIN LOCATIONS.

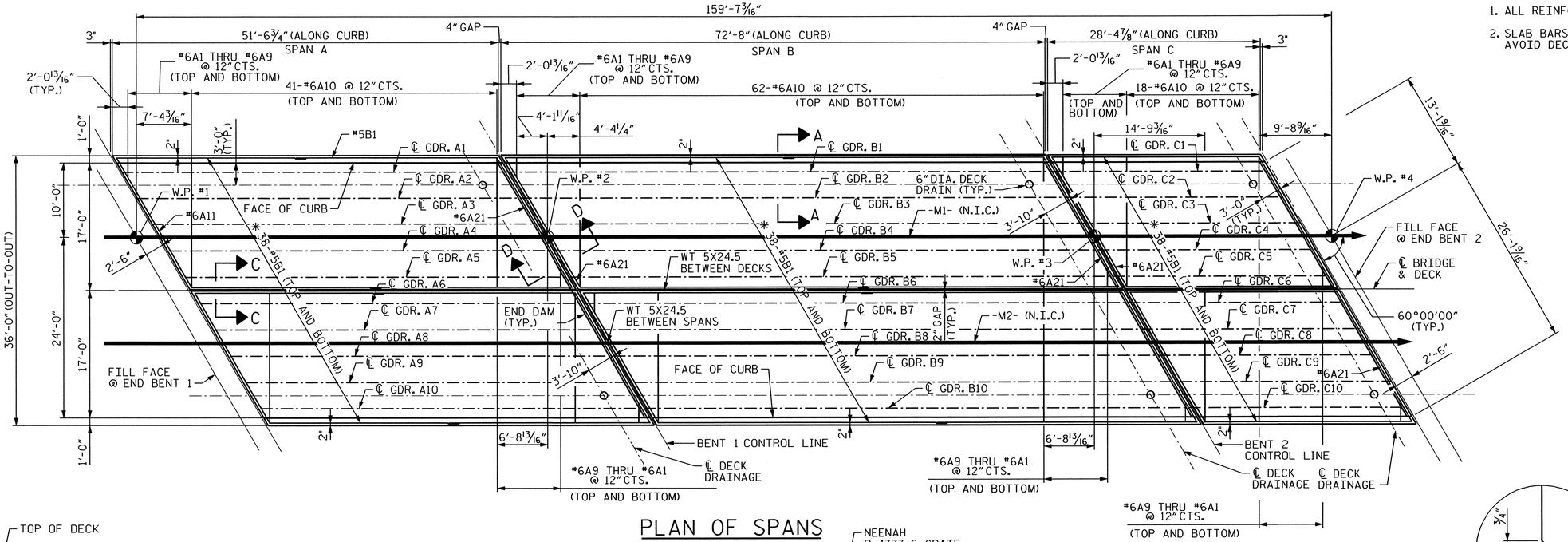

PLAN OF SPANS

✱ FOR B1 BAR SPACING, SEE TYPICAL DECK SECTION.

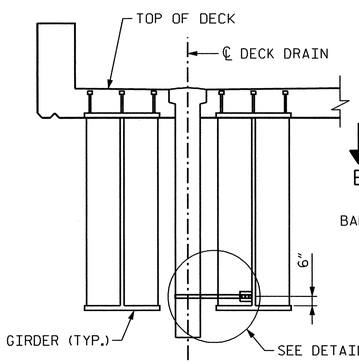

SECTION A-A

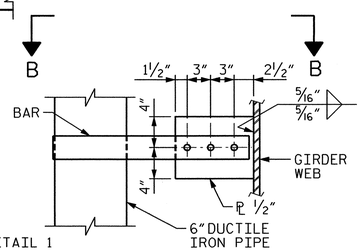

DETAIL 1

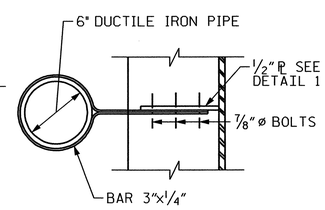

SECTION B-B

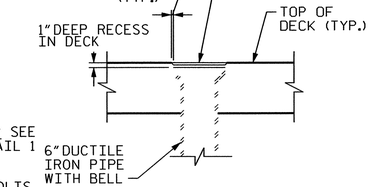

DECK DRAIN DETAIL

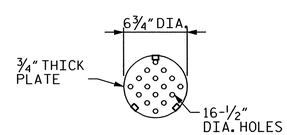

CAST IRON GRATE

NOTE: ALTERNATE TYPE GRATES WILL BE CONSIDERED.

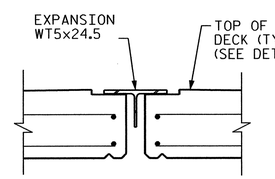

SECTIONS C-C

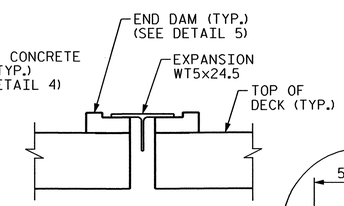

SECTIONS D-D

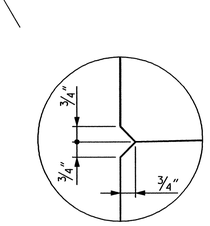

DETAIL 2

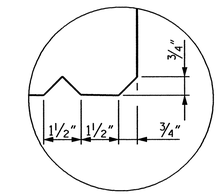

DETAIL 3

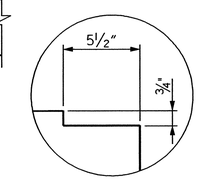

DETAIL 4

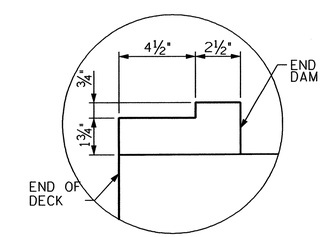

DETAIL 5

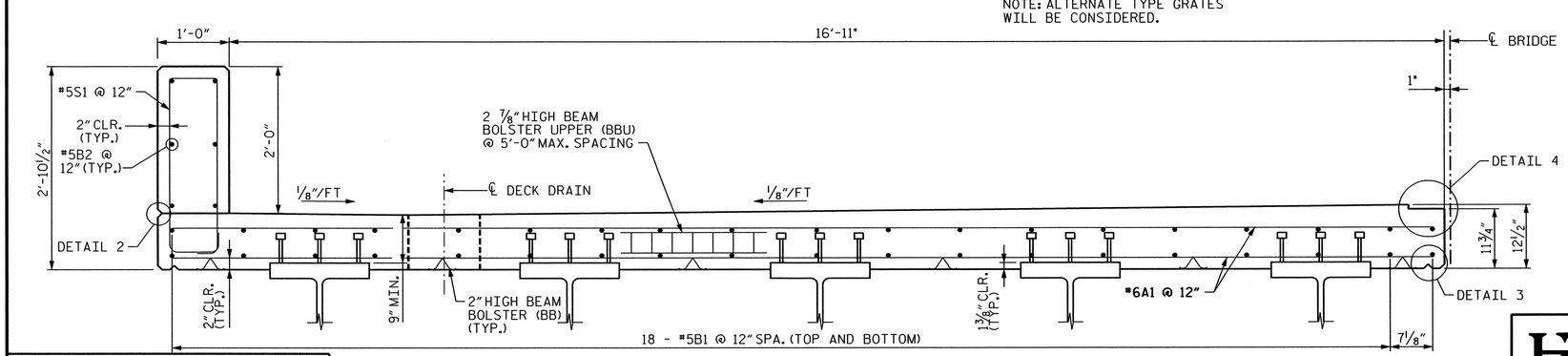

TYPICAL DECK SECTION

PROJECT NO. P-5208A

CABARRUS COUNTY

STATION: 10282+62.09 -M1- (N.I.C)

MILE POST: 361.10

STATE OF NORTH CAROLINA
DEPARTMENT OF TRANSPORTATION
RALEIGH

SUPERSTRUCTURE

PLAN OF SPANS

NORTH CAROLINA PROFESSIONAL SEAL 027292 ENGINEER DEREK C. STATON
6-27-13

HDR Engineering, Inc. of the Carolinas
440 S. Church Street, Suite 1000, Charlotte, NC 28202
N.C.B.E.L.S. License Number: F-0116

REVISIONS						SHEET NO.
NO.	BY:	DATE:	NO.	BY:	DATE:	ST-07
1	--	--	3	--	--	TOTAL SHEETS
2	--		4	--	--	35

DRAWN BY : LNM DATE : 03/13
CHECKED BY : KKM DATE : 03/13

$$$$$$SYSTIME$$$$$
$$$$$$$$$$$$$$$$$$$$$$DGN$$$$$$$$$$$$$$$$$$$$$$
USERNAME

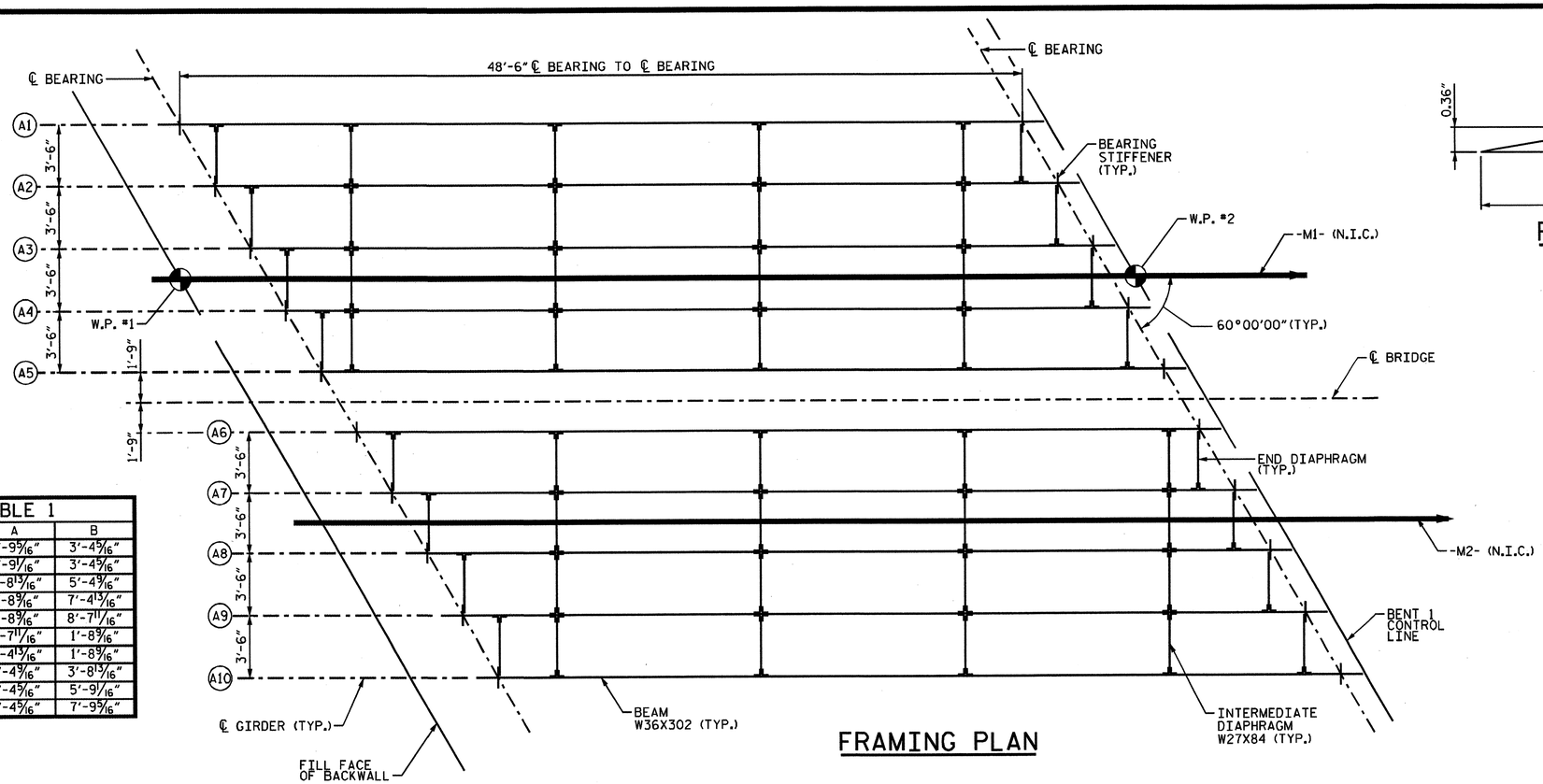

FRAMING PLAN

TABLE 1		
GIRDER	A	B
A1	7'-9 5/16"	3'-4 5/16"
A2	5'-9 1/16"	3'-4 5/16"
A3	3'-8 13/16"	5'-4 9/16"
A4	1'-8 9/16"	7'-4 13/16"
A5	1'-8 9/16"	8'-7 11/16"
A6	8'-7 11/16"	1'-8 9/16"
A7	7'-4 13/16"	1'-8 9/16"
A8	5'-4 9/16"	3'-8 13/16"
A9	3'-4 5/16"	5'-9 1/16"
A10	3'-4 5/16"	7'-9 5/16"

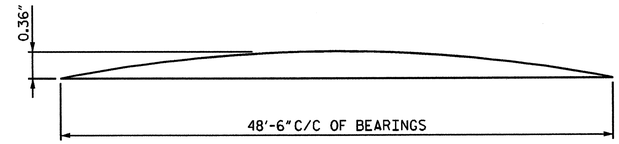

PARABOLIC CAMBER DIAGRAM

NOTES

FOR DIAPHRAGM AND STIFFENER DETAILS, SEE "STEEL DETAILS" SHEETS.

FOR BEARING DETAILS, SEE "BEARING DETAILS" SHEET.

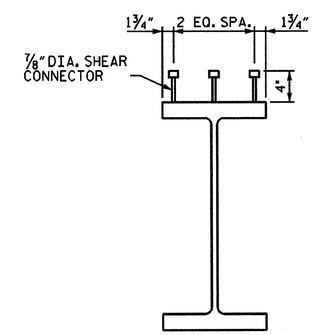

SHEAR CONNECTOR DETAIL

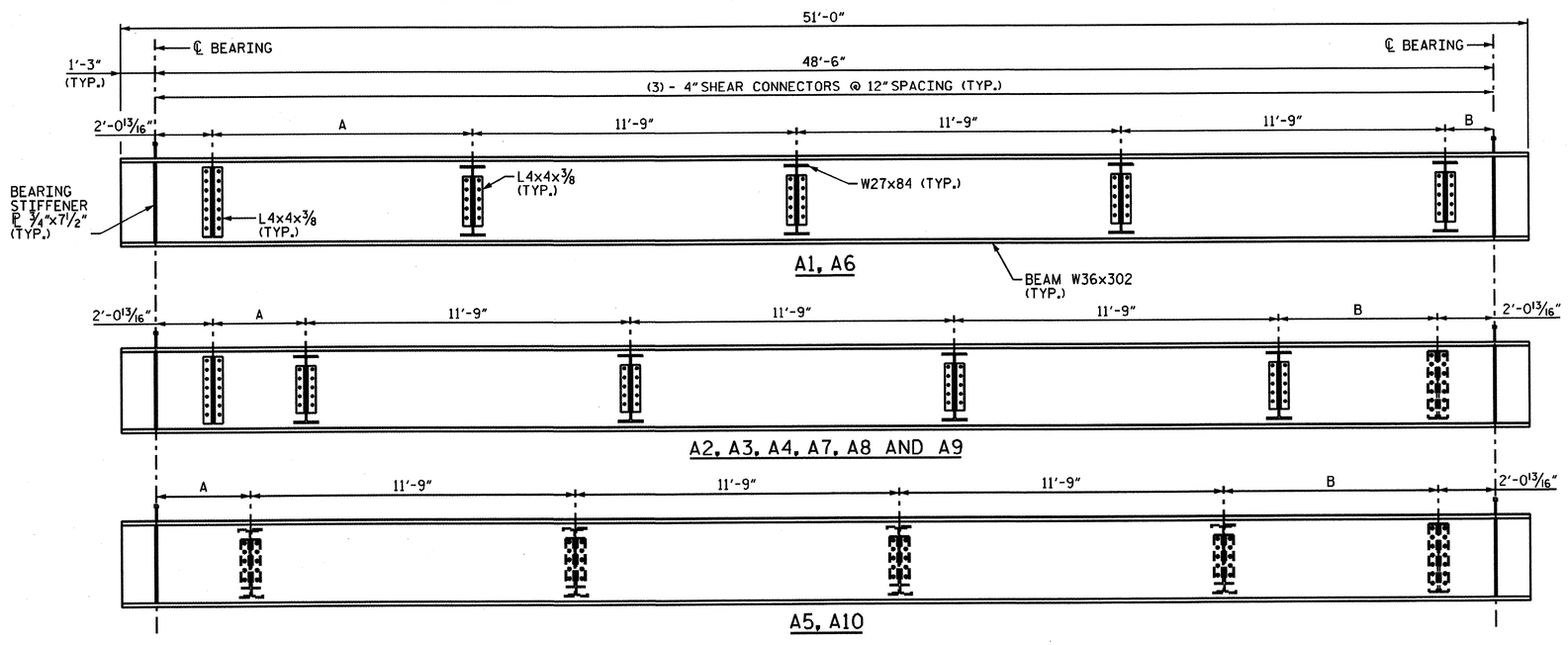

GIRDER ELEVATION

PROJECT NO. P-5208A

CABARRUS COUNTY

STATION: 10282+62.09 -M1- (N.I.C.)

SHEET 1 OF 3 MILE POST: 361.10

STATE OF NORTH CAROLINA
DEPARTMENT OF TRANSPORTATION
RALEIGH

SUPERSTRUCTURE

FRAMING PLAN AND GIRDER ELEVATION SPAN A

NORTH CAROLINA PROFESSIONAL SEAL 027292 ENGINEER DEREK C. STATON 6-3-13

HDR Engineering, Inc. of the Carolinas
440 S. Church Street, Suite 1000, Charlotte, NC 28202
N.C.B.E.L.S. License Number: F-0116

REVISIONS						SHEET NO.
NO.	BY:	DATE:	NO.	BY:	DATE:	ST-08
1	--	--	3	--	--	TOTAL SHEETS
2	--	--	4	--	--	35

DRAWN BY : LNM DATE : 03/13
CHECKED BY : KKM DATE : 03/13

$$$$$$$SYSTIME$$$$$
$$$$$$$$$$$$$$$$$$$$DGN$$$$$$$$$$$$$$$$$$$$$$
USERNAME

TABLE 2		
GIRDER	A	B
B1	8'-7⅝"	2'-5⅛"
B2	6'-7⅝"	2'-5⅛"
B3	4'-7⅛"	4'-6⅛"
B4	2'-6⅛"	6'-6⅜"
B5	2'-6⅛"	8'-6⅝"
B6	8'-6⅝"	2'-6⅛"
B7	6'-6⅜"	2'-6⅛"
B8	4'-6⅛"	4'-7⅛"
B9	2'-5⅞"	6'-7⅝"
B10	2'-5⅛"	8'-7⅝"

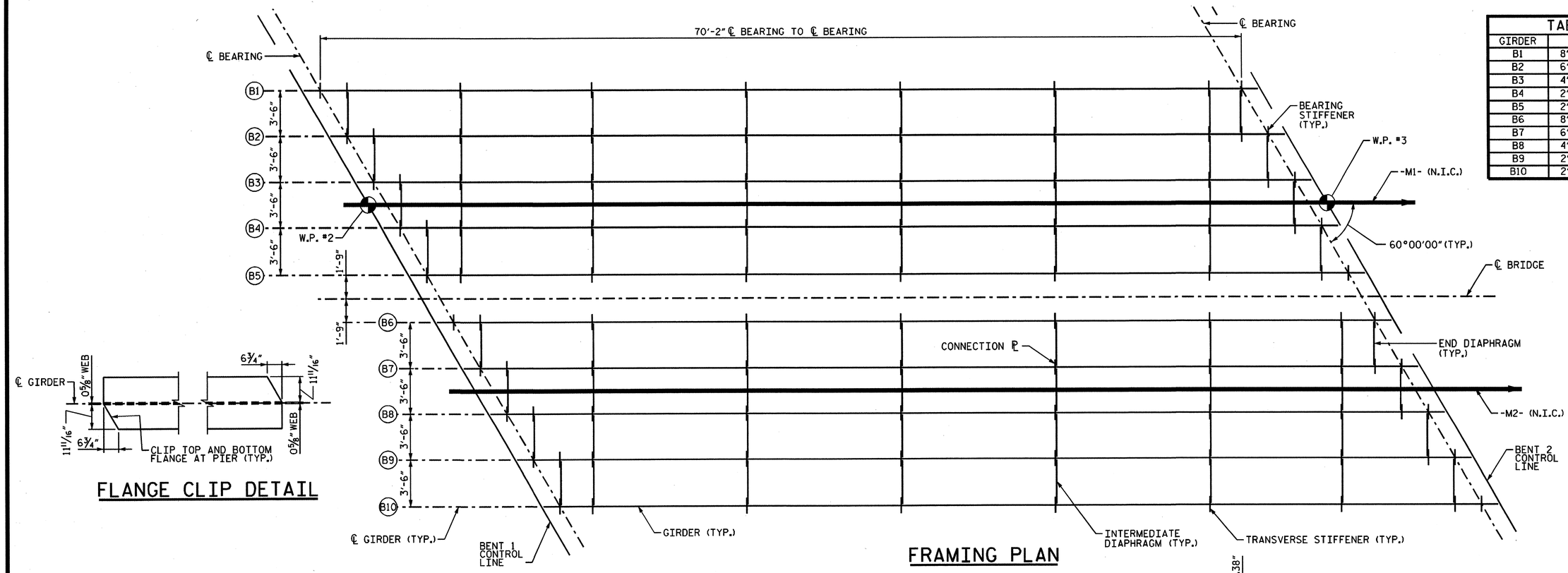

FLANGE CLIP DETAIL

FRAMING PLAN

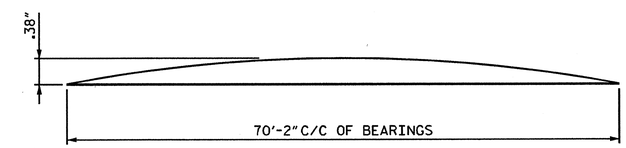

PARABOLIC CAMBER DIAGRAM

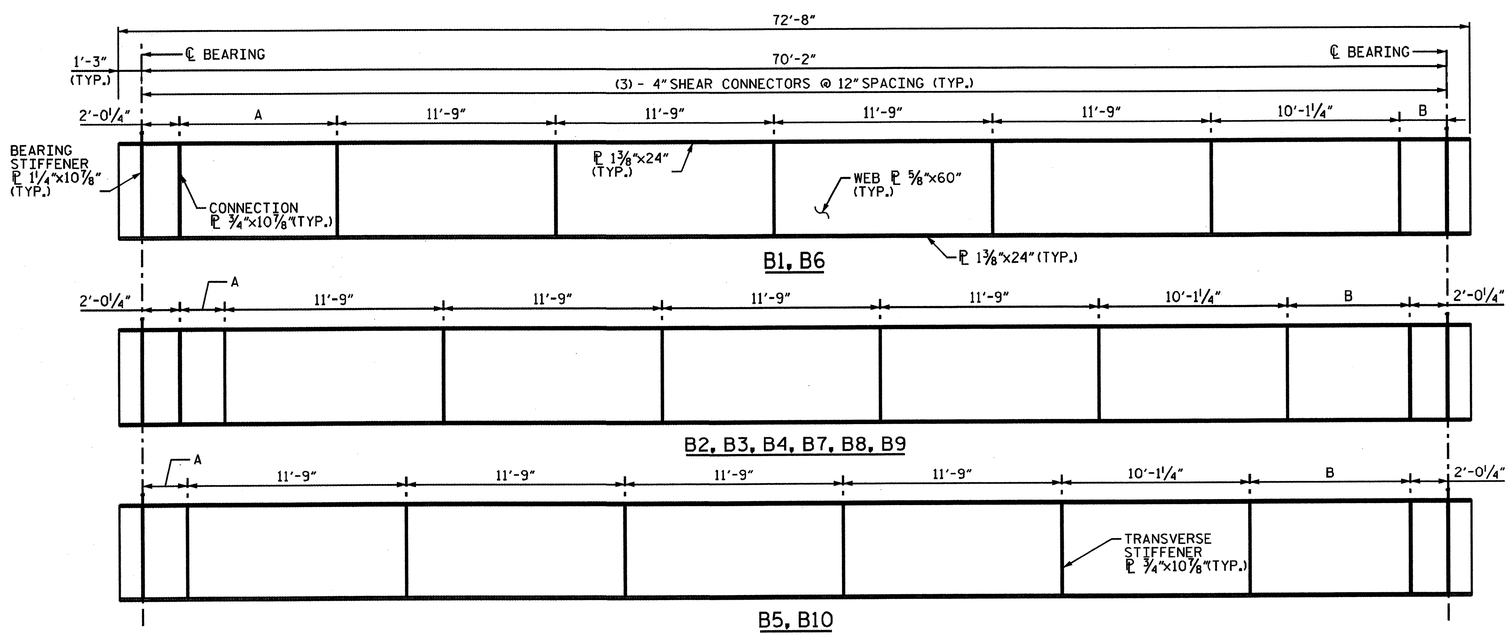

GIRDER ELEVATION

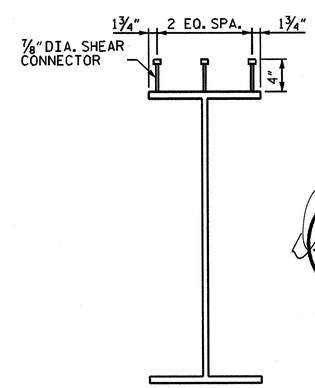

SHEAR CONNECTOR DETAIL

NOTES

FOR DIAPHGRAGM AND STIFFENER DETAILS, SEE "STEEL DETAILS" SHEETS.

FOR BEARING DETAILS, SEE "BEARING DETAILS" SHEET.

NORTH CAROLINA PROFESSIONAL SEAL 027292 ENGINEER DEREK C. STATON
6-3-13

PROJECT NO. P-5208A

CABARRUS COUNTY

STATION: 10282+62.09 -M1- (N.I.C.)

SHEET 2 OF 3 MILE POST: 361.10

STATE OF NORTH CAROLINA
DEPARTMENT OF TRANSPORTATION
RALEIGH

SUPERSTRUCTURE

FRAMING PLAN AND GIRDER ELEVATION SPAN B

HDR Engineering, Inc. of the Carolinas
440 S. Church Street, Suite 1000, Charlotte, NC 28202
N.C.B.E.L.S. License Number: F-0116

REVISIONS							SHEET NO.
NO.	BY:	DATE:	NO.	BY:	DATE:		ST-09
1	--	--	3	--	--		TOTAL SHEETS
2	--	--	4	--	--		35

DRAWN BY : LNM DATE : 03/13
CHECKED BY : KKM DATE : 03/13

$$$$$$$SYSTIME$$$$$
$$$$$$$$$$$$$$$$$$$$$$$$DGN$$$$$$$$$$$$$$$$$$$$$$$$
USERNAME

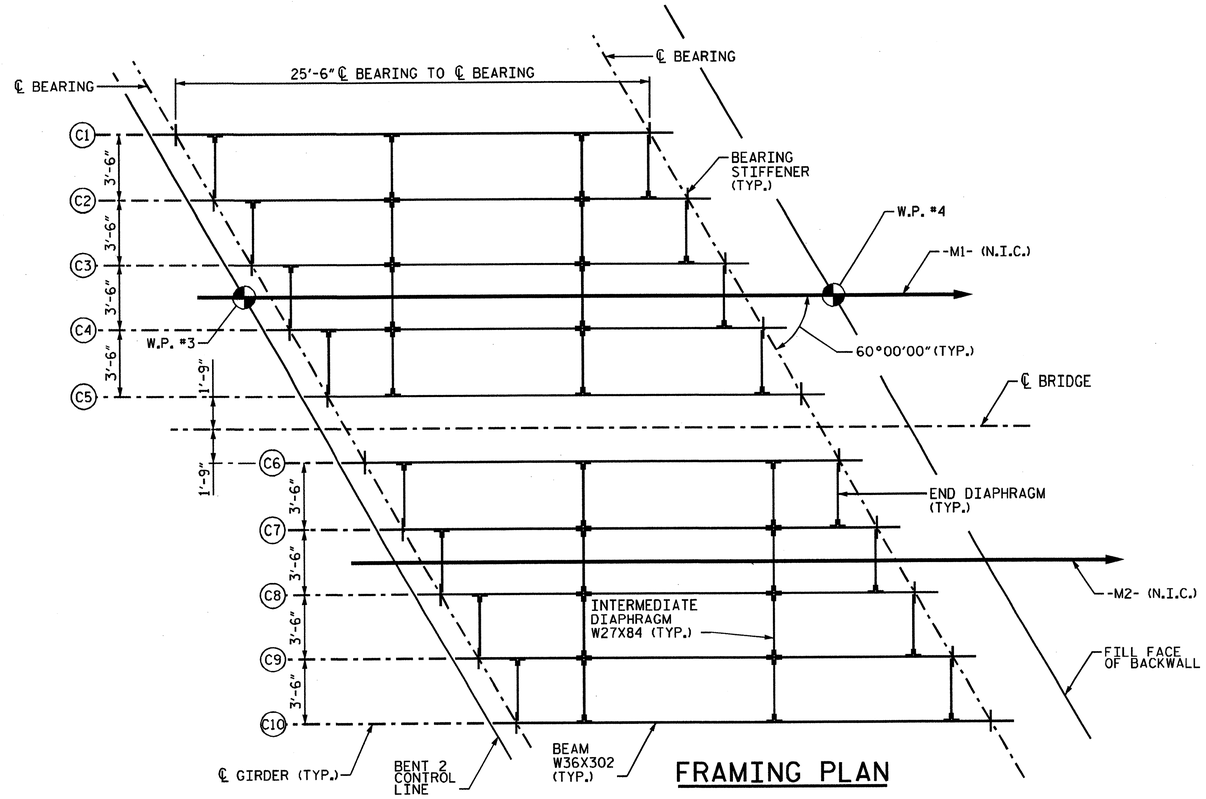

FRAMING PLAN

TABLE 3		
GIRDER	A	B
C1	9'-6 11/16"	3'-7 5/16"
C2	7'-6 7/16"	3'-7 5/16"
C3	5'-6 3/16"	5'-7 9/16"
C4	3'-5 15/16"	7'-7 13/16"
C5	3'-5 15/16"	9'-8 1/16"
C6	9'-8 1/16"	3'-5 15/16"
C7	7'-7 13/16"	3'-5 15/16"
C8	5'-7 9/16"	5'-6 3/16"
C9	3'-7 5/16"	7'-6 7/16"
C10	3'-7 5/16"	9'-6 11/16"

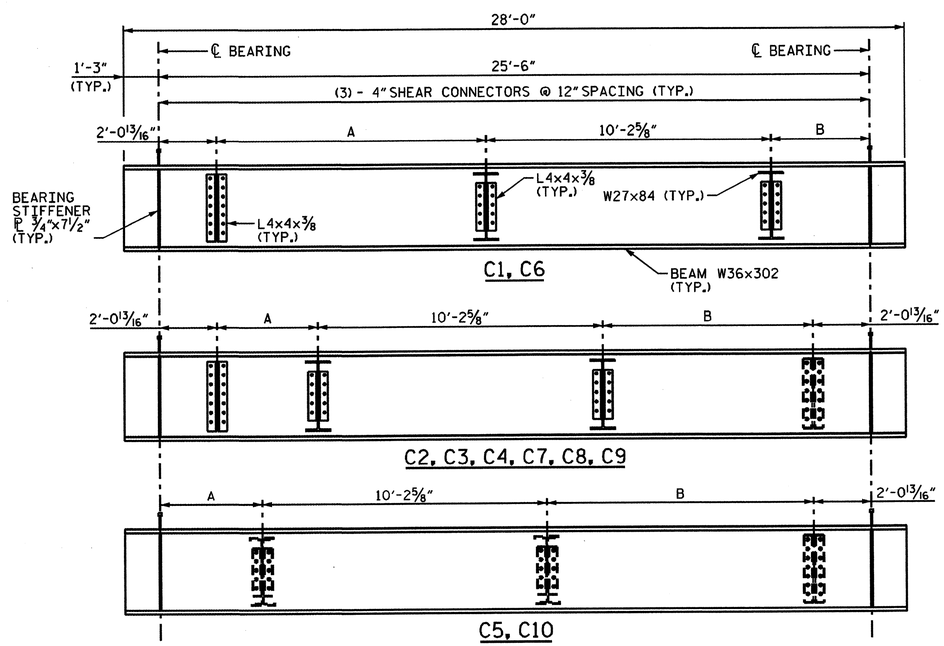

GIRDER ELEVATION

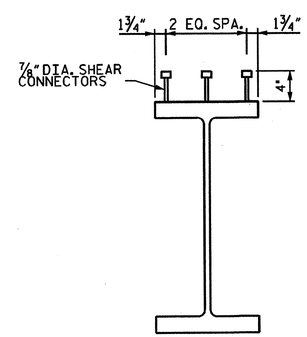

SHEAR CONNECTOR DETAIL

SCALE: 1" = 1'-0'

NOTES

FOR DIAPHRAGM AND STIFFENER DETAILS, SEE "STEEL DETAILS" SHEETS.

FOR BEARING DETAILS, SEE "BEARING DETAILS SHEETS".

NORTH CAROLINA PROFESSIONAL SEAL 027292 ENGINEER DEREK C. STATON

6-3-13

PROJECT NO. P-5208A

CABARRUS COUNTY

STATION: 10282+62.09 -M1- (N.I.C.)

SHEET 3 OF 3 MILE POST: 361.10

STATE OF NORTH CAROLINA
DEPARTMENT OF TRANSPORTATION
RALEIGH

SUPERSTRUCTURE

FRAMING PLAN AND GIRDER ELEVATION SPAN C

HDR Engineering, Inc. of the Carolinas
440 S. Church Street, Suite 1000, Charlotte, NC 28202
N.C.B.E.L.S. License Number: F-0116

REVISIONS						SHEET NO.
NO.	BY:	DATE:	NO.	BY:	DATE:	ST-10
1	--	--	3	--	--	TOTAL SHEETS
2	--	--	4	--	--	35

DRAWN BY : LNM DATE : 03/13
CHECKED BY : KKM DATE : 03/13

$$$$$$$SYSTIME$$$$$
$$$$$$$$$$$$$$$$$$$$$$DGN$$$$$$$$$$$$$$$$$$$$$$
USERNAME

STRUCTURAL STEEL NOTES

SPECIFICATIONS: AMERICAN RAILWAY ENGINEERING AND MAINTENANCE-OF-WAY ASSOCIATION (AREMA) MANUAL FOR RAILWAY ENGINEERING, 2012 EDITION.

STRUCTURAL STEEL: ALL STRUCTURAL STEEL FOR FRACTURE CRITICAL MEMBERS (FCM) SHALL BE ASTM A709, GRADE 50F2, Fy = 50,000 PSI.. ALL OTHER STRUCTURAL STEEL SHAPES AND PLATES, SHALL BE ASTM A709, GRADE 50T2 OR A709 GRADE 50F2. BEARING ASSEMBLIES SHALL BE ASTM A709 GRADE 50T2. ALL STRUCTURAL STEEL SHALL MEET THE REQUIREMENTS OF THE PROJECT SPECIAL PROVISION FOR STRUCTURAL STEEL FOR RAILROAD BRIDGES AND THE FOLLOWING REQUIREMENTS:

1. THE MATERIAL SUPPLIED SHALL BE OTHER THAN RIMMED OR CAPPED STEEL.
2. THE MATERIAL SUPPLIED SHALL BE SILICON-KILNED, FINE GRAIN PRACTICE.
3. CERTAIN ELEMENTS OF THE STRUCTURE ARE NOTED AS "FRACTURE CRITICAL MEMBERS" (FCM) AND SHALL MEET THE REQUIREMENTS OF THE "FRACTURE CONTROL PLAN" CONTAINED IN AWS D1.5 EXCEPT AS MODIFIED BY SECTION 1.14, CHAPTER 15 OF THE AREMA MANUAL. THE IMPACT REQUIREMENTS FOR FRACTURE CRITICAL MEMBERS SHALL BE REQUIRED FOR ZONE 2 SERVICE TEMPERATURE. TEST RESULTS SHALL BE FURNISHED TO THE ENGINEER AND RAILROAD FOR THEIR USE.

ALL DIMENSIONS SHOWN ARE HORIZONTAL OR VERTICAL, UNLESS OTHERWISE NOTED.

BEARING STIFFENERS ARE TO BE PLACED NORMAL TO THE WEB OF THE GIRDER AND SHALL BE PLUMB.

A CHARPY V-NOTCH TEST IS REQUIRED ON ALL BEAM SECTIONS, COVER PLATES AND SPLICE PLATES AS SHOWN ON THE PLANS AND IN ACCORDANCE WITH ARTICLE 1072-7 OF THE STANDARD SPECIFICATIONS.

A CHARPY V-NOTCH TEST IS REQUIRED FOR WEB PLATES, BOTTOM FLANGE PLATES, BOTTOM FLANGE SPLICE PLATES AND WEB SPLICE PLATES (IF USED) FOR ALL GIRDERS AND IN ACCORDANCE WITH ARTICLE 1072-7 OF THE STANDARD SPECIFICATIONS.

CAMBERED GIRDER LENGTHS SHALL BE ADJUSTED AND BEARINGS ARE TO BE PLACED ON THE CAMBERED GIRDER SO AS TO BE ALIGNED WITH THE ANCHORS AFTER THE DEAD LOAD DEFLECTION HAS OCCURRED. SHOP DRAWINGS SHALL BE PREPARED ACCORDINGLY.

NUTS ON BOLTS FOR CONNECTING DIAPHRAGM TO CONNECTOR PLATE SHALL BE LEFT LOOSE FOR PURPOSE OF ADJUSTMENT UNTIL BOTH SIDES OF SLAB HAVE BEEN POURED.

A BOLTED FIELD SPLICE WILL BE PERMITTED IN THE GIRDERS IN SPAN B. IF A FIELD SPLICE IS USED, IT SHALL BE MADE ENTIRELY AT THE CONTRACTOR'S EXPENSE AND NO ADDITIONAL MEASUREMENT OR PAYMENT WILL BE MADE FOR THE ADDITIONAL MATERIALS REQUIRED. THE LOCATION, DETAILS AND SPLICE MATERIAL WILL BE SUBJECT TO THE APPROVAL OF THE ENGINEER.

NO SHOP CAMBER REQUIRED, TURN NATURAL MILL CAMBER UP FOR SPAN C.

ALL SURFACES OF BEARING PLATES SHALL BE SMOOTH AND STRAIGHT.

END OF BEAMS AND GIRDERS SHALL BE PLUMB.

FABRICATORS SHALL DETAIL DIAPHRAGM MEMBERS AND CONNECTIONS FOR FULL DEAD LOAD FIT UP. GIRDERS SHALL BE PLUMB AFTER THE FULL AMOUNT OF DEAD LOAD IS APPLIED.

NORFOLK SOUTHERN CORPORATION SHALL BE FURNISHED COPIES OF MILL TEST REPORTS FOR ALL MATERIAL EXCEPT MISCELLANEOUS PLATES AND SHAPES. REPORTS SHALL INDICATE COMPLIANCE WITH ALL SPECIFIC REQUIREMENTS

SHOP INSPECTION SHALL BE BY NORFOLK SOUTHERN CORPORATION OR ITS AUTHORIZED AGENT.

FOR PAINTING STRUCTURAL STEEL, SEE SPECIAL PROVISIONS.

BOLTED CONNECTIONS SHALL BE MDE WITH 7/8" DIAMETER ASTM A324, TYPE I HIGH STRENGTH BOLT WITH HEAVY HEX HEAD, HEAVY HEX NUT AND HARDENED WASHERS IN ACCORDANCE WITH AREMA SPECIFICATIONS USING THE TURN OF THE NUT METHOD. DIRECT TENSION INDICATORS WILL NOT BE USED.

SHOP DRAWINGS SHALL BE APPROVED BY THE CHIEF ENGINEER - BRIDGES AND STRUCTURES, NORFOLK SOUTHERN CORPORATION, ATLANTA, GA. SHOP DRAWINGS SHALL BE LABELED "NORFOLK SOUTHERN MP NS-361.10"

BOLT HOLES IN STRUCTURAL STEEL MEMBERS SHALL BE STANDARD SIZE UNLESS OTHERWISE INDICATED ON THE PLANS.

HIGH STRENGTH BOLTS, NUTS AND WASHER SHALL BE MECHANICALLY GALVANIZED IN ACCORDANCE WITH ASTM 8695.

ANCHOR BOLTS SHALL BE SIZE INDICATED ON PLANS.

ALL WELDING SHALL BE MADE WITH SERIES E70 WELDING ELECTRODES.

ALL DIMENSIONS SHOWN ARE HORIZONTAL OR VERTICAL UNLESS OTHERWISE NOTED.

PROJECT NO. P-5208A

CABARRUS COUNTY

STATION: 10282+62.09 -M1- (N.I.C.)

MILE POST: 361.10

NORTH CAROLINA PROFESSIONAL SEAL 027292 ENGINEER DENEA C. STATON

6-3-13

STATE OF NORTH CAROLINA
DEPARTMENT OF TRANSPORTATION
RALEIGH

SUPERSTRUCTURE

STRUCTURAL STEEL NOTES

HDR Engineering, Inc. of the Carolinas
440 S. Church Street, Suite 1000, Charlotte, NC 28202
N.C.B.E.L.S. License Number: F-0116

REVISIONS						SHEET NO.
NO.	BY:	DATE:	NO.	BY:	DATE:	ST-11
1	--	--	3	--	--	TOTAL SHEETS
2	--	--	4	--	--	35

DRAWN BY : LNM DATE : 03/13
CHECKED BY : KKM DATE : 03/13

$$$$$$SYSTIME$$$$$
$$$$$$$$$$$$$$$$$$$$$$$$DGN$$$$$$$$$$$$$$$$$$$$$$$$
USERNAME

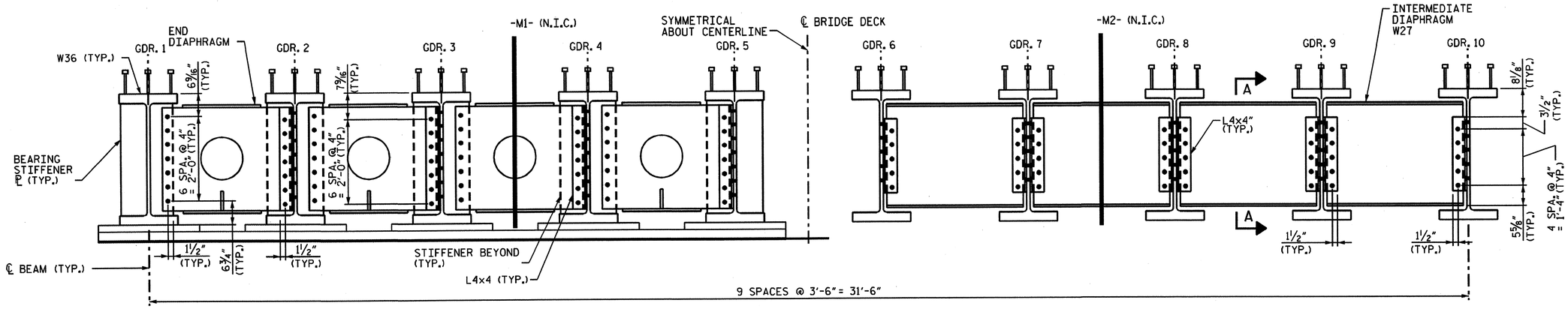

HALF SECTION AT END BENT

DIAPHRAGM SECTION
SPANS A AND C

HALF SECTION AT MID-SPAN

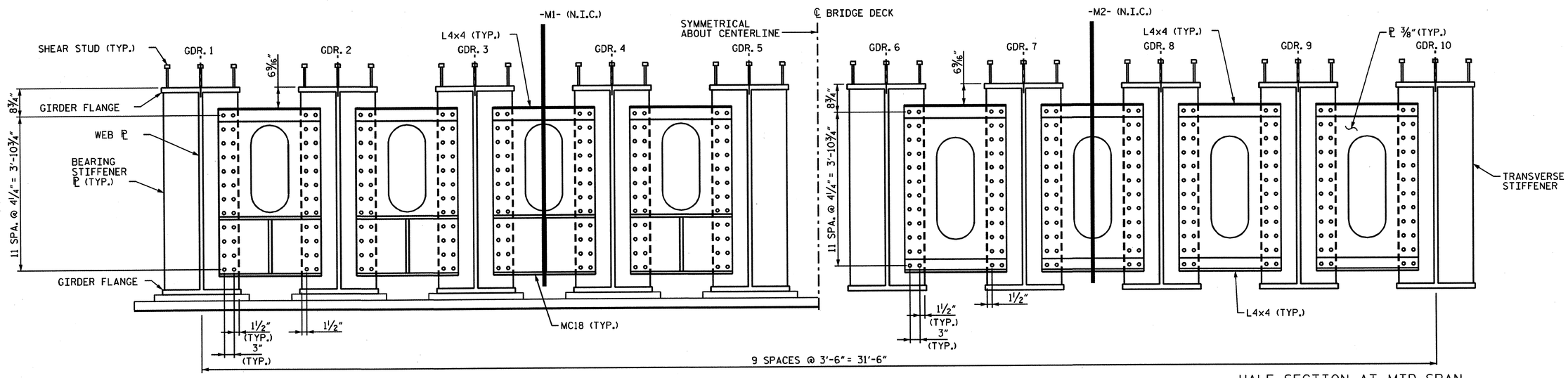

HALF SECTION AT BENT

DIAPHRAGM SECTION
SPAN B

HALF SECTION AT MID-SPAN

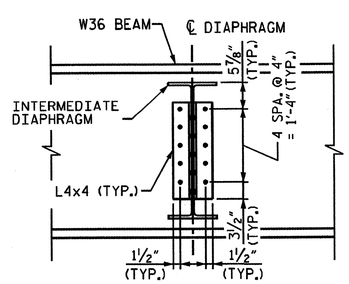

SECTION A-A

PROJECT NO. P-5208A

CABARRUS **COUNTY**

STATION: 10282+62.09 -M1- (N.I.C.)

SHEET 1 OF 2 MILE POST: 361.10

STATE OF NORTH CAROLINA
DEPARTMENT OF TRANSPORTATION
RALEIGH

SUPERSTRUCTURE STEEL DETAILS

NORTH CAROLINA PROFESSIONAL SEAL 027292 ENGINEER DEREK C. STATON
6-3-13

HDR Engineering, Inc. of the Carolinas
440 S. Church Street, Suite 1000, Charlotte, NC 28202
N.C.B.E.L.S. License Number: F-0116

REVISIONS								SHEET NO.
NO.	BY:	DATE:	NO.	BY:	DATE:			ST-12
1	--	--	3	--	--			TOTAL SHEETS
2	--	--	4	--	--			35

DRAWN BY : LNM DATE : 03/13
CHECKED BY : KKM DATE : 03/13

$$$$$$$SYSTIME$$$$$
$$$$$$$$$$$$$$$$$$$$$$$$DGN$$$$$$$$$$$$$$$$$$$$$$$$
USERNAME

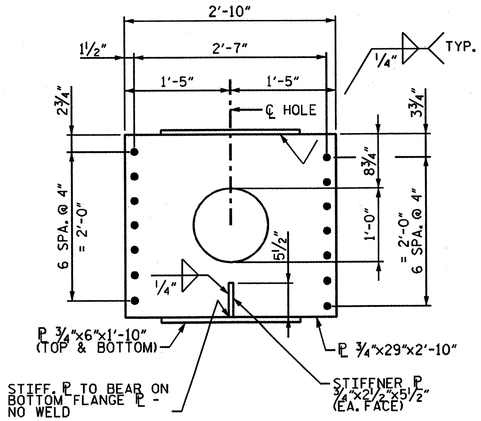

END DIAPHRAGM
SPANS A AND C

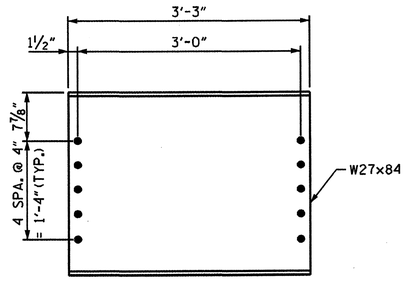

INTERMEDIATE DIAPHRAGM
SPANS A AND C

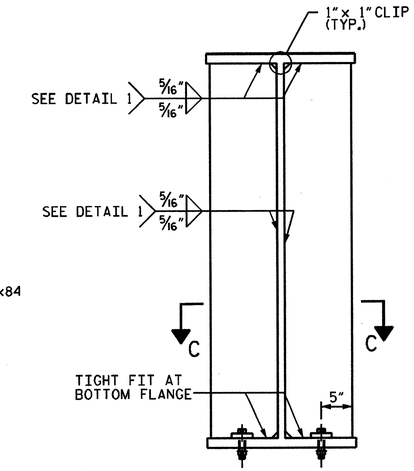

INTERMEDIATE TRANSVERSE
STIFFENER - SPAN B

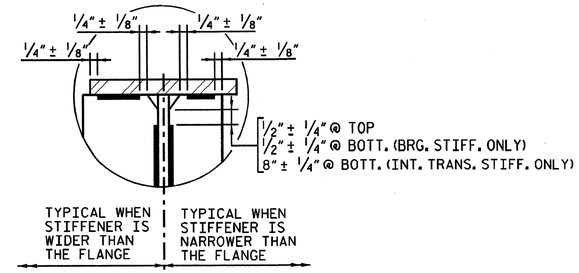

DETAIL 1

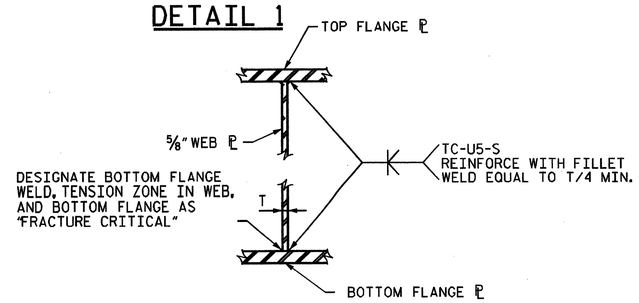

FLANGE TO WEB WELD DETAIL

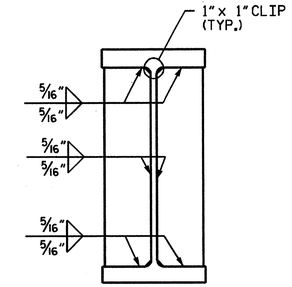

BEARING STIFFENERS
SPANS A AND C

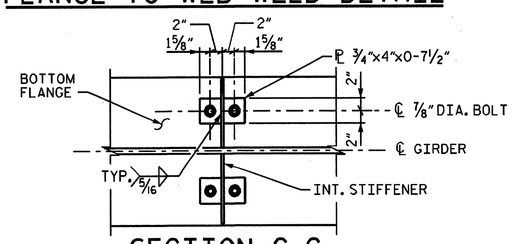

SECTION C-C
INT. STIFFENER CONNECTION

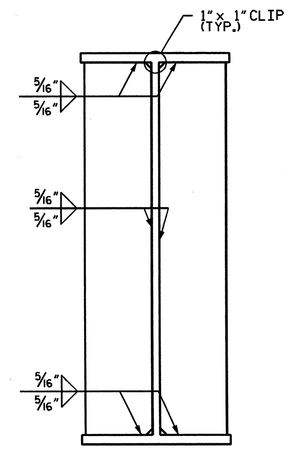

BEARING STIFFENERS
SPAN B

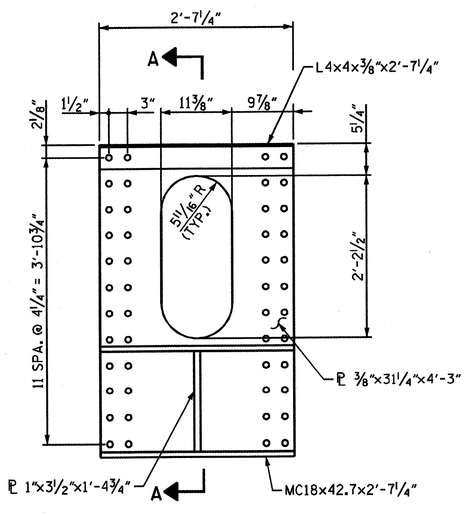

END DIAPHRAGM
SPAN B

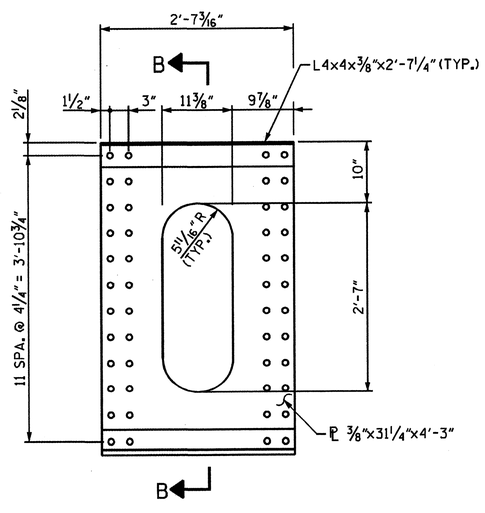

INTERMEDIATE DIAPHRAGM
SPAN B

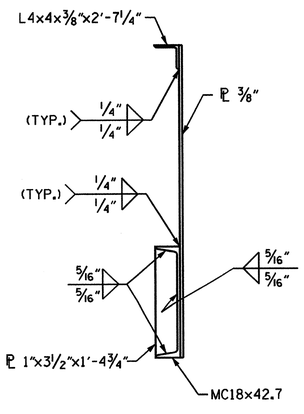

SECTION A-A

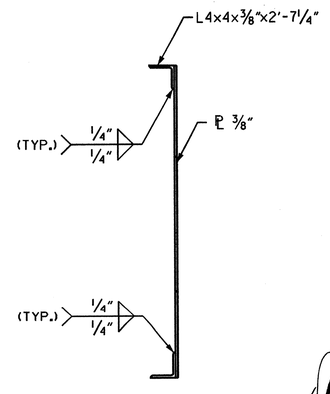

SECTION B-B

PROJECT NO. P-5208A

CABARRUS **COUNTY**

STATION: 10282+62.09 -M1- (N.I.C.)

SHEET 2 OF 2 MILE POST: 361.10

STATE OF NORTH CAROLINA
DEPARTMENT OF TRANSPORTATION
RALEIGH

SUPERSTRUCTURE
STEEL DETAILS

HDR Engineering, Inc. of the Carolinas
440 S. Church Street, Suite 1000, Charlotte, NC 28202
N.C.B.E.L.S. License Number: F-0116

REVISIONS								SHEET NO.
NO.	BY:	DATE:	NO.	BY:	DATE:			ST-13
1	--	--	3	--	--			TOTAL SHEETS
2	--	--	4	--	--			35

DRAWN BY : LNM DATE : 03/13
CHECKED BY : KKM DATE : 03/13

$$$$$$$SYSTIME$$$$$
$$$$$$$$$$$$$$$$$$$$$$$$DGN$$$$$$$$$$$$$$$$$$$$$$$$
USERNAME

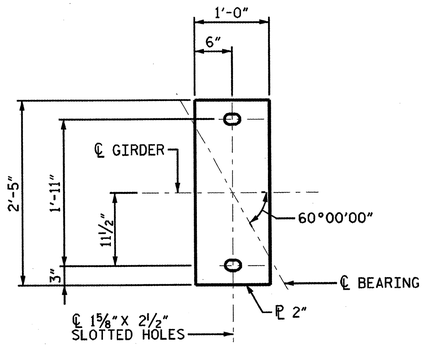

SOLE PLATES AT BENT SPAN A AND C

(20 REQ'D)

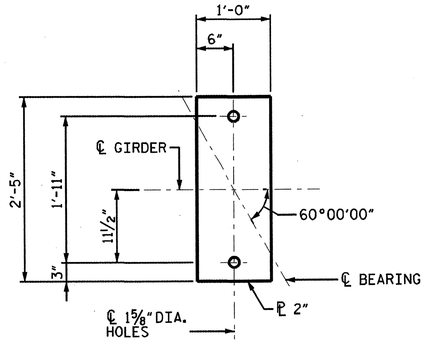

SOLE PLATES AT END BENTS

(20 REQ'D)

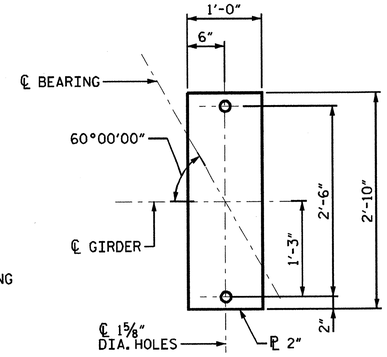

SOLE PLATES AT BENT SPAN B

(10 REQ'D)

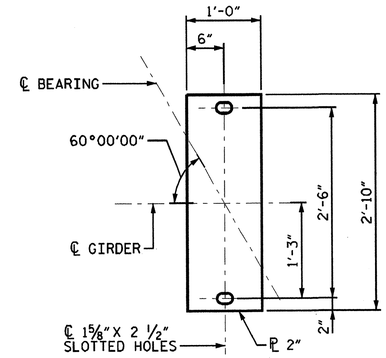

SOLE PLATES AT BENT SPAN B

(10 REQ'D)

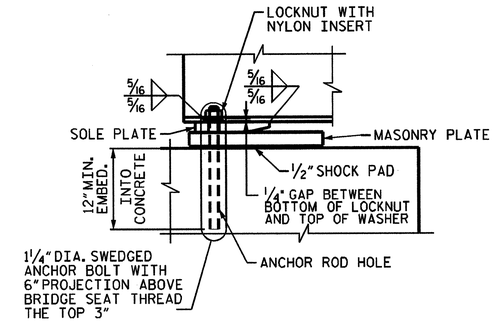

BEARING ELEVATION

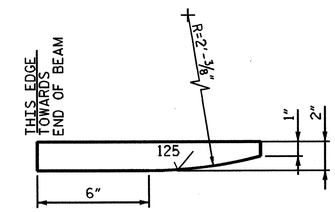

SECTION THROUGH SOLE PLATE

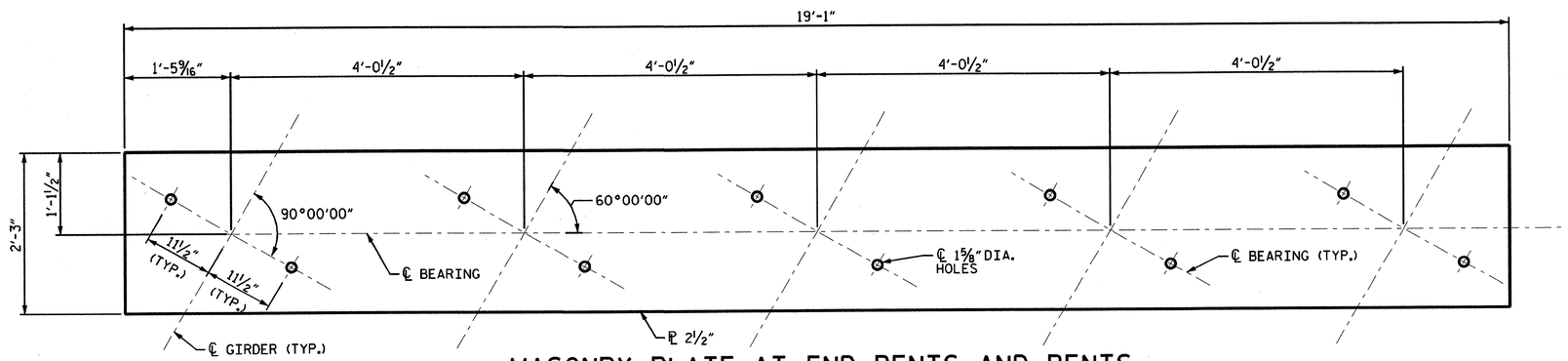

MASONRY PLATE AT END BENTS AND BENTS SPANS A AND C

(8 REQ'D)

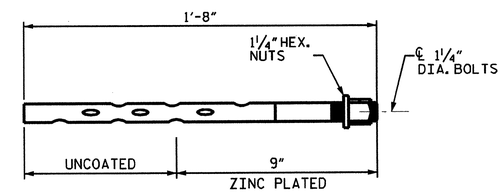

SWEDGED ANCHOR BOLT

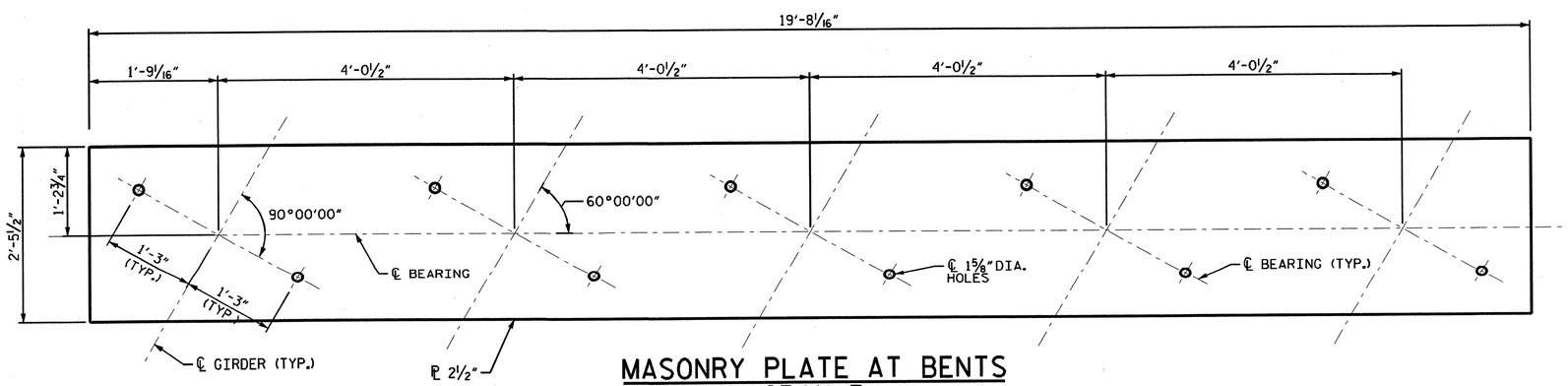

MASONRY PLATE AT BENTS SPAN B

(4 REQ'D)

NOTES

PAYMENT FOR BEARING PLATES SHALL BE INCLUDED IN LUMP SUM PRICE BID FOR "STRUCTURAL STEEL"

PROJECT NO. P-5208A

CABARRUS COUNTY

STATION: 10282+62.09 -M1- (N.I.C.)

MILE POST: 361.10

STATE OF NORTH CAROLINA
DEPARTMENT OF TRANSPORTATION
RALEIGH

SUPERSTRUCTURE

BEARING DETAILS

NORTH CAROLINA PROFESSIONAL SEAL 027292 ENGINEER DEREK C. STATON

6-3-13

HDR Engineering, Inc. of the Carolinas
440 S. Church Street, Suite 1000, Charlotte, NC 28202
N.C.B.E.L.S. License Number: F-0116

REVISIONS						SHEET NO.
NO.	BY:	DATE:	NO.	BY:	DATE:	ST-14
1	--	--	3	--	--	TOTAL SHEETS
2	--	--	4	--	--	35

DRAWN BY : LNM DATE : 03/13
CHECKED BY : KKM DATE : 03/13

\$\$\$\$\$\$SYSTIME\$\$\$\$\$
\$DGN\$
USERNAME

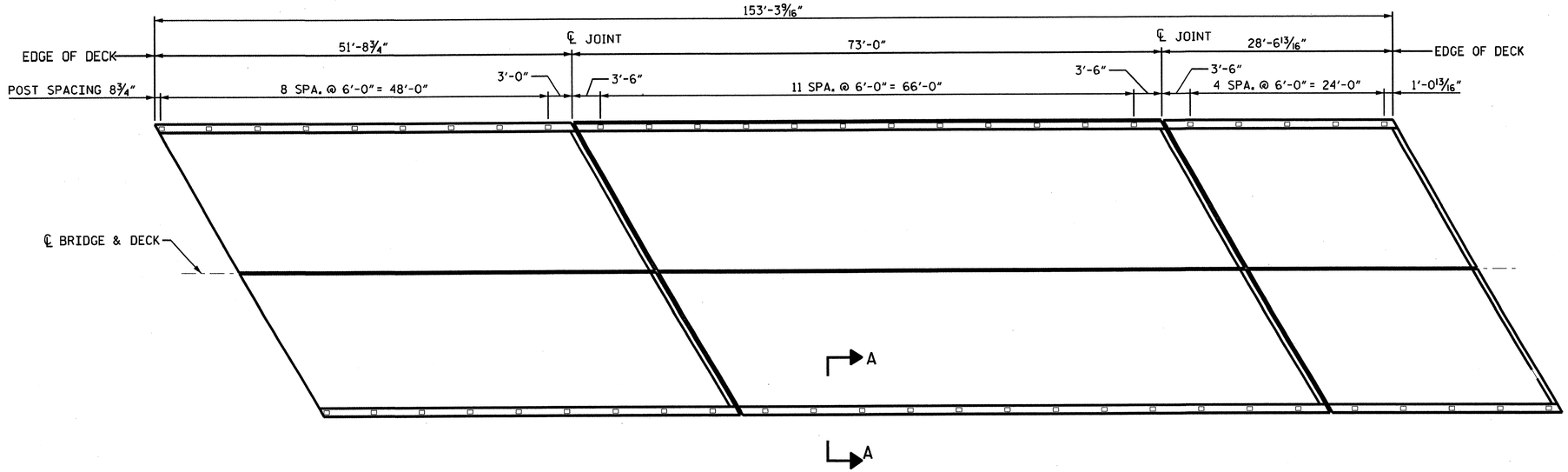

HANDRAIL POST SPACING

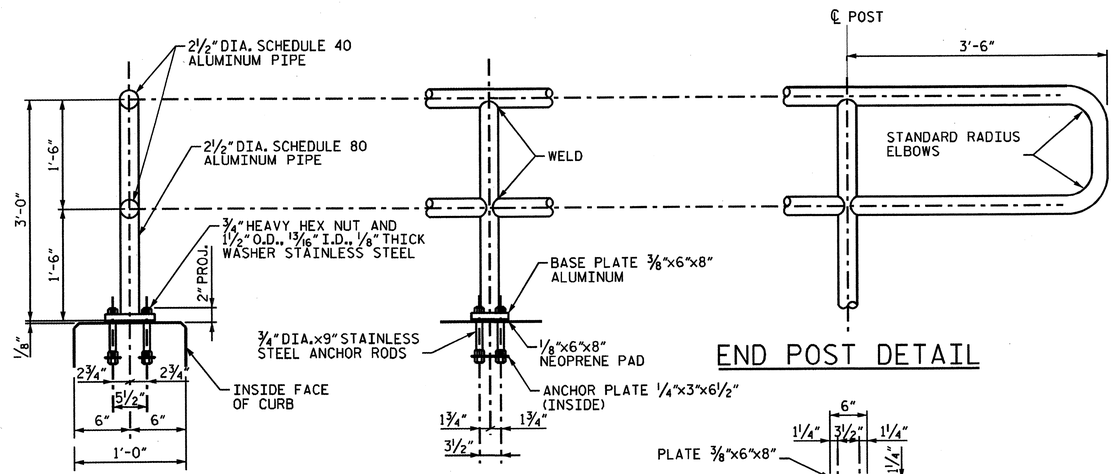

SECTION A-A

ELEVATION

END POST DETAIL

ALUMINUM HANDRAIL AND POST

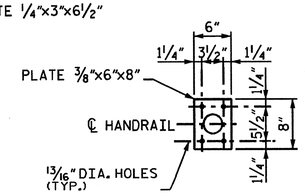

BASE PLATE

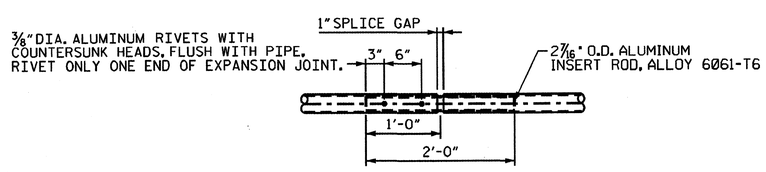

EXPANSION JOINT DETAIL

NOTES

ALUMINUM PIPE TO BE ASTM B-429, ALLOY 6061-T6 AND BASE PLATE TO BE ASTM B-209, ALLOY 6061-T6.

STAINLESS STEEL BOLTS, CAP SCREWS, AND NUTS TO BE ASTM A-276 TYPE 304. STAINLESS STEEL WASHERS TO BE ASTM A-276 TYPE 302.

CERTIFIED MILL REPORTS ARE REQUIRED FOR RAIL AND POSTS. SHOP INSPECTIONS ARE NOT REQUIRED.

AFTER ANCHOR BOLT NUTS HAVE BEEN TIGHTENED, THREADS SHALL BE NICKED TO LOCK NUTS.

ANCHOR PLATES SHALL CONFORM TO ASTM SPECIFICATION A36.

ANCHOR RODS SHALL CONFORM TO ASTM SPECIFICATION A276 TYPE 302 OR 304, STAINLESS STEEL AND THREADS SHALL BE ROLLED, NOT CUT.

UPPER ANCHOR ROD NUTS SHALL BE HEAVY STEEL HEX NUTS, PER ASTM A276 TYPE 302 OR 304 STAINLESS STEEL.

LOWER ANCHOR ROD NUTS SHALL BE HEAVY STEEL HEX NUTS, PER ASTM A563.

WELDING SHALL BE IN ACCORDANCE WITH THE CURRENT AWS STRUCTURAL WELDING CODE - ALUMINUM.

EXPANSION JOINTS IN HANDRAIL SHALL BE LOCATED AT ALL DECK JOINTS AND OPEN JOINTS IN THE CURBS.

PROJECT NO. P-5208A

CABARRUS **COUNTY**

STATION: 10282+62.09 -M1- (N.I.C.)

MILE POST: 361.10

STATE OF NORTH CAROLINA
DEPARTMENT OF TRANSPORTATION
RALEIGH

SUPERSTRUCTURE HANDRAIL DETAILS

HDR Engineering, Inc. of the Carolinas
440 S. Church Street, Suite 1000, Charlotte, NC 28202
N.C.B.E.L.S. License Number: F-0116

REVISIONS						SHEET NO.
NO.	BY:	DATE:	NO.	BY:	DATE:	ST-15
1	--	--	3	--	--	TOTAL SHEETS
2	--	--	4	--	--	35

DRAWN BY : LNM DATE : 03/13
CHECKED BY : KKM DATE : 03/13

$$$$$$SYSTIME$$$$$
$$$$$$$$$$$$$$$$$$$$$$$$DGN$$$$$$$$$$$$$$$$$$$$$$$$
USERNAME

BILL OF MATERIAL

DECK - SPAN A (SHEET ST-7, FOR HALF-DECK) (2 REQ'D)

BAR	NO.	SIZE	TYPE	LENGTH	WEIGHT
A1	4	#6	STR	2'-7'	16
A2	4	#6	STR	4'-4'	26
A3	4	#6	STR	6'-1"	36
A4	4	#6	STR	7'-9"	47
A5	4	#6	STR	9'-6"	57
A6	4	#6	STR	11'-3"	68
A7	4	#6	STR	13'-0"	78
A8	4	#6	STR	14'-9"	88
A9	4	#6	STR	16'-5"	99
A10	82	#6	STR	16'-8"	2053
A11	4	#6	STR	20'-0"	120
B1	36	#5	STR	26'-10"	1008

EPOXY-COATED REINFORCING STEEL 3695 LBS

5,000 PSI CONCRETE 29.4 CY

BILL OF MATERIAL

DECK - SPAN B (SHEET ST-7, FOR HALF-DECK) (2 REQ'D)

BAR	NO.	SIZE	TYPE	LENGTH	WEIGHT
A1	4	#6	STR	2'-7'	16
A2	4	#6	STR	4'-4'	26
A3	4	#6	STR	6'-1"	36
A4	4	#6	STR	7'-9"	47
A5	4	#6	STR	9'-6"	57
A6	4	#6	STR	11'-3"	68
A7	4	#6	STR	13'-0"	78
A8	4	#6	STR	14'-9"	88
A9	4	#6	STR	16'-5"	99
A10	124	#6	STR	16'-8"	3104
A11	4	#6	STR	20'-0"	120
B1	36	#5	STR	37'-4"	1402

EPOXY-COATED REINFORCING STEEL 5141 LBS

5,000 PSI CONCRETE 41.4 CY

BILL OF MATERIAL

DECK - SPAN C (SHEET ST-7, FOR HALF-DECK) (2 REQ'D)

BAR	NO.	SIZE	TYPE	LENGTH	WEIGHT
A1	4	#6	STR	2'-7'	16
A2	4	#6	STR	4'-4'	26
A3	4	#6	STR	6'-1"	36
A4	4	#6	STR	7'-9"	47
A5	4	#6	STR	9'-6"	57
A6	4	#6	STR	11'-3"	68
A7	4	#6	STR	13'-0"	78
A8	4	#6	STR	14'-9"	88
A9	4	#6	STR	16'-5"	99
A10	36	#6	STR	16'-8"	901
A11	4	#6	STR	20'-0"	120
B1	36	#5	STR	25'-3"	948

EPOXY-COATED REINFORCING STEEL 2484 LBS

5,000 PSI CONCRETE 16.2 CY

BAR TYPES

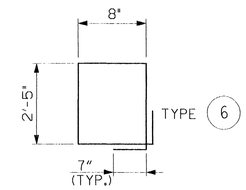

BILL OF MATERIAL

CURB - SPAN A (SHEET ST-7, FOR HALF-DECK) (2 REQ'D)

BAR	NO.	SIZE	TYPE	LENGTH	WEIGHT
B2	12	#5	STR	26'-10"	320
S1	52	#5	6	7'-4"	398

EPOXY-COATED REINFORCING STEEL 718 LBS

5,000 PSI CONCRETE 3.2 CY

BILL OF MATERIAL

CURB - SPAN B (SHEET ST-7, FOR HALF-DECK) (2 REQ'D)

BAR	NO.	SIZE	TYPE	LENGTH	WEIGHT
B2	12	#5	STR	37'-4"	452
S1	73	#5	6	7'-4"	558

EPOXY-COATED REINFORCING STEEL 1010 LBS

5,000 PSI CONCRETE 4.5 CY

BILL OF MATERIAL

CURB - SPAN C (SHEET ST-7, FOR HALF-DECK) (2 REQ'D)

BAR	NO.	SIZE	TYPE	LENGTH	WEIGHT
B2	6	#5	STR	28'-0"	175
S1	29	#5	6	7'-4"	222

EPOXY-COATED REINFORCING STEEL 397 LBS

5,000 PSI CONCRETE 1.8 CY

NOTE: ALL REINFORCING FOR SUPERSTRUCTURE TO BE EPOXY-COATED

PROJECT NO. P-5208A

CABARRUS COUNTY

STATION: 10282+62.09 -M1- (N.I.C.)

MILE POST: 361.10

NORTH CAROLINA PROFESSIONAL SEAL 027292 ENGINEER DEREK C. STATON

6-4-13

STATE OF NORTH CAROLINA
DEPARTMENT OF TRANSPORTATION
RALEIGH

SUPERSTRUCTURE BILL OF MATERIALS

HDR Engineering, Inc. of the Carolinas
440 S. Church Street, Suite 1000, Charlotte, NC 28202
N.C.B.E.L.S. License Number: F-0116

REVISIONS						SHEET NO.
NO.	BY:	DATE:	NO.	BY:	DATE:	ST-16
1	--	--	3	--	--	TOTAL SHEETS
2	--	--	4	--	--	35

DRAWN BY : LNM DATE : 03/13
CHECKED BY : KKM DATE : 03/13

$$$$$$SYSTIME$$$$$
$$$$$$$$$$$$$$$$$$$$$$$$DGN$$$$$$$$$$$$$$$$$$$$$$$$
$$$$USERNAME$$$$

0041DEL_P10a1
0001ADD_P10a1

NORTH CAROLINA PROFESSIONAL SEAL 027292 ENGINEER DEREK C. STATON
6-27-13

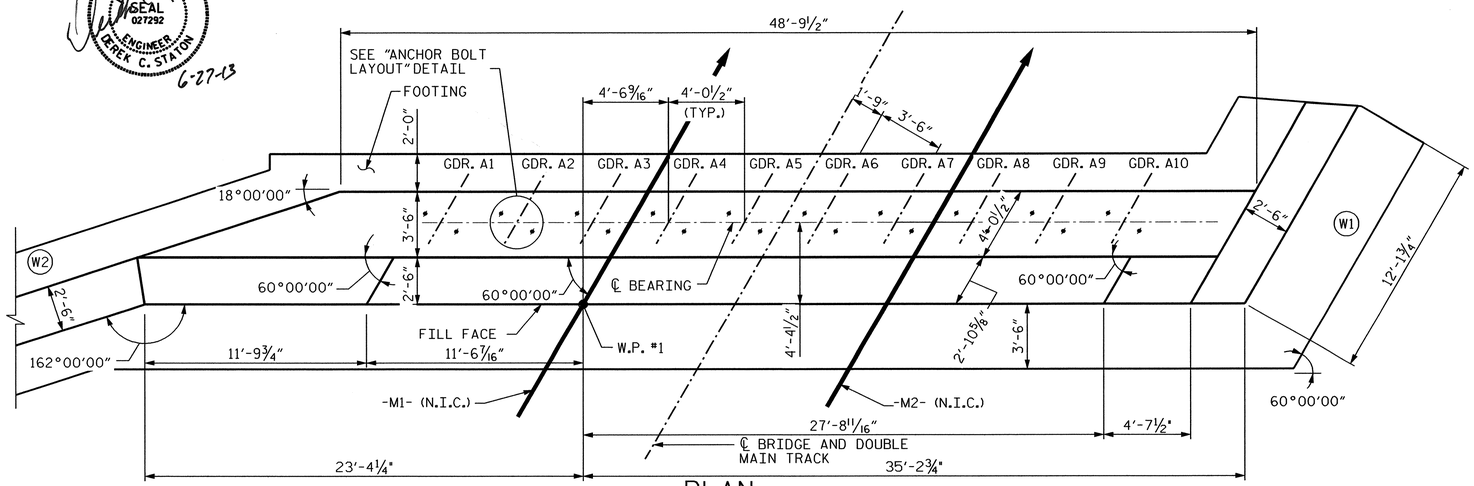

PLAN

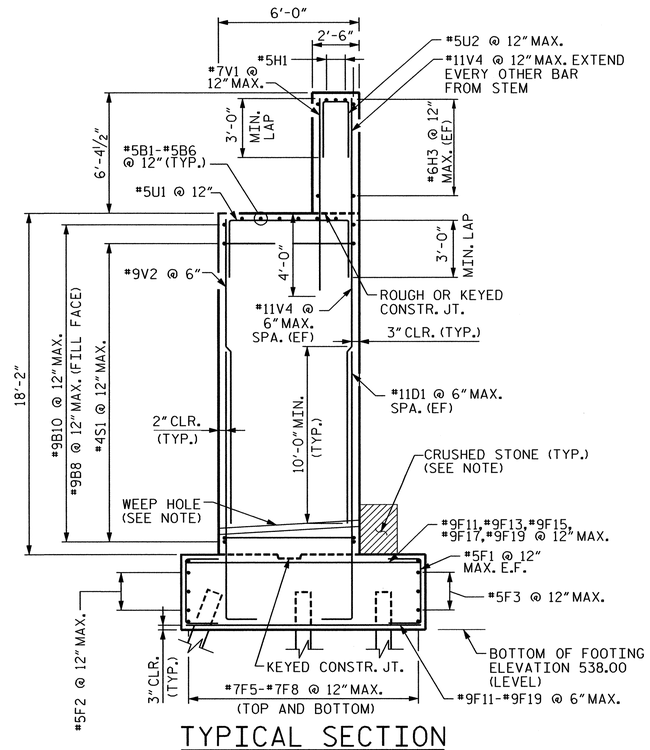

TYPICAL SECTION

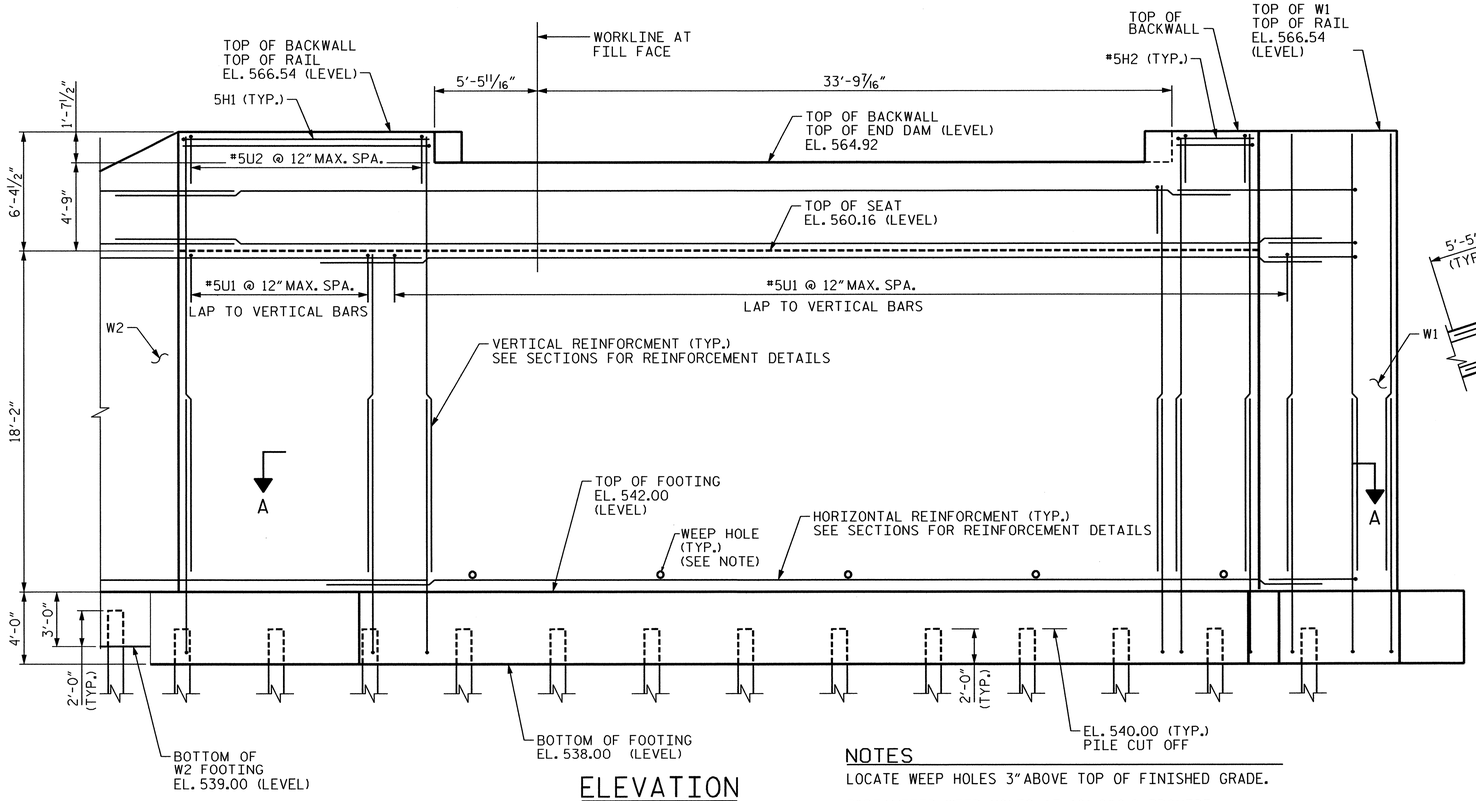

ELEVATION

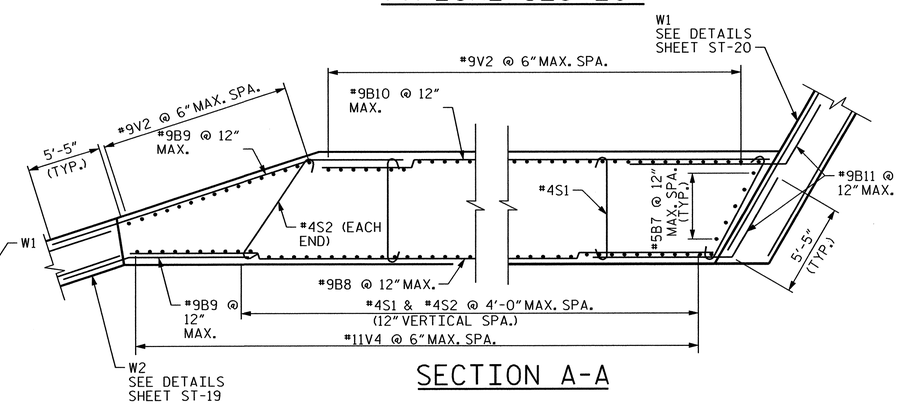

SECTION A-A

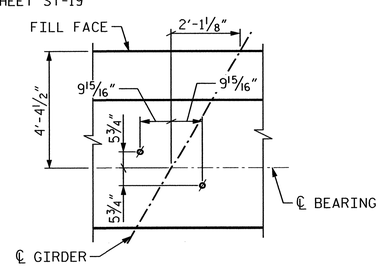

ANCHOR BOLT LAYOUT

NOTES

LOCATE WEEP HOLES 3" ABOVE TOP OF FINISHED GRADE.

3" DIAMETER WEEP HOLES AT 10'-0" O.C. PROVIDE ONE CUBIC YARD OF CRUSHED STONE AT WEEP HOLE. WRAP CRUSHED STONE IN GEOTEXTILE FABRIC.

PROJECT NO. P-5208A

CABARRUS COUNTY

STATION: 10282+62.09 -M1- (N.I.C.)

SHEET 1 OF 5 MILE POST: 361.10

STATE OF NORTH CAROLINA
DEPARTMENT OF TRANSPORTATION
RALEIGH

SUBSTRUCTURE

END BENT 1

HDR Engineering, Inc. of the Carolinas
440 S. Church Street, Suite 1000, Charlotte, NC 28202
N.C.B.E.L.S. License Number: F-0116

REVISIONS						SHEET NO.
NO.	BY:	DATE:	NO.	BY:	DATE:	ST-17
1	--	--	3	--	--	TOTAL SHEETS
2	--	--	4	--	--	35

DRAWN BY : LNM DATE : 03/13
CHECKED BY : KKM DATE : 03/13

$$$$$$$SYSTIME$$$$$
$$$$$$$$$$$$$$$$$$$$$$$$DGN$$$$$$$$$$$$$$$$$$$$$$$$
USERNAME

0041DEL_P10a1
0001ADD_P10a1

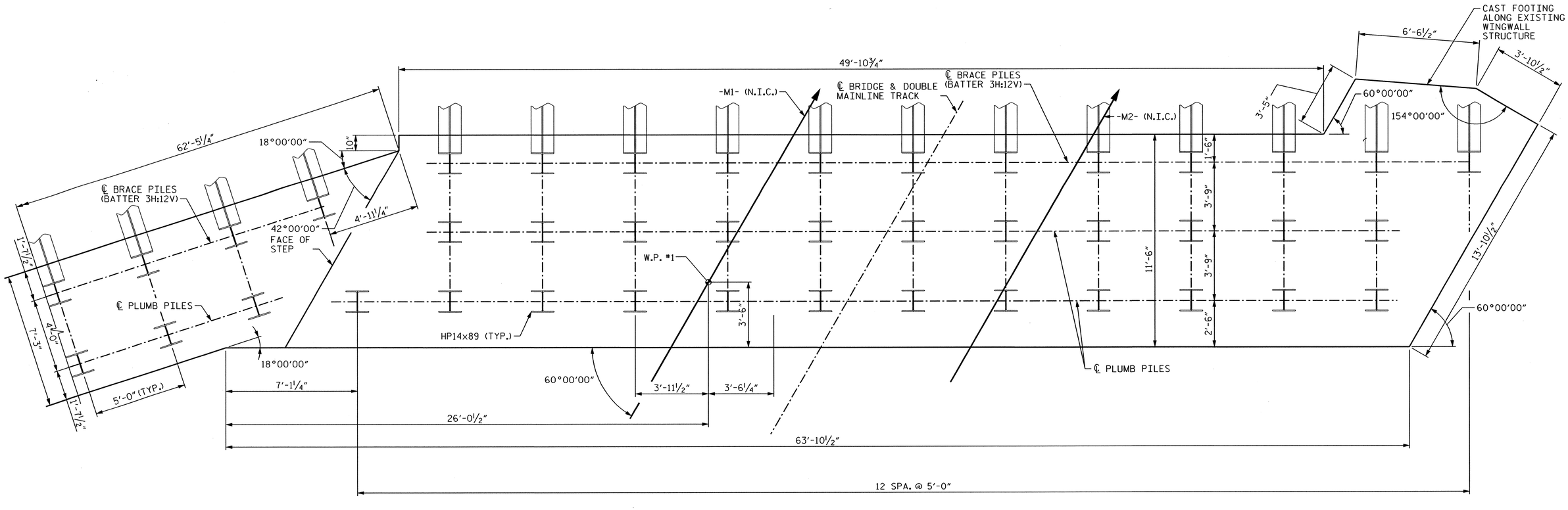

PILE CAP PLAN

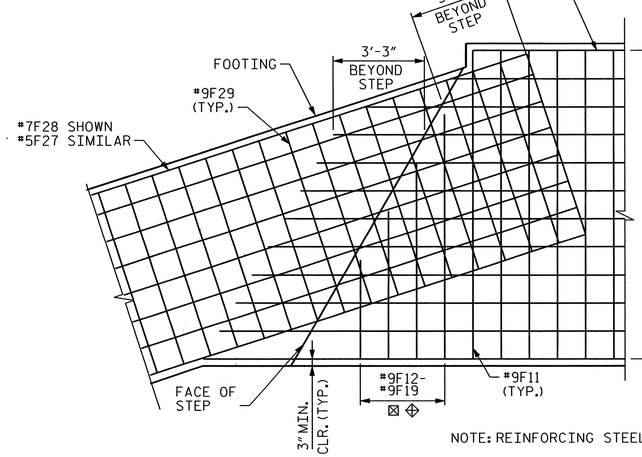

FOOTING REINFORCING AT W2

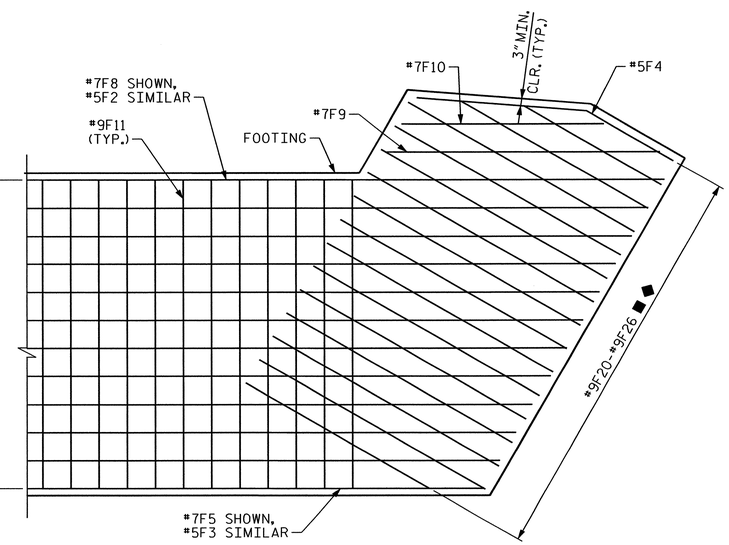

FOOTING REINFORCING AT W1

NOTE: REINFORCING STEEL ON BOTTOM IS NOT SHOWN FOR CLARITY.

□ TOP REINFORCING: 9-#7F5, 1-#7F6, 1-#7F7, 1-#7F8 @ 12" MAX., 2 BAR RUN
◇ BOTTOM REINFORCING: 9-#7F5, 1-#7F6, 1-#7F7, 1-#7F8 @ 12" MAX., 2 BAR RUN

⊠ TOP REINFORCING: 1-#9F13, 1-#9F15, 1-#9F17, 1-#9F19 @ 12" MAX.
⊕ BOTTOM REINFORCING: 1-#9F12, 1-#9F13, 1-#9F14, 1-#9F15, 1-#9F16, 1-#9F17, 1-#9F18, 1-#9F19 @ 6" MAX.

■ TOP REINFORCING: 1-#9F20, 1-#9F22, 12-#9F24, 1-#9F25, 1-#9F26 @ 12" MAX.
◆ BOTTOM REINFORCING: 1-#9F20, 1-#9F21, 1-#9F22, 1-#9F23, 23-#9F24, 1-#9F25, 1-#9F26 @ 6" MAX.

PROJECT NO. P-5208A
CABARRUS COUNTY
STATION: 10282+62.09 -M1- (N.I.C.)
SHEET 2 OF 5 MILE POST: 361.10

NORTH CAROLINA PROFESSIONAL SEAL 027292 ENGINEER DEREK C. STATON
6-27-13

STATE OF NORTH CAROLINA
DEPARTMENT OF TRANSPORTATION
RALEIGH

SUBSTRUCTURE

END BENT 1
PILE CAP PLAN

HDR Engineering, Inc. of the Carolinas
440 S. Church Street, Suite 1000, Charlotte, NC 28202
N.C.B.E.L.S. License Number: F-0116

REVISIONS						SHEET NO.
NO.	BY:	DATE:	NO.	BY:	DATE:	ST-18
1	--	--	3	--	--	TOTAL SHEETS
2	--	--	4	--	--	35

DRAWN BY : LNM DATE : 03/13
CHECKED BY : KKM DATE : 03/13

$$$$$$SYSTIME$$$$$
$$$$$$$$$$$$$$$$$$$$$$$$DGN$$$$$$$$$$$$$$$$$$$$$$$$
USERNAME

0041DEL_P10a1
0001ADD_P10a1

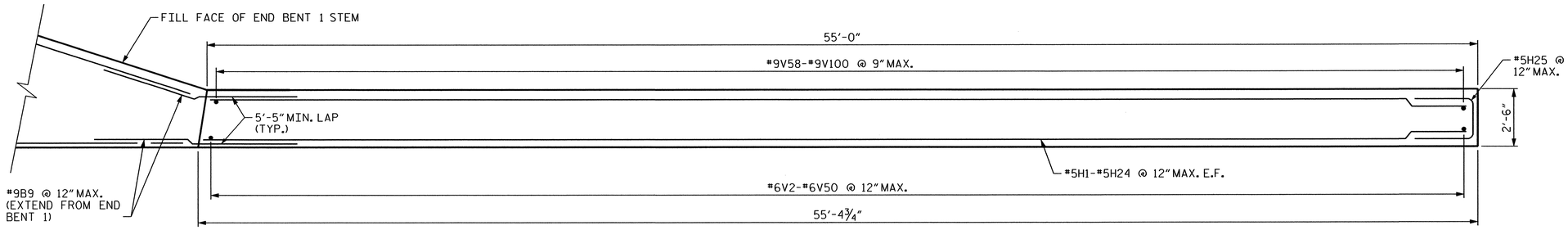

SECTION A-A

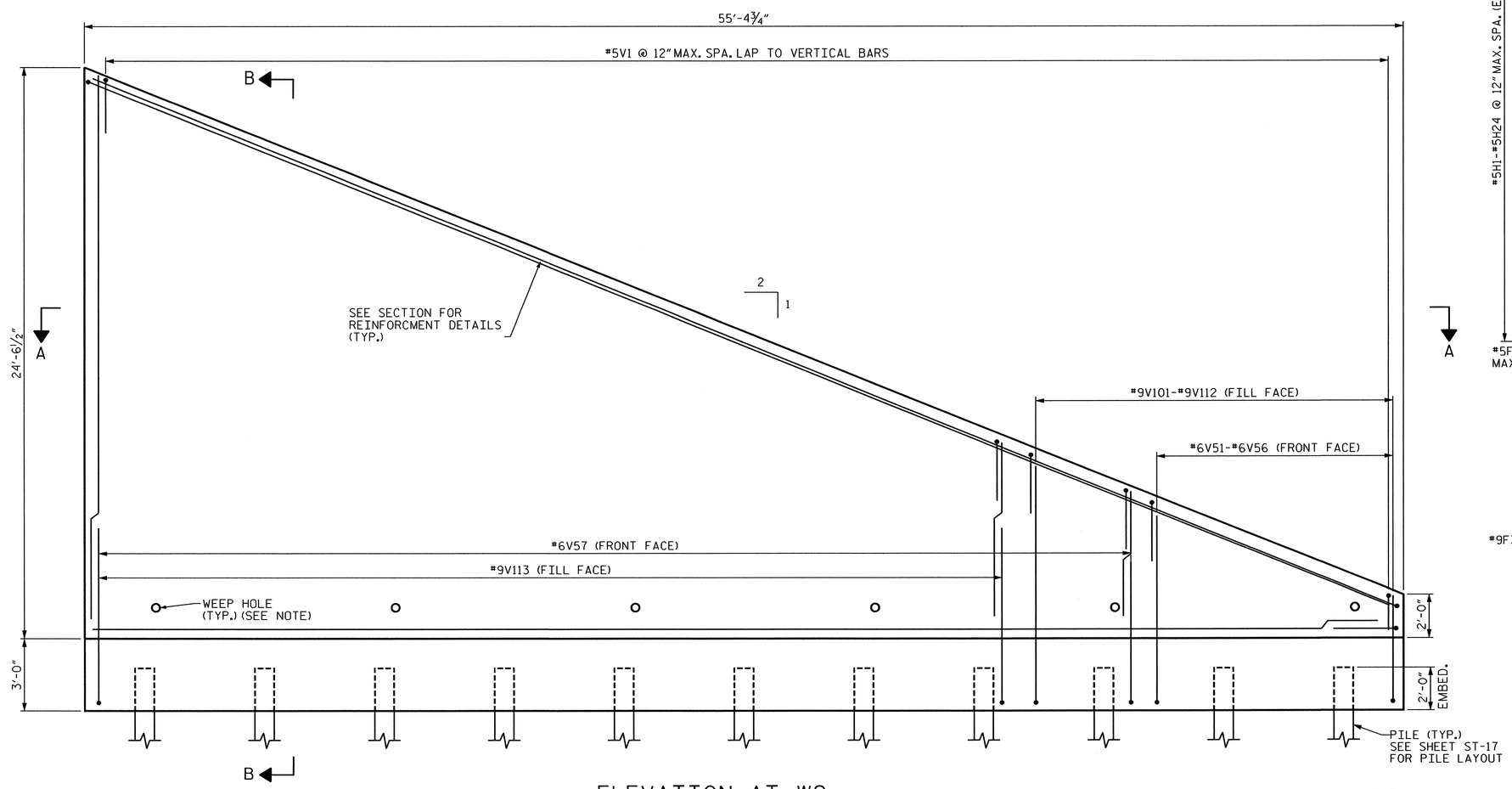

ELEVATION AT W2

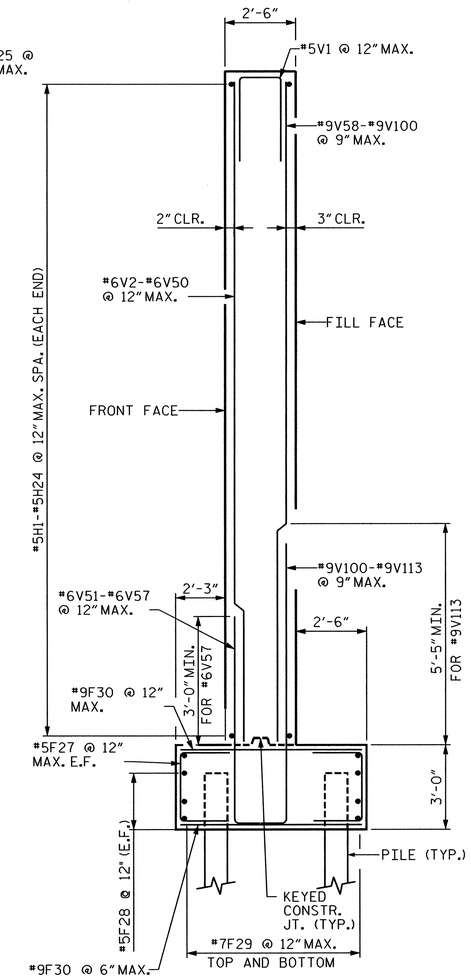

SECTION B-B AT W2

NOTES

3" DIAMETER WEEP HOLES AT 10'-0" O.C. PROVIDE ONE CUBIC YARD OF CRUSHED STONE AT WEEP HOLE. WRAP CRUSHED STONE IN GEOTEXTILE FABRIC. LOCATE WEEP HOLE OUTLET 3" ABOVE FINISHED GRADE.

NORTH CAROLINA PROFESSIONAL SEAL 027292 ENGINEER DEREK C. STATON
6-27-13

PROJECT NO. P-5208A
CABARRUS COUNTY
STATION: 10282+62.09 -M1- (N.I.C.)
SHEET 3 OF 5
MILE POST: 361.10

STATE OF NORTH CAROLINA
DEPARTMENT OF TRANSPORTATION
RALEIGH

SUBSTRUCTURE
END BENT 1
WINGWALL DETAILS

HDR Engineering, Inc. of the Carolinas
440 S. Church Street, Suite 1000, Charlotte, NC 28202
N.C.B.E.L.S. License Number: F-0116

REVISIONS						SHEET NO.
NO.	BY:	DATE:	NO.	BY:	DATE:	ST-19
1	--	--	3	--	--	TOTAL SHEETS
2	--	--	4	--	--	35

DRAWN BY : LNM DATE : 03/13
CHECKED BY : KKM DATE : 03/13

$$$$$$SYSTIME$$$$$
$$$$$$$$$$$$$$$$$$$$$$$$DGN$$$$$$$$$$$$$$$$$$$$$$$$
USERNAME

0041DEL_P10a1
0001ADD_P10a1

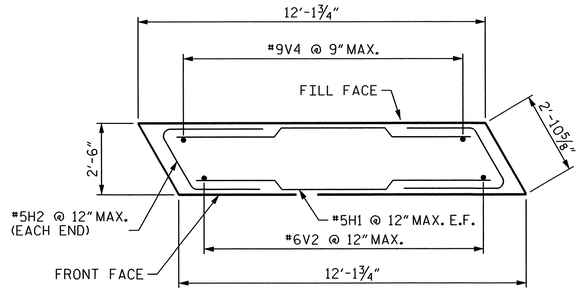

SECTION A-A

(SEE SECTION A-A ON SHEETS ST-17 AND ST-18 FOR WINGWALL TO END BENT CONNECTION DETAIL)

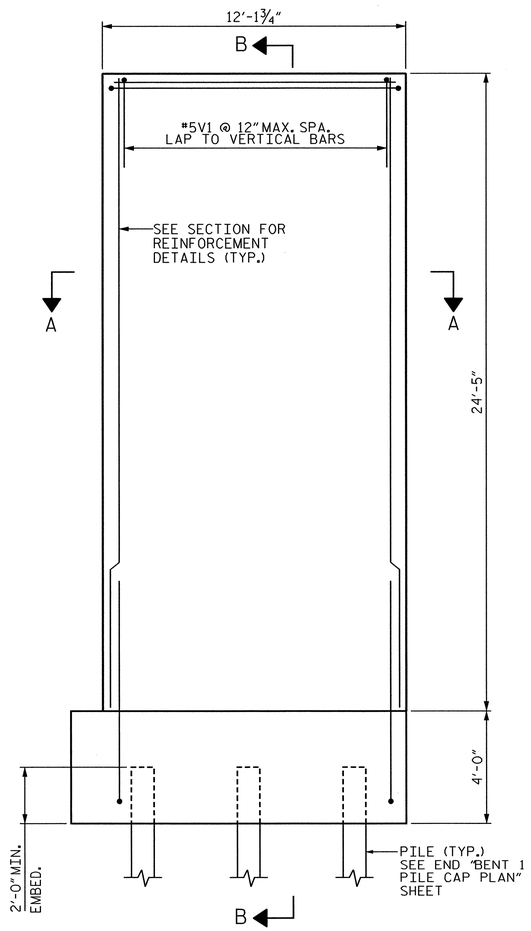

WINGWALL ELEVATION AT W1

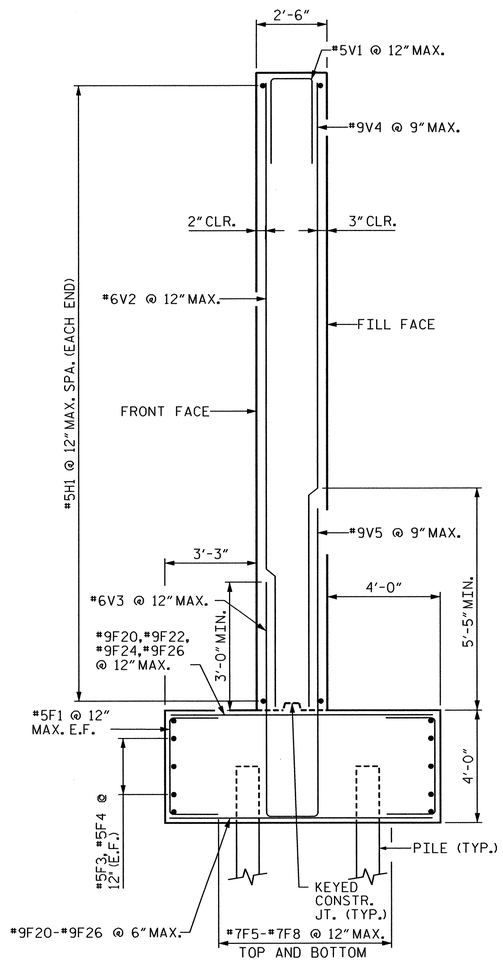

SECTION B-B AT W1

PROJECT NO. P-5208A

CABARRUS COUNTY

STATION: 10282+62.09 -M1- (N.I.C.)

SHEET 4 OF 5 MILE POST: 361.10

STATE OF NORTH CAROLINA
DEPARTMENT OF TRANSPORTATION
RALEIGH

SUBSTRUCTURE

END BENT 1
WINGWALL DETAILS

NORTH CAROLINA PROFESSIONAL SEAL 027292 ENGINEER DEREK C. STATON 6-27-13

HDR Engineering, Inc. of the Carolinas
440 S. Church Street, Suite 1000, Charlotte, NC 28202
N.C.B.E.L.S. License Number: F-0116

REVISIONS						SHEET NO.
NO.	BY:	DATE:	NO.	BY:	DATE:	ST-20
1	--	--	3	--	--	TOTAL SHEETS
2	--	--	4	--	--	35

DRAWN BY : KKM DATE : 05/13
CHECKED BY : AAM DATE : 05/13

$$$$$$SYSTIME$$$$$
$$$$$$$$$$$$$$$$$$$$$$$$DGN$$$$$$$$$$$$$$$$$$$$$$$$
$$$$USERNAME$$$$

0041DEL_P10a1
0001ADD_P10a1

BILL OF MATERIAL

END BENT 1 (SHEET ST-17 AND ST-18)

BAR	NO.	SIZE	TYPE	LENGTH	WEIGHT
B1	2	#5	STR	28'-11"	61
B2	2	#5	STR	28'-10"	61
B3	2	#5	STR	29'-0"	61
B4	2	#5	STR	27'-9"	59
B5	2	#5	STR	26'-6"	56
B6	2	#5	STR	26'-9"	56
B7	5	#5	STR	17'-1"	90
B8	36	#9	STR	30'-7"	3746
B9	36	#9	3	19'-7"	1256
B10	36	#9	STR	26'-7"	3256
B11	36	#9	3	10'-3"	1256
D1	62	#11	2	16'-5"	5403
U1	49	#5	1	11'-8"	603
U2	56	#5	1	8'-2"	433
V1	58	#7	STR	10'-6"	1243
V2	111	#9	STR	17'-1"	6453
V3	58	#9	STR	17'-1"	3372
V4	118	#11	STR	23'-3"	13699
H1	3	#5	STR	12'-4"	39
H2	3	#5	STR	4'-3"	13
H3	24	#6	STR	29'-2"	1048
S1	216	#4	4	6'-4"	1029
S2	36	#4	4	7'-4"	180
F1	109	#5	1	6'-10"	786
F2	6	#5	STR	25'-10"	164
F3	6	#5	STR	31'-3"	198
F5	36	#7	STR	33'-6"	2462
F6	4	#7	STR	33'-3"	272
F7	4	#7	STR	32'-0"	261
F8	4	#7	STR	31'-11"	261
F11	114	#9	STR	11'-0"	4267
F12	1	#9	STR	9'-7"	33
F13	2	#9	STR	8'-9"	60
F14	1	#9	STR	7'-10"	27
F15	2	#9	STR	7'-0"	48
F16	1	#9	STR	6'-2"	21
F17	2	#9	STR	5'-3"	36
F18	1	#9	STR	4'-5"	15
F19	2	#9	STR	3'-7"	24

REINFORCING STEEL 52,342 LBS

CLASS AA CONCRETE 296.8 CY

HP14x89 STEEL PILES NO. 35

1138 LIN. FT

BILL OF MATERIAL

W1 (SHEET ST-20)

BAR	NO.	SIZE	TYPE	LENGTH	WEIGHT
V1	13	#5	1	8'-2"	114
V2	13	#6	STR	24'-1"	469
V3	13	#6	2	9'-9"	190
V4	17	#9	STR	24'-1"	1393
V5	17	#9	2	12'-2"	704
H1	48	#5	STR	11'-9"	595
H2	48	#5	1	7'-2"	363
F1	13	#5	1	6'-10"	94
F4	3	#5	3	11'-5"	36
F9	2	#7	STR	9'-9"	40
F10	2	#7	STR	7'-2"	29
F20	2	#9	STR	5'-8"	39
F21	1	#9	STR	6'-8"	23
F22	2	#9	STR	7'-8"	52
F23	1	#9	STR	8'-9"	30
F24	35	#9	STR	9'-3"	1102
F25	2	#9	STR	8'-4"	57
F26	2	#9	STR	7'-6"	51

REINFORCING STEEL 5,562 LBS

CLASS AA CONCRETE 27.7 CY

BILL OF MATERIAL

W2 (SHEET ST-19)

BAR	NO.	SIZE	TYPE	LENGTH	WEIGHT	BAR	NO.	SIZE	TYPE	LENGTH	WEIGHT	BAR	NO.	SIZE	TYPE	LENGTH	WEIGHT
V1	56	#5	1	8'-2"	482	V53	1	#6	2	5'-5"	8	V105	1	#9	2	7'-1"	24
V2	1	#6	STR	24'-3"	36	V54	1	#6	2	5'-2"	8	V106	1	#9	2	6'-8"	23
V3	1	#6	STR	24'-1"	36	V55	1	#6	2	4'-7"	7	V107	1	#9	2	6'-3"	21
V4	1	#6	STR	22'-10"	34	V56	1	#6	2	4'-2"	6	V108	1	#9	2	5'-10"	20
V5	1	#6	STR	22'-5"	34	V57	50	#6	2	8'-9"	655	V109	1	#9	2	5'-5"	18
V6	1	#6	STR	22'-0"	33	V58	1	#9	STR	24'-1"	82	V110	1	#9	2	5'-0"	17
V7	1	#6	STR	21'-7"	32	V59	1	#9	STR	24'-3"	83	V111	1	#9	2	4'-7"	16
V8	1	#6	STR	21'-2"	32	V60	1	#9	STR	22'-10"	78	V112	1	#9	2	4'-2"	14
V9	1	#6	STR	20'-9"	31	V61	1	#9	STR	22'-5"	76	V113	44	#9	2	11'-2"	1672
V10	1	#6	STR	20'-4"	30	V62	1	#9	STR	22'-0"	75	H1	1	#5	2	4'-3"	4
V11	1	#6	STR	19'-11"	30	V63	1	#9	STR	21'-7"	73	H2	1	#5	2	6'-6"	7
V12	1	#6	STR	19'-6"	29	V64	1	#9	STR	21'-2"	72	H3	1	#5	2	8'-9"	9
V13	1	#6	STR	19'-1"	29	V65	1	#9	STR	20'-9"	71	H4	1	#5	2	11'-0"	12
V14	1	#6	STR	18'-8"	28	V66	1	#9	STR	20'-4"	69	H5	1	#5	2	13'-3"	14
V15	1	#6	STR	18'-3"	27	V67	1	#9	STR	19'-11"	68	H6	1	#5	2	15'-6"	16
V16	1	#6	STR	17'-10"	27	V68	1	#9	STR	19'-6"	66	H7	1	#5	2	17'-9"	19
V17	1	#6	STR	17'-5"	26	V69	1	#9	STR	19'-1"	65	H8	1	#5	2	20'-0"	21
V18	1	#6	STR	17'-0"	25	V70	1	#9	STR	18'-8"	64	H9	1	#5	2	22'-3"	23
V19	1	#6	STR	16'-7"	25	V71	1	#9	STR	18'-3"	62	H10	1	#5	2	24'-6"	26
V20	1	#6	STR	16'-2"	24	V72	1	#9	STR	17'-10"	61	H11	1	#5	2	26'-9"	28
V21	1	#6	STR	15'-9"	24	V73	1	#9	STR	17'-5"	59	H12	1	#5	2	29'-0"	31
V22	1	#6	STR	15'-4"	23	V74	1	#9	STR	17'-0"	58	H13	1	#5	2	31'-3"	33
V23	1	#6	STR	14'-11"	22	V75	1	#9	STR	16'-7"	56	H14	1	#5	2	33'-6"	35
V24	1	#6	STR	14'-5"	22	V76	1	#9	STR	16'-2"	55	H15	1	#5	2	35'-9"	38
V25	1	#6	STR	14'-1"	21	V77	1	#9	STR	15'-9"	54	H16	1	#5	2	38'-0"	40
V26	1	#6	STR	13'-8"	20	V78	1	#9	STR	15'-4"	52	H17	2	#5	STR	40'-3"	85
V27	1	#6	STR	13'-3"	20	V79	1	#9	STR	14'-11"	51	H18	2	#5	STR	42'-6"	90
V28	1	#6	STR	12'-10"	19	V80	1	#9	STR	14'-5"	49	H19	2	#5	STR	44'-9"	94
V29	1	#6	STR	12'-5"	19	V81	1	#9	STR	14'-1"	48	H20	2	#5	STR	47'-0"	99
V30	1	#6	STR	12'-0"	18	V82	1	#9	STR	13'-8"	47	H21	2	#5	STR	49'-3"	104
V31	1	#6	STR	11'-7"	17	V83	1	#9	STR	13'-3"	45	H22	2	#5	STR	51'-6"	109
V32	1	#6	STR	11'-2"	17	V84	1	#9	STR	12'-10"	44	H23	2	#5	STR	53'-9"	113
V33	1	#6	STR	10'-9"	16	V85	1	#9	STR	12'-5"	42	H24	2	#5	STR	53'-9"	113
V34	1	#6	STR	10'-4"	15	V86	1	#9	STR	12'-0"	41	H25	2	#5	1	8'-2"	15
V35	1	#6	STR	9'-11"	15	V87	1	#9	STR	11'-7"	39	F27	119	#5	1	5'-10"	732
V36	1	#6	STR	9'-5"	14	V88	1	#9	STR	11'-2"	38	F28	12	#5	STR	33'-4"	422
V37	1	#6	STR	9'-1"	14	V89	1	#9	STR	10'-9"	37	F29	32	#7	STR	33'-11"	2216
V38	1	#6	STR	8'-8"	13	V90	1	#9	STR	10'-4"	35	F30	162	#9	STR	6'-9"	3721
V39	1	#6	STR	8'-3"	12	V91	1	#9	STR	9'-11"	34						
V40	1	#6	STR	7'-10"	12	V92	1	#9	STR	9'-5"	32						
V41	1	#6	STR	7'-5"	11	V93	1	#9	STR	9'-1"	31						
V42	1	#6	STR	7'-0"	10	V94	1	#9	STR	8'-8"	29						
V43	1	#6	STR	6'-7"	10	V95	1	#9	STR	8'-3"	28						
V44	1	#6	STR	6'-2"	9	V96	1	#9	STR	7'-10"	27						
V45	1	#6	STR	5'-9"	9	V97	1	#9	STR	7'-5"	25						
V46	1	#6	STR	5'-4"	8	V98	1	#9	STR	7'-0"	24						
V47	1	#6	STR	4'-11"	7	V99	1	#9	STR	6'-7"	22						
V48	1	#6	STR	4'-6"	7	V100	1	#9	STR	6'-2"	21						
V49	1	#6	STR	4'-1"	6	V101	1	#9	2	8'-9"	30						
V50	1	#6	STR	3'-8"	5	V102	1	#9	2	8'-4"	28						
V51	1	#6	2	6'-8"	10	V103	1	#9	2	7'-11"	27						
V52	1	#6	2	5'-10"	9	V104	1	#9	2	7'-6"	26						

REINFORCING STEEL 14,582 LBS

CLASS AA CONCRETE 112.9 CY

HP14x89 STEEL PILES NO. 23

805 LIN. FT

BAR TYPES

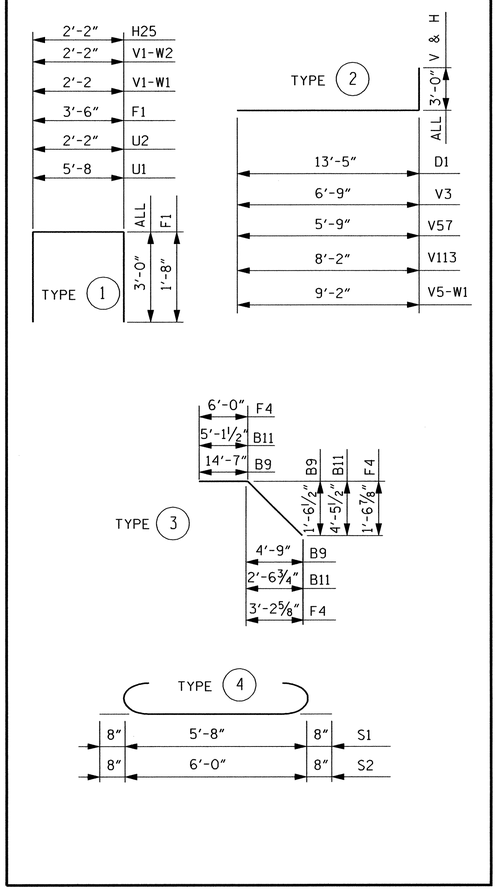

PROJECT NO. P-5208A

CABARRUS COUNTY

STATION: 10282+62.09 -M1- (N.I.C.)

SHEET 5 OF 5 MILE POST: 361.10

STATE OF NORTH CAROLINA
DEPARTMENT OF TRANSPORTATION
RALEIGH

SUBSTRUCTURE END BENT 1 BILL OF MATERIAL

NORTH CAROLINA PROFESSIONAL SEAL 027292 ENGINEER DEREK C. STATON
6-27-13

HDR Engineering, Inc. of the Carolinas
440 S. Church Street, Suite 1000, Charlotte, NC 28202
N.C.B.E.L.S. License Number: F-0116

REVISIONS						SHEET NO.
NO.	BY:	DATE:	NO.	BY:	DATE:	ST-21
1	--	--	3	--	--	TOTAL SHEETS
2	--	--	4	--	--	35

DRAWN BY : KKM DATE : 05/13
CHECKED BY : KKM DATE : 05/13

$$$$$$SYSTIME$$$$$
$$$$$$$$$$$$$$$$$$$$$$DGN$$$$$$$$$$$$$$$$$$$$$$$$
USERNAME

0041DEL_P10a1
0001ADD_P10a1

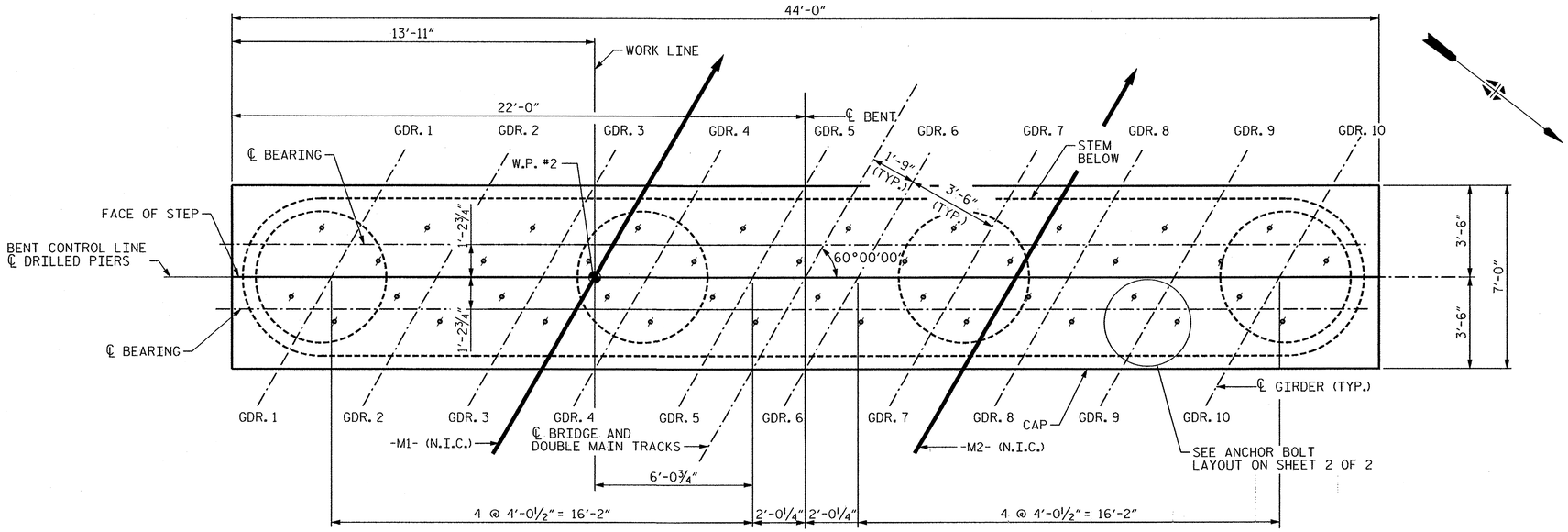

PLAN

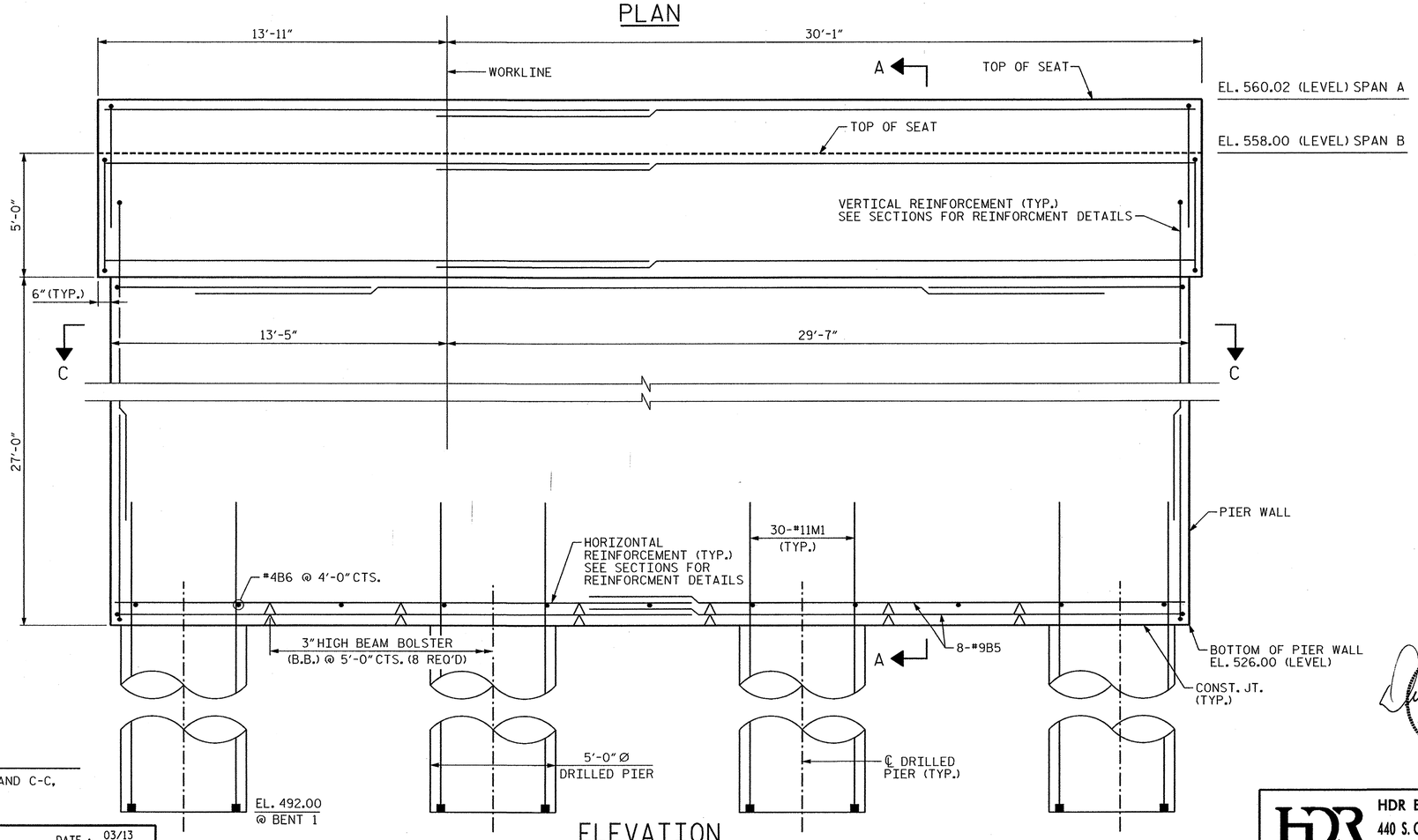

ELEVATION

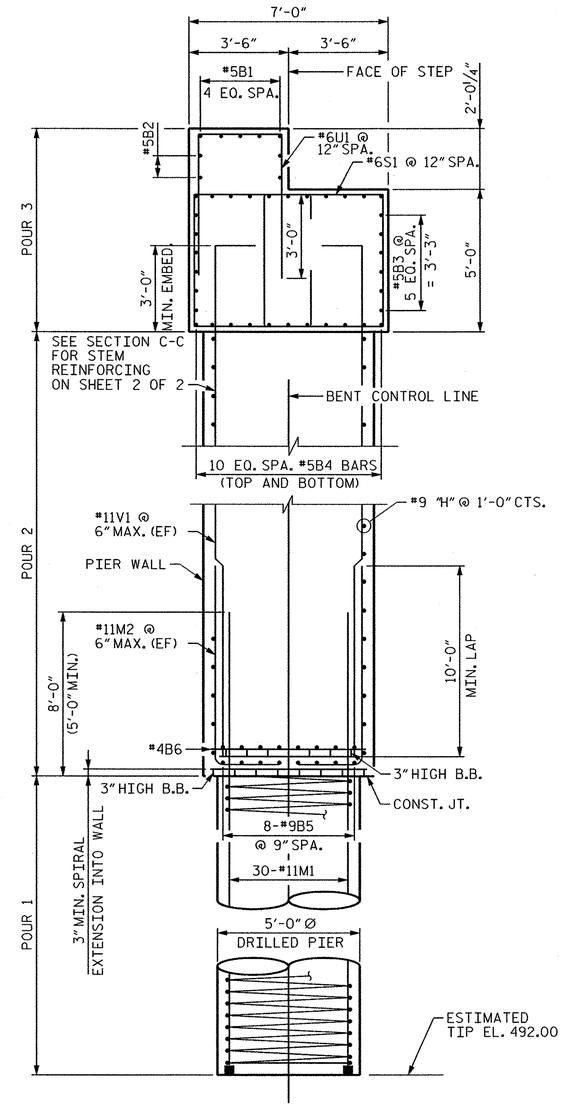

SECTION A-A

PROJECT NO. P-5208A

CABARRUS COUNTY

STATION: 10282+62.09 -M1- (N.I.C.)

SHEET 1 OF 2 MILE POST: 361.10

STATE OF NORTH CAROLINA
DEPARTMENT OF TRANSPORTATION
RALEIGH

SUBSTRUCTURE

BENT 1

NOTES

FOR SECTION A-A AND C-C, SEE 2 OF 2.

NORTH CAROLINA PROFESSIONAL SEAL 027292 ENGINEER DEREK C. STATON

7-8-13

HDR Engineering, Inc. of the Carolinas
440 S. Church Street, Suite 1000, Charlotte, NC 28202
N.C.B.E.L.S. License Number: F-0116

REVISIONS						SHEET NO.
NO.	BY:	DATE:	NO.	BY:	DATE:	ST-22
1	--	--	3	--	--	TOTAL SHEETS
2	--	--	4	--	--	35

DRAWN BY : KKM DATE : 03/13
CHECKED BY : KKM DATE : 03/13

$$$$$$$SYSTIME$$$$$
$$$$$$$$$$$$$$$$$$$$$$$$DGN$$$$$$$$$$$$$$$$$$$$$$$$
USERNAME

0041DEL_P10a1
0001ADD_P10a1

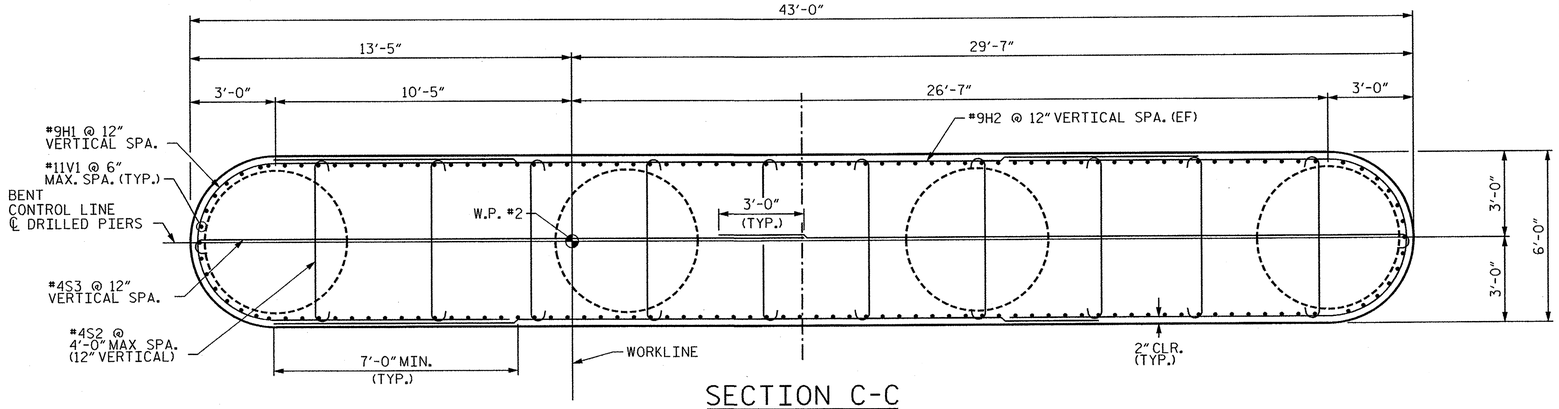

SECTION C-C

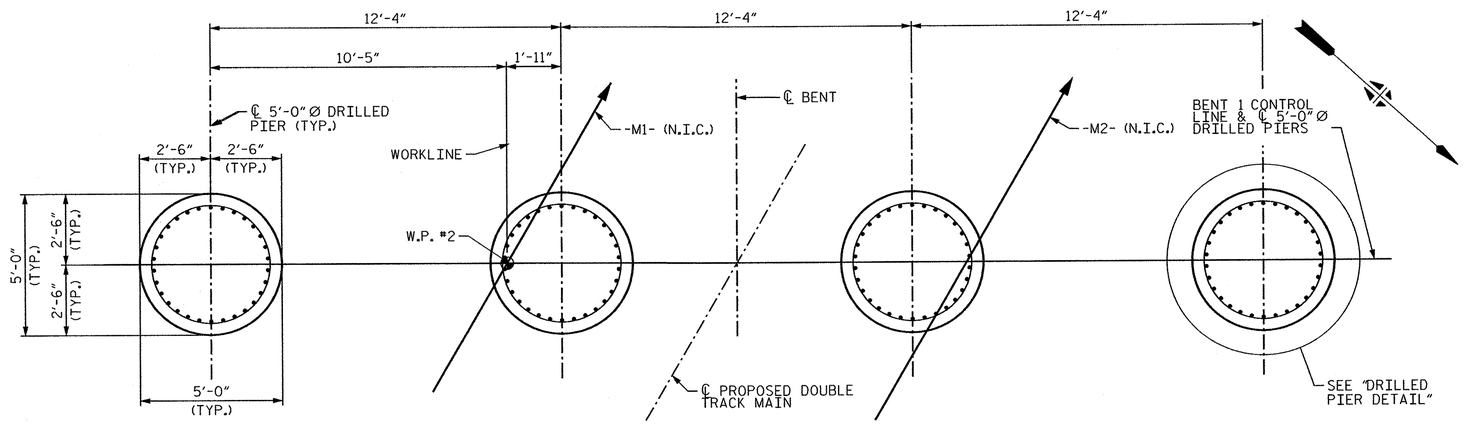

PLAN OF DRILLED PIERS

BAR TYPES

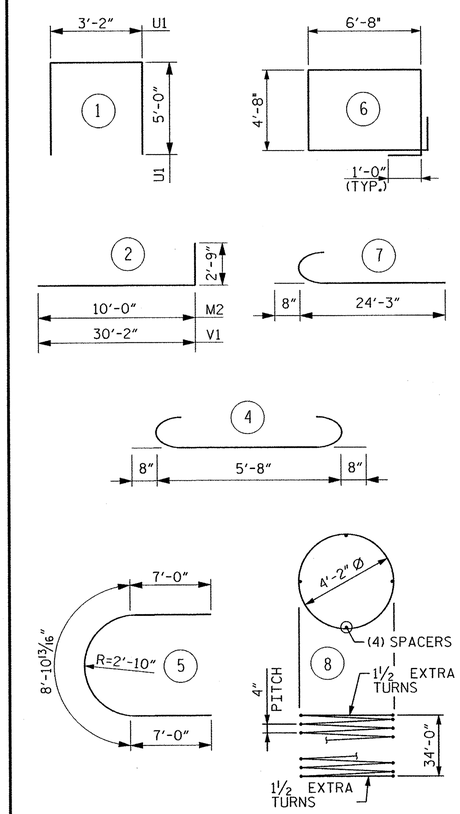

BILL OF MATERIAL

BENT 1 (SHEET ST-22)

BAR	NO.	SIZE	TYPE	LENGTH	WEIGHT
B1	10	#5	STR	22'-11"	242
B2	8	#5	STR	22'-11"	193
B3	24	#5	STR	22'-11"	580
B4	44	#5	STR	22'-11"	1064
B5	32	#9	STR	24'-1"	2622
B6	11	#4	STR	5'-8"	44
U1	44	#6	1	13'-2"	867
S1	44	#6	6	24'-8"	1625
S2	280	#4	4	7'-0"	1334
S3	56	#4	7	24'-11"	950
H1	56	#9	5	22'-11"	4367
H2	56	#9	STR	37'-0"	7051
V1	182	#11	2	32'-11"	31801
M1	120	#11	STR	42'-0"	26754
M2	150	#11	2	12'-9"	10152

REINFORCING STEEL					89646 LBS.
SPIRAL COLUMN REINFORCING STEEL					
SP-1	4	#5	8	1374'-11"	5801
CLASS AA CONCRETE	POUR 2 (WALL)				281.7 CU. YDS.
	POUR 3 (CAP)				69.2 CU. YDS.
	TOTAL				350.9 CU. YDS.
DRILLED PIER CONC. - POUR 1					98.9 CU. YDS.
5'-0" Ø DRILLED PIERS IN SOIL					64 LIN. FT.
5'-0" Ø DRILLED PIERS NOT IN SOIL					72 LIN. FT.
SID INSPECTION					4 EA.
CSL TESTING					1 EA.
CSL TUBES					710 LIN. FT.

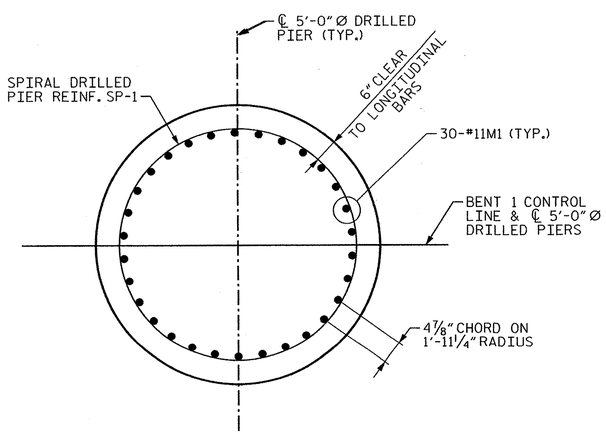

DRILLED PIER DETAIL

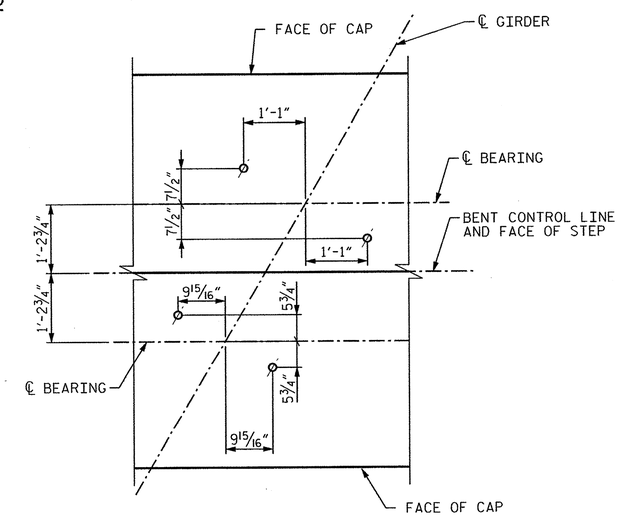

ANCHOR BOLT LAYOUT

NOTES

THE CONTRACTOR'S ATTENTION IS CALLED TO THE FACT THAT THE LONGITUDINAL REINFORCEMENT FOR THE DRILLED PIERS IS DETAILED WITH 3 FEET OF EXTRA LENGTH

ALL STEEL IN THE DRILLED PIERS IS INCLUDED IN THE PAY ITEMS FOR "REINFORCING STEEL" AND "SPIRAL REINFORCING STEEL".

THE SPIRAL REINFORCING STEEL SHALL BE W31 OR D31 COLD DRAWN STEEL WIRE OR #5 PLAIN OR DEFORMED BAR.

SPLICING OF THE LONGITUDINAL BARS IN THE DRILLED PIER WILL NOT BE PERMITTED.

NORTH CAROLINA PROFESSIONAL SEAL 027292 ENGINEER DEREK C. STATON

7-8-13

PROJECT NO. P-5208A

CABARRUS COUNTY

STATION: 10282+62.09 -M1- (N.I.C.)

SHEET 2 OF 2 MILE POST: 361.10

STATE OF NORTH CAROLINA
DEPARTMENT OF TRANSPORTATION
RALEIGH

SUBSTRUCTURE

BENT 1

HDR Engineering, Inc. of the Carolinas
440 S. Church Street, Suite 1000, Charlotte, NC 28202
N.C.B.E.L.S. License Number: F-0116

REVISIONS						SHEET NO.
NO.	BY:	DATE:	NO.	BY:	DATE:	ST-23
1	--	--	3	--	--	TOTAL SHEETS
2			4	--	--	35

DRAWN BY : LNM DATE : 03/13
CHECKED BY : KKM DATE : 03/13

$$$$$$$SYSTIME$$$$$
$$$$$$$$$$$$$$$$$$$$$$DGN$$$$$$$$$$$$$$$$$$$$$$

0041DEL_P10a1
0001ADD_P10a1

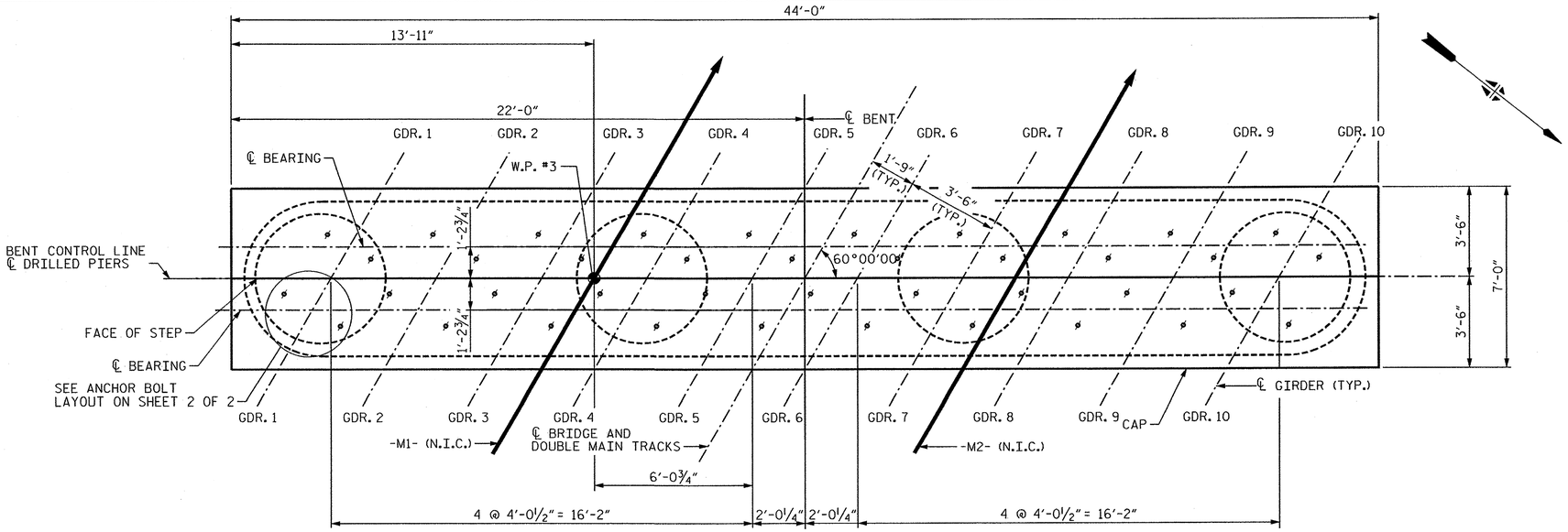

PLAN

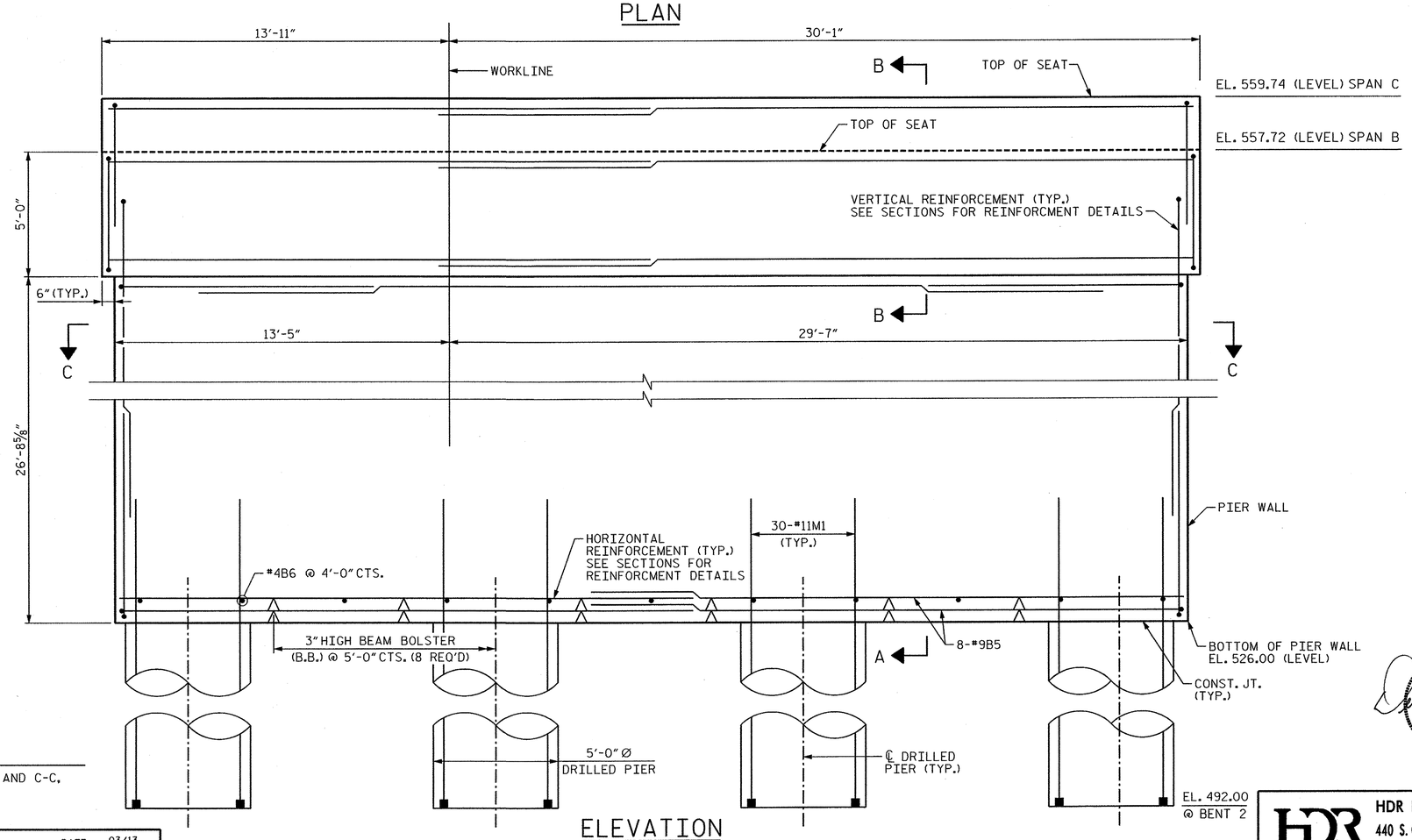

ELEVATION

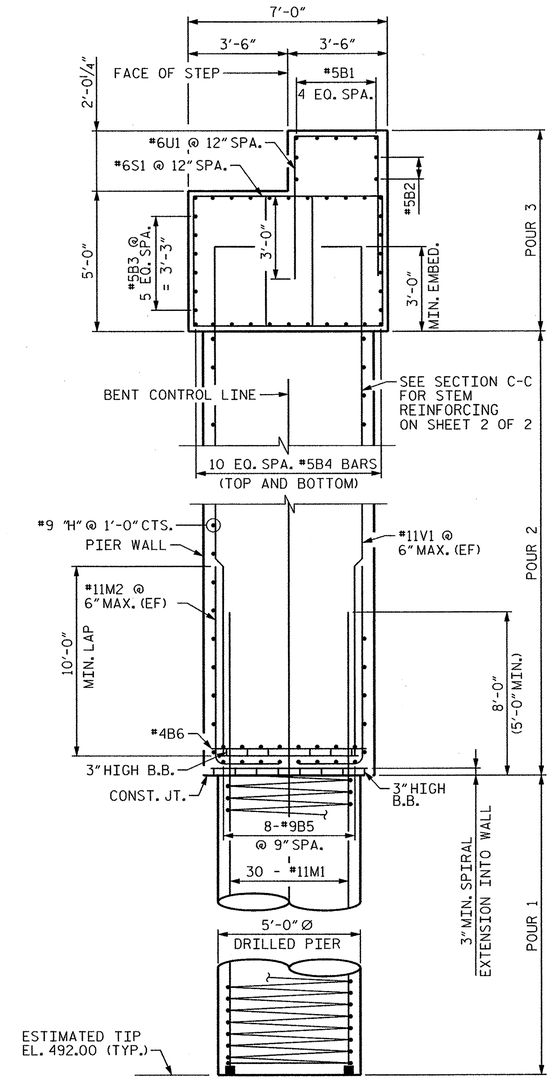

SECTION A-A

PROJECT NO. P-5208A

CABARRUS COUNTY

STATION: 10282+62.09 -M1- (N.I.C.)

SHEET 1 OF 2 MILE POST: 361.10

STATE OF NORTH CAROLINA
DEPARTMENT OF TRANSPORTATION
RALEIGH

SUBSTRUCTURE
BENT 2

NORTH CAROLINA PROFESSIONAL SEAL 027292 ENGINEER DEREK C. STATON

7-8-13

NOTES

FOR SECTION A-A AND C-C, SEE 2 OF 2.

HDR Engineering, Inc. of the Carolinas
440 S. Church Street, Suite 1000, Charlotte, NC 28202
N.C.B.E.L.S. License Number: F-0116

REVISIONS						SHEET NO.
NO.	BY:	DATE:	NO.	BY:	DATE:	ST-24
1	--	--	3	--	--	TOTAL SHEETS
2	--	--	4	--	--	35

DRAWN BY : KKM DATE : 03/13
CHECKED BY : KKM DATE : 03/13

$$$$$$SYSTIME$$$$$
$$$$$$$$$$$$$$$$$$$$DGN$$$$$$$$$$$$$$$$$$$$
USERNAME

0041DEL_P10a1
0001ADD_P10a1

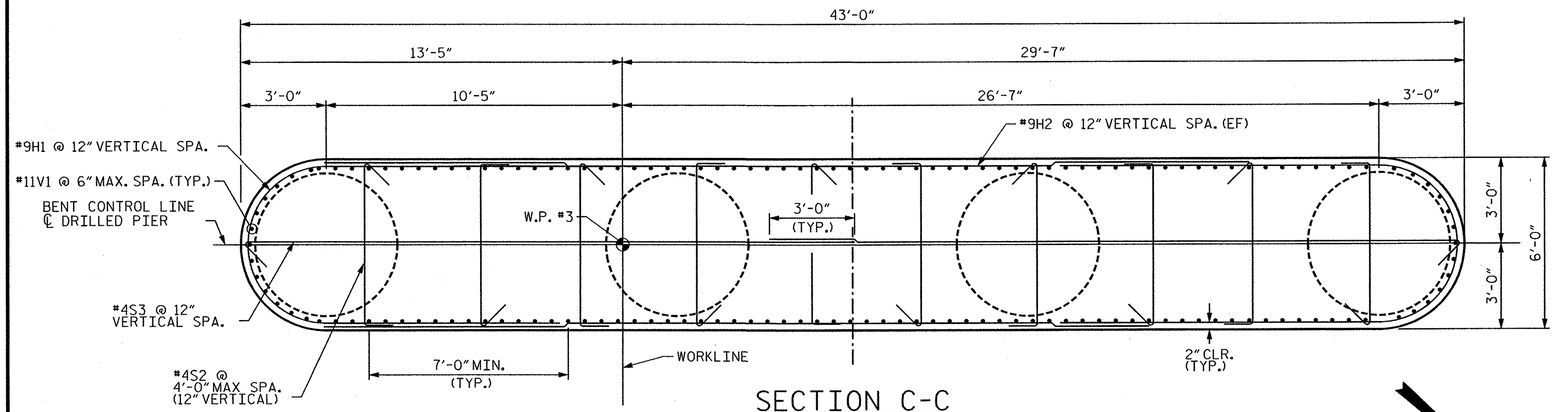

SECTION C-C

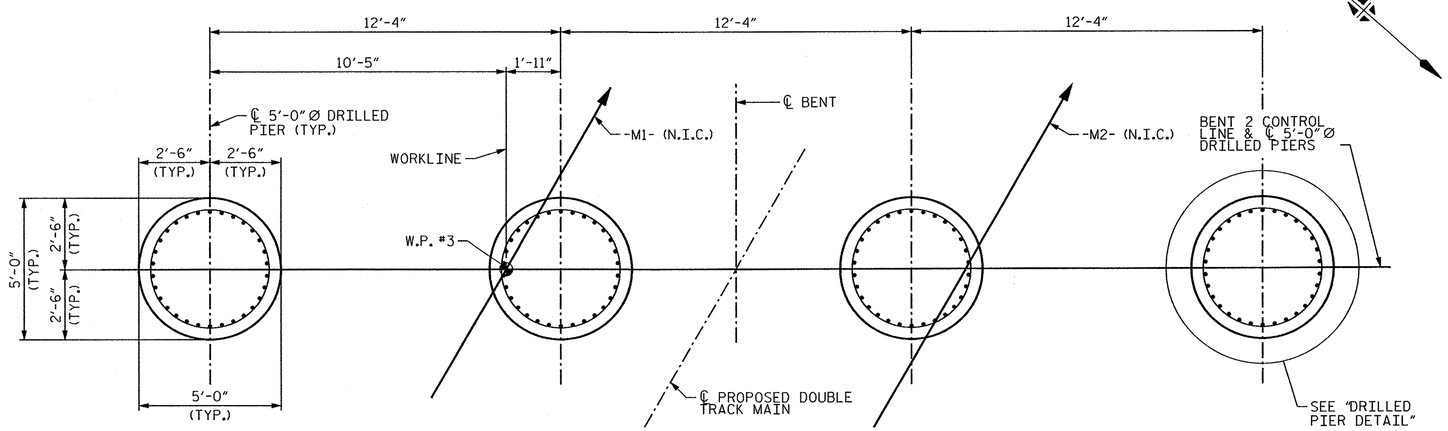

PLAN OF DRILLED PIERS

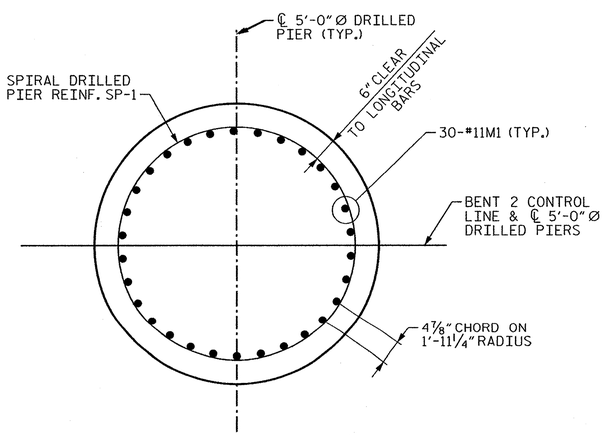

DRILLED PIER DETAIL

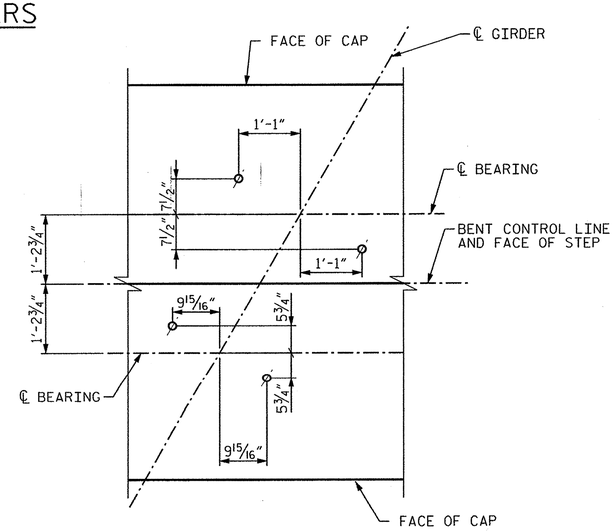

ANCHOR BOLT LAYOUT

BAR TYPES

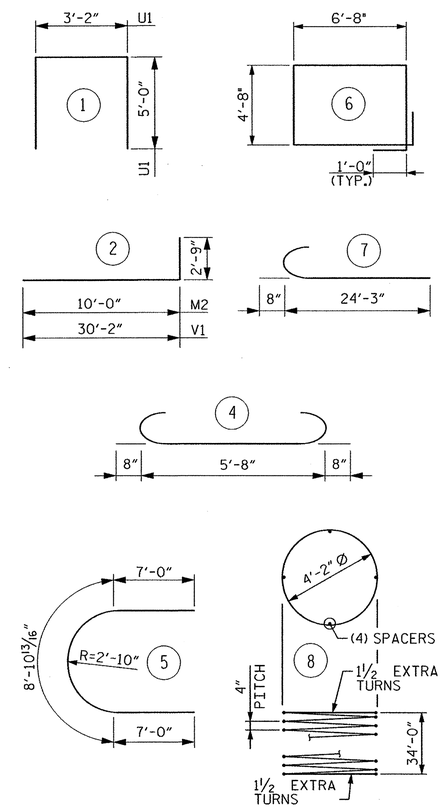

BILL OF MATERIAL

BENT 2 (SHEET ST-24)

BAR	NO.	SIZE	TYPE	LENGTH	WEIGHT
B1	10	#5	STR	22'-11"	242
B2	8	#5	STR	22'-11"	193
B3	24	#5	STR	22'-11"	580
B4	44	#5	STR	22'-11"	1064
B5	32	#9	STR	24'-1"	2622
B6	11	#4	STR	5'-8"	44
U1	44	#6	1	13'-2"	867
S1	44	#6	6	24'-8"	1625
S2	280	#4	4	7'-0"	1334
S3	56	#4	7	24'-11"	950
H1	56	#9	5	22'-11"	4367
H2	56	#9	STR	37'-0"	7051
V1	182	#11	2	32'-11"	31801
M1	120	#11	STR	42'-0"	26754
M2	150	#11	2	12'-9"	10152
REINFORCING STEEL					89646 LBS.
SPIRAL COLUMN REINFORCING STEEL					
SP-1	4	#5	8	1374'-11"	5801
CLASS AA CONCRETE	POUR 2 (WALL)				281.7 CU. YDS.
	POUR 3 (CAP)				69.2 CU. YDS.
	TOTAL				350.9 CU. YDS.
DRILLED PIER CONC. - POUR 1					98.9 CU. YDS.
5'-0" Ø DRILLED PIERS IN SOIL					69 LIN. FT.
5'-0" Ø DRILLED PIERS NOT IN SOIL					67 LIN. FT.
SID INSPECTION					4 EA.
CSL TESTING					1 EA.
CSL TUBES					710 LIN. FT.

NOTES

THE CONTRACTOR'S ATTENTION IS CALLED TO THE FACT THAT THE LONGITUDINAL REINFORCEMENT FOR THE DRILLED PIERS IS DETAILED WITH 3 FEET OF EXTRA LENGTH

ALL STEEL IN THE DRILLED PIERS IS INCLUDED IN THE PAY ITEMS FOR "REINFORCING STEEL" AND "SPIRAL REINFORCING STEEL".

THE SPIRAL REINFORCING STEEL SHALL BE W31 OR D31 COLD DRAWN STEEL WIRE OR #5 PLAIN OR DEFORMED BAR.

SPLICING OF THE LONGITUDINAL BARS IN THE DRILLED PIER WILL NOT BE PERMITTED.

NORTH CAROLINA PROFESSIONAL SEAL 027292 ENGINEER DEREK C. STATON
7-8-13

PROJECT NO. P-5208A

CABARRUS COUNTY

STATION: 10282+62.09 -M1- (N.I.C.)

SHEET 2 OF 2 MILE POST: 361.10

STATE OF NORTH CAROLINA
DEPARTMENT OF TRANSPORTATION
RALEIGH

SUBSTRUCTURE

BENT 2

HDR Engineering, Inc. of the Carolinas
440 S. Church Street, Suite 1000, Charlotte, NC 28202
N.C.B.E.L.S. License Number: F-0116

REVISIONS						SHEET NO.
NO.	BY:	DATE:	NO.	BY:	DATE:	ST-25
1	--	--	3	--	--	TOTAL SHEETS
2	--	--	4	--	--	35

DRAWN BY : KKM DATE : 03/13
CHECKED BY : KKM DATE : 03/13

$$$$$$$SYSTIME$$$$$
$$$$$$$$$$$$$$$$$$$$$$$$DGN$$$$$$$$$$$$$$$$$$$$$$$$
USERNAME

0041DEL_P10a1
0001ADD_P10a1

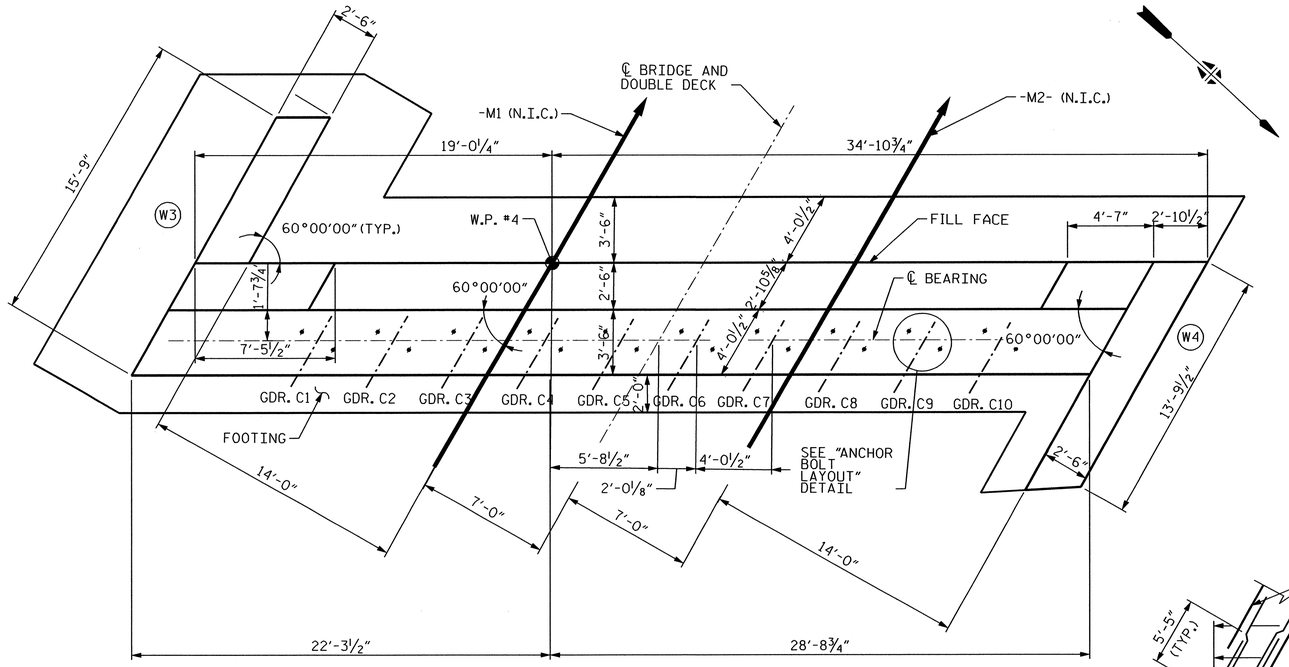

PLAN

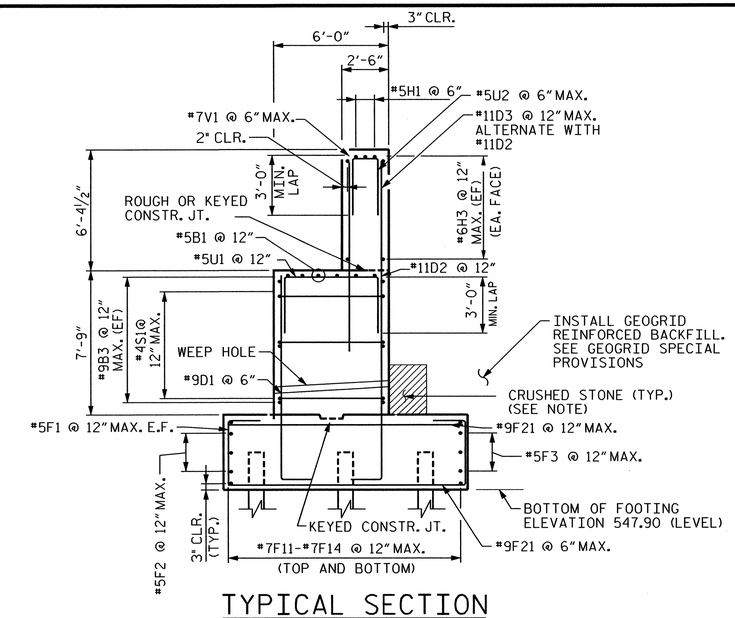

TYPICAL SECTION

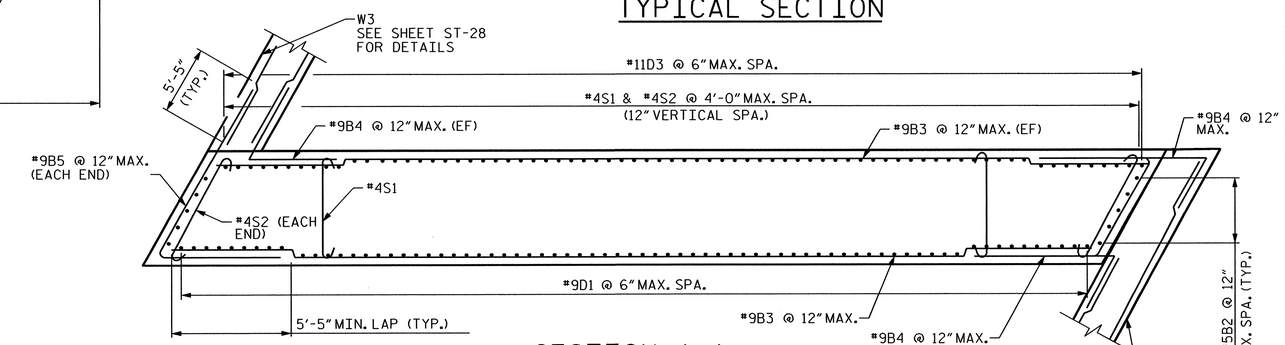

SECTION A-A

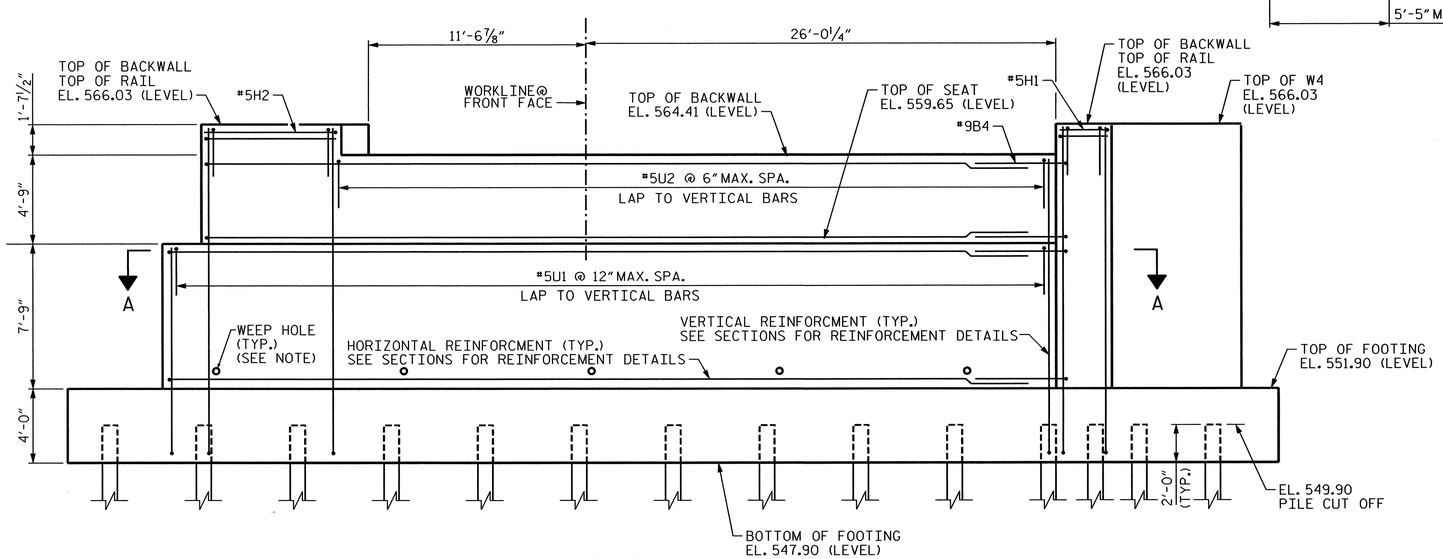

ELEVATION

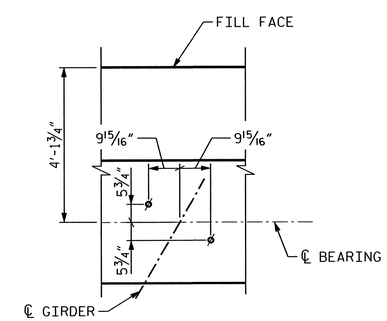

ANCHOR BOLT LAYOUT

NORTH CAROLINA PROFESSIONAL SEAL 027292 ENGINEER DEREK C. STATON
6-27-13

PROJECT NO. P-5208A

CABARRUS COUNTY

STATION: 10282+62.09 -M1- (N.I.C.)

SHEET 1 OF 3 MILE POST: 361.10

STATE OF NORTH CAROLINA
DEPARTMENT OF TRANSPORTATION
RALEIGH

SUBSTRUCTURE

END BENT 2

NOTES

LOCATE WEEP HOLES OUTLET 3" ABOVE TOP OF FINISHED GRADE.

3" DIAMETER WEEP HOLES AT 10'-0" O.C. PROVIDE ONE CUBIC YARD OF CRUSHED STONE AT WEEP HOLE. WRAP CRUSHED STONE IN GEOTEXTILE FABRIC.

HDR Engineering, Inc. of the Carolinas
440 S. Church Street, Suite 1000, Charlotte, NC 28202
N.C.B.E.L.S. License Number: F-0116

REVISIONS						SHEET NO.
NO.	BY:	DATE:	NO.	BY:	DATE:	ST-26
1	--	--	3	--	--	TOTAL SHEETS
2	--	--	4	--	--	35

DRAWN BY : LNM DATE : 03/13
CHECKED BY : KKM DATE : 03/13

$$$$$$SYSTIME$$$$$
$$$$$$$$$$$$$$$$$$$$$$$$DGN$$$$$$$$$$$$$$$$$$$$$$$$
USERNAME

0041DEL_P10a1
0001ADD_P10a1

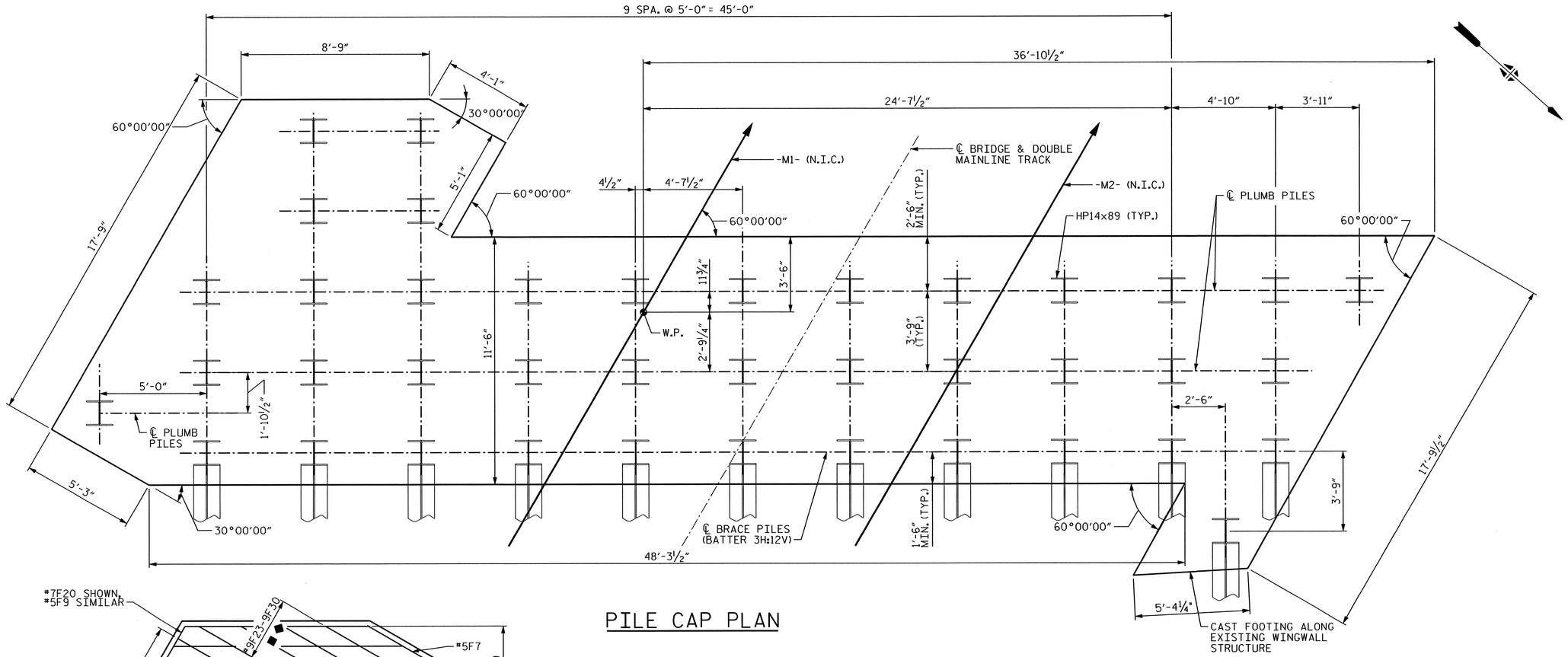

PILE CAP PLAN

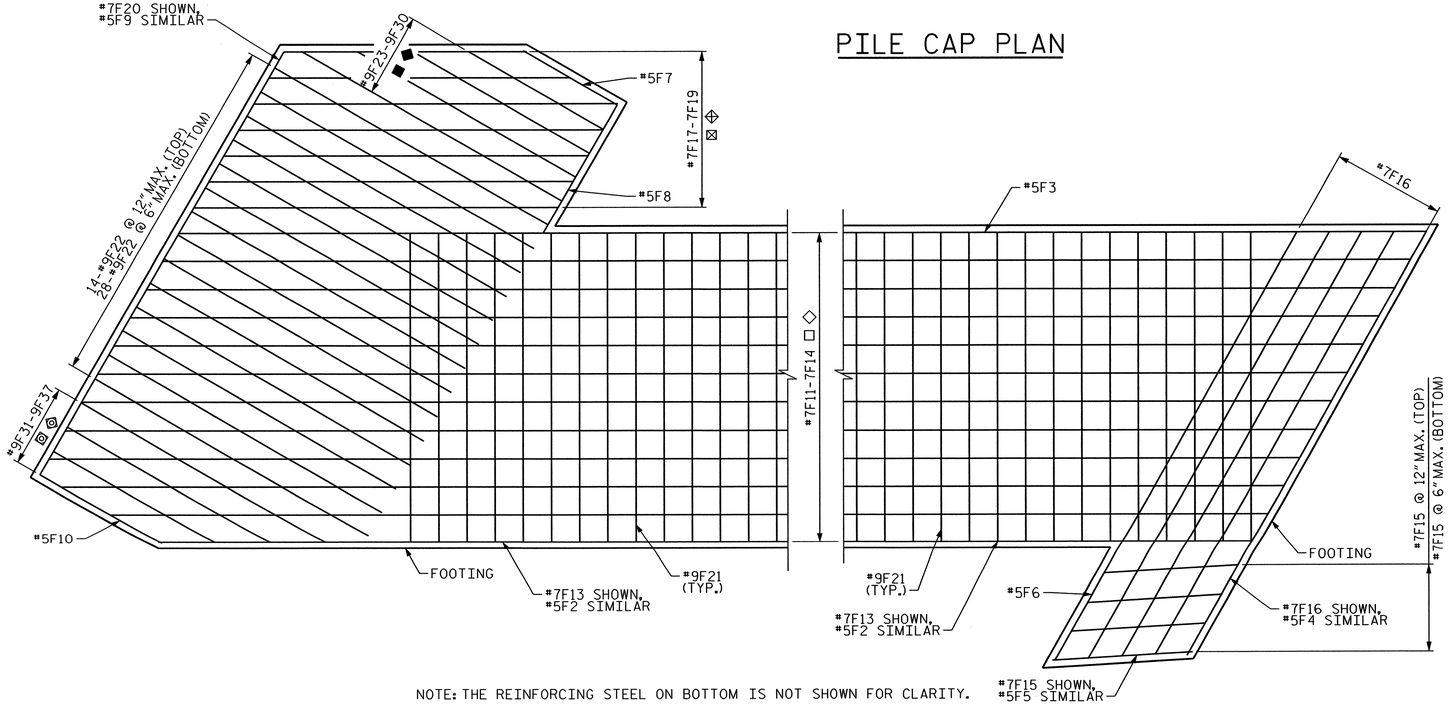

NOTE: THE REINFORCING STEEL ON BOTTOM IS NOT SHOWN FOR CLARITY.

FOOTING REINFORCING AT W3

FOOTING REINFORCING AT W4

□ TOP REINFORCING: 9-#7F11, 1-#7F12, 1-#7F13, 1-#7F14 @ 12" MAX., 2 BAR RUN
◇ BOTTOM REINFORCING: 9-#7F11, 1-#7F12, 1-#7F13, 1-#7F14 @ 12" MAX., 2 BAR RUN

⊠ TOP REINFORCING: 5-#7F17, 1-#7F18, 1-#7F19 @ 12" MAX.
⊕ BOTTOM REINFORCING: 5-#7F17, 1-#7F18, 1-#7F19 @ 12" MAX.

■ TOP REINFORCING: 1-#9F23, 1-#9F25, 1-#9F27, 1-#9F29 @ 12" MAX.
◆ BOTTOM REINFORCING: 1-#9F23, 1-#9F24, 1-#9F25, 1-#9F26, 1-#9F27, 1-#9F28, 1-#9F29, 1-#9F30 @ 6" MAX.

⊡ TOP REINFORCING: 1-#9F31, 1-#9F33, 1-#9F35, 1-#9F37 @ 12" MAX.
⊞ BOTTOM REINFORCING: 1-#9F31, 1-#9F32, 1-#9F33, 1-#9F34, 1-#9F35, 1-#9F36, 1-#9F37 @ 6" MAX.

PROJECT NO. P-5208A
CABARRUS COUNTY
STATION: 10282+62.09 -M1- (N.I.C.)
SHEET 2 OF 3 MILE POST: 361.10

STATE OF NORTH CAROLINA
DEPARTMENT OF TRANSPORTATION
RALEIGH

SUBSTRUCTURE

END BENT 2
PILE CAP PLAN

NORTH CAROLINA PROFESSIONAL SEAL 027292 ENGINEER DEREK C. STATON
6-27-13

HDR Engineering, Inc. of the Carolinas
440 S. Church Street, Suite 1000, Charlotte, NC 28202
N.C.B.E.L.S. License Number: F-0116

REVISIONS						SHEET NO.
NO.	BY:	DATE:	NO.	BY:	DATE:	S7-27
1	--	--	3	--	--	TOTAL SHEETS
2	--	--	4	--	--	35

DRAWN BY : LNM DATE : 03/13
CHECKED BY : KKM DATE : 03/13

$$$$$$$SYSTIME$$$$$
$$$$$$$$$$$$$$$$$$$$$$$$DGN$$$$$$$$$$$$$$$$$$$$$$$$
USERNAME

0041DEL_P10a1
0001ADD_P10a1

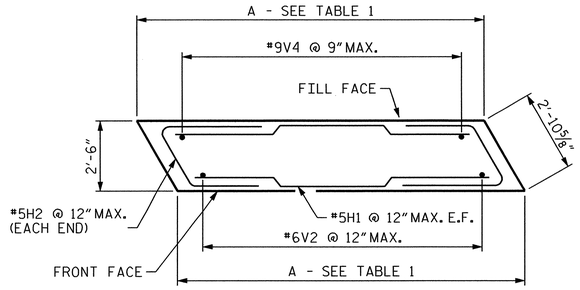

SECTION A-A

(SEE SECTION A-A ON SHEETS ST-26 FOR WINGWALL TO END BENT CONNECTION DETAIL)

TABLE 1

WINGWALL	DIMENSION	
	A	B
W3	15'-9"	14'-1 9/16"
W4	13'-9 1/2"	14'-1 9/16"

BAR TYPES

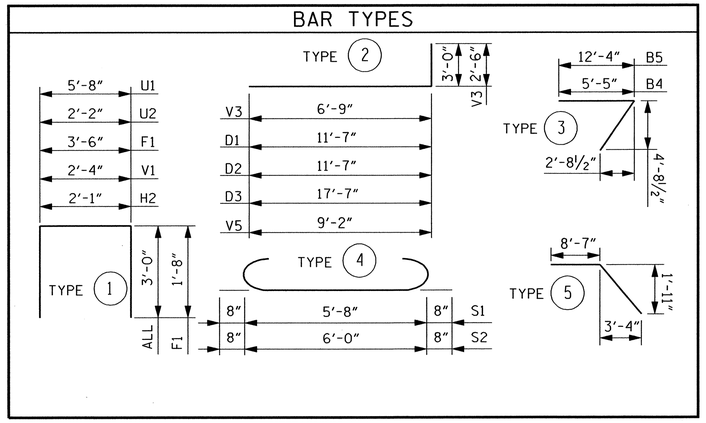

BILL OF MATERIAL

END BENT 2 (SHEET ST-26)

BAR	NO.	SIZE	TYPE	LENGTH	WEIGHT
B1	12	#5	STR	26'-5"	333
B2	10	#5	STR	7'-8"	81
B3	36	#9	STR	28'-1"	3440
B4	24	#9	3	10'-10"	885
B5	8	#9	3	17'-9"	483
D1	102	#9	2	14'-7"	5062
D2	75	#11	2	14'-11"	5939
D3	51	#11	2	20'-11"	5663
U1	51	#5	1	11'-8"	628
U2	51	#5	1	8'-2"	439
H1	3	#5	STR	4'-3"	13
H2	3	#5	STR	7'-1"	22
H3	20	#6	STR	26'-8"	799
S1	99	#4	4	7'-0"	472
S2	18	#4	4	7'-4"	90
V1	51	#7	STR	10'-2"	1059
F1	94	#5	1	6'-10"	678
F2	6	#5	STR	27'-3"	172
F3	6	#5	STR	30'-6"	193
F11	36	#7	STR	30'-0"	2242
F12	4	#7	STR	31'-2"	245
F13	4	#7	STR	29'-6"	241
F14	4	#7	STR	27'-10"	227
F21	137	#9	STR	11'-0"	5128
REINFORCING STEEL 34534 LBS					
CLASS AA CONCRETE 218.6 CY					
HP14x89 STEEL PILES NO. 40					
1100 LIN. FT					

BILL OF MATERIAL

W3 (SHEET ST-28)

BAR	NO.	SIZE	TYPE	LENGTH	WEIGHT
V1	17	#5	1	8'-4"	149
V2	17	#6	STR	13'-8"	348
V3	17	#6	2	8'-6"	216
V4	22	#9	STR	13'-8"	1023
V5	22	#9	2	11'-2"	836
H1	30	#5	STR	15'-5"	488
H2	30	#5	1	8'-1"	256
F1	39	#5	1	6'-10"	281
F7	3	#5	5	12'-5"	39
F8	3	#5	STR	5'-4"	17
F9	3	#5	STR	17'-4"	55
F10	3	#5	STR	4'-11"	16
F17	10	#7	STR	12'-11"	264
F18	2	#7	STR	10'-8"	44
F19	2	#7	5	12'-5"	51
F20	2	#7	STR	17'-4"	71
F22	42	#9	STR	11'-2"	1596
F23	2	#9	STR	10'-8"	73
F24	1	#9	STR	9'-9"	33
F25	2	#9	STR	8'-11"	61
F26	1	#9	STR	8'-0"	27
F27	2	#9	STR	7'-3"	49
F28	1	#9	STR	6'-4"	22
F29	2	#9	STR	5'-6"	37
F30	1	#9	STR	4'-8"	16
F31	2	#9	STR	10'-0"	68
F32	1	#9	STR	9'-2"	31
F33	2	#9	STR	8'-4"	57
F34	1	#9	STR	7'-5"	25
F35	2	#9	STR	6'-7"	45
F36	1	#9	STR	5'-9"	20
F37	2	#9	STR	4'-11"	33
REINFORCING STEEL 6346 LBS					
CLASS AA CONCRETE 19.8 CY					

BILL OF MATERIAL

W4 (SHEET ST-28)

BAR	NO.	SIZE	TYPE	LENGTH	WEIGHT
V1	15	#5	1	8'-4"	132
V2	15	#6	STR	13'-8"	307
V3	15	#6	2	8'-6"	191
V4	19	#9	STR	13'-8"	884
V5	19	#9	2	11'-2"	722
H1	30	#5	STR	13'-5"	425
H2	30	#5	1	8'-1"	256
F1	26	#5	1	6'-10"	187
F4	3	#5	STR	17'-3"	55
F5	3	#5	STR	4'-9"	15
F6	3	#5	STR	4'-11"	16
F15	8	#7	STR	4'-9"	78
F16	12	#7	STR	17'-3"	423
REINFORCING STEEL 3688 LBS					
CLASS AA CONCRETE 18.3 CY					

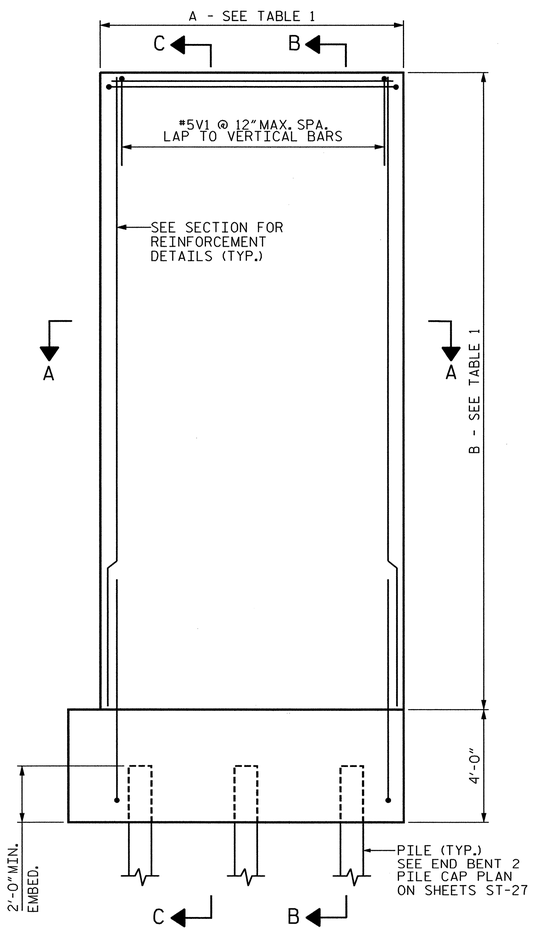

WINGWALL ELEVATION

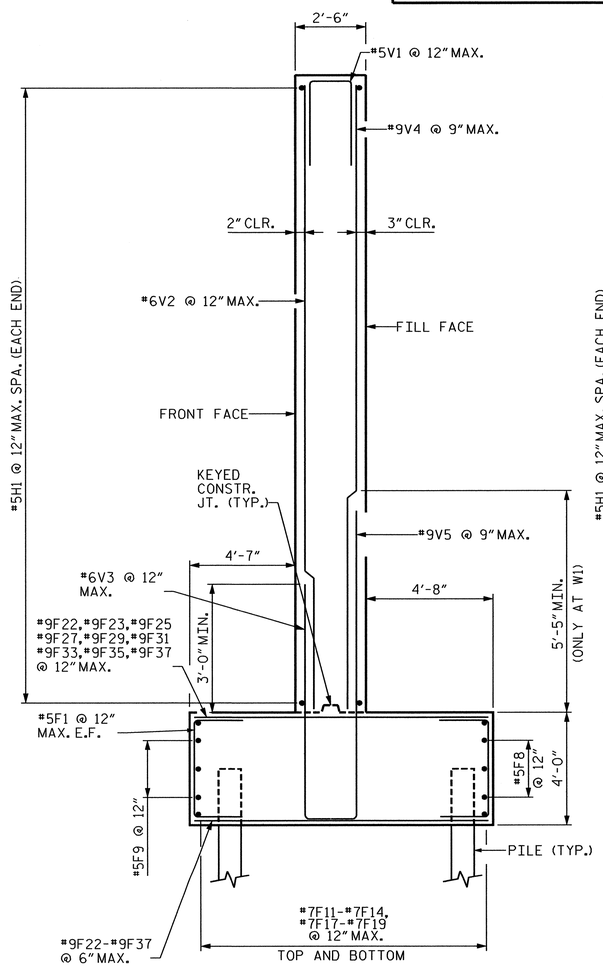

SECTION B-B AT W3

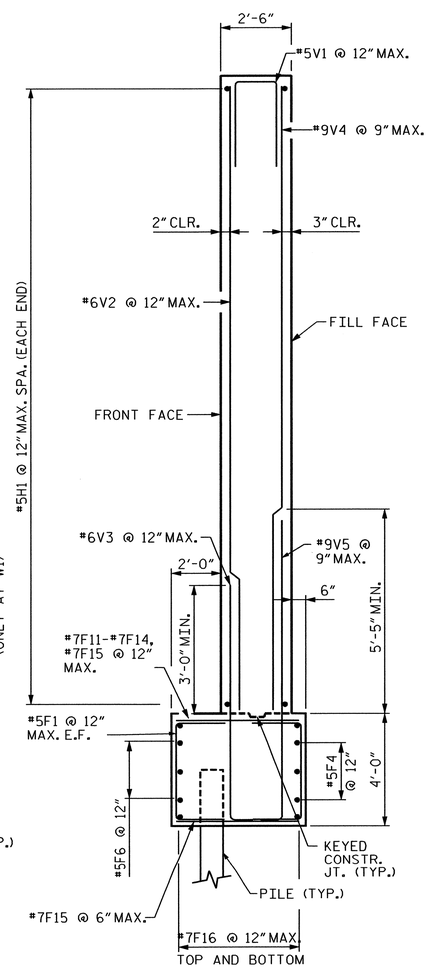

SECTION C-C AT W4

NORTH CAROLINA PROFESSIONAL SEAL 027292 ENGINEER DEREK C. STATON
6-27-13

PROJECT NO. P-5208A

CABARRUS COUNTY

STATION: 10282+62.09 -M1- (N.I.C.)

SHEET 3 OF 3 MILE POST: 361.10

STATE OF NORTH CAROLINA
DEPARTMENT OF TRANSPORTATION
RALEIGH

SUBSTRUCTURE
END BENT 2 WINGWALL DETAILS

HDR Engineering, Inc. of the Carolinas
440 S. Church Street, Suite 1000, Charlotte, NC 28202
N.C.B.E.L.S. License Number: F-0116

REVISIONS						SHEET NO.
NO.	BY:	DATE:	NO.	BY:	DATE:	ST-28
1	--	--	3	--	--	TOTAL SHEETS
2	--	--	4	--	--	35

DRAWN BY : KKM DATE : 05/13
CHECKED BY : KKM DATE : 05/13

$$$$$$$SYSTIME$$$$$
$$$$$$$$$$$$$$$$$$$$$DGN$$$$$$$$$$$$$$$$$$$$$$$
USERNAME

0041DEL_P10a1
0001ADD_P10a1

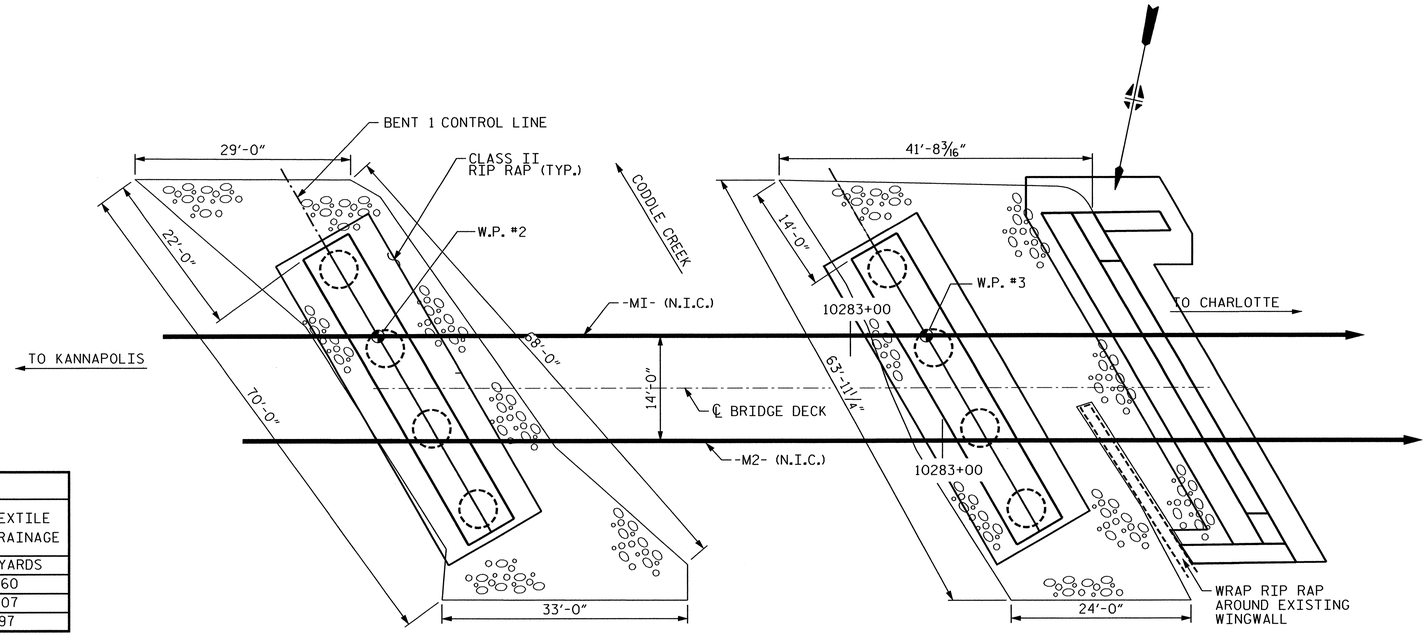

PLAN

ESTIMATED QUANTITIES		
BRIDGE @ STA. 10282+62.09 -M1-	RIP RAP CLASS II (2'-0" THICK)	GEOTEXTILE FOR DRAINAGE
	TONS	SQ. YARDS
BENT 1	238	160
BENT 2	253	107
END BENT 2	211	97

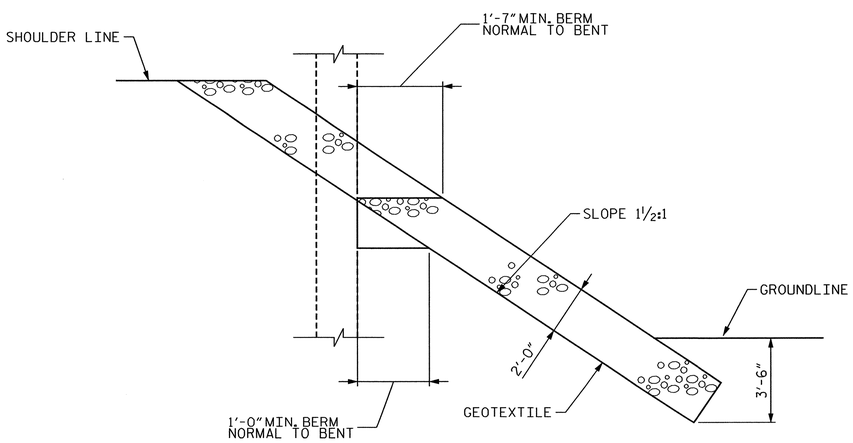

TYPICAL SECTION AT BENT

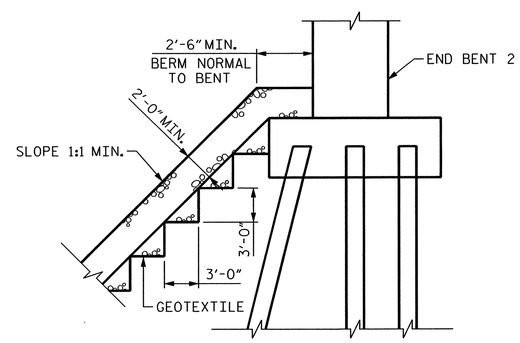

SECTION AT END BENT 2

PROJECT NO. P-5208A

CABARRUS COUNTY

STATION: 10282+62.09 -M1- (N.I.C.)

NORTH CAROLINA PROFESSIONAL SEAL 027292 ENGINEER DEREK C. STATON

6-27-13

STATE OF NORTH CAROLINA
DEPARTMENT OF TRANSPORTATION
RALEIGH

RIP RAP DETAILS

HDR Engineering, Inc. of the Carolinas
440 S. Church Street, Suite 1000, Charlotte, NC 28202
N.C.B.E.L.S. License Number: F-0116

REVISIONS						SHEET NO.
NO.	BY:	DATE:	NO.	BY:	DATE:	S7-29
1	--	--	3	--	--	TOTAL SHEETS
2	--	--	4	--	--	35

DRAWN BY : RC DATE : 05/13
CHECKED BY : KKM DATE : 05/13

$$$$$$SYSTIME$$$$$
$$$$$$$$$$$$$$$$$$$$$$$$DGN$$$$$$$$$$$$$$$$$$$$$$$$
USERNAME

0041DEL_P10a1
0001ADD_P10a1

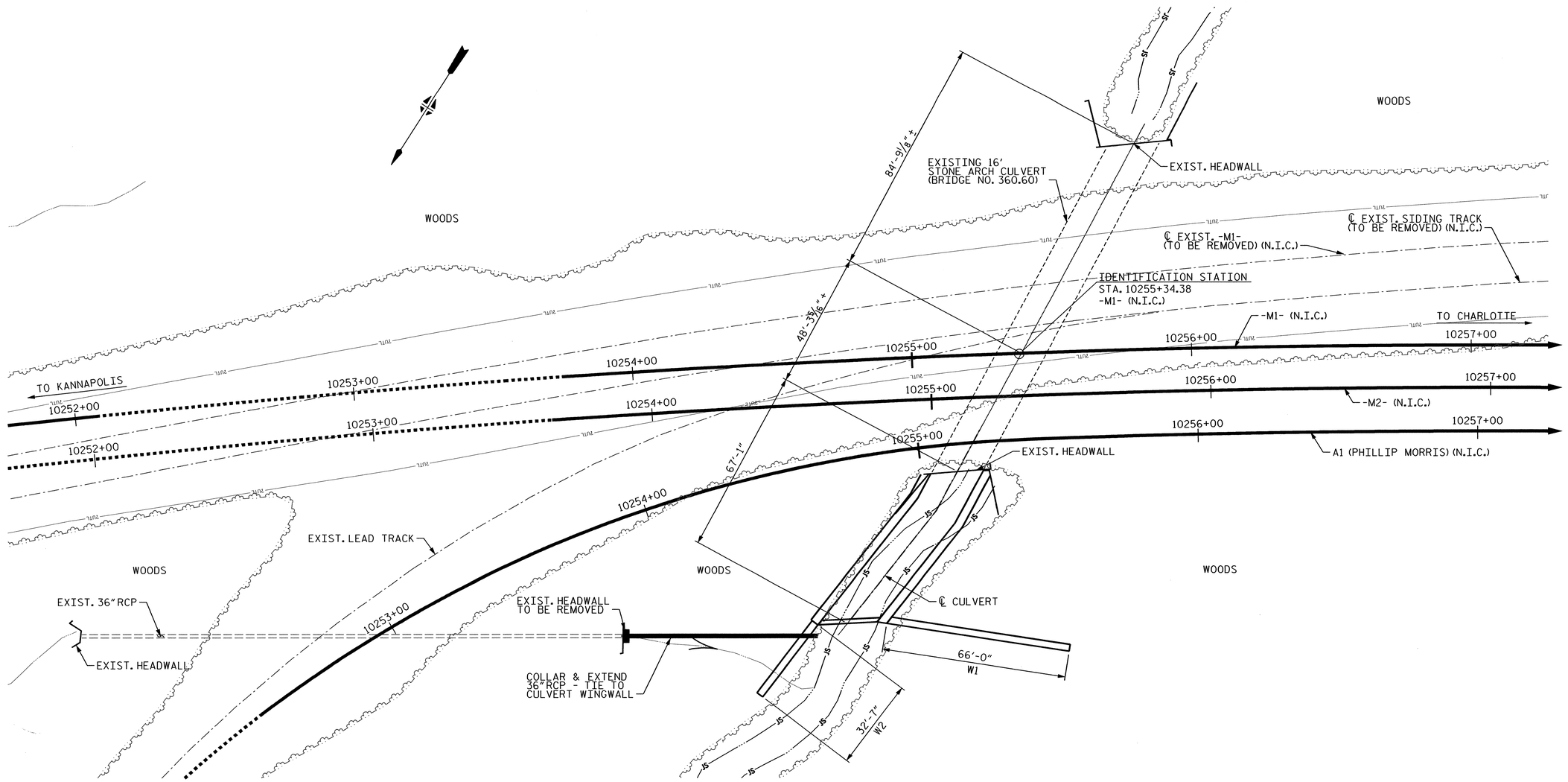

LOCATION SKETCH

BM #101, 203'-10" LT. OF -BL- STA. 108+57.81, ELEV. 557.34

PROJECT NO. P-5208A

CABARRUS COUNTY

STATION: 10255+34.38 -M1- (N.I.C.)

SHEET 1 OF 6 BRIDGE NO. 360.60

TOTAL BILL OF MATERIAL								
	CULVERT EXCAVATION	PILE EXCAVATION IN SOIL	PILE EXCAVATION NOT IN SOIL	PDA TESTING	CLASS AA CONCRETE	REINFORCING STEEL (CULVERT)	HP 14x89 STEEL PILES	
	LUMP SUM	LF	LF	EACH	CY	LBS	NO.	LF
CULVERT TOTAL	LUMP SUM	40	182	1	485.2	68,992	54	648

NOTES

PAYMENT FOR PARTIAL REMOVAL OF EXISTING WINGWALL SHALL BE INCLUDED IN PRICE BID FOR CULVERT EXCAVATION.

NORTH CAROLINA PROFESSIONAL SEAL 027292 ENGINEER DEREK C. STATON
6-27-13

STATE OF NORTH CAROLINA
DEPARTMENT OF TRANSPORTATION
RALEIGH

16' ARCH CULVERT
FOR CULVERT EXTENSION
UNDER RAILROAD

HDR Engineering, Inc. of the Carolinas
440 S. Church Street, Suite 1000, Charlotte, NC 28202
N.C.B.E.L.S. License Number: F-0116

REVISIONS						SHEET NO.
NO.	BY:	DATE:	NO.	BY:	DATE:	ST-30
1	--	--	3	--	--	TOTAL SHEETS
2	--	--	4	--	--	35

DRAWN BY : RC DATE : 03/13
CHECKED BY : RC DATE : 03/13

$$$$$$SYSTIME$$$$$
$$$$$$$$$$$$$$$$$$$$DGN$$$$$$$$$$$$$$$$$$$$$$$$
USERNAME

0041DEL_P10a1
0001ADD_P10a1

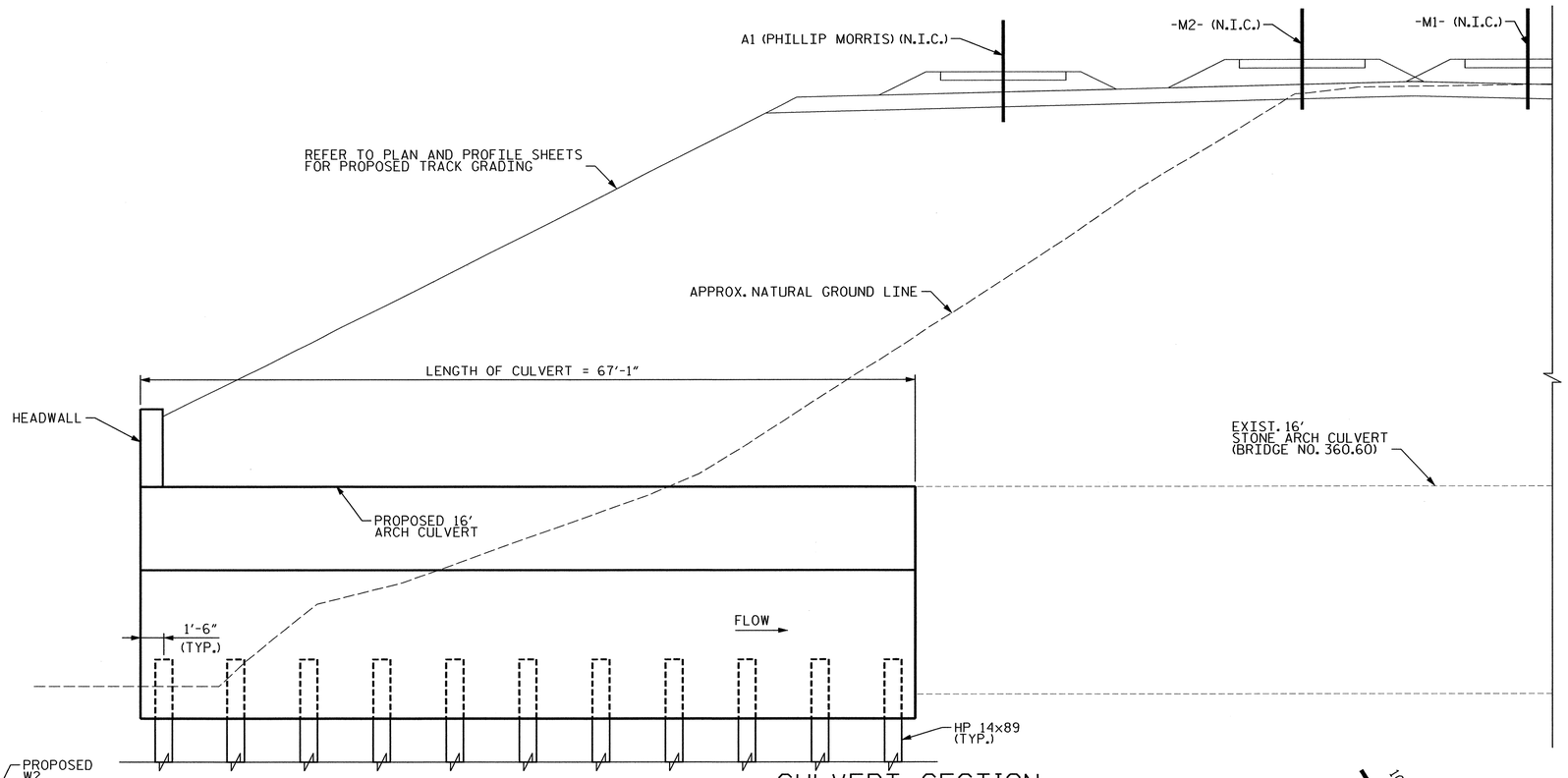

CULVERT SECTION

SECTION CUT PERPENDICULAR TO -M1- (N.I.C.)

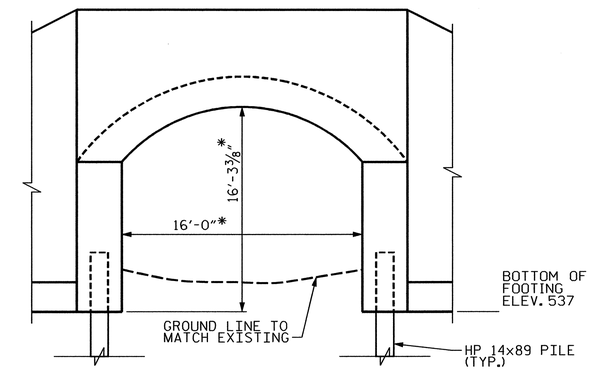

CULVERT END SECTION

* CONTRACTOR TO MATCH EXISTING OPENING

HYDRAULIC DATA

DESIGN DISCHARGE:	897 CFS
FREQUENCY OF DESIGN FLOOD:	100 YRS.
DESIGN HIGH WATER ELEVATION:	548.86
DRAINAGE AREA:	1.4 SQ. MI.
BASIC DISCHARGE (Q100):	897 CFS
BASIC HIGH WATER ELEVATION:	548.86

OVERTOPPING FLOOD DATA

OVERTOPPING DISCHARGE:	1900+ CFS
FREQUENCY OF OVERTOPPING FLOOD:	500+ YRS.
OVERTOPPING FLOOD ELEVATION:	548.27

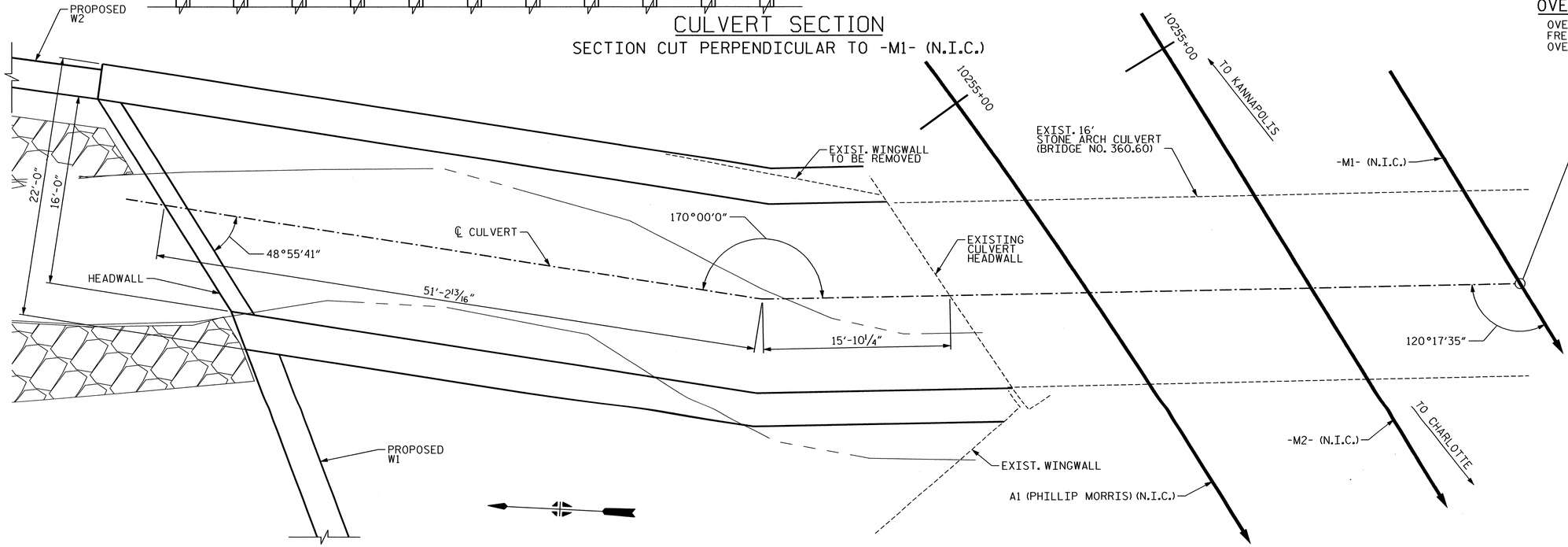

PLAN

IDENTIFICATION STATION
STA. 10255+34.38
-M1- (N.I.C.)

NORTH CAROLINA PROFESSIONAL SEAL 027292 ENGINEER DEREK C. STATON
6-27-13

PROJECT NO. P-5208A

CABARRUS COUNTY

STATION: 10255+34.38 -M1- (N.I.C.)

SHEET 2 OF 6 MILE POST: 360.60

STATE OF NORTH CAROLINA
DEPARTMENT OF TRANSPORTATION
RALEIGH

16' ARCH CULVERT

HDR Engineering, Inc. of the Carolinas
440 S. Church Street, Suite 1000, Charlotte, NC 28202
N.C.B.E.L.S. License Number: F-0116

REVISIONS						SHEET NO.
NO.	BY:	DATE:	NO.	BY:	DATE:	S7-31
1	--	--	3	--	--	TOTAL SHEETS
2	--	--	4	--	--	35

DRAWN BY : RC DATE : 03/13
CHECKED BY : RC DATE : 03/13

$$$$$$$SYSTIME$$$$$
$$$$$$$$$$$$$$$$$$$$$$DGN$$$$$$$$$$$$$$$$$$$$$$
USERNAME

0041DEL_P10a1
0001ADD_P10a1

NOTES

DRILL AND BOND DOWELS @ 18" MAX. SPACING EACH WAY x 2'-0" WITH 12" MINIMUM EMBEDMENT (OR PER MANUFACTURER'S RECOMMENDATION) INTO EXISTING CULVERT.

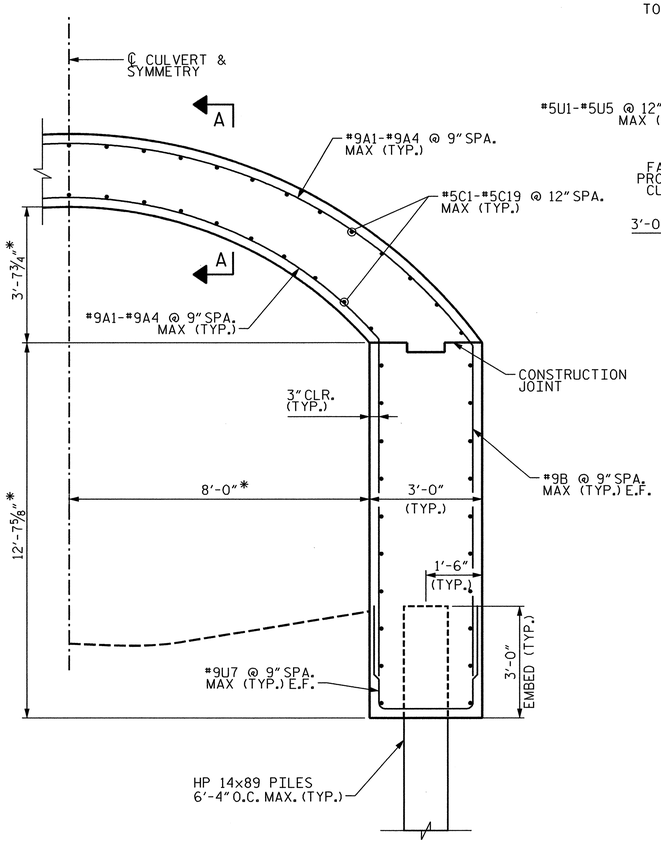

CULVERT HALF SECTION

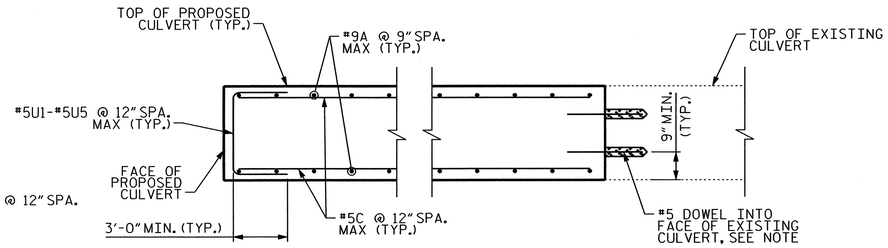

SECTION A-A

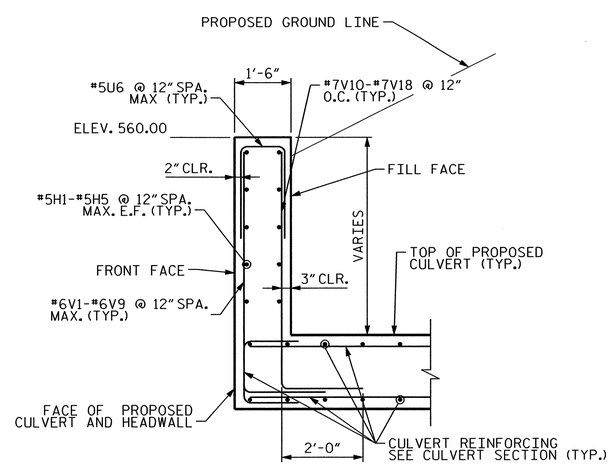

SECTION - HEADWALL

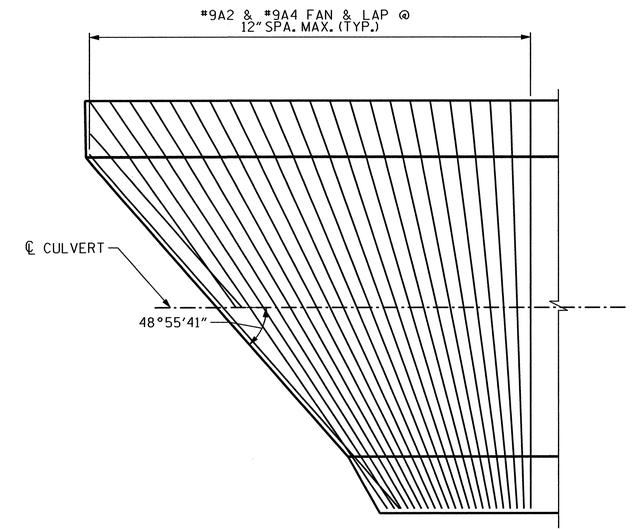

DETAIL AT END

* CONTRACTOR TO MATCH EXISTING OPENING

FOUNDATION NOTE

FOR PILES, SEE SECTION 450 OF THE STANDARD SPECIFICATIONS.

THE ALLOWABLE BEARING CAPACITY FOR PILES IS 135 TONS PER PILE.

DRIVE PILES TO A REQUIRED BEARING CAPACITY OF 270 TONS PER PILE. THE REQUIRED BEARING CAPACITY IS EQUAL TO THE ALLOWABLE BEARING CAPACITY WITH A MINIMUM FACTOR OF SAFETY OF TWO.

IT HAS BEEN ESTIMATED THAT A HAMMER WITH AN EQUIVALENT RATED ENERGY IN THE RANGE OF 30,000 TO 55,000 FT-LBS PER BLOW WILL BE REQUIRED TO DRIVE PILES. THIS ESTIMATED ENERGY RANGE DOES NOT RELEASE THE CONTRACTOR FROM PROVIDING DRIVING EQUIPMENT IN ACCORDANCE WITH SUBARTICLE 450-3(D)(2) OF THE STANDARD SPECIFICATIONS.

PILE EXCAVATION IS REQUIRED TO INSTALL PILES. EXCAVATE HOLES TO ELEVATION 527 FT. FOR PILE EXCAVATION, SEE SECTION 450 OF THE STANDARD SPECIFICATIONS.

INSTALL PILES TO A TIP ELEVATION NO HIGHER THAN 527 FT.

THE SCOUR CRITICAL ELEVATION FOR THE FOUNDATIONS IS ELEVATION 536 FEET. SCOUR CRITICAL ELEVATIONS ARE USED TO MONITOR POSSIBLE SCOUR PROBLEMS DURING THE LIFE OF THE STRUCTURE.

KEY FOOTINGS AT LEAST 12" INTO WEATHERED ROCK WITH MINIMUM THICKNESS AS SHOWN ON THE PLANS.

CONCRETE IS REQUIRED TO FILL HOLES FOR PILE EXCAVATION.

PDA WILL NOT BE USED TO MONITOR DRIVING STRESSES.

A DELMAG D19-32 PILE HAMMER WAS UTILIZED AS A COMMON HAMMER TYPE TO DETERMINE POTENTIAL PILE DRIVING STRESSES. THIS HAMMER SHOULD PROVIDE SUFFICIENT ENERGY TO DRIVE THE PILES TO THE REQUIRED DRIVING RESISTANCE AT THE FOUNDATION LOCATIONS. THE ACTUAL HAMMER TO BE UTILIZED WILL BE SUBMITTED BY THE CONTRACTOR AND ANALYZED AFTER LETTING.

FOUNDATIONS MUST BE PLACED ON NON-SCOURABLE ROCK. IF ADEQUATE MATERIAL IS NOT ENCOUNTERED AT THE PLAN BOTTOM OF FOOTING EXCAVATION, EXCAVATE DOWN TO NON-SCOURABLE ROCK AND BACKFILL TO THE FOUNDATION BEARING ELEVATION WITH 3,000 PSI CONCRETE OR LOWER THE FOUNDATION BEARING ELEVATION ACCORDINGLY.

PROJECT NO. P-5208A
CABARRUS COUNTY
STATION: 10255+34.38 -M1- (N.I.C.)
SHEET 3 OF 6 MILE POST: 360.60

NORTH CAROLINA PROFESSIONAL SEAL 027292 ENGINEER DEREK C. STATON
6-27-13

HDR Engineering, Inc. of the Carolinas
440 S. Church Street, Suite 1000, Charlotte, NC 28202
N.C.B.E.L.S. License Number: F-0116

STATE OF NORTH CAROLINA
DEPARTMENT OF TRANSPORTATION
RALEIGH

16' ARCH CULVERT

DETAILS

REVISIONS						SHEET NO.
NO.	BY:	DATE:	NO.	BY:	DATE:	S7-32
1	--	--	3	--	--	TOTAL SHEETS
2	--	--	4	--	--	35

DRAWN BY : RC DATE : 03/13
CHECKED BY : RC DATE : 03/13

$$$$$$SYSTIME$$$$$
$$$$$$$$$$$$$$$$$$$$$$DGN$$$$$$$$$$$$$$$$$$$$$$
USERNAME

0041DEL_P10a1
0001ADD_P10a1

NOTES

3"Ø WEEP HOLES 10'-0" O.C. PROVIDE 1 CUBIC YARD OF CRUSHED STONE AT WEEP HOLE. WRAP CRUSHED STONE IN GEOTEXTILE FILTER FABRIC.

SHIFT REINFORCING AS NEEDED TO AVOID CONFLICT WITH PILES. ⚠1

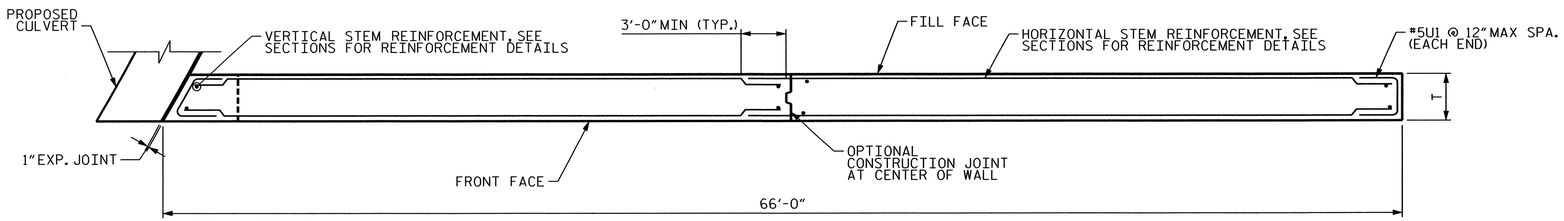

SECTION A-A

FOOTING NOT SHOWN

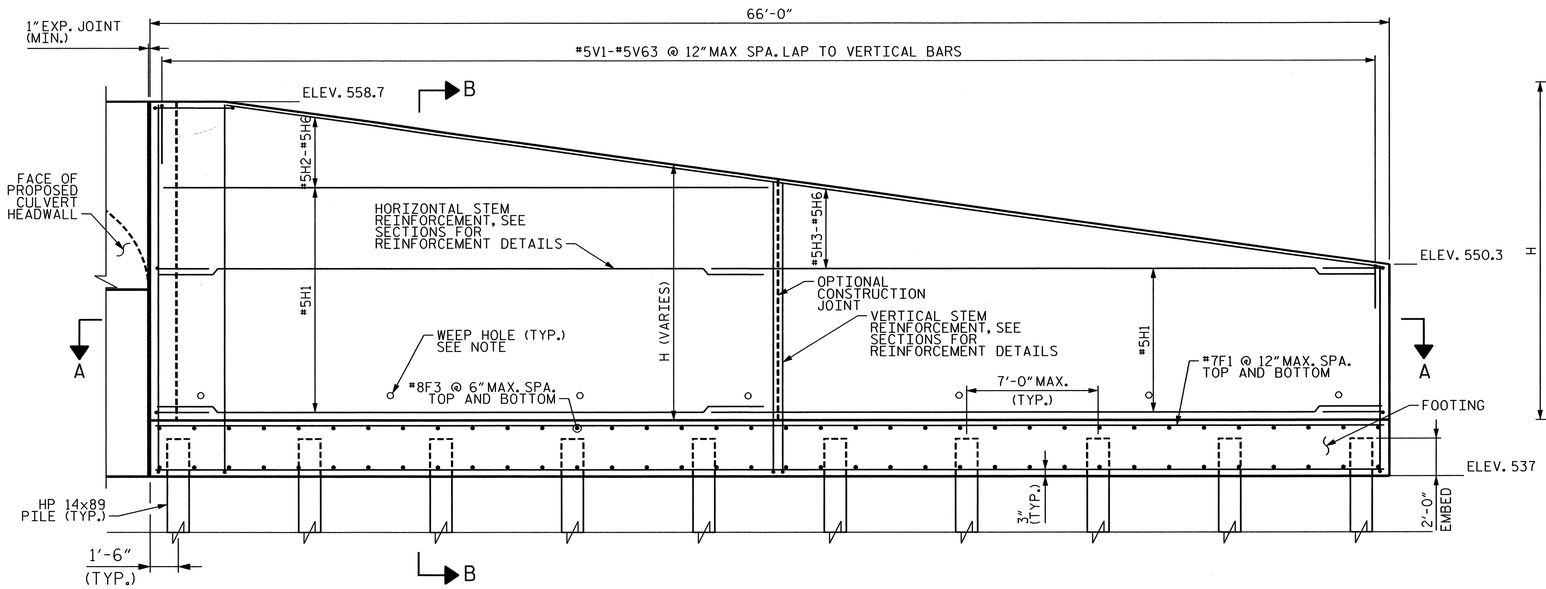

ELEVATION - W1

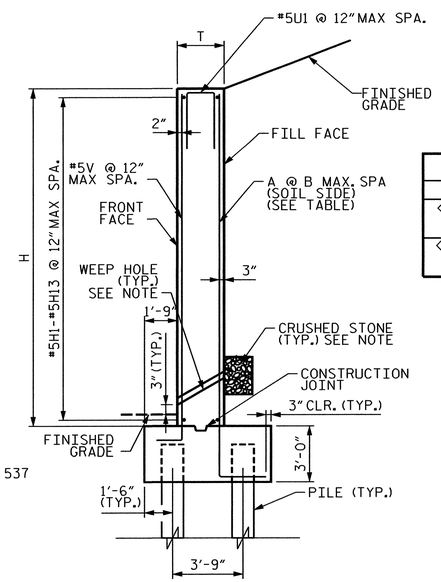

SECTION B-B

(FOOTING REINFORCING IS NOT SHOWN FOR CLARITY)

WINGWALL DIMENSIONS			
H	T	A	B
< 15'-0"	2'-6"	#9V94-#9V126, #9V186-#9V201	12"
< 20'-0"	2'-6"	#9V127-#9V185, #9V202-#9V234	6"

PROJECT NO. P-5208A

CABARRUS COUNTY

STATION: 10255+34.38 -M1- (N.I.C.)

SHEET 4 OF 6 MILE POST: 360.60

STATE OF NORTH CAROLINA
DEPARTMENT OF TRANSPORTATION
RALEIGH

16' ARCH CULVERT DETAILS FOR W1

HDR Engineering, Inc. of the Carolinas
440 S. Church Street, Suite 1000, Charlotte, NC 28202
N.C.B.E.L.S. License Number: F-0116

REVISIONS						SHEET NO.
NO.	BY:	DATE:	NO.	BY:	DATE:	S7-33
1	--	--	3	--	--	TOTAL SHEETS
2	--	--	4	--	--	35

DRAWN BY : -- DATE : MM/YY
CHECKED BY : -- DATE : MM/YY

$$$$$$SYSTIME$$$$$
$$$$$$$$$$$$$$$$$$$$DGN$$$$$$$$$$$$$$$$$$$$$$$$
USERNAME

0041DEL_P10a1
0001ADD_P10a1

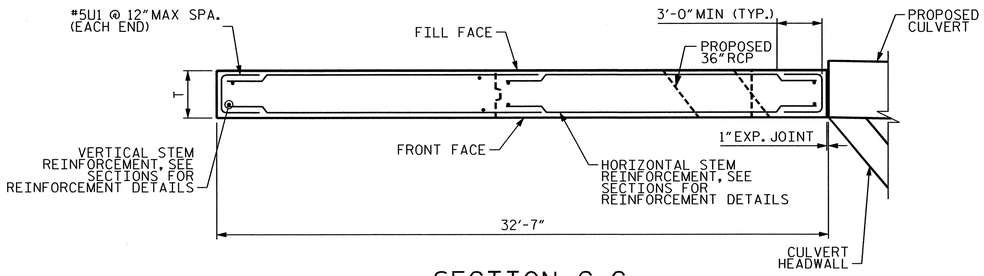

SECTION C-C

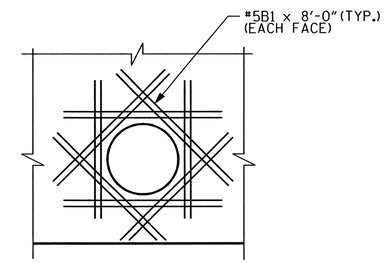

DETAIL 1

NOTE: BEND BARS AS NECESSARY

NOTES

3" Ø WEEP HOLES 10'-0" O.C. PROVIDE 1 CUBIC YARD OF CRUSHED STONE AT WEEP HOLE. WRAP CRUSHED STONE IN GEOTEXTILE FILTER FABRIC.

SHIFT REINFORCING AS NEEDED TO AVOID CONFLICT WITH PILES.

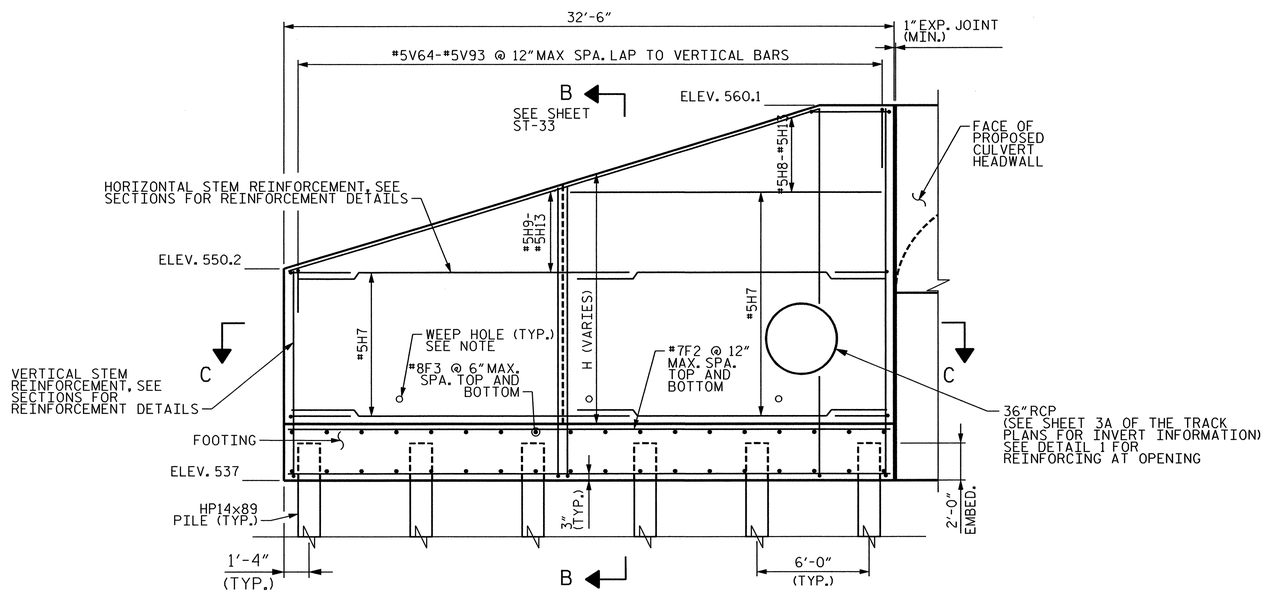

ELEVATION - W2

SEE SHEET ST-33 FOR WALL DIMENSIONS

PROJECT NO. P-5208A

CABARRUS COUNTY

STATION: 10255+34.38 -M1- (N.I.C.)

SHEET 5 OF 6 MILE POST: 360.60

STATE OF NORTH CAROLINA
DEPARTMENT OF TRANSPORTATION
RALEIGH

16' ARCH CULVERT DETAILS FOR W2

NORTH CAROLINA PROFESSIONAL SEAL 027292 ENGINEER DEREK C. STATON
6-27-13

HDR Engineering, Inc. of the Carolinas
440 S. Church Street, Suite 1000, Charlotte, NC 28202
N.C.B.E.L.S. License Number: F-0116

REVISIONS						SHEET NO.
NO.	BY:	DATE:	NO.	BY:	DATE:	ST-34
1	--	--	3	--	--	TOTAL SHEETS
2	--	--	4	--	--	35

DRAWN BY : -- DATE : MM/YY
CHECKED BY : -- DATE : MM/YY

$$$$$$SYSTIME$$$$$
$$$$$$$$$$$$$$$$$$$$$$$$DGN$$$$$$$$$$$$$$$$$$$$$$$$
USERNAME

0041DEL_P10a1
0001ADD_P10a1

BILL OF MATERIAL

CULVERT (SHEET ST-32 AND 33)

BAR	NO.	SIZE	TYPE	DIM. "A"	LENGTH	WEIGHT
A1	68	#9	STR.	-	25'-0"	5785
A2	46	#9	STR.	-	22'-0"	3444
A3	68	#9	STR.	-	19'-0"	4396
A4	46	#9	STR.	-	18'-0"	2818
B1	360	#9	STR.	-	12'-2"	14904
C1	96	#5	3	-	5'- 0"	506
C2	22	#5	STR.	-	30'-7"	710
C3	20	#5	STR.	-	29'-0"	612
C4	20	#5	STR.	-	27'-6"	580
C5	26	#5	STR.	-	26'-2"	718
C6	2	#5	STR.	-	9'- 8"	20
C7	16	#5	STR.	-	8'- 3"	139
C8	16	#5	STR.	-	9'- 2"	155
C9	14	#5	STR.	-	10'-2"	150
C10	14	#5	STR.	-	11'- 1"	164
C11	24	#5	STR.	-	12'-11"	327
C12	26	#5	STR.	-	29'-6"	809
C13	26	#5	STR.	-	29'-7"	811
C14	13	#5	STR.	-	7'- 5"	102
C15	13	#5	STR.	-	9'- 3"	127
C16	26	#5	STR.	-	23'-3"	638
C17	26	#5	STR.	-	22'-7"	619
C18	13	#5	STR.	-	21'-4"	293
C19	13	#5	STR.	-	20'-11"	287
U1	11	#5	1	-	7'- 6"	87
U2	6	#5	1	-	7'- 7"	48
U3	4	#5	1	-	7'- 8"	32
U4	2	#5	1	-	7'- 9"	16
U5	2	#5	1	-	7'-10"	17
U6	23	#5	1	-	7'- 1"	172
U7	45	#9	1	-	8'- 6"	1302
H1	12	#5	STR.	-	21'- 8"	274
H2	4	#5	STR.	-	6'- 0"	25
H3	4	#5	STR.	-	4'- 2"	18
H4	4	#5	STR.	-	2'- 9"	12
H5	4	#5	STR.	-	1'- 8"	7
V1	3	#6	2	6'-4"	8'- 4"	37
V2	2	#6	2	6'-6"	8'- 6"	25
V3	2	#6	2	6'-8"	8'- 8"	26
V4	2	#6	2	7'-0"	9'- 0"	27
V5	2	#6	2	7'-6"	9'- 6"	28
V6	2	#6	2	8'-1"	10'- 1"	30
V7	2	#6	2	8'-10"	10'-10"	32
V8	2	#6	2	9'-8"	11'- 8"	35
V9	6	#6	2	9'-10"	11'-10"	106
V10	3	#7	2	6'-4"	8'- 4"	51
V11	2	#7	2	6'-6"	8'- 6"	35
V12	2	#7	2	6'-8"	8'- 8"	35
V13	2	#7	2	7'-0"	9'- 0"	37
V14	2	#7	2	7'-6"	9'- 6"	39
V15	2	#7	2	8'-1"	10'- 1"	41
V16	2	#7	2	8'-10"	10'-10"	44
V17	2	#7	2	9'-8"	11'- 8"	48
V18	6	#7	2	9'-11"	11'-11"	146

REINFORCING STEEL 41946 LBS
CLASS AA CONCRETE 273.7 CY
HP14x89 STEEL PILES NO. 22
264 LIN. FT

BILL OF MATERIAL

W1 & W2 (SHEET ST-33 AND ST-34)

BAR	NO.	SIZE	TYPE	DIM. "A"	LENGTH	WEIGHT
U1	162	#5	1	-	8'- 1"	1381
H1	52	#5	STR.	-	35'- 9"	1961
H2	2	#5	STR.	-	32'- 9"	69
H3	4	#5	STR.	-	25'- 6"	108
H4	4	#5	STR.	-	18'- 2"	77
H5	4	#5	STR.	-	10'-10"	46
H6	4	#5	STR.	-	3'- 7"	15
H7	52	#5	STR.	-	19'- 0"	1042
H8	2	#5	STR.	-	16'- 0"	34
H9	4	#5	STR.	-	13'- 2"	56
H10	4	#5	STR.	-	10'- 4"	44
H11	4	#5	STR.	-	7'- 5"	31
H12	4	#5	STR.	-	4'- 6"	19
H13	2	#5	STR.	-	3'- 11"	8
F1	28	#7	STR.	-	35'- 9"	2044
F2	14	#7	STR.	-	32'- 0"	915
F3	392	#8	STR.	-	6'- 3"	6586
V1	1	#5	2	11'-0"	12'- 0"	13
V2	1	#5	2	11'-2"	12'- 2"	13
V3	1	#5	2	11'-3"	12'- 3"	13
V4	1	#5	2	11'-5"	12'- 5"	13
V5	1	#5	2	11'-6"	12'- 6"	13
V6	1	#5	2	11'-8"	12'- 8"	13
V7	1	#5	2	11'-10"	12'-10"	14
V8	1	#5	2	11'-11"	12'-11"	14
V9	1	#5	2	12'-1"	13'- 1"	14
V10	1	#5	2	12'-3"	13'- 3"	14
V11	1	#5	2	12'-4"	13'- 4"	14
V12	1	#5	2	12'-6"	13'- 6"	14
V13	1	#5	2	12'-7"	13'- 7"	14
V14	1	#5	2	12'-9"	13'- 9"	15
V15	1	#5	2	12'-11"	13'-11"	15
V16	1	#5	2	13'-0"	14'- 0"	15
V17	1	#5	2	13'-2"	14'- 2"	15
V18	1	#5	2	13'-4"	14'- 4"	15
V19	1	#5	2	13'-5"	14'- 5"	15
V20	1	#5	2	13'-7"	14'- 7"	15
V21	1	#5	2	13'-9"	14'- 9"	16
V22	1	#5	2	13'-10"	14'-10"	16
V23	1	#5	2	14'-0"	15'- 0"	16
V24	1	#5	2	14'-1"	15'- 1"	16
V25	1	#5	2	14'-3"	15'- 3"	16
V26	1	#5	2	14'-5"	15'- 5"	16
V27	1	#5	2	14'-6"	15'- 6"	16
V28	1	#5	2	14'-8"	15'- 8"	17
V29	1	#5	2	14'-10"	15'-10"	17
V30	1	#5	2	14'-11"	15'-11"	17
V31	1	#5	2	15'-1"	16'- 1"	17
V32	1	#5	2	15'-2"	16'- 2"	17
V33	1	#5	2	15'-4"	16'- 4"	17
V34	1	#5	2	15'-6"	16'- 6"	17
V35	1	#5	2	15'-7"	16'- 7"	17
V36	1	#5	2	15'-9"	16'- 9"	18
V37	1	#5	2	15'-11"	16'-11"	18
V38	1	#5	2	16'-0"	17'- 0"	18
V39	1	#5	2	16'-2"	17'- 2"	18
V40	1	#5	2	16'-3"	17'- 3"	18
V41	1	#5	2	16'-5"	17'- 5"	18
V42	1	#5	2	16'-7"	17'- 7"	19
V43	1	#5	2	16'-8"	17'- 8"	19
V44	1	#5	2	16'-10"	17'-10"	19
V45	1	#5	2	17'-0"	18'- 0"	19
V46	1	#5	2	17'-1"	18'- 1"	19
V47	1	#5	2	17'-3"	18'- 3"	19
V48	1	#5	2	17'-4"	18'- 4"	19
V49	1	#5	2	17'-6"	18'- 6"	20
V50	1	#5	2	17'-8"	18'- 8"	20
V51	1	#5	2	17'-9"	18'- 9"	20
V52	1	#5	2	17'-11"	18'-11"	20
V53	1	#5	2	18'-1"	19'- 1"	20
V54	1	#5	2	18'-2"	19'- 2"	20
V55	1	#5	2	18'-4"	19'- 4"	20
V56	1	#5	2	18'-5"	19'- 5"	20
V57	1	#5	2	18'-7"	19'- 7"	21
V58	1	#5	2	18'-9"	19'- 9"	21
V59	1	#5	2	18'-10"	19'-10"	21
V60	1	#5	2	19'-0"	20'- 0"	21
V61	1	#5	2	19'-2"	20'- 2"	21
V62	1	#5	2	19'-3"	20'- 3"	21
V63	5	#5	2	19'-5"	20'- 5"	108
V64	1	#5	2	11'-0"	12'- 0"	13
V65	1	#5	2	11'-4"	12'- 4"	13
V66	1	#5	2	11'-8"	12'- 8"	13
V67	1	#5	2	12'-1"	13'- 1"	14
V68	1	#5	2	12'-5"	13'- 5"	14
V69	1	#5	2	12'-9"	13'- 9"	15
V70	1	#5	2	13'-1"	14'- 1"	15
V71	1	#5	2	13'-5"	14'- 5"	15
V72	1	#5	2	13'-9"	14'- 9"	16
V73	1	#5	2	14'-2"	15'- 2"	16
V74	1	#5	2	14'-6"	15'- 6"	16
V75	1	#5	2	14'-10"	15'-10"	17
V76	1	#5	2	15'-2"	16'- 2"	17
V77	1	#5	2	15'-6"	16'- 6"	17
V78	1	#5	2	15'-10"	16'-10"	18
V79	1	#5	2	16'-3"	17'- 3"	18
V80	1	#5	2	16'-7"	17'- 7"	19
V81	1	#5	2	16'-11"	17'-11"	19
V82	1	#5	2	17'-3"	18'- 3"	19
V83	1	#5	2	17'-7"	18'- 7"	20
V84	1	#5	2	17'-11"	18'-11"	20
V85	1	#5	2	18'-4"	19'- 4"	20
V86	1	#5	2	18'-8"	19'- 8"	21
V87	1	#5	2	19'-0"	20'- 0"	21
V88	1	#5	2	19'-4"	20'- 4"	21
V89	1	#5	2	19'-8"	20'- 8"	22
V90	1	#5	2	20'-0"	21'- 0"	22
V91	1	#5	2	20'-5"	21'- 5"	23
V92	1	#5	2	20'-9"	21'- 9"	23
V93	4	#5	2	21'-1"	22'- 1"	93
V94	1	#9	2	13'-0"	14'- 0"	48
V95	1	#9	2	13'-2"	14'- 2"	48
V96	1	#9	2	13'-3"	14'- 3"	48
V97	1	#9	2	13'-5"	14'- 5"	49
V98	1	#9	2	13'-7"	14'- 7"	50
V99	1	#9	2	13'-8"	14'- 8"	50
V100	1	#9	2	13'-10"	14'-10"	50
V101	1	#9	2	13'-11"	14'-11"	51
V102	1	#9	2	14'-1"	15'- 1"	51
V103	1	#9	2	14'-3"	15'- 3"	52
V104	1	#9	2	14'-4"	15'- 4"	52
V105	1	#9	2	14'-6"	15'- 6"	53
V106	1	#9	2	14'-8"	15'- 8"	53
V107	1	#9	2	14'-9"	15'- 9"	54
V108	1	#9	2	14'-11"	15'-11"	54
V109	1	#9	2	15'-0"	16'- 0"	54
V110	1	#9	2	15'-2"	16'- 2"	55
V111	1	#9	2	15'-4"	16'- 4"	56
V112	1	#9	2	15'-5"	16'- 5"	56
V113	1	#9	2	15'-7"	16'- 7"	56
V114	1	#9	2	15'-9"	16'- 9"	57
V115	1	#9	2	15'-10"	16'-10"	57
V116	1	#9	2	16'-0"	17'- 0"	58
V117	1	#9	2	16'-1"	17'- 1"	58
V118	1	#9	2	16'-3"	17'- 3"	59
V119	1	#9	2	16'-5"	17'- 5"	59
V120	1	#9	2	16'-6"	17'- 6"	60
V121	1	#9	2	16'-8"	17'- 8"	60
V122	1	#9	2	16'-10"	17'-10"	61
V123	1	#9	2	16'-11"	17'-11"	61
V124	1	#9	2	17'-1"	18'- 1"	62
V125	1	#9	2	17'-2"	18'- 2"	62
V126	1	#9	2	17'-4"	18'- 4"	62
V127	1	#9	2	17'-5"	18'- 5"	63
V128	1	#9	2	17'-6"	18'- 6"	63
V129	1	#9	2	17'-6"	18'- 6"	63
V130	1	#9	2	17'-7"	18'- 7"	63
V131	1	#9	2	17'-8"	18'- 8"	64
V132	1	#9	2	17'-9"	18'- 9"	64
V133	1	#9	2	17'-10"	18'-10"	64
V134	1	#9	2	17'-11"	18'-11"	64
V135	1	#9	2	17'-11"	18'-11"	64
V136	1	#9	2	18'-0"	19'- 0"	65
V137	1	#9	2	18'-1"	19'- 1"	65
V138	1	#9	2	18'-2"	19'- 2"	65
V139	1	#9	2	18'-3"	19'- 3"	66
V140	1	#9	2	18'-3"	19'- 3"	66
V141	1	#9	2	18'-4"	19'- 4"	66
V142	1	#9	2	18'-5"	19'- 5"	66
V143	1	#9	2	18'-6"	19'- 6"	66
V144	1	#9	2	18'-7"	19'- 7"	67
V145	1	#9	2	18'-7"	19'- 7"	67
V146	1	#9	2	18'-8"	19'- 8"	67
V147	1	#9	2	18'-9"	19'- 9"	67
V148	1	#9	2	18'-10"	19'-10"	67
V149	1	#9	2	18'-11"	19'-11"	68
V150	1	#9	2	19'-0"	20'- 0"	68
V151	1	#9	2	19'-0"	20'- 0"	68
V152	1	#9	2	19'-1"	20'- 1"	68
V153	1	#9	2	19'-2"	20'- 2"	69
V154	1	#9	2	19'-3"	20'- 3"	69
V155	1	#9	2	19'-4"	20'- 4"	69
V156	1	#9	2	19'-4"	20'- 4"	69
V157	1	#9	2	19'-5"	20'- 5"	69
V158	1	#9	2	19'-6"	20'- 6"	70
V159	1	#9	2	19'-7"	20'- 7"	70
V160	1	#9	2	19'-8"	20'- 8"	70
V161	1	#9	2	19'-8"	20'- 8"	70
V162	1	#9	2	19'-9"	20'- 9"	71
V163	1	#9	2	19'-10"	20'-10"	71
V164	1	#9	2	19'-11"	20'-11"	71
V165	1	#9	2	20'-0"	21'- 0"	71
V166	1	#9	2	20'-1"	21'- 1"	72
V167	1	#9	2	20'-1"	21'- 1"	72
V168	1	#9	2	20'-2"	21'- 2"	72
V169	1	#9	2	20'-3"	21'- 3"	72
V170	1	#9	2	20'-4"	21'- 4"	73
V171	1	#9	2	20'-5"	21'- 5"	73
V172	1	#9	2	20'-5"	21'- 5"	73
V173	1	#9	2	20'-6"	21'- 6"	73
V174	1	#9	2	20'-7"	21'- 7"	73
V175	1	#9	2	20'-8"	21'- 8"	74
V176	1	#9	2	20'-9"	21'- 9"	74
V177	1	#9	2	20'-9"	21'- 9"	74
V178	1	#9	2	20'-10"	21'-10"	74
V179	1	#9	2	20'-11"	21'-11"	75
V180	1	#9	2	21'-0"	22'- 0"	75
V181	1	#9	2	21'-1"	22'- 1"	75
V182	1	#9	2	21'-2"	22'- 2"	75
V183	1	#9	2	21'-2"	22'- 2"	75
V184	1	#9	2	21'-3"	22'- 3"	76
V185	9	#9	2	21'-4"	22'- 4"	684
V186	1	#9	2	13'-0"	14'- 0"	48
V187	1	#9	2	13'-4"	14'- 4"	49
V188	1	#9	2	13'-8"	14'- 8"	50
V189	1	#9	2	14'-1"	15'- 1"	51
V190	1	#9	2	14'-5"	15'- 5"	52
V191	1	#9	2	14'-9"	15'- 9"	54
V192	1	#9	2	15'-1"	16'- 1"	55
V193	1	#9	2	15'-5"	16'- 5"	56
V194	1	#9	2	15'-9"	16'- 9"	57
V195	1	#9	2	16'-2"	17'- 2"	58
V196	1	#9	2	16'-6"	17'- 6"	60
V197	1	#9	2	16'-10"	17'-10"	61
V198	1	#9	2	17'-2"	18'- 2"	62
V199	1	#9	2	17'-6"	18'- 6"	63
V200	1	#9	2	17'-10"	18'-10"	64
V201	1	#9	2	18'-3"	19'- 3"	66
V202	1	#9	2	18'-5"	19'- 5"	66
V203	1	#9	2	18'-7"	19'- 7"	67
V204	1	#9	2	18'-9"	19'- 9"	67
V205	1	#9	2	18'-11"	19'-11"	68
V206	1	#9	2	19'-1"	20'- 1"	68
V207	1	#9	2	19'-3"	20'- 3"	69
V208	1	#9	2	19'-5"	20'- 5"	69
V209	1	#9	2	19'-7"	20'- 7"	70
V210	1	#9	2	19'-9"	20'- 9"	71
V211	1	#9	2	19'-11"	20'-11"	71
V212	1	#9	2	20'-1"	21'- 1"	72
V213	1	#9	2	20'-4"	21'- 4"	73
V214	1	#9	2	20'-6"	21'- 6"	73
V215	1	#9	2	20'-8"	21'- 8"	74
V216	1	#9	2	20'-10"	21'-10"	74
V217	1	#9	2	21'-0"	22'- 0"	75
V218	1	#9	2	21'-2"	22'- 2"	75
V219	1	#9	2	21'-4"	22'- 4"	76
V220	1	#9	2	21'-6"	22'- 6"	77
V221	1	#9	2	21'-8"	22'- 8"	77
V222	1	#9	2	21'-10"	22'-10"	78
V223	1	#9	2	22'-0"	23'- 0"	78
V224	1	#9	2	22'-2"	23'- 2"	79
V225	1	#9	2	22'-5"	23'- 5"	80
V226	1	#9	2	22'-7"	23'- 7"	80
V227	1	#9	2	22'-9"	23'- 9"	81
V228	1	#9	2	22'-11"	23'-11"	81
V229	1	#9	2	23'-1"	24'- 1"	82
V230	1	#9	2	23'-3"	24'- 3"	83
V231	1	#9	2	23'-5"	24'- 5"	83
V232	1	#9	2	23'-7"	24'- 7"	84
V233	1	#9	2	23'-9"	24'- 9"	84
V234	8	#9	2	23'-11"	24'-11"	678
B1	32	#5	STR.	-	8'-0"	270

REINFORCING STEEL 26976 LBS
CLASS AA CONCRETE 211.5 CY
HP14x89 STEEL PILES NO. 32
384 LIN. FT

BAR TYPES

CULVERT

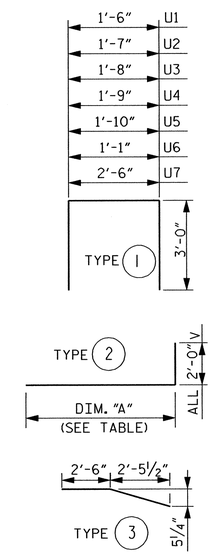

BAR TYPES

W1 & W2

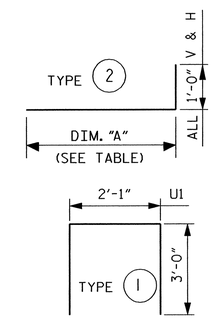

PROJECT NO. P-5208A

CABARRUS COUNTY

STATION: 10255+34.38 -M1- (N.I.C.)

SHEET 6 OF 6 MILE POST: 360.60

NORTH CAROLINA PROFESSIONAL SEAL 027292 ENGINEER DEREK C. STATON
6-27-13

HDR Engineering, Inc. of the Carolinas
440 S. Church Street, Suite 1000, Charlotte, NC 28202
N.C.B.E.L.S. License Number: F-0116

STATE OF NORTH CAROLINA
DEPARTMENT OF TRANSPORTATION
RALEIGH

16' ARCH CULVERT

BILL OF MATERIAL

REVISIONS						SHEET NO.
NO.	BY:	DATE:	NO.	BY:	DATE:	ST-35
1	--	--	3	--	--	TOTAL SHEETS
2	--	--	4	--	--	35

DRAWN BY : RC DATE : 03/13
CHECKED BY : KKM DATE : 03/13

$$$$$$$SYSTIME$$$$$
$$$$$$$$$$$$$$$$$$$$$$$$DGN$$$$$$$$$$$$$$$$$$$$$$$$
USERNAME

DGN 0041DEL_P10a1

TIP PROJECT: P-5208C

CONTRACT: C203206

STATE OF NORTH CAROLINA
RAIL DIVISION

CABARRUS COUNTY

STATE	STATE PROJECT REFERENCE NO.	SHEET NO.	TOTAL SHEETS
N.C.	P-5208C		

STATE PROJ. NO.	F.A. PROJ. NO.	DESCRIPTION
50000.1.STR07T1B		P.E./UTIL P.E.
50000.1.STR08T3		P.E./UTIL P.E.
43219.2.STR09P5208		R.O.W.
50000.3.STR01T4A	FRA–FR–HSR–0006–10–01–00	CONST./UTIL. CONST.

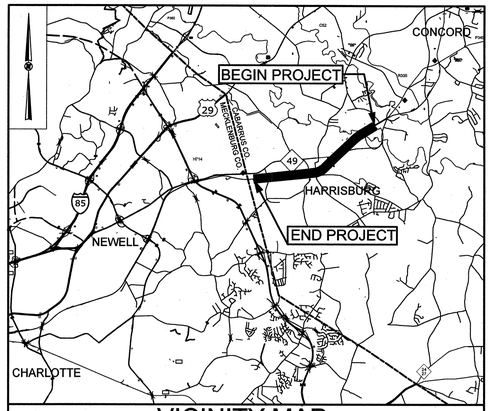

VICINITY MAP

NAD 83/ NSRS 2007

LOCATION: NCRR MAINLINE RAILROAD ROADBED FROM SOUTH OF PHARR MILL ROAD (SR 1158, MP 361.9) TO MILLBROOK ROAD (SR 1182, MP 365.5)

TYPE OF WORK: BRIDGE ON NCRR OVER ROCKY RIVER

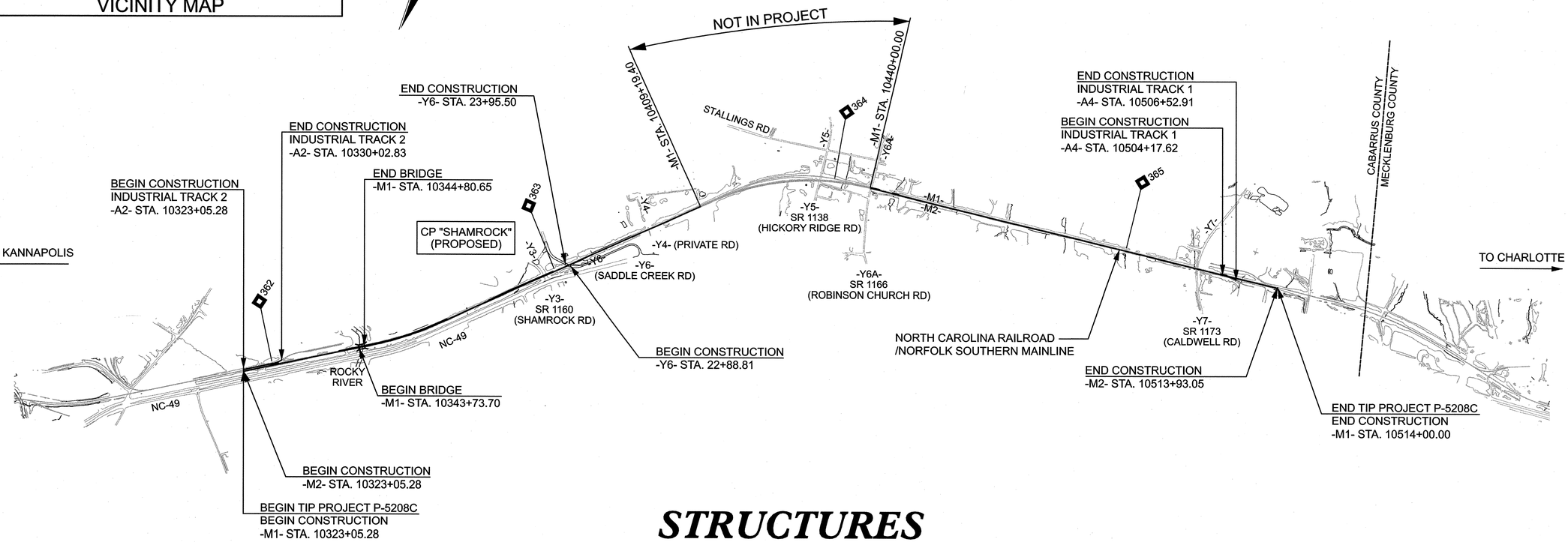

STRUCTURES

GRAPHIC SCALES

50 0 50 100
PLANS

50 0 50 100
PROFILE (HORIZONTAL)

10 0 10 20
PROFILE (VERTICAL)

PROJECT LENGTH

LENGTH OF RAIL TIP PROJECT	3.013 MILES
LENGTH OF STRUCTURE TIP PROJECT	0.020 MILES
TOTAL LENGTH OF TIP PROJECT	3.033 MILES

Prepared in the Office of:

HNTB

HNTB NORTH CAROLINA, P.C.
343 E. Six Forks Road, Suite 200
Raleigh, North Carolina 27609
NC License No: C-1554

2012 STANDARD SPECIFICATIONS

RIGHT OF WAY DATE:
SEPTEMBER 2012

LETTING DATE:
JULY 16, 2013

COREY VERNIER, P.E.
RAIL PROJECT ENGINEER

ENRICO ROQUE, P.E.
RAIL PROJECT DESIGN ENGINEER

DAVID HAWKINS, P.E.
STRUCTURE PROJECT ENGINEER

JAMES BYRD, P.E.
HYDRAULICS PROJECT ENGINEER

BRAD SMYTHE, P.E.
NCDOT PROJECT MANAGER

STRUCTURES ENGINEER

NORTH CAROLINA PROFESSIONAL SEAL 27812 ENGINEER DAVID W. HAWKINS

5/10/13

SIGNATURE: *P.E.*

NC DEPARTMENT OF TRANSPORTATION
RAIL DIVISION
DESIGN AND CONSTRUCTION

0041DEL_P10a1

DGN

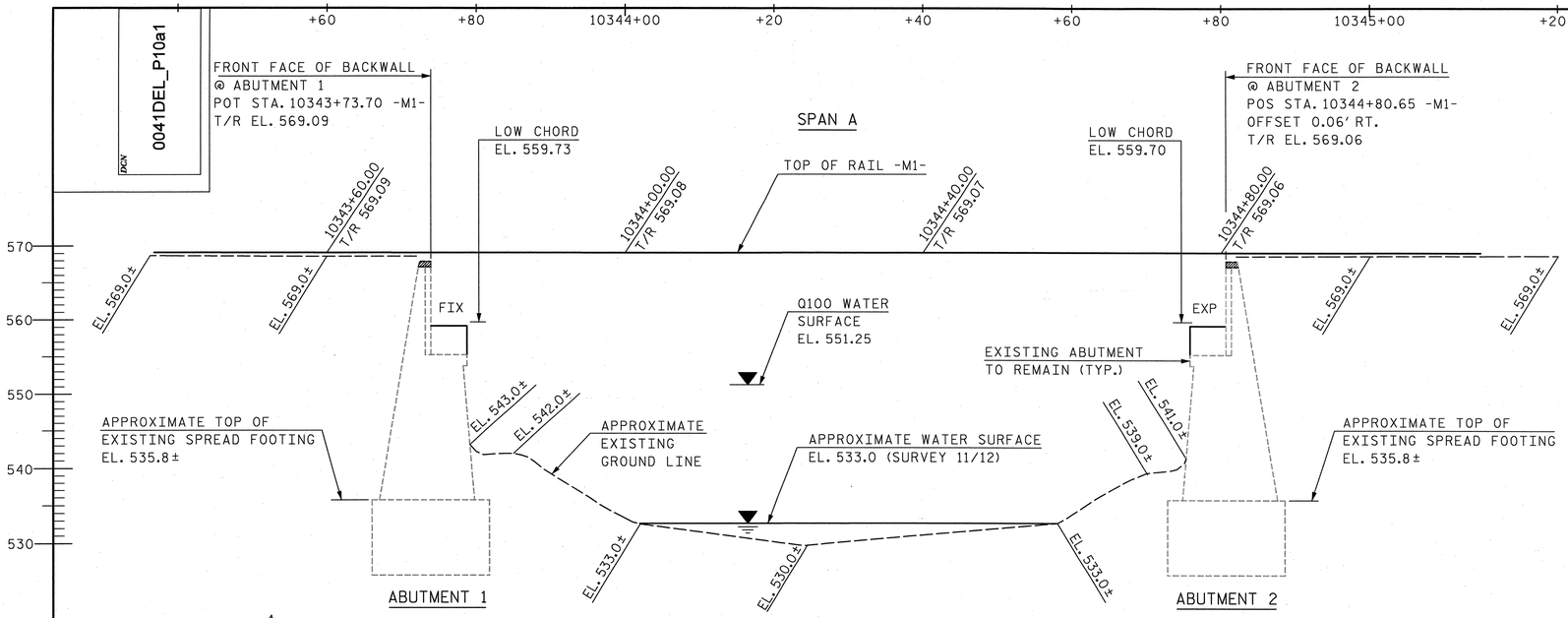

SECTION ALONG ℄ SURVEY -M1-

(ABUTMENTS ON SECTION AT RIGHT ANGLES TO ABUTMENTS)

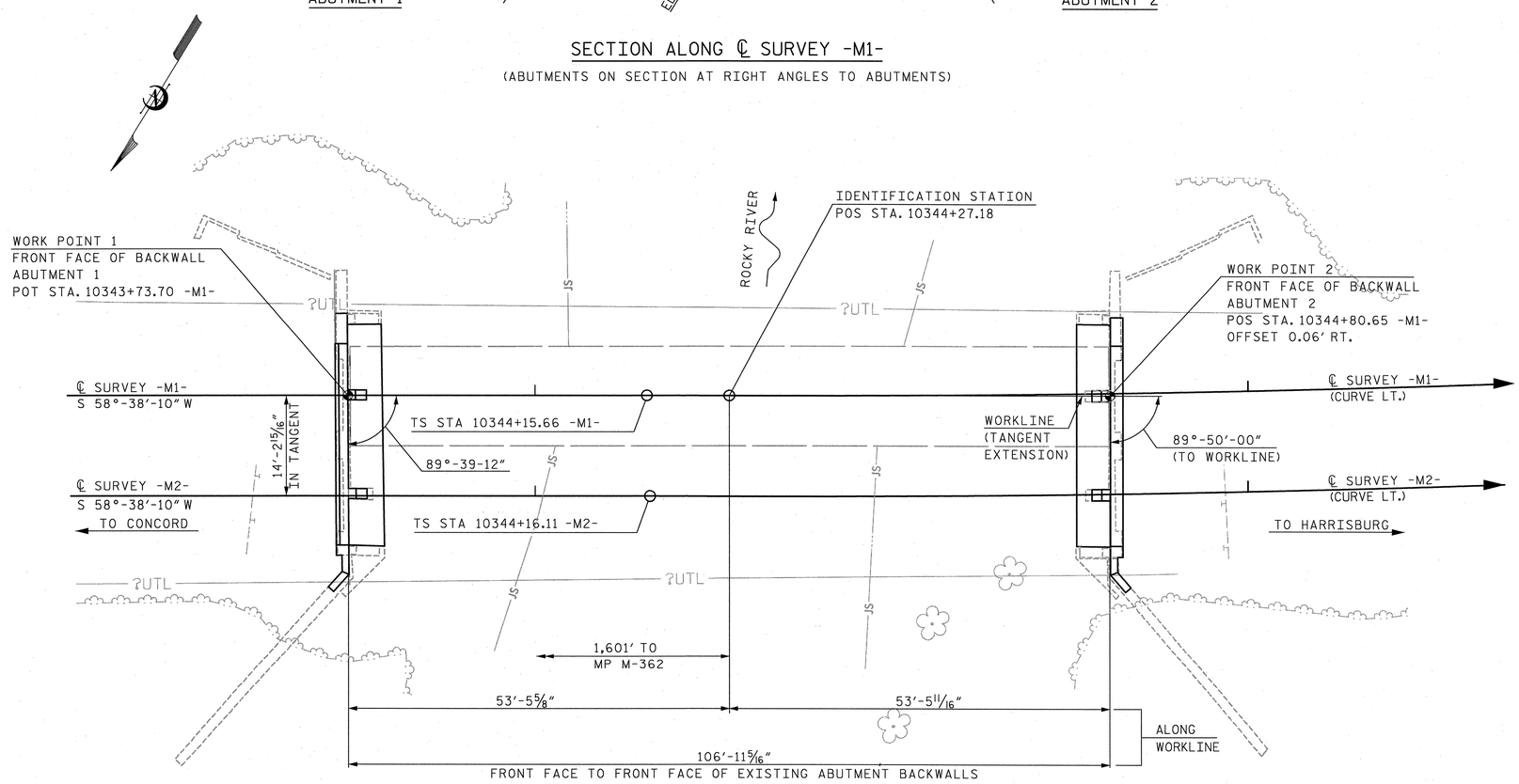

PLAN

NOTES:

FOR GENERAL NOTES, SEE "GENERAL DRAWING: GENERAL NOTES AND INDEX OF DRAWINGS" SHEET.

CURVE DATA FOR -M1-

PIs STA 10346+63.67
Δs = 1°-53'-27.5" (LT)
Ls = 372.00 FT.
LT = 248.01 FT.
ST = 124.01 FT.

CURVE DATA FOR -M2-

PIs STA 10346+64.12
Δs = 1°-53'-27.5" (LT)
Ls = 372.00 FT.
LT = 248.01 FT.
ST = 124.01 FT.

PVI STA. 10343+70.00
EL. = 568.33
VC = 690'

GRADE DATA -M1-

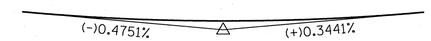

PVI STA. 10343+70.00
EL. = 568.33
VC = 660'

GRADE DATA -M2-

HYDRAULIC DATA

DESIGN DISCHARGE	15580 CFS
FREQUENCY OF DESIGN FLOOD	100 YRS.
DESIGN HIGH WATER ELEVATION	551.25
DRAINAGE AREA	134 SQ. MI.

OVERTOPPING FLOOD DATA

OVERTOPPING DISCHARGE	-
FREQUENCY OF OVERTOPPING FLOOD	500+ YRS.
OVERTOPPING FLOOD ELEVATION	569.1

I HEREBY CERTIFY THESE PLANS ARE AS-BUILT PLANS

PROJECT NO. P-5208C

CABARRUS COUNTY

STATION: 10344+27.18 -M1-

MILE POST: 362.30

SHEET 1 OF 3

STATE OF NORTH CAROLINA
DEPARTMENT OF TRANSPORTATION
RALEIGH

GENERAL DRAWING

BRIDGE ON NCRR MAINLINE
OVER ROCKY RIVER
BETWEEN PHARR MILL RD. (SR 1158)
AND SHAMROCK RD. (SR 1160)

NORTH CAROLINA PROFESSIONAL ENGINEER SEAL 12916 PAUL J. BARBER 5/10/13

NORTH CAROLINA PROFESSIONAL ENGINEER SEAL 27812 DAVID W. HAWKINS 5/10/13

HNTB

HNTB NORTH CAROLINA, P.C.
License No. C-1554
343 E. Six Forks Rd., Suite 200, Raleigh, N.C. 27609

DRAWN BY J. BAYNE DATE 3/13
CHECKED BY D. RAGAN DATE 3/13

DWG. NO. 1

REVISIONS						SHEET NO.
NO.	BY:	DATE:	NO.	BY:	DATE:	S-1
1			3			TOTAL SHEETS
2			4			21

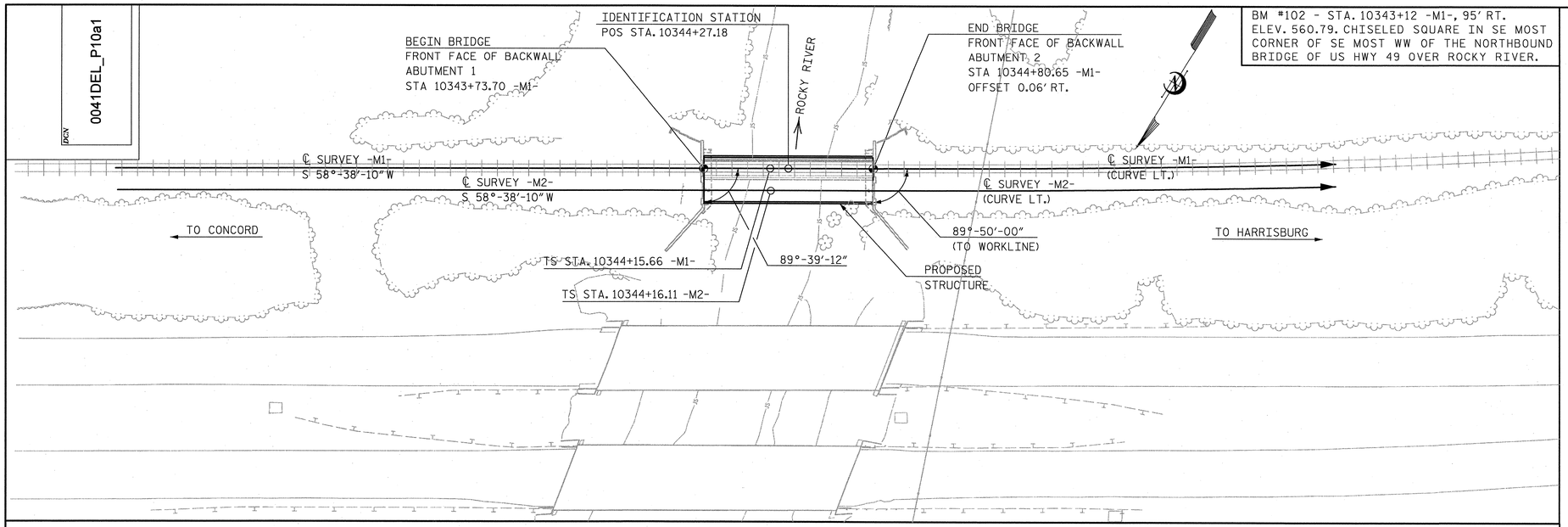

LOCATION SKETCH

NO KNOWN UTILITY CONFLICTS.

TOTAL BILL OF MATERIAL

	REMOVAL OF EXISTING STRUCTURE AT STATION 10344+27.18 -M1-	REINFORCED CONCRETE DECK SLAB	CLASS AA CONCRETE	REINFORCING STEEL	APPROX. 430,646 LBS. STRUCTURAL STEEL	PAINTING OF STRUCTURAL STEEL	WATER-PROOFING	METHOD B DAMPPROOFING	METAL RAIL AND WALKWAY	CONCRETE PARAPET	SELF-LUBRICATING EXPANSION BEARING ASSEMBLIES	STRUCTURE DRAINAGE SYSTEM AT STATION 10344+27.18 -M1-	EPOXY MORTAR REPAIRS	EPOXY RESIN INJECTION	CONDUIT IN PARAPET AT STATION 10344+27.18 -M1-
	LUMP SUM	SQ. FEET	CU. YARDS	LBS.	LUMP SUM	LUMP SUM	SQ. YARDS	SQ. YARDS	L.F.	L.F.	LUMP SUM	LUMP SUM	SQ. FEET	L.F.	LUMP SUM
SUPERSTRUCTURE	———	3,247	———	———	LUMP SUM	LUMP SUM	346.4	———	214.0	212.9	LUMP SUM	LUMP SUM	———	———	LUMP SUM
ABUTMENT 1	———	———	23.9	1,037	———	———	6.9	3.7	———	———	———	———	4.5	25.0	———
ABUTMENT 2	———	———	23.1	1,020	———	———	6.9	3.6	———	———	———	———	4.5	25.0	———
TOTAL	LUMP SUM	3,247	47.0	2,057	LUMP SUM	LUMP SUM	360.2	7.3	214.0	212.9	LUMP SUM	LUMP SUM	9.0	50.0	LUMP SUM

EXISTING STEEL DECK PLATE GIRDER STRUCTURE AND PORTIONS OF EXISTING BACKWALLS SHALL BE REMOVED AS SHOWN IN THE PLANS. REMOVAL OF THESE ITEMS SHALL BE PAID FOR ON A LUMP SUM BASIS AS "REMOVAL OF EXISTING STRUCTURE AT STATION 10344+27.18 -M1-".

PROJECT NO. P-5208C

CABARRUS COUNTY

STATION: 10344+27.18 -M1-

MILE POST: 362.30

SHEET 2 OF 3

NORTH CAROLINA PROFESSIONAL SEAL 12916 ENGINEER PAUL J. BARBER 6/13/13

NORTH CAROLINA PROFESSIONAL SEAL 27812 ENGINEER DAVID W. HAWKINS 6/13/13

STATE OF NORTH CAROLINA
DEPARTMENT OF TRANSPORTATION
RALEIGH

GENERAL DRAWING

LOCATION SKETCH AND
TOTAL BILL OF MATERIAL

HNTB

HNTB NORTH CAROLINA, P.C.
License No. C-1554
343 E. Six Forks Rd., Suite 200, Raleigh, N.C. 27609

DRAWN BY J. BAYNE DATE 3/13
CHECKED BY D. RAGAN DATE 3/13

DWG. NO. 2

REVISIONS						SHEET NO.
NO.	BY:	DATE:	NO.	BY:	DATE:	S-2
1			3			TOTAL SHEETS
2			4			21

0041DEL_P10a1

GENERAL NOTES

ASSUMED LIVE LOAD = AREMA E80 OR ALTERNATE LIVE LOAD.

FOR OTHER DESIGN DATA AND GENERAL NOTES, SEE SHEET SN.

FOR EROSION CONTROL MEASURES, SEE EROSION CONTROL PLANS.

THIS BRIDGE SUPERSTRUCTURE AND SUBSTRUCTURE MODIFICATIONS HAVE BEEN DESIGNED IN ACCORDANCE WITH THE REQUIREMENTS OF THE CURRENT EDITION OF AREMA'S MANUAL FOR RAILWAY ENGINEERING, VOL. 2, STRUCTURES, AND NORFOLK SOUTHERN CORPORATION'S "GUIDELINES FOR DESIGN OF HIGHWAY SEPARATION STRUCTURES UNDER RAILROAD (UNDERPASS GRADE SEPARATION)".

THIS BRIDGE HAS BEEN DESIGNED IN ACCORDANCE WITH THE REQUIREMENTS OF THE AASHTO BRIDGE DESIGN SPECIFICATIONS FOR SEISMIC ZONE 1.

REINFORCING STEEL SHALL BE ASTM DESIGNATION A615, GRADE 60. ALL DIMENSIONS RELATING TO BAR SPACING ARE TO BAR CENTERS UNLESS NOTED. FABRICATION TO BE IN ACCORDANCE WITH THE "MANUAL OF STANDARD PRACTICE", A.C.I. 315-80. ALL REINFORCING IN THE CONCRETE DECK SLAB AND PARAPETS SHALL BE EPOXY COATED.

EXPANSION JOINT MATERIAL SHALL BE EITHER RUBBER OR CORK CONFORMING WITH AASHTO SPECIFICATIONS M-153-84 EXCEPT AS SHOWN ON THE PLANS OR IN THE SPECIAL PROVISIONS. CELLULAR AND BULB TYPE WATERSTOPS AND RUBBER JOINT COMPOUNDS SHALL BE AS SHOWN ON THE PLANS AND IN THE SPECIAL PROVISIONS.

STRUCTURE DRAINAGE SYSTEM: METAL DRAINS IN BALLAST TROUGH OF BRIDGE SHALL BE AS SHOWN ON THE PLANS AND OUTLINED IN THE SPECIAL PROVISIONS. DETAILS OF THE DRAINAGE SYSTEM SHALL BE SUBMITTED TO THE CHIEF ENGINEER BRIDGES AND STRUCTURES, NORFOLK SOUTHERN CORPORATION, ATLANTA, GA. FOR APPROVAL.

DAMPPROOFING: BACK OF PROPOSED BACKWALLS AND BACK OF PROPOSED WINGS SHALL BE DAMPPROOFED WITH METHOD "B" DAMPPROOFING.

WATERPROOFING: BRIDGE DECK, ALL CONSTRUCTION JOINTS AND ANY VISIBLE SHRINKAGE CRACKS WHICH WILL BE COVERED BY FILL SHALL BE WATERPROOFED WITH A COLD LIQUID-APPLIED ELASTOMERIC MEMBRANE. FOR WATERPROOFING, SEE SPECIAL PROVISIONS.

WATERPROOFING IS REQUIRED AT THE FOLLOWING LOCATIONS:
1. BRIDGE DECK AND INSIDE OF CONCRETE PARAPET AS SHOWN ON "TYPICAL SECTION".
2. ALONG FILL FACE OF HORIZONTAL CONSTRUCTION JOINT BETWEEN PROPOSED BACKWALL/WINGWALL EXTENSION AND EXISTING BACKWALL/WINGWALL.

THE CONTRACTOR SHALL PROVIDE INDEPENDENT ASSURANCE SAMPLES OF REINFORCING STEEL AS FOLLOWS: FOR PROJECTS REQUIRING UP TO 400 TONS OF REINFORCING STEEL, ONE 30 INCH SAMPLE OF EACH SIZE BAR USED, AND FOR PROJECTS REQUIRING OVER 400 TONS OF REINFORCING STEEL, TWO 30 INCH SAMPLES OF EACH SIZE BAR USED. THE BARS FROM WHICH THE SAMPLES ARE TAKEN MUST THEN BE SPLICED WITH REPLACEMENT BARS OF THE SIZE AND LENGTH OF THE SAMPLE, PLUS A MINIMUM LAP SPLICE OF THIRTY BAR DIAMETERS. PAYMENT FOR THE SAMPLES OF REINFORCING STEEL SHALL BE CONSIDERED INCIDENTAL TO VARIOUS PAY ITEMS.

FOR PLACING LOAD ON STRUCTURE MEMBERS, SEE SPECIAL PROVISIONS.

ALL MATERIALS AND WORKMANSHIP SHALL BE IN ACCORDANCE WITH "STANDARD SPECIFICATIONS FOR ROADS AND STRUCTURES", JANUARY 2012, NORTH CAROLINA DEPARTMENT OF TRANSPORTATION (HEREIN CALLED STANDARD SPECIFICATIONS), EXCEPT AS NOTED HEREIN, ELSEWHERE ON PLANS, OR IN THE SPECIAL PROVISIONS (STRUCTURAL STEEL IN ACCORDANCE WITH CURRENT AREMA SPECIFICATIONS).

ALL CONCRETE SHALL BE 4,500 PSI CLASS AA CONCRETE WITH NO. 57 OR 67 COARSE AGGREGATE AND SHALL BE AIR-ENTRAINED. MINIMUM CEMENT CONTENT PER CUBIC YARD OF CONCRETE SHALL BE 6.5 BAGS. NO SUBSTITUTION OF FLYASH, BLAST FURNACE SLAG OR OTHER MATERIAL WILL BE PERMITTED IN MEETING THIS MINIMUM CEMENT REQUIREMENT. CHAMFER ALL EXPOSED EDGES AND CORNERS 3/4" EXCEPT AS NOTED. THE USE OF GROUND GRANULATED BLAST FURNACE SLAG IS NOT PERMITTED IN THIS STRUCTURE.

CONTROL OF WORK: ALL WORK INVOLVED IN THE CONSTRUCTION OF THE RAILWAY STRUCTURE SHALL BE PERFORMED SATISFACTORY TO THE ENGINEER AND/OR NORFOLK SOUTHERN RAILWAY COMPANY. ALL METHODS OF HANDLING THE WORK AFFECTING THE SAFETY OF RAIL OPERATIONS MUST BE APPROVED BY THE RAILWAY COMPANY BEFORE PROCEEDING WITH THAT PORTION OF THE WORK. RAIL TRAFFIC SHALL, AT ALL TIMES, BE MAINTAINED AND PROTECTED. THE CONTRACTOR SHALL NOT AT ANY TIME DELAY OR INTERFERE WITH RAIL OPERATIONS.

NEEDLE BEAMS WILL NOT BE ALLOWED UNLESS OTHERWISE CALLED FOR ON THE PLANS OR APPROVED BY THE ENGINEER.

FOR METAL RAIL AND WALKWAY, SEE SPECIAL PROVISIONS.

FOR SELF-LUBRICATING EXPANSION BEARING ASSEMBLIES, SEE SPECIAL PROVISIONS.

FOR CONDUIT IN PARAPETS, SEE SPECIAL PROVISIONS.

FOR PORTLAND CEMENT, SEE SPECIAL PROVISIONS.

FOR FINE AND COARSE AGGREGATE, SEE SPECIAL PROVISIONS.

SEE "STRUCTURAL STEEL DETAILS" SHEET FOR STRUCTURAL STEEL NOTES.

FOR BACKFILL BEHIND ABUTMENTS AND OTHER BACKFILL AROUND THE STRUCTURE, SEE SPECIAL PROVISION "BACKFILLING AROUND STRUCTURES".

FOR PAINTING STRUCTURAL STEEL, SEE SPECIAL PROVISONS.

FOR WATERSTOPS, SEE SPECIAL PROVISIONS.

FOR ELASTOMERIC FLASHING, SEE SPECIAL PROVISIONS.

FOR RUBBER JOINT COMPOUNDS, SEE SPECIAL PROVISIONS.

FOR STRUCTURE DRAINAGE SYSTEM, SEE SPECIAL PROVISIONS.

FOR STRUCTURAL STEEL, SEE SPECIAL PROVISIONS.

FOR RAILROAD TRACKWORK, SEE RAILROAD TRACKWORK PLANS.

FOR SUBMITTAL OF WORKING DRAWINGS, SEE SPECIAL PROVISIONS.

FOR FALSEWORK AND FORMWORK, SEE SPECIAL PROVISIONS.

FOR CRANE SAFETY, SEE SPECIAL PROVISIONS.

FOR GROUT FOR STRUCTURES, SEE SPECIAL PROVISIONS.

FOR CONCRETE PARAPET, SEE SPECIAL PROVISIONS.

FOR WATERPROOFING, SEE SPECIAL PROVISIONS.

FOR EPOXY MORTAR REPAIRS, SEE SPECIAL PROVISIONS.

FOR EPOXY RESIN INJECTION, SEE SPCIAL PROVISIONS.

THE USE OF A TEMPORARY CAUSEWAY OR WORK BRIDGE IS NOT PERMITTED.

ALL BAR SUPPORTS AND ALL INCIDENTAL REINFORCING STEEL USED IN THE DECK AND PARAPET SHALL BE EPOXY COATED IN ACCORDANCE WITH THE NCDOT STANDARD SPECIFICATIONS.

THE SUPERSTRUCTURE OF THE EXISTING SINGLE SPAN STRUCTURE CONSISTING OF A SINGLE STEEL DECK PLATE GIRDER SPAN OF 106'-11 5/16" SHALL BE REMOVED.

THESE DRAWINGS HAVE BEEN PREPARED BASED ON THE BEST INFORMATION AVAILABLE. ACTUAL FIELD CONDITIONS MAY REQUIRE MODIFICATIONS IN CONSTRUCTION DETAILS AND QUANTITIES. THE CONTRACTOR IS RESPONSIBLE FOR THE VERIFICATION OF ALL DETAILS INCLUDING GEOMETRY AND ELEVATIONS PRIOR TO THE FABRICATION OR INSTALLATION OF ANY MATERIAL. THE CONTRACTOR SHALL SUBMIT TO THE ENGINEER, OR AUTHORIZED REPRESENTATIVE, COPIES OF FIELD SURVEYS AND VERIFICATIONS FOR THE INCLUSION INTO THE CONSTRUCTION RECORDS FOR THE PROJECT.

REMOVAL OF THE EXISTING BRIDGE SUPERSTRUCTURE SHALL BE PERFORMED SO AS NOT TO ALLOW DEBRIS TO FALL INTO THE WATER. THE CONTRACTOR SHALL REMOVE THE BRIDGE SUPERSTRUCTURE AND SUBMIT PLANS FOR DEMOLITION IN ACCORDANCE WITH ARTICLE 402-2 OF THE STANDARD SPECIFICATIONS.

TRACKWORK SHALL BE CONSTRUCTED BY OTHERS. TRACKWORK SHALL INCLUDE BALLAST, TIES, RAILS AND OTHER TRACK MATERIAL. COORDINATION WILL BE REQUIRED BETWEEN THE TRACK CONTRACTOR AND THE BRIDGE CONTRACTOR TO ACCOMODATE PROPOSED SUPERSTRUCTURE AND SUBSTRUCTURE MODIFICATIONS.

INASMUCH AS THE PAINT SYSTEM ON THE EXISTING STRUCTURAL STEEL CONTAINS LEAD, THE CONTRACTOR'S ATTENTION IS DIRECTED TO ARTICLE 107-1 OF THE STANDARD SPECIFICATIONS. ANY COSTS RESULTING FROM COMPLIANCE WITH APPLICABLE STATE OR FEDERAL REGULATIONS PERTAINING TO HANDLING OF MATERIALS CONTAINING LEAD BASED PAINT SHALL BE INCLUDED IN THE BID PRICE FOR "REMOVAL OF EXISTING STRUCTURE AT STATION 10344+27.18 -M1-".

INASMUCH AS THE EXISTING BRIDGE TIES CONTAIN CREOSOTE OR OTHER PRESERVATIVE TREATMENT, THE CONTRACTOR'S ATTENTION IS DIRECTED TO ARTICLE 107-1 OF THE STANDARD SPECIFICATIONS. ANY COSTS RESULTING FROM COMPLIANCE WITH APPLICABLE STATE OR FEDERAL REGULATIONS PERTAINING TO HANDLING OF MATERIALS CONTAINING CREOSOTE OR OTHER PRESERVATIVE TREATMENT SHALL BE INCLUDED IN THE BID PRICE FOR "REMOVAL OF EXISTING STRUCTURE AT STATION 10344+27.18 -M1-".

INDEX OF DRAWINGS

1 GENDRAL DRAWING: GENERAL PLAN & ELEVATION (SHEET 1 OF 3)
2 GENERAL DRAWING: LOCATION SKETCH AND TOTAL BILL OF MATERIAL (SHEET 2 OF 3)
3 GENERAL DRAWING: GENERAL NOTES AND INDEX OF DRAWINGS (SHEET 3 OF 3)
4 SEQUENCE OF CONSTRUCTION (SHEET 1 OF 2)
5 SEQUENCE OF CONSTRUCTION (SHEET 2 OF 2)
6 SUPERSTRUCTURE: TYPICAL SECTION
7 SUPERSTRUCTURE: DECK DETAILS
8 SUPERSTRUCTURE: PLAN OF DECK - SPAN A
9 SUPERSTRUCTURE: FRAMING PLAN & GIRDER DETAILS - SPAN A
10 SUPERSTRUCTURE: STRUCTURAL STEEL DETAILS (SHEET 1 OF 2)
11 SUPERSTRUCTURE: STRUCTURAL STEEL DETAILS (SHEET 2 OF 2)
12 SUPERSTRUCTURE: BEARING DETAILS
13 SUPERSTRUCTURE: EXPANSION PLATE DETAILS (SHEET 1 OF 2)
14 SUPERSTRUCTURE: EXPANSION PLATE DETAILS (SHEET 2 OF 2)
15 SUPERSTRUCTURE: WALKWAY AND HANDRAIL PLAN
16 SUPERSTRUCTURE: WALKWAY AND HANDRAIL DETAILS
17 SUPERSTRUCTURE: BILL OF MATERIAL
18 SUBSTRUCTURE: ABUTMENT 1 (SHEET 1 OF 2)
19 SUBSTRUCTURE: ABUTMENT 1 (SHEET 2 OF 2)
20 SUBSTRUCTURE: ABUTMENT 2 (SHEET 1 OF 2)
21 SUBSTRUCTURE: ABUTMENT 2 (SHEET 2 OF 2)

PROJECT NO. P-5208C
CABARRUS COUNTY
STATION: 10344+27.18 -M1-
MILE POST: 362.30

SHEET 3 OF 3

NORTH CAROLINA PROFESSIONAL SEAL 12916 ENGINEER PAUL J. BARBER 6/5/13

NORTH CAROLINA PROFESSIONAL SEAL 27812 ENGINEER DAVID W. HAWKINS 6/5/13

STATE OF NORTH CAROLINA
DEPARTMENT OF TRANSPORTATION
RALEIGH

GENERAL DRAWING

GENERAL NOTES
AND
INDEX OF DRAWINGS

HNTB
HNTB NORTH CAROLINA, P.C.
License No. C-1554
343 E. Six Forks Rd., Suite 200, Raleigh, N.C. 27609

DRAWN BY J. BAYNE DATE 3/13
CHECKED BY D. RAGAN DATE 3/13

DWG. NO. 3

REVISIONS						
NO.	BY:	DATE:	NO.	BY:	DATE:	
1			3			
2			4			

SHEET NO. S-3
TOTAL SHEETS 21

0041DEL_P10a1

DGN

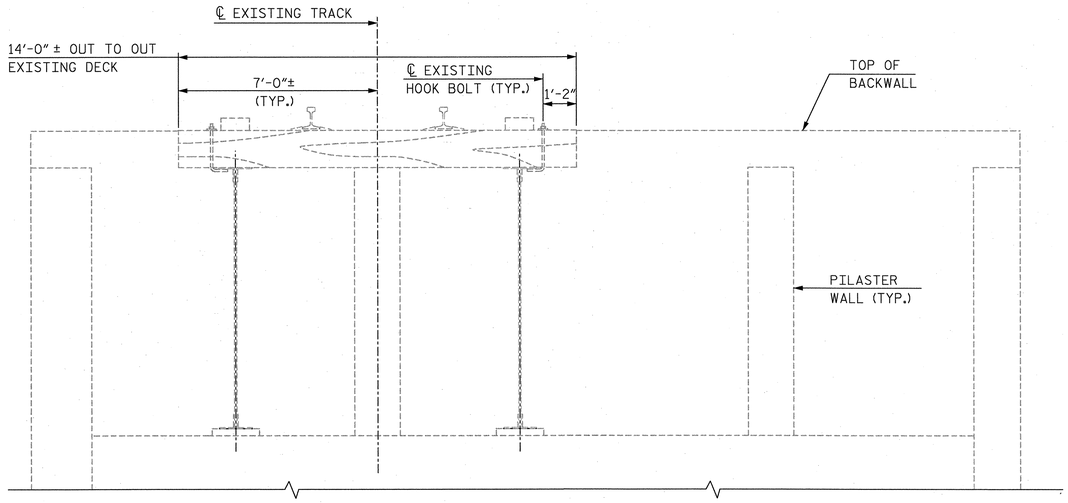

EXISTING BRIDGE TYPICAL SECTION

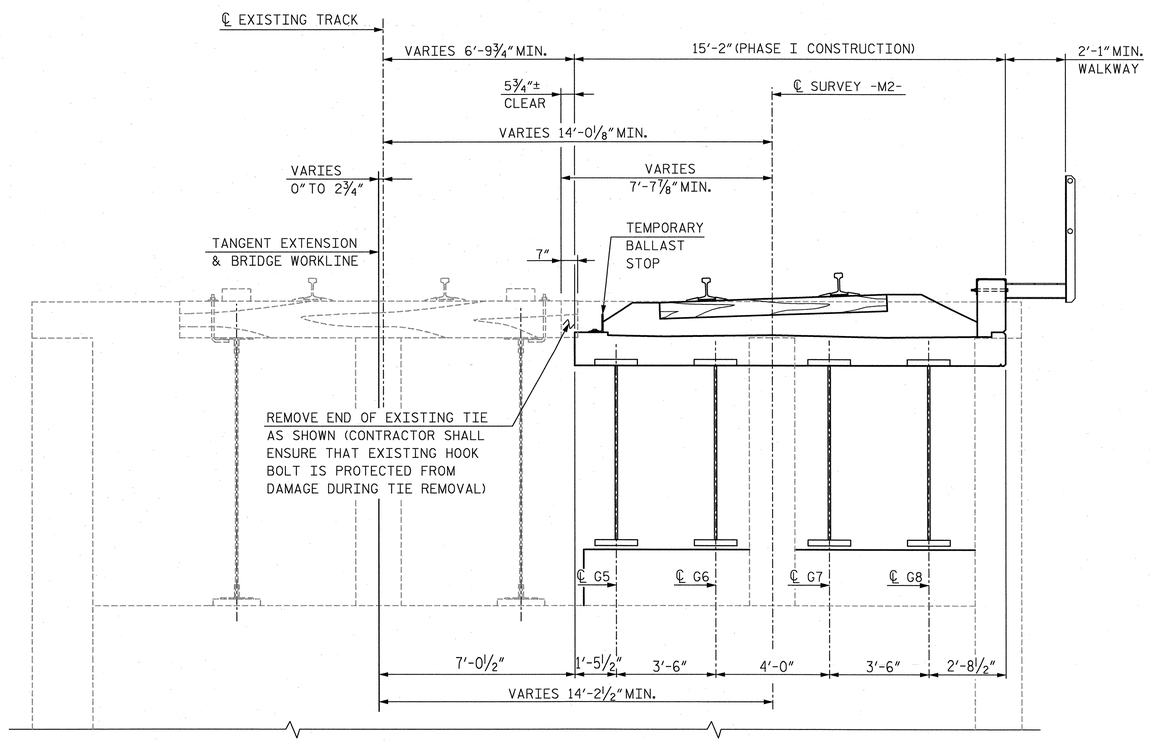

PHASE I TYPICAL SECTION

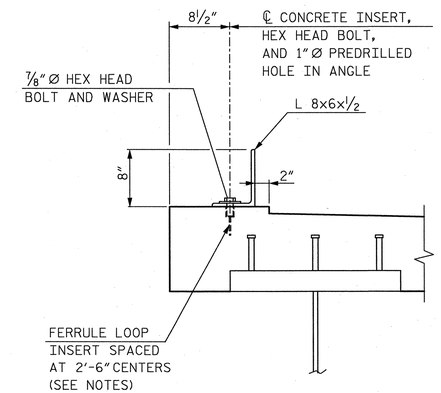

TEMPORARY BALLAST STOP DETAIL

NOTES:

IN ORDER TO CARRY OUT THE WORK WITH THE LEAST POSSIBLE DISRUPTION TO SCHEDULED RAIL TRAFFIC, CONTRACTOR IS EXPECTED TO ADJUST WORKING HOURS OR WORK WEEK TO ACCOMMODATE TRACK AVAILABILITY BASED ON TYPICAL TRAIN SCHEDULES. TEMPORARY TRACK OUTAGES SHALL BE AT THE SOLE DISCRETION OF THE OPERATING RAILROAD. FOR "PROTECTION OF RAILWAY INTEREST", SEE PROJECT SPECIFICATIONS.

THE L 8x6x½ FOR THE TEMPORARY BALLAST STOP SHALL BE A36 STEEL AND ANCHORED TO THE DECK AS SHOWN IN THE DETAIL ON THIS SHEET. INSERTS SHALL BE CAST INTO THE DECK SURFACE AT MAXIMUM 2'-6" CENTERS AND SO AS TO AVOID THE TOP MAT OF REBAR AND GIRDER SHEAR STUDS. INSERTS SHALL PROVIDE A SAFE WORKING TENSION LOAD OF 5,200 LBS. AND SAFE WORKING SHEAR LOAD OF 1,800 LBS. AFTER THE PHASE 2 CONSTRUCTION HAS BEEN COMPLETED AND WATERPROOFED, REMOVE THE TEMPORARY BALLAST STOP AND GROUT THE INSERTS WITH A HIGH STRENGTH, NON-METALLIC, PORTLAND CEMENT GROUT IN ACCORDANCE WITH THE SPECIAL PROVISIONS. ALL LABOR, MATERIALS AND OTHER INCIDENTALS REQUIRED FOR TEMPORARY BALLAST STOPS SHALL BE PAID FOR UNDER THE PAY ITEM "REINFORCED CONCRETE DECK SLAB."

PHASE I CONSTRUCTION

1. REMOVE END OF EXISTING TIES AS SHOWN.
2. CONSTRUCT PHASE I ABUTMENT CAP AND ABUTMENT BACKWALL MODIFICATIONS AS SHOWN IN PLANS.
3. CONSTRUCT SUPERSTRUCTURE TO PHASE I LIMITS SHOWN IN TYPICAL SECTION.
4. WATERPROOF SURFACE OF PHASE I SUPERSTRUCTURE, INCLUDING 1'-2" EDGE DAM. INSERTS SHALL BE PROTECTED DURING WATERPROOFING OPERATIONS.
5. INSTALL BALLAST STOP.
6. TRACK CONTRACTOR TO BUILD AND COMPLETE -M2- ACROSS BRIDGE AND OPEN RAIL TO TRAFFIC.

PROJECT NO. P-5208C

CABARRUS COUNTY

STATION: 10344+27.18 -M1-

MILE POST: 362.30

SHEET 1 OF 2

NORTH CAROLINA PROFESSIONAL SEAL 12916 ENGINEER PAUL J. BARBER 05/09/13

NORTH CAROLINA PROFESSIONAL SEAL 27812 ENGINEER DAVID W. HAWKINS 5/10/13

STATE OF NORTH CAROLINA
DEPARTMENT OF TRANSPORTATION
RALEIGH

SEQUENCE OF CONSTRUCTION

HNTB

HNTB NORTH CAROLINA, P.C.
License No. C-1554
343 E. Six Forks Rd., Suite 200, Raleigh, N.C. 27609

DRAWN BY J. BAYNE DATE 3/13
CHECKED BY D. RAGAN DATE 3/13

DWG. NO. 4

REVISIONS							
NO.	BY:	DATE:	NO.	BY:	DATE:	SHEET NO.	S-4
1			3			TOTAL SHEETS	21
2			4				

0041DEL_P10a1

DGN

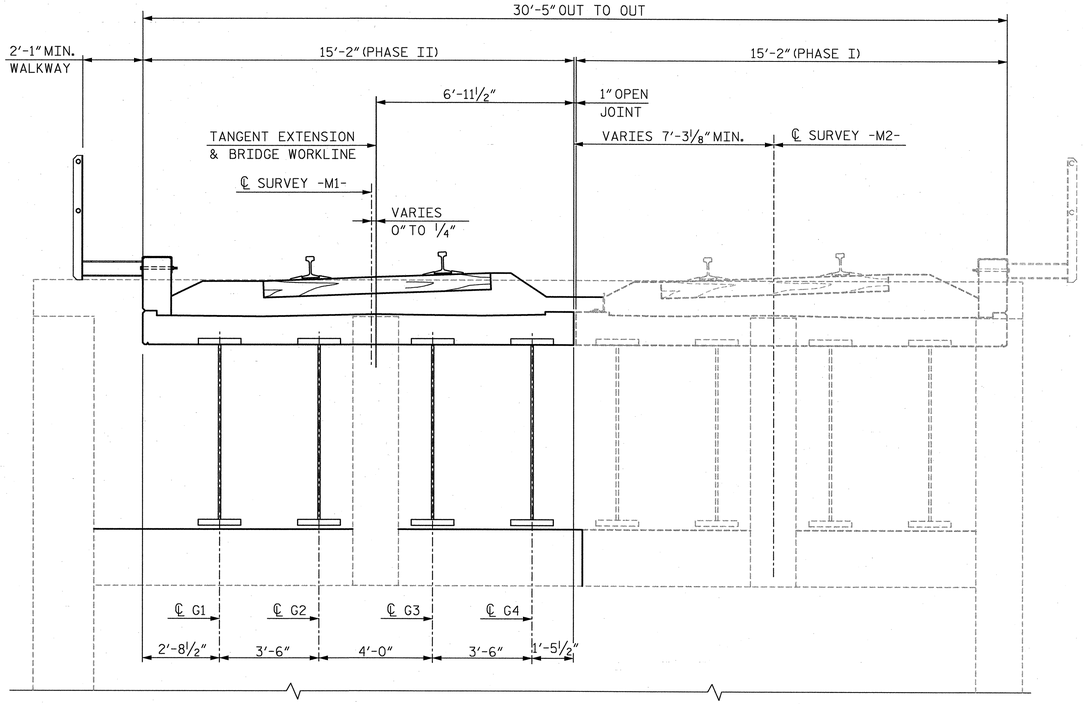

PHASE II TYPICAL SECTION

NOTES:

DIAPHRAGM CONNECTIONS IN THE CENTER BAY SHALL NOT BE PERFORMED UNDER ACTIVE TRACK CONDITIONS. THEREFORE A TEMPORARY TRACK OUTAGE MAY BE REQUIRED FOR THIS WORK. ALL WORK REQUIRED FOR FIELD DIAPHRAGM CONNECTIONS SHALL BE MADE DURING A SINGLE TRACK OUTAGE. FOR DIAPHRAGM CONNECTIONS IN CENTER BAY, SEE "STRUCTURAL STEEL DETAILS" SHEET 1 OF 2. TEMPORARY TRACK OUTAGES SHALL BE AT THE SOLE DISCRETION OF THE OPERATING RAILROAD.

CONSTRUCT AND REMOVE TEMPORARY BALLAST STOP AS DETAILED ON SHEET 1 OF 2. TEMPORARY BALLAST STOPS SHALL REMAIN IN PLACE UNTIL AFTER PHASE II CONSTRUCTION HAS BEEN COMPLETED AND WATERPROOFED.

PHASE II CONSTRUCTION

1. REMOVE EXISTING DECK GIRDER SPAN AT PROPOSED -M1- TRACK LOCATION.
2. CONSTRUCT PHASE II ABUTMENT CAP AND BACKWALL MODIFICATIONS AS SHOWN IN PLANS.
3. CONSTRUCT SUPERSTRUCTURE TO PHASE II LIMITS SHOWN IN TYPICAL SECTION. D3 AND D6 DIAPHRAGM CONNECTIONS TO PHASE I SUPERSTRUCTURE SHALL NOT BE MADE UNTIL AFTER PHASE II BRIDGE DECK HAS CURED FOR A MINIMUM OF 14 DAYS AND ATTAINED A MINIMUM COMPRESSIVE STRENGTH OF 4500 PSI.
4. COMPLETE DIAPHRAGM CONNECTIONS IN CENTER BAY AS SHOWN ON "STRUCTURAL STEEL DETAILS" SHEET 1 OF 2 AND AS NOTED HEREIN. PLACE TEMPORARY WEIGHT ON PHASE II SUPERSTRUCTURE TO VERTICALLY ALIGN DECK EDGES PRIOR TO COMPLETING D3 AND D6 CONNECTIONS.
5. WATERPROOF SURFACE OF PHASE II SUPERSTRUCTURE. ENSURE A MINIMUM OVERLAP OF 2" WITH PHASE I WATERPROOFING. REMOVE TEMPORARY BALLAST STOP AFTER WATERPROOFING HAS CURED IN ACCORDANCE WITH MEMBRANE SUPPLIER RECOMMENDATIONS.
6. TRACK CONTRACTOR TO BUILD AND COMPLETE -M1- ACROSS BRIDGE AND OPEN RAIL FOR TRAFFIC.

PROJECT NO. P-5208C

CABARRUS COUNTY

STATION: 10344+27.18 -M1-

MILE POST: 362.30

SHEET 2 OF 2

NORTH CAROLINA PROFESSIONAL SEAL 12916 ENGINEER PAUL J. BARBER 5/9/13

NORTH CAROLINA PROFESSIONAL SEAL 27812 ENGINEER DAVID W. HAWKINS 5/9/13

STATE OF NORTH CAROLINA
DEPARTMENT OF TRANSPORTATION
RALEIGH

SEQUENCE OF CONSTRUCTION

HNTB

HNTB NORTH CAROLINA, P.C.
License No. C-1554
343 E. Six Forks Rd., Suite 200, Raleigh, N.C. 27609

DRAWN BY J. BAYNE DATE 3/13
CHECKED BY D. RAGAN DATE 3/13

DWG. NO. 5

REVISIONS						SHEET NO.
NO.	BY:	DATE:	NO.	BY:	DATE:	S-5
1			3			TOTAL SHEETS
2			4			21

0041DEL_P10a1

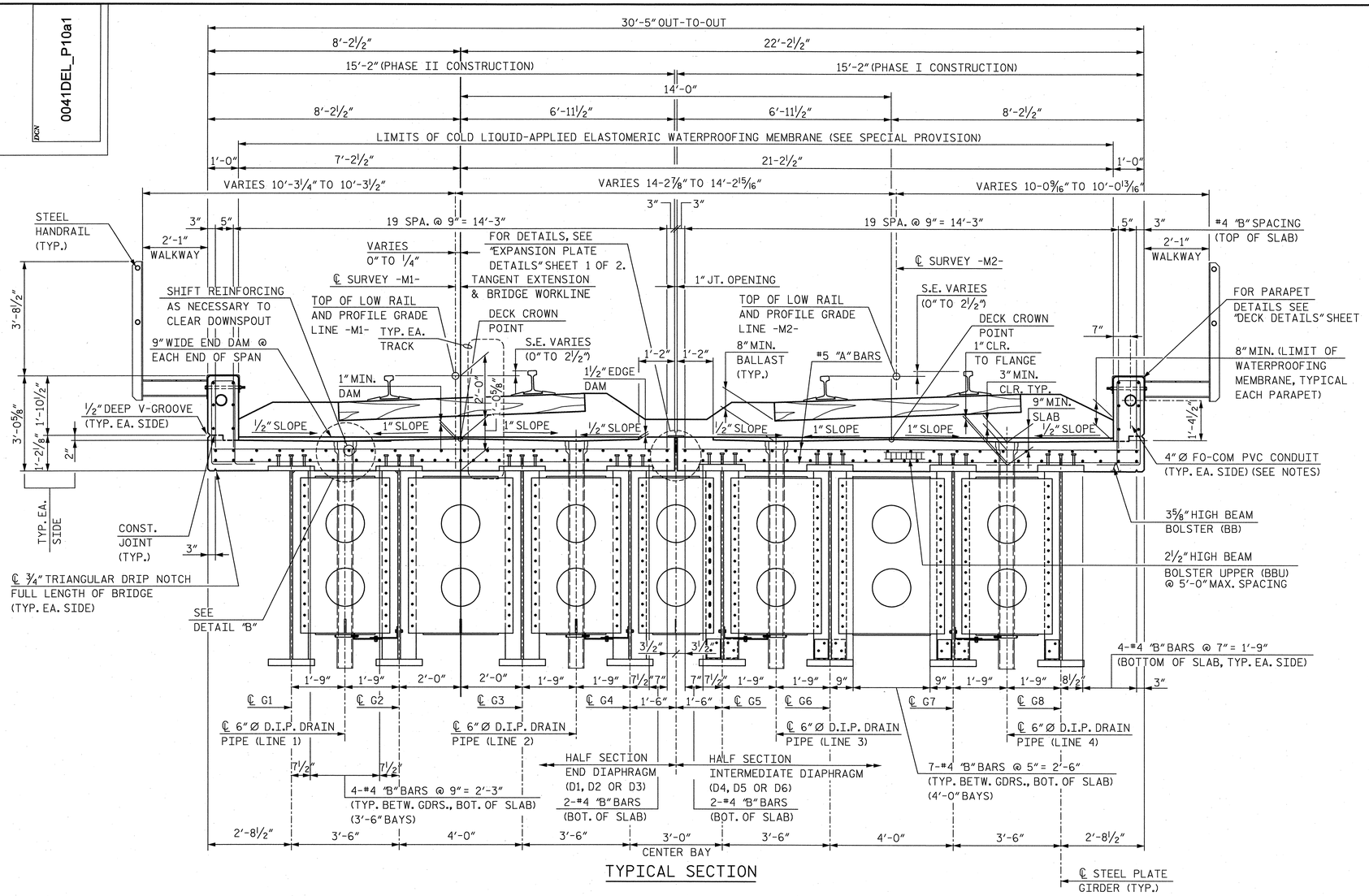

TYPICAL SECTION

NOTES FOR CONDUIT IN PARAPETS

CONDUIT TO BE 4" DIA. IN ACCORDANCE WITH UNDERWRITER'S LABORATORY SPECIFICATIONS.

PROVISIONS SHALL BE MADE FOR EXPANSION BETWEEN DECK SLAB AT EXPANSION JOINT AT ABUTMENT 2 (EXPANSION FITTINGS).

COUPLING SHALL BE PROVIDED BEHIND BACKWALL OF ABUTMENT 1 AND 2 FOR CONNECTION TO 4" DIA. RIGID PIPE (RIGID PIPE BY RAILWAY COMPANY).

FOR CONDUIT IN PARAPETS, SEE SPECIAL PROVISIONS.

NOTES:

ALL REINFORCING STEEL IN THE DECK AND PARAPETS SHALL BE EPOXY COATED. CLEAR COVER TO ALL REINFORCING IS 2" MINIMUM UNLESS NOTED OTHERWISE.

FOR WALKWAY AND HANDRAIL DETAILS, SEE "WALKWAY AND HANDRAIL DETAILS" SHEET.

FOR CONCRETE PARAPET DETAILS, SEE "DECK DETAILS" SHEET.

DESIGN INCLUDES WEIGHT OF 6" ADDITIONAL BALLAST TO ACCOUNT FOR FUTURE RESURFACING OF TRACK.

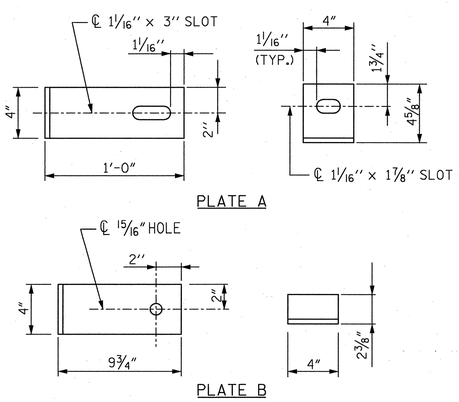

DRAINAGE PIPE SUPPORT CONNECTION PLATES

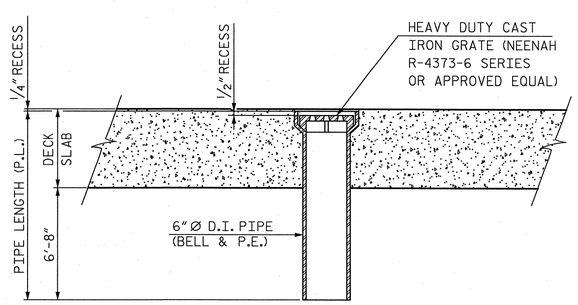

DETAIL "B"

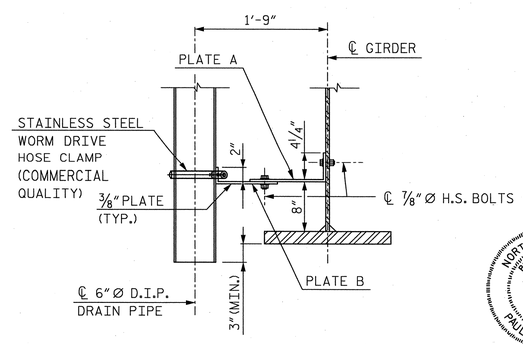

DRAINAGE PIPE SUPPORT DETAIL

PROJECT NO. P-5208C

CABARRUS COUNTY

STATION: 10344+27.18 -M1-

MILE POST: 362.30

STATE OF NORTH CAROLINA
DEPARTMENT OF TRANSPORTATION
RALEIGH

SUPERSTRUCTURE

TYPICAL SECTION

HNTB NORTH CAROLINA, P.C.
License No. C-1554
343 E. Six Forks Rd., Suite 200, Raleigh, N.C. 27609

DRAWN BY M. WRIGHT DATE 3/13
CHECKED BY D. RAGAN DATE 3/13

DWG. NO. 6

REVISIONS						
NO.	BY:	DATE:	NO.	BY:	DATE:	
1			3			
2			4			

SHEET NO. S-6

TOTAL SHEETS 21

0041DEL_P10a1

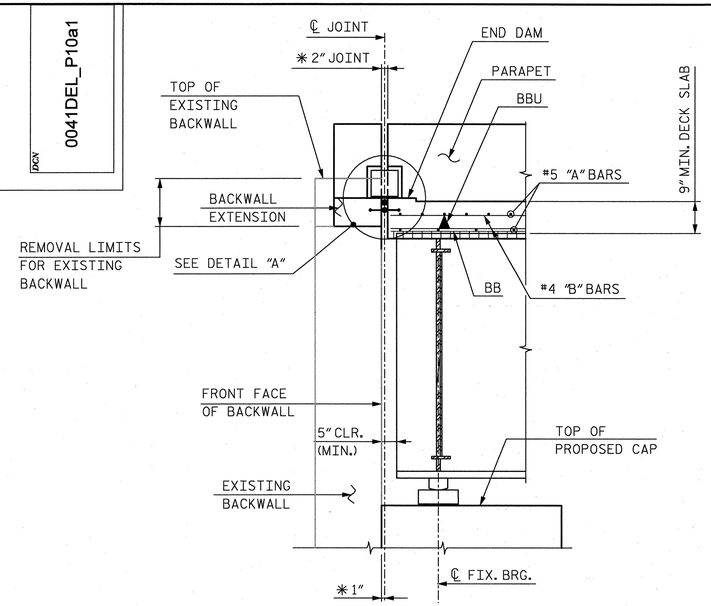

SECTION A-A

(ABUT. 1 SHOWN, ABUT. 2 SIMILAR)

✱ NORMAL TO ℄ JOINT

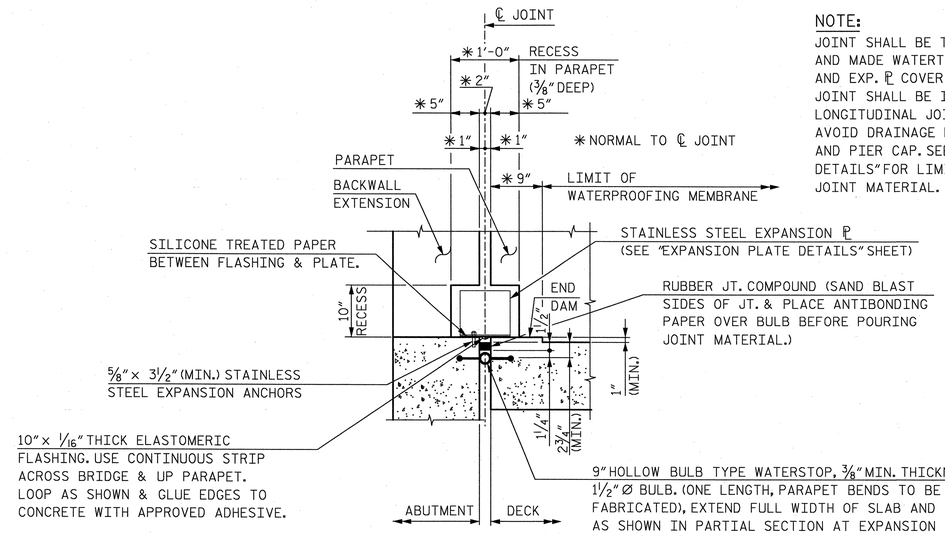

DETAIL "A"

NOTE:

JOINT SHALL BE TESTED FOR LEAKS AND MADE WATERTIGHT BEFORE FLASHING AND EXP. ℙ COVER ARE INSTALLED. JOINT SHALL BE INSTALLED AT LONGITUDINAL JOINT INTERSECTION TO AVOID DRAINAGE LEAKS ABOVE ABUTMENT AND PIER CAP. SEE "EXPANSION PLATE DETAILS" FOR LIMITS OF EXPANSION JOINT MATERIAL.

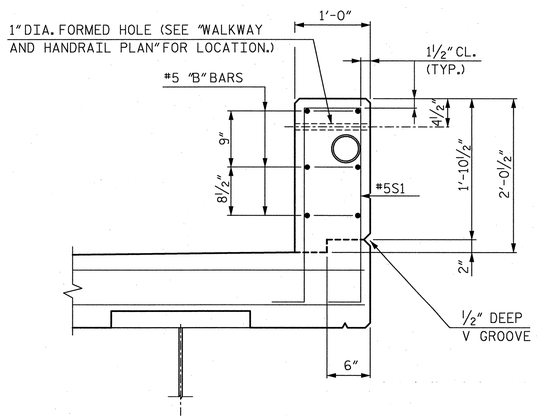

SECTION THRU PARAPET

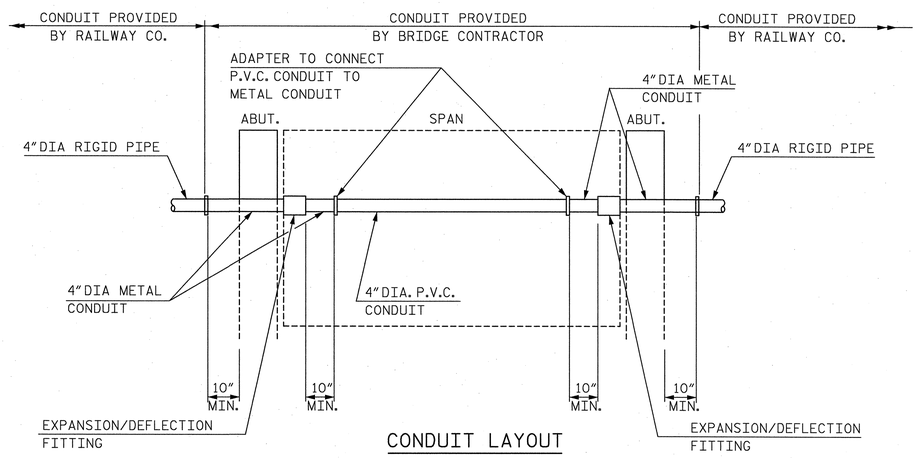

CONDUIT LAYOUT

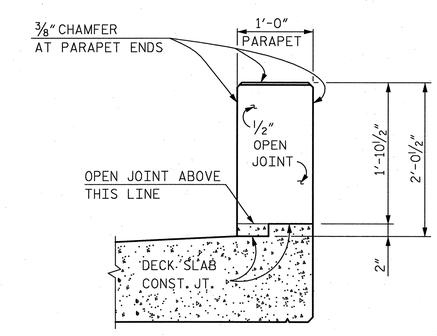

SECTION THRU OPEN JOINT IN PARAPET

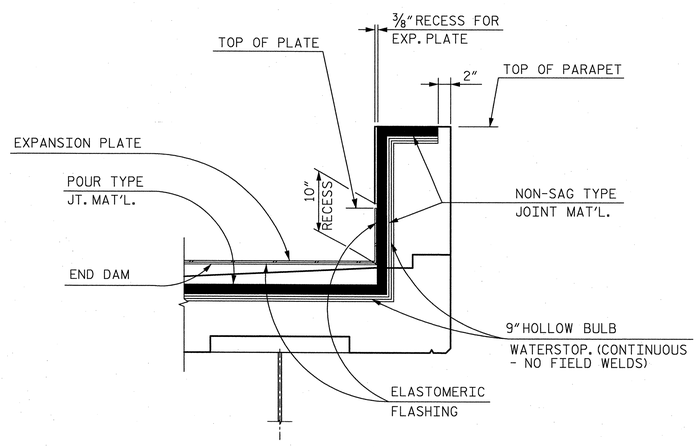

PART SECTION AT EXPANSION JOINT

PROJECT NO. P-5208C

CABARRUS COUNTY

STATION: 10344+27.18 -M1-

MILE POST: 362.30

STATE OF NORTH CAROLINA
DEPARTMENT OF TRANSPORTATION
RALEIGH

SUPERSTRUCTURE

DECK DETAILS

HNTB

HNTB NORTH CAROLINA, P.C.
License No. C-1554
343 E. Six Forks Rd., Suite 200, Raleigh, N.C. 27609

DRAWN BY M. WRIGHT DATE 3/13
CHECKED BY D. RAGAN DATE 3/13

DWG. NO. 7

REVISIONS						SHEET NO.
NO.	BY:	DATE:	NO.	BY:	DATE:	S-7
1			3			TOTAL SHEETS
2			4			21

0041DEL_P10a1

DGN

NOTES:

ALL REINFORCING SHALL BE EPOXY COATED.

FOR SECTION A-A SEE "DECK DETAILS" SHEET.

FOR CONCRETE PARAPET DETAILS, SEE "DECK DETAILS" SHEET.

FOR DECK DRAIN DETAIL SEE DETAIL "B" ON "TYPICAL SECTION" SHEET.

#5S1 BARS IN PARAPET MAY BE SHIFTED SLIGHTLY TO MAINTAIN PROPER CLEARANCE TO EXPANSION JOINTS IN PARAPET.

SLAB BARS MAY BE SHIFTED TO AVOID DECK DRAIN LOCATIONS.

FOR WALKWAY AND HANDRAIL SUPPORT BRACKET (SB1) LOCATION AND SPACING, SEE "WALKWAY AND HANDRAIL PLAN" SHEET.

E.F. = EACH FACE

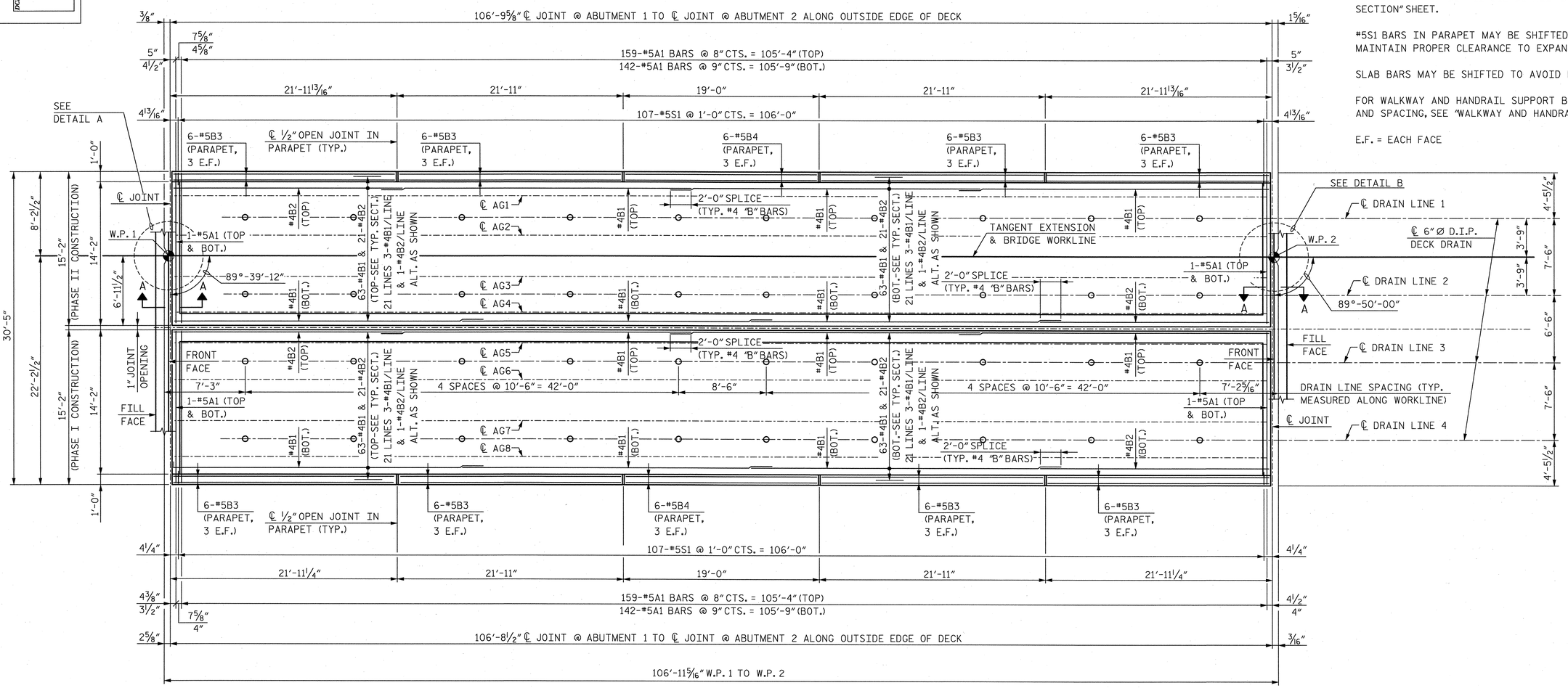

PLAN - SPAN A

℄ SURVEY -M1- & -M2- ARE NOT SHOWN FOR CLARITY.

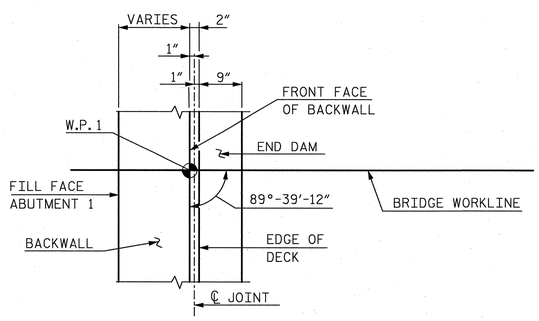

DETAIL A

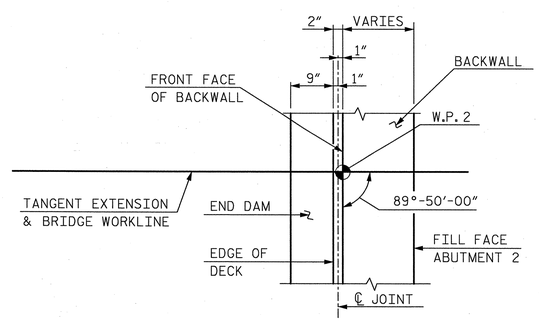

DETAIL B

PROJECT NO. P-5208C

CABARRUS COUNTY

STATION: 10344+27.18 -M1-

MILE POST: 362.30

STATE OF NORTH CAROLINA
DEPARTMENT OF TRANSPORTATION
RALEIGH

SUPERSTRUCTURE

PLAN OF DECK - SPAN A

NORTH CAROLINA PROFESSIONAL SEAL 12916 ENGINEER PAUL J. BARBER 5/9/13

NORTH CAROLINA PROFESSIONAL SEAL 27812 ENGINEER DAVID W. HAWKINS 5/10/13

HNTB

HNTB NORTH CAROLINA, P.C.
License No. C-1554
343 E. Six Forks Rd., Suite 200, Raleigh, N.C. 27609

DRAWN BY M. WRIGHT DATE 3/13
CHECKED BY D. RAGAN DATE 3/13

DWG. NO. 8

REVISIONS						
NO.	BY:	DATE:	NO.	BY:	DATE:	
1			3			
2			4			

SHEET NO. S-8

TOTAL SHEETS 21

0041DEL_P10a1

DGN

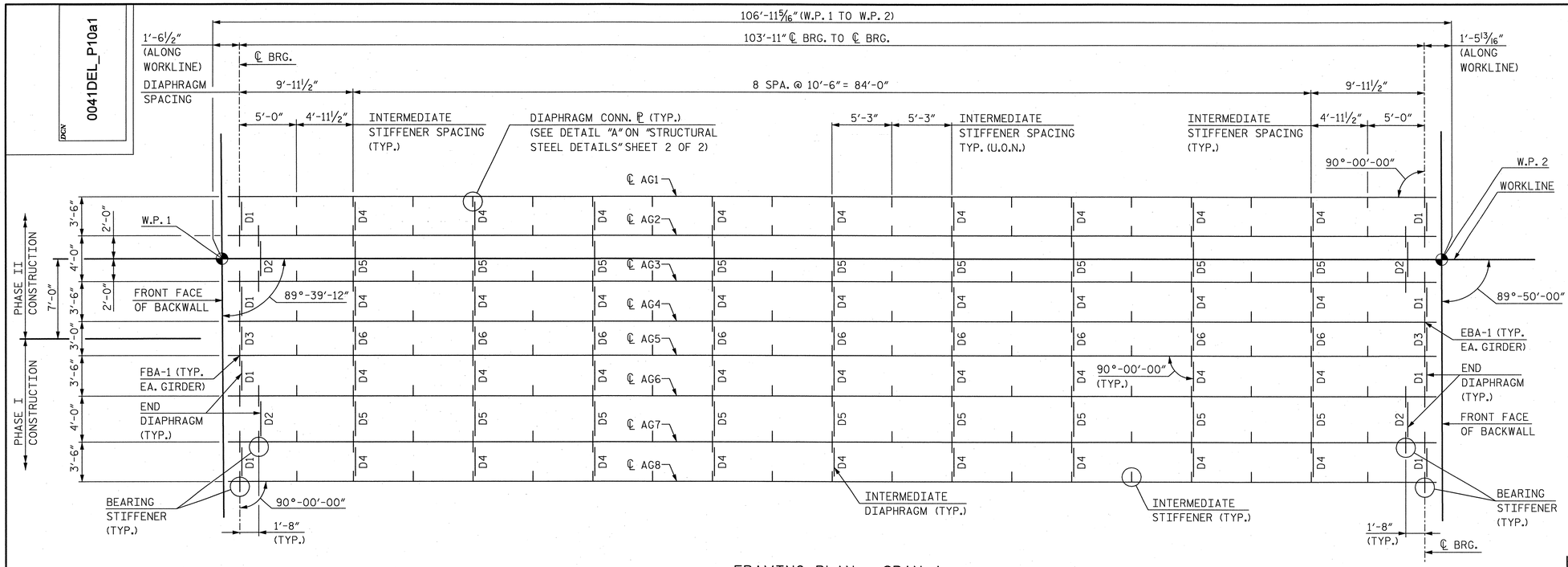

FRAMING PLAN - SPAN A

NOTES:

ALL DIMENSIONS ON THIS DRAWING ARE HORIZONTAL.

℄ BEARINGS ARE PARALLEL.

CUT WEBS FOR 1 1/8" CAMBER. ADJUST END CUTS AND DIMENSIONS AS REQUIRED.

DIAPHRAGM D3 AND D6 TO BE INCLUDED IN PHASE II CONSTRUCTION.

REFER TO "STRUCTURAL STEEL DETAILS" SHEETS FOR:

- STRUCTURAL STEEL NOTES
- DIAPHRAGM DETAILS
- STIFFENER AND CONNECTOR ℙ DETAILS
- SHEAR CONNECTOR DETAILS
- FLANGE TO WEB WELD DETAIL

FOR BEARINGS, SEE "BEARING DETAILS" SHEET.

FOR DRAIN PIPE SUPPORT DETAILS, SEE "TYPICAL SECTION" SHEET.

FLANGE AND WEB SHOP SPLICES SHALL BE MADE WITH FULL PENETRATION GROOVE WELDS. SEE DETAILS ON "STRUCTURAL STEEL DETAILS" SHEET. FABRICATOR IS TO SHOW WELD CONFIGURATION AND JOINT PREPARATION ON SHOP DRAWINGS FOR APPROVAL.

FLANGE AND WEB SHOP SPLICE SHALL BE STAGGERED LONGITUDINALLY A MINIMUM OF 2'-0". SEE "STRUCTURAL STEEL DETAILS" SHEETS FOR DETAIL.

FC = FRACTURE CRITICAL

INT = NON-FRACTURE CRITICAL MEMBERS OR COMPONENTS REQUIRING IMPROVED NOTCH TOUGHNESS.

U.O.N. = UNLESS OTHERWISE NOTED.

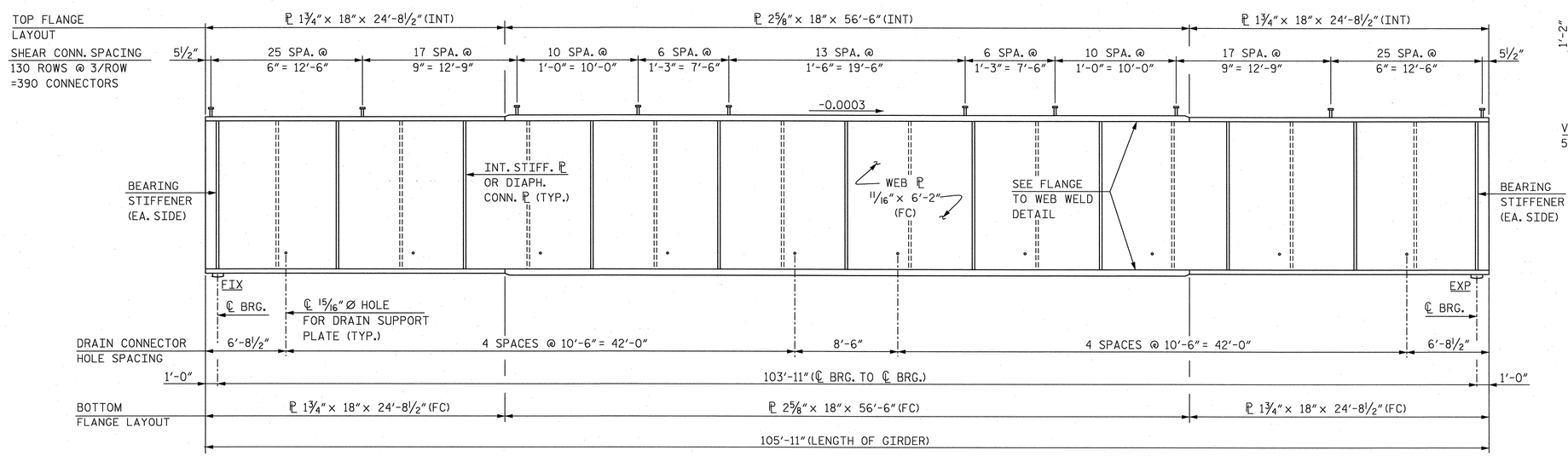

TYPICAL GIRDER ELEVATION - SPAN A

(INTERIOR GIRDER SHOWN, EXTERIOR GIRDER SIMILAR)

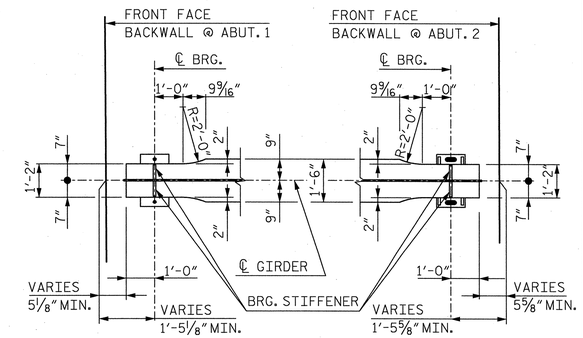

@ ABUTMENT 1 @ ABUTMENT 2

BOTTOM FLANGE GIRDER END DETAILS - SPAN A

PROJECT NO. P-5208C

CABARRUS COUNTY

STATION: 10344+27.18 -M1-

MILE POST: 362.30

STATE OF NORTH CAROLINA
DEPARTMENT OF TRANSPORTATION
RALEIGH

SUPERSTRUCTURE

FRAMING PLAN AND GIRDER DETAILS SPAN A

NORTH CAROLINA PROFESSIONAL SEAL 12916 ENGINEER PAUL J. BARGER 5/6/13

NORTH CAROLINA PROFESSIONAL SEAL 27812 ENGINEER DAVID W. HAWKINS 5/6/13

HNTB

HNTB NORTH CAROLINA, P.C.
License No. C-1554
343 E. Six Forks Rd., Suite 200, Raleigh, N.C. 27609

DRAWN BY J. BAYNE DATE 3/13
CHECKED BY D. RAGAN DATE 3/13

DWG. NO. 9

REVISIONS						SHEET NO.
NO.	BY:	DATE:	NO.	BY:	DATE:	S-9
1			3			TOTAL SHEETS
2			4			21

0041DEL_P10a1

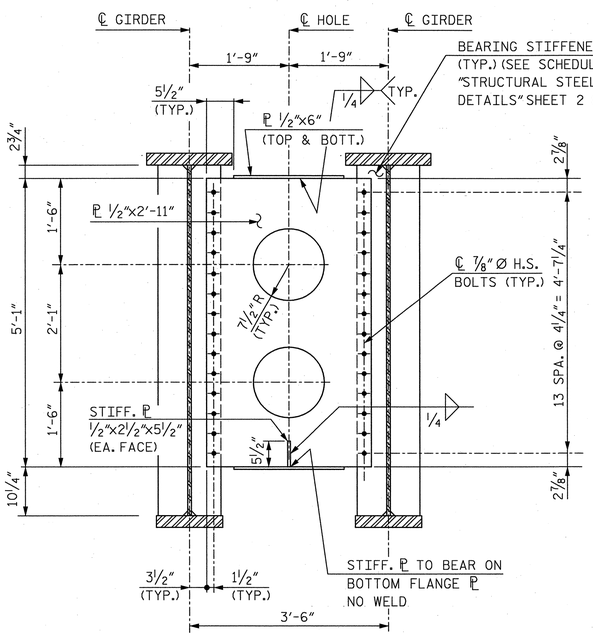

SECTION @ END DIAPHRAGM (D1)

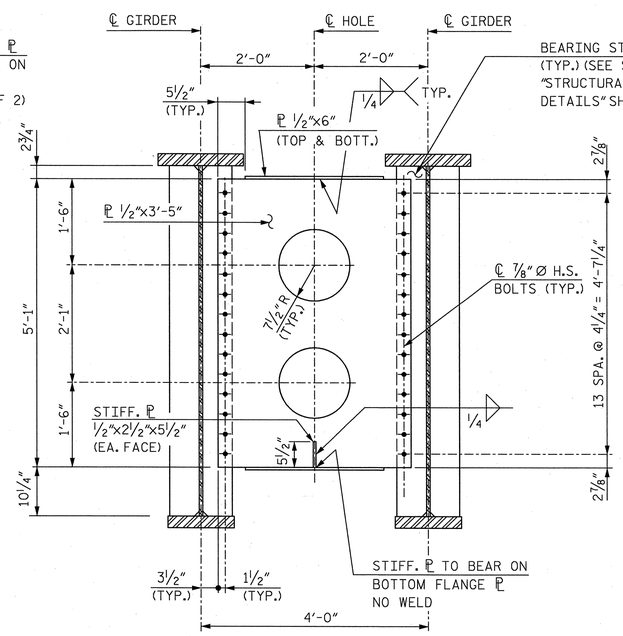

SECTION @ END DIAPHRAGM (D2)

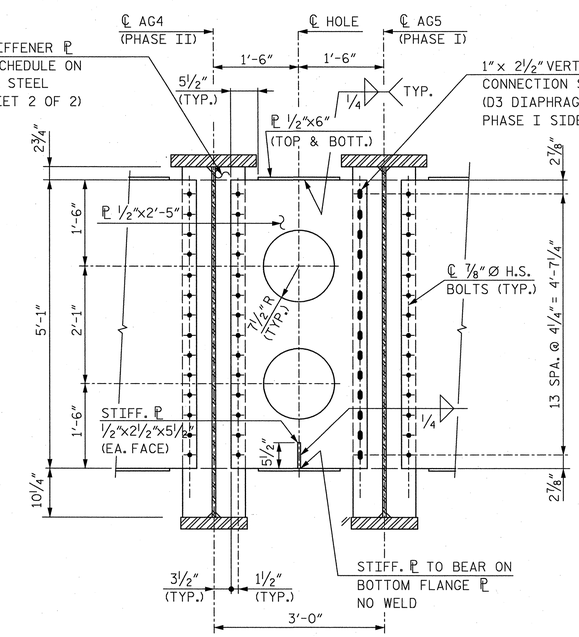

SECTION @ END DIAPHRAGM (D3)

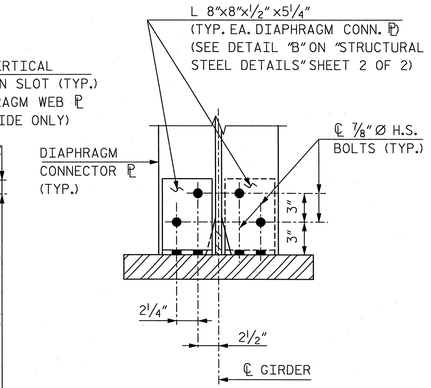

DETAIL C

NOTE:
FOR INSTALLATION OF DIAPHRAGMS D3 AND D6, SEE "CONSTRUCTION SEQUENCE" SHEET 2 OF 2.

NOTE:
BOLT HOLES IN BEARING STIFFENER ℙ AND DIAPHRAGM CONNECTOR ℙ FOR DIAPHRAGMS D3 AND D6 SHALL BE STANDARD SIZE.

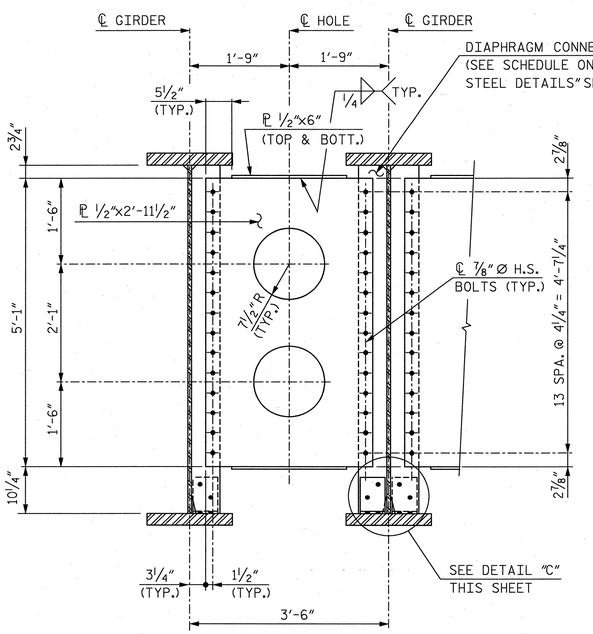

SECTION @ INTERMEDIATE DIAPHRAGM (D4)

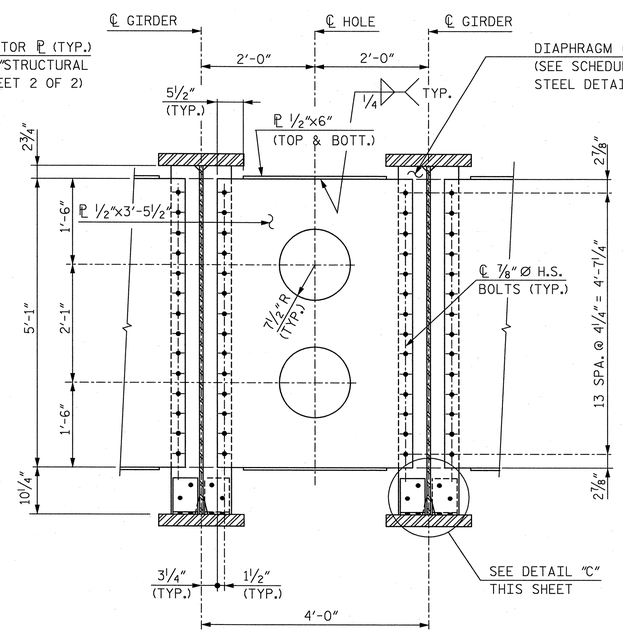

SECTION @ INTERMEDIATE DIAPHRAGM (D5)

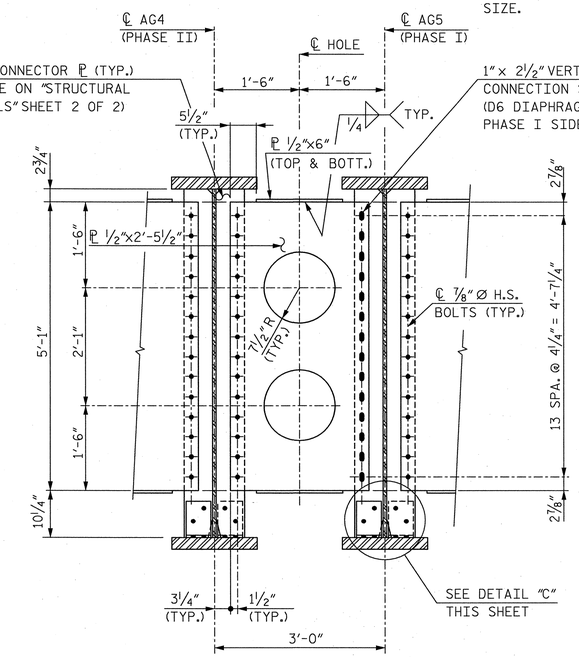

SECTION @ INTERMEDIATE DIAPHRAGM (D6)

NOTE:
FOR DIAPHRAGM LOCATIONS, SEE FRAMING PLANS.

PROJECT NO. P-5208C
CABARRUS COUNTY
STATION: 10344+27.18 -M1-
MILE POST: 362.30

SHEET 1 OF 2

STATE OF NORTH CAROLINA
DEPARTMENT OF TRANSPORTATION
RALEIGH

SUPERSTRUCTURE

STRUCTURAL STEEL DETAILS

HNTB NORTH CAROLINA, P.C.
License No. C-1554
343 E. Six Forks Rd., Suite 200, Raleigh, N.C. 27609

DRAWN BY J. BAYNE DATE 3/13
CHECKED BY D. RAGAN DATE 3/13
DWG. NO. 10

REVISIONS						
NO.	BY:	DATE:	NO.	BY:	DATE:	
1			3			
2			4			

SHEET NO. S-10
TOTAL SHEETS 21

0041DEL_P10a1

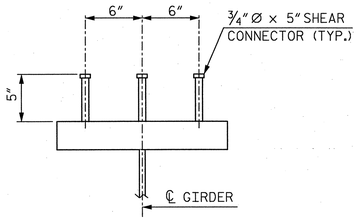

SHEAR CONNECTOR DETAIL

(TYP. ALL GIRDERS)

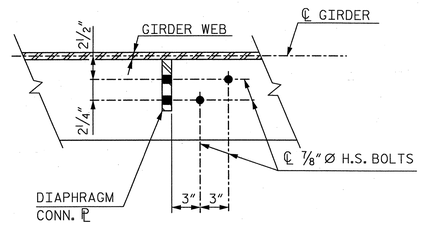

DETAIL "A"

(RIGHT SIDE OF WEB SHOWN, LEFT SIDE SIMILAR)

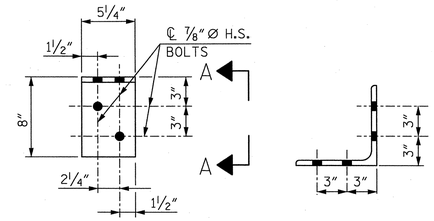

PLAN VIEW A-A

DETAIL "B"

(L 8"x8"x1/2"x5 1/4")

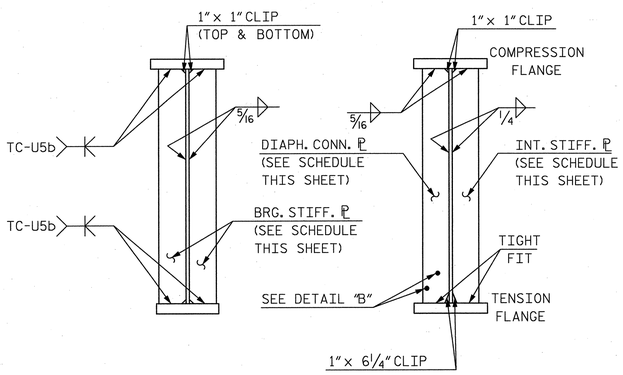

STIFFENER/CONN. ℙ DETAILS

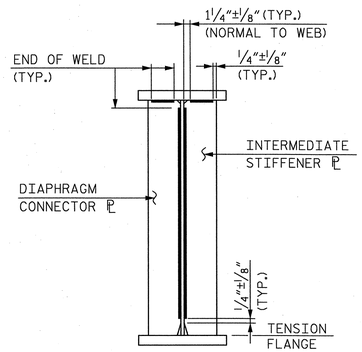

WELD TERMINATION DETAILS

(FILLET WELDS ONLY)

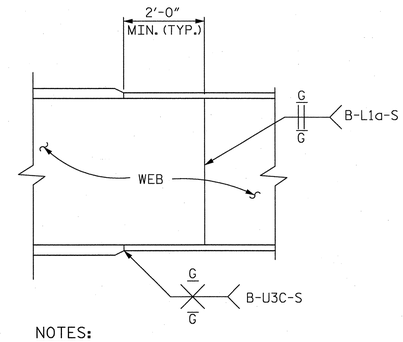

NOTES:

ELECTROSLAG WELDING IS NOT PERMITTED.

ULTRASONIC OR RADIOGRAPHIC INSPECTION IS REQUIRED FOR ALL FLANGE AND WEB SPLICE WELDS. SEE SPECIAL PROVISIONS.

GRIND WELDS IN DIRECTION OF STRESS ONLY (I.E. PARALLEL TO ℄ GIRDER).

SHOP SPLICE DETAILS

STIFF./CONN. ℙ SCHEDULE	
TYPE	SPAN A
BRG. STIFF.	ℙ 7/8" x 6 1/4"
DIAPH. CONN. ℙ	ℙ 1/2" x 6"
INT. STIFF.	ℙ 1/2" x 6"

NOTE: SEE FRAMING PLANS FOR STIFFENER/CONN. ℙ LOCATIONS

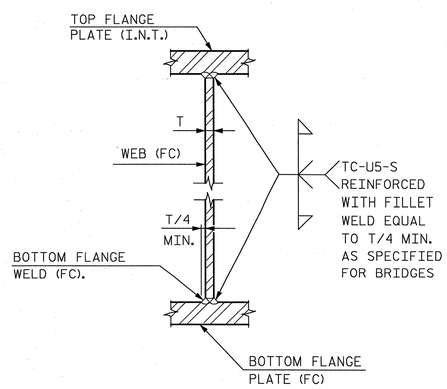

FLANGE TO WEB WELD DETAIL

NO SCALE

STRUCTURAL STEEL NOTES

DESIGN DATA:

STRUCTURAL STEEL SHALL CONFORM TO THE FOLLOWING ASTM SPECIFICATIONS:

- GIRDER FLANGES AND WEB: A709, GRADE 50.
- MISCELLANEOUS MATERIAL: A709, GRADE 50.
- ANCHOR BOLTS FOR BEARING DEVICES SHALL CONFORM TO ASTM A449. ANCHOR BOLTS, NUTS, AND PLATE WASHERS SHALL BE HOT-DIPPED GALVANIZED IN ACCORDANCE WITH AASHTO M232.

ALL DIMENSIONS SHOWN ARE HORIZONTAL OR VERTICAL UNLESS OTHERWISE NOTED. ALL DIMENSIONS ARE SHOWN AT 60°F.

NORFOLK SOUTHERN CORPORATION SHALL BE FURNISHED COPIES OF MILL TEST REPORTS FOR ALL MATERIALS EXCEPT MISCELLANEOUS PLATES AND SHAPES. REPORTS SHALL INDICATE COMPLIANCE WITH ALL SPECIFIED REQUIREMENTS.

SHOP INSPECTION SHALL BE BY NORFOLK SOUTHERN CORPORATION OR ITS AUTHORIZED AGENT. SEE STRUCTURAL STEEL SPECIAL PROVISION FOR ADDITIONAL WELDING INSPECTION OF FLANGE PLATE TO WEB PLATE WELDS.

FOR PAINTING STRUCTURAL STEEL, SEE SPECIAL PROVISIONS.

BOLTED CONNECTIONS SHALL BE MADE WITH 7/8" Ø ASTM A325, TYPE 1 HIGH STRENGTH BOLTS WITH HEAVY HEX HEAD, HEAVY HEX NUT AND HARDENED WASHERS IN ACCORDANCE WITH A.R.E.M.A. SPECIFICATIONS USING THE TURN OF THE NUT METHOD. DIRECT TENSION INDICATORS SHALL NOT BE USED.

SHOP DRAWINGS SHALL BE APPROVED BY THE CHIEF ENGINEER - BRIDGES AND STRUCTURES, NORFOLK SOUTHERN CORPORATION, ATLANTA, G.A. SHOP DRAWINGS SHALL BE LABELED "NORFOLK SOUTHERN MP NS-362.30".

BOLT HOLES IN STRUCTURAL STEEL MEMBERS SHALL BE STANDARD SIZE UNLESS OTHERWISE INDICATED ON THE PLANS.

HIGH STRENGTH BOLTS, NUTS & WASHERS SHALL BE MECHANICALLY GALVANIZED IN ACCORDANCE WITH ASTM B695.

ANCHOR BOLTS SHALL BE 1 1/4" Ø IN ACCORDANCE WITH A.R.E.M.A. SPECIFICATIONS AND SHALL BE GROUTED IN FORMED HOLES AFTER GIRDERS ARE ERECTED.

BEARING PADS SHALL BE USED WHENEVER STEEL MASONRY PLATE, OR OTHER STEEL BEARING PLATE, BEARS ON CONCRETE. PADS SHALL BE PREFORMED FABRIC BEARING PADS, 1/2" THICK. FOR PAD REQUIREMENTS, SEE STRUCTURAL STEEL SPECIAL PROVISIONS.

SHEAR CONNECTORS ON GIRDERS MAY BE SHIFTED AS NECESSARY TO CLEAR FLANGE SPLICE WELDS.

WEB SHOP SPLICES ARE PERMITTED TO LIMIT THE MAXIMUM REQUIRED WEB PIECE LENGTHS TO 45'-0". PERMITTED WEB SHOP SPLICES SHALL NOT BE LOCATED WITHIN 15'-0" OF MAXIMUM DEAD LOAD DEFLECTION AND SHALL BE LOCATED 6" MIN. FROM CONNECTOR PLATE OR INTERMEDIATE STIFFENER WELDS. FLANGE AND WEB SHOP SPLICES SHALL CONFORM TO SHOP SPLICE DETAILS SHOWN ON THE PLANS.

STRUCTURAL STEEL ELEMENTS DENOTED AS "FC" ARE FRACTURE CRITICAL AND SHALL MEET IMPACT TEST REQUIREMENTS SET FORTH IN THE FRACTURE CONTROL PLAN OF THE AREMA MANUAL, CHAPTER 15, SECTION 1.14. NOTCH TOUGHNESS REQUIREMENTS AND TESTING SHALL BE BASED ON ZONE 2 REQUIREMENTS.

STRUCTURAL STEEL ELEMENTS DENOTED AS "INT" SHALL MEET IMPACT TEST REQUIREMENTS SET FORTH IN THE FRACTURE CONTROL PLAN OF THE AREMA MANUAL, CHAPTER 15, SECTION 1.2. TESTING SHALL BE BASED ON ZONE 2 REQUIREMENTS.

ALL WELDING CONNECTIONS SHALL BE MADE WITH SERIES E70 WELDING ELECTRODES.

FOR DRAINAGE PIPE SUPPORT DETAIL, SEE "TYPICAL SECTION" SHEET.

FC = FRACTURE CRITICAL

INT = NON-FRACTURE CRITICAL MEMBERS OR COMPONENTS REQUIRING IMPROVED NOTCH TOUGHNESS.

PROJECT NO. P-5208C

CABARRUS COUNTY

STATION: 10344+27.18 -M1-

MILE POST: 362.30

SHEET 2 OF 2

NORTH CAROLINA PROFESSIONAL SEAL 12916 ENGINEER PAUL J. BARBER 5/5/13

NORTH CAROLINA PROFESSIONAL SEAL 27812 ENGINEER DAVID W. HAWKINS 5/30/13

STATE OF NORTH CAROLINA
DEPARTMENT OF TRANSPORTATION
RALEIGH

SUPERSTRUCTURE

STRUCTURAL STEEL DETAILS

HNTB

HNTB NORTH CAROLINA, P.C.
License No. C-1554
343 E. Six Forks Rd., Suite 200, Raleigh, N.C. 27609

DRAWN BY J. BAYNE DATE 3/13
CHECKED BY D. RAGAN DATE 3/13

DWG. NO. 11

REVISIONS						SHEET NO.
NO.	BY:	DATE:	NO.	BY:	DATE:	S-11
1			3			TOTAL SHEETS
2			4			21

0041DEL_P10a1

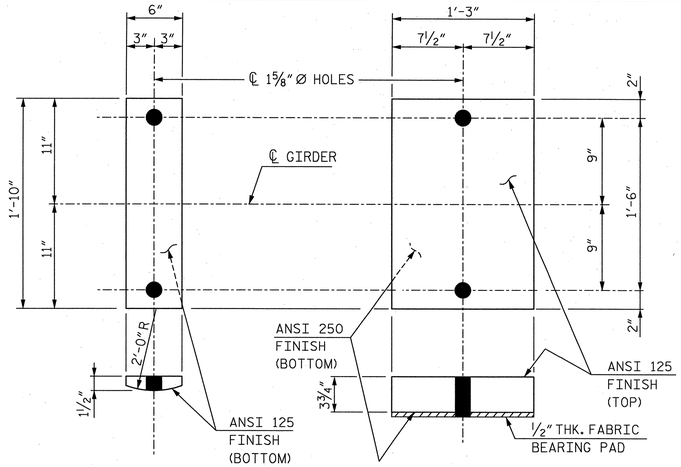

SOLE PLATE MASONRY PLATE

FIXED BEARINGS

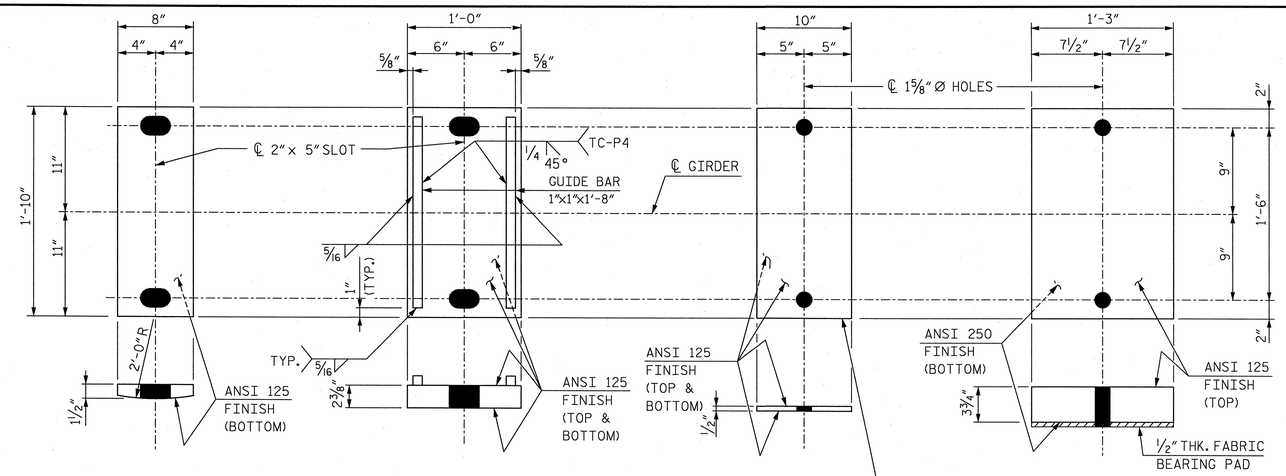

SOLE PLATE SLIDING PLATE BRONZE PLATE MASONRY PLATE

EXPANSION BEARINGS

BRONZE PLATE TO BE ASTM B22 - COPPER ALLOY 913 OR ASTM B100 - COPPER ALLOY 510. TOP SURFACE TO BE SELF LUBRICATING.

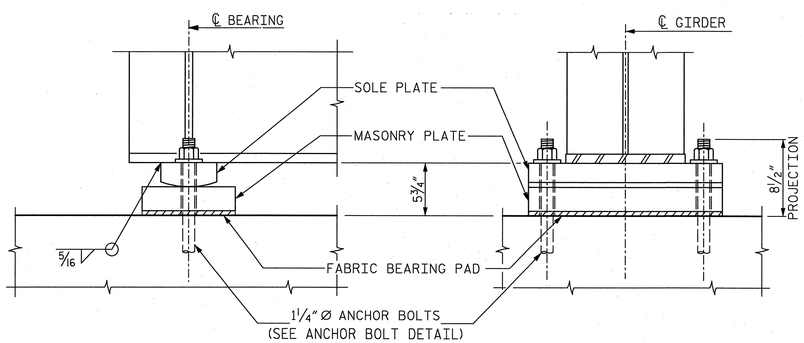

FIXED BEARING ASSEMBLY (FBA-1)

(8 REQ'D)

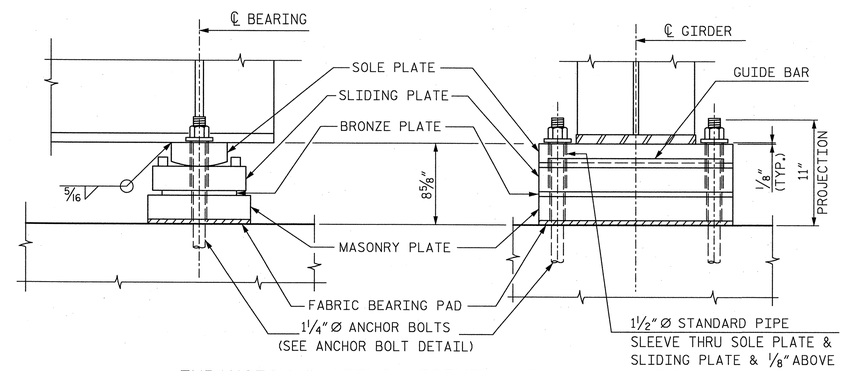

EXPANSION BEARING ASSEMBLY (EBA-1)

(8 REQ'D)

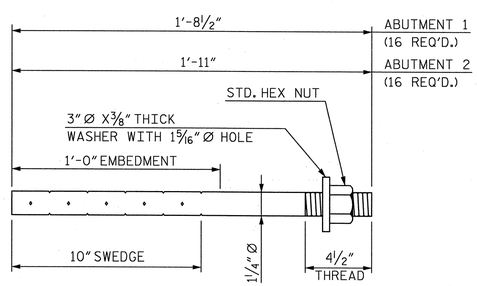

ANCHOR BOLT DETAIL

NOTES:

ANCHOR BOLTS, SLIDING PLATE (EXPANSION BEARING) AND MASONRY PLATE (FIXED AND EXPANSION BEARINGS) SHALL BE HOT DIPPED GALVANIZED.

ALL PLATE SURFACES SHALL BE PAINTED WITH A 3 COAT PAINT SYSTEM EXCEPT AS SPECIFIED BELOW.

(A) THE SLIDING PLATE (EXPANSION BEARING) SHALL NOT BE PAINTED BUT SHALL RECEIVE A COAT OF LUBRICATION.

(B) THE MASONRY PLATE (FIXED AND EXPANSION BEARINGS) SHALL NOT BE PAINTED.

(C) THE BOTTOM SURFACE OF THE SOLE PLATE SHALL NOT BE PAINTED BUT SHALL RECEIVE A SINGLE COAT OF PRIMER APPLIED IN THE SHOP.

(D) THE TOP SURFACE OF THE SOLE PLATE SHALL NOT BE PAINTED IN THE VICINITY OF THE WELD BETWEEN THE SOLE PLATE AND THE BOTTOM FLANGE.

FOR PAINT SYSTEM FOR STRUCTURAL STEEL, SEE SPECIAL PROVISIONS.

FOR SELF-LUBRICATING EXPANSION BEARING ASSEMBLIES, SEE SPECIAL PROVISIONS.

PROJECT NO. P-5208C

CABARRUS COUNTY

STATION: 10344+27.18 -M1-

MILE POST: 362.30

NORTH CAROLINA PROFESSIONAL SEAL 12916 ENGINEER PAUL J. BARBER 5/10/13

NORTH CAROLINA PROFESSIONAL SEAL 27812 ENGINEER DAVID W. HAWKINS 5/10/13

STATE OF NORTH CAROLINA
DEPARTMENT OF TRANSPORTATION
RALEIGH

SUPERSTRUCTURE

BEARING DETAILS

HNTB NORTH CAROLINA, P.C.
License No. C-1554
343 E. Six Forks Rd., Suite 200, Raleigh, N.C. 27609

DRAWN BY J. BAYNE DATE 3/13
CHECKED BY D. RAGAN DATE 3/13

DWG. NO. 12

REVISIONS						
NO.	BY:	DATE:	NO.	BY:	DATE:	
1			3			
2			4			

SHEET NO. S-12

TOTAL SHEETS 21

0041DEL_P10a1

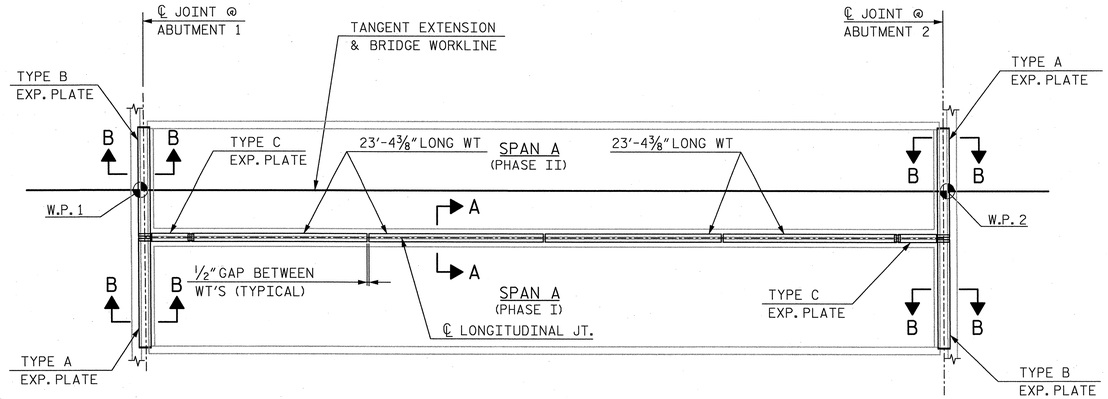

EXPANSION PLATE LAYOUT

(SEE PART PLANS, SHEET 2 OF 2)

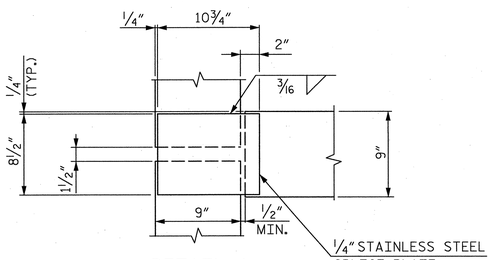

DETAIL A

(2 REQUIRED)

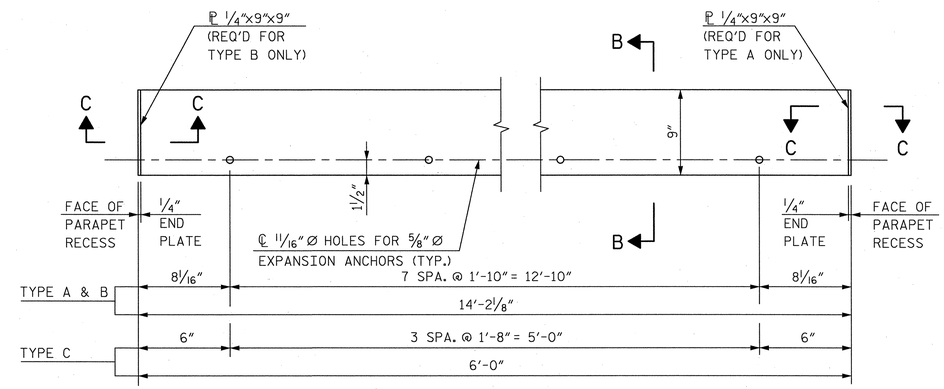

PLAN - EXPANSION PLATE

NOTE: PAYMENT FOR THE EXPANSION PLATES, EXPANSION ANCHORS, AND WT'S IS INCLUDED IN THE COST FOR STRUCTURAL STEEL.

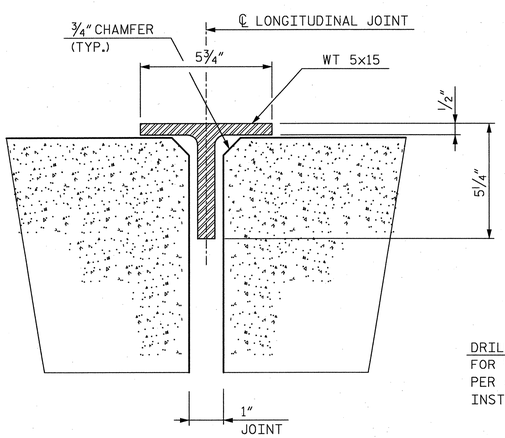

SECTION A-A

WT MEMBERS AND STEEL SPLICE PLATE (DETAIL "B") SHALL BE ASTM A36 STEEL AND SHALL BE GALVANIZED IN ACCORDANCE WITH THE STANDARD SPECIFICATIONS. PRIOR TO WELDING, GRIND THE SURFACE OF THE WT MEMBER AND PLATE. AFTER WELDING DAMAGED GALVANIZED SURFACES SHALL BE REPAIRED IN ACCORDANCE WITH THE STANDARD SPECIFICATIONS.

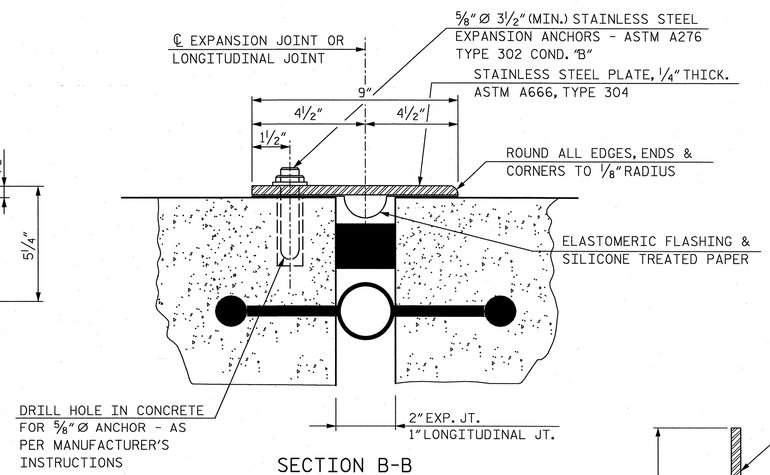

SECTION B-B

DETAIL OF EXPANSION ANCHOR AND PLATE

SEE DETAIL A ON "DECK DETAILS" SHEET FOR ADDITIONAL JOINT INFORMATION.

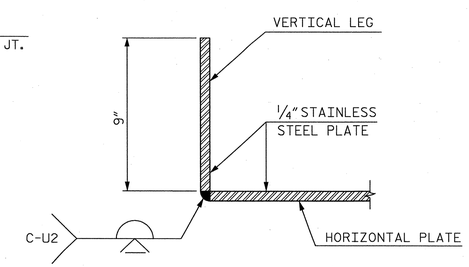

SECTION C-C

PROJECT NO. P-5208C

CABARRUS COUNTY

STATION: 10344+27.18 -M1-

MILE POST: 362.30

SHEET 1 OF 2

STATE OF NORTH CAROLINA
DEPARTMENT OF TRANSPORTATION
RALEIGH

SUPERSTRUCTURE

EXPANSION PLATE DETAILS

NORTH CAROLINA PROFESSIONAL SEAL 12916 ENGINEER PAUL J. BARBER 5/14/13

NORTH CAROLINA PROFESSIONAL SEAL 27812 ENGINEER DAVID W. HAWKINS 5/20/13

HNTB NORTH CAROLINA, P.C.
License No. C-1554
343 E. Six Forks Rd., Suite 200, Raleigh, N.C. 27609

DRAWN BY M. WRIGHT DATE 3/13
CHECKED BY D. RAGAN DATE 3/13
DWG. NO. 13

REVISIONS						SHEET NO.
NO.	BY:	DATE:	NO.	BY:	DATE:	S-13
1			3			TOTAL SHEETS
2			4			21

0041DEL_P10a1

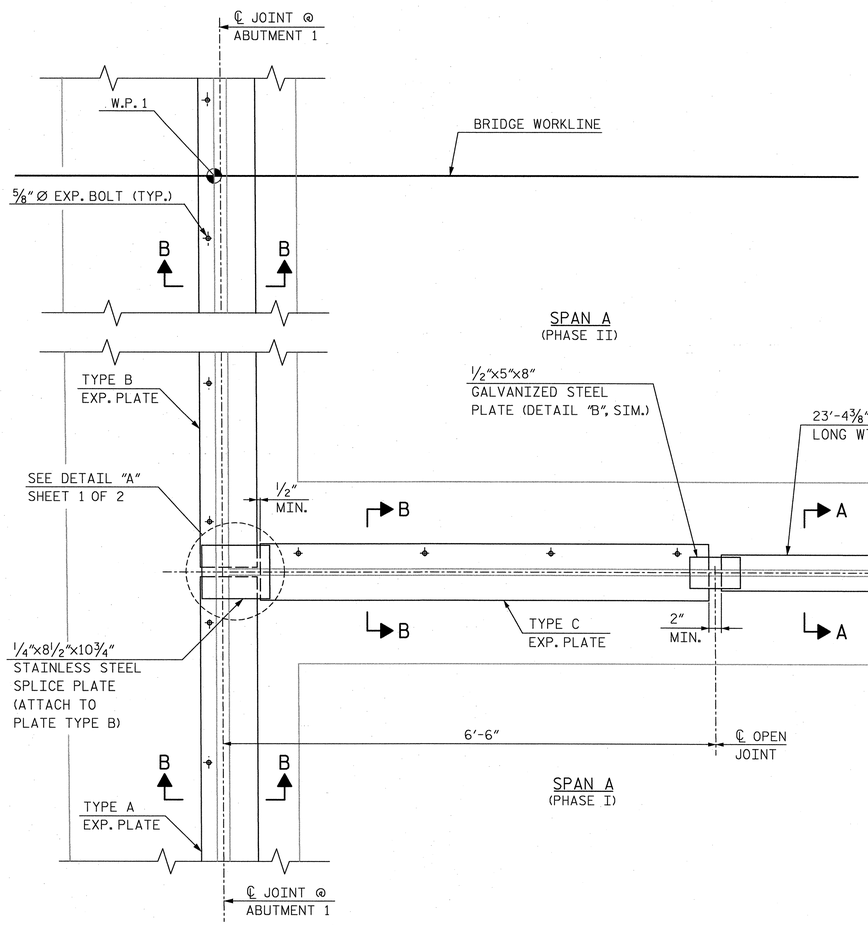

EXPANSION PLATE LAYOUT
@ ABUTMENT 1

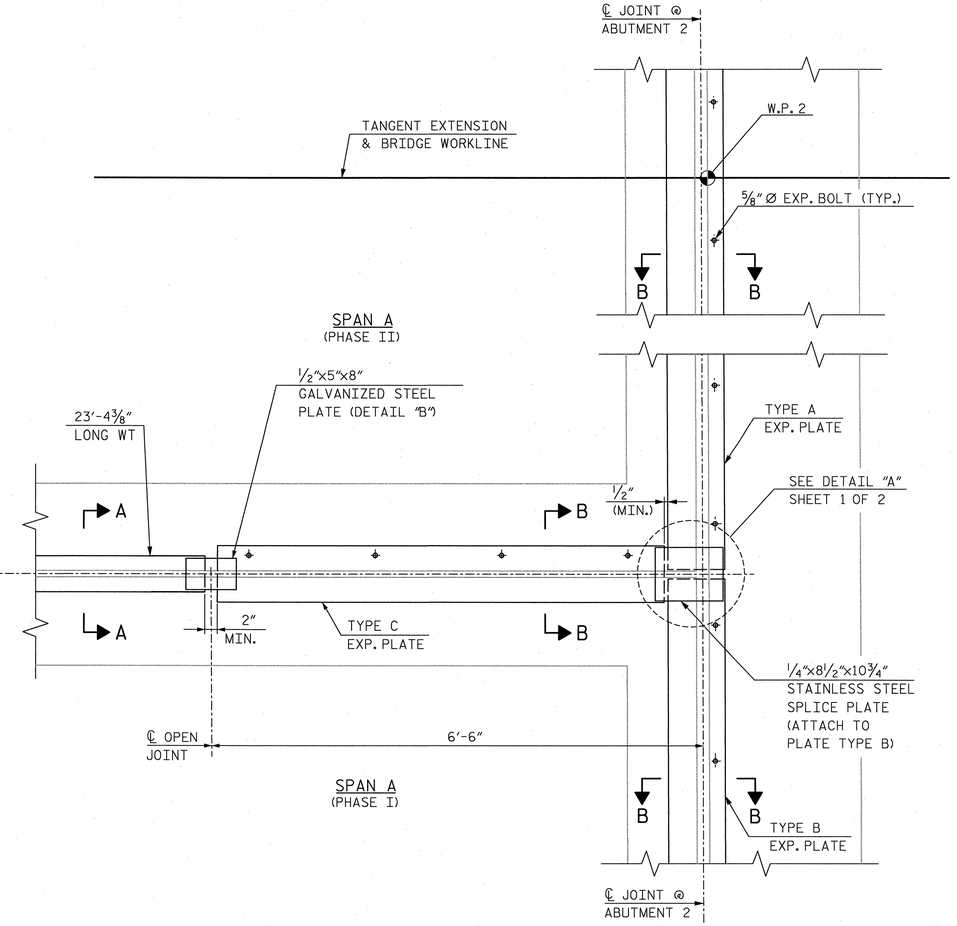

EXPANSION PLATE LAYOUT
@ ABUTMENT 2

NOTE: ALL EXPANSION PLATES AND WT MEMBERS ALONG LONGITUDINAL JOINT WILL BE INSTALLED AS PART OF PHASE II CONSTRUCTION.

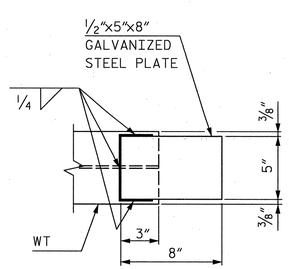

DETAIL B
(2 REQ'D)

PROJECT NO. P-5208C
CABARRUS COUNTY
STATION: 10344+27.18 -M1-
MILE POST: 362.30

SHEET 2 OF 2

STATE OF NORTH CAROLINA
DEPARTMENT OF TRANSPORTATION
RALEIGH

SUPERSTRUCTURE

EXPANSION PLATE DETAILS

NORTH CAROLINA PROFESSIONAL SEAL 12916 ENGINEER PAUL J. BARBER 5/10/13

NORTH CAROLINA PROFESSIONAL SEAL 27812 ENGINEER DAVID W. HAWKINS 5/10/13

HNTB NORTH CAROLINA, P.C.
License No. C-1554
343 E. Six Forks Rd., Suite 200, Raleigh, N.C. 27609

DRAWN BY M. WRIGHT DATE 3/13
CHECKED BY D. RAGAN DATE 3/13
DWG. NO. 14

REVISIONS								SHEET NO.
NO.	BY:	DATE:	NO.	BY:	DATE:			S-14
1			3					TOTAL SHEETS
2			4					21

0041DEL_P10a1

DGN

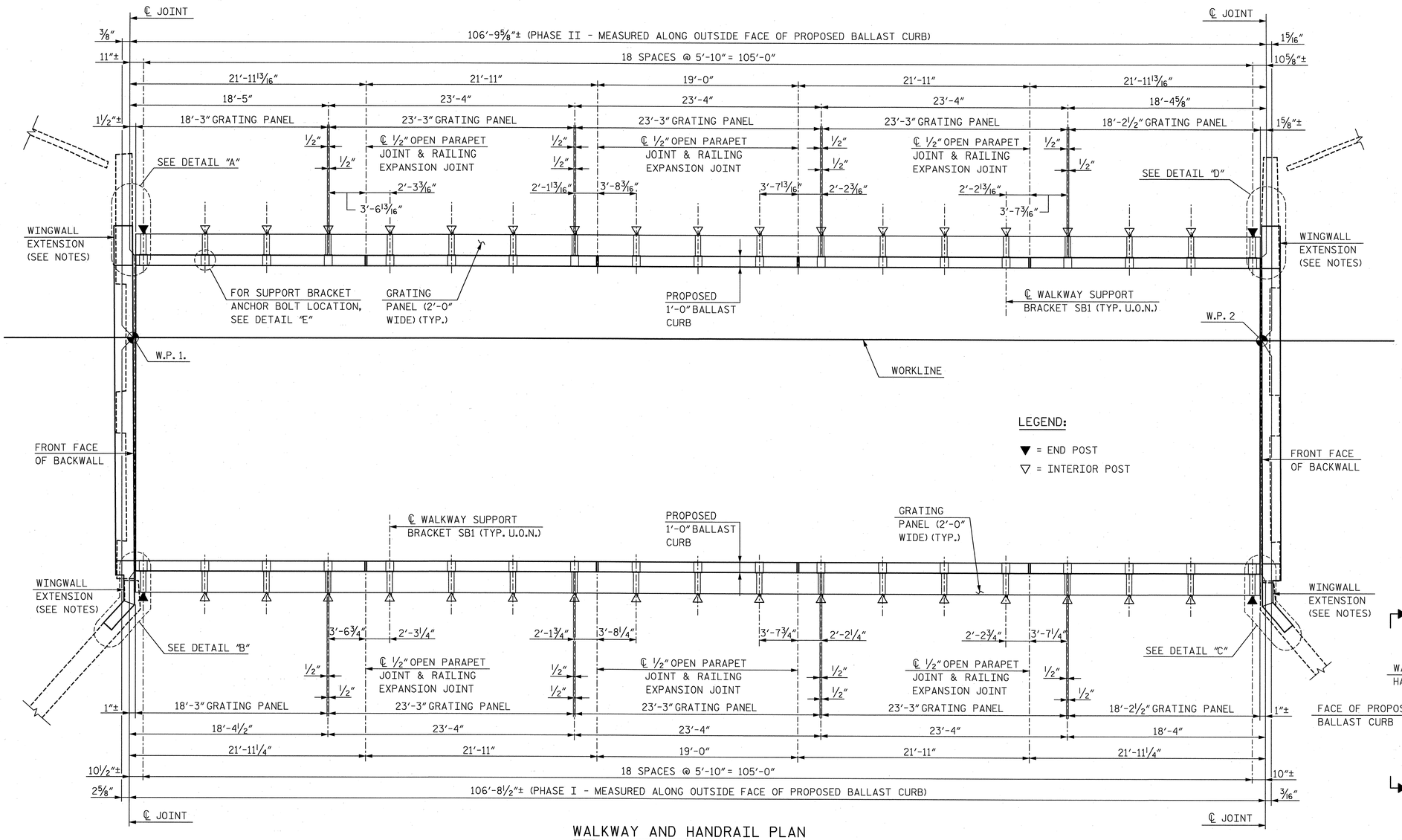

WALKWAY AND HANDRAIL PLAN

NOTES:

FOR WINGWALL EXTENSION DETAILS, SEE "ABUTMENT 1" AND "ABUTMENT 2" SHEETS.

FOR WALKWAY AND HANDRAIL DETAILS, VIEW A-A, AND VIEW B-B, SEE "WALKWAY AND HANDRAIL DETAILS" SHEET.

ALL DIMENSIONS SHOWN ARE ALONG EXTERIOR FACE OF PARAPET.

U.O.N. = UNLESS OTHERWISE NOTED.

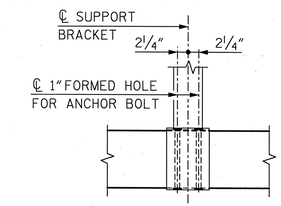

DETAIL "E"

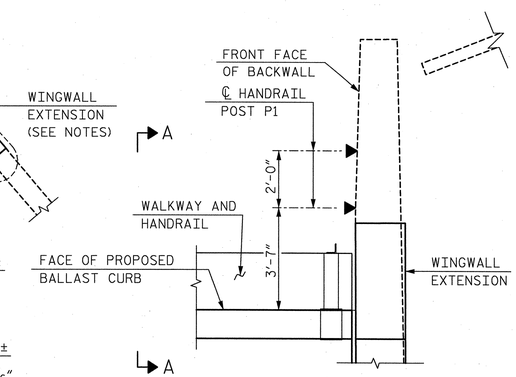

DETAIL "D"

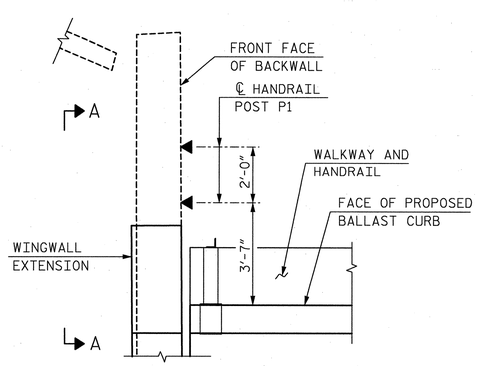

DETAIL "A"

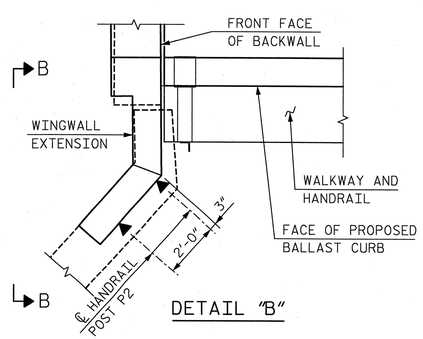

DETAIL "B"

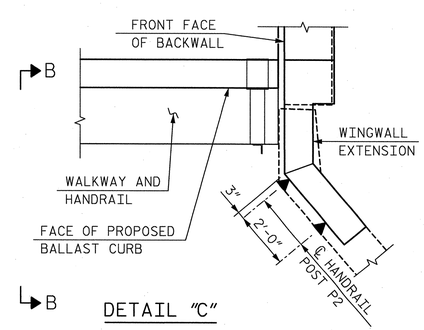

DETAIL "C"

PROJECT NO. P-5208C

CABARRUS COUNTY

STATION: 10344+27.18 -M1-

MILE POST: 362.30

STATE OF NORTH CAROLINA
DEPARTMENT OF TRANSPORTATION
RALEIGH

SUPERSTRUCTURE

WALKWAY AND HANDRAIL PLAN

NORTH CAROLINA PROFESSIONAL SEAL 12916 ENGINEER PAUL J. BARBER 5/9/13

NORTH CAROLINA PROFESSIONAL SEAL 27812 ENGINEER DAVID W. HAWKINS 5/10/13

HNTB

HNTB NORTH CAROLINA, P.C.
License No. C-1554
343 E. Six Forks Rd., Suite 200, Raleigh, N.C. 27609

DRAWN BY M. WRIGHT DATE 3/13
CHECKED BY D. RAGAN DATE 3/13

DWG. NO. 15

REVISIONS						SHEET NO.
NO.	BY:	DATE:	NO.	BY:	DATE:	S-15
1			3			TOTAL SHEETS
2			4			21

0041DEL_P10a1

DGN

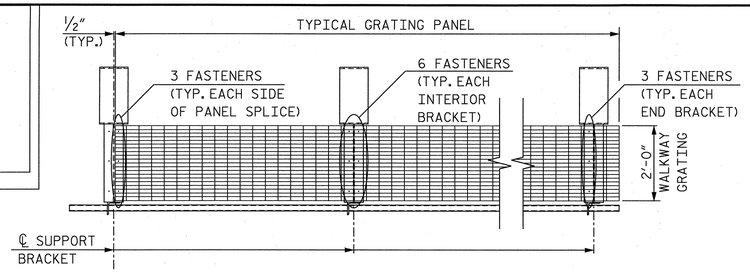

PARTIAL WALKWAY PLAN

NOTE:

GRATING PANELS SHALL BE ATTACHED TO THE SUPPORT BRACKETS USING STANDARD PANEL FASTENERS. THE 3/8" DIA HOLES PROVIDED IN THE W6x25 TOP FLANGE MAY BE USED FOR THIS PURPOSE. ATTACHMENT DETAILS SHALL BE SUBMITTED TO THE ENGINEER FOR APPROVAL.

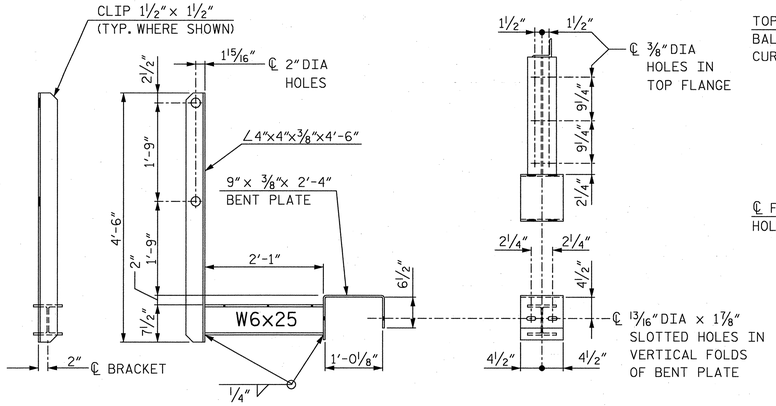

WALKWAY AND HANDRAIL SUPPORT BRACKET (SB1) DETAILS

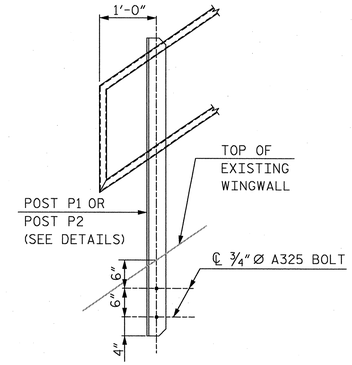

DETAIL FOR ATTACHING HANDRAIL POST TO EXISTING WINGWALLS

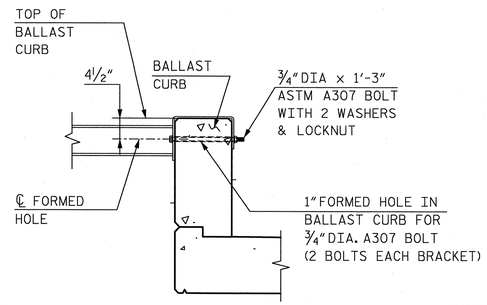

DETAIL OF ATTACHMENT AT BALLAST CURB

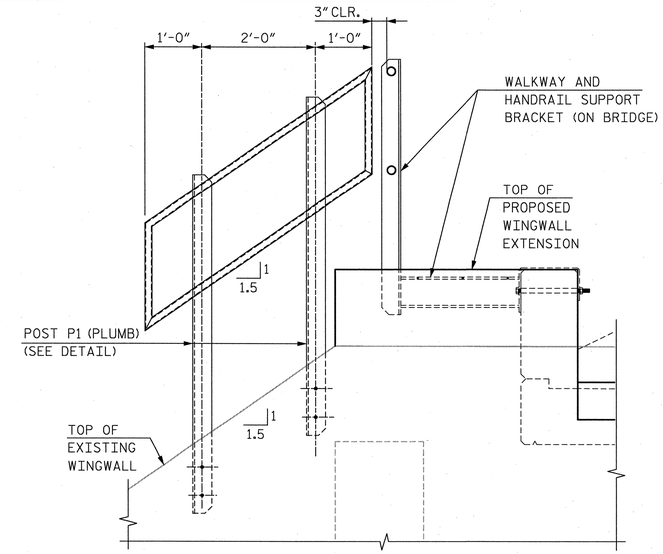

VIEW A-A

(ABUTMENT 1 SHOWN, ABUTMENT 2 SIMILAR)

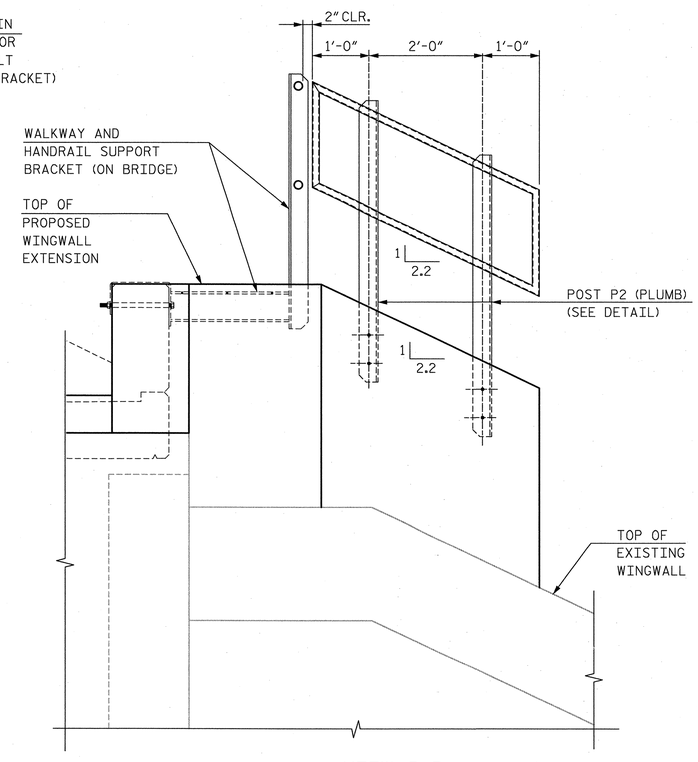

VIEW B-B

(ABUTMENT 1 SHOWN, ABUTMENT 2 SIMILAR)

MATERIAL REQUIREMENTS

CONTRACTOR SHALL SUBMIT WALKWAY AND HANDRAIL SHOP DRAWINGS FOR APPROVAL PRIOR TO FABRICATION AND INSTALLATION.

WALKWAY AND HANDRAIL SHALL MEET THE FOLLOWING MATERIAL REQUIREMENTS:
WALKWAY SUPPORT BRACKET - ASTM A36
HANDRAIL PIPE - ASTM A53 GRADE B
CARRIAGE BOLT - ASTM A307 GRADE A
ELASTIC LOCKNUT - MIL-N-25027
FLAT CIRCULAR WASHER - ASTM F436

WALKWAY GRATING SHALL BE 2'-0" WIDE PANELS WITH 1 3/4" BEARING BARS ON 1 3/16" CENTERS AND CROSS BARS ON 4" CENTERS (NAAMM W-19-4).

WALKWAY GRATING PANELS SHALL BE FULLY HOT-DIP GALVANIZED IN ACCORDANCE WITH ASTM A123 AND SHALL HAVE A SERRATED TOP SURFACE.

A325 BOLTS FOR ATTACHMENT OF POST P1 AND P2 SHALL BE INSTALLED USING AN ADHESIVE ANCHOR SYSTEM. ADHESIVE ANCHOR SYSTEM SHALL PROVIDE A WORKING LOAD OF 2,500 LBS. FIELD TESTING OF ADHESIVE ANCHORS IS NOT REQUIRED.

EXCEPT FOR THE GALVANIZED GRATING PANELS, WALKWAY ASSEMBLIES SHALL BE SHOP-PAINTED WITH AN APPROVED INORGANIC ZINC-ACRYLIC SYSTEM IN ACCORDANCE WITH PAINTING STRUCTURAL STEEL SPECIAL PROVISION. TOP COAT SHALL BE WHITE.

A307 AND A325 BOLTS, NUTS AND WASHERS SHALL BE GALVANIZED IN ACCORDANCE WITH ASTM B695.

PAYMENT FOR WINGWALL EXTENSION HANDRAILS SHALL BE INCLUDED IN UNIT COST FOR METAL RAIL AND WALKWAY.

METAL RAIL AND WALKWAY PAY LENGTH: (PHASE I) 107.0 LIN. FT.
METAL RAIL AND WALKWAY PAY LENGTH: (PHASE II) 107.0 LIN. FT.
METAL RAIL AND WALKWAY PAY LENGTH: (TOTAL) 214.0 LIN. FT

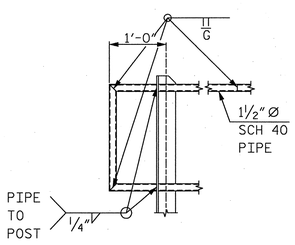

HANDRAIL DETAIL

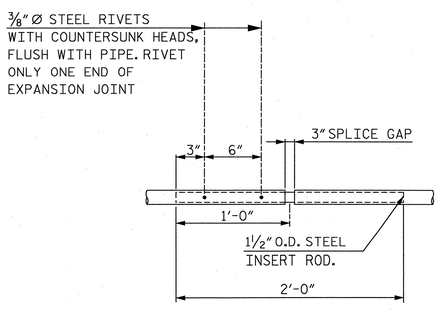

PIPE EXPANSION JOINT DETAIL

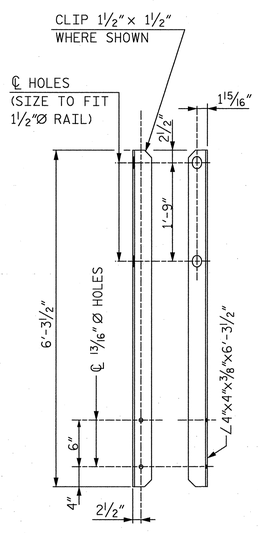

POST P1 DETAIL

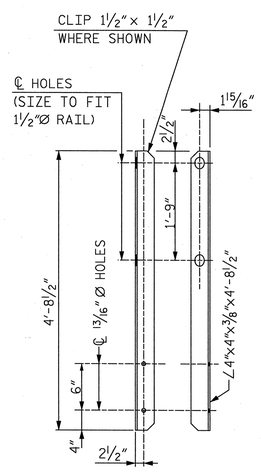

POST P2 DETAIL

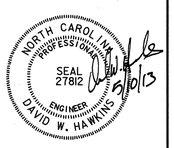

PROJECT NO. P-5208C

CABARRUS COUNTY

STATION: 10344+27.18 -M1-

MILE POST: 362.30

STATE OF NORTH CAROLINA
DEPARTMENT OF TRANSPORTATION
RALEIGH

SUPERSTRUCTURE

WALKWAY AND HANDRAIL DETAILS

HNTB

HNTB NORTH CAROLINA, P.C.
License No. C-1554
343 E. Six Forks Rd., Suite 200, Raleigh, N.C. 27609

DRAWN BY J. BAYNE DATE 3/13
CHECKED BY D. RAGAN DATE 3/13

DWG. NO. 16

REVISIONS						
NO.	BY:	DATE:	NO.	BY:	DATE:
1			3		
2			4		

SHEET NO. S-16

TOTAL SHEETS 21

0041DEL_P10a1

DGN

EPOXY-COATED REINFORCING STEEL

SPAN A

PHASE I	BAR	NO.	SIZE	TYPE	LENGTH	WEIGHT
SLAB	A1	301	5	STR.	14'-10"	4,657
	B1	63	4	STR.	30'-0"	1,263
	B2	21	4	STR.	22'-4"	313
					SUBTOTAL	6,233
PARAPET	B3	24	5	STR.	21'-6"	538
	B4	6	5	STR.	18'-7"	116
	S1	107	5	1	7'-0"	781
					SUBTOTAL	1,435
					PHASE I TOTAL	7,668

PHASE II	BAR	NO.	SIZE	TYPE	LENGTH	WEIGHT
SLAB	A1	301	5	STR.	14'-10"	4,657
	B1	63	4	STR.	30'-0"	1,263
	B2	21	4	STR.	22'-4"	313
					SUBTOTAL	6,233
PARAPET	B3	24	5	STR.	21'-6"	538
	B4	6	5	STR.	18'-7"	116
	S1	107	5	1	7'-0"	781
					SUBTOTAL	1,435
					PHASE II TOTAL	7,668

BAR TYPES

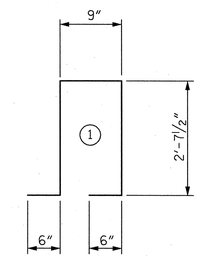

ALL BAR DIMENSIONS ARE OUT TO OUT

QUANTITY BREAKDOWN BY SPAN						
	EPOXY COATED REINFORCING STEEL (LBS.)		CLASS AA CONCRETE (CU. YDS.)			
			DECK SLAB		PARAPETS	
	PHASE I	PHASE II	PHASE I	PHASE II	PHASE I	PHASE II
SPAN "A"	7,668	7,668	51.0	51.0	7.4	7.4

TOTAL SUPERSTRUCTURE QUANTITIES			
	REINFORCED CONCRETE DECK SLAB	EPOXY COATED REINFORCING STEEL	CLASS AA CONCRETE
	SQ. FT.	LBS.	CU. YDS.
DECK SLAB	3,247	12,466	102.0
PARAPET	———	2,870	14.8
TOTALS	3,247	15,336	116.8

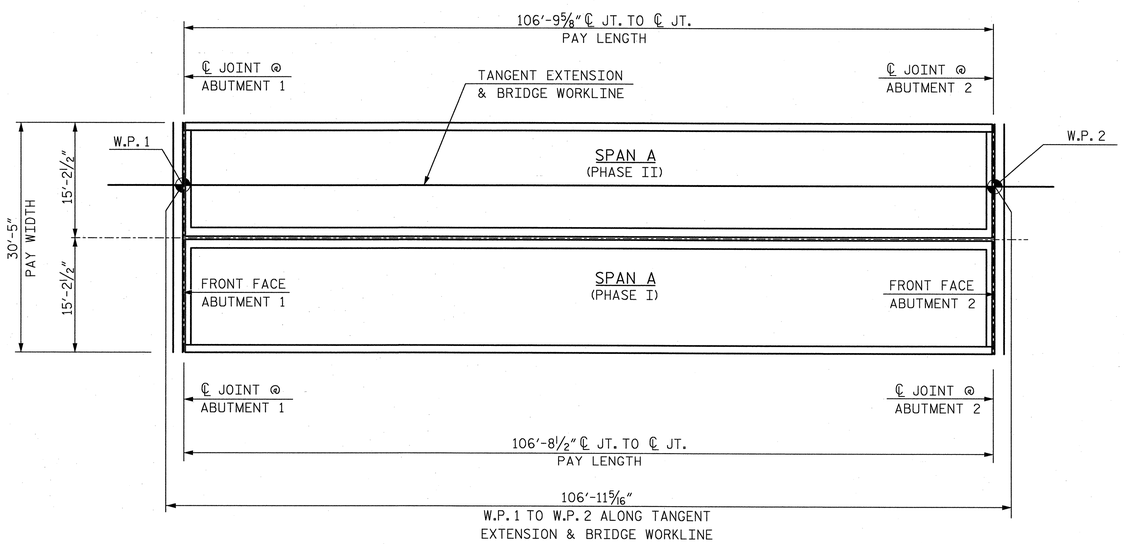

LAYOUT FOR COMPUTING AREA
OF REINFORCED CONCRETE DECK SLAB
(SQ. FEET PHASE I = 1,623)
(SQ. FEET PHASE II = 1,624)

PROJECT NO. P-5208C
CABARRUS COUNTY
STATION: 10344+27.18 -M1-
MILE POST: 362.30

NORTH CAROLINA PROFESSIONAL SEAL 12916 ENGINEER PAUL J. BARBER 5/9/13

NORTH CAROLINA PROFESSIONAL SEAL 27812 ENGINEER DAVID W. HAWKINS 5/9/13

STATE OF NORTH CAROLINA
DEPARTMENT OF TRANSPORTATION
RALEIGH

SUPERSTRUCTURE

BILL OF MATERIAL

HNTB

HNTB NORTH CAROLINA, P.C.
License No. C-1554
343 E. Six Forks Rd., Suite 200, Raleigh, N.C. 27609

DRAWN BY M. WRIGHT DATE 3/13
CHECKED BY D. RAGAN DATE 3/13
DWG. NO. 17

REVISIONS						
NO.	BY:	DATE:	NO.	BY:	DATE:	
1			3			
2			4			

SHEET NO. S-17
TOTAL SHEETS 21

0041DEL_P10a1

DGN

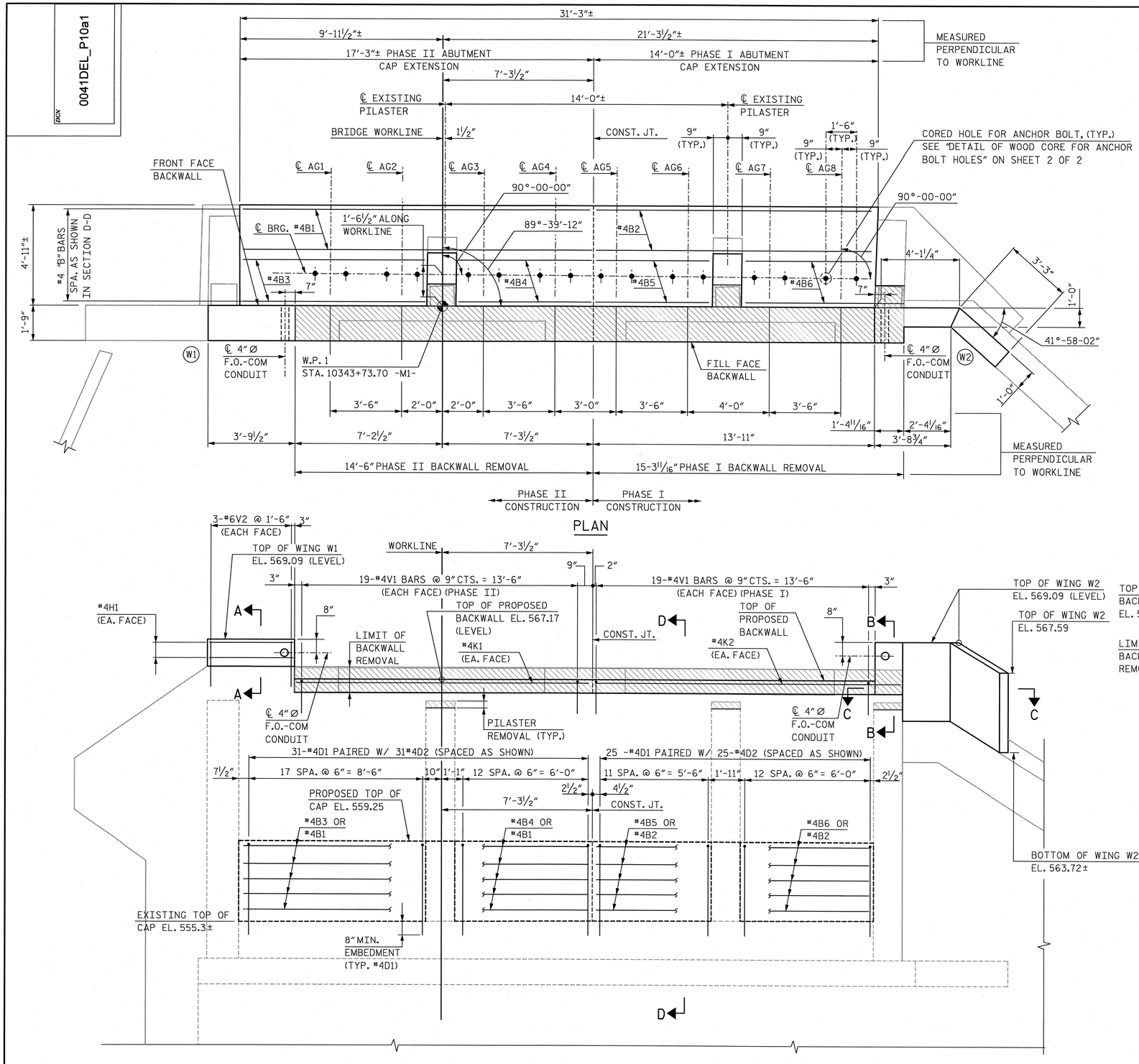

PLAN

ELEVATION

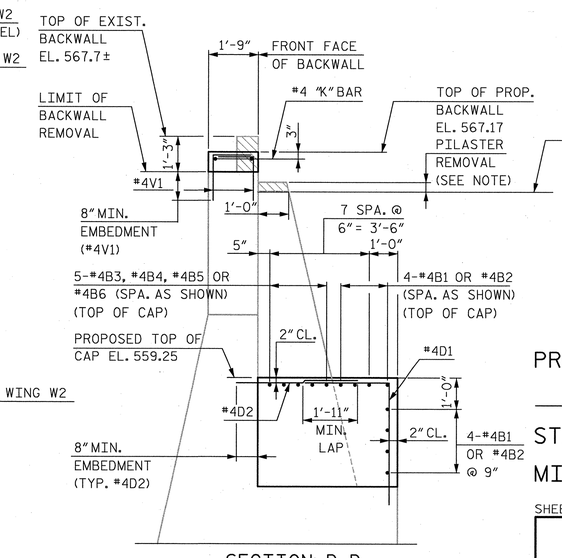

NOTE: REMOVE CONCRETE PILASTER TO LIMITS SHOWN AND REPAIR WITH EPOXY MORTAR.

SECTION D-D

NOTES:

FOR SECTION A-A, B-B, C-C AND WINGWALL (W2) DETAILS, SEE SHEET 2 OF 2.

CONDUIT TO BE 4" Ø IN ACCORDANCE WITH UNDERWRITERS LABORATORY SPECIFICATIONS.

THE CONTRACTOR SHALL USE AN ADHESIVE ANCHOR SYSTEM FOR THE #4 "V" BARS, #6 "V" BARS AND #4 "D" DOWELS IN THE BACKWALL AND WINGWALL EXTENSION. NO FIELD TESTING IS REQUIRED. THE YIELD LOAD OF THE #6 "V" BARS IS 26.4 KIPS. THE YIELD LOAD FOR THE #4 "V" BARS AND #4 "D" DOWELS IS 12.0 KIPS. ADHESIVE ANCHOR SYSTEM SHALL DEVELOP 125% OF THE YIELD LOAD OF THE BAR. FOR ADHESIVELY ANCHORED ANCHOR BOLTS OR DOWELS, SEE SECTION 420-13 OF THE STANDARD SPECIFICATIONS.

THE TOP SURFACE OF EXISTING WALLS AND CAP SHALL BE FREE OF DEBRIS AND UNSOUND CONCRETE PRIOR TO PLACEMENT OF WALL AND CAP EXTENSION.

THE TOP SURFACE OF EXISTING WALLS AND CAP SHALL BE ROUGHENED TO ¼" AMPLITUDE PRIOR TO PLACEMENT OF WALL AND CAP EXTENSION.

#4 "B" BARS AND #4 "D" DOWELS MAY BE SHIFTED SLIGHTLY TO CLEAR ANCHOR BOLTS.

FOR METAL HANDRAIL DETAILS, SEE "WALKWAY AND HANDRAIL PLAN" SHEET.

DENOTES EXISTING BACKWALL OR PILASTER REMOVAL.

REMOVE EXISTING PILASTER REINFORCING STEEL TO A MINIMUM DEPTH OF 3" BELOW PROPOSED PILASTER ELEVATION 565.75 PRIOR TO PLACEMENT OF EPOXY MORTAR.

FOR EPOXY MORTAR, SEE SPECIAL PROVISIONS.

FOR SEQUENCE OF CONSTRUCTION, SEE "SEQUENCE OF CONSTRUCTION" SHEETS.

PROJECT NO. P-5208C

CABARRUS COUNTY

STATION: 10344+27.18 -M1-

MILE POST: 362.30

SHEET 1 OF 2

STATE OF NORTH CAROLINA
DEPARTMENT OF TRANSPORTATION
RALEIGH

SUBSTRUCTURE

ABUTMENT 1

NORTH CAROLINA PROFESSIONAL SEAL 12916 ENGINEER PAUL J. BARBER 5/10/13

NORTH CAROLINA PROFESSIONAL SEAL 27812 ENGINEER DAVID W. HAWKINS 5/10/13

HNTB NORTH CAROLINA, P.C.
License No. C-1554
343 E. Six Forks Rd., Suite 200, Raleigh, N.C. 27609

DRAWN BY J. BAYNE DATE 3/13
CHECKED BY D. HAWKINS DATE 3/13

DWG. NO. 18

REVISIONS						
NO.	BY:	DATE:	NO.	BY:	DATE:	
1			3			
2			4			

SHEET NO. S-18

TOTAL SHEETS 21

0041DEL_P10a1

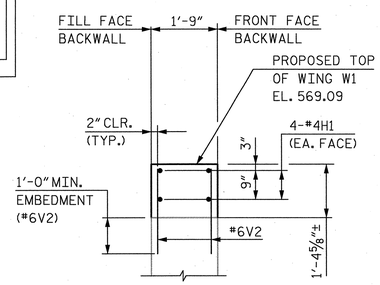

SECTION A-A

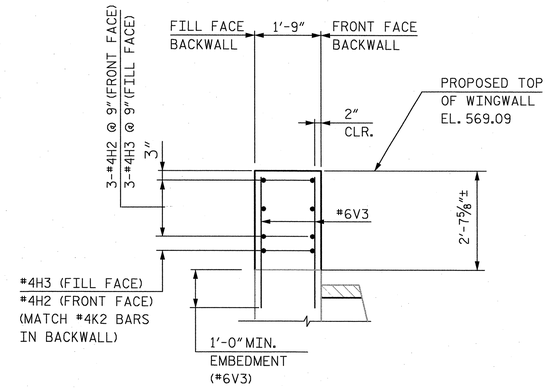

SECTION B-B

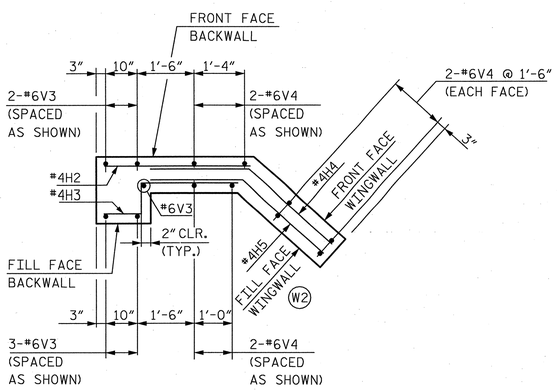

SECTION C-C

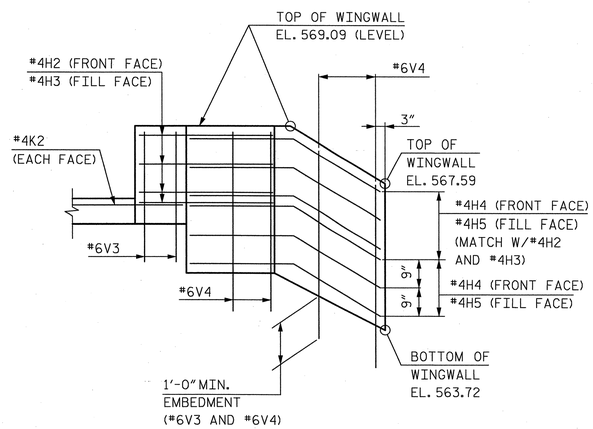

ELEVATION OF WING W2

BAR TYPES

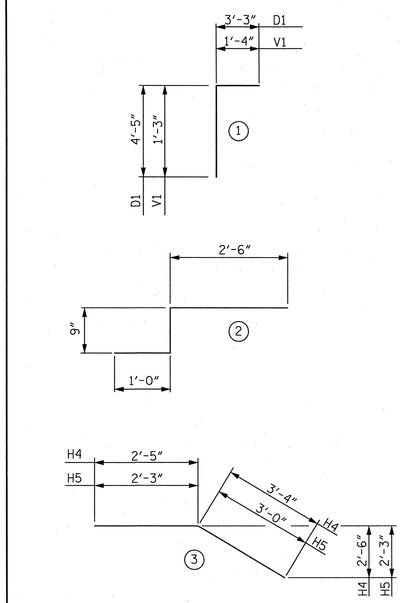

ALL BAR DIMENSIONS ARE OUT TO OUT

BILL OF REINFORCING

ABUTMENT 1 - PHASE I

BAR	NO.	SIZE	TYPE	LENGTH	WEIGHT
B2	8	4	STR.	13'-6"	72
B5	5	4	STR.	5'-5"	18
B6	5	4	STR.	5'-11"	20
D1	25	4	1	7'-8	128
D2	25	4	STR.	4'-1"	68
H2	4	4	STR.	3'-9"	10
H3	4	4	2	4'-3"	11
H4	6	4	3	5'-9"	23
H5	6	4	3	5'-3"	21
K2	2	4	STR.	14'-9"	20
V1	38	4	1	2'-7"	66
V3	5	6	STR.	3'-6"	26
V4	8	6	STR.	4'-8"	56

ABUTMENT 1 - PHASE II

BAR	NO.	SIZE	TYPE	LENGTH	WEIGHT
B1	8	4	STR.	16'-9"	90
B3	5	4	STR.	8'-10"	30
B4	5	4	STR.	6'-0"	20
D1	31	4	1	7'-8"	159
D2	31	4	STR.	4'-1"	85
H1	4	4	STR.	3'-5"	9
K1	2	4	STR.	14'-2"	19
V1	38	4	1	2'-7"	66
V2	6	6	STR.	2'-2"	20

QUANTITIES

ITEM		TOTAL
REINFORCING STEEL		
PHASE I	LBS	539
PHASE II	LBS	498
CLASS AA CONCRETE:		
PHASE I	C.Y.	11.1
PHASE II	C.Y.	12.8
EPOXY MORTAR REPAIRS		
PHASE I	S.F.	3.0
PHASE II	S.F.	1.5
EPOXY RESIN INJECTION		
PHASE I	L.F.	25.0

WOOD CORE 3½" Ø x 2½" Ø x 1'-4"
TO BE REMOVED AFTER CONCRETE
HAS TAKEN INITIAL SET.

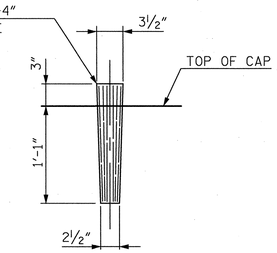

DETAIL OF WOOD CORE FOR
ANCHOR BOLT HOLES

CRACK REPAIR

USING EPOXY RESIN INJECTION, REPAIR CRACKS 5 MILS (125 µm) WIDE OR GREATER IN FACE OF EXISTING TURNBACK CONCRETE WINGWALL ADJACENT TO NORTH END OF ABUTMENT CAP. FOR EPOXY RESIN INJECTION, SEE SPECIAL PROVISIONS.

REPAIR ANY CRACK OR SPALL AREA UNSUITABLE FOR REPAIR BY INJECTION WITH EPOXY MORTAR.

MORTAR JOINT REPAIR

EXISTING MORTAR JOINTS WITH LOOSE OR MISSING MORTAR SHALL BE REPOINTED WITH GROUT. MORTAR JOINT SHALL BE FREE OF DEBRIS OR LOOSE MORTAR PRIOR TO GROUT PLACEMENT. FOR GROUT, SEE GROUT FOR STRUCTURES SPECIAL PROVISION.

PAYMENT FOR MORTAR JOINT REPAIR SHALL BE CONSIDERED INCIDENTAL TO THE SEVERAL PAY ITEMS FOR ABUTMENT 1.

PROJECT NO. P-5208C
CABARRUS COUNTY
STATION: 10344+27.18 -M1-
MILE POST: 362.30

SHEET 2 OF 2

STATE OF NORTH CAROLINA
DEPARTMENT OF TRANSPORTATION
RALEIGH

SUBSTRUCTURE

ABUTMENT 1

NORTH CAROLINA PROFESSIONAL SEAL 12916 ENGINEER PAUL J. BARBER 5/9/13

NORTH CAROLINA PROFESSIONAL SEAL 27812 ENGINEER DAVID W. HAWKINS 5/9/13

HNTB NORTH CAROLINA, P.C.
License No. C-1554
343 E. Six Forks Rd., Suite 200, Raleigh, N.C. 27609

DRAWN BY J. BAYNE DATE 3/13
CHECKED BY D. HAWKINS DATE 3/13
DWG. NO. 19

REVISIONS						
NO.	BY:	DATE:	NO.	BY:	DATE:	
1			3			
2			4			

SHEET NO. S-19
TOTAL SHEETS 21

0041DEL_P10a1

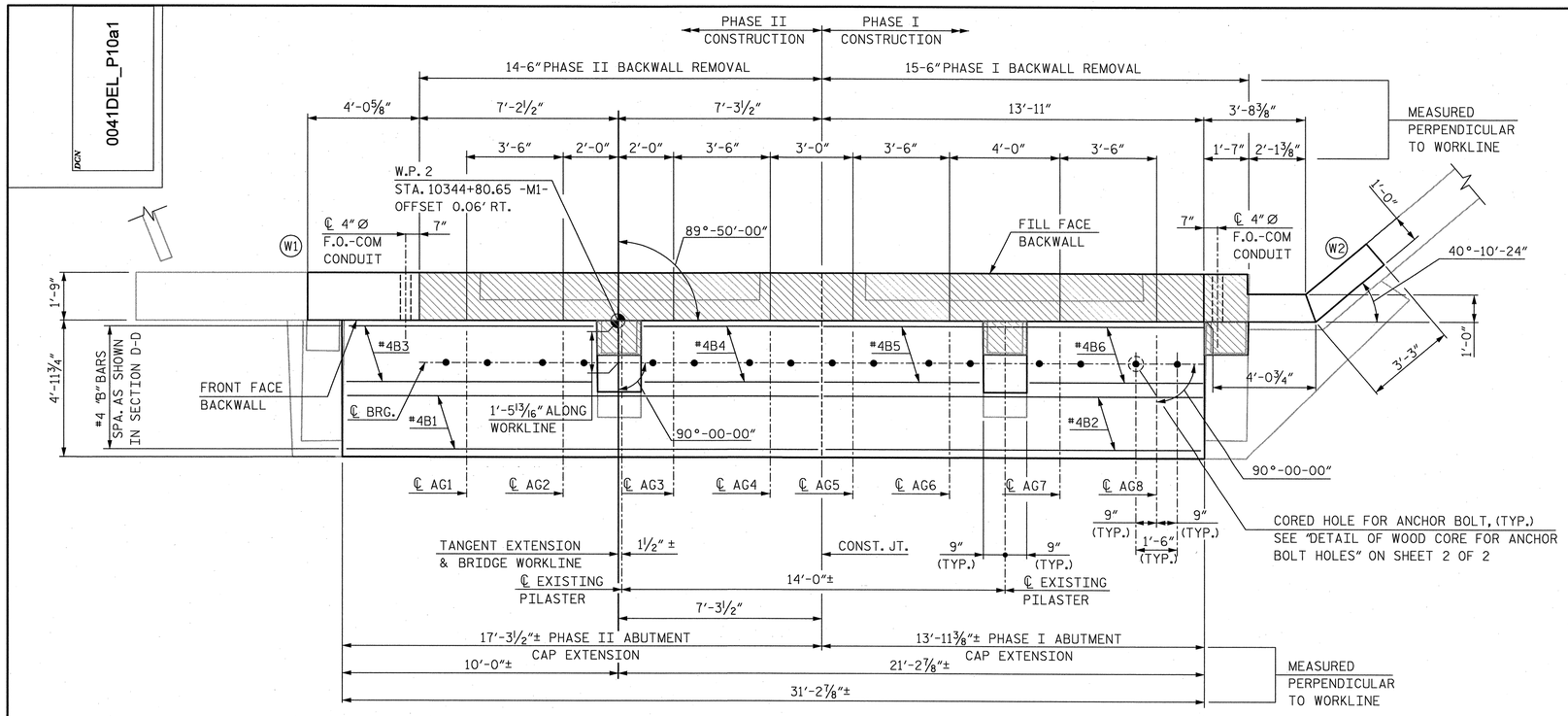

PLAN

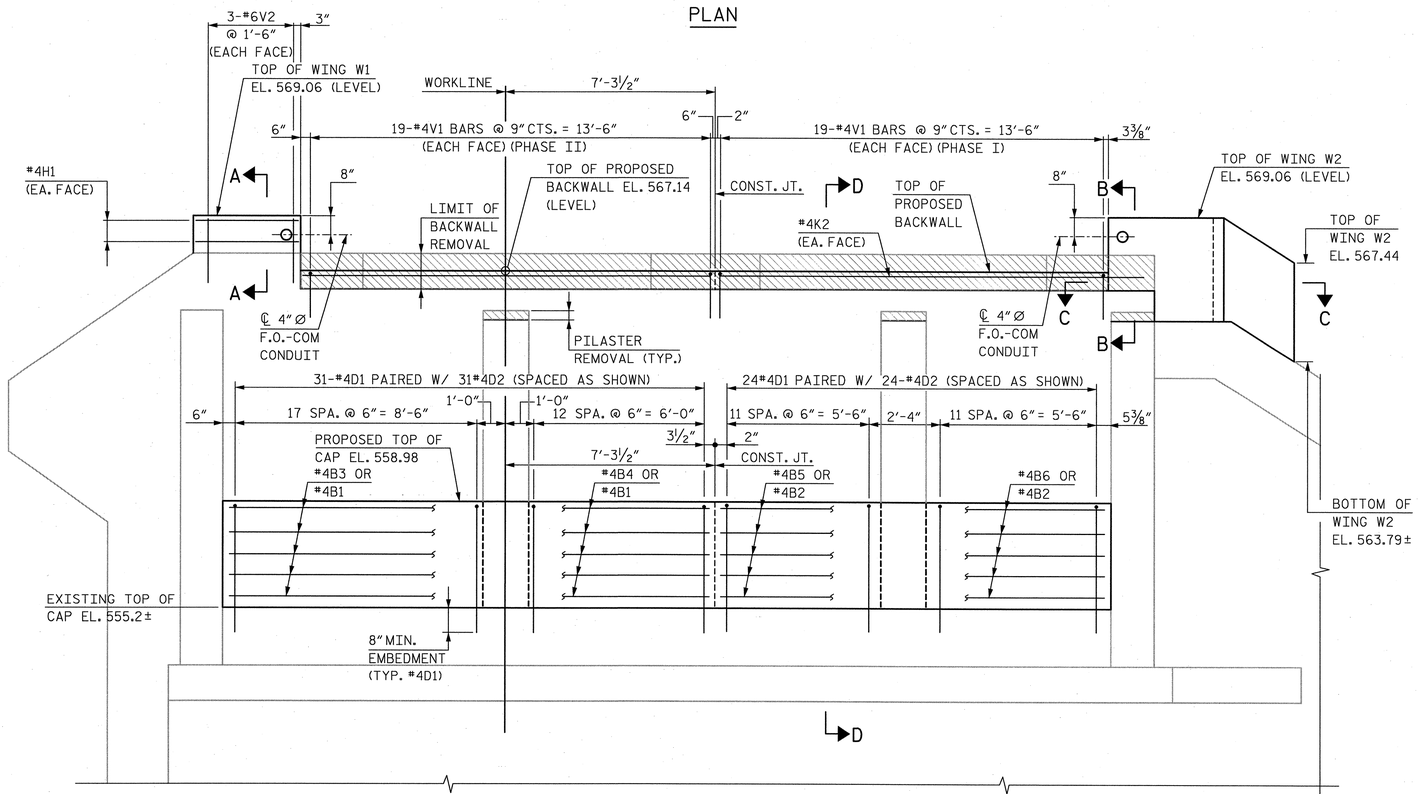

ELEVATION

NOTES:

FOR SECTION A-A, B-B, C-C AND WINGWALL (W2) DETAILS, SEE SHEET 2 OF 2.

CONDUIT TO BE 4" Ø IN ACCORDANCE WITH UNDERWRITERS LABORATORY SPECIFICATIONS.

THE CONTRACTOR SHALL USE AN ADHESIVE ANCHOR SYSTEM FOR THE #4 "V" BARS, #6 "V" BARS, AND #4 "D" DOWELS IN THE BACKWALL AND WINGWALL EXTENSION. NO FIELD TESTING IS REQUIRED. THE YIELD LOAD OF THE #6 "V" BARS IS 26.4 KIPS. THE YIELD LOAD FOR THE #4 "V" BARS AND #4 "D" DOWELS IS 12.0 KIPS. ADHESIVE ANCHOR SYSTEM SHALL DEVELOP 125% OF THE YIELD LOAD OF THE BAR. FOR ADHESIVELY ANCHORED ANCHOR BOLTS OR DOWELS, SEE SECTION 420-13 OF THE STANDARD SPECIFICATIONS.

THE TOP SURFACE OF EXISTING WALLS AND CAP SHALL BE FREE OF DEBRIS AND UNSOUND CONCRETE PRIOR TO PLACEMENT OF WALL AND CAP EXTENSION.

THE TOP SURFACE OF EXISTING WALLS AND CAP SHALL BE ROUGHENED TO 1/4" AMPLITUDE PRIOR TO PLACEMENT OF WALL AND CAP EXTENSION.

#4 "B" BARS AND #4 "D" DOWELS MAY BE SHIFTED SLIGHTLY TO CLEAR ANCHOR BOLTS.

FOR METAL HANDRAIL DETAILS, SEE "WALKWAY AND HANDRAIL PLAN" SHEET.

DENOTES EXISTING BACKWALL OR PILASTER REMOVAL.

REMOVE EXISTING PILASTER REINFORCING STEEL TO A MINIMUM DEPTH OF 3" BELOW PROPOSED PILASTER ELEVATION 565.72 PRIOR TO PLACEMENT OF EPOXY MORTAR.

FOR EPOXY MORTAR, SEE SPECIAL PROVISIONS.

FOR SEQUENCE OF CONSTRUCTION, SEE "SEQUENCE OF CONSTRUCTION" SHEETS.

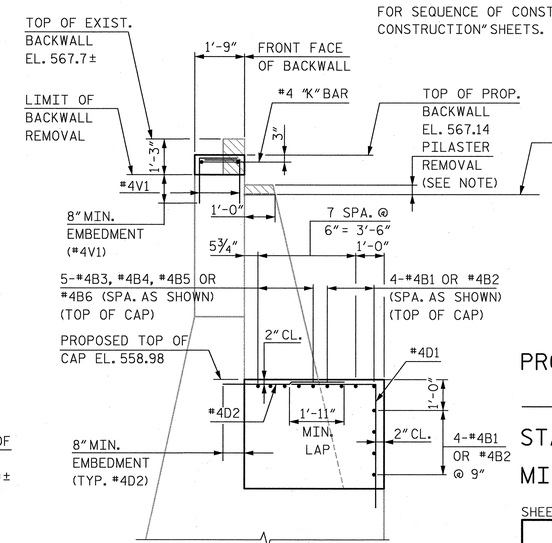

NOTE: REMOVE CONCRETE PILASTER TO LIMITS SHOWN AND REPAIR WITH EPOXY MORTAR.

SECTION D-D

PROJECT NO. P-5208C

CABARRUS COUNTY

STATION: 10344+27.18 -M1-

MILE POST: 362.30

SHEET 1 OF 2

STATE OF NORTH CAROLINA
DEPARTMENT OF TRANSPORTATION
RALEIGH

SUBSTRUCTURE

ABUTMENT 2

NORTH CAROLINA PROFESSIONAL SEAL 12916 ENGINEER PAUL J. BARBER 5/10/13

NORTH CAROLINA PROFESSIONAL SEAL 27812 ENGINEER DAVID W. HAWKINS 5/10/13

HNTB NORTH CAROLINA, P.C.
License No. C-1554
343 E. Six Forks Rd., Suite 200, Raleigh, N.C. 27609

DRAWN BY J. BAYNE DATE 3/13
CHECKED BY D. HAWKINS DATE 3/13

DWG. NO. 20

REVISIONS							
NO.	BY:	DATE:	NO.	BY:	DATE:		
1			3				
2			4				

SHEET NO. S-20

TOTAL SHEETS 21

0041DEL_P10a1

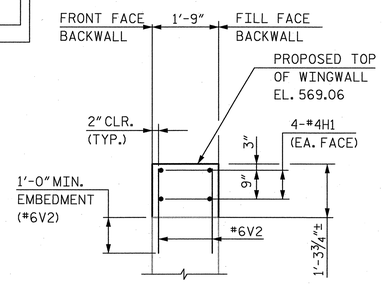

SECTION A-A

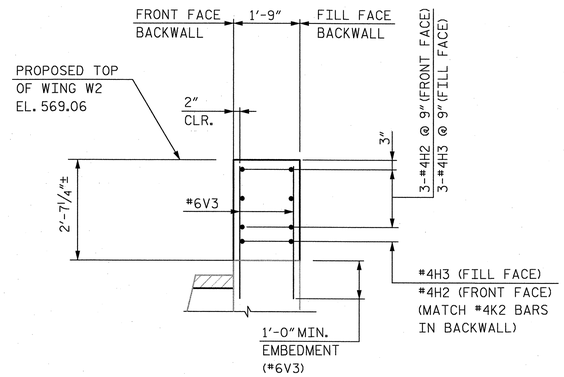

SECTION B-B

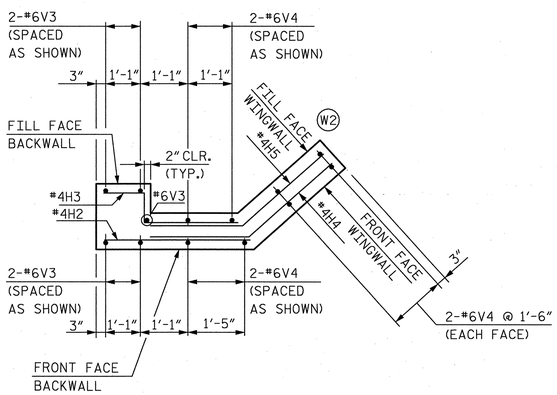

SECTION C-C

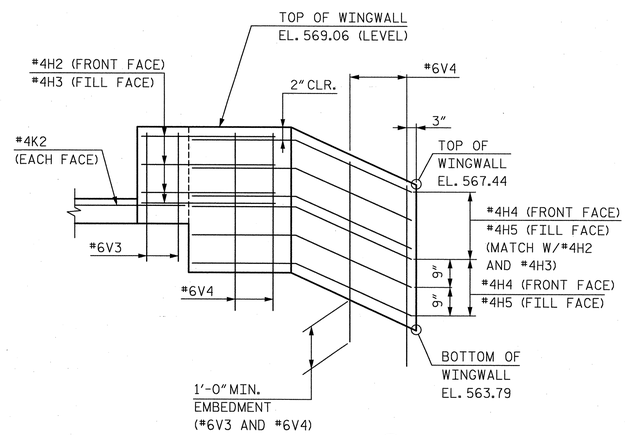

ELEVATION OF WING W2

BAR TYPES

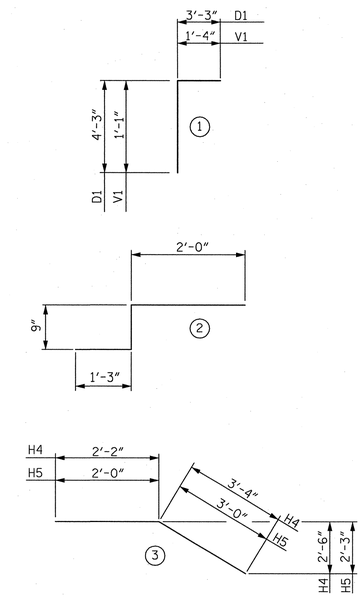

ALL BAR DIMENSIONS ARE OUT TO OUT

BILL OF REINFORCING

ABUTMENT 2 - PHASE I

BAR	NO.	SIZE	TYPE	LENGTH	WEIGHT
B2	8	4	STR.	13'-6"	72
B5	5	4	STR.	5'-6"	18
B6	5	4	STR.	6'-0"	20
D1	24	4	1	7'-6"	120
D2	24	4	STR.	4'-1"	65
H2	4	4	STR.	3'-8"	10
H3	4	4	2	4'-0"	11
H4	6	4	3	5'-6"	22
H5	6	4	3	5'-0"	20
K2	2	4	STR.	15'-0"	20
V1	38	4	1	2'-5"	61
V3	5	6	STR.	3'-4"	25
V4	8	6	STR.	4'-5"	53

ABUTMENT 2 - PHASE II

BAR	NO.	SIZE	TYPE	LENGTH	WEIGHT
B1	8	4	STR.	16'-11"	90
B3	5	4	STR.	8'-11"	30
B4	5	4	STR.	6'-1"	20
D1	31	4	1	7'-6"	155
D2	31	4	STR.	4'-1"	85
H1	4	4	STR.	3'-8"	10
K1	2	4	STR.	14'-2"	19
V1	38	4	1	2'-5"	61
V2	6	6	STR.	2'-1"	19

QUANTITIES

ITEM		TOTAL
REINFORCING STEEL		
PHASE I	LBS	517
PHASE II	LBS	489
CLASS AA CONCRETE:		
PHASE I	C.Y.	10.7
PHASE II	C.Y.	12.4
EPOXY MORTAR REPAIRS		
PHASE I	S.F.	3.0
PHASE II	S.F.	1.5
EPOXY RESIN INJECTION		
PHASE I	L.F.	25.0

WOOD CORE 3 1/2" Ø x 2 1/2" Ø x 1'-4" TO BE REMOVED AFTER CONCRETE HAS TAKEN INITIAL SET.

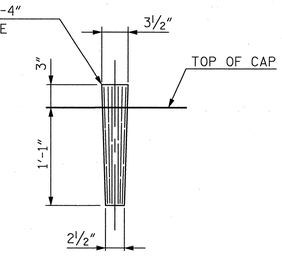

DETAIL OF WOOD CORE FOR ANCHOR BOLT HOLES

CRACK REPAIR

USING EPOXY RESIN INJECTION, REPAIR CRACKS 5 MILS (125 µm) WIDE OR GREATER IN FACE OF EXISTING TURNBACK CONCRETE WINGWALL ADJACENT TO NORTH END OF ABUTMENT CAP. FOR EPOXY RESIN INJECTION, SEE SPECIAL PROVISIONS.

REPAIR ANY CRACK OR SPALL AREA UNSUITABLE FOR REPAIR BY INJECTION WITH EPOXY MORTAR.

MORTAR JOINT REPAIR

EXISTING MORTAR JOINTS WITH LOOSE OR MISSING MORTAR SHALL BE REPOINTED WITH GROUT. MORTAR JOINT SHALL BE FREE OF DEBRIS OR LOOSE MORTAR PRIOR TO GROUT PLACEMENT. FOR GROUT, SEE GROUT FOR STRUCTURES SPECIAL PROVISION.

PAYMENT FOR MORTAR JOINT REPAIR SHALL BE CONSIDERED INCIDENTAL TO THE SEVERAL PAY ITEMS FOR ABUTMENT 2.

PROJECT NO. P-5208C

CABARRUS COUNTY

STATION: 10344+27.18 -M1-

MILE POST: 362.30

SHEET 2 OF 2

STATE OF NORTH CAROLINA
DEPARTMENT OF TRANSPORTATION
RALEIGH

SUBSTRUCTURE

ABUTMENT 2

NORTH CAROLINA PROFESSIONAL SEAL 12916 ENGINEER PAUL J. BARBER 3/13

NORTH CAROLINA PROFESSIONAL SEAL 27812 ENGINEER DAVID W. HAWKINS 3/13

HNTB NORTH CAROLINA, P.C.
License No. C-1554
343 E. Six Forks Rd., Suite 200, Raleigh, N.C. 27609

DRAWN BY J. BAYNE DATE 3/13
CHECKED BY D. HAWKINS DATE 3/13

DWG. NO. 21

REVISIONS						
NO.	BY:	DATE:	NO.	BY:	DATE:	
1			3			
2			4			

SHEET NO. S-21

TOTAL SHEETS 21

0041DEL_P10a1

DGN

TIP PROJECT: P-5208G

CONTRACT: C203206

12:25:20 PM
q:\10268940\400_Tech_Info_Disc_Files\450_NCDOTStdTechDesFiles\Structures\P-5208G_STR_TSH.dgn
bellstein

STATE OF NORTH CAROLINA
NCDOT RAIL DIVISION

STATE	STATE PROJECT REFERENCE NO.	SHEET NO.	TOTAL SHEETS
N.C.	P-5208G		

STATE PROJ. NO.	F.A. PROJ. NO.	DESCRIPTION
50000.1.STR11T1B		PE, UTIL PE
50000.1.STR12T3		PE, UTIL PE
43219.2.STR09P5208		RIGHT OF WAY
50000.3.STR01T4A	FRA-FR-HSR-0006-10-01-00	CONST, UTIL CONST

CABARRUS AND MECKLENBURG COUNTIES

LOCATION: NCRR/NS MAINLINE RAILROAD FROM MILLBROOK ROAD (SR 1182, MP 365.5) TO NORTH OF NEWELL-HICKORY GROVE ROAD (SR 2853), MP 370.7

TYPE OF WORK: GRADING, DRAINAGE, PAVING, STRUCTURES AND RETAINING WALLS

NAD 83/ NSRS 2007

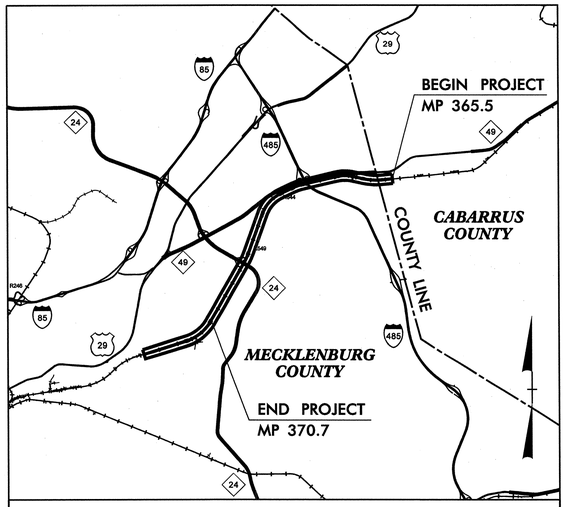

VICINITY MAP

STRUCTURES

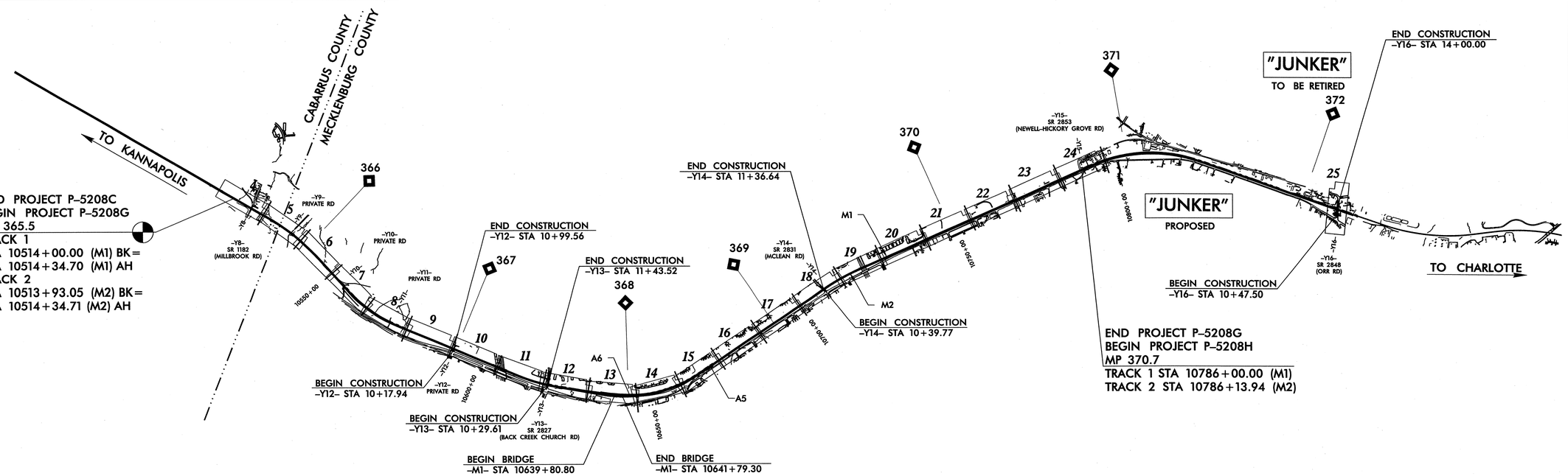

PROJECT LENGTH

LENGTH OF RAIL TIP PROJECT P-5208G	=	5.107 MILES
LENGTH OF STRUCTURE TIP PROJECT	=	0.038 MILES
TOTAL LENGTH OF TIP PROJECT	=	5.145 MILES

Prepared In the Office of:
AECOM
NC FIRM LICENSE No: F-0342
701 Corporate Center Drive, Suite 475
Raleigh, NC 27607
(919) 854-6200 - (919) 854-6259(FAX)

2012 STANDARD SPECIFICATIONS

RIGHT OF WAY DATE: SEPTEMBER 2012

LETTING DATE: JULY 16, 2013

RILEY BIRMINGHAM, PE
RAIL PROJECT ENGINEER
CLAUDETTE ROQUE, PE
ROADWAY PROJECT ENGINEER
MARK KAMPRATH, PE
HYDRAULICS PROJECT ENGINEER
MARK PEARSON, PE
STRUCTURE PROJECT ENGINEER
BRAD SMYTHE, PE
NCDOT PROJECT MANAGER

STRUCTURES ENGINEER

NORTH CAROLINA PROFESSIONAL SEAL ENGINEER L. MARK PEARSON 10656

2/16/13

SIGNATURE: P.E.

NC DEPARTMENT OF TRANSPORTATION
RAIL DIVISION
PLANNING AND DEVELOPMENT

F.A. PROJ. NO.: FRA-FR-HSR-0006-10-01-00

0041DEL_P10a1

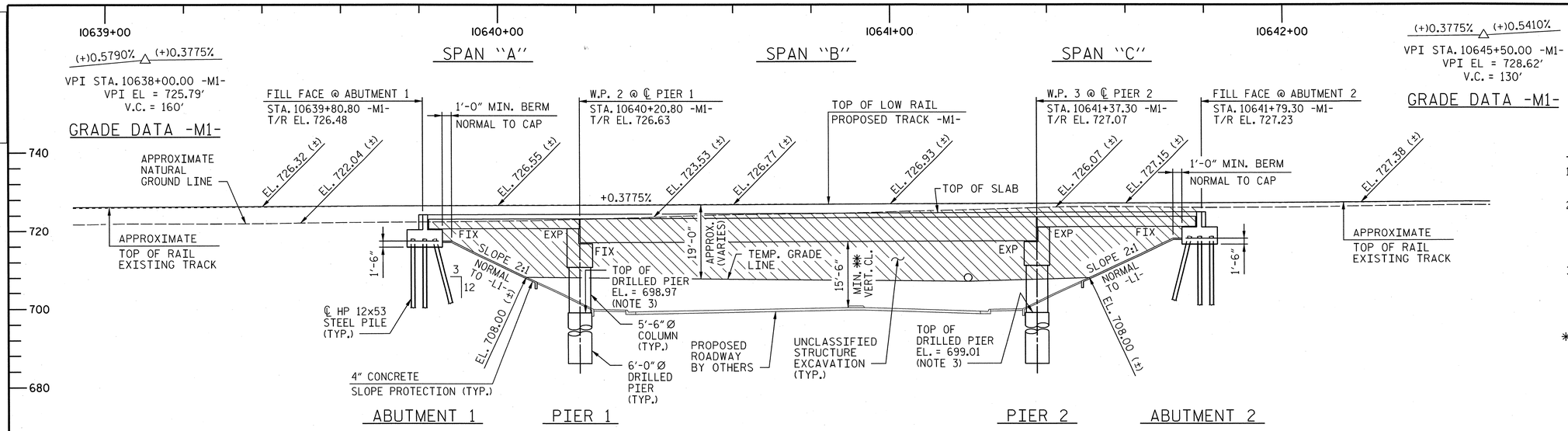

SECTION ALONG ℄ -M1-

(ABUTMENT AND PIER SECTIONS AT RIGHT ANGLES TO ABUTMENTS AND PIERS)

NOTES:

1. SEE "GENERAL DRAWING - LONG CHORD LAYOUT (SHEET 3 OF 4)" FOR GENERAL NOTES.
2. DESIGN SPEED:
   50 MPH FOR FREIGHT
   60 MPH FOR INTERMODAL
   80 MPH FOR PASSENGER
   90 MPH FOR FUTURE PASSENGER
3. THESE ELEVATIONS ARE AT THE CENTER DRILLED PIERS. FOR ELEVATIONS AT OTHER DRILLED PIERS, SEE SHEETS "SUBSTRUCTURE - PIER 1" AND "SUBSTRUCTURE - PIER 2".

✱✱ CONTROL POINT FOR ULTIMATE MINIMUM VERTICAL CLEARANCE OF 15'-6" OCCURS AT EXTERIOR GIRDER ON NORTH SIDE.

HORIZONTAL CURVE DATA

-M1-	-M2-
PI STA. 10651+06.30	PI STA. 10651+17.90
△ = 36°26'56.93" (LT.)	△ = 36°26'56.93" (LT.)
D = 1°30'00"	D = 1°30'00"
L = 2,429.9432'	L = 2,429.9432'
R = 3,819.8277'	R = 3,819.8277'

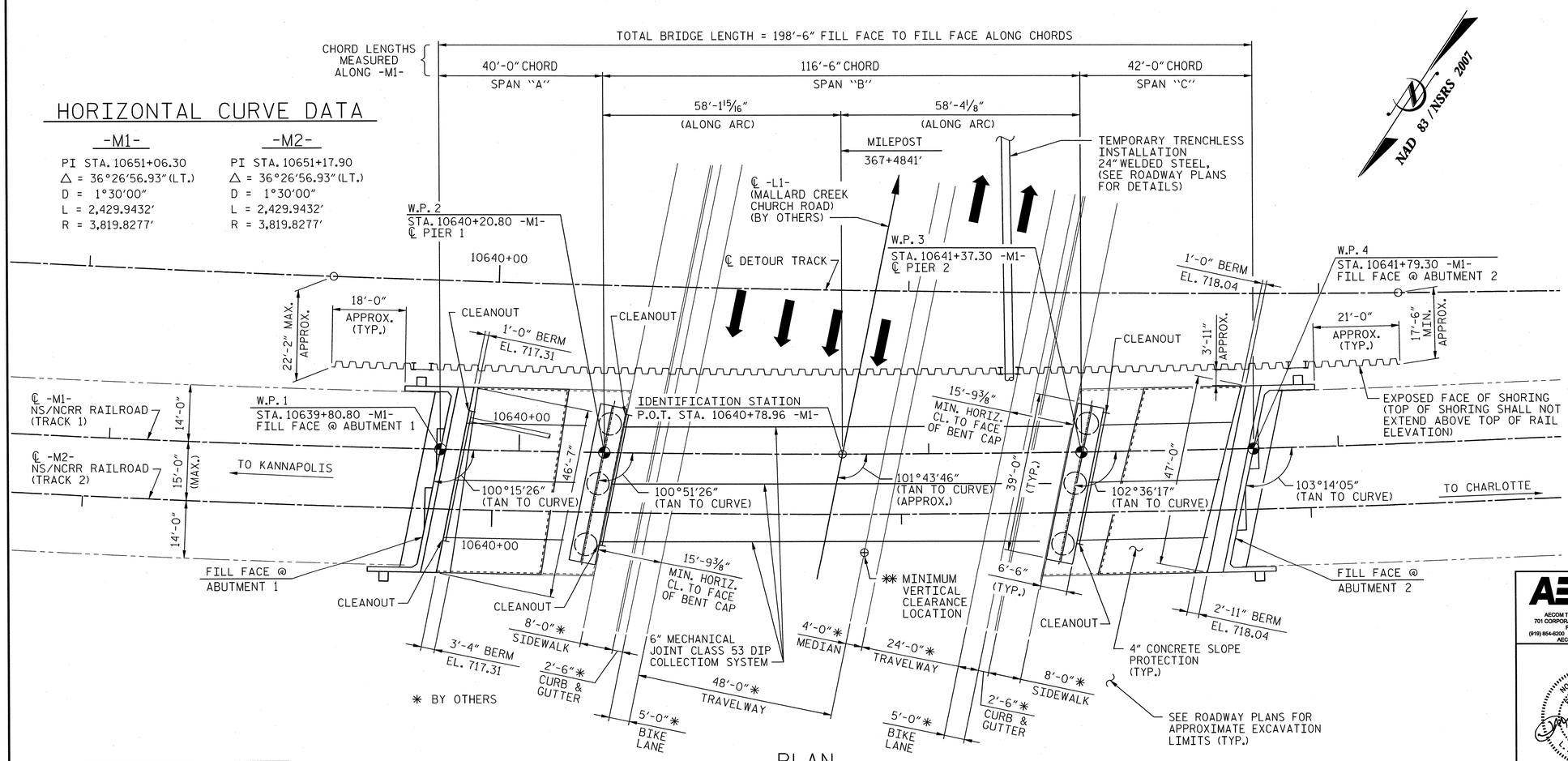

PLAN

(ABUTMENT PILES NOT SHOWN FOR CLARITY)

MILEPOST 367+4841'

PROJECT NO. P-5208G

MECKLENBURG **COUNTY**

STATION: P.O.T. 10640+78.96 -M1-

SHEET 1 OF 5 BRIDGE NO. 367.90

AECOM
AECOM TECHNICAL SERVICES, INC.
701 CORPORATE CENTER DRIVE, SUITE 475
RALEIGH, NC 27607
(919) 854-6200 www.aecom.com
AECOM License No. F-0342

NORTH CAROLINA PROFESSIONAL SEAL 10656 ENGINEER L. MARK PEARSON 1/24/13

STATE OF NORTH CAROLINA
DEPARTMENT OF TRANSPORTATION
RALEIGH

GENERAL DRAWING
FOR NS/NCRR RAILROAD
BRIDGE OVER MALLARD
CREEK CHURCH ROAD

REVISIONS						SHEET NO.
NO.	BY:	DATE:	NO.	BY:	DATE:	S-01
1			3			TOTAL SHEETS
2			4			58

DRAWN BY : MTB DATE : 01/13
CHECKED BY : JL DATE : 01/13

DATE 4/23/2013
TIME: 2:27:59 PM

USER: Bellsjal
DGN: dx\50286\9404\400_Tech_Info_Disc_Files\450_NCDOT Std Text\DesFiles\Structures\V12\L-PlanElev.dgn

0041DEL_P10a1

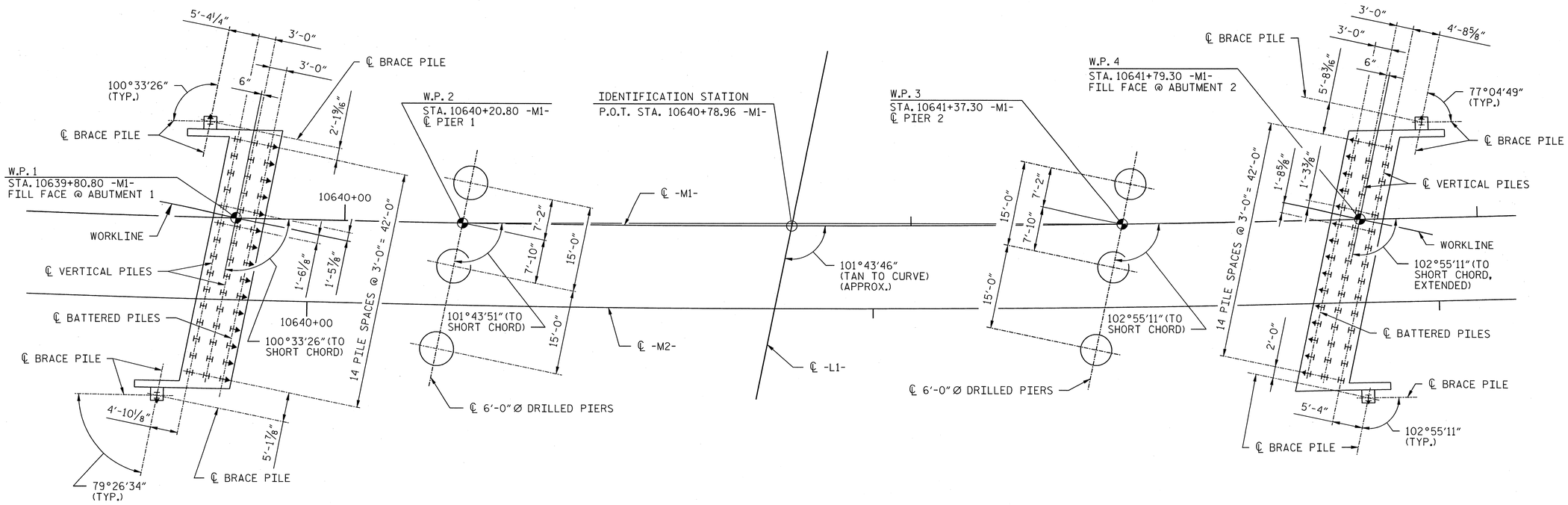

ABUTMENT 1 PIER 1 PIER 2 ABUTMENT 2

FOUNDATION LAYOUT

FOUNDATION NOTES:

1. FOUNDATION DESIGN WAS PERFORMED USING ASD AND AREMA METHODS.
2. FOR DRILLED PIERS, SEE SECTION 411 OF THE STANDARD SPECIFICATIONS.
3. DRILLED PIERS AT PIER NO. 1 AND PIER NO. 2 ARE DESIGNED FOR BOTH SKIN FRICTION AND END BEARING. CHECK FIELD CONDITIONS FOR THE REQUIRED END BEARING CAPACITY OF 100 TSF.
4. DRILLED PIERS AT PIER NO. 1 ARE DESIGNED FOR AN APPLIED LOAD OF 1,495, 1,980, AND 1,710 (LEFT, CENTER, RIGHT) TONS EACH AT THE TOP OF THE COLUMN.
5. DRILLED PIERS AT PIER NO. 2 ARE DESIGNED FOR AN APPLIED LOAD OF 1,480, 2,060, AND 1,705 (LEFT, CENTER, RIGHT) TONS EACH AT THE TOP OF THE COLUMN.
6. INSTALL DRILLED PIERS AT PIER NO. 1 THAT EXTEND TO AN ELEVATION NO HIGHER THAN 663.0, 657.5, AND 662.5 (LEFT, CENTER, RIGHT) FT AND SATISFY THE REQUIRED END BEARING CAPACITY.
7. INSTALL DRILLED PIERS AT PIER NO. 2 THAT EXTEND TO AN ELEVATION NO HIGHER THAN 666.0, 660.0, AND 677.0 (LEFT, CENTER, RIGHT) FT AND SATISFY THE REQUIRED END BEARING CAPACITY.
8. PERMANENT STEEL CASING IS NOT REQUIRED FOR DRILLED PIERS AT PIERS NO. 1 AND NO. 2.
9. TEMPORARY CASING WILL BE REQUIRED TO CONSTRUCT THE COLUMNS AT PIERS NO. 1 AND NO. 2. THESE CASINGS SHALL BE SIZED TO ACCOMMODATE THE COLUMN FORMS. SEE DRILLED PIER DETAILS SHEET.
10. SID INSPECTIONS SHALL BE REQUIRED FOR DRILLED PIERS. THE ENGINEER WILL DETERMINE THE NEED FOR SID INSPECTIONS. FOR SID INSPECTIONS, SEE SECTION 411 OF THE STANDARD SPECIFICATIONS.
11. DRILLED PIER CONCRETE SHALL BE USED FOR ALL DRILLED PIERS.
12. DO NOT USE SLURRY CONSTRUCTION FOR DRILLED PIERS AT PIER NO. 1 AND PIER NO. 2.
13. CSL TUBES AND TESTING ARE REQUIRED FOR DRILLED PIERS AT PIER NO. 1 AND PIER NO. 2. FOR CROSSHOLE SONIC LOGGING, SEE SECTION 411 OF THE STANDARD SPECIFICATIONS.
14. PAYMENT FOR DRILLED PIERS SHALL BE FROM TOP OF SHAFT TO TIP OF SHAFT AT PIERS NO. 1 AND NO. 2.
15. DRIVE PILES AT ABUTMENT NO. 1 AND ABUTMENT NO. 2 TO A REQUIRED BEARING CAPACITY OF 180 TONS PER PILE. THE REQUIRED BEARING CAPACITY IS EQUAL TO THE ALLOWABLE BEARING CAPACITY WITH A MINIMUM FACTOR OF SAFETY OF TWO.
16. THE ALLOWABLE BEARING CAPACITY FOR PILES AT ABUTMENT NO. 1 AND ABUTMENT NO. 2 IS 90 TONS PER PILE.
17. FOR PILES, SEE SECTION 450 OF THE STANDARD SPECIFICATIONS.
18. FOR PILES, THE MINIMUM DRIVING RESISTANCE IS EQUAL TO THE ALLOWABLE BEARING CAPACITY NOTED IN THE PLANS PLUS ANY ADDITIONAL RESISTANCE FOR DOWNDRAG OR SCOUR, IF APPLICABLE, MULTIPLIED BY A FACTOR OF SAFETY.
19. IT HAS BEEN ESTIMATED THAT A HAMMER WITH AN EQUIVALENT RATED ENERGY IN THE RANGE OF 27,093 TO 66,198 FT-LBS PER BLOW WILL BE REQUIRED TO DRIVE PILES AT ABUTMENT NO. 1 AND ABUTMENT NO. 2. THIS ESTIMATED ENERGY RANGE DOES NOT RELEASE THE CONTRACTOR FROM ARTICLE 450-5 OF THE STANDARD SPECIFICATIONS.
20. ALL PILES ARE STEEL HP 12x53.
21. ▼ INDICATES PILE TO BE BATTERED 3:12 IN DIRECTION OF ARROW.
22. ALL DIMENSIONS TO BATTERED PILES ARE AT BOTTOM OF CAP ELEVATION.
23. ALL DIMENSIONS ARE PARALLEL OR NORMAL TO FILL FACE ABUTMENTS, ℄ PIERS, OR WORKLINE.
24. FOR FOUNDATION ELEVATIONS AND DETAILS, SEE PIER AND ABUTMENT DETAILS.

DRAWN BY : JWH DATE : 01/13
CHECKED BY : JL DATE : 01/13

MILEPOST 367+4841'

PROJECT NO. P-5208G
MECKLENBURG COUNTY
STATION: P.O.T. 10640+78.96 -M1-

SHEET 2 OF 5

AECOM
AECOM TECHNICAL SERVICES, INC.
701 CORPORATE CENTER DRIVE, SUITE 475
RALEIGH, NC 27607
(919) 854-6200 www.aecom.com
AECOM License No. F-0342

NORTH CAROLINA PROFESSIONAL ENGINEER SEAL 10656 L. MARK PEARSON 5/15/13

STATE OF NORTH CAROLINA
DEPARTMENT OF TRANSPORTATION
RALEIGH

GENERAL DRAWING
FOUNDATION LAYOUT

REVISIONS							SHEET NO.
NO.	BY:	DATE:	NO.	BY:	DATE:		S-02
1			3				TOTAL SHEETS
2			4				58

DATE: 5/15/2013
TIME: 8:06:03 AM

USER: bellisiem
DGN: G:\60258940\400_Tech_Info_Disc_Files\450_NCDOT\Staff tech\Bel Files\Structures\H20_Found Layout.dgn

0041DEL_P10a1

DGN

DATE: 4/15/2013
TIME: 12:33:55 PM

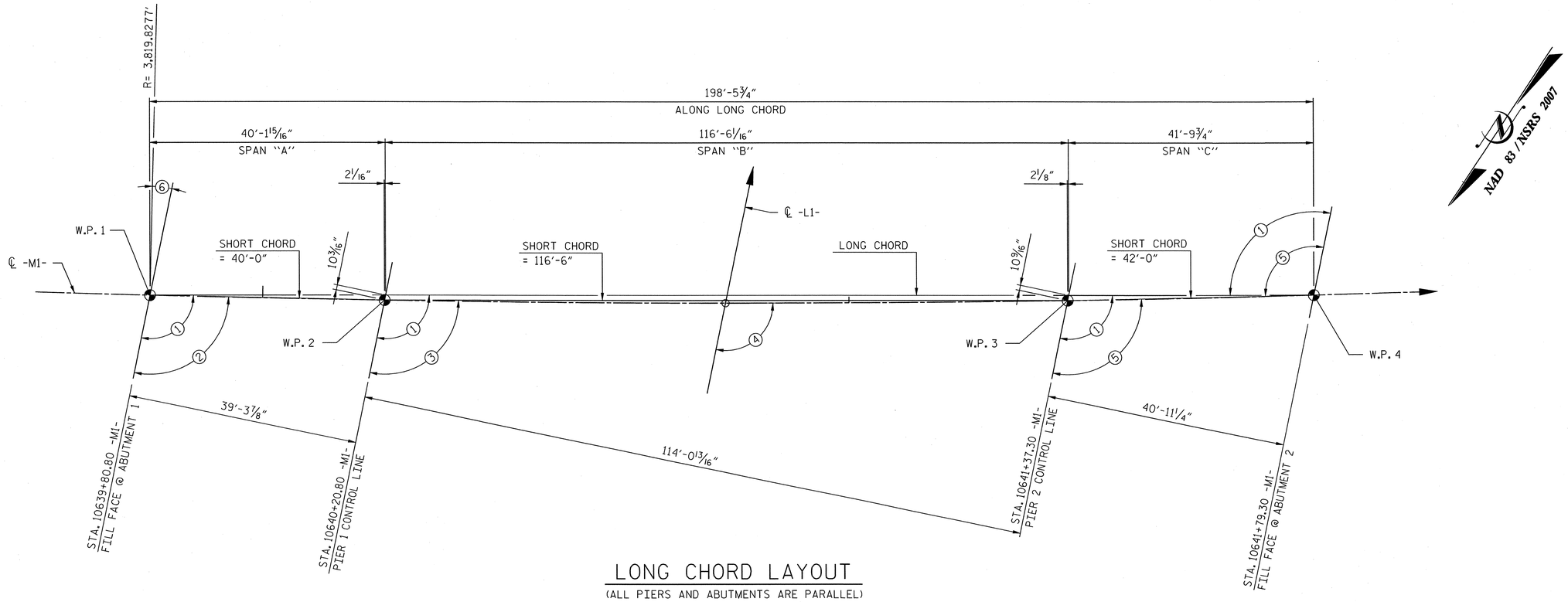

LONG CHORD LAYOUT

(ALL PIERS AND ABUTMENTS ARE PARALLEL)

NAD 83 / NSRS 2007

TABLE OF ANGLES	
No.	ANGLE
1	101°44'45"
2	100°33'26"
3	101°43'51"
4	101°43'46" (TAN. TO CURVE)
5	102°55'11"
6	10°15'26"

GENERAL NOTES:

1. ASSUMED LIVE LOAD: AREMA E80 OR ALTERNATE LIVE LOAD.
2. FOR OTHER DESIGN DATA AND GENERAL NOTES, SEE SHEET SN.
3. FOR EROSION CONTROL MEASURES, SEE EROSION CONTROL PLANS.
4. THIS BRIDGE HAS BEEN DESIGNED IN ACCORDANCE WITH THE REQUIREMENTS OF THE CURRENT EDITION OF AREMA'S "MANUAL FOR RAILWAY ENGINEERING, VOL. 2, STRUCTURES", AND NORFOLK SOUTHERN CORPORATION'S "GUIDELINES FOR DESIGN OF HIGHWAY SEPARATION STRUCTURES UNDER RAILROAD (UNDERPASS GRADE SEPARATION)".
5. THIS BRIDGE HAS BEEN DESIGNED IN ACCORDANCE WITH THE REQUIREMENTS OF THE AASHTO STANDARD SPECIFICATIONS FOR SEISMIC DESIGN OF HIGHWAY BRIDGES FOR SEISMIC PERFORMANCE CATEGORY A.
6. REINFORCING STEEL SHALL BE ASTM A615, GRADE 60. ALL DIMENSIONS RELATING TO BAR SPACING ARE TO BAR CENTERS UNLESS NOTED. FABRICATION TO BE IN ACCORDANCE WITH THE "MANUAL OF STANDARD PRACTICE", ACI 315-80. ALL REINFORCING IN THE CONCRETE DECK SLAB AND PARAPETS SHALL BE EPOXY COATED.
7. EXPANSION JOINT MATERIAL SHALL BE EITHER RUBBER OR CORK CONFORMING WITH AASHTO SPECIFICATIONS M-153-84 EXCEPT AS SHOWN ON THE PLANS OR IN THE SPECIAL PROVISIONS. CELLULAR AND BULB TYPE WATERSTOPS AND RUBBER JOINT COMPOUNDS SHALL BE SHOWN ON THE PLANS AND IN THE SPECIAL PROVISIONS.
8. STRUCTURE DRAINAGE SYSTEM: METAL DRAINS BEHIND ABUTMENTS AND IN BALLAST TROUGH OF BRIDGE, INCLUDING DUCTILE IRON PIPE COLLECTOR SYSTEM, SHALL BE AS SHOWN ON THE PLANS AND OUTLINED IN THE SPECIAL PROVISIONS. DETAILS OF THE DRAINAGE SYSTEM SHALL BE SUBMITTED TO THE CHIEF ENGINEER, BRIDGES AND STRUCTURES, NORFOLK SOUTHERN CORPORATION, ATLANTA, GA FOR APPROVAL.
9. DAMPPROOFING: PIER COLUMNS UP TO GROUND LINE, BACK OF BACKWALLS AND ABUTMENT SEATS, AND BACK OF WINGS SHALL BE DAMPPROOFED WITH METHOD "B" DAMPPROOFING.
10. WATERPROOFING: FOR WATERPROOFING, SEE SPECIAL PROVISIONS. THE BRIDGE DECK AND ALL CONSTRUCTION JOINTS WHICH WILL BE COVERED BY FILL SHALL BE WATERPROOFED WITH A MEMBRANE WATERPROOFING SYSTEM.
11. THE CONTRACTOR SHALL PROVIDE INDEPENDENT ASSURANCE SAMPLES OF REINFORCING STEEL AS FOLLOWS: FOR PROJECTS REQUIRING UP TO 400 TONS OF REINFORCING STEEL, ONE 30 INCH SAMPLE OF EACH SIZE BAR USED, AND FOR PROJECTS REQUIRING OVER 400 TONS OF REINFORCING STEEL, TWO 30 INCH SAMPLES OF EACH SIZE BAR USED. THE BARS FROM WHICH THE SAMPLES ARE TAKEN MUST THEN BE SPLICED WITH REPLACEMENT BARS OF THE SIZE AND LENGTH OF THE SAMPLE, PLUS A MINIMUM LAP SPLICE OF THIRTY BAR DIAMETERS. PAYMENT FOR THE SAMPLES OF REINFORCING STEEL SHALL BE CONSIDERED INCIDENTAL TO VARIOUS PAY ITEMS.
12. ALL MATERIALS AND WORKMANSHIP SHALL BE IN ACCORDANCE WITH "STANDARD SPECIFICATIONS FOR ROADS AND STRUCTURES", JANUARY 2012, NORTH CAROLINA DEPARTMENT OF TRANSPORTATION (HEREIN CALLED STANDARD SPECIFICATIONS), EXCEPT AS NOTED HEREIN, ELSEWHERE ON PLANS, OR IN THE SPECIAL PROVISIONS (STRUCTURAL STEEL IN ACCORDANCE WITH CURRENT AREMA SPECIFICATIONS).
13. ALL CONCRETE USED IN SUPERSTRUCTURES AND SUBSTRUCTURES SHALL BE 4,500 PSI CLASS AA CONCRETE WITH NO. 57 OR 67 COARSE AGGREGATE AND SHALL BE AIR-ENTRAINED. MINIMUM CEMENT PER CUBIC YARD OF CONCRETE SHALL BE 6.5 BAGS. NO SUBSTITUTION OF FLYASH, BLAST FURNACE SLAG OR OTHER MATERIAL WILL BE PERMITTED IN MEETING THIS MINIMUM CEMENT REQUIREMENT. CHAMFER ALL EXPOSED EDGES AND CORNERS ¾" EXCEPT AS NOTED. THE USE OF GROUND GRANULATED BLAST FURNACE SLAG IS NOT PERMITTED IN THIS STRUCTURE.
14. CONTROL OF WORK: ALL WORK INVOLVED IN THE CONSTRUCTION OF THE RAILWAY STRUCTURE SHALL BE PERFORMED SATISFACTORY TO THE ENGINEER AND/OR NORFOLK SOUTHERN RAILWAY COMPANY. ALL METHODS OF HANDLING THE WORK AFFECTING THE SAFETY OF RAIL OPERATIONS MUST BE APPROVED BY THE RAILWAY COMPANY BEFORE PROCEEDING WITH THAT PORTION OF THE WORK. RAIL TRAFFIC SHALL, AT ALL TIMES, BE MAINTAINED AND PROTECTED. THE CONTRACTOR SHALL NOT AT ANY TIME DELAY OR INTERFERE WITH RAIL OPERATIONS.
15. NEEDLE BEAMS WILL NOT BE ALLOWED UNLESS OTHERWISE CALLED FOR ON THE PLANS OR APPROVED BY THE ENGINEER.
16. FOR METAL RAIL (ALUMINUM), SEE SPECIAL PROVISIONS.
17. FOR SELF-LUBRICATING EXPANSION BEARING ASSEMBLIES, SEE SPECIAL PROVISIONS.
18. FOR CONDUIT IN PARAPETS, SEE SPECIAL PROVISIONS.
19. FOR PORTLAND CEMENT, SEE SPECIAL PROVISIONS.
20. FOR FINE AND COARSE AGGREGATE, SEE SPECIAL PROVISIONS.
21. SEE "STRUCTURAL STEEL DETAILS" SHEET FOR STRUCTURAL STEEL NOTES.
22. FOR BACKFILL BEHIND ABUTMENTS AND OTHER BACKFILL AROUND THE STRUCTURE, SEE SPECIAL PROVISION "BACKFILLING AROUND STRUCTURES".
23. FOR PAINTING STRUCTURAL STEEL, SEE SPECIAL PROVISIONS.
24. FOR WATERSTOPS, SEE SPECIAL PROVISIONS.
25. FOR ELASTOMERIC FLASHING, SEE SPECIAL PROVISIONS.
26. FOR RUBBER JOINT COMPOUNDS, SEE SPECIAL PROVISIONS.
27. FOR STRUCTURE DRAINAGE SYSTEM, SEE SPECIAL PROVISIONS.
28. FOR STRUCTURAL STEEL, SEE SPECIAL PROVISIONS.
29. FOR RAILROAD TRACKWORK, SEE RAILROAD TRACKWORK PLANS.
30. FOR SUBMITTAL OF WORKING DRAWINGS, SEE SPECIAL PROVISIONS.
31. FOR FALSEWORK AND FORMWORK, SEE SPECIAL PROVISIONS.
32. FOR CRANE SAFETY, SEE SPECIAL PROVISIONS.
33. FOR GROUT FOR STRUCTURES, SEE SPECIAL PROVISIONS.
34. FOR CONCRETE PARAPET, SEE SPECIAL PROVISIONS.
35. FOR REINFORCED CONCRETE DECK SLAB, SEE SPECIAL PROVISIONS.
36. THE MATERIAL SHOWN IN THE CROSS-HATCHED AREA SHALL BE EXCAVATED FOR A DISTANCE OF 70± FT EACH SIDE OF CENTERLINE BRIDGE AS DIRECTED BY THE ENGINEER. THIS WORK WILL BE PAID FOR AT THE CONTRACT LUMP SUM PRICE FOR UNCLASSIFIED STRUCTURE EXCAVATION. SEE SECTION 412 OF THE STANDARD SPECIFICATIONS. FINAL SLOPES OF THE EXCAVATION SHALL NOT EXCEED 2:1.
37. WORK SHALL NOT BE STARTED ON THIS BRIDGE UNTIL ROADWAY SECTION HAS BEEN EXCAVATED.

PROJECT NO. P-5208G
MECKLENBURG **COUNTY**
STATION: P.O.T. 10640+78.96 -M1-

SHEET 3 OF 5

AECOM
AECOM TECHNICAL SERVICES, INC.
701 CORPORATE CENTER DRIVE, SUITE 475
RALEIGH, NC 27607
(919) 854-6200 www.aecom.com
AECOM License No. F-0342

NORTH CAROLINA PROFESSIONAL SEAL 10656 ENGINEER L. MARK PEARSON 4/16/13

STATE OF NORTH CAROLINA
DEPARTMENT OF TRANSPORTATION
RALEIGH

GENERAL DRAWING
LONG CHORD LAYOUT

REVISIONS						SHEET NO.
NO.	BY:	DATE:	NO.	BY:	DATE:	S-03
1			3			TOTAL SHEETS
2			4			58

DRAWN BY : DDL DATE : 01/13
CHECKED BY : JL DATE : 01/13

USER: bellsten
DGN: G:\60286940\400_Tech_Info_Dfts_Files\450_NCDOT Std Tech\DesFiles\Structures\H21_Longchordlayout.dgn

BENCH MARK: BL 82
STA. 464+63.98
COORDINATES: N 571638.8727 E 1487733.0143
ELEV. = 721.71'

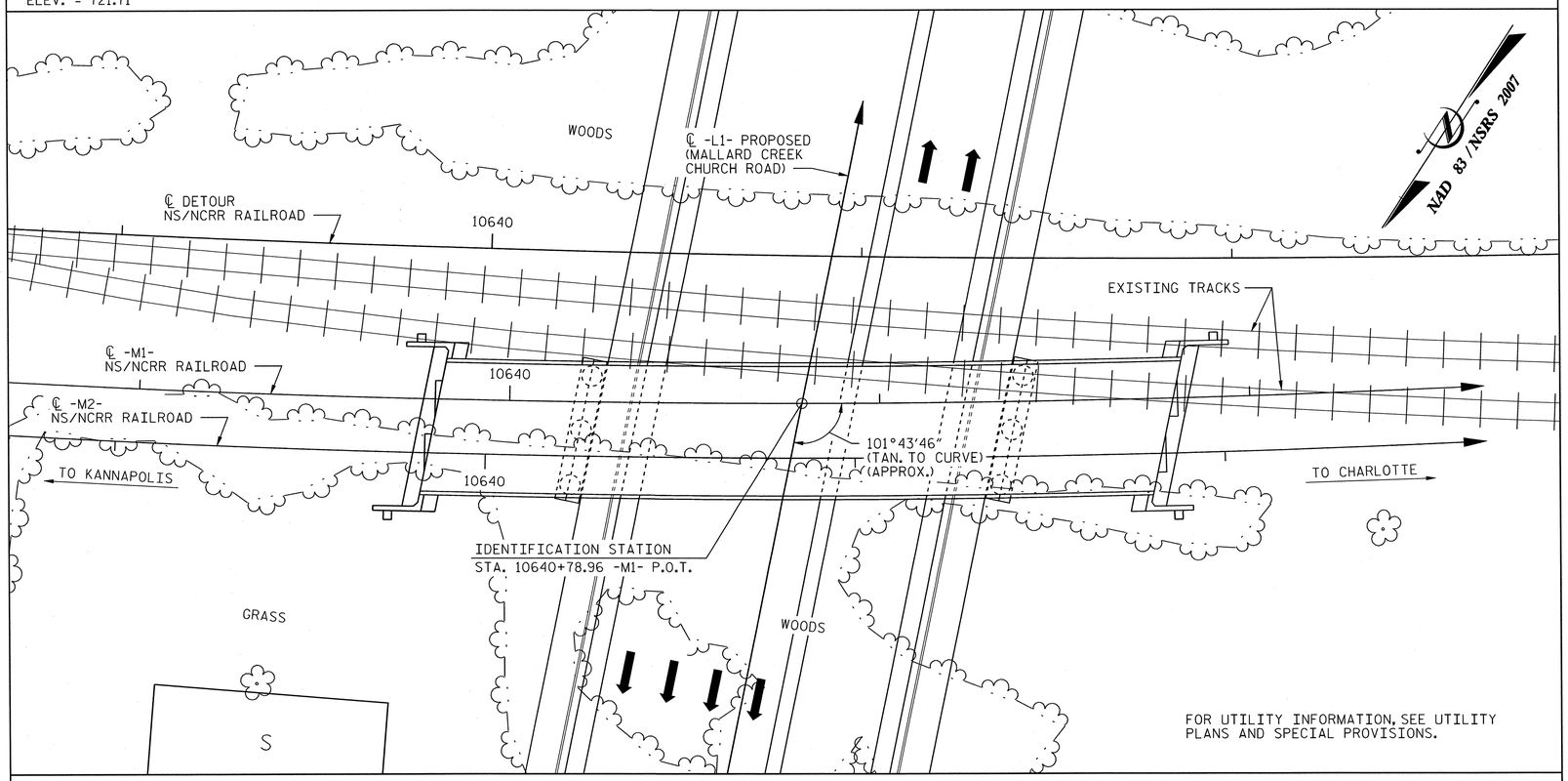

LOCATION SKETCH

SEQUENCE OF CONSTRUCTION

RAILROAD TRAFFIC IS TO BE MAINTAINED AT ALL TIMES ALONG THE ON-SITE TEMPORARY RAILROAD DETOUR DURING CONSTRUCTION OF THE FOLLOWING:

1. COMPLETE ALL NECESSARY UTILITY ADJUSTMENTS AND RELOCATIONS TO CLEAR THE BRIDGE AND TEMPORARY SHORING CONSTRUCTION AREAS.
2. COMPLETE ALL NECESSARY CLEARING AND GRUBBING AND INSTALL AND MAINTAIN EROSION AND SEDIMENT CONTROL MEASURES REQUIRED FOR THE GRADING AND BRIDGE CONSTRUCTION.
3. IMPLEMENT ANY NECESSARY TEMPORARY CONSTRUCTION DEWATERING OR DRAINAGE MEASURES.
4. INSTALL TEMPORARY SHORING FOR SUPPORT OF EXCAVATION ADJACENT TO TEMPORARY RAILROAD DETOUR.
5. EXCAVATE TO BOTTOM OF ABUTMENTS AND TO TEMPORARY GRADE ELEVATIONS AT PIERS.
6. CONSTRUCT PROPOSED DOUBLE TRACK RAILROAD BRIDGE OVER PROPOSED MALLARD CREEK CHURCH ROAD. CONSTRUCT CONCRETE SLOPE PROTECTION TO ONE FOOT ABOVE TEMPORARY GRADE ELEVATION AND CLEAR OF THE TEMPORARY SHORING.
7. CONSTRUCT THE RAILROAD ROADBED APPROACHING THE BRIDGE AND TEMPORARY STRUCTURE DRAINAGE SYSTEM. REMOVE SHORING AS REQUIRED TO COMPLETE ROAD BED.
8. PLACE THE SUBBALLAST TO THE REQUIRED GRADE FOR THE PERMANENT MAIN TRACK.
9. * CONSTRUCT THE NEW SEGMENT OF THE PERMANENT MAIN TRACK.
10. * LINE THE END SEGMENTS OF THE EXISTING TRACK OVER TO THE NEW ALIGNMENT. SURFACE THE PERMANENT MAIN TRACK AND PLACE IT IN SERVICE.
11. * REMOVE THE UNUSED SEGMENT OF THE EXISTING TRACK.
12. REMOVE THE UNUSED BALLAST FROM THE EXISTING ROADBED AND GRADE THE ROADWAY SECTION THROUGH THE EXISTING ROADBEDTO THE TEMPORARY GRADE ELEVATION.
13. REMOVE THE SHORING AND GRADE THE CUT SLOPES TO THE PROPOSED SUBGRADE ELEVATIONS.
14. CONSTRUCT THE PERMANENT RAILROAD DRAINAGE SYSTEMS.
15. CONSTRUCT THE PERMANENT BRIDGE DRAINAGE SYSTEM CONNECTIONS.
16. FINISH GRADING THE END SLOPES AND SIDE SLOPES AND CONSTRUCT THE REMAINDER OF THE CONCRETE SLOPE PROTECTION.
17. COMPLETE FINAL GRADING, SEEDING AND MULCHING AT THE ABUTMENTS AND WING WALLS.

* DENOTES OPERATIONS TO BE PERFORMED BY THE RAILROAD COMPANY.

DETOUR DESIGN SPEED:
50 MPH FOR FREIGHT
60 MPH FOR INTERMODAL
65 MPH FOR PASSENGER

PROJECT NO. P-5208G
MECKLENBURG **COUNTY**
STATION: P.O.T. 10640+78.96 -M1-

SHEET 4 OF 5

AECOM
AECOM TECHNICAL SERVICES, INC.
701 CORPORATE CENTER DRIVE, SUITE 475
RALEIGH, NC 27607
(919) 854-6200 www.aecom.com
AECOM License No. F-0342

NORTH CAROLINA PROFESSIONAL ENGINEER SEAL 10656 L. MARK PEARSON
4/16/13

STATE OF NORTH CAROLINA
DEPARTMENT OF TRANSPORTATION
RALEIGH

GENERAL DRAWING
LOCATION SKETCH

REVISIONS						SHEET NO.
NO.	BY:	DATE:	NO.	BY:	DATE:	S-04
1			3			TOTAL SHEETS
2			4			58

DRAWN BY : DDL DATE : 01/13
CHECKED BY : JL DATE : 01/13

DCN 0041DEL_P10a1

DATE: 4/15/2013
TIME: 12:51:07 PM

USER: bellstem
DGN: 0:\60268940\400_Tech_Info_Disc_Files\450_NCDOTStdTechDesFiles\Structures\H2J_LOC.dgn

0041DEL_P10a1

DRAWING INDEX

S-01 GENERAL DRAWING - PLAN AND ELEVATION
S-02 GENERAL DRAWING - FOUNDATION LAYOUT
S-03 GENERAL DRAWING - LONG CHORD LAYOUT
S-04 GENERAL DRAWING - LOCATION SKETCH
S-05 GENERAL DRAWING - DRAWING INDEX & TOTAL BILL OF MATERIAL
S-06 SUPERSTRUCTURE - TYPICAL SECTION SPANS "A" & "C"
S-07 SUPERSTRUCTURE - TYPICAL SECTION SPAN "B"
S-08 SUPERSTRUCTURE - TYPICAL DECK DETAILS
S-09 SUPERSTRUCTURE - PLAN OF SPAN "A"
S-10 SUPERSTRUCTURE - PLAN OF SPAN "B"
S-11 SUPERSTRUCTURE - PLAN OF SPAN "C"
S-12 SUPERSTRUCTURE - FRAMING PLAN AND GIRDER DETAILS - SPAN "A"
S-13 SUPERSTRUCTURE - FRAMING PLAN AND GIRDER DETAILS - SPAN "B"
S-14 SUPERSTRUCTURE - FRAMING PLAN AND GIRDER DETAILS - SPAN "C"
S-15 SUPERSTRUCTURE - STRUCTURAL STEEL DETAILS (1 OF 2)
S-16 SUPERSTRUCTURE - STRUCTURAL STEEL DETAILS (2 OF 2)
S-17 SUPERSTRUCTURE - BEARING DETAILS SPANS "A" & "C"
S-18 SUPERSTRUCTURE - BEARING DETAILS SPAN "B"
S-19 SUPERSTRUCTURE - EXPANSION PLATE DETAILS
S-20 SUPERSTRUCTURE - METAL HANDRAIL DETAILS (1 OF 2)
S-21 SUPERSTRUCTURE - METAL HANDRAIL DETAILS (2 OF 2)
S-22 SUPERSTRUCTURE - BILL OF MATERIALS
S-23 SUBSTRUCTURE - ABUTMENT 1 (1 OF 4)
S-24 SUBSTRUCTURE - ABUTMENT 1 (2 OF 4)
S-25 SUBSTRUCTURE - ABUTMENT 1 (3 OF 4)
S-26 SUBSTRUCTURE - ABUTMENT 1 (4 OF 4)
S-27 SUBSTRUCTURE - PIER 1 (1 OF 2)
S-28 SUBSTRUCTURE - PIER 1 (2 OF 2)
S-29 SUBSTRUCTURE - PIER 2 (1 OF 2)
S-30 SUBSTRUCTURE - PIER 2 (2 OF 2)
S-31 SUBSTRUCTURE - DRILLED PIER DETAILS
S-32 SUBSTRUCTURE - ABUTMENT 2 (1 OF 4)
S-33 SUBSTRUCTURE - ABUTMENT 2 (2 OF 4)
S-34 SUBSTRUCTURE - ABUTMENT 2 (3 OF 4)
S-35 SUBSTRUCTURE - ABUTMENT 2 (4 OF 4)
S-36 STRUCTURE DRAINAGE DETAILS (1 OF 8)
S-37 STRUCTURE DRAINAGE DETAILS (2 OF 8)
S-38 STRUCTURE DRAINAGE DETAILS (3 OF 8)
S-39 STRUCTURE DRAINAGE DETAILS (4 OF 8)
S-40 STRUCTURE DRAINAGE DETAILS (5 OF 8)
S-41 STRUCTURE DRAINAGE DETAILS (6 OF 8)
S-42 STRUCTURE DRAINAGE DETAILS (7 OF 8)
S-43 STRUCTURE DRAINAGE DETAILS (8 OF 8)
S-44 SLOPE PROTECTION DETAILS (1 OF 2)
S-45 SLOPE PROTECTION DETAILS (2 OF 2)
S-46 TEMPORARY RAILROAD SHORING LAYOUT (1 OF 2)
S-47 TEMPORARY RAILROAD SHORING LAYOUT (2 OF 2)
S-48 EXCAVATION PLAN WITH TEMPORARY RAILROAD SHORING REMOVED
S-49 TEMPORARY RAILROAD SHORING DETAILS (1 OF 3)
S-50 TEMPORARY RAILROAD SHORING DETAILS (2 OF 3)
S-51 TEMPORARY RAILROAD SHORING DETAILS (3 OF 3)
S-52 RETAINING WALL 1 PLAN
S-53 RETAINING WALL 1 ELEVATION
S-54 RETAINING WALL 1 DETAILS
S-55 RETAINING WALL 1 PILE ELEVATIONS AND PANEL TYPES
S-56 RETAINING WALL 1 NOTES AND TYPICAL DETAILS (1 OF 3)
S-57 RETAINING WALL 1 NOTES AND TYPICAL DETAILS (2 OF 3)
S-58 RETAINING WALL 1 NOTES AND TYPICAL DETAILS (3 OF 3)

TOTAL BILL OF MATERIAL

	UNCLASSIFIED STRUCTURE EXCAVATION AT STA. 10640+78.96	6'-0" DIA. DRILLED PIERS IN SOIL	6'-0" DIA. DRILLED PIERS NOT IN SOIL	PDA TESTING	SID INSPECTION	CSL TESTING	REINFORCED CONCRETE DECK SLAB	CLASS AA CONCRETE (AS MODIFIED BY RAILWAY)	REINFORCING STEEL	SPIRAL COLUMN REINFORCING STEEL	STRUCTURAL STEEL	HP 12x53 STEEL PILES		STEEL PILE POINTS
	LUMP SUM	LIN. FT.	LIN. FT.	EACH	EACH	EACH	SQ. FT.	CU. YDS.	LBS.	LBS.	APPROX. LBS.	NO.	LIN. FT.	EACH
SUPERSTRUCTURE	LUMP SUM	—	—	—	—	—	7244.1	—	—	—	901110	—	—	—
ABUTMENT #1	—	—	—	—	—	—	—	93.4	15445	—	—	47	1880	47
PIER #1	—	86.9	27.0	—	3	1	—	103.3	43895	17513	—	—	—	—
PIER #2	—	72.1	22.0	—	3	1	—	104.8	40256	14941	—	—	—	—
ABUTMENT #2	—	—	—	—	—	—	—	95.1	15488	—	—	47	2350	47
TOTAL	LUMP SUM	159.0	49.0	—	6	2	7244.1	396.6	115084	32454	901110	94	4230	94

TOTAL BILL OF MATERIAL (CONT'D.)

	METHOD B DAMPPROOFING	CONCRETE PARAPET 1'-0" x 1'-9"	CONDUIT IN PARAPET AT STA. 10640+78.96	4" SLOPE PROTECTION	PAINTING STRUCTURAL STEEL	SELF-LUBRICATING EXPANSION BEARING ASSEMBLIES	STRUCTURE DRAINAGE SYSTEM	TEMPORARY RAILROAD SHORING	METAL HANDRAIL	1" ASPHALT PLANKING PROTECTIVE COURSE FOR DECK	MEMBRANE LAYER WATERPROOFING FOR DECK	TWO PART MEMBRANE WATERPROOFING SYSTEM
	SQ. YDS.	LIN. FT.	LUMP SUM	SQ. YDS.	LUMP SUM	LUMP SUM	LUMP SUM	LUMP SUM	LIN. FT.	SQ. YDS.	SQ. YDS.	SQ. YDS.
SUPERSTRUCTURE	—	391.5	LUMP SUM	—	LUMP SUM	LUMP SUM	LUMP SUM	LUMP SUM	461.6	790.4	790.4	—
ABUTMENT #1	80.0	—	—	154	—	—	LUMP SUM	LUMP SUM	—	—	—	18.0
PIER #1	5.0	—	—	—	—	—	LUMP SUM	LUMP SUM	—	—	—	—
PIER #2	5.0	—	—	—	—	—	LUMP SUM	LUMP SUM	—	—	—	—
ABUTMENT #2	80.0	—	—	159	—	—	—	—	—	—	—	18.0
TOTAL	170.0	391.5	LUMP SUM	313	LUMP SUM	LUMP SUM	LUMP SUM	LUMP SUM	461.6	790.4	790.4	36.0

PROJECT NO. P-5208G

MECKLENBURG **COUNTY**

STATION: P.O.T. 10640+78.96 -M1-

SHEET 5 OF 5

AECOM
AECOM TECHNICAL SERVICES, INC.
701 CORPORATE CENTER DRIVE, SUITE 475
RALEIGH, NC 27607
(919) 854-6200 www.aecom.com
AECOM License No. F-0342

NORTH CAROLINA PROFESSIONAL SEAL 10656 ENGINEER MARK PEARSON
5/15/13

STATE OF NORTH CAROLINA
DEPARTMENT OF TRANSPORTATION
RALEIGH

GENERAL DRAWING

DRAWING INDEX AND TOTAL BILL OF MATERIAL

REVISIONS						SHEET NO.
NO.	BY:	DATE:	NO.	BY:	DATE:	S-05
1			3			TOTAL SHEETS
2			4			58

DRAWN BY : SGS DATE : 01/13
CHECKED BY : JL DATE : 01/13

DATE: 5/15/2013
TIME: 8:06:39 AM

USER: bellsten
DGN: G:\0025894\0400_Tech_Info_Dist_Files\450_NCDOT Std Text\Bse Files\Structure\H50_index.dgn

DGN 0041DEL_P10a1

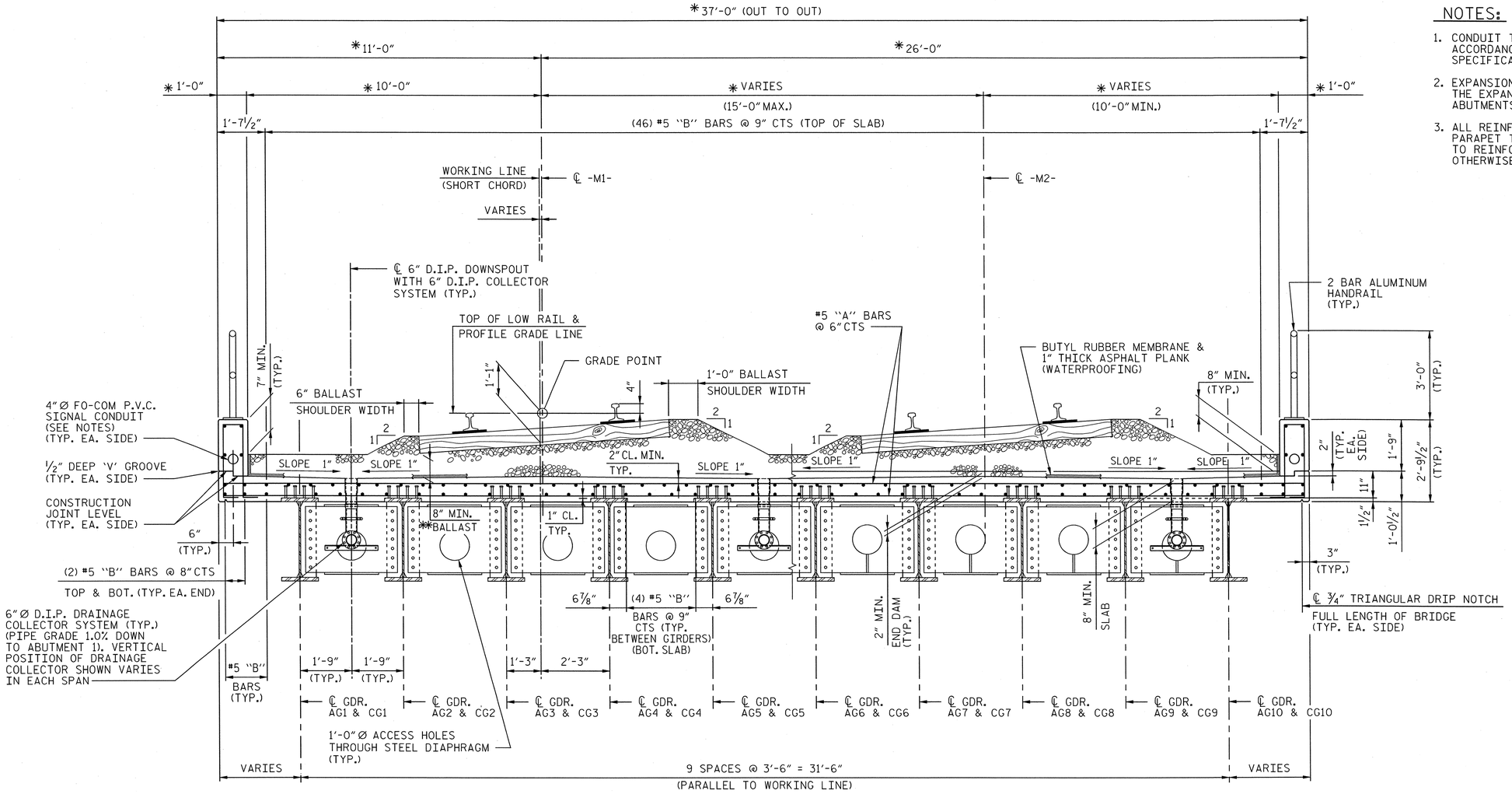

NOTES:

1. CONDUIT TO BE 4" Ø P.V.C. CONDUIT IN ACCORDANCE WITH UNDERWRITER'S LABORATORY SPECIFICATIONS.
2. EXPANSION FITTINGS SHALL BE LOCATED AT THE EXPANSION JOINT OF PIERS 1 AND 2, AND ABUTMENTS 1 AND 2.
3. ALL REINFORCING STEEL IN DECK SLAB AND PARAPET TO BE EPOXY COATED. CLEAR COVER TO REINFORCING IS 2" MINIMUM UNLESS OTHERWISE NOTED.

** 8" MINIMUM BALLAST THICKNESS IS MEASURED ABOVE ASPHALT PLANK AND BUTYL MEMBRANE WATERPROOFING.

TYPICAL HALF SECTION
AT INTERMEDIATE DIAPHRAGMS
(HOLE CONFIGURATION VARIES)

TYPICAL HALF SECTION
AT END DIAPHRAGMS
(HOLE CONFIGURATION VARIES)

TYPICAL SECTION AT SPANS A & C
(SHOWN UPSTATION)

* DENOTES RADIAL DIMENSION.

GIRDER LAYOUT LINES ARE PARALLEL TO THE WORKING LINE IN EACH SPAN.

PROJECT NO. P-5208G
MECKLENBURG COUNTY
STATION: P.O.T. 10640+78.96 -M1-

AECOM
AECOM TECHNICAL SERVICES, INC.
701 CORPORATE CENTER DRIVE, SUITE 475
RALEIGH, NC 27607
(919) 854-6200 www.aecom.com
AECOM License No. F-0342

NORTH CAROLINA PROFESSIONAL SEAL 10656 ENGINEER MARK PEARSON
4/16/13

STATE OF NORTH CAROLINA
DEPARTMENT OF TRANSPORTATION
RALEIGH

SUPERSTRUCTURE

TYPICAL SECTION -
SPANS "A" & "C"

REVISIONS						SHEET NO.
NO.	BY:	DATE:	NO.	BY:	DATE:	S-06
1			3			TOTAL SHEETS
2			4			58

DRAWN BY : MTB DATE : 01/13
CHECKED BY : JL DATE : 01/13

DATE: 4/15/2013
TIME: 12:55:08 PM
USER: bellsen
DGN: Q:\60268940\400_Tech_Info_Disc_Files\450_NCDOTStdTechDesFiles\Structures\H2J_TypSec2.dgn

0041DEL_P10a1

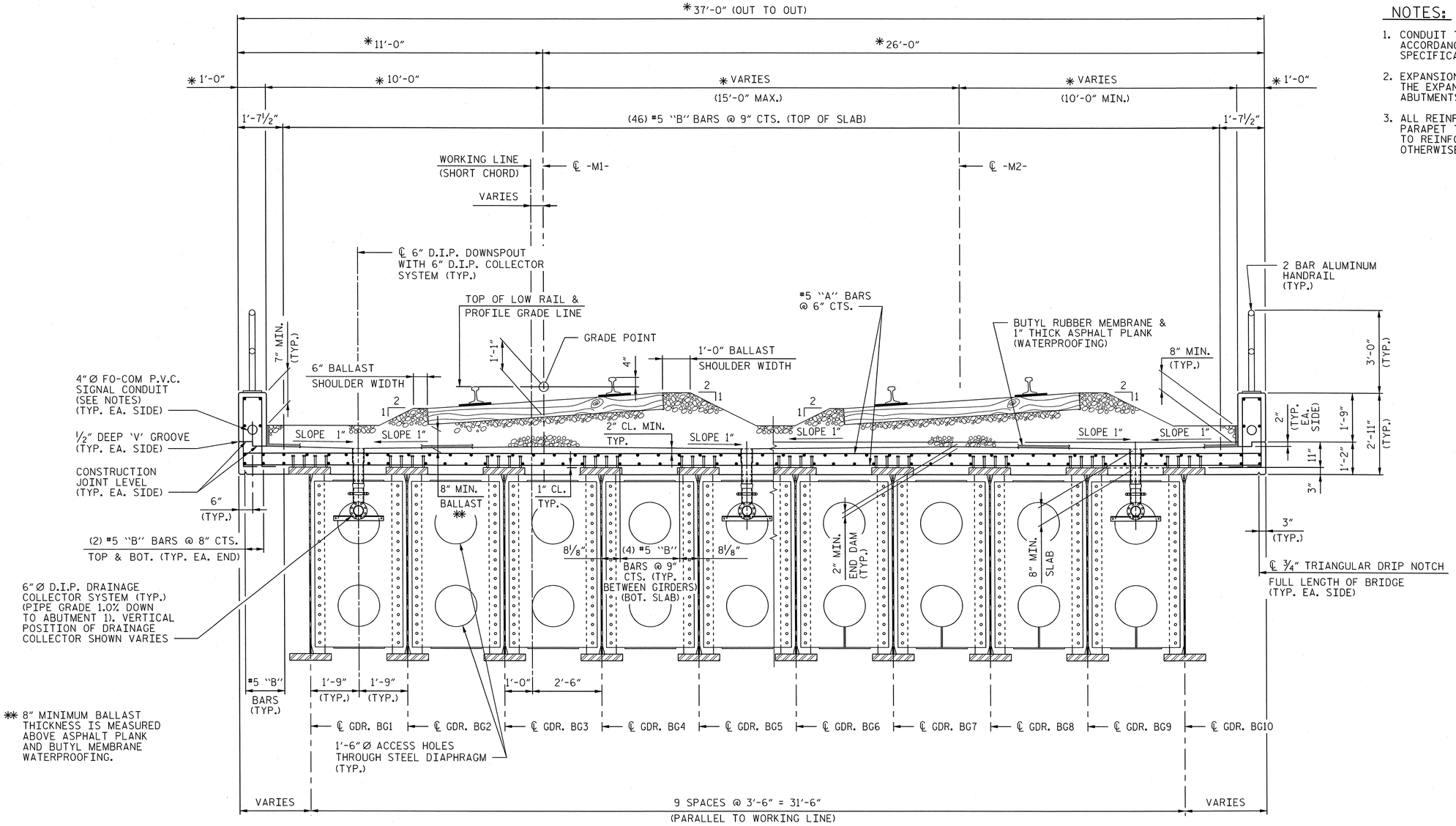

** 8" MINIMUM BALLAST THICKNESS IS MEASURED ABOVE ASPHALT PLANK AND BUTYL MEMBRANE WATERPROOFING.

NOTES:

1. CONDUIT TO BE 4"Ø P.V.C. CONDUIT IN ACCORDANCE WITH UNDERWRITER'S LABORATORY SPECIFICATIONS.
2. EXPANSION FITTINGS SHALL BE LOCATED AT THE EXPANSION JOINT OF PIERS 1 AND 2, AND ABUTMENTS 1 AND 2.
3. ALL REINFORCING STEEL IN DECK SLAB AND PARAPET TO BE EPOXY COATED. CLEAR COVER TO REINFORCING IS 2" MINIMUM UNLESS OTHERWISE NOTED.

TYPICAL HALF SECTION
AT INTERMEDIATE DIAPHRAGMS
(HOLE CONFIGURATION VARIES)

TYPICAL HALF SECTION
AT END DIAPHRAGMS
(HOLE CONFIGURATION VARIES)

TYPICAL SECTION AT SPAN B

(SHOWN UPSTATION)

* DENOTES RADIAL DIMENSION.

GIRDER LAYOUT LINES ARE PARALLEL TO THE WORKING LINE.

PROJECT NO. P-5208G

MECKLENBURG COUNTY

STATION: P.O.T. 10640+78.96 -M1-

AECOM
AECOM TECHNICAL SERVICES, INC.
701 CORPORATE CENTER DRIVE, SUITE 475
RALEIGH, NC 27607
(919) 854-6200 www.aecom.com
AECOM License No. F-0342

NORTH CAROLINA PROFESSIONAL SEAL 10656 ENGINEER J. MARK PEARSON
3/16/13

STATE OF NORTH CAROLINA
DEPARTMENT OF TRANSPORTATION
RALEIGH

SUPERSTRUCTURE

TYPICAL SECTION - SPAN "B"

REVISIONS							
NO.	BY:	DATE:	NO.	BY:	DATE:	SHEET NO.	S-07
1			3			TOTAL SHEETS	58
2			4				

DRAWN BY : MTB DATE : 01/13
CHECKED BY : JL DATE : 01/13

DATE: 4/15/2013
TIME: 12:57:09 PM

USER: bellsiem
DGN: G:\60226894\0-400_Tech_Info_Dist_Files\450_NCDOT Std Tech\Bef Files\Structures\H20_Typ3ed.dgn

0041DEL_P10a1

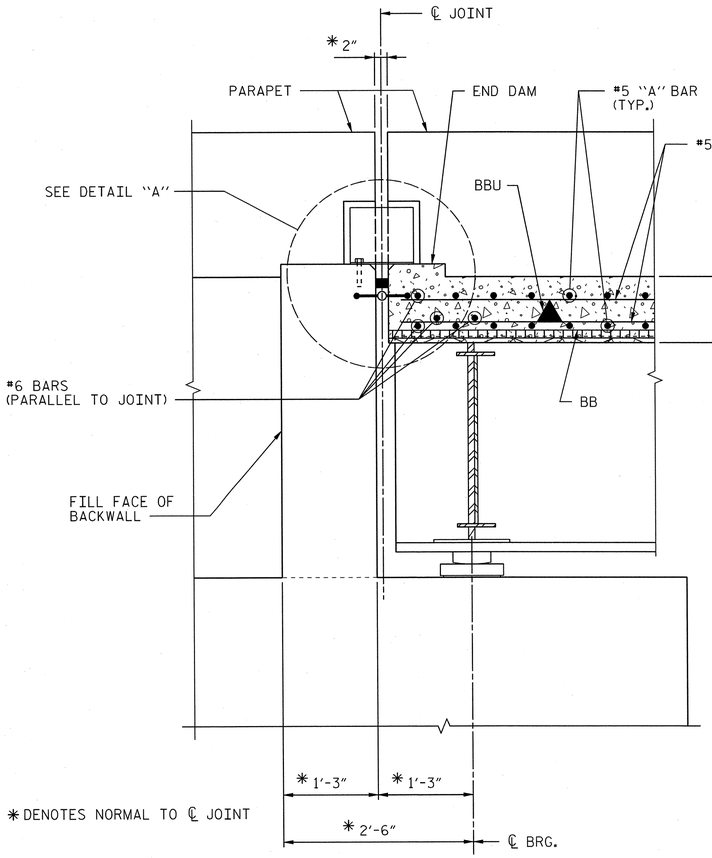

SECTION "A-A"

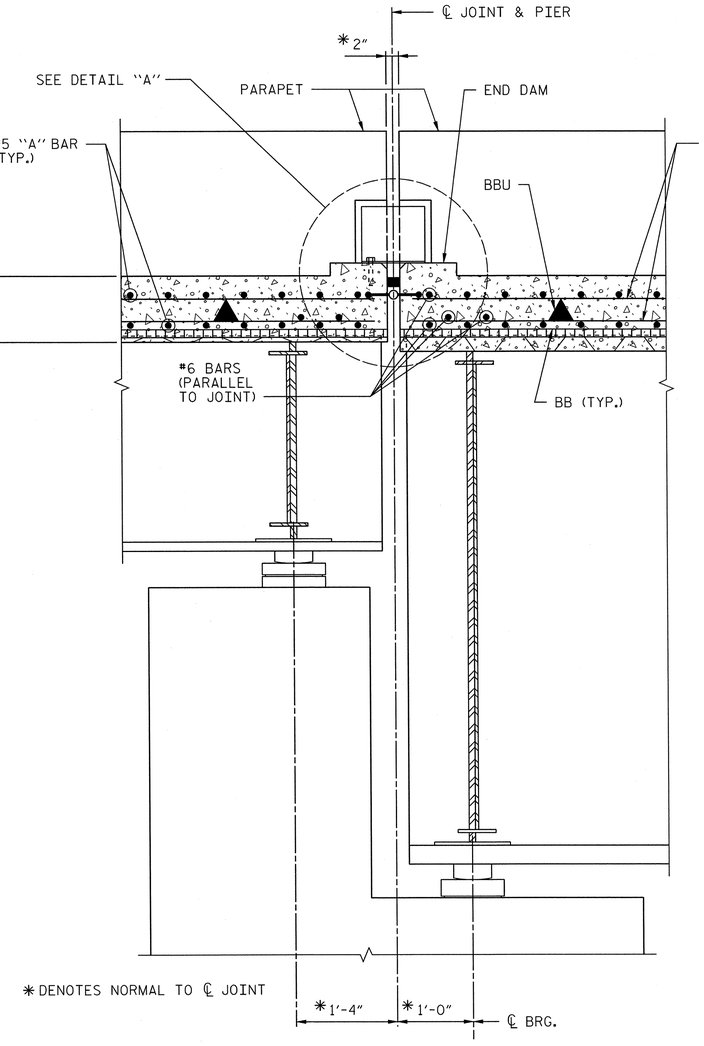

SECTION "B-B"

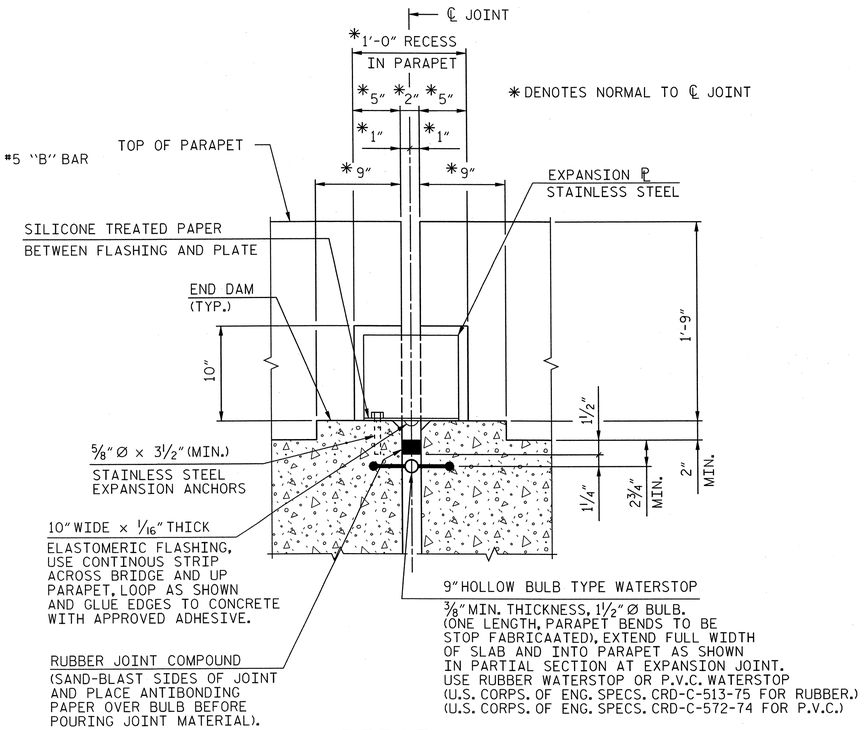

DETAIL "A"

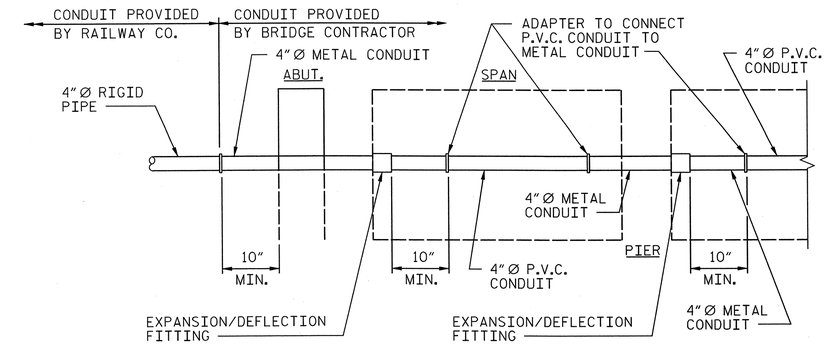

CONDUIT LAYOUT

NOT TO SCALE

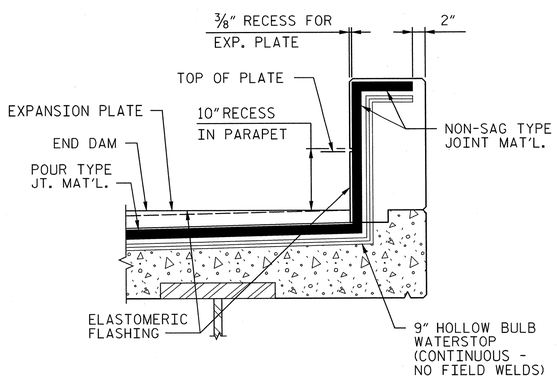

PARTIAL SECTION AT EXPANSION JOINT

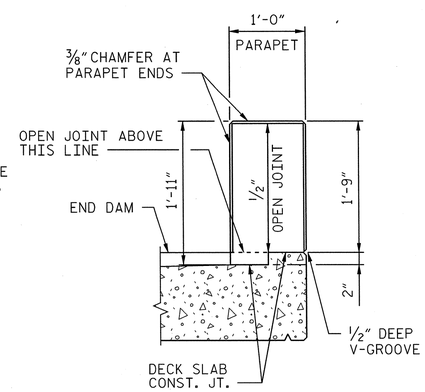

SECTION THRU OPEN JOINT IN PARAPET

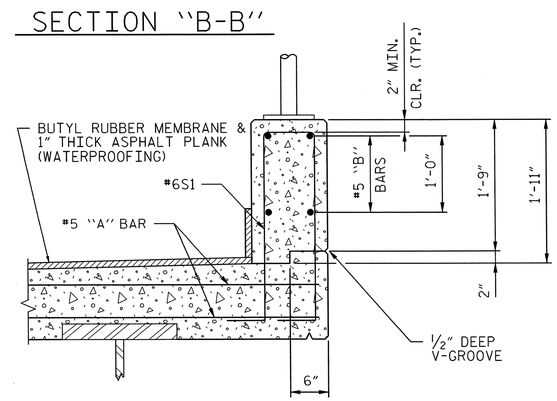

SECTION THRU PARAPET

PROJECT NO. P-5208G

MECKLENBURG **COUNTY**

STATION: P.O.T. 10640+78.96 -M1-

AECOM

AECOM TECHNICAL SERVICES, INC.
701 CORPORATE CENTER DRIVE, SUITE 475
RALEIGH, NC 27607
(919) 854-6200 www.aecom.com
AECOM License No. F-0342

NORTH CAROLINA PROFESSIONAL SEAL 30656 ENGINEER J. MARK PEARSON 4/16/13

STATE OF NORTH CAROLINA
DEPARTMENT OF TRANSPORTATION
RALEIGH

SUPERSTRUCTURE
TYPICAL DECK DETAILS

REVISIONS						SHEET NO.
NO.	BY:	DATE:	NO.	BY:	DATE:	S-08
1			3			TOTAL SHEETS
2			4			58

DRAWN BY : JWH DATE : 01/13
CHECKED BY : JL DATE : 01/13

DATE 4/15/2013
TIME 1:00:25 PM

USER: bellsteve
DGN: G:\60286594\0400_Tech_Info_Dist_Files\450_NCDOT\SdTech\DocFiles\Structures\V12_SuperDeckDetail.dgn

0041DEL_P10a1

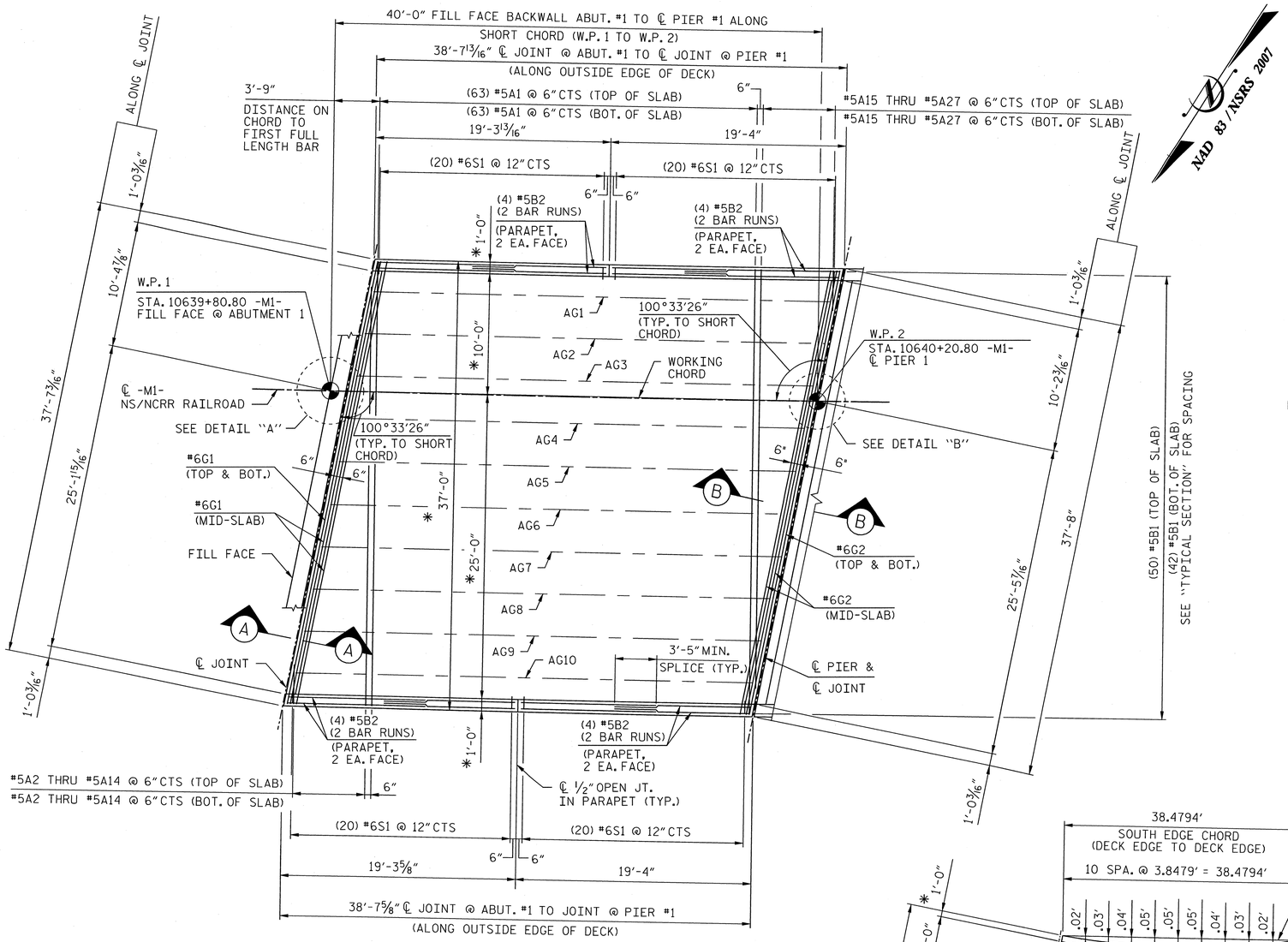

PLAN

*RADIAL DIMENSIONS

NOTES:

1. ALL REINFORCING SHALL BE EPOXY COATED.
2. FOR SECTIONS "A-A" AND "B-B", SEE "TYPICAL DECK DETAILS" SHEET.
3. FOR DECK DRAIN DETAIL, SEE DETAIL "B" ON "STRUCTURAL DRAINAGE DETAILS" SHEET.
4. FOR DETAILS AND REINFORCEMENT OF CONCRETE PARAPETS SEE "CONCRETE PARAPET DETAILS" SHEETS.

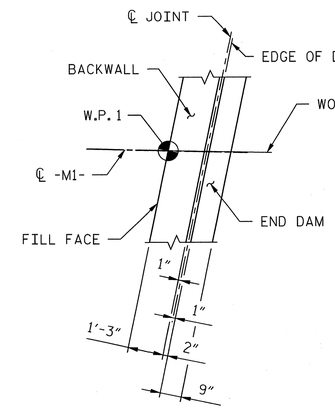

DETAIL "A"

(REINFORCING NOT SHOWN)

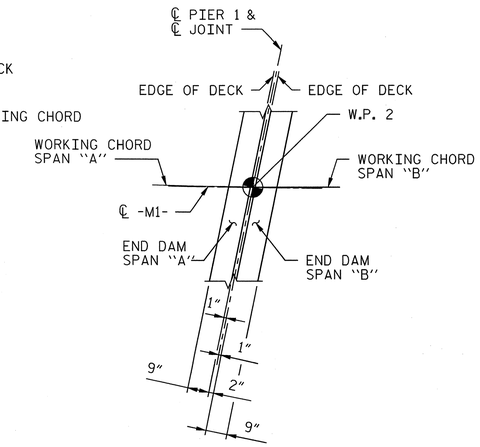

DETAIL "B"

(REINFORCING NOT SHOWN)

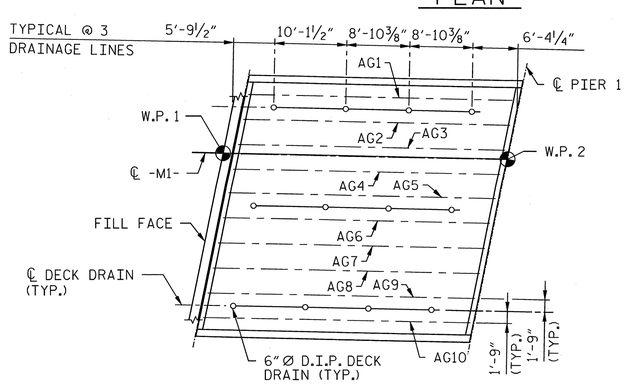

DECK DRAIN LOCATIONS

D.I.P. = DUCTILE IRON PIPE

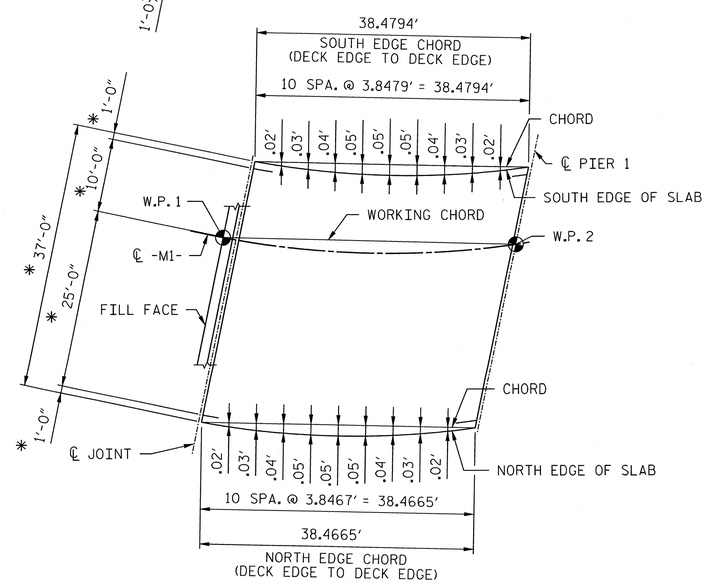

OFFSET DIMENSIONS FOR SLAB EDGES

PROJECT NO. P-5208G

MECKLENBURG COUNTY

STATION: P.O.T. 10640+78.96 -M1-

AECOM

AECOM TECHNICAL SERVICES, INC.
701 CORPORATE CENTER DRIVE, SUITE 475
RALEIGH, NC 27607
(919) 854-6200 www.aecom.com
AECOM License No. F-0342

NORTH CAROLINA PROFESSIONAL SEAL 10656 ENGINEER MARK PEARSON

STATE OF NORTH CAROLINA
DEPARTMENT OF TRANSPORTATION
RALEIGH

SUPERSTRUCTURE
PLAN OF SPAN "A"

REVISIONS						SHEET NO.
NO.	BY:	DATE:	NO.	BY:	DATE:	S-09
1			3			TOTAL SHEETS
2			4			58

DRAWN BY : JWH DATE : 01/13
CHECKED BY : JL DATE : 01/13

DATE: 4/15/2013
TIME: 1:05:05 PM

USER: bellsim
DGN: G:\60262893\40-400_Tech_Info_Disc_Files\450_NCDOT Std Tech Doc Files\Structures\H20_Plan Span A.dgn

0041DEL_P10a1

NAD 83 / NSRS 2007

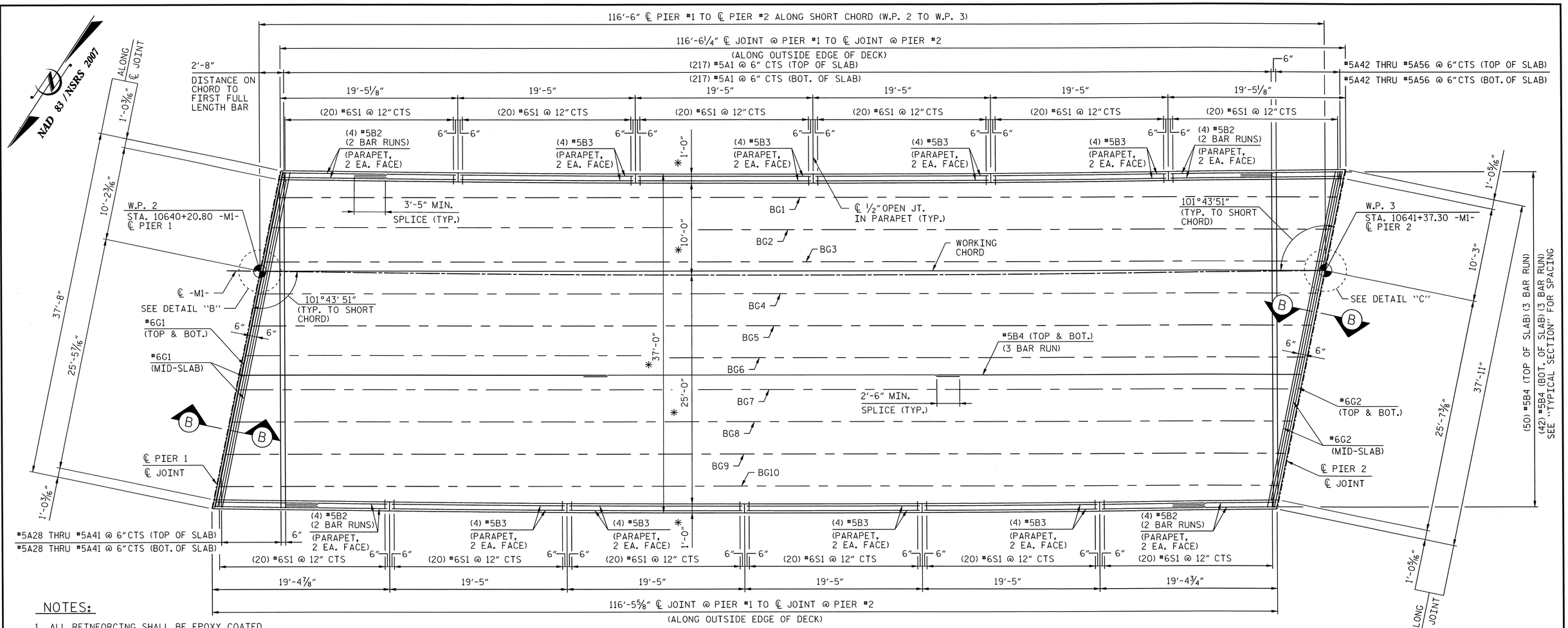

NOTES:

1. ALL REINFORCING SHALL BE EPOXY COATED.
2. FOR SECTION "B-B", SEE "TYPICAL DECK DETAILS" SHEET.
3. FOR DETAIL "B", SEE "SUPERSTRUCTURE PLAN OF SPAN A" SHEET. FOR DETAIL "C", SEE "SUPERSTRUCTURE PLAN OF SPAN C" SHEET.
4. FOR DECK DRAIN DETAIL, SEE DETAIL "B" ON "STRUCTURAL DRAINAGE DETAILS" SHEET.

*RADIAL DIMENSIONS

PLAN

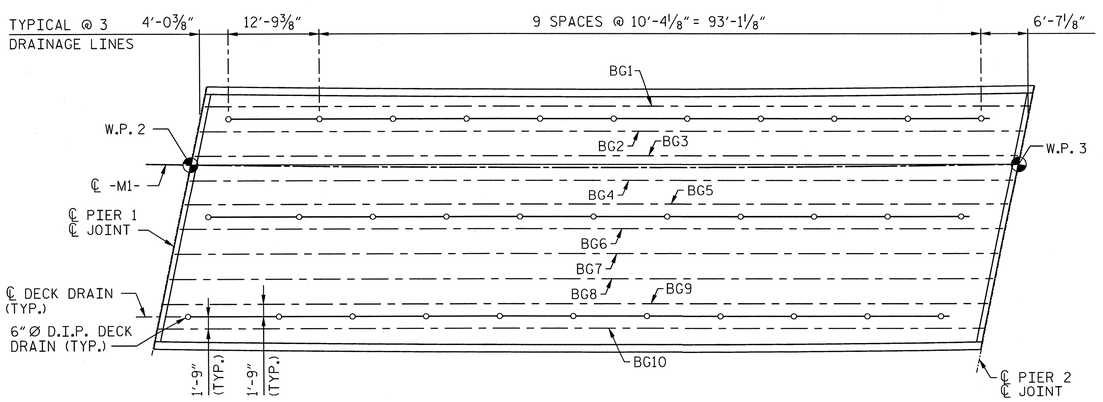

DECK DRAIN LOCATIONS

D.I.P. = DUCTILE IRON PIPE

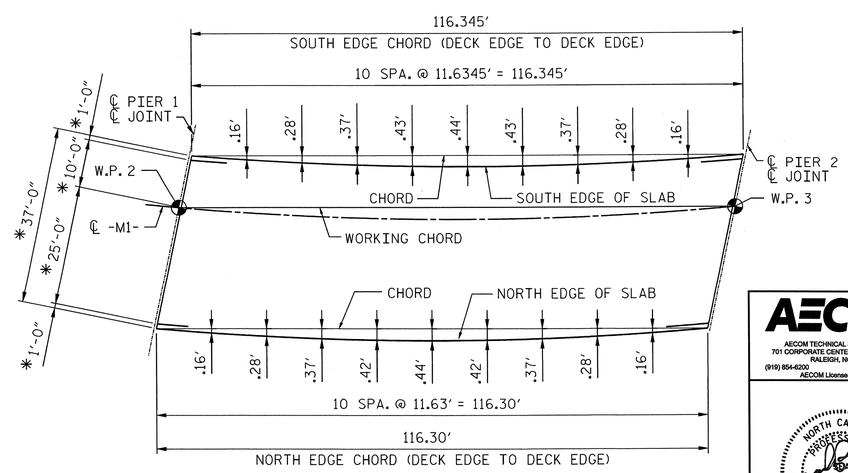

OFFSET DIMENSIONS FOR SLAB EDGES

PROJECT NO. P-5208G

MECKLENBURG COUNTY

STATION: P.O.T. 10640+78.96 -M1-

AECOM

AECOM TECHNICAL SERVICES, INC.
701 CORPORATE CENTER DRIVE, SUITE 475
RALEIGH, NC 27607
(919) 854-6200 www.aecom.com
AECOM Licenses No. F-0342

NORTH CAROLINA PROFESSIONAL SEAL 10656 ENGINEER L. MARK PEARSON 2/16/13

STATE OF NORTH CAROLINA
DEPARTMENT OF TRANSPORTATION
RALEIGH

SUPERSTRUCTURE
PLAN OF SPAN "B"

REVISIONS								SHEET NO.
NO.	BY:	DATE:	NO.	BY:	DATE:			S-10
1			3					TOTAL SHEETS
2			4					58

DRAWN BY : JWH DATE : 01/13
CHECKED BY : JL DATE : 01/13

DATE: 4/15/2013
TIME: 10:06:37 PM

USER: bellsiem
DGN: D:\60282894\400_Tech_Info_Disc_Files\450_NCDOT Std Text\Dsd Files\Structures\M3J_Plan Span Bdgn

0041DEL_P10a1

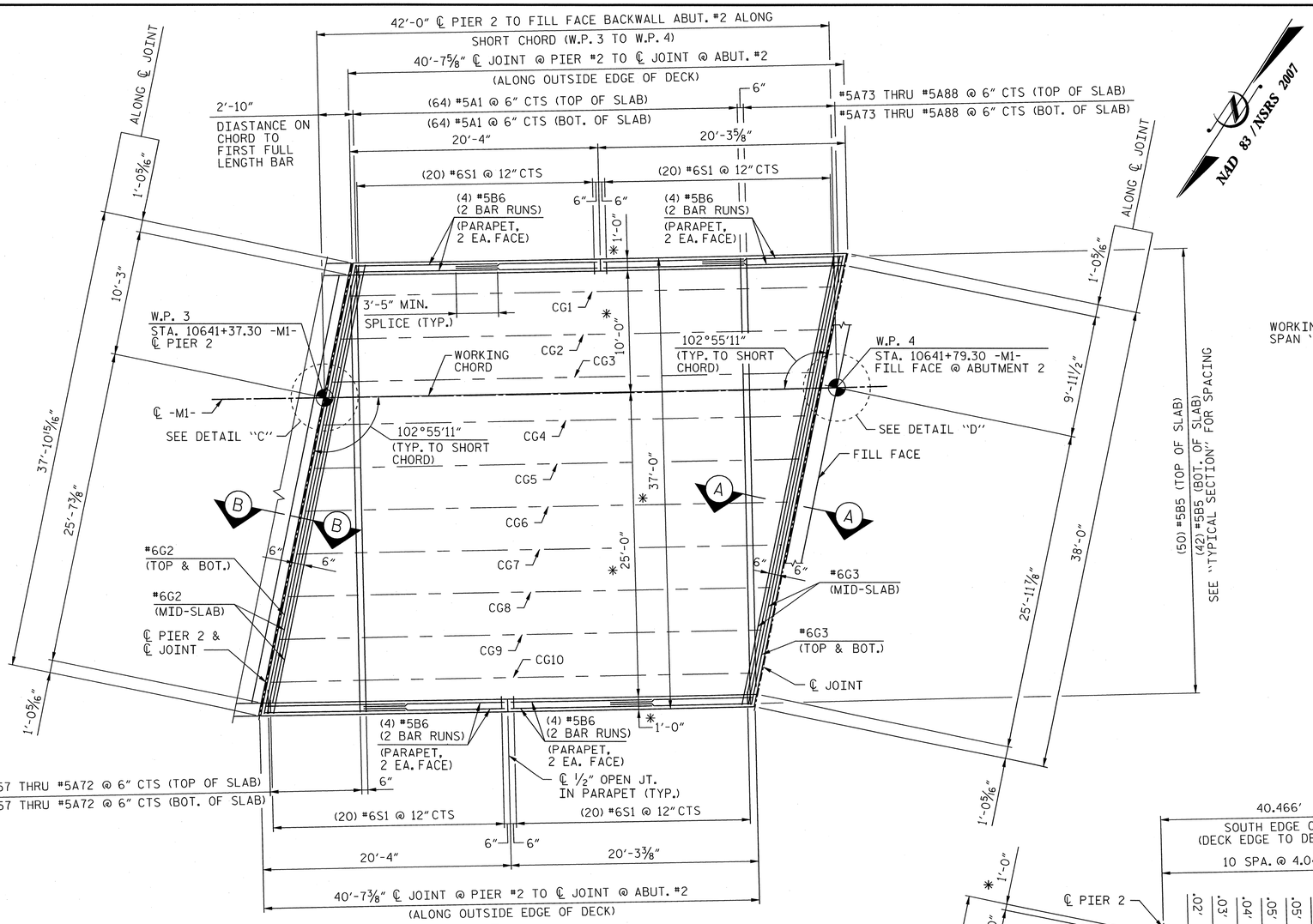

PLAN

*RADIAL DIMENSIONS

NAD 83 / NSRS 2007

NOTES:

1. ALL REINFORCING SHALL BE EPOXY COATED.
2. FOR SECTIONS "A-A" AND "B-B", SEE "TYPICAL DECK DETAILS" SHEET.
3. FOR DECK DRAIN DETAIL, SEE DETAIL "B" ON "STRUCTURAL DRAINAGE DETAILS" SHEET.
4. FOR DETAILS AND REINFORCEMENT OF CONCRETE PARAPETS SEE "CONCRETE PARAPET DETAILS" SHEETS.

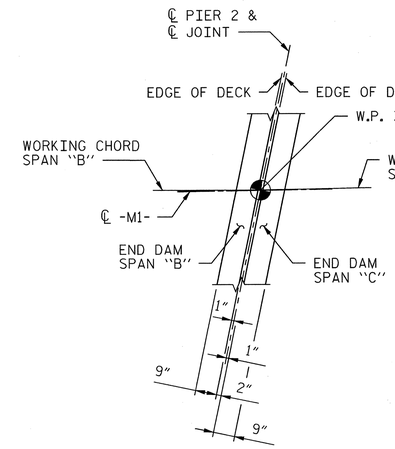

DETAIL "C"
(REINFORCING NOT SHOWN)

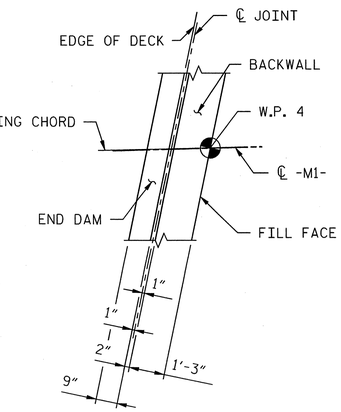

DETAIL "D"
(REINFORCING NOT SHOWN)

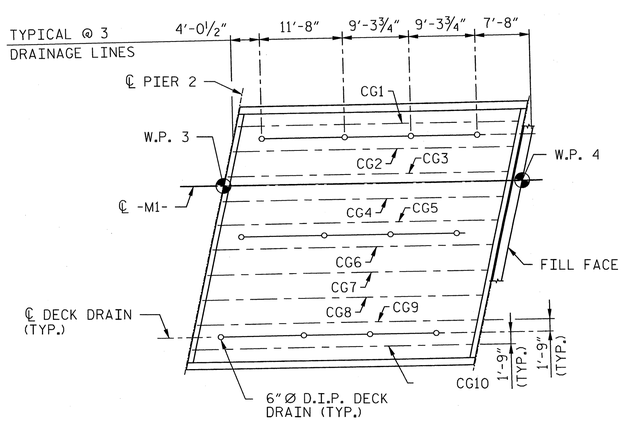

DECK DRAIN LOCATIONS

D.I.P. = DUCTILE IRON PIPE

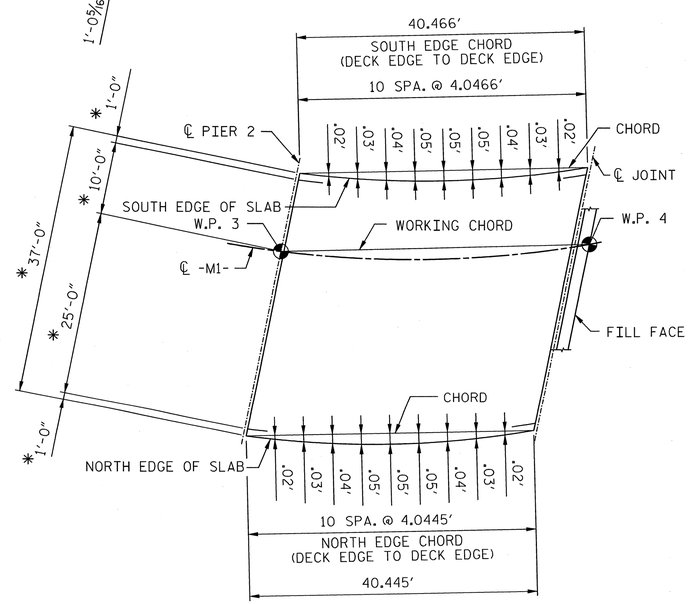

OFFSET DIMENSIONS FOR SLAB EDGES

PROJECT NO. P-5208G
MECKLENBURG COUNTY
STATION: P.O.T. 10640+78.96 -M1-

AECOM
AECOM TECHNICAL SERVICES, INC.
701 CORPORATE CENTER DRIVE, SUITE 475
RALEIGH, NC 27607
(919) 854-6200 www.aecom.com
AECOM License No. F-0342

NORTH CAROLINA PROFESSIONAL SEAL 10656 ENGINEER L. MARK PEARSON 4/16/13

STATE OF NORTH CAROLINA
DEPARTMENT OF TRANSPORTATION
RALEIGH

SUPERSTRUCTURE
PLAN OF SPAN "C"

REVISIONS						SHEET NO.
NO.	BY:	DATE:	NO.	BY:	DATE:	S-11
1			3			TOTAL SHEETS
2			4			58

DRAWN BY : JWH DATE : 01/13
CHECKED BY : JL DATE : 01/13

DATE: 4/15/2013
TIME: 1:35 PM

USER: bellstem
DGN: O:\5208\B9840\400_Tech_Info_Dist_Files\V50_NCDOT StdTechDesFiles\Structures\V12_Plan Span C.dgn

0041DEL_P10a1

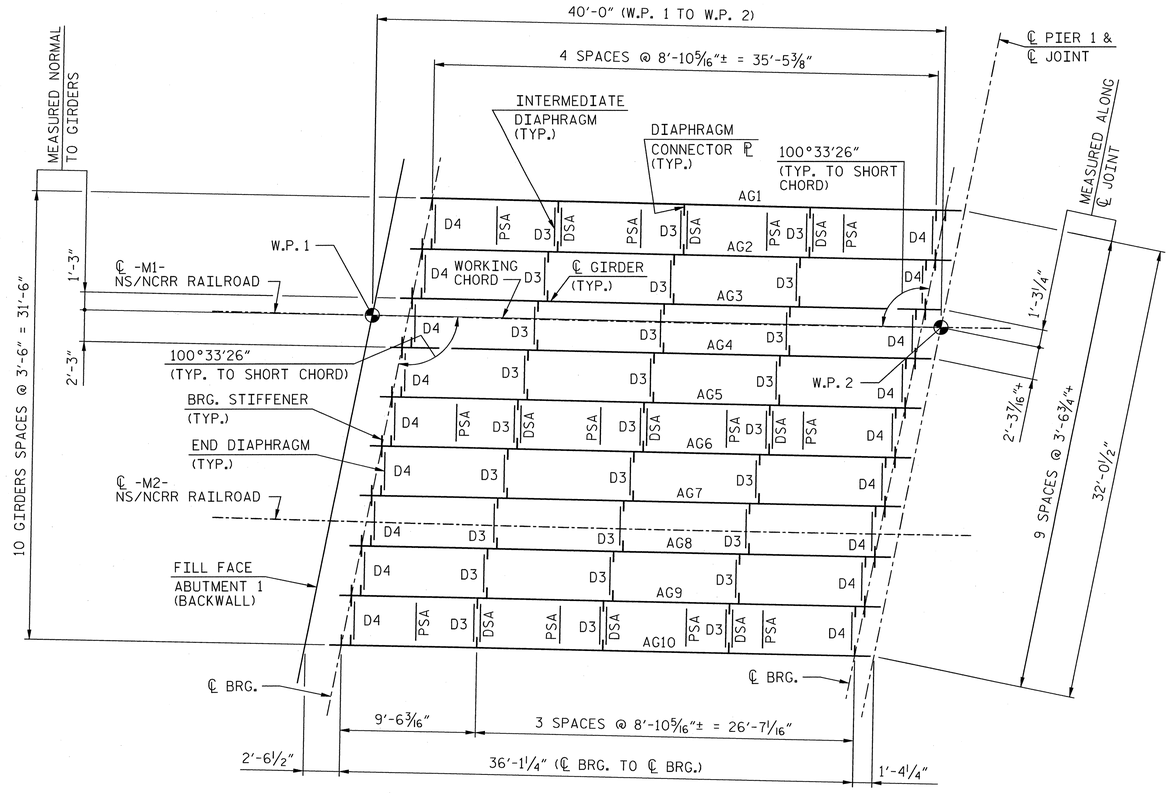

FRAMING PLAN

NOTE: ALL GIRDERS ARE PARALLEL TO WORKING CHORD.

NAD 83 / NSRS 2007

NOTES:

1. ALL DIMENSIONS ON THIS DRAWING ARE HORIZONTAL.
2. ℄ ABUTMENT 1, ℄ PIER 1, AND ℄ BEARINGS ARE PARALLEL.
3. FOR STRUCTURAL STEEL NOTES, DIAPHRAGM DETAILS, STIFFENER & CONNECTOR ℙ DETAILS, SHEAR STUD CONNECTOR DETAIL, FLANGE TO WEB WELD DETAIL, WELD TERMINATION DETAIL AND SHOP SPLICE DETAIL, SEE "STRUCTURAL STEEL DETAILS" SHEETS.
4. FOR BEARINGS, SEE "BEARING DETAILS" SHEET.
5. FOR DSA AND PSA DRAIN PIPE SUPPORT DETAILS, SEE "STRUCTURE DRAINAGE DETAILS" SHEET.
6. BEARING STIFFENERS AND END DIAPHRAGM CONNECTOR PLATES ARE ORIENTED NORMAL TO CENTERLINE OF GIRDER.
7. THE GIRDERS IN SPAN "A" CAN BE SUBSTITUTED EQUIVALENTLY WITH W33 x 221.

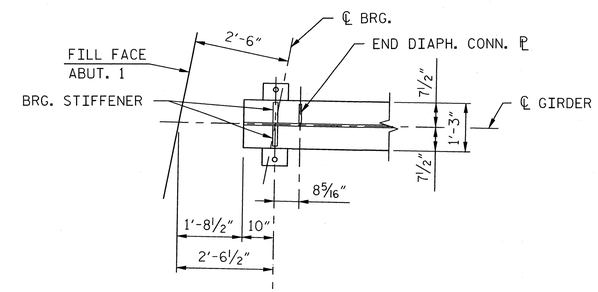

AT ABUTMENT 1

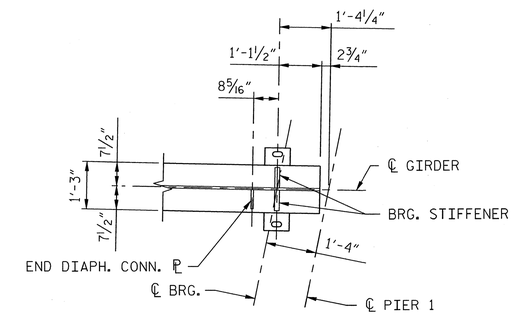

AT PIER 1

GIRDER END DIAPHRAGMS

(BOTTOM FLANGE SHOWN)

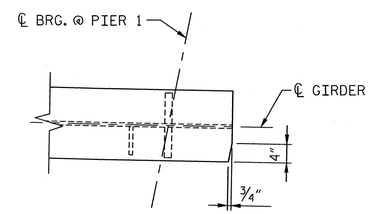

TOP FLANGE CLIP DIMENSIONS

(PIER 1 ONLY)

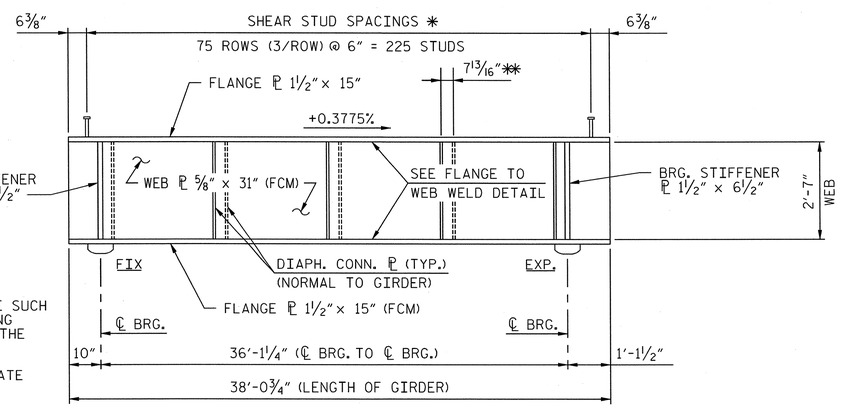

NOTES:

✱ ALIGN STUDS ON GIRDER FLANGE SUCH THAT BOTTOM SLAB REINFORCING BARS CAN BE PLACED BETWEEN THE STUDS NORMAL TO THE GIRDER.

✱✱ TYPICAL OFFSET AT INTERMEDIATE DIAPHRAGM CONNECTOR PLATES.

TYPICAL BEAM ELEVATION

(INTERIOR GIRDER SHOWN, EXTERIOR GIRDER SIMILAR)
(NTS)

CAMBER TABLE (DECIMAL INCHES)											
TENTH POINT	0.0	0.1	0.2	0.3	0.4	0.5	0.6	0.7	0.8	0.9	1.0
REQUIRED CAMBER	0.000	0.040	0.075	0.102	0.120	0.126	0.120	0.102	0.075	0.040	0.000

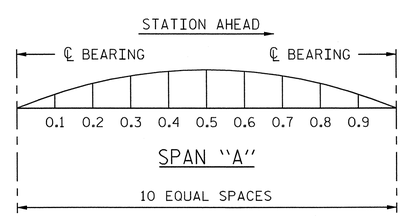

SCHEMATIC CAMBER ORDINATES

PROJECT NO. P-5208G
MECKLENBURG COUNTY
STATION: P.O.T. 10640+78.96 -M1-

SHEET 1 OF 3

AECOM
AECOM TECHNICAL SERVICES, INC.
701 CORPORATE CENTER DRIVE, SUITE 475
RALEIGH, NC 27607
(919) 854-6200 www.aecom.com
AECOM License No. F-0342

NORTH CAROLINA PROFESSIONAL SEAL 10656 ENGINEER L. MARK PEARSON 4/16/13

STATE OF NORTH CAROLINA
DEPARTMENT OF TRANSPORTATION
RALEIGH

SUPERSTRUCTURE

FRAMING PLAN AND GIRDER DETAILS - SPAN "A"

REVISIONS						SHEET NO.
NO.	BY:	DATE:	NO.	BY:	DATE:	S-12
1			3			TOTAL SHEETS
2			4			58

DRAWN BY : DDL DATE : 01/13
CHECKED BY : JL DATE : 01/13

DATE: 4/16/2013
TIME: 08:56 PM

USER: bellsem
DGN: C:\SDOCS\SP40V400_Tech_Infra_Disc_Files\H50_NCDOT SYS Tech Docs Files\Structures\H2U_FramingPlan_A.dgn

0041DEL_P10a1

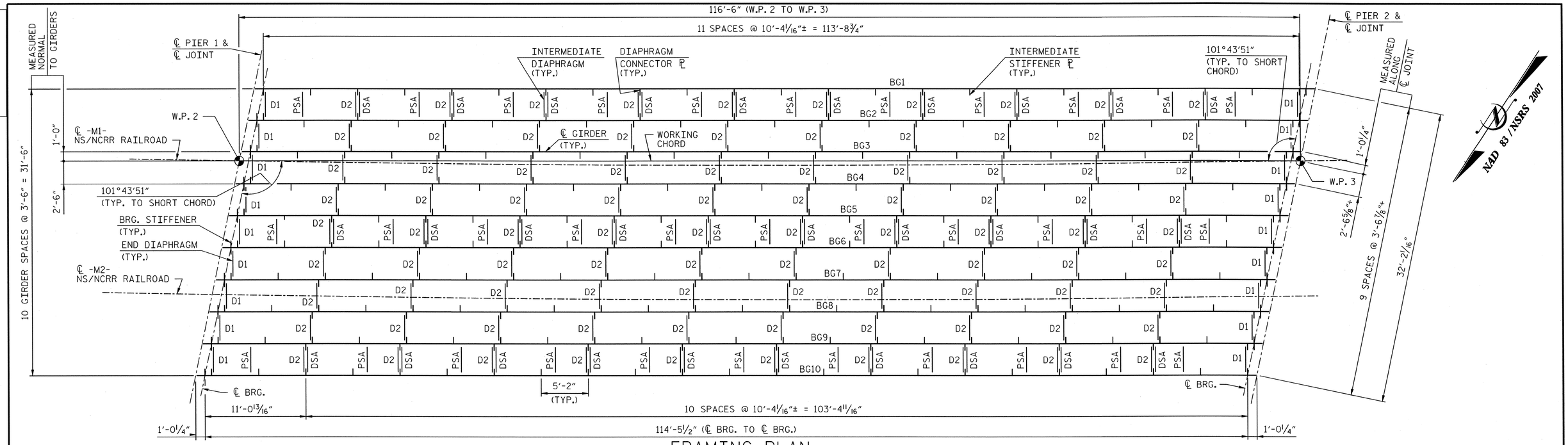

FRAMING PLAN

NOTE: ALL GIRDERS ARE PARALLEL TO WORKING CHORD.

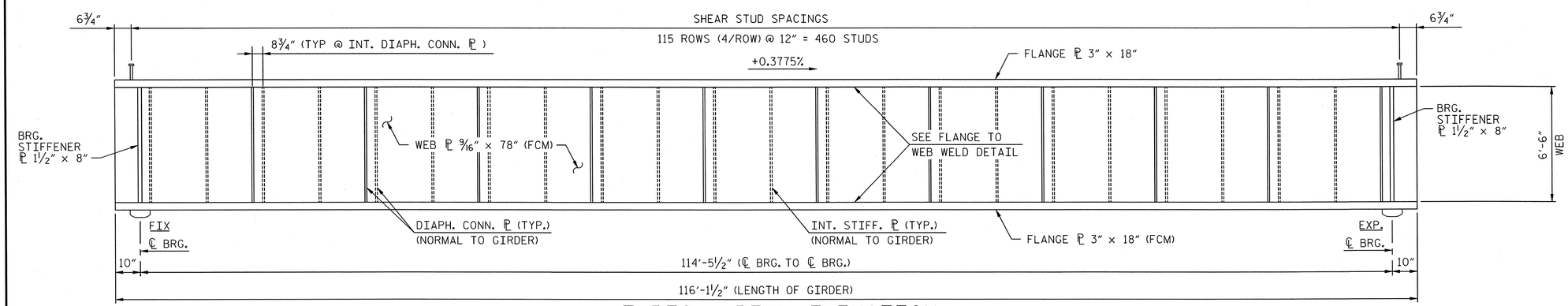

TYPICAL BEAM ELEVATION

(INTERIOR GIRDER SHOWN, EXTERIOR GIRDER SIMILAR)
(NTS)

NOTES:

1. ALL DIMENSIONS ON THIS DRAWING ARE HORIZONTAL.
2. ℄ PIER 1, ℄ PIER 2, AND ℄ BEARINGS ARE PARALLEL.
3. FOR STRUCTURAL STEEL NOTES, DIAPHRAGM DETAILS, STIFFENER & CONNECTOR ℙ DETAILS, SHEAR STUD CONNECTOR DETAIL, FLANGE TO WEB WELD DETAIL, WELD TERMINATION DETAIL AND SHOP SPLICE DETAIL, SEE "STRUCTURAL STEEL DETAILS" SHEETS.
4. FOR BEARINGS, SEE "BEARING DETAILS" SHEET.
5. FOR DSA AND PSA DRAIN PIPE SUPPORT DETAILS, SEE "STRUCTURE DRAINAGE DETAILS" SHEET.
6. BEARING STIFFENERS AND END DIAPHRAGM CONNECTOR PLATES ARE ORIENTED NORMAL TO CENTERLINE OF GIRDER.

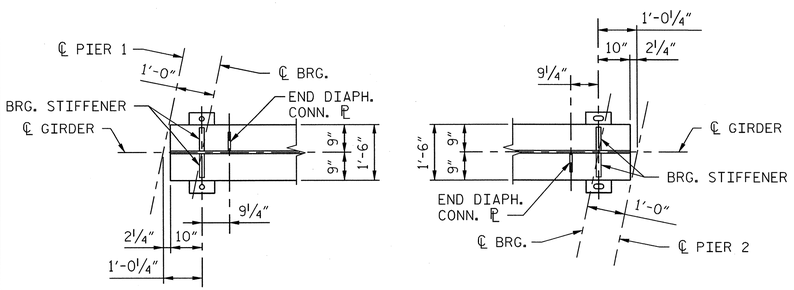

GIRDER END DIAPHRAGMS

(BOTTOM FLANGE SHOWN)

CAMBER TABLE (DECIMAL INCHES)																					
TWENTIETH POINT	0.0	0.05	0.1	0.15	0.2	0.25	0.3	0.35	0.4	0.45	0.5	0.55	0.6	0.65	0.7	0.75	0.8	0.85	0.9	0.95	1.0
REQUIRED CAMBER	0.000	0.196	0.385	0.565	0.729	0.875	0.998	1.097	1.169	1.213	1.228	1.213	1.169	1.097	0.998	0.875	0.729	0.565	0.385	0.196	0.000

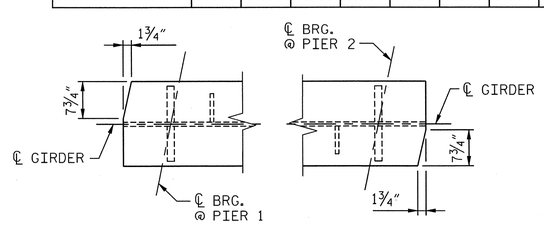

TOP FLANGE CLIP DIMENSIONS

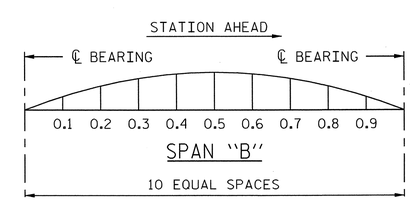

SCHEMATIC CAMBER ORDINATES

PROJECT NO. P-5208G

MECKLENBURG COUNTY

STATION: P.O.T. 10640+78.96 -M1-

SHEET 2 OF 3

AECOM
AECOM TECHNICAL SERVICES, INC.
701 CORPORATE CENTER DRIVE, SUITE 475
RALEIGH, NC 27607
(919) 854-6200 www.aecom.com
AECOM License No. F-0342

NORTH CAROLINA PROFESSIONAL SEAL 10656 ENGINEER J. MARK PEARSON 4/16/13

STATE OF NORTH CAROLINA
DEPARTMENT OF TRANSPORTATION
RALEIGH

SUPERSTRUCTURE

FRAMING PLAN AND GIRDER DETAILS - SPAN "B"

REVISIONS						
NO.	BY:	DATE:	NO.	BY:	DATE:	
1			3			
2			4			

SHEET NO. S-13
TOTAL SHEETS 58

DRAWN BY : DDL DATE : 01/13
CHECKED BY : JL DATE : 01/13

DATE: 4/15/2013
TIME: 1:22:49 PM

USER: bellsian
DGN: G:\2012\59940\400_Tech_Info_Dis_Files\450_NCDOT StdTechDesFiles\Structures\H21_FramingPlan_B.dgn

0041DEL_P10a1

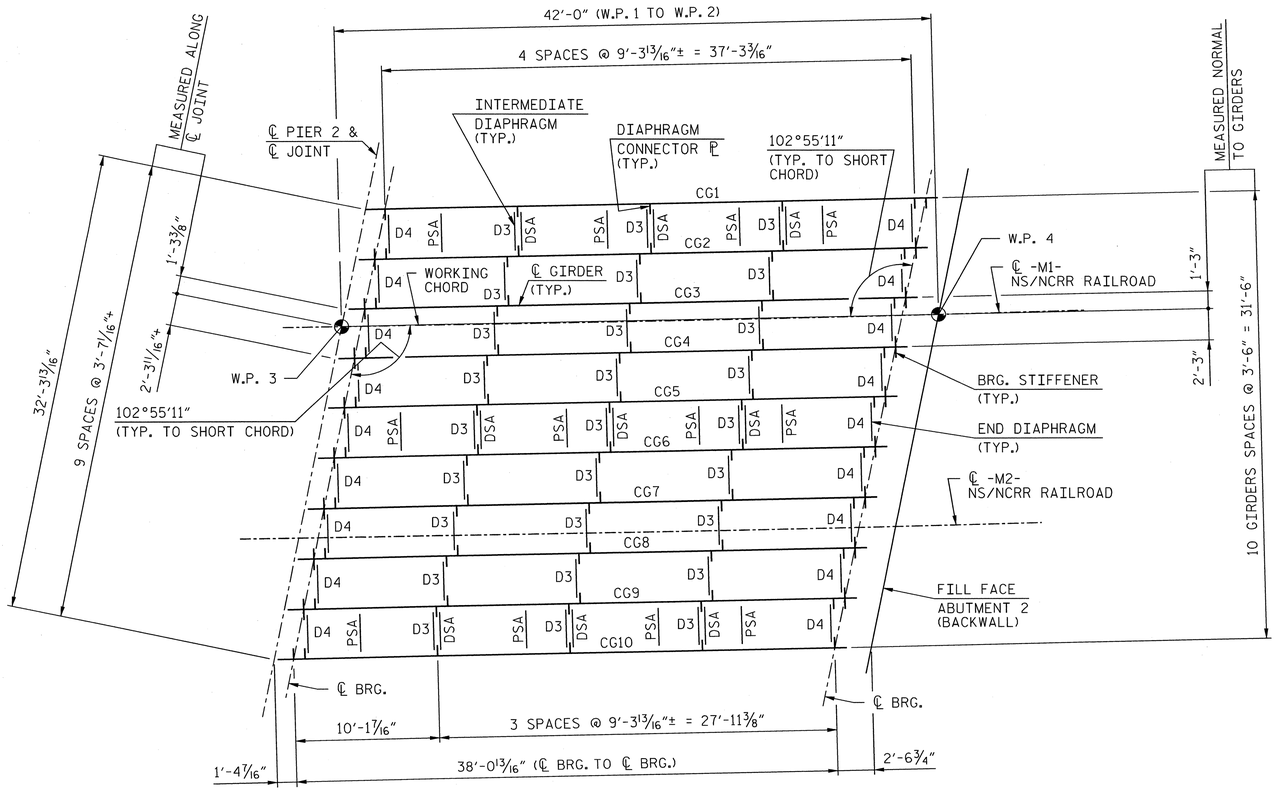

FRAMING PLAN

NOTE: ALL GIRDERS ARE PARALLEL TO WORKING CHORD.

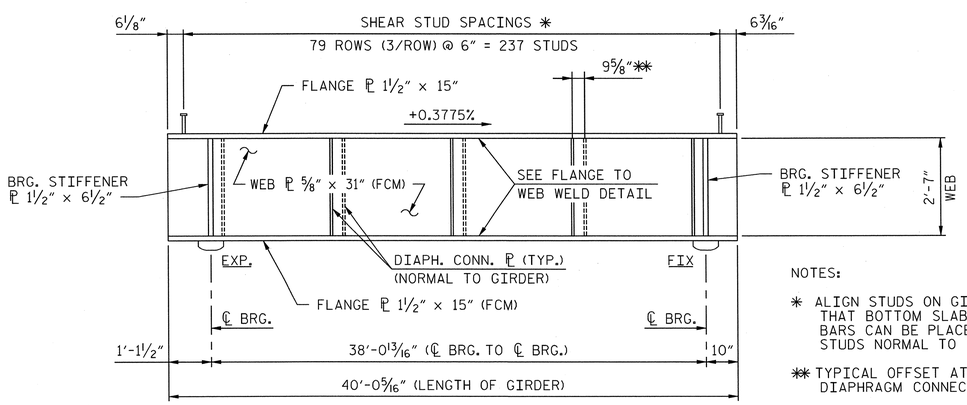

TYPICAL BEAM ELEVATION

(INTERIOR GIRDER SHOWN, EXTERIOR GIRDER SIMILAR)
(NTS)

NOTES:

✳ ALIGN STUDS ON GIRDER FLANGE SUCH THAT BOTTOM SLAB REINFORCING BARS CAN BE PLACED BETWEEN THE STUDS NORMAL TO THE GIRDER.

✳✳ TYPICAL OFFSET AT INTERMEDIATE DIAPHRAGM CONNECTOR PLATES.

CAMBER TABLE (DECIMAL INCHES)											
TENTH POINT	0.0	0.1	0.2	0.3	0.4	0.5	0.6	0.7	0.8	0.9	1.0
REQUIRED CAMBER	0.000	0.051	0.096	0.131	0.154	0.161	0.154	0.131	0.096	0.051	0.000

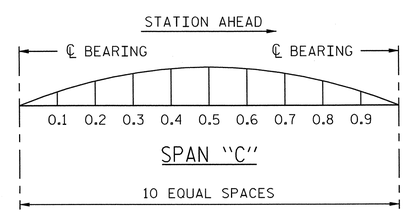

SCHEMATIC CAMBER ORDINATES

NAD 83 / NSRS 2007

NOTES:

1. ALL DIMENSIONS ON THIS DRAWING ARE HORIZONTAL.
2. ℄ PIER 2, ℄ ABUTMENT 2, AND ℄ BEARINGS ARE PARALLEL.
3. FOR STRUCTURAL STEEL NOTES, DIAPHRAGM DETAILS, STIFFENER & CONNECTOR ℙ DETAILS, SHEAR STUD CONNECTOR DETAIL, FLANGE TO WEB WELD DETAIL, WELD TERMINATION DETAIL AND SHOP SPLICE DETAIL, SEE "STRUCTURAL STEEL DETAILS" SHEETS.
4. FOR BEARINGS, SEE "BEARING DETAILS" SHEET.
5. FOR DSA AND PSA DRAIN PIPE SUPPORT DETAILS, SEE "STRUCTURE DRAINAGE DETAILS" SHEET.
6. BEARING STIFFENERS AND END DIAPHRAGM CONNECTOR PLATES ARE ORIENTED NORMAL TO CENTERLINE OF GIRDER.
7. THE GIRDERS IN SPAN "C" CAN BE SUBSTITUTED EQUIVALENTLY WITH W33 x 221.

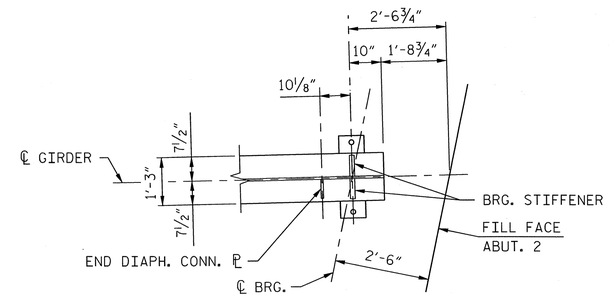

AT ABUTMENT 2

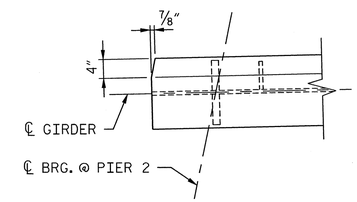

TOP FLANGE CLIP DIMENSIONS

(PIER 2 ONLY)

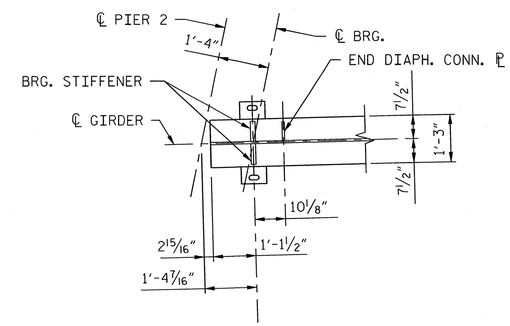

AT PIER 2

GIRDER END DIAPHRAGMS

(BOTTOM FLANGE SHOWN)

PROJECT NO. P-5208G

MECKLENBURG COUNTY

STATION: P.O.T. 10640+78.96 -M1-

SHEET 3 OF 3

AECOM
AECOM TECHNICAL SERVICES, INC.
701 CORPORATE CENTER DRIVE, SUITE 475
RALEIGH, NC 27607
(919) 854-6200 www.aecom.com
AECOM License No. F-0342

NORTH CAROLINA PROFESSIONAL SEAL 10656 ENGINEER MARK PEARSON
2/16/13

STATE OF NORTH CAROLINA
DEPARTMENT OF TRANSPORTATION
RALEIGH

SUPERSTRUCTURE

FRAMING PLAN AND GIRDER DETAILS - SPAN "C"

REVISIONS								SHEET NO.
NO.	BY:	DATE:	NO.	BY:	DATE:			S-14
1			3					TOTAL SHEETS
2			4					58

DRAWN BY : DDL DATE : 01/13
CHECKED BY : JL DATE : 01/13

DATE: 4/15/2013
TIME: 12:29:43 PM

USER: bellsem
DGN: 0:\60258940\400_Tech_Info_Disc_Files\450_NCDOT Staff\ectDesFiles\Structures\V33_FramingPlan_C.dgn

0041DEL_P10a1

DATE: 4/15/2013
TIME: 1:27:53 PM

NOTES:

1. FOR DIAPHRAGM LOCATIONS, SEE FRAMING PLANS.
2. FOR DETAILS OF DIAPHRAGM SUPPORT ANGLES (DSA), SEE "STRUCTURE DRAINAGE DETAILS" SHEET.
3. FOR STRUCTURAL STEEL NOTES, STIFFENER & CONNECTOR ℙ DETAILS, SHEAR STUD CONNECTOR DETAIL, FLANGE TO WEB WELD DETAIL, WELD TERMINATION DETAIL AND SHOP SPLICE DETAIL, SEE "STRUCTURAL STEEL DETAILS", SHEET 2 OF 2.

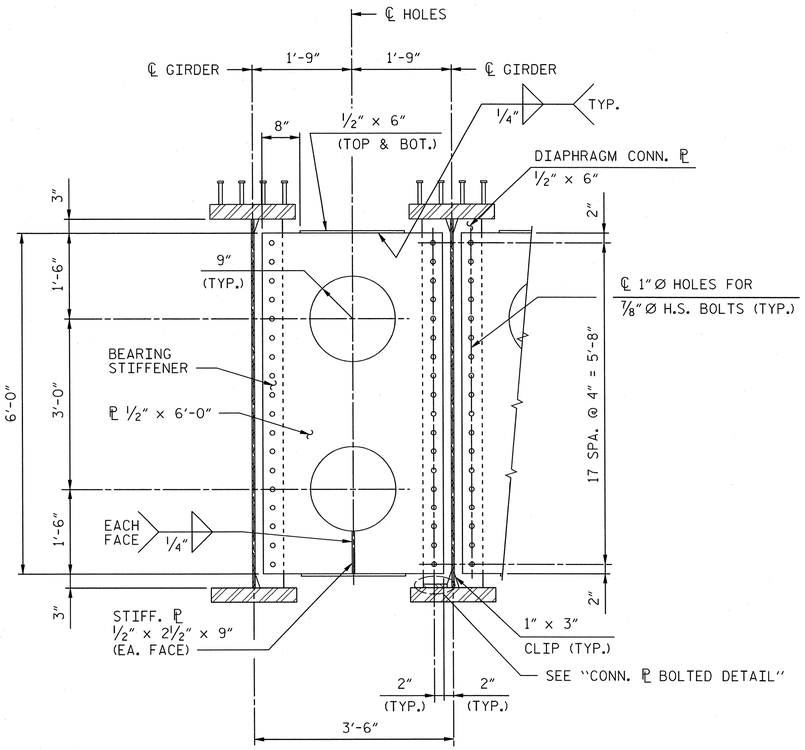

SECTION AT END DIAPHRAM - D1

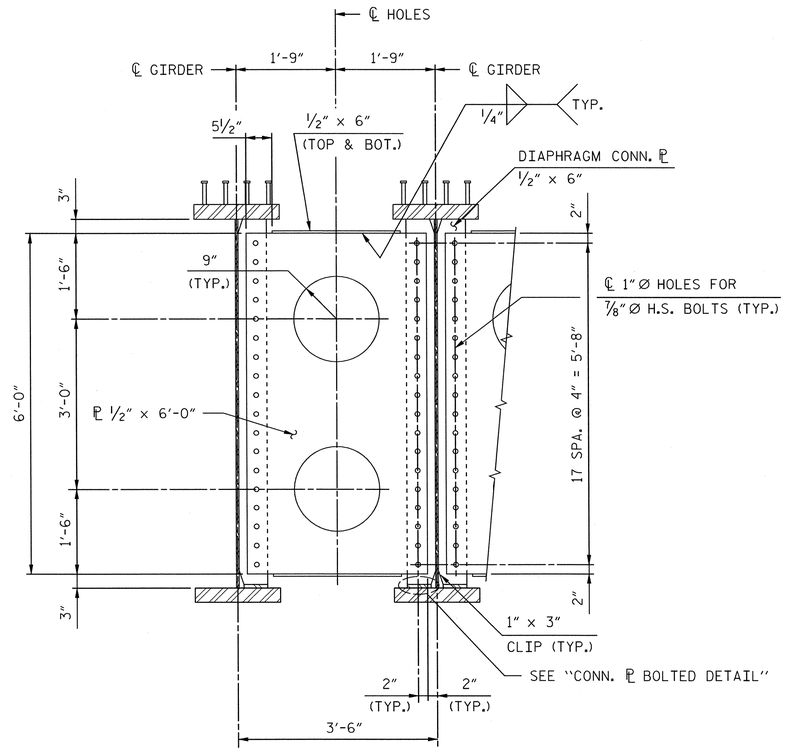

SECTION AT INTERMEDIATE DIAPHRAM - D2

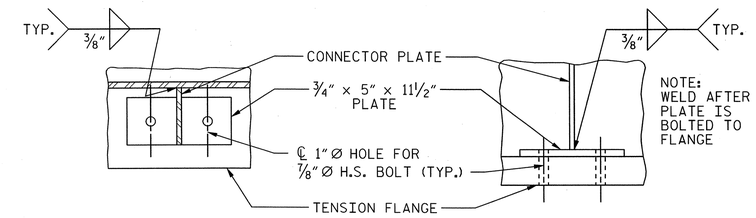

PLAN ELEVATION

CONN. ℙ BOLTED DETAIL

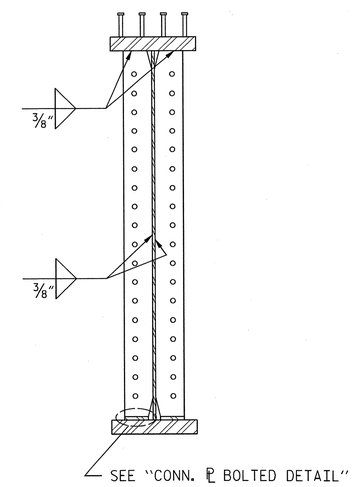

CONNECTOR ℙ DETAIL

SPAN "B" SHOWN, SPANS "A" & "C" SIMILAR

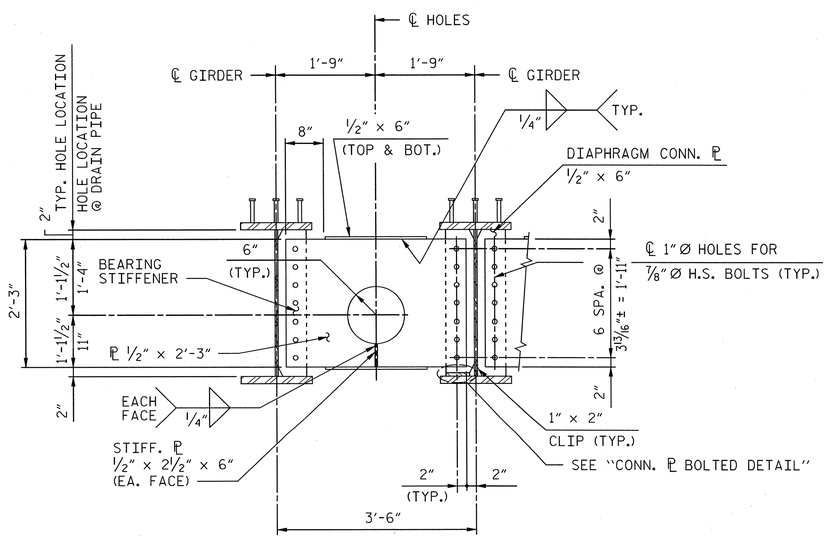

SECTION AT END DIAPHRAM - D4

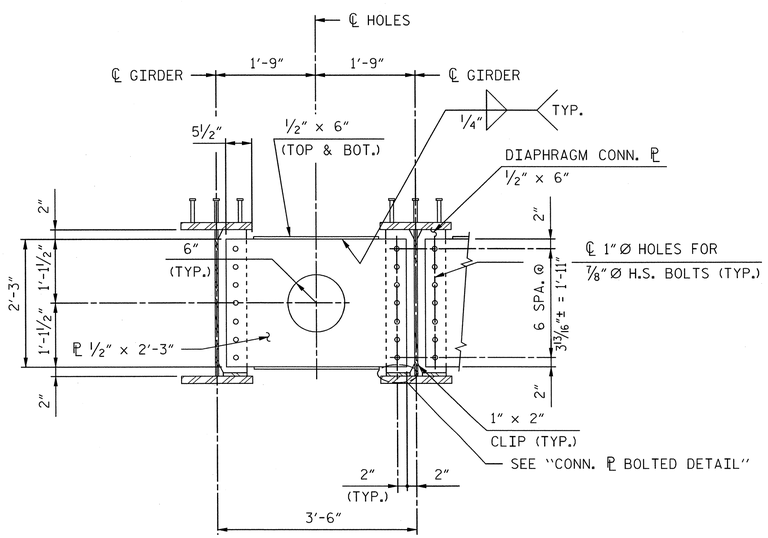

SECTION AT INTERMEDIATE DIAPHRAM - D3

PROJECT NO. P-5208G

MECKLENBURG COUNTY

STATION: P.O.T. 10640+78.96 -M1-

SHEET 1 OF 2

AECOM
AECOM TECHNICAL SERVICES, INC.
701 CORPORATE CENTER DRIVE, SUITE 475
RALEIGH, NC 27607
(919) 854-6200 www.aecom.com
AECOM License No. F-0342

NORTH CAROLINA PROFESSIONAL SEAL 10656 ENGINEER L. MARK PEARSON 4/16/13

STATE OF NORTH CAROLINA
DEPARTMENT OF TRANSPORTATION
RALEIGH

SUPERSTRUCTURE

STRUCTURAL STEEL DETAILS

REVISIONS						SHEET NO.
NO.	BY:	DATE:	NO.	BY:	DATE:	S-15
1			3			TOTAL SHEETS
2			4			58

DRAWN BY : JWH DATE : 01/13
CHECKED BY : JL DATE : 01/13

USER: bellclem
DGN: D:\62028949\400_Tech_Info_Disc_Files\450_NCDOT Std Textbase Files\Structures\V8i_Struct Steel Details 0.dgn

0041DEL_P10a1

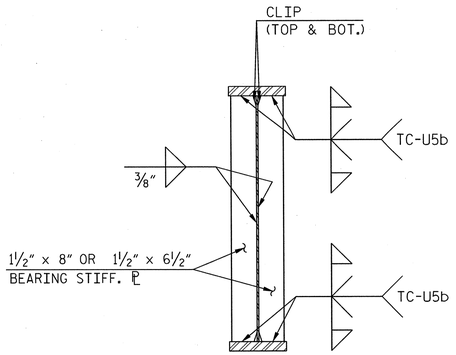

BEARING STIFFENER

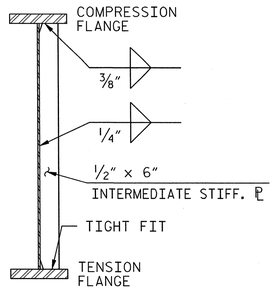

INTERMEDIATE STIFFENER

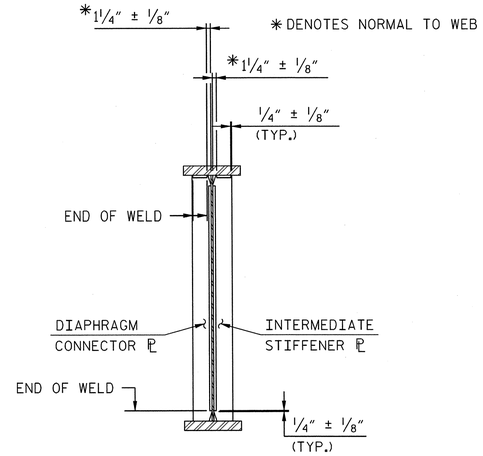

WELD TERMINATION DETAIL

(FILLET WELDS ONLY)

STIFFENER ℙ DETAILS

(FOR CONNECTION ℙ DETAIL, SEE "STRUCTURAL STEEL DETAILS", SHEET 1 OF 2)

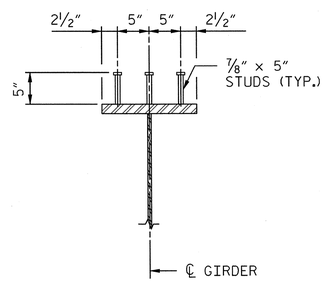

SHEAR STUD CONNECTOR DETAIL

(TYP. ALL GIRDERS - SPANS "A" & "C")

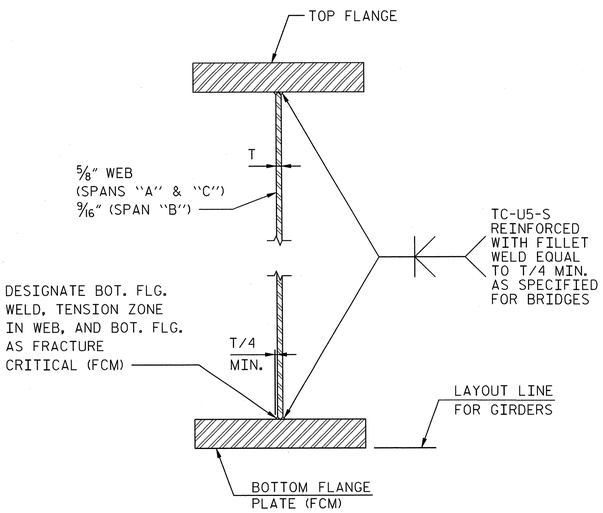

FLANGE TO WEB WELD DETAIL

NOTE:

ALIGN STUDS ON GIRDER FLANGE SUCH THAT BOTTOM SLAB REINFORCING BARS CAN BE PLACED BETWEEN THE STUDS NORMAL TO THE GIRDERS.

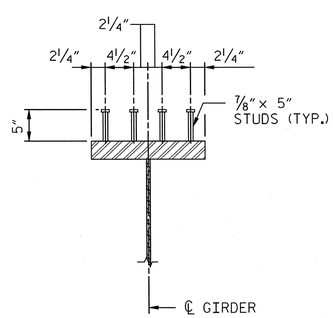

SHEAR STUD CONNECTOR DETAIL

(TYP. ALL GIRDERS - SPAN "B")

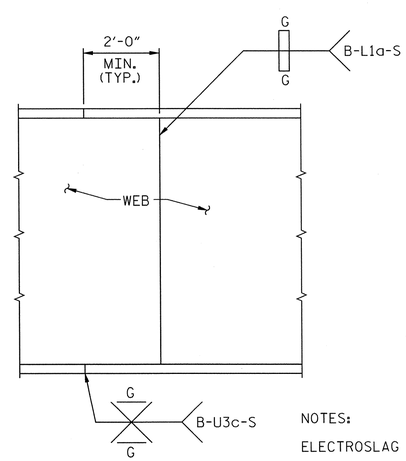

NOTES:

ELECTROSLAG WELDING IS NOT PERMITTED.

ULTRASONIC OR RADIOGRAPHIC INSPECTION IS REQUIRED FOR ALL FLANGE AND WEB SPLICE WELDS, SEE SPECIAL PROVISIONS.

GRIND WELDS IN DIRECTION OF STRESS ONLY (I.E. PARALLEL TO ℄ GIRDER).

SHOP SPLICE DETAIL

STRUCTURAL STEEL NOTES:

1. STRUCTURAL STEEL: fs = 27.5 ksi STRUCTURAL STEEL SHALL CONFORM TO THE FOLLOWING ASTM SPECIFICATIONS:

   BOTTOM FLANGES AND TENSION PORTIONS OF WEBS OF GIRDERS:
   A709, GRADE 50 WITH SUPPLEMENTALS S84-F2, S91 AND S93 APPLYING, AND IMPACT TEST REQUIREMENT OF 25 ft-lb @ 40°F AS GOVERNED BY ASTM A673 FOR TEST FREQUENCY "P".

   TOP FLANGES AND COMPRESSION PORTIONS OF WEBS OF GIRDERS:
   A709, GRADE 50 WITH SUPPLEMENTALS S83-T2 AND S91 APPLYING, AND WITH IMPACT TEST REQUIREMENT OF 15 ft-lb @ 40°F AS GOVERNED BY ASTM A673 FOR TEST FREQUENCY "H".

   ANCHOR BOLTS FOR BEARING DEVICES SHALL CONFORM TO ASTM F-1554. ANCHOR BOLTS, NUTS, AND PLATE WASHERS SHALL BE HOT-DIP QALVANIZED IN ACCORDANCE WITH ASTM A153.

   MISCELLANEOUS MATERIAL: A709, GRADE 50.

2. ALL DIMENSIONS SHOWN ARE HORIZONTAL OR VERTICAL UNLESS OTHERWISE NOTED.
3. GIRDER BOTTOM FLANGE PLATE INCLUDING WEB TO FLANGE WELD AND TENSION ZONE OF WEB PLATE ARE DESIGNATED FRACTURE CRITICAL (FCM) MEMBERS.
4. MILL TEST REPORTS: NORFOLK SOUTHERN RAILWAY COMPANY SHALL BE FURNISHED COPIES OF MILL TEST REPORTS FOR ALL MATERIALS EXCEPT MISCELLANEOUS PLATES AND SHAPES. REPORTS SHALL INDICATE COMPLIANCE WITH ALL SPECIFIED REQUIREMENTS.
5. INSPECTION: SHOP INSPECTION BY NORFOLK SOUTHERN REAILWAY COMPANY OR ITS AUTHORIZED AGENT, SEE SPECIAL PROVISIONS FOR ADDITIONAL WELDING INSPECTION OF FLANGE PLATE TO WEB PLATES WELDS.
6. SHOP AND FIELD PAINT: STRUCTURAL STEEL SHALL BE PAINTED IN ACCORDANCE WITH THE CURRENT NORFOLK SOUTHERN CORPORATION SPECIFICATIONS. THE SYSTEM TO BE USED SHALL BE AN INORGANIC ZINC-ACRYLIC SYSTEM. TOP OF TOP FLANGE AND VERTICAL EDGES OF TOP FLANGE OF ALL GIRDERS SHALL BE PAINTED. TOP COAT TO BE APPLIED IN THE FIELD.
7. SHOP DRAWINGS: SHOP DRAWINGS SHALL BE APPOVED BY THE CHIEF ENGINEER - BRIDGES & STRUCTURES, NORFOLK SOUTHERN CORPORATION, ATLANTA, GEORGIA. MATERIAL SHALL NOT BE FABRICATED UNTIL DRAWINGS HAVE BEEN APPROVED. COPIES OF APPROVED SHOP DRAWINGS ARE TO BE FURNISHED TO NCDOT. SHOP DRAWINGS SHALL BE LABELED "NORFOLK SOUTHERN MP 367+4841".
8. HOLES: OPEN HOLES AS NOTED.
9. HIGH STRENGTH BOLTS, NUTS AND WASHERS: ASTM DESIGNATION A325.
10. ANCHOR BOLTS SHALL BE 1 1/2" Ø IN ACCORDANCE WITH A.R.E.M.A. SPECIFICATIONS AND SHALL BE GROUTED IN FORMED HOLES AFTER GIRDERS ARE ERECTED.
11. FOR CAMBER REQUIREMENTS, SEE FRAMING PLANS.
12. CAMBERED GIRDER LENGTHS SHALL BE ADJUSTED AND BEARINGS PLACED ON CAMBERED GIRDERS SO AS TO BE ALIGNED WITH THE ANCHORS AFTER DEAD LOAD DEFLECTION HAS OCCURRED, SHOP PLANS SHALL BE PREPARED ACCORDINGLY.
13. BEARING PADS SHALL BE USED WHENEVER STEEL MASONRY PLATE, OR OTHER STEEL BEARING PLATE, BEARS ON CONCRETE. PADS SHALL BE PREFORMED FABRIC BEARING PADS, 1/2" THICK, PREFORMED FABRIC BEARING PADS SHALL BE SHOCK PAD STYLE 15175 AS MANUFACTURED BY ALERT MANUFACTURING AND SUPPLY COMPANY, CHICAGO, ILLINOIS, OR FABREEKA PADS AS MANUFACTURED BY FABREEKA PRODUCTS COMPANY, 1190 ADAMS STREET, BOSTON, MASSACHUSETTS, OR SORBTEX PADS AS MANUFACTURED BY VDSS ENGINEERING, INC., CHICAGO, ILLINOIS, OR APPROVED EQUAL.
14. SHEAR CONNECTORS ON GIRDERS MAY BE SHIFTED UP TO 1" TO CLEAR FLANGE SPLICE WELDS.
15. WEB SHOP SPLICES ARE PERMITTED TO LIMIT THE MAXIMUM REQUIRED WEB PIECE LENGTHS TO 45 FT. PERMITTED WEB SHOP SPLICES SHALL NOT BE LOCATED WITHIN 15 FT. OF MAXIMUM DEAD LOAD DEFLECTION AND SHALL BE LOCATED AS FAR AS POSSIBLE FROM CONNECTOR PLATE OR INTERMEDIATE STIFFENER WELDS. FLANGE SHOP SPLICES SHALL NOT BE PERMITTED UNLESS NOTED.

PROJECT NO. P-5208G
MECKLENBURG COUNTY
STATION: P.O.T. 10640+78.96 -M1-

SHEET 2 OF 2

AECOM
AECOM TECHNICAL SERVICES, INC.
701 CORPORATE CENTER DRIVE, SUITE 475
RALEIGH, NC 27607
(919) 854-6200 www.aecom.com
AECOM License No. F-0342

NORTH CAROLINA PROFESSIONAL SEAL 10656 ENGINEER L. MARK PEARSON 01/16/13

STATE OF NORTH CAROLINA
DEPARTMENT OF TRANSPORTATION
RALEIGH

SUPERSTRUCTURE

STRUCTURAL STEEL DETAILS

REVISIONS						SHEET NO.
NO.	BY:	DATE:	NO.	BY:	DATE:	S-16
1			3			TOTAL SHEETS
2			4			58

DRAWN BY : JWH DATE : 01/13
CHECKED BY : JL DATE : 01/13

DATE: 4/15/2013
TIME: 1:36:59 PM

USER: bellsben
DGN: 0:\60125894\400_Tech_Info_Disc_Files\450_NCDOT Std Details\Structures\H2J_Strut Steel Details 02.dgn

0041DEL_P10a1

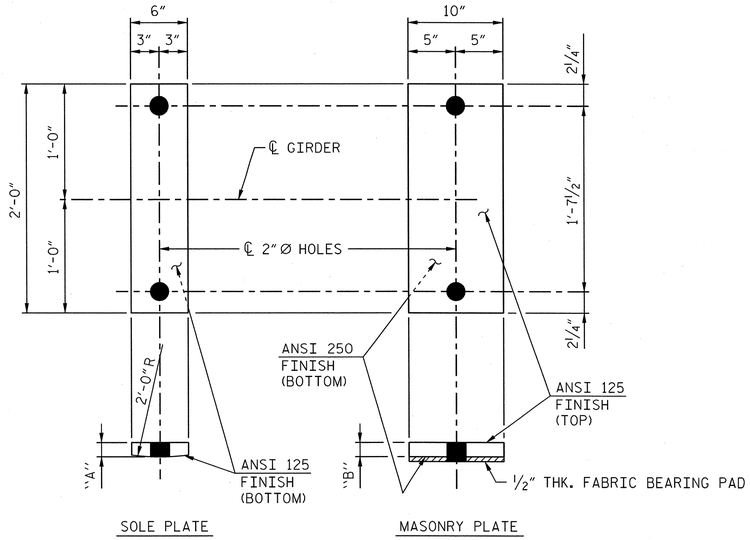

FIXED BEARINGS

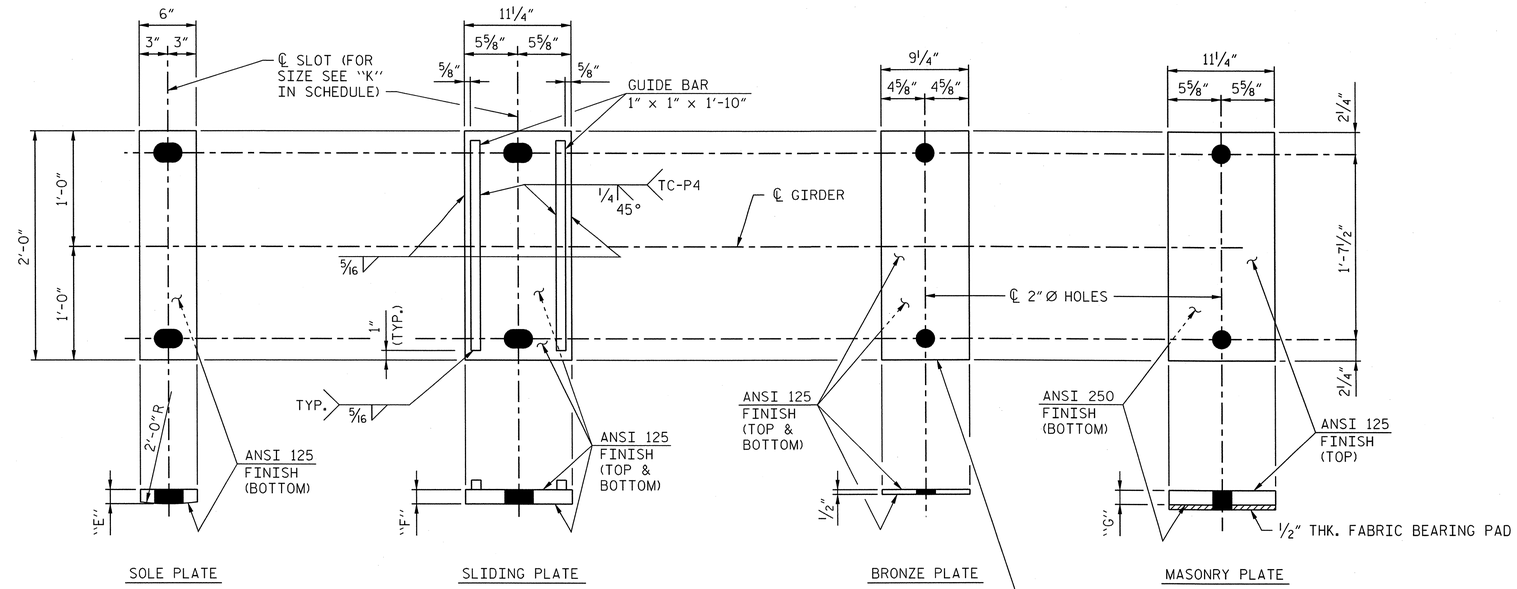

EXPANSION BEARINGS

BRONZE PLATE TO BE ASTM B22 - COPPER ALLOY 913 OR ASTM B100 - COPPER ALLOY 510. TOP SURFACE TO BE SELF LUBRICATING.

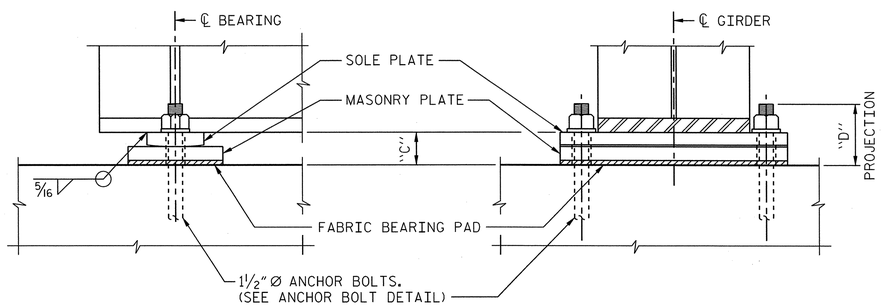

FIXED BEARING ASSEMBLY (FBA-1)

(20 REQ'D.)

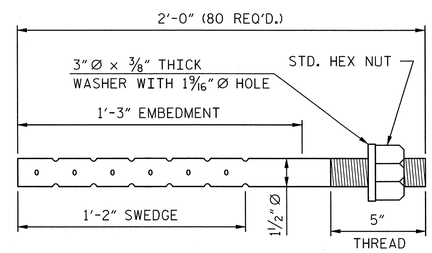

ANCHOR BOLT DETAIL

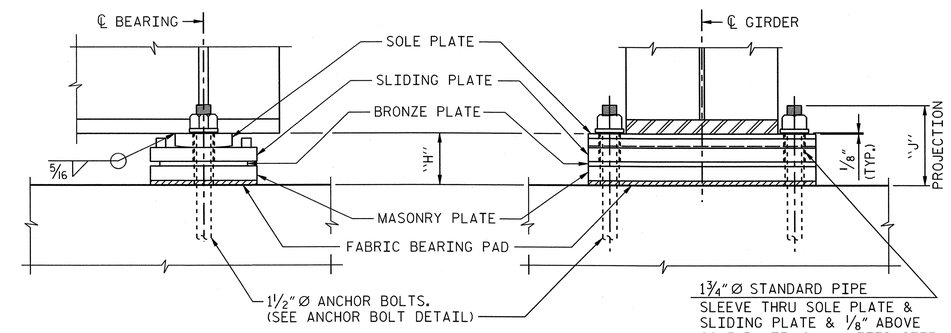

EXPANSION BEARING ASSEMBLY (EBA-1)

(20 REQ'D.)

BEARING PLATE SCHEDULE

GIRDER	DIMENSIONS (in.)									
	FIXED BEARING (FBA-1)				EXPANSION BEARING (EBA-1)					
	"A"	"B"	"C"	"D"	"E"	"F"	"G"	"H"	"J"	"K"
AG1	1½"	2¼"	4¼"	7¼"	1½"	1½"	1¾"	5¾"	8¾"	2" x 4"
AG2	1½"	2¼"	4¼"	7¼"	1½"	1½"	1¾"	5¾"	8¾"	2" x 4"
AG3	1½"	2 3/16"	4 3/16"	7 3/16"	1½"	1½"	1 11/16"	5 11/16"	8 11/16"	2" x 4"
AG4	1½"	2 3/16"	4 3/16"	7 3/16"	1½"	1½"	1 11/16"	5 11/16"	8 11/16"	2" x 4"
AG5	1½"	2⅛"	4⅛"	7⅛"	1½"	1½"	1⅝"	5⅝"	8⅝"	2" x 4"
AG6	1½"	2⅛"	4⅛"	7⅛"	1½"	1½"	1⅝"	5⅝"	8⅝"	2" x 4"
AG7	1½"	2 1/16"	4 1/16"	7 1/16"	1½"	1½"	1 9/16"	5 9/16"	8 9/16"	2" x 4"
AG8	1½"	2 1/16"	4 1/16"	7 1/16"	1½"	1½"	1 9/16"	5 9/16"	8 9/16"	2" x 4"
AG9	1½"	2"	4"	7"	1½"	1½"	1½"	5½"	8½"	2" x 4"
AG10	1½"	2"	4"	7"	1½"	1½"	1½"	5½"	8½"	2" x 4"
CG1	1½"	2 5/16"	4 5/16"	7 5/16"	1½"	1½"	1 13/16"	5 13/16"	8 13/16"	2" x 4"
CG2	1½"	2 5/16"	4 5/16"	7 5/16"	1½"	1½"	1 13/16"	5 13/16"	8 13/16"	2" x 4"
CG3	1½"	2¼"	4¼"	7¼"	1½"	1½"	1¾"	5¾"	8¾"	2" x 4"
CG4	1½"	2 3/16"	4 3/16"	7 3/16"	1½"	1½"	1¾"	5¾"	8¾"	2" x 4"
CG5	1½"	2 3/16"	4 3/16"	7 3/16"	1½"	1½"	1 11/16"	5 11/16"	8 11/16"	2" x 4"
CG6	1½"	2⅛"	4⅛"	7⅛"	1½"	1½"	1⅝"	5⅝"	8⅝"	2" x 4"
CG7	1½"	2⅛"	4⅛"	7⅛"	1½"	1½"	1⅝"	5⅝"	8⅝"	2" x 4"
CG8	1½"	2 1/16"	4 1/16"	7 1/16"	1½"	1½"	1 9/16"	5 9/16"	8 9/16"	2" x 4"
CG9	1½"	2 1/16"	4 1/16"	7 1/16"	1½"	1½"	1 9/16"	5 9/16"	8 9/16"	2" x 4"
CG10	1½"	2"	4"	7"	1½"	1½"	1½"	5½"	8½"	2" x 4"

NOTES:

ANCHOR BOLTS, SLIDING PLATE (EXPANSION BEARING) AND MASONRY PLATE (FIXED AND EXPANSION BEARINGS) SHALL BE HOT DIPPED GALVANIZED.

ALL PLATE SURFACES SHALL BE PAINTED WITH A 3 COAT PAINT SYSTEM EXCEPT AS SPECIFIED BELOW.

(A) THE SLIDING PLATE (EXPANSION BEARING) SHALL NOT BE PAINTED BUT SHALL RECEIVE A COAT OF LUBRICATION.

(B) THE MASONRY PLATE (FIXED AND EXPANSION BEARINGS) SHALL NOT BE PAINTED.

(C) THE BOTTOM SURFACE OF THE SOLE PLATE SHALL NOT BE PAINTED BUT SHALL RECEIVE A SINGLE COAT OF PRIMER APPLIED IN THE SHOP.

(D) THE TOP SURFACE OF THE SOLE PLATE SHALL NOT BE PAINTED IN THE VICINITY OF THE WELD BETWEEN THE SOLE PLATE AND THE BOTTOM FLANGE.

FOR ACRYLIC PAINT SYSTEM FOR STRUCTURAL STEEL, SEE SPECIAL PROVISIONS.

FOR SELF LUBRICATING EXPANSION BEARING ASSEMBLIES, SEE SPECIAL PROVIVSIONS.

PROJECT NO. P-5208G

MECKLENBURG COUNTY

STATION: P.O.T. 10640+78.96 -M1-

SHEET 1 OF 2

AECOM
AECOM TECHNICAL SERVICES, INC.
701 CORPORATE CENTER DRIVE, SUITE 475
RALEIGH, NC 27607
(919) 854-6200 www.aecom.com
AECOM License No. F-0342

NORTH CAROLINA PROFESSIONAL SEAL 10656 ENGINEER MARK PEARSON 01/16/13

STATE OF NORTH CAROLINA
DEPARTMENT OF TRANSPORTATION
RALEIGH

SUPERSTRUCTURE

BEARING DETAILS
SPANS "A" & "C"

REVISIONS								SHEET NO.
NO.	BY:	DATE:	NO.	BY:	DATE:			S-17
1			3					TOTAL SHEETS
2			4					58

DRAWN BY : MTB DATE : 01/13
CHECKED BY : JL DATE : 01/13

DATE: 4/15/2013
TIME: 1:39:3 PM

USER: bellsiem
DGN: 0:\60226894\400_Tech_Info_Disc_Files\450_NCDOT-Std Text\Des Files\Structures\H21_BrgDets_1.dgn

0041DEL_P10a1

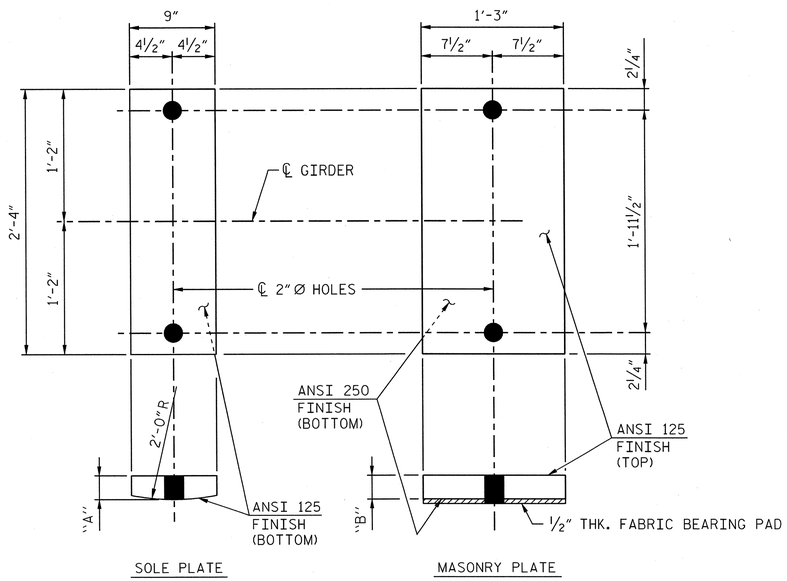

FIXED BEARINGS

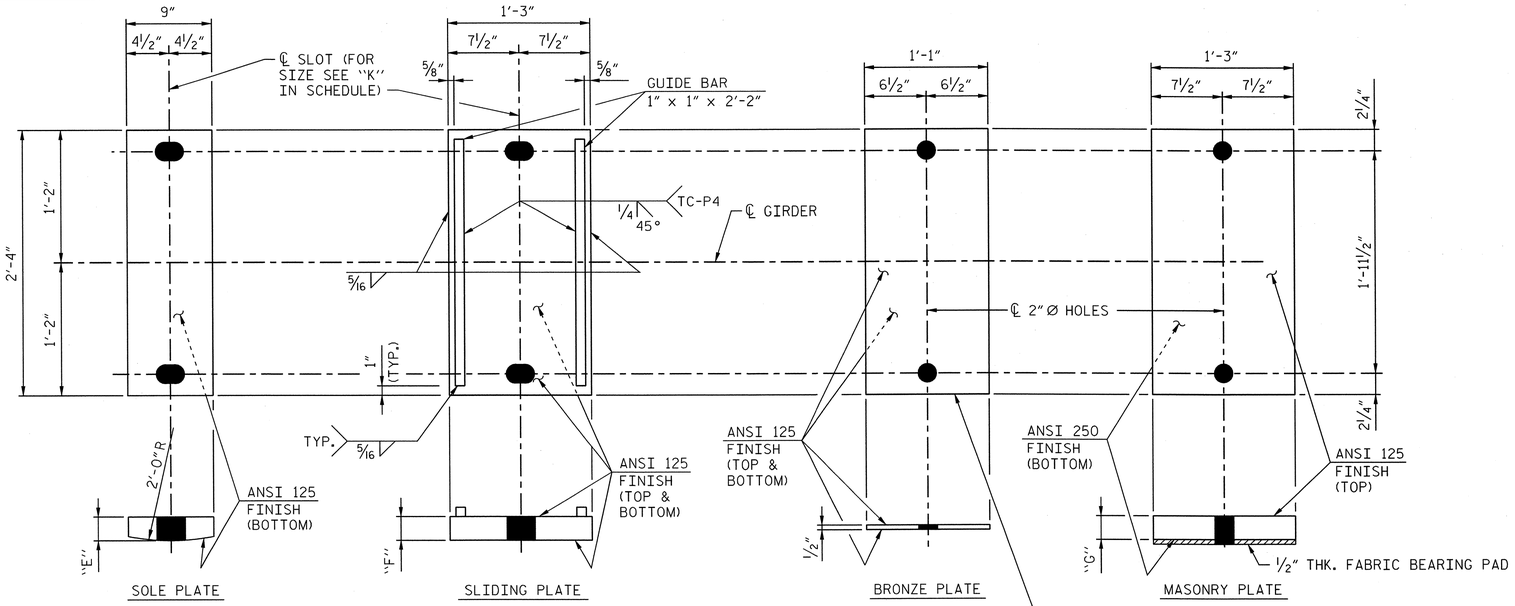

EXPANSION BEARINGS

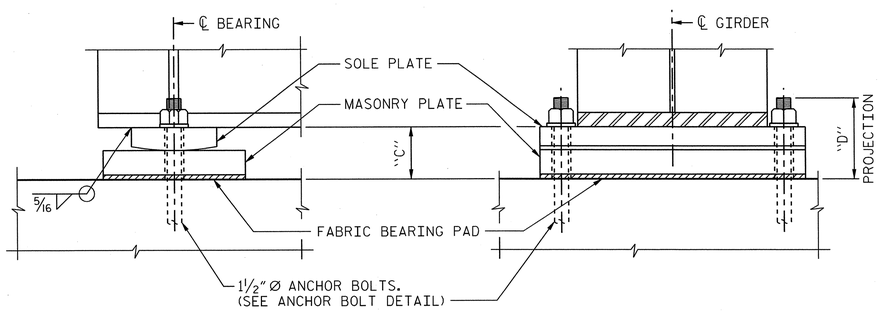

FIXED BEARING ASSEMBLY (FBA-2)

(10 REQ'D.)

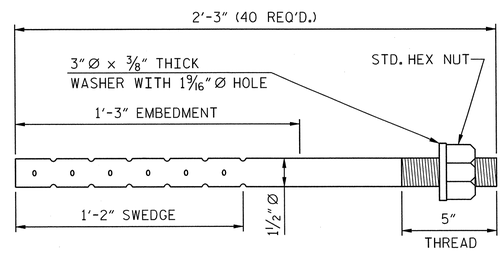

ANCHOR BOLT DETAIL

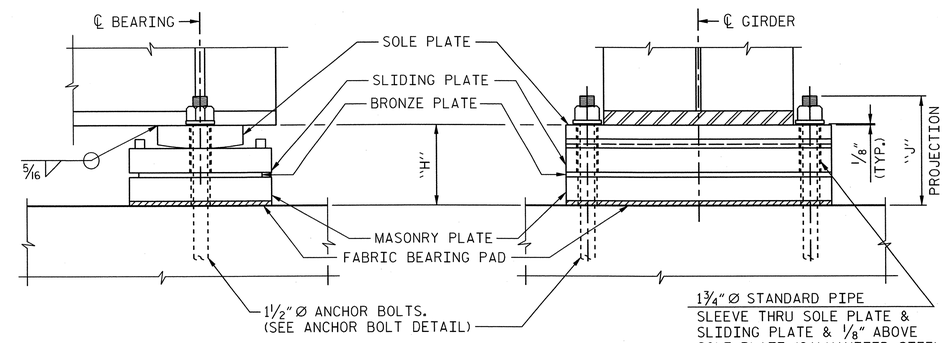

EXPANSION BEARING ASSEMBLY (EBA-2)

(10 REQ'D.)

BEARING PLATE SCHEDULE

GIRDER	DIMENSIONS (in.)									
	FIXED BEARING (FBA-2)				EXPANSION BEARING (EBA-2)					
	"A"	"B"	"C"	"D"	"E"	"F"	"G"	"H"	"J"	"K"
BG1	2½"	2 13/16"	5 13/16"	8 13/16"	2½"	2½"	2¾"	8¾"	11¾"	2" x 4"
BG2	2½"	2¾"	5¾"	8¾"	2½"	2½"	2¾"	8¾"	11¾"	2" x 4"
BG3	2½"	2¾"	5¾"	8¾"	2½"	2½"	2 11/16"	8 11/16"	11 11/16"	2" x 4"
BG4	2½"	2 11/16"	5 11/16"	8 11/16"	2½"	2½"	2 11/16"	8 11/16"	11 11/16"	2" x 4"
BG5	2½"	2 11/16"	5 11/16"	8 11/16"	2½"	2½"	2⅝"	8⅝"	11⅝"	2" x 4"
BG6	2½"	2⅝"	5⅝"	8⅝"	2½"	2½"	2⅝"	8⅝"	11⅝"	2" x 4"
BG7	2½"	2⅝"	5⅝"	8⅝"	2½"	2½"	2 9/16"	8 9/16"	11 9/16"	2" x 4"
BG8	2½"	2 9/16"	5 9/16"	8 9/16"	2½"	2½"	2 9/16"	8 9/16"	11 9/16"	2" x 4"
BG9	2½"	2 9/16"	5 9/16"	8 9/16"	2½"	2½"	2½"	8½"	11½"	2" x 4"
BG10	2½"	2½"	5½"	8½"	2½"	2½"	2½"	8½"	11½"	2" x 4"

NOTES:

ANCHOR BOLTS, SLIDING PLATE (EXPANSION BEARING) AND MASONRY PLATE (FIXED AND EXPANSION BEARINGS) SHALL BE HOT DIPPED GALVANIZED.

ALL PLATE SURFACES SHALL BE PAINTED WITH A 3 COAT PAINT SYSTEM EXCEPT AS SPECIFIED BELOW.

(A) THE SLIDING PLATE (EXPANSION BEARING) SHALL NOT BE PAINTED BUT SHALL RECEIVE A COAT OF LUBRICATION.

(B) THE MASONRY PLATE (FIXED AND EXPANSION BEARINGS) SHALL NOT BE PAINTED.

(C) THE BOTTOM SURFACE OF THE SOLE PLATE SHALL NOT BE PAINTED BUT SHALL RECEIVE A SINGLE COAT OF PRIMER APPLIED IN THE SHOP.

(D) THE TOP SURFACE OF THE SOLE PLATE SHALL NOT BE PAINTED IN THE VICINITY OF THE WELD BETWEEN THE SOLE PLATE AND THE BOTTOM FLANGE.

FOR ACRYLIC PAINT SYSTEM FOR STRUCTURAL STEEL, SEE SPECIAL PROVISIONS.

FOR SELF LUBRICATING EXPANSION BEARING ASSEMBLIES, SEE SPECIAL PROVIVSIONS.

PROJECT NO. P-5208G

MECKLENBURG COUNTY

STATION: P.O.T. 10640+78.96 -M1-

SHEET 2 OF 2

AECOM
AECOM TECHNICAL SERVICES, INC.
701 CORPORATE CENTER DRIVE, SUITE 475
RALEIGH, NC 27607
(919) 854-6200 www.aecom.com
AECOM License No. F-0342

NORTH CAROLINA PROFESSIONAL SEAL 10656 ENGINEER L. MARK PEARSON 4/16/13

STATE OF NORTH CAROLINA
DEPARTMENT OF TRANSPORTATION
RALEIGH

SUPERSTRUCTURE

BEARING DETAILS
SPAN "B"

REVISIONS						SHEET NO.
NO.	BY:	DATE:	NO.	BY:	DATE:	S-18
1			3			TOTAL SHEETS
2			4			58

DRAWN BY : MTB DATE : 01/13
CHECKED BY : JL DATE : 01/13

DATE: 4/15/2013
TIME: 1:40:34 PM

USER: bellchem
DGN: 0:\60282884\400_Tech_Info_Disc_Files\450_NCDOT Std Text Base Files\Structures\V12_Brg Pads_Exp.n

0041DEL_P10a1

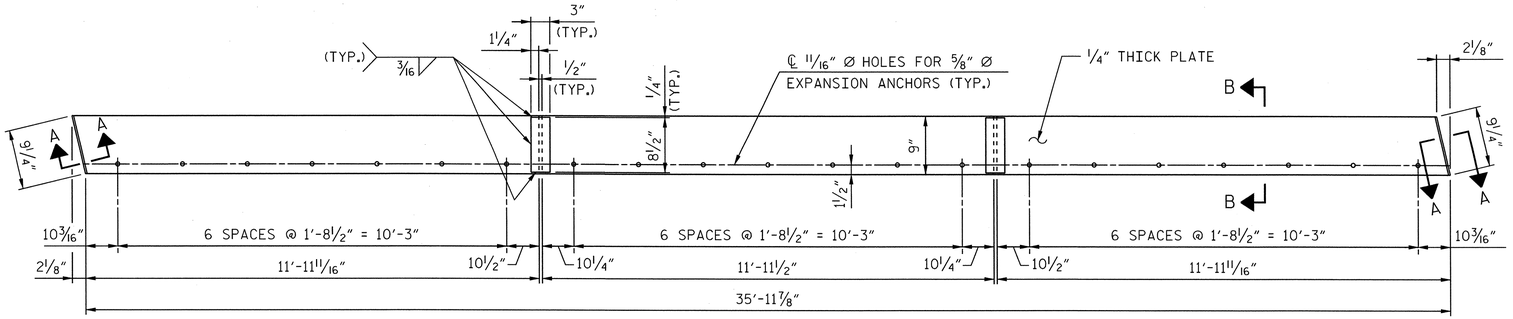

ABUTMENT #2

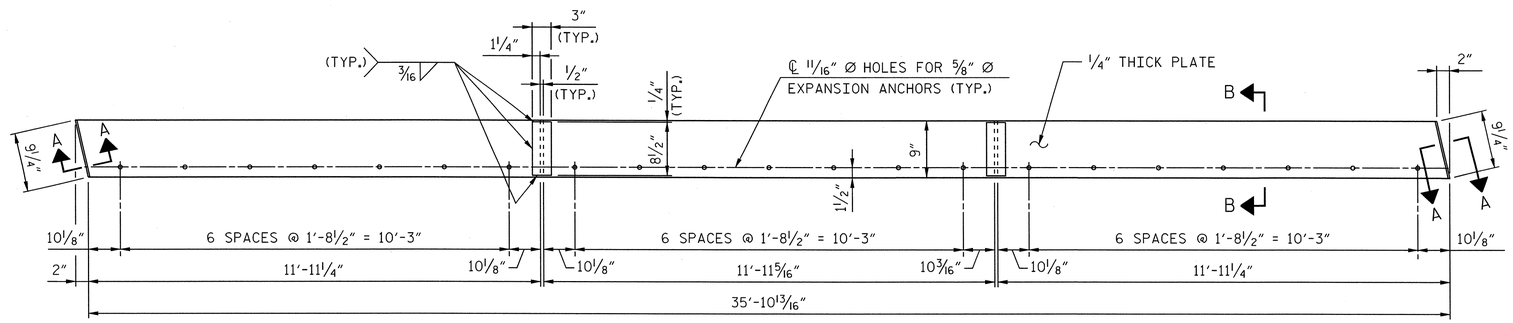

PIER #2

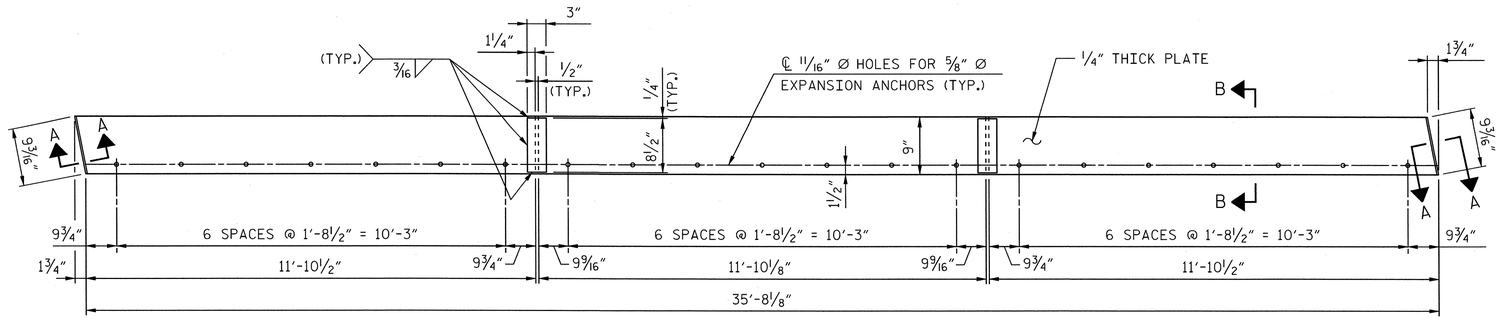

PIER #1

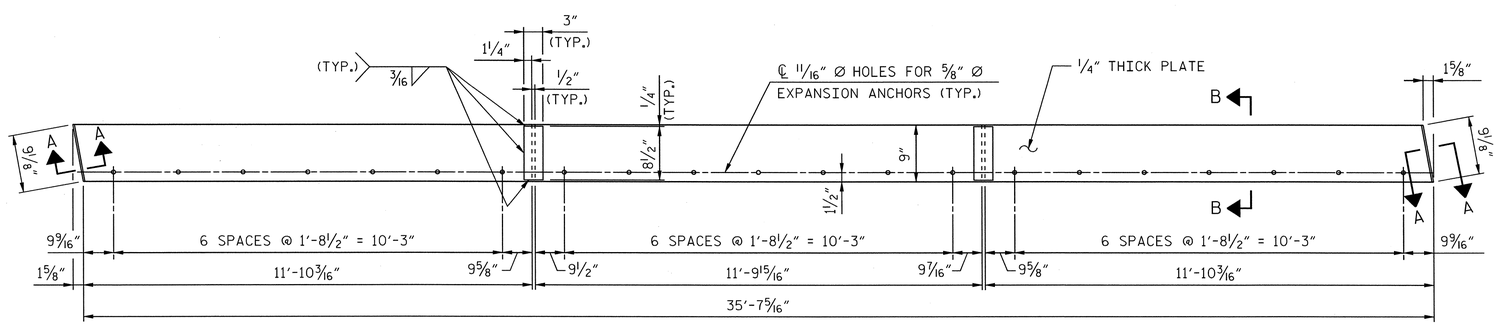

ABUTMENT #1

PLAN - EXPANSION PLATES

UP STATION

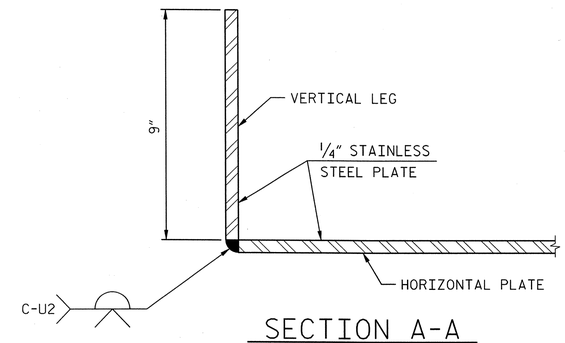

SECTION A-A

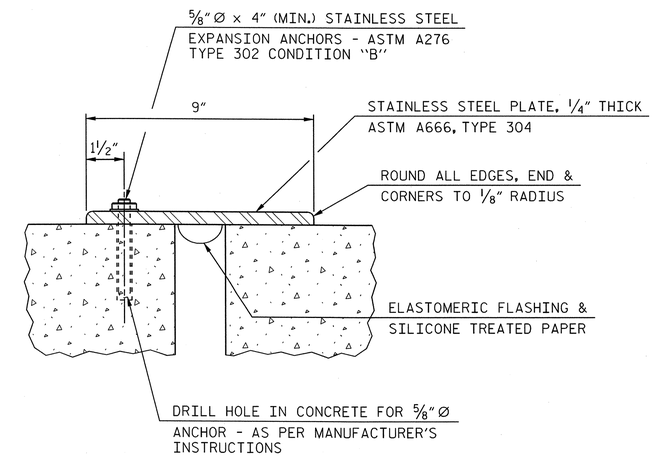

SECTION B-B
(DETAIL OF EXPANSION ANCHOR)

PROJECT NO. P-5208G
MECKLENBURG **COUNTY**
STATION: P.O.T. 10640+78.96 -M1-

AECOM
AECOM TECHNICAL SERVICES, INC.
701 CORPORATE CENTER DRIVE, SUITE 475
RALEIGH, NC 27607
(919) 854-6200 www.aecom.com
AECOM License No. F-0342

NORTH CAROLINA PROFESSIONAL SEAL 10656 ENGINEER L. MARK PEARSON 4/16/13

STATE OF NORTH CAROLINA
DEPARTMENT OF TRANSPORTATION
RALEIGH

SUPERSTRUCTURE

EXPANSION PLATE DETAILS

REVISIONS						SHEET NO.
NO.	BY:	DATE:	NO.	BY:	DATE:	S-19
1			3			TOTAL SHEETS
2			4			58

DRAWN BY : MTB DATE : 01/13
CHECKED BY : JL DATE : 01/13

DATE: 4/15/2013
TIME: 1:44:28 PM

USER: bellisim
DGN: C:\80128594\0400_Tech_Info_Disc_Files\450_NCDOT\SIGT textBeFiles\Structures\V10_ExpPlateDetails.dgn

0041DEL_P10a1

DGN

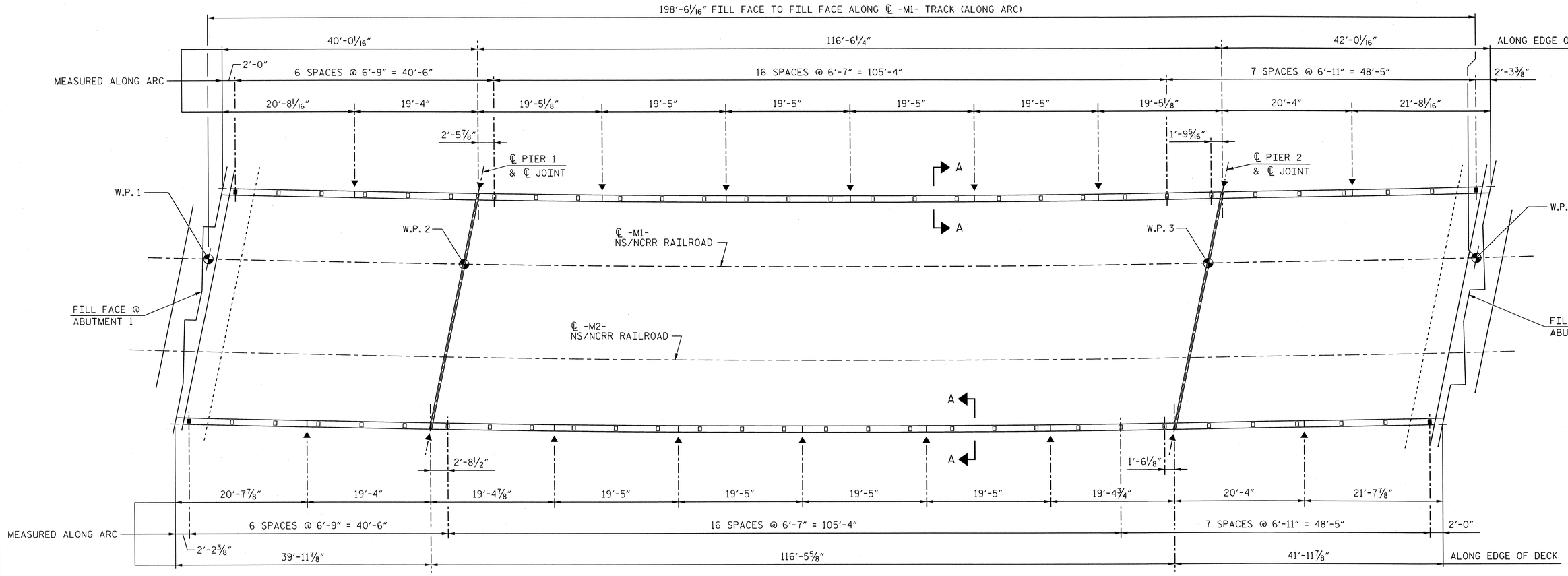

HANDRAIL POST SPACING PLAN - BRIDGE

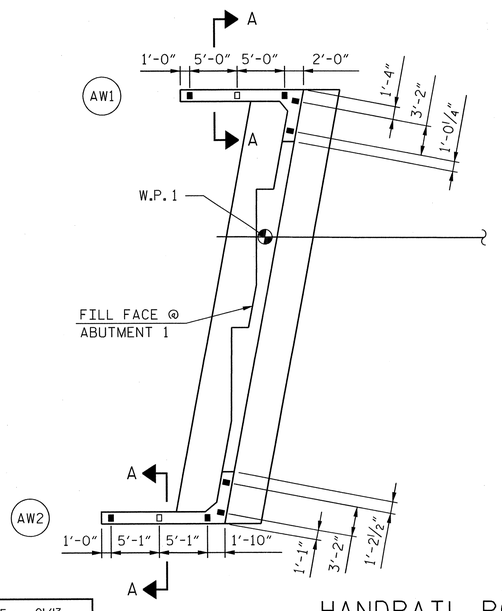

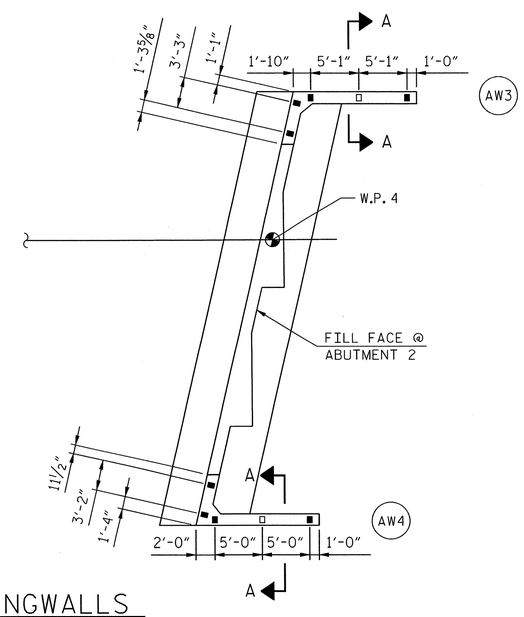

HANDRAIL POST SPACING PLAN - WINGWALLS

LEGEND:

- ■ - END POST
- □ - INTERIOR POST
- ▼ - PARAPET & RAIL EXPANSION JOINT

PROJECT NO. P-5208G

MECKLENBURG **COUNTY**

STATION: P.O.T. 10640+78.96 -M1-

SHEET 1 OF 2

AECOM

AECOM TECHNICAL SERVICES, INC.
701 CORPORATE CENTER DRIVE, SUITE 475
RALEIGH, NC 27607
(919) 854-6200 www.aecom.com
AECOM License No. F-0342

NORTH CAROLINA PROFESSIONAL SEAL 10656 ENGINEER J. MARK PEARSON
4/16/13

STATE OF NORTH CAROLINA
DEPARTMENT OF TRANSPORTATION
RALEIGH

SUPERSTRUCTURE

METAL HANDRAIL DETAILS

REVISIONS						
NO.	BY:	DATE:	NO.	BY:	DATE:	
1			3			
2			4			

SHEET NO. S-20

TOTAL SHEETS 58

DRAWN BY : MTB DATE : 01/13
CHECKED BY : JL DATE : 01/13

DATE: 4/15/2013
TIME: 1:46:50 PM

USER: bellsiem
DGN: Q:\60268940\400_Tech_Info_Dis_Files\450_NCDOT Staff Tech Use Files\Structures\H25J_MHHandRail_1.dgn

0041DEL_P10a1

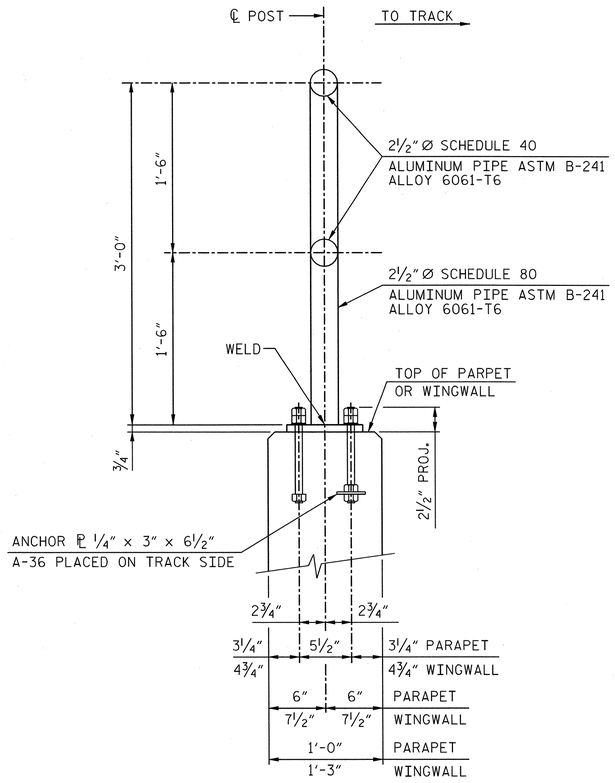

SECTION A-A

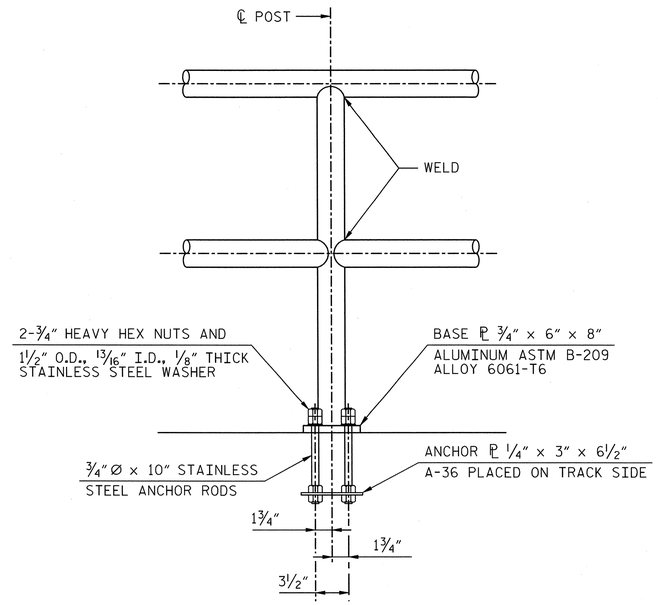

FRONT VIEW

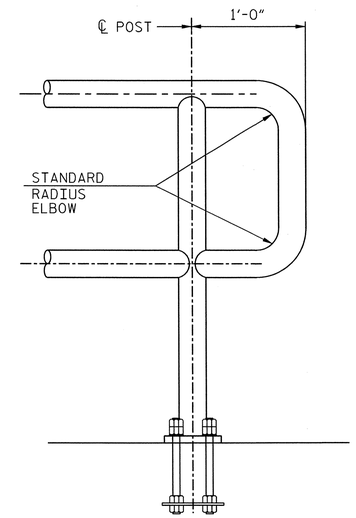

END POST DETAIL

(ON ABUTMENT WINGS AND ENDS
OF BRIDGE PARAPETS - SEE SHT. 1 OF 2)

NOTES:

1. JOINTS IN RAILING (SPLICE GAP) SHALL BE LOCATED AS SHOWN IN POST SPACING PLAN.
2. ALUMINUM PIPE TO BE ASTM B-429, ALLOY 6061-T6 AND BASE PLATE TO BE ASTM B-209, ALLOY 6061-T6.
3. STAINLESS STEEL BOLTS, CAP SCREWS, AND NUTS TO BE ASTM A-276 TYPE 304. STAINLESS STEEL WASHERS TO BE AST, A-276 TYPE 302.
4. POSTS TO BE SET PERPENDICULAR TO TOP OF CURB AND RAILS SHALL BE PLACED PARALLEL TO THE GRADE OF THE BRIDGE.
5. CERTIFIED MILL REPORTS ARE REQUIRED FOR RAIL AND POSTS. SHOP INSPECTIONS ARE NOT REQUIRED.
6. AFTER ANCHOR ROD NUTS HAVE BEEN TIGHTENED, THREADS SHALL BE NICKED TO LOCK NUTS.
7. CURVED RAIL USAGE: WHERE RAILS ARE TO BE USED ON BRIDGES ON HORIZONTAL AND/OR VERTICAL CURVATURE, THE CONTRACTOR MAY, AT HIS OPTION, HAVE THE REQUIRED CURVATURE IN THE RAIL FORMED IN THE SHOP OR IN THE FIELD. IN EITHER EVENT THE RAIL SHALL CONFORM WITHOUT BUCKLING OR KINKING TO THE REQUIRED CURVATURE IN A UNIFORM MANNER ACCEPTABLE TO THE ENGINEER.
8. ANCHOR PLATES SHALL BE STEEL CONFORMING TO ASTM SPECIFICATION A36.
9. ANCHOR RODS SHALL CONFORM TO ASTM SPECIFICATION A276 TYPE 302 OR 304, STAINLESS STEEL, AND TREADS SHALL BE ROLLED, NOT CUT.
10. UPPER ANCHOR ROD NUTS SHALL BE HEAVY HEX NUTS, PER ASTM A276 TYPE 302 OR 304 STAINLESS STEEL.
11. LOWER ANCHOR ROD NUTS SHALL BE HEAVY STEEL HEX NUTS, PER ASTM A563.
12. THE CENTERLINE OF ANY SPLICE AND/OR EXPANSION JOINT IS TO BE LOCATED AT LEAST 2'-0" AWAY FROM CENTERLINE OF POST. EXPANSION AND/OR SPLICE JOINTS FOR EACH RAIL OF TWO RAILINGS ARE TO BE PLACED IN THE SAME LOCATION AND IN THE SAME PANEL.
13. WELDING SHALL BE IN ACCORDANCE WITH THE CURRENT AWS STRUCTURAL WELDING CODE - ALUMINUM.
14. THE BOTTOM OF THE BASE PLATES SHALL BE THOROUGHLY COATED WITH ALUMINUM INPREGNATED CAULKING COMPOUND OF APPROVED QUALITY.
15. THE LENGTH OF THE METAL RAIL TO BE PAID FOR SHALL BE THE CONTINUOUS LENGTH MEASURED FROM END TO END OF RAIL, ALONG THE TOP OF RAIL.

PAY LENGTH = 461'-7"

ALUMINUM HANDRAIL AND POST

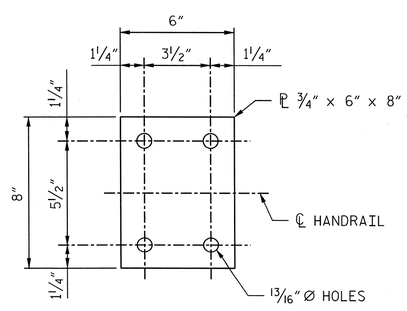

BASE PLATE

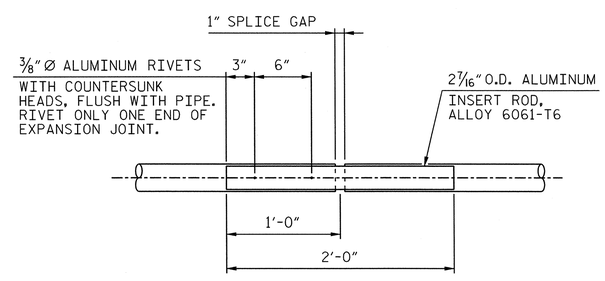

EXPANSION JOINT DETAIL

PROJECT NO. P-5208G

MECKLENBURG COUNTY

STATION: P.O.T. 10640+78.96 -M1-

SHEET 2 OF 2

AECOM
AECOM TECHNICAL SERVICES, INC.
701 CORPORATE CENTER DRIVE, SUITE 475
RALEIGH, NC 27607
(919) 854-6200
www.aecom.com
AECOM License No. F-0342

NORTH CAROLINA PROFESSIONAL SEAL 19506 ENGINEER L. MARK PEARSON 4/16/13

STATE OF NORTH CAROLINA
DEPARTMENT OF TRANSPORTATION
RALEIGH

SUPERSTRUCTURE

METAL HANDRAIL DETAILS

REVISIONS								SHEET NO.
NO.	BY:	DATE:	NO.	BY:	DATE:			S-21
1			3					TOTAL SHEETS
2			4					58

DRAWN BY : MTB DATE : 01/13
CHECKED BY : JL DATE : 01/13

DATE: 4/15/2013
TIME: 1:49:27 PM

USER: bellstem
DGN: 0:\60258940\400_Tech_Info_Disc_Files\450_NCDOT Std Tech Disc Files\Structures\H21_MHandrail_2.dgn

0041DEL_P10a1

REINFORCING STEEL SCHEDULE

SPAN "A"						SPAN "B"						SPAN "C"					
BAR	NO.	SIZE	TYPE	LENGTH	WEIGHT	BAR	NO.	SIZE	TYPE	LENGTH	WEIGHT	BAR	NO.	SIZE	TYPE	LENGTH	WEIGHT
A1	126	#5	STR.	36'-8"	4,819	A1	434	#5	STR.	36'-8"	16,598	A1	128	#5	STR.	36'-8"	4,896
A2	2	#5	STR.	2'-10"	6												
A3	2	#5	STR.	5'-5"	11	A28	2	#5	STR.	3'-8"	8	A57	2	#5	STR.	1'-11"	4
A4	2	#5	STR.	8'-1"	17	A29	2	#5	STR.	6'-1"	13	A58	2	#5	STR.	4'-2"	9
A5	2	#5	STR.	10'-9"	22	A30	2	#5	STR.	8'-6"	18	A59	2	#5	STR.	6'-4"	13
A6	2	#5	STR.	13'-4"	28	A31	2	#5	STR.	10'-11"	23	A60	2	#5	STR.	8'-6"	18
A7	2	#5	STR.	16'-0"	33	A32	2	#5	STR.	13'-4"	28	A61	2	#5	STR.	10'-9"	22
A8	2	#5	STR.	18'-8"	39	A33	2	#5	STR.	15'-9"	33	A62	2	#5	STR.	12'-11"	27
A9	2	#5	STR.	21'-3"	44	A34	2	#5	STR.	18'-2"	38	A63	2	#5	STR.	15'-2"	32
A10	2	#5	STR.	23'-11"	50	A35	2	#5	STR.	20'-7"	43	A64	2	#5	STR.	17'-4"	36
A11	2	#5	STR.	26'-7"	55	A36	2	#5	STR.	23'-0"	48	A65	2	#5	STR.	19'-7"	41
A12	2	#5	STR.	29'-2"	61	A37	2	#5	STR.	25'-5"	53	A66	2	#5	STR.	21'-9"	45
A13	2	#5	STR.	31'-10"	66	A38	2	#5	STR.	27'-10"	58	A67	2	#5	STR.	24'-0"	50
A14	2	#5	STR.	34'-6"	72	A39	2	#5	STR.	30'-3"	63	A68	2	#5	STR.	26'-2"	55
A15	2	#5	STR.	34'-6"	72	A40	2	#5	STR.	32'-8"	68	A69	2	#5	STR.	28'-4"	59
A16	2	#5	STR.	31'-11"	67	A41	2	#5	STR.	35'-1"	73	A70	2	#5	STR.	30'-7"	64
A17	2	#5	STR.	29'-3"	61	A42	2	#5	STR.	32'-2"	67	A71	2	#5	STR.	32'-9"	68
A18	2	#5	STR.	26'-7"	55	A43	2	#5	STR.	32'-10"	68	A72	2	#5	STR.	35'-0"	73
A19	2	#5	STR.	24'-0"	50	A44	2	#5	STR.	30'-5"	63	A73	2	#5	STR.	35'-2"	73
A20	2	#5	STR.	21'-4"	45	A45	2	#5	STR.	28'-0"	58	A74	2	#5	STR.	33'-0"	69
A21	2	#5	STR.	18'-8"	39	A46	2	#5	STR.	25'-7"	53	A75	2	#5	STR.	30'-9"	64
A22	2	#5	STR.	16'-1"	34	A47	2	#5	STR.	23'-2"	48	A76	2	#5	STR.	28'-7"	60
A23	2	#5	STR.	13'-5"	28	A48	2	#5	STR.	20'-10"	43	A77	2	#5	STR.	26'-5"	55
A24	2	#5	STR.	10'-10"	23	A49	2	#5	STR.	18'-5"	38	A78	2	#5	STR.	24'-2"	50
A25	2	#5	STR.	8'-2"	17	A50	2	#5	STR.	16'-0"	33	A79	2	#5	STR.	22'-0"	46
A26	2	#5	STR.	5'-6"	11	A51	2	#5	STR.	13'-7"	28	A80	2	#5	STR.	19'-10"	41
A27	2	#5	STR.	2'-11"	6	A52	2	#5	STR.	11'-2"	23	A81	2	#5	STR.	17'-7"	37
						A53	2	#5	STR.	8'-10"	18	A82	2	#5	STR.	15'-5"	32
						A54	2	#5	STR.	6'-5"	13	A83	2	#5	STR.	13'-2"	27
						A55	2	#5	STR.	4'-0"	8	A84	2	#5	STR.	11'-0"	23
B1	92	#5	STR.	38'-1"	3,655	A56	2	#5	STR.	1'-7"	3	A85	2	#5	STR.	8'-10"	18
B2	32	#5	STR.	11'-3"	376							A86	2	#5	STR.	6'-7"	14
												A87	2	#5	STR.	4'-5"	9
G1	8	#6	STR.	37'-3"	448	B2	32	#5	STR.	11'-3"	376	A88	2	#5	STR.	2'-2"	5
						B3	32	#5	STR.	19'-1"	611						
						B4	276	#5	STR.	40'-4"	11,611	B5	92	#5	STR.	40'-1"	3,847
												B6	32	#5	STR.	11'-4"	379
						G1	4	#6	STR.	37'-3"	224						
S1	80	#6	1	6'-6"	782	G2	4	#6	STR.	37'-6"	226	G2	4	#6	STR.	37'-6"	226
												G3	4	#6	STR.	37'-7"	226
						S1	240	#6	1	6'-6"	2,344						
												S1	80	#6	1	6'-6"	782

BAR TYPES

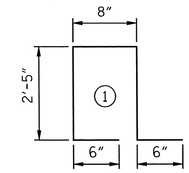

ALL BAR DIMENSIONS ARE OUT TO OUT

BILL OF MATERIAL BREAKDOWN BY SPAN

SPANS	CLASS AA CONCRETE (CU. YDS.)		EPOXY COATED REINFORCING STEEL
	DECK SLAB	PARAPET	(LBS.)
SPAN "A"	42.2	5.2	11,092
SPAN "B"	137.5	15.8	33,121
SPAN "C"	44.4	5.5	11,595
TOTALS	224.1	26.5	55,808

TOTAL SUPERSTRUCTURE BILL OF MATERIAL

	CLASS AA CONCRETE	EPOXY COATED REINFORCING STEEL
	(CU. YDS.)	(LBS.)
DECK SLAB	224.1	54,066
PARAPET	26.5	1,742
TOTALS	250.6	55,808

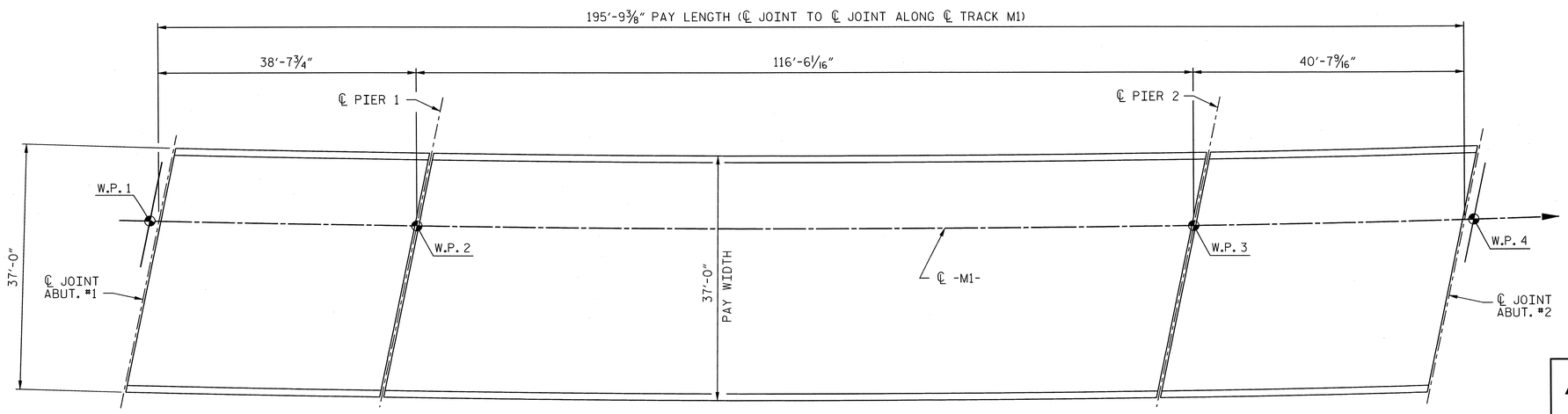

LAYOUT FOR COMPUTING AREA
OF REINFORCED CONCRETE DECK SLAB
(SQ. FEET = 7,243.9)

DRAWN BY : JWH DATE : 01/13
CHECKED BY : JL DATE : 01/13

DATE: 4/15/2013
TIME: 1:51:53 PM

USER: bellsley
DGN: 0:\5208\B9940\400_Tech_Info_Dist_Files\450_NCDOT SIdTechDistFiles\Structure\V12_SuperBOM.dgn

PROJECT NO. P-5208G
MECKLENBURG COUNTY
STATION: P.O.T. 10640+78.96 -M1-

AECOM
AECOM TECHNICAL SERVICES, INC.
701 CORPORATE CENTER DRIVE, SUITE 475
RALEIGH, NC 27607
(919) 854-6200 www.aecom.com
AECOM License No. F-0342

NORTH CAROLINA PROFESSIONAL SEAL 19656 ENGINEER L. MARK PEARSON
4/16/13

STATE OF NORTH CAROLINA
DEPARTMENT OF TRANSPORTATION
RALEIGH

SUPERSTRUCTURE
BILL OF MATERIAL

REVISIONS						SHEET NO.
NO.	BY:	DATE:	NO.	BY:	DATE:	S-22
1			3			TOTAL SHEETS
2			4			58

0041DEL_P10a1

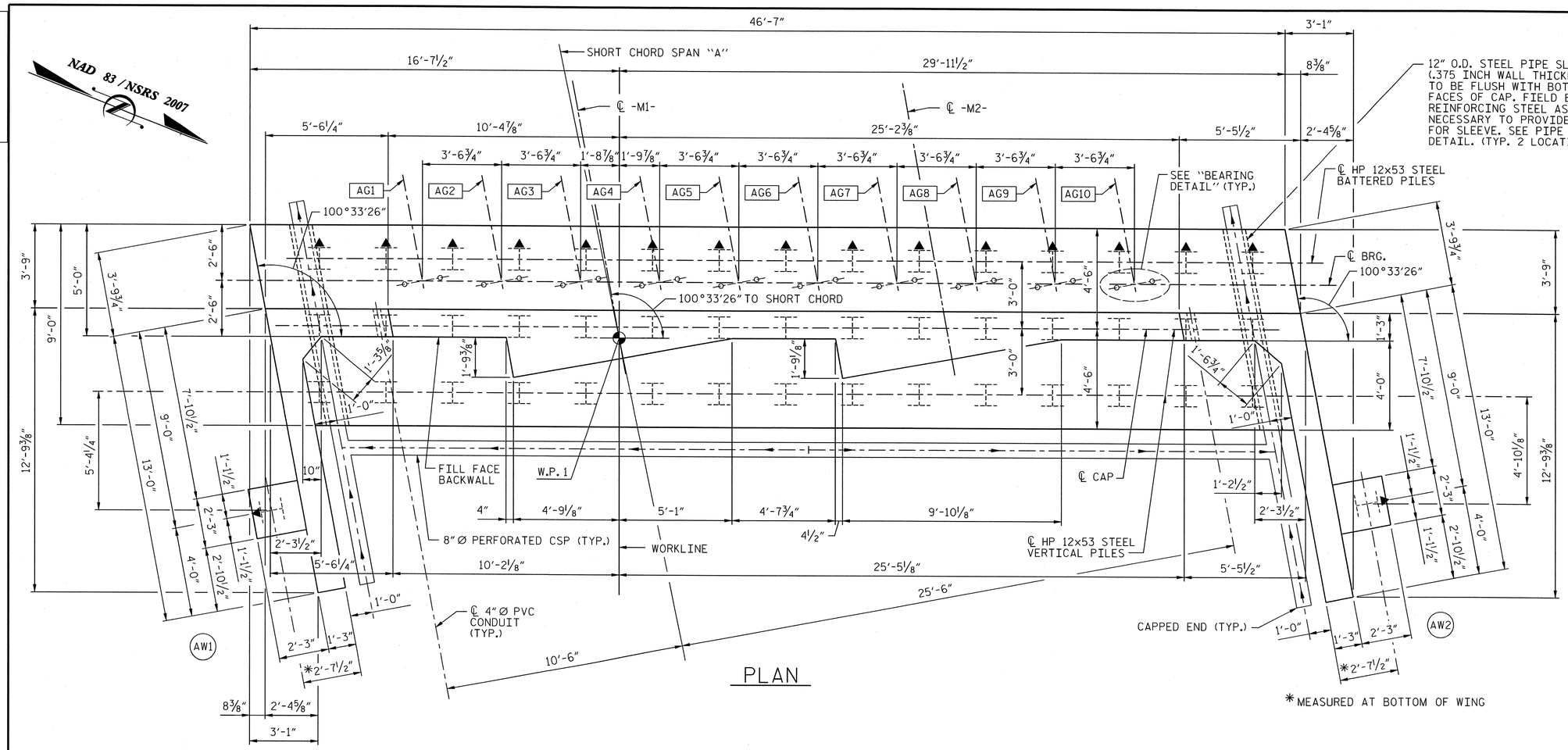

PLAN

NOTES:

1. FOR ABUTMENT REINFORCING, SEE SHEET 2 OF 4.
2. FOR PIPE SLEEVE DETAIL, SEE SHEET 2 OF 4.
3. FOR WINGWALL REINFORCING, SEE SHEET 3 OF 4.
4. FOR EPOXY PROTECTIVE COATING, SEE STANDARD SPECIFICATIONS.
5. ▲ INDICATES PILE BATTER 3:12 IN DIRECTION SHOWN.
6. FOR SECTION "A-A", SEE SHEET 4 OF 4.
7. FOR PILE SPLICE DETAILS, SEE SHEET 4 OF 4.
8. BACKWALL SHALL BE PLACED BEFORE APPLYING THE EPOXY PROTECTIVE COATING.

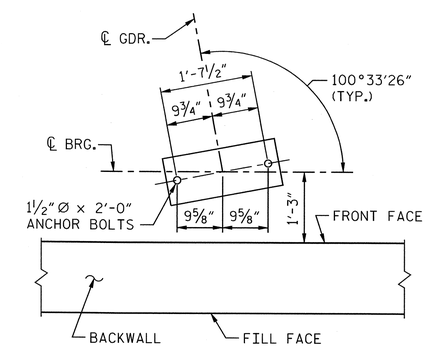

BEARING DETAIL

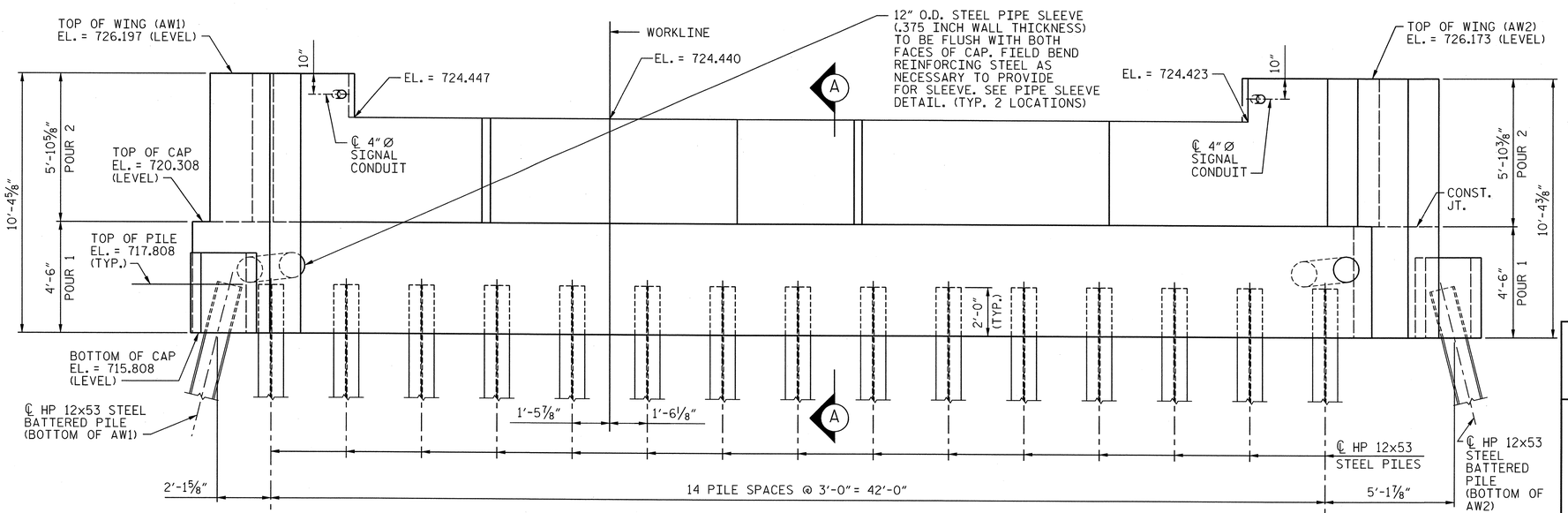

ELEVATION

PROJECT NO. P-5208G

MECKLENBURG **COUNTY**

STATION: P.O.T. 10640+78.96 -M1-

SHEET 1 OF 4

AECOM
AECOM TECHNICAL SERVICES, INC.
701 CORPORATE CENTER DRIVE, SUITE 475
RALEIGH, NC 27607
(919) 854-6200 www.aecom.com
AECOM License No. F-0342

NORTH CAROLINA PROFESSIONAL SEAL 10656 ENGINEER MARK PEARSON 5/15/13

STATE OF NORTH CAROLINA
DEPARTMENT OF TRANSPORTATION
RALEIGH

SUBSTRUCTURE

ABUTMENT #1
PLAN AND ELEVATION

REVISIONS						SHEET NO.
NO.	BY:	DATE:	NO.	BY:	DATE:	S-23
1			3			TOTAL SHEETS
2			4			58

DRAWN BY : MTB DATE : 01/13
CHECKED BY : JL DATE : 01/13

DATE: 5/15/2013
TIME: 8:29:53 AM

USER: bellsjem
DGN: 0:\60286940\400_Tech_Info_Disc_Files\450_NCDOT Std Details\Structures\H20_Abut-1_Ldgn

0041DEL_P10a1

DGN

DATE: 4/15/2013
TIME: 1:54:58 PM

USER: bollsten
DGN: 0:\8208594\0400_Tech_Info_Disc_Files\450_NCDOT StdTechDocFiles\Structures\V12_Abut-1_2.dgn

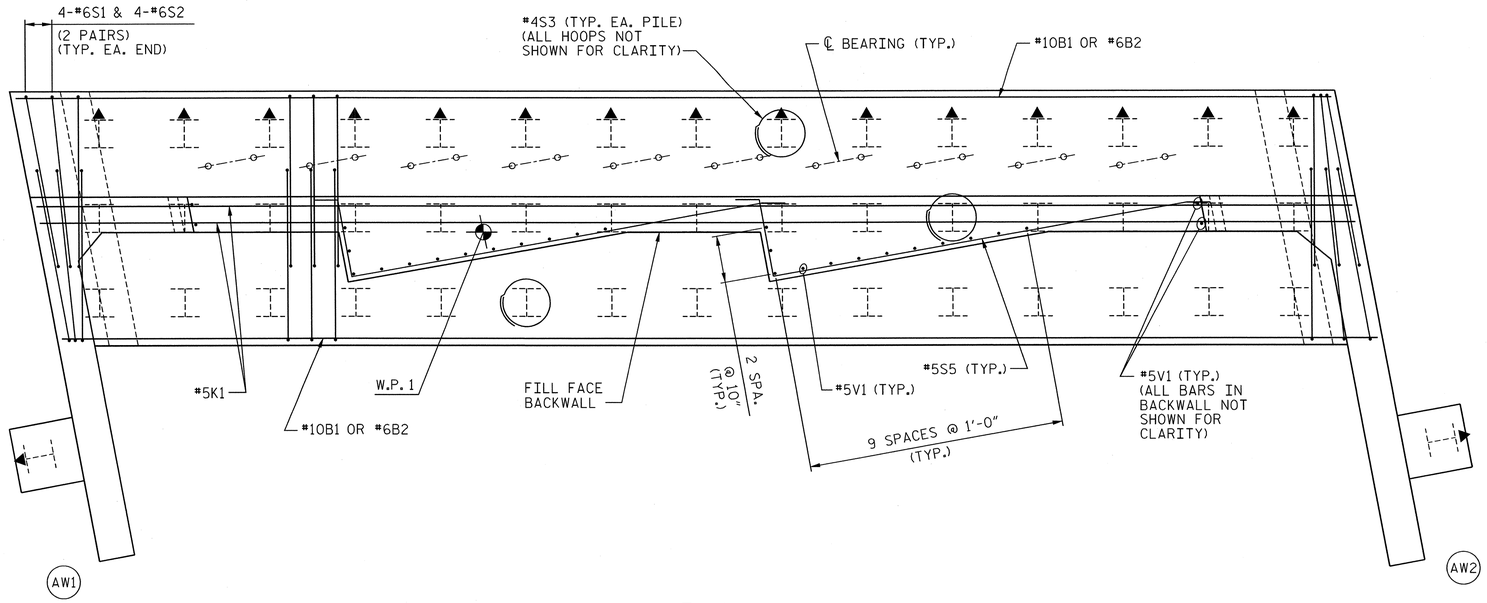

PLAN

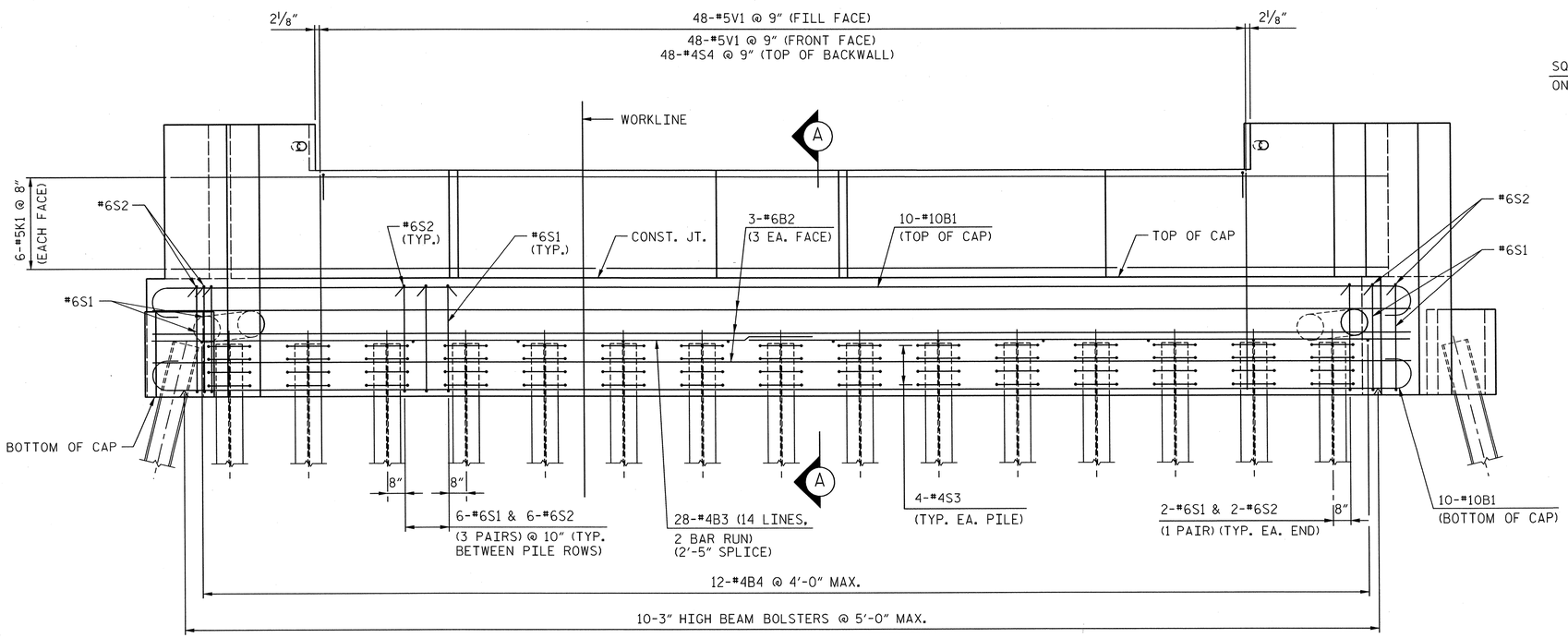

ELEVATION

NOTES:

1. STIRRUPS IN CAP MAY BE SHIFTED AS NECESSARY TO CLEAR ANCHOR BOLTS.
2. FOR EPOXY PROTECTIVE COATING, SEE STANDARD SPECIFICATIONS.
3. FOR WINGWALL REINFORCING AND DETAILS, SEE SHEET 3 OF 4.
4. FOR SECTION "A-A", SEE SHEET 4 OF 4.
5. ▲ INDICATES PILE BATTER 3:12 IN DIRECTION SHOWN.

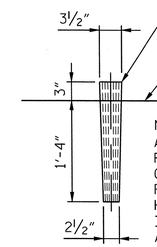

NOTE:
AT THE CONTRACTOR'S OPTION, HOLES FOR ANCHOR BOLTS MAY BE DRILLED. CARE SHALL BE TAKEN TO SET REINFORCING STEEL SO AS TO CLEAR HOLE LOCATION. IF FREEZING WEATHER IS ENCOUNTERED, FILL HOLES WITH ANTIFREEZE AND SAWDUST. ANCHOR BOLTS SHALL BE GROUTED IN PLACE. GROUT TO BE APPROVED BY ENGINEER.

DETAIL OF WOOD CORE FOR ANCHOR BOLT HOLES

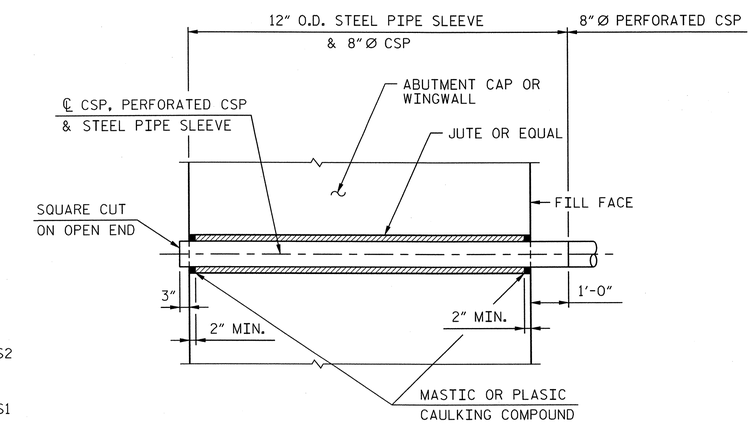

PIPE SLEEVE DETAIL

PROJECT NO. P-5208G

MECKLENBURG **COUNTY**

STATION: P.O.T. 10640+78.96 -M1-

SHEET 2 OF 4

AECOM
AECOM TECHNICAL SERVICES, INC.
701 CORPORATE CENTER DRIVE, SUITE 475
RALEIGH, NC 27607
(919) 854-6200 www.aecom.com
AECOM License No. F-0342

NORTH CAROLINA PROFESSIONAL SEAL 10656 ENGINEER L. MARK PEARSON
4/16/13

STATE OF NORTH CAROLINA
DEPARTMENT OF TRANSPORTATION
RALEIGH

SUBSTRUCTURE

ABUTMENT #1
REINFORCING

REVISIONS						SHEET NO.
NO.	BY:	DATE:	NO.	BY:	DATE:	S-24
1			3			TOTAL SHEETS
2			4			58

DRAWN BY : MTB DATE : 01/13
CHECKED BY : JL DATE : 01/13

0041DEL_P10a1

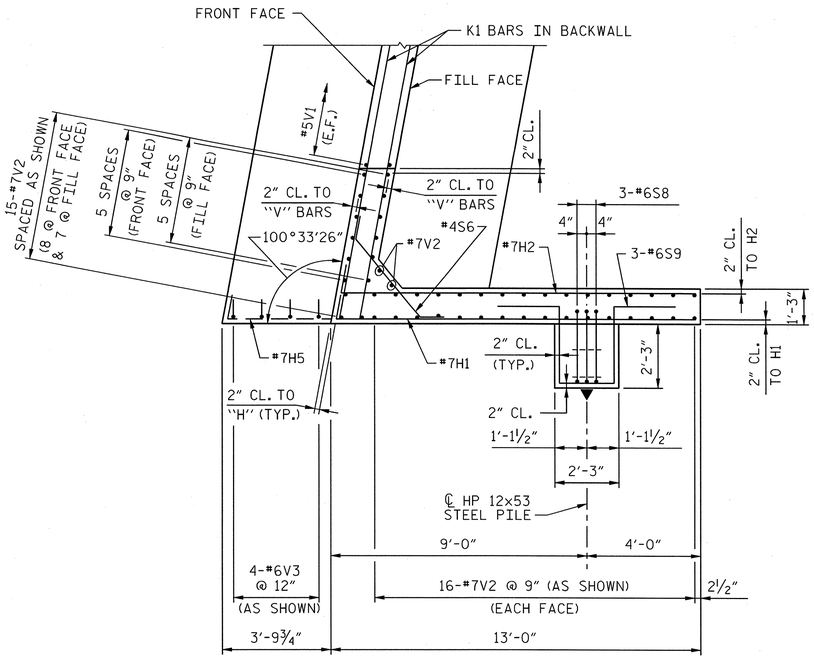

PLAN WING - AW1

NOTE:
SEE "METAL HANDRAIL DETAILS" SHEET FOR LOCATIONS OF ANCHOR ASSEMBLIES FOR METAL HANDRAIL.

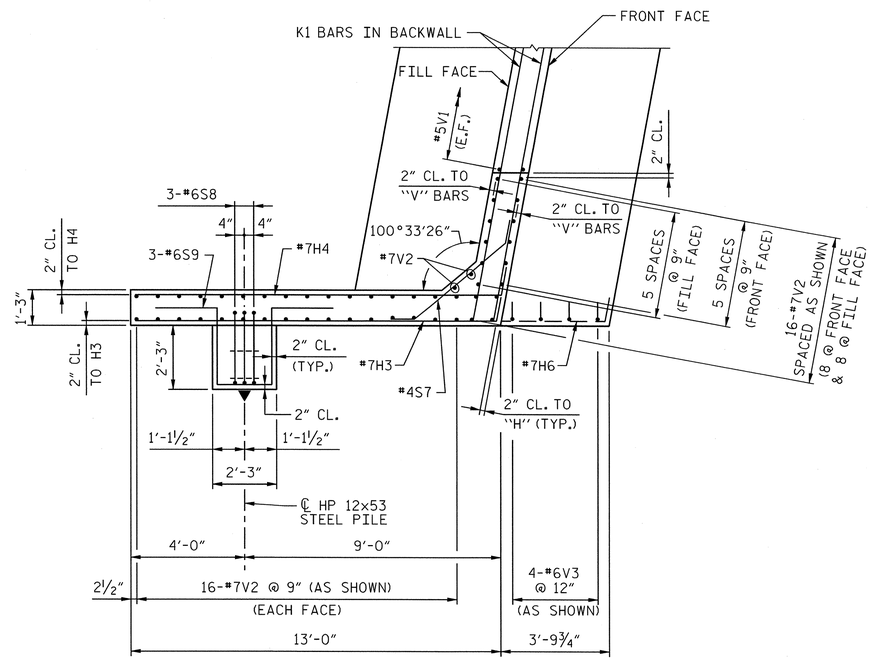

PLAN WING - AW2

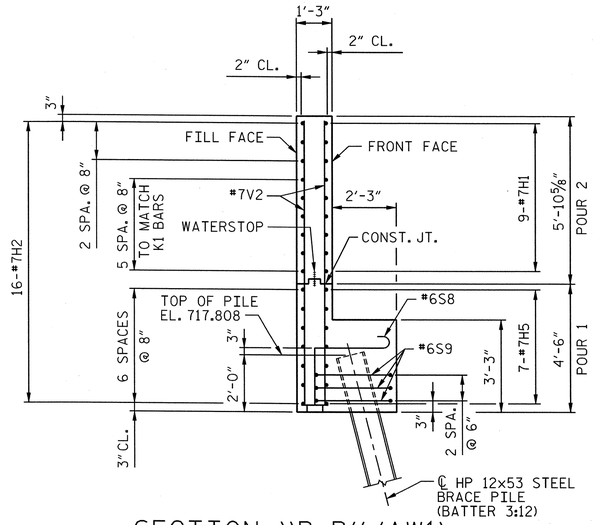

SECTION "B-B" (AW1)

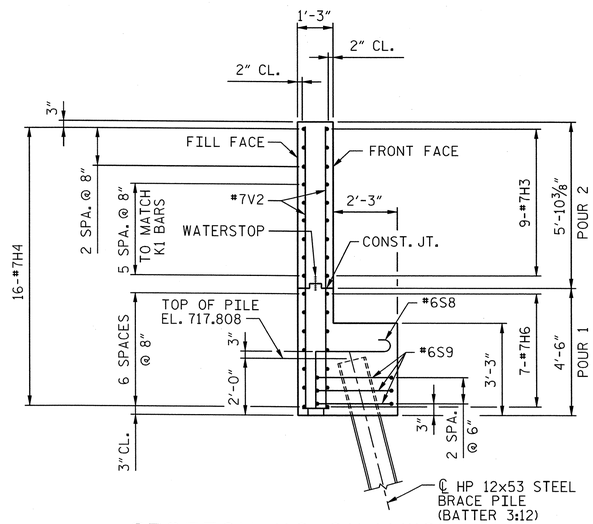

SECTION "C-C" (AW2)

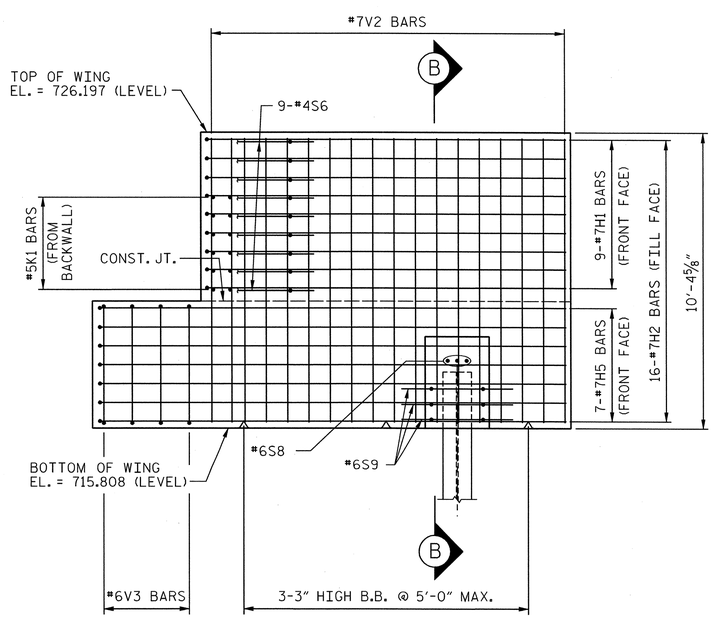

ELEVATION - AW1

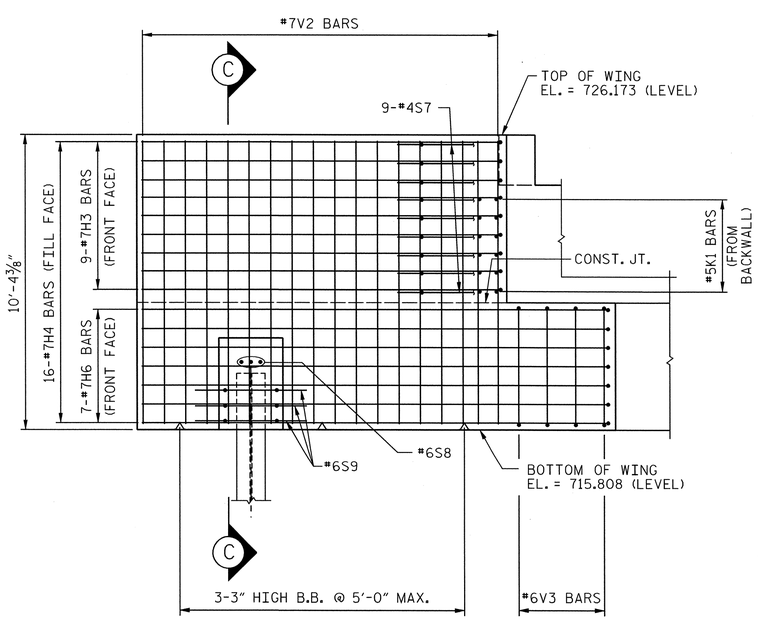

ELEVATION - AW2

PROJECT NO. P-5208G
MECKLENBURG COUNTY
STATION: P.O.T. 10640+78.96 -M1-

SHEET 3 OF 4

AECOM
AECOM TECHNICAL SERVICES, INC.
701 CORPORATE CENTER DRIVE, SUITE 475
RALEIGH, NC 27607
(919) 854-6200 www.aecom.com
AECOM License No. F-0342

NORTH CAROLINA PROFESSIONAL SEAL 10656 ENGINEER MARK PEARSON
5/15/13

STATE OF NORTH CAROLINA
DEPARTMENT OF TRANSPORTATION
RALEIGH

SUBSTRUCTURE

ABUTMENT #1
SECTIONS AND DETAILS

REVISIONS								SHEET NO.
NO.	BY:	DATE:	NO.	BY:	DATE:			S-25
1			3					TOTAL SHEETS
2			4					58

DRAWN BY : MTB DATE : 01/13
CHECKED BY : JL DATE : 01/13

DATE: 5/15/2013
TIME: 8:33:34 AM

USER: bellsem
DGN: G:\2012\5894\D400_Tech_Info_Disc_Files\450_NCDOT SHDTechDocFiles\Structure\V12_Abut-1_3.dgn

0041DEL_P10a1

NOTE:
SEE SECTION "A-A" ON "TYPICAL DECK DETAILS" SHEET FOR WATERSTOP IN DECK JOINT.

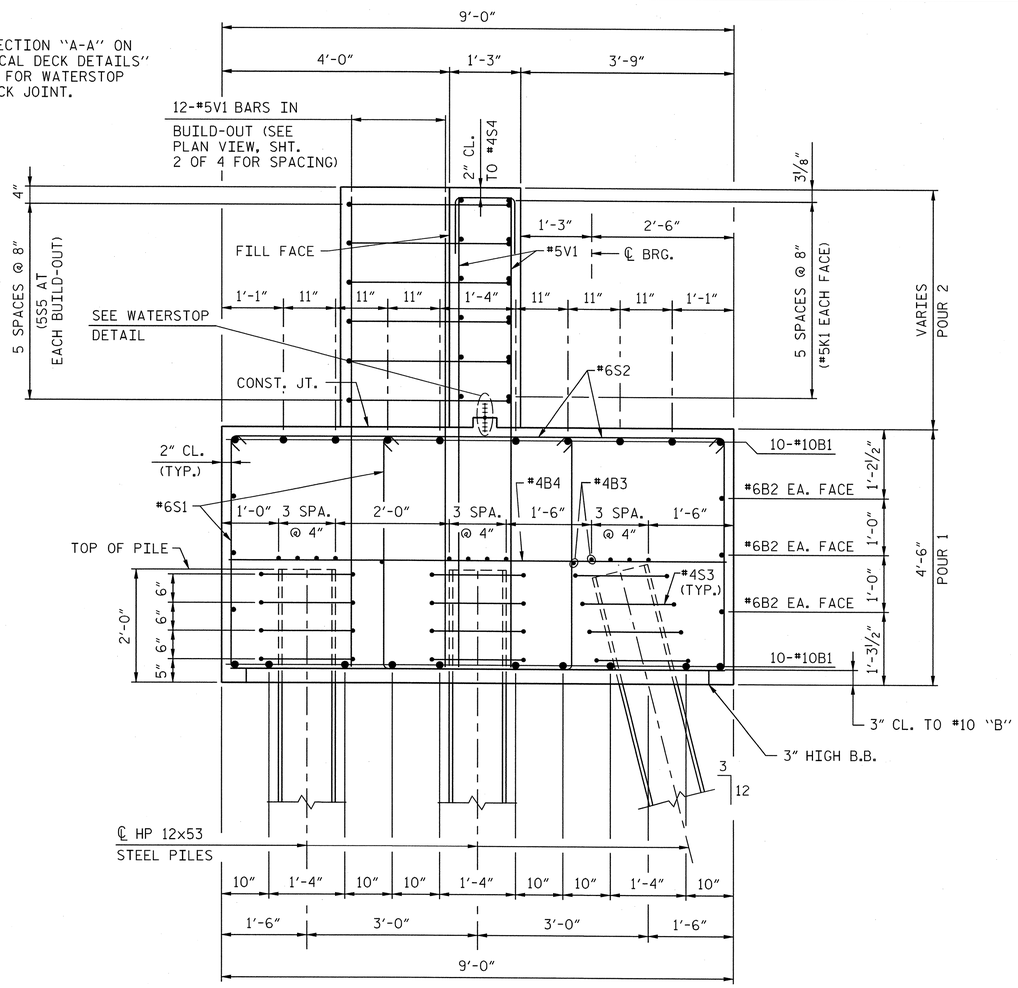

SECTION "A-A"

BAR TYPES

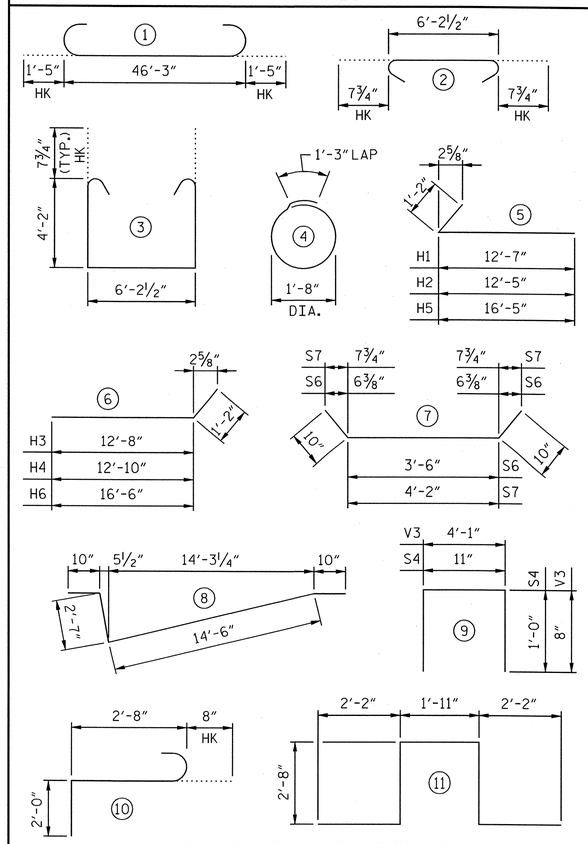

ALL BAR DIMENSIONS ARE OUT TO OUT.

BILL OF MATERIAL

ABUTMENT #1

BAR	NO.	SIZE	TYPE	LENGTH	WEIGHT
B1	20	#10	1	49'-1"	4224
B2	6	#6	STR	46'-3"	417
B3	28	#4	STR	24'-4"	455
B4	12	#4	STR	8'-8"	69
H1	9	#7	5	13'-9"	253
H2	16	#7	5	13'-7"	444
H3	9	#7	6	13'-10"	254
H4	16	#7	6	14'-0"	458
H5	7	#7	5	17'-7"	252
H6	7	#7	6	17'-8"	253
K1	12	#5	STR	46'-3"	579
S1	96	#6	3	15'-10"	2283
S2	96	#6	2	7'-6"	1081
S3	180	#4	4	6'-6"	782
S4	48	#4	9	2'-11"	94
S5	12	#5	8	18'-9"	235
S6	9	#4	7	5'-2"	31
S7	9	#4	7	5'-10"	35
S8	6	#6	10	5'-4"	48
S9	6	#6	11	11'-7"	104
V1	120	#5	STR	8'-2"	1022
V2	99	#7	STR	9'-11"	2007
V3	8	#6	9	5'-5"	65

TOTAL REINFORCING STEEL LBS. 15445

ABUTMENT #1 TOTAL QUANTITIES

CLASS AA CONCRETE		
POUR 1 (CAP & LOWER WING)	C.Y.	74.3
POUR 2 (BACKWALL & UPPER WING)	C.Y.	19.1
TOTAL	C.Y.	93.4
HP 12x53 STEEL PILES	NO.	47
	LIN. FT.	1880

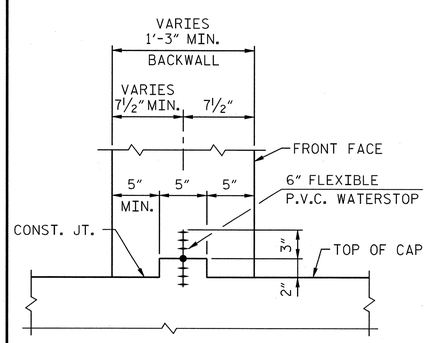

WATERSTOP DETAIL

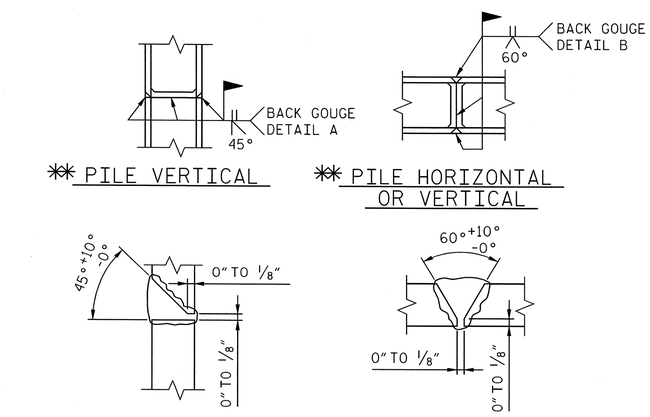

** PILE VERTICAL

** PILE HORIZONTAL OR VERTICAL

DETAIL A

DETAIL B

**POSITION OF PILE DURING WELDING.

PILE SPLICE DETAILS

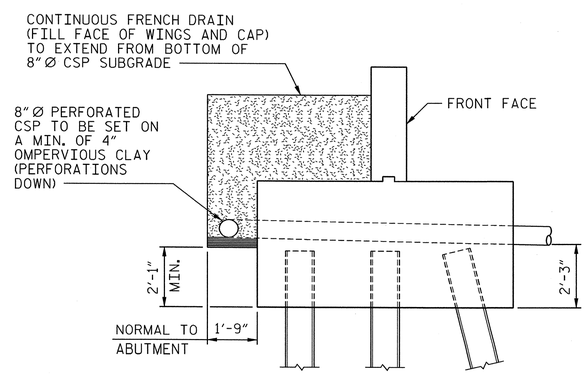

CONTINUOUS FRENCH DRAIN DETAIL

PROJECT NO. P-5208G
MECKLENBURG COUNTY
STATION: P.O.T. 10640+78.96 -M1-

SHEET 4 OF 4

AECOM
AECOM TECHNICAL SERVICES, INC.
701 CORPORATE CENTER DRIVE, SUITE 475
RALEIGH, NC 27607
(919) 854-6200 www.aecom.com
AECOM License No. F-0342

NORTH CAROLINA PROFESSIONAL SEAL 10656 ENGINEER J. MARK PEARSON 5/15/13

STATE OF NORTH CAROLINA
DEPARTMENT OF TRANSPORTATION
RALEIGH

SUBSTRUCTURE

ABUTMENT #1 DETAILS

REVISIONS								SHEET NO.
NO.	BY:	DATE:	NO.	BY:	DATE:			S-26
1			3					TOTAL SHEETS
2			4					38

DRAWN BY : MTB DATE : 01/13
CHECKED BY : JL DATE : 01/13

DATE: 5/15/2013
TIME: 8:36:54 AM

USER: bellislam
DGN: G:\60528894\0400_Tech_Info_Disc_Files\450_NCDOT Std Tech Docs Files\Structures\H21_Abut-1_4.dgn

0041DEL_P10a1

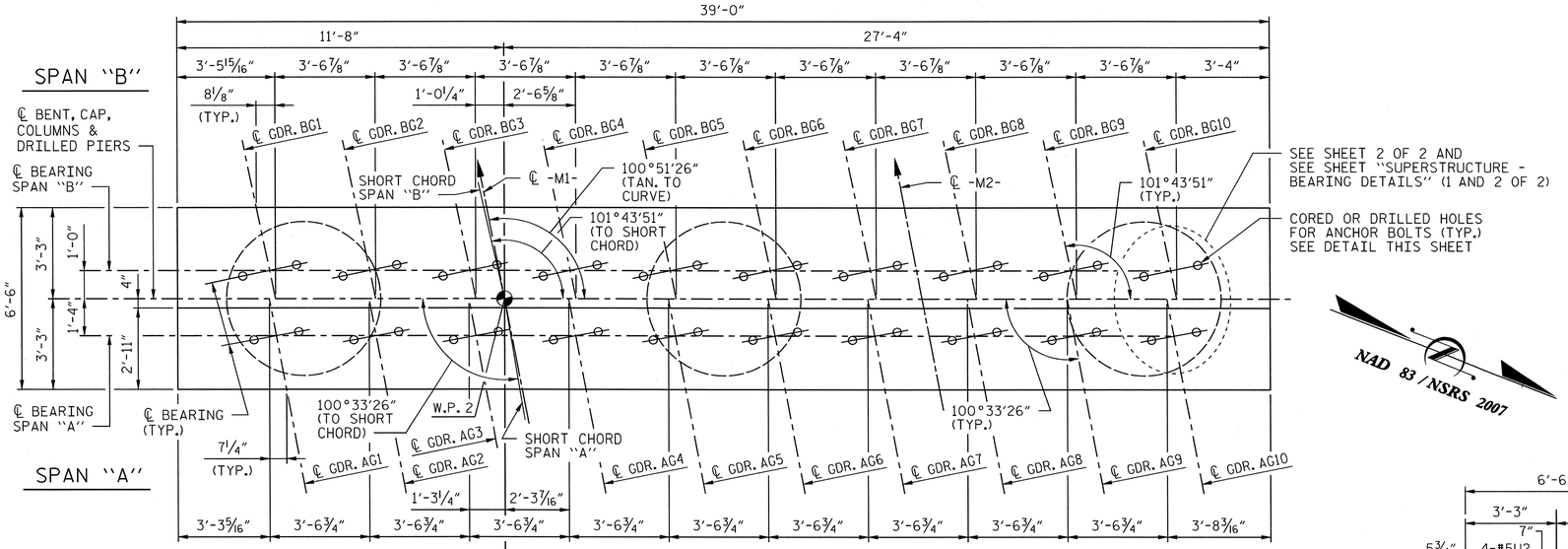

PLAN

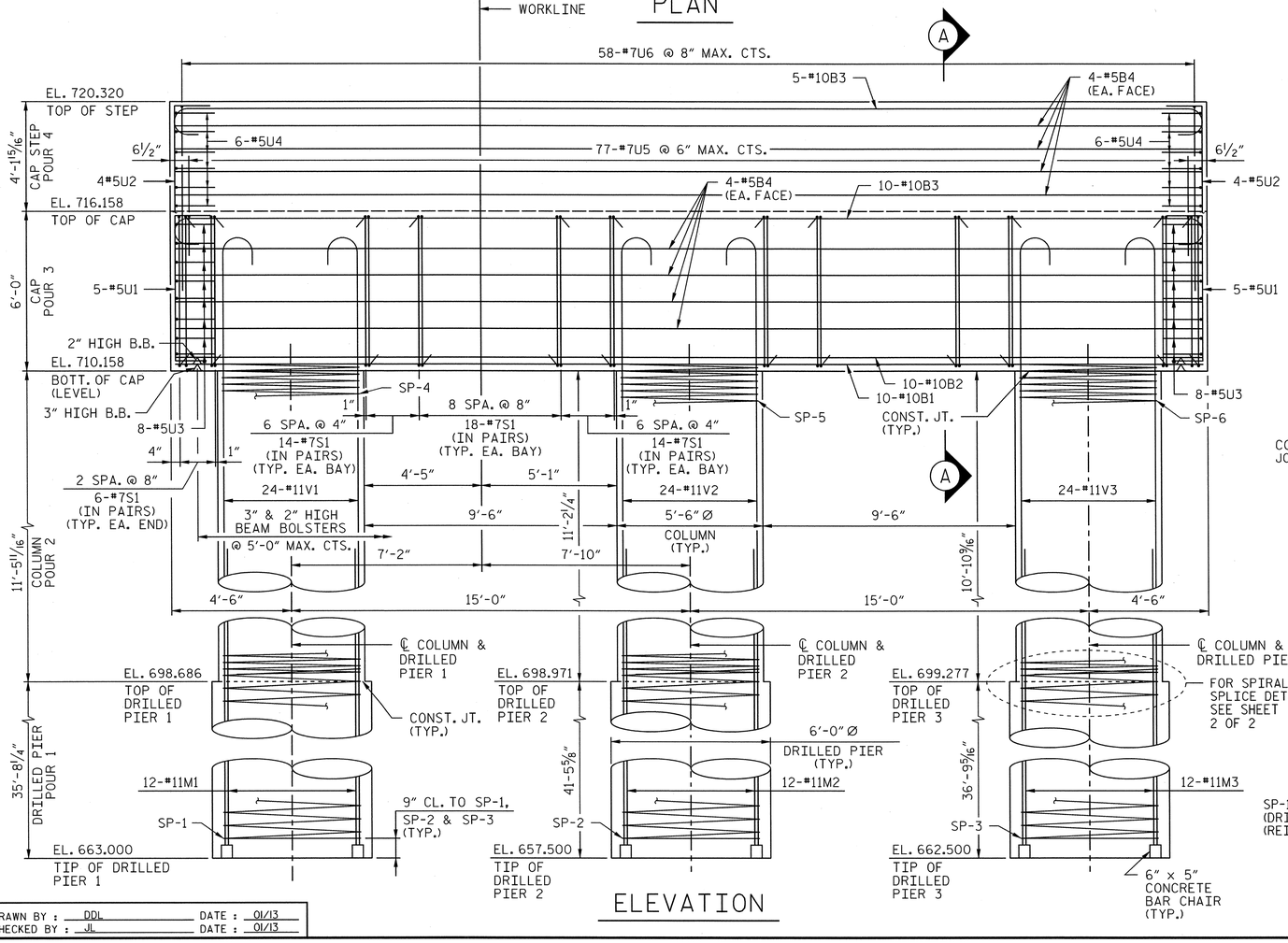

ELEVATION

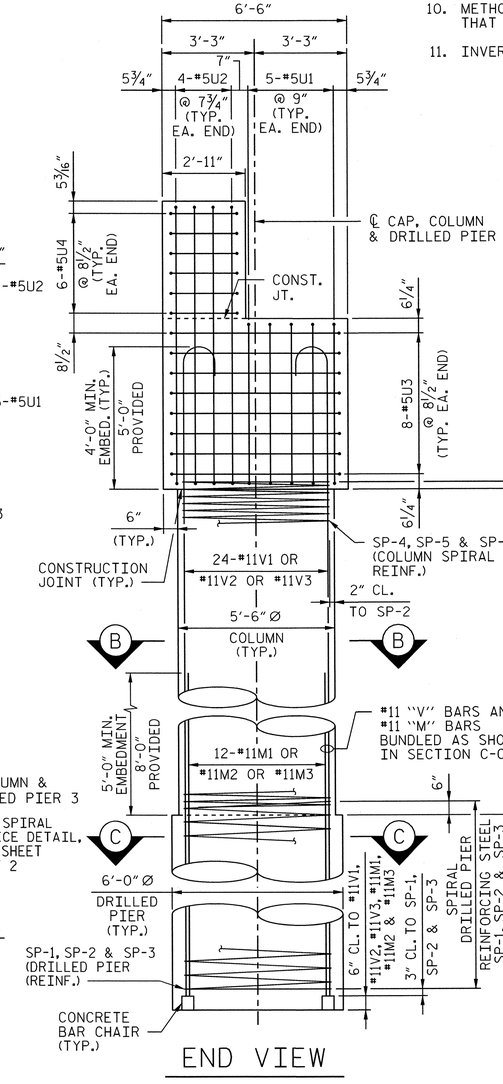

END VIEW

NOTES:

1. FOR EPOXY PROTECTIVE COATING, SEE STANDARD SPECIFICATIONS ARTICLE 420-18.
2. STIRRUPS IN CAP MAY BE SHIFTED AS NECESSARY TO CLEAR ANCHOR BOLTS.
3. HOOKS ON "V" BARS MAY BE TURNED AS NECESSARY FOR PLACING REINFORCING STEEL.
4. THE TOP SURFACE AREAS OF THE PIER CAPS SHALL BE CURED IN ACCORDANCE WITH THE STANDARD SPECIFICATIONS EXCEPT THAT THE MEMBRANCE CURING COMPOUND METHOD SHALL NOT BE USED.
5. ALL STEEL IN THE DRILLED PIERS IS INCLUDED IN THE PAY ITEMS FOR "REINFORCING STEEL" AND "SPIRAL COLUMN REINFORCEMENT STEEL".
6. THE CONTRACTOR'S ATTENTION IS CALLED TO THE FACT THAT THE LONGITUDINAL REINFORCEMENT FOR THE DRILLED PIERS IS DETAILED WITH 3 FEET OF EXTRA LENGTH.
7. SPLICING OF THE LONGITUDINAL BARS IN THE DRILLED PIERS WILL NOT BE PERMITTED.
8. THE LOCATION OF THE CONSTRUCTION JOINT IN THE DRILLED PIERS IS BASED ON AN APPROXIMATE GROUND LINE ELEVATION. IF THE CONSTRUCTION JOINT IS ABOVE THE ACTUAL GROUND ELEVATION, THE CONTRACTOR SHALL PLACE THE CONSTRUCTION JOINT ONE FOOT BELOW THE GROUND LINE.
9. METHOD A WATERPROOFING SHOULD BE APPLIED AROUND THE CONSTRUCTION JOINT AT THE COLUMN AND DRILLED PIER FOR EACH COLUMN.
10. METHOD D DAMPPROOFING SHOULD BE APPLIED TO ANY PART OF THE COLUMN THAT IS BELOW THE GROUND LINE.
11. INVERT ALTERNATE STIRRUP PAIRS IN BENT CAP.

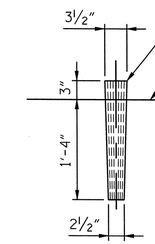

NOTE: AT THE CONTRACTOR'S OPTION, HOLE FOR ANCHOR BOLTS MAY BE DRILLED. CARE SHALL BE TAKEN TO SET REINFORCING STEEL SO AS TO CLEAR HOLE LOCATION. IF FREEZING WEATHER IS ENCOUNTERED, FILL HOLES WITH ANTIFREEZE AND SAWDUST.

DETAIL OF WOOD CORE FOR ANCHOR BOLT HOLES

PROJECT NO. P-5208G

MECKLENBURG COUNTY

STATION: P.O.T. 10640+78.96 -M1-

SHEET 1 OF 2

AECOM
AECOM TECHNICAL SERVICES, INC.
701 CORPORATE CENTER DRIVE, SUITE 475
RALEIGH, NC 27607
(919) 854-6200 www.aecom.com
AECOM License No. F-0342

NORTH CAROLINA PROFESSIONAL SEAL 10656 ENGINEER L. MARK PEARSON 4/16/13

STATE OF NORTH CAROLINA
DEPARTMENT OF TRANSPORTATION
RALEIGH

SUBSTRUCTURE

PIER 1
PLANS AND ELEVATION

REVISIONS								SHEET NO.
NO.	BY:	DATE:	NO.	BY:	DATE:			S-27
1			3					TOTAL SHEETS
2			4					58

DRAWN BY : DDL DATE : 01/13
CHECKED BY : JL DATE : 01/13

DATE: 4/15/2013
TIME: 2:03:08 PM

USER: bellelen
DGN: 6\92868\40\400_Tech_Info_Disc_Files\450_NCDOT Staff to Use Files\Structures\V23_Pier-1_L.dgn

0041DEL_P10a1

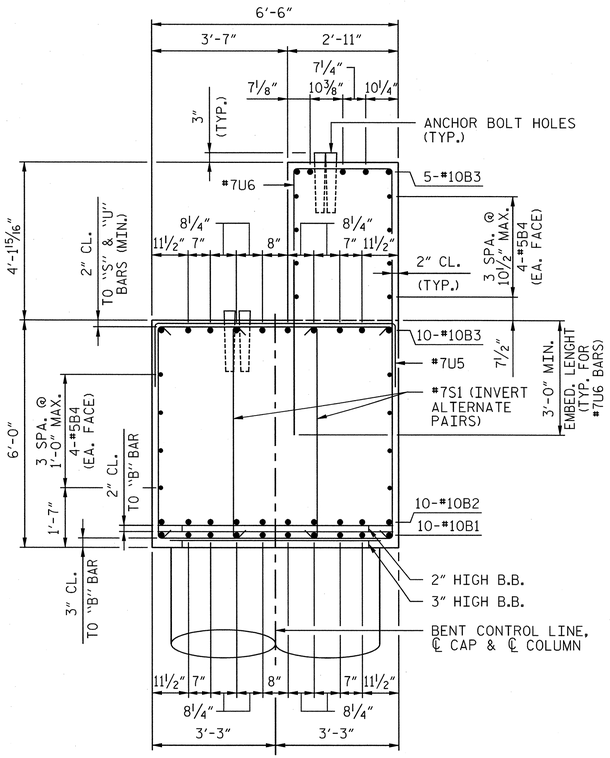

SECTION "A"

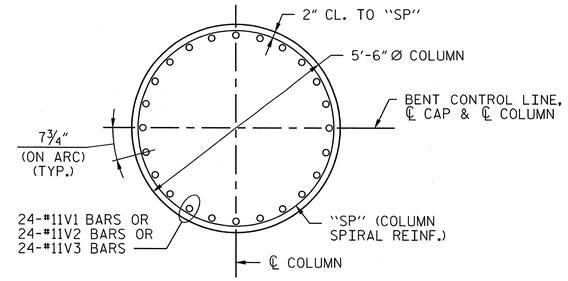

SECTION "B-B"

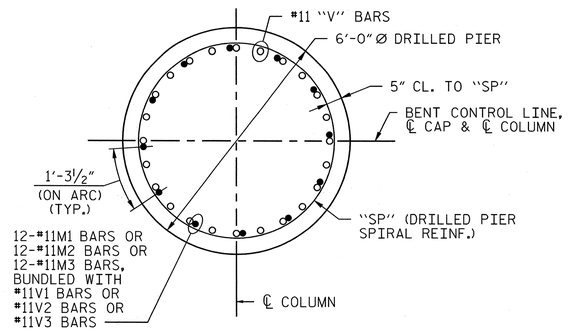

SECTION "C-C"

○ #11V1 OR #11V2 OR #11V3 (COLUMN AND DRILLED PIER)

● #11M1 OR #11M2 OR #11M3 (DRILLED PIER)

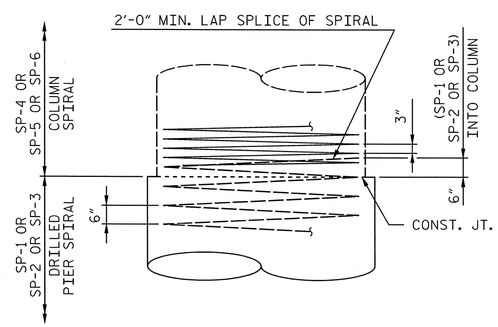

CONSTRUCTION JOINT DETAIL

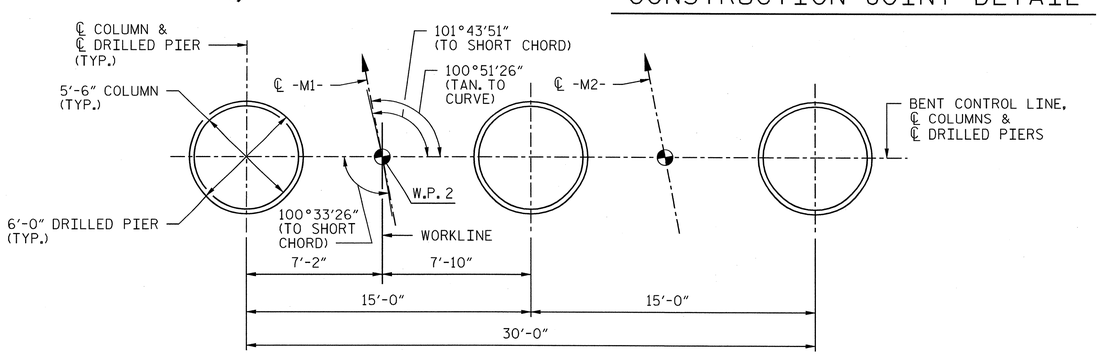

FOOTING PLAN

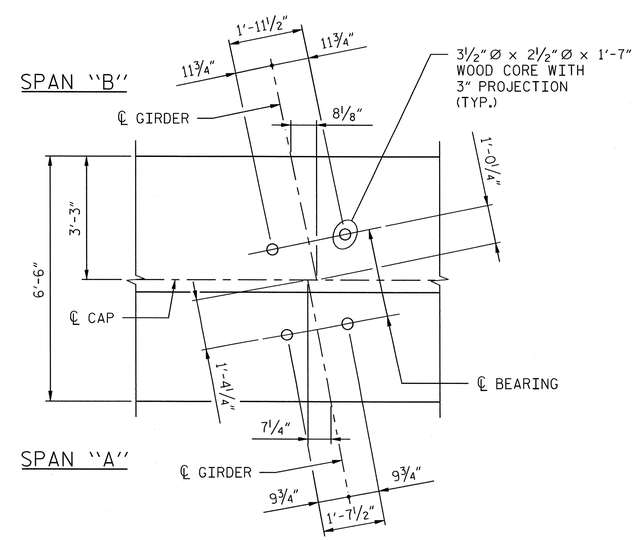

BEARING DETAIL

BAR TYPES

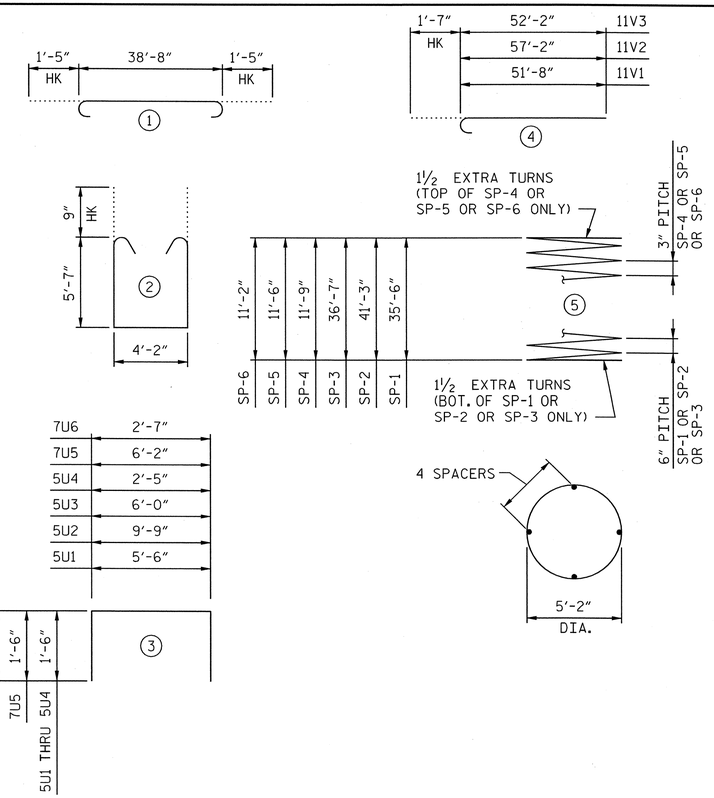

7U6	2'-7"
7U5	6'-2"
5U4	2'-5"
5U3	6'-0"
5U2	9'-9"
5U1	5'-6"

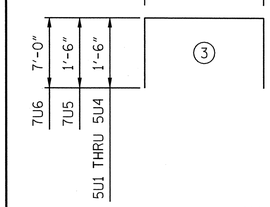

ALL BAR DIMENSIONS ARE OUT TO OUT.

BILL OF MATERIAL

PIER 1

BAR	NO.	SIZE	TYPE	LENGTH	WEIGHT
B1	10	#10	STR	38'-8"	1664
B2	10	#10	STR	38'-8"	1664
B3	15	#10	1	41'-6"	2679
B4	16	#5	STR	38'-8"	645
M1	12	#11	STR	43'-3"	2757
M2	12	#11	STR	49'-0"	3124
M3	12	#11	STR	44'-4"	2827
S1	104	#7	2	16'-10"	3578
U1	10	#5	3	8'-6"	89
U2	8	#5	3	12'-9"	106
U3	16	#5	3	9'-0"	150
U4	12	#5	3	5'-5"	68
U5	77	#7	3	9'-2"	1443
U6	58	#7	3	16'-7"	1966
V1	24	#11	4	53'-3"	6790
V2	24	#11	4	58'-9"	7491
V3	24	#11	4	53'-9"	6854
REINFORCING STEEL				LBS.	43895
SP-1	2	**	5	1160'-10"	4745
SP-2	2	**	5	1345'-0"	5498
SP-3	2	**	5	1195'-6"	4887
SP-4	1	***	5	779'-6"	813
SP-5	1	***	5	763'-4"	796
SP-6	1	***	5	742'-0"	774
SPIRAL REINFORCING STEEL				LBS.	17513

** THE "SP" SPIRAL REINFORCING STEEL SHALL BE BUNDLED #7 PLAIN OR DEFORMED BAR.

*** THE "SP" SPIRAL REINFORCING STEEL SHALL BE W31 OR D-31 COLD DRAWN WIRE OR #5 PLAIN OR DEFORMED BAR.

PIER 1 TOTAL QUANTITIES

CLASS AA CONCRETE		
POUR 2 (COLUMNS)	C.Y.	29.5
POUR 3 (CAP)	C.Y.	56.3
POUR 4 (CAP STEP)	C.Y.	17.5
TOTAL CLASS AA CONCRETE	C.Y.	103.3
DRILLED PIERS, CONCRETE		
POUR 1	C.Y.	119.3
6'-0"Ø DRILLED PIERS IN SOIL	LIN. FT.	86.9
6'-0"Ø DRILLED PIERS NOT IN SOIL	LIN. FT.	27.0
CSL TUBES	LIN. FT.	720.0

PROJECT NO. P-5208G

MECKLENBURG **COUNTY**

STATION: P.O.T. 10640+78.96 -M1-

SHEET 2 OF 2

AECOM

AECOM TECHNICAL SERVICES, INC.
701 CORPORATE CENTER DRIVE, SUITE 475
RALEIGH, NC 27607
(919) 854-6200 www.aecom.com
AECOM License No. F-0342

NORTH CAROLINA PROFESSIONAL SEAL 10656 ENGINEER MARK PEARSON 8/15/13

STATE OF NORTH CAROLINA
DEPARTMENT OF TRANSPORTATION
RALEIGH

SUBSTRUCTURE

PIER 1
SECTIONS AND DETAILS

REVISIONS								SHEET NO.
NO.	BY:	DATE:	NO.	BY:	DATE:			S-28
1			3					TOTAL SHEETS
2			4					58

DRAWN BY : DDL DATE : 01/13
CHECKED BY : JL DATE : 01/13

DATE: 5/15/2013
TIME: 9:00:54 AM

USER: bellsjen
DGN: G:\60258594\400_Tech_Info_Dsc_Files\v450_NC007StdTechDscFiles\Structures\V25_Pier-1_Exign

0041DEL_P10a1

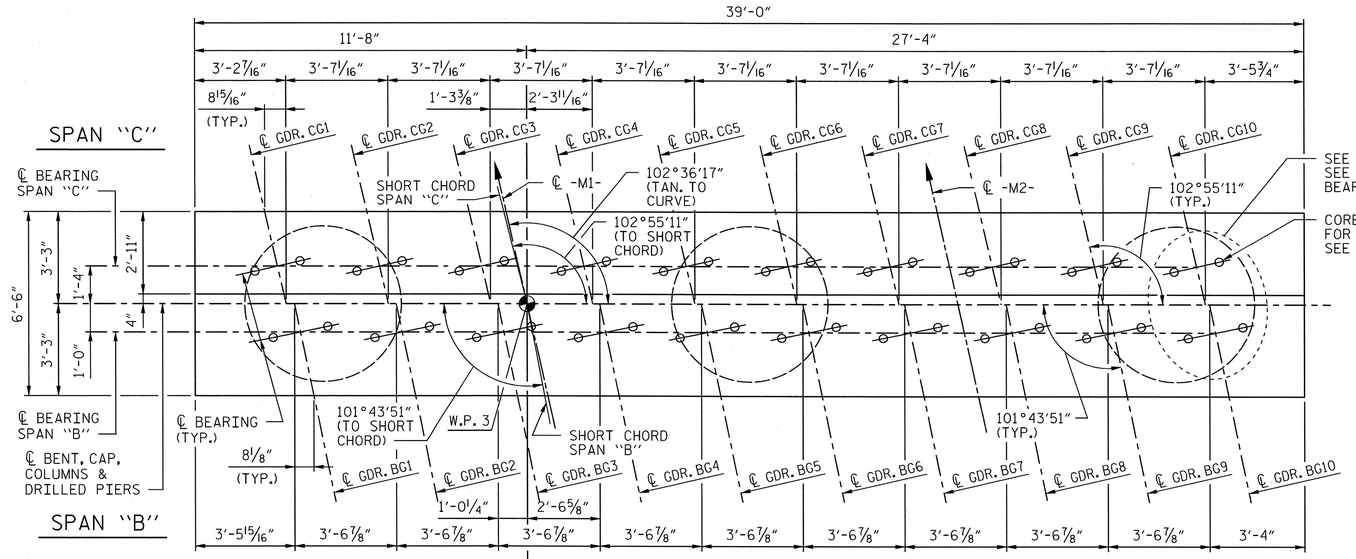

SEE SHEET 2 OF 2 AND SEE SHEET "SUPERSTRUCTURE - BEARING DETAILS" (1 AND 2 OF 2)

CORED OR DRILLED HOLES FOR ANCHOR BOLTS (TYP.) SEE DETAIL THIS SHEET

NAD 83 / NSRS 2007

PLAN

NOTES:

1. FOR EPOXY PROTECTIVE COATING, SEE STANDARD SPECIFICATIONS ARTICLE 420-18.
2. STIRRUPS IN CAP MAY BE SHIFTED AS NECESSARY TO CLEAR ANCHOR BOLTS.
3. HOOKS ON "V" BARS MAY BE TURNED AS NECESSARY FOR PLACING REINFORCING STEEL.
4. THE TOP SURFACE AREAS OF THE PIER CAPS SHALL BE CURED IN ACCORDANCE WITH THE STANDARD SPECIFICATIONS EXCEPT THAT THE MEMBRANCE CURING COMPOUND METHOD SHALL NOT BE USED.
5. ALL STEEL IN THE DRILLED PIERS IS INCLUDED IN THE PAY ITEMS FOR "REINFORCING STEEL" AND "SPIRAL COLUMN REINFORCEMENT STEEL".
6. THE CONTRACTOR'S ATTENTION IS CALLED TO THE FACT THAT THE LONGITUDINAL REINFORCEMENT FOR THE DRILLED PIERS IS DETAILED WITH 3 FEET OF EXTRA LENGTH.
7. SPLICING OF THE LONGITUDINAL BARS IN THE DRILLED PIERS WILL NOT BE PERMITTED.
8. THE LOCATION OF THE CONSTRUCTION JOINT IN THE DRILLED PIERS IS BASED ON AN APPROXIMATE GROUND LINE ELEVATION. IF THE CONSTRUCTION JOINT IS ABOVE THE ACTUAL GROUND ELEVATION, THE CONTRACTOR SHALL PLACE THE CONSTRUCTION JOINT ONE FOOT BELOW THE GROUND LINE.
9. METHOD A WATERPROOFING SHOULD BE APPLIED AROUND THE CONSTRUCTION JOINT AT THE COLUMN AND DRILLED PIER FOR EACH COLUMN.
10. METHOD D DAMPPROOFING SHOULD BE APPLIED TO ANY PART OF THE COLUMN THAT IS BELOW THE GROUND LINE.
11. INVERT ALTERNATE STIRRUP PAIRS IN BENT CAP.

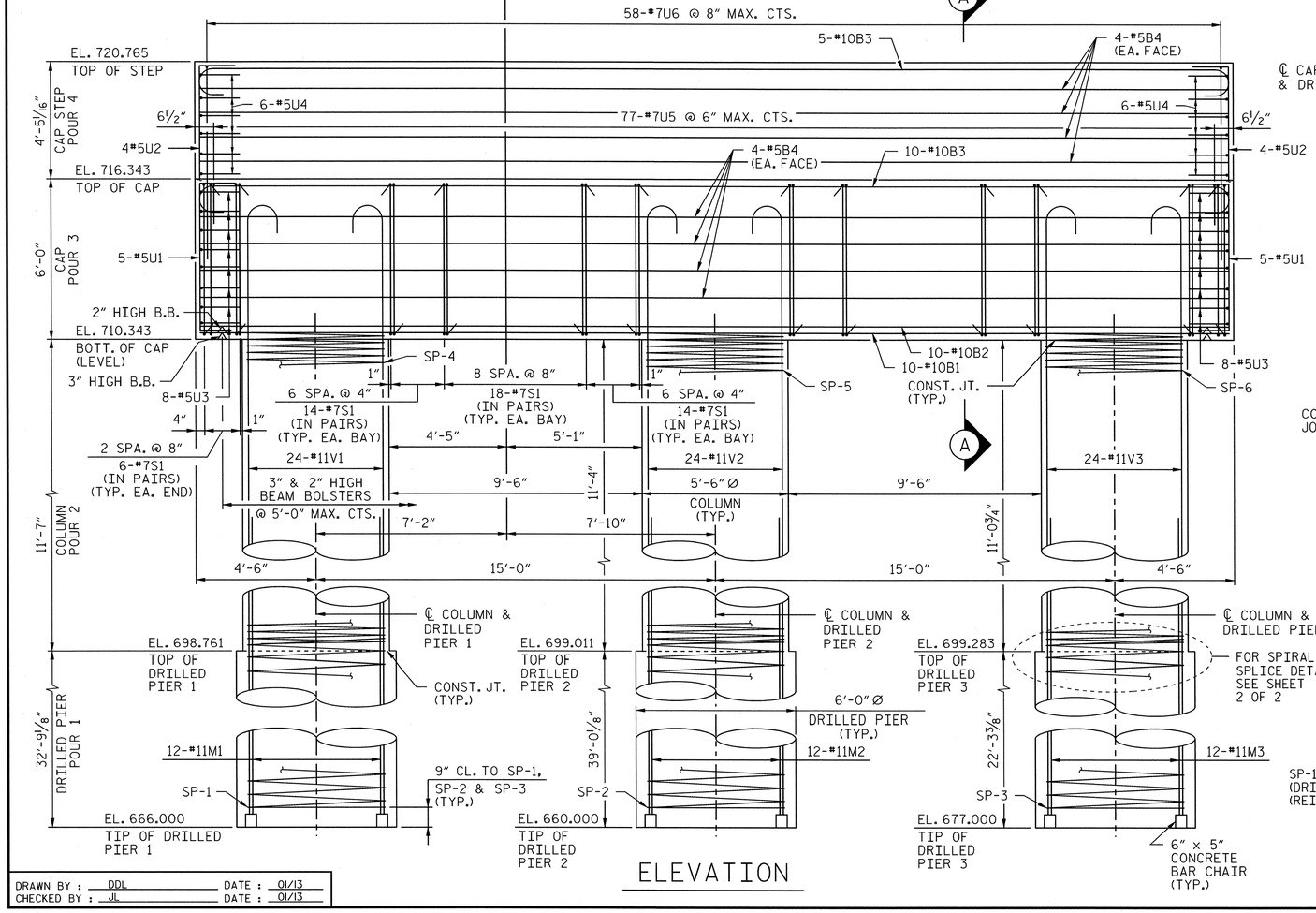

ELEVATION

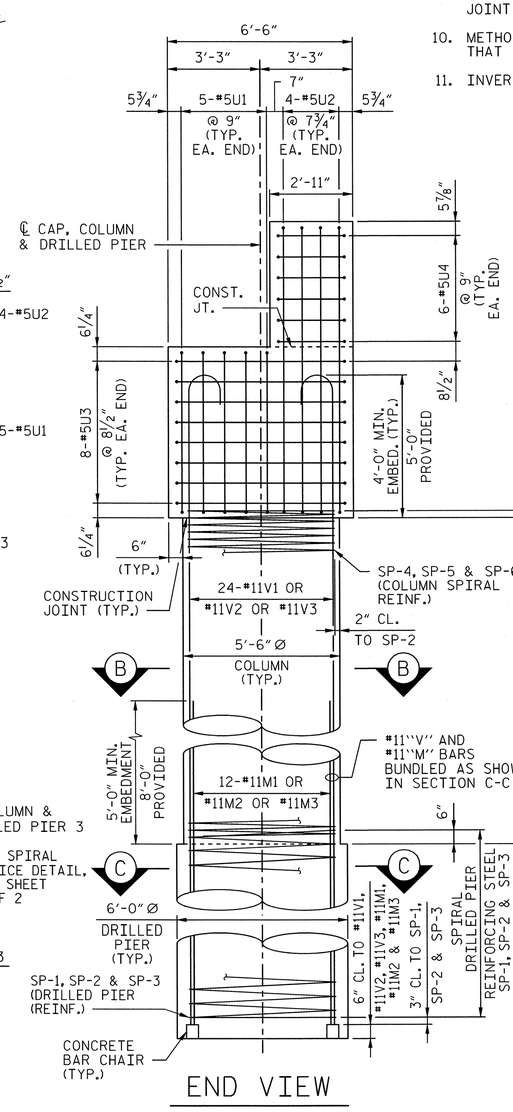

END VIEW

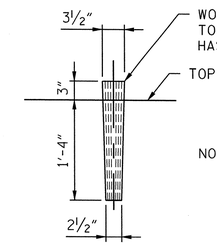

NOTE: AT THE CONTRACTOR'S OPTION, HOLE FOR ANCHOR BOLTS MAY BE DRILLED. CARE SHALL BE TAKEN TO SET REINFORCING STEEL SO AS TO CLEAR HOLE LOCATION. IF FREEZING WEATHER IS ENCOUNTERED, FILL HOLES WITH ANTIFREEZE AND SAWDUST.

DETAIL OF WOOD CORE FOR ANCHOR BOLT HOLES

PROJECT NO. P-5208G

MECKLENBURG COUNTY

STATION: P.O.T. 10640+78.96 -M1-

SHEET 1 OF 2

AECOM
AECOM TECHNICAL SERVICES, INC.
701 CORPORATE CENTER DRIVE, SUITE 475
RALEIGH, NC 27607
(919) 854-6200 www.aecom.com
AECOM License No. F-0342

NORTH CAROLINA PROFESSIONAL SEAL 10656 ENGINEER L. MARK PEARSON 4/16/13

STATE OF NORTH CAROLINA
DEPARTMENT OF TRANSPORTATION
RALEIGH

SUBSTRUCTURE

PIER 2
PLANS AND ELEVATION

REVISIONS								SHEET NO.
NO.	BY:	DATE:	NO.	BY:	DATE:			S-29
1			3					TOTAL SHEETS
2			4					58

DRAWN BY : DDL DATE : 01/13
CHECKED BY : JL DATE : 01/13

DATE: 4/15/2013
TIME: 2:01:42 PM

USER: bellsleep
DGN: G:\802\B5904\H400_Tech_Infr_Dist_Files\H50_NC0013\Traffic\Bell\Files\Structure\H12_Pier-2_Ldgn

0041DEL_P10a1

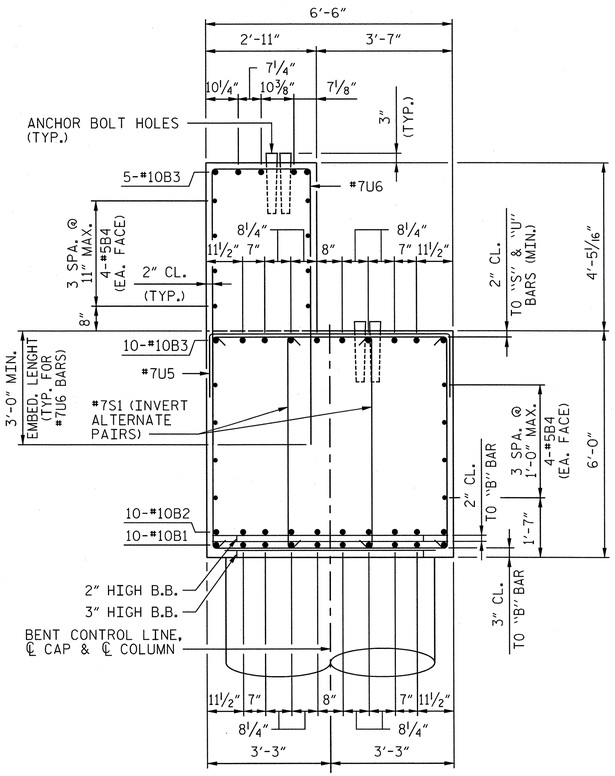

SECTION "A"

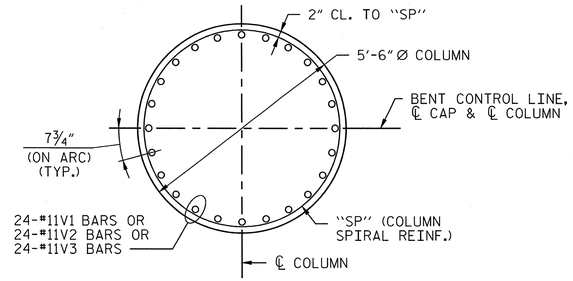

SECTION "B-B"

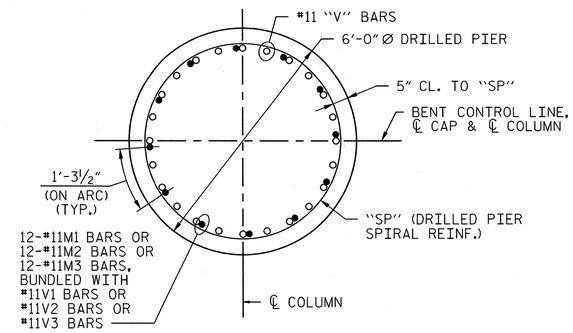

SECTION "C-C"

○ #11V1 OR #11V2 (COLUMN AND DRILLED PIER)

● #11M1 OR #11M2 OR #11M3 (DRILLED PIER)

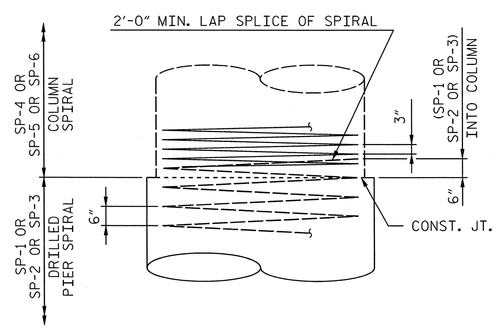

CONSTRUCTION JOINT DETAIL

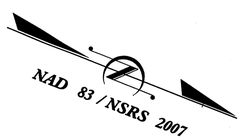

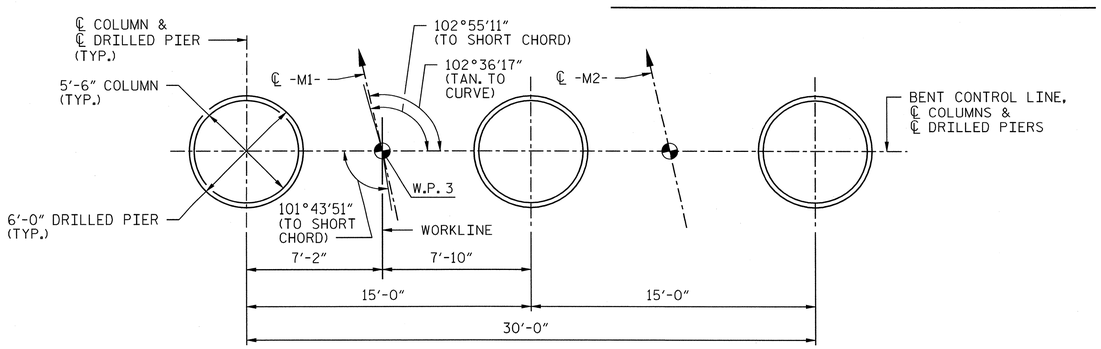

FOOTING PLAN

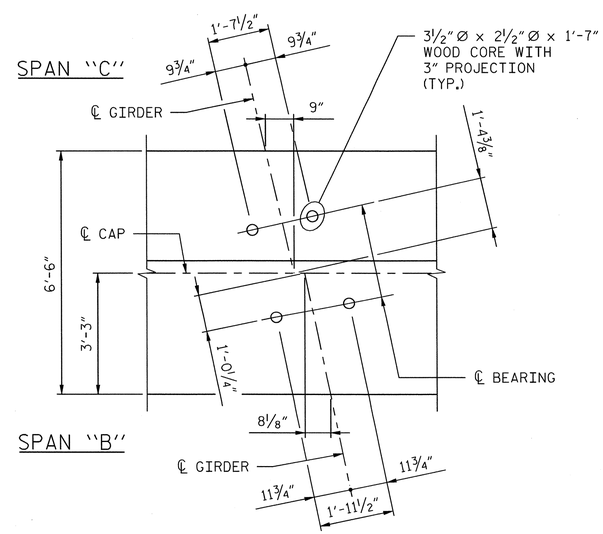

BEARING DETAIL

BAR TYPES

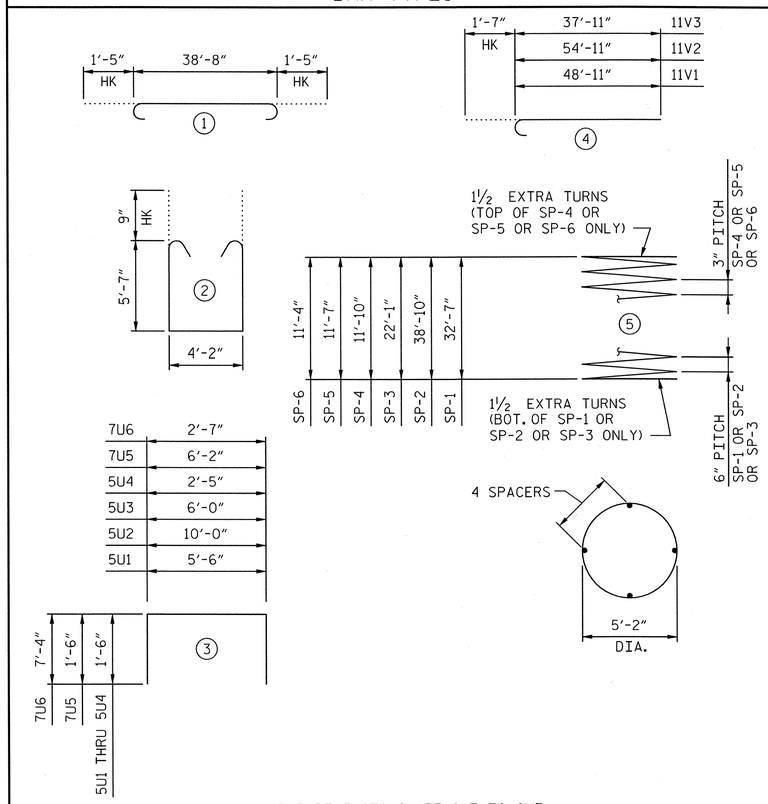

ALL BAR DIMENSIONS ARE OUT TO OUT.

BILL OF MATERIAL

PIER 2

BAR	NO.	SIZE	TYPE	LENGTH	WEIGHT
B1	10	#10	STR	38'-8"	1664
B2	10	#10	STR	38'-8"	1664
B3	15	#10	1	41'-6"	2679
B4	16	#5	STR	38'-8"	645
M1	12	#11	STR	40'-4"	2571
M2	12	#11	STR	46'-7"	2970
M3	12	#11	STR	29'-10"	1902
S1	104	#7	2	16'-10"	3578
U1	10	#5	3	8'-6"	89
U2	8	#5	3	13'-0"	108
U3	16	#5	3	9'-0"	150
U4	12	#5	3	5'-5"	68
U5	77	#7	3	9'-2"	1443
U6	58	#7	3	17'-3"	2045
V1	24	#11	4	50'-6"	6439
V2	24	#11	4	56'-6"	7204
V3	24	#11	4	39'-6"	5037
REINFORCING STEEL				LBS.	40256
SP-1	2	**	5	1067'-6"	4364
SP-2	2	**	5	1267'-6"	5182
SP-3	2	**	5	731'-2"	2989
SP-4	1	***	5	784'-10"	819
SP-5	1	***	5	768'-10"	802
SP-6	1	***	5	752'-8"	785
SPIRAL REINFORCING STEEL				LBS.	14941

** THE "SP" SPIRAL REINFORCING STEEL SHALL BE BUNDLED #7 PLAIN OR DEFORMED BAR.

*** THE "SP" SPIRAL REINFORCING STEEL SHALL BE W31 OR D-31 COLD DRAWN WIRE OR #5 PLAIN OR DEFORMED BAR.

PIER 2 TOTAL QUANTITIES

CLASS AA CONCRETE		
POUR 2 (COLUMNS)	C.Y.	29.9
POUR 3 (CAP)	C.Y.	56.3
POUR 4 (CAP STEP)	C.Y.	18.6
TOTAL CLASS AA CONCRETE	C.Y.	104.8
DRILLED PIERS, CONCRETE		
POUR 1	C.Y.	98.5
6'-0" Ø DRILLED PIERS IN SOIL	LIN. FT.	72.1
6'-0" Ø DRILLED PIERS NOT IN SOIL	LIN. FT.	22.0
CSL TUBES	LIN. FT.	600.0

PROJECT NO. P-5208G

MECKLENBURG COUNTY

STATION: P.O.T. 10640+78.96 -M1-

SHEET 2 OF 2

AECOM

AECOM TECHNICAL SERVICES, INC.
701 CORPORATE CENTER DRIVE, SUITE 475
RALEIGH, NC 27607
(919) 854-6200 www.aecom.com
AECOM License No. F-0342

NORTH CAROLINA PROFESSIONAL SEAL 10656 ENGINEER L. MARK PEARSON 01/15/13

STATE OF NORTH CAROLINA
DEPARTMENT OF TRANSPORTATION
RALEIGH

SUBSTRUCTURE

PIER 2
SECTIONS AND DETAILS

REVISIONS						SHEET NO.
NO.	BY:	DATE:	NO.	BY:	DATE:	S-30
1			3			TOTAL SHEETS
2			4			58

DRAWN BY : DDL DATE : 01/13
CHECKED BY : JL DATE : 01/13

DATE: 5/15/2013
TIME: 9:04:47 AM

USER: bellsjen
DGN: 0:\50208\940\400_Tech_Info_Disc_Files\450_NCDOT3dTechDesFiles\StructuresV8J_Pier-2_2.dgn

DCN 0041DEL_P10a1

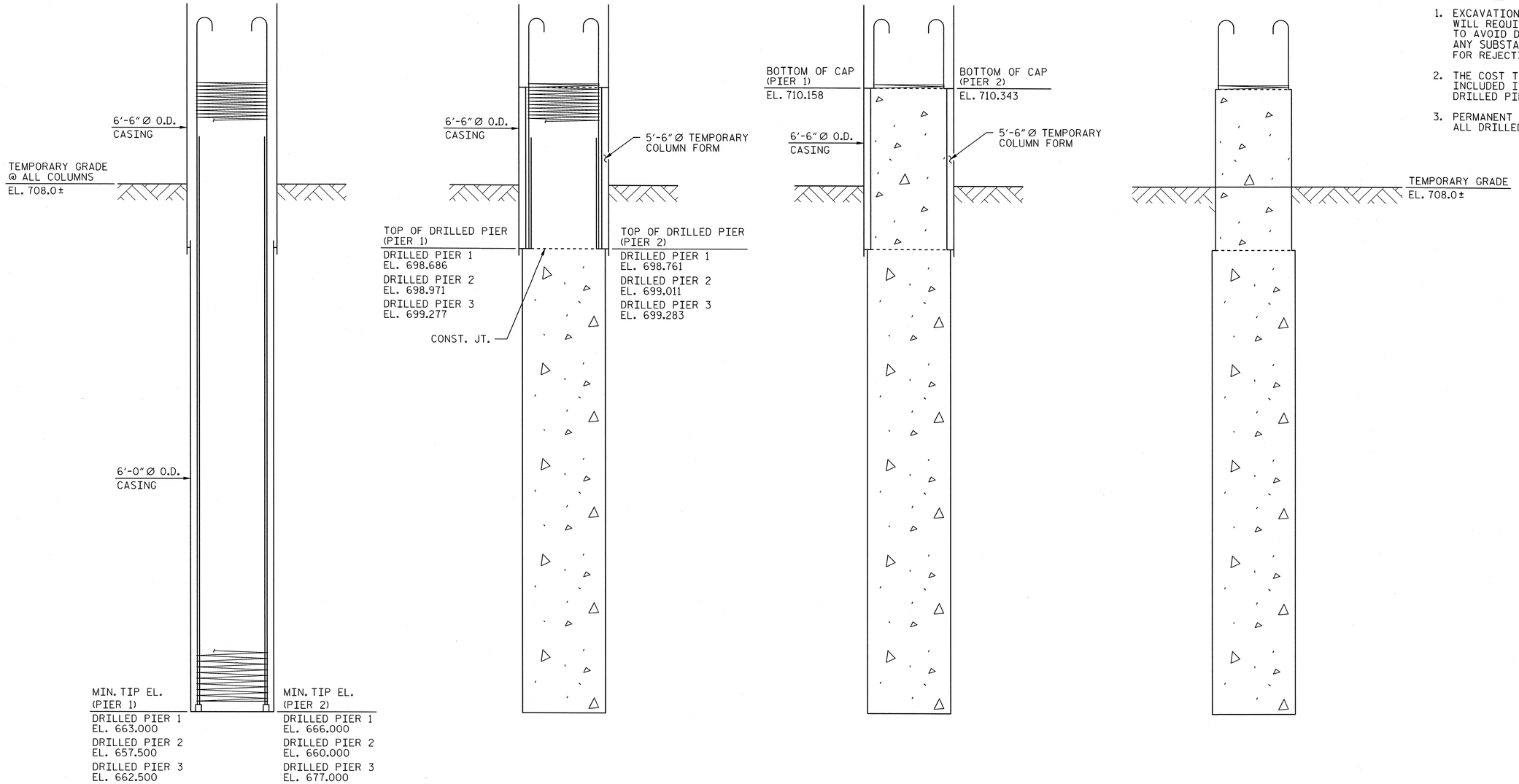

NOTES:

1. EXCAVATION AGAINST THE COLUMNS (STEP 4) WILL REQUIRE CAREFUL DIGGING IN ORDER TO AVOID DAMAGING THE COLUMNS. ANY SUBSTANTIAL DAMAGE WILL BE CAUSE FOR REJECTION OF THAT PARTICULAR COLUMN.
2. THE COST TO PERFORM THIS WORK SHALL BE INCLUDED IN THE UNIT PRICE BID FOR 6'-0"Ø DRILLED PIERS.
3. PERMANENT STEEL CASING IS NOT REQUIRED FOR ALL DRILLED PIERS.

STEP 1

1. AUGER AND INSTALL 6'-6"Ø O.D. CASING TO ELEVATION SHOWN.
2. AUGER AND INSTALL 6'-0"Ø O.D. CASING TO MINIMUM TIP ELEVATION AS SHOWN.
3. INSTALL REBAR CAGE.

STEP 2

1. POUR CONCRETE TO TOP OF DRILLED PIER ELEVATION AS SHOWN WHILE EXTRACTING 6'-0"Ø O.D. CASING.
2. INSTALL 5'-6"Ø TEMPORARY COLUMN FORM.

STEP 3

1. POUR CONCRETE TO BOTTOM OF CAP ELEVATION AS SHOWN.
2. EXTRACT 6'-6"Ø O.D. CASING AFTER CONCRETE HAS REACHED A MINIMUM COMPRESSIVE STRENGTH OF 3000 PSI.

STEP 4

1. EXCAVATE TO FINISH GRADE ELEVATION AS SHOWN.
2. REMOVE 5'-6"Ø TEMPORARY COLUMN FORM.
3. PATCH COLUMN SURFACE AS NECESSARY TO ESTABLISH ACCEPTABLE APPEARENCE.

DRILLED PIER CONSTRUCTION SEQUENCE

(FOR ALL DRILLED PIERS AND COLUMNS)

PROJECT NO. P-5208G

MECKLENBURG **COUNTY**

STATION: P.O.T. 10640+78.96 -M1-

AECOM

AECOM TECHNICAL SERVICES, INC.
701 CORPORATE CENTER DRIVE, SUITE 475
RALEIGH, NC 27607
(919) 854-6200 www.aecom.com
AECOM License No. F-0342

NORTH CAROLINA PROFESSIONAL SEAL 10656 ENGINEER L. MARK PEARSON 5/15/13

STATE OF NORTH CAROLINA
DEPARTMENT OF TRANSPORTATION
RALEIGH

SUBSTRUCTURE

DRILLED PIER DETAILS

REVISIONS						SHEET NO.
NO.	BY:	DATE:	NO.	BY:	DATE:	S-31
1			3			TOTAL SHEETS
2			4			58

DRAWN BY : DDL DATE : 01/13
CHECKED BY : JL DATE : 01/13

DATE: 5/15/2013
TIME: 9:08:05 AM
USER: bellstem
DGN: G:\60266940\400_Tech_Info_Disc_Files\450_NCDOTStdTechDesFiles\Structures\H2J_Drilled Pier Details.dgn

0041DEL_P10a1

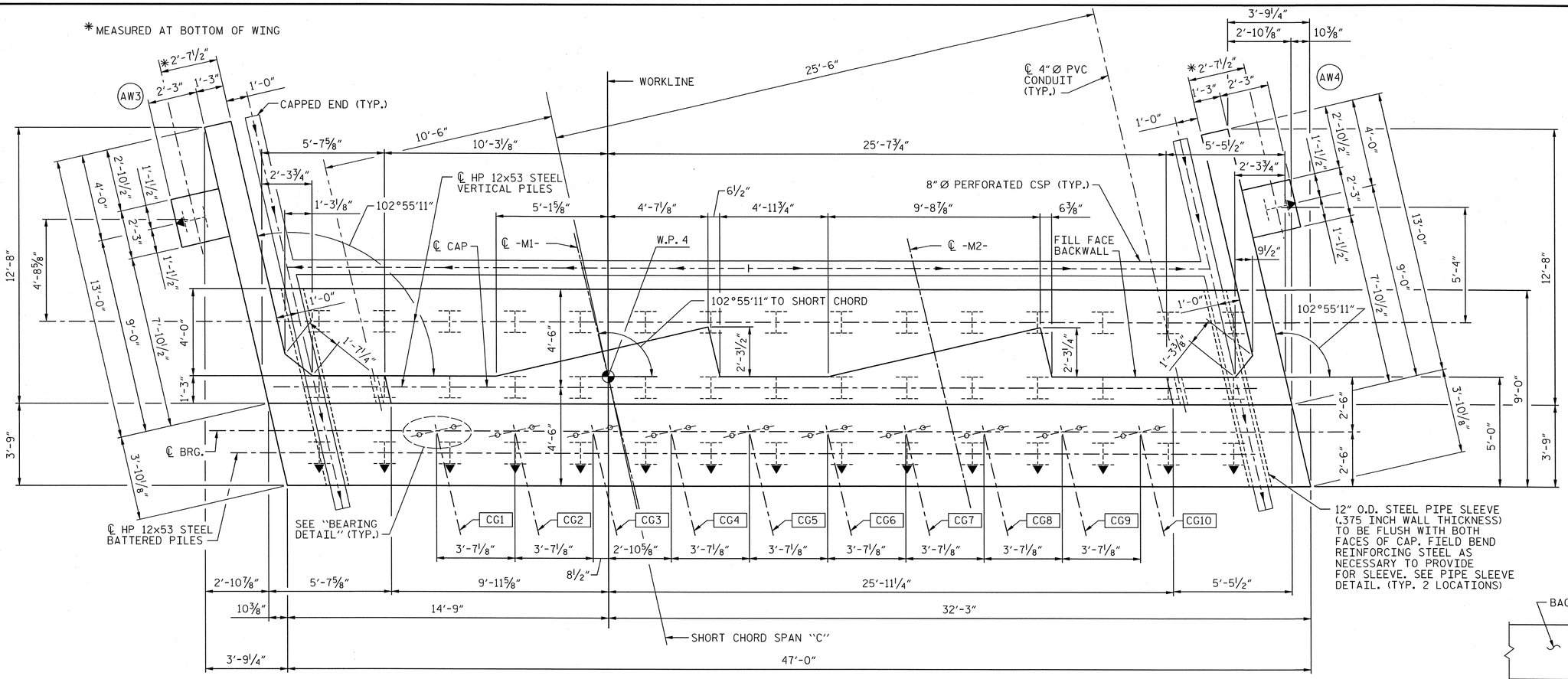

PLAN

NOTES:

1. FOR ABUTMENT REINFORCING, SEE SHEET 2 OF 4.
2. FOR PIPE SLEEVE DETAIL, SEE SHEET 2 OF 4.
3. FOR WINGWALL REINFORCING, SEE SHEET 3 OF 4.
4. FOR EPOXY PROTECTIVE COATING, SEE STANDARD SPECIFICATIONS.
5. ▲ INDICATES PILE BATTER 3:12 IN DIRECTION SHOWN.
6. FOR SECTION "A-A", SEE SHEET 4 OF 4.
7. FOR PILE SPLICE DETAILS, SEE SHEET 4 OF 4.
8. BACKWALL SHALL BE PLACED BEFORE APPLYING THE EPOXY PROTECTIVE COATING.

NAD 83 / NSRS 2007

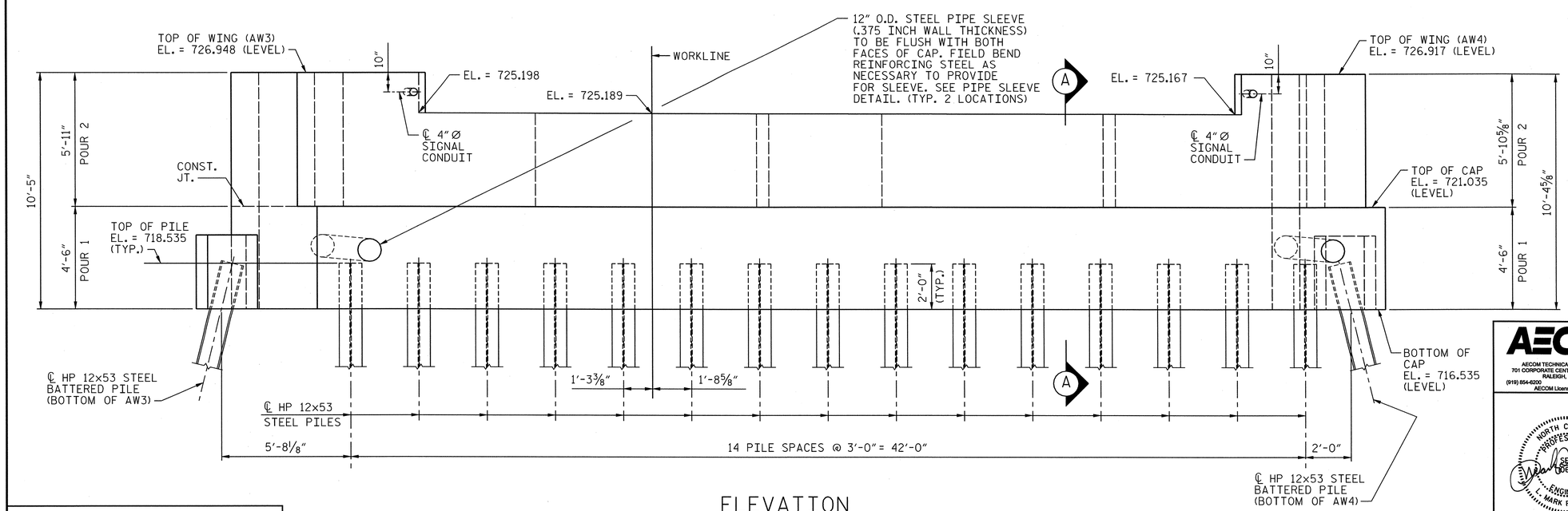

ELEVATION

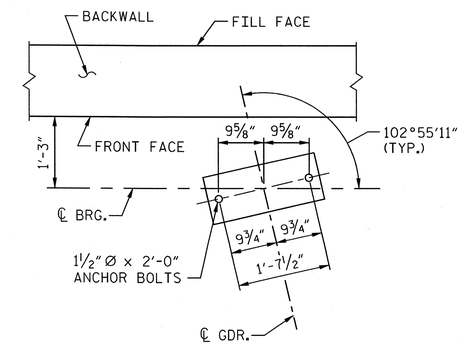

BEARING DETAIL

PROJECT NO. P-5208G

MECKLENBURG **COUNTY**

STATION: P.O.T. 10640+78.96 -M1-

SHEET 1 OF 4

AECOM
AECOM TECHNICAL SERVICES, INC.
701 CORPORATE CENTER DRIVE, SUITE 475
RALEIGH, NC 27607
(919) 854-6200 www.aecom.com
AECOM License No. F-0342

NORTH CAROLINA PROFESSIONAL SEAL 030656 ENGINEER MARK PEARSON
5/15/13

STATE OF NORTH CAROLINA
DEPARTMENT OF TRANSPORTATION
RALEIGH

SUBSTRUCTURE

ABUTMENT #2
PLAN AND ELEVATION

REVISIONS						SHEET NO.
NO.	BY:	DATE:	NO.	BY:	DATE:	S-32
1			3			TOTAL SHEETS
2			4			38

DRAWN BY : MTB DATE : 01/13
CHECKED BY : JL DATE : 01/13

DATE: 5/15/2013
TIME: 8:40:25 AM

USER: bellsjem
DGN: G:\5208\5894\0400_Tech_Info_Dfts_Files\450_NC00T Staff\Bridge Files\Structure\V12_Abut-2.dgn

DGN 0041DEL_P10a1

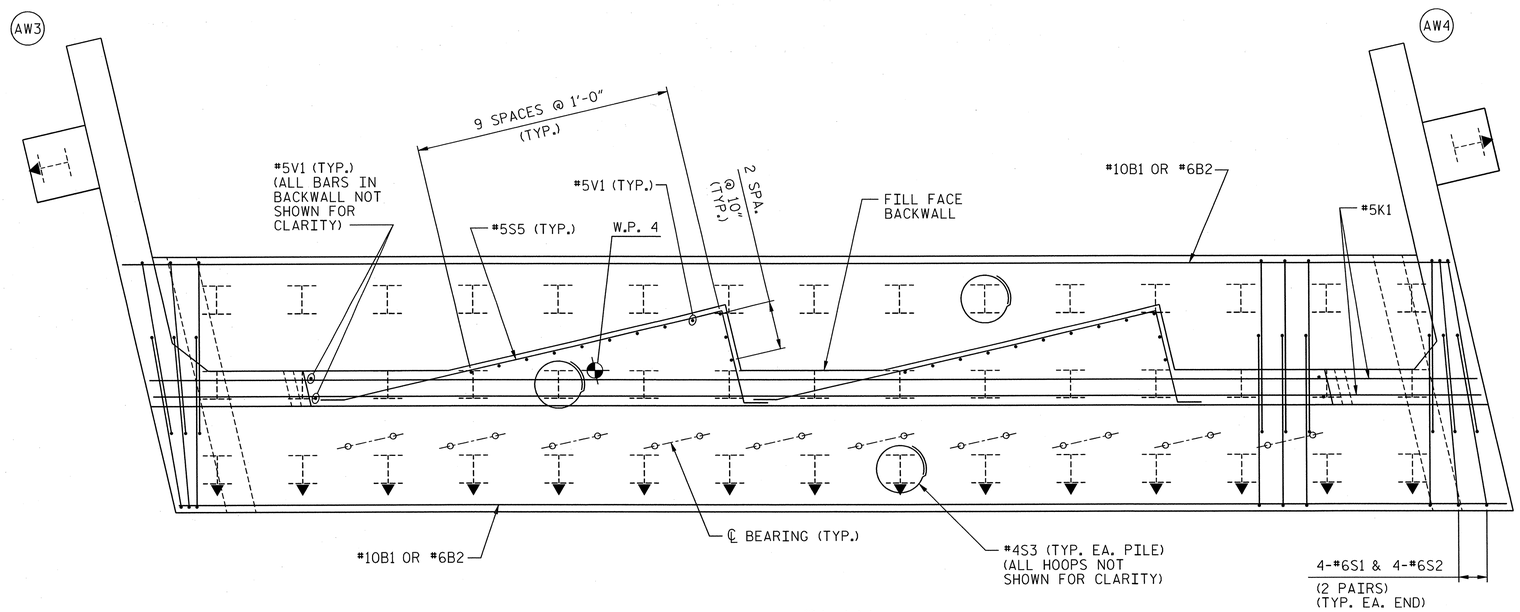

PLAN

NOTES:

1. STIRRUPS IN CAP MAY BE SHIFTED AS NECESSARY TO CLEAR ANCHOR BOLTS.
2. FOR EPOXY PROTECTIVE COATING, SEE STANDARD SPECIFICATIONS.
3. FOR WINGWALL REINFORCING AND DETAILS, SEE SHEET 3 OF 4.
4. FOR SECTION "A-A", SEE SHEET 4 OF 4.
5. ▲ INDICATES PILE BATTER 3:12 IN DIRECTION SHOWN.

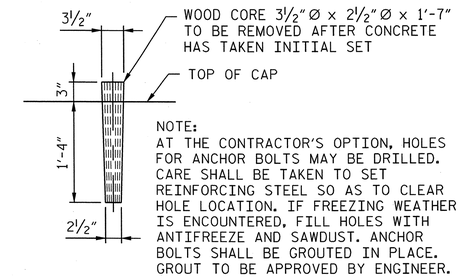

DETAIL OF WOOD CORE FOR ANCHOR BOLT HOLES

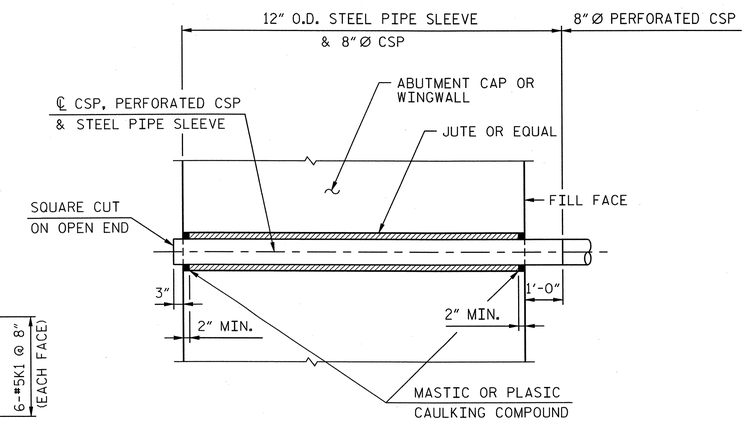

PIPE SLEEVE DETAIL

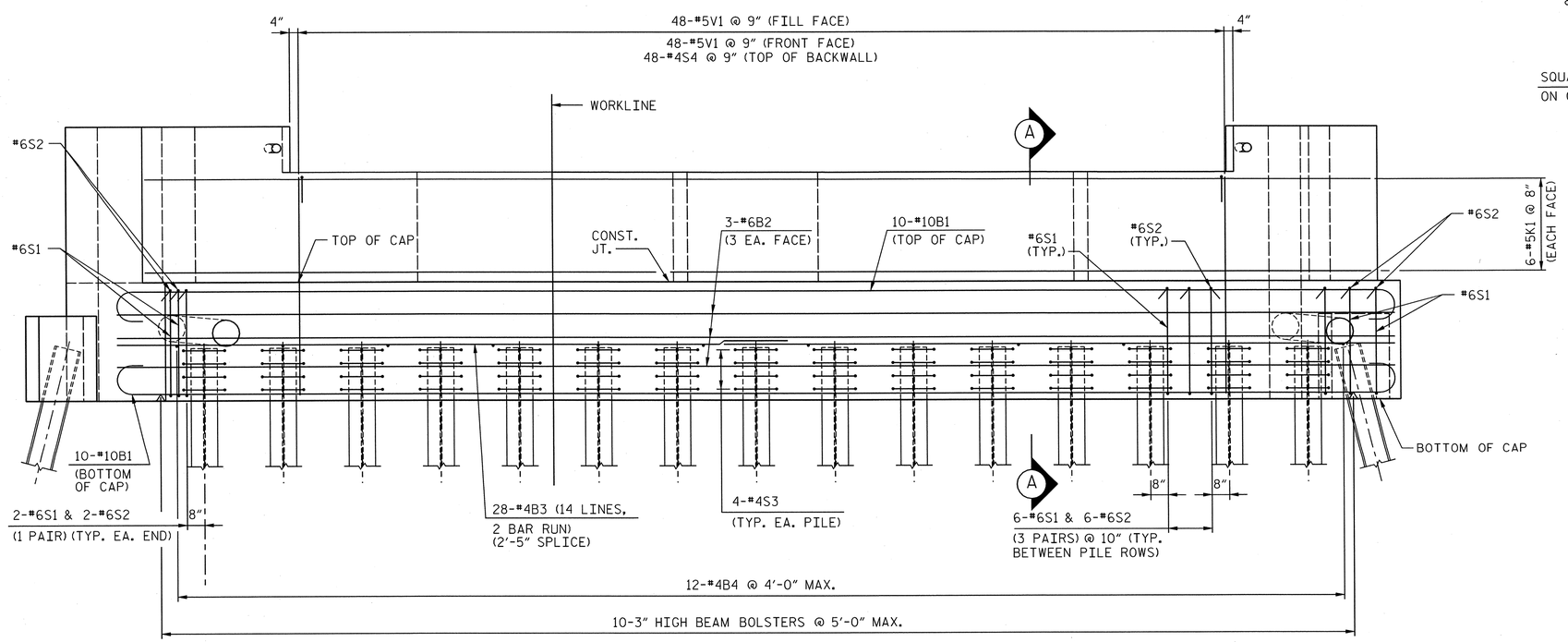

ELEVATION

PROJECT NO. P-5208G

MECKLENBURG COUNTY

STATION: P.O.T. 10640+78.96 -M1-

SHEET 2 OF 4

AECOM

AECOM TECHNICAL SERVICES, INC.
701 CORPORATE CENTER DRIVE, SUITE 475
RALEIGH, NC 27607
(919) 854-6200 www.aecom.com
AECOM License No. F-0342

NORTH CAROLINA PROFESSIONAL SEAL 10656 ENGINEER L. MARK PEARSON 4/24/13

STATE OF NORTH CAROLINA
DEPARTMENT OF TRANSPORTATION
RALEIGH

SUBSTRUCTURE

ABUTMENT #2
REINFORCING

REVISIONS						SHEET NO.
NO.	BY:	DATE:	NO.	BY:	DATE:	S-33
1			3			TOTAL SHEETS
2			4			58

DRAWN BY : MTB DATE : 01/13
CHECKED BY : JL DATE : 01/13

DATE: 4/22/2013 TIME: 3:40:35 PM
USER: bellstem DGN: 0:\60268940\400_Tech_Info_Disc_Files\450_NCDOTStdTechDesFiles\Structures\H21_Abut-2_2.dgn

0041DEL_P10a1

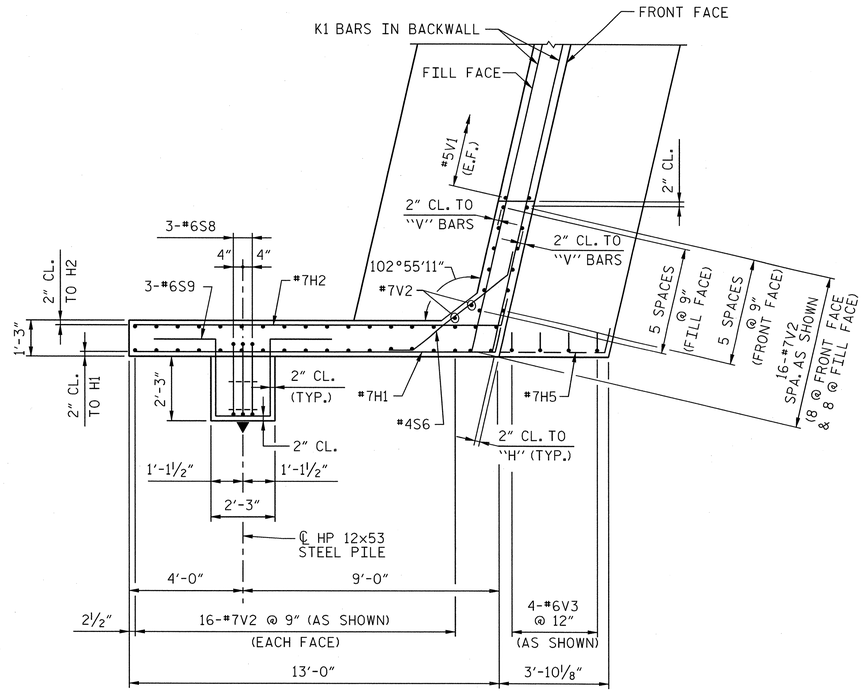

PLAN WING - AW3

NOTE:
SEE "METAL HANDRAIL DETAILS" SHEET FOR LOCATIONS OF ANCHOR ASSEMBLIES FOR METAL HANDRAIL.

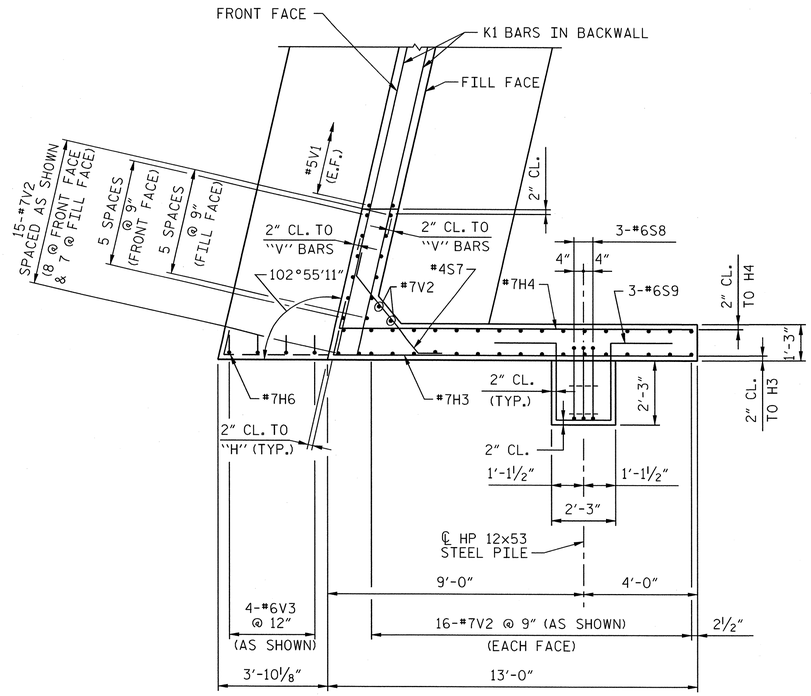

PLAN WING - AW4

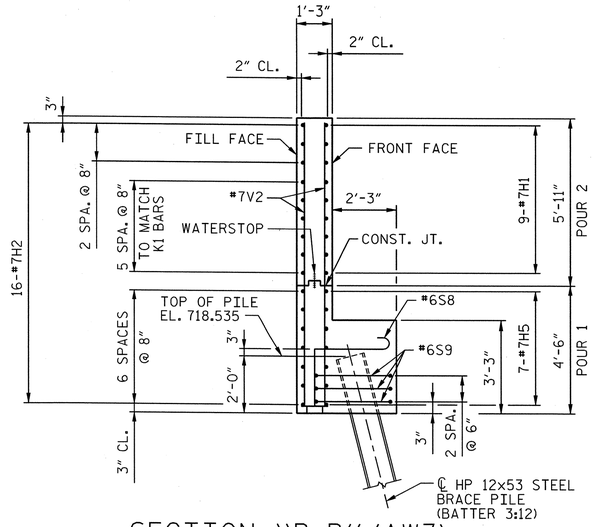

SECTION "B-B" (AW3)

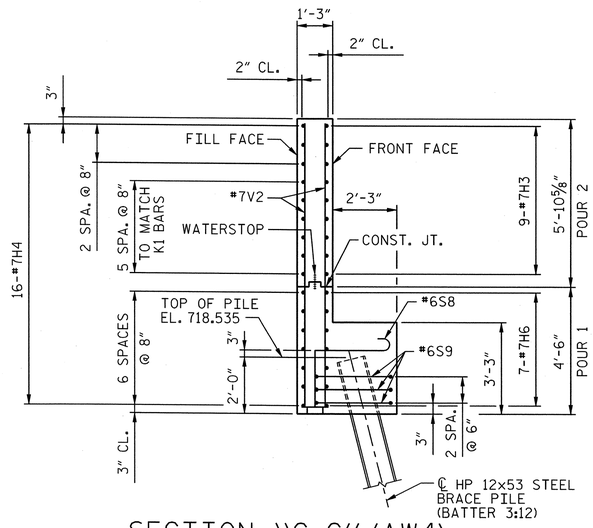

SECTION "C-C" (AW4)

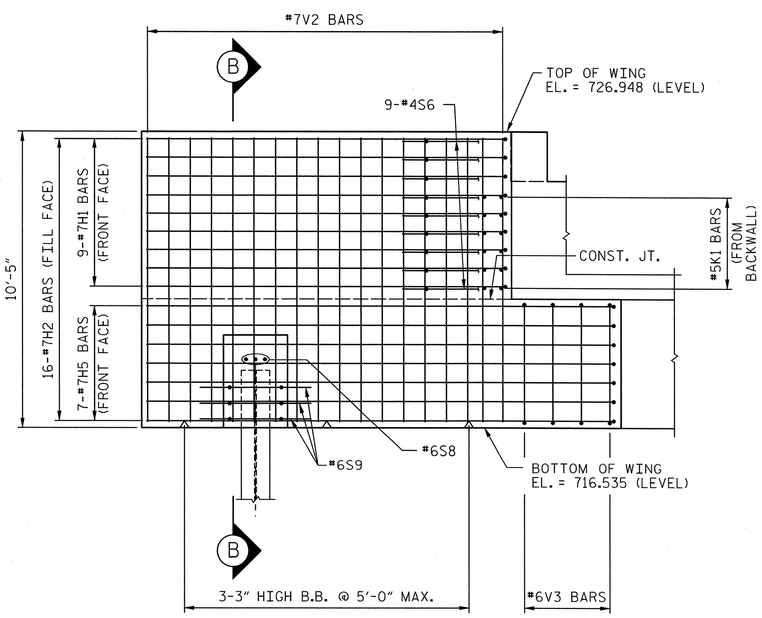

ELEVATION - AW3

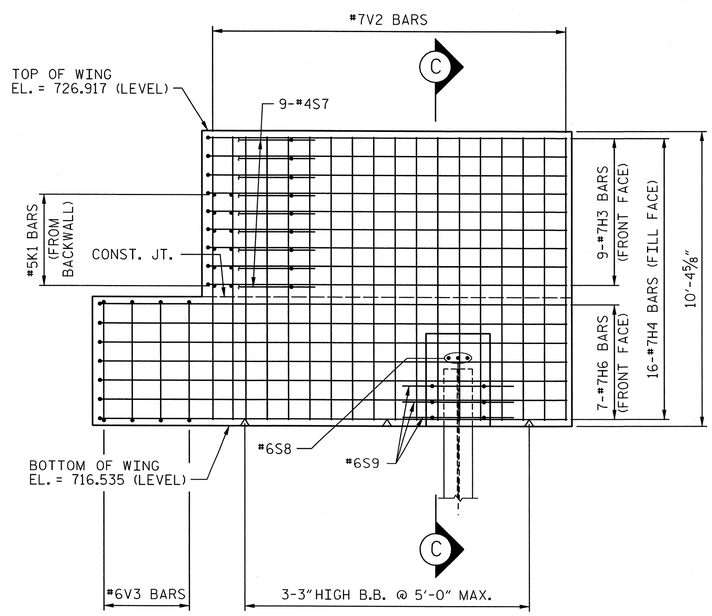

ELEVATION - AW4

PROJECT NO. P-5208G

MECKLENBURG COUNTY

STATION: P.O.T. 10640+78.96 -M1-

SHEET 3 OF 4

AECOM
AECOM TECHNICAL SERVICES, INC.
701 CORPORATE CENTER DRIVE, SUITE 475
RALEIGH, NC 27607
(919) 854-6200 www.aecom.com
AECOM License No. F-0342

NORTH CAROLINA PROFESSIONAL SEAL 10656 ENGINEER MARK PEARSON
5/15/13

STATE OF NORTH CAROLINA
DEPARTMENT OF TRANSPORTATION
RALEIGH

SUBSTRUCTURE

ABUTMENT #2
SECTIONS AND DETAILS

REVISIONS						SHEET NO.
NO.	BY:	DATE:	NO.	BY:	DATE:	S-34
1			3			TOTAL SHEETS
2			4			58

DRAWN BY : MTB DATE : 01/13
CHECKED BY : JL DATE : 01/13

DATE: 5/15/2013
TIME: 8:45:32 AM

USER: bellsen
DGN: G:\6020589\40\400_Tech_Info_Dist_Files\450_NCDOT Std Tech Dist Files\Structures\H3U_Abut-2_3.dgn

0041DEL_P10a1

NOTE:
SEE SECTION "A-A" ON "TYPICAL DECK DETAILS" SHEET FOR WATERSTOP IN DECK JOINT.

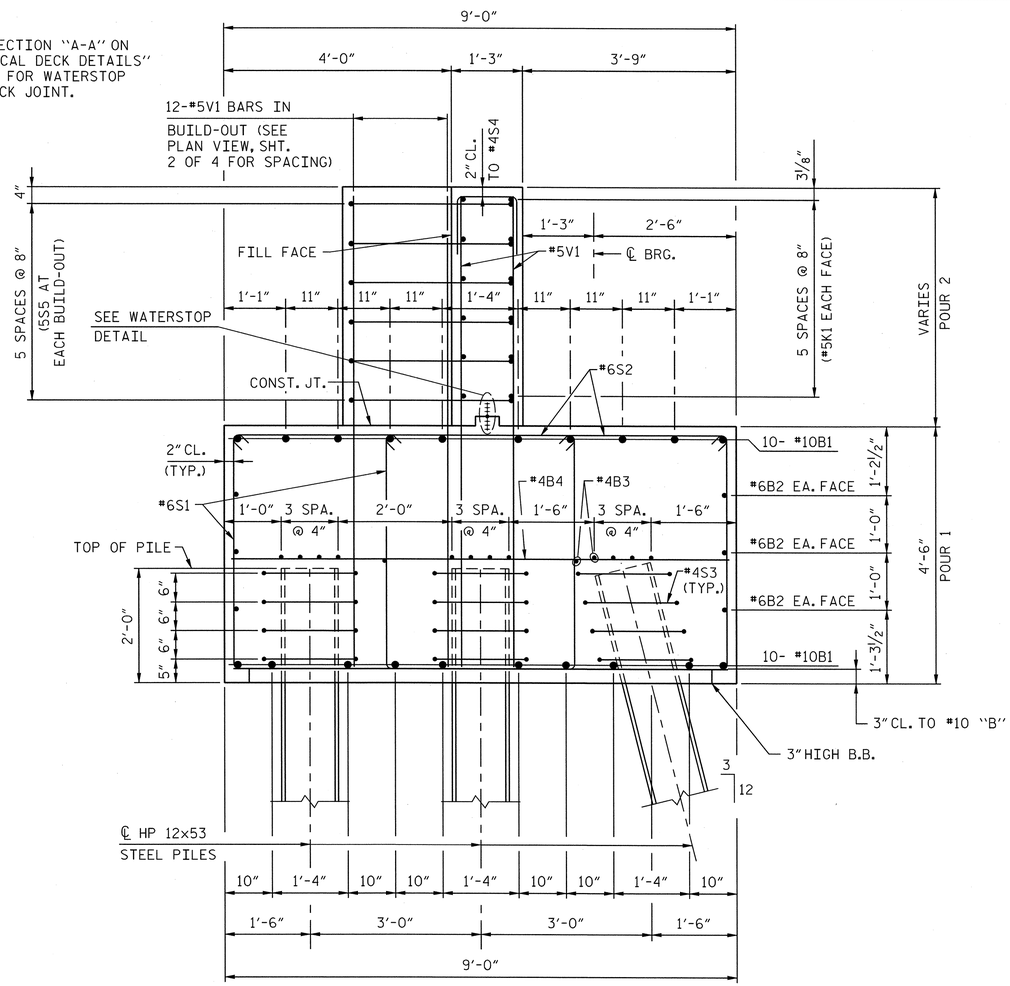

SECTION "A-A"

BAR TYPES

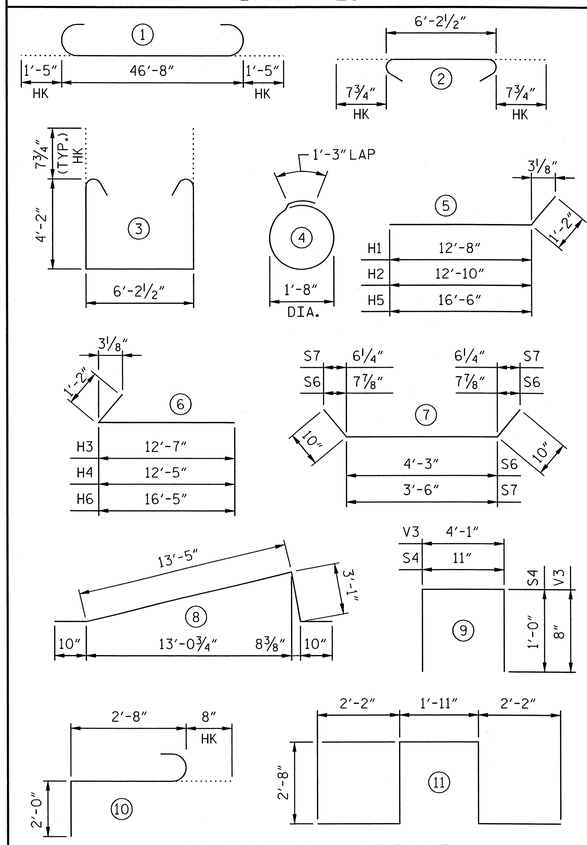

ALL BAR DIMENSIONS ARE OUT TO OUT.

BILL OF MATERIAL

ABUTMENT #2

BAR	NO.	SIZE	TYPE	LENGTH	WEIGHT
B1	20	#10	1	49'-6"	4260
B2	6	#6	STR	46'-8"	421
B3	28	#4	STR	24'-7"	460
B4	12	#4	STR	8'-8"	69
H1	9	#7	5	13'-10"	254
H2	16	#7	5	14'-0"	458
H3	9	#7	6	13'-9"	253
H4	16	#7	6	13'-7"	444
H5	7	#7	5	17'-8"	253
H6	7	#7	6	17'-7"	252
K1	12	#5	STR	46'-8"	584
S1	96	#6	3	15'-10"	2283
S2	96	#6	2	7'-6"	1081
S3	180	#4	4	6'-6"	782
S4	48	#4	9	2'-11"	94
S5	12	#5	8	18'-2"	227
S6	9	#4	7	5'-11"	36
S7	9	#4	7	5'-2"	31
S8	6	#6	10	5'-4"	48
S9	6	#6	11	11'-7"	104
V1	120	#5	STR	8'-2"	1022
V2	99	#7	STR	9'-11"	2007
V3	8	#6	9	5'-5"	65

TOTAL REINFORCING STEEL LBS. 15488

ABUTMENT #2 TOTAL QUANTITIES

CLASS AA CONCRETE		
POUR 1 (CAP & LOWER WING)	C.Y.	74.9
POUR 2 (BACKWALL & UPPER WING)	C.Y.	20.2
TOTAL	C.Y.	95.1
HP 12x53 STEEL PILES	NO.	47
	LIN. FT.	2350

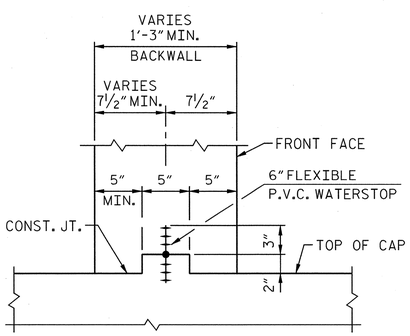

WATERSTOP DETAIL

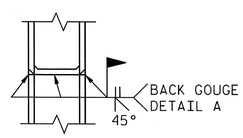

** PILE VERTICAL

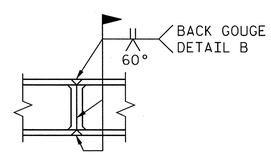

** PILE HORIZONTAL OR VERTICAL

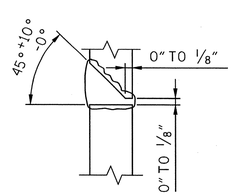

DETAIL A

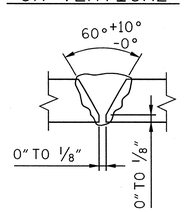

DETAIL B

**POSITION OF PILE DURING WELDING.

PILE SPLICE DETAILS

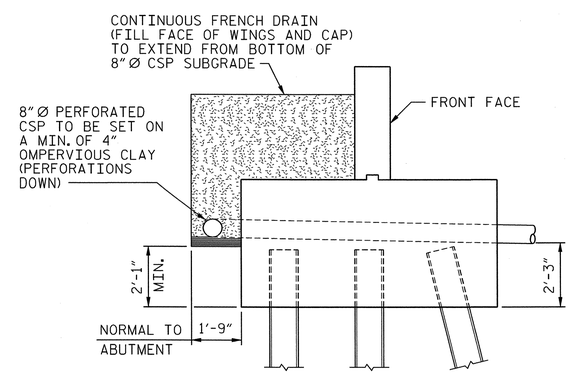

CONTINUOUS FRENCH DRAIN DETAIL

PROJECT NO. P-5208G
MECKLENBURG COUNTY
STATION: P.O.T. 10640+78.96 -M1-

SHEET 4 OF 4

AECOM
AECOM TECHNICAL SERVICES, INC.
701 CORPORATE CENTER DRIVE, SUITE 475
RALEIGH, NC 27607
(919) 854-6200 www.aecom.com
AECOM License No. F-0342

NORTH CAROLINA PROFESSIONAL SEAL 10656 ENGINEER L. MARK PEARSON
3/15/13

STATE OF NORTH CAROLINA
DEPARTMENT OF TRANSPORTATION
RALEIGH

SUBSTRUCTURE

ABUTMENT #2 DETAILS

REVISIONS						SHEET NO.
NO.	BY:	DATE:	NO.	BY:	DATE:	S-35
1			3			TOTAL SHEETS
2			4			58

DRAWN BY : MTB DATE : 01/13
CHECKED BY : JL DATE : 01/13

DATE: 5/15/2013
TIME: 8:49:58 AM

USER: bellsem
DGN: 0:\60126589-WO-600_Tech_Info_Disc_Files\450_NCDOT Staff text\Des Files\Structures\V20_Abut-2.dgn

0041DEL_P10a1

DATE: 4/15/2013
TIME: 2:28:07 PM

FITTING SCHEDULE AND ESTIMATED QUANTITIES

MARK	SIZE	DESCRIPTION	MATERIAL	UNIT	TOTAL
1	6"	GRATE, NEENAH R-4373 SERIES, HEAVY DUTY, OR EQUAL	CAST IRON	EA	57
2	6"	BELL x PLAIN END, NO GASKET, CLASS 53	DUCTILE IRON	EA	57
3	6"	FLANGE & FLARE (BELL MOUTH), LG = 8", OPENING WIDTH = 11.0"	DUCTILE IRON	EA	66
4	6"	CROSS, FLG	DUCTILE IRON	EA	9
5	6"	TEE, FLG	DUCTILE IRON	EA	56
6	6"	45° ELL, MJ	DUCTILE IRON	EA	1
7	6"	22.5° ELL, MJ	DUCTILE IRON	EA	2
8	6"	MJ RESTRAINT, MEGALUG SERIES 1100, OR EQUAL	DUCTILE IRON	EA	6
9	8" x 6"	TEE, FLG	DUCTILE IRON	EA	3
10	6"	PIPE, CLASS 53	DUCTILE IRON	FT	529
11	8"	TEE, FLG	DUCTILE IRON	EA	1
12	8"	PIPE, CLASS 53	DUCTILE IRON	FT	35
13	8"	90° ELL, FLG	DUCTILE IRON	EA	1
14	6"	90° ELL, FLG	DUCTILE IRON	EA	1
15	6"	BLIND FLANGE	DUCTILE IRON	EA	22
16	8"	BLIND FLANGE	DUCTILE IRON	EA	2

FITTING SCHEDULE AND ESTIMATED QUANTITIES (CONTINUATION)

MARK	SIZE	DESCRIPTION	MATERIAL	UNIT	TOTAL
17	PER DETAIL NO. 4	DIAPHRAGM SUPPORT ANGLE (DSA)	STEEL	EA	48
18	PER DETAIL NO. 3	PIPE SUPPORT ANGLE (PSA)	STEEL	EA	57
19	PER DETAIL NO. 2	OFFSET PIPE CLAMP FOR 6"DI PIPE	GALV STEEL	EA	16
20	PER DETAIL NO. 2	OFFSET PIPE CLAMP FOR 8"DI PIPE	GALV STEEL	EA	8

NOTES:

1. ALL DIMENSIONS ARE SUBJECT TO ADJUSTMENTS TO FIT MEASUREMENTS TAKEN AFTER DECKS HAVE BEEN POURED.

2. ABBREVIATIONS:

D.I. = DUCTILE IRON
P.L. = PIPE LENGTH
P.E. = PLAIN END
FLG = FLANGE
MJ = MECHANICAL JOINT
LG = LENGTH
TYP = TYPICAL
GALV = GALVANIZED

3. FLANGED FITTINGS SHALL BE DUCTILE IRON CONFORMING TO ANSI/AWWA C110/A21.10.

4. MECHANICAL JOINT FITTINGS SHALL BE DUCTILE IRON CONFORMING TO ANSI/AWWA C153/A21.53, COMPACT, AND SHALL HAVE A MECHANICAL JOINT RESTRAINT ON EACH END.

5. STAINLESS STEEL BOLTS SHALL BE USED FOR ALL FITTINGS.

6. ALL DUCTILE IRON DRAINAGE PIPE AND FITTINGS SHALL HAVE THE EXTERIOR SURFACES CLEANED AND PAINTED. THE EXTERIOR SURFACES SHALL BE INSPECTED AND PRE-CLEANED WITH SUITABLE SOLVENT TO REMOVE ALL TRACES OF GREASE, OIL, ASPHALT AND OTHER SOLUBLE CONTAMINANTS. ABRASIVE BLAST ALL SURFACES WITH FINE ABRASIVE TO REMOVE ALL LOOSE ANNEALING OXIDES, RUST, DIRT AND OTHER FOREIGN MATTER. ONLY SLIGHT STAINS AND TIGHTLY ADHERING OXIDES ARE ALLOWED TO REMAIN ON THE SURFACE. ANY AREA WHERE RUST REAPPEARS BEFORE APPLICATION SHALL BE REBLASTED. ANY DUST OR OTHER CONTAMINANTS REMAINING AFTER BLASTING SHALL BE REMOVED WITH DRY, OIL FREE COMPRESSED AIR OR BY VACUUM CLEANING. A SURFACE PROFILE DEPTH (ANCHOR PATTERN) OF AT LEAST 2.0 MILS (76.2 MICRONS) IS REQUIRED (REFERENCE ASTM D 4417, METHOD C).
ALL PIPING AND FITTINGS SHALL THEN BE PAINTED WITH ONE PRIME COAT OF A MODIFIED AROMATIC POLYURETHANE PRIMER TO 3.0 TO 4.0 DRY MILS, A SECOND PRIME COAT OF A POLYAMIDOAMINE EPOXY TO 6.0 DRY MILS, AND ONE COAT OF AN ALIPHATIC ACRYLIC POLYURETHANE TO 2.5 DRY MILS.

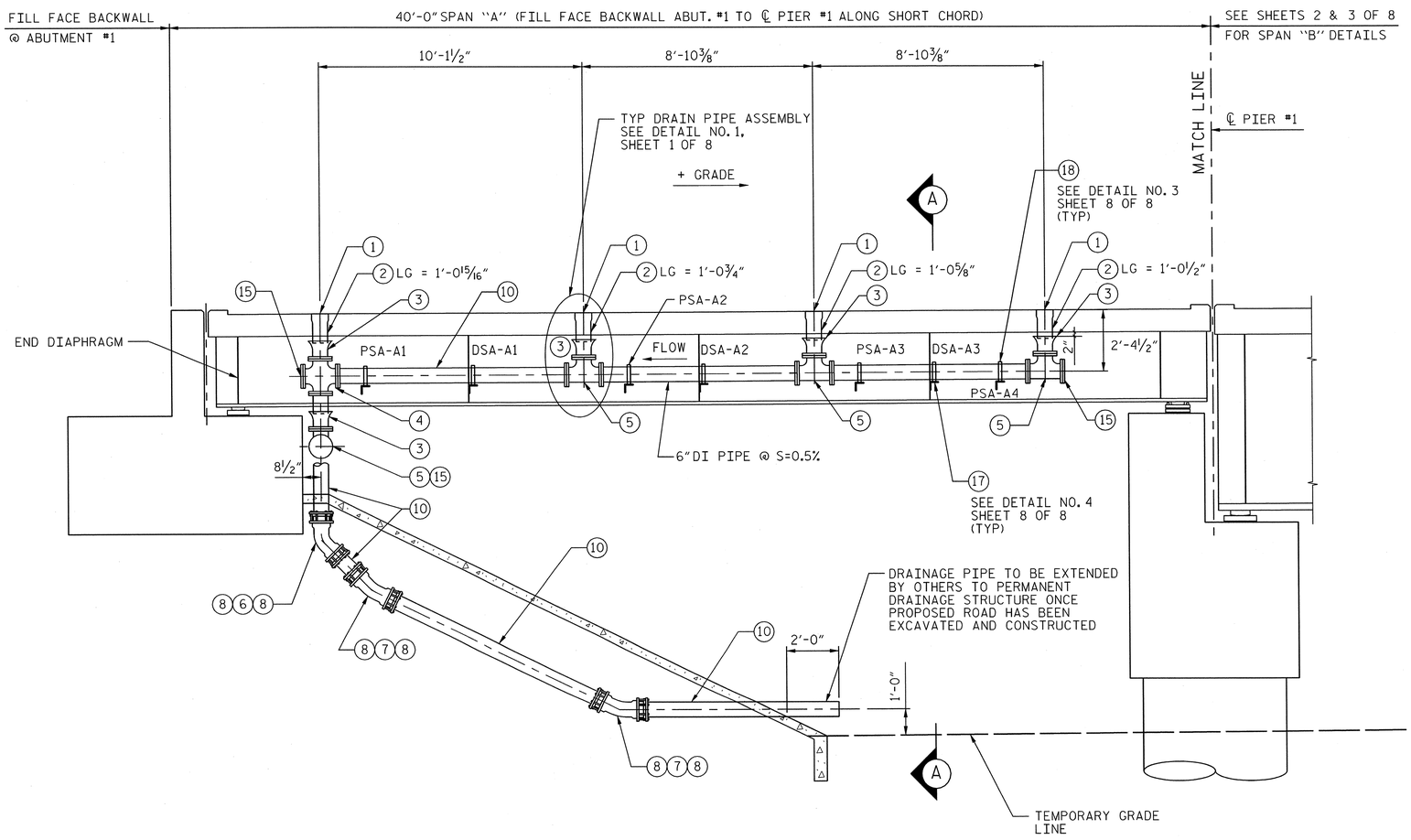

DRAINAGE DETAILS - SPAN "A"
(TYP 3 LOCATIONS)

SCALE: ⅜" = 1'-0"

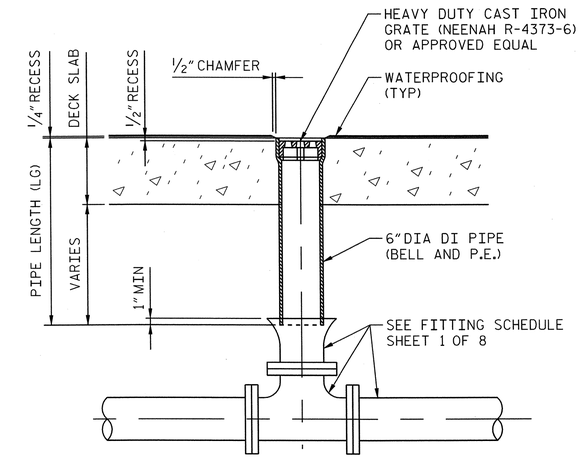

DETAIL NO. 1
DRAIN PIPE ASSEMBLY

SCALE: 1" = 1'-0"

PROJECT NO. P-5208G
MECKLENBURG **COUNTY**
STATION: P.O.T. 10640+78.96 -M1-

SHEET 1 OF 8

AECOM
AECOM TECHNICAL SERVICES, INC.
701 CORPORATE CENTER DRIVE, SUITE 475
RALEIGH, NC 27607
(919) 854-6200 www.aecom.com
AECOM License No. F-0342

NORTH CAROLINA PROFESSIONAL SEAL 10656 ENGINEER J. MARK PEARSON 12/16/13

STATE OF NORTH CAROLINA
DEPARTMENT OF TRANSPORTATION
RALEIGH

STRUCTURE DRAINAGE DETAILS

REVISIONS						SHEET NO.
NO.	BY:	DATE:	NO.	BY:	DATE:	S-36
1			3			TOTAL SHEETS
2			4			58

DRAWN BY : JMS DATE : 01/13
CHECKED BY : DSS DATE : 01/13

USER: bellstem
DGN: QA50ZBB9HO400_Tech_Info_Disc_Files\450_NCDOT Shift textBasFiles\Structures\V12_Draft_1.dgn

0041DEL_P10a1

DATE: 4/15/2013
TIME: 2:28:41 PM

USER: bwilson
DGN: D:\SS\28940-400_Tech_Info_Disc_Files\450_NCDOT Std Textbase Files\Structures\V12_Drain_2.dgn

NOTES:

1. ALL DIMENSIONS ARE SUBJECT TO ADJUSTMENTS TO FIT MEASUREMENTS TAKEN AFTER DECKS HAVE BEEN POURED.

2. ABBREVIATIONS:

D.I. = DUCTILE IRON
P.L. = PIPE LENGTH
P.E. = PLAIN END
FLG = FLANGE
MJ = MECHANICAL JOINT
LG = LENGTH
TYP = TYPICAL

3. FOR FITTING SCHEDULE AND ESTIMATED QUANTITIES, SEE SHEET 1 OF 8.

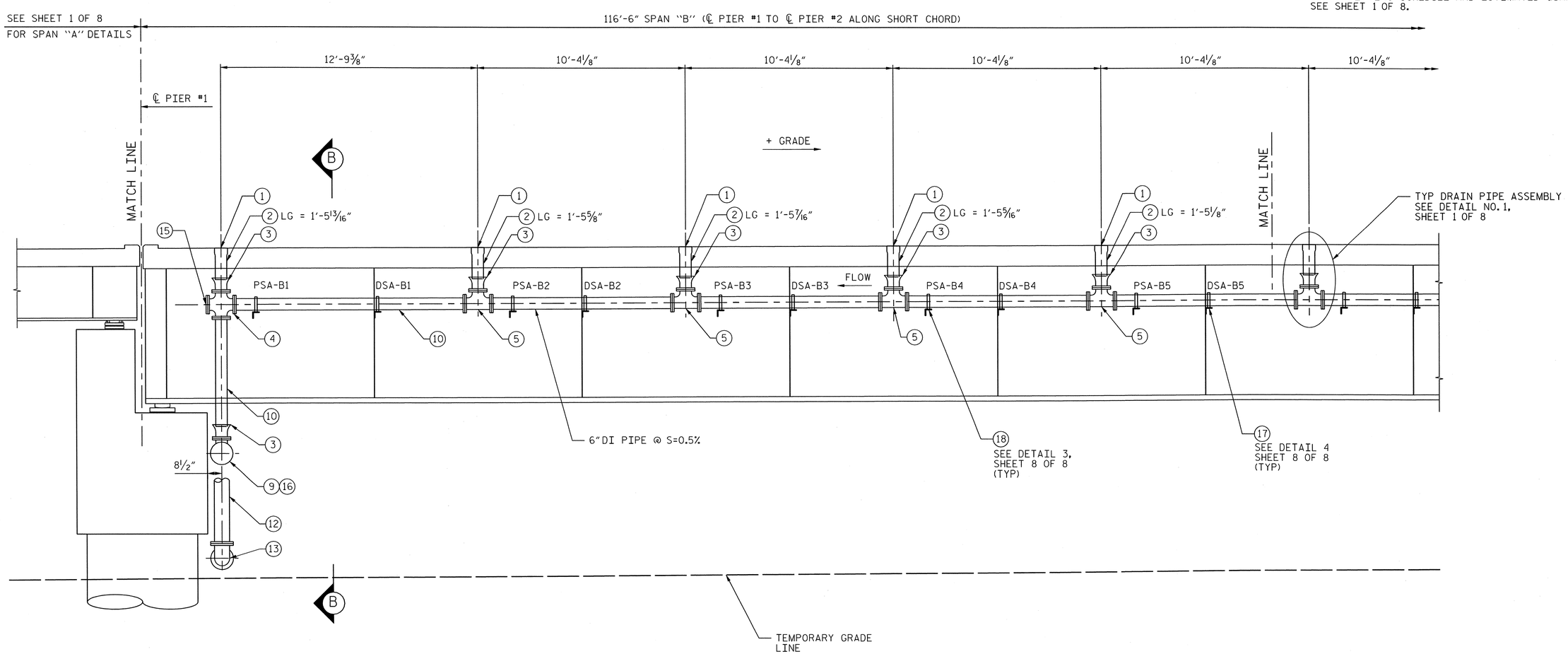

DRAINAGE DETAILS - SPAN "B"
(TYP 3 LOCATIONS)

SCALE: 3/8" = 1'-0"

PROJECT NO. P-5208G
MECKLENBURG **COUNTY**
STATION: P.O.T. 10640+78.96 -M1-

SHEET 2 OF 8

AECOM
AECOM TECHNICAL SERVICES, INC.
701 CORPORATE CENTER DRIVE, SUITE 475
RALEIGH, NC 27607
(919) 854-6200
www.aecom.com
AECOM License No. F-0342

NORTH CAROLINA PROFESSIONAL SEAL 10656 ENGINEER L. MARK PEARSON
9/16/13

STATE OF NORTH CAROLINA
DEPARTMENT OF TRANSPORTATION
RALEIGH

STRUCTURE DRAINAGE DETAILS

REVISIONS						SHEET NO.
NO.	BY:	DATE:	NO.	BY:	DATE:	S-37
1			3			TOTAL SHEETS
2			4			58

DRAWN BY : JMS DATE : 01/13
CHECKED BY : DSS DATE : 01/13

0041DEL_P10a1

DGN

DATE: 4/15/2013
TIME: 2:29:57 PM

USER: bellsjen
DGN: G:\0026569\ADWOD_Tech_Info_Disc_Files\450_NCDOT SidePlanFiles\Structures\V10_Drain_3.dgn

NOTES:

1. ALL DIMENSIONS ARE SUBJECT TO ADJUSTMENTS TO FIT MEASUREMENTS TAKEN AFTER DECKS HAVE BEEN POURED.

2. ABBREVIATIONS:

D.I. = DUCTILE IRON
P.L. = PIPE LENGTH
P.E. = PLAIN END
FLG = FLANGE
MJ = MECHANICAL JOINT
LG = LENGTH
TYP = TYPICAL

3. FOR FITTING SCHEDULE AND ESTIMATED QUANTITIES, SEE SHEET 1 OF 8.

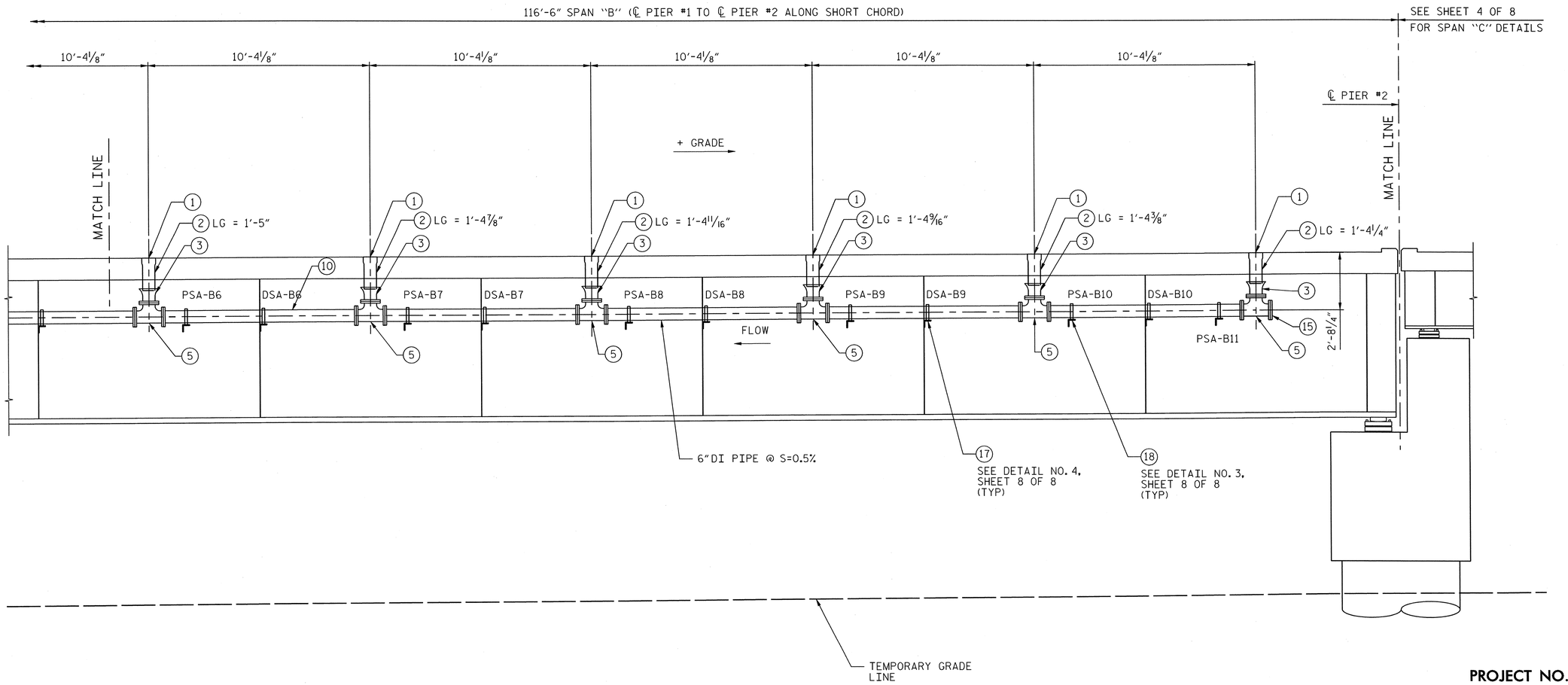

DRAINAGE DETAILS - SPAN "B"
(TYP 3 LOCATIONS)

SCALE: 3/8" = 1'-0"

PROJECT NO. P-5208G

MECKLENBURG **COUNTY**

STATION: P.O.T. 10640+78.96 -M1-

SHEET 3 OF 8

AECOM
AECOM TECHNICAL SERVICES, INC.
701 CORPORATE CENTER DRIVE, SUITE 475
RALEIGH, NC 27607
(919) 854-6200 www.aecom.com
AECOM License No. F-0342

NORTH CAROLINA PROFESSIONAL SEAL 10656 ENGINEER J. MARK PEARSON
3/16/13

STATE OF NORTH CAROLINA
DEPARTMENT OF TRANSPORTATION
RALEIGH

STRUCTURE DRAINAGE DETAILS

REVISIONS						SHEET NO.
NO.	BY:	DATE:	NO.	BY:	DATE:	S-38
1			3			TOTAL SHEETS
2			4			58

DRAWN BY : JMS DATE : 01/13
CHECKED BY : DSS DATE : 01/13

0041DEL_P10a1

DGN

NOTES:

1. ALL DIMENSIONS ARE SUBJECT TO ADJUSTMENTS TO FIT MEASUREMENTS TAKEN AFTER DECKS HAVE BEEN POURED.

2. ABBREVIATIONS:

D.I. = DUCTILE IRON
P.L. = PIPE LENGTH
P.E. = PLAIN END
FLG = FLANGE
MJ = MECHANICAL JOINT
LG = LENGTH
TYP = TYPICAL

3. FOR FITTING SCHEDULE AND ESTIMATED QUANTITIES, SEE SHEET 1 OF 8.

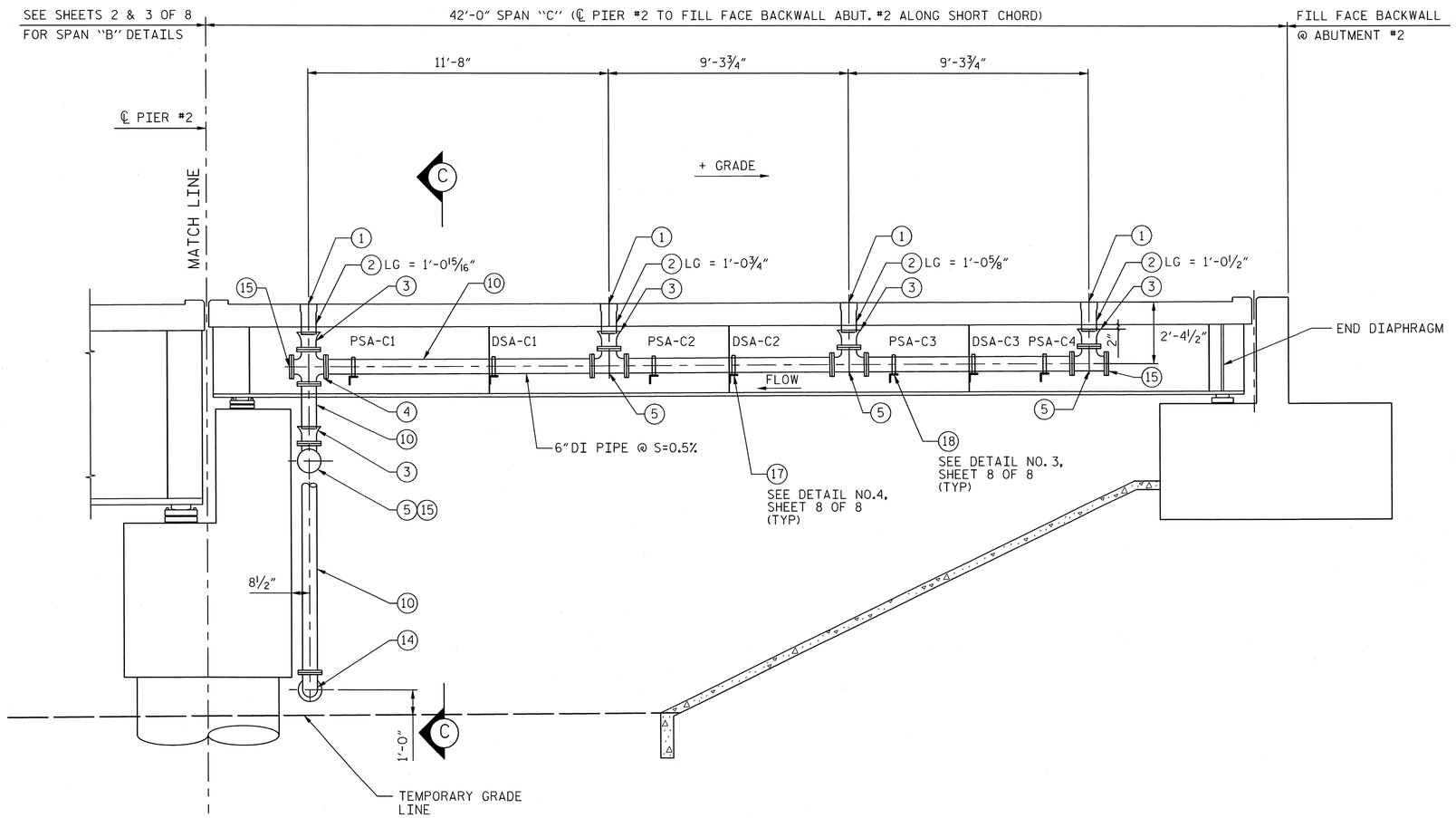

DRAINAGE DETAILS - SPAN "C"
(TYP 3 LOCATIONS)

SCALE: ⅜" = 1'-0"

PROJECT NO. P-5208G

MECKLENBURG COUNTY

STATION: P.O.T. 10640+78.96 -M1-

SHEET 4 OF 8

AECOM
AECOM TECHNICAL SERVICES, INC.
701 CORPORATE CENTER DRIVE, SUITE 475
RALEIGH, NC 27607
(919) 854-6200 www.aecom.com
AECOM License No. F-0342

NORTH CAROLINA PROFESSIONAL SEAL 10656 ENGINEER L. MARK PEARSON
4/16/13

STATE OF NORTH CAROLINA
DEPARTMENT OF TRANSPORTATION
RALEIGH

STRUCTURE DRAINAGE DETAILS

REVISIONS						SHEET NO.
NO.	BY:	DATE:	NO.	BY:	DATE:	S-39
1			3			TOTAL SHEETS
2			4			58

DRAWN BY : JMS DATE : 01/13
CHECKED BY : DSS DATE : 01/13

DATE: 4/16/2013
TIME: 2:33:35 PM

USER: bellsjen
DGN: 0:\60028949\400_Tech_Info_Disc_Files\450_NCDOT Std Text Def Files\Structures\H21_Drain_4.dgn

0041DEL_P10a1

DGN

DATE: 1/15/2013
TIME: 2:33:59 PM

USER: bellsiem
DGN: G:\60286940\400_Tech_Info_Disc_Files\450_NCDOT SHE\bridge Files\Structures\V12_Drgs_5.dgn

NOTES:

1. ALL DIMENSIONS ARE SUBJECT TO ADJUSTMENTS TO FIT MEASUREMENTS TAKEN AFTER DECKS HAVE BEEN POURED.

2. ABBREVIATIONS:

D.I. = DUCTILE IRON
P.L. = PIPE LENGTH
P.E. = PLAIN END
FLG = FLANGE
MJ = MECHANICAL JOINT
LG = LENGTH
TYP = TYPICAL

3. FOR FITTING SCHEDULE AND ESTIMATED QUANTITIES, SEE SHEET 1 OF 8.

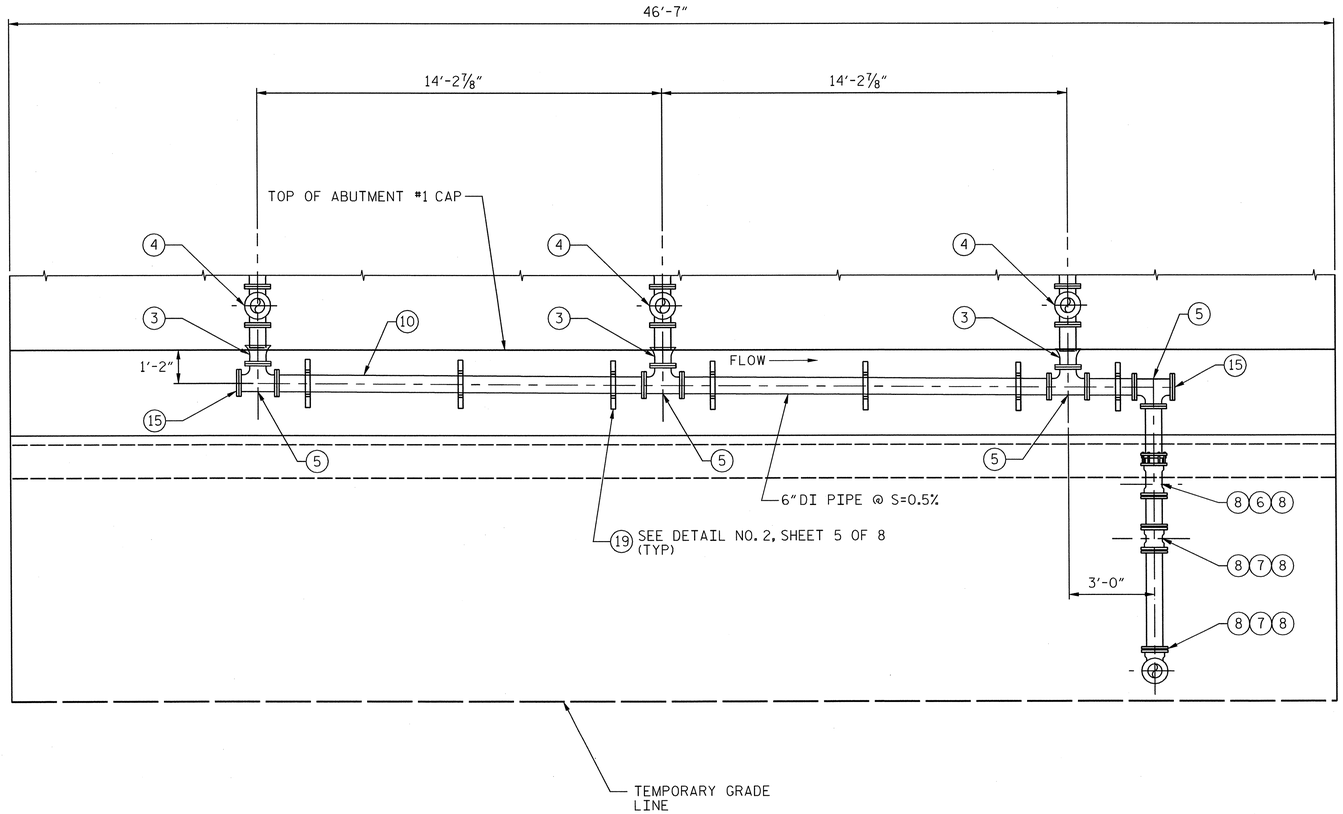

SECTION A-A
DRAINAGE DETAILS - SPAN "A"

SCALE: 3/8" = 1'-0"

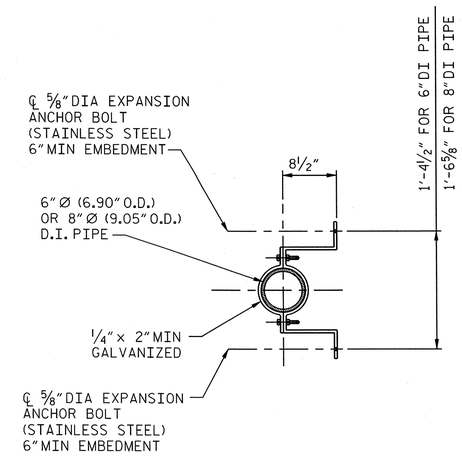

DETAIL NO. 2
OFFSET PIPE CLAMP

SCALE: 1" = 1'-0"

PROJECT NO. P-5208G

MECKLENBURG **COUNTY**

STATION: P.O.T. 10640+78.96 -M1-

SHEET 5 OF 8

AECOM
AECOM TECHNICAL SERVICES, INC.
701 CORPORATE CENTER DRIVE, SUITE 475
RALEIGH, NC 27607
(919) 854-6200 www.aecom.com
AECOM License No. F-0342

NORTH CAROLINA PROFESSIONAL SEAL 10656 ENGINEER MARK PEARSON 2/14/13

STATE OF NORTH CAROLINA
DEPARTMENT OF TRANSPORTATION
RALEIGH

STRUCTURE DRAINAGE DETAILS

REVISIONS						SHEET NO.
NO.	BY:	DATE:	NO.	BY:	DATE:	S-40
1			3			TOTAL SHEETS
2			4			58

DRAWN BY : JMS DATE : 01/13
CHECKED BY : DSS DATE : 01/13

DCN 0041DEL_P10a1

NOTES:

1. ALL DIMENSIONS ARE SUBJECT TO ADJUSTMENTS TO FIT MEASUREMENTS TAKEN AFTER DECKS HAVE BEEN POURED.

2. ABBREVIATIONS:

D.I. = DUCTILE IRON
P.L. = PIPE LENGTH
P.E. = PLAIN END
FLG = FLANGE
MJ = MECHANICAL JOINT
LG = LENGTH
TYP = TYPICAL

3. FOR FITTING SCHEDULE AND ESTIMATED QUANTITIES, SEE SHEET 1 OF 8.

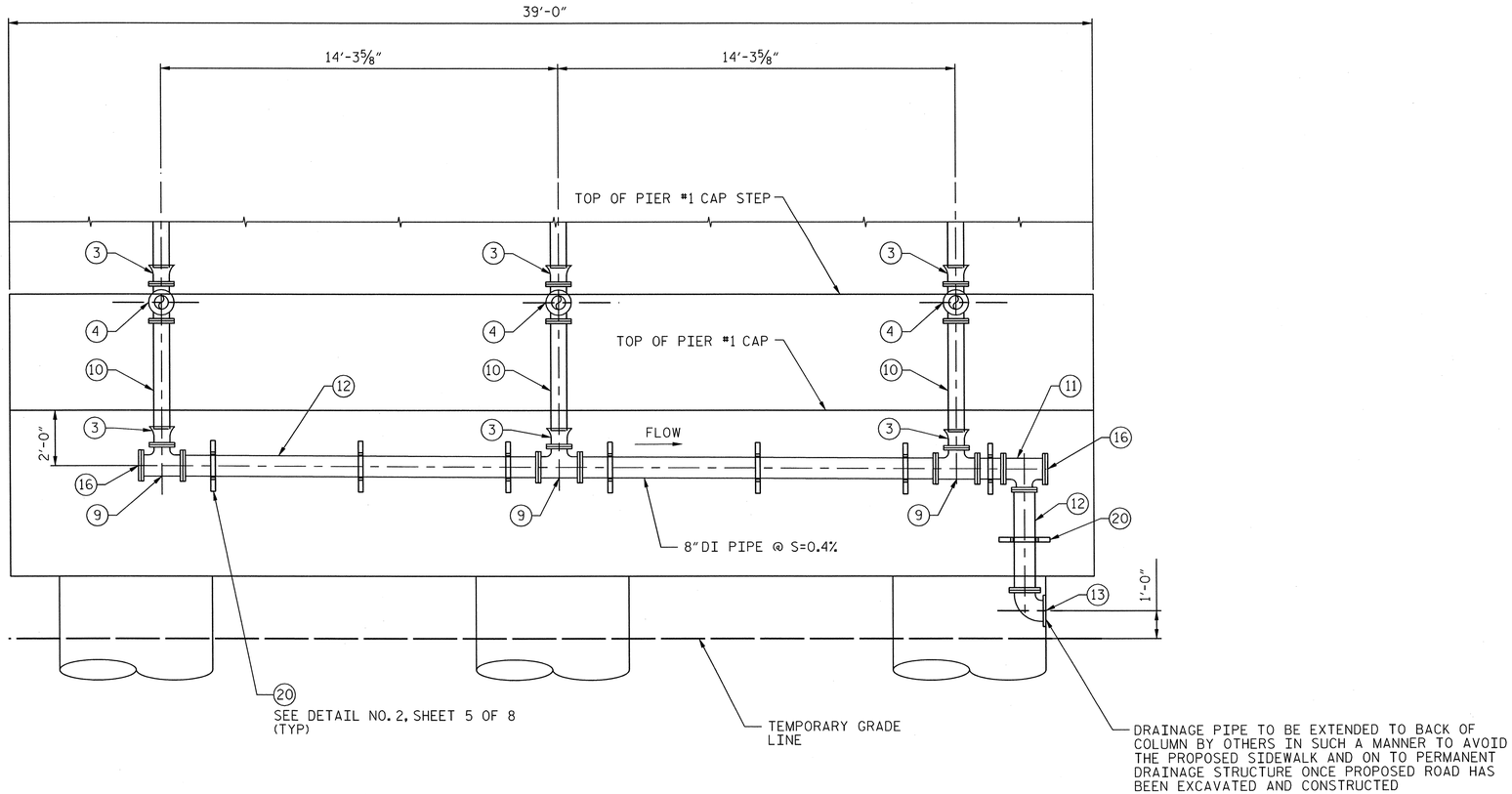

SECTION B-B
DRAINAGE DETAILS - SPAN "B"

SCALE: ⅜" = 1'-0"

PROJECT NO. P-5208G
MECKLENBURG **COUNTY**
STATION: P.O.T. 10640+78.96 -M1-

SHEET 6 OF 8

AECOM
AECOM TECHNICAL SERVICES, INC.
701 CORPORATE CENTER DRIVE, SUITE 475
RALEIGH, NC 27607
(919) 854-6200 www.aecom.com
AECOM License No. F-0342

NORTH CAROLINA PROFESSIONAL SEAL 19656 ENGINEER MARK PEARSON 4/16/13

STATE OF NORTH CAROLINA
DEPARTMENT OF TRANSPORTATION
RALEIGH

STRUCTURE DRAINAGE DETAILS

REVISIONS						SHEET NO.
NO.	BY:	DATE:	NO.	BY:	DATE:	S-41
1			3			TOTAL SHEETS
2			4			58

DRAWN BY : JMS DATE : 01/13
CHECKED BY : DSS DATE : 01/13

DATE: 4/15/2013
TIME: 2:35:39 PM

USER: bellstem
DGN: G:\60268940\400_Tech_Info_Disc_Files\450_NCDOTStdTechDesFiles\Structures\H2J_Drain_6.dgn

0041DEL_P10a1

DGN

DATE: 4/15/2014
TIME: 2:34:28 PM

USER: bellisiam
DGN: C:\SUDS\8940\400_Tech_Info_Disc_Files\450_NCDOT SHT tech\Deliv Files\Structures\H20_Drain_7.dgn

NOTES:

1. ALL DIMENSIONS ARE SUBJECT TO ADJUSTMENTS TO FIT MEASUREMENTS TAKEN AFTER DECKS HAVE BEEN POURED.

2. ABBREVIATIONS:

D.I. = DUCTILE IRON
P.L. = PIPE LENGTH
P.E. = PLAIN END
FLG = FLANGE
MJ = MECHANICAL JOINT
LG = LENGTH
TYP = TYPICAL

3. FOR FITTING SCHEDULE AND ESTIMATED QUANTITIES, SEE SHEET 1 OF 8.

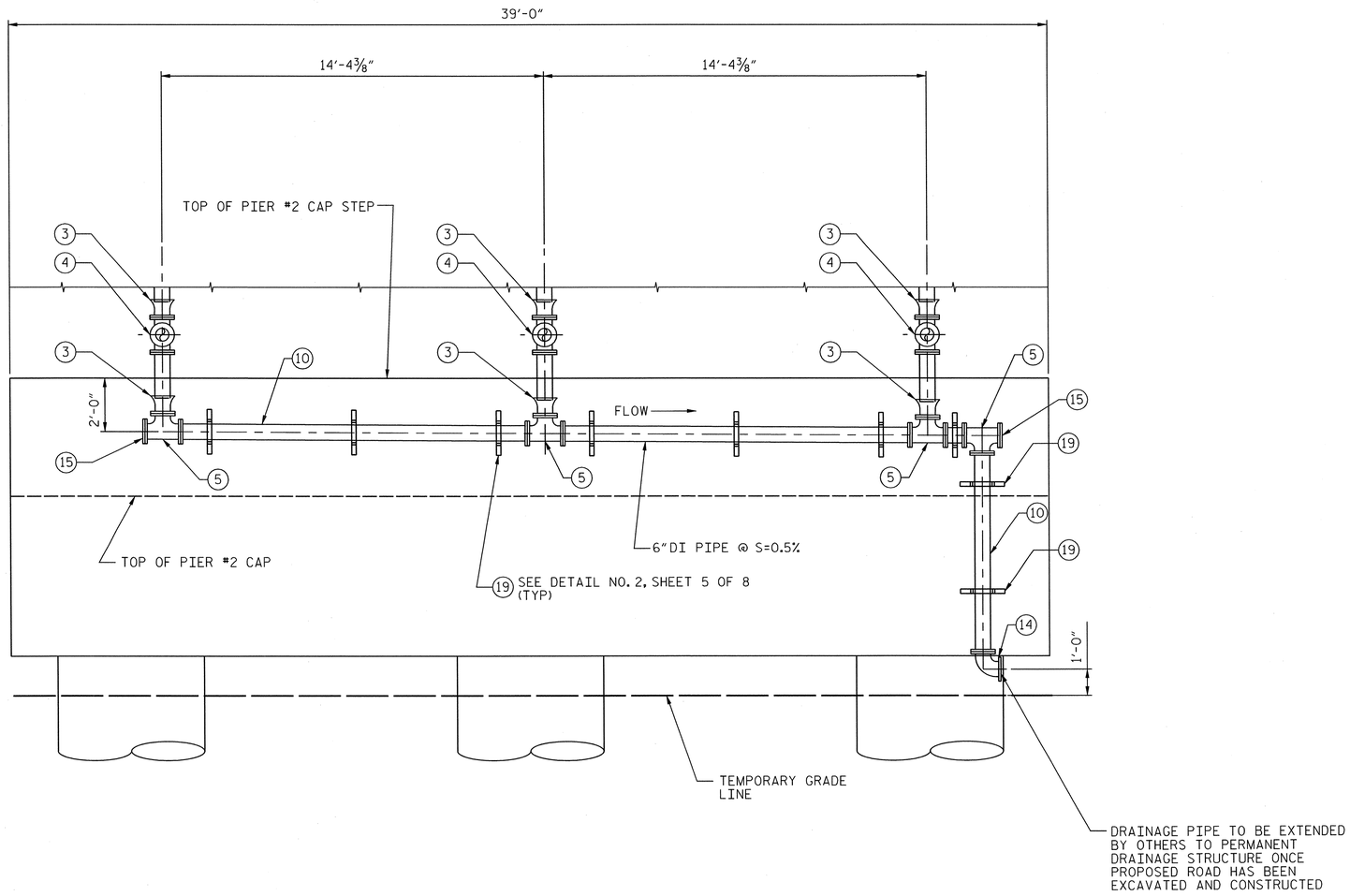

SECTION C-C
DRAINAGE DETAILS - SPAN "C"

SCALE: 3/8" = 1'-0"

PROJECT NO. P-5208G
MECKLENBURG **COUNTY**
STATION: P.O.T. 10640+78.96 -M1-

SHEET 7 OF 8

AECOM
AECOM TECHNICAL SERVICES, INC.
701 CORPORATE CENTER DRIVE, SUITE 475
RALEIGH, NC 27607
(919) 854-6200 www.aecom.com
AECOM License No. F-0342

NORTH CAROLINA PROFESSIONAL SEAL 10866 ENGINEER L. MARK PEARSON 4/16/13

STATE OF NORTH CAROLINA
DEPARTMENT OF TRANSPORTATION
RALEIGH

STRUCTURE DRAINAGE DETAILS

REVISIONS								SHEET NO.
NO.	BY:	DATE:	NO.	BY:	DATE:			S-42
1			3					TOTAL SHEETS
2			4					58

DRAWN BY : JMS DATE : 01/13
CHECKED BY : DSS DATE : 01/13

0041DEL_P10a1

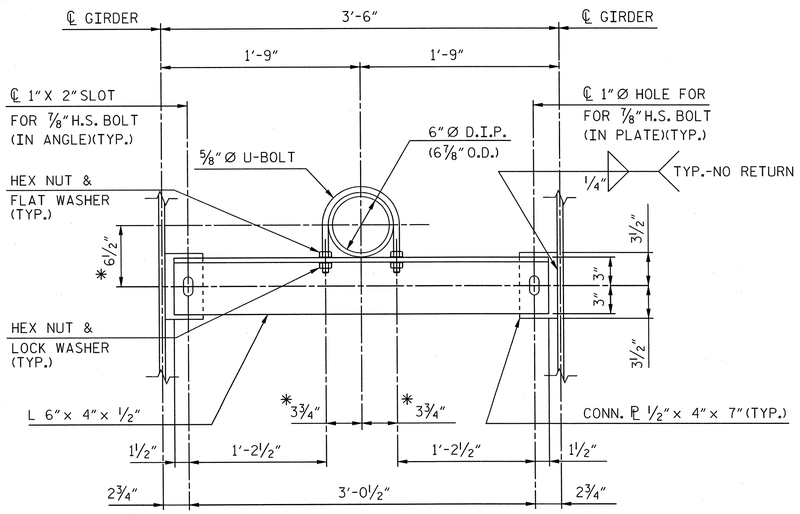

ELEVATION

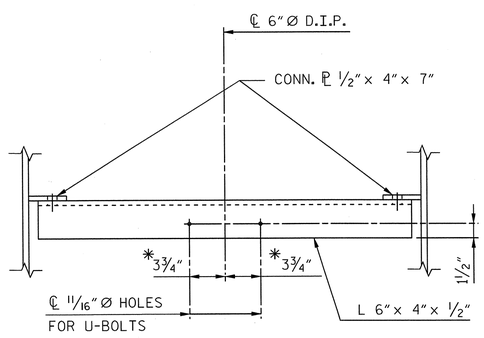

PLAN

*ADJUST AS NECESSARY TO ALLOW FOR STRAY CURRENT PROTECTION. SEE NOTE #3, THIS SHEET.

DETAIL NO. 3
PIPE SUPPORT ANGLE (PSA)

(SPANS "A" & "C" SHOWN, SPAN "B" SIMILAR)
(19 REQ'D. EACH OF 3 LOCATIONS)

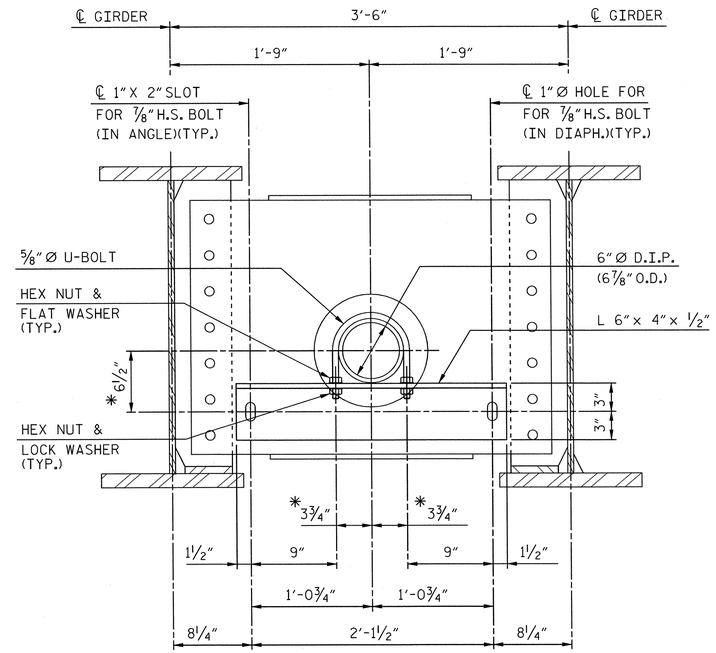

ELEVATION

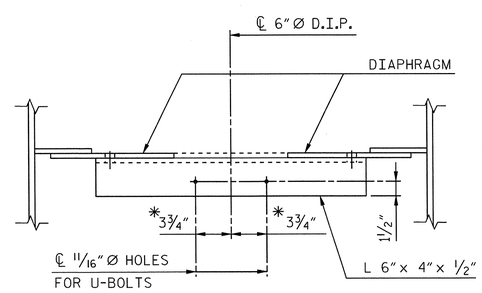

PLAN

NOTE:
DIAPHRAGM FLANGE ℙ
NOT SHOWN FOR CLARITY

DETAIL NO. 4
DIAPHRAGM SUPPORT ANGLE (DSA)

(SPANS "A" & "C" SHOWN, SPAN "B" SIMILAR)
(16 REQ'D. EACH OF 3 LOCATIONS)

NOTES:

1. FOR LOCATIONS AND DESIGNATIONS OF DSA & PSA, SEE FRAMING PLAN AND DRAINAGE DETAILS.
2. MAKE FINAL PIPE ALIGNMENT AND TIGHTEN U-BOLTS AFTER RAILROAD TRACK HAS BEEN LAID ACROSS THE BRIDGE.
3. PROVIDE PVC OR NEOPRENE-COATED STRIPS, EPOXY-CEMENTED TO THE U-BOLT OR PIPE OR STRAY CURRENT PROTECTION.
4. FOR STRUCTURE DRAINAGE SYSTEM, SEE SPECIAL PROVISIONS.

DSA	"Y"
A1	2'-0 3/4"
A2	2'-0 5/8"
A3	2'-0 1/2"
B1	2'-4 1/8"
B2	2'-4"
B3	2'-3 13/16"
B4	2'-3 11/16"
B5	2'-3 1/2"
B6	2'-3 3/8"
B7	2'-3 1/4"
B8	2'-3 1/16"
B9	2'-2 15/16"
B10	2'-2 3/4"
C1	2'-0 13/16"
C2	2'-0 5/8"
C3	2'-0 1/2"

PSA	"Y"
A1	2'-0 13/16"
A2	2'-0 11/16"
A3	2'-0 9/16"
A4	2'-0 1/2"
B1	2'-4 1/4"
B2	2'-4 1/16"
B3	2'-3 7/8"
B4	2'-3 3/4"
B5	2'-3 9/16"
B6	2'-3 7/16"
B7	2'-3 1/4"
B8	2'-3 1/8"
B9	2'-3"
B10	2'-2 13/16"
B11	2'-2 11/16"
C1	2'-0 7/8"
C2	2'-0 11/16"
C3	2'-0 9/16"
C4	2'-0 1/2"

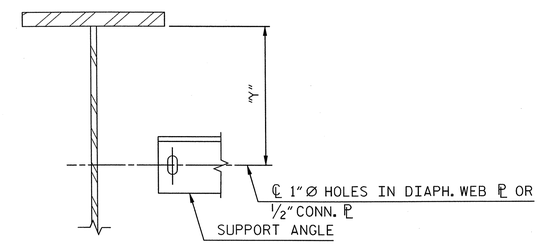

PROJECT NO. P-5208G
MECKLENBURG COUNTY
STATION: P.O.T. 10640+78.96 -M1-

SHEET 8 OF 8

AECOM
AECOM TECHNICAL SERVICES, INC.
701 CORPORATE CENTER DRIVE, SUITE 475
RALEIGH, NC 27607
(919) 854-6200 www.aecom.com
AECOM License No. F-0342

NORTH CAROLINA PROFESSIONAL SEAL 16656 ENGINEER L. MARK PEARSON 01/16/13

STATE OF NORTH CAROLINA
DEPARTMENT OF TRANSPORTATION
RALEIGH

SUPERSTRUCTURE

DRAINAGE DETAILS

REVISIONS						SHEET NO.
NO.	BY:	DATE:	NO.	BY:	DATE:	S-43
1			3			TOTAL SHEETS
2			4			58

DRAWN BY : JWH DATE : 01/13
CHECKED BY : JL DATE : 01/13

DATE: 4/15/2013
TIME: 2:43:38 PM

USER: bellsen
DGN: 0:\6028984\0400_Tech_Info_Dsc_Files\450_NCDOT Staff tech\DesFiles\Structures\V12_Drainage Details.dgn

0041DEL_P10a1

DGN

DATE: 4/15/2013
TIME: 2:46:42 PM

USER: pelijelen
DGN: G:\60028594\HOD_Tech_Info_Disc_Files\450_NCDOT\SiteTechDataFiles\Structures\H22L_Slope Protection Dtlgdn

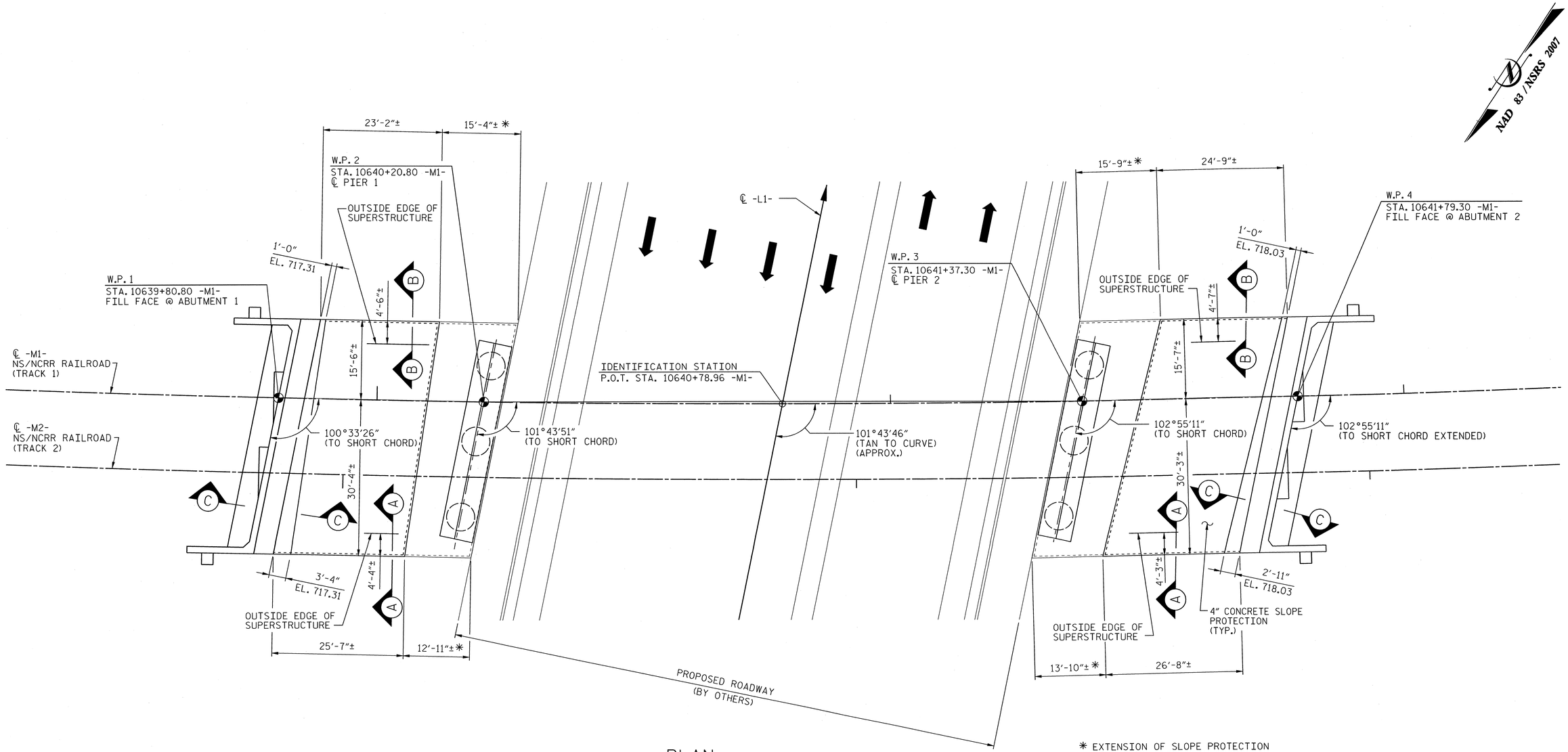

PLAN

* EXTENSION OF SLOPE PROTECTION TO BE INCLUDED WITH PROPOSED ROADWAY BY OTHERS.

PROJECT NO. P-5208G

MECKLENBURG **COUNTY**

STATION: P.O.T. 10640+78.96 -M1-

SHEET 1 OF 2

AECOM

AECOM TECHNICAL SERVICES, INC.
701 CORPORATE CENTER DRIVE, SUITE 475
RALEIGH, NC 27607
(919) 854-6200 www.aecom.com
AECOM License No. F-0342

NORTH CAROLINA PROFESSIONAL ENGINEER SEAL 10656 L. MARK PEARSON
4/16/13

STATE OF NORTH CAROLINA
DEPARTMENT OF TRANSPORTATION
RALEIGH

SLOPE PROTECTION DETAILS

REVISIONS						SHEET NO.
NO.	BY:	DATE:	NO.	BY:	DATE:	S-44
1			3			TOTAL SHEETS
2			4			58

DRAWN BY : JWH DATE : 01/13
CHECKED BY : JL DATE : 01/13

0041DEL_P10a1

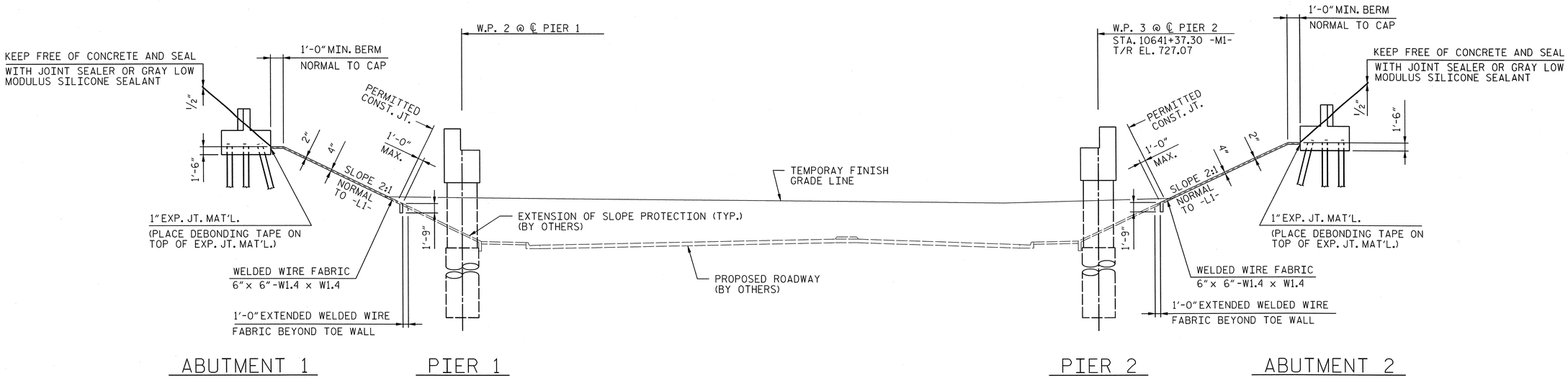

ELEVATION

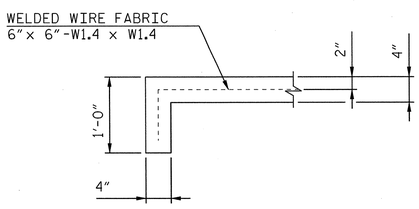

SECTION A-A

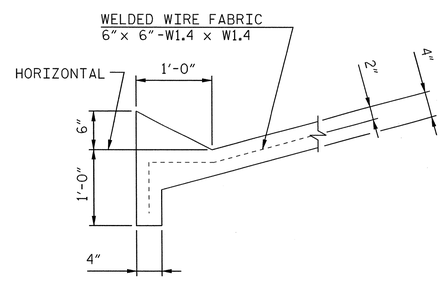

SECTION B-B

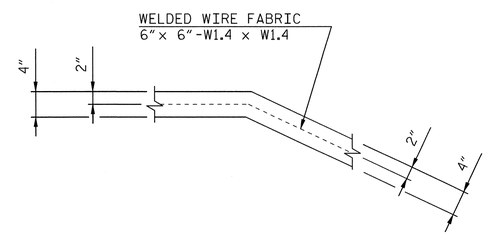

SECTION C-C

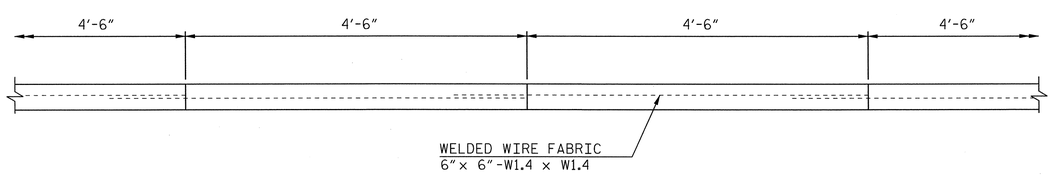

POURING DETAIL

GENERAL NOTES:

SLOPE PROTECTION SHALL BE PLACED UNDER THE ENDS OF THE BRIDGE AS SHOWN IN THE DETAILS. MEASUREMENT AND PAYMENT SHALL BE AS PRESCRIBED IN SECTION 462 OF THE STANDARD SPECIFICATIONS. FOR BERM WIDTH, SEE GENERAL DRAWING.

SLOPE PROTECTION SHALL CONSIST OF 4"POURED-IN-PLACE CONCRETE PAVING AS SHOWN IN THE DETAILS ON THIS SHEET. CONCRETE SHALL BE CLASS "B". THE CONCRETE SURFACE SHALL BE FLOATED WITH A WOODEN FLOAT AND FINISHED.

WELDED WIRE FABRIC REINFORCING SHALL BE 6 x 6 - W1.4 x W1.4, 60" WIDE. SLOPE PROTECTION SHALL BE POURED IN 4'-6"STRIPS AS SHOWN IN THE "POURING DETAILS" WITH ADJACENT RUNS OF WELDED WIRE FABRIC LAPPING AT LEAST 6". THE COST OF THE WELDED WIRE FABRIC SHALL BE INCLUDED IN THE CONTRACT UNIT PRICE BID PER SQUARE YARD FOR SLOPE PROTECTION.

ESTIMATED QUANTITIES

BRIDGE AT STA. 10640+78.96	4" SLOPE PROTECTION (SQ. YD.)	* WELDED WIRE FABRIC 60" WIDE (L.F.)
ABUTMENT 1	154	314
ABUTMENT 2	159	321

* QUANTITY SHOWN IS BASED ON 4'-6"POURS.

PROJECT NO. P-5208G

MECKLENBURG **COUNTY**

STATION: P.O.T. 10640+78.96 -M1-

SHEET 2 OF 2

AECOM

AECOM TECHNICAL SERVICES, INC.
701 CORPORATE CENTER DRIVE, SUITE 475
RALEIGH, NC 27607
(919) 854-6200 www.aecom.com
AECOM License No. F-0342

NORTH CAROLINA PROFESSIONAL SEAL 0656 ENGINEER L. MARK PEARSON 4/16/13

STATE OF NORTH CAROLINA
DEPARTMENT OF TRANSPORTATION
RALEIGH

SLOPE PROTECTION DETAILS

REVISIONS						SHEET NO.
NO.	BY:	DATE:	NO.	BY:	DATE:	S-45
1			3			TOTAL SHEETS
2			4			58

DRAWN BY : JWH DATE : 01/13
CHECKED BY : JL DATE : 01/13

DATE: 4/15/2013
TIME: 2:49:04 PM

USER: bellsaac
DGN: 0:\60286894\0400_Tech_Info_Dist_Files\450_NCDOT\StdTechDesFiles\Structures\V12_Slope Protection 02.dgn

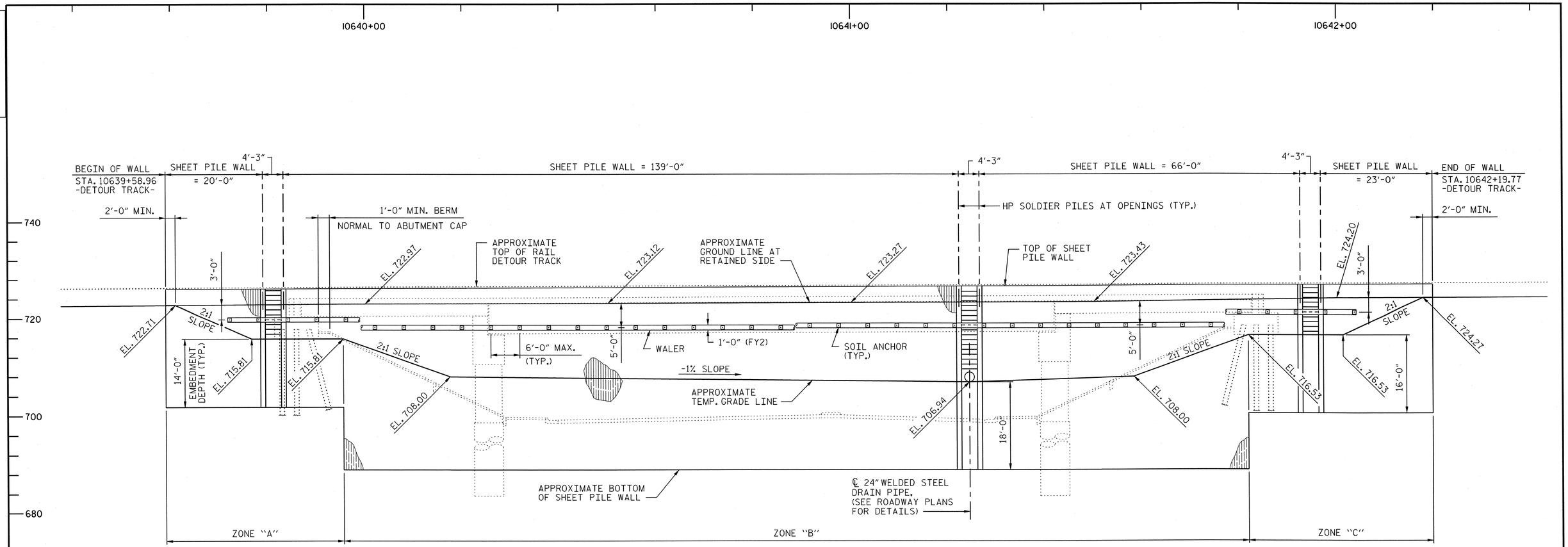

TEMPORARY WALL ELEVATION

PROJECT NO. P-5208G

MECKLENBURG **COUNTY**

STATION: P.O.T. 10640+78.96 -M1-

SHEET 1 OF 2

AECOM

AECOM TECHNICAL SERVICES, INC.
701 CORPORATE CENTER DRIVE, SUITE 475
RALEIGH, NC 27607
(919) 854-6200 www.aecom.com
AECOM License No. F-0342

NORTH CAROLINA PROFESSIONAL ENGINEER 10656 MARK PEARSON 4/16/13

STATE OF NORTH CAROLINA
DEPARTMENT OF TRANSPORTATION
RALEIGH

TEMPORARY RAILROAD
SHORING LAYOUT

REVISIONS						SHEET NO.
NO.	BY:	DATE:	NO.	BY:	DATE:	S-46
1			3			TOTAL SHEETS
2			4			58

DRAWN BY : DDL DATE : 01/13
CHECKED BY : JL DATE : 01/13

DGN 0041DEL_P10a1

DATE: 4/15/2013
TIME: 2:52:40 PM

USER: bellsiem
DGN: 0:\60268940\400_Tech_Info_Disc_Files\450_NCDOTStdTechDesFiles\Structures\H2J_Wall_Profile.dgn

0041DEL_P10a1

DGN

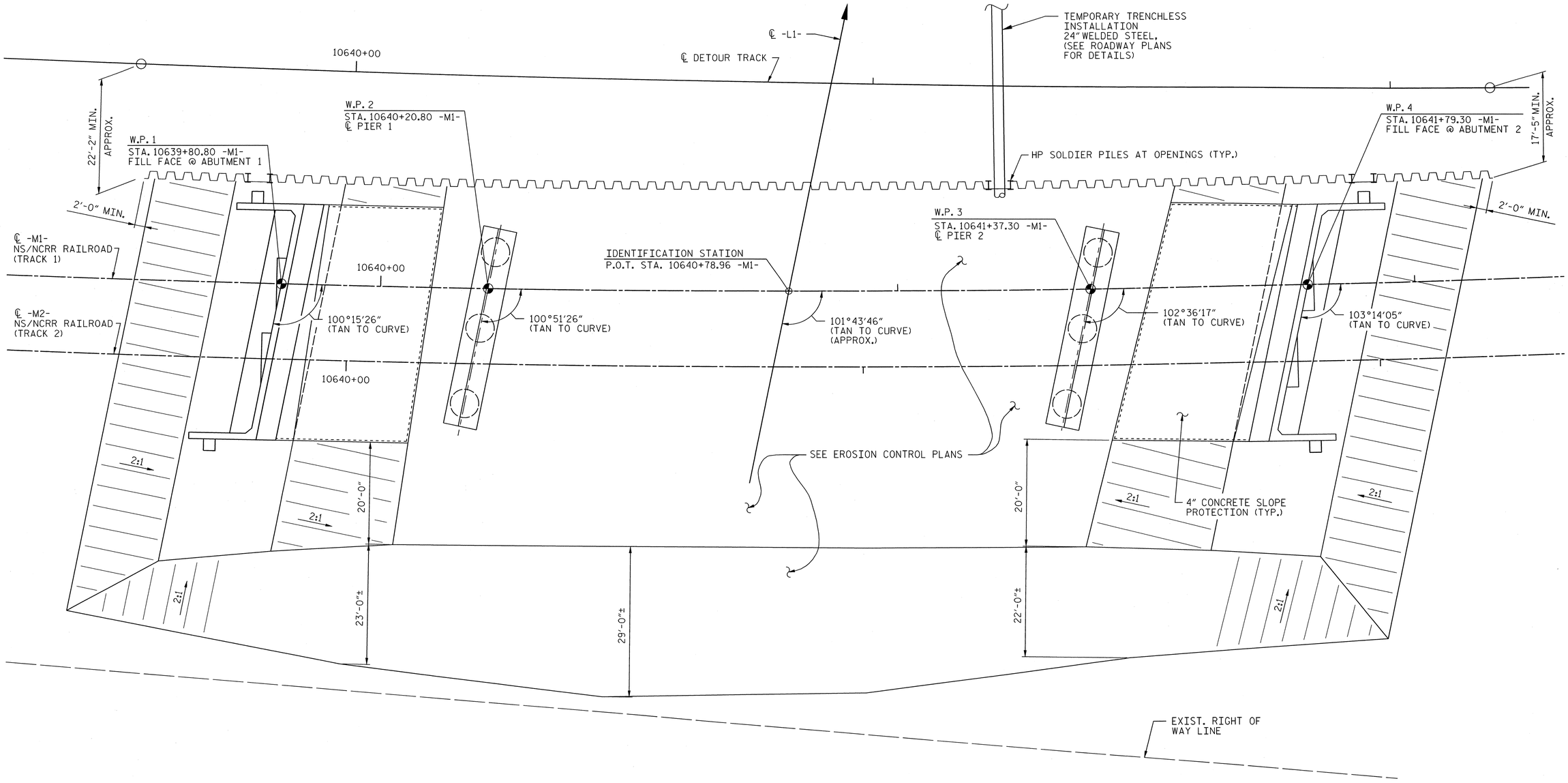

TEMPORARY WALL PLAN

(EXCAVATION FOR BRIDGE CONSTRUCTION)

PROJECT NO. P-5208G

MECKLENBURG **COUNTY**

STATION: P.O.T. 10640+78.96 -M1-

SHEET 2 OF 2

AECOM

AECOM TECHNICAL SERVICES, INC.
701 CORPORATE CENTER DRIVE, SUITE 475
RALEIGH, NC 27607
(919) 854-6200
www.aecom.com
AECOM License No. F-0342

NORTH CAROLINA PROFESSIONAL SEAL 10656 ENGINEER L. MARK PEARSON 2/16/13

STATE OF NORTH CAROLINA
DEPARTMENT OF TRANSPORTATION
RALEIGH

TEMPORARY RAILROAD SHORING LAYOUT

REVISIONS							SHEET NO.
NO.	BY:	DATE:	NO.	BY:	DATE:		S-47
1			3				TOTAL SHEETS
2			4				58

DRAWN BY : JWH DATE : 01/13
CHECKED BY : JL DATE : 01/13

DATE: 4/15/2013
TIME: 2:25:07 PM

USER: 94598
DGN: G:\60258809\400_Tech_Info_Disc_Files\450_NCDOT Stuff\eDisFiles\Structures\H2U_Wall_Profile_2.dgn

0041DEL_P10a1

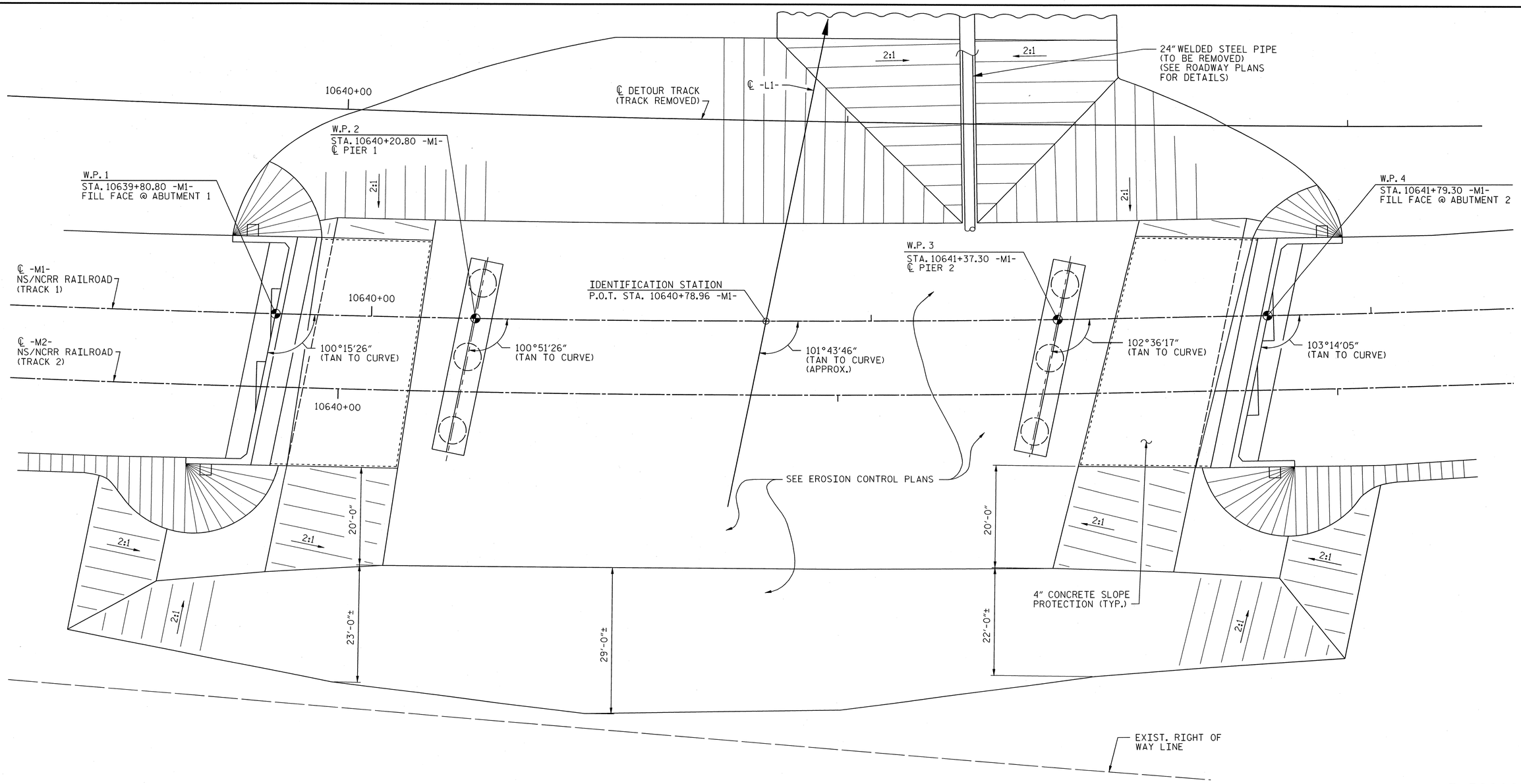

EXCAVATION PLAN WITH TEMPORARY WALL REMOVED

PROJECT NO. P-5208G

MECKLENBURG **COUNTY**

STATION: P.O.T. 10640+78.96 -M1-

AECOM

AECOM TECHNICAL SERVICES, INC.
701 CORPORATE CENTER DRIVE, SUITE 475
RALEIGH, NC 27607
(919) 854-6200 www.aecom.com
AECOM License No. F-0342

NORTH CAROLINA PROFESSIONAL SEAL 10656 ENGINEER L. MARK PEARSON 5/29/13

STATE OF NORTH CAROLINA
DEPARTMENT OF TRANSPORTATION
RALEIGH

EXCAVATION PLAN WITH TEMPORARY RAILROAD SHORING REMOVED

REVISIONS						SHEET NO.
NO.	BY:	DATE:	NO.	BY:	DATE:	S-48
1			3			TOTAL SHEETS
2			4			58

DRAWN BY : JWH DATE : 01/13
CHECKED BY : JL DATE : 01/13

DATE: 5/29/2013
TIME: 11:45:25 AM

USER: belfsom
DGN: Q:\60028949\400_Tech_Info_Disc_Files\450_NCDOT Shift extra\Deaf Files\Structures\H2U_Wall_Profile_3.dgn

TEMPORARY WALL NOTES:

CONSTRUCTION SPECIFICATIONS:

NORTH CAROLINA DEPARTMENT OF TRANSPORTATION "STANDARD SPECIFICATIONS FOR ROADS AND STRUCTURES", JANUARY 2012 (HEREIN CALLED STANDARD SPECIFICATIONS).

DESIGN CRITERIA:

DESIGN IS IN ACCORDANCE WITH THE FOLLOWING:
1. NCDOT STRUCTURES DESIGN MANUAL DATED DECEMBER 2012
2. NORFOLK SOUTHERN CORPORATION'S "GUIDELINES FOR DESIGN OF HIGHWAY SEPARATION STRUCTURES UNDER RAILROAD (UNDERPASS GRADE SEPARATION)"
3. CURRENT EDITION OF AREMA'S "MANUAL FOR RAILWAY ENGINEERING, VOL. 2, STRUCTURES"
4. AISC STEEL CONSTRUCTION MANUAL 14TH EDITION

UNLESS NOTED OTHERWISE, THE HORIZONTAL DEFLECTION OF THE WALLS SHALL NOT EXCEED 0.5 INCHES. PILE DEFLECTIONS MAY CAUSE DISTRESS OF THE ADJACENT RAILROAD DETOUR TRACK DURING CONSTRUCTION.

THE DESIGN INCLUDES A LIVE LOAD SURCHARGE ALLOWANCE IN ACCORDANCE WITH AREMA ARTICLE 8-20.3.2.2. THE CONTRACTOR IS RESPONSIBLE FOR DETERMINING THE ADEQUACY OF THE WALL WITH RESPECT TO ANY ADDITIONAL LOADS RESULTING FROM THE CONTRACTOR'S CONSTRUCTION PROCEDURES OR OPERATIONS.

PLAN DIMENSIONS:

ALL DIMENSIONS IN THESE PLANS ARE MEASURED HORIZONTALLY (LEVEL) OR VERTICALLY (PLUMB) UNLESS OTHERWISE NOTED.

DO NOT SCALE DRAWINGS. IF DIMENSIONS ARE IN QUESTION, CONTACT THE ENGINEER BEFORE CONTINUING WITH CONSTRUCTION.

STRUCTURAL STEEL:

STEEL PILE:	ASTM A572 OR A709, GRADE 50
WALERS:	ASTM A572 OR A709, GRADE 50
PLATES:	ASTM A572 OR A709, GRADE 50
BOLTS:	ASTM A325, TYPE I
ANCHOR NUTS:	STANDARD HEAVY DUTY HEXAGON HEAD TYPE CONFORMING TO ASTM A29 GRADE C-1045 GALVANIZE TIES, BOLTS, NUTS, AND WASHERS.
SOLDIER PILES:	SOLDIER PILES ARE HP 14x117.

WELDING:

1. WELD METAL TO BE E70XX
2. WELDING DERAILS AND OPERATIONS SHALL BE IN ACCORDANCE WITH THE CURRENT EDITION OF THE AASHTO/AWS D1.5 BRIDGE WELDING CODE.
3. WELDS REQUIRING NON-DESTRUCTIVE TESTING SHALL BE TESTED IN ACCORDANCE WITH AASHTO/AWS D1.5 BRIDGE WELDING CODE.

CORROSION PROTECTION:

1. UNLESS NOTED OTHERWISE, NO CORROSION PROTECTION MEASURES ARE REQUIRED.
2. SECTION PROPERTIES DO NOT INCLUDE SACRIFICIAL THICKNESS FOR THE TEMPORARY WALL.
3. SOIL ANCHORS SHALL HAVE CORROSION PROTECTION IN ACCORDANCE WITH CURRENT "RECOMMENDATIONS FOR PRESTRESSED ROCK AND SOIL ANCHORS" FROM THE POST-TENSIONING INSTITUTE.

WALL DATA TABLE:

SHEET PILE WALL REQUIREMENTS DETAILED IN THE PLANS HAVE BEEN DESIGNED AS PER THE SOIL PROPERTIES:
SOIL UNIT WEIGHT = 120 PCF
SOIL FRICTION ANGLE = 30.0 DEGREES
IF FIELD CONDITIONS DIFFER FROM THOSE SHOWN, THE ENGINEER SHALL BE NOTIFIED AND WALL REDESIGN CONSIDERED.

COLD-FORMED STEEL SHEET PILES SHALL HAVE SECTION PROPERTIES 20% HIGHER THAN THE VALUES SHOWN FOR HOT-ROLLED STEEL SHEET PILES.
EXAMPLE:
HOT-ROLLED MOMENT OF INERTIA = 100 IN4/FT CORRESPONDS TO COLD-FORMED MOMENT OF INERTIA = 120 IN4/FT.

ANCHORS:

THE ANCHOR FORCE IS GIVEN ALONG THE BAR (RESULTANT FORCE). UNLESS NOTED OTHERWISE THE ANCHOR VERTICAL INSTALLATION ANGLE IS TO BE 15 DEGREES AND THE HORIZONTAL INSTALLATION IS 0 DEGREES (PERPENDICULAR TO WALL ALIGNMENT).

THE SERVICE ANCHOR FORCE (ANCHOR DESIGN LOAD) ASSUMES LOAD FACTORS EQUAL TO 1.0 FOR ALL INCLUDED LOADS.

THE ANCHOR FORCE IS BASED ON THE MAXIMUM ANCHOR SPACING SHOWN IN THE WALL DATA TABLE. ANY ADJUSTMENTS TO THE ANCHOR SPACING OR THE ANCHOR VERTICAL INSTALLATION ANGLE WILL REQUIRE MODIFICATIONS TO THE ANCHOR FORCE, WALER STRUCTURAL SECTION AND CONNECTIONS WHICH SHALL BE APPROVED BY THE ENGINEER.

ANCHOR BAR TYPE: DEFINITION OF ANCHOR BAR TYPE (UNLESS OTHERWISE NOTED):
ANCHOR BAR TYPE IS ASTM A722, GRADE 150 KSI (AASHTO M275). ANCHOR BARS SHALL BE IN ACCORDANCE WITH CURRENT "RECOMMENDATIONS FOR PRESTRESSED ROCK AND SOIL ANCHORS" FROM THE POST-TENSIONING INSTITUTE.

IF SPECIFIED, THE ANCHOR BAR MINIMUM TOTAL LENGTH INDICATED IN THE WALL DATA TABLE IS REQUIRED FOR GLOBAL STABILITY. THE CONTRACTOR SHALL DETERMINE THE ANCHOR BAR BONDED LENGTH. THE ANCHOR BAR BONDED LENGTH PLUS THE MINIMUM UNBONDED LENGTH SHOWN IN THE WALL DATA TABLE SHALL MEET OR EXCEED THE ANCHOR BAR MINIMUM TOTAL LENGTH AS SHOWN IN THE WALL DATA TABLE.

LAGGING:

LAGGING SHALL BE CONSTRUCTION GRADE LUMBER OR BETTER WITH A MINIMUM TABULATED UNIT STRESS IN BENDING (FB) OF 1,200 PSI. THE NOMINAL THICKNESS OF LAGGING SELECTED SHALL NOT BE LESS THAN 4 IN.

LAGGING INSTALLATION SHALL BE COORDINATED WITH THE EXCAVATION. ALONG THE LAGGING LINE, THE SOIL SHALL BE REMOVED TO THE BACK OF LAGGING LOCATION, PLUS A TOLERANCE OF ONE (1) INCH MAXIMUM OVER EXCAVATION BEHIND THE LAGGING. LAGGING SHALL BE INSTALLED SO THE LAGGING IS IN CONTACT WITH THE SOIL.

CONSTRUCTION:

THE CONTRACTOR IS RESPONSIBLE FOR THE SAFETY AND STABILITY OF THE STRUCTURE AT EACH STAGE OF CONSTRUCTION.

THE CONTRACTOR IS RESPONSIBLE TO COORDINATE INSTALLATION OF FEATURES SUCH AS PILES, SHAFTS, DRAINAGE PIPES, DRAINAGE STRUCTURES, ETC. WITHIN THE ANCHORED REGION OF THE WALL TO ENSURE THE STRUCTURAL INTEGRITY OF THE ANCHORED WALL SYSTEM.

EXISTING OR PROPOSED FEATURES (INCLUDING BUT NOT LIMITED TO CONDUIT, PIPING, UTILITY LINES, EXISTING STRUCTURES) WHICH INTERFERE WITH THE INSTALLATION OF THE WALL SHALL BE LOCATED AND COORDINATED PRIOR TO THE START OF CONSTRUCTION BY THE CONTRACTOR.

CONSTRUCTION ENGINEERING NOTE: CONSTRUCTION ENGINEERING FOR DETAILS NOT PROVIDED IN THESE PLANS SHALL BE THE RESPONSIBILITY OF THE CONTRACTOR. ALL CONSTRUCTION ENGINEERING SHALL BE PERFORMED BY A NORTH CAROLINA PROFESSIONAL ENGINEER. ALL CONSTRUCTION ENGINEERING MUST BE SUBMITTED TO THE ENGINEER FOR REVIEW.

WALL ANCHORS SHALL BE LOCATED BY THE CONTRACTOR TO SATISFY MAXIMUM SPACING OF ANCHORS. DRAINAGE STRUCTURE/INLET LOCATIONS TO BE ADJUSTED UP TO 2 FT. IN EITHER DIRECTION ALONG THE LONGITUDINAL FLOW LINE TO ACCOMMODATE PLACEMENT OF WALL ANCHORS. THE CONTRACTOR SHALL REWORK SHOULDER GRADING UP TO 30 FT. IN EITHER DIRECTION LONGITUDINALLY ALONG THE FLOW LINE TO MAINTAIN ADEQUATE LONGITUDINAL GRADES FOR PROPER DRAINAGE TO PREVENT PONDING.

THE DESIGN OF THE TEMPORARY WALL IS BASED ON THE ASSUMPTION THAT EXCAVATION WILL EXTEND NO DEEPER THAN THE EXCAVATION ELEVATION. IF A CONDITION OTHER THAN THAT DETAILED EXISTS, THE ENGINEER SHALL BE CONTACTED TO DETERMINE THE NEED FOR MODIFICATIONS.

IF THE CONTRACTOR CANNOT DRIVE THE PILING TO THE MINIMUM EMBEDMENT DEPTH, THE ENGINEER SHALL BE CONTACTED TO DETERMINE THE NEED FOR MODIFICATIONS.

THE CONTRACTOR IS RESPONSIBLE FOR WATER RETENTION DURING CONSTRUCTION. UNLESS OTHERWISE NOTED THE CONTRACTOR SHALL ENSURE THE WATER LEVEL ON BOTH SIDES OF THE WALL IS LOWER THAN THE EXCAVATION LEVEL ANYTIME DURING THE CONSTRUCTION, IMPLEMENTING TEMPORARY DEWATERING OR OTHER WATER CONTROL MEASURES AS NEEDED.

UNLESS OTHERWISE NOTED THE WALER STRUCTURAL SECTION SPECIFIED IN WALL DATA TABLE ASSUMES A MINIMUM OF 4 ANCHORS PER WALER FIELD SECTION. SHOP OR FIELD SPLICES OF WALER ARE SUBJECT TO THE "CONSTRUCTION ENGINEERING NOTE".

WEDGE PLATE: WEDGE PLATES MAY BE FIELD CUT. WEDGE PLATES TO BE SIZED SO THAT WALER BEARS UNIFORMLY ON ALL WEDGE PLATES PRIOR TO ANCHOR BAR LOCK-OFF.

THE CONTRACTOR SHALL BE RESPONSIBLE FOR THE CONSTRUCTION SEQUENCE OF THE SHEET PILE WALL.

THE DESIGN OF THE STRUCTURE IS BASED ON THE ASSUMED CONSTRUCTION SEQUENCE. THE CONTRACTOR SHALL VERIFY THE ACCURACY AND THE CONSTRUCTABILITY OF THE ASSUMED CONSTRUCTION SEQUENCE AND THE CONSTRUCTION SEQUENCE ASSUMPTIONS UTILIZED. THE CONTRACTOR MAY CHANGE THE CONSTRUCTION SEQUENCE AND CONSTRUCTION SEQUENCE ASSUMPTIONS ACCORDING TO THE PROVISIONS OF THE CONSTRUCTION ENGINEERING NOTE. CONSTRUCTION ENGINEERING RESULTING FROM CHANGES TO THE ASSUMED CONSTRUCTION SEQUENCE AND CONSTRUCTION SEQUENCE ASSUMPTIONS SHOWN IN THE PLANS SHALL BE THE RESPONSIBILITY OF THE CONTRACTOR.

VERY DENSE SOILS MAY BE ENCOUNTERED DURING SHEET / SOLDIER PILE INSTALLATION. SPECIAL EQUIPMENT AND/OR PROCEDURES (PREDRILLING, PREFORMING, PUNCHING, ETC.) MAY BE REQUIRED TO FACILITATE SHEET /SOLDIER PILE INSTALLATION. PREDRILLED/PREFORMED HOLES SHALL BE MADE SUCH THAT DENSE SOIL LAYERS ARE PENETRATED AND LOOSENED BUT SOIL IS NOT EXTRACTED AND AN OPEN EXCAVATION IS NOT CREATED.

ASSUMED CONSTRUCTION SEQUENCE:

1. LOCATE / RELOCATE ALL UTILITIES OR OTHER CONFLICTS WHICH MAY INTERFERE WITH SHEET PILE OR ANCHOR INSTALLATION.
2. EXCAVATED SIDE OF WALL TO BE UNIFORM GROUND PROFILE WITHIN TWICE RETAINED HEIGHT OF WALL.
3. DRIVE PILE TO MINIMUM EMBEDMENT DEPTH.
4. BACKFILL RETAINED SIDE OF WALL TO UNIFORM RETAINED EARTH GROUND PROFILE AS REQUIRED.
5. EXCAVATE TO A POINT NO MORE THAN 2 FT BELOW THE ANCHOR ELEVATION(S), CREATING A LEVEL BENCH FOR ANCHOR DRILLING OPERATIONS.
6. INSTALL ANCHORS.
7. INSTALL WALER SYSTEM.
8. PERFORM BOTH PERFORMANCE AND PROOF TESTS ON ANCHOR BAR AND LOCK-OFF ANCHOR BAR IN ACCORDANCE WITH CURRENT "RECOMMENDATIONS FOR PRESTRESSED ROCK AND SOIL ANCHORS" FROM THE POST-TENSIONING INSTITUTE.
9. EXCAVATE TO THE FINAL EXCAVATION ELEVATION AS REQUIRED.

ZONE	MAXIMUM EXPOSED HEIGHT OF WALL, H	SHEET PILE					SOLDIER PILE PROPERTIES			SOIL ANCHORS				
		HOT ROLLED PROPERTIES		COLD ROLLED PROPERTIES		MIN. EMBEDMENT DEPTH, D	ELASTIC SECTION MODULUS	MOMENT OF INERTIA	MIN. EMBEDMENT DEPTH, D	MAXIMUM SPACING, S	SIZE	UNBONDED LENGTH	MINIMUM BONDED LENGTH	TOTAL LENGTH MINIMUM
		ELASTIC SECTION MODULUS	MOMENT OF INERTIA	ELASTIC SECTION MODULUS	MOMENT OF INERTIA									
	(FT)	(IN^3/FT)	(IN^4/FT)	(IN^3/FT)	(IN^4/FT)	(FT)	(IN^3)	(IN^4)	(FT)	(FT)	(IN)	(FT)	(FT)	(FT)
"A"	7	45	360	54	432	14	60	360	14	6	1¼	14	70*/5**	84*/19**
"B"	17	45	360	54	432	24	172	1220	24	5	1¼	14	70*/5**	84*/19**
"C"	8	45	360	54	432	16	60	360	16	6	1¼	14	70*/5**	84*/19**

SERVICE ANCHOR FORCE = 70.0 kips, ANCHOR DRILLED HOLE DIAMETER IS 4".
* MINIMUM ANCHOR BONDED LENGTH IN RESIDUAL SOILS WHEN ANCHOR DOES NOT ENTER BEDROCK.
** MINIMUM ANCHOR BONDED LENGTH IN BEDROCK WHEN ANCHOR ENTERS BEDROCK.

WALL DATA TABLE

PROJECT NO. P-5208G
MECKLENBURG COUNTY
STATION: P.O.T. 10640+78.96 -M1-

SHEET 1 OF 3

AECOM
AECOM TECHNICAL SERVICES, INC.
701 CORPORATE CENTER DRIVE, SUITE 475
RALEIGH, NC 27607
(919) 854-6200 www.aecom.com
AECOM License No. F-0342

NORTH CAROLINA PROFESSIONAL SEAL 10656 ENGINEER L. MARK PEARSON 5/15/13

STATE OF NORTH CAROLINA
DEPARTMENT OF TRANSPORTATION
RALEIGH

TEMPORARY RAILROAD SHORING

DETAILS

REVISIONS						SHEET NO.
NO.	BY:	DATE:	NO.	BY:	DATE:	S-49
1			3			TOTAL SHEETS
2			4			58

DRAWN BY : JWH DATE : 01/13
CHECKED BY : JL DATE : 01/13

0041DEL_P10a1
DGN
DATE: 5/15/2013
TIME: 8:53:38 AM
USER: bellsley
DGN: G:\60226859\HO\400_Tech_Info_Disc_Files\450_NCDOT STIP Tech Data Files\Structures\H20_Wall_Serf Outpn

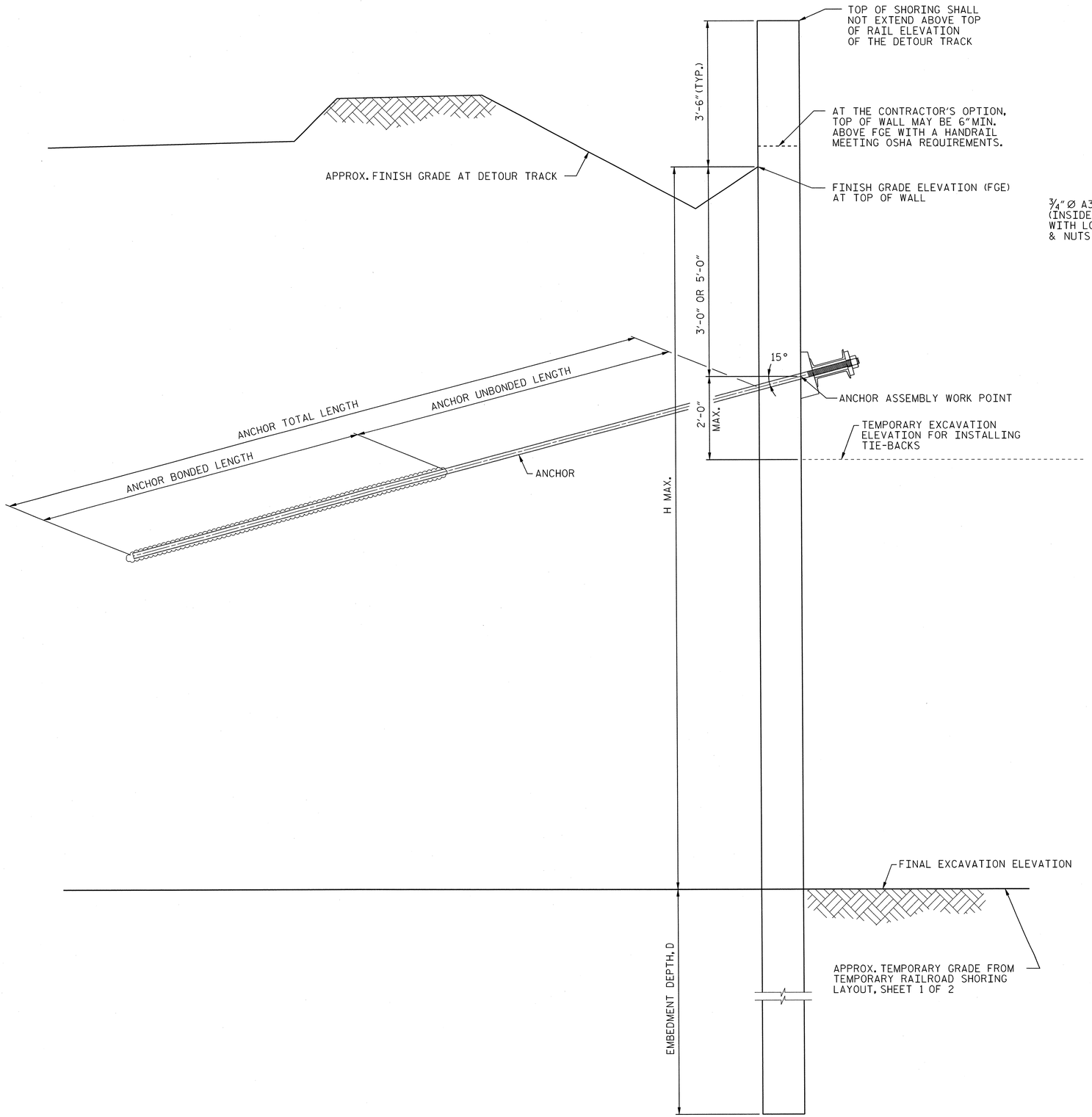

TYPICAL SECTION

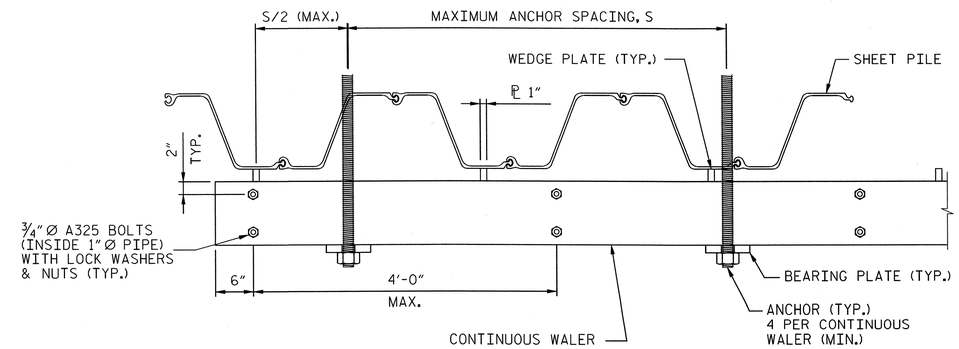

PARTIAL PLAN

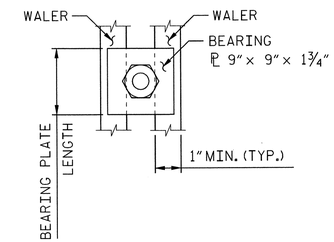

WALER DETAIL PLAN

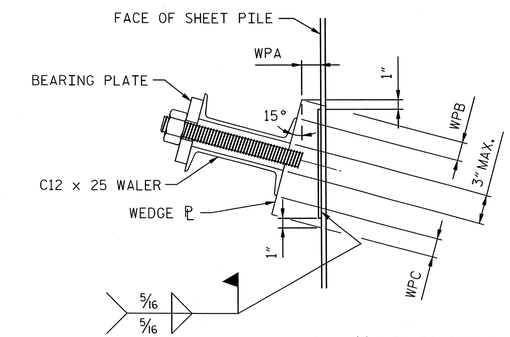

WPA = 1/4" MIN. TO 2" MAX.
WPB = 1/4" MIN. TO 2" MAX.
WPC = 1/4" MIN. TO 2" MAX.

ANCHORAGE DETAIL

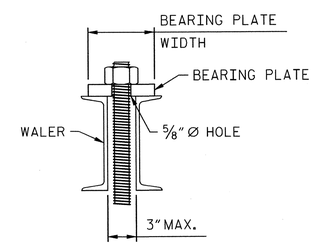

WALER DETAIL SECTION

PROJECT NO. P-5208G

MECKLENBURG **COUNTY**

STATION: P.O.T. 10640+78.96 -M1-

SHEET 2 OF 3

AECOM

AECOM TECHNICAL SERVICES, INC.
701 CORPORATE CENTER DRIVE, SUITE 475
RALEIGH, NC 27607
(919) 854-6200 www.aecom.com
AECOM License No. F-0342

NORTH CAROLINA PROFESSIONAL SEAL 10656 ENGINEER L. MARK PEARSON 4/16/13

STATE OF NORTH CAROLINA
DEPARTMENT OF TRANSPORTATION
RALEIGH

TEMPORARY RAILROAD SHORING DETAILS

REVISIONS						SHEET NO.
NO.	BY:	DATE:	NO.	BY:	DATE:	S-50
1			3			TOTAL SHEETS
2			4			58

DRAWN BY : JWH DATE : 01/13
CHECKED BY : JL DATE : 01/13

DCN 0041DEL_P10a1

DATE: 4/15/2013
TIME: 3:05:42 PM

USER: bellsiam
DGN: G:\60258940\400_Tech_Info_Disc_Files\450_NCDOTStdTechDesFiles\Structures\H2J_Wall_Sect 02.dgn

DGN 0041DEL_P10a1

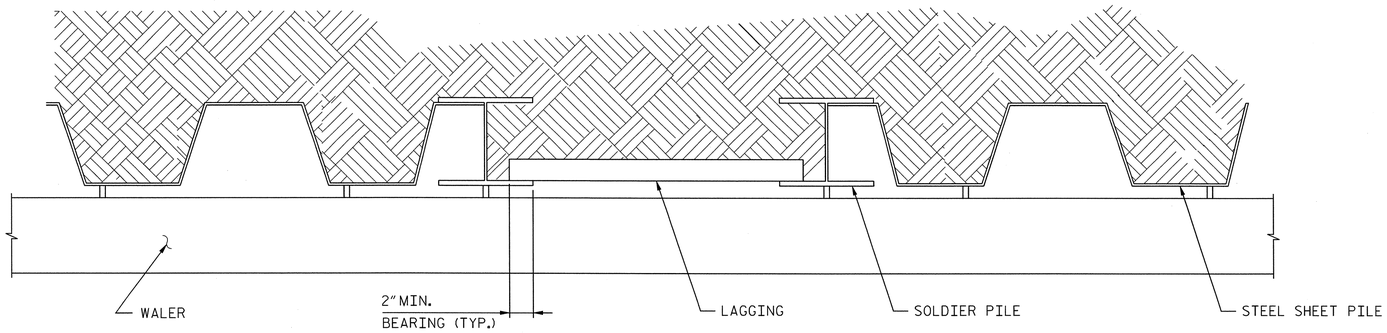

SECTION "A-A"

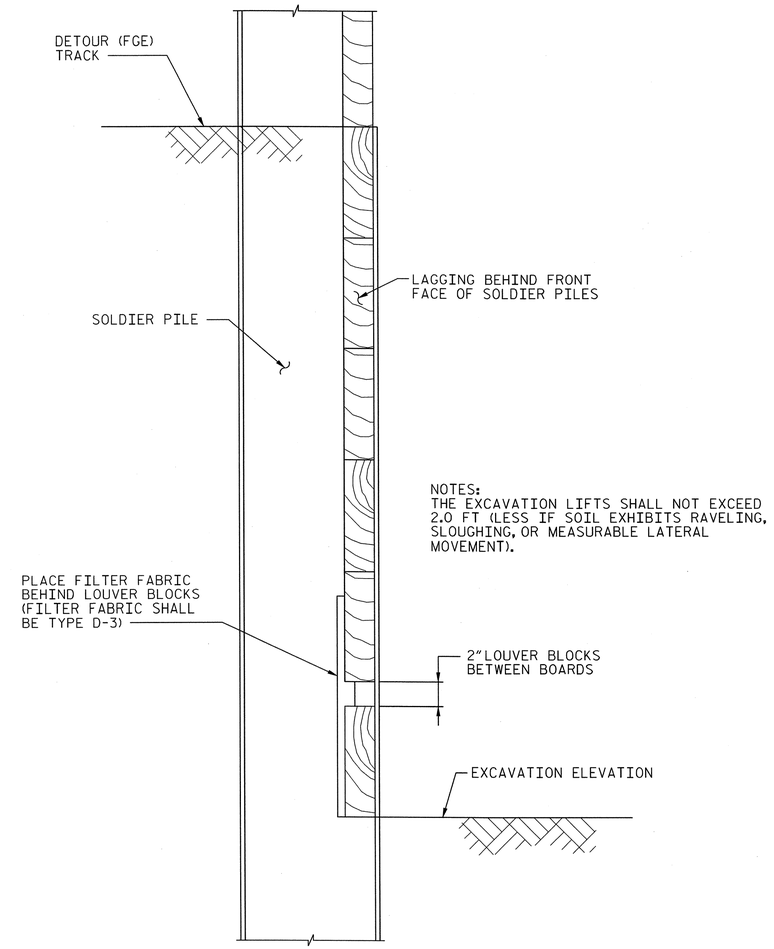

NOTES:
THE EXCAVATION LIFTS SHALL NOT EXCEED 2.0 FT (LESS IF SOIL EXHIBITS RAVELING, SLOUGHING, OR MEASURABLE LATERAL MOVEMENT).

SECTION "B-B"

NOTE:
WHERE EXCAVATION IS BELOW TOP OF PIPE WELD 3/8" STEEL PLATE TO STEEL PILES TO CLOSE GAPS IN LAGGING.

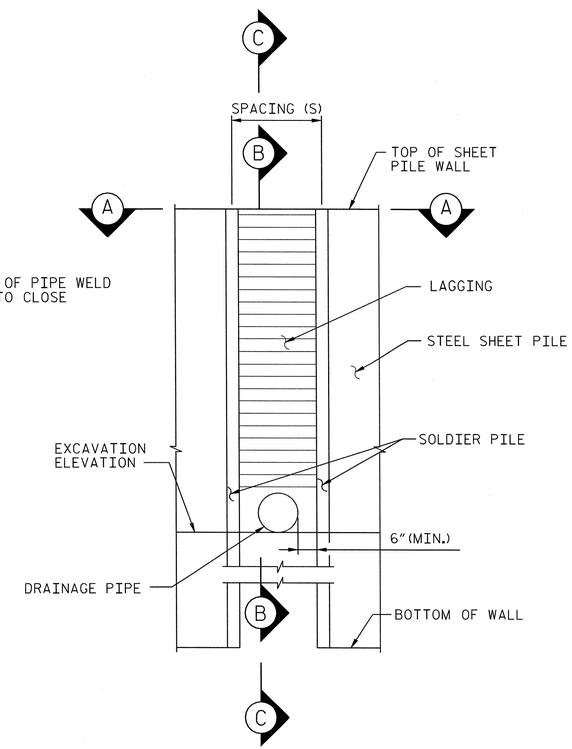

ELEVATION
AT OPENING
(OPENING AT DRAINAGE PIPE SHOWN, OTHERS SIMILAR)

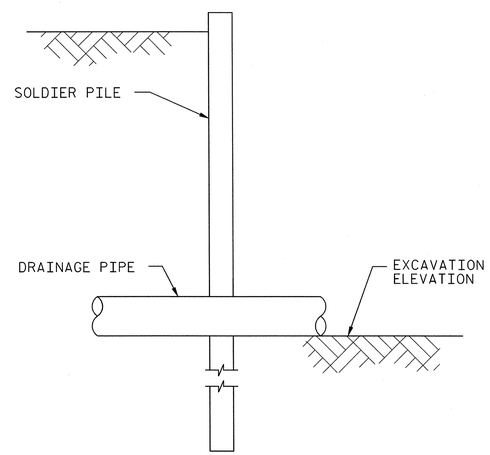

SECTION "C-C"

PROJECT NO. P-5208G
MECKLENBURG **COUNTY**
STATION: P.O.T. 10640+78.96 -M1-

SHEET 3 OF 3

AECOM
AECOM TECHNICAL SERVICES, INC.
701 CORPORATE CENTER DRIVE, SUITE 475
RALEIGH, NC 27607
(919) 854-6200 www.aecom.com
AECOM License No. F-0342

NORTH CAROLINA PROFESSIONAL SEAL 10656 ENGINEER MARK PEARSON
4/16/13

STATE OF NORTH CAROLINA
DEPARTMENT OF TRANSPORTATION
RALEIGH

TEMPORARY RAILROAD SHORING

DETAILS

REVISIONS						SHEET NO.
NO.	BY:	DATE:	NO.	BY:	DATE:	S-51
1			3			TOTAL SHEETS
2			4			58

DRAWN BY : JWH DATE : 01/13
CHECKED BY : JL DATE : 01/13

DATE: 4/15/2013
TIME: 3:09:23 PM
USER: bellsiem
DGN: Q:\60268940\400_Tech_Info_Disc_Files\450_NCDOTStdTechDesFiles\Structures\H2J_Wall_Sect 03.dgn

0041DEL_P10a1

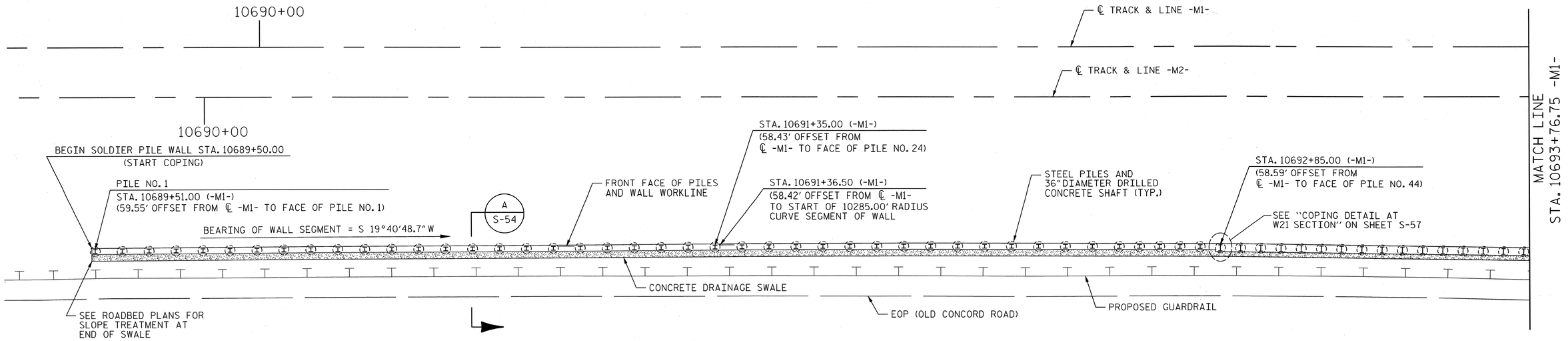

PLAN

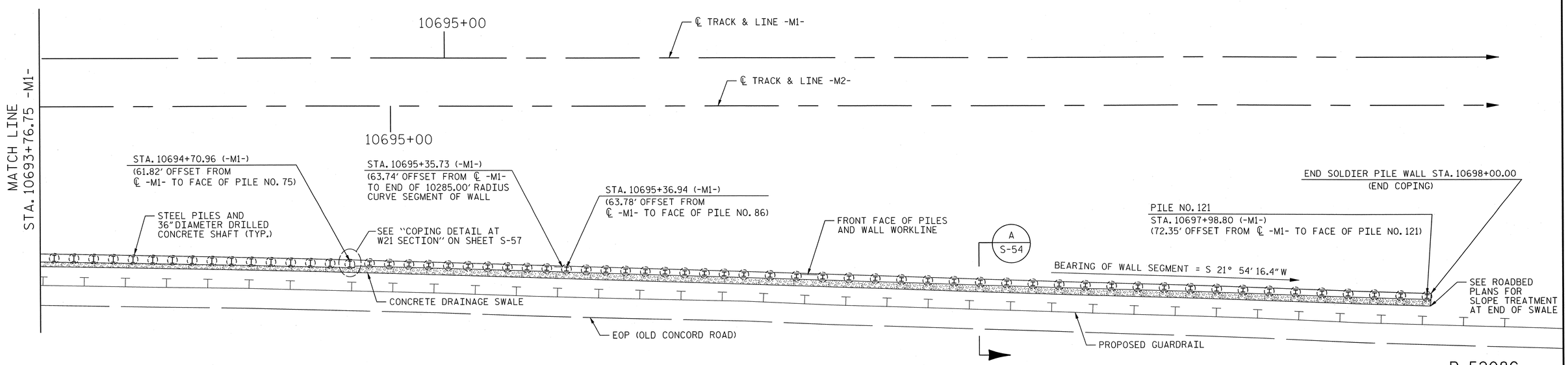

PLAN

PROJECT NO. P-5208G

MECKLENBURG **COUNTY**

STATION: 10689+50.00 -M1-

NOTES:

FOR RETAINING WALL NOTES AND TYPICAL DETAILS, SEE SHEETS S-56, S-57 AND S-58.

FOR ELEVATION VIEW OF RETAINING WALL, SEE SHEET S-53.

AECOM

AECOM TECHNICAL SERVICES, INC.
701 CORPORATE CENTER DRIVE, SUITE 475
RALEIGH, NC 27607
(919) 854-6200 www.aecom.com
AECOM License No. F-0342

NORTH CAROLINA PROFESSIONAL SEAL 10656 ENGINEER L. MARK PEARSON 4/24/13

STATE OF NORTH CAROLINA
DEPARTMENT OF TRANSPORTATION
RALEIGH

RETAINING WALL 1
PLAN

REVISIONS						SHEET NO.
NO.	BY:	DATE:	NO.	BY:	DATE:	S-52
1			3			TOTAL SHEETS
2			4			58

DRAWN BY : MTB DATE : 03/13
CHECKED BY : JL DATE : 03/13

DATE: 4/23/2013
TIME: 1:55:34 PM

USER: BuffaW
DGN: $$$$

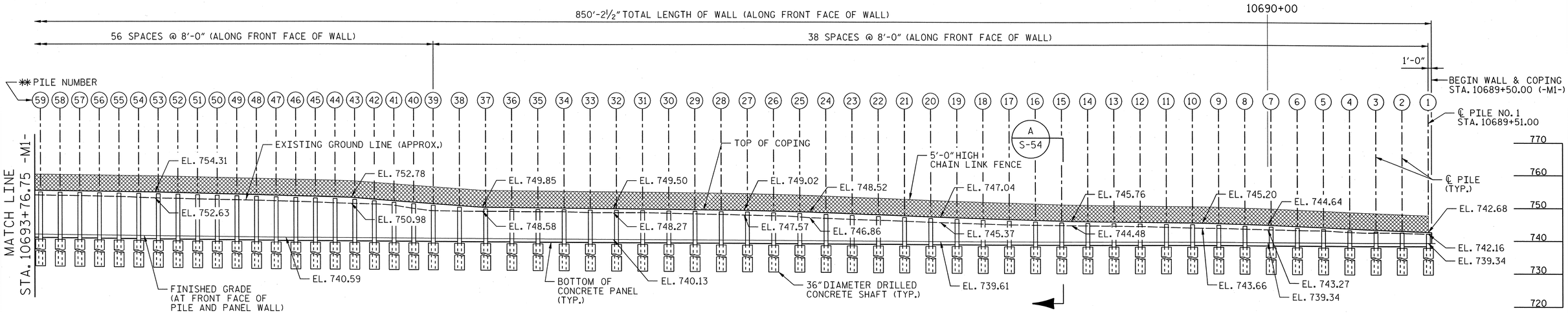

WALL ELEVATION-FRONT FACE

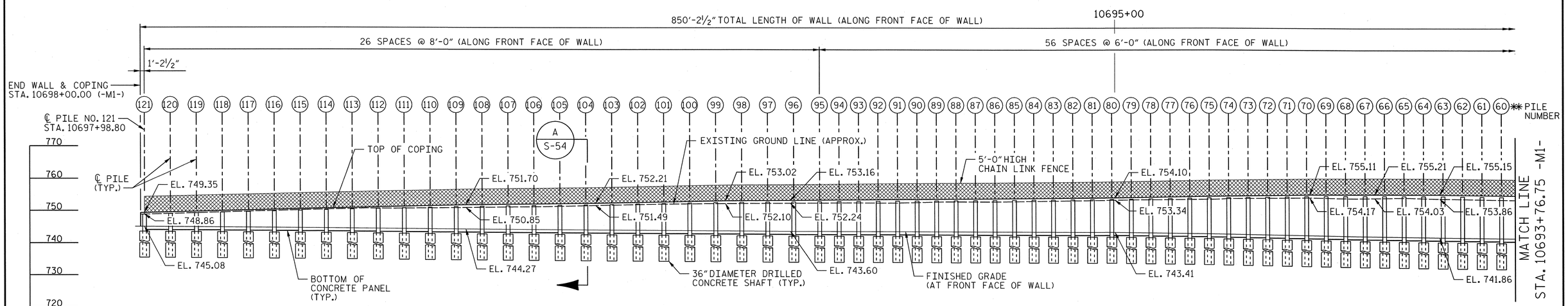

WALL ELEVATION-FRONT FACE

PROJECT NO. P-5208G

MECKLENBURG **COUNTY**

STATION: 10689+50.00 -M1-

NOTES:

FOR RETAINING WALL NOTES AND TYPICAL DETAILS, SEE SHEETS S-56, S-57 AND S-58.

** FOR PILE SIZES, PILE ELEVATIONS, AND CONCRETE PANEL TYPES, SEE SHEET S-55.

AECOM
AECOM TECHNICAL SERVICES, INC.
701 CORPORATE CENTER DRIVE, SUITE 475
RALEIGH, NC 27607
(919) 854-6200 www.aecom.com
AECOM Licenses No. F-0342

NORTH CAROLINA PROFESSIONAL SEAL 10656 ENGINEER J. MARK PEARSON 03/24/13

STATE OF NORTH CAROLINA
DEPARTMENT OF TRANSPORTATION
RALEIGH

RETAINING WALL 1
ELEVATION

REVISIONS						SHEET NO.
NO.	BY:	DATE:	NO.	BY:	DATE:	S-53
1			3			TOTAL SHEETS
2			4			58

DRAWN BY : MTB DATE : 03/13
CHECKED BY : JL DATE : 03/13

DATE: 4/23/2013
TIME: 2:52:30 PM
USER: BellWM
DGN: C:\SDB\58694\Cv400_Tech_Info_Disc_Files\450_NCDOT Std Test\DesFiles\Structures\H21J_Retaining_Wall_Profile_2.dgn

0041DEL_P10a1

DATE: 4/24/2013
TIME: 3:50:34 PM

USER: lowery
DGN: 0:\82658940\400_Tech_Info_Dsc_Files\450_NCDOT Stiffeat\BasFiles\Structures\FINAL CADD & STAMP\H21_Retaining Wall_Profile_3.dgn

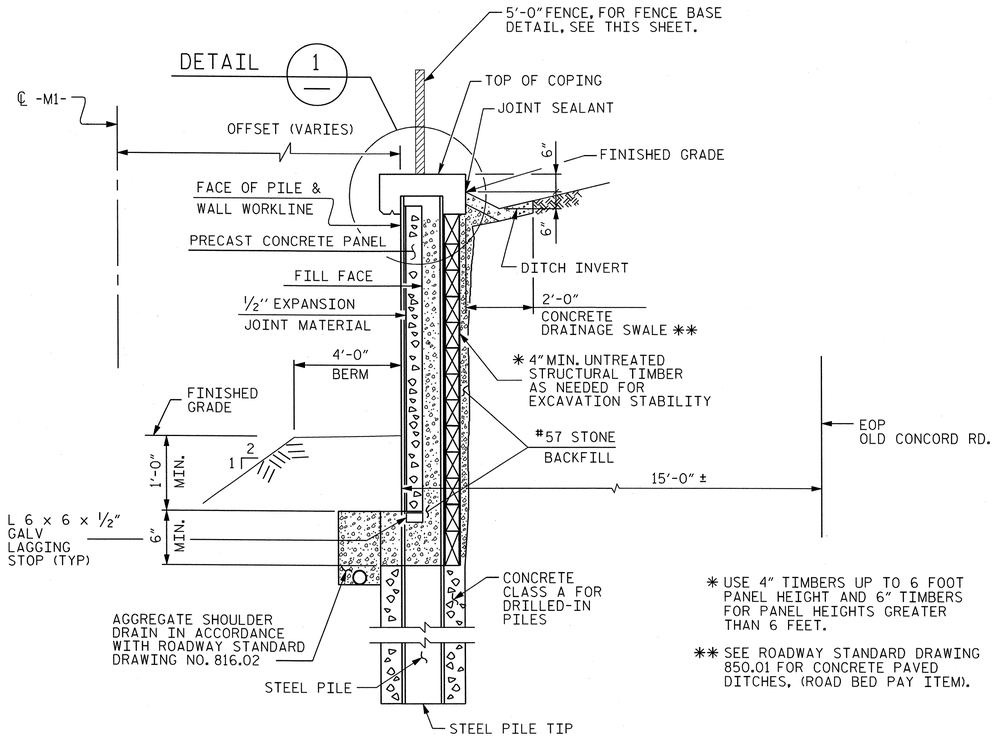

* USE 4" TIMBERS UP TO 6 FOOT PANEL HEIGHT AND 6" TIMBERS FOR PANEL HEIGHTS GREATER THAN 6 FEET.

** SEE ROADWAY STANDARD DRAWING 850.01 FOR CONCRETE PAVED DITCHES, (ROAD BED PAY ITEM).

SECTION A
NTS S-54 S-53

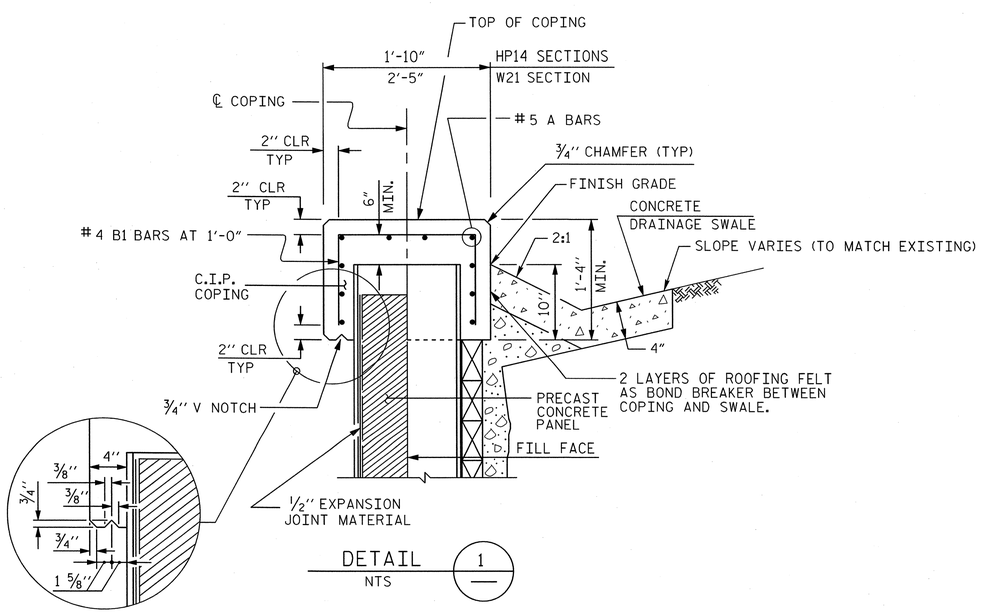

DETAIL 1
NTS

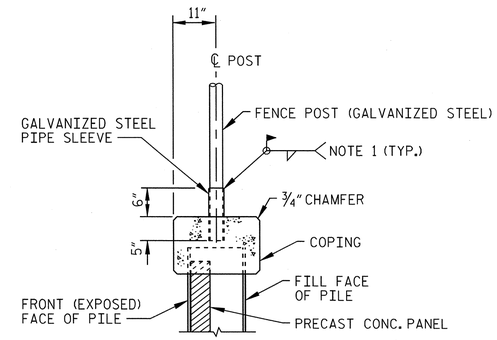

TYPICAL
FENCE BASE AT TOP OF COPING

NOT TO SCALE

NOTES:

1. REPAIR ALL GALVANIZED SURFACES DAMAGED DURING INSTALLATION OF FENCE POSTS IN ACCORDANCE WITH SPECIFICATIONS.
2. FOR 5'-0" FENCE DETAILS AND POST SIZES AND PLACEMENT, SEE ROADBED PLANS AND CHAIN LINK FENCE STD. DWG. NO. 866.01. USE GALVANIZED STEEL POSTS FOR WELDING TO POST BASE. THE CHAIN LINK FENCE IS A ROADBED PAY ITEM. THE FENCE BASE EMBEDDED IN THE COPING IS INCLUDED IN THE RETAINING WALL PAY ITEM.
3. THE I.D. OF THE GALVANIZED STEEL PIPE SLEEVES SHALL BE SIZED TO FIT THE O.D. OF THE POSTS WITH SUFFICIENT TOLERANCE FOR SETTING AND WELDING THE POSTS.

PROJECT NO. P-5208G
MECKLENBURG COUNTY
STATION: 10689+50.00 -M1-

AECOM
AECOM TECHNICAL SERVICES, INC.
701 CORPORATE CENTER DRIVE, SUITE 475
RALEIGH, NC 27607
(919) 854-6200 www.aecom.com
AECOM License No. F-0342

NORTH CAROLINA PROFESSIONAL SEAL 10656 ENGINEER L. MARK PEARSON
4/24/13

STATE OF NORTH CAROLINA
DEPARTMENT OF TRANSPORTATION
RALEIGH

RETAINING WALL 1
DETAILS

REVISIONS						SHEET NO.
NO.	BY:	DATE:	NO.	BY:	DATE:	S-54
1			3			TOTAL SHEETS
2			4			58

DRAWN BY : MTB DATE : 03/13
CHECKED BY : JL DATE : 03/13

RETAINING WALL 1
ADJACENT TO -M1-

PILE ELEVATIONS AND PANEL TYPES

PILE NO.	M1 PILE STATION	M1 OFFSET (RIGHT) (FT.)	PILE SIZE	PILE SPACE (FT.)	PILE MIN. EMBEDMENT (FT.)	PILE LENGTH (FT.)	TOP SHAFT CONCRETE ELEVATION (FT.)	PILE CUT OFF ELEVATION (FT.)	PANEL TYPE	BOTTOM PANEL ELEVATION (FT.)
BEGIN COPING	10689+50.00									
1	10689+51.00	59.55	HP14X73	NA	14.00	18.46	737.68	742.14		
2	10689+59.00	59.50	HP14X73	8'-0"	14.00	18.68	737.50	742.18	A	738.18
3	10689+67.00	59.45	HP14X73	8'-0"	14.00	19.00	737.50	742.50	B	738.00
4	10689+75.00	59.40	HP14X73	8'-0"	14.00	19.18	737.64	742.82	B	738.32
5	10689+83.00	59.36	HP14X73	8'-0"	17.00	22.50	737.64	743.14	C	738.14
6	10689+91.00	59.31	HP14X73	8'-0"	17.00	22.68	737.78	743.46	D	737.96
7	10689+99.00	59.26	HP14X73	8'-0"	17.00	23.18	737.60	743.78	D	738.28
8	10690+07.00	59.21	HP14X73	8'-0"	19.00	25.50	737.60	744.10	E	738.10
9	10690+15.00	59.16	HP14X73	8'-0"	19.00	25.78	737.56	744.34	E	738.34
10	10690+23.00	59.11	HP14X73	8'-0"	19.00	26.00	737.56	744.56	F	738.06
11	10690+31.00	59.06	HP14X73	8'-0"	19.00	26.00	737.74	744.74	F	738.24
12	10690+39.00	59.01	HP14X73	8'-0"	19.00	26.00	737.85	744.85	F	738.35
13	10690+47.00	58.97	HP14X73	8'-0"	19.00	26.39	737.58	744.97	F	738.47
14	10690+55.00	58.92	HP14X73	8'-0"	22.00	29.50	737.58	745.08	G	738.08
15	10690+63.00	58.87	HP14X73	8'-0"	22.00	29.50	737.69	745.19	G	738.19
16	10690+71.00	58.82	HP14X73	8'-0"	22.00	29.50	737.86	745.36	G	738.36
17	10690+79.00	58.77	HP14X73	8'-0"	22.00	29.74	737.87	745.61	G	738.61
18	10690+87.00	58.72	HP14X73	8'-0"	22.00	30.00	737.87	745.87	H	738.37
19	10690+95.00	58.67	HP14X73	8'-0"	22.00	30.24	737.88	746.12	H	738.62
20	10691+03.00	58.62	HP14X73	8'-0"	24.00	32.73	737.65	746.38	I	738.38
21	10691+11.00	58.58	HP14X73	8'-0"	24.00	33.00	737.65	746.65	I	738.65
22	10691+19.00	58.53	HP14X73	8'-0"	24.00	33.00	737.95	746.95	J	738.45
23	10691+27.00	58.48	HP14X73	8'-0"	24.00	33.20	738.04	747.24	J	738.74
24	10691+35.00	58.43	HP14X73	8'-0"	27.00	36.50	738.04	747.54	K	738.54
25	10691+43.00	58.38	HP14X73	8'-0"	27.00	36.74	738.10	747.84	K	738.84
26	10691+51.00	58.34	HP14X73	8'-0"	27.00	37.00	738.10	748.10	L	738.60
27	10691+59.00	58.31	HP14X73	8'-0"	27.00	37.00	738.30	748.30	L	738.80
28	10691+67.00	58.28	HP14X73	8'-0"	27.00	37.40	738.10	748.50	L	739.00
29	10691+75.00	58.26	HP14X117	8'-0"	29.00	39.50	738.10	748.60	M	738.60
30	10691+83.00	58.24	HP14X117	8'-0"	29.00	39.50	738.20	748.70	M	738.70
31	10691+91.00	58.23	HP14X117	8'-0"	29.00	39.50	738.30	748.80	M	738.80
32	10691+99.00	58.23	HP14X117	8'-0"	29.00	39.50	738.39	748.89	M	738.89
33	10692+07.00	58.23	HP14X117	8'-0"	29.00	39.50	738.49	748.99	M	738.99
34	10692+15.00	58.24	HP14X117	8'-0"	29.00	39.50	738.56	749.06	M	739.06
35	10692+23.00	58.26	HP14X117	8'-0"	29.00	39.50	738.63	749.13	M	739.13
36	10692+31.00	58.28	HP14X117	8'-0"	29.00	39.50	738.70	749.20	M	739.20
37	10692+39.00	58.31	HP14X117	8'-0"	29.00	39.50	738.77	749.27	M	739.27
38	10692+47.00	58.34	HP14X117	8'-0"	29.00	39.50	738.84	749.34	M	739.34
39	10692+55.00	58.38	HP14X117	8'-0"	30.00	41.00	738.86	749.86	N	739.36
40	10692+61.00	58.42	HP14X117	6'-0"	32.00	43.59	738.86	750.45	O	739.45
41	10692+67.00	58.45	HP14X117	6'-0"	35.00	47.03	738.86	750.89	P	739.39
42	10692+73.00	58.50	HP14X117	6'-0"	35.00	47.47	738.86	751.33	Q	739.33
43	10692+79.00	58.54	HP14X117	6'-0"	35.00	47.91	738.86	751.77	R	739.27
44	10692+85.00	58.59	W21X101	6'-0"	37.00	50.35	738.86	752.21	S	739.21
45	10692+90.99	58.64	W21X101	6'-0"	37.00	50.55	738.86	752.41	S	739.41
46	10692+96.99	58.70	W21X101	6'-0"	37.00	50.70	738.86	752.56	S	739.56
47	10693+02.99	58.75	W21X132	6'-0"	37.00	50.85	738.86	752.71	T	739.21
48	10693+08.99	58.82	W21X132	6'-0"	37.00	51.01	738.86	752.87	T	739.37
49	10693+14.99	58.88	W21X132	6'-0"	40.00	54.16	738.86	753.02	T	739.52
50	10693+20.99	58.95	W21X132	6'-0"	40.00	54.31	738.86	753.17	T	739.67
51	10693+26.99	59.02	W21X132	6'-0"	40.00	54.47	738.86	753.33	T	739.83
52	10693+32.99	59.10	W21X132	6'-0"	40.00	54.62	738.86	753.48	T	739.98
53	10693+38.99	59.18	W21X132	6'-0"	40.00	54.77	738.86	753.63	U	739.80
54	10693+44.99	59.26	W21X132	6'-0"	40.00	54.92	738.86	753.78	U	739.95
55	10693+50.99	59.35	W21X132	6'-0"	40.00	55.02	738.68	753.88	U	740.05
56	10693+56.99	59.44	W21X132	6'-0"	40.00	55.10	738.86	753.96	U	740.13
57	10693+62.99	59.54	W21X132	6'-0"	40.00	55.19	738.86	754.05	U	740.22
58	10693+68.99	59.63	W21X132	6'-0"	40.00	55.27	738.86	754.13	U	740.30
59	10693+74.99	59.73	W21X132	6'-0"	40.00	55.36	738.86	754.22	U	740.39
60	10693+80.99	59.84	W21X132	6'-0"	40.00	55.44	738.86	754.30	U	740.47
61	10693+86.99	59.95	W21X132	6'-0"	40.00	55.52	738.86	754.38	U	740.55
62	10693+92.98	60.06	W21X132	6'-0"	40.00	55.61	738.86	754.47	U	740.64
63	10693+98.98	60.17	W21X132	6'-0"	40.00	55.69	738.86	754.55	U	740.72
64	10694+04.98	60.29	W21X132	6'-0"	40.00	55.78	738.86	754.64	U	740.81
65	10694+10.98	60.41	W21X132	6'-0"	40.00	55.81	738.86	754.67	U	740.84
66	10694+16.98	60.54	W21X132	6'-0"	40.00	55.82	738.86	754.68	U	740.85
67	10694+22.98	60.67	W21X132	6'-0"	40.00	55.84	738.86	754.70	U	740.87

RETAINING WALL 1
ADJACENT TO -M1-

PILE ELEVATIONS AND PANEL TYPES

PILE NO.	M1 PILE STATION	M1 OFFSET (RIGHT) (FT.)	PILE SIZE	PILE SPACE (FT.)	PILE MIN. EMBEDMENT (FT.)	PILE LENGTH (FT.)	TOP SHAFT CONCRETE ELEVATION (FT.)	PILE CUT OFF ELEVATION (FT.)	PANEL TYPE	BOTTOM PANEL ELEVATION (FT.)
68	10694+28.98	60.80	W21X132	6'-0"	37.00	52.84	738.86	754.70	T	741.20
69	10694+34.98	60.93	W21X132	6'-0"	37.00	52.81	738.86	754.67	T	741.17
70	10694+40.97	61.07	W21X132	6'-0"	37.00	52.78	738.86	754.64	T	741.14
71	10694+46.97	61.22	W21X101	6'-0"	37.00	52.73	738.86	754.59	T	741.09
72	10694+52.97	61.36	W21X101	6'-0"	37.00	52.63	738.86	754.49	S	741.49
73	10694+58.97	61.51	W21X101	6'-0"	37.00	52.53	738.86	754.39	S	741.39
74	10694+64.97	61.67	W21X101	6'-0"	37.00	52.43	738.86	754.29	R	741.79
75	10694+70.96	61.82	W21X101	6'-0"	35.00	50.33	738.86	754.19	R	741.69
76	10694+76.96	61.98	HP14X117	6'-0"	35.00	50.23	738.86	754.09	R	741.59
77	10694+82.96	62.15	HP14X117	6'-0"	35.00	50.13	738.86	753.99	Q	741.99
78	10694+88.96	62.31	HP14X117	6'-0"	35.00	50.03	738.86	753.89	Q	741.89
79	10694+94.96	62.48	HP14X117	6'-0"	35.00	49.93	738.86	753.79	P	742.29
80	10695+00.95	62.66	HP14X117	6'-0"	32.00	46.82	738.86	753.68	P	742.18
81	10695+06.95	62.84	HP14X117	6'-0"	32.00	46.73	738.86	753.59	P	742.09
82	10695+12.95	63.02	HP14X117	6'-0"	32.00	46.67	738.86	753.53	P	742.03
83	10695+18.94	63.20	HP14X117	6'-0"	32.00	46.62	738.86	753.48	O	742.48
84	10695+24.94	63.39	HP14X117	6'-0"	32.00	46.56	738.86	753.42	O	742.42
85	10695+30.94	63.58	HP14X117	6'-0"	32.00	46.51	738.86	753.37	O	742.37
86	10695+36.94	63.78	HP14X117	6'-0"	32.00	46.45	738.86	753.31	O	742.31
87	10695+42.93	63.97	HP14X117	6'-0"	32.00	46.39	738.86	753.25	O	742.25
88	10695+48.93	64.17	HP14X117	6'-0"	32.00	46.34	738.86	753.20	O	742.20
89	10695+54.93	64.37	HP14X117	6'-0"	32.00	46.28	738.86	753.14	O	742.14
90	10695+60.92	64.56	HP14X73	6'-0"	30.00	44.22	738.86	753.08	V	742.58
91	10695+66.92	64.76	HP14X73	6'-0"	30.00	44.17	738.86	753.03	V	742.53
92	10695+72.92	64.96	HP14X73	6'-0"	30.00	44.11	738.86	752.97	V	742.47
93	10695+78.91	65.15	HP14X73	6'-0"	30.00	44.05	738.86	752.91	V	742.41
94	10695+84.91	65.35	HP14X73	6'-0"	30.00	44.00	738.86	752.86	V	742.36
95	10695+90.91	65.55	HP14X117	8'-0"	30.00	40.63	742.17	752.80	N	742.17
96	10695+98.90	65.81	HP14X117	8'-0"	29.00	39.63	742.11	752.74	M	742.61
97	10696+06.90	66.07	HP14X117	8'-0"	29.00	39.61	742.06	752.67	M	742.56
98	10696+14.89	66.33	HP14X117	8'-0"	29.00	39.65	741.96	752.61	M	742.46
99	10696+22.89	66.59	HP14X117	8'-0"	29.00	39.76	741.80	752.56	M	742.30
100	10696+30.89	66.85	HP14X73	8'-0"	29.00	39.32	742.14	752.46	L	742.64
101	10696+38.88	67.12	HP14X73	8'-0"	27.00	37.33	741.97	752.30	L	742.47
102	10696+46.88	67.38	HP14X73	8'-0"	27.00	36.83	742.31	752.14	K	742.81
103	10696+54.87	67.64	HP14X73	8'-0"	27.00	36.80	742.17	751.97	K	742.67
104	10696+62.87	67.90	HP14X73	8'-0"	27.00	36.74	742.07	751.81	K	743.57
105	10696+70.86	68.16	HP14X73	8'-0"	27.00	36.20	742.47	751.67	J	742.97
106	10696+78.86	68.43	HP14X73	8'-0"	27.00	36.20	742.37	751.57	J	742.87
107	10696+86.86	68.69	HP14X73	8'-0"	24.00	33.21	742.26	751.47	J	742.76
108	10696+94.85	68.95	HP14X73	8'-0"	24.00	32.74	742.63	751.37	I	743.13
109	10697+02.85	69.21	HP14X73	8'-0"	24.00	32.82	742.44	751.26	I	742.94
110	10697+10.84	69.47	HP14X73	8'-0"	24.00	32.38	742.75	751.13	H	743.25
111	10697+18.84	69.73	HP14X73	8'-0"	22.00	29.88	743.06	750.94	G	743.56
112	10697+26.83	70.00	HP14X73	8'-0"	22.00	29.88	742.87	750.75	G	743.37
113	10697+34.83	70.26	HP14X73	8'-0"	22.00	29.38	743.18	750.56	F	743.68
114	10697+42.83	70.52	HP14X73	8'-0"	19.00	25.88	743.49	750.37	E	743.99
115	10697+50.82	70.78	HP14X73	8'-0"	19.00	25.88	743.30	750.18	E	743.80
116	10697+58.82	71.04	HP14X73	8'-0"	23.00	29.38	743.61	749.99	D	744.11
117	10697+66.81	71.31	HP14X73	8'-0"	13.00	18.88	743.92	749.80	C	744.42
118	10697+74.81	71.57	HP14X73	8'-0"	13.00	18.88	743.73	749.61	C	744.23
119	10697+82.80	71.83	HP14X73	8'-0"	13.00	18.38	744.04	749.42	B	744.54
120	10697+90.80	72.09	HP14X73	8'-0"	13.00	17.88	744.35	749.23	A	744.85
121	10697+98.80	72.35	HP14X73	8'-0"	13.00	17.71	744.33	749.04	A	744.83
END COPING	10698+00.00									

PROJECT NO. P-5208G

MECKLENBURG **COUNTY**

STATION: 10689+50.00 -M1-

AECOM
AECOM TECHNICAL SERVICES, INC.
701 CORPORATE CENTER DRIVE, SUITE 475
RALEIGH, NC 27607
(919) 854-6200 www.aecom.com
AECOM License No. F-0342

NORTH CAROLINA PROFESSIONAL SEAL 10656 ENGINEER J. MARK PEARSON 2/24/13

STATE OF NORTH CAROLINA
DEPARTMENT OF TRANSPORTATION
RALEIGH

RETAINING WALL 1
PILE ELEVATIONS
AND PANEL TYPES

REVISIONS						SHEET NO.
NO.	BY:	DATE:	NO.	BY:	DATE:	S-55
1			3			TOTAL SHEETS
2			4			58

DRAWN BY : DDL DATE : 03/13
CHECKED BY : JL DATE : 03/13

0041DEL_P10a1
DGN
DATE: 4/23/2013
TIME: 8:58:05 AM
USER: Bellfield
DGN: C:\SUBDES\9-40-400_Tech_Info_Disc_Files\45D_NCDOT Std Text\DesFiles\Structures\H21J_Retain_Wall_Prof1a_44gn

0041DEL_P10a1
DGN
DATE: 4/16/2013
TIME: 12:42:21 PM
USER: bellsjam
DGN: G:\60286949\400_Tech_Info_Disc_Files\450_NCDOT Stuff edit Files\Structures\H21_Retaining Wall_Profile_5.dgn

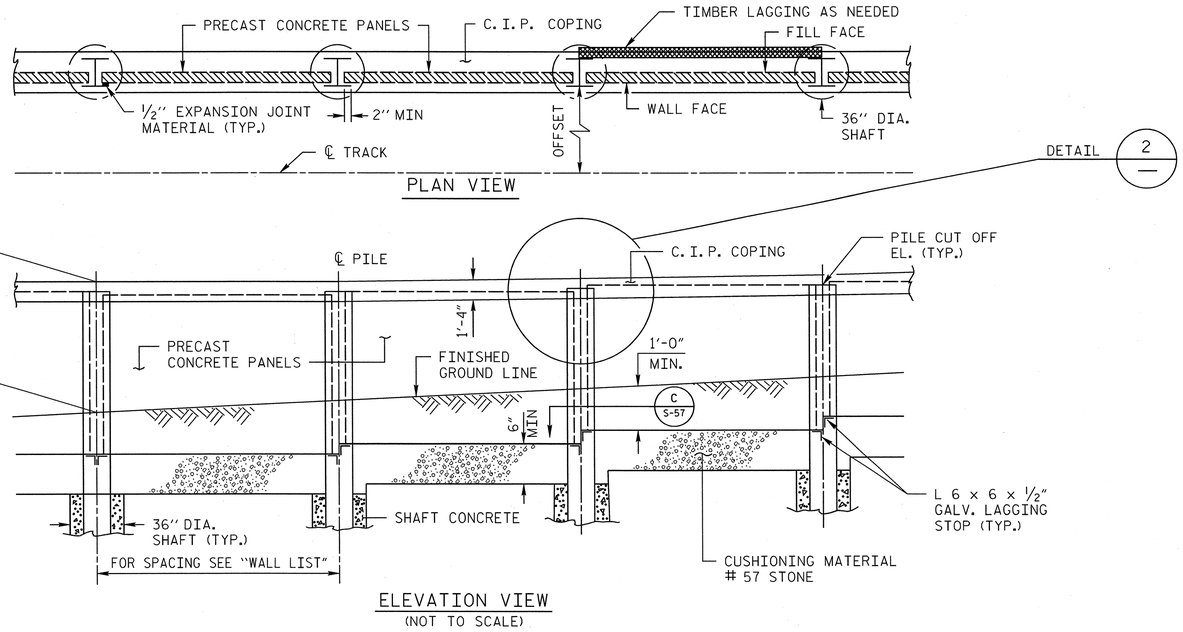

FOR SECTION THRU WALL, SEE SHEET S-54.

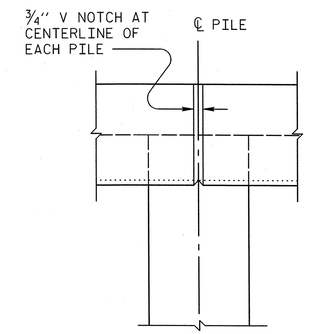

DETAIL 2
NTS

NOTES:

1. FOR SOLDIER PILE RETAINING WALLS, SEE SPECIAL PROVISION FOR SOLDIER PILE RETAINING WALLS.

2. A FENCE IS REQUIRED ON TOP OF RETAINING WALL NO. 1. SEE ROADBED PLANS AND ROADWAY STD. DWG. NO. 866.01 FOR FENCE DETAILS.

3. DRILLED-IN H-PILES ARE REQUIRED FOR RETAINING WALL NO. 1.

4. USE A SOLDIER PILE RETAINING WALL WITH PRECAST CONCRETE PANELS THAT MEET SECTION 1077 OF THE STANDARD SPECIFICATIONS FOR RETAINING WALL NO. 1.

5. BEFORE BEGINNING SOLDIER PILE RETAINING WALL NO. 1, SURVEY WALL LOCATION AND SUBMIT A REVISED WALL PROFILE VIEW (WALL ENVELOPE) FOR REVIEW. DO NOT START WALL FABRICATION OR CONSTRUCTION UNTIL THE REVISED WALL ENVELOPE IS ACCEPTED.

6. RETAINING WALL NO. 1 WAS DESIGNED BY ASD METHOD:
   1) H = 4 FEET TO 14 FEET
   2) MINIMUM EMBEDMENT DEPTHS AS SHOWN IN TABLE "PILE ELEVATIONS AND PANEL TYPES" ON SHEET S-55.
   3) IN-SITU ASSUMED MATERIAL PARAMETERS RETAINED SOILS
      UNIT WEIGHT, GAMMA = 120 LB/CF
      FRICTION ANGLE, PHI = 33 DEGREES
      COHESION, C = 0 LB/SF
   4) (IN-SITU ASSUMED MATERIAL PARAMETERS FOUNDATION SOILS
      UNIT WEIGHT, GAMMA = 110 LB/CF
      FRICTION ANGLE, PHI = 30 DEGREES
      COHESION, C = 0 LB/SF)

7. RETAINING WALL NO. 1 IS DESIGNED FOR A LIVE LOAD (TRAFFIC) SURCHARGE OF 250 PSF.

8. INSTALL PILES TO THE CUT OFF ELEVATIONS AND LENGTHS SHOWN ON THE PLANS BY PRE-AUGERING OR DRILLING. THE HOLE SHALL BE 36 INCH MINIMUM DIAMETER. BACKFILL WITH 3000 PSI CONCRETE UP TO THE BOTTOM OF THE CUSHIONING MATERIAL.

9. PILES SHALL BE GALVANIZED ASTM A709, GRADE 50 STEEL.

10. PILES SHALL BE PAINTED. SEE SPECIAL PROVISIONS FOR SOLDIER PILE RETAINING WALLS.

11. THE TOP OF THE INSTALLED PILES SHALL BE WITHIN 2 INCHES OF THEIR PLAN LOCATION IN ANY DIRECTION.

12. CONCRETE PANELS SHALL HAVE A MINIMUM BEARING DISTANCE OF TWO INCHES ON THE PILE FLANGE. 1/2" THICK EXPANSION JOINT MATERIAL SHALL BE PLACED BETWEEN THE CONCRETE PANELS AND PILE FLANGES FOR THE WIDTH OF THE BEARING SURFACE.

13. THE PRECAST CONCRETE PANELS SHALL HAVE A VERTICALLY BROOMED FINISH.

14. CONCRETE PANELS SHALL BE HELD SECURELY AGAINST PILES UNTIL BACKFILL IS PLACED. BACKFILL SHALL BE BROUGHT UP UNIFORMLY.

15. BOTH CUSHIONING MATERIAL AND BACKFILL MATERIAL BEHIND THE PANELS SHALL BE NO. 57 STONE AND COMPACTED AS REQUIRED BY THE ENGINEER. THE STONE SHALL BE RODDED AND SPREAD IN ORDER TO FILL ALL VOIDS AND INSURE MAXIMUM DENSITY. FLUSHING THE STONE WITH WATER TO AID COMPACTION WILL NOT BE ALLOWED.

16. BACKFILLING SHALL BE COMPLETED PRIOR TO FORMING THE COPING.

17. TOP OF COPING TO BE ADJUSTED BY ENGINEER TO GIVE A UNIFORM APPEARANCE.

18. BACKSLOPES SHALL BE GRADED PRIOR TO WALL CONSTRUCTION.

19. CONSTRUCTION JOINTS IN COPING ARE PERMITTED AT LOCATIONS WHERE COPING CHANGES SLOPE AND AT APPROXIMATELY 90 FOOT CENTERS. EXPANSION JOINTS ARE NOT PERMITTED.

20. THE CONTRACTOR SHALL VERIFY THE LOCATION OF DRAINAGE STRUCTURES AND UTILITIES PRIOR TO INSTALLING PILES. THE LAYOUT OF THE WALL MAY NEED TO BE ADJUSTED TO AVOID UNANTICIPATED INTERFERENCE.

21. WHERE THE ALIGNMENT OF THE WALL IS CURVED, THE PILES SHALL BE LAID OUT ON CHORDS AND ALIGNED SUCH THAT THEIR FLANGES ARE TANGENT TO THE CURVE AT THE WEB.

22. THE DEPTH OF THE COPING AT THE WALL END MAY NEED TO BE ADJUSTED IN THE FIELD TO COVER THE TOP OF THE PRECAST PANELS.

23. EXCAVATION SEQUENCE:
   - DRILL 36" DIAMETER SHAFTS FROM NATURAL GROUND, INSTALL PILES AND BACKFILL WITH CONCRETE TO THE TOP OF SHAFT ELEVATIONS BEFORE EXCAVATING TO INSTALL PANELS OR LAGGING.
   - EXCAVATION TO INSTALL THE PANELS OR LAGGING SHALL BE VERTICAL, HAVE A MAXIMUM LIFT HEIGHT OF 4 FEET, AND BE LIMITED IN EXTENT TO ONLY WHAT IS NECESSARY.
   - INSTALL TIMBER LAGGING AS NEEDED TO MEET OSHA REQUIREMENTS FOR SAFE EXCAVATION HEIGHTS.
   - THE LAGGING SHALL HAVE A MINIMUM BEARING DISTANCE OF THREE (3) INCHES ON THE PILE FLANGE.
   - UNTREATED STRUCTURAL TIMBERS SHALL BE A MINIMUM OF FOUR (4) INCHES THICK UP TO H = 6 FEET, AND SIX (6) INCHES UP TO H = 14 FEET.
   - PLACE BACKFILL BEHIND THE LAGGING IMMEDIATELY AFTER INSTALLATION.
   - WHERE PRACTICAL, THE TOP THREE PIECES OF LAGGING SHALL BE REMOVED PRIOR TO BACKFILLING. ALL OTHER LAGGING SHALL BE LEFT IN PLACE.

PROJECT NO. P-5208G
MECKLENBURG COUNTY
STATION: 10689+50.00 -M1-

SHEET 1 OF 3

AECOM
AECOM TECHNICAL SERVICES, INC.
701 CORPORATE CENTER DRIVE, SUITE 475
RALEIGH, NC 27607
(919) 854-6200 www.aecom.com
AECOM License No. F-0342

NORTH CAROLINA PROFESSIONAL SEAL 10656 ENGINEER L. MARK PEARSON
4/17/13

STATE OF NORTH CAROLINA
DEPARTMENT OF TRANSPORTATION
RALEIGH

RETAINING WALL 1
NOTES AND TYPICAL DETAILS

REVISIONS								SHEET NO.
NO.	BY:	DATE:	NO.	BY:	DATE:			S-56
1			3					TOTAL SHEETS
2			4					53

DRAWN BY : DDL DATE : 03/13
CHECKED BY : JL DATE : 03/13

0041DEL_P10a1

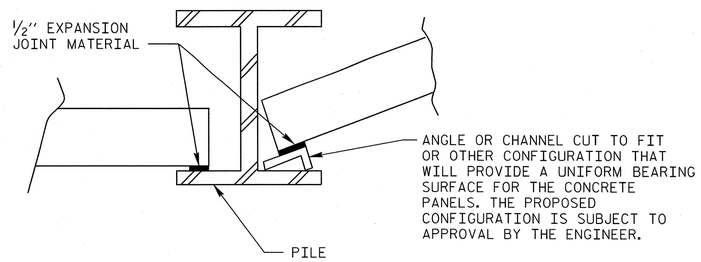

DETAIL OF PILE WHERE WALL CHANGES DIRECTION

(NOT TO SCALE)

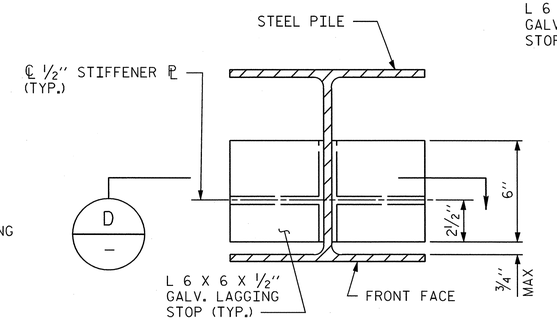

SECTION C S-57 / S-56
NTS

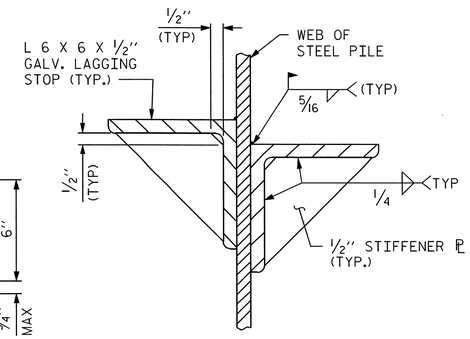

SECTION D
NTS

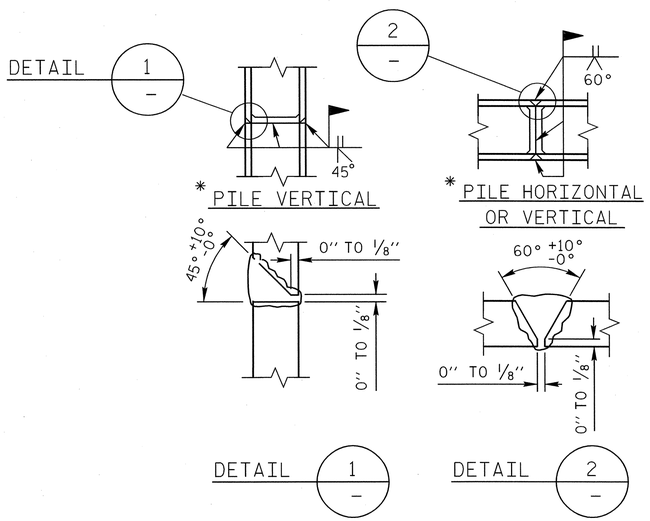

* POSITION OF PILE DURING WELDING.

PILE SPLICE DETAILS

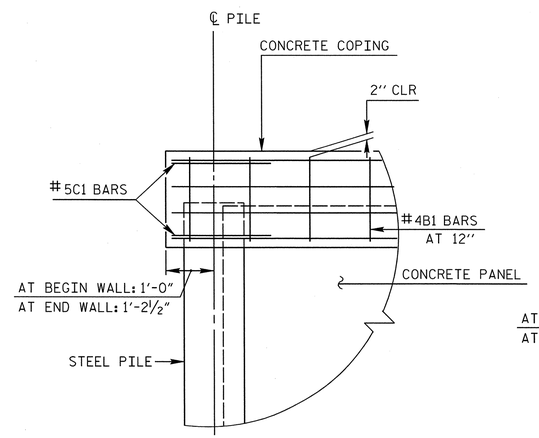

FRONT VIEW

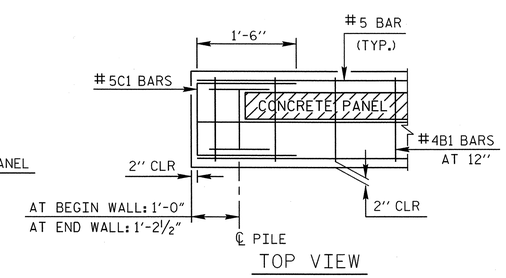

TOP VIEW

END OF COPING DETAIL

(NOT TO SCALE)

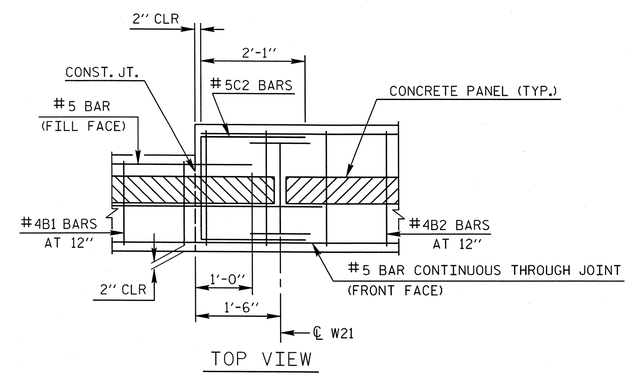

TOP VIEW

COPING DETAIL AT W21 SECTION

(NOT TO SCALE)

PROJECT NO. P-5208G

MECKLENBURG **COUNTY**

STATION: 10689+50.00 -M1-

SHEET 2 OF 3

AECOM
AECOM TECHNICAL SERVICES, INC.
701 CORPORATE CENTER DRIVE, SUITE 475
RALEIGH, NC 27607
(919) 854-6200 www.aecom.com
AECOM License No. F-0342

NORTH CAROLINA PROFESSIONAL SEAL 10656 ENGINEER MARK PEARSON 3/24/13

STATE OF NORTH CAROLINA
DEPARTMENT OF TRANSPORTATION
RALEIGH

RETAINING WALL 1
NOTES AND TYPICAL DETAILS

REVISIONS						SHEET NO.
NO.	BY:	DATE:	NO.	BY:	DATE:	S-57
1			3			TOTAL SHEETS
2			4			58

DRAWN BY : DDL DATE : 03/13
CHECKED BY : JL DATE : 03/13

DATE: 4/23/2013
TIME: 8:45:45 AM

USER: PeiYuM
DGN: D:\SDS\5894040-00_Tech_Info_Disc_Files\450_NCDOT_Std Tech Def Files\Structures\H20_Retaining_Wall_Prefile_5.dgn

0041DEL_P10a1

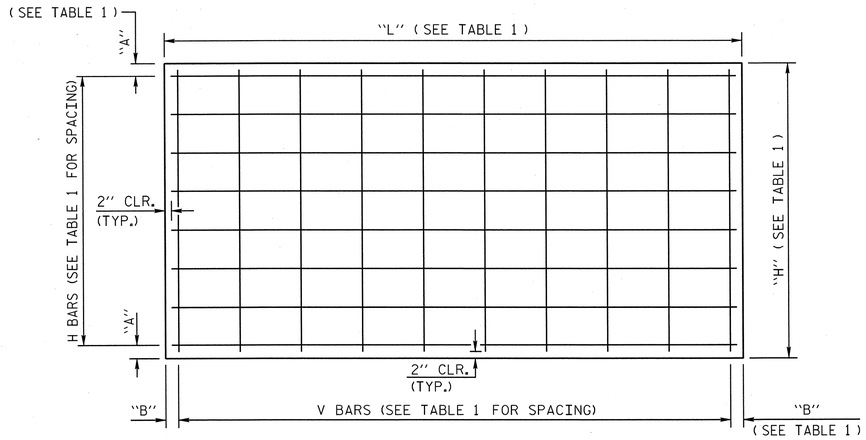

PRECAST PANEL DETAIL

(NOT TO SCALE)

NOTE: IF RAILROAD SURCHARGES ARE INCLUDED, THE PANEL DESIGN MUST BE EVALUATED.

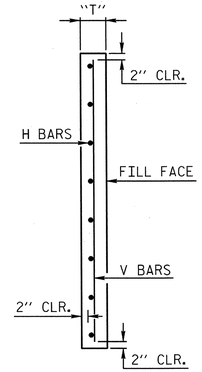

END VIEW

COPING BAR TYPES

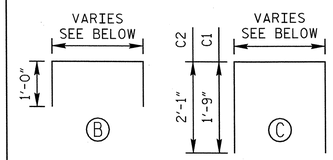

ALL DIMENSIONS OUT- TO - OUT

BAR	PILE SIZE	DIMENSION
B1, C1	HP 14X	1'-6"
B2, C2	W 21X	2'-1"

TABLE 1
PRECAST PANELS

PANEL TYPE	"H"	"L"	"T"	BAR TYPES HORIZONTAL NO. PER PANEL	HORIZONTAL SPACING C-C	VERTICAL NO. PER PANEL	VERTICAL SPACING C-C	"A"	"B"	CONC. C.Y. PER PANEL
A	4'-0"	7'-6"	6"	8-H1	6"	15-V1	6"	3"	3"	0.56
B	4'-6"	7'-6"	6"	9-H2	6"	15-V2	6"	3"	3"	0.63
C	5'-0"	7'-6"	6"	10-H3	6"	15-V3	6"	3"	3"	0.69
D	5'-6"	7'-6"	6"	11-H4	6"	15-V4	6"	3"	3"	0.76
E	6'-0"	7'-6"	6"	12-H5	6"	15-V5	6"	3"	3"	0.83
F	6'-6"	7'-6"	6"	13-H6	6"	15-V6	6"	3"	3"	0.90
G	7'-0"	7'-6"	6"	14-H7	6"	15-V7	6"	3"	3"	0.97
H	7'-6"	7'-6"	6"	15-H8	6"	15-V8	6"	3"	3"	1.04
I	8'-0"	7'-6"	6"	16-H9	6"	15-V9	6"	3"	3"	1.11
J	8'-6"	7'-6"	6"	17-H10	6"	15-V10	6"	3"	3"	1.18
K	9'-0"	7'-6"	6"	18-H11	6"	15-V11	6"	3"	3"	1.25
L	9'-6"	7'-6"	6"	19-H12	6"	15-V12	6"	3"	3"	1.32
M	10'-0"	7'-6"	6"	20-H13	6"	15-V13	6"	3"	3"	1.39
N	10'-6"	7'-6"	7"	21-H14	6"	15-V14	6"	3"	3"	1.70
O	11'-0"	5'-6"	7"	22-H15	6"	11-V15	6"	3"	3"	1.31
P	11'-6"	5'-6"	7"	23-H16	6"	11-V16	6"	3"	3"	1.37
Q	12'-0"	5'-6"	7"	24-H17	6"	11-V17	6"	3"	3"	1.43
R	12'-6"	5'-6"	7"	25-H18	6"	11-V18	6"	3"	3"	1.49
S	13'-0"	5'-6"	7"	26-H19	6"	11-V19	6"	3"	3"	1.54
T	13'-6"	5'-6"	7"	27-H20	6"	11-V20	6"	3"	3"	1.60
U	13'-10"	5'-6"	7"	28-H21	6"	11-V21	6"	3"	3"	1.64
V	10'-6"	5'-6"	7"	21-H22	6"	11-V22	6"	3"	3"	1.25

PANEL BAR TYPES

BAR	TYPE	SIZE	LENGTH (FT-IN)
H1-H14	STR.	#4	7'-2"
H15-H22	STR.	#4	5'-2"
V1	STR.	#4	3'-8"
V2	STR.	#4	4'-2"
V3	STR.	#5	4'-8"
V4	STR.	#5	5'-2"
V5	STR.	#5	5'-8"
V6	STR.	#5	6'-2"
V7	STR.	#5	6'-8"
V8	STR.	#5	7'-2"
V9	STR.	#5	7'-8"
V10	STR.	#5	8'-2"
V11	STR.	#5	8'-8"
V12	STR.	#5	9'-2"
V13	STR.	#5	9'-8"
V14	STR.	#5	10'-2"
V15	STR.	#5	10'-8"
V16	STR.	#6	11'-2"
V17	STR.	#6	11'-8"
V18	STR.	#6	12'-2"
V19	STR.	#6	12'-8"
V20	STR.	#6	13'-2"
V21	STR.	#6	13'-6"
V22	STR.	#5	10'-2"

PROJECT NO. P-5208G

MECKLENBURG COUNTY

STATION: 10689+50.00 -M1-

SHEET 3 OF 3

AECOM

AECOM TECHNICAL SERVICES, INC.
701 CORPORATE CENTER DRIVE, SUITE 475
RALEIGH, NC 27607
(919) 854-6200 www.aecom.com
AECOM License No. F-0342

NORTH CAROLINA PROFESSIONAL SEAL 10656 ENGINEER L. MARK PEARSON 4/24/13

STATE OF NORTH CAROLINA
DEPARTMENT OF TRANSPORTATION
RALEIGH

RETAINING WALL 1
NOTES AND TYPICAL DETAILS

REVISIONS NO.	BY:	DATE:	NO.	BY:	DATE:
1			3		
2			4		

SHEET NO. S-58

TOTAL SHEETS 58

DRAWN BY : DDL DATE : 03/13
CHECKED BY : JL DATE : 03/13

DATE: 4/23/2013
TIME: 8:54:49 AM

USER: Bellinal
DGN: U:\60286940\400_Tech_Info_Disc_Files\450_NCDOT Std Tech Data Files\Structures\V12_Retaining_Wall_Profile_T.dgn

PROJECT REFERENCE NO.	SHEET NO.
P-5208G	DET-01
R/W SHEET NO.	
RAIL DESIGN ENGINEER	HYDRAULICS ENGINEER
4/17/13	4/18/13

Prepared in the Office of: AECOM NC FIRM LICENSE No: F-0342 701 Corporate Center Drive, Suite 475 Raleigh, NC 27607 (919) 854-6200 - (919) 854-6259(FAX)

NOTES:
1. TOP OF SUB-GRADE IS TO BE CROWNED.
2. TRACK CONSTRUCTION, INCLUDING BALLAST, TIE AND RAIL INSTALLATION, BY NSR.
3. ACTUAL LOCATION OF EXCAVATION IS TO BE BASED ON FIELD CONDITIONS AS DETERMINED BY THE NORFOLK SOUTHERN REPRESENTATIVE.

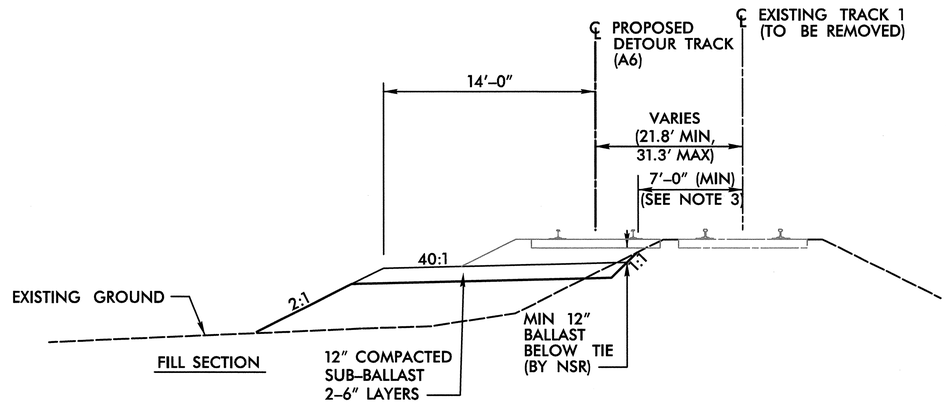

TYPICAL SECTION NO. 1

-M1- STA. 10635+65 TO STA. 10639+70
-M1- STA. 10641+90 TO STA. 10643+70

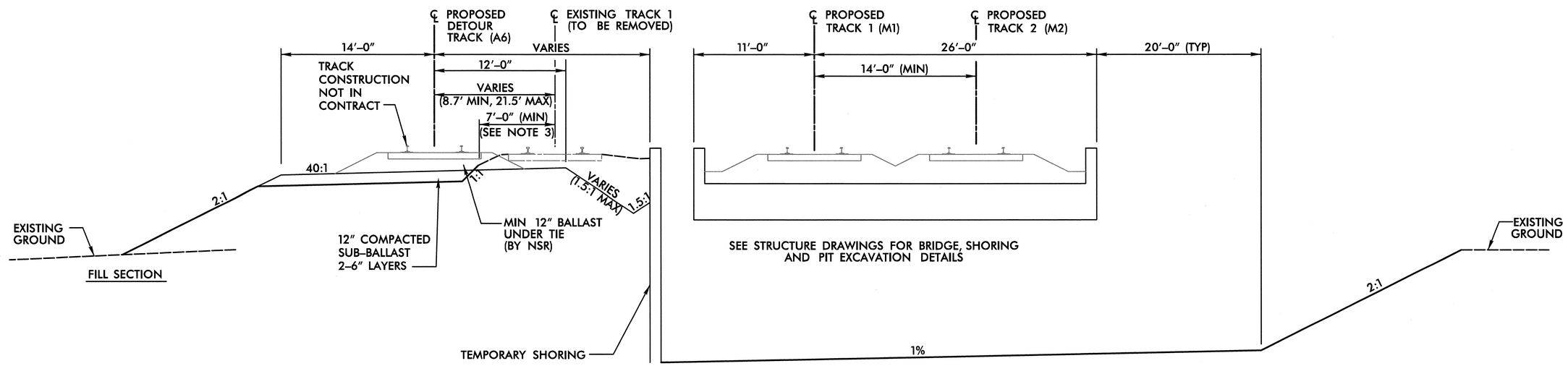

TYPICAL SECTION NO. 2

-M1- STA. STA. 10639+70 TO STA. 10641+90

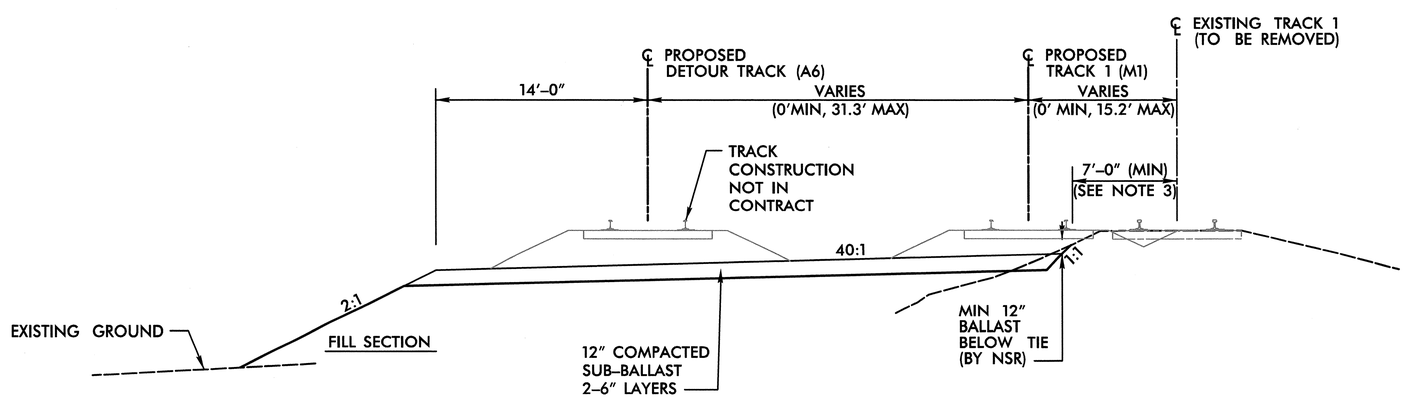

TYPICAL SECTION NO. 3

-M1- STA. 10643+70 TO STA. 10645+50
-M1- STA. 10660+00 TO STA. 10666+90

DCN 0041DEL_P10a1

USER: westml
DATE: 4/17/2013
TIME: 8:40:48 PM
DGN: R:\Rail\Sheets\Mallard Creek Detour\P-5208G_RR-DET01.dgn

0041DEL_P10a1

NOTES:
1. TOP OF SUB-GRADE IS TO BE CROWNED.
2. TRACK CONSTRUCTION, INCLUDING BALLAST, TIE AND RAIL INSTALLATION, BY NSR.
3. ACTUAL LOCATION OF EXCAVATION IS TO BE BASED ON FIELD CONDITIONS AS DETERMINED BY THE NORFOLK SOUTHERN REPRESENTATIVE.

PROJECT REFERENCE NO.	SHEET NO.
P-5208G	DET-02
R/W SHEET NO.	
RAIL DESIGN ENGINEER	HYDRAULICS ENGINEER

Prepared in the Office of: AECOM

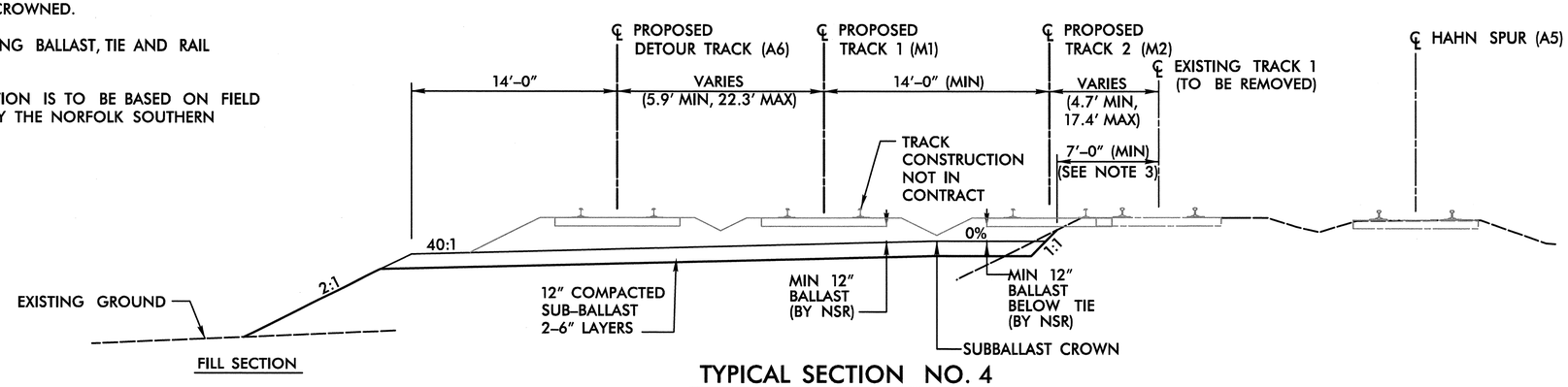

TYPICAL SECTION NO. 4

-M1- STA. STA. 10645+50 TO STA. 10649+00

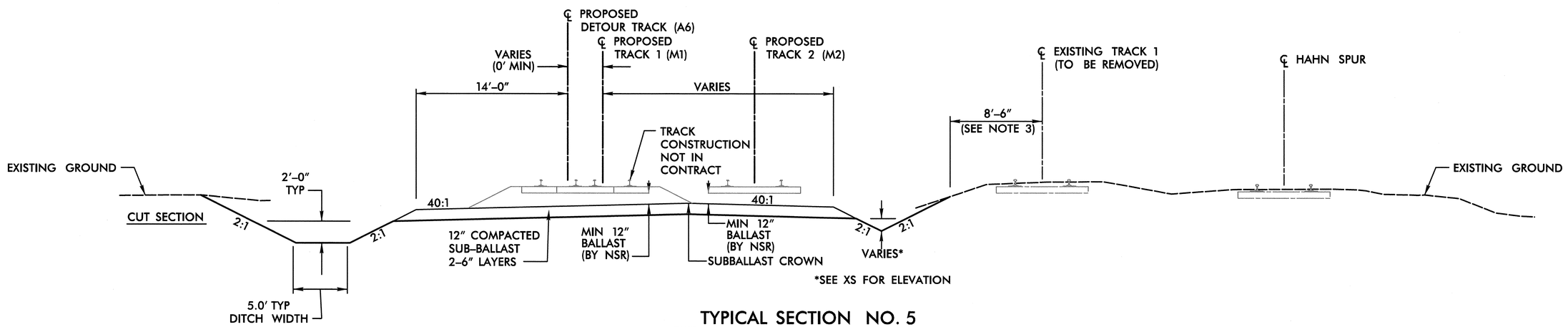

TYPICAL SECTION NO. 5

-M1- STA. STA. 10649+00 TO STA. 10660+00

USER: westtd
DATE: 4/17/2013
TIME: 8:49 PM
DGN: R:\Rail\Sheets\Maitland Creek Detour\P-5208G_RR-DET02.dgn

0041DEL_P10a1

DGN

PROJECT REFERENCE NO.	SHEET NO.
P-5208G	DET-03
R/W SHEET NO.	

RAIL DESIGN ENGINEER — NORTH CAROLINA PROFESSIONAL SEAL 036222 ENGINEER — 4/17/13

HYDRAULICS ENGINEER — NORTH CAROLINA PROFESSIONAL SEAL 14101 ENGINEER — 4/18/13

Prepared in the Office of: AECOM — NC FIRM LICENSE No: F-0342 701 Corporate Center Drive, Suite 475 Raleigh, NC 27607 (919) 854-6200 / FAX (919) 854-6259

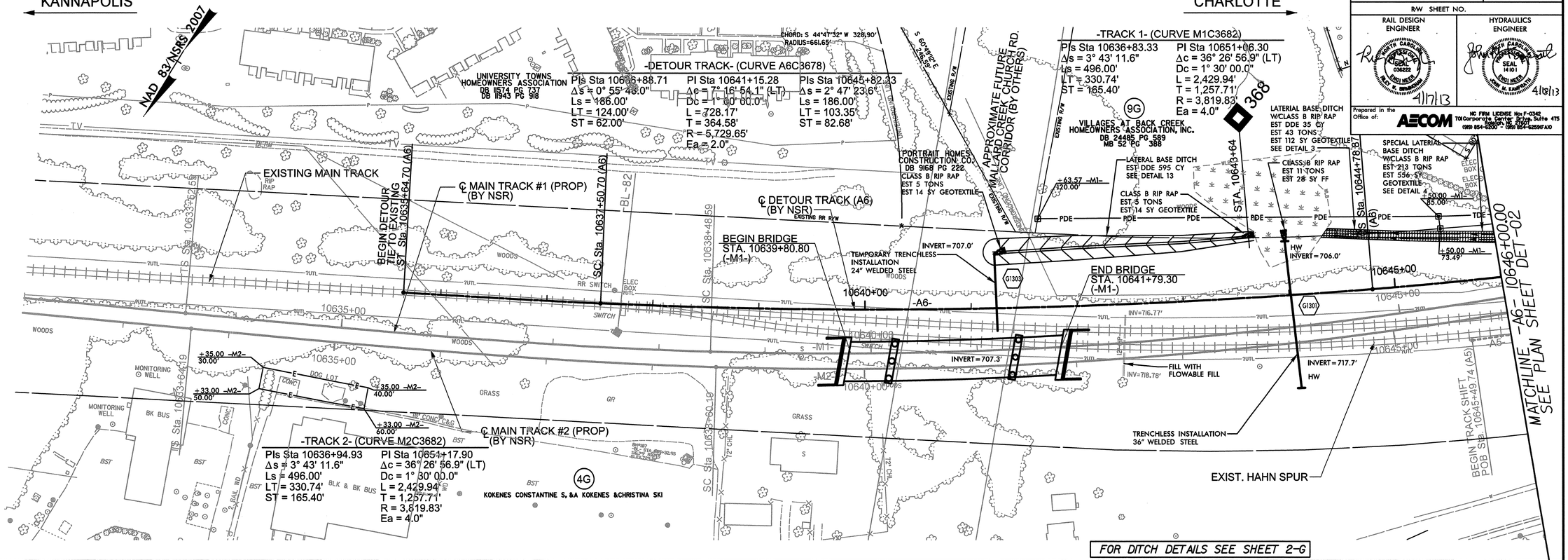

-A6- MALLARD CREEK CHURCH ROAD DETOUR

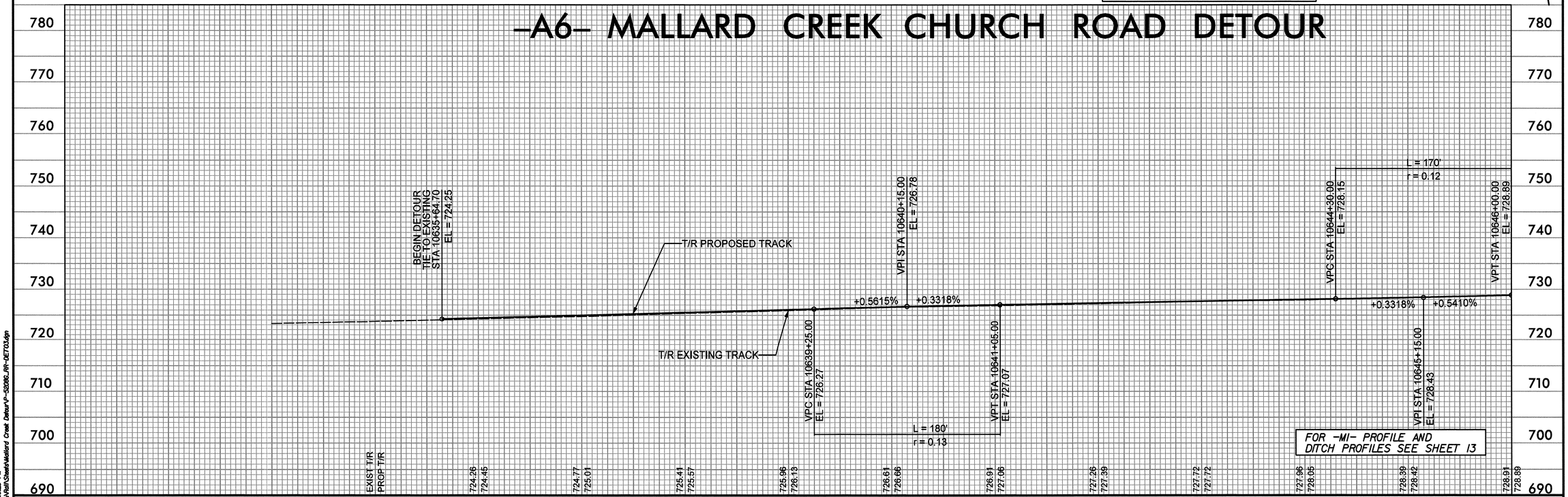

USER: weatmi
DATE: 4/17/2013
TIME: 8:40:53 PM
DGN: R:\Hydr\Sheets\Mallard Creek Detour\P-5208G_RR-DET03.dgn

0041DEL_P10a1

PROJECT REFERENCE NO.	SHEET NO.
P-5208G	DET-05
R/W SHEET NO.	
RAIL DESIGN ENGINEER	HYDRAULICS ENGINEER
NORTH CAROLINA PROFESSIONAL ENGINEER SEAL 036222 RILEY W. BRIMBRAUM 4/17/13	NORTH CAROLINA PROFESSIONAL ENGINEER SEAL 14101 JOHN M. KAMPRATH 4/18/13

Prepared in the Office of: AECOM NC FIRM LICENSE No: F-0342 701 Corporate Center Drive, Suite 475 Raleigh, NC 27607 (919) 854-6200 - (919) 854-6259(FAX)

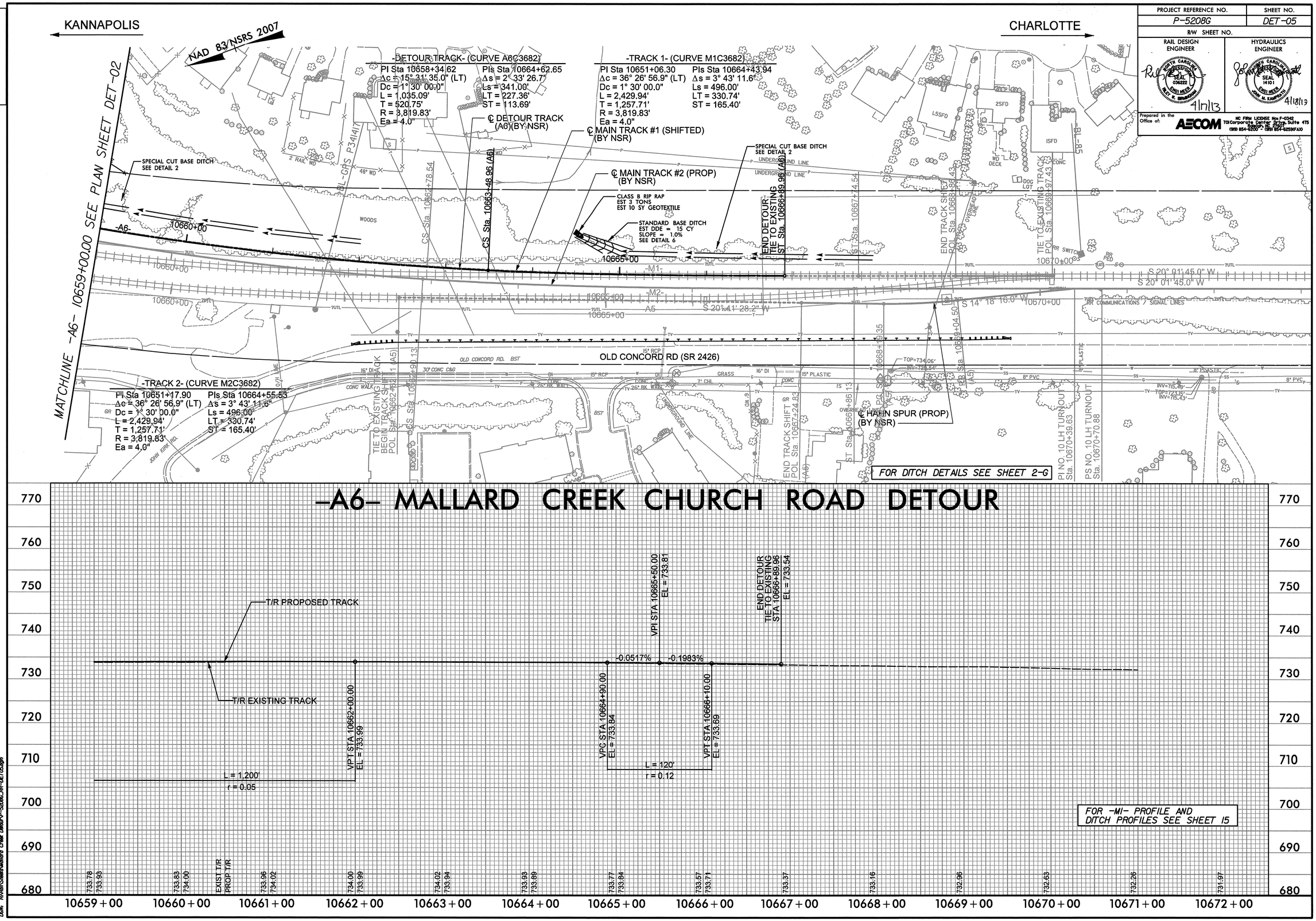

USER: westml
DATE: 4/17/2013
TIME: 8:40:27 PM
DGN: R:\Rail\Sheets\Mallard Creek Detour\P-5208G_RR-DET05.dgn

0041DEL_P10a1

PROJECT REFERENCE NO.	SHEET NO.
P-5208G	DET-04
R/W SHEET NO.	
RAIL DESIGN ENGINEER	HYDRAULICS ENGINEER
4/17/13	4/18/13

Prepared in the Office of: AECOM

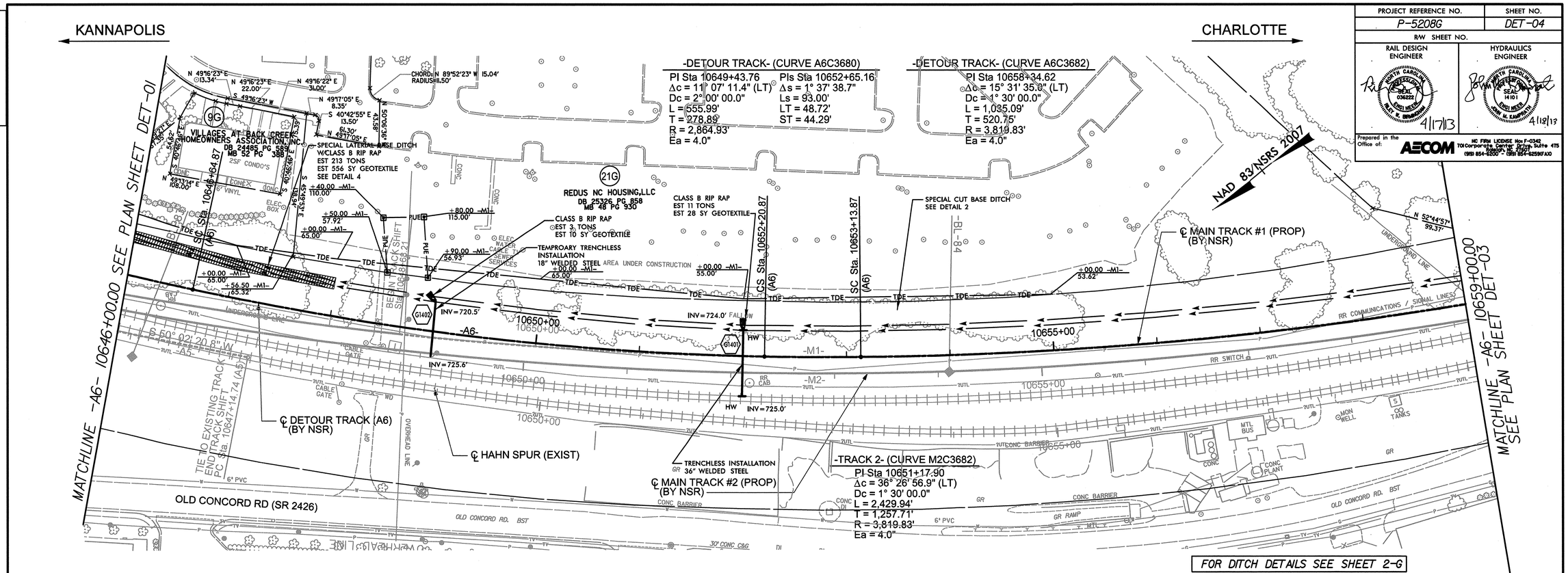

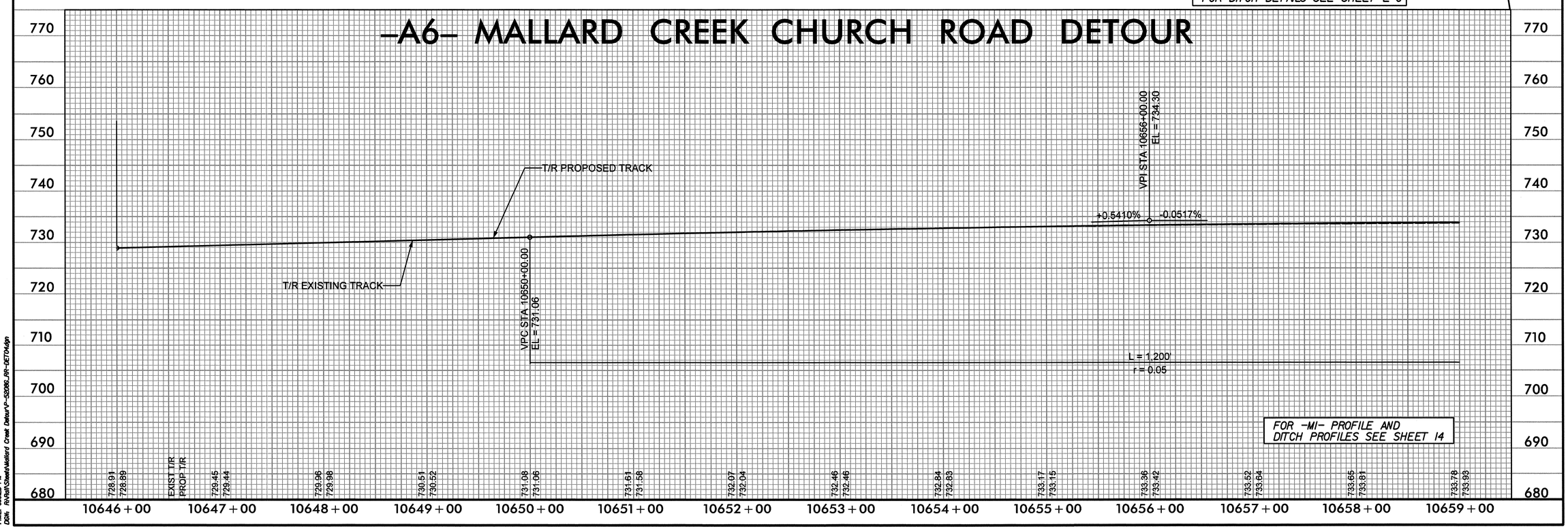

USER: westml
DATE: 4/17/2013
TIME: 8:40:25 PM
DGN: R:\Rail\Sheets\Mallard Creek Detour\P-5208G_RR-DET04.dgn

0041DEL_P10a1

DGN

0 5 10	PROJ. REFERENCE NO.	SHEET NO.
	P-5208G	DET-10

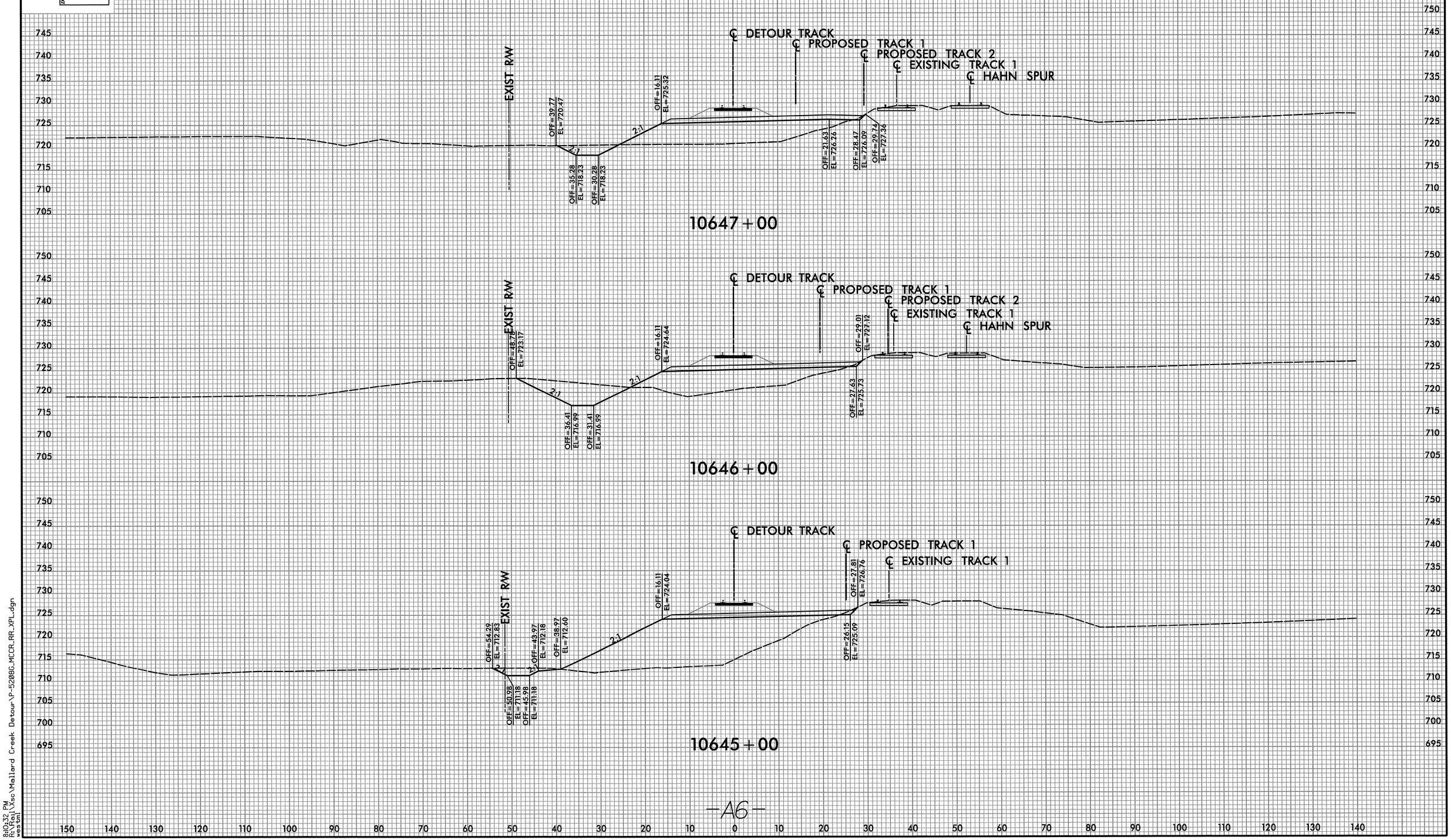

-A6-

8:10:32 PM
R:\Rail\Xsc\Mallard Creek Detour\P-5208G_MCCR_RR_XPL.dgn
westm

0041DEL_P10a1

0 5 10	PROJ. REFERENCE NO.	SHEET NO.
	P-5208G	DET-07

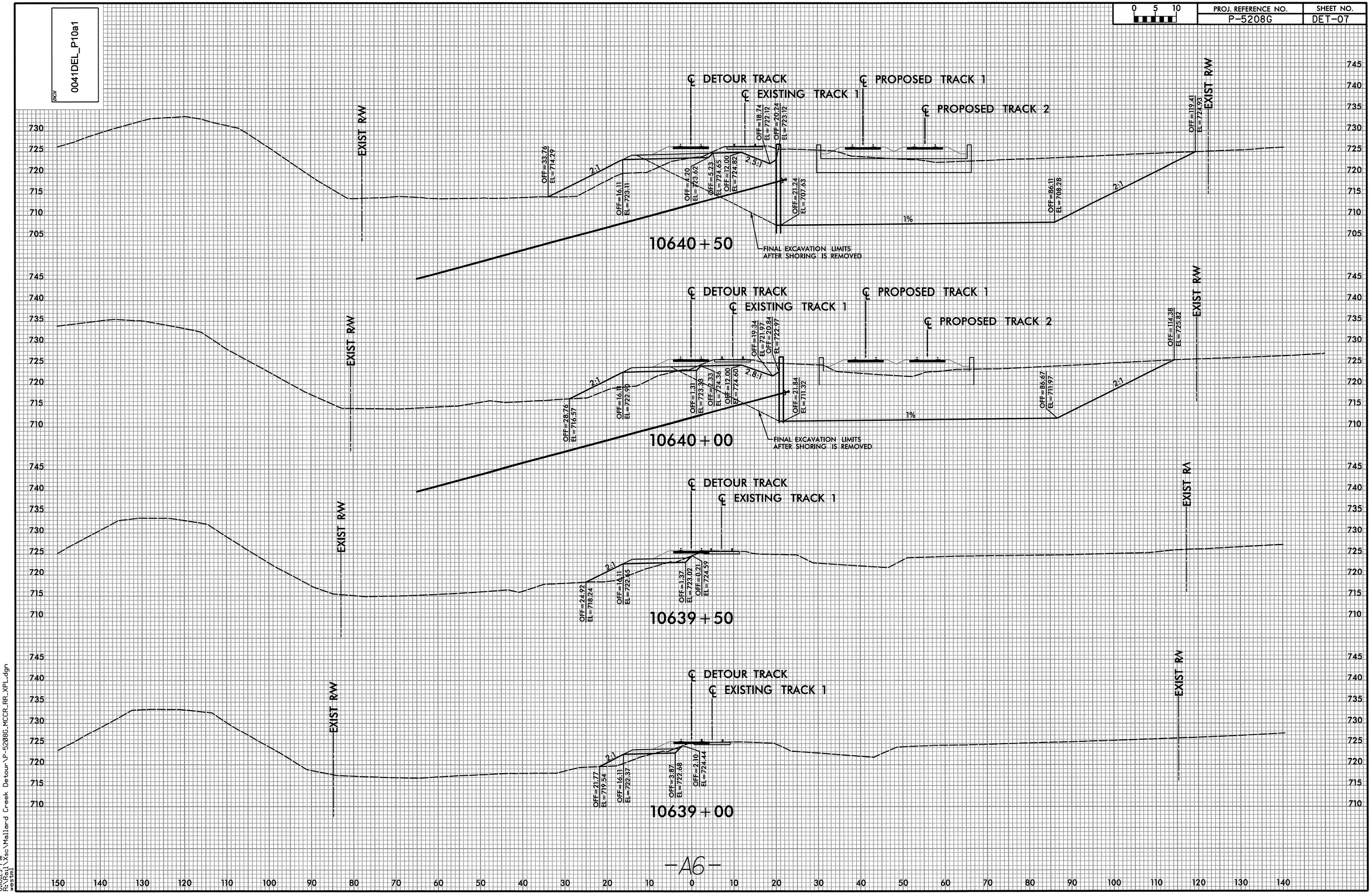

-A6-

8/10/23 PM
R:\Rail\Xsc\Mallard Creek Detour\P-5208G_MCCR_RR_XPL.dgn
westml

0041DEL_P10a1

DGN

0 5 10	PROJ. REFERENCE NO.	SHEET NO.
	P-5208G	DET-06

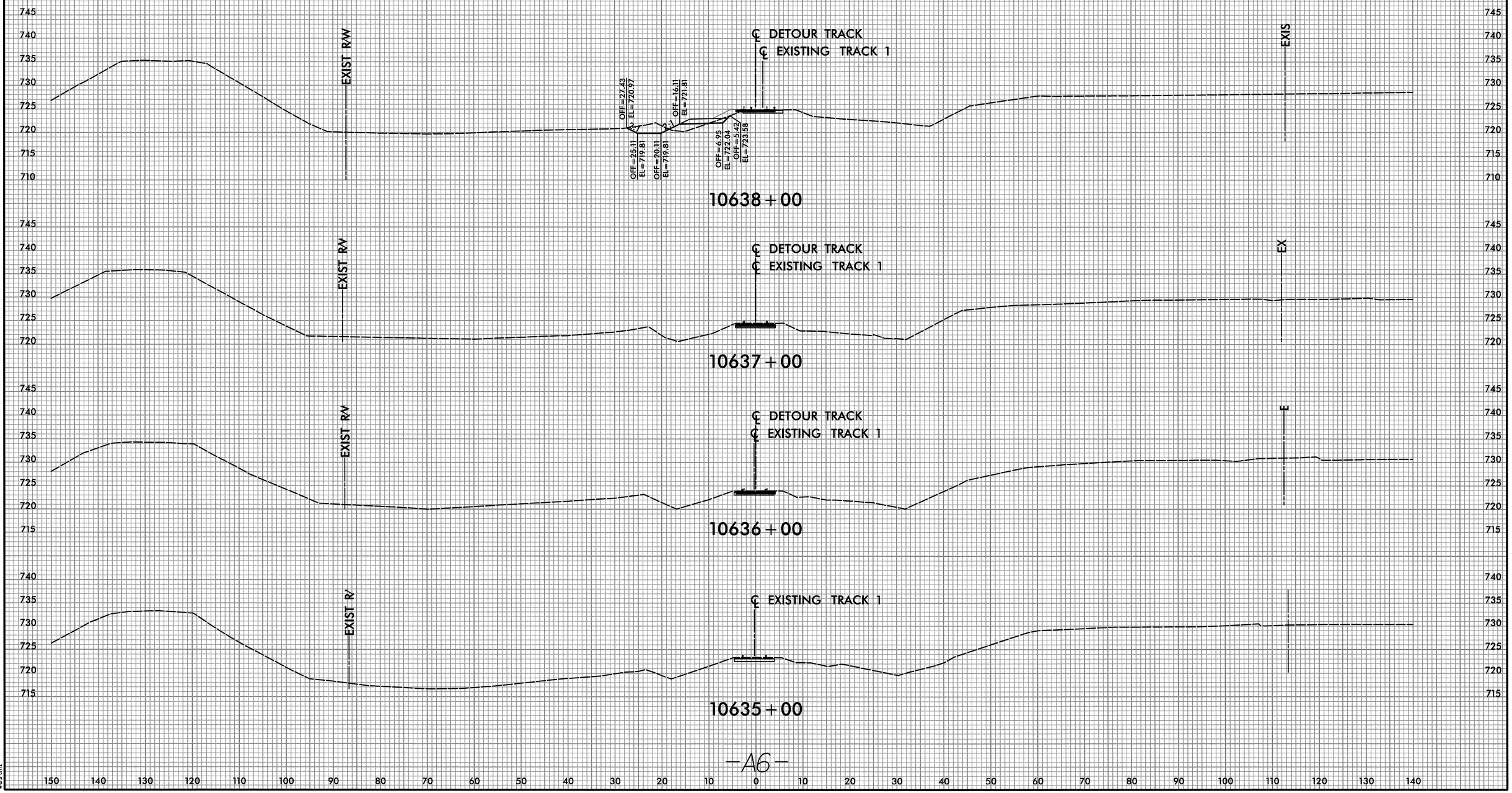

—A6—

8:10:29 PM
R:\Rail\Xsc\Mallard Creek Detour\P-5208G_MCCR_RR_XPL.dgn
westmi

PROJ. REFERENCE NO.	SHEET NO.
P-5208G	DET-08

0 5 10

0041DEL_P10a1

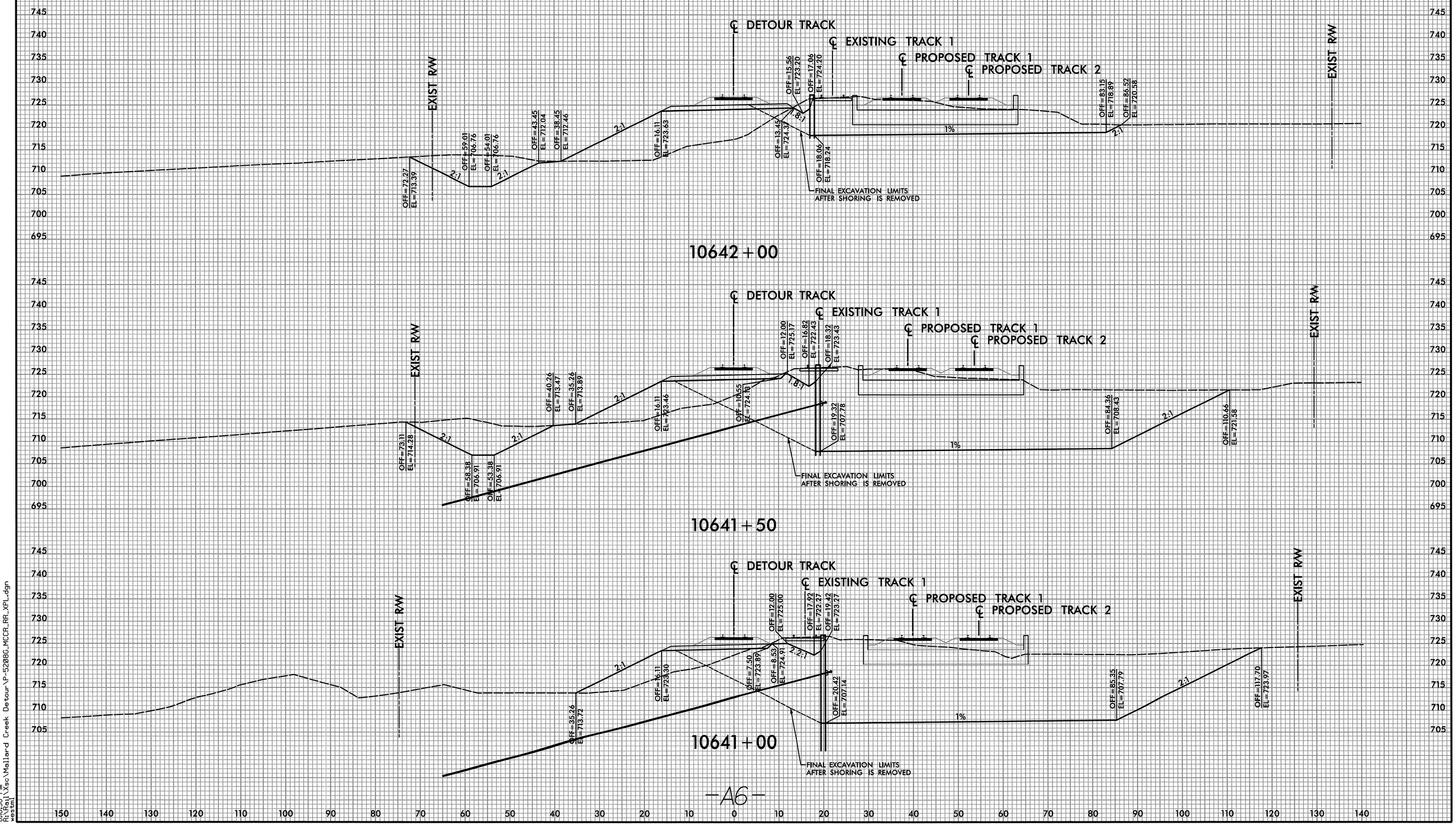

-A6-

8:10:30 PM
R:\Raj\Xsc\Mallard Creek Detour\P-5208G_MCCR_RR_XPL.dgn
westm1

0041DEL_P10a1

DGN

0 5 10	PROJ. REFERENCE NO.	SHEET NO.
	P-5208G	DET-09

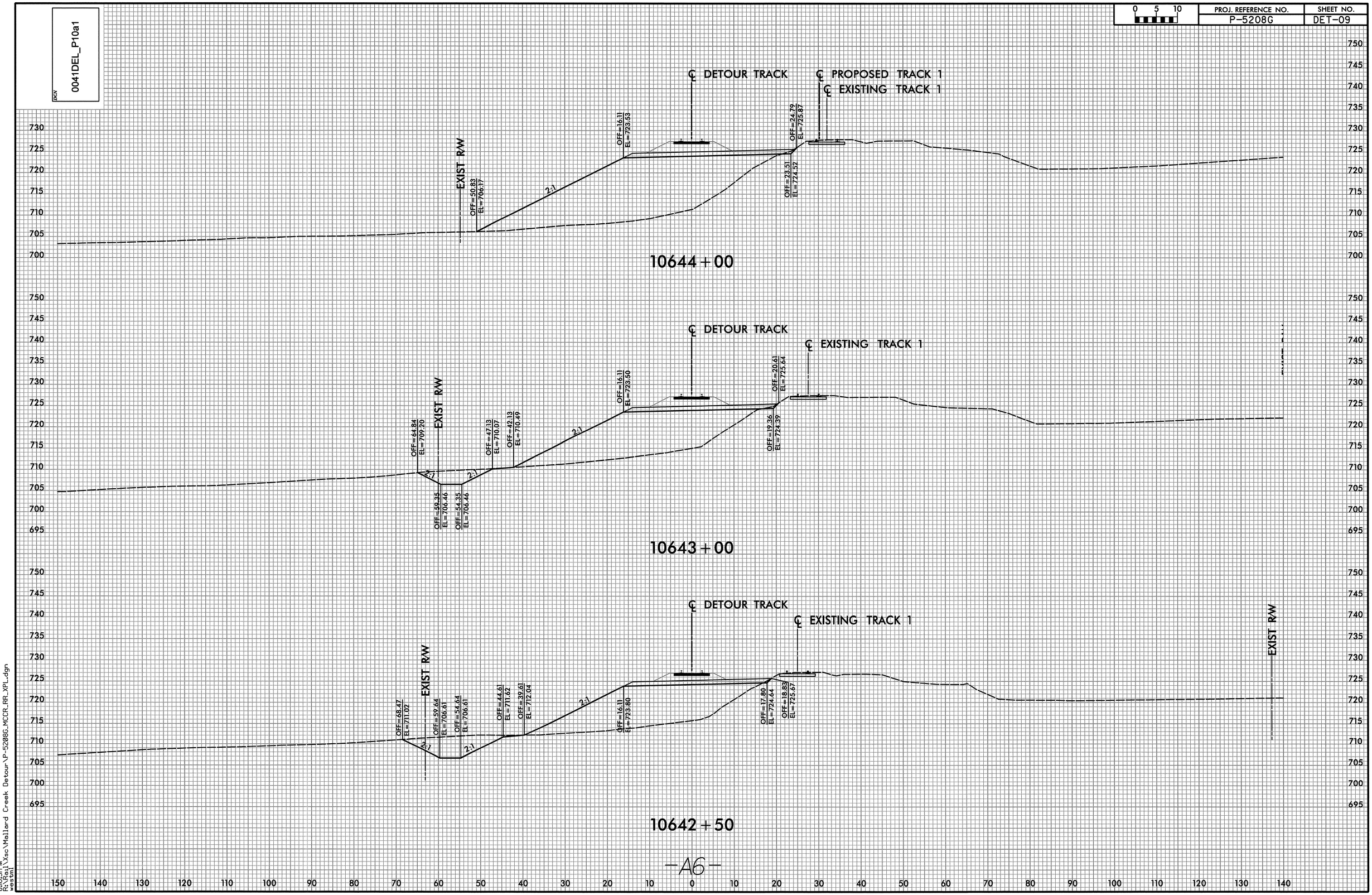

—A6—

8:10:31 PM
R:\Rail\Xsc\Mallard Creek Detour\P-5208G_MCCR_RR_XPL.dgn
westm1

0041DEL_P10a1

DGN

0 5 10	PROJ. REFERENCE NO.	SHEET NO.
	P-5208G	DET-11

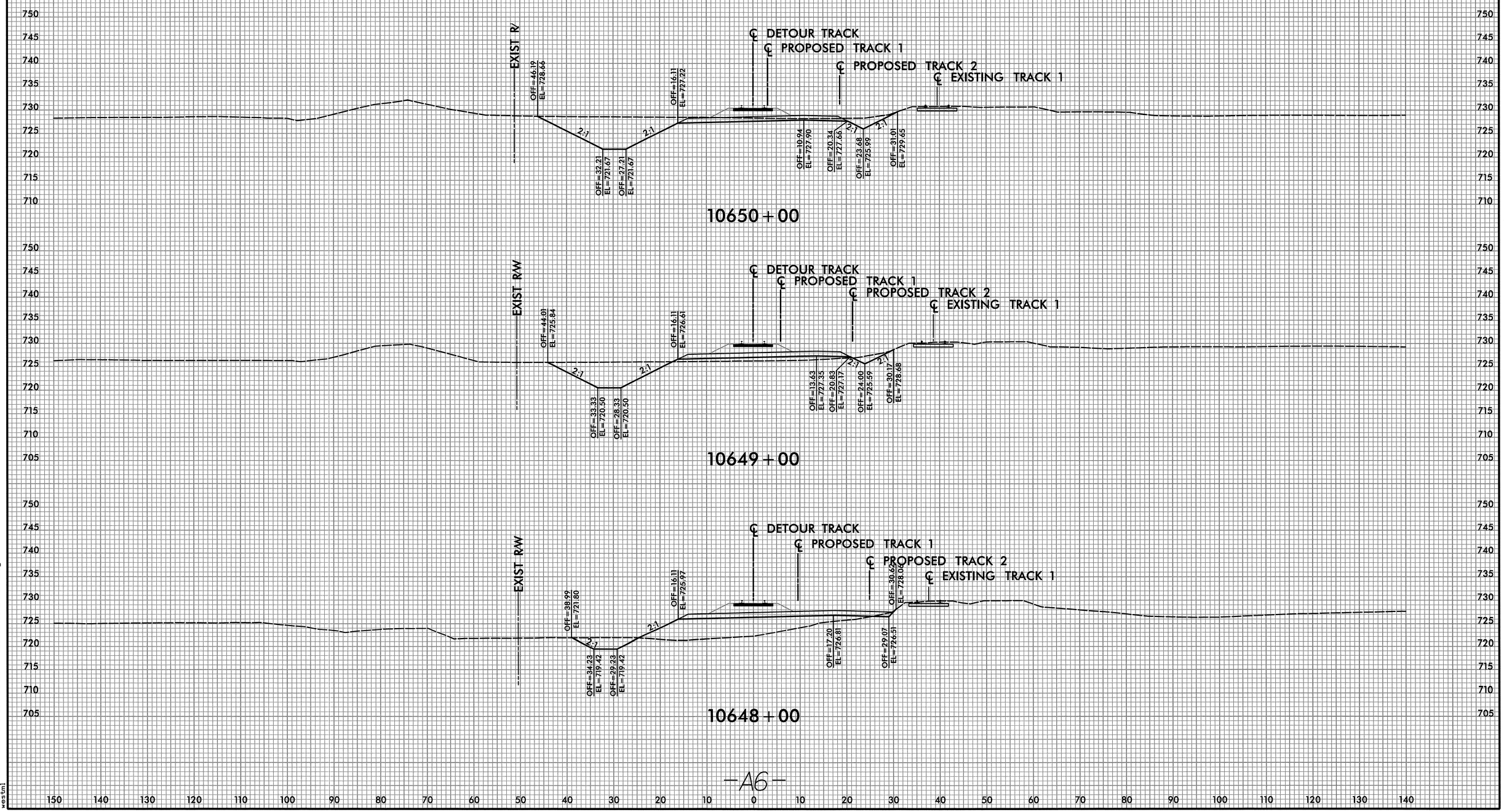

-A6-

8:10:33 PM
R:\Rail\Xsc\Mallard Creek Detour\P-5208G_MCCR_RR_XPL.dgn
westml

0041DEL_P10a1

DGN

0 5 10	PROJ. REFERENCE NO.	SHEET NO.
	P-5208G	DET-12

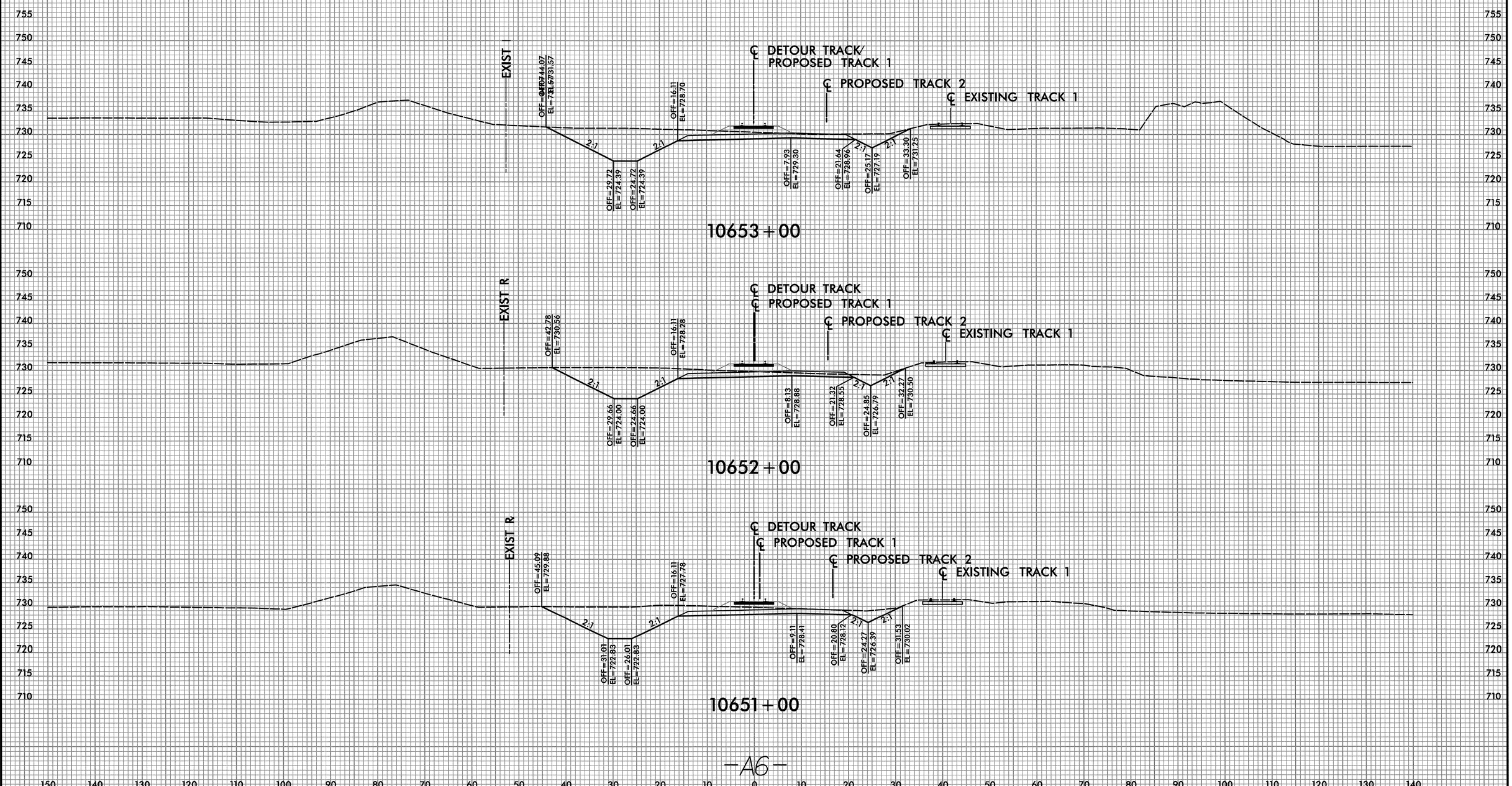

-A6-

8:10:34 PM
R:\Rail\Xsc\Mallard Creek Detour\P-5208G_MCCR_RR_XPL.dgn
westml

0041DEL_P10a1

DGN

0 5 10	PROJ. REFERENCE NO.	SHEET NO.
	P-5208G	DET-13

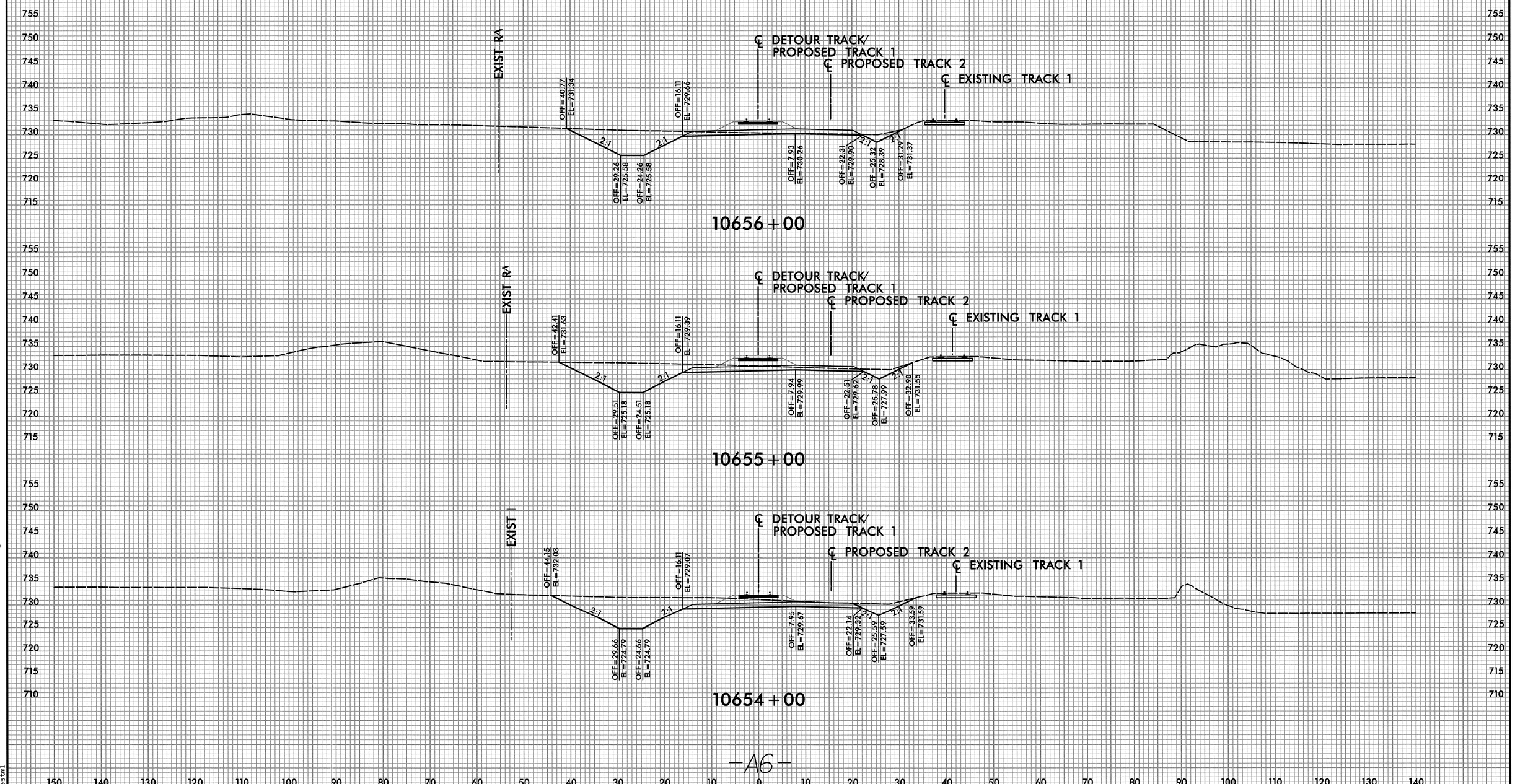

—A6—

8:10:35 PM
R:\Rail\Xsc\Mallard Creek Detour\P-5208G_MCCR_RR_XPL.dgn
westml

0041DEL_P10a1

0 5 10	PROJ. REFERENCE NO.	SHEET NO.
	P-5208G	DET-14

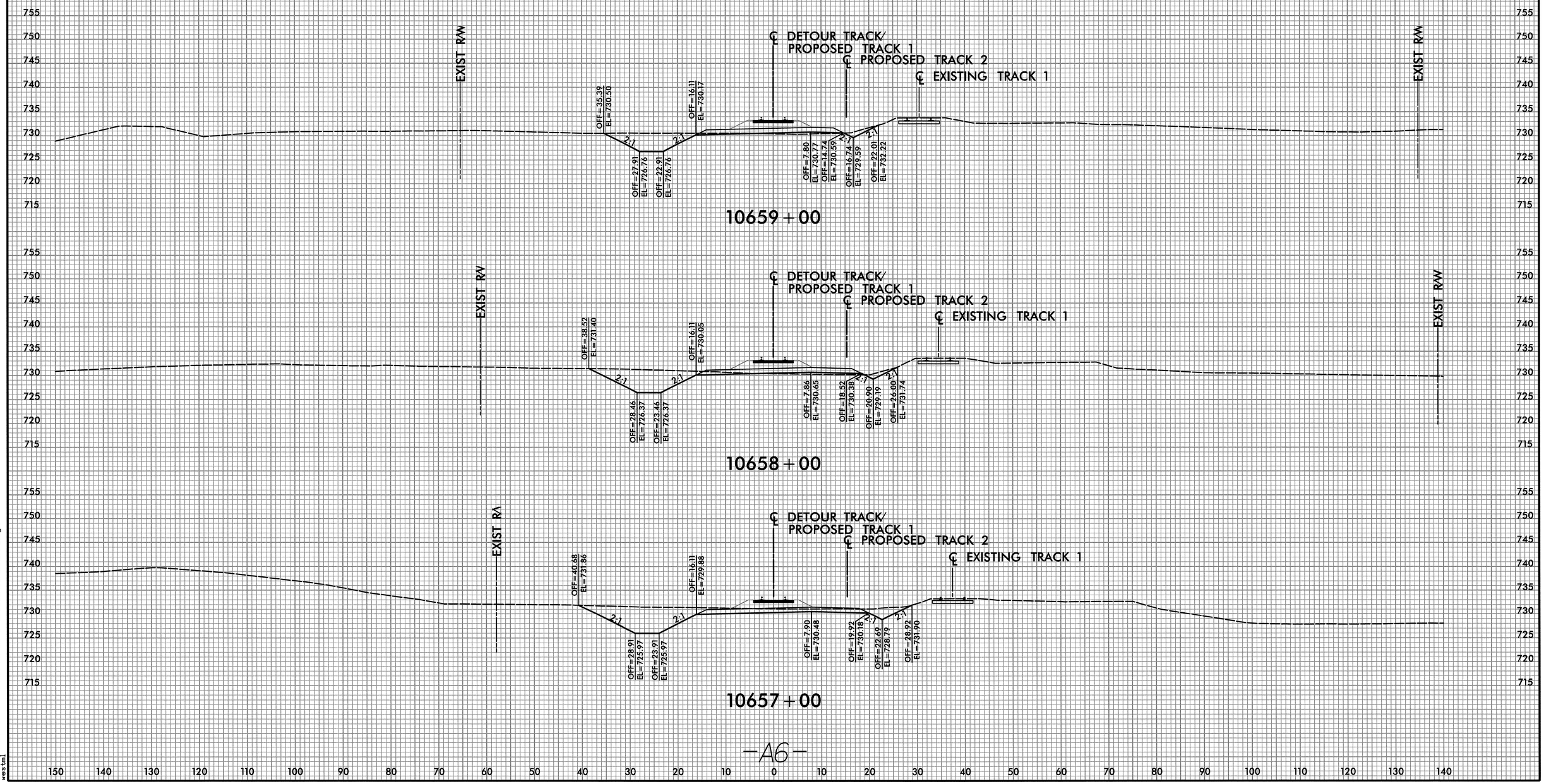

-A6-

8:10:35 PM
R:\Rail\Xsc\Mallard Creek Detour\P-5208G_MCCR_RR_XPL.dgn
westml

0041DEL_P10a1

DGN

0 5 10	PROJ. REFERENCE NO.	SHEET NO.
	P-5208G	DET-15

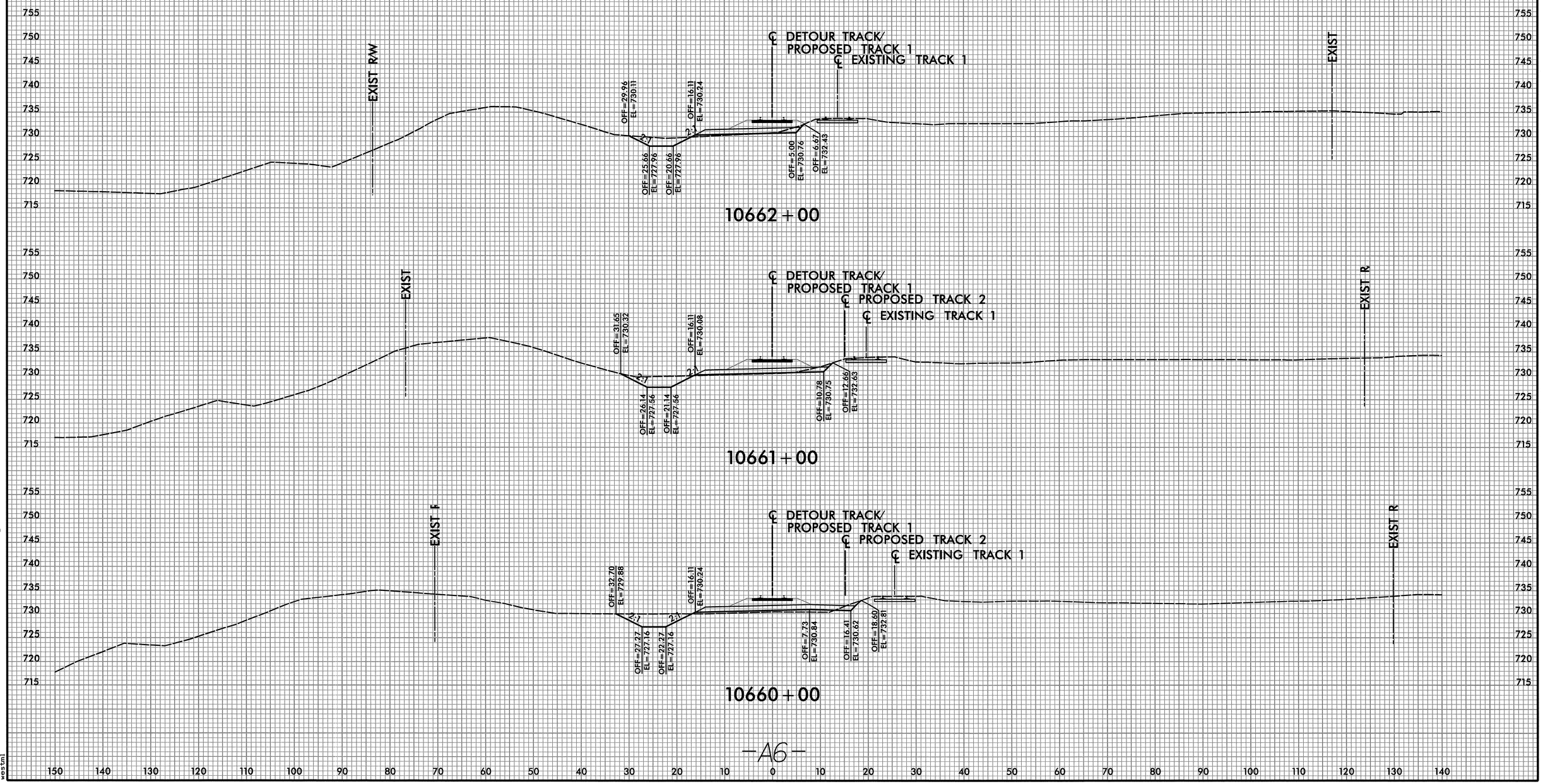

—A6—

8/10/36 PM
R:\Rail\Xsc\Mallard Creek Detour\P-5208G_MCCR_RR_XPL.dgn
westm1

0041DEL_P10a1

DGN

0 5 10	PROJ. REFERENCE NO.	SHEET NO.
	P-5208G	DET-16

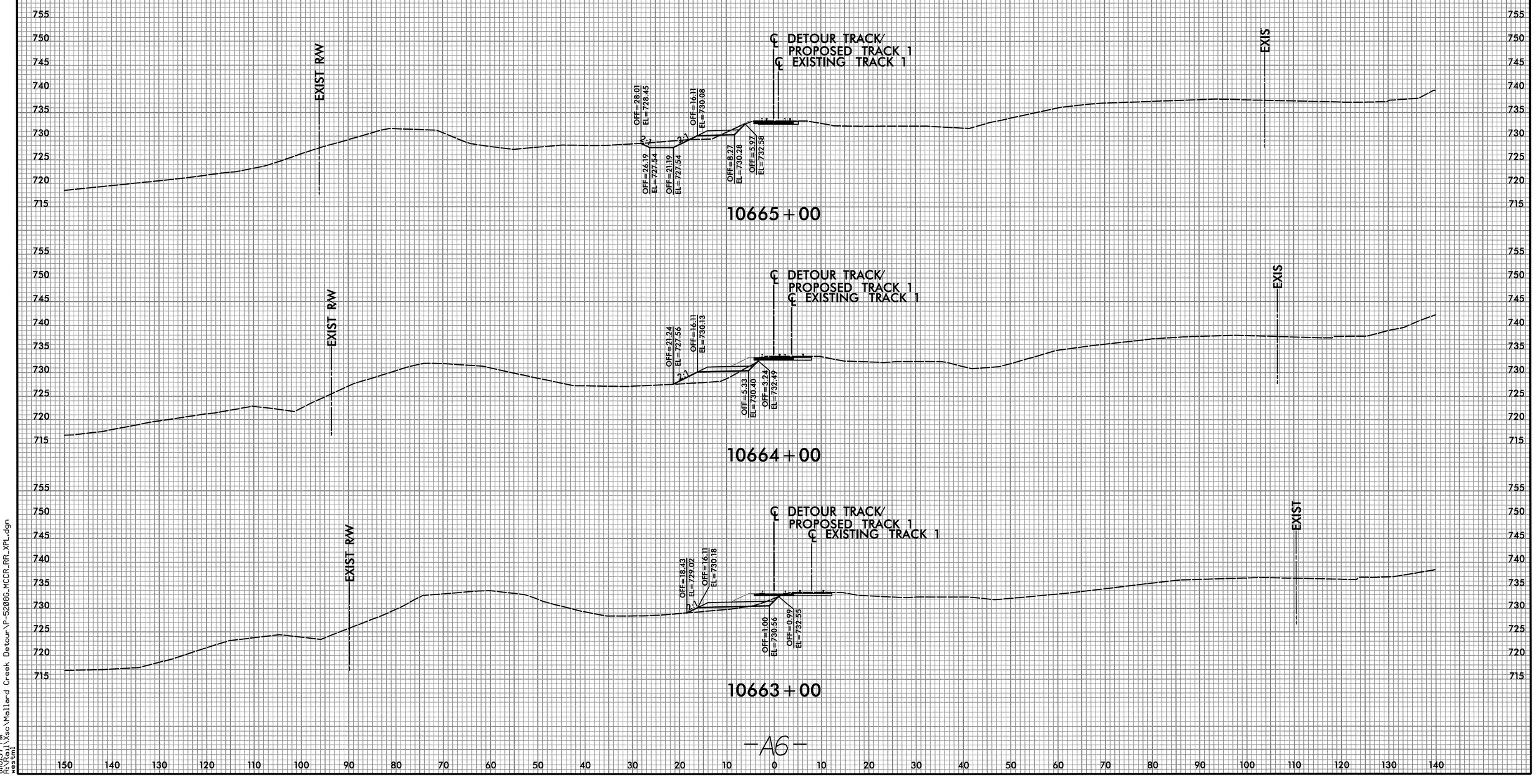

—A6—

8:10:37 PM
R:\Rail\Xsc\Mallard Creek Detour\P-5208G_MCCR_RR_XPL.dgn
westm1

0041DEL_P10a1

0 5 10	PROJ. REFERENCE NO.	SHEET NO.
	P-5208G	DET-17

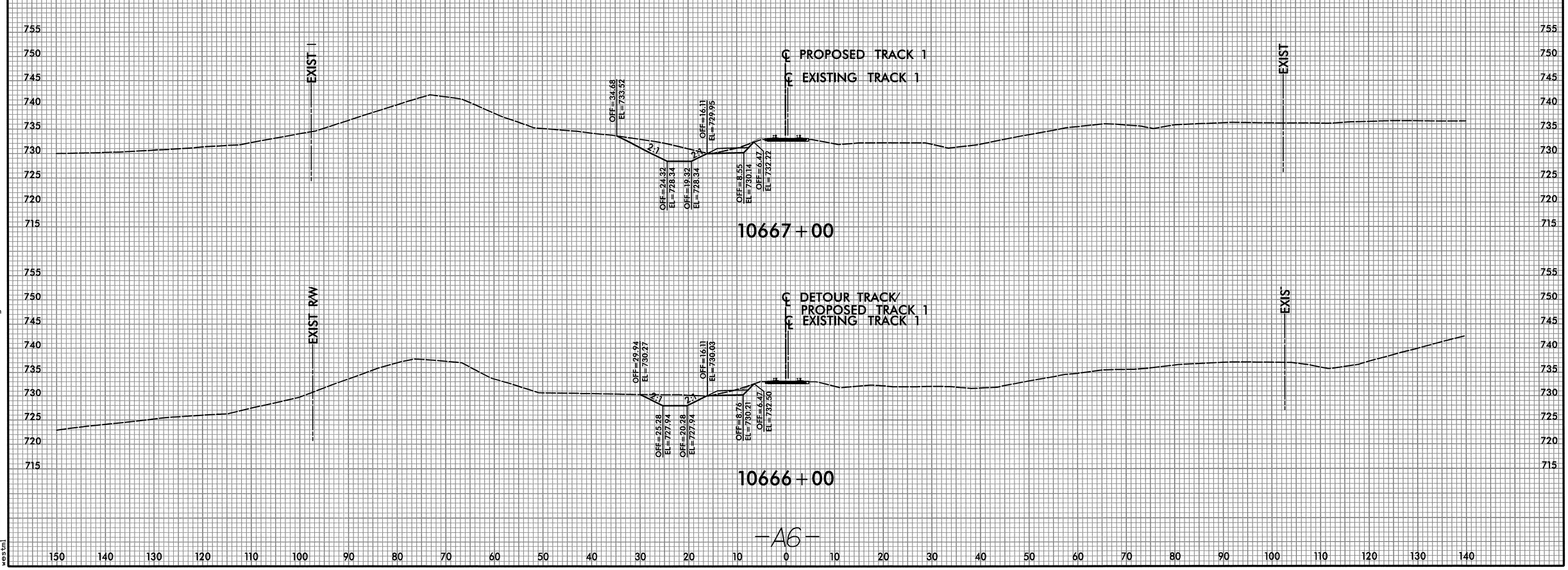

-A6-

8:10:38 PM
R:\Rail\Xsc\Mallard Creek Detour\P-5208G_MCCR_RR_XPL.dgn
westml

DGN 0041DEL_P10a1

STANDARD NOTES

DESIGN DATA:

SPECIFICATIONS	A.A.S.H.T.O. (CURRENT)
LIVE LOAD	SEE PLANS
IMPACT ALLOWANCE	SEE A.A.S.H.T.O.
STRESS IN EXTREME FIBER OF	
STRUCTURAL STEEL - AASHTO M270 GRADE 36	20,000 LBS. PER SQ. IN.
- AASHTO M270 GRADE 50W	27,000 LBS. PER SQ. IN.
- AASHTO M270 GRADE 50	27,000 LBS. PER SQ. IN.
REINFORCING STEEL IN TENSION	
GRADE 60	24,000 LBS. PER SQ. IN.
CONCRETE IN COMPRESSION	1,200 LBS. PER SQ. IN.
CONCRETE IN SHEAR	SEE A.A.S.H.T.O.
STRUCTURAL TIMBER - TREATED OR	
UNTREATED - EXTREME FIBER STRESS	1,800 LBS. PER SQ. IN.
COMPRESSION PERPENDICULAR TO GRAIN OF TIMBER	375 LBS. PER SQ. IN.
EQUIVALENT FLUID PRESSURE OF EARTH	30 LBS. PER CU. FT. (MINIMUM)

MATERIAL AND WORKMANSHIP:

EXCEPT AS MAY OTHERWISE BE SPECIFIED ON PLANS OR IN THE SPECIAL PROVISIONS, ALL MATERIAL AND WORKMANSHIP SHALL BE IN ACCORDANCE WITH THE 2012 "STANDARD SPECIFICATIONS FOR ROADS AND STRUCTURES" OF THE N. C. DEPARTMENT OF TRANSPORTATION.

STEEL SHEET PILING FOR PERMANENT OR TEMPORARY APPLICATIONS SHALL BE HOT ROLLED.

CONCRETE:

UNLESS OTHERWISE REQUIRED ON PLANS, CLASS A CONCRETE SHALL BE USED FOR ALL PORTIONS OF ALL STRUCTURES WITH THE EXCEPTION THAT: CLASS AA CONCRETE SHALL BE USED IN BRIDGE SUPERSTRUCTURES, ABUTMENT BACKWALLS, AND APPROACH SLABS; AND CLASS B CONCRETE SHALL BE USED FOR SLOPE PROTECTION AND RIP RAP.

CONCRETE CHAMFERS:

UNLESS OTHERWISE NOTED ON THE PLANS, ALL EXPOSED CORNERS ON STRUCTURES SHALL BE CHAMFERED 3/4" WITH THE FOLLOWING EXCEPTIONS: TOP CORNERS OF CURBS MAY BE ROUNDED TO 1-1/2" RADIUS WHICH IS BUILT INTO CURB FORMS; CORNERS OF TRANSVERSE FLOOR EXPANSION JOINTS SHALL BE ROUNDED WITH A 1/4" FINISHING TOOL UNLESS OTHERWISE REQUIRED ON PLANS; AND CORNERS OF EXPANSION JOINTS IN THE ROADWAY FACES AND TOPS OF CURBS AND SIDEWALKS SHALL BE ROUNDED TO A 1/4" RADIUS WITH A FINISHING STONE OR TOOL UNLESS OTHERWISE REQUIRED ON PLANS.

DOWELS:

DOWELS WHEN INDICATED ON PLANS AS FOR CULVERT EXTENSIONS, SHALL BE EMBEDDED AT LEAST 12" INTO THE OLD CONCRETE AND GROUTED INTO PLACE WITH 1:2 CEMENT MORTAR.

ALLOWANCE FOR DEAD LOAD DEFLECTION, SETTLEMENT, ETC. IN CASTING SUPERSTRUCTURES:

BRIDGES SHALL BE BUILT ON THE GRADE OR VERTICAL CURVE SHOWN ON PLANS. SLABS, CURBS AND PARAPETS SHALL CONFORM TO THE GRADE OR CURVE.

ALL DIMENSIONS WHICH ARE GIVEN IN SECTION AND ARE AFFECTED BY DEAD LOAD DEFLECTIONS ARE DIMENSIONS AT CENTER LINE OF BEARING UNLESS OTHERWISE NOTED ON PLANS. IN SETTING FORMS FOR STEEL BEAM BRIDGES AND PRESTRESSED CONCRETE GIRDER BRIDGES, ADJUSTMENTS SHALL BE MADE DUE TO THE DEAD LOAD DEFLECTIONS FOR THE ELEVATIONS SHOWN. WHERE BLOCKS ARE SHOWN OVER BEAMS FOR BUILDING UP TO THE SLAB, THE VERTICAL DIMENSIONS OF THE BLOCKS SHALL BE ADJUSTED BETWEEN BEARINGS TO COMPENSATE FOR DEAD LOAD DEFLECTIONS, VERTICAL CURVE ORDINATE, AND ACTUAL BEAM CAMBER. WHERE BOTTOM OF SLAB IS IN LINE WITH BOTTOM OF TOP FLANGES, DEPTH OF SLAB BETWEEN BEARINGS SHALL BE ADJUSTED TO COMPENSATE FOR DEAD LOAD DEFLECTION, VERTICAL CURVE ORDINATE, AND ACTUAL BEAM CAMBER.

IN SETTING FALSEWORK AND FORMS FOR REINFORCED CONCRETE SPANS, AN ALLOWANCE SHALL BE MADE FOR DEAD LOAD DEFLECTIONS, SETTLEMENT OF FALSEWORK, AND PERMANENT CAMBER WHICH SHALL BE PROVIDED FOR IN ADDITION TO THE ELEVATIONS SHOWN. AFTER REMOVAL OF THE FALSEWORK, THE FINISHED STRUCTURES SHALL CONFORM TO THE PROFILE AND ELEVATIONS SHOWN ON THE PLANS AND CONSTRUCTION ELEVATIONS FURNISHED BY THE ENGINEER.

DETAILED DRAWINGS FOR FALSEWORK OR FORMS FOR BRIDGE SUPERSTRUCTURE AND ANY STRUCTURE OR PARTS OF A STRUCTURE AS NOTED ON THE PLANS SHALL BE SUBMITTED TO THE ENGINEER FOR APPROVAL BEFORE CONSTRUCTION OF THE FALSEWORK OR FORMS IS STARTED.

REINFORCING STEEL:

ALL REINFORCING STEEL SHALL BE DEFORMED. DIMENSIONS RELATIVE TO PLACEMENT OF REINFORCING ARE TO CENTERS OF BARS UNLESS OTHERWISE INDICATED IN THE PLANS. DIMENSIONS ON BAR DETAILS ARE TO CENTERS OF BARS OR ARE OUT TO OUT AS INDICATED ON PLANS.

WIRE BAR SUPPORTS SHALL BE PROVIDED FOR REINFORCING STEEL WHERE INDICATED ON THE PLANS. WHEN BAR SUPPORT PIECES ARE PLACED IN CONTINUOUS LINES, THEY SHALL BE SO PLACED THAT THE ENDS OF THE SUPPORTING WIRES SHALL BE LAPPED TO LOCK LEGS ON ADJOINING PIECES.

STRUCTURAL STEEL:

AT THE CONTRACTOR'S OPTION, HE MAY SUBSTITUTE 7/8" Ø SHEAR STUDS FOR THE ¾" Ø STUDS SPECIFIED ON THE PLANS. THIS SUBSTITUTION SHALL BE MADE AT THE RATE OF 3 - 7/8" Ø STUDS FOR 4 - 3/4" Ø STUDS, AND STUD SPACING CHANGES SHALL BE MADE AS NECESSARY TO PROVIDE THE SAME EQUIVALENT NUMBER OF 7/8" Ø STUDS ALONG THE BEAM AS SHOWN FOR 3/4" Ø STUDS BASED ON THE RATIO OF 3 - 7/8" Ø STUDS FOR 4 - 3/4" Ø STUDS. STUDS OF THE LENGTH SPECIFIED ON THE PLANS MUST BE PROVIDED. THE MAXIMUM SPACING SHALL BE 2'-0".

EXCEPT AT THE INTERIOR SUPPORTS OF CONTINUOUS BEAMS WHERE THE COVER PLATE IS IN CONTACT WITH BEARING PLATE, THE CONTRACTOR MAY, AT HIS OPTION, SUBSTITUTE FOR THE COVER PLATES DESIGNATED ON THE PLANS COVER PLATES OF THE EQUIVALENT AREA PROVIDED THESE PLATES ARE AT LEAST 5/16" IN THICKNESS AND DO NOT EXCEED A WIDTH EQUAL TO THE FLANGE WIDTH LESS 2" OR A THICKNESS EQUAL TO 2 TIMES THE FLANGE THICKNESS. THE SIZE OF FILLET WELDS SHALL CONFORM TO THE REQUIREMENTS OF THE CURRENT ANSI/AASHTO/AWS "BRIDGE WELDING CODE". ELECTROSLAG WELDING WILL NOT BE PERMITTED.

WITH THE SOLE EXCEPTION OF EDGES AT SURFACES WHICH BEAR ON OTHER SURFACES, ALL SHARP EDGES AND ENDS OF SHAPES AND PLATES SHALL BE SLIGHTLY ROUNDED BY SUITABLE MEANS TO A RADIUS OF APPROXIMATELY 1/16 INCH OR EQUIVALENT FLAT SURFACE AT A SUITABLE ANGLE PRIOR TO PAINTING, GALVANIZING, OR METALLIZING.

HANDRAILS AND POSTS:

METAL STANDARDS AND FACES OF THE CONCRETE END POSTS FOR THE METAL RAIL SHALL BE SET NORMAL TO THE GRADE OF THE CURB, UNLESS OTHERWISE SHOWN ON PLANS. THE METAL RAIL AND TOPS OF CONCRETE POSTS USED WITH THE ALUMINUM RAIL SHALL BE BUILT PARALLEL TO THE GRADE OF THE CURB.

METAL HANDRAILS SHALL BE IN ACCORDANCE WITH THE PLANS. RAILS SHALL BE AS MANUFACTURED FOR BRIDGE RAILING. CASTINGS SHALL BE OF A UNIFORM APPEARANCE. FINS AND OTHER DEFORMATIONS RESULTING FROM CASTING OR OTHERWISE SHALL BE REMOVED IN A MANNER SO THAT A UNIFORM COLORING OF THE COMPLETED CASTING SHALL BE OBTAINED. CASTINGS WITH DISCOLORATIONS OR OF NON-UNIFORM COLORING WILL NOT BE ACCEPTED. CERTIFIED MILL REPORTS ARE REQUIRED FOR METAL RAILS AND POSTS.

SPECIAL NOTES:

GENERALLY, IN CASE OF DISCREPANCY, THIS STANDARD SHEET OF NOTES SHALL GOVERN OVER THE SPECIFICATIONS, BUT THE REMAINDER OF THE PLANS SHALL GOVERN OVER NOTES HEREON, AND SPECIAL PROVISIONS SHALL GOVERN OVER ALL. SEE SPECIFICATIONS ARTICLE 105-4.

ENGLISH

JANUARY, 1990