I 28

PROJECT SPECIAL PROVISIONS

CITY OF WINSTON-SALEM TRAFFIC SIGNAL SYSTEM UPGRADE/EXPANSION PROJECT

PHASE A

Eastern Section & Downtown

N.C. Project No. C-5224A (WBS # 45437.3.1)
F.A. Project No. CMS-0918 (89)
Forsyth County

Prepared for:

North Carolina Department of Transportation
ITS and Signals Unit

NORTH CAROLINA PROFESSIONAL SEAL 17586 ENGINEER J. TODD BROOKS

2/7/13

Prepared by:

ATKINS

1616 East Millbrook Road, Suite 310
Raleigh, NC 27609
Phone: (919) 876-6888
NCBEES # F-0326

February 7, 2013

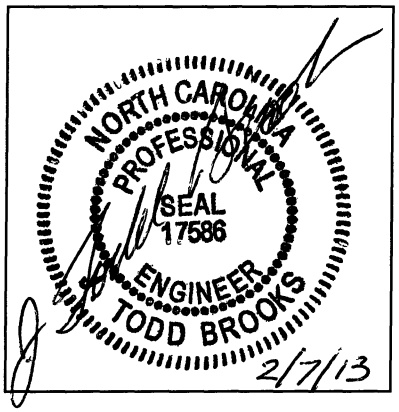

Project Special Provisions

Based On

NCDOT ITS and Signals Project Special Provisions

Version 12.1

Prepared by:

ATKINS 1616 East Millbrook Road, Suite 310
Raleigh, NC 27609 • NCBEES # F-0326

Contents

1. GENERAL REQUIREMENTS 17
1.1. DESCRIPTION 17
(A) Summary of Work 17
(B) Specifications and Special Provisions 20
(C) Coordination of Plans, Specifications, and Special Provisions 20
1.2. MATERIALS 21
(A) Qualified Products 21
(B) Submittal Requirements 21
(C) Observation Period 22
(D) Warranties 22
(E) Firmware Licensing and Upgrades 22
(F) Wire and Cable 23
(G) Painting 23
(H) Performance of Warranty Repair and Maintenance 23
1.3. CONSTRUCTION METHODS 24
(A) General 24
(B) Contractor's Office 25
(C) Work within Historic Districts 25
(D) Work within the Central Business District (CBD) 26
(E) Regulations and Codes 26
(F) Utility Services 27
(G) Maintenance and Repair of Material 27
(H) Inspections 29
(I) Removal of Existing Equipment and Material 29
(J) Railroad Preemption 29
(K) Timing of Signals 29
(L) Wire and Cable 30
(M) Electrical Services and Grounding 30
(N) Electrical Bonding 31
(O) Traffic Signal Activation 31
(P) Requirements for Cables Crossing Railroads 31
1.4. CONSTRUCTION STAGING/MIGRATION 35
(A) Introduction 35
(B) TMC Migration 36
(C) Red Ring Construction 36

(D) Field Infrastructure 37
(E) Field Migration 38
(F) Intersection Parameters and Database 42
(G) Time-Based Coordination (TBC) 42
1.5. MEASUREMENT AND PAYMENT 43

2. MOBILIZATION 44
2.1. DESCRIPTION 44
2.2. MEASUREMENT AND PAYMENT 44

3. TEMPORARY TRAFFIC CONTROL 45
3.1. DESCRIPTION 45
3.2. GENERAL REQUIREMENTS 45
(A) Maintenance of Traffic 45
(B) Temporary Lane Closures 45
(C) Traffic Stoppage 46
(D) Traffic Control Supervision 46
(E) Vehicular Access 46
(F) Pedestrian Access 46
(G) Greenways 47
(H) Alternate to Transportation Management Plan 47
(I) Temporary Traffic Control Plan Not fully Covered in the Contract 47
3.3. MATERIALS 47
(A) Work Zone Traffic Control Devices 47
(B) Work Zone Signs 48
(C) Flashing Arrow Boards 48
(D) Portable Changeable Message Signs 48
(E) Drums 48
(F) Cones 49
(G) Barricades 49
(H) Flaggers 49
(I) Truck Mounted Attenuators 49
(J) Skinny Drums 49
3.4. CONSTRUCTION METHODS 49
(A) Work Zone Traffic Control Devices 49
(B) Work Zone Signs 50
(C) Flashing Arrow Boards 50
(D) Portable Changeable Message Signs 50
(E) Drums 51
(F) Cones 51
(G) Barricades 51
(H) Flaggers 52
(I) Truck Mounted Attenuator 52
(J) Skinny Drums 52
(K) Law Enforcement 53
(L) Pedestrian Safety 53

3.5. MAINTENANCE AND INSPECTION 53
(A) Work Zone Traffic Control Devices 53
3.6. FAILURE TO MAINTAIN TRAFFIC CONTROL 54
3.7. MEASUREMENT AND PAYMENT 54

4. SIGNAL HEADS 57
4.1. DESCRIPTION 57
4.2. MATERIALS 57
(A) General 57
(B) Vehicle Signal Heads 59
(C) Pedestrian Signal Heads and Pushbuttons 61
(D) Signal Cable 63
4.3. CONSTRUCTION METHODS 63
(A) General 63
(B) Vehicle Signal Heads 63
(C) Pedestrian Signal Heads and Pushbuttons 65
4.4. MEASUREMENT AND PAYMENT 66

5. MESSENGER CABLE 67
5.1. DESCRIPTION 67
5.2. MATERIALS 67
(A) General 67
(B) Messenger Cable 67
(C) Pole Line Hardware 67
(D) Grounding Electrodes 68
5.3. CONSTRUCTION METHODS 68
(A) General 68
(B) Messenger Cable for Signal Heads or Loop Lead-In Cable 69
(C) Messenger Cable for Communications Cable 69
(D) Messenger Cable for Multiple Cables 69
(E) Pole Grounding System 69
5.4. MEASUREMENT AND PAYMENT 69

6. UNDERGROUND CONDUIT 71
6.1. DESCRIPTION 71
6.2. MATERIALS 71
(A) General 71
(B) Conduit Bodies, Boxes and Fittings 71
(C) Conduit Types 71
(D) Conduit Plugs, Pull Line, and Tracer Wire 73
(E) Mechanical Couplings for HDPE Conduit 74
(F) Duct and Conduit Sealer 74
6.3. CONSTRUCTION METHODS 74
(A) General 74
(B) Trenching 76
(C) Plowing (HDPE Conduit Only) 78
(D) Directional Drilling 78
(E) Maximum Length of Directional Drill 81

(F) Splicing and Coupling of HDPE Conduit 81
6.4. MEASUREMENT AND PAYMENT 81

7. JUNCTION BOXES 84
7.1. DESCRIPTION 84
7.2. MATERIALS 84
(A) General 84
(B) Polymer Concrete (PC) Junction Boxes 84
(C) Junction Box Sizes 85
7.3. CONSTRUCTION METHODS 85
(A) General 85
(B) GPS Coordinates 86
7.4. MEASUREMENT AND PAYMENT 86

8. EXTENSION OF EXISTING FIELD WIRING AT CONTROLLER CABINETS 88
8.1. DESCRIPTION 88
8.2. MATERIALS 88
(A) Terminal Blocks 88
(B) Terminal Splice Cabinets 88
(C) Gel-Filled Splice Connectors 89
(D) Signal Cable and Loop Lead-In Cable 89
8.3. CONSTRUCTION METHODS 89
(A) General 89
(B) Inside Controller Cabinets 89
(C) External to Controller Cabinets 89
(D) Terminal Splice Cabinets 90
(E) Terminal Splice Cabinet Where Existing Cabinet is Base-Mounted 90
8.4. MEASUREMENT AND PAYMENT 91

9. WOOD POLES 93
9.1. DESCRIPTION 93
9.2. MATERIALS 93
(A) General 93
(B) Wood Poles for Signals and Aerial Cable Routes 93
(C) CCTV Wood Poles 93
9.3. CONSTRUCTION METHODS 93
9.4. MEASUREMENT AND PAYMENT 95

10. GUY ASSEMBLIES 96
10.1. DESCRIPTION 96
10.2. MATERIALS 96
10.3. CONSTRUCTION METHODS 96
(A) General 96
(B) Guy Assemblies for Signal Heads or Loop Lead-in Cable 96
(C) Guy Assemblies for Communications Cable 97
10.4. MEASUREMENT AND PAYMENT 98

11. RISER ASSEMBLIES 99
11.1. DESCRIPTION 99
11.2. MATERIALS 99
11.3. CONSTRUCTION METHODS 101
11.4. MEASUREMENT AND PAYMENT 103

12. INDUCTIVE DETECTION LOOPS 105
12.1. DESCRIPTION 105
12.2. MATERIALS 105
(A) Loop Sealant 105
(B) Loop Wire 105
(C) Conduit 106
12.3. CONSTRUCTION METHODS 106
12.4. MEASUREMENT AND PAYMENT 107

13. LEAD-IN CABLE 108
13.1. DESCRIPTION 108
13.2. MATERIALS 108
13.3. CONSTRUCTION METHODS 108
13.4. MEASUREMENT AND PAYMENT 108

14. FIBER-OPTIC CABLE 110
14.1. DESCRIPTION 110
14.2. MATERIALS 110
(A) General 110
(B) SMFO Communications Cable 110
(C) Drop Cable 111
(D) Communications Cable Identification Markers 112
(E) Fiber-Optic Cable Storage Guides 113
(F) Aerial Cable Protectors 113
14.3. CONSTRUCTION METHODS 113
(A) General 113
(B) Aerial Installation 114
(C) Underground Installation 115
(D) Indoor Installation 116
(E) Installation of Drop Cable 116
(F) Aerial Cable Protectors 117
14.4. MEASUREMENT AND PAYMENT 117

15. FIBER-OPTIC SPLICE CENTERS 119
15.1. DESCRIPTION 119
15.2. MATERIALS 119
(A) Interconnect Center 119
(B) Hub Splice Center 119
(C) IS Hub Splice Center 120
(D) Splice Enclosure 121
(E) Existing Splice Enclosures 121

15.3. CONSTRUCTION METHODS 122
(A) General (Workmanship Identification Information) 122
(B) Workmanship 122
(C) Termination and Splicing within Interconnect Centers & Hub Splice Centers 123
(D) Interconnect Centers in Controller and CCTV Cabinets 123
(E) Hub Splice Center 123
(F) IS Hub Splice Center 123
(G) Termination and Splicing within Splice Enclosure 124
(H) Modify Existing Splice 124
(I) Testing 125
15.4. MEASUREMENT AND PAYMENT 125

16. CABLE MARKERS 128
16.1. DESCRIPTION 128
16.2. MATERIALS 128
(A) Delineator Markers 128
(B) Cabinet Decals 129
(C) Utility Pole Signs 129
(D) Curb Markers 130
16.3. CONSTRUCTION METHODS 131
(A) Cable Markers in Historic Districts 131
(B) Delineator Markers 131
(C) Cabinet Decals 132
(D) Pole Signs 132
(E) Curb Markers 132
16.4. MEASUREMENT AND PAYMENT 133

17. REMOVE EXISTING COMMUNICATIONS CABLE 134
17.1. DESCRIPTION 134
17.2. MATERIALS 134
17.3. CONSTRUCTION METHODS 134
(A) General 134
(B) Removal of Aerial Communications Cable 134
(C) Limited Removal of Downtown Underground Communications Cable 134
(D) Removal of Underground Communications Cable from In-Street Duct Systems 136
(E) Removal of Underground Communications Cable Outside of Downtown 137
17.4. MEASUREMENT AND PAYMENT 137

18. CABLE TRANSFERS 139
18.1. DESCRIPTION 139
18.2. CONSTRUCTION METHODS 139
18.3. MEASUREMENT AND PAYMENT 139

19. SIGNAL PEDESTALS 140
19.1. DESCRIPTION 140
19.2. MATERIALS 140
(A) Pedestal Shaft 140
(B) Transformer Bases 141

(C) Anchor Bolts 141
(D) Pedestal Cap 142
(E) Pole Flange Base for 4 1/2" Pipe 142
(F) Breakaway Anchors 142
(G) Foundation 142
19.3. CONSTRUCTION METHODS 142
(A) Type I Pedestrian Pushbutton Post 142
(B) Type II and III Pedestals 143
19.4. MEASUREMENT AND PAYMENT 143

20. SIGNS INSTALLED FOR SIGNALS 144
20.1. DESCRIPTION 144
20.2. MATERIALS 144
20.3. CONSTRUCTION METHODS 144
20.4. MEASUREMENT AND PAYMENT 144

21. EQUIPMENT CABINET FOUNDATIONS 145
21.1. DESCRIPTION 145
21.2. MATERIALS 145
21.3. CONSTRUCTION METHODS 146
21.4. MEASUREMENT AND PAYMENT 147

22. MODIFY CABINET FOUNDATIONS 149
22.1. DESCRIPTION 149
22.2. MATERIALS 149
22.3. CONSTRUCTION METHODS 149
(A) General 149
(B) Install Conduit Entrance into Existing Foundation 149
(C) Modify Foundation 149
(D) Alternate Methods of Modifying Foundations 150
(E) Ground Surface Restoration 152
22.4. MEASUREMENT AND PAYMENT 152

23. CONTROLLERS WITH CABINETS 154
23.1. DESCRIPTION 154
23.2. MATERIALS - GENERAL 154
23.3. MATERIALS – TYPE 2070L CONTROLLERS 154
23.4. MATERIALS – GENERAL CABINETS 154
23.5. MATERIALS – TYPE 170E CABINETS 155
(A) Type 170 E Cabinets General 155
(B) Special Coatings for Cabinets 156
(C) Type 170 E Cabinet Electrical Requirements 156
(D) Type 170 E Cabinet Physical Requirements 163
(E) Model 2018 Enhanced Conflict Monitor 165
23.6. MATERIALS – TYPE 170 DETECTOR SENSOR UNITS 173
23.7. CONSTRUCTION METHODS 173
(A) General 173
(B) Electrical Service and Grounding 175

(C) Edge Switch 175
(D) Workshop 175
(E) GPS Coordinates 176
23.8. MEASUREMENT AND PAYMENT 176

24. CABINET BASE ADAPTER AND BASE EXTENDER 178
24.1. DESCRIPTION 178
24.2. MATERIALS 178
24.3. CONSTRUCTION METHODS 178
(A) General 178
24.4. MEASUREMENT AND PAYMENT 179

25. SPECIAL COATING FOR CABINETS 180
25.1. DESCRIPTION 180
25.2. MATERIALS 180
25.3. CONSTRUCTION METHODS 180
25.4. MEASUREMENT AND PAYMENT 180

26. ELECTRICAL SERVICE 182
26.1. DESCRIPTION 182
26.2. MATERIALS 182
(A) Electrical Service 182
(B) Equipment Cabinet Disconnect 185
(C) Grounding Electrodes (Ground Rods) 185
26.3. CONSTRUCTION METHODS 186
(A) General 186
(B) New Electrical Service for Traffic Signal 187
(C) New Electrical Service for CCTV 188
(D) New Shared Electrical Service for Traffic Signal and CCTV/Hub Cabinet 188
(E) Modify Existing Electrical Service for Traffic Signal 189
(F) Modify Existing Electrical Service for CCTV/Hub Cabinet 189
(G) Grounding of Electrical Services 189
26.4. MEASUREMENT AND PAYMENT 190

27. ETHERNET RADIO 192
27.1. DESCRIPTION 192
27.2. MATERIALS 192
(A) General 192
(B) 900 MHz Ethernet Radio Transceivers 192
(C) Software 193
(D) Directional Antenna (Yagi) 194
(E) Omnidirectional Antenna 195
(F) Antenna Mounting Hardware Kit 196
(G) Coaxial Cable 196
(H) Standard N-Type Male Connector 196
(I) Coaxial Cable Shield Grounding and Weatherproofing Kits 197
(J) Coaxial Cable Power Divider (Splitter) 197
(K) Lightning Arrestor 198

(L) Disconnect Switch 198
(M) Warning Signs(s) and Decal(s) 198
27.3. CONSTRUCTION METHODS 198
(A) General 198
(B) Antenna 199
(C) Cabling 199
(D) Cabinet and Electrical Power Wiring 200
(E) Disconnect Switch 200
(F) Warning Sign(s) and Decal(s) 200
27.4. MEASURMENT AND PAYMENT 201

28. ETHERNET CABLE 202
28.1. DESCRIPTION 202
28.2. MATERIALS 202
(A) Ethernet Cable 202
(B) Connectors 202
(C) LAN Patch Panel 203
(D) Ethernet Patch Cords 203
(E) Network Interface Boxes 203
(F) Environmental Requirements 203
28.3. CONSTRUCTION METHODS 204
(A) General 204
(B) Aerial Installation 204
(C) Messenger Cable Installation 204
(D) Underground Installation 205
(E) LAN Patch Panel 205
(F) Network Interface Boxes 205
(G) Ethernet Patch Cords 206
28.4. MEASUREMENT AND PAYMENT 206

29. CCTV FIELD EQUIPMENT 207
29.1. DESCRIPTION 207
29.2. MATERIALS 207
(A) General 207
(B) Standards 208
(C) Camera Assembly 208
(D) Composite Cable 210
(E) Camera Mounting Bracket 211
(F) Camera Cabinet 211
(G) Grounding 216
(H) Software 216
29.3. CONSTRUCTION METHODS 216
(A) Electrical and Mechanical Requirements 216
(B) CCTV Camera Assembly 216
(C) CCTV Camera Attachment to Pole 216
(D) CCTV Cabinet 217
(E) Power Service 217

(F) Grounding 218
(G) Software 218
(H) GPS Coordinates 218
29.4. MEASUREMENT AND PAYMENT 219

30. CCTV INTEGRATION AND SOFTWARE MODIFICATION 220
30.1. DESCRIPTION 220
30.2. MATERIALS 220
(A) CCTV Control Software 220
(B) Regional ITS Graphical User Interface (GUI) Software 221
30.3. CONSTRUCTION METHODS 222
(A) CCTV Control Software 222
(B) Regional ITS Graphical User Interface (GUI) Software 222
30.4. MEASUREMENT AND PAYMENT 222

31. SIGNAL SYSTEM SOFTWARE MODIFICATIONS 223
31.1. DESCRIPTION 223
31.2. FUNCTIONAL REQUIREMENTS 223
(A) General 223
(B) Distributed Processing Signal System Software 225
(C) Local Controller Firmware 231
(D) System Support Software and Devices 231
31.3. INSTALLATION AND INTEGRATION 231
(A) General 231
(B) Distributed Processing Signal System Software 231
(C) Local Controller Firmware 232
31.4. TESTING 232
31.5. MEASUREMENT AND PAYMENT 232

32. COMPUTER HARDWARE AND PERIPHERALS 234
32.1. DESCRIPTION 234
(A) ITS Servers 234
(B) Computer Workstations 234
(C) Laptop Computers 234
(D) KVM Switch 234
(E) UPS 234
(F) Existing Equipment 235
32.2. MATERIALS 235
(A) ITS Servers 235
(B) Computer Workstations 237
(C) Laptop Computers 238
(D) KVM Switch 239
(E) UPS 240
32.3. CONSTRUCTION REQUIREMENTS 241
(A) General 241
(B) ITS Servers 241
(C) Computer Workstation 242
(D) Laptop Computers 242

(E) KVM Switch 243
(F) UPS 243
(G) Existing Equipment 243
32.4. DOCUMENTATION 243
32.5. WARRANTY 243
32.6. MEASUREMENT AND PAYMENT 244

33. COMMUNICATIONS HARDWARE 245
33.1. DESCRIPTION 245
(A) Managed Ethernet Core Switch 245
(B) Firewall 245
(C) Managed Ethernet Switch 245
(D) Ethernet Edge Switch 245
(E) UPS 245
(F) SMFO Contact Mapping Transmitters and Receivers 245
(G) Network Management Software 246
(H) Hub Cabinet 246
(I) IS Hub Cabinet 246
33.2. MATERIALS 246
(A) General 246
(B) Managed Ethernet Core Switch 247
(C) Firewall 251
(D) Managed Ethernet Switch 254
(E) Ethernet Edge Switch 259
(F) UPS 262
(G) Hub Cabinet 264
(H) IS Hub Cabinets 268
(I) Network Management Software 268
(J) Ethernet Patch Panel 269
(K) SMFO Contact Mapping Transmitters and Receivers 269
33.3. CONSTRUCTION METHODS 269
(A) General 269
(B) Managed Ethernet Core Switch 270
(C) Firewall 270
(D) Managed Ethernet Switches 271
(E) Ethernet Edge Switch 272
(F) UPS 272
(G) Hub Cabinet 273
(H) Network Management Software 274
(I) Ethernet Patch Panel 275
(J) SMFO Contact Mapping Transmitters and Receivers 275
33.4. MEASUREMENT AND PAYMENT 275

34. ETHERNET BRIDGE 278
34.1. DESCRIPTION 278
(A) General 278

34.2. MATERIALS 280
(A) Wireless Ethernet Bridge 280
(B) Coaxial Cable 281
(C) Standard N-Type Male Connector 282
(D) Coaxial Cable Shield Grounding and Weatherproofing Kits 282
(E) Coaxial Cable Power Divider (Splitter) 283
(F) Surge Suppression 283
(G) Disconnect Switch 284
(H) Warning Signs and Decals 284
(I) Pole-Mounting Hardware 284
34.3. CONSTRUCTION METHODS 284
(A) Site Survey 284
(B) Radio Licensing 284
(C) Configuration 285
(D) Software 285
(E) General Requirements for Metal Pole Locations 285
(F) Antenna 286
(G) Antenna Cabling 286
(H) Cabinet and Electrical Power Wiring 286
(I) Disconnect Switch 287
(J) Warning Sign(s) and Decal(s) 287
(K) Routing of Cable for Antennas Mounted on Metal Poles 287
(L) Wireless Ethernet Testing 288
(M) Training 289
34.4. MEASURMENT AND PAYMENT 289

35. DIGITAL VIDEO EQUIPMENT 291
35.1. DESCRIPTION 291
35.2. MATERIALS 291
(A) Digital Hardware Video Encoder (DVE) 291
(B) Video Monitor Processor Unit 292
(C) TMC and Signal Shop Video Display Monitor 293
(D) Network Video Recorder (NVR) 294
35.3. CONSTRUCTION METHODS 295
(A) General 295
(B) Digital Hardware Video Encoder 295
(C) Video Monitor Processor Unit 296
(D) Video Display Monitor 296
(E) Network Video Recorder (NVR) 297
35.4. MEASUREMENT AND PAYMENT 297

36. ENCLOSED COMMUNICATIONS RACK 299
36.1. DESCRIPTION 299
36.2. MATERIALS 299
(A) Wall-Mounted Communications Rack 299

36.3. CONSTRUCTION METHODS 299
(A) General 299
(B) Wall-Mounted Communications Rack 299
36.4. MEASUREMENT AND PAYMENT 300

37. BUILDING MODIFICATIONS AND FIBER-OPTIC CABLE TERMINATION....301
37.1. DESCRIPTION 301
37.2. MATERIALS 301
(A) General 301
(B) Fiber-Optic Splicing and Termination 301
(C) TMC Building Modifications 302
(D) Bryce Stuart Municipal Building Modifications....302
(E) Signal Shop Modifications....303
37.3. CONSTRUCTION METHODS 303
(A) General 303
(B) Traffic Management Center (TMC)....304
(C) Bryce Stuart Building 304
(D) Signal Shop 304
37.4. MEASUREMENT AND PAYMENT 305

38. SUBMITTAL DATA AND DOCUMENTATION....307
38.1. DESCRIPTION 307
38.2. SUBMITTALS 307
(A) General 307
(B) Project Construction Schedule....307
(C) Qualified Products 308
(D) System Design Report....308
(E) Fiber-optic Splicing Drawings....308
(F) Submittal Requirements....308
38.3. DOCUMENTATION AND MANUALS 310
(A) General 310
(B) Plan of Record Documentation....311
(C) Manuals....312
(D) Wiring Diagrams....312
(E) Splice Diagrams 313
38.4. MEASUREMENT AND PAYMENT 313

39. SYSTEM SUPPORT AND TEST EQUIPMENT 314
39.1. DESCRIPTION 314
39.2. MATERIALS 314
(A) General 314
(B) Fiber-Optic Restoration Kit 314
(C) Spare Cable and Connectors Kit....315
(D) Fiber-Optic Power Meter 315
(E) Optical Light Generator 315
(F) Visual Fault Locator 316
(G) Video Monitor....316
(H) Ethernet Radio Support Equipment 317

(I) Conflict Monitor Tester with Notebook Computer 317
(J) Test Controllers with Cabinets....317
(K) CCTV Test Cabinet....318
39.3. MEASUREMENT AND PAYMENT 319

40. TRAINING 322
40.1. DESCRIPTION 322
40.2. MATERIALS 322
(A) General....322
(B) Ethernet Communications and Networking....325
(C) Fiber-Optic Cable....326
(D) CCTV Field Equipment 326
(E) Digital Video Equipment 327
(F) 2070 Controllers, Conflict Monitors, Cabinets and Controller Firmware 327
(G) Wireless Communications System 329
(H) UPS 330
40.3. MEASUREMENT AND PAYMENT 330

41. TESTING AND ACCEPTANCE 331
41.1. GENERAL 331
41.2. INSTALLED SITE TESTS 331
(A) Fiber-Optic Cable....332
(B) Ethernet Communications System 333
(C) Traffic Signal Controllers and Conflict Monitors....334
(D) Communications System Support Equipment 334
(E) CCTV Field Equipment 334
(F) Digital Video Equipment 335
(G) UPS 335
(H) Ethernet Radio Equipment....335
41.3. SYSTEM TESTING....336
(A) General....336
(B) CCTV Subsystem....336
(C) Traffic Signal Subsystem 337
41.4. OBSERVATION PERIOD....337
(A) General....337
(B) CCTV Subsystem....338
(C) Traffic Signal Subsystem 338
41.5. MEASUREMENT AND PAYMENT 338
41.6. FINAL ACCEPTANCE 339

1. GENERAL REQUIREMENTS

1.1. DESCRIPTION

(A) Summary of Work

This project is the first phase of a two-phase project to rehabilitate and expand the existing City of Winston-Salem, North Carolina's computerized traffic signal system controlled by a Centracs® distributed processing system. Overall project work will be primarily comprised of communications system replacement and expansion, field equipment upgrades, enhancement of the central system/Traffic Management Center (TMC) and the expansion of the video monitoring system. However, not all of this work is included in Phase A. In its entirety, the overall project includes:

- Signal display upgrades at selected locations and replacement of existing controllers and cabinets with new Model 2070L controllers housed in Model 332 or 336S cabinets for the approximately 401 signalized intersections that will comprise the expanded system;
- Replacement of an existing copper-wire communications system with a new Ethernet-based, fault-tolerant, predominantly fiber-optic communications system comprised of approximately 138 roadway miles of fiber-optic cable (120 new miles + 18 miles of existing NCDOT ITS cables), along with a new downtown wireless communications network and some wireless communications links in outlying areas;
- Expanding the existing video surveillance system from 11 existing CCTV cameras to 30 CCTV cameras while retaining the existing central video equipment and software;
- Retaining the existing Centracs® distributed processing central software but replacing central computers with new computer workstations and servers; and,
- Installation of a separate, dark fiber-optic communications cable coincident with the signal system communications cable along several routes for future termination and use by the City of Winston-Salem's Information Systems (IS) Department independent of the signal system.

This Phase A project encompasses the eastern geographic area of the city as well as the downtown, also referred to herein as the central business district (CBD). Phase A also includes construction of a fiber-optic communications ring that will encircle the downtown. This communications ring, hereinafter referred to as the "Red Ring," is roughly comprised of segments of the following streets:

- Northwest Boulevard, Patterson Avenue, and Martin Luther King, Jr. Drive along its northern perimeter;
- Martin Luther King, Jr. Drive along its eastern perimeter;
- Rams Drive, Salem Avenue, Cemetery Street and Wachovia Street along its southern perimeter;
- Peters Creek Parkway, First Street and Hawthorne Road along its western perimeter.

The purpose of the Red Ring is to intercept all radial rings outside of the downtown and aggregate their data using managed Ethernet switches (i.e., routing switches) in communications hub cabinets installed at points along the ring.

A new wireless communications network installed in the core of the downtown will link most of the traffic signals inside the Red Ring. Fiber-optic communications cables will link the remaining signals on the periphery of the downtown to the Red Ring and will also backhaul the downtown wireless communications system to the fiber-optic communications network at designated points. These fiber-optic cables inside the Red Ring will also provide communications to CCTV cameras inside the ring.

There will be two homerun fiber-optic communications cable links from the Red Ring to the City of Winston-Salem Traffic Management Center (TMC) housed in the Clark Campbell Transportation Center located at 100 West Fifth Street inside the ring. The primary link will be a new fiber-optic communications cable routed from the north along portions of Patterson Avenue, 7th Street, 8th Street, Oak Street and Trade Street directly to the TMC. Designated fibers in an existing fiber-optic communication cable owned by the North Carolina Department of Transportation (NCDOT) that runs along Church Street from Cemetery Street to the City's Transportation Department offices on the third floor of the Bryce A. Stuart Municipal Building at 100 East First Street will provide the secondary homerun link from the south. The Phase B Contractor will install a new underground fiber optic communications cable between the Bryce Stuart Building and the TMC to complete this secondary link.

Phase A will be comprised of 219 signalized intersections, 4 video surveillance cameras (install 2 new and retain 2 existing) and approximately 45 miles of fiber-optic communications cable. In addition to installing new fiber-optic cable, Phase A will use designated fibers in existing communications cables owned by NCDOT along US 52, University Parkway, Martin Luther King, Jr. Drive, and Business 40. Phase A establishes Ethernet-based fiber-optic communications between all field devices and the TMC, the Bryce Stuart Building and the City's Signal Shop (i.e., Traffic Maintenance Shop) located at 650 Stadium Drive, Building 42. The Phase A Contractor will be responsible for integrating the Phase A traffic signals into the Centracs® system and integrating the new CCTV cameras into the existing central video surveillance system using the portion of the new fiber-optic communications system and the downtown wireless communications network constructed in Phase A.

All of the existing signals that have NEMA controllers and cabinets are to be replaced with Model 2070L controllers in Type 332, 336A and 336S cabinets under this project.

New fiber-optic communications cable will be installed primarily by overlashing to the existing communications cable but also by lashing to new messenger cable, installing in existing underground conduit/duct systems, and installing in new underground conduit/duct systems. To migrate from the existing to the new communications system while minimizing disruptions to signal system operations, the existing twisted-pair copper wire communications system will be progressively decommissioned as the new Ethernet-based fiber-optic communications system is built-out and brought online.

Provide a complete, fully functional and fully integrated traffic signal system, video surveillance system, and Ethernet communications system. Perform the following major tasks under this contract, as shown in the Plans (the list that follows is not meant to be all-inclusive):

- Furnish and install a new Ethernet-based fiber-optic communications system for the traffic signal system comprised of fiber-optic cable, fiber-optic drop cables, and fiber-optic splice centers (i.e., splice enclosures, interconnect centers, etc.), fiber-optic splice cabinets, Ethernet switches and related electronics;
- Furnish and install new, dark fiber-optic communications cable along with aerial and underground splice enclosures for future termination and use by the City's IS Department.
- Furnish and install underground conduit/duct, junction boxes, risers with heat shrink tubing, risers with weatherheads, messenger cable, fiber-optic cable storage guides, wood poles, and pole guy assemblies with guy guards;
- Furnish and install Ethernet core switches, managed Ethernet switches and Ethernet edge switches;
- Furnish and install new cabinets and ancillary equipment, extending existing field wiring as necessary;
- Modify existing cabinet foundations and install new cabinet foundations;
- Upgrade existing traffic signal displays;
- Remove existing control equipment and cabinets;
- Remove existing twisted-pair, copper wire communications cable, including associated risers, splice cabinets and junction boxes, where designated in the Plans;
- Furnish and install detector loops, junction boxes, and lead-in cables;
- Furnish and install signal cable;
- Furnish and install CCTV camera assemblies and CCTV cabinets;
- Furnish and install digital video encoders and decoders;
- Modify existing electrical services and install new electrical services and associated grounding;
- Fully integrate all components, except the IS Department communications cable, into a fully-functioning Ethernet-based, fiber-optic communications network.
- Fully integrate wireless communications links into the Ethernet-based communications network.
- Fully integrate all traffic signal controllers, system detectors, software, computers and servers into a fully functioning distributed processing traffic control system.
- Fully integrate all CCTV cameras, video components and software into a fully functioning video monitoring system.

Traffic signals and fiber-optic communications cable being installed by others under separate but concurrent NCDOT TIP and City road improvement contracts will ultimately be integrated (by others) into the upgraded and expanded Winston-Salem Signal System. These concurrent projects include but may not be limited to the following:

<u>NCDOT TIP Projects</u>:

- Winston-Salem Signal System Upgrade & Expansion – Phase B (C-5224B)
- Salem Creek Connector - from Rams Drive to Martin Luther King, Jr. Drive (U-2925)
- Union Cross Road – from Wallburg Road to Sedge Garden Road (U-4909)
- New Signal- Intersection of Ferrell Avenue and New Walkertown Road (U-4742JG)

City of Winston-Salem Projects:

- CCTV Video Surveillance System Upgrade Project (C-5142)
- CCTV Video Surveillance System Expansion Projects (C-4981A, C-4981B, C-4981C)
- Clemmonsville Road Widening – from Old Salisbury Road to S. Main Street (U-2923)
- Motor Road Extension - from Old Rural Hall Road to Old Walkertown Road (200303)

For the U-2925 project, fiber-optic cable strands in a separate tube have been assigned for the U-2925 contractor's use. There shall be one set of fibers for a traffic signal system circuit for for the new traffic signals in that project. The designated fibers are shown in Volume 2 of the Plans.

Some traffic signal work on the above projects may be underway by the time construction begins on this signal system project, but most of the work is expected to run concurrent with the signal system construction. Contractors for different traffic signal projects who are working within the same area shall coordinate and cooperate with each other. Each contractor shall conduct his work so as not to interfere with or hinder the progress of the work being performed by the other contractors.

The Department will stagger the start of construction Phase B from the start of construction on this Phase A project, but there will be concurrent construction on Phase B while Phase A is being constructed. In addition, Phase A construction work may overlap construction work in Phase B where the geographic boundaries of phases meet. In some cases, the work on the adjoining Phase B may be interrelated to the Phase A work. For example, Phase B's fiber-optic communications cable may be required to splice into fiber-optic cable being installed in Phase A or terminate at a communications hub being installed in Phase A. Contractors for the two different phases who are working within the same area shall coordinate and cooperate with each other. Each contractor shall conduct his work so as not to interfere with or hinder the progress of the work being performed by the other contractor.

(B) Specifications and Special Provisions

Conform to these Project Special Provisions and the North Carolina Department of Transportation (NCDOT) *Standard Specifications for Roads and Structures*, dated January 2012, hereinafter referred to as the "*Standard Specifications*". Conform to the Codes and Regulations described in Section 1700 of the *Standard Specifications*.

Within these Project Special Provisions, the "Department" refers to the North Carolina Department of Transportation, and the "City" refers to the City of Winston-Salem's Transportation Department.

(C) Coordination of Plans, Specifications, and Special Provisions

The *Standard Specifications*, the Plans and these Project Special Provisions are essential parts of the contract, and a requirement occurring in one is as binding as though occurring in all. They are complementary and provide and describe the complete contract. In case of a discrepancy or conflict, the following will apply in ascending order:

- Calculated dimensions shall govern over scaled dimensions;
- Supplemental Specifications shall govern over *Standard Specifications*;

- Plans shall govern over Supplemental Specifications, *Standard Specifications* and *Roadway Standard Drawings*;
- Project Special Provisions shall govern over Standard Special Provisions, Plans, *Standard Specifications,* Supplemental Specifications and *Roadway Standard Drawings.*

In the event of a contradiction within the Project Special Provisions as to the measurement and payment of any pay item, the text of the respective Measurement and Payment subsection for the pay item in question shall govern.

The Contractor shall not take advantage of any apparent error or omission in the contract. In the event such errors or omissions are discovered, the Engineer will make such corrections and interpretations as may be determined necessary for the fulfillment of the intent of the contract.

1.2. MATERIALS

(A) Qualified Products

Furnish new equipment, materials, and hardware unless otherwise required. Inscribe manufacturer's name, model number, serial number, and any additional information needed for proper identification on each piece of equipment housed in a case or housing.

2012 ITS and Signals Qualified Products List (QPL) is available on the North Carolina Department of Transportation's website at the following address:

https://connect.ncdot.gov/resources/safety/Pages/ITS-and-Signals-Qualified-Products.aspx

Signal and communications equipment, material, and hardware shall be pre-approved on the QPL by the date of installation. Equipment, material, and hardware not pre-approved when required will not be allowed for use on the project. Consult the QPL website to obtain pre-approval procedures.

(B) Submittal Requirements

Furnish a Type 3 material certification in accordance with Article 106-3 of the *Standard Specifications*. When requested by the Department, provide additional certifications from independent testing laboratories and sufficient data to verify item meets applicable specifications. Ensure additional certification states the testing laboratory is independent of the material manufacturer and neither the laboratory nor the manufacturer has a vested interest in the other.

Identify all proprietary parts in Contractor-furnished material. The Department reserves the right to reject material that uses proprietary components not commercially available through electronic or electrical supply houses.

For Contractor-furnished material listed on the QPL, furnish submittals in the format defined by the QPL.

For Contractor-furnished material not on the QPL, furnish three copies of the equipment list including three copies of catalog cuts. Identify proposed material on catalog cuts by a reproducible means (highlighter pen does not transfer to copies). Ensure material lists contain material description, brand name, manufacturer's address and telephone number, stock number, size, identifying trademark or symbol, and other appropriate ratings.

Do not fabricate or order material until receipt of the Engineer's approval.

Refer to the "Submittal Data and Documentation" section of these Project Special Provisions for additional submittal requirements.

(C) Observation Period

Prior to final acceptance, all Contractor-furnished equipment and software shall successfully complete a 60-day Observation Period.

The 60-day Observation Period is considered to be part of the work included in the total contract time and must be completed prior to final acceptance of the project.

Final acceptance will occur following the successful completion of the 60-day Observation Period and after all documentation requirements have been fully satisfied.

Refer to the "Testing and Acceptance" section of these Project Special Provisions for additional requirements.

(D) Warranties

Unless otherwise required herein, provide manufacturer's warranties on Contractor-furnished equipment for material and workmanship that are customarily issued by the equipment manufacturer or that are at least one year in length, whichever is greater, from the date of final acceptance of the project by the Department. Include unconditional coverage for all parts and labor necessary or incidental to repair of defective equipment or workmanship and malfunctions that arise during warranty period.

For light emitting diode (LED) traffic signal modules, provide a written warranty against defects in materials and workmanship for a period of 60 months after installation of the modules. During the warranty period, the manufacturer must provide replacement modules within 45 days of receipt of modules that have failed at no cost to the Department.

Ensure all Contractor-furnished equipment, including pieces and components of equipment, hardware, firmware, software, middleware, internal components, and subroutines which perform any date or time data recognition function, calculation, or sequencing will support a four digit year format for a period of at least 50 years and will support user-definable parameters for setting the start and end dates for daylight savings time.

Upon receipt of the Department's written final acceptance of project, transfer manufacturer's warranties with proper validation by the manufacturer to the Department and the City. Provide warranties in the names of both the North Carolina Department of Transportation and the City of Winston-Salem.

(E) Firmware Licensing and Upgrades

Provide the Department with a license to duplicate all programmable devices in equipment for maintenance and software upgrades. Provide binary or hexadecimal format files for each device that may be programmed by the Department. Ensure files are provided on PC compatible compact disks or other approved media.

Ensure software/firmware performance upgrades that occur during the contract period up through final acceptance of the project are furnished to the Department at no additional cost.

Make software/firmware upgrades that are developed to correct operating characteristics available to the Department at no additional cost until the warranty period expires.

Provide licensed copies of all software/firmware to the Department for any programmable devices furnished by the Contractor and installed under this project for which licensed software has not already been provided by the City and the Department. The Department shall have the right to install any and all software/firmware for maintenance and support on all hardware provided under this contract. This shall include but not be limited to all servers for the Signal System, CCTV System, LAN System, traffic signal controllers and network. Provide software/firmware for maintenance and support of workstations, laptop computers, system support software, utility software, traffic signal controllers, and CCTV systems and controllers, and all other programmable devices.

(F) Wire and Cable

Furnish wire and cable on reels. When requested by the Department, furnish samples of wire and cable to the Department at no additional cost.

(G) Painting

Where painting of traffic signal controller cabinets and their base extenders/adapters (where called for in the plans), signal heads, signal poles, and pedestals is required, apply paint at the factory. For black-coated rigid galvanized risers, meter bases and disconnects installed on black-painted metal poles in downtown, apply the black paint or powder coating indoors in a controlled environment prior to installation in the field. Refer the "Special Coatings for Cabinets", "Riser Assemblies", and "Electrical Service" sections of these Project Special Provisions for specific requirements for special coatings applied to designated controller cabinets and base extenders/adapters and rigid galvanized risers, meter bases and disconnects attached to black metal poles.

No field painting will be allowed except for the following situations:

1. Touch-up painting when paint has been scratched or marred. Apply two field coats of the same color and grade enamel as the original paint to the scratched or marred portions.
2. Painting black new 1" rigid galvanized conduits and new rigid LB conduit bodies installed to route feeder conductors between new black-coated disconnects/meters and new black controller cabinets on existing black metal poles in the downtown. Prepare the galvanized surface to receive, including the application of etch primer, as described in the "Riser Assemblies" section of these Project Special Provisions.

(H) Performance of Warranty Repair and Maintenance

Provide authorization to the Traffic Electronics Center of the North Carolina Department of Transportation (NCDOT) to perform all warranty repairs after project acceptance. The decision to perform warranty work at the Traffic Electronics Center by NCDOT electronics technicians or to have warranty work performed by the Vendor shall be at the discretion of the Department. Provide any training required by the manufacturer to authorize the Traffic Electronics Center to perform warranty work and ensure manufacturer will furnish parts to the Traffic Electronics Center for all warranty repairs at no cost to the Department. In addition, ensure the manufacturer agrees to provide prompt technical support to the NCDOT electronics technicians for a period of one year after the end of the warranty period at no cost to the Department. Defective parts replaced under warranty by the Traffic Electronics Center will be returned to the Vendor at the Vendor's request. Provide schematics, part lists, and other documentation to perform bench

repair to the Traffic Electronics Center within 2 weeks upon request. The Department agrees not to divulge any proprietary information in the schematics, part lists and other documentation upon request from the Vendor. After project acceptance and at the request of the Department, the manufacturer shall perform warranty repairs to equipment which fails during the warranty period at no cost to the Department including freight costs to ship repaired equipment back to the Traffic Electronics Center. Ensure all equipment is repaired and returned to the Traffic Electronics Center within 21 calendar days of receipt by the manufacturer.

1.3. CONSTRUCTION METHODS

(A) General

Before beginning signal work, verify all existing signal equipment is in satisfactory working order. Report all defective signal equipment to the Engineer so as not to be held responsible for defects.

Identify and label all field wiring (e.g., signal conductors, pushbutton wires, loop detector lead-ins, etc.) in existing controller cabinets prior to disconnecting any field wiring.

Do not remove and replace more than one controller and cabinet per day unless otherwise approved by the Engineer. Once controller and cabinet replacement has begun at a given location, complete the removal and replacement work at that location before beginning removal and replacement of a controller and cabinet at another location.

Locate existing conduit, cable runs, inductive detection loops, lead-in, junction boxes, and detection equipment before installing or using equipment that can damage or interfere with such facilities. The locations of existing inductive detection loops shown on the Plans are approximate.

Locate all underground utilities before beginning drilling, digging, and trenching operations.

Ensure that an IMSA certified, or equivalent, Level II traffic qualified signal technician is standing by to provide emergency maintenance services whenever work is being performed on traffic signal controller cabinets and traffic signal controller cabinet foundations. Standby status is defined as being able to arrive, fully equipped, at the work site within 30 minutes ready to provide maintenance services.

Immediately cease work and notify the Engineer and affected owners if damage to existing utilities, cables, or equipment occurs. Make all required repairs and replacements at no additional cost to the Department.

Avoid trimming (i.e., pruning) trees wherever possible. Removal and topping of trees is strictly prohibited. Obtain approval from the City of Winston-Salem's Urban Forester for any proposed tree trimming and pruning prior to performing tree trimming. All tree trimming must be performed by an ISA Certified Arborist Trimming and must conform to ANSI A300 standards. In accordance with Section 74-302 of the City Code, obtain a no-cost permit from the City before trimming or pruning of any tree on public right-of-way. Contact the City's Urban Forester at 336-748-3019, to request this permit. In addition, the Contractor must obtain a Minor Work Certificate of Appropriateness from the Historic Resources Commission for any tree trimming or pruning in and around Old Salem. The Contractor will be assessed civil penalties (i.e., fines) for any tree trimming performed in violation of the requirements of the Project Special Provisions and the City Code, including but not limited to work performed by someone

other than an ISA Certified Arborist, unauthorized tree trimming, failure to obtain required permit and approvals, excessive tree trimming and tree removal.

(B) Contractor's Office

Throughout the project until final acceptance, the Contractor shall maintain a full-time staffed office with storage and testing facilities within the Winston-Salem City Limits.

(C) Work within Historic Districts

Several signalized intersections, some proposed CCTV camera sites and several fiber-optic communications cable routes lie within or adjacent to historic districts. The Department has coordinated with the agencies that have jurisdiction over these historic districts and has received the permits and certificates for the work called for in the Plans in these historic districts. Do not deviate from the work called for in the Plans within a historic district without the prior approval of the Engineer and the agency/agencies that have jurisdiction over the historic district. Where construction work must deviate from the Plans, notify the Engineer in advance so that the Department can request/apply for the appropriate approvals for such changes prior to the Contractor performing work at that location.

Avoid damaging or removing sidewalks and curbs within designated historic districts whenever possible. Do not damage, disturb or remove any existing granite curbs. Where granite curbs conflict with the installation of underground conduit and cable, bore (drill) conduit underneath granite curb. Do not bore through granite curbs. Replace any granite curb damaged due to construction of this project at no cost to the Department or the City. Immediately notify the Engineer and coordinate with the City of Winston-Salem's Director of the Streets Division at 336-734-1550 when any existing granite curb is disturbed or damaged by construction of this project. As directed by the Engineer, reset disturbed granite curb and replace damaged granite curb in accordance with the City's standard detail for "Proper Installation of Granite Curb" (see Special Detail sheet in the construction plans).

Where removal and replacement of concrete sidewalk and concrete curb is unavoidable, replace them with concrete materials that match the finish, appearance and color of the adjacent existing sidewalk as close as technically feasible as determined by the Engineer. Finishes may include but are not limited to water-washed, broom and trowel. The dimensions and the profile (i.e., shape) of the new curbing shall match that of the adjacent existing curbing.

Where removal and replacement of sidewalk constructed of materials other than concrete is unavoidable, notify the Engineer and coordinate with the City of Winston-Salem's Director of the Streets Division at 336-734-1550 at least two weeks prior to disturbing the existing sidewalk. Replace the sidewalk with in-kind materials that match the finish, appearance and color of the adjacent existing sidewalk as close as technically feasible as determined by the Engineer and the City's Streets Division Director. If the sidewalk is constructed of materials such as brick, stone or pavers, carefully remove and subsequently reinstall the bricks, stones or pavers using methods approved by the Engineer. Take photographs and make sketches to record the pattern of the existing materials prior to removal. Replace any bricks, stones or pavers damaged due to construction on this project with approved in-kind, matching materials.

Repair and replacement of existing sidewalk will be measured and paid for in accordance with the "Equipment Cabinet Foundations" section of these Project Special Provisions.

Complete all repairs with in-kind materials to all sidewalks removed for construction and reopen the repaired and restored sidewalk to pedestrian traffic within five consecutive calendar days following initial removal. If the Contractor fails to repair and reopen a sidewalk in accordance with these Project Special Provisions within the time frame specified, the Department reserves the right to make the necessary repairs, and all expenses incurred by the Department in making the repairs and restoring the sidewalk will be deducted from payment due the Contractor, plus **$500 liquidated damage per occasion, per day, or any portion thereof**, until corrected.

For new signal cabinet foundations constructed within historic districts, use concrete tinted to light earth-toned palette to soften the visual impact of the new concrete.

Do not trim, remove or damage tree limbs within historic districts. Hand-lashing of aerial cables to messenger cable may be required in some areas due to overhanging and protruding tree limbs along the cable route.

(D) Work within the Central Business District (CBD)

The central business district (CBD) in downtown Winston-Salem experiences large volumes of vehicular and pedestrian traffic and on-street parking during business hours on weekdays as well as on some weekends due to special events. The CBD is defined as the area in downtown Winston-Salem bounded by Broad Street on the west, Seventh Street on the north, Patterson Avenue on the east and First Street on the south inclusive. The M.C. Benton, Jr. Convention and Civic Center, which hosts several large meetings throughout the year, is located in the CBD. In addition, the CBD is occasionally the site of festivals and parades and other cultural events and celebrations.

Do not perform any work within the CBD without prior approval of the Department. Submit to the Department for review and approval two weeks in advance a schedule for proposed work that will require narrowing or closing a lane, road, sidewalk or pedestrian crossing within this area.

(E) Regulations and Codes

Furnish material and workmanship conforming to the *National Electric Code* (NEC), *National Electric Safety Code* (NESC), Underwriters Laboratories (UL), or other listing agencies approved by the North Carolina Department of Insurance, and all local safety codes in effect on the date of advertisement. Comply with Article 4, Chapter 87 of the *North Carolina General Statutes* (Licensing of Electrical Contractors). Comply with the Plans, all previously referenced specifications, and all applicable local ordinances and regulations before and during all stages of the electrical work.

When required by the local ordinances and governmental agencies, upon completion of the work, have all systems inspected and approved in writing by the authorized governmental electrical inspector for the area. Furnish written certification of the authorized inspector's approval to the Engineer. Inspection by the authorized governmental electrical inspector must neither eliminate nor take the place of the inspections by the Engineer. Upon the Engineer's receipt of written certification and the Contractor's written request for a final inspection of the installations, the Engineer will perform a final inspection.

Where required, conform to ITE, AASHTO, and ASTM standards in effect on the date of advertisement.

Notify the Engineer, local traffic enforcement agency, local utility company, and affected railroad companies seven business days before operational shutdowns to coordinate connection or disconnection to an existing utility or system, unless otherwise instructed herein.

Install meter bases and service disconnects as required by the NESC, NEC, local utility companies, and local ordinances. Install standoffs only when required and approved by the local utility companies. Where a standoff must be used, obtain the local utility company's approval prior to installing the standoff.

(F) Utility Services

Coordinate all work to ensure electrical power of proper voltage, phase, frequency, and ampacity is available to complete the work. Use electrical service cables with THWN insulation.

When electrical, telephone, and telecommunication service is not furnished by the Department or the City and is required, contact the utility company and make application to ensure all work can be completed. Obtain authorization for service in the Department's name for Department-owned locations and in the City's name for City-owned locations. Make application for service in the Department's name for Department-owned locations and in the City's name for City-owned locations.

The Department and the City will be responsible for direct payment of monthly utility company usage charges. The Contractor will be responsible for all expenses associated with utility installation costs, hookups, etc.

Coordinate all work involving electrical service with the appropriate electric utility company. Coordinate with the utility company to ascertain the feasibility of installing electrical service at each location before performing any work. Obtain all required local permits before beginning work.

(G) Maintenance and Repair of Material

Ensure that an IMSA certified, or equivalent, Level II traffic qualified signal technician is standing by to provide emergency maintenance services whenever work is being performed on traffic signal controller cabinets and traffic signal controller cabinet foundations. Standby status is defined as being able to arrive, fully equipped, at the work site within 30 minutes ready to provide maintenance services.

Furnish the Engineer with the name, office telephone number, cellular (mobile) telephone number, and pager number of the supervisory employee who will be responsible for maintenance and repair of equipment during all hours.

Maintain and repair all Contractor-furnished and installed signal and communications related equipment within the project construction limits until completion of the Observation Period and receipt of written notification of final acceptance of the project. This requirement for maintaining and repairing said equipment shall remain in effect in the event of severe weather (see NOAA National Severe Storms Laboratory website http://www.nssl.noaa.gov/primer/) or a natural disaster, including but not limited to floods, winter weather, lightning, damaging winds, hail, tornado, tropical storm or hurricane. Items reused (that are unmodified), such as signal heads, signal cable, local detector loops and lead-in cable, will be maintained by others.

Make entries into the maintenance diaries housed inside each traffic signal controller cabinet upon each visit to the controller cabinet. Maintain these diaries through final acceptance of the project.

For all failures, malfunctions, damages to equipment, or errors in workmanship affecting signal operation, begin necessary repairs within four hours of notification. Complete repairs within eight hours of notification. Comply with Section 150 of the *Standard Specifications* for maintenance of traffic flow. The inability to contact the supervisory employee or prearranged alternate will not extend repair time requirements.

Remove and replace all signal and communications related equipment that fails. The Department will furnish the Contractor replacement equipment for Department-furnished equipment that fails, except for equipment furnished by other contractors within the construction limits of separate NCDOT TIP projects and City of Winston-Salem projects that have not yet been formally accepted by the Department. Maintenance and repair of equipment within the construction limits of NCDOT TIP projects will be the responsibility of the respective TIP project contractors until the Department's final acceptance of those TIP projects.

Except for damages and malfunctions caused by the Contractor's work activities, the Contractor will not be held responsible for pre-existing conditions reported to the Engineer before starting traffic signal work at the specific intersection. The Contractor will assume responsibility for all maintenance and emergency services necessary once traffic signal work has begun at the specific intersection and for all damages and malfunctions caused either directly or indirectly by the Contractor's work activities.

In the event the Contractor fails to perform in accordance with the Plans and Project Special Provisions within the time frame specified, the Department reserves the right to perform maintenance and emergency service necessary to ensure continuous traffic signal operation. Further, all expenses incurred by the Department in implementing this option will be deducted from payment due the Contractor, plus **$2,500 liquidated damages per occasion, per day, or any portion thereof**, until corrected.

Perform yearly maintenance on all traffic signal conflict monitors. The year shall be defined as beginning on the date of installation of the controller and cabinet at the intersection. Use a signal conflict monitor tester that is capable of interfacing with an Intel®-based notebook computer for input/output. The tester shall test signal conflict monitor displays, timing and voltage functions and input/output combinations of either true or false conflicts. All outputs shall be in plain English. It shall be possible to generate a hard copy printout or to store the results to a file on computer disc. A "No Faults Detected" indication shall be displayed as appropriate.

Ensure that the signal conflict monitor tester is maintained and calibrated per the manufacturer's recommendation. Provide to the Engineer a copy of the manufacturer's certification that the signal conflict monitor tester has been certified before testing any traffic signal conflict monitors. Perform test on each traffic signal conflict monitor per the manufacturer's recommendation. Provide one (1) copy of the traffic signal conflict monitor test results to the Engineer. Place one (1) copy in the traffic signal controller cabinet. Perform these yearly tests for the life of the project.

(H) Inspections

The City and the Department may access the Contractor's equipment to perform railroad, signal, and preventative maintenance inspections, and conflict monitor certification as necessary. The Contractor shall be present for these inspections.

(I) Removal of Existing Equipment and Material

Remove all Department-owned and City-owned signal and communications related equipment and material that will not be used. Signal and communications equipment and materials to be removed under this project include, but are not limited to: signal controllers and cabinets and the equipment housed therein; signal and lead-in cables; poles; splice cabinets; cabinet foundations; junction boxes; messenger cable; communications cable; and guy assemblies. Assume ownership of removed poles (including stub poles), messenger cable, junction boxes, interconnect cable, communications cable, video display monitors and supporting hardware. Return all other Department-owned equipment and material between 8:00 a.m. and 12:00 p.m., Monday through Thursday, to the Division 9 Traffic Services Office located at 350 Craft Drive in Winston-Salem, North Carolina, 27105. Return all other City-owned equipment and material between 8:00 a.m. and 12:00 p.m., Monday through Thursday, to the City Signal Shop located in City Yard Building 42 on Paul Howell Boulevard (27101). The Department will deduct the cost of Department-owned and City-owned equipment damaged by the Contractor from money due to the Contractor.

(J) Railroad Preemption

Where railroad preemption is required, coordinate all work with the railroad. Do not place signals into operation until signal and railroad company equipment has been interconnected with required railroad-highway crossing devices and railroad preemption is working properly. Ensure preemption sequences begin immediately after activation of train detection. Contact and coordinate with the railroad company to schedule interconnection of the signal to the railroad controller cabinet. Install lead-in cable from the signal controller cabinet to a railroad company furnished and installed lockable junction box. Interconnection will be made by the railroad company. Provide fail-safe operation such that removal of voltage from the railroad side of the isolation relay will initiate the railroad preemption sequence.

Conduct a railroad-highway interconnection preemption inspection for each intersection prior to placing new signal equipment into steady operation. The inspection shall be performed with all appropriate Division, City and Railroad personnel in attendance. The signal shall pass all requirements of the preemption inspection before it can be accepted under the project by the Engineer. The railroad preemption inspection form is available on the NCDOT ITS & Signals Unit website:

https://connect.ncdot.gov/resources/safety/Pages/ITS-and-Signals.aspx

The Contractor along with other appropriate personnel shall conduct additional preemption inspections annually as long as the signal is in operation under the Contractor's jurisdiction until the signal is accepted by the Engineer.

(K) Timing of Signals

Implement timing values for signal controllers. Modify proposed phasing and timing of existing controllers. Reinstall all existing time-based coordination. As directed, make modifications to existing coordination to account for changes in signal phasing.

The Department reserves the right to make, or have the Contractor make, field timing changes necessary for pattern optimization and to eliminate identifiable, potential hazards to the motoring public. The Engineer will notify the Contractor of timing changes made or supply the Contractor with revised timing plans if the Department requires the Contractor to implement the timing changes.

Verify time-base coordination in 2070L controllers that upon installation will not be immediately connected to communicate with the new signal system over the new Ethernet fiber-optic cable network. Reset the controller's clock to the common time source if it has drifted. **Ensure that controllers' internal clocks are all synchronized at least once per week to the same date and time of day**. Maintain the time synchronization in all controllers during any time that communication with the TMC is interrupted.

Record the time and date of each visit, the activity performed and name of person who visited the cabinet and performed the clock maintenance activity. Maintain a record of clock maintenance activity in a single document and furnish to the Engineer for review upon request. Failure to visit each intersection that is not online to check and update clocks will result in **liquidated damages of $1,500 per visit not performed**.

(L) Wire and Cable

For installation in a conduit system, lubricate cable and wires before installing in conduit. Use lubricant that will not physically or chemically harm cable jacket, wire insulation, and conduit.

Only splice lead-in cables in junction boxes using UL®-approved, underground splice connectors or in condulets using gel-filled splice connectors. Splice all other electrical wire and cable (i.e., signal cable, etc.) inside equipment cabinets, cabinet base extenders/adapters, and terminal splice boxes at nickel-plated brass, recessed-screw, barrier-type terminal blocks or using gel-filled splice connectors. Unless specifically allowed, connect no more than two conductors to the same terminal screw. Do not splice any electrical wire or cable other than lead-in cables in junction boxes or condulets.

Maintain color coding of wires through splices.

Protect ends of wire and cable from water and moisture.

Place permanent labels on all wires and cables to clearly identify each one. Use an indelible black ink marker or approved labeling devices to write on the permanent labels when required.

Install all wire and cable with necessary hardware including, but not limited to shoulder eyebolts, washers, nuts, thimbleyelets, three-bolt clamps, J-hooks, split bolt connectors, grounding clamps, and lashing material.

(M) Electrical Services and Grounding

Where electrical services do not include an external electrical service disconnect, modify or replace the electrical service to add an electrical service disconnect and a new grounding electrode system. Comply with the "Electrical Service" section of these Project Special Provisions.

Provide a grounding electrode system at all new electrical services. In addition to NEC requirements, test grounding electrode resistance for a maximum of 20 ohms. Furnish and install additional ground rods to grounding electrode system as necessary to meet test requirements.

Modify existing electrical services, as necessary, to meet the grounding requirements of the NEC, these Project Special Provisions and the Plans. Remove any ground rods in the cabinet foundation and install a new grounding electrode system. Cut off abandoned ground rods in the cabinet foundation flush with the foundation surface. Where a grounding electrode system is connected to the electrical service in accordance with the NEC, test grounding electrode resistance for a maximum of 20 ohms. Grounding electrode resistance test must be verified or witnessed by the Engineer or the Engineer's designated representative. Furnish and install additional ground rods to grounding electrode system as necessary to meet the Project Special Provisions and test requirements. Refer to the "Electrical Service" section of these Project Special Provisions for additional requirements pertaining to grounding of electrical services.

Follow test equipment's procedures for measuring grounding electrode resistance. When using clamp-type ground resistance meters, readings of less than 1 ohm typically indicate a ground loop. Rework bonding and grounding circuits as necessary to remove ground loop circuits and retest. If a ground loop cannot be identified and removed to allow the proper use of a clamp-type ground resistance meter, use the three-point test method.

Submit a completed Inductive Loop & Grounding Test Form available on the Department's website. The form is located on the Department's website at:

https://connect.ncdot.gov/resources/safety/Pages/ITS-and-Signals.aspx

Provide a length of marker tape 6 to 12 inches below finished grade directly over grounding electrodes and conductors.

(N) Electrical Bonding

Using an approved termination means, connect a number 14 AWG minimum 19-strand copper conductor (Type THWN) with green insulation to serve as an equipment grounding conductor to metal poles, vehicular and pedestrian signal pedestals, and other metallic components which are not otherwise bonded, through means approved by the Engineer.

(O) Traffic Signal Activation

Do not place signal in steady (stop-and-go) mode until inspected and authorized by the Engineer.

(P) Requirements for Cables Crossing Railroads

Copies of all executed railroad agreements and related correspondence may be obtained from the Engineer upon request.

(1) Railroad Crossings

Application has been made with Norfolk Southern Corporation (NS), with Winston-Salem Southbound Railway (WSS) through CSX Transportation, Inc. (CSX), and the NCDOT Rail Division, hereinafter called the Railroad Company(ies), for the encroachment agreements necessary under this Contract. Do not commence cable routings over or under railroad-owned facilities until notification and coordination with Engineer and the appropriate Railroad Company has occurred. Install fiber-optic communications cable as shown on the Plans. All work associated with the crossing is to conform to the Railroad Company's specifications. For

work within NS rights of way, comply with latest approved edition of NCSE-4 (Specifications for Wire, Conduit and Cable Occupations of Norfolk Southern Corporation Property) and NSCE-8 (Specifications for Pipeline Occupancy of Norfolk Southern Corporation Property).

Cable crossings include the following locations:

Plan Sheet	Location	Railroad Company
CL A-004	Railroad Overpass at Northwest Boulevard and Broad Street/Thurmond Street intersection / Crossing #722 147U	NS
CL A-007	Railroad Overpass east of Northwest Boulevard and Trade Street intersection / Crossing #722 044U	NS
CL A-010	At-Grade Crossing west of US 52 SB Ramps and Martin Luther King Jr Drive intersection / Crossing #470 230W	NCDOT
CL A-026	Railroad Overpass west of US 52 Southbound Ramps and Rams Drive intersection / Crossing #876 719U	WSS
CL A-027	Railroad Underpass west of I-40 Business Eastbound Ramps and Martin Luther King Jr Boulevard / Crossing #722 057V	NS
CL A-038	Railroad Overpass south of Northwest Boulevard and University Parkway intersection / Crossing #722 141D	NS
CL A-041	At-Grade Crossing east of Main Street and 7th Street intersection / Crossing #722 047P	NS
CL A-055	Railroad Overpass north of Cherry Street and North Point Boulevard intersection / Crossing #722 030L	NS
CL A-092	Railroad Overpass north of Patterson Avenue and 17th Street intersection / Crossing #722 042F	NS
CL A-096	At-Grade Crossing north of Patterson Avenue and Indiana Avenue intersection / Crossing #722 035V	NS
CL A-102	Railroad Underpass west of Liberty Street and Akron Drive intersection / Crossing #470 219W	NS
CL A-115	Railroad Underpass north of Liberty Street and Lansing Drive intersection / Crossing #470 218P	NS
CL A-167	Railroad Underpass west of Sprague Street and Old Lexington Road intersection / Crossing #876 723J	WSS

(2) Insurance Requirements

The Department has provided Railroad Protective Liability Insurance to Norfolk Southern as part of the Department's encroachment agreements with Norfolk Southern for each of the NS locations listed in the table above. The NCDOT Rail Division and WSS do not require the Contractor to provide any additional insurance for the crossings of their facilities identified above.

If required by the railroad, pay for railroad personnel to be present when work is performed.

In addition to any other forms of insurance or bonds required under the terms of the Contract and the *Standard Specifications*, take out and keep in force from the commencement of all construction on railroad right-of-way until the final inspection and acceptance of the project by

the Engineer, insurance of the following kinds and amount. It is understood that the amounts specified are minimum amounts and that larger amounts may be carried if so desired. Any insurance taken out due to these requirements shall be subject to the approval of the Engineer, and the Railroad Companies as to form and amount. Furnish satisfactory policies prior to beginning of the work on railroad right-of-way.

Refer to the following web links for more specific insurance requirements and requirements for working on the rights-of-way of each railroad company. In the event of a conflict between the requirements of one or more railroad companies and the requirements contained in the Plans or these Project Special Provisions, the requirements of the railroad company shall govern.

Norfolk Southern Corporation:

http://www.nscorp.com/nscportal/nscorp/Customers/Publications/pdf/SEC3_MISC3.pdf

CSX Transportation, Inc.:

http://www.csx.com/index.cfm/customers/non-freight-services/propertyreal-estate/permitting-utility-installations-and-rights-of-entry/COS_Facility_Application_Information_Packet[1].pdf

Commercial General Liability Insurance

Furnish evidence to the Engineer of Contractor's commercial General Liability Insurance coverage with a combined single limit of not less than $1,000,000 for each occurrence for operations performed on the railroad right-of-way. The Contractor's policy shall name Norfolk Southern Railway Company as an additional insured. If any part of the work is sublet, similar insurance in the same amounts and evidence thereof as required of the Prime Contractor shall be provided by or on behalf of the Subcontractor to cover Subcontractor's operations on the railroad right-of-way.

Keep such insurance in force until final inspection of the project, or that portion or portions within the railroad right-of-way, by the Engineer or, in the case of Subcontractors, until the Contractor furnishes a letter to the Engineer stating that the Subcontractor has completed his/her subcontracted work within the railroad right-of-way to Contractor's satisfaction, and that the Contractor will accomplish any additional work necessary on the railroad right-of-way with the Contractor's own forces.

Termination of Insurance and Policies to be Submitted

Any insurance policies given hereunder shall cover all Contractor-performed work the Contractor in connection with the work in the introductory paragraph within railroad right-of-way, but shall not be liable for accidents occurring after acceptance of the completed project by the Department. Such policies shall contain a clause requiring 30 days written notice be given to the Engineer and to the appropriate Railroad Company, prior to cancellation or change.

Submit to the Engineer the original and one copy of the Commercial General Liability Policy, one certified duplicate copy of all other policies, and certificates of insurance in an original and two copies as required by these Project Special Provisions.

No extra allowance will be made for the insurance required hereunder. The entire cost shall be included in the contract unit price bids for other pay items.

The named insured under the commercial General Liability Insurance Policy is the respective Railroad Company, and the designation of the job site description of work is as follows: All construction on the <<RAILROAD COMPANY>> right-of-way on NCDOT Project No. C-5224A in Winston-Salem and Forsyth County, North Carolina.

(3) Flagging Protection or Watchman Service

Provide 72 hours advance notice to Norfolk Southern in order that flagging service can be arranged and provided. Do not undertake any work within the NS right-of-way until the flagman is at the job site.

Provide a minimum of 7 days advance notice to Winston-Salem Southbound Railway (WSS) in order that flagging service can be arranged and provided. Provide this advance notice to Mr. Jeff Butler of CSX at 888-631-9085 (alternate contact: Mr. Jody Freeman of CSX at 336-529-9600, if Mr. Butler is not available) to provide this advance notice. Do not undertake any work within the WSS right-of-way until the flagman is at the job site.

(4) Delays Caused by Operations of Others

Neither the Department nor the Railroad Company assumes any responsibility for any work performed by others in connection with the construction of the project, and the Contractor shall have no claim whatsoever against the Department or the Railroad Company for any inconvenience, delay, or additional cost incurred by the Contractor on account of such operations by others.

(5) Time Extensions

No time extensions related to railroad encroachments will be allowed until the related work becomes the controlling factor relative to overall project completion.

(6) Cooperation with Others

Cooperate with others participating in the construction of the project to the end that all work may be carried on to the best advantage.

(7) Authority of Railroad Engineer

The authorized representative of the Railroad Company, hereinafter referred to as the Railroad Engineer, will have the final authority in all matters affecting the safe maintenance of railroad traffic of his company.

(8) Interference with Railroad Operations

Arrange and conduct work so that there will be no interference with railroad operations, including train, signal, telephone and telegraphic services, or damage to the property of the Railroad Company or to the poles, wire, and other facilities of tenants on the rights-of-way of the Railroad Company. Wherever work is liable to affect the operations or safety of trains, first submit the method of doing such work to the Railroad Engineer for approval. However, such approval will not relieve the Contractor from liability.

Should conditions arising from or in connection with the work, require that immediate and unusual provisions be made to protect train operations and property of the Railroad Company, it shall be a part of the required services by the Contractor to make such provisions and if, in the judgment of the Railroad Engineer such provisions are insufficient, the Railroad Engineer or the Department may, at the expense of the Contractor, require or provide such provisions as may be deemed necessary.

(9) Directional Drilling beneath Norfolk Southern Tracks

Prior to the commencement of horizontal directional drilling (HDD) beneath railroad tracks either owned or operated by Norfolk Southern Corporation, submit to NS for approval a complete construction procedure of the proposed directional drilling operation. Include with the submission the manufacturer's catalog information describing the type of equipment to be used. Comply with requirements of the encroachment agreement with NS and with "Specifications for Pipeline Occupancy of Norfolk Southern Corporation Property" (NSCE-8).

(10) Storage of Materials

Do not store materials and equipment where they will interfere with railroad operations, nor on the rights-of-way of the Railroad Company without first having obtained permission from the Railroad Engineer. Such permission will be with the understanding that the Railroad Company will not be liable or damage to such material and equipment from any cause, and that the Railroad Engineer may move or require the Contractor to move, at the Contractor's expense, such material and equipment.

(11) Completion and Acceptance of Work

Upon completion of the work, remove from within the limits of the railroad right-of-way all machinery, equipment, surplus materials, or rubbish and leave said rights-of-way in a neat and orderly condition. Acceptance of the work will be contingent upon final inspection by the Department and by the Railroad Company (if required by the Railroad Company) to determine if the work was completed satisfactorily in a manner acceptable to the Department and the Railroad Company.

1.4. CONSTRUCTION STAGING/MIGRATION

(A) Introduction

This section addresses the general flow of construction in regards to communications throughout the life of the project. It is essential that the Contractor make every effort to minimize communications downtime to the traffic signals.

Follow the outline of construction described below. Update the construction schedule monthly. Submit a detailed field migration plan (including details of controller cabinet change-outs) and schedule to the Department for review and approval at least two weeks prior to the onset of work, and no later than 60 days after Notice to Proceed. Provide monthly updates to the migration plan at each monthly coordination/construction progress meeting during the project. Include a detail of controller cabinet change-outs, listing every intersection, existing and future control zone, and existing and future communication zone, and a schedule of the migration. Include information explaining how the following situations will be handled:

- Existing pole-mount cabinet converted to base-mount,
- Existing cabinet foundation retained,
- Base-mount cabinet on new foundation,
- Installation and splicing of 6-fiber drop cable assemblies,
- Installation of drop cable assemblies into risers with existing fiber-optic cable,
- Reel-to-reel splice locations,
- Transitioning the City's existing twisted-pair communications network to and Ethernet based system over fiber-optic cable, changing out the controllers, and

- Removal of existing twisted pair copper cable once a controller cabinet has been changed out;
- How to coordinate with others at the time new cabinets are set to make the necessary signal changes at the TMC to get the controller online.

Submit a System Design Report to the Engineer for Department review and approval prior to beginning any migration from the existing signal system and communications system to the new signal system and new Ethernet communications system. Submit the System Design Report in both hard copy and electronic form. Refer to "Submittal Data and Documentation" section of these Project Special Provisions for additional requirements.

(B) TMC Migration

The central block diagram for the new signal system, as shown on the Plans, depicts the completed system equipment to be retained and the new equipment to be installed. The proposed sequence is described below.

Maintain the operation of the existing CCTV and Centracs® signal systems. Construct the TMC building modifications described in these Project Special Provisions and as shown in the Plans. Install the managed Ethernet core switch, firewall, managed Ethernet switch, server(s), monitors, workstations, and all necessary equipment at the TMC. Replace the TMC monitors.

Install all software. Install the Centracs® system software on the new servers. Setup a test facility to configure local equipment. Configure the Ethernet core switch for the permanent IP addresses, VLANS, and other configuration data before its installation.

Modify the existing device database. Convert the signal timing data and build the system and intersection graphics where necessary for signals not yet on the Centracs® signal system.

After the controllers are replaced, additional database work must be performed. Reconfigure the controllers' communications addresses on the existing serial communications network to the Ethernet network. Revise the offset references when the NEMA controllers are replaced with 2070s. The NEMA controllers use offsets referenced to the end of the coordinated phase green. The 2070s, with Oasis IP-based firmware, use as an offset reference to the beginning of the green interval of the coordinated phase. If there are two coordinated phases such as two and six, then the new reference is to be the beginning of the coordinated phase green of the second phase.

(C) Red Ring Construction

Begin construction of the both signal system and IS Department Red Ring cables around the Central Business District (CBD) as shown in the Plans by first installing the messenger cable and down guys and the associated managed Ethernet switches and hub cabinets. After the messenger and down guys are constructed, install the fiber optic cable from the Red Ring to the Clark Campbell Transportation Center. Ensure there are empty conduits and/or risers into each hub cabinet for fiber-optic cable to be installed later either under this Phase A construction project our under the Phase B construction project.

For those routes with existing overhead communications cable, overlash the new fiber-optic cable to the existing communications cable. For the underground routes downtown, install the new cable in spare ducts. For the cable entrance into the Clark Campbell Transportation Center, install the new fiber-optic cable inside the spare conduits and risers that run alongside the

existing conduits and risers that house the existing communications cable. Cable and conduit entrances to the Signal Shop can also begin at this time.

Splice existing NCDOT fiber-optic cables to the proposed Red Ring cable where called for in the Plans. The new fiber network will be spliced into several segments of existing single mode fiber-optic cable along MLK Drive and on US 52 and 3rd Street to complete the Red Ring.

Provide cable storage for subsequent and future splices where called for in the Plans.

Construct the Bryce Stuart Building modifications described in these Project Special Provisions and as shown in the Plans. Install the managed Ethernet switch, workstations, and all necessary equipment at the Bryce Stuart Building.

Construct the Signal Shop modifications described in these Project Special Provisions and as shown in the Plans. Install the managed Ethernet switch, workstation, and all necessary equipment at the Signal Shop.

(D) Field Infrastructure

The approach to maintaining and maximizing communications to all signals throughout the construction process requires that the new fiber-optic communications infrastructure be constructed while the existing communications infrastructure remains in place and operational. This will allow the intersections, even those in close proximity to one another, to function on the existing communications system until such time as they are migrated to the new Ethernet fiber-optic communications system. The new Ethernet fiber-optic communications network is comprised of:

1) New aerial cable overlashed to existing communications cable while the existing communications cable remains in use. Install the messenger cable and down guys before beginning any overhead fiber-optic cable installation. The overlashed existing twisted pair communications cable will be abandoned in place after construction. Certain aerial routes are on new pole lines or deviate from the course of the existing communications cable. Existing twisted pair copper wire communications cable that is not overlashed (e.g., in risers, where route changes, etc.) will be removed along with existing splice cabinets, unused risers and abandoned junction boxes, after communications have completely migrated to the new fiber-optic cable and the existing twisted-pair communications cable is no longer in use or will not be used for the IS Department cable. Along a section of S. Main Street, the City IS Department, separately from this project, will overlash new fiber-optic communications cable to the existing twisted-pair copper cable that will be abandoned in place.

2) New underground cable in a new trenched, drilled or bored conduit. In certain situations, as shown in the Plans, the fiber-optic cable will be installed in an existing spare conduit that runs alongside the conduit containing the existing communications cable. In some cases, as shown in the Plans, the fiber-optic cable will be installed inside the same conduit that contains the existing communications cable.

3) Wireless communications using 4.9 GHz for the CBD signals to replace the existing twisted-pair communications cable housed in Duke Energy underground ducts.

4) Certain segments of existing NCDOT and City fiber-optic cable, namely that being installed under TIP projects C-5412, C-4981B, U-2826B, U-2925 and other existing City and NCDOT fiber-optic cable spliced into the new fiber-optic network.

(E) Field Migration

Follow the outline of construction described below. Submit a detailed field migration plan (including details of controller cabinet change-outs) and schedule to the Engineer for review and approval at least two weeks prior to the onset of work. Update the migration plan monthly and submit it five business days prior to the monthly construction meeting. Do not disconnect any existing twisted-pair communications and do not replace any existing traffic signal controllers until such time that all new fiber-optic cable is installed and accepted for use. Obtain approval from the Engineer for any deviations from this sequence. Note that fiber-optic cable for future termination and use by the City's IS Department will be installed along many but not all cable routes coincident with the fiber-optic cables for the signal system. The general routes of these IS Department fiber cables are shown on the IS Cable Schematics in Volume II of the Plans.

(1) General Requirements

Configure the edge switches for the permanent IP addresses, VLANS, and other configuration data before their field installation.

Notify the City of Winston-Salem Signal System Manager at (336) 747-6879 at least two weeks prior to the commencement of work on a particular communications channel to ensure that time-base coordination will be operating and effective during the time of communications interruption. Place in time-base coordination, those signals within existing communications circuits that actively being migrated to the Ethernet communications system.

Where possible, start at the outer edges of the existing local communications circuit and work inward toward the TMC. The existing twisted-pair, copper wire communications cable will be progressively decommissioned as the new Ethernet-based fiber-optic communications system is built-out and brought online, starting at the outer reaches of the system boundaries and working inward toward the TMC. Construct the IS Department fiber-optic cable at the same time as the signal system fiber-optic cable.

Group the work by the existing communications circuits, allowing intersection migration to take place in discrete packages. The boundaries of the existing communications circuites are documented in these Plans. Interrupt communications, replace cabinets and controllers, and migrate signals from the existing communications network to the new fiber-optic communications network.

If the communications conversion in the subject communications circuit interrupts the communication in another existing communications circuit, the Contractor must re-establish communication continuity in the adjacent communications circuit before any work can continue.

Upon successful testing, integrate into the central system software under Ethernet communications.

Complete the migration of all traffic signals in one Ethernet circuit before beginning work on traffic signals in another Ethernet circuit. Complete the intersection migrations in a communications circuit within the number of workdays equal to no more than the number of signalized intersections in the communications circuit. Exceptions to the requirements in this section must be approved by the Engineer.

In addition to grouping work by existing communications circuits, further organize work by proposed communications ring.

Synchronize the clocks of the traffic signal controllers a minimum of once per week while the controllers are off-line from the communications system (refer the "Time-Base Coordination" subsection later in Section 1 of these Project Special Provisions for additional requirements).

Migrate communications between the TMC and the Signal Shop over to the new Ethernet communications system as early as possible.

As each Ethernet circuit is completed and lit, test communications to each Ethernet edge switch in that circuit as per the requirements of "Testing and Acceptance" section of these Project Special Provisions.

Prior to the end of any work day, ensure that communication between the TMC and existing signal controllers still connected to the existing communications cable is reestablished and working correctly.

Construct and splice drop cables to existing and proposed CCTV cameras while maintaining the existing communications. Migrate the existing and proposed cameras as the adjacent traffic signals are migrated to new system whenever possible.

Splice existing NCDOT ITS fiber-optic cables to the proposed trunk cables where called for in the Plans. The new fiber network will be spliced into several segments of existing NCDOT ITS single mode fiber-optic cable as described in the table below:

Existing NCDOT ITS Cable Spliced to Proposed Trunk Cables

Route	Segment	Existing Cable Size
Business 40 (US 421)	MLK Blvd to Old Greensboro Road	144
MLK Drive	US 52 to East 3rd Street	72
MLK Drive/Thomasville Rd.	Reynolds Park Rd to I-40	72
US 52	Motor Road to Akron Drive	72
US 52	Clemmonsville Road to I-40	72
Reynolds Blvd.	University Parkway to Cherry St.	144
I-40	Silas Creek Parkway to US 52.	144
I-40	US 52 to Thomasville Road.	72
Church Street	Cemetery St. to First St.	72

Notify the Engineer and coordinate with the Triad Regional ITS Engineer at (336) 315-7079 at least two weeks prior to the commencement of splicing or other work on these cables. Provide the Triad Regional ITS Engineer updated splice details, updated field splicing location, and Contractor emergency contact information prior to beginning work. **Do not cut the entire cable and re-splice all the fibers**, unless prior approval is obtained from NCDOT. The interruption of connectivity of these cables shall be limited to 48 hours or less, and shall occur only on a non-holiday weekend. **Liquidated damages** for failure to restore communications in

an existing NCDOT ITS fiber-optic communications cable within 48 hours are **$1500 per 24-hour period or any portion thereof**.

Repair at own expense, any damage to NCDOT fiber within 48 hours of notification of the incidence of damage. **Liquidated damages** for failure to repair a damaged NCDOT ITS fiber-optic communications cable and restore communications within 48 hours are **$1500 per 24-hour period or any portion thereof**.

(2) Step 1

The City has joint-use permits for the proposed new attachments of aerial fiber-optic communications cable. Joint-use permits issued by the utility pole owners expire 120 days from the date of issuance. The Contractor shall commence installation of messenger cables and guy assemblies at the outset of construction and work continuously and expeditiously to complete this work prior to the joint-use permit expiration date. In the event that this work cannot be completed within 120 days, notify the Engineer 20 calendar days in advance to allow the City to request an extension of the permit.

(3) Step 2

Construct the fiber-optic communications cable that encircles the downtown, what has been deemed the "Red Ring". This route will largely be over-lashed to existing City of Winston-Salem or NCDOT aerial cable. See Sheets 5 and 6 in Volume II of the Plans for a drawing of the entire Red Ring. Construct the homerun fiber-optic cable from the north side of the Red Ring to the City's TMC. Coordinate work on the south side with the Contractor for TIP Project U-2925.

The Red Ring fiber-optic cable will tie into existing NCDOT ITS fiber-optic cables at the following three locations:

- MLK Drive at US 52,
- MLK Drive at 5th Street, and
- Church Street at Cemetery Street.

Notify the Engineer and coordinate with the Triad Regional ITS Engineer at (336) 315-7079 at least two weeks prior to the commencement of splicing or other work on these cables. Provide the Triad Regional ITS Engineer updated splice details, updated field splicing location, and Contractor emergency contact information prior to beginning work. Do not cut the entire cable and re-splice all the fibers, unless prior approval is obtained from NCDOT. The interruption of connectivity of these cables shall be limited to 48 hours or less, and shall occur only on a non-holiday weekend. Repair at own expense, any damage to NCDOT fiber within 48 hours of notification of the incidence of damage.

Adhere to the instructions in the preceding paragraph anywhere the project Plans call for a relocation of, or splicing into, other NCDOT cables that connect cameras with the Triad Regional Transportation Management Center (TRTMC).

(4) Step 3

Begin construction of the trunk cables along the major routes. For those routes with overhead cable, overlash the new fiber-optic cable to the existing communications cable. For the underground routes, install the new cable in spare ducts, where available, or inside the same conduit as the existing communications cable as shown in the Plans. Provide cable storage for subsequent and future splices where called for in the Plans.

These trunk cables will connect the new managed Ethernet switches at communications hub cabinets along the Red Ring, providing a homerun route for Ethernet communications to the City's TMC.

Construct the proposed communications hub cabinets along the Red Ring and install the communications hardware in the hub cabinets. Establish Ethernet communications and test as per requirements of the "Testing and Acceptance" section of these Project Special Provisions.

(5) Step 4

Construct the trunk cables to the minor arterials and non-redundant links and splice them to the trunk cables constructed in Step 3.

(6) Step 5

Construct and splice drop cables to local intersections in conjunction with new risers or conduits into the controller cabinets while maintaining the existing communications.

(7) Step 6

Configure the edge switches for the permanent IP addresses, VLANS, and other configuration data before their field installation.

Once Ethernet communications are established in Step 3 and successfully tested, and continuous communications paths are established with outlying signals, begin the process of transferring communications from the old twisted-pair copper network to the new fiber network. See "Time-Based Coordination" section below for further details. Exceptions to the requirements in this section must be approved by the Engineer. Notify the City of Winston-Salem Signal System Manager at least two weeks prior to the commencement of work on a particular communications channel to ensure that time-base coordination will be operating and effective during the time of communications interruption. As each Ethernet circuit is completed and lit, test intersection communications as per the requirements of "Testing and Acceptance" section of these Project Special Provisions.

Generally, start at the outer edge of the existing twisted-pair copper circuit and work towards the TMC. Group the work by the existing communications circuits as identified in the Plans, allowing intersection migration to take place in discrete packages.

Interrupt communications, replace cabinets and controllers, and migrate signals from the existing twisted-pair, copper wire communications network to the new fiber-optic communications network. If communications conversion in the subject communications circuit interrupts the communication in another communications circuit, the Contractor must re-establish communication continuity in the adjacent communications circuit before any work can continue.

Upon successful testing, integrate into the central system software under Ethernet communications.

Complete the work of migrating all the traffic signals in one communications circuit before moving to the next communications circuit. Complete the intersection migrations in a communications circuit within the number of workdays equal to no more than the number of signalized intersections in the communications circuit. Exceptions to the requirements in this section must be approved by the Engineer.

As each Ethernet circuit is completed and lit, test intersection communications as per the requirements of "Testing and Acceptance" section of the Project Special Provisions.

Ensure controller cabinet change-outs adhere to all requirements listed in Subsections 1.3(A) and 1.3(F) as well as in Section 3, "Temporary Traffic Control", of the Project Special Provisions.

Prior to the end of any work day, ensure that communications between the Ethernet edge switches, the managed Ethernet switches, and the managed Ethernet core switch in TMC, are reestablished, if they were interrupted, and are working correctly.

(8) Step 7

Construct and splice drop cables to existing and proposed CCTV cameras while maintaining the existing communications. Migrate the existing and proposed cameras as the adjacent traffic signals are replaced.

(9) Step 8

Remove only the materials from the TMC and the Signal Shop as called for in the Plans including some of the old head end equipment (modems, other communications hardware, etc). The existing Centracs® servers and the balance of the serial modems shall remain operational and in place until the Phase B signal system construction project (C-5224B) is completed.

(10) Step 9

Conduct system testing, acceptance and burn in period.

Test the IS Department fiber-optic cable per the requirements of the "Testing and Acceptance" section of these Project Special Provisions.

(F) Intersection Parameters and Database

The Contractor shall submit requests for intersection timing parameters and data to the Engineer at least three weeks (15 business days) prior to needing them. The City will provide all intersection parameters, database and timing plans in ASC/2 and/or ASC/3 format electronically as portable document format (PDF) files and as Microsoft Excel® files. The Contractor shall be responsible for converting City-furnished timing data to OASIS™-formatted data and for loading the OASIS™-formatted data into the Model 2070L controllers and conflict monitors.

(G) Time-Based Coordination (TBC)

Before the existing communication is interrupted within a control zone, verify the time-based coordination plans installed in all the intersection controllers within the control zone. (If necessary, time-based plans will be provided electronically by the Engineer for the Contractor to implement.)

Verify the time reference on each controller at least once per week (by synchronizing with a National Standard Time source while time-based coordination is in use and make any corrections necessary to maintain proper coordination. Reset the controller's clock to the common time source if it has drifted. **Ensure that the controllers' internal clocks are all synchronized at least once per week to the same date and time of day**. Maintain the time synchronization in all controllers during any time that communication with the TMC is interrupted.

Record the time and date of each visit, the activity performed and name of the person who visited the cabinet and performed the clock maintenance activity. Maintain a record of clock

maintenance activity in a single document and furnish to the Engineer for review upon request. Failure to visit weekly each intersection that is not online to check and update clocks will result in **liquidated damages of $1,500 per visit not performed**.

The Engineer reserves the right to make, or have the Contractor make, field timing changes necessary for the pattern optimization and to eliminate identifiable, potential hazards to the motoring public. The Engineer will notify the Contractor of timing changes made or supply the Contractor with revised timing plans if the Department requires the Contractor to implement the timing changes.

Ensure that the time-based coordination plans from existing controllers are transferred to the replacement controllers at those same locations.

1.5. MEASUREMENT AND PAYMENT

There will be no direct payment for work covered in this section. Payment at the contract unit prices for the various items in the contract will be full compensation for all work covered by this section. Include the incidental costs for furnishing and/or installing materials and equipment expressly required under the contract for successful completion of the contract, but whose measurement and payment is not specifically stated under any of the contract pay items, into the unit cost(s) for the various items in the contract.

2. MOBILIZATION

2.1. DESCRIPTION

This work consists of preparatory work and operations to mobilize personnel, materials and equipment to the project site.

2.2. MEASUREMENT AND PAYMENT

Mobilization will be paid as contract lump sum price.

Partial payments for *Mobilization* will be made with the first and second partial pay estimates paid on the contract and will be made at the rate of 50% lump sum price on each of these partial pay estimates, provided the amount bid for *Mobilization* does not exceed 5% of the total amount bid for the contract. Where the amount bid for *Mobilization* exceeds 5% of the total amount bid for the contract, 2.5% percent of the total amount bid will be paid on each of the first two partial pay estimates. That portion exceeding 5% will be paid on the last partial pay estimate.

Such price and payment includes, but is not limited to, the movement of personnel, equipment, supplies, and incidentals to the project site, for the establishment of offices, buildings, and other facilities necessary for work on the project; the removal and disbandment of those personnel, equipment, supplies, incidentals, or other facilities that were established for the prosecution of work on the project; and for all other work and operations that shall be performed for costs incurred before beginning work on the various items on the project site.

Payment will be made under:

Pay Item	Pay Unit
Mobilization	Lump Sum

3. TEMPORARY TRAFFIC CONTROL

3.1. DESCRIPTION

Furnish, install, maintain, relocate, and remove temporary traffic control devices in accordance with these Project Special Provisions, the Transportation Management Plan, the MUTCD, and Roadway Standard Drawings to maintain and control vehicular and pedestrian traffic in a safe and efficient manner during signal system construction. All temporary traffic control devices furnished by the Contractor shall remain the property of the Contractor, unless otherwise specified in the contract.

3.2. GENERAL REQUIREMENTS

(A) Maintenance of Traffic

The Contractor will be required to maintain traffic, both vehicular and pedestrian, within the limits of the project, including roadways that cross or intersect the project, unless otherwise provided for in the contract or approved by the Engineer. The Contractor shall conduct his work in a safe manner that will create a minimum amount of inconvenience to traffic, both vehicular and pedestrian.

Maintain vehicular and pedestrian traffic through work zones in accordance with these Project Special Provisions, the MUTCD, and *Roadway Standard Drawings*, 23 CFR 630 Subparts J and K and the Transportation Management Plan (TMP).

Mark all hazards with signs, barricades, drums or other warning devices until the hazard is eliminated.

(B) Temporary Lane Closures

(1) General

Operate all equipment and personnel within the designated work area during lane closures. Do not impede or stop traffic for the purpose of performing construction related work on the traffic side of the lane closure, except when called for in the Transportation Management Plan.

Install lane closures with the traffic flow, beginning with devices on the upstream side of traffic. Remove lane closures against the traffic flow, beginning with devices on the downstream side of traffic.

Vehicles used to install or remove lane closures shall have flashing or rotating beacons.

(2) Intersections

When construction proceeds through an intersection, provide flagger(s) and all other necessary Traffic Control as required by the Plans to direct the traffic through the intersection. When an intersection is signalized, have authorized personnel place the signal in flash mode prior to beginning work in the intersection.

When it is necessary to close a lane of traffic for construction on the departure (downstream) side of an intersection, implement the lane closure on the approach (upstream) side of the intersection. Close the appropriate lane of dual turn lanes that would otherwise turn into the lane that is closed on the departure side of the intersection.

(C) Traffic Stoppage

Limit the stoppage of traffic to times specified in the Plans. Provide enough time between consecutive stoppages to allow the traffic queue to dissipate.

(D) Traffic Control Supervision

Provide the service of at least one qualified work zone supervisor. The work zone supervisor shall have the overall responsibility for the proper implementation of the traffic management plans and ensure all employees working inside the NCDOT and City rights-of-way have received the proper training appropriate to the job decisions each individual is required to make.

The work zone supervisor is not required to be on site at all times but shall be available to address concerns of the Engineer. The name and contract information of the work zone supervisor shall be provided to the Engineer prior to or at the preconstruction conference.

Qualification of work zone supervisors shall be done by an NCDOT approved training agency or other approved training provider. For a complete listing of these, see the Work Zone Traffic Control's webpage: http://www.ncdot.gov/doh/preconstruct/wztc/

Coordinate with and cooperate with traffic control supervisors of adjacent or overlapping construction projects to insure safe and adequate traffic control is maintained throughout the projects at all times including periods of construction inactivity in accordance with Article 105-7 of the *Standard Specifications*.

(E) Vehicular Access

Maintain continuous and safe vehicular access, including but not limited to, all residences, businesses, schools, police and fire stations, hydrants, other emergency services, hospitals and mailboxes. Conduct operations in such a manner as to limit the inconvenience to property owners.

(F) Pedestrian Access

Maintain continuous and safe pedestrian access, including but not limited to, all residences, businesses, schools and mailboxes. Conduct operations in such a manner as to limit the inconvenience to pedestrians. Pay special attention to pedestrian areas used by visually-impaired pedestrians. Coordinate with local Orientation and Mobility Specialists to make appropriate provisions for visually impaired pedestrians when construction activities will disrupt pedestrian paths that they normally use.

Protect open excavations within or adjacent to areas subject to pedestrian traffic from pedestrian intrusion by surrounding the excavation/hazard with orange plastic mesh construction fencing (also referred to as safety fence, tree protection barricade, warning fence, etc.) or other method approved by the Engineer. Do not use tape, flagging, rope or plastic chain strung between barricades, cones or stakes.

Determine the extent of pedestrian needs through engineering judgment or by the traffic control supervisor responsible for the work zone. Inspect the work zone regularly so effective pedestrian traffic is maintained. When pedestrian movement through or around a work site is necessary, provide a separate usable footpath. If the previous pedestrian facility was accessible to pedestrians with disabilities, provide a footpath during temporary traffic control that is accessible. Do not have any abrupt changes in grade or terrain that could cause a tripping hazard

or could be a barrier to wheelchair use. Provide barriers and channelizing devices that are detectable to pedestrians who have visual disabilities. Provide temporary pedestrian facilities that are made of concrete, asphalt or other suitable material as approved by the Engineer at all locations where the existing sidewalks have been removed for construction operations.

Do not sever or move pedestrian facilities for non-construction activities such as parking for vehicles and equipment. Separate pedestrian movements from both work site activity and vehicular traffic.

(G) Greenways

Comply with all requirements of the "Pedestrians" for all work that is adjacent to, encroaches upon or is within City of Winston-Salem Greenways. Maintain and make provisions for bicycle ingress and egress and provide for safe passage of bicycles along greenways in manner similar to the requirement for pedestrians. At least two weeks prior to beginning any work that may affect or disrupt pedestrian and bicycle traffic along a City Greenway, coordinate with the City of Winston-Salem Department of Transportation concerning any special requirements, any special events like bike races, and work day/hour limitations for the affected Greenway. A map showing the location and routes of the City's Greenways may be found at the following Web address:

http://www.ci.winston-salem.nc.us/Assets/CityOfWS//Documents/Recreation/Greenways/greenways12brochure-web.pdf

(H) Alternate to Transportation Management Plan

If desired, submit an alternate TMP a minimum of 30 calendar days in advance of the anticipated implementation to allow for adequate review time. Do not implement alternate plans for traffic control until approved in writing and properly sealed. No adjustment in compensation or extension of the completion date(s) will be allowed due to the review time of the alternate. If an alternate TMP is implemented, the Contractor shall be responsible for any unanticipated changes to subsequent Steps.

(I) Temporary Traffic Control Plan Not fully Covered in the Contract

When the Transportation Management Plan does not cover a particular work function, notify the Engineer to allow for the development or modification of a sealed set of the Transportation Management Plans.

3.3. MATERIALS

(A) Work Zone Traffic Control Devices

Refer to Division 10 of the *Standard Specifications*.

Use temporary traffic control devices that comply with 23 CFR 630 Subpart K. Provide a Type 7 material certifications in accordance with Article 106-3 of the *Standard Specifications* at least 72 hours before use for all used temporary traffic control devices.

Provide temporary traffic control devices that are listed on the NCDOT Approved Product List.

(B) Work Zone Signs

Refer to Division 10 of the *Standard Specifications*:

Item	Section
Barricade Mounted Signs	1089-3
Work Zone Signs	1089-1
Work Zone Sign Supports	1089-2

Portable work zone signs shall be roll up or approved composite substrates. Use portable work zone signs only with portable work zone sign stands specifically designed for one another.

Provide portable work zone sign stands, portable signs and sheeting that meet NCHRP 350 for Category II traffic control devices and are listed on the NCDOT Approved Products List.

Provide portable work zone signs and stands that are crash tested together as a system by the manufacturer. Poor performance of portable work zone signs or portable work zone sign stands at any site, whether or not related to a specific contract, will be grounds for non-acceptance of a product on any project under contract.

(C) Flashing Arrow Boards

Refer to Division 10 of the *Standard Specifications*:

Item	Section
Flashing Arrow Boards	1089-6

Use arrow boards that are on the NCDOT Approved Product List.

Poor performance of arrow boards at any site, whether or not related to a specific contract, will be grounds for non-acceptance of a product on any project under contract.

(D) Portable Changeable Message Signs

Refer to Division 10 of the *Standard Specifications*:

Item	Section
Portable Changeable Message Signs	1089-7

Use portable changeable message signs that are on the NCDOT Approved Products List.

Poor performance of portable changeable message signs at any site, whether or not related to a specific contract, will be grounds for non-acceptance of a product on any project under contract.

(E) Drums

Refer to Division 10 of the *Standard Specifications*:

Item	Section
Drums	1089-5

Provide drums that are on the NCDOT Approved Products List.

(F) Cones

Refer to Division 10 of the *Standard Specifications*:

Item	Section
Cones	1089-5

Provide cones that are on the NCDOT Approved Products List.

(G) Barricades

Refer to Division 10 of the *Standard Specifications*:

Item	Section
Barricades	1089-3

Provide barricades that meet NCHRP 350 for Category II traffic control devices and are on the NCDOT Approved Products List.

(H) Flaggers

Refer to Division 10 of the *Standard Specifications*:

Item	Section
Flaggers	1089-10

(I) Truck Mounted Attenuators

Refer to Division 10 of the *Standard Specifications*:

Item	Section
Truck Mounted Impact Attenuators	1089-9

Use TMAs that meet NCHRP 350 Test Level II or III for work zone traffic control devices and are on the NCDOT Approved Products List.

Historical performance of the TMA will help determine the future use of the material by the Department, even if the TMA has been approved. Poor performance of TMA at any site, whether or not related to a specific contract, will be grounds for non-acceptance of a product on any project under contract.

(J) Skinny Drums

Refer to Division 10 of the *Standard Specifications*:

Item	Section
Skinny Drums	1089-5

Provide skinny drums that are on the NCDOT Approved Products List.

3.4. CONSTRUCTION METHODS

(A) Work Zone Traffic Control Devices

Ensure all traffic control devices inspected and approved before using them on the project. Install temporary traffic control devices before construction operations begin and during the proper phase of construction. Maintain and relocate temporary traffic control devices during the

time they are in use. Keep these devices in place as long as they are needed and immediately remove thereafter. When operations are performed in stages, install only those devices that apply to the present conditions.

(B) Work Zone Signs

(1) Work Zone Signs (Barricade Mounted)

Mount approved composite or roll-up signs to barricade rails so that the signs do not cover more than 50% of the top two rails or 33% of the total area of the three rails. Mount signs at least 1 foot from the ground to the bottom of the sign.

(2) Work Zone Signs (Portable)

Install the portable work zone sign and sign stand to stand plumb within 10° left and right, within 20° front and back and be capable of standing erect in windy conditions.

Install roll-up or approved composite signs at least 1 foot from the bottom of the sign to the edge of pavement elevation on two-lane two-way roadways and at least 5 feet from the bottom of the sign to the edge of pavement elevation on multi-lane roadways.

Clean the sign face prior to use.

When not in use for periods longer than 30 minutes, lay the portable work zone sign flat on the ground and collapse the sign stand and lay it flat on the ground.

(C) Flashing Arrow Boards

Use arrow boards that have the capability to display mode selections.

Do not use straight-line caution or chevron displays.

Mount flashing arrow boards on trucks, trailers, or other mobile units.

Expedite repairs due to failure, malfunction or damage to an arrow board. Furnish another arrow board approved by the Engineer during the repair time. Repair or replace arrow boards immediately; otherwise, suspend all construction activities requiring the use of the sign until the sign is restored to operation.

Perform all maintenance operations recommended by the manufacturer of the sign.

(D) Portable Changeable Message Signs

Mount all portable changeable message signs on a trailer or truck so as to support the message board in a level position and in accordance with the Plans. Align and sight the portable changeable message sign to provide optimal driver visibility. Messages on a portable changeable message sign shall consist of no more than 2 phases, and a phase shall consist of no more than 3 lines of text. Each phase shall be capable of being understood by itself, regardless of the order in which it is read. Messages shall be centered and uppercase within each line of the legend. If more than one portable changeable message sign is simultaneously legible to road users, then only one of the signs shall display a sequential message at any given time. As guidance, the display time for each phase shall be at least 2 seconds, and the sum of the display times for both of the phases shall be no more than 8 seconds. Sign operator will adjust the display rate so the 2 phase message can be understood by the motorist approaching the sign at the posted speed limit. Relocate the units for the various stages of construction as shown in the Plans or as needed to adequately inform the motorists.

Provide an experienced operator for the portable changeable message sign during periods of operation to ensure that the messages displayed on the sign panel are in accordance with the Plans and in accordance with message content guidelines. Ensure that the message sign is illuminated properly to meet the existing light conditions, and that all adjustments for operation of the sign are made as needed to properly guide motorists.

Expedite repairs due to failure, malfunction, or damage to a portable changeable message sign. Furnish another portable changeable message during the repair time. Repair and/or replace portable changeable message sign immediately; otherwise, suspend all construction activities requiring the use of the sign until the sign is restored to operation.

Perform all maintenance operations recommended by the manufacturer of the sign. Include the periodic cleaning of the sign face and associated solar panels in maintenance operations.

(E) Drums

Use the same type of reflective sheeting on all drums installed at any one time during the life of the project. Spacing of these devices is equal in feet to the speed limit in the taper and twice the speed limit in the tangent sections

Use a ballasting method in accordance with the manufacturer's specification. When using tire ballasting method, use approved manufacturer's tires and place the tires flush with the ground.

Immediately replace any drum, ballast or reflective sheeting that are torn, crushed, discolored or otherwise damaged.

(F) Cones

Use reflective adhesive sheeting on all cones used between dusk and dawn. Use the same type of reflective sheeting on all cone collars installed at any one time during the life of the project. Do not use cones in the upstream taper of lane or shoulder closures for multilane roadways and use for no longer than 3 consecutive days.

Use ballasting methods in accordance with manufacturer's specification. Cones may be used on all facilities for daytime and nighttime work with speed limits at or below 55 mph. If used at night, the cones shall have adhesive reflective sheeting and shall meet the height requirements in the *Roadway Standard Drawings*.

Cones may be used instead of drums, where allowed in the TMP plans or by the Engineer, on facilities with speed limits above 55 mph, if both the work is performed during daylight conditions and the devices are removed after each work period. Drums shall be used in the tapers.

The maximum spacing for cones on multi-lane roadways is equal in feet to the posted speed limit.

Immediately replace any cone that is torn, crushed, discolored or otherwise damaged.

(G) Barricades

At the end of the workday, properly close the road where construction equipment accesses a road closure through Type III barricades.

Use sandbags or other approved ballasting methods to prevent overturning of barricades by the wind. If needed, place sandbags or other acceptable ballasting on the feet of the frame. Do not ballast barricades with objects such as rocks or chunks of concrete.

Do not anchor barricades to any pavement surfaces unless such anchoring method has passed the crash test requirement of NCHRP 350 for work zone category II devices.

Point the striped diagonals on the barricade rails in the direction of traffic flow.

(H) Flaggers

Provide the service of properly equipped and qualified flaggers (see *Roadway Standard Drawings* No. 1150.01) at locations and times for such period as necessary for the control and protection of vehicular and pedestrian traffic. Anyone who controls traffic is required to be qualified. Qualification consists of each flagger receiving proper training in the set-up and techniques of safely and competently performing a flagging operation. Qualification of flaggers is to be done by an NCDOT approved training agency or other approved training provider. For a complete listing of these, see the Work Zone Traffic Control's webpage.

Prior to beginning work on the project, a Qualification Statement that all flaggers used on the project have been properly trained through an NCDOT approved training resource shall be provided to the Engineer.

Use flagging methods that comply with the guidelines in the MUTCD.

(I) Truck Mounted Attenuator

Before use, furnish the Engineer detailed brochures, specifications, and other manufacturer's data that completely describes the performance criteria, installation, and instructions for the TMA.

Use only TMAs that meet the crash test requirements of *Standard Specifications* Article 1089-9(A).

Do not park TMAs against rigid objects (i.e. bridge piers or portable concrete barrier) except as a temporary safety measure and in no case for longer than 72 hours. Install the TMA on a truck that is fully operational, in good running order, and in accordance with the manufacturer's specifications.

Use the appropriate lighting and delineation on the truck and TMAs as shown in the contract.

Repair or replace within 24 hours any attenuator that becomes crushed or otherwise damaged so that it will perform its intended purpose. Suspend all construction activities until the attenuator is repaired or replaced. Provide safe control of traffic until the attenuator has been repaired by using approved methods.

(J) Skinny Drums

Use the same type of reflective sheeting (Type III High Intensity Prismatic or greater) on all skinny drums installed at any one time during the life of the project. Use ballasting methods in accordance with the manufacturer's specification.

Immediately replace any skinny drum, ballast or reflective sheeting that are torn, crushed, discolored or otherwise damaged.

Skinny drums may be used instead of cones on all facilities with speed limits of 55 mph and below. Spacing of these devices is equal in feet to the speed limit in the taper and twice the speed limit or every other skip in the tangent sections.

Skinny drums may be used instead of cones and drums where allowed in the TMP or by the Engineer on facilities with speed limits above 55 mph, if all the following apply:

1) The work is performed during daylight conditions,
2) The devices are removed after each work period and
3) Drums are used in the tapers.

Do not use skinny drums on control-of-access facilities with speed limits above 55 mph that either involve night work or allow devices to remain in place overnight.

Do not use skinny drums for tapers on multilane or control-of-access roadways with speed limits above 55 mph.

Do not intermix with drums or cones unless directed by the Engineer or the TMP.

(K) Law Enforcement

Use uniformed law enforcement officers and marked law enforcement vehicles equipped with blue lights mounted on top of the vehicle and law enforcement vehicle emblems to direct or control traffic as required by the Plans or by the Engineer.

Use a law enforcement officer(s) when an existing traffic signal must be taken out of operation in order to remove and replace the existing cabinet and controller. Use a law enforcement officer(s) when a traffic signal must be deactivated while constructing a conduit entrance into an existing cabinet foundation (subject to the Engineer's prior approval), while overlaying an existing cabinet foundation with a new preformed foundation and while removing and replacing an existing foundation with a new preformed foundation in the same location.

(L) Pedestrian Safety

Install measures for separating pedestrian traffic from the work area and from adjacent vehicular traffic where pedestrian paths are evident or sidewalks are present. Use protective barricades, warning and guidance devices and signs to provide a safe, well-defined passageway for pedestrians. When a sidewalk must be closed temporarily to perform construction work, refer to Chapter 6D, "Pedestrian and Worker Safety," and Typical Applications 28 and 29 (TA-28 and TA-29) of the 2009 Edition of the *Manual on Uniform Traffic Control Devices* (MUTCD 2003) for appropriate pedestrian traffic control measures. The MUTCD 2009 is available online at the following web address: http://mutcd.fhwa.dot.gov

3.5. MAINTENANCE AND INSPECTION

(A) Work Zone Traffic Control Devices

Submit a proposed traffic control device maintenance schedule and checklist for approval prior to construction. Perform continuous maintenance and scheduled inspections of traffic control devices. Review and maintain all traffic handling measures to ensure that adequate provisions are in place for the safety of the public and workers.

Maintenance activities include cleaning, repair or replacement of temporary traffic control devices that are damaged, torn, crushed, discolored, displaced or deteriorated beyond effectiveness.

If there are traffic control devices in use, perform inspection on a daily basis.

If the name and telephone number of the agency, Contractor or supplier is shown on the non-retroreflective surface of all channelizing devices, use letters and numbers that are a non-reflective color and not over 2 inches in height.

3.6. FAILURE TO MAINTAIN TRAFFIC CONTROL

Failure to maintain temporary traffic control measures and traffic control devices in accordance with this Project Special Provision may result in formal notification of noncompliance. Implement remedial action immediately for imminent danger situations as directed. Implement remedial action within 48 hours after notification of a safety issue that is not an imminent danger situation. See Articles 107-21 and 108-7 of the *Standard Specifications*.

Failure to comply may result in having the work performed with available forces and equipment. In cases of willful disregard for the safety of the public, the Engineer may proceed immediately to implement the measures necessary to provide the appropriate level of traffic control to ensure that the safety of all concerned parties is maintained.

3.7. MEASUREMENT AND PAYMENT

Nominal dimensions will be used to compute sign panel areas.

Work zone signs (barricade mounted) will be measured and paid for as the actual number of square feet satisfactorily installed on barricades and accepted by the Engineer. Payment will be made for the initial installation only. Relocation of signs will be considered incidental to the measurement of the quantity of signs.

Work zone signs (portable) will be measured and paid for as the actual number of square feet satisfactorily installed and accepted by the Engineer. Payment will be made for the initial installation only. Relocation of signs will be considered incidental to the measurement of the quantity of signs.

No direct payment will be made for portable work zone sign stands. All portable work zone sign stands will be incidental to the work of providing work zone signs.

Flashing arrow board will be measured and paid for as the maximum number of boards that have been satisfactorily placed and accepted by the Engineer in use at any one time during the life of the project as required by the contract. Relocation, repair, replacement and maintenance of arrow boards is considered incidental to the work of this section of the Project Special Provisions.

Portable changeable message signs will be measured and paid for as the maximum number of portable changeable message signs acceptably placed and in operation, at any one time during the life of the project. Payment for *portable changeable message signs* will be made on the following schedule:

70% of the unit bid upon placing the unit in service.
20% of the unit bid when the project is 50% complete.

10% of the unit bid when the project is 100% complete.

Relocation, replacement, repair and maintenance of portable changeable message signs is considered incidental to the work of this section of the Project Special Provisions.

Drums will be measured and paid for as the maximum number of drums acceptably placed and in use at any one time during the life of the project. Relocation, repair, replacement and maintenance of cones will be incidental to the work of this section of the Project Special Provisions.

Cones will be measured and paid for as the maximum number of cones acceptably placed and in use at any one time during the life of the project. Relocation, repair, replacement and maintenance of cones will be incidental to the work of this section of the Project Special Provisions.

Barricades (Type III) will be measured and paid for as the maximum number of linear feet of barricades acceptably placed and in use at any one time during the life of the project. Measurement will be made of the total length of each barricade along one rail. Relocation, repair, replacement and maintenance of barricades will be incidental to the work of this section of the Project Special Provisions.

Flagger will be measured and paid for as the actual number of hours that each flagger is satisfactorily provided and accepted by the Engineer during the life of the project. Flagging conducted for the convenience of the Contractor's operations is not compensated. The Department will pay for flaggers, including those used at Y-lines that are used in conjunction with a lane closure. Flaggers used for operations not involving a lane closure will be incidental to that operation and no payment will be made. Flaggers used for hauling operations, where the only need for a lane closure is due to the hauling operation, will be incidental to that operation and no payment will be made. Any flagger used for less than one hour will be incidental to that operation.

TMA will be measured and paid for as the maximum number of TMAs acceptably placed and in use at any one time during the life of the project for all operations other than moving and mobile operations. TMAs will be incidental to all moving and mobile operations. In the case of emergency situations, TMAs will not be paid for when payment has already been made for a stationary unit. Relocation of TMAs will be incidental to the measurement of the quantities of TMAs and no separate payment will be made.

Skinny drum will be measured and paid for as the actual number of skinny drums satisfactorily placed, accepted by the Engineer and in use at any one time during the life of the project. Relocation, repair, replacement and maintenance of skinny drums is considered incidental to the work of this section of the Project Special Provisions.

Law enforcement will be measured and paid for as the actual number of hours that each law enforcement officer is provided during the life of the project as approved by the Engineer and subject to the following conditions:

- Measurement and payment will not exceed 3 hours per police officer provided to direct traffic at a given signalized intersection during the removal and replacement of a controller cabinet.

- Measurement and payment will not exceed 1 hour per police officer provided to direct traffic at a given signalized intersection while constructing a new conduit entrance into an existing cabinet foundation, overlaying an existing cabinet foundation with a new preformed foundation or replacing an existing foundation with a new preformed foundation in the same location.

There will be no direct payment for marked law enforcement vehicles as they are considered incidental to the pay item.

No measurement will be made of orange plastic mesh construction fencing or other approved methods of protecting open excavations/hazards from pedestrian intrusion as such measures will be considered incidental to the excavation work.

If the Contractor fails to maintain acceptable traffic control measures or temporary traffic control devices and the Engineer implements measures necessary to provide the appropriate level of traffic control, the actual cost of performing said work will be deducted from the monies due the Contractor on the contract.

Payment will be made under:

Pay Item	**Pay Unit**
Work Zones Signs (Barricade Mounted)	Square Foot
Work Zones Signs (Portable)	Square Foot
Flashing Arrow Board	Each
Portable Changeable Message Sign	Each
Drums	Each
Cones	Each
Barricades (Type III)	Linear Foot
Flagger	Hour
TMA	Each
Skinny Drum	Each
Law Enforcement	Hour

4. SIGNAL HEADS

4.1. DESCRIPTION

Furnish and install vehicle and pedestrian LED signal heads, visors, interconnecting brackets, wire entrance fittings, mounting assemblies, signal cable, lashing wire, pedestrian pushbuttons (and associated lead-in cable), pedestrian signal signs, grounding systems, and all necessary hardware.

4.2. MATERIALS

(A) General

Furnish material, equipment and hardware under this section that is pre-approved on the ITS and Signals QPL.

Fabricate vehicle signal head housings and end caps from from ultraviolet and heat-stabilized virgin polycarbonate material.

Fabricate 16-inch pedestrian signal head housings and end caps from die-cast aluminum. Provide visor mounting screws, door latches, and hinge pins fabricated from stainless steel. Provide interior screws, fasteners, and metal parts fabricated from stainless steel or corrosion resistant material.

Fabricate tunnel and traditional visors for vehicle signal heads from ultraviolet and heat-stabilized virgin polycarbonate material. Fabricate tunnel and traditional visors for pedestrian signal heads from sheet aluminum.

Paint all surfaces inside and outside of signal housings and doors. Paint outside surfaces of tunnel and traditional visors, messenger cable mounting assemblies, pole and pedestal mounting assemblies, and pedestrian pushbutton housings. Have electrostatically-applied, fused-polyester paint a minimum of 2.5 to 3.5 mils thick. Do not apply paint to the latching hardware or rigid vehicle signal head mounting brackets for mast arm attachments.

Paint the signal housings and visors black (Federal Standard 595C, Color Chip Number 17038) when:

- The pedestrian or vehicle signal will be mounted on metal poles or mast arms that currently have a black finish.
- The existing pedestrian and vehicle signals at the intersection where the new signals will be installed are painted black.

For signals at all other locations, paint the signal housings highway yellow (Federal Standard 595C, Color Chip Number 13538).

Have the interior surfaces of tunnel and traditional visors painted an alkyd urea black synthetic baking enamel with a minimum gloss reflectance and meeting the requirements of MIL-E-10169, "Enamel Heat Resisting, Instrument Black." Paint the exterior surfaces of tunnel and traditional visors black (Federal Standard 595C, Color Chip Number 17038).

For pole mounting, provide side of pole mounting assemblies with framework and all other hardware necessary to make complete, watertight connections of the signal heads to the poles and pedestals. Fabricate the mounting assemblies and frames from aluminum with all necessary

hardware, screws, washers, etc. to be stainless steel. Provide mounting fittings that match the positive locking device on the signal head with the serrations integrally cast into the brackets. Provide upper and lower pole plates that have a 1¼-inch vertical conduit entrance hubs with the hubs capped on the lower plate and 1½-inch horizontal hubs. Ensure that the assemblies provide rigid attachments to poles and pedestals so as to allow no twisting or swaying of the signal heads. Ensure that all raceways are free of sharp edges and protrusions, and can accommodate a minimum of ten Number 14 AWG conductors. Furnish pole-mounting assemblies that are the same color as the housing of the pedestrian or vehicle signal head that will be attached to them (e.g., furnish black assemblies for black signal heads and yellow assemblies for yellow signal heads). Comply with the painting requirements for signal heads listed above.

For pedestal mounting, provide a post-top slipfitter mounting assembly that matches the positive locking device on the signal head with serrations integrally cast into the slipfitter. Provide stainless steel hardware, screws, washers, etc. Provide a minimum of six 3/8 X 3/4-inch long square head bolts for attachment to pedestal. Provide a center post for multi-way slipfitters. Furnish post-top slipfitter mounting assemblies that are either the same color as the housing of the pedestrian or vehicle signal head that will be attached to them (e.g., furnish black assemblies for black signal heads and yellow assemblies for yellow signal heads) or which have a natural aluminum finish. Comply with the painting requirements for signal heads listed above.

For light emitting diode (LED) traffic signal modules, provide the following requirements for inclusion on the Department's Qualified Products List (QPL) for traffic signal equipment.

1. Sample submittal,
2. Third-party independent laboratory testing results for each submitted module with evidence of testing and conformance with all of the Design Qualification Testing specified in Section 6.4 of each of the following Institute of Transportation Engineers (ITE) specifications:
   - Vehicle Traffic Control Signal Heads – Light Emitting Diode (LED) Circular Signal Supplement
   - Vehicle Traffic Control Signal Heads – Light Emitting Diode (LED) Vehicle Arrow Traffic Signal Supplement
   - Pedestrian Traffic Control Signal Indications – Light Emitting Diode (LED) Pedestrian Traffic Signal Modules.

   (Note: The Department currently recognizes two approved independent testing laboratories. They are Intertek ETL Semko and Light Metrics, Incorporated with Garwood Laboratories. Independent laboratory tests from other laboratories may be considered as part of the QPL submittal at the discretion of the Department.
3. Evidence of conformance with the requirements of these specifications,
4. A manufacturer's warranty statement in accordance with the required warranty, and
5. Submittal of manufacturer's design and production documentation for the model, including but not limited to, electrical schematics, electronic component values, proprietary part numbers, bill of materials, and production electrical and photometric test parameters,
6. Evidence of approval of the product to bear the Intertek ETL Verified product label for LED traffic signal modules.

In addition to meeting the performance requirements for the minimum period of 60 months, provide a written warranty against defects in materials and workmanship for the modules for a period of 60 months after installation of the modules. During the warranty period, the manufacturer must provide replacement modules within 45 days of receipt of modules that have failed at no cost to the State or City. Repaired or refurbished modules may not be used to fulfill the manufacturer's warranty obligations. Provide manufacturer's warranty documentation to the Department during evaluation of product for inclusion on the ITS and Signals QPL.

(B) Vehicle Signal Heads

Comply with the ITE standard "Vehicle Traffic Control Signal Heads". Provide housings with provisions for attaching backplates.

Provide visors that are 8 inches in length for 8-inch vehicle signal head sections. Provide visors that are 10 inches in length for 12-inch vehicle signal heads.

Provide a termination block with one empty terminal for field wiring for each indication plus one empty terminal for the neutral conductor. Have all signal sections wired to the termination block. Provide barriers between the terminals that have terminal screws with a minimum Number 8 thread size and that will accommodate and secure spade lugs sized for a Number 10 terminal screw.

Mount termination blocks in the yellow signal head sections on all in-line vehicle signal heads. Mount the termination block in the red section on five-section vehicle signal heads.

Furnish vehicle signal head interconnecting brackets. Provide one-piece aluminum brackets less than 4.5 inches in height and with no threaded pipe connections. Provide hand holes on the bottom of the brackets to aid in installing wires to the signal heads. Lower brackets that carry no wires and are used only for connecting the bottom signal sections together may be flat in construction.

For messenger cable mounting, provide messenger cable hangers, wire outlet bodies, balance adjusters, bottom caps, wire entrance fitting brackets, and all other hardware necessary to make complete, watertight connections of the vehicle signal heads to the messenger cable. Fabricate mounting assemblies from malleable iron and provide serrated rings made of aluminum. Provide messenger cable hangers and balance adjusters that are galvanized before being painted. Fabricate balance adjuster eyebolt and eyebolt nut from stainless steel or galvanized malleable iron. Provide messenger cable hangers with U-bolt clamps. Fabricate washers, screws, bolts, clevis pins, cotter pins, nuts, and U-bolt clamps from stainless steel.

For mast arm mounting, provide rigid vehicle signal head mounting brackets and all other hardware necessary to make complete, watertight connections of the vehicle signal heads to the mast arms and to provide a means for vertically adjusting the vehicle signal heads to proper alignment. Fabricate the mounting assemblies from malleable iron or aluminum, and provide serrated rings made of aluminum. Provide stainless steel cable attachment assemblies to secure the brackets to the mast arms. Ensure all fastening hardware and fasteners are fabricated from stainless steel.

Provide LED vehicular traffic signal modules (hereafter referred to as modules) that consist of an assembly that uses LEDs as the light source in lieu of an incandescent lamp for use in traffic signal sections. Use LEDs that are aluminum indium gallium phosphorus (AlInGaP) technology for red and yellow indications and indium gallium nitride (InGaN) for green

indications. Install the ultra bright type LEDs that are rated for 100,000 hours of continuous operation from -40°F to +165°F. Design modules to have a minimum useful life of 60 months and to meet all parameters of this specification during this period of useful life.

For the modules, provide spade terminals crimped to the lead wires and sized for a #10 screw connection to the existing terminal block in a standard signal head. Do not provide other types of crimped terminals with a spade adapter.

Ensure the power supply is integral to the module assembly. On the back of the module, permanently mark the date of manufacture (month & year) or some other method of identifying date of manufacture.

Tint the red, yellow and green lenses to correspond with the wavelength (chromaticity) of the LED. Transparent tinting films are unacceptable. Provide a lens that is integral to the unit with a smooth outer surface.

(1) LED Circular Signal Modules:

Provide modules in the following configurations: 12-inch circular sections, and 8-inch circular sections. All makes and models of LED modules purchased for use on this project shall appear on the current NCDOT ITS & Signals Qualified Products List (QPL).

Provide the manufacturer's model number and the product number (assigned by the Department) for each module that appears on the 2012 or most recent ITS & Signals QPL. In addition, provide manufacturer's certification in accordance with Article 106-3 of the *Standard Specifications,* that each module meets or exceeds the ITE "Vehicle Traffic Control Signal Heads – Light Emitting Diode (LED) Circular Signal Supplement" dated June 27, 2005 (hereafter referred to as VTCSH Circular Supplement) and other requirements stated in this specification.

Provide modules that meet the following requirements when tested under the procedures outlined in the VTCSH Circular Supplement:

Module Type	Max. Wattage at 165° F	Nominal Wattage at 77° F
12-inch red circular	17	11
8-inch red circular	13	8
12-inch green circular	15	15
8-inch green circular	12	12

For yellow circular signal modules, provide modules tested under the procedures outlined in the VTCSH Circular Supplement to insure power required at 77° F is 22 Watts or less for the 12-inch circular module and 13 Watts or less for the 8-inch circular module.

Note: Use a wattmeter having an accuracy of ±1% to measure the nominal wattage and maximum wattage of a circular traffic signal module. Power may also be derived from voltage, current and power factor measurements.

(2) LED Arrow Signal Modules

Provide 12-inch omnidirectional arrow signal modules. All makes and models of LED modules purchased for use on this project shall appear on the current NCDOT ITS & Signals Qualified Products List (QPL).

Provide the manufacturer's model number and the product number (assigned by the Department) for each module that appears on the 2012 or most recent ITS & Signals QPL. In addition, provide manufacturer's certification in accordance with Article 106-3 of the *Standard Specifications,* that each module meets or exceeds the requirements for 12-inch omnidirectional modules specified in the ITE "Vehicle Traffic Control Signal Heads – Light Emitting Diode (LED) Vehicle Arrow Traffic Signal Supplement" dated July 1, 2007 (hereafter referred to as VTCSH Arrow Supplement) and other requirements stated in this specification.

Provide modules that meet the following requirements when tested under the procedures outlined in the VTCSH Arrow Supplement:

Module Type	Max. Wattage at 165° F	Nominal Wattage at 77° F
12-inch red circular	12	9
12-inch green circular	11	11

For yellow arrow signal modules, provide modules tested under the procedures outlined in the VTCSH Arrow Supplement to insure power required at 77° F is 12 Watts or less.

Note: Use a wattmeter having an accuracy of ±1% to measure the nominal wattage and maximum wattage of an arrow traffic signal module. Power may also be derived from voltage, current and power factor measurements.

(C) Pedestrian Signal Heads and Pushbuttons

Provide pedestrian signal heads with international symbols that meet the MUTCD. Do not provide letter indications.

Comply with the ITE standard for "Pedestrian Traffic Control Signal Indications" and the following sections of the ITE standard for "Vehicle Traffic Control Signal Heads" in effect on the date of advertisement:

- Section 3.00 - "Physical and Mechanical Requirements"
- Section 4.01 - "Housing, Door, and Visor: General"
- Section 4.04 - "Housing, Door, and Visor: Materials and Fabrication"
- Section 7.00 - "Exterior Finish"

Provide a double-row termination block with three empty terminals and number 10 screws for field wiring. Provide barriers between the terminals that accommodate a spade lug sized for number 10 terminal screws. Mount the termination block in the hand section. Wire all signal sections to the terminal block.

Where required by the Plans, provide 16-inch pedestrian signal heads with traditional three-sided, rectangular visors, 6 inches long.

Design the LED pedestrian traffic signal modules (hereafter referred to as modules) for installation into standard pedestrian traffic signal sections that do not contain the incandescent signal section reflector, lens, eggcrate visor, gasket, or socket. Provide modules that consist of an assembly that uses LEDs as the light source in lieu of an incandescent lamp. Use LEDs that are of the latest aluminum indium gallium phosphorus (AlInGaP) technology for the Portland Orange hand and countdown displays. Use LEDs that are of the latest indium gallium nitride (InGaN) technology for the Lunar White walking man displays. Install the ultra bright type LEDs that are rated for 100,000 hours of continuous operation from -40°F to +165°F. Design

modules to have a minimum useful life of 60 months and to meet all parameters of this specification during this period of useful life.

Design all modules to operate using a standard 3-wire field installation. Provide spade terminals crimped to the lead wires and sized for a #10 screw connection to the existing terminal block in a standard pedestrian signal housing. Do not provide other types of crimped terminals with a spade adapter.

Ensure the power supply is integral to the module assembly. On the back of the module, permanently mark the date of manufacture (month & year) or some other method of identifying date of manufacture.

Provide modules in the following configuration: 16-inch displays which have the solid hand/walking man overlay on the left and the countdown on the right. All makes and models of LED modules purchased for use on this project shall appear on the current NCDOT ITS & Signals Qualified Products List (QPL).

Provide the manufacturer's model number and the product number (assigned by the Department) for each module that appears on the 2012 or most recent ITS & Signals QPL. In addition, provide manufacturer's certification in accordance with Article 106-3 of the *Standard Specifications,* that each module meets or exceeds the ITE "Pedestrian Traffic Control Signal Indications – Light Emitting Diode (LED) Pedestrian Traffic Signal Modules" dated August 04, 2010 (hereafter referred to as PTCSI Pedestrian Standard) and other requirements stated in this specification.

Provide modules that meet the following requirements when tested under the procedures outlined in the PTCSI Pedestrian Standard:

Module Type	Max. Wattage at 165° F	Nominal Wattage at 77° F
Hand Indication	16	13
Walking Man Indication	12	9
Countdown Indication	16	13

Note: Use a wattmeter having an accuracy of ±1% to measure the nominal wattage and maximum wattage of a pedestrian signal module. Power may also be derived from voltage, current and power factor measurements.

Provide module lens that is hard coated or otherwise made to comply with the material exposure and weathering effects requirements of the Society of Automotive Engineers (SAE) J576. Ensure all exposed components of the module are suitable for prolonged exposure to the environment, without appreciable degradation that would interfere with function or appearance.

Ensure the countdown display continuously monitors the traffic controller to automatically learn the pedestrian phase time and update for subsequent changes to the pedestrian phase time.

Ensure the countdown display begins normal operation upon the completion of the preemption sequence and no more than one pedestrian clearance cycle.

Provide 2-inch diameter pedestrian pushbuttons with weather-tight housings fabricated from die-cast aluminum and threading in compliance with the NEC for rigid metal conduit. Provide a weep hole in the housing bottom and ensure that the unit is vandal resistant.

Provide pushbutton housings that are suitable for mounting on flat or curved surfaces and that will accept 1/2-inch conduit installed in the top. Provide units that have a heavy duty pushbutton assembly with a sturdy, momentary, normally-open switch. Have contacts that are electrically insulated from the housing and pushbutton. Ensure that the pushbuttons are rated for a minimum of 5 mA at 24 volts DC and 250 mA at 12 volts AC. Furnish pushbuttons with housings that are the same color as the housing of the corresponding pedestrian signal installed at a given location (e.g., furnish black pushbutton housings for black pedestrian signal heads and yellow pushbutton housings for yellow pedestrian signal heads). Comply with the painting requirements for signal heads listed above. Stainless steel pushbutton housings are an acceptable alternative to painted or powder-coated aluminum housings for all locations.

Provide standard R10-3e signs for countdown pedestrian heads with mounting hardware that comply with the MUTCD in effect on the date of advertisement.

(D) Signal Cable

Furnish 16-4 and 16-7 signal cable that complies with IMSA specification 20-1 except provide the following conductor insulation colors:

- For 16-4 cable: white, yellow, red, and green;
- For 16-7 cable: white, yellow, red, green, yellow with black stripe tracer, red with black stripe tracer, and green with black stripe tracer. Apply continuous stripe tracer on conductor insulation with a longitudinal or spiral pattern.

Provide a ripcord to allow the cable jacket to be opened without using a cutter. IMSA specification 19-1 will not be acceptable. Provide a cable jacket labeled with the IMSA specification number and provide conductors constructed of stranded copper.

4.3. CONSTRUCTION METHODS

(A) General

Bag new pedestrian and vehicle signal heads with burlap bags or bags made of non-ripping material specifically designed for covering signal heads until signal heads are placed in operation. Do not use trash bags of any type.

When new signal heads are placed into operation, immediately bag and remove signals heads that are not to be reused.

Adjust each signal head vertically and horizontally so that light output will be of maximum effectiveness for traffic and pedestrians. Do not tilt signal heads forward.

(B) Vehicle Signal Heads

Install vehicle signal heads such that the top of the signal housing located over any portion of a highway that can be used by motor vehicles is no more than 25.6 ft above the pavement.

Install vehicle signal heads such that the maximum mounting height to the top of the signal housing is as shown in the graph below if the location is between 40 ft and 53 ft from the stop line.

Maximum Mounting Height of Signal Heads
Located Between 40 Feet and 53 Feet from Stop Line

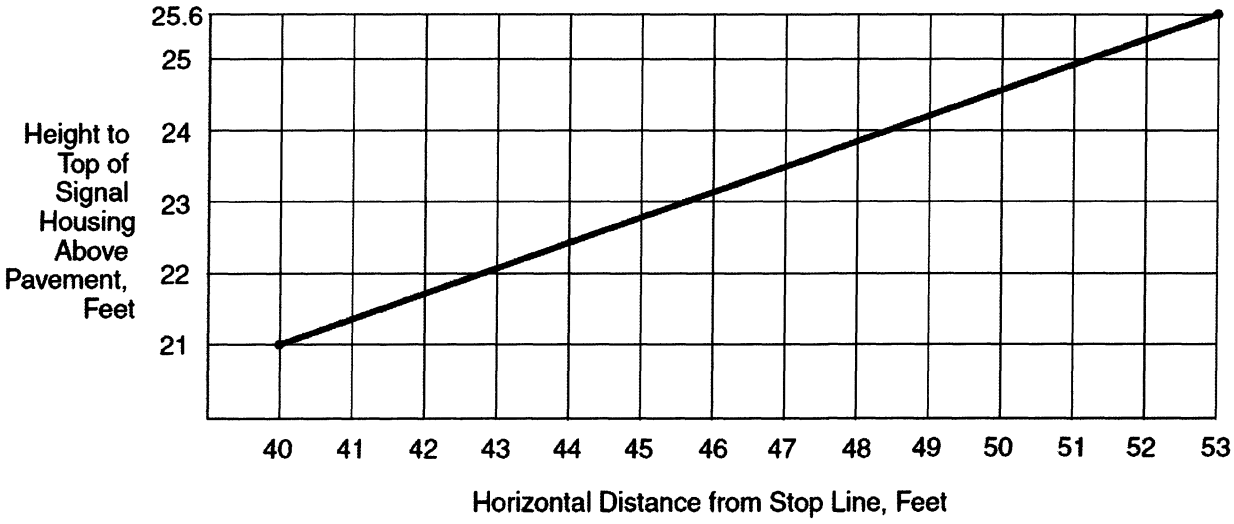

Graph of maximum mounting height of signal heads.

Install vehicle signal heads such that the bottom of the signal housing and any related attachments to the signal head located over any portion of a highway that can be used by motor vehicles is at least 16.5 ft above the pavement directly below the signal head.

1) Install vehicle signal heads such that the bottom of the signal housing (including brackets) of a signal head that is vertically arranged and not located over a roadway is as follows:
   (a) A minimum of 8 ft and a maximum of 19 ft above the sidewalk or, if there is no sidewalk, above the pavement grade at the center of the roadway.
   (b) A minimum of 8 ft and a maximum of 19 ft above the median island grade of a center median island if located on the near side of the intersection.
2) Install vehicle signal heads such that the bottom of the signal housing (including brackets) of a signal head that is horizontally arranged and not located over a roadway is as follows:
   (a) A minimum of 8 ft and a maximum of 22 ft above the sidewalk or, if there is no sidewalk, above the pavement grade at the center of the roadway.
   (b) A minimum of 8 ft and a maximum of 22 ft above the median island grade of a center median island if located on the near side of the intersection.

Where vehicle signal heads are installed on messenger cable, install mounting hardware consisting of messenger cable hanger, balance adjuster, bottom cap, wire entrance fitting bracket, and insulating bushings.

Where vehicle signal heads are installed on mast arms, install mounting hardware consisting of rigid vehicle signal head mounting brackets.

Install signal cable in continuous lengths between signal controller cabinets and signal heads. Route signal cable to minimize the length of cable installed and the number of cables and conductors in each run. Pull 36 inches of additional signal cable into controller cabinets.

Wrap signal cable to messenger cable with at least 4 turns of wrapping tape spaced at intervals less than 15 inches or lash signal cable to messenger cable with one 360-degree spiral of lashing wire per 12 inches.

Make electrical connections inside each signal head, signal controller cabinet, and termination compartment in metal poles. Do not splice cable at any other point between signal heads and controller cabinet.

Coil sufficient signal cable beside each vehicle signal head to accommodate head shifts during various construction phases. For final signal head locations, coil 36 inches on each side of signal head if signal cable comes from both directions. If signal cable terminates at the signal head, coil 36 inches of signal cable on the same side as the cable run.

(C) Pedestrian Signal Heads and Pushbuttons

Install new countdown pedestrian signal heads at locations shown in the plans.

Install new pedestrian signal pushbuttons and new pedestrian signal signs at all locations where new pedestrian signal heads are being installed (including locations where existing pedestrian signal heads are being replaced), unless the pedestrian movement is non-actuated (i.e., pretimed). Do not provide and install pushbuttons and pedestrian signal signs for non-actuated (i.e., pre-timed) pedestrian movements unless the Plans call for installation of accessible pedestrian signals. Install R10-3e signs immediately above pushbuttons for countdown pedestrian signal heads.

Install the pedestrian pushbutton on a signal pole or pedestal located within the intersection radius that is adjacent to the accessible ramp and/or pedestrian crossing that the pushbutton and associated pedestrian signal serve and that is directly accessible from the sidewalk by a pedestrian using a wheelchair or other walking aid. Mount the pushbutton with its center approximately 3.5 feet but no more than 4 feet above the adjacent sidewalk or pedestrian path. Install the pushbutton adjacent to a level surface. Do not install the pushbutton in a location that requires the pedestrian to traverse a cut or fill slope (i.e., embankment), berm or ditch to access the pushbutton. Place the pushbutton on a side of the pole or pedestal that it is facing the sidewalk/pedestrian path and parallel to the crosswalk it serves. Do not place the pushbutton in a location that requires the pedestrian to leave the sidewalk to access the pushbutton. Do not mount the pushbutton underneath a pole-mounted cabinet or any other location that is difficult to reach or find.

Install the pedestrian pushbutton between the edge of the crosswalk line (extended) farthest from the center of the intersection and the side of the curb ramp (if present), but not greater than 5 feet from said crosswalk line. Install the pedestrian pushbutton between 1.5 feet and 6 feet from the edge of the curb, shoulder or pavement, whenever feasible, but no greater than 10 feet from the edge of the curb, shoulder or pavement. Where two pushbuttons are located on the same corner of the intersection, install the pedestrian pushbuttons at least 10 feet apart, unless physical constraints make doing so impractical. Refer to MUTCD Figure 4E-4, "Typical Pushbutton Locations" for additional guidance on placement of pushbuttons.

Connect new pushbutton (where there is no exiting pushbutton) to controller cabinet using a new lead-in cable separate from any lead-in cable for any other pushbutton. Bond pushbutton housing and all metal components to cabinet ground using lead-in cable ground.

Reuse existing wiring to connect a replacement pushbutton. In cases where conduit and wiring from an existing pushbutton connect to an existing pedestrian signal head mounting bracket, extend the conduit and replace the wiring as necessary to maintain the approximate 3.5-foot (4-foot maximum) mounting height of the pushbutton above grade/sidewalk.

4.4. MEASUREMENT AND PAYMENT

Vehicle signal head (_____) will be measured and paid for as the actual number of vehicle signal heads of each size and number of sections furnished, installed, and accepted.

Pedestrian signal head (16", 1 section w/countdown) will be measured and paid for as the actual number of 16", 1 section pedestrian signal heads with countdown display that are furnished, installed, and accepted.

No measurement will be made of visors, wire entrance fittings, interconnecting brackets, mounting assemblies, pedestrian pushbuttons, and pedestrian signal signs as these will be considered incidental to furnishing and installing signal heads. Similarly, no measurement will be made of lead-in cable and conduit where new pushbuttons are installed to replace existing pushbuttons as these are considered incidental to furnishing and installing pedestrian signal heads.

Signal cable will be measured and paid for as actual linear feet of signal cable furnished, installed, and accepted. Measurement will be point to point with no allowance for sag. Twenty-five feet will be allowed for vertical segments up or down poles.

No measurement will be made for drip loops, coiled sections, or lashing wire as these will be considered incidental to furnishing and installing signal cable.

No measurement will be made of replacing existing pedestrian pushbuttons where the corresponding pedestrian signal heads are being replaced as such work will be considered incidental to furnishing and installing new pedestrian signal heads.

Payment will be made under:

Pay Item	**Pay Unit**
Vehicle Signal Head (12", 4 Section)	Each
Vehicle Signal Head (12", 5 Section)	Each
Pedestrian Signal Head (16", 1 Section w/Countdown)	Each
Signal Cable	Linear Foot

5. MESSENGER CABLE

5.1. DESCRIPTION

Furnish and install messenger cable (span wire) with cable clamps, machine bolts, eyebolts, 3-bolt clamps, J-hooks, eye nuts, split-bolt connectors, metal pole clamps, stainless steel bands, and all necessary hardware.

Furnish and install pole grounding systems consisting of #6 AWG solid bare copper wire, messenger bonding clamps, hot-dipped galvanized wire staples, ground rods, and exothermic welding.

5.2. MATERIALS

(A) General

Material, equipment, and hardware furnished under this section shall be pre-approved on the ITS & Signals QPL.

(B) Messenger Cable

Comply with ASTM A475 for extra high strength grade wire strand, Class A zinc coating. Fabricate messenger cable from seven steel wires twisted into a single concentric strand.

(C) Pole Line Hardware

Provide universal grade strandvises used for extra high strength steel messenger cable.

Provide other pole line hardware constructed of hot-dipped galvanized steel conforming to ASTM A153.

Provide machine bolts, eyebolts, and thimble eye bolts with minimum tensile strength of 12,400 lbs. Provide hot-dipped galvanized nuts, 3" x 3" curved square washers, and thimbleyelets.

Provide suspension clamp fabricated from hot-dipped galvanized steel with minimum length of 5 3/4". Ensure clamp has a groove rated for the messenger cable size it is intended to secure. Provide J-hook fabricated from 3/8" thick hot-dipped galvanized steel flat or oval stock with sufficient hook radius to cradle 11/16" diameter cable. Provide two 1/2" diameter hot-dipped galvanized bolts and nuts to tighten the clamp around the messenger cable. Provide one 5/8" diameter hot-dipped galvanized bolt of sufficient length to attach J-hook and clamp to the wood pole with a 3" x 3" curved square washer and double nuts.

Provide 3-bolt clamp fabricated from hot-dipped galvanized steel with minimum length of 5 3/4". Ensure clamp has 2 parallel grooves rated for the messenger cable size it is intended to secure. Provide three 5/8" diameter hot-dipped galvanized bolts and nuts to tighten the clamp around the messenger cable.

Provide parallel groove clamp consisting of high strength, high conductivity non-copper bearing aluminum alloy clamp halves with interlocking fingers to prevent mismatch. Ensure clamp halves have molded grooves to secure #8-1/0 AWG stranded copper wires. Provide clamps with grooves prefilled with antioxidant joint compound. Provide 3/8" hex head, square shank, galvanized steel bolt with galvanized steel lock washer and nut.

Provide 1/2" and 3/4" wide, .030" thick Type 316 stainless steel straps with Type 316 stainless steel buckles.

Provide either 0.05" x 0.30" aluminum wrapping tape or 0.06" diameter Type 316 stainless steel lashing wire for lashing cables to messenger cable. Ensure aluminum wrapping tape is 1350 alloy, O-temper, with 12,800 psi tensile strength. Use 0.045" diameter Type 316 stainless steel lashing wire to lash fiber-optic communications cable to messenger cable.

Provide hot-dipped galvanized steel clamp with groove sized for 1/4" to 3/8" messenger cable for securing lashing wire(s) to messenger cables at ends of each spiraled run. Ensure clamp hardware is hot-dipped galvanized steel.

Provide galvanized metal pole clamps and stainless steel banding hardware for attaching pole line hardware (e.g., strandvises, three-bolt clamps, etc.) to metal signal poles.

Refer to the following article 1091-2, "Wire", of the *Standard Specifications*.

(D) Grounding Electrodes

Provide grounding electrodes (i.e., ground rods) as indicated in these Project Special Provisions and on the Plans. Provide 5/8" diameter, 10-foot long, copper-clad steel ground rods with 10 mil thick copper cladding.

5.3. CONSTRUCTION METHODS

(A) General

Install guy assemblies before installing messenger cable.

Use 3/8-inch messenger cable for spans supporting vehicle signal heads, and/or signs.

Use 1/4-inch messenger cable for spans supporting only cables unless otherwise specified.

For messenger cable crossing over railroad tracks, provide a minimum of 27 feet of vertical clearance, unless otherwise specified.

For permanent installations, install messenger cable in continuous lengths with no splices except where an insulator is required. With prior approval, existing messenger for temporary installations may be extended instead of installing new messenger cable.

Tension messenger cable to eliminate appreciable sag and to match sag of surrounding utilities. Otherwise, allow 3% to 4% sag of the span length between poles.

For mid-run spans using wood poles, attach messenger cable to the pole with a 3-bolt cable clamp with J-hook consisting of 5/8" diameter machine bolts, J-hooks, washers and square nuts to attach messenger cable to wood poles. Provide machine bolts that are 3" longer than the pole diameter. For mid-run spans using metal or other Department-approved poles, attach messenger cable to the pole with a 3-bolt clamp with J-hook secured to the metal pole via a pole band clamp. Refer to *Metal Pole Standard Drawing* Sheet M6 found on the Department's website.

When terminating spans at wood poles, connect messenger cable to a dead-end strandvise attached to the pole via a 5/8" diameter shoulder eye bolt or 5/8" diameter shoulder angle bolt with 5/8" eye nut as shown in *Roadway Standard Drawing No. 1720.01*. When terminating spans at metal or other Department-approved poles, connect messenger cable to a dead-end strandvise attached to the pole via a pole attachment clamp. Refer to *Metal Pole Standard Drawing* Sheet M6 as shown in the previous paragraph. Do not install more than one messenger cable and

strandvise assembly to a single metal or other Department-approved pole attachment clamp. During installation, ensure that messenger cable is centered and directly aligned at the pole clamp's attachment point such that the cable does not exert forces on the sides of the clamp's attachment point.

Do not drill holes in metal poles to attach messenger cable. Do not attach messenger cable to metal poles that are owned by anyone other than the City or the Department without prior approval of the Engineer and the pole owner. Where such attachments are approved, use attachment methods and hardware approved by the pole owner.

Maintain electrical continuity at all splices.

On joint use poles at signal and ITS equipment installations (i.e., Controller Cabinets, CCTV Cabinets, Communications Hub Cabinets, etc.), do not use existing utility company grounds. Install a new, separate grounding system for the signal and ITS equipment.

(B) Messenger Cable for Signal Heads or Loop Lead-In Cable

For messenger cable attached to joint use poles, install a new pole grounding system that complies these Project Special Provisions. If a pole ground exists on a joint use pole, bond new pole grounding system to existing pole ground using number 6 AWG minimum solid bare copper grounding wire terminated with split bolt connectors or parallel groove clamps at each end. If existing poles do not have a pole grounding system, install a new pole grounding system that complies with these Project Special Provisions.

(C) Messenger Cable for Communications Cable

For messenger cable attached to joint use poles, bond messenger cable to existing pole ground at each end and at1300-foot intervals. Install bond using #6 AWG minimum solid bare copper grounding wire terminated with split bolt connectors or parallel groove clamp at each end. If existing poles do not have a pole grounding system, install a new pole grounding system that complies these Project Special Provisions.

(D) Messenger Cable for Multiple Cables

On multiple messenger cable arrangements, connect all messenger cable ends with #6 AWG minimum solid bare copper wire and bond with split bolt connectors or parallel groove clamp and terminate to pole ground.

(E) Pole Grounding System

On Department-owned poles, install a grounding system consisting of #6 AWG solid bare copper wire that is exothermically welded to a single ground rod installed at the pole base or to the electrical service grounding electrode system located within 10 feet of the pole. Install #6 AWG solid bare copper ground wire up the pole to a point adjacent to the uppermost span. Staple the ground wire to the pole using hot dipped galvanized 1.5" staples. Staple the ground wire to the pole 4 inches apart from the ground level to 8 feet above the ground, and then 24 inches apart from 8 feet above ground level to a point adjacent to the span.

5.4. MEASUREMENT AND PAYMENT

Messenger cable (_____) will be measured and paid for as actual horizontal linear feet of messenger cable furnished, installed, and accepted. Measurement will be point to point with no allowance for sag.

No measurement will be made of cable clamps, machine bolts, J-hooks, eye bolts, 3-bolt assemblies, eye nuts, split bolt connectors, metal pole clamps, stainless steel banding hardware, and bonding to an existing pole grounding systems as these will be considered incidental to furnishing and installing messenger cable.

Pole grounding system will be measured and paid for as the actual number of new pole grounding systems furnished, installed and accepted.

No separate measurement will be made of #6 AWG solid bare copper wire, messenger bonding clamps, hot-dipped galvanized wire staples, ground rods, or exothermic welding as these items will be considered incidental to furnishing and installing a pole grounding system. Bonding to an existing pole grounding system will be considered incidental to furnishing and installing messenger cable.

Payment will be made under:

Pay Item	**Pay Unit**
Messenger Cable (1/4")	Linear Foot
Messenger Cable (3/8")	Linear Foot
Pole Grounding System	Each

6. UNDERGROUND CONDUIT

6.1. DESCRIPTION

Furnish and install conduit for underground installation with tracer wire, miscellaneous fittings, all necessary hardware, marker tape, backfill, graded stone, paving materials, and seeding and mulching.

6.2. MATERIALS

(A) General

Except for HDPE conduit, furnish material, equipment, and hardware under this section that is pre-approved on the ITS and Signals QPL.

Refer to the following articles of the *Standard Specifications*:

Backfill 1018-2

Graded Stone 545-2 and 545-3

(B) Conduit Bodies, Boxes and Fittings

Use conduit bodies, boxes, and fittings that meet UL Standard 514A or 514B for electrical and communications installations.

(C) Conduit Types

(1) Rigid Metallic Conduit

Provide rigid hot dipped galvanized steel conduit that meets UL Standard 6 with rigid full weight sherardized or galvanized threaded fittings.

(2) PVC Conduit

Provide non-metallic conduit and duct including associated couplings, approved for below ground use with or without concrete encasement in accordance with UL Standard 651A. Provide Schedule 40 conduit unless otherwise specified.

(3) Solid Wall HDPE Conduit

Use HDPE conduit that conforms to UL Standard 651B. Provide conduit meeting the requirements of the table below with minimum wall thickness ratios corresponding to EPEC-40 (Schedule 40), EPEC-80 (Schedule 80) or EPEC-B (SDR 13.5) as listed in UL Standard 651B, Table 5.1, 5.2 and 5.3.

Provide HDPE conduit with an outer diameter to minimum wall thickness ratio that complies with ASTM D 3035, Standard Dimension Ratio (SDR) 11 or better (thicker wall) **for use in railroad rights-of-way**. Provide HDPE conduit with an outer diameter to minimum wall thickness ratio that complies with ASTM D 3035, Standard Dimension Ratio (SDR) 13.5 for all other applications.

HDPE CONDUIT SIZE	
Conduit Trade Size	**Furnish**
1"	EPEC-40
1-1/4"	EPEC-40
1-1/2"	EPEC-B (SDR 13.5)
2"	EPEC-B (SDR 13.5)
2-1/2"	EPEC-B (SDR 13.5)
3"	EPEC-B (SDR 13.5)
4"	EPEC-B (SDR 13.5)
5"	EPEC-80
6"	EPEC-80

Ensure the PE resin compounds used in manufacturing the conduit meet or exceed the cell classification PE 334420C (black with 2% minimum carbon black) or PE 334420E (colored conduit with UV inhibitors) in ASTM D3350 and the table below.

RESIN PROPERTIES		
Property	**Requirement**	**Test Method**
Density	0.940 - 0.947g/cm3	ASTM D1505 ASTM D792 ASTM D4883
Melt Index (condition 190/2.16 is acceptable)	< 0.4 grams/10 minutes	ASTM D1238
Flexural Modulus	80,000 psi, min.	ASTM D790
Tensile Strength	Tensile Strength 3,000 psi, min.	ASTM D638
Elongation	Elongation 400%, min.	ASTM D638
Slow Crack Growth Resistance	An ESCR as per condition B, 10% IGEPAL requirement of F50>24 hrs is allowable	ASTM D1693
Hydrostatic Design Basis	"0" for Non-Pressure Rated Pipe	ASTM D2837
UV Resistance (Outdoor Conduit Only)	Stabilize with at least 2% by weight carbon black or colored with UV Inhibitor	ASTM D4218

Furnish conduits in the colors for the applications shown in the table below. For conduits manufactured with stripes, ensure the stripes are uniformly located around the conduit with 120 degrees of separation. Do not use "Solid Yellow" or "Black with Yellow Stripes" conduit.

CONDUIT COLORS		
Conduit Contents	**Preferred Solid Color**	**Alternate**
Signal Cable	Black	None
Loop Lead-in Cable	White	Black with White Stripes
Communications Cable (Copper, Fiber Optic, Coaxial)	Orange	Black with Orange Stripes
Electrical Power Cable	Red	Black with Red Stripes

Ensure the HDPE conduit is resistant to benzene, calcium 1 chloride, ethyl alcohol, fuel oil, gasoline, lubricating oil, potassium chloride, sodium chloride, sodium nitrate and transformer oil and is protected against degradation due to oxidation and general corrosion.

Furnish factory lubricated, low friction, conduit with a coefficient of friction of 0.10 or less in accordance with Telcordia GR-356. Ensure the supplied conduit is identified and certified as meeting, UL Standard 651B. Ensure the conduit is marked at least with the following information on 10 ft or less intervals:

1) Material: HDPE
2) Trade Size: i.e., 2"
3) Conduit Type: SDR 13.5 or EPEC-B
4) Manufacturer's name or trademark
5) Manufacturer's identity code to identify manufacturing date, facility, etc.
6) UL symbol or UL listing number

Furnish coilable conduit that is supplied on reels in continuous lengths for transportation and storage outside. Ensure that the process of installing the coilable conduit on the reel does not alter the properties or performance of the conduit for its intended purpose.

(D) Conduit Plugs, Pull Line, and Tracer Wire

Furnish conduit plugs that provide a watertight barrier when installed in conduit. Furnish conduit plugs sized in accordance with conduit. Ensure conduit plug provides a means to secure a pull line to the end of the plug. Provide removable and reusable duct plugs. Conduit plugs are not required to be listed electrical devices.

For all spared conduits, furnish 3/4", pre-lubricated, woven polyester tape, pull line with minimum rated tensile strength of 2,500 lb. Pull lines are not required to be listed electrical devices.

Provide green insulated number 14 AWG, THWN, stranded copper wire to serve as tracer wire.

Furnish non-detectable underground marker tape with the wording "WARNING – Fiber-Optic Cable" in all trenches containing one or more conduits that will house fiber-optic communications cable.

(E) Mechanical Couplings for HDPE Conduit

Provide mechanical couplings that are both watertight and airtight for joining two segments of HDPE conduit of like diameter. Provide couplings designed to accommodate pneumatic methods of cable installation. Provide couplings suitable for burial underground and which meet the following requirements:

- The coupling shall not fail by leakage when subjected to sustained internal pressure testing as noted in ASTM F 2176.
- The coupling shall not fail by leakage when subjected to sustained external pressure testing as noted in ASTM F 2176.
- The coupling assemblies tested shall be able to comply with the tensile loading requirements as specified in ASTM F 2176.
- As specified in ASTM F 2176, the coupling shall not fail when conditioned at low temperature conditions of 10° F and tested by an impact with a force of 20 ft-lb using Type "B" as described in Test Method ASTM D 2444.

(F) Duct and Conduit Sealer

Use duct and conduit sealer or mastic which is a putty-like compound and:

- Is permanently non-hardening, non-oxidizing, and non-corrosive to metals, rubber, plastic, lacquer and paints;
- Is readily workable for thumbing into openings and forming into seals around wires inside conduits and openings around conduits;
- Has a service temperature range of minus 30°F to 200°F;
- Is clean, non-poisonous and non-injurious to human skin;
- Seals against water, dust and air and shall adhere to wood, glass, plastics, metal, rubber and painted surfaces; and
- Is non-conductive.

6.3. CONSTRUCTION METHODS

(A) General

Except where the Plans call for a specific installation method or where the Engineer directs otherwise, underground conduit may be installed by either trenching, directional drilling or plowing at the option of the Contractor but will be measured and paid for as "underground conduit," regardless of installation method (see "Measurement and Payment" subsection).

Refer to Section 1 of these Project Special Provisions for additional requirements concerning work within and adjacent to historic districts.

Ensure conduit is free of moisture and debris before pulling cables.

Where cable is not immediately installed or conduit is for future use (spare), seal the ends of the conduit with a conduit plug immediately following installation of the conduit. Secure a pull line to the conduit plug in such a manner that it will not interfere with installation of the conduit plug and provides a watertight seal.

Extend ends of conduit 2" to 4" above concrete surfaces and 4" above crushed stone bases. For metallic conduit, install metallic bushings and bond conduits.

All conduits installed in a common trench or bore must be the same size and all conduits in a continuous longitudinal run must be the same size. Do not intermix different size conduits in the same run.

Install a minimum of two conduits (i.e., at least one for fiber-optic cable plus one dedicated spare) for all underground routes unless the Plans show otherwise. Exceptions on plans may include short runs to CCTV cameras, short PVC runs to controller cabinets from main trunk line, or installations under railroad tracks.

Install junction boxes in underground conduit runs as shown on the Plans. Do not exceed 150 feet between junction boxes in any underground conduit route that conveys traffic signal or lead-in cable and 1,500 feet between junction boxes in any underground conduit route that conveys communications cable without the prior approval the Engineer.

(1) Conduit Entering Junction Boxes

Terminate conduits installed for communications cables (fiber optics, Ethernet and coaxial) in oversized or special-sized, heavy-duty junction boxes as shown on the Plans. Do not install other conduits in these junction boxes unless otherwise specified.

Terminate conduits installed for signal wiring, including loop lead-in cable, in standard size junction boxes unless otherwise specified.

For all conduits entering junction boxes, seal spare conduits with approved conduit plugs. Seal conduits containing fiber-optic communications cable, Ethernet cable, signal cable and lead-in cable with duct and conduit sealer.

(2) Tracer Wire

Install tracer wire in all conduits containing fiber-optic cable, unless otherwise indicated on the Plans or the Engineer directs otherwise. Pull tracer wire simultaneously in continuous length with the fiber-optic cable. Where multiple pulls of fiber-optic cable are required and conduit is placed in the same trench, only one tracer wire is required. Where multiple pulls of fiber-optic cable are required and conduits may separate into individual trenches, install a tracer wire in each conduit run. Splice tracer wire only in cabinets and junction boxes using waterproof butt splice connectors. Coil and store 10 feet of spare tracer wire in junction boxes. Label all tracer wires entering an equipment cabinet. For a given tracer wire run between two controller cabinets, bond the tracer wire to the equipment ground inside the controller cabinet at one end of run only; do not bond both ends of the tracer wire in a continuous run to cabinet grounds at each end of the run. Establish a consistent convention for which end the tracer wire will be bonded along a give roadway or corridor. For example, bond the end of the tracer wire closest/to (in the direction of) the Winston-Salem TMC.

(3) Ground Surface Restoration

Upon completion of conduit installation and backfilling of all trenches and other excavations, restore the disturbed ground to its original condition as determined and approved by the Engineer. For paved areas, replace removed or damaged pavement with in kind materials, matching the elevation, color, texture/finish and general appearance of the surrounding pavement. Refer to Section 1 of these Project Special Provisions for additional requirements concerning sidewalks and curbs in historic districts. For unpaved areas, backfill excavations with removed material, tamp the backfilled material and rake smooth the top 1½ inches. Finish unpaved areas flush with surrounding natural ground and to match the original contour of the ground. Seed with same type of grass as surrounding area and mulch the newly seeded area. If unpaved area was not grassed, replace the original ground cover in kind as directed by the Engineer.

Complete repairs to and restoration of all ground (paved and unpaved) disturbed by construction within five consecutive calendar days following initial removal. If the Contractor fails to repair and restore the ground in accordance with these Project Special Provisions within the time frame specified, the Department reserves the right to make the necessary repairs, and all expenses incurred by the Department in making the repairs and restoring the ground will be deducted from payment due the Contractor, plus **$500 liquidated damages per occasion, per day, or any portion** thereof, until corrected.

(4) Plan of Record Drawings

Upon completion of the conduit system for communications, furnish the Engineer with a plan of record drawing detailing both the horizontal and vertical (i.e. depth) locations of the conduit system.

(B) Trenching

(1) General

Install PVC, HDPE, or rigid metallic conduit for all underground runs as specified in the Plans. Install rigid metallic conduit for all trenched underground runs located inside railroad right-of-way, unless otherwise specified. Clean existing underground conduit to be incorporated into a new system by drawing a mandrel through the conduit followed by a swab. Clear obstructions or blockages in an existing underground conduit designated for reuse by using compressed air, water jetting, rod and mandrel or other method as approved by the Engineer. Once obstruction/blockage has been cleared, perform aforementioned cleaning procedure to clean out any remaining materials which may cause cable abrasions. Bond all metallic conduit.

If more than one conduit is required between the same points, install conduit in one common trench.

Install non-detectable marker tape longitudinally in the trench 6 to 12 inches below the unpaved ground surface or below the underside of the paved surface.

Install longitudinal runs of conduit a minimum of 1 foot from back of curb or 6 feet from edge of pavement in the absence of curb. If ditches are present, install conduit a minimum of 4 feet from the bottom of the ditch line.

Maintain a minimum trench depth of 30" (or 12" in areas blocked by rock or impenetrable obstructions) below finished grade or 6" below roadway sub-base, whichever is deeper. Upon completion, restore surface to like-original condition within five consecutive calendar days of

occurrence of damage. Remove all rock and debris from backfill material. Remove excess material from site and compact area according to Article 300-7 of the *Standard Specifications*. Backfill with excavated material and compact to 95% of original density.

Backfill trench at locations along the trench path where non-movable objects, such as rocks and boulders, cannot be avoided. The purpose of the backfill is to provide a gradual change in elevation of the trench, so that excessive bending and stress will not be transferred to conduits once underground conduit system is installed.

After installation of conduits and upon completion of tamping and backfilling, perform a mandrel test on each conduit to ensure no conduit has been damaged. Furnish a non-metallic mandrel having a diameter of approximately 50% of the inside diameter of the conduit in which it is to be pulled through. If damage has occurred, replace the entire length of conduit. Ensure pull line is re-installed.

Use HDPE conduit in trenched areas unless otherwise specified in the Plans. Use 2-inch PVC or rigid galvanized conduit between junction boxes adjacent to the controller cabinet and the 2-inch conduit stub-outs from the cabinet foundation.

Use 2-inch PVC conduits for short conduit segments used to convey IS Department fiber-optic cable between a junction box housing both signal system and IS fiber-optic cables and an adjacent junction box used exclusively for IS Department fiber-optic cable.

Comply with the *NCDOT Policies and Procedures for Accommodating Utilities on Highway Rights-of-Way* in effect on the date of advertisement.

(2) Unpaved Trenching

Install conduit in unpaved areas. Rake smooth the top 1-1/2 inches and seed with same type of grass as surrounding area. Finish unpaved areas flush with the surrounding natural ground. Restore damaged grassed areas. Seed and mulch, using methods and material approved by the Engineer, within five consecutive calendar days following initial damage to grassed areas, unless the Engineer approves otherwise due to weather and soil conditions. If the Contractor fails to repair the grassed areas in accordance with these Project Special Provisions within the time frame specified, the Department reserves the right to make the necessary repairs, and all expenses incurred by the Department in making the repairs and restoring the grassed area will be deducted from payment due the Contractor, plus **$500 liquidated damages per occasion, per day, or any portion thereof**, until corrected.

Adapt operations to variations in weather of soil conditions as necessary for the successful establishment and growth of the grasses. When the Engineer determines that weather and soil conditions are unfavorable, including but not limited to extremely wet or frozen soil, do not distribute any limestone or fertilizer and do not sow any seed. During seasons of the year when temperatures are not conducive to germination and growth of the type of grass seed to be planted, seed and mulch the disturbed areas with temporary seeding that will germinate and grow under the prevailing temperatures until such time that permanent seeding can be established, as approved and directed by the Engineer.

As directed by the Engineer, apply additional seed or completely reseed areas which have been previously seeded and mulched but which have been damaged, have failed to successfully establish a stand of vegetation or have an unsatisfactory cover of vegetation. Perform supplemental and repair seeding promptly at all locations and times as directed by the Engineer.

(3) Paved Trenching

On concrete surfaces, replace the entire joint of concrete and match the original concrete as to color and finish unless otherwise specified. On all other surfaces, neatly cut and replace the width of trench with like material. Refer to Section 1 of these Project Special Provisions for additional requirements concerning sidewalks and curbs in historic districts. Place graded stone material to temporarily maintain pedestrian traffic where repairs cannot be performed immediately.

Finish paved areas with materials matching damaged areas. For conduit installed under roadways, cut neatly and replace the width of paved area damaged by trenching. For conduit installed under sidewalks and walkways, remove entire section of slab from joint to joint and replace. Place graded stone material to temporarily maintain traffic where repairs cannot be performed immediately. Comply with Article 545-4 of the *Standard Specifications*.

Complete repairs to all paved areas removed for construction within five consecutive calendar days following initial removal. If the Contractor fails to repair the paved area in accordance with these Project Special Provisions within the time frame specified, the Department reserves the right to make the necessary repairs, and all expenses incurred by the Department in making the repairs and restoring the paved area will be deducted from payment due the Contractor, plus **$500 liquidated damages per occasion, per day, or any portion thereof**, until corrected.

(C) Plowing (HDPE Conduit Only)

Direct plow HDPE ducts simultaneously using chute plow method. Direct plow ducts at a minimum depth so the top of the highest duct is 30 inches deep unless otherwise approved.

Provide sufficient personnel to feed chute, operate prime mover and equipment carrying reels (if separate equipment is used), observe chute feeding, observe plowing, and observe reel payout. Use chute with adequate dimensions to allow for passage of duct without damage. During plow operation, continuously check chute opening and path to be sure there are no obstructions and monitor payout reels to be sure reels are turning at a steady rate.

(D) Directional Drilling

(1) Pre-Approvals and Minimum Depth Requirements

Obtain approval before beginning drilling operations.

At all points where HDPE conduit will traverse under roadways, driveways, sidewalks, or Controlled Access Areas including entrance/exit ramps, maintain a minimum depth of 4 feet or 8 times the back reamer's diameter, whichever is deeper. For an installation that runs parallel to a controlled access area or entrance/exit ramps maintain a minimum depth of 30 inches below finished grade. Maintain a minimum clearance of 30 inches below finished grade when crossing ditch lines.

For installations in railroad right-of-way, minimum cover (measured from the base of the rail to the top of the pipe) shall be 15 feet, with a minimum of 15 feet below the finished grade of ditch lines. For the following structures, the minimum clearance requirements are:

MINIMUM CLEARANCE REQUIREMENTS FOR STRUCTURES	
Man-made Structure	**Minimum Clearance Requirement**
Bridge foundation	5' horizontal & 4' vertical (clearances greater than minimum horizontal should continue to use the 4V:5H ratio, i.e., 10' horizontal should be no deeper than 8')
Drainage pipes 60" or less	1' above or below [while maintaining a minimum depth of 30" below grade]
Drainage pipes greater than 60"	1' above or 4' below [while maintaining a minimum depth of 30" below grade]
Box Culverts	1' above or 4' below [while maintaining a minimum depth of 30" below grade]
Slope protection	2' below
Slope protection foundation footing	5' below
Railroad tracks	15' minimum between base of rail to top of pipe; 15' minimum below finished grade of ditch line.

Guarantee the drill rig operator and digital walkover locating system operator are factory-trained to operate the make and model of equipment provided and have a minimum of one-year experience operating the make and model of drill rig. Submit documentation of the operators' training and experience for review at least two weeks before start of directional drilling operations.

Provide a means of collecting and containing drilling fluid/slurry that returns to the surface such as a slurry pit. Provide measures to prevent drilling fluids from entering drainage ditches and storm sewer systems. Prevent drilling fluid/slurry from accumulating on or flowing onto pedestrian walkways, driveways, and streets. Disposal on public or railroad right-of-way or railroad drainage ditches/facilities is prohibited. Immediately remove all drilling fluids/slurry that are accidentally spilled.

(2) Directional Drill Operations

Provide grounding for the drill rig in accordance with the manufacturer's recommendations. Place excavated material near the top of the working pit and dispose of properly. Backfill pits and trenches to facilitate drilling operations immediately after drilling is completed.

When directionally drilling conduit beneath railroad right-of-way, place drill rig so that launching and receiving pits are outside railroad right-of-way if possible. If not possible, ensure the pits are outside the railroad influence zone. The railroad influence zone (also referred to as the embankment line) begins at a point on the existing grade 10 feet horizontally from center line of track and extends downward on a
1 ½ (H) to 1 (V) slope away from tracks.

No geotechnical investigations have been performed at the sites of proposed directional drill operations for this project. Prior to performing the directional drilling operation, field investigate the site of the proposed directional drill conduit, including but not limited to walking the bore

path and talking to adjacent property owners, to ascertain the soil conditions that may be encountered and to review the site's topography. Ensure that the equipment, tooling, personnel expertise and techniques used at each site are sufficient to complete the directional drill operation successfully, regardless of soil conditions encountered. At all times, have alternate drill heads available in case the soil conditions do not match expected conditions.

Use drill head suitable for type of material being drilled and sized no more than 2 inches larger than the outer diameter of the conduit, unless in railroad right-of-way. In railroad right-of-way the drill head must be sized no more than 1.5 times the outside diameter of the conduit being installed. Direct drill to obtain proper depth and desired destination. Pressure grout with an approved bentonite/polymer slurry mixture to fill all voids. Do not jet alone or wet bore with water.

During drilling operation, locate drill head every 10 feet along drill path and before traversing underground utilities or structures. Within railroad right-of-ways, mark the location and depth 10 foot intervals and when traversing underground utilities and structures. Use digital walkover locating system to track drill head during directional drilling operation. Ensure locating system is capable of determining pitch, roll, heading, depth, and horizontal position of the drill head at any point.

Once drill head has reached final location, remove head, and install back reamer of appropriate size (no more than 2 inches larger than outer diameter of conduits [or 1.5 times the outside diameter in railroad right-of-way]) to simultaneously facilitate back reaming of drill hole and installation of conduit. Use back reamer that is sized larger than actual conduits to ensure conduits are not adversely subjected to deviations caused by the original drill operation and are as straight as practical in their final position.

The intent of these Project Special Provisions is to limit the diameter of the actual drill shaft/hole so that it is no more than 2 inches larger than the conduit outer diameter, unless in railroad right-of-way. Within railroad right-of-way, the diameter of the bore hole may not exceed 1.5 times the outside diameter of the specified conduit. This enlarged diameter may be accomplished either during the original bore or during the back reaming/conduit installation process.

Once installation of conduit has started, continue installation without interruption so as to prevent conduit from becoming firmly set. Apply bentonite/polymer slurry mixture during conduit installation.

Upon completion of conduit installation, perform a mandrel test on conduit system to ensure conduit has not been damaged. Furnish non-metallic mandrel with a diameter of approximately 50% of the inside diameter of the conduit in which it is to be pulled through. If damage has occurred, replace the entire length of conduit and ensure that pull line is re-installed.

(3) Drilling Fluids

Use lubrication for subsequent removal of material and immediate installation of the conduit. The use of water and other fluids in connection with directional drilling operations will be permitted only to the extent necessary to lubricate cuttings. Do not jet alone or wet bore with water. Use drilling fluid/slurry consisting of at least 10% high-grade bentonite/polymer slurry to consolidate excavated material and seal drill hole walls.

Transport waste drilling fluid/slurry from site and dispose of in a method that complies with local, state and federal laws and regulations. Disposal on public or railroad right-of-ways or within public or railroad drainage ditches/facilities is prohibited.

(E) Maximum Length of Directional Drill

The length of a directional drill shall not exceed 1,500 feet measured horizontally along the route of the directionally drilled conduit(s), unless otherwise approved by the Engineer. For routes longer than 1,500 feet, begin a successive directional drill where the first directional drill reaches 1,500 feet and install an oversized heavy-duty junction box where the two directional drilled conduit runs meet. The spacing of junction boxes in a directionally drilled route shall not exceed 1,500 feet.

(F) Splicing and Coupling of HDPE Conduit

Install a continuous HDPE conduit free from splices or couplings between junction boxes whenever possible. However, splicing or coupling of HDPE conduit may be permitted, subject to the prior approval of the Engineer, to complete an underground HDPE conduit run when the end of an HDPE reel is reached. However, splicing in the middle of a directional drill operation is prohibited.

Join the HDPE conduit ends by installing mechanical couplings in accordance with the manufacturer's instructions or by splicing the conduits using either a butt-fusion welder or an electro-fusion welder. Submit the proposed method of coupling or splicing the conduits to the Engineer for review and approval prior to joining any HDPE conduits.

Otherwise, install an oversized, heavy-duty junction box where the ends of the HDPE conduits meet in lieu of joining the ends through splicing and coupling. Install an oversized junction box where the number of conduits in the underground run changes and where a directionally drilled conduit meets a trenched conduit. For example, install an oversized junction box where two directionally drilled conduits meet a single run of trenched conduit.

6.4. MEASUREMENT AND PAYMENT

Tracer wire will be measured along the horizontal linear feet of tracer wire furnished, installed, and accepted. Measurement will be along the approximate centerline of the conduit system. Payment will be made in linear feet. No payment will be made for excess tracer wire in junction boxes and/or cabinets.

IS tracer wire will be measured along the horizontal linear feet of tracer wire furnished, installed, and accepted inside conduit used to convey IS Department fiber-optic cable(s) exclusively. Measurement will be along the approximate centerline of the IS Department conduit system. Payment will be made in linear feet. No payment will be made for excess tracer wire in junction boxes and/or cabinets.

Underground conduit (qty)(size) will be measured in horizontal linear feet of underground conduit installation of each type furnished, installed, and accepted, without regard to the installation method. Measurement will be along the approximate centerline of the conduit system. Payment will be in linear feet.

No measurement will be made of 1" underground conduit that conveys electrical service wire between a service riser and a disconnect/meter and between a disconnect and an equipment cabinet as such work will be considered incidental to furnishing and installing a new electrical

service, furnishing and installing and equipment cabinet disconnect or modifying an existing electrical service. (See "Electrical Service" section of these Project Special Provisions).

IS underground conduit (qty)(size) will be measured in horizontal linear feet of underground conduit installation of each type used exclusively to convey IS Department fiber-optic cable(s) that are furnished, installed, and accepted, without regard to the installation method. Measurement will be along the approximate centerline of the IS Department conduit system. Payment will be in linear feet.

Directional drill (qty)(size) will be measured horizontal linear feet of directional drill for underground conduit installation furnished, installed, and accepted. Measurement will be along the approximate centerline of the conduit system. Payment will be made in linear feet. When directional drilling is used where the Plans call for "Underground Conduit", directional drilling will be measured and paid for as Underground Conduit. There will be no additional compensation for field-investigating site conditions nor for providing any specialized equipment, tooling, personnel or techniques necessary to complete the installation of the underground conduit through directional drilling for the soil conditions encountered, including but not limited to rock.

IS directional drill (qty)(size) will be measured horizontal linear feet of directional drill for underground conduit used exclusively to convey IS Department fiber-optic cable(s) that are furnished, installed, and accepted. Measurement will be along the approximate centerline of the IS Department conduit system. Payment will be made in linear feet. When directional drilling is used where the Plans call for "IS Underground Conduit", directional drilling will be measured and paid for as Underground Conduit. There will be no additional compensation for field-investigating site conditions nor for providing any specialized equipment, tooling, personnel or techniques necessary to complete the installation of the underground conduit through directional drilling for the soil conditions encountered, including but not limited to rock.

No measurement will be made of vertical segments, non-metallic conduit, metallic conduit, conduit sealing material, pull lines, duct plugs, marker tape, and miscellaneous fittings, as these will be considered incidental to conduit installation.

No measurement will be made of clearing existing blockages and obstructions from existing conduits nor for cleaning existing conduits prior to installation of new communications cable inside the existing conduits as such work will be considered incidental to furnishing and installing the communications cable.

No measurement will be made of restoration of paved roadways/driveways and unpaved ground surfaces with like materials, including but not limited to backfill, graded stone, paved materials, seeding and mulching, as this work will be considered incidental to conduit installation. No measurement will be made of removing, stockpiling and resetting existing granite curb as such work will be considered incidental to conduit installation. The Department will make no payment for a given underground conduit run until all repairs to paved and unpaved surfaces damaged/disturbed during the installation of the underground conduit have been completed and accepted.

Repair and replacement of existing sidewalk will be measured and paid for in accordance with the "Equipment Cabinet Foundations" section of these Project Special Provisions.

No measurement will be made of horizontal segments between the base of a riser and an adjacent junction box or base-mounted cabinet foundation that are 10 feet or less in length measured from the center of the riser to the center of the junction box or from the center of the riser to the center of the vertical sweep through the cabinet foundation as these will be considered incidental to riser installation.

No measurement will be made of conduit segments between adjacent traffic signal system junction boxes that are 10 feet or less in length measured from center of junction box to center of junction box as these will be considered incidental to furnishing and installing the junction boxes.

Conduit will be paid for per linear foot based on quantity and size of conduits. As examples, an installation of a single 2" HDPE conduit would be paid as:

Directional Drill (1)(2") Linear Foot

No measurement or payment will be made for furnishing and installing and subsequently removing graded stone material for temporary maintenance of traffic where a portion of existing pavement has been removed as such work will be considered incidental to furnishing and installing underground conduit.

Payment will be made under:

Pay Item	**Pay Unit**
Tracer Wire	Linear Foot
IS Tracer Wire	Linear Foot
Underground Conduit (1)(2")	Linear Foot
Underground Conduit (2)(2")	Linear Foot
IS Underground Conduit (2)(2")	Linear Foot
Directional Drill (1)(2")	Linear Foot
Directional Drill (2)(2")	Linear Foot
Directional Drill (1)(4")	Linear Foot
IS Directional Drill (1)(2")	Linear Foot

7. JUNCTION BOXES

7.1. DESCRIPTION

Furnish and install junction boxes (pull boxes) with covers, washed stone, grounding systems, and all necessary hardware.

7.2. MATERIALS

(A) General

Provide electrical junction boxes with covers of the type and size indicated by the contract or the Plans for the termination of conduits, for splicing loop wires to loop lead-in cables and for splicing and storing fiber-optic communications cable.

Except for special-sized junction boxes, material, equipment, and hardware furnished under this section shall be pre-approved on the ITS and Signals QPL.

Provide #67 washed stone aggregates in conformance with Sections 545 and 1005 of the *Standard Specifications.*

(B) Polymer Concrete (PC) Junction Boxes

Provide polymer concrete (PC) boxes which are stackable, have bolted covers and have open bottoms. Ensure vertical extensions of 6" to 12" are available from the junction box manufacturer.

Use polymer concrete material made of an aggregate consisting of sand and gravel bound together with a polymer and reinforced with glass strands to fabricate box and cover components which are exposed to sunlight. Other thermosetting glass-reinforced materials may be used for components which are not normally exposed to sunlight.

Provide certification that the polymer concrete boxes and covers meet Tier 15 requirements of ANSI/SCTE 77. Provide certification that testing methods are compliant with ANSI/SCTE 77.

Provide junction box covers with the required logos on the cover as follows:

- For standard size junction boxes, provide covers with the standard *Traffic Signal* logo.
- For oversized and special-sized junction boxes that house fiber-optic communications cable for the traffic signal system (including junction boxes that house fiber-optic communications cables for both the signal system and the City's IS Department), provide covers with the following logo/imprint:
  WSDOT – F.O. (line 1), *(336) 727-8000* (line 2).
- For oversized and special-sized junction boxes that house fiber-optic communications cable for City's IS Department only (i.e., that do not house fiber-optic cable for the signal system), provide covers with the following logo/imprint:
  WS I.S. – F.O. (line 1), *336-727-8000* (line 2).

Provide at least 2 size 3/8" diameter hex head stainless steel cover bolts to match inserts in the box. Provide pull slot(s) with stainless steel pin(s). Polymer concrete junction boxes are not required to be listed electrical devices.

(C) Junction Box Sizes

Provide junction boxes and covers of the following sizes as called for in the Plans:

Junction Box Size	Minimum Inside Dimensions
Standard Size	16"(l) x 10"(w) x 10"(d)
Oversized	30"(l) x 15"(w) x 24"(d)
Special-Sized	36"(l) x 24"(w) x 24"(d)

7.3. CONSTRUCTION METHODS

(A) General

Install junction boxes flush with finished grade. Backfill beneath and around the junction box using #67 washed stone as shown in NCDOT Roadway Standard Drawing No. 1716.01. Do not install sealant compound between junction boxes and covers.

Upon completion of junction box installation and backfilling of all excavations, restore the disturbed ground to its original condition as determined and approved by the Engineer. For paved areas, replace removed or damaged pavement with in kind materials, matching the elevation, color, texture/finish and general appearance of the surrounding pavement. Refer to Section 1 of these Project Special Provisions for additional requirements concerning sidewalks and curbs in historic districts. For unpaved areas, backfill excavations with removed material, tamp the backfilled material and rake smooth the top 1½ inches. Finish unpaved areas flush with surrounding natural ground and to match the original contour of the ground. Seed with same type of grass as surrounding area and mulch the newly seeded area. If unpaved area was not grassed, replace the original ground cover in kind as directed by the Engineer.

Complete restoration of all ground disturbed during junction box installation within five consecutive calendar days following initial removal and excavation. If the Contractor fails to repair and restore the disturbed ground in accordance with these Project Special Provisions within the time frame specified, the Department reserves the right to make the necessary repairs, and all expenses incurred by the Department in making the repairs and restoring the ground will be deducted from payment due the Contractor, plus **$500 liquidated damages per occasion, per day, or any portion thereof**, until corrected.

Install standard size junction boxes as shown in the Plans and where underground splicing of electrical cables is necessary. Install standard size junction boxes within 3 feet of pole or pole foundation where transitioning from below ground to a riser assembly. Install standard size junction boxes within 5 ft of each end of each lateral run of conduit for electrical cables. When lateral runs for electrical cables are greater than 150 feet, install additional junction boxes to ensure distances between junction boxes does not exceed 150 feet.

Install oversized junction boxes as shown in the Plans in underground fiber-optic communications cable runs where the conduit run transitions from directionally drilled conduit to trenched conduit and where transitioning from below ground to a riser assembly. Install

oversized junction boxes in underground fiber-optic communications cable runs at maximum intervals of 1,500 feet, or where shown in the Plans, whichever is less.

Install special-sized junction boxes at all underground splice enclosure locations in underground fiber-optic communications cable runs as shown in the Plans.

(B) GPS Coordinates

Provide real world coordinates for all junction boxes and equipment cabinets installed or utilized under this project. Provide the coordinates in feet units using the North Carolina State Plane coordinate system (1983 North American Datum also known as NAD '83). Furnish coordinates that do not deviate more than 1.7 feet in the horizontal plane and 3.3 feet in the vertical plane. Global positioning system (GPS) equipment able to obtain the coordinate data within these tolerances may be used. Submit cut sheets on the GPS unit proposed to collect the data for approval by the Engineer.

Provide both a digital copy and hard copy of all information regarding the location (including to but not limited to manufacturer, model number, City system ID number and NCDOT inventory number) in the Microsoft Excel spreadsheet using the format shown in example below.

City Sys ID#	NCDOT Inv #	Name	Location	Latitude	Longitude	Manufacturer	Model #
	05-0134	Equipment Cabinet	US 70 at Raynor Rd./ Auburn-Knightdale	-78.5500	35.6873	McCain	Type-332
		Junction Box # 1 (Phase 2 Side)	US 70 at Raynor Rd./ Auburn-Knightdale	-78.5516	35.6879	Quazite	PG1118BA12(Box) PG118HA00(Cover)
		Junction Box # 2 (Phase 2 Side)	US 70 at Raynor Rd./ Auburn-Knightdale	-78.5506	35.6876	Quazite	PG1118BA12(Box) PG118HA00(Cover)
		Junction Box # 3 (Near Cabinet)	US 70 at Raynor Rd./ Auburn-Knightdale	-78.5501	35.6873	Quazite	PG1118BA12(Box) PG118HA00(Cover)
		Junction Box # 4 (Phase 6 Side)	US 70 at Raynor Rd./ Auburn-Knightdale	-78.5486	35.6873	Quazite	PG1118BA12(Box) PG118HA00(Cover)
		Junction Box # 5 (Phase 6 Side)	US 70 at Raynor Rd./ Auburn-Knightdale	-78.5493	35.6876	Quazite	PG1118BA12(Box) PG118HA00(Cover)
		Junction Box # 6 (Phase 4 Side)	US 70 at Raynor Rd./ Auburn-Knightdale	-78.5503	35.6879	Quazite	PG1118BA12(Box) PG118HA00(Cover)

7.4. MEASUREMENT AND PAYMENT

Junction box (_____) will be measured and paid in actual number of junction boxes of each size and type furnished, installed, and accepted.

IS junction box (_____) will be measured and paid in actual number of IS junction boxes of each size and type used to house IS Department fiber-optic cables exclusively that are furnished, installed, and accepted.

No measurement will be made of covers, washed stone, removal of existing junction boxes and grounding systems as these will be considered incidental to furnishing and installing junction boxes and IS junction boxes.

No measurement will be made of restoration of paved roadways/driveways and unpaved ground surfaces with like materials, including but not limited to backfill, washed stone, paved materials, seeding and mulching, as this work will be considered incidental to junction box installation. The Department will make no payment for a given junction box until all repairs to

paved and unpaved surfaces damaged/disturbed during the installation of the junction box have been completed and accepted.

Repair and replacement of existing sidewalk will be measured and paid for in accordance with the "Equipment Cabinet Foundations" section of these Project Special Provisions.

No measurement will be made of collecting and recording GPS coordinates for junction boxes and compiling this data in the prescribed Microsoft Excel spreadsheet as such work will be considered incidental to furnishing and installing junction boxes.

Payment will be made under:

Pay Item	Pay Unit
Junction Box (Standard Size)	Each
Junction Box (Over-sized)	Each
Junction Box (Special-Sized)	Each
IS Junction Box (Over-sized)	Each
IS Junction Box (Special-Sized)	Each

8. EXTENSION OF EXISTING FIELD WIRING AT CONTROLLER CABINETS

8.1. DESCRIPTION

Furnish and install terminal splice cabinets to splice and extend existing signal and loop lead-in cables (i.e., field wiring) to new controller cabinets. Furnish and install gel-filled splice connectors to splice and extend existing conductors inside new controller cabinets.

8.2. MATERIALS

(A) Terminal Blocks

Provide terminal block (i.e., terminal strips) constructed of electrical grade thermoplastic or thermosetting plastic with the terminals recessed between molded barriers for splicing and extending existing field wiring. Provide terminal blocks with the number of terminals required in these provisions or with a sufficient number to accommodated splicing and extending of incoming existing field wiring conductors. Each terminal shall have two terminal screws that have a minimum outside diameter of 3/16 inches. A removable shorting bar shall be provided between the screws of each terminal. Both the screws and shorting bar shall be made of corrosion resistant nickel-plated brass. Provide separate terminal blocks for signal conductors and loop lead-in conductors.

(B) Terminal Splice Cabinets

Provide NEMA Type 3 or Type 4 enclosures fabricated of sheet steel or sheet aluminum with continuous weld construction and with a drip shield top. The steel enclosures shall be stainless steel. Aluminum enclosures shall have a standard mill finish.

Provide an enclosure with a terminal block having at least 20 terminals with each terminal having two terminal screws. Mount the terminal block on the back wall of the enclosure in such a manner that no mounting screws, nuts, etc., protrude through the enclosure. Center the terminal block both horizontally and vertically on the back wall of the enclosure in line with the long dimension of the enclosure. Install additional terminal blocks as necessary.

Provide an enclosure of sufficient size to accommodate entrances for a minimum of four 2-inch galvanized rigid metal conduits in the bottom of the enclosure. The dimensions of the enclosure shall not be less than 16" wide x 20" high x 8" deep. The enclosure shall have a hinged front door which opens to the side and which is secured by a Corbin No. 2 lock and latch. A door handle is not required.

Provide conduit entrances in the bottom of the cabinet only which are of the size and number required for the specific location where cabinet will be installed. Conduit entrances in the top or sides of the cabinet are prohibited. Conduit entrances may be either pre-drilled or field-drilled, but shall not exceed the number required for the location. Extra or spare entrances, capped or otherwise, are not acceptable. Field-verify the required number, size and position of entrances prior to drilling.

Provide all necessary hardware and mounting brackets for attaching the terminal splice cabinet on the pole. Such hardware shall provide for mounting the cabinet to metal or wood signal poles using at least two stainless steel bands (straps) of the size recommended by the manufacturer, one near the top of cabinet and one near the bottom.

Furnish rigid galvanized conduit, fittings and conduit outlet bodies along with new pull boxes where required to replace existing short risers. Use conduits, fittings and conduit outlet bodies of same nominal size as the existing short risers being replaced. Furnish conduit fittings and outlet bodies as required to install existing risers into base of new terminal splice cabinet.

(C) Gel-Filled Splice Connectors

Furnish gel-filled connectors of the appropriate wire gauge to butt splice and extend the existing conductors of signal cables and loop lead-in cables inside controller cabinets.

(D) Signal Cable and Loop Lead-In Cable

Furnish new traffic signal cables and loop lead-in cables for extending existing cables from new terminal splice cabinet. Furnish equivalent size conductor signal cable. Furnish loop lead-in cable which complies with the "Lead-In Cable" section of these Project Special Provisions. Furnish new conductors and new cables that match the insulation color coding of the conductors in the existing cables to which they are being spliced.

8.3. CONSTRUCTION METHODS

(A) General

Prior to splicing and extending existing conductors or rerouting existing conductors through new conduits and risers, place permanent labels on all incoming and outgoing conductors in the controller cabinet using a naming convention such as Phase 1 Green, Phase 2 Yellow, Loop 2A, etc., unless the conductors are already labeled. Where there are existing labels on the conductors, confirm that they are labeled correctly and replace any labels that are incorrect.

Place similar permanent labels on the ends of all new conductors used to extend the existing conductors.

Perform standard megger tests on loops after splicing and extending loop lead-ins. Upon approval of the Engineer, replace lead-in cables or loop and lead-in cable assemblies that do not pass standard megger tests.

Maintain the color coding of individual conductors through the splice. Splice and extend existing conductors using new conductors with the same insulation color. Do not splice together conductors with different color insulation.

(B) Inside Controller Cabinets

Where a new controller cabinet is being mounted over existing conduit stubouts on an existing foundation or over existing riser bases at a pole-mounted location and the existing field wiring will not reach the terminal blocks provided inside the new cabinet, splice and extend the incoming and outgoing signal and loop lead-in conductors inside the controller cabinet using gel-filled butt splice connectors.

(C) External to Controller Cabinets

Where new controller cabinets are being installed in a different location from the existing cabinet location and the Plans do not call for re-cabling of the intersection, install, as shown on the Plans, a terminal splice cabinet to splice and extend existing signal and loop lead-in conductors as required to reach the new controller cabinet through new risers and conduits.

Do not splice and extend conductors external to the controller cabinet where the existing field wiring is of sufficient length to reach the new cabinet in its new location. An example would be

where the Plans call for the new cabinet to be placed on a new foundation located at the same or lesser distance from the adjacent signal pole as the existing base-mounted cabinet and foundation. At such locations, pull the existing cables out of the existing cabinet, risers and conduit and reroute them to the new cabinet via the new risers and conduits.

Use a terminal splice cabinet when an existing pole-mounted cabinet is being replaced with a new base-mounted cabinet and the Plans do not call for re-cabling the intersection. Use a terminal splice cabinet where an existing base-mounted cabinet is being replaced with a new base-base mounted cabinet on a new foundation in a new location and the existing cabling is not long enough to reach the base of the new cabinet and the Plans do not call for re-cabling the intersection.

Do not route electrical service wire through the terminal splice cabinet.

(D) Terminal Splice Cabinets

Disconnect the conductors from the existing cabinet, remove the existing pole-mounted controller cabinet, but retain the existing risers, conduit outlet bodies and cables housed therein. Install the new terminal splice cabinet on the pole at same location as removed cabinet with bottom of splice cabinet at the same vertical height as the bottom of the removed cabinet. Install conduit entry holes into base of new cabinet and attach existing risers. Adjust existing conduits and modify/add conduit outlet bodies as necessary to attach to new cabinet. Splice the existing signal cables and loop lead-in cables to the new cables on the terminal splice block and extend new signal cables and new lead-in cables to new base mounted cabinet via two separate, new 2-inch rigid galvanized short risers and underground conduits as shown in the Plans. Use 16-14 AWG insulated solderless crimp terminals on the ends of conductors being spliced. Install the terminals with a ratcheting-type crimp tool. Bond the terminal splice cabinet to the equipment ground in the controller cabinet using a 14 AWG stranded THHN copper wire with green insulation. Do not put loop grounds and other grounds with neutral conductors.

At certain intersections with existing pole-mounted controller cabinets, existing lead-in cables or pedestrian signal cables are routed underground to existing pole-mounted cabinets and enter the bottom of existing cabinet via a short riser. A short riser is defined as a short section of vertical conduit between the bottom of a pole-mounted cabinet and the ground below that conveys cables between an underground conduit and the cabinet. Where these short risers are attached to the face of the pole, attach the short riser into a conduit entrance on the bottom of the new terminal splice cabinet and splice the existing cables to the new cables on the terminal block in the cabinet.

Where the existing short riser is "freestanding" (i.e., it is offset horizontally more than one inch from the face of the signal pole and is not secured to the face of the signal pole) or is damaged (i.e., crimped or severely bent), replace the existing short riser with a new short riser attached to the face of the pole as shown in the Plans. Feed the existing cables through the new conduit and short riser and into the new terminal splice cabinet. Splice the existing conductors to the new conductors on the terminal block.

(E) Terminal Splice Cabinet Where Existing Cabinet is Base-Mounted

Mount the terminal splice cabinet on the pole with the center of the cabinet 48 inches above the ground at the base of the pole. Install new risers to the terminal splice cabinet and short risers from the terminal splice cabinet to the underground conduits leading to the new controller

cabinet foundation. Disconnect field wiring from existing base-mounted controller cabinet, carefully pull the cables out of the tops of the existing risers and reroute the existing cables through new risers to a terminal splice cabinet. Splice the existing signal cables and loop lead-in cables to the new cables on the terminal splice block and extend new signal cables and new lead-in cables to new base mounted cabinet via two separate, new 2-inch rigid galvanized short risers and underground conduits as shown in the Plans. Use 16-14 AWG insulated solderless crimp terminals on the ends of conductors being spliced. Install the terminals with a ratcheting-type crimp tool. Bond the terminal splice cabinet to the equipment ground in the controller cabinet using a 14 AWG stranded THHN copper wire. Do not put loop grounds and other grounds with neutral conductors.

Where a loop lead-in cable or pedestrian signal cable enters the existing cabinet foundation directly via an existing underground conduit instead of through a riser, take care to protect the existing cables and the conduit stubout so as not to damage them when removing the existing controller cabinet and its existing foundation. Pull the cables back out of the foundation stubouts from a junction box, handhole, or transformer base, if available, before removing the cabinet foundation. Upon removal of the cabinet foundation, install a junction box over the conduit stubouts and install new underground conduit(s) from the junction box to a stubout in the new cabinet foundation. Splice the loop lead-in cable to new lead-in cable in the junction box in accordance with *Roadway Standard Drawing No. 1725.01* and run the new lead-in cable from the junction box directly to the new controller cabinet via the new underground conduit. Do not splice and extend existing pedestrian signal cable. Remove the existing pedestrian signal cable and install new, continuous pedestrian signal cable from the pedestrian signal to the new controller cabinet via the existing and new underground conduits.

Where these short risers are attached to the face of the pole, attach the short riser into a conduit entrance on the bottom of the new terminal splice cabinet and splice the existing cables to the new cables on the terminal block in the cabinet.

8.4. MEASUREMENT AND PAYMENT

Terminal Splice Cabinet will be measured and paid for as the actual number of terminal splice cabinets, furnished, installed, and accepted.

No measurement will be made of new full-height risers attached to the bottom of terminal splice cabinet as these will be considered incidental to furnishing and installing terminal splice cabinets.

No measurement will be made of replacement of existing conduit bodies and fittings, and installation of new conduit bodies and fittings as these will be considered incidental to furnishing and installing terminal splice cabinets.

No measurement will be made of new short risers that replace of existing short risers as they will be considered incidental to furnishing and installing terminal splice cabinets.

When required to intercept existing underground conduit, new junction boxes will be paid for in accordance with the "Junction Boxes" section of these Project Special Provisions as approved by the Engineer.

No measurement will be made of additional signal cable/conductors and loop lead-ins, as the splicing of all existing signal conductors and loop lead-ins in the splice cabinet, extending them

through new risers and conduits and connecting them to the new controller cabinet will be considered incidental to furnishing and installing terminal splice cabinets.

No measurement will be made of gel-filled splice connectors and additional signal and loop lead-in cable/conductors as the splicing and extending of conductors inside the controller cabinet will be considered incidental to furnishing and installing the new controller and cabinet.

No measurement will be made of testing of loops after splicing and extending lead-in cables as performing standard megger tests will be considered incidental to splicing and extending the lead-in cables.

Engineer-approved replacement of loops will be paid as provided for under *Inductive Loop Sawcut* in accordance with the "Inductive Detection Loops" section of these Project Special Provisions. Engineer-approved replacement of loop lead-ins will be paid as provided for under *Lead-In Cable* in accordance with the "Lead-In Cable" section of these Project Special Provisions.

Payment will be made under:

Pay Item	**Pay Unit**
Terminal Splice Cabinet	Each

9. WOOD POLES

9.1. DESCRIPTION

Furnish and install wood poles with grounding systems and all necessary hardware.

9.2. MATERIALS

(A) General

Material, equipment, and hardware furnished under this section shall be pre-approved on the ITS and Signals QPL.

Furnish treated timber poles that meet the requirements of ANSI O5.1, except the timber shall be treated Southern Pine or treated Douglas Fir.

Treat poles in accordance with AWPA Standard U1, except require retention of preservative as below.

Give all poles a preservative treatment of either pentachlorophenol, or chromated copper arsenate. The same type of preservative shall be used throughout the entire length of the project.

Minimum retention for poles treated with pentachlorophenol will be 0.45 lb. by assay of dry chemical per cubic foot of wood. Minimum retention for poles treated with chromated copper arsenate will be 0.6 lb. by assay of dry chemical per cubic foot of wood.

Refer to the following sections of the *Standard Specifications:*

- 1091-6, "Grounding Electrodes"
- 1082, "Inspection Requirements"
- 1091-2, "Wire and Cable"
- 1082, "Structural Timber and Lumber"

(B) Wood Poles for Signals and Aerial Cable Routes

Unless otherwise specified in the Plans, furnish Class 3 wood poles that have a minimum length of 40 feet and are of a sufficient length to maintain the minimum required clearances above the roadway, obstructions, and affected railroad tracks.

(C) CCTV Wood Poles

Furnish Class 3 or better wood poles to mount CCTV cameras and cabinets that are of sufficient length to permit the CCTV camera to be mounted at the mounting height specified in the Plans. To provide for mounting heights of up to 35 feet above the ground at the base of the pole, furnish CCTV wood poles that are at least 50 feet in length. The Contractor is encouraged to visit the site of the proposed CCTV poles to confirm the length of pole required to attain the specified mounting prior to ordering the CCTV poles.

9.3. CONSTRUCTION METHODS

Install poles at locations shown on the Plans. Except where the Plans specify an exact location (i.e., show offsets and dimensions from a known points), place the pole at an offset from the edge of travel way that is consistent with other fixed objects and utility poles along that side of the road, but in no case closer than 1.5 feet from the face of curb. Within intersection radii, install poles a minimum of 7 feet behind face of curb or 10 feet from the edge of travel way

where there is no curb. If the Plans do not specify an exact locations, the pole is not within the intersection radius and there are no other poles along the side of the road where the pole is to be installed, locate the pole as far as practical from the edge of the roadway, using the setback distances in the following table as a guide:

Speed Limit	Desirable Minimum Setback Distance	
	from face of curb in curb & gutter section	from edge of travel way in shoulder section (no curb)
≤ 25 mph	8 feet	10 feet
30-35 mph	10 feet	12 feet
40 mph	12 feet	16 feet
45 mph	16 feet	18 feet
50 mph	20 feet	22 feet
55 mph	22 feet	24 feet
≥ 60 mph	n/a	30 feet

Measure the setback distance from the face of curb or edge of travel lane to the face of the pole.

Field conditions and site specific constraints may require the pole to be located at setback distances less than those listed above, subject to the approval of the Engineer.

Mark final pole locations and receive approval from the Engineer before installing poles.

Ensure poles are of sufficient length to maintain the minimum required clearances above the roadway, obstructions, and affected railroad tracks

Drill or auger a hole for placement of pole and to allow for compacting. Set poles for signals and aerial cable routes at the manufacturer's recommended depth or at a depth equal to 10% of the pole length plus 2 feet, whichever is greater, but in no case less than of 5 feet deep. Set CCTV wood poles at a minimum depth of 10 feet. Ensure the pole is within 2 degrees of vertical when fully loaded.

Backfill hole with pole installed and tamp backfill in 6 inch lifts with a mechanical tamp until compacted density is at least 95% of original density.

On new Department-owned or City-owned poles, install a grounding system consisting of #6 AWG solid bare copper wire that is exothermically welded to a single ground rod installed at the base of the pole or to the electrical service grounding electrode system located within 10 feet of the pole. Install ground wire so as to minimize damage from vandalism and environmental

exposures. Install ground wire up pole to a point adjacent to the uppermost span. Use hot-dipped galvanized 1.5" wire staples to secure ground wire to pole, spacing the staples along the ground as follows:

- 4 inches apart from ground level to 8 feet above ground level;
- 24 inches apart from 8 feet above ground level to point adjacent to uppermost span.

9.4. MEASUREMENT AND PAYMENT

Wood pole will be measured and paid for as the actual number of wood poles furnished, installed, and accepted.

CCTV wood pole will be measured and paid for as the actual number of CCTV wood poles furnished, installed, and accepted regardless of length.

Pole grounding systems, where required, will be measured and paid for in accordance with the "Messenger Cable" section of these Project Special Provisions.

Payment will be made under:

Pay Item	Pay Unit
Wood Pole	Each
CCTV Wood Pole	Each

10. GUY ASSEMBLIES

10.1. DESCRIPTION

Furnish and install guy assemblies with all necessary hardware.

10.2. MATERIALS

Material, equipment, and hardware furnished under this section shall be pre-approved on the ITS and Signals QPL.

Furnish guy assemblies with anchor assemblies, guy cable, and guy cable guard.

Provide anchor assemblies with all miscellaneous hardware consisting of either expanding anchor with rod and triple-eye attachment, screw anchor with extension rod and triple-eye attachment, or expanding rock anchor with triple-eye attachment. Ensure anchor assembly size is adequate for site conditions. Provide rods constructed of hot-dipped galvanized steel sized according to the soil bearing conditions in the area. Provide triple-eye guy attachments constructed of hot-dipped galvanized steel. Anchor assemblies with double-strand eyes may be used in lieu of those with the triple-eye feature when only one guy cable is to be attached. Ensure anchor assemblies are 7 feet minimum in length.

For type of anchor assembly furnished, ensure the following:

1) Expanding Anchor

   Provide steel construction with protective paint or heat shrink of 6 mil plastic to protect metal during shipping and storage.

2) Screw Anchor

   Provide hot-dipped galvanized steel construction.

3) Expanding Rock Anchors

   Provide malleable iron and rust-resisting paint construction.

Provide 3-bolt clamp to match messenger cable size.

Provide full round guy cable guards that are 8 feet in length and constructed of ultraviolet (UV) stabilized, high impact, bright yellow, high density polyethylene (HDPE).

Provide guy cables consisting of messenger cable of the same size as the largest sized messenger cable to be guyed. Comply with the "Messenger Cable" section of these Project Special Provisions.

Refer to the "Pole Line Hardware" subsection of the "Messenger Cable" section of these Project Special Provisions.

10.3. CONSTRUCTION METHODS

(A) General

Comply with *Roadway Standard Drawing* (RSD) No. 1721.01 when constructing guy assemblies.

(B) Guy Assemblies for Signal Heads or Loop Lead-in Cable

Install guy assemblies with guy cable, guy guards, anchors, three-bolt clamps and associated fittings. Use two-bolt attachment method where there is adequate room on the pole to comply

with the NESC. Attach guy assembly and guy cable to two separate bolts with one bolt for span and one bolt for guy cable.

Where adequate spacing is not available and a violation of the NESC would occur with the two-bolt attachment method, use approved one-bolt attachment method for attaching messenger cable and guy assembly.

Bond guy assembly to existing pole ground and to the messenger cable using parallel groove clamp or equivalent. If existing City or NCDOT poles do not have a grounding system, install a grounding system consisting of number #6 AWG solid bare copper wire that is exothermically welded to a single ground rod installed at the base of the pole or to the electrical service grounding electrode system located within 10 feet of the pole. Install ground wire so as to minimize damage from vandalism and environmental exposures. Install ground wire up pole to a point adjacent to the uppermost span. Install ground wire up pole to a point adjacent to the uppermost span. Use hot-dipped galvanized 1.5" wire staples to secure ground wire to pole, spacing the staples along the ground as follows:

- 4 inches apart from ground level to 8 feet above ground level;
- 24 inches apart from 8 feet above ground level to point adjacent to uppermost span.

Do not use guy anchors as grounding electrodes.

Do not attach to existing guy assemblies unless specifically approved by owner.

When proposed guy assembly replaces an existing guy assembly, remove the existing guy assembly, including guy anchor if not reused for the new guy assembly.

(C) Guy Assemblies for Communications Cable

When installing messenger cable for supporting only communications cable, use approved one-bolt attachment method for attaching messenger cable and guy assembly.

Bond guy assembly to existing pole ground and to the messenger cable using parallel groove clamp or equivalent. If existing City or NCDOT poles do not have a grounding system, install a grounding system consisting of number #6 AWG solid bare copper wire that is exothermically welded to a single ground rod installed at the base of the pole or to the electrical service grounding electrode system located within 10 feet of the pole. Install ground wire so as to minimize damage from vandalism and environmental exposures. Install ground wire up pole to a point adjacent to the uppermost span. Use hot-dipped galvanized 1.5" wire staples to secure ground wire to pole, spacing the staples along the ground as follows:

- 4 inches apart from ground level to 8 feet above ground level;
- 24 inches apart from 8 feet above ground level to point adjacent to uppermost span.

Do not use guy anchors as grounding electrodes.

Do not attach to existing guy assemblies unless specifically approved by owner.

When proposed guy assembly replaces an existing guy assembly, remove the existing guy assembly, including guy anchor if not reused for the new guy assembly.

10.4. MEASUREMENT AND PAYMENT

Guy assembly will be measured and paid as the actual number of direct down guy (i.e., standard guy) assemblies furnished, installed, and accepted.

Guy assembly (____) will be measured and paid as the actual number of guy assemblies of each type (aerial or sidewalk) furnished, installed, and accepted.

No measurement will be made of guy cable, guy guards, anchors, clamps, strandvises, 2" galvanized pipe, pole plates, other fittings, or the removal of existing guy assemblies as these will be considered incidental to furnishing and installing guy assemblies.

Pole grounding systems, where required, will be measured and paid for in accordance with the "Messenger Cable" section of these Project Special Provisions.

Payment will be made under:

Pay Item	Pay Unit
Guy Assembly	Each
Guy Assembly (Aerial)	Each
Guy Assembly (Sidewalk)	Each

11. RISER ASSEMBLIES

11.1. DESCRIPTION

Furnish and install riser assemblies with clamp-on, aluminum weatherheads or heat shrink tubing, galvanized pole attachment fittings, stainless steel banding hardware, grounding and all necessary hardware.

11.2. MATERIALS

Furnish material, equipment, and hardware furnished under this section that is pre-approved on the ITS and Signals QPL.

Provide conduit for risers that is rigid hot dipped galvanized steel conduit that meets UL Standard 6 with rigid full weight sherardized or galvanized threaded fittings.

Refer to the following sections of the *Standard Specifications:*

- 1091-6, "Grounding Electrodes"
- 1091-2, "Wire and Cable"

In addition, refer to the "Pole Line Hardware" subsection of the "Messenger Cable" section of these Project Special Provisions.

Provide Schedule 40 PVC female adapter to connect an underground run of PVC conduit to the threaded end of a rigid metallic elbow/sweep at the base of a rigid metallic riser. Provide PVC adapters that have the same nominal diameter as the riser to join underground conduit of the same diameter to the riser. The interior surface of one end of the PVC female adapter shall be compatibly threaded to connect it to the threaded end of the rigid metallic riser without the aid of additional fittings, hardware or adhesives. The opposite end of the adapter shall be non-threaded to permit a slip fit, glued connection to the underground PVC conduit.

Furnish appropriately sized clamp-on aluminum weatherheads for electrical control and power cables.

Furnish heat shrink tubing for the installation of fiber-optic or coaxial cable in a new riser. Ensure the heat shrink tubing is made of modified polyolefin and includes a hot-melt adhesive. Provide tubing that has a length of at least 5" before heating. Ensure the heat shrink tubing will provide a watertight fit around individual cables and outer wall of the riser after heat is applied in accordance with the manufacturer's instructions.

Furnish heat shrink tubing retrofit kits for the installation of fiber optic cable or coaxial cables to an existing riser with existing cables, except for the existing 4" PVC risers mounted on a pole on Oak Street NW near the City's Public Safety Center. Ensure the heat shrink material is made of modified polyolefin and is supplied in a flat sheet design. Ensure the kit contains an apparatus to secure both ends of the flat sheet together to form a tube shaped cylinder. Ensure the securing apparatus is flexible to the point that it will allow the heat shrink material to conform to the shape and dimensions of the riser and cables once heat is applied and will not separate during the heating process. Provide heat shrink tubing retrofit kits with a hot-melt adhesive. Provide the flat sheet heat shrink material that has a minimum length of 5" prior to heating. Ensure the heat shrink tubing retrofit kit provides a watertight fit around individual cables and outer wall of the riser after heat is applied in accordance with the manufacturer's instructions.

For sealing the existing 4" PVC risers mounted on a pole on Oak Street NW near the City's Public Safety Center, provide a water-blocking foam duct sealant. Provide a duct sealant that is rapidly expanding two-part, polyurethane closed-cell foam that forms a water-blocking seal when injected into a void between two dams formed by coils of fire-retardant packing/damming strips placed inside the end of the riser. Ensure that duct sealant is designed to adhere to PVC, HDPE or metal. Provide all materials necessary to form the seal in accordance with the manufacturer's instructions, including the packing/damming strips. Submit catalog cuts/manufacturer's literate for the duct sealant to the Engineer for approval prior to use.

Provide 1" rigid galvanized risers with weatherheads that are black in color to convey proposed Ethernet bridge antenna cables at the following intersections with existing black metal signal poles:

First Street at Cherry Street
First Street at Liberty Street
First Street at Main Street
Second Street at Spruce Street
Second Street at Marshall Street
Second Street at Cherry Street
Second Street at Liberty Street
Second Street at Main Street
Second Street at Church Street
Third Street at Cherry Street
Third Street at Liberty Street
Third Street at Main Street
Third Street at Church Street
Fourth Street at Spring Street
Fourth Street at Poplar Street*
Fourth Street at Spruce Street*
Fourth Street at Marshall Street*
Fourth Street at Cherry Street*
Fourth Street at Trade Street*
Fourth Street at Liberty Street*
Fourth Street at Main Street*
Fourth Street at Church Street*
Fifth Street at Marshall Street
Fifth Street at Cherry Street
Fifth Street at Trade Street
Fifth Street at Liberty Street
Fifth Street at Main Street
Fifth Street at Church Street
Sixth Street at Cherry Street
Sixth Street at Liberty Street
Main Street at Business 40 Off-ramp

** Denotes intersections where controller cabinet also has a black finish.*

For the locations above, provide riser assemblies with either a black powder coated finish or a Contractor-applied black painted finish. Submit the manufacturer's literature and application instructions for the proposed powder coating or paint system to the Engineer for approval prior to application. For Contractor-applied paint finish, use a durable, exterior latex-acrylic paint system that is compatible with and designed to adhere permanently to a galvanized steel surface. Provide paint that is black in color and dries to a satin finish. Prepare the galvanized steel surface to receive paint following the recommendations of the American Galvanizers Association (www.galvanizeit.org) as well as the paint manufacturer's instructions. Remove all surface contaminants by washing with a manufacturer recommended detergent or degreaser, then apply a wash primer (i.e., etch primer). Apply the paint following application of the wash primer. Apply the coating to all exterior surfaces of the enclosure indoors in a controlled environment in accordance with the paint manufacturer's instructions. Do not paint riser assemblies in the field or after installation. Only touch-up paint may be field-applied, as necessary and as approved by the Engineer, following installation.

Where black-coated risers are being attached to metal poles with a black coating, provide stainless steel bands, clamps and hardware that have a factory-applied, baked-on powder coated black satin finish that is UV fade-resistant and chip resistant. Field-application of coating and field-painting of bands, clamps and mounting hardware is prohibited. Submit catalog cuts/manufacturer's literature for banding hardware and clamps, both coated and uncoated, to the Engineer for approval.

11.3. CONSTRUCTION METHODS

Install risers with required weatherheads or heat shrink tubing on poles using pole attachment fittings and, on metal poles, stainless steel banding hardware. Maintain a 10" minimum and 18" maximum offset from signal messenger to the top riser for all risers. On utility-owned poles, maintain a 40" offset from the electrical utility's power conductors to top of riser and riser attachment fittings.

Use approved heat shrink tubing retrofit kits when installing new fiber-optic or coaxial cable into existing risers that contain existing fiber-optic or coaxial cables, except for the existing 4" PVC risers mounted on a pole on Oak Street NW near the City's Public Safety Center.

Install heat shrink tubing retrofit kits in existing risers as specified.

Seal the existing 4" PVC risers attached to a pole on Oak Street NW near the City's Public Safety Center with an approved water-blocking foam duct sealant. Create two dams with a void between them inside the riser by wrapping fire-retardant packing/damming strips around the cable(s) or coiling the strips inside an empty riser. Mix and inject the sealant into the void and damming material per the manufacturer's instructions to complete the seal.

Use separate 1/2-inch riser with weatherhead for pedestrian pushbutton.

Use separate 1-inch riser with weatherhead for pedestrian signals.

Use separate 1-inch riser with weatherhead for electrical service.

Use separate 1-inch riser with weatherhead for antenna cable on downtown metal poles.

Use separate 2-inch riser with weatherhead for signal cables (bundled). Use separate 2-inch riser with weatherhead for the combination of all lead-in cable and twisted-pair communications cable. Install condulet on all risers for lead-in cable. Use a 2-inch riser with weatherhead for composite cable routed to a CCTV camera.

Use a separate riser with heat shrink tubing for fiber-optic communications cables and coaxial cable. For pole-mounted cabinets only, use 1-inch risers with heat shrink tubing for all new risers, that will contain fiber-optic communications drop cables and for new risers that will contain coaxial cable routed to a radio antenna, unless the Plans call for use of a 2-inch riser with heat shrink tubing at a specific location. Connect 1-inch risers to the bottom of the pole-mounted cabinet using a pair of standard 90-degree elbows to form a 180-degree sweep up into the bottom of the cabinet. Standard 90-degree elbows for 1-inch conduit have a 5.75-inch radius and equal horizontal and vertical legs that measure approximately 8 inches each. Smaller elbows are prohibited. Larger elbows may only be used if approved by the Engineer. For all other locations use 2-inch risers with heat shrink tubing. Install risers with heat shrink tubing so that cable can be installed without violating its minimum bending radius. Install cable so it does not share a riser with any other cable type. Use the same 2-inch riser that houses the signal system fiber-

optic communications cable to convey the IS Department fiber-optic cable on coincident routes unless the Plans call for installation of a separate riser to convey the IS Department cable.

Install heat shrink tubing in accordance with manufacturer's recommendations. Provide tubing a minimum of 5 inches in length with a minimum of 2.5 inches extended over cables and 2.5 inches extended over risers after heat has been applied. Use nylon filler rods with UV protection or equivalent and sealing spacer clips to separate cables where multiple cables enter a riser. Ensure sealing spacer clips have a heat activated sealing compound with the sealing compound fully encapsulating the space between cables. Ensure heat shrink tubing provides a watertight fit around individual cables and outer walls of risers. Do not use cut sections of cable or any other devices in lieu of filler rods. Use aluminum tape around cables to prevent damage from sealing chemicals. Use a heat source that will provide even heat distribution around tubing. Ensure no damage occurs to any cables. Do not use a heat source with an open flame.

Remove existing weatherheads, sealing bushings, heat shrink tubing and riser caps and install heat shrink tubing retrofit kits on existing risers according to the installation procedures above.

Transition from rigid galvanized steel risers to underground PVC conduits using an approved rigid galvanized steel sweeping elbow with PVC female adapter. Use PVC female adapters that have the same nominal diameter as the riser to join underground conduit of the same diameter to the riser. Apply Teflon thread tape to the threads of rigid galvanized steel sweeping elbow before screwing the PVC adapter onto the threaded end of the elbow. Connect the threaded female end of the PVC adapter to the threaded male end of the rigid galvanized steel sweeping elbow without the use of additional fittings, hardware or adhesives. Connect the opposite, non-threaded end of the adapter to the underground PVC conduit using a slip fit, glued connection.

Bond all new risers, a minimum of 10 feet above grade, to the pole ground using a #6 AWG minimum solid bare copper wire and an approve pipe clamp, a split-bolt connector or parallel groove clamp. On pole-mounted cabinets where the risers are connected to the cabinet, bond risers in the cabinet using ground bushings with a #6 AWG minimum solid bare copper wire to cabinet ground bus.

If a pole ground exists on a joint-use pole, bond new riser to the existing pole ground using #6 AWG minimum solid bare copper wire terminated with split-bolt connectors or parallel groove clamp.

If the existing pole does not have a grounding system, install new grounding system consisting of #6 AWG solid bare copper wire that is exothermically welded to a single ground rod installed at the base of the pole or to the electrical service grounding electrode system located within 10 feet of the pole. Install ground wire so as to minimize damage from vandalism and environmental exposures. Install ground wire up pole to a point adjacent to the uppermost span. Use hot-dipped galvanized 1.5" wire staples to secure ground wire to pole, spacing the staples along the ground as follows:

- 4 inches apart from ground level to 8 feet above ground level;
- 24 inches apart from 8 feet above ground level to point adjacent to uppermost span.

11.4. MEASUREMENT AND PAYMENT

__" Riser with _____ will be measured and paid as the actual number of risers of each type and size furnished, installed, and accepted.

IS __" Riser with _____ will be measured and paid as the actual number of risers of each type and size used to convey IS Department fiber-optic cables exclusively that are furnished, installed, and accepted.

No measurement will be made of weatherheads, heat shrink tubing, conduit outlet bodies such as condulets, elbows, conduit fittings, PVC female adapters, and pole attachment fittings as these will be considered incidental to furnishing and installing risers.

Pole grounding systems, where required, will be measured and paid for in accordance with the "Messenger Cable" section of these Project Special Provisions.

No measurement will be made for horizontal sections of underground conduit that connect the riser to stub-outs in an adjacent cabinet foundation or to an adjacent junction box and that measure 10 feet or less in horizontal length from the center of the riser to the center of junction box or from the center of the riser to the center of the vertical sweep through the controller cabinet foundation. Such conduit will be considered incidental to furnishing and installing the riser assembly.

No measurement will be made for vertical conduit segments (i.e., short risers) extending from an entrance in the bottom of a pole-mounted cabinet to ground level below the cabinet to tie directly onto an underground conduit as such conduits will be considered incidental to furnishing and installing the pole-mounted cabinet.

No measurement will be made of 1" risers with weatherheads furnished and installed as part of new electrical services as they will be considered incidental to furnishing and installing new electrical services (see "Electrical Service" section of these Project Special Provisions).

No measurement will be made of painting or powder coating 1" risers with weatherheads mounted on black metal poles for downtown Ethernet bridge radio locations as such work will be considered incidental to furnishing and installing the 1" riser with weatherhead and the Ethernet bridge radio.

Heat shrink tubing retrofit kit will be measured and paid for as the actual number of heat shrink tubing retrofit kits furnished, installed, and accepted.

No measurement will be made of removing existing weatherheads, sealing bushings, heat shrink tubing and riser caps from existing risers as such removals will be considered incidental to furnishing and installing heat shrink tubing retrofit kits.

4" PVC riser seal will be measured and paid for as the actual number of water-blocking foam duct seals in existing 4" PVC risers, with or without cable inside, that are furnished, installed and accepted.

Payment will be made under:

Pay Item	Pay Unit
½" Riser with Weatherhead	Each
1" Riser with Weatherhead	Each
2" Riser with Weatherhead	Each
1" Riser with Heat Shrink Tubing	Each
2" Riser with Heat Shrink Tubing	Each
IS 2" Riser with Heat Shrink Tubing	Each
Heat Shrink Tubing Retrofit Kit	Each
4" PVC Riser Seal	Each

12. INDUCTIVE DETECTION LOOPS

12.1. DESCRIPTION

Furnish and install inductive detection loops with loop slot sealant, loop wire, conduit with fittings, and all necessary hardware.

12.2. MATERIALS

Furnish material, equipment, and hardware furnished under this section that is pre-approved on the ITS and Signals QPL.

(A) Loop Sealant

Provide the Engineer with a Type 3 material certifications and material safety data sheets (MSDS) for the sealant in accordance with Article 106-3 of the *Standard Specifications*.

Provide loop slot sealant that completely encapsulates loop wire when installed according to manufacturer's instructions. Provide loop sealant that does not generate temperatures greater than 220° F. Ensure sealant bonds with asphalt and concrete pavement saw slots so sealant and encapsulated loop wire do not come out of slot. Ensure sealant is self-leveling, but with sufficient viscosity to prevent exit from saw slot when installed along a 10% grade.

Provide sealant that protects loop wire by preventing the entrance of dirt, water, rocks, sticks, and other debris into saw slot, and is resistant to traffic, water, gasoline, chemical and chemical fumes, mild alkalis, oils, and mild acids. Ensure sealant will not be affected by water and sealant does not chemically interact with pavement and loop wire insulation.

Ensure loop sealant has sufficient flexibility to permit expected pavement expansion and contraction due to weather and to permit pavement movement due to traffic without cracking for a temperature range of -40 to 160° F.

Provide sealant with a usable life of at least ten minutes once mixed, when the ambient temperature is 75° F. Ensure sealant dries to tack-free state in less than 2 hours, and does not flow within or out of saw slot after exposed surface has become tack free. Tack free time will be determined by testing with a cotton ball until no sealant adheres to cotton ball and no cotton adheres to sealant.

Ensure two-part sealant cures within 48 hours to attain 95% of published properties for the cured material.

Ensure one part sealant cures within 30 days to attain 95% of published properties for the cured material.

(B) Loop Wire

Provide loop wire composed of 19-strand conductor insulated by a cross-linked polyethylene compound. Ensure insulated conductors are completely encased in tubes of low density polyethylene compound. Print manufacturer's name, manufacture year, and any applicable part number on encasing tube at intervals of 2 feet or less.

Provide #14 AWG copper conductors fabricated from 19 strands that comply with ASTM B3 before insulating. Ensure stranded conductors use either concentric or bunch stranding, and

comply with circular mil area and physical requirements of ASTM B8 or ASTM B174 for bunch stranding.

Provide insulating compound that is cross-linked thermosetting black polyethylene in accordance with ASTM D 2655. Ensure insulation is applied concentrically about conductor. Provide insulation thickness not less than 0.026" at any point and minimum average thickness of 0.030" as measured by UL Standard 62.

Ensure insulation of finished conductor will withstand application of a 60 Hertz or 3,000 Hertz, 7,500 volt (RMS) essentially sinusoidal spark test potential as specified in UL Standard 83.

Provide insulated conductors that are factory-installed in protective encasing tube that complies with the following:

- Encasing tube fabricated of polyethylene compound conforming to ASTM D1248 for Type I, Class C, Grade E5.
- Minimum inside diameter of 0.150"
- Wall thickness of 0.040" ± 0.010"
- Outside diameter of 0.240" ± 0.010" Conduit

(C) Conduit

Comply with the "Underground Conduit" section of these Project Special Provisions for PVC conduit.

12.3. CONSTRUCTION METHODS

All work performed in this section shall be done in the presence of the Engineer.

Notify Engineer one week before installing inductive detection loops.

Coordinate sawcutting and loop placement with pavement markings. For new construction or for resurfacing, install inductive detection loops before placing final layer of surface course. On unmarked pavement, pre-mark locations of stop lines and lane lines before locating inductive detection loops.

Before sawcutting, pre-mark inductive detection loop locations and receive approval. Sawcut pavement at approved pre-marked locations. Do not allow vehicles to travel over unsealed loop slots.

Install conduit with bushings from edge of pavement to junction box. Do not sawcut through curb. Do not sawcut or drill holes for conduit or wires through granite curb. See additional requirements for work in historic districts in Section 1 of these Project Special Provisions.

Remove all loose material and wash saw slots with a high-pressure method using an air and water mixture. Dry saw slots with compressed air. Clear saw slots of jagged edges and protrusions. Seat loop conductor at bottom of saw slot without damaging loop wire.

Before sealing loop conductors, test that impedance from the loop wire to ground is at least 100 megohms. For each location with inductive loops, submit a completed Inductive Detection Loop & Grounding Test Results form and place copy in controller cabinet. Ensure all loops are included on form. The form is located on the Department's website at https://connect.ncdot.gov/resources/safety/Pages/ITS-and-Signals.aspx .

Embed loop conductors in saw slot with loop sealant. Seal saw slot and dispose of excess sealant in an environmentally safe manner.

Between where loop conductor pairs leave the saw cut in pavement and enter a junction box, twist loop conductor pairs a minimum of 5 turns per foot. Permanently label each twisted pair in the junction box with nylon cable tie using indelible ink. Indicate loop number and loop polarity on the tie.

12.4. MEASUREMENT AND PAYMENT

Inductive loop sawcut will be measured and paid as the actual linear feet of inductive loop sawcut furnished, installed, and accepted.

No measurement will be made of loop slot sealant, loop wire, conduit, and conduit fittings as these will be considered incidental to furnishing and installing inductive detection loops.

Payment will be made under:

Pay Item	Pay Unit
Inductive Loop Sawcut	Linear Foot

13. LEAD-IN CABLE

13.1. DESCRIPTION

Furnish and install lead-in cable with all necessary hardware to be used in conjunction with, but not limited to, inductive detection loops, pedestrian pushbutton assemblies or railroad circuitry.

13.2. MATERIALS

Furnish material, equipment, and hardware furnished under this section that is pre-approved on the ITS and Signals QPL.

Furnish lead-in cable with two conductors of #14 AWG fabricated from stranded tinned copper that complies with IMSA Specification 50-2 except as follows:

- Ensure conductor is twisted with a maximum lay of 2.0 inches, resulting in a minimum of 6 turns per foot.
- Provide a ripcord to allow cable jacket to be opened without using a cutter.

Provide length markings in a contrasting color showing sequential feet and within 1% of actual cable length. Ensure character height of the markings is approximately 0.10 inch.

Refer to the "Pole Line Hardware" subsection of the "Messenger Cable" section of these Project Special Provisions.

13.3. CONSTRUCTION METHODS

For underground runs, install lead-in cable in 2-inch non-metallic conduit. For aerial installation, wrap lead-in cable to messenger cable with at least four turns of wrapping tape spaced at intervals less than 15 inches or lash lead-in cable to messenger cable with one 360° spiral of lashing wire per 12 inches.

Where railroad preemption is required, install lead-in cable from signal controller cabinet to railroad company furnished and installed lockable junction box.

Except where the plans call for splicing and extending existing lead-in cable conductors inside a new controller cabinet or for using a terminal splice box to splice and extend existing lead-in cable to a new cabinet location, splicing of lead-in cable will be allowed only for runs in excess of 750 feet. Splice lead-in cable in terminal splice boxes, junction boxes, condulets on poles or controller cabinets.

Test each complete loop system from the controller cabinet by using a megger to verify that impedance from the loop system to the ground is at least 50 megohms. After successful completion of megger test, test loop system resistance using an electronic ohmmeter to verify loop system resistance is less than 0.00885 ohms per foot.

13.4. MEASUREMENT AND PAYMENT

Lead-in cable will be measured and paid as the actual linear feet of lead-in cable furnished, installed, and accepted. Measurement will be made by calculating the difference in length markings located on outer jacket from start of run to end of run for each run. Terminate all cables before determining length of cable run.

If markings are not visible, measurement will be point to point with no allowance for sag. Twenty-five feet will be allowed for vertical segments up or down poles.

Payment will be made under:

Pay Item	Pay Unit
Lead-in Cable	Linear Foot

14. FIBER-OPTIC CABLE

14.1. DESCRIPTION

Furnish and install single mode fiber-optic (SMFO) communications cable and drop cable assemblies, fiber-optic cable storage guides (snow shoes), communications cable identification markers, lashing wire, and all necessary hardware.

14.2. MATERIALS

(A) General

Refer to the "Pole Line Hardware" subsection of the "Messenger Cable" section of these Project Special Provisions for lashing wire, wrapping tape and hardware used for installation of aerial fiber-optic cable.

(B) SMFO Communications Cable

Furnish single-mode fiber-optic communications cable that is pre-approved on the ITS and Signals QPL.

Furnish single-mode fiber-optic cable manufactured into a loose buffer tube design installed around a central strength member where the cable complies with RUS CFR 1755.900and ICEA 640 requirements. Ensure the manufacturer is ISO 9001 and TL9000 registered and that the manufacturer's cable is RUS listed. The operating temperature range of the cable shall be -40°F to +158°F.

Furnish individual fibers manufactured from silica and dopant materials with each fiber having a color coated finish that is compatible with local injection detection (LID) devices. Distinguish each fiber from others by color coding that meets EIA/TIA-598. Furnish single mode fiber that does not exceed attenuation ratings of 0.25 dB/km at 1550 nm and 0.35 dB/km at 1310 nm and complies with ITU G.652D and IEC 60793-2-50 Type B.1.3 industry standards for low water peak, single mode fiber. Provide fibers that are useable and with a surface, sufficiently free of imperfections and inclusions to meet optical, mechanical and environmental requirements.

Ensure the core central strength member is a dielectric glass reinforced rod and that the completed cable assembly has a maximum pulling rating of 600 lbf during installation (short term) and 180 lbf long term installed.

Construct buffer tubes (nominal size of 2.5 mm) manufactured from a polypropylene copolymer material to provide good kink resistance and allows the buffer tube to maintain flexibility in cold temperature over the expected lifetime of the cable. Except for 6-fiber drop cables, provide exactly 12 fibers per buffer tube in all cables regardless of the total number of fibers the cables contain. Do not provide cables with any other fiber count per buffer tube. Ensure that that all buffer tubes are filled with a water-blocking gel or water swellable material. Construct the cable such that the buffer tubes are stranded around the central strength member in a reverse oscillating arrangement to allow for mid-span entry. Distinguish each buffer tube from others by color coding that meets EIA/TIA-598. Use filler tubes to maintain a circular cross-section of the cable. Ensure the filler tubes are the same nominal size as the buffer tubes. Apply binders (water swellable yarn, aramid fiber, etc.) with sufficient tension to secure buffer tubes and filler tubes to the central member without crushing the buffer tubes. Ensure that binding

material is non-hygroscopic, non-wicking and dielectric with low shrinkage. Ensure the binders are of a high tensile strength that is helically stranded evenly around cable core.

Ensure the cable core is protected from the ingress of moisture by a water swellable material or that is filled with a water blocking compound that is non-conductive. Ensure the water swellable material (when activated) or the water blocking compound is free from dirt and foreign matter and is removable with conventional nontoxic solvents. Furnish at least one ripcord to aid in the process of removing the outer jacket. Furnish the outer jacket constructed of a medium-density polyethylene material to provide reduced friction and enhanced durability. Ensure the polyethylene material contains carbon black to provide UV protection and does not promote the growth of fungus. Ensure the cable jacket is free of slits, holes or blisters and the nominal outer jacket thickness is > 0.050".

Ensure the completed cable assembly contains identifications markings printed along the outside cover of the jacket every 2 feet. Ensure the character height of the markings is approximately 0.10". Provide length markings in sequential feet and within one percent of actual cable length.

Mark each cable with the following:

(1) Sequential length marks in feet as specified

(2) The name of the manufacturer

(3) "OPTICAL CABLE"

(4) Month/year of manufacture

(5) Number(s) of and type(s) of fibers

(6) Cable ID Number for product traceability

(C) Drop Cable

Provide drop cable meeting the material requirements list in "SMFO Communications Cable" subsection above with the exceptions herein to provide communications links between splice enclosures and the Ethernet edge switches through interconnect centers mounted in controller cabinets and in CCTV cabinets. Furnish drop cables containing a minimum of six individual fibers.

To facilitate installation in 1" risers at pole-mounted cabinet locations, furnish low bend radius drop cable that complies with RUS-CRF 1755.900 and is RUS listed. A low bend radius cable is defined as a fiber-optic cable whose manufacturer-specified minimum bend radius does not exceed 5.75 inches when loaded and 4 inches when installed for a 6-fiber cable. Ensure drop cable has the same operating characteristics as the SMFO cable it is to be coupled with.

On one end of the cable, furnish LC connectors for termination of all drop cable fibers on connector panel mounted inside an equipment cabinet. Provide either factory preassembled drop cables with SMFO pigtails and LC connectors already attached or field install the pigtails and connectors. For field installed connectors, provide cabinet-mounted interconnect centers that are pre-equipped with factory-preassembled connector panels, SMFO pigtails with LC connectors and splice trays; then fusion splice all drop cable fibers to the SMFO pigtails.

Ensure attenuation of drop cable at 1310 nm does not exceed 0.4 dB/km and the attenuation at 1550 nm does not exceed 0.3 dB/km. Ensure attenuation loss for complete drop cable does not exceed a mean value of 1.5 dB.

(D) Communications Cable Identification Markers

Furnish communications cable identification markers that are resistant to fading when exposed to UV sources and changes in weather. Use markers designed to coil around fiber-optic cable that do not slide or move along the surface of the cable once installed. Ensure exposure to UV light and weather does not affect the markers natural coiling effect or deteriorate performance. Provide communications cable wraps that permit writing with an indelible marking pen.

Furnish cable identification markers with the following text for signal system communications cables:

WARNING
WINSTON-SALEM D.O.T. FIBER-OPTIC
CALL: (336) 727-8000

WARNING
WINSTON-SALEM D.O.T. FIBER-OPTIC

Overall Marker Dimensions:	*7(l) x 4 (w) inches*
Lettering Height:	*3/8 inch for "WARNING"; 1/4" for all other lettering*
Colors:	*Black text on yellow background*

Furnish cable identification markers with the following text for City of Winston-Salem IS Department communications cables:

WARNING
WINSTON-SALEM I.S. FIBER-OPTIC
CALL: (336) 727-8000

WARNING
WINSTON-SALEM I.S. FIBER-OPTIC

Overall Marker Dimensions:	*7(l) x 4 (w) inches*
Lettering Height:	*3/8 inch for "WARNING"; 1/4" for all other lettering*
Colors:	*Black text on white background*

Submit a sample of proposed communications cable identification marker to the Engineer for approval before installation.

(E) Fiber-Optic Cable Storage Guides

Furnish fiber-optic cable storage guides (snowshoes) that are pre-approved on the ITS and Signals QPL.

Furnish fiber-optic storage guides (snowshoes) that are non-conductive and resistant to fading when exposed to UV sources and changes in weather. Ensure snowshoes have a captive design such that fiber-optic cable will be supported when installed in the rack and the minimum bending radius will not be violated. Provide stainless steel attachment hardware for securing snowshoes to messenger cable and black UV resistant tie-wraps for securing fiber-optic cable to snowshoe. Ensure snowshoes are stackable so that multiple cable configurations are possible.

(F) Aerial Cable Protectors

Furnish aerial cable protectors designed to protect aerial fiber-optic communications cable from damage by squirrels and from tree limb abrasion. Provide cable protectors that are designed to fit over the cable as a wrap-around protective sleeve, that have a round shape and are fabricated with cable tie slots spaced approximately 12 inches apart along the entire length. Size the cable protectors to properly fit over the cable(s) lashed to messenger cable in accordance with the manufacturer's guidelines. Provide cable protectors that are constructed of rugged, durable dielectric material such as high density PVC that is black in color, formulated for outdoor use and has special additives to prevent degradation from ultraviolet light. Provide aerial cable protectors that are designed for a service life of at least 10 years.

14.3. CONSTRUCTION METHODS

(A) General

Provide cable manufacturer's attenuation and Optical Time Domain Reflectometer (OTDR) testing data for each reel of cable.

Install SMFO communications cable, snow shoes, communications cable identification markers, lashing wire, and all necessary hardware.

Comply with manufacturer's recommendations. Install communications cable on signal poles, utility poles, messenger cable, and in conduits as required to bring the fiber-optic cable into and, if necessary, out of each splice enclosure.

Take all precautions necessary to ensure cable is not damaged during storage, handling, and installation. Do not violate minimum bending radius of 20 times the radius of cable diameter or manufacturer's recommendation, whichever is greater. Do not step on cable nor run over cable with vehicles or equipment. Do not pull cable over or around obstructions, or along the ground.

Determine lengths of cable necessary to reach from termination-point to termination-point. Install cable in continuous lengths between approved splicing facilities. Additionally, provide a sufficient amount of slack cable to allow for an additional 20 feet of cable to be present after removal of outer sheath for termination. Store the 20 feet of spare cable inside the cabinet. Measure slack cable by extending cable straight out of communications hub cabinet door. No splicing is permitted at any field cabinets other than communications hub cabinets and splicing drop cable fibers to SMFO pigtails in cabinet-mounted interconnect centers.

Keep cable ends sealed at all times during installation to effectively prevent the ingress of moisture. Use approved heat shrink cable end cap. Do not use tape to seal cable ends.

Before installing cable, provide three copies of cable manufacturer's recommended and maximum pulling tension. Do not exceed manufacturer's recommended pulling tension. Use pulling grips containing a breakaway rotating swivel. Coil cable in a figure-8 configuration whenever cable is unreeled for subsequent pulling.

Install fiber-optic cable in separate risers with heat shrink tubing (1-inch or 2-inch as shown on the Plans) or separate conduits. Do not share risers or conduits containing fiber-optic cable with other non-fiber-optic cable unless the Plans specify otherwise or the Engineer directs or approves otherwise.

Seal all conduits containing fiber-optic communications cable in junction boxes and cabinet bases with duct and conduit sealer. Comply with the requirements for duct and conduit sealer in the "Underground Conduit" section of these Project Special Provisions.

(B) Aerial Installation

Install one communications cable identification marker on both the signal system cable and the IS Department cable within 36 inches of pole attachment points and at locations where more than one cable originates or terminates. At splice enclosures, install a communications cable marker on one of the cables where it enters or exits the splice enclosure and ensure that the marker is installed so that it visible (but not necessarily readable) from the ground below. At fiber-optic cable storage guides (i.e., snow shoes), install a communications cable marker at each end, 6 inches or less from the inner edge of each snow shoe, to identify the cable being stored.

Double lash fiber-optic cable to messenger cable with one 360° spiral per foot.

Machine lashing of any cable is not permitted along any messenger cable span to which a traffic signal or overhead sign is or will be attached. Either reuse existing 0.05" x 0.30" aluminum wrapping tape or furnish and install new aluminum wrapping tape.

Use pole attachment hardware and roller guides with safety clips to install aerial run cable.

Use a breakaway swivel so as not to exceed 80% of the maximum allowable pulling tension specified by the cable's manufacturer if cable is pulled by mechanical means. Do not allow cable to contact the ground or other obstructions between poles during installation.

Use a cable suspension clamp when attaching cable tangent to a pole. Select and place cable blocks and corner blocks so as not to exceed the cable's minimum bending radius. Do not pull cable across J-hooks.

Store 100 feet of each fiber-optic cable on all cable runs that are continuous without splices as shown in the Plans. Store 100 feet of IS Department fiber-optic cable at future splice points as shown on the Plans. Obtain approval for spare cable storage locations. Store spare fiber-optic cable on fiber-optic cable storage guides (snow shoes). Where the Plans call for both signal system and IS fiber-optic cable to be stored at the same location, use stacked snow shoes and store the spare signal system cable on the top rack (closest to messenger) and the IS Department cable on the bottom rack. Where spare cable storage locations for the signal system cable and the IS Department cable are shown separately on the Plans but fall adjacent to one another due to field conditions during construction, the spare cables may also be stored on stacked snowshoes at

a common location instead of separately, subject to the to the approval of both the Engineer and the City IS Department's authorized representative.

Locate spare cable storage in the middle of spans between termination points. Do not store spare fiber-optic cable over the roadway or driveways.

(C) Underground Installation

Install fiber-optic cable underground in conduit using cable pulling lubricants recommended by the fiber-optic cable manufacturer. Where more than one fiber-optic cable is being installed in a multiple conduit underground run, ensure that at least one conduit remains empty for future use by installing more than one cable in a conduit as needed, unless directed otherwise by the Engineer.

Obtain approval of cable pulling lubricant and method of pulling before installing underground fiber-optic cable.

Use a breakaway swivel so as not to exceed 80% of the maximum allowable pulling tension specified by the cable's manufacturer if cable is pulled by mechanical means.

Keep tension on cable reel and pulling line at start of each pull. Do not release tension if pulling operation is halted. Restart pulling operation by gradually increasing tension until cable is in motion.

For pulling cable through manholes, junction boxes, and vaults, feed cable by manually rotating the reel. Do not pull cable through intermediate junction boxes, handholds, or openings in conduit unless otherwise approved.

Inside all junction boxes, install communications cable identification markers on each communications cable entering the junction box.

In a junction box where no splice enclosure is required, store 50 feet of each fiber-optic cable on all cable runs as shown in the Plans.

In a junction box where a splice enclosure is required but not immediately installed, store 50 feet of fiber-optic cable intended for the splice as shown in the Plans.

Store 50 feet of IS Department fiber-optic cable at future splice points as shown on the Plans. Obtain approval for spare cable storage locations. Unless otherwise indicated on the plans, IS Department fiber-optic cable may be stored in the same junction box where signal system fiber-optic cable is stored, except for locations where the splice enclosures for the signal system cable and the IS Department cable are coincident, including locations designated as future splice points where 50 feet of spare cable is stored initially. At such coincident splice locations, store for future splicing or splice the IS Department cable in a separate, "IS cable only" junction box installed next to the signal system junction box in accordance with the Special Detail in the Plans.

If a blockage is encountered when attempting to install a communications cable inside an existing conduit in accordance with the Plans, use compressed air, water jetting, rod and mandrel or other Engineer-approved method to clear the obstruction or blockage in the existing underground conduit. Once obstruction/blockage has been substantially cleared, draw a mandrel through the conduit followed by a swab to clean out any remaining materials which may cause cable abrasions. Use a mandrel constructed of aluminum or stainless steel that is at least 6 inches

in length and has an outer diameter that is approximately 1/2 inch less than the inside diameter of the conduit being cleared.

(D) Indoor Installation

Install the fiber-optic cable in risers and conduit between the building entrance and the enclosed communications racks being installed inside the TMC and the Signal Shop using cable pulling lubricants recommended by the fiber-optic cable manufacturer. Obtain approval of cable pulling lubricant and method of pulling before installing the fiber-optic cable.

Use a breakaway swivel so as not to exceed 80% of the maximum allowable pulling tension specified by the cable's manufacturer if cable is pulled by mechanical means. Keep tension on cable reel and pulling line at start of each pull. Do not release tension if pulling operation is halted. Restart pulling operation by gradually increasing tension until cable is in motion.

For pulling cable through junction boxes and cabinets, feed cable by manually rotating the reel. Do not pull cable through cabinets, junction boxes, handholds, or openings in conduit unless otherwise approved. Inside all junction boxes and cabinets, install communications cable identification markers on each communications cable entering the junction box.

Store 30 feet of each fiber-optic cable inside the enclosed communications racks inside the TMC and the Signal Shop after terminating the cables in the rack-mounted splice centers housed therein.

(E) Installation of Drop Cable

Verify the length of drop cable needed, including slack, to reach from termination point to termination point.

At aerial splice enclosures, install the aerial splice enclosure and corresponding cable storage guide 50 feet apart and store between the splice enclosure and corresponding cable storage guide 50 feet of slack cable for each cable entering and exiting the splice enclosure.

At below ground splice enclosures, coil 50 feet of slack cable for each cable entering and exiting the splice enclosure in the manhole or junction box where enclosure is located. Coil and store any drop cable in excess of what is needed for storage in the manhole or junction box in the base of the equipment cabinet. Where fiber-optic cables are installed but not immediately spliced, store 50 feet of drop cable and 50 feet of fiber-optic trunk cable inside the manhole or junction box to facilitate subsequent splicing in the splice enclosure. Cap and seal ends of cables that have yet to be spliced or terminated with a waterproof heat-shrink cap/seal as approved by the Engineer.

At equipment cabinet end of drop cable, terminate <u>all</u> fibers by splicing them to factory-assembled SMFO pigtails with LC connectors and connecting the pigtails to the connector panel in the rack-mounted interconnect center. Label all connectors, pigtails and the connector panel. At the aerial or underground splice location, cap off all unused fibers and label to correspond with the connector panel. After termination, coil and store in the base of the equipment cabinet 20 feet of drop cable plus any additional drop cable in excess of what is needed for overhead storage.

Where the Plans call for a fiber-optic drop cable to be installed in an existing riser, remove all existing cables from the riser and remove the existing weatherhead, sealing bushing or heat shrink tubing. Install the new fiber-optic drop cable in the existing riser and install new heat

shrink tubing at the top of the existing riser using a heat shrink tubing retrofit kit. If the riser contains existing fiber-optic communications cable, carefully remove the fiber-optic cable from the riser so as not violate its minimum bending radius or otherwise damage the cable. Temporarily coil and store the existing fiber-optic cable overhead in a manner approved by the Engineer until the new drop cable can be spliced into the existing cable in an aerial splice enclosure. Once splicing has been completed, furnish and install fiber-optic cable storage guides and permanently store all remaining spare cable.

Using an OTDR, test the end-to-end connectivity of the drop cable from patch panel installed inside the signal or CCTV cabinet to the adjacent managed Ethernet switches. Comply with the OTDR testing and reporting requirements of the "Fiber-Optic Splice Centers" section of these Project Special Provisions when testing drop cable.

(F) Aerial Cable Protectors

Where shown in Plans and as directed by the Engineer, at locations where aerial fiber-optic communications cables are subject to damage by squirrels or from tree limb abrasion, install cable protectors over the fiber-optic cable that are of sufficient length to protect the cable from the potential threat as directed by the Engineer. Do not install aerial cable protectors at any locations without the prior approval of the Engineer. Do not install cable protectors for lengths of application that are shorter or longer than approved/directed by the Engineer.

14.4. MEASUREMENT AND PAYMENT

Communications cable (____-fiber) will be measured and paid as the actual linear feet of fiber-optic cable of each fiber count furnished, installed, and accepted according to the following conditions: 80% of the payment will be made upon acceptance of the installed cable and the remaining 20% of the payment will be made following splicing, testing and final acceptance (including completion of the 60-day Observation Period). Measurement will be made by calculating the difference in length markings located on outer jacket from start of run to end of run for each run. Terminate all fibers before determining length of cable run.

IS Communications cable (____-fiber) will be measured and paid as the actual linear feet of fiber-optic cable of each fiber count exclusively for use by the City IS Department that are furnished, installed, and accepted according to the following conditions: 80% of the payment will be made upon acceptance of the installed cable and the remaining 20% of the payment will be made following splicing, testing and final acceptance (including completion of the 60-day Observation Period). Measurement will be made by calculating the difference in length markings located on outer jacket from start of run to end of run for each run. Terminate all fibers before determining length of cable run.

Drop cable will be measured and paid as the actual linear feet of fiber-optic drop cable comprise of a minimum of 6 fibers that are furnished, installed, and accepted according to the following conditions: 80% of the payment will be made upon acceptance of the installed and spliced drop cable, and the remaining 20% of the payment will be made following final acceptance (including completion of the 60-day Observation Period).

Aerial cable protector will be measured and paid as the actual linear feet of aerial cable protector furnished, installed, and accepted. No measurement and payment will be made of any aerial cable protector installed without the prior approval of the Engineer or for cable protector

installed at locations or for lengths of application other than approved or directed by the Engineer.

No measurement will be made for terminating, splicing, and testing fiber-optic cable, communications cable identification markers, fiber-optic cable storage guides, SMFO jumpers and pigtails, mechanical sealing devices and conduit seals/sealing putty, as these will be considered incidental to the installation of fiber-optic cable and drop cables.

No measurement will be made of removing existing cables from existing risers as such removals will be considered incidental to furnishing and installing the fiber-optic cables and drop cables.

No measurement will be made of clearing a blockage or obstruction from an existing conduit necessary to install a communications cable in an existing underground conduit as such work will be considered incidental to installation of the communications cable.

No measurement will be made of removing existing weatherheads, sealing bushings, heat shrink tubing and riser caps to install new fiber-optic drop cables in existing risers as such removals will be considered incidental to furnishing and installing heat shrink tubing retrofit kits. Heat shrink tubing retrofit kits will be measured and paid for in accordance with the "Riser Assemblies" section of these Project Special Provisions.

Payment will be made under:

Pay Item	Pay Unit
Communications Cable (24-Fiber)	Linear Foot
Communications Cable (36-Fiber)	Linear Foot
Communications Cable (48-Fiber)	Linear Foot
Communications Cable (72-Fiber)	Linear Foot
IS Communications Cable (24-Fiber)	Linear Foot
IS Communications Cable (48-Fiber)	Linear Foot
IS Communications Cable (96-Fiber)	Linear Foot
IS Communications Cable (144-Fiber)	Linear Foot
Drop Cable	Linear Foot
Aerial Cable Protector	Linear Feet

15. FIBER-OPTIC SPLICE CENTERS

15.1. DESCRIPTION

Furnish and install fiber-optic interconnect centers, fiber-optic splice enclosures, and all necessary hardware.

Modify existing fiber-optic interconnect centers and/or splice enclosures as shown in the plans. Refer to manufacturer's recommendations for opening, modifying and re-sealing the existing fiber-optic interconnect center and/or fiber-optic splice enclosure.

15.2. MATERIALS

Furnish material, equipment, and hardware furnished under this section that is pre-approved on the ITS and Signals QPL.

(A) Interconnect Center

Furnish compact, modular interconnect centers designed to mount inside equipment cabinets. Design and size interconnect centers to accommodate all fibers entering cabinets. Provide interconnect centers for controller cabinets and CCTV cabinets that are 1 rack unit (RU) high.

Provide splice trays that hold, protect, organize optical fibers, and secure fibers inside splice tray. Design and size the splice trays to be dielectric, to accommodate all fibers entering splice tray, and to provide sufficient space to prevent microbending of optical fibers. Provide connector panels with LC-type connectors.

Furnish SMFO pigtails with each interconnect center. Provide pigtails are a maximum of 6 feet in length with factory-assembled LC connectors on one end. Ensure SMFO pigtails meet the operating characteristics of the SMFO cable with which it is to be coupled.

For connecting Ethernet edge switches to the interconnect center patch panels, furnish SMFO jumpers that are a minimum of 3 feet in length with factory-assembled LC connectors on one end (i.e., the interconnect center end) and, on the other end, factory-assembled connectors of the same type provided on the Ethernet edge switch.

For connecting contact mapping fiber-optic transmitters and receivers to the interconnect center patch panels, furnish SMFO jumpers that are a minimum of 3 feet in length with factory-assembled LC connector on one end and ST connectors on the other end.

Ensure SMFO jumpers meet the operating characteristics of the SMFO cable with which they are to be coupled.

(B) Hub Splice Center

Furnish a separate rack-mounted fiber-optic splice housing for each fiber-optic communications cable entering and terminated inside each hub cabinet. (Note: Where a given cable is severed and both ends of the cable are pulled into the hub cabinet for splicing, each cable end is considered a separate cable requiring a separate splice housing.) Provide splice centers sized to accommodate fusion splicing of all fibers in the designated cable to pigtails in splice trays housed inside the splice center and terminating those pigtails on the splice center's connector panels (i.e., patch panels) as shown in the Plans. Equip each splice center with LC-compatible connector panels with 12 connectors on each panel (arranged in either a simplex or

duplex arrangement) to terminate fibers from each buffer tube in the incoming cable on a unique connector panel (i.e., one connector panel per buffer tube).

Provide a splice housing that is either a one-piece unit designed to house the connector panels as well as the splice trays or a two-part unit comprised of a rack-mountable connector housing (i.e., distribution panel) and a matching splice housing. For a two-part unit, furnish a connector housing and splice housing made by the same manufacturer and designed by the manufacturer to work together as a unit. Provide a splice center designed to house a separate splice tray for each buffer tube in the cable and to store buffer tubes following splicing. The splice center, whether a single unit or a two-piece unit, shall occupy no more than four rack units. Provide splice centers that have connector panels on the front of the unit that are protected by a transparent door or shield constructed of rigid, durable plastic or acrylic material.

Provide splice trays that hold, protect, organize optical fibers, and secure fibers inside splice tray. Design and size the splice trays to be dielectric, to accommodate all fibers entering splice tray, and to provide sufficient space to prevent microbending of optical fibers.

Furnish SMFO pigtails with each hub splice center. Provide pigtails are a maximum of 6 feet in length with factory-assembled LC connectors. Ensure SMFO pigtails meet the operating characteristics of the SMFO cable with which it is to be coupled. Factory pre-terminated and pre-assembled pigtailed connector panels may be furnished in lieu pigtails pre-assembled with LC connectors, subject to the Engineer's approval.

For connecting managed Ethernet switches to the hub splice center patch panels, furnish SMFO jumpers that are a minimum of 3 feet in length with factory-assembled LC connectors one end (i.e., the interconnect center end) and, on the other end, factory-assembled connectors of the same type provided on the Ethernet edge switch. Ensure SMFO jumpers meet the operating characteristics of the SMFO cable with which they are to be coupled.

Provide all hardware needed to install these units in the rack inside the hub cabinet.

(C) IS Hub Splice Center

Furnish a separate rack-mounted fiber-optic splice housing for each IS Department fiber-optic communications cable entering and terminated inside each IS hub cabinet. (Note: Where a given cable is severed and both ends of the cable are pulled into the IS hub cabinet for splicing, each cable end is considered a separate cable requiring a separate splice housing.) Provide splice centers sized to accommodate future fusion splicing by others of all fibers in the designated cable to pigtails in splice trays housed inside the splice center and future termination (by others) of those pigtails on the splice center's connector panels (i.e., patch panels). Equip each splice center with LC-compatible connector panels with 12 connectors on each panel (arranged in either a simplex or duplex arrangement) for future termination by others of all fibers from each buffer tube in the incoming cable on a unique connector panel (i.e., one connector panel per buffer tube). Provide factory pre-assembled connector panels with SMFO pigtails pre-terminated on the connectors. Ensure pigtails are a maximum of 6 feet in length and meet the operating characteristics of the SMFO cable with which they will be coupled by others at a later date.

Provide a splice housing that is either a one-piece unit designed to house the connector panels as well as the splice trays or a two-part unit comprised of a rack-mountable connector housing (i.e., distribution panel) and a matching splice housing. For a two-part unit, furnish a

connector housing and splice housing made by the same manufacturer and designed by the manufacturer to work together as a unit. Provide a splice center designed to house a separate splice tray for each buffer tube in the cable and to store buffer tubes following splicing. The splice center, whether a single unit or a two-piece unit, shall occupy no more than four rack units. Provide splice centers that have connector panels on the front of the unit that are protected by a transparent door or shield constructed of rigid, durable plastic or acrylic material.

Provide splice trays that hold, protect, organize optical fibers, and secure fibers inside splice tray. Design and size the splice trays to be dielectric, to accommodate all fibers entering splice tray, and to provide sufficient space to prevent microbending of optical fibers. Furnish sufficient splice trays to accommodate the splicing indicated in the Plans plus the future splicing by others of all fibers to pigtails at a later date.

Provide all hardware needed to install these units in the rack inside the hub cabinet.

(D) Splice Enclosure

Furnish splice enclosures that are re-enterable using a mechanical dome-to-base seal with a flash test valve, and are impervious to the entry of foreign material (water, dust, etc.). Ensure enclosures are manufactured in such a manner to be suitable for aerial, pedestal, buried, junction box, and manhole installation.

Provide enclosures with a minimum of one oversized oval port that will accept two cables and with a minimum of four round ports (for single cables) that will accommodate all cables entering enclosure. Provide heat shrink cable shields with enclosure to ensure weather-tight seal where each cable enters enclosure.

Within enclosures, provide enough hinged mountable splice trays to store the number of splices required, plus the capacity to house six additional splices. Provide a fiber containment basket for storage of loose buffer tubes expressed (i.e., uncut and unspliced) through the enclosure. Ensure enclosures allow sufficient space to prevent microbending of buffer tubes when coiled.

Provide splice trays that hold, protect, organize optical fibers, and secure fibers inside splice tray. Provide splice trays that are dielectric.

(E) Existing Splice Enclosures

When adding a new fiber-optic cable to an existing splice enclosure or otherwise modifying an existing splice inside an existing splice enclosure, furnish heat shrink cable shields that are compatible with the enclosure to ensure weather-tight seal where each new cable enters the existing enclosure and to replace any existing seals that are broken or removed while modifying the splice.

For modifications to the existing splices housed in Multilink® Starfighter™ 4000-D dome splice enclosures installed on State Project U-2826B, furnish cable addition kits and multi-port grommet inserts compatible with the existing 4000-D enclosure as needed to enable insertion of an additional fiber-optic cable(s) into the existing splice enclosure as shown on the Plans. Provide splice trays and splice protectors as needed that are compatible with the existing 4000-D splice enclosure to accommodate splicing of the new fiber-optic cables to the existing fiber-optic cables inside the existing splice enclosure.

Provide splice trays that hold, protect, organize optical fibers, and secure fibers inside splice tray for new or modified splices inside existing splice enclosures and interconnect centers. Provide splice trays that are dielectric and that are compatible with the existing splice enclosure or interconnect center. Provide splice trays that are sized to accommodate all fibers entering the splice tray and to provide sufficient space to prevent microbending of optical fibers.

Furnish SMFO pigtails for terminating new fibers on the connector panel of an existing interconnect center. Provide pigtails containing connector panels that are a maximum of 6 feet in length with a factory-assembled LC connector on one end. Ensure SMFO pigtails meet the operating characteristics of the SMFO cable with which it is to be coupled. Provide connector panels with LC-type connectors that are compatible with the existing interconnect center.

For connecting Ethernet edge switches to the interconnect center patch panel, furnish SMFO jumpers that are a minimum of 3 feet in length with factory-assembled LC connectors one end (i.e., the interconnect center end) and, on the other end, factory-assembled connectors of the same type provided on the Ethernet edge switch. Ensure SMFO jumpers meet the operating characteristics of the SMFO cable with which it is to be coupled.

15.3. CONSTRUCTION METHODS

(A) General (Workmanship Identification Information)

Include on the cover of each splice tray in a legible format the following workmanship identification information:

- Splice location reference # or identification information (e.g., 09-xxxx tray 1 of 3, 09-xxxx tray 2 of 3, etc.);
- Date the splice was made;
- Name of company that performed the splicing;
- Name of person who performed the splicing.

(B) Workmanship

Upon cutting the cable and removing the outer jacketing material down to the individual buffer tubes, secure the central strength member to the enclosure so that no tensile force is applied to the fibers. Secure the individual buffer tubes to the splice trays by a method recommended by the manufacturer. Determine the length of each buffer tube needed to ensure that the buffer tube can be looped a minimum of two times around the inside of the splice tray. Upon determining the length of buffer tube needed, remove the buffer tube to expose the individual fibers for fusion splicing. Adjust individual fiber lengths as necessary to ensure that once the fusion splicing process in completed the finished splices will align with the "splice block organizer" supplied within the splice tray. Ensure the splice block organizer has individual fusion splice space holders for each fiber splice.

While prepping the individual fibers for splicing, install the heat shrink protective tube over the fiber and then perform the splicing operations, following the manufacturer's instructions. Verify that the newly formed splice does not exceed 0.05 dB of attenuation. If the attenuation is more than 0.05 dB, then remake the splice until it meets the 0.05 dB or less requirement. Finish the splicing operation by sliding the heat shrink tube over the splice and applying heat to active the heat shrink tubing. Secure the finished splice in the splice block organizer. Ensure each

splice is properly secured in a space holder in the splice block organizer. Multiple splices secured to the same space holder are unacceptable.

Ensure all buffer tubes are contained within splice trays so that no bare fibers are outside of the tray. Do not damage the fibers are damaged or violate the minimum bend radius of the fiber.

Prior to installing the cover over the splice tray and placing it in its final resting location, take a MANDATORY digital photograph of the splice tray that shows the final workmanship. Ensure that the photograph shows the "Workmanship Identification Information" as well as the workmanship associated with installing and terminating the fiber. Include digital copies of each photograph on a compact disc as part of the OTDR Test Results submittal.

(C) Termination and Splicing within Interconnect Centers & Hub Splice Centers

Terminate and fusion splice all fibers as shown in the Plans.

Label all fiber-optic connectors, whether on jumpers, connector panels, or other equipment, to prevent improper connection. Obtain approval of fiber-optic connector labeling method.

For all fibers designated for termination to a connector panel within an interconnect center or hub splice center, fusion splice the fibers to pigtails.

For all fibers designated to pass through interconnect center, neatly coil and express the fibers without cutting. For all buffer tubes designated to pass through interconnect center, neatly coil excess tubing inside interconnect center.

(D) Interconnect Centers in Controller and CCTV Cabinets

Install interconnect centers with connector panels, splice trays, storage for slack cable or fibers, mounting and strain relief hardware, and all necessary hardware. Mount the interconnect center in the rack inside the controller cabinet or CCTV cabinet at the location indicated in the Plans. Install SMFO jumpers between the appropriate connectors on the interconnect center and the edge switch.

Install LC-to-ST SMFO jumpers between the appropriate connectors on the interconnect center and the contact mapping transmitters and receivers as shown in the Plans.

(E) Hub Splice Center

Install hub splice centers with connector panels, splice trays, storage for slack cable or fibers, mounting and strain relief hardware, and all necessary hardware. Mount hub splice centers at the top of the rack inside the communications hub cabinet as shown in the plans, leaving sufficient space in the rack below to allow the Phase B Contractor to install an additional splice center(s) at a later date.

Install SMFO jumpers between the appropriate connectors on the connector panels of the splice center and the managed Ethernet switch inside the hub cabinet.

(F) IS Hub Splice Center

Install IS hub splice centers with connector panels, splice trays, storage for slack cable or fibers, mounting and strain relief hardware, and all necessary hardware. Mount IS hub splice centers in the rack inside the IS hub cabinet at a location designated by the Engineer in coordination with the IS Department. Install dust caps on all connectors on the connector panels.

(G) Termination and Splicing within Splice Enclosure

Install splice enclosures with splice trays, basket containment assemblies, racking for slack cable or fibers, mounting and strain relief hardware, and all other necessary hardware. Install separate splice enclosures for the signal system fiber-optic cables and the IS Department fiber-optic cables. Do not splice IS Department cables and signal system cables within the same splice enclosure.

Do not install splice enclosures for IS Department fiber-optic cable in junction boxes that are designated to house, either now or at some later date, splice enclosures for the signal system fiber-optic cable. At such locations, splice the IS Department fiber-optic cable in an "IS cable only" junction box installed next to the signal system cable junction box.

Do not install aerial splice enclosures and storage guides over roadways or driveways.

Fusion splice all fibers including fibers designated to be coupled with fibers from a drop cable. For all fibers designated to pass through splice enclosure, coil and express the fibers without cutting.

For all buffer tubes designated to pass through splice enclosure, neatly coil excess tubing inside basket provided with enclosure.

Label all fiber-optic splices. Obtain approval of fiber-optic connector labeling method.

Install heat shrink cable shields using methods recommended by the manufacturer of the enclosure. Perform a pressurization flash test on enclosure in accordance with manufacturer's recommended procedures at the conclusion of splicing procedure and before final placement of enclosure.

For aerial installations, secure enclosures to messenger cable using manufacturer supplied hardware. Secure SMFO cable and drop cables to snowshoes.

Install enclosures with enough slack cable to allow enclosure to be lowered to ground level and extended into a splicing vehicle.

For underground, manhole, and junction box facility installations, place the enclosure along with required spare cables in the facility in a neat and workmanship like manner. Install underground splice enclosures only in special-sized junction boxes unless the Plans indicate otherwise or the Engineer approves otherwise.

(H) Modify Existing Splice

Modify existing fiber-optic interconnect centers and/or splice enclosures as shown in the Plans. Terminate and splice new fibers and re-splice existing fibers within existing interconnect centers and splice enclosures as shown on the Plans. Use existing splice trays, where available, inside the splice center and install additional patch panels, splice trays and pigtails where necessary and fusion splice fiber connections as required by the Plans, then perform OTDR testing. Provide new splice trays that compatible with the existing splice enclosures when previously unspliced buffer tubes are spliced. Install new fiber-optic jumpers and make connections to Ethernet edge switches and managed Ethernet switches, other equipment and/or patch panels as necessary. Comply with all requirements of "Interconnect Center" and "Splice Enclosure" subsections above.

Install new cable addition kit and new multi-port grommet inserts in the existing Multilink® Starfighter™ 4000-D dome splice enclosures installed under State Project U-2826B as required to insert a new fiber-optic cable(s) into the existing splice enclosure as shown on the Plans. Install additional splice trays as necessary to splice the new cable(s) to the existing NCDOT fiber-optic cable as shown in the Plans. Insert the new fiber-optic cable(s) through the new grommet insert and fusion splice fibers in the new cable to designated fibers in the existing cables as shown in the Plans.

Install new fiber-optic jumpers and make connections to Ethernet edge switches and managed Ethernet switches, other equipment and/or patch panels as necessary. Comply with all requirements of the "Interconnect Center" and "Splice Enclosure" subsections above.

Relocate existing aerial splice enclosure and corresponding existing fiber-optic cable storage rack(s) as shown on the Plans. Unlash existing, reroute and relash existing fiber-optic cable as required to relocate the existing aerial splice enclosure.

(I) Testing

Provide written notification to the Engineer a minimum of 10 working days before beginning the OTDR tests.

After splicing is completed, perform bi-directional OTDR tests on each fiber, including unused fibers. Install a 1,000-foot pre-tested launch cable between the OTDR and fiber-optic cable to be tested and a 1,000-foot pre-tested destination cable on the end of the fiber-optic cable to be tested. Ensure each launch cable has been tested and is compatible with the fiber-optic cable being installed. Provide the Engineer with test results of the launch cable before use. Re-test or replace launch cable at the Engineer's request.

Ensure fusion splice losses do not exceed 0.05 dB and connectors have a loss of 0.5 dB or less. If any fiber exceeds maximum allowable attenuation or if fiber-optic properties of the cable have been impaired, take appropriate actions up to and including replacement of the fiber-optic cable. Corrective action will be at no additional cost to the Department.

Clearly label each OTDR trace identifying a starting and ending point for all fibers being tested. Record the attenuation level of each fiber and clearly indicate OTDR trace results in report format. Furnish two hard copies of each of the OTDR trace results and electronic copies of all trace results along with digital photographs showing workmanship for each splice on a compact disc. Furnish the manufacturer's make, model number and software version of the OTDR used for testing.

Provide the Engineer with two copies of the software needed to view the OTDR traces electronically.

15.4. MEASUREMENT AND PAYMENT

Interconnect center will be measured and paid as the actual number of fiber-optic interconnect centers furnished, installed in controller and CCTV cabinets, and accepted according to following conditions: 80% of the payment will be made upon acceptance of the installed interconnect centers and the remaining 20% of the payment will be made following final acceptance (including completion of the 60-day observation period).

Hub splice center (__-fiber) will be measured and paid as the actual number of fiber-optic splice centers of each fiber count furnished, installed in communications hub cabinets, and

accepted according to following conditions: 80% of the payment will be made upon acceptance of the installed hub splice centers and the remaining 20% of the payment will be made following final acceptance (including completion of the 60-day observation period).

IS hub splice center (__-fiber) will be measured and paid as the actual number of fiber-optic splice centers of each fiber count furnished, installed in IS Department hub cabinets, and accepted according to following conditions: 80% of the payment will be made upon acceptance of the installed hub splice centers and the remaining 20% of the payment will be made following final acceptance (including completion of the 60-day observation period).

Splice enclosure will be measured and paid as the actual number of fiber-optic splice enclosures that are furnished, installed, and accepted, regardless of installation location (i.e., aerial, underground, manhole, or junction box), according to following conditions: 80% of the payment will be made upon acceptance of the installed splice enclosures and the remaining 20% of the payment will be made following final acceptance (including completion of the 60-day Observation Period).

IS Splice enclosure will be measured and paid as the actual number of fiber-optic splice enclosures used to splice IS Department cables that are furnished, installed, and accepted, regardless of installation location (i.e., aerial, underground, manhole, or junction box), according to following conditions: 80% of the payment will be made upon acceptance of the installed splice enclosures and the remaining 20% of the payment will be made following final acceptance (including completion of the 60-day Observation Period).

Modify existing splice will be measured and paid as the actual number of existing fiber-optic splice enclosures, interconnect centers and splice centers where existing splices are reconfigured, new fibers are spliced to existing fibers and new fibers are terminated in the existing splice center. Measurement will be made per existing splice enclosure without regard to type and location of splice enclosure and without regard to the number of splices and terminations required at each location. Payment for modify existing splice will be full compensation for all materials and work required to modify the existing splices in accordance with the plans. No measurement will be made of cable addition kits, grommet inserts, heat shrink tubing, splice trays and splice protectors as such work will be considered incidental to modifying the existing splice. No measurement will be made of relocating an existing aerial splice enclosure and associated fiber-optic cable storage guide(s) as such work will be considered incidental to modifying the existing splice.

No measurement will be made of fusion splices, splice trays, splice protectors, pigtails, jumpers, connector panels, labeling, photographs, testing and corrective actions, repairs and replacements needed for exceeding the maximum allowable attenuation or other defects, as these will be considered incidental to furnishing and installing fiber-optic interconnect centers and splice enclosures, and modifying existing splices.

Payment will be made under:

Pay Item	Pay Unit
Interconnect Center	Each
Hub Splice Center (36-Fiber)	Each
Hub Splice Center (48-Fiber)	Each
Hub Splice Center (72-Fiber)	Each
IS Hub Splice Center (24-Fiber)	Each
IS Hub Splice Center (96-Fiber)	Each
IS Hub Splice Center (144-Fiber)	Each
Splice Enclosure	Each
IS Splice Enclosure	Each
Modify Existing Splice	Each

16. CABLE MARKERS

16.1. DESCRIPTION

Furnish and install delineator markers (tubular marker posts), joint-use utility pole tags/decals, equipment cabinet decals, and curb/sidewalk markers/medallions with all necessary hardware and adhesives to warn of buried fiber-optic communications cable.

16.2. MATERIALS

(A) Delineator Markers

Furnish material, equipment, and hardware under this section that is pre-approved on the ITS and Signals QPL.

Furnish delineator markers, also referred to as tubular marker posts that are approximately 6 feet long and constructed of Type III, high-density polyethylene (HDPE) material. Provide delineator assemblies that are ultraviolet stabilized to help prevent components from color fading, warping, absorbing water, and deterioration with prolonged exposure to the elements. Provide delineators designed to self-erect after being knocked down or pushed over. Provide orange delineator posts.

Provide text, including City contact number, hot stamped in black on a yellow reflective background material that will not fade or deteriorate over time. Provide delineator markers with nominal message height of 15" that contain the following text visible from all directions approaching the assembly:

(B) Cabinet Decals

Furnish pressure-sensitive, waterproof decals to apply to the exterior surface of field equipment cabinets. Construct decals of durable vinyl or plastic that is chemical resistant and resists tearing and shrinking. Screen print text and symbols on decal using UV-stable, fade-resistant, waterproof ink. Ensure that decal will adhere permanently to a milled aluminum surface under a variety of weather conditions and a wide range of air temperatures (0° F to 150° F minimum). Provide a decal that can be applied without special surface preparation.

Provide cabinet decals that contain the text and symbols, text emphasis and text proportions depicted in the following examples format:

Overall Decal Dimensions:
6"(w) x 4"(h) minimum,
7"(w) x 5"(h) maximum

Text Height (min.):
1/2" for *WARNING*
3/8" for *BURIED FIBER-OPTIC CABLE,* and *CALL (336) 727-8000, 1/4"* for all other

Background Color: Yellow
Text Color: Black
Symbol Color: Black
Symbol Size: 1.5"- 2" DIA

Submit sample of proposed cabinet decals to the Engineer for approval before installation. In lieu of designing a custom decal, the contractor may submit for the Engineer's approval a stock/standard decal format (i.e., off-the-shelf format) from the decal manufacturer that differs from the example format proposed above but that still embodies the content and intent conveyed by the example format.

(C) Utility Pole Signs

Furnish signs for installation on wood utility poles that are constructed of 40 mil aluminum or high-impact, UV-resistant plastic such as high impact polyolefin. Provide signs with rounded corners (0.25" max. radius) and that have pre-drilled/pre-punched fastener holes at the top and bottom edge of the sign and centered horizontally on the sign. Provide hot-dipped, galvanized wood screws or ring-shanked nails for attaching the sign to wood utility poles.

Ensure that background of sign is fade resistant. Screen print text and symbols on decal using UV-stable, fade-resistant, waterproof ink.

Provide utility pole signs that contain the text and symbols, text emphasis and text proportions depicted in the following examples format:

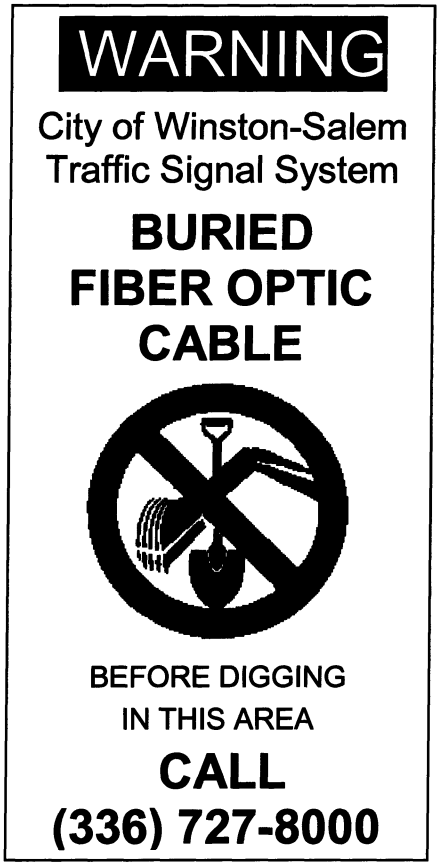

Overall Tag Dimensions: 3.5"(w) x 7"-12"(h)

Text Height (min.):

1/2" for *WARNING;*
3/8" for B*URIED FIBER-OPTIC CABLE*;
3/8" for *CALL* and *(336) 727-8000;*
1/4" for all other

Text Color: Black
Background Color: Yellow
Symbol Color: Black
Symbol Size: 2" Diameter

Submit sample of proposed pole sign to the Engineer for approval before installation. In lieu of designing a custom sign, the contractor may submit for the Engineer's approval a stock/standard sign format (i.e., off-the-shelf format) from the sign manufacturer that differs from the example format proposed above but that still embodies the content and intent conveyed by the example format.

(D) Curb Markers

Furnish durable, non-reflective curb markers fabricated from UV-resistant, non-metallic materials other than ceramic material, such as polyurethane or high impact polypropylene or other high impact plastic. Provide curb markers that are designed for outdoor use, that are waterproof, that resist fading, that are temperature stable and that resist chemical and mechanical abrasion. Furnish curb markers with a quick-setting adhesive to permanently adhere curb markers to Portland cement concrete and granite as well as other non-porous hard surfaces. Do not provide markers that require intrusive fasteners to secure the marker to the surface. Provide curb markers that do not require special tools such as torches, tamping machines or drills or hardware or special surface preparation for installation. Furnish curb markers from a manufacturer that has been producing such curb markers for a minimum of 10 consecutive years. Provide curb markers with a manufacturer's warranty of 10 years or more.

For general marking of underground cable routes in accordance with this Project Special Provision, provide curb markers that contain the text and symbols, text emphasis and text proportions depicted in the following example format:

Overall Curb Marker Dimensions: 2.5" diameter
Text: Black
Background: Orange

Submit samples of proposed curb marker to the Engineer for approval before installation. In lieu of designing a custom curb marker, the Contractor may submit for the Engineer's approval a stock/standard curb marker format (i.e., off-the-shelf format) from the curb marker manufacturer that differs from the example format proposed above but that still embodies the content and intent conveyed by the example format.

Have the curb marker manufacturer provide a list of references along with contract information for at least five different municipal government agencies and/or state departments of transportation that have installed the proposed manufacturer's curb marker and can attest to the performance of the manufacturer's curb marker over a continuous period of no less than seven years. Submit these references to the Engineer for review in conjunction with submission of the sample.

16.3. CONSTRUCTION METHODS

(A) Cable Markers in Historic Districts

Obtain the Engineer's approval prior to installing any cable markers (i.e., cabinet decals, utility pole signs/decals, and curb markers) within historic districts. The Engineer may modify the application criteria described herein or delete the requirement for some or all cable markers based upon the requirements of the particular historic district.

(B) Delineator Markers

Submit sample of proposed delineator markers for approval before installation.

Install delineator markers using a method that firmly and securely anchors delineator marker in the ground to prohibit twisting and easy removal.

Install delineator markers at locations specified on the plans. Do not install delineator markers at locations other than those specified in the Plans without the prior approval of the Engineer.

(C) Cabinet Decals

Clean the surface to which the decal will be applied using a mild cleaner that will not damage, deface or discolor the milled aluminum finish of the equipment cabinet. Ensure surface is thoroughly dry before applying decal. Observe any application temperature restrictions specified by the manufacturer when applying the decals.

Apply decal to two sides of the cabinet. Do not apply to cabinet doors or over any cabinet vents/louvers. Place the decals in the top right corner.

Do not apply decals to cabinets where cable is fed to the cabinet from aerial drop on a nearby pole unless the Engineer directs otherwise. Apply decals to cabinet where fiber-optic cable is routed to and/or from the cabinet in an underground conduit run other than the stub-out from a nearby riser that conveys and aerial drop cable.

(D) Pole Signs

Using the hot-dipped galvanized, ring-shanked nails or wood screws, mount the pole sign on the side of pole facing the adjacent street at a height of approximately 5 feet above the ground. Secure the sign to the pole with at least one fastener at the top of the sign and one at the bottom through the pre-drilled/pre-punched fastener holes provided. Do not field-drill or field-punch signs. Do not install over cables, ground wires, other pole signs, pole tags or pole birthmark (embossed class and length). Mount sign to wood poles only; do not attach sign to metal poles.

Install signs on pole line that is parallel to and adjacent to the underground cable route. Install on each pole in the line along the route, unless otherwise approved by the Engineer. When two or more poles are located in close proximity to one another, install the sign on only one of the poles as approved by the Engineer.

(E) Curb Markers

Install curb markers along curbed streets where the presence of underground fiber-optic communications cable cannot be marked otherwise by placing signs or decals on utility poles. Examples could include but are not limited to: streetscaped areas, residential neighborhoods, areas without utility poles and downtown areas.

Install the curb markers at the beginning and end of the underground run, at the beginning, and end of each street block along the underground run, at the midpoint of each street block that is approximately 200-500 feet long, and at intervals of approximately 200 feet elsewhere along the underground run. Premark the proposed locations of the curb markers with 2" x 3" wire flags and obtain the Engineer's approval of the proposed locations prior to installing the curb markers. Remove wire flags immediately following installation and acceptance of curb markers. Do not mark fiber-optic drop cable that originates at an aerial splice enclosure and travels a short distance underground between the riser pole and the equipment cabinet, unless otherwise directed by the Engineer. Do not install any curb markers without the Engineer's prior approval.

Clean surface to which the curb marker will be applied. Make sure application surface is flat, dry, and free of any loose debris or cracks. Apply adhesive to back side of curb marker in accordance with manufacturer's instructions. When installing on curb, position marker on top of curb, not on the face of the curb, and center the marker on the top of the curb. Align the curb marker so that arrows (if any) are parallel to underground cable run and so that text can be read from the adjacent street. Apply the curb marker to the application surface and press firmly. Ensure that entire edge around perimeter of marker is sealed to the application surface.

Where underground conduit runs and associated junction boxes are within 10 feet of the adjacent curb and junction boxes are visible from the curb (e.g., in sidewalk, between curb and sidewalk, at back of sidewalk, etc.), install the curb markers on the lids of each oversized and special-sized junction box in lieu of installing them on the curb unless directed otherwise by the Engineer. Where the junction boxes are greater than 10 feet from the curb, install curb markers on the lids of each oversized and special-sized junction box in addition to installing them on the curb unless directed otherwise by the Engineer.

Where there is no curb and there are no poles on which to install pole tags or decals to mark the underground run, install curb markers on the lids of each oversized and special-sized junction box.

16.4. MEASUREMENT AND PAYMENT

Delineator marker will be measured and paid for as the actual number of delineator markers (tubular marker posts) furnished, installed, and accepted.

No measurement will be made of utility pole signs, cabinet decals, curb markers and curb marker adhesive as they will be considered incidental to furnishing and installing underground conduit.

Payment will be made under:

Pay Item	Pay Unit
Delineator Marker	Each

17. REMOVE EXISTING COMMUNICATIONS CABLE

17.1. DESCRIPTION

Remove existing communications cable. Remove existing communications cable splice boxes/cabinets and associated risers and in-ground junction boxes as designated in the Plans.

17.2. MATERIALS

Furnish rigid galvanized threaded pipe caps or rigid galvanized threaded pipe plugs to seal the ends of vertical conduits after "short risers" underneath pole-mounted cabinets are cutoff near ground level. Furnish rigid galvanized pipe caps and rigid galvanized threaded nipples to seal holes remaining in transformer bases of metal poles following removal communications cable splice boxes from the transformer bases. Provide roof and flashing sealant to seal around the edge of the pipe caps following installation on the transformer bases.

Furnish heavy duty, dielectric, heat shrink end caps designed to seal off and provide mechanical and mechanical protection to the ends of electrical and telecommunications cables. Provide end caps appropriated sized for the cables that they will be sealing.

17.3. CONSTRUCTION METHODS

(A) General

Do not reuse any removed communications cable, messenger cable, junction boxes, pole attachment hardware or abandoned risers on the project, unless otherwise specified.

(B) Removal of Aerial Communications Cable

Removal of existing aerial communications cable also includes removal and proper disposal of aerial splice enclosures, messenger cable and mounting hardware, associated guy assemblies, as well as abandoned risers, splice boxes and splice cabinets. Removal of guy assemblies includes the removal of guy anchors if not used by any other guy assembly.

Unless otherwise directed by the Engineer, remove and properly dispose of existing wood poles that are vacated upon removal of the existing communications cable (i.e., where the communications cable was the only attachment to the pole).

(C) Limited Removal of Downtown Underground Communications Cable

There are 35 traffic signals with metal poles and mast arms in the heart of downtown Winston-Salem (i.e., in the CBD) that are served by existing twisted-pair communications cable that resides in underground conduits and duct owned by Duke Energy. This area is roughly bounded by Sixth Street on the north, Chestnut Street on the east, First Street on the south, and Spring Street on the west. These signalized intersections are:

First Street at Cherry Street
First Street at Liberty Street
First Street at Main Street
Second Street at Spruce Street
Second Street at Marshall Street
Second Street at Cherry Street
Second Street at Liberty Street
Second Street at Main Street
Second Street at Church Street
Third Street at Cherry Street
Third Street at Liberty Street
Third Street at Main Street
Third Street at Church Street
Third Street at Chestnut Street
Fourth Street at Spring Street
Fourth Street at Poplar Street
Fourth Street at Spruce Street
Fourth Street at Marshall Street
Fourth Street at Cherry Street
Fourth Street at Trade Street
Fourth Street at Liberty Street
Fourth Street at Main Street
Fourth Street at Church Street
Fifth Street at Spring Street
Fifth Street at Poplar Street
Fifth Street at Spruce Street
Fifth Street at Marshall Street
Fifth Street at Cherry Street
Fifth Street at Trade Street
Fifth Street at Liberty Street
Fifth Street at Main Street
Fifth Street at Church Street
Sixth Street at Marshall Street
Sixth Street at Cherry Street
Sixth Street at Liberty Street

Since the communications cable runs through Duke Energy manholes and duct systems that contain primary electric power cables, most of it will be left it place rather than removed under this contract. Only short above-ground segments between the underground conduit system and controller cabinets will be removed under this contract, with the ends of the remaining cable capped and sealed for future removal by others.

Do not enter Duke Energy manholes or other Duke Energy junction boxes that contain electrical power service cables.

For base-mounted controller cabinets in this area, disconnect the twisted-pair communications cable inside the controller cabinet, then carefully sever the existing cable close to the end of the conduit stub-out in the cabinet foundation, leaving just enough cable exposed to apply a heat shrink end cap over the end of the cable. Clean and prepare end of cable in accordance with heat shrink cable end cap manufacturer's instructions. Install a heat shrink cap appropriately sized for the cable being sealed over the end of the cable. Remove and dispose of the severed cable remnant. If the communications cable is routed through a junction box next to the cabinet before entering the base of the cabinet and that junction box contains no electrical service wires, then pull the cable out of the cabinet base and sever and cap the cable inside the junction box instead of controller cabinet, as directed by the Engineer.

Where cabinets are pole-mounted on the Duke Energy metal poles, the existing communications is routed into the transformer base of the metal pole and then into a splice box mounted on the exterior of the transformer base. Inside the splice box, the communications cable is spliced to a short segment of twisted-pair cable that runs back through the interior of the metal pole and into the bottom of the pole-mounted cabinet via a condulet. **Be advised that unfused electrical service conductors may be present in transformer bases of the metal poles**. Take care to ensure that conductors in communications cable do not come in contact with such electrical wiring inside the transformer base and the metal pole inside pole when severing,

capping and removing segments of the communications cable. Take necessary precautions so that workers do not contact the service conductors while performing the cable removal work.

Disconnect the existing twisted-pair cable inside the pole-mounted controller cabinet and inside the splice box mounted on the pole base. Remove this disconnected segment of cable by carefully pulling it out through the pole-mounted cabinet. Retain the LB condulet between the pole and the bottom of the controller cabinet for later use to route cables to antennas that may be mounted on these poles.

Remove the splice box/cabinets from the pole base. Pull the end(s) of the remain communications cable out through the transformer base hand-hole, then clean and prepare end of cable(s) in accordance with heat shrink cable end cap manufacturer's instructions. Install a heat shrink cap appropriately sized for the cable being sealed over the end of the cable(s) and store them inside the transformer base. Remove and dispose of the severed cable remnant.

To plug the hole in the transformer base, install a rigid galvanized threaded nipple through the hole in the transformer base from inside the base, then screw a rigid galvanized pipe cap onto the nipple from outside the base as shown in the Plans. Apply roof and flashing sealant around the edge of the pipe cap to form a waterproof seal between the pipe cap and the transformer base of the pole. Following installation of the conduit plug, the City of Winston-Salem will arrange for others to perform touch-up painting of areas where splice boxes/cabinets have been removed from painted metal poles and their transformer bases as necessary.

At four downtown intersections, cabinets are mounted on wood poles and there is a short riser, not attached to the pole, that conveys the existing twisted-pair communications cable from the ground beneath the cabinet directly into the bottom of the cabinet. These four intersections are:

Sixth Street at Spruce Street	Sixth Street at Trade Street
First Street at Church Street	Fifth Street at Broad Street

At the above locations, disconnect the twisted-pair communications cable inside the pole-mounted controller cabinet, disconnect the short riser from the bottom of the cabinet, and then cut off the short riser and communications cable nearly flush with the sidewalk below the cabinet, leaving just enough conduit exposed to install a rigid galvanized threaded pipe cap or rigid galvanized threaded pipe plug. Seal and push the twisted pair cable down into the portion of the riser that remains below ground, thread the pipe end, then install a rigid galvanized threaded pipe cap or threaded pipe plug to seal the conduit.

(D) Removal of Underground Communications Cable from In-Street Duct Systems

Where shown in the Plans, remove the existing twisted-pair copper wire communications cable from existing underground duct systems located beneath Patterson Avenue between Third Street and Seventh Street and beneath Waughtown Street from west of Fayetteville Street to Center Street. Contact the City of Winston-Salem Signal System Supervisor at (336) 747-6879 at least 14 days prior to removing the cable to arrange to have a representative from the City's Signal Shop on-site when cable is being removed to ensure proper identification of cable to be removed. Remove the cables segment by segment between adjacent manholes.

Provide appropriate traffic control devices for maintaining pedestrian and vehicular traffic in accordance with the Transportation Management Plan (TMP). Comply with all OSHA®

regulations related to confined spaces when working inside manholes, ensuring that workers manholes have proper training and certification when required. Provide OHSA®-compliant manhole guardrails to protect all open manholes along with fresh air blowers and hoses. Pump water out manholes as necessary.

For Patterson Avenue, remove the cable running longitudinally along Patterson Avenue as well as lateral drops to the controller cabinets at the signalized intersections. The duct system under Waughtown Street is owned by AT&T. Contact AT&T at least 14 days in advance to notify AT&T of proposed schedule for work and allow AT&T to have a representative present on-site during removal of the City's communications cable from the AT&T duct system.

(E) Removal of Underground Communications Cable Outside of Downtown

Removal of existing underground communications cable includes proper disposal of junction boxes, if required. Where junction boxes have been removed, backfill hole to 95% of surrounding density and finish level with surrounding ground.

When removing existing communications cable from an underground conduit that will be retained for future use, install a pull tape in the vacated underground conduit in conjunction with or immediately following removal of the existing cable. Seal the ends of the vacated conduit with an approved duct plug or duct and conduit sealer following installation of the pull tape.

When the Contractor has made reasonable attempts to remove an existing communications cable but is unable to do so as confirmed by the Engineer, carefully cut the existing cable close to the end of the conduit/duct, leaving just enough cable exposed to apply a heat shrink end cap over the end of the cable. Clean and prepare end of cable in accordance with heat shrink cable end cap manufacturer's instructions. Install a heat shrink cap appropriately sized for the cable being sealed over the end of the cable, then abandon the cable in the existing conduit/duct. Remove and dispose of the severed cable remnant.

17.4. MEASUREMENT AND PAYMENT

Remove existing communications cable will be measured in horizontal linear feet of existing communications cable removed and accepted. Payment will be in linear feet. Sag, vertical segments, and spare segments of communications cable will not be paid for, as these distances will be considered incidental to the removal of existing communications cable.

No additional measurement will be made for multiple communications cables being removed from the same underground conduit or same pole. No payment will be made for communications cable that cannot be removed and is abandoned in place.

No measurement will be made of the removal of messenger cable, pole attachment hardware, guy assemblies, aerial splice enclosures, wood poles, stub poles, risers and in-ground junction boxes vacated upon removal of the existing communications cable, as these will be considered incidental to the removal of the existing communication cable.

No measurement will be for installing a pull tape inside of and sealing the ends of an existing conduit that will be retained for future use after removing an existing communications cable from that conduit as such work will be considered incidental to installation of new fiber-optic communications cable.

No measurement will be made for equipment (i.e., manhole guardrails, fresh air blowers, harnesses and retrieval systems, etc.), training, certifications and permits required to comply with

OSHA® regulations and requirements when working inside manholes as they will be considered incidental to removing existing communications cable. No measurement will be made of pumping water out of manholes as such work will be considered incidental to removing existing communications cable.

Cut and cap existing communications cable will be measured as the actual number of signalized intersections within the CBD where the existing underground twisted-pair communications is disconnected from the controller cabinet, a limited portion of the cable above ground is removed and then the remainder is sealed with a heat-shrink cap in accordance with the Plans and these Project Special Provision. No measurement will be made of communications cable removed, cable end caps, number of cables cut and capped at a given intersection, furnishing and installing rigid galvanized conduit nipples and threaded pipe caps following removal of splice boxes, roof and flashing sealant, removing above-ground sections of existing short-risers and installing rigid galvanize threaded pipe caps or threaded pipe plugs, as such work is considered incidental to cutting and capping the existing communications cable. Removal and disposal of existing splice boxes mounted on the transformer based of metal poles will be measured and paid for as "remove splice cabinet" in accordance with this project special provision.

Remove splice cabinet will be measured as the actual existing communications cable splice boxes and cabinets successfully removed, disposed of and accepted without regard to the size or type of cabinet/box, mounting location or mounting method. Such payment includes removal and disposal of cabinet/box mounting brackets and hardware.

No measurement will be made of the removal of risers vacated upon removal of existing splice boxes/cabinets and associated communications cable, and of conduit plugs installed in existing holes in metal poles and their transformer bases following removal of splice boxes/cabinets, as these will be considered incidental to the removal of the existing splice box/cabinet. No measurement will be made of conduit plugs.

Payment will be made under:

Pay Item	**Pay Unit**
Remove Existing Communications Cable	Linear Foot
Cut and Cap Existing Communications Cable	Each
Remove Splice Cabinet	Each

18. CABLE TRANSFERS

18.1. DESCRIPTION

Remove and reinstall existing communications cable for pole relocations.

18.2. CONSTRUCTION METHODS

During the project, transfers of existing communications cable from one pole to an adjacent pole may be required. Perform transfers as directed by the Engineer. Remove existing cable from the pole and reinstall the cable and any existing attachment hardware on the adjacent second pole. Remove all communications hardware from first pole from which the cable was removed. Furnish and install any new attachment hardware as required.

18.3. MEASUREMENT AND PAYMENT

Cable transfer will be measured and paid as the actual number of cable transfers with attachment hardware from one pole to an adjacent pole furnished, installed, and accepted.

Payment will be made under:

Pay Item	Pay Unit
Cable Transfer	Each

19. SIGNAL PEDESTALS

19.1. DESCRIPTION

Furnish and install signal pedestal assemblies with foundations, grounding systems, and all necessary hardware.

19.2. MATERIALS

Furnish material, equipment, and hardware under this section that is pre-approved on the ITS and Signals QPL.

Furnish pedestal assemblies with foundations that conform to the latest edition of the *AASHTO Standard Specifications for Structural Supports for Highway Signs, Luminaires, and Traffic Signals* in effect on the date of project advertisement. Refer to *Roadway Standard Drawings* No. 1743 for structural design specifications for each type of pedestal.

Refer to Articles 1091-6, "Grounding Electrodes" and 1091-2, "Wire and Cable" of the *Standard Specifications*.

(A) Pedestal Shaft

Furnish one piece pedestal shafts fabricated from either aluminum or galvanized steel pipe with a uniform pipe outer diameter of 4.5" and of the lengths specified for the type of pedestal shown on *Roadway Standard Drawing No.* 1743.

Pedestals are defined as follows:

- Type I – Pedestrian Pushbutton Post
- Type II – Normal-Duty Pedestal
- Type III – Heavy-Duty Pedestal

For Type I (pedestrian pushbutton pedestals) and Type II (normal-duty pedestals), furnish shafts constructed from schedule 40 extruded aluminum pipe that conforms to Aluminum Association Alloy 6063-T6 with a tensile strength of 30 KSI and a minimum wall thickness of 0.237". Aluminum conduit will not develop the necessary strength required and is not allowed. Thread and deburr in accordance with American National Standard Pipe Threads, NPT (ANSI B2.1). Finish the exterior with a rough surface texture consisting of a uniform grain pattern that is perpendicular to the axis of the pipe along the full pipe length. Unless otherwise specified, do not use galvanized steel pipe for Type I and Type II pedestal shafts.

For Type III (heavy-duty pedestals), furnish schedule 1 120 galvanized steel pipe that conforms to ASTM A53. Provide an 11" square by 1" thick steel base plate with minimum yield strength of 36 ksi that conforms to ASTM A36. Fabricate the base plate with four equally spaced bolt holes on an 11" bolt circle. Orient the bolt holes in the corners of the plate. Size the holes to accommodate 1" diameter machine bolts. Weld the pedestal shaft to the center of the base plate using a socket connection. Provide circumferential fillet welds at the top and bottom of the base plate. Perform all welding in accordance with the latest AWS Code. Hot-dip galvanize the pedestal shaft and base plate assembly after fabrication in accordance with ASTM A123. Unless otherwise specified, do not use aluminum pipe for Type III pedestal shafts.

(B) Transformer Bases

Furnish transformer bases for each type of pedestal shown on *Roadway Standard Drawings* No. 1743 fabricated from aluminum that meets Aluminum Association Alloy 356 or equivalent, and that are designed to break upon impact in accordance with AASHTO requirements. Submit FHWA certification for each type of transformer base that reflects compliance with NCHRP 350. For use in grounding and bonding, provide a 0.5" minimum diameter, coarse thread hole cast into transformer base located inside base and oriented for easy access.

Provide a minimum access opening for all transformer bases of 8" x 8" with an access door that is attached with stainless steel hinges on one side of the transformer base. Provide a 1/4" x 3/4" long stainless steel vandal proof screw to secure access door.

For Type I (pedestrian pushbutton pedestals) and Type II (normal-duty pedestals), provide overall base dimensions of 15" (l) x 13 3/4" (w) x 13 3/4" (d) for square bases and 14" (l) x 16 1/2" (w) x 16 1/2" (d) for octagonal bases. Provide a threaded opening at the top of the base to receive a 4" NPT pipe shaft. Fabricate the bottom of the transformer base with 4 equally spaced holes or slots for a 12" bolt circle to secure the entire assembly to the concrete foundation.

For Type III (heavy-duty pedestals), provide square bases with overall dimensions of 17" (l) x 13" (w) x 13" (d). Fabricate the top of the transformer base with 4 equally spaced holes or slots for an 11" bolt circle to attach the pedestal shaft. Size the holes or slots to accommodate 1" diameter machine bolts. Fabricate the bottom of the transformer base with 4 equally spaced holes or slots for a 12" bolt circle to secure the entire assembly to the concrete foundation. Size the holes or slots to accommodate 1" diameter anchor bolts. Provide the following mounting hardware for heavy-duty pedestals:

1) Four 1" diameter by 3 1/2" long machine bolts (ASTM F593), with heavy hex nuts (ASTM A563 Grade DH, or A 194 Grade 2H), and thick flat washers, and lock washers (ASTM F436) per pedestal assembly. Galvanize in accordance with ASTM A153.
2) Three heavy hex nuts (ASTM A563 Grade DH, or A194 Grade 2H), 2 thick flat washers, and one lock washer (ASTM F436) for each anchor bolt. Galvanize in accordance with ASTM A153.
3) Six minimum slotted stainless steel shims of necessary thickness for leveling per pedestal assembly.

(C) Anchor Bolts

For each pedestal, provide 4 anchor bolts in accordance with ASTM F1554, Grade 55, of the size and length specified in Roadway Standard Drawings No. 1743 each having one heavy hex nut with 2 washers at the top and 2 heavy hex nuts with one washer at the bottom. Provide anchor bolts with coarse threads at 10 threads per inch for a minimum length of 4" from each end of the bolt. All thread anchor rods may be used. Ensure anchor bolts are hot-dipped galvanized in accordance with ASTM A153 with completely galvanized nuts and washers. Provide hex nuts with coarse threads. Ensure hex nuts are in accordance with ASTM A563 Grade DH, ASTM A194, Grade 2H or equivalent. Ensure washers are in accordance with ASTM F436 or equivalent. As a minimum, provide standard size washers.

(D) Pedestal Cap

Furnish a 4-1/2" outside diameter slip fit domed pedestal top cap for each pedestal assembly designed to fit over the outside of the pedestal shaft. Fabricate the cap from aluminum that meets Aluminum Association Alloy 356. Ensure the cap provides 3 equally spaced stainless steel set screw fasteners to secure the cap to the pedestal shaft.

(E) Pole Flange Base for 4 1/2" Pipe

Furnish a flange base with cover for use with Type I (pedestrian pushbutton pedestals) and Type II (normal-duty pedestals) only. Flange bases are non breakaway supports that are to be used with a breakaway bolt system for AASHTO compliance for breakaway structures. Provide aluminum or steel flange bases with a minimum 7.5" diameter bolt circle. Ensure bases are either continuously welded to shafts or threaded to receive shafts. Each base should be designed to accommodate either three or four 1/2" bolts equally spaced on the bolt circle to receive breakaway anchors. Provide NPT threads on the internal opening of the flange base through the full length of the flange base with locking set screws at the top of the base to receive a 4" NPT pipe shaft.

Fabricate aluminum flange bases that meet Aluminum Association Alloy 356 requirements for architectural bases. Fabricate steel flange bases that meet ASTM A36.

Do not use flange bases for Type III pedestals.

(F) Breakaway Anchors

Furnish single or double neck omni-directional breakaway anchor bolt coupling systems for use with Type I (pedestrian pushbutton pedestals) and Type II (normal-duty pedestals) only. Use breakaway anchors that are FHWA certified to be compliant with NCHRP Report 350 as an alternative to transformer bases. Use with non breakaway pole flange bases. Use 1/2" diameter bolts for pushbutton posts and 3/4" bolts for normal-duty pedestals. Fabricate from steel with a minimum yield strength of 55 KSI. Galvanize in accordance with ASTM A153. Do not use breakaway anchors with Type III pedestals, or in conjunction with breakaway transformer bases.

(G) Foundation

Install pedestal foundations of the type and size shown on *Roadway Standard Drawings* No. 1743.04 Furnish Class A minimum concrete that conforms to Article 1000-4. Provide reinforcing steel that conforms to the applicable parts of Section 1070 of the *Standard Specifications*.

19.3. CONSTRUCTION METHODS

(A) Type I Pedestrian Pushbutton Post

Install pushbutton post for mounting pedestrian pushbutton (refer to "Signal Head" section of these Project Special Provisions).

Install underground conduit for pushbutton lead-in cable in the pushbutton post's concrete foundation.

Attach or anchor pushbutton post to the top of foundation via a breakaway support in a vertical plumb orientation. Ensure post is of sufficient length to accommodate the pushbutton, accessible pedestrian signals and any associated pedestrian informational signing at the mounting heights shown in the plans or *Roadway Standard Drawings* No. 1705 and 1743.

(B) Type II and III Pedestals

Locate foundations, determine elevation, and submit findings for normal-duty and heavy duty pedestals. Obtain the Engineer's approval of foundation locations and elevations before constructing foundations.

Excavate in accordance with Section 410, Foundation Excavation, of the *Standard Specifications*. If encountered, remove rock or boulders to a depth sufficient to obtain stability necessary to support the structure for design loads. Ensure ground is level before installing foundations.

Construct foundations in accordance with Section 825, Incidental Concrete Construction, of the *Standard Specifications*. Cast concrete for pole foundations against undisturbed soil unless otherwise permitted. Provide forms with chamfer strips that measure one inch along diagonal face at all corners above ground level. Do not install foundations over uncompacted fill or muck.

Install conduit in foundations.

Securely place, position, and align anchor bolts symmetrically about the center of foundation.

Give exposed vertical concrete surfaces an ordinary surface finish. Give exposed horizontal surfaces a float finish.

Level tops of concrete foundations. Do not allow tops to exceed 4 inches above adjacent ground surface. Pour and finish foundation to a level flush with surrounding sidewalk when possible.

Do not erect pedestals until concrete has attained a minimum compressive strength of 2,500 psi as determined by cylinder breaks.

Refer to *Roadway Standard Drawings* No. 1705 and 1743.

19.4. MEASUREMENT AND PAYMENT

Type II pedestal with foundation will be measured and paid as the actual number of normal-duty pedestals with foundations furnished, installed, and accepted.

No measurement will be made for pedestal foundations, grounding systems and any peripheral pedestal mounting hardware as these are considered incidental to furnishing and installing pedestals.

Payment will be made under:

Pay Item	Pay Unit
Type II Pedestal with Foundation	Each

20. SIGNS INSTALLED FOR SIGNALS

20.1. DESCRIPTION

Furnish and install signs for signals with approved cable hangers, rigid sign mounting brackets, U-channel posts, and all necessary hardware.

20.2. MATERIALS

Comply with Articles 1092-1, Signs and Hardware, and 1092-2 Retroreflective Sheeting, of the *Standard Specifications*.

Use Grade C retroreflective sheeting, except for black sheeting. Use non-reflective for black sheeting.

Conform to the message layout, size, and color as required in the *MUTCD*.

For messenger cable mounting, furnish either messenger cable hangers with free-swinging, 360° adjustable sign brackets or 3-bolt clamps as directed. Furnish aluminum, galvanized steel, or stainless steel sign supporting hardware.

For ground mounting, furnish steel, 3 lb., U-channel posts with hardware for ground mounting. Comply with Section 903, Ground Mounted Sign Supports of the *Standard Specifications*.

For mast-arm mounting, furnish rigid aluminum, galvanized steel or stainless steel sign mounting brackets.

20.3. CONSTRUCTION METHODS

Install signs with approved mounting hardware. Comply with sign offsets and mounting heights as shown in the *MUTCD* and NCDOT *Roadway Standard Drawing* No. 904.50.

For messenger cable mounting, install signs 6 inches minimum from signal heads.

For ground mounting, comply with Section 903, Ground Mounted Supports of the *Standard Specifications*.

For mast arm mounting, install attachment brackets to allow adjustment so signs:

- Are aimed in required direction,
- Are plumb as viewed from respective approaches,
- May be tilted forward or backward as required, and
- May be raised or lowered on mast arm throughout full length of sign.

20.4. MEASUREMENT AND PAYMENT

Sign for signals will be measured and paid as the actual number of signs for signals, regardless of mounting method, furnished, installed, and accepted.

Payment will be made under:

Pay Item	Pay Unit
Sign for Signals	Each

21. EQUIPMENT CABINET FOUNDATIONS

21.1. DESCRIPTION

Furnish and install foundations for base-mounted equipment cabinets, including signal controller cabinets and communications hub cabinets, and all necessary hardware.

Furnish either poured concrete foundations or preformed cabinet pad foundations and all necessary hardware. Obtain approval of foundation type.

21.2. MATERIALS

Furnish preformed cabinet pad foundation material, equipment, and hardware under this section that is pre-approved on the ITS and Signals QPL.

Provide preformed cabinet pad foundations with 7"(l) x 18"(w) minimum opening for the entrance of conduits. For precast cabinet foundations, include steel reinforcement to ensure structural integrity during shipment and placing of item. Include four 3/4" coil thread inserts for lifting. Comply with Article 1077-16 of the *Standard Specifications.*

Furnish cabinet foundations with chamfered top edges. Provide minimum Class B concrete.

Refer to Article 1000-4, Portland Cement Concrete, of the *Standard Specifications.*

Provide standard cabinet foundations in unpaved areas with a minimum pad area that extends 24" from front and back of cabinet base extenders and adapters, and 3" from sides of cabinet base extenders and adapters. For cabinet foundations installed within brick or concrete sidewalks, omit the 24" from the front and rear of the cabinet and provide a foundation that extends 3" from all four sides of the cabinet base extender as shown on the special detail in the Plans.

Furnish Portland cement concrete, in accordance with Article 848-2 of the *Standard Specifications*, to replace removed or damaged sections of existing sidewalk and restore locations to preconstruction condition.

Furnish replacement sidewalk pavers where required to restore locations to preconstruction condition that are of the same color, texture, shape, dimensions and materials as the damaged or modified items.

Provide replacement materials for other special pavement treatments or landscaping that are the same materials as the damaged or modified items to restore locations to preconstruction condition.

For repair of concrete sidewalks within historic districts that are removed or damaged by construction, provide concrete tinted to match the appearance of the existing sidewalk. Affected sidewalk locations include but are not necessarily limited to:

- Old Salem Road at Academy Street
- Business 40 WB Ramp at First Street
- Main Street at Cemetery Street
- Liberty Street/Old Salem Road at Brookstown Avenue
- First Street at Fourth Street/Burke Street
- Broad Street at Fifth Street

- Broad Street at Sixth Street
- Brookstown Avenue at Burke Street
- Fifth Street at Summit Street

For new equipment cabinet foundations within historic districts, provide concrete tinted to a light earth-toned palette to soften visual impact of new concrete. Affected foundation locations include but are not necessarily limited to:

- Old Salem Road at Academy Street
- Liberty Street/Old Salem Road at Brookstown Avenue
- Broad Street at Sixth Street

21.3. CONSTRUCTION METHODS

Comply with Section 825, Incidental Concrete Construction – General, of the *Standard Specifications*.

For equipment cabinet foundations within and adjacent to historic districts, tint the concrete mix to a light earth-toned palette to soften the visual impact. Refer to Section 1 of these Project Special Provisions for additional requirements concerning construction within historic districts.

Obtain approval for final cabinet foundation locations before pouring concrete base or installing a preformed cabinet base. Locate new cabinets so as not to obstruct sight distance of vehicles turning on red or create any ADA violations or pedestrian conflicts. Maintain 12 inches minimum from service pole to closest point on foundation unless otherwise approved.

Do not install foundations over uncompacted fill or muck. Hand tamp soil before placing concrete or preformed cabinet base and ensure ground is level.

When using poured concrete foundations, use procedures, equipment, and hardware as follows:

- Use a minimum of four 1/2-inch diameter expanding type anchor bolts to secure cabinet to foundation.
- In unpaved areas, install cabinet foundations a minimum 4 inches above and 4 inches below finished grade. In paved areas, install foundations 1 inch above the paved surface at its highest point and 4 inches below the paved surface at its lowest point.
- Locate external stubbed out conduit at cabinet foundation so conduit is in middle of cabinet. Provide service conduit as the rightmost conduit coming into cabinet. Provide two spare conduits stubbed out; one pointed toward service pole and the other toward direction of lead-in cable. Inscribe identification arrow in foundation indicating direction of spare conduits.
- Ensure that conduits extend 2" to 3" above finished cabinet foundation.
- Give cabinet foundation a broom finish. Seal space between cabinet base and foundation with permanent, flexible, waterproof sealing material.

If using preformed cabinet pad, use loop sealant to seal the conduit stub-outs within the knock-out. <u>Do not use preformed cabinet pad for cabinet foundations located within or adjacent to historic districts</u>.

Restore the disturbed ground surrounding the new cabinet foundation to its original, preconstruction condition as determined and approved by the Engineer.

- For paved areas, replace removed or damaged pavement with in kind materials, matching the elevation, color, texture/finish and general appearance of the surrounding pavement. Refer to Section 1 of these Project Special Provisions for additional requirements concerning sidewalks and curbs in historic districts. Replace concrete sidewalk in whole slabs from joint to joint and comply with Section 848 of the *Standard Specifications*. Replace sidewalk pavers using pavers of the same color, texture, shape, dimensions and materials as the damaged or modified items. Place graded stone material to temporarily maintain pedestrian traffic where repairs cannot be performed immediately. Comply with Article 545-4 of the *Standard Specifications.*
- For unpaved areas, backfill excavations with removed material, tamp the backfilled material and rake smooth the top 1½ inches. Finish unpaved areas flush with surrounding natural ground and to match the original contour of the ground. Seed with same type of grass as surrounding area and mulch the newly seeded area. If unpaved area was not grassed, replace the original ground cover in kind as directed by the Engineer.

Complete repairs to and restoration of all ground (paved and unpaved) disturbed for construction within five consecutive calendar days following initial removal. If the Contractor fails to repair and restore the ground in accordance with these Project Special Provisions within the time frame specified, the Department reserves the right to make the necessary repairs, and all expenses incurred by the Department in making the repairs and restoring the ground will be deducted from payment due the Contractor, plus **$500 liquidated damages per occasion, per day, or any portion thereof**, until corrected.

21.4. MEASUREMENT AND PAYMENT

Signal cabinet foundation will be measured and paid as the actual number of signal cabinet foundations furnished, installed, and accepted.

No measurement will be made of special finishing, staining and tinting of concrete for signal cabinet foundations to match the appearance of existing sidewalk within or adjacent to a historic district as such work will be considered incidental to furnishing and installing signal cabinet foundations.

Hub cabinet foundation will be measured and paid as the actual number of hub cabinet foundations furnished, installed, and accepted.

IS hub cabinet foundation will be measured and paid as the actual number of IS hub cabinet foundations furnished, installed, and accepted.

4" concrete sidewalk will be measured and paid as the actual square yards of concrete furnished, installed and accepted.

No measurement will be made of special finishing, staining and tinting of concrete sidewalk to match the appearance of existing sidewalk as such work will be considered incidental to furnishing and installing 4" concrete sidewalk.

Brick pavers will be measured and paid as the actual square feet of brick pavers furnished, installed and accepted.

No measurement or payment will be made for restoration of the surrounding unpaved ground surfaces in accordance with these Project Special Provisions as such work will be considered incidental to furnishing and installing foundations for signal, hub, and IS hub cabinets.

No measurement or payment will be made for furnishing and installing and subsequently removing graded stone material for temporary maintenance pedestrian traffic where a portion of an existing sidewalk has been removed as such work will be considered incidental to furnishing and installing foundations for signal, hub, and IS hub cabinets.

Payment will be made under:

Pay Item	**Pay Unit**
Signal Cabinet Foundation	Each
Hub Cabinet Foundation	Each
IS Hub Cabinet Foundation	Each
4" Concrete Sidewalk	Square Yard
Brick Pavers	Square Foot

22. MODIFY CABINET FOUNDATIONS

22.1. DESCRIPTION

Where approved by the Engineer, install conduit entrances into existing foundations in accordance with the Plans and Project Special Provisions.

Modify existing foundations in accordance with the Plans and Project Special Provisions.

22.2. MATERIALS

Comply with the provisions of "Equipment Cabinet Foundations" section of these Project Special Provisions.

22.3. CONSTRUCTION METHODS

(A) General

Ensure that an IMSA certified, or equivalent, Level II traffic qualified signal technician is standing by to provide emergency maintenance services whenever work is being performed on traffic signal controller cabinet foundations. Standby status is defined as being able to arrive, fully equipped, at the work site within 30 minutes ready to provide maintenance services.

(B) Install Conduit Entrance into Existing Foundation

Maintain a minimum of 3 inches of cover between new conduit and edge of foundation. Maintain minimum clearances of 1 inch from the flange of the base adapter and 2 inches from existing conduits. Avoid damaging existing conduit, conductors, and anchor bolts. Repair all such damages. Where approved by the Engineer, the foundation may be chipped instead of drilled for conduit entrance. When possible, maintain traffic signal operations while drilling is performed.

Bond new metallic conduit to the cabinet grounding system.

After installation of conduit, place grout to seal around conduit, and return the foundation to normal appearance.

(C) Modify Foundation

Enlarge existing cabinet foundations to accommodate the new cabinet and/or to provide a maintenance technician pad.

Excavate the ground around the existing foundation to a depth sufficient to expose a minimum of 4 inches of the foundation below existing grade.

Rough the sides of the existing foundation from the top to a point 4 inches below grade by means of a chisel or other method approved by the Engineer.

Wash the sides of the foundation with water pressurized at 50 psi and thoroughly dry with compressed air.

Drill holes approximately 6 inches deep on 12-inch centers into the existing foundation. Clean holes with compressed air only prior to applying epoxy and installing dowels. Do not clean holes with water or any other liquid. Install #4 dowels and epoxy into place. Provide dowels of the following lengths:

Foundation Extension	Length of Dowel
>16"	18"
>6" and ≤16"	11"
=6"	8"

Use concrete to install the maintenance technician pad.

Form the sides of the modified foundation to a minimum depth of 4 inches below grade.

Position forms so that all existing exposed foundation surfaces at or above grade level will be matched.

Apply a coating of approved epoxy bonding agent to all exposed roughened concrete surfaces as recommended by the manufacturer.

As a minimum, enlarge the foundation to the distance specified for new cabinet foundations. Maintenance technician pads should be added to the foundation to provide a minimum work area of 24 inches [length] x 30 inches [width] from both the front and rear doors of the cabinet, unless otherwise directed by the Engineer. Increase the pad enlargement beyond these minimum dimensions to match the width of the existing foundation along the side to which concrete is being added to maintain the rectangular shape of the pad.

Provide a 1-inch chamfer on all new outside edges.

Modify cabinet foundations located within or adjacent to historic districts as shown in the Plans using a concrete mix tinted to match the appearance of the existing concrete foundation being modified.

(D) Alternate Methods of Modifying Foundations

Where the Plans call for a new conduit entrance to be installed into an existing cabinet foundation or for the existing foundation to be modified by expanding it, the Contractor may, subject to the approval of the Engineer and at no additional cost to the Department, use one of the following methods in lieu of core-drilling and/or expanding the existing base, unless the foundation is located within or adjacent to a historic district:

- Remove the existing cabinet foundation and replace it with a new preformed cabinet pad in the same location.
- Overlay the existing cabinet foundation with a new preformed cabinet pad.
- Install a new cabinet foundation adjacent to the existing foundation.

Comply with the construction methods for each method described below.

Do not use alternate methods for modifying foundations within or adjacent to historic districts. Comply with the Plans when modifying foundations within or adjacent to historic districts.

(1) In Situ Replacement

Carefully remove the existing concrete from around the existing conduit spread, taking care not to damage the conduit stubs or the existing field wiring. Construct additional conduit stub-out(s) where the Plans call for a new conduit entrance in the existing

foundation. Once existing concrete has been completely removed and new stub-out(s) has been constructed, immediately set a preformed cabinet pad over the existing conduit spread and new stubout(s). Install preformed cabinet pad in accordance with the manufacturer's instructions. Reinstall existing controller and cabinet or install new controller and cabinet on the new preformed pad. Provide preformed cabinet pads that are listed on the ITS and Signals QPL.

(2) Overlay Existing Foundation

Where the top of the existing cabinet foundation is no more than 2 inches above the surrounding ground, overlay the existing foundation by setting a preformed cabinet pad over the existing conduit spread and existing foundation. Level and hand tamp the ground around the existing foundation and install the preformed pad in accordance with the manufacturer's instructions. Furnish and install couplings, nipples, and bushings (PVC or rigid galvanized steel) to extend the existing conduit stub-outs so that the tops of the conduits are 2-3 inches above the top of the preformed pad. Use existing field wiring, splicing and extending the field wiring inside the controller cabinet as needed (refer to Extension of Existing Field Wiring section of these Project Special Provisions). Install new conduit entrance(s) into the existing foundation if necessary.

Immediately reinstall the existing controller and cabinet or install the new controller and cabinet once the preformed pad is set in place.

Backfill around the perimeter of the new pad with topsoil to a point 4 inches below the top surface of the new pad. Gently slope the backfill to tie into the existing ground line with a gradual slope no steeper than 4:1; do not create an abrupt or unsightly mound. Ensure the preformed pad and backfill does not block the flow of runoff or impound water. Hand tamp the new soil and apply grass seed and mulch.

Do not use this method where the top of the existing cabinet foundation is more than 2 inches higher than the surrounding ground, unless the Engineer approves otherwise.

(3) Construct New Foundation Adjacent to Existing Foundation

Construct a new cabinet foundation with all necessary hardware adjacent to the existing foundation and rewire the cabinet using one of the following methods:

- Install new risers on adjacent cabinet pole, "pull back" existing field wiring to the top of the existing risers, reinstall existing wiring through the new risers to the new foundation and splice and extend field wiring with gel-filled butt splice connectors in base of new cabinet if necessary.
- Install new risers with terminal splice cabinet on adjacent cabinet pole, "pull back" existing field wiring to the top of the existing risers, and reinstall existing wiring through the new risers to the terminal splice cabinet. Inside the terminal splice cabinet, splice the existing wiring to new conductors from the new base-mounted controller cabinet.

Comply with the "Equipment Cabinet Foundations" section and the "Extension of Existing Field Wiring" section of these Project Special Provisions.

(E) Ground Surface Restoration

Restore the disturbed ground surrounding the modified cabinet foundation to its original condition as determined and approved by the Engineer. For paved areas, replace removed or damaged pavement with in kind materials, matching the elevation, color, texture/finish and general appearance of the surrounding pavement. Refer to Section 1 of these Project Special Provisions for additional requirements concerning sidewalks and curbs in historic districts. For unpaved areas, backfill excavations with removed material, tamp the backfilled material and rake smooth the top 1½ inches. Finish unpaved areas flush with surrounding natural ground and to match the original contour of the ground. Seed with same type of grass as surrounding area and mulch the newly seeded area. If unpaved area was not grassed, replace the original ground cover in kind as directed by the Engineer.

Complete repairs to and restoration of all ground (paved and unpaved) disturbed for construction within five consecutive calendar days following initial removal. If the Contractor fails to repair and restore the ground in accordance with these Project Special Provisions within the time frame specified, the Department reserves the right to make the necessary repairs, and all expenses incurred by the Department in making the repairs and restoring the ground will be deducted from payment due the Contractor, plus **$500 liquidated damages per occasion, per day, or any portion thereof**, until corrected.

22.4. MEASUREMENT AND PAYMENT

Conduit entrance into existing foundation will be measured as the actual number of conduit entrances drilled into existing cabinet foundations furnished, installed and accepted. As approved by the Engineer, police provided for directing traffic while a signal is inoperable during construction of conduit entrance into existing foundation will be measured and paid for separately in accordance with the "Temporary Traffic Control" section of these Project Special Provisions.

Modify foundation for controller cabinet will be measured as the actual number of existing cabinet foundations modified and accepted.

Alternate methods for adding conduit entrances to and modifying existing cabinet foundations will be measured and paid as *conduit entrance into existing foundation* and/or *modify foundation for controller cabinet*, as specified in the Plans for the given location. Such payment will be full compensation for all work required to add the conduit entrance and/or modify the cabinet foundation using one of the alternate methods described above. No separate measurement will be made of preformed cabinet pads, removal of existing foundations or splicing and extending existing field wiring required due to the use of an alternate method for adding a conduit entrance or for modifying an existing cabinet foundation.

No measurement will be made of special finishing, staining and tinting of concrete to match the appearance of an existing concrete foundation and existing sidewalk within or adjacent to a historic district as such work will be considered incidental to modifying foundations for controller cabinets.

No measurement or payment will be made for restoration of the surrounding unpaved ground surfaces in accordance with these Project Special Provisions as such work will be considered incidental to the pay items above.

Payment will be made under:

Pay Item	Pay Unit
Conduit Entrance into Existing Foundation	Each
Modify Foundation for Controller Cabinet	Each

23. CONTROLLERS WITH CABINETS

23.1. DESCRIPTION

Furnish and install controllers with cabinets and all necessary hardware. Furnish all pole or foundation mounting hardware, detector sensor cards, one Corbin Number 2 cabinet key, one police panel key, conflict monitors, surge protection, grounding systems, AC/DC isolator cards, auxiliary files (where required) and all necessary hardware. Install updates of local controller and operating system software.

23.2. MATERIALS - GENERAL

Except for conflict monitors, furnish material, equipment, and hardware under this section that is pre-approved on the ITS and Signals QPL.

23.3. MATERIALS – TYPE 2070L CONTROLLERS

Conform to CALTRANS *Transportation Electrical Equipment Specifications* (TEES) (dated August 16, 2002, plus Errata 1 dated October 27, 2003 and Errata 2 dated June 8, 2004) except as required herein.

Furnish Model 2070L controllers. Ensure that removal of the CPU module from the controller will place the intersection into flash.

The Department will provide local controller software at the beginning of the burning-in period. Contractor shall give 5 working days notice before needing software. Program software provided by the Department. The Department will provide updates to the local controller software for installation by the Contractor up through final acceptance of the project.

Provide Model 2070L controllers with the latest version of OS9 operating system software and device drivers, composed of the unit chassis and at a minimum the following modules and assemblies:

- MODEL 2070-1B, CPU Module, Single Board
- MODEL 2070-2A, Field I/O Module (FI/O)
- MODEL 2070-3B, Front Panel Module (FP), Display B (8x40)
- MODEL 2070-4A, Power Supply Module, 10 AMP
- MODEL 2070-7A, Async Serial Com Module (9-pin RS-232)

Provide all updates to the OS9 operating system software released up through final acceptance of the project at no additional cost to the Department.

Provide Model 2070L controllers that are capable of properly running the Department's OASIS local controller software and that are capable of operating properly within an Ethernet communications system.

23.4. MATERIALS – GENERAL CABINETS

Provide a moisture resistant coating on all circuit boards.

Provide one 20 mm diameter radial lead UL-recognized metal oxide varistor (MOV) between each load switch field terminal and equipment ground. Electrical performance is outlined below.

PROPERTIES OF MOV SURGE PROTECTOR	
Maximum Continuous Applied Voltage at 185° F	150 VAC (RMS) 200 VDC
Maximum Peak 8x20μs Current at 185° F	6500 A
Maximum Energy Rating at 185° F	80 J
Voltage Range 1 mA DC Test at 77° F	212-268 V
Max. Clamping Voltage 8x20μs, 100A at 77° F	395 V
Typical Capacitance (1 MHz) at 77° F	1600 pF

Provide a power line surge protector that is a two-stage device that will allow connection of the radio frequency interference filter between the stages of the device. Ensure that a maximum continuous current is at least 10A at 120V. Ensure that the device can withstand a minimum of 20 peak surge current occurrences at 20,000A for an 8x20 microsecond waveform. Provide a maximum clamp voltage of 395V at 20,000A with a nominal series inductance of 200μh. Ensure that the voltage does not exceed 395V. Provide devices that comply with the following:

Frequency (Hz)	Minimum Insertion Loss (dB)
60	0
10,000	30
50,000	55
100,000	50
500,000	50
2,000,000	60
5,000,000	40
10,000,000	20
20,000,000	25

23.5. MATERIALS – TYPE 170E CABINETS

(A) Type 170 E Cabinets General

Conform to the city of Los Angeles' Specification No. 54-053-08, *Traffic Signal Cabinet Assembly Specification* (dated July 2008), except as required herein.

For certain locations in downtown Winston-Salem identified in the Plans where existing cabinets mounted on metal signal poles are being replaced with new cabinets at same mounting position, furnish model 336A pole mounted cabinets configured for 8 vehicle phases, 4 pedestrian phases, and 6 overlaps. When overlaps are required, provide auxiliary output files for the overlaps. Do not reassign load switches to accommodate overlaps unless shown on electrical details. Provide 336A pole mounted cabinets that are 36" high with 30" high internal rack assemblies.

Furnish model 336S pole-mounted and base-mounted cabinets configured for 8 vehicle phases, 4 pedestrian phases, and 6 overlaps. When overlaps are required, provide auxiliary output files for the overlaps. Do not reassign load switches to accommodate overlaps unless shown on electrical details. Provide 336S pole-mounted and base-mounted cabinets that are 46" high with 40" high internal rack assemblies.

Furnish model 332 base mounted cabinets configured for 8 vehicle phases, 4 pedestrian phases, and 6 overlaps. When overlaps are required, provide auxiliary output files for the overlaps. Do not reassign load switches to accommodate overlaps unless shown on electrical details.

Provide model 200 load switches, model 222 loop detector sensors, model 252 AC isolators, and model 242 DC isolators according to the electrical details. As a minimum, provide one (1) model 2018 conflict monitor, one (1) model 206L power supply unit, two (2) model 204 flashers, one (1) DC isolator (located in slot I14), and four (4) model 430 flash transfer relays (provide seven (7) model 430 flash transfer relays if auxiliary output file is installed) with each cabinet.

(B) Special Coatings for Cabinets

For certain locations in downtown Winston-Salem as designated in the Plans, provide cabinets with a special black powder-coated finish and anti-graffiti coating in accordance with the "Special Coating for Cabinets" section of these Project Special Provisions. The locations include:

- Fourth Street at Poplar Street
- Fourth Street at Spruce Street
- Fourth Street at Marshall Street
- Fourth Street at Cherry Street
- Fourth Street at Trade Street
- Fourth Street at Liberty Street
- Fourth Street at Main Street
- Fourth Street at Church Street
- Fourth Street at Linden Street
- Fifth Street at Linden Street
- Martin Luther King Jr. Drive at US 52 SB Ramp/Linden Avenue
- Martin Luther King Jr. Drive at US 52 NB Ramp
- Martin Luther King Jr. Drive at Patterson Avenue
- Rams Drive at Salem Avenue

(C) Type 170 E Cabinet Electrical Requirements

Provide a cabinet assembly designed to ensure that upon leaving any cabinet switch or conflict monitor initiated flashing operation, the controller starts up in the programmed start up phases and start up interval.

Furnish two sets of non-fading cabinet wiring diagrams and schematics in a paper envelope or container and placed in the cabinet drawer.

All AC+ power is subject to radio frequency signal suppression.

Provide surge suppression in the cabinet for each type of cabinet device. Provide surge protection for the full capacity of the cabinet input file. Provide surge suppression devices that operate properly over a temperature range of -40° F to +185° F. Ensure the surge suppression devices provide both common and differential modes of protection.

Provide a pluggable power line surge protector that is installed on the back of the PDA (power distribution assembly) chassis to filter and absorb power line noise and switching transients. Ensure the device incorporates LEDs for failure indication and provides a dry relay contact closure for the purpose of remote sensing. Ensure the device meets the following specifications:

Peak Surge Current (Single pulse, 8x20µs).....20,000A
Occurrences (8x20µs waveform).....10 minimum @ 20,000A
Maximum Clamp Voltage.....395VAC
Operating Current.....15 amps
Response Time.....< 5 nanoseconds

Provide a loop surge suppressor for each set of loop terminals in the cabinet. Ensure the device meets the following specifications:

Peak Surge Current (6 times, 8x20µs)
(Differential Mode).....400A
(Common Mode).....1,000A
Occurrences (8x20µs waveform).....500 min @ 200A
Maximum Clamp Voltage
(Differential Mode @400A).....35V
(Common Mode @1,000A).....35V
Response Time.....< 5 nanoseconds
Maximum Capacitance.....35 pF

Provide a data communications surge suppressor for each communications line entering or leaving the cabinet. Ensure the device meets the following specifications:

Peak Surge Current (Single pulse, 8x20µs).....10,000A
Occurrences (8x20µs waveform).....100 min @ 2,000A
Maximum Clamp Voltage.....Rated for equipment protected
Response Time.....< 1 nanosecond
Maximum Capacitance.....1,500 pF
Maximum Series Resistance.....15Ω

Provide a DC signal surge suppressor for each DC input channel in the cabinet. Ensure the device meets the following specifications:

Peak Surge Current (Single pulse, 8x20µs).....10,000A
Occurrences (8x20µs waveform).....100 @ 2,000A
Maximum Clamp Voltage.....30V
Response Time.....< 1 nanosecond

Provide a 120 VAC signal surge suppressor for each AC+ interconnect signal input. Ensure the device meets the following specifications:

Peak Surge Current (Single pulse, 8x20µs).....20,000A
Maximum Clamp Voltage.....350VAC
Response Time.....< 200 nanoseconds
Discharge Voltage.....<200 Volts @ 1,000A
Insulation Resistance.....≥100 MΩ

Provide conductors for surge protection wiring that are of sufficient size (ampacity) to withstand maximum overcurrents which could occur before protective device thresholds are attained and current flow is interrupted.

If additional surge protected power outlets are needed to accommodate fiber transceivers, modems, etc., install a UL listed, industrial, heavy-duty type power outlet strip with a minimum rating of 15 A / 125 VAC, 60 Hz. Provide a strip that has a minimum of 3 grounded outlets. Ensure the power outlet strip plugs into one of the controller unit receptacles located on the rear of the PDA. Ensure power outlet strip is mounted securely; provide strain relief if necessary.

Provide a door switch in the front and a door switch in the rear of the cabinet that will provide the controller unit with a Door Ajar alarm when either the front or the rear door is open. Ensure the door switches apply DC ground to the Input File when either the front door or the rear door is open.

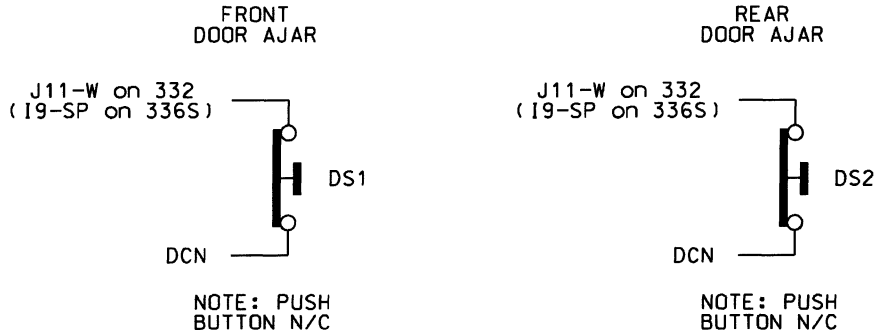

Furnish a fluorescent fixture in the rear across the top of the cabinet and another fluorescent fixture in the front across the top of the cabinet at a minimum. Ensure that the fixtures provide sufficient light to illuminate all terminals, labels, switches, and devices in the cabinet. Conveniently locate the fixtures so as not to interfere with a technician's ability to perform work on any devices or terminals in the cabinet. Provide a protective diffuser to cover exposed bulbs. Install 16 watt T-4 lamps in the fluorescent fixtures. Provide a door switch to provide power to each fixture when the respective door is open. Wire the fluorescent fixtures to the 15 amp ECB (equipment circuit breaker).

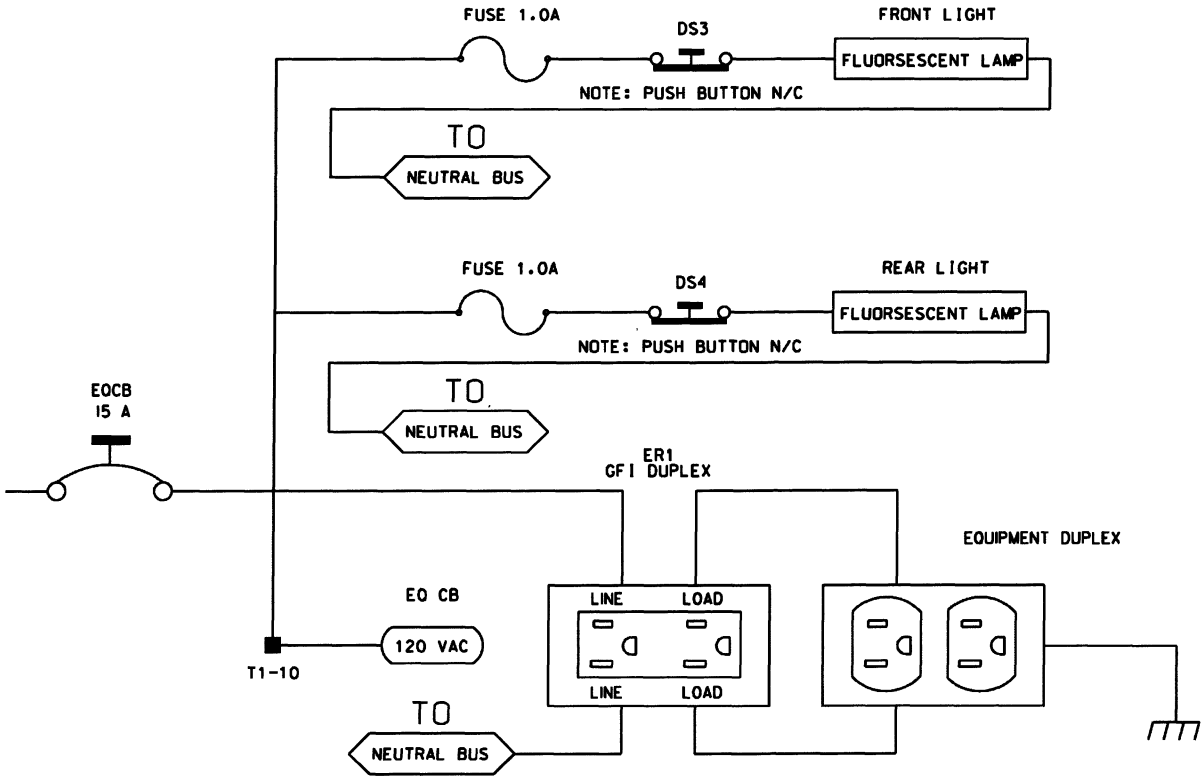

Furnish a police panel with a police panel door. For model 336A and 336S cabinets, mount the police panel on the rear door. Ensure that the police panel door permits access to the police panel when the main door is closed. Ensure that no rainwater can enter the cabinet even with the police panel door open. Provide a police panel door hinged on the right side as viewed from the front. Provide a police panel door lock that is keyed to a standard police/fire call box key. In addition to the requirements of LA Specification No. 54-053-08, provide the police panel with a toggle switch connected to switch the intersection operation between normal stop-and-go operation (AUTO) and manual operation (MANUAL). Ensure that manual control can be implemented using inputs and software such that the controller provides full programmed clearance times for the yellow clearance and red clearance for each phase while under manual control.

Provide a 1/4-inch locking phone jack in the police panel for a hand control to manually control the intersection. Provide sufficient room in the police panel for storage of a hand control and cord.

Ensure the 336A and 336S cabinet Input Files are wired as follows:

336 Cabinet Port-Bit/C-1 Pin Assignment														
Slot #	1	2	3	4	5	6	7	8	9	10	11	12	13	14
C-1 (Spares)	59	60	61	62	63	64	65	66	75	76	77	78	79	80
Port C-1	3-2 56	1-1 39	3-4 58	1-3 41	3-1 55	1-2 40	3-3 57	1-4 42	2-5 51	5-5 71	5-6 72	5-1 67	5-2 68	6-7 81
Port C-1	2-1 47	1-5 43	2-3 49	1-7 45	2-2 48	1-6 44	2-4 50	1-8 46	2-6 52	5-7 73	5-8 74	5-3 69	5-4 70	6-8 82

For model 332 base mounted cabinets, ensure terminals J14-E and J14-K are wired together on the rear of the Input File. Connect TB9-12 (J14 Common) on the Input Panel to T1-2 (AC-) on the rear of the PDA.

Provide detector test switches mounted at the top of the cabinet rack or other convenient location which may be used to place a call on each of eight phases based on the chart below. Provide three positions for each switch: On (place call), Off (normal detector operation), and Momentary On (place momentary call and return to normal detector operation after switch is released). Ensure that the switches are located such that the technician can read the controller display and observe the intersection.

Connect detector test switches for cabinets as follows:

336 Cabinet		332 Cabinet	
Detector Call Switches	**Terminals**	**Detector Call Switches**	**Terminals**
Phase 1	I1-F	Phase 1	I1-W
Phase 2	I2-F	Phase 2	I4-W
Phase 3	I3-F	Phase 3	I5-W
Phase 4	I4-F	Phase 4	I8-W
Phase 5	I5-F	Phase 5	J1-W
Phase 6	I6-F	Phase 6	J4-W
Phase 7	I7-F	Phase 7	J5-W
Phase 8	I8-F	Phase 8	J8-W

Provide the PCB 28/56 connector for the conflict monitor unit (CMU) with 28 independent contacts per side, dual-sided with 0.156 inch contact centers. Provide the PCB 28/56 connector contacts with solder eyelet terminations. Ensure all connections to the PCB 28/56 connector are soldered to the solder eyelet terminations.

Ensure that all cabinets have the CMU connector wired according to the 332 cabinet connector pin assignments (include all wires for auxiliary output file connection). Wire pins 13, 16, R, and U of the CMU connector to a separate 4 pin plug, P1, as shown below. Provide a second plug, P2, which will mate with P1 and is wired to the auxiliary output file as shown below. Provide an additional plug, P3, which will mate with P1 and is wired to the pedestrian yellow circuits as shown below. When no auxiliary output file is installed in the cabinet, provide wires for the green and yellow inputs for channels 11, 12, 17, and 18, the red inputs for channels 17 and 18, and the wires for the P2 plug. Terminate the two-foot wires with ring type lugs, insulated, and bundled for optional use.

	P1		P2		P3	
PIN	FUNCTION	CONN TO	FUNCTION	CONN TO	FUNCTION	CONN TO
1	CH-9G	CMU-13	OLA-GRN	A123	2P-YEL	114
2	CH-9Y	CMU-16	OLA-YEL	A122	4P-YEL	105
3	CH-10G	CMU-R	OLB-GRN	A126	6P-YEL	120
4	CH-10Y	CMU-U	OLB-YEL	A125	8P-YEL	111

Do not provide the P20 terminal assembly (red monitor board) or red interface ribbon cable as specified in the LA Specification NO. 54-053-08.

Provide a P20 connector that mates with and is compatible with the red interface connector mounted on the front of the conflict monitor. Ensure that the P20 connector and the red interface connector on the conflict monitor are center polarized to ensure proper connection. Ensure that removal of the P20 connector will cause the conflict monitor to recognize a latching fault condition and place the cabinet into flashing operation.

Wire the P20 connector to the output file and auxiliary output file using 22 AWG stranded wires. Ensure the length of these wires is a minimum of 42 inches. Provide a durable braided sleeve around the wires to organize and protect the wires.

Wiret the P20 connector to the traffic signal red displays to provide inputs to the conflict monitor as shown below. Ensure the pedestrian Don't Walk circuits are wired to channels 13 through 16 of the P20 connector. When no auxiliary output file is installed in the cabinet, provide wires for channels 9 through 12 reds. Provide a wire for special function 1. Terminate the unused wires with ring type lugs, insulated, and bundled for optional use.

P20 Connector					
PIN	FUNCTION	CONN TO	PIN	FUNCTION	CONN TO
1	Channel 15 Red	119	11	Channel 16 Red	110
2	Channel 14 Red	104	12	Chassis GND	01-9
3	Channel 13 Red	113	13	N/C	
4	Channel 12 Red	AUX 101	14	Spec Function 1	
5	Channel 10 Red	AUX 124	15	Channel 11 Red	AUX 114
6	Channel 9 Red	AUX 121	16	Channel 8 Red	107
7	Channel 7 Red	122	17	Channel 6 Red	134
8	Channel 5 Red	131	18	Channel 4 Red	101
9	Channel 3 Red	116	19	Channel 2 Red	128
10	Channel 1 Red	125	20	Red Enable	01-14

Do not wire pin 12 of the load switch sockets.

Ensure the controller unit outputs to the auxiliary output file are pre-wired to the C5 connector. When no auxiliary output file is installed in the cabinet, connect the C5 connector to a storage socket located on the Input Panel or on the rear of the PDA.

In addition to the requirements of LA Specification No. 54-053-08, ensure relay K1 on the Power Distribution Assembly (PDA) is a four pole relay and K2 on the PDA is a two pole relay.

Provide a two pole, ganged circuit breaker for the flash bus circuit. Ensure the flash bus circuit breaker is an inverse time circuit breaker rated for 10 amps at 120 VAC with a minimum of 10,000 RMS symmetrical amperes short circuit current rating. Do not provide the auxiliary switch feature on the flash bus circuit breaker. Ensure the ganged flash bus circuit breaker is certified by the circuit breaker manufacturer to provide gang tripping operation.

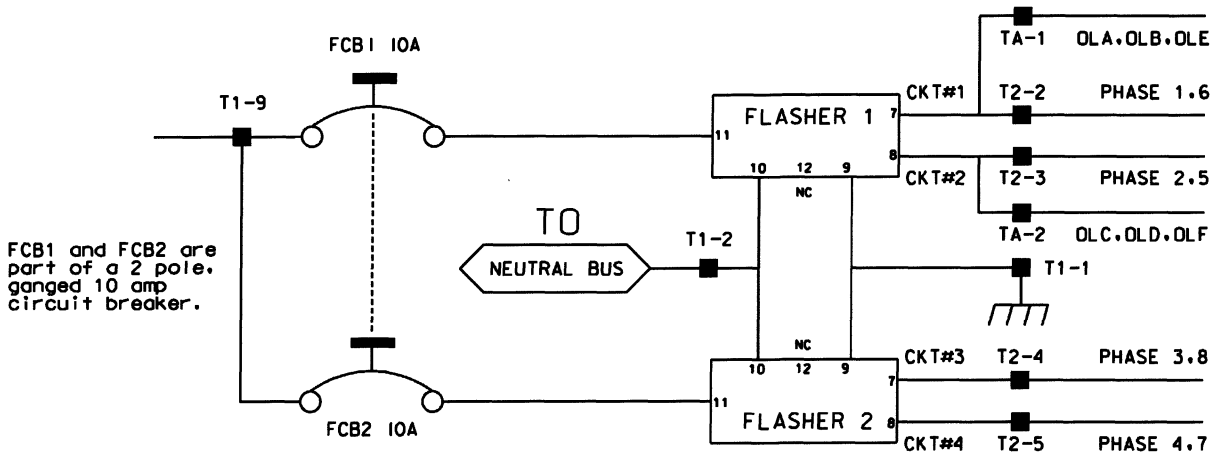

Ensure auxiliary output files are wired as follows:

AUXILIARY OUTPUT FILE TERMINAL BLOCK TA ASSIGNMENTS	
POSITION	**FUNCTION**
1	Flasher Unit #1, Circuit 1/FTR1 (OLA, OLB)/FTR3 (OLE)
2	Flasher Unit #1, Circuit 2/FTR2 (OLC, OLD)/FTR3 (OLF)
3	Flash Transfer Relay Coils
4	AC -
5	Power Circuit 5
6	Power Circuit 5
7	Equipment Ground Bus
8	NC

Provide four spare load resistors mounted in each cabinet. Ensure each load resistor is rated as shown in the table below. Wire one side of each load resistor to AC-. Connect the other side of each resistor to a separate terminal on a four (4) position terminal block. Mount the load resistors and terminal block either inside the back of Output File No. 1 or on the upper area of the Service Panel.

ACCEPTABLE LOAD RESISTOR VALUES	
VALUE (ohms)	**WATTAGE**
1.5K – 1.9 K	25W (min)
2.0K – 3.0K	10W (min)

Provide Model 200 load switches, Model 204 flashers, Model 242 DC isolators, Model 252 AC isolators, and Model 206L power supply units that conform to CALTRANS' "*Transportation Electrical Equipment Specifications*" dated March 12, 2009 with Erratum 1.

(D) Type 170 E Cabinet Physical Requirements

Do not mold, cast, or scribe the name "City of Los Angeles" on the outside of the cabinet door as specified in LA Specification No. 54-053-08. Do not provide a Communications Terminal Panel as specified in LA Specification No. 54-053-08. Do not provide terminal block TBB on the Service Panel. Do not provide Cabinet Verification Test Program software or associated test jigs as specified in LA Specification No. 54-053-08.

Furnish unpainted, natural, aluminum cabinet shells for all locations except those identified in the "Special Coatings for Cabinets" subsection above to have custom finish applied to the cabinets. Ensure that all non-aluminum hardware on the cabinet is stainless steel or a Department approved non-corrosive alternate.

Ensure the lifting eyes, gasket channels, police panel, and all supports welded to the enclosure and doors are fabricated from 0.125 inch minimum thickness aluminum sheet and meet the same standards as the cabinet and doors.

Provide front and rear doors with latching handles that allow padlocking in the closed position. Furnish 0.75 inch minimum diameter stainless steel handles with a minimum 0.5 inch shank. Place the padlocking attachment at 4.0 inches from the handle shank center to clear the lock and key. Provide an additional 4.0 inches minimum gripping length.

Provide Corbin #2 locks on the front and rear doors. Provide one (1) Corbin #2 and one (1) police master key with each cabinet. Ensure main door locks allow removal of keys in the locked position only.

Provide a surge protection panel with 16 loop surge protection devices and designed to allow sufficient free space for wire connection/disconnection and surge protection device replacement. For model 332 cabinets, provide an additional 20 loop surge protection devices. Provide an additional two AC+ interconnect surge devices to protect one slot and eight DC surge protection devices to protect four slots. Provide no protection devices on slot I14.

For 336A and 336S pole-mounted and 336S base-mounted cabinets, mount surge protection devices for the AC+ interconnect inputs, inductive loop detector inputs, and low voltage DC inputs on a swing down panel assembly fabricated from sturdy aluminum. Attach the swing down panel to the bottom rear cabinet rack assembly using thumb screws. Ensure the swing down panel allows for easy removal of the input file without removing the surge protection panel assembly or its parts. Have the surge protection devices mounted horizontally on the panel and soldered to the feed through terminals of four 14 position terminal blocks with #8 screws mounted on the other side. Ensure the top row of terminals is connected to the upper slots and the bottom row of terminals is connected to the bottom slots. Provide a 15 position copper equipment ground bus attached to the field terminal side (outside) of the swing down panel for termination of loop lead-in shield grounds. Ensure that a Number 4 AWG green wire connects the surge protection panel assembly ground bus to the main cabinet equipment ground.

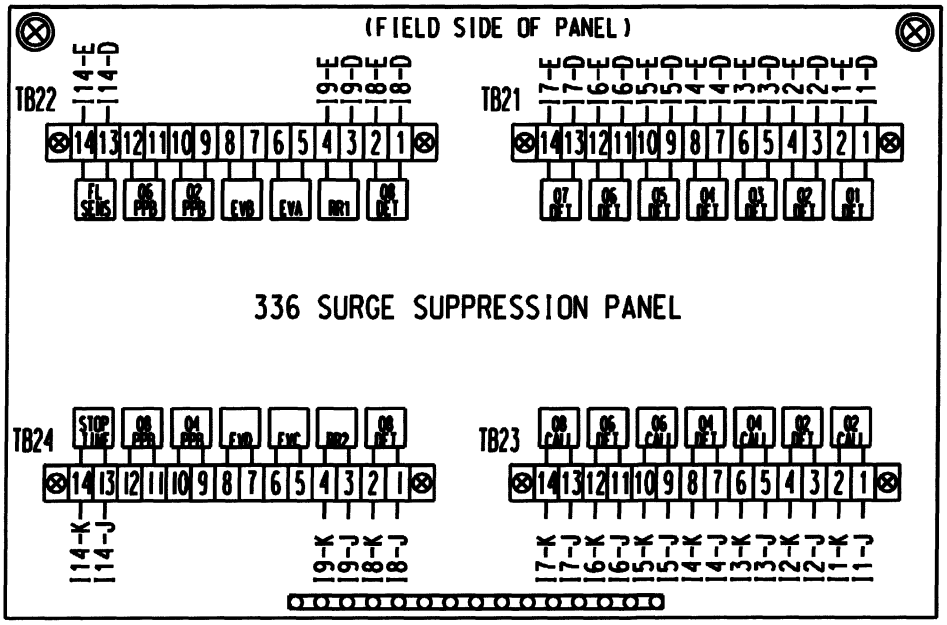

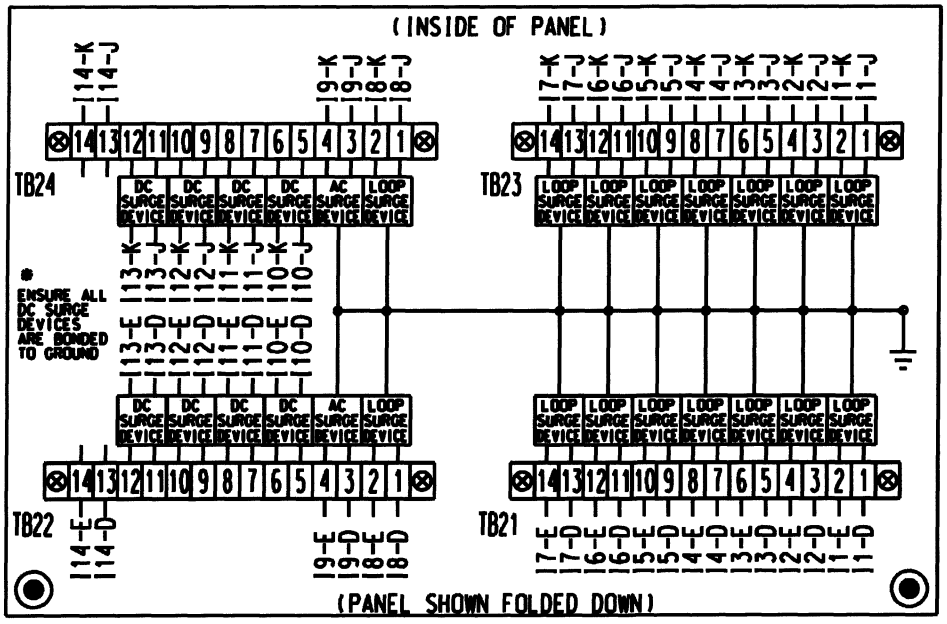

For 332 base mounted cabinets, mount surge protection panels on the left side of the cabinet as viewed from the rear. Attach each panel to the cabinet rack assembly using bolts and make it easily removable. Mount the surge protection devices in vertical rows on each panel and connect the devices to one side of 12 position, double row terminal blocks with #8 screws. For each surge protection panel, terminate all grounds from the surge protection devices on a copper equipment ground bus attached to the surge protection panel. Wire the terminals to the rear of a standard input file using spade lugs for input file protection.

Provide permanent labels that indicate the slot and the pins connected to each terminal that may be viewed from the rear cabinet door. Label and orient terminals so that each pair of inputs

is next to each other. Indicate on the labeling the input file (I or J), the slot number (1-14) and the terminal pins of the input slots (either D & E for upper or J & K for lower).

Provide a minimum 14 x 16 inch pull out, hinged top shelf located immediately below controller mounting section of the cabinet. Ensure the shelf is designed to fully expose the table surface outside the controller at a height approximately even with the bottom of the controller. Ensure the shelf has a storage bin interior which is a minimum of 1 inch deep and approximately the same dimensions as the shelf. Provide an access to the storage area by lifting the hinged top of the shelf. Fabricate the shelf and slide from aluminum or stainless steel and ensure the assembly can support the 2070L controller plus 15 pounds of additional weight. Ensure shelf has a locking mechanism to secure it in the fully extended position and does not inhibit the removal of the 2070L controller or removal of cards inside the controller when fully extended. Provide a locking mechanism that is easily released when the shelf is to be returned to its non-use position directly under the controller.

(E) Model 2018 Enhanced Conflict Monitor

Furnish Model 2018 Enhanced Conflict Monitors that provide monitoring of 18 channels. Ensure each channel consists of a green, yellow, and red field signal input. Ensure that the conflict monitor meets or exceeds CALTRANS *Transportation Electrical Equipment Specifications* dated March 12, 2009 with Erratum 1 (hereafter referred to as CALTRANS's 2009 TEES) for a model 210 monitor unit and other requirements stated in this specification.

Ensure the conflict monitor is provided with a 18 channel conflict programming card. Pin EE and Pin T of the programming card shall be connected together. Pin 16 of the conflict programming card shall be floating. Ensure that the absence of the conflict programming card will cause the conflict monitor to trigger (enter into fault mode), and remain in the triggered state until the programming card is properly inserted and the conflict monitor is reset.

Provide a conflict monitor that incorporates LED indicators into the front panel to dynamically display the status of the monitor under normal conditions and to provide a comprehensive review of field inputs with monitor status under fault conditions. Ensure that the monitor indicates the channels that were active during a conflict condition and the channels that experienced a failure for all other per channel fault conditions detected. Ensure that these indications and the status of each channel are retained until the Conflict Monitor is reset. Furnish LED indicators for the following:

- AC Power (Green LED indicator)
- VDC Failed (Red LED indicator)
- WDT Error (Red LED indicator)
- Conflict (Red LED indicator)
- Red Fail (Red LED indicator)
- Dual Indication (Red LED indicator)
- Short Yellow/Sequence Failure (Red LED indicator)
- Program Card/PC Ajar (Red LED indicator)
- Monitor Fail/Diagnostic Failure (Red LED indicator)

- 54 Channel Status Indicators (1 Red, 1 Yellow, and 1 Green LED indicator for each of the 18 channels)

Provide a switch to set the Red Fail fault timing. Ensure that when the switch is in the ON position the Red Fail fault timing value is set to 1350 +/- 150ms (2018 mode). Ensure that when the switch is in the OFF position the Red Fail fault timing value is set to 850 +/- 150ms (210 mode).

Provide a switch to set the Watchdog fault timing. Ensure that when the switch is in the ON position the Watchdog fault timing value is set to 1.0 +/- 0.1s (2018 mode). Ensure that when the switch is in the OFF position the Watchdog fault timing value is set to 1.5 +/- 0.1s (210 mode).

Provide a jumper or switch to set the AC line brown-out levels. Ensure that when the jumper is present or the switch is in the ON position the AC line dropout voltage threshold is 98 +/- 2 Vrms, the AC line restore voltage threshold is 103 +/- 2 Vrms, and the AC line brown-out timing value is set to 400 +/- 50ms (2018 mode). Ensure that when the jumper is not present or the switch is in the OFF position the AC line dropout voltage threshold is 92 +/- 2 Vrms, the AC line restore voltage threshold is 98 +/- 2 Vrms, and the AC line brown-out timing value is set to 80 +/- 17ms (210 mode).

Provide a jumper or switch that will enable and disable the Watchdog Latch function. Ensure that when the jumper is not present or the switch is in the OFF position the Watchdog Latch function is disabled. In this mode of operation, a Watchdog fault will be reset following a power loss, brownout, or power interruption. Ensure that when the jumper is present or the switch is in the ON position the Watchdog Latch function is enabled. In this mode of operation, a Watchdog fault will be retained until a Reset command is issued.

Provide a jumper that will reverse the active polarity for pin #EE (output relay common). Ensure that when the jumper is not present pin #EE (output relay common) will be considered 'Active' at a voltage greater than 70 Vrms and 'Not Active' at a voltage less than 50 Vrms (Caltrans mode). Ensure that when the jumper is present pin #EE (output relay common) will be considered 'Active' at a voltage less than 50 Vrms and 'Not Active' at a voltage greater than 70 Vrms (Failsafe mode).

In addition to the connectors required by CALTRANS' 2009 TEES, provide the conflict monitor with a red interface connector mounted on the front of the monitor. Ensure the connector is 20-pin, right angle, male connector with latching clip locks and polarizing keys. Ensure the right angle solder tails are designed for 0.062" thick printed circuit board. Keying of the connecter shall be between pins 3 and 5, and between 17 and 19. Ensure the connector has two rows of pins with the odd numbered pins are on one row and the even pins on the other row. Ensure the connector pin row spacing is 0.10" and pitch is 0.10". Ensure the mating length of the connector pins is 0.24". Ensure the pins are finished with gold plating 30μ" thick.

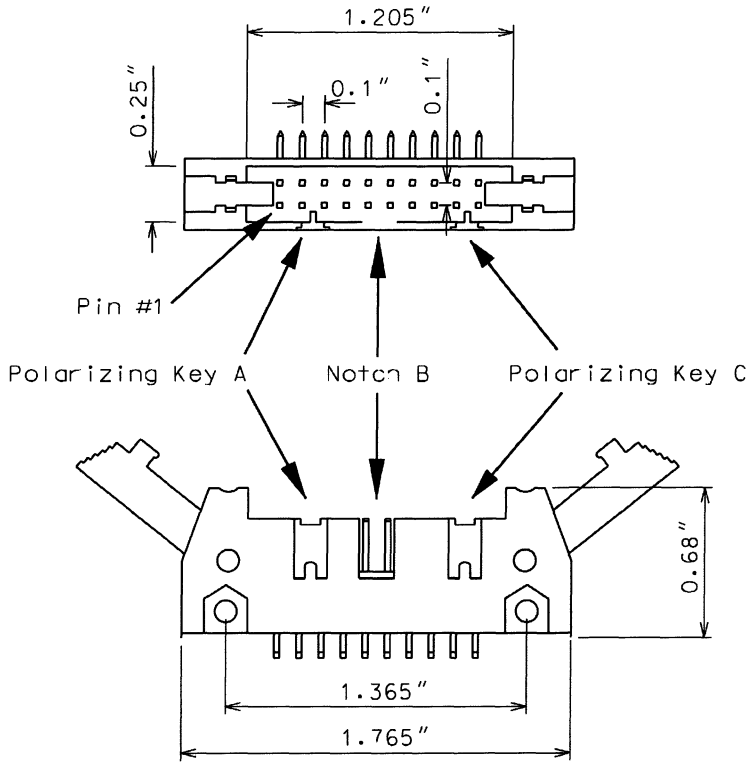

Ensure the red interface connector pins on the monitor have the following functions:

Pin #	Function	Pin #	Function
1	Channel 15 Red	2	Channel 16 Red
3	Channel 14 Red	4	Chassis Ground
5	Channel 13 Red	6	Special Function 2
7	Channel 12 Red	8	Special Function 1
9	Channel 10 Red	10	Channel 11 Red
11	Channel 9 Red	12	Channel 8 Red
13	Channel 7 Red	14	Channel 6 Red
15	Channel 5 Red	16	Channel 4 Red
17	Channel 3 Red	18	Channel 2 Red
19	Channel 1 Red	20	Red Enable

Ensure that the removal of the P-20 red interface ribbon cable will cause the monitor to recognize a latching fault condition and place the cabinet into flashing operation.

Provide Special Function 1 and Special Function 2 inputs to the unit which shall disable only Red Fail Monitoring when either input is sensed active. A Special Function input shall be sensed active when the input voltage exceeds 70 Vrms with a minimum duration of 550 ms. A Special Function input shall be sensed not active when the input voltage is less than 50 Vrms or the duration is less than 250 ms. A Special Function input is undefined by these specifications and may or may not be sensed active when the input voltage is between 50 Vrms and 70 Vrms or the duration is between 250 ms and 550 ms.

Ensure the conflict monitor recognizes field signal inputs for each channel that meet the following requirements:

- consider a Red input greater than 70 Vrms and with a duration of at least 500 ms as an "on" condition;
- consider a Red input less than 50 Vrms or with a duration of less than 200 ms as an "off" condition (no valid signal);
- consider a Red input between 50 Vrms and 70 Vrms or with a duration between 200 ms and 500 ms to be undefined by these specifications;
- consider a Green or Yellow input greater than 25 Vrms and with a duration of at least 500 ms as an "on" condition;
- consider a Green or Yellow input less than 15 Vrms or with a duration of less than 200 ms as an "off" condition; and
- consider a Green or Yellow input between 15 Vrms and 25 Vrms or with a duration between 200 ms and 500 ms to be undefined by these specifications.

Provide a conflict monitor that recognizes the faults specified by CALTRANS' 2009 TEES and the following additional faults. Ensure the conflict monitor will trigger upon detection of a fault and will remain in the triggered (in fault mode) state until the unit is reset at the front panel or through the external remote reset input for the following failures:

1. **Red Monitoring or Absence of Any Indication (Red Failure):** A condition in which no "on" voltage signal is detected on any of the green, yellow, or red inputs to a given monitor channel. If a signal is not detected on at least one input (R, Y, or G) of a conflict monitor channel for a period greater than 1000 ms when used with a 170 controller and 1500 ms when used with a 2070L controller, ensure monitor will trigger and put the intersection into flash. If the absence of any indication condition lasts less that 750 ms when used with a 170 controller and 1200 ms when used with a 2070L controller, ensure conflict monitor will not trigger. Red fail monitoring shall be enabled on a per channel basis by the use of switches located on the conflict monitor. Have red monitoring occur when both the following input conditions are in effect:
    a) Red Enable input to monitor is active (Red Enable voltages are "on" at greater than 70 Vrms, off at less than 50 Vrms, undefined between 50 and 70 Vrms), and
    b) Neither Special Function 1 nor Special Function 2 inputs are active.
    c) Pin #EE (output relay common) is not active.
2. **Short/Missing Yellow Indication Error (Sequence Error):** Yellow indication following a green is missing or shorter than 2.7 seconds (with ± 0.1-second accuracy). If a channel fails to detect an "on" signal at the Yellow input for a minimum of 2.7 seconds (± 0.1 second) following the detection of an "on" signal at a Green input for that channel, ensure that the monitor triggers and generates a clearance/short yellow error fault indication. Short/missing yellow (clearance) monitoring shall be enabled on a per channel bases by the use of switches located on the monitor. This fault shall not occur when the channel is programmed for Yellow Inhibit, when the Red Enable signal is inactive or pin #EE (output relay common) is active.
3. **Dual Indications on the Same Channel:** In this condition, more than one indication (R,Y,G) is detected as "on" at the same time on the same channel. If dual indications are detected for a period greater than 500 ms, ensure that the conflict monitor triggers and

displays the proper failure indication (Dual Ind fault). If this condition is detected for less than 200 ms, ensure that the monitor does not trigger. G-Y-R dual indication monitoring shall be enabled on a per channel basis by use of switches located on the conflict monitor. G-Y dual indication monitoring shall be enabled for all channels by use of a switch located on the conflict monitor. This fault shall not occur when the Red Enable signal is inactive or pin #EE (output relay common) is active.

4. **Configuration Settings Change:** The configuration settings are comprised of (as a minimum) the permissive diode matrix, dual indication switches, yellow disable jumpers, any option switches, any option jumpers, and the Watchdog Enable switch. Ensure the conflict monitor compares the current configuration settings with the previous stored configuration settings on power-up, on reset, and periodically during operation. If any of the configuration settings are changed, ensure that the conflict monitor triggers and causes the program card indicator to flash. Ensure that configuration change faults are only reset by depressing and holding the front panel reset button for three seconds. Ensure the external remote reset input does not reset configuration change faults.

Ensure the conflict monitor will trigger and the AC Power indicator will flash at a rate of 2 Hz ± 20% with a 50% duty cycle when the AC Line voltage falls below the "drop-out" level. Ensure the conflict monitor will resume normal operation when the AC Line voltage returns above the "restore" level. Ensure the AC Power indicator will remain illuminated when the AC voltage returns above the "restore" level. Should an AC Line power interruption occur while the monitor is in the fault mode, then upon restoration of AC Line power, the monitor will remain in the fault mode and the correct fault and channel indicators will be displayed.

Provide a flash interval of at least 6 seconds and at most 10 seconds in duration following a power-up, an AC Line interruption, or a brownout restore. Ensure the conflict monitor will suspend all fault monitoring functions, close the Output relay contacts, and flash the AC indicator at a rate of 4 Hz ± 20% with a 50% duty cycle during this interval. Ensure the termination of the flash interval after at least 6 seconds if the Watchdog input has made 5 transitions between the True and False state and the AC Line voltage is greater than the "restore" level. If the watchdog input has not made 5 transitions between the True and False state within 10 ± 0.5 seconds, the monitor shall enter a WDT error fault condition.

Ensure the conflict monitor will monitor an intersection with up to four approaches using the four-section Flashing Yellow Arrow (FYA) vehicle traffic signal as outlined by the NCHRP 3-54 research project for protected-permissive left turn signal displays. Ensure the conflict monitor will operate in the FYA mode and FYAc (Compact) mode as specified below to monitor each channel for the following fault conditions: Conflict, Red Fail, Dual Indication, and Clearance. Provide a switch to select between the FYA mode and FYAc mode. Provide a switch to select each FYA phase movement for monitoring.

FYA Mode				
FYA Signal Head	Phase 1	Phase 3	Phase 5	Phase 7
Red Arrow	Channel 9 Red	Channel 10 Red	Channel 11 Red	Channel 12 Red
Yellow Arrow	Channel 9 Yellow	Channel 10 Yellow	Channel 11 Yellow	Channel 12 Yellow
Flashing Yellow Arrow	Channel 9 Green	Channel 10 Green	Channel 11 Green	Channel 12 Green
Green Arrow	Channel 1 Green	Channel 3 Green	Channel 5 Green	Channel 7 Green

FYAc Mode				
FYA Signal Head	Phase 1	Phase 3	Phase 5	Phase 7
Red Arrow	Channel 1 Red	Channel 3 Red	Channel 5 Red	Channel 7 Red
Yellow Arrow	Channel 1 Yellow	Channel 3 Yellow	Channel 5 Yellow	Channel 7 Yellow
Flashing Yellow Arrow	Channel 1 Green	Channel 3 Green	Channel 5 Green	Channel 7 Green
Green Arrow	Channel 9 Green	Channel 9 Yellow	Channel 10 Green	Channel 10 Yellow

Ensure that the conflict monitor will log at least nine of the most recent events detected by the monitor in non-volatile EEPROM memory (or equivalent). For each event, record at a minimum the time, date, type of event, status of each field signal indication with RMS voltage, and specific channels involved with the event. Ensure the conflict monitor will log the following events: monitor reset, configuration, previous fault, and AC line. Furnish the signal sequence log that shows all channel states (Greens, Yellows, and Reds) and the Red Enable State for a minimum of 2 seconds prior to the current fault trigger point. Ensure the display resolution of the inputs for the signal sequence log is not greater than 50 ms.

Provide a conflict monitor with Ethernet 10/100 Mbps, RJ-45 port for data communication access to the monitor by a local notebook computer and remotely via a workstation or notebook computer device connected to the signal system local area network. The Ethernet port shall be electrically isolated from the conflict monitor's electronics and shall provide a minimum of 1500 Vrms isolation. Integrate unit with Ethernet switch in cabinet.

Provide software to retrieve the time and date from at network server. This mechanism will be used to synchronize the on-board times between the conflict monitor and the controller.

Furnish Windows-based, graphic user interface software to view and retrieve all event log information. In addition, provide software that will search and display a list of conflict monitor IP addresses and IDs on the network. Furnish software to change the conflict monitor's network parameters such as IP address and subnet mask. Install on workstations and notebook computers where the signal system client software is installed.

MONITOR BOARD EDGE CONNECTOR

Pin #	Function (Back Side)	Pin #	Function (Component Side)
1	Channel 2 Green	A	Channel 2 Yellow
2	Channel 13 Green	B	Channel 6 Green
3	Channel 6 Yellow	C	Channel 15 Green
4	Channel 4 Green	D	Channel 4 Yellow
5	Channel 14 Green	E	Channel 8 Green
6	Channel 8 Yellow	F	Channel 16 Green
7	Channel 5 Green	H	Channel 5 Yellow
8	Channel 13 Yellow	J	Channel 1 Green
9	Channel 1 Yellow	K	Channel 15 Yellow
10	Channel 7 Green	L	Channel 7 Yellow
11	Channel 14 Yellow	M	Channel 3 Green
12	Channel 3 Yellow	N	Channel 16 Yellow
13	Channel 9 Green	P	Channel 17 Yellow
14	Channel 17 Green	R	Channel 10 Green
15	Channel 11 Yellow	S	Channel 11 Green
16	Channel 9 Yellow	T	Channel 18 Yellow
17	Channel 18 Green	U	Channel 10 Yellow
--		--	
18	Channel 12 Yellow	V	Channel 12 Green
19	Channel 17 Red	W	Channel 18 Red
20	Chassis Ground	X	Not Assigned
21	AC-	Y	DC Common
22	Watchdog Timer	Z	External Test Reset
23	+24VDC	AA	+24VDC
24	Tied to Pin 25	BB	Stop Time (Output)
25	Tied to Pin 24	CC	Not Assigned
26	Not Assigned	DD	Not Assigned
27	Relay Output, Side #3, N.O.	EE	Relay Output,Side #2,Common
28	Relay Output, Side #1, N.C.	FF	AC+

-- Slotted for keying between Pins 17/U and 18/V

CONFLICT PROGRAM CARD PIN ASSIGNMENTS

Pin #	Function (Back Side)	Pin #	Function (Component Side)
1	Channel 2 Green	A	Channel 1 Green
2	Channel 3 Green	B	Channel 2 Green
3	Channel 4 Green	C	Channel 3 Green
4	Channel 5 Green	D	Channel 4 Green
5	Channel 6 Green	E	Channel 5 Green
6	Channel 7 Green	F	Channel 6 Green
7	Channel 8 Green	H	Channel 7 Green
8	Channel 9 Green	J	Channel 8 Green
9	Channel 10 Green	K	Channel 9 Green
10	Channel 11 Green	L	Channel 10 Green
11	Channel 12 Green	M	Channel 11 Green
12	Channel 13 Green	N	Channel 12 Green
13	Channel 14 Green	P	Channel 13 Green
14	Channel 15 Green	R	Channel 14 Green
15	Channel 16 Green	S	Channel 15 Green
16	N/C	T	PC AJAR
17	Channel 1 Yellow	U	Channel 9 Yellow
18	Channel 2 Yellow	V	Channel 10 Yellow
19	Channel 3 Yellow	W	Channel 11 Yellow
20	Channel 4 Yellow	X	Channel 12 Yellow
21	Channel 5 Yellow	Y	Channel 13 Yellow
22	Channel 6 Yellow	Z	Channel 14 Yellow
23	Channel 7 Yellow	AA	Channel 15 Yellow
24	Channel 8 Yellow	BB	Channel 16 Yellow
--		--	
25	Channel 17 Green	CC	Channel 17 Yellow
26	Channel 18 Green	DD	Channel 18 Yellow
27	Channel 16 Green	EE	PC AJAR (Program Card)
28	Yellow Inhibit Common	FF	Channel 17 Green

-- Slotted for keying between Pins 24/BB and 25/CC

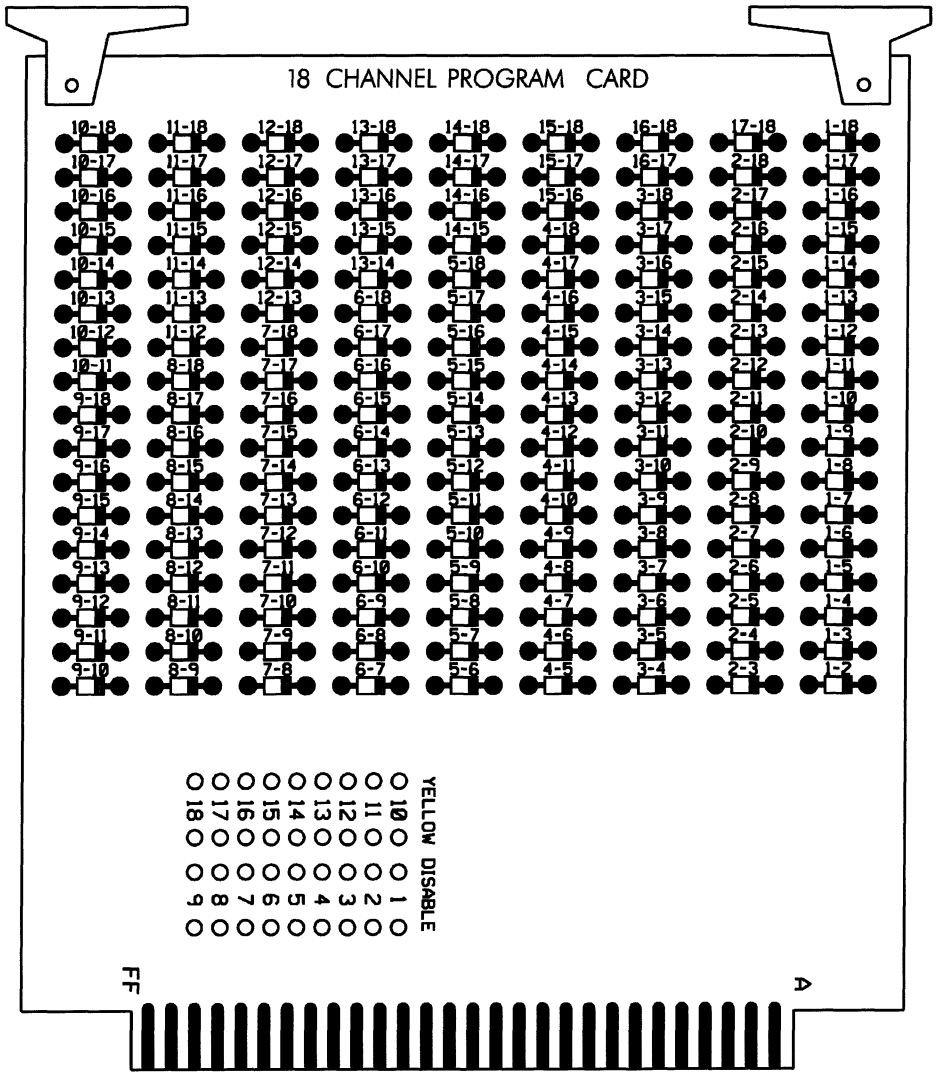

23.6. MATERIALS – TYPE 170 DETECTOR SENSOR UNITS

Furnish detector sensor units (i.e., detector cards) that comply with Chapter 5, Section 1, "General Requirements" and Chapter 5, Section 2, "Model 222 & 224 Loop Detector Sensor Units," of the CALTRANS *Transportation Electrical Equipment Specifications*, dated March 12, 2009 with Erratum 1.

23.7. CONSTRUCTION METHODS

(A) General

Identify and label all field wiring (e.g., signal conductors, pushbutton wires, loop detector lead-ins, etc.) in existing controller cabinets prior to disconnecting any field wiring.

Remove existing controllers and cabinets where required. Remove the maintenance diary from the existing cabinet and place it in the new cabinet. Take existing equipment out of service only at the time directed. Provide a law enforcement officer(s) to direct traffic through the

signalized intersection while the signal is inoperable. Complete installation the new controller and cabinet and **restore signal operations within three hours** of taking the existing controller and cabinet out of service.

Turn to the next clean page (i.e., next page with no entries) in the diary and make an entry on the new page upon installation of the new controller and cabinet to document the date and time of installation. Maintain the maintenance diary and update it upon each subsequent visit to the cabinet until final acceptance of the project.

If the existing maintenance diary is found to be in poor condition or nearly full, notify the Engineer to have the City provide a new diary. Upon receipt of the new maintenance diary, place the new diary inside the cabinet and give the old diary to the Engineer for return to the City for archiving. Prior to removing the existing maintenance diary, make and entry in the old diary to document the date and time it was removed from the cabinet and turned over to the Engineer. Make the initial entry in the new maintenance diary to document the date and time of installation of the new cabinet and controller and the date the new maintenance diary was placed inside the cabinet. Maintain the maintenance diary and update it upon each subsequent visit to the cabinet until final acceptance of the project.

Locate new cabinets so as not to obstruct sight distance of vehicles turning on red.

Install controllers, cabinets, detector sensor units, and hardware that provide required phasing, color sequence, flash sequence, interconnection, railroad clearance and preemption, and emergency vehicle clearance and preemption.

For all Department-owned signals, stencil the signal inventory number on both the front and rear doors of the cabinet. Use 3-inch black characters. Do not stencil letters or numbers on the cabinets for City-owned signals.

Provide external electrical service disconnect, mounted independent of the cabinet, at all new cabinet locations and at existing cabinet locations where specified in the Plans.

Do not program controller for late night flashing operation at railroad preemption installations. For all other installations, do not program controller for late night flashing operation unless otherwise directed. Ensure all signal heads for same approach flash concurrently during flashing operation.

Provide serial number and cabinet model number for each new controller and controller cabinet installed.

When installing a pole mounted cabinet in a new location or in an existing location where new risers and cabling are replacing existing risers and cabling, mount the cabinet so that the height to cabinet middle is 4 feet from the ground below. Avoid mounting cabinets so that they overhang and encroach upon an adjacent sidewalk or pedestrian path. Where a minor overhang of the sidewalk or pedestrian path cannot reasonably be avoided, ensure that that a minimum of 4 feet of clear sidewalk width will remain once the cabinet is installed. Do not mount cabinets where one of its doors opens into a street, driveway or other area subject to vehicular traffic or where an existing physical feature such as a pole, sign post, down guy, shrub or tree prevents its doors from being opened at least 90 degrees.

When replacing an existing pole-mounted cabinet with a new pole-mounted cabinet and the existing risers and cabling are being retained, mount the new cabinet so that the cabinet bottom

rests upon the existing riser connections even though this causes the cabinet middle to be higher or lower than 4 feet above ground, unless the Plans indicate or the Engineer directs otherwise. Except where the "Summary of Work by Intersection" sheet calls for use of the "Reconfigured Pole Mounted 336S Cabinet Detail" to mount the 2070L controller lower in the rack inside such cabinets, comply with the cabinet layout shown in *Roadway Standard Drawing* No. 1751.01, Sheet 2 of 2.

Do not construct new conduit entry holes into existing metal poles to attain the 4-foot mounting height.

Program and activate controllers with proposed phasing and timing.

Install all updates to the local controller software and OS9 operating system software during the life of the project up through final acceptance of the project, including existing 2070L controllers that will be retained and incorporated into the upgraded and expanded Winston-Salem Signal System.

Once all new cables have been installed in and existing cables, where applicable, have been removed from base-mounted cabinets, seal all conduits entering the cabinet base as follows:

- Seal spare conduits with approved conduit plugs.
- Seal conduits containing fiber-optic communications cable with duct and conduit sealer.
- Seal conduits containing signal cable, and loop lead-in wire with duct and conduit sealer.

Seal existing conduits as well as new conduits, regardless of whether cables are being removed from or installed in them. Comply with the requirements for conduit plugs and duct and conduit sealer in the "Underground Conduit" section of these Project Special Provisions.

(B) Electrical Service and Grounding

Where electrical services do not include an external electrical service disconnect, modify or replace the electrical service as shown in the Plans to add an electrical service disconnect and a new grounding electrode system.

Provide a grounding electrode system at all new electrical services.

Comply with all requirements of the "Electrical Service" section of these Project Special Provisions.

(C) Edge Switch

Install and program the Ethernet edge switches in accordance with the "Communications Hardware" section of these Project Special Provisions.

(D) Workshop

Provide enclosed workshop to store, set up and test new controllers and cabinets before installation. Locate workshop within the City Limits of Winston-Salem. Ensure workshop provides protection from weather and sufficient space to house two test observers, all necessary test equipment and material, controllers and cabinets. Provide the workshop until final acceptance of the project.

Configure and test each controller and cabinet to match the proposed signal design. Ensure all equipment furnished and installed or modified by the Contractor at each location operates in full compliance with the Plans and Project Special Provisions. Test each controller and cabinet for proper color sequence, flashing operation, phase timings, preemption, coordination, and conflict monitor programming. Ensure that simultaneous conflicting phase outputs will cause the cabinet to revert to flashing operation. For intersections with any type of preemption, submit a completed Preemption Test Procedure Checklist. The checklist is located on the Department's Website.

Test the cabinet and controller for eight hours minimum. Following this test, and before installation, the Engineer will inspect the equipment in operation. The Engineer may require other tests to ensure proper operation. These tests shall be at no additional cost to the Department.

(E) GPS Coordinates

Provide real world coordinates for all junction boxes and equipment cabinets installed or utilized under this project. Provide the coordinates in feet units using the North Carolina State Plane coordinate system (1983 North American Datum also known as NAD '83). Furnish coordinates that do not deviate more than 1.7 feet in the horizontal plane and 3.3 feet in the vertical plane. Global positioning system (GPS) equipment able to obtain the coordinate data within these tolerances may be used. Submit cut sheets on the GPS unit proposed to collect the data for approval by the Engineer.

Provide both a digital copy and hard copy of all information regarding the location (including to but not limited to manufacturer, model number, City system ID number and NCDOT inventory number) in the Microsoft Excel® spreadsheet using the format shown in example below.

City System ID#	NCDOT Inv #	Name	Location	Latitude	Longitude	Manufacturer	Model #
	05-0134	Equipment Cabinet	US 70 at Raynor Rd./ Auburn-Knightdale	-78.5500	35.6873	McCain	Type-332
		Junction Box # 1 (Phase 2 Side)	US 70 at Raynor Rd./ Auburn-Knightdale	-78.5516	35.6879	Quazite	PG1118BA12(Box) PG118HA00(Cover)
		Junction Box # 2 (Phase 2 Side)	US 70 at Raynor Rd./ Auburn-Knightdale	-78.5506	35.6876	Quazite	PG1118BA12(Box) PG118HA00(Cover)
		Junction Box # 3 (Near Cabinet)	US 70 at Raynor Rd./ Auburn-Knightdale	-78.5501	35.6873	Quazite	PG1118BA12(Box) PG118HA00(Cover)
		Junction Box # 4 (Phase 6 Side)	US 70 at Raynor Rd./ Auburn-Knightdale	-78.5486	35.6873	Quazite	PG1118BA12(Box) PG118HA00(Cover)
		Junction Box # 5 (Phase 6 Side)	US 70 at Raynor Rd./ Auburn-Knightdale	-78.5493	35.6876	Quazite	PG1118BA12(Box) PG118HA00(Cover)
		Junction Box # 6 (Phase 4 Side)	US 70 at Raynor Rd./ Auburn-Knightdale	-78.5503	35.6879	Quazite	PG1118BA12(Box) PG118HA00(Cover)

23.8. MEASUREMENT AND PAYMENT

Controller with cabinet (____) will be measured and paid as the actual number of each type of controllers with cabinets of each type and mounting method that are furnished, installed, and accepted, subject to the following conditions: 90% of the payment will be made upon

acceptance of the unit; 10% of the payment will be made following final acceptance of the integrated system (including completion of the 60-day observation period).

No measurement will be made of conflict monitors, grounding systems, modems and workshop as these will be considered incidental to furnishing and installing controllers with cabinets.

New and modified electrical services and electrical service grounding systems will be measured and paid for in accordance with the "Electrical Service" section of these Project Special Provisions.

Detector card (Model 222) will be measured and paid as the actual number of Model 222 detector cards furnished, installed, and accepted.

Auxiliary output file will be measured and paid as the actual number of auxiliary output files furnished, installed, and accepted.

Ethernet edge switches will be measured and paid for in accordance with the "Communications Hardware" section of these Project Special Provisions.

No measurement or payment will be made of any hardware and fasteners required for mounting controller cabinets to poles and foundations as these items will be considered incidental to installing controllers with cabinets.

No measurement or payment will be made of conduit nipples, fittings, signal cable, service wire, locknuts and bushings or other materials necessary to mount a new pole-mounted cabinet in the same location as an existing pole-mounted cabinet that is being replaced.

No measurement or payment will be made of sealing conduits with duct plugs, mechanical sealing devices and duct and conduit sealer as such work will be considered incidental to furnishing and installing controllers with cabinets.

No measurement will be made of collecting and recording GPS coordinates for controller cabinets and junction boxes and compiling this data in the prescribed Microsoft Excel® spreadsheet as such work will be considered incidental installing controllers with cabinets and installing controllers.

The special anti-graffiti, black power-coated finish for controller cabinet where called for in the Plans will be measured and paid for in accordance with the "Special Coating for Cabinets" section of these Project Special Provisions.

Payment will be made under:

Pay Item	Pay Unit
Controller with Cabinet (2070L, 336A, Pole Mounted)	Each
Controller with Cabinet (2070L, 336S, Pole Mounted)	Each
Controller with Cabinet (2070L, 332, Base Mounted)	Each
Controller with Cabinet (2070L, 336S, Base Mounted)	Each
Detector Card (Model 222)	Each
Auxiliary Output File	Each

24. CABINET BASE ADAPTER AND BASE EXTENDER

24.1. DESCRIPTION

Furnish and install cabinet base adapters and base extenders with all necessary hardware for 170E-family cabinets.

24.2. MATERIALS

Fabricate base adapters and extenders from the same materials and with the same finish as cabinet housing. Fabricate base adapter and extender in the same manner as controller cabinets, meeting all applicable specifications called for in Section 7.5 of CALTRANS TEES (11/19/99). Provide base adapters and extenders that have a minimum height of 12". Provide cabinet base adapters that comply with the details shown in the Plans.

For certain locations in downtown Winston-Salem as designated in the Plans, provide base extenders and base adapters with a special black powder-coated finish and anti-graffiti coating in accordance with the "Special Coating for Cabinets" section of these Project Special Provisions. The locations include:

- Fourth Street at Poplar Street
- Fourth Street at Spruce Street
- Fourth Street at Marshall Street
- Fourth Street at Cherry Street
- Fourth Street at Trade Street
- Fourth Street at Liberty Street
- Fourth Street at Main Street
- Fourth Street at Church Street
- Fourth Street at Linden Street
- Fifth Street at Linden Street
- Martin Luther King Jr. Drive at US 52 SB Ramp/Linden Avenue
- Martin Luther King Jr. Drive at US 52 NB Ramp
- Martin Luther King Jr. Drive at Patterson Avenue

24.3. CONSTRUCTION METHODS

(A) General

Unless otherwise shown in the Plans, install a cabinet base extender at locations requiring a new Model 332 cabinet on an existing/modified or new foundation and where an existing base-mounted Model 332 cabinet that is being retained does not have a cabinet base extender.

Install a cabinet base adapter at locations requiring a new Model 332 cabinet to be installed on an existing/modified foundation where the opening in the bottom of a cabinet base extender will not fit over the existing conduit spread. Unless otherwise directed by the Engineer, install cabinet base adapters only at locations indicated in the Plans. Do not install cabinet base adapters where the plans call for use of a cabinet base extender without the prior approval of the Engineer.

Where the plans require a Model 336S cabinet to be base mounted, install adapter or extender, as required.

Use permanent, flexible waterproof sealing material to:

- Seal between cabinet base and cabinet base adapter/extender, and
- Seal space between cabinet base adapter/extender and foundation.

24.4. MEASUREMENT AND PAYMENT

Cabinet base extender will be measured and paid as the actual number of cabinet base extenders furnished, installed, and accepted.

Cabinet base adapter will be measured and paid as actual number of cabinet base adapters furnished, installed, and accepted.

The special anti-graffiti, black power-coated finish for cabinet base extenders and bases adapters where called for in the Plans will be measured and paid for in accordance with the "Special Coating for Cabinets" section of these Project Special Provisions.

Payment will be made under:

Pay Item	Pay Unit
Cabinet Base Extender	Each
Cabinet Base Adapter	Each

25. SPECIAL COATING FOR CABINETS

25.1. DESCRIPTION

Furnish and apply a special black powder-coated finish with anti-graffiti coating to controller cabinets, CCTV cabinets and cabinet base extenders and adapters for locations in downtown Winston-Salem as shown in the Plans.

25.2. MATERIALS

Provide a thermosetting powder-coated finish that is black in color with an additional anti-graffiti top coating. Provide a coating that is UV-fade resistant and scratch resistant. Match the black color used for the existing metal traffic signal poles with mast arms, existing controller cabinets and existing signal pedestals already installed in downtown Winston-Salem. (Note: At the intersection of Rams Drive and Salem Avenue, new black-coated metal poles are due to be installed by others to replace existing wood poles under a separate project.) Contact the City of Winston-Salem Transportation Department to confirm the color used for these existing poles and cabinets in downtown Winston-Salem.

Prior to applying the special coating to the equipment, submit sample chips, 2 x 4 inches, of the black powder coating to the Engineer for approval along with catalog cuts/product data sheets from the manufacturer for the coatings proposed. Do not apply the coating to any equipment without the prior approval of the Engineer.

25.3. CONSTRUCTION METHODS

Apply the special coating to new equipment only and in accordance with the instructions of the coating manufacturer. Properly prepare the aluminum surfaces that will receive the special coating in accordance with coating manufacturer's specifications. Factory-apply the coating indoors in a temperature and humidity-controlled controlled environment. Electrostatically apply the dry powder finish and oven-cure the finish following application of the powder. Verify through appropriate testing that the finished coating achieves a minimum dry film thickness of 2.4 mils.

Field application of the coating is prohibited. Apply the coating only to the exterior of the cabinet, base extender or base adapter; do not apply the coating to interior of the equipment.

25.4. MEASUREMENT AND PAYMENT

Special coating (332 cabinet) will be measured and paid as the actual number of Model 332 cabinets to which a special coating is a applied and accepted.

Special coating (336 cabinet) will be measured and paid as the actual number of Model 336 cabinets to which a special coating is a applied and accepted. Measurement and payment will be without regard to cabinet mounting (i.e., pole or base) and Model 336 cabinet subtype (i.e., 336A vs. 336S).

Special coating (base adapter/extender) will be measured and paid as the actual number of cabinet base adapters and cabinet base extenders to which a special coating is a applied and accepted.

Payment will be made under:

Pay Item	Pay Unit
Special Coating (332 Cabinet)	Each
Special Coating (336 Cabinet)	Each
Special Coating (Base Extender/Adapter)	Each

26. ELECTRICAL SERVICE

26.1. DESCRIPTION

At locations called out in the Plans, install a new electrical service and modify an existing electrical service, including an external disconnect and meter base.

Comply with the National Electrical Code (NEC), the National Electrical Safety Code (NESC), the *Standard Specifications*, these Project Special Provisions, and all local ordinances. Coordinate all work involving electrical service with the appropriate utility company and the Engineer.

26.2. MATERIALS

(A) Electrical Service

Provide material, equipment and hardware under this section that is pre-approved on the 2012 ITS and Signals QPL by the date of equipment installation.

Provide, modify and/or upgrade all materials necessary to form a complete electrical service assembly as shown in the Plans. Furnish new external electrical service disconnects, meter bases, and required grounding. Replace electrical service feeder conductors and conduits between the disconnects and the controller cabinets as required.

Provide external electrical service disconnects at all new and existing cabinet locations unless otherwise specified in the Plans. Where electrical services do not include an external electrical service disconnect, modify service to include electrical service disconnect and a new grounding electrode system.

Provide all electrical service disconnects with a space/expansion slots, covered by a knockout or removable blank cover, designed to allow the future installation of at least one additional circuit breaker.

Provide inverse time circuit breaker with at least 10,000 RMS symmetrical amperes short circuit current rating in a lockable NEMA 3R enclosure.

Furnish 3-wire stranded #8 AWG copper service conductors with THWN rating for supplying power to the meter base/disconnects where only one device is being connected (1 signal, 1 CCTV, or 1 communications hub cabinet). Furnish 3-wire stranded #3 AWG copper service conductors with THWN rating for supplying power to the meter base/disconnect where multiple devices are sharing the service. Provide conductors with black, red, and white insulation that are intended for power circuits at 600 V or less and comply with the following:

- Listed as meeting UL Standard UL-83
- Meets ASTM B-3 and B-8 or B-787 standards.

Furnish 3-wire stranded copper feeder conductors with THWN rating for supplying power to field equipment cabinets. Provide conductors with black, white, and green insulation that are intended for power circuits at 600 V or less and comply with the following:

- Listed as meeting UL Standard UL-83
- Meets ASTM B-3 and B-8 or B-787 standards.

As indicated below, provide the following:

Traffic Signal Cabinet:
- 1 single-pole 50A breaker
- 1 spare slot/space (minimum)
- 3-wire stranded #8 AWG copper feeder conductors with THWN rating

CCTV Camera Cabinet:
- 1 single-pole 15A breaker
- 1 spare slot/space (minimum)
- 3-wire stranded #12 AWG copper feeder conductors with THWN rating

Traffic Signal Cabinet and CCTV Camera Cabinet:
- 1 single-pole 50A breaker (Signal)
- 1 single-pole 15A breaker (CCTV)
- 1 spare slot/space (minimum)
- 3-wire stranded #8 AWG copper feeder conductors with THWN rating (Signal)
- 3-wire stranded #12 AWG copper feeder conductors with THWN rating (CCTV)

Traffic Signal Cabinet and Hub Cabinet
- 2 single-pole 50A breakers
- 1 spare slot/space (minimum)
- 3-wire stranded #8 AWG copper feeder conductors with THWN rating (Signal)
- 3-wire stranded #8 AWG copper feeder conductors with THWN rating (Hub)

Furnish 1" rigid galvanized conduit between disconnect and the equipment cabinets as required. For underground runs greater than 10 feet in length, the Contractor may transition from 1" rigid galvanized conduit to 1" PVC conduit for the remainder of the underground run beyond the initial 10 feet. Furnish Schedule 40 PVC female adapters to connect the PVC conduit to the threaded end of the rigid galvanized conduit. The interior surface of one end of the PVC female adapter shall be compatibly threaded to connect it to the threaded end of the rigid metallic riser without the aid of additional fittings, hardware or adhesives. The opposite end of the adapter shall be non-threaded to permit a slip fit, glued connection to the underground PVC conduit.

Ensure service disconnects are listed as meeting UL Standard UL-489 and marked as being suitable for use as service equipment. Fabricate enclosure from galvanized steel. Provide ground bus and neutral bus with a minimum of four terminals with minimum wire capacity range of number 8 through number 2/0 AWG.

Furnish NEMA Type 3R meter base rated 100A minimum for overhead service and 200A minimum for underground service and that meets the requirements of the local utility. Provide meter base with ampere rating of meter sockets based on sockets being wired with insulated wire rated at least 167°. With each meter base, provide a blank meter socket cover made from UV stabilized polycarbonate or metal and that is either clear or gray in color to prevent access to interior of meter base until meter is installed by the local power company.

Furnish 4 terminal, 600 volt, single phase, 3 wire meter base that complies with the following:

- Line, Load, and Neutral Terminals accept #8 to 2/0 AWG copper/aluminum wire;
- Ringed or Ringless Type, with or without bypass;
- Made of galvanized steel;
- Listed as meeting UL Standard UL-414; and
- Overhead or underground service entrance as specified.

Provide electrical service disconnects, meter bases, combination panel enclosures and pedestals with electrostatically applied dry powder paint finish with minimum thickness of 2.4 mils and that is light gray in color, except for the downtown locations noted below. All exterior surfaces must be powder coated steel. When the Plans call for new electrical service at the following locations in downtown Winston-Salem, provide separate meter base and disconnect enclosures that are black in color for consistency with the black finish on the existing metal signal poles at these intersections:

First Street at Cherry Street	Fourth Street at Cherry Street*
First Street at Liberty Street	Fourth Street at Trade Street*
First Street at Main Street	Fourth Street at Liberty Street*
Second Street at Spruce Street	Fourth Street at Main Street*
Second Street at Marshall Street	Fourth Street at Church Street*
Second Street at Cherry Street	Fifth Street at Spring Street
Second Street at Liberty Street	Fifth Street at Poplar Street
Second Street at Main Street	Fifth Street at Spruce Street
Second Street at Church Street	Fifth Street at Marshall Street
Third Street at Cherry Street	Fifth Street at Cherry Street
Third Street at Liberty Street	Fifth Street at Trade Street
Third Street at Main Street	Fifth Street at Liberty Street
Third Street at Church Street	Fifth Street at Main Street
Third Street at Chestnut Street	Fifth Street at Church Street
Fourth Street at Spring Street	Sixth Street at Marshall Street
Fourth Street at Poplar Street*	Sixth Street at Cherry Street
Fourth Street at Spruce Street*	Sixth Street at Liberty Street
Fourth Street at Marshall Street*	Main Street at Business 40 Off-Ramp

** Denotes intersections where controller cabinet also has a black finish.*

For the locations above, provide meter bases and disconnects with either a manufacturer-applied black powder coated finish or a Contractor-applied black painted finish. For Contractor-applied paint finish, use a durable, exterior paint system that is compatible with and designed to adhere permanently to the manufacturer's stock finish on the enclosures. Provide paint that is black in color and dries to a satin finish. Submit the manufacturer's literature and application instructions for the proposed paint system to the Engineer for approval prior to application. Prepare the surface to receive paint in accordance with the paint manufacturer's instructions, including but not limited to chemical cleaning of the surface, application of primer, light sanding, etc. Apply the coating to all exterior surfaces of the enclosure indoors in a controlled

environment in accordance with the paint manufacturer's instructions. Exterior surfaces include the portions of enclosure sides (i.e., flanges, lips) that insert under the edge of and are concealed by the enclosure's door/cover but are visible when the door is open or cover is removed. Do not paint disconnects and meter bases in the field or after installation. Only touch-up paint may be field-applied, as necessary and as approved by the Engineer, following installation.

Furnish 1" watertight hub (i.e., meter socket hub) for threaded rigid galvanized conduit with meter base.

If meter base and electrical service disconnect are supplied in the same enclosure (i.e., combination panel), ensure assembly is marked as being suitable for use as service equipment. Ensure combination meter and disconnect mounted in a pedestal for underground service is listed as meeting UL Standard UL-231. Otherwise, ensure combination meter and disconnect is listed as meeting UL Standard UL-67.

Provide a combination panel with pedestal extension as shown in the Plans for all new ground-mounted electrical service assemblies for underground electrical service. Do not provide wood posts, steel U-channel posts, square tube sign posts, metal framing channels or any method other than an underground service pedestal to mount meter bases and disconnects for new underground electrical service. Provide combination panels with pedestals of sufficient length to attain a minimum embedment depth of 24 inches below grade when installed per the manufacturer's instructions.

Provide a grounding electrode system at all new electrical services. Provide underground marker tape above ground grounding electrodes and buried ground wire. Provide all grounding electrodes and ground wire necessary to ensure that grounding system, whether existing or new, complies with all grounding requirements of these Project Special Provisions.

Where the Plans call for modifying an existing electrical service for a traffic signal, provide a single-pole 50A inverse time circuit breaker with at least 10,000 RMS symmetrical amperes short circuit current rating to replace an existing circuit breaker in an existing disconnect.

(B) Equipment Cabinet Disconnect

Furnish new equipment cabinet disconnect with circuit breaker(s) at the locations shown in the Plans. Provide equipment cabinet disconnects that have a minimum of four (4) spaces and a minimum of 10,000 RMS symmetrical amperes short circuit current rating in a lockable NEMA 3R enclosure. Ensure equipment cabinet disconnects are listed as meeting UL Standard UL-489 and marked as being suitable for use as service disconnects. Fabricate enclosure from galvanized steel and electrostatically apply dry powder paint finish, light gray in color, to yield a minimum thickness of 2.4 mils. All exterior surfaces must be powder coated steel. Provide ground bus and neutral bus with a minimum of four terminals and a minimum wire capacity range of number 8 through number 2 AWG.

(C) Grounding Electrodes (Ground Rods)

Furnish 5/8"x10' copper clad steel grounding electrodes (ground rods), #4 AWG solid bare copper conductors, and exothermic welding kits for grounding system installations. Comply with the NEC, the *Standard Specifications*, these Project Special Provisions and the Plans.

26.3. CONSTRUCTION METHODS

(A) General

All work involving electrical service shall be coordinated with the appropriate electric utility company. Coordinate with the utility company to ascertain the feasibility of installing electrical service at each location before performing any work. Obtain all required local permits before beginning work.

Run feeder conductors separately from all other conductors in a 1-inch rigid galvanized conduit. Do not allow feeder conductors to share conduits with any other conductors or cables. Do not route unfused electrical feeder conductors inside of metal poles. Permanently label conductors at all access points using nylon tags labeled with permanent ink. Ensure each conductor has a unique identifier. Label conductors immediately upon installation. Use component name and labeling scheme approved by the Engineer.

Use rigid galvanized conduit for all underground conduit runs 10 feet or less in length. For underground runs greater than 10 feet in length, the Contractor may transition from 1" rigid galvanized conduit to 1" PVC conduit for the remainder of the run beyond the initial 10 feet using an approved PVC female adapter. Apply thread seal tape to the threads of the rigid galvanized conduit before screwing the PVC adapter onto the threaded male end of the conduit. Connect the threaded female end of the PVC adapter to the threaded end of the rigid galvanized conduit, then connect the not threaded end of the adapter to the PVC conduit using a slip fit, glued connection.

Direct bury pedestals that support combination panel at a minimum embedment depth of 24 inches below grade.

Upon completion of electrical service installation and backfilling of all excavations, restore the disturbed ground to its original condition as determined and approved by the Engineer. For paved areas, replace removed or damaged pavement with in kind materials, matching the elevation, color, texture/finish and general appearance of the surrounding pavement. Refer to Section 1 of these Project Special Provisions for additional requirements concerning sidewalks and curbs in historic districts. For unpaved areas, backfill excavations with removed material, tamp the backfilled material and rake smooth the top 1½ inches. Finish unpaved areas flush with surrounding natural ground and to match the original contour of the ground. Seed with same type of grass as surrounding area and mulch the newly seeded area. If unpaved area was not grassed, replace the original ground cover in kind as directed by the Engineer.

Complete repairs to and restoration of all ground (paved and unpaved) disturbed for construction within five consecutive calendar days following initial removal. If the Contractor fails to repair and restore the ground in accordance with these Project Special Provisions within the time frame specified, the Department reserves the right to make the necessary repairs, and all expenses incurred by the Department in making the repairs and restoring the ground will be deducted from payment due the Contractor, plus **$500 liquidated damages per occasion, per day, or any portion thereof**, until corrected.

Install meter socket covers on new meter bases to block access to the wiring inside until the meter is attached to the meter base by the power company. Use only approved meter socket covers that comply with these Project Special Provisions; do not use cardboard, paper, plywood,

sheet plastic, tape, etc. to cover the meter socket opening. Do not leave a meter socket uncovered.

Provide all necessary stainless steel banding hardware and clamps for securely attaching service disconnects, meter bases, combination panels and service conduits and risers to metal poles. Where equipment is being attached to metal poles with a black coating, provide stainless steel bands, clamps and hardware that have a factory-applied, baked-on powder coated black satin finish that is UV fade-resistant and chip resistant. Field-application of coating and field-painting of bands, clamps and mounting hardware is prohibited. Submit catalog cuts/manufacturer's literature for banding hardware and clamps, both coated and uncoated, to the Engineer for approval.

(B) New Electrical Service for Traffic Signal

At locations identified in the Plans, install new electrical service for a traffic signal controller cabinet. Comply with *Roadway Standard Drawing* Nos. 1700.01 and 1700.02 as well as the special details entitled "Signal Cabinet Detail, Pole-Mounted" and "Ground Mounted Electrical Service Detail" provided in the Plans.

Install a new electrical service comprised of an external service disconnect as well as a meter base with meter socket cover, even if the new service is replacing an existing non-metered electrical service. After installation of the meter base with meter socket cover, the local power company will remove the meter socket cover and transfer the existing meter or install a new meter and make any necessary connections to the power lines.

For locations that have existing PVC service risers, replace the existing electrical service with a new electrical service that has a rigid galvanized riser, as described above.

At intersections in the CBD that have metal poles with mast arms, the existing electrical service is routed underground into the existing metal signal pole and then out through a LB condulet to an existing electrical service mounted on the face of the pole. While some of these locations have external disconnects, others have only a meter. At such "meter-only" locations, install a new electrical service where called for in the Plans as follows:

1. Coordinate the removal of the existing meter base and installation of the replacement meter base and new disconnect with the local power company to ensure that electrical service to the traffic signal controller can be restored immediately upon completion of the work.
2. Use law enforcement to direct traffic through the intersection while power to the controller is temporarily interrupted.
3. In order to minimize the signal downtime, do not perform any other work at the intersection (e.g., cabinet change-out, wireless communications work, removal of existing communication cable, etc.) while performing the electrical service work.
4. Remove the existing meter base while retaining the existing service wires coming up and out of the signal pole and the LB condulet that they pass through.
5. Using stainless steel bands that are black in color, install a new meter base (black in color) on the metal pole over the existing service condulet, attach the condulet to the appropriate knock-out in the bottom of the meter base enclosure, then have the local power company route the existing service conductors to the meter socket. Do not

construct any new holes or enlarge existing holes in the metal pole to route electrical service conductors.

6. Using stainless steel bands that are black in color, install a new service disconnect (black in color) on the metal pole directly above meter base and connect the disconnect to the meter base using a 1-1/4" rigid galvanized watertight meter socket hub.

7. Install a new 1" rigid galvanized conduit between the meter base and the bottom of the adjacent controller cabinet. Attach the conduit to the appropriate knockout in the side of the meter base adjacent to the controller cabinet and near the bottom of the enclosure. Use a rigid galvanized LB to attach the conduit to the bottom of the controller cabinet. Furnish and install new feeder conductors between meter socket and the breaker inside the disconnect, then from breaker back down through the meter base and 1" conduit to the controller cabinet.

   At locations where the conduit and LB are being attached to a cabinet designated to have a black finish, paint the conduit and LB black for consistency with the color of the cabinet and pole. Refer to the table in the "Electric Service" subsection under "Materials" above for intersections with black controller cabinets. Comply with the requirements for painting rigid galvanized risers found in the "Riser Assemblies" section of these Project Special Provisions when applying paint to the rigid galvanized LBs and conduit, except conduit and LB may be field painted.

8. Install a meter socket cover if the power company is not ready to install the meter.

9. Restore electric power to the traffic signal controller and return the signal to normal operations.

(C) New Electrical Service for CCTV

At locations identified in the Plans, install new electrical service for a CCTV cabinet in accordance with the details shown in the Plans. Install a new electrical service comprised of an external service disconnect and a meter base with meter socket cover housed in a combination panel. Mount the combination panel on the CCTV pole. After installation of the meter base with meter socket cover, the local power company will remove the socket cover and transfer the existing meter or install a new meter and make any necessary connections to the power lines.

Unless the Plans indicate otherwise, have the power company route the service drop underground to the combination panel, even where source power lines are overhead.

(D) New Shared Electrical Service for Traffic Signal and CCTV/Hub Cabinet

For locations where a single new electrical service is being provided to both a traffic signal controller cabinet and a communications hub cabinet or to both a traffic signal controller cabinet and a CCTV cabinet (i.e., two separate circuits from single electrical service), install the new electrical service with two circuit breakers in the disconnect adjacent to the signal controller cabinet in accordance with the "New Electrical Service for Traffic Signal" subsection above. Install new 1" rigid galvanized underground conduits and short risers between the new disconnect and the cabinets. Route new feeder conductors from the circuit breakers to the cabinets through the new underground rigid conduit and short risers. Permanently label the circuit breakers to identify which circuit serves the signal controller cabinet and which circuit serves the communications hub cabinet or the CCTV cabinet.

(E) Modify Existing Electrical Service for Traffic Signal

Where an existing electrical service for a traffic signal controller cabinet has an existing circuit breaker that is rated less than 50A, replace the existing circuit breaker with a new single-pole 50 A inverse time circuit breaker. Test and upgrade grounding system as required to ensure that grounding system complies with the grounding requirements for electrical service in these Project Special Provisions.

(F) Modify Existing Electrical Service for CCTV/Hub Cabinet

At locations identified in the Plans, modify the existing electrical service for a traffic signal controller cabinet to extend electrical service to a new CCTV cabinet or communications hub cabinet being installed adjacent to the controller cabinet. If the existing disconnect has the capacity to house an additional circuit breaker, install a new breaker for the CCTV cabinet service (15A) or for the hub cabinet service (50A). Where the existing disconnect cannot accommodate and additional breaker, remove the existing disconnect and replace the existing disconnect with a new disconnect that has two circuit breakers plus at least one expansion slot to provide two separate circuits, one for the signal controller cabinet and one for the CCTV cabinet or the communications hub cabinet. Route new feeder conductors to the CCTV cabinet or to the hub cabinet through new 1" rigid galvanized conduit and risers as shown in the Plans. Permanently label the circuit breakers to identify which circuit serves the signal controller cabinet and which circuit serves the CCTV cabinet or hub cabinet.

Test and upgrade grounding system as required to ensure that grounding system complies with the grounding requirements for electrical service in these Project Special Provisions.

(G) Grounding of Electrical Services

In addition to NEC requirements, test grounding electrode resistance for a maximum of 20 ohms. Furnish and install additional ground rods to grounding electrode system as necessary to meet test requirements. Furnish 5/8" x 10' copper clad steel grounding electrode system (ground rods), #4 AWG solid bare copper conductors, and exothermic welding kits for grounding system installations. Comply with NEC, the *Standard Specifications*, these Project Special Provisions and the Plans.

Modify existing electrical services, as necessary, to meet the grounding requirements of the NEC, these Project Special Provisions and the Plans. Remove any ground rods in the cabinet foundation and install a new grounding electrode system. Cut off abandoned ground rods in the cabinet foundation flush with the foundation surface. Where a grounding electrode system is connected to the electrical service in accordance with the NEC, test grounding electrode resistance for a maximum of 20 ohms. Grounding electrode resistance test must be verified or witnessed by the Engineer or the Engineer's designated representative. Furnish and install additional ground rods to grounding electrode system as necessary to meet the requirements of these Project Special Provisions and test requirements.

Follow test equipment's procedures for measuring grounding electrode resistance. When using clamp-type ground resistance meters, readings of less than 1 ohm typically indicate a ground loop. Rework bonding and grounding circuits as necessary to remove ground loop circuits and retest. If a ground loop cannot be identified and removed to allow the proper use of a clamp-type ground resistance meter, use the three-point test method.

Submit a completed Inductive Loop & Grounding Test Form available on the Department's website. The form is located on the Department's website at:

https://connect.ncdot.gov/resources/safety/Pages/ITS-and-Signals.aspx

Install a length of underground marker tape 6 to 12 inches below finished grade directly over grounding electrodes and conductors.

26.4. MEASUREMENT AND PAYMENT

New electrical service will be measured and paid for as the actual number of complete, functional electrical service locations furnished, installed and tested, regardless of type (i.e., traffic signal only; CCTV cabinet only; communications hub cabinet only; shared service for signal and CCTV or hub cabinet).

No measurement will be made of risers with weatherheads for electrical service as they will be considered incidental to furnishing and installing a new electrical service.

No measurement will be made of short risers (i.e., from disconnect to underground conduit and from underground conduit to bottom of cabinet), meter bases, meter socket covers, service disconnects, additional circuit breakers in new service disconnects where required, underground conduit between service risers and disconnects/meters, conduit for feeder conductors between the service disconnect and the equipment cabinet, PVC female adapters, acquisition of service fees, service entrance conductors, feeder conductors, ground wire, black powder coating of disconnect and meter base where required and any remaining hardware and conduit to connect the electrical service to the cabinet as they will be considered incidental to furnishing and installing new electrical service.

No measurement will be made of painting 1" rigid galvanized conduits and conduit bodies (LBs) that connect black electrical service meters and disconnects to black controller cabinets mounted on black metal poles in downtown Winston-Salem as such work will be considered incidental to furnishing and installing a new electrical service.

Modify existing electrical service (traffic signal) will be measured and paid for as the actual number of existing electrical service locations that have been modified by replacing an existing breaker with a new 50A breaker.

Modify existing electrical service (CCTV/Hub) will be measured and paid for as the actual number of existing electrical service locations that have been modified to extend electrical service from an existing service point for traffic signal to a proposed new CCTV cabinet or communications hub cabinet. No measurement will be made of short risers, underground conduit, PVC female adapters and junction boxes from the existing service point to the CCTV cabinet or hub cabinet as such work is considered incidental to modifying the existing electrical service for CCTV/Hub. No measurement will be made of electrical service feeder conductors as such work is considered incidental to modifying an existing electrical service for CCTV/hub.

Equipment cabinet disconnect will be measured and paid as the actual number of complete and functional equipment cabinet disconnects furnished, installed and accepted. Breakers, exposed vertical conduit runs to the cabinet, feeder conductors, ground wire and any remaining hardware, conduit and PVC female adapters to connect the equipment cabinet disconnect to the cabinet will be considered incidental to furnishing and installing the equipment cabinet disconnect.

5/8" X 10' grounding electrode (ground rod) will be measured and paid as the actual number of 5/8" copper clad steel ground rods furnished, installed and accepted as part of grounding systems for new and modified electrical services and equipment cabinet disconnects. No separate payment will be made for #4 AWG solid bare copper grounding conductors or exothermic welding kits as they will be considered incidental to furnishing and installing the ground rod. No measurement and payment for grounding electrodes furnished and installed for purposes other than electrical service grounding systems.

No measurement will be made of restoration of paved roadways/driveways and unpaved ground surfaces with like materials, including but not limited to backfill, graded stone, paved materials, seeding and mulching, as this work will be considered incidental to installation of a new electrical service.

The Department will make no payment for a given new electrical service until all repairs to paved and unpaved surfaces damaged/disturbed during the installation the electrical service have been completed and accepted.

Repair and replacement of existing sidewalk will be measured and paid for in accordance with the "Equipment Cabinet Foundations" section of these Project Special Provisions.

Payment will be made under:

Pay Item	**Pay Unit**
New Electrical Service	Each
Modify Existing Electrical Service (Traffic Signal)	Each
Modify Existing Electrical Service (CCTV/Hub)	Each
Equipment Cabinet Disconnect	Each
5/8" x 10' Grounding Electrode	Each

27. ETHERNET RADIO

27.1. DESCRIPTION

Furnish and install an Ethernet radio system with all necessary hardware and signage in accordance with the Plans and this Project Special Provision to provide a data link between traffic signal controllers. Provide a radio system with a bi-directional, full duplex communications channel between two "line-of-sight" antennas using license free, spread spectrum technology operating in the 902-928 MHz frequency band.

Furnish material and workmanship conforming to the *National Electrical Code* (NEC), the *National Electrical Safety Code* (NESC), Underwriters Laboratories (UL) or a third-party listing agency accredited by the North Carolina Department of Insurance, and all local safety codes in effect on the date of advertisement. Comply with all regulations and codes imposed by the owner of affected utility poles.

27.2. MATERIALS

(A) General

Refer to "Pole Line Hardware" subsection in the "Messenger Cable" section of these Project Special Provisions.

Refer to the following articles of the *Standard Specifications*:

Wire	1091-2
Signs and Hardware	1092-1
Retroreflective Sheeting	1092-2

Refer to *Roadway Standard Drawing* No. 1756.01.

(B) 900 MHz Ethernet Radio Transceivers

Furnish license free 902 – 928 MHz Ethernet radio transceivers with antennas, coaxial cable and mounting hardware, and configuration software. Design radio transceivers to work in "point-to-point", "store and forward repeater", "point-to-multipoint" and "peer to peer" configurations. Provide radios that can operate as repeaters. Ensure the 900 MHz Ethernet radio transceivers meet the following minimum requirements:

- License free (ISM) spread spectrum radio band (902 – 928 MHz),
- Frequency hopping technology (direct sequence spread spectrum technology is not acceptable),
- Bi-directional, full duplex,
- Provide at least 3 Programmable Radio Frequency (RF) output levels ranging from 1mW up to 1 Watt,
- Provide user-selectable radio frequency channels (Min. 50) and hopping patterns (Min. 50) that will allow the user to adjust operating characteristics to avoid interference within the intended 902 – 928 MHz frequency range,
- Ethernet interface capable of operating at 1.1 Mbs with a data rate of 345 Kbps,
- DB9-F connector for RS-232/422/485 serial port,
- Maximum of 8mSec. end-to-end latency
- 16 bit Cyclic Redundancy Check (CRC) error checking with auto re-transmit,

- Built-in store-and-forward (single radio repeater, back-to-back radio set-ups are not allowed to accomplish this function),
- Data encryption 128 bit WEP, 128 bit WPA, 256 Bit AES,
- Receiver sensitivity of –108dBm @ 10^{-6} BER,
- Antenna port: Threaded Connector (Nickel or Silver Plated Brass),
- Front panel LED indicators:
  - Power,
  - Transmit data,
  - Receive data,
  - Data Port Indicators, consisting of at least 3 LED's grouped together representing a Low, Medium or High Signal Strength with regards to the communications link with another targeted radio. Software running on a laptop is not acceptable in meeting this requirement for front panel LED Data Port Indicators.
- Operating temperature of –40 to +165°F at 0 to 95% Humidity.
- Power supply requirements:
  - Wall adapter:
    - Input Voltage (120 VAC UL/CSA) wall cube plug-in module
    - Output Voltage (6 VDC to 24 VDC)
  - Typical current draw of no greater than 400 mA when powered with 12 VDC input, and transmitting 1 Watt of RF output power.
  - Radio Sleep mode with a maximum current draw of <1μA; and
- Shelf mounted design.

Furnish a Radio Frequency Signal Jumper constructed of an RG-58 Coaxial Cable. On one end of the cable, supply a RF Threaded Connector that is compatible with the radio supplied and on the other end supply a Standard N-Type Male Connector to mate with the lightning arrestor. Provide the jumper in 6-foot lengths. Ensure that the cable is pre-assembled by a manufacturing facility. Contractor and Vendor assembled cables are not acceptable.

Furnish an Ethernet data interface cable to be installed between the Ethernet radio and either a traffic signal controller or Ethernet edge switch. Ensure cable is a minimum of 6 feet long. Ensure that the cable is assembled in a manufacturing facility. Contractor and/or Vendor assembled cables are not acceptable.

Ensure that installing the Ethernet radio system with a fully functional traffic signal controller does not require any field device modifications with regards to hardware or software.

(C) Software

Furnish units with a Windows®-based software program that uses a GUI (Graphical User Interface) to provide "remote programming, radio configuration, remote maintenance, diagnostics and spectrum analyzer" features. Ensure the software will operate on all past and current Microsoft® Windows® operating platforms: Windows 98®, Windows 2000®, Windows NT®, Windows XP®, Windows Vista® or Windows® 7. Provide software approved by the Engineer that is designed to function with the approved radio. Provide configuration software that can be upgraded in the future at no additional charge.

Ensure the radio is configurable from a single location (i.e. master radio location) via supplied software (no extra cost). Furnish software supplied with drivers to allow easy set-up

with all industry standard traffic signal controllers, including 2070 controllers containing custom software written specifically for the North Carolina Department of Transportation.

(D) Directional Antenna (Yagi)

Furnish a directional antenna of welded construction that allows for vertical and horizontal polarization. Furnish 8.5 dBd Gain or 13 dBd Gain antenna that meets the following minimum specifications:

Properties of 8.5 dBd Gain Antenna

Property	Requirement
Frequency range	896 – 940 MHz
Nominal gain	8.5 dBd
Front to back ratio	18 dB
Horizontal beamwidth (at half power points)	65 degree
Vertical beamwidth (at half power points)	55 degree
Power rating, UHF frequency	200 Watts
Lightning protection	DC ground
Termination	Coaxial pigtail with a standard N-Type female connector
Impedance	50 ohms
Length	24”
Rated wind velocity	125 mph
Rated wind velocity (with 0.5 inch radial ice)	100 mph
Projected wind surface area (flat plane equivalent)	0.26 sq ft
Number elements	6

Furnish mounting hardware with the antenna that will secure the antenna to a mounting pipe that has a 1.5" Nominal Pipe Size (approximately 2" OD pipe diameter), as recommended by the manufacturer of the antenna and as approved by the Engineer.

Properties of 13 dBd Gain Antenna

Property	Requirement
Frequency range	902 – 928 MHz
Nominal gain	13 dBd
Front to back ratio	20 dB
Horizontal beamwidth (at half power points)	40 degree
Vertical beamwidth (at half power points)	35 degree
Power rating, UHF frequency	200 Watts
Lightning protection	DC Ground
Termination	Coaxial pigtail with a Standard N-Type Female Connector
Impedance	50 ohms
Length	53"
Rated wind velocity	125 mph
Rated wind velocity (with 0.5 inch radial ice)	100 mph
Projected wind surface area (flat plane equivalent)	0.46 sq ft
Number elements	13

Furnish mounting hardware with the antenna that will secure the antenna to a mounting pipe that has a 1.5" Nominal Pipe Size (approximately 2" OD pipe diameter), as recommended by the manufacturer of the antenna and as approved by the Engineer.

(E) Omnidirectional Antenna

Furnish a omnidirectional antenna of solid, single piece construction that meets the following minimum specifications:

Properties of Omnidirectional Antenna

Property	Requirement
Frequency range	900-928 MHz
Nominal gain	Typical gains of 3 or 6 dBd (dependent upon gain needed for application)
Termination	Standard N-Type female connector
Impedance	50 ohms
VSWR	1.5:1
Vertical beam width	33 degrees (3 dBd gain) 17 degrees (6 dBd gain)
Lightning protection	DC ground
Power rating, UHF frequency	100 Watts
Length	25" (3 dBd gain), 65" (6 dBd gain)
Rated wind velocity	125 mph

Furnish mounting hardware with the antenna that will secure the antenna to a mounting pipe that has a 1.5" Nominal Pipe Size (approximately 2" OD pipe diameter), as recommended by the manufacturer of the antenna and as approved by the Engineer.

(F) Antenna Mounting Hardware Kit

Furnish an antenna mounting kit to support the antenna when attached to a metal pole, mast arm or wood pole.

Ensure the Antenna Mounting Hardware Kit includes at least one 96" galvanized steel cable with a stainless steel bolt, nut and lock washer assembly on each end. Ensure the pole base plate accepts a 1-1/2" NPT aluminum pipe, and provides a surface that is at least 6-3/4" long x 4-1/4" to provide contact with the pole. Ensure the pole base plate is designed to allow both ends of the 96" galvanized cables to be secured and tightened to the base plate. Provide a 90 degree elbow with internal threads on both ends to accommodate 1-1/2" NPT aluminum pipes. Provide a 1-1/2" x 18" long aluminum pipe threaded on both ends and a 1-1/2" x 24" aluminum pipe threaded on one end with an end cap.

(G) Coaxial Cable

Furnish 400 Series cable to provide a link between the antenna and the lightning arrestor that meets the following minimum specifications:

Properties of Coaxial Cable

Property	Requirement
Attenuation (dB/100 ft) @ 900 MHz	3.9 dB
Power rating @ 900 MHz	0.58 kW
Center conductor	0.108" diameter Copper Clad Aluminum
Dielectric: Cellular PE	0.285" diameter
Shield	Aluminum Tape – 0.291" diameter Tinned Copper Braid – 0.320" diameter
Jacket	Black UV protected polyethylene
Bend radius	1" with less than 1 ohm impedance change at bend
Impedance	50 ohms
Capacitance per foot	23.9 pF/ft
End connectors	Standard N-Type Male Connectors on both ends

(H) Standard N-Type Male Connector

Furnish standard N-Type male connector(s) of proper sizing to mate with the 400 series coaxial cable and use a crimping method to secure the connector to the coaxial cable. Furnish a connector that meets the following minimum requirements:

1) Center contact: Gold plated beryllium copper (spring loaded, non-solder),
2) Outer contact: Silver plated brass,
3) Body: Silver plated brass,
4) Crimp sleeve: Silver plated copper,
5) Dielectric: Teflon PTFE,

6) Waterproofing sleeve: Adhesive lined polyolefin – heat shrink, and
7) Attachment Size: Crimp Size 0.429" (minimum) hex.
8) Electrical Properties:
   a) Impedance: 50 ohms,
   b) Working voltage: 1000 vrms (max),
   c) Insertion loss: 0.1 x $\sqrt{F_{GHz}}$, and
   d) VSWR: 1.25:1 (max) up to 3GHz.

(I) Coaxial Cable Shield Grounding and Weatherproofing Kits

Furnish a coaxial cable shield grounding kit containing components that will adequately bond and ground the cable shield to the pole ground. Ensure the grounding kit complies with MIL-STD-188-124A for coaxial cable and protects the cable from lightning currents in excess of 200kA. Ensure each kit is supplied, as a minimum, with the following:

- Preformed strap: 24 Gauge copper strap that is a minimum of 1-5/8 inch long and is sized to mate with the 400 series coaxial cable,
- Tensioning hardware: Copper nuts and lock washers,
- Grounding lead cable: #6 AWG, stranded, insulated copper wire

Furnish a weatherproofing kit containing components that will protect the coaxial cable shield grounding system against the ingress of moisture and prevent vibrations from loosening the connections. Ensure the weatherproofing kit is supplied, as a minimum, with the following:

- Butyl mastic tape: 3-3/4 inches wide by 24 inches long (approximately),
- Electrical tape: 2 inches wide by 20 inches long (approximately)

(J) Coaxial Cable Power Divider (Splitter)

Furnish a coaxial cable power divider for repeater radio sites in accordance with the table below. Ensure the power divider accommodates a single primary input RF source and divides/splits the signal (power) equally between 2 output ports.

Properties of Coaxial Cable Power Divider

Property	Requirement
Power Division	2 - Way
Frequency	900 - 1100 MHz
Insertion Loss	0.22 dB
Impedance	50 Ohm
VSWR ref. to 50 Ohm (max)	1.3:1
Max. Input Power	500 Watts
Connectors	Standard N-Type Female
Dimension	2.5"W x 5"L
Weight	1.5 lb (approximately)

(K) Lightning Arrestor

Furnish a lightning arrestor installed in line between each antenna and its designated radio inside the equipment cabinet that complies with the requirements listed in the table below. Furnish a lightning arrestor with multi-strike capability, low strike throughput energy, flange mount and bulkhead mount options and a standard N-Type female connector on both the surge-side and protected-side connectors.

Properties of Lightning Arrestor

Property	Requirement
Filter Type	DC Block (non gas tube design)
Surge	20kA, 800MHz to 2.0GHz ≤ 1.1 : 1 VSWR 18kA, 800MHz to 2.3GHz ≤ 1.1 : 1 VSWR 18kA, 700MHz to 2.7GHz ≤ 1.2 : 1 VSWR
Insertion loss	≤0.1 dB over frequency range
Max power	500 w @ 920MHz (750 W @ at 122° F)
RF power	300 Watts
Let through voltage	≤ ±3 Volts for 3kA @ 8/20 μs Waveform
Throughput energy	≤ 0.5 μJ for 3kA @ 8/20 μs Waveform
Temperature	-40 to 185° F Storage/Operating 122° F
Vibration	1G at 5 Hz up to 100Hz
Unit impedance	50Ω
VSWR	1.1:1
Frequency range	800 MHz to 2200 MHz

(L) Disconnect Switch

Where an antenna is mounted on a joint-use pole, furnish a double pole, single throw snap switch in a weatherproof outlet box with cover, suitable for use in wet locations. Ensure outlet box and cover support a lockout tag device. Ensure outlet box includes one ½-inch hole in back of box. Furnish mounting hardware, sealing gaskets and lockout tag. On NCDOT and City-owned poles, the disconnect switch is not required and may be omitted.

(M) Warning Signs(s) and Decal(s)

Where an antenna is mounted on a joint-use pole, furnish an "RF Warning Sign" and "Decal" in accordance with *Roadway Standard Drawing* No. 1736.01, Sheets 3 and 4 of 5. Furnish stainless steel banding hardware or other attachment method approved by the Engineer to secure the sign to either metal or wood poles. On NCDOT or City-owned poles, the warning signs and decals are not required and may be omitted.

27.3. CONSTRUCTION METHODS

(A) General

Perform a radio path site survey test before installing any equipment. Ensure the test evaluates the Signal Strength (dBm), Fade Margin (dB), Signal-to-Noise Ratio, Data Integrity (poll test), and a complete frequency spectrum scan. Ensure the radio path site survey test is performed using the supplied brand of radio equipment to be deployed. During the initial radio path signal strength test it may be determined that a repeater station may be necessary to

complete the intended link. Provide the test results to the Engineer for review and approval. Submit copies of the test results and colored copies of the frequency spectrum scan along with an electronic copy of this information. The Engineer will approve final locations of antennas and any necessary repeater stations. Install a coaxial cable, a power divider, an antenna splitter cable and additional antenna locations where it is determined that a dual antenna configuration is necessary to accommodate communications in multiple directions.

Install the antennas in accordance with the following table:

Location	Antenna	
	Direction Pointing	Type/Gain
Old Walkertown Road at Motor Road/Carver School Road	Southeast	1- Yagi (13 dB)
Carver School Road at Lansing Drive	Northwest	1- Yagi (13 dB)
Cherry Street at Polo Road	Northeast	1- Yagi (13 dB)
Indiana Avenue at Polo Road	Southwest	1- Yagi (13 dB)
Indiana Avenue at Alspaugh Boulevard	Northwest	1- Yagi (13 dB)

At certain locations it may be necessary to integrate the radio system with a fiber-optic system. Follow the details shown in the fiber-optic splice plans.

Refer to and comply with *Roadway Standard Drawing* No. 1736.01.

(B) Antenna

Install the antenna in such a manner that avoids conflicts with other utilities (separation distances in accordance with the guidelines of the NESC) and as specified in the antenna manufacturer's recommendations. Secure the antenna mounting hardware to the pole and route the coaxial cable such that no strain is placed on the N-Type Male coaxial connectors. On wood pole installations, bond the antenna mounting hardware to the pole ground using # 6 AWG bare copper wire using split bolt or compression type fitting. Install two antennae at a repeater site with a coaxial antenna cable splitter. Secure splitter to pole.

(C) Cabling

Install the coaxial cable shield grounding system by carefully removing the outer jacket of the coaxial cable without damaging the cable shield. Install the shield grounding system following the cable manufacturer's recommendations. Install and weatherproof the connection using the appropriate weatherproofing materials and following the manufacturer's recommendations. On wood poles, secure the #6 AWG grounding lead cable to the pole ground using split bolt or compression type fitting or an Engineer approved method. On metal poles, secure the #6 AWG grounding lead cable to the pole using an Engineer approved method.

Do not exceed the 1-inch bend radius of the coaxial cable as it traverses from the cabinet to the antenna assembly. Connect the lightning arrestor to the coaxial cable in the equipment cabinet. Properly ground and secure the arrestor in the cabinet.

(D) Cabinet and Electrical Power Wiring

Fasten all wiring and harness supports to the cabinet with screws or other removable mechanical means. Do not use adhesives.

Do not locate terminals on the underside of the shelf or at other places where they are not readily visible and accessible, or where they may be a hazard to personnel. Provide a clear plastic guard for exposed 120 VAC terminals on the power panel.

Permanently label all cables entering the cabinet. Ensure the power supply for the radio system is **NOT** connected to the GFCI receptacle circuit located in the cabinet. Place a copy of all manufacturer equipment specifications and instruction and maintenance manuals in the equipment cabinet.

(E) Disconnect Switch

At locations where the antenna is mounted on a joint-use pole, install a double pole, snap switch to remove power from the Ethernet radio transceiver system. Comply with *Roadway Standard Drawing* No. 1736.01, Sheet 1 of 5. Do not mount weatherproof box on the traffic signal cabinet door. Drill a hole in the side of the traffic signal cabinet. Mount the outlet box over the hole using a ½-inch chase nipple and bushings. Ensure sealing gaskets are in place and no water can enter the cabinet. Securely mount the weatherproof outlet box with additional mounting screws. Bond the outlet box to the equipment ground bus. Run the power supply cord of the Ethernet radio unit into the outlet box and connect to switch. Securely attach power supply cord to equipment rack. Install disconnect switch with lockout tag cover. The disconnect switch is required where the antenna is mounted on a joint-use pole. If the antenna is mounted on an NCDOT or City-owned pole, the disconnect switch is not required and may be omitted.

Do not install the power supply for the radio in a GFCI protected outlet.

(F) Warning Sign(s) and Decal(s)

At locations where the antenna is mounted on a joint use pole, mount the warning sign to the pole as shown on *Roadway Standard Drawing* No. 1736.01, Sheet 2 of 5. Ensure there are no conflicts between the warning sign and surrounding utilities. Mount warning sign to be easily viewed. Do not mount warning sign under pole grounds or conduit.

Clean and remove any dirt or oil on traffic cabinet before placing decal. Place decal adjacent to the disconnect switch located on the outside of traffic cabinet as shown on *Standard Drawing* No. 1736.01, Sheet 1 of 5.

The RF warning signs and decals are required when antennas are mounted on joint-use poles. If the antenna is mounted on an NCDOT or City-owned pole, the warning signs and decals are not required and may be omitted.

27.4. MEASURMENT AND PAYMENT

900MHz Ethernet Radio will be measured and paid as the actual number of Ethernet radios furnished, installed and accepted according to following conditions: 80% of the payment will be made upon acceptance of the installed radio system and the remaining 20% of the payment will be made following final acceptance (including completion of the 60-day Observation Period). This item includes the appropriate sized antenna(e), antenna mounting hardware, radio, power supplies and power cords, disconnect/snap switch, signs, decals, data interface cable, coaxial cable, lightning arrestor, radio frequency jumper, coaxial cable power divider (splitter), coaxial cable connectors, coaxial cable shield grounding system with weatherproofing, labeling, any integration between the radio system and a fiber-optic network if necessary, installation materials and configuration software necessary to complete this work, including the radio path site survey and warranties.

Riser assemblies will be measured and paid for separately in accordance with the "Riser Assemblies" section of these Project Special Provisions.

Payment will be made under:

Pay Item	Pay Unit
900MHz Ethernet Radio	Each

28. ETHERNET CABLE

28.1. DESCRIPTION

Furnish and install copper Ethernet cable, as shown in the Plans, for interconnecting various hardware in an Ethernet network located between the traffic signal cabinets, CCTV cabinets, the TMC, the Signal Shop and the Bryce Stuart Building.

28.2. MATERIALS

(A) Ethernet Cable

Provide Category 5 Enhanced (5e) Ethernet cable that complies with ANSI/TIA-568-A-5 standards for four-pair shielded twisted copper for Ethernet communications. The cable shall meet all of the mechanical requirements of ANSI/ICEA S-80-576 applicable to four-pair inside wiring cable for plenum or general cabling.

Furnish Ethernet cable meeting the following minimum performance requirements:

- Specified frequency range: 1-100 MHz
- Attenuation: 24 dB
- NEXT: 37.1 dB
- ACR: 3.1 dB
- ELFEXT: 17 dB
- Power-sum ELFEXT: 14.4 dB
- Return loss: 8 dB
- Propagation delay: 548 nsec
- Delay skew: 50 nsec

Furnish Ethernet cable meeting the following physical requirements:

- Jacket: PVC, UV resistant
- Insulation: Polyolefin
- Core: Gel-filled or flooded core
- Binder: Clear mylar with 100% coverage
- Shield: Aluminum/mylar with 100% coverage
- Drain Wire: 24 AWG, seven stranded tinned copper
- Conductors: Annealed bare copper
- Conductor size: 24 AWG

For Ethernet cable installed outdoors on aerial messenger cables and in underground conduits, provide cable rated for such conditions (i.e., UV-resistant, wet conditions, etc.).

(B) Connectors

Provide RJ-45 connectors with gold wire conductors terminated according EIA/TIA-568-A/568-B standards. Provide connectors with eight contacts. Furnish connectors appropriately rated for the cable being installed. Provide cables with factory-installed connectors for interior cables.

(C) LAN Patch Panel

Furnish a 36-port LAN patch panel in the TMC and a 12-port LAN patch panel in the Bryce Stuart Building. The quantity of Ethernet ports may be provided in 12 increment size patch panels. The patch panels shall be designed for Category 5e cable and shall meet TIA/EIA-568-A-5 Category 5e and ISO 11801 Class D standards. The cables shall terminate on the patch panel with Type 110 insulation displacement connectors. All ports shall be RJ-45 eight-wire jacks.

Furnish patch panel with write-on areas for port and panel identification.

(D) Ethernet Patch Cords

Furnish Fast Ethernet patch cords meeting the following physical requirements:

- Minimum of five (5)-foot length,
- Category 5e,
- RJ-45 connectors on both ends,
- Molded anti-snag hoods over connectors, and
- Gold plated connectors.

Furnish Ethernet patch cords meeting the following minimum performance requirements:

- TIA/EIA-568-A-5, Additional Transmission Performance Specifications for 4-pair 100 Ω Enhanced Category 5e Cabling.
- Frequency Range: 1-100 MHz.
- Near-End Crosstalk (NEXT): 30.1 dB.
- Power-sum NEXT: 27.1 dB.
- Attenuation to Crosstalk Ratio (ACR): 6.1 dB.
- Power-sum ACR: 3.1 dB.
- Return Loss: 10 dB. and
- Propagation Delay: 548 nsec.

(E) Network Interface Boxes

Furnish under floor, flush mount, wall mount, and ceiling mount network interface boxes for the Ethernet Category5e cabling as shown in the Plans. For under floor and wall mount network interface boxes provide two-port units. For ceiling and flush mount network interface boxes, install single port units.

(F) Environmental Requirements

(1) Outdoor Cable

Provide 4-pair twisted copper Ethernet cable and connectors rated for an ambient operating temperature range of -30° to 165° F. The cable shall be shielded, outdoor-rated and have a UV-resistant jacket. The void between the insulated copper pairs and the polyethylene outer jacket shall be injected with a water resistant flooding compound.

(2) Interior Cable

Provide 4-pair twisted copper Ethernet cable and connectors rated for an ambient operating temperature range of -30° to 165° F. Furnish factory pre-terminated/pre-connectorized Ethernet cables whenever possible. Provide factory pre-connectorized Ethernet cables for all cables that are less than or equal to 12 feet in length.

28.3. CONSTRUCTION METHODS

(A) General

Install Category 5e cable for all network cabling in the TMC, the Signal Shop, and the Bryce Stuart Municipal Building.

Install Category 5e Ethernet cable for all other locations, including traffic signal controller cabinets, traffic signal and utility poles, and in conduits or on messenger cable to bring the cable between traffic signal controller and CCTV cabinets.

Furnish all tools, equipment, materials, supplies, and hardware necessary to install a fully operational Ethernet cable system as depicted in the Plans. Install the Ethernet cable according to the latest version of the manufacturer's cable installation procedures and the industry-accepted installation standards, codes, and practices, or as directed by the Engineer.

Take all precautions necessary to ensure the Ethernet cable is not damaged during storage and installation. Do not step on the cable nor run over the cable with vehicles or equipment. Do not pull the cable over or around obstructions or along the ground.

Immediately cease work and notify the Engineer and the affected owner should damage to existing cables or equipment occur. Make the required repairs at no additional cost to the Department.

Provide the Engineer with three copies of the Ethernet cable manufacturer's recommended and maximum pulling tensions for each Ethernet cable size before the installation of Ethernet cable.

Install Ethernet cable in continuous lengths with no splices outside cabinets.

Cut cables to length to minimize coils of spare cable. Cut outer jacket and trim conductors per manufacturer's recommendations. Ensure all conductors extend to the end of the channel and make solid electrical contact with the gold connectors. Crimp the RJ-45 connector body to lock conductors in channels.

(B) Aerial Installation

Use pole attachment hardware and roller guides with safety clips to install the aerial Ethernet cable.

Maintain tension during the pulling process for aerial run Ethernet cable by using a mechanical clutch (dynamometer) device with breakaway swivel approved by the Engineer. Do not exceed 80 percent of the manufacturer's maximum allowable pulling tension. Do not allow the Ethernet cable to contact the ground or other obstructions between the poles during installation. Do not use a motorized vehicle to generate cable-pulling forces.

(C) Messenger Cable Installation

Double lash the Ethernet cable to the messenger cable where the messenger cable is used solely to support the communications cable.

Wrap the communications cable to the messenger cable using aluminum ribbon wraps where the messenger cable supports other cables (i.e., traffic signal cable, lead-in cable, etc.).

(D) Underground Installation

Install underground Ethernet cable as shown in the Plans using cable-pulling lubricants approved by the Ethernet cable manufacturer and the Engineer. Obtain the Engineer's approval of the cable lubricant and method of pulling before the installation of underground Ethernet cable.

Do not exceed 80 percent of the manufacturer's maximum pulling tension when installing underground Ethernet cable.

Use a clutch device (dynamometer) with breakaway swivel so as not to exceed the allowable pulling tension if the cable is pulled by mechanical means. Do not use a motorized vehicle to generate cable-pulling forces.

Keep tension on the cable reel and the pulling line at the start of each pull. Do not release the tension in the cable if the pulling operation is halted. Restart the pulling operation by gradually increasing the tension until the cable is in motion.

Set cable reels up on the same side of the junction box as the conduit section in which the cable is to be installed. Place the reel level and align the reel with the conduit section such that the cable will pass from the top of the reel in a smooth bend into the conduit without twisting. Do not pull the cable from the bottom of the reel. Manually feed the cable by rotating the reel. Do not pull the cable through intermediate junction boxes, pull boxes, handholes, or openings in conduit unless otherwise approved by the Engineer.

Crimp the RJ-45 connector body to lock conductors in channels. Test each connector from end to end.

All Ethernet wiring in buildings shall terminate either in LAN patch panel or network interface boxes.

(E) LAN Patch Panel

Install the rack mounted patch panel in TMC and in the 3rd floor communications room of the Bryce Stuart Building.

Reuse the network cabling from the console workstations and existing printer in the TMC. Terminate the cable on the proposed patch panel.

Remove one inch of cable jacket. Fan out all four twisted pairs in the specified wiring sequence. Minimize removal of cable jacket. Follow manufacturer's installation instructions for cable termination and panel assembly. Punch down the conductors using a manufacturer's recommended tool. Terminate field wiring and secure with cable management hardware.

(F) Network Interface Boxes

Install under floor, flush mounted and ceiling mounted network interface boxes at locations shown in the Plans. Wire-tie multiple cables to the same box together.

For wall mounted network interface boxes, securely fasten box to metal studs or ceiling grid so boxes will not move.

Install network interface boxes in the following locations as shown in the Plans:

- TMC:
  - Under existing communications rack housing the NVR and ITS servers
- Bryce Stuart Building
  - Wall mounted in the Signal System Supervisor's office
  - Floor mounted in the Signal System Technician's offices
- Signal Shop:
  - Wall mounted in the signal shop supervisor's office

(G) Ethernet Patch Cords

Install Ethernet patch cords between Ethernet patch panels and devices and network interface box and devices.

28.4. MEASUREMENT AND PAYMENT

Ethernet cable will be measured and paid as the actual linear feet of Ethernet cable furnished, installed, and accepted. Measurement will be made by calculating the difference in length markings located on outer jacket from start of run to end of run for each run. No measurement will be made of connectors as such work is considered incidental to installing the Ethernet cable.

Patch panel (Ethernet) will be measured and paid as the actual number of Ethernet LAN patch panels furnished, installed, and accepted.

Network interface box will be measured and paid as the actual number of network interface/audio-visual boxes furnished, installed, and accepted.

No measurement will be made of the following Ethernet patch cables as they will be considered incidental to furnishing and installing the equipment that they connect:

- Ethernet patch cables that connect adjacent devices/equipment (e.g., between an edge switch and a controller housed in the same cabinet);
- Ethernet patch cables between equipment housed in the same or adjacent equipment racks in the TMC;
- Ethernet patch cables between a computer or server and a network interface box; and
- Ethernet patch cables between equipment housed in the same room such as in the TMC, the Bryce Stuart Building and the Signal Shop.

Payment will be made under:

Pay Item	Pay Unit
Ethernet Cable	Linear Foot
Patch Panel (Ethernet)	Each
Network Interface Box	Each

29. CCTV FIELD EQUIPMENT

29.1. DESCRIPTION

Furnish and install CCTV field equipment, cabinets and local camera control software described in this Section. Remove and deliver existing CCTV field equipment and cabinets that will not be used per Section 1 of these Project Special Provisions and as shown in the Plans.

Furnish and install new electrical service for CCTV as shown in the Plans.

Provide a system to protect field devices and electronic equipment from lightning and surge protection using UL listed surge protection devices.

29.2. MATERIALS

(A) General

Provide new CCTV camera assemblies with composite cable and CCTV cabinets.

Each CCTV camera assembly shall consist of the following:

- NEMA environmental dome enclosure,
- CCTV color digital signal processing camera unit with zoom lens, filter, control circuit, and accessories,
- Control receiver/driver that complies with the NTCIP specifications listed below,
- Motorized pan, tilt, and zoom,
- Power supplies,
- Pole-mount camera attachment hardware,
- All necessary cable, connectors and incidental hardware to make a complete and operable system,
- NEMA Type 4, IP 66 enclosure constructed of aluminum with a clear acrylic dome or approved equal camera unit housing,
- 60-foot composite cable for power supply and video and data transmission, and
- Surge protection devices.

Each CCTV cabinet assembly shall consist of the following:

- Type 336A pole-mounted cabinet
- Local interface panel,
- Power supplies/transformers,
- Transient voltage surge suppressors, and
- All necessary cable, connectors and incidental hardware to make a complete and operable system.

Provide camera software as described herein only if the cameras are of a different model and brand from what currently exists in the City's CCTV system.

Provide CCTV field equipment that is fully compatible and interoperable with existing CCTV field equipment and existing CCTV central software installed by others under City Projects C-5142 and C-4198.

(B) Standards

- ANSI,
- ASTM,
- CE, Class B,
- EIA Standards 170, 232, 422, 250C and 485,
- FCC Rules Part 15, Sub-part J,
- FCC Class A,
- FCC, Class B,
- IEEE,
- ICEA,
- IMSA,
- ISO 9001,
- NEC,
- NEMA 4X, IP 66,
- NEMA Type 1,
- NTSC, and
- UL Listed.

Provide UL listed surge protection devices according to the UL 1449, 2nd edition standard that comply with the NEMA requirements as detailed in the NEMA LS 1 (1992) standard.

Provide a means to ground all equipment as called for in the Standard Specifications, these Project Special Provisions, and the Plans.

(C) Camera Assembly

(1) Cameras

Provide new ¼-inch charged-coupled device (CCD) color day/night cameras. Provide cameras with automatic gain control (AGC) for clear images in varying light levels. The camera must meet the following minimum requirements:

• Video signal format:	NTSC composite color video output, 1 volt peak to peak,
• Horizontal resolution:	540 TV Lines,
• Image sensor resolution:	768 horizontal pixels by 752 vertical pixels,
• Automatic gain control (AGC):	0-20 dB, peak-average adjustable,
• White balance:	Automatic through the lens with manual override,
• Electronic-shutter:	Dip-switch selectable NTSC electronic shutter with speed range from 1/2 of a second (off) to 1/30,000 of a second (NTSC),
• Overexposure protection:	Built-in circuitry or a protection device to prevent any damage to the camera when pointed at strong light sources, including the sun,
• Gain control:	Automatic and manual,
• Sensitivity:	1.5 lux at 90% scene reflectance,
• Sync system:	Internal AC line lock, phase adjustable using remote control, V-sync,

- Signal to noise ratio: Greater than 50 dB,
- Video output connection: 1-volt peak to peak, 75 ohms terminated, BNC connector, and
- Primary voltage: 120 VAC,
- Camera voltage: 24 VAC or 24 VDC, and
- Camera power: 73 VA with heater at 24 VAC or 3A at 24 VDC.

(2) Lens

Provide each camera with a motorized zoom lens with automatic iris control with manual override and neutral density spot filter. Provide lenses that meet the following optical specifications:

- Automatic focus: Automatic with manual override,
- Horizontal angle of view: 54 degrees at 3.6 mm wide zoom and 2.5 degrees at 82 mm telephoto zoom,
- Focal length: 3.6 mm to 124 mm, 35X optical zoom, 12X electronic zoom,
- Zoom Speed: 2.9, 4.2 and 5.8 seconds,
- Lens aperture: Minimum of f/1.6,
- Maximum Sensitivity at 35 IRE: .025 lux at ½ second color, .1 lux at 1/60 second black and white, .004 lux at ½ sec. black and white,
- Preset positioning: Minimum of 128 presets.

The lens must be capable of both automatic and remote manual control iris and focus override operation. The lens must be equipped for remote control of zoom and focus, including automatic movement to any of the preset zoom and focus positions. Provide mechanical or electrical means to protect the motors from overrunning in extreme positions. The operating voltages of the lens must be compatible with the outputs of the camera control.

(3) Pan and Tilt Unit

Equip each new dome style assembly with a pan and tilt unit. The pan and tilt unit must be integral to dome system. The pan and tilt unit must be rated for outdoor operation, provide dynamic braking for instantaneous stopping, prevent drift, and have minimum backlash. The dome must have an auto flip dome rotation to rotate and reposition camera for viewing objects passing below camera. Provide electronic image stabilization. The pan and tilt units must meet or exceed the following specifications:

- Pan: Continuous 360 degrees,
- Tilt: +2 to -92 degrees minimum,
- Presets: Minimum of 128 presets,
- Preset accuracy: .1 degree,
- Preset pan speed: .1 degrees/second to 200 degrees/second,
- Preset tilt speed: .1 degrees/second to 400 degrees/second,
- Privacy zones: Minimum of eight user configurable shapes,
- Input voltage: 24 VDC or 24 VAC, and
- Motors: Two-phase induction type, continuous duty, instantaneous reversing.

(4) Power Supplies

Provide all power supplies necessary for the camera and its pan tilt unit. Mount power supplies in the camera cabinet and utilize composite cable to supply power the camera and pan tilt unit.

(5) Control Receiver/Driver

Each new camera unit must contain a control receiver/driver that is integral to the CCTV dome assembly. The control receiver/driver must receive serial asynchronous data initiated from a camera control unit, decode the command data, perform error checking, and drive the pan/tilt unit, camera controls, and motorized lens. As a minimum, the control receiver/drivers must provide the following functions:

- Zoom in/out,
- Automatic focus with manual override,
- Tilt up/down,
- Automatic iris with manual override,
- Pan right/left, and
- Minimum of 128 preset positions for pan, tilt, and zoom.

In addition, each control receiver/driver must accept status information from pan/tilt unit and motorized lens for preset positioning of those components. The control receiver/driver must relay pan, tilt, zoom, and focus positions from the field to remote camera control units. The control receiver/driver must accept "goto" preset commands from the camera control unit, decode the command data, perform error checking, and drive the pan/tilt and motorized zoom lens to the correct preset position. The preset commands from the camera control unit will consist of unique values for the desired pan, tilt, zoom, and focus positions.

(6) Camera Housing

Provide new dome style enclosure for assemblies with a high performance integrated dome system or approved equal. Provide the dome housing with a 1½" NPT threaded cable entry. Equip each camera housing with a mounting assembly for attachment to the CCTV camera pole. The enclosures must be equipped with a strip heater. Provide a sunshield fabricated from corrosion resistant aluminum and finished in a neutral color of weather resistant enamel. The viewing area of the enclosure must be tempered glass.

Provide surge protectors for all ungrounded conductors that will enter the CCTV enclosure as described below. House the surge protectors within the CCTV housing in a manner approved by the Engineer.

A dome-type environmental housing shall have a sustained ambient operating temperature of -50 degrees F to 122 degrees F, with 100 percent non-condensing relative humidity as defined within the NEMA TS-2 (1998) standard.

The enclosure shall have a NEMA 4X/IP-66 rating.

(D) Composite Cable

Provide a composite cable for carrying the CCTV power, analog video and serial data between the camera and CCTV cabinet. The composite cable shall consist of:

- Outer jacket composed of UV resistant PVC,
- RG-59U coaxial cable
  - Maximum outer diameter .75 in.,
  - PVC jacket,
  - 75 ohm rating,
  - Nominal capacitance of 17.5 pF/ft.,
  - 22 AWG stranded copper center conductor,
  - Bare copper stranded shield.
- Data cable
  - 22 AWG stranded cable,
  - Two twisted pairs,
  - Nominal capacitance of 26 pF/ft.,
  - Nominal impedance of 55 ohms,
  - Common shield/drain wire.
- Power Cable,
  - 16 AWG,
  - Four wire, and
  - THWN stranded.

(E) Camera Mounting Bracket

Provide a pole attachment assembly for the CCTV camera unit to mount on wood poles, metal poles, and metal mast arms. The attachment assembly shall use stainless steel banding around the pole approved by the Engineer.

Provide the CCTV attachment assembly that allows for the removal and replacement of the CCTV enclosure as well as providing a weatherproof, weather-tight, seal that does not allow moisture to enter the enclosure.

Provide CCTV camera attachment assembly that is able to withstand wind loading at the maximum wind speed and gust factor called for in the interim revision of the 2002 ASHTO Specifications for Structural Supports for Highway Signs, Luminaries and Traffic Signals and can support a minimum camera unit dead load of 45 pounds.

(F) Camera Cabinet

(1) General

Provide cabinets to house CCTV related and communications equipment described herein. Provide the cabinets with a 19-inch communications rack for all equipment.

Provide Type 336A CCTV cabinets that provide for and meet the following minimum requirements:

- Ethernet edge switch (paid for separately),
- Digital video encoder (paid for separately),
- Termination of the composite cable to the camera,
- Local interface panel with maintenance access points for data and video connections to observe camera images and program/monitor camera status,
- Fiber-optic interconnect center (paid for separately),
- Grounding bus bar,

- 19-inch rack system for mounting of all devices in the cabinet,
- Pull-out shelf for laptop and maintenance use,
- Stationary shelf for shelf-mounting the digital video encoder and Ethernet edge switch,
- Fluorescent lighting,
- Ventilation fan,
- Thermostats,
- 120 VAC power supply,
- 120 VAC GFCI-protected duplex outlets for tools,
- 120 VAC surge protected duplex outlets for equipment,
- Surge protection on incoming and outgoing electrical lines (power and data),
- Transformers/power supplies, and
- Power strip along vertical rail.

Provide cabinets complete with a prefabricated cabinet shell, and all internal components and equipment, back and side panels, front and back doors, terminal strips, cabling and harnesses, surge protection for power and communication circuits, power distribution blocks or assemblies, shelves, connectors and all mounting hardware necessary for installation of equipment.

Provide the cabinets using unpainted sheet aluminum with a minimum thickness of 0.125 inch.

Provide the rack assembly with a removable, standard 19-inch EIA compliant rack. Equip each cabinet with an aluminum storage compartment mounted in the rack assembly with the following dimensions (±0.5 inch): 16 inches wide, 14 inches long and 1.75 inches deep. Provide the compartment with a ball bearing telescoping drawer guides to allow full extension from the rack assembly. The storage compartment shall open to provide a full-depth storage space for cabinet documentation and other miscellaneous items. The storage compartment shall be of adequate construction to support a weight of 20 pounds without sagging when extended. The top of the storage compartment shall be hinged aluminum. Provide at least one removable metal a full-depth shelf with each cabinet.

Provide all cabinets and exterior door seams with continuously welded seams and with smooth exterior welds. Provide all cabinets with two (2) full-size doors (one front, one back). Provide the doors with three hinges, or a full-length stainless steel piano hinge, with stainless steel pins spot-welded at the top. The hinges shall utilize stainless steel hinge pins. Mount the hinges so that they cannot be removed from the door or cabinet without first opening the door. Brace the door and hinges to withstand a 100-pound per vertical foot of door height load applied vertically to the outer edge of the door when standing open. There shall be no permanent deformation or impairment of any part of the door or cabinet body when the load is removed. Provide the cabinet door with a #2 Corbin lock. Provide two keys for each cabinet. Provide the cabinet doors so they can be padlocked. Provide door openings with double flanges on all four sides.

Doorstops shall be included at 90° and 180° positions. Provide both the door and the doorstop mechanism of sufficient strength to withstand a simulated wind load of five pounds per square foot of door area applied to the both inside and outside surfaces without failure, permanent deformation, or compromising of door position and normal operation. Provide the cabinets without auxiliary police doors.

Ensure that cabinet doors include a gasket to provide a dust and weather-resistant seal when closed. Provide the gasket material with closed-cell neoprene and shall maintain its resiliency after exposure to the outdoor environment. The gasket shall show no sign of rolling or sagging, and shall ensure a uniform dust and weather-resistant seal around the entire door facing.

Provide pole-mounted versions of the 336A CCTV cabinet as required by the Plans.

(2) Ventilation

Provide a cooling fan in all cabinets with a minimum capacity of 100 CFM. Provide a thermostat to control the ventilation system.

Provide the cabinets with vent openings in the door to allow convection cooling of electronic components. Locate the vent opening on the lower portion of the cabinet door and cover fully on the inside with a commercially available disposable three layer graded type filter.

Provide cabinets with a serial number unique to the manufacturer. Engrave the entire identification code on a metallic plate that is epoxied to the cabinet on the upper right hand sidewall.

(3) Electrical

Provide a power distribution assembly that consists of power filters, transient voltage suppression, equipment grounding, main and branch circuit breakers for equipment, electrical outlets, lighting and ventilation.

Provide AC isolation within the cabinet. Configure all cabinets to accept 120 VAC from the utility company.

Provide UL listed circuit breakers with an interrupt capacity of 5,000 amperes and insulation resistance of 100 MΩ at 500 VDC. Provide power distributions blocks for use as power feed and junction points for two and three wire circuits. The line side of each shall be capable of handling up to 2/0 AWG conductors. Isolate the AC neutral and equipment ground wiring and terminal blocks from the line wiring by an insulation resistance of at least 10 MΩ when measured at the AC neutral.

For components that are furnished by the Contractor that are mounted on cabinet side panels, fasten with hex-head or Phillips-head machine screws. Install the screws into tapped and threaded holes in the panels. The components include, but are not limited to, terminal blocks; bus bars, and DC power supply chassis.

Tag and identify all cabinet wiring installed by the Contractor by the use of insulated pre-printed sleeves. The wire markers shall identify in plain words with sufficient details without abbreviations or codes.

Neatly arrange all wiring in the cabinet, firmly lace or bundle it, and mechanically secure the wiring without the use of adhesive fasteners. Route and secure all wiring and cabling so as to avoid sharp edges and to avoid conflicts with other equipment or cabling. Terminate all wiring on a terminal block, strip, bus bar, device clamp, lug; or connector, do not splice any wiring. Label all wiring, cables, terminal strips, and distribution blocks provided by the Contractor. Provide strain relief for all cabling with connectors, all cabling entering knockouts or ports at the equipment, and where appropriate.

(4) Cable Terminations

Terminate all field cabling on the respective surge protection devices for composite coaxial video, 4-wire EIA 422 data communications, and 24 VAC power cable.

Provide an interface panel to permit a technician to connect a laptop and video monitor to the front side to control the camera locally and view live CCTV video without disconnecting the field wiring. All field wiring shall be routed through the surge protection units before the interface panel. Clearly label all connections on the interface panel.

Provide three adaptor cables to convert USB data to RS-422/RS-232.

Provide a video splitter on the video cable to simultaneous provide video to the video monitor port and to the encoder. Provide a switch for selecting and local camera PTZ control.

(5) Surge Suppression

Provide surge protection both ahead of and behind the ITS device electronics for the cameras. All surge protection devices shall have an ambient operating temperature of -40 degrees F to 165 degrees F with 95 percent non-condensing relative humidity. All surge protection devices shall comply with the following standards:

- UL 1449 version 3 for electrical power,
- UL 497B for paired data communications, and
- UL 497C for coaxial communications.

For those CCTV cabinets with Ethernet communications over twisted-pair copper cable, provide surge protection devices meeting UL 497A.

Grounding

Provide a cabinet grounding system as shown in the Plans. Incorporate a means to bond (i.e., connected) all metal components of the camera and cabinets to the grounding system with a grounding cable that uses a mechanical connection on the equipment side and an exothermic welded connection at the down cable.

Line Side CCTV Power

Each cabinet must be provided with a hybrid-type, power line surge protection device mounted inside the power distribution assembly. The protector must be installed between the applied line voltage and earth ground. The surge protector must be capable of reducing the effect of lighting transient voltages applied to the AC line. The protector must be mounted inside the power distribution assembly housing facing the rear of the cabinet. The protector must include the following features and functions:

- Maximum AC line voltage: 140 VAC,
- Twenty pulses of peak current, each of which must rise in 8 microseconds and fall in 20 microseconds to ½ the peak: 20,000 Amperes,
- The protector must be provided with the following terminals:
  - Main line (AC line first stage terminal),
  - Main neutral (AC neutral input terminal),
  - Equipment line out (AC line second state output terminal, 19 amps),
  - Equipment neutral out (neutral terminal to protected equipment),
  - Ground (earth connection),

- The main AC line in and the equipment line out terminals must be separated by a 200 Microhenry (minimum) inductor rated to handle the 10 Amp AC service,
- The first stage clamp must be between main line and ground terminals,
- The second stage clamp must be between equipment line out and equipment neutral,
- The protector for the first and second stage clamp must have an MOV or similar solid-state device rated at 20 KA and must be of a completely solid-state design (i.e., no gas discharge tubes allowed),
- The main neutral and equipment neutral out must be connected together internally and must have an MOV similar solid-state device or gas discharge tube rated at 20 KA between main neutral and ground terminals,
- Peak clamp voltage: 350 volts at 20 KA (voltage measured between equipment line out and equipment neutral out terminals. Current applied between main line and ground terminals with ground and main neutral terminals externally tied together),
- Voltage must never exceed 350 volts, and
- The protector must be epoxy-encapsulated in a flame-retardant material.
- Continuous service current: 10 Amps at 120 VAC RMS.
- The equipment line out must provide power to cabinet CCTV and communications equipment and to the 24V power supply.

Load Side CCTV Power

Load side protection is designed to restrict surge current transients from entering the power source from the CCTV device and/or site. The surge protection for the CCTV power source shall have an operating voltage of 120 volts single phase and a maximum continuous operating voltage of 150 volts single phase.

The device's surge protection shall be rated at a minimum of 90,000 amps per phase and have maximum clamping voltage ratings of 330 volts at 500 amps, 395 volts at 3,000 amps, and 533 volts at 10,000 amps. The surge protection shall also be UL listed for a minimum suppressed voltage of 330 volts per line to the neutral/ground. The suppression device shall be of the metal oxide varistor (MOV) type.

Load Side CCTV Data/Video

Provide specialized surge protection devices at the supply and load sides of all low voltage connections to the CCTV device and its operating subsystems. Provide specialized surge protection devices at the supply and load sides of all low voltage Ethernet data connections between a CCTV and traffic signal cabinet. These connections include, but are not limited to, coaxial video cables and low voltage control serial and Ethernet data cables that comply with EIA requirements as detailed in the EIA-232/422/485 standards.

The surge protection shall have an operating voltage to match the characteristics of the CCTV, such as 24 volts of direct current (VDC) or 24 volts of alternating current and less than 5 VDC for data and video functions. These specialized surge protection units shall be UL listed according to the UL 497B (paired-date cable) and UL 497C (coaxial cable) standards. The minimum surge current rating for the surge protection shall be 2,000 amps for data and telecommunications, 2,000 amps for twisted pair video, and 4,000 amps for binary network connectors (BNC).

(G) Grounding

Provide a minimum of four grounding electrodes with a minimum length of 10 feet each and listed according to UL requirements as detailed in the *UL 467J* standard. Provide copper clad or solid copper electrodes.

(H) Software

Provide a Vendor-supplied GUI-based software to setup, configure and operate the cameras in the field. This software shall include features to set communications addresses and protocols, define camera ID lens control, digital signal processing (DSP) settings, azimuth configuration, presets, tours, and privacy zones. The software shall allow the user to control all functions of the camera locally from the CCTV cabinet at the base of the pole with a serial or USB cable.

29.3. CONSTRUCTION METHODS

(A) Electrical and Mechanical Requirements

Ground all equipment as called for in the *Standard Specifications*, these Project Special Provisions, and the Plans.

Install surge protectors on all ungrounded conductors entering the CCTV enclosure as described below. House the protectors in a small, ventilated weatherproof cabinet attached near the CCTV attachment point in a manner approved by the Engineer. The air terminal ground wire must not pass through this cabinet.

(B) CCTV Camera Assembly

Mount CCTV camera units at a height sufficient to adequately see traffic in all direction and as approved by the Engineer. Mount cameras on poles at the attachment heights shown on Special Details in the Plans.

Mount CCTV camera on the side of pole that is nearest to the intended field of view, to avoid occlusion of the view by the pole or utility lines. Obtain approval of camera orientation from the Engineer. Comply with the "Wood Poles" section of these Project Special Provisions.

(C) CCTV Camera Attachment to Pole

Have the Engineer approve the pole location prior to installing the camera on an existing pole and prior to setting a new pole. At locations shown in the Plans, assemble the camera attachment hardware for the CCTV camera unit and attach to the pole using stainless steel banding approved by the Engineer. Submit shop drawings for review and approval by the Engineer prior to installation.

Install the camera attachment assembly to the pole in a manner that allows for the removal and replacement of the CCTV enclosure as well as providing a weatherproof, weather-tight seal that does not allow moisture to enter the enclosure.

Install CCTV camera attachment assembly that is able to withstand wind loading at the maximum wind speed and gust factor called for in the AASHTO *Standard Specifications for Structural Supports for Highway Signs, Luminaires and Traffic Signals*, 4th Edition, 2006 Interim, and can support a minimum camera unit dead load of 45 pounds.

(D) CCTV Cabinet

Mount the CCTV cabinet on the pole supporting the CCTV camera it controls using approved hardware and attachment brackets. Mount the cabinet 4 feet from the ground to the center of the cabinet. Avoid mounting cabinets where they will overhang and encroach upon an adjacent sidewalk or pedestrian path. Where a minor overhang of the sidewalk or pedestrian path cannot be reasonably avoided, ensure that that a minimum of 4 feet of clear sidewalk width will remain once the cabinet is installed. Do not mount cabinets above pedestrian pushbuttons or where they will hinder access to pedestrian pushbuttons. Have the Engineer approve the proposed mounting position prior to attaching the CCTV cabinet to the pole.

Ground all cabinets in accordance with the requirements of these Project Special Provisions. Keep the ground wire from the cabinet ground bus bar to the ground rod assembly or array as short as possible. Ensure the ground wire is not in contact with any other part of the cabinet.

Tag and identify all cabinet wiring installed by the Contractor by the use of insulated pre-printed sleeves. The wire markers shall identify in plain words with sufficient details without abbreviations or codes.

Neatly arrange all wiring, firmly lace or bundle it, and mechanically secure the wiring without the use of adhesive fasteners. Route and secure all wiring and cabling to avoid sharp edges and to avoid conflicts with other equipment or cabling. Terminate all wiring on a terminal block, strip, bus bar, device clamp, lug, or connector, do not splice any wiring. Label all wiring, cables, terminal strips, and distribution blocks installed by the Contractor. Provide strain relief for all cabling with connectors, all cabling entering knockouts or ports at the equipment, and where appropriate.

Fasten all components installed by the Contractor to be mounted on cabinet side panels with hex-head or Phillips-head machine screws. Install the screws into tapped and threaded holes in the panels. The components include, but are not limited to, terminal blocks; bus bars, and DC power supply chassis.

Connect the CCTV camera cabinet to the CCTV camera assembly using a composite cable carrying the video, serial data and power. Terminal strips shall be provided with the cabinets to support 4-wire EIA 422 communications and the 24 VAC power as will be required for power and data.

Mount the digital video encoder on a shelf in the 19" equipment rack inside the cabinet in accordance with the "Digital Video Encoder" section of these Project Special Provisions. Mount the fiber-optic interconnect center in accordance with the "Fiber-Optic Communications Cable" section of these Project Special Provisions.

Install the Ethernet edge switch inside the cabinet in accordance with the "Communications Hardware" section of these Project Special Provisions. Mount the edge switch on the same shelf in the CCTV cabinet as the video encoder. Connect the appropriate connectors on the interconnect center with those on the Ethernet edge switch using SMFO jumpers.

(E) Power Service

Provide 120 VAC power from the existing electrical service for an existing traffic signal controller cabinets as shown on the Plans. For locations where traffic signal cabinet power service is not available, install new power service under separate pay item as shown in the Plans.

Comply with the "Electrical Service" section of these Project Special Provisions and the details shown in the Plans.

(F) Grounding

Ground the CCTV pole and subsystems in accordance with the special details (i.e., "SD" sheets) in the Plans.

(1) Device Line Side

Connect the surge protection devices on the CCTV power source on the line side. This device shall provide protection between line-to-neutral, line-to-ground, line-to-line and neutral-to-ground.

(2) Device Load Side

Connect the surge protection devices in the power line side ahead of all CCTV electronic equipment. This installation technique is designed to restrict earth current transients induced within the ground or directly from the power source from entering the ITS device through the incoming 120/240-volt power circuit. This device shall provide protection between line-to-neutral, line-to-ground, line-to-line and neutral to ground.

(3) Device Data/Video Supply

Connect the specialized surge protection devices at the supply and line sides of all low voltage connections to the CCTV device and its operating subsystems. These connections include, but are not limited to, Category 5E data cables, coaxial video cables, twisted pair video cables, and low voltage control cables that comply with EIA requirements as detailed in the EIA-232/422/485 standards.

(G) Software

If Vendor software is provided to program and operate the cameras, install the Vendor-supplied GUI-based software to setup, configure and operate the cameras on each laptop supplied with the project.

(H) GPS Coordinates

Provide real world coordinates for all junction boxes and equipment cabinets installed or utilized under this project. Provide the coordinates in feet units using the North Carolina State Plane coordinate system (1983 North American Datum also known as NAD '83). Furnish coordinates that do not deviate more than 1.7 feet in the horizontal plane and 3.3 feet in the vertical plane. Global positioning system (GPS) equipment able to obtain the coordinate data within these tolerances may be used. Submit cut sheets on the GPS unit proposed to collect the data for approval by the Engineer.

Provide both a digital copy and hard copy of all information regarding the location (including to but not limited to manufacturer, model number, City system ID number and NCDOT inventory number) in the Microsoft Excel spreadsheet using the format shown in example below.

City System ID#	NCDOT Inv #	Name	Location	Latitude	Longitude	Manufacturer	Model #
	05-0134	Equipment Cabinet	US 70 at Raynor Rd./ Auburn-Knightdale	-78.5500	35.6873	McCain	Type-332
		Junction Box # 1 (Phase 2 Side)	US 70 at Raynor Rd./ Auburn-Knightdale	-78.5516	35.6879	Quazite	PG1118BA12(Box) PG118HA00(Cover)
		Junction Box # 2 (Phase 2 Side)	US 70 at Raynor Rd./ Auburn-Knightdale	-78.5506	35.6876	Quazite	PG1118BA12(Box) PG118HA00(Cover)
		Junction Box # 3 (Near Cabinet)	US 70 at Raynor Rd./ Auburn-Knightdale	-78.5501	35.6873	Quazite	PG1118BA12(Box) PG118HA00(Cover)
		Junction Box # 4 (Phase 6 Side)	US 70 at Raynor Rd./ Auburn-Knightdale	-78.5486	35.6873	Quazite	PG1118BA12(Box) PG118HA00(Cover)
		Junction Box # 5 (Phase 6 Side)	US 70 at Raynor Rd./ Auburn-Knightdale	-78.5493	35.6876	Quazite	PG1118BA12(Box) PG118HA00(Cover)
		Junction Box # 6 (Phase 4 Side)	US 70 at Raynor Rd./ Auburn-Knightdale	-78.5503	35.6879	Quazite	PG1118BA12(Box) PG118HA00(Cover)

29.4. MEASUREMENT AND PAYMENT

CCTV camera assembly will be measured and paid as the actual number of CCTV camera assemblies furnished, installed, and accepted according to following conditions: 90% of the payment will be made upon acceptance of the installed CCTV camera assembly and the remaining 10% of the payment will be made following final acceptance (including completion of the 60-day observation period).

No separate measurement will be made for composite cabling, connectors, CCTV camera attachment assemblies (including luminaire mast arms), software, grounding equipment, surge protector devices, composite cable, other cabling, and conduit, or any other equipment or labor required to install the CCTV assembly and integrate it with the fiber-optic communications equipment as they are considered incidental to furnishing and installing the CCTV camera assembly and the CCTV cabinet.

CCTV cabinet will be measured and paid as the actual number of pole-mounted CCTV cabinets furnished, installed, and accepted, according to following conditions: 90% of the payment will be made upon acceptance of the installed CCTV cabinet and the remaining 10% of the payment will be made following final acceptance (including completion of the 60-day observation period).

No separate measurement and payment will be made for hardware, fasteners and brackets required to mount CCTV cabinets to a pole as shown in the Plans as such work with be considered incidental to furnishing and installing the CCTV cabinets.

Installation of Ethernet edge switches and digital video encoders will be measured and paid for in accordance with the "Communications Hardware" and "Central Video Equipment" sections of these Project Special Provisions.

Payment will be made under:

Pay Item	Pay Unit
CCTV Camera Assembly	Each
CCTV Cabinet	Each

30. CCTV INTEGRATION AND SOFTWARE MODIFICATION

30.1. DESCRIPTION

Modify the City's existing CCTV system software package to add the additional cameras and video devices provided in this Project.

30.2. MATERIALS

(A) CCTV Control Software

The existing CCTV system software allows users to:

- Select and control selected analog and IP-based cameras via software based graphical controls, including PTZ and other advance features of cameras,
- Assign CCTV images to specific output devices (network video recorder, monitors), workstation video capture cards, and component device inputs,
- Facilitate video sharing,
- Video display control such as individual monitors and monitor walls,
- Video image capture, and
- Video archiving.

The system software supports TCP/IP and SNMP. Provide a graphical user interface for CCTV control functions.

The software is a scalable product that controls both analog and IP video streams.

A window can span one or more display monitors. Provide the following features for the new cameras added under this project:

- Drag and drop maps to display video on maps,
- Zoom in and out feature,
- Pan/tilt control of cameras, and
- Presets for setting camera positions.

(1) Graphical User Interface

The graphical user interface (GUI) consists of an interface for configuring all devices and variables of the system. The configuration of the GUI permits those users with access privileges to add, delete or modify devices.

The GUI consists of the users' normal operational interface. The user GUI provides a graphic map of the overall project area with icons representing camera locations. At a minimum, include for the addition cameras the users' GUI with a map display, available device list, and viewer to see current events.

At a minimum, update the GUI to include the project cameras in users' GUI with a map display, available device list, and viewer for current events.

Map Display

Expand this graphic display with the same map used for the signal system software. Map format shall be the same format as existing map. The maps shall be customizable, with access privileges, to add icons, labels, hyperlinks, and alarms. Provide maps that are zoomable.

Utilize the existing icons that provide the user with camera control, unless that camera is in use by another user. If the selected camera is in use by another user, a message identifying the current user shall be displayed. In addition, a display showing the camera's current user defined preset position will be shown. The icon shall also display current status. At the operator's discretion, the GUI or the camera control panel may be used to control all camera functions.

Device List

Clicking on an icon in the CCTV system software shall produce a scrollable, drop-down list that contains the name of all video outputs (such as monitors, NVR, encoders, etc.) that are connected to the system. A subsequent click on the appropriate video output name shall select the device on which the video is to be displayed or transmitted and provide access to that device's controls available to the user Output devices presently in use shall not be available for use until they have been de-selected.

(2) Device Drivers

Provide device drivers for each device in the system including cameras, monitors, video recorders provided with this project. Provide the ability to share device drivers. Device drivers may run as an executable program or window service.

(3) FTP Image Capture

Utilize the existing FTP image capture software applications and add the cameras provided under this project to the database.

(B) Regional ITS Graphical User Interface (GUI) Software

The Regional ITS Graphical User Interface (GUI) Software is housed on a server in the TRTMC. The software includes a zoomable static display map that includes a location of each ITS device. This map can be dynamically sized. Each ITS device is associated with an icon that loads an executable application. All ITS elements, icon and their respective locations are stored in the 1983 North American Datum North Carolina state plane coordinates in English units (feet). Text notes are stored for each device, which includes the dates of the last modification.

The purpose of the Regional ITS GUI is to provide a common interface among the various traffic operations and management centers in the region to launch traffic management applications on other servers from local computer workstations in their respective centers. The Regional ITS GUI assumes the following:

- When a field device on the GUI is actuated, the client software for the application is present on the workstation from where the application is launched,
- The user on the local workstation has network level rights to log onto the application server where the ITS devices native software resides, and
- The user on the local workstation has application level security rights to use the application software for the devices actuated.

30.3. CONSTRUCTION METHODS

(A) CCTV Control Software

Update the database of the existing CCTV software on the video server along with the CCTV software decoders to add the cameras, workstations and monitors provided under this Project.

Install the CCTV system client application on five (5) computers/laptops in the TMC, Signal Shop and Bryce Stuart Building. Verify that the software is fully operable on the applicable workstations and laptops included in the project and designated by the Engineer.

For each camera assign names consistent with the existing system. Configure presets and tours for each camera.

Assign operator rights to City staff provided by the Engineer. Provide NCDOT staff access for those staff members provided by the Engineer.

Coordinate Internet access through the firewall with the City of Winston-Salem IS Department for the image capture software in order to send the image files to NCDOT by FTP transfer.

(B) Regional ITS Graphical User Interface (GUI) Software

Update the existing EIC server in the TRTMC and edit any existing unified device database to add the new CCTV devices with icons and correct coordinates. The unified device database contains the coordinates of each device in individual records and contains a maximum of fifty fields. Collect the location data from all CCTV field devices required to include the new CCTV devices in the database. Ensure the map extents have adequate coverage to show the new CCTV devices. Ensure the existing capability to import data from other file formats is maintained. All additions to the database must be viewable by all current users of the system.

30.4. MEASUREMENT AND PAYMENT

Modify CCTV Software shall be measured and paid as a lump sum. This shall include furnishing, installing, and all materials, equipment, labor, tools, storage, shipping, and incidentals necessary to modify the existing software, complete system integration, and provide a complete operating system.

Modify Regional ITS GUI Software shall be measured and paid as a lump sum. This shall include furnishing, installing, and all materials, equipment, labor, tools, storage, shipping, and incidentals necessary to modify the existing software, complete system integration, and provide a complete operating system.

Payment will be made under:

Pay Item	Pay Unit
Modify CCTV Software	Lump Sum
Modify Regional ITS GUI Software	Lump Sum

31. SIGNAL SYSTEM SOFTWARE MODIFICATIONS

31.1. DESCRIPTION

The Contractor will be responsible for:

- Installing the existing licensed Centracs® software on new servers,
- Migrating the Phase A controllers from NEMA to 2070L models and to the Ethernet network over single mode fiber-optic cable,
- Installing firmware on the new 2070L controllers included in this project, and
- Adding Phase A controllers and associated devices to the Ethernet network over single mode fiber-optic cable that are not currently part of the system,
- Database modifications and conversions associated with the above items.

The intent is to maintain the current set of features already installed on the present installation.

Install traffic control system software that is already licensed to the City of Winston-Salem for the following applications:

- Distributed Processing System Software
- System Support Software

Install the following software as furnished by the Engineer:

- Local Controller Software (latest IP version of NCDOT's OASIS® software package)

The Contractor shall be responsible for the migration of, development of and integration of all system graphics (and associated system devices) described in the following specifications.

31.2. FUNCTIONAL REQUIREMENTS

(A) General

The overall architecture of the Centracs® system is a client server design based on hybrid centralized/distributed intersection control concepts.

Processing is distributed and the OASIS® IP communications protocol will be used for all intersection controller interfaces. Client workstations access a networked file server that perform traffic management, system communications, database management, and system graphics.

The Centracs® system is implemented using standard, commercially available computer hardware required in the "Computer Hardware and Peripherals" section of these Project Special Provisions. Windowing graphical user interfaces (GUI) using object-oriented design and geographically coded database components is an integral part of the system design. These elements form the basis of all user interactions with the system.

All software and firmware furnished under this project (both for individual field equipment locations and for central software) that maintain internal clocks and utilize those clocks for

display of time, reporting of time back to system users, reporting of time on reports and event logs, and/or use of internal time clock to coordinate actions and activities with other software or devices is able to adjust to leap-year and current day light savings time dates automatically without user intervention or adjustment.

(1) Local Area Network Requirements

A 10/100/1000 Base-T Ethernet, local area network (LAN) supports the distributed client/server architecture. The requirements for the LAN are in "Communications Hardware" section of these Project Special Provisions.

The software allows for a minimum of sixteen (16) simultaneous users (including remote users) of the traffic signal system applications software. No degradation in system performance shall occur when sixteen operators use the system simultaneously. Each user, subject to his or her security level, shall have full access for system control, database entry/examination, malfunction diagnosis, system operation evaluation and measures of effectiveness analysis. Access by any particular user to any particular command shall be allowed or disallowed based upon that user's assigned security level.

(2) Software License

Furnish software modifications necessary for system operation as per this Project Special Provision to the agency at no additional cost during the warranty period.

The software may be used at the City of Winston-Salem TMC, the Bryce Stuart Municipal building, the Signal Shop, NCDOT Division 9, or at any other offices in the State of North Carolina that the City and State, or their authorized agent, may establish for the purpose of traffic signal monitoring and control of the Winston-Salem signal system.

For any software functionality that is specifically developed for this project, the software developer shall provide hardcopy and digital copies of the un-compiled source code of the software. This source code must be fully documented and commented, so that an experienced programmer/developer (3 plus years) in the language(s) that the software is written may interpret, modify, and debug the code. The required software compilers shall be specifically and clearly identified and include the operating system platform, the version number, release number and date, and brand.

For copyrighted commercial off-the-shelf (COTS) software, a copy of the source code (both hardcopy and un-compiled digital commented as described in the preceding paragraph) shall be held in an escrow account by an independent agent agreed to prior to final acceptance of the system by the Department. The version of the source code in the escrow account shall be updated as modifications, fixes, enhancements, and improvements are made to the software and implemented on the software products used by the Department. In the event the provider of COTS software product(s) defaults, discontinues support of the software product(s) furnished under this project, goes out of business, or otherwise is unavailable to support the software product(s), the software source code contained in the escrow account shall immediately become the property of the Department.

Provide any third party software licenses to the Department and the City of Winston-Salem for software that may be used. Example: report-configuring, diagnostic, or monitoring software.

(3) Operating System

The operating system for all Centracs® software provided under this project shall be Microsoft Windows Server® 2008 and Microsoft Windows® 7 Professional Edition. The release used shall be the latest revision and service packs available as recommended by the supplier of the system software.

The network operating system (NOS) shall be Microsoft Windows Server® 2008 or approved equal and must be compatible with the traffic signal system software.

(B) Distributed Processing Signal System Software

(1) General

The Centracs® signal system software is not a prototype or software custom-developed for this project.

The Centracs® system software shall communicate directly with the local intersection 2070 controllers installed under this project. The Centracs® signal system software shall interface with the latest IP version of NCDOT's OASIS® local controller software package.

The Centracs® software provides central monitoring of up to 1000 intelligent controllers. The system design shall accommodate future expansion. The addition of new intersections and detectors, in the field, shall not require additional software or central hardware, except for modems or transceivers and shall require only modification of the control database.

All changes to the Centracs® system, including adding new controllers, configuring communications, modifying maps and intersection displays, etc., shall be performed through the system graphical user interface and by updating files in the system software folders. The use of initialization files and external editors will not be allowed.

(2) Power Failure

Interface Centracs® system software with the uninterruptible power supply. Upon detection of a loss of power, the system software shall notify the operator.

The traffic control program may suddenly stop execution for various hardware or software reasons. In such event, alarms shall alert the operator as to the problem and circuitry shall ensure against the transmission of erroneous data by the field communications subsystem.

In the event that the operator determines that the operation of the system is improper, he/she shall be able to immediately force all system intersections to an off-line, or a time-based coordination timing plan stored in the local controller (depending on the local day plan) from any system workstation.

(3) Backup Intersection Operation

The Centracs® system provides for backup intersection operation in case of failure of the ITS Application Server, ITS Backup Applications Server, ITS Communications Servers, or the communication system. This backup shall be accomplished by means of time-based coordination (TBC) provided by the local controller software.

When operating by centrally controlled scheduled events, the local controllers shall automatically implement local TBC, according to the day plan programmed into the controller whenever communication to central is absent.

When operating by centrally controlled manual commands, the local controllers shall continue to run according to those commands regardless of the state of communications.

(4) Clock Updates

Upon login, each workstation clock shall be automatically updated by the Microsoft Windows® operating system to the current time of the distributed system server clock.

(5) Remote Access

The Centracs® system allows full access to the system for a multiple user by means of Ethernet access through a secured firewall, using Microsoft Terminal Services or other means approved by the Department. The remote user shall be allowed to perform any functions, permitted by Terminal Services, and available to any other user with the same level of security regardless to where the user is physically located.

(6) Paging

The Centracs® system is capable of automatically sending alphanumeric messages (SMS – text messaging) to cellular telephones and email addresses upon detecting problems with the system or from any device. Malfunctions notifications shall also appear as a pop-up alarm, or similar notification approved by the department, on each workstation logged into the system. An audible alert shall be associated with a pop-up alarm, and configurable by the user.

(7) Field Communications

Within the Winston-Salem computerized signal system, traffic signal controllers will be integrated with field Ethernet edge switches that are arranged in redundant ring communications channels supporting a minimum twenty (20) traffic signal controllers on a dedicated communications channel. The software shall operate with a fully redundant communications network. Each controller will be connected to the system via a pair of optical fibers and field Ethernet switch. A channel consists of two fibers: one transmitting and the other receiving.

Each channel with its boundaries and the controllers and CCTV cameras contained within it are depicted on the cable schematic diagram shown in the Plans.

(8) Database Preparation

Complete all data entry necessary to implement the operation of the system software.

The City will furnish intersection timing information and coordination parameters (cycle, split, offset) for conversion by the Contractor into the new database. Any existing custom intersection displays will also be provided by the Department or the City. Otherwise, default intersection timing data and standard intersection maps will be utilized when configuring intersections onto the system. Program all system detectors shown in the Plans. Coordinate with the City to provide setup, naming/labeling, logging and any features required for the operation of all system detectors.

TOD/DOW plans, alarms and other information for the operation of the signal system shall be entered by the Contractor.

(9) System Function Monitoring

Verification of on-street system operation shall be incorporated in the new signal system. Operation of all controller equipment shall be monitored, with current displays and malfunctions

reported in near real-time. Continuous, polled communication shall occur from the local controller to the communication server.

(10) Database Backup and Restoration

The Centracs® system has a simple means of copying the database files from the hard disk to a removable storage device or archive server. All files required to restore the system to operation without the need to manually re-enter data shall be included on removable storage device.

(11) Graphical User Interface

In the existing software, graphical icons are used on the displays to represent system devices. The icons provide easy access to traffic control data (signal timing, geometric, etc.), real-time data (intersection, link status, etc.), the database, and graphical image files.

Update the GUI to include an intersection/link base map with windowed table reports and management input windows for all devices in this Project. The updated GUI provides interactive mechanisms to assist in creating, editing, and modifying editable dynamic graphic screens that are linked to system dynamic elements. As a result, all operator actions are immediately visible as a change in the system graphic.

Whenever possible, reuse maps, system graphics and intersection displays. The Contractor may import these maps, graphics and displays from the existing system.

System Graphics

The existing dynamic condition maps provide a simple mechanism for system navigation, presentation of status, and selections within the user interface.

Backgrounds for the system-wide graphic contain commercial vector images of geographically accurate maps or scanned images. These images are compatible with common GIS packages such as ARCGIS. These images shall be used as the display layers of real-time graphics displays. The graphics for the entire system shall use ESRI map objects embedded environment, or approved equivalent.

Backgrounds for the control section and intersection displays shall be .bmp or .jpg formats in the same format as the existing graphics.

All updates to the graphics for system maps, control section maps, and intersection displays shall be submitted to the Engineer for approval before being used in the software and any databases.

System Map

The update ESRI-based system-wide map or approved equivalent shall provide a dynamic display of the entire surveillance area. The system map shall include other layers the agency requires, including but not limited to, interstate highways, major arterial roads, railroads, jurisdiction boundaries, and bodies of water. It shall be possible to "zoom in" and "drill down" to any specific area of the map using the pointing device to select one corner of an area to view, and then select the opposite corner of the area to view. Zoom out capability shall also be provided.

The updated graphic shall dynamically display the status of the controllers (e.g., coordination, emergency vehicle preemption, railroad preemption, transition, free operation,

flashing, failure, intersection phase status). Intersection status and roadway links shall change color dynamically based on user definable color selection.

Intersection phase status (green, yellow and red) shall display in real-time on the intersection phasing icon. The intersection control status shall display as the background color on the intersection plan icon. Intersection plan information shall display as a number on the intersection plan icon.

Control Section Map

Create new default subsection maps/zones or areas to provide a display for signals within the project limits. The default displays will be called control section maps, and shall provide a more detailed display of selected zones or areas of the system. A control section shall be able to be called from the system map display via a double mouse click or from a drop down menu. A minimum of fifteen (15) control section displays shall be capable of being simultaneously displayed while the system map is open and the maximum number intersection display windows are open. The control section map interface shall be an integrated portion of the distributed processing system software and shall not be a stand-alone package.

The updated control section map shall provide a dynamic display of the signal system, including landmarks, streets, signalized intersections, interstate highways (if applicable), railroads (if applicable), system detectors, system detector actuation. Labels for these items shall also be displayed. All labeling shall be approved by the Engineer. The graphic shall also dynamically display the status of the controllers in the sub-area (e.g., coordination, emergency vehicle preemption, railroad preemption transition, free operation, flashing, failed, intersection phase status). Volume and occupancy levels shall be displayed as color bars on the map. Intersection phase status (green, yellow, and red) shall be displayed in real-time using arrow icons. Link status shall be shown as green for free flow or near free flow conditions. Yellow shall be shown for moderate congestion or transition conditions. Red shall be shown for congested conditions, and flashing red shall be used to indicate severe congestion or major delays. The control section display shall be capable of being dynamically sized by a workstation user. Resizing the window shall not reduce the amount of data displayed on a workstation monitor, and the same aspect ratio shall be monitored as before the resizing. The control section map graphic shall include a user-definable control section map title. North shall either be at the top or right side of the monitor when displaying a control sub-area. Vertical and horizontal scroll bars may be provided if the size of the sub-area is such that it cannot be displayed on a monitor at a scale (as determined by the Engineer) that is adequate for viewing by the operator. The City will provide to the Contractor the final control sections boundaries for each control section display to be developed by the Contractor. Submit a sample of a control section display or map for review by the Engineer.

Intersection Display

The intersection graphic shall display both static and dynamic information. The static information shall include the intersection name, geometrics of the intersection (including a graphic display of the number of lanes and their associated use), adjacent land use, the location of the controller, and a layout of the intersection with the intersections signal locations and number of heads. The dynamic information to be displayed shall include:

- All vehicle signal indications for each active phase, and up to sixteen (16) overlaps with red, yellow, and green indicators
- All pedestrian signal indications, for up to sixteen (16) active phases. WALK, flashing DONT WALK, and steady DONT WALK shall be shown
- Vehicle and pedestrian detector actuations for each active phase
- Cycle timer (central and local clocks)
- Timing plan in effect (with cycle length and offset)

Operational status of the intersection shall include the following, but not be limited to:

- Timing in effect (in coordination, TOD, TR, etc.)
- Status mode (transition, free operation, flash, preemption (railroad or emergency vehicle)
- Control mode (manual control, local control, failed, etc.)

The intersection display shall accommodate all OASIS® phasing.

The intersection display shall be capable of being dynamically sized by a workstation user. Resizing the window shall not reduce the amount of data displayed on a workstation monitor.

Provide intersection display graphics for the signals within the project limits. The City will provide any available existing templates for use by the Contractor.

(12) Intersection Monitoring

The status of each controller shall be monitored and any detected error condition is logged. Error conditions are stored in a form that specifies the type, date, and time of the error. Error processing is performed during both coordinated and free operations.

The software monitors for the following conditions:

Communications Status

The system software reports the present status of the communication system at the controller. Changes in status of the communication system are recorded in the system log.

Communication Error

If communication between the communications servers and local intersection is lost for a number of consecutive seconds, a failure is identified and an error message is logged and the intersection shall be dropped from system monitoring. Upon identification of a communications error, the software continuously attempts to re-establish communications to the intersection and regain monitoring of the intersection.

Flash Conditions

The system has the following flash mode capabilities:

- **Central Flash**: Individual intersections and control sections are capable of being placed on flash by operator command or schedule entry.
- **Cabinet Flash**: Cabinet flash mode is indicated when a controller enters flash via manual selection at the cabinet.
- **Conflict Flash**: Conflict flash results from a tripped conflict monitor at the local intersection. Conflict flash is logged as a failure by the software system.

The type of flash mode (central, cabinet, or conflict), the intersection name, date and time is logged for each entry or exit from flash.

Local Preemption

The system monitors and recognizes the occurrence of preemption at each local intersection. System log messages are recorded to note the beginning and ending times of local preemption and the type of preemption (e.g. emergency vehicle, railroad, etc.).

Implemented Local Manual Control

Local manual control is initiated and controlled by hardware at the intersection. The software identities any intersection that is in local manual control by means of a status message. When the local manual control status is removed, the local software initiates the transition back to normal operation and the system log messages are recorded at the start and end of local manual control condition.

Local and System Detectors

The system allows users to set up and gather detector data from local and system detectors for traffic responsive operation or other analytical purposes.

Timing Plans

An intersection timing plan is defined as a unique combination of cycle length, split and offset at an intersection.

(13) Intersection Control

The software allows any user to control and implement changes to any intersection controller via the GUI, either through scheduled events, manually controlled events, or time-of-day plans programmed in the local controller. All parameters and events that can be programmed from the controller front panel are available at central for remote implementation. Any aspect of the controller timing shall be assessable from central, and allow editing of all timings. Full upload and download of timings to controllers is also allowed.

(14) Security

Maintain the same security access as is configured in the existing system.

(C) Local Controller Firmware

Local controller firmware shall be the latest version of the NCDOT-approved IP-based controller firmware. The Engineer will furnish the latest version of the firmware at the time of burn-in. Request the firmware from the Engineer a minimum of seven business days prior to burn-in.

(D) System Support Software and Devices

(1) Productivity Software

Furnish a network version of the latest release of the Microsoft Office 2010, Professional Edition, including Excel, Access, Word, and PowerPoint. A license shall be provided for each workstation and notebook computer furnished with the project. Furnish and install a copy of the latest release of Microsoft Office 2010, Professional Edition, on each workstation and notebook computer furnished.

Include original installation disks or CD-ROMs for each software package. Provide full technical and maintenance support for all software.

31.3. INSTALLATION AND INTEGRATION

(A) General

Install and fully integrate the existing Centracs® distributed processing signal system software on new ITS Application Server called for in "Computer Hardware and Peripherals" section of these Project Special Provisions. Install and fully integrate the existing Centracs® distributed processing signal system software on each new workstation and notebook computers furnished under this contract into the Winston-Salem traffic signal system.

Install and fully integrate the existing Centracs® distributed processing signal system software with the new ITS Communications Server called for in "Computer Hardware and Peripherals" section of these Project Special Provisions as required.

Install all software furnished for the system in accordance with the procedures recommended by the software supplier.

Install a copy of the existing Centracs® distributed processing traffic signal system software and all communications software necessary to achieve remote operations on the new laptop computers.

Register all software products furnished with this project with the software supplier. The City of Winston-Salem and NCDOT shall be identified as the registered owners of all software.

(B) Distributed Processing Signal System Software

Install and integrate the distributed processing traffic control applications software and all other software with the communications system and local controllers to provide a traffic signal system that provides the functionality required by these Project Special Provisions.

Load all parameters necessary to implement coordinated signal operations. The Engineer will furnish the timing parameters in standard traffic engineering format (cycle, split, and offset) prior to the initiation of the 60-day observation period. Make any modifications to the cycle, split, and offset information furnished by the Engineer that are necessary to implement the timing plans into the system database. The test period may not begin until the timing parameters have been loaded. The Engineer may, at his/her option, observe the loading of the timing plans.

As directed by the Engineer, make modifications to the coordinated signal timing parameters (cycle, split and offset) prior to system acceptance to improve system coordination and efficiency. The Engineer will furnish the parameters to be modified by the Contractor. Make these modifications at no additional cost. No timing plan changes will be required after the successful completion of the system operational test (as approved by the Engineer).

Prepare comprehensive, detailed graphic displays for the system display, for all control section displays, and for all intersection displays. Contractor shall install all displays and fully integrate with system software. Submit all graphics to the Engineer for approval prior to use in the software and any databases.

Program all new system detectors installed under this project, and all existing system detectors being reused, in the signal system software. Install all associated graphics related to system detectors. Integrate system detector locations (based on the actual installation in the field) on all associated system graphics.

Submit specific landmarks and features to be displayed in the section and intersection displays to the Engineer for approval. Develop each screen upon approval of the areas to be displayed by each screen and make revisions as required from review.

(C) Local Controller Firmware

Install NCDOT-furnished local controller firmware on all new controllers. Use the latest IP-based version available at the time of installation as directed by the Engineer. Request local controller firmware from Engineer a minimum of five business days prior to use of software during burn-in period.

All controllers in the final Signal System shall have identical local software.

31.4. TESTING

Provide the following tests and demonstration of the system software:

- System Operational Test (as called for in "Testing and Acceptance" section)
- 60-Day Observation Period (as called for in the "Testing and Acceptance" section)

31.5. MEASUREMENT AND PAYMENT

Reinstall and modify signal system software shall be measured and paid as a lump sum. This shall include the furnishing, installing, testing, and all materials, third-party software for reporting, equipment, labor, tools, storage, shipping, and incidentals necessary to install the existing Centracs® software on new ITS servers, workstations and laptop computers furnished under this contract, complete system integration, and provide a complete operational system. Partial payment for this item will be made as follows: 50% of the lump sum price upon modification and installation of the software and 50% of the lump sum price upon successful completion of the Observation Period. No payment will be made for providing software license and source code as required in these Project Special Provisions.

System support software and devices shall be measured and paid as a lump sum. This shall include the furnishing, installing, and all materials, equipment, labor, tools, storage, shipping, and incidentals necessary to install and configure the software and provide a complete operating system. Payment for this item will be made as follows: 100% of the lump sum price upon

delivery, installation and testing of the software into the appropriate hardware. No payment will be made for providing software license and source code as required in these Project Special Provisions.

All other software and hardware otherwise required to accomplish the functionality required by the Project Special Provisions will not be paid for separately but will be considered incidental. No payment will be made for providing software license and source code as required in these Project Special Provisions.

Testing will not be paid for separately but will be considered incidental to equipment installation.

Payment will be made under:

Pay Item	**Pay Unit**
Reinstall and Modify Signal System Software	Lump Sum
System Support Software and Devices	Lump Sum

32. COMPUTER HARDWARE AND PERIPHERALS

32.1. Description

Furnish and install all materials with the most recently developed and approved product versions that meet or exceed all applicable standards, specifications, and requirements before the system is considered for acceptance. Ensure that all equipment features, functions, and performance measures are met.

Furnish, assemble, fabricate and install new products obtained from the manufacturer or reseller. Provide commercial off-the-shelf materials, equipment, and components.

Furnish and install ITS servers and two computer workstations in the TMC, one workstation in the Signal Shop and one workstation and one laptop in the Bryce Stuart Municipal Building. Ensure that all workstation and laptop computers can access the ITS LAN and can be used to monitor, interact, and control all critical input and output parameters of the traffic signal system and ITS devices.

(A) ITS Servers

Furnish and install ITS servers in the TMC as described in the Plans and these Project Special Provisions. Furnish and install one application server, two communications servers, and a backup server for system backups. Connect the ITS servers to the Gigabit Ethernet core switch and the UPS units.

(B) Computer Workstations

Furnish and install computer workstations consisting of a CPU, monitor(s), keyboard, UPS and mouse in the TMC, the Bryce Stuart Building and the Signal Shop

(C) Laptop Computers

Furnish and install one laptop computer consisting of the computer, two external monitors, UPS, power supply, carrying bag, and mouse for use by City staff in the Bryce Stuart Building.

(D) KVM Switch

Furnish and install a rack-mounted KVM switch assembly consisting of a monitor, keyboard, and mouse with switching hardware to control and access the servers supplied with this project.

(E) UPS

Furnish and install uninterruptible power supply (UPS) units for the following:

- The computer workstations, ITS Servers, Ethernet core and managed Ethernet switches, and video monitors in the TMC;
- The computer workstations, laptop computer and managed Ethernet switch in the Bryce Stuart Building; and
- The computer workstation and managed Ethernet switch in the Signal Shop.

Each UPS shall also include any ancillary equipment or incidental items, such as required mounting hardware and cabling.

(F) Existing Equipment

Remove all existing computer equipment from the TMC and Bryce Stuart Building as shown in the Plans.

32.2. MATERIALS

(A) ITS Servers

(1) Functional

The ITS servers shall integrate the workstations with other ITS systems and shall enable video and data accessibility and exchange between various systems. The servers shall function in automated fashion in unmanned mode supporting clients' control functions via ASN.1 and/or XML-defined protocols over TCP/IP. Provide the servers capable of operating in the following configurations:

- Single server configuration (environments with n*10 controlled objects).
- Multiple server configuration (environments with n*100 controlled objects).
- Thin server configuration (active control of local part in case of larger system).

Provide ITS servers meeting the following functional requirements:

- Handle commands from system clients via ASN.1 and/or XML defined protocol over standard TCP/IP connection.
- Command underlying nodes (devices such as encoders, video servers).
- Report status of system nodes and alarms.
- Monitor system nodes connections.
- Store recent alarms in internal database.
- Receive Simple Network Management Protocol (SNMP) traps generated by network infrastructure, translate SNMP traps as system alarms, and send alarms as SNMP traps.
- Support remote configuration and diagnostics.
- Restore video and connections in case of system component restarts.
- Support protocols: TCP, UDP, NTP and IP Multicast IGMP.

(2) Performance

Provide ITS application and backup servers meeting the following minimum requirements:

- Processor: Dual quad core Intel Xeon L5620 or better at 2.8 GHz or greater, 12 MB cache processor, Turbo, L2 cache at 1333 MHz,
- Memory: Minimum 8 GB single-ranked UDIMMS for two processors at 1333 MHz,
- Backplane: 1x6 backplane for 3.5 inch drives,
- Power Supply: Redundant power supplies with separate cords,
- Riser: Riser with two PICe x 8 and two PICe x slots
- Drive Controller: PERC6i SAS RAID 5 with PCIe 256 MB cache,
- Hard Drives: RAID 6 with 4x300 GB, 15k RPM serial SCSI drives, 3 Gbps, 3.5 inch, Hotplug,

- CD-ROM: DVD +/-RW SATA Drive, internal,
- Video Card: Integrated video chipset controller 8 MB SD RAM with 480 MB/s memory bandwidth and DirectX 5.0,
- Video Adaptor: SGVA,
- Mounting: Slide ready rails and cable management
- Network: Dual-port Gigabit Network Adaptor with TOE, PCIe-4, and
- Operating System: Microsoft Server 2008 Release 2 with Service Pack 2, Standard Edition and 5 CALs, and Microsoft SQL 2008 Standard Edition.
- Support Software: Microsoft SQL 2008.

Provide two ITS communications server meeting the following minimum requirements:

- Processor: Dual quad core Intel Xeon L5620 or better at 2.8 GHz or greater, 12 MB cache processor, Turbo, L2 cache at 1333 MHz,
- Memory: Minimum 8 GB, single ranked UDIMMS for two processors at 1333 MHz,
- Power Supply: Redundant power supplies with separate cords,
- Riser: Riser with two PICe x 8 and two PICe x slots
- Drive Controller: Internal PERC6i SAS RAID 6 with RAID 1 OS, 2x4 connectors, PCIe, 256 MB cache,
- Hard Drives: Raid 6 with 4x 73 GB, 15k RPM serial attached SCSI drives, 3 Gbps 3.5 inch, Hotplug,
- CD-ROM: DVD +/-RW SATA Drive, internal,
- Video Card: Integrated video chipset controller 8 MB SD RAM including 3D 60 MHz memory, 480 MB/s memory bandwidth and DirectX 5.0,
- Video Adaptor: SGVA,
- Mounting: Slide ready rails and cable management
- Network: Dual-port Gigabit Network Adaptor with TOE, PCIe-4, and
- Embedded Management: iDRAC6 Express, and
- Operating System: Microsoft Server 2008 Release 2 with Service Pack 2, Standard Edition and 5 CALs, and Microsoft SQL 2008 Standard Edition.

(3) Physical Features

Provide rack-mounted ITS servers for proposed enclosed 19-inch communications rack located in the TMC Server Room and the TMC. Provide servers with a maximum size of three RUs.

Provide servers meeting the minimum following power requirements:

- Power supply: 110-130 VAC.
- Power consumption: Typical 600-800 W per power supply.

Provide servers meeting the following data port requirements:

- Serial: One standard serial port,
- Audio: Three jacks – channel out, line in, and microphone.
- Ethernet: Dual 1000 Base T Ethernet with RJ-45 connectors as described above and
- USB port: Six USB 2.0 ports.

Provide servers with at least one direct 10/100 Base T Ethernet LAN interface. The network connector shall be RJ-45 for Category 5e UTP for interfacing with the signal system's Gigabit Ethernet core switch.

(B) Computer Workstations

(1) Functional

Provide computer workstations that can operate the signal system software and the video control software over an Ethernet network in the TMC, Signal Shop and the Bryce Stuart Municipal Building.

(2) Performance

Provide computer workstations meeting the following requirements:

- Processor: Quad core Intel Xeon i5 processor at 2.4 GHz or greater, 8 MB cache, L2 cache at 1333 MHz,
- Memory: 4 GB Dual Channel DDR2 ECC SDRAM, 1066 MHz,
- Network: 10/100/1000 Base T Ethernet PCI Express with RJ-45 connector,
- Hard Drive Controller: C1, All SATA drives, non-RAID,
- Hard Drive: 250 GB SATA, 3.0 Gbp/s, operating at 7200 RPM, 8 MB data burst cache,
- CD-ROM: 16X DVD and 16x DVD+/- RW,
- Keyboard: USB 104-key model,
- Mouse: USB 3-button optical mouse with center scroll,
- Sound: 16-bit integrated audio with external speakers,
- Video Card: 512 MB PCIe with dual DVI video outputs,
- Video Output: RGB and DMI connector,
- Desktop Monitor Color: 16.7 million colors,
- Operating System: Windows® 7 Professional, latest version,
- Application software: Enterprise version of Norton antivirus software compatible with City requirements, and DVD burning software, and
- Desktop Monitors: LED, dual 23-inch, digital flat panel display, DVI-D, HDCP Display ports,
  - USB Ports: One USB upstream port and three downstream ports,
  - Resolution: 1,920 x 1,080 dpi,
  - Pixel Pitch: 0.265 mm
  - Viewing Angle: 178 degrees vertically and horizontally
  - Contrast Ratio: 1,000:1 (typical) and 10,000:1 (dynamic)
  - Brightness: 300 cd/m^2
  - Colors: 16.7 million colors.

For the workstation in the Signal Shop, use dual video output card to drive the workstation monitor and one wall monitor as follows.

(3) Physical Features

Provide computer workstations meeting the minimum power requirements:

- Input voltage: 90-135 V at 50/60 Hz,
- Output wattage: 460 W, and
- Heat Dissipation: 93.1 BTU/hour (fully loaded computer without monitor).

Provide computer workstations meeting the minimum port requirements:

- Keyboard: One USB connection,
- Mouse: One USB connection,
- Audio: Miniature phono jacks – line out, line in, and microphone,
- Ethernet: 10/100 Base T Ethernet with RJ-45 connector, and
- USB Port: At least 4 rear and 2 front USB 2.0 ports (min. 6 total)

Equip all computer workstations with at least one direct 10/100 Base T Ethernet LAN interface. The network connector shall be RJ-45 for Category 5e or 6 UTP for interfacing with the Gigabit Ethernet core switch.

(C) Laptop Computers

(1) Functional

Provide one laptop computer that can operate the signal system software and the video control software over an Ethernet network in the Bryce Stuart Municipal Building.

(2) Performance

Ensure that the laptop computer meets the following requirements. Ensure that the laptops have the capability to be networked with ITS LAN via an Ethernet cable connection through the Gigabit Ethernet core switch located in the TMC and over the Internet. Configure the laptop computers for connection anywhere in the network to facilitate maintenance and troubleshooting activities.

- Processor: Intel dual core Xeon i5-2540M at 2.46 GHz or greater, 2x6MB cache processor, L2 cache at 800 MHz,
- Memory: 8 GB DDR3, 1133 MHz,
- Network: Integrated 10/100/1000 Base T Ethernet with RJ-45 connector, 802.11g wireless LAN card,
- Hard Drive Controller: C1, All SATA drives, non-RAID,
- Hard Drive: 500 GB SATA operating at 7200 RPM,
- CD-ROM: 8X DVD+/-RW combo drive,
- Keyboard: 104 key model,
- Mouse: USB, 2 three-button optical mice,
- Audio: Miniature phono jacks – line out, line in, and microphone
- Sound: Integrated audio with external speakers,
- Modem: 3G Data/Fax card,
- Video Adaptor: 4X AGP with 1 GB GDDR5 video,

- Internal Monitor: 16.5-inch HD, LED,1366 x 768,
- Desktop Monitor: LED, dual 23-inch, digital flat panel display, DVI-D, HDCP Display ports,
  - USB Ports: One USB upstream port and three downstream ports.
  - Resolution: 1920 x 1,080 dpi,
  - Pixel Pitch: .265 mm
  - Viewing Angle: 178 degrees vertically and horizontally,
  - Contrast ratio: 1000:1 (typical and 10,000:1 (dynamic)
  - Brightness: 300 cd/m^2,
  - Colors: 16.7 million colors,
- Operating System: Windows® 7 Professional, latest version,
- Application software: Enterprise version of Norton antivirus software compatible with City requirements, and DVD burning software, and
- Other Accessories: Two AC adaptors per laptop, spare battery and nylon travel bag and docking station.

(3) Physical Features

Ensure that the laptop computer operates on an input voltage of 90 to 135 VAC at 50/60 Hz. Provide laptop computers meeting the following minimum port requirements:

- Audio: Three jacks – channel out, line in, and microphone,
- Ethernet: 10/100 Base T Ethernet with RJ-45 connector, and
- USB Port: Two USB 2.0 ports.
- Monitor: LED, anti-glare screen (for outdoor use in sunlight)

Equip the laptop computer with at least one direct 10/100 Base T Ethernet LAN interface. Ensure that the network connector is an RJ-45 for Category 5e UTP to interface with the Gigabit Ethernet core switch.

(D) KVM Switch

(1) Functional

Provide keyboard-video-mouse (KVM) assembly that can access and provide operator interface for at least six (6) servers. The KVM switch may have either an integral tilt-up screen or a separate screen.

(2) Performance

Provide KVM meeting the following requirements:

- Meets EIA-310C & IEC-3 specifications,
- The KVM assembly shall include KVM switch, keyboard, flat screen display, and associated cabling,
- Port selection by pushbuttons, on-screen display, or hot keys,
- Remotely accessible over the network,
- Active port status LEDs,
- Administrative and user assignable rights,
- IP addressable,
- Compatible with Windows® 7 Professional and Windows® Server 2008,

- Support video resolution up to 1,600 x 1,200 at 75 Hz, and
- Servers: Minimum of six.

(3) Physical Features

Furnish a KVM switch meeting the following material requirements:

- Monitor: Integrated or separate 17-inch, TFT 1,280 x 1,024, 27 dpi, SGVA, LED, folding rack-mounted, contrast ratio of 350:1, frame rate of 60Hz (typ.), 75Hz (Max),
- Keyboard: 104 key model,
- Mouse: Touch pad,
- KVM switch: Rack-mounted, maximum 2 RU size,
- Cabling: All power, keyboard, mouse and display cabling between each server and the KVM assembly; and mounting brackets, and
- Power Supply: 120 VAC.

(E) UPS

(1) Functional

Provide UPS units that produce uninterruptible power and power conditioning for the computer workstations, ITS Servers, and laptop computer in the TMC, the Bryce Stuart Building and the Signal Shop

Each UPS shall provide adequate capacity to run its respective workstation and monitor(s) without commercial power for twenty minutes. Provide load calculations for each configuration of equipment connecting to a UPS.

(2) Performance

Provide UPS meeting the following performance requirements:

- Output voltage distortion: less than 5 percent,
- Nominal input voltage: 120V,
- Nominal output voltage: 120V,
- Input frequency: 50/60 Hz ±3Hz, auto-sensing,
- Output frequency (sync to mains): 57-63 Hz for 60 Hz nominal frequency,
- Waveform type: Sine wave, and
- Noise filtering: Full time multi-pole noise filtering shall meet 0.3% IEEE surge let-through; zero clamping response time shall meet UL 1449.

Verify that the UPS meets all specifications and is capable of performing all of its functions during and after being subjected to:

- Operating temperature: 0-104° F,
- Operating relative humidity: 95%,
- Storage temperature: 5-113° F, and
- Storage relative humidity: 95%.

(3) Physical Features

Supply each UPS unit with twenty-five (25) percent spare outlets. Ensure that the UPS meets the following material requirements:

- Floor mounted for all workstations and laptops at all locations
- Sealed AGM type, maintenance free batteries,
- USB interface port,
- Status Lights: power on, power source and overload,
- Alarms: audible and remote notification, and
- Manual power on/off switch.

Supply UPS unit with multi-pole noise filtering. Ensure that the UPS remote monitoring software performs the following functions:

- Data logging,
- Event logging,
- Fault notification,
- Unattended system shutdown,
- Hibernation,
- Operating system shutdown, and
- Power event summary.

32.3. CONSTRUCTION REQUIREMENTS

(A) General

Receive approval for the System Design Report described in these Project Special Provisions before submitting products submittal data, purchasing, installing and configuring the computer and communications hardware at each facility. Implement the plan upon approval.

Integrate all servers, workstations, laptops, and printers on the ITS LAN so all applications will be fully functional. Install the operating system, software and antivirus software to the City IS standards.

Furnish all tools, equipment, materials, supplies, and manufactured hardware, and perform all operations and equipment integration necessary to provide a complete, fully operational network. Mount all equipment as shown in plans in enclosed 19" communications racks. All cabling shall be:

- Neatly tagged with permanent labels at both ends of every cable,
- Secured with wire ties and cable management hardware in the communications racks, and
- Grounded to rack grounding hardware.

Ensure that all project IP addresses are assigned as defined in the System Design Report. Ensure the as-built documentation includes the identification of all IP addresses and VLANs, and associated hardware devices and device locations.

(B) ITS Servers

Install the ITS servers in the proposed enclosed 19-inch communications rack located in the TMC. Install the software packages described in these Project Special Provisions.

Install all software necessary to support the signal system software and to meet all of the data communications requirements described in these Project Special Provisions, including once-per-second polling of all traffic signal controllers.

Connect the existing and proposed ITS servers to the managed Ethernet switch. Install Ethernet patch cords between the Ethernet patch panel and the managed Ethernet switch in the TMC. Plug power supplies into outlets on separate circuits. Connect servers to KVM switch. Power up and run diagnostics.

Configure the ITS LAN for remote access through the firewall with remote access software for up to four laptop licenses.

(C) Computer Workstation

Install the computer workstations in locations as shown in the Plans. Install the client software packages described in these Project Special Provisions.

Connect the workstations to the ITS LAN by installing Ethernet patch cords between the Ethernet patch panel and the managed Ethernet switch in the TMC. Perform the following operational tests for each computer component in accordance with the test plans. After the equipment has been installed, perform the following:

- Connect all components (monitors, mice, keyboards, existing printers, network cables, power supplies),
- Install all software required in these Project Special Provisions,
- Configure network communications,
- Map network drives and existing printers,
- Run diagnostic utilities on the hardware, and
- Print test pages for each workstation on each existing printer to verify printer configuration.

(D) Laptop Computers

Install the laptop computer with supporting hardware in the Bryce Stuart Building. Connect the laptop to the ITS LAN through the managed Ethernet core switch in the Bryce Stuart Building.

Perform the following operational tests for each computer component in accordance with the test plans. After the equipment has been installed, perform the following:

- Connect all components (monitors, mice, keyboards, existing printers, network cables, power supplies),
- Install all software required in these Project Special Provisions,
- Configure network communications,
- Map network drives and existing printers,
- Run diagnostic utilities on the hardware, and
- Print test pages for each laptop on the existing printer to verify printer configuration.

(E) KVM Switch

Install the KVM assembly in the enclosed 19-inch communications rack with the ITS servers. If the rack does not have enough room for an external monitor, then mount the external monitor on the top of the rack.

After the KVM assembly has been installed, perform the following operational tests on the KVM assembly in accordance with the test plans:

- Connect all existing and proposed servers, monitors, keyboards, mice, and power supplies,
- Program the on-screen display to assign ports and bank numbers and to enter the names of each server in the menu,
- Program the KVM switch for scan features and access privileges, and
- Select each server and ensure the mouse and keyboard work the selected server and the monitor displays the appropriate server.

(F) UPS

Install UPS units in the TMC, the Bryce Stuart Building and the Signal Shop as close as possible to their respective equipment. Connect the UPS unit to a power outlet. Connect the UPS monitoring port to a USB port on its respective workstation.

Install the UPS monitoring software on the workstations in the TMC, the Bryce Stuart Building and the Signal Shop for remote monitoring of the respective UPS units. Configure the remote monitoring to send email alerts. Run the UPS diagnostics.

(G) Existing Equipment

Reuse the existing printer in the TMC. Reuse the newly installed (by others) CCTV server. Reconnect the CCTV server and map the server drives on the ITS LAN.

Remove all existing servers, computers, monitors, and associated support equipment designated to be removed in the Plans and these Project Special Provisions. Deliver all servers, workstations and flat screen monitors to the City. Dispose of all other equipment.

32.4. DOCUMENTATION

Furnish the Department two copies of the following materials prior to acceptance: installation, operation, training and troubleshooting manuals, wiring diagrams, including cable pinouts, parts lists, warranty materials, and serial and model numbers of all equipment furnished. Furnish all software and operating system on CD or DVD with original license information registered to the City of Winston-Salem.

32.5. WARRANTY

Provide a minimum of three-year manufacturer's warranty to guarantee the materials supplied are free of defects and workmanship. The manufacturer's warranty period starts upon the date of final acceptance.

32.6. MEASUREMENT AND PAYMENT

ITS server will be measured and paid as the actual number of ITS servers furnished, installed, and accepted.

Computer workstation will be measured and paid as the actual number of computer workstations with monitor(s), keyboard, UPS, mouse, operating system, and software furnished, installed, and accepted.

Laptop computer will be measured and paid as the actual number of laptop computers with external monitors, keyboard, UPS, mouse, AC adaptors, spare battery, nylon travel bag, docking station, operating system, and software furnished, installed, and accepted.

KVM switch will be measured and paid as the actual number of KVM switches furnished, installed, and accepted. If a separate LED monitor is provided, then no separate measurement and payment will be made for the monitor.

No separate measurement will be made for coaxial cables, communication cables, electrical cables, mounting hardware, nuts, bolts, brackets, connectors, risers, grounding equipment, or surge suppression, as these will be considered incidental to the pay items for ITS server, laptop and workstation computer, and KVM switch.

No separate measurement will be made for UPS units supplied with each workstation and laptop computer. The UPS units for workstation computers will be considered incidental to the pay items for workstation and laptop computers.

No measurement and payment will be made for removal of existing computer hardware and peripherals and existing communications hardware in the TMC, the Bryce Stuart Municipal Building and the Signal Shop as such work will be considered incidental to furnishing and installing computer hardware and peripherals and communications hardware at those locations.

Payment will be made under:

Pay Item	**Pay Unit**
ITS Server	Each
Computer Workstation	Each
Laptop Computer	Each
KVM Switch	Each

33. COMMUNICATIONS HARDWARE

33.1. DESCRIPTION

Furnish and install all equipment described below for a fully functional Gigabit Ethernet network for communication to the signal system and CCTV.

(A) Managed Ethernet Core Switch

Furnish and install a central Layer 3 managed Gigabit Ethernet core switch along with a Category 5e/6 patch panel for the TMC. Ensure that the manage Ethernet core switch provides Gigabit Ethernet connectivity at transmission rates of 1000 megabits per second (Mbps).

(B) Firewall

Furnish and install firewall appliances in the TMC to provide network security from Internet-based traffic, as well as to provide an IPsec Virtual Private Network (VPN) connectivity.

(C) Managed Ethernet Switch

Furnish and install managed Ethernet switches for use in the TMC, in the Signal Shop and as field routing switches in hub cabinets. Ensure that the managed Ethernet switch provides wire-speed, Ethernet connectivity at transmission rates of 1000 megabits per second to/from each device on the switch to the core switch.

Reuse the existing managed Ethernet core switch in the TMC as the managed Ethernet switch in the Bryce Stuart Building.

(D) Ethernet Edge Switch

Furnish and install a hardened, field Ethernet edge switch (hereafter "edge switch") for field devices. Ensure that the edge switch provides wire-speed, Ethernet connectivity at each device location to the managed Ethernet switch.

(E) UPS

Furnish and install floor and rack-mounted uninterruptible power supply (UPS) units as described in this Project Special Provision for the Ethernet core switch, firewall, video monitors, and servers in the TMC, managed Ethernet switch in the Signal Shop and the managed Ethernet switch in the Bryce Stuart Building and the hub cabinets. Each UPS shall also include any ancillary equipment or incidental items, such as required mounting hardware and cabling. Furnish and install monitoring software to provide email alerts.

Furnish all materials with the most recently developed and approved product versions that meet or exceed all applicable standards, specifications, and requirements before the system is considered for acceptance. Size the UPS to provide at least 20 minutes of UPS power. Provide the UPS a 25% reserve of receptacles. Provide load calculations for each configuration of equipment connecting to a UPS.

(F) SMFO Contact Mapping Transmitters and Receivers

Furnish and install 8-channel contact mapping (i.e., contact closure) SMFO transmitters and receivers to reinstate an existing exit ramp queue detection and signal preemption system on Broad Street at its interchange with Business 40.

(G) Network Management Software

For the communications network, utilize the existing network management software (NMS) for configuration, troubleshooting, security, and system monitoring. The Contractor shall modify the current system configuration to include all of the Ethernet core, managed Ethernet and Ethernet edge switches, firewall, network video recorder, and other Ethernet devices installed on the project.

Install the existing network management software on all relevant proposed communications hardware installed under this project, including workstations, laptops and servers, as recommended by the manufacturer's instructions. Ensure that the system is interoperable with all end-to-end communications elements (i.e., video encoder, edge switch, managed Ethernet switch, managed Ethernet core switch, video decoder) that connect each CCTV camera to analog and digital video monitors.

(H) Hub Cabinet

Furnish and install air-conditioned cabinets to house managed Ethernet switches described herein. Size the cabinet appropriately to fit all the equipment installed within the cabinet at the particular location. Size the cabinet to ensure ease of access to equipment and provide proper ventilation in order to maintain an internal operating environment that does not exceed the environmental operating ranges for devices placed within the cabinet.

(I) IS Hub Cabinet

Furnish and install non-air-conditioned cabinets to house IS splice centers installed under this project as well as future IS communications equipment (by others). Provide the same size and style cabinet as provided for the communications hub cabinet for the signal system.

33.2. MATERIALS

(A) General

Ensure that the Ethernet switches are fully compatible and interoperable with the trunk Ethernet network interface and that the Ethernet switches support half and full duplex Ethernet communications.

Furnish Ethernet switches that provide 99.999% error-free operation, and that complies with the Electronic Industries Alliance (EIA) Ethernet data communication requirements using single-mode fiber-optic transmission medium and copper transmission medium. Ensure that the Ethernet switches have a minimum mean time between failures (MTBF) of 10 years, or 87,600 hours, as calculated using the Bellcore/Telcordia SR-332 standard for reliability prediction.

Provide all SMFO jumpers required to connect the managed Ethernet core switch, managed Ethernet switches, and Ethernet edge switches with the connector panels of fiber-optic splice centers. Provide SMFO jumpers with factory-assembled LC connectors one end (i.e., the fiber-optic interconnect center/connector housing end) and, on the other end, factory-assembled connectors of the same type provided on the managed Ethernet core switch, managed Ethernet switch and Ethernet edge switch. Provide SMFO jumpers that are a minimum of 3 feet in length for Ethernet switches inside controller cabinets, CCTV cabinets, the Bryce Stuart Municipal Building and the Signal Shop. Furnish SMFO jumpers that are a minimum of 6 feet in length for the communications racks inside the TMC. Ensure SMFO jumpers meet the operating characteristics of the SMFO cable with which it is to be coupled.

(B) Managed Ethernet Core Switch

(1) Standards

Provide a managed Ethernet core switch that complies with the following IEEE networking standards for Ethernet communications:

- IEEE 802.1D Spanning Tree Protocol (STP),
- IEEE 802.1P Quality of Service (QoS),
- IEEE 802.1Q Virtual Local Area Networks (VLAN Tagging),
- IEEE 802.1S Multiple Spanning Tree Protocol (MSTP),
- IEEE 802.1X Port-Based Network Access Control,
- IEEE 802.1W Rapid Spanning Tree Protocol (RSTP),
- IEEE 802.3X Flow Control,
- IEEE 802.3Z Standards Compliant 1000 Base-SX and 1000 Base-LX optics,
- IEEE 802.3ad Link Aggregation,
- RFC 821 – Simple Mail Transfer Protocol,
- RFC 854 – Telnet Protocol Specification,
- RFC 1112 – IGMP v1,
- RFC 2131 – Dynamic Host Configuration Protocol for IPv4,
- RFC 2236 – IGMP v2,
- RFC 3315 – Dynamic Host Configuration Protocol for IPv6 (DCHCPv6),
- RFC 3376 – IGMP v3,
- RFC 2362 – Protocol Independent Multicast Sparse Mode (PIM-SM),
- RFC 3973 – Protocol Independent Multicast Dense Mode (PIM-DM),
- RFC 2328 – Open Shortest Path First (OSPF) v2,
- RFC 2338 – Virtual Router Redundancy Protocol (VRRP),
- RFC 2570:2575 – SNMP v3,
- RFC 2030 – Simple Network Time Protocol (SNTP), and
- RFC 2267 – Denial of Service (DoS).

Ensure that the managed Ethernet core switch has a minimum mean time between failures (MTBF) of 10 years, or 87,600 hours, as calculated using the Bellcore/Telcordia SR-332 standard for reliability prediction.

(2) Functional

Provide a managed Ethernet core switch that is capable of a minimum 600 Gbps total switching capacity. Ensure the Ethernet core switch complies with the EIA's Ethernet data communication requirements using a single-mode fiber-optic transmission media; and Category 5e copper transmission media.

Provide a chassis-type design with a minimum of eight (8) slots that meets the following minimum requirements:

Power:

- Redundant power supplies,
- Hot swappable,
- 110 VAC single phase power source,
- Switch fabric / processor, and
- Redundant switch fabric modules.

I/O:

- Minimum of six (6) I/O slots,
- Ethernet single mode fiber-optic blades shall support a minimum of 24 ports per blade at full wire speed with support for Standard (10 km) and Long Haul (70+ km) optics, and
- Ethernet copper blade shall support a minimum of 24 ports per blade at full wire speed.

Security Features:

- IEEE 802.1X – RADIUS Authentication,
- TACACS+,
- Secure Shell (SSH v2),
- Access Control List (ACL), and
- Denial of Service (DoS) Protection.

Ports: Provide auto-negotiation circuitry that automatically negotiates the highest possible data rate and duplex operation possible with attached devices supporting the IEEE 802.3 Clause 28 auto-negotiation standard.

Optical Ports: Ensure that all single mode fiber-optic link ports operate at 1310 or 1550 nanometers. Provide fully-functional ports with Type LC connectors and the optics for the optical ports as specified in the Plans or by the Engineer. Do not use mechanical transfer registered jack (MTRJ) or ST type connectors. Provide 24 fully functional single mode fiber-optic 1 Gbps ports with optical transceivers installed in the managed Ethernet core switch. Each optical transceiver shall consist of fiber pairs; one fiber will transmit (TX) data and one fiber will receive (RX) data. Provide GBICs or small form-factor plug-able (SFP) ports with 10 km or 25 km optics.

Provide short range 1 Gbps optical transceivers as specified in the Plans or by the Engineer. Each transceiver consists of fiber pairs; one fiber will transmit (TX) data and one fiber will receive (RX) data. Provide optical transceivers that meet the following minimum requirements:

- Optical receiver sensitivity: -20 dBm,
- Optical transmitter power: -9.5 dBm,
- Maximum transmission distance: 10 km, and
- Operating wavelength: 1310 nm.

Copper Ports: Provide 24 fully functional copper ports installed in the Ethernet core switch. Provide copper ports that are Type RJ-45 and that auto-negotiate speed (i.e., 10/100/1000 Base) and duplex (i.e., full or half). Ensure that all 10/100/1000 Base TX ports meet the specifications detailed in this section and are compliant with the IEEE 802.3 standard pinouts. Ensure that all

Category 5e unshielded twisted pair/shielded twisted pair network cables are compliant with the EIA/TIA-568-A standard.

Ensure that the managed Ethernet core switch (10/100/1000 Mbps ports) supports jumbo frames and full Layer 3 routing. Ensure that the switch includes support for dynamic unicast routing protocols such as RIPv1/v2 and OSPF, and support for multicast routing protocols, including PIM-SM, PIM-DM, and DVMRP.

Port Security: Supply a Ethernet core switch that supports/complies with the following (remotely) minimum requirements:

- Ability to configure static MAC addresses,
- Ability to disable automatic address learning per port, known hereafter as Secure Port. Secure Ports only forward data for pre-defined / learned MAC addresses, and
- Trap and alarm upon any unauthorized MAC address and shutdown for programmable duration. Port shutdown requires administrator to manually reset the port before communications are allowed.

(3) Physical Features

Physical: Provide a managed Ethernet core switch that is rack mountable into a standard 19-inch EIA rack and not exceed 15 RU in height. Provide all mounting kits, brackets, and hardware for mounting into a standard 19-inch rack.

Power Supply: Provide the managed Ethernet core switch that is equipped with auto-sensing, auto-switching primary and redundant power supplies. Ensure that the design and construction of the core and switch permits swapping of the power supplies while the switch is running without opening the chassis and that the removal of one of the power supplies shall not interrupt switch operation and outputs of video decoders (hot-swappable).

Chassis Fan Assembly: Equip the managed Ethernet core switch with at least one cooling fan assembly per power supply to cool the CPU, main memory, and voltage regulators. Ensure that the fan has sufficient capacity and airflow to cool the switch.

(4) Electrical Specifications

Ensure that the managed Ethernet core switch operates and power is supplied with 115 volts of alternating current (VAC) at 60 Hz input frequency. Ensure that the managed Ethernet core switch has a minimum operating input of 110 VAC and a maximum operating input of 130 VAC. Ensure that if the device requires operating voltages other than 120 VAC, supply the required voltage converter. Ensure that the maximum power consumption does not exceed 1500 watts for the Ethernet core switch. Ensure that the managed Ethernet core switch and GBICs have diagnostic light emitting diodes (LEDs), including link, TX, RX, speed (for Category 5e ports only), and power LEDs.

(5) Performance Requirements

Ensure that the Ethernet core switch includes management capabilities, as defined in the following:

- Have a non-blocking architecture,
- Route and switch unicast and multicast traffic simultaneously at wire speed,

Support fully redundant load sharing and hot swappable power supplies (N+1 support),

(6) Management Capabilities

Ensure that the managed Ethernet core switch includes management capabilities, as defined in the following:

- Incorporate an internal temperature sensor capable of sending system log and/or SNMP traps should the switch exceed a specified warning level,
- Support automatic powering off should the temperature exceed a specified level to prevent damage to the switch,
- Support port mirroring and monitoring to aid in troubleshooting,
- Be capable of utilizing the following standard protocols:
  - Support VLAN (IEEE 802.1Q),
  - Support Multiple Spanning Tree Protocol (IEEE 802.1Q-2005),
  - Support Rapid Spanning Tree Protocol (IEEE 802.1W),
  - Support IGMP Versions 1 and 2 (RFC 1112 and 2236),
  - Support RIP Versions 1 and 2 (RFC 1058 and 1723),
  - Support OSPF Version 2 (RFC 1583 and 2328),
  - Support PIM (SM & DM),
  - Support IGMP Version 1 and 2 (RFC 1112 and 2236),
  - Support DVMRP,
  - Support VRRP (RFC 2338),
  - Support ToS/DSCP mapping to priority queue,
  - Support QoS queue management using weighted round robin (WRR) and strict priority (SP),
  - Support 10/100/1000 BaseTX ports (RJ-45),
  - Support a minimum of (2) 10-Gigabit Ethernet ports per blade,
  - Support Flow Control (IEEE 802.3x),
  - Support Gigabit Ethernet (IEEE 802.3z),
  - Support SNMP Version 1 and 3,
  - Support 4 groups of RMON-I (Groups 1-3, 9),
  - Be managed through console (RS-232), telnet, and Web interface, and
  - Support download and upload of images and configurations via TFTP.

Ensure that the managed Ethernet core switch fully supports all Layer 2 and Layer 3 management features related to multicast data transmission and routing, including, but not be limited to:

- An STP healing/convergence rate that meets or exceeds specifications published in the IEEE 802.1 D standards.
- An RSTP healing/convergence rate that meets or exceeds specifications published in the IEEE 802.1w standard.
- A core switch that is a port-based VLAN and supports VLAN tagging that meets or exceeds specifications as published in the IEEE 802.1Q standard.
- A multicast forwarding database that supports a minimum of 2048 entries in hardware.

- A forwarding/filtering rate that is a minimum of 14,880 packets per second for 10 megabits per second and 148,800 packets per second for 100 megabits per second.
- Support of Traffic Class Expediting and Dynamic Multicast Filtering.
- Support of, at a minimum, Version 2 of the Internet Group Management Protocol (IGMP).
- Support of remote and local setup and management via telnet, Secure Shell (SSHv2) or secure Web-based GUI and command line interfaces.
- Support of the SNMP protocol.
- Verify that the Ethernet core switch can be accessed using the resident EIA-232 management port, a telecommunication network, or the Trivial File Transfer Protocol (TFTP).
- Port security through controlling access by the users. Ensure that the Ethernet core switch has the capability to generate an alarm and shut down ports when an unauthorized user accesses the network.
- Support of the TFTP-and the SNTP. Ensure that the Ethernet core switch supports port mirroring for troubleshooting purposes when combined with a network analyzer.

(7) Environmental Specifications

Supply a managed Ethernet core switch that adheres to the following environmental constraints:

- Operating Temperature Range: 32° F to 104° F,
- Storage Temperature Range: 14° F to 158° F, and
- Operating Relative Humidity Range: 10% to 95%, noncondensing.

(C) Firewall

(1) Standards

Ensure that the firewall appliances comply with all applicable IEEE networking standards for Ethernet communications, including but not limited to:

- RFC 854: Telnet Protocol Specification.
- RFC 4271: Border Gateway Protocol (BGP).
- RFC 2328: Open Shortest Path First (OSPF).
- RFC 2338: Virtual Router Redundancy Protocol (VRRP).
- RFC 2453: Routing Information Protocol (RIP) version 2.
- RFC 2362: Protocol Independent Multicast Sparse Mode (PIM-SM).
- RFC 2236: Internet Group Management Protocol (IGMP) version 2. and
- IEEE 802.1X: Port-Based Network Access Control.

Ensure that the firewall appliances have a minimum mean time between failures (MTBF) of 10 years, or 87,600 hours, as calculated using the Bellcore/Telcordia SR-332 standard for reliability prediction.

(2) Performance Requirements

Ensure that the firewall appliances meet the following minimum performance requirements:

- Firewall Throughput: 350+ Mbps.
- Advanced Encryption Standard (AES) VPN Throughput: 100 Mbps.

- 3DES Encryption VPN Throughput: 100 Mbps.
- Maximum Concurrent Sessions: 48,000.
- Virtual Routers: 6, and
- Security Zones: 40.

Provide sufficient memory to enable optional features such as IPS, antivirus, and anti-spam with no additional hardware upgrades.

(3) Functional Requirements

Ensure that the firewall appliances support the following features which shall include, but not be limited to:

- IPsec VPN Capabilities:
  - 500 Concurrent VPN Tunnels.
  - DES, 3DES, and AES.
  - MD-5 and SHA-1 Authentication.
  - Manual Key, Internet Key Exchange (IKE), IKEv2, and EAP Public Key Infrastructure (PKI) (X.509).
  - Remote Access VPN.
- Authentication:
  - Web-based Authentication.
  - RADIUS.
  - 802.1X.
  - RSA SecureID.
- Modes of Operation:
  - Layer 2 Mode.
  - Layer 3 Mode.
- Address Translation:
  - Network Address translation (NAT).
  - Port Address Translation (PAT).
  - Mapped IP (MIP) (L3 Mode).
  - Virtual IP (VIP) (L3 Mode).
- High Availability (HA):
  - Active/active – L3 mode.
  - Active/passive – Transparent & L3 mode.
  - Configuration Synchronization.
  - VRRP.
- Quality of Service / Traffic Management:
  - Guaranteed Bandwidth.
  - Maximum Bandwidth.
  - Priority Bandwidth Utilization.
- Support for optional Intrusion Prevention System (IPS) (Deep Inspection) subscription.
- Support for optional Antivirus, antispam, and web filtering subscription.
- Network Attack Detection.
- DoS and DDos Protection.

- TCP Reassembly for Fragmented Packet Protection.
- Brute Force Attack Mitigation.
- SYN Cookie Protection.
- Zone-based IP Spoofing, and
- Malformed Packet Protection.

(4) Physical Features

Copper Ports: Provide a firewall appliance that includes a minimum of six (6) Ethernet 10/100 Base-T copper ports and two (2) Ethernet 10/100/1000 Base-T copper ports. Provide Type RJ-45 copper ports that auto-negotiate speed (i.e., 10/100/1000 Base) and duplex (i.e., full or half). Ensure that all ports meet the specifications detailed in this section and are compliant with the IEEE 802.3 standard pinouts. Ensure that all Category 5e unshielded twisted pair/shielded twisted pair network cables are compliant with the EIA/TIA-568-B standard. Provide auto-negotiation circuitry that will automatically negotiate the highest possible data rate and duplex operation possible with attached devices supporting the IEEE 802.3 Clause 28 auto-negotiation standard.

(5) Electrical Specifications

Ensure the firewall appliance meets the following electrical requirements:

- Input voltage range: 110 VAC to 130 VAC, auto ranging, and
- Input frequency: 60 Hz.

Ensure that if the firewall appliances require operating voltages other than 120 VAC, supply the required voltage converter. Ensure that the maximum power consumption does not exceed 200 watts.

(6) Management Capabilities

Ensure that the firewall appliance supports all Layer 2 management features and certain Layer 3 features related to multicast data transmission and routing. These features shall include, but not be limited to:

- Support of remote and local setup and management via telnet, Secure Shell (SSHv2) or secure Web-based GUI and command line interfaces, and
- Support of the Simple Network Management Protocol (SNMP).
- Verify that the firewall can be accessed using the resident EIA-232 management port, a telecommunication network, or the Trivial File Transfer Protocol (TFTP).

Network Capabilities: Provide a firewall appliance that supports/complies with the following minimum requirements:

- Provide full implementation of IGMP v2,
- Provide full implementation of SNMPv3,
- Password manageable,
- Telnet/SSHv2,
- HTTP (Embedded Web Server) with Secure Sockets Layer (SSL), and
- Full implementation of RFC 783 (TFTP) to allow remote firmware upgrades.

Network Security: Provide a firewall appliance that supports/complies with the following (remotely) minimum network security requirements:

- Multi-level user passwords,
- RADIUS centralized password management (IEEE 802.1X),
- SNMPv3 encrypted authentication and access security,
- Support of the TFTP and SNTP.

(7) Environmental Specifications

Provide a firewall appliance that adheres to the following environmental constraints if located within a climate-controlled environment:

- Operating temperature range: 32°F to 104°F,
- Storage temperature range: 14°F to 158°F, and
- Operating relative humidity range: 10% to 90%, non-condensing.

(D) Managed Ethernet Switch

(1) Standards

Ensure that the managed Ethernet switches comply with all applicable IEEE networking standards for Ethernet communications, including but not limited to:

- IEEE 802.1D Spanning Tree Protocol (STP),
- IEEE 802.1P Quality of Service (QoS),
- IEEE 802.1Q Virtual Local Area Networks (VLAN Tagging),
- IEEE 802.1Q-2005 Multiple Spanning Tree Protocol (MSTP),
- IEEE 802.1X Port-Based Network Access Control,
- IEEE 802.1W Rapid Spanning Tree Protocol (RSTP),
- IEEE 802.3u supplement standard regarding 100 Base TX/100 Base FX,
- IEEE 802.3X Flow Control,
- IEEE 802.3Z Standards Compliant 1000 Base-SX and 1000 Base-LX optics,
- IEEE 802.3ad Link Aggregation,
- RFC 821 – Simple Mail Transfer Protocol,
- RFC 854 – Telnet Protocol Specification,
- RFC 1112 – IGMP v1,
- RFC 2131 – Dynamic Host Configuration Protocol for IPv4,
- RFC 2236 – IGMP v2,
- RFC 3315 – Dynamic Host Configuration Protocol for IPv6 (DCHCPv6),
- RFC 3376 – IGMP v3,
- RFC 2362 – Protocol Independent Multicast Sparse Mode (PIM-SM),
- RFC 3973 – Protocol Independent Multicast Dense Mode (PIM-DM),
- RFC 2328 – Open Shortest Path First (OSPF) v2,
- RFC 2338 – Virtual Router Redundancy Protocol (VRRP),
- RFC 2570:2575 – SNMP v3,
- RFC 2030 – Simple Network Time Protocol (SNTP), and
- RFC 2267 – Denial of Service (DoS).

Ensure that the managed Ethernet switches have a minimum mean time between failures (MTBF) of 10 years, or 87,600 hours, as calculated using the Bellcore/Telcordia SR-332 standard for reliability prediction.

(2) Functional

Ensure that the managed Ethernet switches support all Layer 2 management features and certain Layer 3 features related to multicast data transmission and routing. These features shall include, but not be limited to:

- An STP healing/convergence rate that meets or exceeds specifications published in the IEEE 802.1D standard,
- An RSTP healing/convergence rate that meets or exceeds specifications published in the IEEE 802.1w standard,
- Support port-based VLAN and support VLAN tagging that meets or exceeds specifications as published in the IEEE 802.1Q standard, and have a minimum 4-kilobit VLAN address table,
- A forwarding/filtering rate that is a minimum of 14,880 packets per second for 10 megabits per second and 148,800 packets per second for 100 megabits per second,
- A minimum 4-kilobit MAC address table,
- Support of Traffic Class Expediting and Dynamic Multicast Filtering,
- Support of, at a minimum, snooping of Version 2 of the Internet Group Management Protocol (IGMP),
- Support of remote and local setup and management via telnet, Secure Shell (SSHv2), or secure Web-based GUI and command line interfaces,
- Support of the Simple Network Management Protocol version 3 (SNMPv3). Verify that the Ethernet edge switch can be accessed using the resident EIA-232 management port, a telecommunication network, or the Trivial File Transfer Protocol (TFTP),
- Port security through controlling access by the users. Ensure that the Ethernet edge switch has the capability to generate an alarm and shut down ports when an unauthorized user accesses the network,
- Support of remote monitoring (RMON-I) of the Ethernet agent, and
- Support of the TFTP and SNTP. Ensure that the managed Ethernet switches support port mirroring for troubleshooting purposes when combined with a network analyzer.

(3) Physical Features

Mounting: Provide 19" rack mount managed Ethernet switches that do not exceed a height of 2 RU.

Optical Ports: Ensure that all single mode fiber-optic link ports operate at 1310 or 1550 nanometers in single mode. Provide fully-functional ports with Type LC connectors and the optics for the optical ports as specified in the Plans or by the Engineer. Do not use mechanical transfer registered jack (MTRJ) or ST type connectors. Ensure that each optical port consists of a pair of fibers: one fiber will transmit (TX) data and the other fiber will receive (RX) data.

Provide fully functional single mode fiber-optic 100 Mbps ports with optical transceivers installed in the proposed managed Ethernet switches. Each optical transceiver shall consist of fiber pairs; one fiber will transmit (TX) data and one fiber will receive (RX) data. Provide GBICs ports that have 20 km optics. Provide the following number of single mode fiber-optic 100 Mbps ports in the hub cabinets.

Managed Ethernet Switch	100 Mbps Ports with optics	Total 100 Mbps Ports
Hub Switch A	48	36
Hub Switch B	48	36
Hub Switch C	48	30
Hub Switch D	48	30
TMC	4	4

Provide two 1 Gbps optical transceivers (GBICs) as specified in the Plans or by the Engineer in each Hub Switch A through D. Each transceiver consists of fiber pairs; one fiber will transmit (TX) data and one fiber will receive (RX) data. Provide optical transceivers that meet the following minimum requirements:

- Optical receiver sensitivity: -20 dBm,
- Optical transmitter power: -9.5 dBm,
- Maximum transmission distance: 10 km, and
- Operating wavelength: 1310 nm.

Copper Ports: If two chassis are needed in the hub cabinets in order to provide the required number of ports provide two (2) 1000 Base TX uplink ports. Provide managed Ethernet switches in Hubs A through D that include a minimum of six (6) 10/100/1000 Base TX ports.

For the TMC location provide two (2) 1000 Base TX uplink ports and 48 10/100/1000 Base TX ports. Provide Type RJ-45 copper ports and that auto-negotiate speed (i.e., 10/100/1000 Base) and duplex (i.e., full or half). Ensure that all 10/100/1000 Base TX ports meet the specifications detailed in this section and are compliant with the IEEE 802.3 standard pinouts. Ensure that all Category 5e unshielded twisted pair/shielded twisted pair network cables are compliant with the EIA/TIA-568-B standard.

Ensure that the managed Ethernet switch (10/100/1000 Mbps ports) supports jumbo frames and full Layer 3 routing. Ensure that the switch includes support for dynamic unicast routing protocols such as RIPv1/v2 and OSPF, and support for multicast routing protocols, including PIM-SM, PIM-DM, and DVMRP.

Port Security: Ensure that the managed Ethernet switches support/comply with the following minimum requirements:

- Ability to configure static MAC addresses,
- Ability to disable automatic address learning per ports, known hereafter as Secure Port. Secure Ports only forward data for pre-defined / learned MAC addresses.
- Trap and alarm upon any unauthorized MAC address and shutdown for programmable duration. Port shutdown requires administrator to manually reset the port before communications are allowed.

Network Capabilities: Provide managed Ethernet switches that support/comply with the following minimum requirements:

- Have a non-blocking architecture,
- Route and switch unicast and multicast traffic simultaneously at wire speed,
- Support port mirroring and monitoring to aid in troubleshooting,
- Support QoS queue management using weighted round robin (WRR) and strict priority (SP),
- Support 10/100/1000 BaseTX ports (RJ-45),
- Provide support for the following RMON–I groups, at a minimum,
    - Part 1: Statistics
    - Part 2: History
    - Part 3: Alarm
    - Part 9: Event
- Capable of mirroring any port to any other port within the switch,
- Meet the IEEE 802.3ad (Port Trunking) standard for a minimum of two groups of four ports,
- Telnet/CLI,
- HTTP (Embedded Web Server) with Secure Sockets Layer (SSL), and
- Be managed through console (RS-232), telnet, and Web interface, and
- Support download and upload of images and configurations via TFTP.
- Full implementation of RFC 783 (TFTP) to allow remote firmware upgrades.
- Support port mirroring and monitoring to aid in troubleshooting,

Network Security: Provide managed Ethernet switches that support/comply with the following (remotely) minimum network security requirements:

- Multi-level user passwords,
- RADIUS centralized password management (IEEE 802.1X),
- SNMPv3 encrypted authentication and access security,
- Port security through controlling access by the users: ensure that the managed Ethernet switch has the capability to generate an alarm and shut down ports when an unauthorized user accesses the network,
- Support of remote monitoring (RMON) of the Ethernet agent, and
- Support of the TFTP and SNTP. Ensure that the managed Ethernet switch supports port mirroring for troubleshooting purposes when combined with a network analyzer.

(4) Electrical Specifications

Ensure that the managed Ethernet switches have redundant power supplies and operate and power is supplied with 115 VAC. Ensure that the edge switch has a minimum operating input of 110 AC and a maximum operating input of 130 VAC. Ensure that if the device requires operating voltages other than 120 VAC, supply the required voltage converter. Ensure that the maximum power consumption does not exceed 350 watts.

Ensure that the managed Ethernet switches have diagnostic light emitting diodes (LEDs), including link, port activity, duplex mode, speed (for Category 5e ports only), and power LEDs.

(5) Management Capabilities

Ensure that the managed Ethernet switch includes management capabilities, as defined in the following:

- Incorporate an internal temperature sensor capable of sending system log and/or SNMP traps should the switch exceed a specified warning level,
- Support automatic powering off should the temperature exceed a specified level to prevent damage to the switch,
- Support port mirroring and monitoring to aid in troubleshooting,
- Be capable of utilizing the following standard protocols:
  - Support VLAN (IEEE 802.1Q),
  - Support Multiple Spanning Tree Protocol (IEEE 802.1Q-2005)
  - Support Rapid Spanning Tree Protocol (IEEE 802.1W),
  - Support IGMP Versions 1 and 2 (RFC 1112 and 2236),
  - Support RIP Versions 1 and 2 (RFC 1058 and 1723),
  - Support OSPF Version 2 (RFC 1583 and 2328),
  - Support PIM (SM & DM),
  - Support IGMP Version 1 and 2 (RFC 1112 and 2236),
  - Support DVMRP,
  - Support VRRP (RFC 2338),
  - Support ToS/DSCP mapping to priority queue,
  - Support QoS queue management using weighted round robin (WRR) and strict priority (SP),
  - Support 10/100/1000 BaseTX ports (RJ-45),
  - Support a minimum of (2) 10-Gigabit Ethernet ports per blade,
  - Support Flow Control (IEEE 802.3x),
  - Support Gigabit Ethernet (IEEE 802.3z),
  - Support SNMP Version 1 and 3,
  - Support 4 groups of RMON-I (Groups 1-3, 9),
  - Be managed through console (RS-232), telnet, and Web interface, and
  - Support download and upload of images and configurations via TFTP.

Ensure that the managed Ethernet switch fully supports all Layer 2 and Layer 3 management features related to multicast data transmission and routing, including, but not be limited to:

- An STP healing/convergence rate that meets or exceeds specifications published in the IEEE 802.1 D standards.
- An RSTP healing/convergence rate that meets or exceeds specifications published in the IEEE 802.1w standard.
- A managed Ethernet Ethernet core switch that is a port-based VLAN and supports VLAN tagging that meets or exceeds specifications as published in the IEEE 802.1Q standard.
- A multicast forwarding database that supports a minimum of 2048 entries in hardware.
- A forwarding/filtering rate that is a minimum of 14,880 packets per second for 10 megabits per second and 148,800 packets per second for 100 megabits per second.

- Support of Traffic Class Expediting and Dynamic Multicast Filtering.
- Support of, at a minimum, Version 2 of the Internet Group Management Protocol (IGMP).
- Support of remote and local setup and management via telnet, Secure Shell (SSHv2), or secure Web-based GUI and command line interfaces.
- Support of the SNMP protocol.
- Verify that the Ethernet core switch can be accessed using the resident EIA-232 management port, a telecommunication network, or the Trivial File Transfer Protocol (TFTP).
- Port security through controlling access by the users. Ensure that the Ethernet core switch has the capability to generate an alarm and shut down ports when an unauthorized user accesses the network.
- Support of the TFTP-and the SNTP. Ensure that the Ethernet core switch supports port mirroring for troubleshooting purposes when combined with a network analyzer.

(6) Environmental Specifications

Provide managed Ethernet switches that adhere to the following environmental constraints if located within a climate-controlled environment:

- Operating temperature range: -40°F to 130°F,
- Storage temperature range: -40°F to 185°F, and
- Operating relative humidity range: 5% to 90%, non-condensing.

(E) Ethernet Edge Switch

(1) Standards

Ensure that the edge switches comply with all applicable IEEE networking standards for Ethernet communications, including but not limited to:

- IEEE 802.1D standard for media access control (MAC) bridges used with the Spanning Tree Protocol (STP),
- IEEE 802.1P standard for Quality of Service (QoS),
- IEEE 802.1Q standard for port-based virtual local area networks (VLANs),
- IEEE 802.1Q-2005 standard for MAC bridges used with the Multiple Spanning Tree Protocol,
- IEEE 802.1w standard for MAC bridges used with the Rapid Spanning Tree Protocol (RSTP),
- IEEE 802.1x standard for port based network access control, including RADIUS,
- IEEE 802.3 standard for local area network (LAN) and metropolitan area network (MAN) access and physical layer specifications,
- IEEE 802.3u supplement standard regarding 100 Base TX/100 Base FX,
- IEEE 802.3x standard regarding flow control with full duplex operation, and
- RFC 783 – TFTP
- RFC 854 – Telnet Protocol Specification,
- RFC 1112 – IGMP v1,
- RFC 1541 – Dynamic Host Configuration Protocol for IPv4,
- RFC 2030 – SNTP

- RFC 2068 – HTTP
- RFC 2236 – IGMP v2,
- RFC 2865 – RADIUS
- RFC 3414 – SNMPv3-USM
- RFC 3415 – SNMPv3-VACM.

Ensure that the edge switches have a minimum mean time between failures (MTBF) of 10 years, or 87,600 hours, as calculated using the Bellcore/Telcordia SR-332 standard for reliability prediction.

(2) Functional

Ensure that the edge switches support all Layer 2 management features and certain Layer 3 features related to multicast data transmission. These features shall include, but not be limited to:

- An STP healing/convergence rate that meets or exceeds specifications published in the IEEE 802.1D standard,
- An RSTP healing/convergence rate that meets or exceeds specifications published in the IEEE 802.1w standard,
- An Ethernet edge switch that is a port-based VLAN and supports VLAN tagging that meets or exceeds specifications as published in the IEEE 802.1Q standard, and has a minimum 4-kilobit VLAN address table (254 simultaneous),
- A forwarding/filtering rate that is a minimum of 14,880 packets per second for 10 megabits per second and 148,800 packets per second for 100 megabits per second,
- A minimum 4-kilobit MAC address table,
- Support of Traffic Class Expediting and Dynamic Multicast Filtering,
- Support of, at a minimum, snooping of Version 2 of the Internet Group Management Protocol (IGMP),
- Support of remote and local setup and management via telnet or secure Web-based GUI and command line interfaces,
- Support of the Simple Network Management Protocol version 3 (SNMPv3). Verify that the Ethernet edge switch can be accessed using the resident EIA-232 management port, a telecommunication network, or the Trivial File Transfer Protocol (TFTP),
- Port security through controlling access by the users. Ensure that the Ethernet edge switch has the capability to generate an alarm and shut down ports when an unauthorized user accesses the network,
- Support of the TFTP and SNTP. Ensure that the Ethernet edge switch supports port mirroring for troubleshooting purposes when combined with a network analyzer.

(3) Physical Features

Mounting: Provide shelf mount edge switches. Optionally, if cabinet space dictates provide mounting kit to attach the edge switch to a vertical rack rail or a DIN rail in the cabinet. If the Contractor elects to use DIN rail mounting supply the DIN rail with the edge switch.

Ports: Provide 10/100 Mbps auto-negotiating ports (RJ-45) copper Ethernet ports for all edge switches. Provide auto-negotiation circuitry that will automatically negotiate the highest

possible data rate and duplex operation possible with attached devices supporting the IEEE 802.3 Clause 28 auto-negotiation standard.

Optical Ports: Ensure that all fiber-optic link ports operate at 1310 or 1550 nanometers in single mode. Provide fully-functional ports with Type LC connectors and the optics for the optical ports. Do not use mechanical transfer registered jack (MTRJ) or ST type connectors.

Provide edge switches having a minimum of two optical 100 Base FX ports capable of transmitting data at 100 megabits per second. Ensure that each optical port consists of a pair of fibers, one fiber will transmit (TX) data and one fiber will receive (RX) data.

Provide 10/100 Mbps optical ports that consist of fiber pairs, one fiber will transmit (TX) data and one fiber will receive (RX) data. Provide optical ports that meet the following minimum requirements:

- Optical receiver sensitivity: -32 dBm,
- Optical transmitter power: -15.5 dBm,
- Typical transmission distance: 20 km, and
- Operating wavelength: 1310 nm.

Copper Ports: Provide edge switches that includes a minimum of six copper ports. Provide Type RJ-45 copper ports and that auto-negotiate speed (i.e., 10/100 Base) and duplex (i.e., full or half). Ensure that all 10/100 Base TX ports meet the specifications detailed in this section and are compliant with the IEEE 802.3 standard pinouts. Ensure that all Category 5e unshielded twisted pair/shielded twisted pair network cables are compliant with the EIA/TIA-568-B standard.

Port Security: Ensure that the edge switches support/comply with the following (remotely) minimum requirements:

- Ability to configure static MAC addresses,
- Ability to disable automatic address learning per ports, known hereafter as Secure Port. Secure Ports only forward, and
- Trap and alarm upon any unauthorized MAC address and shutdown for programmable duration. Port shutdown requires administrator to manually reset the port before communications are allowed.

Network Capabilities: Provide edge switches that support/comply with the following minimum requirements:

- Provide full implementation of IGMPv2 snooping (RFC 2236),
- Provide full implementation of SNMPv1, SNMPv2c, and/or SNMPv3,
- Capable of mirroring any port to any other port within the switch,
- Meet the IEEE 802.1Q (VLAN) standard per port for up to four VLANs,
- Meet the IEEE 802.3ad (Port Trunking) standard for a minimum of two groups of four ports,
- Telnet/CLI,
- HTTP (Embedded Web Server) with Secure Sockets Layer (SSL), and
- Full implementation of RFC 783 (TFTP) to allow remote firmware upgrades.

Network Security: Provide an edge switches that support/comply with the following (remotely) minimum network security requirements:

- Multi-level user passwords,
- RADIUS centralized password management (IEEE 802.1X),
- SNMPv3 encrypted authentication and access security,
- Port security through controlling access by the users: ensure that the Ethernet edge switch has the capability to generate an alarm and shut down ports when an unauthorized user accesses the network,
- Support of remote monitoring (RMON) of the Ethernet agent, and
- Support of the TFTP and SNTP. Ensure that the Ethernet edge switch supports port mirroring for troubleshooting purposes when combined with a network analyzer.

(4) Electrical Specifications

Ensure that the edge switches operate and power is supplied with 115 current VAC. Ensure that the edge switches have a minimum operating input of 110 VAC and a maximum operating input of 130 VAC. Ensure that if the device requires operating voltages other than 120 VAC, supply the required voltage converter. Ensure that the maximum power consumption does not exceed 50 watts. Ensure that the edge switches have diagnostic light emitting diodes (LEDs), including link, TX, RX, speed (for Category 5e ports only), and power LEDs.

(5) Environmental Specifications

Provide Ethernet edge switches that adhere to the following environmental constraints as defined in the environmental requirements section of the NEMA TS 2 standard if located within a climate-controlled environment:

- Operating temperature range: -30°F to 165°F,
- Storage temperature range: 14°F to 158°F, and
- Operating relative humidity range: 10% to 90%, non-condensing.

Verify that the edge switch manufacturer certifies their device has successfully completed environmental testing as defined in the environmental requirements section of the NEMA TS 2 standard. Verify that vibration and shock resistance meet the requirements of Sections 2.1.9 and 2.1.10, respectively, of the NEMA TS 2 standard. Ensure that the edge switch is protected from rain, dust, corrosive elements, and typical conditions found in a roadside environment.

The edge switches shall meet or exceed the following environmental standards:

- IEEE 1613 (electric utility substations),
- IEC 6185003 (electric utility substations),
- IEEE 61800-3 (variable speed drive systems), and
- IEC 61000-6-2 (generic industrial).

(F) UPS

Provide UPS units that produce uninterruptible power and power conditioning for the ITS Servers, firewall, core Ethernet and managed Ethernet switches, hub cabinets, and video monitors in the TMC, managed Ethernet switch in the Bryce Stuart Building, and the managed Ethernet switch in the Signal Shop.

Each UPS shall provide adequate capacity to run its respective workstation and equipment without commercial power for twenty minutes. Provide load calculations for each configuration of equipment connecting to a UPS.

(1) Standards

Ensure that the UPS units comply with the following standards:

- ANSI,
- ASTM,
- CSA, and
- UL.

(2) Functional

Each UPS shall provide adequate capacity to run its respective equipment without commercial power for 20 minutes. Size the UPS units for the proposed loads. Provide load calculations for each configuration of equipment connecting to a UPS assuming a run time of 20 minutes.

Ensure that the UPS and its remote monitoring software perform the following functions:

- Remote environmental monitoring of temperature and humidity,
- Data logging,
- Event logging,
- Fault notification,
- Hibernation,
- Radius authentication,
- Protocols: HTTP, HTTPS, IPv4, IPv6, SMTP (v1-v3), Telnet, SSH v2, SSL,
- Manage all network UPS units,
- Operating system shutdown,
- Load shedding to turn off selected devices or groups of devices,
- Outlet control to turn off, reboot, or shutdown outlets,
- Power event summary,
- Recommended actions,
- Risk assessment summary,
- Run command file, and
- System event log integration.

(3) Physical Features

Supply each UPS unit described above with 25 percent spare outlets. Ensure that the UPS meets the following material requirements:

- Rack-mounted and floor mounted as listed below in these Project Special Provisions.
- Sealed AGM type, maintenance free batteries,
- Minimum of nine NEMA 5-15R and two NEMA 5-20R outlets,
- NEMA L5-30P input plug,
- Ethernet network management card using 10/100 Base TX communications,
- USB interface port,
- Remote environmental monitoring of temperature and humidity with telnet management,
- Status lights: power on, power source and overload,
- Alarms: audible and remote notification,

- Manual power on/off switch, and
- Supply UPS unit with multi-pole noise filtering. Supply UPS with a terminal for connecting the UPS to a surge protection device.

(4) Environmental Specifications

Verify that the UPS meets all specifications and is capable of performing all of its functions during and after being subjected to:

- Operating temperature: 0° F to 104° F,
- Operating relative humidity: 95%,
- Storage temperature: 5° F to 113° F, and
- Storage relative humidity: 95%.

(G) Hub Cabinet

(1) Standards

Ensure that the hub cabinets comply with the following standards:

- ANSI;
- ASTM;
- IMSA ;
- ISO 9001;
- NEC;
- NEMA TS-2; and
- UL listed.

(2) Functional

Furnish Caltrans Type 333 base-mounted hub cabinets meeting the following minimum requirements:

- Side-by-side, double doors on both front and rear of cabinet;
- Fiber-optic splice centers (paid separately);
- Grounding bus bar;
- 19-inch rack system for mounting of all devices in the cabinet;
- Pull-out shelf for laptop and maintenance use;
- Maintenance access connections;
- Fluorescent lighting;
- Ventilation fans;
- 120VAC power supply;
- 120VAC ground fault circuit interrupter (GFCI)-protected duplex outlets for tools;
- 120VAC surge-protected duplex outlets for equipment;
- Sunshields;
- Lightning and surge protection on incoming and outgoing electrical lines (power and data);
- Managed Ethernet switch (paid separately);
- Power strip along vertical rail;
- Air conditioner for cooling Ethernet hub switch; and

- UPS with sufficient capacity to hold hub's electrical load for 4 hours, (paid separately).

(3) Physical Features

Provide cabinets that are completely weatherproof to prevent the entry of water. Provide cabinet and door exterior seams that are continuously welded and all exterior welds are smooth. Provide cabinets with two full-size doors with three hinges, or a full-length stainless steel piano hinge, with stainless steel pins spot-welded at the top. Provide hinges that utilize stainless steel hinge pins. Provide hinges that are mounted so that they cannot be removed from the door or cabinet without first opening the door. Provide door and hinges braced to withstand a 100-pound per vertical foot of door height load applied vertically to the outer edge of the door when standing open. Ensure that there is no permanent deformation or impairment of any part of the door or cabinet body when the load is removed. Provide cabinet door fitted with a #2 Corbin lock. Provide two keys for each cabinet. Provide cabinet doors that are also pad lockable. Provide door openings that are double flanged on all four sides.

Provide cabinets constructed of unpainted sheet aluminum alloy H5052-H32 with a minimum thickness of 0.125 inch.

Provide the hub cabinet with sunshields outside to deflect solar heat away from the cabinet. The sunshields must be offset a minimum of one inch from the exterior cabinet walls. Ensure that the sunshields are fabricated from 5052-H32 aluminum sheet that is 0.125 inch thick, and that sunshield corners are rounded and smoothed for safety. Mount the sunshields on standoffs at the top and each side of the cabinet.

Provide doorstops at 90 and 180-degree positions. Ensure that both the door and the doorstop mechanism are of sufficient strength to withstand a simulated wind load of five pounds per square foot of door area applied to the both inside and outside surfaces without failure, permanent deformation, or compromising of door position and normal operation. Do not provide auxiliary police doors.

Ensure that cabinet doors include a gasket to provide a dust and weather-resistant seal when closed. Ensure that the gasket material is closed-cell neoprene and maintains its resiliency after exposure to the outdoor environment. Ensure that the gasket shows no sign of rolling or sagging, and provide a uniform dust and weather-resistant seal around the entire door facing.

Provide cabinets that include predrilled holes of standard diameter and bolt pattern with four (4) anchor bolts with each cabinet unit as part of the unit price bid. Provide a panel with each cabinet that matches the rest of the cabinet; and is held in place by four bolts provided with the panel. Drill or punch the panel to accommodate the bolts; the drill holes shall match the bolt pattern of the base cabinet of the cabinet. Provide a panel designed to be fitted in the interior of the cabinet and fabricated of the same material and thickness as the cabinet bottom.

Provide rails to create a cage to mount hardware, wiring panels and miscellaneous mounting brackets. Provide rails constructed of .1345-inch steel or .105-inch stainless steel. Provide rails with a keyhole design with slots 2 inches on center with a top opening of 5/8 inch in diameter to allow the insertion of a .625-inch by 1-inch carriage bolt. Ensure that the rails are 1.5 to 2 inches wide by .5 inches deep. Drill and tap the rails for 10-32 screws or rack screws with EIA universal spacing.

Provide rack assemblies that have a removable, standard 19-inch EIA compliant rack. The rack shall have a clearance between the rails of 17.5 inches.

Equip each cabinet with an aluminum storage compartment mounted in the rack assembly with the following dimensions (±0.5 inch): 16 inches wide, 14 inches long, and 1.75 inches deep. Provide compartment with ball-bearing telescoping drawer guides to allow full extension from the rack assembly. Ensure that when extended, the storage compartment opens to provide storage space for cabinet documentation and other miscellaneous items. Ensure that the storage compartment is of adequate construction to support a weight of 20 pounds when extended without sagging. Provide a top to the storage compartment that is hinged aluminum. Provide two (2) removable metal shelves with each cabinet.

Furnish a cabinet base extender with each hub cabinet that complies with the requirements of the "Cabinet Base Adapter and Base Extender" section of these Project Special Provisions.

(4) Lighting

Provide the field cabinet with two 20-watt fluorescent lamps and clear shatterproof shield assemblies which are mounted on the inside front and rear top of the cabinet. Ensure that these lamps are unobstructed and able to cast light on the equipment. Equip the field cabinet with door-actuated switches so that the lamps automatically turn on when either cabinet door is opened and go off when the doors are closed.

(5) Electrical

Provide a service panel assembly to function as the entry point for AC power to the cabinet and the location for power filtering, transient suppression, and equipment grounding. Provide AC isolation within the cabinet. Configure cabinet to accept 120 VAC from the utility company.

Provide circuit breakers that are UL listed and have an interrupt capacity of 5,000 amperes and insulation resistance of 100 MΩ at 500 VDC. Provide power distribution blocks that are suitable for use as power feed and as junction points for two and three wire circuits. Ensure that the line side of each block is capable of handling up to 2/0 AWG conductors. Ensure that the AC neutral and equipment ground wiring and terminal blocks are isolated from the line wiring by an insulation resistance of at least 10 MΩ when measured at the AC neutral.

Provide UL listed surge protection devices according to the UL 1449, 2nd edition standard that comply with the NEMA requirements as detailed in the NEMA LS 1 (1992) standard.

Provide branch circuits, surge protection devices, and grounding for the ITS device-connected load served by the cabinet, including ventilation fans, internal lights, electrical receptacles, etc., as shown on the Plans. Terminate field wiring on terminal blocks with the voltage and current rating of the terminal block is greater than the voltage and current rating of the wire fastened to it.

Furnish a power distribution assembly that fits in the EIA 19-inch rack and provides for protection and distribution of 120VAC power.

Ensure that ground bus bars are fabricated from a copper alloy material compatible with copper wire. Use ground bus bars that have at least two positions where a #6 AWG stranded copper wire can be attached.

Mount the ground bus bar on the side of the cabinet wall adjacent to the service panel assembly for the connection of AC neutral wires and chassis ground wires. If more than one

ground bus bar is used in a cabinet, use a minimum of a #10 AWG copper wire to interconnect them.

Wire into the cabinet's circuitry the connector harnesses for the ITS devices and other accessory equipment to be housed therein.

Terminate conductors on terminal blocks using insulated terminal lugs large enough to accommodate the conductor to be terminated. When two or more conductors are terminated on field wiring terminal block screws, use a terminal ring lug for termination of those conductors. Number all terminal block circuits and cover the blocks with a clear insulating material to prevent inadvertent contact.

(6) Ventilation

Ensure the cabinet assembly can maintain the temperature and humidity within the environmental requirements of the hub switches.

Include two cooling fans with 100 CFM, minimum capacity. Provide thermostats to be incorporated into the ventilation system. Mount fans in the top of the cabinet.

Provide the cabinets with vent openings in the lower portion of the door to allow convection cooling of electronic components. Cover them fully on the inside with a commercially available disposable three layer graded type filter. All air entering the cabinet must pass through the air filter.

(7) Air Conditioner

Furnish each hub cabinet with a rack mounted air-cooled air conditioner that operates on 120VAC. The air conditioner shall be fit within a 19-inch EIA communications rack and shall not be external mounted on the cabinet. The air conditioner shall be mounted in the bottom of the cabinet to avoid damage to any communications equipment.

The air conditioners shall have a built-in condensate evaporator and condensate drain fitting and hose to the outside of the cabinet. The air conditioner shall be rated for a minimum of 3500 BTU. There shall be low temperature control to prevent overcooling.

Provide EMI/RFI transient spike protection. Equip the cabinet and air conditioner with remote monitoring of high temperature and low airflow conditions. Intake air shall enter through cabinet door vent and be exhausted through top cabinet vents. Air conditioners shall be CFC free or low ODP (R-22) refrigerant and shall use closed loop cooling. Insulate all cold components (coolant lines, compressor, evaporator, etc.) with high-performance insulation.

Blower motors shall be UL listed. Ensure the blower motors are equipped with automatic reset thermal overload protection. Provide double sealed and double shielded ball bearings.

The air conditioners shall have permanent corrugated aluminum or stainless steel air filters. The filters shall be removable and washable.

All grilles shall be stainless steel.

(8) Environmental Requirements

Ensure the cabinet assembly can maintain the temperature and humidity within the environmental requirements of the hub switches.

(H) IS Hub Cabinets

Furnish IS hub cabinets that comply with all the requirements listed in "Hub Cabinets" subsection above, except do not provide the IS hub cabinet with the following:

- Air conditioner,
- UPS,
- Managed Ethernet Switch, and
- Lightning and surge protection.

Wire the IS hub cabinet for future addition of electrical service by others, including equipping it with fluorescent lights and ventilation fans.

(I) Network Management Software

Utilize the existing network management software that provides configuration, troubleshooting, security and system monitoring for the ITS communications network. Furnish additional licenses to add the devices installed under this project. Ensure that the system includes the following features:

- Able to create and maintain system and user identification and passwords,
- GUI interface,
- Syslog and SNMP alarm manager,
- Distributed server support for scalable management,
- Physical and logical topology for viewing every element on the network and how it is connected,
- Fault management and alarm view to see the health and status of every element on the network,
- Configuration management for configuring multiple elements and images, perform multi-step upgrades and archive device configurations,
- Switch configuration and monitoring,
- Inventory tool for the managed devices,
- VLAN manager,
- IP/MAC Address finder,
- Administration tool,
- Spanning Tree monitor,
- Support industry standard protocols such as SNMP, ANS.1, and XML,
- Handle commands from system clients via ASN.1 and/or XML-defined protocol over a standard TCP/IP connection,
- Command underlying nodes (devices such as decoders, encoders, and switches),
- Report status of system nodes and alarms,
- Monitor system node connections,
- Store recent alarms in an internal database,
- Cooperate with another server in redundant set (when working in redundant configuration),
- Receive SNMP traps generated by network infrastructure, translate SNMP traps as system alarms, and send alarms as SNMP traps,
- Support remote configuration and diagnostics, and
- Restore video and connections in case of system component restarts.

(J) Ethernet Patch Panel

Furnish a rack-mountable 48-port Ethernet patch panel for installation in the enclosed 19-inch communications rack inside the TMC. Provide a patch panel designed for Category 5e/6cable and that meets TIA/EIA-568-A-5 Category 5e and ISO 11801 Class D standards. All ports shall be RJ-45 eight-wire jacks. Provide all mounting screws and mounting hardware needed to mount the patch panel in a 19-inch equipment rack.

(K) SMFO Contact Mapping Transmitters and Receivers

Furnish SMFO contact mapping (i.e., contract closure) transmitters and receivers for installation inside traffic signal controller cabinets on Broad Street to transmit ramp queue detector preempt calls from an upstream controller to downstream controllers to alleviate excessive queues on the Business 40 exit ramps to Broad Street.

Provide SMFO contact mapping transmitters and receivers that meet the following functional requirements:

- Number of Contacts: 8 independent point-to-point contacts
- Contact Default State: Normally open,
- Contact Output Rating: 200 VDC @ 0.5 A, 12 watts
- Response Time: 25 msec (max.),
- Power: 8-15 VDC @ 150 mA,
- Max. Distance: 25 miles,
- Operating Temp.: -40° C to +75° C,
- Relative Humidity: 0 to 95%, non-condensing.

Provide SMFO contact mapping transmitters and receivers meeting the following hardware requirements:

- Fibers Used: One fiber, bi-directional
- LED Indicators: Power, Channel Status and Link (receive only),
- Optical Connectors: ST,
- Data and Power Connectors: Screw terminal,
- Mounting: Surface mount,
- Certification: NEMA TS-2

Furnish each SMFO contact mapping transmitter and receiver with two factory pre-assembled SMFO fiber-optic jumpers that are 3 feet in length with an ST connector on one end and an LC connector on the other end for connecting the transmitter/receiver to the patch panel of the cabinet-mounted interconnect center.

Provide a plug-in power supply with each SMFO contact mapping transmitter and receiver.

33.3. CONSTRUCTION METHODS

(A) General

Ensure that all communications hardware is UL listed.

Verify that network/field/data patch cords meet all ANSI/EIA/TIA requirements for Category 5e four-pair unshielded twisted pair cabling with stranded conductors and RJ-45 connectors.

Receive approval for the System Design Report described in these Project Special Provisions before submitting product submittal data, purchasing, installing and configuring the computer and communications hardware at each facility.

Ensure that all project IP addresses are assigned as defined in the System Design Report. Ensure the as-built documentation includes the identification of all IP addresses and VLANs, and associated hardware devices and device locations. Configure the Ethernet network so the traffic signals and CCTV cameras are in separate VLANs.

(B) Managed Ethernet Core Switch

The managed Ethernet core switch shall act as the central data aggregation node for the new communications network. Ensure that the managed Ethernet core switch is capable of handling future expansion within the overall signal system and communications networks within the forecasted lifecycle of the new optical communications network. Ensure that the managed Ethernet core switch communicates with the managed Ethernet switches and the Ethernet edge switches at Ethernet data transmission rates (1 Gbps and 100 Mbps respectively). Connect the managed Ethernet core switch to the managed Ethernet switch and to the firewall in the TMC with Ethernet patch cords.

The City will designate their network administrator for the ITS LAN. Upon completion, ensure that the City's network administrator will be able to remotely manage the Ethernet core switch for switch configuration, performance monitoring, and troubleshooting. Locate the Ethernet core switch in the TMC as shown in the Plans and provide full Layer 3 functionality.

Install and configure the managed Ethernet core switch to be fully compatible with the managed Ethernet switches and the edge switches as defined in these Project Special Provisions. Ensure that all project IP addresses and VLAN IDs are assigned as defined in the System Design Report. Ensure that at a minimum, the managed Ethernet core switch configuration includes following features: SNMP, SNTP, Port Security, all required VLANs, Unicast Routing protocols, and Multicast Routing protocols. Ensure unused switch ports are disabled.

Ensure all fiber connections of the managed Ethernet core switch are connected to two pairs of single mode fiber strands via fiber-optic interconnect center for redundant communications.

(C) Firewall

Install the firewall appliance in a rack as shown in the Plans in the TMC. Connect the managed Ethernet core switch to the firewall in the TMC with Ethernet patch cords. Install the latest General Availability (GA) software release available from the manufacturer. Ensure all firewall appliances are running the same revision of software.

Configure a minimum of two (2) zones. Configure appropriate security policies to protect the City's internal ITS network from Internet-based attacks. Configure an IPsec VPN on each firewall to connect to NCDOT via a secure link over the Internet. Configure access to provide video to the City's IS Department. This VPN connection shall be a site-to-site VPN and shall not require VPN client software. Configure remote access VPN capability to allow City staff to access the network remotely via a secure connection from the Internet. If a VPN client is required for the remote access VPN, the Contractor shall provide a sufficient number of licenses for the required client software. If a server license is required, the Contractor shall provide all licenses for the server software as well.

Furnish and install proper cables to connect the firewall to the Ethernet core switch, the managed Ethernet switch and the WAN connection, and field managed Ethernet switches. Ensure that the firewall appliance communicates with the Ethernet core switch at Gigabit Ethernet data transmission rates (1000 Mbps).

Ensure that the network administrator will be able to remotely manage each firewall appliance for configuration, performance monitoring, threat detection, and troubleshooting.

Install and configure the firewall appliance to be fully compatible with the Ethernet core switch.

(D) Managed Ethernet Switches

(1) General

Ensure that the City's network administrator will be able to manage each managed Ethernet switch individually or as a group/cluster for switch configuration, performance monitoring, and troubleshooting. Note that these specifications require additional minimum management intelligence (i.e., Layer 2+) typical of most current industrial Ethernet deployments. Ensure that the managed Ethernet switches include Layer 2+ capability providing architecture standardization, open connectivity (i.e., interoperability), bandwidth management, rate limiting, security filtering, and general integration management of an advanced Ethernet switching architecture.

Ensure that all project IP addresses and VLAN IDs are assigned as defined in the System Design Report. Ensure that at a minimum, the switch configuration includes the following features: SNMP, SNTP, Port Security, all required VLANs, Unicast Routing protocols, and Multicast Routing protocols. Ensure unused switch ports are disabled.

Ensure that the managed Ethernet switches are fully accessible by technicians without blocking access to other equipment. Verify that fiber-optic jumpers consist of a length of cable that is connectorized on both ends, primarily used for interconnecting termination or patching facilities and/or equipment. Use fiber-optic jumpers that are factory assembled and connectorized and are certified by the fiber-optic jumpers' manufacturer to meet the relevant performance standards required below. Verify that network/field/data jumper cables meet all ANSI/EIA/TIA requirements for Category 5e 4-pair unshielded twisted pair cabling with stranded conductors and RJ45 connectors.

(2) Proposed Managed Ethernet Switches

Mount and secure the managed Ethernet switches inside communications racks in the TMC, inside the hub cabinets as well as on the shelf in the Signal Shop. For the TMC location, connect the managed Ethernet switch to the Ethernet core switch in the TMC and to the following items in the TMC: existing and proposed ITS servers, 336S test cabinet, proposed UPS, the video server, existing and proposed video processing units, existing encoders and decoders, and the proposed network video recorder. In addition, connect this managed Ethernet switch to the TMC workstations and printers.

For the Signal Shop location, connect the managed Ethernet switches to the following items in the Signal Shop: UPS, two 2070 test controllers with conflict monitors (four ports total), test CCTV cabinet, and workstation using Ethernet patch cords and to the adjacent managed Ethernet switch over single-mode fiber-optic cable as shown in the Plans.

(3) Existing Managed Ethernet Core Switch

Remove, mount and secure the existing managed Ethernet core switch inside communications racks in the wall-mounted rack enclosure in the 3rd floor communications room in the Bryce Stuart Building. Connect the managed Ethernet switches to the following items: signal system supervisor's laptop computer, signal system technician's workstation and the UPS for the managed Ethernet switch as shown in the Plans.

(E) Ethernet Edge Switch

Ensure that the City's network administrator will be able to manage each edge switch individually or as a group/cluster for switch configuration, performance monitoring, and troubleshooting. Note that these specifications require additional minimum management intelligence (i.e., Layer 2+) typical of most current industrial Ethernet deployments. Ensure that the edge switch includes Layer 2+ capability providing architecture standardization, open connectivity (i.e., interoperability), bandwidth management, rate limiting, security filtering, and general integration management of an advanced Ethernet switching architecture.

Ensure that all project IP addresses and VLAN IDs are assigned as defined in the System Design Report. Ensure that at a minimum, the switch configuration includes the following features: SNMP, SNTP, Port Security, all required VLANs. Ensure unused switch ports are disabled.

Mount the edge switch inside each field cabinet by securely fastening the edge switch to the vertical rail of the equipment rack or to a shelf using manufacturer-recommended or Engineer-approved attachment methods, attachment hardware and fasteners. Ensure that the edge switch is mounted securely in the cabinet and is fully accessible by field technicians without blocking access to other equipment Verify that fiber-optic jumpers consist of a length of cable that is connectorized on both ends, primarily used for interconnecting termination or patching facilities and/or equipment. Use fiber-optic jumpers that are factory assembled and connectorized and are certified by the fiber-optic jumpers' manufacturer to meet the relevant performance standards required below. Verify that network/field/data jumper cables meet all ANSI/EIA/TIA requirements for Category 5e 4-pair unshielded twisted pair cabling with stranded conductors and RJ45 connectors.

(F) UPS

Install UPS units with the following equipment connected to them:

- TMC:
  - Rack-mounted Unit 1 and 2 in an N2 configuration for redundant power supplies for the Ethernet switches:
    - Core Ethernet switch
    - Managed Ethernet switch
    - Firewall
  - Rack mounted Unit 3:
    - Four ITS servers
    - KVM switch
  - Rack mounted Unit 4:
    - Four new video monitors
    - Proposed video processor unit

- Rack mounted in the Bryce Stuart Building, 3rd floor communications room:
  - Managed Ethernet switch
- Floor mounted in the Signal Shop:
  - Managed Ethernet switch
  - Computer workstation
  - Video Monitor
- Rack mounted for each field hub cabinet

For Units 1 and 2 above connect the UPS to separate outlets in different circuits as shown in the Plans. Keep the UPS as close as possible to their respective equipment. Connect the UPS unit to a power outlet. Connect the UPS monitoring port to a USB port of its respective workstation.

Place each power supply of the core and managed Ethernet switches on separate UPS units. Allocate the load of the equipment to balance the load while using 120 VAC.

Connect each UPS unit to a power outlet. Connect the UPS monitoring port to the Ethernet core switch.

Install the UPS monitoring software on the ITS LAN workstations to remotely monitor the UPS. Run the UPS diagnostics. Configure the remote monitoring to send email alerts.

Plug the power strip mounted on the respective rack frame into the UPS. Plug all communications hardware into the UPS or the power strip.

(G) Hub Cabinet

Ensure all cabinet wiring is tagged and identified by the use of insulated pre-printed sleeves and follows the project's cable identification scheme. Ensure that the wire markers identify usage in plain words with sufficient details without abbreviations or codes.

Use stranded copper for all conductors, including those in jacketed cables. Neatly arrange all wiring, firmly lace or bundle it, and mechanically secure the wiring without the use of adhesive fasteners. Route and secure all wiring and cabling to avoid sharp edges and to avoid conflicts with other equipment or cabling. Terminate all wiring on a terminal block, strip, bus bar, device clamp, lug, or connector. Do not splice any wiring. Label all wiring, cables, terminal strips, and distribution blocks with permanent and waterproof tags. Provide strain relief for all cabling with connectors, all cabling entering knockouts or ports at the equipment, and where appropriate.

Fasten all components of the cabinet assembly to be mounted on cabinet side panels with hex-head or Phillips-head machine screws. Install the screws into tapped and threaded holes in the panels. The components include, but are not limited to, terminal blocks; bus bars, panel and socket mounted TVSS, circuit breakers, accessory and equipment outlets, and DC power supply chassis. Configure each cabinet mounted UPS unit for remote monitoring from the City of Winston-Salem TMC.

Fasten all other cabinet components with hex-head or Phillips-head machine screws installed with nuts (with locking washer or insert) or into tapped and threaded holes. Fasten stud-mounted components to a mounting bracket providing complete access to the studs and mounting nuts. Ensure that all fastener heads and nuts (when used) are fully accessible within a complete cabinet assembly, and any component is removable without requiring removal of other components, panels or mounting rails. Do not use self-tapping or self-threading fasteners.

Mount the air conditioner in the bottom of the cabinet and but do not obstruct any cable entry into the cabinet. Install condensate drains to drain condensation water out of the cabinet. Ensure the cabinet has provisions to route conduit to the existing cabinet as shown in the drawings.

Furnish and install a 48" 120 VAC power strip vertically along one of the rear rails of the communications rack. Provide a power strip that has at least eight outlets along its length.

Provide a cabinet that is ISO 9001 certified at the time of bid letting.

Equip cabinets with lightning and surge protection described separately in these Project Special Provisions.

Locate cabinets so as not to obstruct sight distance of vehicles turning on red.

Install base mounted cabinets as shown on the Plans and as approved by the Engineer. Refer to the "Equipment Cabinet Foundations" section of these Project Special Provisions for installation requirements for the hub cabinet foundations. Install only the required number of conduits as shown on the Plans plus one additional spare stub out conduit. Position the ends of conduits approximately 2 inches above the finished surface of the concrete base.

Mount the hub cabinets and IS hub cabinets on cabinet base extenders in accordance with the "Cabinet Base Adapter and "Base Extender" section of these Project Special Provisions.

Mount surge protection devices in the cabinet for the particular field devices that will be connected to that cabinet.

Terminate power service wire, video, and data cabling on the appropriate terminal strips, surge protection devices or jacks in the cabinet with insulated terminal lugs or connectors. Use a calibrated ratchet-type crimping tool to install the insulated terminal lugs onto the field wires.

Label spare circuits of the data cables and connect them to the cabinet ground bus bar.

Neatly bundle and identify all field wiring cables in the cabinet with permanent waterproof tags.

Ground all hub cabinets in accordance with the requirements of these Project Special Provisions. Keep the ground wire from the cabinet ground bus bar to the ground rod assembly or array as short as possible. Ensure the ground wire is not in contact with any other part of the cabinet.

(H) Network Management Software

Utilize the existing NMS server application on the ITS communications server. Configure the NMS to monitor and manage the proposed ITS servers, Ethernet core, managed Ethernet and edge switches, firewalls and other Ethernet devices. Install software on the proposed workstations and laptop computer on this project to provide access to the NMS software. Establish user access rights, designate who has administrative, manager and monitoring rights. Expand the database through an automatic utility within the NMS or manually enter the data. Establish groupings of devices with like functions or features, this would include geographically related, device types, owners. Setup automatic database and configuration backups. Setup system and device alarms and alarm notifications.

Setup graphical network views. Use mapping images provided by manufacturers to geographically locate devices.

(I) Ethernet Patch Panel

Mount the Ethernet patch panel in the TMC in the enclosed communications rack as shown in the Plans. Terminate the Ethernet cables from other racks in the TMC on the punch down block. Follow manufacturer's installation instructions for cable termination and panel assembly. Install Ethernet patch cables between the patch panel and the Ethernet core switch.

Mount the Ethernet patch panel in the 3rd floor communications room in the Bryce Stuart Building as shown in the Plans. Terminate the Ethernet cables from the offices on the punch down block. Follow manufacturer's installation instructions for cable termination and panel assembly. Install Ethernet patch cables between the patch panel and the managed Ethernet switch.

(J) SMFO Contact Mapping Transmitters and Receivers

Install SMFO contact mapping transmitters and receivers in the controller cabinets at the following intersections:

- S. Broad Street at First Street (C-194) (1 receiver)
- S. Broad Street at Business 40 WB Ramp (09-1090) (2 transmitters, 1 receiver)
- S. Broad Street at Business 40 EB Ramps (09-1091) (1 receiver, 1 transmitter)

Install DC isolators as shown in the Plans. Connect the controller inputs and outputs as shown on the Plans to transmit detector preempt calls between an upstream controller and the downstream controller.

33.4. MEASUREMENT AND PAYMENT

The switches include all appropriate ports, cabling, grounding, redundancies, labeling and any integration between the switches and the communications network as necessary to make a fully working installation. All power supplies, power cords, adapters, mounting hardware, DIN rail mounting brackets, DIN rails, connectors, serial cables, signs, decals, disconnect switches, installation materials, and configuration software necessary to complete this work, will be included and will be incidental.

Managed Ethernet core switch will be measured and paid as the actual number of managed Ethernet core switches furnished, installed, and accepted. No separate measurement will be made for fiber-optic ports modules, GBICs and Ethernet ports as they will be considered incidental to furnishing and installing the managed Ethernet core switch.

Firewall will be measured and paid as the actual number of firewalls furnished, installed, and accepted.

Managed Ethernet switch will be measured and paid as the actual number of managed Ethernet switches furnished, installed, and accepted. No separate measurement will be made for fiber-optic port modules and GBICs and Ethernet ports as they will be considered incidental to furnishing and installing the managed Ethernet switch.

Relocate managed Ethernet core switch will be measured and paid as the actual number of existing managed Ethernet switches removed, relocated and reintegrated, and accepted.

Ethernet edge switch will be measured and paid as the actual number of Ethernet edge switches furnished, installed, and accepted.

Modify network management software will be measured and paid as lump sum modified, installed, and accepted. Additional software licenses for the network management software shall be incidental to modify network management software.

UPS will be measured and paid as the actual number of UPS units described in this section of the Project Special Provisions furnished, installed and accepted in the hub cabinets, TMC, the Bryce Stuart Building and the Signal Shop. No separate measurement will be made for UPS units supplied with the computer workstations in the TMC, the Bryce Stuart Building and the Signal Shop as they will be considered incidental to furnishing and installing the computer workstations.

Hub cabinet will be measured and paid as the actual number of hub cabinets furnished, installed and accepted.

IS hub cabinet will be measured and paid as the actual number of IS hub cabinets furnished, installed and accepted.

No measurement will be made of cabinet base extenders for hub cabinets and IS hub cabinets as they will be considered incidental to furnishing and installing the hub cabinets and IS hub cabinets.

Hub splice centers will be measured and paid according to the "Fiber-optic Splice Centers" section of these Project Special Provisions. Hub cabinet foundations will be measured and paid for according to the "Equipment Cabinet Foundations" section of these Project Special Provisions.

SMFO contact mapping transmitter will be measured and paid as the actual number of SMFO contact mapping transmitters furnished, installed and accepted.

SMFO contact mapping receiver will be measured and paid as the actual number of SMFO contact mapping receivers furnished, installed and accepted.

No separate measurement will be made for SMFO jumpers, coaxial cables, communication cables, Ethernet patch cables, electrical cables, mounting hardware, nuts, bolts, brackets, connectors, risers, plug-in power supplies, grounding equipment, surge suppression, or training as these will be considered incidental to the pay items listed above.

Payment will be made under:

Pay Item	Pay Unit
Managed Ethernet Core Switch	Each
Firewall	Each
Managed Ethernet Switch	Each
Relocate Managed Ethernet Core Switch	Each
Ethernet Edge Switch	Each
Modify Network Management Software	Lump Sum
UPS	Each
Hub Cabinet	Each
IS Hub Cabinet	Each
SMFO Contact Mapping Transmitter	Each
SMFO Contact Mapping Receiver	Each

34. ETHERNET BRIDGE

34.1. DESCRIPTION

Furnish and install an Ethernet bridge radio system with all necessary hardware in accordance with the Plans and this Project Special Provision to provide data links between signalized intersections in the CBD. Provide a radio system with a bi-directional, full duplex communications channel between multiple "near line-of-sight" antennas using licensed, spread spectrum technology operating in the 4.9 GHz Public Safety frequency band. The wireless Ethernet bridge shall be a 4.9 GHz solution with a 23 dBi integrated antenna or an Engineer approved equivalent.

Furnish material and workmanship conforming to the *National Electrical Code* (NEC), the *National Electrical Safety Code* (NESC), Underwriters Laboratories (UL) or a third-party listing agency accredited by the North Carolina Department of Insurance, and all local safety codes in effect on the date of advertisement. Comply with all regulations and codes imposed by the owner of affected utility poles.

(A) General

Wireless Ethernet Bridges (Radios) at Signalized Intersections

To provide an Ethernet network signal connection to other intersections, furnish and install wireless Ethernet bridges (i.e., radios) in a point-to-point (P2P), point-to-multipoint (P2MP) or repeater configuration at the following intersections:

No.	Corridor	Location	Fiber Access Point	Ethernet Bridge (Radio) Configuration	Antenna Type
1	1st Street	1st and Marshall	Y	P2MP	Integrated Panel/Omni*
2	1st Street	1st and Cherry	N	P2MP	Integrated Panel
3	1st Street	1st and N. Liberty	N	P2MP	Integrated Panel
4	1st Street	1st and S. Main	N	P2MP	Integrated Panel/Omni*
5	1st Street	1st and Church	N	P2MP/Repeater	Integrated Panel/Omni*
6	1st Street	Main/Business 40	N	P2P	Integrated Panel
7	2nd Street	2nd and Marshall	N	P2MP/Repeater	Integrated Panel/Omni*
8	2nd Street	2nd and Cherry	N	P2MP/Repeater	Integrated Panel/Omni*
9	2nd Street	2nd and Liberty	N	P2MP	Integrated Panel
10	2nd Street	2nd and Main	N	P2MP	Integrated Panel
11	2nd Street	2nd and Church	N	P2MP/Repeater	Integrated Panel/Omni*
12	2nd Street	2nd and Spruce	N	Repeater	Integrated Omni

No.	Corridor	Location	Fiber Access Point	Ethernet Bridge (Radio) Configuration	Antenna Type
13	3rd Street	3rd and Patterson	Y	P2MP	Integrated Panel
14	3rd Street	3rd and Chestnut	N	P2MP	Integrated Panel
15	3rd Street	3rd and Church	N	P2MP	Integrated Panel
16	3rd Street	3rd and Main	N	P2MP	Integrated Panel
17	3rd Street	3rd and Liberty	N	P2MP/Repeater	Integrated Panel/Omni*
18	3rd Street	3rd and Cherry	N	P2MP	Integrated Panel
19	4th Street	4th and Marshall	N	P2MP	Integrated Panel
20	4th Street	4th and Cherry	N	P2MP/Repeater	Integrated Panel/Omni*
21	4th Street	4th and Trade	N	Repeater	Integrated Panel/Omni*
22	4th Street	4th and N. Liberty	N	P2MP/Repeater	Integrated Panel/Omni*
23	4th Street	4th and N. Main	N	P2MP	Integrated Panel
24	4th Street	4th and Church	N	P2MP	Integrated Panel
26	4th Street	4th and Spring	N	P2P	Integrated Panel
27	4th Street	4th and Poplar	N	P2P	Integrated Panel
28	4th Street	4th and Spruce	N	Repeater	Integrated Omni
29	5th Street	5th and N. Broad	Y	P2MP	Integrated Panel
30	5th Street	5th and Spring	N	P2MP/Repeater	Integrated Panel/Omni*
31	5th Street	5th and Poplar	N	P2MP	Integrated Panel
32	5th Street	5th and Spruce	N	P2MP	Integrated Panel
33	5th Street	5th and Marshall	N	P2MP/Repeater	Integrated Panel/Omni*
34	5th Street	5th and Cherry	N	P2MP	Integrated Panel
35	5th Street	5th and Trade	N	P2P	Integrated Panel
36	5th Street	5th and N. Liberty	N	P2MP/Repeater	Integrated Panel/Omni*
37	5th Street	5th and N. Main	N	Repeater	Integrated Omni
38	5th Street	5th and N. Church	N	P2P	Integrated Panel
39	6th Street	6th and Main	Y	P2MP/Repeater	Integrated Panel/Omni*
40	6th Street	6th and Liberty	N	P2MP/Repeater	Integrated Panel/Omni*
41	6th Street	6th and Trade	N	P2MP	Integrated Panel
42	6th Street	6th and Cherry	N	P2MP	Integrated Panel

No.	Corridor	Location	Fiber Access Point	Ethernet Bridge (Radio) Configuration	Antenna Type
43	6th Street	6th and Marshall	N	P2MP/Repeater	Integrated Panel/Omni*
44	6th Street	6th and Spruce	N	P2MP	Integrated Panel

* Based on the results of the radio path site survey as specified in subsection entitled "Site Survey" under "Construction Methods" below, the location, antenna type and radio configuration may be subject to change. In these instances, the Contractor shall install the appropriate antenna type and configure each radio to achieve the maximum signal transfer.

At certain locations it will be necessary to integrate the radio system with a fiber-optic system. Follow the details shown in the fiber-optic splice plans.

34.2. MATERIALS

(A) Wireless Ethernet Bridge

The wireless Ethernet bridge shall be 4.9 GHz with a 23dBi integrated antenna, flat panel or omni-directional antenna or an Engineer approved equivalent at locations as shown in the Plans. The Ethernet Bridge shall enable high-speed long range outdoor point-to-point, point-to-multipoint and repeater communications links and shall be suited for installations subject to harsh environments.

The wireless outdoor Ethernet bridge shall include the radio, power supply, power injector, cabling and connectors, and a surge protection.

Ensure the Wireless Ethernet Bridge meets the following minimum requirements:

Radio Specifications

- Multiple Frequency Bands: 4.940-4.990 GHz Public Safety Band (FCC Part 90, licensed Intl.)
- Non-overlapping Channels: 8 x 5 MHz, 4 x 10 MHz, 2 x 20 MHz
- Frequency Selection: Dynamic
- Standards Compliance: IEEE 802.3, 802.11i, 802.11a
- Total System EIRP and radio output power: Radio output power Max: 23dBm (Set to local regulatory requirements to comply with transmit, conducted EIRP power limits)
- Data Rate: 1 to 54 Mbps
- Receiver Sensitivity: -74 to -97 dBm
- Wireless Modulation: Orthogonal Frequency Division Multiplexing (OFDM)
- Operating Modes: Backhaul (point-to-point) Point-to-multipoint and Repeater
- Enclosure Rating: IP67

- Security/Authentication and Encryption: AES-CCM Encryption, 64 and 128 bit WEP Encryption, WPA, WPA2, TKIP, MAC/RADIUS Server Authentication, and EAP-tls/EAP-Pass-through

Configuration and Management

- Configuration Utility: Remote SSH, SNMP, FTP
- Software Upgrades: FTP download
- Diagnostics Tools: Antenna Alignment, Bandwidth, and Frequency Usage
- Real-time Link Monitoring: Secure Management Interface - Real-time signal strength, authentication data, system uptime, data rate, channel selection
- Electrical Power Input: 120 VAC input. Power over Ethernet (PoE) low voltage DC with maximum power consumption of 9W.
- Power Output: 1 Amp at 18VDC
- Mechanical Dimensions: 13 in x 13 in x 13 in
- Weight: Less than 6 pounds.

Environmental

- Radio Operating Temperature: -30°C to 60°C. Weather protected outdoor units
- Radio Operating Humidity: 5% to 95% non-condensing

Compliance and Certification

- Regulations: FCC Part 90
- Safety: UL - Canada, USA, CE

The wireless Ethernet bridge shall be capable of being configured in point-to-point, point-to-multipoint or repeater modes of operation.

(B) Coaxial Cable

Furnish 400 Series cable to provide a link between the antenna and the lightning arrestor that meets the following minimum specifications:

Properties of Coaxial Cable

Property	Requirement
Attenuation (dB/100 ft) @ 900 MHz	3.9 dB
Power rating @ 900 MHz	0.58 kW
Center conductor	0.108" diameter Copper Clad Aluminum
Dielectric: Cellular PE	0.285" diameter
Shield	Aluminum Tape – 0.291" diameter Tinned Copper Braid – 0.320" diameter
Jacket	Black UV protected polyethylene
Bend radius	1" with less than 1 ohm impedance change at bend
Impedance	50 ohms
Capacitance per foot	23.9 pF/ft
End connectors	Standard N-Type Male Connectors on both ends

(C) Standard N-Type Male Connector

Furnish standard N-Type male connector(s) of proper sizing to mate with the 400 series coaxial cable and use a crimping method to secure the connector to the coaxial cable. Furnish a connector that meets the following minimum requirements:

- Center contact: Gold plated beryllium copper (spring loaded, non-solder),
- Outer contact: Silver plated brass,
- Body: Silver plated brass,
- Crimp sleeve: Silver plated copper,
- Dielectric: Teflon PTFE,
- Waterproofing sleeve: Adhesive lined polyolefin – heat shrink, and
- Attachment Size: Crimp Size 0.429" (minimum) hex.
- Electrical Properties:
  - Impedance: 50 ohms,
  - Working voltage: 1000 vrms (max),
  - Insertion loss: 0.1 x $\sqrt{F_{GHz}}$, and
  - VSWR: 1.25:1 (max) up to 3GHz.

(D) Coaxial Cable Shield Grounding and Weatherproofing Kits

Furnish a coaxial cable shield grounding kit containing components that will adequately bond and ground the cable shield to the pole ground. Ensure the grounding kit complies with MIL-STD-188-124A for coaxial cable and protects the cable from lightning currents in excess of 200kA. Ensure each kit is supplied, as a minimum, with the following:

- Preformed strap: 24 Gauge copper strap that is a minimum of 1-5/8 inch long and is sized to mate with the 400 series coaxial cable,
- Tensioning hardware: Copper nuts and lock washers,
- Grounding lead cable: #6 AWG, stranded, insulated copper wire

Furnish a weatherproofing kit containing components that will protect the coaxial cable shield grounding system against the ingress of moisture and prevent vibrations from loosening the connections. Ensure the weatherproofing kit is supplied, as a minimum, with the following:

- Butyl mastic tape: 3-3/4 inches wide by 24 inches long (approximately),
- Electrical tape: 2 inches wide by 20 inches long (approximately)

(E) Coaxial Cable Power Divider (Splitter)

Furnish a coaxial cable power divider for repeater radio sites (if needed) in accordance with the table below. Ensure the power divider accommodates a single primary input RF source and divides/splits the signal (power) equally between two output ports.

Properties of Coaxial Cable Power Divider

Property	Requirement
Power Division	2 - Way
Frequency	4.940-4.990 GHz
Insertion Loss	0.22 dB
Impedance	50 Ohm
VSWR ref. to 50 Ohm (max)	1.3:1
Max. Input Power	500 Watts
Connectors	Standard N-Type Female
Coaxial Cable	Furnish 400 Series cable to provide a link between the antenna and the lightning arrestor that meets the following minimum specifications:
Weight	1.5 lb (approximately)

(F) Surge Suppression

Provide surge protection in the traffic signal controller cabinet. All surge protection devices shall have an ambient operating temperature of -40 degrees F to 165 degrees F with 95 percent non-condensing relative humidity. All surge protection devices shall comply with UL 497A for paired data communications.

Provide specialized surge protection devices at the supply side of all low voltage connections to the wireless Ethernet bridges. These connections include Ethernet data cables that comply with EIA requirements.

These specialized surge protection units shall be UL listed according to the UL 497A. The minimum surge current rating for the surge protection shall be 2,000 amps for data and telecommunications.

(G) Disconnect Switch

Where an antenna is mounted on a joint-use pole, furnish a double pole, single throw snap switch in a weatherproof outlet box with cover, suitable for use in wet locations. Ensure outlet box and cover support a lockout tag device. Ensure outlet box includes one ½-inch hole in back of box. Furnish mounting hardware, sealing gaskets and lockout tag. On NCDOT and City-owned poles, the disconnect switch is not required and may be omitted.

(H) Warning Signs and Decals

Where an antenna is mounted on a joint-use pole, furnish "RF Warning Sign" and "Decal" in accordance with Roadway Standard Drawing No. 1736.01, Sheets 3 and 4 of 5. On NCDOT and City-owned poles, the warning signs and decals are not required and may be omitted.

(I) Pole-Mounting Hardware

Provide all hardware and mounting brackets required to mount the antennas and RF antenna warning sign (where required) on metal and wood poles as required by the Plans. Attach antennas and signs to poles using stainless steel banding hardware and clamps. Where antennas, signs, and risers are being attached to metal poles with a black coating, provide stainless steel bands, clamps and hardware and antenna mounting brackets that have a factory-applied, baked-on powder coated black satin finish that is UV fade-resistant and chip resistant. Field-application of coating and field-painting of bands, clamps and mounting hardware is prohibited. Submit catalog cuts/manufacturer's literature for banding hardware and clamps, both coated and uncoated, to the Engineer for approval.

34.3. CONSTRUCTION METHODS

(A) Site Survey

Perform a radio path site survey test before installing any equipment. Ensure the test evaluates the Signal Strength (dBm), Fade Margin (dB), Signal-to-Noise Ratio, Data Integrity (poll test), and a complete frequency spectrum scan. Ensure the radio path site survey test is performed using the supplied brand of radio equipment to be deployed. During the initial radio path signal strength test it may be determined that a repeater station may be necessary to complete the intended link. Provide the test results to the Engineer for review and approval. Submit copies of the test results and color copies of the frequency spectrum scan along with an electronic copy of this information. The Engineer will approve final locations of antennas and any necessary repeater stations. If required, install an antenna splitter cable at locations where it is determined that a dual antenna configuration is necessary to accommodate communications in multiple directions.

(B) Radio Licensing

Description: Obtain for the City/Department an FCC 4.9 GHz permanent fixed point-to-point license for each radio used to implement the wireless Ethernet links included in this project.

Licensing Requirements: Produce all the required data needed at each radio site to submit the licensing application. Obtain this data once the final location for each radio has been determined though the testing process.

Application Process: Submit the licensing application for each radio to the Federal Communications Commission (FCC) within two (2) weeks of the determination of the final

location for the radio. Coordinate with the Engineer thirty (30) days in advance of installation to ensure that the 4.9 GHz license has been filed and approved with the FCC.

(C) Configuration

Set up the wireless Ethernet bridge (i.e., radio) for operation in accordance with the manufacturer's recommendations. Configure the radios as point-to-point, point-multipoint or repeaters as appropriate. Configure them to use the frequencies found to minimize interference. Align antennas to receive the maximum signal transfer. Implement strong encryption and any other security features offered or as requested by the Engineer. Test to ensure that the radios function as intended.

(D) Software

Furnish units with a Windows® compatible software program that uses a GUI (Graphical User Interface) to provide "remote programming, radio configuration, remote maintenance, diagnostics and spectrum analyzer" features. Provide software approved by the Engineer that is designed to function with the approved radio. Provide configuration software that can be upgraded in the future at no additional charge to the City/Department.

Ensure the wireless Ethernet bridge (i.e., radio transceiver) is configurable from a single location (i.e. either end of the radio link) via supplied software (no extra cost to the City/Department).

(E) General Requirements for Metal Pole Locations

At most of the intersections in the proposed Ethernet bridge radio system, the traffic signals and controller cabinets are mounted on metal poles with mast arm and streetlight poles owned by Duke Energy. Coordinate all work related to the mounting of antennas and routing of antenna cables on these metal poles with Duke Energy. Comply with Duke Energy's requirements for conducting work on these metal poles.

Be advised that unfused electrical service conductors may be present in transformer bases of the metal poles as well as routed vertically inside the pole to streetlights mounted at the top of the pole. Take care to ensure that antenna cables do not come in contact with such electrical wiring inside the transformer base and inside the pole and install non-metallic flexible conduit to shield the antenna cable from such electrical conductors. Take necessary precautions so that workers do not contact the service conductors while installing the antenna cables.

Prior to performing installing antennas and antenna cables, thoroughly investigate each site where antennas are proposed for mounting on the Duke-owned metal poles to become familiar with the unique conditions associated with each site and to ascertain the scope of the work required at each location. Develop a site-specific work plan as needed to address unique conditions encountered at each site.

Use black stainless banding hardware, clamps and mounting brackets when attaching antennas, signs and risers to the black-coated metal poles as required by the Plans. Do not use intrusive attachment methods on the metal poles. Use risers painted or powder coated black where the Plans call for risers to be installed on black metal poles (see "Riser Assembly" section of these Project Special Provisions).

Do not create any new holes or enlarge any existing holes in the metal poles, mast arms and transformer bases.

(F) Antenna

Install the antenna in such a manner that avoids conflicts with other utilities (separation distances in accordance with the guidelines of the NESC) and as specified in the antenna manufacturer's recommendations. Refer to the Special Details (i.e., "SD" sheets) in the Plans for antenna mounting and cable routing details. Secure the antenna mounting hardware to the pole and route the Ethernet cable such that no strain is placed on the RG-45 connectors. On wood pole installations, bond the antenna mounting hardware to the pole ground using # 6 AWG bare copper wire using split bolt or compression type fitting. Install two antennae at a repeater site with a low-loss coaxial cable and, if required, an antenna cable splitter. If used, secure the antenna cable splitter to pole, using Engineer-approved non-intrusive methods to attach them securely to metal poles. Examples of non-intrusive attachment methods, subject to the Engineer's review and approval, include: black UV and weather resistant cable ties designed for outdoor use; industrial grade black hook-and-loop fastener systems designed for outdoor use; and black, heavy-duty, double-sided adhesive foam mounting squares designed to be permanent and weather resistant for outdoor use.

Secure the antenna to the pole using stainless steel banding hardware or a method approved by the Engineer. Use black stainless banding hardware, clamps and mounting brackets when attaching antennas to black-coated metal poles.

(G) Antenna Cabling

Install the coaxial cable shield grounding system by carefully removing the outer jacket of the coaxial cable without damaging the cable shield. Install the shield grounding system following the cable manufacturer's recommendations. Install and weatherproof the connection using the appropriate weatherproofing materials and following the manufacturer's recommendations. On wood poles, secure the #6 AWG grounding lead cable to the pole ground using split bolt or compression type fitting or an Engineer approved method. On metal poles, secure the #6 AWG grounding lead cable to the pole using an Engineer approved method.

(H) Cabinet and Electrical Power Wiring

Provide surge protection in controller cabinets to comply with the radio manufacturer's recommendations for these protectors.

Furnish outdoor rated CAT-5E Ethernet cable to be installed between the wireless Ethernet bridges (i.e., radio transceivers) and Ethernet power injector. Provide all necessary Ethernet patch cables and ensure cables are of appropriate length.

Connect the Ethernet surge protection devices between the Ethernet power injector and the wireless Ethernet bridge. This installation technique is designed to restrict earth current transients induced within the ground or directly from the power source from entering the wireless Ethernet bridge.

Ensure that installing the Ethernet radio transceivers with a fully functional traffic signal controller does not require any field device modifications with regards to hardware or software.

Fasten all wiring and harness supports to the cabinet with screws or other removable mechanical means. Do not use adhesives.

Do not locate terminals on the underside of the shelf or at other places where they are not readily visible and accessible, or where they may be a hazard to personnel. Provide a clear plastic guard for exposed 120 VAC terminals on the power panel.

Permanently label all cables entering the cabinet. Ensure the power supply for the radio system is **NOT** connected to the GFCI receptacle circuit located in the cabinet. Place a copy of all manufacturer equipment specifications and instruction and maintenance manuals in the equipment cabinet.

(I) Disconnect Switch

At locations where the antenna is mounted on a joint-use pole, install a double pole, snap switch to remove power from the Ethernet radio transceiver system. Install the disconnect switch on the exterior of the traffic signal controller cabinet (see *Roadway Standard Drawing* No. 1736.01, Sheet 1 of 5, for disconnect switch mounting location). Do not mount weatherproof box on the traffic signal cabinet door. Drill a hole in the side of the traffic signal cabinet. Mount the outlet box over the hole using a ½-inch chase nipple and bushings. Ensure sealing gaskets are in place and no water can enter the cabinet. Securely mount the weatherproof outlet box with additional mounting screws. Bond the outlet box to the equipment ground bus. Run the power supply cord of the radio unit into the outlet box and connect to switch. Securely attach power supply cord to equipment rack. Install disconnect switch with lockout tag cover. The disconnect switch is required where the antenna is mounted on a joint-use pole. If the antenna is mounted on an NCDOT or City-owned pole, the disconnect switch is not required and may be omitted.

Do not install the power supply for the radio in a GFCI protected outlet.

(J) Warning Sign(s) and Decal(s)

Where an antenna is mounted on a joint-use pole, install RF warning sign in the position shown on the Special Details (i.e., "SD" sheets) in the Plans and apply the decal to the controller cabinet as shown in Roadway Standard Drawing No.1736.01, Sheet 1 of 5. Ensure there are no conflicts between the warning sign and surrounding utilities. Mount warning sign to be easily viewed. Do not mount warning sign under pole grounds or conduit.

Secure to the pole using stainless steel banding hardware or a method approved by the Engineer. Use black stainless banding hardware, clamps and mounting brackets when attaching antennas and signs to black-coated metal poles.

Clean and remove any dirt or oil on traffic cabinet before placing decal. Place decal adjacent to the disconnect switch located on the outside of traffic cabinet as shown on Roadway Standard Drawing No. 1736.01, Sheet 1 of 5.

The warning signs and decals are required when the antennas are mounted on joint-use poles. If the antenna is mounted on an NCDOT or City-owned poles, the warning sign and decal is not required and may be omitted.

(K) Routing of Cable for Antennas Mounted on Metal Poles

Do not create any new holes in the existing metal poles, mast arms and transformer bases nor enlarge any existing holes, except where the Plans call for drilling a hole through the hand-hole

cover (not the pole) opposite the monotube mast arm attachment point. In all other cases, use the same holes through which signal cables and communications cable currently pass to feed the antenna cables into and out of the poles and mast arms. Do not feed antenna cables through holes or conduits that contain electrical conductors.

Where the Plans call for routing the antenna cable from the controller cabinet to the antenna through the interior of the metal pole, install the antenna cable in a continuous non-metallic flexible conduit from the antenna cable's entry point to its exit point to shield the cable from unfused electrical conductors present inside the pole. Provide a non-intrusive means for securing the upper end of the flex conduit to the interior of the pole so that it does not drop down to the pole base.

For all existing "truss arm" poles, install a 1" black rigid galvanized riser with weatherhead on the exterior of the pole to route the antenna cable between the signal cabinet and an antenna mounted on the pole. Attach the riser to the pole using black stainless steel bands. Do not route antenna cables vertically inside the pole of truss arm poles. For antennas mounted on the truss arm, feed the antenna cable from the weatherhead into an existing hole on the underside of the truss arm and then route the cable inside the truss arm to existing hole adjacent to the nearest signal head mounted on the arm. Feed the antenna cable out of the hole on the arm beside the signal head and route it to the antenna mounted on the arm. Use black, UV resistant cable ties to secure the antenna cable to the truss arm as directed by the Engineer.

For "monotube" mast arm poles, route the antenna cable, housed in flex conduit, up through the inside of the pole to mast arm attachment point, unless the Plans indicate otherwise. Field drill a small hole in the cover of the hand-hole opposite the mast arm of sufficient diameter to feed the antenna cable through the cover. Touch-up the perimeter of the newly drilled hole with zinc-rich paint and insert a rubber grommet through the hole to provide a water-resistant seal around the antenna cable. Form a drip loop in the antenna cable below the grommeted hole to prevent water from entering the pole via the antenna cable. Route the cable to an antenna mounted on the upright part of the pole above the mast arm and hand-hole. Use black, UV resistant cable ties to secure the antenna cable to the pole arm as directed by the Engineer.

For antennas mounted on the monotube mast arm, feed the antenna cable vertically up through the inside of the pole and then into the inside of the mast arm without the cable exiting the pole. Route the antenna cable to the existing hole adjacent to the nearest signal head mounted on the arm. Feed the antenna cable out of the hole on the arm beside the signal head and route it to the antenna mounted on the arm. Use black, UV resistant cable ties to secure the antenna cable to the truss arm as directed by the Engineer.

On wood poles, attach a 1" rigid galvanized riser with weatherhead (unpainted) using conduit straps. Route the antenna cable from the signal cabinet mounted on the wood pole to the antenna mounted on the wood pole through this riser.

Refer to the Special Details (i.e., "SD" sheets) in the Plans for additional cable routing and antenna mounting details.

(L) Wireless Ethernet Testing

Description: The wireless Ethernet links must be tested prior to purchasing the Ethernet bridge radios and once the wireless links are installed. The wireless testing prior to purchasing of the radios will validate the viability of each wireless link and will adjust any radio mounting

locations. Following installation of the wireless network sections, acceptance testing must be conducted to demonstrate that wireless links are providing maximum throughput and that wireless network sections passing through repeater sites are providing acceptable throughput.

Tree Foliage Constraint: All wireless testing must be completed when 90% of peak tree foliage has developed or remains on the trees along a link or corridor being tested. The Engineer has final approval of the wireless testing timeframe based on this requirement.

Wireless Acceptance Testing: Test the installed and configured individual wireless links and wireless network connections. A wireless link is defined as being between two Ethernet bridge radios. A wireless network connection may be between two Ethernet bridge radios at intersections or may pass through multiple repeaters to provide a wireless connection between Ethernet switches at adjacent intersections.

Test Procedure: Develop a wireless link and wireless network connection testing procedure that follows the RFC 2544 protocol. The procedure must be approved by the Engineer. The test procedure must determine the throughput of each individual wireless link and for each wireless network connection.

Acceptance: A wireless link and network connection will be accepted as complete when testing results demonstrate and document that each installed wireless link meets or exceeds the initial link test results, and the throughput meets or exceeds 22 Mbps 90% or the time. The wireless network connections must meet or exceed the initial test results for the worst case wireless link that composes the wireless network connection. Provide all equipment and personnel needed to safely conduct the test and arrange for the Engineer's representative to witness the tests.

(M) Training

A factory certified representative shall provide two (2) days of local training after radios have been installed and are operational.

34.4. MEASURMENT AND PAYMENT

4.9 GHz Ethernet Bridge will be measured and paid as the actual number of Ethernet bridges furnished, installed and accepted according to following conditions: 80% of the payment will be made upon acceptance of the installed bridge system and the remaining 20% of the payment will be made following final acceptance (including completion of the 60-day Observation Period). This item includes the appropriate antenna(e), Ethernet cable, PoE adapter, Ethernet power injector, grounding system with weatherproofing, surge protection, installation materials, configuration software, labeling, any integration between the bridge system and the fiber-optic network (if necessary) and warranties.

The Contractor shall be responsible for providing a complete, functional system including all necessary cables and connectors in accordance to the specifications and as specified in the Plans. All miscellaneous patch and interconnect cables shall meet the proposed equipment specification requirements and shall meet EIA/TIA telecommunications standards.

No measurement will be made of power supplies, power cords, adapters, antenna mounting hardware, stainless steel banding hardware and clamps, connectors, cables, non-metallic flex conduit, grommets, cable ties, surge protection devices, cable splitters, non-intrusive mounting systems for cable splitters, low-loss coaxial cable, signs, decals, disconnect switches, and

installation materials necessary to complete this work, including the radio path site survey test and warranties, as these will be considered incidental to furnishing and installing Ethernet bridges.

Riser assemblies will be measured and paid for separately in accordance with the "Riser Assemblies" section of these Project Special Provisions.

Payment will be made under:

Pay Item	Pay Unit
4.9 GHz Ethernet Bridge	Each

35. DIGITAL VIDEO EQUIPMENT

35.1. DESCRIPTION

Furnish and install, or furnish only as noted below, video display interface units, video monitors, digital video encoders for converting analog and digital video.

Furnish and install a network video recorder (NVR) with an integrated DVD/CD writer in the TMC as shown in the Plans.

35.2. MATERIALS

(A) Digital Hardware Video Encoder (DVE)

Furnish and install digital hardware video encoder hardware to create a video-over-IP network system, as shown in the Plans. The video encoder units may be shelf or rack-mounted.

Furnish digital hardware video encoder components that utilize the Moving Picture Experts Group's MPEG-4 Part 10/H.264 video compression technology in accordance with the International Organization for Standardization (ISO) and International Electrotechnical Commission (IEC) requirements detailed in the ISO/IEC 13818 and 14496-14 standards, respectively. Provide the ability for the user to select the video compression technology. Ensure that the hardware video encoder is capable of unicast and multicast operation, and that they support the Session Announcement Protocol (SAP) as recommended by the Internet Engineering Task Force (IETF) RFC 2974, and Differentiated Services/Quality of Service (DiffServ/QoS) software components. Ensure that the digital video encoder provides 99.999% error-free operation.

Provide a DVE that is a hardware-based network device able to accept a minimum of one analog National Television System Committee (NTSC) video input and digitize it for transport across IP networks. Use a digital video encoder that provides a minimum of two serial data interfaces for transmission of command and control data to other devices (typically camera PTZ commands), as well as console and configuration functions. Provide compatible decoder software along with the digital video encoder at no additional cost.

Furnish digital video encoders compatible with those provided in State Projects C-4192 and C-4152.

(1) Video Specifications

Ensure that any video input utilizes a BNC connector and delivers one-volt peak-to-peak (Vp-p) NTSC composite video signals for encoding. Ensure that the DVE operates with both color and monochrome video, and that they allow the user to select and adjust video resolution. Ensure that the DVE support resolutions that include, but are not limited to those in table below. Ensure that the MPEG-4 DVE is capable of delivering color and monochrome video at 30 fps regardless of resolution, and that they can do so using variable, programmable bit rates from 32 Kbps to 4 Mbps. Ensure that the DVE provides fixed and variable bit rate modes.

Resolution Specifications

Compression Technology	Resolution	NTSC Requirements
MPEG-4	QCIF	176 horizontal x 120 vertical
MPEG-4	CIF	352 horizontal x 240 vertical
MPEG-4	2CIF	704 horizontal x 288 vertical

Note: The resolutions attained depend on the data transmission rate.

(2) Environmental Specifications

Unless stated otherwise in the Plans, provide digital video encoders that meet all specifications during and after being subjected to an ambient operating temperature range of -30°F to 165°F as defined in the environmental requirements section of the NEMA TS 2 standard, with a maximum non-condensing relative humidity of 95%.

Ensure that cabinets housing system components comply with the environmental requirements detailed in the NEMA TS 2 standard. House the digital video encoder in a field cabinet with protection from moisture and airborne contaminants, blowing rain, wind, blowing sand, blowing dust, humidity, roadside pollutants, vandalism, and theft. Ensure that the digital video encoder is resistant to vibration and shock, and conforms to Sections 2.1.9 and 2.1.10, respectively, of the NEMA TS 2 standard.

(B) Video Monitor Processor Unit

(1) General

Provide a server class computer that will serve as a video monitor processor unit. Provide video monitor display cards to operate the new display monitors. The video monitor processor units shall meet the following requirements and be compatible with those supplied under TIP Project C-5142B:

- Support Windows® Server 2008 operating system
- Occupy no more than three rack units
- Include 10/100/1000 MB network interface cards
- Include one terrabyte of storage
- Include a quad core processor operating
- Provide software-based video decoding for at least 16 H.264 video streams at 25 frames per second.
- Provide video monitor display cards described below.

(2) Video Monitor Display Cards

Provide video display output cards that are comparable to those in the existing video monitor processor units supplied under TIP Project C-5142B: Provide video display output cards that meet the following requirements:

- Form Factor: ATX,
- Graphics Bus: PCI Express 2.0 x16,
- Number of Slots: One,

- Resolution: Display port 2560 x 1600, Digital Video Interface D (DVI-D) (Single Link) at 1920 x 1200,
- Color Precision: 128 bit,
- Buffer Memory: 512 MB GDDR3,
- Memory bandwidth: 11,2 GB/s per graphics processor unit (GPU),
- Display Connectors: Quad display port outputs drive display port. Display port cable to DVI-D for four displays, and
- Passive Heatsink.

(C) TMC and Signal Shop Video Display Monitor

Provide four 32-inch LED monitors that expand the existing monitor wall in the TMC. Provide eight replacement 32-inch and two replacement 47-inch LED monitors for the existing monitor wall in the TMC. Provide one 32-inch LED monitor for the Signal Shop. Provide only new video monitors; do not furnish used or refurbished monitors. Furnish monitors made by the same manufacturer, regardless of whether they are being installed in the TMC or the Signal Shop. Provide the same model monitor for all monitors installed at a given location. Provide power cords for all monitors of sufficient length to plug into duplex wall receptacle adjacent to monitor mounting location.

Provide mounting brackets specifically designed for mounting the size of LED monitors described below on both metal and wood stud walls. Provide brackets that allow vertical and horizontal tilt to optimize viewing angles. Provide brackets with locking setscrews to prevent the monitor from falling or sliding off the bracket. Provide all mounting hardware and fasteners and plywood backboard necessary for securely attaching monitor mount brackets to metal stud and wood stud walls.

Provide monitors meeting the following requirements:

- Display Type: TFT active matrix, widescreen flat panel,
- Mounting: Wall-mount,
- Pixel Pitch: 0.6 mm,
- Pixels per Inch: 42 pixels at native resolution,
- Resolution: 1,920 x 1,080 dpi,
- Colors: Minimum 16.7 million colors,
- Horizontal Scanning Frequency: >85 kHz,
- Vertical Scanning Frequency: 50-86 Hz,
- Response Time: 6 ms,
- Contrast Ratio: 1000:1,
- Aspect ratio: 16:9,
- Viewing Angle (Horizontal): 178 degrees,
- Viewing Angle (Vertical): 178 degrees,
- Brightness: 500 cd/m^2, and
- Signal Compatibility: VGA to UXGA, and
- HDTV Supported Formats: 480i, 480p, 575i, 575p, 720p, 1035i, 1080i, 1080p,
- Digital Inputs: DisplayPort, HDMI, and DVI-D
- Analog Inputs: HD-15 VGA in, RGB. BNC composite, RCA component and S-video,

- Audio Inputs: RCA Audio, stereo mini-jack, DisplayPort audio, HDMI audio, and
- External Control: RS-232 and infrared remote.

Provide DVI-D video cables with the monitors to reach from the video server outputs in the TMC to the wall monitors in the TMC. Provide DVI-D cables and connectors meeting the following requirements:

- Cable: Individually insulated, 28 AWG copper conductors,
- Connectors: 24x1 pin male on both ends,
- Pins: Gold Plated,
- Maximum Resolution: 1920x 1200,
- Bit Rate: 24-bit, and
- Bandwidth Rating: 9.9 Gbps.

(D) Network Video Recorder (NVR)

The network video recorder (NVR) shall interface to the IP network and be able to record video images from cable TV and the CCTV camera video images and write those images to a DVD for viewing on a workstation. Furnish and install a network-based NVR in the TMC. Provide an NVR with the capability to record from IP streams four IP cameras simultaneously. Provide an NVR meeting the following requirements:

- Processor: Quad core Intel Xeon L9400 processor at 2.66 GHz or greater,
- Memory: 4 GB RAM,
- Network: Dual 10/100/1000 Base T Ethernet with RJ-45 connectors,
- Hard Drive: Internal 2 TB SATA, 3.0 Gaps, operating at 15.2 RPM,
- Video Card: 512 MB RAM with DirectX 9.0c,
- Video Output: SVGA connector, and
- Operating System: Windows® 7 Professional, latest version.

Provide an NVR meeting the minimum power requirements:

- Input voltage: 90-135 V at 50/60 Hz, and
- Output wattage: 255 W.

Provide an NVR meeting the minimum port requirements:

- Keyboard: One 6-pin mini-DIN connector or use USB connection,
- Mouse: One 6-pin mini-DIN connector or use USB connection,
- Audio: Minature phono plugs for line in, line out and microphone,
- Ethernet: Dual 10/100 Base T Ethernet with RJ-45 connector, and
- USB Port: Six USB 2.0 ports.

Provide the NVR capable of reading and writing DVDs (digital video discs) and CDs (compact discs) and meeting the following minimum functional requirements:

- Compression Formats: MJPEG, MPEG-4 part 10, H.264,
- DVD Read Speed – 12X,
- DVD Write Speed – 8X,
- DVD Rewrite Speed – 4X,
- CD Read Speed – 40X,

- CD Write Speed – 24X,
- CD Rewrite Speed – 24X,
- Type of Drive – DVD +/- RW,
- Interface – Hi-Speed USB, IEEE 1394 (FireWire),
- Access Time – 140ms,
- Cache Size – 2MB,
- Recording Modes – Multi-session,
- Load Type – Tray,
- CD Support Formats – CD Text, CD-DA, CD-ROM, Photo CD, Video CD, and
- Media Supported – DVD+R, CD-Rom, CD-R, CD-RW, DVD-ROM, DVD-R, DVD-RW, DVD+RW, DVD+R.

35.3. CONSTRUCTION METHODS

(A) General

Receive approval for the System Design Report described in these Project Special Provisions before submitting products submittal data, purchasing, installing and configuring the central video equipment described in this section of the Project Special Provisions.

(B) Digital Hardware Video Encoder

(1) Serial Interface

Use hardware-based digital video encoders having a minimum of two serial data interfaces and connectors that conform to EIA-232/422/485 standards. Ensure that the serial interfaces support EIA-232 as well as 2-wire and 4-wire EIA-422/485 connections. Ensure that the serial port(s) support data rates up to 115.2 Kbps. Serial interface parameters, such as data format, number of bits, handshaking, and parity, shall be software programmable through local connection to the digital video encoders and through connections over the network. Serial interface ports may utilize RJ-45 connectors, D-sub connectors, or screw terminals.

(2) Network Interface

Ensure that the digital video encoder local area network (LAN) connection supports the requirements detailed in the IEEE 802.3 standard for 10/100 Ethernet connections. Provide a DVE having a minimum of one Ethernet port, which shall be a 10/100 Base-TX connection. Ensure that the connector complies with the EIA and Telecommunications Industry Association (TIA) requirements as detailed in the EIA/TIA-568-A standard. Provide copper-based network interface ports that utilize RJ-45 connectors.

Ensure that all Category 5e unshielded twisted pair/shielded twisted pair network cables are compliant with the EIA/TIA-568-B standard. Ensure that the network communication conforms to User Datagram Protocol (UDP), Version 4 of the Internet Protocol (IP) and Version 2 of the Internet Group Multicast Protocol (IGMP).

(3) Front Panel Status Indicators

Ensure the digital video encoders have light-emitting diode (LED) displays, liquid crystal displays (LCDs), or similar illuminated displays to configuration and management. Provide digital video encoders that support local and remote configuration and management. Configuration and management functions shall include access to all user-programmable features, including but not limited to addressing, serial port configuration, video settings, device monitoring, diagnostic utilities, and security functions. Ensure that the digital video encoders and digital video decoders support configuration and management via serial login, telnet login, and Simple Network Management Protocol (SNMP).

(4) Electrical Specifications

Ensure that all wiring meets NEC requirements and standards. Provide equipment that operates on a nominal voltage of 120 VAC. The equipment shall operate within a voltage range of 89 VAC to 135 VAC. The operating frequency range for power shall be 60-hertz ±3 Hz. If the device requires operating voltages of less than 120 VAC, supply the appropriate voltage converter.

Furnish, install and integrate the video encoders in each CCTV cabinet shown in the Plans. Connect the analog input of the video encoder to the CCTV camera as defined above. Connect the Ethernet output of the video encoder to Ethernet edge switch. Use standard coax cable with BNC (gold-plated center pin) connectors. Connect the RS-422 PTZ serial communications from the camera to the serial port of the video encoder. Configure ports and IP addresses for multicast broadcast and VLANs.

(C) Video Monitor Processor Unit

Install video display monitor processing units in existing communications racks in the TMC as shown in the Plans. Integrate the units with the Ethernet network and video display subsystem.

Install and configure the existing video decoding software on the display units. Configure the existing software decoder to process the additional CCTV cameras installed under this project.

(D) Video Display Monitor

(1) General

Conceal all video cabling between each monitor. Connect power cords to adjacent receptacles (provided by others) in wall.

Ensure when completed the power and video cables will be concealed behind the monitors.

(2) TMC

Replace the existing eight 32-inch and two 47-inch LCD monitors. Deliver the removed units to the City for their use. Shelf-mount the monitors in the TMC monitor wall. The monitors shall align vertically and horizontally with each other. Conceal the power and video cabling in the existing rack cable management hardware.

Connect the new monitors to video display output cards in the existing video monitor processing units.

(3) Signal Shop

Use mounting brackets specifically designed for wall mounting of monitors. Use mounting brackets specifically designed for wall mounting of LED monitors. Ensure the mounting brackets are secured to wall studs, concrete block or plywood backboard according to the manufacturer's recommendations.

Connect the wall monitor to the Signal Shop workstation and configure so it will display content from the workstation.

(4) Electrical Specifications

Ensure that all wiring meets NEC requirements and standards. Provide equipment that operates on a nominal voltage of 120 VAC. The equipment shall operate within a voltage range of 89 VAC to 135 VAC. The operating frequency range for power shall be 60-hertz ±3 Hz. If the device requires operating voltages of less than 120 VAC, supply the appropriate voltage converter.

Furnish, install and integrate the digital video encoders in each CCTV cabinet shown in the Plans. Connect the analog input of the digital video encoder to the CCTV camera as defined above. Connect the Ethernet output of the digital video encoder to Ethernet edge switch. Use standard coax cable with BNC (gold-plated center pin) connectors. Connect the RS-422 PTZ serial communications from the camera to the serial port of the digital video encoder. Configure ports and IP addresses for multicast broadcast and VLANs.

(C) Video Monitor Processor Unit

Install video display monitor processing units in existing communications racks in the TMC as shown in the Plans. Integrate the units with the Ethernet network and video display subsystem.

Install and configure the existing video decoding software on the display units. Configure the existing software decoder to process the additional CCTV cameras installed under this project.

(D) Video Display Monitor

(1) General

Conceal all video cabling between each monitor. Connect power cords to adjacent receptacles (provided by others) in wall.

Ensure when completed the power and video cables will be concealed behind the monitors.

(2) TMC

Replace the existing eight 32-inch and two 47-inch LCD monitors. Deliver the removed units to the City for their use. Shelf-mount the monitors in the TMC monitor wall. The monitors shall align vertically and horizontally with each other. Conceal the power and video cabling in the existing rack cable management hardware.

Connect the new monitors to video display output cards in the existing video monitor processing units.

(3) Signal Shop

Use mounting brackets specifically designed for wall mounting of monitors. Use mounting brackets specifically designed for wall mounting of LED monitors. Ensure the mounting brackets are secured to wall studs, concrete block or plywood backboard according to the manufacturer's recommendations.

Connect the wall monitor to the Signal Shop workstation and configure so it will display content from the workstation.

(E) Network Video Recorder (NVR)

Install the NVR in proposed server rack and connect to Ethernet network. Configure the NVR for remote control and scheduled recording.

Ensure when completed the power and video cables will be concealed behind the monitors.

35.4. MEASUREMENT AND PAYMENT

The materials provided in this section include all appropriate ports, cabling, grounding, redundancies, labeling and any integration between the devices and the communications network as necessary to make a fully working installation.

All power supplies, power cords, adapters, mounting hardware, connectors, serial cables, signs, decals, installation materials, and configuration software necessary to complete the work described in this section of the Project Special Provisions are to be included and will be incidental the equipment and materials furnished and installed under this section of the Project Special Provisions.

Digital hardware video encoder will be measured and paid as the actual number of digital hardware video encoders furnished, installed, and accepted.

Video monitor processor units will be measured and paid as the actual number of video monitor processor units furnished, installed and accepted in the TMC. No separate payment will be made for the video display output cards as they will be considered incidental to furnishing and installing the video monitor processor units. No separate measurement and payment will be made for installing and configuring the existing video software as such work will be considered incidental to furnishing and installing the TMC video display monitors.

TMC video display monitor (_____) will be measured and paid as the actual number of video display monitors of each screen size furnished, installed, and accepted in the TMC.

Signal shop video display monitor will be measured and paid as the actual number of video display monitors furnished, installed, and accepted in the Signal Shop.

Network video recorder will be measured and paid as the actual number of network video recorders furnished, installed, and accepted.

No separate measurement will be made for coaxial or DVI-D cables, cable connectors, communication cables, Ethernet cables between equipment housed within the same room/rack/cabinet, electrical cables, video display monitor mounts, mounting hardware, nuts, bolts, brackets, connectors, grounding equipment, surge suppression or documentation as these will be considered incidental to the pay items listed above.

Payment will be made under:

Pay Item	Pay Unit
Digital Hardware Video Encoder	Each
Video Monitor Processor Unit	Each
TMC Video Display Monitor (32")	Each
TMC Video Display Monitor (47")	Each
Signal Shop Video Display Monitor	Each
Network Video Recorder	Each

36. ENCLOSED COMMUNICATIONS RACK

36.1. DESCRIPTION

Furnish and install wall-mounted enclosed communication rack at the Bryce Stuart Municipal Building.

36.2. MATERIALS

(A) Wall-Mounted Communications Rack

Furnish a wall-mounted EIA 19-inch equipment rack cabinet for mounting in the Bryce Stuart Municipal Building to house a managed Ethernet switch and a rack-mounted UPS. The unit shall be an enclosed rack at least 20 rack units high with approximate dimensions of 36"H x 21" W x 26" D. The rear mounting plate that attaches the cabinet to the wall shall be hinged along one side with latches on the opposite side so that the cabinet can be swung open to access the rear of the cabinet.

Provide a power strip inside that uses 120 VAC 60 Hz power; the power strip shall contain at least six outlets and a six-foot power cord. Provide grounding bus bar system to ground rack-mounted electrical equipment.

Provide racks constructed of all metal components. Supply all screws, nuts, washers, lock nuts, brackets and hardware necessary to assemble equipment described herein. Vents shall be on front and rear panels. Furnish wire entry access plates with dust tight seals.

Provide cable management hardware for attachment to rack frame and between 19-inch rack angles. The hardware shall include cable organizers and clamps to provide strain relief and cable mounting. Provide one shelf.

Construct all rack frames and rack angles of 12-gauge steel or greater. Construct the sides, top and bottom panels of 16-gauge steel or greater.

Paint the panels, rack frames, and rack angles with black polyester powder coating or baked on paint.

36.3. CONSTRUCTION METHODS

(A) General

Ground the racks to a building ground.

(B) Wall-Mounted Communications Rack

Install the wall-mounted communications rack cabinet on the wall of the 3rd floor communications room of the Bryce Stuart Municipal Building as shown in the Plans. Install the fiber-optic splice center, managed Ethernet switch and rack-mounted UPS in the rack inside the cabinet.

Furnish and install a power strip and 10-foot power cord on the rear of the rack frame. Furnish and install strip that uses 120 VAC 60 Hz power and that contains at least 5 outlets. Furnish and install grounding bus bar system to ground the rack-mounted electrical equipment. Equip door with grounding studs.

Furnish and install cable management hardware for attachment vertically along the rack frame and horizontally between 19-inch rack angles. Cable management hardware shall run vertically up one rear rack frame. Provide hardware including cable organizers and clamps to provide strain relief and cable mounting.

36.4. MEASUREMENT AND PAYMENT

Wall-mounted communications rack will be measured and paid as the actual number of wall-mounted communications racks furnished, installed, and accepted.

No separate measurement and payment will be made for rack set-up and assembly, mounting of all accessories and equipment specified for installation within the rack, all brackets, fasteners, and hardware required for properly mounting equipment in the rack, as such materials and work will be considered incidental to furnishing and installing the communications racks.

Payment will be made under:

Pay Item	Pay Unit
Wall-Mounted Communications Rack	Each

37. BUILDING MODIFICATIONS AND FIBER-OPTIC CABLE TERMINATION

37.1. DESCRIPTION

At locations called for in the Plans, route fiber-optic cable in new and/or existing conduits and install conduits into buildings as shown. Terminate fiber-optic cable in fiber-optic splice centers in building as shown in the Plans. Furnish and install cable and cable routing facilities as shown in the Plans. Furnish and install electrical outlets and circuits in the TMC. Furnish and install additional shelves in the modular video wall furniture in the TMC. Install a wall-mounted shelf in the Signal Shop.

All construction to reach a building is paid for using other pay items in these Project Special Provisions. All construction to enter a building (including all work from creating a new entrance or integrating with an existing entrance) and making internal provisions for terminating cables are covered under these building modification pay items.

37.2. MATERIALS

(A) General

Use risers and conduit materials as called for in the *Standard Specifications* or these Project Special Provisions.

Use caulking and sealing materials for sealing entrances into buildings as approved by the Engineer.

Use new cable raceways, electrical boxes, and metallic conduit as approved by the Engineer. Where called for in the Plans, use intermediate metallic conduit (IMC) that complies with the NEC and EIA/TIA Standard 569 and commercial building standards for telecommunications pathways.

(B) Fiber-Optic Splicing and Termination

Furnish SMFO pigtails with each splice housing, connector housing and interconnect center. Provide pigtails that are a maximum of 6 feet in length with a factory assembled LC connectors on one end. Ensure that the SMFO pigtails meet the operating characteristics of the SMFO cable with which it is to be coupled.

Furnish SMFO jumpers that are a minimum of 3 feet in length with factory assembled LC connectors on one end (i.e., the splice/interconnect center end) and, on the other end, factory-assembled connectors of the same type provided on the Ethernet edge switch and provided on the Ethernet core switch. Ensure that SMFO jumpers meet the operating characteristics of the SMFO cable with which it is to be coupled. Provide all of SMFO jumpers with all of the connector combinations necessary to provide the connectivity indicated in the Plans and required by these Project Special Provisions to produce a fully-functional Ethernet communications system.

Provide connector panels with LC-type connectors for connector housings and interconnect centers installed in all facilities.

For each splice housing and interconnect center, provide splice trays that hold, protect, and organize optical fibers, and secure fibers inside splice tray. Design and size splice trays to be

dielectric, to accommodate all fibers entering the splice tray, and to provide sufficient space to prevent microbending of optical fibers.

(C) TMC Building Modifications

(1) Rack-Mounted Connector and Splice Housings

Furnish one rack-mountable connector housing (i.e., distribution panel) and a matching splice housing for splicing the fibers in the incoming signal system trunk cables to SMFO fiber optic pigtails and terminating on patch panels in the communications cabinet being installed in the TMC (i.e., one connector housing for each incoming cable). Each connector housing shall have LC-compatible connector panels and shall have a capacity for terminating a minimum of 48 fibers on the patch panel. The connector housing shall occupy no more than four rack units. Provide a matching splice housing and necessary splice trays for fusion splicing the incoming single-mode fibers in the 48-fiber trunk cable to the pigtails. The splice housing shall occupy no more than four rack units, shall be of the same manufacturer as the associated connector housing and designed to work with the connector housing. The splice housing shall have the capacity to splice at least 48 fibers. Store a minimum of 20 LF of each fiber-optic cable inside the communications rack cabinet that contains the splice and connector housings. Provide all hardware needed to install these units in the TMC.

(2) Flexible Fabric Innerduct

Furnish a flexible, multi-celled, textile innerduct system for installation in the existing 4" rigid galvanized conduit entering the Clark Campbell Transportation Center building and routed to the TMC housed therein. Provide a plenum-rated fabric innerduct system that meets UL 2024A standards for Plenum Optical Fiber/Communications raceways. Provide a flexible fabric innerduct comprised of three cells each with a 200 lb. nylon resin flat woven, plenum-rated pull tape preinstalled to facilitate installation of up to six fiber-optic communications cables (two per cell). Provide a textile innerduct system constructed from white Nylon-6 resin containing melamine-cyanurate polymer.

(3) Video Monitor Walls

Relocate four existing shelves and install two additional shelves and mounting hardware to support four new 32" video monitors, eight replacement 32" video monitors and two replacement 47" video monitors. This existing modular office furniture is manufactured by Wright Line.

(D) Bryce Stuart Municipal Building Modifications

(1) Conduit, Conduit Fasteners and Fittings for Entrances

Furnish all conduit, conduit fittings, outlet bodies, conduit straps, conduit-to-beam fasteners, rod-to-beam fasteners, threaded rods, conduit fasteners and any other hardware required to provide a conduit to convey the Cat 5e Ethernet communications cable above the drop ceiling in the Bryce Stuart Building as shown in the Plans.

(2) Electrical Conduit for Network Interface Boxes

Furnish all conduit, conduit fittings, outlet bodies, conduit straps, conduit-to-beam fasteners, rod-to-beam fasteners, threaded rods, conduit fasteners and any other hardware required to provide a conduit to convey the Ethernet cable above the drop ceiling in the Bryce Stuart Building as shown in the Plans.

(E) Signal Shop Modifications

(1) Wall Shelf

Furnish a wood shelf to support the managed Ethernet switch in the Signal Shop. Provide the shelf with metal shelf brackets and wall anchors to securely attach the shelf to the concrete block wall of the Signal Shop. Provide a shelf that is sturdy enough to support the weight of the managed Ethernet switch. Provide a shelf that is sufficiently wide and deep to support the managed Ethernet switch without it overhanging the shelf on any side.

(2) Wall-Mounted Interconnect Center

Furnish a compact, modular interconnect center designed to be wall-mounted for splicing and terminating all 24 fibers in the incoming 24-fiber-optic cable at the Signal Shop. Furnish an interconnect center that complies with the requirements of interconnect centers in the "Splice Centers" section of these Project Special Provisions, except the unit shall be wall mounted on the concrete block wall. Store a 100 LF of slack fiber-optic cable outside of and adjacent to the building on the overhead span as shown in the Plans.

(3) Conduit, Conduit Fasteners and Fittings for Entrances

Furnish all conduit, conduit fittings, outlet bodies, conduit straps, conduit-to-beam fasteners, rod-to-beam fasteners, threaded rods, conduit fasteners, bushings, duct sealant, heat shrink tubing, and any other hardware required to provide a conduit to convey the fiber-optic communications cable above the drop ceiling in the Signal Shop building as shown in the Plans.

37.3. CONSTRUCTION METHODS

(A) General

Contact Engineer prior to entering any building. Coordinate and obtain approval from Engineer regarding allowable working time in buildings.

Prior to core drilling or otherwise creating new entrance into an existing building or through an interior wall, obtain approval of methods and materials from the Engineer. In all cases create entrances through exterior walls that are weatherproof and watertight and through interior walls that are properly sealed with an approved, UL-listed fire-block sealant.

Whenever possible, use existing cable raceways, ducts and drop ceilings to route fiber optic cable.

When working inside the buildings, cover all furnishings, including chairs and electronic and computer equipment with drop cloths to protect them from debris and to aid in cleanup. Replace the raised floor panels and ceiling panels and clean up all dust and debris by the end of each work period unless otherwise approved by the Engineer. Replace any floor panels damaged during installation of the above ceiling conduit at no expense to the Department.

Perform all work called for in the Plans to enter building, install cable conduits and cable raceways, and to route cabling in raised floors, drop ceilings, and new and existing conduits.

Terminate all optical fibers in splice centers unless otherwise shown on the Plans.

Install splice centers with connector panels, splice trays, storage for slack cable or fibers, mounting and strain relief hardware, and all necessary hardware. Comply with all requirements of the "Fiber-Optic Splice Centers" section of these Project Special Provisions.

(B) Traffic Management Center (TMC)

Install equipment and route cable into the TMC through existing rigid metal and IMC conduit as shown in the Plans. Contact Larry Walker at (336) 747-6879 at least 30 days in advance of work to confirm work schedule, work restrictions and to make arrangements for gaining access to the building. Perform all work in accordance with NESC regulations and guidelines.

Install a continuous, plenum-rated, 3-cell flexible textile innerduct system inside the 4" rigid galvanized conduit from its entrance into the first floor of the Clark Campbell Transportation Center to its termination in the TMC on the second floor of the building. Install the fabric innerduct system in accordance with the manufacturer's instructions, using a breakaway swivel. Install the fabric innerduct in a continuous, unsplice length from the junction box outside the building to the TMC on the second floor of the building. Pull the proposed fiber-optic communications cable inside the building and into the TMC using one cell of this innerduct. Leave the remaining cells and their pre-installed pull tapes for use by the Phase B contractor for pulling and additional fiber-optic communications cable into the TMC at a later date.

Install the required rack-mounted fiber connector housing and splice housing in the communications rack in the TMC as shown in the Plans. Fusion splice all fibers in the entering fiber-optic cables to SMFO pigtails inside rack-mounted splice housing, then connect the pigtails to the appropriate connectors in the connector housing. Terminate all pigtails from the incoming cable. Clearly label the connector housing using an approved labeling method. Install SMFO jumpers between the connector panels and the Ethernet core switch.

(C) Bryce Stuart Building

Install equipment, conduit and route Ethernet cable into the Bryce Stuart Building through proposed 3/4" IMC conduit as shown in the Plans. Contact Larry Walker at (336) 747-6879 at least 30 days in advance of work to confirm work schedule, work restrictions and to make arrangements for gaining access to the building. Perform all work in accordance with NESC regulations and guidelines.

Install the proposed Ethernet cable in proposed ¾" IMC conduit as shown in the Plans from the 3rd floor communications room to one office and one cubicle. Reuse the existing fiber-optic cable and fiber-optic interconnect center already terminated in the 3rd floor communications room and installed by others as shown in the Plans. Follow procedures above for protecting equipment, cleaning up and terminating cable.

Fusion splice all fibers in the entering fiber-optic cables to SMFO pigtails inside rack-mounted splice housing, then connect the pigtails to the appropriate connectors in the connector housing. Terminate all pigtails from the incoming cable in the connector housing. Clearly label the connector housing using an approved labeling method. Install SMFO jumpers between the connector panels and the relocated existing Ethernet core switch.

(D) Signal Shop

Contact Larry Walker at (336) 747-6879 at least 14 days in advance of work to confirm work schedule, work restrictions and to make arrangements for gaining access to the building housing the Signal Shop and Traffic Signal Supervisor's office. Perform all work in accordance with NESC regulations and guidelines.

Install equipment and route cable into the Signal Shop through proposed rigid metal and IMC conduit as shown in the Plans. Contact Larry Walker at (336) 747-6879 at least 30 days in

advance of work to confirm work schedule, work restrictions and to make arrangements for gaining access to the building. Perform all work in accordance with NESC regulations and guidelines.

Install a 1" RGS conduit through the exterior brick wall into the Signal Shop above the drop ceiling as shown in the Plans. Install a waterproof duct sealant to make a water tight seal and prevent water intrusion between exterior of the 1" conduit and the hole through the wall. Seal the exterior end of the conduit with approved heat shrink tubing after the fiber-optic cable has been pulled into the building.

Install a 1" IMC conduit with appropriate RGS to IMC conduit fitting and run the IMC conduit above the dropped ceiling as shown in the Plans. Install a 90-degree bend to run the conduit down the wall to the interconnect center. Attach the conduit to the wall using approved conduit straps anchored into the wall. Terminate the conduit with a bushing to protect the cable from damage.

Install the proposed fiber-optic and Ethernet cable in proposed IMC conduit as shown in the Plans. Follow procedures above for protecting equipment, cleaning up and terminating cable.

Install the wood shelf as shown in the Plans so it is not in conflict with the conduit, fiber-optic interconnect center and network interface box. Mount the wood shelf and brackets to the block wall with anchors suitable for concrete block to support the managed Ethernet switch in the signal shop. Prime and paint the shelf to match the existing wall paint.

Feed the cables down through the tubing, into the wall-mounted fiber-optic interconnect center. Install the required wall-mounted fiber-optic interconnect center in the Signal Shop as shown in the Plans. Fusion splice all fibers in the entering fiber-optic cables to SMFO pigtails inside rack-mounted splice housing, then connect the pigtails to the appropriate connectors in the connector housing. Install SMFO jumpers between the connector panels and the managed Ethernet switch.

Apply an Engineer-approved, UL-listed fire-stop sealant (putty, caulk, mortar, etc.) to seal gaps between any new conduits installed and holes cut through interior building walls and partitions.

37.4. MEASUREMENT AND PAYMENT

TMC modifications will be measured and paid at the contract lump sum price. The price and payment will be full compensation for all work required to route and terminate the fiber-optic cable into the TMC as shown in the Plans, all work to relocate existing shelves and replace existing monitors, furnish and install two new shelves and hardware as well as any other work not called for under other items but required to accomplish the building modifications.

No separate measurement and payment will be made of flexible textile innerduct system installed in existing conduit inside the TMC building as such work will be considered incidental to the TMC modifications.

Bryce Stuart Building modifications will be measured and paid at the contract lump sum price. The price and payment will be full compensation for all work required to route and terminate the Ethernet cable into the Bryce Stuart Building as shown in the Plans, as well as any other work not called for under other items but required to accomplish the building modifications.

Signal shop modifications will be measured and paid at the contract lump sum price. The price and payment will be full compensation for all work required to install conduit and route and terminate the fiber-optic cable into the building as shown in the Plans, install a wood shelf to support the managed Ethernet switch as well as any other work not called for under other items but required to accomplish the building modifications.

The Ethernet cables in the TMC, Bryce Building and in the Signal Shop will be measured and paid for in accordance with the "Ethernet Communications Cable" section of these Project Special Provisions.

No separate payment will be made for wall-mount splice cabinets, splice housings, connector housings, interconnect centers, patch panels, splice trays, splicing, conduit, conduit fittings, conduit hangers, conduit surface mounting hardware and brackets, and fire-stop sealant as these will be considered incidental to the building modifications.

No separate measurement will be made for mounting hardware, nuts, bolts, brackets, connectors, grounding equipment as these will be considered incidental to the pay items listed above.

No separate measurement will be made for computer hardware, Ethernet switches, video head-end equipment, and rack cabinets, as these will be measured and paid for elsewhere in these Project Special Provisions.

Payment will be made under:

Pay Item	**Pay Unit**
TMC Modifications	Lump Sum
Bryce Stuart Building Modifications	Lump Sum
Signal Shop Modifications	Lump Sum

38. SUBMITTAL DATA AND DOCUMENTATION

38.1. DESCRIPTION

Submit project documentation for Department review and approval as described below.

38.2. SUBMITTALS

(A) General

The intent of this subsection of the Project Special Provisions is to provide the requirements for submittal data (i.e., shop drawings, catalogue cuts, manufacturers' literature, proposed changes to splice drawings, construction schedule, system design report, etc.) and the process by which submittal data will be reviewed.

Provide all submittal documentation in either 8½" x 11" or 11" x 17" format. No documentation smaller than 8½" x 11" will be accepted. No documentation larger than 11" x 17" will be accepted without the prior approval of the Engineer. All submittals will be reviewed and approved by the Department. Absence of comment will not grant approval.

(B) Project Construction Schedule

Prepare and submit for approval by the Engineer a schedule of the proposed working progress on the project in accordance with the instructions and on forms furnished by the Department. Update and submit the schedule no less than monthly.

The project schedule shall include a monthly schedule of values. At the end of each calendar month shown on the schedule, show a value (in dollars) of the cumulative project work projected to be completed. The initially proposed project schedule shall be submitted no later than 5 business days prior to the date of the project preconstruction conference and shall be approved before any work is begun on the project. Update and submit the project schedule five business days prior to the monthly construction meetings.

When conditions beyond the Contractor's control have adversely affected the Contractor's progress, or the Department has extended the completion date, the Contractor may submit a revised progress schedule to the Department for approval. Such revised progress schedule will not be approved unless accompanied by a detailed written statement giving the Contractor's reasons for the proposed revision.

The project construction schedule shall show at least:

- Major Activities,
- Critical Path,
- Task Dependencies,
- Float Time for Each Task,
- Project Start and Completion,
- Task Durations,
- Task Begin and End Dates,
- Milestones,
- Material Submittals,
- Submittal Review Periods,
- Equipment Deliveries,

- Sample and Material Testing,
- Acceptance and Demonstration Testing,
- Training,
- Observation Period,
- Final Acceptance.

(C) Qualified Products

Furnish new equipment, materials, and hardware unless otherwise required. Inscribe manufacturer's name, model number, serial number, and any additional information needed for proper identification on each piece of equipment housed in a case or housing.

The ITS & Signals Qualified Products List (QPL) is available on the North Carolina Department of Transportation's Website. Certain signal and communications equipment, material, and hardware shall be pre-approved on the QPL by the date of installation. Equipment, material, and hardware not pre-approved when required will not be allowed for use on the project. Consult the QPL Website to obtain pre-approval procedures.

(D) System Design Report

Prepare a System Design Report to describe the proposed network architecture and its configuration. Provide schematics to illustrate the network architecture and configuration, in addition to the written description. Provide a detailed description of the hardware and software to be installed. The report shall depict and describe the entire layout of the equipment and their connectivity. Provide a detailed listing of the hardware including brand and model numbers, functions and descriptions. Provide a detailed listing of the VLAN configuration and IP addresses.

Submit the report and obtain approval before providing material submittals for the following packages of items as described below: central video equipment, software, computer hardware, and communications equipment.

(E) Fiber-optic Splicing Drawings

Submit drawings that illustrate any proposed changes to the fiber-optic splicing details for Department review and approval at least 10 working days prior to beginning fiber-optic splicing. Do not perform any fiber-optic splicing until the Department approves the proposed changes.

(F) Submittal Requirements

Provide written certification to the Department that all Contractor-furnished material is in accordance with the contract. When requested by the Department, provide additional certifications from independent testing laboratories and sufficient data to verify item meets applicable specifications. Ensure additional certification states the testing laboratory is independent of the material manufacturer and neither the laboratory nor the manufacturer has a vested interest in the other.

The intent of submittals is to show completely the materials meet the requirements of the Plans and Project Special Provisions and how the Contractor intends to construct or configure the materials. The Contractor shall clearly demonstrate in the submittals that the desired materials shall meet or exceed the requirements of the Plans and Project Special Provisions. Each submittal shall be sufficiently complete and detailed for the Department to review and approve the submittal. If the Department deems the submittal insufficient in detail or completeness for

review or approval, the submittal will be returned as rejected. Additional time will not be granted for resubmittal.

Before material submittal data begins, provide to the Department a list of all submittals with approximate dates of submission that the Contractor intends to make. It is incumbent upon the Contractor to schedule reviews in a timely manner that will not delay his schedule.

Certain groups of materials are related in function and operate as a subsystem together. To ensure individual and subsystem compliance with the project requirements materials shall be submitted as packages as follows:

Submittal Package	Description
System Design Report	See "System Design Report" subsection above.
Controllers and Cabinets	2070L Controllers, 332, 336A and 336S Cabinets, Conflict Monitors, Base Adapters, Base Extenders, Preformed Cabinet Foundations, Special Coating for Cabinets and Base Extenders/Adapters
Fiber-optic Cable	Fiber-optic Cable, Drop Cables, Splice Enclosures, Interconnect Centers, Rack-mounted Splice Housing and Connector Housings, Hub Splice Centers, Wall-mounted Interconnect Center, Splice Trays, Cable Addition Kits, Multiport Grommet Inserts, Delineator Markers, Cable Markers, Communications Cable Identification Markers.
CCTV Equipment	Composite Video Cable, CCTV camera, CCTV cabinet
Digital Video Equipment*	Encoders, Video Display Output Cards, Video Processor Unit, Video Monitors, Network Video Recorder (NVR), Signal Shop Video Display Monitors
System Support Equipment	Fiber-optic Restoration Kit, Fiber-optic Power Meter, Optical Light Generator, Visual Fault Locator, Video Monitor, Conflict Monitor Tester, Test Controllers with Cabinets, CCTV Test Cabinet
Computer Hardware*	ITS Servers, Workstations, Laptops, KVM Switch, UPS (see "Computer Hardware and Peripherals" section of these Project Special Provisions for further requirements)
Communications Equipment*	Managed Ethernet Core Switch, Managed Ethernet Switches and Ethernet Edge Switches, SMFO Contact Mapping Transmitters and Receivers (see "Communications Hardware" section of these Project Special Provisions for further requirements), Firewall, Communications Rack, UPS

Submittal Package	Description
Wireless Communications Equipment*	Ethernet bridge radio system, Ethernet radios, Ethernet radio antennas and antenna mounting hardware, RF disconnect switch, RF warning sign and decals, lightning arrestors
Field Infrastructure	Conduit, Junction Boxes, Terminal Splice Boxes/Cabinets, Electrical Service Equipment (Disconnects, Meter Bases, Combination Panels), Stainless Steel Banding Hardware, and Misc. Hardware

* Indicates submittal packages that cannot be submitted for review until the System Design Report has been submitted and approved.

Identify all proprietary parts in Contractor-furnished material. The Department reserves the right to reject material that uses proprietary components not commercially available off-the-shelf products.

For Contractor-furnished material listed on the QPL, furnish submittals in the format defined by the QPL.

For Contractor-furnished material not on the QPL, furnish three copies of the equipment list including three copies of catalog cuts. Identify proposed material on catalog cuts by a reproducible means (highlighter pen does not transfer to copies). Ensure material lists contain material description, brand name, manufacturer's address and telephone number, stock number, size, identifying trademark or symbol, and other appropriate ratings. For submittals showing a variety of models and parts available from the manufacturer, clearly identify by circles, marking our other means the specific materials for which approval is requested.

Allocate 40 calendar days for the Department to review and respond to a submittal. Do not deviate from what is approved without approval by the Department. Do not fabricate or order material until receipt of the Department's approval. All submittals will be returned as either "Approved (as submitted)", "Approved as Noted" or "Rejected". The Contractor may proceed with fabrication or ordering for items marked "Approved". If an item is marked "Approved as Noted" without any stipulation for resubmittal, then the Contractor may proceed with fabrication or ordering. For any other notations, the Contractor shall revise the submittal, address comments and resubmit for approval.

38.3. DOCUMENTATION AND MANUALS

(A) General

Provide all manuals and plan of record (i.e., "as-built") documentation. All as-built plans and documentation shall be reviewed and accepted by the Engineer prior to final acceptance of the project. All documentation, except as otherwise specifically approved by the Engineer, must meet the following requirements:

1. Provide final as-built plans on 11" x 17" paper along with a PDF of each as-built plan sheet. Provide draft as-built plans for Department review on 22" x 34" paper. No documentation for as-built plans smaller than 11" x 17" will be accepted.

2. Provide any documentation that exceeds the size of 11" x 17" paper in a reproducible format 22" x 34" in size.
3. For electrical schematics and cabinet wiring diagrams not bound into printed manuals, provide paper copies at least 22" x 34" in size.
4. No non-plan documentation smaller than 8.5" x 11" will be accepted.
5. Do not fold or crease reproducibles.

As a minimum, provide the documentation described in the paragraphs below.

(B) Plan of Record Documentation

Provide as-built drawings that depict any changes of components, measurement or layout of the Plans. Show all construction changes, with the final location and depth of conduits, wiring external to the cabinet, locations of splice closures, system detector locations, and SMFO cable terminations, etc., in detail in a reproducible format. Submit as-built construction changes changes within 10 consecutive calendar days after the Observation Period begins. Note and date each change on the drawings. Failure to revise as-built documentation to reflect current work may result in withholding of payments until the as-built documentation is brought current. The submitted as-built documentation may be field-checked by the Engineer at his discretion. If the as-built documentation is found to have an unacceptable number of inaccuracies, the Engineer may withhold payment until the as-built plans are corrected. Include all field installation including the SMFO cable network installed on the drawings.

For underground conduit systems that house communications cable, furnish the Engineer with a plan of record drawing detailing the locations of the conduit system, including junction boxes and their corresponding GPS coordinates. For directionally-drilled underground conduit systems, identify the vertical location (i.e., depth) of the conduits along the run.

Store documentation for signal installations in a manila envelope placed in a weatherproof holder inside the cabinet drawer. Store all documentation furnished with the controllers and cabinets, including manuals, electrical schematic diagram, and cabinet wiring diagram inside the envelope in the weatherproof holder. Provide two marked-up "redline" copies of the signal plan and the electrical and programming detail, placing one copy in the weatherproof holder inside the cabinet drawer immediately upon installation of the cabinet and giving the second copy to the Engineer.

For CCTV camera assemblies, provide two copies of a parts list(s) that includes serial and model numbers of all Contractor-furnished equipment prior to final acceptance. All equipment and appurtenances shall be identified by name, model number, serial number, technical support and warranty telephone numbers, and any other pertinent information required to facilitate equipment maintenance.

The Department will provide the Contractor one electronic copy of the Plans for his use in developing the as-built drawings. Modify the original electronic file such that all changes are marked with callout boxes or other method approved by the Engineer. Any other base maps that may be necessary for the Contractor to prepare the as-built drawings in accordance with these Project Special Provisions will be the Contractor's responsibility. Use CADD conventions that are consistent with those used on the original plans.

Within 10 consecutive calendar days after the Observation Period begins, furnish one reproducible copy of the draft as-built plans in hard copy format for review. Provide draft hard copy as-built drawings on 22"x 34" bond plan sheets.

Upon receipt of review comments from the Engineer, correct any errors and make all necessary revisions to the draft as-built plans prior to final acceptance of the project. Submit final as-built plans in electronic and hard copy format. Provide final hard copy as-built drawings on 11"x 17" bond plan sheets. Provide electronic plans in MicroStation (latest release in use by the Department) format along with copies of the same files saved/exported in AutoCAD format (for City use). Provide the electronic files on CD or DVD.

(C) Manuals

Provide at least five hard copies along with one electronic copy (on CD or DVD) of the following manuals:

- Operator's manuals containing detailed operating instructions for each different type or model of equipment. Ensure that manuals contain instructions for possible modification to equipment.
- Maintenance procedures manuals containing detailed preventative and corrective maintenance procedures and troubleshooting procedures for each different type or model of equipment.
- Installation, operations and training manuals for all Contractor-provided software.

The manuals provided above shall be in addition to manuals provided with and stored inside each control equipment cabinet.

(D) Wiring Diagrams

Provide detailed wiring diagrams that include interconnection (wired and wireless) of equipment with pin-out configurations, pin functions, and cable parts numbers. This includes configuration at each field equipment cabinet or equipment cabinet at central locations. Provide two copies of system connection diagrams showing system interconnection cables and associated terminations. Use naming convention approved by the Engineer and conforming to Belcore standards. Provide one electronic copy of the wiring diagrams in MicroStation format.

Example:

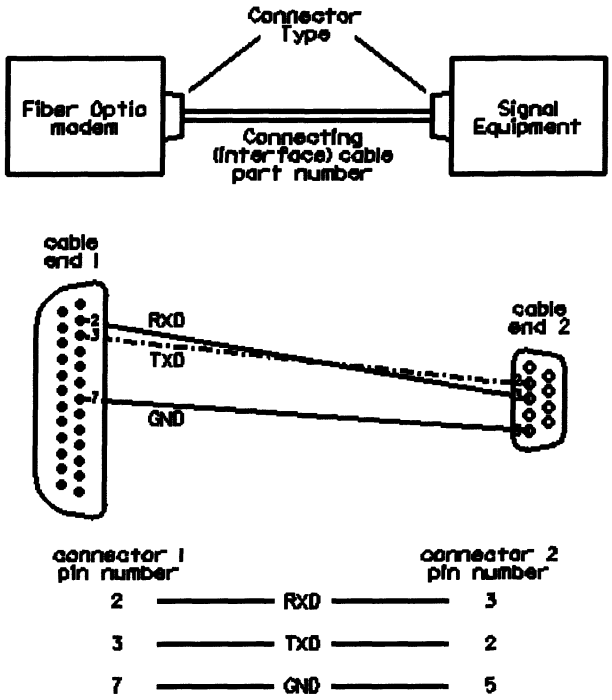

(E) Splice Diagrams

Prepare as-built splice diagrams that depict the communications cable plant as constructed. Depict the splices made at each splice enclosure by identifying spliced fiber and buffer tube. Ensure the splice diagram is in a similar format to those provided with the project Plans. Identify all expressed fibers, spare fibers, used fibers and capped fibers.

Original splice diagrams will be provided in electronic format in MicroStation format. Designate any changes to these diagrams by using a method approved by the Engineer. Furnish as-built splice diagrams in MicroStation format along with copies of the same files saved/exported in AutoCAD format (for City use). Provide the electronic files on CD or DVD.

38.4. MEASUREMENT AND PAYMENT

There will be no direct payment for work covered in this section. Payment at the contract unit prices for the various items in the contract will be full compensation for all work covered by this section.

39. SYSTEM SUPPORT AND TEST EQUIPMENT

39.1. DESCRIPTION

Furnish fiber-optic system support and test equipment and signal system support and test equipment with all necessary hardware in accordance with the Plans and Project Special Provisions.

39.2. MATERIALS

(A) General

Furnish equipment with test probes/leads, batteries (for battery-operated units), line cords (for AC-operated units), and carrying cases. Provide operating instructions and maintenance manuals with each item.

Before starting any system testing or training, furnish all fiber-optic communications system support and test equipment as well as signal system support and test equipment.

(B) Fiber-Optic Restoration Kit

Furnish a fully functional fiber-optic restoration kit consisting of the following items (minimum):

- Pliers-type strippers,
- Non-nicking fiber stripper tool with procedures,
- Buffer tube stripper tool with procedures,
- Fiber-optic cleaver with diamond blade and average cut less than 0.5 degrees from perpendicular,
- Screw driver set,
- Fiber-optic cable for cleaning alignment sleeves and LC connectors and jumper ends,
- Fifty 2.5 mm swabs,
- Twenty-four 2.5 mm cleaning tips for cleaning and LC connectors, ferrules, and termini faces,
- Two rolls of electrical tape, ¾-inch width,
- Laboratory type cleaning wipes,
- Metal ruler,
- Tweezers,
- Crimping pliers,
- Mechanical splice assembly manual,
- Mechanical splice assembly fixture,
- 12 non-adhesive, mechanical splices,
- Scissors,
- Hard-sided, padded storage case.
- Premises Service Kit includes tool frame, RJ-11/12 and RJ-45/CATV "F" die sets, round cable cutter/stripper, LC CST coax stripper, punch down tool with 110 and 66 blades, LAN & Telecom Cable Testing Kit, coax and data tester, plier type cutter/strippers, RJ-45 adapter and 2 BNC to CATV adapters.

- 2 Mechanical Splice Trays with 12 mechanical splice capacity, compatible with the interconnect centers being installed in the traffic signal controller cabinets and CCTV cabinets.

(C) Spare Cable and Connectors Kit

Furnish a minimum of 10 of each type of fiber-optic jumper of each length and each type of connector combination used on the project. In addition, furnish the following:

- 500 feet of outdoor-rated, UV-resistant CAT 5e cable,
- 10 BNC crimp-on male connectors,
- 20 CAT 5e patch cords, 5 feet long with molded strain relief cables,
- 6 CAT 6 patch cords, 5 feet long with molded strain relief cables, and
- 20 RJ-45 male connectors

(D) Fiber-Optic Power Meter

Furnish one fiber-optic power meter for measuring absolute power and link losses, as well as monitoring power levels and testing threshold levels. Provide the following features:

- Spectral range: 750 nm to 1700 nm,
- Calibrated wavelengths: 850, 1310, and 1550 nm,
- Accuracy: ± 3 percent (± 0.1 dB) at -20 dBm at 70 degrees F at calibrated wavelengths,
- Readout resolution: 4 digits, 0.01 dBm,
- Display: Backlit LCD,
- Fiber-optic connector: LC, SC and ST,
- Power-up stabilization: Less than five seconds at ambient temperature,
- Tone threshold settings: User selectable from 1 to 35 dB, plus OFF,
- Analog output port:
  - Voltage: 0 to + 1 V FSD of linear power range,
  - Output impedance: 5 kilohms, nominal,
- Temperature:
  - Operating: 32° to 122° F,
  - Storage: 0° to 150° F,
- Relative humidity: 5 to 95 percent, non-condensing,
- Battery power: Alkaline: 28 hours; NiCad: 8 hours (recharger and NiCad batteries provided)
- Carrying case

(E) Optical Light Generator

Furnish optical light generators for testing link losses and trouble-shooting single-mode fiber-optic cables and networks. Provide a lightweight, compact, handheld unit constructed of rugged, durable materials. Provide a unit with automatic wavelength detection mode and the following additional features:

- Emitter type: Class I laser
- Spectral width: 5 nm or less,
- Nominal wavelengths: 1310 and 1550 nm,
- Warm-up period: 15 minutes or less

- Display: Backlit LCD,
- Fiber-optic connector: LC, SC and ST
- Power/signal stability: ±0.10 dB,
- Modulation: 270, 1k, 2k Hz,
- Weight with batteries: 1.2 lb. max.
- Temperature (minimum range):
  - Storage: 32° to 122° F
  - Operating: -10° to 150° F,
- Relative humidity: 0% to 95% non-condensing,
- Batteries: Alkaline: 28 hours; NiCad: 8 hours (recharger and NiCad batteries provided)
- Carrying case.

(F) Visual Fault Locator

Furnish one lightweight, compact, handheld, battery-powered visual fault locater (VFL) designed for visually locating faults in single-mode fiber-optic cables, jumpers, pigtails and patch panels, such microbends, breaks, bare fibers, poor connectorization and poor splicing. Provide a unit with a red laser light source that when coupled with an optical fiber will identify a fault in the optical path by emitting light (e.g., producing a glow) at the point of the fault. Provide a unit constructed of rugged, durable materials and which has a dust cap tethered to the unit to protect the optic interface when not in use. Provide batteries of the required size and quantity and a carrying case or protective belt holster with each visual fault locator. Provide the following additional features:

- Emitter Type: Class II Visible Red Laser
- Wavelength: 635 - 670 nm
- Peak Output Power: 1mW
- Selectable Output Modes: Continuous (steady; constant-on) and pulsed (flashing; blinking) at 2-3 Hz frequency
- Batteries: No more than two AA or two AAA (alkaline)
- Battery Life: Minimum of 30 hours of continuous operation in continuous mode
- Connector Interface: 2.5mm ferrule connector, Type LC, SC or ST
- Weight with Batteries: 5.7 oz. (180 g) maximum
- Operating Temperature (min. range): 14°F to 113°F (-10°C to +45°C)
- Storage Temperature (min. range): -4°F to 140°F (-20°C to +60°C)

(G) Video Monitor

Furnish one portable color CCTV monitor for field testing of CCTV installations with the following features.

- Display: 48" light emitting diode (LED) display,
- Input Signal: 1 NTSC input and 1 VGA input,
- Color: Full color (262 minimum colors),
- Video Resolution: 800 x 480,
- Dot Pitch: 0.2025 (H) x 0.0675 (W) mm,
- Luminosity: 250 cd/m^2

- Controls: Color, brightness, power on/off, tint, red and blue drive,
- Battery Life: Minimum of 4 hours of continuous operation in continuous mode
- Power: 12 VDC, 650 mA with recharger and AC power adaptor,
- Cables: 6" power and video cables each,
- Connectors: Video – BNC and VGA, Power – DC jack,
- Operating Temperature: 32° F to 104° F, and
- Other: Carrying case.

(H) Ethernet Radio Support Equipment

(1) Ethernet Radio Modem

Furnish one Ethernet radio modem identical to the type installed in the traffic signal controller cabinets to be used for emergency restoration of the system and the wireless communications system.

(1) Lightning Arrestor

Furnish one Ethernet radio lightning arrestors identical to the type installed in the traffic signal controller cabinets to be used for emergency restoration of the transient voltage suppression equipment.

(I) Conflict Monitor Tester with Notebook Computer

Furnish a standalone, portable conflict monitor test unit with notebook computer intended for use on workbench. The tester shall use/control an Intel-based notebook computer of equal requirements to other notebook computers furnished under this project for input/output. The tester shall test conflict monitor displays, timing and voltage functions, and input/output combinations of either true or false conflicts. Any software provided with the tester shall be modular, menu driven, and offer a "help" screen. A video "setup/usage" training tape or DVD shall be provided with each unit. All input/outputs shall be in plain English. It shall be possible to generate a hardcopy printout, or to store the results electronically to a disc file. A "No Faults Detected" indication shall be displayed as appropriate.

(J) Test Controllers with Cabinets

Furnish and install a 2070L controller with a 332 test cabinet and a 2070L controller with 336 test cabinet at the Signal Shop. Furnish and install a 2070L controller with a 336 test cabinet in the TMC as shown in the Plans. Each test cabinet shall include a full complement of detector cards, switch packs, a conflict monitor, two (2) AC isolators, two (2) DC isolators and a railroad preemption test panel. Provide a railroad preemption panel that is identical to those installed at railroad preemption locations in the field under this contract. Fully label the test cabinet and panels. Equip the 332 test cabinet with an auxiliary output file to simulate flashing yellow arrow phasing. Provide controllers and cabinets that comply with the material requirements for controllers and cabinets in the preceding subsections of this Project Special Provision. Fully label each test cabinet. Plug the power cord from the test cabinet into an existing wall receptacle adjacent to the cabinet.

(2) Construction

Furnish each test cabinet with a heavy-duty aluminum dolly base with heavy-duty, locking casters. The base shall accommodate a fully equipped, base-mounted cabinet. Attach a pole or

pedestal to each base to support a display panel, which shall be located beside the cabinet for convenient use by maintenance personnel. The display panel shall have all indicators and switches on the front and shall have a suitable aluminum enclosure. The panel shall be fully labeled.

(3) Indicators

The panel shall contain indictors to display the outputs of all the cabinet's traffic signal load switched. Red, yellow and green indicators shall be use to display the outputs of the traffic signal load switches. In addition, indicators shall be provided for four (4) pedestrian signal displays and 4 special functions. The indicators shall use LED's that are user replaceable.

(4) Controls

Equip the display panel with controls that are connected to simulate all the inputs, for test purposed, to the controller which are not already accommodated by switches in the controller cabinet.

(5) Harnesses

Connect the display panel to the controller cabinet by means of harnesses. Conceal the harnesses inside the pedestal or pipe supporting the panel and route the harnesses into the test cabinet through the bottom of the cabinet.

(6) Connection to the System

Furnish and install Ethernet cables to connect the test controllers and their corresponding conflict monitors to the managed Ethernet switch mounted on a shelf installed on the wall outside the Traffic Signal Supervisor's office.

(K) CCTV Test Cabinet

Furnish and install one (1) CCTV test cabinet in the Signal Shop.

The test cabinet shall include a Type 336A cabinet as installed at field locations under this project. The test cabinets shall include a complete CCTV camera with enclosure, CCTV test panel, a digital video encoder unit, and all cabling necessary to integrate the camera and all cabinet equipment. The test cabinet and panel shall be fully labeled.

Integrate the CCTV test cabinet with a CCTV assembly furnished under the "CCTV Field Equipment" section of these Project Special Provisions.

(1) Construction

Mount the CCTV test cabinet on a heavy-duty aluminum dolly base with four (4) heavy duty locking casters. The base shall accommodate a fully equipped base-mounted CCTV cabinet. A pole or pedestal shall be attached to the base to support a CCTV camera, which shall be located beside the cabinet convenient for use by maintenance personnel.

(2) Connection to System

Furnish and install Ethernet cables to connect the CCTV test cabinet to the managed Ethernet switch mounted on a shelf installed on the wall outside the Traffic Signal Supervisor's office.

39.3. MEASUREMENT AND PAYMENT

Furnish fiber-optic restoration kit will be measured and paid as the actual number of fiber-optic restoration kits furnished and accepted.

Furnish spare cable and connectors kit will be measured and paid as the actual number of spare cable and connectors kits furnished and accepted.

Furnish fiber-optic power meter will be measured and paid as the actual number of fiber-optic power meters furnished and accepted.

Furnish optical light generator will be measured and paid as the actual number of optical light generators furnished and accepted.

Furnish visual fault locator will be measured and paid as the actual number of visual fault locators furnished and accepted.

Furnish video monitor will be measured and paid as the actual number of video test monitors furnished and accepted.

Furnish conflict monitor tester will be measured and paid as the actual number of conflict monitor testers with notebook computers furnished and accepted. There will be no separate measurement and payment for the notebook computer as it will be considered incidental to furnishing the conflict monitor tester.

Furnish detector card (Model 222) will be measured and paid as the actual number of Type 222 detector cards furnished and accepted.

Furnish 2070L controller will be measured and paid as the actual number of 2070L controllers furnished and accepted.

Furnish _____ cabinet will be measured and paid as the actual number of each type of controller cabinet furnished and accepted.

Furnish 2018 enhanced conflict monitor will be measured and paid as the actual number of Model 2018 enhanced conflict monitors furnished and accepted.

Furnish Ethernet edge switch will be measured and paid as the actual number of Ethernet edge switches furnished and accepted.

Furnish SMFO contact mapping transmitter will be measured and paid as the actual number of SMFO contact mapping transmitters furnished and accepted.

Furnish SMFO contact mapping receiver will be measured and paid as the actual number of SMFO contact mapping receivers furnished and accepted.

Furnish 4.9 GHz Ethernet Bridge will be measured and paid as the actual number of Ethernet Bridges furnished and accepted. This item includes one complete spare Ethernet Bridge and ancillary components as specified within.

Furnish 900MHz Ethernet radio will be measured and paid as the actual number of Ethernet radios furnished and accepted. This item includes one spare antenna, coaxial cable shield grounding system with weatherproofing, lightning arrestor, power supply and power cord per radio.

Furnish Ethernet radio lightning arrestor will be measured and paid as the actual number of Ethernet radio lightning arrestors furnished and accepted.

Furnish digital hardware video encoder will be measured and paid as the actual number of digital hardware video encoders furnished and accepted.

Test controller with cabinet (2070L, 332) will be measured and paid as the actual number of 2070L controllers with a 332 test cabinet furnished, installed in the Signal Shop and accepted.

Test controller with cabinet (2070L, 336S) will be measured and paid as the actual number of 2070L controllers with a 336S test cabinet furnished, installed in the Signal Shop and the TMC accepted.

Test cabinets and controllers will not be included in the numbers of spare cabinets and controllers provided for this project.

No measurement will be made of load switches, AC isolator cards, DC isolator cards, detector cards, preemption panels, and auxiliary output files provide with the test controllers and test cabinets as they will be considered incidental to furnishing and installing the test controllers with cabinets. No measurement will be made of Ethernet cables required to connect the test controller and conflict monitor to the managed Ethernet switch and the power cord required to plug the test cabinet into the existing wall receptacle as they will be considered incidental to furnishing and installing the test controllers with cabinets.

CCTV test cabinet with CCTV camera assembly will be measured and paid as the actual number of CCTV test cabinets with CCTV camera assembly furnished, installed in the Signal Shop and accepted. No measurement will be made of the camera assembly nor for the Ethernet cables required to connect the CCTV test cabinet to the managed Ethernet switch and the power cord required to plug the test cabinet into the existing wall receptacle as they will be considered incidental to furnishing and installing the CCTV test cabinet.

Payment will be made under:

Pay Item	**Pay Unit**
Furnish Fiber-Optic Restoration Kit	Each
Furnish Spare Cable and Connectors Kit	Each
Furnish Fiber-Optic Power Meter	Each
Furnish Optical Light Generator	Each
Furnish Visual Fault Locator	Each
Furnish Video Monitor	Each
Furnish Conflict Monitor Tester	Each
Furnish Detector Card (Model 222)	Each
Furnish 2070L Controller	Each
Furnish 336A Cabinet	Each
Furnish 336S Cabinet	Each

Pay Item	Pay Unit
Furnish 332 Cabinet	Each
Furnish 2018 Enhanced Conflict Monitor	Each
Furnish Ethernet Edge Switch	Each
Furnish SMFO Contact Mapping Transmitter	Each
Furnish SMFO Contract Mapping Receiver	Each
Furnish 4.9 GHz Ethernet Bridge	Each
Furnish 900MHz Ethernet Radio	Each
Furnish Ethernet Radio Lightning Arrestor	Each
Furnish Digital Hardware Video Encoder	Each
Test Controller with Cabinet (2070L, 332)	Each
Test Controller with Cabinet (2070L, 336S)	Each
CCTV Test Cabinet	Each

40. TRAINING

40.1. DESCRIPTION

Provide training for the installation, operation and maintenance of:

- Ethernet core switch,
- Managed Ethernet switches,
- Ethernet edge switches,
- Servers,
- Network configuration,
- Fiber-optic communications cable,
  - Fiber-optic interconnect centers,
  - Splice enclosures (aerial and underground)
  - Splice trays and other related fiber-optic equipment in accordance with the Plans and Project Special Provisions,
- Wireless communications equipment,
- CCTV field equipment, if the equipment supplied is not the exactly the same equipment as what the City already has,
- Digital video equipment, if the equipment supplied is not the exact same equipment as what the City already has,
- Signal System Software (focusing on changes related to the Ethernet version of the software),
- Controller hardware and local controller software including:
  - 2070L Controllers,
  - Cabinets,
  - Conflict monitors,
  - Detectors,
  - OASIS® IP (Version) controller software,
- UPS, and
- System support and test equipment.

40.2. MATERIALS

(A) General

Provide training in the installation, operation, maintenance, troubleshooting and repair of all equipment and software. Prepare training outline, agenda, training manuals, training exercises, instructor resumes and any other teaching aids and submit them for approval by the Department prior to conducting training. For each course, provide a training exercise to demonstrate through hands-on activities the subject matter covered in the course lecture or course section. For exercises requiring computers, furnish enough computers to have one computer per two students.

Provide all laptop computers, projectors and projector screens needed for the training. Provide all audiovisual equipment needed for presentations and demonstrations, including video players. Provide new test cabinets, controllers and conflict monitors for use during the training. Furnish all power cords, extension cords, power strips and other cables required for the equipment used in the training.

Provide draft-training material to the Department for review and approval at least 60 days prior to the scheduled training. Provide adequate time for review and revision of the draft training materials. Furnish all audio-visual equipment, demonstration equipment, including a test cabinet, and "hands-on" equipment in support of the envisioned training. Each training participant shall receive a copy of course materials including both comprehensive and presentation manuals. Assume there will be a maximum of 16 students in each class session. Provide two additional copies of these documents to the Department.

Utilize training personnel well versed in the subject matter and with extensive field experience dealing with real world problems. Utilize training personnel that have been certified by the respective manufacturers.

The City shall provide the training facility. Provide the Department with a 30-day notification to carry out the training so that arrangements can be made for attendance. Coordinate a mutually agreeable date, time and location with the City through the Engineer. The Engineer shall approve the training schedule time and location. A "day" of training shall consist of 8 hours of training.

When two sessions are required, conduct the first session early in the project, scheduling it to occur immediately prior to the first implementation of the given software or hardware so that City and Department staff can become familiar with the software or hardware prior to its implementation on the project. Conduct the second session near the conclusion of the project. If more than two sessions are required, conduct the remaining sessions approximately midway between the first and last sessions. Do not conduct multiple sessions back-to-back or near end of project. **Conduct the first session of training on 2070 traffic signal controllers, cabinets, conflict monitors and controller firmware at least one week prior to installing the first new controller with cabinet on the project.**

Develop the course content specifically for the products supplied for this project. The course shall include the following topics:

- Introductory-level briefing to familiarize attendees;
- Terminology;
- Theory of operation;
- Installation;
- Hardware and software configuration;
- Operating procedures and capabilities;
- Testing, diagnostics and troubleshooting;
- Software applications;
- Use of the system documentation to operate, diagnose, maintain, and expand the system; and
- "Hands-on" use of the system, laptop computer and software, system test equipment, and any other system equipment supplied.

Provide course lengths as follows:

Course	Type of Training	Total Students	No. of Sessions	Length (Days)
Ethernet Communications and Networking*	Lecture and Hands-on Exercises	16	2	6
Fiber-Optic Communications	Lecture and Hands-on Exercises	16	2	3
CCTV Field Equipment**	Lecture and Hands-on Exercises	16	1	1
Digital Video Equipment**	Lecture and Hands-on Exercises	16	1	0.5
2070 Traffic Signal Controllers, Conflict Monitors, Cabinets, and Controller Firmware	Lecture and Hands-on Exercises	16	3	5
Wireless communications equipment	Lecture and Hands-on Exercises	16	1	2
UPS	Lecture and Demonstration	16	1	0.25

* Do not conduct any training on this topic until the System Design Report has been submitted for review and subsequently approved by the Department.

** Required if the equipment supplied is not the exact same as what the City already has.

Provide additional specific training as described below.

(B) Ethernet Communications and Networking

Provide training using the test and repair equipment furnished for the project. The training session shall be presented by field service specialist(s) employed by the suppliers of the communications system components. Provide training for the Ethernet communications and networking for the following categories and for the minimum number of hours shown:

Course	Type of Training	Length (Days)
Ethernet Communications and Networks		2
Terminology	Lecture	
Theory of design	Lecture	
Network configuration	Lecture	
VLANs	Lecture	
Equipment overview	Lecture	
Network maintenance	Lecture, Demonstration and Hands-on	
System backup, data archiving, routine procedures	Hands-on	
Troubleshooting procedures	Hands-on	
Testing	Hands-on	
System restart and recovery	Hands-on	
Question and answer session	Lecture	
Ethernet Switches (all types and configurations)		3
Introduction	Lecture	
Configuration and programming	Lecture and Hands-on	
Review of Maintenance Manual	Lecture and Hands-on	
Review of Operations Manual	Lecture and Hands-on	
Maintenance	Lecture, Demonstration and Hands-on	
Routine	Hands-on	
Troubleshooting procedures	Hands-on	
Testing	Hands-on	
System restart and recovery	Hands-on	
Question and answer session	Lecture	
Network Management Software		1
Introduction	Lecture	
Network Configuration (changes in network only)	Lecture and Hands-on	
Question and answer session.	Lecture	

(C) Fiber-Optic Cable

Provide training using the test and repair equipment furnished for the project. Provide training for the fiber-optic system for the following categories and for the minimum number of hours shown:

Course	Type of Training	Length (Days)
Ethernet Switches – Optics		1
Safety	Lecture	
Introduction to Ethernet switch optics	Lecture	
Review of Maintenance Manual – optics	Lecture	
Review of Operations Manual - optics	Lecture	
Question and answer session	Lecture	
Fiber-Optic Cable System		2
Safety	Lecture	
Introduction to fiber-optics, theory, and principles	Lecture	
Fiber and cable types	Lecture and Hands-on	
National Electrical Code considerations	Lecture and Hands-on	
Plenum and riser type cable		
Outdoor cable, etc.		
Introduction to terminating hardware, end equipment, and applications	Lecture, Demonstration and Hands-on	
Connectors (ST, SC, LC, etc.)		
Splice enclosure, splice trays, and connector panels		
Cable placement techniques		
Question and answer session		
Cable handling and preparation (sheath removal, grip installation, etc.)	Lecture, Demonstration and Hands-on	
Splicing and terminating methods	Lecture, Demonstration and Hands-on	
Mechanical splicing using various techniques		
Fusion splicing		
Field termination of connector types		
Introduction to cable plant testing procedures	Lecture, Demonstration and Hands-on	
Proper usage of optical light generator and power meter		
Class project (build working system using cables/connectors made by attendees)	Lecture, Demonstration and Hands-on	
Question and answer session.		
Class project -- Testing and troubleshooting	Lecture, Demonstration and Hands-on	
Cable system maintenance and restoration	Lecture	
Question and answer session.		

(D) CCTV Field Equipment

Provide CCTV field equipment training if the equipment supplied is not the exact same equipment as the City currently has. Provide training that includes operational theory and

procedures of the field components of the CCTV system. This training shall be oriented towards the users and maintenance personnel of the system. The training session shall be presented by field service specialist(s) employed by the suppliers of the CCTV field components. This training session shall include exercises that should take one-half of the day. Provide training for the CCTV field equipment and the local CCTV camera software as described below:

Course	Type of Training	Length (Days)
Operations	Lecture	0.5
Theory of operation	Lecture, Demonstration	
Local camera programming	Lecture, Demonstration and Hands-on	
Camera addresses		
Presets		
Privacy zones		
Privacy zones		
Tours		
Other features		
Maintenance	Lecture	0.5
Routine maintenance	Lecture, Demonstration and Hands-on	
Testing	Lecture, Demonstration and Hands-on	
Troubleshooting	Lecture, Demonstration and Hands-on	

(E) Digital Video Equipment

Provide digital video equipment training if the equipment supplies is not the exact same equipment as the City currently has. Provide training that includes operational theory and procedures of the central components of the CCTV system. This training shall be oriented towards users and maintenance personnel of the system. This training session shall include hands-on exercises that should take approximately one-half of the session. The training shall address the use of, but not limited to, the following devices: NVR, encoders, software decoder, monitors, and the video server. Provide training for the digital video equipment as described below:

Course	Type of Training	Length (Days)
Operations and Theory of operations	Lecture	0.25
Programming	Lecture, Demonstration and Hands-on	0.25
Maintenance	Lecture	
Routine maintenance	Lecture, Demonstration and Hands-on	
Testing	Lecture, Demonstration and Hands-on	
Troubleshooting	Lecture, Demonstration and Hands-on	

(F) 2070 Controllers, Conflict Monitors, Cabinets and Controller Firmware

Provide three identical training sessions in the basic theory, operation, routine maintenance and troubleshooting of the 2070 controller equipment, cabinets, conflict monitors, auxiliary output files and other related equipment. **Conduct one of these training sessions prior to the**

installation of any new controllers and cabinet on the project. Assume the attendees have no working knowledge through their current use of 2070 controllers.

Provide training, both lecture (i.e., classroom instruction) and hands-on exercise in the use of the local controller firmware, including how to load the firmware onto a new controller. Provide one computer for every two students for the hands-on exercises.

Training for controllers and cabinets shall be integrated into a single session with training exercises for cabinets and training exercises for controllers running concurrently. Instructors from the controller Vendor and instructors from the cabinet Vendor shall be in attendance during all days of the session.

Controller-specific instruction during the session shall be taught by experienced Vendor personnel who thoroughly understand both the traffic engineering aspects of signal timing and the entry of timing into the controller and internal TBC's. Cabinet-specific instruction during the session shall be taught by a field service specialist(s) employed by the manufacturer.

The signal controller and cabinet assemblies session shall include, but not be limited to, the following:

- Formal classroom presentation of the functional operation of the signal cabinet, including a discussion on each individual component of the cabinet that details its function, installation techniques, and normal operation
- Formal classroom presentation of the functional operation of the 2070L controller.
- Formal classroom presentation of proper cabinet wiring procedures
- Hands-on workshop on installation of electrical components and surge protection for cabinets.
- Formal classroom presentation and hands-on workshop on operation of signal monitor tester
- Hands-on workshop on timing data entry for 2070L controller.
- All local intersection timing parameters
- All coordination timing parameters
- All parameters and threshold levels associated with traffic responsive operation
- Formal classroom presentation and hands-on workshop on operation of local controller utility software
- Formal classroom presentation and hands-on workshop on operation of controller tester
- Hands-on workshop of proper installation, programming, and troubleshooting of conflict monitors
- Hands-on workshop of proper installation, programming, and troubleshooting of detector cards and lead-in cable
- Hands-on workshop wherein maintenance personnel will troubleshoot simulated controller and cabinet assembly faults to the component level

The lecture, demonstration; hands-on class shall include the following sessions specific to the 2070 related family of hardware and software (controllers, cabinets, signal monitors and detectors):

Course	Type of Training	Length (Days)
Programming	Lecture, Demonstration and Hands-on	1.5
Phasing,		
Timing,		
Preemption,		
Coordination,		
Data transfer		
Operations	Lecture	1.5
Theory of operation	Lecture, Demonstration and Hands-on	
Testing	Lecture, Demonstration and Hands-on	
Maintenance	Lecture	2
Routine maintenance	Lecture, Demonstration and Hands-on	
Troubleshooting	Lecture, Demonstration and Hands-on	

Each of the identical training sessions shall consist of five consecutive days, beginning on a Monday.

(G) Wireless Communications System

Provide training for the 900 MHz Ethernet radio and 4.9 GHz Ethernet Bridge radio equipment as described below:

Course	Type of Training	Length (Days)
Operations	Lecture, Demonstration	2.0
Theory of operation	Lecture	
Safety	Lecture	
Antenna alignment	Lecture	
Site Surveys	Lecture, Demonstration and Hands-on	
Procedures		
Interpreting and understanding the results		
Programming and software	Lecture, Demonstration and Hands-on	
Configuration		
Repeater applications		
Maintenance	Lecture	
Routine maintenance	Lecture, Demonstration and Hands-on	
Testing	Lecture, Demonstration and Hands-on	
Troubleshooting	Lecture, Demonstration and Hands-on	

(H) UPS

Provide training for the UPS units that is 2 hours in length, including both classroom and "hands-on" training.

40.3. MEASUREMENT AND PAYMENT

Training will be measured and paid at the contract lump sum price. The price and payment will be full compensation for all work required by this section of these Project Special Provisions.

Payment will be made under:

Pay Item	Pay Unit
Training	Lump Sum

41. TESTING AND ACCEPTANCE

41.1. GENERAL

Conduct and complete successfully the following progressive series of tests before acceptance: field demonstration test prior to installation, installed standalone tests, system test of the network hardware, network management software and an operational test. Develop a comprehensive series of test plans for each device to determine the equipment was correctly installed and meets the requirements of materials, workmanship, performance, and functionality required in the plans and project special provisions. The test plans shall describe the functions to be tested, purpose of test, setup requirements, procedures to be followed, any inputs and expected outputs for each test, criteria for pass/fail and any required tools or test equipment. Any software testers shall be pre-approved by the Department.

Develop as part of the Test Plan a Traceability Matrix of all the individual subsystem functional requirements to be used to cross-reference each planned test to a specific contract requirement to be verified. This Test Evaluation/Traceability Matrix shall be used by the Engineer to crosscheck the functional requirements and the results.

A key element of test plans, where appropriate, is the introduction of forced errors into the functional test. The test plan shall check the actual result of the forced error against the anticipated result. Tests will be performed by the Contractor and witnessed by the Department and the City. No deviation from the written test procedure shall be permitted without approval from the Engineer. Any changes to the approved test procedure to accommodate unforeseen events during the time of testing shall be documented in a copy of the master test procedure. Immediately following the conclusion of each test, the Department, the City and the Contractor shall meet to agree on the results observed and recorded during the testing. This will form the basis for the conclusions reported in the test plan. All test results, notes, and observations shall be maintained in both electronic and hard copy. Maintain complete records of all test results during all stages of testing.

41.2. INSTALLED SITE TESTS

Conduct an approved, standalone equipment installation test at the field site. Test all standalone functions of the field equipment using equipment installed as detailed in the plans, or as directed by the Engineer.

Complete approved test plan forms and turn them over to the Engineer for review as a basis for rejection or acceptance. Provide a minimum notice of 30 calendar days prior to all tests to permit the Engineer or his representative to observe each test.

If any unit fails to pass its stand-alone test, correct the unit or substitute another unit in its place, then repeat the test.

If a unit has been modified as a result of a standalone test failure, prepare a report describing the nature of the failure and the corrective action taken and deliver it to the Engineer prior to re-testing the unit. If a failure pattern develops, the Engineer may direct that design and construction modifications be made to all units without additional cost to the Department or an extension of the contract period.

Utilize Vendor supplied device software to perform diagnostic tests of each device. The Vendor supplied diagnostic software shall be provided to the Department before final acceptance. Test the following features of each competent as described below.

(A) Fiber-Optic Cable

Conduct optical time domain reflectometer (OTDR) tests on the cable on the reel and after the cable is installed and terminated. Provide written notification a minimum of ten days before beginning fiber-optic cable testing.

Consult the "IS Cable Schematic" in the Plans for testing points for the IS Department fiber-optic cable. Certain segments of the IS Department fiber-optic cable may not be terminated initially to facilitate testing. Install mechanical connectors on all fibers at the test points in the tube shown in the Plans to facilitate testing sections of the cable. When testing is complete, finish splicing the cable as shown in the Plans and seal the ends of the cable using an approved heat-shrink cap/seal and house the end of the cable in the splice enclosure.

After splicing is completed, perform bi-directional OTDR tests on each fiber, including unused fibers, to ensure the following:

- Fusion splice loss does not exceed 0.05 dB,
- Terminations and connections have a loss of 0.5 dB or less, and
- Reflection loss is 40 dB or greater for each connector.

Install a 1000-foot pre-tested launch cable between the OTDR and fiber-optic cable to be tested.

If exceeded, remake splices until the loss falls below 0.05 dB. The Engineer will record each attempt for purposes of acceptance.

Test the fiber-optic cable at both 1310 and 1550 nm.

Furnish durable labeled plots and electronic copies on a CD or DVD of test results for each fiber including engineering calculations demonstrating that OTDR test results meet or exceed the attenuation requirements and that optical properties of the cable have not been impaired. Clearly label each OTDR trace identifying a starting and ending point for all fibers being tested.

Provide engineering calculations and tests for fiber-optic cable that demonstrate the loss budget where the fiber originates and where the fiber meets an electronic device. The calculations shall summarize the optical losses versus the allowable losses for the communications equipment between each pair of communications hardware. Provide a summary section or spreadsheet with a labeled tabular summary showing each test segment with begin and end points and actual versus allowable losses. Label the manufacturer's make, model number and software version of the OTDR used for testing.

Furnish one hard copy of each of the OTDR trace results and electronic copies of all trace results on a CD or DVD.

If any fiber exceeds the maximum allowable attenuation or if the fiber-optic properties of the cable have been impaired, take approved corrective action including replacement of complete segments of fiber-optic cable if required. Corrective action will be at no additional cost to the Department.

(B) Ethernet Communications System

(1) Winston-Salem TMC Wiring

Test any cable installed as part of this project per TIA 568 specifications for continuity, opens, shorts, split pairs, mis-wiring and reversed pairs. Test for DC resistance, impedance, and line capacitive loading. Correct any faults and retest. If retest fails, replace defective cable or connectors.

(2) ITS Servers, Workstations, and Laptop Computers

The following operational tests shall be performed for each ITS server, workstation, and laptop computer in accordance with the test plans. After the equipment has been installed:

- Connect all components (displays, mice, keyboards, printers, network cables, power supplies),
- Configure network communications,
- Map network drives,
- Test connections to all devices by pinging,
- Run diagnostic utilities on the hardware,
- Map all network servers, and
- Print test pages for each workstation on each printer to verify printer configuration.

(3) Ethernet Switches

Once the core switch, managed Ethernet switches and Ethernet edge switches have been installed, conduct local field acceptance tests of the Ethernet edge switch field site according to the submitted test plan. Perform the following:

- Verify that physical construction has been completed as detailed in the Plans,
- Inspect the quality and tightness of ground and surge protector connections,
- Verify proper voltages for all power supplies and related power circuits,
- Connect devices to the power sources,
- Verify all connections, including correct installation of communication and power cables, and
- Perform testing on multicast routing functionality.

Repair or replace defective or failed equipment and retest.

Upon satisfactory completion of operational test, begin an Observation Period of 60 days prior to system acceptance.

(4) KVM Assembly

The following operational tests shall be performed for each KVM assembly in accordance with the test Plans. After the KVM assembly has been installed:

- Connect all servers, monitors, keyboards, mice, and power supplies,
- Program the on-screen display to assign ports and bank numbers and to enter the names of each server in the menu,
- Program the KVM switch for scan features, access privileges, and
- Select each server and ensure the mouse and keyboard work the selected server and the monitor displays the appropriate server.

(C) Traffic Signal Controllers and Conflict Monitors

The following items, not otherwise required to be tested elsewhere, shall be tested: cable continuity, grounding, power-up self-test, proper controller sequencing, detector and pedestrian pushbutton calls.

(D) Communications System Support Equipment

Perform self-diagnostic tests on all electronic test equipment provided to the Department to ensure the equipment is proper operating order. Utilize the supplied test equipment in the training for the fiber-optic cable.

(E) CCTV Field Equipment

Develop an operational test plan that demonstrates all requirements of the equipment and software. Submit for approval before conducting tests.

Notify the Department at least 14 calendar days prior to the proposed date for the tests. The Department and the City shall have the right to witness such tests, or to designate an individual or entity to witness such tests.

Perform the following local field operational tests at the camera assembly field site in accordance with the test Plans. A laptop computer shall provide camera control and positioning. After completing the installation of the camera assembly, including the camera hardware, power supply, and connecting cables, the Contractor shall:

- Furnish all equipment, appliances, and labor necessary to test the installed cable and to perform the following tests before any connections are made,
- Verify that physical construction has been completed,
- Inspect the quality and tightness of ground and surge protector connections,
- Check the power supply voltages and outputs,
- Connect devices to the power sources,
- Perform continuity tests on the surveillance camera's stranded conductor element using a meter having a minimum input resistance of 20,000 ohms per volt and show that each conductor has a resistance of not more than 16 ohms per 984.3 feet of conductor;
- Measure the insulation resistance between the conductors, and between each conductor, ground, and shield using a megger. The resistance must be infinity. Perform all resistance testing after final termination and cable installation, but prior to the connection of any electronics or field devices; and
- Replace any cable that fails to meet these parameters, or if any testing reveals defects in the cable, and retest new cable as specified; and
- Verify installation of specified cables and connections between the camera, PTZ, camera control receiver, and control cabinet,
- Perform the CCTV assembly manufacturer's initial power-on test in accordance with the manufacturer's recommendation,
- Set the camera control address,
- Verify the presence and quality of the video image in the field cabinet with a portable NTSC-approved monitor or laptop computer
- Exercise the pan, tilt, zoom, focus, iris opening, and manual iris control selections, and the operation, preset positioning, and power on/off functions,

- Demonstrate the pan and tilt speeds and extent of movement to meet all applicable standards, specifications, and requirements,
- Verify proper voltage of all power supplies, and
- Interconnect the communication interface device with the communication network's assigned fiber-optic trunk cable and verify that there is a transmission LED illuminated.

Test the grounding system per ANSI/IEEE C62.41 and ANSI/IEEE C62.45 as applicable. Measure the ground impedance utilizing an instrument designed specifically to measure and document the ground impedance. Provide written test results of the ground impedance for each location to the engineer prior to backfilling the grounding electrode. The test results shall include the instrument model, date of instrument calibration, and local environmental conditions at the time of testing. Certify and sign the test results by the Contractor.

Repair or replace defective or failed equipment and retest.

(F) Digital Video Equipment

Test the components of the digital video equipment as follows:

- Check all ground, power, data, Ethernet and digital video connections,
- Run power up self test on each piece of equipment,
- Run all available Vendor-supplied self-diagnostics.

(G) UPS

Perform the following operational tests for each UPS in accordance with the test plans. After the UPS has been installed:

- Connect all field devices to UPS,
- Connect UPS monitoring cable to managed Ethernet switch,
- Install and configure UPS monitoring software from Winston-Salem TMC, and
- Configure monitoring software for remote notifications of power outage and use of battery power.

Repair or replace defective or failed equipment and retest.

(H) Ethernet Radio Equipment

Test the Ethernet radios as follows:

- Check all ground, power, data, Ethernet and analog video connections,
- Run power up self test on each piece of equipment,
- Run all available Vendor-supplied self-diagnostics,
- Check received signal strength, noise levels, bandwidth, and accuracy of test data transmission between each pair of nodes,
- Adjust hopping patterns as necessary to maximize the quality of the signal strength,
- If adjusting the hopping pattern does not significantly improve the quality of the signal strength, then adjust antenna as necessary to maximize the quality of the signal strength, and
- Test the transmission of data to ensure the transmission of data from the spread spectrum radios to the edge switches. Run the system diagnostics from end to end.

41.3. SYSTEM TESTING

(A) General

Conduct tests as described below of the traffic signal and CCTV subsystems. Conduct approved device subsystem tests on the field equipment with the Winston-Salem TMC equipment including, at a minimum, all remote communications hardware monitoring and control functions. These tests shall be a demonstration of overall system stability. During this test period, limit downtime due to mechanical, electrical, or other malfunctions to a maximum of eight hours. The Engineer has the right to suspend the test to correct deficiencies and restart the test or to extend the test period by time equal to the downtime in excess of eight hours.

Conduct device and subsystem tests of any repaired or replaced equipment.

Display the event log from the traffic signal and CCTV software for a minimum of seven days. Complete approved data forms and turn them over to the Engineer for review, and as a basis for rejection or acceptance.

The Engineer has the right to suspend the test to correct deficiencies and restart the test or to extend the test period by time equal to the downtime in excess of eight hours. If a component has been modified as a result of a test failure, prepare a report and deliver it to the Engineer prior to retesting.

(B) CCTV Subsystem

After completing the integration of the CCTV cameras into the CCTV subsystem software, conduct a minimum of a seven-day test of the CCTV subsystem hardware and software. This will include that portion of the communications network serving the CCTV subsystem. The Engineer has the right to suspend the test to correct deficiencies and restart the test or to extend the test period by time equal to the downtime in excess of eight hours. If during that time it is determined by the Department or the City there are hardware or software failures that are the responsibility of the Contractor, the Contractor shall make repairs or replacements to the satisfaction of the Department and the City.

Test the following features of each competent as described below.

(1) CCTV Field Equipment

The following items, not otherwise required to be tested elsewhere, shall be tested for each CCTV site <u>from the City's TMC</u>:

- Power-up self-tests,
- Iris control,
- Preset functions,
- Presence and quality of the video image,
- Preset positioning, and power on/off functions,
- Camera and controller access and security from all laptops and workstations,
- Disconnect camera and take local control and reconnect camera at local cabinet to the communications and verify Winston-Salem TMC control is regained,
- Confirm ability to change camera ID,
- Verify unique camera identifier and icons on GUI,
- Viewing of camera image on each monitor.

(2) Digital Video Equipment

Verify that all CCTV images can be displayed correctly on each monitor using the CCTV central software.

(3) CCTV Central Software

Thoroughly test all functions of the software from the Winston-Salem TMC and the TRTMC to ensure correct operation. Test the components of the CCTV central equipment from both the signal shop and the Winston-Salem TMC as follows:

- Use the GUI interface to select and view each camera,
- Use and the GUI interface to test the ability to control the pan-tilt-zoom and iris settings of each camera,
- Use the GUI interface and test the ability to select and place any camera on any monitor,
- Utilizing a TRTMC workstation demonstrate the ability to select, control and view the camera images, and
- Use the image capture software to test the ability to capture video images and transport them to NCDOT via the existing EIC Server.

(C) Traffic Signal Subsystem

After completion of the integration of the traffic signals into the new signal system central software, conduct a minimum of a seven-day test of the traffic signal subsystem hardware and that portion of the communications network serving the traffic signal subsystem. The Engineer has the right to suspend the test to correct deficiencies and restart the test or to extend the test period by time equal to the downtime in excess of eight hours. If during that time it is determined by the Department that there are failures that are the responsibility of the Contractor, the Contractor shall make repairs or replacements to the satisfaction of the Department.

Verify communications port addressing from the traffic signal controllers.

41.4. OBSERVATION PERIOD

(A) General

A 60-day Observation Period shall begin upon the successful completion of the installed site tests and the system tests described in the preceding subsections as well as the correction of all known deficiencies, including minor construction items and punch-list items developed by the Engineer. During this period the Department and the City shall observe equipment and software operation to determine that all components of the fiber-optic communications system operate properly and interface with the traffic signal subsystem components and CCTV subsystem components according to the requirements of the Plans and these Project Special Provisions over an extended period of time.

During the Observation Period, respond to failures of the Contractor's equipment within two hours and make repairs within eight hours. For items that pose a traffic safety hazard such as a controller failure, make repairs within four hours. If any failures affect major system components for more than 48 hours, the Department shall suspend the Observation Period beginning when the failure occurred. Resume the Observation Period after successful repair or replacement. Failures of the following types will cause the Department to terminate the

Observation Period and restart the Observation Period from zero once the failures have been corrected:

1. System or component failures that necessitate a redesign of any component; and
2. Three or more major system component failures of like nature within any 30-day period.

Major system components include:

- Ethernet core switch, managed Ethernet switch and Ethernet edge switches;
- The fiber-optic communications network (not including the City IS Department fiber-optic cable);
- The LAN and the Winston-Salem TMC and Signal Shop computer equipment; and
- CCTV equipment.

Begin a new 60-day Observation Period with the approval of the Engineer after the faulty equipment has been repaired or replaced and the redesigned components have been installed.

A successful 60-day Observation Period shall consist of continuous operation with no more than a total of five calendar days of non-operation due to mechanical, electrical, or other malfunctions.

The Observation Period shall be completed by the project completion date and prior to final acceptance of the project. The Observation Period shall not begin until the both the CCTV and traffic signal subsystem tests have been successfully completed. The Observation Period shall not begin without the approval of the Engineer.

(B) CCTV Subsystem

During the Observation Period, the Department and the City will observe equipment and software operation according to the requirements of the Plans and these Project Special Provisions. Verify that the TRTMC can view and control the proposed cameras.

Major subsystem components include the CCTV cameras, Ethernet switches, fiber-optic cable, and CCTV cabinets.

(C) Traffic Signal Subsystem

During the Observation Period, the Department and the City will observe equipment and software operation according to the requirements of the Plans and these Project Special Provisions.

Major subsystem components include the all Ethernet switches, Ethernet radio equipment, fiber-optic cable, controllers and conflict monitors, and cabinets.

41.5. MEASUREMENT AND PAYMENT

There will be no direct payment for work covered in this section. Payment at the contract unit prices for the various items in the contract will be full compensation for all work covered by this section.

41.6. FINAL ACCEPTANCE

Final system acceptance is defined as the time when all work and materials described in the Plans and these Project Special Provisions have been furnished and completely installed by the Contractor; all parts of the work have been approved and accepted by the Engineer; and the CCTV and signal subsystems have been operated continuously and successfully for the 60-day Observation Period.

Final acceptance shall not occur until:

- All field demonstration, installed site, system, and operational tests have been satisfactorily completed;
- All punch-list discrepancies have been rectified;
- All documentation has been delivered and accepted; and
- All required training has been completed.