STATE	STATE PROJECT REFERENCE NO.	SHEET NO.	TOTAL SHEETS
N.C.	C-5224A	1	

STATE PROJ. NO.	F.A. PROJ. NO.	DESCRIPTION
45437.1.1		PE
45437.3.1	CMS-0918(89)	CONST

NORTH CAROLINA DEPARTMENT OF TRANSPORTATION

PLANS FOR PROPOSED IMPROVEMENTS

CITY OF WINSTON-SALEM

COMPUTERIZED TRAFFIC SIGNAL SYSTEM

PHASE A: EASTERN SECTION & DOWNTOWN

REPLACEMENT & EXPANSION OF THE COMPUTERIZED TRAFFIC SIGNAL SYSTEM.
RELATED WORK INCLUDES:
UPGRADING LOCAL INTERSECTION CONTROLLERS, CABINETS, AND SYSTEM DETECTORS WITH LIMITED SIGNAL WIRING AND SIGNAL HEAD UPGRADES WHEN NECESSARY; EXPANSION OF CCTV MONITORING NETWORK; AND INSTALLATION OF A ETHERNET COMMUNICATIONS NETWORK COMPRISED OF FIBER-OPTIC CABLE AND WIRELESS TECHNOLOGY WITH ALL RELATED EQUIPMENT.

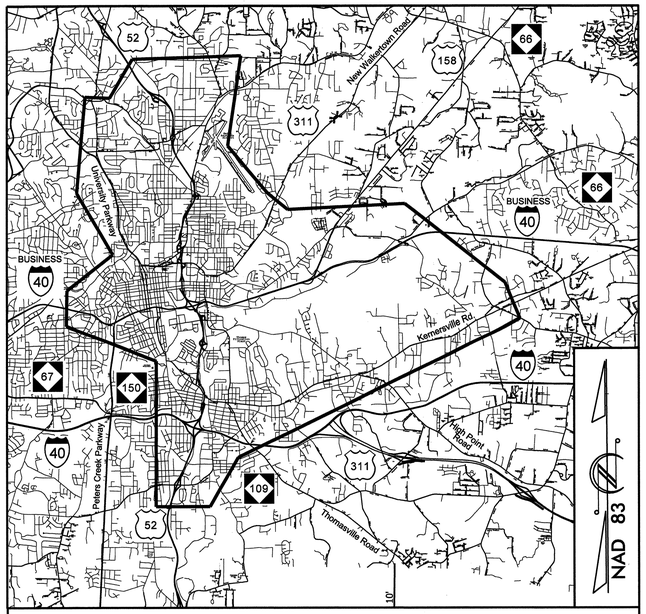

VICINITY MAP

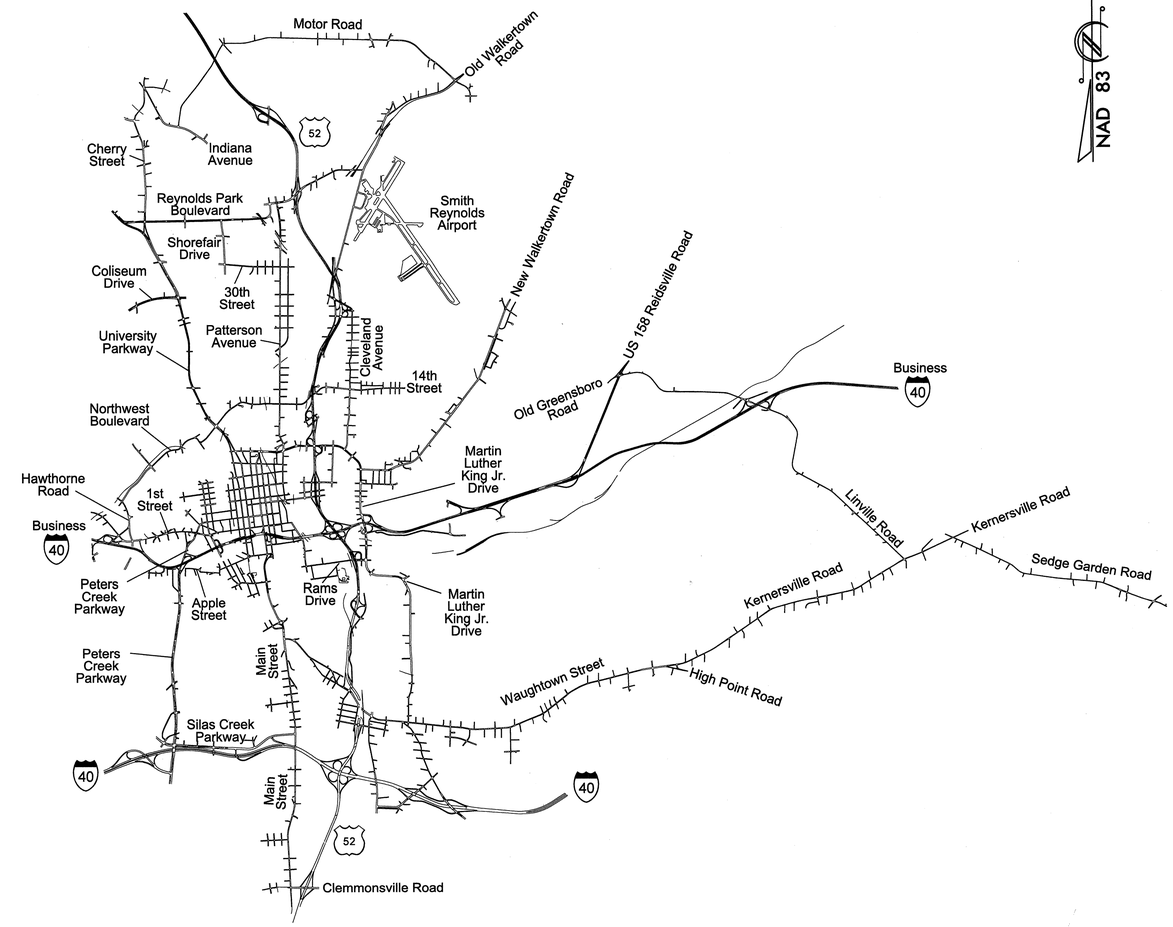

Phase A

Volume II of III
Fiber-Optic Splicing

CONTRACT: C203153

TIP PROJECT: C-5224A

2012 STANDARD SPECIFICATIONS

LETTING DATE: MAY 21, 2013

PROJECT LENGTH = 45 MILES

750 Greenfield Parkway, Garner, NC 27529

NCDOT CONTACTS:
TRANSPORTATION MOBILITY & SAFETY DIVISION
INTELLIGENT TRANSPORTATION SYSTEMS SECTION
GREG A. FULLER, PE - STATE ITS & SIGNALS ENGINEER

ATKINS
1616 EAST MILLBROOK ROAD, SUITE 310
RALEIGH, NORTH CAROLINA 27609
(919) 876-6888 NCBEES #F-0326

J. TODD BROOKS, PE - ATKINS PROJECT MANAGER
LISA M. MOON, PE - ATKINS SENIOR PROJECT ENGINEER
H. ALFRED BADGETT, PE - ATKINS SENIOR PROJECT ENGINEER

Winston-Salem

SEAL

NORTH CAROLINA PROFESSIONAL SEAL 19962 ENGINEER HENRY ALFRED BADGETT, III

H. Alfred Badgett 11/1/12
SIGNATURE *DATE*

PROJECT REFERENCE NO.	SHEET NO.
C-5224A	2

INDEX OF SHEETS

Volume I

1 ..... TITLE SHEET (COMMUNICATIONS & CCTV FIELD INFRASTRUCTURE, BUILDING MODIFICATIONS AND SPECIAL DETAILS)
2 ..... INDEX OF SHEETS AND ROADWAY STANDARD DRAWINGS
3 ..... SUMMARY OF QUANTITIES
4 ..... OVERVIEW OF PHASES A & B
5 THRU 6 ..... CENTRAL BLOCK DIAGRAM
7 ..... WIRELESS FIELD EQUIPMENT BLOCK DIAGRAM
8 THRU 10 ..... CBD WIRELESS CORRIDOR DESIGN
11 THRU 12 ..... SYSTEM DETECTORS AND CONTROL ZONE SCHEMATIC
13 THRU 30 ..... SUMMARY OF WORK BY CABLE LAYOUT PLANS
31 ..... CCTV INSTALLATION SUMMARY
CL A-1A THRU CL A-1D ..... CABLE LAYOUT PLANS KEY SHEET
CL A-1E ..... LEGEND/ GENERAL NOTES/ ABBREVIATIONS
CL A-1F ..... CONSTRUCTION NOTES
CL A-001 THRU CL A-223 ..... CABLE LAYOUT PLANS
SD-1 ..... CCTV CAMERA INSTALLATION, WOOD POLES U/G ELEC. SERVICE
SD-2 ..... CCTV RISER AND CONDUIT DETAILS, POLE-MOUNTED CABINET
SD-3 ..... CCTV CABINET ASSEMBLY LAYOUT
SD-4 ..... SIGNAL CABINET DETAIL, POLE-MOUNTED
SD-5 ..... RECONFIGURED POLE-MOUNTED 336 AND 336S CABINETS
SD-6 ..... TERMINAL SPLICE CABINET DETAIL
SD-7 ..... RISER DETAIL
SD-8 ..... FOUNDATION MODIFICATION DETAIL
SD-9 ..... BASE ADAPTER DETAIL
SD-10 THRU SD-11 ..... CBD ANTENNA MOUNTING DETAIL
SD-12 THRU SD-13 ..... CBD WIRELESS CABINET DETAIL
SD-14 ..... AERIAL FIBER-OPTIC CABLE STORAGE & SPLICE ENCLOSURES
SD-15 ..... GROUND MOUNTED ELECTRICAL SERVICE DETAIL
SD-16 ..... BRYCE STUART BUILDING MODIFICATIONS
SD-17 ..... TMC MODIFICATIONS
SD-18 ..... TMC MONITOR WALL MODIFICATIONS
SD-19 ..... TMC RACK LAYOUTS
SD-20 ..... SIGNAL SHOP MODIFICATIONS
SD-21 ..... HUB CABINET DETAIL
SD-22 ..... JUNCTION BOX PLACEMENT DETAIL
SD-23 ..... VERTICAL ADJUSTMENT OF SMFO CABLE
SD-24 ..... DOWNTOWN ELECTRICAL SERVICE AND SPLICE BOX DETAILS
SD-25 ..... BASE-MOUNTED CABINET FOUNDATION DETAILS
SD-26 ..... GRANITE CURB INSTALLATION
TMP-1 THRU TMP-14 ..... TRANSPORTATION MANAGEMENT PLAN

Volume II

1 ..... TITLE SHEET (FIBER-OPTIC SPLICING)
2 ..... INDEX OF SHEETS AND ROADWAY STANDARD DRAWINGS
3 ..... COMMS. CABLE SCHEMATICS SHEET LAYOUT
4 THRU 8 ..... COMMS. CABLE SCHEMATICS
9 THRU 12 ..... IS COMMS. CABLE SCHEMATICS
13 THRU 17 ..... FIBER-OPTIC CABLE USAGE SUMMARY
18 ..... FIBER-OPTIC SPLICING DETAILS KEY SHEET
FS-01 THRU FS-64 ..... FIBER-OPTIC SPLICING DETAILS
FS-65 THRU FS-66 ..... IS FIBER-OPTIC SPLICING DETAILS

Volume III

1 ..... TITLE SHEET (TRAFFIC SIGNAL DESIGNS)
2 ..... INDEX OF SHEETS AND ROADWAY STANDARD DRAWINGS
3 ..... SIGNAL PLANS INDEX SHEET
4 THRU 27 ..... SUMMARY OF WORK BY INTERSECTION
SIG. 1 THRU SIG. 418 ..... TRAFFIC SIGNAL PLANS

ROADWAY STANDARD DRAWINGS

THE FOLLOWING ROADWAY STANDARDS AS APPEAR IN "ROADWAY STANDARD DRAWINGS" PROJECT SERVICES UNIT – N.C. DEPARTMENT OF TRANSPORTATION – RALEIGH, N.C., DATED JANUARY 2012 ARE APPLICABLE TO THIS PROJECT AND BY REFERENCE ARE HEREBY CONSIDERED A PART OF THESE PLANS:

STD. NO.	TITLE
848.01	CONCRETE SIDEWALK
1101.02	TEMPORARY LANE CLOSURES
1101.03	TEMPORARY ROAD CLOSURES
1101.04	TEMPORARY SHOULDER CLOSURES
1101.11	TRAFFIC CONTROL DESIGN TABLES
1110.02	PORTABLE WORK ZONE SIGNS
1115.01	FLASHING ARROW BOARDS
1130.01	DRUM
1135.01	CONES
1145.01	BARRICADES – TYPE III
1150.01	FLAGGING DEVICES
1165.01	TRUCK MOUNTED ATTENUATOR – DELINEATION
1180.01	SKINNY DRUM
1205.01	PAVEMENT MARKINGS – LINE TYPES AND OFFSETS
1205.02	PAVEMENT MARKINGS – DIVIDED AND UNDIVIDED ROADWAYS
1205.04	PAVEMENT MARKINGS – INTERSECTIONS
1205.05	PAVEMENT MARKINGS – TURN LANES
1205.07	PAVEMENT MARKINGS – PEDESTRIAN CROSSWALKS
1205.08	PAVEMENT MARKINGS – SYMBOLS AND WORD MESSAGES
1700.01	ELECTRICAL SERVICE OPTIONS
1700.02	ELECTRICAL SERVICE GROUNDING
1705.01	SIGNAL HEADS – VEHICULAR SIGNAL HEADS
1705.02	SIGNAL HEADS – PEDESTRIAN ASSEMBLIES
1705.03	SIGNAL HEADS – WIRE COLOR CONVENTIONS
1715.01	UNDERGROUND CONDUIT – TRENCHING
1716.01	JUNCTION BOXES
1720.01	WOOD POLES
1721.01	GUY ASSEMBLIES
1725.01	INDUCTIVE DETECTION LOOPS
1730.01	FIBER-OPTIC CABLE – SPARE CABLE STORAGE
1736.01	SPREAD SPECTRUM RADIO
1743.01	PEDESTAL
1751.01	CONTROLLERS AND CABINETS – CABINET COMPONENT LAYOUT
1751.02	CONTROLLERS AND CABINETS – POWER, GROUND AND AUXILIARY

ATKINS 1616 EAST MILLBROOK ROAD, SUITE 310
RALEIGH, NORTH CAROLINA 27609
(919) 876-6888 NCBEES #F-0326

Prepared for the Offices of:
Transportation Mobility and Safety Division
NORTH CAROLINA DEPARTMENT OF TRANSPORTATION
Intelligent Transportation Systems
750 Greenfield Parkway, Garner, NC 27529

Winston-Salem Signal System
Index of Sheets and
Roadway Standard Drawings
Phase A

Division 09	Forsyth County	Winston-Salem
PLAN DATE: January 2013	REVIEWED BY: MB Toth	
PREPARED BY: JAW/BKS	REVIEWED BY: LM Moon	

SCALE	REVISIONS	INIT.	DATE
NTS			

SEAL
NORTH CAROLINA PROFESSIONAL SEAL 022516 ENGINEER LISA M. MOON
SIGNATURE Lisa M. Moon DATE 1-11-13

CADD Filename: Phase A 2_IndexSheet.dgn

22-MAR-2013 15:44
D:\Transportation\Traffic\Curr\I0002712 Winston Salem Sig Sys\Special Details\Phase A 2_IndexSheet.dgn
13833

PROJECT REFERENCE NO.	SHEET NO.
C-5224A	3

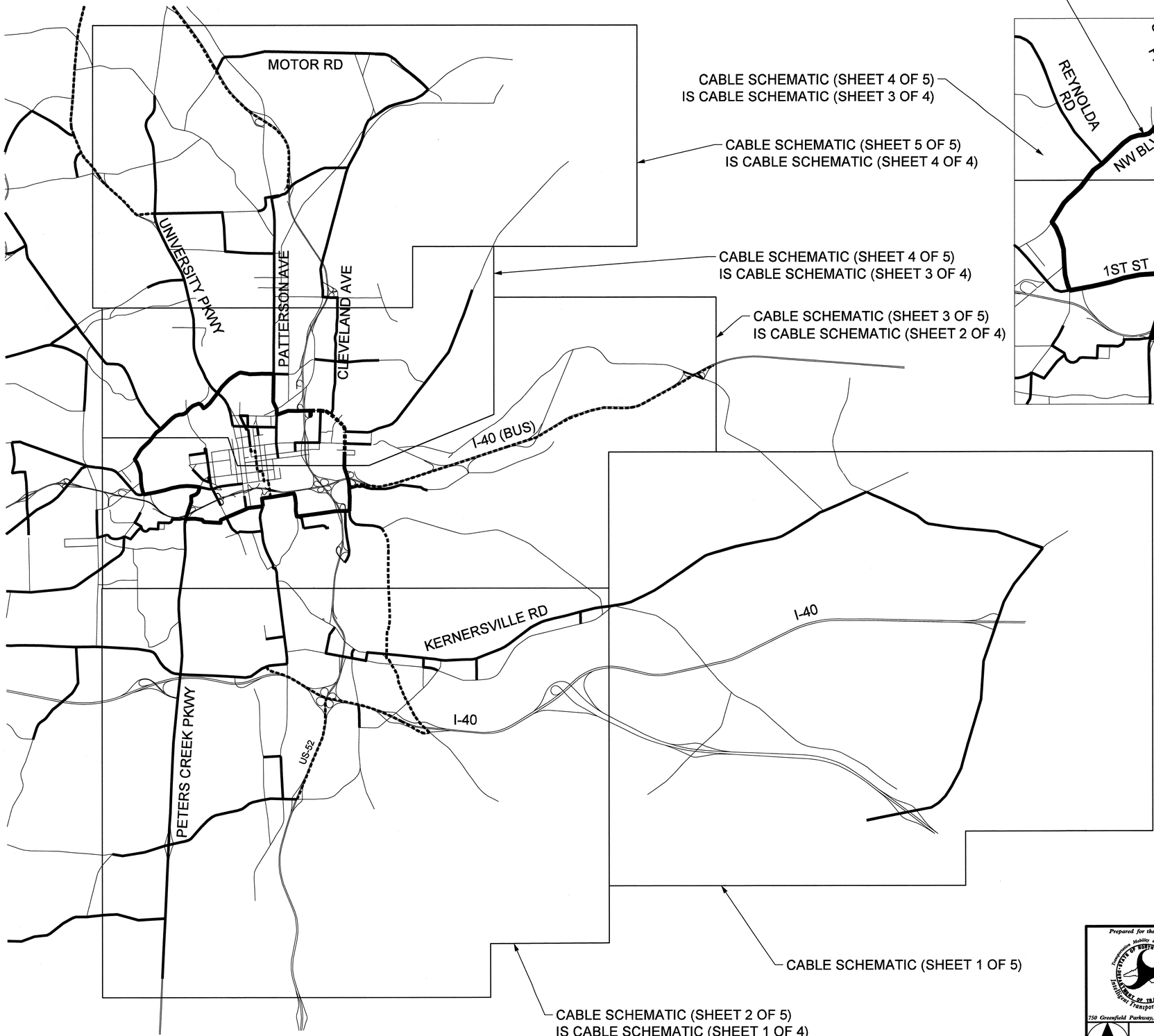

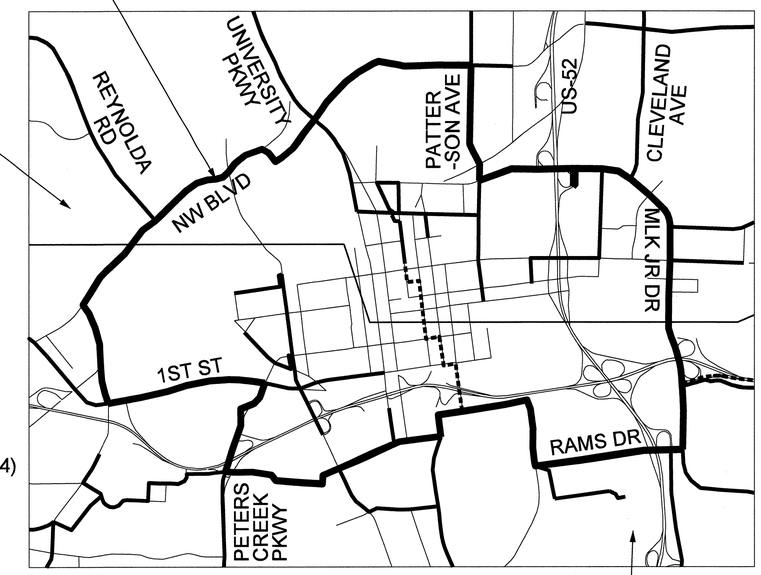

RED RING DETAIL

CABLE SCHEMATIC (SHEET 3 OF 5)
IS CABLE SCHEMATIC (SHEET 2 OF 4)

ATKINS 1616 EAST MILLBROOK ROAD, SUITE 310
RALEIGH, NORTH CAROLINA 27609
(919) 876-6888 NCBEES #F-0326

Prepared for the Offices of:
Transportation Mobility and Safety Division
STATE OF NORTH CAROLINA DEPARTMENT OF TRANSPORTATION
Intelligent Transportation Systems
750 Greenfield Parkway, Garner, NC 27529

Winston-Salem Signal System
Comms. Cable Schematics
Sheet Layout
Phase A

Division 09 Forsyth County Winston-Salem

PLAN DATE:	January 2013	REVIEWED BY:	HAB
PREPARED BY:	BJS	REVIEWED BY:	JTB

SCALE: N.T.S.

REVISIONS	INIT.	DATE

SEAL
NORTH CAROLINA PROFESSIONAL SEAL 19962 ENGINEER HENRY ALFRED BADGETT, III

SIGNATURE H. Alfred Badgett DATE 1/11/13

CADD Filename: Phase A Cable Schematics- Sheet Layout.dgn

17-JAN-2013 16:32
**RALFS07*Trans_Projects*TEC*Cur*100022712 Winston Salem Sig Sys*Comms and ITS*Cable Overview Maps*Phase A*Phase A Cable Schematics- Sheet Layout.dgn
23653

PROJECT REFERENCE NO.	SHEET NO.
C-5224A	4

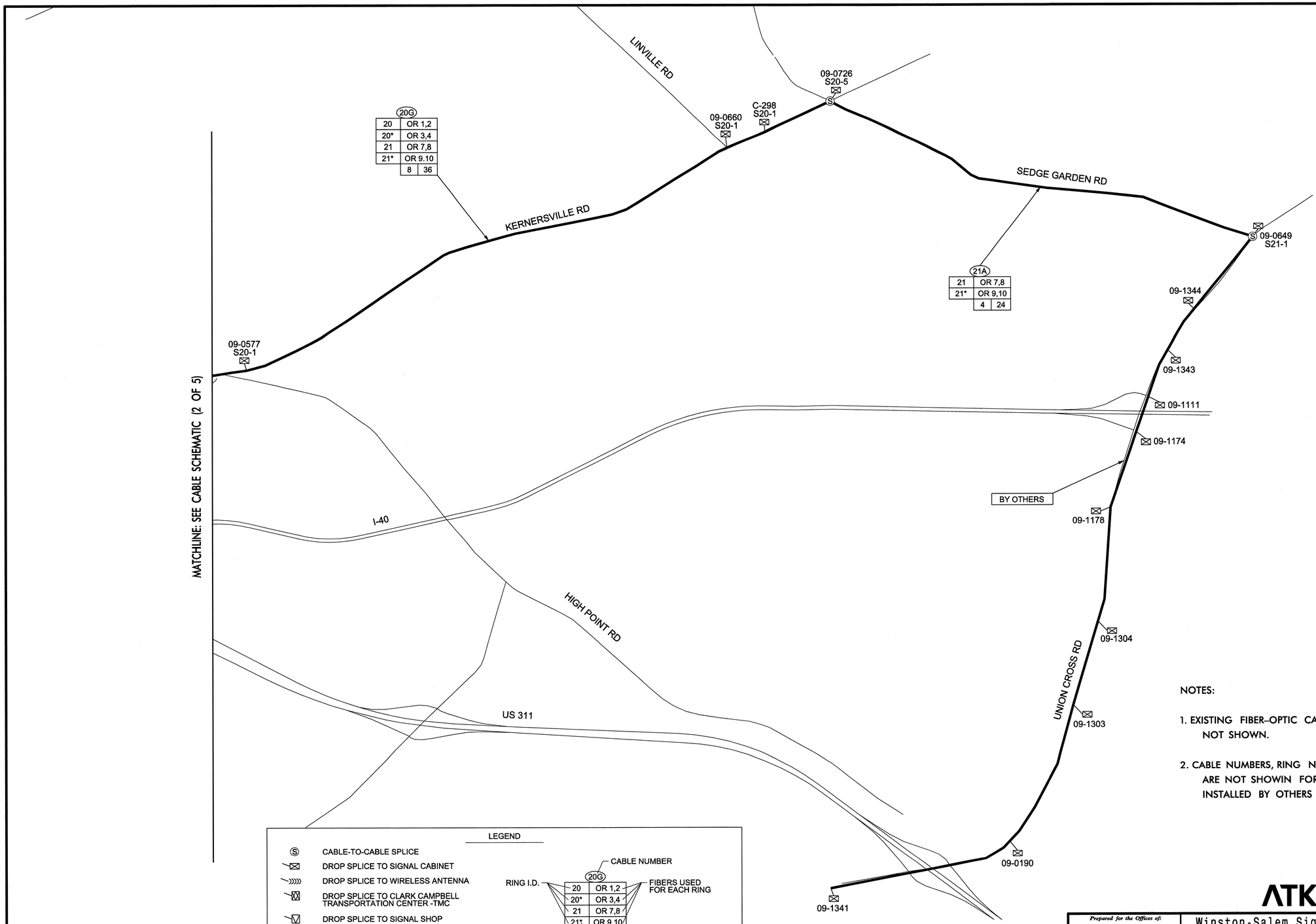

NOTES:

1. EXISTING FIBER-OPTIC CABLE THAT IS NOT USED IS NOT SHOWN.

2. CABLE NUMBERS, RING NUMBERS, AND FIBERS USED ARE NOT SHOWIN FOR NEW FIBER-OPTIC CABLE INSTALLED BY OTHERS (PHASE B).

ATKINS 1616 EAST MILLBROOK ROAD, SUITE 310 RALEIGH, NORTH CAROLINA 27609 (919) 876-6888 NCBEES #F-0326

Prepared for the Offices of: Transportation Mobility and Safety Division, State of North Carolina, Department of Transportation, Intelligent Transportation Systems
750 Greenfield Parkway, Garner, NC 27529

Winston-Salem Signal System
Comms. Cable Schematics
Phase A
(1 of 5)

Division 09 Forsyth County Winston-Salem

PLAN DATE:	January 2013	REVIEWED BY:	HAB
PREPARED BY:	BJS	REVIEWED BY:	JTB

SCALE: N.T.S.

REVISIONS	INIT.	DATE

SEAL: NORTH CAROLINA PROFESSIONAL SEAL 19962 ENGINEER HENRY ALFRED BADGETT, III

H. Alfred Badgett 1/11/13
SIGNATURE DATE

CADD Filename: Phase A Cable Schematics- 01.dgn

17-JAN-2013 16:05
**RALFS07*Trans_Projects*TEG*Curr*100022712 Winston Salem Sig Sys*Comms and ITS*Cable Overview Maps*Phase A*Phase A Cable Schematics- 01.dgn
23653

PROJECT REFERENCE NO.	SHEET NO.
C-5224A	5

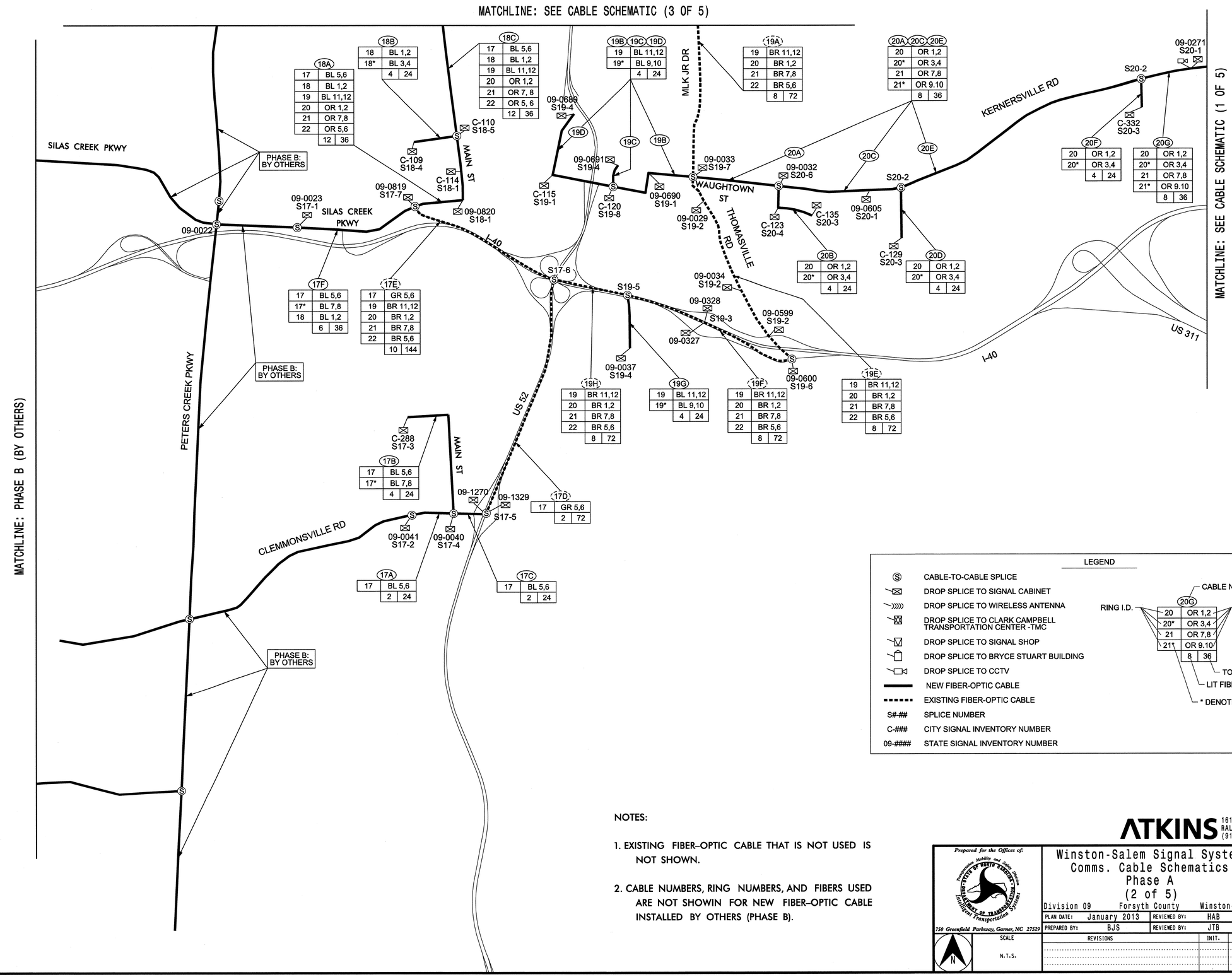

LEGEND

- CABLE-TO-CABLE SPLICE
- DROP SPLICE TO SIGNAL CABINET
- DROP SPLICE TO WIRELESS ANTENNA
- DROP SPLICE TO CLARK CAMPBELL TRANSPORTATION CENTER -TMC
- DROP SPLICE TO SIGNAL SHOP
- DROP SPLICE TO BRYCE STUART BUILDING
- DROP SPLICE TO CCTV
- NEW FIBER-OPTIC CABLE
- EXISTING FIBER-OPTIC CABLE
- S#-## SPLICE NUMBER
- C-### CITY SIGNAL INVENTORY NUMBER
- 09-#### STATE SIGNAL INVENTORY NUMBER

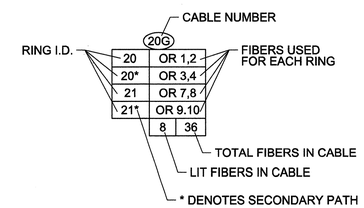

NOTES:

1. EXISTING FIBER-OPTIC CABLE THAT IS NOT USED IS NOT SHOWN.
2. CABLE NUMBERS, RING NUMBERS, AND FIBERS USED ARE NOT SHOWIN FOR NEW FIBER-OPTIC CABLE INSTALLED BY OTHERS (PHASE B).

ATKINS 1616 EAST MILLBROOK ROAD, SUITE 310
RALEIGH, NORTH CAROLINA 27609
(919) 876-6888 NCBEES #F-0326

Prepared for the Offices of: Transportation Mobility and Safety Division, State of North Carolina Department of Transportation, Intelligent Transportation Systems
750 Greenfield Parkway, Garner, NC 27529

Winston-Salem Signal System Comms. Cable Schematics Phase A (2 of 5)

Division 09 Forsyth County Winston-Salem

PLAN DATE:	January 2013	REVIEWED BY:	HAB
PREPARED BY:	BJS	REVIEWED BY:	JTB

SCALE: N.T.S.

REVISIONS	INIT.	DATE

SEAL: NORTH CAROLINA PROFESSIONAL SEAL 19962 ENGINEER HENRY ALFRED BADGETT, III

SIGNATURE H. Alfred Badgett DATE 1/11/13

CADD Filename: Phase A Cable Schematics- 02.dgn

17-JAN-2013 16:05
**RALFS07*Trans_Projects*TEO*Curr*100022112 Winston Salem Sig Sys*Comms and ITS*Cable Overview Maps*Phase A*Phase A Cable Schematics- 02.dgn
23653

PROJECT REFERENCE NO.	SHEET NO.
C-5224A	6

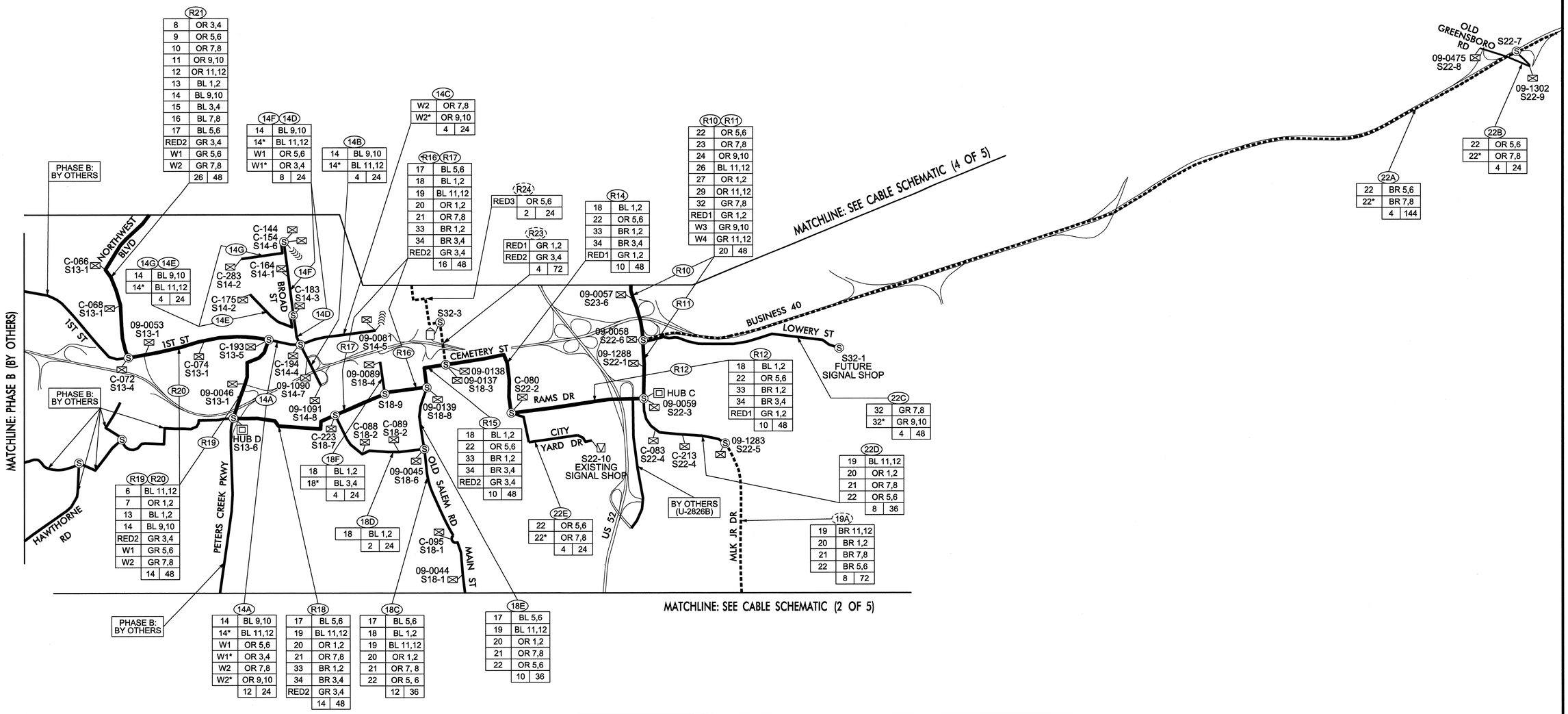

NOTES:

1. EXISTING FIBER-OPTIC CABLE THAT IS NOT USED IS NOT SHOWN.
2. CABLE NUMBERS, RING NUMBERS, AND FIBERS USED ARE NOT SHOWIN FOR NEW FIBER-OPTIC CABLE INSTALLED BY OTHERS (PHASE B).
3. CABLE R13 (NOT SHOWN) MERGED WITH CABLE R12.

LEGEND

- CABLE-TO-CABLE SPLICE
- DROP SPLICE TO SIGNAL CABINET
- DROP SPLICE TO WIRELESS ANTENNA
- DROP SPLICE TO CLARK CAMPBELL TRANSPORTATION CENTER -TMC
- DROP SPLICE TO SIGNAL SHOP
- DROP SPLICE TO BRYCE STUART BUILDING
- DROP SPLICE TO CCTV
- NEW FIBER-OPTIC CABLE
- EXISTING FIBER-OPTIC CABLE
- S#-## SPLICE NUMBER
- C-### CITY SIGNAL INVENTORY NUMBER
- 09-#### STATE SIGNAL INVENTORY NUMBER

CABLE NUMBER

20G

RING I.D.	FIBERS USED FOR EACH RING
20	OR 1,2
20*	OR 3,4
21	OR 7,8
21*	OR 9.10
8	36

TOTAL FIBERS IN CABLE

LIT FIBERS IN CABLE

* DENOTES SECONDARY PATH

ATKINS
1616 EAST MILLBROOK ROAD, SUITE 310
RALEIGH, NORTH CAROLINA 27609
(919) 876-6888 NCBEES #F-0326

Prepared for the Offices of: Transportation Mobility and Safety Division, State of North Carolina Department of Transportation, Intelligent Transportation System

750 Greenfield Parkway, Garner, NC 27529

Winston-Salem Signal System Comms. Cable Schematics Phase A (3 of 5)

Division 09 Forsyth County Winston-Salem

PLAN DATE:	January 2013	REVIEWED BY:	HAB
PREPARED BY:	BJS	REVIEWED BY:	JTB

SCALE: N.T.S.

REVISIONS	INIT.	DATE

SEAL: NORTH CAROLINA PROFESSIONAL SEAL 19962 ENGINEER HENRY ALFRED BADGETT, III

SIGNATURE Henry Badgett DATE 1/16/13

CADD File name: Phase A Cable Schematics- 03.dgn

17-JAN-2013 16:05
$$$$ALFSD7$$Trans_Projects$$TEG$$Curr$$100022712 Winston Salem Sig Sys$$Comms and ITS$$Cable Overview Maps$$Phase A$$Phase A Cable Schematics- 03.dgn
23653

PROJECT REFERENCE NO.	SHEET NO.
C-5224A	7

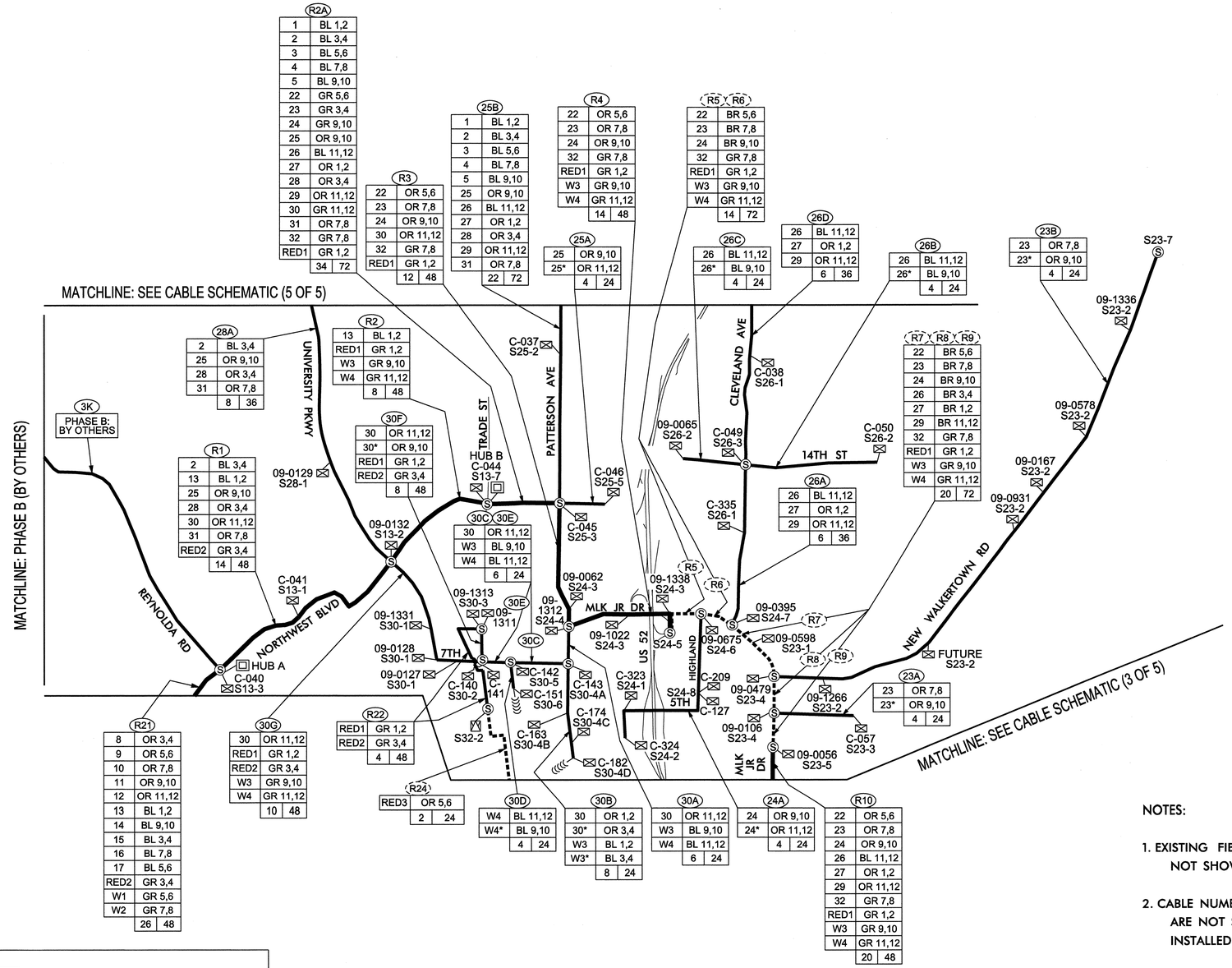

NOTES:

1. EXISTING FIBER–OPTIC CABLE THAT IS NOT USED IS NOT SHOWN.

2. CABLE NUMBERS, RING NUMBERS, AND FIBERS USED ARE NOT SHOWIN FOR NEW FIBER–OPTIC CABLE INSTALLED BY OTHERS (PHASE B).

LEGEND

- (S) CABLE-TO-CABLE SPLICE
- DROP SPLICE TO SIGNAL CABINET
- DROP SPLICE TO WIRELESS ANTENNA
- DROP SPLICE TO CLARK CAMPBELL TRANSPORTATION CENTER -TMC
- DROP SPLICE TO SIGNAL SHOP
- DROP SPLICE TO BRYCE STUART BUILDING
- DROP SPLICE TO CCTV
- NEW FIBER-OPTIC CABLE
- EXISTING FIBER-OPTIC CABLE
- S#-## SPLICE NUMBER
- C-### CITY SIGNAL INVENTORY NUMBER
- 09-#### STATE SIGNAL INVENTORY NUMBER

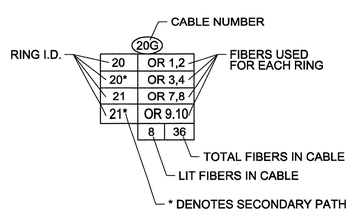

ATKINS
1616 EAST MILLBROOK ROAD, SUITE 310
RALEIGH, NORTH CAROLINA 27609
(919) 876-6888 NCBEES #F-0326

Prepared for the Offices of:
Transportation Mobility and Safety Division
STATE OF NORTH CAROLINA DEPARTMENT OF TRANSPORTATION
Intelligent Transportation Systems
750 Greenfield Parkway, Garner, NC 27529

Winston-Salem Signal System
Comms. Cable Schematics
Phase A
(4 of 5)

Division 09 Forsyth County Winston-Salem

PLAN DATE:	January 2013	REVIEWED BY:	HAB
PREPARED BY:	BJS	REVIEWED BY:	JTB

SCALE: N.T.S.

REVISIONS	INIT.	DATE

SEAL: NORTH CAROLINA PROFESSIONAL SEAL 19962 ENGINEER HENRY ALFRED BADGETT, III

H. Alfred Badgett 1/17/13
SIGNATURE DATE

CADD Filename: Phase A Cable Schematics- 04.dgn

17-JAN-2013 16:05
**RALFSO*Trans_Projects*TEG*Curr*100022712 Winston Salem Sig Sys*Comms and ITS*Cable Overview Maps*Phase A*Phase A Cable Schematics- 04.dgn
23653

PROJECT REFERENCE NO.	SHEET NO.
C-5224A	8

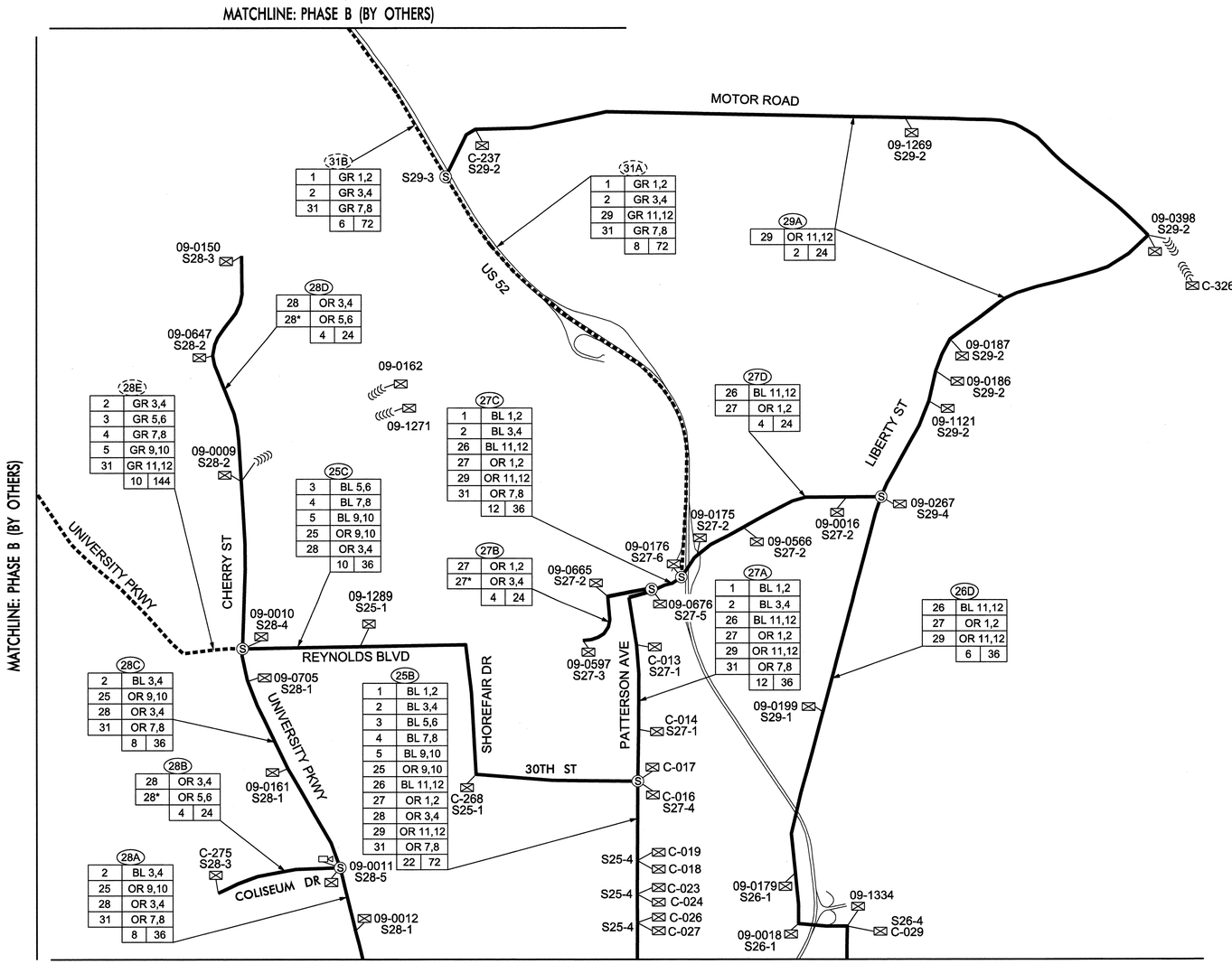

NOTES:

1. EXISTING FIBER-OPTIC CABLE THAT IS NOT USED IS NOT SHOWN.

2. CABLE NUMBERS, RING NUMBERS, AND FIBERS USED ARE NOT SHOWIN FOR NEW FIBER-OPTIC CABLE INSTALLED BY OTHERS (PHASE B).

LEGEND

Ⓢ	CABLE-TO-CABLE SPLICE
	DROP SPLICE TO SIGNAL CABINET
	DROP SPLICE TO WIRELESS ANTENNA
	DROP SPLICE TO CLARK CAMPBELL TRANSPORTATION CENTER -TMC
	DROP SPLICE TO SIGNAL SHOP
	DROP SPLICE TO BRYCE STUART BUILDING
	DROP SPLICE TO CCTV
	NEW FIBER-OPTIC CABLE
	EXISTING FIBER-OPTIC CABLE
S#-##	SPLICE NUMBER
C-###	CITY SIGNAL INVENTORY NUMBER
09-####	STATE SIGNAL INVENTORY NUMBER

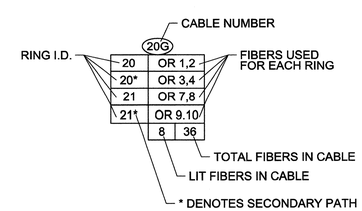

ATKINS 1616 EAST MILLBROOK ROAD, SUITE 310 RALEIGH, NORTH CAROLINA 27609 (919) 876-6888 NCBEES #F-0326

Prepared for the Offices of: Transportation Mobility and Safety Division, State of North Carolina, Department of Transportation, Intelligent Transportation Systems
750 Greenfield Parkway, Garner, NC 27529

Winston-Salem Signal System
Comms. Cable Schematics
Phase A
(5 of 5)

Division 09 Forsyth County Winston-Salem

PLAN DATE:	January 2013	REVIEWED BY:	HAB
PREPARED BY:	BJS	REVIEWED BY:	JTB

SCALE N.T.S.

REVISIONS	INIT.	DATE

SEAL
NORTH CAROLINA PROFESSIONAL SEAL 19962 ENGINEER HENRY ALFRED BADGETT, III
H. Alfred Badgett 1/11/13
SIGNATURE DATE

CADD Filename: Phase A Cable Schematics- 05.dgn

17-JAN-2013 16:05
**RALFS07*Trans_Projects*TEG*Curr*100022712 Winston Salem Sig Sys*Comms and ITS*Cable Overview Maps*Phase A*Phase A Cable Schematics- 05.dgn
23653

PROJECT REFERENCE NO.	SHEET NO.
C-5224A	9

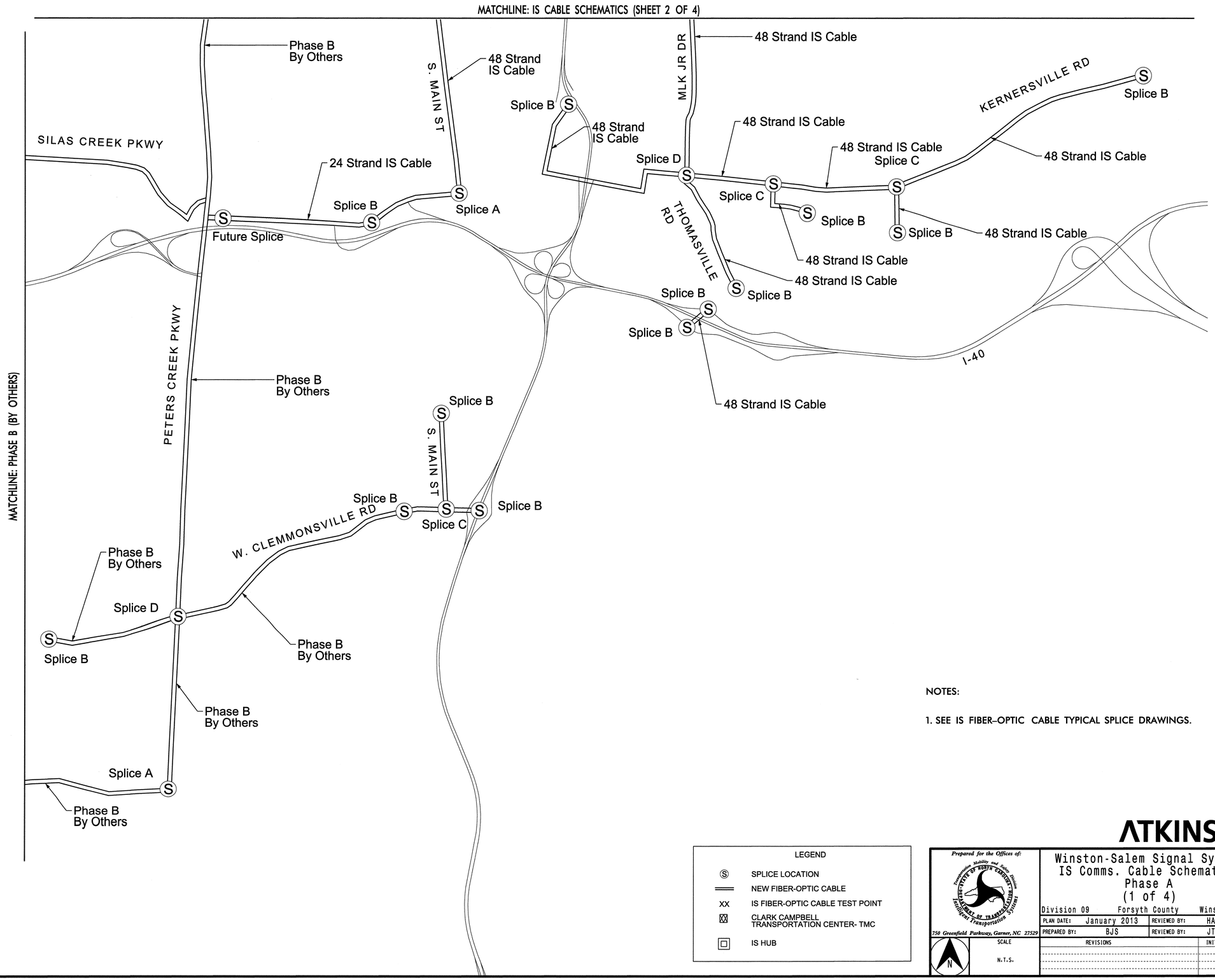

NOTES:

1. SEE IS FIBER-OPTIC CABLE TYPICAL SPLICE DRAWINGS.

LEGEND

Ⓢ	SPLICE LOCATION
═══	NEW FIBER-OPTIC CABLE
XX	IS FIBER-OPTIC CABLE TEST POINT
⊠	CLARK CAMPBELL TRANSPORTATION CENTER- TMC
□	IS HUB

ATKINS 1616 EAST MILLBROOK ROAD, SUITE 310 RALEIGH, NORTH CAROLINA 27609 (919) 876-6888 NCBEES #F-0326

Prepared for the Offices of: Transportation Mobility and Safety Division, State of North Carolina, Department of Transportation, Intelligent Transportation Systems
750 Greenfield Parkway, Garner, NC 27529

Winston-Salem Signal System
IS Comms. Cable Schematics
Phase A
(1 of 4)

Division 09 Forsyth County Winston-Salem

PLAN DATE:	January 2013	REVIEWED BY:	HAB
PREPARED BY:	BJS	REVIEWED BY:	JTB

SCALE N.T.S.

REVISIONS	INIT.	DATE

SEAL: NORTH CAROLINA PROFESSIONAL SEAL 19962 ENGINEER HENRY ALFRED BADGETT III

H. Alfred Badgett 3/11/13
SIGNATURE DATE

CADD Filename: Phase A IS Cable Schematics- 01.dgn

22-MAR-2013 14:22
O:\Transportation\Traffic\Curr\100022712 Winston Salem Sig Sys\Comms and ITS\Cable Overview Maps\Phase A\Phase A IS Cable Schematics- 01.dgn
13833

PROJECT REFERENCE NO.	SHEET NO.
C-5224A	10

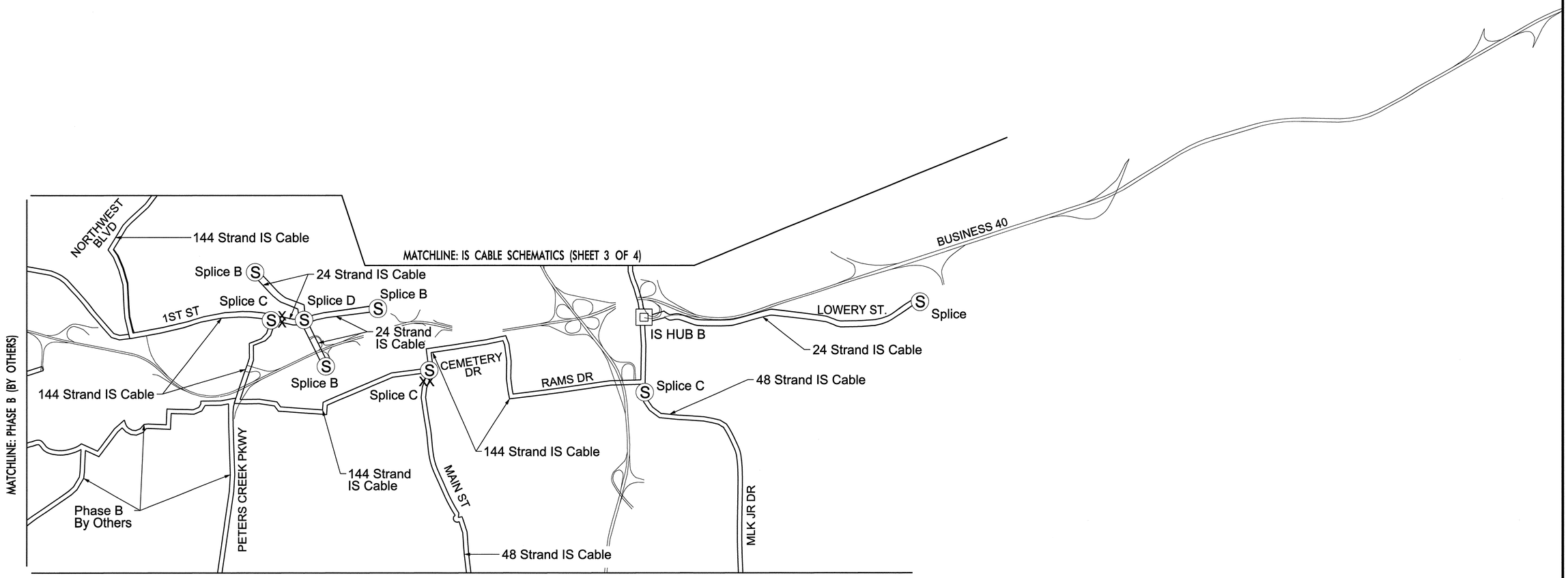

NOTES:

1. SEE IS FIBER-OPTIC CABLE TYPICAL SPLICE DRAWINGS.

LEGEND

(S)	SPLICE LOCATION
═══	NEW FIBER-OPTIC CABLE
XX	IS FIBER-OPTIC CABLE TEST POINT
⊠	CLARK CAMPBELL TRANSPORTATION CENTER- TMC
▣	IS HUB

ATKINS 1616 EAST MILLBROOK ROAD, SUITE 310
RALEIGH, NORTH CAROLINA 27609
(919) 876-6888 NCBEES #F-0326

Prepared for the Offices of:
Transportation Mobility and Safety Division
Intelligent Transportation Systems
750 Greenfield Parkway, Garner, NC 27529

Winston-Salem Signal System
IS Comms. Cable Schematics
Phase A
(2 of 4)

Division 09 Forsyth County Winston-Salem

PLAN DATE:	January 2013	REVIEWED BY:	HAB
PREPARED BY:	BJS	REVIEWED BY:	JTB

SCALE: N.T.S.

REVISIONS	INIT.	DATE

SEAL
NORTH CAROLINA PROFESSIONAL SEAL 19962 ENGINEER HENRY ALFRED BADGETT III
SIGNATURE H. Alfred Badgett III DATE 3/11/13

CADD Filename: Phase A IS Cable Schematics- 02.dgn

22-MAR-2013 14:22
C:\Transportation\Traffic\Curr\10002212 Winston Salem Sig Sys\Comms and ITS\Cable Overview Maps\Phase A\Phase A IS Cable Schematics- 02.dgn
13833

PROJECT REFERENCE NO.	SHEET NO.
C-5224A	11

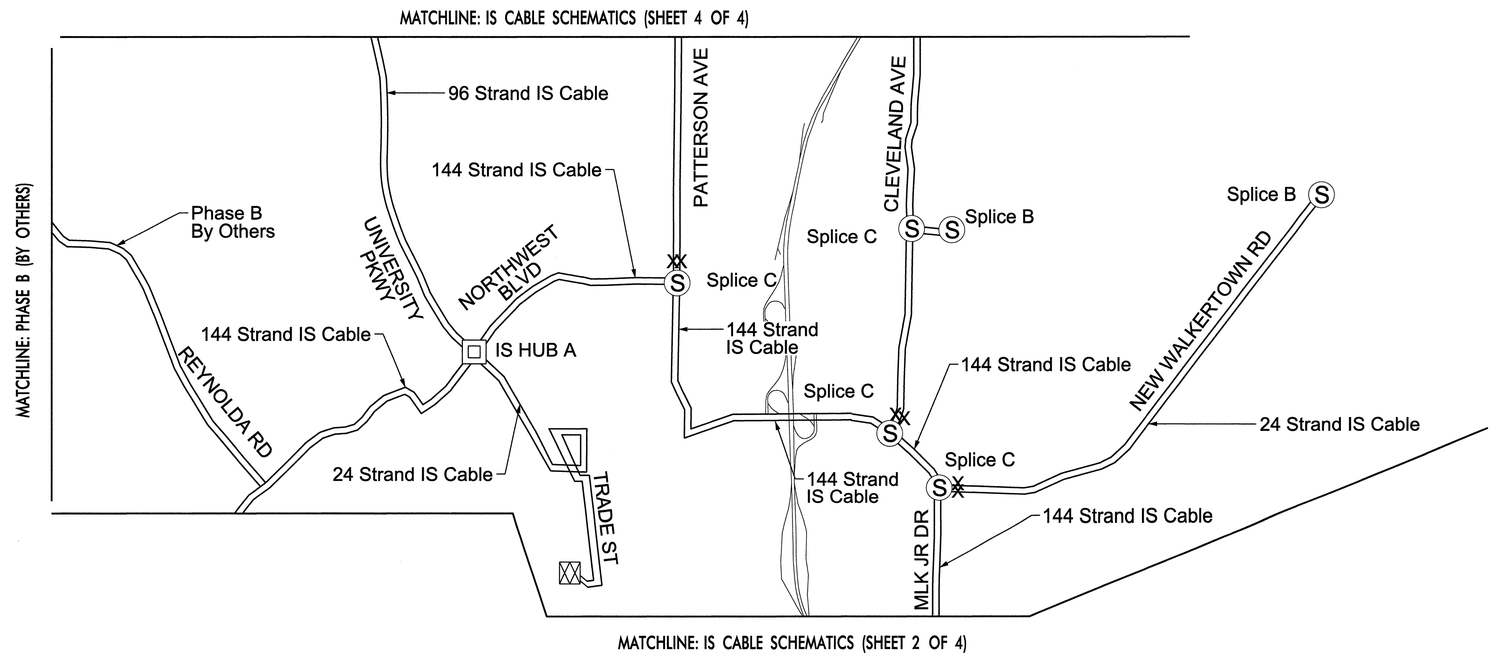

NOTES:

1. SEE IS FIBER-OPTIC CABLE TYPICAL SPLICE DRAWINGS.

LEGEND

(S)	SPLICE LOCATION
═══	NEW FIBER-OPTIC CABLE
XX	IS FIBER-OPTIC CABLE TEST POINT
⊠	CLARK CAMPBELL TRANSPORTATION CENTER- TMC
⊡	IS HUB

ATKINS 1616 EAST MILLBROOK ROAD, SUITE 310
RALEIGH, NORTH CAROLINA 27609
(919) 876-6888 NCBEES #F-0326

Prepared for the Offices of:
Transportation Mobility and Safety Division
STATE OF NORTH CAROLINA DEPARTMENT OF TRANSPORTATION
Intelligent Transportation Systems
750 Greenfield Parkway, Garner, NC 27529

Winston-Salem Signal System IS Comms. Cable Schematics Phase A (3 of 4)

Division 09 Forsyth County Winston-Salem

PLAN DATE:	January 2013	REVIEWED BY:	HAB
PREPARED BY:	BJS	REVIEWED BY:	JTB

SCALE: N.T.S.

REVISIONS	INIT.	DATE

SEAL

NORTH CAROLINA PROFESSIONAL SEAL 19962 ENGINEER ALFRED BADGETT, III

SIGNATURE H. Alfred Badgett DATE 3/1/13

CADD File name: Phase A IS Cable Schematics- 03.dgn

22-MAR-2013 14:22
O:\transportation\Traffic\Curr\100022712 Winston Salem Sig Sys\Comms and ITS\Cable Overview Maps\Phase A\Phase A IS Cable Schematics- 03.dgn
13813

PROJECT REFERENCE NO.	SHEET NO.
C-5224A	12

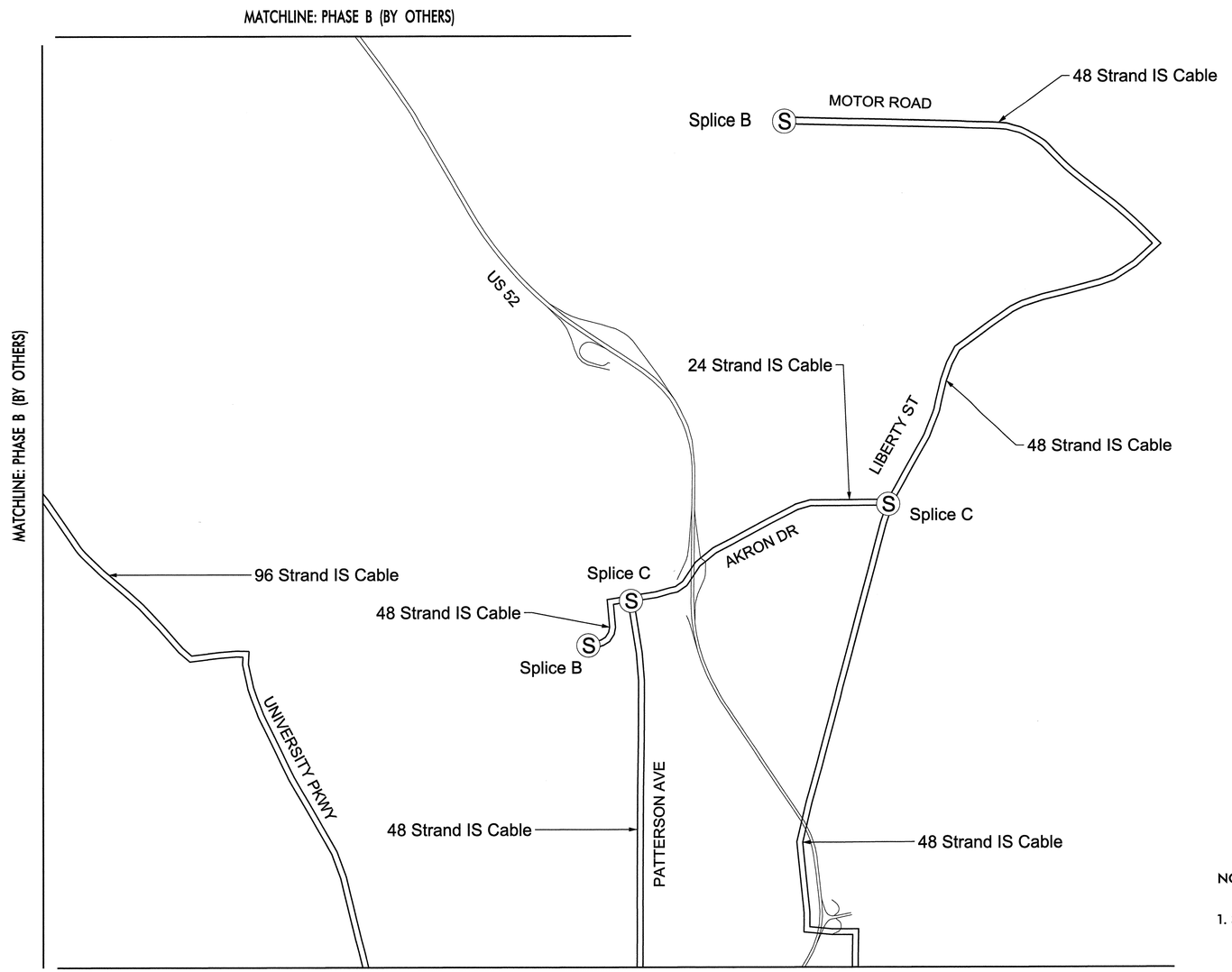

NOTES:

1. SEE IS FIBER-OPTIC CABLE TYPICAL SPLICE DRAWINGS.

LEGEND

(S)	SPLICE LOCATION
═══	NEW FIBER-OPTIC CABLE
XX	IS FIBER-OPTIC CABLE TEST POINT
⊠	CLARK CAMPBELL TRANSPORTATION CENTER- TMC
□	IS HUB

ATKINS 1616 EAST MILLBROOK ROAD, SUITE 310
RALEIGH, NORTH CAROLINA 27609
(919) 876-6888 NCBEES #F-0326

Prepared for the Offices of:
Transportation Mobility and Safety Division
STATE OF NORTH CAROLINA DEPARTMENT OF TRANSPORTATION
Intelligent Transportation Systems
750 Greenfield Parkway, Garner, NC 27529

SCALE: N.T.S.

Winston-Salem Signal System
IS Comms. Cable Schematics
Phase A
(4 of 4)

Division 09 Forsyth County Winston-Salem

PLAN DATE:	January 2013	REVIEWED BY:	HAB
PREPARED BY:	BJS	REVIEWED BY:	JTB

REVISIONS	INIT.	DATE

SEAL: NORTH CAROLINA PROFESSIONAL SEAL 19962 ENGINEER HENRY ALFRED BADGETT III

SIGNATURE H. Alfred Badgett III DATE 3/1/13

CADD File name: Phase A IS Cable Schematics- 04.dgn

22-MAR-2013 14:22
G:\Transportation\Traffic\Curr\00022712 Winston Salem Sig Sys\Comms and ITS\Cable Overview Maps\Phase A\Phase A IS Cable Schematics- 04.dgn
13953

PROJECT REFERENCE NO.	SHEET NO.
C-5224A	13

CABLE NO.=		14A	14B	14C	14D	14E	14F	14G	17A	17B	17C	17D	17E	17F	18A	18B	18C	18D	18E	18F	19A
CABLE SIZE=		24	24	24	24	24	24	24	24	24	24	72	144	36	36	24	36	24	36	24	72
NEW/EXISTING		NEW	NEW	NEW	NEW	NEW	NEW	NEW	NEW	NEW	NEW	EXISTING	EXISTING	NEW	NEW	NEW	NEW	NEW	NEW	NEW	EXISTING
TUBE	STRANDS																				
BLUE	1, 2													18	18	18	18	18		18	
BLUE	3, 4															18*				18*	
BLUE	5, 6								17	17	17	17		17	17		17		17		
BLUE	7, 8									17*				17*							
BLUE	9, 10	14	14		14	14	14	14													
BLUE	11, 12	14*	14*		14*	14*	14*	14*							19		19		19		
ORANGE	1, 2		PRE												20		20		20		
ORANGE	3, 4	W1*	PRE		W1*		W1*														
ORANGE	5, 6	W1			W1		W1								22		22		22		
ORANGE	7, 8	W2		W2											21		21		21		
ORANGE	9, 10	W2*		W2*																	
ORANGE	11, 12																				
GREEN	1, 2																				
GREEN	3, 4																				
GREEN	5, 6												17								
GREEN	7, 8																				
GREEN	9, 10																				
GREEN	11, 12																				
BROWN	1, 2												20								20
BROWN	3, 4																				
BROWN	5, 6												22								22
BROWN	7, 8												21								21
BROWN	9, 10																				
BROWN	11, 12												19								19
SLATE	1, 2																				
SLATE	3, 4																				
SLATE	5, 6																				
SLATE	7, 8																				
SLATE	9, 10																				
SLATE	11, 12																				
WHITE	1, 2																				
WHITE	3, 4																				
WHITE	5, 6																				
WHITE	7, 8																				
WHITE	9, 10																				
WHITE	11, 12																				

NOTE:

1. ASTERISK (*) DENOTES REDUNDANT FIBERS.
2. "PRE" DENOTES FIBERS USED FOR SIGNAL PREEMPTION.
3. RING 17 TO BE NON-REDUNDANT IN PHASE A. RING 17 REDUNDANCY TO BE COMPLETED BY OTHERS IN PHASE B.
4. RING 18 TO BE NON-REDUNDANT IN PHASE A. RING 18 REDUNDANCY TO BE COMPLETED BY OTHERS IN PHASE B.

ATKINS 1616 EAST MILLBROOK ROAD, SUITE 310
RALEIGH, NORTH CAROLINA 27609
(919) 876-6888 NCBEES #F-0326

Prepared for the Offices of:
Transportation Mobility and Safety Division
STATE OF NORTH CAROLINA DEPARTMENT OF TRANSPORTATION
Intelligent Transportation Systems
750 Greenfield Parkway, Garner, NC 27529

Winston-Salem Signal System
Fiber-Optic Usage Summary
Phase A
(1 of 5)

Division 09 Forsyth County Winston-Salem

PLAN DATE:	January 2013	REVIEWED BY:	HAB
PREPARED BY:	BJS	REVIEWED BY:	JTB

SCALE	REVISIONS	INIT.	DATE
N.T.S.			

SEAL
NORTH CAROLINA PROFESSIONAL SEAL 19962 ENGINEER HENRY ALFRED BADGETT III
H. Alfred Badgett 1/11/13
SIGNATURE DATE

CADD Filename: Fiber Allocation Char

09-JAN-2013 15:03
U:\Transportation\Traffic\Curr\100022712 Winston Salem Sig Sys\Comms and ITS\Splice Diagrams\Phase A\Fiber Allocation Chart -01.dgn
12204

PROJECT REFERENCE NO.	SHEET NO.
C-5224A	14

CABLE NO.=		19B	19C	19D	19E	19F	19G	19H	20A	20B	20C	20D	20E	20F	20G	21A	22A	22B	22C	22D	22E
CABLE SIZE=		24	24	24	72	72	24	72	36	24	36	24	36	24	36	24	144	24	48	36	24
NEW/EXISTING		NEW	NEW	NEW	EXISTING	EXISTING	NEW	EXISTING	NEW	NEW	NEW	NEW	NEW	NEW	NEW	NEW	EXISTING	NEW	NEW	NEW	NEW
TUBE	STRANDS																				
BLUE	1, 2																				
BLUE	3, 4																				
BLUE	5, 6																				
BLUE	7, 8																				
BLUE	9, 10	19*	19*	19*			19*														
BLUE	11, 12	19	19	19			19													19	
ORANGE	1, 2								20	20	20	20	20	20	20					20	
ORANGE	3, 4								20*	20*	20*	20*	20*	20*	20*						
ORANGE	5, 6																22	22		22	22
ORANGE	7, 8								21		21		21		21	21	22*	22*		21	22*
ORANGE	9, 10								21*		21*		21*		21*	21*					
ORANGE	11, 12																				
GREEN	1, 2																				
GREEN	3, 4																				
GREEN	5, 6																				
GREEN	7, 8																		32		
GREEN	9, 10																		32*		
GREEN	11, 12																				
BROWN	1, 2				20	20		20													
BROWN	3, 4																				
BROWN	5, 6				22	22		22													
BROWN	7, 8				21	21		21													
BROWN	9, 10																				
BROWN	11, 12				19	19		19													
SLATE	1, 2																				
SLATE	3, 4																				
SLATE	5, 6																				
SLATE	7, 8																				
SLATE	9, 10																				
SLATE	11, 12																				
WHITE	1, 2																				
WHITE	3, 4																				
WHITE	5, 6																				
WHITE	7, 8																				
WHITE	9, 10																				
WHITE	11, 12																				

NOTE:

ASTERISK (*) DENOTES REDUNDANT FIBERS

ATKINS 1616 EAST MILLBROOK ROAD, SUITE 310
RALEIGH, NORTH CAROLINA 27609
(919) 876-6888 NCBEES #F-0326

Prepared for the Offices of:
Transportation Mobility and Safety Division
STATE OF NORTH CAROLINA
DEPARTMENT OF TRANSPORTATION
Intelligent Transportation Systems
750 Greenfield Parkway, Garner, NC 27529

Winston-Salem Signal System
Fiber-Optic Usage Summary
Phase A
(2 of 5)

Division 09 Forsyth County Winston-Salem

PLAN DATE:	January 2013	REVIEWED BY:	HAB
PREPARED BY:	BJS	REVIEWED BY:	JTB

SCALE: N.T.S.

REVISIONS	INIT.	DATE

SEAL
NORTH CAROLINA PROFESSIONAL SEAL 19962 ENGINEER HENRY ALFRED BADGETT, III

H. Alfred Badgett 1/11/13
SIGNATURE DATE

CADD Filename: Fiber Allocation Char

09-JAN-2013 15:03
O:*Transportation*Traffic*Curr*100022712 Winston Salem Sig Sys*Comms and ITS*Splice Diagrams*Phase A*Fiber Allocation Chart -02.dgn
12054

PROJECT REFERENCE NO.	SHEET NO.
C-5224A	15

CABLE NO.=		23A	23B	24A	25A	25B	25C	26A	26B	26C	26D	27A	27B	27C	27D	28A	28B	28C	28D	28E	29A
CABLE SIZE=		24	24	24	24	72	36	36	24	24	36	36	24	36	24	36	24	36	24	144	24
NEW/EXISTING		NEW	NEW	NEW	NEW	NEW	NEW	NEW	NEW	NEW	NEW	NEW	NEW	NEW	NEW	NEW	NEW	NEW	NEW	EXISTING	NEW
TUBE	STRANDS																				
BLUE	1, 2					1						1		1							
BLUE	3, 4					2						2		2		2		2			
BLUE	5, 6					3	3														
BLUE	7, 8					4	4														
BLUE	9, 10					5	5		26*	26*											
BLUE	11, 12					26		26	26	26	26	26		26	26						
ORANGE	1, 2					27		27			27	27	27	27	27						
ORANGE	3, 4					28	28						27*			28	28	28	28		
ORANGE	5, 6																28*		28*		
ORANGE	7, 8	23	23			31						31		31		31		31			
ORANGE	9, 10	23*	23*	24	25	25	25									25		25			
ORANGE	11, 12			24*	25*	29		29			29	29		29							29
GREEN	1, 2																				
GREEN	3, 4																			2	
GREEN	5, 6																			3	
GREEN	7, 8																			4	
GREEN	9, 10																			5	
GREEN	11, 12																			31	
BROWN	1, 2																				
BROWN	3, 4																				
BROWN	5, 6																				
BROWN	7, 8																				
BROWN	9, 10																				
BROWN	11, 12																				
SLATE	1, 2																				
SLATE	3, 4																				
SLATE	5, 6																				
SLATE	7, 8																				
SLATE	9, 10																				
SLATE	11, 12																				
WHITE	1, 2																				
WHITE	3, 4																				
WHITE	5, 6																				
WHITE	7, 8																				
WHITE	9, 10																				
WHITE	11, 12																				

NOTE:

ASTERISK (*) DENOTES REDUNDANT FIBERS

ATKINS 1616 EAST MILLBROOK ROAD, SUITE 310
RALEIGH, NORTH CAROLINA 27609
(919) 876-6888 NCBEES #F-0326

Prepared for the Offices of:
Transportation Mobility and Safety Division
Intelligent Transportation Systems
750 Greenfield Parkway, Garner, NC 27529

Winston-Salem Signal System
Fiber-Optic Usage Summary
Phase A
(3 of 5)

Division 09 Forsyth County Winston-Salem

PLAN DATE: January 2013 REVIEWED BY: HAB
PREPARED BY: BJS REVIEWED BY: JTB

SCALE N.T.S.

REVISIONS	INIT.	DATE

SEAL
NORTH CAROLINA PROFESSIONAL SEAL 19962 ENGINEER HENRY ALFRED BADGETT III

SIGNATURE DATE

CADD Filename: Fiber Allocation Char

09-JAN-2013 15:03
D:\Transportation\Traffic\Cur\10002712 Winston Salem Sig Sys\Comms and ITS\Splice Diagrams\Phase A\Fiber Allocation Chart -03.dgn
12054

PROJECT REFERENCE NO.	SHEET NO.
C-5224A	16

CABLE NO.=		30A	30B	30C	30D	30E	30F	30G	31A	31B	R1	R2	R2A	R3	R4	R5	R6	R7	R8	R9	R10	R11
CABLE SIZE=		24	24	24	24	24	24	48	72	72	48	48	72	48	48	72	72	72	72	72	48	48
NEW/EXISTING		NEW	NEW	NEW	NEW	NEW	NEW	NEW	EXISTING	EXISTING	NEW	NEW	NEW	NEW	NEW	EXISTING	EXISTING	EXISTING	EXISTING	EXISTING	NEW	NEW
TUBE	STRANDS																					
BLUE	1, 2		W3								13	13	1									
BLUE	3, 4		W3*								2		2									
BLUE	5, 6												3									
BLUE	7, 8												4									
BLUE	9, 10	W3		W3	W4*	W3							5									
BLUE	11, 12	W4		W4	W4	W4							26								26	26
ORANGE	1, 2		30										27								27	27
ORANGE	3, 4		30*								28		28									
ORANGE	5, 6													22	22						22	22
ORANGE	7, 8										31		31	23	23						23	23
ORANGE	9, 10						30*				25		25	24	24						24	24
ORANGE	11, 12	30		30		30	30	30			30		29	30							29	29
GREEN	1, 2							RED1	1	1		RED1	RED1	RED1	RED1	RED1	RED1	RED1	RED1	RED1	RED1	RED1
GREEN	3, 4							RED2	2	2	RED2		23									
GREEN	5, 6												22									
GREEN	7, 8								31	31			32	32	32	32	32	32	32	32	32	32
GREEN	9, 10							W3				W3	24		W3	W3	W3	W3	W3	W3	W3	W3
GREEN	11, 12							W4	29			W4	30		W4	W4	W4	W4	W4	W4	W4	W4
BROWN	1, 2																	27	27	27		
BROWN	3, 4																	26	26	26		
BROWN	5, 6															22	22	22	22	22		
BROWN	7, 8															23	23	23	23	23		
BROWN	9, 10															24	24	24	24	24		
BROWN	11, 12																	29	29	29		
SLATE	1, 2																					
SLATE	3, 4																					
SLATE	5, 6																					
SLATE	7, 8																					
SLATE	9, 10																					
SLATE	11, 12																					
WHITE	1, 2																					
WHITE	3, 4																					
WHITE	5, 6																					
WHITE	7, 8																					
WHITE	9, 10																					
WHITE	11, 12																					

NOTE:

ASTERISK (*) DENOTES REDUNDANT FIBERS

ATKINS 1616 EAST MILLBROOK ROAD, SUITE 310
RALEIGH, NORTH CAROLINA 27609
(919) 876-6888 NCBEES #F-0326

Prepared for the Offices of:
Transportation Mobility and Safety Division
STATE OF NORTH CAROLINA DEPARTMENT OF TRANSPORTATION
Intelligent Transportation System
750 Greenfield Parkway, Garner, NC 27529

Winston-Salem Signal System
Fiber-Optic Usage Summary
Phase A
(4 of 5)

Division 09 Forsyth County Winston-Salem

PLAN DATE:	January 2013	REVIEWED BY:	HAB
PREPARED BY:	BJS	REVIEWED BY:	JTB

SCALE	REVISIONS	INIT.	DATE
N.T.S.			

SEAL
NORTH CAROLINA PROFESSIONAL SEAL 19962 ENGINEER HENRY ALFRED BADGETT, III
SIGNATURE H. Alfred Badgett DATE 1/11/13

CADD Filename: Fiber Allocation Char

09-JAN-2013 15:04
D:\Transportation\traffic\Curr\1000022112 Winston Salem Sig Sys\Comms and ITS\Splice Diagrams\Phase A\Fiber Allocation Chart -04.dgn
12:04

CABLE NO.=		R12	R14	R15	R16	R17	R18	R19	R20	R21	R22	R23	R24
CABLE SIZE=		48	48	48	48	48	48	48	48	48	48	72	24
NEW/EXISTING		NEW	NEW	NEW	NEW	NEW	NEW	NEW	NEW	NEW	NEW	EXISTING	EXISTING
TUBE	STRANDS												
BLUE	1, 2	18	18	18	18	18		13	13	13			
BLUE	3, 4									15			
BLUE	5, 6				17	17	17			17			
BLUE	7, 8									16			
BLUE	9, 10							14	14	14			
BLUE	11, 12				19	19	19	6	6				
ORANGE	1, 2				20	20	20	7	7				
ORANGE	3, 4									8			
ORANGE	5, 6	22	22	22						9			RED3
ORANGE	7, 8				21	21	21			10			
ORANGE	9, 10									11			
ORANGE	11, 12									12			
GREEN	1, 2	RED1	RED1								RED1	RED1	
GREEN	3, 4			RED2	RED2	RED2	RED2	RED2	RED2	RED2	RED2	RED2	
GREEN	5, 6							W1	W1	W1			
GREEN	7, 8							W2	W2	W2			
GREEN	9, 10												
GREEN	11, 12												
BROWN	1, 2	33	33	33	33	33	33						
BROWN	3, 4												
BROWN	5, 6												
BROWN	7, 8												
BROWN	9, 10												
BROWN	11, 12												
SLATE	1, 2												
SLATE	3, 4												
SLATE	5, 6												
SLATE	7, 8												
SLATE	9, 10												
SLATE	11, 12												
WHITE	1, 2												
WHITE	3, 4												
WHITE	5, 6												
WHITE	7, 8												
WHITE	9, 10												
WHITE	11, 12												

NOTES:

1. ASTERISK (*) DENOTES REDUNDANT FIBERS

2. CABLE R13 (NOT SHOWN) MERGED WITH CABLE R12.

3. RING 33 SHALL BE THE FUTURE TRAFFIC SIGNALS ON U-2925.

ATKINS 1616 EAST MILLBROOK ROAD, SUITE 310
RALEIGH, NORTH CAROLINA 27609
(919) 876-6888 NCBEES #F-0326

Prepared for the Offices of:
Transportation Mobility and Safety Division
STATE OF NORTH CAROLINA
DEPARTMENT OF TRANSPORTATION
Intelligent Transportation Systems
750 Greenfield Parkway, Garner, NC 27529

Winston-Salem Signal System
Fiber-Optic Usage Summary
Phase A
(5 of 5)

Division 09 Forsyth County Winston-Salem

PLAN DATE:	January 2013	REVIEWED BY:	HAB
PREPARED BY:	BJS	REVIEWED BY:	JTB

SCALE: N.T.S.

REVISIONS	INIT.	DATE

SEAL
NORTH CAROLINA PROFESSIONAL SEAL 19962 ENGINEER HENRY ALFRED BADGETT, III

H. Alfred Badgett 3/11/13
SIGNATURE DATE

CADD Filename: Fiber Allocation Chart

22-MAR-2013 14:22
O:\Transportation\Traffic\Curr\100022712 Winston Salem Sig Sys\Comms and ITS\Splice Diagrams\Phase A\Fiber Allocation Chart -05.dgn
13833

PROJECT REFERENCE NO.	SHEET NO.
C-5224A	18

FS Sheet	Splice No.	Signal Inventory No.	CL Sheet
FS-01	S13-1	C-041	CL A-004
		C-066	CL A-001
		C-068	CL A-013
		09-0053	CL A-014
		C-074	CL A-015
		09-0046	CL A-017
FS-02	S13-2	09-0132	CL A-005
FS-03	S13-3	C-040 / Hub A	CL A-002
FS-04	S13-4	C-072	CL A-014
FS-05	S13-5	C-193	CL A-016
FS-06	S13-6	Business 40 @ NC-150 / Hub D	CL A-018
FS-06A	S13-7	C-044 / Hub B	CL A-007
FS-07	S14-1	C-164	CL A-035
	S14-2	C-283	CL A-037
		C-175	CL A-036
	S14-3	C-183	CL A-034
FS-08	S14-4	C-194	CL A-030
FS-09	S14-5	09-0081 / Wireless Fiber Access Point	CL A-031
	S14-6	C-144 / C-154 / Wireless Fiber Access Point	CL A-035
FS-09A	S14-7	09-1090	CL A-033
	S14-8	09-1091	CL A-033
FS-10	S17-1	09-0023	CL A-156
	S17-2	09-0041	CL A-141
	S17-3	C-288	CL A-155
FS-11	S17-4	09-0040	CL A-141
FS-12	S17-5	09-1329 / 09-1270	CL A-142
FS-13	S17-6	I-40 @ US-52	CL A-214
FS-14	S17-7	09-0819	CL A-158
FS-15	S18-1	C-095	CL A-152
		09-0044	CL A-151
		C-114	CL A-148
		09-0820	CL A-148
	S18-2	C-089	CL A-162
		C-088	CL A-161
FS-16	S18-3	Church St @ Cemetery St / 09-0138 / 09-0137	CL A-022
FS-17	S18-4	09-0089	CL A-032
		C-109	CL A-159
	S18-5	C-110	CL A-149
FS-18	S18-6	09-0045	CL A-153
	S18-7	C-223	CL A-019
FS-19	S18-8	09-0139	CL A-021
FS-20	S18-9	Marshall St @ Wachovia St	CL A-021
FS-21	S19-1	09-0690	CL A-169
		C-115	CL A-167
	S19-2	09-0029	CL A-195
		09-0034	CL A-196
		09-0599	CL A-197
	S19-3	09-0327 / 09-0328	CL A-194
FS-22	S19-4	09-0689	CL A-166
		09-0691	CL A-191
		09-0037	CL A-192
	S19-5	I-40 @ Old Lexington Rd	CL A-192
FS-23	S19-6	09-0600	CL A-198
FS-24	S19-7	09-0033	CL A-140
FS-25	S19-8	C-120	CL A-168

FS Sheet	Splice No.	Signal Inventory No.	CL Sheet
FS-26	S20-1	C-298	CL A-189
		09-0660	CL A-188
		09-0577	CL A-179
		09-0271	CL A-179
		09-0605	CL A-173
	S20-2	Waughtown St @ Marble St	CL A-173
		Waughtown St @ Cole Rd	CL A-178
	S20-3	C-332	CL A-201
		C-135	CL A-199
		C-129	CL A-200
FS-27	S20-4	C-123	CL A-199
	S20-5	09-0726	CL A-190
	S20-6	09-0032	CL A-171
FS-28	S21-1	09-0649	CL A-209
	S22-1	09-1288	CL A-027
FS-29	S22-2	C-080	CL A-024
FS-30	S22-3	09-0059 / Hub C	CL A-026
FS-31	S22-4	C-083	CL A-134
		C-213	CL A-134
FS-32	S22-5	09-1283	CL A-135
FS-33	S22-6	09-0058	CL A-027
FS-34	S22-7	Business 40 @ Linville Rd	CL A-210
	S22-8	09-0475	CL A-210
	S22-9	09-1302	CL A-210
	S22-10	Existing Signal Shop	CL A-053
FS-35	S23-1	09-0598	CL A-012
	S23-2	09-1336	CL A-131
		09-0578	CL A-129
		09-0167	CL A-128
		09-0931	CL A-128
		FUTURE (NEW WALKERTOWN RD @ FERRELL CT)	CL A-126
		09-1266	CL A-124
	S23-3	C-057	CL A-133
FS-36	S23-4	09-0479	CL A-029
		09-0106	CL A-029
	S23-5	09-0056	CL A-028
FS-37	S23-6	09-0057	CL A-028
	S23-7	Carver School Rd @ US-311	CL A-132
	S24-1	C-323	CL A-050
FS-38	S24-2	C-324	CL A-049
	S24-3	09-0062	CL A-009
		09-1338	CL A-011
		09-1022	CL A-010
	S24-4	09-1312	CL A-010
FS-39	S24-5	MLK Jr Dr @ US 52 Ramp	CL A-011
FS-40	S24-6	09-0675	CL A-011
FS-41	S24-7	09-0395	CL A-012
FS-42	S24-8	C-209 / C-127	CL A-051
	S25-1	09-1289	CL A-084
		C-268	CL A-087
	S25-2	C-037	CL A-093
FS-43	S25-3	C-045	CL A-008
FS-44	S25-4	C-018 / C-019	CL A-094
		C-023 / C-024	CL A-094
		C-026 / C-027	CL A-094
	S25-5	C-046	CL A-119
	S26-1	09-0179	CL A-108
		09-0018	CL A-108
		C-038	CL A-106
		C-335	CL A-103

FS Sheet	Splice No.	Signal Inventory No.	CL Sheet
FS-45	S26-2	09-0065	CL A-121
		C-050	CL A-123
FS-46	S26-3	C-049	CL A-104
FS-47	S26-4	C-029 / 09-1334	CL A-107
	S27-1	C-013	CL A-097
		C-014	CL A-096
FS-48	S27-2	09-0016	CL A-102
		09-0175	CL A-100
		09-0566	CL A-101
		09-0665	CL A-098
	S27-3	09-0597	CL A-098
FS-49	S27-4	C-016 / C-017	CL A-095
FS-50	S27-5	09-0676	CL A-099
	S27-6	09-0176	CL A-100
FS-51	S28-1	09-0705	CL A-059
		09-0012	CL A-063
		09-0161	CL A-061
		09-0129	CL A-066
	S28-2	09-0647	CL A-055
		09-0009	CL A-057
	S28-3	09-0150	CL A-054
		C-275	CL A-089
FS-52	S28-4	09-0010	CL A-059
FS-53	S28-5	09-0011	CL A-062
FS-54	S29-1	09-0199	CL A-110
FS-55	S29-2	09-1269	CL A-079
		C-237	CL A-074
		09-0398	CL A-118
		09-0187	CL A-116
		09-0186	CL A-115
		09-1121	CL A-115
	S29-3	US-52 @ Motor Rd	CL A-073
FS-56	S29-4	09-0267	CL A-113
FS-57	S30-1	09-1331	CL A-039
		09-0128	CL A-039
		09-0127	CL A-040
FS-58	S30-2	C-140 / C-141	CL A-040
FS-59	S30-3	09-1313 / 09-1311	CL A-042
FS-60	S30-4A	C-143	CL A-048
	S30-4B	C-163	CL A-047
	S30-4C	C-174	CL A-047
	S30-4D	C-182 / Wireless Fiber Access Point	CL A-047
FS-61	S30-5	C-142	CL A-040
	S30-6	C-151 / Wireless Fiber Access Point	CL A-046
FS-62	S32-1	Future Signal Shop	CL A-213
FS-63	S32-2	Transportation Center	CL A-043
FS-64	S32-3	Bryce Stuart Building	CL A-045
FS-65	Splice A	See: IS Comms. Cable Schematics	(Typical)
	Splice B	See: IS Comms. Cable Schematics	(Typical)
FS-66	Splice C	See: IS Comms. Cable Schematics	(Typical)
	Splice D	See: IS Comms. Cable Schematics	(Typical)

ATKINS 1616 EAST MILLBROOK ROAD, SUITE 310
RALEIGH, NORTH CAROLINA 27609
(919) 876-6888 NCBEES #F-0326

Prepared for the Offices of:
Transportation Mobility and Safety Division
STATE OF NORTH CAROLINA DEPARTMENT OF TRANSPORTATION
Intelligent Transportation Systems
750 Greenfield Parkway, Garner, NC 27529

Winston-Salem Signal System Fiber-Optic Splicing Details Key Sheet Phase A

Division 09 Forsyth County Winston-Salem

PLAN DATE:	January 2013	REVIEWED BY:	HAB
PREPARED BY:	BJS	REVIEWED BY:	JTB

SCALE: N.T.S.

REVISIONS	INIT.	DATE

SEAL
NORTH CAROLINA PROFESSIONAL SEAL 19962 ENGINEER HENRY ALFRED BADGETT, III

SIGNATURE H. Alfred Badgett DATE 1/11/13

CADD Filename: Fiber Splicing Key Sh

09-JAN-2013 15:04
D:\Transportation\Traffic\Curr\100022712 Winston Salem Sig Sys\Comms and ITS\Splice Diagrams\Phase A\Fiber Splicing Key Sheet.dgn
12:04

PROJECT REFERENCE NO.	SHEET NO.
C-5224A	FS-01

SPLICE ENCLOSURE NO.

13-1

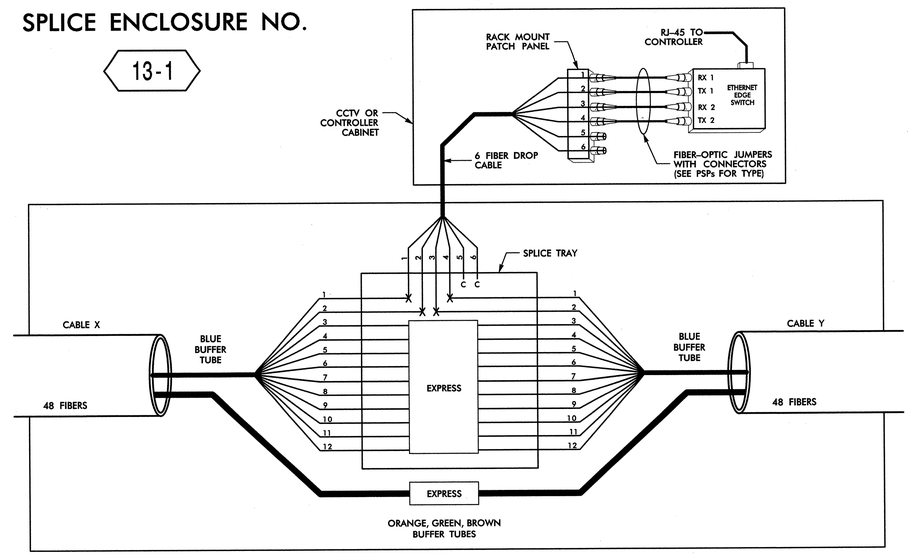

SPLICE ENCLOSURE NO. 13-1							
INTERSECTION NO.	CL SHEET	CABLE X			CABLE Y		
		CABLE NO.	ALONG ROUTE	TO	CABLE NO.	ALONG ROUTE	TO
C-041	CL A-004	R1	NORTHWEST BLVD	UNIVERSITY PKWY	R1	NORTHWEST BLVD	REYNOLDA RD
C-066	CL A-001	R21	NORTHWEST BLVD	REYNOLDA RD	R21	HAWTHORNE RD	GLADE ST
C-068	CL A-013	R21	HAWTHORNE RD	NORTHWEST BLVD	R21	HAWTHORNE RD	W 1ST ST
09-0053	CL A-014	R20	W 1ST ST	HAWTHORNE RD	R21	W 1ST ST	4TH ST
C-074	CL A-015	R20	W 1ST ST	1-40 BUS OFF RAMP	R21	W 1ST ST	PETERS CREEK PKWY
09-0046	CL A-017	R19	PETERS CREEK PKWY	W 1ST ST	R19	PETERS CREEK PKWY	HUB D

LEGEND

COLOR CODE TIA/EIA 598-B

(1) BLUE	(7) RED
(2) ORANGE	(8) BLACK
(3) GREEN	(9) YELLOW
(4) BROWN	(10) VIOLET
(5) SLATE	(11) ROSE
(6) WHITE	(12) AQUA

X = FUSION SPLICE INDIVIDUAL FIBER

C = CAP AND SEAL

EXPRESS = EXPRESS FIBERS THROUGH WITHOUT CUTTING

BUFFER SPLICE = SPLICE ALL FIBERS IN BUFFER TUBE COLOR TO COLOR

NOTES

1. UNUSED FIBERS LEFT COILED AND STORED IN SPLICE TRAY
2. UNUSED BUFFER TUBES LEFT COILED AND STORED IN SPLICE ENCLOSURE
3. EDGE SWITCH CONFIGURATIONS ARE GENERIC. CONTRACTOR IS RESPONSIBLE FOR DETERMINING/ENSURING THE PROPER TERMINATIONS.

ATKINS 1616 EAST MILLBROOK ROAD, SUITE 310
RALEIGH, NORTH CAROLINA 27609
(919) 876-6888 NCBEES #F-0326

Prepared for the Offices of:
Transportation Mobility and Safety Division
STATE OF NORTH CAROLINA DEPARTMENT OF TRANSPORTATION
Intelligent Transportation Systems
750 Greenfield Parkway, Garner, NC 27529

Winston-Salem Signal System
Fiber-Optic
Splicing Details
Phase A

Division 09 Forsyth County Winston-Salem

PLAN DATE: January 2013	REVIEWED BY: HAB		
PREPARED BY: BJS	REVIEWED BY: JTB		
SCALE	REVISIONS	INIT.	DATE
N.T.S.			

SEAL
NORTH CAROLINA PROFESSIONAL SEAL 19962 ENGINEER HENRY ALFRED BADGETT, III

SIGNATURE H. Alfred Badgett DATE 1/11/13

CADD Filename: FS-01.dgn

09-JAN-2013 14:07
O:\Transportation\Traffic\Curr\10002712 Winston Salem Sig Sys\Comms and ITS\Splice Diagrams\Phase A\FS-01.dgn
12054

PROJECT REFERENCE NO.	SHEET NO.
C-5224A	FS-02

SPLICE ENCLOSURE NO.

13-2

SEE: CL A-005

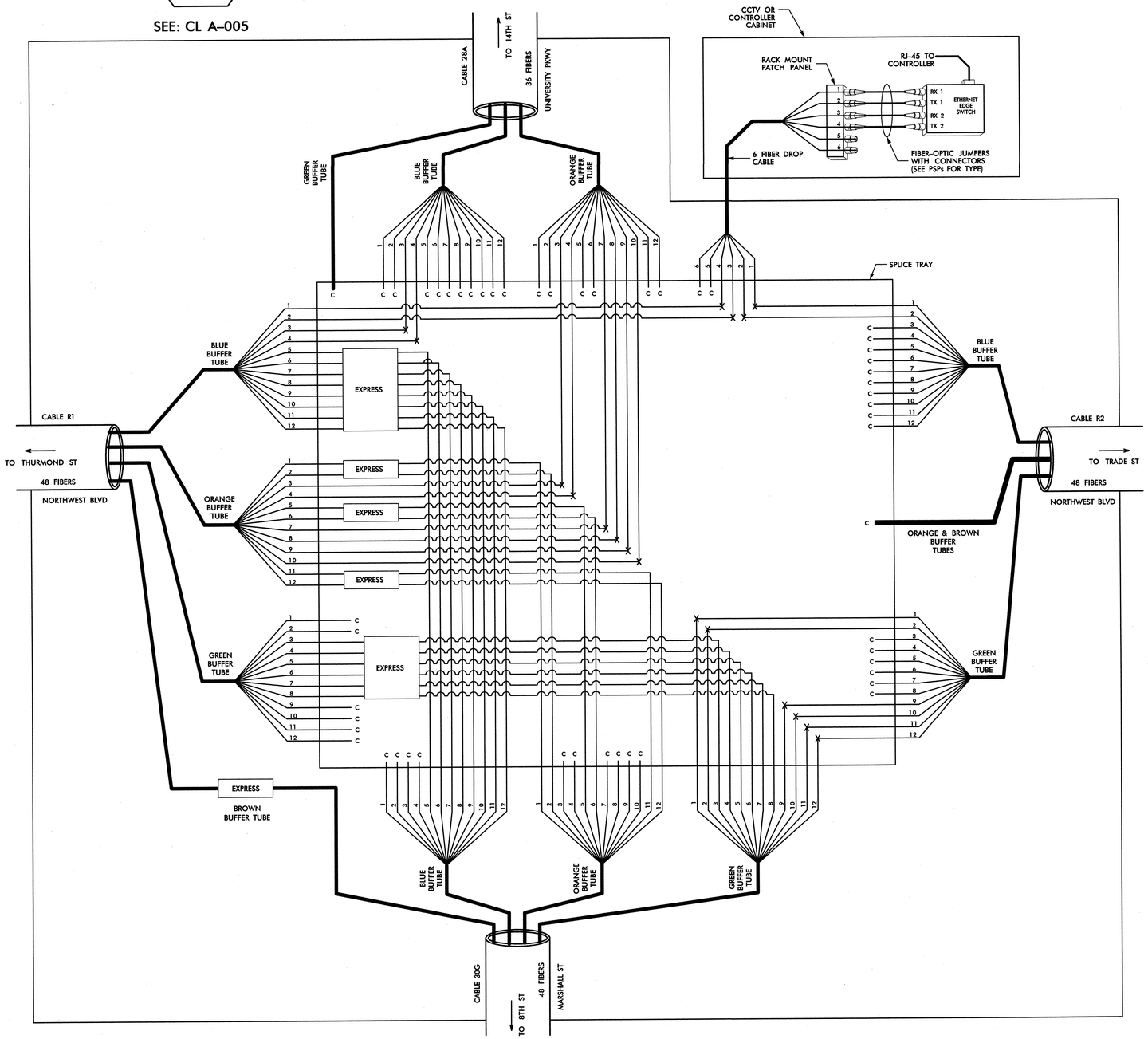

LEGEND

COLOR CODE TIA/EIA 598-B	
(1) BLUE	(7) RED
(2) ORANGE	(8) BLACK
(3) GREEN	(9) YELLOW
(4) BROWN	(10) VIOLET
(5) SLATE	(11) ROSE
(6) WHITE	(12) AQUA

X = FUSION SPLICE INDIVIDUAL FIBER

C = CAP AND SEAL

EXPRESS = EXPRESS FIBERS THROUGH WITHOUT CUTTING

BUFFER SPLICE = SPLICE ALL FIBERS IN BUFFER TUBE COLOR TO COLOR

NOTES

1. UNUSED FIBERS LEFT COILED AND STORED IN SPLICE TRAY
2. UNUSED BUFFER TUBES LEFT COILED AND STORED IN SPLICE ENCLOSURE
3. EDGE SWITCH CONFIGURATIONS ARE GENERIC. CONTRACTOR IS RESPONSIBLE FOR DETERMINING/ENSURING THE PROPER TERMINATIONS.

ATKINS 1616 EAST MILLBROOK ROAD, SUITE 310
RALEIGH, NORTH CAROLINA 27609
(919) 876-6888 NCBEES #F-0326

Prepared for the Offices of: Transportation Mobility and Safety Division, Intelligent Transportation Systems, STATE OF NORTH CAROLINA DEPARTMENT OF TRANSPORTATION
750 Greenfield Parkway, Garner, NC 27529

Winston-Salem Signal System
Fiber-Optic
Splicing Details
Phase A

Division 09 Forsyth County Winston-Salem

PLAN DATE:	January 2013	REVIEWED BY:	HAB
PREPARED BY:	BJS	REVIEWED BY:	JTB

SCALE	REVISIONS	INIT.	DATE
N.T.S.			

SEAL

NORTH CAROLINA PROFESSIONAL SEAL 19962 ENGINEER HENRY ALFRED BADGETT, III

SIGNATURE DATE 1/11/13

CADD Filename: FS-02.dgn

09-JAN-2013 14:15
U:\Transportation\Traffic\Curr\100022712 Winston Salem Sig Sys\Comms and ITS\Splice Diagrams\Phase A\FS-02.dgn
12054

PROJECT REFERENCE NO.	SHEET NO.
C-5224A	FS-03

HUB A SPLICE NO.

13-3

SEE: CL A-002

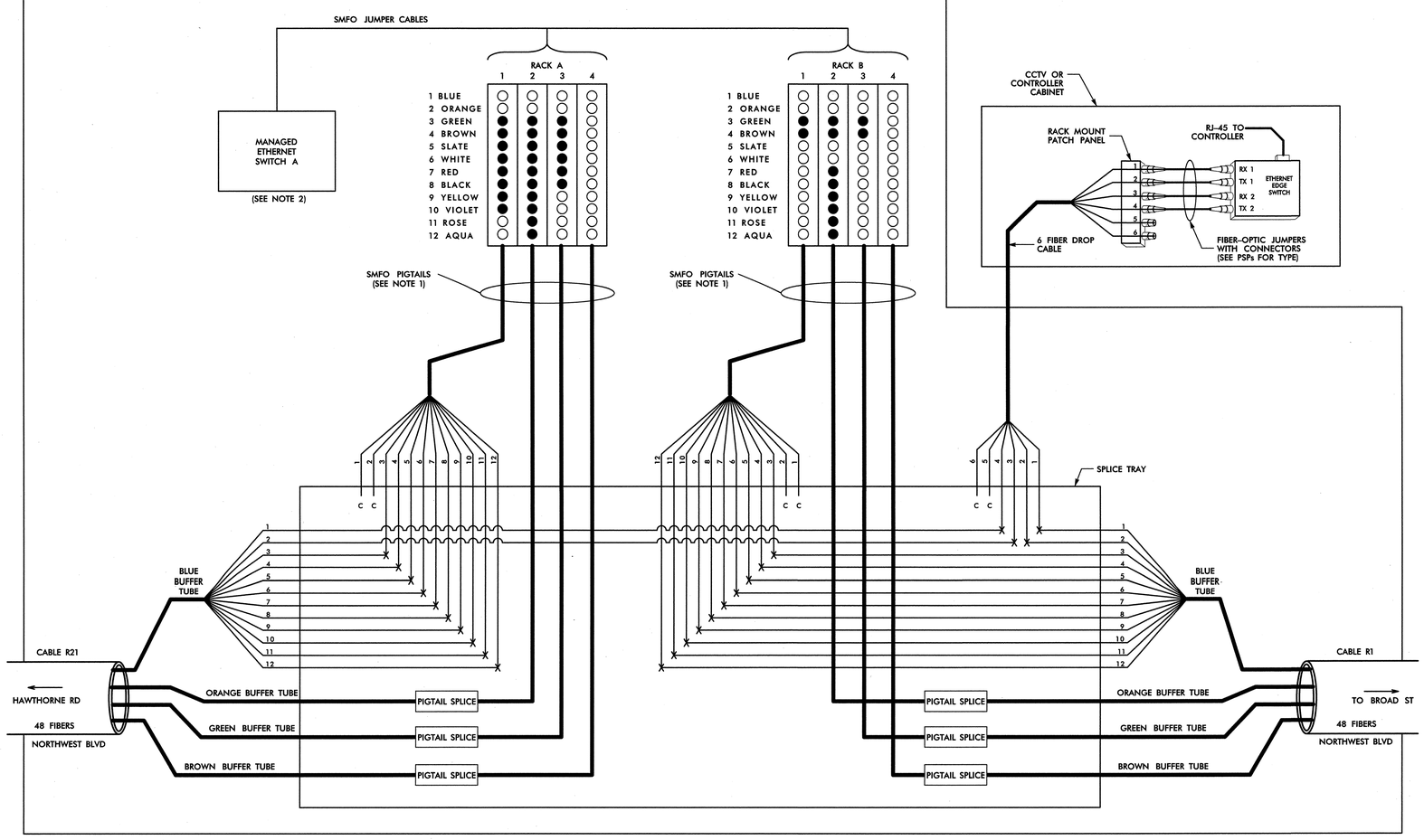

RACK A

SLOT 1		
1 BLUE	DARK	
2 ORANGE	DARK	
3 GREEN	RING	15 TX
4 BROWN	RING	15 RX
5 SLATE	RING	17 TX
6 WHITE	RING	17 RX
7 RED	RING	16 TX
8 BLACK	RING	16 RX
9 YELLOW	RING	14 TX
10 VIOLET	RING	14 RX
11 ROSE	DARK	
12 AQUA	DARK	
SLOT 2		
1 BLUE	DARK	
2 ORANGE	DARK	
3 GREEN	RING	8 TX
4 BROWN	RING	8 RX
5 SLATE	RING	9 TX
6 WHITE	RING	9 RX
7 RED	RING	10 TX
8 BLACK	RING	10 RX
9 YELLOW	RING	11 TX
10 VIOLET	RING	11 RX
11 ROSE	RING	12 TX
12 AQUA	RING	12 RX
SLOT 3		
1 BLUE	DARK	
2 ORANGE	DARK	
3 GREEN	RING	RED 2 TX
4 BROWN	RING	RED 2 RX
5 SLATE	RING	W1 TX
6 WHITE	RING	W1 RX
7 RED	RING	W2 TX
8 BLACK	RING	W2 RX
9 YELLOW	DARK	
10 VIOLET	DARK	
11 ROSE	DARK	
12 AQUA	DARK	
SLOT 4		
1 BLUE	DARK	
2 ORANGE	DARK	
3 GREEN	DARK	
4 BROWN	DARK	
5 SLATE	DARK	
6 WHITE	DARK	
7 RED	DARK	
8 BLACK	DARK	
9 YELLOW	DARK	
10 VIOLET	DARK	
11 ROSE	DARK	
12 AQUA	DARK	

RACK B

SLOT 1		
1 BLUE	DARK	
2 ORANGE	DARK	
3 GREEN	RING	2 TX
4 BROWN	RING	2 RX
5 SLATE	DARK	
6 WHITE	DARK	
7 RED	DARK	
8 BLACK	DARK	
9 YELLOW	DARK	
10 VIOLET	DARK	
11 ROSE	DARK	
12 AQUA	DARK	
SLOT 2		
1 BLUE	DARK	
2 ORANGE	DARK	
3 GREEN	RING	28 TX
4 BROWN	RING	28 RX
5 SLATE	DARK	
6 WHITE	DARK	
7 RED	RING	31 TX
8 BLACK	RING	31 RX
9 YELLOW	RING	25 TX
10 VIOLET	RING	25 RX
11 ROSE	RING	30 TX
12 AQUA	RING	30 RX
SLOT 3		
1 BLUE	DARK	
2 ORANGE	DARK	
3 GREEN	RING	RED 2 RX
4 BROWN	RING	RED 2 TX
5 SLATE	DARK	
6 WHITE	DARK	
7 RED	DARK	
8 BLACK	DARK	
9 YELLOW	DARK	
10 VIOLET	DARK	
11 ROSE	DARK	
12 AQUA	DARK	
SLOT 4		
1 BLUE	DARK	
2 ORANGE	DARK	
3 GREEN	DARK	
4 BROWN	DARK	
5 SLATE	DARK	
6 WHITE	DARK	
7 RED	DARK	
8 BLACK	DARK	
9 YELLOW	DARK	
10 VIOLET	DARK	
11 ROSE	DARK	
12 AQUA	DARK	

NOTES:

1. SPLICE SMFO PIGTAILS TO BUFFER TUBES COLOR TO COLOR.
2. INSTALL SMFO JUMPER CABLES FROM PORTS DENOTED BY FILLED CIRCLES IN RACKS TO MANAGED ETHERNET SWITCH.

LEGEND

COLOR CODE TIA/EIA 598-B

(1) BLUE	(7) RED
(2) ORANGE	(8) BLACK
(3) GREEN	(9) YELLOW
(4) BROWN	(10) VIOLET
(5) SLATE	(11) ROSE
(6) WHITE	(12) AQUA

X = FUSION SPLICE INDIVIDUAL FIBER

C = CAP AND SEAL

EXPRESS = EXPRESS FIBERS THROUGH WITHOUT CUTTING

BUFFER SPLICE = SPLICE ALL FIBERS IN BUFFER TUBE COLOR TO COLOR

NOTES

1. UNUSED FIBERS LEFT COILED AND STORED IN SPLICE TRAY
2. UNUSED BUFFER TUBES LEFT COILED AND STORED IN SPLICE ENCLOSURE
3. EDGE SWITCH CONFIGURATIONS ARE GENERIC. CONTRACTOR IS RESPONSIBLE FOR DETERMINING/ENSURING THE PROPER TERMINATIONS.

ATKINS 1616 EAST MILLBROOK ROAD, SUITE 310
RALEIGH, NORTH CAROLINA 27609
(919) 876-6888 NCBEES #F-0326

Prepared for the Offices of:
Transportation Mobility and Safety Division
STATE OF NORTH CAROLINA DEPARTMENT OF TRANSPORTATION
Intelligent Transportation Systems
750 Greenfield Parkway, Garner, NC 27529

Winston-Salem Signal System Fiber-Optic Splicing Details Phase A

Division 09 Forsyth County Winston-Salem

PLAN DATE:	January 2013	REVIEWED BY:	HAB
PREPARED BY:	BJS	REVIEWED BY:	JTB

SCALE	REVISIONS	INIT.	DATE
N.T.S.			

SEAL

NORTH CAROLINA PROFESSIONAL SEAL 19962 ENGINEER HENRY ALFRED BADGETT III

H. Alfred Badgett 1/11/13
SIGNATURE DATE

CADD Filename: FS-03.dgn

09-JAN-2013 14:15
D:\Transportation\Traffic\Curr\I00022712 Winston Salem Sig Sys\Comms and ITS\Splice Diagrams\Phase A\FS-03.dgn
12054

PROJECT REFERENCE NO.	SHEET NO.
C-5224A	FS-04

SPLICE ENCLOSURE NO.

13-4

SEE: CL A-014

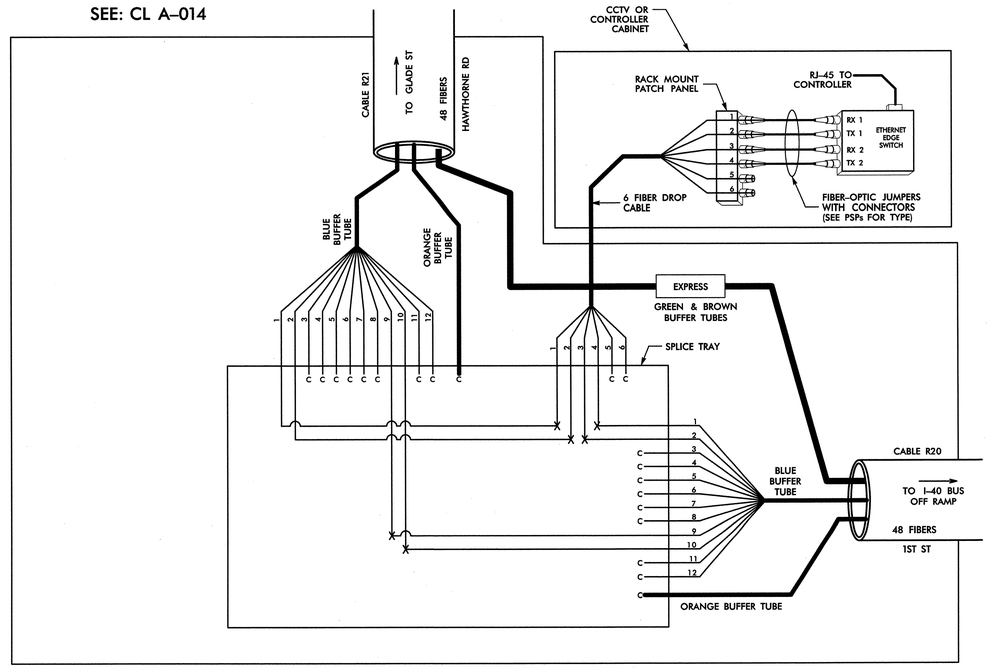

LEGEND

COLOR CODE TIA/EIA 598-B

(1) BLUE	(7) RED
(2) ORANGE	(8) BLACK
(3) GREEN	(9) YELLOW
(4) BROWN	(10) VIOLET
(5) SLATE	(11) ROSE
(6) WHITE	(12) AQUA

X = FUSION SPLICE INDIVIDUAL FIBER

C = CAP AND SEAL

EXPRESS = EXPRESS FIBERS THROUGH WITHOUT CUTTING

BUFFER SPLICE = SPLICE ALL FIBERS IN BUFFER TUBE COLOR TO COLOR

NOTES

1. UNUSED FIBERS LEFT COILED AND STORED IN SPLICE TRAY
2. UNUSED BUFFER TUBES LEFT COILED AND STORED IN SPLICE ENCLOSURE
3. EDGE SWITCH CONFIGURATIONS ARE GENERIC. CONTRACTOR IS RESPONSIBLE FOR DETERMINING/ENSURING THE PROPER TERMINATIONS.

ATKINS 1616 EAST MILLBROOK ROAD, SUITE 310
RALEIGH, NORTH CAROLINA 27609
(919) 876-6888 NCBEES #F-0326

Prepared for the Offices of:
Transportation Mobility and Safety Division
STATE OF NORTH CAROLINA DEPARTMENT OF TRANSPORTATION
Intelligent Transportation Systems
750 Greenfield Parkway, Garner, NC 27529

Winston-Salem Signal System Fiber-Optic Splicing Details Phase A

Division 09 Forsyth County Winston-Salem

PLAN DATE: January 2013	REVIEWED BY: HAB
PREPARED BY: BJS	REVIEWED BY: JTB

SCALE	REVISIONS	INIT.	DATE
N.T.S.			

SEAL

NORTH CAROLINA PROFESSIONAL SEAL 19962 ENGINEER HENRY ALFRED BADGETT, III

SIGNATURE DATE

CADD Filename: FS-04.dgn

09-JAN-2013 14:15
D:\Transportation\Traffic\Curr\00022712 Winston Salem Sig Sys\Comms and ITS\Splice Diagrams\Phase A\FS-04.dgn
12054

PROJECT REFERENCE NO.	SHEET NO.
C-5224A	FS-05

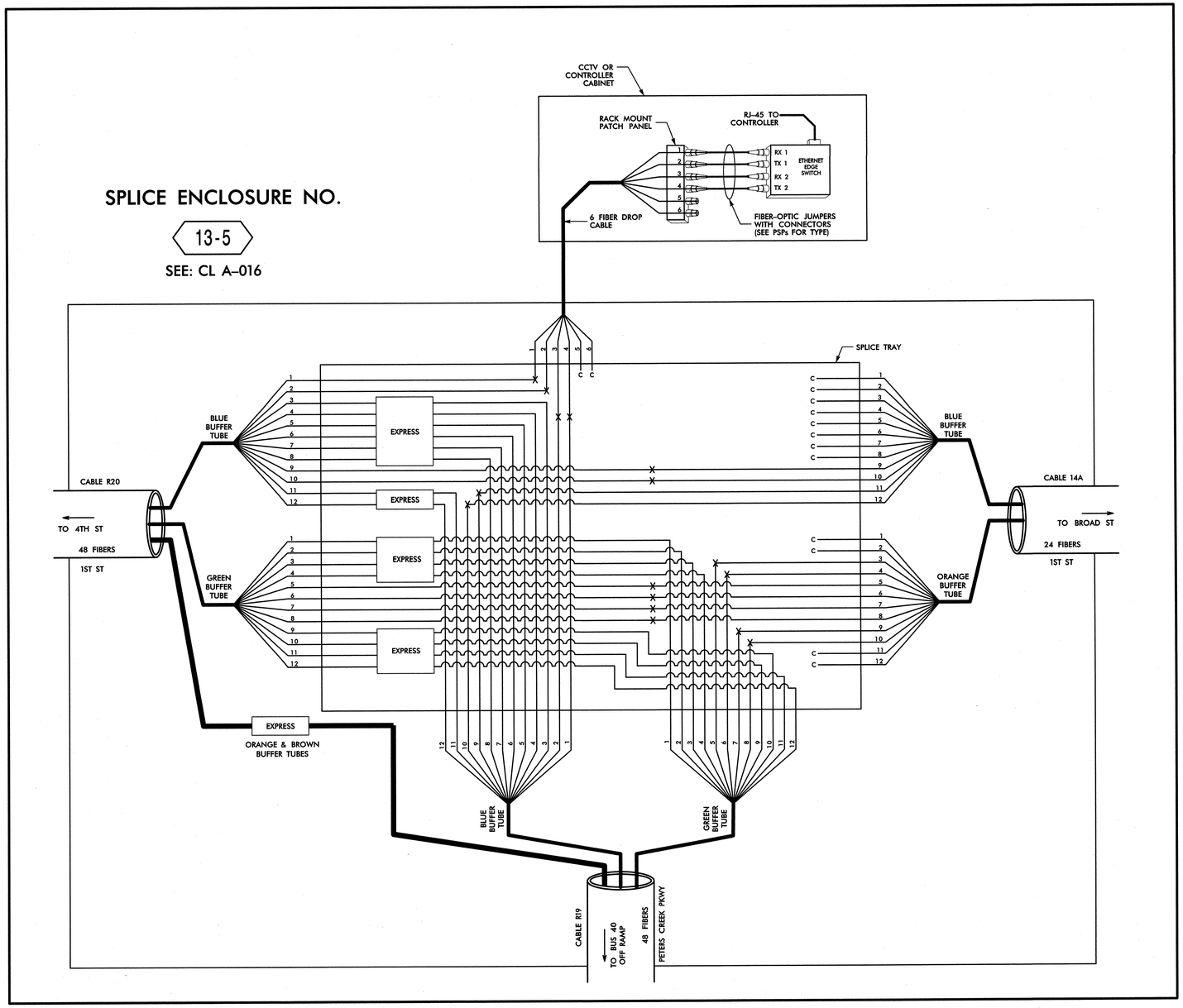

LEGEND

COLOR CODE TIA/EIA 598-B	
(1) BLUE	(7) RED
(2) ORANGE	(8) BLACK
(3) GREEN	(9) YELLOW
(4) BROWN	(10) VIOLET
(5) SLATE	(11) ROSE
(6) WHITE	(12) AQUA

X = FUSION SPLICE INDIVIDUAL FIBER

C = CAP AND SEAL

EXPRESS = EXPRESS FIBERS THROUGH WITHOUT CUTTING

BUFFER SPLICE = SPLICE ALL FIBERS IN BUFFER TUBE COLOR TO COLOR

NOTES

1. UNUSED FIBERS LEFT COILED AND STORED IN SPLICE TRAY
2. UNUSED BUFFER TUBES LEFT COILED AND STORED IN SPLICE ENCLOSURE
3. EDGE SWITCH CONFIGURATIONS ARE GENERIC. CONTRACTOR IS RESPONSIBLE FOR DETERMINING/ENSURING THE PROPER TERMINATIONS.

ATKINS 1616 EAST MILLBROOK ROAD, SUITE 310
RALEIGH, NORTH CAROLINA 27609
(919) 876-6888 NCBEES #F-0326

Prepared for the Offices of:
Transportation Mobility and Safety Division
STATE OF NORTH CAROLINA DEPARTMENT OF TRANSPORTATION
Intelligent Transportation Systems
750 Greenfield Parkway, Garner, NC 27529

Winston-Salem Signal System Fiber-Optic Splicing Details Phase A

Division 09 Forsyth County Winston-Salem

PLAN DATE: January 2013	REVIEWED BY: HAB
PREPARED BY: BJS	REVIEWED BY: JTB

SCALE: N.T.S.

REVISIONS | INIT. | DATE

SEAL: NORTH CAROLINA PROFESSIONAL SEAL 19962 ENGINEER HENRY ALFRED BADGETT, III

SIGNATURE H Alfred Badgett DATE 11/6/13

CADD Filename: FS-05.dgn

09-JAN-2013 14:15
O:\Transportation\Traffic\Cur\10022712 Winston Salem Sig Sys\Comms and ITS\Splice Diagrams\Phase A\FS-05.dgn
12094

PROJECT REFERENCE NO.	SHEET NO.
C-5224A	FS-06

HUB D
SPLICE NO.
13-6

SEE: CL A-018

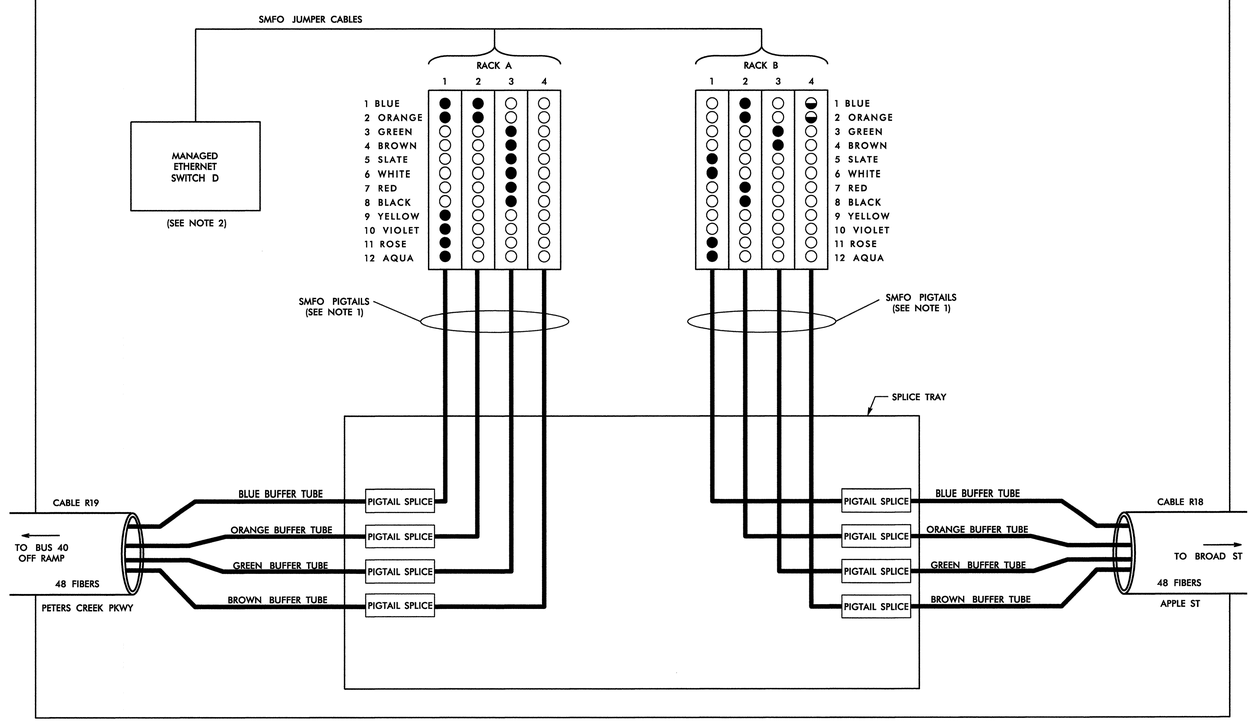

RACK A

SLOT 1

1	BLUE	RING 13 RX
2	ORANGE	RING 13 TX
3	GREEN	DARK
4	BROWN	DARK
5	SLATE	DARK
6	WHITE	DARK
7	RED	DARK
8	BLACK	DARK
9	YELLOW	RING 14 RX
10	VIOLET	RING 14 TX
11	ROSE	RING 6 RX
12	AQUA	RING 6 TX

SLOT 2

1	BLUE	RING 7 RX
2	ORANGE	RING 7 TX
3	GREEN	DARK
4	BROWN	DARK
5	SLATE	DARK
6	WHITE	DARK
7	RED	DARK
8	BLACK	DARK
9	YELLOW	DARK
10	VIOLET	DARK
11	ROSE	DARK
12	AQUA	DARK

SLOT 3

1	BLUE	DARK
2	ORANGE	DARK
3	GREEN	RING RED2 RX
4	BROWN	RING RED2 TX
5	SLATE	RING W1 RX
6	WHITE	RING W1 TX
7	RED	RING W2 RX
8	BLACK	RING W2 TX
9	YELLOW	DARK
10	VIOLET	DARK
11	ROSE	DARK
12	AQUA	DARK

SLOT 4

1	BLUE	DARK
2	ORANGE	DARK
3	GREEN	DARK
4	BROWN	DARK
5	SLATE	DARK
6	WHITE	DARK
7	RED	DARK
8	BLACK	DARK
9	YELLOW	DARK
10	VIOLET	DARK
11	ROSE	DARK
12	AQUA	DARK

RACK B

SLOT 1

1	BLUE	DARK
2	ORANGE	DARK
3	GREEN	DARK
4	BROWN	DARK
5	SLATE	RING 17 RX
6	WHITE	RING 17 TX
7	RED	DARK
8	BLACK	DARK
9	YELLOW	DARK
10	VIOLET	DARK
11	ROSE	RING 19 RX
12	AQUA	RING 19 TX

SLOT 2

1	BLUE	RING 20 RX
2	ORANGE	RING 20 TX
3	GREEN	DARK
4	BROWN	DARK
5	SLATE	DARK
6	WHITE	DARK
7	RED	RING 21 RX
8	BLACK	RING 21 TX
9	YELLOW	DARK
10	VIOLET	DARK
11	ROSE	DARK
12	AQUA	DARK

SLOT 3

1	BLUE	DARK
2	ORANGE	DARK
3	GREEN	RING RED2 TX
4	BROWN	RING RED2 RX
5	SLATE	DARK
6	WHITE	DARK
7	RED	DARK
8	BLACK	DARK
9	YELLOW	DARK
10	VIOLET	DARK
11	ROSE	DARK
12	AQUA	DARK

SLOT 4

1	BLUE	RING 33 RX *
2	ORANGE	RING 33 TX *
3	GREEN	RING
4	BROWN	RING
5	SLATE	DARK
6	WHITE	DARK
7	RED	DARK
8	BLACK	DARK
9	YELLOW	DARK
10	VIOLET	DARK
11	ROSE	DARK
12	AQUA	DARK

* BY OTHERS (SEE NOTE 4)

NOTES:

1. SPLICE SMFO PIGTAILS TO BUFFER TUBES COLOR TO COLOR.
2. INSTALL SMFO JUMPER CABLES FROM PORTS DENOTED BY FILLED CIRCLES IN RACKS TO MANAGED ETHERNET SWITCH.
3. HALF-FILLED CIRCLES IN RACKS INDICATE FUTURE USE BY OTHERS (U-2925).
4. RING 33 SHALL BE THE FUTURE TRAFFIC SIGNALS ON U-2925.

LEGEND

COLOR CODE TIA/EIA 598-B

(1) BLUE	(7) RED
(2) ORANGE	(8) BLACK
(3) GREEN	(9) YELLOW
(4) BROWN	(10) VIOLET
(5) SLATE	(11) ROSE
(6) WHITE	(12) AQUA

X = FUSION SPLICE INDIVIDUAL FIBER

C = CAP AND SEAL

EXPRESS = EXPRESS FIBERS THROUGH WITHOUT CUTTING

BUFFER SPLICE = SPLICE ALL FIBERS IN BUFFER TUBE COLOR TO COLOR

NOTES

1. UNUSED FIBERS LEFT COILED AND STORED IN SPLICE TRAY
2. UNUSED BUFFER TUBES LEFT COILED AND STORED IN SPLICE ENCLOSURE
3. EDGE SWITCH CONFIGURATIONS ARE GENERIC. CONTRACTOR IS RESPONSIBLE FOR DETERMINING/ENSURING THE PROPER TERMINATIONS.

ATKINS 1616 EAST MILLBROOK ROAD, SUITE 310
RALEIGH, NORTH CAROLINA 27609
(919) 876-6888 NCBEES #F-0326

Prepared for the Offices of:
Transportation Mobility and Safety Division
STATE OF NORTH CAROLINA DEPARTMENT OF TRANSPORTATION
Intelligent Transportation Systems
750 Greenfield Parkway, Garner, NC 27529

Winston-Salem Signal System
Fiber-Optic
Splicing Details
Phase A

Division 09 Forsyth County Winston-Salem

PLAN DATE:	January 2013	REVIEWED BY:	HAB
PREPARED BY:	BJS	REVIEWED BY:	JTB

SCALE: N.T.S.

REVISIONS	INIT.	DATE

SEAL: NORTH CAROLINA PROFESSIONAL SEAL 19362 ENGINEER HENRY ALFRED BADGETT, III

SIGNATURE H. Alfred Badgett DATE 3/11/13

CADD Filename: FS-06.dgn

26-MAR-2013 09:48
D:\Transportation\Traffic\Curr\10002712 Winston Salem Sig Sys\Comms and ITS\Splice Diagrams\Phase A\FS-06.dgn
13453

PROJECT REFERENCE NO.	SHEET NO.
C-5224A	FS-06A

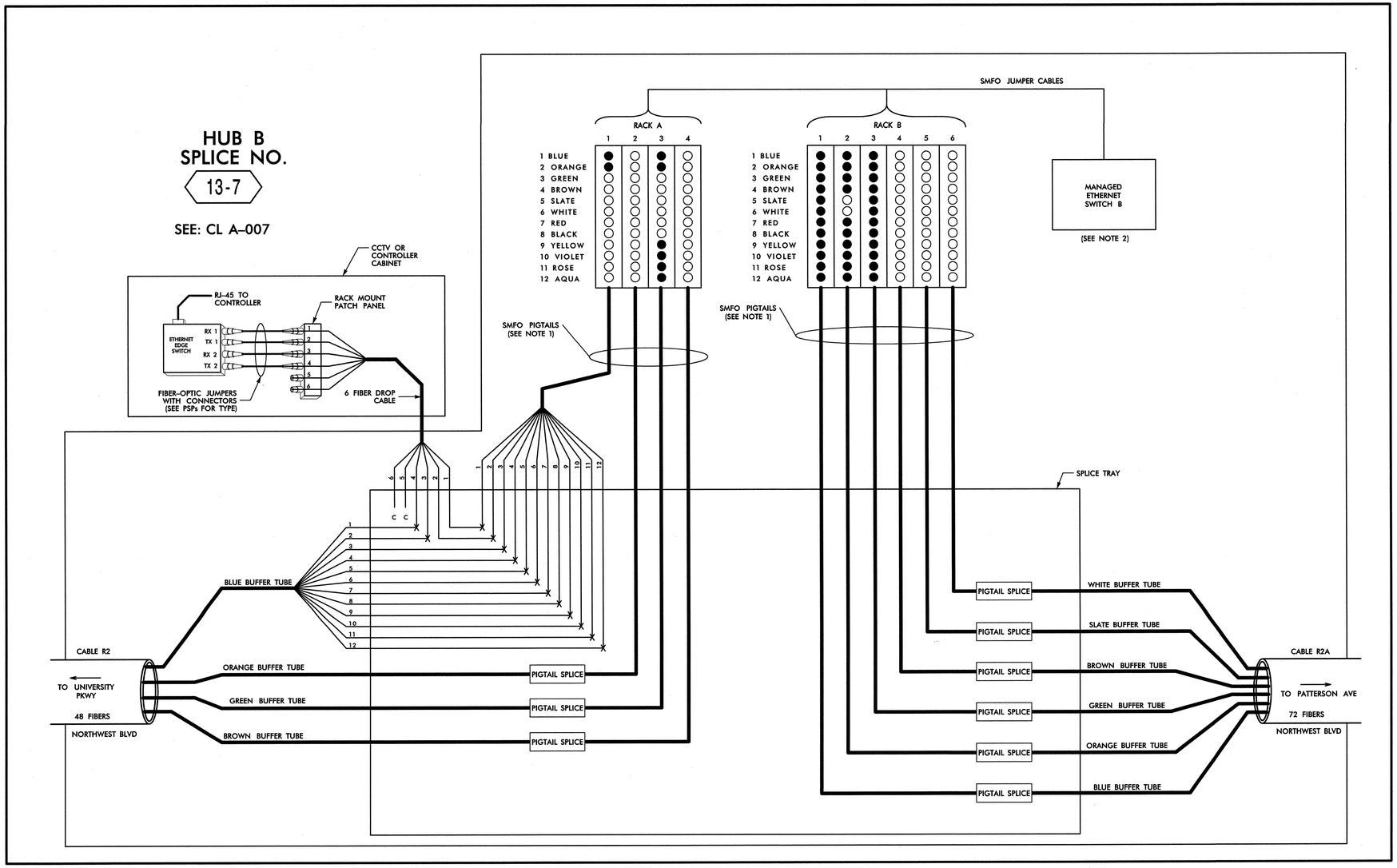

NOTES:

1. SPLICE SMFO PIGTAILS TO BUFFER TUBES COLOR TO COLOR.
2. INSTALL SMFO JUMPER CABLES FROM PORTS DENOTED BY FILLED CIRCLES IN RACKS TO MANAGED ETHERNET SWITCH.

RACK A

SLOT 1

1 BLUE	RING	13 TX
2 ORANGE	RING	13 RX
3 GREEN	DARK	
4 BROWN	DARK	
5 SLATE	DARK	
6 WHITE	DARK	
7 RED	DARK	
8 BLACK	DARK	
9 YELLOW	DARK	
10 VIOLET	DARK	
11 ROSE	DARK	
12 AQUA	DARK	

SLOT 2

1 BLUE	DARK	
2 ORANGE	DARK	
3 GREEN	DARK	
4 BROWN	DARK	
5 SLATE	DARK	
6 WHITE	DARK	
7 RED	DARK	
8 BLACK	DARK	
9 YELLOW	DARK	
10 VIOLET	DARK	
11 ROSE	DARK	
12 AQUA	DARK	

SLOT 3

1 BLUE	RING	RED1 RX
2 ORANGE	RING	RED1 TX
3 GREEN	DARK	
4 BROWN	DARK	
5 SLATE	DARK	
6 WHITE	DARK	
7 RED	DARK	
8 BLACK	DARK	
9 YELLOW	RING	W3 TX
10 VIOLET	RING	W3 RX
11 ROSE	RING	W4 TX
12 AQUA	RING	W4 RX

SLOT 4

1 BLUE	DARK	
2 ORANGE	DARK	
3 GREEN	DARK	
4 BROWN	DARK	
5 SLATE	DARK	
6 WHITE	DARK	
7 RED	DARK	
8 BLACK	DARK	
9 YELLOW	DARK	
10 VIOLET	DARK	
11 ROSE	DARK	
12 AQUA	DARK	

RACK B

SLOT 1

1 BLUE	RING	1 RX
2 ORANGE	RING	1 TX
3 GREEN	RING	2 RX
4 BROWN	RING	2 TX
5 SLATE	RING	3 RX
6 WHITE	RING	3 TX
7 RED	RING	4 RX
8 BLACK	RING	4 TX
9 YELLOW	RING	5 RX
10 VIOLET	RING	5 TX
11 ROSE	RING	26 TX
12 AQUA	RING	26 RX

SLOT 2

1 BLUE	RING	27 TX
2 ORANGE	RING	27 RX
3 GREEN	RING	28 RX
4 BROWN	RING	28 TX
5 SLATE	DARK	
6 WHITE	DARK	
7 RED	RING	31 RX
8 BLACK	RING	31 TX
9 YELLOW	RING	25 RX
10 VIOLET	RING	25 TX
11 ROSE	RING	29 TX
12 AQUA	RING	29 RX

SLOT 3

1 BLUE	RING	RED1 TX
2 ORANGE	RING	RED1 RX
3 GREEN	RING	23 TX
4 BROWN	RING	23 RX
5 SLATE	RING	22 TX
6 WHITE	RING	22 RX
7 RED	RING	32 TX
8 BLACK	RING	32 RX
9 YELLOW	RING	24 TX
10 VIOLET	RING	24 RX
11 ROSE	RING	30 RX
12 AQUA	RING	30 TX

SLOT 4

1 BLUE	DARK	
2 ORANGE	DARK	
3 GREEN	DARK	
4 BROWN	DARK	
5 SLATE	DARK	
6 WHITE	DARK	
7 RED	DARK	
8 BLACK	DARK	
9 YELLOW	DARK	
10 VIOLET	DARK	
11 ROSE	DARK	
12 AQUA	DARK	

SLOT 5

1 BLUE	DARK	
2 ORANGE	DARK	
3 GREEN	DARK	
4 BROWN	DARK	
5 SLATE	DARK	
6 WHITE	DARK	
7 RED	DARK	
8 BLACK	DARK	
9 YELLOW	DARK	
10 VIOLET	DARK	
11 ROSE	DARK	
12 AQUA	DARK	

SLOT 6

1 BLUE	DARK	
2 ORANGE	DARK	
3 GREEN	DARK	
4 BROWN	DARK	
5 SLATE	DARK	
6 WHITE	DARK	
7 RED	DARK	
8 BLACK	DARK	
9 YELLOW	DARK	
10 VIOLET	DARK	
11 ROSE	DARK	
12 AQUA	DARK	

LEGEND

COLOR CODE TIA/EIA 598-B

(1) BLUE	(7) RED
(2) ORANGE	(8) BLACK
(3) GREEN	(9) YELLOW
(4) BROWN	(10) VIOLET
(5) SLATE	(11) ROSE
(6) WHITE	(12) AQUA

X = FUSION SPLICE INDIVIDUAL FIBER

C = CAP AND SEAL

EXPRESS = EXPRESS FIBERS THROUGH WITHOUT CUTTING

BUFFER SPLICE = SPLICE ALL FIBERS IN BUFFER TUBE COLOR TO COLOR

NOTES

1. UNUSED FIBERS LEFT COILED AND STORED IN SPLICE TRAY
2. UNUSED BUFFER TUBES LEFT COILED AND STORED IN SPLICE ENCLOSURE
3. EDGE SWITCH CONFIGURATIONS ARE GENERIC. CONTRACTOR IS RESPONSIBLE FOR DETERMINING/ENSURING THE PROPER TERMINATIONS.

ATKINS 1616 EAST MILLBROOK ROAD, SUITE 310
RALEIGH, NORTH CAROLINA 27609
(919) 876-6888 NCBEES #F-0326

Prepared for the Offices of:
Transportation Mobility and Safety Division
Department of Transportation
Intelligent Transportation Systems
750 Greenfield Parkway, Garner, NC 27529

SCALE: N.T.S.

Winston-Salem Signal System Fiber-Optic Splicing Details Phase A

Division 09 Forsyth County Winston-Salem

PLAN DATE:	January 2013	REVIEWED BY:	HAB
PREPARED BY:	BJS	REVIEWED BY:	JTB

REVISIONS	INIT.	DATE

SEAL

NORTH CAROLINA PROFESSIONAL SEAL 19962 ENGINEER HENRY ALFRED BADGETT III

SIGNATURE DATE

CADD Filename: FS-06A.dgn

28-JAN-2013 16:32
G:\Transportation\Traffic\Curr\100022712 Winston Salem Sig Sys\Comms and ITS\Splice Diagrams\Phase A\FS-06A.dgn
13833

PROJECT REFERENCE NO.	SHEET NO.
C-5224A	FS-07

SPLICE ENCLOSURE NO. 14-1

SEE: CL A-035

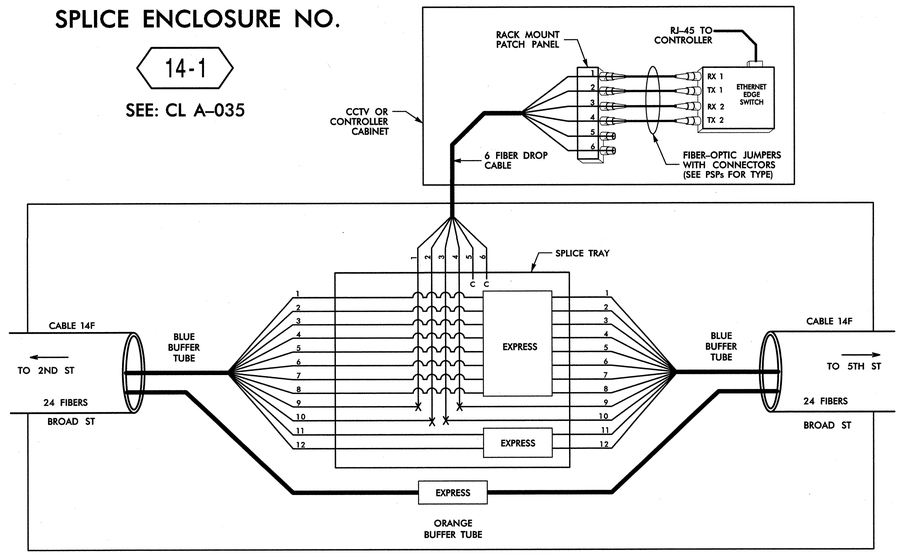

SPLICE ENCLOSURE NO. 14-2

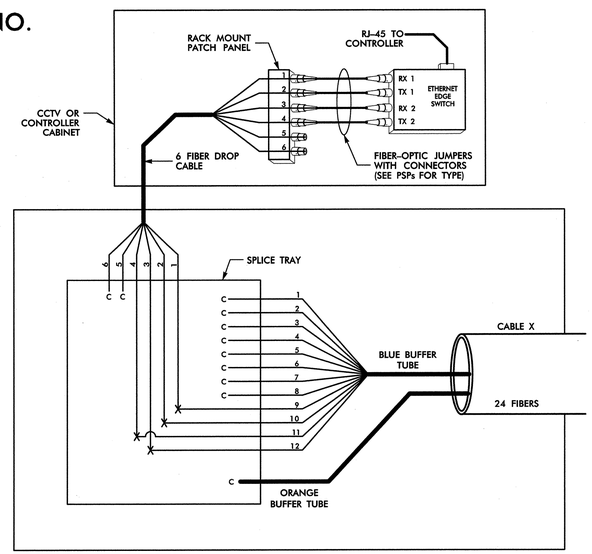

SPLICE ENCLOSURE NO. 14-3

SEE: CL A-034

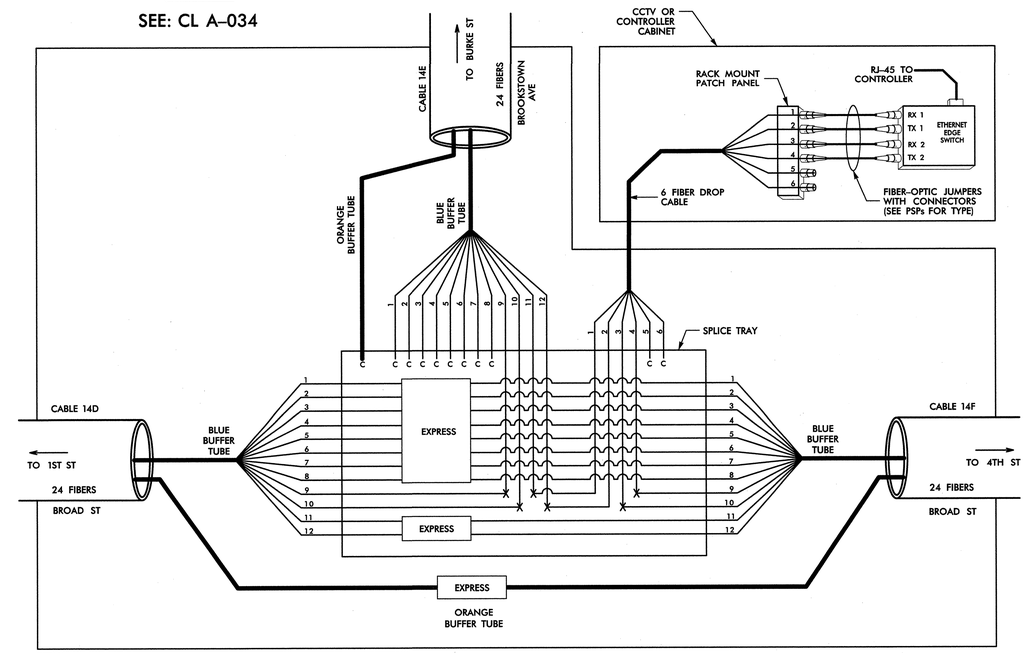

SPLICE ENCLOSURE NO. 14-2				
INTERSECTION NO.	CL SHEET	CABLE X		
		CABLE NO.	ALONG ROUTE	TO
C-175	CL A-036	14E	BROOKSTOWN AVE	BROAD ST
C-283	CL A-037	14G	5TH ST	BROAD ST

LEGEND

COLOR CODE TIA/EIA 598-B

(1) BLUE (2) ORANGE (3) GREEN (4) BROWN (5) SLATE (6) WHITE (7) RED (8) BLACK (9) YELLOW (10) VIOLET (11) ROSE (12) AQUA

X = FUSION SPLICE INDIVIDUAL FIBER

C = CAP AND SEAL

EXPRESS = EXPRESS FIBERS THROUGH WITHOUT CUTTING

BUFFER SPLICE = SPLICE ALL FIBERS IN BUFFER TUBE COLOR TO COLOR

NOTES

1. UNUSED FIBERS LEFT COILED AND STORED IN SPLICE TRAY
2. UNUSED BUFFER TUBES LEFT COILED AND STORED IN SPLICE ENCLOSURE
3. EDGE SWITCH CONFIGURATIONS ARE GENERIC. CONTRACTOR IS RESPONSIBLE FOR DETERMINING/ENSURING THE PROPER TERMINATIONS.

ATKINS 1616 EAST MILLBROOK ROAD, SUITE 310 RALEIGH, NORTH CAROLINA 27609 (919) 876-6888 NCBEES #F-0326

Prepared for the Offices of: Transportation Mobility and Safety Division, State of North Carolina, Department of Transportation, Intelligent Transportation Systems
750 Greenfield Parkway, Garner, NC 27529

Winston-Salem Signal System
Fiber-Optic
Splicing Details
Phase A

Division 09 Forsyth County Winston-Salem

PLAN DATE:	January 2013	REVIEWED BY:	HAB
PREPARED BY:	BJS	REVIEWED BY:	JTB

SCALE: N.T.S.

REVISIONS	INIT.	DATE

SEAL

NORTH CAROLINA PROFESSIONAL SEAL 19962 ENGINEER HENRY ALFRED BADGETT, III

H. Alfred Badgett 1/11/13
SIGNATURE DATE

CADD Filename: FS-07.dgn

09-JAN-2013 14:15
O:\Transportation\Traffic\Curr\100022712 Winston Salem Sig Sys\Comms and ITS\Splice Diagrams\Phase A\FS-07.dgn
12054

PROJECT REFERENCE NO.	SHEET NO.
C-5224A	FS-08

SPLICE ENCLOSURE NO.

14-4

SEE: CL A-030

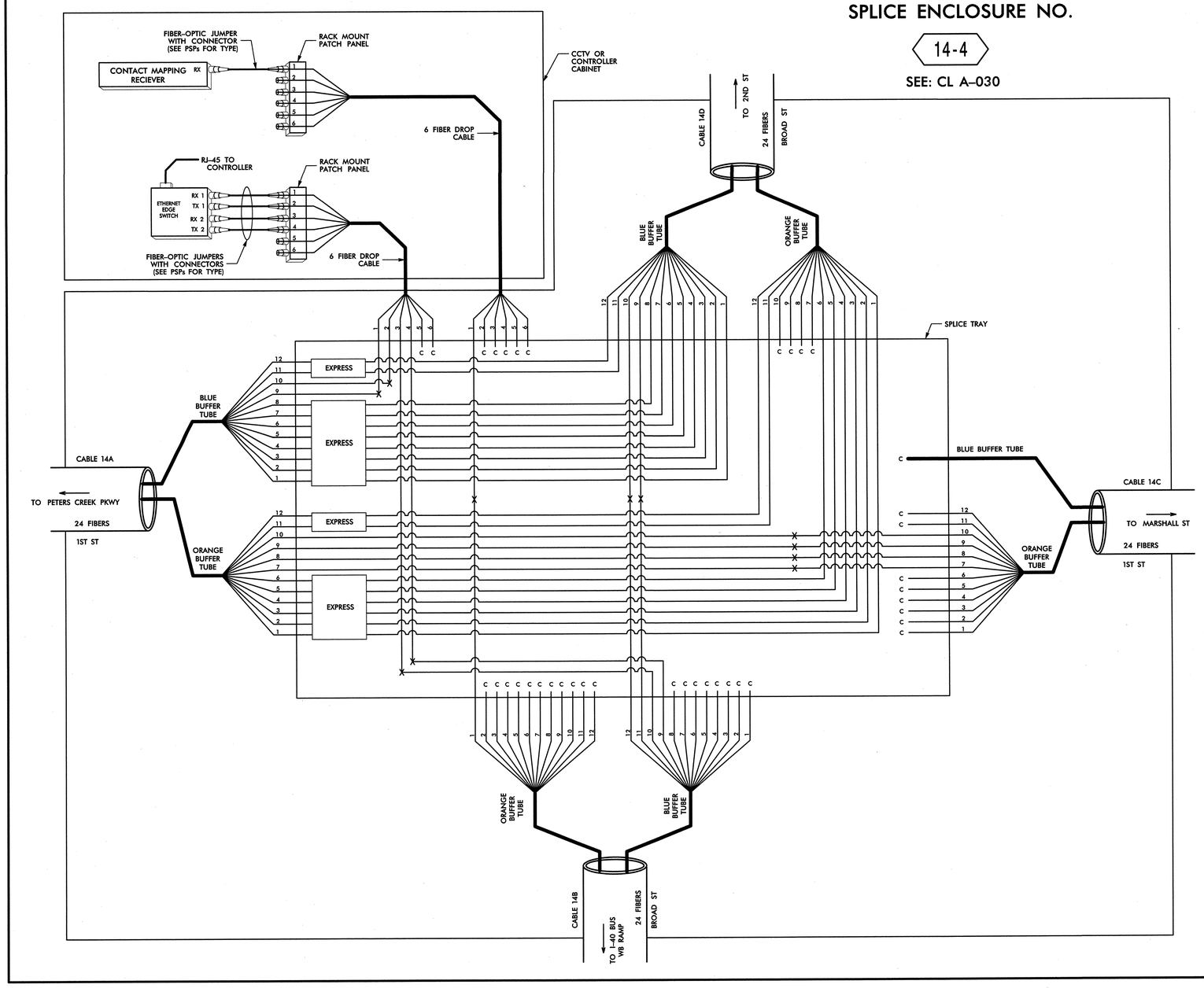

LEGEND

COLOR CODE TIA/EIA 598-B

(1) BLUE	(7) RED
(2) ORANGE	(8) BLACK
(3) GREEN	(9) YELLOW
(4) BROWN	(10) VIOLET
(5) SLATE	(11) ROSE
(6) WHITE	(12) AQUA

X = FUSION SPLICE INDIVIDUAL FIBER

C = CAP AND SEAL

EXPRESS = EXPRESS FIBERS THROUGH WITHOUT CUTTING

BUFFER SPLICE = SPLICE ALL FIBERS IN BUFFER TUBE COLOR TO COLOR

NOTES

1. UNUSED FIBERS LEFT COILED AND STORED IN SPLICE TRAY
2. UNUSED BUFFER TUBES LEFT COILED AND STORED IN SPLICE ENCLOSURE
3. EDGE SWITCH CONFIGURATIONS ARE GENERIC. CONTRACTOR IS RESPONSIBLE FOR DETERMINING/ENSURING THE PROPER TERMINATIONS.

ATKINS 1616 EAST MILLBROOK ROAD, SUITE 310
RALEIGH, NORTH CAROLINA 27609
(919) 876-6888 NCBEES #F-0326

Prepared for the Offices of:
Transportation Mobility and Safety Division
STATE OF NORTH CAROLINA
DEPARTMENT OF TRANSPORTATION
Intelligent Transportation Systems
750 Greenfield Parkway, Garner, NC 27529

SCALE: N.T.S.

Winston-Salem Signal System
Fiber-Optic
Splicing Details
Phase A

Division 09 Forsyth County Winston-Salem

PLAN DATE:	January 2013	REVIEWED BY:	HAB
PREPARED BY:	BJS	REVIEWED BY:	JTB

REVISIONS	INIT.	DATE

SEAL

NORTH CAROLINA PROFESSIONAL SEAL 19962 ENGINEER HENRY ALFRED BADGETT, III

SIGNATURE DATE 1/11/13

CADD Filename: FS-08.dgn

09-JAN-2013 14:15
D:\Transportation\Traffic\Curr\10022712 Winston Salem Sig Sys\Comms and ITS\Splice Diagrams\Phase A\FS-08.dgn
12054

PROJECT REFERENCE NO.	SHEET NO.
C-5224A	FS-09

SPLICE ENCLOSURE NO. 14-5

SEE: CL A-031

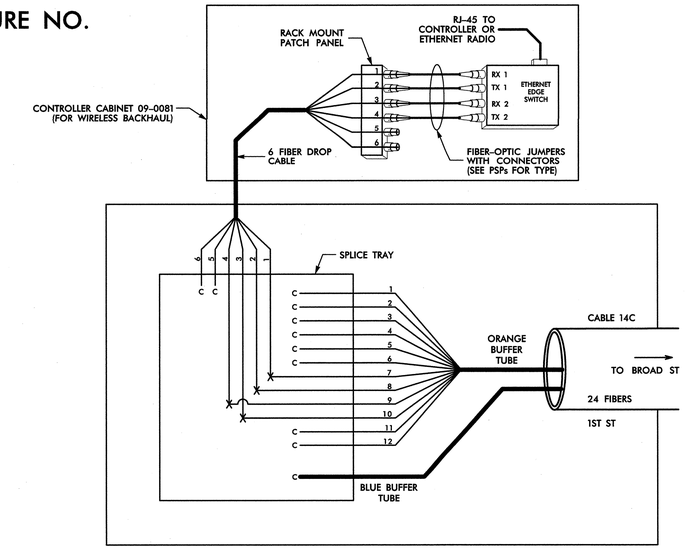

NOTE: ETHERNET EDGE SWITCH AT 09-0081 HAS RJ-45 CABLES TO BOTH CONTROLLER AND ETHERNET RADIO.

SPLICE ENCLOSURE NO. 14-6

SEE: CL A-035

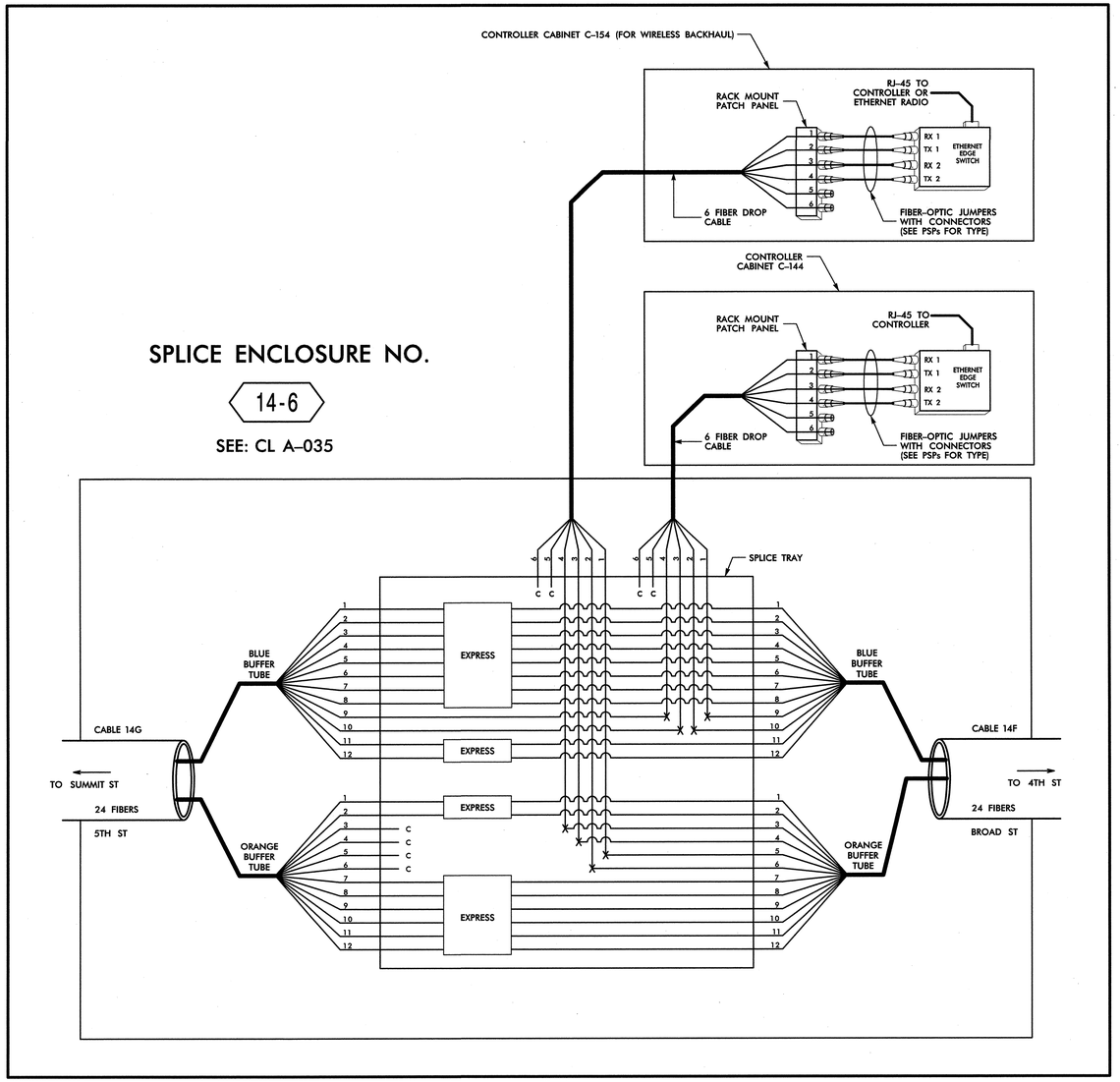

NOTE: ETHERNET EDGE SWITCH AT C-154 HAS RJ-45 CABLES TO BOTH CONTROLLER AND ETHERNET RADIO.

LEGEND

COLOR CODE TIA/EIA 598-B

(1) BLUE	(7) RED
(2) ORANGE	(8) BLACK
(3) GREEN	(9) YELLOW
(4) BROWN	(10) VIOLET
(5) SLATE	(11) ROSE
(6) WHITE	(12) AQUA

X = FUSION SPLICE INDIVIDUAL FIBER

C = CAP AND SEAL

EXPRESS = EXPRESS FIBERS THROUGH WITHOUT CUTTING

BUFFER SPLICE = SPLICE ALL FIBERS IN BUFFER TUBE COLOR TO COLOR

NOTES

1. UNUSED FIBERS LEFT COILED AND STORED IN SPLICE TRAY
2. UNUSED BUFFER TUBES LEFT COILED AND STORED IN SPLICE ENCLOSURE
3. EDGE SWITCH CONFIGURATIONS ARE GENERIC. CONTRACTOR IS RESPONSIBLE FOR DETERMINING/ENSURING THE PROPER TERMINATIONS.

ATKINS 1616 EAST MILLBROOK ROAD, SUITE 310
RALEIGH, NORTH CAROLINA 27609
(919) 876-6888 NCBEES #F-0326

Prepared for the Offices of: Transportation Mobility and Safety Division, STATE OF NORTH CAROLINA DEPARTMENT OF TRANSPORTATION, Intelligent Transportation Systems
750 Greenfield Parkway, Garner, NC 27529

Winston-Salem Signal System Fiber-Optic Splicing Details Phase A

Division 09 Forsyth County Winston-Salem

PLAN DATE:	January 2013	REVIEWED BY:	HAB
PREPARED BY:	BJS	REVIEWED BY:	JTB

SCALE: N.T.S.

REVISIONS	INIT.	DATE

SEAL: NORTH CAROLINA PROFESSIONAL SEAL 19962 ENGINEER HENRY ALFRED BADGETT III

SIGNATURE H. Alfred Badgett DATE 1/11/12

CADD Filename: FS-09.dgn

09-JAN-2013 14:15
01:\Transportation\Traffic\Curr\1100022712 Winston Salem Sig Sys\Comms and ITS\Splice Diagrams\Phase A\FS-09.dgn
12034

PROJECT REFERENCE NO.	SHEET NO.
C-5224A	FS-09A

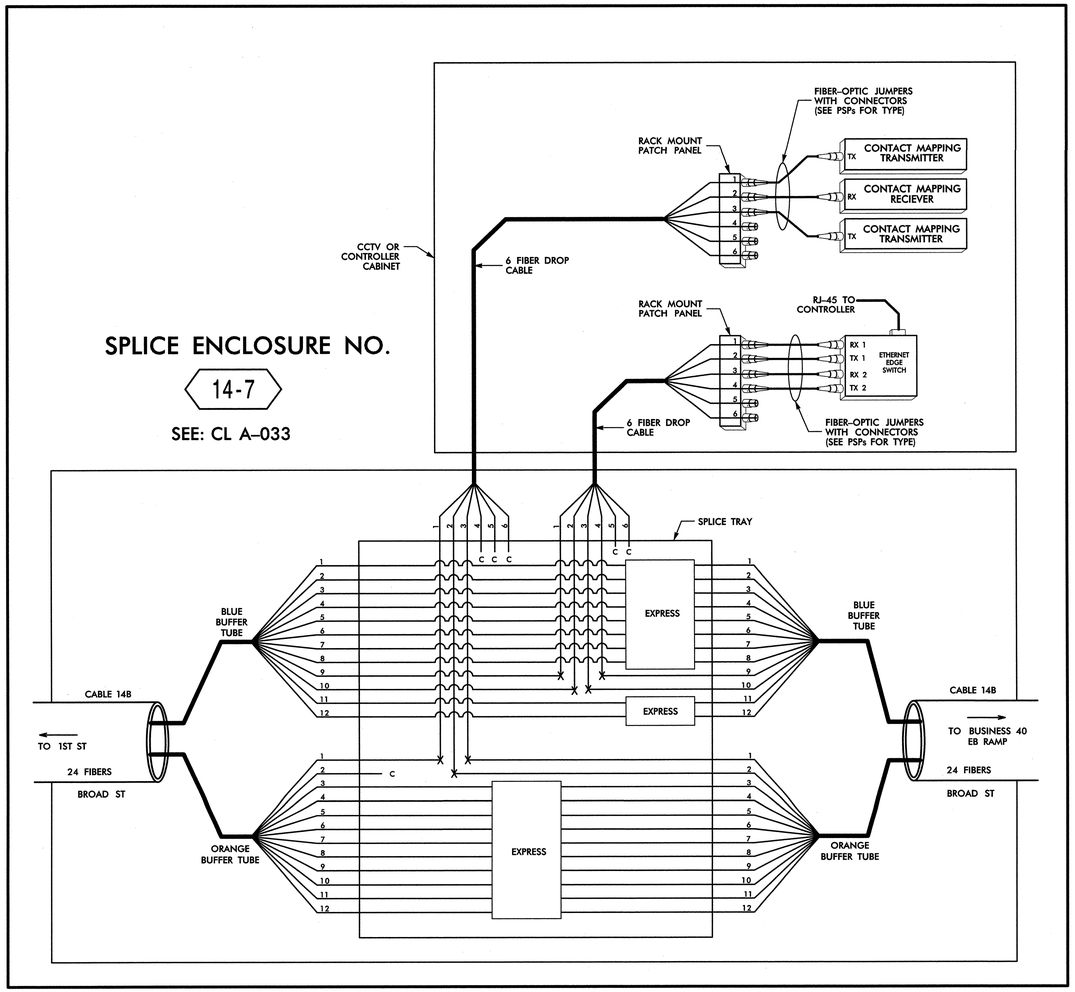

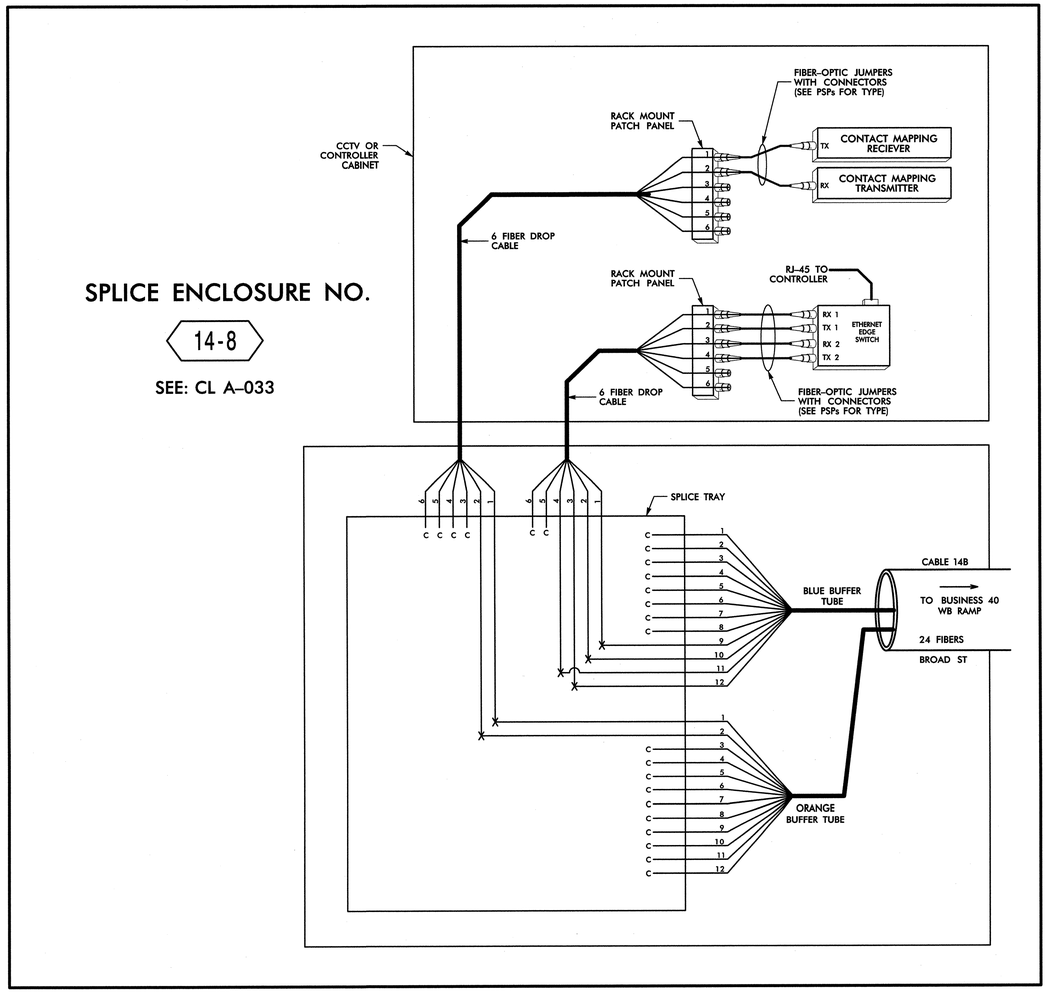

LEGEND

COLOR CODE TIA/EIA 598-B

(1) BLUE	(7) RED
(2) ORANGE	(8) BLACK
(3) GREEN	(9) YELLOW
(4) BROWN	(10) VIOLET
(5) SLATE	(11) ROSE
(6) WHITE	(12) AQUA

X = FUSION SPLICE INDIVIDUAL FIBER

C = CAP AND SEAL

EXPRESS = EXPRESS FIBERS THROUGH WITHOUT CUTTING

BUFFER SPLICE = SPLICE ALL FIBERS IN BUFFER TUBE COLOR TO COLOR

NOTES

1. UNUSED FIBERS LEFT COILED AND STORED IN SPLICE TRAY
2. UNUSED BUFFER TUBES LEFT COILED AND STORED IN SPLICE ENCLOSURE
3. EDGE SWITCH CONFIGURATIONS ARE GENERIC. CONTRACTOR IS RESPONSIBLE FOR DETERMINING/ENSURING THE PROPER TERMINATIONS.

ATKINS 1616 EAST MILLBROOK ROAD, SUITE 310
RALEIGH, NORTH CAROLINA 27609
(919) 876-6888 NCBEES #F-0326

Prepared for the Offices of: Transportation Mobility and Safety Division, State of North Carolina, Department of Transportation, Intelligent Transportation Systems
750 Greenfield Parkway, Garner, NC 27529

Winston-Salem Signal System Fiber-Optic Splicing Details Phase A

Division 09 Forsyth County Winston-Salem

PLAN DATE:	January 2013	REVIEWED BY:	HAB
PREPARED BY:	BJS	REVIEWED BY:	JTB

SCALE: N.T.S.

REVISIONS	INIT.	DATE

SEAL: NORTH CAROLINA PROFESSIONAL SEAL 19962 ENGINEER HENRY ALFRED BADGETT, III

SIGNATURE DATE

CADD Filename: FS-09A.dgn

28-JAN-2013 16:32
O:\Transportation\Traffic\Curr\100022112 Winston Salem Sig Sys\Comms and ITS\Splice Diagrams\Phase A\FS-09A.dgn
13353

PROJECT REFERENCE NO.	SHEET NO.
C-5224A	FS-10

SPLICE ENCLOSURE NO.

17-1

SEE: CL A-156

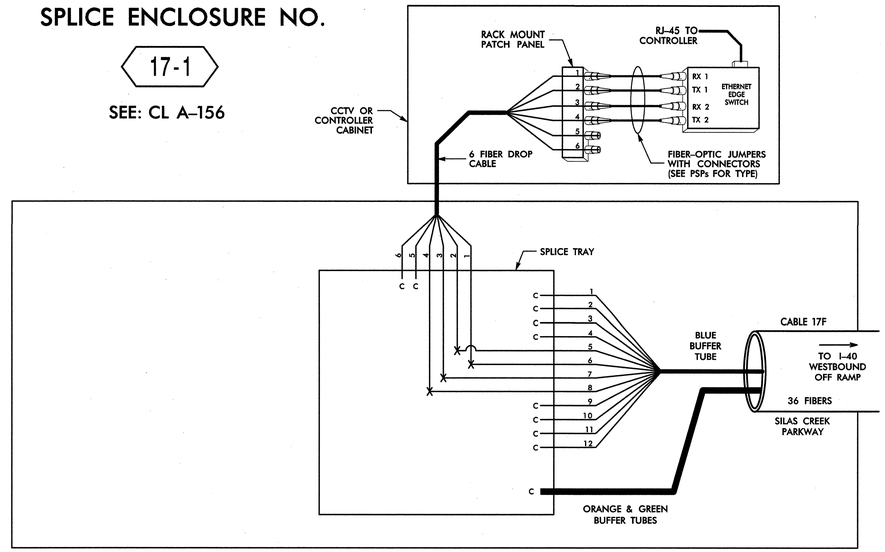

NOTE: THIS SPLICE TO BE MODIFIED BY OTHERS (PHASE B) TO COMPLETE RING 18 REDUNDANCY.

SPLICE ENCLOSURE NO.

17-3

SEE: CL A-155

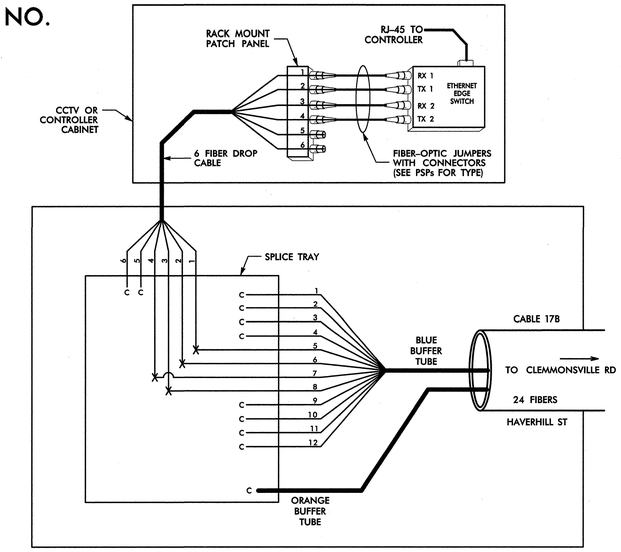

SPLICE ENCLOSURE NO.

17-2

SEE: CL A-141

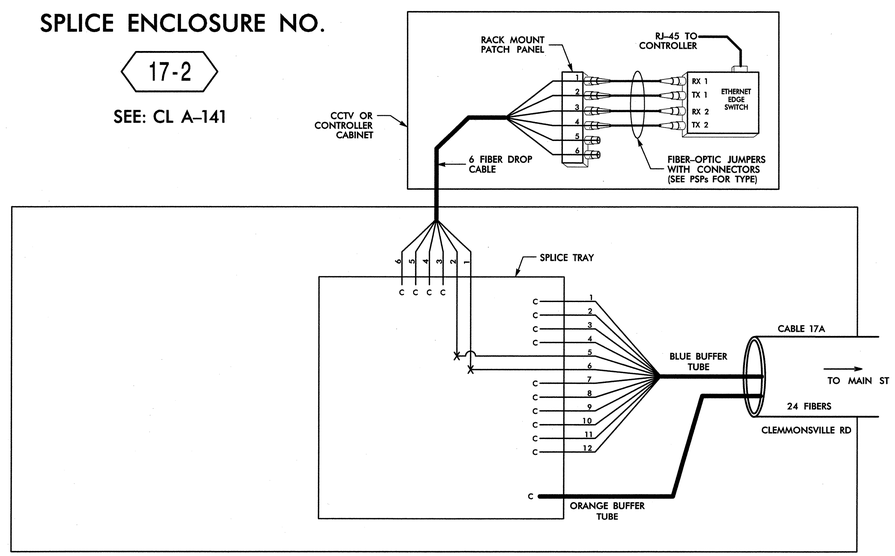

NOTE: THIS SPLICE TO BE MODIFIED BY OTHERS (PHASE B) TO COMPLETE RING 17 REDUNDANCY.

LEGEND

COLOR CODE TIA/EIA 598-B

(1) BLUE	(7) RED
(2) ORANGE	(8) BLACK
(3) GREEN	(9) YELLOW
(4) BROWN	(10) VIOLET
(5) SLATE	(11) ROSE
(6) WHITE	(12) AQUA

X = FUSION SPLICE INDIVIDUAL FIBER

C = CAP AND SEAL

EXPRESS = EXPRESS FIBERS THROUGH WITHOUT CUTTING

BUFFER SPLICE = SPLICE ALL FIBERS IN BUFFER TUBE COLOR TO COLOR

NOTES

1. UNUSED FIBERS LEFT COILED AND STORED IN SPLICE TRAY
2. UNUSED BUFFER TUBES LEFT COILED AND STORED IN SPLICE ENCLOSURE
3. EDGE SWITCH CONFIGURATIONS ARE GENERIC. CONTRACTOR IS RESPONSIBLE FOR DETERMINING/ENSURING THE PROPER TERMINATIONS.

ATKINS 1616 EAST MILLBROOK ROAD, SUITE 310
RALEIGH, NORTH CAROLINA 27609
(919) 876-6888 NCBEES #F-0326

Prepared for the Offices of:
Transportation Mobility and Safety Division
STATE OF NORTH CAROLINA DEPARTMENT OF TRANSPORTATION
Intelligent Transportation Systems
750 Greenfield Parkway, Garner, NC 27529

Winston-Salem Signal System
Fiber-Optic
Splicing Details
Phase A

Division 09 Forsyth County Winston-Salem

PLAN DATE:	January 2013	REVIEWED BY:	HAB
PREPARED BY:	BJS	REVIEWED BY:	JTB

SCALE	REVISIONS	INIT.	DATE
N.T.S.			

SEAL

NORTH CAROLINA PROFESSIONAL SEAL 19962 ENGINEER HENRY ALFRED BADGETT, III

H. Alfred Badgett 1/11/13
SIGNATURE DATE

CADD Filename: FS-10.dgn

09-JAN-2013 14:15
D:\#Transportation\Traffic\Curr\#100022712 Winston Salem Sig Sys\Comms and ITS\Splice Diagrams\Phase A\FS-10.dgn
12054

PROJECT REFERENCE NO.	SHEET NO.
C-5224A	FS-11

SPLICE ENCLOSURE NO.

17-4

SEE: CL A-141

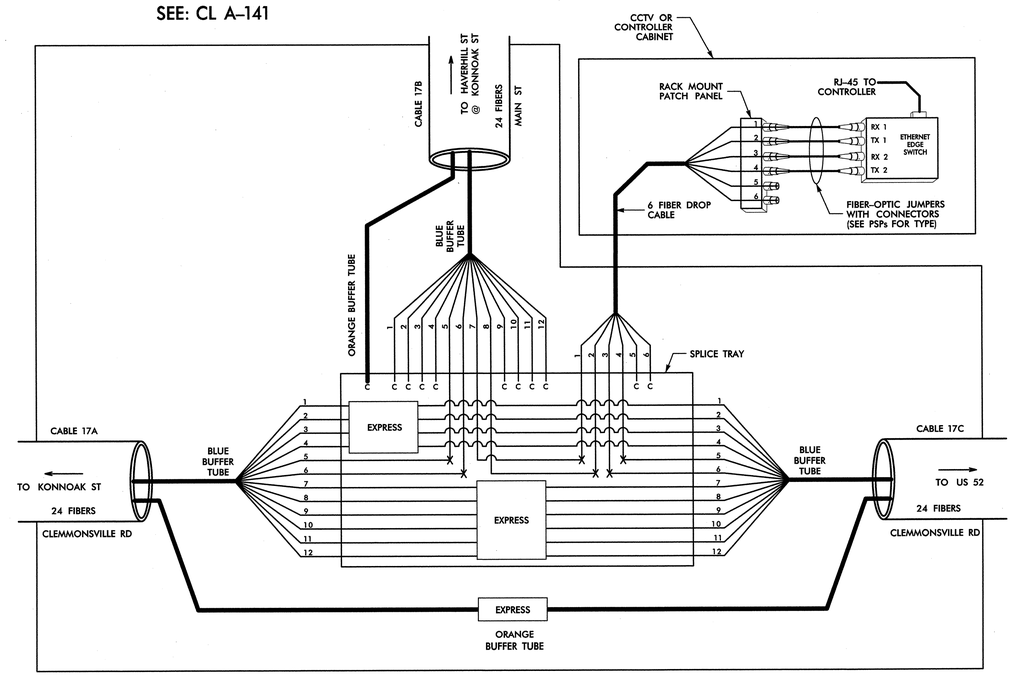

LEGEND

COLOR CODE TIA/EIA 598-B	
(1) BLUE	(7) RED
(2) ORANGE	(8) BLACK
(3) GREEN	(9) YELLOW
(4) BROWN	(10) VIOLET
(5) SLATE	(11) ROSE
(6) WHITE	(12) AQUA

X = FUSION SPLICE INDIVIDUAL FIBER

C = CAP AND SEAL

EXPRESS = EXPRESS FIBERS THROUGH WITHOUT CUTTING

BUFFER SPLICE = SPLICE ALL FIBERS IN BUFFER TUBE COLOR TO COLOR

NOTES

1. UNUSED FIBERS LEFT COILED AND STORED IN SPLICE TRAY
2. UNUSED BUFFER TUBES LEFT COILED AND STORED IN SPLICE ENCLOSURE
3. EDGE SWITCH CONFIGURATIONS ARE GENERIC. CONTRACTOR IS RESPONSIBLE FOR DETERMINING/ENSURING THE PROPER TERMINATIONS.

ATKINS 1616 EAST MILLBROOK ROAD, SUITE 310
RALEIGH, NORTH CAROLINA 27609
(919) 876-6888 NCBEES #F-0326

Prepared for the Offices of:
Transportation Mobility and Safety Division
NORTH CAROLINA DEPARTMENT OF TRANSPORTATION
Intelligent Transportation Systems
750 Greenfield Parkway, Garner, NC 27529

Winston-Salem Signal System
Fiber-Optic
Splicing Details
Phase A

Division 09 Forsyth County Winston-Salem

PLAN DATE: January 2013	REVIEWED BY: HAB
PREPARED BY: BJS	REVIEWED BY: JTB

SCALE: N.T.S.

REVISIONS	INIT.	DATE

SEAL: NORTH CAROLINA PROFESSIONAL SEAL 19962 ENGINEER HENRY ALFRED BADGETT III

SIGNATURE DATE

CADD Filename: FS-11.dgn

09-JAN-2013 14:21
O:\Transportation\Traffic\Cur\10002712 Winston Salem Sig Sys\Comms and ITS\Splice Diagrams\Phase A\FS-11.dgn
12094

PROJECT REFERENCE NO.	SHEET NO.
C-5224A	FS-12

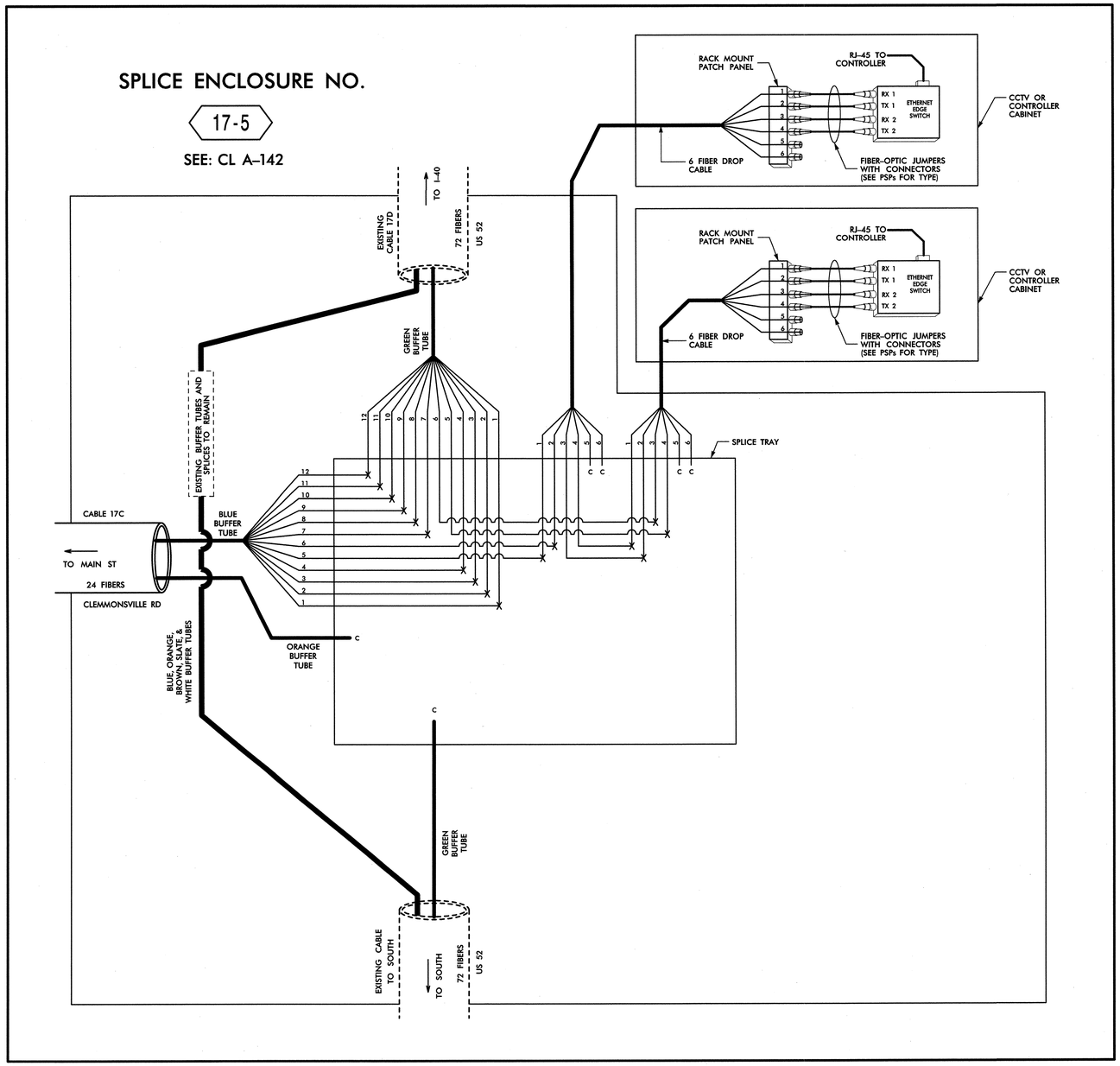

LEGEND

COLOR CODE TIA/EIA 598-B	
(1) BLUE	(7) RED
(2) ORANGE	(8) BLACK
(3) GREEN	(9) YELLOW
(4) BROWN	(10) VIOLET
(5) SLATE	(11) ROSE
(6) WHITE	(12) AQUA

X = FUSION SPLICE INDIVIDUAL FIBER

C = CAP AND SEAL

EXPRESS = EXPRESS FIBERS THROUGH WITHOUT CUTTING

BUFFER SPLICE = SPLICE ALL FIBERS IN BUFFER TUBE COLOR TO COLOR

NOTES

1. UNUSED FIBERS LEFT COILED AND STORED IN SPLICE TRAY
2. UNUSED BUFFER TUBES LEFT COILED AND STORED IN SPLICE ENCLOSURE
3. EDGE SWITCH CONFIGURATIONS ARE GENERIC. CONTRACTOR IS RESPONSIBLE FOR DETERMINING/ENSURING THE PROPER TERMINATIONS.

ATKINS 1616 EAST MILLBROOK ROAD, SUITE 310
RALEIGH, NORTH CAROLINA 27609
(919) 876-6888 NCBEES #F-0326

Prepared for the Offices of:
Transportation Mobility and Safety Division
STATE OF NORTH CAROLINA DEPARTMENT OF TRANSPORTATION
Intelligent Transportation Systems
750 Greenfield Parkway, Garner, NC 27529

SCALE: N.T.S.

Winston-Salem Signal System
Fiber-Optic
Splicing Details
Phase A

Division 09 Forsyth County Winston-Salem

PLAN DATE:	January 2013	REVIEWED BY:	HAB
PREPARED BY:	BJS	REVIEWED BY:	JTB

REVISIONS	INIT.	DATE

SEAL: NORTH CAROLINA PROFESSIONAL SEAL 19962 ENGINEER HENRY ALFRED BADGETT III

SIGNATURE 1/4/13 DATE

CADD Filename: FS-12.dgn

09-JAN-2013 14:21
O:\Transportation\Traffic\Curr\100022712 Winston Salem Sig Sys\Comms and ITS\Splice Diagrams\Phase A\FS-12.dgn
12094

PROJECT REFERENCE NO.	SHEET NO.
C-5224A	FS-13

SPLICE ENCLOSURE NO.

17-6

(EXISTING)

SEE: CL A-214

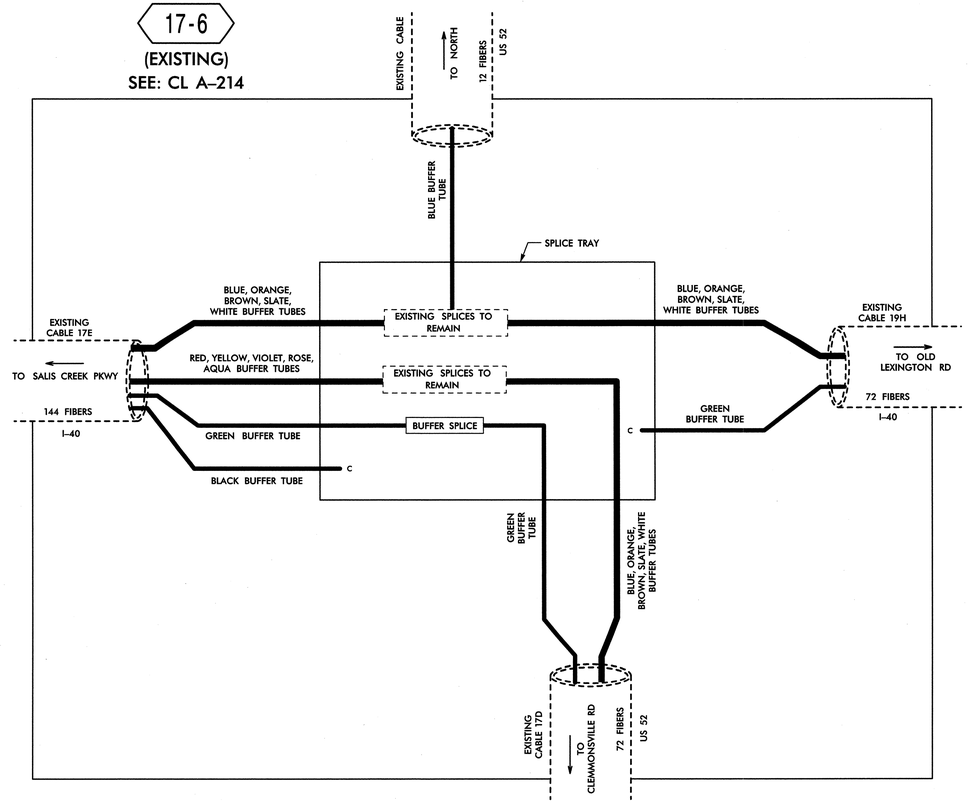

LEGEND

COLOR CODE TIA/EIA 598-B

(1) BLUE	(7) RED
(2) ORANGE	(8) BLACK
(3) GREEN	(9) YELLOW
(4) BROWN	(10) VIOLET
(5) SLATE	(11) ROSE
(6) WHITE	(12) AQUA

X = FUSION SPLICE INDIVIDUAL FIBER

C = CAP AND SEAL

EXPRESS = EXPRESS FIBERS THROUGH WITHOUT CUTTING

BUFFER SPLICE = SPLICE ALL FIBERS IN BUFFER TUBE COLOR TO COLOR

NOTES

1. UNUSED FIBERS LEFT COILED AND STORED IN SPLICE TRAY
2. UNUSED BUFFER TUBES LEFT COILED AND STORED IN SPLICE ENCLOSURE
3. EDGE SWITCH CONFIGURATIONS ARE GENERIC. CONTRACTOR IS RESPONSIBLE FOR DETERMINING/ENSURING THE PROPER TERMINATIONS.

ATKINS 1616 EAST MILLBROOK ROAD, SUITE 310
RALEIGH, NORTH CAROLINA 27609
(919) 876-6888 NCBEES #F-0326

Prepared for the Offices of:

Transportation Mobility and Safety Division
STATE OF NORTH CAROLINA
DEPARTMENT OF TRANSPORTATION
Intelligent Transportation Systems

750 Greenfield Parkway, Garner, NC 27529

SCALE: N.T.S.

Winston-Salem Signal System
Fiber-Optic
Splicing Details
Phase A

Division 09 Forsyth County Winston-Salem

PLAN DATE:	January 2013	REVIEWED BY:	HAB
PREPARED BY:	BJS	REVIEWED BY:	JTB

REVISIONS	INIT.	DATE

SEAL

NORTH CAROLINA PROFESSIONAL SEAL 19962 ENGINEER HENRY ALFRED BADGETT III

SIGNATURE H. Alfred Badgett DATE 1/14/13

CADD Filename: FS-13.dgn

09-JAN-2013 14:21
D:\Transportation\Traffic\Curr\100022712 Winston Salem Sig Sys\Comms and ITS\Splice Diagrams\Phase A\FS-13.dgn
12.034

PROJECT REFERENCE NO.	SHEET NO.
C-5224A	FS-14

SPLICE ENCLOSURE NO.

17-7

(EXISTING)

SEE: CL A-158

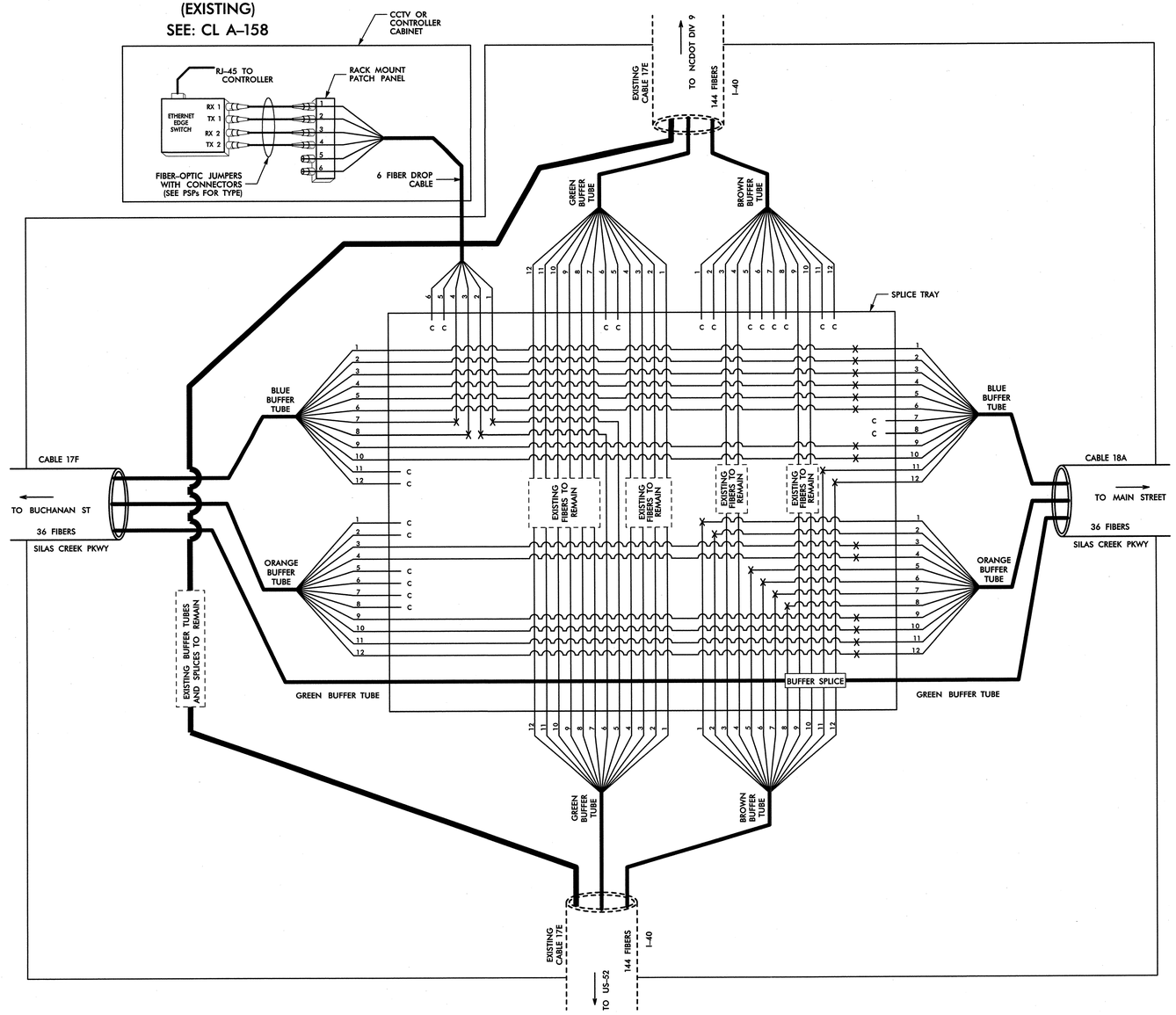

LEGEND

COLOR CODE TIA/EIA 598-B

(1) BLUE	(7) RED
(2) ORANGE	(8) BLACK
(3) GREEN	(9) YELLOW
(4) BROWN	(10) VIOLET
(5) SLATE	(11) ROSE
(6) WHITE	(12) AQUA

X = FUSION SPLICE INDIVIDUAL FIBER

C = CAP AND SEAL

EXPRESS = EXPRESS FIBERS THROUGH WITHOUT CUTTING

BUFFER SPLICE = SPLICE ALL FIBERS IN BUFFER TUBE COLOR TO COLOR

NOTES

1. UNUSED FIBERS LEFT COILED AND STORED IN SPLICE TRAY
2. UNUSED BUFFER TUBES LEFT COILED AND STORED IN SPLICE ENCLOSURE
3. EDGE SWITCH CONFIGURATIONS ARE GENERIC. CONTRACTOR IS RESPONSIBLE FOR DETERMINING/ENSURING THE PROPER TERMINATIONS.

ATKINS 1616 EAST MILLBROOK ROAD, SUITE 310
RALEIGH, NORTH CAROLINA 27609
(919) 876-6888 NCBEES #F-0326

Prepared for the Offices of:
Transportation Mobility and Safety Division
STATE OF NORTH CAROLINA DEPARTMENT OF TRANSPORTATION
Intelligent Transportation Systems
750 Greenfield Parkway, Garner, NC 27529

SCALE: N.T.S.

Winston-Salem Signal System
Fiber-Optic
Splicing Details
Phase A

Division 09 Forsyth County Winston-Salem

PLAN DATE:	January 2013	REVIEWED BY:	HAB
PREPARED BY:	BJS	REVIEWED BY:	JTB

REVISIONS	INIT.	DATE

SEAL
NORTH CAROLINA PROFESSIONAL SEAL 19962 ENGINEER HENRY ALFRED BADGETT, III

SIGNATURE Henry Alfred Badgett DATE 11/14/13

CADD Filename: FS-14.dgn

09-JAN-2013 14:21
U:\Transportation\Traffic\Curr\100022712 Winston Salem Sig Sys\Comms and ITS\Splice Diagrams\Phase A\FS-14.dgn
12054

PROJECT REFERENCE NO.	SHEET NO.
C-5224A	FS-15

SPLICE ENCLOSURE NO. 18-1

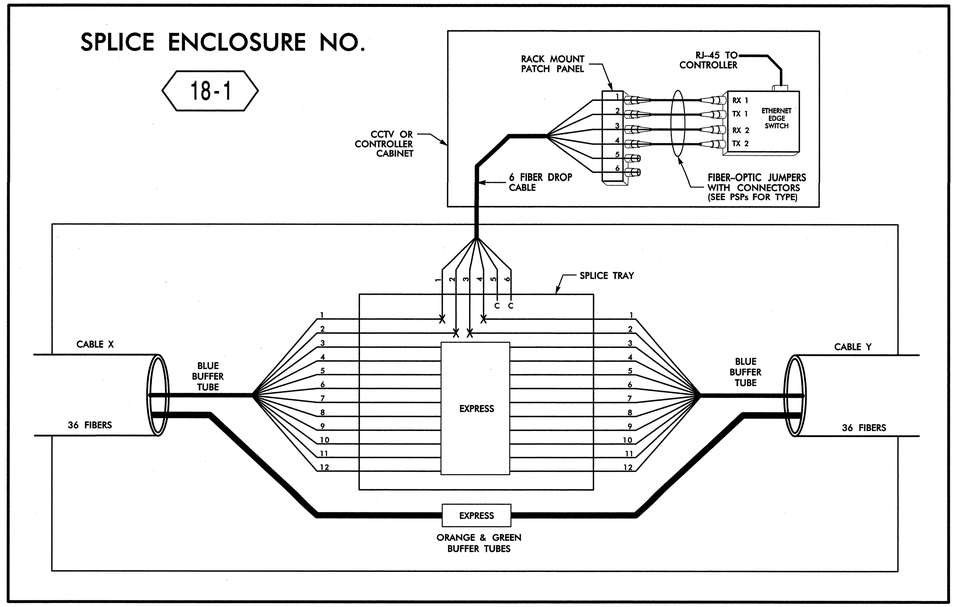

SPLICE ENCLOSURE NO. 18-1							
INTERSECTION NO.	CL SHEET	CABLE X			CABLE Y		
		CABLE NO.	ALONG ROUTE	TO	CABLE NO.	ALONG ROUTE	TO
C-095	CL A-152	18C	OLD SALEM RD	ACADEMY ST	18C	MAIN ST	WAUGHTOWN ST
09-0044	CL A-151	18C	MAIN ST	SALEM AVE	18C	MAIN ST	ACADIA AVE
C-114	CL A-148	18A	MAIN ST	ACADIA AVE	18A	MAIN ST	SILAS CREEK PKWY
09-0820	CL A-148	18A	MAIN ST	SPRAGUE ST	18A	SILAS CREEK PKWY	I-40 EB OFF RAMP

SPLICE ENCLOSURE NO. 18-2

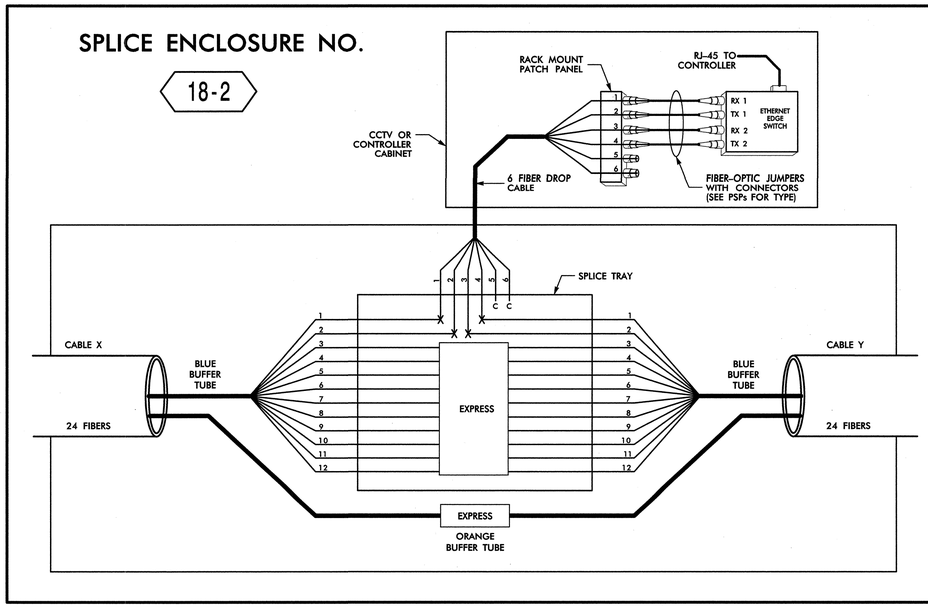

SPLICE ENCLOSURE NO. 18-2							
INTERSECTION NO.	CL SHEET	CABLE X			CABLE Y		
		CABLE NO.	ALONG ROUTE	TO	CABLE NO.	ALONG ROUTE	TO
C-088	CL A-161	18D	BROAD ST	WACHOVIA ST	18D	ACADEMY ST	MARSHALL ST
C-089	CL A-162	18D	ACADEMY ST	BROAD ST	18D	ACADEMY ST	OLD SALEM RD

LEGEND

COLOR CODE TIA/EIA 598-B

(1) BLUE	(7) RED
(2) ORANGE	(8) BLACK
(3) GREEN	(9) YELLOW
(4) BROWN	(10) VIOLET
(5) SLATE	(11) ROSE
(6) WHITE	(12) AQUA

X = FUSION SPLICE INDIVIDUAL FIBER

C = CAP AND SEAL

EXPRESS = EXPRESS FIBERS THROUGH WITHOUT CUTTING

BUFFER SPLICE = SPLICE ALL FIBERS IN BUFFER TUBE COLOR TO COLOR

NOTES

1. UNUSED FIBERS LEFT COILED AND STORED IN SPLICE TRAY
2. UNUSED BUFFER TUBES LEFT COILED AND STORED IN SPLICE ENCLOSURE
3. EDGE SWITCH CONFIGURATIONS ARE GENERIC. CONTRACTOR IS RESPONSIBLE FOR DETERMINING/ENSURING THE PROPER TERMINATIONS.

ATKINS 1616 EAST MILLBROOK ROAD, SUITE 310
RALEIGH, NORTH CAROLINA 27609
(919) 876-6888 NCBEES #F-0326

Prepared for the Offices of:
Transportation Mobility and Safety Division
STATE OF NORTH CAROLINA DEPARTMENT OF TRANSPORTATION
Intelligent Transportation Systems
750 Greenfield Parkway, Garner, NC 27529

Winston-Salem Signal System Fiber-Optic Splicing Details Phase A

Division 09 Forsyth County Winston-Salem

PLAN DATE:	January 2013	REVIEWED BY:	HAB
PREPARED BY:	BJS	REVIEWED BY:	JTB

REVISIONS	INIT.	DATE

SCALE N.T.S.

SEAL

NORTH CAROLINA PROFESSIONAL SEAL 19362 ENGINEER HENRY ALFRED BADGETT, III

SIGNATURE H. Alfred Badgett DATE 1/11/13

CADD Filename: FS-15.dgn

09-JAN-2013 14:21
d:\transportation\traffic\Curr\10022712 Winston Salem Sig Sys\Comms and ITS\Splice Diagrams\Phase A\FS-15.dgn
12034

PROJECT REFERENCE NO.	SHEET NO.
C-5224A	FS-16

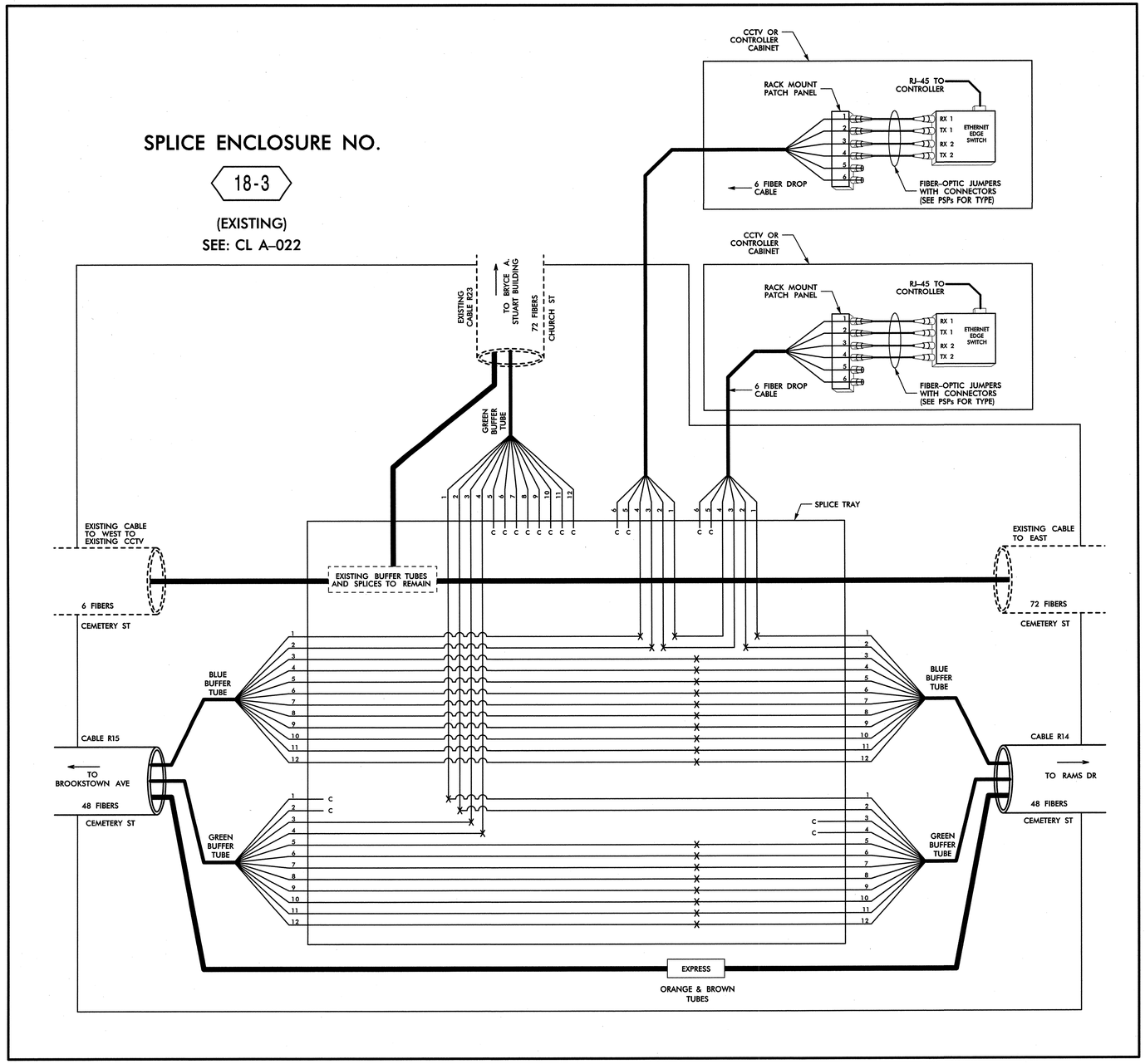

LEGEND

COLOR CODE TIA/EIA 598-B	
(1) BLUE	(7) RED
(2) ORANGE	(8) BLACK
(3) GREEN	(9) YELLOW
(4) BROWN	(10) VIOLET
(5) SLATE	(11) ROSE
(6) WHITE	(12) AQUA

X = FUSION SPLICE INDIVIDUAL FIBER

C = CAP AND SEAL

EXPRESS = EXPRESS FIBERS THROUGH WITHOUT CUTTING

BUFFER SPLICE = SPLICE ALL FIBERS IN BUFFER TUBE COLOR TO COLOR

NOTES

1. UNUSED FIBERS LEFT COILED AND STORED IN SPLICE TRAY
2. UNUSED BUFFER TUBES LEFT COILED AND STORED IN SPLICE ENCLOSURE
3. EDGE SWITCH CONFIGURATIONS ARE GENERIC. CONTRACTOR IS RESPONSIBLE FOR DETERMINING/ENSURING THE PROPER TERMINATIONS.

ATKINS 1616 EAST MILLBROOK ROAD, SUITE 310
RALEIGH, NORTH CAROLINA 27609
(919) 876-6888 NCBEES #F-0326

Prepared for the Offices of:
Transportation Mobility and Safety Division
STATE OF NORTH CAROLINA
DEPARTMENT OF TRANSPORTATION
Intelligent Transportation Systems
750 Greenfield Parkway, Garner, NC 27529

Winston-Salem Signal System Fiber-Optic Splicing Details Phase A

Division 09 Forsyth County Winston-Salem

PLAN DATE:	January 2013	REVIEWED BY:	HAB
PREPARED BY:	BJS	REVIEWED BY:	JTB

SCALE	REVISIONS	INIT.	DATE
N.T.S.			

SEAL
NORTH CAROLINA PROFESSIONAL SEAL 19962 ENGINEER HENRY ALFRED BADGETT, III

SIGNATURE DATE 1/4/13

CADD Filename: FS-16.dgn

09-JAN-2013 14:21
D:*Transportation\Traffic\Curr*100022712 Winston Salem Sig Sys\Comms and ITS\Splice Diagrams\Phase A\FS-16.dgn
12094

PROJECT REFERENCE NO.	SHEET NO.
C-5224A	FS-17

SPLICE ENCLOSURE NO.

18-4

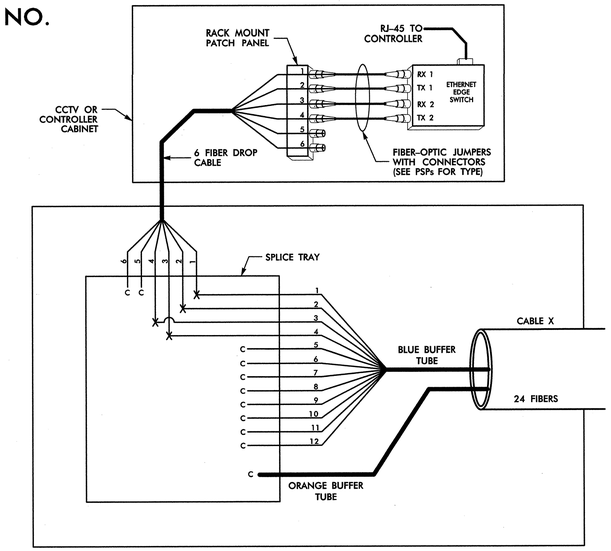

SPLICE ENCLOSURE NO. 18-4				
INTERSECTION NO.	CL SHEET	CABLE X		
		CABLE NO.	ALONG ROUTE	TO
09-0089	CL A-032	18F	MARSHALL ST	WACHOVIA ST
C-109	CL A-159	18B	ACADIA AVE	MAIN ST

SPLICE ENCLOSURE NO.

18-5

SEE: CL A-149

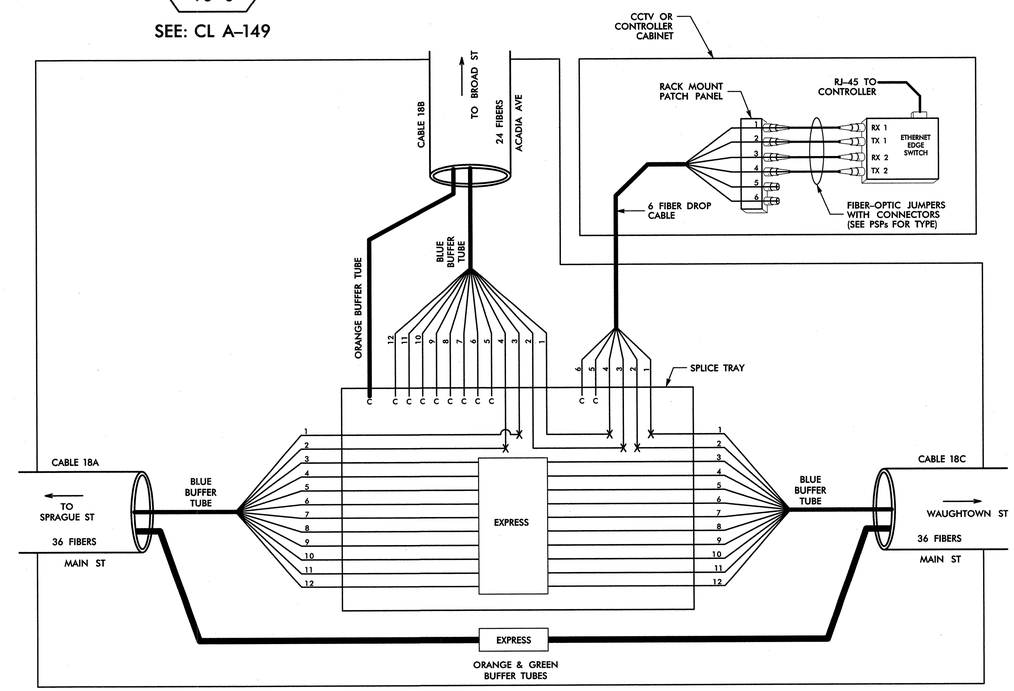

LEGEND

COLOR CODE TIA/EIA 598-B

(1) BLUE	(7) RED
(2) ORANGE	(8) BLACK
(3) GREEN	(9) YELLOW
(4) BROWN	(10) VIOLET
(5) SLATE	(11) ROSE
(6) WHITE	(12) AQUA

X = FUSION SPLICE INDIVIDUAL FIBER

C = CAP AND SEAL

EXPRESS = EXPRESS FIBERS THROUGH WITHOUT CUTTING

BUFFER SPLICE = SPLICE ALL FIBERS IN BUFFER TUBE COLOR TO COLOR

NOTES

1. UNUSED FIBERS LEFT COILED AND STORED IN SPLICE TRAY
2. UNUSED BUFFER TUBES LEFT COILED AND STORED IN SPLICE ENCLOSURE
3. EDGE SWITCH CONFIGURATIONS ARE GENERIC. CONTRACTOR IS RESPONSIBLE FOR DETERMINING/ENSURING THE PROPER TERMINATIONS.

ATKINS 1616 EAST MILLBROOK ROAD, SUITE 310
RALEIGH, NORTH CAROLINA 27609
(919) 876-6888 NCBEES #F-0326

Prepared for the Offices of:
Transportation Mobility and Safety Division
STATE OF NORTH CAROLINA DEPARTMENT OF TRANSPORTATION
Intelligent Transportation Systems
750 Greenfield Parkway, Garner, NC 27529

Winston-Salem Signal System Fiber-Optic Splicing Details Phase A

Division 09 Forsyth County Winston-Salem

PLAN DATE:	January 2013	REVIEWED BY:	HAB
PREPARED BY:	BJS	REVIEWED BY:	JTB

REVISIONS	INIT.	DATE

SCALE: N.T.S.

SEAL: NORTH CAROLINA PROFESSIONAL SEAL 19962 ENGINEER HENRY ALFRED BADGETT III

SIGNATURE: H Alfred Badgett DATE: 1/9/13

CADD Filename: FS-17.dgn

09-JAN-2013 14:21
O:\Transportation\Traffic\Curr\100022112 Winston Salem Sig Sys\Comms and ITS\Splice Diagrams\Phase A\FS-17.dgn
12054

PROJECT REFERENCE NO.	SHEET NO.
C-5224A	FS-18

SPLICE ENCLOSURE NO.

18-6

SEE: CL A-153

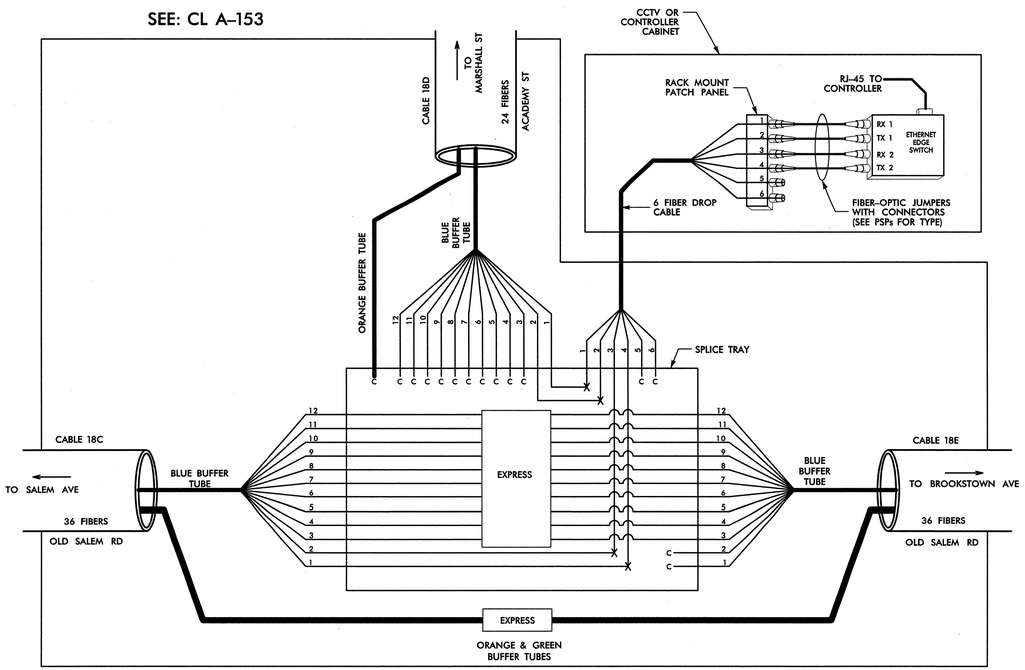

SPLICE ENCLOSURE NO.

18-7

SEE: CL A-019

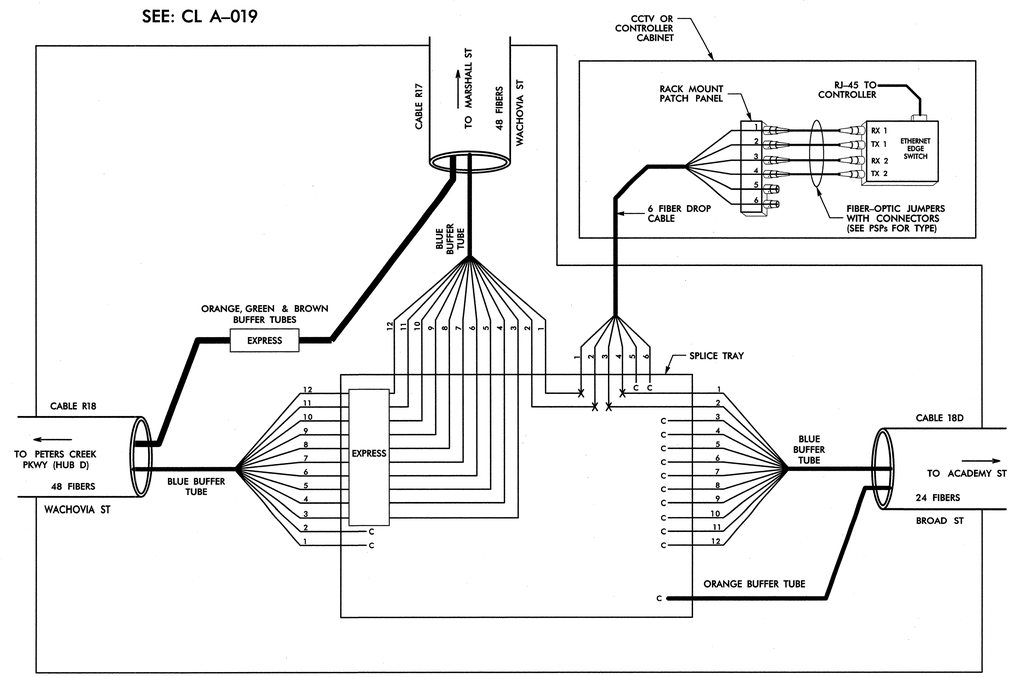

LEGEND

COLOR CODE TIA/EIA 598-B

(1) BLUE	(7) RED
(2) ORANGE	(8) BLACK
(3) GREEN	(9) YELLOW
(4) BROWN	(10) VIOLET
(5) SLATE	(11) ROSE
(6) WHITE	(12) AQUA

X = FUSION SPLICE INDIVIDUAL FIBER

C = CAP AND SEAL

EXPRESS = EXPRESS FIBERS THROUGH WITHOUT CUTTING

BUFFER SPLICE = SPLICE ALL FIBERS IN BUFFER TUBE COLOR TO COLOR

NOTES

1. UNUSED FIBERS LEFT COILED AND STORED IN SPLICE TRAY
2. UNUSED BUFFER TUBES LEFT COILED AND STORED IN SPLICE ENCLOSURE
3. EDGE SWITCH CONFIGURATIONS ARE GENERIC. CONTRACTOR IS RESPONSIBLE FOR DETERMINING/ENSURING THE PROPER TERMINATIONS.

ATKINS 1616 EAST MILLBROOK ROAD, SUITE 310
RALEIGH, NORTH CAROLINA 27609
(919) 876-6888 NCBEES #F-0326

Prepared for the Offices of:
Transportation Mobility and Safety Division
STATE OF NORTH CAROLINA
DEPARTMENT OF TRANSPORTATION
Intelligent Transportation Systems
750 Greenfield Parkway, Garner, NC 27529

Winston-Salem Signal System
Fiber-Optic
Splicing Details
Phase A

Division 09 Forsyth County Winston-Salem

PLAN DATE:	January 2013	REVIEWED BY:	HAB
PREPARED BY:	BJS	REVIEWED BY:	JTB

SCALE: N.T.S.

REVISIONS	INIT.	DATE

SEAL
NORTH CAROLINA PROFESSIONAL SEAL 19962 ENGINEER HENRY ALFRED BADGETT III

H Alfred Badgett 1/11/13
SIGNATURE DATE

CADD Filename: FS-18.dgn

09-JAN-2013 14:21
O:\Transportation\Traffic\Curr\100022712 Winston Salem Sig Sys\Comms and ITS\Splice Diagrams\Phase A\FS-18.dgn
12054

PROJECT REFERENCE NO.	SHEET NO.
C-5224A	FS-19

SPLICE ENCLOSURE NO.

18-8

SEE: CL A-021

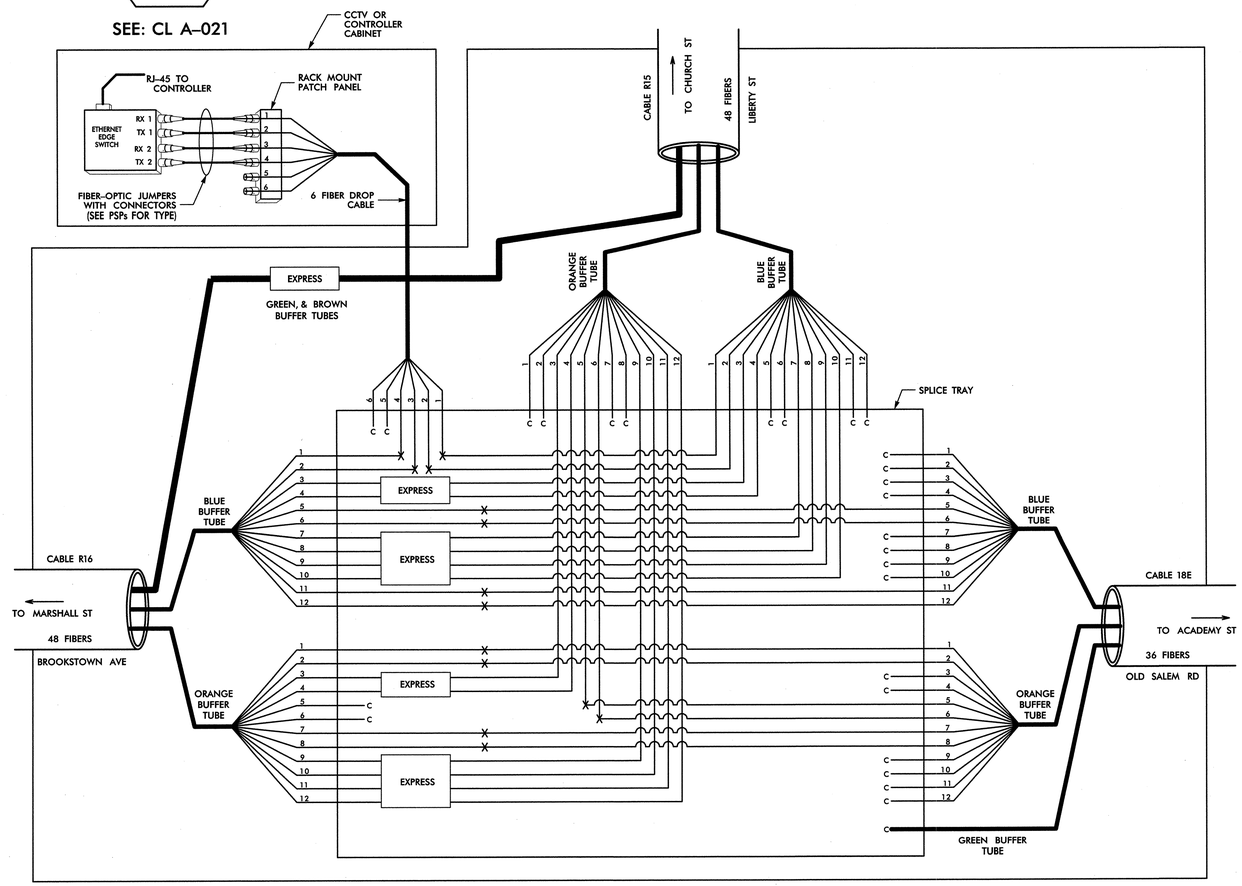

LEGEND

COLOR CODE TIA/EIA 598-B	
(1) BLUE	(7) RED
(2) ORANGE	(8) BLACK
(3) GREEN	(9) YELLOW
(4) BROWN	(10) VIOLET
(5) SLATE	(11) ROSE
(6) WHITE	(12) AQUA

X = FUSION SPLICE INDIVIDUAL FIBER

C = CAP AND SEAL

EXPRESS = EXPRESS FIBERS THROUGH WITHOUT CUTTING

BUFFER SPLICE = SPLICE ALL FIBERS IN BUFFER TUBE COLOR TO COLOR

NOTES

1. UNUSED FIBERS LEFT COILED AND STORED IN SPLICE TRAY
2. UNUSED BUFFER TUBES LEFT COILED AND STORED IN SPLICE ENCLOSURE
3. EDGE SWITCH CONFIGURATIONS ARE GENERIC. CONTRACTOR IS RESPONSIBLE FOR DETERMINING/ENSURING THE PROPER TERMINATIONS.

ATKINS 1616 EAST MILLBROOK ROAD, SUITE 310
RALEIGH, NORTH CAROLINA 27609
(919) 876-6888 NCBEES #F-0326

Prepared for the Offices of: Transportation Mobility and Safety Division, Intelligent Transportation Systems, State of North Carolina Department of Transportation
750 Greenfield Parkway, Garner, NC 27529

Winston-Salem Signal System
Fiber-Optic
Splicing Details
Phase A

Division 09 Forsyth County Winston-Salem

PLAN DATE: January 2013	REVIEWED BY: HAB
PREPARED BY: BJS	REVIEWED BY: JTB

SCALE	REVISIONS	INIT.	DATE
N.T.S.			

SEAL: NORTH CAROLINA PROFESSIONAL SEAL 19962 ENGINEER HENRY ALFRED BADGETT, III

H Alfred Badgett 1/4/13
SIGNATURE DATE

CADD Filename: FS-19.dgn

09-JAN-2013 14:21
O:\Transportation\Traffic\Curr\100022712 Winston Salem Sig Sys\Comms and ITS\Splice Diagrams\Phase A\FS-19.dgn
12054

PROJECT REFERENCE NO.	SHEET NO.
C-5224A	FS-20

SPLICE ENCLOSURE NO.

18-9

SEE: CL A-021

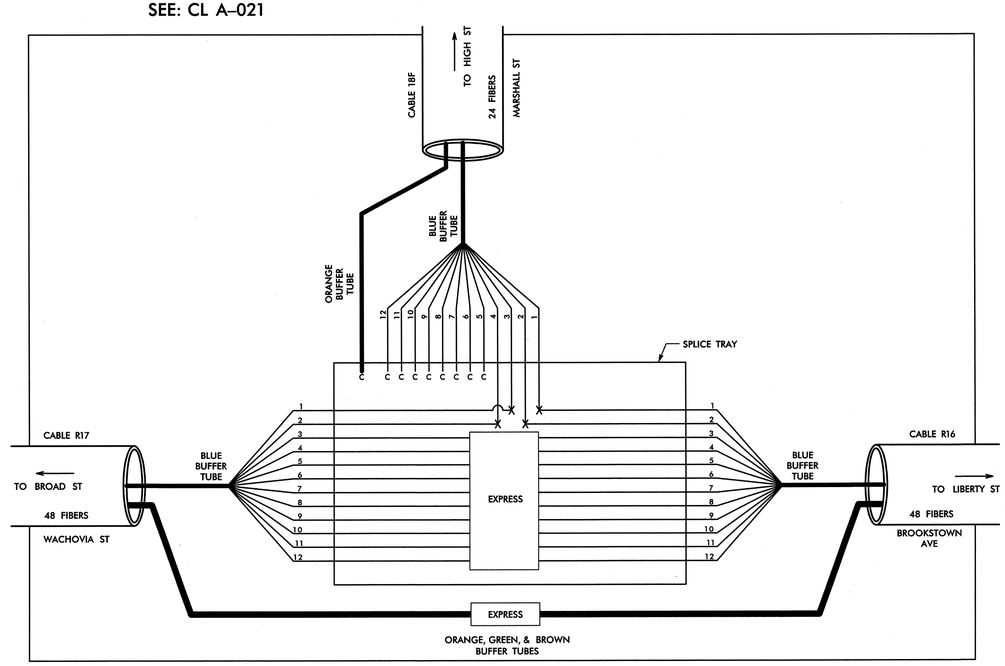

LEGEND

COLOR CODE TIA/EIA 598-B	
(1) BLUE	(7) RED
(2) ORANGE	(8) BLACK
(3) GREEN	(9) YELLOW
(4) BROWN	(10) VIOLET
(5) SLATE	(11) ROSE
(6) WHITE	(12) AQUA

X = FUSION SPLICE INDIVIDUAL FIBER

C = CAP AND SEAL

EXPRESS = EXPRESS FIBERS THROUGH WITHOUT CUTTING

BUFFER SPLICE = SPLICE ALL FIBERS IN BUFFER TUBE COLOR TO COLOR

NOTES

1. UNUSED FIBERS LEFT COILED AND STORED IN SPLICE TRAY
2. UNUSED BUFFER TUBES LEFT COILED AND STORED IN SPLICE ENCLOSURE
3. EDGE SWITCH CONFIGURATIONS ARE GENERIC. CONTRACTOR IS RESPONSIBLE FOR DETERMINING/ENSURING THE PROPER TERMINATIONS.

ATKINS 1616 EAST MILLBROOK ROAD, SUITE 310
RALEIGH, NORTH CAROLINA 27609
(919) 876-6888 NCBEES #F-0326

Prepared for the Offices of:
Transportation Mobility and Safety Division
STATE OF NORTH CAROLINA
DEPARTMENT OF TRANSPORTATION
Intelligent Transportation Systems
750 Greenfield Parkway, Garner, NC 27529

Winston-Salem Signal System
Fiber-Optic
Splicing Details
Phase A

Division 09 Forsyth County Winston-Salem

PLAN DATE:	January 2013	REVIEWED BY:	HAB
PREPARED BY:	BJS	REVIEWED BY:	JTB

SCALE	REVISIONS	INIT.	DATE
N.T.S.			

SEAL
NORTH CAROLINA PROFESSIONAL SEAL 19962 ENGINEER HENRY ALFRED BADGETT, III

H Alfred Badgett 7/11/13
SIGNATURE DATE

CADD Filename: FS-20.dgn

09-JAN-2013 14:21
O:\Transportation\TrafficCurr\100022712 Winston Salem Sig Sys\Comms and ITS\Splice Diagrams\Phase A\FS-20.dgn
12054

PROJECT REFERENCE NO.	SHEET NO.
C-5224A	FS-21

SPLICE ENCLOSURE NO. 19-1

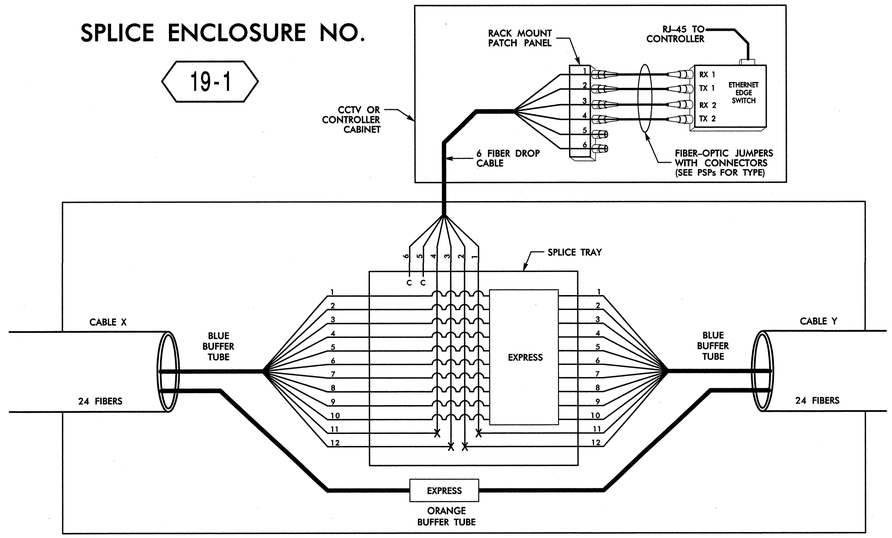

SPLICE ENCLOSURE NO. 19-1							
INTERSECTION NO.	CL SHEET	CABLE X			CABLE Y		
		CABLE NO.	ALONG ROUTE	TO	CABLE NO.	ALONG ROUTE	TO
09-0690	CL A-169	19B	DACIAN ST / SPRAGUE ST	OLD LEXINGTON RD	19B	WAUGHTON ST	MLK JR DR
C-115	CL A-167	19D	VARGRAVE ST	WAUGHTON ST	19D	SPRAGUE ST	OLD LEXINGTON RD

SPLICE ENCLOSURE NO. 19-2 (EXISTING)

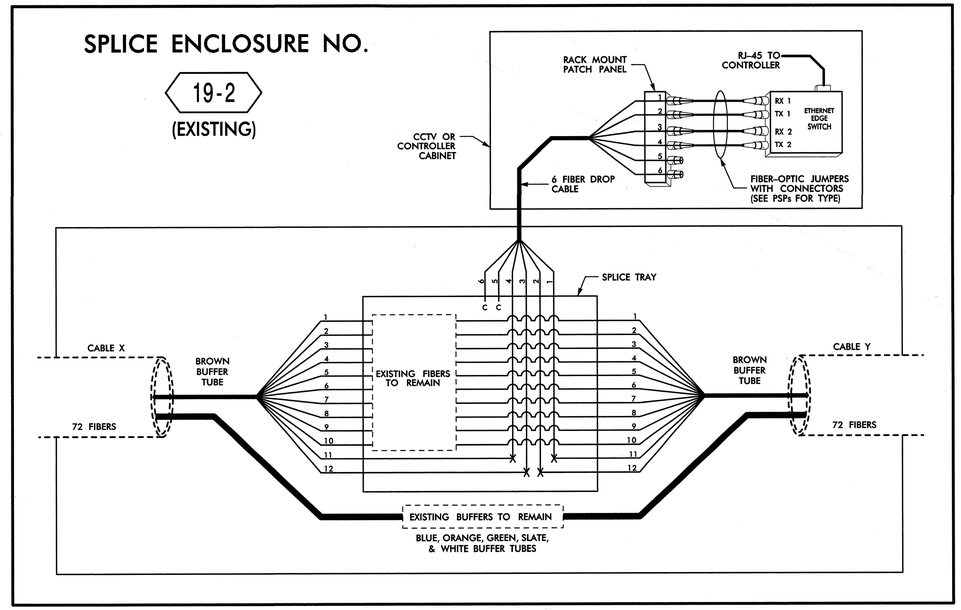

SPLICE ENCLOSURE NO. 19-2							
INTERSECTION NO.	CL SHEET	CABLE X			CABLE Y		
		CABLE NO.	ALONG ROUTE	TO	CABLE NO.	ALONG ROUTE	TO
09-0029	CL A-195	19E	THOMASVILLE RD	CLEMMONSVILLE RD	19E	THOMASVILLE RD	WAUGHTOWN ST
09-0034	CL A-196	19E	THOMASVILLE RD	I-40 WB RAMP	19E	THOMASVILLE RD	SPRAGUE ST
09-0599	CL A-197	19E	THOMASVILLE RD	I-40 EB RAMP	19E	THOMASVILLE RD	CLEMMONSVILLE RD

SPLICE ENCLOSURE NO. 19-3

SEE: CL A-194

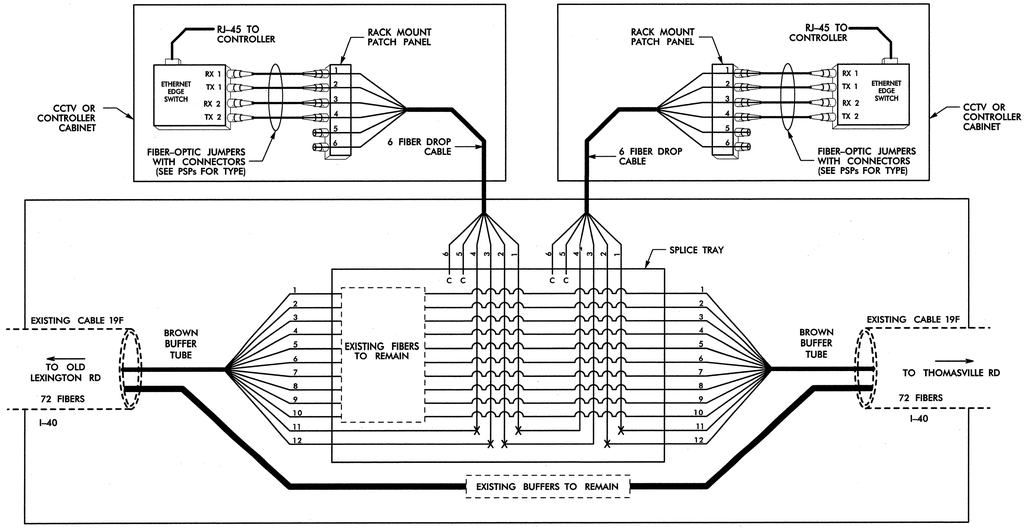

LEGEND

COLOR CODE TIA/EIA 598-B

(1) BLUE	(7) RED
(2) ORANGE	(8) BLACK
(3) GREEN	(9) YELLOW
(4) BROWN	(10) VIOLET
(5) SLATE	(11) ROSE
(6) WHITE	(12) AQUA

X = FUSION SPLICE INDIVIDUAL FIBER

C = CAP AND SEAL

EXPRESS = EXPRESS FIBERS THROUGH WITHOUT CUTTING

BUFFER SPLICE = SPLICE ALL FIBERS IN BUFFER TUBE COLOR TO COLOR

NOTES

1. UNUSED FIBERS LEFT COILED AND STORED IN SPLICE TRAY
2. UNUSED BUFFER TUBES LEFT COILED AND STORED IN SPLICE ENCLOSURE
3. EDGE SWITCH CONFIGURATIONS ARE GENERIC. CONTRACTOR IS RESPONSIBLE FOR DETERMINING/ENSURING THE PROPER TERMINATIONS.

ATKINS 1616 EAST MILLBROOK ROAD, SUITE 310
RALEIGH, NORTH CAROLINA 27609
(919) 876-6888 NCBEES #F-0326

Prepared for the Offices of: Transportation Mobility and Safety Division, State of North Carolina, Department of Transportation, Intelligent Transportation Systems
750 Greenfield Parkway, Garner, NC 27529

Winston-Salem Signal System
Fiber-Optic
Splicing Details
Phase A

Division 09 Forsyth County Winston-Salem

PLAN DATE: January 2013	REVIEWED BY: HAB
PREPARED BY: BJS	REVIEWED BY: JTB

SCALE	REVISIONS	INIT.	DATE
N.T.S.			

SEAL: NORTH CAROLINA PROFESSIONAL SEAL 19962 ENGINEER HENRY ALFRED BADGETT, III

SIGNATURE DATE

CADD Filename: FS-21.dgn

09-JAN-2013 14:27
O:\Transportation\Traffic\Curr\100022712 Winston Salem Sig Sys\Comms and ITS\Splice Diagrams\Phase A\FS-21.dgn
12054

PROJECT REFERENCE NO.	SHEET NO.
C-5224A	FS-22

SPLICE ENCLOSURE NO.

19-4

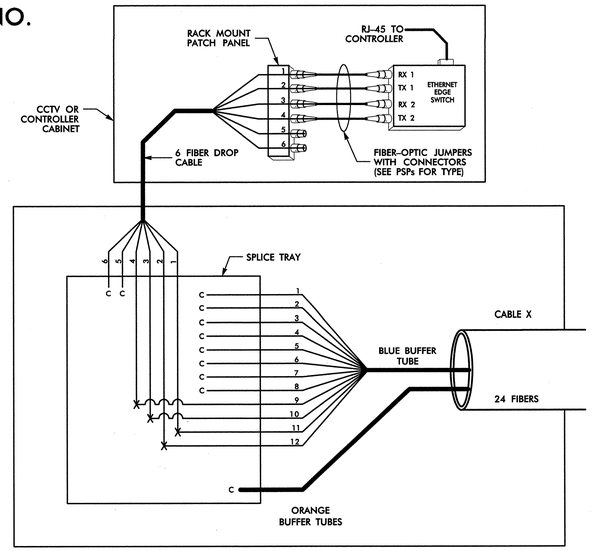

SPLICE ENCLOSURE NO. 19-4				
INTERSECTION NO.	CL SHEET	CABLE X		
		CABLE NO.	ALONG ROUTE	TO
09-0689	CL A-166	19D	VARGRAVE ST	SPRAGUE ST
09-0691	CL A-191	19C	OLD LEXINGTON RD	SPRAGUE ST
09-0037	CL A-192	19G	OLD LEXINGTON RD	I-40

SPLICE ENCLOSURE NO.

19-5

(EXISTING)

SEE: CL A-192

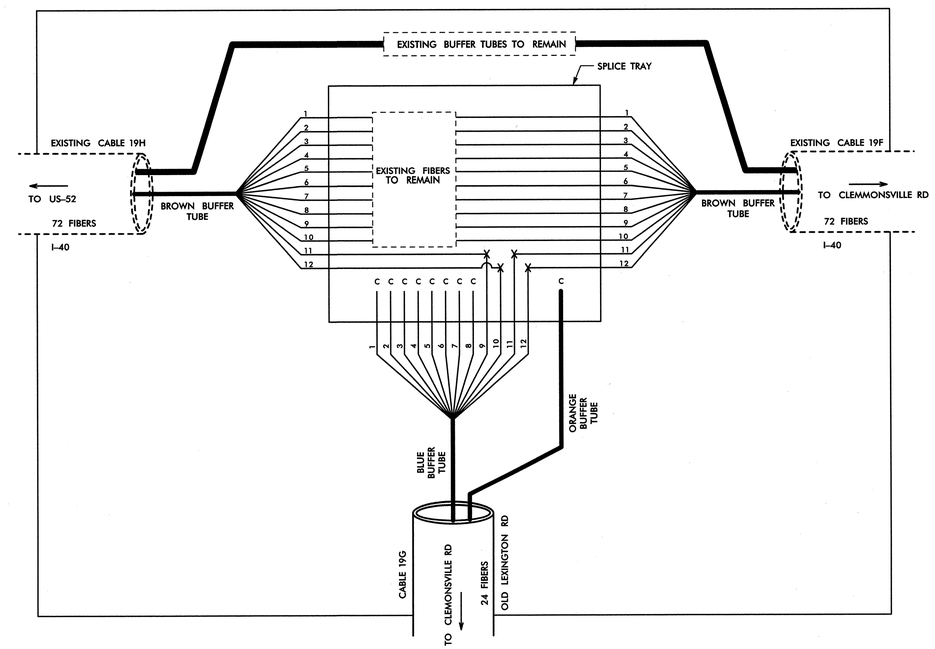

LEGEND

COLOR CODE TIA/EIA 598-B

(1) BLUE	(7) RED
(2) ORANGE	(8) BLACK
(3) GREEN	(9) YELLOW
(4) BROWN	(10) VIOLET
(5) SLATE	(11) ROSE
(6) WHITE	(12) AQUA

X = FUSION SPLICE INDIVIDUAL FIBER

C = CAP AND SEAL

EXPRESS = EXPRESS FIBERS THROUGH WITHOUT CUTTING

BUFFER SPLICE = SPLICE ALL FIBERS IN BUFFER TUBE COLOR TO COLOR

NOTES

1. UNUSED FIBERS LEFT COILED AND STORED IN SPLICE TRAY
2. UNUSED BUFFER TUBES LEFT COILED AND STORED IN SPLICE ENCLOSURE
3. EDGE SWITCH CONFIGURATIONS ARE GENERIC. CONTRACTOR IS RESPONSIBLE FOR DETERMINING/ENSURING THE PROPER TERMINATIONS.

ATKINS 1616 EAST MILLBROOK ROAD, SUITE 310
RALEIGH, NORTH CAROLINA 27609
(919) 876-6888 NCBEES #F-0326

Prepared for the Offices of: Transportation Mobility and Safety Division, Intelligent Transportation Systems, STATE OF NORTH CAROLINA DEPARTMENT OF TRANSPORTATION

750 Greenfield Parkway, Garner, NC 27529

SCALE: N.T.S.

Winston-Salem Signal System
Fiber-Optic
Splicing Details
Phase A

Division 09 Forsyth County Winston-Salem

PLAN DATE:	January 2013	REVIEWED BY:	HAB
PREPARED BY:	BJS	REVIEWED BY:	JTB

REVISIONS	INIT.	DATE

SEAL: NORTH CAROLINA PROFESSIONAL SEAL 19962 ENGINEER HENRY ALFRED BADGETT III

H. Alfred Badgett III 1/11/13
SIGNATURE DATE

CADD Filename: FS-22.dgn

09-JAN-2013 14:27
O:\Transportation\Traffic\Curr\100022712 Winston Salem Sig Sys\Comms and ITS\Splice Diagrams\Phase A\FS-22.dgn
12034

PROJECT REFERENCE NO.	SHEET NO.
C-5224A	FS-23

SPLICE ENCLOSURE NO.

19-6

(EXISTING)

SEE: CL A-198

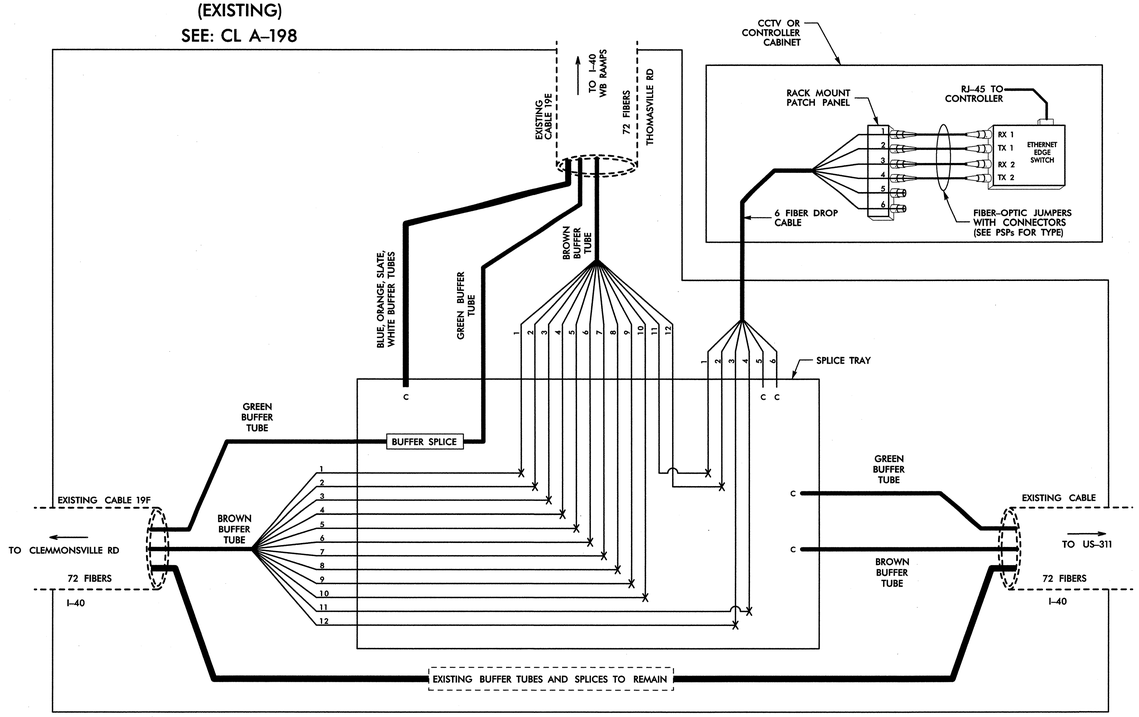

LEGEND

COLOR CODE TIA/EIA 598-B

(1) BLUE	(7) RED
(2) ORANGE	(8) BLACK
(3) GREEN	(9) YELLOW
(4) BROWN	(10) VIOLET
(5) SLATE	(11) ROSE
(6) WHITE	(12) AQUA

X = FUSION SPLICE INDIVIDUAL FIBER

C = CAP AND SEAL

EXPRESS = EXPRESS FIBERS THROUGH WITHOUT CUTTING

BUFFER SPLICE = SPLICE ALL FIBERS IN BUFFER TUBE COLOR TO COLOR

NOTES

1. UNUSED FIBERS LEFT COILED AND STORED IN SPLICE TRAY
2. UNUSED BUFFER TUBES LEFT COILED AND STORED IN SPLICE ENCLOSURE
3. EDGE SWITCH CONFIGURATIONS ARE GENERIC. CONTRACTOR IS RESPONSIBLE FOR DETERMINING/ENSURING THE PROPER TERMINATIONS.

ATKINS 1616 EAST MILLBROOK ROAD, SUITE 310
RALEIGH, NORTH CAROLINA 27609
(919) 876-6888 NCBEES #F-0326

Prepared for the Offices of: Transportation Mobility and Safety Division, State of North Carolina Department of Transportation, Statewide Transportation Systems
750 Greenfield Parkway, Garner, NC 27529

Winston-Salem Signal System
Fiber-Optic
Splicing Details
Phase A

Division 09 Forsyth County Winston-Salem

PLAN DATE:	January 2013	REVIEWED BY:	HAB
PREPARED BY:	BJS	REVIEWED BY:	JTB

SCALE	REVISIONS	INIT.	DATE
N.T.S.			

SEAL: NORTH CAROLINA PROFESSIONAL SEAL 19982 ENGINEER HENRY ALFRED BADGETT III

H. Alfred Badgett 1/11/13
SIGNATURE DATE

CADD Filename: FS-23.dgn

09-JAN-2013 14:27
C:\Transportation\Traffic\Curr\100022712 Winston Salem Sig Sys\Comms and ITS\Splice Diagrams\Phase A\FS-23.dgn
12054

PROJECT REFERENCE NO.	SHEET NO.
C-5224A	FS-24

SPLICE ENCLOSURE NO.

19-7

SEE: CL A-140

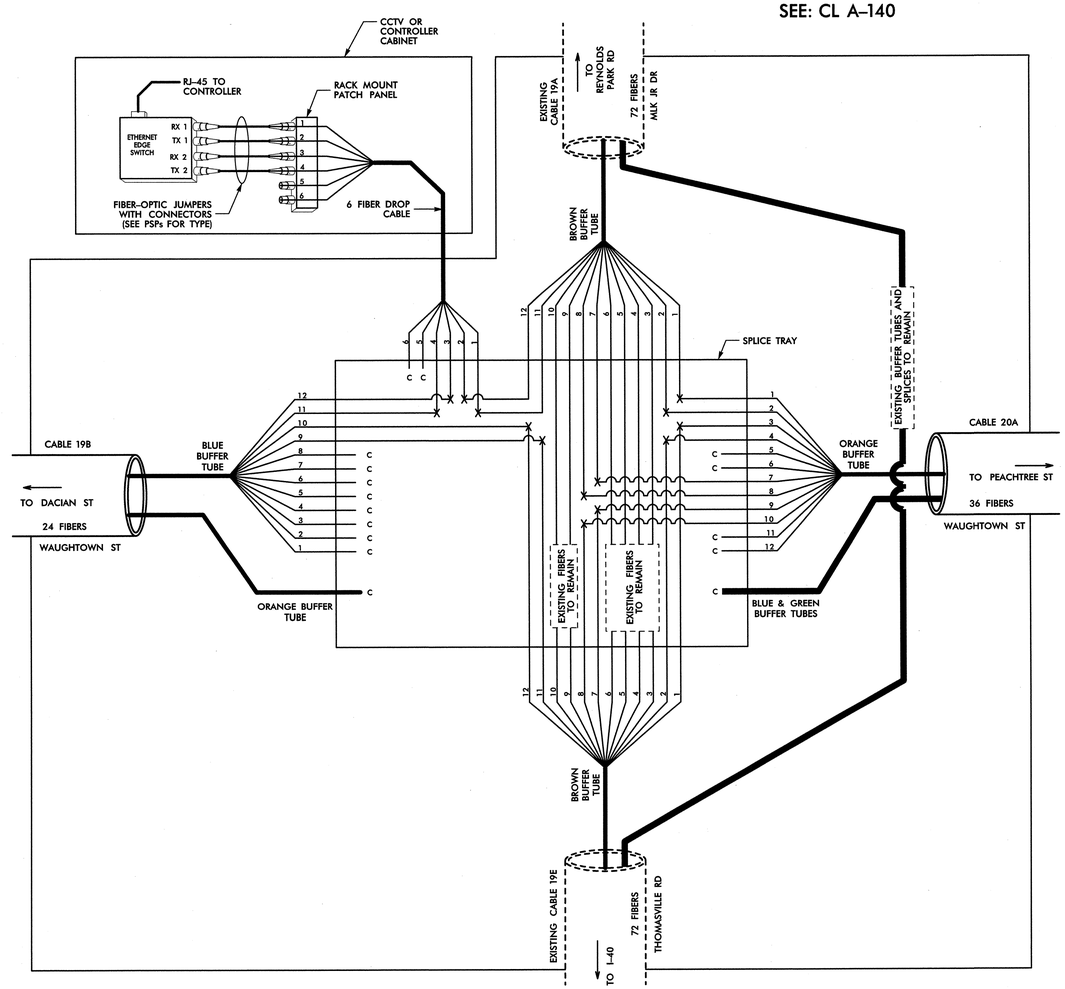

LEGEND

COLOR CODE TIA/EIA 598-B

(1) BLUE	(7) RED
(2) ORANGE	(8) BLACK
(3) GREEN	(9) YELLOW
(4) BROWN	(10) VIOLET
(5) SLATE	(11) ROSE
(6) WHITE	(12) AQUA

X = FUSION SPLICE INDIVIDUAL FIBER

C = CAP AND SEAL

EXPRESS = EXPRESS FIBERS THROUGH WITHOUT CUTTING

BUFFER SPLICE = SPLICE ALL FIBERS IN BUFFER TUBE COLOR TO COLOR

NOTES

1. UNUSED FIBERS LEFT COILED AND STORED IN SPLICE TRAY
2. UNUSED BUFFER TUBES LEFT COILED AND STORED IN SPLICE ENCLOSURE
3. EDGE SWITCH CONFIGURATIONS ARE GENERIC. CONTRACTOR IS RESPONSIBLE FOR DETERMINING/ENSURING THE PROPER TERMINATIONS.

ATKINS 1616 EAST MILLBROOK ROAD, SUITE 310
RALEIGH, NORTH CAROLINA 27609
(919) 876-6888 NCBEES #F-0326

Prepared for the Offices of: Transportation Mobility and Safety Division, State of North Carolina, Department of Transportation, Intelligent Transportation Systems

750 Greenfield Parkway, Garner, NC 27529

Winston-Salem Signal System
Fiber-Optic
Splicing Details
Phase A

Division 09 Forsyth County Winston-Salem

PLAN DATE:	January 2013	REVIEWED BY:	HAB
PREPARED BY:	BJS	REVIEWED BY:	JTB

SCALE: N.T.S.

REVISIONS	INIT.	DATE

SEAL

NORTH CAROLINA PROFESSIONAL SEAL 19962 ENGINEER HENRY ALFRED BADGETT, III

SIGNATURE DATE 1/9/13

CADD Filename: FS-24.dgn

09-JAN-2013 14:27
u:\transportation\Traffic\Curr\100022712 Winston Salem Sig Sys\Comms and ITS\Splice Diagrams\Phase A\FS-24.dgn
12094

PROJECT REFERENCE NO.	SHEET NO.
C-5224A	FS-25

SPLICE ENCLOSURE NO.

19-8

SEE: CL A-168

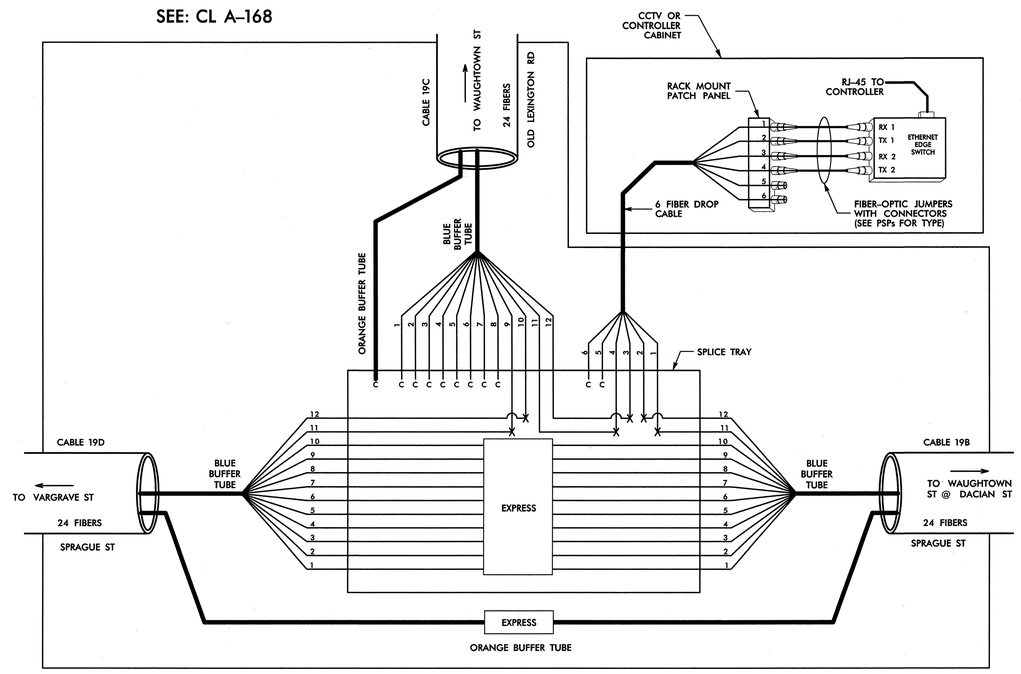

LEGEND

COLOR CODE TIA/EIA 598-B	
(1) BLUE	(7) RED
(2) ORANGE	(8) BLACK
(3) GREEN	(9) YELLOW
(4) BROWN	(10) VIOLET
(5) SLATE	(11) ROSE
(6) WHITE	(12) AQUA

X = FUSION SPLICE INDIVIDUAL FIBER

C = CAP AND SEAL

EXPRESS = EXPRESS FIBERS THROUGH WITHOUT CUTTING

BUFFER SPLICE = SPLICE ALL FIBERS IN BUFFER TUBE COLOR TO COLOR

NOTES

1. UNUSED FIBERS LEFT COILED AND STORED IN SPLICE TRAY
2. UNUSED BUFFER TUBES LEFT COILED AND STORED IN SPLICE ENCLOSURE
3. EDGE SWITCH CONFIGURATIONS ARE GENERIC. CONTRACTOR IS RESPONSIBLE FOR DETERMINING/ENSURING THE PROPER TERMINATIONS.

ATKINS 1616 EAST MILLBROOK ROAD, SUITE 310
RALEIGH, NORTH CAROLINA 27609
(919) 876-6888 NCBEES #F-0326

Prepared for the Offices of: Transportation Mobility and Safety Division, Intelligent Transportation Systems, Department of Transportation, State of North Carolina

750 Greenfield Parkway, Garner, NC 27529

Winston-Salem Signal System
Fiber-Optic
Splicing Details
Phase A

Division 09 Forsyth County Winston-Salem

PLAN DATE:	January 2013	REVIEWED BY:	HAB
PREPARED BY:	BJS	REVIEWED BY:	JTB

SCALE: N.T.S.

REVISIONS	INIT.	DATE

SEAL: NORTH CAROLINA PROFESSIONAL SEAL 19962 ENGINEER HENRY ALFRED BADGETT, III

SIGNATURE H Alfred Badgett DATE 1/16/13

CADD Filename: FS-25.dgn

09-JAN-2013 14:21
0:\Transportation\Traffic\Curr\100022712 Winston Salem Sig Sys\Comms and ITS\Splice Diagrams\Phase A\FS-25.dgn
12094

PROJECT REFERENCE NO.	SHEET NO.
C-5224A	FS-26

SPLICE ENCLOSURE NO. 20-1

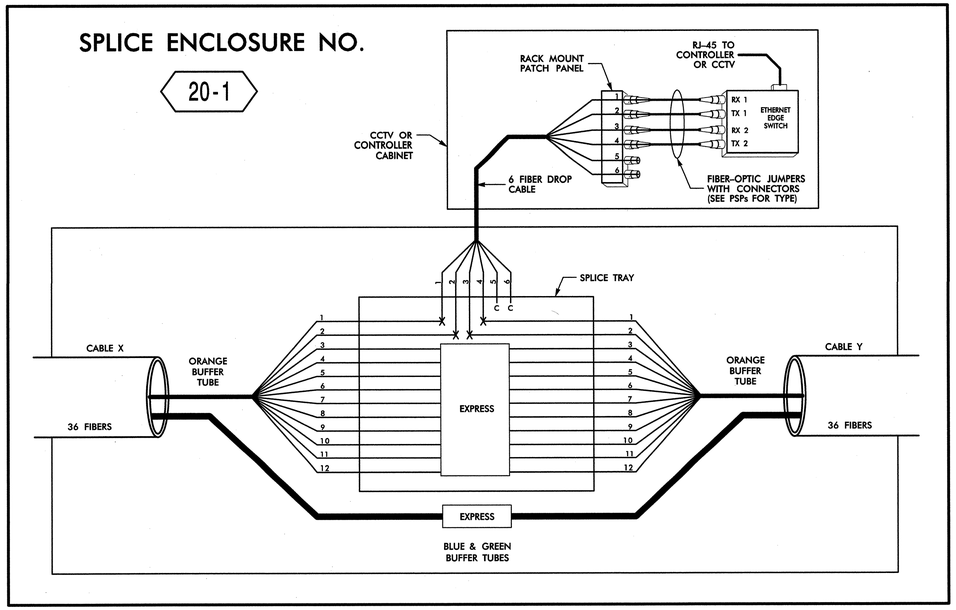

SPLICE ENCLOSURE NO. 20-1							
INTERSECTION NO.	CL SHEET	CABLE X			CABLE Y		
		CABLE NO.	ALONG ROUTE	TO	CABLE NO.	ALONG ROUTE	TO
C-298	CL A-189	20G	KERNERSVILLE RD	LINVILLE RD	20G	KERNERSVILLE RD	SEDGE GARDEN RD
09-0660	CL A-188	20G	KERNERSVILLE RD	HIGH POINT RD	20G	KERNERSVILLE RD	OAK GROVE CHURCH RD
09-0577	CL A-179	20G	KERNERSVILLE RD	REYNOLDS PARK RD	20G	KERNERSVILLE RD	LINVILLE RD
09-0271	CL A-179	20G	KERNERSVILLE RD	COLE RD	20G	KERNERSVILLE RD	HIGH POINT RD
09-0605	CL A-173	20C	WAUGHTOWN ST	PEACHTREE ST	20C	WAUGHTOWN ST	MARBLE ST

NOTE: ETHERNET EDGE SWITCH AT 09-0271 HAS RJ-45 CABLES TO BOTH CONTROLLER AND CCTV.

SPLICE ENCLOSURE NO. 20-2

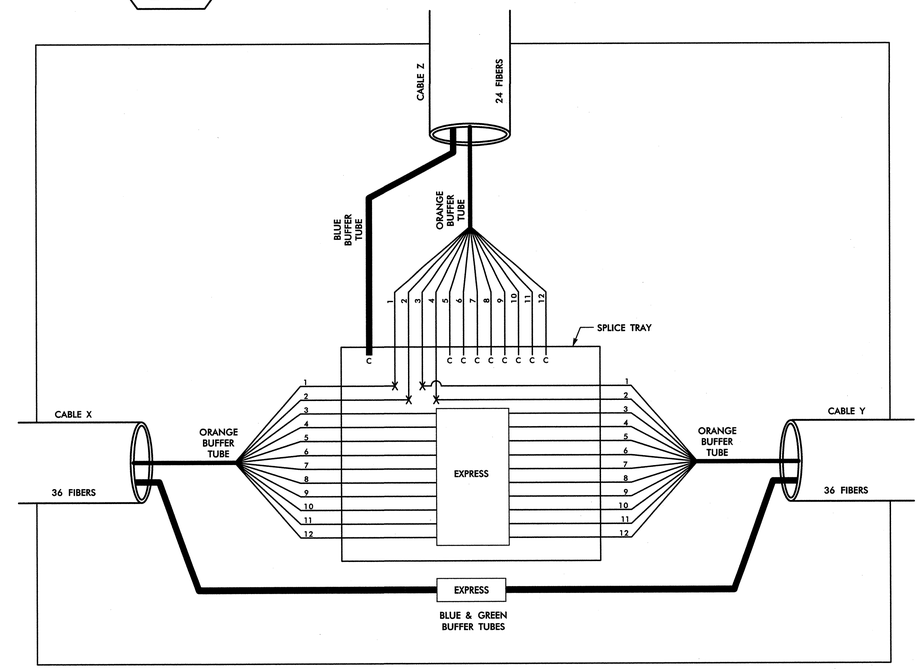

SPLICE ENCLOSURE NO. 20-2										
INTERSECTION NO.	CL SHEET	CABLE X			CABLE Y			CABLE Z		
		CABLE NO.	ALONG ROUTE	TO	CABLE NO.	ALONG ROUTE	TO	CABLE NO.	ALONG ROUTE	TO
WAUGHTOWN ST @ MARBLE ST	CL A-173	20C	WAUGHTOWN ST	PLEASANT ST	20E	WAUGHTOWN ST	COLE RD	20D	MARBLE ST	SPRAGUE ST
WAUGHTOWN ST @ COLE RD	CL A-178	20E	WAUGHTOWN ST	MARBLE ST	20G	WAUGHTOWN ST	REYNOLDS PARK RD	20F	COLE RD	SPRAGUE ST

SPLICE ENCLOSURE NO. 20-3

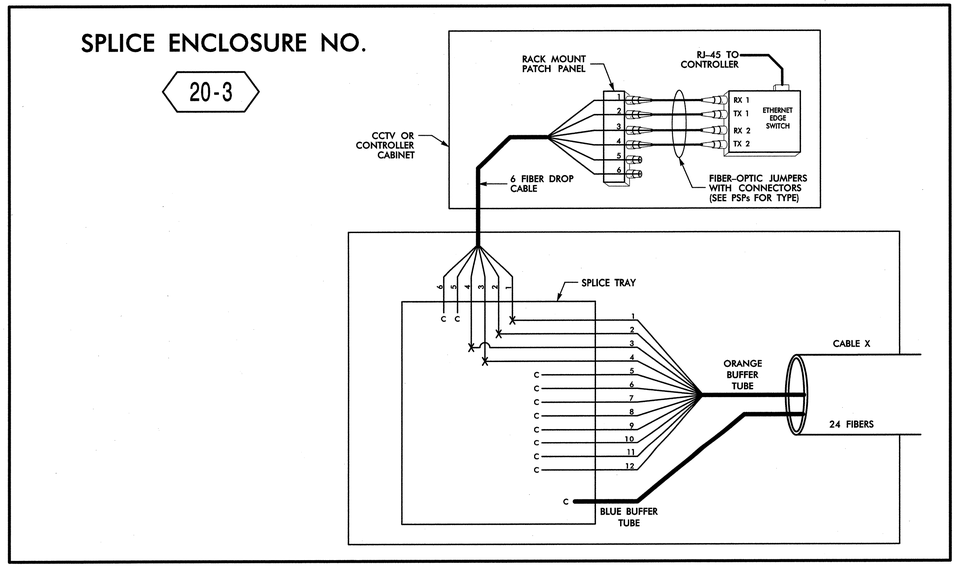

SPLICE ENCLOSURE NO. 20-3				
INTERSECTION NO.	CL SHEET	CABLE X		
		CABLE NO.	ALONG ROUTE	TO
C-135	CL A-199	20B	SPRAGUE ST	PEACHTREE ST
C-129	CL A-200	20D	MARBLE ST	WAUGHTOWN ST
C-332	CL A-201	20F	COLE RD	WAUGHTOWN ST

LEGEND

COLOR CODE TIA/EIA 598-B	
(1) BLUE	(7) RED
(2) ORANGE	(8) BLACK
(3) GREEN	(9) YELLOW
(4) BROWN	(10) VIOLET
(5) SLATE	(11) ROSE
(6) WHITE	(12) AQUA

X = FUSION SPLICE INDIVIDUAL FIBER

C = CAP AND SEAL

EXPRESS = EXPRESS FIBERS THROUGH WITHOUT CUTTING

BUFFER SPLICE = SPLICE ALL FIBERS IN BUFFER TUBE COLOR TO COLOR

NOTES

1. UNUSED FIBERS LEFT COILED AND STORED IN SPLICE TRAY
2. UNUSED BUFFER TUBES LEFT COILED AND STORED IN SPLICE ENCLOSURE
3. EDGE SWITCH CONFIGURATIONS ARE GENERIC. CONTRACTOR IS RESPONSIBLE FOR DETERMINING/ENSURING THE PROPER TERMINATIONS.

ATKINS 1616 EAST MILLBROOK ROAD, SUITE 310
RALEIGH, NORTH CAROLINA 27609
(919) 876-6888 NCBEES #F-0326

Prepared for the Offices of: Transportation Mobility and Safety Division, State of North Carolina Department of Transportation, Intelligent Transportation Systems
750 Greenfield Parkway, Garner, NC 27529

Winston-Salem Signal System
Fiber-Optic
Splicing Details
Phase A

Division 09 Forsyth County Winston-Salem

PLAN DATE: January 2013	REVIEWED BY: HAB
PREPARED BY: BJS	REVIEWED BY: JTB

SCALE	REVISIONS	INIT.	DATE
N.T.S.			

SEAL: NORTH CAROLINA PROFESSIONAL SEAL 19962 ENGINEER HENRY ALFRED BADGETT III

H. Alfred Badgett 1/8/13
SIGNATURE DATE

CADD Filename: FS-26.dgn

09-JAN-2013 14:27
D:*Transportation\Traffic\Curr*100022712 Winston Salem Sig Sys\Comms and ITS\Splice Diagrams\Phase A\FS-26.dgn
12054

PROJECT REFERENCE NO.	SHEET NO.
C-5224A	FS-27

SPLICE ENCLOSURE NO.

20-4

SEE: CL A-199

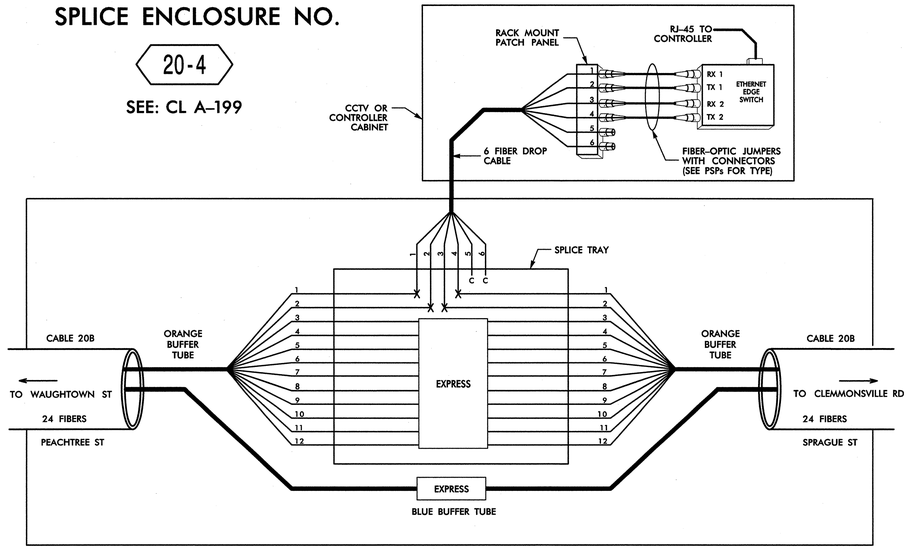

SPLICE ENCLOSURE NO.

20-5

SEE: CL A-190

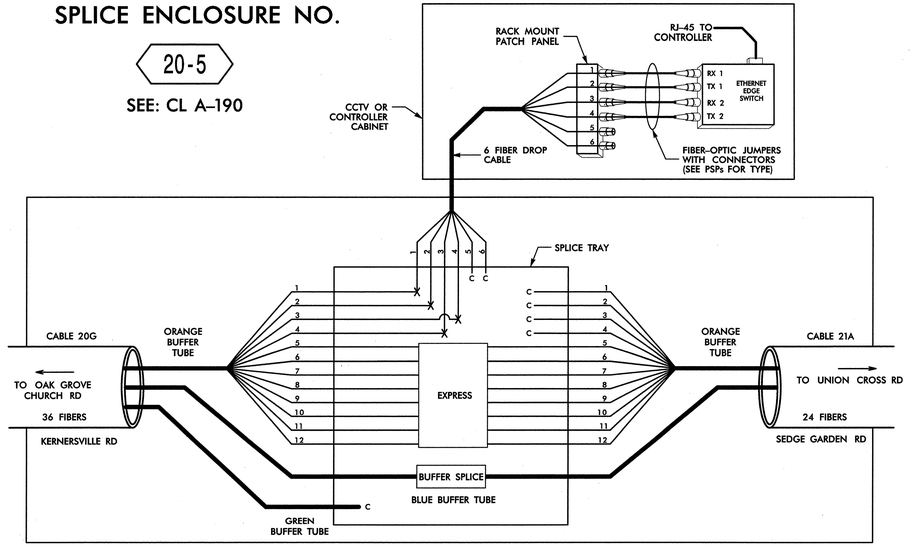

SPLICE ENCLOSURE NO.

20-6

SEE: CL A-171

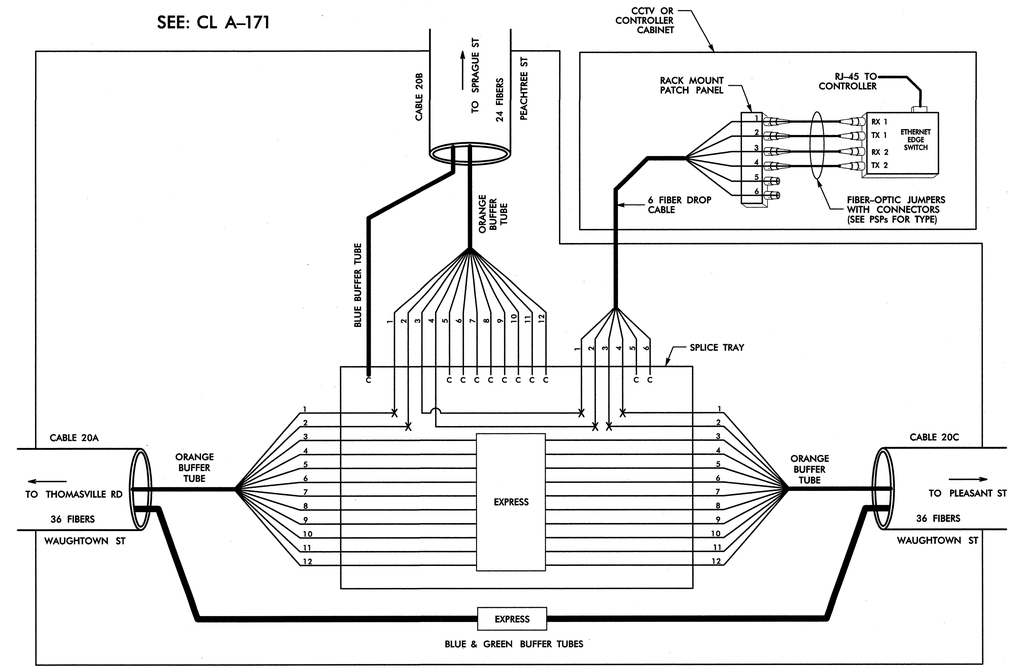

LEGEND

COLOR CODE TIA/EIA 598-B

(1) BLUE	(7) RED
(2) ORANGE	(8) BLACK
(3) GREEN	(9) YELLOW
(4) BROWN	(10) VIOLET
(5) SLATE	(11) ROSE
(6) WHITE	(12) AQUA

X = FUSION SPLICE INDIVIDUAL FIBER

C = CAP AND SEAL

EXPRESS = EXPRESS FIBERS THROUGH WITHOUT CUTTING

BUFFER SPLICE = SPLICE ALL FIBERS IN BUFFER TUBE COLOR TO COLOR

NOTES

1. UNUSED FIBERS LEFT COILED AND STORED IN SPLICE TRAY
2. UNUSED BUFFER TUBES LEFT COILED AND STORED IN SPLICE ENCLOSURE
3. EDGE SWITCH CONFIGURATIONS ARE GENERIC. CONTRACTOR IS RESPONSIBLE FOR DETERMINING/ENSURING THE PROPER TERMINATIONS.

ATKINS 1616 EAST MILLBROOK ROAD, SUITE 310
RALEIGH, NORTH CAROLINA 27609
(919) 876-6888 NCBEES #F-0326

Prepared for the Offices of:
Transportation Mobility and Safety Division
STATE OF NORTH CAROLINA
DEPARTMENT OF TRANSPORTATION
Intelligent Transportation Systems
750 Greenfield Parkway, Garner, NC 27529

Winston-Salem Signal System
Fiber-Optic
Splicing Details
Phase A

Division 09 Forsyth County Winston-Salem

PLAN DATE:	January 2013	REVIEWED BY:	HAB
PREPARED BY:	BJS	REVIEWED BY:	JTB

SCALE: N.T.S.

REVISIONS	INIT.	DATE

SEAL
NORTH CAROLINA PROFESSIONAL SEAL 19962 ENGINEER HENRY ALFRED BADGETT, III

H Alfred Badgett 1/11/13
SIGNATURE DATE

CADD Filename: FS-27.dgn

09-JAN-2013 14:27
O:\Transportation\Traffic\Curr\100022712 Winston Salem Sig Sys\Comms and ITS\Splice Diagrams\Phase A\FS-27.dgn
12054

PROJECT REFERENCE NO.	SHEET NO.
C-5224A	FS-28

SPLICE ENCLOSURE NO.

21-1

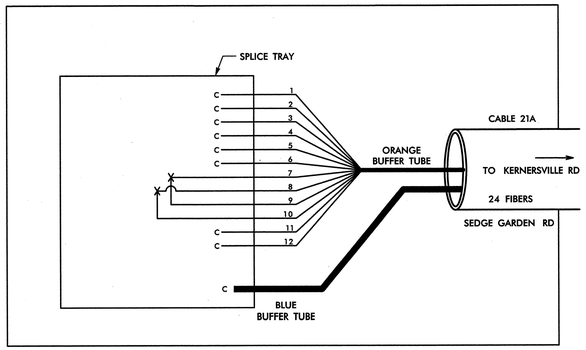

SPLICE ENCLOSURE NO.

22-1

SEE: CL A-027

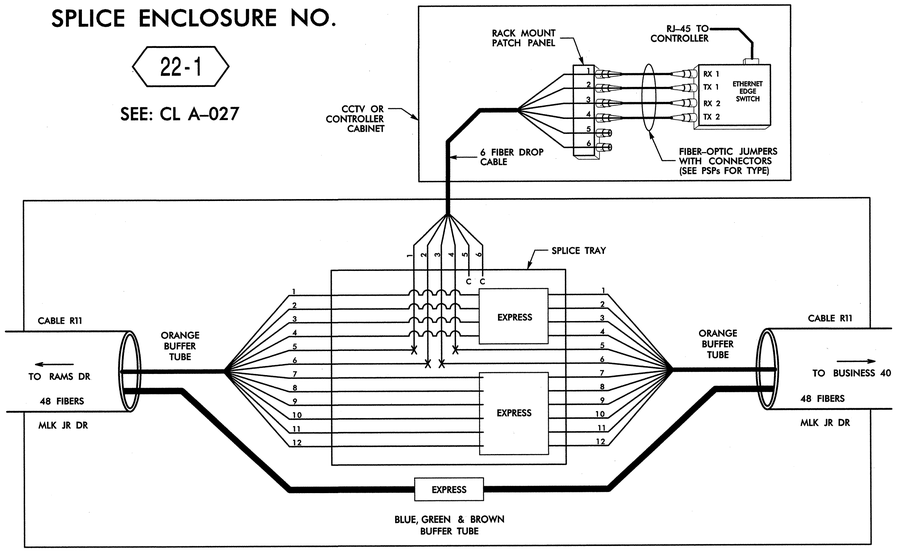

LEGEND

COLOR CODE TIA/EIA 598-B

(1) BLUE	(7) RED
(2) ORANGE	(8) BLACK
(3) GREEN	(9) YELLOW
(4) BROWN	(10) VIOLET
(5) SLATE	(11) ROSE
(6) WHITE	(12) AQUA

X = FUSION SPLICE INDIVIDUAL FIBER

C = CAP AND SEAL

EXPRESS = EXPRESS FIBERS THROUGH WITHOUT CUTTING

BUFFER SPLICE = SPLICE ALL FIBERS IN BUFFER TUBE COLOR TO COLOR

NOTES

1. UNUSED FIBERS LEFT COILED AND STORED IN SPLICE TRAY
2. UNUSED BUFFER TUBES LEFT COILED AND STORED IN SPLICE ENCLOSURE
3. EDGE SWITCH CONFIGURATIONS ARE GENERIC. CONTRACTOR IS RESPONSIBLE FOR DETERMINING/ENSURING THE PROPER TERMINATIONS.

ATKINS
1616 EAST MILLBROOK ROAD, SUITE 310
RALEIGH, NORTH CAROLINA 27609
(919) 876-6888 NCBEES #F-0326

Prepared for the Offices of:
Transportation Mobility and Safety Division
STATE OF NORTH CAROLINA DEPARTMENT OF TRANSPORTATION
Intelligent Transportation Systems
750 Greenfield Parkway, Garner, NC 27529

SCALE: N.T.S.

Winston-Salem Signal System Fiber-Optic Splicing Details Phase A

Division 09 Forsyth County Winston-Salem

PLAN DATE:	January 2013	REVIEWED BY:	HAB
PREPARED BY:	BJS	REVIEWED BY:	JTB

REVISIONS	INIT.	DATE

SEAL
NORTH CAROLINA PROFESSIONAL SEAL 19902 ENGINEER HENRY ALFRED BADGETT, III

SIGNATURE H. Alfred Badgett DATE 1/11/13

CADD Filename: FS-28.dgn

09-JAN-2013 14:27
G:\Transportation\Traffic\Curr\100022712 Winston Salem Sig Sys\Comms and ITS\Splice Diagrams\Phase A\FS-28.dgn
12054

PROJECT REFERENCE NO.	SHEET NO.
C-5224A	FS-29

SPLICE ENCLOSURE NO.

22-2

SEE: CL A-024

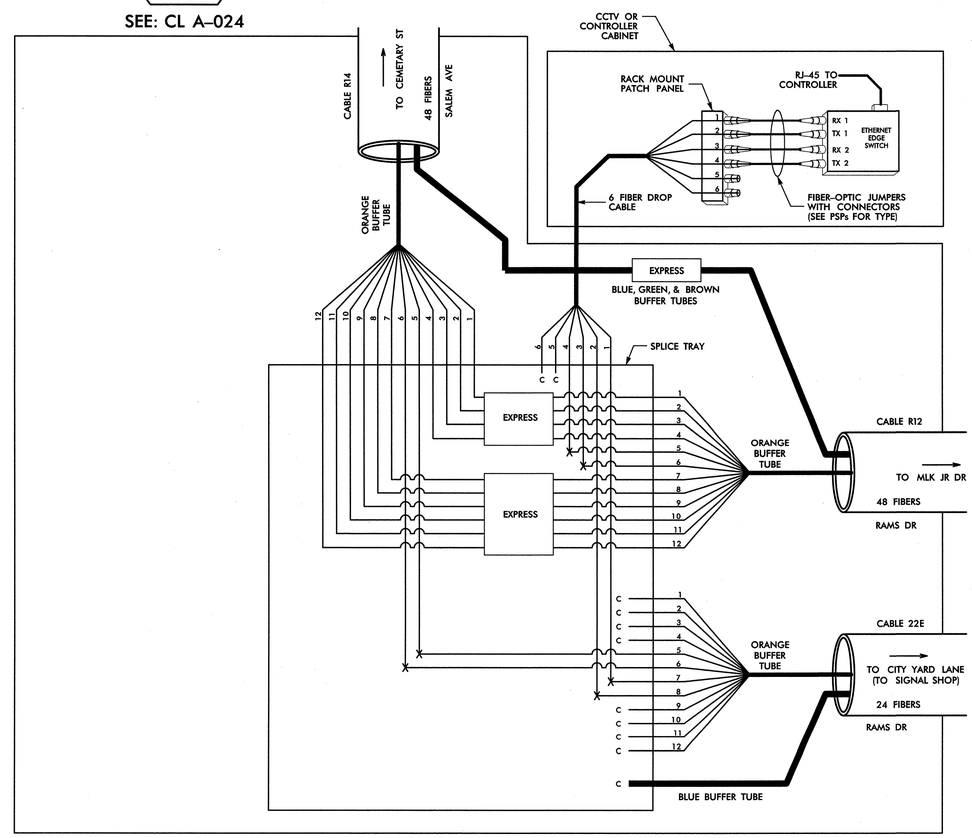

LEGEND

COLOR CODE TIA/EIA 598-B	
(1) BLUE	(7) RED
(2) ORANGE	(8) BLACK
(3) GREEN	(9) YELLOW
(4) BROWN	(10) VIOLET
(5) SLATE	(11) ROSE
(6) WHITE	(12) AQUA

X = FUSION SPLICE INDIVIDUAL FIBER

C = CAP AND SEAL

EXPRESS = EXPRESS FIBERS THROUGH WITHOUT CUTTING

BUFFER SPLICE = SPLICE ALL FIBERS IN BUFFER TUBE COLOR TO COLOR

NOTES

1. UNUSED FIBERS LEFT COILED AND STORED IN SPLICE TRAY
2. UNUSED BUFFER TUBES LEFT COILED AND STORED IN SPLICE ENCLOSURE
3. EDGE SWITCH CONFIGURATIONS ARE GENERIC. CONTRACTOR IS RESPONSIBLE FOR DETERMINING/ENSURING THE PROPER TERMINATIONS.

ATKINS 1616 EAST MILLBROOK ROAD, SUITE 310
RALEIGH, NORTH CAROLINA 27609
(919) 876-6888 NCBEES #F-0326

Prepared for the Offices of: Transportation Mobility and Safety Division, Intelligent Transportation Systems, Department of Transportation State of North Carolina
750 Greenfield Parkway, Garner, NC 27529

Winston-Salem Signal System
Fiber-Optic
Splicing Details
Phase A

Division 09 Forsyth County Winston-Salem

PLAN DATE:	January 2013	REVIEWED BY:	HAB
PREPARED BY:	BJS	REVIEWED BY:	JTB

SCALE	REVISIONS	INIT.	DATE
N.T.S.			

SEAL: NORTH CAROLINA PROFESSIONAL SEAL 19962 ENGINEER HENRY ALFRED BADGETT, III

SIGNATURE H. Alfred Badgett DATE 1/11/13

CADD Filename: FS-29.dgn

09-JAN-2013 14:27
D:*Transportation\Traffic\Curr*100022712 Winston Salem Sig Sys\Comms and ITS\Splice Diagrams\Phase A\FS-29.dgn
12054

PROJECT REFERENCE NO.	SHEET NO.
C-5224A	FS-30

HUB C SPLICE NO.

22-3

SEE: CL A-026

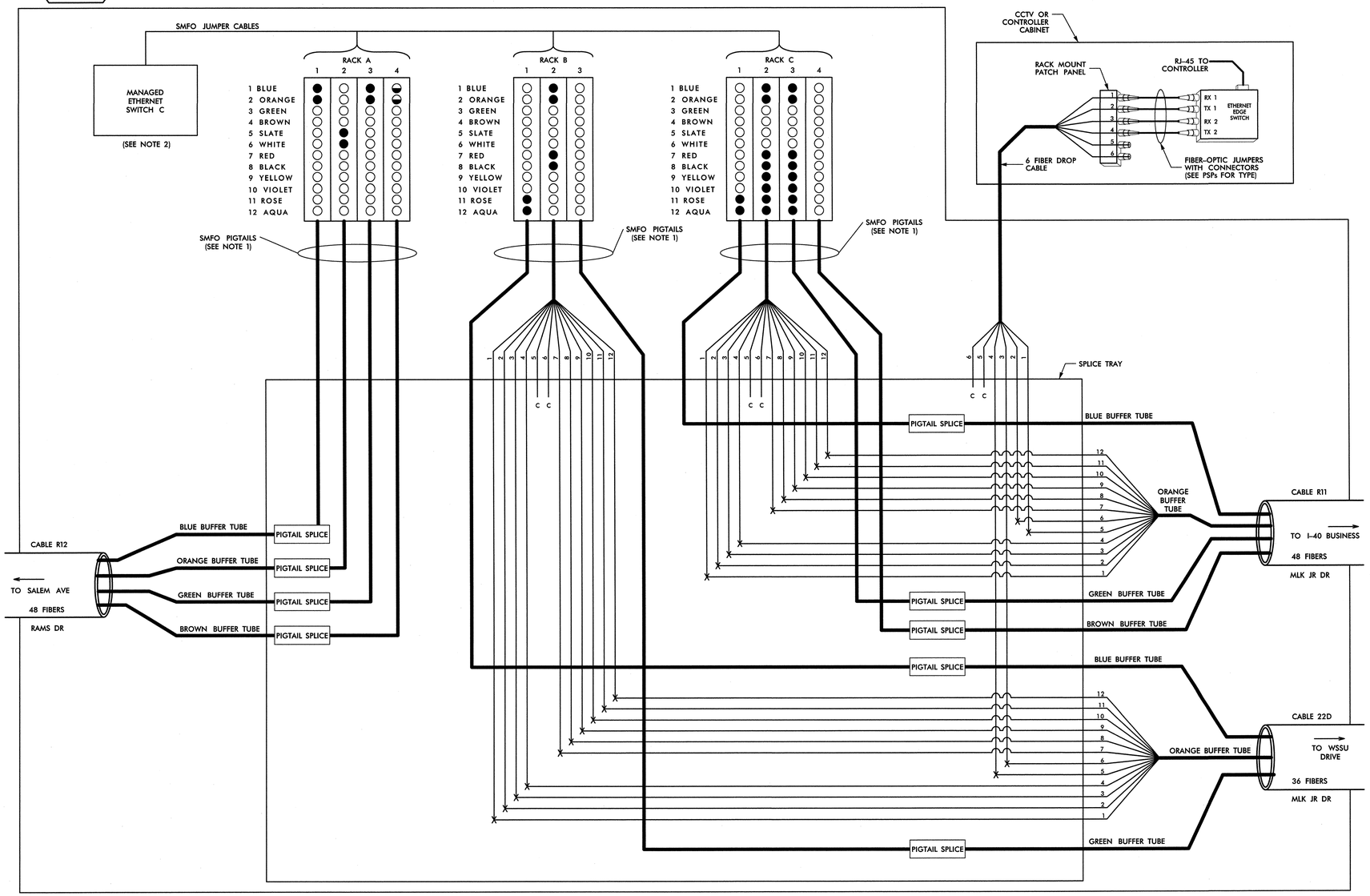

RACK A

SLOT 1

1 BLUE	RING 18 TX
2 ORANGE	RING 18 RX
3 GREEN	DARK
4 BROWN	DARK
5 SLATE	DARK
6 WHITE	DARK
7 RED	DARK
8 BLACK	DARK
9 YELLOW	DARK
10 VIOLET	DARK
11 ROSE	DARK
12 AQUA	DARK

SLOT 2

1 BLUE	DARK
2 ORANGE	DARK
3 GREEN	DARK
4 BROWN	DARK
5 SLATE	RING 22 RX
6 WHITE	RING 22 TX
7 RED	DARK
8 BLACK	DARK
9 YELLOW	DARK
10 VIOLET	DARK
11 ROSE	DARK
12 AQUA	DARK

SLOT 3

1 BLUE	RING RED1 TX
2 ORANGE	RING RED1 RX
3 GREEN	DARK
4 BROWN	DARK
5 SLATE	DARK
6 WHITE	DARK
7 RED	DARK
8 BLACK	DARK
9 YELLOW	DARK
10 VIOLET	DARK
11 ROSE	DARK
12 AQUA	DARK

SLOT 4

1 BLUE	RING 33 TX *
2 ORANGE	RING 33 RX *
3 GREEN	RING
4 BROWN	RING
5 SLATE	DARK
6 WHITE	DARK
7 RED	DARK
8 BLACK	DARK
9 YELLOW	DARK
10 VIOLET	DARK
11 ROSE	DARK
12 AQUA	DARK

* BY OTHERS (SEE NOTE 4)

RACK C

SLOT 1

1 BLUE	DARK
2 ORANGE	DARK
3 GREEN	DARK
4 BROWN	DARK
5 SLATE	DARK
6 WHITE	DARK
7 RED	DARK
8 BLACK	DARK
9 YELLOW	DARK
10 VIOLET	DARK
11 ROSE	RING 26 RX
12 AQUA	RING 26 TX

SLOT 2

1 BLUE	RING 27 RX
2 ORANGE	RING 27 TX
3 GREEN	DARK
4 BROWN	DARK
5 SLATE	DARK
6 WHITE	DARK
7 RED	RING 23 RX
8 BLACK	RING 23 TX
9 YELLOW	RING 24 RX
10 VIOLET	RING 24 TX
11 ROSE	RING 29 RX
12 AQUA	RING 29 TX

SLOT 3

1 BLUE	RING RED1 RX
2 ORANGE	RING RED1 TX
3 GREEN	DARK
4 BROWN	DARK
5 SLATE	DARK
6 WHITE	DARK
7 RED	RING 32 RX
8 BLACK	RING 32 TX
9 YELLOW	RING W3 RX
10 VIOLET	RING W3 TX
11 ROSE	RING W4 RX
12 AQUA	RING W4 TX

SLOT 4

1 BLUE	DARK
2 ORANGE	DARK
3 GREEN	DARK
4 BROWN	DARK
5 SLATE	DARK
6 WHITE	DARK
7 RED	DARK
8 BLACK	DARK
9 YELLOW	DARK
10 VIOLET	DARK
11 ROSE	DARK
12 AQUA	DARK

RACK B

SLOT 1

1 BLUE	DARK
2 ORANGE	DARK
3 GREEN	DARK
4 BROWN	DARK
5 SLATE	DARK
6 WHITE	DARK
7 RED	DARK
8 BLACK	DARK
9 YELLOW	DARK
10 VIOLET	DARK
11 ROSE	RING 19 TX
12 AQUA	RING 19 RX

SLOT 2

1 BLUE	RING 20 TX
2 ORANGE	RING 20 RX
3 GREEN	DARK
4 BROWN	DARK
5 SLATE	DARK
6 WHITE	DARK
7 RED	RING 21 TX
8 BLACK	RING 21 RX
9 YELLOW	DARK
10 VIOLET	DARK
11 ROSE	DARK
12 AQUA	DARK

SLOT 3

1 BLUE	DARK
2 ORANGE	DARK
3 GREEN	DARK
4 BROWN	DARK
5 SLATE	DARK
6 WHITE	DARK
7 RED	DARK
8 BLACK	DARK
9 YELLOW	DARK
10 VIOLET	DARK
11 ROSE	DARK
12 AQUA	DARK

NOTES:

1. SPLICE SMFO PIGTAILS TO BUFFER TUBES COLOR TO COLOR.
2. INSTALL SMFO JUMPER CABLES FROM PORTS DENOTED BY FILLED CIRCLES IN RACKS TO MANAGED ETHERNET SWITCH.
3. HALF-FILLED CIRCLES IN RACKS INDICATE FUTURE USE BY OTHERS (U-2925).
4. RING 33 SHALL BE THE FUTURE TRAFFIC SIGNALS ON U-2925.

ATKINS 1616 EAST MILLBROOK ROAD, SUITE 310
RALEIGH, NORTH CAROLINA 27609
(919) 876-6888 NCBEES #F-0326

LEGEND

COLOR CODE TIA/EIA 598-B

(1) BLUE	(7) RED
(2) ORANGE	(8) BLACK
(3) GREEN	(9) YELLOW
(4) BROWN	(10) VIOLET
(5) SLATE	(11) ROSE
(6) WHITE	(12) AQUA

X = FUSION SPLICE INDIVIDUAL FIBER

C = CAP AND SEAL

EXPRESS = EXPRESS FIBERS THROUGH WITHOUT CUTTING

BUFFER SPLICE = SPLICE ALL FIBERS IN BUFFER TUBE COLOR TO COLOR

NOTES

1. UNUSED FIBERS LEFT COILED AND STORED IN SPLICE TRAY
2. UNUSED BUFFER TUBES LEFT COILED AND STORED IN SPLICE ENCLOSURE
3. EDGE SWITCH CONFIGURATIONS ARE GENERIC. CONTRACTOR IS RESPONSIBLE FOR DETERMINING/ENSURING THE PROPER TERMINATIONS.

Prepared for the Offices of: Transportation Mobility and Safety Division, Intelligent Transportation Systems, Bureau of Transportation Systems, Department of Transportation, State of North Carolina

750 Greenfield Parkway, Garner, NC 27529

SCALE: N.T.S.

Winston-Salem Signal System Fiber-Optic Splicing Details Phase A

Division 09 Forsyth County Winston-Salem

PLAN DATE:	January 2013	REVIEWED BY:	HAB
PREPARED BY:	BJS	REVIEWED BY:	JTB

REVISIONS	INIT.	DATE

SEAL

NORTH CAROLINA PROFESSIONAL SEAL 19962 ENGINEER HENRY ALFRED BADGETT, III

SIGNATURE DATE 1/11/13

CADD Filename: FS-30.dgn

18-MAR-2013 13:01
O:\Transportation\Traffic\Curr\100022712 Winston Salem Sig Sys\Comms and ITS\Splice Diagrams\Phase A\FS-30.dgn
12054

PROJECT REFERENCE NO.	SHEET NO.
C-5224A	FS-31

SPLICE ENCLOSURE NO.

22-4

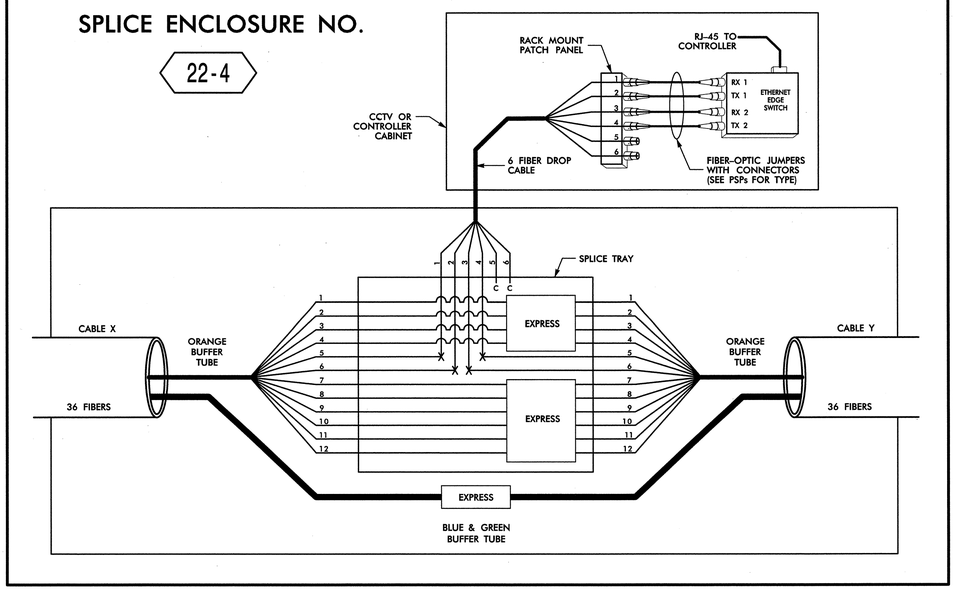

SPLICE ENCLOSURE NO. 22-4							
INTERSECTION NO.	CL SHEET	CABLE X			CABLE Y		
		CABLE NO.	ALONG ROUTE	TO	CABLE NO.	ALONG ROUTE	TO
C-083	CL A-134	22D	MLK JR DR	RAMS DR	22D	MLK JR DR	WSSU X-WALK
C-213	CL A-134	22D	MLK JR DR	WSSU DR	22D	MLK JR DR	REYNOLDS PARK DR

LEGEND

COLOR CODE TIA/EIA 598-B

(1) BLUE	(7) RED
(2) ORANGE	(8) BLACK
(3) GREEN	(9) YELLOW
(4) BROWN	(10) VIOLET
(5) SLATE	(11) ROSE
(6) WHITE	(12) AQUA

X = FUSION SPLICE INDIVIDUAL FIBER

C = CAP AND SEAL

EXPRESS = EXPRESS FIBERS THROUGH WITHOUT CUTTING

BUFFER SPLICE = SPLICE ALL FIBERS IN BUFFER TUBE COLOR TO COLOR

NOTES

1. UNUSED FIBERS LEFT COILED AND STORED IN SPLICE TRAY
2. UNUSED BUFFER TUBES LEFT COILED AND STORED IN SPLICE ENCLOSURE
3. EDGE SWITCH CONFIGURATIONS ARE GENERIC. CONTRACTOR IS RESPONSIBLE FOR DETERMINING/ENSURING THE PROPER TERMINATIONS.

ATKINS 1616 EAST MILLBROOK ROAD, SUITE 310
RALEIGH, NORTH CAROLINA 27609
(919) 876-6888 NCBEES #F-0326

Prepared for the Offices of:
Transportation Mobility and Safety Division
STATE OF NORTH CAROLINA DEPARTMENT OF TRANSPORTATION
Intelligent Transportation Systems
750 Greenfield Parkway, Garner, NC 27529

Winston-Salem Signal System
Fiber-Optic
Splicing Details
Phase A

Division 09 Forsyth County Winston-Salem

PLAN DATE:	January 2013	REVIEWED BY:	HAB
PREPARED BY:	BJS	REVIEWED BY:	JTB

SCALE: N.T.S.

REVISIONS	INIT.	DATE

SEAL: NORTH CAROLINA PROFESSIONAL SEAL 19992 ENGINEER HENRY ALFRED BADGETT III

SIGNATURE H. Alfred Badgett DATE 1/11/13

CADD Filename: FS-31.dgn

09-JAN-2013 14:27
D:\Transportation\Traffic\Curr\100022712 Winston Salem Sig Sys\Comms and ITS\Splice Diagrams\Phase A\FS-31.dgn
12054

PROJECT REFERENCE NO.	SHEET NO.
C-5224A	FS-32

SPLICE ENCLOSURE NO.

22-5

SEE: CL A-135

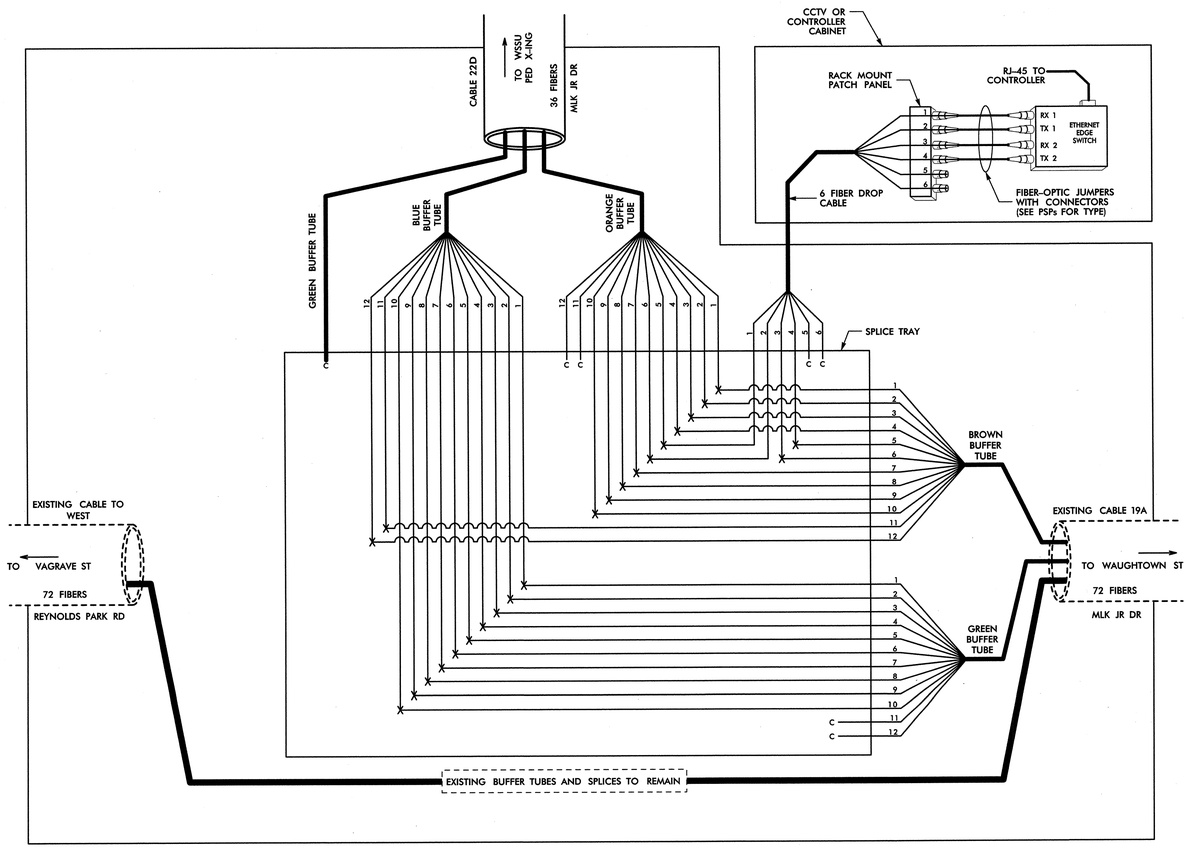

LEGEND

COLOR CODE TIA/EIA 598-B	
(1) BLUE	(7) RED
(2) ORANGE	(8) BLACK
(3) GREEN	(9) YELLOW
(4) BROWN	(10) VIOLET
(5) SLATE	(11) ROSE
(6) WHITE	(12) AQUA

X = FUSION SPLICE INDIVIDUAL FIBER

C = CAP AND SEAL

EXPRESS = EXPRESS FIBERS THROUGH WITHOUT CUTTING

BUFFER SPLICE = SPLICE ALL FIBERS IN BUFFER TUBE COLOR TO COLOR

NOTES

1. UNUSED FIBERS LEFT COILED AND STORED IN SPLICE TRAY
2. UNUSED BUFFER TUBES LEFT COILED AND STORED IN SPLICE ENCLOSURE
3. EDGE SWITCH CONFIGURATIONS ARE GENERIC. CONTRACTOR IS RESPONSIBLE FOR DETERMINING/ENSURING THE PROPER TERMINATIONS.

ATKINS 1616 EAST MILLBROOK ROAD, SUITE 310
RALEIGH, NORTH CAROLINA 27609
(919) 876-6888 NCBEES #F-0326

Prepared for the Offices of: Transportation Mobility and Safety Division, Intelligent Transportation Systems, State of North Carolina Department of Transportation

750 Greenfield Parkway, Garner, NC 27529

Winston-Salem Signal System
Fiber-Optic
Splicing Details
Phase A

Division 09 Forsyth County Winston-Salem

PLAN DATE:	January 2013	REVIEWED BY:	HAB
PREPARED BY:	BJS	REVIEWED BY:	JTB

SCALE: N.T.S.

REVISIONS	INIT.	DATE

SEAL: NORTH CAROLINA PROFESSIONAL SEAL 19962 ENGINEER HENRY ALFRED BADGETT III

SIGNATURE H Alfred Badgett DATE 1/11/13

CADD Filename: FS-32.dgn

09-JAN-2013 14:27
u:\Transportation\Traffic\Curr\10022712 Winston Salem Sig Sys\Comms and ITS\Splice Diagrams\Phase A\FS-32.dgn
12294

PROJECT REFERENCE NO.	SHEET NO.
C-5224A	FS-33

SPLICE ENCLOSURE NO.

22-6

SEE: CL A-027

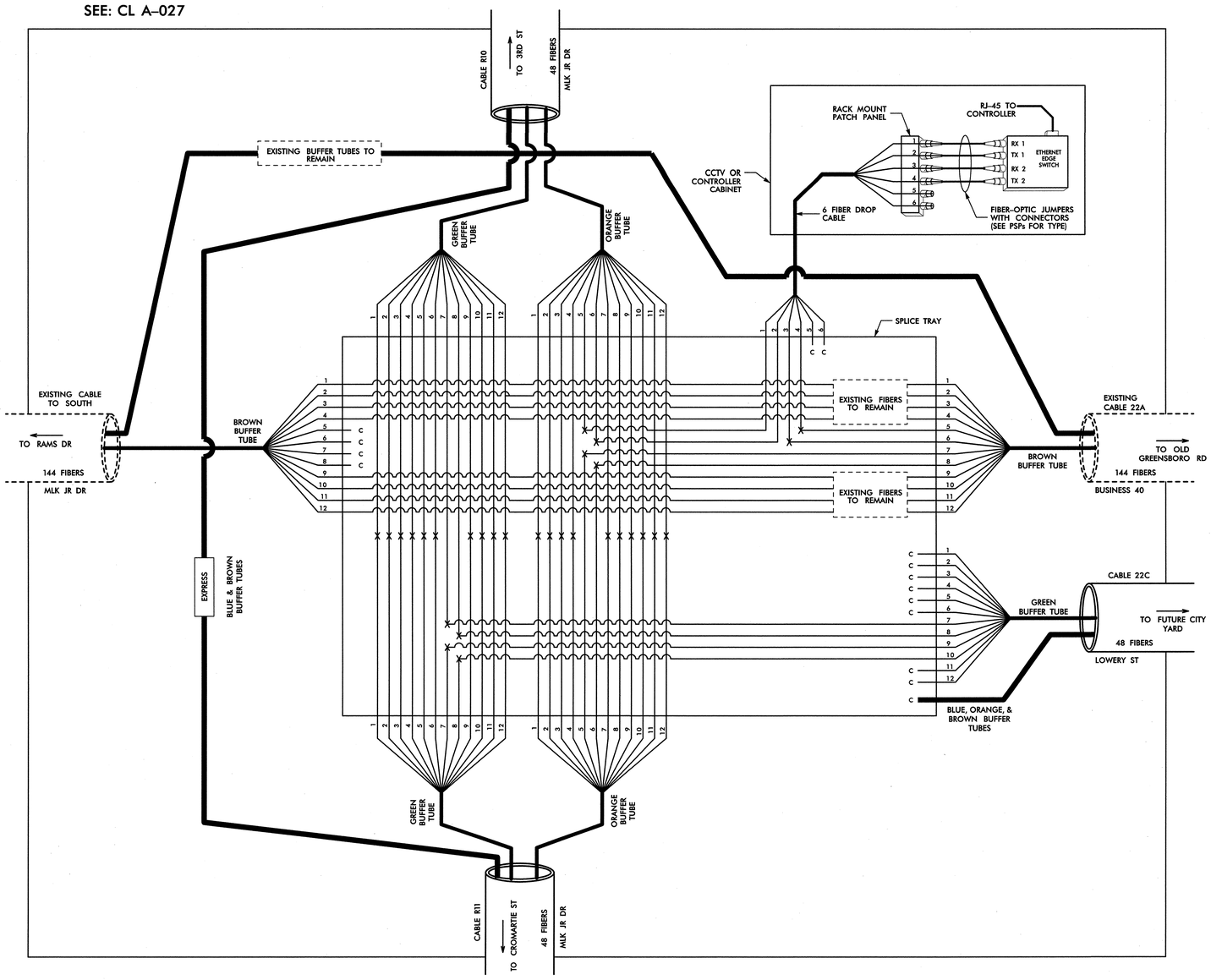

ATKINS 1616 EAST MILLBROOK ROAD, SUITE 310
RALEIGH, NORTH CAROLINA 27609
(919) 876-6888 NCBEES #F-0326

LEGEND

COLOR CODE TIA/EIA 598-B

(1) BLUE	(7) RED
(2) ORANGE	(8) BLACK
(3) GREEN	(9) YELLOW
(4) BROWN	(10) VIOLET
(5) SLATE	(11) ROSE
(6) WHITE	(12) AQUA

X = FUSION SPLICE INDIVIDUAL FIBER

C = CAP AND SEAL

EXPRESS = EXPRESS FIBERS THROUGH WITHOUT CUTTING

BUFFER SPLICE = SPLICE ALL FIBERS IN BUFFER TUBE COLOR TO COLOR

NOTES

1. UNUSED FIBERS LEFT COILED AND STORED IN SPLICE TRAY
2. UNUSED BUFFER TUBES LEFT COILED AND STORED IN SPLICE ENCLOSURE
3. EDGE SWITCH CONFIGURATIONS ARE GENERIC. CONTRACTOR IS RESPONSIBLE FOR DETERMINING/ENSURING THE PROPER TERMINATIONS.

Prepared for the Offices of:
Transportation Mobility and Safety Division
STATE OF NORTH CAROLINA
DEPARTMENT OF TRANSPORTATION
Intelligent Transportation Systems
750 Greenfield Parkway, Garner, NC 27529

Winston-Salem Signal System
Fiber-Optic
Splicing Details
Phase A

Division 09 Forsyth County Winston-Salem

PLAN DATE:	January 2013	REVIEWED BY:	HAB
PREPARED BY:	BJS	REVIEWED BY:	JTB

SCALE: N.T.S.

REVISIONS	INIT.	DATE

SEAL

NORTH CAROLINA PROFESSIONAL SEAL 19962 ENGINEER HENRY ALFRED BADGETT, III

H. Alfred Badgett 1/11/13
SIGNATURE DATE

CADD Filename: FS-33.dgn

09-JAN-2013 14:27
O:\Transportation\Traffic\Curr\100022712 Winston Salem Sig Sys\Comms and ITS\Splice Diagrams\Phase A\FS-33.dgn
12054

PROJECT REFERENCE NO.	SHEET NO.
C-5224A	FS-34

SPLICE ENCLOSURE NO.

22-7

SEE: CL A–210

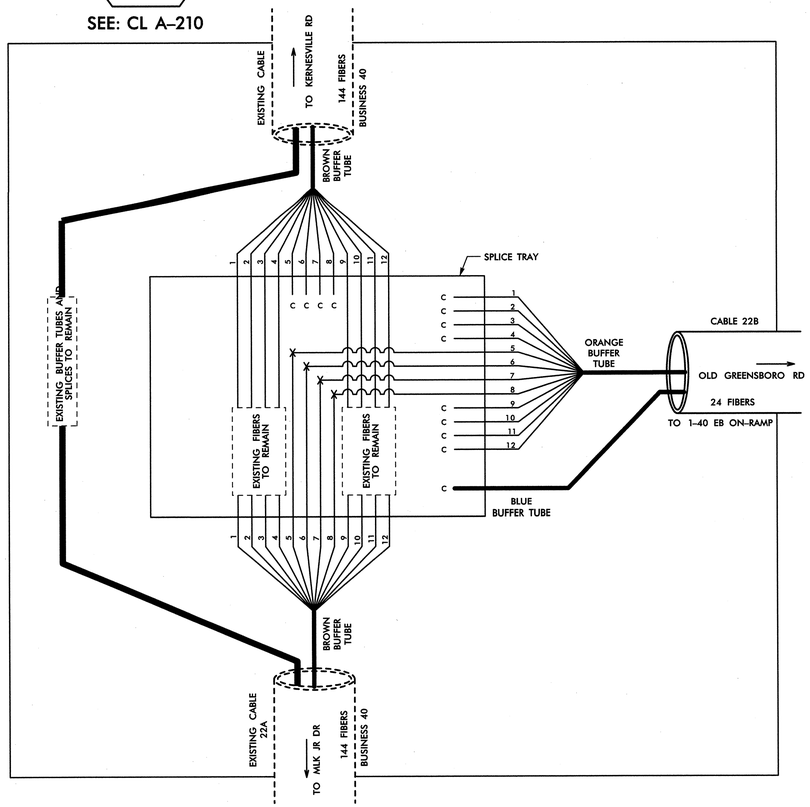

SPLICE ENCLOSURE NO.

22-8

SEE: CL A–210

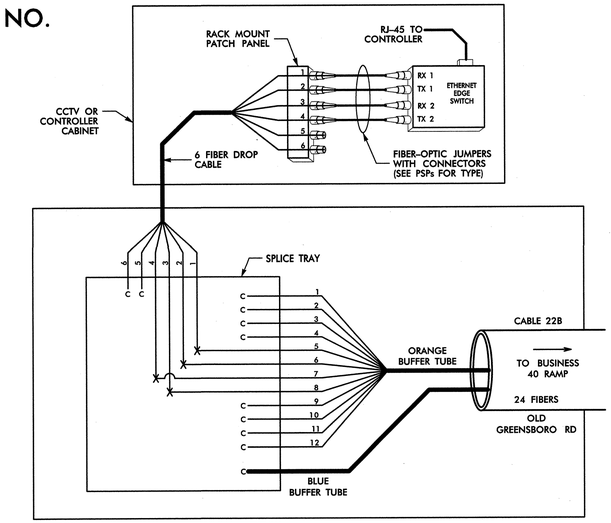

SPLICE ENCLOSURE NO.

22-9

SEE: CL A–210

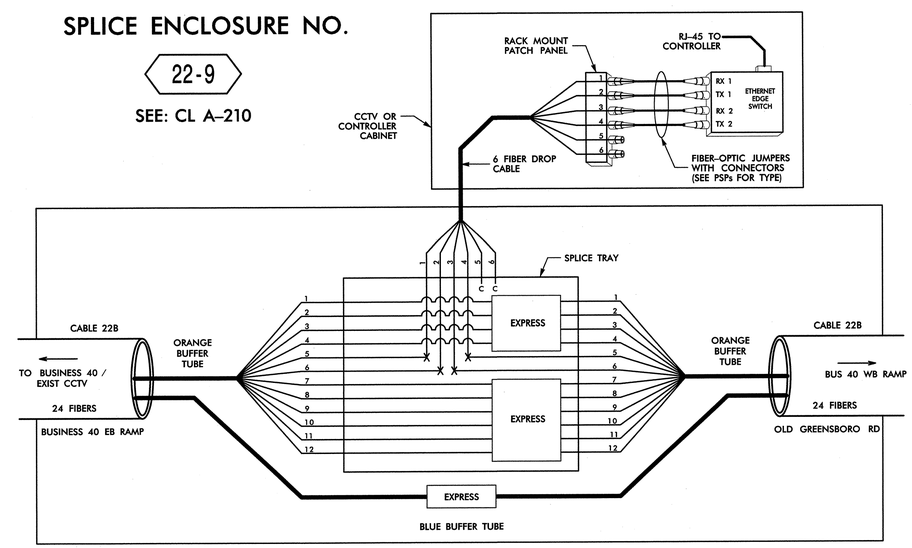

EXISTING SIGNAL SHOP SPLICE NO.

22-10

SEE: CL A–053

NOTES:

1. SPLICE SMFO PIGTAILS TO BUFFER TUBES COLOR TO COLOR.
2. INSTALL SMFO JUMPER CABLES FROM PORTS DENOTED BY FILLED CIRCLES IN RACKS TO MANAGED ETHERNET SWITCH.

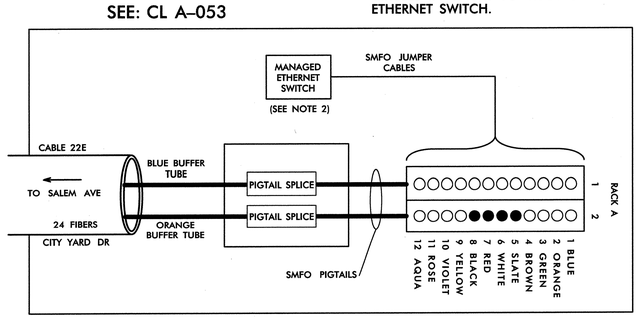

RACK A

SLOT 2		
1	BLUE	DARK
2	ORANGE	DARK
3	GREEN	DARK
4	BROWN	DARK
5	SLATE	DARK
6	WHITE	DARK
7	RED	DARK
8	BLACK	DARK
9	YELLOW	DARK
10	VIOLET	DARK
11	ROSE	DARK
12	AQUA	DARK

RACK B

SLOT 2		
1	BLUE	DARK
2	ORANGE	DARK
3	GREEN	DARK
4	BROWN	DARK
5	SLATE	RING 22 RX
6	WHITE	RING 22 TX
7	RED	RING 22 TX
8	BLACK	RING 22 RX
9	YELLOW	DARK
10	VIOLET	DARK
11	ROSE	DARK
12	AQUA	DARK

LEGEND

COLOR CODE TIA/EIA 598-B

(1) BLUE	(7) RED
(2) ORANGE	(8) BLACK
(3) GREEN	(9) YELLOW
(4) BROWN	(10) VIOLET
(5) SLATE	(11) ROSE
(6) WHITE	(12) AQUA

X = FUSION SPLICE INDIVIDUAL FIBER

C = CAP AND SEAL

EXPRESS = EXPRESS FIBERS THROUGH WITHOUT CUTTING

BUFFER SPLICE = SPLICE ALL FIBERS IN BUFFER TUBE COLOR TO COLOR

NOTES

1. UNUSED FIBERS LEFT COILED AND STORED IN SPLICE TRAY
2. UNUSED BUFFER TUBES LEFT COILED AND STORED IN SPLICE ENCLOSURE
3. EDGE SWITCH CONFIGURATIONS ARE GENERIC. CONTRACTOR IS RESPONSIBLE FOR DETERMINING/ENSURING THE PROPER TERMINATIONS.

ATKINS 1616 EAST MILLBROOK ROAD, SUITE 310
RALEIGH, NORTH CAROLINA 27609
(919) 876-6888 NCBEES #F-0326

Prepared for the Offices of: Transportation Mobility and Safety Division — Intelligent Transportation Systems — Department of Transportation — State of North Carolina
750 Greenfield Parkway, Garner, NC 27529

Winston-Salem Signal System
Fiber-Optic
Splicing Details
Phase A

Division 09 Forsyth County Winston-Salem

PLAN DATE:	January 2013	REVIEWED BY:	HAB
PREPARED BY:	BJS	REVIEWED BY:	JTB

SCALE: N.T.S.

REVISIONS	INIT.	DATE

SEAL: NORTH CAROLINA PROFESSIONAL SEAL 19962 ENGINEER HENRY ALFRED BADGETT, III

SIGNATURE: H. Alfred Badgett DATE: 1/11/13

CADD Filename: FS-34.dgn

09-JAN-2013 14:27
O:\Transportation\Traffic\Curr\100022712 Winston Salem Sig Sys\Comm and ITS\Splice Diagrams\Phase A\FS-34.dgn
12054

PROJECT REFERENCE NO.	SHEET NO.
C-5224A	FS-35

SPLICE ENCLOSURE NO. 23-1

SEE: CL A–012

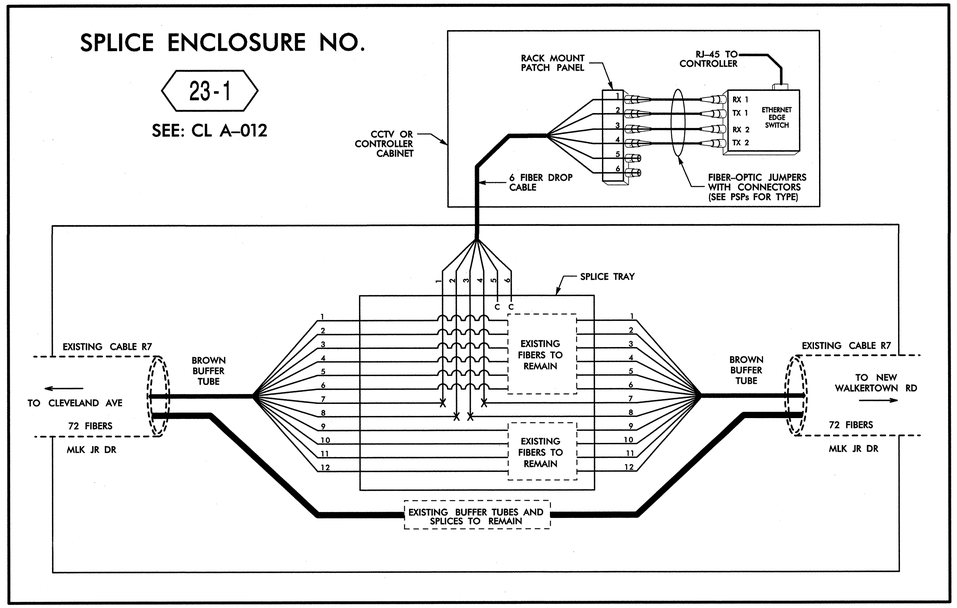

SPLICE ENCLOSURE NO. 23-2

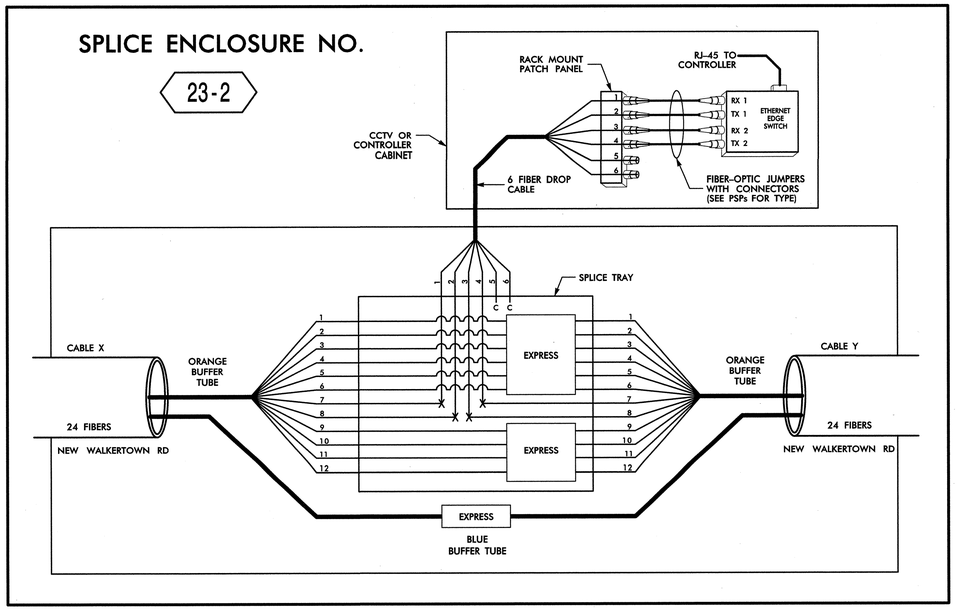

SPLICE ENCLOSURE NO. 23-3

SEE: CL A–133

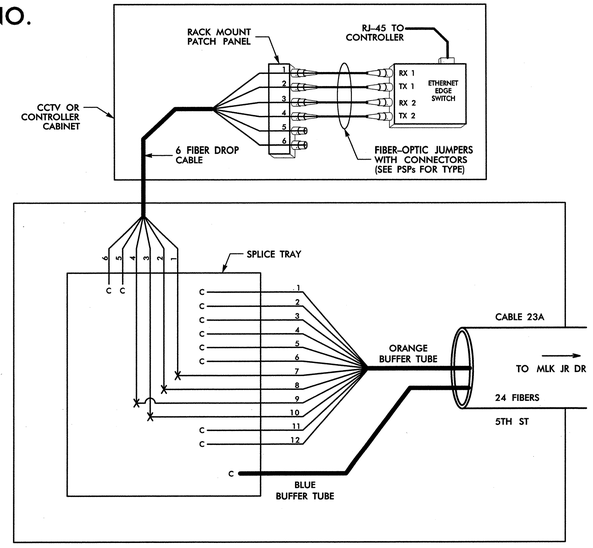

SPLICE ENCLOSURE NO. 23-2							
INTERSECTION NO.	CL SHEET	CABLE X			CABLE Y		
		CABLE NO.	ALONG ROUTE	TO	CABLE NO.	ALONG ROUTE	TO
09-1266	CL A-124	23B	NEW WALKERTOWN RD	MLK JR DR	23B	NEW WALKERTOWN RD	FERRELL CT
FUTURE (NEW WALKERTOWN RD @ FERRELL CT)	CL A-126	23B	NEW WALKERTOWN RD	JACKSON AVE	23B	NEW WALKERTOWN RD	14TH ST
09-0931	CL A-128	23B	NEW WALKERTOWN RD	FERRELL CT	23B	NEW WALKERTOWN RD	DELLABROOK RD
09-0167	CL A-128	23B	NEW WALKERTOWN RD	14TH ST	23B	NEW WALKERTOWN RD	WATER WORKS RD
09-0578	CL A-129	23B	NEW WALKERTOWN RD	DELLABROOK RD	23B	NEW WALKERTOWN RD	BOWEN BLVD
09-1336	CL A-131	23B	NEW WALKERTOWN RD	WATER WORKS RD	23B	NEW WALKERTOWN RD	CARVER SCHOOL RD

LEGEND

COLOR CODE TIA/EIA 598-B

(1) BLUE	(7) RED
(2) ORANGE	(8) BLACK
(3) GREEN	(9) YELLOW
(4) BROWN	(10) VIOLET
(5) SLATE	(11) ROSE
(6) WHITE	(12) AQUA

X = FUSION SPLICE INDIVIDUAL FIBER

C = CAP AND SEAL

EXPRESS = EXPRESS FIBERS THROUGH WITHOUT CUTTING

BUFFER SPLICE = SPLICE ALL FIBERS IN BUFFER TUBE COLOR TO COLOR

NOTES

1. UNUSED FIBERS LEFT COILED AND STORED IN SPLICE TRAY
2. UNUSED BUFFER TUBES LEFT COILED AND STORED IN SPLICE ENCLOSURE
3. EDGE SWITCH CONFIGURATIONS ARE GENERIC. CONTRACTOR IS RESPONSIBLE FOR DETERMINING/ENSURING THE PROPER TERMINATIONS.

ATKINS 1616 EAST MILLBROOK ROAD, SUITE 310
RALEIGH, NORTH CAROLINA 27609
(919) 876-6888 NCBEES #F-0326

Prepared for the Offices of: Transportation Mobility and Safety Division, State of North Carolina, Department of Transportation, Intelligent Transportation Systems
750 Greenfield Parkway, Garner, NC 27529

Winston-Salem Signal System Fiber-Optic Splicing Details Phase A

Division 09 Forsyth County Winston-Salem

PLAN DATE:	January 2013	REVIEWED BY:	HAB
PREPARED BY:	BJS	REVIEWED BY:	JTB

SCALE	REVISIONS	INIT.	DATE
N.T.S.			

SEAL

NORTH CAROLINA PROFESSIONAL SEAL 19962 ENGINEER HENRY ALFRED BADGETT III

SIGNATURE DATE

CADD Filename: FS-35.dgn

09-JAN-2013 14:27
D:\Transportation\Traffic\Curr\100022712 Winston Salem Sig Sys\Comms and ITS\Splice Diagrams\Phase A\FS-35.dgn
12054

PROJECT REFERENCE NO.	SHEET NO.
C-5224A	FS-36

SPLICE ENCLOSURE NO.

23-4

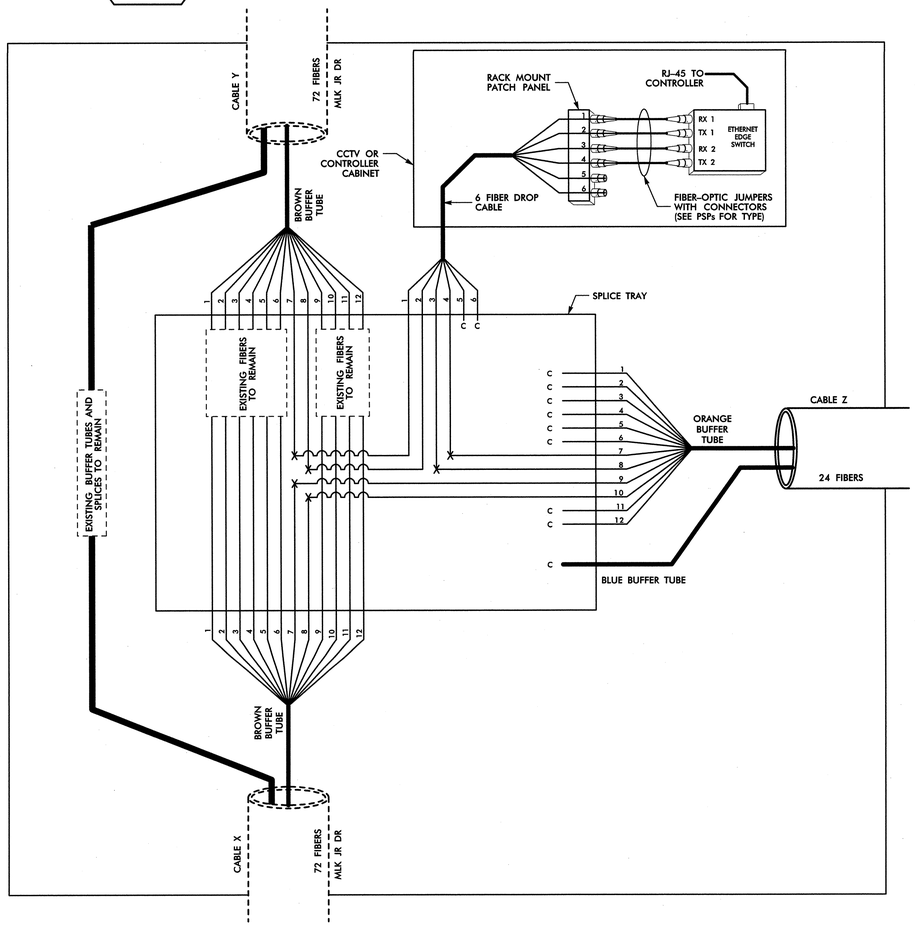

SPLICE ENCLOSURE NO.

23-5

(EXISTING)

SEE: CL A-028

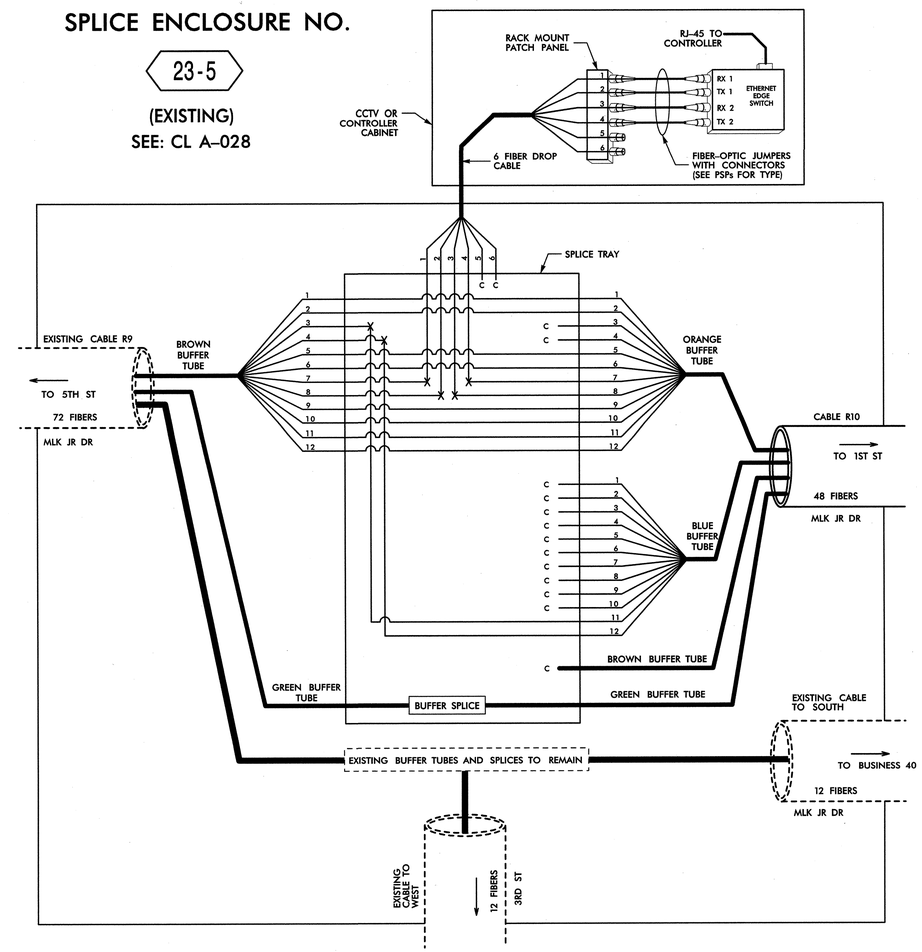

SPLICE ENCLOSURE NO. 23-4										
INTERSECTION NO.	CL SHEET	CABLE X			CABLE Y			CABLE Z		
		CABLE NO.	ALONG ROUTE	TO	CABLE NO.	ALONG ROUTE	TO	CABLE NO.	ALONG ROUTE	TO
09-0479	CL A-029	R8	MLK JR DR	5TH ST	R7	MLK JR DR	CLEVELAND AVE	23B	NEW WALKERTOWN RD	JACKSON AVE
09-0106	CL A-029	R9	MLK JR DR	3RD ST	R8	MLK JR DR	NEW WALKERTOWN RD	23A	5TH ST	CAMERON AVE

LEGEND

COLOR CODE TIA/EIA 598-B

(1) BLUE	(7) RED
(2) ORANGE	(8) BLACK
(3) GREEN	(9) YELLOW
(4) BROWN	(10) VIOLET
(5) SLATE	(11) ROSE
(6) WHITE	(12) AQUA

X = FUSION SPLICE INDIVIDUAL FIBER

C = CAP AND SEAL

EXPRESS = EXPRESS FIBERS THROUGH WITHOUT CUTTING

BUFFER SPLICE = SPLICE ALL FIBERS IN BUFFER TUBE COLOR TO COLOR

NOTES

1. UNUSED FIBERS LEFT COILED AND STORED IN SPLICE TRAY
2. UNUSED BUFFER TUBES LEFT COILED AND STORED IN SPLICE ENCLOSURE
3. EDGE SWITCH CONFIGURATIONS ARE GENERIC. CONTRACTOR IS RESPONSIBLE FOR DETERMINING/ENSURING THE PROPER TERMINATIONS.

ATKINS 1616 EAST MILLBROOK ROAD, SUITE 310
RALEIGH, NORTH CAROLINA 27609
(919) 876-6888 NCBEES #F-0326

Prepared for the Offices of: Transportation Mobility and Safety Division, State of North Carolina Department of Transportation, Intelligent Transportation Systems
750 Greenfield Parkway, Garner, NC 27529

Winston-Salem Signal System
Fiber-Optic
Splicing Details
Phase A

Division 09 Forsyth County Winston-Salem

PLAN DATE:	January 2013	REVIEWED BY:	HAB
PREPARED BY:	BJS	REVIEWED BY:	JTB

SCALE	REVISIONS	INIT.	DATE
N.T.S.			

SEAL: NORTH CAROLINA PROFESSIONAL SEAL 19962 ENGINEER HENRY ALFRED BADGETT III

SIGNATURE H. Alfred Badgett DATE 1/11/13

CADD Filename: FS-36.dgn

09-JAN-2013 14:36
D:\#transportation\#Traffic\#Curr\#100022712 Winston Salem Sig Sys\#Comms and ITS\#Splice Diagrams\#Phase A\#FS-36.dgn
12034

PROJECT REFERENCE NO.	SHEET NO.
C-5224A	FS-37

SPLICE ENCLOSURE NO.

23-6

SEE: CL A-028

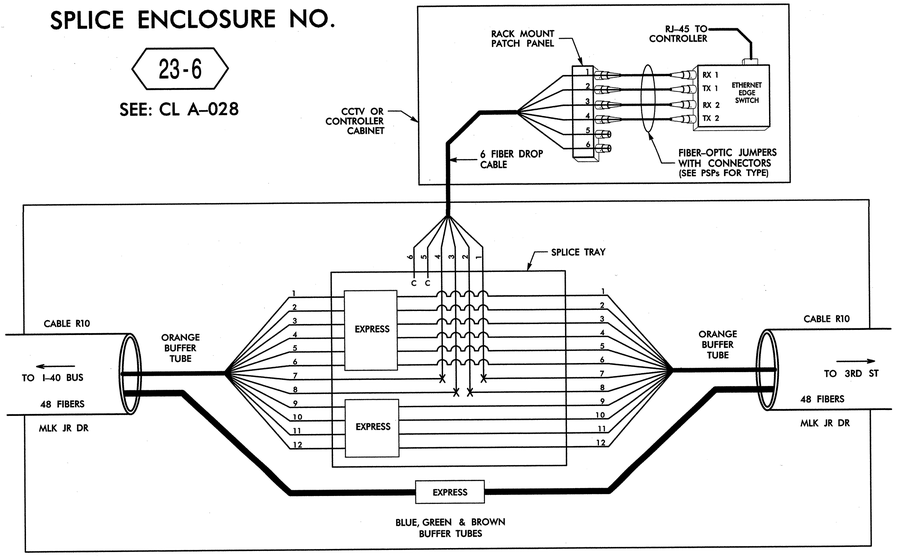

SPLICE ENCLOSURE NO.

24-1

SEE: CL A-050

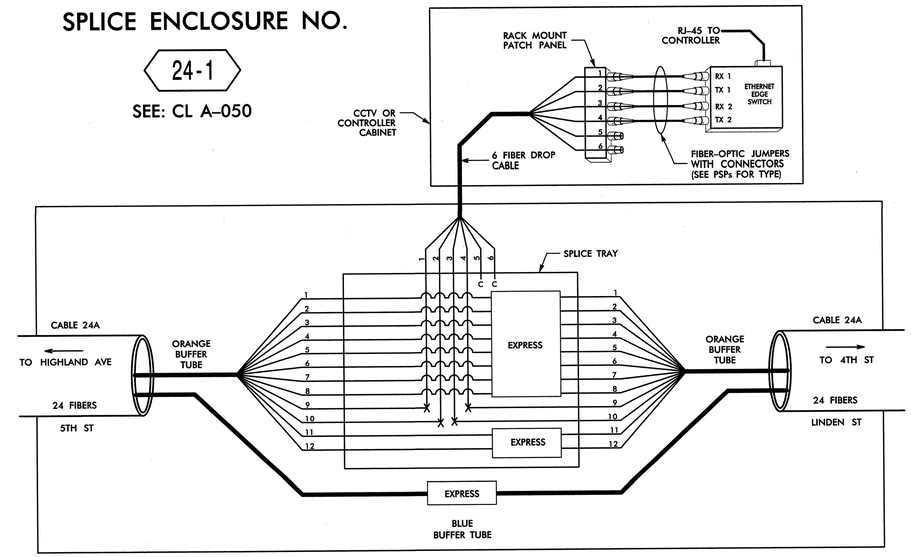

SPLICE ENCLOSURE NO.

23-7

SEE: CL A-132

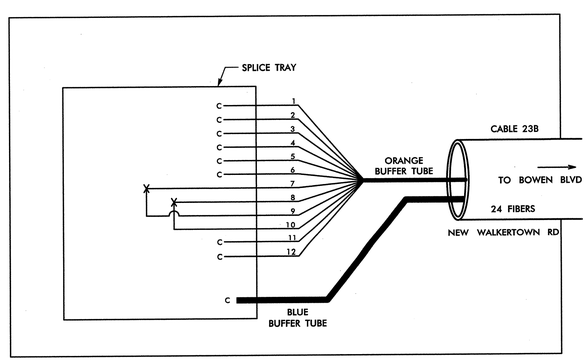

LEGEND

COLOR CODE TIA/EIA 598-B

(1) BLUE	(7) RED
(2) ORANGE	(8) BLACK
(3) GREEN	(9) YELLOW
(4) BROWN	(10) VIOLET
(5) SLATE	(11) ROSE
(6) WHITE	(12) AQUA

X = FUSION SPLICE INDIVIDUAL FIBER

C = CAP AND SEAL

EXPRESS = EXPRESS FIBERS THROUGH WITHOUT CUTTING

BUFFER SPLICE = SPLICE ALL FIBERS IN BUFFER TUBE COLOR TO COLOR

NOTES

1. UNUSED FIBERS LEFT COILED AND STORED IN SPLICE TRAY
2. UNUSED BUFFER TUBES LEFT COILED AND STORED IN SPLICE ENCLOSURE
3. EDGE SWITCH CONFIGURATIONS ARE GENERIC. CONTRACTOR IS RESPONSIBLE FOR DETERMINING/ENSURING THE PROPER TERMINATIONS.

ATKINS 1616 EAST MILLBROOK ROAD, SUITE 310
RALEIGH, NORTH CAROLINA 27609
(919) 876-6888 NCBEES #F-0326

Prepared for the Offices of: Transportation Mobility and Safety Division, State of North Carolina Department of Transportation, Intelligent Transportation Systems
750 Greenfield Parkway, Garner, NC 27529

Winston-Salem Signal System Fiber-Optic Splicing Details Phase A

Division 09 Forsyth County Winston-Salem

PLAN DATE:	January 2013	REVIEWED BY:	HAB
PREPARED BY:	BJS	REVIEWED BY:	JTB

REVISIONS	INIT.	DATE

SCALE N.T.S.

SEAL: NORTH CAROLINA PROFESSIONAL SEAL 19962 ENGINEER HENRY ALFRED BADGETT, III

SIGNATURE H Alfred Badgett DATE 1/11/13

CADD Filename: FS-37.dgn

09-JAN-2013 14:36
rbadgett
C:\Users\rbadgett\AppData\Local\Temp\AcPublish_12054\FS-37.dgn

PROJECT REFERENCE NO.	SHEET NO.
C-5224A	FS-38

SPLICE ENCLOSURE NO.

24-2

SEE: CL A-049

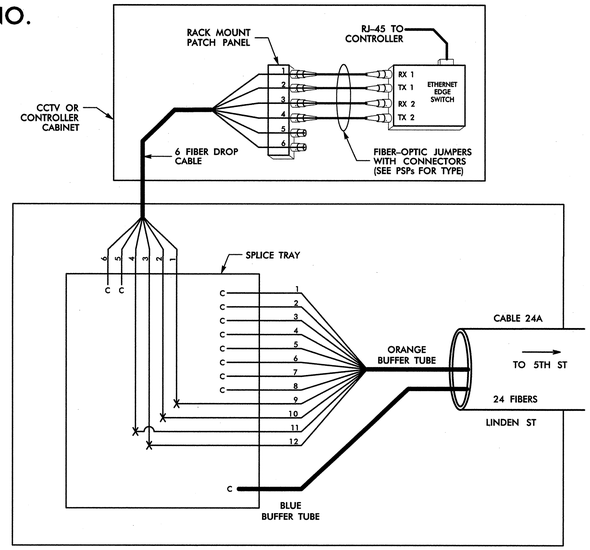

SPLICE ENCLOSURE NO.

24-3

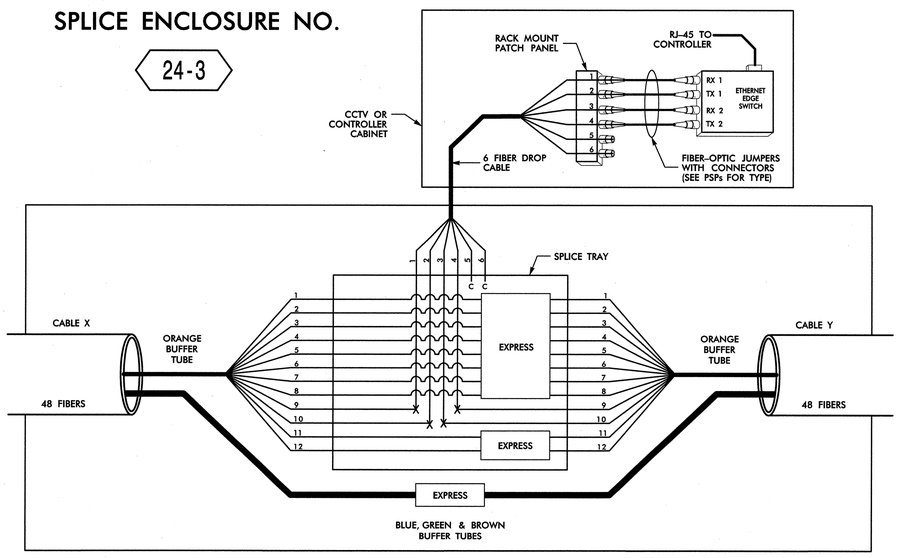

SPLICE ENCLOSURE NO.

24-4

SEE: CL A-010

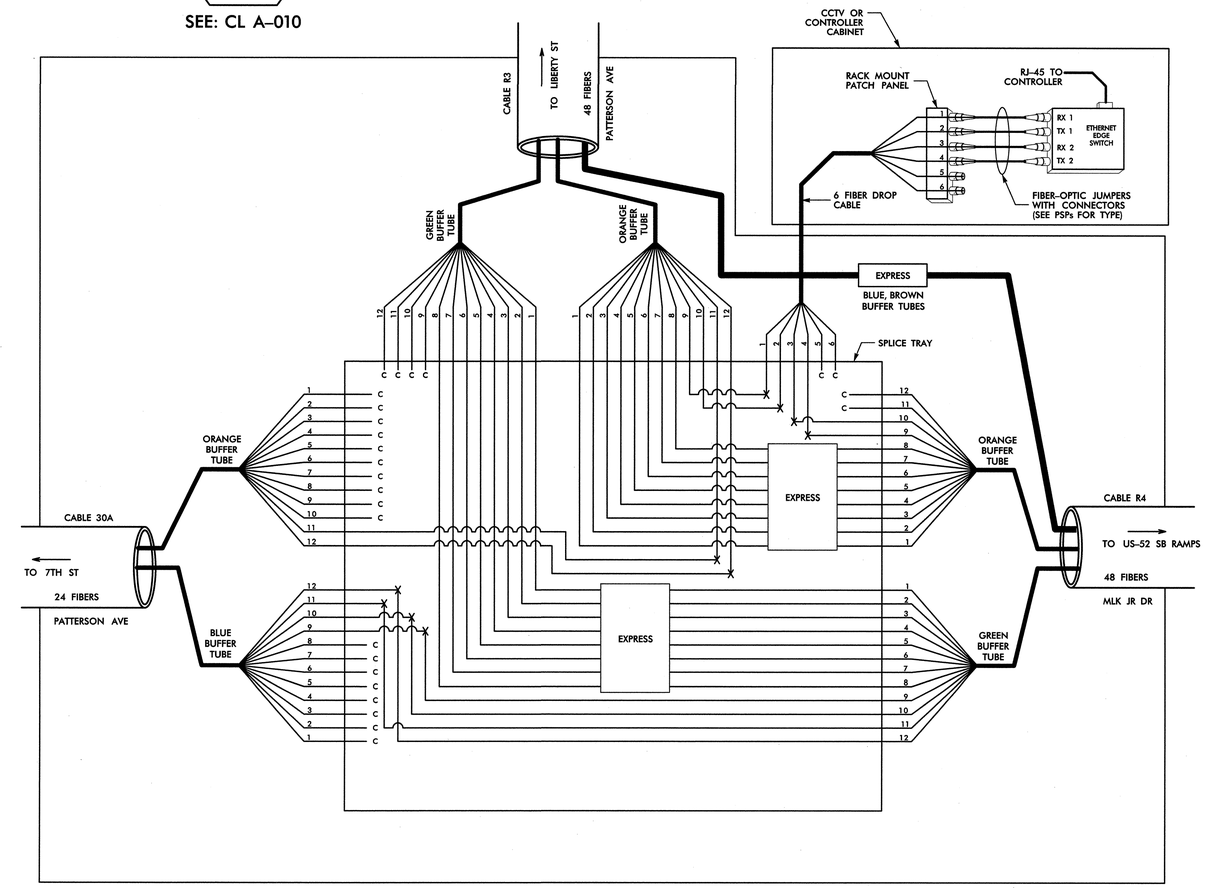

SPLICE ENCLOSURE NO. 24-3							
INTERSECTION NO.	CL SHEET	CABLE X			CABLE Y		
		CABLE NO.	ALONG ROUTE	TO	CABLE NO.	ALONG ROUTE	TO
09-0062	CL A-009	R3	PATTERSON AVE	NORTHWEST BLVD	R3	PATTERSON AVE	MLK JR DR
09-1338	CL A-011	R4	MLK JR DR	US 52 SB RAMPS	R5	US 52 NB RAMPS	US 52 EXIST. SPLICE
09-1022	CL A-010	R4	MLK JR DR	PATTERSON AVE	R4	MLK JR DR	US 52 SB RAMPS

LEGEND

COLOR CODE TIA/EIA 598-B

(1) BLUE	(7) RED
(2) ORANGE	(8) BLACK
(3) GREEN	(9) YELLOW
(4) BROWN	(10) VIOLET
(5) SLATE	(11) ROSE
(6) WHITE	(12) AQUA

X = FUSION SPLICE INDIVIDUAL FIBER

C = CAP AND SEAL

EXPRESS = EXPRESS FIBERS THROUGH WITHOUT CUTTING

BUFFER SPLICE = SPLICE ALL FIBERS IN BUFFER TUBE COLOR TO COLOR

NOTES

1. UNUSED FIBERS LEFT COILED AND STORED IN SPLICE TRAY
2. UNUSED BUFFER TUBES LEFT COILED AND STORED IN SPLICE ENCLOSURE
3. EDGE SWITCH CONFIGURATIONS ARE GENERIC. CONTRACTOR IS RESPONSIBLE FOR DETERMINING/ENSURING THE PROPER TERMINATIONS.

ATKINS 1616 EAST MILLBROOK ROAD, SUITE 310
RALEIGH, NORTH CAROLINA 27609
(919) 876-6888 NCBEES #F-0326

Prepared for the Offices of: Transportation Mobility and Safety Division, Intelligent Transportation Systems, NORTH CAROLINA DEPARTMENT OF TRANSPORTATION

750 Greenfield Parkway, Garner, NC 27529

Winston-Salem Signal System Fiber-Optic Splicing Details Phase A

Division 09 Forsyth County Winston-Salem

PLAN DATE: January 2013	REVIEWED BY: HAB
PREPARED BY: BJS	REVIEWED BY: JTB

SCALE: N.T.S.

REVISIONS	INIT.	DATE

SEAL: NORTH CAROLINA PROFESSIONAL SEAL 19962 ENGINEER HENRY ALFRED BADGETT, III

SIGNATURE DATE 1/11/13

CADD Filename: FS-38.dgn

09-JAN-2013 14:36
U:\Transportation\Traffic\Curr\100002712 Winston Salem Sig Sys\Comms and ITS\Splice Diagrams\Phase A\FS-38.dgn
12024

PROJECT REFERENCE NO.	SHEET NO.
C-5224A	FS-39

SPLICE ENCLOSURE NO.

24-5

SEE: CL A-011
(EXISTING)

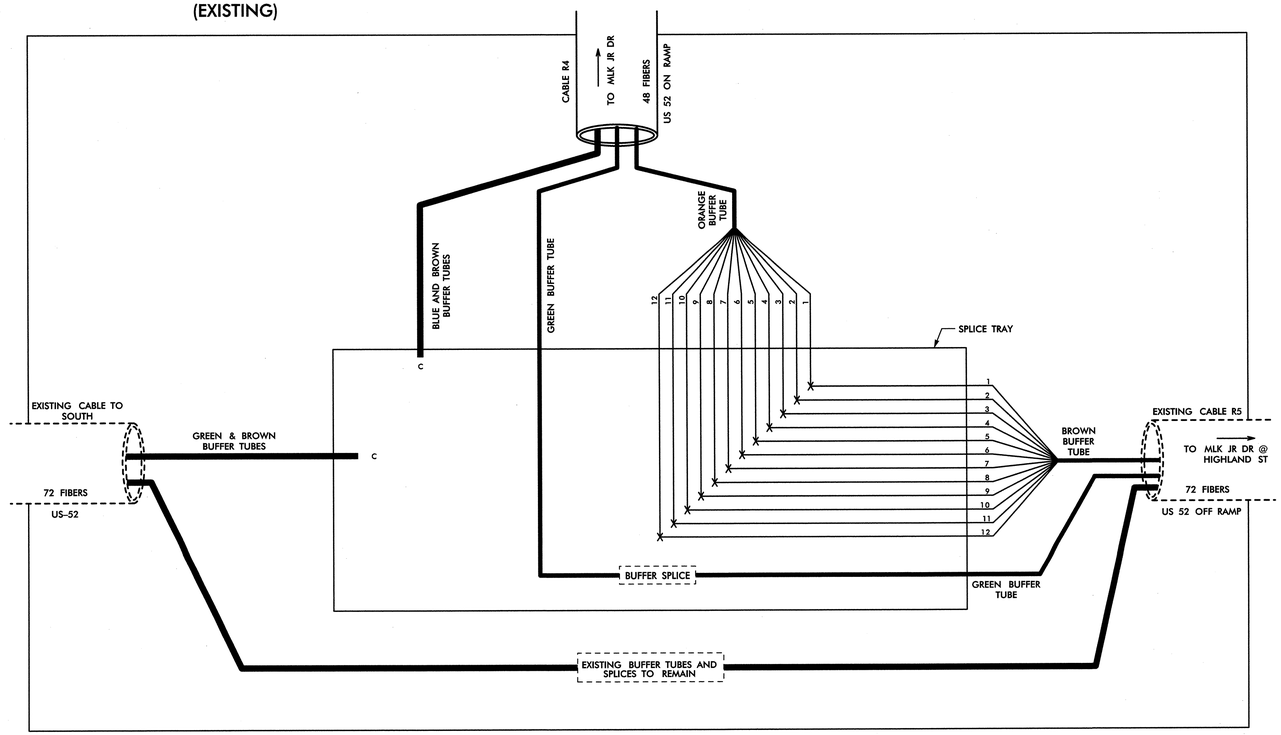

LEGEND

COLOR CODE
TIA/EIA 598-B

(1) BLUE	(7) RED
(2) ORANGE	(8) BLACK
(3) GREEN	(9) YELLOW
(4) BROWN	(10) VIOLET
(5) SLATE	(11) ROSE
(6) WHITE	(12) AQUA

X = FUSION SPLICE INDIVIDUAL FIBER

C = CAP AND SEAL

EXPRESS = EXPRESS FIBERS THROUGH WITHOUT CUTTING

BUFFER SPLICE = SPLICE ALL FIBERS IN BUFFER TUBE COLOR TO COLOR

NOTES

1. UNUSED FIBERS LEFT COILED AND STORED IN SPLICE TRAY
2. UNUSED BUFFER TUBES LEFT COILED AND STORED IN SPLICE ENCLOSURE
3. EDGE SWITCH CONFIGURATIONS ARE GENERIC. CONTRACTOR IS RESPONSIBLE FOR DETERMINING/ENSURING THE PROPER TERMINATIONS.

ATKINS 1616 EAST MILLBROOK ROAD, SUITE 310
RALEIGH, NORTH CAROLINA 27609
(919) 876-6888 NCBEES #F-0326

Prepared for the Offices of:
Transportation Mobility and Safety Division
STATE OF NORTH CAROLINA DEPARTMENT OF TRANSPORTATION
Intelligent Transportation Systems
750 Greenfield Parkway, Garner, NC 27529

Winston-Salem Signal System
Fiber-Optic
Splicing Details
Phase A

Division 09 Forsyth County Winston-Salem

PLAN DATE:	January 2013	REVIEWED BY:	HAB
PREPARED BY:	BJS	REVIEWED BY:	JTB

SCALE	REVISIONS	INIT.	DATE
N.T.S.			

SEAL
NORTH CAROLINA PROFESSIONAL SEAL 19962 ENGINEER HENRY ALFRED BADGETT III

H Alfred Badgett 1/11/13
SIGNATURE DATE

CADD Filename: FS-39.dgn

09-JAN-2013 14:36
O:\Transportation\Traffic\Curr\100022712 Winston Salem Sig Sys\Comms and ITS\Splice Diagrams\Phase A\FS-39.dgn
12:204

PROJECT REFERENCE NO.	SHEET NO.
C-5224A	FS-40

SPLICE ENCLOSURE NO.

24-6

SEE: CL A-011

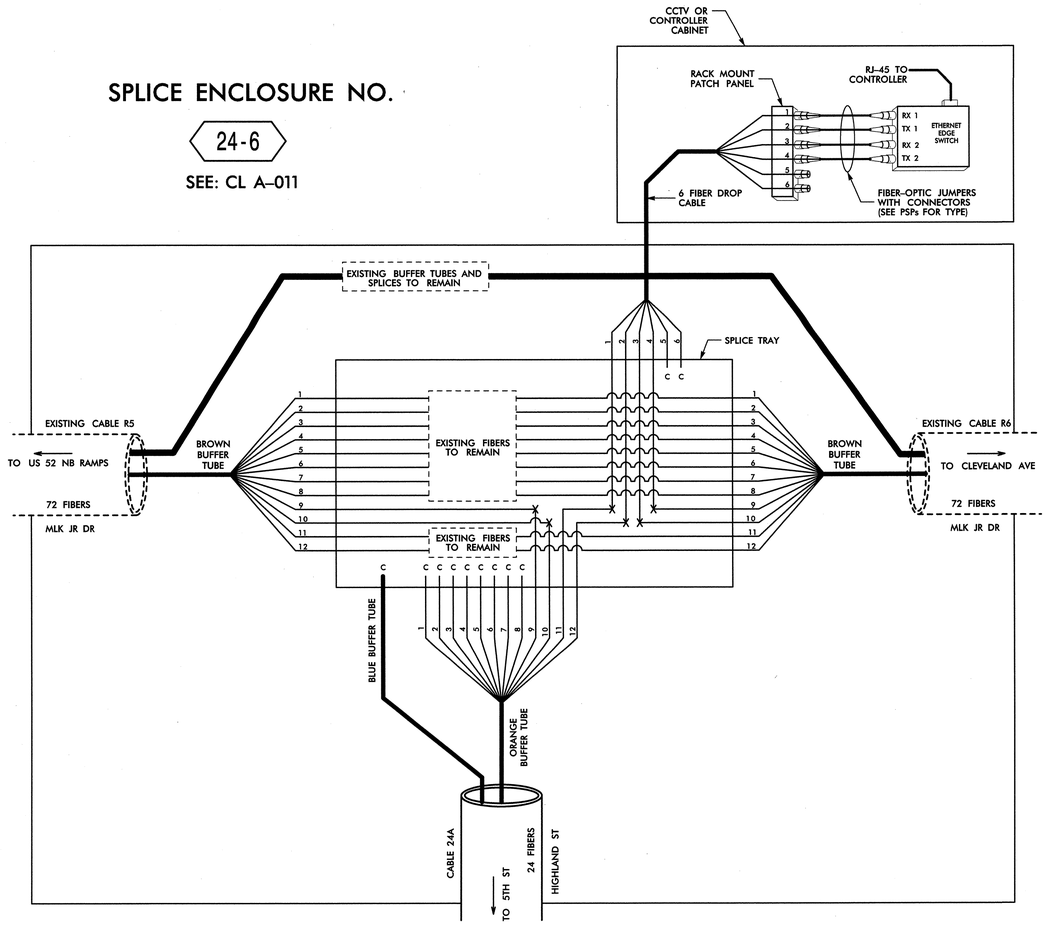

LEGEND

COLOR CODE TIA/EIA 598-B

(1) BLUE	(7) RED
(2) ORANGE	(8) BLACK
(3) GREEN	(9) YELLOW
(4) BROWN	(10) VIOLET
(5) SLATE	(11) ROSE
(6) WHITE	(12) AQUA

X = FUSION SPLICE INDIVIDUAL FIBER

C = CAP AND SEAL

EXPRESS = EXPRESS FIBERS THROUGH WITHOUT CUTTING

BUFFER SPLICE = SPLICE ALL FIBERS IN BUFFER TUBE COLOR TO COLOR

NOTES

1. UNUSED FIBERS LEFT COILED AND STORED IN SPLICE TRAY
2. UNUSED BUFFER TUBES LEFT COILED AND STORED IN SPLICE ENCLOSURE
3. EDGE SWITCH CONFIGURATIONS ARE GENERIC. CONTRACTOR IS RESPONSIBLE FOR DETERMINING/ENSURING THE PROPER TERMINATIONS.

ATKINS 1616 EAST MILLBROOK ROAD, SUITE 310
RALEIGH, NORTH CAROLINA 27609
(919) 876-6888 NCBEES #F-0326

Prepared for the Offices of:
Transportation Mobility and Safety Division
STATE OF NORTH CAROLINA DEPARTMENT OF TRANSPORTATION
Intelligent Transportation Systems
750 Greenfield Parkway, Garner, NC 27529

Winston-Salem Signal System
Fiber-Optic
Splicing Details
Phase A

Division 09 Forsyth County Winston-Salem

PLAN DATE:	January 2013	REVIEWED BY:	HAB
PREPARED BY:	BJS	REVIEWED BY:	JTB

SCALE: N.T.S.

REVISIONS	INIT.	DATE

SEAL
NORTH CAROLINA PROFESSIONAL SEAL 19962 ENGINEER HENRY ALFRED BADGETT, III

H. Alfred Badgett 1/11/13
SIGNATURE DATE

CADD Filename: FS-40.dgn

09-JAN-2013 14:36
D:\Transportation\Traffic\Curr*\00022712 Winston Salem Sig Sys*Comms and ITS*Splice Diagrams*Phase A*FS-40.dgn
12054

PROJECT REFERENCE NO.	SHEET NO.
C-5224A	FS-41

SPLICE ENCLOSURE NO.

24-7

SEE: CL A-012

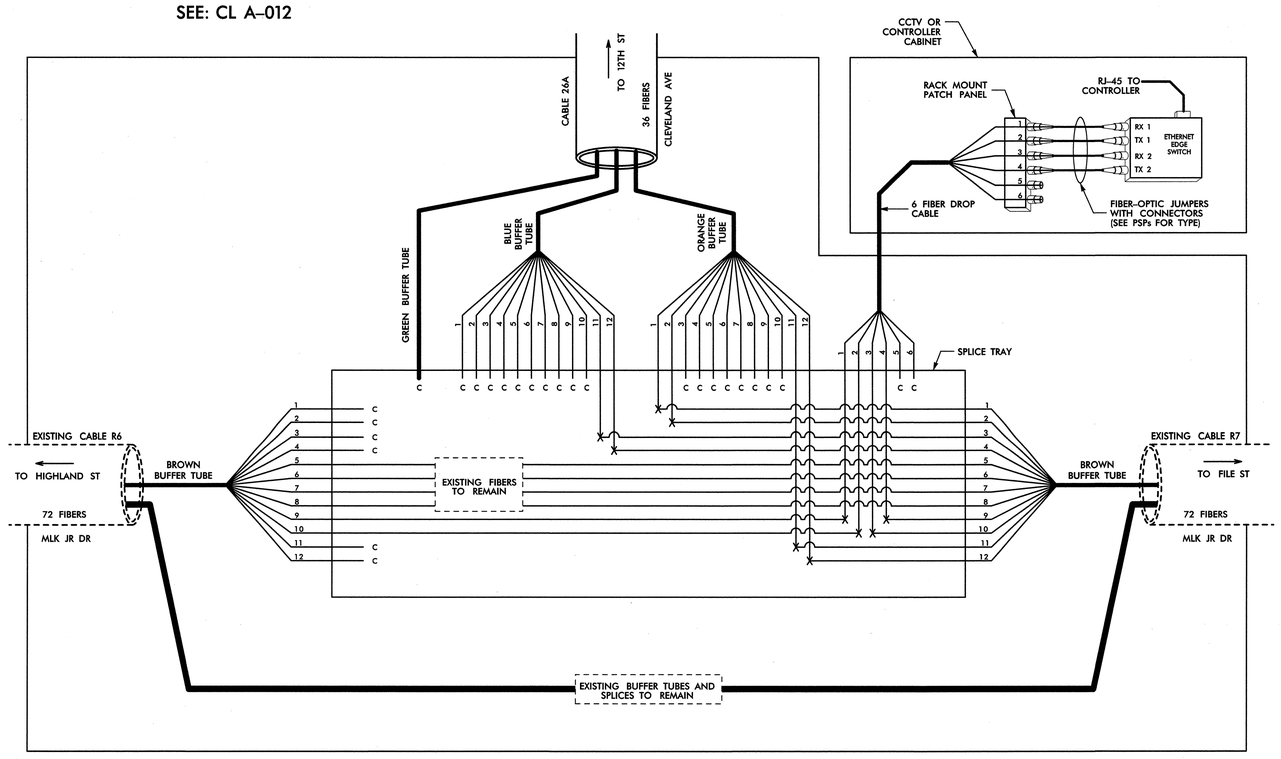

LEGEND

COLOR CODE TIA/EIA 598-B	
(1) BLUE	(7) RED
(2) ORANGE	(8) BLACK
(3) GREEN	(9) YELLOW
(4) BROWN	(10) VIOLET
(5) SLATE	(11) ROSE
(6) WHITE	(12) AQUA

X = FUSION SPLICE INDIVIDUAL FIBER

C = CAP AND SEAL

EXPRESS = EXPRESS FIBERS THROUGH WITHOUT CUTTING

BUFFER SPLICE = SPLICE ALL FIBERS IN BUFFER TUBE COLOR TO COLOR

NOTES

1. UNUSED FIBERS LEFT COILED AND STORED IN SPLICE TRAY
2. UNUSED BUFFER TUBES LEFT COILED AND STORED IN SPLICE ENCLOSURE
3. EDGE SWITCH CONFIGURATIONS ARE GENERIC. CONTRACTOR IS RESPONSIBLE FOR DETERMINING/ENSURING THE PROPER TERMINATIONS.

ATKINS 1616 EAST MILLBROOK ROAD, SUITE 310
RALEIGH, NORTH CAROLINA 27609
(919) 876-6888 NCBEES #F-0326

Prepared for the Offices of:
Transportation Mobility and Safety Division
STATE OF NORTH CAROLINA DEPARTMENT OF TRANSPORTATION
Intelligent Transportation Systems
750 Greenfield Parkway, Garner, NC 27529

Winston-Salem Signal System Fiber-Optic Splicing Details Phase A

Division 09 Forsyth County Winston-Salem

PLAN DATE:	January 2013	REVIEWED BY:	HAB
PREPARED BY:	BJS	REVIEWED BY:	JTB

SCALE: N.T.S.

REVISIONS	INIT.	DATE

SEAL

NORTH CAROLINA PROFESSIONAL SEAL 19962 ENGINEER HENRY ALFRED BADGETT, III

SIGNATURE DATE 1/11/13

CADD Filename: FS-41.dgn

09-JAN-2013 14:36
D:\Transportation\Traffic\Curr\100022712 Winston Salem Sig Sys\Comms and ITS\Splice Diagrams\Phase A\FS-41.dgn
12054

PROJECT REFERENCE NO.	SHEET NO.
C-5224A	FS-42

SPLICE ENCLOSURE NO. 24-8

SEE: CL A-051

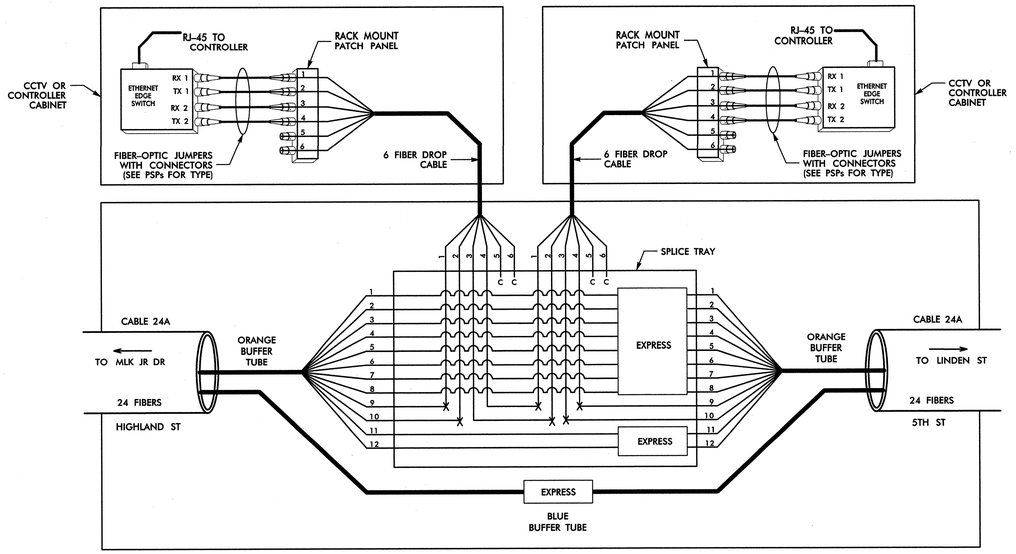

SPLICE ENCLOSURE NO. 25-1

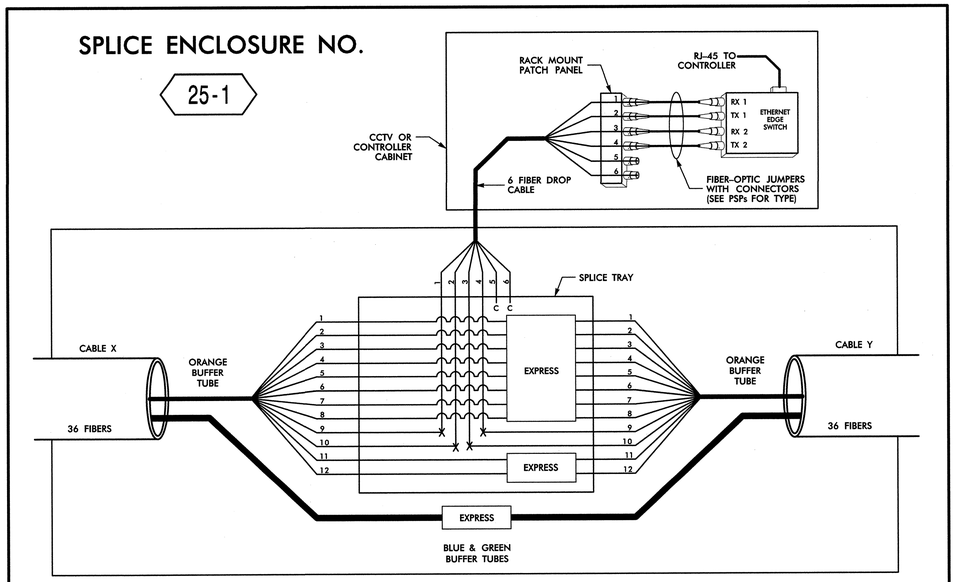

SPLICE ENCLOSURE NO. 25-1							
INTERSECTION NO.	CL SHEET	CABLE X			CABLE Y		
		CABLE NO.	ALONG ROUTE	TO	CABLE NO.	ALONG ROUTE	TO
09-1289	CL A-084	25C	REYNOLDS BLVD	UNIVERSITY PKWY	25C	REYNOLDS BLVD	SHOREFAIR DR
C-268	CL A-087	25C	SHOREFAIR DR	WHITAKER PARK	25C	30TH ST	PATTERSON AVE

SPLICE ENCLOSURE NO. 25-2

SEE: CL A-093

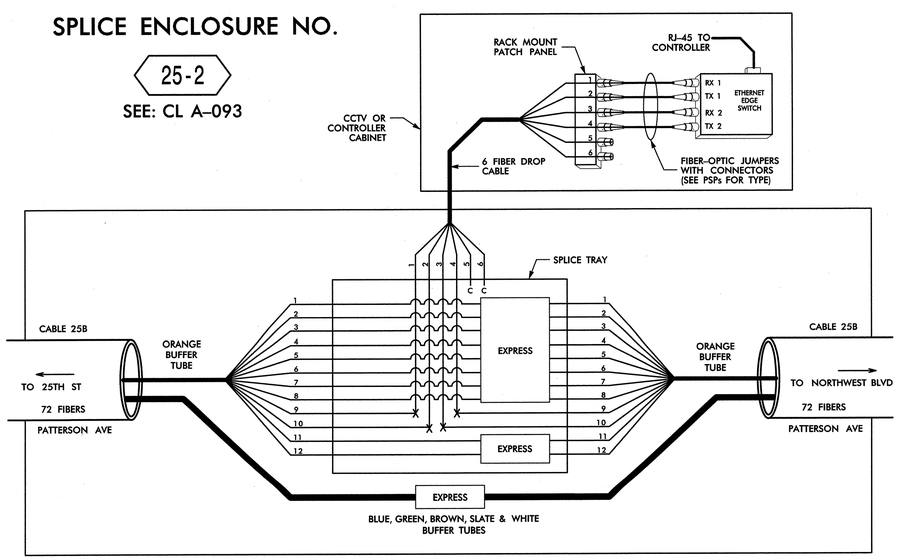

LEGEND

COLOR CODE TIA/EIA 598-B

(1) BLUE	(7) RED
(2) ORANGE	(8) BLACK
(3) GREEN	(9) YELLOW
(4) BROWN	(10) VIOLET
(5) SLATE	(11) ROSE
(6) WHITE	(12) AQUA

X = FUSION SPLICE INDIVIDUAL FIBER

C = CAP AND SEAL

EXPRESS = EXPRESS FIBERS THROUGH WITHOUT CUTTING

BUFFER SPLICE = SPLICE ALL FIBERS IN BUFFER TUBE COLOR TO COLOR

NOTES

1. UNUSED FIBERS LEFT COILED AND STORED IN SPLICE TRAY
2. UNUSED BUFFER TUBES LEFT COILED AND STORED IN SPLICE ENCLOSURE
3. EDGE SWITCH CONFIGURATIONS ARE GENERIC. CONTRACTOR IS RESPONSIBLE FOR DETERMINING/ENSURING THE PROPER TERMINATIONS.

ATKINS 1616 EAST MILLBROOK ROAD, SUITE 310
RALEIGH, NORTH CAROLINA 27609
(919) 876-6888 NCBEES #F-0326

Prepared for the Offices of: Transportation Mobility and Safety Division — State of North Carolina — Department of Transportation — Intelligent Transportation Systems
750 Greenfield Parkway, Garner, NC 27529

Winston-Salem Signal System Fiber-Optic Splicing Details Phase A

Division 09 Forsyth County Winston-Salem

PLAN DATE:	January 2013	REVIEWED BY:	HAB
PREPARED BY:	BJS	REVIEWED BY:	JTB

SCALE: N.T.S.

REVISIONS	INIT.	DATE

SEAL: NORTH CAROLINA PROFESSIONAL SEAL 19962 ENGINEER HENRY ALFRED BADGETT III

H Alfred Badgett 1/16/13
SIGNATURE DATE

CADD Filename: FS-42.dgn

09-JAN-2013 14:36
D:\Transportation\Traffic\Curr\100022712 Winston Salem Sig Sys\Comm and ITS\Splice Diagrams\Phase A\FS-42.dgn
12034

PROJECT REFERENCE NO.	SHEET NO.
C-5224A	FS-43

SPLICE ENCLOSURE NO.

25-3

SEE: CL A-008

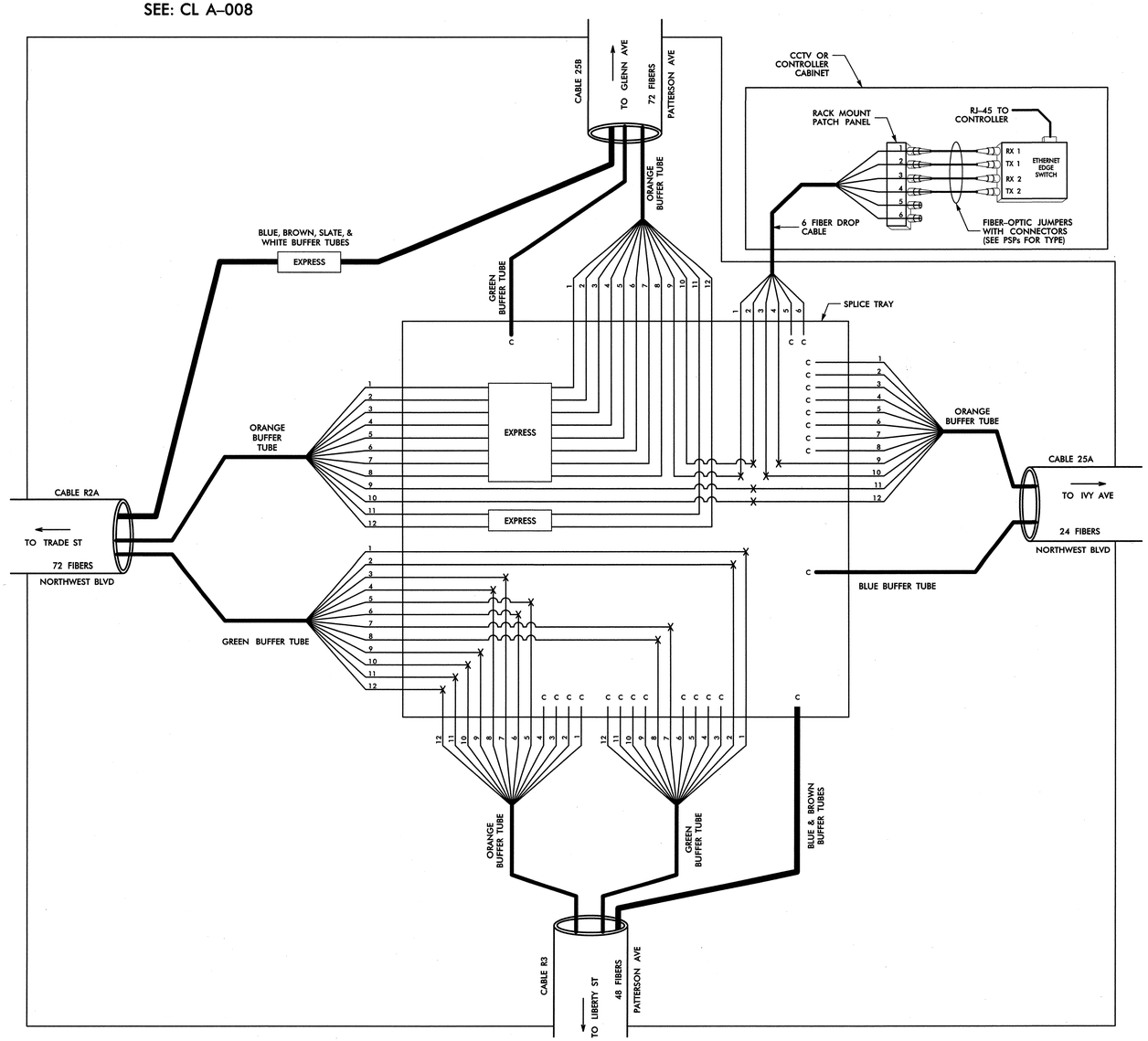

LEGEND

COLOR CODE TIA/EIA 598-B	
(1) BLUE	(7) RED
(2) ORANGE	(8) BLACK
(3) GREEN	(9) YELLOW
(4) BROWN	(10) VIOLET
(5) SLATE	(11) ROSE
(6) WHITE	(12) AQUA

X = FUSION SPLICE INDIVIDUAL FIBER

C = CAP AND SEAL

EXPRESS = EXPRESS FIBERS THROUGH WITHOUT CUTTING

BUFFER SPLICE = SPLICE ALL FIBERS IN BUFFER TUBE COLOR TO COLOR

NOTES

1. UNUSED FIBERS LEFT COILED AND STORED IN SPLICE TRAY
2. UNUSED BUFFER TUBES LEFT COILED AND STORED IN SPLICE ENCLOSURE
3. EDGE SWITCH CONFIGURATIONS ARE GENERIC. CONTRACTOR IS RESPONSIBLE FOR DETERMINING/ENSURING THE PROPER TERMINATIONS.

ATKINS 1616 EAST MILLBROOK ROAD, SUITE 310
RALEIGH, NORTH CAROLINA 27609
(919) 876-6888 NCBEES #F-0326

Prepared for the Offices of:
Transportation Mobility and Safety Division
STATE OF NORTH CAROLINA DEPARTMENT OF TRANSPORTATION
Intelligent Transportation Systems
750 Greenfield Parkway, Garner, NC 27529

Winston-Salem Signal System
Fiber-Optic
Splicing Details
Phase A

Division 09 Forsyth County Winston-Salem

PLAN DATE:	January 2013	REVIEWED BY:	HAB
PREPARED BY:	BJS	REVIEWED BY:	JTB

SCALE: N.T.S.

REVISIONS	INIT.	DATE

SEAL
NORTH CAROLINA PROFESSIONAL SEAL 19962 ENGINEER HENRY ALFRED BADGETT, III

H. Alfred Badgett 1/11/13
SIGNATURE DATE

CADD Filename: FS-43.dgn

09-JAN-2013 14:36
q:\Transportation\Traffic\Curr\10002712 Winston Salem Sig Sys\Comms and ITS\Splice Diagrams\Phase A\FS-43.dgn
12:54

PROJECT REFERENCE NO.	SHEET NO.
C-5224A	FS-44

SPLICE ENCLOSURE NO. 25-4

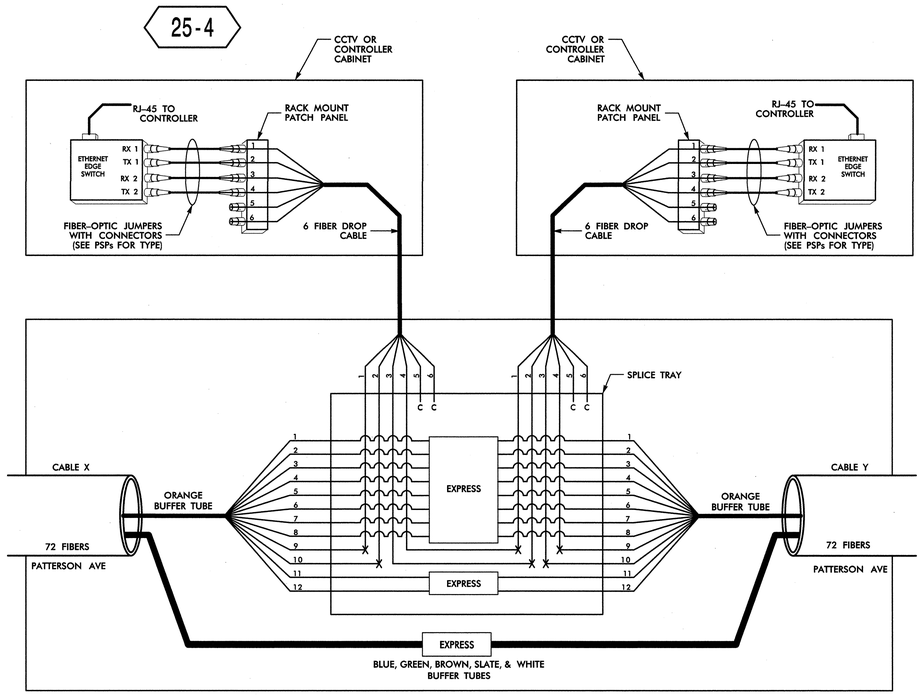

SPLICE ENCLOSURE NO. 25-4							
INTERSECTION NO.	CL SHEET	CABLE X			CABLE Y		
		CABLE NO.	ALONG ROUTE	TO	CABLE NO.	ALONG ROUTE	TO
C-018 / C-019	CL A-094	25B	PATTERSON AVE	30TH ST	25B	PATTERSON AVE	27TH ST
C-023 / C-024	CL A-094	25B	PATTERSON AVE	28TH ST	25B	PATTERSON AVE	25TH ST
C-026 / C-027	CL A-094	25B	PATTERSON AVE	27TH ST	25B	PATTERSON AVE	GLENN AVE @ PATTERSON AVE

SPLICE ENCLOSURE NO. 25-5

SEE: CL A-119

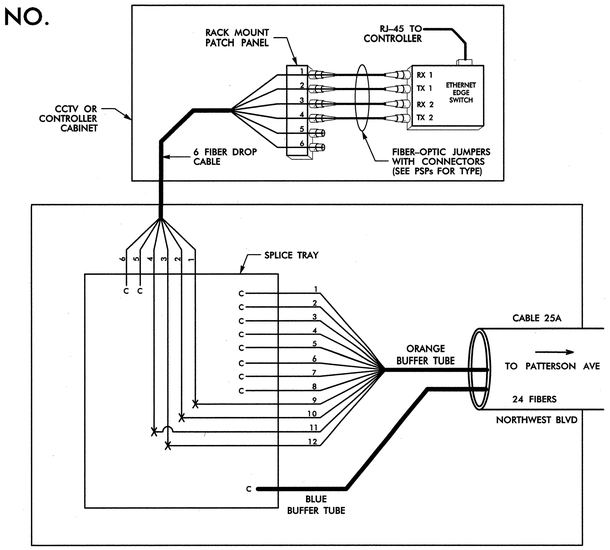

SPLICE ENCLOSURE NO. 26-1

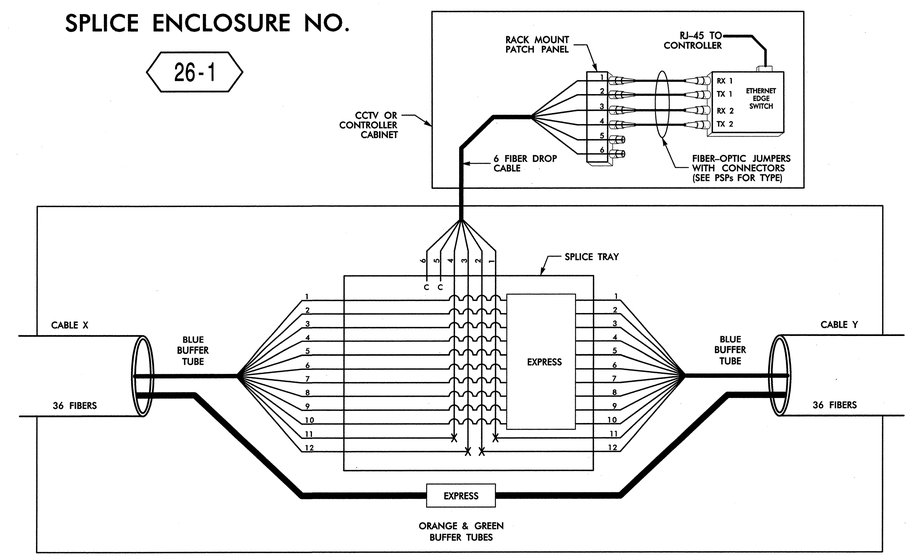

SPLICE ENCLOSURE NO. 26-1							
INTERSECTION NO.	CL SHEET	CABLE X			CABLE Y		
		CABLE NO.	ALONG ROUTE	TO	CABLE NO.	ALONG ROUTE	TO
09-0179	CL A-108	26D	LIBERTY ST	25TH ST	26D	LIBERTY ST	FAIRCHILD RD
09-0018	CL A-108	26D	25TH ST	CLEVELAND AVE	26D	LIBERTY ST	28TH ST
C-038	CL A-106	26D	CLEVELAND AVE	14TH ST	26D	CLEVELAND AVE	25TH ST
C-335	CL A-103	26A	CLEVELAND AVE	MLK JR DR	26A	CLEVELAND AVE	14TH ST

LEGEND

COLOR CODE TIA/EIA 598-B

(1) BLUE	(7) RED
(2) ORANGE	(8) BLACK
(3) GREEN	(9) YELLOW
(4) BROWN	(10) VIOLET
(5) SLATE	(11) ROSE
(6) WHITE	(12) AQUA

X = FUSION SPLICE INDIVIDUAL FIBER

C = CAP AND SEAL

EXPRESS = EXPRESS FIBERS THROUGH WITHOUT CUTTING

BUFFER SPLICE = SPLICE ALL FIBERS IN BUFFER TUBE COLOR TO COLOR

NOTES

1. UNUSED FIBERS LEFT COILED AND STORED IN SPLICE TRAY
2. UNUSED BUFFER TUBES LEFT COILED AND STORED IN SPLICE ENCLOSURE
3. EDGE SWITCH CONFIGURATIONS ARE GENERIC. CONTRACTOR IS RESPONSIBLE FOR DETERMINING/ENSURING THE PROPER TERMINATIONS.

ATKINS 1616 EAST MILLBROOK ROAD, SUITE 310
RALEIGH, NORTH CAROLINA 27609
(919) 876-6888 NCBEES #F-0326

Prepared for the Offices of: Transportation Mobility and Safety Division, State of North Carolina, Department of Transportation, Intelligent Transportation Systems
750 Greenfield Parkway, Garner, NC 27529

SCALE: N.T.S.

Winston-Salem Signal System
Fiber-Optic Splicing Details
Phase A

Division 09 Forsyth County Winston-Salem

PLAN DATE:	January 2013	REVIEWED BY:	HAB
PREPARED BY:	BJS	REVIEWED BY:	JTB

REVISIONS	INIT.	DATE

SEAL

NORTH CAROLINA PROFESSIONAL SEAL 19962 ENGINEER HENRY ALFRED BADGETT, III

H Alfred Badgett 1/11/13
SIGNATURE DATE

CADD Filename: FS-44.dgn

09-JAN-2013 14:36
G:\Transportation\Traffic\Curr\100022112 Winston Salem Sig Sys\Comms and ITS\Splice Diagrams\Phase A\FS-44.dgn
12054

PROJECT REFERENCE NO.	SHEET NO.
C-5224A	FS-45

SPLICE ENCLOSURE NO.

26-2

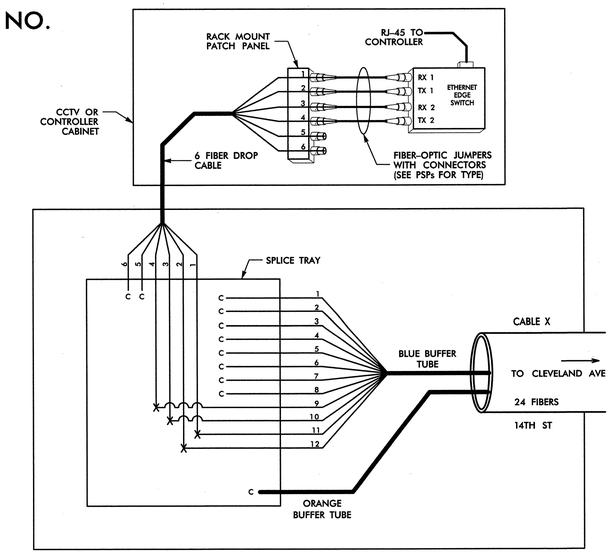

SPLICE ENCLOSURE NO. 26-2				
INTERSECTION NO.	CL SHEET	CABLE X		
		CABLE NO.	ALONG ROUTE	TO
09-0065	CL A-121	26C	14TH ST	CLEVELAND AVE
C-050	CL A-123	26B	14TH ST	CLEVELAND AVE

LEGEND

COLOR CODE TIA/EIA 598-B	
(1) BLUE	(7) RED
(2) ORANGE	(8) BLACK
(3) GREEN	(9) YELLOW
(4) BROWN	(10) VIOLET
(5) SLATE	(11) ROSE
(6) WHITE	(12) AQUA

X = FUSION SPLICE INDIVIDUAL FIBER

C = CAP AND SEAL

EXPRESS = EXPRESS FIBERS THROUGH WITHOUT CUTTING

BUFFER SPLICE = SPLICE ALL FIBERS IN BUFFER TUBE COLOR TO COLOR

NOTES

1. UNUSED FIBERS LEFT COILED AND STORED IN SPLICE TRAY
2. UNUSED BUFFER TUBES LEFT COILED AND STORED IN SPLICE ENCLOSURE
3. EDGE SWITCH CONFIGURATIONS ARE GENERIC. CONTRACTOR IS RESPONSIBLE FOR DETERMINING/ENSURING THE PROPER TERMINATIONS.

ATKINS 1616 EAST MILLBROOK ROAD, SUITE 310
RALEIGH, NORTH CAROLINA 27609
(919) 876-6888 NCBEES #F-0326

Prepared for the Offices of:
Transportation Mobility and Safety Division
STATE OF NORTH CAROLINA
DEPARTMENT OF TRANSPORTATION
Intelligent Transportation Systems
750 Greenfield Parkway, Garner, NC 27529

Winston-Salem Signal System
Fiber-Optic
Splicing Details
Phase A

Division 09 Forsyth County Winston-Salem

PLAN DATE:	January 2013	REVIEWED BY:	HAB
PREPARED BY:	BJS	REVIEWED BY:	JTB

SCALE	REVISIONS	INIT.	DATE
N.T.S.			

SEAL
NORTH CAROLINA PROFESSIONAL SEAL 19962 ENGINEER HENRY ALFRED BADGETT, III

H. Alfred Badgett 1/6/12
SIGNATURE DATE

CADD Filename: FS-45.dgn

09-JAN-2013 14:36
O:\Transportation\Traffic\Curr\1000022712 Winston Salem Sig Sys\Comms and ITS\Splice Diagrams\Phase A\FS-45.dgn
12094

PROJECT REFERENCE NO.	SHEET NO.
C-5224A	FS-46

SPLICE ENCLOSURE NO.

26-3

SEE: CL A-104

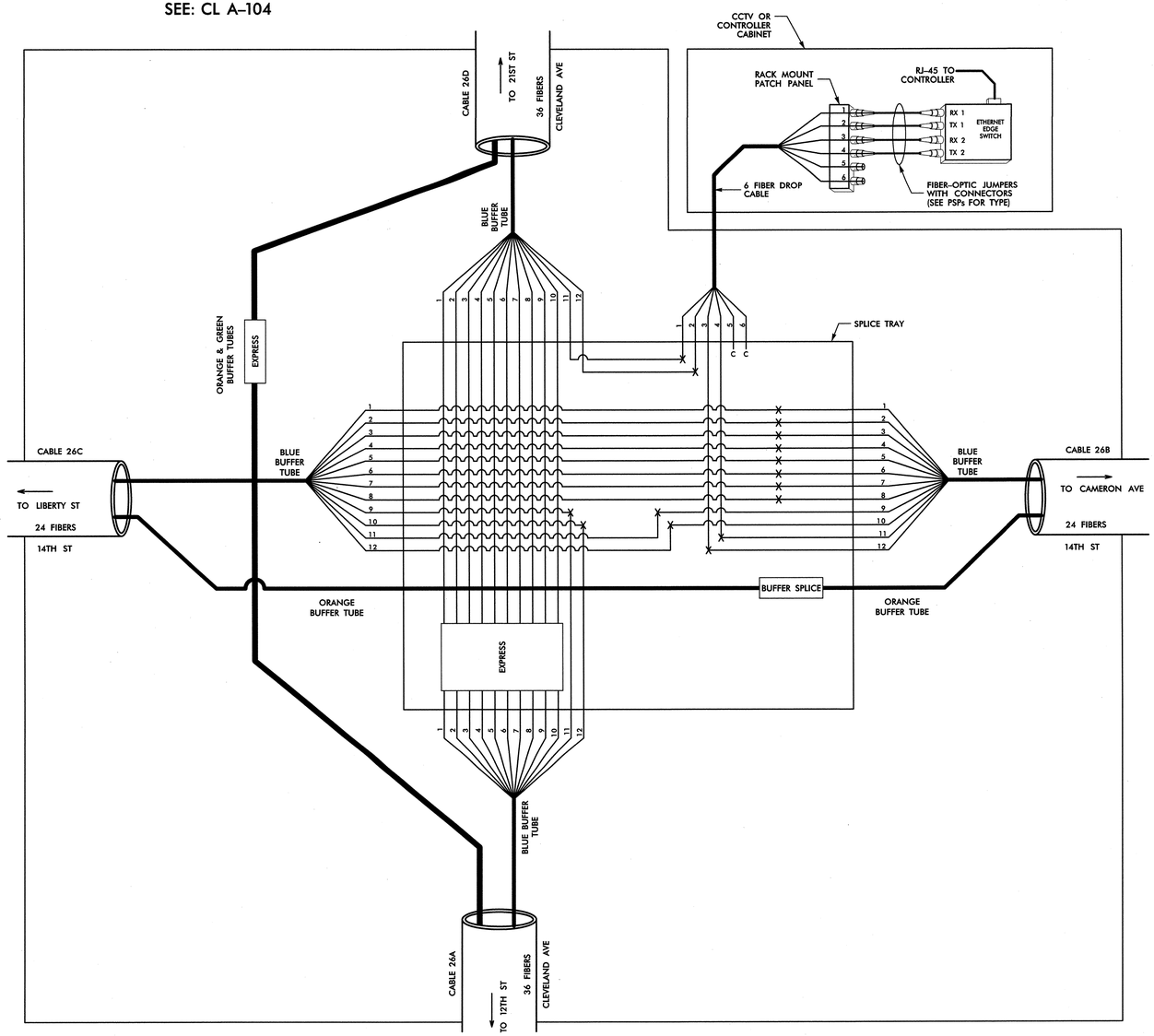

LEGEND

COLOR CODE TIA/EIA 598-B

(1) BLUE	(7) RED
(2) ORANGE	(8) BLACK
(3) GREEN	(9) YELLOW
(4) BROWN	(10) VIOLET
(5) SLATE	(11) ROSE
(6) WHITE	(12) AQUA

X = FUSION SPLICE INDIVIDUAL FIBER

C = CAP AND SEAL

EXPRESS = EXPRESS FIBERS THROUGH WITHOUT CUTTING

BUFFER SPLICE = SPLICE ALL FIBERS IN BUFFER TUBE COLOR TO COLOR

NOTES

1. UNUSED FIBERS LEFT COILED AND STORED IN SPLICE TRAY
2. UNUSED BUFFER TUBES LEFT COILED AND STORED IN SPLICE ENCLOSURE
3. EDGE SWITCH CONFIGURATIONS ARE GENERIC. CONTRACTOR IS RESPONSIBLE FOR DETERMINING/ENSURING THE PROPER TERMINATIONS.

ATKINS 1616 EAST MILLBROOK ROAD, SUITE 310
RALEIGH, NORTH CAROLINA 27609
(919) 876-6888 NCBEES #F-0326

Prepared for the Offices of:
Transportation Mobility and Safety Division
STATE OF NORTH CAROLINA DEPARTMENT OF TRANSPORTATION
Intelligent Transportation Systems
750 Greenfield Parkway, Garner, NC 27529

Winston-Salem Signal System
Fiber-Optic
Splicing Details
Phase A

Division 09 Forsyth County Winston-Salem

PLAN DATE:	January 2013	REVIEWED BY:	HAB
PREPARED BY:	BJS	REVIEWED BY:	JTB

SCALE	REVISIONS	INIT.	DATE
N.T.S.			

SEAL

NORTH CAROLINA PROFESSIONAL SEAL 19962 ENGINEER HENRY ALFRED BADGETT, III

SIGNATURE DATE 1/11/13

CADD Filename: FS-46.dgn

09-JAN-2013 14:36
rpa4ft Transportation*Traffic*Curr*100022112 Winston Salem Sig Sys*Comms and ITS*Splice Diagrams*Phase A*FS-46.dgn
12251

PROJECT REFERENCE NO.	SHEET NO.
C-5224A	FS-47

SPLICE ENCLOSURE NO.

26-4

SEE: CL A-107

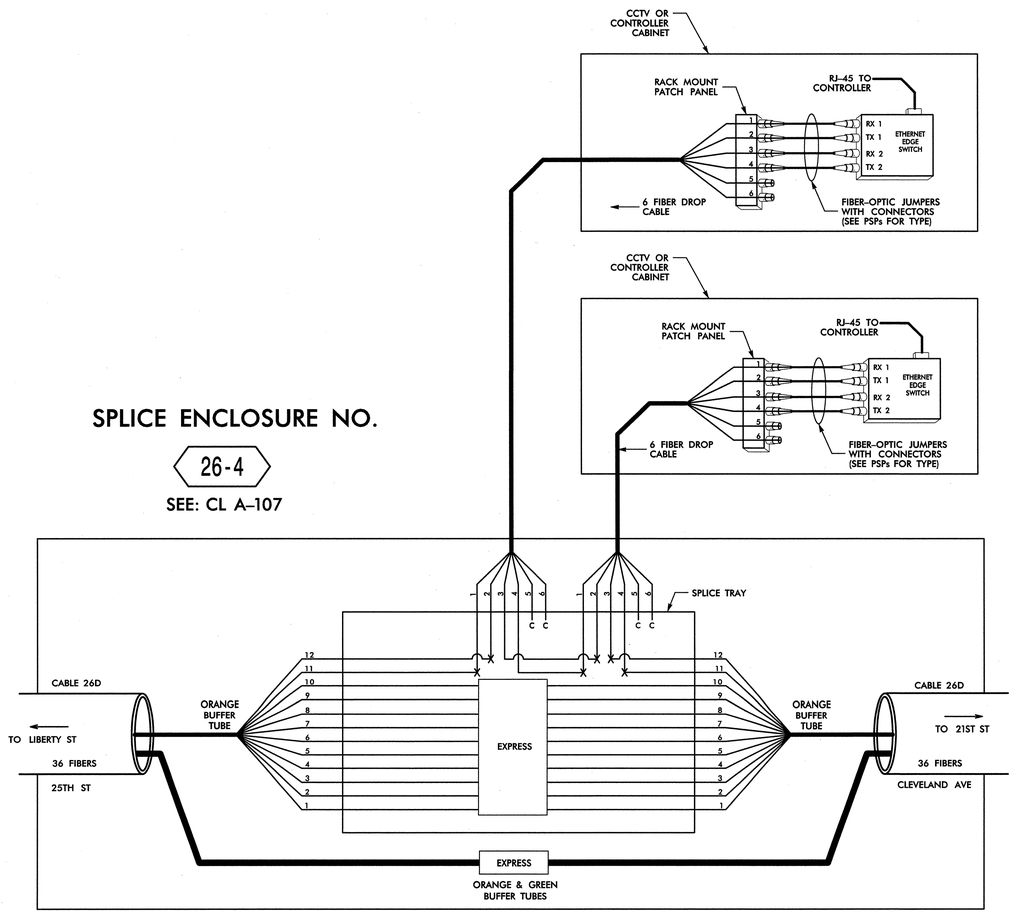

SPLICE ENCLOSURE NO.

27-1

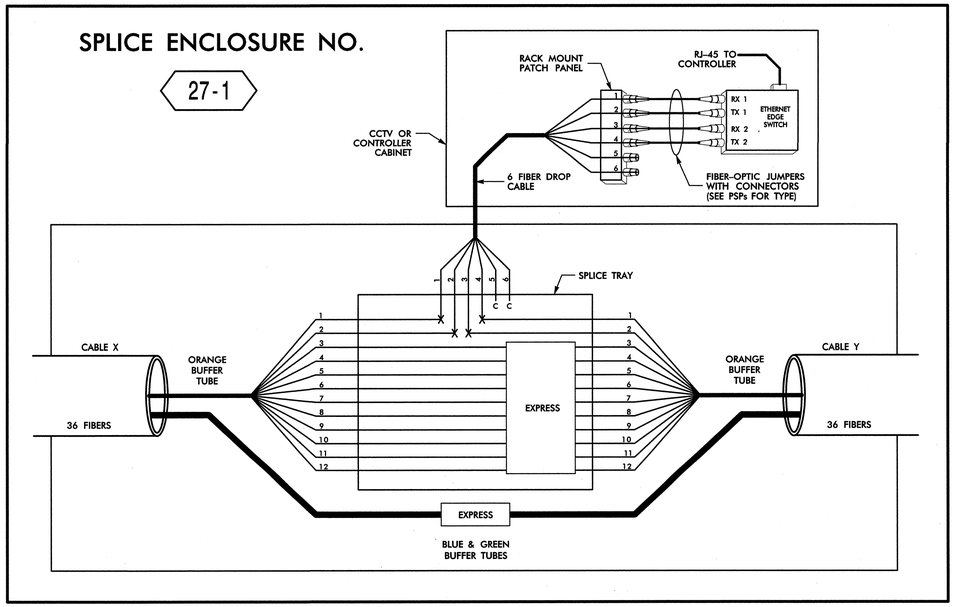

SPLICE ENCLOSURE NO. 27-1							
INTERSECTION NO.	CL SHEET	CABLE X			CABLE Y		
		CABLE NO.	ALONG ROUTE	TO	CABLE NO.	ALONG ROUTE	TO
C-013	CL A-097	27A	PATTERSON AVE	INDIANA AVE	27A	PATTERSON AVE	SHERATON ST
C-014	CL A-096	27A	PATTERSON AVE	30TH ST	27A	PATTERSON AVE	NORTHSIDE SHOPPING

LEGEND

COLOR CODE TIA/EIA 598-B

(1) BLUE	(7) RED
(2) ORANGE	(8) BLACK
(3) GREEN	(9) YELLOW
(4) BROWN	(10) VIOLET
(5) SLATE	(11) ROSE
(6) WHITE	(12) AQUA

X = FUSION SPLICE INDIVIDUAL FIBER

C = CAP AND SEAL

EXPRESS = EXPRESS FIBERS THROUGH WITHOUT CUTTING

BUFFER SPLICE = SPLICE ALL FIBERS IN BUFFER TUBE COLOR TO COLOR

NOTES

1. UNUSED FIBERS LEFT COILED AND STORED IN SPLICE TRAY
2. UNUSED BUFFER TUBES LEFT COILED AND STORED IN SPLICE ENCLOSURE
3. EDGE SWITCH CONFIGURATIONS ARE GENERIC. CONTRACTOR IS RESPONSIBLE FOR DETERMINING/ENSURING THE PROPER TERMINATIONS.

ATKINS 1616 EAST MILLBROOK ROAD, SUITE 310
RALEIGH, NORTH CAROLINA 27609
(919) 876-6888 NCBEES #F-0326

Prepared for the Offices of: Transportation Mobility and Safety Division, State of North Carolina, Department of Transportation, Intelligent Transportation Systems
750 Greenfield Parkway, Garner, NC 27529

Winston-Salem Signal System
Fiber-Optic
Splicing Details
Phase A

Division 09 Forsyth County Winston-Salem

PLAN DATE:	January 2013	REVIEWED BY:	HAB
PREPARED BY:	BJS	REVIEWED BY:	JTB

SCALE: N.T.S.

REVISIONS	INIT.	DATE

SEAL

NORTH CAROLINA PROFESSIONAL SEAL 19962 ENGINEER HENRY ALFRED BADGETT, III

H Alfred Badgett 1/11/13
SIGNATURE DATE

CADD Filename: FS-47.dgn

09-JAN-2013 14:36
D:\Transportation\Traffic\Curr\100022712 Winston Salem Sig Sys\Comms and ITS\Splice Diagrams\Phase A\FS-47.dgn
12054

PROJECT REFERENCE NO.	SHEET NO.
C-5224A	FS-48

SPLICE ENCLOSURE NO. 27-2

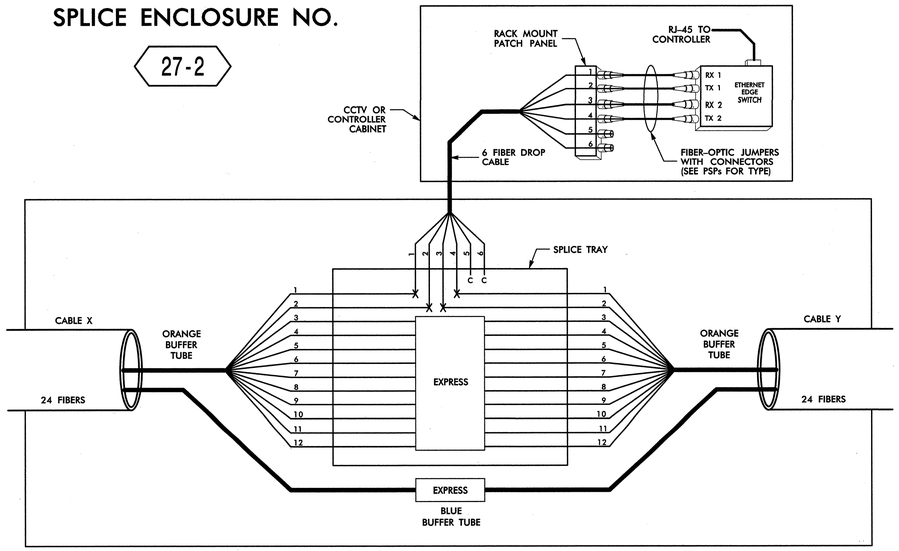

SPLICE ENCLOSURE NO. 27-3

SEE: CL A-098

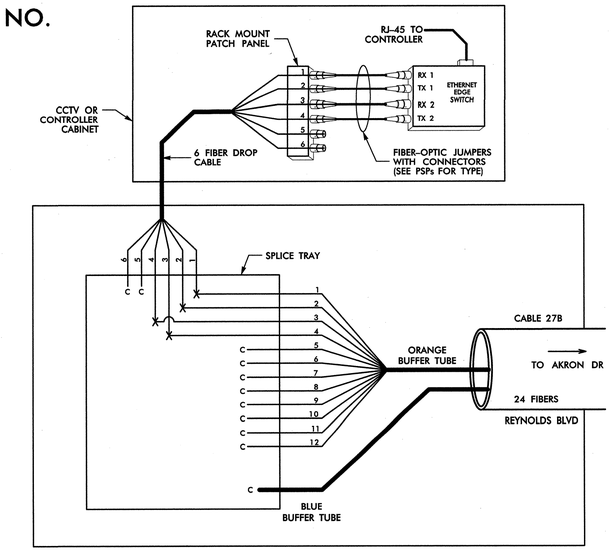

SPLICE ENCLOSURE NO. 27-2							
INTERSECTION NO.	CL SHEET	CABLE X			CABLE Y		
		CABLE NO.	ALONG ROUTE	TO	CABLE NO.	ALONG ROUTE	TO
09-0016	CL A-102	27D	AKRON DR	OGBURN AVE	27D	AKRON DR	LIBERTY ST
09-0175	CL A-100	27D	AKRON DR	US 52	27D	AKRON DR	OGBURN AVE
09-0566	CL A-101	27D	AKRON DR	US 52 NB RAMP	27D	AKRON DR	GLENN AVE
09-0665	CL A-098	27B	AKRON DR	SHERATON ST	27B	REYNOLDS BLVD	INDIANA AVE

LEGEND

COLOR CODE TIA/EIA 598-B

(1) BLUE	(7) RED
(2) ORANGE	(8) BLACK
(3) GREEN	(9) YELLOW
(4) BROWN	(10) VIOLET
(5) SLATE	(11) ROSE
(6) WHITE	(12) AQUA

X = FUSION SPLICE INDIVIDUAL FIBER

C = CAP AND SEAL

EXPRESS = EXPRESS FIBERS THROUGH WITHOUT CUTTING

BUFFER SPLICE = SPLICE ALL FIBERS IN BUFFER TUBE COLOR TO COLOR

NOTES

1. UNUSED FIBERS LEFT COILED AND STORED IN SPLICE TRAY
2. UNUSED BUFFER TUBES LEFT COILED AND STORED IN SPLICE ENCLOSURE
3. EDGE SWITCH CONFIGURATIONS ARE GENERIC. CONTRACTOR IS RESPONSIBLE FOR DETERMINING/ENSURING THE PROPER TERMINATIONS.

ATKINS 1616 EAST MILLBROOK ROAD, SUITE 310 RALEIGH, NORTH CAROLINA 27609 (919) 876-6888 NCBEES #F-0326

Prepared for the Offices of: Transportation Mobility and Safety Division, State of North Carolina Department of Transportation, Intelligent Transportation Systems
750 Greenfield Parkway, Garner, NC 27529

Winston-Salem Signal System
Fiber-Optic
Splicing Details
Phase A

Division 09 Forsyth County Winston-Salem

PLAN DATE: January 2013	REVIEWED BY: HAB
PREPARED BY: BJS	REVIEWED BY: JTB

SCALE: N.T.S.

REVISIONS	INIT.	DATE

SEAL: NORTH CAROLINA PROFESSIONAL SEAL 19962 ENGINEER HENRY ALFRED BADGETT, III

SIGNATURE H Alfred Badgett DATE 1/4/13

CADD Filename: FS-48.dgn

09-JAN-2013 14:36
D:\Transportation\Traffic\Curr*100022712 Winston Salem Sig Sys\Comms and ITS\Splice Diagrams\Phase A\FS-48.dgn
12054

PROJECT REFERENCE NO.	SHEET NO.
C-5224A	FS-49

SPLICE ENCLOSURE NO.

27-4

SEE: CL A-095

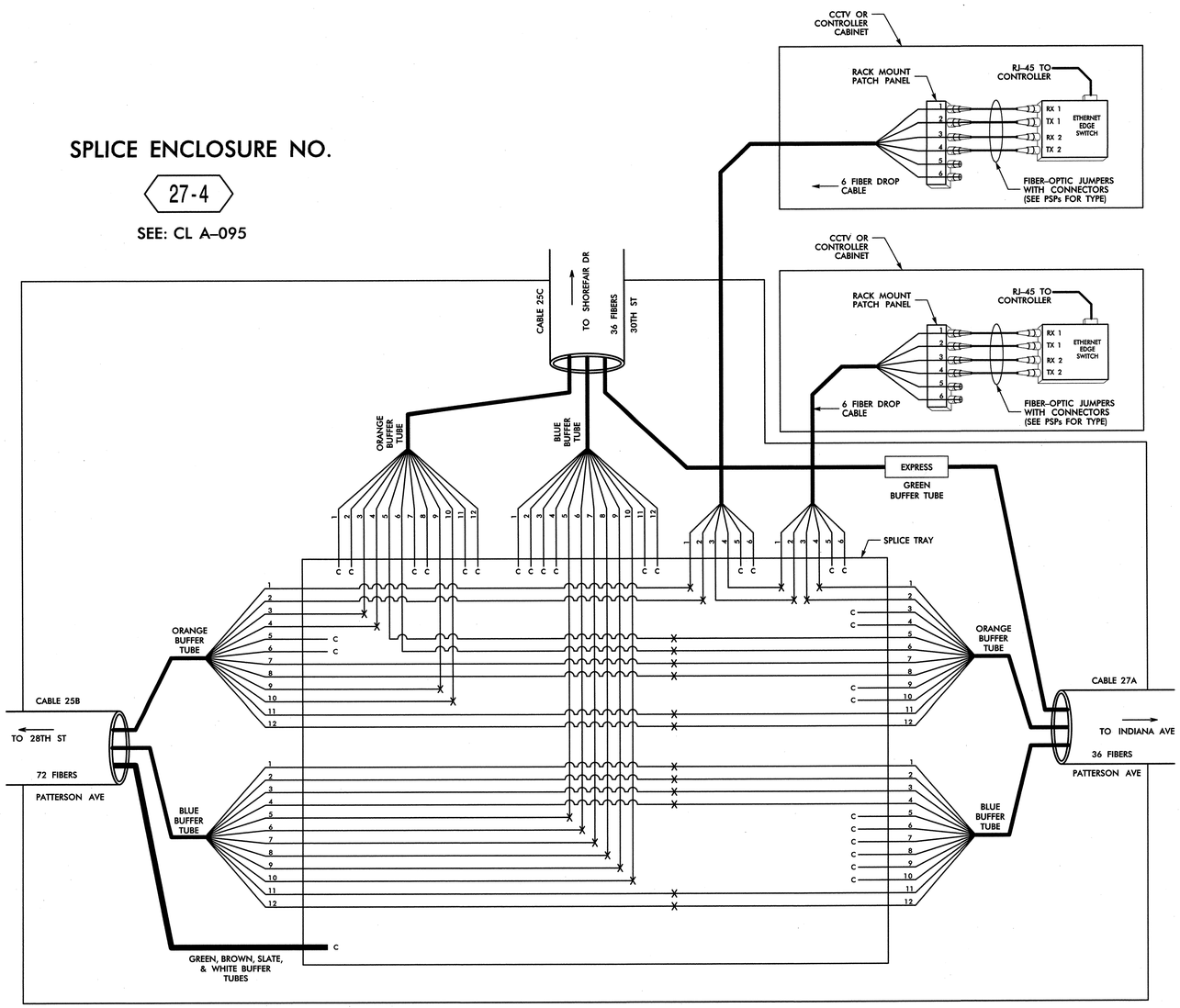

LEGEND

COLOR CODE TIA/EIA 598-B

(1) BLUE	(7) RED
(2) ORANGE	(8) BLACK
(3) GREEN	(9) YELLOW
(4) BROWN	(10) VIOLET
(5) SLATE	(11) ROSE
(6) WHITE	(12) AQUA

X = FUSION SPLICE INDIVIDUAL FIBER

C = CAP AND SEAL

EXPRESS = EXPRESS FIBERS THROUGH WITHOUT CUTTING

BUFFER SPLICE = SPLICE ALL FIBERS IN BUFFER TUBE COLOR TO COLOR

NOTES

1. UNUSED FIBERS LEFT COILED AND STORED IN SPLICE TRAY
2. UNUSED BUFFER TUBES LEFT COILED AND STORED IN SPLICE ENCLOSURE
3. EDGE SWITCH CONFIGURATIONS ARE GENERIC. CONTRACTOR IS RESPONSIBLE FOR DETERMINING/ENSURING THE PROPER TERMINATIONS.

ATKINS 1616 EAST MILLBROOK ROAD, SUITE 310
RALEIGH, NORTH CAROLINA 27609
(919) 876-6888 NCBEES #F-0326

Prepared for the Offices of: Transportation Mobility and Safety Division, State of North Carolina, Department of Transportation, Intelligent Transportation Systems

750 Greenfield Parkway, Garner, NC 27529

Winston-Salem Signal System
Fiber-Optic
Splicing Details
Phase A

Division 09 Forsyth County Winston-Salem

PLAN DATE:	January 2013	REVIEWED BY:	HAB
PREPARED BY:	BJS	REVIEWED BY:	JTB

SCALE: N.T.S.

REVISIONS	INIT.	DATE

SEAL: NORTH CAROLINA PROFESSIONAL SEAL 19962 ENGINEER HENRY ALFRED BADGETT, III

SIGNATURE DATE 1/11/13

CADD Filename: FS-49.dgn

09-JAN-2013 14:36
D:\Transportation\Traffic\Curr\100022712 Winston Salem Sig Sys\Comms and ITS\Splice Diagrams\Phase A\FS-49.dgn
12:04

PROJECT REFERENCE NO.	SHEET NO.
C-5224A	FS-50

SPLICE ENCLOSURE NO.

27-5

SEE: CL A-099

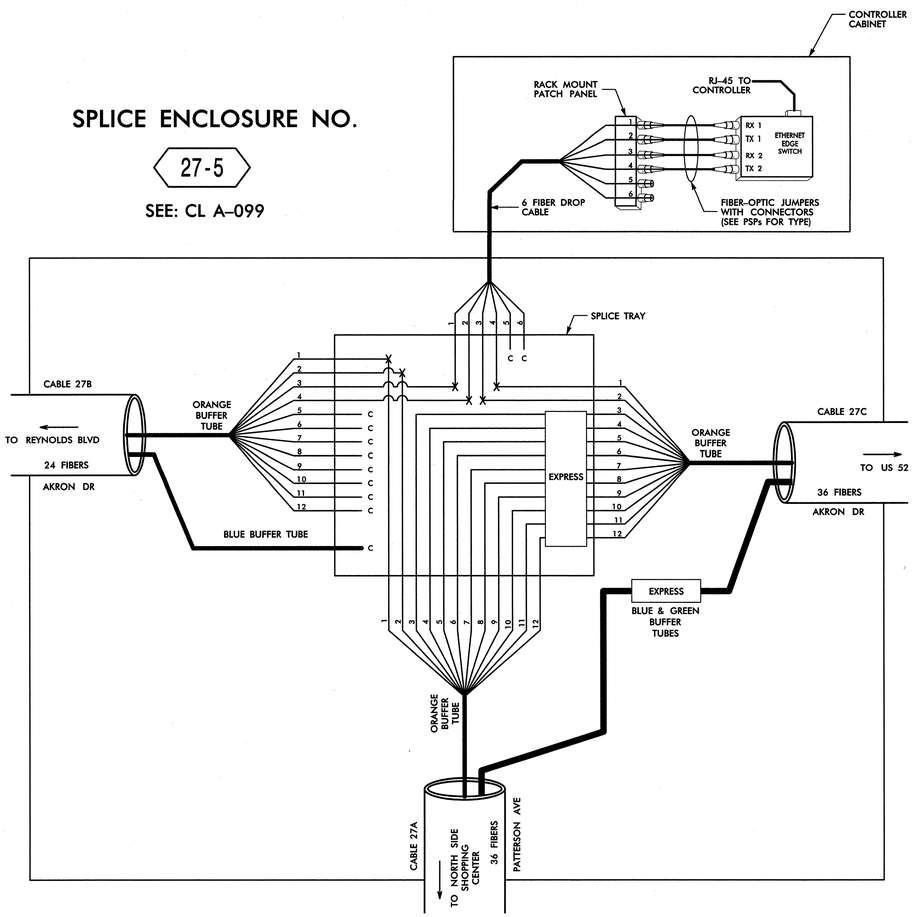

SPLICE ENCLOSURE NO.

27-6

(EXISTING)

SEE: CL A-100

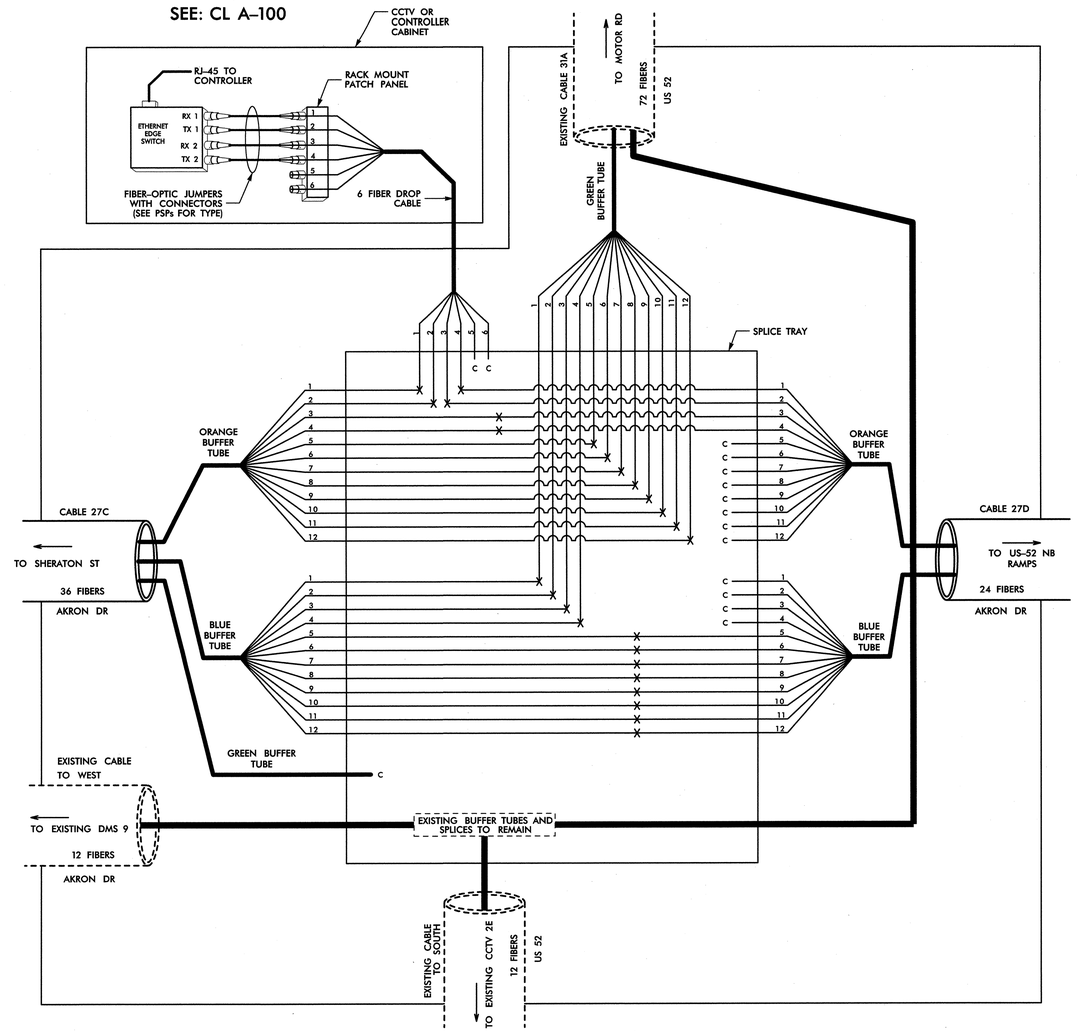

LEGEND

COLOR CODE TIA/EIA 598-B	
(1) BLUE	(7) RED
(2) ORANGE	(8) BLACK
(3) GREEN	(9) YELLOW
(4) BROWN	(10) VIOLET
(5) SLATE	(11) ROSE
(6) WHITE	(12) AQUA

X = FUSION SPLICE INDIVIDUAL FIBER

C = CAP AND SEAL

EXPRESS = EXPRESS FIBERS THROUGH WITHOUT CUTTING

BUFFER SPLICE = SPLICE ALL FIBERS IN BUFFER TUBE COLOR TO COLOR

NOTES

1. UNUSED FIBERS LEFT COILED AND STORED IN SPLICE TRAY
2. UNUSED BUFFER TUBES LEFT COILED AND STORED IN SPLICE ENCLOSURE
3. EDGE SWITCH CONFIGURATIONS ARE GENERIC. CONTRACTOR IS RESPONSIBLE FOR DETERMINING/ENSURING THE PROPER TERMINATIONS.

ATKINS 1616 EAST MILLBROOK ROAD, SUITE 310
RALEIGH, NORTH CAROLINA 27609
(919) 876-6888 NCBEES #F-0326

Prepared for the Offices of:
Transportation Mobility and Safety Division
Intelligent Transportation Systems
750 Greenfield Parkway, Garner, NC 27529

Winston-Salem Signal System
Fiber-Optic
Splicing Details
Phase A

Division 09 Forsyth County Winston-Salem

PLAN DATE:	January 2013	REVIEWED BY:	HAB
PREPARED BY:	BJS	REVIEWED BY:	JTB

SCALE: N.T.S.

REVISIONS	INIT.	DATE

SEAL: NORTH CAROLINA PROFESSIONAL SEAL 19962 ENGINEER HENRY ALFRED BADGETT III

SIGNATURE: H Alfred Badgett DATE: 1/11/13

CADD Filename: FS-50.dgn

09-JAN-2013 14:36
C:\Transportation\Traffic\Curr\10022712 Winston Salem Sig Sys\Coms and ITS\Splice Diagrams\Phase A\FS-50.dgn
12054

PROJECT REFERENCE NO.	SHEET NO.
C-5224A	FS-51

SPLICE ENCLOSURE NO. 28-1

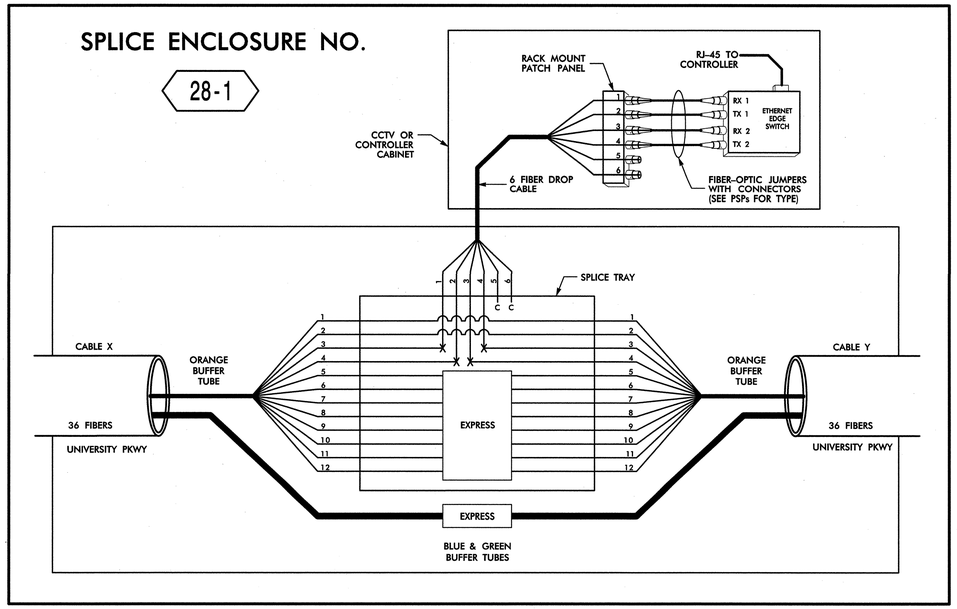

SPLICE ENCLOSURE NO. 28-1							
INTERSECTION NO.	CL SHEET	CABLE X			CABLE Y		
		CABLE NO.	ALONG ROUTE	TO	CABLE NO.	ALONG ROUTE	TO
09-0129	CL A-066	28A	UNIVERSITY PKWY	NORTHWEST BLVD	28A	UNIVERSITY PKWY	25TH ST
09-0012	CL A-063	28A	UNIVERSITY PKWY	14TH ST	28A	UNIVERSITY PKWY	COLISEUM DR
09-0161	CL A-061	28C	UNIVERSITY PKWY	COLISEUM DR	28C	UNIVERSITY PKWY	CHERRY ST
09-0705	CL A-059	28C	UNIVERSITY PKWY	DEACON DR	28C	CHERRY ST	REYNOLDS BLVD

SPLICE ENCLOSURE NO. 28-2

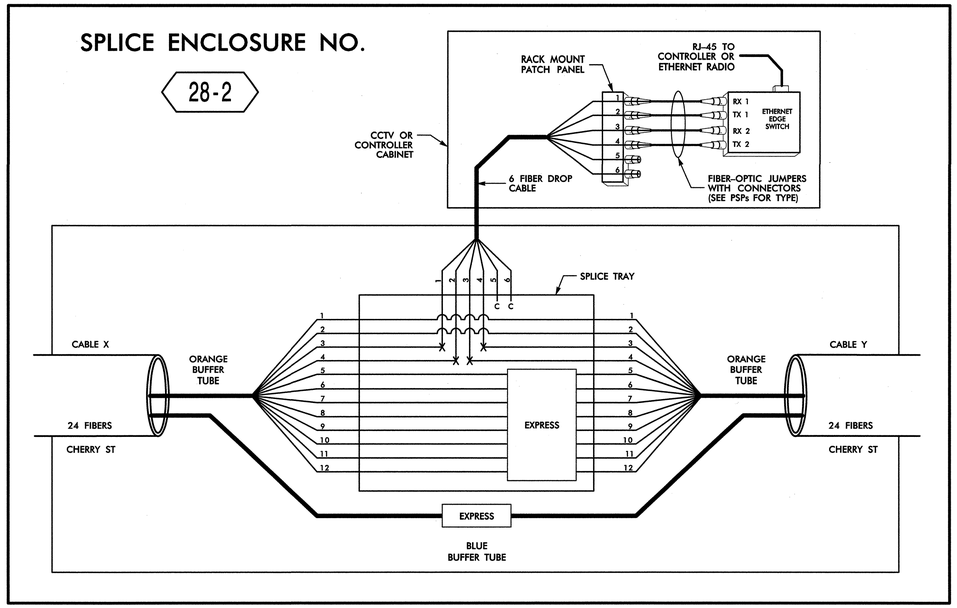

SPLICE ENCLOSURE NO. 28-2							
INTERSECTION NO.	CL SHEET	CABLE X			CABLE Y		
		CABLE NO.	ALONG ROUTE	TO	CABLE NO.	ALONG ROUTE	TO
09-0009	CL A-057	28D	CHERRY ST	UNIVERSITY PKWY	28D	CHERRY ST	NORTH POINT BLVD
09-0647	CL A-055	28D	CHERRY ST	POLO RD	28D	CHERRY ST	INDIANA AVE

NOTE: ETHERNET EDGE SWITCH AT 09-0009 HAS RJ-45 CABLES TO BOTH CONTROLLER AND ETHERNET RADIO.

SPLICE ENCLOSURE NO. 28-3

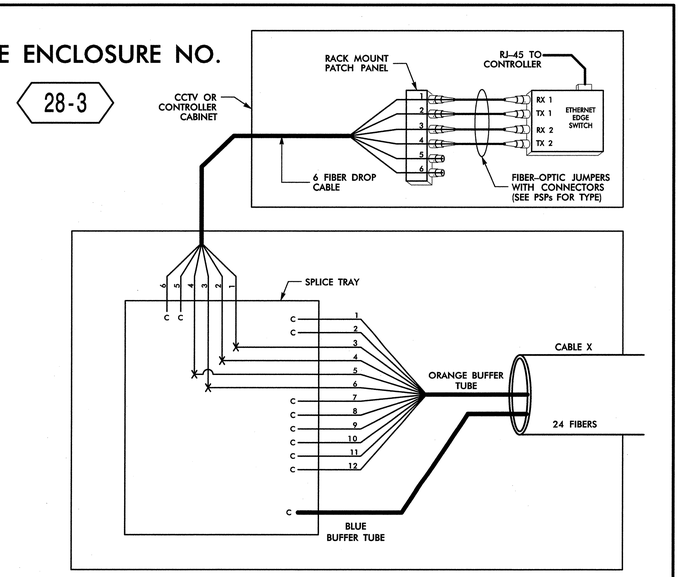

SPLICE ENCLOSURE NO. 28-3				
INTERSECTION NO.	CL SHEET	CABLE X		
		CABLE NO.	ALONG ROUTE	TO
09-0150	CL A-054	28D	CHERRY ST	NORTH POINT BLVD
C-275	CL A-089	28B	COLISEUM DR	UNIVERSITY PKWY

LEGEND

COLOR CODE TIA/EIA 598-B

(1) BLUE	(7) RED
(2) ORANGE	(8) BLACK
(3) GREEN	(9) YELLOW
(4) BROWN	(10) VIOLET
(5) SLATE	(11) ROSE
(6) WHITE	(12) AQUA

X = FUSION SPLICE INDIVIDUAL FIBER

C = CAP AND SEAL

EXPRESS = EXPRESS FIBERS THROUGH WITHOUT CUTTING

BUFFER SPLICE = SPLICE ALL FIBERS IN BUFFER TUBE COLOR TO COLOR

NOTES

1. UNUSED FIBERS LEFT COILED AND STORED IN SPLICE TRAY
2. UNUSED BUFFER TUBES LEFT COILED AND STORED IN SPLICE ENCLOSURE
3. EDGE SWITCH CONFIGURATIONS ARE GENERIC. CONTRACTOR IS RESPONSIBLE FOR DETERMINING/ENSURING THE PROPER TERMINATIONS.

ATKINS 1616 EAST MILLBROOK ROAD, SUITE 310
RALEIGH, NORTH CAROLINA 27609
(919) 876-6888 NCBEES #F-0326

Prepared for the Offices of: Transportation Mobility and Safety Division, Intelligent Transportation Systems, STATE OF NORTH CAROLINA DEPARTMENT OF TRANSPORTATION
750 Greenfield Parkway, Garner, NC 27529

SCALE: N.T.S.

Winston-Salem Signal System Fiber-Optic Splicing Details Phase A

Division 09 Forsyth County Winston-Salem

PLAN DATE:	January 2013	REVIEWED BY:	HAB
PREPARED BY:	BJS	REVIEWED BY:	JTB

REVISIONS	INIT.	DATE

SEAL: NORTH CAROLINA PROFESSIONAL SEAL 19962 ENGINEER HENRY ALFRED BADGETT, III

SIGNATURE: H. Alfred Badgett DATE: 1/11/13

CADD Filename: FS-51.dgn

09-JAN-2013 14:43
09:\Transportation\Traffic\Curr\100022712 Winston Salem Sig Sys\Comms and ITS\Splice Diagrams\Phase A\FS-51.dgn
12:2004

PROJECT REFERENCE NO.	SHEET NO.
C-5224A	FS-52

SPLICE ENCLOSURE NO.

28-4

(EXISTING)
SEE: CL A-059

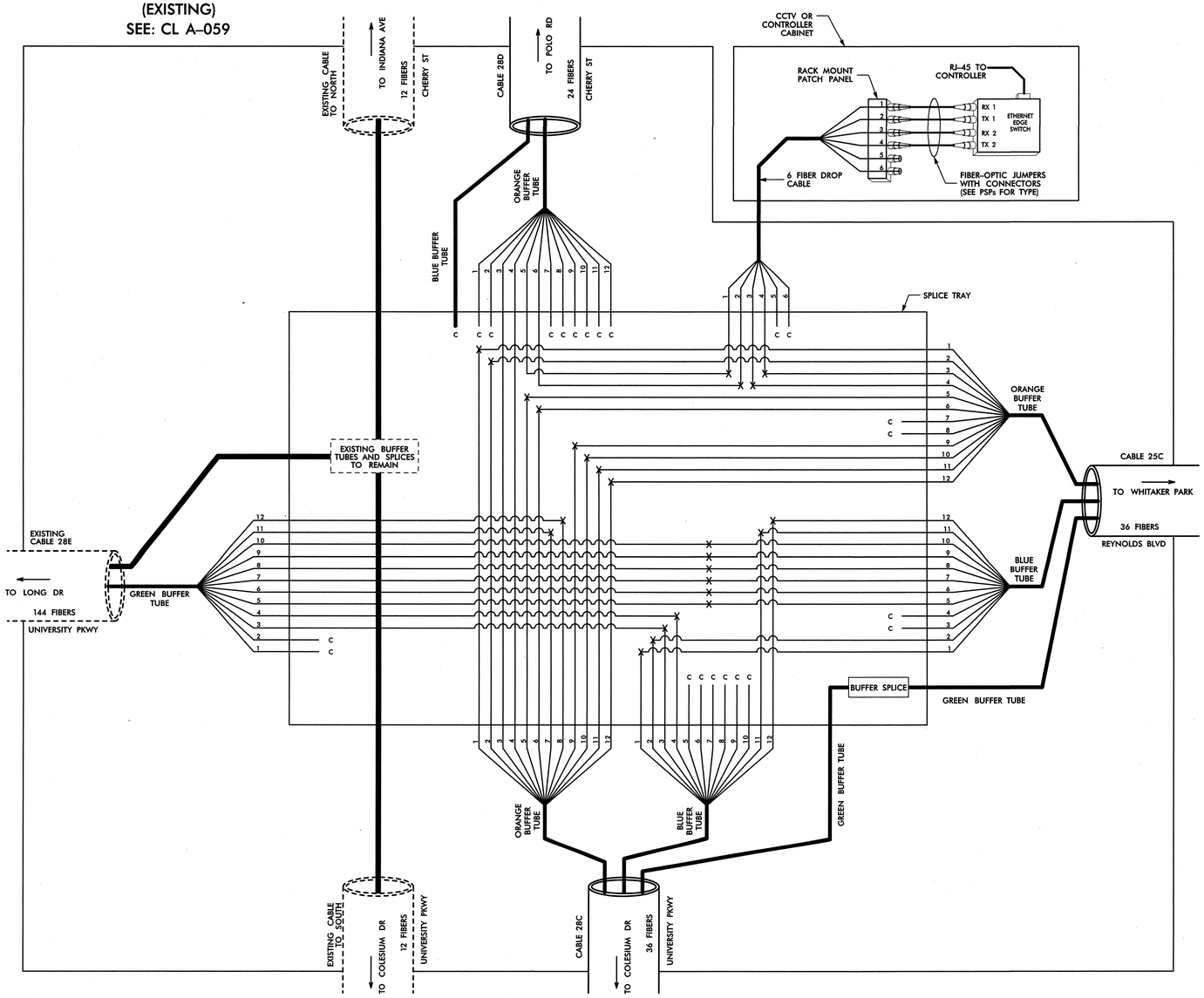

LEGEND

COLOR CODE TIA/EIA 598-B

(1) BLUE	(7) RED
(2) ORANGE	(8) BLACK
(3) GREEN	(9) YELLOW
(4) BROWN	(10) VIOLET
(5) SLATE	(11) ROSE
(6) WHITE	(12) AQUA

X = FUSION SPLICE INDIVIDUAL FIBER

C = CAP AND SEAL

EXPRESS = EXPRESS FIBERS THROUGH WITHOUT CUTTING

BUFFER SPLICE = SPLICE ALL FIBERS IN BUFFER TUBE COLOR TO COLOR

NOTES

1. UNUSED FIBERS LEFT COILED AND STORED IN SPLICE TRAY
2. UNUSED BUFFER TUBES LEFT COILED AND STORED IN SPLICE ENCLOSURE
3. EDGE SWITCH CONFIGURATIONS ARE GENERIC. CONTRACTOR IS RESPONSIBLE FOR DETERMINING/ENSURING THE PROPER TERMINATIONS.

ATKINS 1616 EAST MILLBROOK ROAD, SUITE 310
RALEIGH, NORTH CAROLINA 27609
(919) 876-6888 NCBEES #F-0326

Prepared for the Offices of:
Transportation Mobility and Safety Division
STATE OF NORTH CAROLINA DEPARTMENT OF TRANSPORTATION
Intelligent Transportation Systems
750 Greenfield Parkway, Garner, NC 27529

SCALE: N.T.S.

Winston-Salem Signal System
Fiber-Optic
Splicing Details
Phase A

Division 09 Forsyth County Winston-Salem

PLAN DATE:	January 2013	REVIEWED BY:	HAB
PREPARED BY:	BJS	REVIEWED BY:	JTB

REVISIONS	INIT.	DATE

SEAL: NORTH CAROLINA PROFESSIONAL SEAL 19962 ENGINEER HENRY ALFRED BADGETT, III

SIGNATURE H. Alfred Badgett DATE 1/11/13

CADD Filename: FS-52.dgn

09-JAN-2013 14:43
U:\Transportation\Traffic\Curr\1000022712 Winston Salem Sig Sys\Comms and ITS\Splice Diagrams\Phase A\FS-52.dgn
12054

PROJECT REFERENCE NO.	SHEET NO.
C-5224A	FS-53

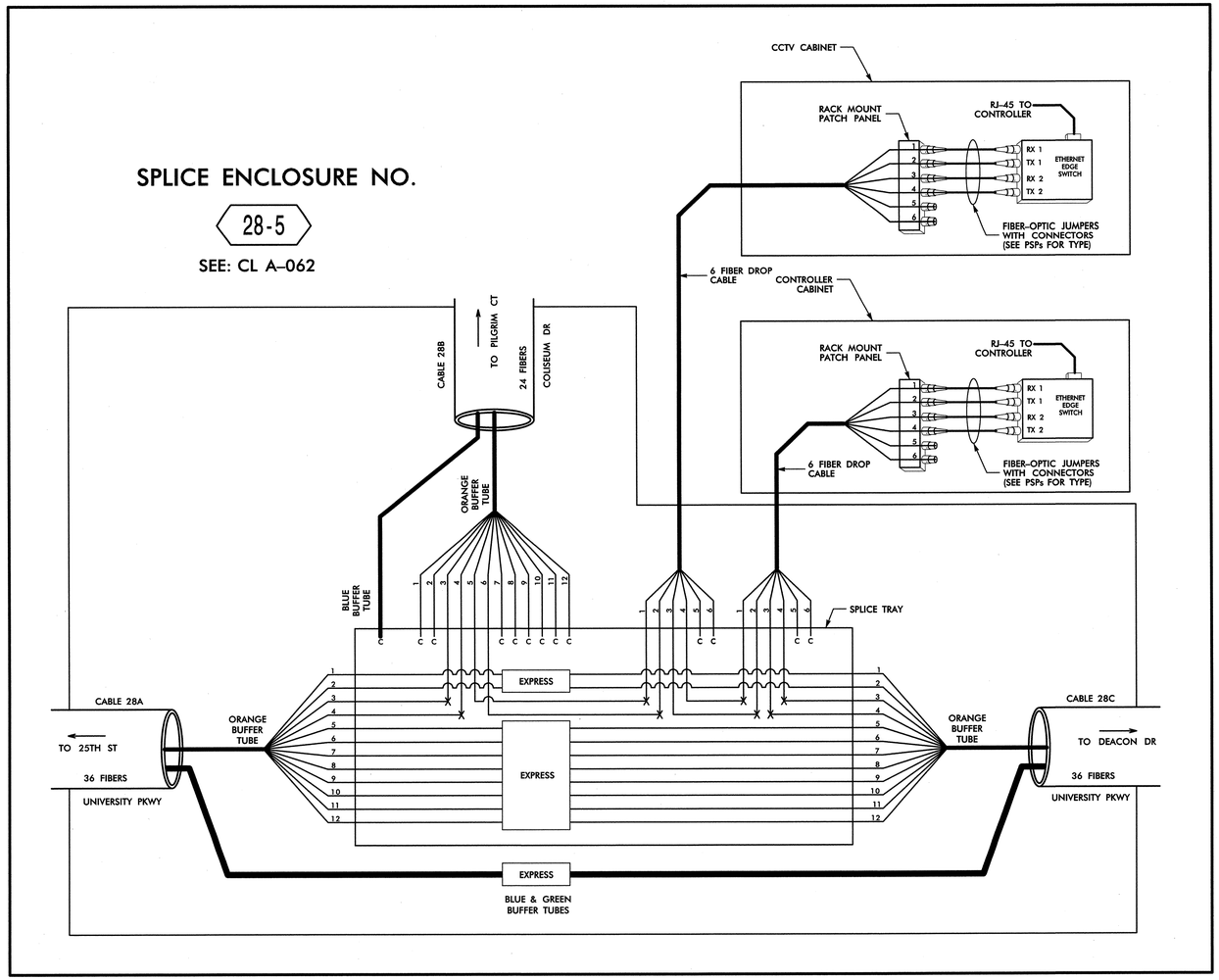

LEGEND

COLOR CODE TIA/EIA 598-B

(1) BLUE	(7) RED
(2) ORANGE	(8) BLACK
(3) GREEN	(9) YELLOW
(4) BROWN	(10) VIOLET
(5) SLATE	(11) ROSE
(6) WHITE	(12) AQUA

X = FUSION SPLICE INDIVIDUAL FIBER

C = CAP AND SEAL

EXPRESS = EXPRESS FIBERS THROUGH WITHOUT CUTTING

BUFFER SPLICE = SPLICE ALL FIBERS IN BUFFER TUBE COLOR TO COLOR

NOTES

1. UNUSED FIBERS LEFT COILED AND STORED IN SPLICE TRAY
2. UNUSED BUFFER TUBES LEFT COILED AND STORED IN SPLICE ENCLOSURE
3. EDGE SWITCH CONFIGURATIONS ARE GENERIC. CONTRACTOR IS RESPONSIBLE FOR DETERMINING/ENSURING THE PROPER TERMINATIONS.

ATKINS 1616 EAST MILLBROOK ROAD, SUITE 310
RALEIGH, NORTH CAROLINA 27609
(919) 876-6888 NCBEES #F-0326

Prepared for the Offices of:
Transportation Mobility and Safety Division
STATE OF NORTH CAROLINA DEPARTMENT OF TRANSPORTATION
Intelligent Transportation Systems
750 Greenfield Parkway, Garner, NC 27529

Winston-Salem Signal System Fiber-Optic Splicing Details Phase A

Division 09 Forsyth County Winston-Salem

PLAN DATE:	January 2013	REVIEWED BY:	HAB
PREPARED BY:	BJS	REVIEWED BY:	JTB

SCALE	REVISIONS	INIT.	DATE
N.T.S.			

SEAL: NORTH CAROLINA PROFESSIONAL SEAL 19962 ENGINEER HENRY ALFRED BADGETT III

SIGNATURE Hr Alfred Badgett DATE 1/11/13

CADD Filename: FS-53.dgn

09-JAN-2013 14:43
D:\transportation\Traffic\Curr\100022712 Winston Salem Sig Sys\Comms and ITS\Splice Diagrams\Phase A\FS-53.dgn
12054

PROJECT REFERENCE NO.	SHEET NO.
C-5224A	FS-54

SPLICE ENCLOSURE NO.

29-1

SEE: CL A-110

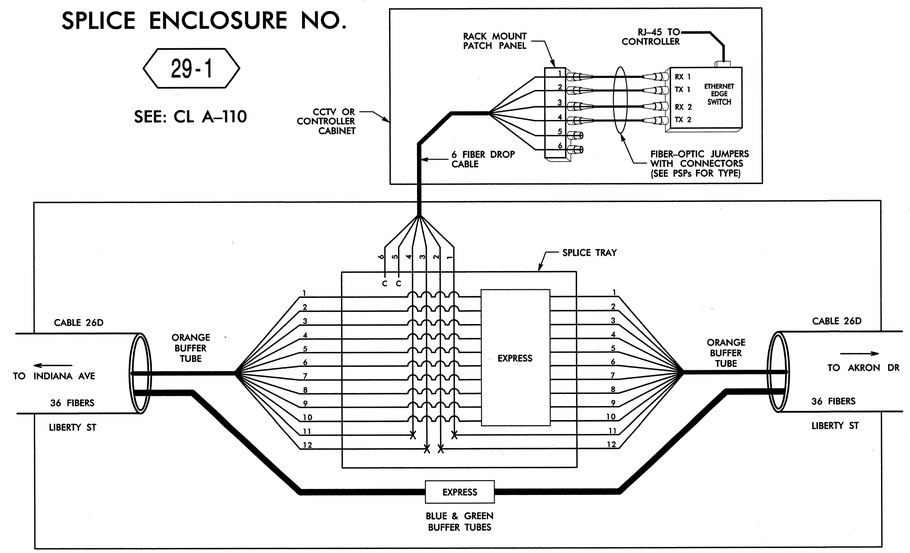

LEGEND

COLOR CODE TIA/EIA 598-B

(1) BLUE	(7) RED
(2) ORANGE	(8) BLACK
(3) GREEN	(9) YELLOW
(4) BROWN	(10) VIOLET
(5) SLATE	(11) ROSE
(6) WHITE	(12) AQUA

X = FUSION SPLICE INDIVIDUAL FIBER

C = CAP AND SEAL

EXPRESS = EXPRESS FIBERS THROUGH WITHOUT CUTTING

BUFFER SPLICE = SPLICE ALL FIBERS IN BUFFER TUBE COLOR TO COLOR

NOTES

1. UNUSED FIBERS LEFT COILED AND STORED IN SPLICE TRAY
2. UNUSED BUFFER TUBES LEFT COILED AND STORED IN SPLICE ENCLOSURE
3. EDGE SWITCH CONFIGURATIONS ARE GENERIC. CONTRACTOR IS RESPONSIBLE FOR DETERMINING/ENSURING THE PROPER TERMINATIONS.

ATKINS 1616 EAST MILLBROOK ROAD, SUITE 310
RALEIGH, NORTH CAROLINA 27609
(919) 876-6888 NCBEES #F-0326

Prepared for the Offices of:
Transportation Mobility and Safety Division
STATE OF NORTH CAROLINA DEPARTMENT OF TRANSPORTATION
Intelligent Transportation Systems
750 Greenfield Parkway, Garner, NC 27529

Winston-Salem Signal System
Fiber-Optic
Splicing Details
Phase A

Division 09 Forsyth County Winston-Salem

PLAN DATE:	January 2013	REVIEWED BY:	HAB
PREPARED BY:	BJS	REVIEWED BY:	JTB

SCALE: N.T.S.

REVISIONS	INIT.	DATE

SEAL
NORTH CAROLINA PROFESSIONAL SEAL 19962 ENGINEER HENRY ALFRED BADGETT III

SIGNATURE H Alfred Badgett DATE 1/11/13

CADD Filename: FS-54.dgn

09-JAN-2013 14:43
O:\Transportation\Traffic\Curr\100022712 Winston Salem Sig Sys\Forms and ITS\Splice Diagrams\Phase A\FS-54.dgn
12054

PROJECT REFERENCE NO.	SHEET NO.
C-5224A	FS-55

SPLICE ENCLOSURE NO. 29-2

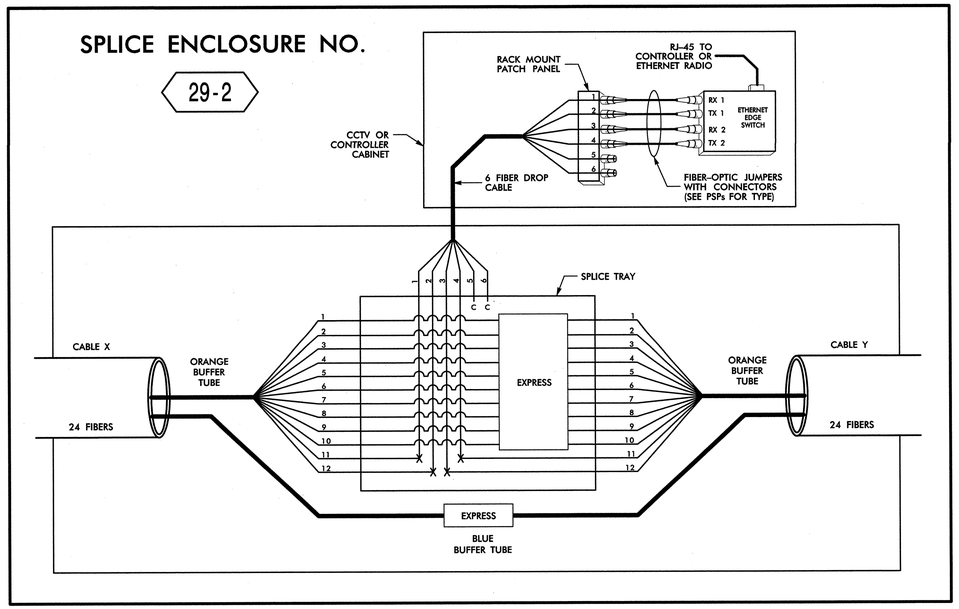

SPLICE ENCLOSURE NO. 29-2							
INTERSECTION NO.	CL SHEET	CABLE X			CABLE Y		
		CABLE NO.	ALONG ROUTE	TO	CABLE NO.	ALONG ROUTE	TO
09-1269	CL A-079	29A	MOTOR RD	PATTERSON AVE	29A	MOTOR RD	OLD WALKERTOWN RD
C-237	CL A-074	29A	MOTOR RD	US 52	29A	MOTOR RD	OLD RURAL HALL RD
09-0398	CL A-118	29A	MOTOR RD	OLD RURAL HALL RD	29A	OLD WALKERTOWN RD	LIBERTY ST
09-0187	CL A-116	29A	OLD WALKERTOWN RD	MOTOR RD	29A	LIBERTY ST	GLENN AVE
09-0186	CL A-115	29A	LIBERTY ST	OLD WALKERTOWN RD	29A	LIBERTY ST	LANSING DR
09-1121	CL A-115	29A	LIBERTY ST	GLENN AVE	29A	LIBERTY ST	AKRON DR

NOTE: ETHERNET EDGE SWITCH AT 09-0398 HAS RJ-45 CABLES TO BOTH CONTROLLER AND ETHERNET RADIO.

SPLICE ENCLOSURE NO. 29-3

(EXISTING)
SEE: CL A-073

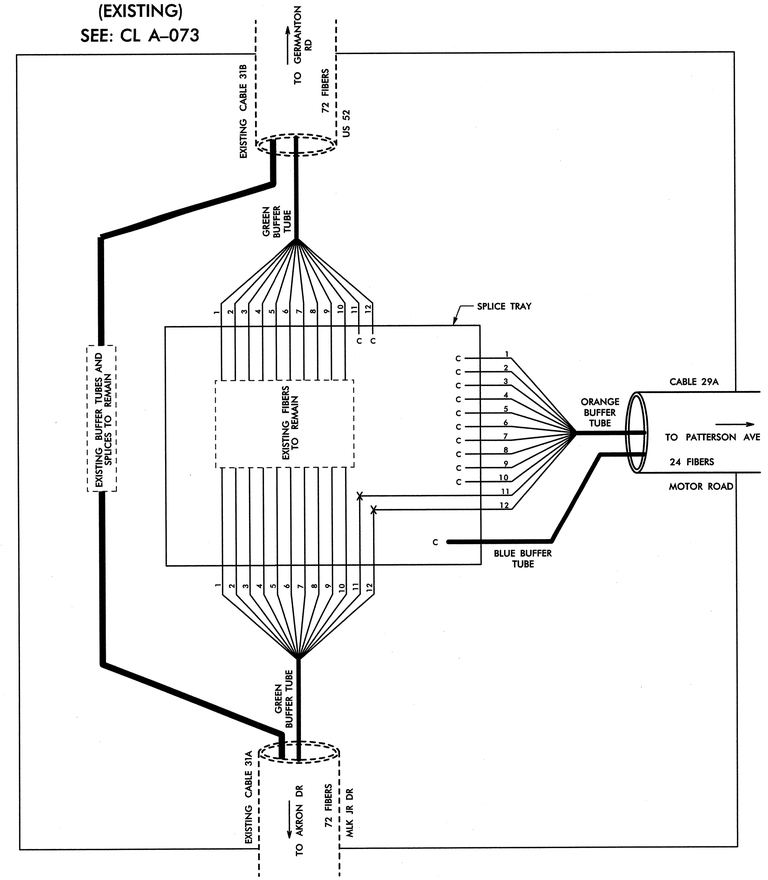

LEGEND

COLOR CODE TIA/EIA 598-B

(1) BLUE	(7) RED
(2) ORANGE	(8) BLACK
(3) GREEN	(9) YELLOW
(4) BROWN	(10) VIOLET
(5) SLATE	(11) ROSE
(6) WHITE	(12) AQUA

X = FUSION SPLICE INDIVIDUAL FIBER

C = CAP AND SEAL

EXPRESS = EXPRESS FIBERS THROUGH WITHOUT CUTTING

BUFFER SPLICE = SPLICE ALL FIBERS IN BUFFER TUBE COLOR TO COLOR

NOTES

1. UNUSED FIBERS LEFT COILED AND STORED IN SPLICE TRAY
2. UNUSED BUFFER TUBES LEFT COILED AND STORED IN SPLICE ENCLOSURE
3. EDGE SWITCH CONFIGURATIONS ARE GENERIC. CONTRACTOR IS RESPONSIBLE FOR DETERMINING/ENSURING THE PROPER TERMINATIONS.

ATKINS 1616 EAST MILLBROOK ROAD, SUITE 310
RALEIGH, NORTH CAROLINA 27609
(919) 876-6888 NCBEES #F-0326

Prepared for the Offices of:
Transportation Mobility and Safety Division
STATE OF NORTH CAROLINA
DEPARTMENT OF TRANSPORTATION
Intelligent Transportation Systems
750 Greenfield Parkway, Garner, NC 27529

Winston-Salem Signal System
Fiber-Optic
Splicing Details
Phase A

Division 09 Forsyth County Winston-Salem

PLAN DATE:	January 2013	REVIEWED BY:	HAB
PREPARED BY:	BJS	REVIEWED BY:	JTB

SCALE	REVISIONS	INIT.	DATE
N.T.S.			

SEAL
NORTH CAROLINA PROFESSIONAL SEAL 19962 ENGINEER HENRY ALFRED BADGETT, III

H Alfred Badgett 1/11/13
SIGNATURE DATE

CADD Filename: FS-55.dgn

09-JAN-2013 14:44
D:\Transportation\Traffic\Curr\1000022712 Winston Salem Sig Sys\Comms and ITS\Splice Diagrams\Phase A\FS-55.dgn
12:034

PROJECT REFERENCE NO.	SHEET NO.
C-5224A	FS-56

SPLICE ENCLOSURE NO.

29-4

SEE: CL A-113

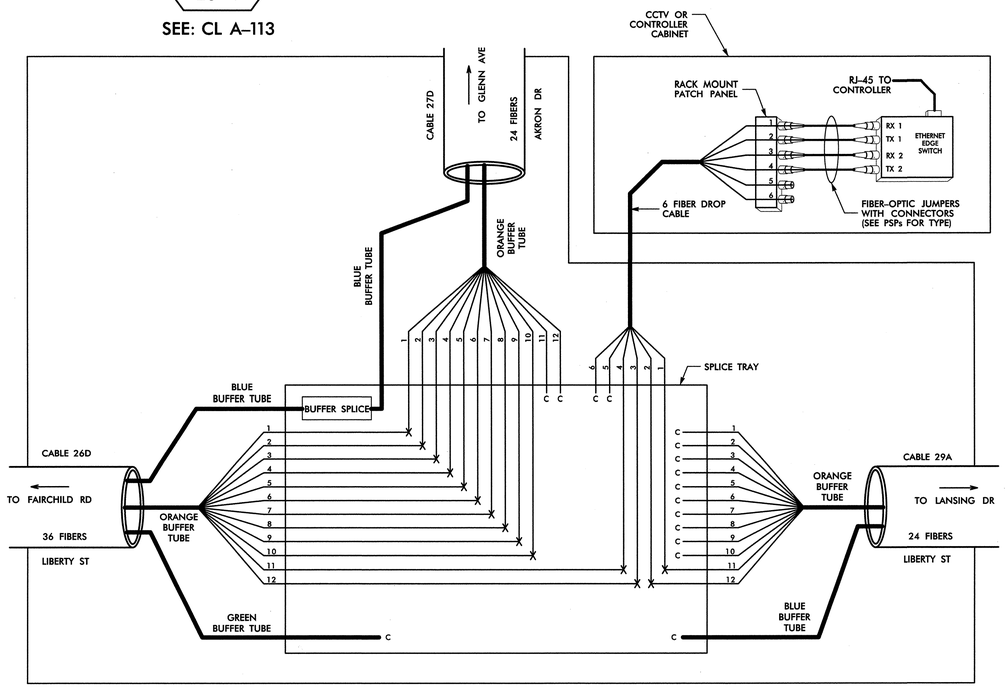

LEGEND

COLOR CODE TIA/EIA 598-B

(1) BLUE	(7) RED
(2) ORANGE	(8) BLACK
(3) GREEN	(9) YELLOW
(4) BROWN	(10) VIOLET
(5) SLATE	(11) ROSE
(6) WHITE	(12) AQUA

X = FUSION SPLICE INDIVIDUAL FIBER

C = CAP AND SEAL

EXPRESS = EXPRESS FIBERS THROUGH WITHOUT CUTTING

BUFFER SPLICE = SPLICE ALL FIBERS IN BUFFER TUBE COLOR TO COLOR

NOTES

1. UNUSED FIBERS LEFT COILED AND STORED IN SPLICE TRAY
2. UNUSED BUFFER TUBES LEFT COILED AND STORED IN SPLICE ENCLOSURE
3. EDGE SWITCH CONFIGURATIONS ARE GENERIC. CONTRACTOR IS RESPONSIBLE FOR DETERMINING/ENSURING THE PROPER TERMINATIONS.

ATKINS 1616 EAST MILLBROOK ROAD, SUITE 310
RALEIGH, NORTH CAROLINA 27609
(919) 876-6888 NCBEES #F-0326

Prepared for the Offices of:
Transportation Mobility and Safety Division
STATE OF NORTH CAROLINA
DEPARTMENT OF TRANSPORTATION
Intelligent Transportation Systems
750 Greenfield Parkway, Garner, NC 27529

Winston-Salem Signal System
Fiber-Optic
Splicing Details
Phase A

Division 09 Forsyth County Winston-Salem

PLAN DATE:	January 2013	REVIEWED BY:	HAB
PREPARED BY:	BJS	REVIEWED BY:	JTB

SCALE	REVISIONS	INIT.	DATE
N.T.S.			

SEAL
NORTH CAROLINA PROFESSIONAL SEAL 19962 ENGINEER HENRY ALFRED BADGETT, III

H. Alfred Badgett 1/11/13
SIGNATURE DATE

CADD Filename: FS-56.dgn

09-JAN-2013 14:44
r:\transportation\Traffic\Curr\1000022712 Winston Salem Sig Sys\Comms and ITS\Splice Diagrams\Phase A\FS-56.dgn
12054

PROJECT REFERENCE NO.	SHEET NO.
C-5224A	FS-57

SPLICE ENCLOSURE NO.

30-1

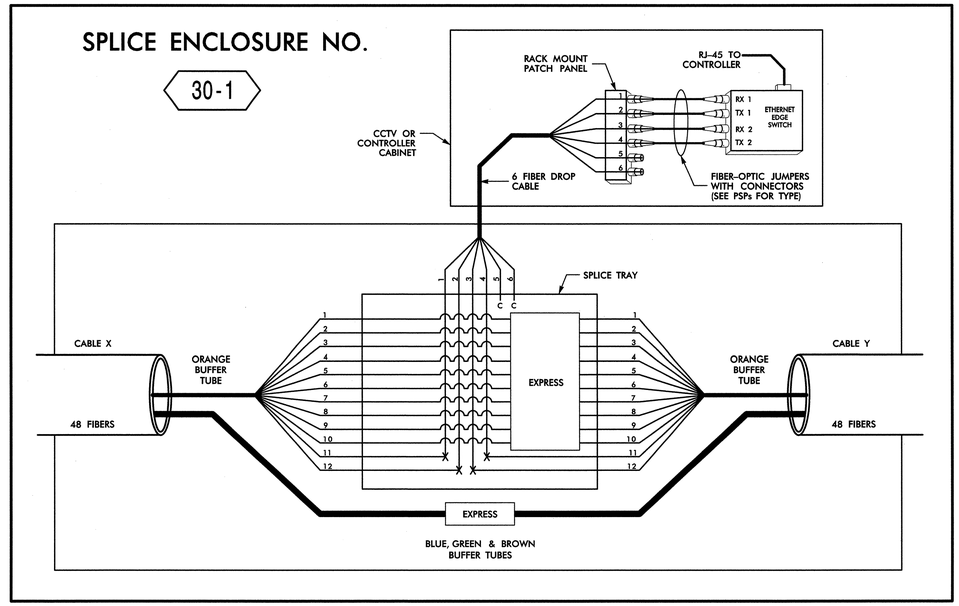

SPLICE ENCLOSURE NO. 30-1							
INTERSECTION NO.	CL SHEET	CABLE X			CABLE Y		
		CABLE NO.	ALONG ROUTE	TO	CABLE NO.	ALONG ROUTE	TO
09-1331	CL A-039	30G	MARSHALL ST	NORTHWEST BLVD	30G	MARSHALL ST	7TH ST
09-0128	CL A-039	30G	MARSHALL ST	8TH ST	30G	7TH ST	CHERRY ST
09-0127	CL A-040	30G	7TH ST	MARSHALL ST	30G	7TH ST	TRADE ST

LEGEND

COLOR CODE TIA/EIA 598-B

(1) BLUE	(7) RED
(2) ORANGE	(8) BLACK
(3) GREEN	(9) YELLOW
(4) BROWN	(10) VIOLET
(5) SLATE	(11) ROSE
(6) WHITE	(12) AQUA

X = FUSION SPLICE INDIVIDUAL FIBER

C = CAP AND SEAL

EXPRESS = EXPRESS FIBERS THROUGH WITHOUT CUTTING

BUFFER SPLICE = SPLICE ALL FIBERS IN BUFFER TUBE COLOR TO COLOR

NOTES

1. UNUSED FIBERS LEFT COILED AND STORED IN SPLICE TRAY
2. UNUSED BUFFER TUBES LEFT COILED AND STORED IN SPLICE ENCLOSURE
3. EDGE SWITCH CONFIGURATIONS ARE GENERIC. CONTRACTOR IS RESPONSIBLE FOR DETERMINING/ENSURING THE PROPER TERMINATIONS.

ATKINS 1616 EAST MILLBROOK ROAD, SUITE 310
RALEIGH, NORTH CAROLINA 27609
(919) 876-6888 NCBEES #F-0326

Prepared for the Offices of:
Transportation Mobility and Safety Division
STATE OF NORTH CAROLINA DEPARTMENT OF TRANSPORTATION
Intelligent Transportation Systems
750 Greenfield Parkway, Garner, NC 27529

Winston-Salem Signal System
Fiber-Optic
Splicing Details
Phase A

Division 09 Forsyth County Winston-Salem

PLAN DATE: January 2013	REVIEWED BY: HAB
PREPARED BY: BJS	REVIEWED BY: JTB

SCALE	REVISIONS	INIT.	DATE
N.T.S.			

SEAL
NORTH CAROLINA PROFESSIONAL SEAL 19962 ENGINEER HENRY ALFRED BADGETT, III

SIGNATURE DATE 1/4/13

CADD Filename: FS-57.dgn

09-JAN-2013 14:44
S:\Transportation\Traffic\Curr#100022712 Winston Salem Sig Sys\Comms and ITS\Splice Diagrams\Phase A\FS-57.dgn
12054

PROJECT REFERENCE NO.	SHEET NO.
C-5224A	FS-58

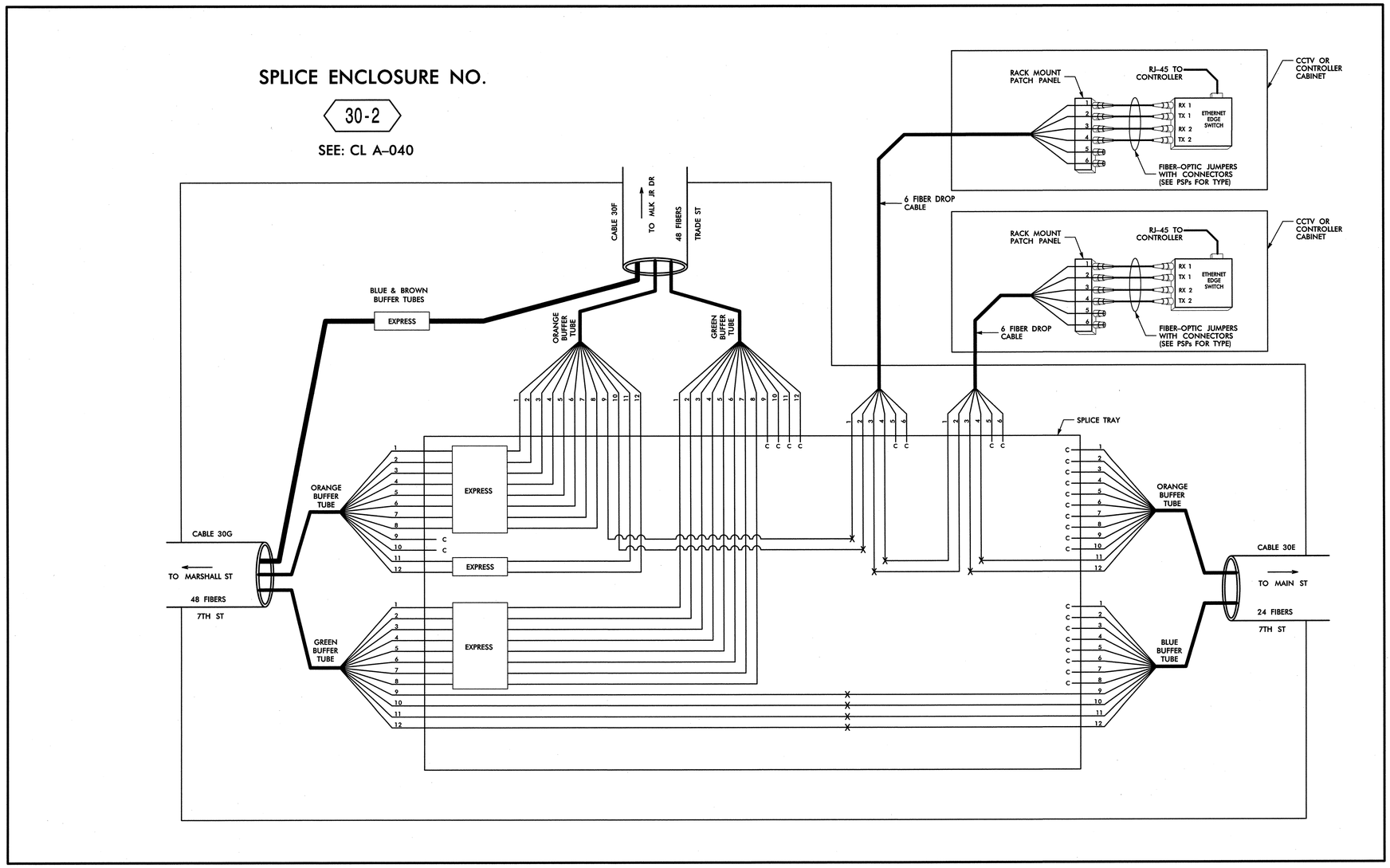

LEGEND

COLOR CODE TIA/EIA 598-B

(1) BLUE	(7) RED
(2) ORANGE	(8) BLACK
(3) GREEN	(9) YELLOW
(4) BROWN	(10) VIOLET
(5) SLATE	(11) ROSE
(6) WHITE	(12) AQUA

X = FUSION SPLICE INDIVIDUAL FIBER

C = CAP AND SEAL

EXPRESS = EXPRESS FIBERS THROUGH WITHOUT CUTTING

BUFFER SPLICE = SPLICE ALL FIBERS IN BUFFER TUBE COLOR TO COLOR

NOTES

1. UNUSED FIBERS LEFT COILED AND STORED IN SPLICE TRAY
2. UNUSED BUFFER TUBES LEFT COILED AND STORED IN SPLICE ENCLOSURE
3. EDGE SWITCH CONFIGURATIONS ARE GENERIC. CONTRACTOR IS RESPONSIBLE FOR DETERMINING/ENSURING THE PROPER TERMINATIONS.

ATKINS 1616 EAST MILLBROOK ROAD, SUITE 310
RALEIGH, NORTH CAROLINA 27609
(919) 876-6888 NCBEES #F-0326

Prepared for the Offices of:
Transportation Mobility and Safety Division
STATE OF NORTH CAROLINA DEPARTMENT OF TRANSPORTATION
Intelligent Transportation System
750 Greenfield Parkway, Garner, NC 27529

Winston-Salem Signal System
Fiber-Optic
Splicing Details
Phase A

Division 09 Forsyth County Winston-Salem

PLAN DATE:	January 2013	REVIEWED BY:	HAB
PREPARED BY:	BJS	REVIEWED BY:	JTB

SCALE	REVISIONS	INIT.	DATE
N.T.S.			

SEAL
NORTH CAROLINA PROFESSIONAL SEAL 19962 ENGINEER HENRY ALFRED BADGETT III

SIGNATURE H Alfred Badgett DATE 1/11/13

CADD Filename: FS-58.dgn

09-JAN-2013 14:44
C:\Transportation\Traffic\Curr\100022712 Winston Salem Sig Sys\Comms and ITS\Splice Diagrams\Phase A\FS-58.dgn
12054

PROJECT REFERENCE NO.	SHEET NO.
C-5224A	FS-59

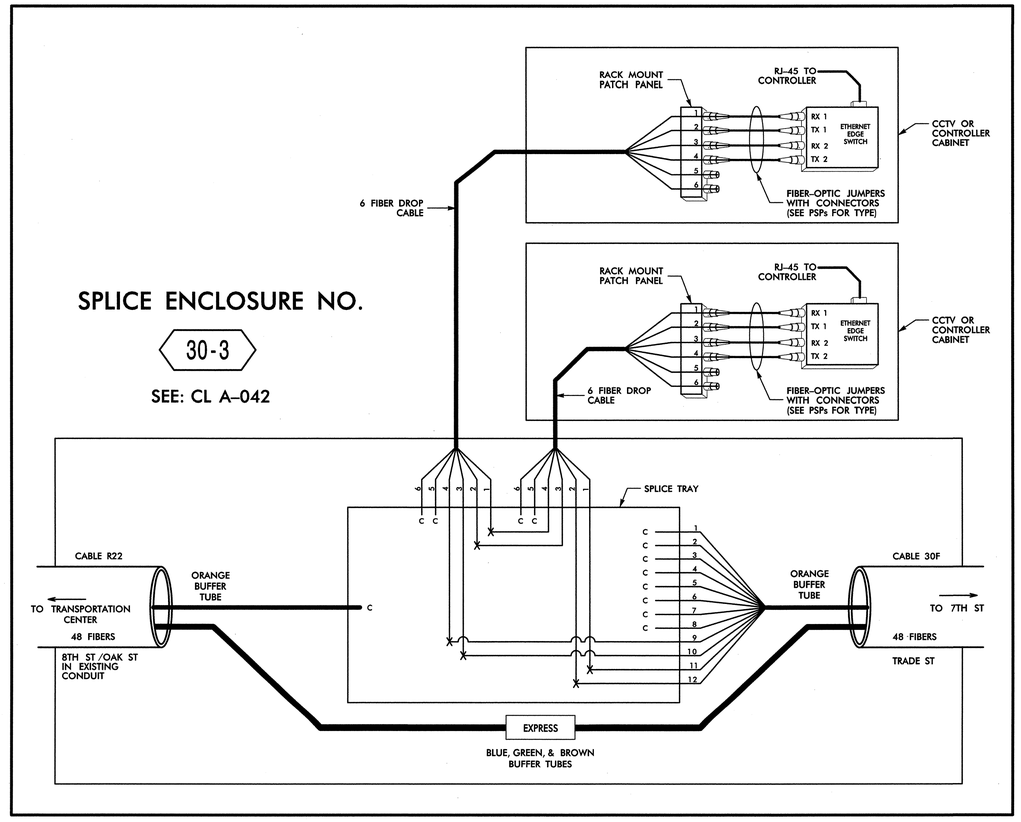

LEGEND

COLOR CODE TIA/EIA 598-B

(1) BLUE	(7) RED
(2) ORANGE	(8) BLACK
(3) GREEN	(9) YELLOW
(4) BROWN	(10) VIOLET
(5) SLATE	(11) ROSE
(6) WHITE	(12) AQUA

X = FUSION SPLICE INDIVIDUAL FIBER

C = CAP AND SEAL

EXPRESS = EXPRESS FIBERS THROUGH WITHOUT CUTTING

BUFFER SPLICE = SPLICE ALL FIBERS IN BUFFER TUBE COLOR TO COLOR

NOTES

1. UNUSED FIBERS LEFT COILED AND STORED IN SPLICE TRAY
2. UNUSED BUFFER TUBES LEFT COILED AND STORED IN SPLICE ENCLOSURE
3. EDGE SWITCH CONFIGURATIONS ARE GENERIC. CONTRACTOR IS RESPONSIBLE FOR DETERMINING/ENSURING THE PROPER TERMINATIONS.

ATKINS 1616 EAST MILLBROOK ROAD, SUITE 310
RALEIGH, NORTH CAROLINA 27609
(919) 876-6888 NCBEES #F-0326

Prepared for the Offices of:
Transportation Mobility and Safety Division
STATE OF NORTH CAROLINA DEPARTMENT OF TRANSPORTATION
Intelligent Transportation Systems
750 Greenfield Parkway, Garner, NC 27529

SCALE: N.T.S.

Winston-Salem Signal System Fiber-Optic Splicing Details Phase A

Division 09 Forsyth County Winston-Salem

PLAN DATE:	January 2013	REVIEWED BY:	HAB
PREPARED BY:	BJS	REVIEWED BY:	JTB

REVISIONS	INIT.	DATE

SEAL
NORTH CAROLINA PROFESSIONAL SEAL 19962 ENGINEER HENRY ALFRED BADGETT, III

SIGNATURE H. Alfred Badgett DATE 1/4/13

CADD Filename: FS-59.dgn

09-JAN-2013 14:44
C:\Transportation\Traffic\Curr\100022712 Winston Salem Sig Sys\Comms and ITS\Splice Diagrams\Phase A\FS-59.dgn
12.0.04

PROJECT REFERENCE NO.	SHEET NO.
C-5224A	FS-60

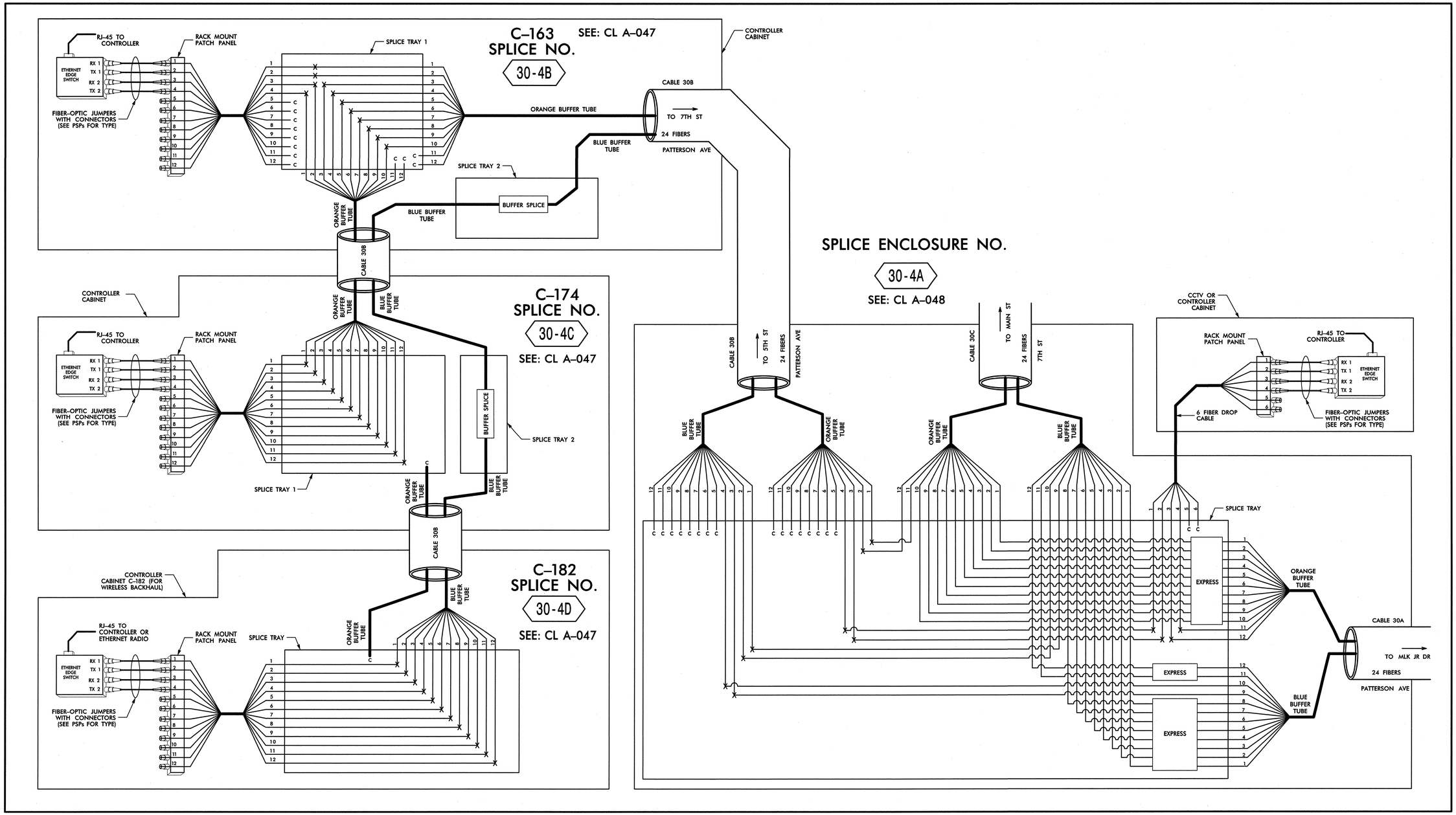

NOTE: ETHERNET EDGE SWITCH AT C–182 HAS RJ–45 CABLES TO BOTH CONTROLLER AND ETHERNET RADIO.

LEGEND

COLOR CODE TIA/EIA 598-B

(1) BLUE	(7) RED
(2) ORANGE	(8) BLACK
(3) GREEN	(9) YELLOW
(4) BROWN	(10) VIOLET
(5) SLATE	(11) ROSE
(6) WHITE	(12) AQUA

X = FUSION SPLICE INDIVIDUAL FIBER

C = CAP AND SEAL

EXPRESS = EXPRESS FIBERS THROUGH WITHOUT CUTTING

BUFFER SPLICE = SPLICE ALL FIBERS IN BUFFER TUBE COLOR TO COLOR

NOTES

1. UNUSED FIBERS LEFT COILED AND STORED IN SPLICE TRAY
2. UNUSED BUFFER TUBES LEFT COILED AND STORED IN SPLICE ENCLOSURE
3. EDGE SWITCH CONFIGURATIONS ARE GENERIC. CONTRACTOR IS RESPONSIBLE FOR DETERMINING/ENSURING THE PROPER TERMINATIONS.

ATKINS 1616 EAST MILLBROOK ROAD, SUITE 310
RALEIGH, NORTH CAROLINA 27609
(919) 876-6888 NCBEES #F-0326

Prepared for the Offices of:
Transportation Mobility and Safety Division
STATE OF NORTH CAROLINA DEPARTMENT OF TRANSPORTATION
Intelligent Transportation Systems
750 Greenfield Parkway, Garner, NC 27529

Winston-Salem Signal System Fiber-Optic Splicing Details Phase A

Division 09 Forsyth County Winston-Salem

PLAN DATE:	January 2013	REVIEWED BY:	HAB
PREPARED BY:	BJS	REVIEWED BY:	JTB

SCALE: N.T.S.

REVISIONS	INIT.	DATE

SEAL: NORTH CAROLINA PROFESSIONAL SEAL 19962 ENGINEER HENRY ALFRED BADGETT, III

SIGNATURE DATE

CADD Filename: FS-60.dgn

09-JAN-2013 14:44
O:\Transportation\Traffic\Curr\100022712 Winston Salem Sig Sys\Comms and ITS\Splice Diagrams\Phase A\FS-60.dgn
12054

PROJECT REFERENCE NO.	SHEET NO.
C-5224A	FS-61

SPLICE ENCLOSURE NO.

30-5

SEE: CL A–040

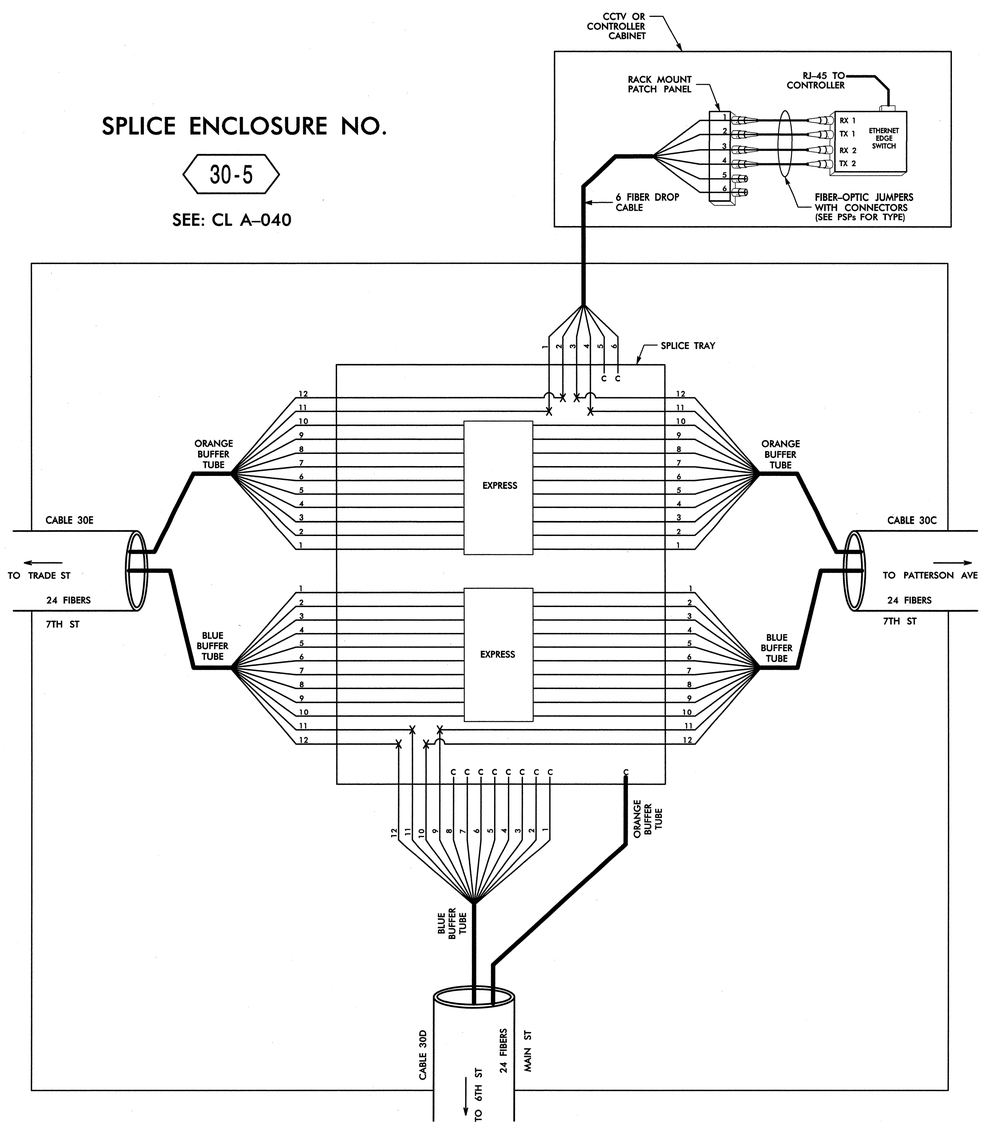

SPLICE ENCLOSURE NO.

30-6

SEE: CL A–046

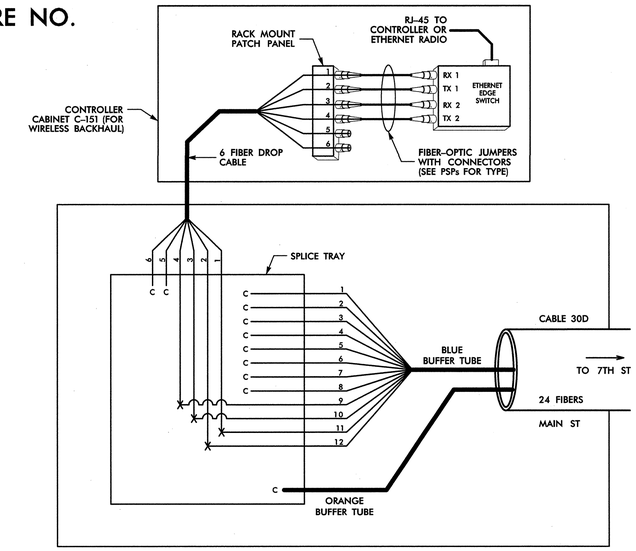

NOTE: ETHERNET EDGE SWITCH AT C–151 HAS RJ–45 CABLES TO BOTH CONTROLLER AND ETHERNET RADIO.

LEGEND

COLOR CODE TIA/EIA 598–B

(1) BLUE	(7) RED
(2) ORANGE	(8) BLACK
(3) GREEN	(9) YELLOW
(4) BROWN	(10) VIOLET
(5) SLATE	(11) ROSE
(6) WHITE	(12) AQUA

X = FUSION SPLICE INDIVIDUAL FIBER

C = CAP AND SEAL

EXPRESS = EXPRESS FIBERS THROUGH WITHOUT CUTTING

BUFFER SPLICE = SPLICE ALL FIBERS IN BUFFER TUBE COLOR TO COLOR

NOTES

1. UNUSED FIBERS LEFT COILED AND STORED IN SPLICE TRAY
2. UNUSED BUFFER TUBES LEFT COILED AND STORED IN SPLICE ENCLOSURE
3. EDGE SWITCH CONFIGURATIONS ARE GENERIC. CONTRACTOR IS RESPONSIBLE FOR DETERMINING/ENSURING THE PROPER TERMINATIONS.

ATKINS 1616 EAST MILLBROOK ROAD, SUITE 310
RALEIGH, NORTH CAROLINA 27609
(919) 876-6888 NCBEES #F-0326

Prepared for the Offices of: Transportation Mobility and Safety Division, State of North Carolina, Department of Transportation, Intelligent Transportation Systems
750 Greenfield Parkway, Garner, NC 27529

Winston-Salem Signal System Fiber-Optic Splicing Details Phase A

Division 09 Forsyth County Winston-Salem

PLAN DATE:	January 2013	REVIEWED BY:	HAB
PREPARED BY:	BJS	REVIEWED BY:	JTB

SCALE	REVISIONS	INIT.	DATE
N.T.S.			

SEAL: NORTH CAROLINA PROFESSIONAL SEAL 19962 ENGINEER HENRY ALFRED BADGETT III

SIGNATURE Henry Alfred Badgett III DATE 1/4/13

CADD Filename: FS-61.dgn

09-JAN-2013 14:44
0:#Transportation#Traffic#Curr#100022712 Winston Salem Sig Sys#Comms and ITS#Splice Diagrams#Phase A#FS-61.dgn
12054

PROJECT REFERENCE NO.	SHEET NO.
C-5224A	FS-62

SPLICE ENCLOSURE NO.

32-1

SEE: CL A-213

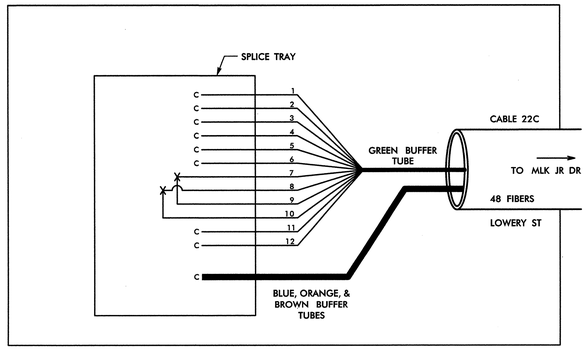

LEGEND

COLOR CODE TIA/EIA 598-B

(1) BLUE	(7) RED
(2) ORANGE	(8) BLACK
(3) GREEN	(9) YELLOW
(4) BROWN	(10) VIOLET
(5) SLATE	(11) ROSE
(6) WHITE	(12) AQUA

X = FUSION SPLICE INDIVIDUAL FIBER

C = CAP AND SEAL

EXPRESS = EXPRESS FIBERS THROUGH WITHOUT CUTTING

BUFFER SPLICE = SPLICE ALL FIBERS IN BUFFER TUBE COLOR TO COLOR

NOTES

1. UNUSED FIBERS LEFT COILED AND STORED IN SPLICE TRAY
2. UNUSED BUFFER TUBES LEFT COILED AND STORED IN SPLICE ENCLOSURE
3. EDGE SWITCH CONFIGURATIONS ARE GENERIC. CONTRACTOR IS RESPONSIBLE FOR DETERMINING/ENSURING THE PROPER TERMINATIONS.

ATKINS 1616 EAST MILLBROOK ROAD, SUITE 310
RALEIGH, NORTH CAROLINA 27609
(919) 876-6888 NCBEES #F-0326

Prepared for the Offices of:
Transportation Mobility and Safety Division
STATE OF NORTH CAROLINA DEPARTMENT OF TRANSPORTATION
Intelligent Transportation Systems
750 Greenfield Parkway, Garner, NC 27529

Winston-Salem Signal System
Fiber-Optic
Splicing Details
Phase A

Division 09 Forsyth County Winston-Salem

PLAN DATE:	January 2013	REVIEWED BY:	HAB
PREPARED BY:	BJS	REVIEWED BY:	JTB

SCALE	REVISIONS	INIT.	DATE
N.T.S.			

SEAL
NORTH CAROLINA PROFESSIONAL SEAL 19962 ENGINEER HENRY ALFRED BADGETT, III

SIGNATURE H. Alfred Badgett DATE 1/11/13

CADD Filename: FS-62.dgn

09-JAN-2013 14:44
D:\Transportation\Traffic\Curr\100022712 Winston Salem Sig Sys\Comm and ITS\Splice Diagrams\Phase A\FS-62.dgn
12054

PROJECT REFERENCE NO.	SHEET NO.
C-5224A	FS-63

CLARK CAMPBELL TRANSPORTATION CENTER – TMC
SPLICE NO.
32-2

SEE: CL A–043

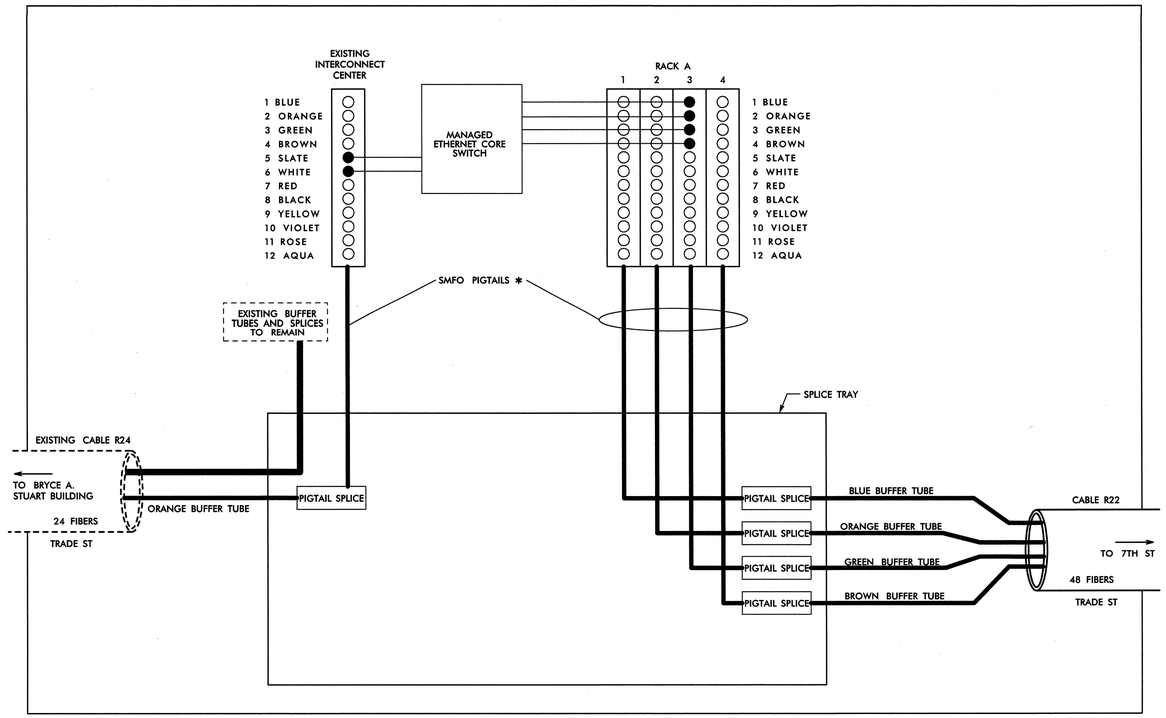

* SMFO PIGTAILS TO BE SPLICED TO BUFFER TUBES COLOR TO COLOR.

RACK A

SLOT 1		
1 BLUE	DARK	
2 ORANGE	DARK	
3 GREEN	DARK	
4 BROWN	DARK	
5 SLATE	DARK	
6 WHITE	DARK	
7 RED	DARK	
8 BLACK	DARK	
9 YELLOW	DARK	
10 VIOLET	DARK	
11 ROSE	DARK	
12 AQUA	DARK	
SLOT 2		
1 BLUE	DARK	
2 ORANGE	DARK	
3 GREEN	DARK	
4 BROWN	DARK	
5 SLATE	DARK	
6 WHITE	DARK	
7 RED	DARK	
8 BLACK	DARK	
9 YELLOW	DARK	
10 VIOLET	DARK	
11 ROSE	DARK	
12 AQUA	DARK	
SLOT 3		
1 BLUE	RING	RED1 TX
2 ORANGE	RING	RED1 RX
3 GREEN	RING	RED2 TX
4 BROWN	RING	RED2 RX
5 SLATE	DARK	
6 WHITE	DARK	
7 RED	DARK	
8 BLACK	DARK	
9 YELLOW	DARK	
10 VIOLET	DARK	
11 ROSE	DARK	
12 AQUA	DARK	
SLOT 4		
1 BLUE	DARK	
2 ORANGE	DARK	
3 GREEN	DARK	
4 BROWN	DARK	
5 SLATE	DARK	
6 WHITE	DARK	
7 RED	DARK	
8 BLACK	DARK	
9 YELLOW	DARK	
10 VIOLET	DARK	
11 ROSE	DARK	
12 AQUA	DARK	

EXISTING INTERCONNECT CENTER

SLOT 1		
1 BLUE	EXIST	
2 ORANGE	EXIST	
3 GREEN	EXIST	
4 BROWN	EXIST	
5 SLATE	RED3	RX
6 WHITE	RED3	TX
7 RED	EXIST	
8 BLACK	EXIST	
9 YELLOW	EXIST	
10 VIOLET	EXIST	
11 ROSE	EXIST	
12 AQUA	EXIST	

LEGEND

COLOR CODE TIA/EIA 598-B

(1) BLUE	(7) RED
(2) ORANGE	(8) BLACK
(3) GREEN	(9) YELLOW
(4) BROWN	(10) VIOLET
(5) SLATE	(11) ROSE
(6) WHITE	(12) AQUA

X = FUSION SPLICE INDIVIDUAL FIBER

C = CAP AND SEAL

EXPRESS = EXPRESS FIBERS THROUGH WITHOUT CUTTING

BUFFER SPLICE = SPLICE ALL FIBERS IN BUFFER TUBE COLOR TO COLOR

NOTES

1. UNUSED FIBERS LEFT COILED AND STORED IN SPLICE TRAY
2. UNUSED BUFFER TUBES LEFT COILED AND STORED IN SPLICE ENCLOSURE
3. EDGE SWITCH CONFIGURATIONS ARE GENERIC. CONTRACTOR IS RESPONSIBLE FOR DETERMINING/ENSURING THE PROPER TERMINATIONS.

ATKINS 1616 EAST MILLBROOK ROAD, SUITE 310
RALEIGH, NORTH CAROLINA 27609
(919) 876-6888 NCBEES #F-0326

Prepared for the Offices of: Transportation Mobility and Safety Division, Intelligent Transportation Systems, Department of Transportation, State of North Carolina
750 Greenfield Parkway, Garner, NC 27529

Winston-Salem Signal System
Fiber-Optic
Splicing Details
Phase A

Division 09 Forsyth County Winston-Salem

PLAN DATE:	January 2013	REVIEWED BY:	HAB
PREPARED BY:	BJS	REVIEWED BY:	JTB

REVISIONS	INIT.	DATE

SCALE: N.T.S.

SEAL: NORTH CAROLINA PROFESSIONAL SEAL 19962 ENGINEER HENRY ALFRED BADGETT III

SIGNATURE H. Alfred Badgett DATE 1/11/13

CADD Filename: FS-63.dgn

09-JAN-2013 14:44
D:\#Transportation\Traffic\Curr\#100022712 Winston Salem Sig Sys\Comms and ITS\Splice Diagrams\Phase A\FS-63.dgn
12054

PROJECT REFERENCE NO.	SHEET NO.
C-5224A	FS-64

BRYCE A. STUART BUILDING
SPLICE NO.

32-3

SEE: CL A–045

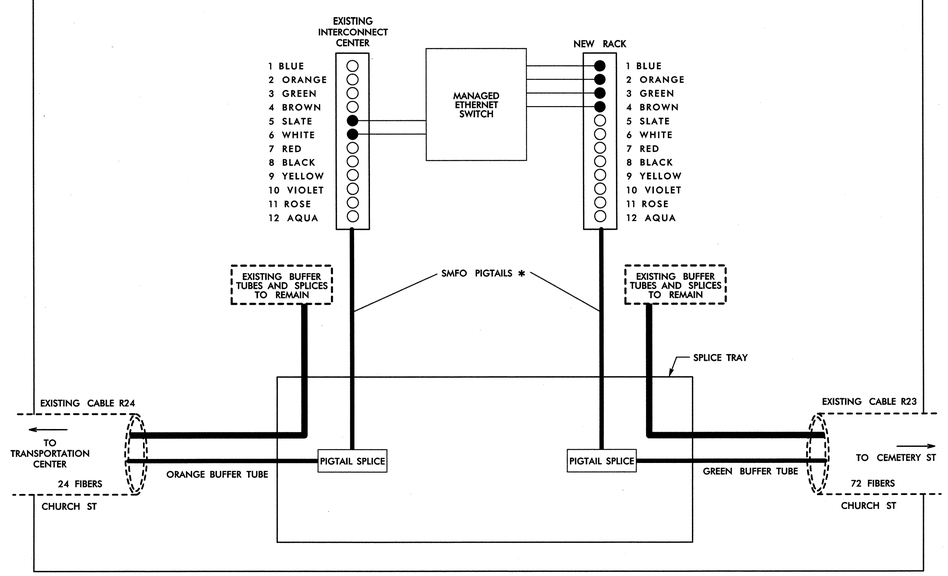

* SMFO PIGTAILS TO BE SPLICED TO BUFFER TUBES COLOR TO COLOR.

NEW RACK

SLOT 1

1	BLUE	RING	RED1 RX
2	ORANGE	RING	RED1 TX
3	GREEN	RING	RED2 RX
4	BROWN	RING	RED2 TX
5	SLATE	DARK	
6	WHITE	DARK	
7	RED	DARK	
8	BLACK	DARK	
9	YELLOW	DARK	
10	VIOLET	DARK	
11	ROSE	DARK	
12	AQUA	DARK	

EXISTING INTERCONNECT CENTER

SLOT 1

1	BLUE	EXIST
2	ORANGE	EXIST
3	GREEN	EXIST
4	BROWN	EXIST
5	SLATE	RED3 TX
6	WHITE	RED3 RX
7	RED	EXIST
8	BLACK	EXIST
9	YELLOW	EXIST
10	VIOLET	EXIST
11	ROSE	EXIST
12	AQUA	EXIST

LEGEND

COLOR CODE TIA/EIA 598-B

(1) BLUE	(7) RED
(2) ORANGE	(8) BLACK
(3) GREEN	(9) YELLOW
(4) BROWN	(10) VIOLET
(5) SLATE	(11) ROSE
(6) WHITE	(12) AQUA

X = FUSION SPLICE INDIVIDUAL FIBER

C = CAP AND SEAL

EXPRESS = EXPRESS FIBERS THROUGH WITHOUT CUTTING

BUFFER SPLICE = SPLICE ALL FIBERS IN BUFFER TUBE COLOR TO COLOR

NOTES

1. UNUSED FIBERS LEFT COILED AND STORED IN SPLICE TRAY
2. UNUSED BUFFER TUBES LEFT COILED AND STORED IN SPLICE ENCLOSURE
3. EDGE SWITCH CONFIGURATIONS ARE GENERIC. CONTRACTOR IS RESPONSIBLE FOR DETERMINING/ENSURING THE PROPER TERMINATIONS.

ATKINS 1616 EAST MILLBROOK ROAD, SUITE 310
RALEIGH, NORTH CAROLINA 27609
(919) 876-6888 NCBEES #F-0326

Prepared for the Offices of: Transportation Mobility and Safety Division — STATE OF NORTH CAROLINA DEPARTMENT OF TRANSPORTATION — Intelligent Transportation Systems
750 Greenfield Parkway, Garner, NC 27529

Winston-Salem Signal System
Fiber-Optic
Splicing Details
Phase A

Division 09 Forsyth County Winston-Salem

PLAN DATE:	January 2013	REVIEWED BY:	HAB
PREPARED BY:	BJS	REVIEWED BY:	JTB

SCALE	REVISIONS	INIT.	DATE
N.T.S.			

SEAL: NORTH CAROLINA PROFESSIONAL SEAL 19962 ENGINEER HENRY ALFRED BADGETT, III

SIGNATURE H. Alfred Badgett DATE 1/8/13

CADD Filename: FS-64.dgn

09-JAN-2013 14:44
g:\Transportation\Traffic\Curr\100022712 Winston Salem Sig Sys\Comms and ITS\Splice Diagrams\Phase A\FS-64.dgn
12054

PROJECT REFERENCE NO.	SHEET NO.
C-5224A	FS-65

IS FIBER SPLICE DETAIL

A

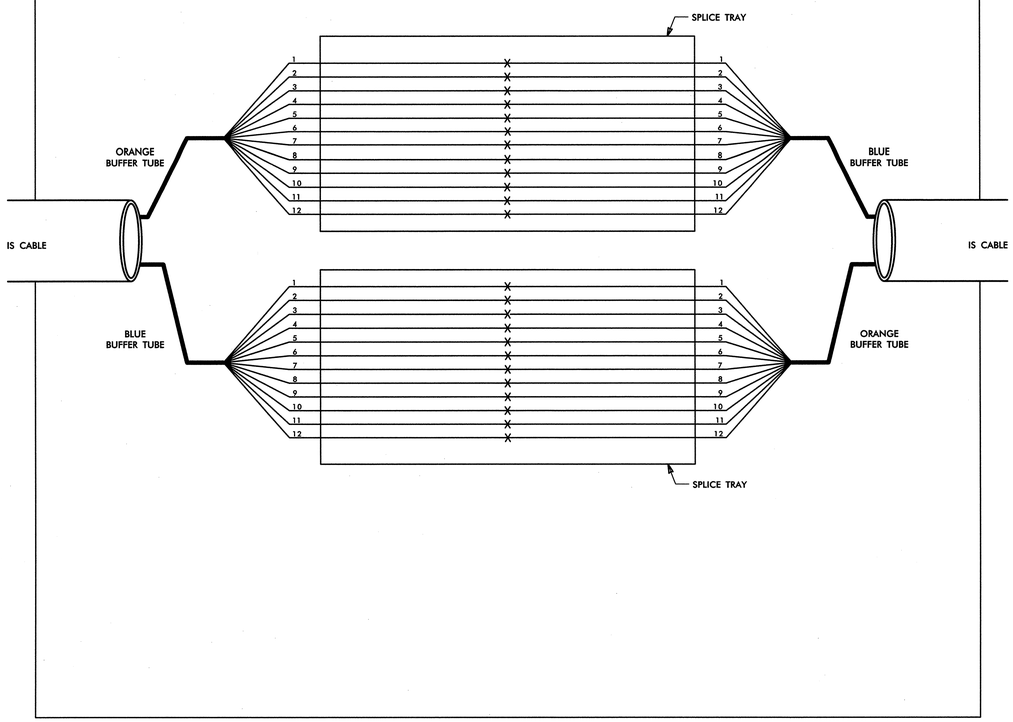

NOTE: ONLY BLUE AND ORANGE BUFFER TUBES ARE SHOWN AND TO BE SPLICED. IN LARGER CABLES, ALL OTHER BUFFER TUBES TO BE CAPPED AND SEALED.

IS FIBER SPLICE DETAIL

B

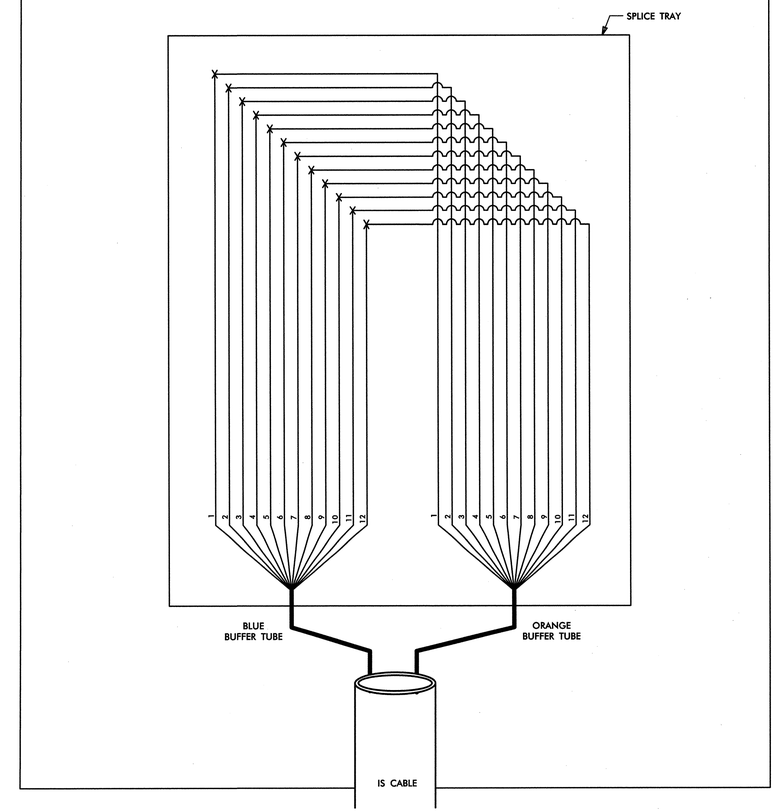

NOTE: ONLY BLUE AND ORANGE BUFFER TUBES ARE SHOWN AND TO BE SPLICED. IN LARGER CABLES, ALL OTHER BUFFER TUBES TO BE CAPPED AND SEALED.

LEGEND

COLOR CODE TIA/EIA 598-B

(1) BLUE	(7) RED
(2) ORANGE	(8) BLACK
(3) GREEN	(9) YELLOW
(4) BROWN	(10) VIOLET
(5) SLATE	(11) ROSE
(6) WHITE	(12) AQUA

X = FUSION SPLICE INDIVIDUAL FIBER

C = CAP AND SEAL

EXPRESS = EXPRESS FIBERS THROUGH WITHOUT CUTTING

BUFFER SPLICE = SPLICE ALL FIBERS IN BUFFER TUBE COLOR TO COLOR

NOTES

1. UNUSED FIBERS LEFT COILED AND STORED IN SPLICE TRAY
2. UNUSED BUFFER TUBES LEFT COILED AND STORED IN SPLICE ENCLOSURE
3. EDGE SWITCH CONFIGURATIONS ARE GENERIC. CONTRACTOR IS RESPONSIBLE FOR DETERMINING/ENSURING THE PROPER TERMINATIONS.

ATKINS 1616 EAST MILLBROOK ROAD, SUITE 310
RALEIGH, NORTH CAROLINA 27609
(919) 876-6888 NCBEES #F-0326

Prepared for the Offices of:
Transportation Mobility and Safety Division
STATE OF NORTH CAROLINA DEPARTMENT OF TRANSPORTATION
Intelligent Transportation Systems
750 Greenfield Parkway, Garner, NC 27529

Winston-Salem Signal System IS Fiber-Optic Splicing Details

Division 09 Forsyth County Winston-Salem

PLAN DATE:	January 2013	REVIEWED BY:	HAB
PREPARED BY:	BJS	REVIEWED BY:	JTB

SCALE	REVISIONS	INIT.	DATE
N.T.S.			

SEAL
NORTH CAROLINA PROFESSIONAL SEAL 19962 ENGINEER HENRY ALFRED BADGETT, III

SIGNATURE DATE

CADD Filename: FS-65.dgn

09-JAN-2013 14:44
D:\Transportation\Traffic\Curr\1000022712 Winston Salem Sig Sys\Comms and ITS\Splice Diagrams\Phase A\FS-65.dgn
12054

PROJECT REFERENCE NO.	SHEET NO.
C-5224A	FS-66

IS FIBER SPLICE DETAIL

C

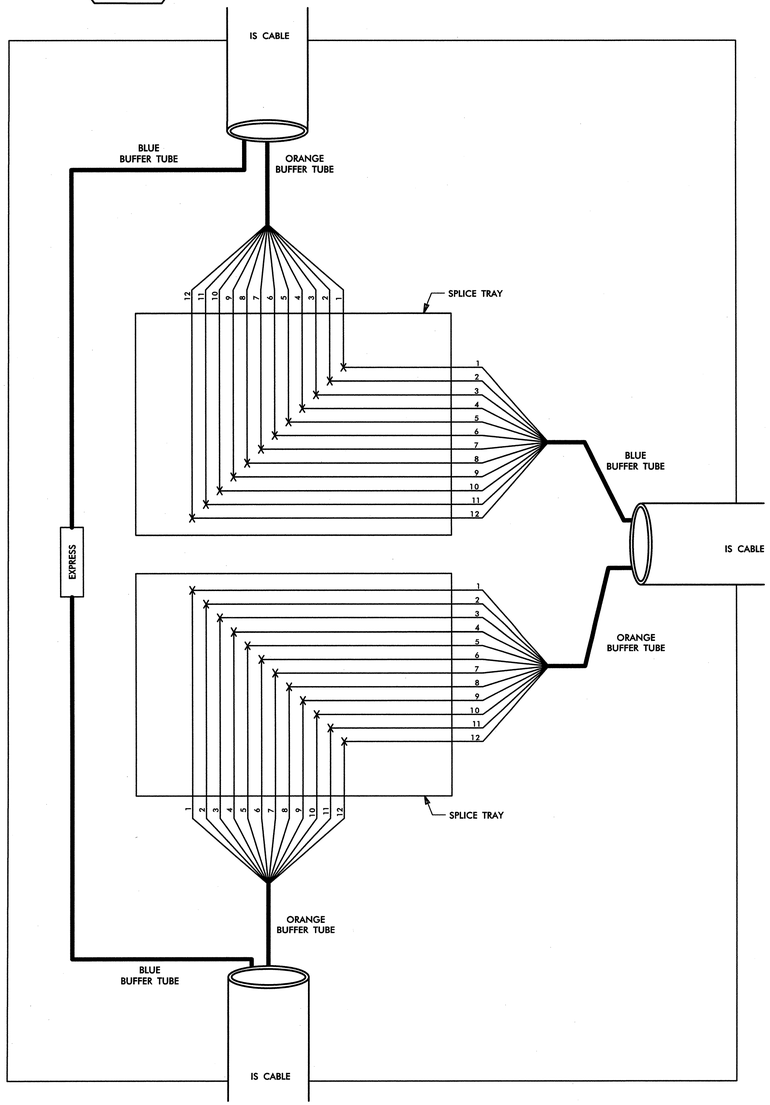

NOTE: ONLY BLUE AND ORANGE BUFFER TUBES ARE SHOWN AND TO BE SPLICED. IN LARGER CABLES, ALL OTHER BUFFER TUBES TO BE CAPPED AND SEALED.

IS FIBER SPLICE DETAIL

D

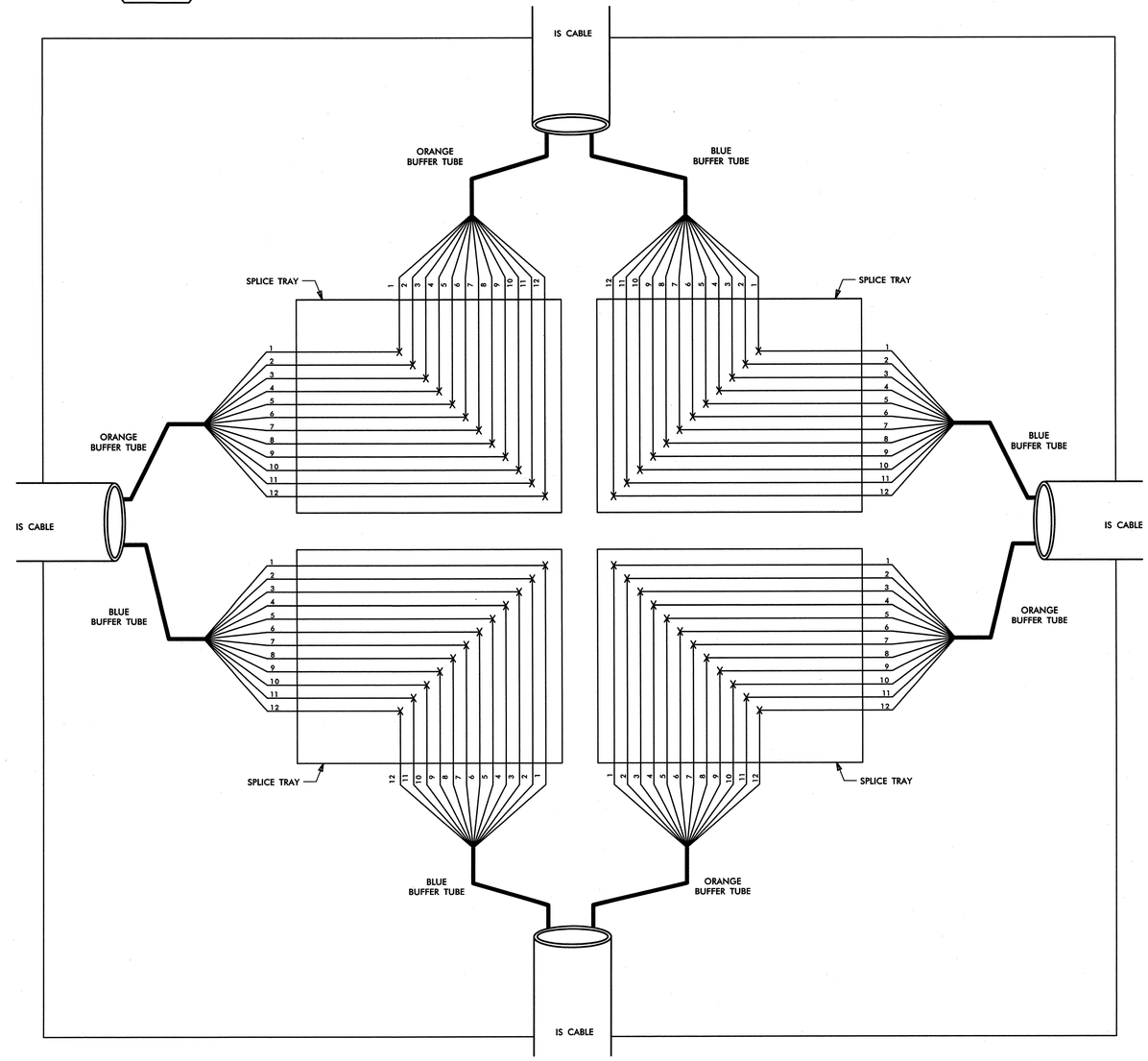

NOTE: ONLY BLUE AND ORANGE BUFFER TUBES ARE SHOWN AND TO BE SPLICED. IN LARGER CABLES, ALL OTHER BUFFER TUBES TO BE CAPPED AND SEALED.

LEGEND

COLOR CODE TIA/EIA 598-B

(1) BLUE	(7) RED
(2) ORANGE	(8) BLACK
(3) GREEN	(9) YELLOW
(4) BROWN	(10) VIOLET
(5) SLATE	(11) ROSE
(6) WHITE	(12) AQUA

X = FUSION SPLICE INDIVIDUAL FIBER

C = CAP AND SEAL

EXPRESS = EXPRESS FIBERS THROUGH WITHOUT CUTTING

BUFFER SPLICE = SPLICE ALL FIBERS IN BUFFER TUBE COLOR TO COLOR

NOTES

1. UNUSED FIBERS LEFT COILED AND STORED IN SPLICE TRAY
2. UNUSED BUFFER TUBES LEFT COILED AND STORED IN SPLICE ENCLOSURE
3. EDGE SWITCH CONFIGURATIONS ARE GENERIC. CONTRACTOR IS RESPONSIBLE FOR DETERMINING/ENSURING THE PROPER TERMINATIONS.

ATKINS 1616 EAST MILLBROOK ROAD, SUITE 310
RALEIGH, NORTH CAROLINA 27609
(919) 876-6888 NCBEES #F-0326

Prepared for the Offices of:
Transportation Mobility and Safety Division
STATE OF NORTH CAROLINA
DEPARTMENT OF TRANSPORTATION
Intelligent Transportation Systems
750 Greenfield Parkway, Garner, NC 27529

Winston-Salem Signal System
IS Fiber-Optic
Splicing Details

Division 09 Forsyth County Winston-Salem

PLAN DATE:	January 2013	REVIEWED BY:	HAB
PREPARED BY:	BJS	REVIEWED BY:	JTB

SCALE: N.T.S.

REVISIONS	INIT.	DATE

SEAL

NORTH CAROLINA PROFESSIONAL SEAL 19962 ENGINEER HENRY ALFRED BADGETT, III

H. Alfred Badgett 1/11/13
SIGNATURE DATE

CADD Filename: FS-66.dgn

09-JAN-2013 14:44
O:\Transportation\Traffic\Curr\100022712 Winston Salem Sig Sys\Comms and ITS\Splice Diagrams\Phase A\FS-66.dgn
12054