TIP PROJECT: R-2303B

CONTRACT: C203087

STATE OF NORTH CAROLINA
DIVISION OF HIGHWAYS

STATE	STATE PROJECT REFERENCE NO.	SHEET NO.	TOTAL SHEETS
N.C.	R-2303B		

STATE PROJ. NO.	F. A. PROJ. NO.	DESCRIPTION
34416.1.1	STPNHF-F-8-2(17)	P.E.
34416.2.3		R/W
34416.3.4		CONST.

CUMBERLAND & SAMPSON COUNTIES

LOCATION: NC 24 FROM SR 1853 (JOHN NUNNERY RD IN CUMBERLAND COUNTY TO SR 1404 (DOWDY RD) IN SAMPSON COUNTY

TYPE OF WORK: GRADING, DRAINAGE, PAVING, STRUCTURES, CULVERT

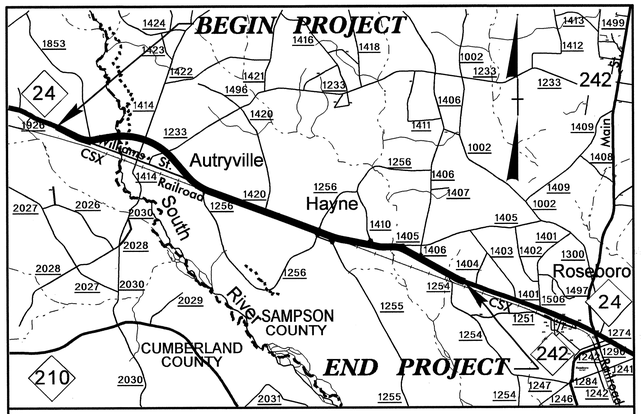

VICINITY MAP

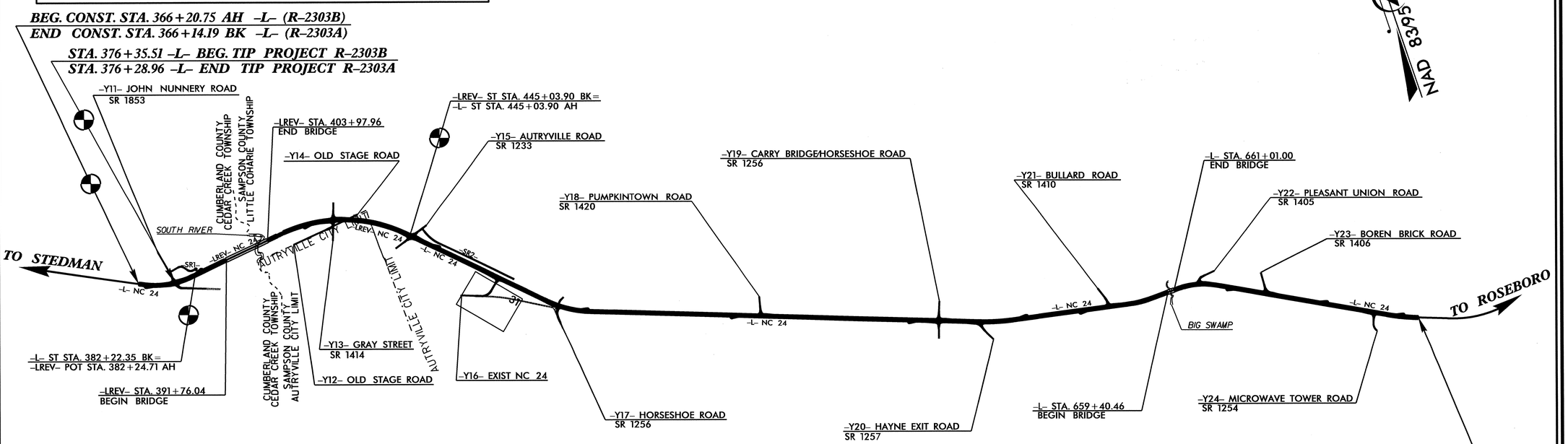

NAD 83/95

STRUCTURES

DESIGN DATA

ADT 2013 = 14792
ADT 2033 = 23272
DHV = 11 %
D = 65 %
T = 9 % *
V = 60 MPH
* TTST 6% DUAL 3%
FUNC. CLASS – ARTERIAL
TIER–STATEWIDE

PROJECT LENGTH

LENGTH ROADWAY TIP PROJECT R-2303B = 6.437 MILES
LENGTH STRUCTURES TIP PROJECT R-2303B = 0.262 MILES
TOTAL LENGTH TIP PROJECT R-2303B = 6.699 MILES

Prepared In the Office of:
DIVISION OF HIGHWAYS
1000 Birch Ridge Dr., Raleigh NC, 27610

2012 STANDARD SPECIFICATIONS

LETTING DATE:
MAY 21, 2013

OMAR R AZIZI, PE
PROJECT ENGINEER

EMILY E. MURRAY, PE
PROJECT DESIGN ENGINEER

STRUCTURES MANAGEMENT UNIT

20-FEB-2013 15:58
$$$$$$$$$$$$$$$$$$$$DGN$$$$$$$$$$$$$$$$$$$$
padkins

391+50 392+00 392+50 393+00 393+50 394+00 394+50 395+00 395+50 396+00

(-)2.5929% (-)0.3172%

GRADE DATA

P.I. STA. = 388+25.00 -LREV-
EL. = 113.80'
V.C. = 400'

SPAN A SPAN B SPAN C SPAN D

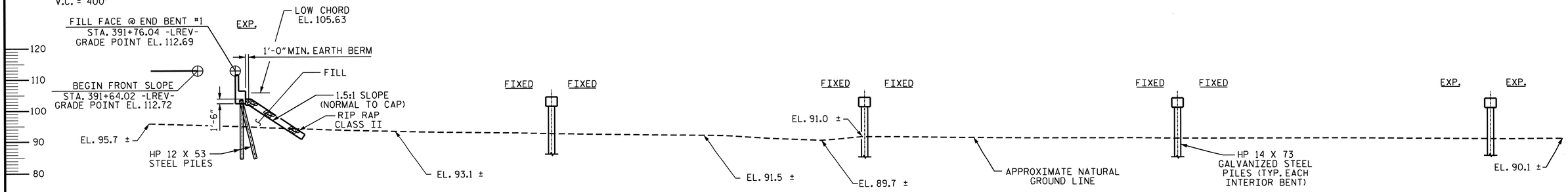

END BENT #1 BENT #1 BENT #2 BENT #3 BENT #4

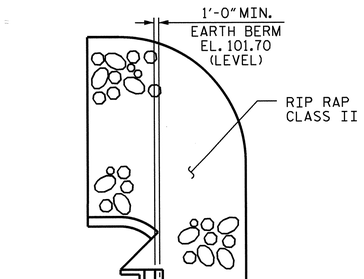

SECTION ALONG CONTROL LINE (LEFT LANE)

NAD 8395

I HEREBY CERTIFY THESE PLANS ARE THE AS-BUILT PLANS.

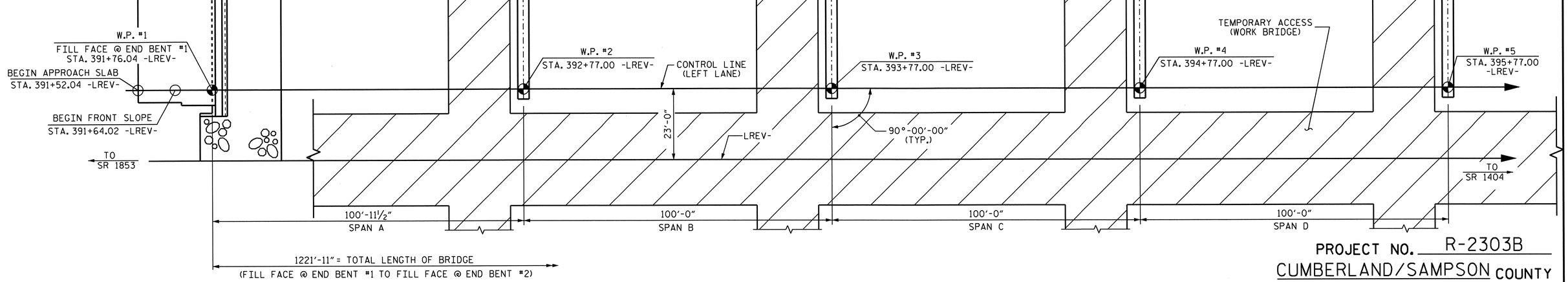

PLAN

PROJECT NO. R-2303B
CUMBERLAND/SAMPSON COUNTY
STATION: 397+87.00-LREV-

SHEET 1 OF 5 BRIDGE NO. 418

STATE OF NORTH CAROLINA
DEPARTMENT OF TRANSPORTATION
RALEIGH

GENERAL DRAWING
FOR BRIDGE OVER
SOUTH RIVER ON NC 24
BETWEEN SR 1853 AND SR 1404
(LEFT LANE)

REVISIONS						SHEET NO.
NO.	BY:	DATE:	NO.	BY:	DATE:	S-1
1			3			TOTAL SHEETS
2			4			146

NORTH CAROLINA PROFESSIONAL SEAL 027274 ENGINEER OMAR R. AZIZI 2-21-13

NORTH CAROLINA PROFESSIONAL SEAL 025516 ENGINEER 2-21-13

DRAWN BY : B.N. BARODAWALA/PEGGY ADKINS DATE : 11-8-12
CHECKED BY : T. AVERETTE DATE : 11-28-12
DESIGN ENGINEER OF RECORD: MOHAMMED AHMED DATE : 8-15-11

20-FEB-2013 15:58
Z:\TIPProjects-R\R2303B\Structures\Plans\str01\ppor1s1\R2303B_sd_GD_01.dgn
padkins

STR. 1

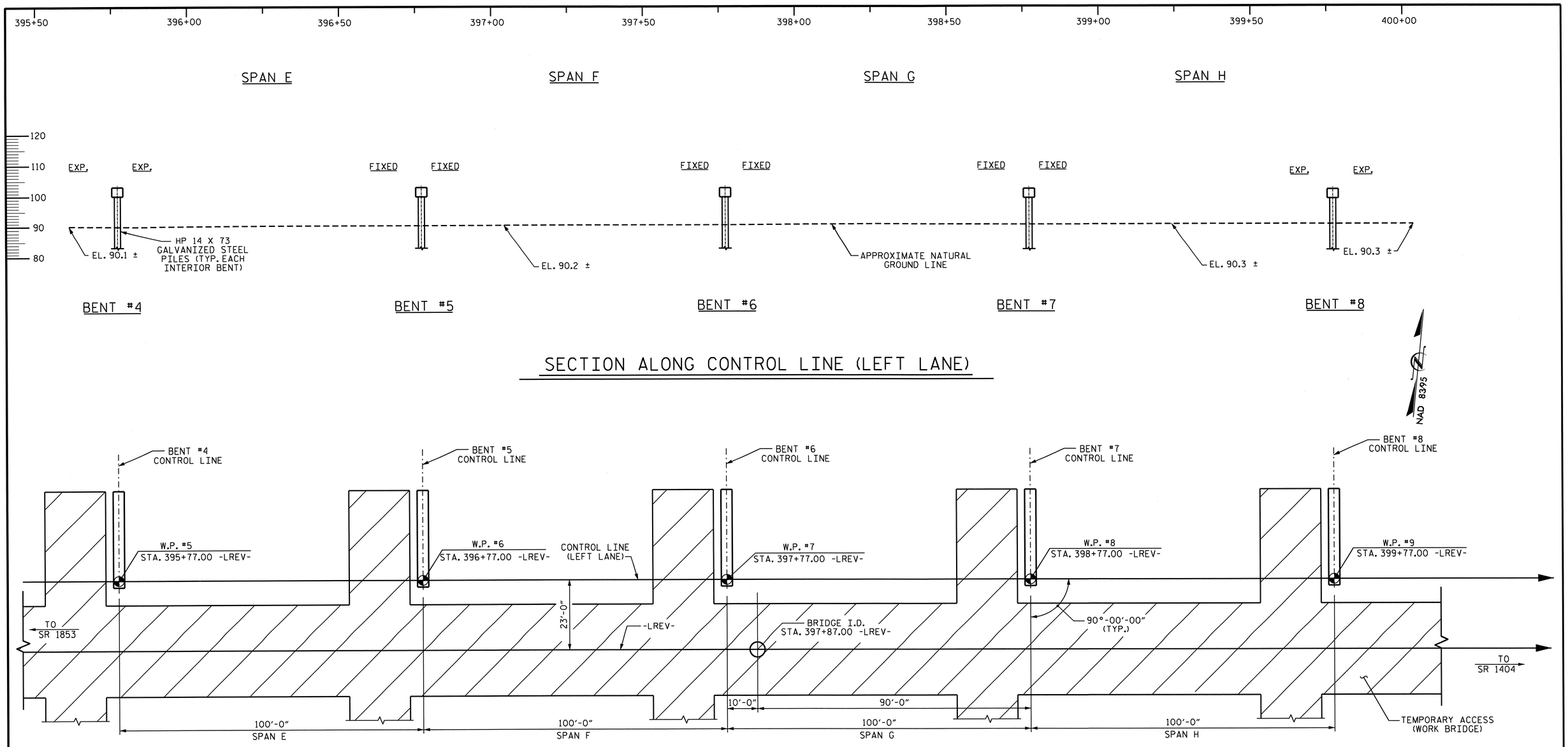

SECTION ALONG CONTROL LINE (LEFT LANE)

1221'-11" = TOTAL LENGTH OF BRIDGE
(FILL FACE @ END BENT #1 TO FILL FACE @ END BENT #2)

PLAN

PROJECT NO. R-2303B

CUMBERLAND/SAMPSON COUNTY

STATION: 397+87.00-LREV-

SHEET 2 OF 5

STATE OF NORTH CAROLINA
DEPARTMENT OF TRANSPORTATION
RALEIGH

GENERAL DRAWING
FOR BRIDGE OVER
SOUTH RIVER ON NC 24
BETWEEN SR 1853 AND SR 1404
(LEFT LANE)

REVISIONS						SHEET NO.
NO.	BY:	DATE:	NO.	BY:	DATE:	S-2
1			3			TOTAL SHEETS
2			4			146

STR. 1

NORTH CAROLINA PROFESSIONAL SEAL 025516 ENGINEER EMILY E. MURRAY
2-21-13

DRAWN BY : B.N. BARODAWALA/PEGGY ADKINS DATE : 11-8-12
CHECKED BY : T. AVERETTE DATE : 11-28-12
DESIGN ENGINEER OF RECORD: MOHAMMED AHMED DATE : 8-15-11

20-FEB-2013 15:58
Z:\TIPProjects-R\R2303B\Structures\Plans\str01\pporisi\R2303B_sd_GD_01.dgn
padkins

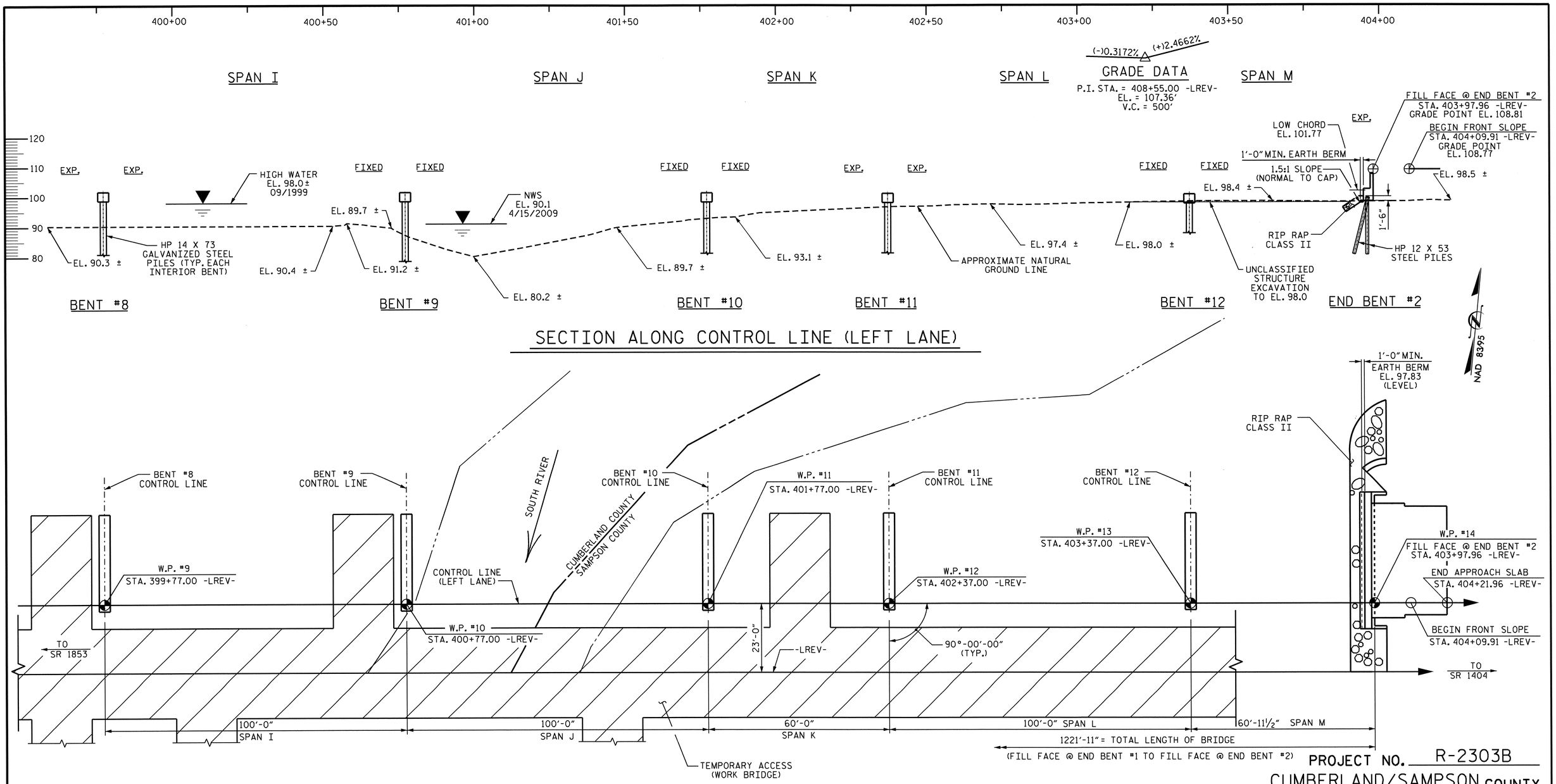

SECTION ALONG CONTROL LINE (LEFT LANE)

PLAN

PROJECT NO. R-2303B

CUMBERLAND/SAMPSON COUNTY

STATION: 397+87.00-LREV-

SHEET 3 OF 5

STATE OF NORTH CAROLINA
DEPARTMENT OF TRANSPORTATION
RALEIGH

GENERAL DRAWING
FOR BRIDGE OVER
SOUTH RIVER ON NC 24
BETWEEN SR 1853 AND SR 1404
(LEFT LANE)

NORTH CAROLINA PROFESSIONAL SEAL 025516 ENGINEER ELMER E. MURRAY
2-21-13

REVISIONS						SHEET NO.
NO.	BY:	DATE:	NO.	BY:	DATE:	S-3
1			3			TOTAL SHEETS
2			4			146

STR. 1 -

DRAWN BY : B.N. BARODAWALA/PEGGY ADKINS DATE : 11-8-12
CHECKED BY : T. AVERETTE DATE : 11-28-12
DESIGN ENGINEER OF RECORD: MOHAMMED AHMED DATE : 8-15-11

20-FEB-2013 15:57
Z:\TIPProjects-R\R2303B\Structures\Plans\str01\pparisi\R2303B_sd_GD_01.dgn
podkins

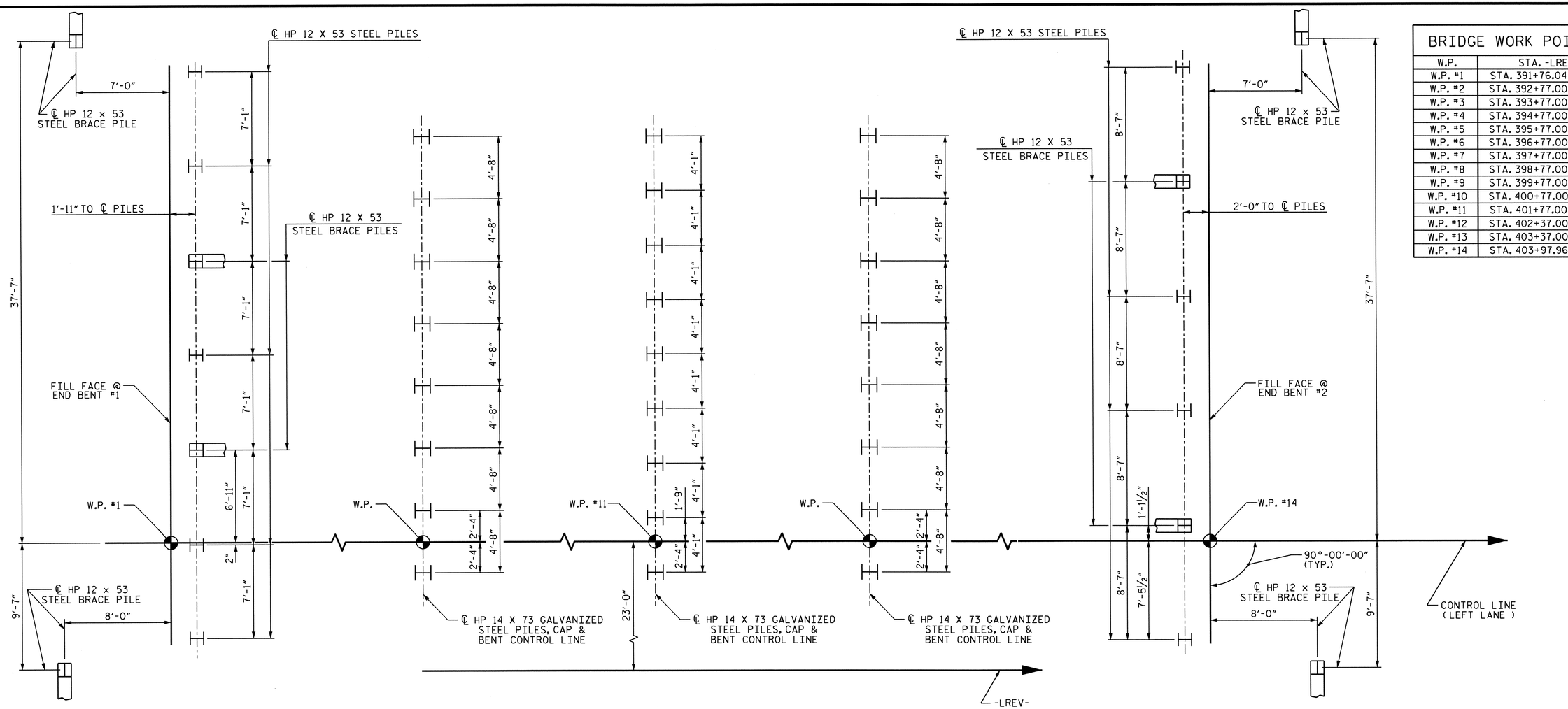

BRIDGE WORK POINTS	
W.P.	STA. -LREV-
W.P. #1	STA. 391+76.04 -LREV-
W.P. #2	STA. 392+77.00 -LREV-
W.P. #3	STA. 393+77.00 -LREV-
W.P. #4	STA. 394+77.00 -LREV-
W.P. #5	STA. 395+77.00 -LREV-
W.P. #6	STA. 396+77.00 -LREV-
W.P. #7	STA. 397+77.00 -LREV-
W.P. #8	STA. 398+77.00 -LREV-
W.P. #9	STA. 399+77.00 -LREV-
W.P. #10	STA. 400+77.00 -LREV-
W.P. #11	STA. 401+77.00 -LREV-
W.P. #12	STA. 402+37.00 -LREV-
W.P. #13	STA. 403+37.00 -LREV-
W.P. #14	STA. 403+97.96 -LREV-

END BENT #1 | BENTS #1 THRU #9 | BENT #10 | BENTS #11 & #12 | END BENT #2

FOUNDATION LAYOUT

DIMENSIONS LOCATING PILES ARE SHOWN TO PILE CENTERLINE.
BRACE PILES AT THE END BENTS TO BE BATTERED @ 3:12.

NOTES:

FOR PILES, SEE SECTION 450 OF THE STANDARD SPECIFICATIONS.

PILES AT END BENT NO. 1 ARE DESIGNED FOR A FACTORED RESISTANCE OF 110 TONS PER PILE.

DRIVE PILES AT END BENT NO. 1 TO A REQUIRED DRIVING RESISTANCE OF 185 TONS PER PILE.

PILES AT END BENT NO. 2 ARE DESIGNED FOR A FACTORED RESISTANCE OF 100 TONS PER PILE.

DRIVE PILES AT END BENT NO. 2 TO A REQUIRED DRIVING RESISTANCE OF 170 TONS PER PILE.

PILES AT BENT NO. 1 THROUGH BENT NO. 9 ARE DESIGNED FOR A FACTORED RESISTANCE OF 210 TONS PER PILE.

DRIVE PILES AT BENT NO. 1 THROUGH BENT NO. 9 TO A REQUIRED DRIVING RESISTANCE OF 285 TONS PER PILE. THIS REQUIRED DRIVING RESISTANCE INCLUDES ADDITIONAL RESISTANCE FOR DOWNDRAG OR SCOUR.

PILES AT BENT NO. 10 ARE DESIGNED FOR A FACTORED RESISTANCE OF 160 TONS PER PILE.

DRIVE PILES AT BENT NO. 10 TO A REQUIRED DRIVING RESISTANCE OF 220 TONS PER PILE. THIS REQUIRED DRIVING RESISTANCE INCLUDES ADDITIONAL RESISTANCE FOR DOWNDRAG OR SCOUR.

PILES AT BENT NO. 11 AND BENT NO. 12 ARE DESIGNED FOR A FACTORED RESISTANCE OF 175 TONS PER PILE.

DRIVE PILES AT BENT NO. 11 AND BENT NO. 12 TO A REQUIRED DRIVING RESISTANCE OF 245 TONS PER PILE. THIS REQUIRED DRIVING RESISTANCE INCLUDES ADDITIONAL RESISTANCE FOR DOWNDRAG OR SCOUR.

INSTALL PILES AT BENT NO. 1 THROUGH BENT NO. 8 TO A TIP ELEVATION NO HIGHER THAN 67.0 FT.

INSTALL PILES AT BENT NO. 9 TO A TIP ELEVATION NO HIGHER THAN 64.0 FT.

INSTALL PILES AT BENT NO. 10 TO A TIP ELEVATION NO HIGHER THAN 61.0 FT.

INSTALL PILES AT BENT NO. 11 AND BENT NO. 12 TO A TIP ELEVATION NO HIGHER THAN 75.0 FT.

SCOUR CRITICAL ELEVATIONS FOR BENT NO. 1 THROUGH BENT NO. 12 ARE ELEVATIONS 88 FT, 87 FT, 86 FT, 86 FT, 86 FT, 86 FT, 86 FT, 86 FT, 84 FT, 88 FT, 92 FT AND 94 FT, RESPECTIVELY. SCOUR CRITICAL ELEVATIONS ARE USED TO MONITOR POSSIBLE SCOUR PROBLEMS DURING THE LIFE OF THE STRUCTURE.

TESTING THE FIRST PRODUCTION PILE WITH THE PDA DURING DRIVING, RESTRIKING OR REDRIVING IS REQUIRED. FOR PDA TESTING, SEE SECTION 450 OF THE STANDARD SPECIFICATIONS AND FOR PILE DRIVING CRITERIA, SEE PILE DRIVING CRITERIA PROVISION.

IT HAS BEEN ESTIMATED THAT A HAMMER WITH AN EQUIVALENT RATED ENERGY IN THE RANGE OF 70-125 KIPS-FT PER BLOW WILL BE REQUIRED TO DRIVE PILES AT BENT NO. 1 THROUGH BENT NO. 9. THIS ESTIMATED ENERGY RANGE DOES NOT RELEASE THE CONTRACTOR FROM PROVIDING DRIVING EQUIPMENT IN ACCORDANCE WITH SUBARTICLE 450-3(D)(2) OF THE STANDARD SPECIFICATIONS.

IT HAS BEEN ESTIMATED THAT A HAMMER WITH AN EQUIVALENT RATED ENERGY IN THE RANGE OF 50-90 KIPS-FT PER BLOW WILL BE REQUIRED TO DRIVE PILES AT BENT NO. 10 THROUGH BENT NO. 12. THIS ESTIMATED ENERGY RANGE DOES NOT RELEASE THE CONTRACTOR FROM PROVIDING DRIVING EQUIPMENT IN ACCORDANCE WITH SUBARTICLE 450-3(D)(2) OF THE STANDARD SPECIFICATIONS.

DRAWN BY : PEGGY ADKINS DATE : 11-8-12
CHECKED BY : T. AVERETTE DATE : 11-28-12
DESIGN ENGINEER OF RECORD: MOHAMMED AHMED DATE : 8-15-11

20-FEB-2013 15:57
Z:\TIPProjects-R\R2303B\Structures\Plans\str01\pparisi\R2303B_sd_GD_01.dgn
padkins

NORTH CAROLINA PROFESSIONAL SEAL 025516 ENGINEER EMILY C. PARISI
2.21.13

PROJECT NO. R-2303B
CUMBERLAND/SAMPSON COUNTY
STATION: 397+87.00-LREV-

SHEET 4 OF 5

STATE OF NORTH CAROLINA
DEPARTMENT OF TRANSPORTATION
RALEIGH

GENERAL DRAWING
FOR BRIDGE OVER
SOUTH RIVER
ON NC 24 BETWEEN
SR 1853 AND SR 1404
(LEFT LANE)

REVISIONS						SHEET NO.
NO.	BY:	DATE:	NO.	BY:	DATE:	S-4
1			3			TOTAL SHEETS
2			4			146

STR. #1

BM #92 : STA. 409+18 -LREV- 413' LT., RR SPIKE IN 10" PINE TREE, ELEV. 109.37', NAVD88.

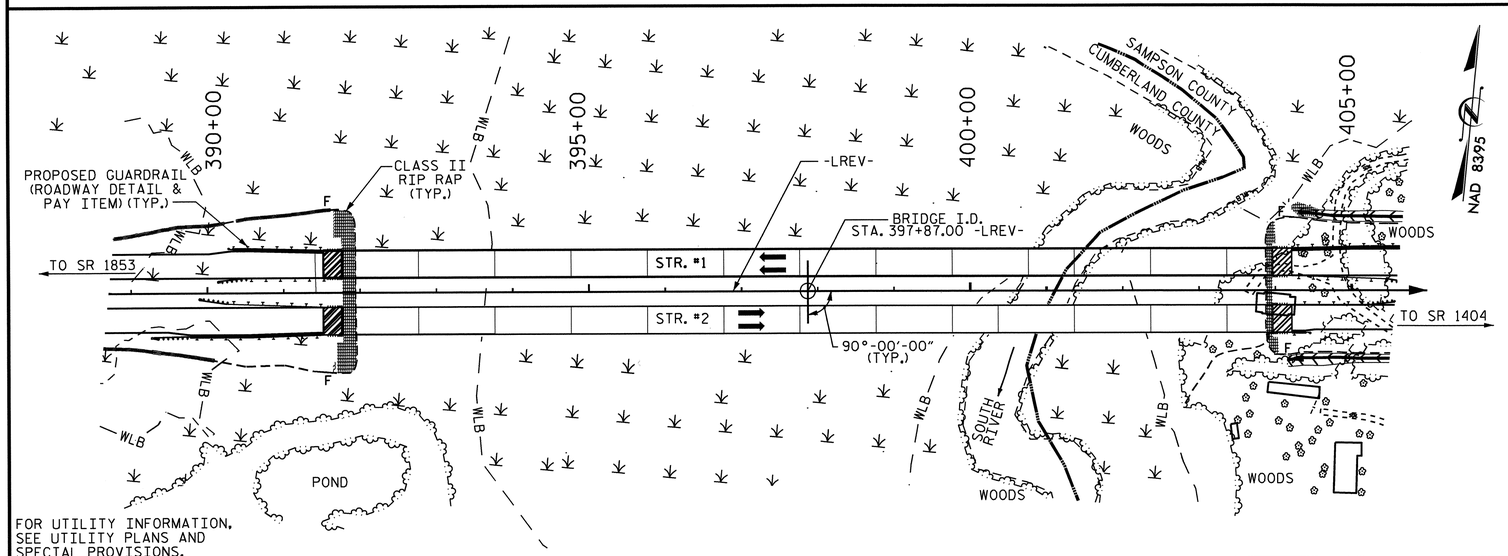

LOCATION SKETCH

HYDRAULIC DATA

DESIGN DISCHARGE	= 8600 C.F.S.
FREQUENCY OF DESIGN FLOOD	= 50 YR.
DESIGN HIGH WATER ELEVATION	= 100.7'
DRAINAGE AREA	= 231.4 SQ. MI.
BASE DISCHARGE (Q100)	= 10200 C.F.S.
BASE HIGH WATER ELEVATION	= 101.9'

OVERTOPPING FLOOD DATA

OVERTOPPING DISCHARGE	= N/A
FREQUENCY OF OVERTOPPING FLOOD	= 500 YR. +
OVERTOPPING FLOOD ELEVATION	= 108.1'

TOTAL BILL OF MATERIAL

	CONSTRUCTION, MAINTENANCE, AND REMOVAL OF TEMPORARY ACCESS	PDA TESTING	UNCLASSIFIED STRUCTURE EXCAVATION	REINFORCED CONCRETE DECK SLAB	GROOVING BRIDGE FLOORS	CLASS A CONCRETE	BRIDGE APPROACH SLABS	REINFORCING STEEL	MODIFIED 63" PRESTRESSED CONCRETE GIRDERS		HP 12 x 53 STEEL PILES		HP 14 X 73 GALVANIZED STEEL PILES		PILE REDRIVES	CONCRETE BARRIER RAIL	RIP RAP CLASS II (2'-0" THICK)	GEOTEXTILE FOR DRAINAGE	ELASTOMERIC BEARINGS	EXPANSION JOINT SEALS
	LUMP SUM	EACH	LUMP SUM	SQ. FT.	SQ. FT.	CU. YDS.	LUMP SUM	LBS.	NO.	LIN. FT.	NO.	LIN. FT.	NO.	LIN. FT.	EACH	LIN. FT.	TONS	SQ. YDS.	LUMP SUM	LUMP SUM
SUPERSTRUCTURE				47877	41668		LUMP SUM		52	4836.67						2479.60			LUMP SUM	LUMP SUM
END BENT 1						39.1		5622			9	495			3		235	261		
BENT 1						21.0		2977					8	640	4					
BENT 2						21.0		2977					8	640	4					
BENT 3						21.0		2977					8	640	4					
BENT 4						21.0		2977					8	640	4					
BENT 5						21.0		2977					8	640	4					
BENT 6						21.0		2977					8	640	4					
BENT 7						21.0		2977					8	640	4					
BENT 8						21.0		2977					8	640	4					
BENT 9						21.0		2977					8	680	4					
BENT 10						21.0		2909					9	630	4					
BENT 11						21.0		2977					8	560	4					
BENT 12						21.0		2977					8	560	4					
END BENT 2						38.9		5542			8	440			3		97	108		
TOTAL	LUMP SUM	2	LUMP SUM	47877	41668	330.0	LUMP SUM	46820	52	4836.67	17	935	97	7550	54	2479.60	332	369	LUMP SUM	LUMP SUM

NOTES:

ASSUMED LIVE LOAD = HL-93 OR ALTERNATE LOADING.

THIS BRIDGE HAS BEEN DESIGNED IN ACCORDANCE WITH THE AASHTO LRFD BRIDGE DESIGN SPECIFICATIONS.

THIS BRIDGE IS LOCATED IN SEISMIC ZONE 1.

FOR OTHER DESIGN DATA AND GENERAL NOTES, SEE SHEET SN.

FOR SUBMITTAL OF WORKING DRAWINGS, SEE SPECIAL PROVISIONS.

FOR FALSEWORK AND FORMWORK, SEE SPECIAL PROVISIONS.

FOR CRANE SAFETY, SEE SPECIAL PROVISIONS.

FOR GROUT FOR STRUCTURES, SEE SPECIAL PROVISIONS.

PRESTRESSED CONCRETE DECK PANELS MAY BE USED IN LIEU OF METAL STAY-IN-PLACE FORMS IN ACCORDANCE WITH ARTICLE 420-3 OF THE STANDARD SPECIFICATIONS.

REMOVABLE FORMS MAY BE USED IN LIEU OF METAL STAY-IN-PLACE FORMS IN ACCORDANCE WITH ARTICLE 420-3 OF THE STANDARD SPECIFICATIONS.

NEEDLE BEAMS WILL NOT BE ALLOWED UNLESS OTHERWISE CALLED FOR ON THE PLANS OR APPROVED BY THE ENGINEER.

FOR EROSION CONTROL MEASURES, SEE EROSION CONTROL PLANS.

FOR ALL INTERIOR BENTS, ONLY PARTIAL GALVANIZING OF THE PILES IS REQUIRED. SEE INTERIOR BENT SHEETS FOR REQUIRED GALVANIZED LENGTHS. PAYMENT FOR PARTIALLY GALVANIZED PILES WILL BE MADE UNDER THE CONTRACT UNIT PRICE FOR GALVANIZED STEEL PILES.

THE MATERIAL SHOWN IN THE CROSS-HATCHED AREA SHALL BE EXCAVATED FOR A DISTANCE OF 45 FT. LEFT AND 150 FT. RIGHT OF -LREV- AS DIRECTED BY THE ENGINEER. THIS WORK WILL BE PAID FOR AT THE CONTRACT LUMP SUM PRICE FOR UNCLASSIFIED STRUCTURE EXCAVATION. SEE SECTION 412 OF THE STANDARD SPECIFICATIONS.

THIS STRUCTURE HAS BEEN DESIGNED IN ACCORDANCE WITH "HEC 18-EVALUATING SCOUR AT BRIDGES."

FOR PLACING LOAD ON STRUCTURE MEMBERS, SEE SPECIAL PROVISIONS.

FOR CONSTRUCTION, MAINTENANCE, AND REMOVAL OF TEMPORARY ACCESS, SEE SPECIAL PROVISIONS.

FOR BRIDGE DECK RIDEABILITY AND GROOVING, SEE SPECIAL PROVISIONS.

PROJECT NO. R-2303B
CUMBERLAND/SAMPSON COUNTY
STATION: 397+87.00-LREV-

SHEET 5 OF 5

STATE OF NORTH CAROLINA
DEPARTMENT OF TRANSPORTATION
RALEIGH

GENERAL DRAWING
FOR BRIDGE OVER
SOUTH RIVER ON NC 24
BETWEEN SR 1853 AND SR 1404

(LEFT LANE)

NORTH CAROLINA PROFESSIONAL SEAL 025516 ENGINEER
2.21.13

REVISIONS						SHEET NO.
NO.	BY:	DATE:	NO.	BY:	DATE:	S-5
1			3			TOTAL SHEETS
2			4			146

STR. #1

DRAWN BY : B.N. BARODAWALA/PEGGY ADKINS DATE : 11-8-12
CHECKED BY : T. AVERETTE DATE : 11-28-12
DESIGN ENGINEER OF RECORD: MOHAMMED AHMED DATE : 8-15-11

20-FEB-2013 15:57
Z:\TIPProjects-R\R2303B\Structures\Plans\str01\pparisi\R2303B_sd_GD_01.dgn
padkins

LOAD AND RESISTANCE FACTOR RATING (LRFR) SUMMARY FOR PRESTRESSED CONCRETE GIRDERS

LEVEL		VEHICLE	WEIGHT (W) (TONS)	CONTROLLING LOAD RATING (#)	MINIMUM RATING FACTORS (RF)	TONS = W x RF	STRENGTH I LIMIT STATE											SERVICE III LIMIT STATE						COMMENT NUMBER
								MOMENT					SHEAR						MOMENT						
							LIVE-LOAD FACTORS (γ_{LL})	DISTRIBUTION FACTORS (DF)	RATING FACTOR	SPAN	GIRDER LOCATION	DISTANCE FROM LEFT END OF SPAN (ft)	DISTRIBUTION FACTORS (DF)	RATING FACTOR	SPAN	GIRDER LOCATION	DISTANCE FROM LEFT END OF SPAN (ft)	LIVE-LOAD FACTORS (γ_{LL})	DISTRIBUTION FACTORS (DF)	RATING FACTOR	SPAN	GIRDER LOCATION	DISTANCE FROM LEFT END OF SPAN (ft)	
DESIGN LOAD RATING		HL-93 (INVENTORY)	N/A	(1)	1.094	--	1.75	0.968	1.47	M	ER	28.876	0.968	1.24	M	I	17.326	0.80	0.922	1.09	A	ER	48.875	
		HL-93 (OPERATING)	N/A	--	1.613	--	1.35	0.968	1.91	M	ER	28.876	0.968	1.61	M	I	17.326	N/A	--	--	--	--	--	
		HS-20 (INVENTORY)	36.000	(2)	1.469	52.866	1.75	0.968	1.86	M	ER	28.876	0.968	1.47	M	I	17.326	0.80	0.922	1.52	A	ER	48.875	
		HS-20 (OPERATING)	36.000	--	1.904	68.556	1.35	0.968	2.42	M	ER	28.876	0.968	1.9	M	I	17.326	N/A	--	--	--	--	--	
LEGAL LOAD RATING	SINGLE VEHICLE (SV)	SNSH	13.500	--	3.596	48.545	1.40	0.968	4.98	M	ER	28.876	0.968	4.02	M	I	17.326	0.80	0.922	3.60	A	ER	48.875	
		SNGARBS2	20.000	--	2.606	52.129	1.40	0.968	3.83	M	ER	28.876	0.968	2.97	M	I	17.326	0.80	0.922	2.61	A	ER	48.875	
		SNAGRIS2	22.000	--	2.439	53.654	1.40	0.968	3.68	M	ER	28.876	0.968	2.8	M	I	17.326	0.80	0.922	2.44	A	ER	48.875	
		SNCOTTS3	27.250	--	1.787	48.703	1.40	0.968	2.48	M	ER	28.876	0.968	2.02	M	I	17.326	0.80	0.922	1.79	A	ER	48.875	
		SNAGGRS4	34.925	--	1.465	51.178	1.40	0.968	2.12	M	ER	28.876	0.968	1.75	M	I	17.326	0.80	0.922	1.47	A	ER	48.875	
		SNS5A	35.550	--	1.435	51.009	1.40	0.968	2.07	M	ER	28.876	0.968	1.81	M	I	17.326	0.80	0.922	1.43	A	ER	48.875	
		SNS6A	39.950	--	1.305	52.134	1.40	0.968	1.92	M	ER	28.876	0.968	1.69	M	I	17.326	0.80	0.922	1.30	A	ER	48.875	
		SNS7B	42.000	--	1.242	52.177	1.40	0.968	1.83	M	ER	28.876	0.968	1.7	M	I	17.326	0.80	0.922	1.24	A	ER	48.875	
	TRUCK TRACTOR SEMI-TRAILER (TTST)	TNAGRIT3	33.000	--	1.588	52.403	1.40	0.968	2.34	M	ER	28.876	0.968	1.98	M	I	17.326	0.80	0.922	1.59	A	ER	48.875	
		TNT4A	33.075	--	1.592	52.651	1.40	0.968	2.36	M	ER	28.876	0.968	1.9	M	I	17.326	0.80	0.922	1.59	A	ER	48.875	
		TNT6A	41.600	--	1.291	53.697	1.40	0.968	1.95	M	ER	28.876	0.968	1.91	M	I	17.326	0.80	0.922	1.29	A	ER	48.875	
		TNT7A	42.000	--	1.292	54.247	1.40	0.968	1.97	M	ER	28.876	0.968	1.76	M	I	17.326	0.80	0.922	1.29	A	ER	48.875	
		TNT7B	42.000	--	1.322	55.54	1.40	0.968	2.05	M	ER	28.876	0.968	1.63	M	I	17.326	0.80	0.922	1.32	A	ER	48.875	
		TNAGRIT4	43.000	--	1.268	54.533	1.40	0.968	1.94	M	ER	28.876	0.968	1.57	M	I	17.326	0.80	0.922	1.27	A	ER	48.875	
		TNAGT5A	45.000	--	1.201	54.027	1.40	0.968	1.82	M	ER	28.876	0.968	1.61	M	I	17.326	0.80	0.922	1.20	A	ER	48.875	
		TNAGT5B	45.000	(3)	1.19	53.569	1.40	0.968	1.79	M	ER	28.876	0.968	1.48	M	I	17.326	0.80	0.922	1.19	A	ER	48.875	

LOAD FACTORS:

DESIGN LOAD RATING FACTORS	LIMIT STATE	γ_{DC}	γ_{DW}
	STRENGTH I	1.25	1.50
	SERVICE III	1.00	1.00

NOTES:

MINIMUM RATING FACTORS ARE BASED ON THE STRENGTH I AND SERVICE III LIMIT STATES.

ALLOWABLE STRESSES FOR SERVICE III LIMIT STATE ARE AS REQUIRED FOR DESIGN.

COMMENTS:

1.

2.

3.

4.

(#) CONTROLLING LOAD RATING

(1) DESIGN LOAD RATING (HL-93)

(2) DESIGN LOAD RATING (HS-20)

(3) LEGAL LOAD RATING **

** SEE CHART FOR VEHICLE TYPE

GIRDER LOCATION

I - INTERIOR GIRDER
EL - EXTERIOR LEFT GIRDER
ER - EXTERIOR RIGHT GIRDER

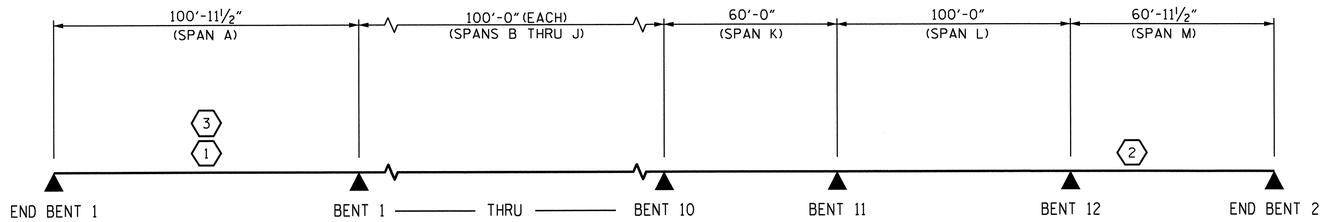

LRFR SUMMARY

DIMENSIONS ARE WORK POINT TO WORK POINT.

PROJECT NO. R-2303B

CUMBERLAND/SAMPSON COUNTY

STATION: 397+87.00 -LREV-

STATE OF NORTH CAROLINA
DEPARTMENT OF TRANSPORTATION
RALEIGH

STANDARD

LRFR SUMMARY FOR PRESTRESSED CONCRETE GIRDERS (NON-INTERSTATE TRAFFIC)

NORTH CAROLINA PROFESSIONAL SEAL 025516 ENGINEER EMILY E. PERRY
2.21.13

REVISIONS						SHEET NO.
NO.	BY:	DATE:	NO.	BY:	DATE:	S-6
1			3			TOTAL SHEETS
2			4			146

STR. #1 STD. NO. LRFR1

ASSEMBLED BY : PEGGY ADKINS DATE : 10-2-12
CHECKED BY : K.P. SEDAI DATE : 10-25-12

DRAWN BY : MAA 1/08
CHECKED BY : GM/DI 2/08

REV. 11/12/08RR MAA/GM
REV. 10/1/11 MAA/GM

DESIGN ENGINEER OF RECORD: MOHAMMED AHMED DATE : 8-15-11

20-FEB-2013 15:56
Z:\TIPProjects-R\R2303B\Structures\Plans\str01\pparisi\R2303B_SD_LRFR_01.dgn
padkins

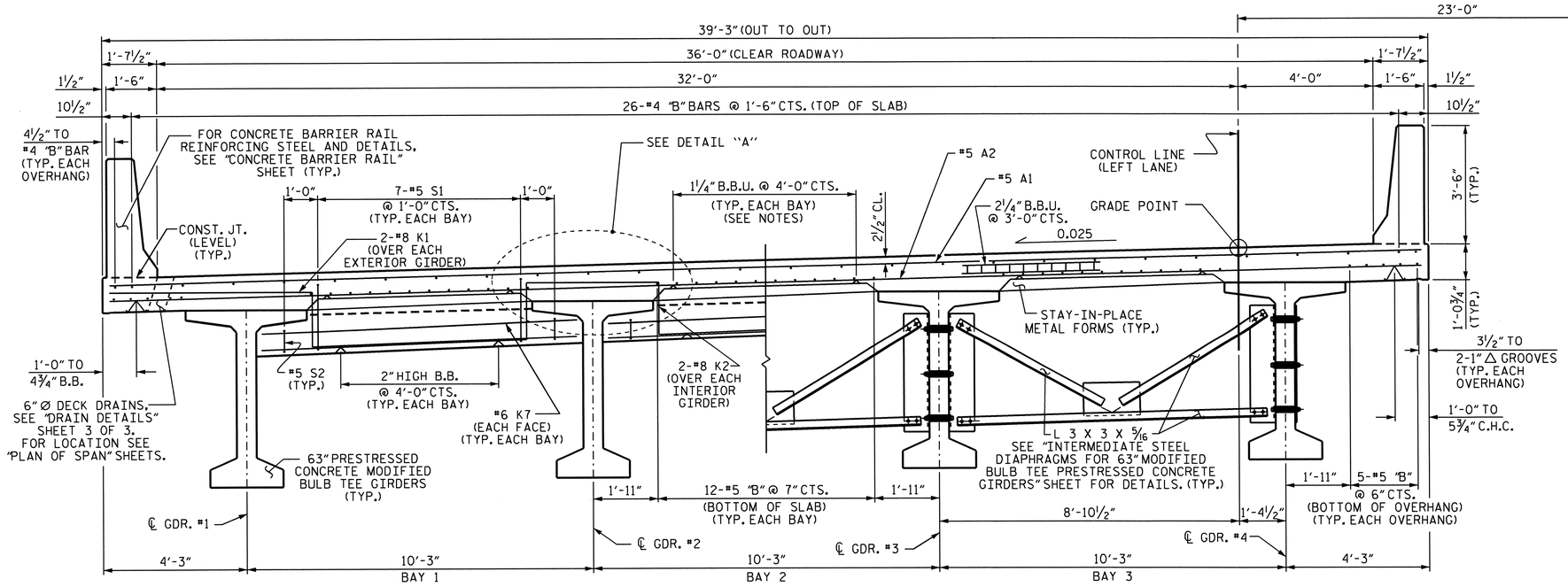

TYPICAL HALF SECTION

SHOWING END BENT DIAPHRAGMS OR BENT DIAPHRAGMS @ BENT NOS. 4, 8 & 11

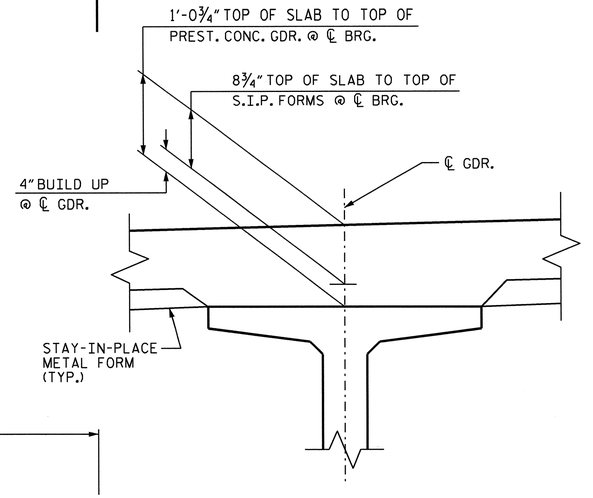

DETAIL "A"

TYPICAL HALF SECTION

SHOWING INTERMEDIATE DIAPHRAGMS

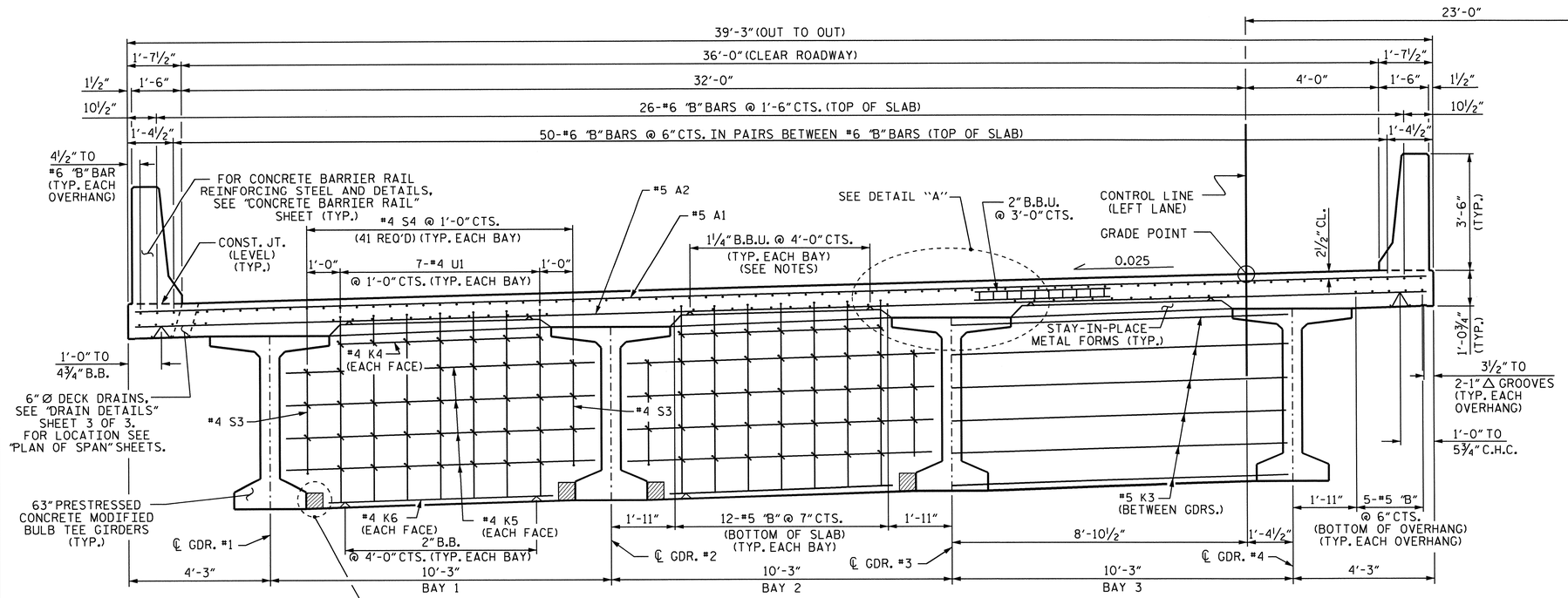

TYPICAL SECTION

SHOWING CONTINUOUS BENT DIAPHRAGM @ BENT NOS. 1, 2, 3, 5, 6, 7, 9, 10 & 12

#4 "K" & #4 "S" BARS ARE TYP. FOR EACH BAY

NOTES:

PROVIDE 1¼" HIGH BEAM BOLSTERS UPPER AT 4'-0" CTS. ATOP THE METAL STAY-IN-PLACE FORMS TO SUPPORT THE BOTTOM MAT OF 'A' BARS. WHEN USING REMOVABLE FORMS, PROVIDE CONTINUOUS HIGH CHAIRS FOR METAL DECK (C.H.C.M.) @ 4'-0" CTS. WITH A HEIGHT TO SUPPORT THE BOTTOM MAT OF 'A' BARS A CLEAR DISTANCE OF 2½" ABOVE THE TOP OF THE REMOVABLE FORM.

LONGITUDINAL STEEL MAY BE SHIFTED SLIGHTLY, AS NECESSARY, TO AVOID INTERFERENCE WITH STIRRUPS IN PRESTRESSED CONCRETE GIRDERS.

PREVIOUSLY CAST CONCRETE IN A CONTINUOUS UNIT SHALL HAVE ATTAINED A MINIMUM COMPRESSIVE STRENGTH OF 3,000 PSI BEFORE ADDITIONAL CONCRETE IS CAST IN THE UNIT.

PROJECT NO. R-2303B

CUMBERLAND/SAMPSON COUNTY

STATION: 397+87.00 -LREV-

SHEET 1 OF 3

STATE OF NORTH CAROLINA
DEPARTMENT OF TRANSPORTATION
RALEIGH

SUPERSTRUCTURE

TYPICAL SECTION

(LEFT LANE)

REVISIONS						SHEET NO.
NO.	BY:	DATE:	NO.	BY:	DATE:	S-7
1			3			TOTAL SHEETS
2			4			146

STR. #1

NORTH CAROLINA PROFESSIONAL SEAL 025516 ENGINEER KEVIN E. MURRAY
2.21.13

DRAWN BY :	PEGGY PARISI	DATE : 10-4-11
CHECKED BY :	K.P. SEDAI	DATE : 9-25-12
DESIGN ENGINEER OF RECORD:	MOHAMMED AHMED	DATE : 8-15-11

20-FEB-2013 15:56
Z:\TIPProjects-R\R2303B\Structures\Plans\str01\pporis1\R2303B_SD_TS_01.dgn
podkins

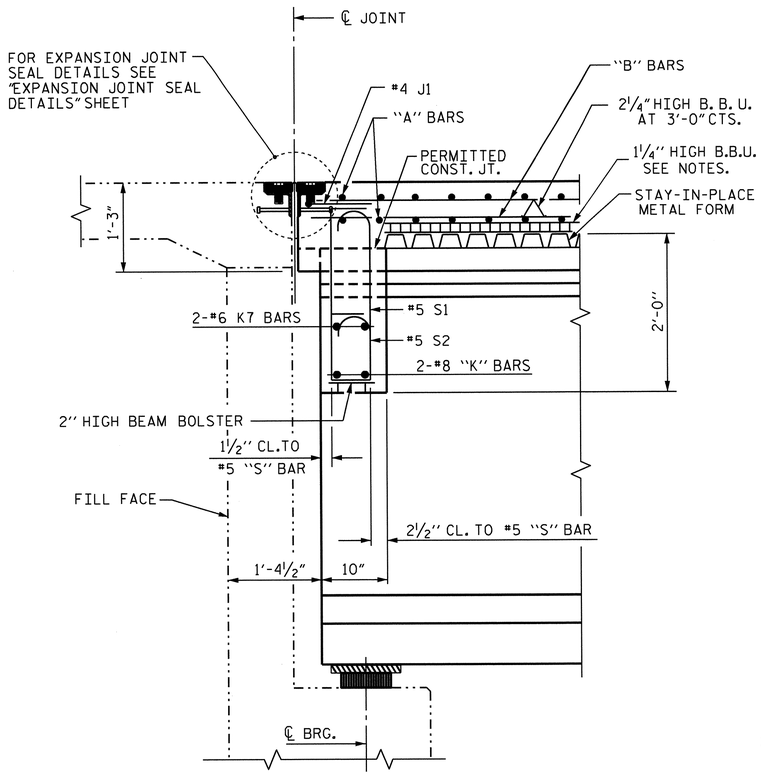

SECTION A-A

SECTION THRU END BENT DIAPHRAGM

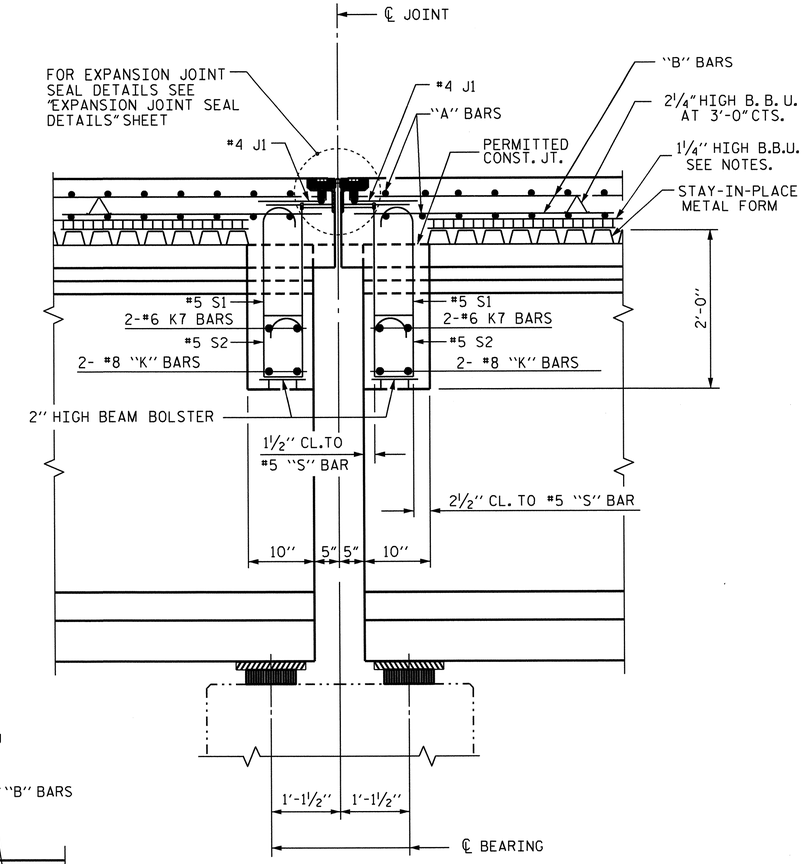

SECTION C-C

BENT NOS. 4, 8 AND 11

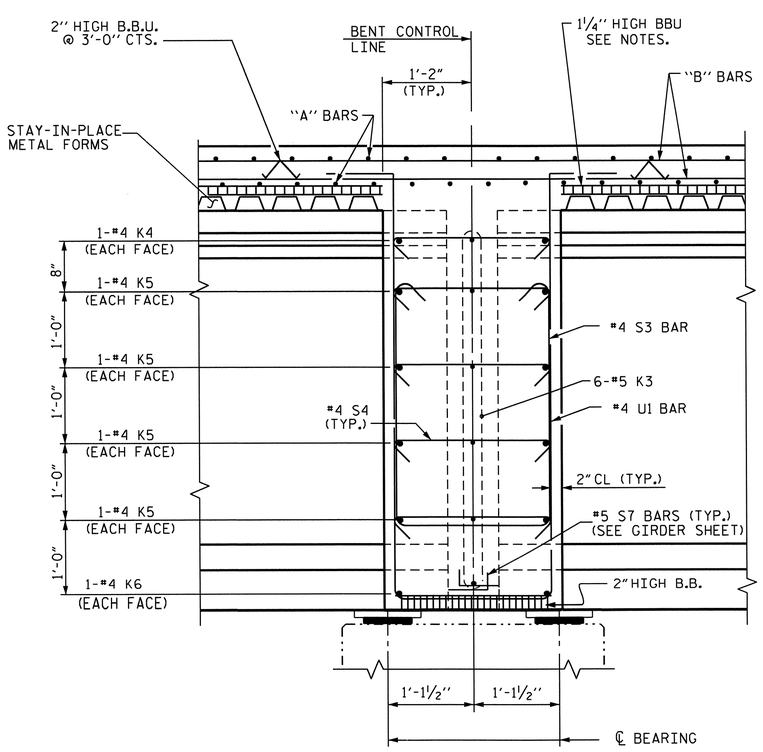

SECTION B-B

BENT NOS. 1, 2, 3, 5, 6, 7, 9, 10 AND 12

PROJECT NO. R-2303B

CUMBERLAND/SAMPSON COUNTY

STATION: 397+87.00 -LREV-

SHEET 2 OF 3

STATE OF NORTH CAROLINA
DEPARTMENT OF TRANSPORTATION
RALEIGH

SUPERSTRUCTURE

TYPICAL SECTION DETAILS

(LEFT LANE)

NORTH CAROLINA PROFESSIONAL SEAL 025516 ENGINEER EMILY E. MURRAY
2.21.13

REVISIONS						SHEET NO.
NO.	BY:	DATE:	NO.	BY:	DATE:	S-8
1			3			TOTAL SHEETS
2			4			146

STR. #1

DRAWN BY : PEGGY PARISI DATE : 10-4-11
CHECKED BY : K.P. SEDAI DATE : 9-25-12
DESIGN ENGINEER OF RECORD: MOHAMMED AHMED DATE : 8-15-11

20-FEB-2013 15:56
Z:\TIPProjects-R\R2303B\Structures\Plans\str01\pparisi\R2303B_SD_TS_01.dgn
padkins

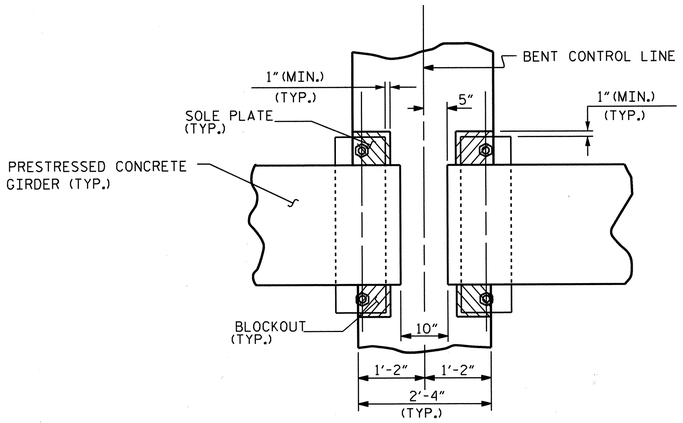

PLAN

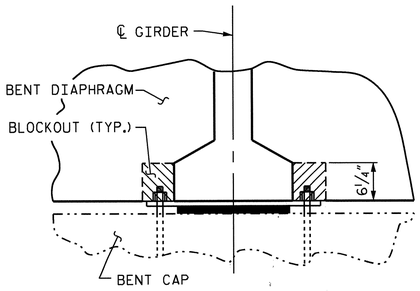

SECTION

BENT DIAPHRAGM BLOCKOUT DETAIL

(BENT NOS. 1, 2, 3, 5, 6, 7, 9, 10 AND 12)

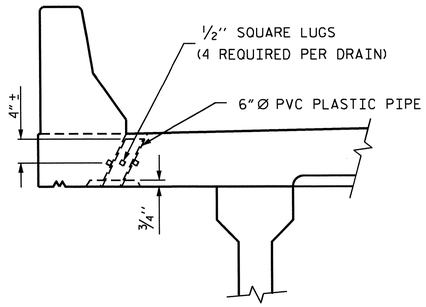

ELEVATION

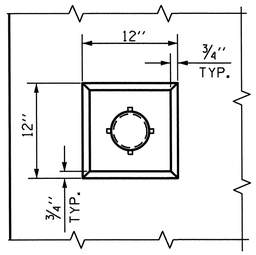

PLAN OF RECESS

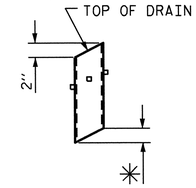

✳ TO BE SET TO MATCH SLOPE
OF BOTTOM OF OVERHANG
(102 DRAINS REQUIRED)

PIPE DETAIL

TOP OF FLOOR DRAINS TO BE SET ⅜" BELOW SURFACE OF SLAB.

4 - ½" SQUARE LUGS TO BE GLUED TO THE P.V.C. PLASTIC PIPE AT EQUAL SPACES AROUND THE PIPE DRAIN APPROXIMATELY 4" FROM THE TOP OF THE PIPE.

THE 6" Ø PVC PLASTIC PIPE AND FITTINGS SHALL BE SCHEDULE 40 AND CONFORM TO ASTM D1785.

DRAIN DETAILS

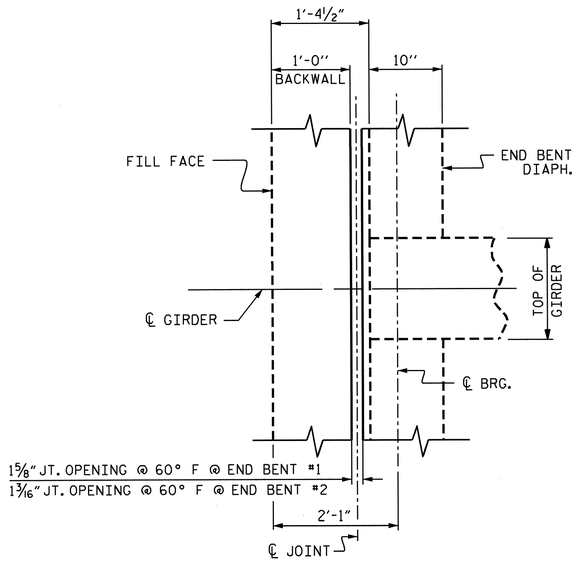

END BENT DIAPHRAGM

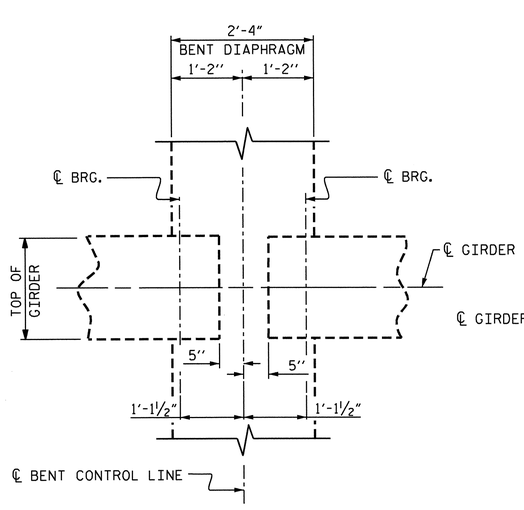

BENT DIAPHRAGM
BENT NOS. 1, 2, 3, 5, 6, 7, 9, 10 AND 12

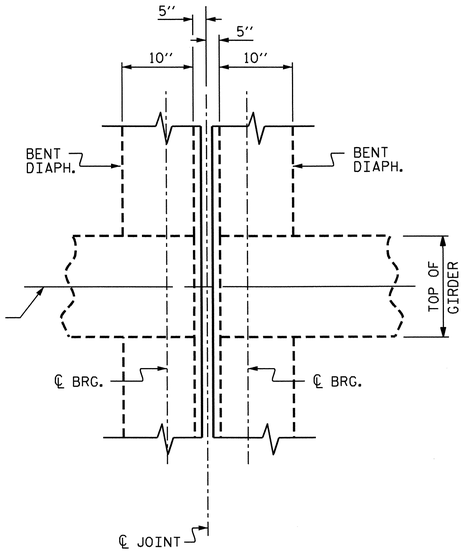

BENT DIAPHRAGM
BENT NOS. 4, 8 AND 11

PLAN

PROJECT NO. R-2303B

CUMBERLAND/SAMPSON COUNTY

STATION: 397+87.00 -LREV-

SHEET 3 OF 3

STATE OF NORTH CAROLINA
DEPARTMENT OF TRANSPORTATION
RALEIGH

SUPERSTRUCTURE

TYPICAL SECTION DETAILS
(LEFT LANE)

REVISIONS						SHEET NO.
NO.	BY:	DATE:	NO.	BY:	DATE:	S-9
1			3			TOTAL SHEETS
2			4			146

NORTH CAROLINA PROFESSIONAL SEAL 025516 ENGINEER E. MAY S. MURRAY
2-21-13

STR. #1

DRAWN BY : PEGGY PARISI DATE : 10-4-11
CHECKED BY : K.P. SEDAI DATE : 9-25-12
DESIGN ENGINEER OF RECORD: MOHAMMED AHMED DATE : 8-15-11

20-FEB-2013 15:56
Z:\TIPProjects-R\R2303B\Structures\Plans\str01\pparisi\R2303B_SD_TS_01.dgn
podkins

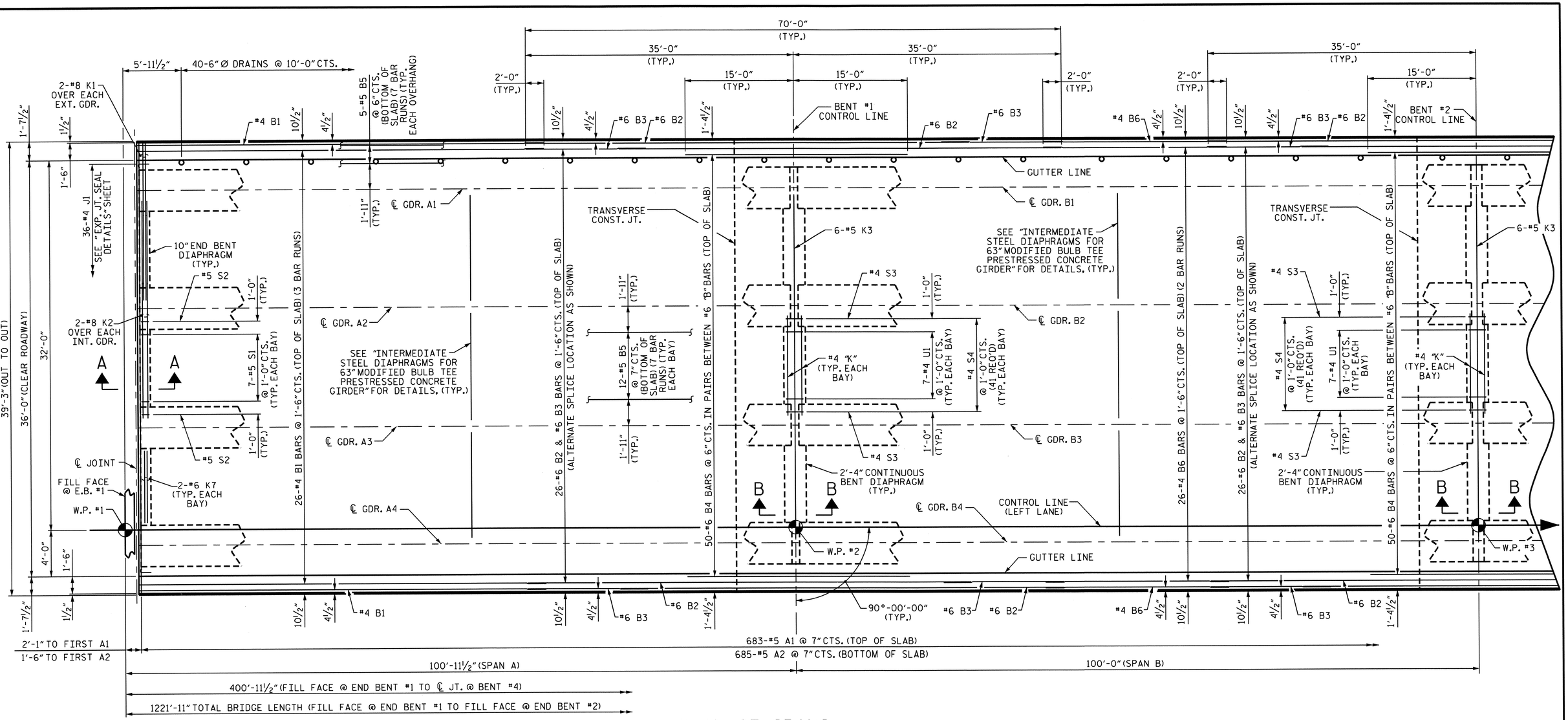

PLAN OF SPANS

FOR BARRIER RAIL REINFORCING STEEL SEE "CONCRETE BARRIER RAIL" SHEETS.
FOR POURING SEQUENCE, SEE "BILL OF MATERIAL" SHEET 1 OF 2.

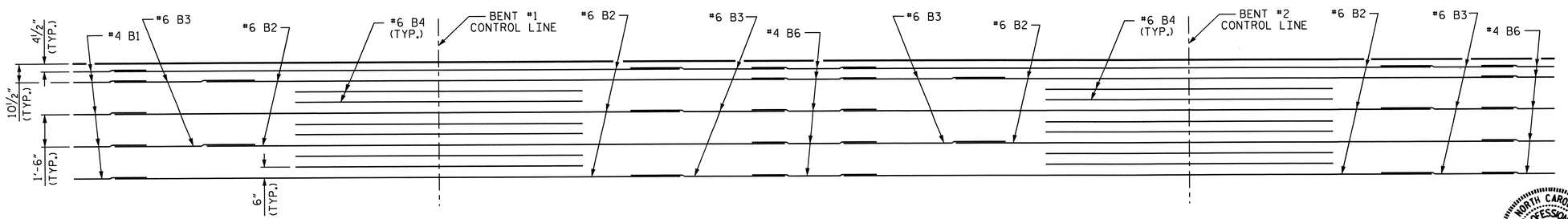

TOP OF SLAB REINFORCING STEEL LAYOUT

PROJECT NO. R-2303B
CUMBERLAND/SAMPSON COUNTY
STATION: 397+87.00 -LREV-

SHEET 1 OF 6

STATE OF NORTH CAROLINA
DEPARTMENT OF TRANSPORTATION
RALEIGH

SUPERSTRUCTURE

PLAN OF SPANS
A & B

(LEFT LANE)

NORTH CAROLINA PROFESSIONAL SEAL 025516 ENGINEER EMILY ECMURRAY
2.21.13

REVISIONS						SHEET NO.
NO.	BY:	DATE:	NO.	BY:	DATE:	S-10
1			3			TOTAL SHEETS
2			4			146

STR. #1

DRAWN BY : PEGGY PARISI DATE : 10-11-11
CHECKED BY : K.P. SEDAI DATE : 9-25-12
DESIGN ENGINEER OF RECORD: MOHAMMED AHMED DATE : 8-15-11

20-FEB-2013 15:56
Z:\TIPProjects-R\R2303B\Structures\Plans\str01\ppars1\R2303B_SD_TS_01.dgn
podkins

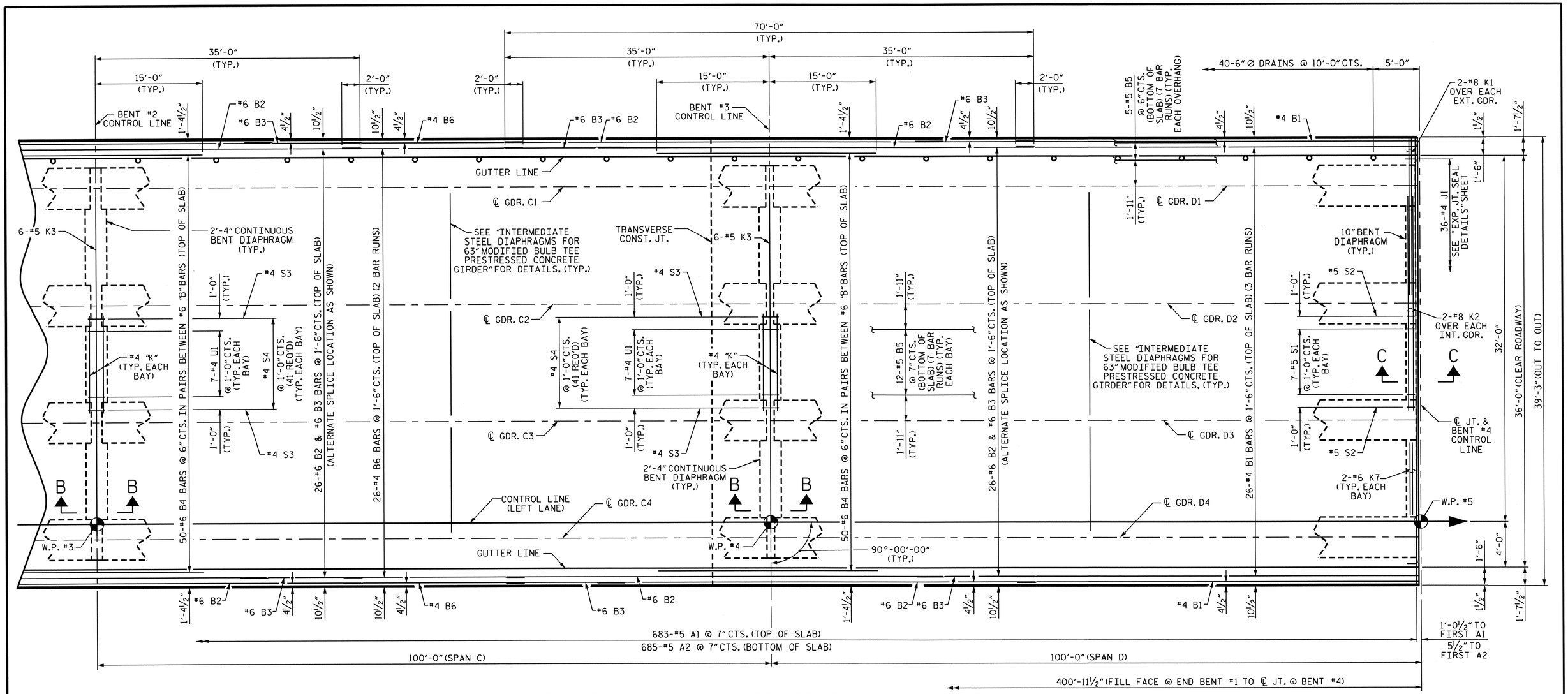

PLAN OF SPANS

FOR BARRIER RAIL REINFORCING STEEL SEE "CONCRETE BARRIER RAIL" SHEETS.
FOR POURING SEQUENCE, SEE "BILL OF MATERIAL" SHEET 1 OF 2.

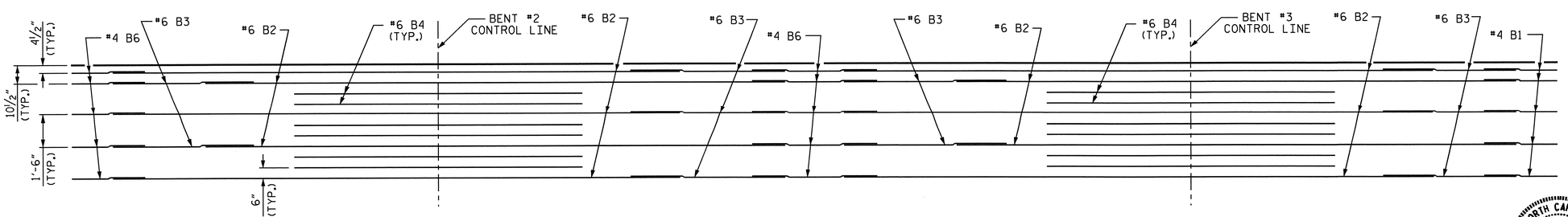

TOP OF SLAB REINFORCING STEEL LAYOUT

DRAWN BY : PEGGY PARISI DATE : 10-11-11
CHECKED BY : K.P. SEDAI DATE : 9-25-12
DESIGN ENGINEER OF RECORD: MOHAMMED AHMED DATE : 8-15-11

20-FEB-2013 15:55
Z:\TIPProjects-R\R2303B\Structures\Plans\str01\ppplsl\R2303B_SD_TS_01.dgn
padkins

NORTH CAROLINA PROFESSIONAL SEAL 025516 ENGINEER
2·21·13

PROJECT NO. R-2303B
CUMBERLAND/SAMPSON COUNTY
STATION: 397+87.00 -LREV-

SHEET 2 OF 6

STATE OF NORTH CAROLINA
DEPARTMENT OF TRANSPORTATION
RALEIGH
SUPERSTRUCTURE

PLAN OF SPANS C & D

(LEFT LANE)

REVISIONS						SHEET NO.
NO.	BY:	DATE:	NO.	BY:	DATE:	S-11
1			3			TOTAL SHEETS
2			4			146

STR. #1

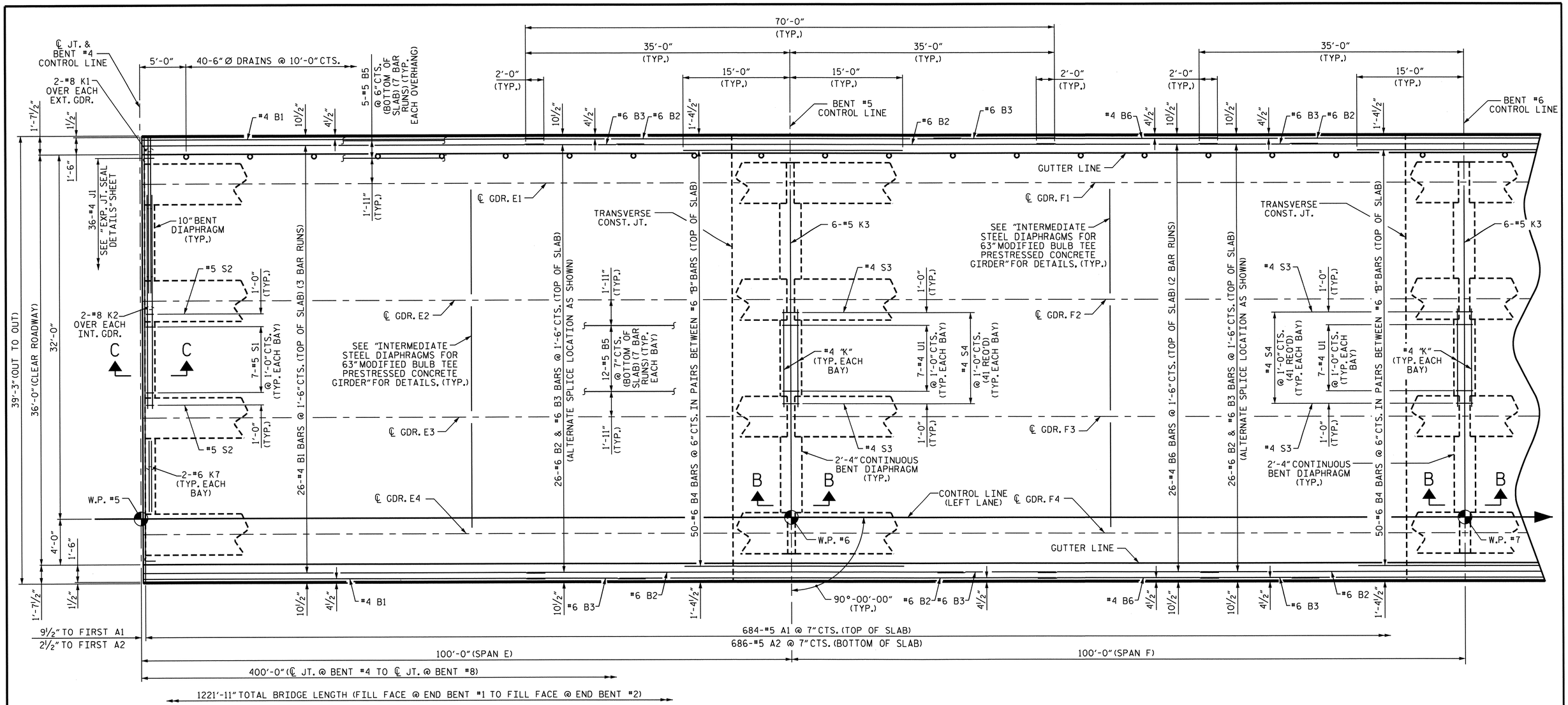

PLAN OF SPANS

FOR BARRIER RAIL REINFORCING STEEL SEE "CONCRETE BARRIER RAIL" SHEETS.
FOR POURING SEQUENCE, SEE "BILL OF MATERIAL" SHEET 1 OF 2.

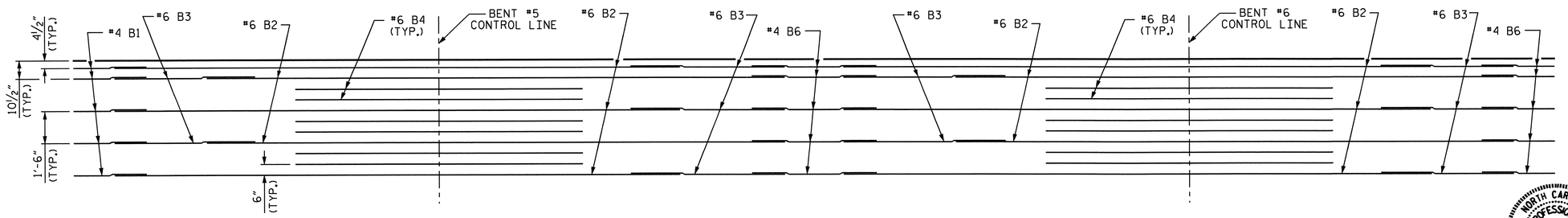

TOP OF SLAB REINFORCING STEEL LAYOUT

PROJECT NO. R-2303B
CUMBERLAND/SAMPSON COUNTY
STATION: 397+87.00 -LREV-

SHEET 3 OF 6

STATE OF NORTH CAROLINA
DEPARTMENT OF TRANSPORTATION
RALEIGH
SUPERSTRUCTURE

PLAN OF SPANS E & F

(LEFT LANE)

REVISIONS						SHEET NO.
NO.	BY:	DATE:	NO.	BY:	DATE:	S-12
1			3			TOTAL SHEETS
2			4			146

NORTH CAROLINA PROFESSIONAL SEAL 025516 ENGINEER EMILY E. GRAY
2.21.13

DRAWN BY : PEGGY PARISI DATE : 10-11-11
CHECKED BY : K.P. SEDAI DATE : 9-25-12
DESIGN ENGINEER OF RECORD: MOHAMMED AHMED DATE : 8-15-11

20-FEB-2013 15:55
Z:\TIPProjects-R\R2303B\Structures\Plans\str01\ppars\R2303B_SD_TS_01.dgn
padkins

STR. #1

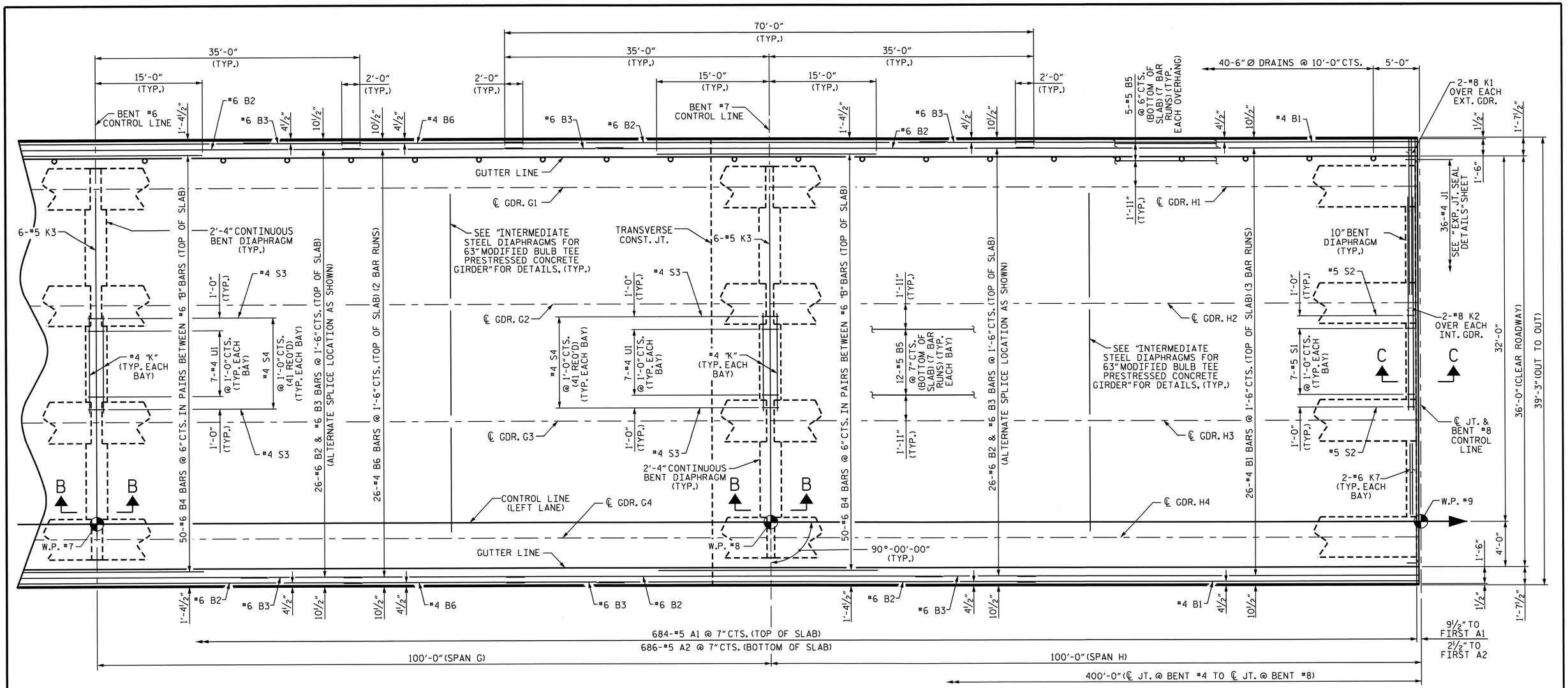

PLAN OF SPANS

FOR BARRIER RAIL REINFORCING STEEL SEE "CONCRETE BARRIER RAIL" SHEETS.
FOR POURING SEQUENCE, SEE "BILL OF MATERIAL" SHEET 1 OF 2.

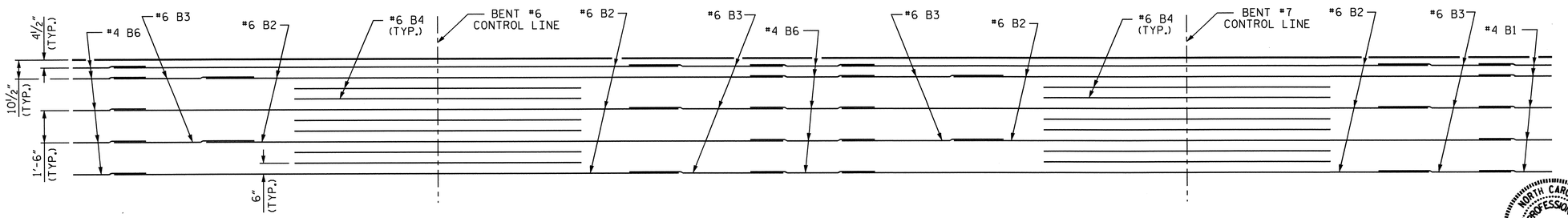

TOP OF SLAB REINFORCING STEEL LAYOUT

PROJECT NO. R-2303B
CUMBERLAND/SAMPSON COUNTY
STATION: 397+87.00 -LREV-

SHEET 4 OF 6

STATE OF NORTH CAROLINA
DEPARTMENT OF TRANSPORTATION
RALEIGH
SUPERSTRUCTURE

PLAN OF SPANS G & H

(LEFT LANE)

REVISIONS						SHEET NO.
NO.	BY:	DATE:	NO.	BY:	DATE:	S-13
1			3			TOTAL SHEETS
2			4			146

NORTH CAROLINA PROFESSIONAL SEAL 025516 ENGINEER EMILY E. MURRAY
2.21.13

DRAWN BY :	PEGGY PARISI	DATE : 10-11-11
CHECKED BY :	K.P. SEDAI	DATE : 9-25-12
DESIGN ENGINEER OF RECORD:	MOHAMMED AHMED	DATE : 8-15-11

20-FEB-2013 15:55
Z:\TIPProjects-R\R2303B\Structures\Plans\str01\pparisi\R2303B_SD_TS_01.dgn
padkins

STR. #1

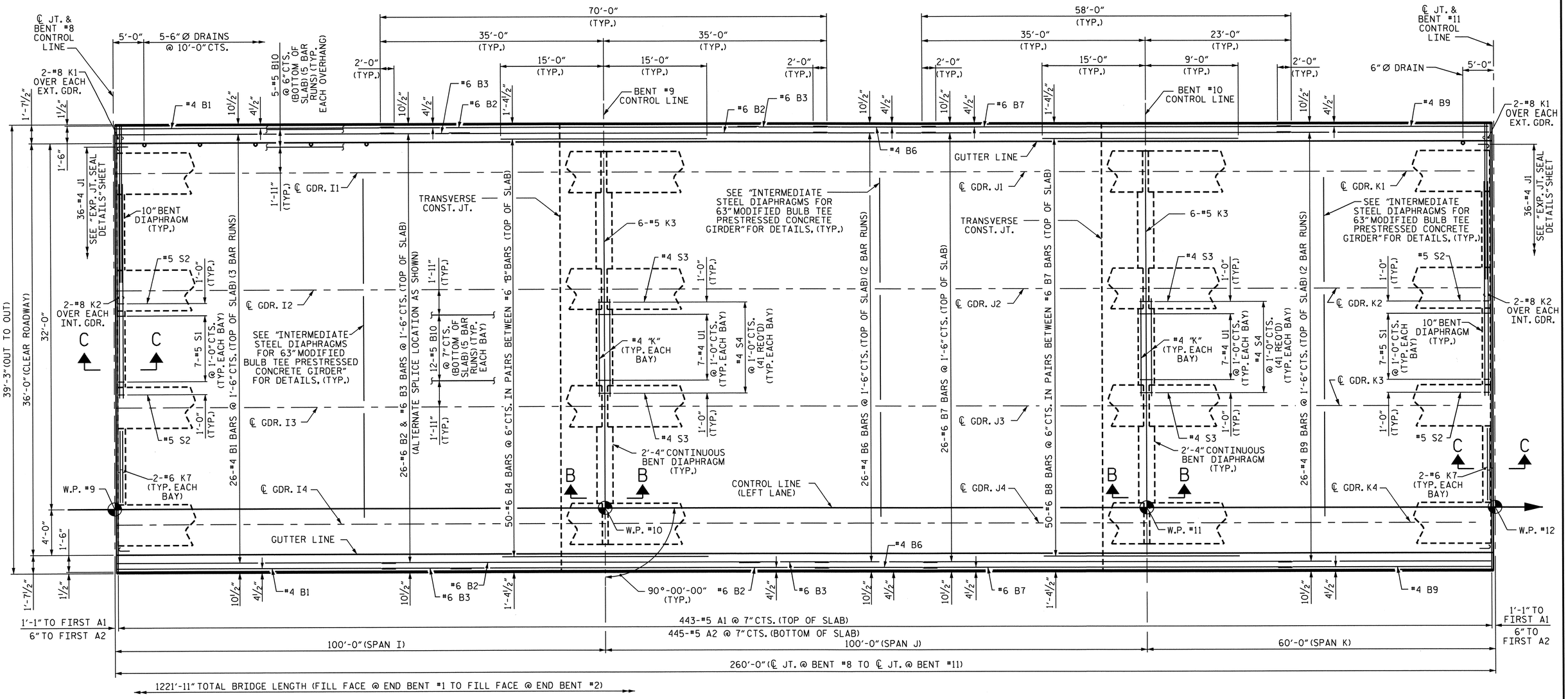

PLAN OF SPANS

FOR BARRIER RAIL REINFORCING STEEL SEE "CONCRETE BARRIER RAIL" SHEETS.
FOR POURING SEQUENCE, SEE "BILL OF MATERIAL" SHEET 1 OF 2.

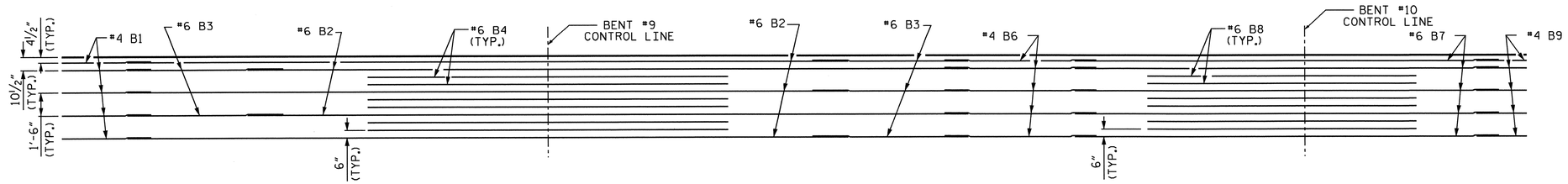

TOP OF SLAB REINFORCING STEEL LAYOUT

PROJECT NO. R-2303B
CUMBERLAND/SAMPSON COUNTY
STATION: 397+87.00 -LREV-

SHEET 5 OF 6

STATE OF NORTH CAROLINA
DEPARTMENT OF TRANSPORTATION
RALEIGH
SUPERSTRUCTURE

PLAN OF SPANS
I, J & K

(LEFT LANE)

REVISIONS						SHEET NO.
NO.	BY:	DATE:	NO.	BY:	DATE:	S-14
1			3			TOTAL SHEETS
2			4			146

NORTH CAROLINA PROFESSIONAL SEAL 025516 ENGINEER E. C. MURRAY
2.21.13

DRAWN BY : PEGGY PARISI DATE : 10-11-11
CHECKED BY : K.P. SEDAI DATE : 9-25-12
DESIGN ENGINEER OF RECORD: MOHAMMED AHMED DATE : 8-15-11

20-FEB-2013 15:55
Z:\TIPProjects-R\R2303B\Structures\Plans\str01\pparisi\R2303B_SD_TS_01.dgn
podkins

STR. #1

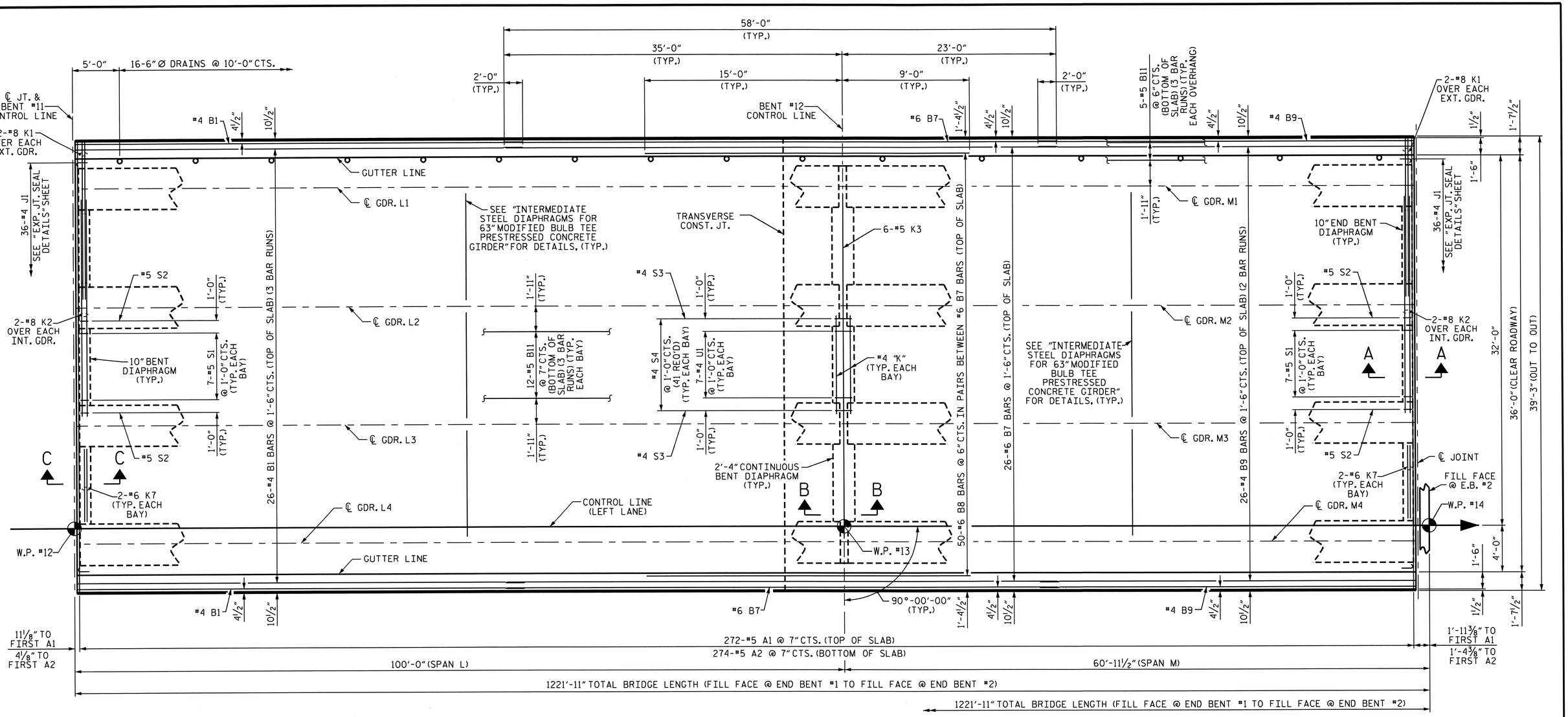

PLAN OF SPANS

FOR BARRIER RAIL REINFORCING STEEL SEE "CONCRETE BARRIER RAIL" SHEETS.
FOR POURING SEQUENCE, SEE "BILL OF MATERIAL" SHEET 1 OF 2.

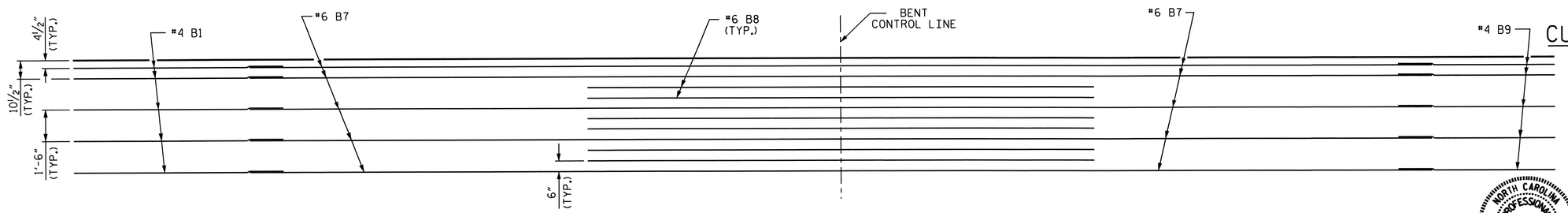

TOP OF SLAB REINFORCING STEEL LAYOUT

NORTH CAROLINA PROFESSIONAL SEAL 025516 ENGINEER EMRY E. MURRAY 2.21.13

PROJECT NO. R-2303B
CUMBERLAND/SAMPSON COUNTY
STATION: 397+87.00 -LREV-

SHEET 6 OF 6

STATE OF NORTH CAROLINA
DEPARTMENT OF TRANSPORTATION
RALEIGH

SUPERSTRUCTURE

PLAN OF SPANS
L & M

(LEFT LANE)

REVISIONS						SHEET NO.
NO.	BY:	DATE:	NO.	BY:	DATE:	S-15
1			3			TOTAL SHEETS
2			4			146

DRAWN BY : PEGGY PARISI DATE : 10-11-11
CHECKED BY : K.P. SEDAI DATE : 9-25-12
DESIGN ENGINEER OF RECORD: MOHAMMED AHMED DATE : 8-15-11

20-FEB-2013 15:55
Z:\TIPProjects-R\R2303B\Structures\Plans\str01\pparisi\R2303B_SD_TS_01.dgn
padkins

STR. #1

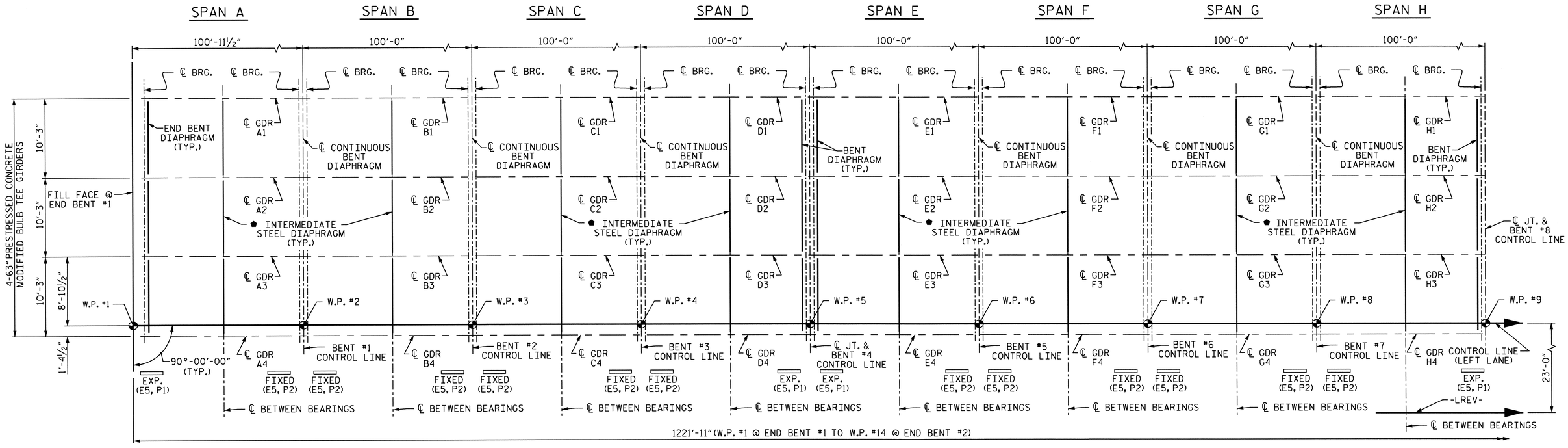

GIRDER LAYOUT

● SEE "INTERMEDIATE STEEL DIAPHRAGMS FOR 63" MODIFIED BULB TEE PRESTRESSED CONCRETE GIRDERS" FOR DETAILS

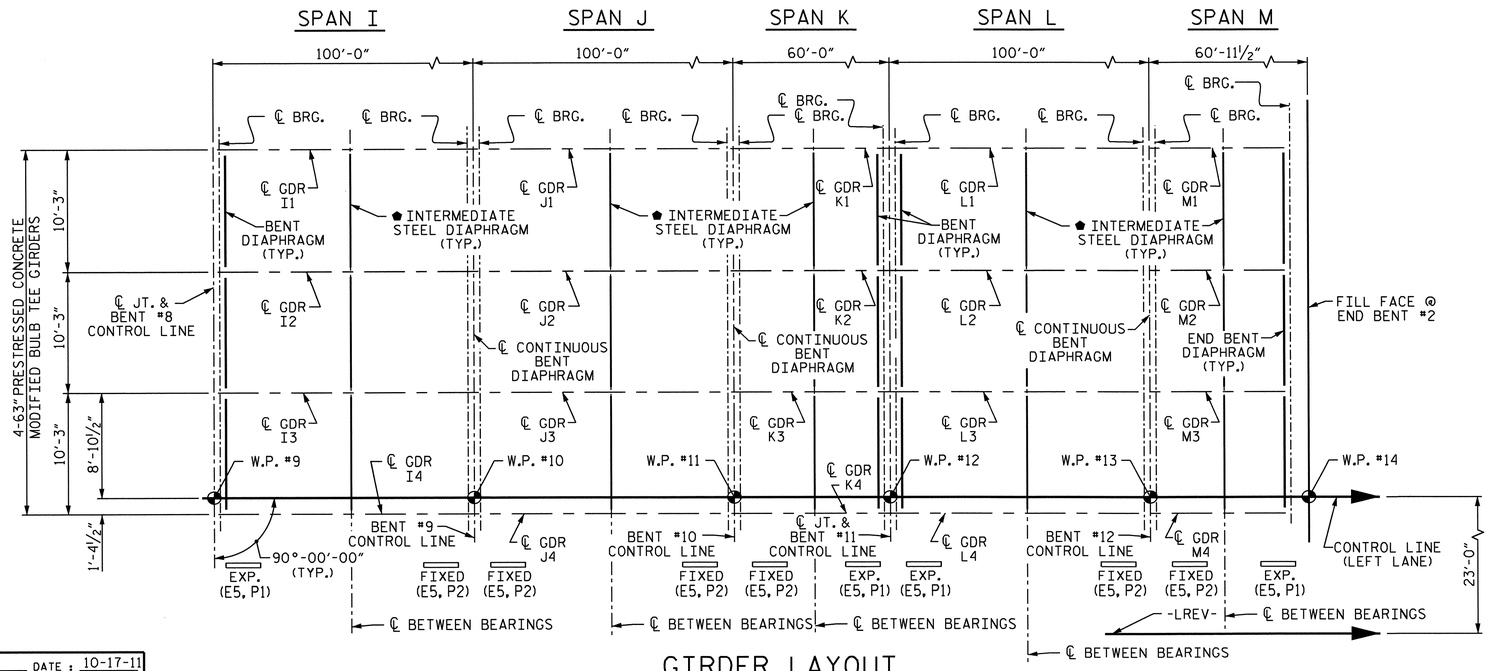

GIRDER LAYOUT

PROJECT NO. R-2303B
CUMBERLAND/SAMPSON COUNTY
STATION: 397+87.00 -LREV-

STATE OF NORTH CAROLINA
DEPARTMENT OF TRANSPORTATION
RALEIGH
SUPERSTRUCTURE

GIRDER LAYOUT

(LEFT LANE)

NORTH CAROLINA PROFESSIONAL SEAL 025516 ENGINEER EMILY E. MURRAY
2-21-13

REVISIONS						SHEET NO.
NO.	BY:	DATE:	NO.	BY:	DATE:	S-16
1			3			TOTAL SHEETS
2			4			146

DRAWN BY : PEGGY PARISI DATE : 10-17-11
CHECKED BY : K.P. SEDAI DATE : 9-25-12
DESIGN ENGINEER OF RECORD: MOHAMMED AHMED DATE : 8-15-11

20-FEB-2013 15:54
Z:\TIPProjects-R\R2303B\Structures\Plans\str01\ppars1s\R2303B_SD_TS_01.dgn
padkins

STR. #1

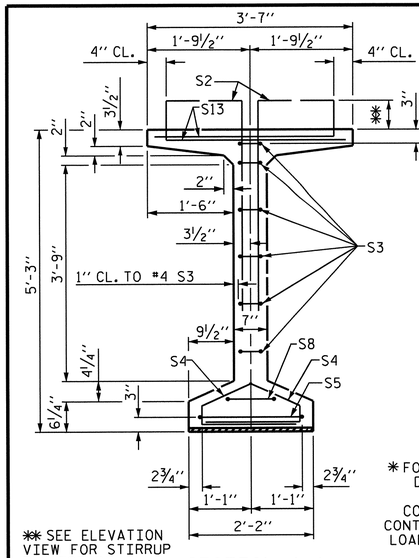

✱✱ SEE ELEVATION VIEW FOR STIRRUP PROJECTION

SECTION A-A

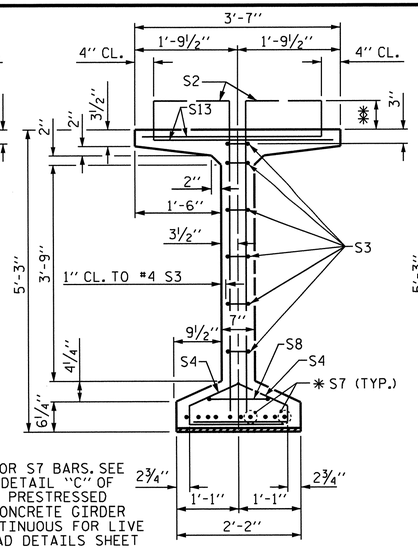

✱FOR S7 BARS, SEE DETAIL "C" OF PRESTRESSED CONCRETE GIRDER CONTINUOUS FOR LIVE LOAD DETAILS SHEET

SECTION B-B

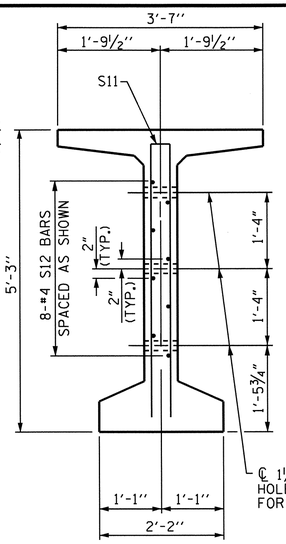

℄ 1½" Ø FORMED HOLE. SEE ELEVATION FOR LOCATION.

SECTION C-C

(S1, S6 AND S9 BARS NOT SHOWN)

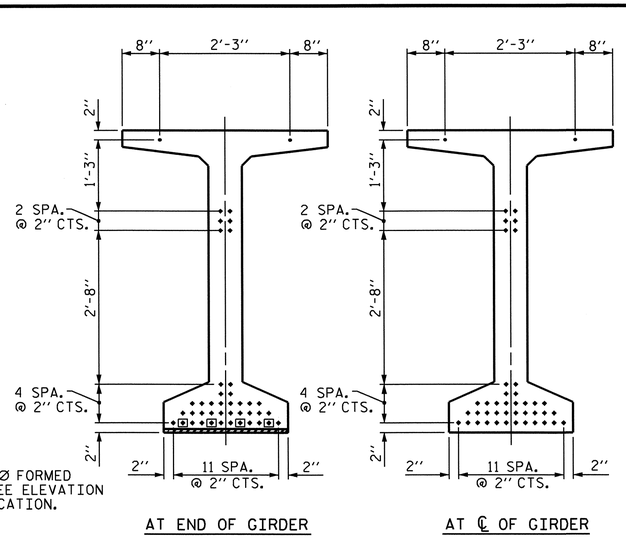

0.6" Ø LOW RELAXATION STRAND LAYOUT

DEBONDING LEGEND

- ● FULLY BONDED STRANDS
- ⊡ STRANDS DEBONDED FOR 4'-0" FROM END OF GIRDER

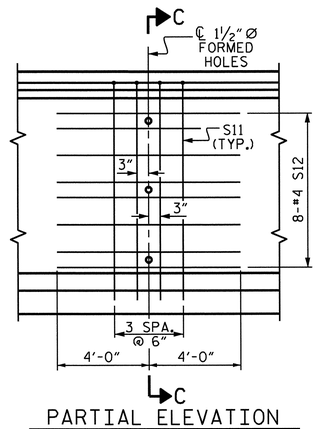

PARTIAL ELEVATION

SHOWING INTERMEDIATE STEEL DIAPHRAGM REINFORCING STEEL FOR GIRDER Nos. 1 THRU 4

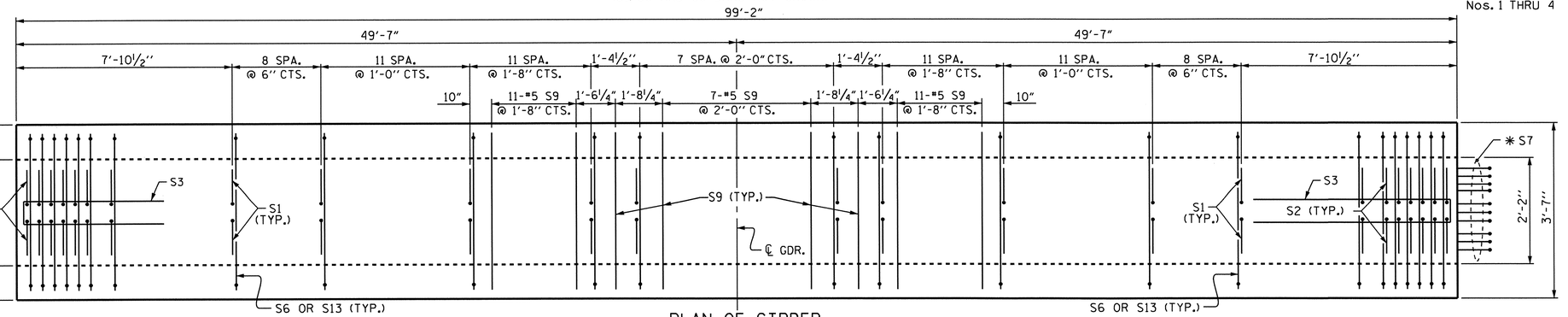

PLAN OF GIRDER

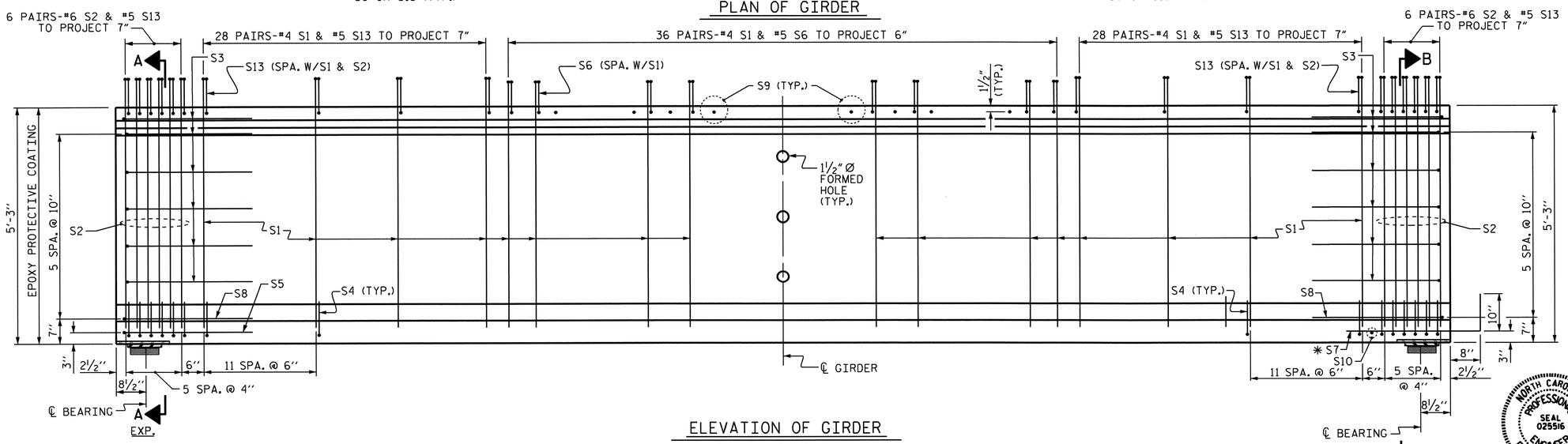

ELEVATION OF GIRDER

SPANS A, D, E, H, I & L

0.6" Ø L.R. GRADE 270 STRANDS		
AREA (SQUARE INCHES)	ULTIMATE STRENGTH (LBS. PER STRAND)	APPLIED PRESTRESS (LBS. PER STRAND)
0.217	58,600	43,950

REINFORCING STEEL FOR ONE GDR

BAR	NUMBER	SIZE	TYPE	LENGTH	WEIGHT
S1	184	#4	1	6'-1"	748
S2	24	#6	1	6'-1"	219
S3	12	#4	2	8'-5"	67
S4	72	#4	3	3'-0"	144
S5	1	#5	2	9'-10"	10
S6	72	#5	4	4'-4"	325
✱S7	10	#5	STR	3'-8"	38
S8	2	#5	2	9'-0"	19
S9	31	#5	STR	3'-3"	105
S10	1	#3	STR	1'-10"	1
S11	4	#5	2	10'-2"	42
S12	8	#4	STR	8'-0"	43
S13	136	#5	4	4'-5"	627

✱NOTE: S7 BARS SHALL BE BENT BEFORE SHIPMENT. HEAT BENDING SHALL NOT BE ALLOWED.

BAR TYPES

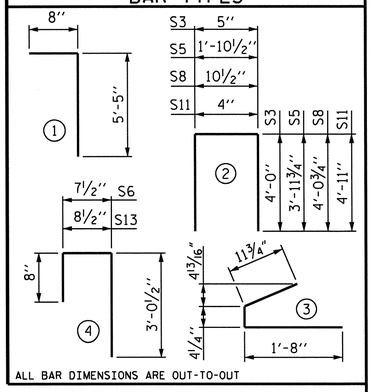

ALL BAR DIMENSIONS ARE OUT-TO-OUT

QUANTITIES FOR ONE GIRDER

	REINFORCING STEEL	9500 PSI CONCRETE	0.6" Ø L.R. STRANDS
	LB.	C.Y.	No.
	2388	19.6	42

GIRDERS REQUIRED

NUMBER	LENGTH	TOTAL LENGTH
24	99'-2"	2380'-0"

PROJECT NO. R-2303B

CUMBERLAND/SAMPSON COUNTY

STATION: 397+87.00-LREV-

SHEET 1 OF 4

STATE OF NORTH CAROLINA
DEPARTMENT OF TRANSPORTATION
RALEIGH

STANDARD

63" PRESTRESSED CONCRETE MODIFIED BULB TEE CONTINUOUS FOR LIVE LOAD

(LEFT LANE)

REVISIONS						SHEET NO.
NO.	BY:	DATE:	NO.	BY:	DATE:	S-17
1			3			TOTAL SHEETS
2			4			146

STR. #1

STD. NO. PCG7 (Sht. 1)

NORTH CAROLINA PROFESSIONAL SEAL 025516 ENGINEER EDWARD ARRAY MAY 2.21.13

ASSEMBLED BY : PEGGY ADKINS DATE : 10-25-11
CHECKED BY : K.P. SEDAI DATE : 9-27-12

DRAWN BY : EEM 2/6/97
CHECKED BY : VAP 2/6/97

REV. 10/17/00 RWW/LES
REV. 5/1/06R TLA/GM
REV. 10/1/11 MAA/GM

DESIGN ENGINEER OF RECORD:
MOHAMMED AHMED DATE : 8-15-11

20-FEB-2013 15:54
Z:\TIPProjects-R\R2303B\Structures\Plans\str01\pparisi\R2303B_SD_TS_01.dgn
podkins

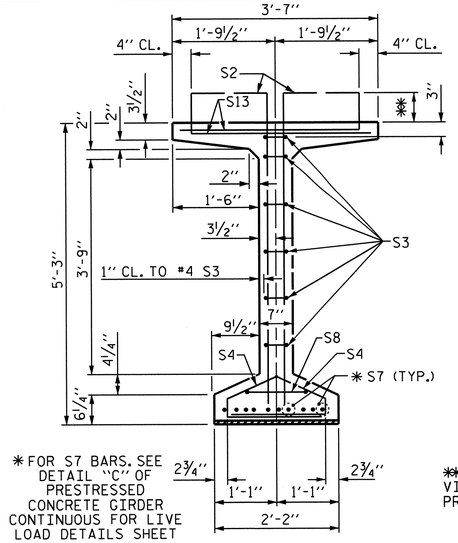

* FOR S7 BARS, SEE DETAIL "C" OF PRESTRESSED CONCRETE GIRDER CONTINUOUS FOR LIVE LOAD DETAILS SHEET

SECTION B-B

** SEE ELEVATION VIEW FOR STIRRUP PROJECTION

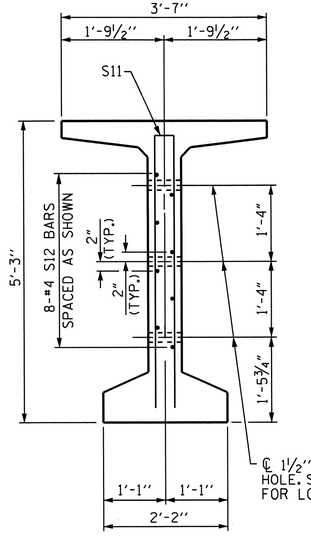

℄ 1½" Ø FORMED HOLE. SEE ELEVATION FOR LOCATION.

SECTION C-C

(S1, S6 AND S9 BARS NOT SHOWN)

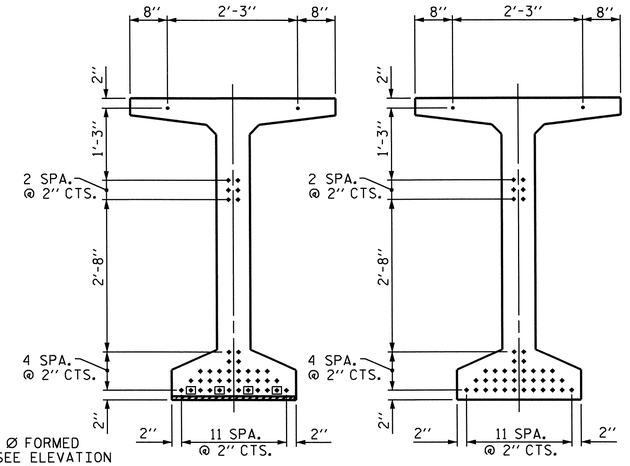

0.6" Ø LOW RELAXATION STRAND LAYOUT

DEBONDING LEGEND

- ● FULLY BONDED STRANDS
- ⊡ STRANDS DEBONDED FOR 4'-0" FROM END OF GIRDER

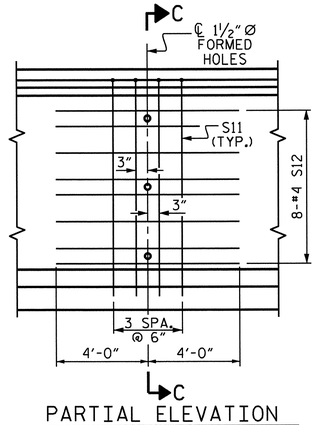

PARTIAL ELEVATION

SHOWING INTERMEDIATE STEEL DIAPHRAGM REINFORCING STEEL FOR GIRDER Nos. 1 THRU 4

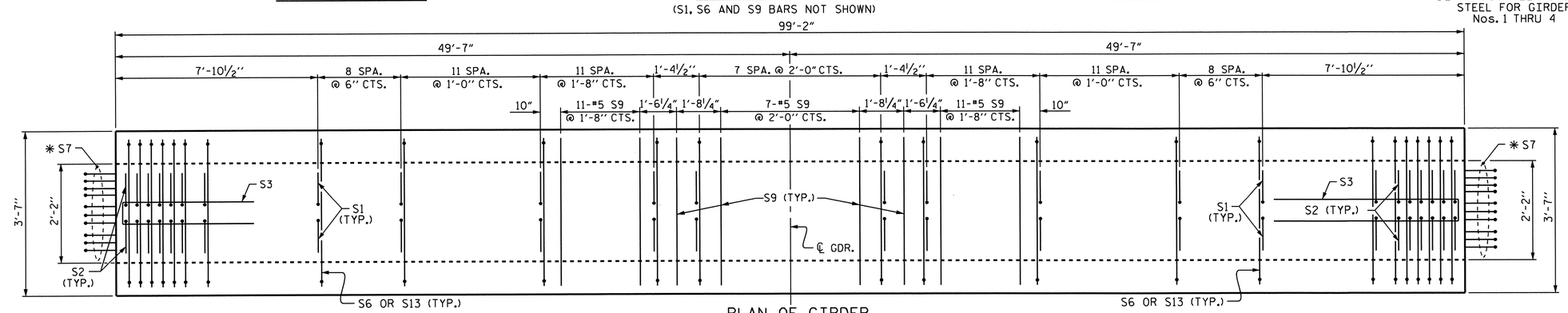

PLAN OF GIRDER

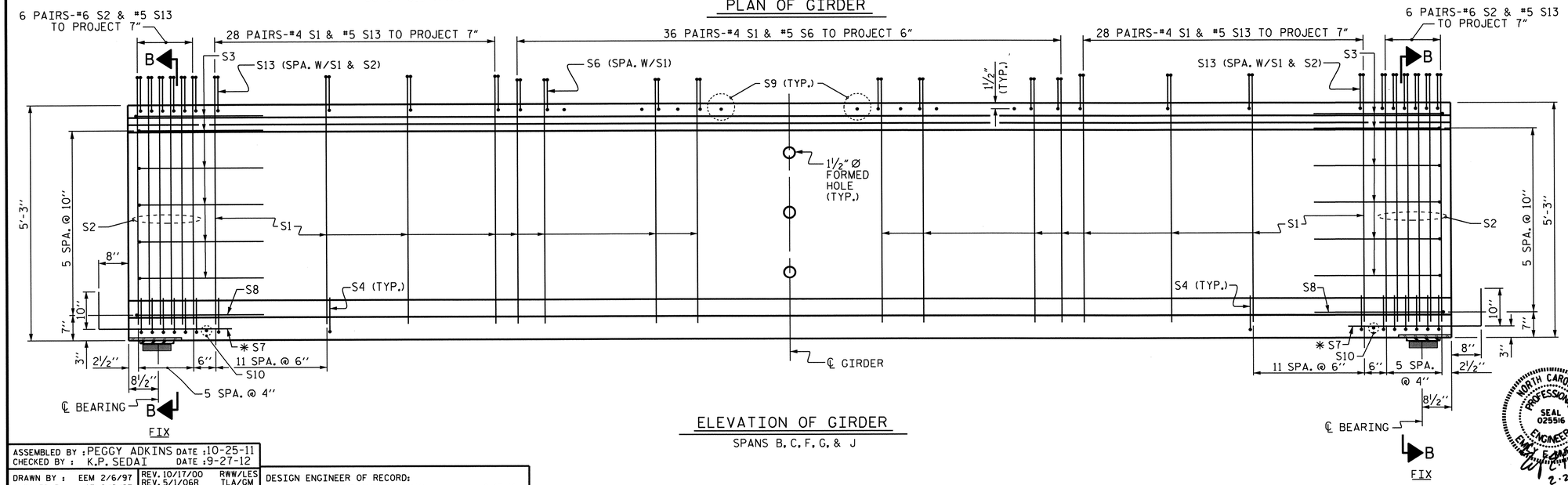

ELEVATION OF GIRDER

SPANS B, C, F, G, & J

0.6" Ø L. R. GRADE 270 STRANDS

AREA (SQUARE INCHES)	ULTIMATE STRENGTH (LBS. PER STRAND)	APPLIED PRESTRESS (LBS. PER STRAND)
0.217	58,600	43,950

REINFORCING STEEL FOR ONE GDR

BAR	NUMBER	SIZE	TYPE	LENGTH	WEIGHT
S1	184	#4	1	6'-1"	748
S2	24	#6	1	6'-1"	219
S3	12	#4	2	8'-5"	67
S4	72	#4	3	3'-0"	144
S6	72	#5	4	4'-4"	325
* S7	20	#5	STR	3'-8"	76
S8	2	#5	2	9'-0"	19
S9	31	#5	STR	3'-3"	105
S10	2	#3	STR	1'-10"	1
S11	4	#5	2	10'-2"	42
S12	8	#4	STR	8'-0"	43
S13	136	#5	4	4'-5"	627

* NOTE: S7 BARS SHALL BE BENT BEFORE SHIPMENT. HEAT BENDING SHALL NOT BE ALLOWED.

BAR TYPES

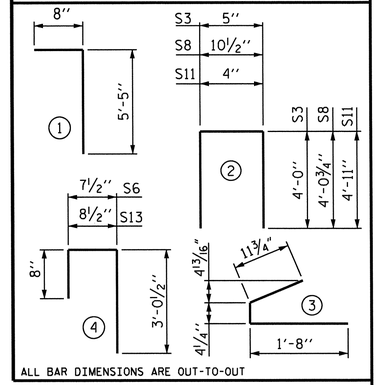

ALL BAR DIMENSIONS ARE OUT-TO-OUT

QUANTITIES FOR ONE GIRDER

	REINFORCING STEEL	9500 PSI CONCRETE	0.6" Ø L.R. STRANDS
	LB.	C.Y.	No.
	2416	19.6	42

GIRDERS REQUIRED

NUMBER	LENGTH	TOTAL LENGTH
20	99'-2"	1983'-4"

PROJECT NO. R-2303B

CUMBERLAND/SAMPSON COUNTY

STATION: 397+87.00-LREV-

SHEET 2 OF 4

STATE OF NORTH CAROLINA
DEPARTMENT OF TRANSPORTATION
RALEIGH

STANDARD

63" PRESTRESSED CONCRETE MODIFIED BULB TEE CONTINUOUS FOR LIVE LOAD

(LEFT LANE)

REVISIONS						SHEET NO.
NO.	BY:	DATE:	NO.	BY:	DATE:	S-18
1			3			TOTAL SHEETS
2			4			146

STR. #1

STD. NO. PCG7 (Sht. 1)

NORTH CAROLINA PROFESSIONAL SEAL 025516 ENGINEER ELIZABETH G. MURRAY 2.21.12

ASSEMBLED BY : PEGGY ADKINS DATE : 10-25-11
CHECKED BY : K.P. SEDAI DATE : 9-27-12

DRAWN BY : EEM 2/6/97
CHECKED BY : VAP 2/6/97

REV. 10/17/00 RWW/LES
REV. 5/1/06R TLA/GM
REV. 10/1/11 MAA/GM

DESIGN ENGINEER OF RECORD:
MOHAMMED AHMED DATE : 8-15-11

20-FEB-2013 15:54
Z:\TIPProjects-R\R2303B\Structures\Plans\str01\pparisi\R2303B_SD_TS_01.dgn
padkins

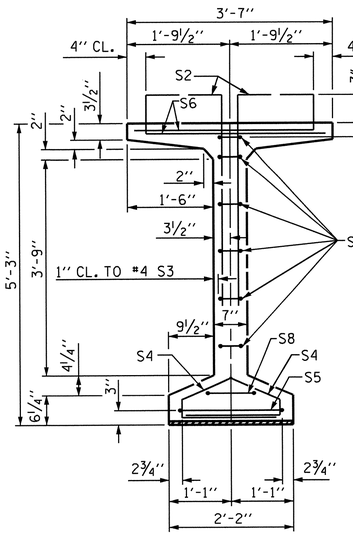

SECTION A-A

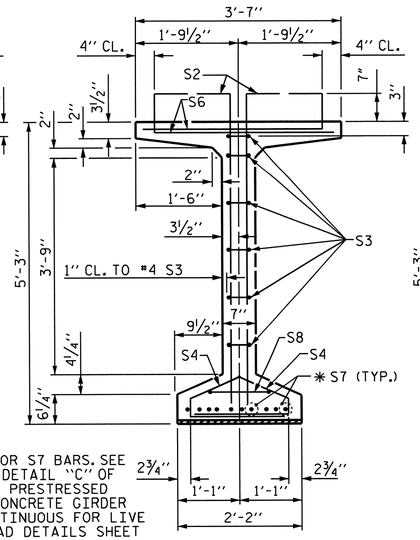

✱FOR S7 BARS, SEE DETAIL "C" OF PRESTRESSED CONCRETE GIRDER CONTINUOUS FOR LIVE LOAD DETAILS SHEET

SECTION B-B

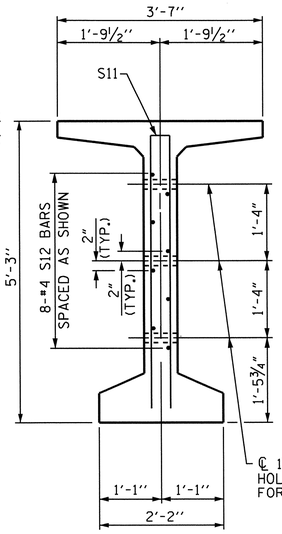

SECTION C-C

(S1, S6 AND S9 BARS NOT SHOWN)

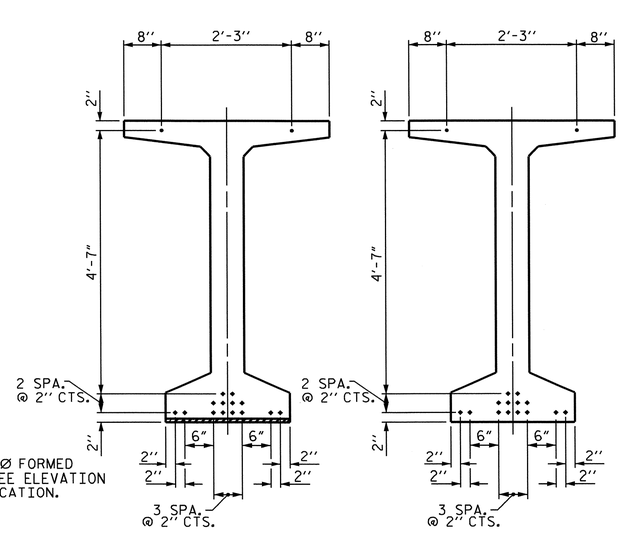

0.6" Ø LOW RELAXATION STRAND LAYOUT

DEBONDING LEGEND

● FULLY BONDED STRANDS

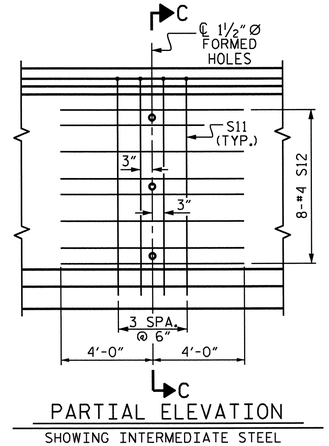

PARTIAL ELEVATION

SHOWING INTERMEDIATE STEEL DIAPHRAGM REINFORCING STEEL FOR GIRDER Nos. 1 THRU 4

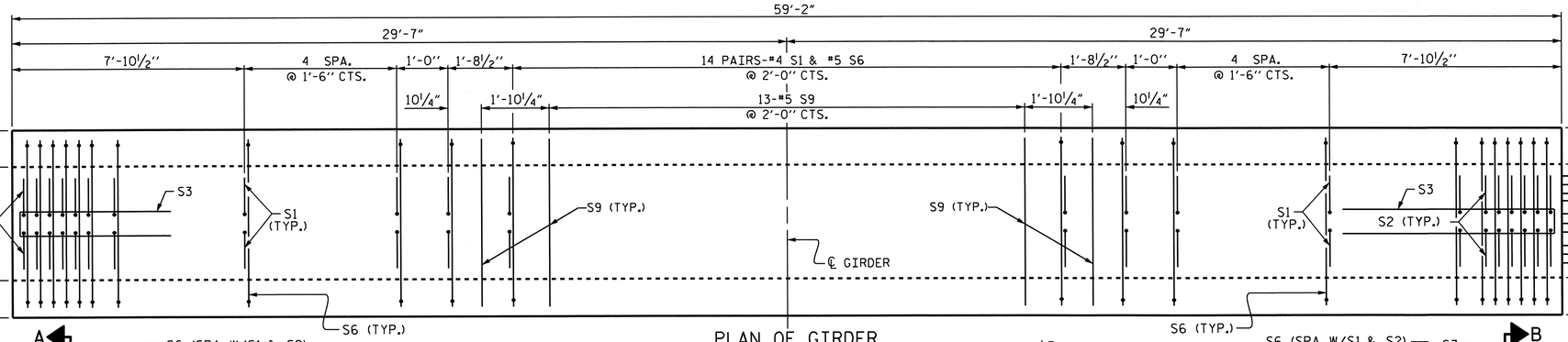

PLAN OF GIRDER

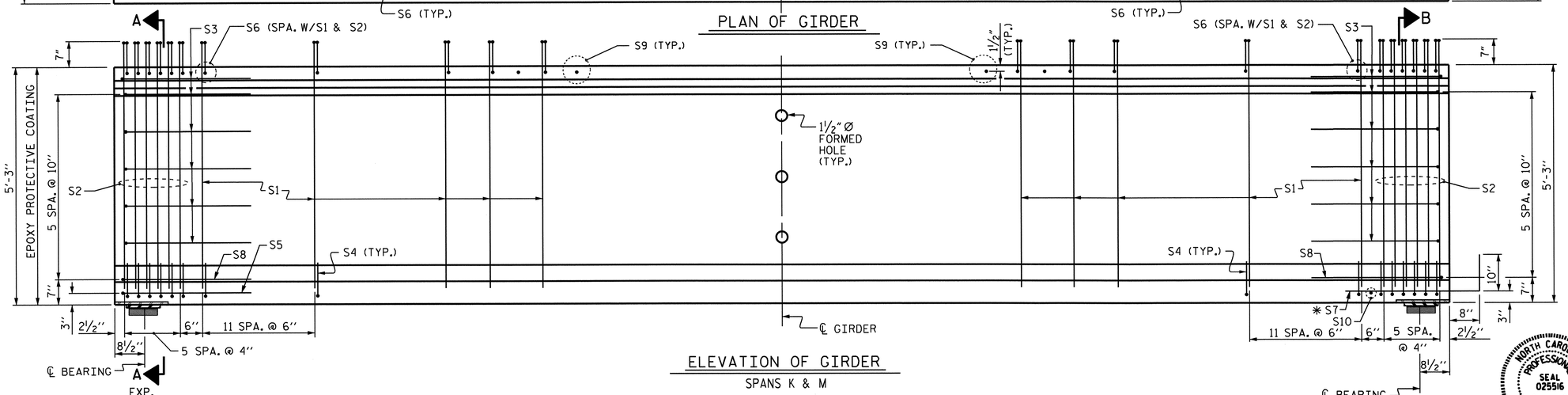

ELEVATION OF GIRDER

SPANS K & M

0.6" Ø L. R. GRADE 270 STRANDS		
AREA (SQUARE INCHES)	ULTIMATE STRENGTH (LBS. PER STRAND)	APPLIED PRESTRESS (LBS. PER STRAND)
0.217	58,600	43,950

REINFORCING STEEL FOR ONE GDR

BAR	NUMBER	SIZE	TYPE	LENGTH	WEIGHT
S1	96	#4	1	6'-1"	390
S2	24	#5	1	6'-1"	152
S3	12	#4	2	8'-5"	67
S4	72	#4	3	3'-0"	144
S5	1	#5	2	9'-10"	10
S6	120	#5	4	4'-5"	553
✱S7	10	#5	STR	3'-8"	38
S8	2	#5	2	9'-0"	19
S9	15	#5	STR	3'-3"	51
S10	1	#3	STR	1'-10"	1
S11	4	#5	2	10'-2"	42
S12	8	#4	STR	8'-0"	43

✱NOTE: S7 BARS SHALL BE BENT BEFORE SHIPMENT. HEAT BENDING SHALL NOT BE ALLOWED.

BAR TYPES

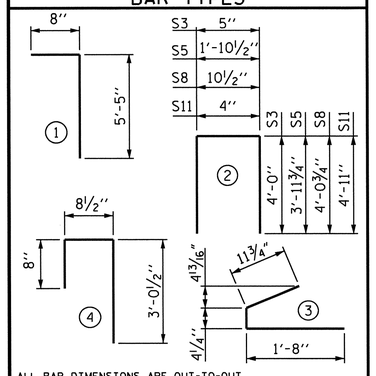

ALL BAR DIMENSIONS ARE OUT-TO-OUT

QUANTITIES FOR ONE GIRDER			
	REINFORCING STEEL	5000 PSI CONCRETE	0.6" Ø L.R. STRANDS
	LB.	C.Y.	No.
	1510	11.7	16

GIRDERS REQUIRED		
NUMBER	LENGTH	TOTAL LENGTH
8	59'-2"	473'-4"

PROJECT NO. R-2303B

CUMBERLAND/SAMPSON COUNTY

STATION: 397+87.00-LREV-

SHEET 3 OF 4

STATE OF NORTH CAROLINA
DEPARTMENT OF TRANSPORTATION
RALEIGH

STANDARD

63" PRESTRESSED CONCRETE MODIFIED BULB TEE CONTINUOUS FOR LIVE LOAD

(LEFT LANE)

REVISIONS						SHEET NO.
NO.	BY:	DATE:	NO.	BY:	DATE:	S-19
1			3			TOTAL SHEETS
2			4			146

NORTH CAROLINA PROFESSIONAL SEAL 025516 ENGINEER E. MURRAY 2-21-12

ASSEMBLED BY: PEGGY ADKINS DATE: 10-25-11
CHECKED BY: K.P. SEDAI DATE: 9-27-12

DRAWN BY: EEM 2/6/97
CHECKED BY: VAP 2/6/97

REV. 10/17/00 RWW/LES
REV. 5/1/06R TLA/GM
REV. 10/1/11 MAA/GM

DESIGN ENGINEER OF RECORD: MOHAMMED AHMED DATE: 8-15-11

20-FEB-2013 15:54
Z:\TIPProjects-R\R2303B\Structures\Plans\str01\pparisi\R2303B_SD_TS_01.dgn
padkins

STR. #1

STD. NO. PCG7 (Sht. 1)

DEAD LOAD DEFLECTION TABLE FOR GIRDERS

0.6"Ø LOW RELAXATION	SPANS A, B, C, D, E, F, G, H, I, J & L GIRDER 1											SPANS A, B, C, D, E, F, G, H, I, J & L GIRDERS 2 & 3											SPANS A, B, C, D, E, F, G, H, I, J & L GIRDER 4										
TENTH POINTS	0	.1	.2	.3	.4	.5	.6	.7	.8	.9	0	0	.1	.2	.3	.4	.5	.6	.7	.8	.9	0	0	.1	.2	.3	.4	.5	.6	.7	.8	.9	0
CAMBER (GIRDER ALONE IN PLACE) ↑	0.000	0.100	0.190	0.260	0.304	0.320	0.304	0.260	0.190	0.100	0.000	0.000	0.100	0.190	0.260	0.304	0.320	0.304	0.260	0.190	0.100	0.000	0.000	0.100	0.190	0.260	0.304	0.320	0.304	0.260	0.190	0.100	0.000
* DEFLECTION DUE TO SUPERIMPOSED D.L. ↓	0.000	0.036	0.068	0.093	0.109	0.114	0.109	0.093	0.068	0.036	0.000	0.000	0.037	0.070	0.096	0.113	0.118	0.113	0.096	0.070	0.037	0.000	0.000	0.037	0.069	0.095	0.111	0.117	0.111	0.095	0.069	0.037	0.000
FINAL CAMBER ↑	0	3/4"	1 7/16"	2"	2 3/8"	2 7/16"	2 3/8"	2"	1 7/16"	3/4"	0	0	3/4"	1 7/16"	1 15/16"	2 5/16"	2 7/16"	2 5/16"	1 15/16"	1 7/16"	3/4"	0	0	3/4"	1 7/16"	2"	2 5/16"	2 7/16"	2 5/16"	2"	1 7/16"	3/4"	0

* INCLUDES FUTURE WEARING SURFACE
ALL VALUES ARE SHOWN IN FEET (DECIMAL FORM), EXCEPT "FINAL CAMBER", WHICH IS GIVEN IN INCHES (FRACTION FORM).

DEAD LOAD DEFLECTION TABLE FOR GIRDERS

0.6"Ø LOW RELAXATION	SPANS K & M GIRDER 1											SPANS K & M GIRDERS 2 & 3											SPANS K & M GIRDER 4										
TENTH POINTS	0	.1	.2	.3	.4	.5	.6	.7	.8	.9	0	0	.1	.2	.3	.4	.5	.6	.7	.8	.9	0	0	.1	.2	.3	.4	.5	.6	.7	.8	.9	0
CAMBER (GIRDER ALONE IN PLACE) ↑	0.000	0.023	0.044	0.060	0.070	0.074	0.070	0.060	0.044	0.023	0.000	0.000	0.023	0.044	0.060	0.070	0.074	0.070	0.060	0.044	0.023	0.000	0.000	0.023	0.044	0.060	0.070	0.074	0.070	0.060	0.044	0.023	0.000
* DEFLECTION DUE TO SUPERIMPOSED D.L. ↓	0.000	0.006	0.011	0.016	0.018	0.019	0.018	0.016	0.011	0.006	0.000	0.000	0.006	0.012	0.016	0.019	0.020	0.019	0.016	0.012	0.006	0.000	0.000	0.006	0.012	0.016	0.019	0.019	0.019	0.016	0.012	0.006	0.000
FINAL CAMBER ↑	0	3/16"	3/8"	9/16"	5/8"	5/8"	5/8"	9/16"	3/8"	3/16"	0	0	3/16"	3/8"	1/2"	5/8"	5/8"	5/8"	1/2"	3/8"	3/16"	0	0	3/16"	3/8"	1/2"	5/8"	5/8"	5/8"	1/2"	3/8"	3/16"	0

* INCLUDES FUTURE WEARING SURFACE
ALL VALUES ARE SHOWN IN FEET (DECIMAL FORM), EXCEPT "FINAL CAMBER", WHICH IS GIVEN IN INCHES (FRACTION FORM).

NOTES

ALL PRESTRESSING STRANDS SHALL BE 7-WIRE LOW-RELAXATION GRADE 270 STRANDS AND SHALL CONFORM TO AASHTO M203 EXCEPT FOR SAMPLING REQUIREMENTS WHICH SHALL BE IN ACCORDANCE WITH THE STANDARD SPECIFICATIONS.

ALL REINFORCING STEEL SHALL BE GRADE 60.

APPLY EPOXY PROTECTIVE COATING TO END OF GIRDER SURFACES INDICATED IN ELEVATION VIEW.

EMBEDDED PLATE "B-1" SHALL BE GALVANIZED IN ACCORDANCE WITH THE STANDARD SPECIFICATIONS. BEVEL EDGES OF PLATE "B-1" TO GIVE CLOSE FIT BUT NOT TIGHT FIT TO STEEL CASTING FORM.

ANCHOR STUDS SHALL CONFORM TO AASHTO M169 GRADES 1010 THROUGH 1020 OR APPROVED EQUAL, AND SHALL MEET THE TYPE "B" REQUIREMENTS OF SUBSECTION 7.3 OF THE ANSI/AASHTO/AWS D1.5 BRIDGE WELDING CODE.

AT ENDS OF GIRDERS TO BE EMBEDDED IN CONCRETE DIAPHRAGMS OR END WALLS, PRESTRESSING STRANDS MAY EXTEND A MAXIMUM OF 2" BEYOND THE GIRDER ENDS. OTHERWISE, PRESTRESSING STRANDS SHALL BE CUT FLUSH WITH THE GIRDER ENDS.

THE TRANSFER OF LOAD FROM THE ANCHORAGES TO THE GIRDER SHALL BE DONE WHEN CONCRETE HAS REACHED A COMPRESSIVE STRENGTH OF NOT LESS THAN 7600 PSI FOR THE 99'-2" GIRDERS AND 4000 PSI FOR THE 59'-2" GIRDERS.

DEPENDING ON THE TYPE OF SYSTEM USED TO SUPPORT THE DECK SLAB FORMS, PRESET ANCHORS MAY BE NECESSARY IN THE PRESTRESSED CONCRETE GIRDER.

THE TOP SURFACE OF THE GIRDER, EXCLUDING THE OUTSIDE 4", SHALL BE RAKED TO A DEPTH OF 1/4".

A 2" x 2" CHAMFER IS ALLOWED AT THE INTERSECTION OF THE WEB AND THE BOTTOM FLANGE OF THE 63" AND 72" MODIFIED BULB TEES ONLY.

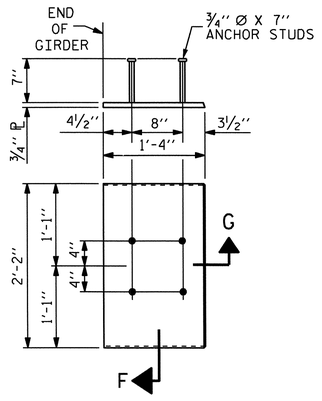

EMBEDDED PLATE "B-1" DETAILS FOR 63" MODIFIED BULB TEES

(2 REQ'D PER GIRDER)

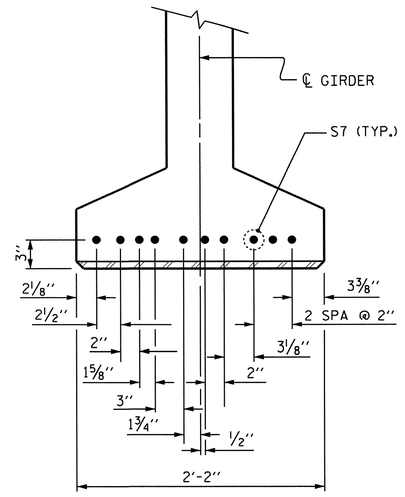

DETAIL "C"

(FOR 63" MODIFIED BULB TEES)

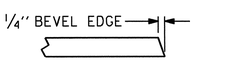

SECTION "G"

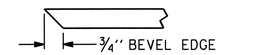

SECTION "F"

(SEE NOTES)

PROJECT NO. R-2303B

CUMBERLAND/SAMPSON COUNTY

STATION: 397+87.00-LREV-

SHEET 4 OF 4

STATE OF NORTH CAROLINA
DEPARTMENT OF TRANSPORTATION
RALEIGH

STANDARD

PRESTRESSED CONCRETE GIRDER CONTINUOUS FOR LIVE LOAD DETAILS

(LEFT LANE)

REVISIONS						SHEET NO.
NO.	BY:	DATE:	NO.	BY:	DATE:	S-20
1			3			TOTAL SHEETS
2			4			146

STR. #1

STD. NO. PCG9 (Sht. 5)

NORTH CAROLINA PROFESSIONAL SEAL 025516 ENGINEER EMILY E. MURRAY
2.21.13

DESIGN ENGINEER OF RECORD: MOHAMMED AHMED	DATE: 8-15-11
ASSEMBLED BY: PEGGY PARISI	DATE: 10-19-11
CHECKED BY: K.P. SEDAI	DATE: 9-28-12
DRAWN BY: ELR 11/91	REV. 7/10/01RR LES/RDR
CHECKED BY: GRP 11/91	REV. 5/1/06 TLA/GM
	REV. 10/1/11 MAA/GM

20-FEB-2013 15:54
Z:\TIPProjects-R\R2303B\Structures\Plans\str01\pparisi\R2303B_SD_TS_01.dgn
padkins

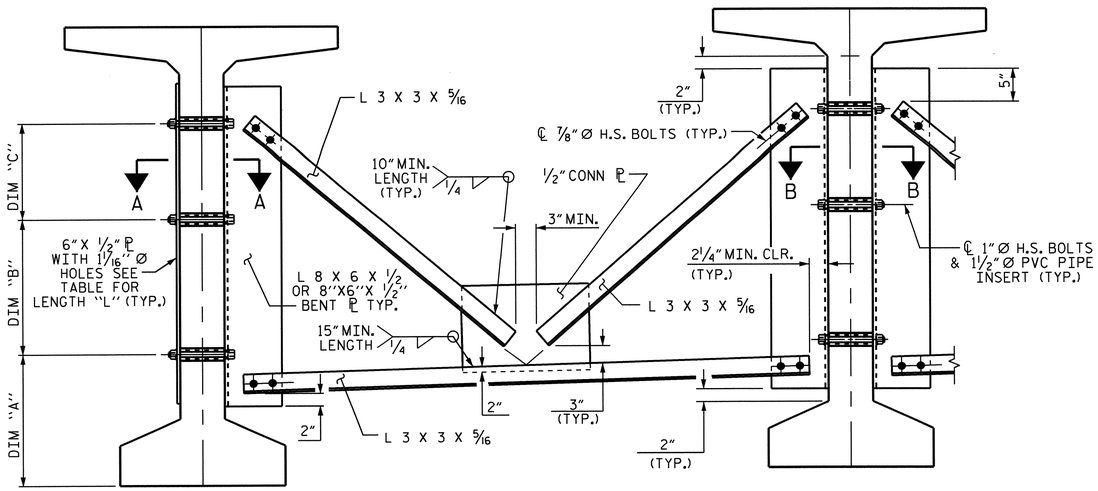

EXTERIOR GIRDER

INTERIOR GIRDER

PART SECTION AT INTERMEDIATE DIAPHRAGM

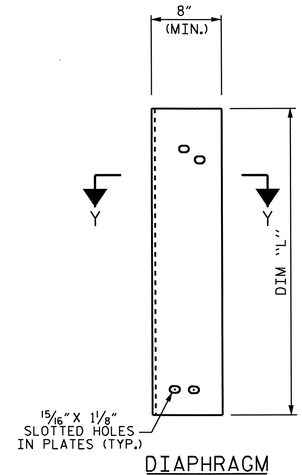

DIAPHRAGM FACE

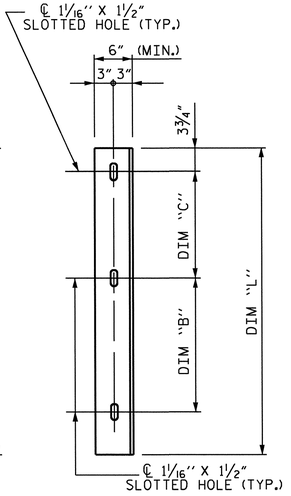

WEB FACE

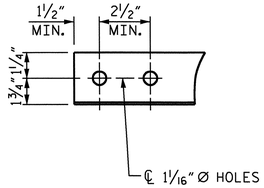

ANGLE END
(L 3 X 3 X 5/16)

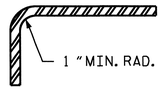

SECTION Y-Y

CONNECTOR PLATE DETAIL

STRUCTURAL STEEL NOTES

ALL INTERMEDIATE DIAPHRAGM STEEL AND CONNECTOR PLATES SHALL BE AASHTO M270 GRADE 50 OR APPROVED EQUAL.

TENSION ON THE ASTM A325 BOLTS THROUGH THE ANGLE MEMBER SHALL BE CALIBRATED USING DIRECT TENSION INDICATOR WASHERS IN ACCORDANCE WITH THE STANDARD SPECIFICATIONS.

TENSION ON THE ASTM A449 BOLTS THROUGH THE GIRDER WEB SHALL BE SNUG TIGHTENED FOLLOWED BY AN ADDITIONAL 1/4 TURN.

THE PLATES, BENT PLATES, AND ANGLES SHALL BE GALVANIZED OR METALLIZED IN ACCORDANCE WITH THE STANDARD SPECIFICATIONS. FOR THERMAL SPRAYED COATINGS (METALLIZATION), SEE SPECIAL PROVISIONS.

FOR METALLIZATION, APPLY AN 8 MIL THICK 99.99 PERCENT ZINC (W-Zn-1) THERMAL SPRAYED COATING WITH A 0.5 MIL THICK SEAL COAT TO ALL STEEL DIAPHRAGM SURFACES IN ACCORDANCE WITH THE THERMAL SPRAYED COATINGS SPECIAL PROVISION AND SECTION 442 OF THE STANDARD SPECIFICATIONS.

GALVANIZE THE HIGH STRENGTH BOLTS, NUTS, WASHERS AND DIRECT TENSION INDICATORS IN ACCORDANCE WITH THE STANDARD SPECIFICATIONS.

USE AN ASTM F436 HARDENED WASHER WITH STANDARD AND SLOTTED HOLES UNDER EACH BOLT HEAD AND NUT.

FOR BOLTS THROUGH THE GIRDER WEB, PROVIDE SUFFICIENT LENGTH OF THREADS ON ALL BOLTS TO ACCOMMODATE WASHERS AND THE THICKNESS OF CONNECTING MEMBER PLUS AT LEAST 1/4" PROJECTION BEYOND THE NUT.

INTERMEDIATE DIAPHRAGM ASSEMBLY SHALL COMPLY WITH SECTION 1072 OF THE STANDARD SPECIFICATIONS.

SUBMIT TWO SETS OF WORKING DRAWINGS FOR THE INTERMEDIATE DIAPHRAGM ASSEMBLY FOR REVIEW, COMMENTS AND ACCEPTANCE. AFTER REVIEW, COMMENTS, AND ACCEPTANCE, SUBMIT SEVEN SETS FOR DISTRIBUTION.

IN THE EXTERIOR BAYS, PLACE TEMPORARY STRUTS BETWEEN PRESTRESSED GIRDERS ADJACENT TO THE STEEL DIAPHRAGMS. STRUTS SHALL REMAIN IN PLACE 3 DAYS AFTER CONCRETE IS PLACED.

THE COST OF THE STEEL DIAPHRAGMS AND ASSEMBLIES SHALL BE INCLUDED IN THE UNIT PRICE BID FOR PRESTRESSED CONCRETE GIRDERS.

TABLE

GIRDER TYPE	DIM "A"	DIM "B"	DIM "C"	DIM "L"
63" BULB TEE	1'-5 3/4"	1'-4"	1'-4"	3'-5"

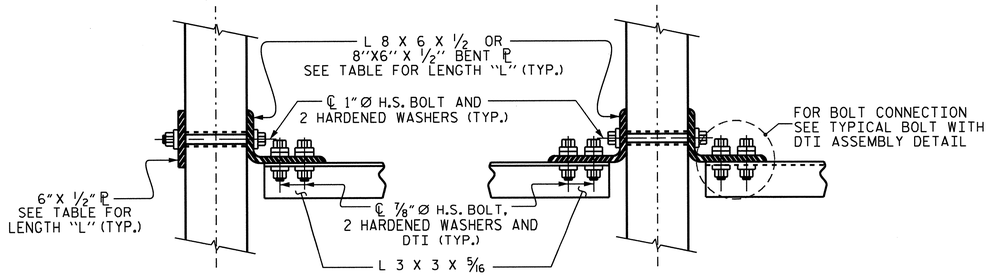

SECTION A-A

SECTION B-B

CONNECTION DETAILS

(FOR SKEW = 90°)

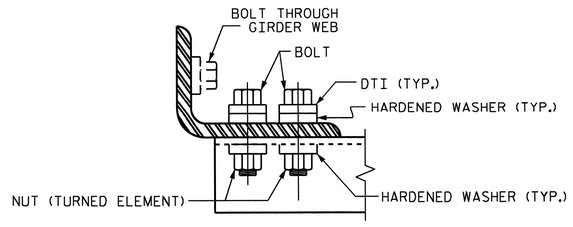

BOLT WITH DTI ASSEMBLY DETAIL

PROJECT NO. R-2303B

CUMBERLAND/SAMPSON COUNTY

STATION: 397+87.00 -LREV-

STATE OF NORTH CAROLINA
DEPARTMENT OF TRANSPORTATION
RALEIGH

STANDARD INTERMEDIATE STEEL DIAPHRAGMS FOR 63" MODIFIED BULB TEE PRESTRESSED CONCRETE GIRDERS (LEFT LANE)

NORTH CAROLINA PROFESSIONAL SEAL 025516 ENGINEER EMAD E. GERGIS 2-21-13

REVISIONS						SHEET NO.
NO.	BY:	DATE:	NO.	BY:	DATE:	S-21
1			3			TOTAL SHEETS
2			4			146

STR. #1 STD. NO. PCG11 (SHT 3)

DESIGN ENGINEER OF RECORD: MOHAMMED AHMED DATE : 8-15-11	
ASSEMBLED BY : PEGGY PARISI DATE : 10-19-11 CHECKED BY : K.P. SEDAI DATE : 9-28-12	
DRAWN BY : RWW 11/09 CHECKED BY : GM 11/09	ADDED 11/23/09R REV. 10/1/11 MAA/GM

20-FEB-2013 15:53
Z:\TIPProjects-R\R2303B\Structures\Plans\str01\ppars1\R2303B_SD_TS_01.dgn
padkins

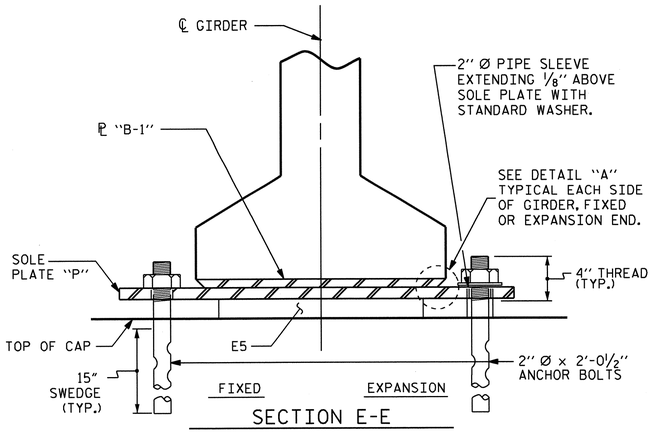

SECTION E-E

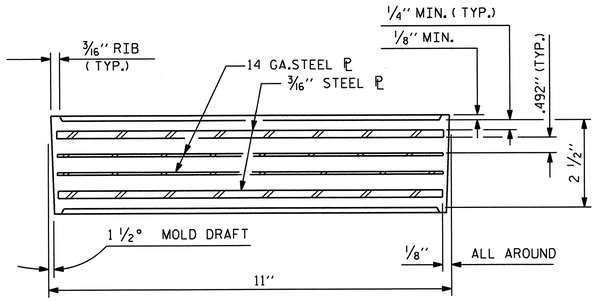

TYPICAL SECTION OF ELASTOMERIC BEARINGS

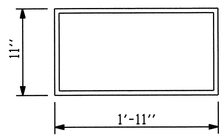

E5 (104 REQ'D)

PLAN VIEW OF ELASTOMERIC BEARING

TYPE VI

MAXIMUM ALLOWABLE SERVICE LOADS	
D.L.+L.L. (NO IMPACT)	
TYPE VI	385 k

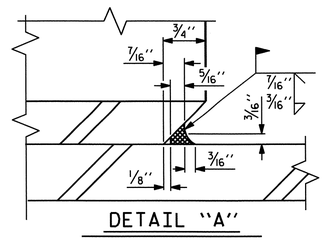

DETAIL "A"

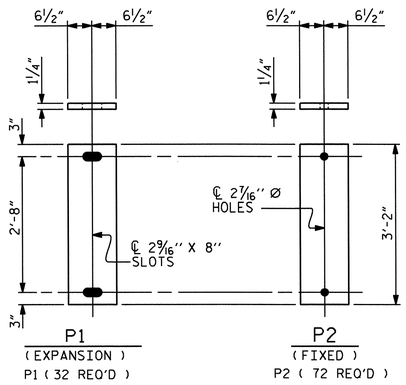

SOLE PLATE DETAILS ("P")

NOTES

AT ALL FIXED POINTS OF SUPPORT, NUTS FOR ANCHOR BOLTS ARE TO BE TIGHTENED FINGER TIGHT AND THEN BACKED OFF 1/2 TURN. THE THREAD OF THE NUT AND BOLT SHALL THEN BE BURRED WITH A SHARP POINTED TOOL.

THE 2" Ø PIPE SLEEVE SHALL BE CUT FROM SCHEDULE 40 PVC PLASTIC PIPE. THE PVC PLASTIC PIPE SHALL MEET THE REQUIREMENTS OF ASTM D1785.

STEEL SOLE PLATES, ANCHOR BOLTS, NUTS, AND WASHERS SHALL BE GALVANIZED IN ACCORDANCE WITH THE STANDARD SPECIFICATIONS.

PRIOR TO WELDING, GRIND THE GALVANIZED SURFACE OF THE PORTION OF THE EMBEDDED PLATE AND SOLE PLATE THAT ARE TO BE WELDED. AFTER WELDING, DAMAGED GALVANIZED SURFACES SHALL BE REPAIRED IN ACCORDANCE WITH THE STANDARD SPECIFICATIONS.

WHEN WELDING THE SOLE PLATE TO THE EMBEDDED PLATE IN THE GIRDER, USE TEMPERATURE INDICATING WAX PENS, OR OTHER SUITABLE MEANS, TO ENSURE THAT THE TEMPERATURE OF THE SOLE PLATE DOES NOT EXCEED 300°F. TEMPERATURES ABOVE THIS MAY DAMAGE THE ELASTOMER.

SOLE PLATE "P", BOLTS, NUTS, WASHERS, AND PIPE SLEEVE SHALL BE INCLUDED IN THE PAY ITEM FOR PRESTRESSED CONCRETE GIRDERS.

ANCHOR BOLTS SHALL MEET THE REQUIREMENTS OF ASTM A449. NUTS SHALL MEET THE REQUIREMENTS OF AASHTO M291-DH OR AASHTO M292-2H. WASHERS SHALL MEET THE REQUIREMENTS OF AASHTO M293. NO SHOP DRAWINGS ARE REQUIRED FOR ANCHOR BOLTS, NUTS AND WASHERS. SHOP INSPECTION IS REQUIRED.

ALL SURFACES OF BEARING PLATES SHALL BE SMOOTH AND STRAIGHT.

THE ELASTOMER IN THE STEEL REINFORCED BEARINGS SHALL HAVE A SHEAR MODULUS OF 0.160 KSI, IN ACCORDANCE WITH AASHTO M251.

FOR STEEL REINFORCED ELASTOMERIC BEARINGS, SEE SPECIAL PROVISIONS.

ALL BEARING PLATES SHALL BE AASHTO M270 GRADE 36.

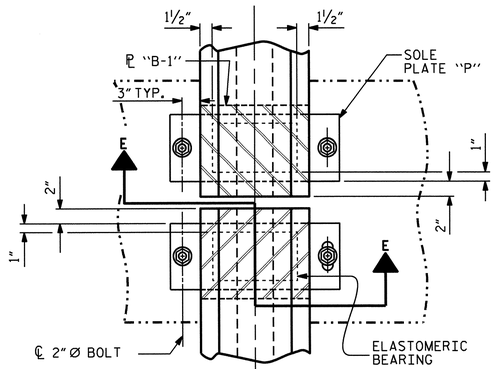

TYPICAL HALF-PLAN (SHOWING CONTINUOUS BENT)

TYPICAL HALF-PLAN (SHOWING SIMPLE SPAN BENT)

PROJECT NO. R-2303B

CUMBERLAND/SAMPSON COUNTY

STATION: 397+87.00 -LREV-

DESIGN ENGINEER OF RECORD: MOHAMMED AHMED		DATE : 8-15-11	
ASSEMBLED BY : PEGGY PARISI		DATE : 10-11-11	
CHECKED BY : K.P. SEDAI		DATE : 9-28-12	
DRAWN BY : EEM 2/97	REV. 5/1/06	TLA/GM	
CHECKED BY : VAP 2/97	REV. 10/1/11	MAA/GM	
	REV. 10/24/12	AAC/MAA	

NORTH CAROLINA PROFESSIONAL SEAL 025516 ENGINEER KEVIN V. PAPPAS

2.21.13

STATE OF NORTH CAROLINA
DEPARTMENT OF TRANSPORTATION
RALEIGH

STANDARD

ELASTOMERIC BEARING DETAILS

PRESTRESSED CONCRETE GIRDER SUPERSTRUCTURE

REVISIONS						SHEET NO.
NO.	BY:	DATE:	NO.	BY:	DATE:	S-22
1			3			TOTAL SHEETS
2			4			146

STR. #1

STD. NO. EB4 (SHT 2)

20-FEB-2013 15:53
Z:\TIPProjects-R\R2303B\Structures\Plans\str01\pparisi\R2303B_SD_TS_01.dgn
padkins

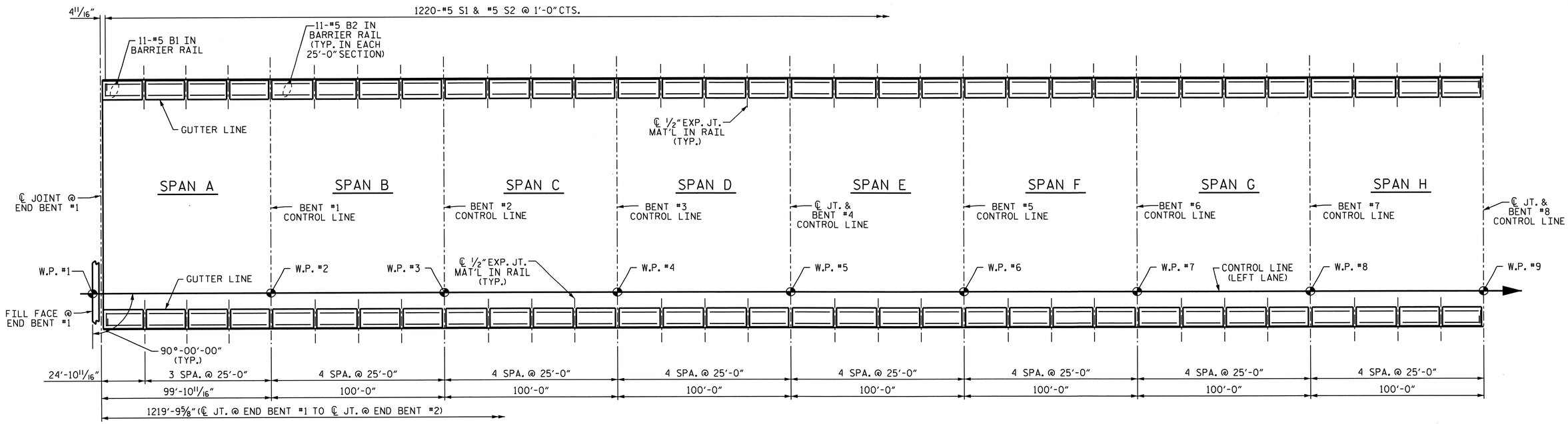

PLAN

DIMENSIONS AND REINFORCING STEEL ARE TYPICAL FOR EACH SIDE.

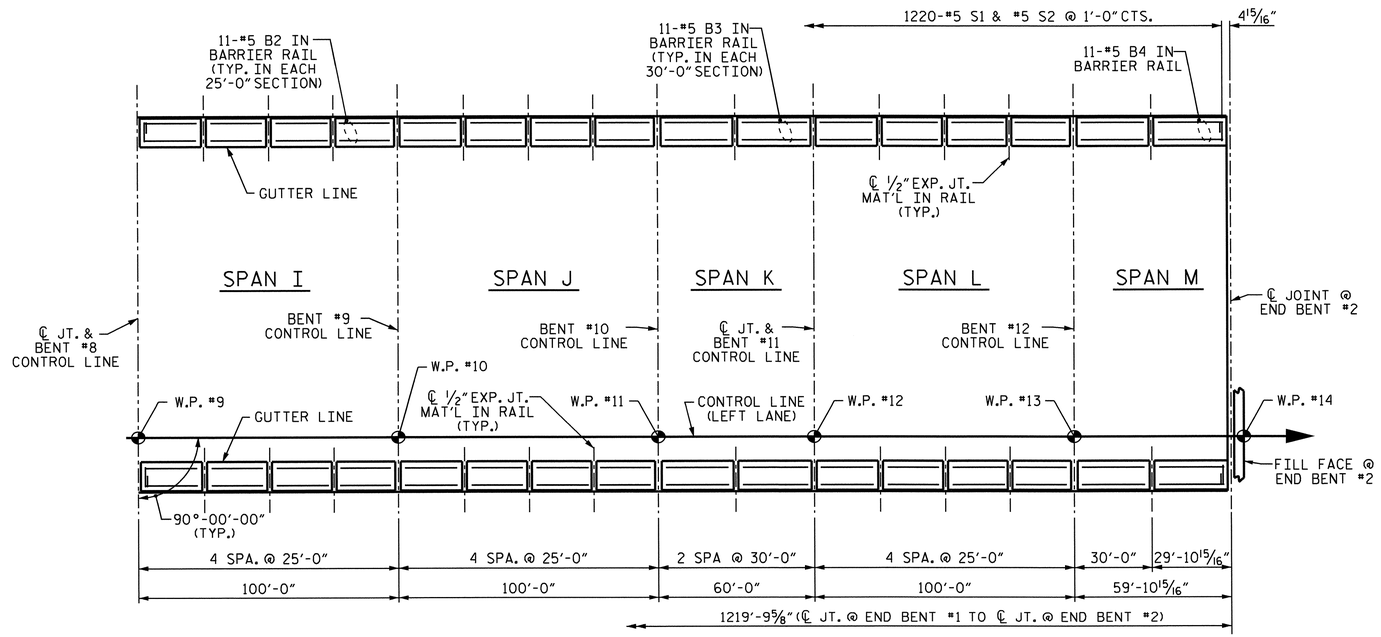

PLAN

DIMENSIONS AND REINFORCING STEEL ARE TYPICAL FOR EACH SIDE.

PROJECT NO. R-2303B

CUMBERLAND/SAMPSON COUNTY

STATION: 397+87.00 -LREV-

SHEET 1 OF 2

STATE OF NORTH CAROLINA
DEPARTMENT OF TRANSPORTATION
RALEIGH

SUPERSTRUCTURE

BARRIER RAIL

(LEFT LANE)

NORTH CAROLINA PROFESSIONAL SEAL 025516 ENGINEER EMILY E. MURRAY
2.21.13

REVISIONS						SHEET NO.
NO.	BY:	DATE:	NO.	BY:	DATE:	S-23
1			3			TOTAL SHEETS
2			4			146

STR. #1

DRAWN BY : PEGGY PARISI DATE : 10-17-11
CHECKED BY : K.P. SEDAI DATE : 9-25-12
DESIGN ENGINEER OF RECORD: MOHAMMED AHMED DATE : 8-15-11

20-FEB-2013 15:53
Z:\TIPProjects-R\R2303B\Structures\Plans\str01\pparisi\R2303B_SD_TS_01.dgn
padkins

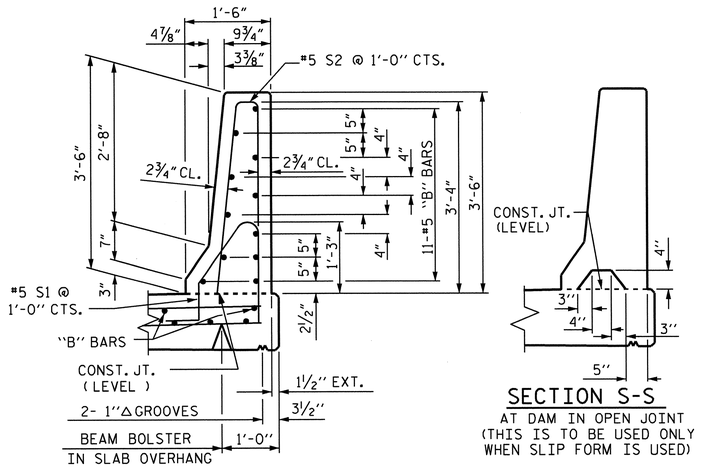

SECTION THRU RAIL

SECTION S-S
AT DAM IN OPEN JOINT
(THIS IS TO BE USED ONLY
WHEN SLIP FORM IS USED)

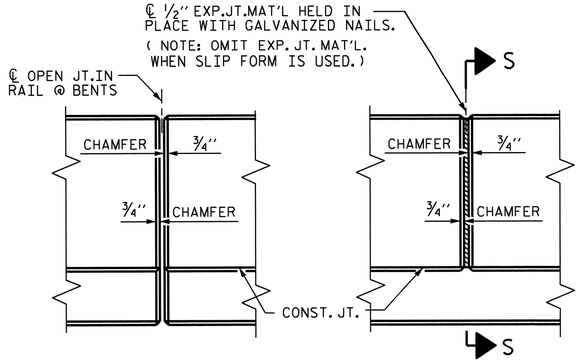

ELEVATION AT EXPANSION JOINTS

BARRIER RAIL DETAILS

NOTES

THE BARRIER RAIL IN A CONTINUOUS UNIT SHALL NOT BE CAST UNTIL ALL SLAB CONCRETE IN THE UNIT HAS BEEN CAST AND HAS REACHED A MINIMUM COMPRESSIVE STRENGTH OF 3,000 PSI.

ALL REINFORCING STEEL IN BARRIER RAILS SHALL BE EPOXY COATED.

GROOVED CONTRACTION JOINTS, ½" IN DEPTH, SHALL BE TOOLED IN ALL EXPOSED FACES OF THE BARRIER RAIL AND IN ACCORDANCE WITH ARTICLE 825-10(B) OF THE STANDARD SPECIFICATIONS. THE CONTRACTION JOINT SHALL BE LOCATED AT EACH THIRD POINT BETWEEN BARRIER RAIL EXPANSION JOINTS. ONLY ONE CONTRACTION JOINT IS REQUIRED AT MIDPOINT OF BARRIER RAIL SEGMENTS LESS THAN 20 FEET IN LENGTH AND NO CONTRACTION JOINTS ARE REQUIRED FOR THOSE SEGMENTS LESS THAN 10 FEET IN LENGTH.

BAR TYPES

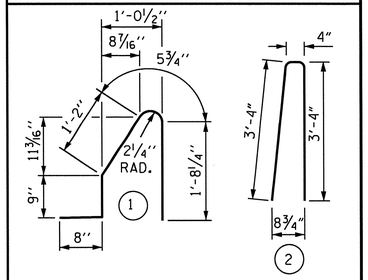

ALL BAR DIMENSIONS ARE OUT TO OUT

BILL OF MATERIAL

FOR CONCRETE BARRIER RAIL ONLY

BAR	NO.	SIZE	TYPE	LENGTH	WEIGHT
* B1	22	#5	STR	24'-4"	558
* B2	946	#5	STR	24'-6"	24174
* B3	66	#5	STR	29'-6"	2031
* B4	22	#5	STR	29'-4"	673
* S1	2440	#5	1	4'-9"	12088
* S2	2440	#5	2	7'-0"	17814

* EPOXY COATED REINFORCING STEEL	57338	LBS.
CLASS AA CONCRETE	331.6	CU. YDS.
CONCRETE BARRIER RAIL		
SUPERSTRUCTURE	2439.60	LIN. FT.
● APPROACH SLABS	40.00	LIN. FT.
TOTAL	2479.60	LIN. FT.

● FOR EPOXY COATED REINFORCING STEEL AND CLASS AA CONCRETE IN THE BARRIER RAIL ON THE APPROACH SLABS, SEE "BRIDGE APPROACH SLAB DETAILS" SHEET.

PROJECT NO. R-2303B

CUMBERLAND/SAMPSON COUNTY

STATION: 397+87.00 -LREV-

SHEET 2 OF 2

STATE OF NORTH CAROLINA
DEPARTMENT OF TRANSPORTATION
RALEIGH

CONCRETE
BARRIER RAIL
DETAILS
(LEFT LANE)

REVISIONS						SHEET NO.
NO.	BY:	DATE:	NO.	BY:	DATE:	S-24
1			3			TOTAL SHEETS
2			4			146

NORTH CAROLINA PROFESSIONAL SEAL 025516 ENGINEER TIMOTHY E. MURRAY 2-21-13

DESIGN ENGINEER OF RECORD:
MOHAMMED AHMED DATE : 8-15-11

ASSEMBLED BY : PEGGY PARISI DATE : 10-18-11
CHECKED BY : K.P. SEDAI DATE : 10-1-12

20-FEB-2013 15:53
Z:\TIPProjects-R\R2303B\Structures\Plans\str01\pparisi\R2303B_SD_TS_01.dgn
padkins

STR. #1

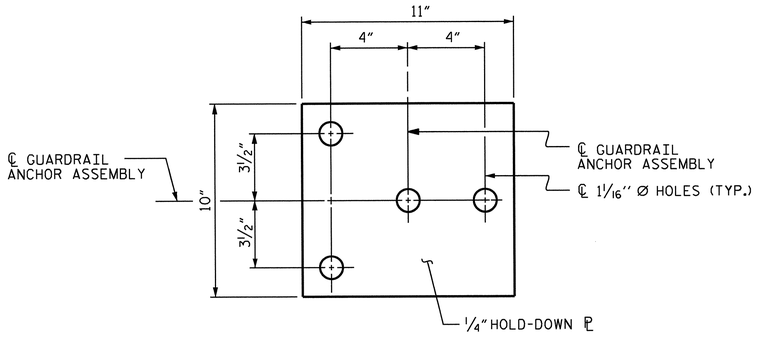

PLAN

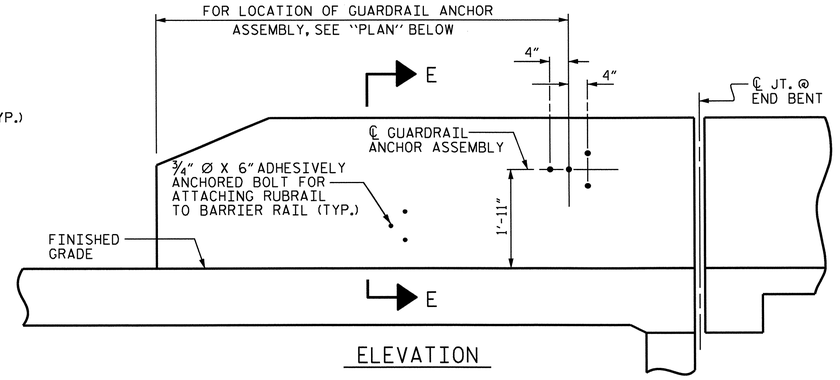

ELEVATION

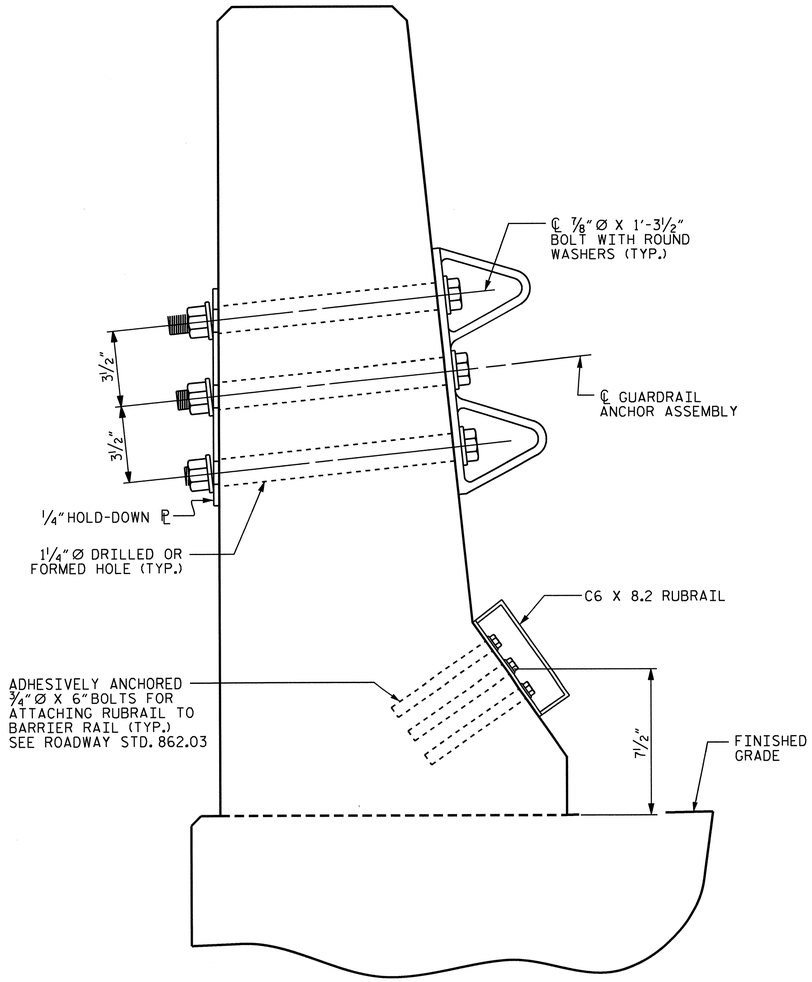

SECTION E-E

GUARDRAIL ANCHOR ASSEMBLY DETAILS

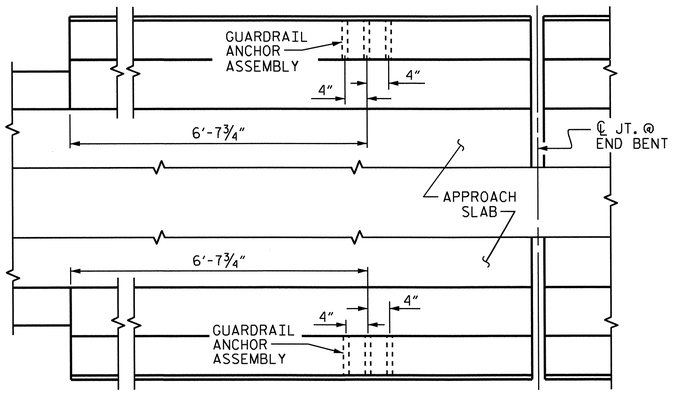

PLAN

LOCATION OF ANCHORS FOR GUARDRAIL

END BENT #1 SHOWN, END BENT #2 SIMILAR.

NOTES

THE GUARDRAIL ANCHOR ASSEMBLY SHALL CONSIST OF A 1/4" HOLD-DOWN PLATE AND 4 - 7/8" Ø BOLTS WITH NUTS AND WASHERS, RUBRAIL, AND ADHESIVELY ANCHORED BOLTS.

THE HOLD-DOWN PLATE SHALL CONFORM TO AASHTO M270 GRADE 36. AFTER FABRICATION, THE HOLD-DOWN PLATE SHALL BE HOT-DIP GALVANIZED IN ACCORDANCE WITH AASHTO M111.

BOLTS SHALL CONFORM TO THE REQUIREMENTS OF ASTM A307 AND NUTS SHALL CONFORM TO THE REQUIREMENTS OF AASHTO M291. BOLTS, NUTS AND WASHERS SHALL BE GALVANIZED. (AT THE CONTRACTOR'S OPTION, STAINLESS STEEL BOLTS, NUTS AND WASHERS MAY BE USED AS AN ALTERNATE FOR THE 7/8" Ø GALVANIZED BOLTS, NUTS AND WASHERS. THEY SHALL CONFORM TO OR EXCEED THE MECHANICAL REQUIREMENTS OF ASTM A307. THE USE OF THIS ALTERNATE SHALL BE APPROVED BY THE ENGINEER.)

THE GUARDRAIL ANCHOR ASSEMBLY IS REQUIRED AT ALL POINTS WHERE APPROACH GUARDRAIL IS TO BE ATTACHED TO THE END OF BARRIER RAIL. FOR POINTS OF ATTACHMENT, SEE SKETCH.

AFTER INSTALLATION, THE EXPOSED THREAD OF THE BOLT SHALL BE BURRED WITH A SHARP POINTED TOOL.

THE COST OF THE GUARDRAIL ANCHOR ASSEMBLY SHALL BE INCLUDED IN THE UNIT CONTRACT PRICE BID FOR CONCRETE BARRIER RAIL.

THE 1 1/4" Ø HOLES SHALL BE FORMED OR DRILLED WITH A CORE BIT. IMPACT TOOLS WILL NOT BE PERMITTED. ANY CONCRETE DAMAGED BY THIS WORK SHALL BE REPAIRED TO THE SATISFACTION OF THE ENGINEER.

THE C6 X 8.2 RUBRAIL IS TO BE ADHESIVELY ANCHORED TO THE RAIL USING THREE 3/4" Ø X 6" BOLTS WITH WASHERS. LEVEL ONE FIELD TESTING IS REQUIRED, AND THE YIELD LOAD OF THE 3/4" Ø BOLT IS 12 KIPS. FOR ADHESIVELY ANCHORED ANCHOR BOLTS OR DOWELS, SEE STANDARD SPECIFICATIONS. SEE ROADWAY STANDARD 862.03 FOR DETAILS AND LOCATION OF THE RUBRAIL.

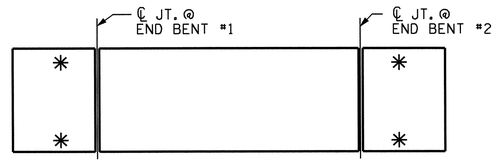

SKETCH SHOWING POINTS OF ATTACHMENTS

✳ DENOTES GUARDRAIL ANCHOR ASSEMBLY

PROJECT NO. R-2303B

CUMBERLAND/SAMPSON COUNTY

STATION: 397+87.00 -LREV-

ASSEMBLED BY : PEGGY PARISI DATE : 10-18-11
CHECKED BY : K.P. SEDAI DATE : 9-28-12

DRAWN BY : TLA 5/06
CHECKED BY : GM 5/06

REV. 10/1/11 MAA/GM
REV. 7/12 MAA/GM
REV. 10/12 MAA/GM

DESIGN ENGINEER OF RECORD: MOHAMMED AHMED DATE : 8-15-11

20-FEB-2013 15:53
Z:\TIPProjects-R\R2303B\Structures\Plans\str01\pparisi\R2303B_SD_TS_01.dgn
padkins

STATE OF NORTH CAROLINA
DEPARTMENT OF TRANSPORTATION
RALEIGH

STANDARD

GUARDRAIL ANCHORAGE FOR BARRIER RAIL

(LEFT LANE)

REVISIONS						SHEET NO.
NO.	BY:	DATE:	NO.	BY:	DATE:	S-25
1			3			TOTAL SHEETS
2			4			146

STR. #1 (SHT 3) STD. NO. GRA2

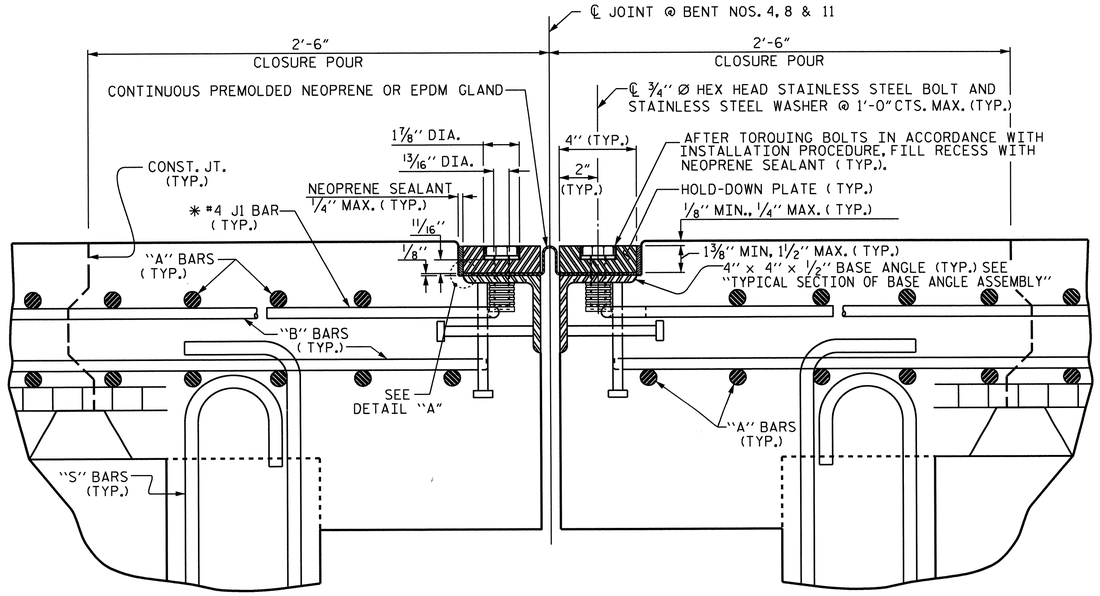

EXPANSION JOINT DETAILS

SECTION NORMAL TO JOINT -- PRESTRESSED GIRDER SUPERSTRUCTURE

* THE QUANTITY OF #4 J1 BARS ON THE BILL OF MATERIAL IS BASED ON 1'-0" CENTERS. J1 BARS SHALL BE PLACED AT EACH VERTICAL STUD ANCHOR BOLT. IN THE EVENT THAT THE NUMBER OF VERTICAL STUD ANCHORS EXCEEDS THE NUMBER OF J1 BARS SPECIFIED, ADDITIONAL J1 BARS WILL NOT BE REQUIRED.

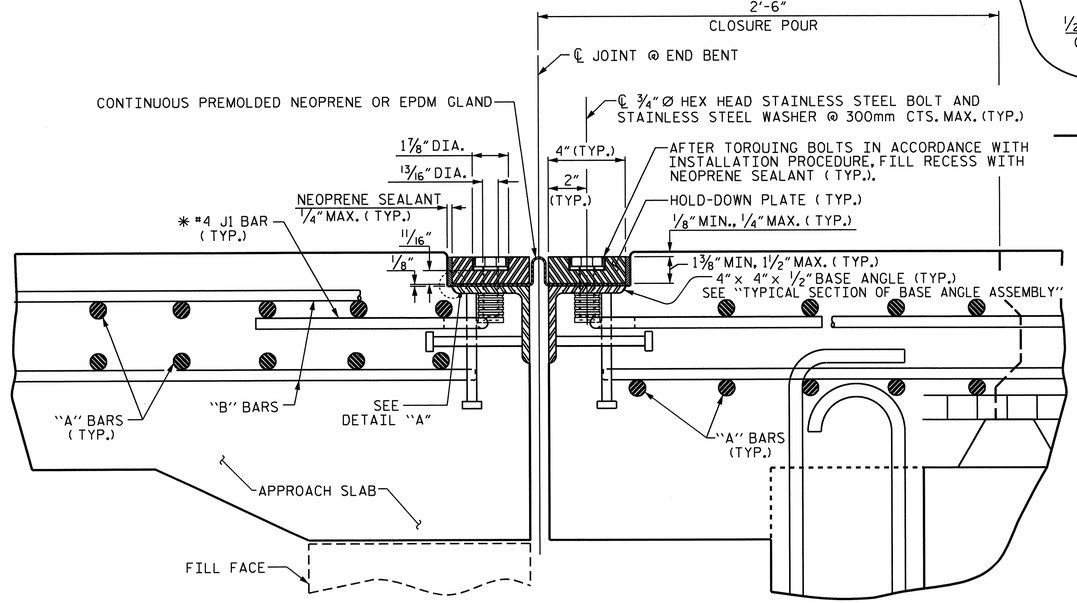

EXPANSION JOINT DETAILS

SECTION NORMAL TO JOINT -- PRESTRESSED GIRDER SUPERSTRUCTURE

* THE QUANTITY OF #4 J1 BARS ON THE BILL OF MATERIAL IS BASED ON 1'-0" CENTERS. J1 BARS SHALL BE PLACED AT EACH VERTICAL STUD ANCHOR BOLT. IN THE EVENT THAT THE NUMBER OF VERTICAL STUD ANCHORS EXCEEDS THE NUMBER OF J1 BARS SPECIFIED, ADDITIONAL J1 BARS WILL NOT BE REQUIRED.

INSTALLATION PROCEDURE

1. A TEMPLATE OR OTHER SUITABLE DEVICE SHALL BE USED TO FORM THE TOP OF THE EXPANSION JOINT SEAL BLOCKOUT TO THE PROPER DEPTH AND WIDTH. THE TEMPLATE SHALL BE 4⅛" TO 4¼" WIDE AND OF SUCH THICKNESS AS TO PROVIDE FOR CORRECT FINAL ELEVATION OF TOP OF HOLD-DOWN PLATES. THE TEMPLATE SHALL BE ATTACHED TO THE BASE ANGLE ASSEMBLY WITH THE ¾" Ø HEX HEAD BOLTS PROVIDED FOR THE HOLD-DOWN PLATES. A 1" Ø HOLE SHALL BE PROVIDED IN THE TEMPLATE CENTERED OVER EACH WEEP HOLE IN THE 4" X 4" X ½" BASE ANGLE. OTHER METHODS OF INSURING DRAINAGE THROUGH WEEP HOLES MAY BE EMPLOYED SUBJECT TO ENGINEER'S APPROVAL.
2. AFTER THE CONCRETE HAS BEEN CAST ON BOTH SIDES OF THE JOINT, REMOVE THE TEMPLATE. THOROUGHLY CLEAN THE BOLT HOLES AND THE ANGLE PLATE. REMOVE ANY EXCESS CONCRETE THAT COMES OUT OF THE WEEP HOLES. ANY DAMAGED STEEL SHALL BE COATED WITH A MINIMUM THICKNESS OF 4 DRY MILS OF ZINC-RICH PAINT IN ACCORDANCE WITH THE STANDARD SPECIFICATIONS.
3. LAY THE GLAND ON THE BASE ANGLE AND FIELD MARK THE GLAND FOR THE BOLT HOLES. HOLES IN THE GLAND SHALL BE PUNCHED ⅞" IN DIAMETER WITH A HAND PUNCH.
4. IN ORDER TO CHECK FOR PROPER ALIGNMENT, PLACE THE GLAND AND HOLD-DOWN PLATES ON THE BASE ANGLE. DO NOT APPLY NEOPRENE SEALANT. BOLT THE HOLD-DOWN PLATES TO THE BASE ANGLE BUT DO NOT TIGHTEN. THE ENGINEER SHALL INSPECT THE JOINT SEAL DEVICE FOR PROPER ALIGNMENT.
5. AFTER INSPECTION, REMOVE THE HOLD-DOWN PLATES AND GLAND. APPLY NEOPRENE SEALANT TO THE BASE ANGLE IN ACCORDANCE WITH THE "INSTALLATION SKETCH". PLACE GLAND AND HOLD-DOWN PLATES ON THE BASE ANGLE. BOLT THE HOLD-DOWN PLATES TO THE BASE ANGLE ASSEMBLY AND TORQUE THE BOLTS TO 88 FT-LBS WITH A TORQUE WRENCH. CHECK THE TORQUE AFTER THREE (3) HOURS AND, IF NECESSARY, RETIGHTEN TO 88 FT-LBS. A FINAL CHECK SHALL BE MADE AT SEVEN (7) DAYS. TORQUE SHALL NOT BE LESS THAN 80 FT-LBS AFTER SEVEN (7) DAYS.
6. AFTER PROPER TOROUING, CLEAN THE BOLT HOLE RECESSES AND THE RECESS BETWEEN THE JOINT SEAL DEVICE AND CONCRETE, COMPLETELY FILL THESE RECESSES WITH NEOPRENE SEALANT.

GENERAL NOTES

1. FOR EXPANSION JOINT SEALS, SEE SPECIAL PROVISIONS.
2. ALL PLATES AND ANGLES SHALL CONFORM TO AASHTO M270 GRADE 36 STEEL OR APPROVED EQUAL. ALL HOLD-DOWN BOLTS SHALL CONFORM TO ASTM F593 ALLOY 304 STAINLESS STEEL AND WASHERS SHALL CONFORM TO ASTM F844 EXCEPT THEY SHALL BE MADE FROM ALLOY 304 STAINLESS STEEL. ALL STUD ANCHORS SHALL CONFORM TO AASHTO M169, GRADES 1010 THRU 1020 OR APPROVED EQUAL. ALL CONCRETE INSERTS SHALL BE CLOSED END AND SHALL CONFORM TO AASHTO M169, GRADE 12L14. TENSILE CAPACITY SHALL BE 3000 LBS. MIN.
3. A PREMOLDED CORRUGATED OR NON-CORRUGATED GLAND SHALL BE USED FOR JOINTS SKEWED BETWEEN 50° THRU 130°. FOR JOINTS SKEWED LESS THAN 50° OR MORE THAN 130°, ONLY A CORRUGATED GLAND SHALL BE USED.
4. CLOSED END FERRULES AND STUD ANCHORS SHALL BE SHOP WELDED AND ALL HOLES SHALL BE SHOP DRILLED AS SHOWN ON PLANS. STUD ANCHORS SHALL BE ELECTRIC ARC END WELDED WITH COMPLETE FUSION.
5. SURFACES COMING IN CONTACT WITH NEOPRENE SHALL BE GROUND SMOOTH PRIOR TO METALLIZING.
6. UPON COMPLETION OF SHOP FABRICATION, THE HOLD DOWN PLATE AND BASE ANGLE ASSEMBLY, AS SHOWN IN THE " TYPICAL SECTION OF BASE ANGLE ASSEMBLY", SHALL BE METALLIZED. SEE SPECIAL PROVISION FOR THERMAL SPRAYED COATINGS (METALLIZATION).
7. BASE ANGLE ASSEMBLY SHALL BE CONTINUOUS FOR THE LENGTH OF THE JOINT. AT CROWN BREAKS, THE ENDS OF THE BASE ANGLE ASSEMBLY SHALL BE CUT PARALLEL TO THE BRIDGE CENTERLINE FOR SKEWS LESS THAN 80° AND GREATER THAN 100°. FINISHED WELD SHALL BE GROUND SMOOTH AND COATED WITH A MINIMUM THICKNESS OF 4 DRY MILS OF ZINC-RICH PAINT IN ACCORDANCE WITH THE STANDARD SPECIFICATIONS.
8. FIELD SPLICES OF HOLD-DOWN PLATES SHALL BE KEPT TO A MINIMUM. CONTRACTOR SHALL FURNISH DETAILED PLANS SHOWING PROPOSED SPLICE LOCATIONS FOR APPROVAL. HOLD-DOWN PLATES SHALL NOT EXCEED 20' LENGTHS UNLESS APPROVED BY THE ENGINEER.
9. NO ALTERNATE JOINT DETAILS SHALL BE PERMITTED IN LIEU OF THOSE SHOWN ON THESE PLANS.
10. THE CONTRACTOR MAY, AT HIS OPTION, USE ADHESIVELY ANCHORED ANCHOR BOLTS IN PLACE OF CONCRETE INSERTS FOR COVER PLATES. THE YIELD LOAD OF THE ¾" Ø BOLT IS 10 KIPS. FIELD TESTING OF THE ADHESIVE BONDING SYSTEM IS NOT REQUIRED.

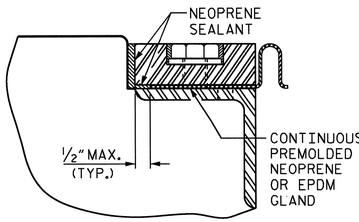

DETAIL "A"

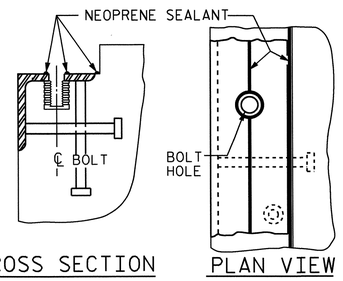

INSTALLATION SKETCH

MOVEMENT AND SETTING AT JOINT					
BENT NO.	SKEW ANGLE	TOTAL MOVEMENT (ALONG ℄ RDWY)	PERPENDICULAR JOINT OPENING AT 45° F	PERPENDICULAR JOINT OPENING AT 60° F	PERPENDICULAR JOINT OPENING AT 90° F
END BENT #1	90°	1 3/16"	1 7/8"	1 5/8"	1 3/16"
BENT #4	90°	2 7/16"	2 3/4"	2 5/16"	1 7/16"
BENT #8	90°	2 1/8"	2 1/2"	2 1/8"	1 3/8"
BENT #11	90°	1 5/16"	1 15/16"	1 11/16"	1 1/4"
END BENT #2	90°	3/8"	1 1/4"	1 3/16"	1 1/16"

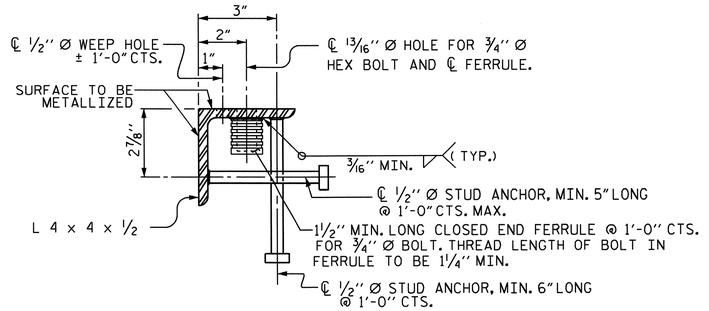

TYPICAL SECTION OF BASE ANGLE ASSEMBLY

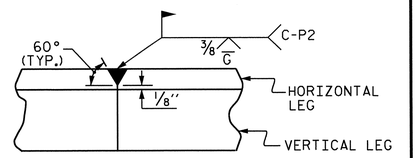

DETAIL- FIELD WELD SPLICE OF BASE ANGLE

PROJECT NO. R-2303B

CUMBERLAND/SAMPSON COUNTY

STATION: 397+87.00 -LREV-

SHEET 1 OF 2

STATE OF NORTH CAROLINA
DEPARTMENT OF TRANSPORTATION
RALEIGH

STANDARD

EXPANSION JOINT SEAL DETAILS

(LEFT LANE)

REVISIONS						SHEET NO.
NO.	BY:	DATE:	NO.	BY:	DATE:	S-26
1			3			TOTAL SHEETS
2			4			146

STR. #1 STD. NO. EJS1 (SHT 1)

NORTH CAROLINA PROFESSIONAL SEAL 025516 ENGINEER EMILY E. COMPTON 2-21-13

ASSEMBLED BY : PEGGY PARISI	DATE : 10-18-11	
CHECKED BY : K.P. SEDAI	DATE : 10-28-12	
DRAWN BY : REK 9/87	REV. 5/7/03R	RWW/JTE
CHECKED BY : CRK 10/87	REV. 5/1/06R	TLA/GM
	REV. 10/1/11	MAA/GM

DESIGN ENGINEER OF RECORD: MOHAMMED AHMED DATE : 8-15-11

20-FEB-2013 15:52
Z:\TIPProjects-R\R2303B\Structures\Plans\str01\pporlsl\R2303B_SD_TS_01.dgn
padkins

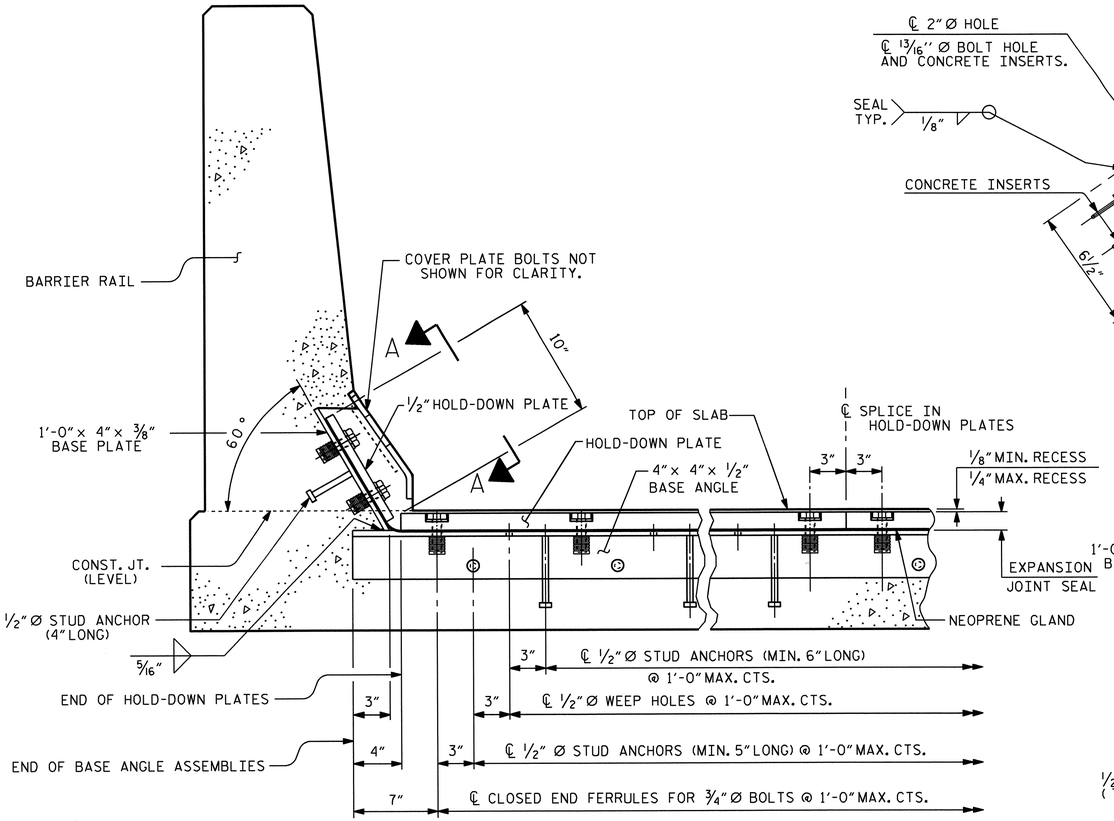

SECTION THRU RAIL NORMAL TO JOINT

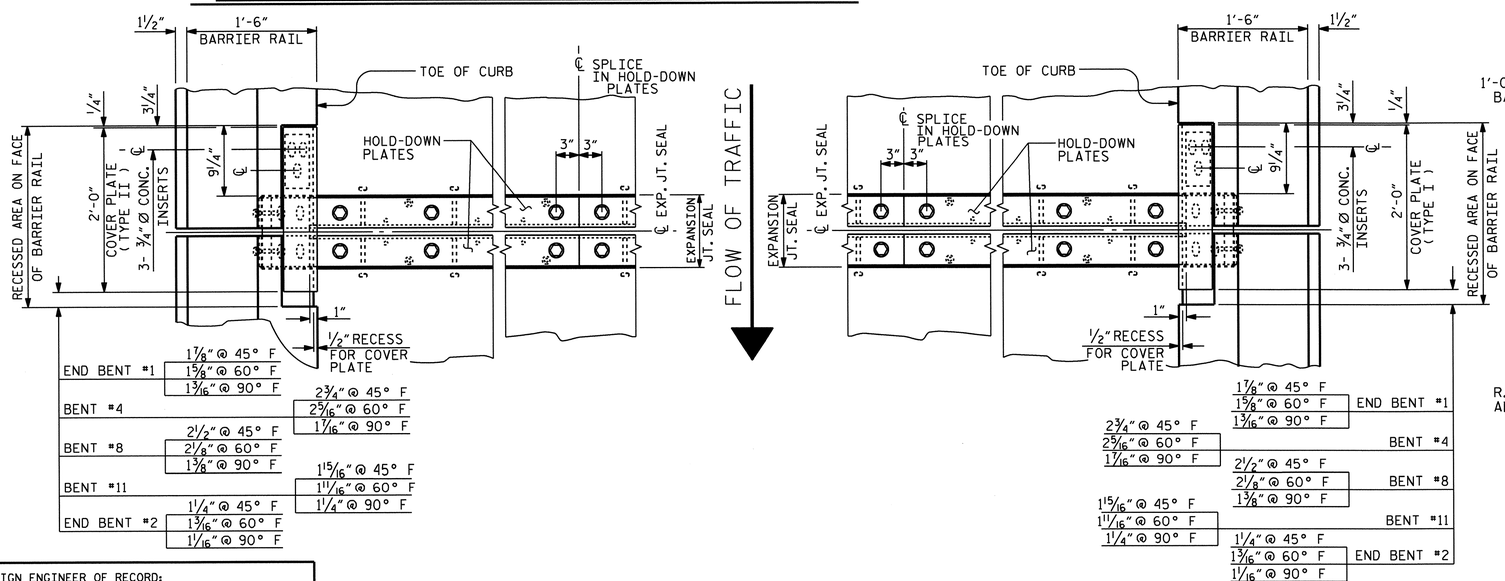

PLAN OF EXPANSION JOINT SEAL

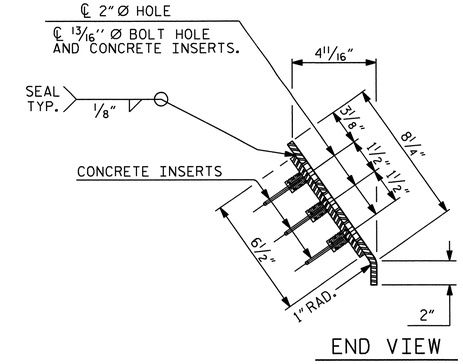

END VIEW

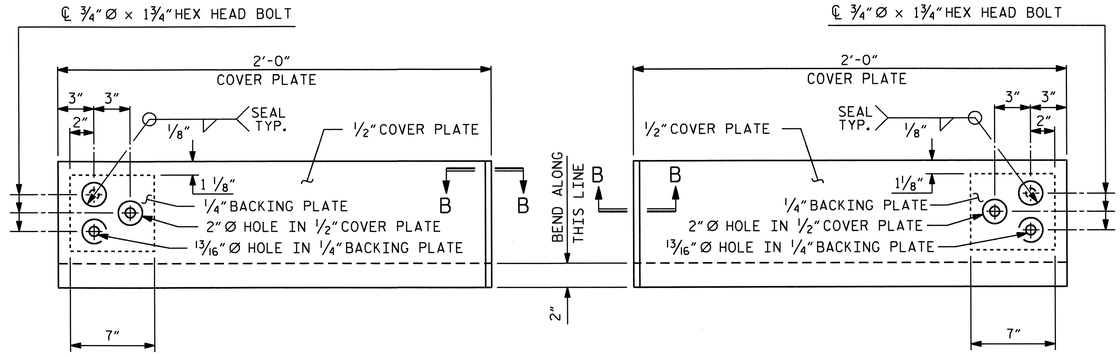

TYPE I - ELEVATION VIEW

TYPE II - ELEVATION VIEW

COVER PLATE DETAILS

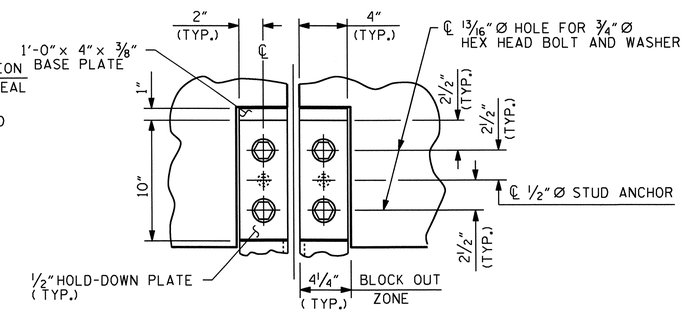

SECTION A - A

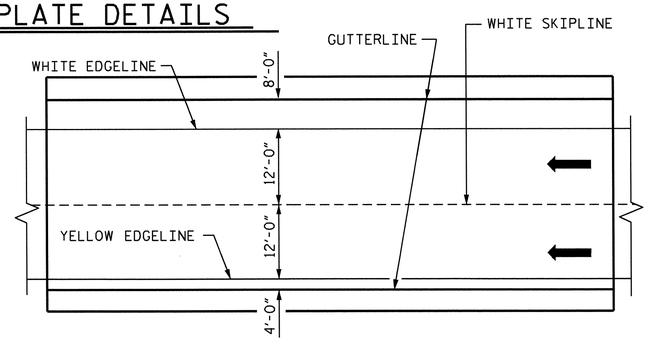

PAVEMENT MARKING ALIGNMENT

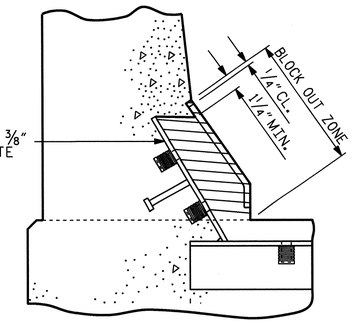

BLOCK OUT DETAIL

SEE " SECTION A - A " FOR OTHER DETAILS.

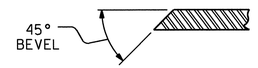

SECTION B - B

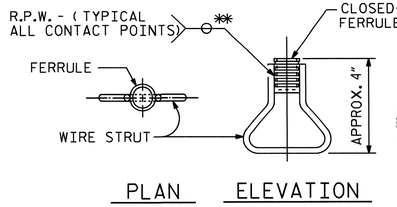

PLAN ELEVATION

CONCRETE INSERT

** EACH WELDED ATTACHMENT OF WIRE TO FERRULE SHALL DEVELOP THE TENSILE STRENGTH OF THE WIRE.

PROJECT NO. R-2303B

CUMBERLAND/SAMPSON COUNTY

STATION: 397+87.00 -LREV-

SHEET 2 OF 2

STATE OF NORTH CAROLINA
DEPARTMENT OF TRANSPORTATION
RALEIGH

STANDARD

EXPANSION JOINT SEAL DETAILS FOR BARRIER RAIL

(LEFT LANE)

REVISIONS						SHEET NO.
NO.	BY:	DATE:	NO.	BY:	DATE:	S-27
1			3			TOTAL SHEETS
2			4			146

STR. #1 STD. NO. EJS2 SHT 1a

NORTH CAROLINA PROFESSIONAL SEAL 025516 ENGINEER EMILY E. MURRAY 2.21.13

DESIGN ENGINEER OF RECORD: MOHAMMED AHMED DATE : 8-15-11

ASSEMBLED BY : PEGGY PARISI DATE : 10-18-11
CHECKED BY : K.P. SEDAI DATE : 9-28-12

DRAWN BY : REK 9/87 REV. 10/1/11 MAA/GM
CHECKED BY : CRK 10/87 REV. 7/12 MAA/GM
REV. 10/12 MAA/GM

20-FEB-2013 15:52
Z:\TIPProjects-R\R2303B\Structures\Plans\str01\pparisi\R2303B_SD_TS_01.dgn
padkins

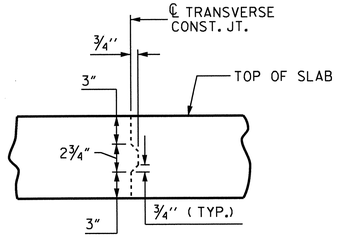

TRANSVERSE CONSTRUCTION JOINT DETAIL

NOTE: REINFORCING STEEL IN SLAB NOT SHOWN.
LONGITUDINAL REINFORCING STEEL SHALL BE CONTINUOUS THRU JOINT

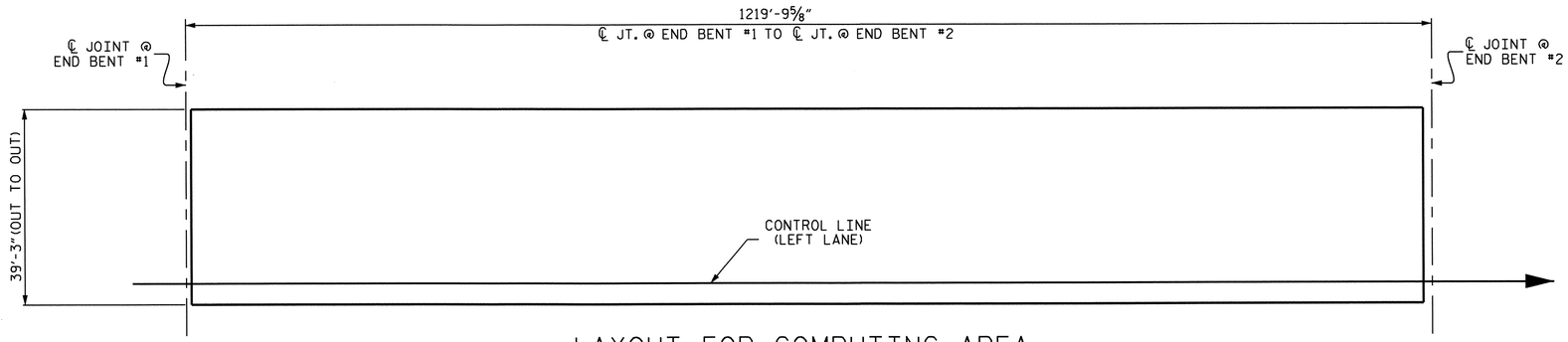

LAYOUT FOR COMPUTING AREA OF REINFORCED CONCRETE DECK SLAB (SQ. FT. = 47,877)

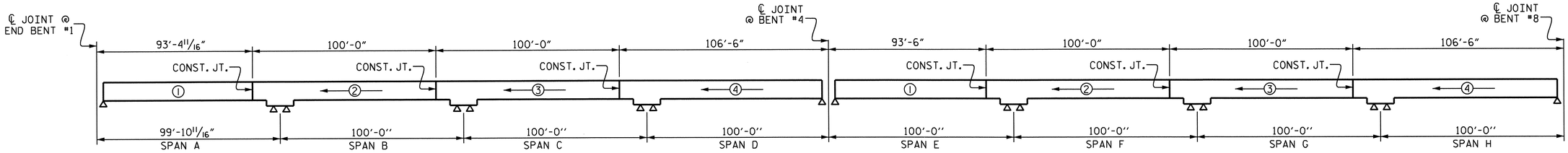

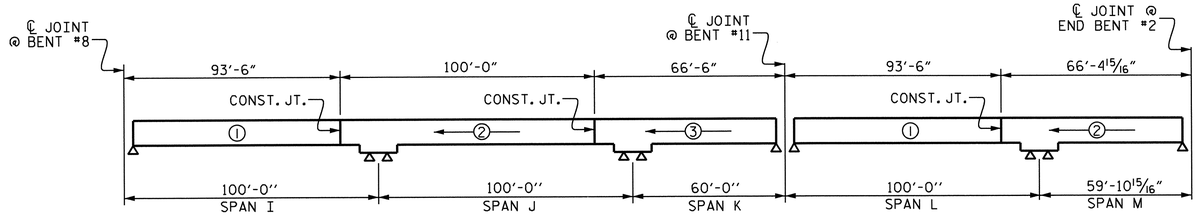

SUPERSTRUCTURE POURING SEQUENCE

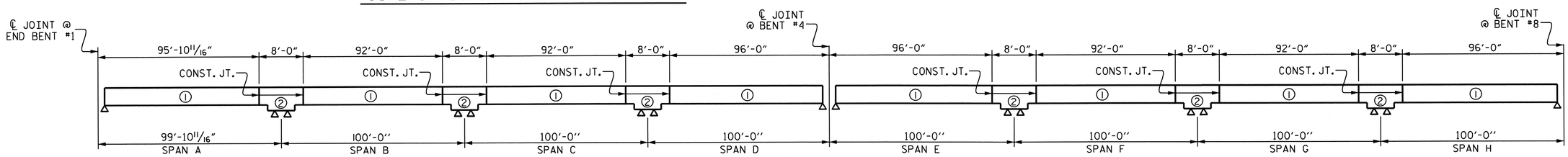

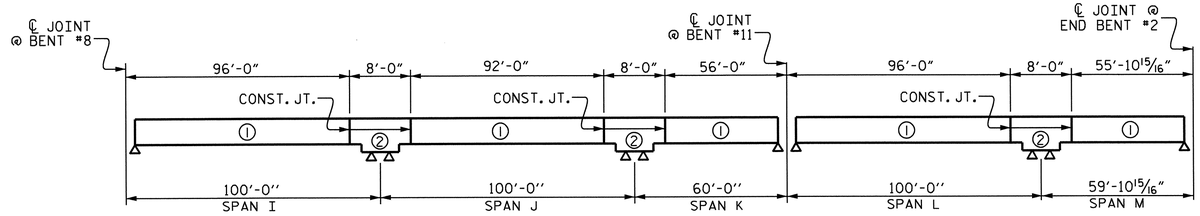

OPTIONAL POURING SEQUENCE

POUR ② CAN NOT BE STARTED UNTIL BOTH ADJACENT ① POURS REACH A MINIMUM OF 3000 PSI.

GROOVING BRIDGE FLOORS		
APPROACH SLABS	1573	SQ.FT.
BRIDGE DECK	40095	SQ.FT.
TOTAL	41668	SQ.FT.

PROJECT NO. R-2303B
CUMBERLAND/SAMPSON COUNTY
STATION: 397+87.00-LREV-

SHEET 1 OF 2

STATE OF NORTH CAROLINA
DEPARTMENT OF TRANSPORTATION
RALEIGH

SUPERSTRUCTURE BILL OF MATERIAL

(LEFT LANE)

NORTH CAROLINA PROFESSIONAL SEAL 025516 ENGINEER EMILY S. MURRAY
2.21.13

REVISIONS						SHEET NO.
NO.	BY:	DATE:	NO.	BY:	DATE:	S-28
1			3			TOTAL SHEETS
2			4			146

STR. #1

DRAWN BY : PEGGY PARISI DATE : 10-11-11
CHECKED BY : K.P. SEDAI DATE : 10-1-12
DESIGN ENGINEER OF RECORD: MOHAMMED AHMED DATE : 8-15-11

20-FEB-2013 15:52
Z:\TIPProjects-R\R2303B\Structures\Plans\str01\pparisi\R2303B_SD_TS_01.dgn
padkins

BILL OF MATERIAL — SPANS A, B, C & D

BAR	NO.	SIZE	TYPE	LENGTH	WEIGHT
✱ A1	683	5	STR	38′-11″	27723
A2	685	5	STR	38′-11″	27804
✱ B1	168	4	STR	23′-7″	2647
✱ B2	84	6	STR	60′-0″	7570
✱ B3	84	6	STR	13′-0″	1640
✱ B4	150	6	STR	30′-0″	6759
B5	322	5	STR	59′-0″	19815
✱ B6	112	4	STR	18′-0″	1347
✱ J1	72	4	6	1′-5″	68
✱ K1	8	8	1	15′-11″	340
✱ K2	8	8	2	23′-11″	511
K3	18	5	STR	30′-5″	571
K4	18	4	STR	6′-4″	76
K5	72	4	STR	9′-4″	449
K6	18	4	STR	6′-9″	81
K7	12	6	STR	9′-3″	167
✱ S1	42	5	3	5′-11″	259
✱ S2	12	5	3	3′-5″	43
S3	18	4	4	9′-3″	111
S4	369	4	5	2′-9″	678
✱ U1	63	4	2	16′-6″	694

REINFORCING STEEL 49752 LBS.

✱ EPOXY COATED REINFORCING STEEL 49601 LBS.

BILL OF MATERIAL — SPANS E, F, G & H

BAR	NO.	SIZE	TYPE	LENGTH	WEIGHT
✱ A1	684	5	STR	38′-11″	27764
A2	686	5	STR	38′-11″	27845
✱ B1	168	4	STR	23′-7″	2647
✱ B2	84	6	STR	60′-0″	7570
✱ B3	84	6	STR	13′-0″	1640
✱ B4	150	6	STR	30′-0″	6759
B5	322	5	STR	59′-0″	19815
✱ B6	112	4	STR	18′-0″	1347
✱ J1	72	4	6	1′-5″	68
✱ K1	8	8	1	15′-11″	340
✱ K2	8	8	2	23′-11″	511
K3	18	5	STR	30′-5″	571
K4	18	4	STR	6′-4″	76
K5	72	4	STR	9′-4″	449
K6	18	4	STR	6′-9″	81
K7	12	6	STR	9′-3″	167
✱ S1	42	5	3	5′-11″	259
✱ S2	12	5	3	3′-5″	43
S3	18	4	4	9′-3″	111
S4	369	4	5	2′-9″	678
✱ U1	63	4	2	16′-6″	694

REINFORCING STEEL 49793 LBS.

✱ EPOXY COATED REINFORCING STEEL 49642 LBS.

BILL OF MATERIAL — SPANS I, J & K

BAR	NO.	SIZE	TYPE	LENGTH	WEIGHT
✱ A1	443	5	STR	38′-11″	17981
A2	445	5	STR	38′-11″	18063
✱ B1	84	4	STR	23′-7″	1323
✱ B2	28	6	STR	60′-0″	2523
✱ B3	28	6	STR	13′-0″	547
✱ B4	50	6	STR	30′-0″	2253
✱ B6	56	4	STR	18′-0″	673
✱ B7	28	6	STR	58′-0″	2439
✱ B8	50	6	STR	24′-0″	1802
✱ B9	56	4	STR	20′-6″	767
B10	230	5	STR	53′-8″	12874
✱ J1	72	4	6	1′-5″	68
✱ K1	8	8	1	15′-11″	340
✱ K2	8	8	2	23′-11″	511
K3	12	5	STR	30′-5″	381
K4	12	4	STR	6′-4″	51
K5	48	4	STR	9′-4″	299
K6	12	4	STR	6′-9″	54
K7	12	6	STR	9′-3″	167
✱ S1	42	5	3	5′-11″	259
✱ S2	12	5	3	3′-5″	43
S3	12	4	4	9′-3″	74
S4	246	4	5	2′-9″	452
✱ U1	42	4	2	16′-6″	463

REINFORCING STEEL 32415 LBS.

✱ EPOXY COATED REINFORCING STEEL 31992 LBS.

BILL OF MATERIAL — SPANS L & M

BAR	NO.	SIZE	TYPE	LENGTH	WEIGHT
✱ A1	272	5	STR	38′-11″	11041
A2	274	5	STR	38′-11″	11122
✱ B1	84	4	STR	23′-7″	1323
✱ B7	28	6	STR	58′-0″	2439
✱ B8	50	6	STR	24′-0″	1802
✱ B9	56	4	STR	20′-6″	767
B11	138	5	STR	54′-9″	7880
✱ J1	72	4	6	1′-5″	68
✱ K1	8	8	1	15′-11″	340
✱ K2	8	8	2	23′-11″	511
K3	6	5	STR	30′-5″	190
K4	6	4	STR	6′-4″	25
K5	24	4	STR	9′-4″	150
K6	6	4	STR	6′-9″	27
K7	12	6	STR	9′-3″	167
✱ S1	42	5	3	5′-11″	259
✱ S2	12	5	3	3′-5″	43
S3	6	4	4	9′-3″	37
S4	123	4	5	2′-9″	226
✱ U1	21	4	2	16′-6″	231

REINFORCING STEEL 19824 LBS.

✱ EPOXY COATED REINFORCING STEEL 18824 LBS.

SUPERSTRUCTURE QUANITIES

	CLASS AA CONCRETE		REINFORCING STEEL	EPOXY COATED REINFORCING STEEL
	(POUR)	(CU. YDS.)	(LBS.)	(LBS.)
SPANS A, B, C & D	POUR 1	128.6	49752	49601
	POUR 2	149.6		
	POUR 3	149.6		
	POUR 4	160.1		
SPANS E, F, G & H	POUR 1	128.8	49793	49642
	POUR 2	149.6		
	POUR 3	149.6		
	POUR 4	160.1		
SPANS I, J & K	POUR 1	128.8	32415	31992
	POUR 2	149.6		
	POUR 3	105.8		
SPANS L & M	POUR 1	128.8	19824	18824
	POUR 2	105.6		
TOTALS**		1794.6	151784	150059

** QUANTITIES FOR BARRIER RAIL ARE NOT INCLUDED

BAR TYPES

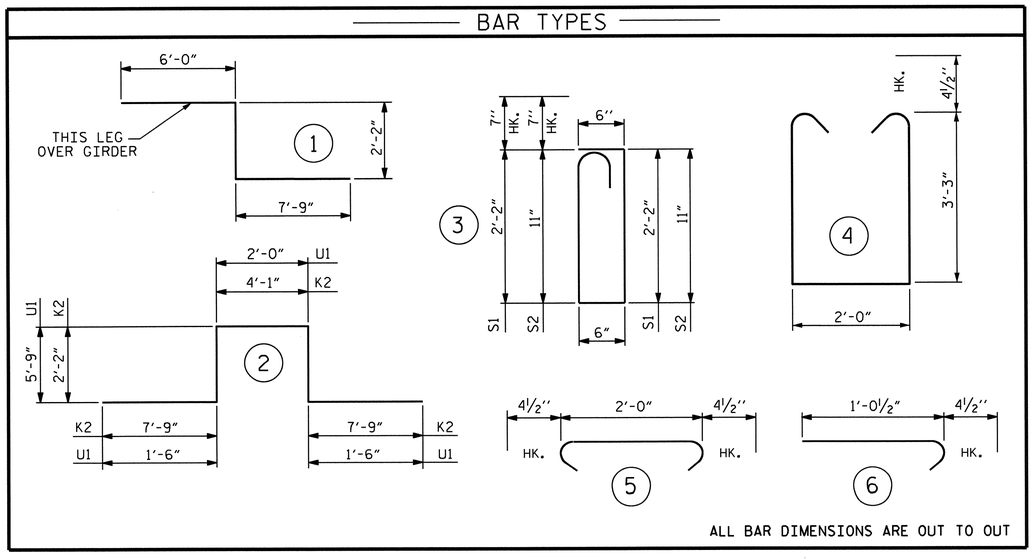

SUPERSTRUCTURE REINFORCING STEEL LENGTHS ARE BASED ON THE FOLLOWING MINIMUM SPLICE LENGTHS

BAR SIZE	SUPERSTRUCTURE EXCEPT APPROACH SLABS, PARAPET, AND BARRIER RAIL		APPROACH SLABS		PARAPET AND BARRIER RAIL
	EPOXY COATED	UNCOATED	EPOXY COATED	UNCOATED	
#4	2′-0″	1′-9″	2′-0″	1′-9″	2′-9″
#5	2′-6″	2′-2″	2′-6″	2′-2″	3′-5″
#6	3′-0″	2′-7″	3′-10″	2′-7″	4′-4″
#7	5′-3″	3′-6″			
#8	6′-10″	4′-7″			

DESIGN ENGINEER OF RECORD: MOHAMMED AHMED DATE : 8-15-11

ASSEMBLED BY : PEGGY PARISI DATE : 10-11-11
CHECKED BY : K.P. SEDAI DATE : 9-25-12

DRAWN BY : JMB 5/87
CHECKED BY : SJD 9/87

REVISIONS	
REV. 8/16/99	RWW/LES
REV. 5/1/06	TLA/GM
REV. 10/1/11	MAA/GM

PROJECT NO. R-2303B
CUMBERLAND/SAMPSON COUNTY
STATION: 397+87.00-LREV-

SHEET 2 OF 2

STATE OF NORTH CAROLINA
DEPARTMENT OF TRANSPORTATION
RALEIGH

STANDARD

SUPERSTRUCTURE BILL OF MATERIAL

(LEFT LANE)

REVISIONS						SHEET NO.
NO.	BY:	DATE:	NO.	BY:	DATE:	S-29
1			3			TOTAL SHEETS
2			4			146

STR. #1 STD. NO. BOM1

20-FEB-2013 15:52
Z:\TIPProjects-R\R2303B\Structures\Plans\str01\pparisi\R2303B_SD_TS_01.dgn
padkins

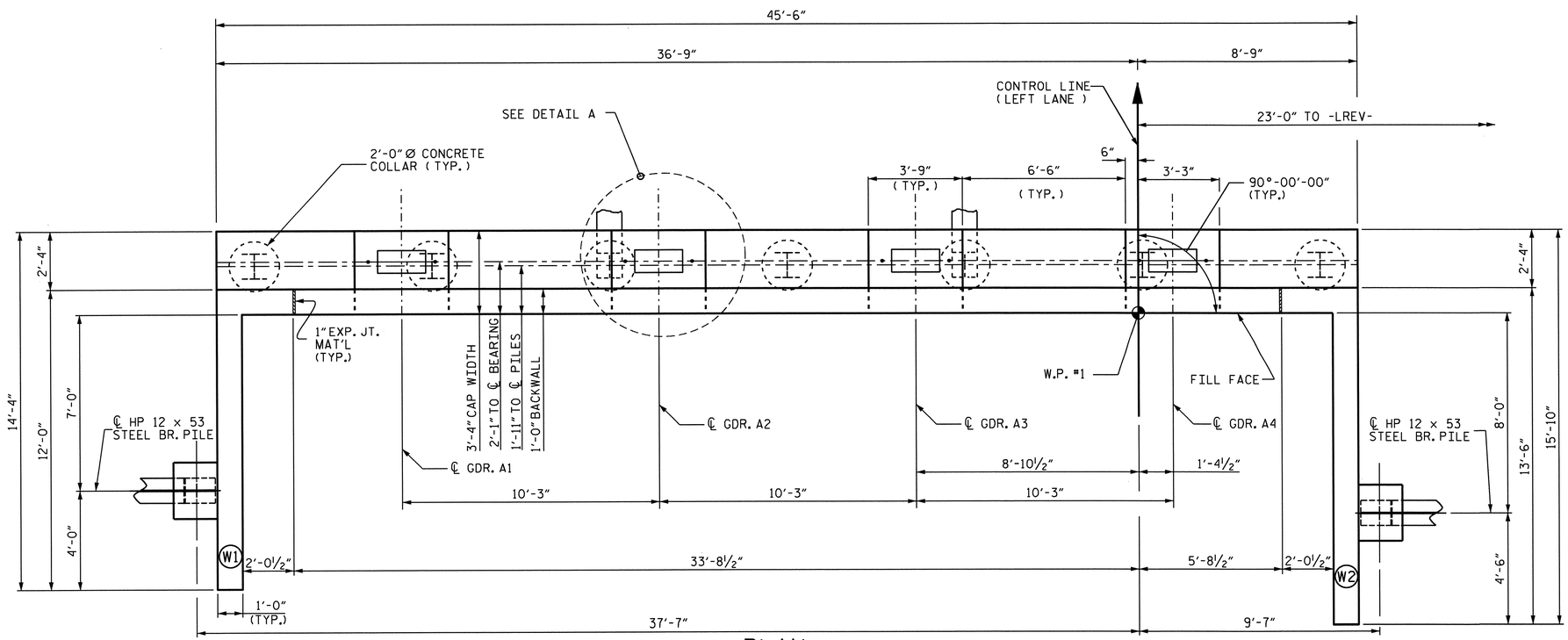

PLAN

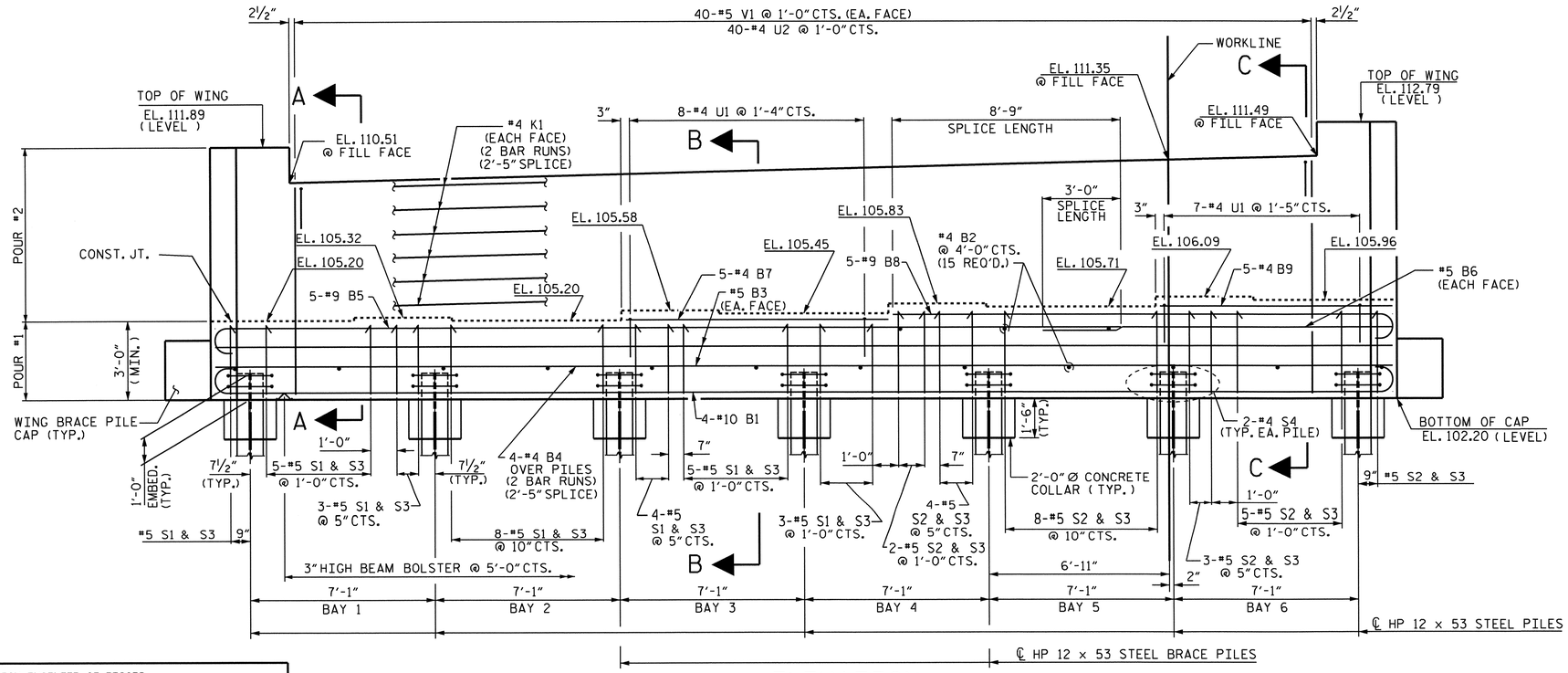

ELEVATION

PILES AND REINFORCING STEEL NOT SHOWN IN WING BRACE PILE CAP FOR CLARITY, SEE WING DETAILS, SHEET 2 OF 3.

NOTES

STIRRUPS IN CAP MAY BE SHIFTED AS NECESSARY TO CLEAR ANCHOR BOLTS.

BACKWALL SHALL BE PLACED BEFORE APPLYING THE EPOXY PROTECTIVE COATING.

THE TOP SURFACE AREAS OF THE END BENT CAP SHALL BE CURED IN ACCORDANCE WITH THE STANDARD SPECIFICATIONS EXCEPT THAT THE MEMBRANE CURING COMPOUND METHOD SHALL NOT BE USED.

THE TOP SURFACE OF THE END BENT CAP EXCEPT THE BRIDGE SEAT BUILDUPS SHALL BE SLOPED TRANSVERSELY FROM THE FILL FACE TO THE BACK FACE AT THE RATE OF 2%.

INSTALL THE 4" DIA. DRAIN PIPE THROUGH THE WING WALL AS REQUIRED FOR REINFORCED BRIDGE APPROACH FILLS, SEE THE ROADWAY PLANS. REINFORCING STEEL IN THE WING WALL MAY BE SHIFTED AS NECESSARY TO CLEAR THE DRAIN PIPE.

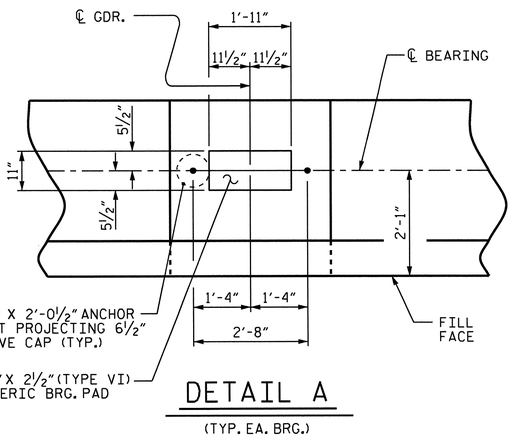

DETAIL A

(TYP. EA. BRG.)

PROJECT NO. R-2303B

CUMBERLAND/SAMPSON COUNTY

STATION: 397+87.00-LREV-

SHEET 1 OF 3

STATE OF NORTH CAROLINA
DEPARTMENT OF TRANSPORTATION
RALEIGH

SUBSTRUCTURE

END BENT #1 (LEFT LANE)

REVISIONS						SHEET NO.
NO.	BY:	DATE:	NO.	BY:	DATE:	S-30
1			3			TOTAL SHEETS
2			4			146

NORTH CAROLINA PROFESSIONAL SEAL 025516 ENGINEER EMILY S. MURRAY 2.21.13

DESIGN ENGINEER OF RECORD: MOHAMMED AHMED	DATE :	9-21-11
DRAWN BY : M.M. AHMED	DATE :	5-1-12
CHECKED BY : A.M. LEE, PE	DATE :	10-12-12

20-FEB-2013 15:51
Z:\TIPProjects-R\R2303B\Structures\Plans\str01\mmo\str1_WBL\Drafting\End Bents\R2303B_SD_Ebs*_01_WBL.dgn
podkins

STR #1

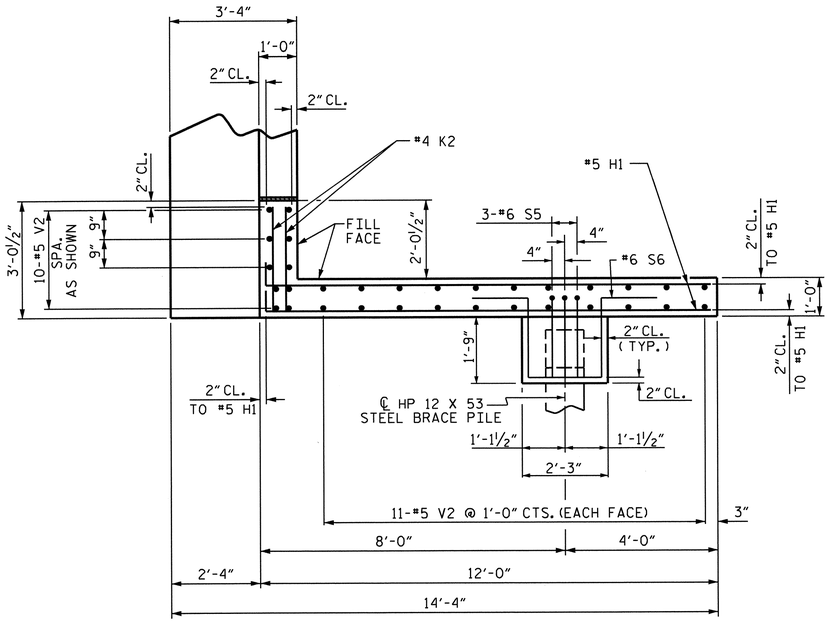

PLAN OF WING W1

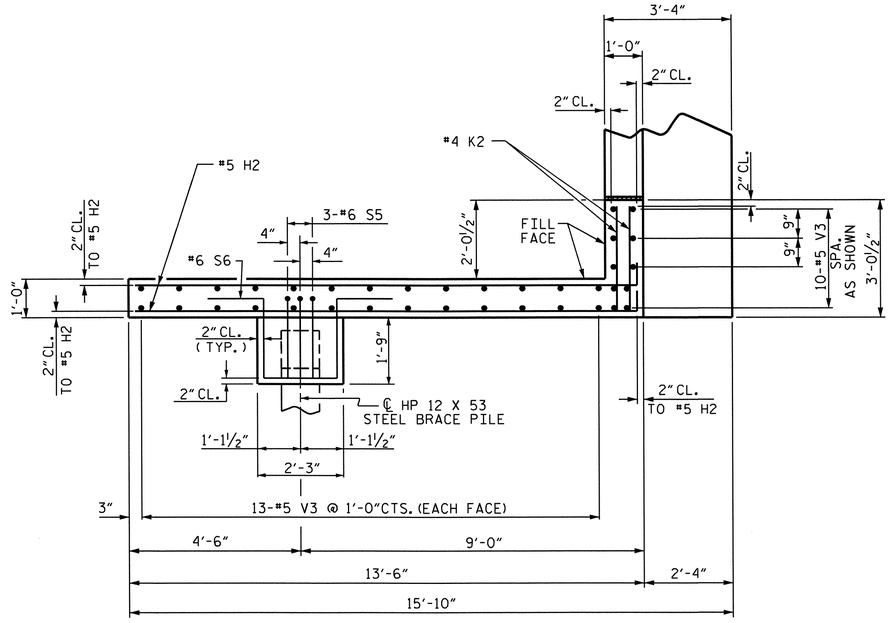

PLAN OF WING W2

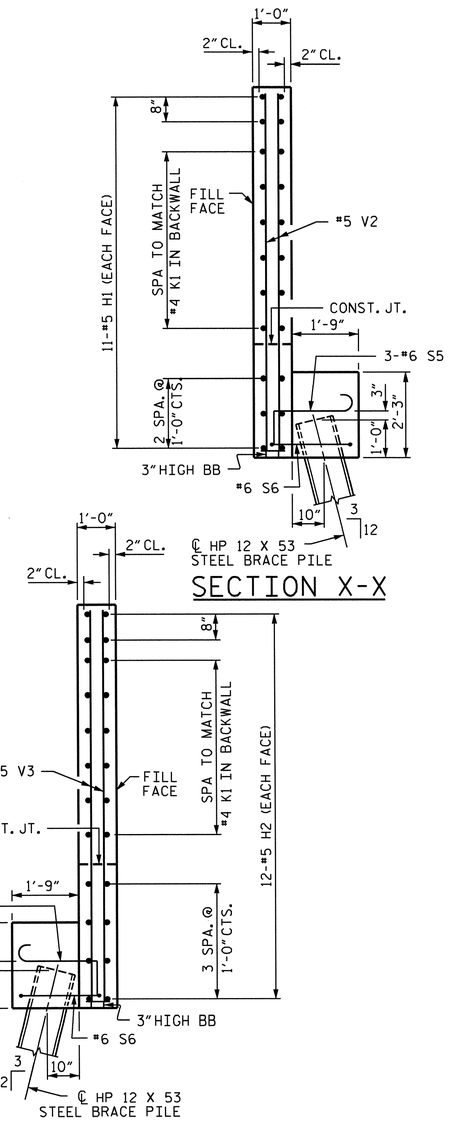

SECTION X-X

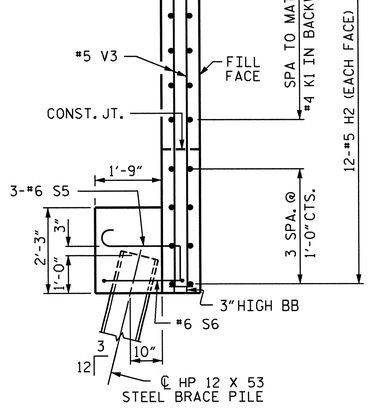

SECTION Y-Y

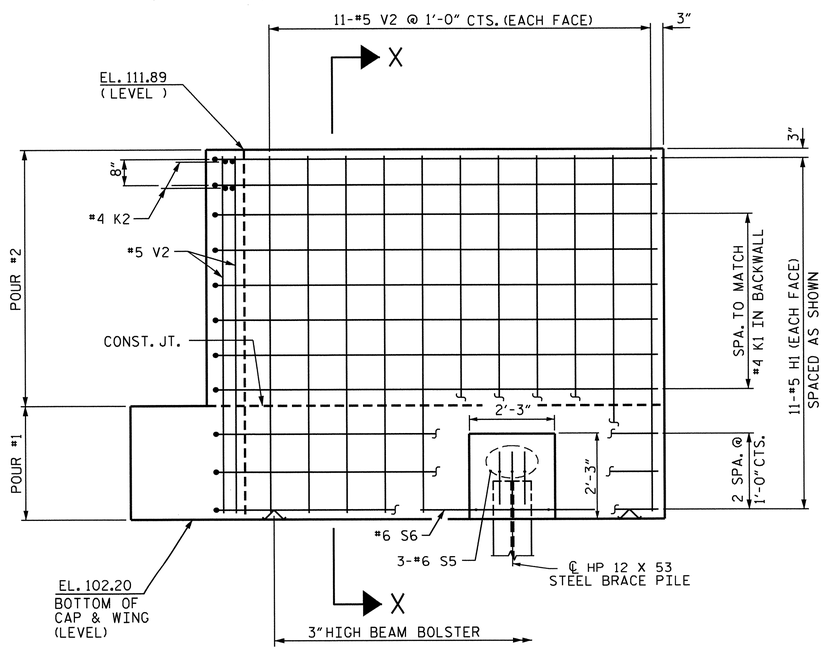

ELEVATION OF WING W1

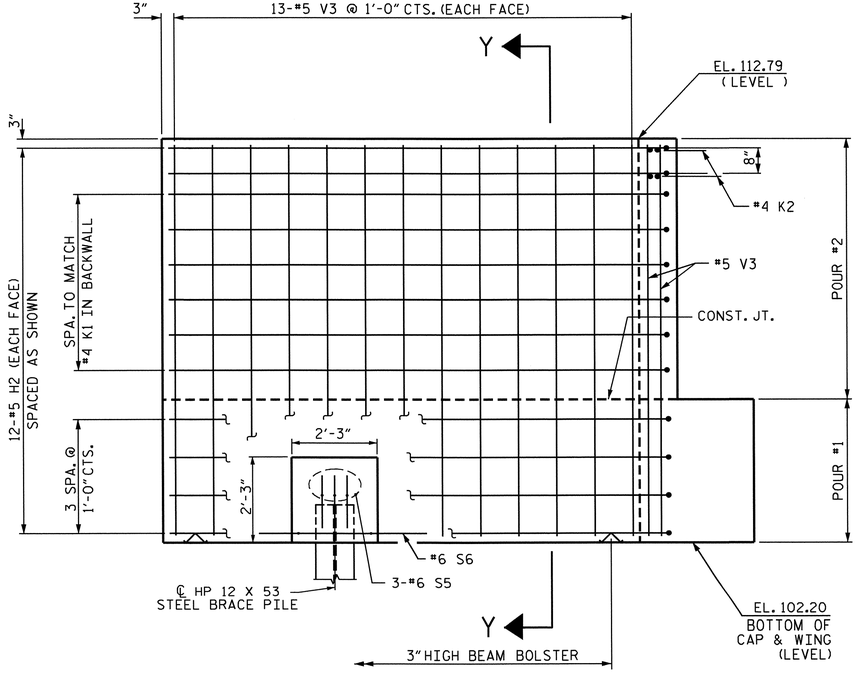

ELEVATION OF WING W2

DESIGN ENGINEER OF RECORD: MOHAMMED AHMED DATE : 9-21-11

DRAWN BY : M.M. AHMED DATE : 5-1-12

CHECKED BY : A.M. LEE, PE DATE : 10-12-12

20-FEB-2013 16:08
Z:\TIPProjects-R\R2303B\Structures\Plans\str01\mma\str1_WBL\Drafting\End Bents\R2303B_SD_Ebs*_01_WBL.dgn
podkins

NORTH CAROLINA PROFESSIONAL SEAL 025516 ENGINEER EMILY E. MURRAY
2.21.13

PROJECT NO. R-2303B

CUMBERLAND/SAMPSON COUNTY

STATION: 397+87.00-LREV-

SHEET 2 OF 3

STATE OF NORTH CAROLINA
DEPARTMENT OF TRANSPORTATION
RALEIGH

SUBSTRUCTURE

END BENT #1
(LEFT LANE)

REVISIONS						SHEET NO.
NO.	BY:	DATE:	NO.	BY:	DATE:	S-31
1			3			TOTAL SHEETS
2			4			146

STR #1

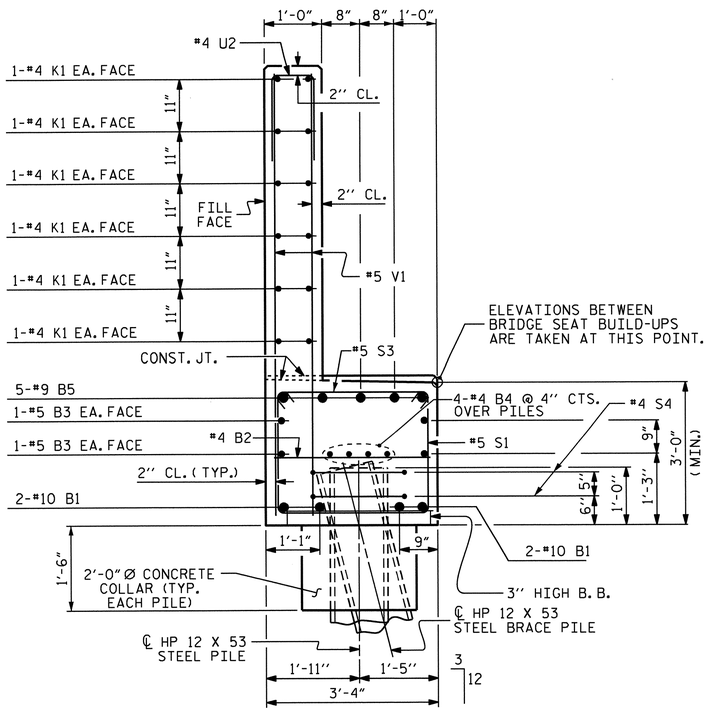

SECTION A-A

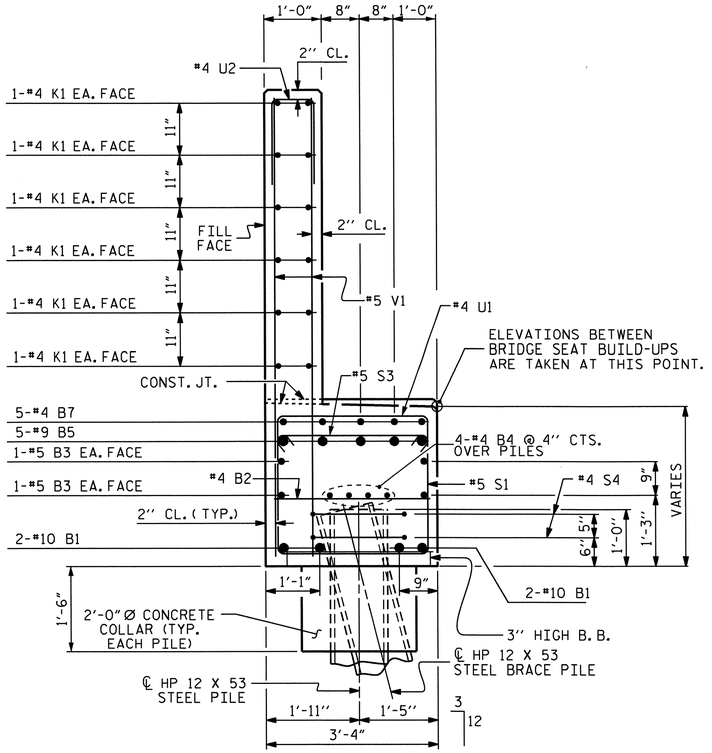

SECTION B-B

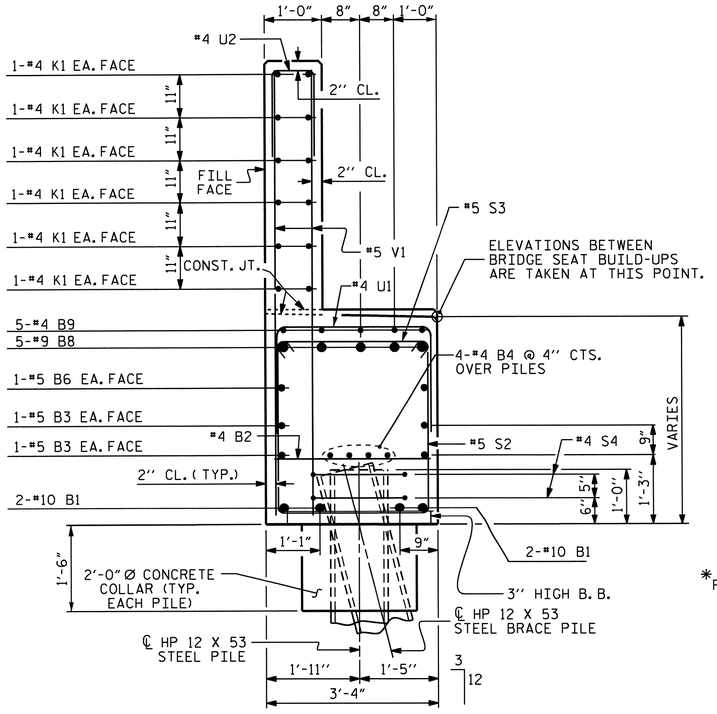

SECTION C-C

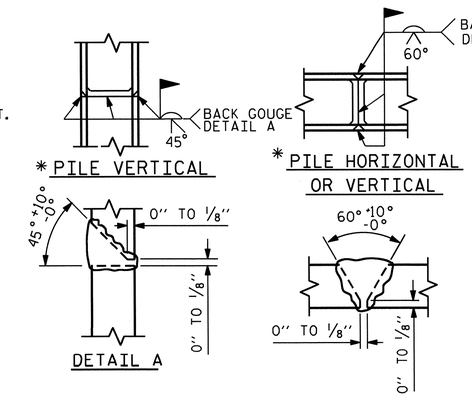

PILE SPLICE DETAILS

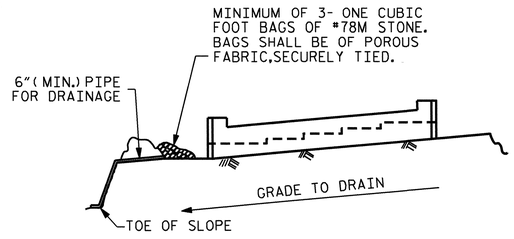

BAGGED STONE AND PIPE SHALL BE PLACED IMMEDIATELY AFTER COMPLETION OF END BENT EXCAVATION. PIPE MAY BE EITHER CONCRETE, CORRUGATED STEEL, CORRUGATED ALUMINUM ALLOY, OR CORRUGATED PLASTIC. PERFORATED PIPE WILL NOT BE ALLOWED.

BAGGED STONE SHALL REMAIN IN PLACE UNTIL THE ENGINEER DIRECTS THAT IT BE REMOVED. THE CONTRACTOR SHALL REMOVE AND DISPOSE OF SILT ACCUMULATIONS AT BAGGED STONE WHEN SO DIRECTED BY THE ENGINEER. BAGS SHALL BE REMOVED AND REPLACED WHENEVER THE ENGINEER DETERMINES THAT THEY HAVE DETERIORATED AND LOST THEIR EFFECTIVENESS.

NO SEPARATE PAYMENT WILL BE MADE FOR THIS WORK AND THE ENTIRE COST OF THIS WORK SHALL BE INCLUDED IN THE UNIT CONTRACT PRICE BID FOR THE SEVERAL PAY ITEMS.

TEMPORARY DRAINAGE AT END BENT

BAR TYPES

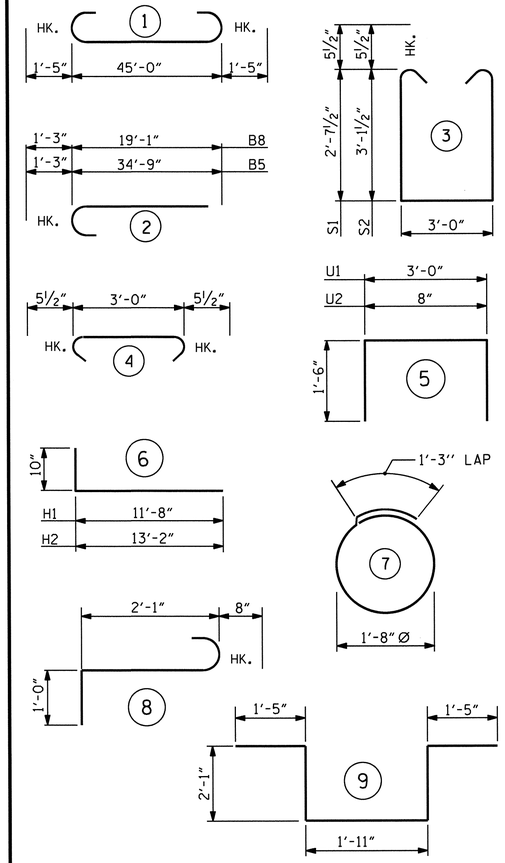

ALL BAR DIMENSIONS ARE OUT TO OUT.

BILL OF MATERIAL
END BENT #1

BAR	NO.	SIZE	TYPE	LENGTH	WEIGHT
B1	4	#10	1	47'-10"	823
B2	15	#4	STR	3'-0"	30
B3	4	#5	STR	45'-2"	188
B4	8	#4	STR	23'-10"	127
B5	5	#9	2	36'-0"	612
B6	2	#5	STR	13'-5"	28
B7	5	#4	STR	10'-1"	34
B8	5	#9	2	20'-4"	346
B9	5	#4	STR	8'-11"	30
H1	22	#5	6	12'-6"	287
H2	24	#5	6	14'-0"	350
K1	24	#4	STR	23'-10"	382
K2	8	#4	STR	2'-8"	14
S1	29	#5	3	9'-2"	277
S2	23	#5	3	10'-2"	244
S3	52	#5	4	3'-11"	212
S4	14	#4	7	6'-6"	61
S5	6	#6	8	3'-9"	34
S6	2	#6	9	8'-11"	27
U1	15	#4	5	6'-0"	60
U2	40	#4	5	3'-8"	98
V1	80	#5	STR	7'-11"	661
V2	32	#5	STR	9'-4"	312
V3	36	#5	STR	10'-3"	385
TOTAL REINFORCING STEEL					5622 LBS.

CLASS A CONCRETE BREAKDOWN	
POUR #1 (CAP, LOWER PART OF WINGS, PILE COLLARS & WING BRACE PILE CAPS)	23.8 CU. YDS.
POUR #2 (BACKWALL & UPPER PART OF WINGS)	15.3 CU. YDS.
TOTAL CLASS A CONCRETE	39.1 CU. YDS.

HP 12 X 53 STEEL PILES	
NO. 9	495 LIN. FT.
PILE REDRIVES	3 EA.

PROJECT NO. R-2303B

CUMBERLAND/SAMPSON COUNTY

STATION: 397+87.00-LREV-

SHEET 3 OF 3

STATE OF NORTH CAROLINA
DEPARTMENT OF TRANSPORTATION
RALEIGH

SUBSTRUCTURE

END BENT #1
(LEFT LANE)

REVISIONS						SHEET NO.
NO.	BY:	DATE:	NO.	BY:	DATE:	S-32
1			3			TOTAL SHEETS
2			4			146

NORTH CAROLINA PROFESSIONAL SEAL 025516 ENGINEER EMILY E. MURRAY
2.21.13

DRAWN BY : M.M. AHMED DATE : 5-3-12
CHECKED BY : A.M LEE, PE DATE : 10-12-12

DESIGN ENGINEER OF RECORD: MOHAMMED AHMED DATE : 9-21-11

20-FEB-2013 16:08
Z:\TIPProjects-R\R2303B\Structures\Plans\str01\mmo\str1_WBL\Drafting\End Bents\R2303B_SD_Ebs*_01_WBL.dgn
pdakins

STR #1

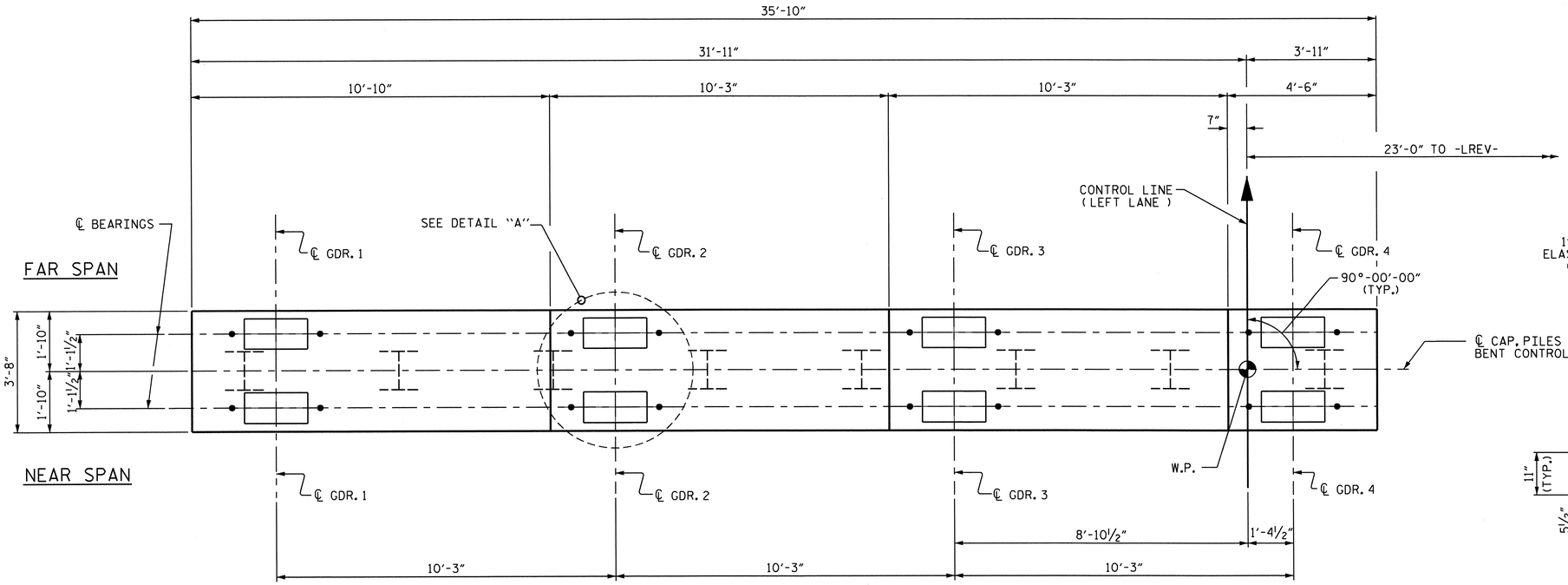

PLAN

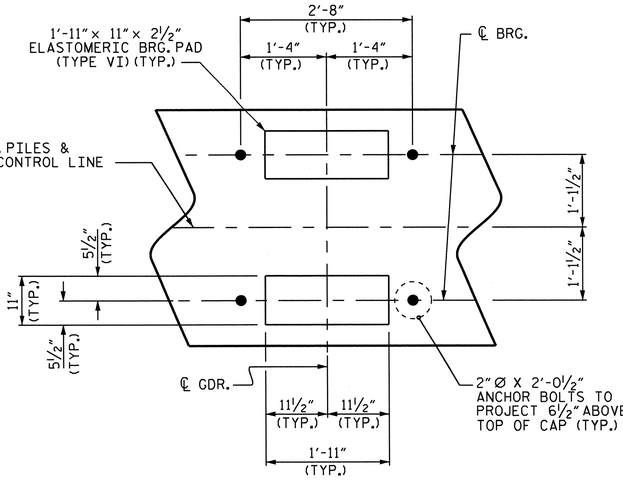

DETAIL "A"

(TYP. EA. GDR.)

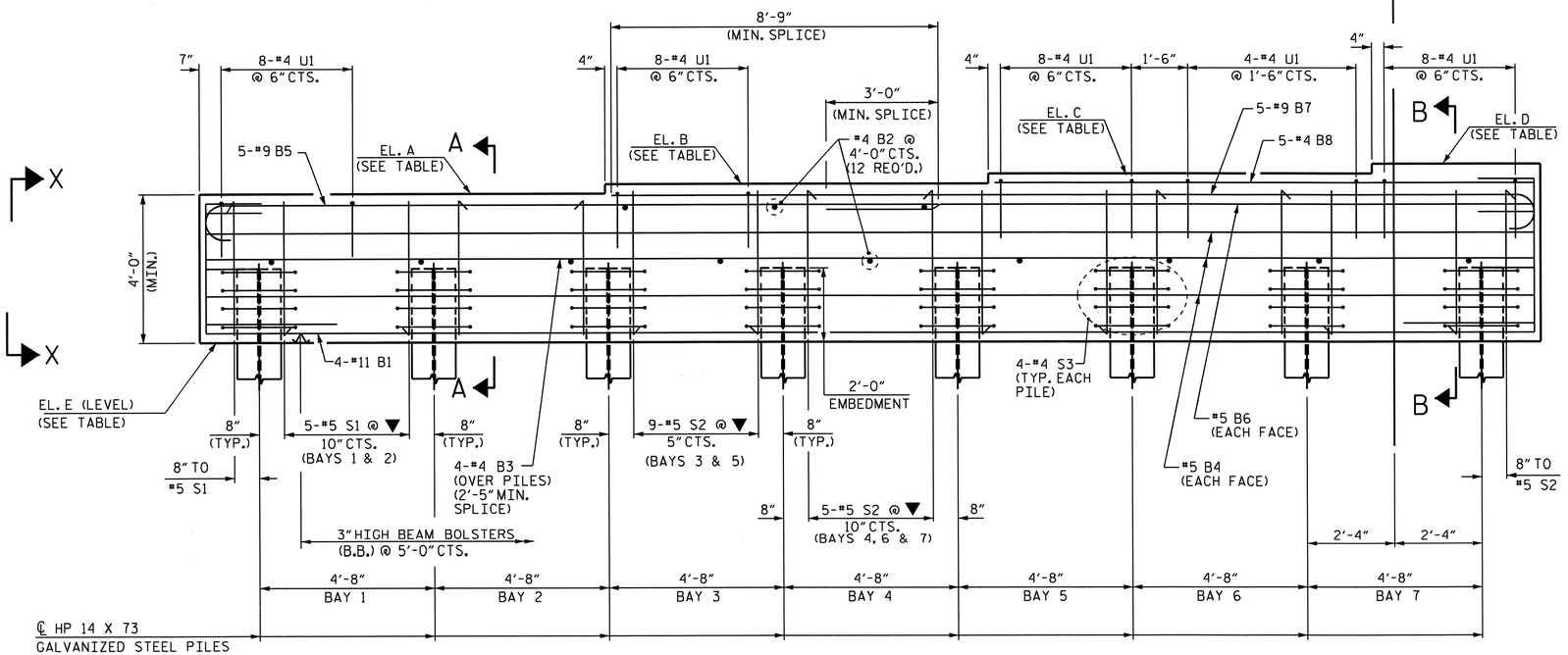

ELEVATION

▼ INVERT ALTERNATE STIRRUPS

NOTES:

STIRRUPS AND U1 BARS IN CAP MAY BE SHIFTED AS NECESSARY TO CLEAR ANCHOR BOLTS.

GALVANIZE THE TOP OF EACH INTERIOR BENT PILE A MINIMUM OF 30 FEET FOR BENTS 1 THRU 10 AND A MINIMUM OF 20 FEET FOR BENTS 11 AND 12 IN ACCORDANCE WITH SECTION 1076 OF THE STANDARD SPECIFICATIONS.

FOR BENTS 4, 8 AND 11 ONLY:
THE TOP SURFACE AREAS OF THE BENT CAPS SHALL BE CURED IN ACCORDANCE WITH THE STANDARD SPECIFICATIONS EXCEPT THE MEMBRANE CURING COMPOUND METHOD SHALL NOT BE USED.

ELEVATION	A	B	C	D	E
BENT 1	105.00	105.26	105.52	105.77	101.00
BENT 2	104.69	104.94	105.20	105.46	100.69
BENT 3	104.37	104.63	104.88	105.14	100.37
BENT 4	104.05	104.31	104.56	104.82	100.05
BENT 5	103.74	103.99	104.25	104.50	99.74
BENT 6	103.42	103.67	103.93	104.19	99.42
BENT 7	103.10	103.36	103.61	103.87	99.10
BENT 8	102.78	103.04	103.30	103.55	98.78
BENT 9	102.47	102.72	102.98	103.23	98.47
BENT 11	101.96	102.21	102.47	102.73	97.96
BENT 12	101.64	101.90	102.15	102.41	97.64

FOR ADDITIONAL REINFORCING STEEL IN ENDS OF CAP, SEE SECTION X-X AND SECTION Y-Y ON SHEET 3 OF 3.

PROJECT NO. R-2303B

CUMBERLAND/SAMPSON COUNTY

STATION: 397+87.00 -LREV-

SHEET 1 OF 3

STATE OF NORTH CAROLINA
DEPARTMENT OF TRANSPORTATION
RALEIGH

SUBSTRUCTURE

BENTS 1 THRU 9, 11 & 12
(LEFT LANE)

NORTH CAROLINA PROFESSIONAL SEAL 025516 ENGINEER TIMOTHY E. NARRA
2-21-13

REVISIONS						SHEET NO.
NO.	BY:	DATE:	NO.	BY:	DATE:	S-33
1			3			TOTAL SHEETS
2			4			146

DESIGN ENGINEER OF RECORD: MOHAMMED AHMED DATE: 9-21-11

DRAWN BY: MOHAMMED AHMED DATE: 5-21-12

CHECKED BY: PEGGY ADKINS DATE: 9-20-12

20-FEB-2013 15:50
Z:\TIPProjects-R\R2303B\Structures\Plans\str01\mmo\str1_WBL\Drafting\Bents\R2303B_SD_B*_01_WBL.dgn
podkins

STR. #1

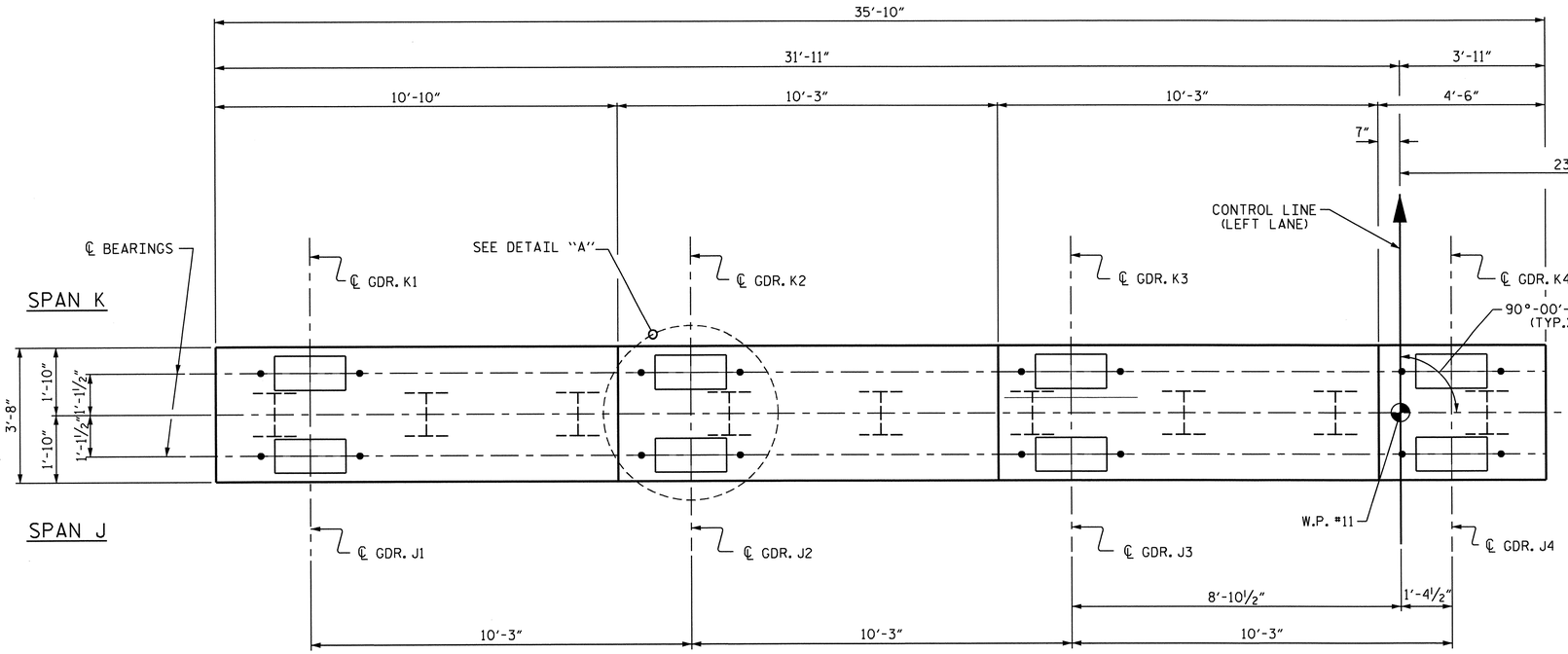

PLAN

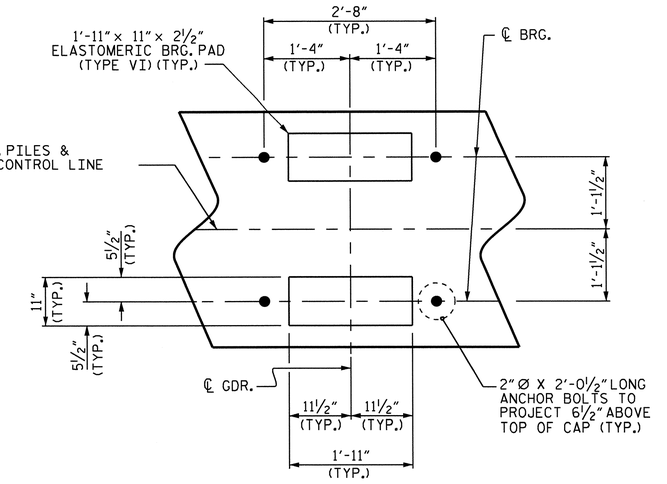

DETAIL "A"
(TYP. EA. GDR.)

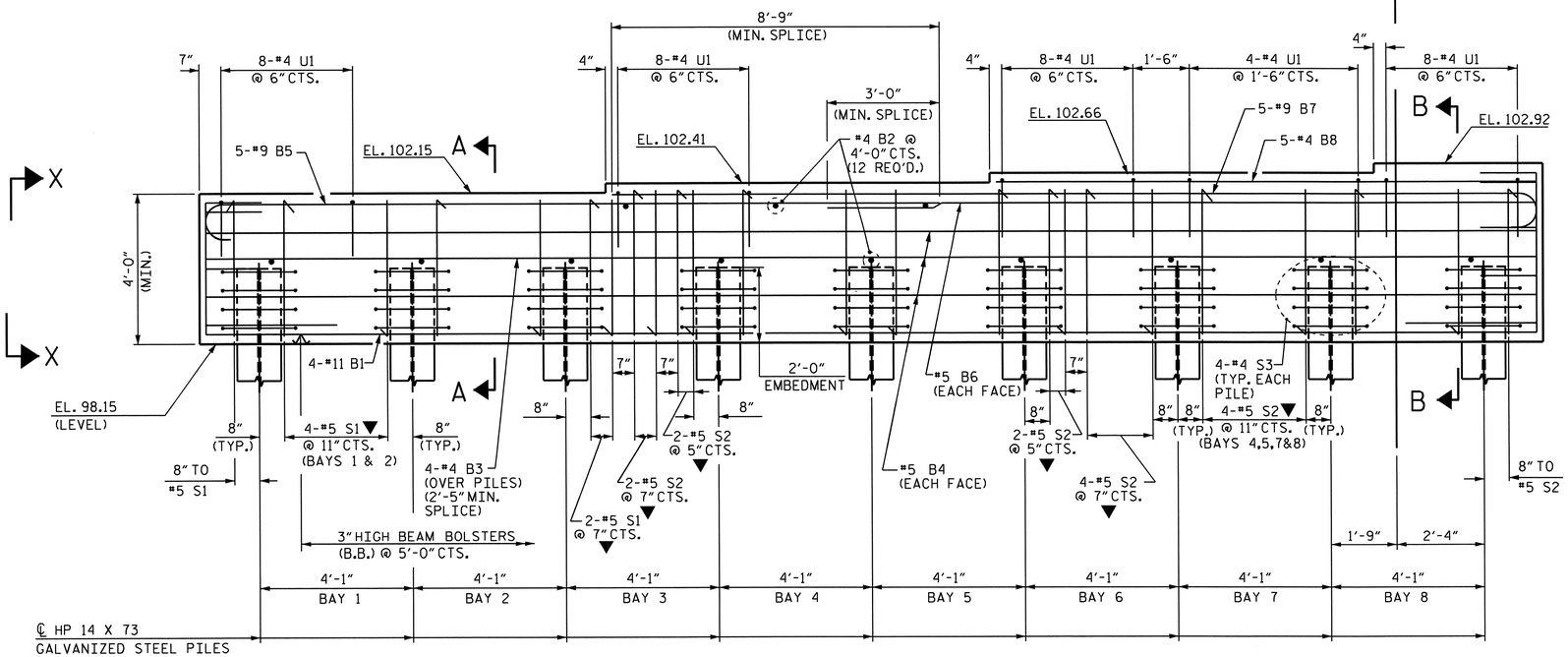

ELEVATION

▼ INVERT ALTERNATE STIRRUPS

NOTES:

STIRRUPS AND U1 BARS IN CAP MAY BE SHIFTED AS NECESSARY TO CLEAR ANCHOR BOLTS.

GALVANIZE THE TOP OF EACH INTERIOR BENT PILE A MINIMUM OF 30 FEET FOR BENTS 1 THRU 10 AND A MINIMUM OF 20 FEET FOR BENTS 11 AND 12 IN ACCORDANCE WITH SECTION 1076 OF THE STANDARD SPECIFICATIONS.

FOR ADDITIONAL REINFORCING STEEL IN ENDS OF CAP, SEE SECTION X-X AND SECTION Y-Y ON SHEET 3 OF 3.

PROJECT NO. R-2303B

CUMBERLAND/SAMPSON COUNTY

STATION: 397+87.00 -LREV-

SHEET 2 OF 3

STATE OF NORTH CAROLINA
DEPARTMENT OF TRANSPORTATION
RALEIGH

SUBSTRUCTURE

BENT 10
(LEFT LANE)

REVISIONS						SHEET NO.
NO.	BY:	DATE:	NO.	BY:	DATE:	S-34
1			3			TOTAL SHEETS
2			4			146

STR. #1

NORTH CAROLINA PROFESSIONAL SEAL 025516 ENGINEER MARY E. HARRA
2.21.13

DESIGN ENGINEER OF RECORD: MOHAMMED AHMED DATE : 9-21-11

DRAWN BY : MOHAMMED AHMED DATE : 5-25-12

CHECKED BY : PEGGY ADKINS DATE : 9-20-12

20-FEB-2013 15:50
Z:\TIPProjects-R\R2303B\Structures\Plans\str01\mmo\str1_WBL\Drafting\Bents\R2303B_SD_B*_01_WBL.dgn
podkins

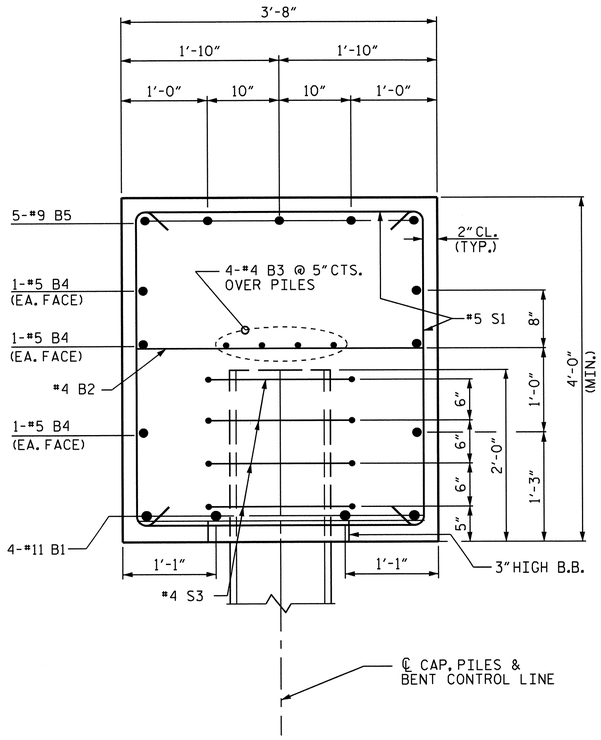

SECTION A-A

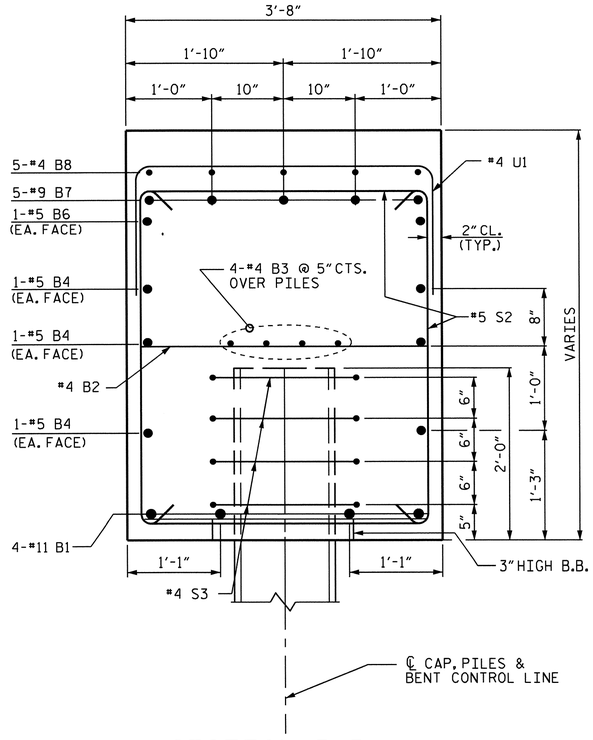

SECTION B-B

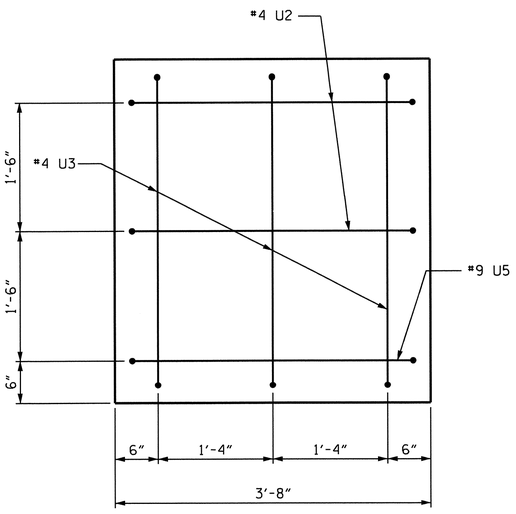

SECTION X-X

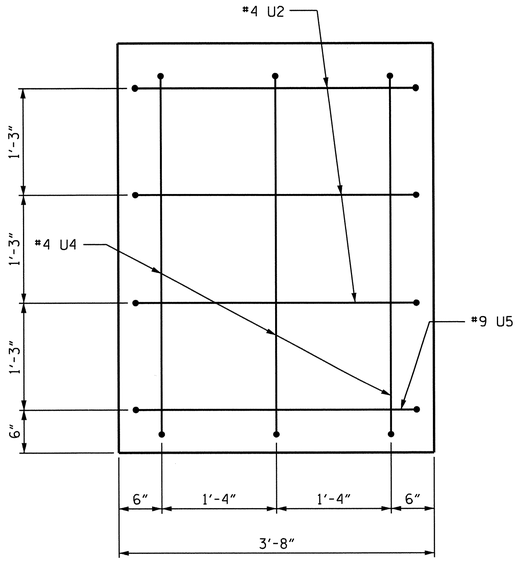

SECTION Y-Y

BAR TYPES

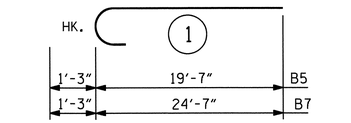

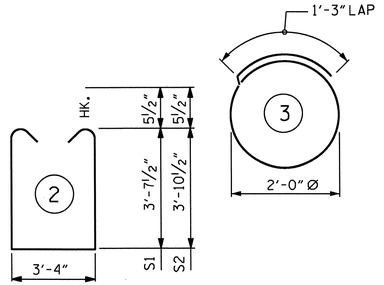

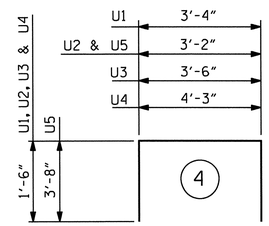

ALL BAR DIMENSIONS ARE OUT TO OUT.

BILL OF MATERIAL FOR ONE BENT (FOR BENTS 1 THRU 9, 11 & 12)

BAR	NO.	SIZE	TYPE	LENGTH	WEIGHT
B1	4	#11	STR	35'-6"	754
B2	12	#4	STR	3'-4"	27
B3	8	#4	STR	19'-0"	102
B4	6	#5	STR	35'-6"	222
B5	5	#9	1	20'-10"	354
B6	2	#5	STR	18'-11"	39
B7	5	#9	1	25'-10"	439
B8	5	#4	STR	14'-5"	48
S1	11	#5	2	11'-6"	132
S2	34	#5	2	12'-0"	426
S3	32	#4	3	7'-7"	162
U1	36	#4	4	6'-4"	152
U2	5	#4	4	6'-2"	21
U3	3	#4	4	6'-6"	13
U4	3	#4	4	7'-3"	15
U5	2	#9	4	10'-6"	71

TOTAL REINFORCING STEEL 2,977 LBS.

CLASS A CONCRETE
POUR #1 CAP 21.0 C.Y.

TOTAL CLASS A CONCRETE 21.0 C.Y.

HP 14 X 73 GALVANIZED STEEL PILES
BENTS 1 THRU 8 NO. 8 640 LIN. FT.
BENT 9 NO. 8 680 LIN. FT.
BENTS 11 & 12 NO. 8 560 LIN. FT.
PILE REDRIVES EA. 4

BILL OF MATERIAL FOR ONE BENT (FOR BENT 10 ONLY)

BAR	NO.	SIZE	TYPE	LENGTH	WEIGHT
B1	4	#11	STR	35'-6"	754
B2	12	#4	STR	3'-4"	27
B3	8	#4	STR	19'-0"	102
B4	6	#5	STR	35'-6"	222
B5	5	#9	1	20'-10"	354
B6	2	#5	STR	18'-11"	39
B7	5	#9	1	25'-10"	439
B8	5	#4	STR	14'-5"	48
S1	11	#5	2	11'-6"	132
S2	27	#5	2	12'-0"	338
S3	36	#4	3	7'-7"	182
U1	36	#4	4	6'-4"	152
U2	5	#4	4	6'-2"	21
U3	3	#4	4	6'-6"	13
U4	3	#4	4	7'-3"	15
U5	2	#9	4	10'-6"	71

TOTAL REINFORCING STEEL 2,909 LBS.

CLASS A CONCRETE
POUR #1 CAP 21.0 C.Y.

TOTAL CLASS A CONCRETE 21.0 C.Y.

HP 14 X 73 GALVANIZED STEEL PILES
BENT 10 NO. 9 630 LIN. FT.
PILE REDRIVES EA. 4

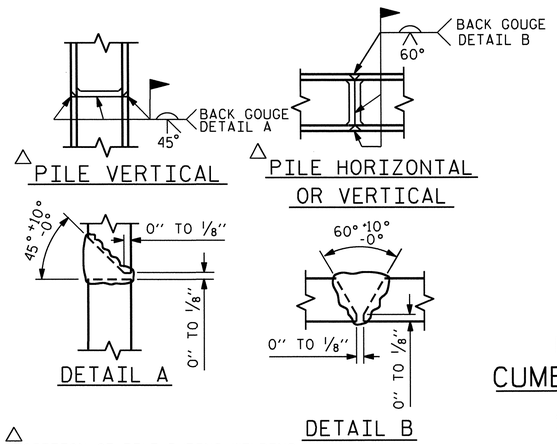

△ POSITION OF PILE DURING WELDING.

PILE SPLICE DETAILS

PROJECT NO. R-2303B
CUMBERLAND/SAMPSON COUNTY
STATION: 397+87.00 -LREV-

SHEET 3 OF 3

STATE OF NORTH CAROLINA
DEPARTMENT OF TRANSPORTATION
RALEIGH

SUBSTRUCTURE

BENTS 1 THRU 12
(LEFT LANE)

REVISIONS						SHEET NO.
NO.	BY:	DATE:	NO.	BY:	DATE:	S-35
1			3			TOTAL SHEETS
2			4			146

STR. #1

NORTH CAROLINA PROFESSIONAL SEAL 025516 ENGINEER EMILY E. SMARRA
2.21.13

DESIGN ENGINEER OF RECORD: MOHAMMED AHMED DATE : 5-21-11
DRAWN BY : MOHAMMED AHMED DATE : 5-22-12
CHECKED BY : PEGGY ADKINS DATE : 9-20-12

20-FEB-2013 15:50
Z:\TIPProjects-R\R2303B\Structures\Plans\str01\mmo\str1_WBL\Drafting\Bents\R2303B_SD_B*_01_WBL.dgn
padkins

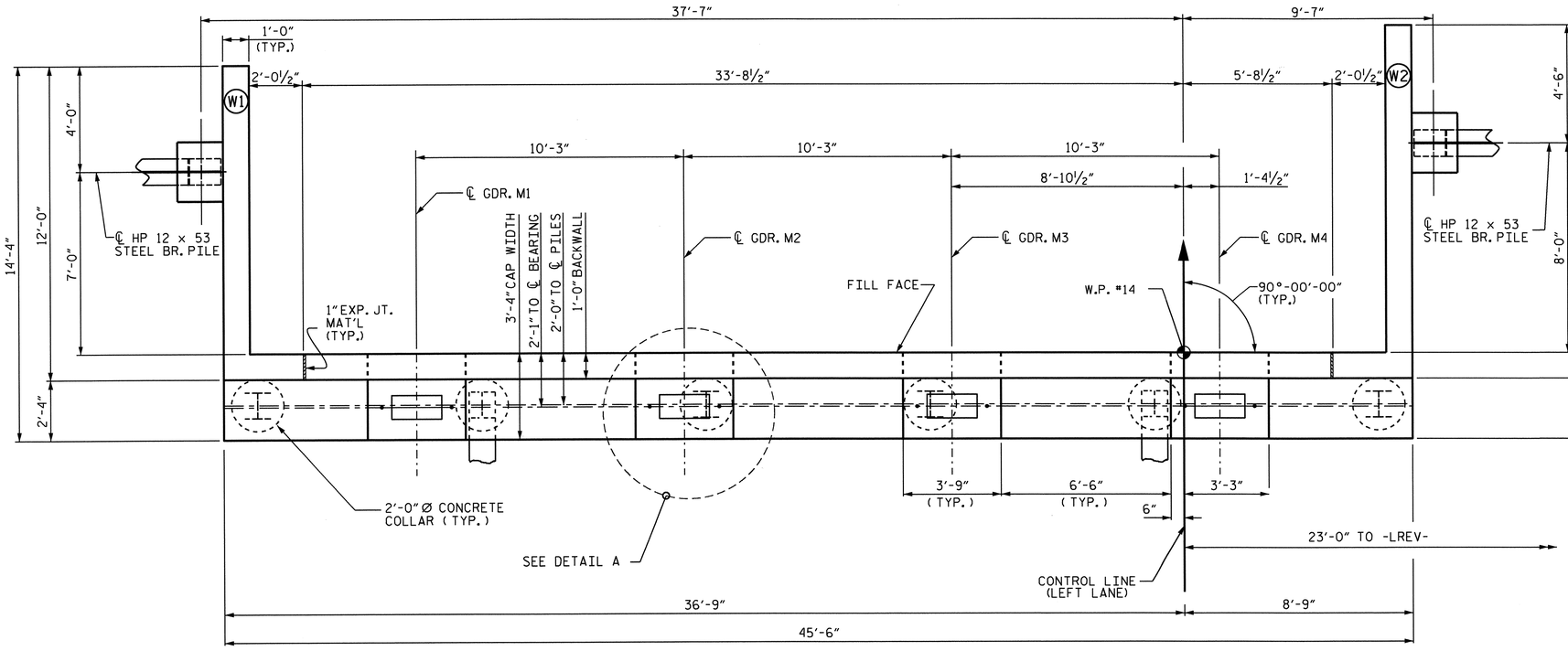

PLAN

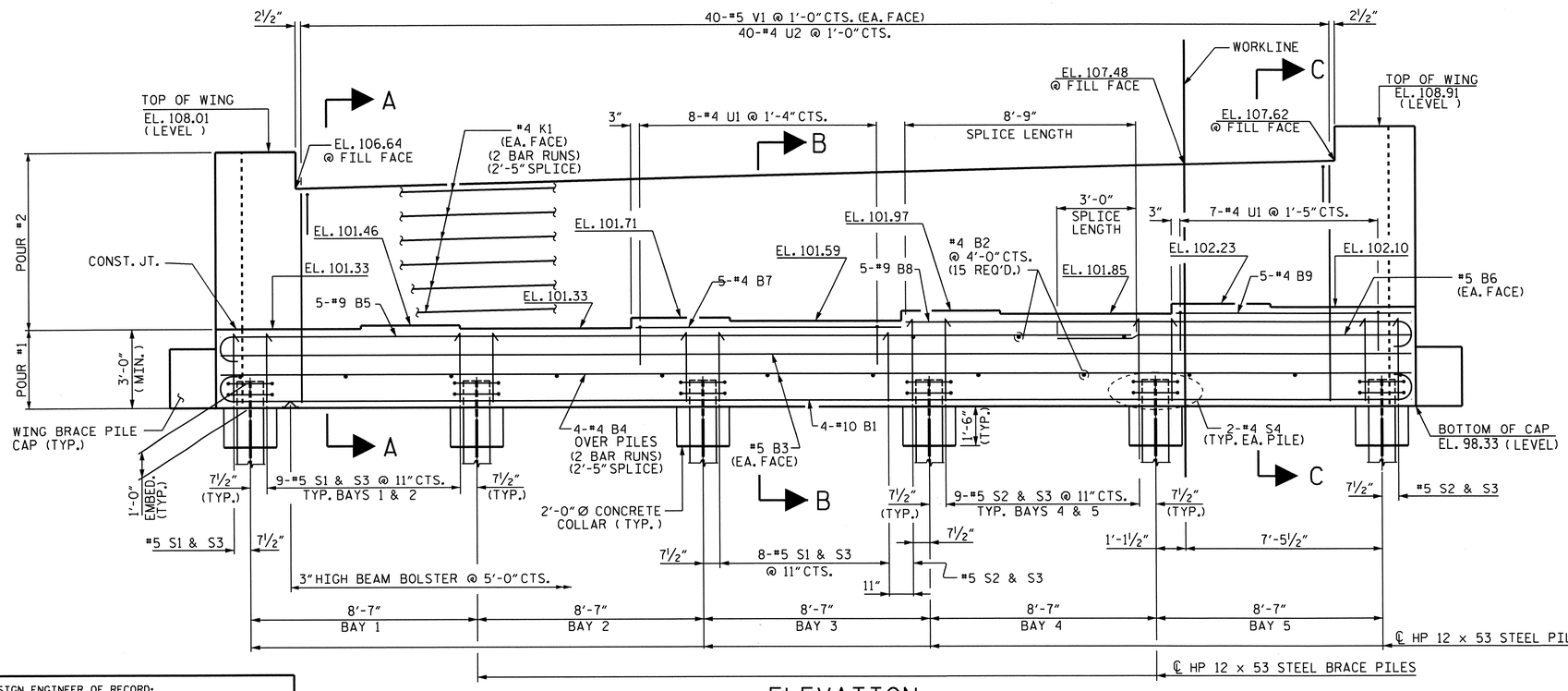

ELEVATION

PILES AND REINFORCING STEEL NOT SHOWN IN WING BRACE PILE CAP FOR CLARITY, SEE WING DETAILS, SHEET 2 OF 3.

NOTES

STIRRUPS IN CAP MAY BE SHIFTED AS NECESSARY TO CLEAR ANCHOR BOLTS.

BACKWALL SHALL BE PLACED BEFORE APPLYING THE EPOXY PROTECTIVE COATING.

THE TOP SURFACE AREAS OF THE END BENT CAP SHALL BE CURED IN ACCORDANCE WITH THE STANDARD SPECIFICATIONS EXCEPT THAT THE MEMBRANE CURING COMPOUND METHOD SHALL NOT BE USED.

THE TOP SURFACE OF THE END BENT CAP EXCEPT THE BRIDGE SEAT BUILDUPS SHALL BE SLOPED TRANSVERSELY FROM THE FILL FACE TO THE BACK FACE AT THE RATE OF 2%.

INSTALL THE 4" DIA. DRAIN PIPE THROUGH THE WING WALL AS REQUIRED FOR REINFORCED BRIDGE APPROACH FILLS. SEE THE ROADWAY PLANS. REINFORCING STEEL IN THE WING WALL MAY BE SHIFTED AS NECESSARY TO CLEAR THE DRAIN PIPE.

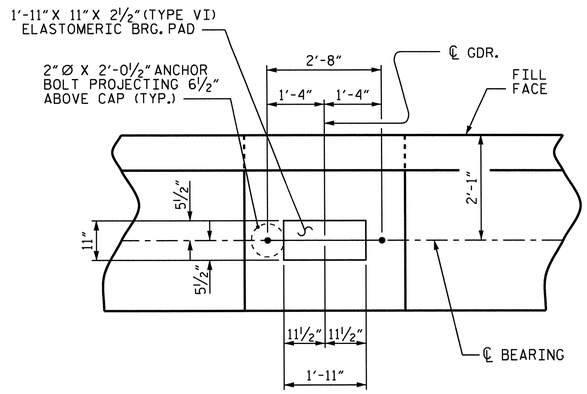

DETAIL A

(TYP. EA. BRG.)

PROJECT NO. R-2303B

CUMBERLAND/SAMPSON COUNTY

STATION: 397+87.00-LREV-

SHEET 1 OF 3

STATE OF NORTH CAROLINA
DEPARTMENT OF TRANSPORTATION
RALEIGH

SUBSTRUCTURE

END BENT #2
(LEFT LANE)

REVISIONS						SHEET NO.
NO.	BY:	DATE:	NO.	BY:	DATE:	S-36
1			3			TOTAL SHEETS
2			4			146

NORTH CAROLINA PROFESSIONAL SEAL 025516 ENGINEER EMILY E. MURRAY 2.21.13

DESIGN ENGINEER OF RECORD: MOHAMMED AHMED DATE: 9-21-11

DRAWN BY: M.M. AHMED DATE: 5/3/12

CHECKED BY: A.M. LEE, PE DATE: 10-12-12

20-FEB-2013 15:50
Z:\TIPProjects-R\R2303B\Structures\Plans\str01\mmo\str1_WBL\Drafting\End Bents\R2303B_SD_Ebs*_01_WBL.dgn
podkins

STR #1

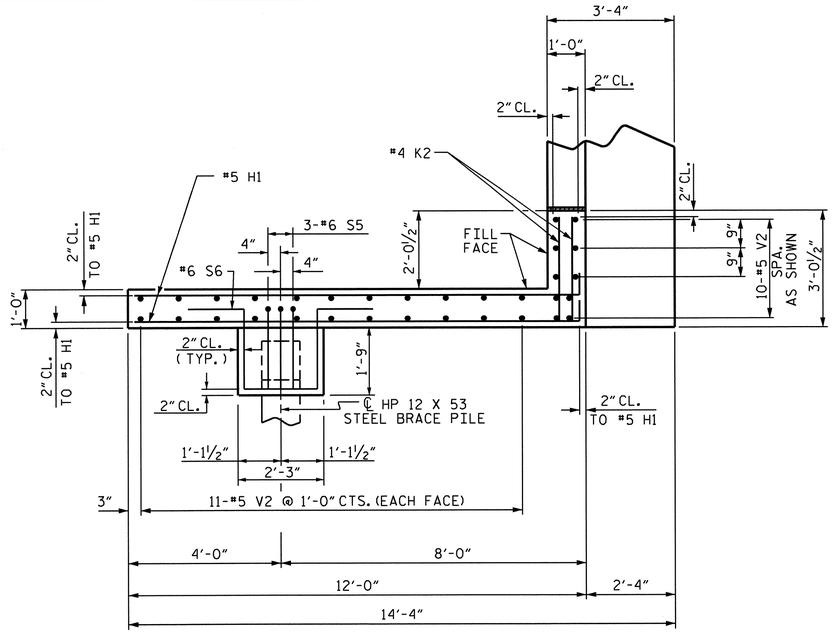

PLAN OF WING W1

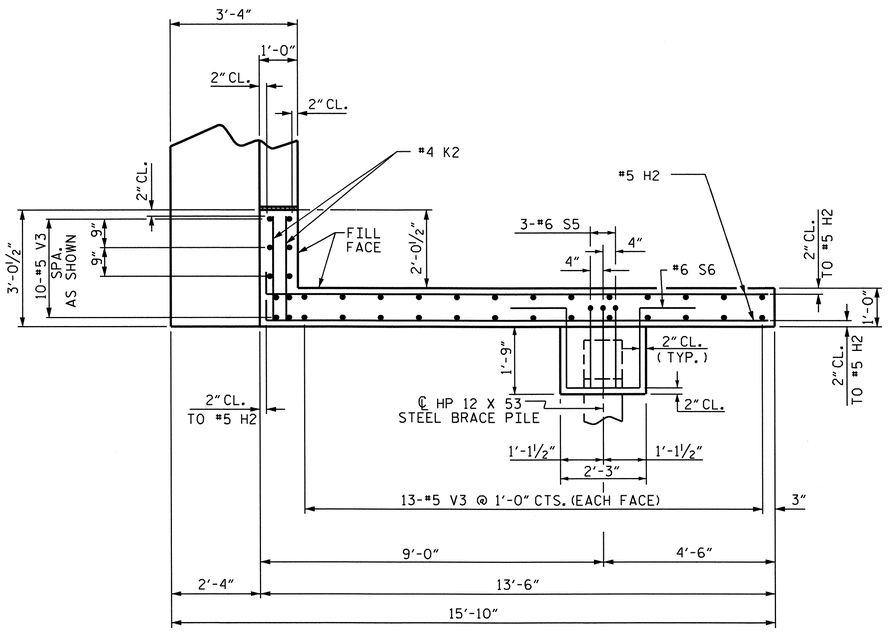

PLAN OF WING W2

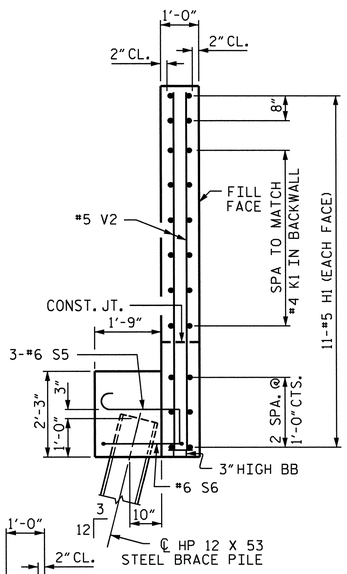

SECTION X-X

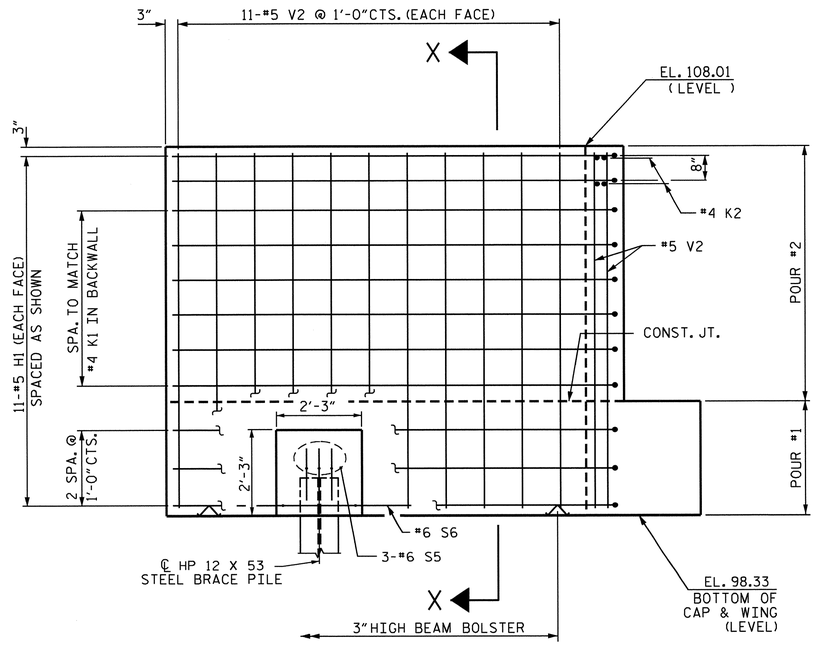

ELEVATION OF WING W1

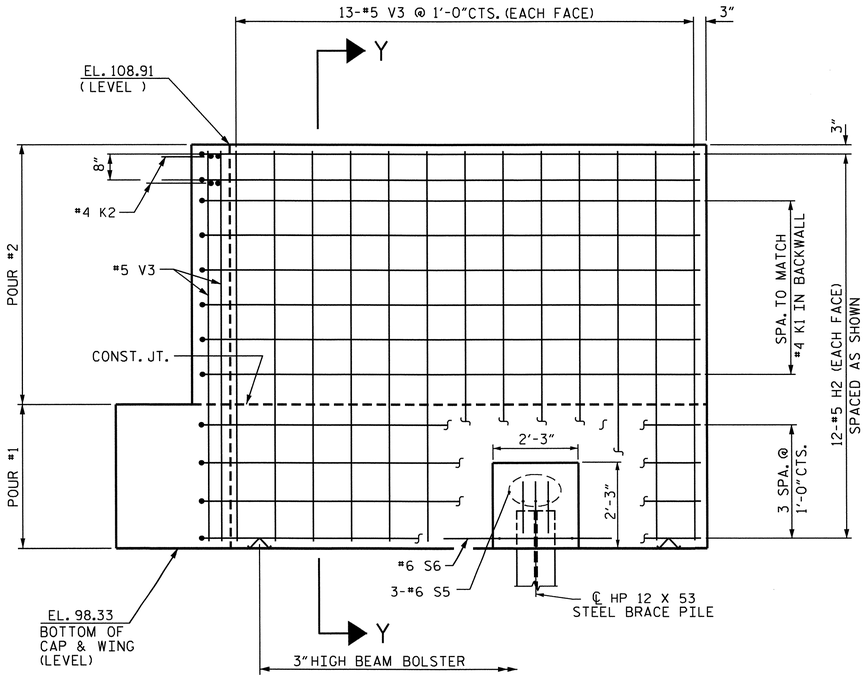

ELEVATION OF WING W2

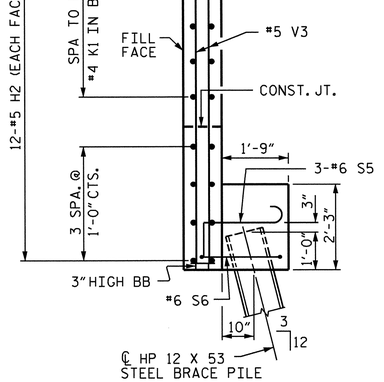

SECTION Y-Y

PROJECT NO. R-2303B

CUMBERLAND/SAMPSON COUNTY

STATION: 397+87.00-LREV-

SHEET 2 OF 3

DESIGN ENGINEER OF RECORD: MOHAMMED AHMED	DATE : 9-21-11	
DRAWN BY : M.M. AHMED	DATE : 5-3-12	
CHECKED BY : A.M. LEE, PE	DATE : 10-12-12	

NORTH CAROLINA PROFESSIONAL SEAL 025516 ENGINEER ELMER E. MURRAY 2-21-13

STATE OF NORTH CAROLINA
DEPARTMENT OF TRANSPORTATION
RALEIGH

SUBSTRUCTURE

END BENT #2
(LEFT LANE)

REVISIONS						SHEET NO.
NO.	BY:	DATE:	NO.	BY:	DATE:	S-37
1			3			TOTAL SHEETS
2			4			146

STR #1

20-FEB-2013 16:08
Z:\TIPProjects-R\R2303B\Structures\Plans\str01\mma\str1_WBL\Drafting\End Bents\R2303B_SD_Ebs*_01_WBL.dgn
podkins

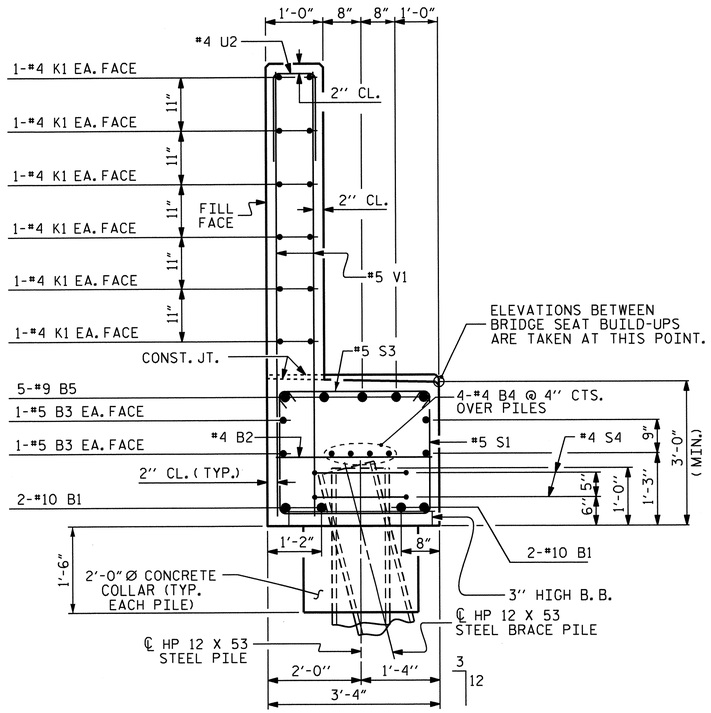

SECTION A-A

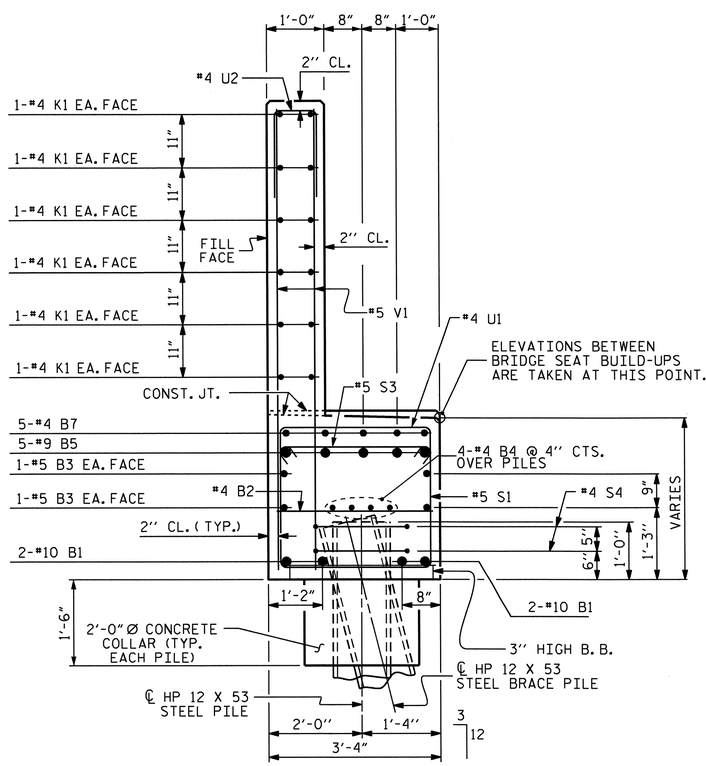

SECTION B-B

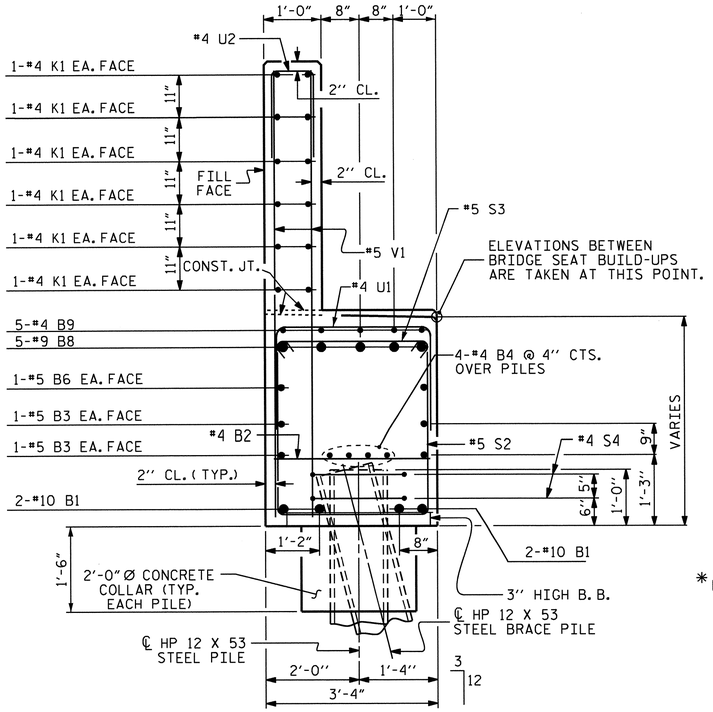

SECTION C-C

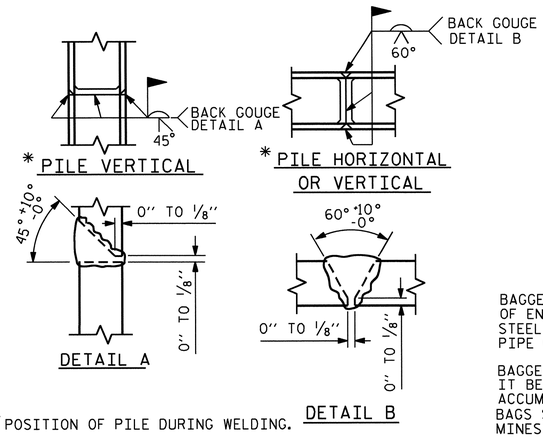

*POSITION OF PILE DURING WELDING.

PILE SPLICE DETAILS

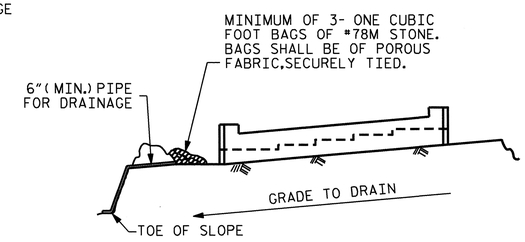

BAGGED STONE AND PIPE SHALL BE PLACED IMMEDIATELY AFTER COMPLETION OF END BENT EXCAVATION. PIPE MAY BE EITHER CONCRETE, CORRUGATED STEEL, CORRUGATED ALUMINUM ALLOY, OR CORRUGATED PLASTIC. PERFORATED PIPE WILL NOT BE ALLOWED.

BAGGED STONE SHALL REMAIN IN PLACE UNTIL THE ENGINEER DIRECTS THAT IT BE REMOVED. THE CONTRACTOR SHALL REMOVE AND DISPOSE OF SILT ACCUMULATIONS AT BAGGED STONE WHEN SO DIRECTED BY THE ENGINEER. BAGS SHALL BE REMOVED AND REPLACED WHENEVER THE ENGINEER DETERMINES THAT THEY HAVE DETERIORATED AND LOST THEIR EFFECTIVENESS.

NO SEPARATE PAYMENT WILL BE MADE FOR THIS WORK AND THE ENTIRE COST OF THIS WORK SHALL BE INCLUDED IN THE UNIT CONTRACT PRICE BID FOR THE SEVERAL PAY ITEMS.

TEMPORARY DRAINAGE AT END BENT

BAR TYPES

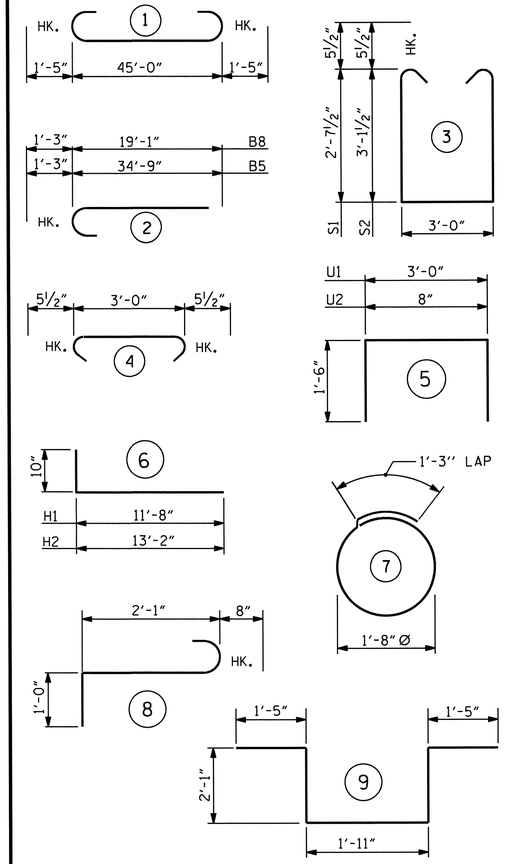

ALL BAR DIMENSIONS ARE OUT TO OUT.

BILL OF MATERIAL

END BENT #2

BAR	NO.	SIZE	TYPE	LENGTH	WEIGHT
B1	4	#10	1	47'-10"	823
B2	15	#4	STR	3'-0"	30
B3	4	#5	STR	45'-2"	188
B4	8	#4	STR	23'-10"	127
B5	5	#9	2	36'-0"	612
B6	2	#5	STR	13'-5"	28
B7	5	#4	STR	10'-1"	34
B8	5	#9	2	20'-4"	346
B9	5	#4	STR	8'-11"	30
H1	22	#5	6	12'-6"	287
H2	24	#5	6	14'-0"	350
K1	24	#4	STR	23'-10"	382
K2	8	#4	STR	2'-8"	14
S1	27	#5	3	9'-2"	258
S2	20	#5	3	10'-2"	212
S3	47	#5	4	3'-11"	192
S4	12	#4	7	6'-6"	52
S5	6	#6	8	3'-9"	34
S6	2	#6	9	8'-11"	27
U1	15	#4	5	6'-0"	60
U2	40	#4	5	3'-8"	98
V1	80	#5	STR	7'-11"	661
V2	32	#5	STR	9'-4"	312
V3	36	#5	STR	10'-3"	385
TOTAL REINFORCING STEEL					5542 LBS.

CLASS A CONCRETE BREAKDOWN	
POUR #1 (CAP, LOWER PART OF WINGS, PILE COLLARS & WING BRACE PILE CAPS)	23.6 CU. YDS.
POUR #2 (BACKWALL & UPPER PART OF WINGS)	15.3 CU. YDS.
TOTAL CLASS A CONCRETE	38.9 CU. YDS.

HP 12 X 53 STEEL PILES	
NO. 8	440 LIN. FT.
PILE REDRIVES	3 EA.

DRAWN BY : M.M. AHMED DATE : 5-3-12
CHECKED BY : A.M LEE, PE DATE : 10-12-12

DESIGN ENGINEER OF RECORD: MOHAMMED AHMED DATE : 9-21-11

20-FEB-2013 16:08
Z:\TIPProjects-R\R2303B\Structures\Plans\str01\mma\str1_WBL\Drafting\End Bents\R2303B_SD_Ebs*_01_WBL.dgn
padkins

PROJECT NO. R-2303B
CUMBERLAND/SAMPSON COUNTY
STATION: 397+87.00-LREV-

SHEET 3 OF 3

STATE OF NORTH CAROLINA
DEPARTMENT OF TRANSPORTATION
RALEIGH

SUBSTRUCTURE

END BENT #2
(LEFT LANE)

REVISIONS						SHEET NO.
NO.	BY:	DATE:	NO.	BY:	DATE:	S-38
1			3			TOTAL SHEETS
2			4			146

STR #1

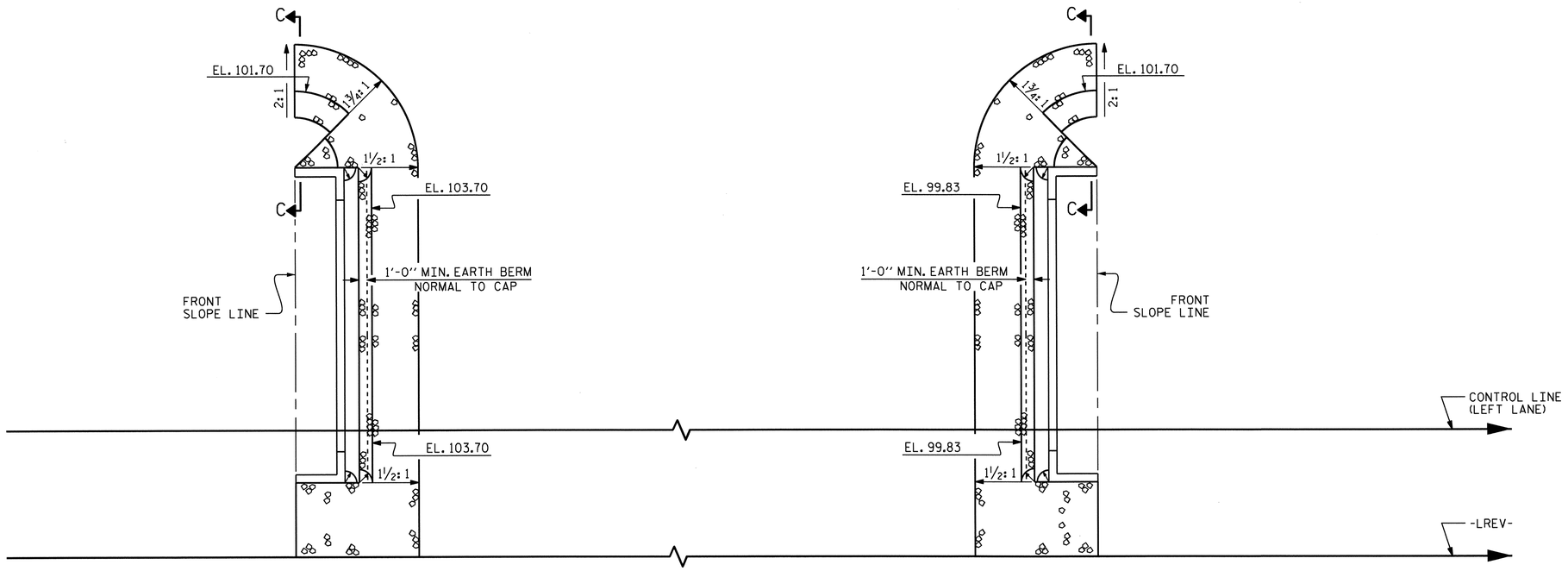

PLAN

ESTIMATED QUANTITIES		
BRIDGE @ STA. 397+87.00 -LREV- (LEFT LANE)	RIP RAP CLASS II (2'-0" THICK)	GEOTEXTILE FOR DRAINAGE
	TONS	SQUARE YARDS
END BENT 1	235	261
END BENT 2	97	108

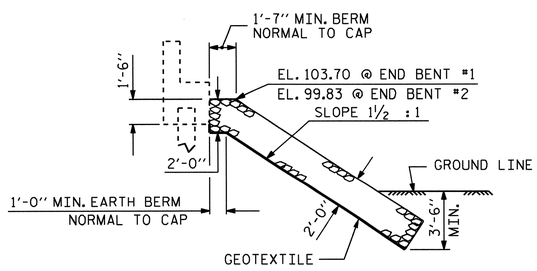

℄ SECTION

BERM RIP RAPPED

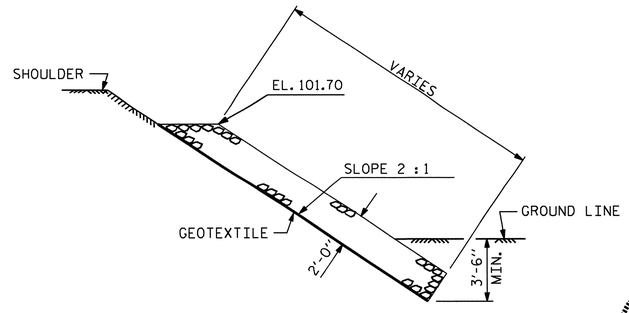

SECTION C-C

PROJECT NO. R-2303B

CUMBERLAND/SAMPSON COUNTY

STATION: 397+87.00 -LREV-

STATE OF NORTH CAROLINA
DEPARTMENT OF TRANSPORTATION
RALEIGH

STANDARD

RIP RAP DETAILS

(LEFT LANE)

NORTH CAROLINA PROFESSIONAL SEAL 025516 ENGINEER E. GARRAY
2.21.13

REVISIONS						SHEET NO.
NO.	BY:	DATE:	NO.	BY:	DATE:	S-39
1			3			TOTAL SHEETS
2			4			146

ASSEMBLED BY : PEGGY ADKINS DATE : 10-10-12
CHECKED BY : T. AVERETTE DATE : 12-17-12

DRAWN BY : REK 1/84	REV. 5/1/06R	TLA/GM
CHECKED BY : RDU 1/84	REV. 10/1/11	MAA/GM
	REV. 12/21/11	MAA/GM

20-FEB-2013 15:49
Z:\TIPProjects-R\R2303B\Structures\Plans\str01\pparisi\R2303B_sd_RR_01.dgn
padkins

STR. #1

STD. NO. RR1 (Sht 2)

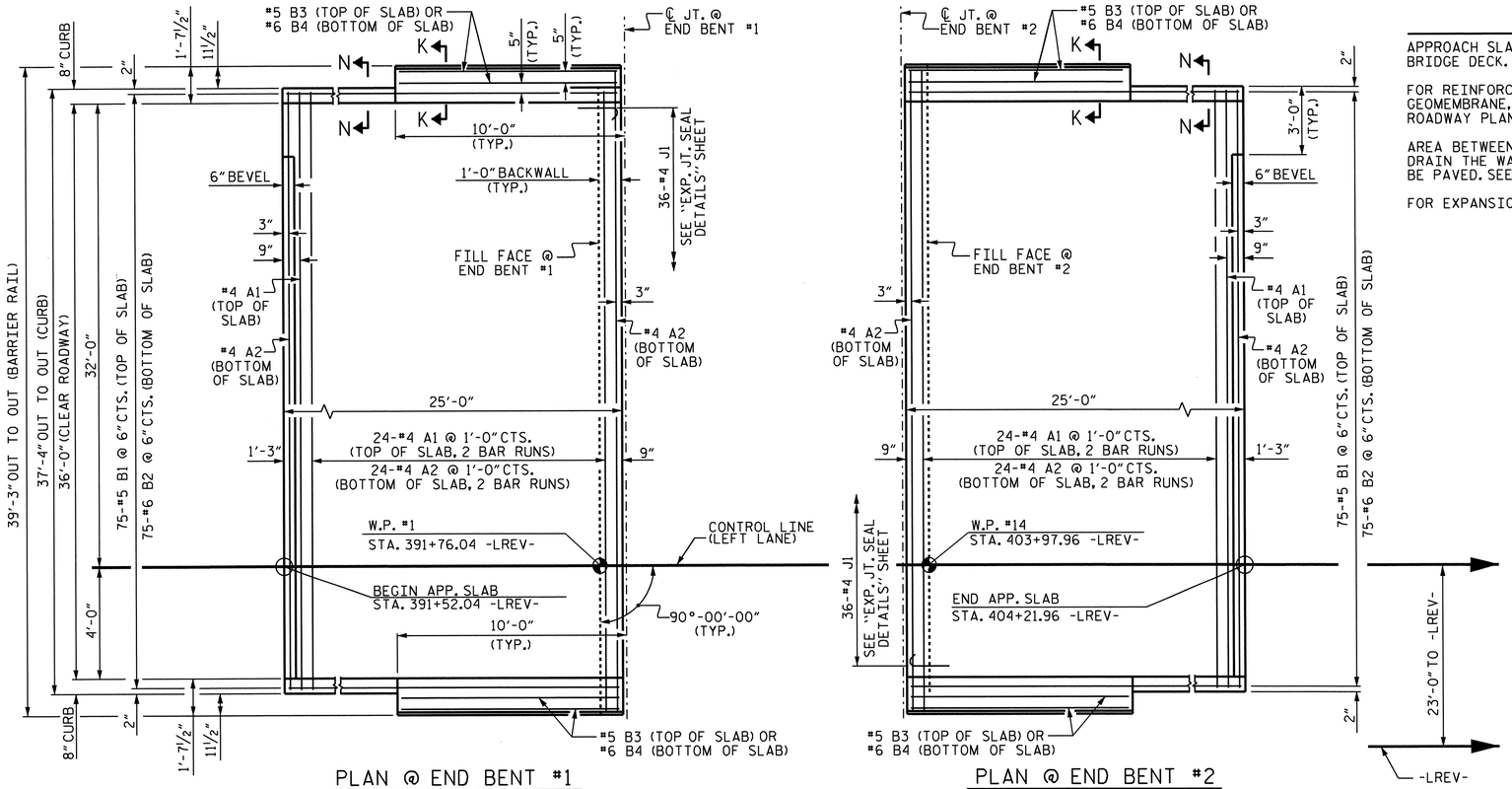

DIMENSIONS SHOWN ARE TYPICAL FOR BOTH APPROACH SLABS

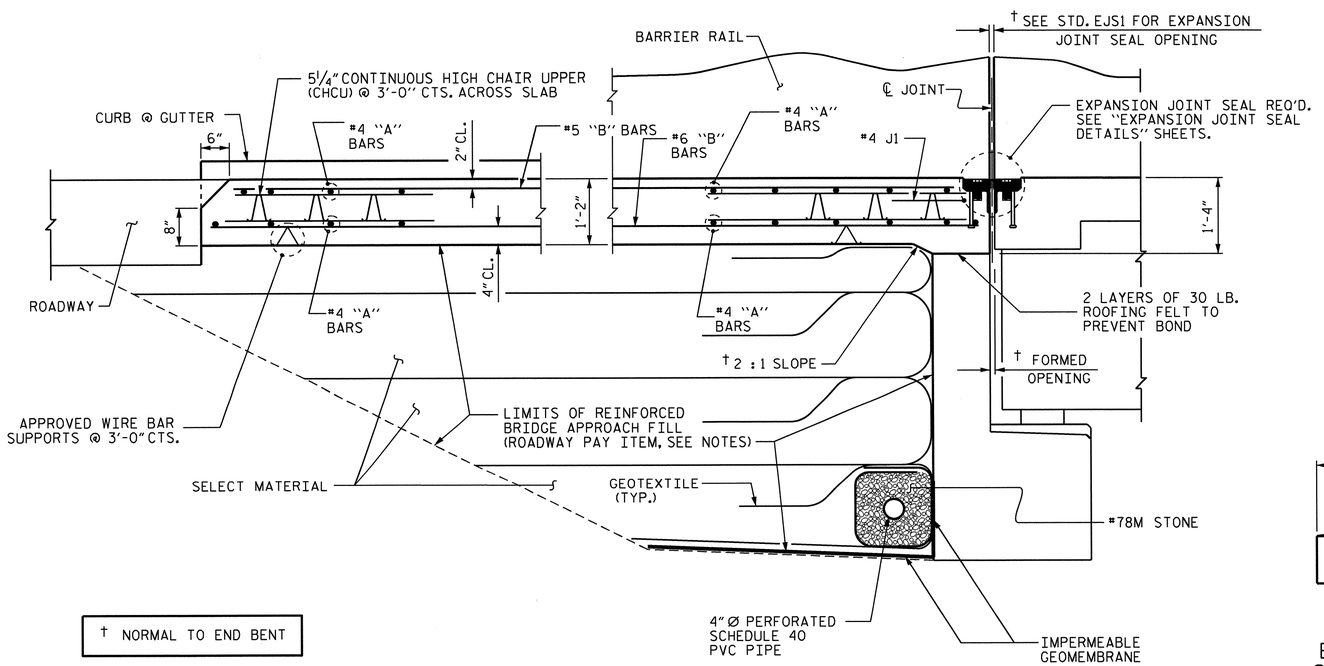

† NORMAL TO END BENT

SECTION THRU SLAB

NOTES

APPROACH SLAB SHALL NOT BE CONSTRUCTED PRIOR TO COMPLETION OF THE BRIDGE DECK.

FOR REINFORCED BRIDGE APPROACH FILL INCLUDING GEOTEXTILE, IMPERMEABLE GEOMEMBRANE, 4" Ø DRAINAGE PIPE, #78M STONE, AND SELECT MATERIAL, SEE ROADWAY PLANS.

AREA BETWEEN THE WINGWALL AND APPROACH SLAB SHALL BE GRADED TO DRAIN THE WATER AWAY FROM THE FILL FACE OF THE BRIDGE AND SHALL BE PAVED. SEE ROADWAY PLANS.

FOR EXPANSION JOINT SEALS, SEE SPECIAL PROVISIONS.

SPLICE LENGTHS		
BAR SIZE	EPOXY COATED	UNCOATED
#4	2'-0"	1'-9"
#5	2'-6"	2'-2"
#6	3'-10"	2'-7"

BILL OF MATERIAL

APPROACH SLAB AT EB #1

BAR	NO.	SIZE	TYPE	LENGTH	WEIGHT
✱A1	50	#4	STR	20'-6"	685
A2	52	#4	STR	20'-4"	706
✱B1	75	#5	STR	23'-10"	1864
B2	75	#6	STR	24'-8"	2779
✱B3	4	#5	STR	9'-7"	40
B4	4	#6	STR	9'-7"	58
✱J1	36	#4	1	1'-5"	34

REINFORCING STEEL 3543 LBS.
✱EPOXY COATED REINFORCING STEEL ✱✱ 2623 LBS.
CLASS AA CONCRETE ✱✱ 41.5 CU. YDS.

APPROACH SLAB AT EB #2

BAR	NO.	SIZE	TYPE	LENGTH	WEIGHT
✱A1	50	#4	STR	20'-6"	685
A2	52	#4	STR	20'-4"	706
✱B1	75	#5	STR	23'-10"	1864
B2	75	#6	STR	24'-8"	2779
✱B3	4	#5	STR	9'-7"	40
B4	4	#6	STR	9'-7"	58
✱J1	36	#4	1	1'-5"	34

REINFORCING STEEL 3543 LBS.
✱EPOXY COATED REINFORCING STEEL ✱✱ 2623 LBS.
CLASS AA CONCRETE ✱✱ 41.5 CU. YDS.

BAR TYPE

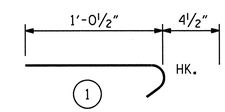

ALL BAR DIMENSIONS ARE OUT TO OUT

✱✱ QUANTITIES FOR BARRIER RAIL ARE NOT INCLUDED. SEE SHEET 2 OF 2.

THE QUANTITY OF #4 J1 BARS ON THE BILL OF MATERIAL IS BASED ON 1'-0" CENTERS. J1 BARS SHALL BE PLACED AT EACH VERTICAL STUD ANCHOR BOLT. IN THE EVENT THAT THE NUMBER OF VERTICAL STUD ANCHORS EXCEEDS THE NUMBER OF J1 BARS SPECIFIED, ADDITIONAL J1 BARS WILL NOT BE REQUIRED.

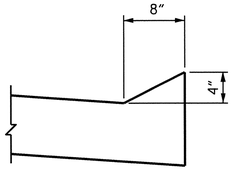

SECTION N-N

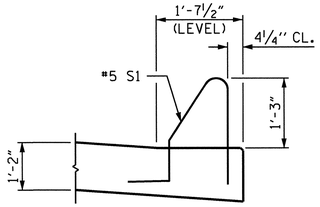

SECTION K-K

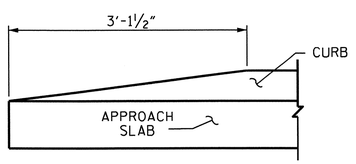

END OF CURB WITHOUT SHOULDER BERM GUTTER

CURB DETAILS

PROJECT NO. R-2303B
CUMBERLAND/SAMPSON COUNTY
STATION: 397+87.00-LREV-

SHEET 1 OF 2

STATE OF NORTH CAROLINA
DEPARTMENT OF TRANSPORTATION
RALEIGH

STANDARD

BRIDGE APPROACH SLAB FOR FLEXIBLE PAVEMENT

(LEFT LANE)

REVISIONS						SHEET NO.
NO.	BY:	DATE:	NO.	BY:	DATE:	S-40
1			3			TOTAL SHEETS
2			4			146

STR. #1 STD. NO. BAS2 (SHT 4)

NORTH CAROLINA PROFESSIONAL SEAL 025516 ENGINEER EMILY B. MURRAY 2.21.13

ASSEMBLED BY : M.D.PISO	DATE : 09-13-12
CHECKED BY : P.A.PARISI	DATE : 10-02-12
DRAWN BY : EEM 3/95	REV. 5/7/03R RWW/JTE
CHECKED BY : VAP 3/95	REV. 5/1/06RR KMM/GM
	REV. 10/1/11 MAA/GM

20-FEB-2013 15:48
Z:\TIPProjects-R\R2303B\Structures\Plans\str01\mdpiso\R-2303B_SD_AS.dgn
padkins

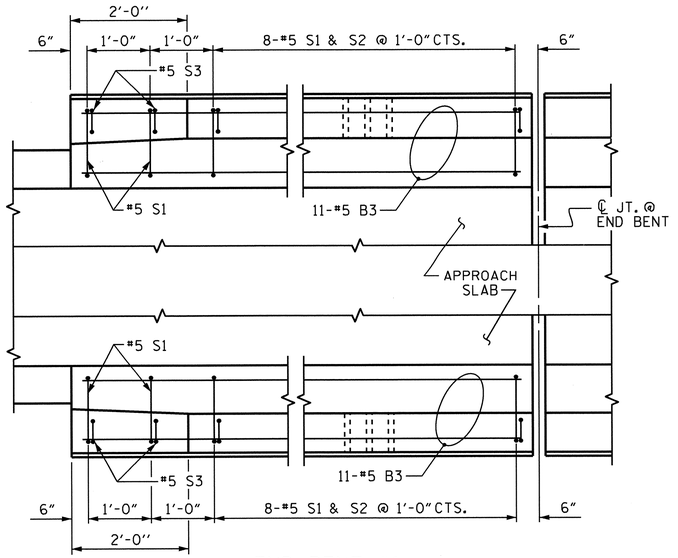

END BENT #1

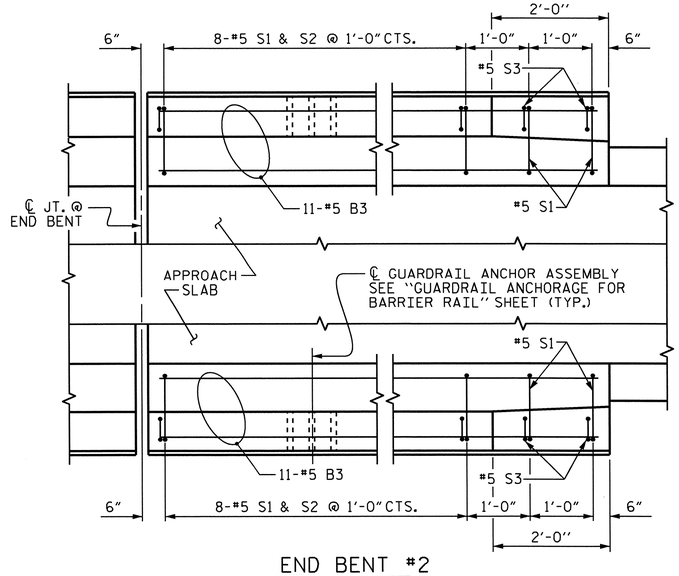

END BENT #2

NOTES

THE COST OF THE BARRIER RAIL ON THE APPROACH SLAB SHALL BE INCLUDED IN THE LINEAR FOOT CONTRACT PRICE BID FOR "CONCRETE BARRIER RAIL".

THE BARRIER RAIL ON EACH APPROACH SLAB SHALL NOT BE CAST UNTIL ALL APPROACH SLAB CONCRETE HAS BEEN CAST AND HAS REACHED A MINIMUM COMPRESSIVE STRENGTH OF 3,000 PSI.

ALL REINFORCING STEEL IN BARRIER RAILS SHALL BE EPOXY COATED.

BAR TYPES

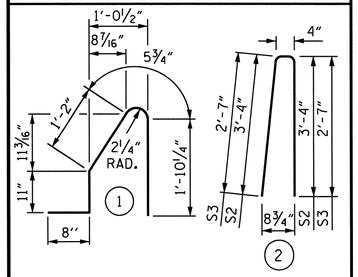

ALL BAR DIMENSIONS ARE OUT TO OUT

BILL OF MATERIAL

BARRIER RAIL ONLY

BAR	NO.	SIZE	TYPE	LENGTH	WEIGHT
* B3	44	#5	STR	9'-7"	440
* S1	40	#5	1	5'-1"	212
* S2	32	#5	2	7'-0"	234
* S3	8	#5	2	5'-6"	46

* EPOXY COATED REINFORCING STEEL	LBS.	932
CLASS AA CONCRETE	C.Y.	5.3
CONCRETE BARRIER RAIL	40.00	LIN. FT.

PLAN OF BARRIER RAIL

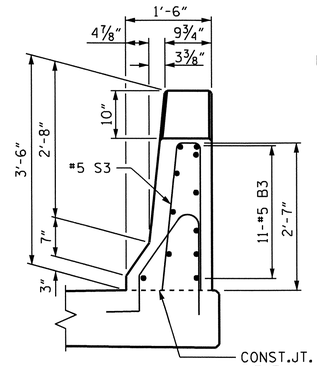

END VIEW

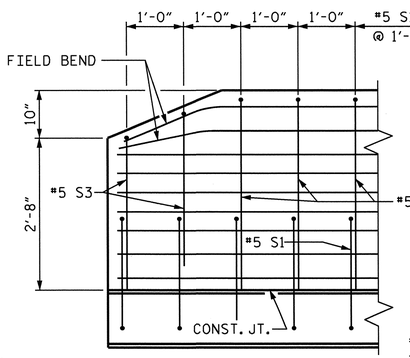

SIDE VIEW

END OF RAIL DETAILS

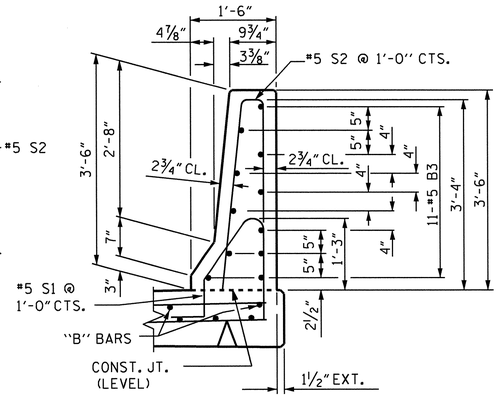

SECTION THRU RAIL

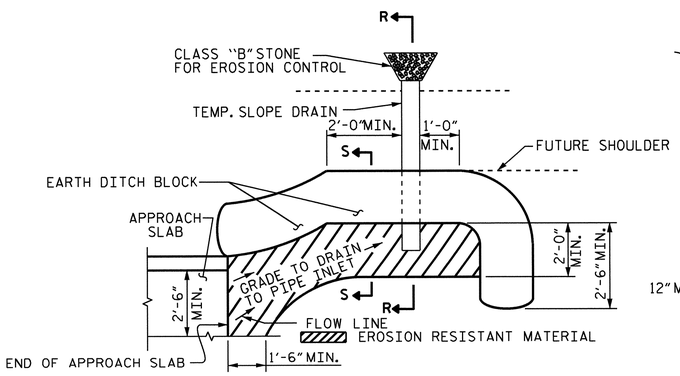

NOTE: IMMEDIATELY AFTER THE CONSTRUCTION OF THE APPROACH SLAB, THE CONTRACTOR SHALL PROVIDE TEMPORARY BERM AND SLOPE DRAIN. CONTRACTOR SHALL GRADE TO PIPE INLET AND PROVIDE EROSION RESISTANT MATERIAL AS SHOWN. THE EROSION RESISTANT MATERIAL SHALL BE EITHER 1) ASPHALT PLANT MIX, TYPE 1 OR TYPE 2, MIN. 2" DEPTH, 2) EROSION CONTROL MAT, OR 3) CONCRETE, AS DIRECTED BY THE ENGINEER. THE SLOPE DRAIN SHALL CONSIST OF A NON-PERFORATED TEMPORARY DRAINAGE PIPE, 12 INCHES IN DIAMETER.

PLAN VIEW

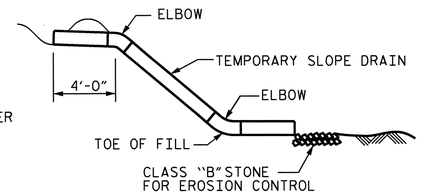

SECTION R-R

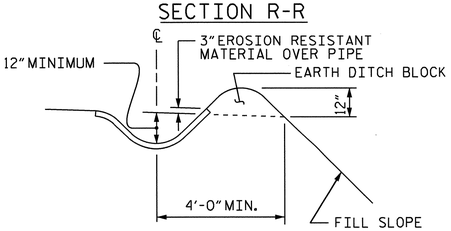

SECTION S-S

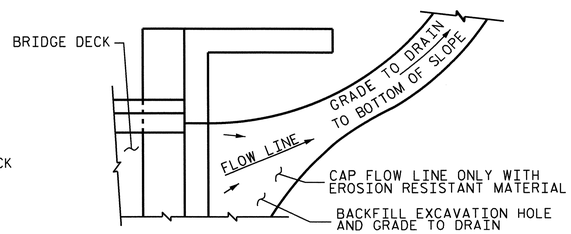

NOTE: IF THE APPROACH SLAB IS NOT CONSTRUCTED IMMEDIATELY AFTER THE BACKFILLING OF THE END BENT EXCAVATION, GRADE TO DRAIN TO THE BOTTOM OF THE SLOPE AND PROVIDE EROSION RESISTANT MATERIAL, SUCH AS FIBERGLASS ROVING OR AS DIRECTED BY THE ENGINEER TO PREVENT SOIL EROSION AND TO PROTECT THE AREA ADJACENT TO THE STRUCTURE. THE CONTRACTOR WILL BE REQUIRED TO REMOVE THESE MATERIALS PRIOR TO CONSTRUCTION OF THE APPROACH SLAB.

TEMPORARY DRAINAGE DETAIL

TEMPORARY BERM AND SLOPE DRAIN DETAILS

(TO BE USED WHEN SHOULDER BERM GUTTER IS REQUIRED)

ASSEMBLED BY : M.D.PISO		DATE : 09-13-12	
CHECKED BY : P.A.PARISI		DATE : 10-03-12	
DRAWN BY : FCJ 11/88	REV. 10/1/11		MAA/GM
CHECKED BY : ARB 11/88	REV. 7/12		MAA/GM
	REV. 10/12		MAA/GM

NORTH CAROLINA PROFESSIONAL SEAL 025516 ENGINEER E. C. MURPHY 2.21.13

PROJECT NO. R-2303B

CUMBERLAND/SAMPSON COUNTY

STATION: 397+87.00-LREV-

SHEET 2 OF 2

STATE OF NORTH CAROLINA
DEPARTMENT OF TRANSPORTATION
RALEIGH

STANDARD

BRIDGE APPROACH SLAB DETAILS

(LEFT LANE)

REVISIONS					
NO.	BY:	DATE:	NO.	BY:	DATE:
1			3		
2			4		

SHEET NO. S-41

TOTAL SHEETS 146

STR. #1

STD. NO. BAS4 (SHT 3)

20-FEB-2013 15:48
Z:\TIPProjects-R\R2303B\Structures\Plans\str01\mdpiso\R-2303B_SD_AS.dgn
padkins

391+50 392+00 392+50 393+00 393+50 394+00 394+50 395+00 395+50 396+00

(-)2.5929% (-)0.3172%

GRADE DATA

P.I. STA. = 388+25.00 -LREV-
EL. = 113.80'
V.C. = 400'

SPAN A SPAN B SPAN C SPAN D

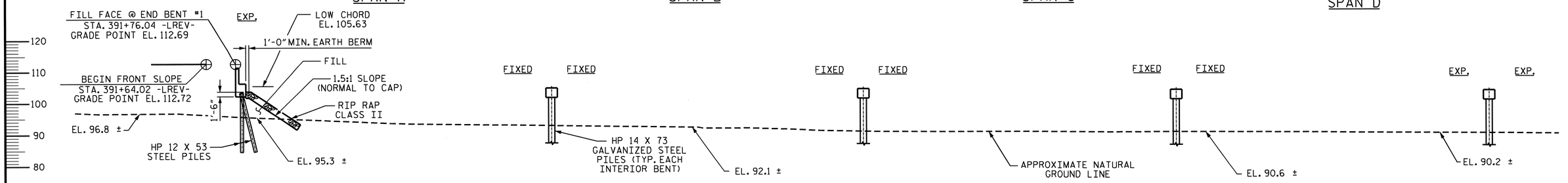

END BENT #1 BENT #1 BENT #2 BENT #3 BENT #4

SECTION ALONG CONTROL LINE (RIGHT LANE)

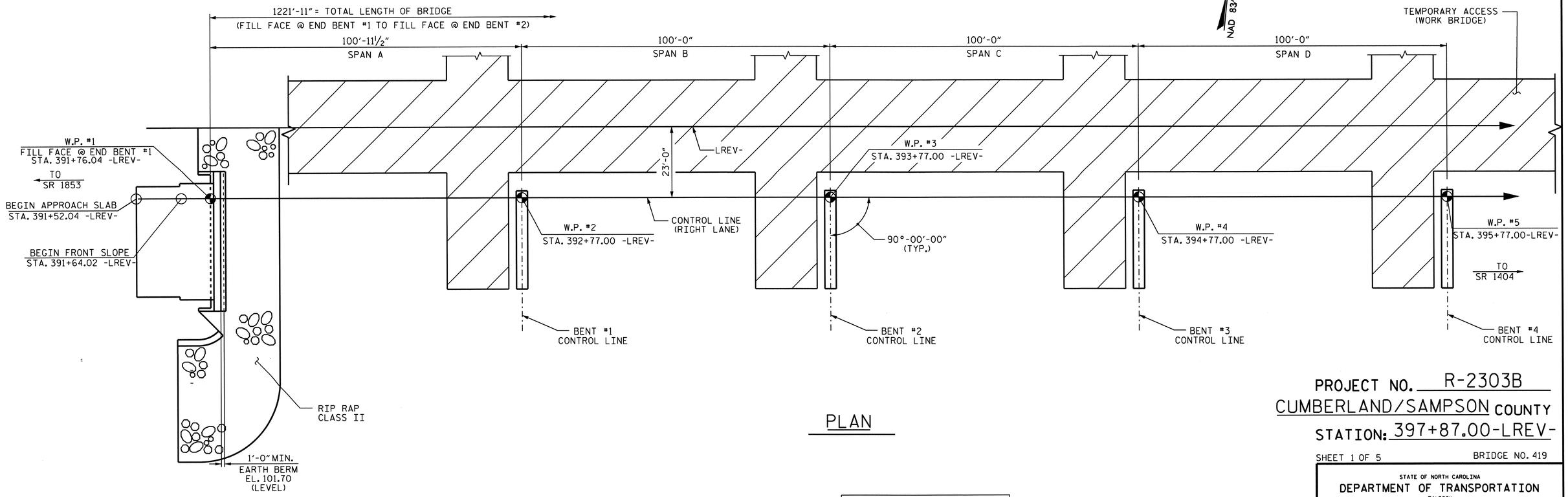

PLAN

I HEREBY CERTIFY THESE PLANS ARE THE AS-BUILT PLANS.

NORTH CAROLINA PROFESSIONAL SEAL 23743 ENGINEER OMAR R. AZIZI
2-21-13

NORTH CAROLINA PROFESSIONAL SEAL 025516 ENGINEER EMILY E. GRAY
2.21.13

PROJECT NO. R-2303B
CUMBERLAND/SAMPSON COUNTY
STATION: 397+87.00-LREV-

SHEET 1 OF 5 BRIDGE NO. 419

STATE OF NORTH CAROLINA
DEPARTMENT OF TRANSPORTATION
RALEIGH

GENERAL DRAWING
FOR BRIDGE OVER
SOUTH RIVER ON NC 24
BETWEEN SR 1853 AND SR 1404
(RIGHT LANE)

REVISIONS						SHEET NO.
NO.	BY:	DATE:	NO.	BY:	DATE:	S-42
1			3			TOTAL SHEETS
2			4			146

STR. 2 -

DRAWN BY : B.N. BARODAWALA/PEGGY ADKINS DATE : 11-8-12
CHECKED BY : T. AVERETTE DATE : 11-28-12
DESIGN ENGINEER OF RECORD: MOHAMMED AHMED DATE : 8-15-11

20-FEB-2013 15:48
Z:\TIPProjects-R\R2303B\Structures\Plans\str02\PADKINS\R2303B_sd_GD_02.dgn
padkins

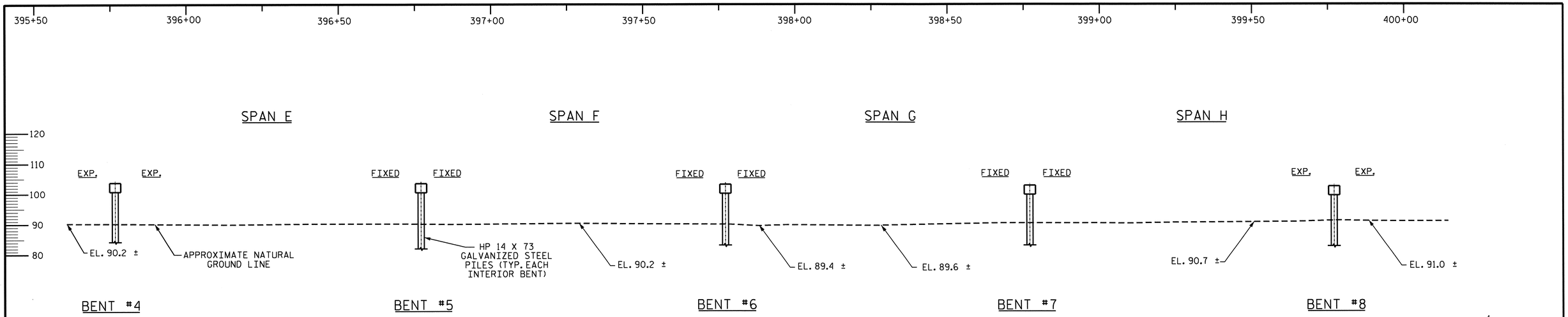

SECTION ALONG CONTROL LINE (RIGHT LANE)

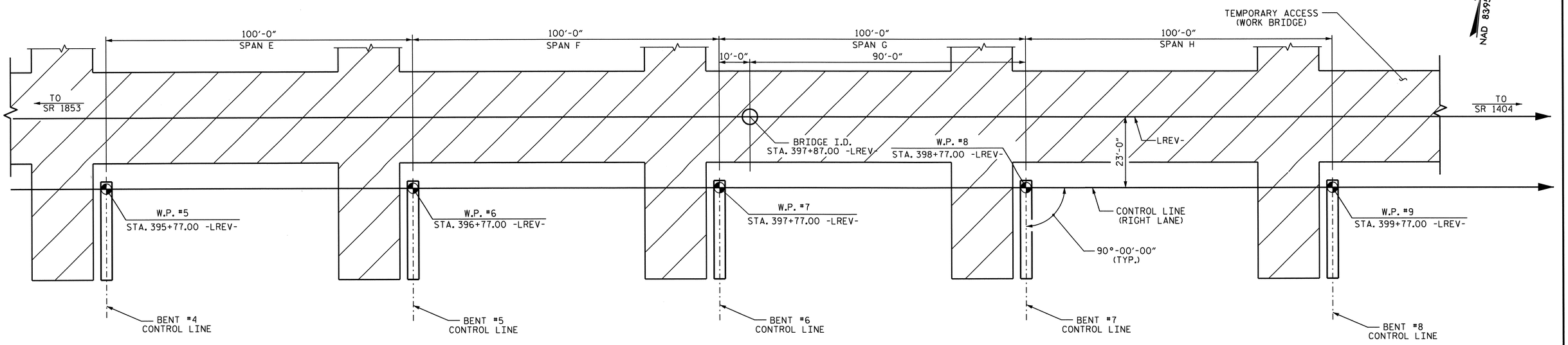

1221'-11" = TOTAL LENGTH OF BRIDGE
(FILL FACE @ END BENT #1 TO FILL FACE @ END BENT #2)

PLAN

PROJECT NO. R-2303B

CUMBERLAND/SAMPSON COUNTY

STATION: 397+87.00-LREV-

SHEET 2 OF 5

STATE OF NORTH CAROLINA
DEPARTMENT OF TRANSPORTATION
RALEIGH

GENERAL DRAWING
FOR BRIDGE OVER
SOUTH RIVER ON NC 24
BETWEEN SR 1853 AND SR 1404
(RIGHT LANE)

REVISIONS						SHEET NO.
NO.	BY:	DATE:	NO.	BY:	DATE:	S-43
1			3			TOTAL SHEETS
2			4			146

STR. 2 -

NORTH CAROLINA PROFESSIONAL SEAL 025516 ENGINEER EMILY E. CHAMBERLAIN
2.21.13

DRAWN BY : B.N. BARODAWALA/PEGGY ADKINS DATE : 11-8-12
CHECKED BY : T. AVERETTE DATE : 11-28-12
DESIGN ENGINEER OF RECORD: MOHAMMED AHMED DATE : 8-15-11

20-FEB-2013 15:47
Z:\TIPProjects-R\R2303B\Structures\Plans\str02\PADKINS\R2303B_sd_GD_02.dgn
padkins

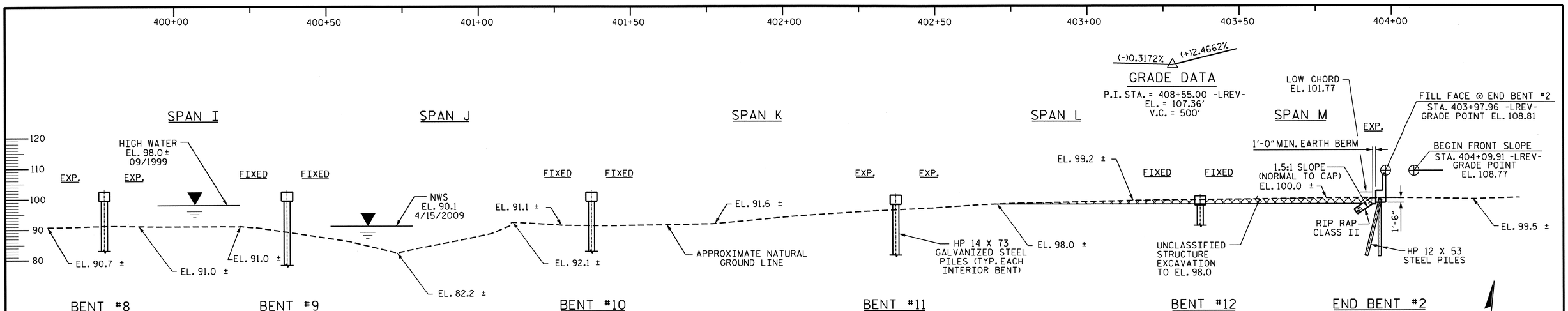

SECTION ALONG CONTROL LINE (RIGHT LANE)

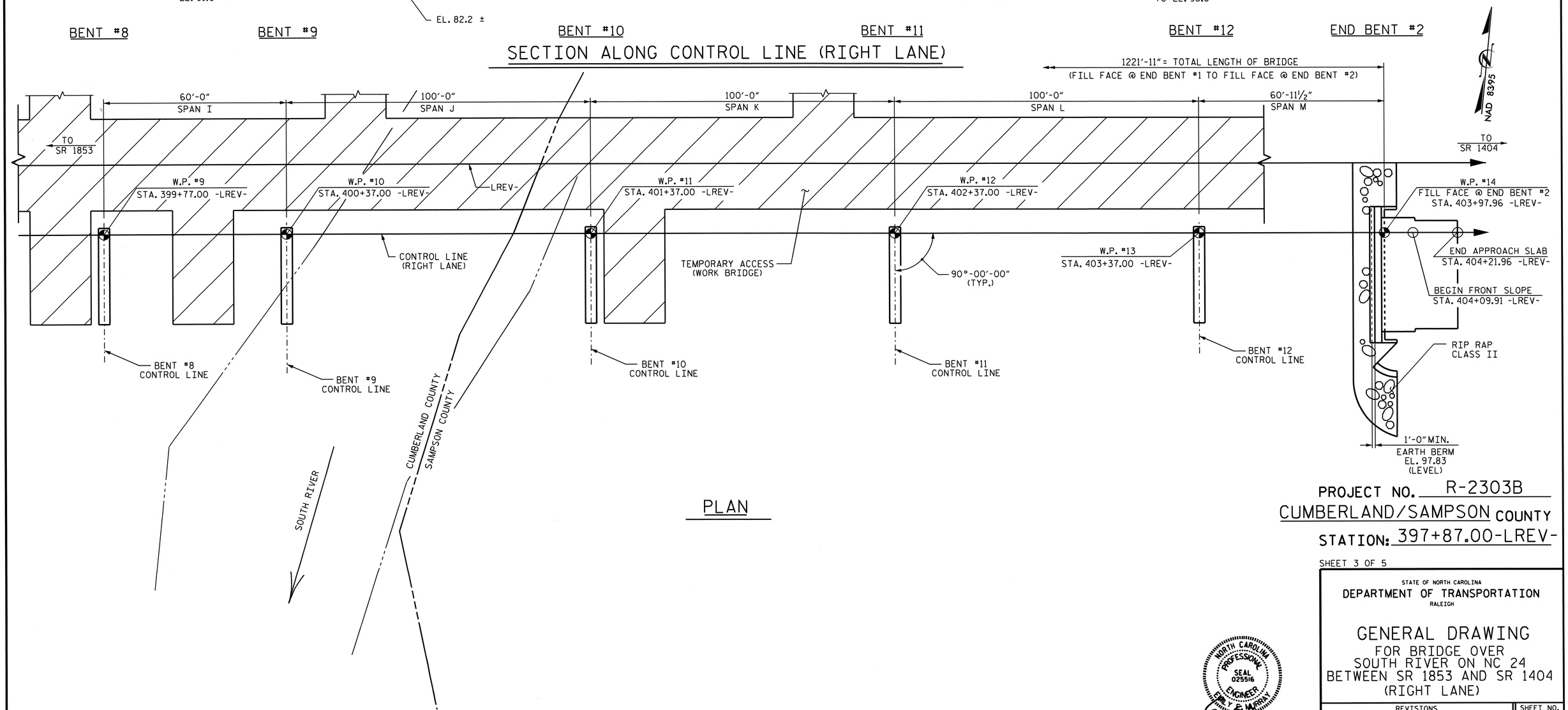

PLAN

PROJECT NO. R-2303B

CUMBERLAND/SAMPSON COUNTY

STATION: 397+87.00-LREV-

SHEET 3 OF 5

STATE OF NORTH CAROLINA
DEPARTMENT OF TRANSPORTATION
RALEIGH

GENERAL DRAWING
FOR BRIDGE OVER
SOUTH RIVER ON NC 24
BETWEEN SR 1853 AND SR 1404
(RIGHT LANE)

REVISIONS						SHEET NO.
NO.	BY:	DATE:	NO.	BY:	DATE:	S-44
1			3			TOTAL SHEETS
2			4			146

NORTH CAROLINA PROFESSIONAL SEAL 025516 ENGINEER TIMOTHY F. MURRAY
2-21-13

DRAWN BY : B.N. BARODAWALA/PEGGY ADKINS DATE : 11-8-12
CHECKED BY : T. AVERETTE DATE : 11-28-12
DESIGN ENGINEER OF RECORD: MOHAMMED AHMED DATE : 8-15-11

20-FEB-2013 15:47
Z:\TIPProjects-R\R2303B\Structures\Plans\str02\PADKINS\R2303B_sd_GD_02.dgn
padkins

STR. 2

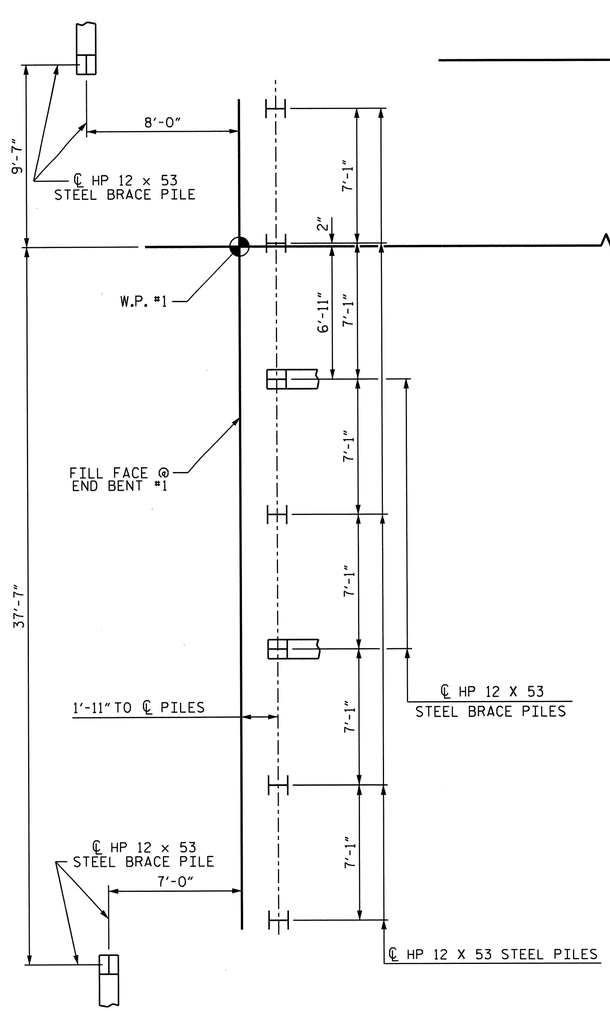

END BENT #1

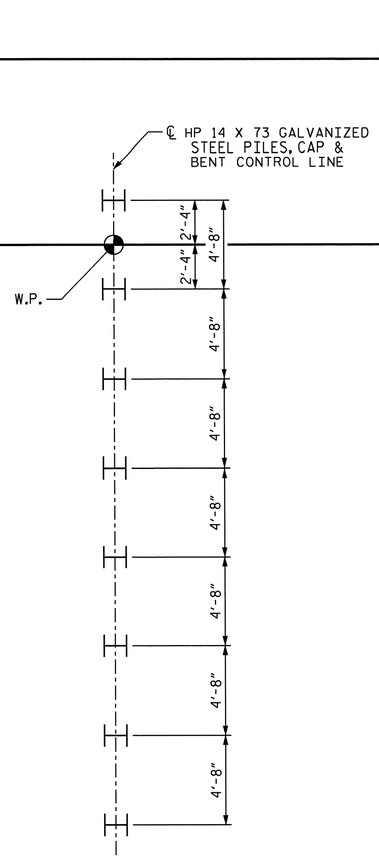

BENTS #1 THRU #12

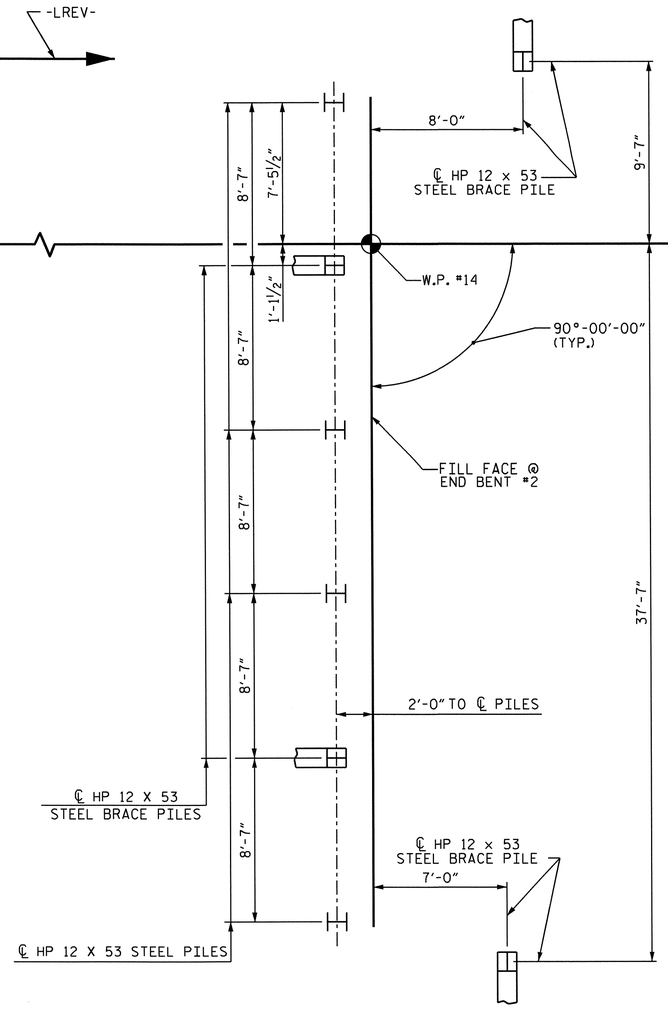

END BENT #2

FOUNDATION LAYOUT

DIMENSIONS LOCATING PILES ARE SHOWN TO PILE CENTERLINE.
BRACE PILES AT THE END BENTS TO BE BATTERED @ 3:12.

BRIDGE WORK POINTS

W.P.	STA. -LREV-
W.P. #1	STA. 391+76.04 -LREV-
W.P. #2	STA. 392+77.00 -LREV-
W.P. #3	STA. 393+77.00 -LREV-
W.P. #4	STA. 394+77.00 -LREV-
W.P. #5	STA. 395+77.00 -LREV-
W.P. #6	STA. 396+77.00 -LREV-
W.P. #7	STA. 397+77.00 -LREV-
W.P. #8	STA. 398+77.00 -LREV-
W.P. #9	STA. 399+77.00 -LREV-
W.P. #10	STA. 400+37.00 -LREV-
W.P. #11	STA. 401+37.00 -LREV-
W.P. #12	STA. 402+37.00 -LREV-
W.P. #13	STA. 403+37.00 -LREV-
W.P. #14	STA. 403+97.96 -LREV-

NOTES:

FOR PILES, SEE SECTION 450 OF THE STANDARD SPECIFICATIONS.

PILES AT END BENT NO. 1 ARE DESIGNED FOR A FACTORED RESISTANCE OF 110 TONS PER PILE.

DRIVE PILES AT END BENT NO. 1 TO A REQUIRED DRIVING RESISTANCE OF 185 TONS PER PILE.

PILES AT END BENT NO. 2 ARE DESIGNED FOR A FACTORED RESISTANCE OF 100 TONS PER PILE.

DRIVE PILES AT END BENT NO. 2 TO A REQUIRED DRIVING RESISTANCE OF 170 TONS PER PILE.

PILES AT BENT NO. 1 THROUGH BENT NO. 7, BENT NO. 10 AND BENT NO. 11 ARE DESIGNED FOR A FACTORED RESISTANCE OF 210 TONS PER PILE.

DRIVE PILES AT BENT NO. 1 THROUGH BENT NO. 7, BENT NO. 10 AND BENT NO. 11 TO A REQUIRED DRIVING RESISTANCE OF 285 TONS PER PILE. THIS REQUIRED DRIVING RESISTANCE INCLUDES ADDITIONAL RESISTANCE FOR DOWNDRAG OR SCOUR.

PILES AT BENT NO. 8 AND BENT NO. 9 ARE DESIGNED FOR A FACTORED RESISTANCE OF 160 TONS PER PILE.

DRIVE PILES AT BENT NO. 8 AND BENT NO. 9 TO A REQUIRED DRIVING RESISTANCE OF 220 TONS PER PILE. THIS REQUIRED DRIVING RESISTANCE INCLUDES ADDITIONAL RESISTANCE FOR DOWNDRAG OR SCOUR.

PILES AT BENT NO. 12 ARE DESIGNED FOR A FACTORED RESISTANCE OF 180 TONS PER PILE.

DRIVE PILES AT BENT NO. 12 TO A REQUIRED DRIVING RESISTANCE OF 245 TONS PER PILE. THIS REQUIRED DRIVING RESISTANCE INCLUDES ADDITIONAL RESISTANCE FOR DOWNDRAG OR SCOUR.

INSTALL PILES AT BENT NO. 1 THROUGH BENT NO. 8 TO A TIP ELEVATION NO HIGHER THAN 66.0 FT.

INSTALL PILES AT BENT NO. 9 AND BENT NO. 10 TO A TIP ELEVATION NO HIGHER THAN 62.0 FT.

INSTALL PILES AT BENT NO. 11 AND BENT NO. 12 TO A TIP ELEVATION NO HIGHER THAN 75.0 FT.

SCOUR CRITICAL ELEVATIONS FOR BENT NO. 1 THROUGH BENT NO. 12 ARE ELEVATIONS 88 FT, 87 FT, 86 FT, 86 FT, 86 FT, 86 FT, 86 FT, 87 FT, 86 FT, 88 FT, 92 FT AND 94 FT, RESPECTIVELY. SCOUR CRITICAL ELEVATIONS ARE USED TO MONITOR POSSIBLE SCOUR PROBLEMS DURING THE LIFE OF THE STRUCTURE.

TESTING THE FIRST PRODUCTION PILE WITH THE PDA DURING DRIVING, RESTRIKING OR REDRIVING IS REQUIRED. FOR PDA TESTING, SEE SECTION 450 OF THE STANDARD SPECIFICATIONS AND FOR PILE DRIVING CRITERIA, SEE PILE DRIVING CRITERIA PROVISION.

IT HAS BEEN ESTIMATED THAT A HAMMER WITH AN EQUIVALENT RATED ENERGY IN THE RANGE OF 70-125 KIPS-FT PER BLOW WILL BE REQUIRED TO DRIVE PILES AT BENT NO. 1 THROUGH BENT NO. 7, BENT NO. 10 AND BENT NO. 11. THIS ESTIMATED ENERGY RANGE DOES NOT RELEASE THE CONTRACTOR FROM PROVIDING DRIVING EQUIPMENT IN ACCORDANCE WITH SUBARTICLE 450-3(D)(2) OF THE STANDARD SPECIFICATIONS.

IT HAS BEEN ESTIMATED THAT A HAMMER WITH AN EQUIVALENT RATED ENERGY IN THE RANGE OF 50-90 KIPS-FT PER BLOW WILL BE REQUIRED TO DRIVE PILES AT BENT NO. 8, BENT NO. 9 AND BENT NO. 12. THIS ESTIMATED ENERGY RANGE DOES NOT RELEASE THE CONTRACTOR FROM PROVIDING DRIVING EQUIPMENT IN ACCORDANCE WITH SUBARTICLE 450-3(D)(2) OF THE STANDARD SPECIFICATIONS.

NORTH CAROLINA PROFESSIONAL SEAL 025516 ENGINEER EMMY E. MURRAY
2-21-13

DRAWN BY : PEGGY ADKINS DATE : 11-8-12
CHECKED BY : T. AVERETTE DATE : 11-28-12
DESIGN ENGINEER OF RECORD: MOHAMMED AHMED DATE : 8-15-11

20-FEB-2013 15:47
Z:\TIPProjects-R\R2303B\Structures\Plans\str02\PADKINS\R2303B_sd_GD_02.dgn
padkins

PROJECT NO. R-2303B
CUMBERLAND/SAMPSON COUNTY
STATION: 397+87.00-LREV-

SHEET 4 OF 5

STATE OF NORTH CAROLINA
DEPARTMENT OF TRANSPORTATION
RALEIGH

GENERAL DRAWING
FOR BRIDGE OVER
SOUTH RIVER
ON NC 24 BETWEEN
SR 1853 AND SR 1404
(RIGHT LANE)

REVISIONS						SHEET NO.
NO.	BY:	DATE:	NO.	BY:	DATE:	S-45
1			3			TOTAL SHEETS
2			4			146

STR. #2

BM #92 : STA. 409+18 -LREV- 413' LT., RR SPIKE IN 10" PINE TREE, ELEV. 109.37', NAVD88.

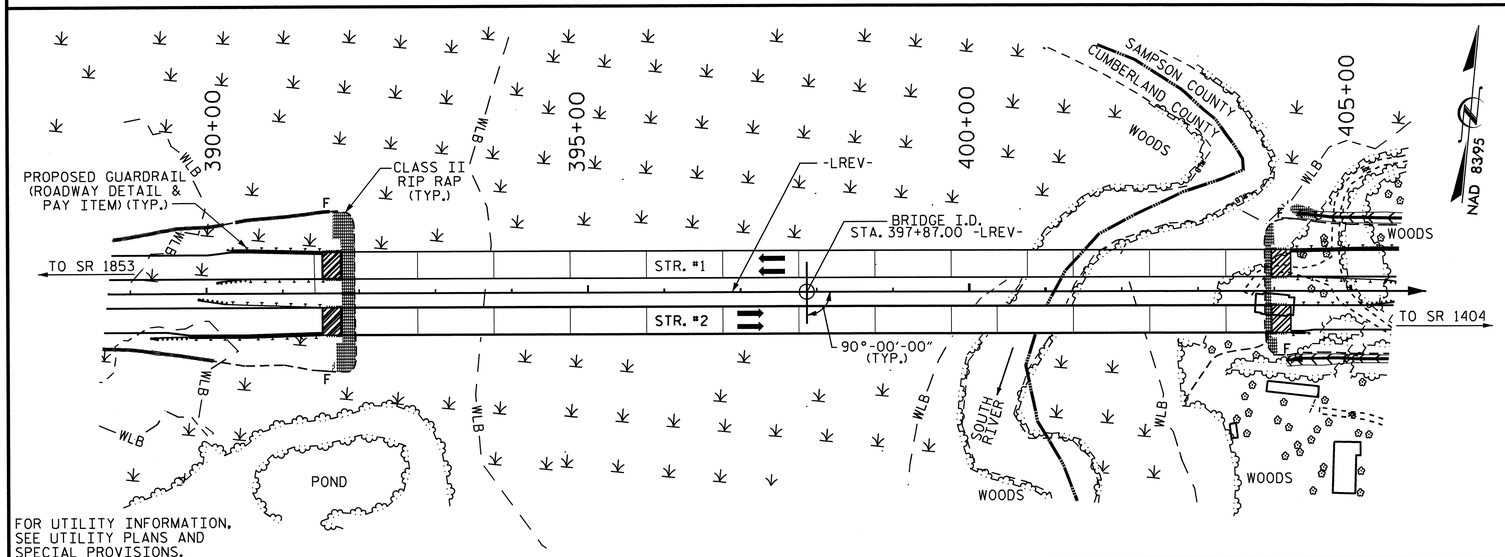

LOCATION SKETCH

HYDRAULIC DATA

DESIGN DISCHARGE	= 8600 C.F.S.
FREQUENCY OF DESIGN FLOOD	= 50 YR.
DESIGN HIGH WATER ELEVATION	= 100.7'
DRAINAGE AREA	= 231.4 SQ. MI.
BASE DISCHARGE (Q100)	= 10200 C.F.S.
BASE HIGH WATER ELEVATION	= 101.9'

OVERTOPPING FLOOD DATA

OVERTOPPING DISCHARGE	= N/A
FREQUENCY OF OVERTOPPING FLOOD	= 500 YR. +
OVERTOPPING FLOOD ELEVATION	= 108.1'

TOTAL BILL OF MATERIAL

	CONSTRUCTION, MAINTENANCE, AND REMOVAL OF TEMPORARY ACCESS	PDA TESTING	UNCLASSIFIED STRUCTURE EXCAVATION	REINFORCED CONCRETE DECK SLAB	GROOVING BRIDGE FLOORS	CLASS A CONCRETE	BRIDGE APPROACH SLABS	REINFORCING STEEL	MODIFIED 63" PRESTRESSED CONCRETE GIRDERS		HP 12 x 53 STEEL PILES		HP 14 X 73 GALVANIZED STEEL PILES		PILE REDRIVES	CONCRETE BARRIER RAIL	RIP RAP CLASS II (2'-0" THICK)	GEOTEXTILE FOR DRAINAGE	ELASTOMERIC BEARINGS	EXPANSION JOINT SEALS
	LUMP SUM	EACH	LUMP SUM	SQ. FT.	SQ. FT.	CU. YDS.	LUMP SUM	LBS.	NO.	LIN. FT.	NO.	LIN. FT.	NO.	LIN. FT.	EACH	LIN. FT.	TONS	SQ. YDS.	LUMP SUM	LUMP SUM
SUPERSTRUCTURE				47877	41688		LUMP SUM		52	4836.67						2479.60			LUMP SUM	LUMP SUM
END BENT 1						39.1		5622			9	495			3		216	240		
BENT 1						21.0		2977					8	640	4					
BENT 2						21.0		2977					8	640	4					
BENT 3						21.0		2977					8	640	4					
BENT 4						21.0		2977					8	640	4					
BENT 5						21.0		2977					8	640	4					
BENT 6						21.0		2977					8	640	4					
BENT 7						21.0		2977					8	640	4					
BENT 8						21.0		2977					8	600	4					
BENT 9						21.0		2977					8	600	4					
BENT 10						21.0		2977					8	640	4					
BENT 11						21.0		2977					8	600	4					
BENT 12						21.0		2977					8	520	4					
END BENT 2						38.9		5542			8	440			3		97	108		
TOTAL	LUMP SUM	2	LUMP SUM	47877	41688	330.0	LUMP SUM	46888	52	4836.67	17	935	96	7440	54	2479.60	313	348	LUMP SUM	LUMP SUM

NOTES:

ASSUMED LIVE LOAD = HL-93 OR ALTERNATE LOADING.

THIS BRIDGE HAS BEEN DESIGNED IN ACCORDANCE WITH THE AASHTO LRFD BRIDGE DESIGN SPECIFICATIONS.

THIS BRIDGE IS LOCATED IN SEISMIC ZONE 1.

FOR OTHER DESIGN DATA AND GENERAL NOTES, SEE SHEET SN.

FOR SUBMITTAL OF WORKING DRAWINGS, SEE SPECIAL PROVISIONS.

FOR FALSEWORK AND FORMWORK, SEE SPECIAL PROVISIONS.

FOR CRANE SAFETY, SEE SPECIAL PROVISIONS.

FOR GROUT FOR STRUCTURES, SEE SPECIAL PROVISIONS.

PRESTRESSED CONCRETE DECK PANELS MAY BE USED IN LIEU OF METAL STAY-IN-PLACE FORMS IN ACCORDANCE WITH ARTICLE 420-3 OF THE STANDARD SPECIFICATIONS.

REMOVABLE FORMS MAY BE USED IN LIEU OF METAL STAY-IN-PLACE FORMS IN ACCORDANCE WITH ARTICLE 420-3 OF THE STANDARD SPECIFICATIONS.

NEEDLE BEAMS WILL NOT BE ALLOWED UNLESS OTHERWISE CALLED FOR ON THE PLANS OR APPROVED BY THE ENGINEER.

FOR EROSION CONTROL MEASURES, SEE EROSION CONTROL PLANS.

FOR ALL INTERIOR BENTS, ONLY PARTIAL GALVANIZING OF THE PILES IS REQUIRED. SEE INTERIOR BENT SHEETS FOR REQUIRED GALVANIZED LENGTHS. PAYMENT FOR PARTIALLY GALVANIZED PILES WILL BE MADE UNDER THE CONTRACT UNIT PRICE FOR GALVANIZED STEEL PILES.

THE MATERIAL SHOWN IN THE CROSS-HATCHED AREA SHALL BE EXCAVATED FOR A DISTANCE OF 45 FT. LEFT AND 150 FT. RIGHT OF -LREV- AS DIRECTED BY THE ENGINEER. THIS WORK WILL BE PAID FOR AT THE CONTRACT LUMP SUM PRICE FOR UNCLASSIFIED STRUCTURE EXCAVATION. SEE SECTION 412 OF THE STANDARD SPECIFICATIONS.

THIS STRUCTURE HAS BEEN DESIGNED IN ACCORDANCE WITH "HEC 18-EVALUATING SCOUR AT BRIDGES."

FOR PLACING LOAD ON STRUCTURE MEMBERS, SEE SPECIAL PROVISIONS.

FOR CONSTRUCTION, MAINTENANCE, AND REMOVAL OF TEMPORARY ACCESS, SEE SPECIAL PROVISIONS.

FOR BRIDGE DECK RIDEABILITY AND GROOVING, SEE SPECIAL PROVISIONS.

PROJECT NO. R-2303B
CUMBERLAND/SAMPSON COUNTY
STATION: 397+87.00-LREV-

SHEET 5 OF 5

STATE OF NORTH CAROLINA
DEPARTMENT OF TRANSPORTATION
RALEIGH

GENERAL DRAWING
FOR BRIDGE OVER
SOUTH RIVER ON NC 24
BETWEEN SR 1853 AND SR 1404

(RIGHT LANE)

NORTH CAROLINA PROFESSIONAL SEAL 025516 ENGINEER DANCY E. MURRAY 2.21.13

REVISIONS						SHEET NO.
NO.	BY:	DATE:	NO.	BY:	DATE:	S-46
1			3			TOTAL SHEETS
2			4			146

STR. #2

DRAWN BY : B.N. BARODAWALA/PEGGY ADKINS DATE : 11-8-12
CHECKED BY : T. AVERETTE DATE : 11-28-12
DESIGN ENGINEER OF RECORD: MOHAMMED AHMED DATE : 8-15-11

20-FEB-2013 15:47
Z:\TIPProjects-R\R2303B\Structures\Plans\str02\PADKINS\R2303B_sd_GD_02.dgn
padkins

LOAD AND RESISTANCE FACTOR RATING (LRFR) SUMMARY FOR PRESTRESSED CONCRETE GIRDERS

LEVEL		VEHICLE	WEIGHT (W) (TONS)	(#) CONTROLLING LOAD RATING	MINIMUM RATING FACTORS (RF)	TONS = W × RF	STRENGTH I LIMIT STATE										SERVICE III LIMIT STATE							COMMENT NUMBER
								MOMENT					SHEAR						MOMENT					
							LIVE-LOAD FACTORS (γ_{LL})	DISTRIBUTION FACTORS (DF)	RATING FACTOR	SPAN	GIRDER LOCATION	DISTANCE FROM LEFT END OF SPAN (ft)	DISTRIBUTION FACTORS (DF)	RATING FACTOR	SPAN	GIRDER LOCATION	DISTANCE FROM LEFT END OF SPAN (ft)	LIVE-LOAD FACTORS (γ_{LL})	DISTRIBUTION FACTORS (DF)	RATING FACTOR	SPAN	GIRDER LOCATION	DISTANCE FROM LEFT END OF SPAN (ft)	
DESIGN LOAD RATING		HL-93 (INVENTORY)	N/A	(1)	1.094	--	1.75	0.94	1.52	M	EL	28.875	0.968	1.29	M	I	17.325	0.80	0.922	1.09	A	EL	48.875	
		HL-93 (OPERATING)	N/A	--	1.669	--	1.35	0.94	1.97	M	EL	28.875	0.968	1.67	M	I	17.325	N/A	--	--	--	--	--	
		HS-20 (INVENTORY)	36.000	(2)	1.519	54.668	1.75	0.94	1.92	M	EL	28.875	0.968	1.52	M	I	17.325	0.80	0.922	1.52	A	EL	48.875	
		HS-20 (OPERATING)	36.000	--	1.971	70.943	1.35	0.94	2.49	M	EL	28.875	0.968	1.97	M	I	17.325	N/A	--	--	--	--	--	
LEGAL LOAD RATING	SINGLE VEHICLE (SV)	SNSH	13.500	--	3.596	48.543	1.40	0.94	5.14	M	EL	28.875	0.968	4.16	M	I	17.325	0.80	0.922	3.60	A	EL	48.875	
		SNGARBS2	20.000	--	2.606	52.128	1.40	0.94	3.95	M	EL	28.875	0.968	3.07	M	I	17.325	0.80	0.922	2.61	A	EL	48.875	
		SNAGRIS2	22.000	--	2.439	53.653	1.40	0.94	3.79	M	EL	28.875	0.968	2.89	M	I	17.325	0.80	0.922	2.44	A	EL	48.875	
		SNCOTTS3	27.250	--	1.787	48.702	1.40	0.94	2.56	M	EL	28.875	0.968	2.09	M	I	17.325	0.80	0.922	1.79	A	EL	48.875	
		SNAGGRS4	34.925	--	1.465	51.176	1.40	0.94	2.18	M	EL	28.875	0.968	1.81	M	I	17.325	0.80	0.922	1.47	A	EL	48.875	
		SNS5A	35.550	--	1.435	51.008	1.40	0.94	2.13	M	EL	28.875	0.968	1.88	M	I	17.325	0.80	0.922	1.43	A	EL	48.875	
		SNS6A	39.950	--	1.305	52.132	1.40	0.94	1.98	M	EL	28.875	0.968	1.75	M	I	17.325	0.80	0.922	1.30	A	EL	48.875	
		SNS7B	42.000	--	1.242	52.175	1.40	0.94	1.88	M	EL	28.875	0.968	1.76	M	I	17.325	0.80	0.922	1.24	A	EL	48.875	
	TRUCK TRACTOR SEMI-TRAILER (TTST)	TNAGRIT3	33.000	--	1.588	52.401	1.40	0.94	2.42	M	EL	28.875	0.968	2.05	M	I	17.325	0.80	0.922	1.59	A	EL	48.875	
		TNT4A	33.075	--	1.592	52.649	1.40	0.94	2.43	M	EL	28.875	0.968	1.96	M	I	17.325	0.80	0.922	1.59	A	EL	48.875	
		TNT6A	41.600	--	1.291	53.696	1.40	0.94	2.01	M	EL	28.875	0.968	1.97	M	I	17.325	0.80	0.922	1.29	A	EL	48.875	
		TNT7A	42.000	--	1.292	54.245	1.40	0.94	2.03	M	EL	28.875	0.968	1.82	M	I	17.325	0.80	0.922	1.29	A	EL	48.875	
		TNT7B	42.000	--	1.322	55.538	1.40	0.94	2.12	M	EL	28.875	0.968	1.69	M	I	17.325	0.80	0.922	1.32	A	EL	48.875	
		TNAGRIT4	43.000	--	1.268	54.531	1.40	0.94	2	M	EL	28.875	0.968	1.62	M	I	17.325	0.80	0.922	1.27	A	EL	48.875	
		TNAGT5A	45.000	--	1.201	54.025	1.40	0.94	1.88	M	EL	28.875	0.968	1.67	M	I	17.325	0.80	0.922	1.20	A	EL	48.875	
		TNAGT5B	45.000	(3)	1.19	53.567	1.40	0.94	1.85	M	EL	28.875	0.968	1.54	M	I	17.325	0.80	0.922	1.19	A	EL	48.875	

LOAD FACTORS:

DESIGN LOAD RATING FACTORS	LIMIT STATE	γ_{DC}	γ_{DW}
	STRENGTH I	1.25	1.50
	SERVICE III	1.00	1.00

NOTES:

MINIMUM RATING FACTORS ARE BASED ON THE STRENGTH I AND SERVICE III LIMIT STATES.

ALLOWABLE STRESSES FOR SERVICE III LIMIT STATE ARE AS REQUIRED FOR DESIGN.

COMMENTS:

1.
2.
3.
4.

(#) CONTROLLING LOAD RATING

(1) DESIGN LOAD RATING (HL-93)

(2) DESIGN LOAD RATING (HS-20)

(3) LEGAL LOAD RATING **

** SEE CHART FOR VEHICLE TYPE

GIRDER LOCATION

I - INTERIOR GIRDER
EL - EXTERIOR LEFT GIRDER
ER - EXTERIOR RIGHT GIRDER

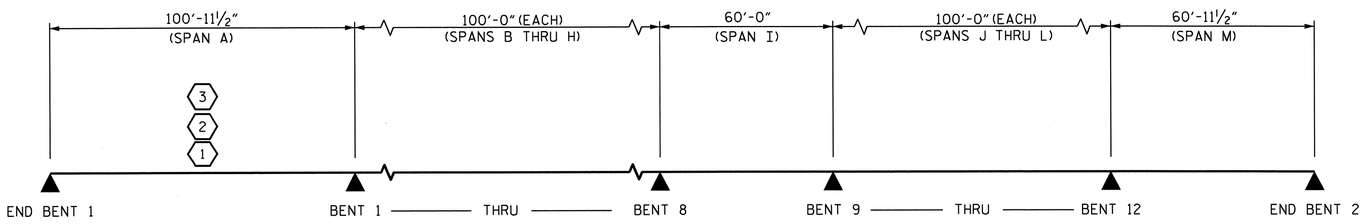

LRFR SUMMARY

DIMENSIONS ARE WORK POINT TO WORK POINT.

PROJECT NO. R-2303B

CUMBERLAND/SAMPSON COUNTY

STATION: 397+87.00 -LREV-

NORTH CAROLINA PROFESSIONAL SEAL 025516 ENGINEER EMILY E. MURRAY 2-21-13

STATE OF NORTH CAROLINA
DEPARTMENT OF TRANSPORTATION
RALEIGH

STANDARD

LRFR SUMMARY FOR PRESTRESSED CONCRETE GIRDERS (NON-INTERSTATE TRAFFIC)

REVISIONS						SHEET NO.
NO.	BY:	DATE:	NO.	BY:	DATE:	S-47
1			3			TOTAL SHEETS
2			4			146

STR. #2 STD. NO. LRFR1

ASSEMBLED BY : PEGGY ADKINS DATE : 10-2-12
CHECKED BY : K.P. SEDAI DATE : 10-25-12

DRAWN BY : MAA 1/08
CHECKED BY : GM/DI 2/08

REV. 11/12/08RR MAA/GM
REV. 10/1/11 MAA/GM

DESIGN ENGINEER OF RECORD: MOHAMMED AHMED DATE : 8-15-11

20-FEB-2013 15:46
Z:\TIPProjects-R\R2303B\Structures\Plans\str02\PADKINS\R2303B_SD_LRFR_02.dgn
padkins

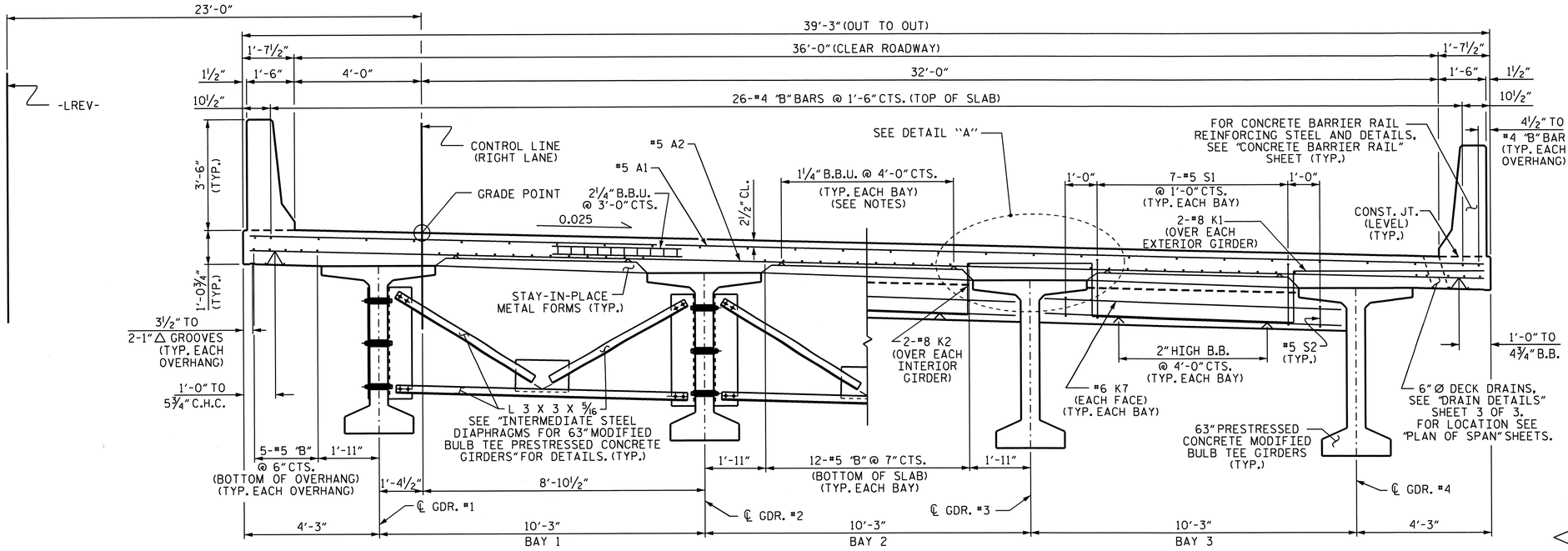

TYPICAL HALF SECTION

SHOWING INTERMEDIATE DIAPHRAGMS

TYPICAL HALF SECTION

SHOWING END BENT DIAPHRAGMS OR BENT DIAPHRAGMS @ BENT NOS. 4, 8 & 11

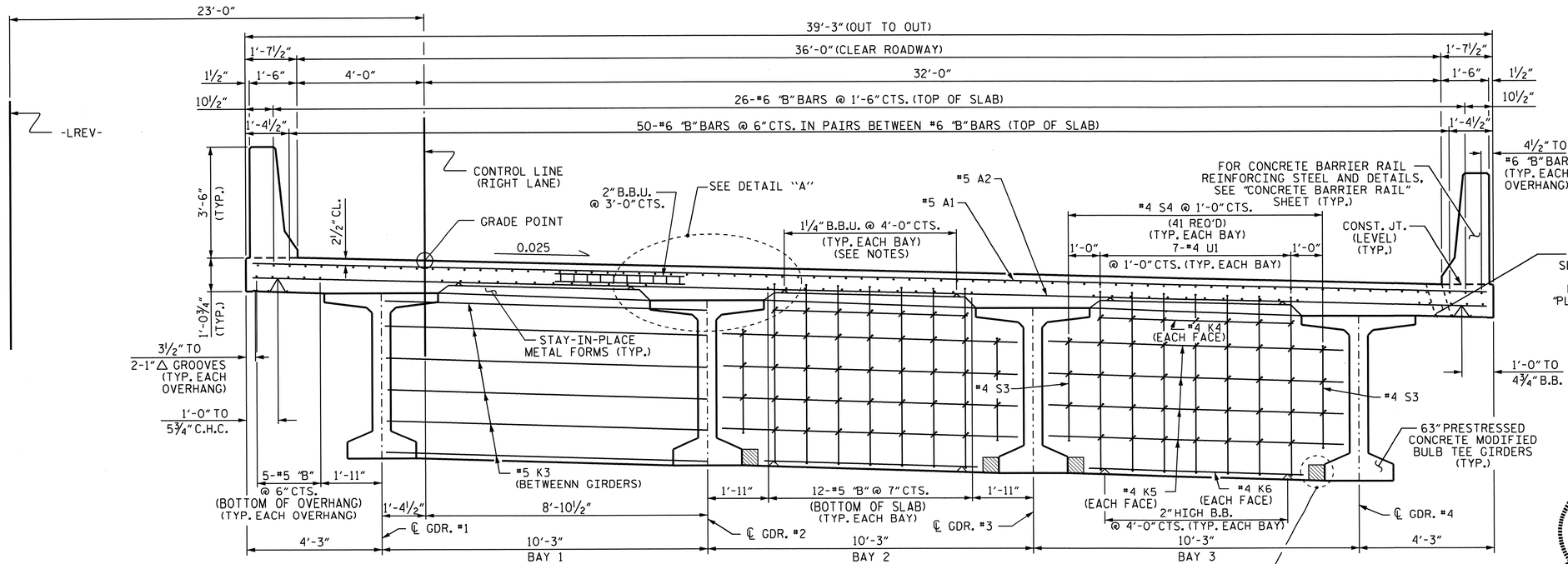

TYPICAL SECTION

SHOWING CONTINUOUS BENT DIAPHRAGM @ BENT NOS. 1, 2, 3, 5, 6, 7, 9, 10 & 12
#4 "K" & #4 "S" BARS ARE TYP. FOR EACH BAY

NOTES:

PROVIDE 1¼" HIGH BEAM BOLSTERS UPPER AT 4'-0" CTS. ATOP THE METAL STAY-IN-PLACE FORMS TO SUPPORT THE BOTTOM MAT OF 'A' BARS. WHEN USING REMOVABLE FORMS, PROVIDE CONTINUOUS HIGH CHAIRS FOR METAL DECK (C.H.C.M.) @ 4'-0" CTS. WITH A HEIGHT TO SUPPORT THE BOTTOM MAT OF 'A' BARS A CLEAR DISTANCE OF 2½" ABOVE THE TOP OF THE REMOVABLE FORM.

LONGITUDINAL STEEL MAY BE SHIFTED SLIGHTLY, AS NECESSARY, TO AVOID INTERFERENCE WITH STIRRUPS IN PRESTRESSED CONCRETE GIRDERS.

PREVIOUSLY CAST CONCRETE IN A CONTINUOUS UNIT SHALL HAVE ATTAINED A MINIMUM COMPRESSIVE STRENGTH OF 3,000 PSI BEFORE ADDITIONAL CONCRETE IS CAST IN THE UNIT.

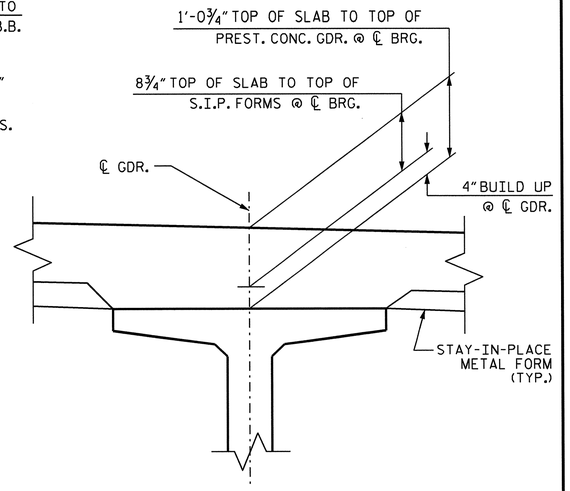

DETAIL "A"

PROJECT NO. R-2303B

CUMBERLAND/SAMPSON COUNTY

STATION: 397+87.00 -LREV-

SHEET 1 OF 3

STATE OF NORTH CAROLINA
DEPARTMENT OF TRANSPORTATION
RALEIGH

SUPERSTRUCTURE

TYPICAL SECTION

(RIGHT LANE)

REVISIONS						SHEET NO.
NO.	BY:	DATE:	NO.	BY:	DATE:	S-48
1			3			TOTAL SHEETS
2			4			146

NORTH CAROLINA PROFESSIONAL SEAL 025516 ENGINEER EMILY K. MURRAY
2-21-13

STR. #2

DRAWN BY : PEGGY PARISI DATE : 10-4-11
CHECKED BY : K.P. SEDAI DATE : 9-25-12
DESIGN ENGINEER OF RECORD: MOHAMMED AHMED DATE : 8-15-11

20-FEB-2013 15:46
Z:\TIPProjects-R\R2303B\Structures\Plans\str02\PADKINS\R2303B_SD_TS_02.dgn
padkins

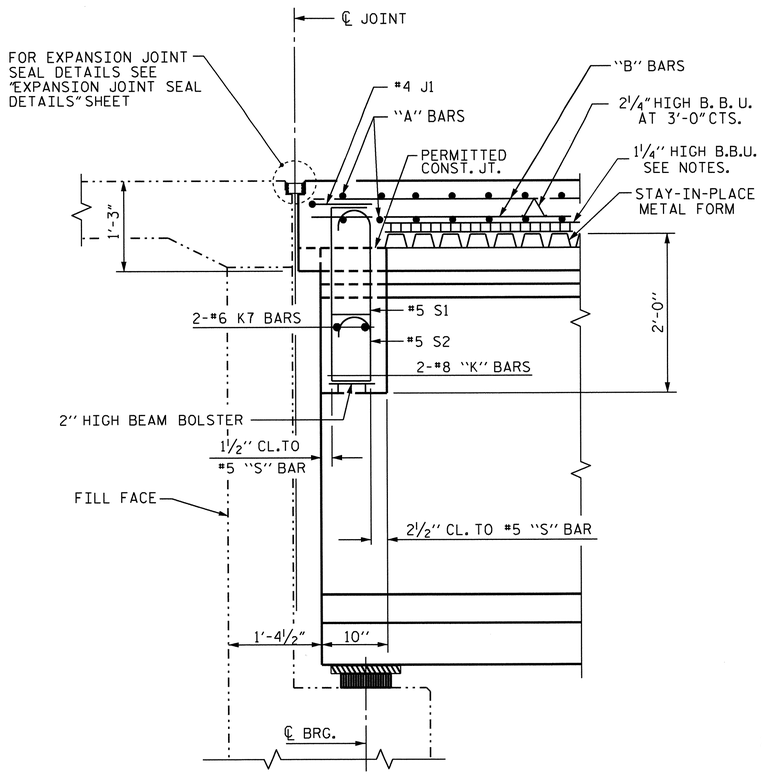

SECTION A-A

SECTION THRU END BENT DIAPHRAGM

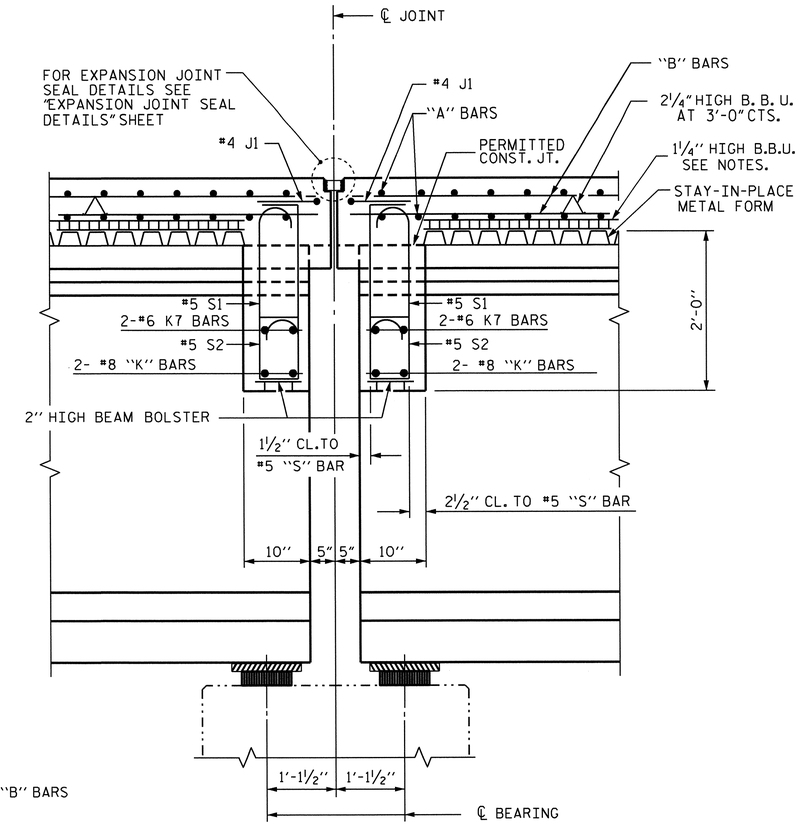

SECTION C-C

BENT NOS. 4, 8 AND 11

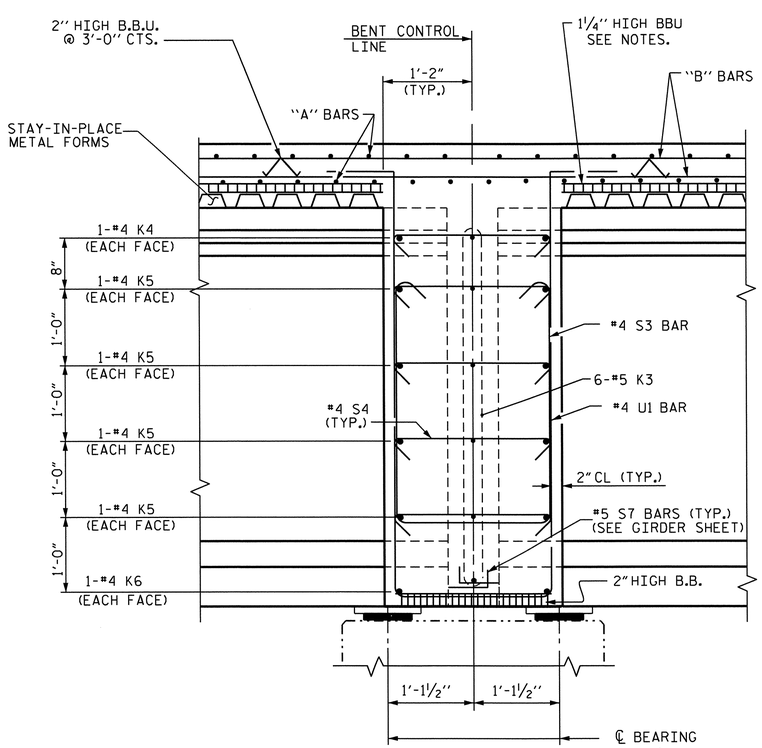

SECTION B-B

BENT NOS. 1, 2, 3, 5, 6, 7, 9, 10 AND 12

PROJECT NO. R-2303B

CUMBERLAND/SAMPSON COUNTY

STATION: 397+87.00 -LREV-

SHEET 2 OF 3

STATE OF NORTH CAROLINA
DEPARTMENT OF TRANSPORTATION
RALEIGH

SUPERSTRUCTURE

TYPICAL SECTION DETAILS

(RIGHT LANE)

REVISIONS						SHEET NO.
NO.	BY:	DATE:	NO.	BY:	DATE:	S-49
1			3			TOTAL SHEETS
2			4			146

NORTH CAROLINA PROFESSIONAL SEAL 025516 ENGINEER EMILY E. LAMARRA 2-21-13

DRAWN BY : PEGGY PARISI DATE : 10-4-11
CHECKED BY : K.P. SEDAI DATE : 9-25-12
DESIGN ENGINEER OF RECORD: MOHAMMED AHMED DATE : 8-15-11

20-FEB-2013 15:46
Z:\TIPProjects-R\R2303B\Structures\Plans\str02\PADKINS\R2303B_SD_TS_02.dgn
padkins

STR. #2

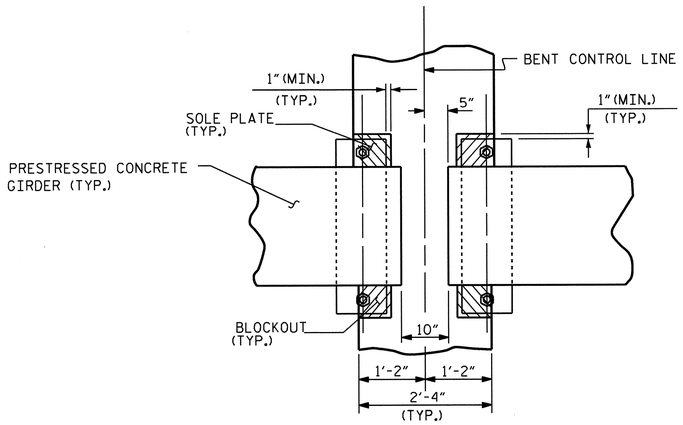

PLAN

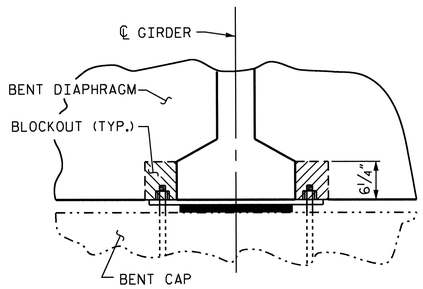

SECTION

BENT DIAPHRAGM BLOCKOUT DETAIL

(BENT NOS. 1, 2, 3, 5, 6, 7, 9, 10 AND 12)

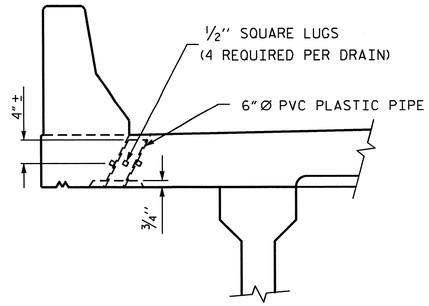

ELEVATION

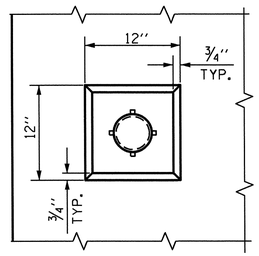

PLAN OF RECESS

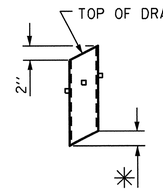

✳ TO BE SET TO MATCH SLOPE OF BOTTOM OF OVERHANG (102 DRAINS REQUIRED)

PIPE DETAIL

TOP OF FLOOR DRAINS TO BE SET ⅜" BELOW SURFACE OF SLAB.

4 - ½" SQUARE LUGS TO BE GLUED TO THE P.V.C. PLASTIC PIPE AT EQUAL SPACES AROUND THE PIPE DRAIN APPROXIMATELY 4" FROM THE TOP OF THE PIPE.

THE 6" Ø PVC PLASTIC PIPE AND FITTINGS SHALL BE SCHEDULE 40 AND CONFORM TO ASTM D1785.

DRAIN DETAILS

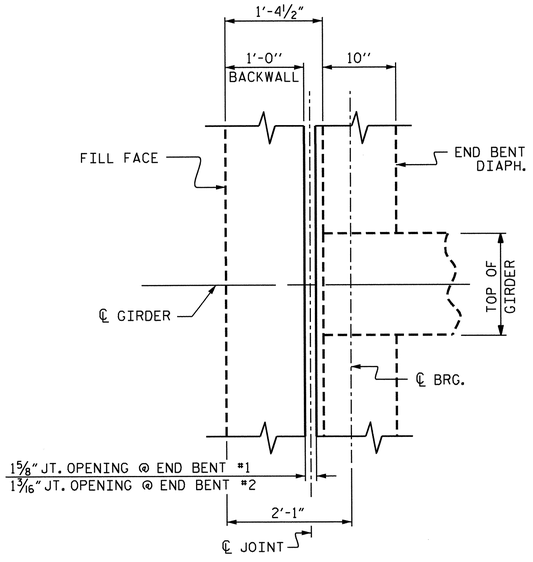

END BENT DIAPHRAGM

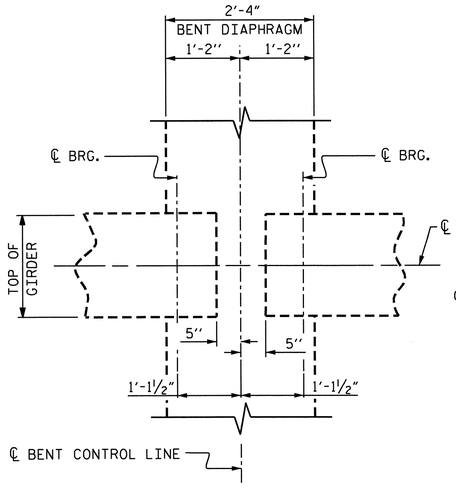

BENT DIAPHRAGM

BENT NOS. 1, 2, 3, 5, 6, 7, 9, 10 AND 12

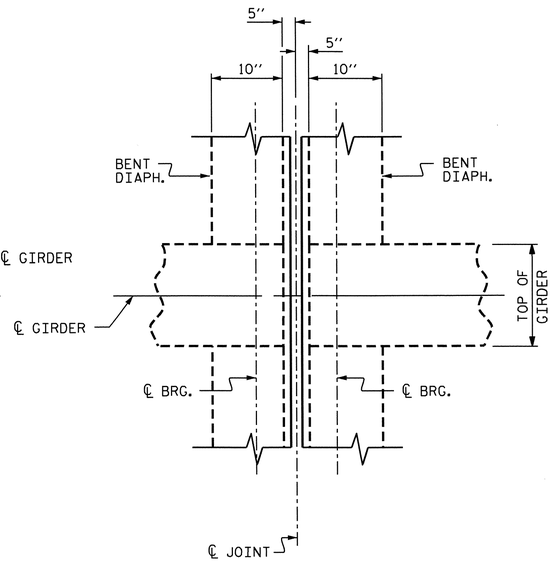

BENT DIAPHRAGM

BENT NOS. 4, 8 AND 11

PLAN

PROJECT NO. R-2303B

CUMBERLAND/SAMPSON COUNTY

STATION: 397+87.00 -LREV-

SHEET 3 OF 3

STATE OF NORTH CAROLINA
DEPARTMENT OF TRANSPORTATION
RALEIGH

SUPERSTRUCTURE

TYPICAL SECTION DETAILS
(RIGHT LANE)

REVISIONS						SHEET NO.
NO.	BY:	DATE:	NO.	BY:	DATE:	S-50
1			3			TOTAL SHEETS
2			4			146

NORTH CAROLINA PROFESSIONAL SEAL 025516 ENGINEER EVAN F. MURRAY 2-21-13

DRAWN BY : PEGGY PARISI DATE : 10-4-11
CHECKED BY : K.P. SEDAI DATE : 9-25-12
DESIGN ENGINEER OF RECORD: MOHAMMED AHMED DATE : 8-15-11

20-FEB-2013 15:45
Z:\TIPProjects-R\R2303B\Structures\Plans\str02\PADKINS\R2303B_SD_TS_02.dgn
padkins

STR. #2

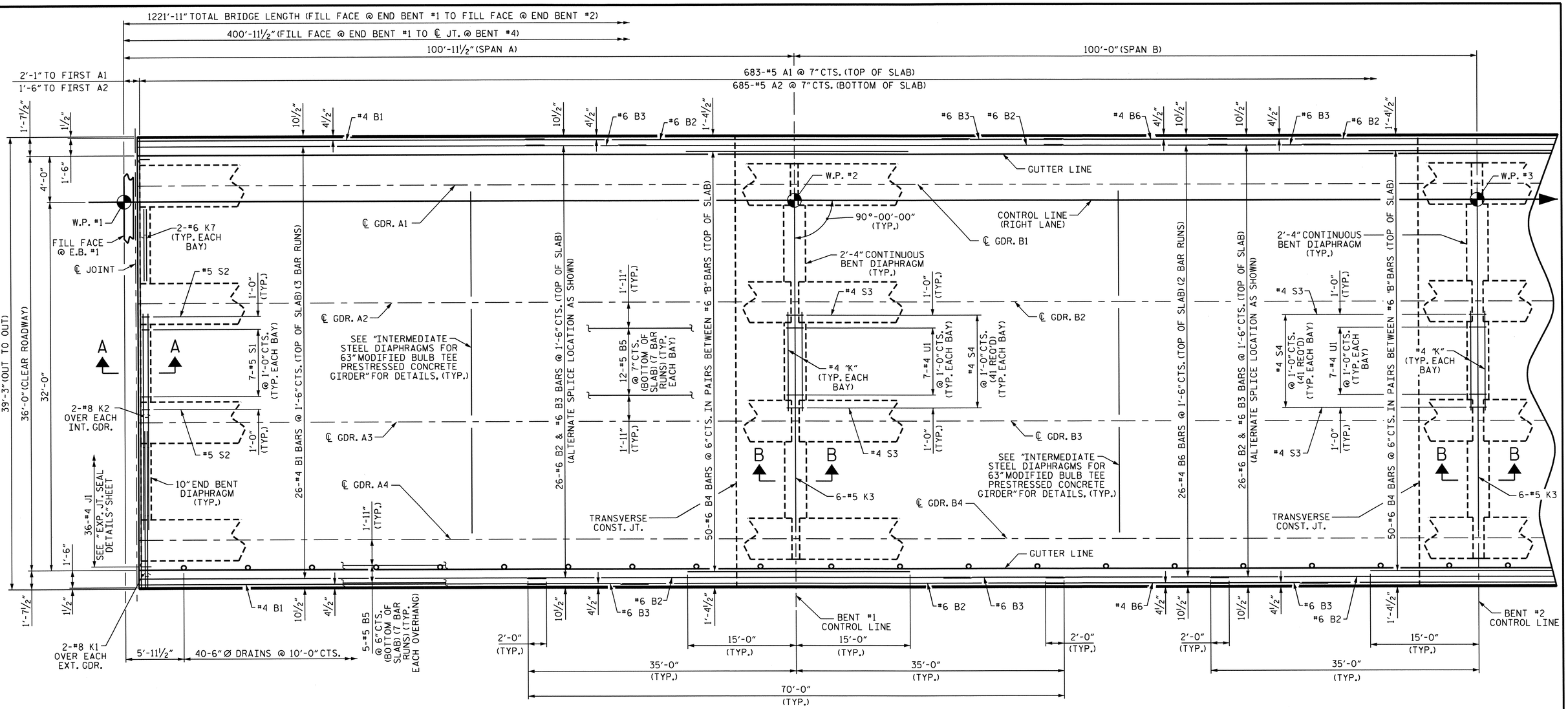

PLAN OF SPANS

FOR BARRIER RAIL REINFORCING STEEL SEE "CONCRETE BARRIER RAIL" SHEETS.
FOR POURING SEQUENCE, SEE "BILL OF MATERIAL" SHEET 1 OF 2.

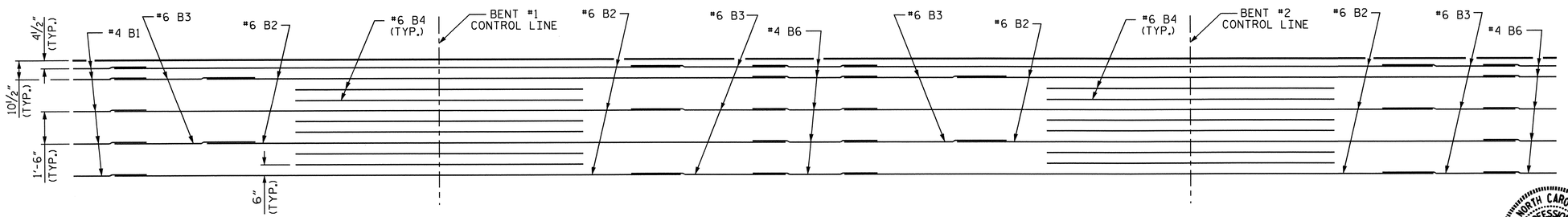

TOP OF SLAB REINFORCING STEEL LAYOUT

PROJECT NO. R-2303B
CUMBERLAND/SAMPSON COUNTY
STATION: 397+87.00 -LREV-

SHEET 1 OF 6

STATE OF NORTH CAROLINA
DEPARTMENT OF TRANSPORTATION
RALEIGH

SUPERSTRUCTURE

PLAN OF SPANS
A & B

(RIGHT LANE)

NORTH CAROLINA PROFESSIONAL SEAL 025516 ENGINEER MARY E. MURRAY 2.21.13

REVISIONS						SHEET NO.
NO.	BY:	DATE:	NO.	BY:	DATE:	S-51
1			3			TOTAL SHEETS
2			4			146

DRAWN BY : PEGGY PARISI DATE : 10-11-11
CHECKED BY : K.P. SEDAI DATE : 9-25-12
DESIGN ENGINEER OF RECORD: MOHAMMED AHMED DATE : 8-15-11

20-FEB-2013 15:45
Z:\TIPProjects-R\R2303B\Structures\Plans\str02\PADKINS\R2303B_SD_TS_02.dgn
padkins

STR. #2

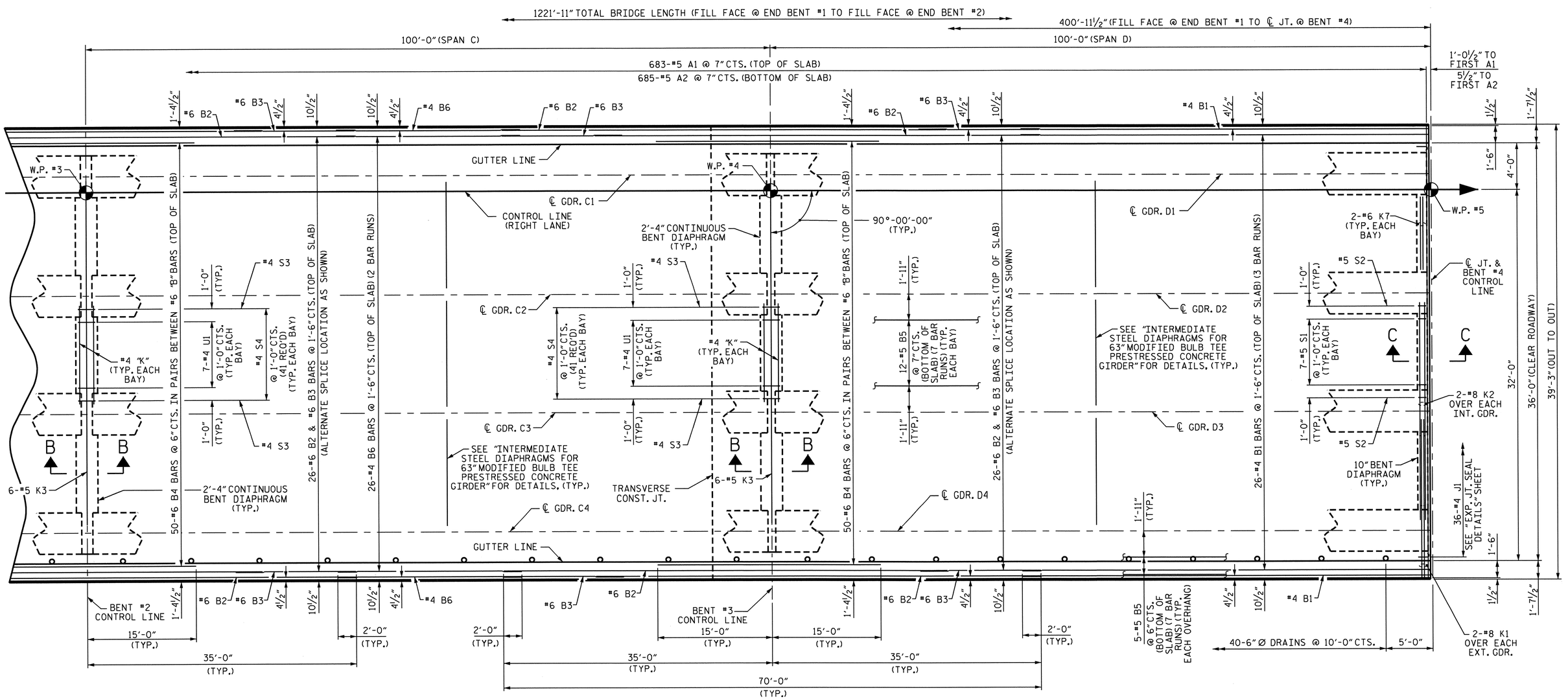

PLAN OF SPANS

FOR BARRIER RAIL REINFORCING STEEL SEE "CONCRETE BARRIER RAIL" SHEETS.
FOR POURING SEQUENCE, SEE "BILL OF MATERIAL" SHEET 1 OF 2.

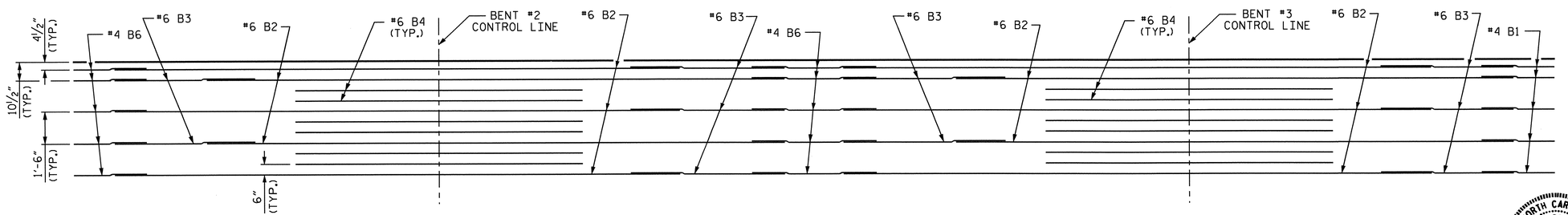

TOP OF SLAB REINFORCING STEEL LAYOUT

PROJECT NO. R-2303B
CUMBERLAND/SAMPSON COUNTY
STATION: 397+87.00 -LREV-

SHEET 2 OF 6

STATE OF NORTH CAROLINA
DEPARTMENT OF TRANSPORTATION
RALEIGH
SUPERSTRUCTURE

PLAN OF SPANS
C & D

(RIGHT LANE)

NORTH CAROLINA PROFESSIONAL SEAL 025516 ENGINEER EMILY E. GARRAY
2-21-13

REVISIONS						SHEET NO.
NO.	BY:	DATE:	NO.	BY:	DATE:	S-52
1			3			TOTAL SHEETS
2			4			146

DRAWN BY : PEGGY PARISI DATE : 10-11-11
CHECKED BY : K.P. SEDAI DATE : 9-25-12
DESIGN ENGINEER OF RECORD: MOHAMMED AHMED DATE : 8-15-11

20-FEB-2013 15:45
Z:\TIPProjects-R\R2303B\Structures\Plans\str02\PADKINS\R2303B_SD_TS_02.dgn
padkins

STR. #2

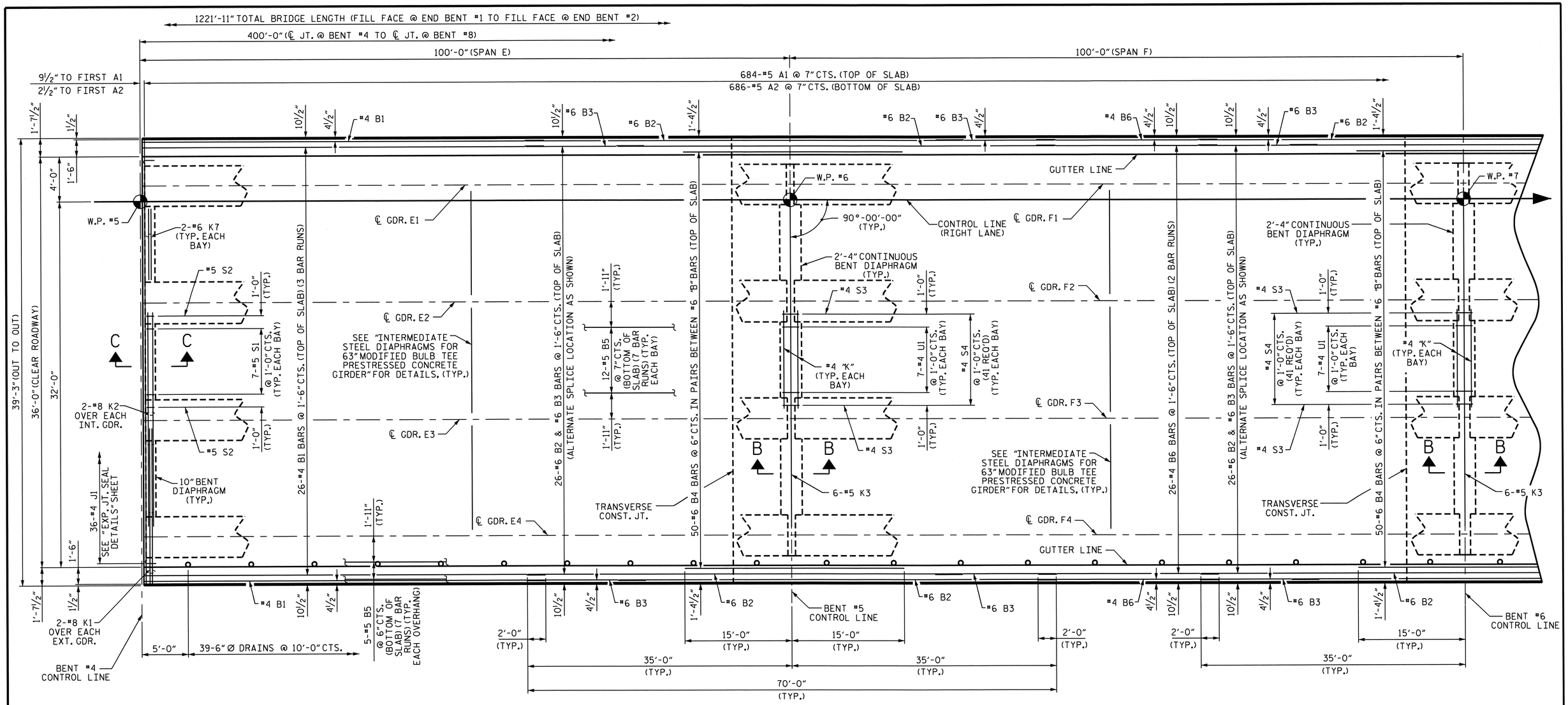

PLAN OF SPANS

FOR BARRIER RAIL REINFORCING STEEL SEE "CONCRETE BARRIER RAIL" SHEETS.
FOR POURING SEQUENCE, SEE "BILL OF MATERIAL" SHEET 1 OF 2.

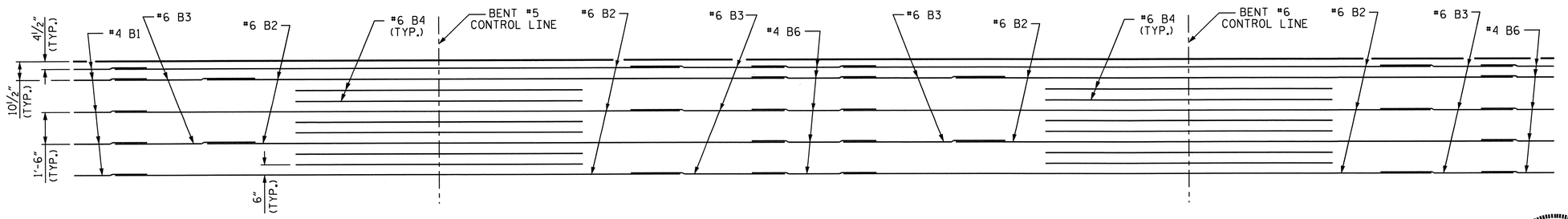

TOP OF SLAB REINFORCING STEEL LAYOUT

PROJECT NO. R-2303B
CUMBERLAND/SAMPSON COUNTY
STATION: 397+87.00 -LREV-

SHEET 3 OF 6

STATE OF NORTH CAROLINA
DEPARTMENT OF TRANSPORTATION
RALEIGH
SUPERSTRUCTURE

PLAN OF SPANS
E & F

(RIGHT LANE)

REVISIONS						SHEET NO.
NO.	BY:	DATE:	NO.	BY:	DATE:	S-53
1			3			TOTAL SHEETS
2			4			146

NORTH CAROLINA PROFESSIONAL SEAL 025516 ENGINEER
2.21.13

DRAWN BY : PEGGY PARISI DATE : 10-11-11
CHECKED BY : K.P. SEDAI DATE : 9-25-12
DESIGN ENGINEER OF RECORD: MOHAMMED AHMED DATE : 8-15-11

20-FEB-2013 15:45
Z:\TIPProjects-R\R2303B\Structures\Plans\str02\PADKINS\R2303B_SD_TS_02.dgn
padkins

STR. #2

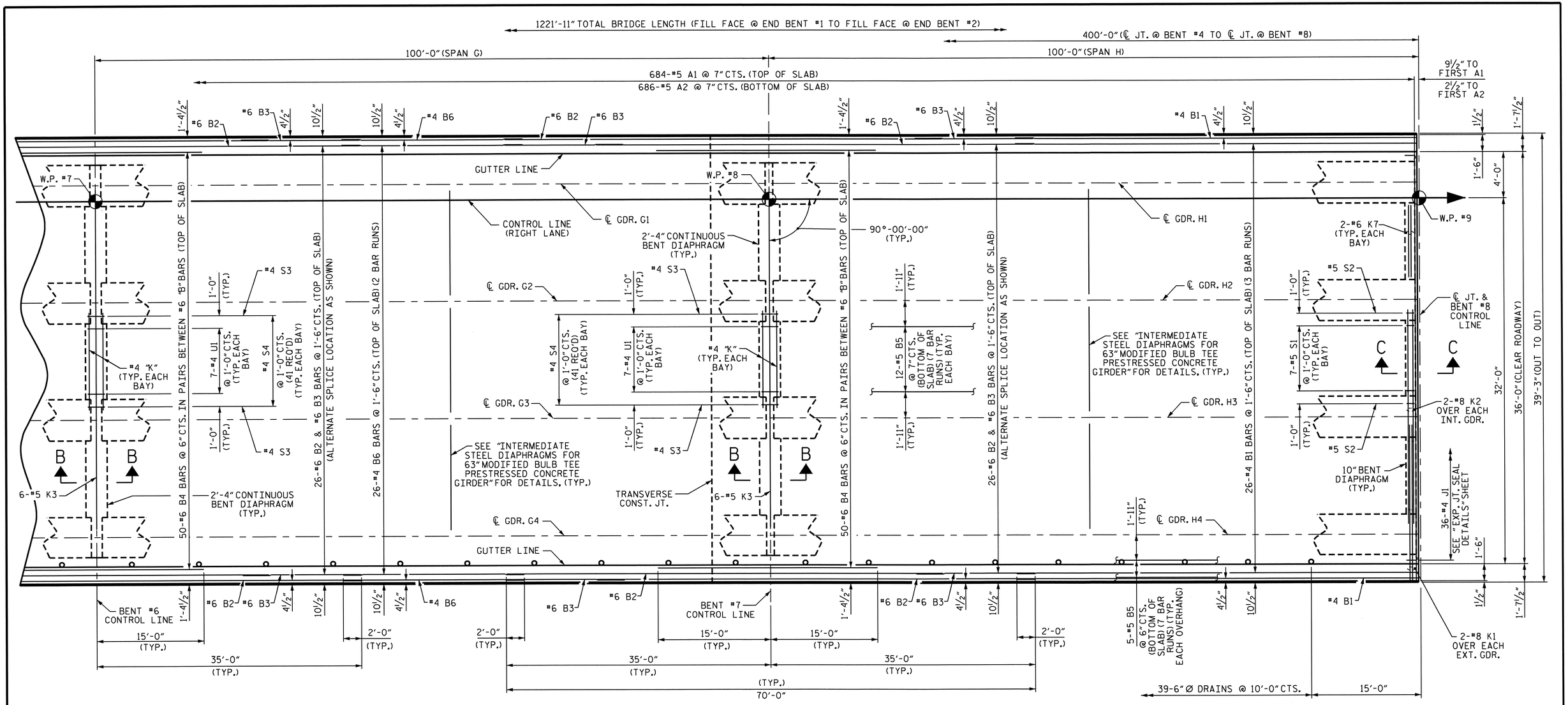

PLAN OF SPANS

FOR BARRIER RAIL REINFORCING STEEL SEE "CONCRETE BARRIER RAIL" SHEETS.
FOR POURING SEQUENCE, SEE "BILL OF MATERIAL" SHEET 1 OF 2.

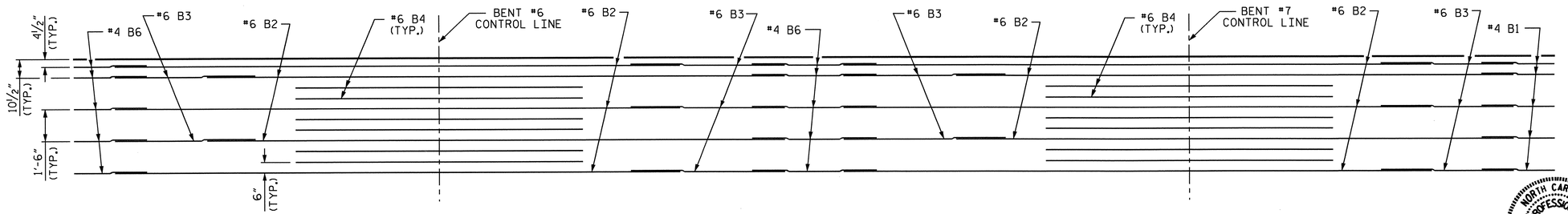

TOP OF SLAB REINFORCING STEEL LAYOUT

PROJECT NO. R-2303B
CUMBERLAND/SAMPSON COUNTY
STATION: 397+87.00 -LREV-

SHEET 4 OF 6

STATE OF NORTH CAROLINA
DEPARTMENT OF TRANSPORTATION
RALEIGH
SUPERSTRUCTURE

PLAN OF SPANS
G & H

(RIGHT LANE)

NORTH CAROLINA PROFESSIONAL SEAL 025516 ENGINEER EMILY E. MURRAY
2-21-13

REVISIONS						SHEET NO.
NO.	BY:	DATE:	NO.	BY:	DATE:	S-54
1			3			TOTAL SHEETS
2			4			146

DRAWN BY : PEGGY PARISI DATE : 10-11-11
CHECKED BY : K.P. SEDAI DATE : 9-25-12
DESIGN ENGINEER OF RECORD: MOHAMMED AHMED DATE : 8-15-11

20-FEB-2013 15:45
Z:\TIPProjects-R\R2303B\Structures\Plans\str02\PADKINS\R2303B_SD_TS_02.dgn
padkins

STR. #2

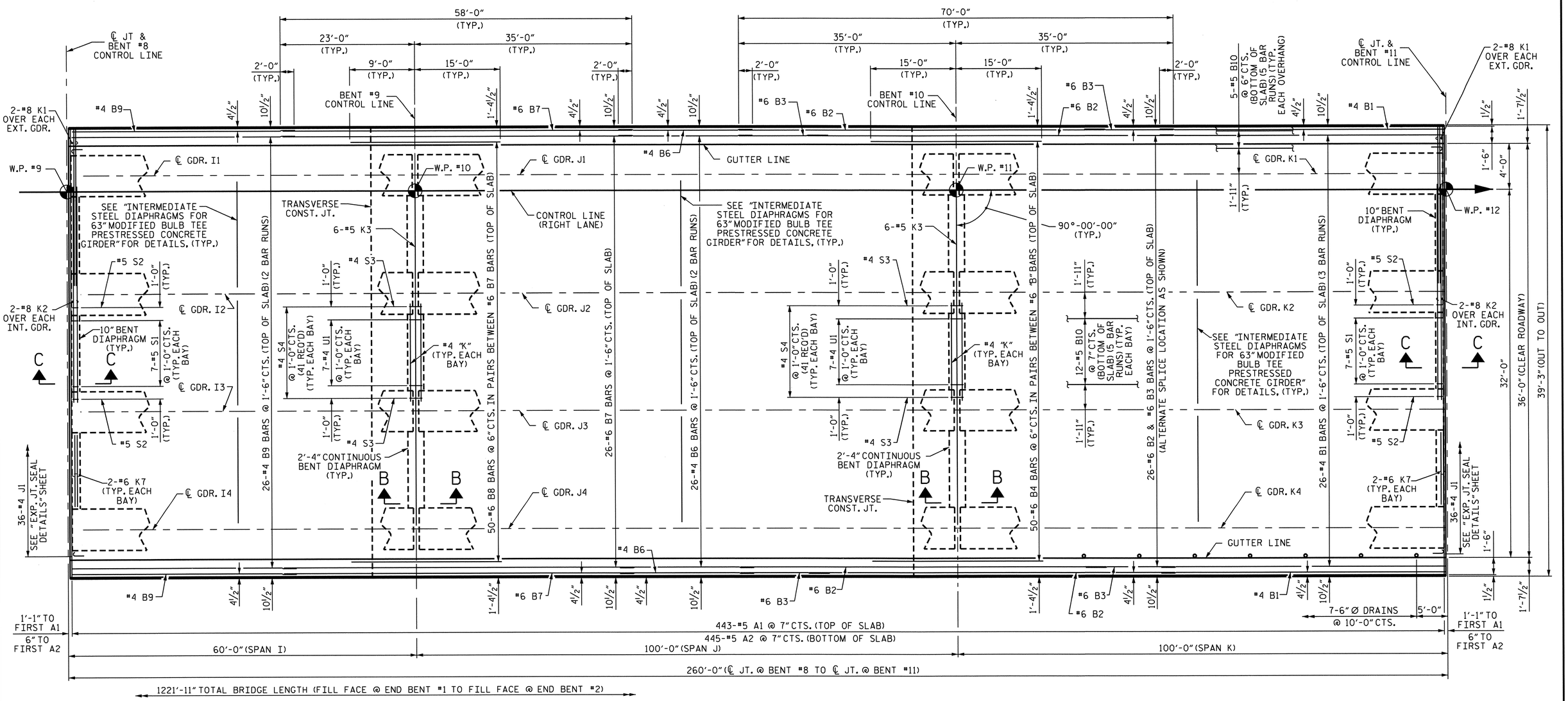

PLAN OF SPANS

FOR BARRIER RAIL REINFORCING STEEL SEE "CONCRETE BARRIER RAIL" SHEETS.
FOR POURING SEQUENCE, SEE "BILL OF MATERIAL" SHEET 1 OF 2.

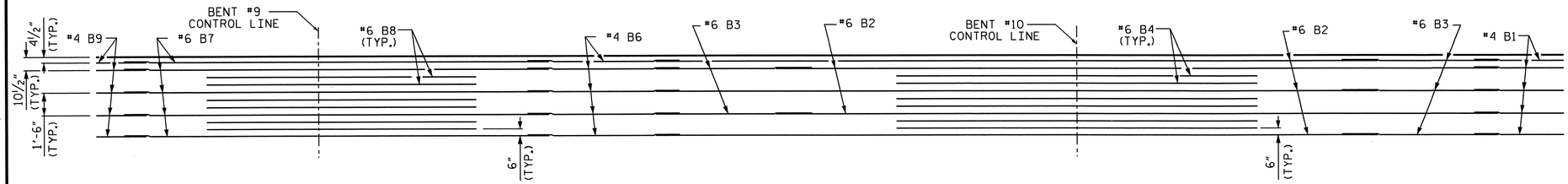

TOP OF SLAB REINFORCING STEEL LAYOUT

PROJECT NO. R-2303B
CUMBERLAND/SAMPSON COUNTY
STATION: 397+87.00 -LREV-

SHEET 5 OF 6

STATE OF NORTH CAROLINA
DEPARTMENT OF TRANSPORTATION
RALEIGH
SUPERSTRUCTURE

PLAN OF SPANS
I, J & K

(RIGHT LANE)

REVISIONS						SHEET NO.
NO.	BY:	DATE:	NO.	BY:	DATE:	S-55
1			3			TOTAL SHEETS
2			4			146

STR. #2

NORTH CAROLINA PROFESSIONAL SEAL 025516 ENGINEER C. E. MURRAY 2-21-13

DRAWN BY : PEGGY PARISI DATE : 10-11-11
CHECKED BY : K.P. SEDAI DATE : 9-25-12
DESIGN ENGINEER OF RECORD: MOHAMMED AHMED DATE : 8-15-11

20-FEB-2013 15:45
Z:\TIPProjects-R\R2303B\Structures\Plans\str02\PADKINS\R2303B_SD_TS_02.dgn
padkins

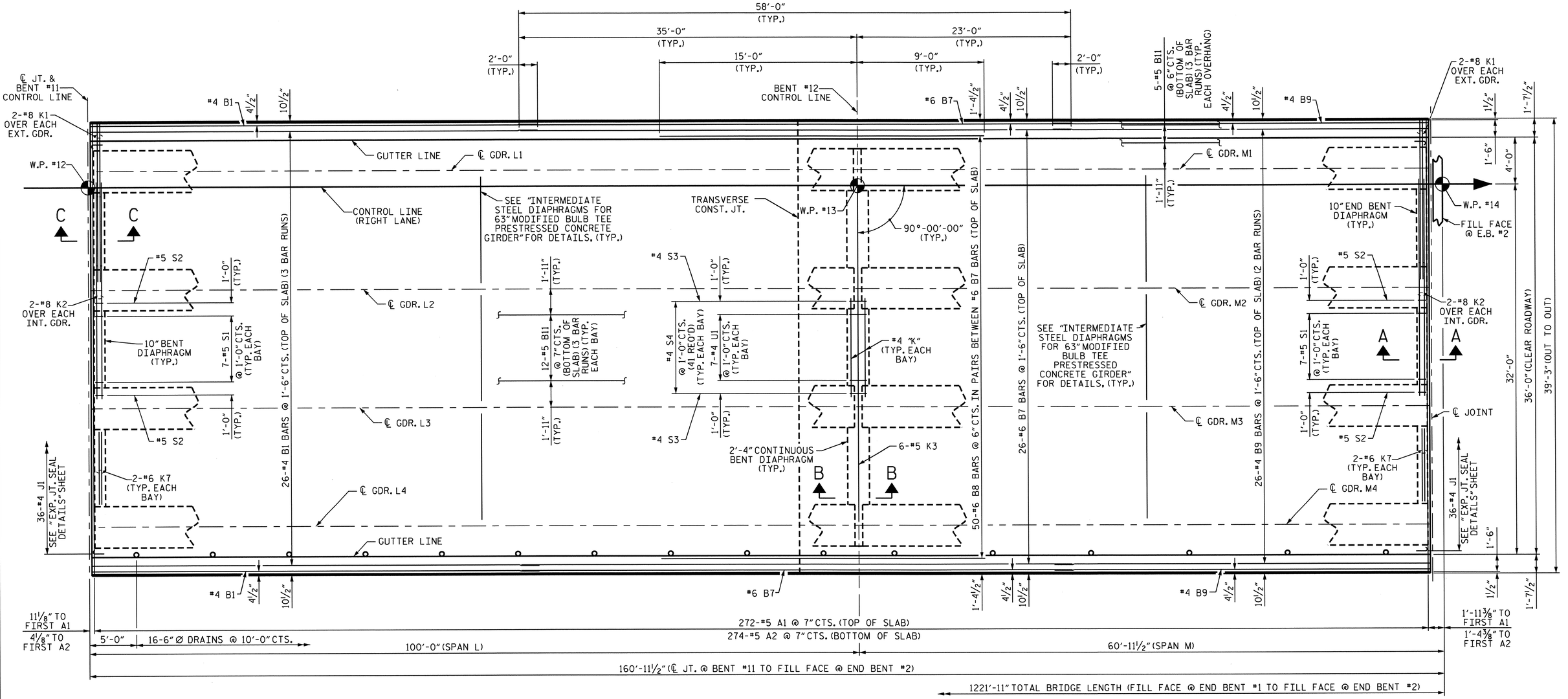

PLAN OF SPANS

FOR BARRIER RAIL REINFORCING STEEL SEE "CONCRETE BARRIER RAIL" SHEETS.
FOR POURING SEQUENCE, SEE "BILL OF MATERIAL" SHEET 1 OF 2.

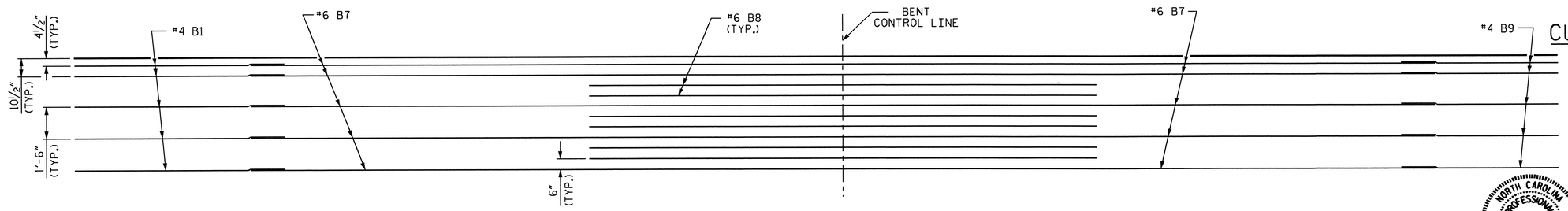

TOP OF SLAB REINFORCING STEEL LAYOUT

PROJECT NO. R-2303B
CUMBERLAND/SAMPSON COUNTY
STATION: 397+87.00 -LREV-

SHEET 6 OF 6

STATE OF NORTH CAROLINA
DEPARTMENT OF TRANSPORTATION
RALEIGH

SUPERSTRUCTURE

PLAN OF SPANS
L & M

(RIGHT LANE)

REVISIONS						SHEET NO.
NO.	BY:	DATE:	NO.	BY:	DATE:	S-56
1			3			TOTAL SHEETS
2			4			146

STR. #2

DRAWN BY : PEGGY PARISI DATE : 10-11-11
CHECKED BY : K.P. SEDAI DATE : 9-25-12
DESIGN ENGINEER OF RECORD: MOHAMMED AHMED DATE : 8-15-11

20-FEB-2013 15:44
Z:\TIPProjects-R\R2303B\Structures\Plans\str02\PADKINS\R2303B_SD_TS_02.dgn
padkins

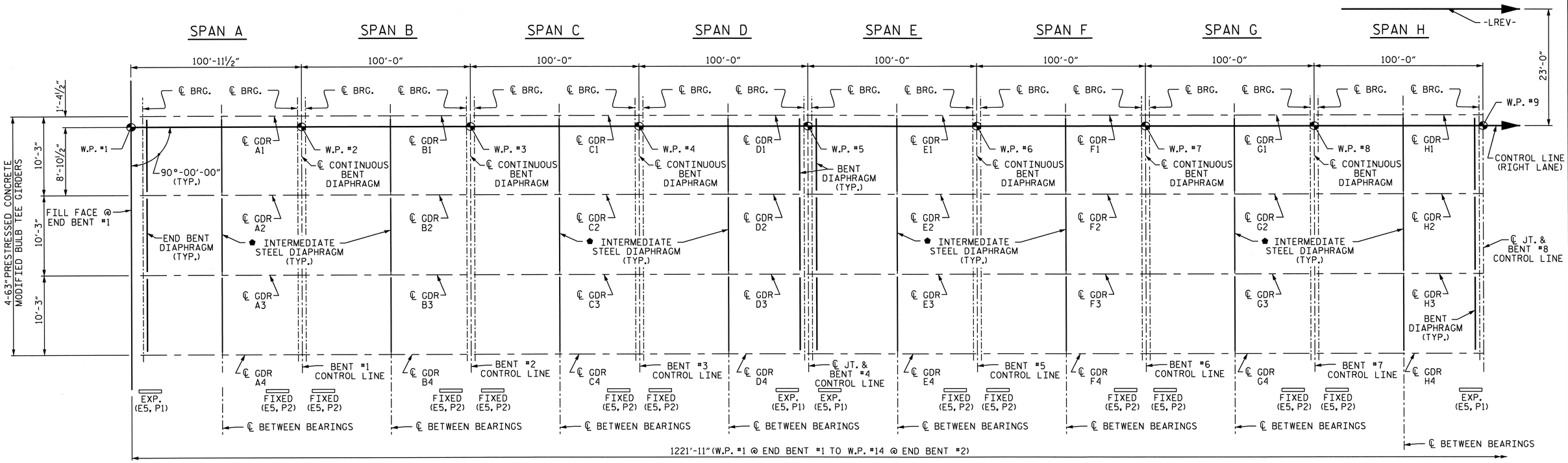

GIRDER LAYOUT

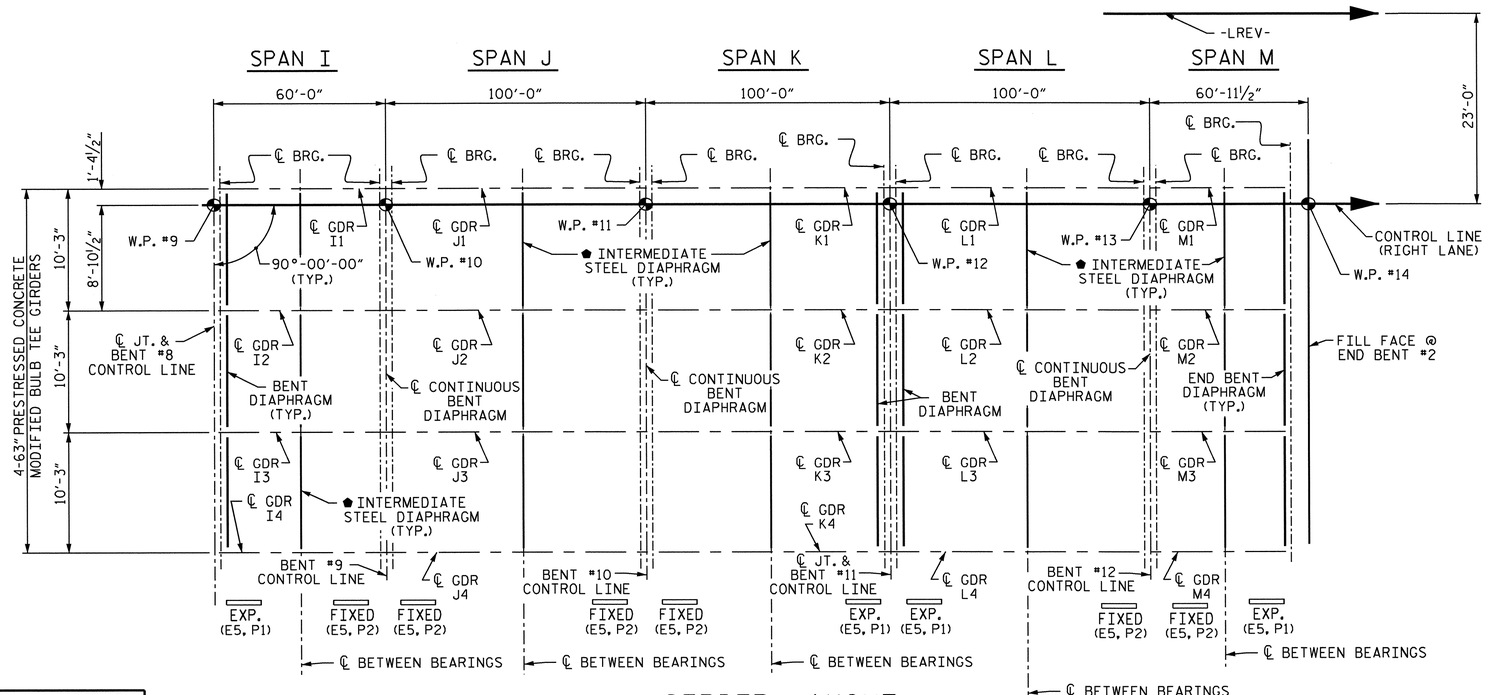

GIRDER LAYOUT

● SEE "INTERMEDIATE STEEL DIAPHRAGMS FOR 63" MODIFIED BULB TEE PRESTRESSED CONCRETE GIRDERS" FOR DETAILS

PROJECT NO. R-2303B

CUMBERLAND/SAMPSON COUNTY

STATION: 397+87.00 -LREV-

STATE OF NORTH CAROLINA
DEPARTMENT OF TRANSPORTATION
RALEIGH
SUPERSTRUCTURE

GIRDER LAYOUT

(RIGHT LANE)

NORTH CAROLINA PROFESSIONAL SEAL 025516 ENGINEER TIMOTHY E. MURRAY
2.21.13

REVISIONS						SHEET NO.
NO.	BY:	DATE:	NO.	BY:	DATE:	S-57
1			3			TOTAL SHEETS
2			4			146

DRAWN BY : PEGGY PARISI DATE : 10-17-11
CHECKED BY : K.P. SEDAI DATE : 9-25-12
DESIGN ENGINEER OF RECORD: MOHAMMED AHMED DATE : 8-15-11

20-FEB-2013 15:44
Z:\TIPProjects-R\R2303B\Structures\Plans\str02\PADKINS\R2303B_SD_TS_02.dgn
padkins

STR. #2

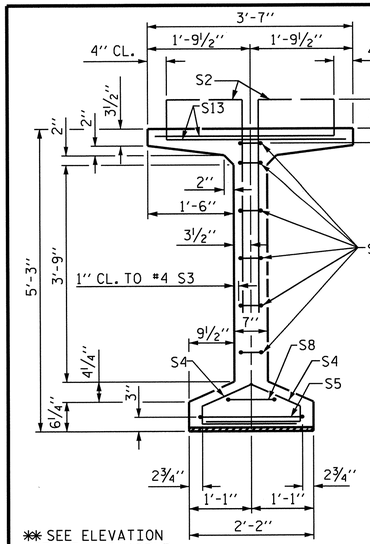

✱✱ SEE ELEVATION VIEW FOR STIRRUP PROJECTION

SECTION A-A

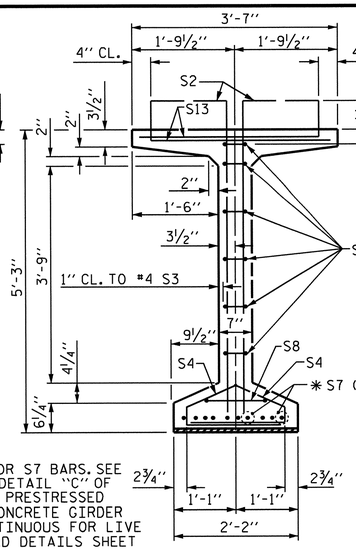

✱ FOR S7 BARS, SEE DETAIL "C" OF PRESTRESSED CONCRETE GIRDER CONTINUOUS FOR LIVE LOAD DETAILS SHEET

SECTION B-B

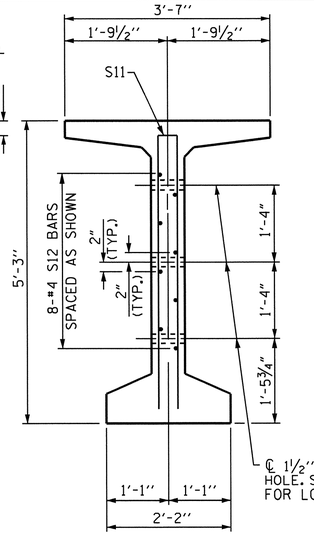

℄ 1½" Ø FORMED HOLE. SEE ELEVATION FOR LOCATION.

SECTION C-C

(S1, S6 AND S9 BARS NOT SHOWN)

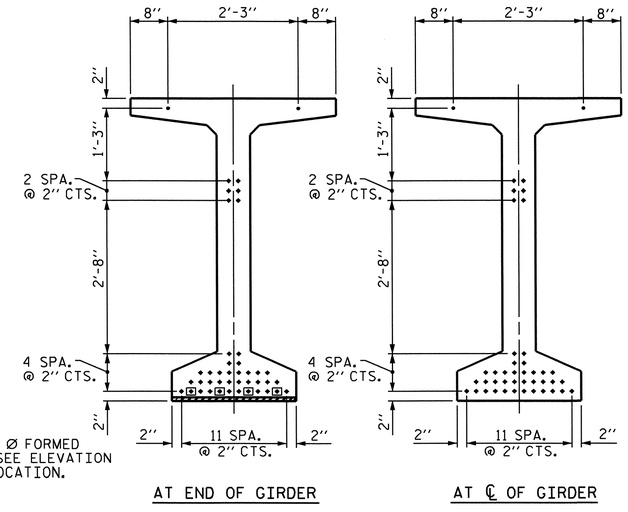

AT END OF GIRDER

AT ℄ OF GIRDER

0.6" Ø LOW RELAXATION STRAND LAYOUT

DEBONDING LEGEND

- ● FULLY BONDED STRANDS
- ⊡ STRANDS DEBONDED FOR 4'-0" FROM END OF GIRDER

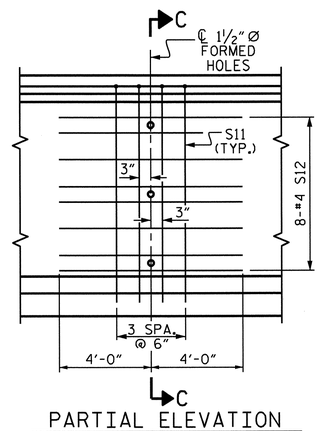

PARTIAL ELEVATION

SHOWING INTERMEDIATE STEEL DIAPHRAGM REINFORCING STEEL FOR GIRDER Nos. 1 THRU 4

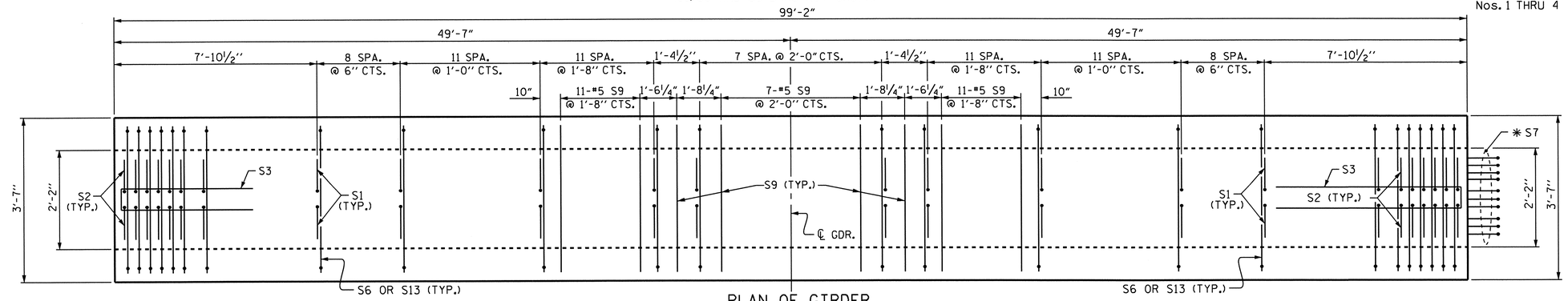

PLAN OF GIRDER

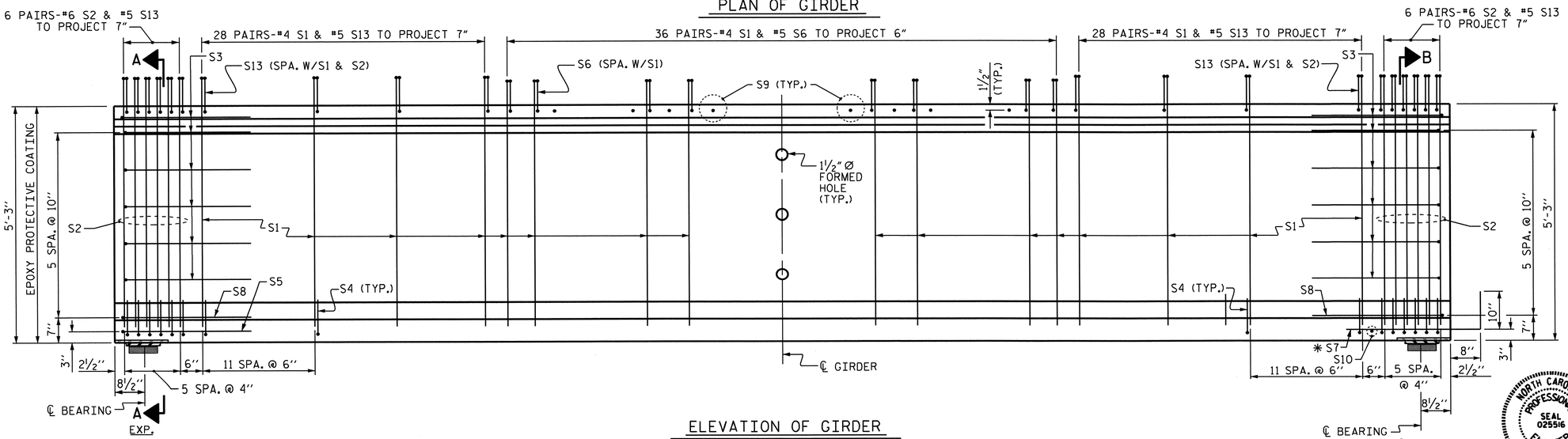

ELEVATION OF GIRDER

SPANS A, D, E, H, K & L

0.6" Ø L. R. GRADE 270 STRANDS		
AREA (SQUARE INCHES)	ULTIMATE STRENGTH (LBS. PER STRAND)	APPLIED PRESTRESS (LBS. PER STRAND)
0.217	58,600	43,950

REINFORCING STEEL FOR ONE GDR

BAR	NUMBER	SIZE	TYPE	LENGTH	WEIGHT
S1	184	#4	1	6'-1"	748
S2	24	#6	1	6'-1"	219
S3	12	#4	2	8'-5"	67
S4	72	#4	3	3'-0"	144
S5	1	#5	2	9'-10"	10
S6	72	#5	4	4'-4"	325
✱ S7	10	#5	STR	3'-8"	38
S8	2	#5	2	9'-0"	19
S9	31	#5	STR	3'-3"	105
S10	1	#3	STR	1'-10"	1
S11	4	#5	2	10'-2"	42
S12	8	#4	STR	8'-0"	43
S13	136	#5	4	4'-5"	627

✱ NOTE: S7 BARS SHALL BE BENT BEFORE SHIPMENT. HEAT BENDING SHALL NOT BE ALLOWED.

BAR TYPES

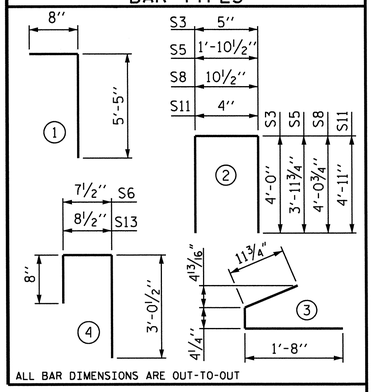

ALL BAR DIMENSIONS ARE OUT-TO-OUT

QUANTITIES FOR ONE GIRDER

	REINFORCING STEEL	9500 PSI CONCRETE	0.6" Ø L.R. STRANDS
	LB.	C.Y.	No.
	2388	19.6	42

GIRDERS REQUIRED

NUMBER	LENGTH	TOTAL LENGTH
24	99'-2"	2380'-0"

PROJECT NO. R-2303B

CUMBERLAND/SAMPSON COUNTY

STATION: 397+87.00-LREV-

SHEET 1 OF 4

STATE OF NORTH CAROLINA
DEPARTMENT OF TRANSPORTATION
RALEIGH

STANDARD

63" PRESTRESSED CONCRETE MODIFIED BULB TEE CONTINUOUS FOR LIVE LOAD

(RIGHT LANE)

NORTH CAROLINA PROFESSIONAL SEAL 025516 ENGINEER JAMES C. MURRAY 2-21-13

REVISIONS						SHEET NO.
NO.	BY:	DATE:	NO.	BY:	DATE:	S-58
1			3			TOTAL SHEETS
2			4			146

STR. #2

STD. NO. PCG7 (Sht. 1)

ASSEMBLED BY : PEGGY ADKINS DATE : 10-25-11			
CHECKED BY : K.P. SEDAI DATE : 9-27-12			
DRAWN BY : EEM 2/6/97	REV. 10/17/00	RWW/LES	DESIGN ENGINEER OF RECORD: MOHAMMED AHMED DATE : 8-15-11
CHECKED BY : VAP 2/6/97	REV. 5/1/06R	TLA/GM	
	REV. 10/1/11	MAA/GM	

20-FEB-2013 15:44
Z:\TIPProjects-R\R2303B\Structures\Plans\str02\PADKINS\R2303B_SD_TS_02.dgn
padkins

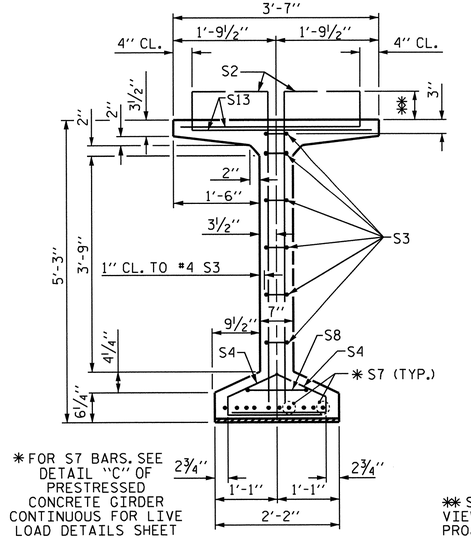

* FOR S7 BARS, SEE DETAIL "C" OF PRESTRESSED CONCRETE GIRDER CONTINUOUS FOR LIVE LOAD DETAILS SHEET

SECTION B-B

** SEE ELEVATION VIEW FOR STIRRUP PROJECTION

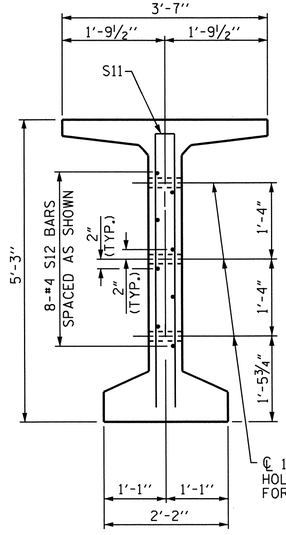

℄ 1½" Ø FORMED HOLE. SEE ELEVATION FOR LOCATION.

SECTION C-C

(S1, S6 AND S9 BARS NOT SHOWN)

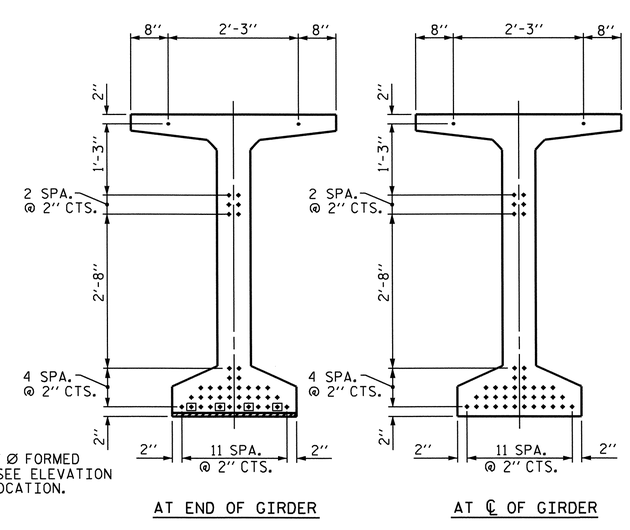

0.6" Ø LOW RELAXATION STRAND LAYOUT

DEBONDING LEGEND

- ● FULLY BONDED STRANDS
- ⊡ STRANDS DEBONDED FOR 4'-0" FROM END OF GIRDER

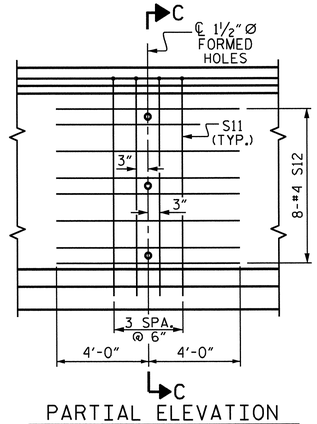

PARTIAL ELEVATION

SHOWING INTERMEDIATE STEEL DIAPHRAGM REINFORCING STEEL FOR GIRDER Nos. 1 THRU 4

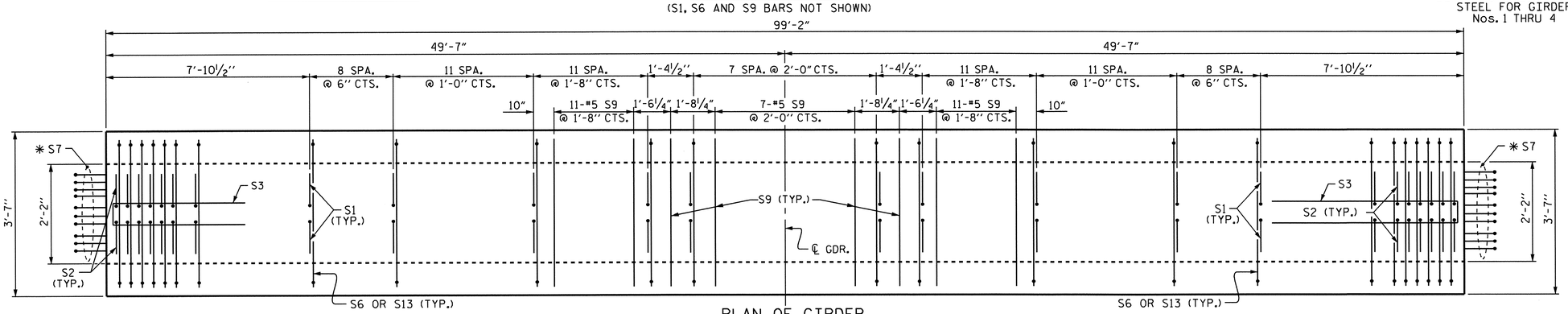

PLAN OF GIRDER

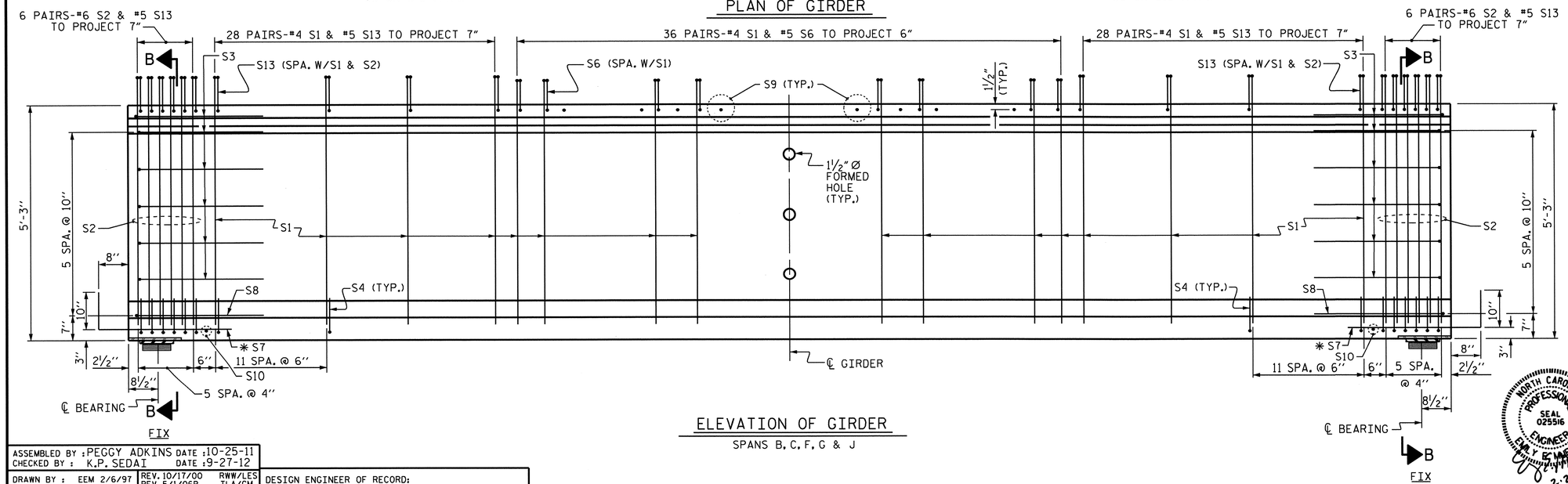

ELEVATION OF GIRDER

SPANS B, C, F, G & J

0.6" Ø L. R. GRADE 270 STRANDS		
AREA (SQUARE INCHES)	ULTIMATE STRENGTH (LBS. PER STRAND)	APPLIED PRESTRESS (LBS. PER STRAND)
0.217	58,600	43,950

REINFORCING STEEL FOR ONE GDR

BAR	NUMBER	SIZE	TYPE	LENGTH	WEIGHT
S1	184	#4	1	6'-1"	748
S2	24	#6	1	6'-1"	219
S3	12	#4	2	8'-5"	67
S4	72	#4	3	3'-0"	144
S6	72	#5	4	4'-4"	325
* S7	20	#5	STR	3'-8"	76
S8	2	#5	2	9'-0"	19
S9	31	#5	STR	3'-3"	105
S10	2	#3	STR	1'-10"	1
S11	4	#5	2	10'-2"	42
S12	8	#4	STR	8'-0"	43
S13	136	#5	4	4'-5"	627

* NOTE: S7 BARS SHALL BE BENT BEFORE SHIPMENT. HEAT BENDING SHALL NOT BE ALLOWED.

BAR TYPES

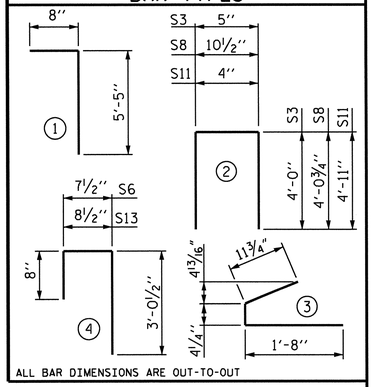

ALL BAR DIMENSIONS ARE OUT-TO-OUT

QUANTITIES FOR ONE GIRDER

	REINFORCING STEEL	9500 PSI CONCRETE	0.6" Ø L.R. STRANDS
	LB.	C.Y.	No.
	2416	19.6	42

GIRDERS REQUIRED

NUMBER	LENGTH	TOTAL LENGTH
20	99'-2"	1983'-4"

PROJECT NO. R-2303B

CUMBERLAND/SAMPSON COUNTY

STATION: 397+87.00-LREV-

SHEET 2 OF 4

STATE OF NORTH CAROLINA
DEPARTMENT OF TRANSPORTATION
RALEIGH

STANDARD

63" PRESTRESSED CONCRETE MODIFIED BULB TEE CONTINUOUS FOR LIVE LOAD

(RIGHT LANE)

NORTH CAROLINA PROFESSIONAL SEAL 025516 ENGINEER E.M. MURRAY 2.21.13

REVISIONS						SHEET NO.
NO.	BY:	DATE:	NO.	BY:	DATE:	S-59
1			3			TOTAL SHEETS
2			4			146

ASSEMBLED BY : PEGGY ADKINS DATE : 10-25-11
CHECKED BY : K.P. SEDAI DATE : 9-27-12

DRAWN BY : EEM 2/6/97
CHECKED BY : VAP 2/6/97

REV. 10/17/00 RWW/LES
REV. 5/1/06R TLA/GM
REV. 10/1/11 MAA/GM

DESIGN ENGINEER OF RECORD:
MOHAMMED AHMED DATE : 8-15-11

20-FEB-2013 15:44
Z:\TIPProjects-R\R2303B\Structures\Plans\str02\PADKINS\R2303B_SD_TS_02.dgn
padkins

STR. #2

STD. NO. PCG7 (Sht. 1)

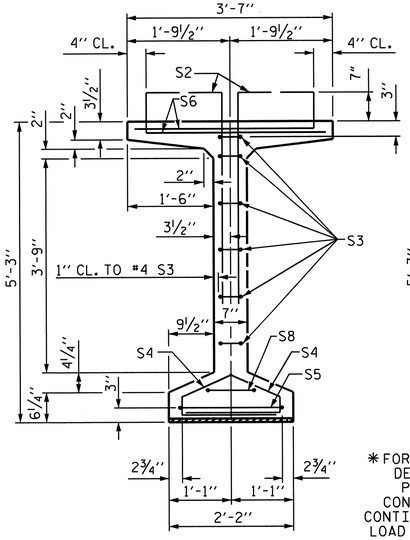

SECTION A-A

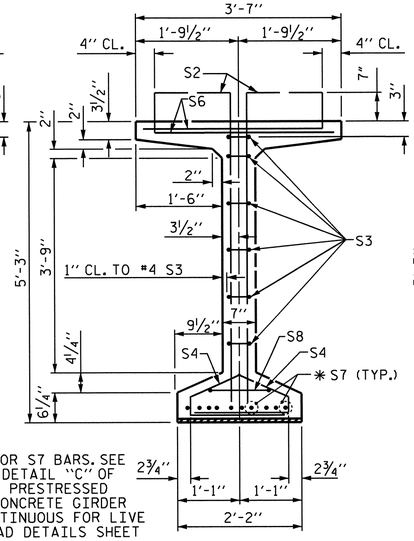

✱FOR S7 BARS, SEE DETAIL "C" OF PRESTRESSED CONCRETE GIRDER CONTINUOUS FOR LIVE LOAD DETAILS SHEET

SECTION B-B

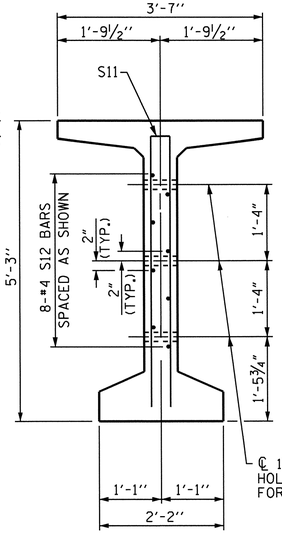

SECTION C-C

(S1, S6 AND S9 BARS NOT SHOWN)

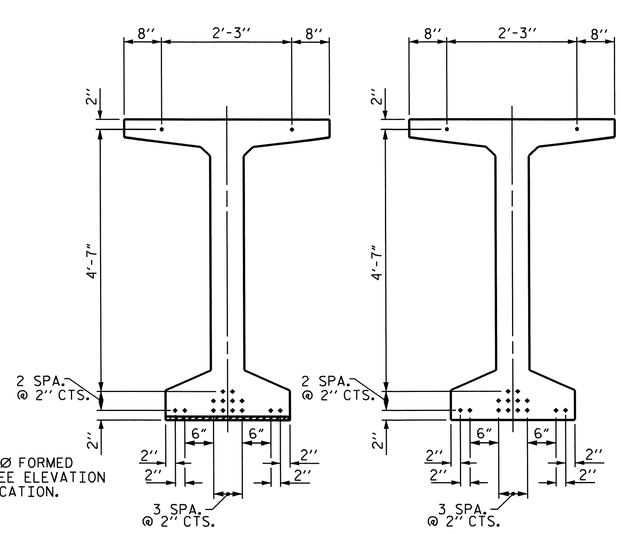

0.6" Ø LOW RELAXATION STRAND LAYOUT

DEBONDING LEGEND

● FULLY BONDED STRANDS

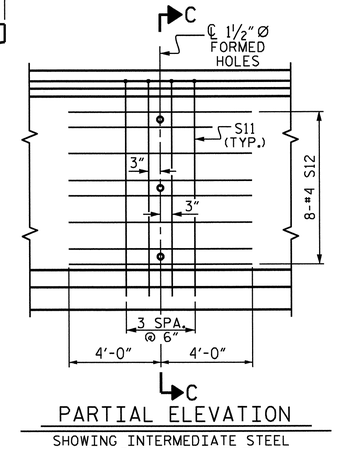

PARTIAL ELEVATION

SHOWING INTERMEDIATE STEEL DIAPHRAGM REINFORCING STEEL FOR GIRDER Nos. 1 THRU 4

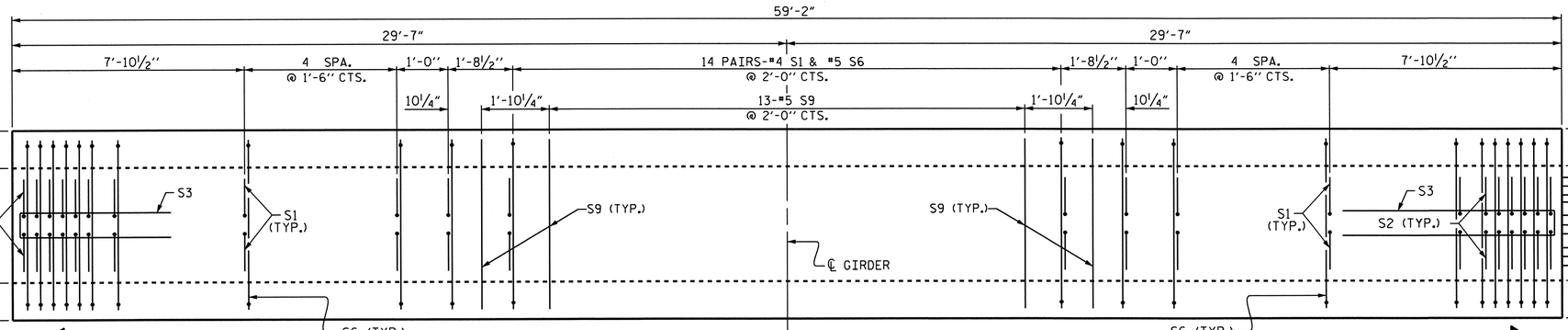

PLAN OF GIRDER

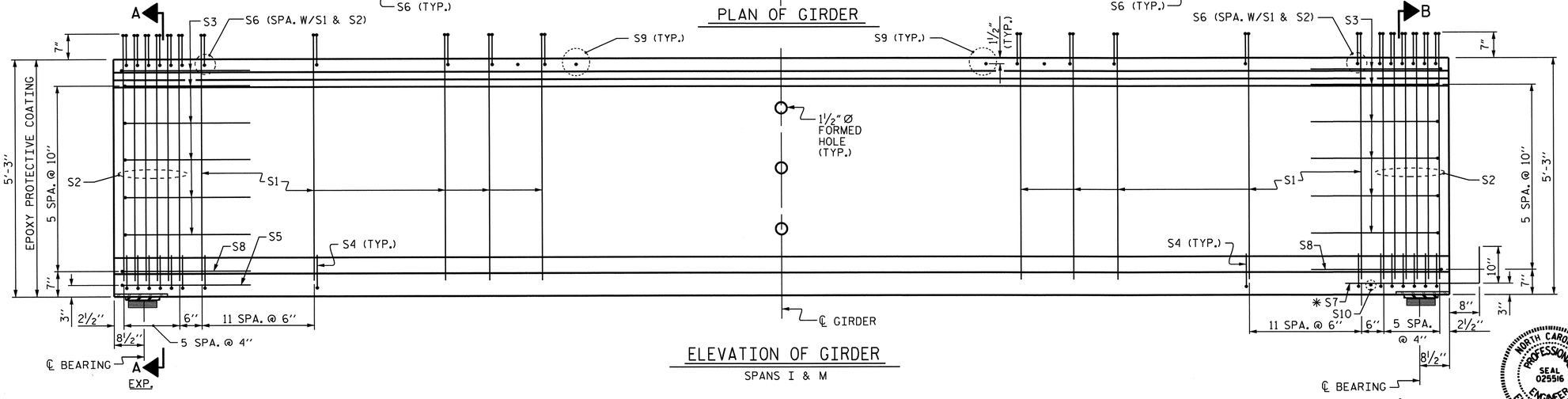

ELEVATION OF GIRDER

SPANS I & M

0.6" Ø L. R. GRADE 270 STRANDS		
AREA (SQUARE INCHES)	ULTIMATE STRENGTH (LBS. PER STRAND)	APPLIED PRESTRESS (LBS. PER STRAND)
0.217	58,600	43,950

REINFORCING STEEL FOR ONE GDR

BAR	NUMBER	SIZE	TYPE	LENGTH	WEIGHT
S1	96	#4	1	6'-1"	390
S2	24	#5	1	6'-1"	152
S3	12	#4	2	8'-5"	67
S4	72	#4	3	3'-0"	144
S5	1	#5	2	9'-10"	10
S6	120	#5	4	4'-5"	553
✱S7	10	#5	STR	3'-8"	38
S8	2	#5	2	9'-0"	19
S9	15	#5	STR	3'-3"	51
S10	1	#3	STR	1'-10"	1
S11	4	#5	2	10'-2"	42
S12	8	#4	STR	8'-0"	43

✱NOTE: S7 BARS SHALL BE BENT BEFORE SHIPMENT. HEAT BENDING SHALL NOT BE ALLOWED.

BAR TYPES

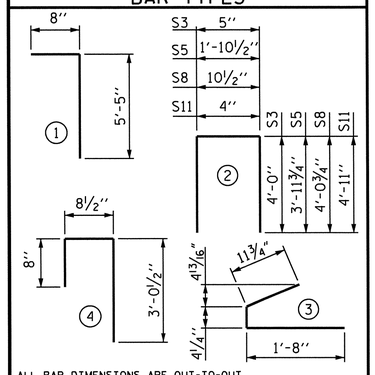

ALL BAR DIMENSIONS ARE OUT-TO-OUT

QUANTITIES FOR ONE GIRDER			
	REINFORCING STEEL	5000 PSI CONCRETE	0.6" Ø L.R. STRANDS
	LB.	C.Y.	No.
	1510	11.7	16

GIRDERS REQUIRED		
NUMBER	LENGTH	TOTAL LENGTH
8	59'-2"	473'-4"

PROJECT NO. R-2303B

CUMBERLAND/SAMPSON COUNTY

STATION: 397+87.00-LREV-

SHEET 3 OF 4

STATE OF NORTH CAROLINA
DEPARTMENT OF TRANSPORTATION
RALEIGH

STANDARD

63" PRESTRESSED CONCRETE MODIFIED BULB TEE CONTINUOUS FOR LIVE LOAD

(RIGHT LANE)

REVISIONS						SHEET NO.
NO.	BY:	DATE:	NO.	BY:	DATE:	S-60
1			3			TOTAL SHEETS
2			4			146

NORTH CAROLINA PROFESSIONAL SEAL 025516 ENGINEER C. MURRAY 2-21-13

ASSEMBLED BY : PEGGY ADKINS DATE : 10-25-11
CHECKED BY : K.P. SEDAI DATE : 9-27-12

DRAWN BY : EEM 2/6/97
CHECKED BY : VAP 2/6/97

REV. 10/17/00 RWW/LES
REV. 5/1/06R TLA/GM
REV. 10/1/11 MAA/GM

DESIGN ENGINEER OF RECORD: MOHAMMED AHMED DATE : 8-15-11

20-FEB-2013 15:44
Z:\TIPProjects-R\R2303B\Structures\Plans\str02\PADKINS\R2303B_SD_TS_02.dgn
padkins

STR. #2

STD. NO. PCG7 (Sht. 1)

DEAD LOAD DEFLECTION TABLE FOR GIRDERS

0.60" Ø LOW RELAXATION	SPANS A, B, C, D, E, F, G, H, J, K & L — GIRDER 1										
TENTH POINTS	0	.1	.2	.3	.4	.5	.6	.7	.8	.9	0
CAMBER (GIRDER ALONE IN PLACE) ↑	0.000	0.100	0.190	0.260	0.304	0.320	0.304	0.260	0.190	0.100	0.000
* DEFLECTION DUE TO SUPERIMPOSED D.L. ↓	0.000	0.037	0.069	0.095	0.111	0.117	0.111	0.095	0.069	0.037	0.000
FINAL CAMBER ↑	0	3/4"	1 7/16"	2"	2 5/16"	2 7/16"	2 5/16"	2"	1 7/16"	3/4"	0

0.60" Ø LOW RELAXATION	SPANS A, B, C, D, E, F, G, H, J, K & L — GIRDERS 2 & 3										
TENTH POINTS	0	.1	.2	.3	.4	.5	.6	.7	.8	.9	0
CAMBER (GIRDER ALONE IN PLACE) ↑	0.000	0.100	0.190	0.260	0.304	0.320	0.304	0.260	0.190	0.100	0.000
* DEFLECTION DUE TO SUPERIMPOSED D.L. ↓	0.000	0.037	0.070	0.096	0.113	0.118	0.113	0.096	0.070	0.037	0.000
FINAL CAMBER ↑	0	3/4"	1 7/16"	1 15/16"	2 5/16"	2 7/16"	2 5/16"	1 15/16"	1 7/16"	3/4"	0

0.60" Ø LOW RELAXATION	SPANS A, B, C, D, E, F, G, H, J, K & L — GIRDER 4										
TENTH POINTS	0	.1	.2	.3	.4	.5	.6	.7	.8	.9	0
CAMBER (GIRDER ALONE IN PLACE) ↑	0.000	0.100	0.190	0.260	0.304	0.320	0.304	0.260	0.190	0.100	0.000
* DEFLECTION DUE TO SUPERIMPOSED D.L. ↓	0.000	0.036	0.068	0.093	0.109	0.114	0.109	0.093	0.068	0.036	0.000
FINAL CAMBER ↑	0	3/4"	1 1/16"	2"	2 3/8"	2 7/16"	2 3/8"	2"	1 1/16"	3/4"	0

* INCLUDES FUTURE WEARING SURFACE
ALL VALUES ARE SHOWN IN FEET (DECIMAL FORM), EXCEPT "FINAL CAMBER", WHICH IS GIVEN IN INCHES (FRACTION FORM).

DEAD LOAD DEFLECTION TABLE FOR GIRDERS

0.60" Ø LOW RELAXATION	SPANS I & M — GIRDER 1										
TENTH POINTS	0	.1	.2	.3	.4	.5	.6	.7	.8	.9	0
CAMBER (GIRDER ALONE IN PLACE) ↑	0.000	0.023	0.044	0.060	0.070	0.074	0.070	0.060	0.044	0.023	0.000
* DEFLECTION DUE TO SUPERIMPOSED D.L. ↓	0.000	0.006	0.012	0.016	0.019	0.019	0.019	0.016	0.012	0.006	0.000
FINAL CAMBER ↑	0	3/16"	3/8"	1/2"	5/8"	5/8"	5/8"	1/2"	3/8"	3/16"	0

0.60" Ø LOW RELAXATION	SPANS I & M — GIRDERS 2 & 3										
TENTH POINTS	0	.1	.2	.3	.4	.5	.6	.7	.8	.9	0
CAMBER (GIRDER ALONE IN PLACE) ↑	0.000	0.023	0.044	0.060	0.070	0.074	0.070	0.060	0.044	0.023	0.000
* DEFLECTION DUE TO SUPERIMPOSED D.L. ↓	0.000	0.006	0.012	0.016	0.019	0.020	0.019	0.016	0.012	0.006	0.000
FINAL CAMBER ↑	0	3/16"	3/8"	1/2"	5/8"	5/8"	5/8"	1/2"	3/8"	3/16"	0

0.60" Ø LOW RELAXATION	SPANS I & M — GIRDER 4										
TENTH POINTS	0	.1	.2	.3	.4	.5	.6	.7	.8	.9	0
CAMBER (GIRDER ALONE IN PLACE) ↑	0.000	0.023	0.044	0.060	0.070	0.074	0.070	0.060	0.044	0.023	0.000
* DEFLECTION DUE TO SUPERIMPOSED D.L. ↓	0.000	0.006	0.011	0.016	0.018	0.019	0.018	0.016	0.011	0.006	0.000
FINAL CAMBER ↑	0	3/16"	3/8"	9/16"	5/8"	5/8"	5/8"	9/16"	3/8"	3/16"	0

* INCLUDES FUTURE WEARING SURFACE
ALL VALUES ARE SHOWN IN FEET (DECIMAL FORM), EXCEPT "FINAL CAMBER", WHICH IS GIVEN IN INCHES (FRACTION FORM).

NOTES

ALL PRESTRESSING STRANDS SHALL BE 7-WIRE LOW-RELAXATION GRADE 270 STRANDS AND SHALL CONFORM TO AASHTO M203 EXCEPT FOR SAMPLING REQUIREMENTS WHICH SHALL BE IN ACCORDANCE WITH THE STANDARD SPECIFICATIONS.

ALL REINFORCING STEEL SHALL BE GRADE 60.

APPLY EPOXY PROTECTIVE COATING TO END OF GIRDER SURFACES INDICATED IN ELEVATION VIEW.

EMBEDDED PLATE "B-1" SHALL BE GALVANIZED IN ACCORDANCE WITH THE STANDARD SPECIFICATIONS. BEVEL EDGES OF PLATE "B-1" TO GIVE CLOSE FIT BUT NOT TIGHT FIT TO STEEL CASTING FORM.

ANCHOR STUDS SHALL CONFORM TO AASHTO M169 GRADES 1010 THROUGH 1020 OR APPROVED EQUAL, AND SHALL MEET THE TYPE "B" REQUIREMENTS OF SUBSECTION 7.3 OF THE ANSI/AASHTO/AWS D1.5 BRIDGE WELDING CODE.

AT ENDS OF GIRDERS TO BE EMBEDDED IN CONCRETE DIAPHRAGMS OR END WALLS, PRESTRESSING STRANDS MAY EXTEND A MAXIMUM OF 2" BEYOND THE GIRDER ENDS. OTHERWISE, PRESTRESSING STRANDS SHALL BE CUT FLUSH WITH THE GIRDER ENDS.

THE TRANSFER OF LOAD FROM THE ANCHORAGES TO THE GIRDER SHALL BE DONE WHEN CONCRETE HAS REACHED A COMPRESSIVE STRENGTH OF NOT LESS THAN 7600 PSI FOR THE 99'-2" GIRDERS AND 4000 PSI FOR THE 59'-2" GIRDERS.

DEPENDING ON THE TYPE OF SYSTEM USED TO SUPPORT THE DECK SLAB FORMS, PRESET ANCHORS MAY BE NECESSARY IN THE PRESTRESSED CONCRETE GIRDER.

THE TOP SURFACE OF THE GIRDER, EXCLUDING THE OUTSIDE 4", SHALL BE RAKED TO A DEPTH OF 1/4".

A 2" x 2" CHAMFER IS ALLOWED AT THE INTERSECTION OF THE WEB AND THE BOTTOM FLANGE OF THE 63" AND 72" MODIFIED BULB TEES ONLY.

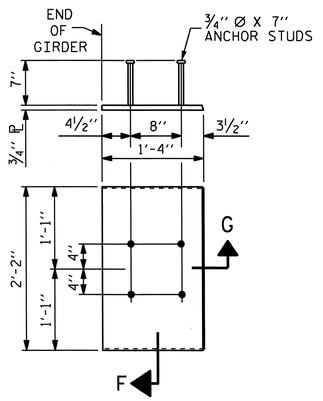

EMBEDDED PLATE "B-1" DETAILS FOR 63" MODIFIED BULB TEES

(2 REQ'D PER GIRDER)

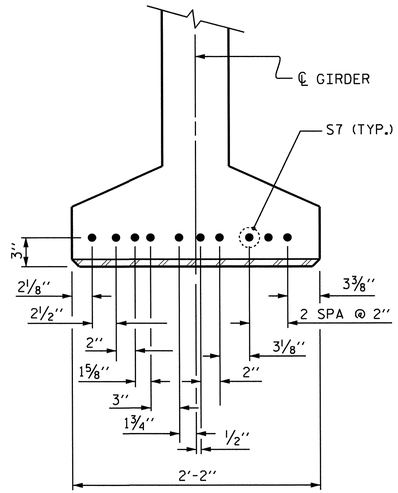

DETAIL "C"

(FOR 63" MODIFIED BULB TEES)

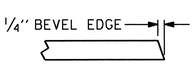

SECTION "G"

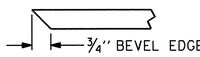

SECTION "F"

(SEE NOTES)

PROJECT NO. R-2303B

CUMBERLAND/SAMPSON COUNTY

STATION: 397+87.00-LREV-

SHEET 4 OF 4

STATE OF NORTH CAROLINA
DEPARTMENT OF TRANSPORTATION
RALEIGH

STANDARD

PRESTRESSED CONCRETE GIRDER CONTINUOUS FOR LIVE LOAD DETAILS

(RIGHT LANE)

REVISIONS						SHEET NO.
NO.	BY:	DATE:	NO.	BY:	DATE:	S-61
1			3			TOTAL SHEETS
2			4			146

STR. #2

STD. NO. PCG9 (Sht. 5)

NORTH CAROLINA PROFESSIONAL SEAL 025516 ENGINEER EMILY E. MURRAY
2.21.13

DESIGN ENGINEER OF RECORD: MOHAMMED AHMED DATE: 8-15-11	
ASSEMBLED BY: PEGGY PARISI DATE: 10-19-11	
CHECKED BY: K.P. SEDAI DATE: 9-28-12	
DRAWN BY: ELR 11/91	REV. 7/10/01RR LES/RDR
CHECKED BY: GRP 11/91	REV. 5/1/06 TLA/GM
	REV. 10/1/11 MAA/GM

20-FEB-2013 15:43
Z:\TIPProjects-R\R2303B\Structures\Plans\str02\PADKINS\R2303B_SD_TS_02.dgn
padkins

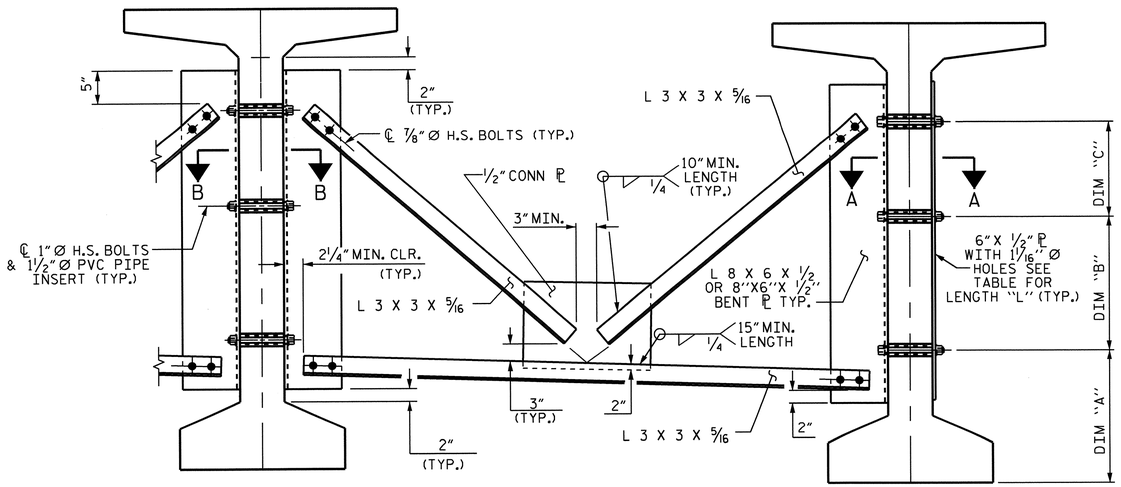

PART SECTION AT INTERMEDIATE DIAPHRAGM

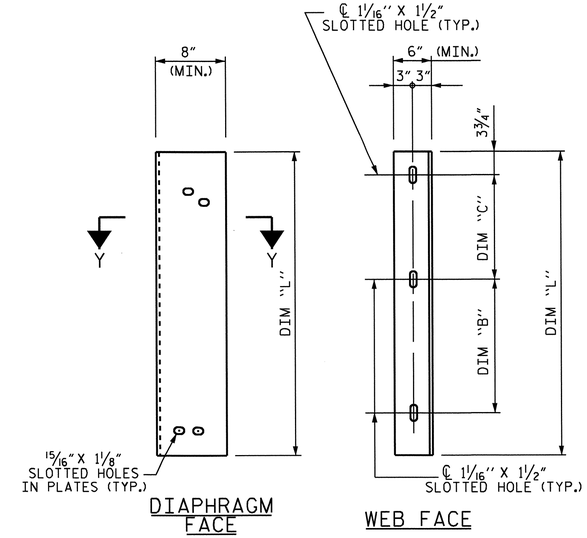

DIAPHRAGM FACE

WEB FACE

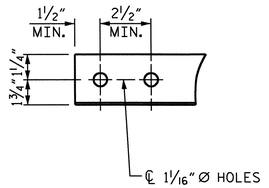

ANGLE END
(L 3 X 3 X 5/16)

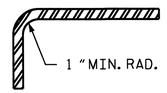

SECTION Y-Y

CONNECTOR PLATE DETAIL

STRUCTURAL STEEL NOTES

ALL INTERMEDIATE DIAPHRAGM STEEL AND CONNECTOR PLATES SHALL BE AASHTO M270 GRADE 50 OR APPROVED EQUAL.

TENSION ON THE ASTM A325 BOLTS THROUGH THE ANGLE MEMBER SHALL BE CALIBRATED USING DIRECT TENSION INDICATOR WASHERS IN ACCORDANCE WITH THE STANDARD SPECIFICATIONS.

TENSION ON THE ASTM A449 BOLTS THROUGH THE GIRDER WEB SHALL BE SNUG TIGHTENED FOLLOWED BY AN ADDITIONAL 1/4 TURN.

THE PLATES, BENT PLATES, AND ANGLES SHALL BE GALVANIZED OR METALLIZED IN ACCORDANCE WITH THE STANDARD SPECIFICATIONS. FOR THERMAL SPRAYED COATINGS (METALLIZATION), SEE SPECIAL PROVISIONS.

FOR METALLIZATION, APPLY AN 8 MIL THICK 99.99 PERCENT ZINC (W-Zn-1) THERMAL SPRAYED COATING WITH A 0.5 MIL THICK SEAL COAT TO ALL STEEL DIAPHRAGM SURFACES IN ACCORDANCE WITH THE THERMAL SPRAYED COATINGS SPECIAL PROVISION AND SECTION 442 OF THE STANDARD SPECIFICATIONS.

GALVANIZE THE HIGH STRENGTH BOLTS, NUTS, WASHERS AND DIRECT TENSION INDICATORS IN ACCORDANCE WITH THE STANDARD SPECIFICATIONS.

USE AN ASTM F436 HARDENED WASHER WITH STANDARD AND SLOTTED HOLES UNDER EACH BOLT HEAD AND NUT.

FOR BOLTS THROUGH THE GIRDER WEB, PROVIDE SUFFICIENT LENGTH OF THREADS ON ALL BOLTS TO ACCOMMODATE WASHERS AND THE THICKNESS OF CONNECTING MEMBER PLUS AT LEAST 1/4" PROJECTION BEYOND THE NUT.

INTERMEDIATE DIAPHRAGM ASSEMBLY SHALL COMPLY WITH SECTION 1072 OF THE STANDARD SPECIFICATIONS.

SUBMIT TWO SETS OF WORKING DRAWINGS FOR THE INTERMEDIATE DIAPHRAGM ASSEMBLY FOR REVIEW, COMMENTS AND ACCEPTANCE. AFTER REVIEW, COMMENTS, AND ACCEPTANCE, SUBMIT SEVEN SETS FOR DISTRIBUTION.

IN THE EXTERIOR BAYS, PLACE TEMPORARY STRUTS BETWEEN PRESTRESSED GIRDERS ADJACENT TO THE STEEL DIAPHRAGMS. STRUTS SHALL REMAIN IN PLACE 3 DAYS AFTER CONCRETE IS PLACED.

THE COST OF THE STEEL DIAPHRAGMS AND ASSEMBLIES SHALL BE INCLUDED IN THE UNIT PRICE BID FOR PRESTRESSED CONCRETE GIRDERS.

TABLE

GIRDER TYPE	DIM "A"	DIM "B"	DIM "C"	DIM "L"
63" BULB TEE	1'-5 3/4"	1'-4"	1'-4"	3'-5"

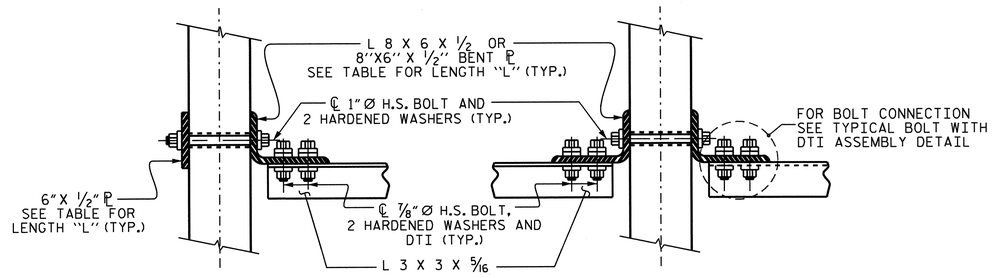

SECTION A-A SECTION B-B

CONNECTION DETAILS

(FOR SKEW = 90°)

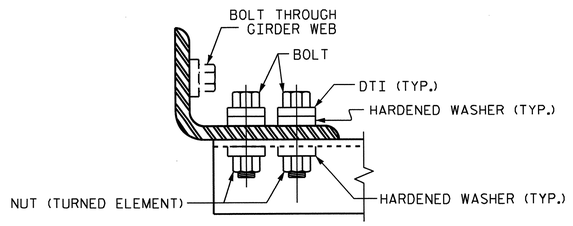

BOLT WITH DTI ASSEMBLY DETAIL

PROJECT NO. R-2303B

CUMBERLAND/SAMPSON COUNTY

STATION: 397+87.00 -LREV-

DESIGN ENGINEER OF RECORD: MOHAMMED AHMED DATE : 8-15-11			
ASSEMBLED BY : PEGGY PARISI DATE : 10-19-11 CHECKED BY : K.P. SEDAI DATE : 9-28-12			
DRAWN BY : RWW 11/09 CHECKED BY : GM 11/09	ADDED 11/23/09R REV. 10/1/11 MAA/GM		

STATE OF NORTH CAROLINA
DEPARTMENT OF TRANSPORTATION
RALEIGH

STANDARD
INTERMEDIATE STEEL
DIAPHRAGMS FOR 63"
MODIFIED BULB TEE
PRESTRESSED CONCRETE
GIRDERS
(RIGHT LANE)

REVISIONS						SHEET NO.
NO.	BY:	DATE:	NO.	BY:	DATE:	S-62
1			3			TOTAL SHEETS
2			4			146

NORTH CAROLINA PROFESSIONAL SEAL 025516 ENGINEER EMILY E. MURRAY 2.21.13

STR. #2 STD. NO. PCG11 (SHT 3)

20-FEB-2013 15:43
Z:\TIPProjects-R\R2303B\Structures\Plans\str02\PADKINS\R2303B_SD_TS_02.dgn
padkins

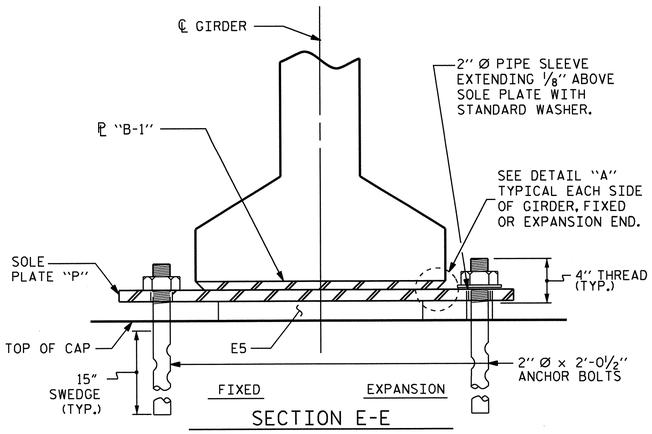

SECTION E-E

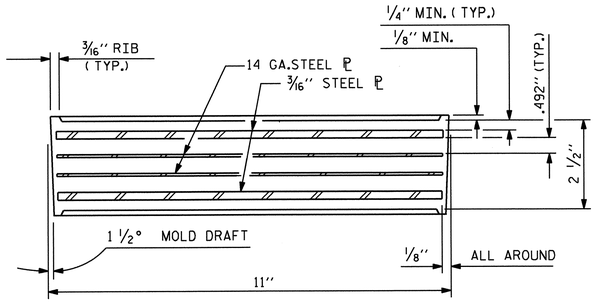

TYPICAL SECTION OF ELASTOMERIC BEARINGS

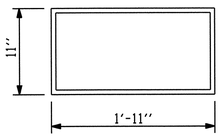

E5 (104 REQ'D)

PLAN VIEW OF ELASTOMERIC BEARING

TYPE VI

MAXIMUM ALLOWABLE SERVICE LOADS	
D.L.+L.L. (NO IMPACT)	
TYPE VI	385 k

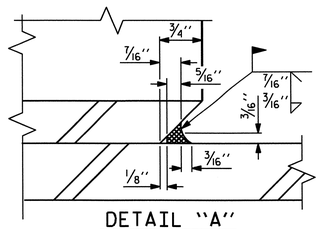

DETAIL "A"

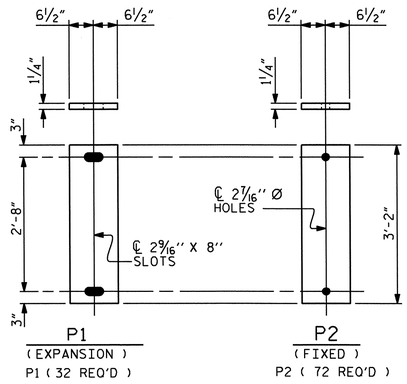

SOLE PLATE DETAILS ("P")

NOTES

AT ALL FIXED POINTS OF SUPPORT, NUTS FOR ANCHOR BOLTS ARE TO BE TIGHTENED FINGER TIGHT AND THEN BACKED OFF 1/2 TURN. THE THREAD OF THE NUT AND BOLT SHALL THEN BE BURRED WITH A SHARP POINTED TOOL.

THE 2" Ø PIPE SLEEVE SHALL BE CUT FROM SCHEDULE 40 PVC PLASTIC PIPE. THE PVC PLASTIC PIPE SHALL MEET THE REQUIREMENTS OF ASTM D1785.

STEEL SOLE PLATES, ANCHOR BOLTS, NUTS, AND WASHERS SHALL BE GALVANIZED IN ACCORDANCE WITH THE STANDARD SPECIFICATIONS.

PRIOR TO WELDING, GRIND THE GALVANIZED SURFACE OF THE PORTION OF THE EMBEDDED PLATE AND SOLE PLATE THAT ARE TO BE WELDED. AFTER WELDING, DAMAGED GALVANIZED SURFACES SHALL BE REPAIRED IN ACCORDANCE WITH THE STANDARD SPECIFICATIONS.

WHEN WELDING THE SOLE PLATE TO THE EMBEDDED PLATE IN THE GIRDER, USE TEMPERATURE INDICATING WAX PENS, OR OTHER SUITABLE MEANS, TO ENSURE THAT THE TEMPERATURE OF THE SOLE PLATE DOES NOT EXCEED 300°F. TEMPERATURES ABOVE THIS MAY DAMAGE THE ELASTOMER.

SOLE PLATE "P", BOLTS, NUTS, WASHERS, AND PIPE SLEEVE SHALL BE INCLUDED IN THE PAY ITEM FOR PRESTRESSED CONCRETE GIRDERS.

ANCHOR BOLTS SHALL MEET THE REQUIREMENTS OF ASTM A449. NUTS SHALL MEET THE REQUIREMENTS OF AASHTO M291-DH OR AASHTO M292-2H. WASHERS SHALL MEET THE REQUIREMENTS OF AASHTO M293. NO SHOP DRAWINGS ARE REQUIRED FOR ANCHOR BOLTS, NUTS AND WASHERS. SHOP INSPECTION IS REQUIRED.

ALL SURFACES OF BEARING PLATES SHALL BE SMOOTH AND STRAIGHT.

THE ELASTOMER IN THE STEEL REINFORCED BEARINGS SHALL HAVE A SHEAR MODULUS OF 0.160 KSI, IN ACCORDANCE WITH AASHTO M251.

FOR STEEL REINFORCED ELASTOMERIC BEARINGS, SEE SPECIAL PROVISIONS.

ALL BEARING PLATES SHALL BE AASHTO M270 GRADE 36.

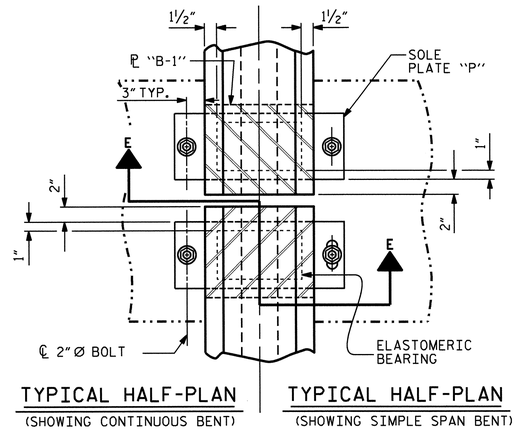

TYPICAL HALF-PLAN (SHOWING CONTINUOUS BENT)

TYPICAL HALF-PLAN (SHOWING SIMPLE SPAN BENT)

PROJECT NO. R-2303B

CUMBERLAND/SAMPSON COUNTY

STATION: 397+87.00 -LREV-

DESIGN ENGINEER OF RECORD: MOHAMMED AHMED DATE : 8-15-11			
ASSEMBLED BY : PEGGY PARISI DATE : 10-11-11			
CHECKED BY : K.P. SEDAI DATE : 9-28-12			
DRAWN BY : EEM 2/97	REV. 5/1/06	TLA/GM	
CHECKED BY : VAP 2/97	REV. 10/1/11	MAA/GM	
	REV. 10/24/12	AAC/MAA	

20-FEB-2013 15:43
Z:\TIPProjects-R\R2303B\Structures\Plans\str02\PADKINS\R2303B_SD_TS_02.dgn
padkins

NORTH CAROLINA PROFESSIONAL SEAL 025516 ENGINEER EMILY E. MURRAY

2.21.13

STATE OF NORTH CAROLINA
DEPARTMENT OF TRANSPORTATION
RALEIGH

STANDARD

ELASTOMERIC BEARING DETAILS

PRESTRESSED CONCRETE GIRDER SUPERSTRUCTURE

REVISIONS						SHEET NO.
NO.	BY:	DATE:	NO.	BY:	DATE:	S-63
1			3			TOTAL SHEETS
2			4			146

STR. #2 STD. NO. EB4 (SHT 2)

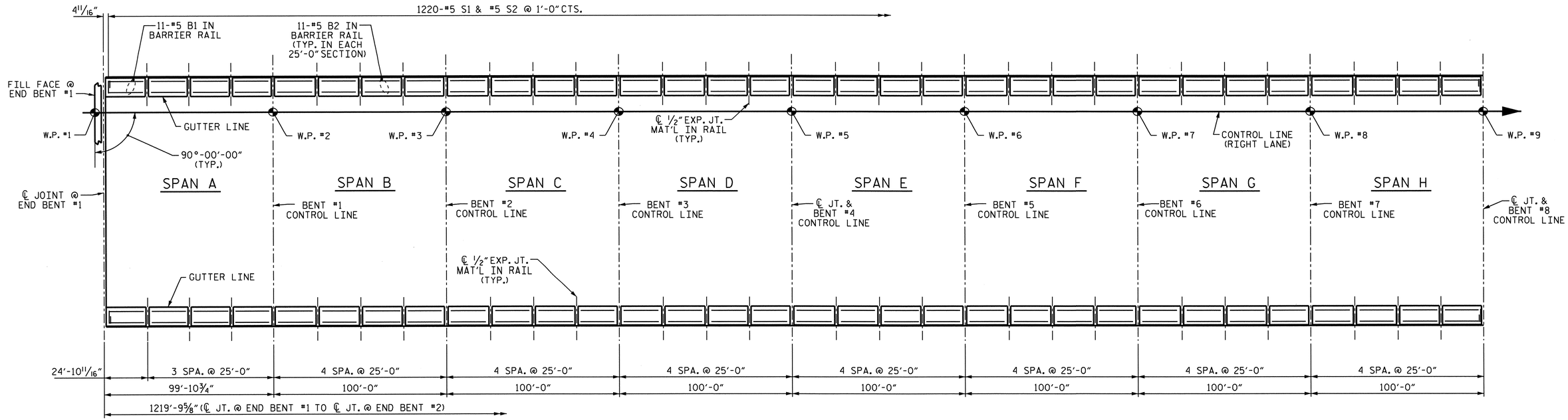

PLAN

DIMENSIONS AND REINFORCING STEEL BARS ARE TYPICAL FOR EACH SIDE.

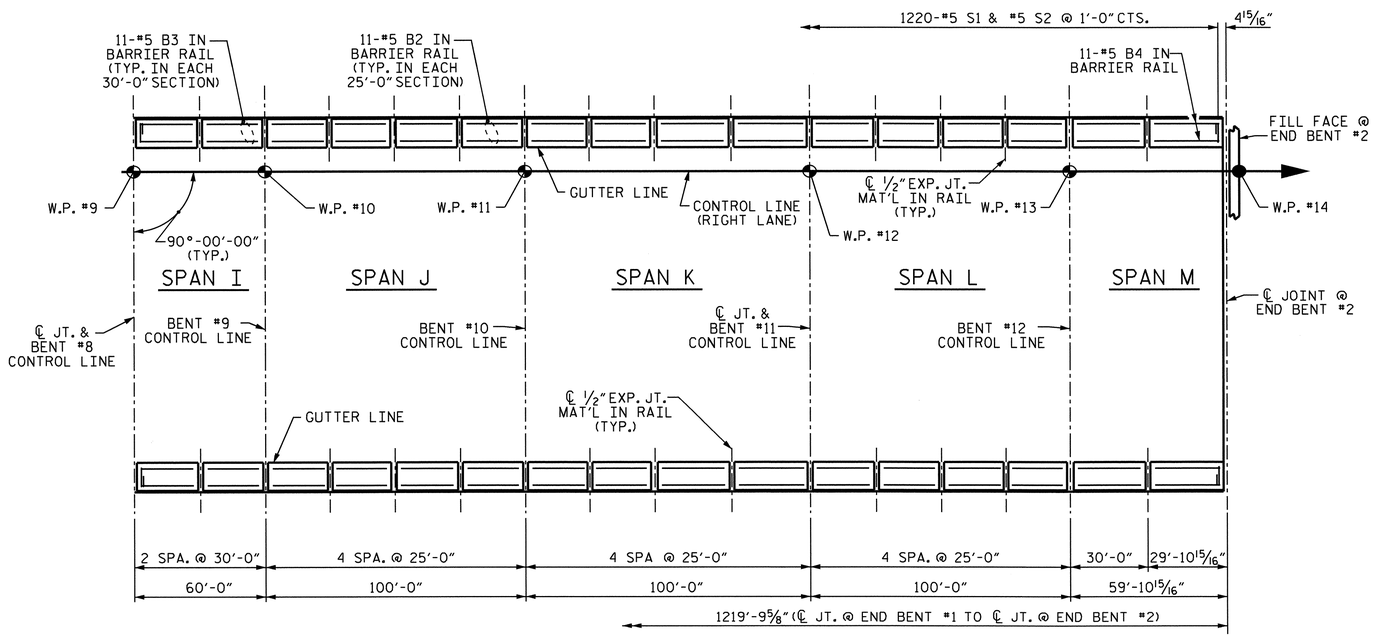

PLAN

DIMENSIONS AND REINFORCING STEEL BARS ARE TYPICAL FOR EACH SIDE.

PROJECT NO. R-2303B

CUMBERLAND/SAMPSON COUNTY

STATION: 397+87.00 -LREV-

SHEET 1 OF 2

STATE OF NORTH CAROLINA
DEPARTMENT OF TRANSPORTATION
RALEIGH

SUPERSTRUCTURE

BARRIER RAIL

(RIGHT LANE)

REVISIONS						SHEET NO.
NO.	BY:	DATE:	NO.	BY:	DATE:	S-64
1			3			TOTAL SHEETS
2			4			146

STR. #2

NORTH CAROLINA PROFESSIONAL SEAL 025516 ENGINEER EMILY E. MURRAY 2-21-13

DRAWN BY : PEGGY PARISI DATE : 10-17-11
CHECKED BY : K.P. SEDAI DATE : 9-25-12
DESIGN ENGINEER OF RECORD: MOHAMMED AHMED DATE : 8-15-11

20-FEB-2013 15:42
Z:\TIPProjects-R\R2303B\Structures\Plans\str02\PADKINS\R2303B_SD_TS_02.dgn
padkins

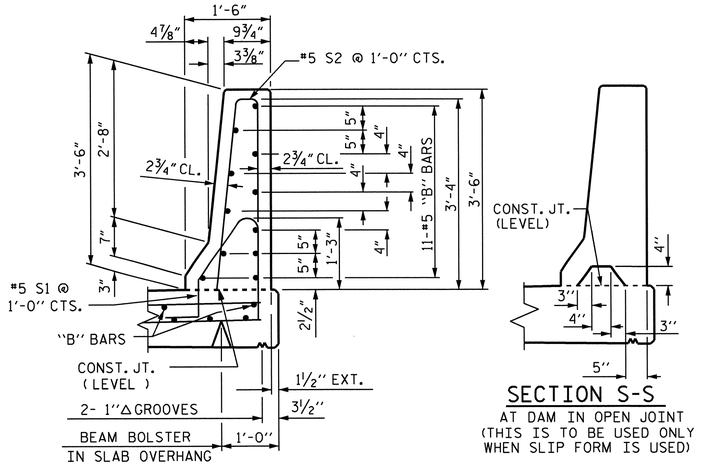

SECTION THRU RAIL

SECTION S-S

AT DAM IN OPEN JOINT
(THIS IS TO BE USED ONLY
WHEN SLIP FORM IS USED)

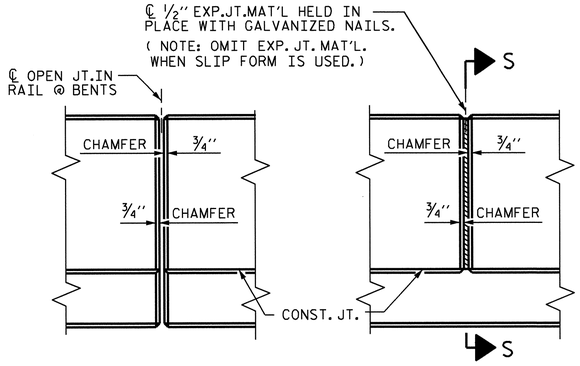

ELEVATION AT EXPANSION JOINTS

BARRIER RAIL DETAILS

NOTES

THE BARRIER RAIL IN A CONTINUOUS UNIT SHALL NOT BE CAST UNTIL ALL SLAB CONCRETE IN THE UNIT HAS BEEN CAST AND HAS REACHED A MINIMUM COMPRESSIVE STRENGTH OF 3,000 PSI.

ALL REINFORCING STEEL IN BARRIER RAILS SHALL BE EPOXY COATED.

GROOVED CONTRACTION JOINTS, ½" IN DEPTH, SHALL BE TOOLED IN ALL EXPOSED FACES OF THE BARRIER RAIL AND IN ACCORDANCE WITH ARTICLE 825-10(B) OF THE STANDARD SPECIFICATIONS. THE CONTRACTION JOINT SHALL BE LOCATED AT EACH THIRD POINT BETWEEN BARRIER RAIL EXPANSION JOINTS. ONLY ONE CONTRACTION JOINT IS REQUIRED AT MIDPOINT OF BARRIER RAIL SEGMENTS LESS THAN 20 FEET IN LENGTH AND NO CONTRACTION JOINTS ARE REQUIRED FOR THOSE SEGMENTS LESS THAN 10 FEET IN LENGTH.

BAR TYPES

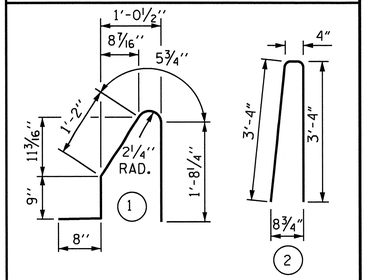

ALL BAR DIMENSIONS ARE OUT TO OUT

BILL OF MATERIAL

FOR CONCRETE BARRIER RAIL ONLY

BAR	NO.	SIZE	TYPE	LENGTH	WEIGHT
* B1	22	#5	STR	24'-4"	558
* B2	946	#5	STR	24'-6"	24174
* B3	66	#5	STR	29'-6"	2031
* B4	22	#5	STR	29'-4"	673
* S1	2440	#5	1	4'-9"	12088
* S2	2440	#5	2	7'-0"	17814

* EPOXY COATED REINFORCING STEEL	57338	LBS.
CLASS AA CONCRETE	331.6	CU. YDS.
CONCRETE BARRIER RAIL		
SUPERSTRUCTURE	2439.60	LIN. FT.
● APPROACH SLABS	40.00	LIN. FT.
TOTAL	2479.60	LIN. FT.

● FOR EPOXY COATED REINFORCING STEEL AND CLASS AA CONCRETE IN THE BARRIER RAIL ON THE APPROACH SLABS, SEE "BRIDGE APPROACH SLAB DETAILS" SHEET.

PROJECT NO. R-2303B

CUMBERLAND/SAMPSON COUNTY

STATION: 397+87.00 -LREV-

SHEET 2 OF 2

STATE OF NORTH CAROLINA
DEPARTMENT OF TRANSPORTATION
RALEIGH

CONCRETE BARRIER RAIL DETAILS

(RIGHT LANE)

REVISIONS						SHEET NO.
NO.	BY:	DATE:	NO.	BY:	DATE:	S-65
1			3			TOTAL SHEETS
2			4			146

NORTH CAROLINA PROFESSIONAL SEAL 025516 ENGINEER C. MURRAY
2.21.13

DESIGN ENGINEER OF RECORD: MOHAMMED AHMED DATE : 8-15-11

ASSEMBLED BY : PEGGY PARISI DATE : 10-18-11
CHECKED BY : K.P. SEDAI DATE : 10-1-12

20-FEB-2013 15:42
Z:\TIPProjects-R\R2303B\Structures\Plans\str02\PADKINS\R2303B_SD_TS_02.dgn
padkins

STR. #2

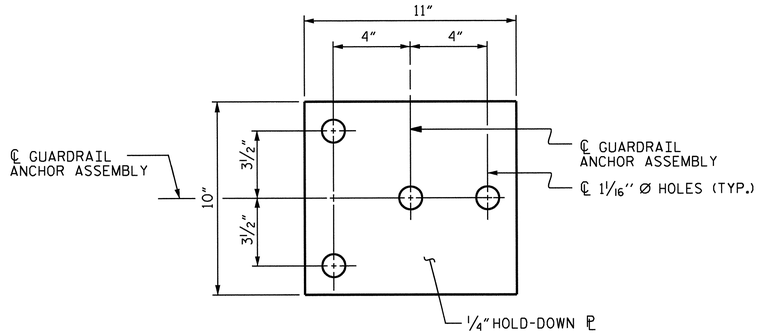

PLAN

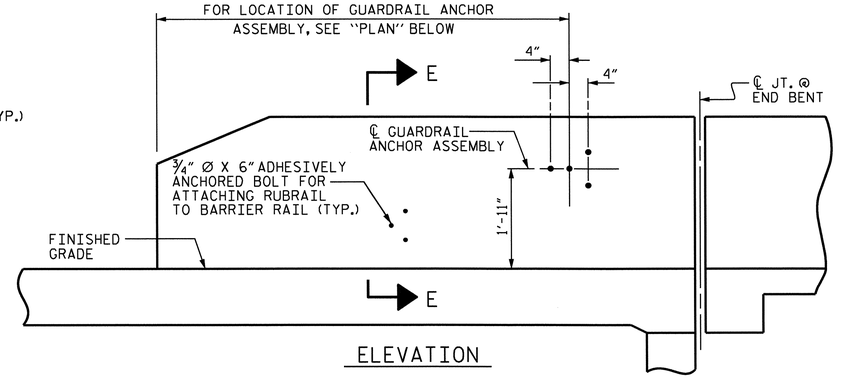

ELEVATION

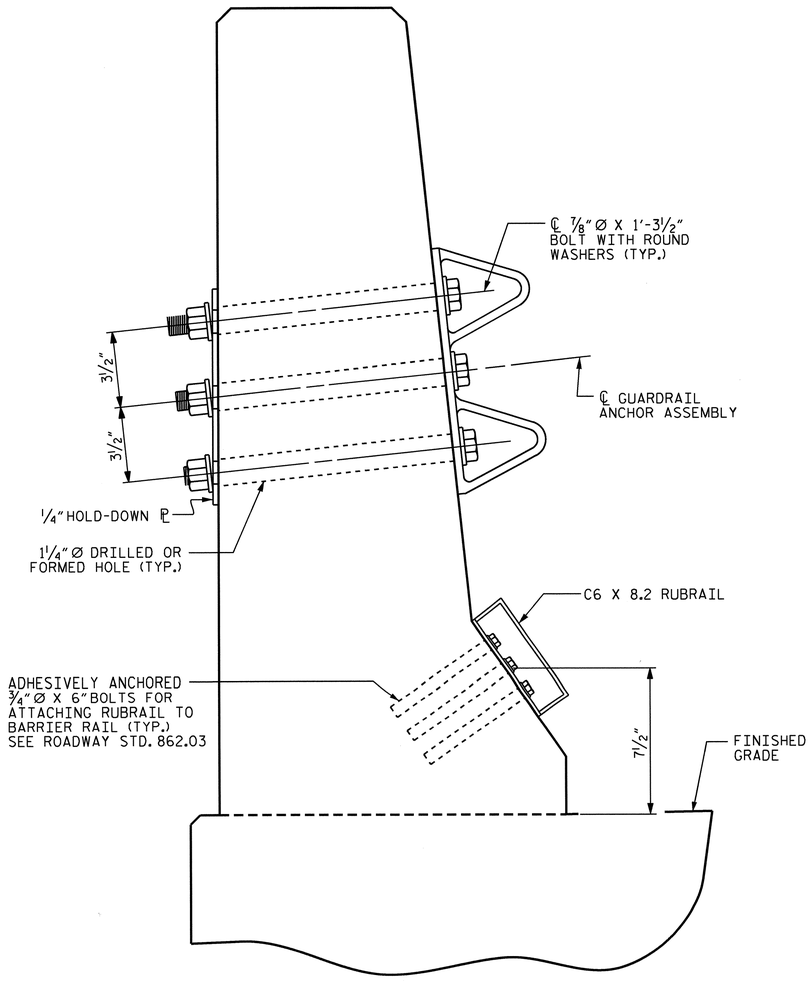

SECTION E-E

GUARDRAIL ANCHOR ASSEMBLY DETAILS

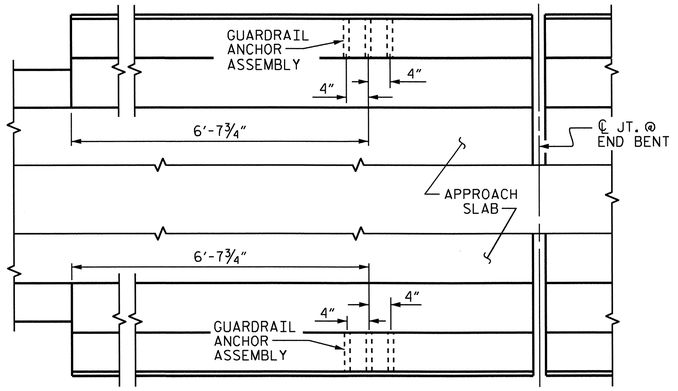

PLAN

LOCATION OF ANCHORS FOR GUARDRAIL

END BENT #1 SHOWN, END BENT #2 SIMILAR.

NOTES

THE GUARDRAIL ANCHOR ASSEMBLY SHALL CONSIST OF A 1/4" HOLD-DOWN PLATE AND 4 - 7/8" Ø BOLTS WITH NUTS AND WASHERS, RUBRAIL, AND ADHESIVELY ANCHORED BOLTS.

THE HOLD-DOWN PLATE SHALL CONFORM TO AASHTO M270 GRADE 36. AFTER FABRICATION, THE HOLD-DOWN PLATE SHALL BE HOT-DIP GALVANIZED IN ACCORDANCE WITH AASHTO M111.

BOLTS SHALL CONFORM TO THE REQUIREMENTS OF ASTM A307 AND NUTS SHALL CONFORM TO THE REQUIREMENTS OF AASHTO M291. BOLTS, NUTS AND WASHERS SHALL BE GALVANIZED. (AT THE CONTRACTOR'S OPTION, STAINLESS STEEL BOLTS, NUTS AND WASHERS MAY BE USED AS AN ALTERNATE FOR THE 7/8" Ø GALVANIZED BOLTS, NUTS AND WASHERS. THEY SHALL CONFORM TO OR EXCEED THE MECHANICAL REQUIREMENTS OF ASTM A307. THE USE OF THIS ALTERNATE SHALL BE APPROVED BY THE ENGINEER.)

THE GUARDRAIL ANCHOR ASSEMBLY IS REQUIRED AT ALL POINTS WHERE APPROACH GUARDRAIL IS TO BE ATTACHED TO THE END OF BARRIER RAIL. FOR POINTS OF ATTACHMENT, SEE SKETCH.

AFTER INSTALLATION, THE EXPOSED THREAD OF THE BOLT SHALL BE BURRED WITH A SHARP POINTED TOOL.

THE COST OF THE GUARDRAIL ANCHOR ASSEMBLY SHALL BE INCLUDED IN THE UNIT CONTRACT PRICE BID FOR CONCRETE BARRIER RAIL.

THE 1 1/4" Ø HOLES SHALL BE FORMED OR DRILLED WITH A CORE BIT. IMPACT TOOLS WILL NOT BE PERMITTED. ANY CONCRETE DAMAGED BY THIS WORK SHALL BE REPAIRED TO THE SATISFACTION OF THE ENGINEER.

THE C6 X 8.2 RUBRAIL IS TO BE ADHESIVELY ANCHORED TO THE RAIL USING THREE 3/4" Ø X 6" BOLTS WITH WASHERS. LEVEL ONE FIELD TESTING IS REQUIRED, AND THE YIELD LOAD OF THE 3/4" Ø BOLT IS 12 KIPS. FOR ADHESIVELY ANCHORED ANCHOR BOLTS OR DOWELS, SEE STANDARD SPECIFICATIONS. SEE ROADWAY STANDARD 862.03 FOR DETAILS AND LOCATION OF THE RUBRAIL.

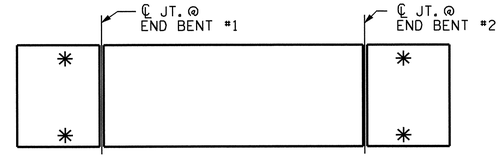

SKETCH SHOWING POINTS OF ATTACHMENTS

✳ DENOTES GUARDRAIL ANCHOR ASSEMBLY

PROJECT NO. R-2303B

CUMBERLAND/SAMPSON COUNTY

STATION: 397+87.00 -LREV-

STATE OF NORTH CAROLINA
DEPARTMENT OF TRANSPORTATION
RALEIGH

STANDARD

GUARDRAIL ANCHORAGE FOR BARRIER RAIL

(RIGHT LANE)

REVISIONS						SHEET NO.
NO.	BY:	DATE:	NO.	BY:	DATE:	S-66
1			3			TOTAL SHEETS
2			4			146

ASSEMBLED BY : PEGGY PARISI	DATE : 10-18-11		
CHECKED BY : K.P. SEDAI	DATE : 9-28-12		
DRAWN BY : TLA 5/06	REV. 10/1/11	MAA/GM	DESIGN ENGINEER OF RECORD: MOHAMMED AHMED DATE : 8-15-11
CHECKED BY : GM 5/06	REV. 7/12	MAA/GM	
	REV. 10/12	MAA/GM	

20-FEB-2013 15:41
Z:\TIPProjects-R\R2303B\Structures\Plans\str02\PADKINS\R2303B_SD_TS_02.dgn
padkins

STR. #2 (SHT 3) STD. NO. GRA2

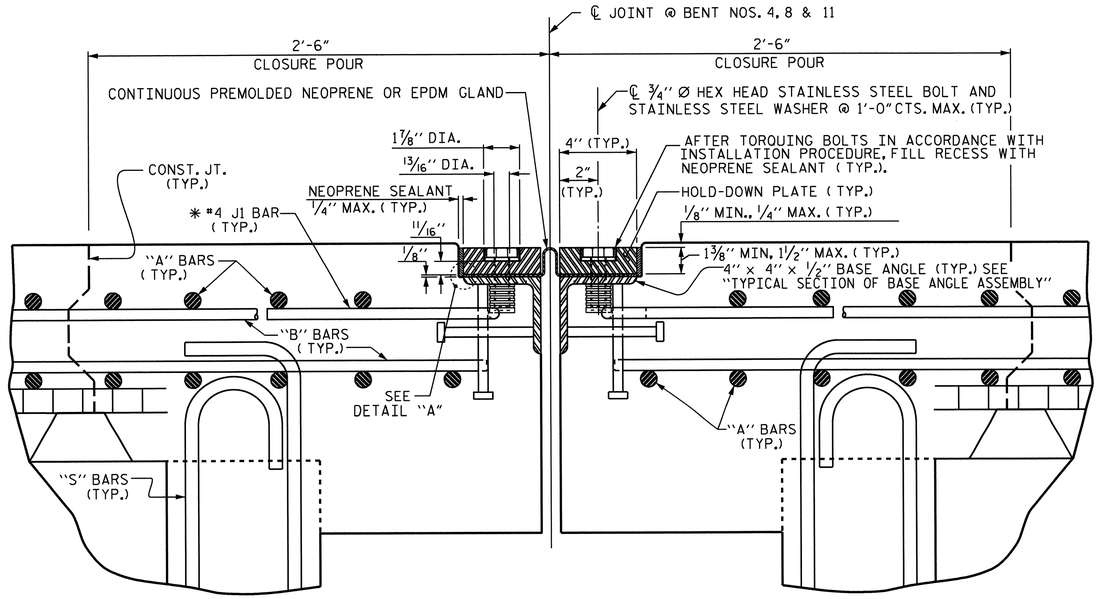

EXPANSION JOINT DETAILS

SECTION NORMAL TO JOINT -- PRESTRESSED GIRDER SUPERSTRUCTURE

⁎ THE QUANTITY OF #4 J1 BARS ON THE BILL OF MATERIAL IS BASED ON 1'-0" CENTERS. J1 BARS SHALL BE PLACED AT EACH VERTICAL STUD ANCHOR BOLT. IN THE EVENT THAT THE NUMBER OF VERTICAL STUD ANCHORS EXCEEDS THE NUMBER OF J1 BARS SPECIFIED, ADDITIONAL J1 BARS WILL NOT BE REQUIRED.

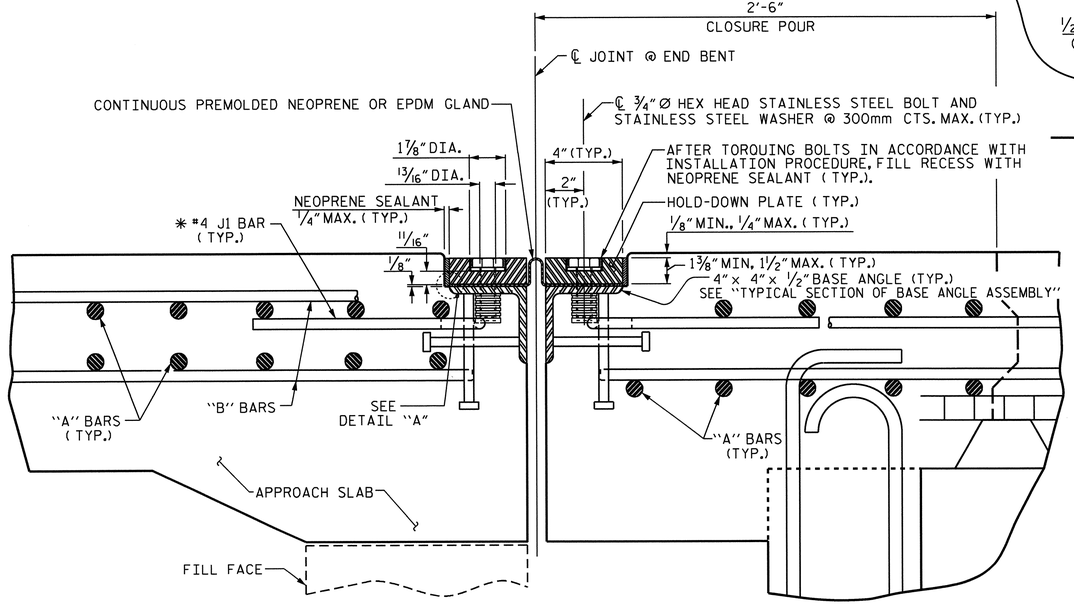

EXPANSION JOINT DETAILS

SECTION NORMAL TO JOINT -- PRESTRESSED GIRDER SUPERSTRUCTURE

⁎ THE QUANTITY OF #4 J1 BARS ON THE BILL OF MATERIAL IS BASED ON 1'-0" CENTERS. J1 BARS SHALL BE PLACED AT EACH VERTICAL STUD ANCHOR BOLT. IN THE EVENT THAT THE NUMBER OF VERTICAL STUD ANCHORS EXCEEDS THE NUMBER OF J1 BARS SPECIFIED, ADDITIONAL J1 BARS WILL NOT BE REQUIRED.

ASSEMBLED BY : PEGGY PARISI	DATE : 10-18-11
CHECKED BY : K.P. SEDAI	DATE : 10-28-12

DRAWN BY : REK 9/87	REV. 5/7/03R	RWW/JTE
CHECKED BY : CRK 10/87	REV. 5/1/06R	TLA/GM
	REV. 10/1/11	MAA/GM

DESIGN ENGINEER OF RECORD: MOHAMMED AHMED DATE : 8-15-11

20-FEB-2013 15:43
Z:\TIPProjects-R\R2303B\Structures\Plans\str02\PADKINS\R2303B_SD_TS_02.dgn
padkins

INSTALLATION PROCEDURE

1. A TEMPLATE OR OTHER SUITABLE DEVICE SHALL BE USED TO FORM THE TOP OF THE EXPANSION JOINT SEAL BLOCKOUT TO THE PROPER DEPTH AND WIDTH. THE TEMPLATE SHALL BE 4⅛" TO 4¼" WIDE AND OF SUCH THICKNESS AS TO PROVIDE FOR CORRECT FINAL ELEVATION OF TOP OF HOLD-DOWN PLATES. THE TEMPLATE SHALL BE ATTACHED TO THE BASE ANGLE ASSEMBLY WITH THE ¾" Ø HEX HEAD BOLTS PROVIDED FOR THE HOLD-DOWN PLATES. A 1" Ø HOLE SHALL BE PROVIDED IN THE TEMPLATE CENTERED OVER EACH WEEP HOLE IN THE 4" X 4" X ½" BASE ANGLE. OTHER METHODS OF INSURING DRAINAGE THROUGH WEEP HOLES MAY BE EMPLOYED SUBJECT TO ENGINEER'S APPROVAL.
2. AFTER THE CONCRETE HAS BEEN CAST ON BOTH SIDES OF THE JOINT, REMOVE THE TEMPLATE. THOROUGHLY CLEAN THE BOLT HOLES AND THE ANGLE PLATE. REMOVE ANY EXCESS CONCRETE THAT COMES OUT OF THE WEEP HOLES. ANY DAMAGED STEEL SHALL BE COATED WITH A MINIMUM THICKNESS OF 4 DRY MILS OF ZINC-RICH PAINT IN ACCORDANCE WITH THE STANDARD SPECIFICATIONS.
3. LAY THE GLAND ON THE BASE ANGLE AND FIELD MARK THE GLAND FOR THE BOLT HOLES. HOLES IN THE GLAND SHALL BE PUNCHED ⅞" IN DIAMETER WITH A HAND PUNCH.
4. IN ORDER TO CHECK FOR PROPER ALIGNMENT, PLACE THE GLAND AND HOLD-DOWN PLATES ON THE BASE ANGLE. DO NOT APPLY NEOPRENE SEALANT. BOLT THE HOLD-DOWN PLATES TO THE BASE ANGLE BUT DO NOT TIGHTEN. THE ENGINEER SHALL INSPECT THE JOINT SEAL DEVICE FOR PROPER ALIGNMENT.
5. AFTER INSPECTION, REMOVE THE HOLD-DOWN PLATES AND GLAND. APPLY NEOPRENE SEALANT TO THE BASE ANGLE IN ACCORDANCE WITH THE "INSTALLATION SKETCH". PLACE GLAND AND HOLD-DOWN PLATES ON THE BASE ANGLE. BOLT THE HOLD-DOWN PLATES TO THE BASE ANGLE ASSEMBLY AND TOROUE THE BOLTS TO 88 FT-LBS WITH A TORQUE WRENCH. CHECK THE TOROUE AFTER THREE (3) HOURS AND, IF NECESSARY, RETIGHTEN TO 88 FT-LBS. A FINAL CHECK SHALL BE MADE AT SEVEN (7) DAYS. TOROUE SHALL NOT BE LESS THAN 80 FT-LBS AFTER SEVEN (7) DAYS.
6. AFTER PROPER TOROUING, CLEAN THE BOLT HOLE RECESSES AND THE RECESS BETWEEN THE JOINT SEAL DEVICE AND CONCRETE, COMPLETELY FILL THESE RECESSES WITH NEOPRENE SEALANT.

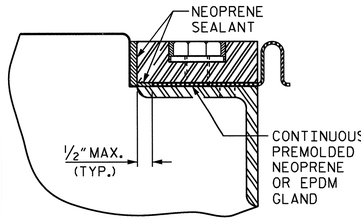

DETAIL "A"

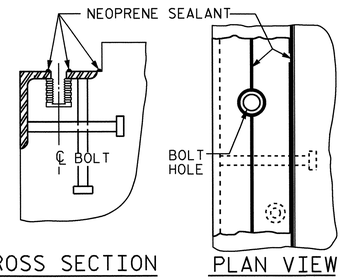

INSTALLATION SKETCH

GENERAL NOTES

1. FOR EXPANSION JOINT SEALS, SEE SPECIAL PROVISIONS.
2. ALL PLATES AND ANGLES SHALL CONFORM TO AASHTO M270 GRADE 36 STEEL OR APPROVED EQUAL. ALL HOLD-DOWN BOLTS SHALL CONFORM TO ASTM F593 ALLOY 304 STAINLESS STEEL AND WASHERS SHALL CONFORM TO ASTM F844 EXCEPT THEY SHALL BE MADE FROM ALLOY 304 STAINLESS STEEL. ALL STUD ANCHORS SHALL CONFORM TO AASHTO M169, GRADES 1010 THRU 1020 OR APPROVED EQUAL. ALL CONCRETE INSERTS SHALL BE CLOSED END AND SHALL CONFORM TO AASHTO M169, GRADE 12L14. TENSILE CAPACITY SHALL BE 3000 LBS. MIN.
3. A PREMOLDED CORRUGATED OR NON-CORRUGATED GLAND SHALL BE USED FOR JOINTS SKEWED BETWEEN 50° THRU 130°. FOR JOINTS SKEWED LESS THAN 50° OR MORE THAN 130°, ONLY A CORRUGATED GLAND SHALL BE USED.
4. CLOSED END FERRULES AND STUD ANCHORS SHALL BE SHOP WELDED AND ALL HOLES SHALL BE SHOP DRILLED AS SHOWN ON PLANS. STUD ANCHORS SHALL BE ELECTRIC ARC END WELDED WITH COMPLETE FUSION.
5. SURFACES COMING IN CONTACT WITH NEOPRENE SHALL BE GROUND SMOOTH PRIOR TO METALLIZING.
6. UPON COMPLETION OF SHOP FABRICATION, THE HOLD DOWN PLATE AND BASE ANGLE ASSEMBLY, AS SHOWN IN THE "TYPICAL SECTION OF BASE ANGLE ASSEMBLY", SHALL BE METALLIZED. SEE SPECIAL PROVISION FOR THERMAL SPRAYED COATINGS (METALLIZATION).
7. BASE ANGLE ASSEMBLY SHALL BE CONTINUOUS FOR THE LENGTH OF THE JOINT. AT CROWN BREAKS, THE ENDS OF THE BASE ANGLE ASSEMBLY SHALL BE CUT PARALLEL TO THE BRIDGE CENTERLINE FOR SKEWS LESS THAN 80° AND GREATER THAN 100°. FINISHED WELD SHALL BE GROUND SMOOTH AND COATED WITH A MINIMUM THICKNESS OF 4 DRY MILS OF ZINC-RICH PAINT IN ACCORDANCE WITH THE STANDARD SPECIFICATIONS.
8. FIELD SPLICES OF HOLD-DOWN PLATES SHALL BE KEPT TO A MINIMUM. CONTRACTOR SHALL FURNISH DETAILED PLANS SHOWING PROPOSED SPLICE LOCATIONS FOR APPROVAL. HOLD-DOWN PLATES SHALL NOT EXCEED 20' LENGTHS UNLESS APPROVED BY THE ENGINEER.
9. NO ALTERNATE JOINT DETAILS SHALL BE PERMITTED IN LIEU OF THOSE SHOWN ON THESE PLANS.
10. THE CONTRACTOR MAY, AT HIS OPTION, USE ADHESIVELY ANCHORED ANCHOR BOLTS IN PLACE OF CONCRETE INSERTS FOR COVER PLATES. THE YIELD LOAD OF THE ¾" Ø BOLT IS 10 KIPS. FIELD TESTING OF THE ADHESIVE BONDING SYSTEM IS NOT REQUIRED.

MOVEMENT AND SETTING AT JOINT					
BENT NO.	SKEW ANGLE	TOTAL MOVEMENT (ALONG ℄ RDWY)	PERPENDICULAR JOINT OPENING AT 45° F	PERPENDICULAR JOINT OPENING AT 60° F	PERPENDICULAR JOINT OPENING AT 90° F
END BENT #1	90°	1 3/16"	1⅛"	1⅝"	1 3/16"
BENT #4	90°	2 7/16"	2¾"	2 5/16"	1 7/16"
BENT #8	90°	1⅞"	2 5/16"	2"	1 5/16"
BENT #11	90°	1½"	2 1/16"	1 13/16"	1¼"
END BENT #2	90°	⅜"	1¼"	1 3/16"	1 1/16"

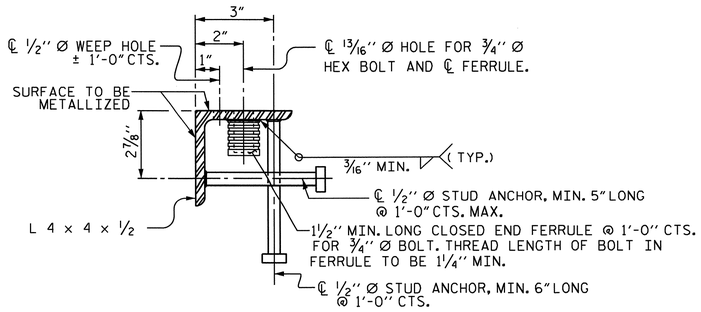

TYPICAL SECTION OF BASE ANGLE ASSEMBLY

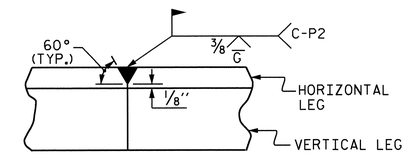

DETAIL- FIELD WELD SPLICE OF BASE ANGLE

PROJECT NO. R-2303B

CUMBERLAND/SAMPSON COUNTY

STATION: 397+87.00 -LREV-

SHEET 1 OF 2

STATE OF NORTH CAROLINA
DEPARTMENT OF TRANSPORTATION
RALEIGH

STANDARD

EXPANSION JOINT SEAL DETAILS

(RIGHT LANE)

NORTH CAROLINA PROFESSIONAL SEAL 025516 ENGINEER TIMOTHY A. MURRAY 2-21-13

REVISIONS						SHEET NO.
NO.	BY:	DATE:	NO.	BY:	DATE:	S-67
1			3			TOTAL SHEETS
2			4			146

STR. #2 STD. NO. EJS1 (SHT 1)

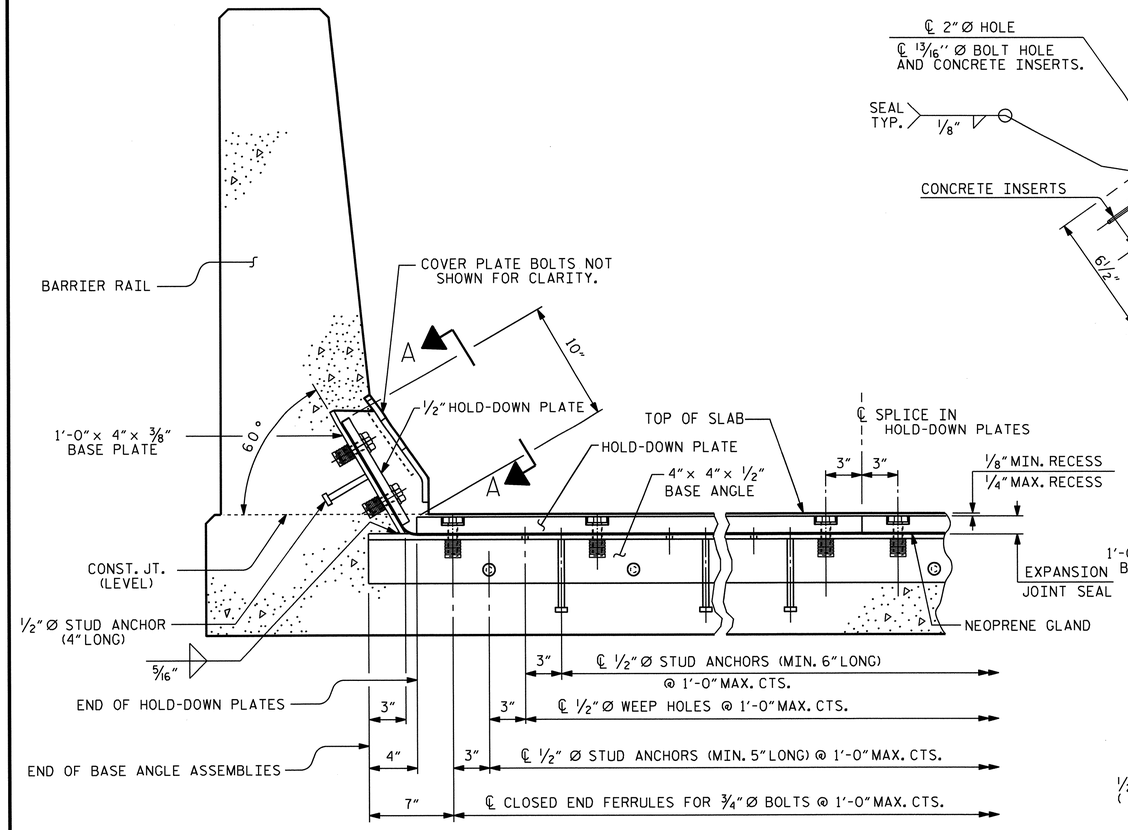

SECTION THRU RAIL NORMAL TO JOINT

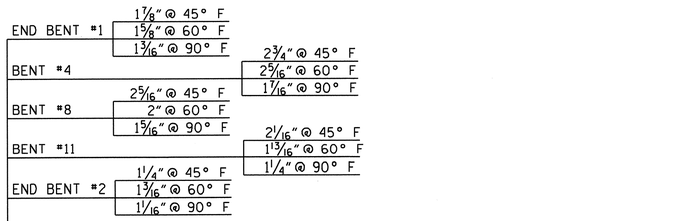

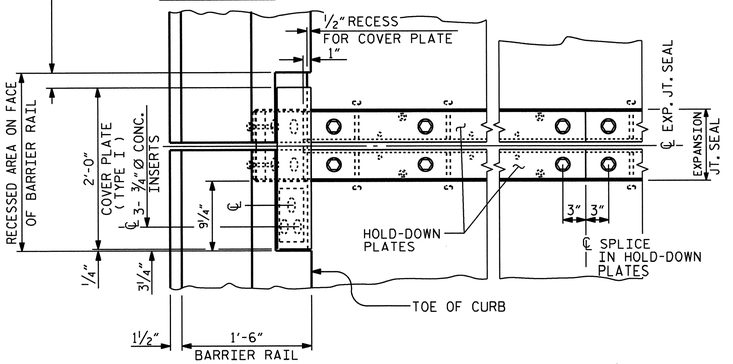

FLOW OF TRAFFIC

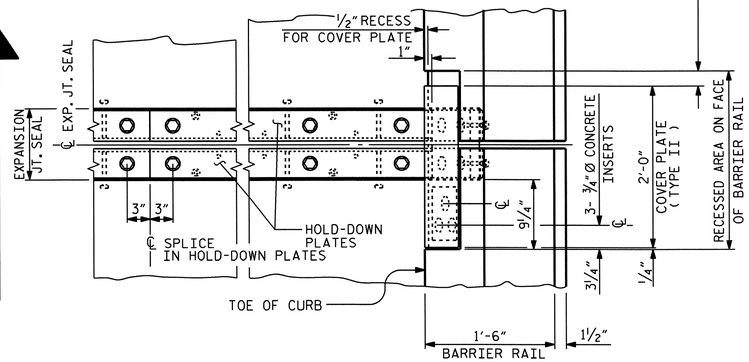

PLAN OF EXPANSION JOINT SEAL

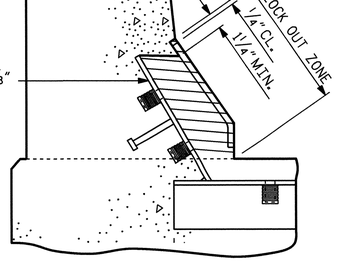

BLOCK OUT DETAIL

SEE "SECTION A - A" FOR OTHER DETAILS.

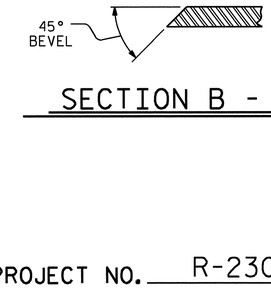

SECTION B - B

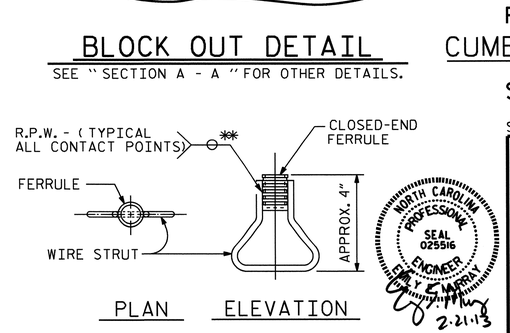

CONCRETE INSERT

** EACH WELDED ATTACHMENT OF WIRE TO FERRULE SHALL DEVELOP THE TENSILE STRENGTH OF THE WIRE.

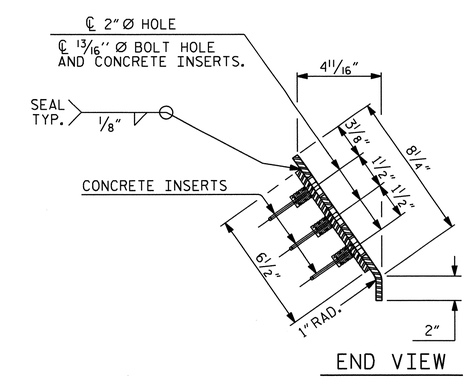

END VIEW

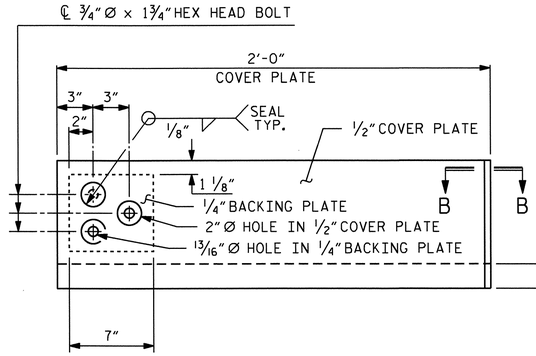

TYPE I - ELEVATION VIEW

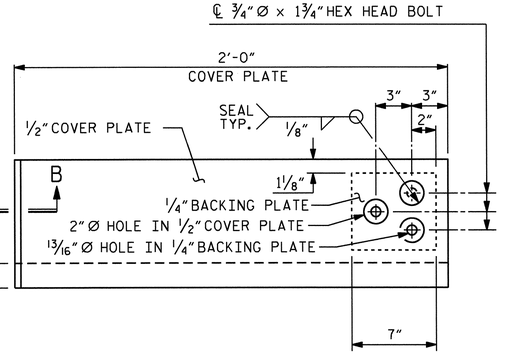

TYPE II - ELEVATION VIEW

COVER PLATE DETAILS

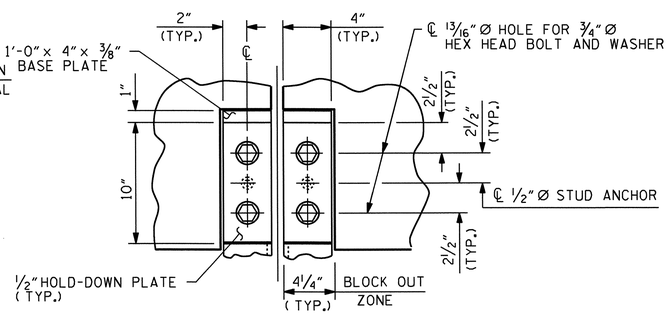

SECTION A - A

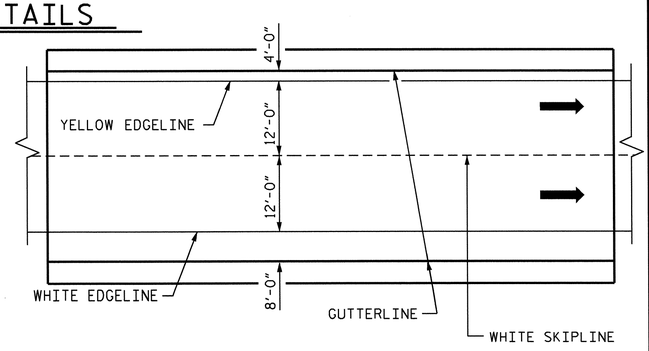

PAVEMENT MARKING ALIGNMENT

PROJECT NO. R-2303B

CUMBERLAND/SAMPSON COUNTY

STATION: 397+87.00 -LREV-

SHEET 2 OF 2

STATE OF NORTH CAROLINA
DEPARTMENT OF TRANSPORTATION
RALEIGH

STANDARD

EXPANSION JOINT SEAL DETAILS FOR BARRIER RAIL

(RIGHT LANE)

NORTH CAROLINA PROFESSIONAL SEAL 025516 ENGINEER JERRY C. MURRAY 2-21-13

REVISIONS						SHEET NO.
NO.	BY:	DATE:	NO.	BY:	DATE:	S-68
1			3			TOTAL SHEETS
2			4			146

ASSEMBLED BY : PEGGY PARISI	DATE : 10-18-11	
CHECKED BY : K.P. SEDAI	DATE : 9-28-12	
DRAWN BY : REK 9/87	REV. 10/1/11	MAA/GM
CHECKED BY : CRK 10/87	REV. 7/12	MAA/GM
	REV. 10/12	MAA/GM

DESIGN ENGINEER OF RECORD: MOHAMMED AHMED DATE : 8-15-11

20-FEB-2013 15:43
Z:\TIPProjects-R\R2303B\Structures\Plans\str02\PADKINS\R2303B_SD_TS_02.dgn
padkins

STR. #2 STD. NO. EJS2 SHT 1b

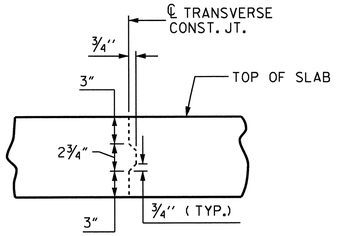

TRANSVERSE CONSTRUCTION JOINT DETAIL

NOTE: REINFORCING STEEL IN SLAB NOT SHOWN. LONGITUDINAL REINFORCING STEEL SHALL BE CONTINUOUS THRU JOINT

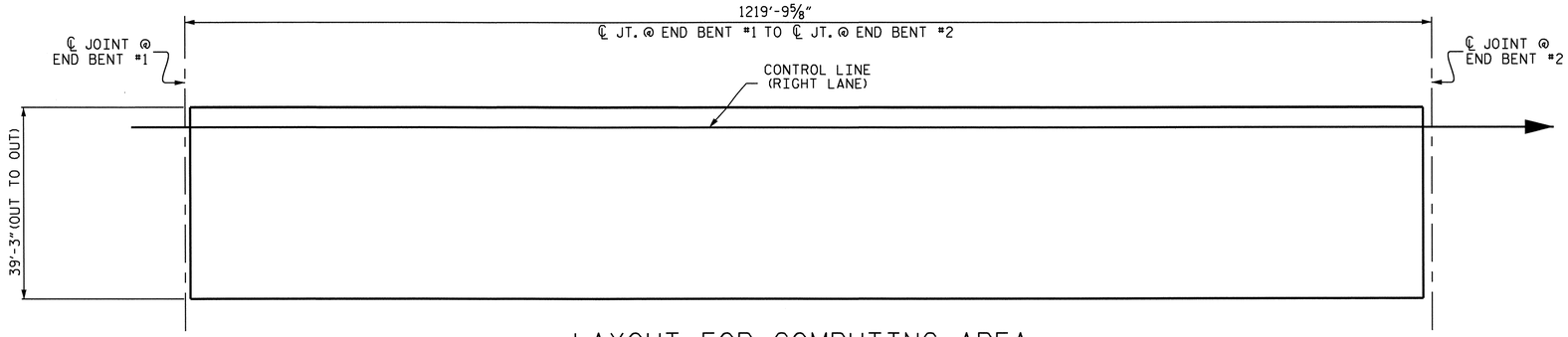

LAYOUT FOR COMPUTING AREA OF REINFORCED CONCRETE DECK SLAB (SQ. FT. = 47,877)

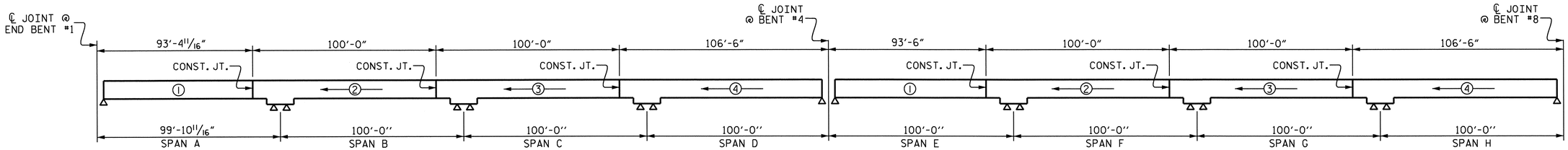

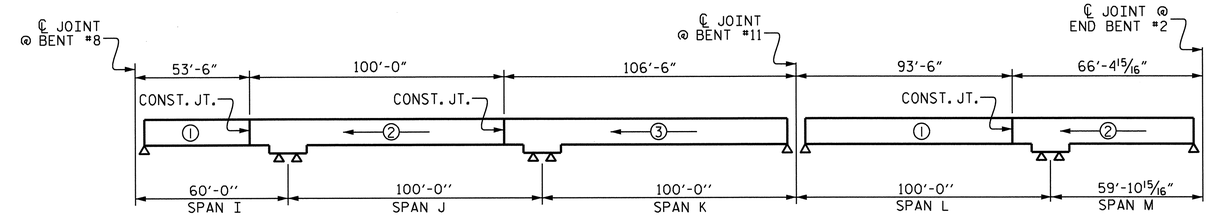

SUPERSTRUCTURE POURING SEQUENCE

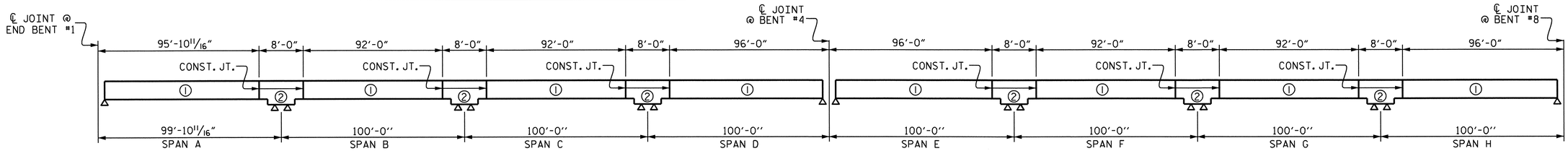

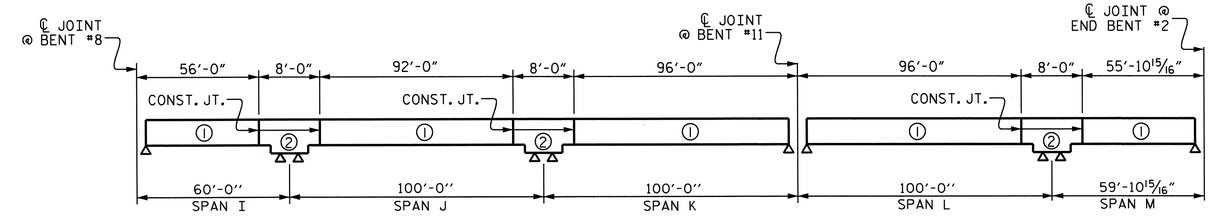

OPTIONAL POURING SEQUENCE

POUR ② CAN NOT BE STARTED UNTIL BOTH ADJACENT ① POURS REACH A MINIMUM OF 3000 PSI.

GROOVING BRIDGE FLOORS		
APPROACH SLABS	1573	SQ.FT.
BRIDGE DECK	40095	SQ.FT.
TOTAL	41668	SQ.FT.

PROJECT NO. R-2303B

CUMBERLAND/SAMPSON COUNTY

STATION: 397+87.00-LREV-

SHEET 1 OF 2

STATE OF NORTH CAROLINA
DEPARTMENT OF TRANSPORTATION
RALEIGH

SUPERSTRUCTURE BILL OF MATERIAL

(RIGHT LANE)

NORTH CAROLINA PROFESSIONAL SEAL 025516 ENGINEER EMILY E. MURRAY 2-21-13

REVISIONS						SHEET NO.
NO.	BY:	DATE:	NO.	BY:	DATE:	S-69
1			3			TOTAL SHEETS
2			4			146

DRAWN BY : PEGGY PARISI DATE : 10-11-11
CHECKED BY : K.P. SEDAI DATE : 10-1-12
DESIGN ENGINEER OF RECORD: MOHAMMED AHMED DATE : 8-15-11

20-FEB-2013 15:41
Z:\TIPProjects-R\R2303B\Structures\Plans\str02\PADKINS\R2303B_SD_TS_02.dgn
padkins

STR. #2

BILL OF MATERIAL
SPANS A, B, C & D

BAR	NO.	SIZE	TYPE	LENGTH	WEIGHT
✱ A1	683	5	STR	38′-11″	27723
A2	685	5	STR	38′-11″	27804
✱ B1	168	4	STR	23′-7″	2647
✱ B2	84	6	STR	60′-0″	7570
✱ B3	84	6	STR	13′-0″	1640
✱ B4	150	6	STR	30′-0″	6759
B5	322	5	STR	59′-0″	19815
✱ B6	112	4	STR	18′-0″	1347
✱ J1	72	4	6	1′-5″	68
✱ K1	8	8	1	15′-11″	340
✱ K2	8	8	2	23′-11″	511
K3	18	5	STR	30′-5″	571
K4	18	4	STR	6′-4″	76
K5	72	4	STR	9′-4″	449
K6	18	4	STR	6′-9″	81
K7	12	6	STR	9′-3″	167
✱ S1	42	5	3	5′-11″	259
✱ S2	12	5	3	3′-5″	43
S3	18	4	4	9′-3″	111
S4	369	4	5	2′-9″	678
✱ U1	63	4	2	16′-6″	694

REINFORCING STEEL 49752 LBS.

✱ EPOXY COATED REINFORCING STEEL 49601 LBS.

BILL OF MATERIAL
SPANS E, F, G & H

BAR	NO.	SIZE	TYPE	LENGTH	WEIGHT
✱ A1	684	5	STR	38′-11″	27764
A2	686	5	STR	38′-11″	27845
✱ B1	168	4	STR	23′-7″	2647
✱ B2	84	6	STR	60′-0″	7570
✱ B3	84	6	STR	13′-0″	1640
✱ B4	150	6	STR	30′-0″	6759
B5	322	5	STR	59′-0″	19815
✱ B6	112	4	STR	18′-0″	1347
✱ J1	72	4	6	1′-5″	68
✱ K1	8	8	1	15′-11″	340
✱ K2	8	8	2	23′-11″	511
K3	18	5	STR	30′-5″	571
K4	18	4	STR	6′-4″	76
K5	72	4	STR	9′-4″	449
K6	18	4	STR	6′-9″	81
K7	12	6	STR	9′-3″	167
✱ S1	42	5	3	5′-11″	259
✱ S2	12	5	3	3′-5″	43
S3	18	4	4	9′-3″	111
S4	369	4	5	2′-9″	678
✱ U1	63	4	2	16′-6″	694

REINFORCING STEEL 49793 LBS.

✱ EPOXY COATED REINFORCING STEEL 49642 LBS.

BILL OF MATERIAL
SPANS I, J & K

BAR	NO.	SIZE	TYPE	LENGTH	WEIGHT
✱ A1	443	5	STR	38′-11″	17981
A2	445	5	STR	38′-11″	18063
✱ B1	84	4	STR	23′-7″	1323
✱ B2	28	6	STR	60′-0″	2523
✱ B3	28	6	STR	13′-0″	547
✱ B4	50	6	STR	30′-0″	2253
✱ B6	56	4	STR	18′-0″	673
✱ B7	28	6	STR	58′-0″	2439
✱ B8	50	6	STR	24′-0″	1802
✱ B9	56	4	STR	20′-6″	767
B10	230	5	STR	53′-8″	12874
✱ J1	72	4	6	1′-5″	68
✱ K1	8	8	1	15′-11″	340
✱ K2	8	8	2	23′-11″	511
K3	12	5	STR	30′-5″	381
K4	12	4	STR	6′-4″	51
K5	48	4	STR	9′-4″	299
K6	12	4	STR	6′-9″	54
K7	12	6	STR	9′-3″	167
✱ S1	42	5	3	5′-11″	259
✱ S2	12	5	3	3′-5″	43
S3	12	4	4	9′-3″	74
S4	246	4	5	2′-9″	452
✱ U1	42	4	2	16′-6″	463

REINFORCING STEEL 32415 LBS.

✱ EPOXY COATED REINFORCING STEEL 31992 LBS.

BILL OF MATERIAL
SPANS L & M

BAR	NO.	SIZE	TYPE	LENGTH	WEIGHT
✱ A1	272	5	STR	38′-11″	11041
A2	274	5	STR	38′-11″	11122
✱ B1	84	4	STR	23′-7″	1323
✱ B7	28	6	STR	58′-0″	2439
✱ B8	50	6	STR	24′-0″	1802
✱ B9	56	4	STR	20′-6″	767
B11	138	5	STR	54′-9″	7880
✱ J1	72	4	6	1′-5″	68
✱ K1	8	8	1	15′-11″	340
✱ K2	8	8	2	23′-11″	511
K3	6	5	STR	30′-5″	190
K4	6	4	STR	6′-4″	25
K5	24	4	STR	9′-4″	150
K6	6	4	STR	6′-9″	27
K7	12	6	STR	9′-3″	167
✱ S1	42	5	3	5′-11″	259
✱ S2	12	5	3	3′-5″	43
S3	6	4	4	9′-3″	37
S4	123	4	5	2′-9″	226
✱ U1	21	4	2	16′-6″	231

REINFORCING STEEL 19824 LBS.

✱ EPOXY COATED REINFORCING STEEL 18824 LBS.

BAR TYPES

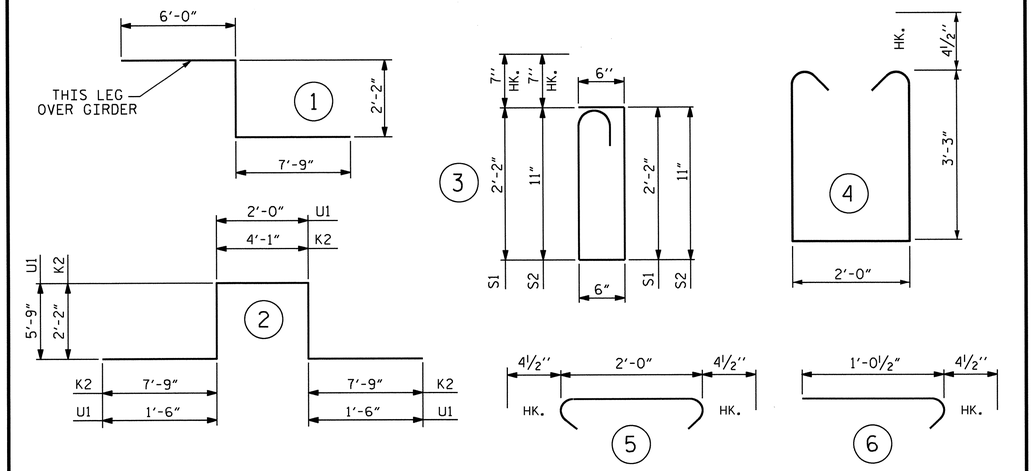

ALL BAR DIMENSIONS ARE OUT TO OUT

SUPERSTRUCTURE QUANITIES

	CLASS AA CONCRETE		REINFORCING STEEL	EPOXY COATED REINFORCING STEEL
	(POUR)	(CU. YDS.)	(LBS.)	(LBS.)
SPANS A, B, C & D	POUR 1	128.6	49752	49601
	POUR 2	149.6		
	POUR 3	149.6		
	POUR 4	160.1		
SPANS E, F, G & H	POUR 1	128.8	49793	49642
	POUR 2	149.6		
	POUR 1	149.6		
	POUR 2	160.1		
SPANS I, J & K	POUR 1	74.5	32415	31992
	POUR 2	149.6		
	POUR 3	160.1		
SPANS L & M	POUR 1	128.8	19824	18824
	POUR 2	105.6		
TOTALS**		1794.6	151784	150059

** QUANTITIES FOR BARRIER RAIL ARE NOT INCLUDED

SUPERSTRUCTURE REINFORCING STEEL LENGTHS ARE BASED ON THE FOLLOWING MINIMUM SPLICE LENGTHS

BAR SIZE	SUPERSTRUCTURE EXCEPT APPROACH SLABS, PARAPET, AND BARRIER RAIL		APPROACH SLABS		PARAPET AND BARRIER RAIL
	EPOXY COATED	UNCOATED	EPOXY COATED	UNCOATED	
#4	2′-0″	1′-9″	2′-0″	1′-9″	2′-9″
#5	2′-6″	2′-2″	2′-6″	2′-2″	3′-5″
#6	3′-0″	2′-7″	3′-10″	2′-7″	4′-4″
#7	5′-3″	3′-6″			
#8	6′-10″	4′-7″			

NORTH CAROLINA PROFESSIONAL SEAL 025516 ENGINEER CURTIS L. MURRAY 2-21-13

PROJECT NO. R-2303B

CUMBERLAND/SAMPSON COUNTY

STATION: 397+87.00-LREV-

SHEET 2 OF 2

STATE OF NORTH CAROLINA
DEPARTMENT OF TRANSPORTATION
RALEIGH

STANDARD

SUPERSTRUCTURE BILL OF MATERIAL

(RIGHT LANE)

REVISIONS						SHEET NO.
NO.	BY:	DATE:	NO.	BY:	DATE:	S-70
1			3			TOTAL SHEETS
2			4			146

DESIGN ENGINEER OF RECORD: MOHAMMED AHMED	DATE : 8-15-11	
ASSEMBLED BY : PEGGY PARISI	DATE : 10-11-11	
CHECKED BY : K.P. SEDAI	DATE : 9-25-12	
DRAWN BY : JMB 5/87	REV. 8/16/99	RWW/LES
CHECKED BY : SJD 9/87	REV. 5/1/06	TLA/GM
	REV. 10/1/11	MAA/GM

20-FEB-2013 15:41
Z:\TIPProjects-R\R2303B\Structures\Plans\str02\PADKINS\R2303B_SD_TS_02.dgn
padkins

STR. #2

STD. NO. BOM1

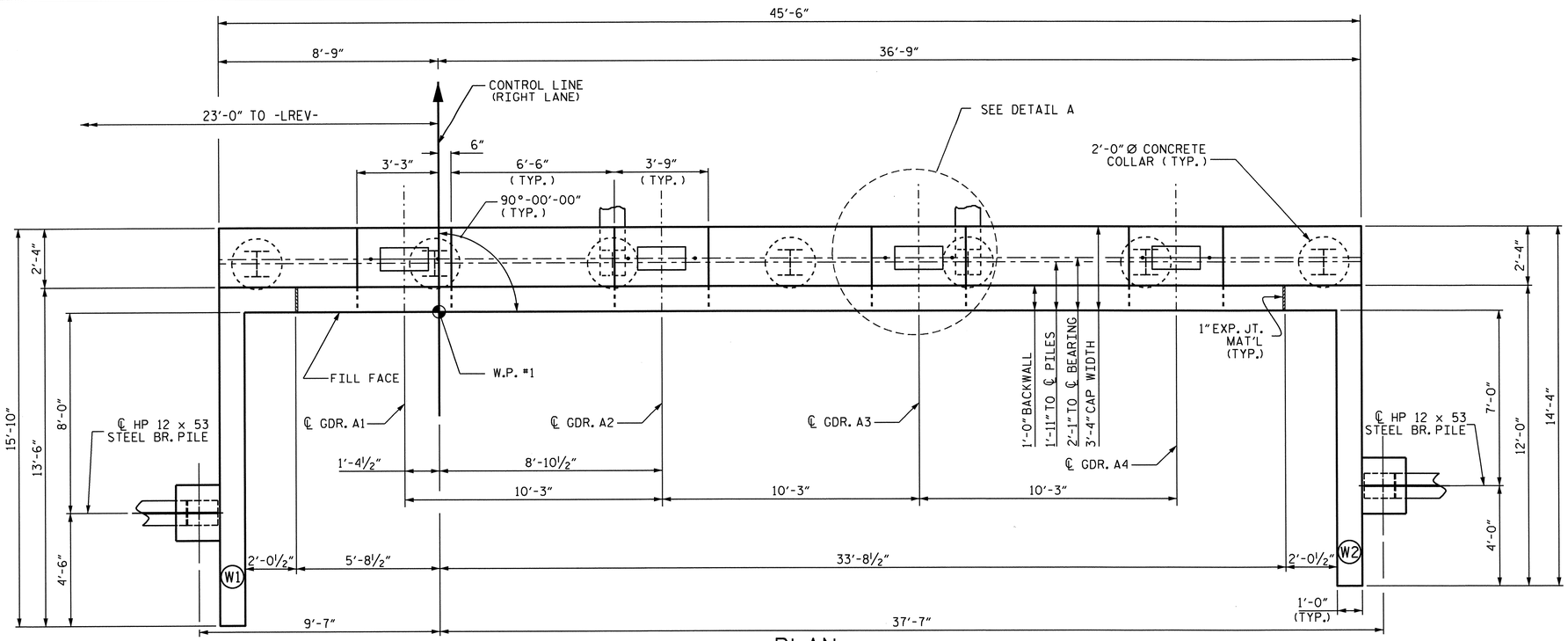

PLAN

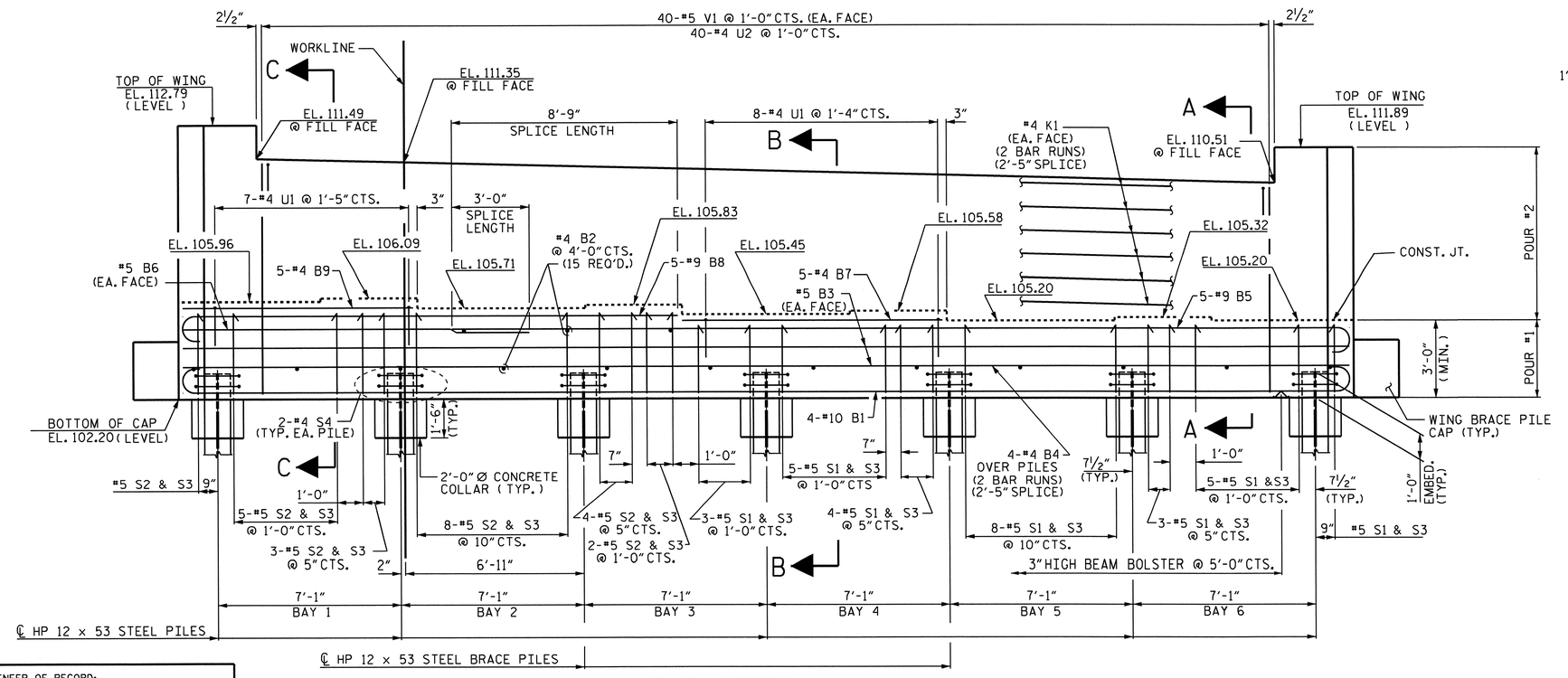

ELEVATION

PILES AND REINFORCING STEEL NOT SHOWN IN WING BRACE PILE CAP FOR CLARITY, SEE WING DETAILS, SHEET 2 OF 3.

NOTES

STIRRUPS IN CAP MAY BE SHIFTED AS NECESSARY TO CLEAR ANCHOR BOLTS.

BACKWALL SHALL BE PLACED BEFORE APPLYING THE EPOXY PROTECTIVE COATING.

THE TOP SURFACE AREAS OF THE END BENT CAP SHALL BE CURED IN ACCORDANCE WITH THE STANDARD SPECIFICATIONS EXCEPT THAT THE MEMBRANE CURING COMPOUND METHOD SHALL NOT BE USED.

THE TOP SURFACE OF THE END BENT CAP EXCEPT THE BRIDGE SEAT BUILDUPS SHALL BE SLOPED TRANSVERSELY FROM THE FILL FACE TO THE BACK FACE AT THE RATE OF 2%.

INSTALL THE 4" DIA. DRAIN PIPE THROUGH THE WING WALL AS REQUIRED FOR REINFORCED BRIDGE APPROACH FILLS, SEE THE ROADWAY PLANS. REINFORCING STEEL IN THE WING WALL MAY BE SHIFTED AS NECESSARY TO CLEAR THE DRAIN PIPE.

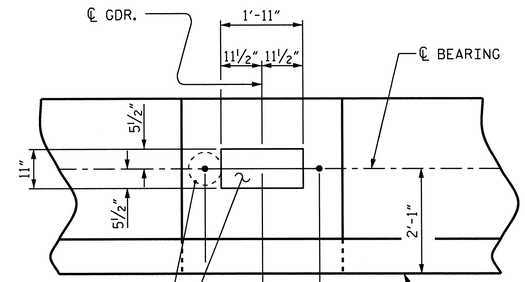

DETAIL A

(TYP. EA. BRG.)

PROJECT NO. R-2303B

CUMBERLAND/SAMPSON COUNTY

STATION: 397+87.00-LREV-

SHEET 1 OF 3

STATE OF NORTH CAROLINA
DEPARTMENT OF TRANSPORTATION
RALEIGH

SUBSTRUCTURE

END BENT #1
(RIGHT LANE)

NORTH CAROLINA PROFESSIONAL SEAL 025516 ENGINEER TIMOTHY E. MURRAY 2.21.13

REVISIONS						SHEET NO.
NO.	BY:	DATE:	NO.	BY:	DATE:	S-71
1			3			TOTAL SHEETS
2			4			146

STR #2

DESIGN ENGINEER OF RECORD: MOHAMMED AHMED DATE: 9-21-11

DRAWN BY: M.M. AHMED DATE: 5-9-12

CHECKED BY: A.M. LEE, PE DATE: 10-12-12

20-FEB-2013 15:28
Z:\TIPProjects-R\R2303B\Structures\Plans\str02\mmo\str2_EBL\Drafting\End Bents\R2303B_SD_Ebs#_02_EBL.dgn
padkins

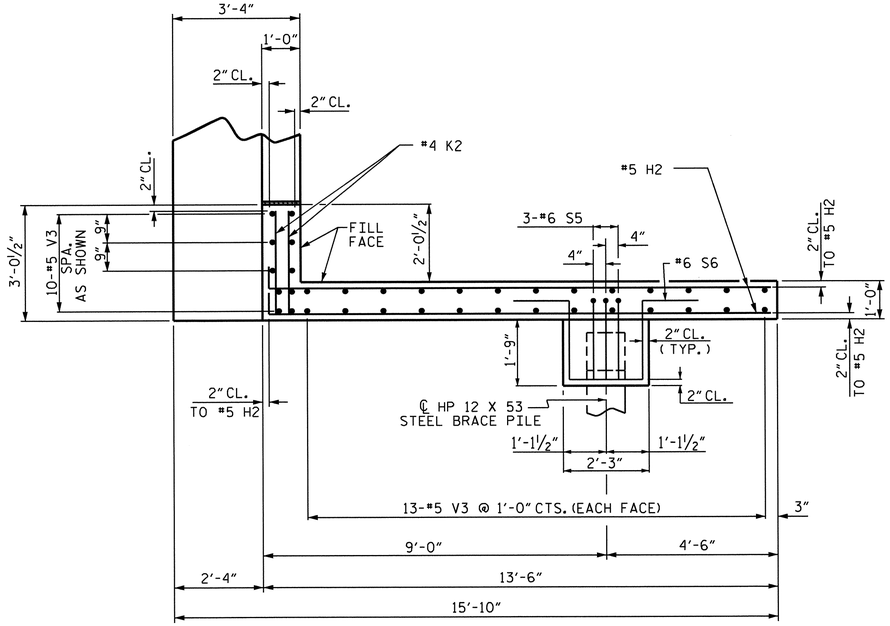

PLAN OF WING W1

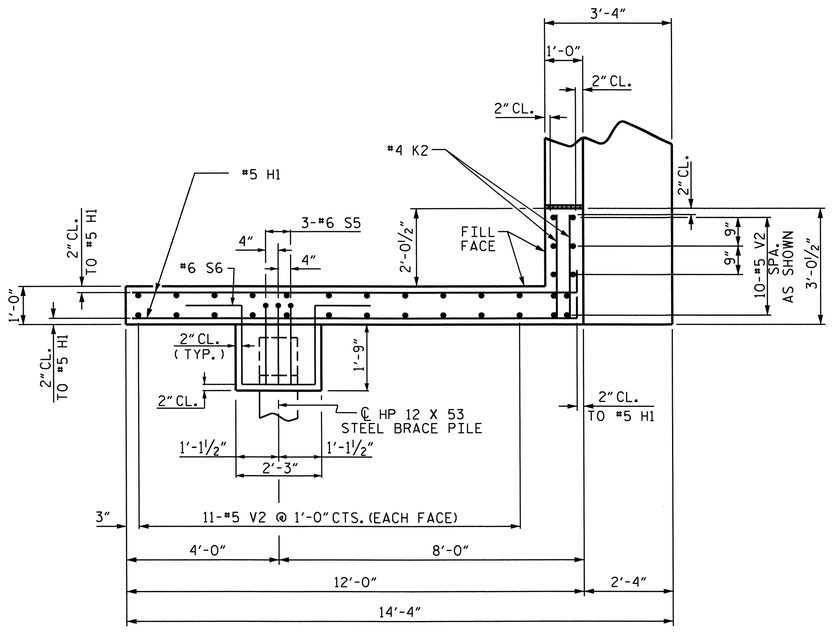

PLAN OF WING W2

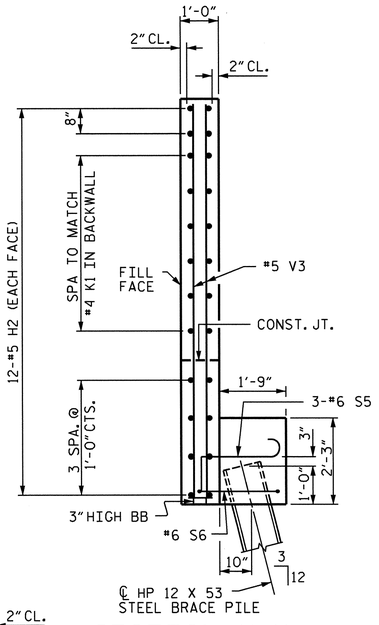

SECTION X-X

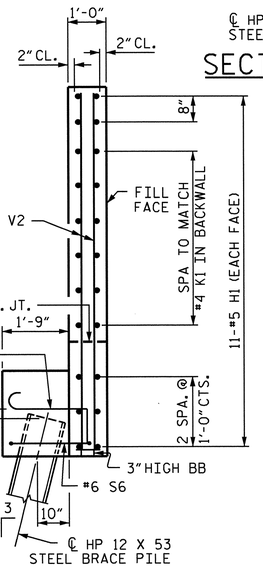

SECTION Y-Y

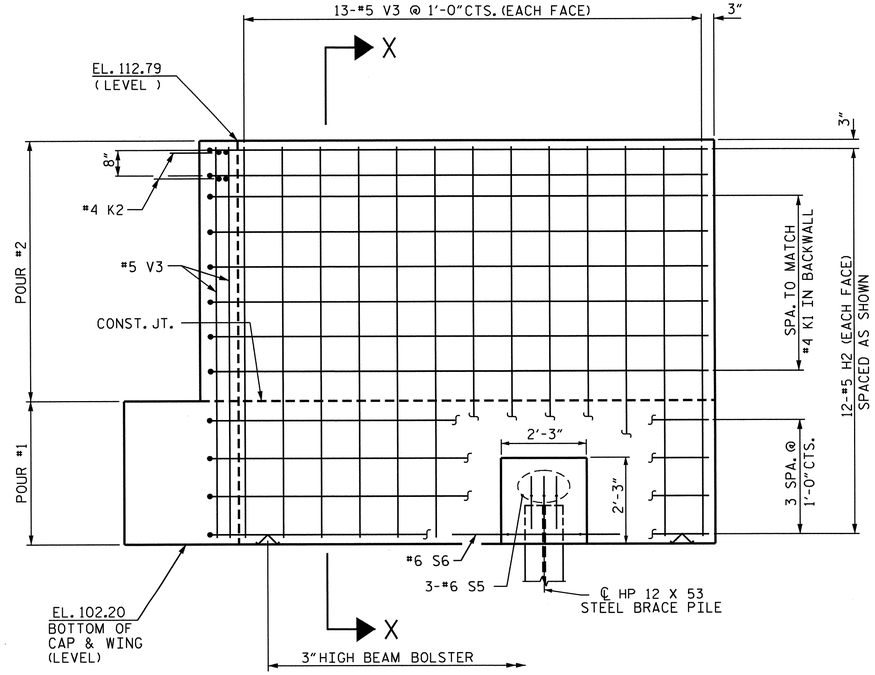

ELEVATION OF WING W1

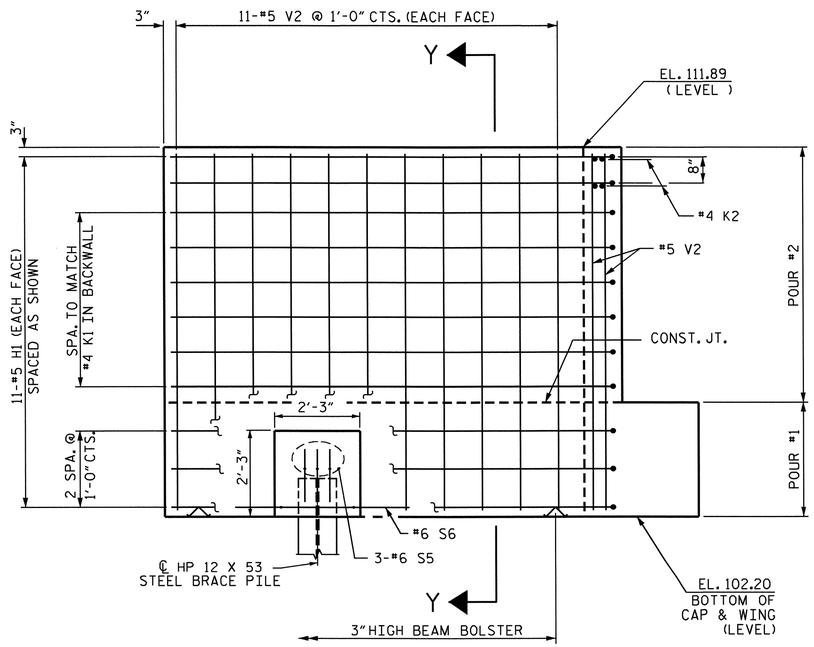

ELEVATION OF WING W2

DESIGN ENGINEER OF RECORD: MOHAMMED AHMED	DATE : 9-21-11
DRAWN BY : M.M. AHMED	DATE : 5-10-12
CHECKED BY : A.M. LEE, PE	DATE : 10-12-12

20-FEB-2013 16:10
Z:\TIPProjects-R\R2303B\Structures\Plans\str02\mma\str2_EBL\Drafting\End Bents\R2303B_SD_Ebs*_02_EBL.dgn
padkins

PROJECT NO. R-2303B

CUMBERLAND/SAMPSON COUNTY

STATION: 397+87.00-LREV-

SHEET 2 OF 3

STATE OF NORTH CAROLINA
DEPARTMENT OF TRANSPORTATION
RALEIGH

SUBSTRUCTURE

END BENT #1
(RIGHT LANE)

REVISIONS						SHEET NO.
NO.	BY:	DATE:	NO.	BY:	DATE:	S-72
1			3			TOTAL SHEETS
2			4			146

STR #2

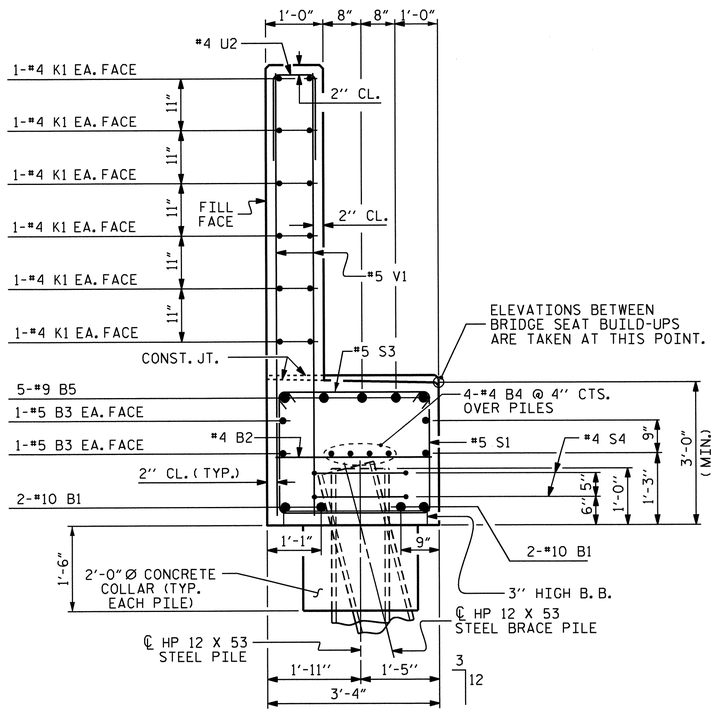

SECTION A-A

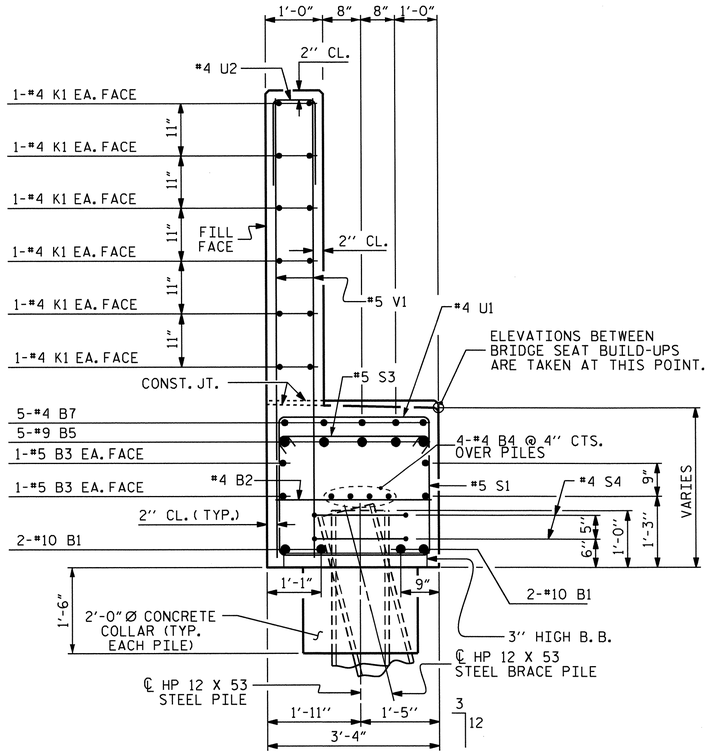

SECTION B-B

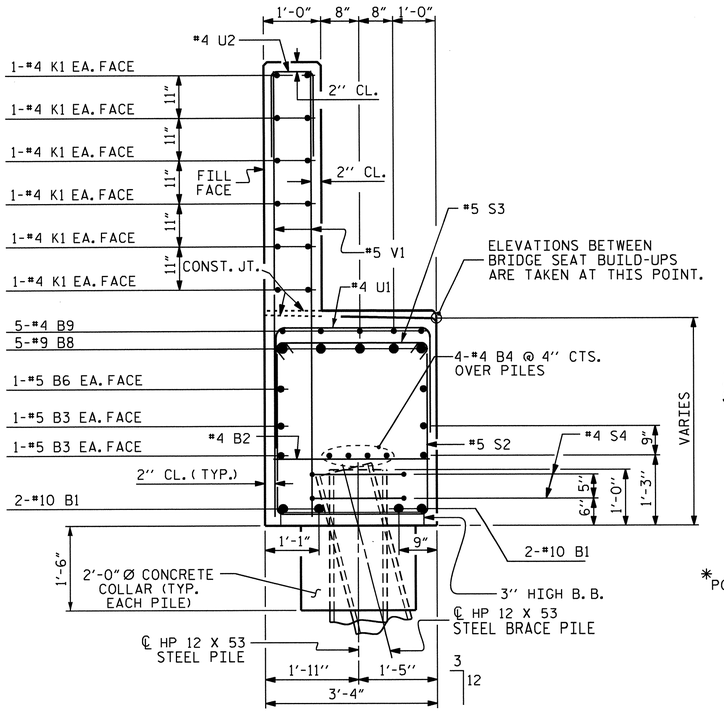

SECTION C-C

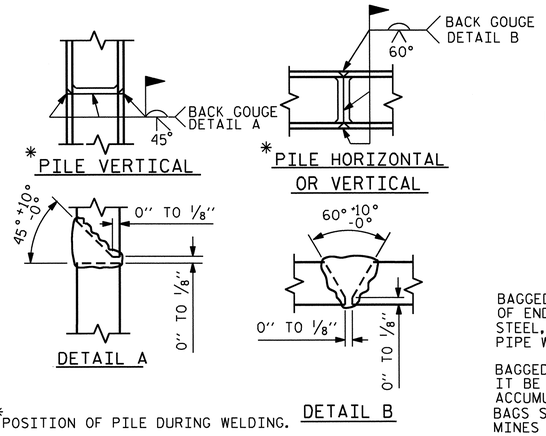

PILE SPLICE DETAILS

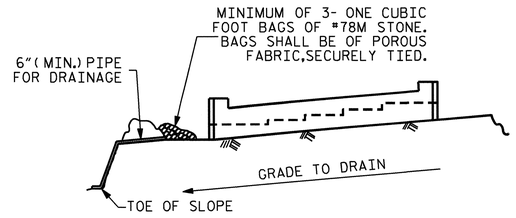

BAGGED STONE AND PIPE SHALL BE PLACED IMMEDIATELY AFTER COMPLETION OF END BENT EXCAVATION. PIPE MAY BE EITHER CONCRETE, CORRUGATED STEEL, CORRUGATED ALUMINUM ALLOY, OR CORRUGATED PLASTIC. PERFORATED PIPE WILL NOT BE ALLOWED.

BAGGED STONE SHALL REMAIN IN PLACE UNTIL THE ENGINEER DIRECTS THAT IT BE REMOVED. THE CONTRACTOR SHALL REMOVE AND DISPOSE OF SILT ACCUMULATIONS AT BAGGED STONE WHEN SO DIRECTED BY THE ENGINEER. BAGS SHALL BE REMOVED AND REPLACED WHENEVER THE ENGINEER DETERMINES THAT THEY HAVE DETERIORATED AND LOST THEIR EFFECTIVENESS.

NO SEPARATE PAYMENT WILL BE MADE FOR THIS WORK AND THE ENTIRE COST OF THIS WORK SHALL BE INCLUDED IN THE UNIT CONTRACT PRICE BID FOR THE SEVERAL PAY ITEMS.

TEMPORARY DRAINAGE AT END BENT

BAR TYPES

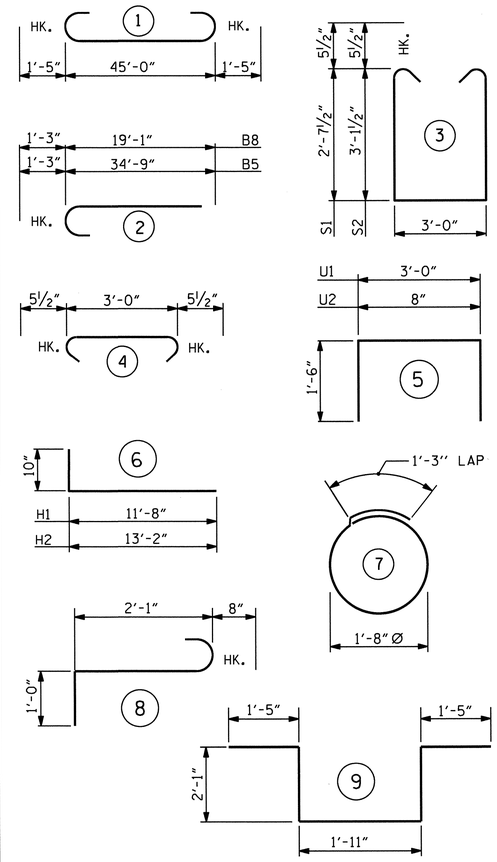

ALL BAR DIMENSIONS ARE OUT TO OUT.

BILL OF MATERIAL

END BENT #1

BAR	NO.	SIZE	TYPE	LENGTH	WEIGHT
B1	4	#10	1	47'-10"	823
B2	15	#4	STR	3'-0"	30
B3	4	#5	STR	45'-2"	188
B4	8	#4	STR	23'-10"	127
B5	5	#9	2	36'-0"	612
B6	2	#5	STR	13'-5"	28
B7	5	#4	STR	10'-1"	34
B8	5	#9	2	20'-4"	346
B9	5	#4	STR	8'-11"	30
H1	22	#5	6	12'-6"	287
H2	24	#5	6	14'-0"	350
K1	24	#4	STR	23'-10"	382
K2	8	#4	STR	2'-8"	14
S1	29	#5	3	9'-2"	277
S2	23	#5	3	10'-2"	244
S3	52	#5	4	3'-11"	212
S4	14	#4	7	6'-6"	61
S5	6	#6	8	3'-9"	34
S6	2	#6	9	8'-11"	27
U1	15	#4	5	6'-0"	60
U2	40	#4	5	3'-8"	98
V1	80	#5	STR	7'-11"	661
V2	32	#5	STR	9'-4"	312
V3	36	#5	STR	10'-3"	385

TOTAL REINFORCING STEEL 5622 LBS.

CLASS A CONCRETE BREAKDOWN	
POUR #1 (CAP, LOWER PART OF WINGS, PILE COLLARS & WING BRACE PILE CAPS)	23.8 CU. YDS.
POUR #2 (BACKWALL & UPPER PART OF WINGS)	15.3 CU. YDS.
TOTAL CLASS A CONCRETE	39.1 CU. YDS.

HP 12 X 53 STEEL PILES	
NO. 9	495 LIN. FT.
PILE REDRIVES	3 EA.

PROJECT NO. R-2303B

CUMBERLAND/SAMPSON COUNTY

STATION: 397+87.00-LREV-

SHEET 3 OF 3

STATE OF NORTH CAROLINA
DEPARTMENT OF TRANSPORTATION
RALEIGH

SUBSTRUCTURE

END BENT #1
(RIGHT LANE)

REVISIONS						SHEET NO.
NO.	BY:	DATE:	NO.	BY:	DATE:	S-73
1			3			TOTAL SHEETS
2			4			146

STR #2

NORTH CAROLINA PROFESSIONAL SEAL 025516 ENGINEER EMILY E. MARRIOTT 2.21.13

DRAWN BY : M.M. AHMED DATE : 5-10-12
CHECKED BY : A.M. LEE, PE DATE : 10-12-12

DESIGN ENGINEER OF RECORD: MOHAMMED AHMED DATE : 9-21-11

20-FEB-2013 16:11
Z:\TIPProjects-R\R2303B\Structures\Plans\str02\mma\str2_EBL\Drafting\End Bents\R2303B_SD_Ebs*_02_EBL.dgn
podkins

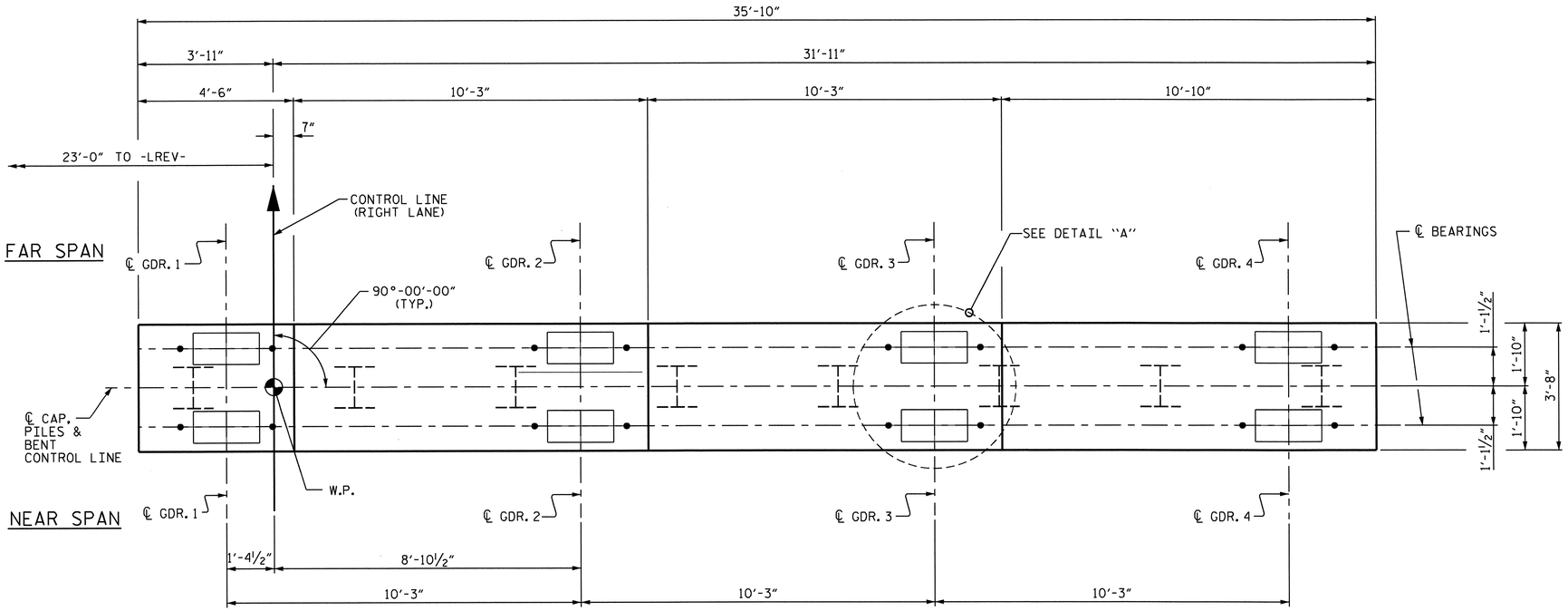

PLAN

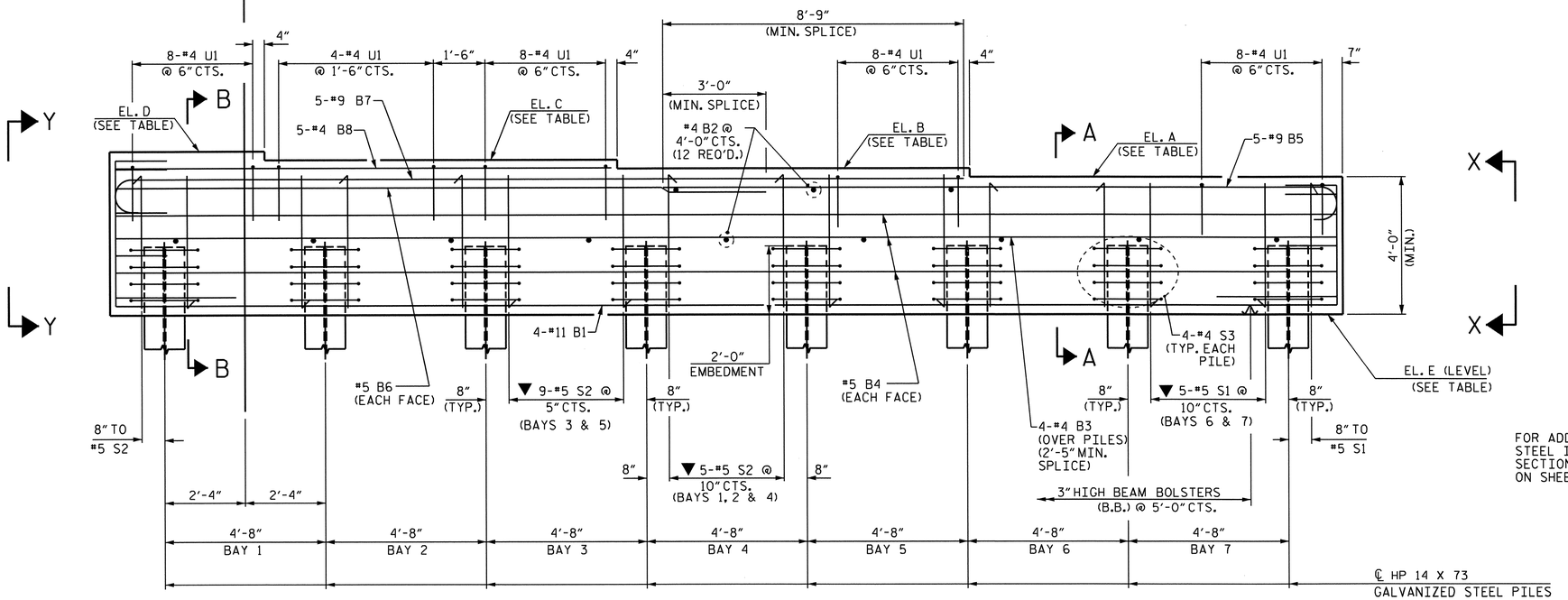

ELEVATION

▼ INVERT ALTERNATE STIRRUPS

NOTES:

STIRRUPS AND U1 BARS IN CAP MAY BE SHIFTED AS NECESSARY TO CLEAR ANCHOR BOLTS.

GALVANIZE THE TOP OF EACH INTERIOR BENT PILE A MINIMUM OF 30 FEET FOR BENTS 1 THROUGH 10 AND A MINIMUM OF 20 FEET FOR BENTS 11 AND 12 IN ACCORDANCE WITH SECTION 1076 OF THE STANDARD SPECIFICATIONS.

FOR BENTS 4, 8 AND 11 ONLY:
THE TOP SURFACE AREAS OF THE BENT CAPS SHALL BE CURED IN ACCORDANCE WITH THE STANDARD SPECIFICATIONS EXCEPT THE MEMBRANE CURING COMPOUND METHOD SHALL NOT BE USED.

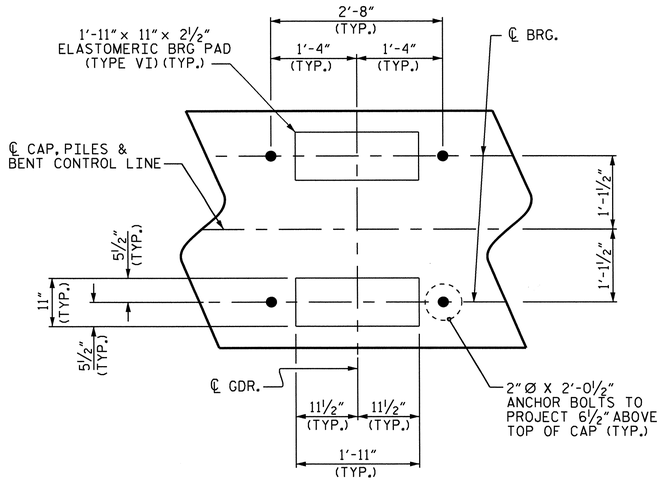

DETAIL "A"
(TYP. EA. GDR.)

ELEVATION	A	B	C	D	E
BENT 1	105.00	105.26	105.52	105.77	101.00
BENT 2	104.69	104.94	105.20	105.46	100.69
BENT 3	104.37	104.63	104.88	105.14	100.37
BENT 4	104.05	104.31	104.56	104.82	100.05
BENT 5	103.74	103.99	104.25	104.50	99.74
BENT 6	103.42	103.67	103.93	104.19	99.42
BENT 7	103.10	103.36	103.61	103.87	99.10
BENT 8	102.78	103.04	103.30	103.55	98.78
BENT 9	102.59	102.85	103.11	103.36	98.57
BENT 10	102.28	102.53	102.79	103.04	98.28
BENT 11	101.96	102.21	102.47	102.73	97.96
BENT 12	101.64	101.90	102.15	102.41	97.64

FOR ADDITIONAL REINFORCING STEEL IN ENDS OF CAP, SEE SECTION X-X AND SECTION Y-Y ON SHEET 2 OF 2.

PROJECT NO. R-2303B
CUMBERLAND/SAMPSON COUNTY
STATION: 397+87.00 -LREV-

SHEET 1 OF 2

STATE OF NORTH CAROLINA
DEPARTMENT OF TRANSPORTATION
RALEIGH

SUBSTRUCTURE

BENTS 1 THRU 12
(RIGHT LANE)

REVISIONS						SHEET NO.
NO.	BY:	DATE:	NO.	BY:	DATE:	S-74
1			3			TOTAL SHEETS
2			4			146

STR. #2

DESIGN ENGINEER OF RECORD: MOHAMMED AHMED DATE: 9-21-11
DRAWN BY: MOHAMMED AHMED DATE: 6-5-12
CHECKED BY: PEGGY ADKINS DATE: 9-20-12

NORTH CAROLINA PROFESSIONAL SEAL 025516 ENGINEER MOHAMMED AHMED 2.21.13

20-FEB-2013 15:27
Z:\TIPProjects-R\R2303B\Structures\Plans\str02\mma\str2_EBL\Drafting\Bents\R2303B_SD_B*_02_EBL.dgn
podkins

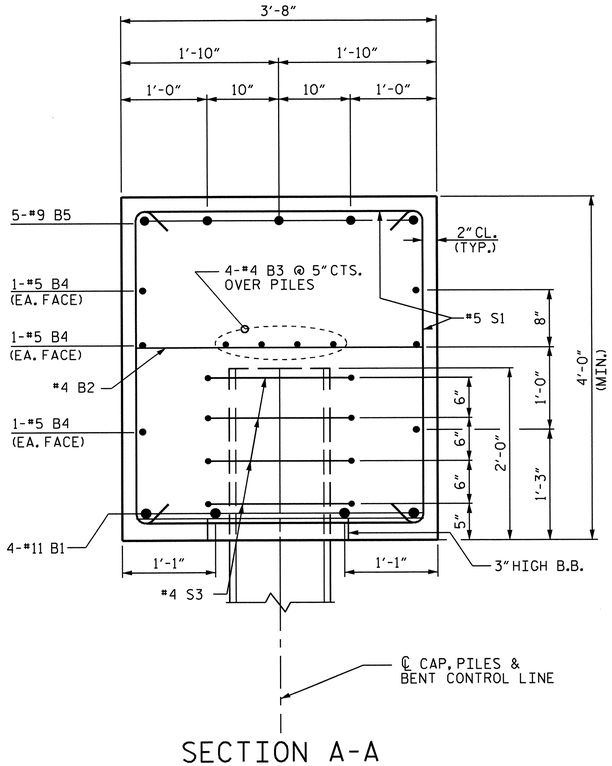

SECTION A-A

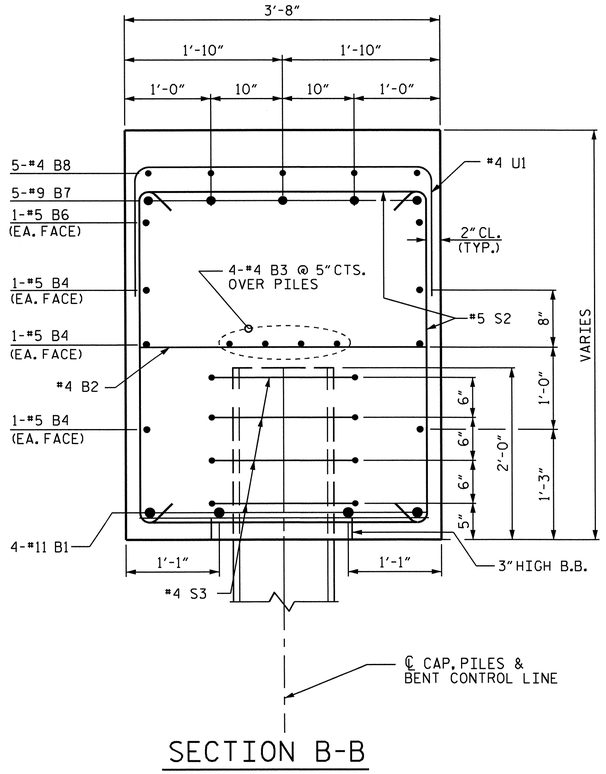

SECTION B-B

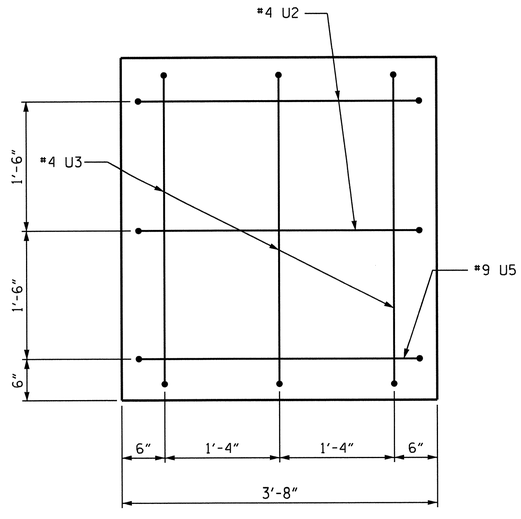

SECTION X-X

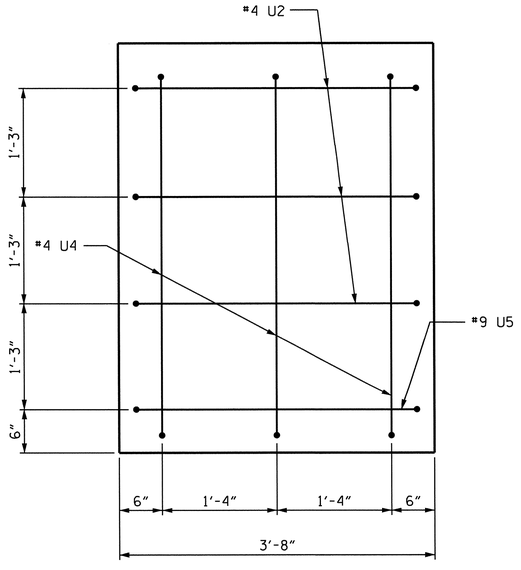

SECTION Y-Y

BAR TYPES

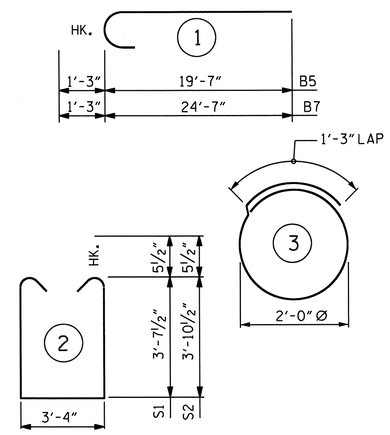

ALL BAR DIMENSIONS ARE OUT TO OUT.

BILL OF MATERIAL FOR ONE BENT (FOR BENTS 1 THRU 12)

BAR	NO.	SIZE	TYPE	LENGTH	WEIGHT
B1	4	#11	STR	35'-6"	754
B2	12	#4	STR	3'-4"	27
B3	8	#4	STR	19'-0"	102
B4	6	#5	STR	35'-6"	222
B5	5	#9	1	20'-10"	354
B6	2	#5	STR	18'-11"	39
B7	5	#9	1	25'-10"	439
B8	5	#4	STR	14'-5"	48
S1	11	#5	2	11'-6"	132
S2	34	#5	2	12'-0"	426
S3	32	#4	3	7'-7"	162
U1	36	#4	4	6'-4"	152
U2	5	#4	4	6'-2"	21
U3	3	#4	4	6'-6"	13
U4	3	#4	4	7'-3"	15
U5	2	#9	4	10'-6"	71

TOTAL REINFORCING STEEL 2,977 LBS.

CLASS A CONCRETE
POUR #1 CAP 21.0 C.Y.

TOTAL CLASS A CONCRETE 21.0 C.Y.

HP 14 X 73 GALVANIZED STEEL PILES

BENTS 1 THRU 7 & 10	NO. 8	640 LIN. FT.
BENTS 8, 9 & 11	NO. 8	600 LIN. FT.
BENT 12	NO. 8	520 LIN. FT.
PILE REDRIVES	EA. 4	

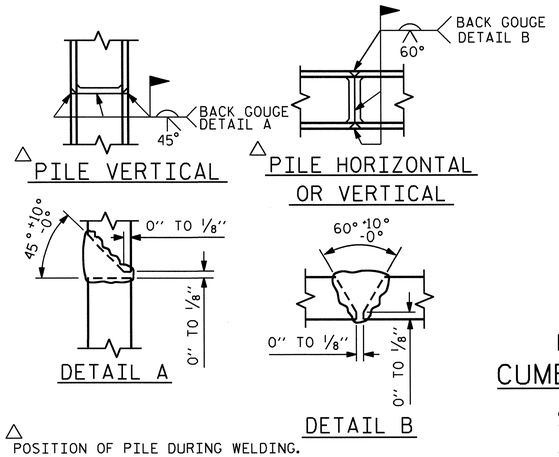

△ POSITION OF PILE DURING WELDING.

PILE SPLICE DETAILS

PROJECT NO. R-2303B
CUMBERLAND/SAMPSON COUNTY
STATION: 397+87.00 -LREV-

SHEET 2 OF 2

STATE OF NORTH CAROLINA
DEPARTMENT OF TRANSPORTATION
RALEIGH

SUBSTRUCTURE

BENTS 1 THRU 12

(RIGHT LANE)

REVISIONS						SHEET NO.
NO.	BY:	DATE:	NO.	BY:	DATE:	S-75
1			3			TOTAL SHEETS
2			4			146

DESIGN ENGINEER OF RECORD: MOHAMMED AHMED DATE : 5-21-11
DRAWN BY : MOHAMMED AHMED DATE : 5-22-12
CHECKED BY : PEGGY ADKINS DATE : 9-20-12

NORTH CAROLINA PROFESSIONAL SEAL 025516 ENGINEER PEGGY E. ADKINS
2.21.13

20-FEB-2013 15:27
Z:\TIPProjects-R\R2303B\Structures\Plans\str02\mma\str2_EBL\Drafting\Bents\R2303B_SD_B*_02_EBL.dgn
padkins

STR. #2

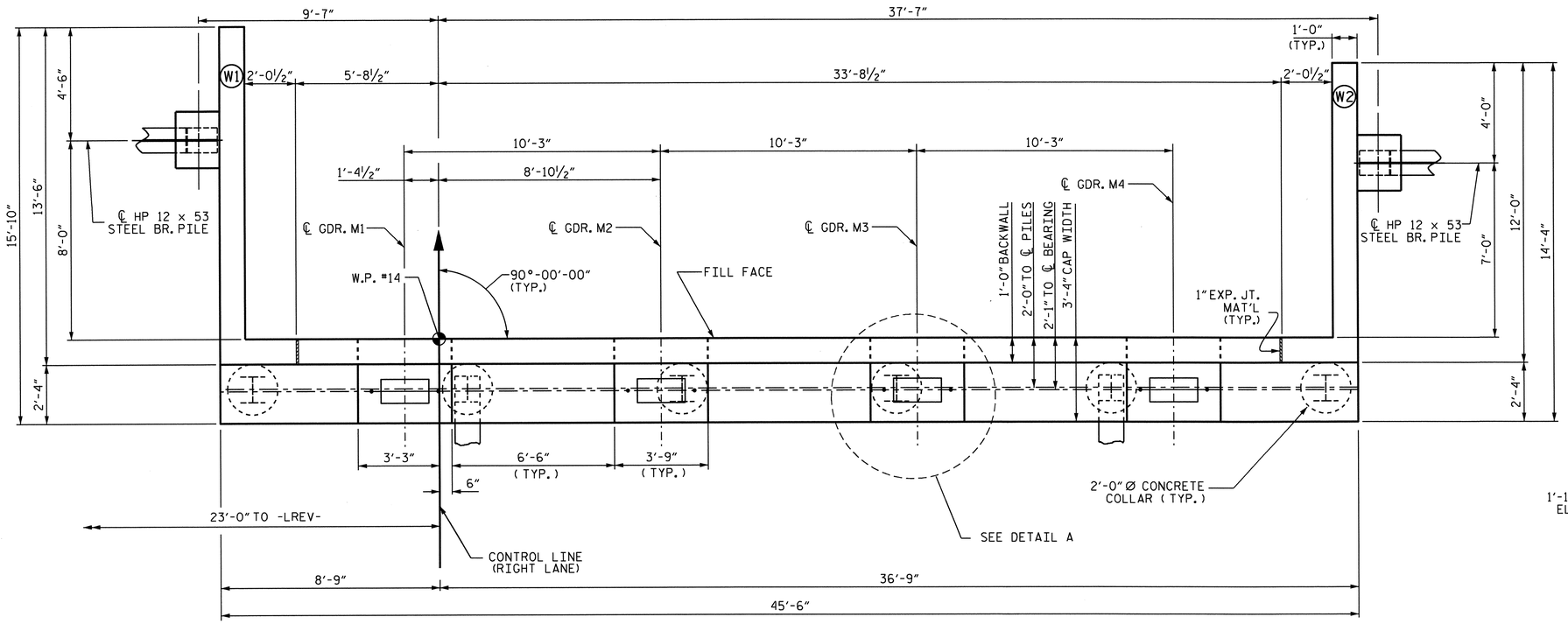

PLAN

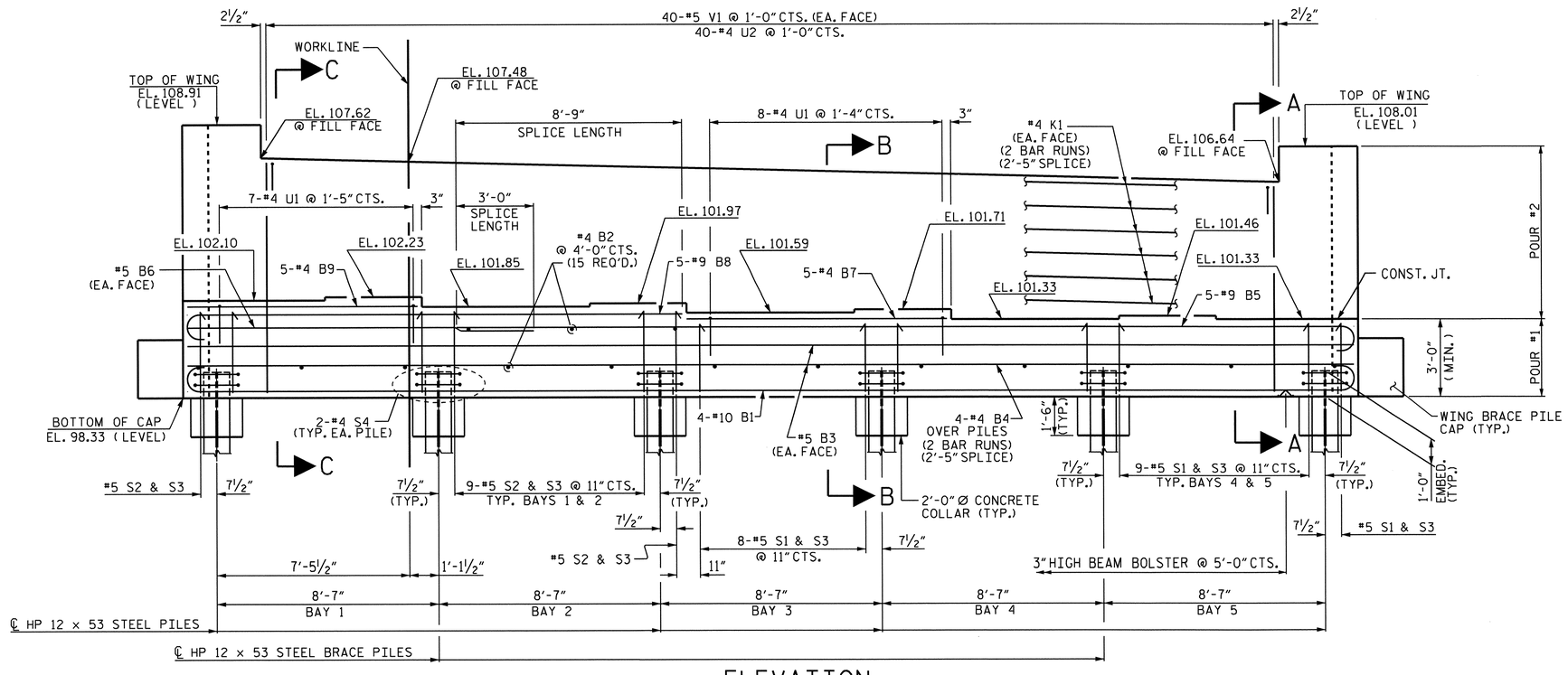

ELEVATION

PILES AND REINFORCING STEEL NOT SHOWN IN WING BRACE PILE CAP FOR CLARITY, SEE WING DETAILS, SHEET 2 OF 3.

NOTES

STIRRUPS IN CAP MAY BE SHIFTED AS NECESSARY TO CLEAR ANCHOR BOLTS.

BACKWALL SHALL BE PLACED BEFORE APPLYING THE EPOXY PROTECTIVE COATING.

THE TOP SURFACE AREAS OF THE END BENT CAP SHALL BE CURED IN ACCORDANCE WITH THE STANDARD SPECIFICATIONS EXCEPT THAT THE MEMBRANE CURING COMPOUND METHOD SHALL NOT BE USED.

THE TOP SURFACE OF THE END BENT CAP EXCEPT THE BRIDGE SEAT BUILDUPS SHALL BE SLOPED TRANSVERSELY FROM THE FILL FACE TO THE BACK FACE AT THE RATE OF 2%.

INSTALL THE 4" DIA. DRAIN PIPE THROUGH THE WING WALL AS REQUIRED FOR REINFORCED BRIDGE APPROACH FILLS. SEE THE ROADWAY PLANS. REINFORCING STEEL IN THE WING WALL MAY BE SHIFTED AS NECESSARY TO CLEAR THE DRAIN PIPE.

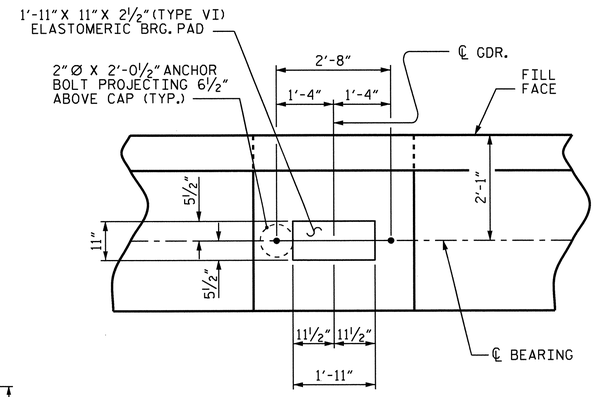

DETAIL A

(TYP. EA. BRG.)

PROJECT NO. R-2303B

CUMBERLAND/SAMPSON COUNTY

STATION: 397+87.00-LREV-

SHEET 1 OF 3

STATE OF NORTH CAROLINA
DEPARTMENT OF TRANSPORTATION
RALEIGH

SUBSTRUCTURE

END BENT #2
(RIGHT LANE)

REVISIONS						SHEET NO.
NO.	BY:	DATE:	NO.	BY:	DATE:	S-76
1			3			TOTAL SHEETS
2			4			146

STR #2

NORTH CAROLINA PROFESSIONAL SEAL 025516 ENGINEER EMILY E. MURRAY 2.21.13

DRAWN BY : M.M. AHMED	DATE : 5/11/12	DESIGN ENGINEER OF RECORD: MOHAMMED AHMED	DATE : 9-21-11
CHECKED BY : A.M. LEE, PE	DATE : 10/12/12		

20-FEB-2013 15:26
Z:\TIPProjects-R\R2303B\Structures\Plans\str02\mmo\str2_EBL\Drafting\End Bents\R2303B_SD_Ebs*_02_EBL.dgn
padkins

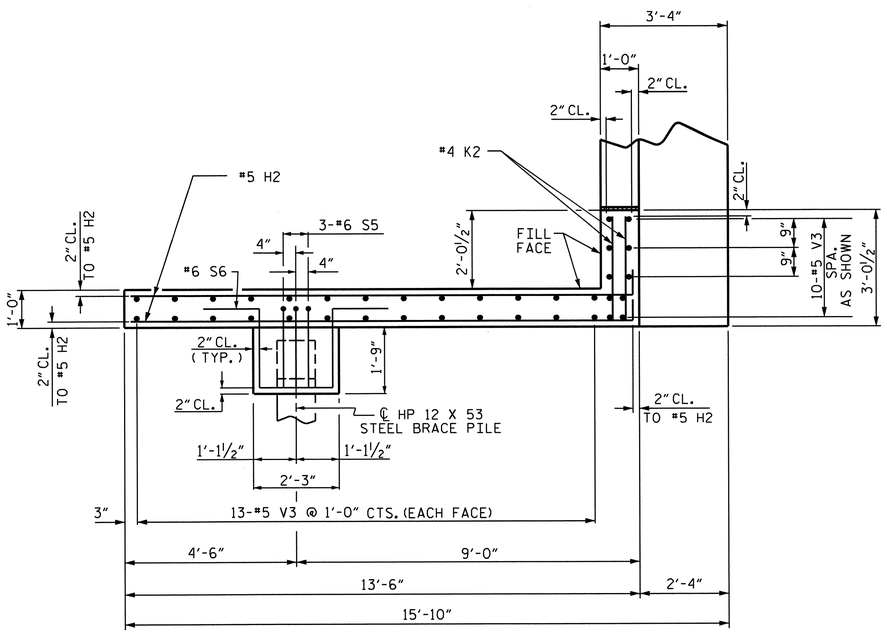

PLAN OF WING W1

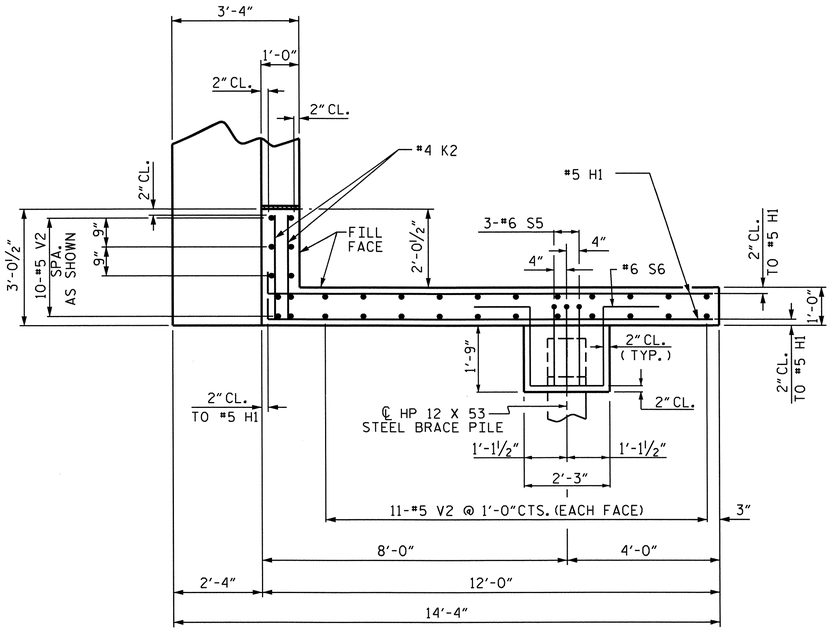

PLAN OF WING W2

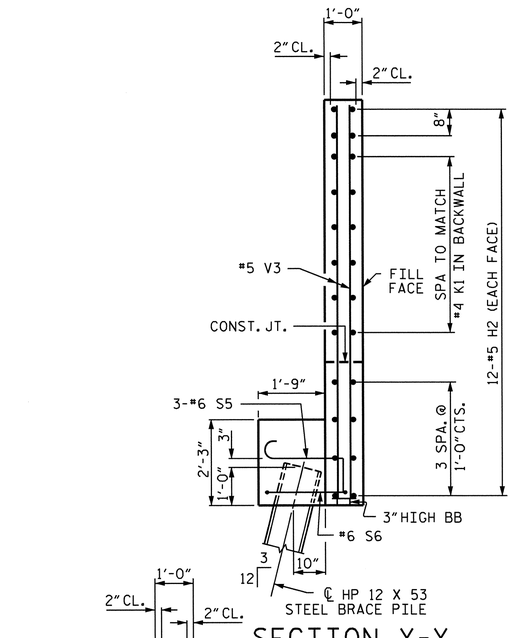

SECTION X-X

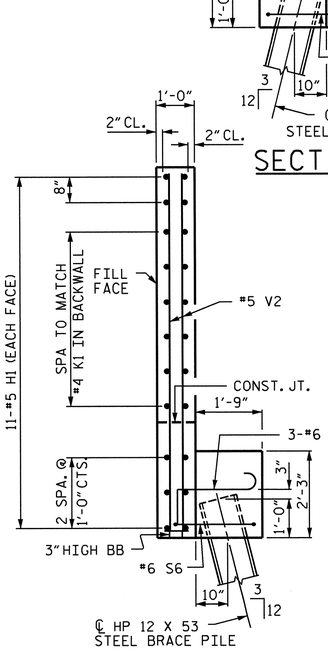

SECTION Y-Y

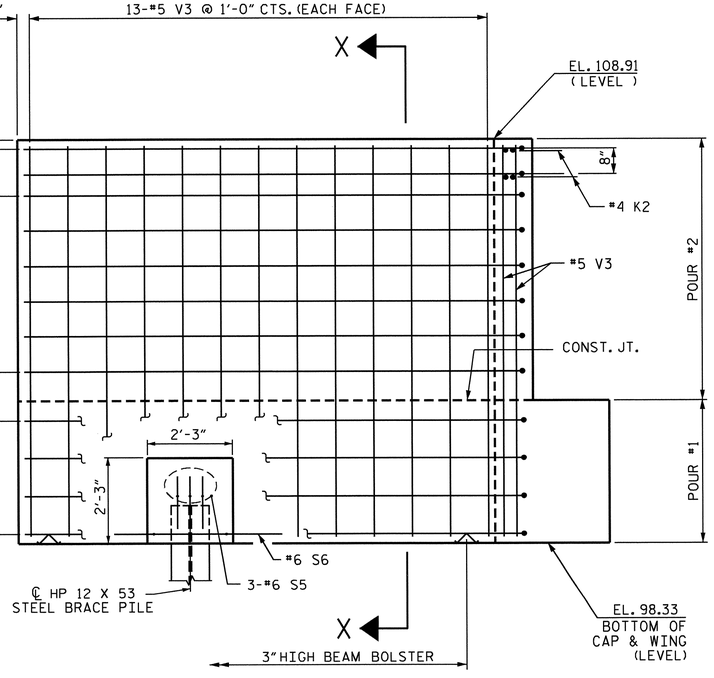

ELEVATION OF WING W1

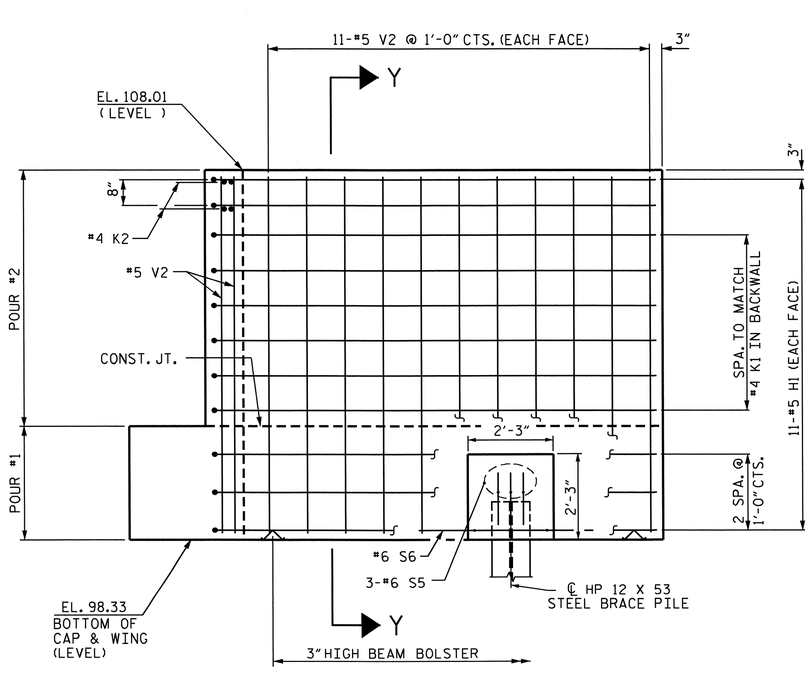

ELEVATION OF WING W2

PROJECT NO. R-2303B

CUMBERLAND/SAMPSON COUNTY

STATION: 397+87.00-LREV-

SHEET 2 OF 3

STATE OF NORTH CAROLINA
DEPARTMENT OF TRANSPORTATION
RALEIGH

SUBSTRUCTURE

END BENT #2
(RIGHT LANE)

NORTH CAROLINA PROFESSIONAL SEAL 025516 ENGINEER EMILY E. MURRAY

DESIGN ENGINEER OF RECORD: MOHAMMED AHMED	DATE : 9-21-11
DRAWN BY : M.M. AHMED	DATE : 5-11-12
CHECKED BY : A.M. LEE, PE	DATE : 10-12-12

REVISIONS						SHEET NO.
NO.	BY:	DATE:	NO.	BY:	DATE:	S-77
1			3			TOTAL SHEETS
2			4			146

STR #2

20-FEB-2013 16:10
Z:\TIPProjects-R\R2303B\Structures\Plans\str02\mmo\str2_EBL\Drafting\End Bents\R2303B_SD_Ebs*_02_EBL.dgn
podkins

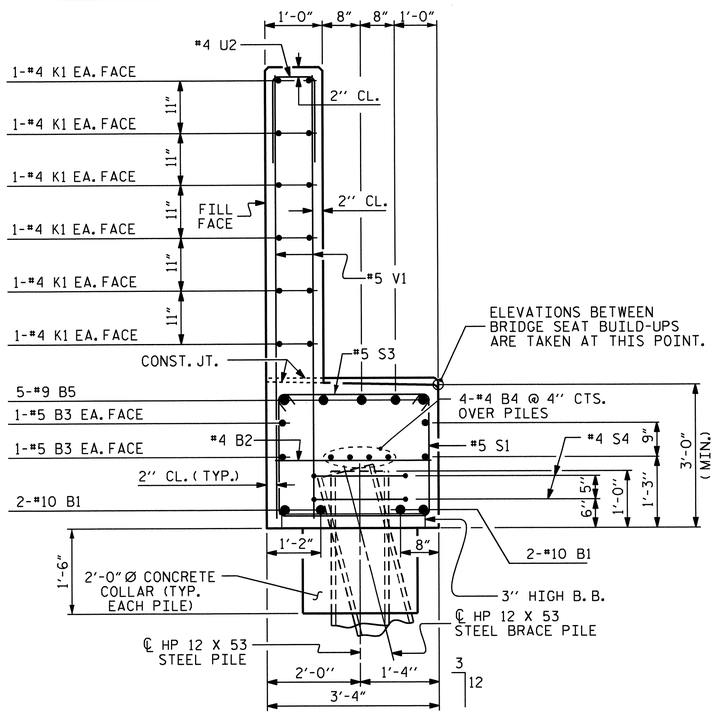

SECTION A-A

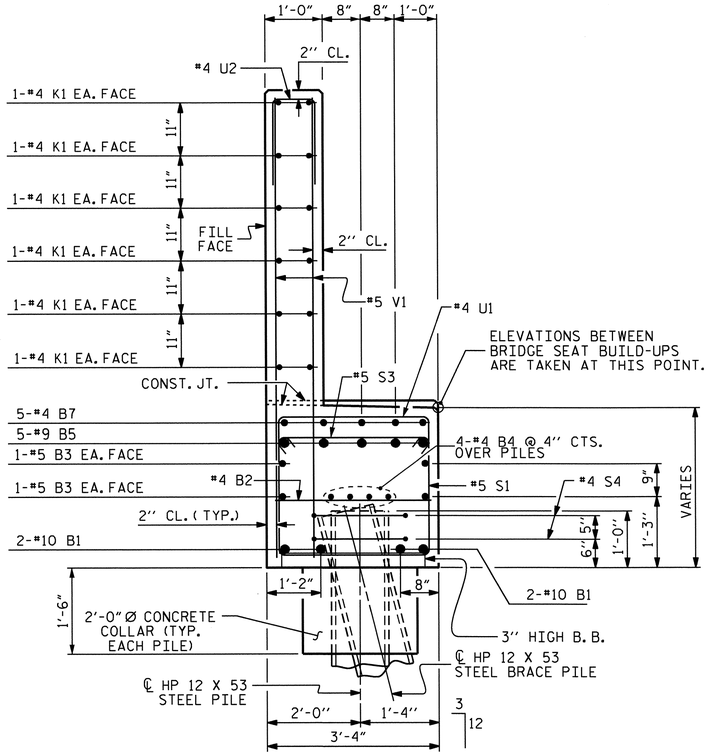

SECTION B-B

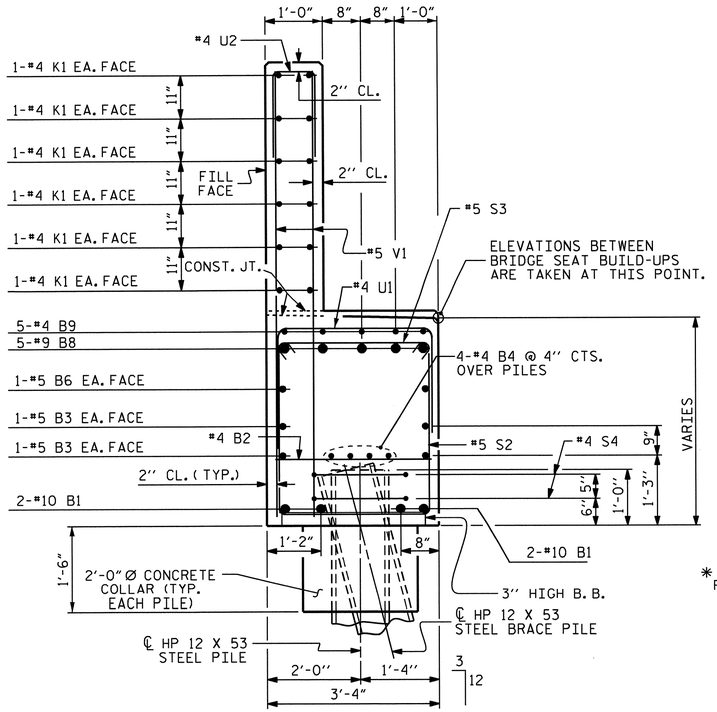

SECTION C-C

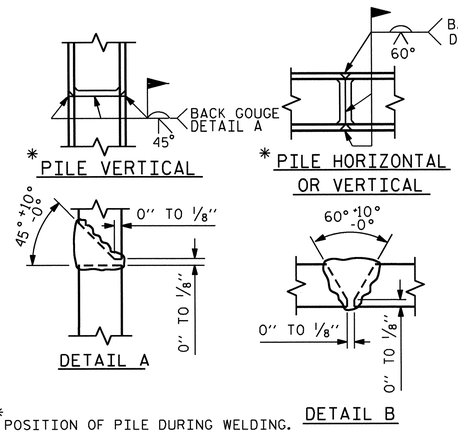

* POSITION OF PILE DURING WELDING.

PILE SPLICE DETAILS

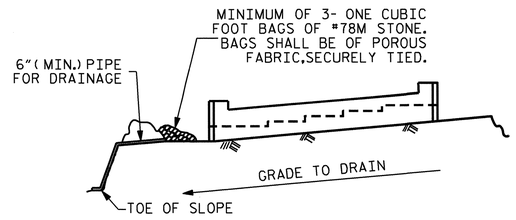

BAGGED STONE AND PIPE SHALL BE PLACED IMMEDIATELY AFTER COMPLETION OF END BENT EXCAVATION. PIPE MAY BE EITHER CONCRETE, CORRUGATED STEEL, CORRUGATED ALUMINUM ALLOY, OR CORRUGATED PLASTIC. PERFORATED PIPE WILL NOT BE ALLOWED.

BAGGED STONE SHALL REMAIN IN PLACE UNTIL THE ENGINEER DIRECTS THAT IT BE REMOVED. THE CONTRACTOR SHALL REMOVE AND DISPOSE OF SILT ACCUMULATIONS AT BAGGED STONE WHEN SO DIRECTED BY THE ENGINEER. BAGS SHALL BE REMOVED AND REPLACED WHENEVER THE ENGINEER DETERMINES THAT THEY HAVE DETERIORATED AND LOST THEIR EFFECTIVENESS.

NO SEPARATE PAYMENT WILL BE MADE FOR THIS WORK AND THE ENTIRE COST OF THIS WORK SHALL BE INCLUDED IN THE UNIT CONTRACT PRICE BID FOR THE SEVERAL PAY ITEMS.

TEMPORARY DRAINAGE AT END BENT

BAR TYPES

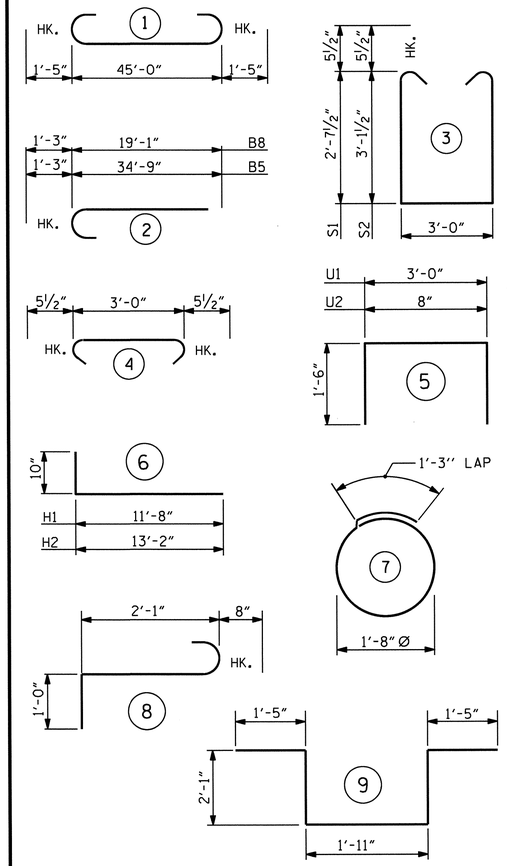

ALL BAR DIMENSIONS ARE OUT TO OUT.

BILL OF MATERIAL
END BENT #2

BAR	NO.	SIZE	TYPE	LENGTH	WEIGHT
B1	4	#10	1	47'-10"	823
B2	15	#4	STR	3'-0"	30
B3	4	#5	STR	45'-2"	188
B4	8	#4	STR	23'-10"	127
B5	5	#9	2	36'-0"	612
B6	2	#5	STR	13'-5"	28
B7	5	#4	STR	10'-1"	34
B8	5	#9	2	20'-4"	346
B9	5	#4	STR	8'-11"	30
H1	22	#5	6	12'-6"	287
H2	24	#5	6	14'-0"	350
K1	24	#4	STR	23'-10"	382
K2	8	#4	STR	2'-8"	14
S1	27	#5	3	9'-2"	258
S2	20	#5	3	10'-2"	212
S3	47	#5	4	3'-11"	192
S4	12	#4	7	6'-6"	52
S5	6	#6	8	3'-9"	34
S6	2	#6	9	8'-11"	27
U1	15	#4	5	6'-0"	60
U2	40	#4	5	3'-8"	98
V1	80	#5	STR	7'-11"	661
V2	32	#5	STR	9'-4"	312
V3	36	#5	STR	10'-3"	385

TOTAL REINFORCING STEEL 5542 LBS.

CLASS A CONCRETE BREAKDOWN

POUR #1 (CAP, LOWER PART OF WINGS, PILE COLLARS & WING BRACE PILE CAPS)	23.6 CU. YDS.
POUR #2 (BACKWALL & UPPER PART OF WINGS)	15.3 CU. YDS.
TOTAL CLASS A CONCRETE	38.9 CU. YDS.

HP 12 X 53 STEEL PILES	
NO. 8	440 LIN. FT.
PILE REDRIVES	3 EA.

PROJECT NO. R-2303B

CUMBERLAND/SAMPSON COUNTY

STATION: 397+87.00-LREV-

SHEET 3 OF 3

STATE OF NORTH CAROLINA
DEPARTMENT OF TRANSPORTATION
RALEIGH

SUBSTRUCTURE
END BENT #2
(RIGHT LANE)

REVISIONS						SHEET NO.
NO.	BY:	DATE:	NO.	BY:	DATE:	S-78
1			3			TOTAL SHEETS
2			4			146

STR #2

NORTH CAROLINA PROFESSIONAL SEAL 025516 ENGINEER BRYAN E. MURRAY
2.21.13

DRAWN BY : M.M. AHMED DATE : 5-3-12
CHECKED BY : A.M. LEE, PE DATE : 10-12-12

DESIGN ENGINEER OF RECORD: MOHAMMED AHMED DATE : 9-21-11

20-FEB-2013 16:10
Z:\TIPProjects-R\R2303B\Structures\Plans\str02\mma\str2_EBL\Drafting\End Bents\R2303B_SD_Ebs*_02_EBL.dgn
pdakins

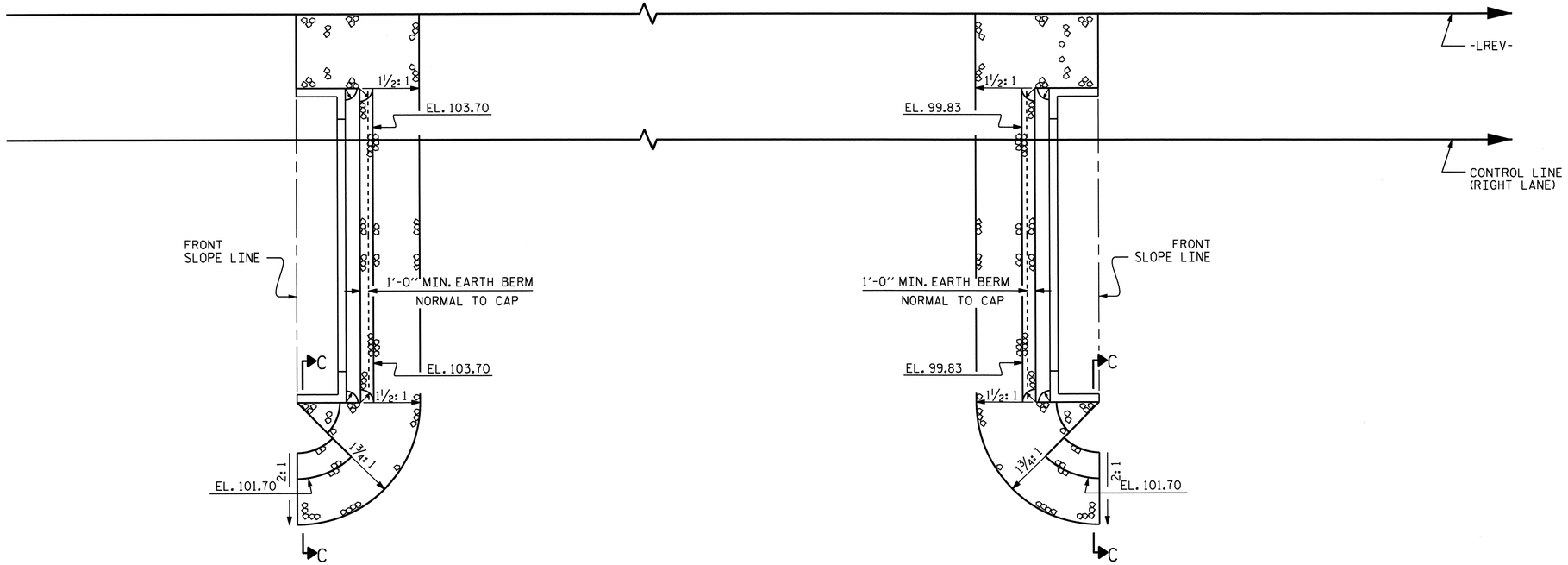

PLAN

ESTIMATED QUANTITIES		
BRIDGE @ STA. 397+87.00 -LREV- (RIGHT LANE)	RIP RAP CLASS II (2'-0" THICK)	GEOTEXTILE FOR DRAINAGE
	TONS	SQUARE YARDS
END BENT 1	216	240
END BENT 2	97	108

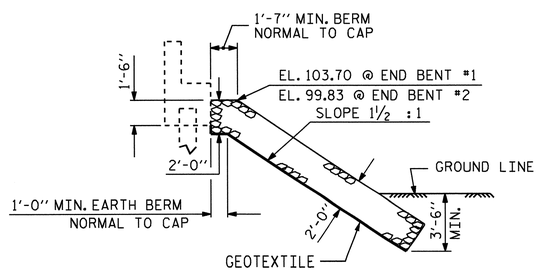

℄ SECTION

BERM RIP RAPPED

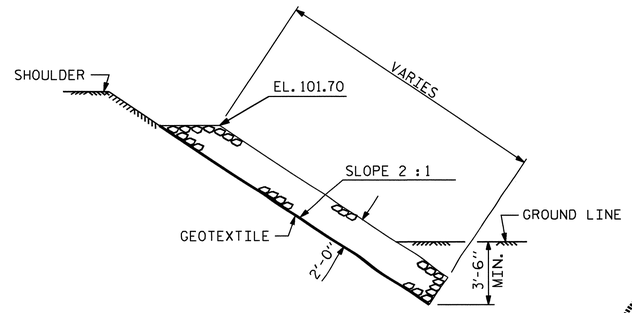

SECTION C-C

PROJECT NO. R-2303B

CUMBERLAND/SAMPSON COUNTY

STATION: 397+87.00 -LREV-

STATE OF NORTH CAROLINA
DEPARTMENT OF TRANSPORTATION
RALEIGH

STANDARD

RIP RAP DETAILS

(RIGHT LANE)

NORTH CAROLINA PROFESSIONAL SEAL 025516 ENGINEER
2-21-13

REVISIONS						SHEET NO.
NO.	BY:	DATE:	NO.	BY:	DATE:	S-79
1			3			TOTAL SHEETS
2			4			146

ASSEMBLED BY : PEGGY ADKINS DATE : 10-10-12		
CHECKED BY : T. AVERETTE DATE : 12-17-12		
DRAWN BY : REK 1/84	REV. 5/1/06R	TLA/GM
CHECKED BY : RDU 1/84	REV. 10/1/11	MAA/GM
	REV. 12/21/11	MAA/GM

20-FEB-2013 15:25
Z:\TIPProjects-R\R2303B\Structures\Plans\str02\PADKINS\R2303B_sd_RR_02.dgn
padkins

STR. #2

STD. NO. RR1 (Sht 2)

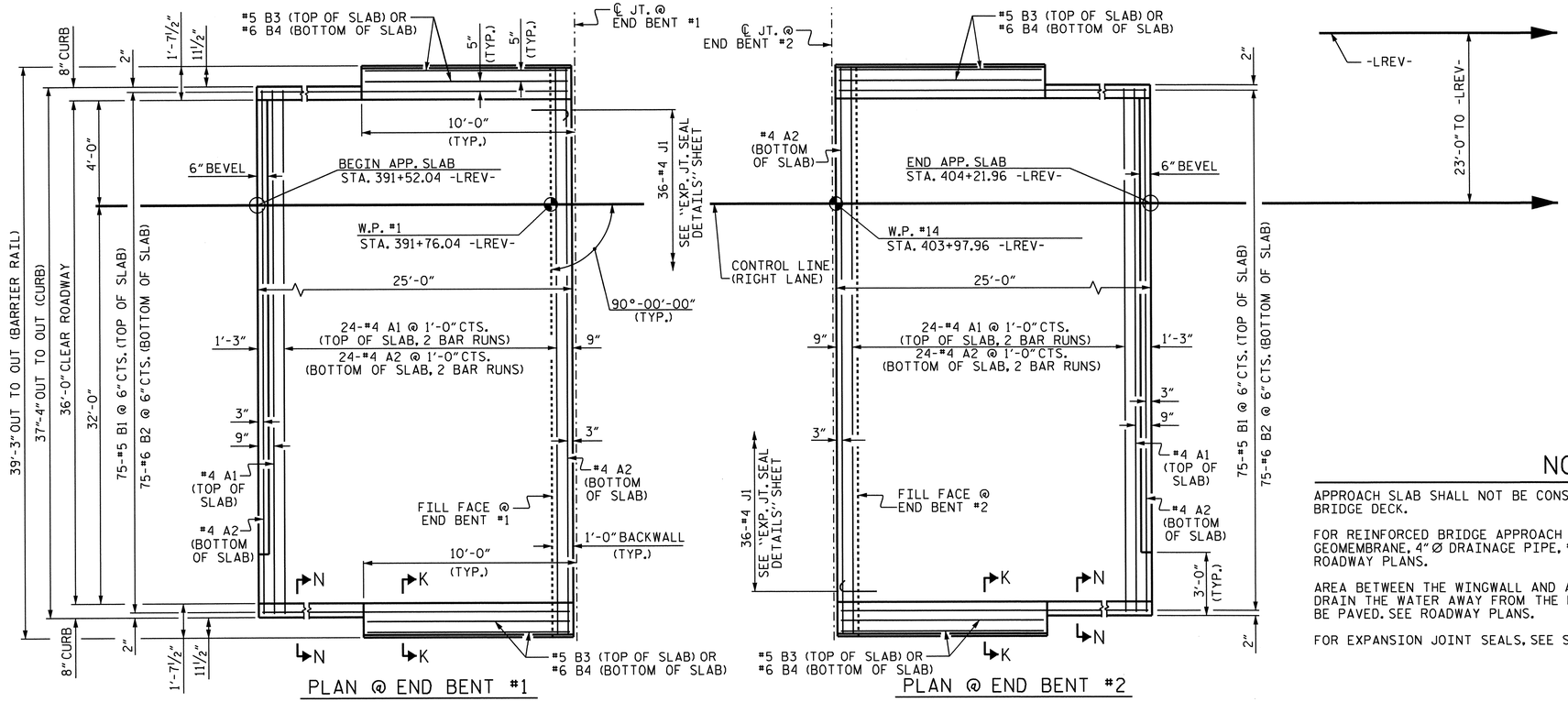

DIMENSIONS SHOWN ARE TYPICAL FOR BOTH APPROACH SLABS

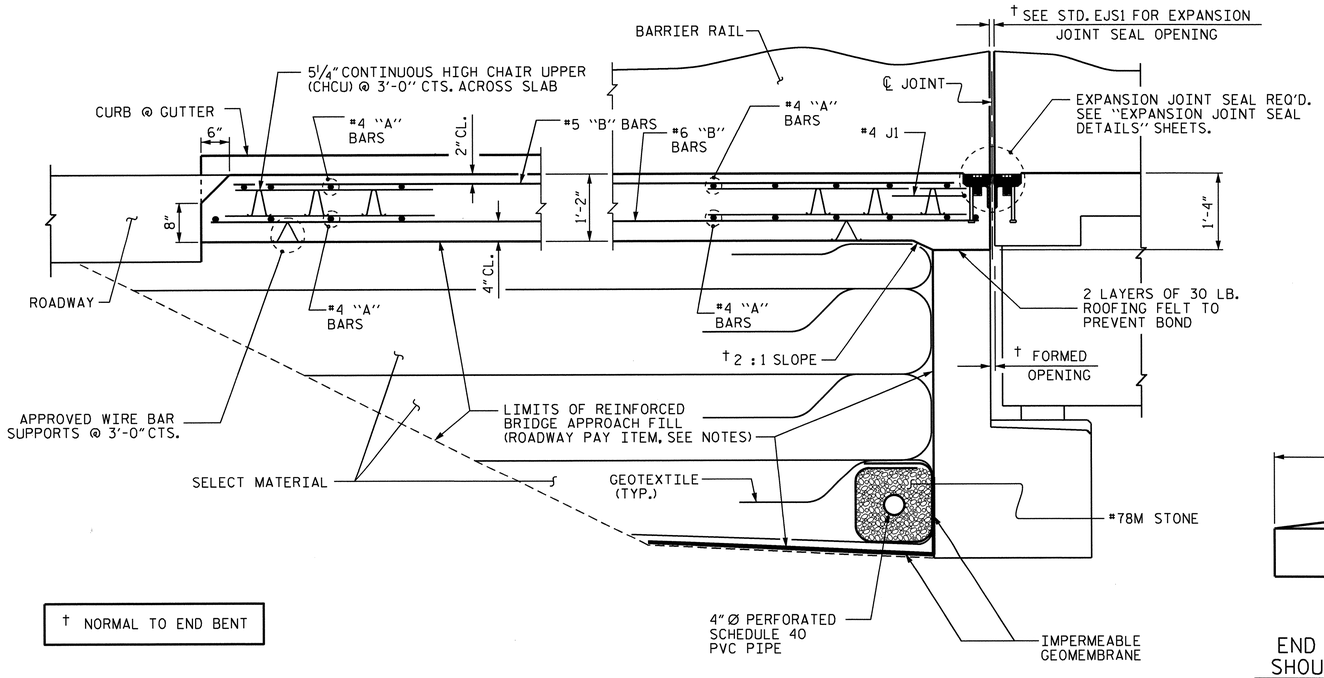

† NORMAL TO END BENT

SECTION THRU SLAB

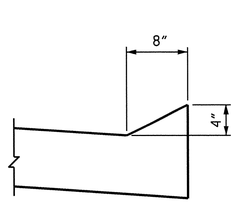

SECTION N-N

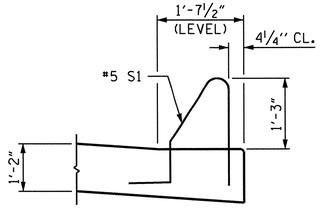

SECTION K-K

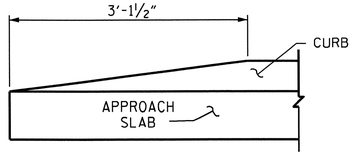

END OF CURB WITHOUT SHOULDER BERM GUTTER

CURB DETAILS

NOTES

APPROACH SLAB SHALL NOT BE CONSTRUCTED PRIOR TO COMPLETION OF THE BRIDGE DECK.

FOR REINFORCED BRIDGE APPROACH FILL INCLUDING GEOTEXTILE, IMPERMEABLE GEOMEMBRANE, 4" Ø DRAINAGE PIPE, #78M STONE, AND SELECT MATERIAL, SEE ROADWAY PLANS.

AREA BETWEEN THE WINGWALL AND APPROACH SLAB SHALL BE GRADED TO DRAIN THE WATER AWAY FROM THE FILL FACE OF THE BRIDGE AND SHALL BE PAVED. SEE ROADWAY PLANS.

FOR EXPANSION JOINT SEALS, SEE SPECIAL PROVISIONS.

BILL OF MATERIAL

APPROACH SLAB AT EB #1

BAR	NO.	SIZE	TYPE	LENGTH	WEIGHT
✱A1	50	#4	STR	20'-6"	685
A2	52	#4	STR	20'-4"	706
✱B1	75	#5	STR	23'-10"	1864
B2	75	#6	STR	24'-8"	2779
✱B3	4	#5	STR	9'-7"	40
B4	4	#6	STR	9'-7"	58
✱J1	36	#4	1	1'-5"	34

REINFORCING STEEL 3543 LBS.
✱EPOXY COATED REINFORCING STEEL ✱✱ 2623 LBS.
CLASS AA CONCRETE ✱✱ 41.5 CU. YDS.

APPROACH SLAB AT EB #2

BAR	NO.	SIZE	TYPE	LENGTH	WEIGHT
✱A1	50	#4	STR	20'-6"	685
A2	52	#4	STR	20'-4"	706
✱B1	75	#5	STR	23'-10"	1864
B2	75	#6	STR	24'-8"	2779
✱B3	4	#5	STR	9'-7"	40
B4	4	#6	STR	9'-7"	58
✱J1	36	#4	1	1'-5"	34

REINFORCING STEEL 3543 LBS.
✱EPOXY COATED REINFORCING STEEL ✱✱ 2623 LBS.
CLASS AA CONCRETE ✱✱ 41.5 CU. YDS.

BAR TYPE

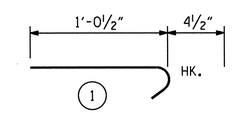

ALL BAR DIMENSIONS ARE OUT TO OUT

✱✱ QUANTITIES FOR BARRIER RAIL ARE NOT INCLUDED. SEE SHEET 2 OF 2.

THE QUANTITY OF #4 J1 BARS ON THE BILL OF MATERIAL IS BASED ON 1'-0" CENTERS. J1 BARS SHALL BE PLACED AT EACH VERTICAL STUD ANCHOR BOLT. IN THE EVENT THAT THE NUMBER OF VERTICAL STUD ANCHORS EXCEEDS THE NUMBER OF J1 BARS SPECIFIED, ADDITIONAL J1 BARS WILL NOT BE REQUIRED.

SPLICE LENGTHS

BAR SIZE	EPOXY COATED	UNCOATED
#4	2'-0"	1'-9"
#5	2'-6"	2'-2"
#6	3'-10"	2'-7"

NORTH CAROLINA PROFESSIONAL SEAL 025516 ENGINEER EMILY E. MURRAY
2.21.13

PROJECT NO. R-2303B
CUMBERLAND/SAMPSON COUNTY
STATION: 397+87.00-LREV-

SHEET 1 OF 2

STATE OF NORTH CAROLINA
DEPARTMENT OF TRANSPORTATION
RALEIGH

STANDARD

BRIDGE APPROACH SLAB FOR FLEXIBLE PAVEMENT

(RIGHT LANE)

REVISIONS						SHEET NO.
NO.	BY:	DATE:	NO.	BY:	DATE:	S-80
1			3			TOTAL SHEETS
2			4			146

STR. #2

STD. NO. BAS2 (SHT 4)

ASSEMBLED BY : M.D.PISO	DATE : 09-27-12	
CHECKED BY : P.A.PARISI	DATE : 10-02-12	
DRAWN BY : EEM 3/95	REV. 5/7/03R	RWW/JTE
CHECKED BY : VAP 3/95	REV. 5/1/06RR	KMM/GM
	REV. 10/1/11	MAA/GM

20-FEB-2013 15:25
Z:\TIPProjects-R\R2303B\Structures\Plans\str02\mdpiso\R-2303B_SD_AS.dgn
padkins

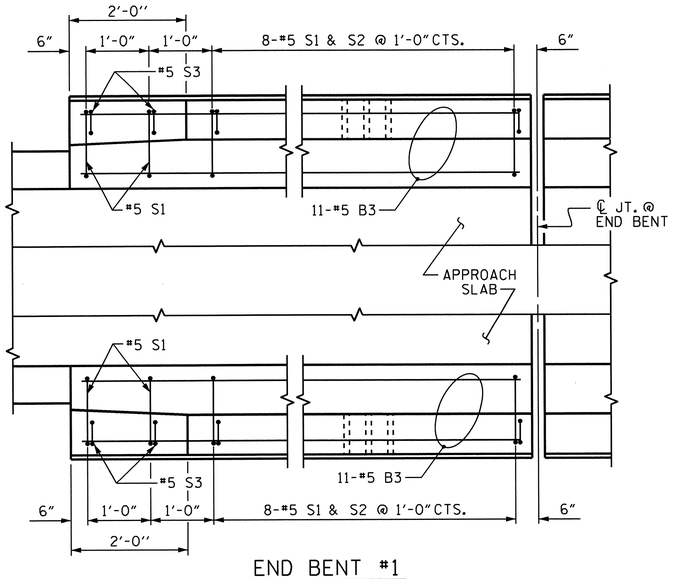

END BENT #1

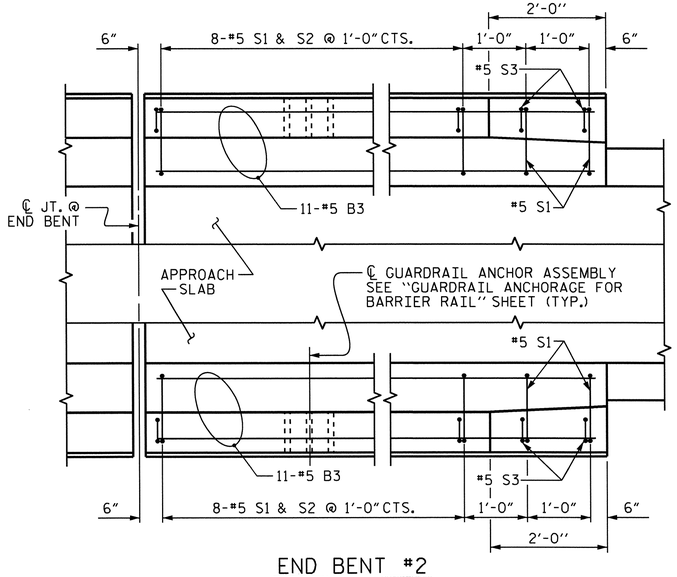

END BENT #2

NOTES

THE COST OF THE BARRIER RAIL ON THE APPROACH SLAB SHALL BE INCLUDED IN THE LINEAR FOOT CONTRACT PRICE BID FOR "CONCRETE BARRIER RAIL".

THE BARRIER RAIL ON EACH APPROACH SLAB SHALL NOT BE CAST UNTIL ALL APPROACH SLAB CONCRETE HAS BEEN CAST AND HAS REACHED A MINIMUM COMPRESSIVE STRENGTH OF 3,000 PSI.

ALL REINFORCING STEEL IN BARRIER RAILS SHALL BE EPOXY COATED.

BAR TYPES

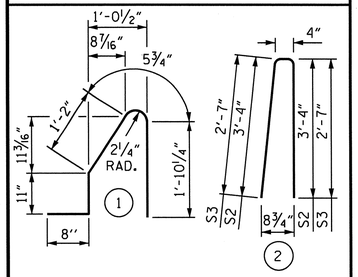

ALL BAR DIMENSIONS ARE OUT TO OUT

BILL OF MATERIAL

BARRIER RAIL ONLY

BAR	NO.	SIZE	TYPE	LENGTH	WEIGHT
✱B3	44	#5	STR	9'-7"	440
✱S1	40	#5	1	5'-1"	212
✱S2	32	#5	2	7'-0"	234
✱S3	8	#5	2	5'-6"	46

✱EPOXY COATED REINFORCING STEEL	LBS.	932
CLASS AA CONCRETE	C.Y.	5.3
CONCRETE BARRIER RAIL	40.00	LIN.FT.

PLAN OF BARRIER RAIL

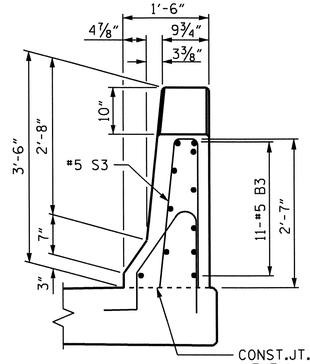

END VIEW

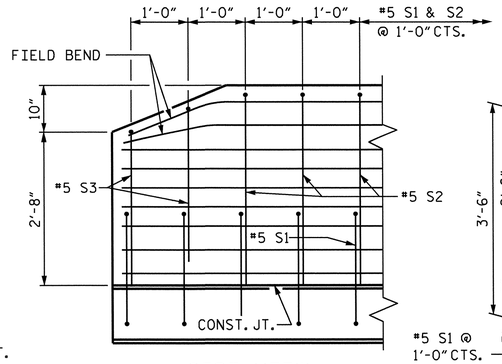

SIDE VIEW

END OF RAIL DETAILS

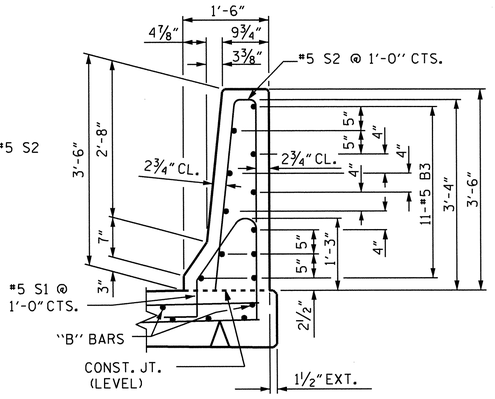

SECTION THRU RAIL

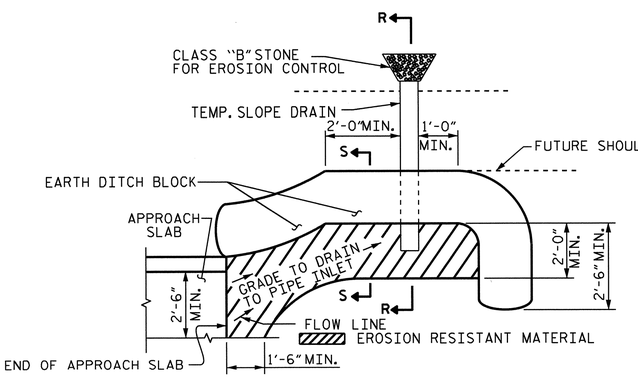

NOTE: IMMEDIATELY AFTER THE CONSTRUCTION OF THE APPROACH SLAB, THE CONTRACTOR SHALL PROVIDE TEMPORARY BERM AND SLOPE DRAIN. CONTRACTOR SHALL GRADE TO PIPE INLET AND PROVIDE EROSION RESISTANT MATERIAL AS SHOWN. THE EROSION RESISTANT MATERIAL SHALL BE EITHER 1) ASPHALT PLANT MIX, TYPE 1 OR TYPE 2, MIN. 2" DEPTH, 2) EROSION CONTROL MAT, OR 3) CONCRETE, AS DIRECTED BY THE ENGINEER. THE SLOPE DRAIN SHALL CONSIST OF A NON-PERFORATED TEMPORARY DRAINAGE PIPE, 12 INCHES IN DIAMETER.

PLAN VIEW

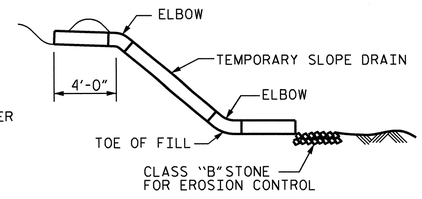

SECTION R-R

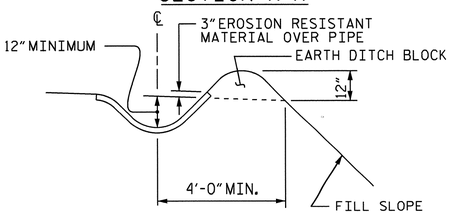

SECTION S-S

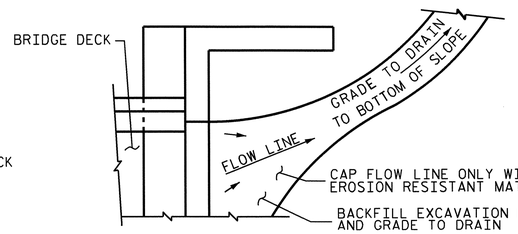

NOTE: IF THE APPROACH SLAB IS NOT CONSTRUCTED IMMEDIATELY AFTER THE BACKFILLING OF THE END BENT EXCAVATION, GRADE TO DRAIN TO THE BOTTOM OF THE SLOPE AND PROVIDE EROSION RESISTANT MATERIAL, SUCH AS FIBERGLASS ROVING OR AS DIRECTED BY THE ENGINEER TO PREVENT SOIL EROSION AND TO PROTECT THE AREA ADJACENT TO THE STRUCTURE. THE CONTRACTOR WILL BE REQUIRED TO REMOVE THESE MATERIALS PRIOR TO CONSTRUCTION OF THE APPROACH SLAB.

TEMPORARY DRAINAGE DETAIL

PROJECT NO. R-2303B

CUMBERLAND/SAMPSON COUNTY

STATION: 397+87.00-LREV-

SHEET 2 OF 2

STATE OF NORTH CAROLINA
DEPARTMENT OF TRANSPORTATION
RALEIGH

STANDARD

BRIDGE APPROACH SLAB DETAILS

(RIGHT LANE)

REVISIONS						SHEET NO.
NO.	BY:	DATE:	NO.	BY:	DATE:	S-81
1			3			TOTAL SHEETS
2			4			146

ASSEMBLED BY :	M.D.PISO	DATE :	09-27-12
CHECKED BY :	P.A.PARISI	DATE :	10-03-12
DRAWN BY : FCJ	11/88	REV. 10/1/11	MAA/GM
CHECKED BY : ARB	11/88	REV. 7/12	MAA/GM
		REV. 10/12	MAA/GM

TEMPORARY BERM AND SLOPE DRAIN DETAILS

(TO BE USED WHEN SHOULDER BERM GUTTER IS REQUIRED)

NORTH CAROLINA PROFESSIONAL SEAL 025516 ENGINEER ELMER C. MURPHY 2-21-13

STR. #2

STD. NO. BAS4 (SHT 3)

20-FEB-2013 15:24
Z:\TIPProjects-R\R2303B\Structures\Plans\str02\mdpiso\R-2303B_SD_AS.dgn
podkins

659+50 660+00 660+50 661+00

SPAN A SPAN B SPAN C

INTEGRAL FIX. FIX. FIX. FIX. INTEGRAL

FILL FACE AT END BENT 1
STA. 659+40.46 -L-
GRADE PT. EL. 109.94

BEGIN FRONT SLOPE
STA. 659+27.73 -L-
GRADE PT. EL. 109.98

1'-0" MIN. EARTH BERM (TYP.)

LOW CHORD EL. 105.16

2 : 1 SLOPE (TYP.)

EL. 101.0±

EL. 103.5±

HW EL. 101.0 (1999)

NWS EL. 95.2 (4/15/09)

EXISTING SUBSTRUCTURE (TYP.)

FILL FACE AT END BENT 2
STA. 661+01.00 -L-
GRADE PT. EL. 109.46

BEGIN FRONT SLOPE
STA. 661+13.55 -L-
GRADE PT. EL. 109.42

1'-6"

EL. 103.5±

LOW CHORD EL. 104.68

EL. 101.0±

EL. 100.3±

EL. 103.3±

APPROX. NATURAL GROUND LINE ALONG EDGE OF BRIDGE ON THE UPSTREAM SIDE

110 100 90 80

EL. 103.3±

1'-6" (TYP.)

GRADE DATA -L-

-2.1096% -0.3010%

PI STA. 655+00.00 -L-
EL. = 111.27'
VC. = 340'

HP 12 X 53 STEEL PILES

CLASS II RIP RAP (TYP.)

EL. 96.0

PP 18 X 0.50 GALVANIZED STEEL PILE

EL. 88.1±

EL. 85.8±

EL. 87.1±

PP 24 X 0.50 GALVANIZED STEEL PILE

EL. 91.8±

EL. 90.6±

EL. 89.1±

EL. 96.0

HP 12 X 53 STEEL PILES

UNCLASSIFIED STRUCTURE EXCAVATION

GRADE DATA -L-

-0.3010% +1.5355%

PI STA. 664+80.00 -L-
EL. = 108.32'
VC. = 400'

INTEGRAL END BENT 1

BENT 1

BENT 2

INTEGRAL END BENT 2

SECTION ALONG CONTROL LINE (LEFT LANE)

CLASS II RIP RAP

I HEREBY CERTIFY THESE PLANS ARE THE AS-BUILT PLANS.

BIG SWAMP

EXISTING STRUCTURE

TEMPORARY ACCESS (WORK BRIDGE)

CLASS II RIP RAP

W.P. #1
FILL FACE @ END BENT 1
STA. 659+40.46 -L-

BEGIN FRONT SLOPE
STA. 659+27.73 -L-

BEGIN APPROACH SLAB
STA. 659+16.29 -L-

W.P. #2
STA. 659+96.00 -L-

CONTROL LINE LEFT LANE

W.P. #3
STA. 660+51.00 -L-

W.P. #4
FILL FACE @ END BENT 2
STA. 661+01.00 -L-

TS STA. 661+10.79 -L-

BEGIN FRONT SLOPE
STA. 661+13.55 -L-

END APPROACH SLAB
STA. 661+25.17 -L-

TO SR 1404

TO SR 1853

23'-0"

1'-0" MIN. EARTH BERM
EL. 101.50 (LEVEL)

BENT 1 CONTROL LINE

BENT 2 CONTROL LINE

90°-00'-00" (TYP.)

1'-0" MIN. EARTH BERM
EL. 101.02 (LEVEL)

BRIDGE I.D.
STA. 660+21.00 -L-

-L-

25'-0" 30'-0"

55'-6½" SPAN A

55'-0" SPAN B

50'-0" SPAN C

160'-6½" TOTAL LENGTH OF BRIDGE (FILL FACE TO FILL FACE)

PLAN

(FOR CLARITY, PILES ARE NOT SHOWN.)

HORIZONTAL CURVE DATA

PIs STA. 662+97.51 -L-
θ_s = 4°-06'-48.8"
Ls = 280.00'
LT = 186.72'
ST = 93.38'

PROJECT NO. R-2303B

CUMBERLAND/SAMPSON COUNTY

STATION: 660+21.00 -L-

SHEET 1 OF 3 REPLACES BRIDGE NO. 11

STATE OF NORTH CAROLINA
DEPARTMENT OF TRANSPORTATION
RALEIGH

GENERAL DRAWING
BRIDGE OVER BIG SWAMP ON NC 24 BETWEEN SR 1853 AND SR 1404 (LEFT LANE)

REVISIONS						SHEET NO.
NO.	BY:	DATE:	NO.	BY:	DATE:	S-82
1			3			TOTAL SHEETS
2			4			146

NORTH CAROLINA PROFESSIONAL SEAL 022244 ENGINEER OMAR R. AZIZ 2/21/13

NORTH CAROLINA PROFESSIONAL SEAL 025516 ENGINEER EMILY E. MURRAY 2-21-13

DRAWN BY : PEGGY ADKINS DATE : 9-21-12
CHECKED BY : T. AVERETTE DATE : 12-18-12
DESIGN ENGINEER OF RECORD: BENNA MATHEW, PE DATE : 7-12-10

19-FEB-2013 09:06
Z:\TIPProjects-R\R2303B\Structures\Plans\str03\pparisi\R2303B_SD_GD_03.dgn
padkins

STR. #3

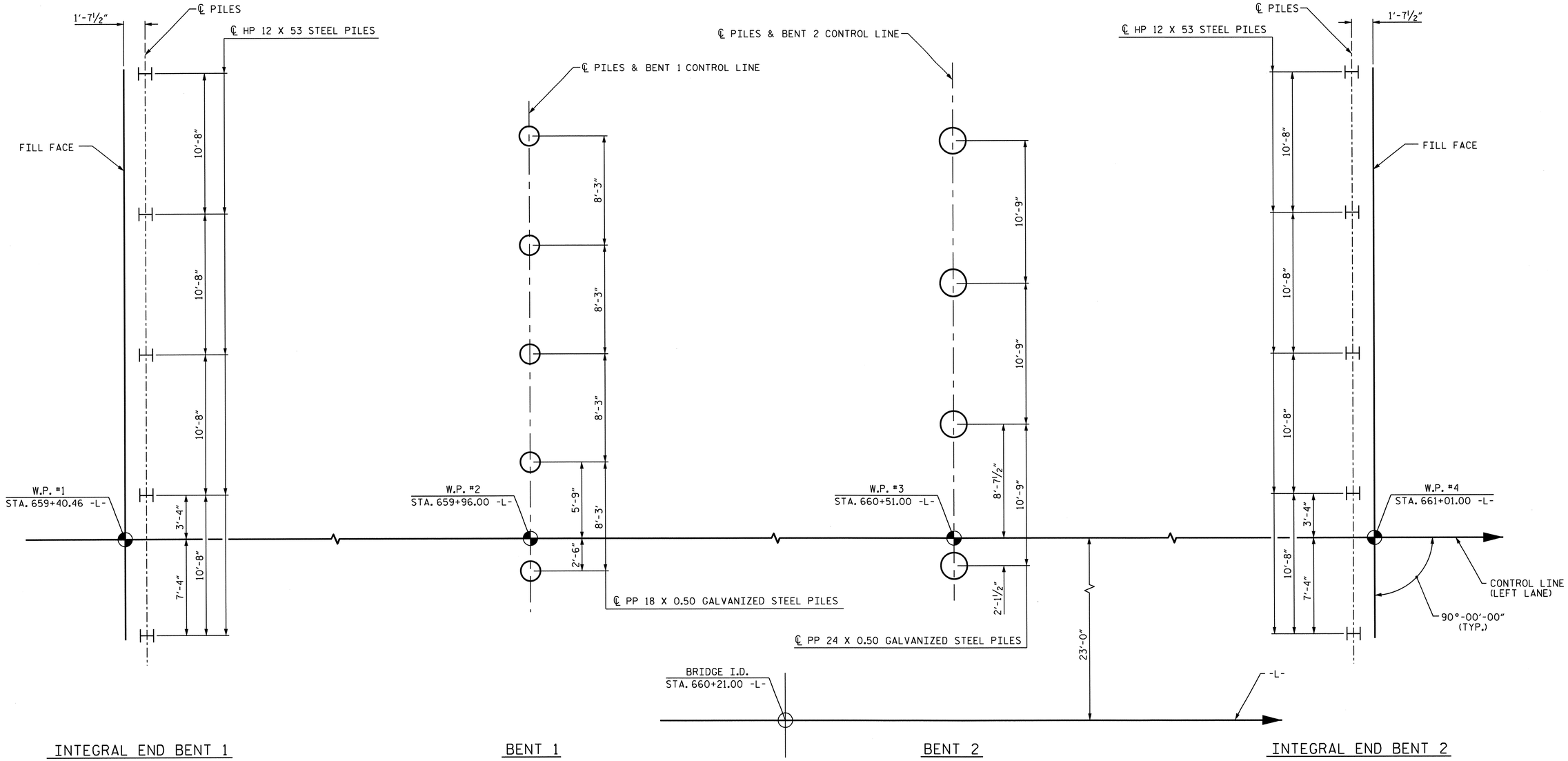

FOUNDATION LAYOUT

DIMENSIONS LOCATING PILES ARE SHOWN TO PILE CENTERLINE.

NOTES:

FOR PILES, SEE SECTION 450 OF THE STANDARD SPECIFICATIONS.

PILES AT END BENT NOS. 1 AND 2 ARE DESIGNED FOR A FACTORED RESISTANCE OF 115 TONS AND 110 TONS PER PILE, RESPECTIVELY.

DRIVE PILES AT END BENT NOS. 1 AND 2 TO A REQUIRED DRIVING RESISTANCE OF 195 TONS AND 185 TONS PER PILE, RESPECTIVELY.

PILES AT BENT NOS. 1 AND 2 ARE DESIGNED FOR A FACTORED RESISTANCE OF 170 TONS AND 220 TONS PER PILE, RESPECTIVELY.

DRIVE PILES AT BENT NOS. 1 AND 2 TO A REQUIRED DRIVING RESISTANCE OF 230 AND 305 TONS PER PILE, RESPECTIVELY. THIS REQUIRED DRIVING RESISTANCE INCLUDES ADDITIONAL RESISTANCE FOR DOWNDRAG OR SCOUR.

INSTALL PILES AT BENT NOS. 1 AND 2 TO A TIP ELEVATION NO HIGHER THAN 64 AND 46 FT, RESPECTIVELY.

THE SCOUR CRITICAL ELEVATIONS FOR BENT NOS. 1 AND 2 ARE ELEVATION 84 FT AND ELEVATION 75 FT, RESPECTIVELY. SCOUR CRITICAL ELEVATIONS ARE USED TO MONITOR POSSIBLE SCOUR PROBLEMS DURING THE LIFE OF THE STRUCTURE.

IT HAS BEEN ESTIMATED THAT A HAMMER WITH AN EQUIVALENT RATED ENERGY IN THE RANGE OF 73,500 FT-LBS TO 125,000 FT-LBS PER BLOW WILL BE REQUIRED TO DRIVE PILES AT BENT NOS. 1 AND 2. THIS ESTIMATED ENERGY RANGE DOES NOT RELEASE THE CONTRACTOR FROM PROVIDING DRIVING EQUIPMENT IN ACCORDANCE WITH SUBARTICLE 450-3(D)(2) OF THE STANDARD SPECIFICATIONS.

TESTING THE FIRST 24" DIA. STEEL PIPE PILE WITH THE PDA DURING DRIVING, RESTRIKING OR REDRIVING IS REQUIRED. FOR PDA TESTING, SEE SECTION 450 OF THE STANDARD SPECIFICATIONS AND FOR PILE DRIVING CRITERIA, SEE PILE DRIVING CRITERIA PROVISION.

PIPE PILE PLATES ARE REQUIRED FOR STEEL PIPE PILES AT BENT NO. 1 AND BENT NO. 2. USE PIPE PILE PLATES WITH A DIAMETER EQUAL TO THE PIPE PILE DIAMETER. FOR STEEL PIPE PILE PLATES, SEE SECTION 450 OF THE STANDARD SPECIFICATIONS.

PROJECT NO. R-2303B

CUMBERLAND/SAMPSON COUNTY

STATION: 660+21.00 -L-

SHEET 2 OF 3

STATE OF NORTH CAROLINA
DEPARTMENT OF TRANSPORTATION
RALEIGH

GENERAL DRAWING

BRIDGE OVER BIG SWAMP
ON NC 24 BETWEEN
SR 1853 AND SR 1404
(LEFT LANE)

REVISIONS						SHEET NO.
NO.	BY:	DATE:	NO.	BY:	DATE:	S-83
1			3			TOTAL SHEETS
2			4			146

NORTH CAROLINA PROFESSIONAL SEAL 025516 ENGINEER EMILY G. MURRAY 2.2143

DRAWN BY :	PEGGY ADKINS	DATE : 9-21-12
CHECKED BY :	T. AVERETTE	DATE : 12-18-12
DESIGN ENGINEER OF RECORD:	BENNA MATHEW, PE	DATE : 7-12-10

19-FEB-2013 09:06
Z:\TIPProjects-R\R2303B\Structures\Plans\str03\pparlsl\R2303B_SD_GD_03.dgn
padkins

STR. #3

BM #141: RR SPIKE IN BASE OF 48" OAK, 397' LEFT, STA. 630+66 -L-, EL. 122.91, NAVD88.

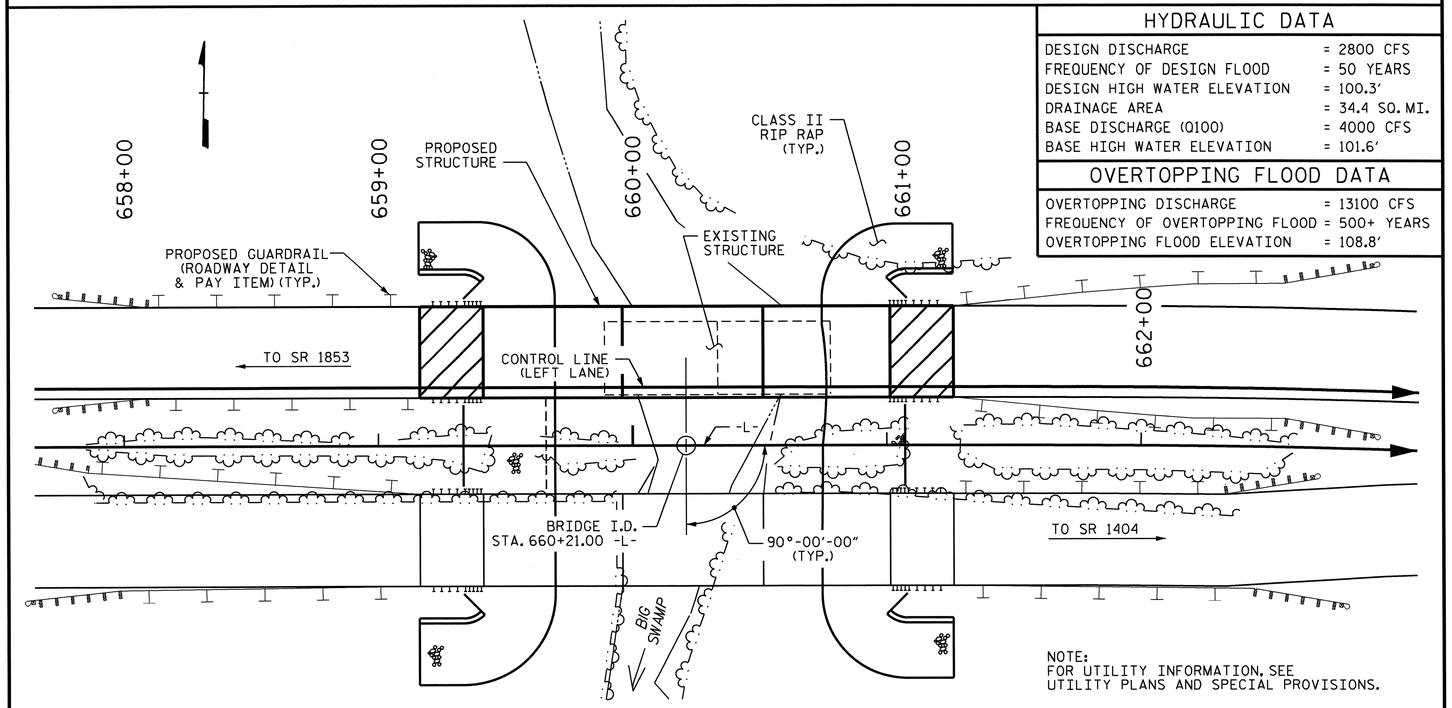

LOCATION SKETCH

HYDRAULIC DATA

DESIGN DISCHARGE	= 2800 CFS
FREQUENCY OF DESIGN FLOOD	= 50 YEARS
DESIGN HIGH WATER ELEVATION	= 100.3'
DRAINAGE AREA	= 34.4 SQ. MI.
BASE DISCHARGE (0100)	= 4000 CFS
BASE HIGH WATER ELEVATION	= 101.6'

OVERTOPPING FLOOD DATA

OVERTOPPING DISCHARGE	= 13100 CFS
FREQUENCY OF OVERTOPPING FLOOD	= 500+ YEARS
OVERTOPPING FLOOD ELEVATION	= 108.8'

NOTES:

ASSUMED LIVE LOAD = HL-93 OR ALTERNATE LOADING.

THIS BRIDGE HAS BEEN DESIGNED IN ACCORDANCE WITH THE AASHTO LRFD BRIDGE DESIGN SPECIFICATIONS.

THIS BRIDGE IS LOCATED IN SEISMIC ZONE 1.

FOR OTHER DESIGN DATA AND GENERAL NOTES, SEE SHEET SN.

FOR SUBMITTAL OF WORKING DRAWINGS, SEE SPECIAL PROVISIONS.

FOR FALSEWORK AND FORMWORK, SEE SPECIAL PROVISIONS.

FOR CRANE SAFETY, SEE SPECIAL PROVISIONS.

FOR GROUT FOR STRUCTURES, SEE SPECIAL PROVISIONS.

PRESTRESSED CONCRETE DECK PANELS MAY BE USED IN LIEU OF METAL STAY-IN-PLACE FORMS IN ACCORDANCE WITH ARTICLE 420-3 OF THE STANDARD SPECIFICATIONS.

THE MATERIAL SHOWN IN THE CROSS-HATCHED AREA SHALL BE EXCAVATED FOR A DISTANCE OF 70 FT. LEFT AND 5 FT. RIGHT OF -L- AS DIRECTED BY THE ENGINEER. THIS WORK WILL BE PAID FOR AT THE CONTRACT LUMP SUM PRICE FOR UNCLASSIFIED STRUCTURE EXCAVATION. SEE SECTION 412 OF THE STANDARD SPECIFICATIONS.

THIS STRUCTURE HAS BEEN DESIGNED IN ACCORDANCE WITH "HEC 18-EVALUATING SCOUR AT BRIDGES."

FOR PLACING LOAD ON STRUCTURE MEMBERS, SEE SPECIAL PROVISIONS.

FOR CONSTRUCTION, MAINTENANCE, AND REMOVAL OF TEMPORARY ACCESS, SEE SPECIAL PROVISIONS.

REMOVABLE FORMS MAY BE USED IN LIEU OF METAL STAY-IN-PLACE FORMS IN ACCORDANCE WITH ARTICLE 420-3 OF THE STANDARD SPECIFICATIONS.

NEEDLE BEAMS WILL NOT BE ALLOWED UNLESS OTHERWISE CALLED FOR ON THE PLANS OR APPROVED BY THE ENGINEER.

FOR EROSION CONTROL MEASURES, SEE EROSION CONTROL PLANS.

FOR INTERIOR BENTS 1 AND 2, ONLY PARTIAL GALVANIZING OF THE PILES IS REQUIRED. SEE INTERIOR BENT SHEETS FOR REQUIRED GALVANIZED LENGTHS. PAYMENT FOR PARTIALLY GALVANIZED PILES WILL BE MADE UNDER THE CONTRACT UNIT PRICE FOR GALVANIZED STEEL PILES.

AFTER SERVING AS A TEMPORARY STRUCTURE, THE EXISTING STRUCTURE CONSISTING OF 2 SPANS AT 45'-0" WITH A CLEAR ROADWAY WIDTH OF 25.6 FT., REINFORCED CONCRETE DECK GIRDERS SUPPORTED BY CONCRETE CAPS ON TIMBER PILES AT END BENTS AND REINFORCED CONCRETE POST AND BEAM WITH PILE FOOTINGS AT THE INTERIOR BENT AND LOCATED AT THE SITE OF THE PROPOSED STRUCTURE SHALL BE REMOVED. THE EXISTING BRIDGE IS PRESENTLY NOT POSTED FOR LOAD LIMIT. SHOULD THE STRUCTURAL INTEGRITY OF THE BRIDGE DETERIORATE DURING CONSTRUCTION OF THE PROPOSED BRIDGE, A LOAD LIMIT MAY BE POSTED AND MAY BE REDUCED AS FOUND NECESSARY DURING THE LIFE OF THE PROJECT.

THE SUBSTRUCTURE OF THE EXISTING BRIDGE INDICATED ON THE PLANS IS FROM THE BEST INFORMATION AVAILABLE. SINCE THIS INFORMATION IS SHOWN FOR THE CONVENIENCE OF THE CONTRACTOR, THE CONTRACTOR SHALL HAVE NO CLAIM WHATSOEVER AGAINST THE DEPARTMENT OF TRANSPORTATION FOR ANY DELAYS OR ADDITIONAL COST INCURRED BASED ON DIFFERENCES BETWEEN THE EXISTING BRIDGE SUBSTRUCTURE SHOWN ON THE PLANS AND THE ACTUAL CONDITIONS AT THE PROJECT SITE.

REMOVAL OF THE EXISTING BRIDGE SHALL BE PERFORMED SO AS NOT TO ALLOW DEBRIS TO FALL INTO THE WATER. THE CONTRACTOR SHALL REMOVE THE BRIDGE AND SUBMIT PLANS FOR DEMOLITION IN ACCORDANCE WITH ARTICLE 402-2 OF THE STANDARD SPECIFICATIONS.

TOTAL BILL OF MATERIAL

	CONSTRUCTION, MAINTENANCE, AND REMOVAL OF TEMPORARY ACCESS	REMOVAL OF EXISTING STRUCTURE	PDA TESTING	UNCLASSIFIED STRUCTURE EXCAVATION	REINFORCED CONCRETE DECK SLAB	GROOVING BRIDGE FLOORS	CLASS A CONCRETE	BRIDGE APPROACH SLABS	REINFORCING STEEL	45" PRESTRESSED CONCRETE GIRDERS		HP 12 X 53 STEEL PILES		PP 24 X 0.50 GALVANIZED STEEL PILES		PP 18 X 0.50 GALVANIZED STEEL PILES		PIPE PILE PLATES	PILE REDRIVES	CONCRETE BARRIER RAIL	RIP RAP CLASS II (2'-0" THICK)	GEOTEXTILE FOR DRAINAGE	ELASTOMERIC BEARINGS
	LUMP SUM	LUMP SUM	EACH	LUMP SUM	SQ.FT.	SQ.FT.	CU.YDS.	LUMP SUM	LBS.	NO.	LIN.FT.	NO.	LIN.FT.	NO.	LIN.FT.	NO.	LIN.FT.	EACH	EACH	LIN.FT.	TONS	SQ.YDS.	LUMP SUM
SUPERSTRUCTURE					6301	6838		LUMP SUM		12	627.83									317.75			LUMP SUM
END BENT NO. 1							22.5		4204			5	350						3		202	224	
BENT NO. 1							11.5		2304							5	375	5	3				
BENT NO. 2							14.3		2419					4	300			4	2				
END BENT NO. 2							22.5		4204			5	350						3		207	230	
TOTAL	LUMP SUM	LUMP SUM	1	LUMP SUM	6301	6838	70.8	LUMP SUM	13131	12	627.83	10	700	4	300	5	375	9	11	317.75	409	454	LUMP SUM

PROJECT NO. R-2303B

CUMBERLAND/SAMPSON COUNTY

STATION: 660+21.00 -L-

SHEET 3 OF 3

STATE OF NORTH CAROLINA
DEPARTMENT OF TRANSPORTATION
RALEIGH

GENERAL DRAWING
BRIDGE OVER BIG SWAMP
ON NC 24 BETWEEN
SR 1853 AND SR 1404
(LEFT LANE)

NORTH CAROLINA PROFESSIONAL SEAL 025516 ENGINEER HENRY E. MURRAY 2.21.13

REVISIONS						SHEET NO.
NO.	BY:	DATE:	NO.	BY:	DATE:	S-84
1			3			TOTAL SHEETS
2			4			146

STR. #3

DRAWN BY : PEGGY ADKINS DATE : 9-21-12
CHECKED BY : T. AVERETTE DATE : 12-18-12
DESIGN ENGINEER OF RECORD: BENNA MATHEW, PE DATE : 7-12-10

19-FEB-2013 09:05
Z:\TIPProjects-R\R2303B\Structures\Plans\str03\pparis\R2303B_SD_GD_03.dgn
padkins

LOAD AND RESISTANCE FACTOR RATING (LRFR) SUMMARY FOR PRESTRESSED CONCRETE GIRDERS

LEVEL		VEHICLE	WEIGHT (W) (TONS)	CONTROLLING LOAD RATING (#)	MINIMUM RATING FACTORS (RF)	TONS = W x RF	STRENGTH I LIMIT STATE											SERVICE III LIMIT STATE						COMMENT NUMBER
							LIVE-LOAD FACTORS (γ_{LL})	MOMENT					SHEAR					LIVE-LOAD FACTORS (γ_{LL})	MOMENT					
								DISTRIBUTION FACTORS (DF)	RATING FACTOR	SPAN	GIRDER LOCATION	DISTANCE FROM LEFT END OF SPAN (ft)	DISTRIBUTION FACTORS (DF)	RATING FACTOR	SPAN	GIRDER LOCATION	DISTANCE FROM LEFT END OF SPAN (ft)		DISTRIBUTION FACTORS (DF)	RATING FACTOR	SPAN	GIRDER LOCATION	DISTANCE FROM LEFT END OF SPAN (ft)	
DESIGN LOAD RATING		HL-93 (INVENTORY)	N/A	1	1.16	--	1.75	0.888	1.32	A	I	26.417	1.001	1.59	C	I	14.188	0.80	0.888	1.16	A	I	26.417	
		HL-93 (OPERATING)	N/A	--	1.72	--	1.35	0.888	1.72	A	I	26.417	1.001	2.06	C	I	14.188	N/A	--	--	--	--	--	
		HS-20 (INVENTORY)	36.000	2	1.46	52.56	1.75	0.888	1.66	A	I	26.417	1.001	1.81	C	I	14.188	0.80	0.888	1.46	A	I	26.417	
		HS-20 (OPERATING)	36.000	--	2.15	77.40	1.35	0.888	2.15	A	I	26.417	1.001	2.35	C	I	14.188	N/A	--	--	--	--	--	
LEGAL LOAD RATING	SINGLE VEHICLE (SV)	SNSH	13.500	--	3.04	41.04	1.40	0.888	4.32	A	I	26.417	1.001	4.65	A	I	26.417	0.80	0.888	3.04	A	I	26.417	
		SNGARBS2	20.000	--	2.37	47.40	1.40	0.888	3.36	A	I	26.417	1.001	3.55	C	I	14.188	0.80	0.888	2.37	A	I	26.417	
		SNAGRIS2	22.000	--	2.29	50.38	1.40	0.888	3.25	A	I	26.417	1.001	3.38	C	I	14.188	0.80	0.888	2.29	A	I	26.417	
		SNCOTTS3	27.250	--	1.51	41.15	1.40	0.888	2.15	A	I	26.417	1.001	2.35	A	I	26.417	0.80	0.888	1.51	A	I	26.417	
		SNAGGRS4	34.925	--	1.30	45.40	1.40	0.888	1.85	A	I	26.417	1.001	2.11	C	I	14.188	0.80	0.888	1.30	A	I	26.417	
		SNS5A	35.550	--	1.27	45.15	1.40	0.888	1.81	A	I	26.417	1.001	2.22	C	I	14.188	0.80	0.888	1.27	A	I	26.417	
		SNS6A	39.950	--	1.18	47.14	1.40	0.888	1.68	A	I	26.417	1.001	2.10	C	I	14.188	0.80	0.888	1.18	A	I	26.417	
		SNS7B	42.000	--	1.13	47.46	1.40	0.888	1.60	A	I	26.417	1.001	2.16	C	I	14.188	0.80	0.888	1.13	A	I	26.417	
	TRUCK TRACTOR SEMI-TRAILER (TTST)	TNAGRIT3	33.000	--	1.45	47.85	1.40	0.888	2.06	A	I	26.417	1.001	2.44	C	I	14.188	0.80	0.888	1.45	A	I	26.417	
		TNT4A	33.075	--	1.46	48.29	1.40	0.888	2.08	A	I	26.417	1.001	2.31	C	I	14.188	0.80	0.888	1.46	A	I	26.417	
		TNT6A	41.600	--	1.21	50.34	1.40	0.888	1.72	A	I	26.417	1.001	2.36	C	I	14.188	0.80	0.888	1.21	A	I	26.417	
		TNT7A	42.000	--	1.23	51.66	1.40	0.888	1.74	A	I	26.417	1.001	2.15	C	I	14.188	0.80	0.888	1.23	A	I	26.417	
		TNT7B	42.000	--	1.28	53.76	1.40	0.888	1.82	A	I	26.417	1.001	2.03	C	I	14.188	0.80	0.888	1.28	A	I	26.417	
		TNAGRIT4	43.000	--	1.21	52.03	1.40	0.888	1.72	A	I	26.417	1.001	1.95	C	I	14.188	0.80	0.888	1.21	A	I	26.417	
		TNAGT5A	45.000	--	1.13	50.85	1.40	0.888	1.61	A	I	26.417	1.001	2.05	C	I	14.188	0.80	0.888	1.13	A	I	26.417	
		TNAGT5B	45.000	3	1.11	49.95	1.40	0.888	1.58	A	I	26.417	1.001	1.84	C	I	14.188	0.80	0.888	1.11	A	I	26.417	

LOAD FACTORS:

DESIGN LOAD RATING FACTORS	LIMIT STATE	γ_{DC}	γ_{DW}
	STRENGTH I	1.25	1.50
	SERVICE III	1.00	1.00

NOTES:

MINIMUM RATING FACTORS ARE BASED ON THE STRENGTH I AND SERVICE III LIMIT STATES.

ALLOWABLE STRESSES FOR SERVICE III LIMIT STATE ARE AS REQUIRED FOR DESIGN.

COMMENTS:

1.
2.
3.
4.

(#) CONTROLLING LOAD RATING
(1) DESIGN LOAD RATING (HL-93)
(2) DESIGN LOAD RATING (HS-20)
(3) LEGAL LOAD RATING **
** SEE CHART FOR VEHICLE TYPE

GIRDER LOCATION
I - INTERIOR GIRDER
EL - EXTERIOR LEFT GIRDER
ER - EXTERIOR RIGHT GIRDER

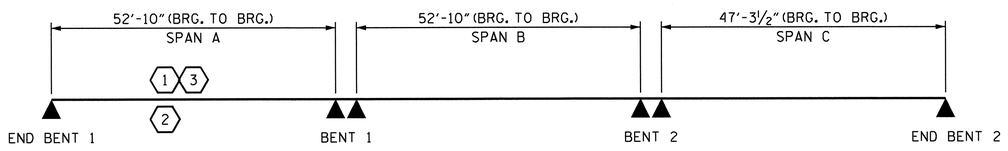

LRFR SUMMARY

PROJECT NO. R-2303B

SAMPSON COUNTY

STATION: 660+21.00 -L-

STATE OF NORTH CAROLINA
DEPARTMENT OF TRANSPORTATION
RALEIGH
STANDARD
LRFR SUMMARY FOR PRESTRESSED CONCRETE GIRDERS
(NON-INTERSTATE TRAFFIC)
(LEFT LANE)

REVISIONS						SHEET NO.
NO.	BY:	DATE:	NO.	BY:	DATE:	S-85
1			3			TOTAL SHEETS
2			4			146

NORTH CAROLINA PROFESSIONAL SEAL 025516 ENGINEER EDWARD E. MURRAY
2.21.13

DESIGN ENGINEER OF RECORD: BEENA MATHEW DATE: 7-24-12	
ASSEMBLED BY: PEGGY PARISI DATE: 11-5-10	
CHECKED BY: K.P. SEDAI DATE: 10-18-12	
DRAWN BY: MAA 1/08	REV. 11/12/08RR MAA/GM
CHECKED BY: GM/DI 2/08	REV. 10/1/11 MAA/GM

19-FEB-2013 09:05
Z:\TIPProjects-R\R2303B\Structures\Plans\str03\pparisi\R-2303B_SD_ts_03.dgn
padkins

STR. #3 STD. NO. LRFR1

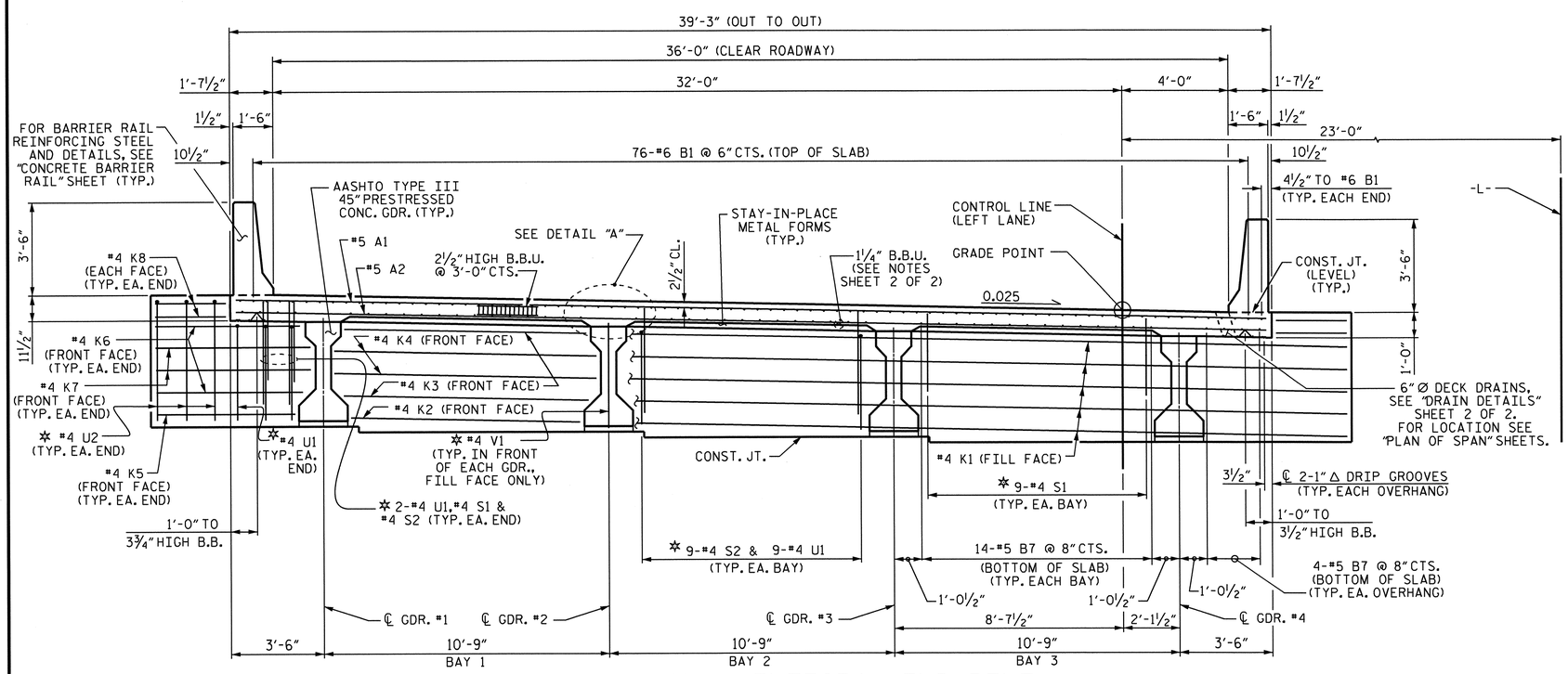

TYPICAL SECTION @ INTEGRAL END BENT

✲ #4 U1, #4 U2, #4 V1, #4 S1 & #4 S2 BARS TO MATCH WITH #4 "V" BARS IN INTEGRAL END BENT CAP

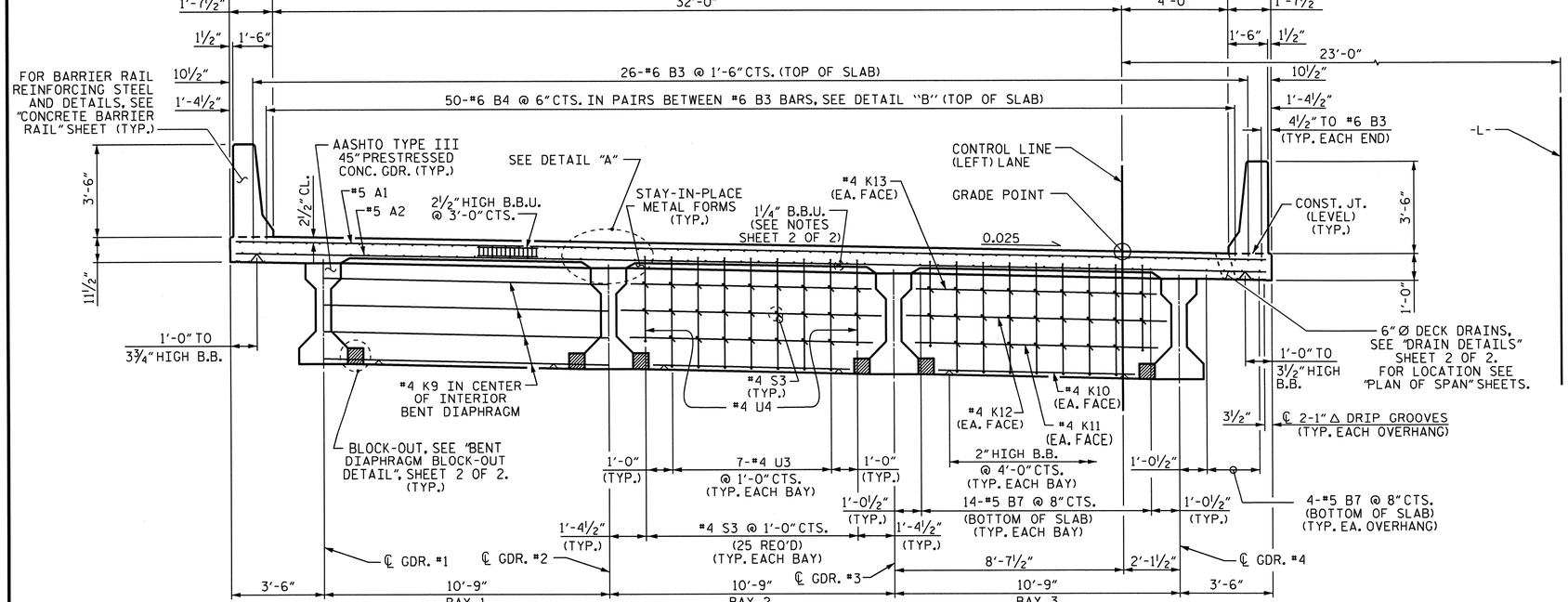

TYPICAL SECTION @ CONTINUOUS BENT DIAPHRAGM

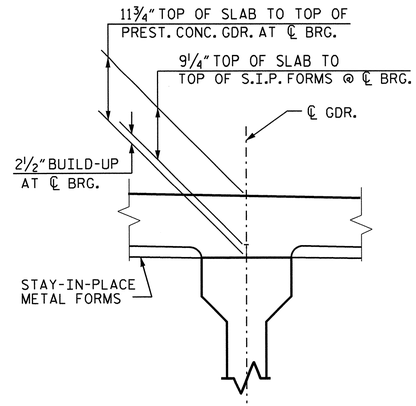

DETAIL "A"

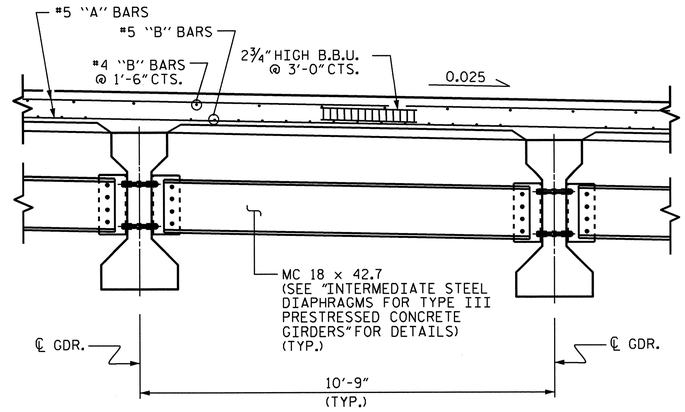

PARTIAL TYPICAL SECTION

AT INTERMEDIATE DIAPHRAGM

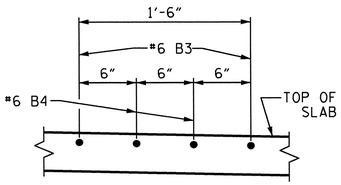

DETAIL "B"

SHOWING TOP OF SLAB "B" BAR SPACING @ CONTINUOUS BENT DIAPHGRAM

PROJECT NO. R-2303B

SAMPSON COUNTY

STATION: 660+21.00 -L-

SHEET 1 OF 2

STATE OF NORTH CAROLINA
DEPARTMENT OF TRANSPORTATION
RALEIGH

SUPERSTRUCTURE

TYPICAL SECTION

(LEFT LANE)

REVISIONS						SHEET NO.
NO.	BY:	DATE:	NO.	BY:	DATE:	S-86
1			3			TOTAL SHEETS
2			4			146

STR. #3

NORTH CAROLINA PROFESSIONAL SEAL 025516 ENGINEER KEVIN K. EDWARDS
2-21-13

DRAWN BY : PEGGY PARISI DATE : 9-15-11
CHECKED BY : K.P. SEDAI DATE : 10-15-12
DESIGN ENGINEER OF RECORD: BEENA MATHEW DATE : 8-15-11

19-FEB-2013 09:05
Z:\TIPProjects-R\R2303B\Structures\Plans\str03\pparisi\R-2303B_SD_ts_03.dgn
padkins

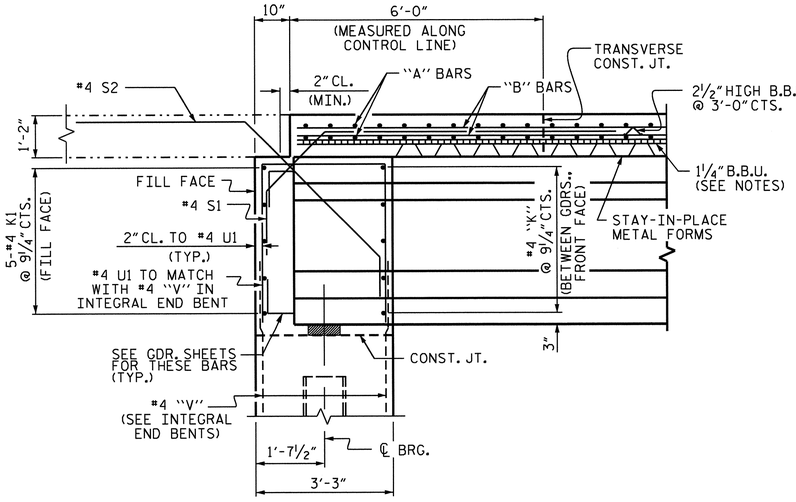

END OF GIRDER DETAIL AT INTEGRAL END BENT

#4 V1 BARS IN FRONT OF GIRDER NOT SHOWN

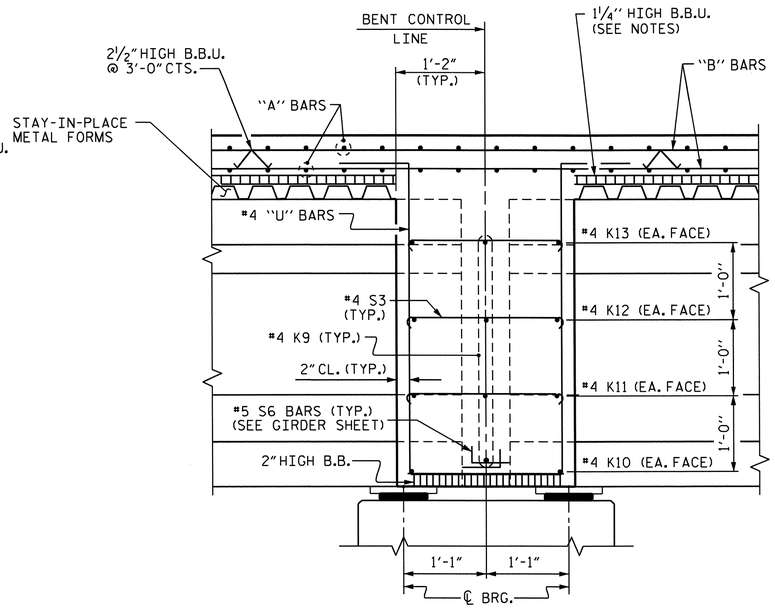

SECTION THRU BENT DIAPHRAGM

NOTES:

LONGITUDINAL STEEL MAY BE SHIFTED SLIGHTLY, AS NECESSARY, TO AVOID INTERFERENCE WITH STIRRUPS IN PRESTRESSED CONCRETE GIRDERS.

PREVIOUSLY CAST CONCRETE IN A CONTINUOUS UNIT SHALL HAVE ATTAINED A MINIMUM COMPRESSIVE STRENGTH OF 3,000 PSI BEFORE ADDITIONAL CONCRETE IS CAST IN THE UNIT.

BARRIER RAIL IN A CONTINUOUS UNIT SHALL NOT BE CAST UNTIL ALL SLAB CONCRETE IN THE UNIT HAS BEEN CAST AND HAS REACHED A MINIMUM COMPRESSIVE STRENGTH OF 3,000 PSI.

PROVIDE 1¼" HIGH BEAM BOLSTERS UPPER AT 4'-0" CTS. ATOP THE METAL STAY-IN-PLACE FORMS TO SUPPORT THE BOTTOM MAT OF 'A' BARS. WHEN USING REMOVABLE FORMS, PROVIDE CONTINUOUS HIGH CHAIRS FOR METAL DECK (C.H.C.M.) @ 4'-0" CTS. WITH A HEIGHT TO SUPPORT THE BOTTOM MAT OF 'A' BARS A CLEAR DISTANCE OF 2½" ABOVE THE TOP OF THE REMOVABLE FORM.

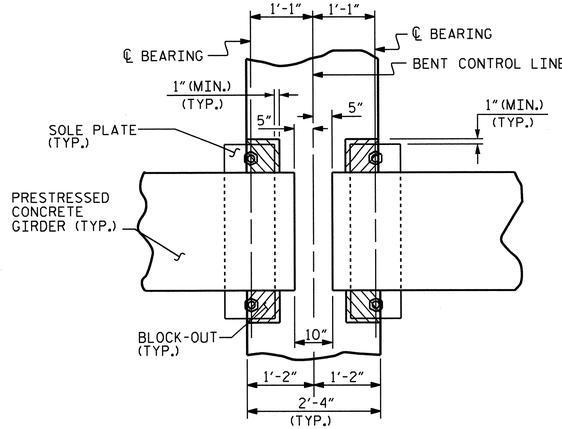

PLAN

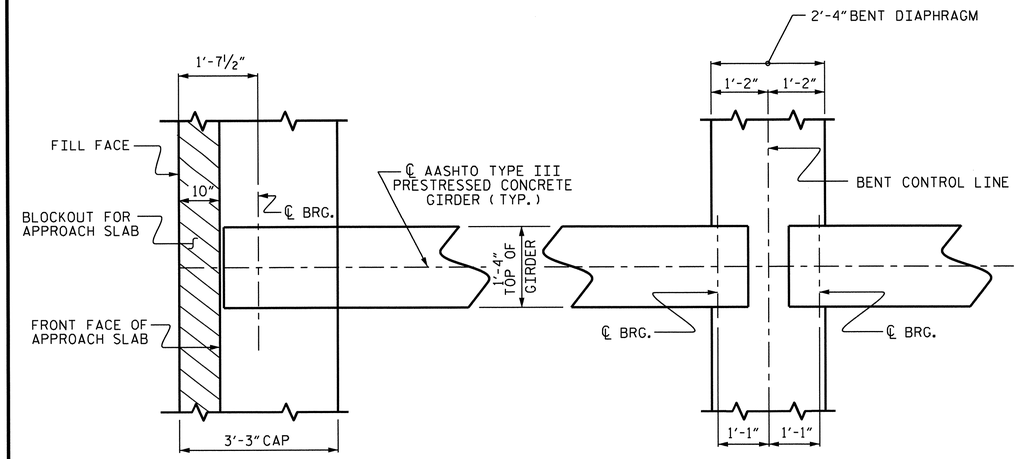

@ INTEGRAL END BENT

@ BENT DIAPHRAGM

PLAN OF GIRDER

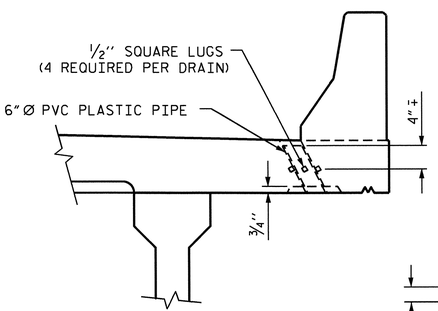

ELEVATION

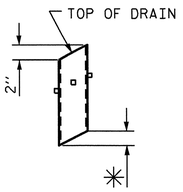

✳ TO BE SET TO MATCH SLOPE OF BOTTOM OF OVERHANG (13 DRAINS REQUIRED)

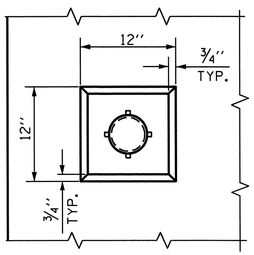

PLAN OF RECESS

PIPE DETAIL

TOP OF FLOOR DRAINS TO BE SET ⅜" BELOW SURFACE OF SLAB.

4 - ½" SQUARE LUGS TO BE GLUED TO THE P.V.C. PLASTIC PIPE AT EQUAL SPACES AROUND THE PIPE DRAIN APPROXIMATELY 4" FROM THE TOP OF THE PIPE.

THE 6" Ø PVC PLASTIC PIPE AND FITTINGS SHALL BE SCHEDULE 40 AND CONFORM TO ASTM D1785.

DRAIN DETAILS

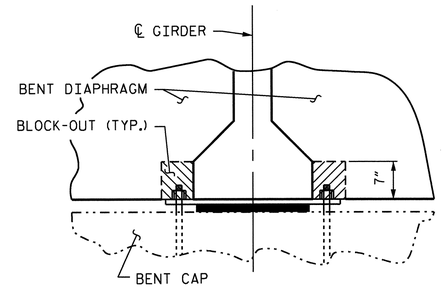

SECTION

BENT DIAPHRAGM BLOCKOUT DETAIL

PROJECT NO. R-2303B

SAMPSON COUNTY

STATION: 660+21.00 -L-

SHEET 2 OF 2

STATE OF NORTH CAROLINA
DEPARTMENT OF TRANSPORTATION
RALEIGH

SUPERSTRUCTURE

TYPICAL SECTION DETAILS

(LEFT LANE)

REVISIONS						SHEET NO.
NO.	BY:	DATE:	NO.	BY:	DATE:	S-87
1			3			TOTAL SHEETS
2			4			146

STR. #3

NORTH CAROLINA PROFESSIONAL SEAL 025516 ENGINEER EARLY E. MURRAY 2-21-13

DRAWN BY :	PEGGY PARISI	DATE :	9-15-11
CHECKED BY :	K.P. SEDAI	DATE :	10-15-12
DESIGN ENGINEER OF RECORD:	BEENA MATHEW	DATE :	8-15-11

19-FEB-2013 09:05
Z:\TIPProjects-R\R2303B\Structures\Plans\str03\pparisi\R-2303B_SD_ts_03.dgn
padkins

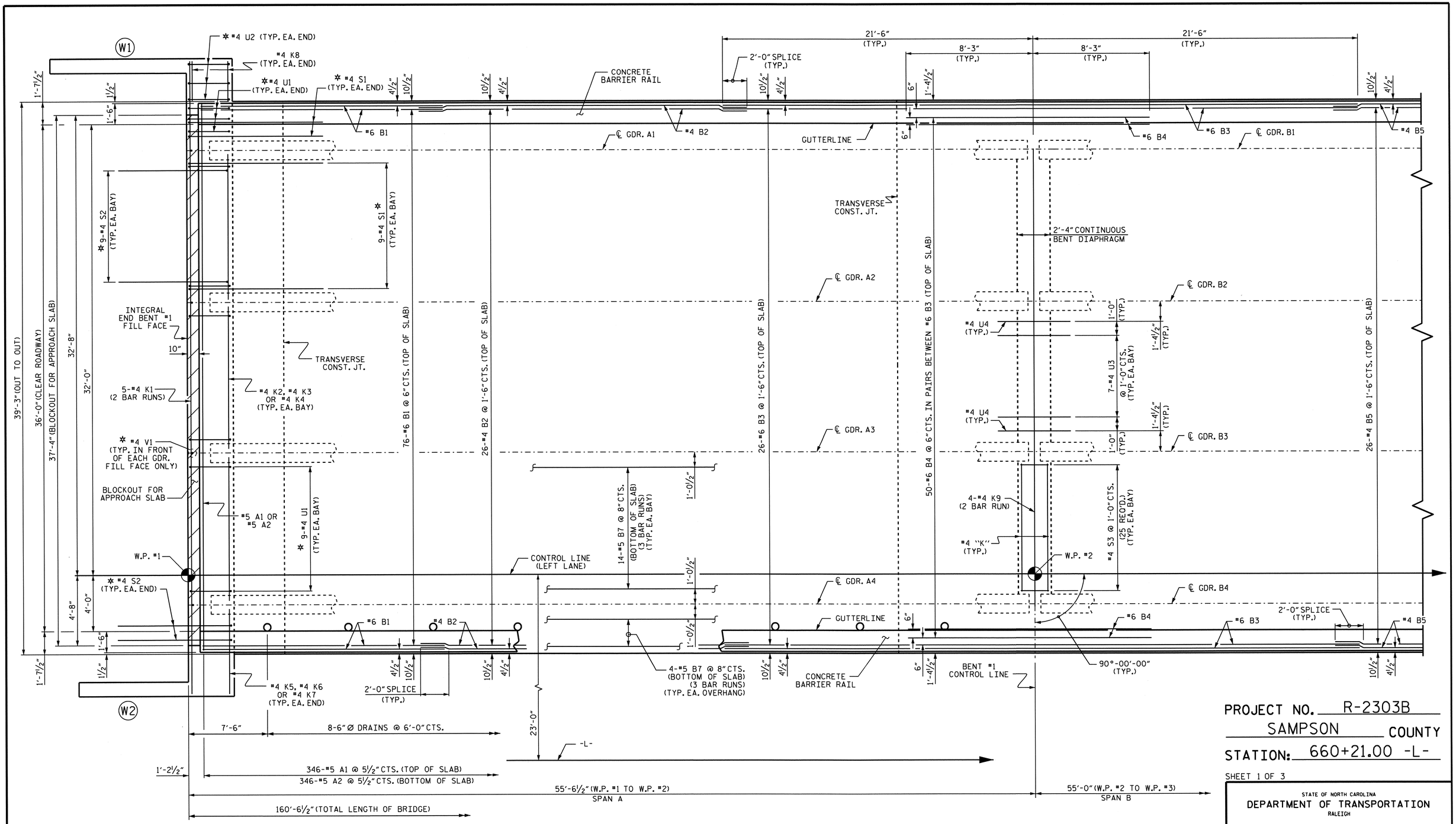

PLAN OF SPANS

FOR LOCATION OF INTERMEDIATE DIAPHRAGMS, SEE "GIRDER LAYOUT."
* #4 U1, #4 U2, #4 V1, #4 S1 & #4 S2 BARS TO MATCH WITH #4 "V" BARS IN INTEGRAL END BENT CAP.

PROJECT NO. R-2303B

SAMPSON COUNTY

STATION: 660+21.00 -L-

SHEET 1 OF 3

STATE OF NORTH CAROLINA
DEPARTMENT OF TRANSPORTATION
RALEIGH

SUPERSTRUCTURE

PLAN OF SPANS

(LEFT LANE)

REVISIONS						SHEET NO.
NO.	BY:	DATE:	NO.	BY:	DATE:	S-88
1			3			TOTAL SHEETS
2			4			146

STR. #3

NORTH CAROLINA PROFESSIONAL SEAL 025516 ENGINEER EMILY E. MURRAY 2.21.13

DRAWN BY :	PEGGY PARISI	DATE :	9-15-11
CHECKED BY :	K.P. SEDAI	DATE :	10-15-12
DESIGN ENGINEER OF RECORD:	BEENA MATHEW	DATE :	8-15-11

19-FEB-2013 09:04
Z:\TIPProjects-R\R2303B\Structures\Plans\str03\pparisi\R-2303B_SD_ts_03.dgn
padkins

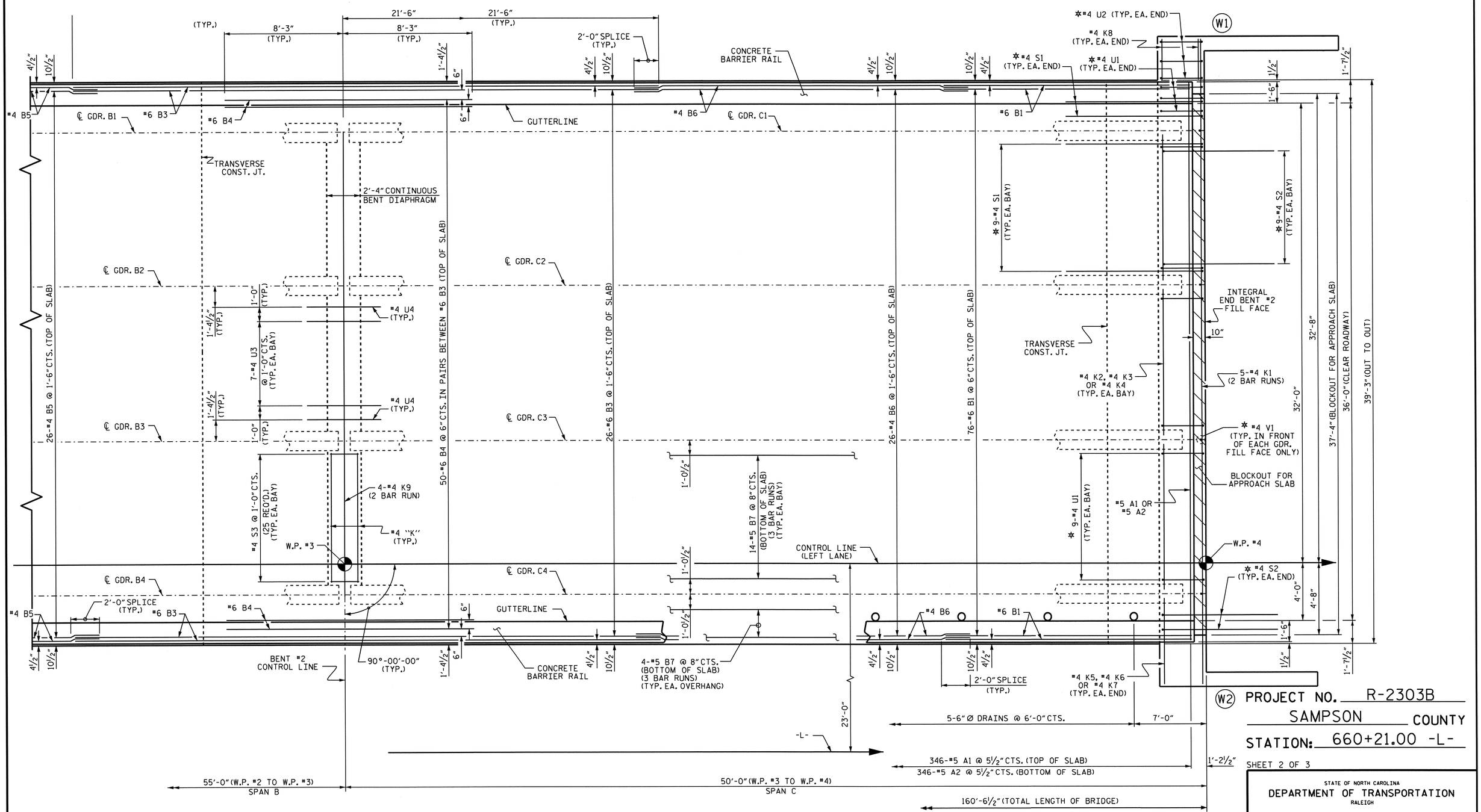

PLAN OF SPANS

FOR LOCATION OF INTERMEDIATE DIAPHRAGMS, SEE "GIRDER LAYOUT."
✲ #4 U1, #4 U2, #4 V1, #4 S1 & #4 S2 BARS TO MATCH WITH #4 "V" BARS IN INTEGRAL END BENT CAP.

W2 PROJECT NO. R-2303B

SAMPSON COUNTY

STATION: 660+21.00 -L-

SHEET 2 OF 3

STATE OF NORTH CAROLINA
DEPARTMENT OF TRANSPORTATION
RALEIGH

SUPERSTRUCTURE

PLAN OF SPANS

(LEFT LANE)

NORTH CAROLINA PROFESSIONAL SEAL 025516 ENGINEER EMILY G. MURRAY 2-21-13

REVISIONS						SHEET NO.
NO.	BY:	DATE:	NO.	BY:	DATE:	S-89
1			3			TOTAL SHEETS
2			4			146

STR. #3

DRAWN BY : PEGGY PARISI DATE : 9-15-11
CHECKED BY : K.P. SEDAI DATE : 10-15-12
DESIGN ENGINEER OF RECORD: BEENA MATHEW DATE : 8-15-11

19-FEB-2013 09:04
Z:\TIPProjects-R\R2303B\Structures\Plans\str03\pparisi\R-2303B_SD_ts_03.dgn
padkins

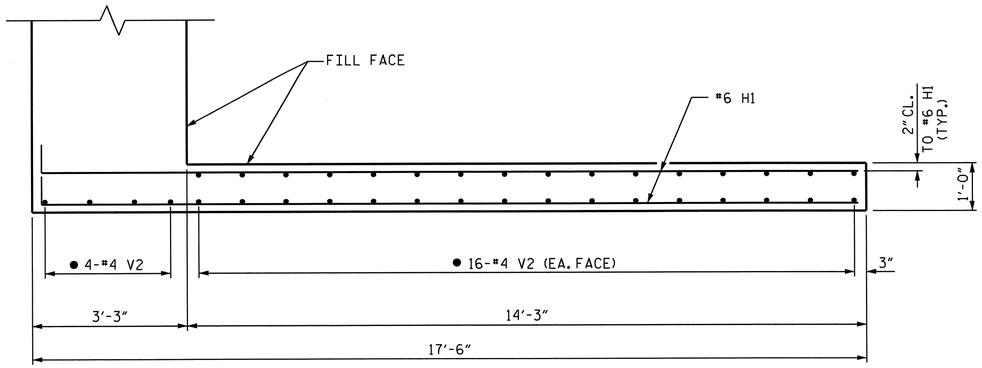

PLAN (W1)

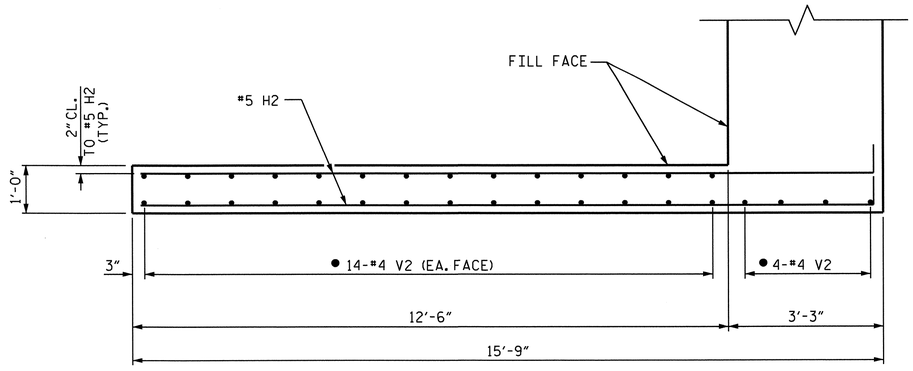

PLAN (W2)

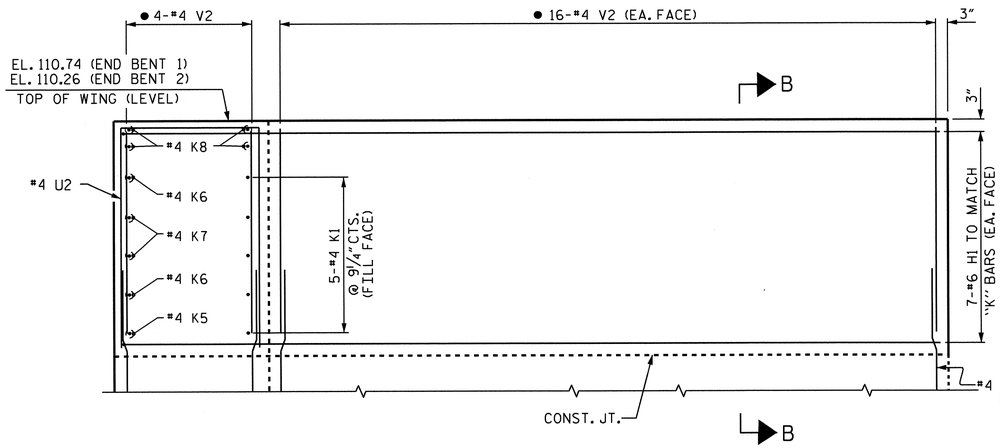

ELEVATION (W1)

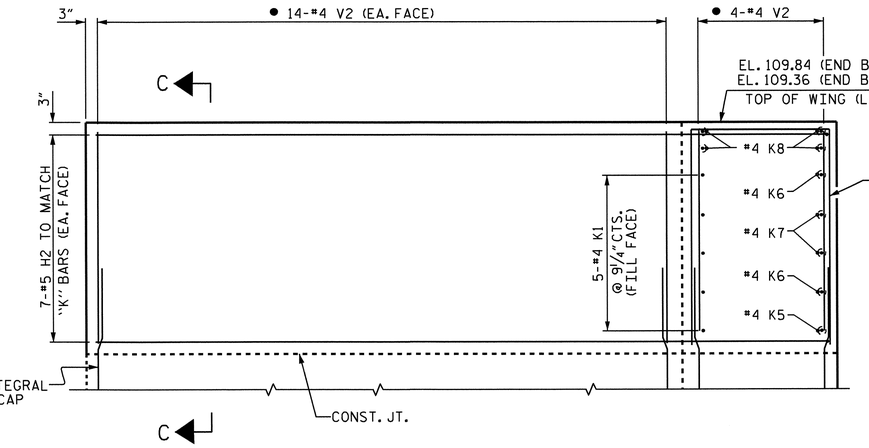

ELEVATION (W2)

UPPER WINGS AT INTEGRAL END BENTS

(FOR LOWER WING REINFORCING STEEL AND DETAILS, SEE INTEGRAL END BENT SHEETS)
FOR WING ORIENTATION, SEE "PLAN OF SPANS" SHEETS.
● #4 V2 BARS TO MATCH WITH #4 "V" BARS IN END BENT WINGS.

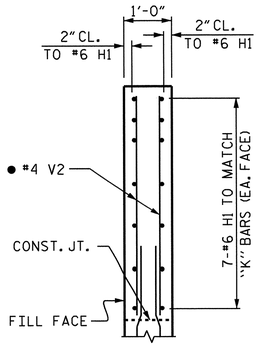

SECTION B-B

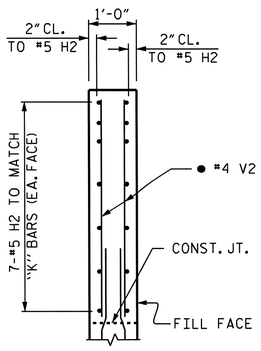

SECTION C-C

PROJECT NO. R-2303B
SAMPSON COUNTY
STATION: 660+21.00 -L-
SHEET 3 OF 3

STATE OF NORTH CAROLINA
DEPARTMENT OF TRANSPORTATION
RALEIGH

SUPERSTRUCTURE
PLAN OF SPAN DETAILS
(LEFT LANE)

REVISIONS						SHEET NO.
NO.	BY:	DATE:	NO.	BY:	DATE:	S-90
1			3			TOTAL SHEETS
2			4			146

STR. #3

DRAWN BY :	PEGGY PARISI	DATE : 9-15-11
CHECKED BY :	K.P. SEDAI	DATE : 10-15-12
DESIGN ENGINEER OF RECORD:	BEENA MATHEW	DATE : 8-15-11

19-FEB-2013 09:04
Z:\TIPProjects-R\R2303B\Structures\Plans\str03\pparisi\R-2303B_SD_ts_03.dgn
padkins

SPAN A

SPAN B

SPAN C

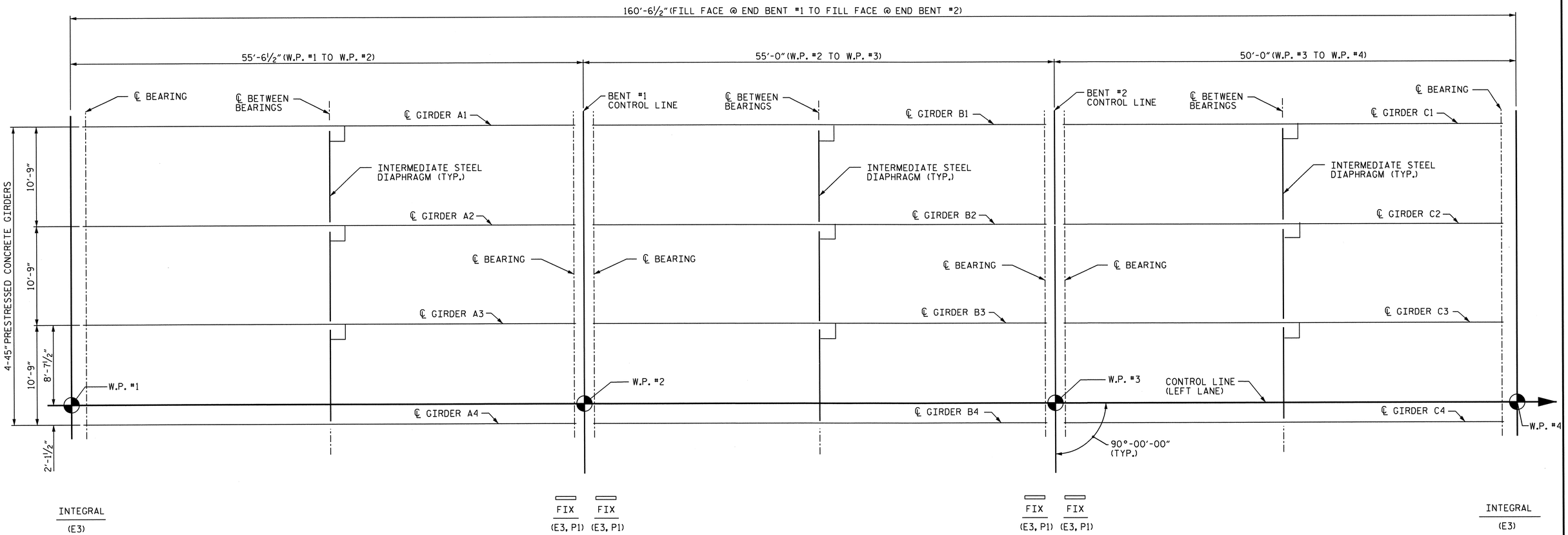

GIRDER LAYOUT

PROJECT NO. R-2303B

SAMPSON COUNTY

STATION: 660+21.00 -L-

STATE OF NORTH CAROLINA
DEPARTMENT OF TRANSPORTATION
RALEIGH

SUPERSTRUCTURE

GIRDER LAYOUT

(LEFT LANE)

NORTH CAROLINA PROFESSIONAL SEAL 025516 ENGINEER EMILY F. MURRAY 2.21.13

REVISIONS						SHEET NO.
NO.	BY:	DATE:	NO.	BY:	DATE:	S-91
1			3			TOTAL SHEETS
2			4			146

DRAWN BY : PEGGY PARISI DATE : 9-15-11
CHECKED BY : K.P. SEDAI DATE : 10-15-12
DESIGN ENGINEER OF RECORD: BEENA MATHEW DATE : 8-15-11

19-FEB-2013 09:04
Z:\TIPProjects-R\R2303B\Structures\Plans\str03\pparisi\R-2303B_SD_ts_03.dgn
podkins

STR. #3

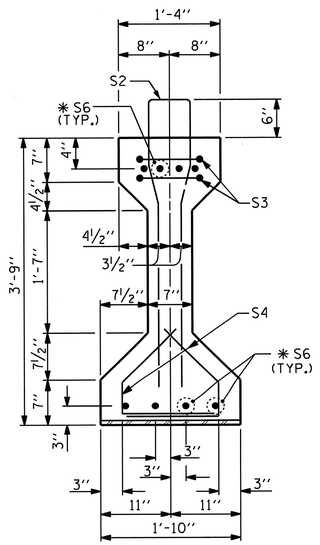

SECTION A-A

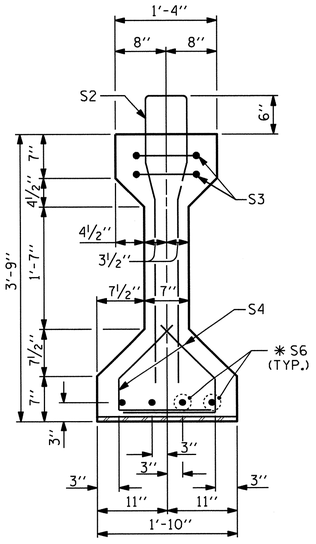

SECTION B-B

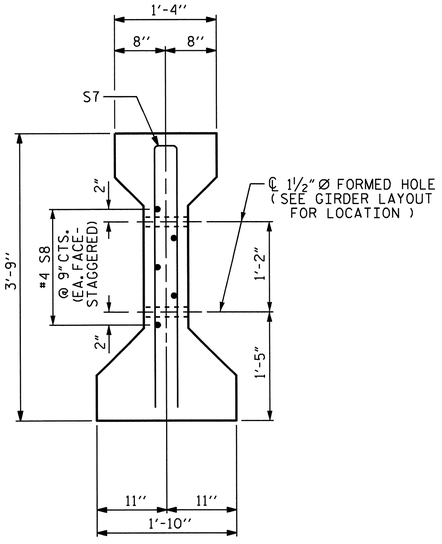

SECTION C-C

(S1 BARS NOT SHOWN)

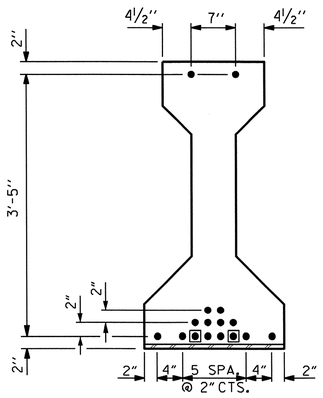

AT END OF GIRDER

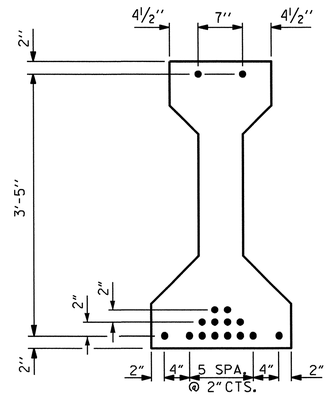

AT ℄ OF GIRDER

0.6" Ø LOW RELAXATION STRAND LAYOUT

▣ STRANDS DEBONDED FOR 4'-0" FROM END OF GIRDER

● FULLY BONDED STRANDS

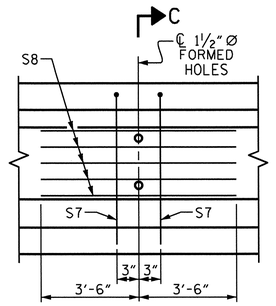

PARTIAL ELEVATION

SHOWING INTERMEDIATE DIAPHRAGM
REINFORCING STEEL FOR ALL GIRDERS

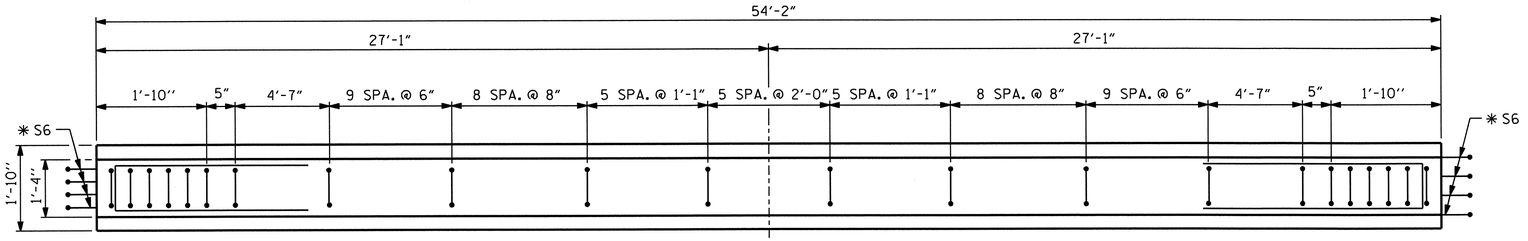

PLAN OF GIRDER

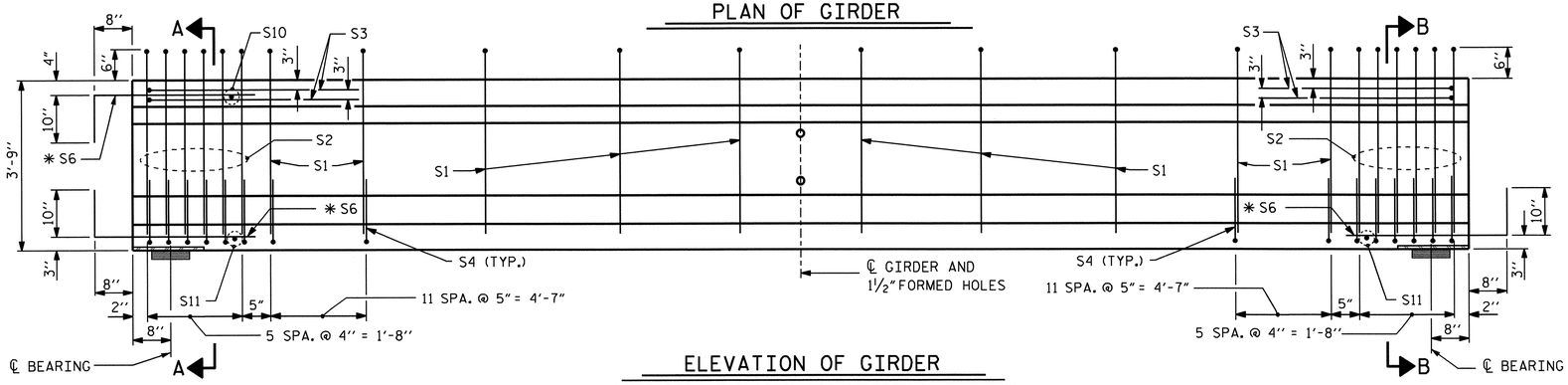

INTEGRAL END BENT

ELEVATION OF GIRDER

(SEE PARTIAL ELEVATION FOR ADDITIONAL "S" BARS)

FIX

0.6" Ø L. R. GRADE 270 STRANDS		
AREA (SQUARE INCHES)	ULTIMATE STRENGTH (LBS. PER STRAND)	APPLIED PRESTRESS (LBS. PER STRAND)
0.217	58,600	43,950

REINFORCING STEEL FOR ONE GIRDER

BAR	NUMBER	SIZE	TYPE	LENGTH	WEIGHT
S1	72	#4	1	8'-6"	409
S2	12	#6	1	8'-6"	153
S3	4	#4	3	8'-8"	23
S4	72	#4	2	2'-9"	132
✱S6	12	#5	STR	3'-8"	46
S7	2	#5	3	7'-2"	15
S8	5	#4	STR	7'-0"	23
S10	1	#3	STR	1'-0"	1
S11	2	#3	STR	1'-6"	1

✱NOTE: S6 BARS SHALL BE BENT BEFORE SHIPMENT. HEAT BENDING SHALL NOT BE ALLOWED.

BAR TYPES

ALL BAR DIMENSIONS ARE OUT-TO-OUT

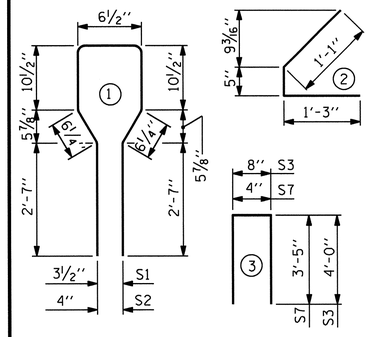

QUANTITIES FOR ONE GIRDER

	REINFORCING STEEL	5000 PSI CONCRETE	0.6" Ø L. R. STRANDS
	LB.	C.Y.	No.
	803	7.8	16

GIRDERS REQUIRED

NUMBER	LENGTH	TOTAL LENGTH
4	54'-2"	216'-8"

PROJECT NO. R-2303B

SAMPSON COUNTY

STATION: 660+21.00 -L-

SHEET 1 OF 5

STATE OF NORTH CAROLINA
DEPARTMENT OF TRANSPORTATION
RALEIGH

STANDARD

AASHTO TYPE III
PRESTRESSED CONCRETE GIRDER
CONTINUOUS FOR LIVE LOAD
SPAN A (LEFT LANE)

REVISIONS						SHEET NO.
NO.	BY:	DATE:	NO.	BY:	DATE:	S-92
1			3			TOTAL SHEETS
2			4			146

NORTH CAROLINA PROFESSIONAL SEAL 025516 ENGINEER TIMOTHY E. MURRAY 2-21-13

DESIGN ENGINEER OF RECORD: BEENA MATHEW	DATE : 7-24-12
ASSEMBLED BY : PEGGY PARISI	DATE : 8-23-12
CHECKED BY : K.P. SEDAI	DATE : 10-17-12
DRAWN BY : ELR 8/91	REV. 10/17/00R RWW/LES
CHECKED BY : GRP 8/91	REV. 5/1/06R TLA/GM
	REV. 10/1/11 MAA/GM

19-FEB-2013 09:04
Z:\TIPProjects-R\R2303B\Structures\Plans\str03\pparisi\R-2303B_SD_ts_03.dgn
padkins

STR. #3

STD. NO. PCG5 (Sht. 2)

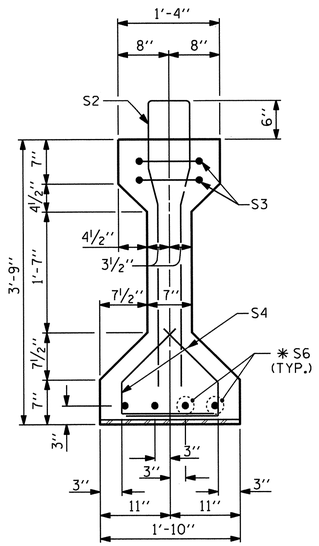

SECTION A-A

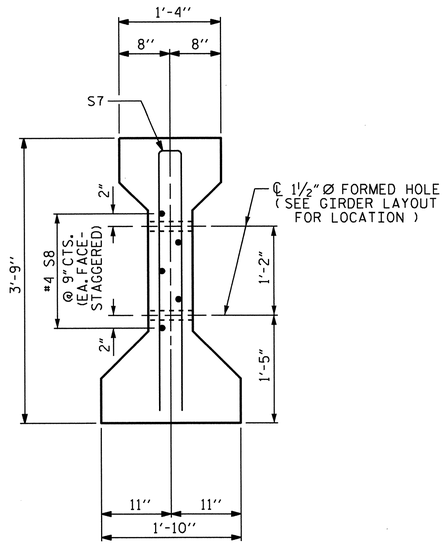

SECTION C-C

(S1 BARS NOT SHOWN)

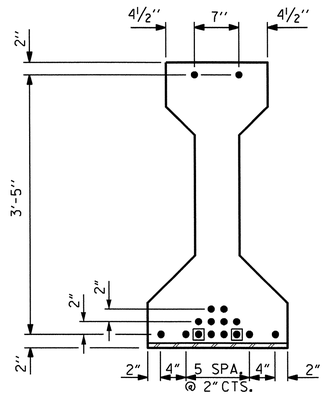

AT END OF GIRDER

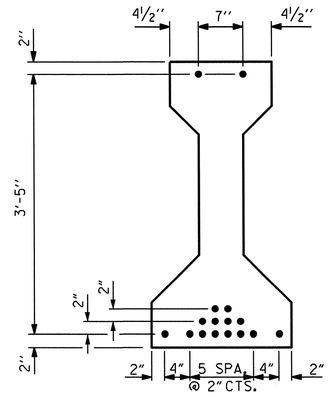

AT ℄ OF GIRDER

0.6" Ø LOW RELAXATION STRAND LAYOUT

▣ STRANDS DEBONDED FOR 4'-0" FROM END OF GIRDER

● FULLY BONDED STRANDS

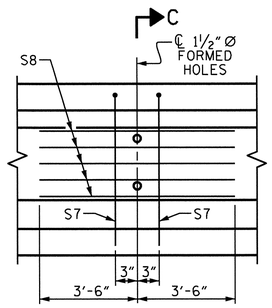

PARTIAL ELEVATION

SHOWING INTERMEDIATE DIAPHRAGM REINFORCING STEEL FOR ALL GIRDERS

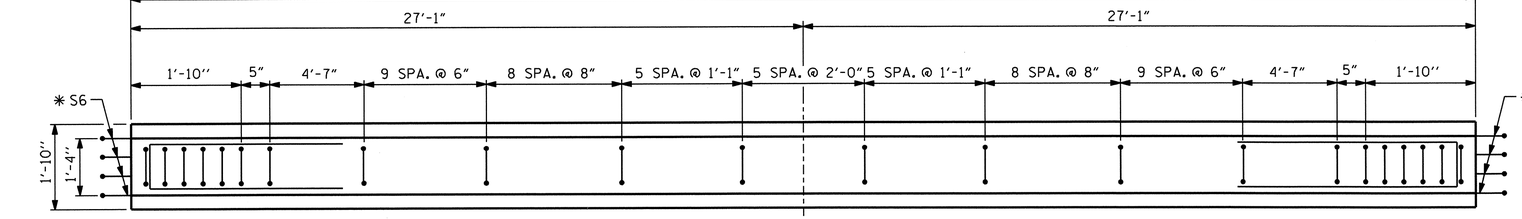

PLAN OF GIRDER

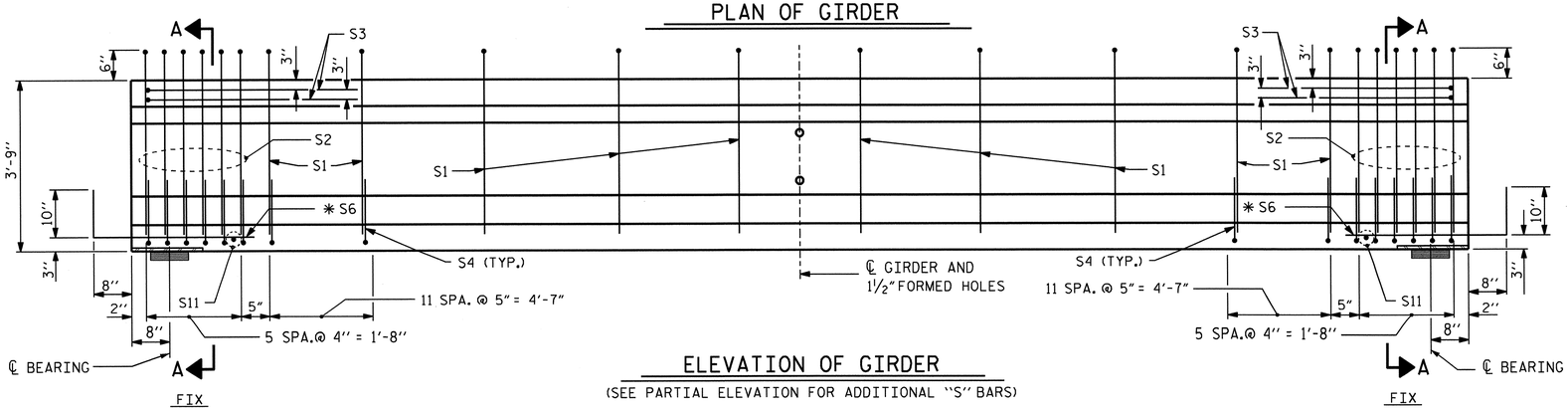

ELEVATION OF GIRDER

(SEE PARTIAL ELEVATION FOR ADDITIONAL "S" BARS)

DESIGN ENGINEER OF RECORD: BEENA MATHEW DATE : 7-24-12	
ASSEMBLED BY : PEGGY PARISI DATE : 8-23-12 CHECKED BY : K.P. SEDAI DATE : 10-17-12	
DRAWN BY : ELR 8/91 CHECKED BY : GRP 8/91	REV. 10/17/00R RWW/LES REV. 5/1/06R TLA/GM REV. 10/1/11 MAA/GM

19-FEB-2013 09:03
Z:\TIPProjects-R\R2303B\Structures\Plans\str03\pparisi\R-2303B_SD_ts_03.dgn
padkins

0.6" Ø L. R. GRADE 270 STRANDS

AREA (SQUARE INCHES)	ULTIMATE STRENGTH (LBS. PER STRAND)	APPLIED PRESTRESS (LBS. PER STRAND)
0.217	58,600	43,950

REINFORCING STEEL FOR ONE GIRDER

BAR	NUMBER	SIZE	TYPE	LENGTH	WEIGHT
S1	72	#4	1	8'-6"	409
S2	12	#6	1	8'-6"	153
S3	4	#4	3	8'-8"	23
S4	72	#4	2	2'-9"	132
✱S6	8	#5	STR	3'-8"	31
S7	2	#5	3	7'-2"	15
S8	5	#4	STR	7'-0"	23
S11	2	#3	STR	1'-6"	1

✱NOTE: S6 BARS SHALL BE BENT BEFORE SHIPMENT. HEAT BENDING SHALL NOT BE ALLOWED.

BAR TYPES

ALL BAR DIMENSIONS ARE OUT-TO-OUT

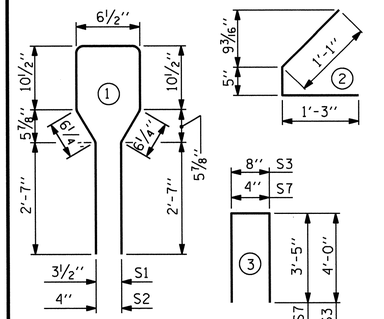

QUANTITIES FOR ONE GIRDER

	REINFORCING STEEL	5000 PSI CONCRETE	0.6" Ø L. R. STRANDS
	LB.	C.Y.	No.
	787	7.8	16

GIRDERS REQUIRED

NUMBER	LENGTH	TOTAL LENGTH
4	54'-2"	216'-8"

PROJECT NO. R-2303B

SAMPSON COUNTY

STATION: 660+21.00 -L-

SHEET 2 OF 5

STATE OF NORTH CAROLINA
DEPARTMENT OF TRANSPORTATION
RALEIGH

STANDARD

AASHTO TYPE III PRESTRESSED CONCRETE GIRDER CONTINUOUS FOR LIVE LOAD SPAN B (LEFT LANE)

REVISIONS						SHEET NO.
NO.	BY:	DATE:	NO.	BY:	DATE:	S-93
1			3			TOTAL SHEETS
2			4			146

NORTH CAROLINA PROFESSIONAL SEAL 025516 ENGINEER MARY E. HARRAY
2.21.13

STR. #3

STD. NO. PCG5 (Sht. 2)

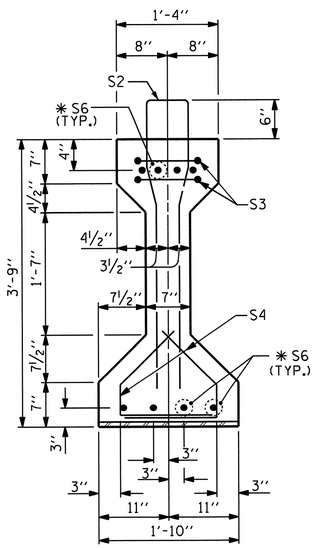

SECTION A-A

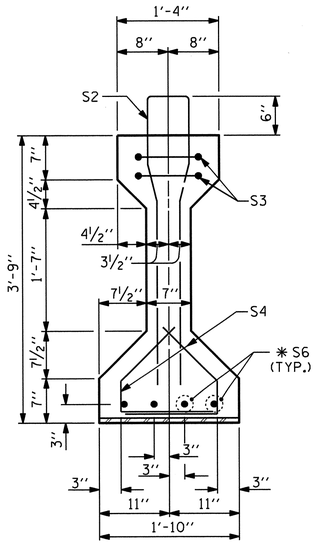

SECTION B-B

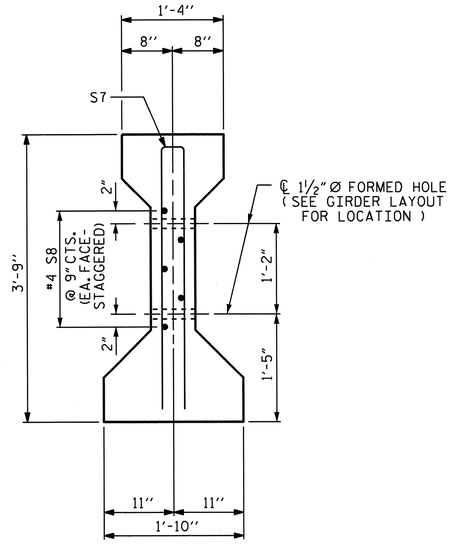

SECTION C-C

(S1 BARS NOT SHOWN)

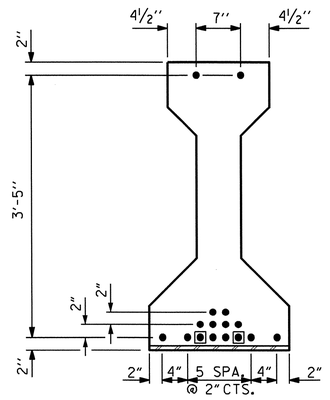

AT END OF GIRDER

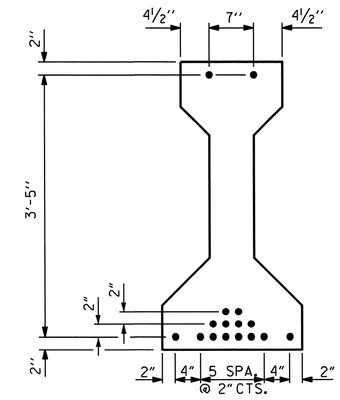

AT ℄ OF GIRDER

0.6" Ø LOW RELAXATION STRAND LAYOUT

▣ STRANDS DEBONDED FOR 6'-0" FROM END OF GIRDER
● FULLY BONDED STRANDS

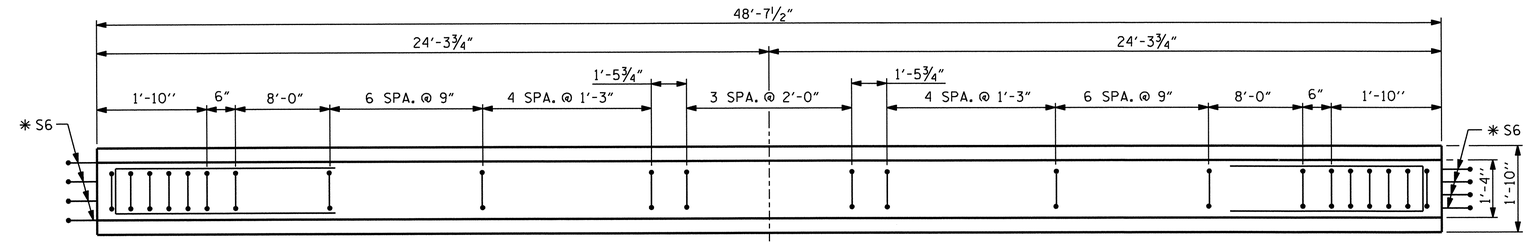

PLAN OF GIRDER

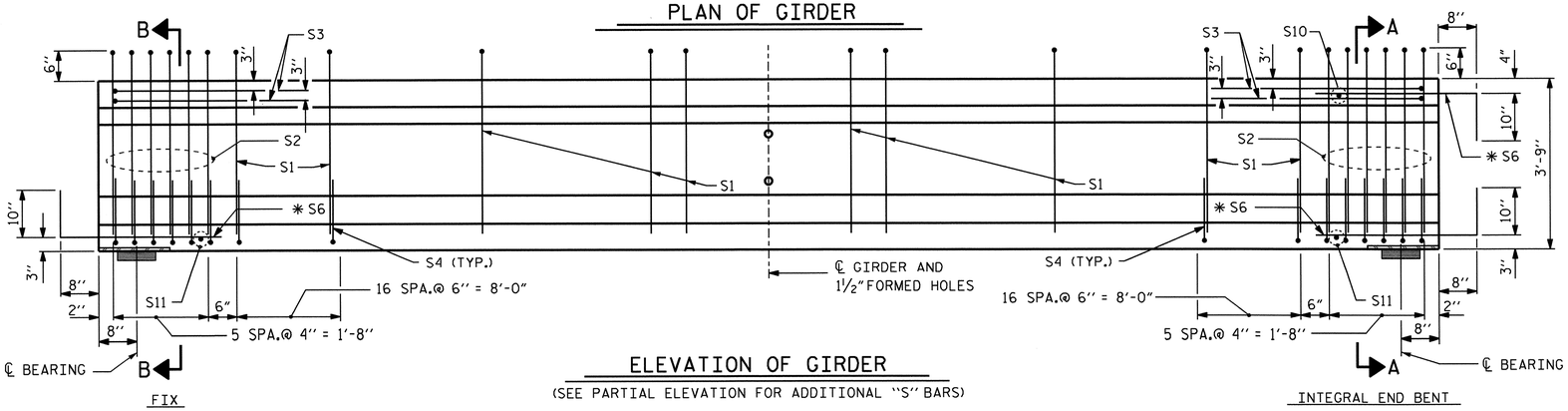

FIX

ELEVATION OF GIRDER

(SEE PARTIAL ELEVATION FOR ADDITIONAL "S" BARS)

INTEGRAL END BENT

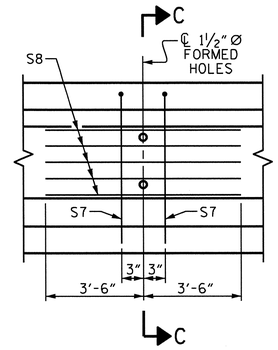

PARTIAL ELEVATION

SHOWING INTERMEDIATE DIAPHRAGM REINFORCING STEEL FOR ALL GIRDERS

0.6" Ø L. R. GRADE 270 STRANDS

AREA (SQUARE INCHES)	ULTIMATE STRENGTH (LBS. PER STRAND)	APPLIED PRESTRESS (LBS. PER STRAND)
0.217	58,600	43,950

REINFORCING STEEL FOR ONE GIRDER

BAR	NUMBER	SIZE	TYPE	LENGTH	WEIGHT
S1	58	#4	1	8'-6"	329
S2	12	#6	1	8'-6"	153
S3	4	#4	3	8'-8"	23
S4	92	#4	2	2'-9"	169
✱S6	12	#5	STR	3'-8"	46
S7	2	#5	3	7'-2"	15
S8	5	#4	STR	7'-0"	23
S10	1	#3	STR	1'-0"	1
S11	2	#3	STR	1'-6"	1

✱NOTE: S6 BARS SHALL BE BENT BEFORE SHIPMENT. HEAT BENDING SHALL NOT BE ALLOWED.

BAR TYPES

ALL BAR DIMENSIONS ARE OUT-TO-OUT

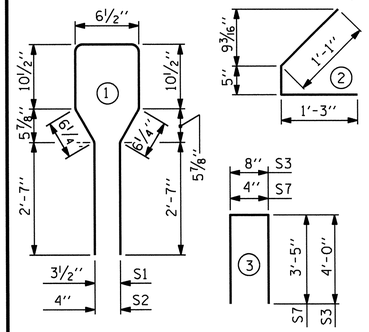

QUANTITIES FOR ONE GIRDER

	REINFORCING STEEL	5000 PSI CONCRETE	0.6" Ø L. R. STRANDS
	LB.	C.Y.	No.
	760	7.0	16

GIRDERS REQUIRED

NUMBER	LENGTH	TOTAL LENGTH
4	48'-7½"	194'-6"

PROJECT NO. R-2303B

SAMPSON COUNTY

STATION: 660+21.00 -L-

SHEET 3 OF 5

STATE OF NORTH CAROLINA
DEPARTMENT OF TRANSPORTATION
RALEIGH

STANDARD

AASHTO TYPE III
PRESTRESSED CONCRETE GIRDER
CONTINUOUS FOR LIVE LOAD
SPAN C (LEFT LANE)

REVISIONS						SHEET NO.
NO.	BY:	DATE:	NO.	BY:	DATE:	S-94
1			3			TOTAL SHEETS
2			4			146

STR. #3

STD. NO. PCG5 (Sht. 2)

NORTH CAROLINA PROFESSIONAL SEAL 025516 ENGINEER EMILY C. FOWLER 2.21.13

DESIGN ENGINEER OF RECORD: BEENA MATHEW DATE : 7-24-12	
ASSEMBLED BY : PEGGY PARISI DATE : 8-23-12 CHECKED BY : K.P. SEDAI DATE : 10-17-12	
DRAWN BY : ELR 8/91 CHECKED BY : GRP 8/91	REV. 10/17/00R RWW/LES REV. 5/1/06R TLA/GM REV. 10/1/11 MAA/GM

19-FEB-2013 09:03
Z:\TIPProjects-R\R2303B\Structures\Plans\str03\pparisi\R-2303B_SD_ts_03.dgn
padkins

SECTION "G"

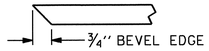

SECTION "F"

(SEE NOTES)

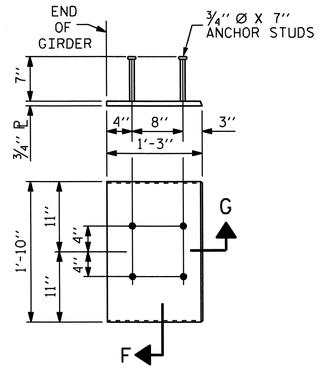

EMBEDDED PLATE "B-1" DETAILS
FOR AASHTO TYPE III GIRDER

(2 REQ'D PER GIRDER)

NOTES

ALL PRESTRESSING STRANDS SHALL BE 7-WIRE LOW-RELAXATION GRADE 270 STRANDS AND SHALL CONFORM TO AASHTO M203 EXCEPT FOR SAMPLING REQUIREMENTS WHICH SHALL BE IN ACCORDANCE WITH THE STANDARD SPECIFICATIONS.

ALL REINFORCING STEEL SHALL BE GRADE 60.

EMBEDDED PLATE "B-1" SHALL BE GALVANIZED IN ACCORDANCE WITH THE STANDARD SPECIFICATIONS. BEVEL EDGES OF PLATE "B-1" TO GIVE CLOSE FIT BUT NOT TIGHT FIT TO STEEL CASTING FORM.

ANCHOR STUDS SHALL CONFORM TO AASHTO M169 GRADES 1010 THROUGH 1020 OR APPROVED EQUAL, AND SHALL MEET THE TYPE "B" REQUIREMENTS OF SUBSECTION 7.3 OF THE ANSI/AASHTO/AWS D1.5 BRIDGE WELDING CODE.

AT ENDS OF GIRDERS TO BE EMBEDDED IN CONCRETE DIAPHRAGMS OR END WALLS, PRESTRESSING STRANDS MAY EXTEND A MAXIMUM OF 2" BEYOND THE GIRDER ENDS. OTHERWISE, PRESTRESSING STRANDS SHALL BE CUT FLUSH WITH THE GIRDER ENDS.

THE TRANSFER OF LOAD FROM THE ANCHORAGES TO THE GIRDER SHALL BE DONE WHEN CONCRETE HAS REACHED A COMPRESSIVE STRENGTH OF NOT LESS THAN 4000 PSI.

DEPENDING ON THE TYPE OF SYSTEM USED TO SUPPORT THE DECK SLAB FORMS, PRESET ANCHORS MAY BE NECESSARY IN THE PRESTRESSED CONCRETE GIRDER.

THE TOP SURFACE OF THE GIRDER, EXCLUDING THE OUTSIDE 4", SHALL BE RAKED TO A DEPTH OF 1/4".

DEAD LOAD DEFLECTION TABLE FOR SPANS A & B

0.6" Ø LOW RELAXATION	GIRDERS 1 AND 4											GIRDERS 2 AND 3										
TENTH POINTS	0	.1	.2	.3	.4	.5	.6	.7	.8	.9	0	0	.1	.2	.3	.4	.5	.6	.7	.8	.9	0
CAMBER (GIRDER ALONE IN PLACE) ↑	0	0.033	0.063	0.087	0.102	0.107	0.102	0.087	0.063	0.033	0	0	0.033	0.063	0.087	0.102	0.107	0.102	0.087	0.063	0.033	0
* DEFLECTION DUE TO SUPERIMPOSED D.L. ↓	0	0.012	0.023	0.031	0.037	0.038	0.037	0.031	0.023	0.012	0	0	0.014	0.026	0.036	0.042	0.045	0.042	0.036	0.026	0.014	0
FINAL CAMBER ↑	0	1/4"	1/2"	11/16"	3/4"	13/16"	3/4"	11/16"	1/2"	1/4"	0	0	1/4"	7/16"	5/8"	11/16"	3/4"	11/16"	5/8"	7/16"	1/4"	0

* INCLUDES FUTURE WEARING SURFACE IN SUPERIMPOSED DEAD LOAD.
ALL VALUES ARE SHOWN IN FEET (DECIMAL FORM), EXCEPT "FINAL CAMBER", WHICH IS GIVEN IN INCHES (FRACTION FORM).

DEAD LOAD DEFLECTION TABLE FOR SPAN C

0.6" Ø LOW RELAXATION	GIRDERS 1 AND 4											GIRDERS 2 AND 3										
TENTH POINTS	0	.1	.2	.3	.4	.5	.6	.7	.8	.9	0	0	.1	.2	.3	.4	.5	.6	.7	.8	.9	0
CAMBER (GIRDER ALONE IN PLACE) ↑	0	0.029	0.054	0.074	0.087	0.091	0.087	0.074	0.054	0.029	0	0	0.029	0.054	0.074	0.087	0.091	0.087	0.074	0.054	0.029	0
* DEFLECTION DUE TO SUPERIMPOSED D.L. ↓	0	0.008	0.015	0.020	0.023	0.025	0.023	0.020	0.015	0.008	0	0	0.009	0.017	0.023	0.027	0.029	0.027	0.023	0.017	0.009	0
FINAL CAMBER ↑	0	1/4"	1/2"	5/8"	3/4"	13/16"	3/4"	5/8"	1/2"	1/4"	0	0	1/4"	7/16"	5/8"	11/16"	3/4"	11/16"	5/8"	7/16"	1/4"	0

* INCLUDES FUTURE WEARING SURFACE IN SUPERIMPOSED DEAD LOAD.
ALL VALUES ARE SHOWN IN FEET (DECIMAL FORM), EXCEPT "FINAL CAMBER", WHICH IS GIVEN IN INCHES (FRACTION FORM).

PROJECT NO. R-2303B

SAMPSON COUNTY

STATION: 660+21.00 -L-

SHEET 4 OF 5

STATE OF NORTH CAROLINA
DEPARTMENT OF TRANSPORTATION
RALEIGH

STANDARD

PRESTRESSED CONCRETE GIRDER CONTINUOUS FOR LIVE LOAD DETAILS

(LEFT LANE)

NORTH CAROLINA PROFESSIONAL SEAL 025516 ENGINEER EMILY E. MURRAY
2-21-13

REVISIONS					
NO.	BY:	DATE:	NO.	BY:	DATE:
1			3		
2			4		

SHEET NO. S-95

TOTAL SHEETS 146

STR. #3

STD. NO. PCG9 (Sht. 2)

ASSEMBLED BY : PEGGY PARISI	DATE : 8-23-12
CHECKED BY : K.P. SEDAI	DATE : 10-18-12
DRAWN BY : ELR 11/91	REV. 7/10/01RR LES/RDR
CHECKED BY : GRP 11/91	REV. 5/1/06 TLA/GM
	REV. 10/1/11 MAA/GM

19-FEB-2013 09:03
Z:\TIPProjects-R\R2303B\Structures\Plans\str03\pparisi\R-2303B_SD_ts_03.dgn
padkins

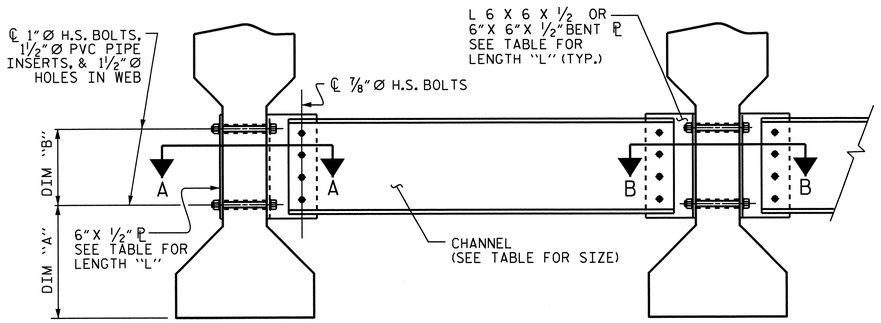

EXTERIOR GIRDER INTERIOR GIRDER

PART SECTION AT INTERMEDIATE DIAPHRAGM

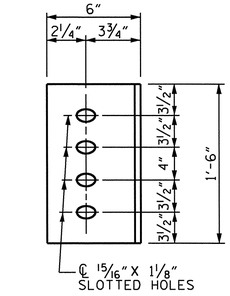

DIAPHRAGM FACE

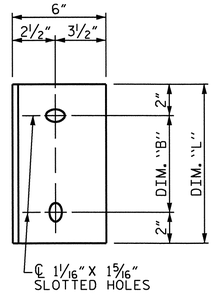

WEB FACE

CONNECTOR PLATE DETAILS

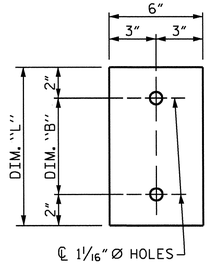

PLATE DETAILS

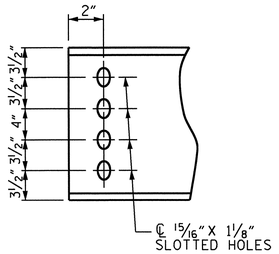

CHANNEL END

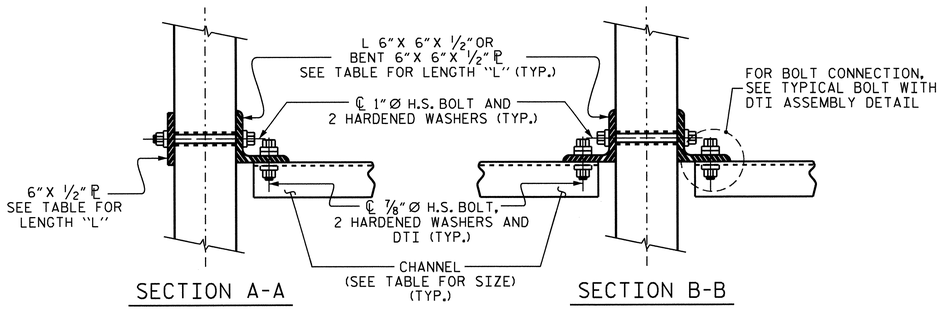

SECTION A-A SECTION B-B

CONNECTION DETAILS

STRUCTURAL STEEL NOTES

ALL INTERMEDIATE DIAPHRAGM STEEL AND CONNECTOR PLATES SHALL BE AASHTO M270 GRADE 50 OR APPROVED EQUAL.

TENSION ON THE ASTM A325 BOLTS THROUGH THE CHANNEL MEMBER SHALL BE CALIBRATED USING DIRECT TENSION INDICATOR WASHERS IN ACCORDANCE WITH THE STANDARD SPECIFICATIONS.

TENSION ON THE ASTM A449 BOLTS THROUGH THE GIRDER WEB SHALL BE SNUG TIGHTENED FOLLOWED BY AN ADDITIONAL ¼ TURN.

THE PLATES, BENT PLATES, CHANNELS, AND ANGLES SHALL BE GALVANIZED OR METALLIZED IN ACCORDANCE WITH THE STANDARD SPECIFICATIONS. FOR THERMAL SPRAYED COATINGS (METALLIZATION), SEE SPECIAL PROVISIONS.

FOR METALLIZATION, APPLY AN 8 MIL THICK 99.99 PERCENT ZINC (W-Zn-1) THERMAL SPRAYED COATING WITH A 0.5 MIL THICK SEAL COAT TO ALL STEEL DIAPHRAGM SURFACES IN ACCORDANCE WITH THE THERMAL SPRAYED COATINGS SPECIAL PROVISION AND SECTION 442 OF THE STANDARD SPECIFICATIONS.

GALVANIZE THE HIGH STRENGTH BOLTS, NUTS, WASHERS AND DIRECT TENSION INDICATORS IN ACCORDANCE WITH THE STANDARD SPECIFICATIONS.

USE AN ASTM F436 HARDENED WASHER WITH STANDARD AND SLOTTED HOLES UNDER EACH BOLT HEAD AND NUT.

FOR BOLTS THROUGH THE GIRDER WEB, PROVIDE SUFFICIENT LENGTH OF THREADS ON ALL BOLTS TO ACCOMMODATE WASHERS AND THE THICKNESS OF CONNECTING MEMBER PLUS AT LEAST ¼"PROJECTION BEYOND THE NUT.

INTERMEDIATE DIAPHRAGM ASSEMBLY SHALL COMPLY WITH SECTION 1072 OF THE STANDARD SPECIFICATIONS.

SUBMIT TWO SETS OF WORKING DRAWINGS FOR THE INTERMEDIATE DIAPHRAGM ASSEMBLY FOR REVIEW, COMMENTS AND ACCEPTANCE. AFTER REVIEW, COMMENTS, AND ACCEPTANCE, SUBMIT SEVEN SETS FOR DISTRIBUTION.

IN THE EXTERIOR BAYS, PLACE TEMPORARY STRUTS BETWEEN PRESTRESSED GIRDERS ADJACENT TO THE STEEL DIAPHRAGMS. STRUTS SHALL REMAIN IN PLACE 3 DAYS AFTER CONCRETE IS PLACED.

THE COST OF THE STEEL DIAPHRAGMS AND ASSEMBLIES SHALL BE INCLUDED IN THE UNIT PRICE BID FOR PRESTRESSED CONCRETE GIRDERS.

TABLE

GIRDER TYPE	CHANNEL SIZE	DIM "A"	DIM "B"	DIM "L"
III	MC 18 x 42.7	1'-5"	1'-2"	1'-6"

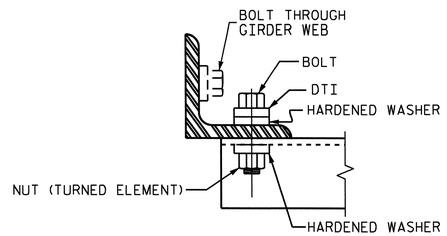

BOLT WITH DTI ASSEMBLY DETAIL

PROJECT NO. R-2303B

SAMPSON COUNTY

STATION: 660+21.00 -L-

SHEET 5 OF 5

STATE OF NORTH CAROLINA
DEPARTMENT OF TRANSPORTATION
RALEIGH

STANDARD
INTERMEDIATE STEEL DIAPHRAGMS FOR TYPE III PRESTRESSED CONCRETE GIRDERS
(LEFT LANE)

NORTH CAROLINA PROFESSIONAL SEAL 025516 ENGINEER EMILY E. MURRAY 2.21.13

REVISIONS						SHEET NO.
NO.	BY:	DATE:	NO.	BY:	DATE:	S-96
1			3			TOTAL SHEETS
2			4			146

DESIGN ENGINEER OF RECORD: BEENA MATHEW DATE : 7-24-12		
ASSEMBLED BY : PEGGY PARISI DATE : 8-23-12		
CHECKED BY : K.P. SEDAI DATE : 10-17-12		
DRAWN BY : TLA 6/05	ADDED 10/21/05	
CHECKED BY : VC 6/05	REV. 5/1/06RRR KMM/GM	
	REV. 10/1/11 MAA/GM	

19-FEB-2013 09:03
Z:\TIPProjects-R\R2303B\Structures\Plans\str03\pparisi\R-2303B_SD_ts_03.dgn
padkins

STR. #3 STD. NO. PCG10 (SHT 3)

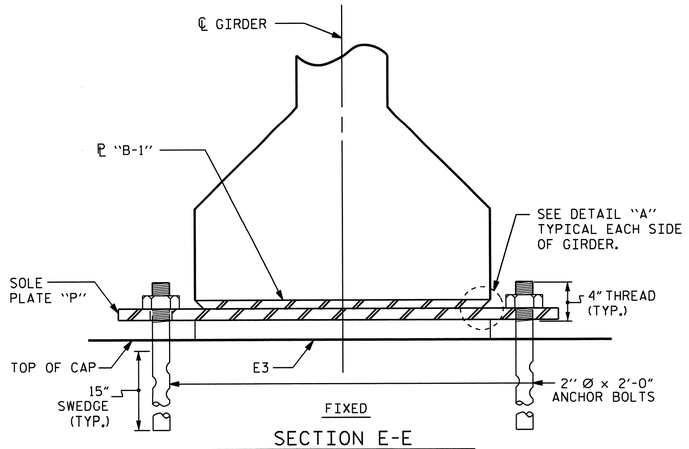

FIXED

SECTION E-E

AT INTERIOR BENTS

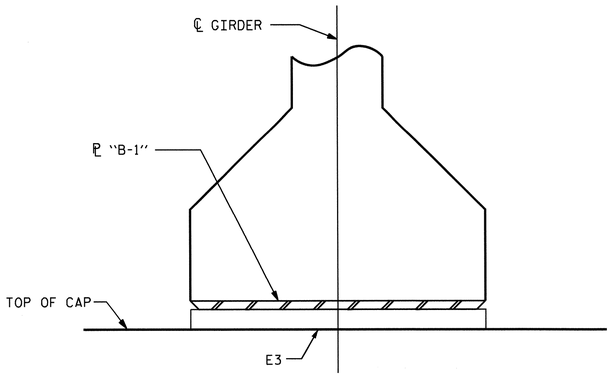

INTEGRAL

SECTION F-F

AT INTEGRAL END BENTS

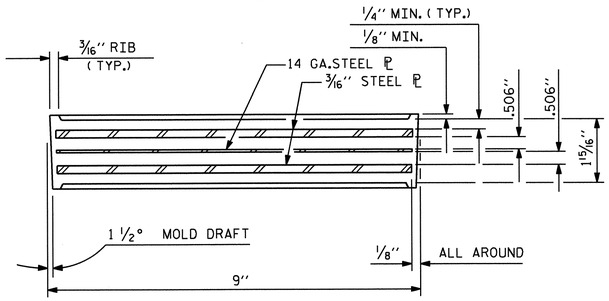

TYPICAL SECTION OF ELASTOMERIC BEARINGS

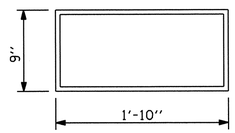

E3 (24 REQ'D.)

PLAN VIEW OF ELASTOMERIC BEARING

TYPE IV

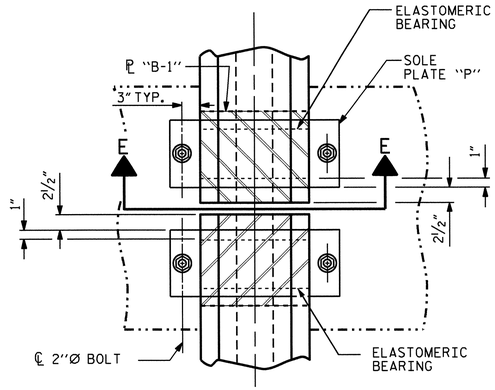

TYPICAL PLAN

(SHOWING CONTINUOUS BENT)

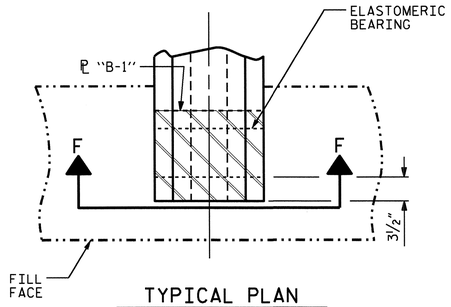

TYPICAL PLAN

(SHOWING INTEGRAL END BENT)

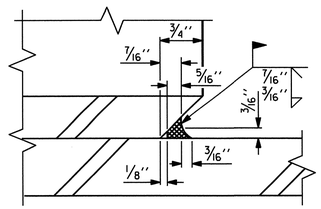

DETAIL "A"

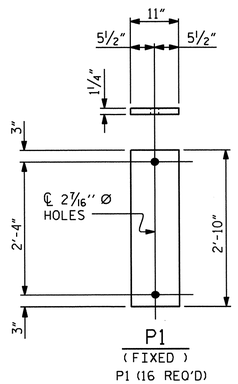

P1

(FIXED)

P1 (16 REQ'D)

SOLE PLATE DETAILS ("P")

NOTES

AT ALL FIXED POINTS OF SUPPORT, NUTS FOR ANCHOR BOLTS ARE TO BE TIGHTENED FINGER TIGHT AND THEN BACKED OFF 1/2 TURN. THE THREAD OF THE NUT AND BOLT SHALL THEN BE BURRED WITH A SHARP POINTED TOOL.

STEEL SOLE PLATES, ANCHOR BOLTS, NUTS, AND WASHERS SHALL BE GALVANIZED IN ACCORDANCE WITH THE STANDARD SPECIFICATIONS.

PRIOR TO WELDING, GRIND THE GALVANIZED SURFACE OF THE PORTION OF THE EMBEDDED PLATE AND SOLE PLATE THAT ARE TO BE WELDED. AFTER WELDING, DAMAGED GALVANIZED SURFACES SHALL BE REPAIRED IN ACCORDANCE WITH THE STANDARD SPECIFICATIONS.

WHEN WELDING THE SOLE PLATE TO THE EMBEDDED PLATE IN THE GIRDER, USE TEMPERATURE INDICATING WAX PENS, OR OTHER SUITABLE MEANS, TO ENSURE THAT THE TEMPERATURE OF THE SOLE PLATE DOES NOT EXCEED 300°F. TEMPERATURES ABOVE THIS MAY DAMAGE THE ELASTOMER.

SOLE PLATE "P", BOLTS, NUTS, WASHERS, AND PIPE SLEEVE SHALL BE INCLUDED IN THE PAY ITEM FOR PRESTRESSED CONCRETE GIRDERS.

ANCHOR BOLTS SHALL MEET THE REQUIREMENTS OF ASTM A449. NUTS SHALL MEET THE REQUIREMENTS OF AASHTO M291-DH OR AASHTO M292-2H. WASHERS SHALL MEET THE REQUIREMENTS OF AASHTO M293. SHOP DRAWINGS ARE NOT REQUIRED FOR ANCHOR BOLT, NUTS AND WASHERS. SHOP INSPECTION IS REQUIRED.

ALL SURFACES OF BEARING PLATES SHALL BE SMOOTH AND STRAIGHT.

THE ELASTOMER IN THE STEEL REINFORCED BEARINGS SHALL HAVE A SHEAR MODULUS OF 0.160 KSI, IN ACCORDANCE WITH AASHTO M251.

FOR STEEL REINFORCED ELASTOMERIC BEARINGS, SEE SPECIAL PROVISIONS.

ALL BEARING PLATES SHALL BE AASHTO M270 GRADE 36.

MAXIMUM ALLOWABLE SERVICE LOADS	
D.L.+L.L. (NO IMPACT)	
TYPE IV	190 k

PROJECT NO. R-2303B

SAMPSON COUNTY

STATION: 660+21.00 -L-

DESIGN ENGINEER OF RECORD: BEENA MATHEW	DATE : 7-24-12		
ASSEMBLED BY : PEGGY PARISI	DATE : 8-23-12		
CHECKED BY : K.P. SEDAI	DATE : 10-18-12		
DRAWN BY : WJH 8/89	REV. 5/1/06	TLA/GM	
CHECKED BY : CRK 8/89	REV. 10/1/11	MAA/GM	
	REV. 10/24/12	AAC/MAA	

19-FEB-2013 09:03
Z:\TIPProjects-R\R2303B\Structures\Plans\str03\pparisi\R-2303B_SD_ts_03.dgn
padkins

STATE OF NORTH CAROLINA
DEPARTMENT OF TRANSPORTATION
RALEIGH

STANDARD

ELASTOMERIC BEARING DETAILS

PRESTRESSED CONCRETE GIRDER SUPERSTRUCTURE (LEFT LANE)

REVISIONS						SHEET NO.
NO.	BY:	DATE:	NO.	BY:	DATE:	S-97
1			3			TOTAL SHEETS
2			4			146

STR. #3

STD. NO. EB3 (SHT 3)

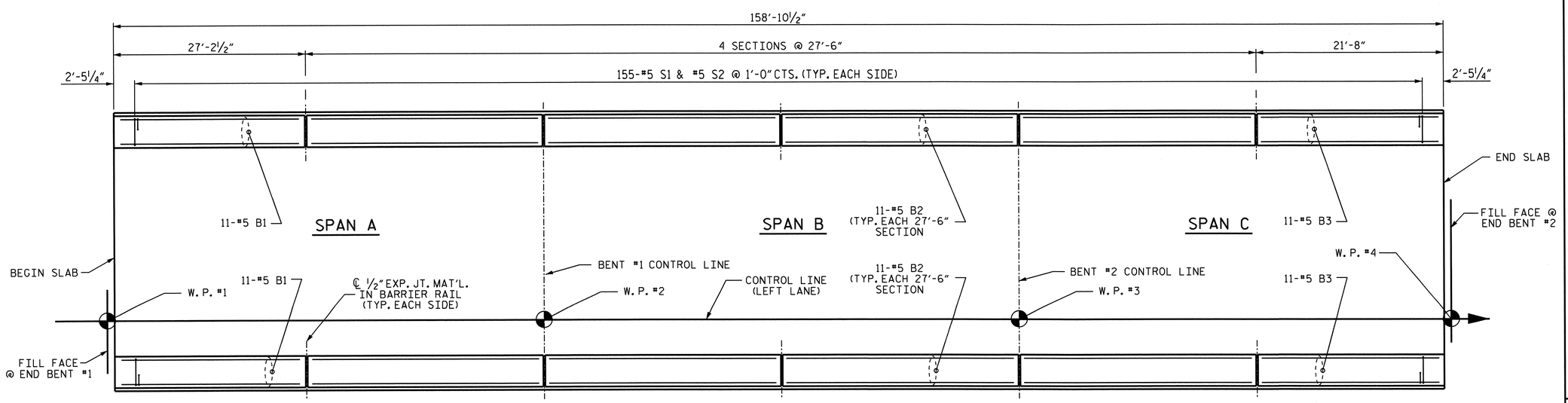

PLAN

NOTES

THE BARRIER RAIL IN EACH SPAN SHALL NOT BE CAST UNTIL ALL SLAB CONCRETE IN THAT SPAN HAS BEEN CAST AND HAS REACHED A MINIMUM COMPRESSIVE STRENGTH OF 3,000 PSI.

ALL REINFORCING STEEL IN BARRIER RAILS SHALL BE EPOXY COATED.

GROOVED CONTRACTION JOINTS, ½" IN DEPTH, SHALL BE TOOLED IN ALL EXPOSED FACES OF THE BARRIER RAIL AND IN ACCORDANCE WITH ARTICLE 825-10(B) OF THE STANDARD SPECIFICATIONS. THE CONTRACTION JOINT SHALL BE LOCATED AT EACH THIRD POINT BETWEEN BARRIER RAIL EXPANSION JOINTS. ONLY ONE CONTRACTION JOINT IS REQUIRED AT MIDPOINT OF BARRIER RAIL SEGMENTS LESS THAN 20 FEET IN LENGTH AND NO CONTRACTION JOINTS ARE REQUIRED FOR THOSE SEGMENTS LESS THAN 10 FEET IN LENGTH.

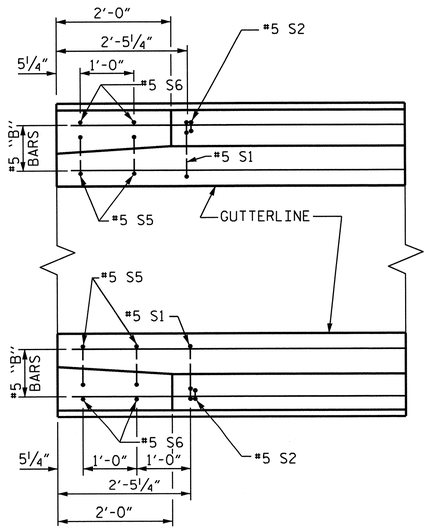

PLAN

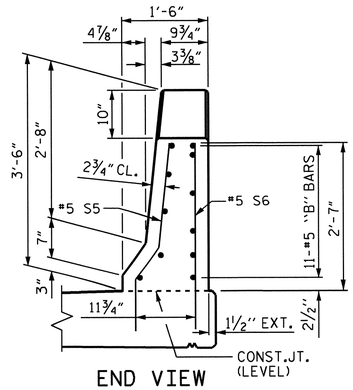

END VIEW

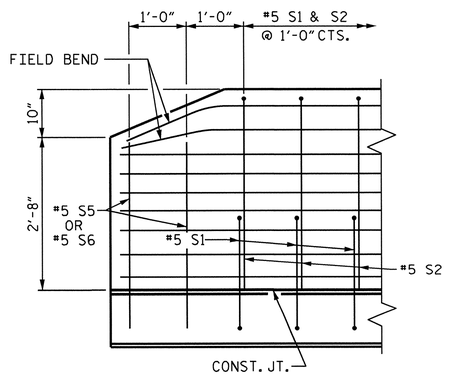

SIDE VIEW

END OF RAIL DETAILS

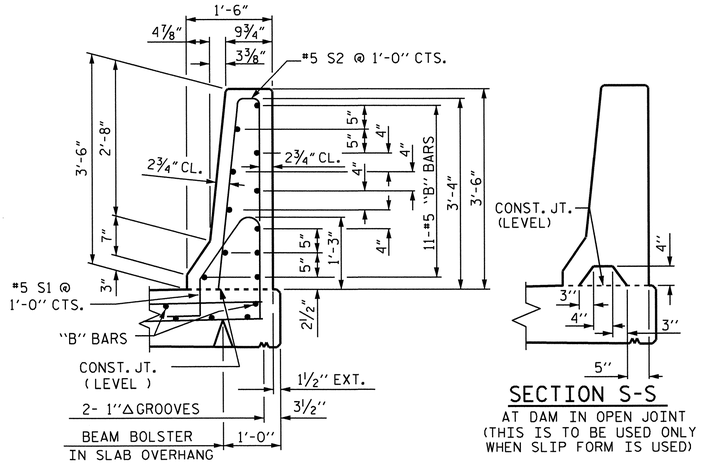

SECTION THRU RAIL

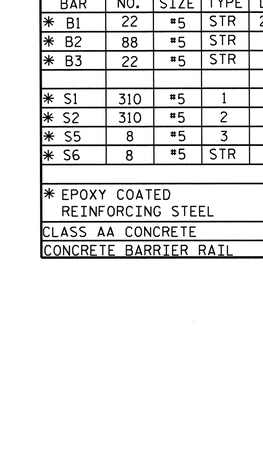

SECTION S-S
AT DAM IN OPEN JOINT
(THIS IS TO BE USED ONLY WHEN SLIP FORM IS USED)

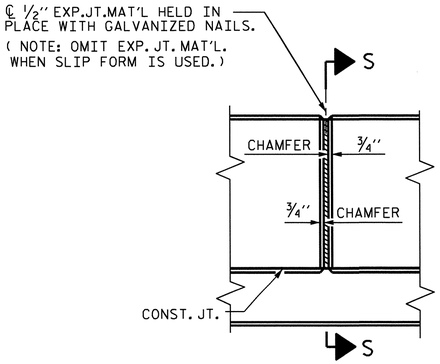

ELEVATION AT EXPANSION JOINTS

BARRIER RAIL DETAILS

BAR TYPES

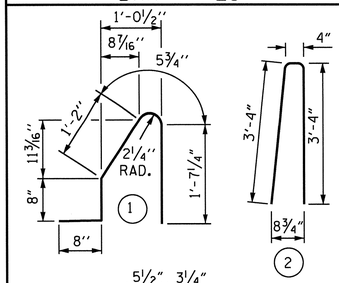

ALL BAR DIMENSIONS ARE OUT TO OUT

BILL OF MATERIAL

FOR CONCRETE BARRIER RAIL ONLY

BAR	NO.	SIZE	TYPE	LENGTH	WEIGHT
* B1	22	#5	STR	26'-10"	616
* B2	88	#5	STR	27'-1"	2486
* B3	22	#5	STR	21'-3"	488
* S1	310	#5	1	4'-7"	1482
* S2	310	#5	2	7'-0"	2263
* S5	8	#5	3	3'-5"	29
* S6	8	#5	STR	3'-3"	27

* EPOXY COATED REINFORCING STEEL	7391 LBS.
CLASS AA CONCRETE	43.1 CU. YDS.
CONCRETE BARRIER RAIL	317.75 LIN. FT.

PROJECT NO. R-2303B

SAMPSON COUNTY

STATION: 660+21.00 -L-

STATE OF NORTH CAROLINA
DEPARTMENT OF TRANSPORTATION
RALEIGH

STANDARD

CONCRETE BARRIER RAIL

(LEFT LANE)

DESIGN ENGINEER OF RECORD: BEENA MATHEW DATE : 7-24-12	
ASSEMBLED BY : PEGGY PARISI DATE : 8-23-12	
CHECKED BY : K.P. SEDAI DATE : 10-18-12	
DRAWN BY : ARB 5/87	REV. 10/1/11 MAA/GM
CHECKED BY : SJD 9/87	REV. 7/12 MAA/GM
	REV. 10/12 MAA/GM

REVISIONS						SHEET NO.
NO.	BY:	DATE:	NO.	BY:	DATE:	S-98
1			3			TOTAL SHEETS
2			4			146

STR. #3

STD. NO. CBR1 (SHT 1)

19-FEB-2013 09:03
Z:\TIPProjects-R\R2303B\Structures\Plans\str03\pparisi\R-2303B_SD_ts_03.dgn
podkins

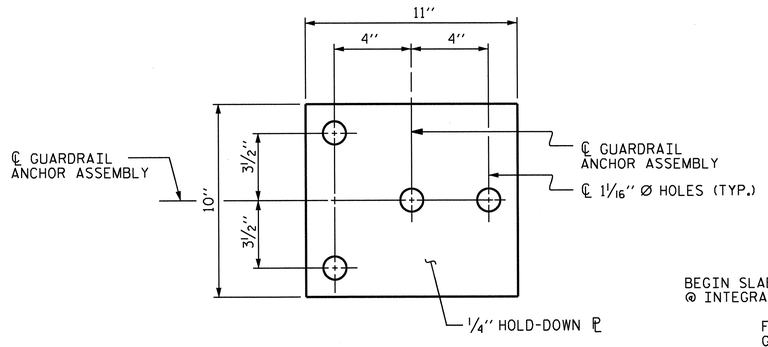

PLAN

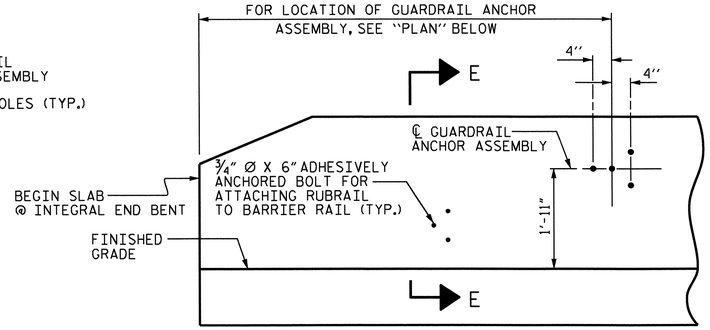

ELEVATION

FOR LOCATION OF RUBRAIL, SEE ROADWAY STD. 862.03

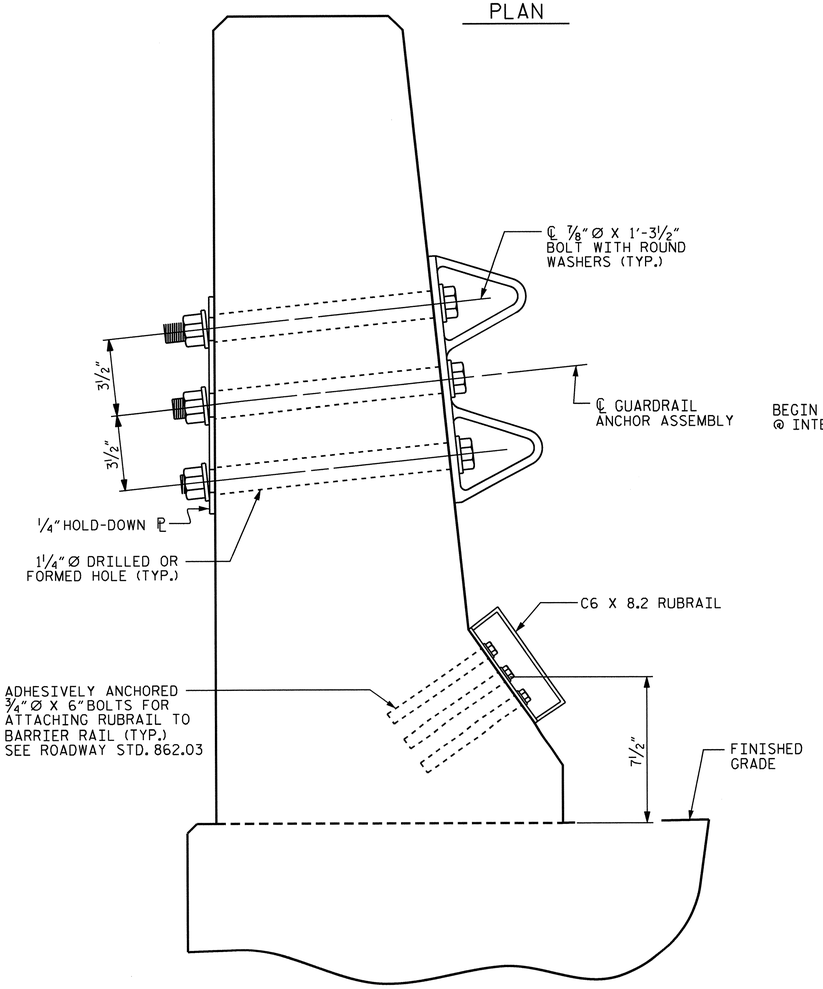

SECTION E-E

GUARDRAIL ANCHOR ASSEMBLY DETAILS

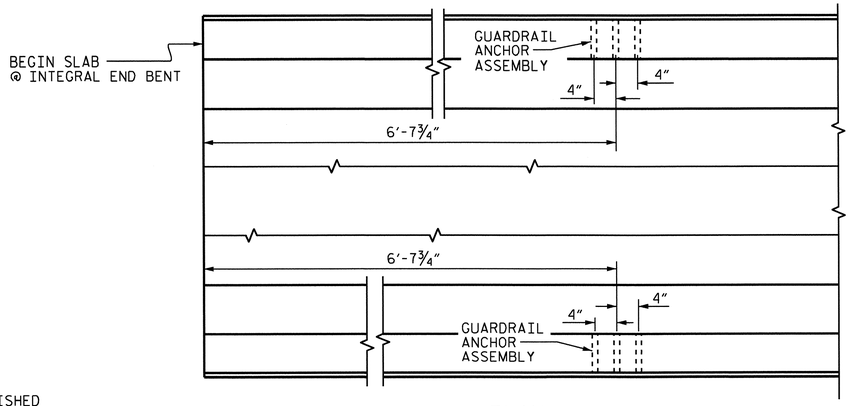

PLAN

LOCATION OF ANCHORS FOR GUARDRAIL

END BENT #1 SHOWN, END BENT #2 SIMILAR.

NOTES

THE GUARDRAIL ANCHOR ASSEMBLY SHALL CONSIST OF A ¼'' HOLD-DOWN PLATE AND 4 - ⅞'' Ø BOLTS WITH NUTS AND WASHERS, RUBRAIL, AND ADHESIVELY ANCHORED BOLTS.

THE HOLD-DOWN PLATE SHALL CONFORM TO AASHTO M270 GRADE 36. AFTER FABRICATION, THE HOLD-DOWN PLATE SHALL BE HOT-DIP GALVANIZED IN ACCORDANCE WITH AASHTO M111.

BOLTS SHALL CONFORM TO THE REQUIREMENTS OF ASTM A307 AND NUTS SHALL CONFORM TO THE REQUIREMENTS OF AASHTO M291. BOLTS, NUTS AND WASHERS SHALL BE GALVANIZED. (AT THE CONTRACTOR'S OPTION, STAINLESS STEEL BOLTS, NUTS AND WASHERS MAY BE USED AS AN ALTERNATE FOR THE ⅞'' Ø GALVANIZED BOLTS, NUTS AND WASHERS. THEY SHALL CONFORM TO OR EXCEED THE MECHANICAL REQUIREMENTS OF ASTM A307. THE USE OF THIS ALTERNATE SHALL BE APPROVED BY THE ENGINEER.)

THE GUARDRAIL ANCHOR ASSEMBLY IS REQUIRED AT ALL POINTS WHERE APPROACH GUARDRAIL IS TO BE ATTACHED TO THE END OF BARRIER RAIL. FOR POINTS OF ATTACHMENT, SEE SKETCH.

AFTER INSTALLATION, THE EXPOSED THREAD OF THE BOLT SHALL BE BURRED WITH A SHARP POINTED TOOL.

THE COST OF THE GUARDRAIL ANCHOR ASSEMBLY SHALL BE INCLUDED IN THE UNIT CONTRACT PRICE BID FOR CONCRETE BARRIER RAIL.

THE 1 ¼'' Ø HOLES SHALL BE FORMED OR DRILLED WITH A CORE BIT. IMPACT TOOLS WILL NOT BE PERMITTED. ANY CONCRETE DAMAGED BY THIS WORK SHALL BE REPAIRED TO THE SATISFACTION OF THE ENGINEER.

THE C6 X 8.2 RUBRAIL IS TO BE ADHESIVELY ANCHORED TO THE RAIL USING THREE ¾" Ø X 6" BOLTS WITH WASHERS. LEVEL ONE FIELD TESTING IS REQUIRED, AND THE YIELD LOAD OF THE ¾" Ø BOLT IS 12 KIPS. FOR ADHESIVELY ANCHORED ANCHOR BOLTS OR DOWELS, SEE STANDARD SPECIFICATIONS. SEE ROADWAY STANDARD 862.03 FOR DETAILS AND LOCATION OF THE RUBRAIL.

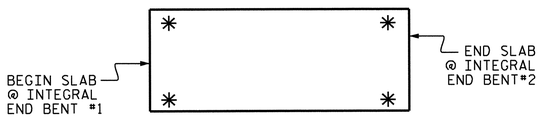

SKETCH SHOWING POINTS OF ATTACHMENTS

✳ DENOTES GUARDRAIL ANCHOR ASSEMBLY

PROJECT NO. R-2303B

SAMPSON COUNTY

STATION: 660+21.00 -L-

STATE OF NORTH CAROLINA
DEPARTMENT OF TRANSPORTATION
RALEIGH

STANDARD

GUARDRAIL ANCHORAGE FOR BARRIER RAIL

(LEFT LANE)

REVISIONS						SHEET NO.
NO.	BY:	DATE:	NO.	BY:	DATE:	S-99
1			3			TOTAL SHEETS
2			4			146

NORTH CAROLINA PROFESSIONAL SEAL 025516 ENGINEER BEENA MATHEW 2-21-13

DESIGN ENGINEER OF RECORD: BEENA MATHEW DATE: 7-24-12			
ASSEMBLED BY : PEGGY PARISI DATE : 8-23-12			
CHECKED BY : K.P. SEDAI DATE : 10-18-12			
DRAWN BY : TLA 5/06	REV. 10/1/11		MAA/GM
CHECKED BY : GM 5/06	REV. 7/12		MAA/GM
	REV. 10/12		MAA/GM

19-FEB-2013 09:03
Z:\TIPProjects-R\R2303B\Structures\Plans\str03\pparisi\R-2303B_SD_ts_03.dgn
padkins

STR. #3 (SHT 1) STD. NO. GRA2

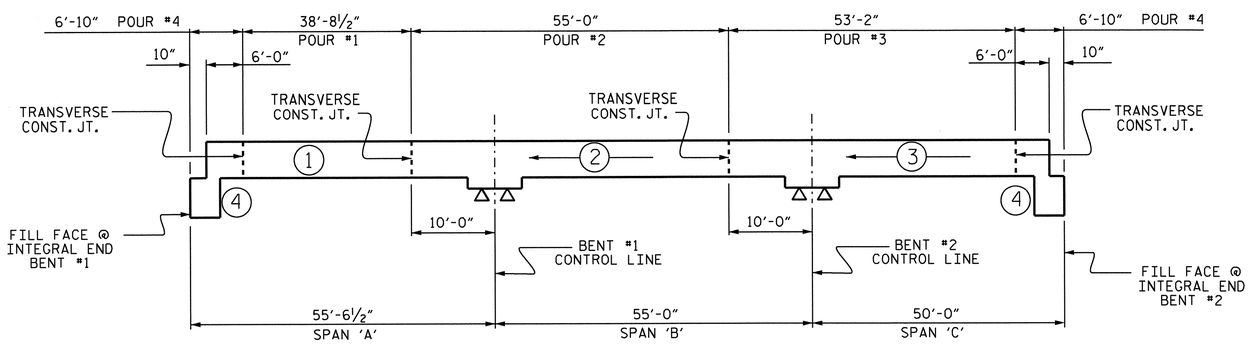

POURING SEQUENCE

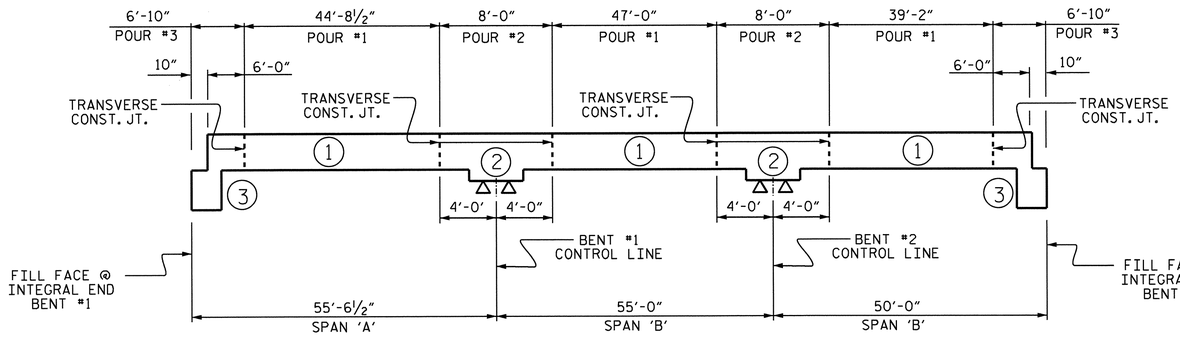

OPTIONAL POURING SEQUENCE

POUR #2 CANNOT BE STARTED UNTIL BOTH ADJACENT POUR #1 REACH A MINIMUM OF 3000 P.S.I.

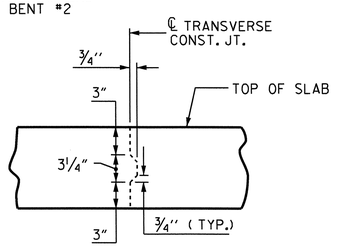

TRANSVERSE CONSTRUCTION JOINT DETAIL

NOTE: REINFORCING STEEL IN SLAB NOT SHOWN. LONGITUDINAL REINFORCING STEEL SHALL BE CONTINUOUS THRU JOINT

SUPERSTRUCTURE REINFORCING STEEL LENGTHS ARE BASED ON THE FOLLOWING MINIMUM SPLICE LENGTHS					
BAR SIZE	SUPERSTRUCTURE EXCEPT APPROACH SLABS, PARAPET, AND BARRIER RAIL		APPROACH SLABS		PARAPET AND BARRIER RAIL
	EPOXY COATED	UNCOATED	EPOXY COATED	UNCOATED	
#4	2'-0"	1'-9"	2'-0"	1'-9"	2'-9"
#5	2'-6"	2'-2"	2'-6"	2'-2"	3'-5"
#6	3'-0"	2'-7"	3'-10"	2'-7"	4'-4"
#7	5'-3"	3'-6"			
#8	6'-10"	4'-7"			

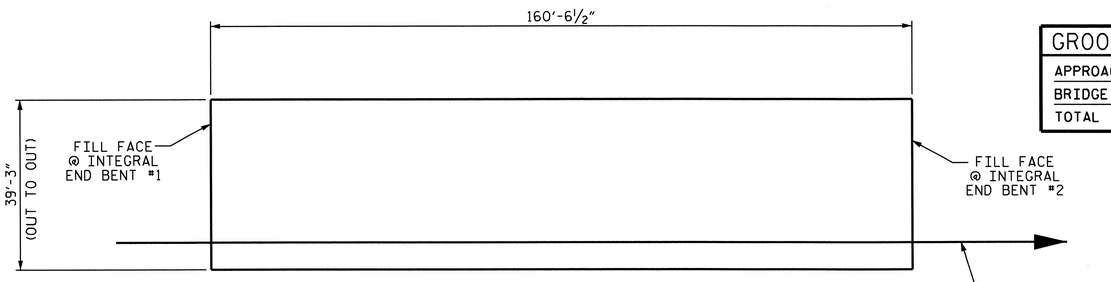

LAYOUT FOR COMPUTING AREA REINFORCED CONCRETE DECK SLAB (SQ. FT. = 6301)

GROOVING BRIDGE FLOORS		
APPROACH SLABS	1606	SQ.FT.
BRIDGE DECK	5232	SQ.FT.
TOTAL	6838	SQ.FT.

BILL OF MATERIAL

SPANS A, B & C

BAR	NO.	SIZE	TYPE	LENGTH	WEIGHT
✱ A1	346	#5	STR	38'-11"	14044
A2	346	#5	STR	38'-11"	14044
✱ B1	156	#6	STR	11'-0"	2577
✱ B2	28	#4	STR	26'-3"	491
✱ B3	56	#6	STR	43'-0"	3617
✱ B4	100	#6	STR	16'-6"	2478
✱ B5	28	#4	STR	16'-0"	299
✱ B6	28	#4	STR	20'-8"	387
B7	150	#5	STR	54'-4"	8500
H1	28	#6	5	18'-2"	764
H2	28	#5	5	16'-3"	475
K1	20	#4	STR	23'-4"	312
K2	6	#4	STR	8'-7"	34
K3	12	#4	STR	9'-1"	73
K4	12	#4	STR	9'-10"	79
K5	4	#4	STR	5'-1"	14
K6	8	#4	STR	5'-4"	29
K7	8	#4	STR	5'-9"	31
K8	16	#4	STR	2'-8"	29
K9	16	#4	STR	17'-0"	182
K10	12	#4	STR	7'-5"	59
K11	12	#4	STR	9'-7"	77
K12	12	#4	STR	9'-10"	79
K13	12	#4	STR	9'-1"	73
✱ S1	62	#4	1	11'-11"	494
✱ S2	62	#4	1	9'-10"	407
S3	150	#4	3	2'-9"	276
U1	66	#4	2	9'-11"	437
U2	12	#4	2	11'-9"	94
✱ U3	42	#4	4	13'-4"	374
✱ U4	12	#4	4	11'-4"	91
V1	8	#4	STR	3'-4"	18
V2	136	#4	STR	4'-6"	409

REINFORCING STEEL = 26088 LBS.

✱EPOXY COATED REINFORCING STEEL = 25259 LBS.

BAR TYPES

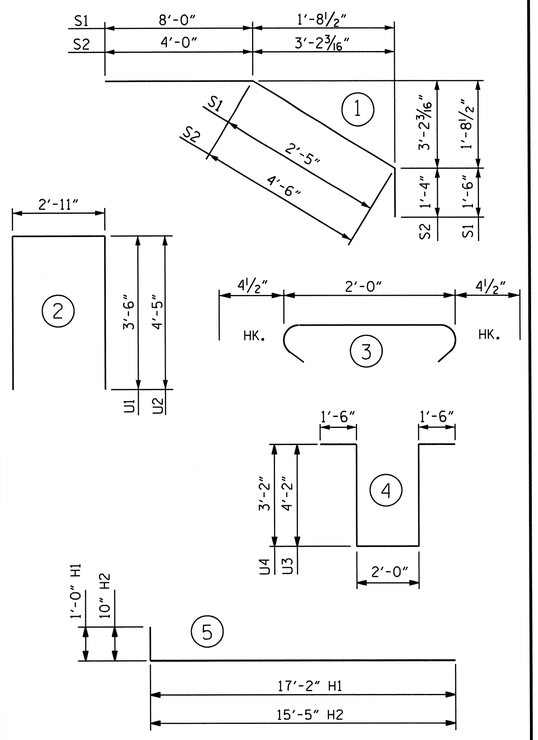

ALL BAR DIMENSIONS ARE OUT TO OUT.

SUPERSTRUCTURE BILL OF MATERIAL

	CLASS AA CONCRETE		REINFORCING STEEL	EPOXY COATED REINFORCING STEEL
	(CU. YDS.)		(LBS.)	(LBS.)
SPANS A, B AND C	POUR 1	50.0	26088	25259
	POUR 2	81.3		
	POUR 3	78.9		
	POUR 4✲	69.7		
TOTALS✱✱		279.9	26088	25259

✱✱ QUANTITIES FOR BARRIER RAIL ARE NOT INCLUDED

✲ POUR 4 QUANTITY INCLUDES UPPER POUR OF WINGS & INTEGRAL END BENT

PROJECT NO. R-2303B

SAMPSON COUNTY

STATION: 660+21.00 -L-

STATE OF NORTH CAROLINA
DEPARTMENT OF TRANSPORTATION
RALEIGH

STANDARD
SUPERSTRUCTURE BILL OF MATERIAL
(LEFT LANE)

REVISIONS						SHEET NO.
NO.	BY:	DATE:	NO.	BY:	DATE:	S-100
1			3			TOTAL SHEETS
2			4			146

STR. #3 STD. NO. BOM2

DESIGN ENGINEER OF RECORD: BEENA MATHEW DATE: 7-24-12		
ASSEMBLED BY: PEGGY PARISI DATE: 11-5-10 CHECKED BY: K.P. SEDAI DATE: 10-18-12		
DRAWN BY: JMB 5/87 CHECKED BY: SJD 9/87	REV. 8/16/99 RWW/LES REV. 5/1/06 TLA/GM REV. 10/1/11 MAA/GM	

NORTH CAROLINA PROFESSIONAL SEAL 025516 ENGINEER KEVIN F. MURRAY 02-21-13

19-FEB-2013 09:02
Z:\TIPProjects-R\R2303B\Structures\Plans\str03\pparisi\R-2303B_SD_ts_03.dgn
podkins

NOTES:

INSTALL THE 4" DIA. DRAIN PIPE THROUGH THE WING WALL AS REQUIRED FOR REINFORCED BRIDGE APPROACH FILLS. SEE THE ROADWAY PLANS. REINFORCING STEEL IN THE WING WALL MAY BE SHIFTED AS NECESSARY TO CLEAR THE DRAIN PIPE.

UPPER PORTION OF INTEGRAL END BENT CAP AND UPPER PORTION OF WINGS SHALL BE POURED WITH THE SUPERSTRUCTURE. SEE SUPERSTRUCTURE PLANS.

THE TOP SURFACE OF THE END BENT CAP AND WINGS, EXCLUDING THE BEARING AREA, SHALL BE RAKED TO A DEPTH OF 1/4".

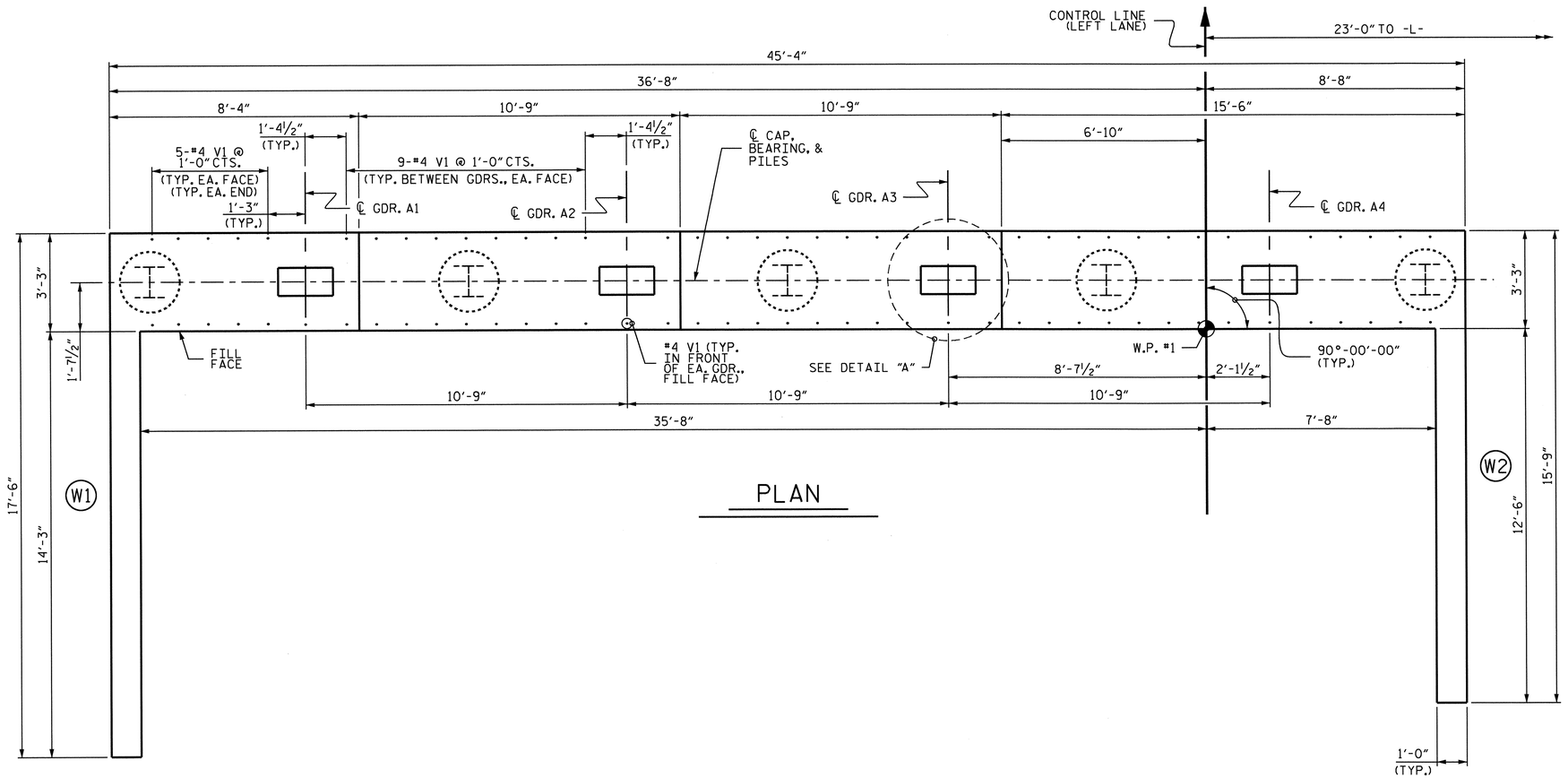

PLAN

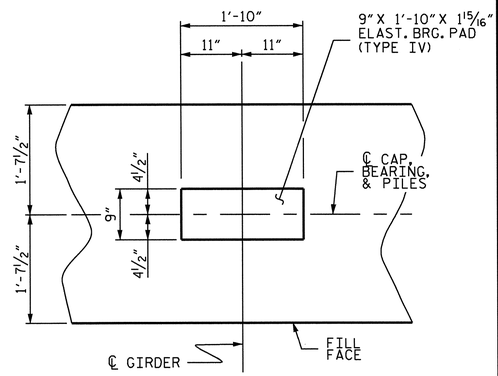

DETAIL "A"
(TYP. EA. GDR.)

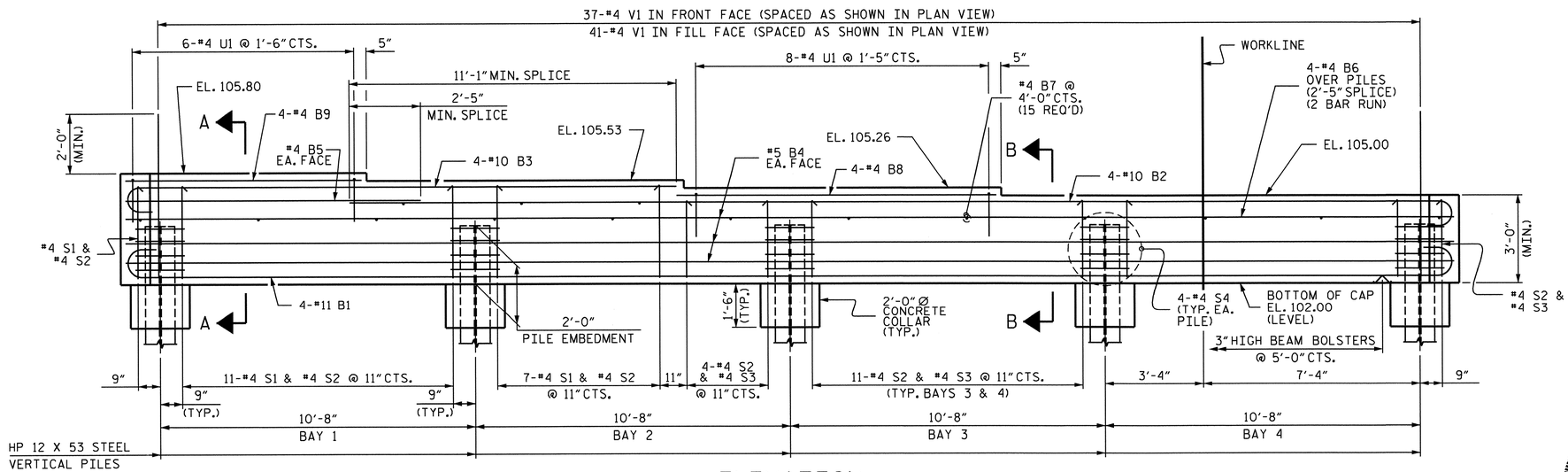

ELEVATION

PROJECT NO. R-2303B
SAMPSON COUNTY
STATION: 660+21.00 -L-

SHEET 1 OF 3

STATE OF NORTH CAROLINA
DEPARTMENT OF TRANSPORTATION
RALEIGH

SUBSTRUCTURE
END BENT #1
(INTEGRAL)
(LEFT LANE)

NORTH CAROLINA PROFESSIONAL SEAL 025516 ENGINEER EMILY E. MURRAY
2-21-13

REVISIONS						SHEET NO.
NO.	BY:	DATE:	NO.	BY:	DATE:	S-101
1			3			TOTAL SHEETS
2			4			146

DESIGN ENGINEER OF RECORD: A. M. LEE, PE DATE: 3-20-12
DRAWN BY: A. M. LEE, PE DATE: 4/2012
CHECKED BY: M.M. AHMED DATE: 10/2012

19-FEB-2013 09:02
Z:\TIPProjects-R\R2303B\Structures\Plans\str03\amlee\R2303B_SD_03_EB.dgn
padkins

STR #3

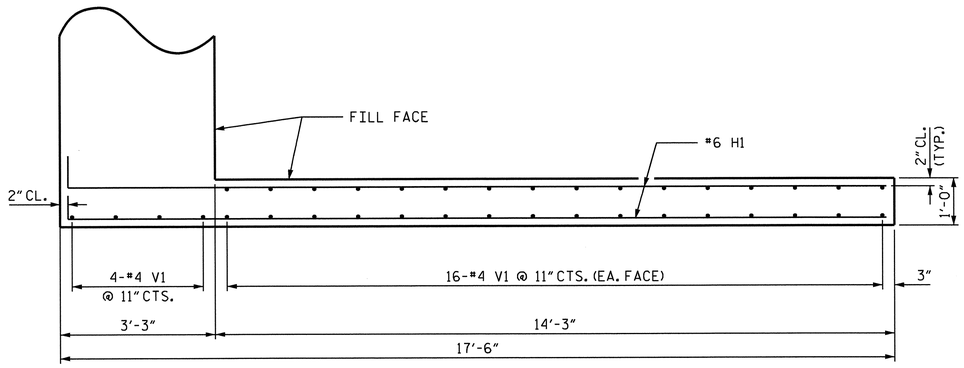

PLAN OF WING (W1)

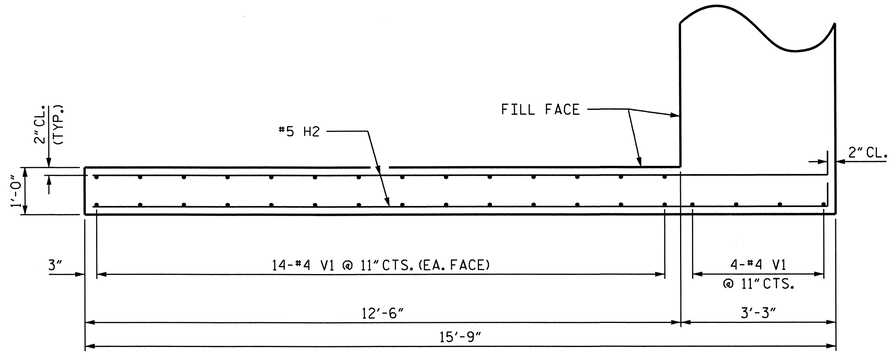

PLAN OF WING (W2)

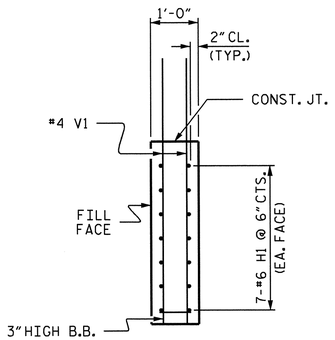

SECTION X-X

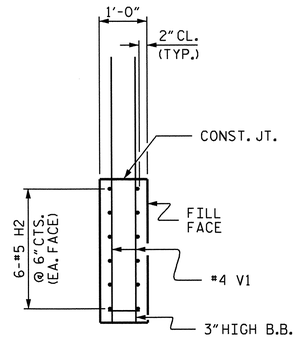

SECTION Y-Y

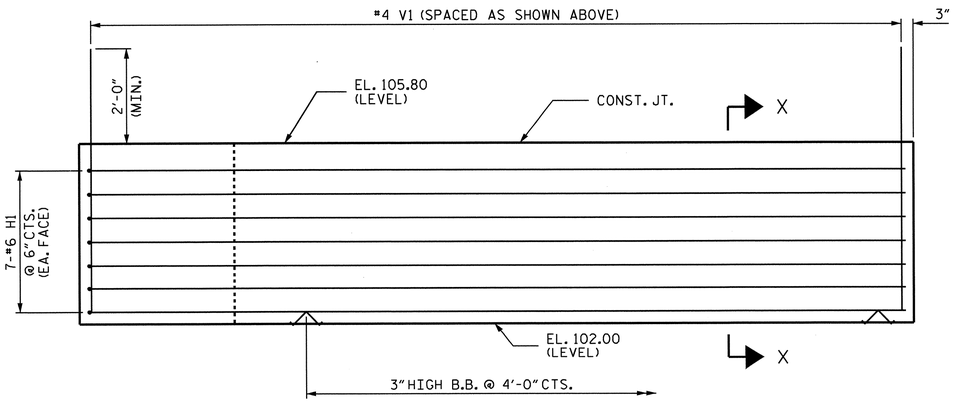

ELEVATION OF WING (W1)

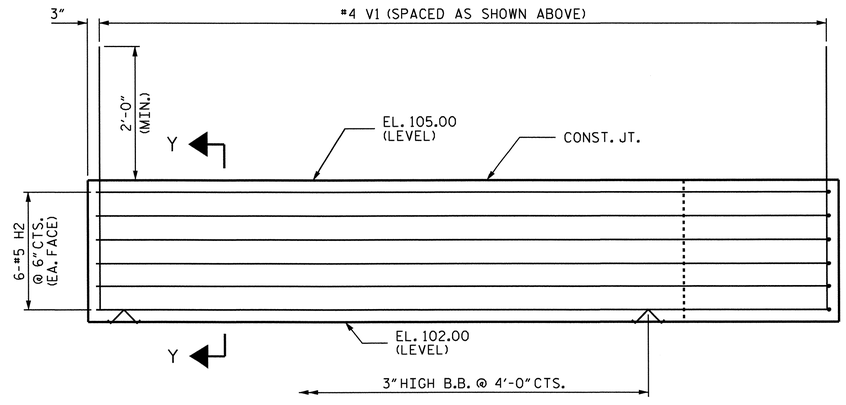

ELEVATION OF WING (W2)

PROJECT NO. R-2303B

SAMPSON COUNTY

STATION: 660+21.00 -L-

SHEET 2 OF 3

STATE OF NORTH CAROLINA
DEPARTMENT OF TRANSPORTATION
RALEIGH

SUBSTRUCTURE

END BENT #1
(INTEGRAL)
(LEFT LANE)

REVISIONS						SHEET NO.
NO.	BY:	DATE:	NO.	BY:	DATE:	S-102
1			3			TOTAL SHEETS
2			4			146

NORTH CAROLINA PROFESSIONAL SEAL 025516 ENGINEER EMILY E. MURRAY
7-21-13

DESIGN ENGINEER OF RECORD: A. M. LEE, PE	DATE : 3-20-12	
DRAWN BY : A. M. LEE, PE	DATE : 4/2012	
CHECKED BY : M.M. AHMED	DATE : 10/2012	

19-FEB-2013 09:01
Z:\TIPProjects-R\R2303B\Structures\Plans\str03\amlee\R2303B_SD_03_EB.dgn
padkins

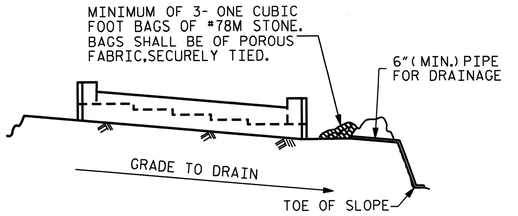

BAGGED STONE AND PIPE SHALL BE PLACED IMMEDIATELY AFTER COMPLETION OF END BENT EXCAVATION. PIPE MAY BE EITHER CONCRETE, CORRUGATED STEEL, CORRUGATED ALUMINUM ALLOY, OR CORRUGATED PLASTIC. PERFORATED PIPE WILL NOT BE ALLOWED.

BAGGED STONE SHALL REMAIN IN PLACE UNTIL THE ENGINEER DIRECTS THAT IT BE REMOVED. THE CONTRACTOR SHALL REMOVE AND DISPOSE OF SILT ACCUMULATIONS AT BAGGED STONE WHEN SO DIRECTED BY THE ENGINEER. BAGS SHALL BE REMOVED AND REPLACED WHENEVER THE ENGINEER DETERMINES THAT THEY HAVE DETERIORATED AND LOST THEIR EFFECTIVENESS.

NO SEPARATE PAYMENT WILL BE MADE FOR THIS WORK AND THE ENTIRE COST OF THIS WORK SHALL BE INCLUDED IN THE UNIT CONTRACT PRICE BID FOR THE SEVERAL PAY ITEMS.

TEMPORARY DRAINAGE AT END BENT

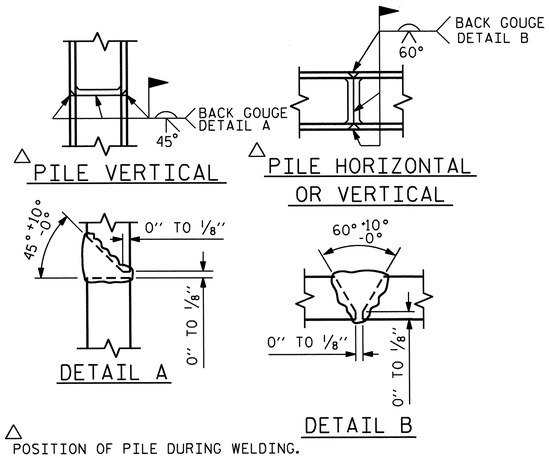

△ POSITION OF PILE DURING WELDING.

PILE SPLICE DETAILS

BAR TYPES

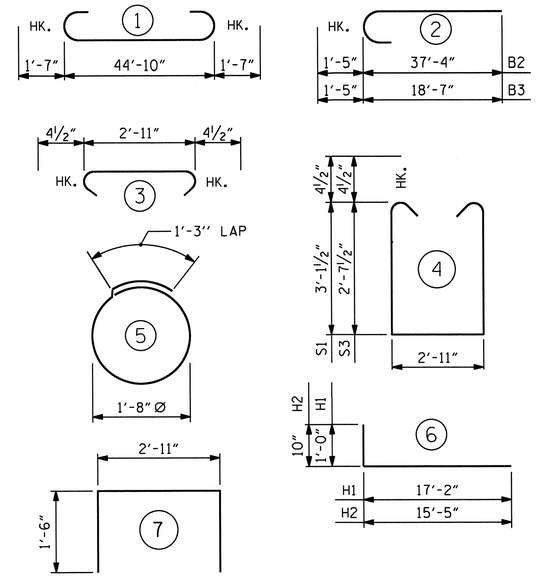

ALL BAR DIMENSIONS ARE OUT TO OUT.

BILL OF MATERIAL
END BENT #1

BAR	NO.	SIZE	TYPE	LENGTH	WEIGHT
B1	4	#11	1	48'-0"	1020
B2	4	#10	2	38'-9"	667
B3	4	#10	2	20'-0"	344
B4	6	#5	STR	45'-0"	282
B5	2	#4	STR	10'-0"	13
B6	8	#4	STR	23'-9"	127
B7	15	#4	STR	2'-11"	29
B8	4	#4	STR	10'-9"	29
B9	4	#4	STR	8'-0"	21
H1	14	#6	6	18'-2"	382
H2	12	#5	6	16'-3"	203
S1	19	#4	4	9'-11"	126
S2	46	#4	3	3'-8"	113
S3	27	#4	4	8'-11"	161
S4	20	#4	5	6'-6"	87
U1	14	#4	7	5'-11"	55
V1	146	#4	STR	5'-7"	545

REINFORCING STEEL	LBS.	4204
CLASS A CONCRETE BREAKDOWN:		
POUR #1 - CAP, COLLARS, AND LOWER WINGS	C.Y.	22.5
HP 12 X 53 STEEL PILES		
NO. 5	LIN. FT.	350
PILE REDRIVES	EA.	3

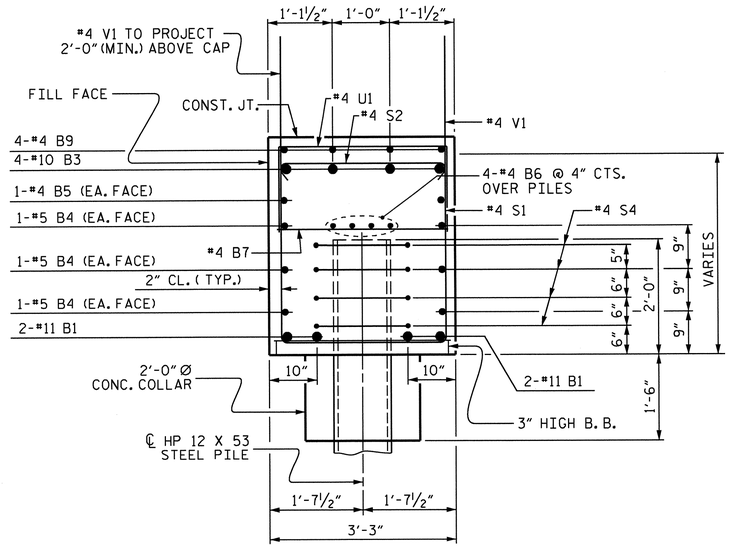

SECTION A-A

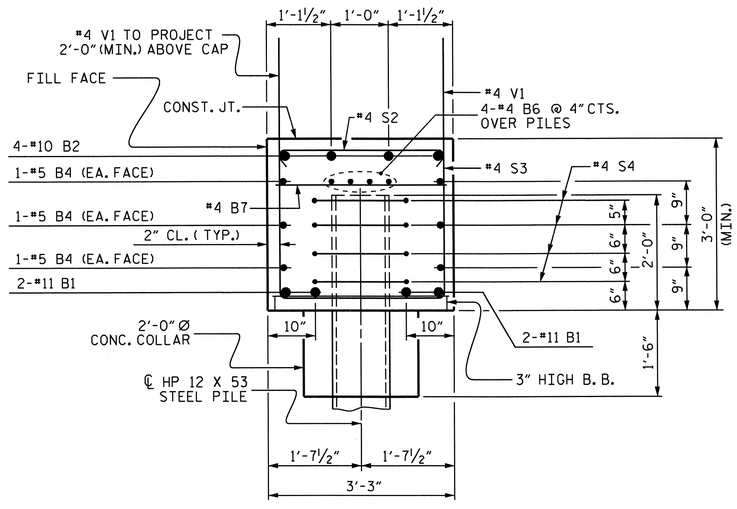

SECTION B-B

PROJECT NO. R-2303B

SAMPSON COUNTY

STATION: 660+21.00 -L-

SHEET 3 OF 3

STATE OF NORTH CAROLINA
DEPARTMENT OF TRANSPORTATION
RALEIGH

SUBSTRUCTURE

END BENT #1 (INTEGRAL) (LEFT LANE)

REVISIONS						SHEET NO.
NO.	BY:	DATE:	NO.	BY:	DATE:	S-103
1			3			TOTAL SHEETS
2			4			146

STR #3

NORTH CAROLINA PROFESSIONAL SEAL 025516 ENGINEER EMILY E. MURRAY 2-21-13

DESIGN ENGINEER OF RECORD: A. M. LEE, PE	DATE :	3-20-12
DRAWN BY : A. M. LEE, PE	DATE :	4/2012
CHECKED BY : M.M. AHMED	DATE :	10/2012

19-FEB-2013 09:01
Z:\TIPProjects-R\R2303B\Structures\Plans\str03\amlee\R2303B_SD_03_EB.dgn
padkins

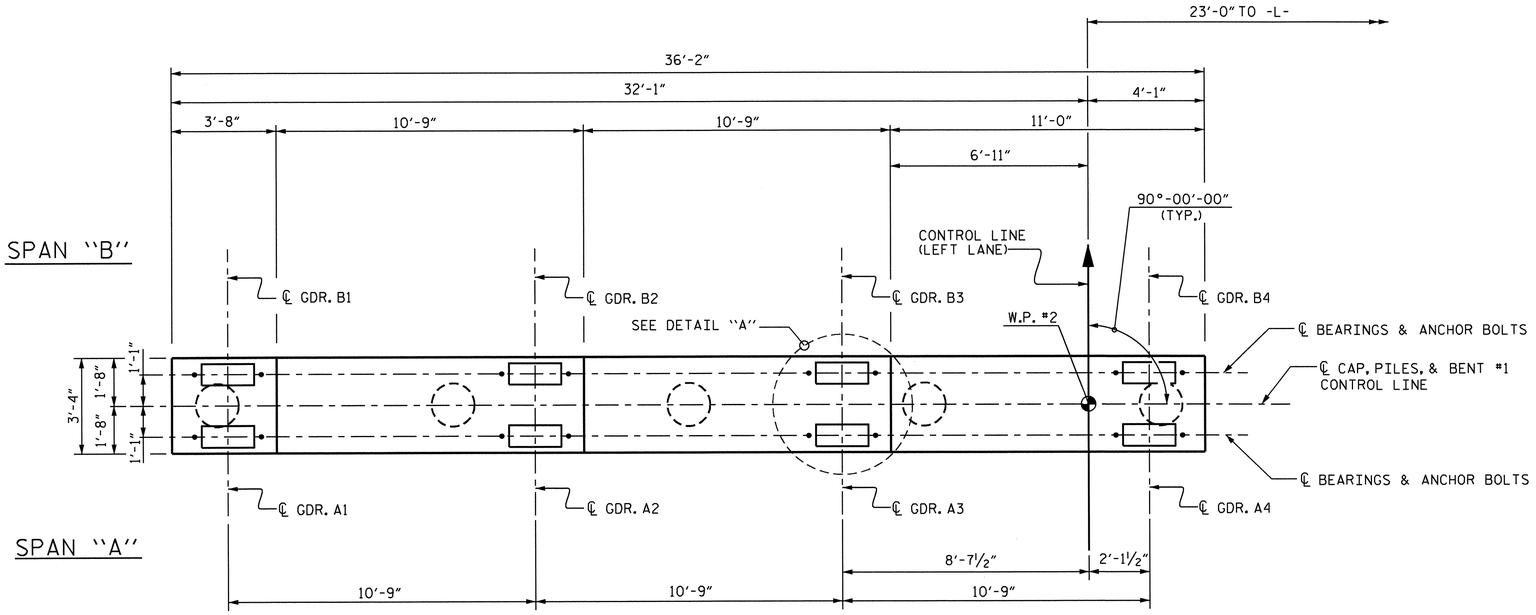

PLAN

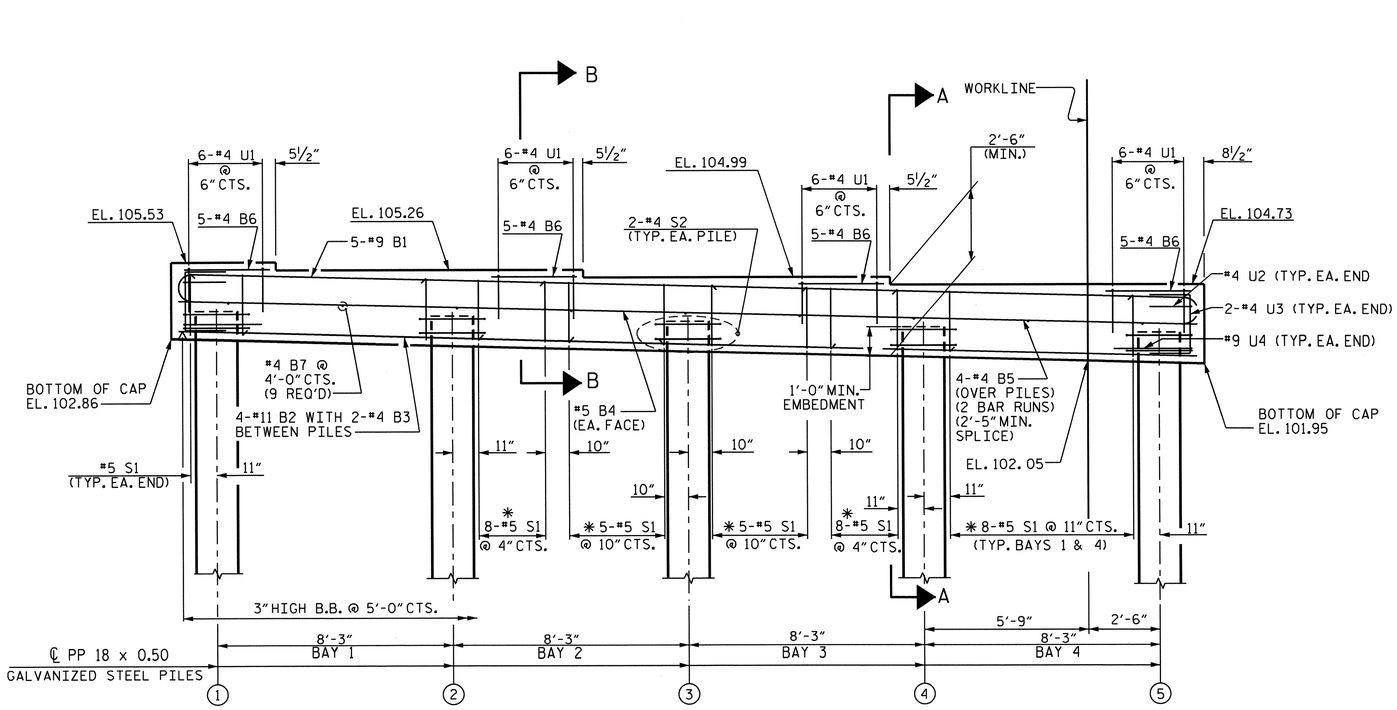

ELEVATION

✳ INVERT ALTERNATE STIRRUPS

NOTES:

STIRRUPS IN THE CAP MAY BE SHIFTED AS NECESSARY TO CLEAR ANCHOR BOLTS.

FOR BENT #1, GALVANIZE THE TOP 30 FEET OF EACH PILE IN ACCORDANCE WITH SECTION 1076 OF THE STANDARD SPECIFICATIONS.

CONCRETE DISPLACED BY THE FILLED 18" STEEL PIPE PILES HAS BEEN DEDUCTED FROM THE QUANTITY OF CLASS A CONCRETE FOR THE BENT CAP.

FOR REINFORCING STEEL IN PIPE PILES, SEE "18" STEEL PIPE PILE" SHEET.

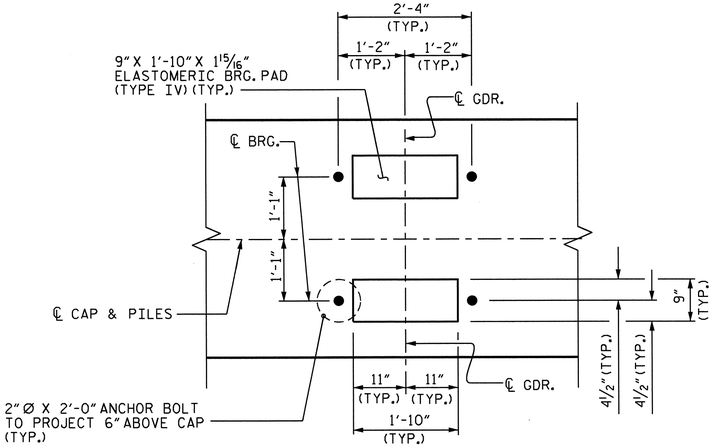

DETAIL "A"

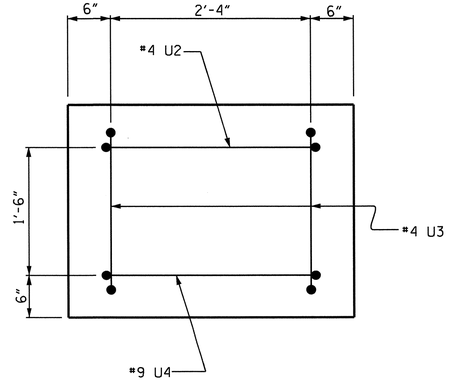

END VIEW
(TYP. BOTH ENDS)

TOP OF PILE ELEVATIONS	
PILE	ELEVATION
①	103.83
②	103.63
③	103.42
④	103.22
⑤	103.01

PROJECT NO. R-2303B

SAMPSON COUNTY

STATION: 660+21.00 -L-

SHEET 1 OF 2

STATE OF NORTH CAROLINA
DEPARTMENT OF TRANSPORTATION
RALEIGH

SUBSTRUCTURE

BENT #1

(LEFT LANE)

REVISIONS						SHEET NO.
NO.	BY:	DATE:	NO.	BY:	DATE:	S-104
1			3			TOTAL SHEETS
2			4			146

STR. #3

NORTH CAROLINA PROFESSIONAL SEAL 025516 ENGINEER EMILY E. MURRAY
2.21.13

DESIGN ENGINEER OF RECORD: MADONNA RORIE	DATE : 4-12-12
DRAWN BY : M.D.PISO	DATE : 06-08-12
CHECKED BY : P.A.PARISI	DATE : 09-18-12

19-FEB-2013 09:01
Z:\TIPProjects-R\R2303B\Structures\Plans\str03\mdpiso\micrstation\R-2303B_SD_B1.dgn
padkins

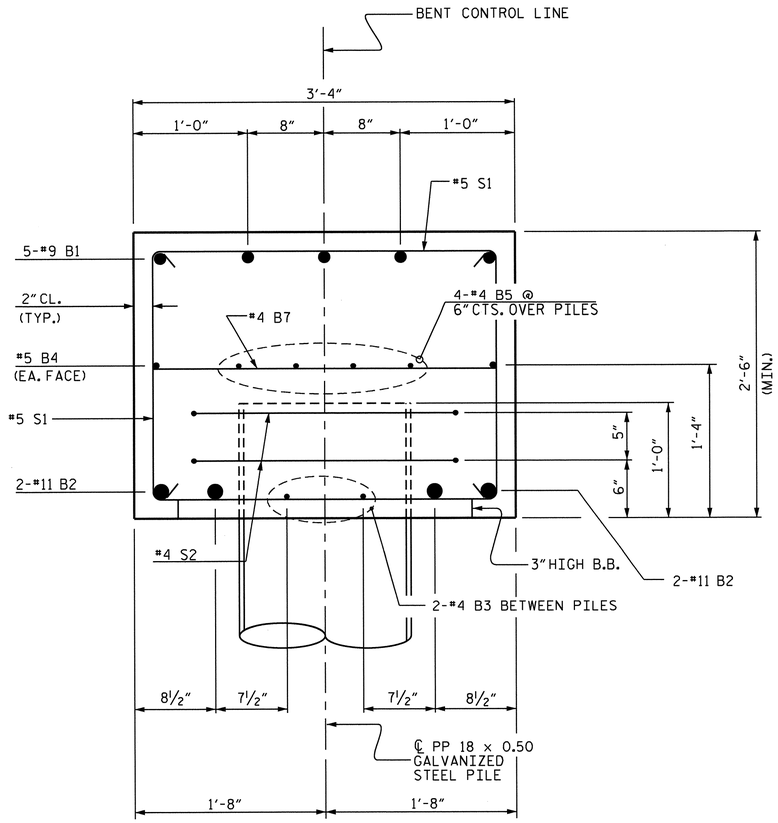

SECTION A-A

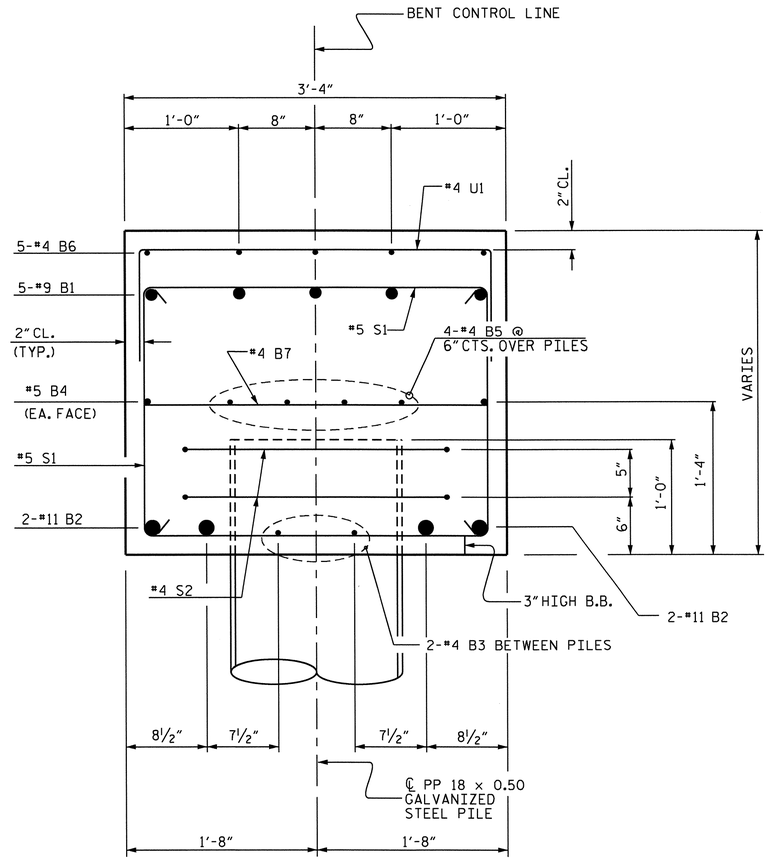

SECTION B-B

BAR TYPES

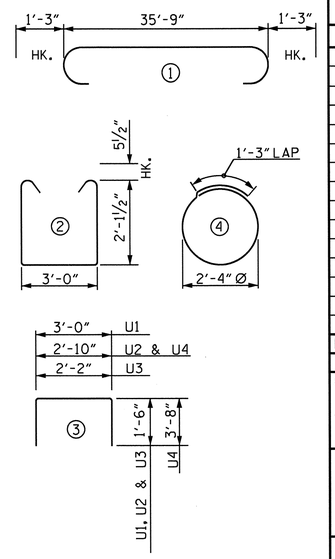

ALL BAR DIMENSIONS ARE OUT TO OUT

BILL OF MATERIAL

BENT #1

BAR	NO.	SIZE	TYPE	LENGTH	WEIGHT
B1	5	#9	1	38'-3"	650
B2	4	#11	STR.	35'-10"	762
B3	8	#4	STR.	6'-3"	33
B4	2	#5	STR.	35'-10"	75
B5	8	#4	STR.	19'-2"	102
B6	20	#4	STR.	3'-4"	45
B7	9	#4	STR.	3'-0"	18
S1	44	#5	2	8'-2"	375
S2	10	#4	4	8'-7"	57
U1	24	#4	3	6'-0"	96
U2	2	#4	3	5'-10"	8
U3	4	#4	3	5'-2"	14
U4	2	#9	3	10'-2"	69
REINFORCING STEEL					2,304 LBS.

CLASS A CONCRETE	
POUR #1 CAP	11.5 C.Y.
TOTAL CONCRETE	11.5 C.Y.

PP 18 x 0.50 GALVANIZED STEEL PILES	
NO. 5	375 LIN. FT.
PILE REDRIVES	3 EA.
PIPE PILE PLATES	5 EA.

PROJECT NO. R-2303B

SAMPSON COUNTY

STATION: 660+21.00 -L-

SHEET 2 OF 2

STATE OF NORTH CAROLINA
DEPARTMENT OF TRANSPORTATION
RALEIGH

SUBSTRUCTURE

BENT #1

(LEFT LANE)

REVISIONS						SHEET NO.
NO.	BY:	DATE:	NO.	BY:	DATE:	S-105
1			3			TOTAL SHEETS
2			4			146

STR. #3

NORTH CAROLINA PROFESSIONAL SEAL 025516 ENGINEER EMILY A. GUARRY
2.21.13

DESIGN ENGINEER OF RECORD: MADONNA RORIE	DATE : 4-12-12
DRAWN BY : M.D.PISO	DATE : 06-08-12
CHECKED BY : P.A.PARISI	DATE : 09-18-12

19-FEB-2013 09:01
Z:\TIPProjects-R\R2303B\Structures\Plans\str03\mdpiso\micrstation\R-2303B_SD_B1.dgn
padkins

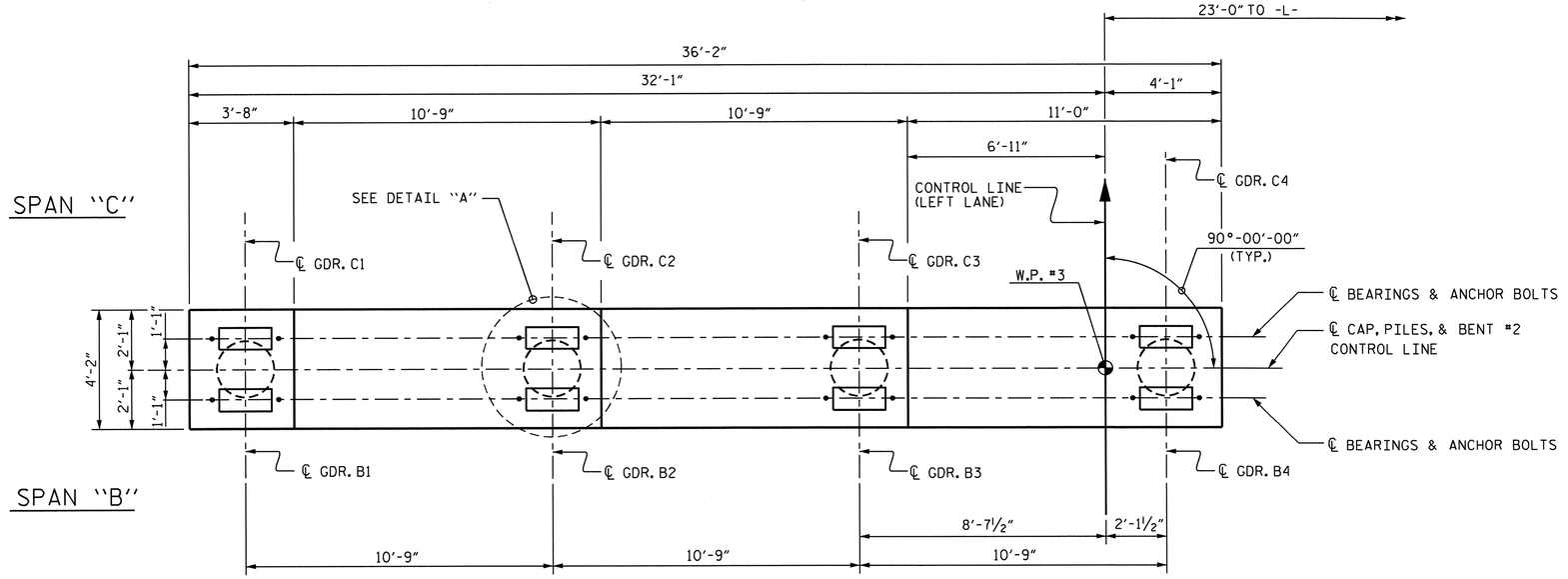

PLAN

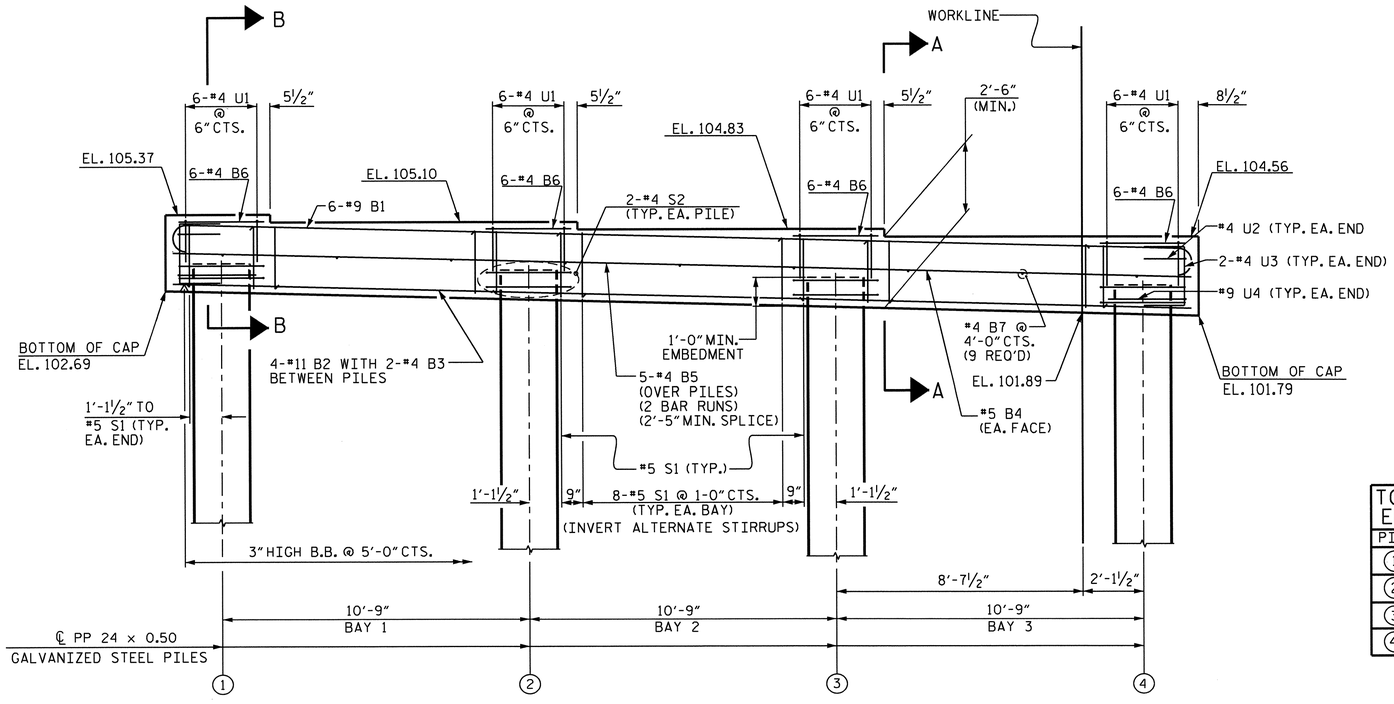

ELEVATION

TOP OF PILE ELEVATIONS	
PILE	ELEVATION
1	103.67
2	103.40
3	103.13
4	102.86

NOTES:

STIRRUPS IN THE CAP MAY BE SHIFTED AS NECESSARY TO CLEAR ANCHOR BOLTS.

FOR BENT #2, GALVANIZE THE TOP 35 FEET OF EACH PILE IN ACCORDANCE WITH SECTION 1076 OF THE STANDARD SPECIFICATIONS.

CONCRETE DISPLACED BY THE FILLED 24" STEEL PIPE PILES HAS BEEN DEDUCTED FROM THE QUANTITY OF CLASS A CONCRETE FOR THE BENT CAP.

FOR REINFORCING STEEL IN PIPE PILES, SEE "24" STEEL PIPE PILE" SHEET.

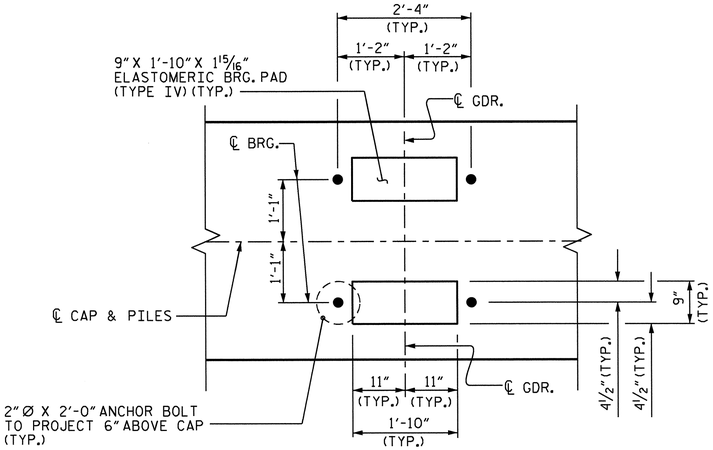

DETAIL "A"

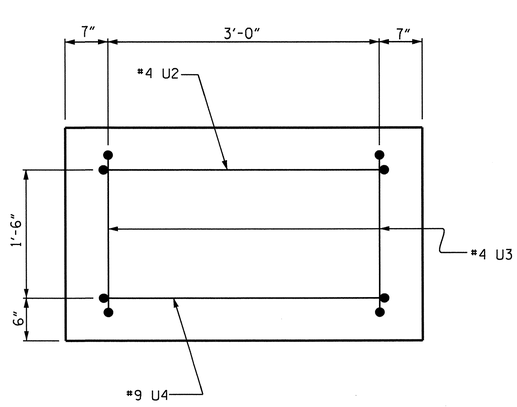

END VIEW
(TYP. BOTH ENDS)

PROJECT NO. R-2303B

SAMPSON COUNTY

STATION: 660+21.00 -L-

SHEET 1 OF 2

STATE OF NORTH CAROLINA
DEPARTMENT OF TRANSPORTATION
RALEIGH

SUBSTRUCTURE

BENT #2

(LEFT LANE)

REVISIONS						SHEET NO.
NO.	BY:	DATE:	NO.	BY:	DATE:	S-106
1			3			TOTAL SHEETS
2			4			146

STR. #3

NORTH CAROLINA PROFESSIONAL SEAL 025516 ENGINEER E. C. MURRAY 2.21.13

DESIGN ENGINEER OF RECORD: MADONNA RORIE	DATE: 4-12-12
DRAWN BY: M.D.PISO	DATE: 06-08-12
CHECKED BY: P.A.PARISI	DATE: 09-18-12

19-FEB-2013 09:00
Z:\TIPProjects-R\R2303B\Structures\Plans\str03\mdpiso\micrstation\R-2303B_SD_B2.dgn
padkins

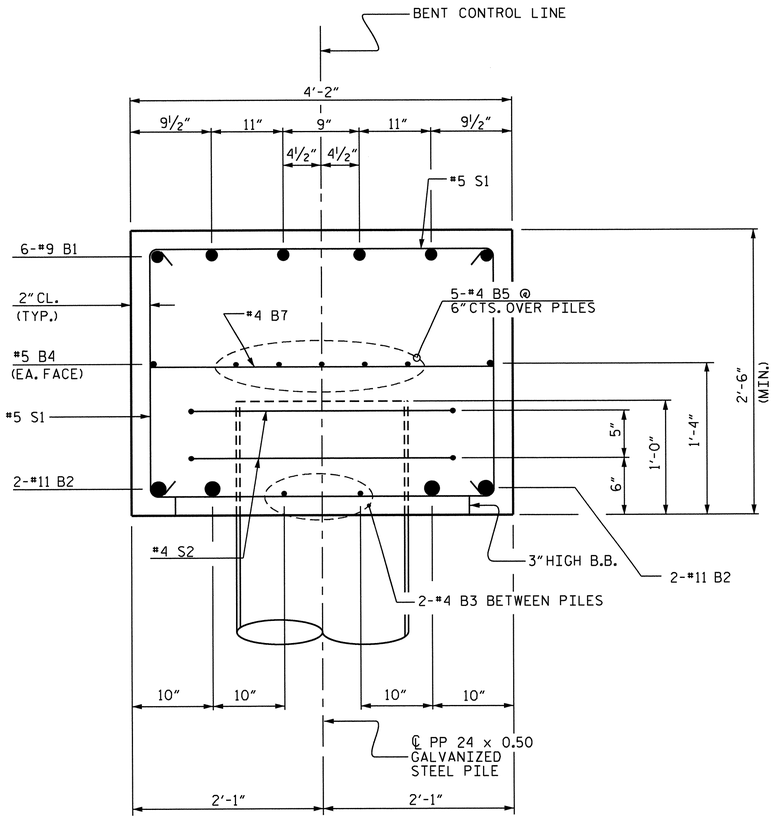

SECTION A-A

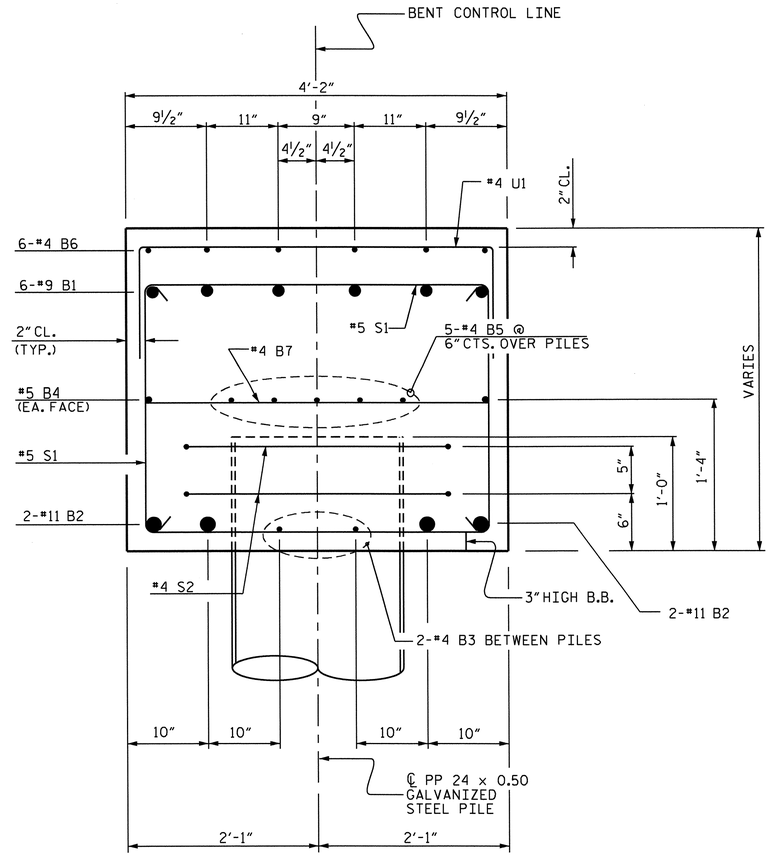

SECTION B-B

BAR TYPES

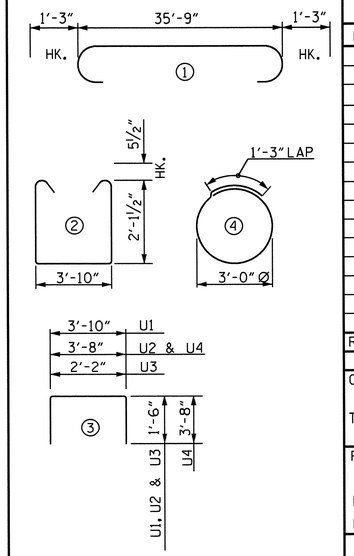

ALL BAR DIMENSIONS ARE OUT TO OUT

BILL OF MATERIAL

BENT #2

BAR	NO.	SIZE	TYPE	LENGTH	WEIGHT
B1	6	#9	1	38'-3"	780
B2	4	#11	STR.	35'-10"	762
B3	6	#4	STR.	8'-3"	33
B4	2	#5	STR.	35'-10"	75
B5	10	#4	STR.	19'-2"	128
B6	24	#4	STR.	3'-4"	53
B7	9	#4	STR.	3'-10"	23
S1	32	#5	2	9'-0"	300
S2	8	#4	4	10'-8"	57
U1	24	#4	3	6'-10"	110
U2	2	#4	3	6'-8"	9
U3	4	#4	3	5'-2"	14
U4	2	#9	3	11'-0"	75
REINFORCING STEEL					2,419 LBS.

CLASS A CONCRETE	
POUR #1 CAP	14.3 C.Y.
TOTAL CONCRETE	14.3 C.Y.

PP 24 x 0.50 GALVANIZED STEEL PILES	
NO. 4	300 LIN. FT.
PILE REDRIVES	2 EA.
PIPE PILE PLATES	4 EA.

PROJECT NO. R-2303B

SAMPSON COUNTY

STATION: 660+21.00 -L-

SHEET 2 OF 2

STATE OF NORTH CAROLINA
DEPARTMENT OF TRANSPORTATION
RALEIGH

SUBSTRUCTURE

BENT #2

(LEFT LANE)

REVISIONS						SHEET NO.
NO.	BY:	DATE:	NO.	BY:	DATE:	S-107
1			3			TOTAL SHEETS
2			4			146

NORTH CAROLINA PROFESSIONAL SEAL 025516 ENGINEER EMILY E. MURRAY
2.21.13

DESIGN ENGINEER OF RECORD: MADONNA RORIE DATE : 4-12-12

DRAWN BY : M.D.PISO DATE : 06-08-12

CHECKED BY : P.A.PARISI DATE : 09-18-12

19-FEB-2013 09:00
Z:\TIPProjects-R\R2303B\Structures\Plans\str03\mdpiso\micrstation\R-2303B_SD_B2.dgn
padkins

STR. #3

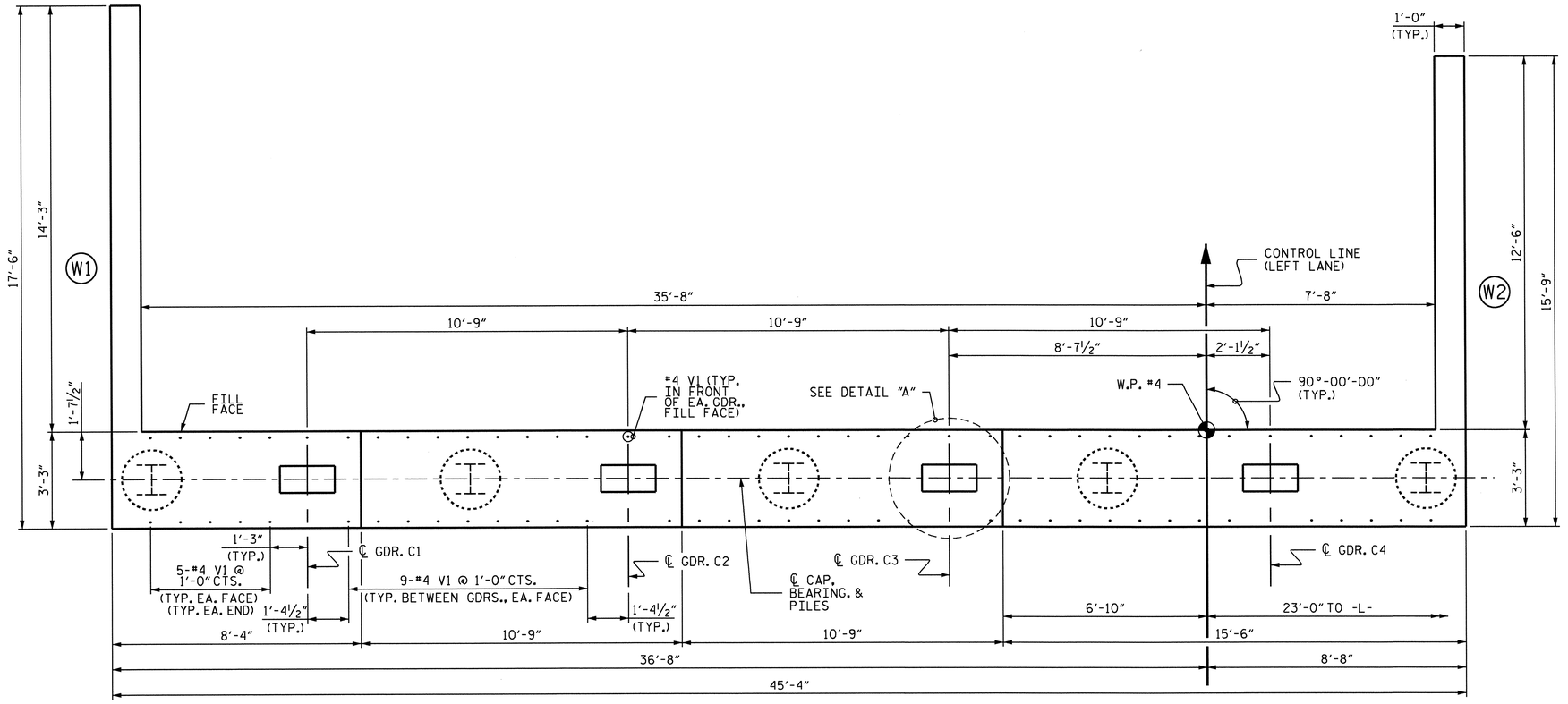

PLAN

NOTES:

INSTALL THE 4" DIA. DRAIN PIPE THROUGH THE WING WALL AS REQUIRED FOR REINFORCED BRIDGE APPROACH FILLS, SEE THE ROADWAY PLANS. REINFORCING STEEL IN THE WING WALL MAY BE SHIFTED AS NECESSARY TO CLEAR THE DRAIN PIPE.

UPPER PORTION OF THE INTEGRAL END BENT CAP AND UPPER PORTION OF WINGS SHALL BE POURED WITH THE SUPERSTRUCTURE. SEE SUPERSTURCTURE PLANS.

THE TOP SURFACE OF THE END BENT CAP AND WINGS, EXCLUDING THE BEARING AREA, SHALL BE RAKED TO A DEPTH OF 1/4".

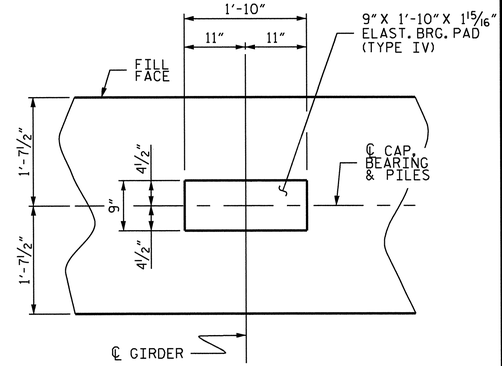

DETAIL "A"
(TYP. EA. GDR.)

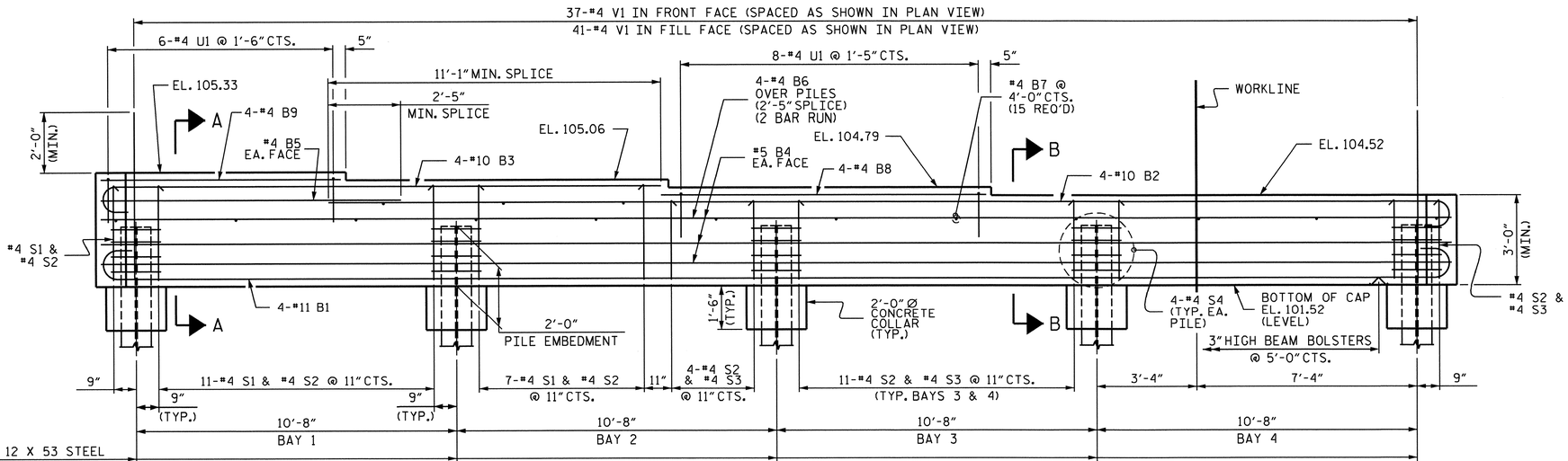

ELEVATION

PROJECT NO. R-2303B

SAMPSON COUNTY

STATION: 660+21.00 -L-

SHEET 1 OF 3

STATE OF NORTH CAROLINA
DEPARTMENT OF TRANSPORTATION
RALEIGH

SUBSTRUCTURE

END BENT #2
(INTEGRAL)
(LEFT LANE)

REVISIONS						SHEET NO.
NO.	BY:	DATE:	NO.	BY:	DATE:	S-108
1			3			TOTAL SHEETS
2			4			146

NORTH CAROLINA PROFESSIONAL SEAL 025516 ENGINEER M. E. AHMED
2.21.13

DESIGN ENGINEER OF RECORD: A. M. LEE, PE DATE: 3-20-12

DRAWN BY: A. M. LEE, PE DATE: 4/2012

CHECKED BY: M.M. AHMED DATE: 10/2012

19-FEB-2013 09:00
Z:\TIPProjects-R\R2303B\Structures\Plans\str03\amlee\R2303B_SD_03_EB.dgn
podkins

STR #3

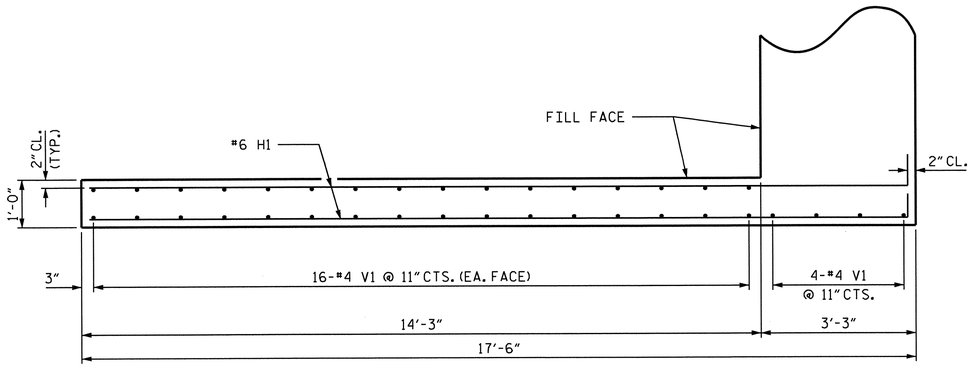

PLAN OF WING (W1)

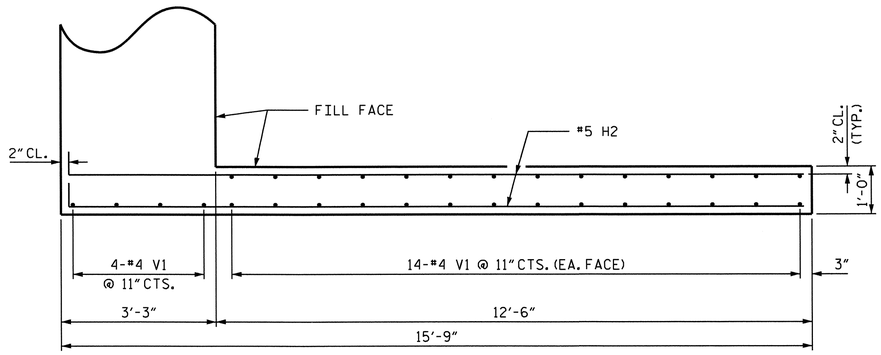

PLAN OF WING (W2)

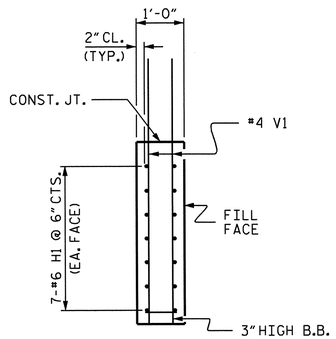

SECTION X-X

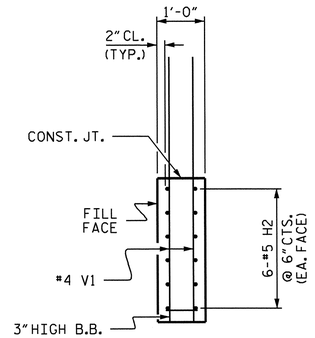

SECTION Y-Y

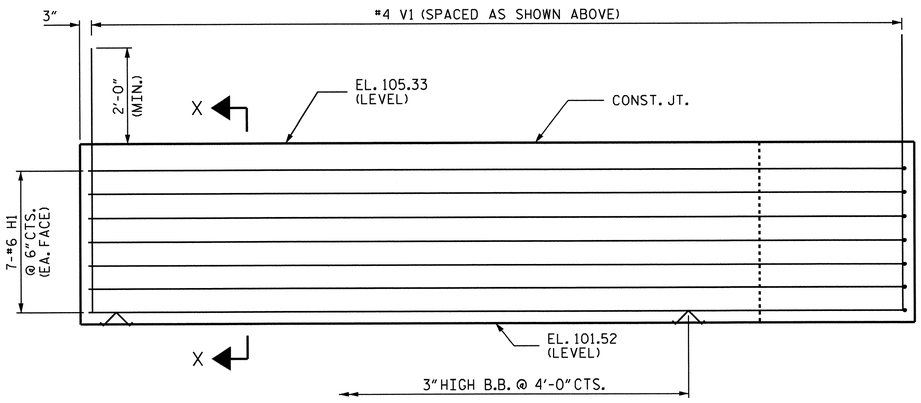

ELEVATION OF WING (W1)

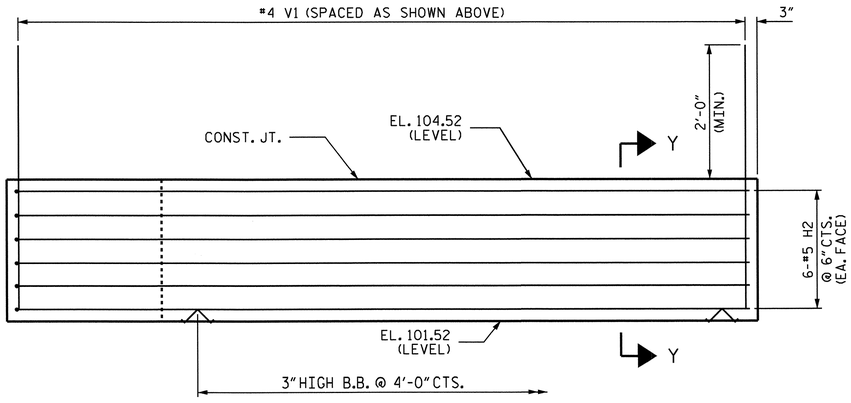

ELEVATION OF WING (W2)

DESIGN ENGINEER OF RECORD: A. M. LEE, PE	DATE : 3-20-12		
DRAWN BY : A. M. LEE, PE	DATE : 4/2012		
CHECKED BY : M.M. AHMED	DATE : 10/2012		

NORTH CAROLINA PROFESSIONAL SEAL 025516 ENGINEER E. MURRAY 2-21-13

PROJECT NO. R-2303B

SAMPSON COUNTY

STATION: 660+21.00 -L-

SHEET 2 OF 3

STATE OF NORTH CAROLINA
DEPARTMENT OF TRANSPORTATION
RALEIGH

SUBSTRUCTURE

END BENT #2
(INTEGRAL)
(LEFT LANE)

REVISIONS						SHEET NO.
NO.	BY:	DATE:	NO.	BY:	DATE:	S-109
1			3			TOTAL SHEETS
2			4			146

STR #3

19-FEB-2013 09:00
Z:\TIPProjects-R\R2303B\Structures\Plans\str03\amlee\R2303B_SD_03_EB.dgn
podkins

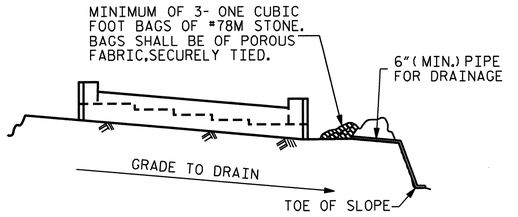

BAGGED STONE AND PIPE SHALL BE PLACED IMMEDIATELY AFTER COMPLETION OF END BENT EXCAVATION. PIPE MAY BE EITHER CONCRETE, CORRUGATED STEEL, CORRUGATED ALUMINUM ALLOY, OR CORRUGATED PLASTIC. PERFORATED PIPE WILL NOT BE ALLOWED.

BAGGED STONE SHALL REMAIN IN PLACE UNTIL THE ENGINEER DIRECTS THAT IT BE REMOVED. THE CONTRACTOR SHALL REMOVE AND DISPOSE OF SILT ACCUMULATIONS AT BAGGED STONE WHEN SO DIRECTED BY THE ENGINEER. BAGS SHALL BE REMOVED AND REPLACED WHENEVER THE ENGINEER DETERMINES THAT THEY HAVE DETERIORATED AND LOST THEIR EFFECTIVENESS.

NO SEPARATE PAYMENT WILL BE MADE FOR THIS WORK AND THE ENTIRE COST OF THIS WORK SHALL BE INCLUDED IN THE UNIT CONTRACT PRICE BID FOR THE SEVERAL PAY ITEMS.

TEMPORARY DRAINAGE AT END BENT

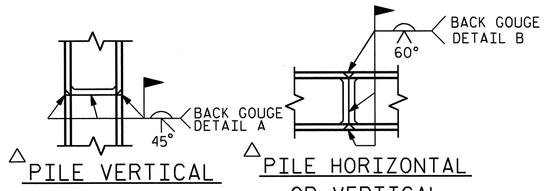

△ PILE VERTICAL

△ PILE HORIZONTAL OR VERTICAL

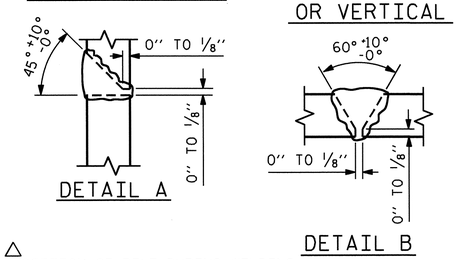

△ POSITION OF PILE DURING WELDING.

PILE SPLICE DETAILS

BAR TYPES

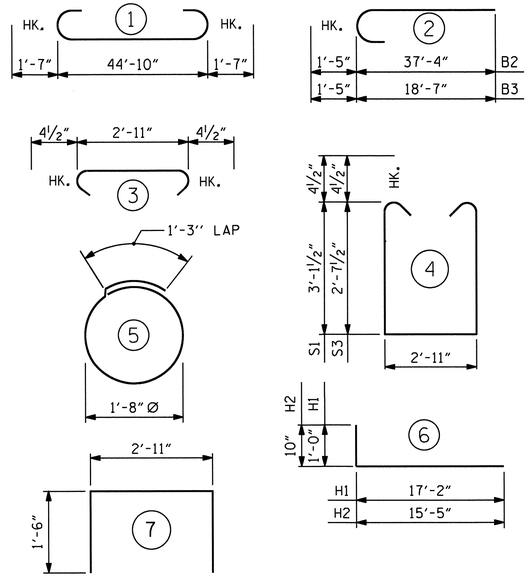

ALL BAR DIMENSIONS ARE OUT TO OUT.

BILL OF MATERIAL

END BENT #2

BAR	NO.	SIZE	TYPE	LENGTH	WEIGHT
B1	4	#11	1	48'-0"	1020
B2	4	#10	2	38'-9"	667
B3	4	#10	2	20'-0"	344
B4	6	#5	STR	45'-0"	282
B5	2	#4	STR	10'-0"	13
B6	8	#4	STR	23'-9"	127
B7	15	#4	STR	2'-11"	29
B8	4	#4	STR	10'-9"	29
B9	4	#4	STR	8'-0"	21
H1	14	#6	6	18'-2"	382
H2	12	#5	6	16'-3"	203
S1	19	#4	4	9'-11"	126
S2	46	#4	3	3'-8"	113
S3	27	#4	4	8'-11"	161
S4	20	#4	5	6'-6"	87
U1	14	#4	7	5'-11"	55
V1	146	#4	STR	5'-7"	545

REINFORCING STEEL		LBS.	4204
CLASS A CONCRETE BREAKDOWN:			
POUR #1 - CAP, COLLARS, AND LOWER WINGS		C.Y.	22.5
HP 12 X 53 STEEL PILES NO. 5		LIN. FT.	350
PILE REDRIVES		EA.	3

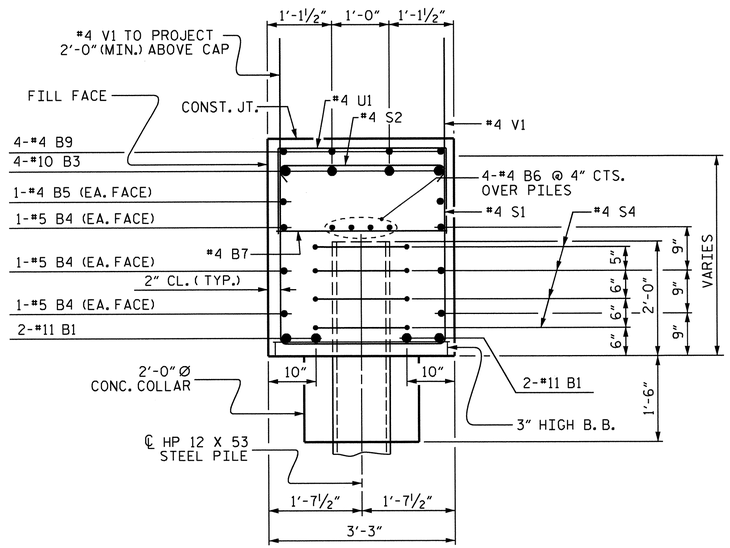

SECTION A-A

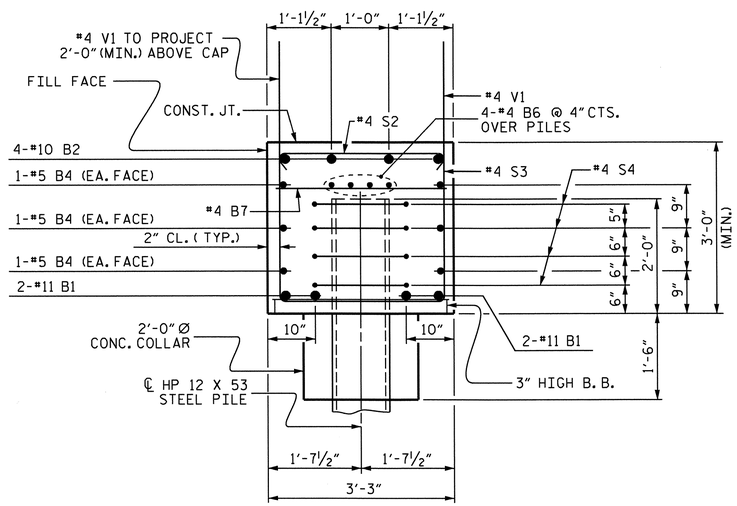

SECTION B-B

PROJECT NO. R-2303B

SAMPSON COUNTY

STATION: 660+21.00 -L-

SHEET 3 OF 3

STATE OF NORTH CAROLINA
DEPARTMENT OF TRANSPORTATION
RALEIGH

SUBSTRUCTURE

END BENT #2 (INTEGRAL) (LEFT LANE)

REVISIONS						SHEET NO.
NO.	BY:	DATE:	NO.	BY:	DATE:	S-110
1			3			TOTAL SHEETS
2			4			146

STR #3

NORTH CAROLINA PROFESSIONAL SEAL 025516 ENGINEER
2-21-13

DESIGN ENGINEER OF RECORD: A. M. LEE, PE DATE: 3-20-12

DRAWN BY: A. M. LEE, PE DATE: 4/2012

CHECKED BY: M.M. AHMED DATE: 10/2012

19-FEB-2013 09:00
Z:\TIPProjects-R\R2303B\Structures\Plans\str03\amlee\R2303B_SD_03_EB.dgn
padkins

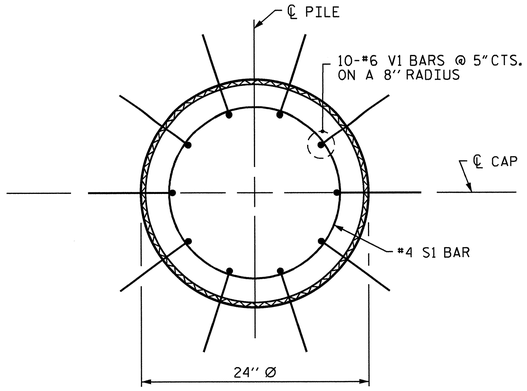

PLAN

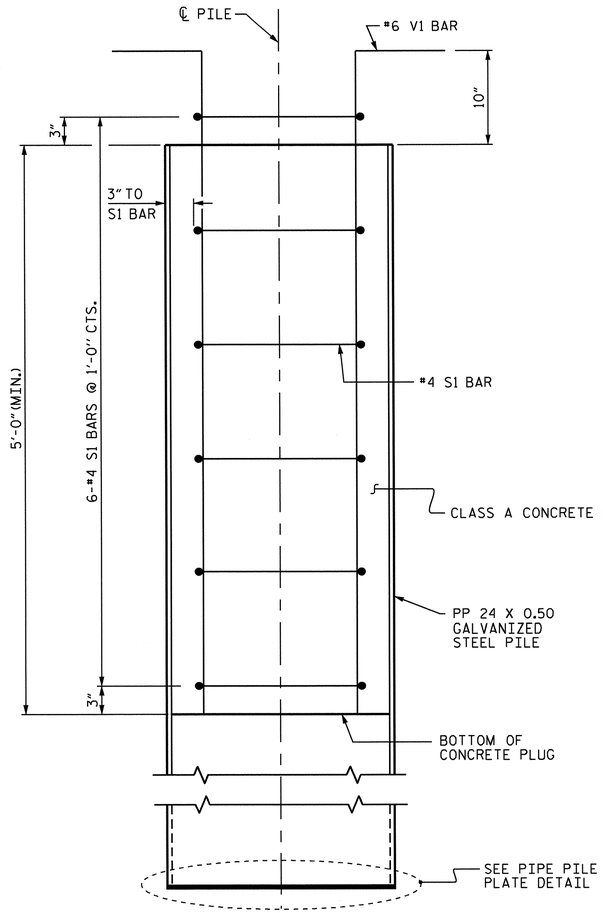

ELEVATION

PP 24 X 0.50 GALVANIZED STEEL PILE

(CLOSED END)

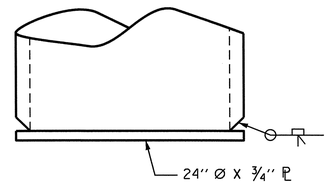

PIPE PILE PLATE DETAIL

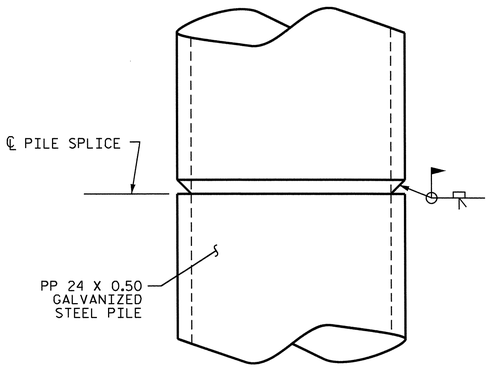

PIPE PILE SPLICE DETAIL

NOTES

PIPE PILES SHALL BE IN ACCORDANCE WITH SECTION 1084 OF THE STANDARD SPECIFICATIONS.

GALVANIZE THE TOP 35 FEET OF EACH PILE IN ACCORDANCE WITH SECTION 1076 OF THE STANDARD SPECIFICATIONS. GALVANIZING OR METALLIZING PIPE PILE PLATES IS NOT REQUIRED.

PIPE PILE PLATES SHALL BE IN ACCORDANCE WITH SECTION 450 OF THE STANDARD SPECIFICATIONS.

REMOVE AND REPLACE OR REPAIR TO THE SATISFACTION OF THE ENGINEER PILES THAT ARE DAMAGED, DEFORMED OR COLLAPSED DURING INSTALLATION OR DRIVING.

PILE SPLICES SHALL BE IN ACCORDANCE WITH THE STANDARD SPECIFICATIONS AND AWS D1.1.

FOR CLOSED END PIPE PILES, REMOVE ALL SOIL AND WATER FROM INSIDE THE PILES JUST PRIOR TO PLACING REINFORCING STEEL AND CONCRETE FOR THE CONCRETE PLUG.

FORM THE CONCRETE PLUG SUCH THAT THE REINFORCING STEEL OR CONCRETE DOES NOT MOVE AND THE CLEARANCE FROM THE REINFORCING STEEL TO THE INSIDE OF THE PILE IS MAINTAINED AFTER CONCRETE PLACEMENT. DO NOT PLACE CONCRETE IN THE BENT CAP UNTIL THE CONCRETE PLUG HAS ATTAINED A MINIMUM COMPRESSIVE STRENGTH OF 1500 PSI.

THE REINFORCING STEEL, CLASS A CONCRETE, AND GALVANIZING ARE CONSIDERED INCIDENTAL TO THE CONTRACT UNIT PRICE BID PER LINEAR FOOT FOR PP 24 X 0.50 GALVANIZED STEEL PILES.

BILL OF MATERIAL FOR ONE PP 24 X 0.50 GALVANIZED STEEL PILE

BAR	NO.	SIZE	TYPE	LENGTH	WEIGHT
S1	6	#4	1	6'-0"	24
V1	10	#6	2	6'-8"	100
REINFORCING STEEL =				124	lbs
CLASS A CONCRETE					
5'-0" MINIMUM PLUG					0.5 CY

BAR TYPES

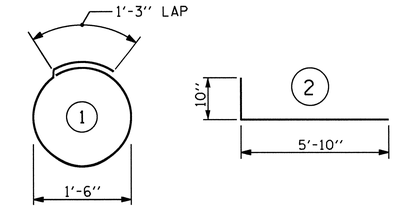

ALL BAR DIMENSIONS ARE OUT TO OUT.

PROJECT NO. R-2303B

SAMPSON COUNTY

STATION: 660+21.00 -L-

STATE OF NORTH CAROLINA
DEPARTMENT OF TRANSPORTATION
RALEIGH

STANDARD

24" STEEL PIPE PILE

(LEFT LANE)

REVISIONS						SHEET NO.
NO.	BY:	DATE:	NO.	BY:	DATE:	S-111
1			3			TOTAL SHEETS
2			4			146

STR. #3

STD. NO. SPP4

NORTH CAROLINA PROFESSIONAL SEAL 025516 ENGINEER MADONNA E. MURRAY
2-21-13

DESIGN ENGINEER OF RECORD: MADONNA RORIE	DATE : 4-12-12
ASSEMBLED BY : M.D.PISO	DATE : 09-25-12
CHECKED BY : P.A.PARISI	DATE : 10-03-12
DRAWN BY : TLA 8/05	ADDED 10/1/05 MAA/KMM
CHECKED BY : GM 9/05	REV. 5/1/06R MAA/GM
	REV. 10/1/11 MAA/GM

19-FEB-2013 08:59
Z:\TIPProjects-R\R2303B\Structures\Plans\str03\mdpiso\micrstation\R-2303B_SD_B2.dgn
padkins

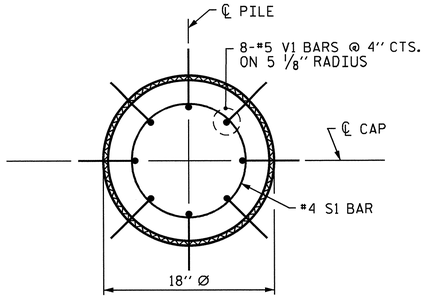

PLAN

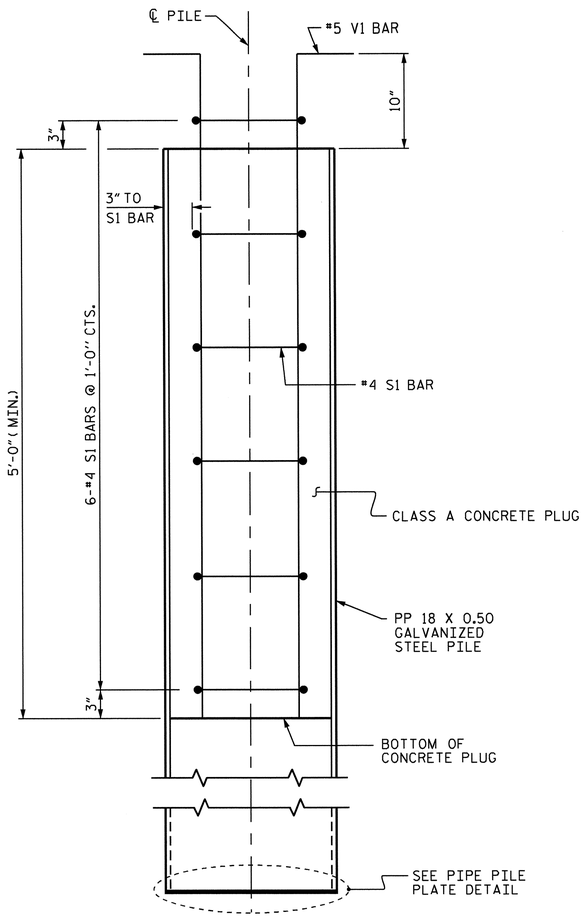

ELEVATION

PP 18 X 0.50 GALVANIZED STEEL PILE

(CLOSED END)

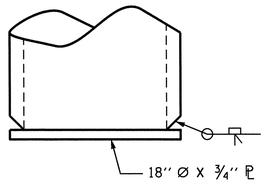

PIPE PILE PLATE DETAIL

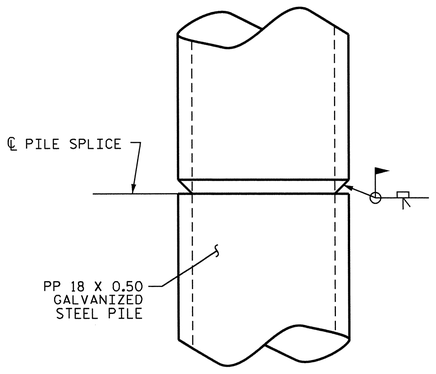

PIPE PILE SPLICE DETAIL

NOTES

PIPE PILES SHALL BE IN ACCORDANCE WITH SECTION 1084 OF THE STANDARD SPECIFICATIONS.

GALVANIZE THE TOP 30 FEET OF EACH PILE IN ACCORDANCE WITH SECTION 1076 OF THE STANDARD SPECIFICATIONS. GALVANIZING OR METALLIZING PIPE PILE PLATES IS NOT REQUIRED.

PIPE PILE PLATES SHALL BE IN ACCORDANCE WITH SECTION 450 OF THE STANDARD SPECIFICATIONS.

REMOVE AND REPLACE OR REPAIR TO THE SATISFACTION OF THE ENGINEER PILES THAT ARE DAMAGED, DEFORMED OR COLLAPSED DURING INSTALLATION OR DRIVING.

PILE SPLICES SHALL BE IN ACCORDANCE WITH THE STANDARD SPECIFICATIONS AND AWS D1.1.

FOR CLOSED END PIPE PILES, REMOVE ALL SOIL AND WATER FROM INSIDE THE PILES JUST PRIOR TO PLACING REINFORCING STEEL AND CONCRETE FOR THE CONCRETE PLUG.

FORM THE CONCRETE PLUG SUCH THAT THE REINFORCING STEEL OR CONCRETE DOES NOT MOVE AND THE CLEARANCE FROM THE REINFORCING STEEL TO THE INSIDE OF THE PILE IS MAINTAINED AFTER CONCRETE PLACEMENT. DO NOT PLACE CONCRETE IN THE BENT CAP UNTIL THE CONCRETE PLUG HAS ATTAINED A MINIMUM COMPRESSIVE STRENGTH OF 1500 PSI.

THE REINFORCING STEEL, CLASS A CONCRETE, AND GALVANIZING ARE CONSIDERED INCIDENTAL TO THE CONTRACT UNIT PRICE BID PER LINEAR FOOT FOR PP 18 X 0.50 GALVANIZED STEEL PILES.

BILL OF MATERIAL FOR ONE PP 18 X 0.50 GALVANIZED STEEL PILE

BAR	NO.	SIZE	TYPE	LENGTH	WEIGHT
S1	6	#4	1	4'-5"	18
V1	8	#5	2	6'-8"	56
REINFORCING STEEL =					74 lbs

CLASS A CONCRETE

5'-0" MINIMUM PLUG 0.3 CY

BAR TYPES

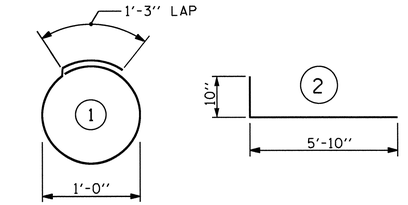

ALL BAR DIMENSIONS ARE OUT TO OUT.

PROJECT NO. R-2303B

SAMPSON COUNTY

STATION: 660+21.00 -L-

STATE OF NORTH CAROLINA
DEPARTMENT OF TRANSPORTATION
RALEIGH

STANDARD

18" STEEL PIPE PILE

(LEFT LANE)

REVISIONS						SHEET NO.
NO.	BY:	DATE:	NO.	BY:	DATE:	S-112
1			3			TOTAL SHEETS
2			4			146

STR. #3 STD. NO. SPP3

DESIGN ENGINEER OF RECORD: MADONNA RORIE DATE : 4-12-12			
ASSEMBLED BY : M.D.PISO DATE : 09-24-12			
CHECKED BY : P.A.PARISI DATE : 09-24-12			
DRAWN BY : RWW 1/01	REV. 10/1/05	LBG/TLA	
CHECKED BY : LES 1/01	REV. 5/1/06R	MAA/KMM	
	REV. 10/1/11	MAA/GM	

NORTH CAROLINA PROFESSIONAL SEAL 025516 ENGINEER GARY E. MURRAY 2-21-13

19-FEB-2013 08:59
Z:\TIPProjects-R\R2303B\Structures\Plans\str03\mdpiso\microstation\R-2303B_SD_B1.dgn
padkins

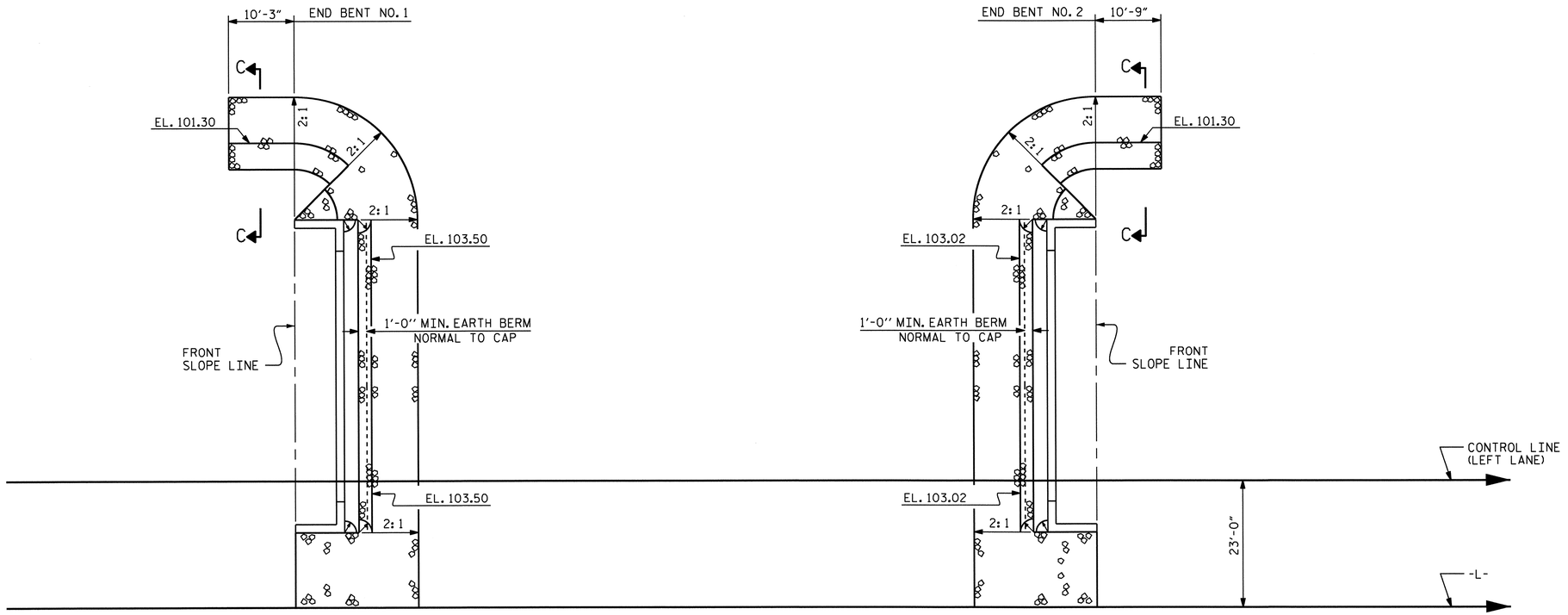

PLAN

ESTIMATED QUANTITIES		
	RIP RAP CLASS II (2'-0" THICK)	GEOTEXTILE FOR DRAINAGE
	TONS	SQUARE YARDS
END BENT 1	202	224
END BENT 2	207	230

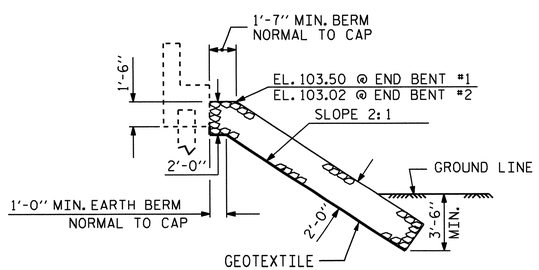

℄ SECTION

BERM RIP RAPPED

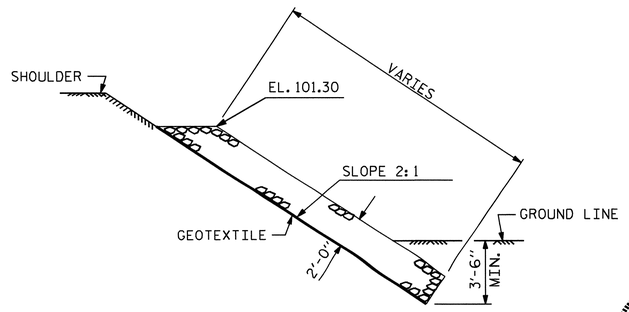

SECTION C-C

PROJECT NO. R-2303B

SAMPSON COUNTY

STATION: 660+21.00 -L-

STATE OF NORTH CAROLINA
DEPARTMENT OF TRANSPORTATION
RALEIGH

STANDARD

RIP RAP DETAILS

(LEFT LANE)

REVISIONS						SHEET NO.
NO.	BY:	DATE:	NO.	BY:	DATE:	S-113
1			3			TOTAL SHEETS
2			4			146

NORTH CAROLINA PROFESSIONAL SEAL 025516 ENGINEER TIMOTHY A. MURRAY 2-21-13

ASSEMBLED BY : PEGGY ADKINS	DATE : 10-10-12	
CHECKED BY : M.D. PISO	DATE : 10-12-12	
DRAWN BY : REK 1/84	REV. 5/1/06R	TLA/GM
CHECKED BY : RDU 1/84	REV. 10/1/11	MAA/GM
	REV. 12/21/11	MAA/GM

19-FEB-2013 08:58
Z:\TIPProjects-R\R2303B\Structures\Plans\str03\pparisi\R2303B_sd_RR_03.dgn
padkins

STR. #3

STD. NO. RR1 (Sht 2)

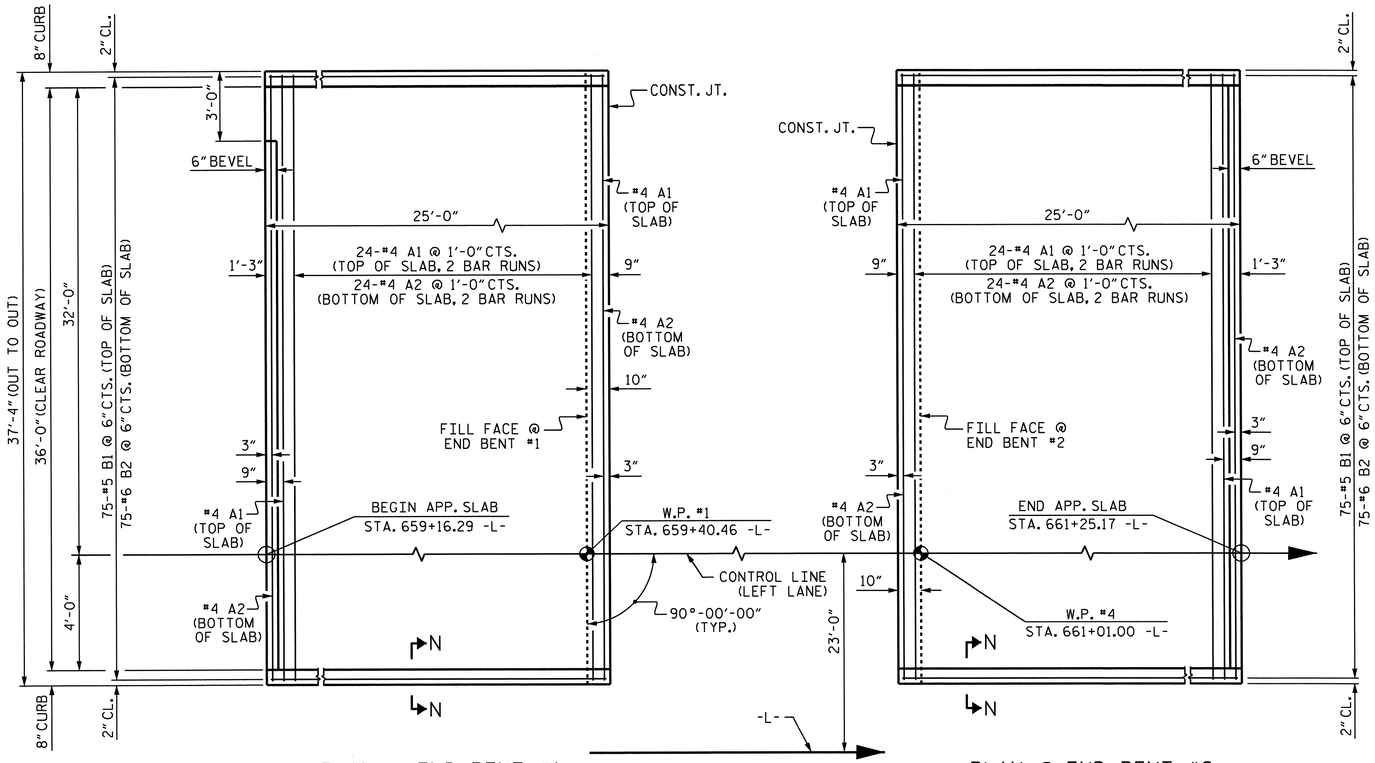

DIMENSIONS SHOWN ARE TYPICAL FOR BOTH APPROACH SLABS

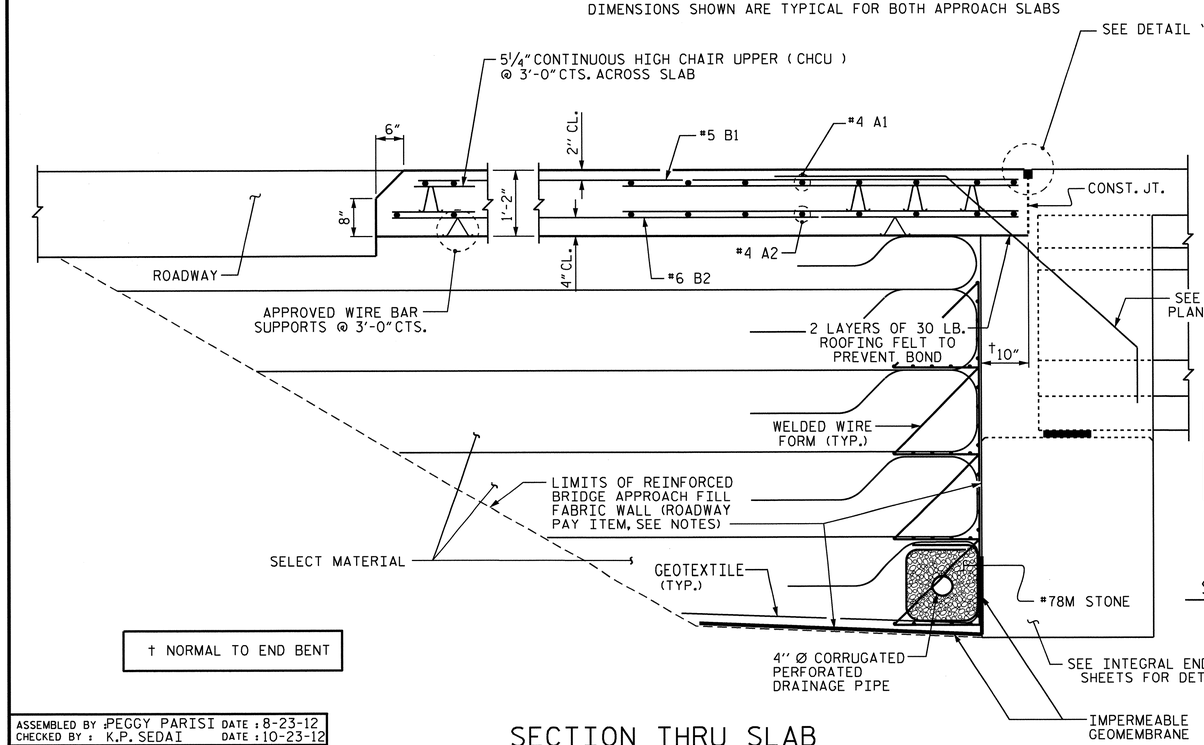

† NORMAL TO END BENT

SECTION THRU SLAB

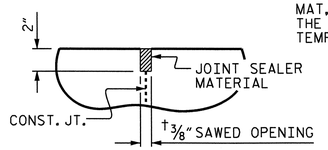

DETAIL "A"

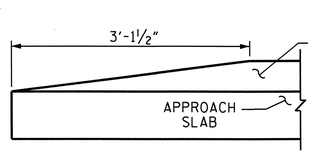

END OF CURB WITHOUT SHOULDER BERM GUTTER

NOTES

APPROACH SLAB SHALL NOT BE CONSTRUCTED PRIOR TO COMPLETION OF THE BRIDGE DECK.

FOR REINFORCED BRIDGE APPROACH FILL FABRIC WALL INCLUDING GEOTEXTILE, IMPERMEABLE GEOMEMBRANE, 4" Ø DRAINAGE PIPE, #78M STONE, WELDED WIRE FORM, AND SELECT MATERIAL, SEE ROADWAY PLANS.

AREA BETWEEN THE WINGWALL AND APPROACH SLAB SHALL BE GRADED TO DRAIN THE WATER AWAY FROM THE FILL FACE OF THE BRIDGE AND SHALL BE PAVED. SEE ROADWAY PLANS.

THE JOINT OPENING AT THE APPROACH SLAB/DECK INTERFACE SHALL BE SAWED NO MORE THAN 12 HOURS AFTER THE APPROACH SLAB IS CAST. THE JOINT SHALL BE CLEANED OF ALL DEBRIS BEFORE THE SEALANT IS APPLIED. THE JOINT SEALER MATERIAL SHALL CONFORM TO THE REQUIREMENTS OF SECTION 1028-3 OF THE STANDARD SPECIFICATIONS.

SPLICE CHART

BAR	SPLICE LENGTH
#4 A1	2'-0"
#4 A2	1'-9"

BILL OF MATERIAL

FOR ONE APPROACH SLAB (2 REQ'D)

BAR	NO.	SIZE	TYPE	LENGTH	WEIGHT
✳ A1	52	#4	STR	19'-6"	677
A2	52	#4	STR	19'-5"	674
✳ B1	75	#5	STR	24'-2"	1890
B2	75	#6	STR	24'-8"	2779

REINFORCING STEEL	3453 LBS.
✳ EPOXY COATED REINFORCING STEEL	2567 LBS.
CLASS AA CONCRETE	40.4 C.Y.

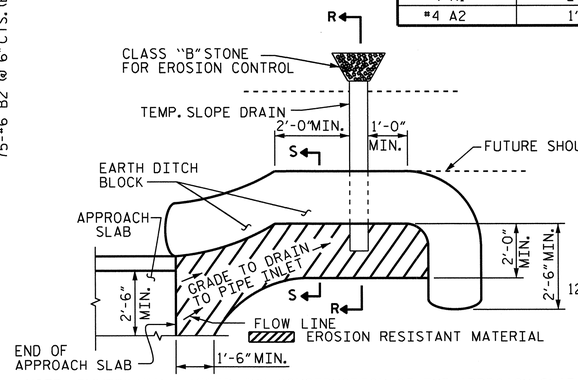

NOTE: IMMEDIATELY AFTER THE CONSTRUCTION OF THE APPROACH SLAB, THE CONTRACTOR SHALL PROVIDE TEMPORARY BERM AND SLOPE DRAIN. CONTRACTOR SHALL GRADE TO PIPE INLET AND PROVIDE EROSION RESISTANT MATERIAL AS SHOWN. THE EROSION RESISTANT MATERIAL SHALL BE EITHER 1) ASPHALT PLANT MIX, TYPE 1 OR TYPE 2, MIN. 2" DEPTH, 2) EROSION CONTROL MAT, OR 3) CONCRETE, AS DIRECTED BY THE ENGINEER. THE SLOPE DRAIN SHALL CONSIST OF A NON-PERFORATED TEMPORARY DRAINAGE PIPE, 12 INCHES IN DIAMETER.

PLAN VIEW

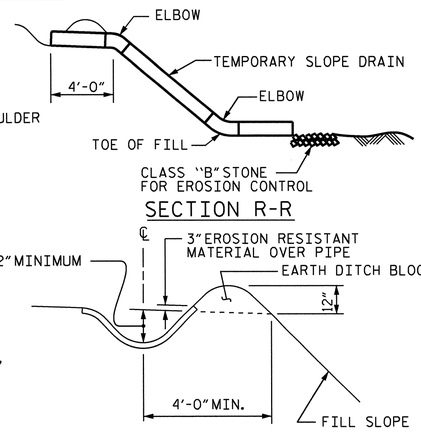

SECTION R-R

SECTION S-S

TEMPORARY BERM AND SLOPE DRAIN DETAILS

(TO BE USED WHEN SHOULDER BERM GUTTER IS REQUIRED)

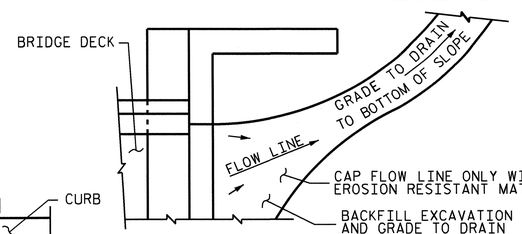

NOTE: IF THE APPROACH SLAB IS NOT CONSTRUCTED IMMEDIATELY AFTER THE BACKFILLING OF THE END BENT EXCAVATION, GRADE TO DRAIN TO THE BOTTOM OF THE SLOPE AND PROVIDE EROSION RESISTANT MATERIAL, SUCH AS FIBERGLASS ROVING OR AS DIRECTED BY THE ENGINEER TO PREVENT SOIL EROSION AND TO PROTECT THE AREA ADJACENT TO THE STRUCTURE. THE CONTRACTOR WILL BE REQUIRED TO REMOVE THESE MATERIALS PRIOR TO CONSTRUCTION OF THE APPROACH SLAB.

TEMPORARY DRAINAGE DETAIL

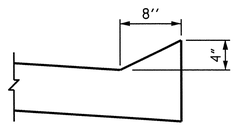

SECTION N-N

PROJECT NO. R-2303B

SAMPSON COUNTY

STATION: 660+21.00 -L-

STATE OF NORTH CAROLINA
DEPARTMENT OF TRANSPORTATION
RALEIGH

STANDARD

BRIDGE APPROACH SLAB FOR INTEGRAL ABUTMENT

(LEFT LANE)

REVISIONS						SHEET NO.
NO.	BY:	DATE:	NO.	BY:	DATE:	S-114
1			3			TOTAL SHEETS
2			4			146

ASSEMBLED BY : PEGGY PARISI	DATE : 8-23-12
CHECKED BY : K.P. SEDAI	DATE : 10-23-12
DRAWN BY : TLA 10/05	ADDED 5/1/06RR KMM/GM
CHECKED BY : GM 5/06	REV. 10/1/11 MAA/GM
	REV. 12/21/11 MAA/GM

19-FEB-2013 08:58
Z:\TIPProjects-R\R2303B\Structures\Plans\str03\pparisi\R-2303B_SD_AP_03.dgn
padkins

STR. #3

STD. NO. BAS5 (SHT 2)

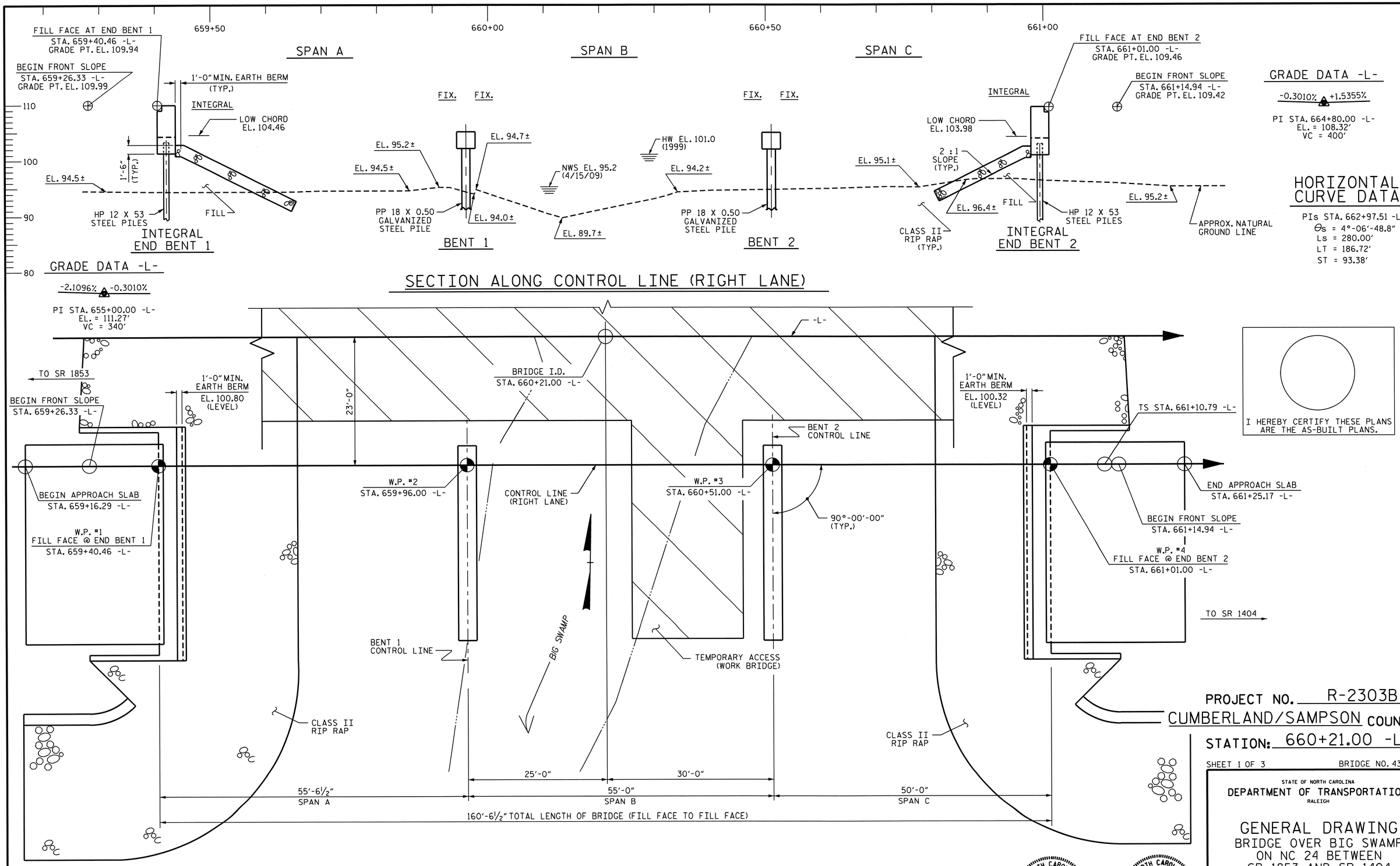

PLAN

(FOR CLARITY, PILES ARE NOT SHOWN.)

DRAWN BY : PEGGY ADKINS DATE : 9-21-12
CHECKED BY : T. AVERETTE DATE : 12-18-12
DESIGN ENGINEER OF RECORD: BENNA MATHEW, PE DATE : 7-12-10

20-FEB-2013 14:55
Z:\TIPProjects-R\R2303B\Structures\Plans\str04\pparisi\R2303B_SD_GD_04.dgn
padkins

NORTH CAROLINA PROFESSIONAL SEAL 032174 ENGINEER OMAR R. AZIZ
2/21/13

NORTH CAROLINA PROFESSIONAL SEAL 025516 ENGINEER
2-21-13

PROJECT NO. R-2303B
CUMBERLAND/SAMPSON COUNTY
STATION: 660+21.00 -L-

SHEET 1 OF 3 BRIDGE NO. 433

STATE OF NORTH CAROLINA
DEPARTMENT OF TRANSPORTATION
RALEIGH

GENERAL DRAWING
BRIDGE OVER BIG SWAMP
ON NC 24 BETWEEN
SR 1853 AND SR 1404
(RIGHT LANE)

REVISIONS						SHEET NO.
NO.	BY:	DATE:	NO.	BY:	DATE:	S-115
1			3			TOTAL SHEETS
2			4			146

STR. #4

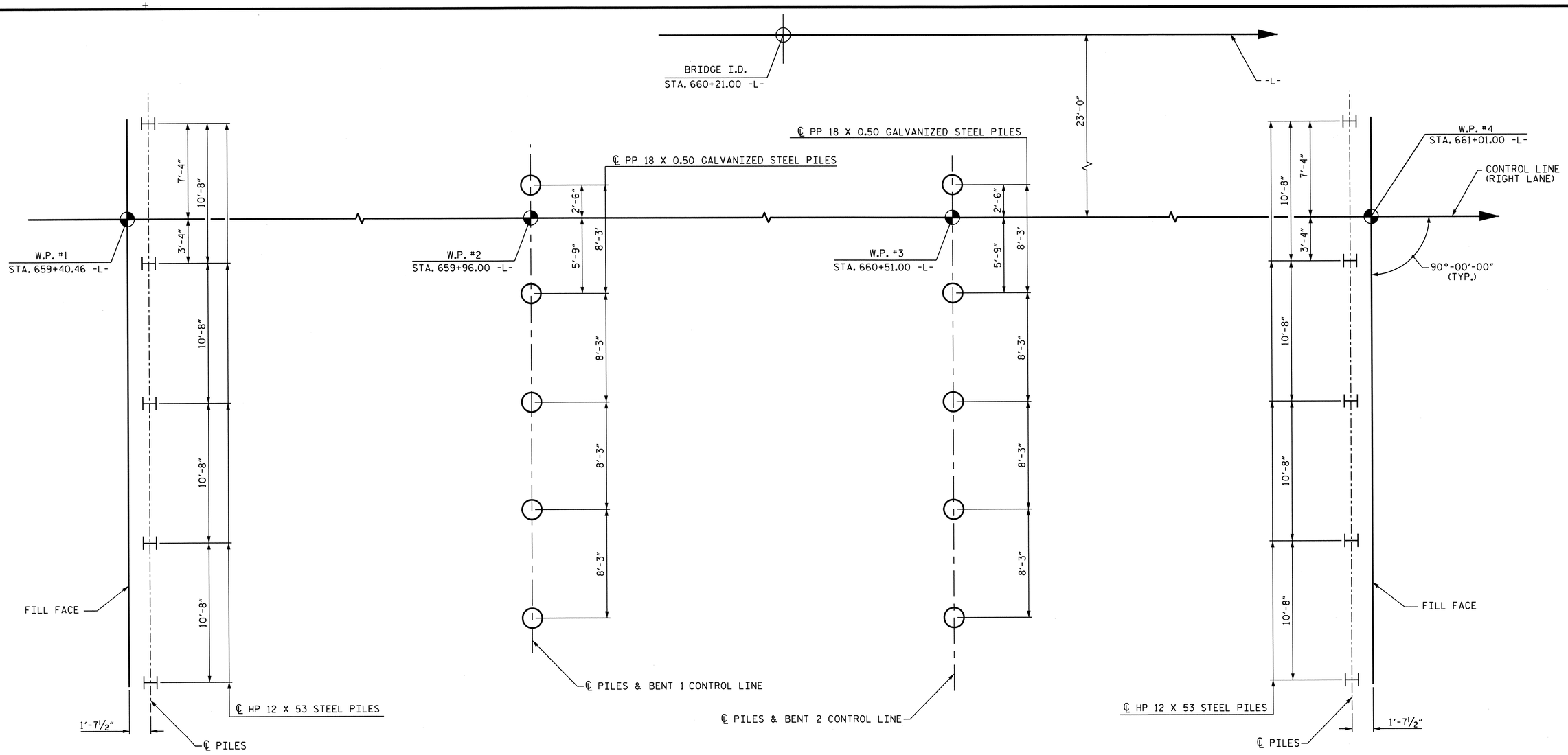

FOUNDATION LAYOUT

DIMENSIONS LOCATING PILES ARE SHOWN TO PILE CENTERLINE.

NOTES:

FOR PILES, SEE SECTION 450 OF THE STANDARD SPECIFICATIONS.

PILES AT END BENT NOS. 1 AND 2 ARE DESIGNED FOR A FACTORED RESISTANCE OF 115 TONS AND 110 TONS PER PILE, RESPECTIVELY.

DRIVE PILES AT END BENT NOS. 1 AND 2 TO A REQUIRED DRIVING RESISTANCE OF 195 TONS AND 185 TONS PER PILE, RESPECTIVELY.

PILES AT BENT NOS. 1 AND 2 ARE DESIGNED FOR A FACTORED RESISTANCE OF 170 TONS TONS PER PILE.

DRIVE PILES AT BENT NOS. 1 AND 2 TO A REQUIRED DRIVING RESISTANCE OF 230 PER PILE. THIS REQUIRED DRIVING RESISTANCE INCLUDES ADDITIONAL RESISTANCE FOR DOWNDRAG OR SCOUR.

INSTALL PILES AT BENT NOS. 1 AND 2 TO A TIP ELEVATION NO HIGHER THAN 64 FT.

THE SCOUR CRITICAL ELEVATIONS FOR BENT NOS. 1 AND 2 ARE ELEVATION 80 FT AND ELEVATION 85 FT, RESPECTIVELY. SCOUR CRITICAL ELEVATIONS ARE USED TO MONITOR POSSIBLE SCOUR PROBLEMS DURING THE LIFE OF THE STRUCTURE.

IT HAS BEEN ESTIMATED THAT A HAMMER WITH AN EQUIVALENT RATED ENERGY IN THE RANGE OF 73,500 FT-LBS TO 125,000 FT-LBS PER BLOW WILL BE REQUIRED TO DRIVE PILES AT BENT NOS. 1 AND 2. THIS ESTIMATED ENERGY RANGE DOES NOT RELEASE THE CONTRACTOR FROM PROVIDING DRIVING EQUIPMENT IN ACCORDANCE WITH SUBARTICLE 450-3(D)(2) OF THE STANDARD SPECIFICATIONS.

TESTING THE FIRST PRODUCTION PILE WITH THE PDA DURING DRIVING, RESTRIKING OR REDRIVING IS REQUIRED. FOR PDA TESTING, SEE SECTION 450 OF THE STANDARD SPECIFICATIONS AND FOR PILE DRIVING CRITERIA, SEE PILE DRIVING CRITERIA PROVISION.

PIPE PILE PLATES ARE REQUIRED FOR STEEL PIPE PILES AT BENT NO. 1 AND BENT NO. 2. USE PIPE PILE PLATES WITH A DIAMETER EQUAL TO THE PIPE PILE DIAMETER. FOR STEEL PIPE PILE PLATES, SEE SECTION 450 OF THE STANDARD SPECIFICATIONS.

DRAWN BY : PEGGY ADKINS DATE : 9-21-12
CHECKED BY : T. AVERETTE DATE : 12-18-12
DESIGN ENGINEER OF RECORD: BENNA MATHEW, PE DATE : 7-12-10

19-FEB-2013 08:57
Z:\TIPProjects-R\R2303B\Structures\Plans\str04\pparisi\R2303B_SD_GD_04.dgn
padkins

PROJECT NO. R-2303B
CUMBERLAND/SAMPSON COUNTY
STATION: 660+21.00 -L-

SHEET 2 OF 3

STATE OF NORTH CAROLINA
DEPARTMENT OF TRANSPORTATION
RALEIGH

GENERAL DRAWING

BRIDGE OVER BIG SWAMP
ON NC 24 BETWEEN
SR 1853 AND SR 1404
(RIGHT LANE)

NORTH CAROLINA PROFESSIONAL SEAL 025516 ENGINEER BENNA MATHEW
2-21-13

REVISIONS						SHEET NO.
NO.	BY:	DATE:	NO.	BY:	DATE:	S-116
1			3			TOTAL SHEETS
2			4			146

STR. #4

BM #141: RR SPIKE IN BASE OF 48" OAK, 397' LEFT, STA. 630+66 -L-, EL. 122.91, NAVD 88.

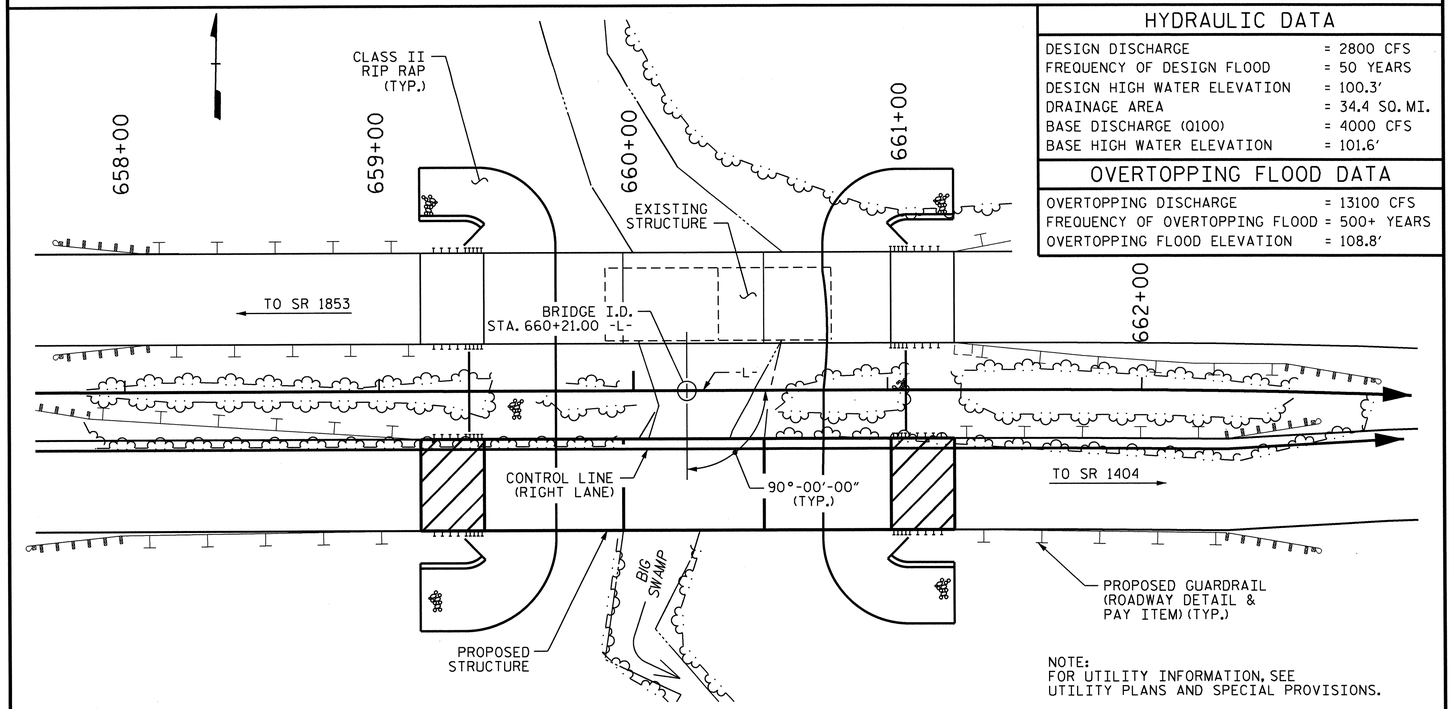

HYDRAULIC DATA

DESIGN DISCHARGE	= 2800 CFS
FREQUENCY OF DESIGN FLOOD	= 50 YEARS
DESIGN HIGH WATER ELEVATION	= 100.3'
DRAINAGE AREA	= 34.4 SQ. MI.
BASE DISCHARGE (Q100)	= 4000 CFS
BASE HIGH WATER ELEVATION	= 101.6'

OVERTOPPING FLOOD DATA

OVERTOPPING DISCHARGE	= 13100 CFS
FREQUENCY OF OVERTOPPING FLOOD	= 500+ YEARS
OVERTOPPING FLOOD ELEVATION	= 108.8'

LOCATION SKETCH

NOTES:

ASSUMED LIVE LOAD = HL-93 OR ALTERNATE LOADING.

THIS BRIDGE HAS BEEN DESIGNED IN ACCORDANCE WITH THE AASHTO LRFD BRIDGE DESIGN SPECIFICATIONS.

THIS BRIDGE IS LOCATED IN SEISMIC ZONE 1.

FOR OTHER DESIGN DATA AND GENERAL NOTES, SEE SHEET SN.

FOR SUBMITTAL OF WORKING DRAWINGS, SEE SPECIAL PROVISIONS.

FOR FALSEWORK AND FORMWORK, SEE SPECIAL PROVISIONS.

FOR CRANE SAFETY, SEE SPECIAL PROVISIONS.

FOR GROUT FOR STRUCTURES, SEE SPECIAL PROVISIONS.

PRESTRESSED CONCRETE DECK PANELS MAY BE USED IN LIEU OF METAL STAY-IN-PLACE FORMS IN ACCORDANCE WITH ARTICLE 420-3 OF THE STANDARD SPECIFICATIONS.

REMOVABLE FORMS MAY BE USED IN LIEU OF METAL STAY-IN-PLACE FORMS IN ACCORDANCE WITH ARTICLE 420-3 OF THE STANDARD SPECIFICATIONS.

NEEDLE BEAMS WILL NOT BE ALLOWED UNLESS OTHERWISE CALLED FOR ON THE PLANS OR APPROVED BY THE ENGINEER.

FOR EROSION CONTROL MEASURES, SEE EROSION CONTROL PLANS.

FOR INTERIOR BENTS 1 AND 2, ONLY PARTIAL GALVANIZING OF THE PILES IS REQUIRED. SEE INTERIOR BENT SHEETS FOR REQUIRED GALVANIZED LENGTHS. PAYMENT FOR PARTIALLY GALVANIZED PILES WILL BE MADE UNDER THE CONTRACT UNIT PRICE FOR GALVANIZED STEEL PILES.

THIS STRUCTURE HAS BEEN DESIGNED IN ACCORDANCE WITH "HEC 18-EVALUATING SCOUR AT BRIDGES."

FOR PLACING LOAD ON STRUCTURE MEMBERS, SEE SPECIAL PROVISIONS.

FOR CONSTRUCTION, MAINTENANCE, AND REMOVAL OF TEMPORARY ACCESS, SEE SPECIAL PROVISIONS.

TOTAL BILL OF MATERIAL

	CONSTRUCTION, MAINTENANCE, AND REMOVAL OF TEMPORARY ACCESS	PDA TESTING	REINFORCED CONCRETE DECK SLAB	GROOVING BRIDGE FLOORS	CLASS A CONCRETE	BRIDGE APPROACH SLABS	REINFORCING STEEL	45" PRESTRESSED CONCRETE GIRDERS		HP 12 X 53 STEEL PILES		PP 18 X 0.50 GALVANIZED STEEL PILES		PIPE PILE PLATES	PILE REDRIVES	CONCRETE BARRIER RAIL	RIP RAP CLASS II (2'-0" THICK)	GEOTEXTILE FOR DRAINAGE	ELASTOMERIC BEARINGS
	LUMP SUM	EACH	SQ.FT.	SQ.FT.	CU.YDS.	LUMP SUM	LBS.	NO.	LIN.FT.	NO.	LIN.FT.	NO.	LIN.FT.	EACH	EACH	LIN.FT.	TONS	SQ. YDS.	LUMP SUM
SUPERSTRUCTURE			6301	6838		LUMP SUM		12	627.83							317.75			LUMP SUM
END BENT NO. 1					22.5		4204			5	350				3		250	278	
BENT NO. 1					11.5		2304					5	375	5	3				
BENT NO. 2					11.5		2304					5	375	5	3				
END BENT NO. 2					22.5		4204			5	350				3		224	248	
TOTAL	LUMP SUM	1	6301	6838	68.0	LUMP SUM	13016	12	627.83	10	700	10	750	10	12	317.75	474	526	LUMP SUM

PROJECT NO. R-2303B

CUMBERLAND/SAMPSON COUNTY

STATION: 660+21.00 -L-

SHEET 3 OF 3

STATE OF NORTH CAROLINA
DEPARTMENT OF TRANSPORTATION
RALEIGH

GENERAL DRAWING
BRIDGE OVER BIG SWAMP
ON NC 24 BETWEEN
SR 1853 AND SR 1404
(RIGHT LANE)

NORTH CAROLINA PROFESSIONAL SEAL 025516 ENGINEER BENNA E. MATHEW
3-21-13

REVISIONS						SHEET NO.
NO.	BY:	DATE:	NO.	BY:	DATE:	S-117
1			3			TOTAL SHEETS
2			4			146

DRAWN BY : PEGGY ADKINS DATE : 9-21-12
CHECKED BY : T. AVERETTE DATE : 12-18-12
DESIGN ENGINEER OF RECORD: BENNA MATHEW, PE DATE : 7-12-10

19-FEB-2013 08:57
Z:\TIPProjects-R\R2303B\Structures\Plans\str04\pparisi\R2303B_SD_GD_04.dgn
padkins

STR. #4

LOAD AND RESISTANCE FACTOR RATING (LRFR) SUMMARY FOR PRESTRESSED CONCRETE GIRDERS

LEVEL		VEHICLE	WEIGHT (W) (TONS)	CONTROLLING LOAD RATING (#)	MINIMUM RATING FACTORS (RF)	TONS = W x RF	STRENGTH I LIMIT STATE										SERVICE III LIMIT STATE						COMMENT NUMBER
								MOMENT					SHEAR					MOMENT						
							LIVE-LOAD FACTORS (γ_{LL})	DISTRIBUTION FACTORS (DF)	RATING FACTOR	SPAN	GIRDER LOCATION	DISTANCE FROM LEFT END OF SPAN (ft)	DISTRIBUTION FACTORS (DF)	RATING FACTOR	SPAN	GIRDER LOCATION	DISTANCE FROM LEFT END OF SPAN (ft)	LIVE-LOAD FACTORS (γ_{LL})	DISTRIBUTION FACTORS (DF)	RATING FACTOR	SPAN	GIRDER LOCATION	DISTANCE FROM LEFT END OF SPAN (ft)	
DESIGN LOAD RATING		HL-93 (INVENTORY)	N/A	(1)	1.16	--	1.75	0.888	1.32	A	I	26.417	1.001	1.59	C	I	14.188	0.80	0.888	1.16	A	I	26.417	
		HL-93 (OPERATING)	N/A	--	1.72	--	1.35	0.888	1.72	A	I	26.417	1.001	2.06	C	I	14.188	N/A	--	--	--	--	--	
		HS-20 (INVENTORY)	36.000	(2)	1.46	52.56	1.75	0.888	1.66	A	I	26.417	1.001	1.81	C	I	14.188	0.80	0.888	1.46	A	I	26.417	
		HS-20 (OPERATING)	36.000	--	2.15	77.40	1.35	0.888	2.15	A	I	26.417	1.001	2.35	C	I	14.188	N/A	--	--	--	--	--	
LEGAL LOAD RATING	SINGLE VEHICLE (SV)	SNSH	13.500	--	3.04	41.04	1.40	0.888	4.32	A	I	26.417	1.001	4.65	A	I	26.417	0.80	0.888	3.04	A	I	26.417	
		SNGARBS2	20.000	--	2.37	47.40	1.40	0.888	3.36	A	I	26.417	1.001	3.55	C	I	14.188	0.80	0.888	2.37	A	I	26.417	
		SNAGRIS2	22.000	--	2.29	50.38	1.40	0.888	3.25	A	I	26.417	1.001	3.38	C	I	14.188	0.80	0.888	2.29	A	I	26.417	
		SNCOTTS3	27.250	--	1.51	41.15	1.40	0.888	2.15	A	I	26.417	1.001	2.35	A	I	26.417	0.80	0.888	1.51	A	I	26.417	
		SNAGGRS4	34.925	--	1.30	45.40	1.40	0.888	1.85	A	I	26.417	1.001	2.11	C	I	14.188	0.80	0.888	1.30	A	I	26.417	
		SNS5A	35.550	--	1.27	45.15	1.40	0.888	1.81	A	I	26.417	1.001	2.22	C	I	14.188	0.80	0.888	1.27	A	I	26.417	
		SNS6A	39.950	--	1.18	47.14	1.40	0.888	1.68	A	I	26.417	1.001	2.10	C	I	14.188	0.80	0.888	1.18	A	I	26.417	
		SNS7B	42.000	--	1.13	47.46	1.40	0.888	1.60	A	I	26.417	1.001	2.16	C	I	14.188	0.80	0.888	1.13	A	I	26.417	
	TRUCK TRACTOR SEMI-TRAILER (TTST)	TNAGRIT3	33.000	--	1.45	47.85	1.40	0.888	2.06	A	I	26.417	1.001	2.44	C	I	14.188	0.80	0.888	1.45	A	I	26.417	
		TNT4A	33.075	--	1.46	48.29	1.40	0.888	2.08	A	I	26.417	1.001	2.31	C	I	14.188	0.80	0.888	1.46	A	I	26.417	
		TNT6A	41.600	--	1.21	50.34	1.40	0.888	1.72	A	I	26.417	1.001	2.36	C	I	14.188	0.80	0.888	1.21	A	I	26.417	
		TNT7A	42.000	--	1.23	51.66	1.40	0.888	1.74	A	I	26.417	1.001	2.15	C	I	14.188	0.80	0.888	1.23	A	I	26.417	
		TNT7B	42.000	--	1.28	53.76	1.40	0.888	1.82	A	I	26.417	1.001	2.03	C	I	14.188	0.80	0.888	1.28	A	I	26.417	
		TNAGRIT4	43.000	--	1.21	52.03	1.40	0.888	1.72	A	I	26.417	1.001	1.95	C	I	14.188	0.80	0.888	1.21	A	I	26.417	
		TNAGT5A	45.000	--	1.13	50.85	1.40	0.888	1.61	A	I	26.417	1.001	2.05	C	I	14.188	0.80	0.888	1.13	A	I	26.417	
		TNAGT5B	45.000	(3)	1.11	49.95	1.40	0.888	1.58	A	I	26.417	1.001	1.84	C	I	14.188	0.80	0.888	1.11	A	I	26.417	

LOAD FACTORS:

DESIGN LOAD RATING FACTORS	LIMIT STATE	γ_{DC}	γ_{DW}
	STRENGTH I	1.25	1.50
	SERVICE III	1.00	1.00

NOTES:

MINIMUM RATING FACTORS ARE BASED ON THE STRENGTH I AND SERVICE III LIMIT STATES.

ALLOWABLE STRESSES FOR SERVICE III LIMIT STATE ARE AS REQUIRED FOR DESIGN.

COMMENTS:

1.
2.
3.
4.

(#) CONTROLLING LOAD RATING

(1) DESIGN LOAD RATING (HL-93)

(2) DESIGN LOAD RATING (HS-20)

(3) LEGAL LOAD RATING **

** SEE CHART FOR VEHICLE TYPE

GIRDER LOCATION

I - INTERIOR GIRDER
EL - EXTERIOR LEFT GIRDER
ER - EXTERIOR RIGHT GIRDER

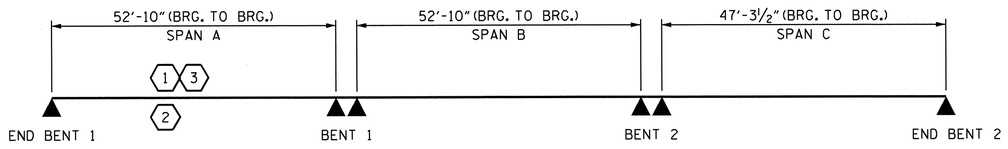

LRFR SUMMARY

PROJECT NO. R-2303B

SAMPSON COUNTY

STATION: 660+21.00 -L-

STATE OF NORTH CAROLINA
DEPARTMENT OF TRANSPORTATION
RALEIGH
STANDARD
LRFR SUMMARY FOR PRESTRESSED CONCRETE GIRDERS
(NON-INTERSTATE TRAFFIC)
(RIGHT LANE)

NORTH CAROLINA PROFESSIONAL SEAL 025516 ENGINEER BEENA MATHEW MARRAY
2.21.13

REVISIONS						SHEET NO.
NO.	BY:	DATE:	NO.	BY:	DATE:	S-118
1			3			TOTAL SHEETS
2			4			146

STR. #4 STD. NO. LRFR1

DESIGN ENGINEER OF RECORD: BEENA MATHEW DATE : 7-24-12

ASSEMBLED BY : PEGGY PARISI DATE : 11-5-10
CHECKED BY : K.P. SEDAI DATE : 10-18-12

DRAWN BY : MAA 1/08
CHECKED BY : GM/DI 2/08

REV. 11/12/08RR MAA/GM
REV. 10/1/11 MAA/GM

19-FEB-2013 08:56
Z:\TIPProjects-R\R2303B\Structures\Plans\str04\pparisi\R-2303B_SD_ts_04.dgn
padkins

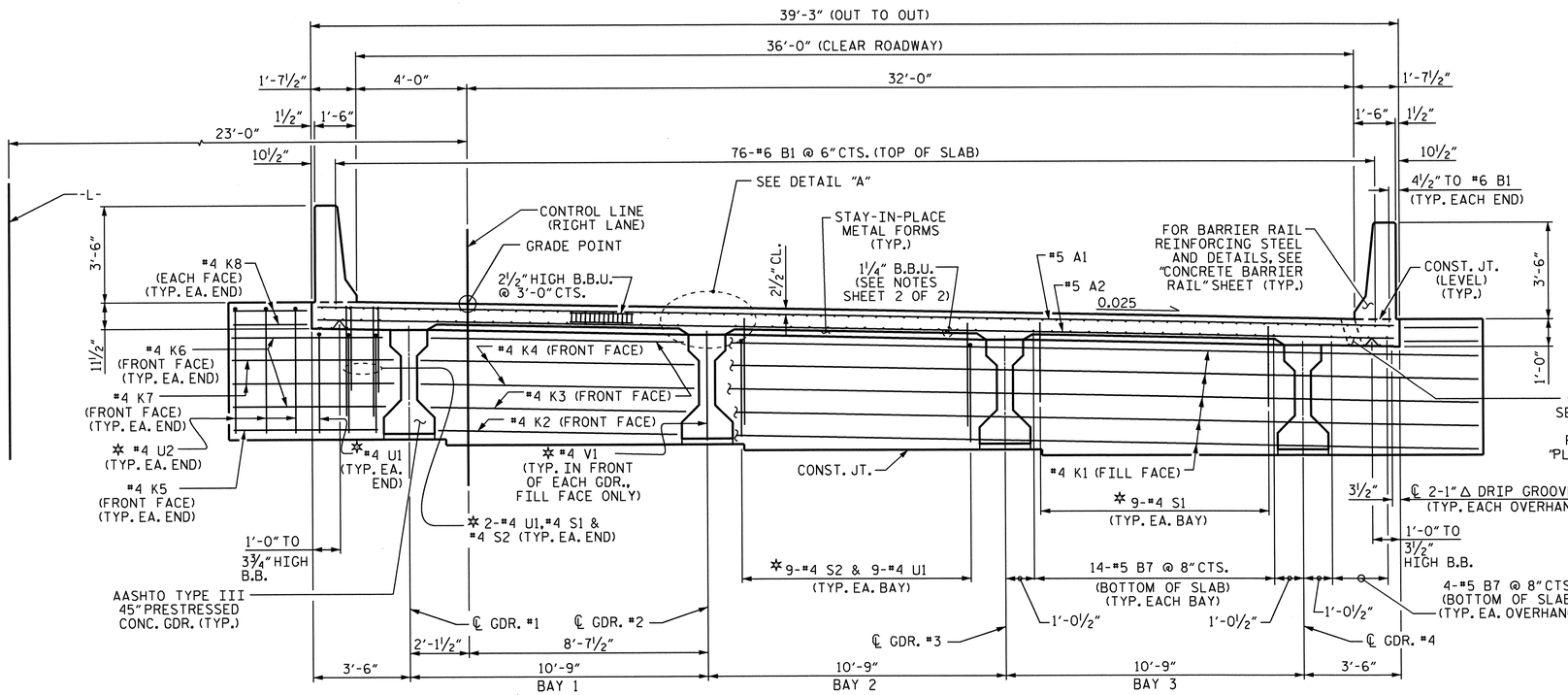

TYPICAL SECTION @ INTEGRAL END BENT

✲ #4 U1, #4 U2, #4 V1, #4 S1 & #4 S2 BARS TO MATCH WITH #4 "V" BARS IN INTEGRAL END BENT CAP

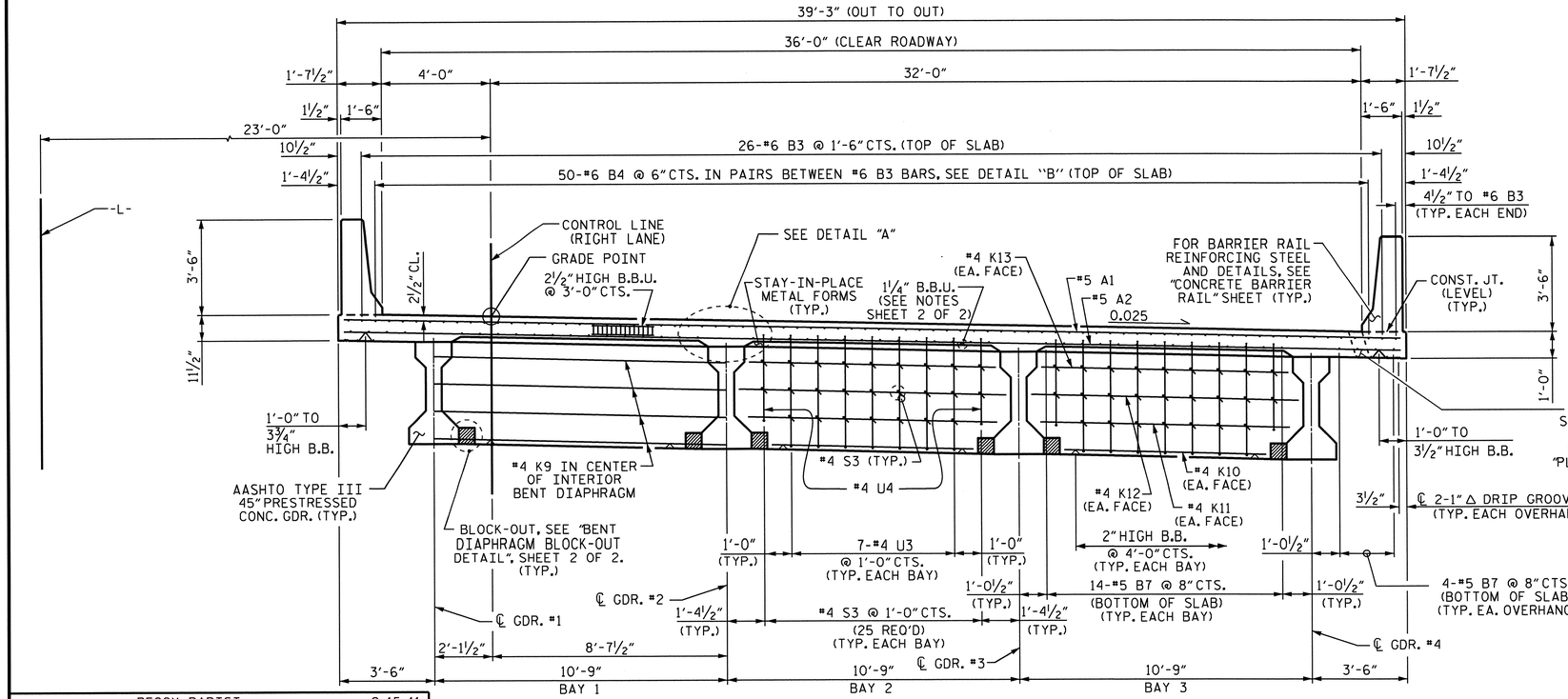

TYPICAL SECTION @ CONTINUOUS BENT DIAPHRAGM

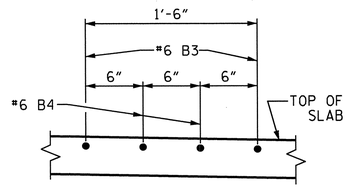

DETAIL "B"

SHOWING TOP OF SLAB "B" BAR SPACING @ CONTINUOUS BENT DIAPHGRAM

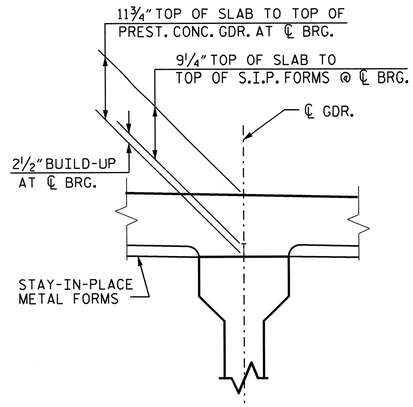

DETAIL "A"

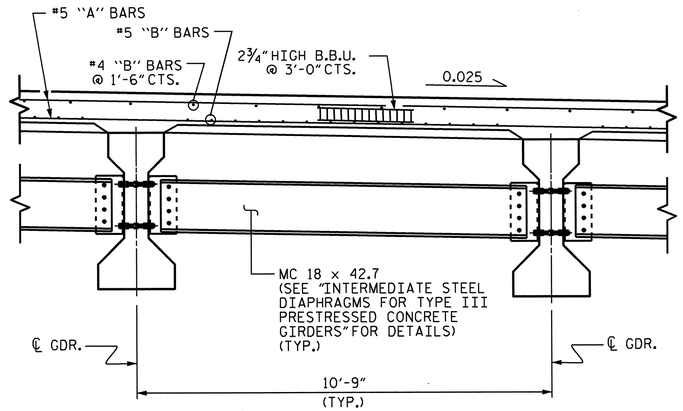

PARTIAL TYPICAL SECTION

AT INTERMEDIATE DIAPHRAGM

PROJECT NO. R-2303B

SAMPSON COUNTY

STATION: 660+21.00 -L-

SHEET 1 OF 2

STATE OF NORTH CAROLINA
DEPARTMENT OF TRANSPORTATION
RALEIGH

SUPERSTRUCTURE

TYPICAL SECTION

(RIGHT LANE)

REVISIONS						SHEET NO.
NO.	BY:	DATE:	NO.	BY:	DATE:	S-119
1			3			TOTAL SHEETS
2			4			146

NORTH CAROLINA PROFESSIONAL SEAL 025516 ENGINEER EMILY E. MURRAY
2.21.13

DRAWN BY : PEGGY PARISI DATE : 9-15-11
CHECKED BY : K.P. SEDAI DATE : 10-15-12
DESIGN ENGINEER OF RECORD: BEENA MATHEW DATE : 8-15-11

19-FEB-2013 08:56
Z:\TIPProjects-R\R2303B\Structures\Plans\str04\ppparisi\R-2303B_SD_ts_04.dgn
padkins

STR. #4

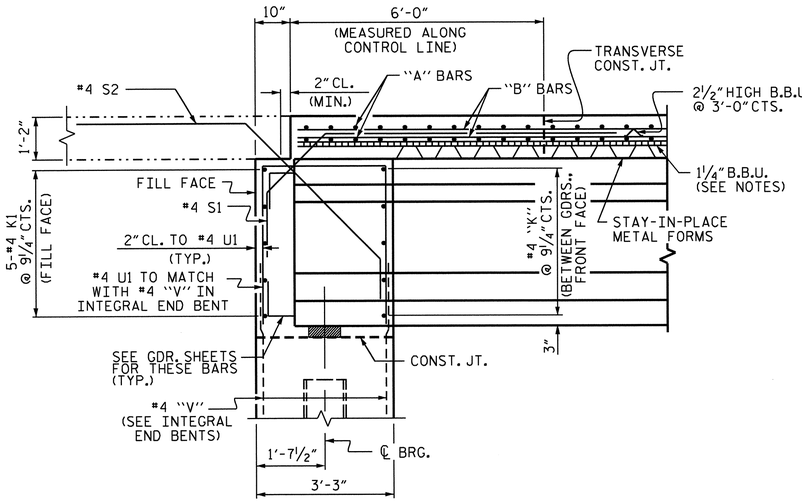

END OF GIRDER DETAIL AT INTEGRAL END BENT

#4 V1 BARS IN FRONT OF GIRDER NOT SHOWN

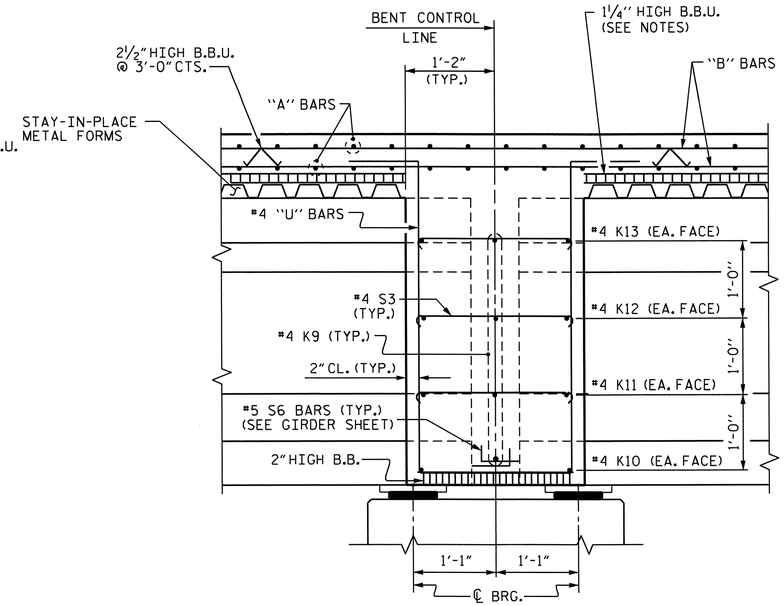

SECTION THRU BENT DIAPHRAGM

NOTES:

LONGITUDINAL STEEL MAY BE SHIFTED SLIGHTLY, AS NECESSARY, TO AVOID INTERFERENCE WITH STIRRUPS IN PRESTRESSED CONCRETE GIRDERS.

PREVIOUSLY CAST CONCRETE IN A CONTINUOUS UNIT SHALL HAVE ATTAINED A MINIMUM COMPRESSIVE STRENGTH OF 3,000 PSI BEFORE ADDITIONAL CONCRETE IS CAST IN THE UNIT.

BARRIER RAIL IN A CONTINUOUS UNIT SHALL NOT BE CAST UNTIL ALL SLAB CONCRETE IN THE UNIT HAS BEEN CAST AND HAS REACHED A MINIMUM COMPRESSIVE STRENGTH OF 3,000 PSI.

PROVIDE 1¼" HIGH BEAM BOLSTERS UPPER AT 4'-0" CTS. ATOP THE METAL STAY-IN-PLACE FORMS TO SUPPORT THE BOTTOM MAT OF 'A' BARS. WHEN USING REMOVABLE FORMS, PROVIDE CONTINUOUS HIGH CHAIRS FOR METAL DECK (C.H.C.M.) @ 4'-0" CTS. WITH A HEIGHT TO SUPPORT THE BOTTOM MAT OF 'A' BARS A CLEAR DISTANCE OF 2½" ABOVE THE TOP OF THE REMOVABLE FORM.

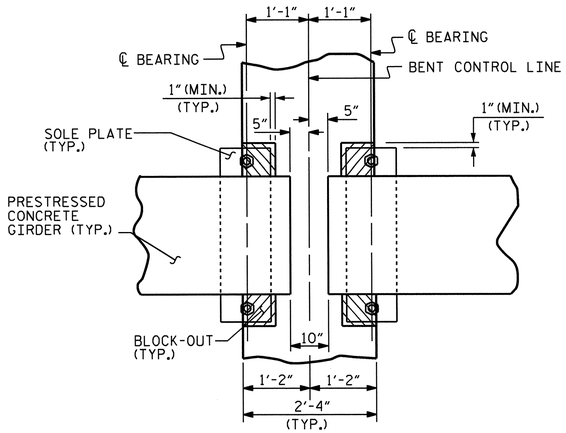

PLAN

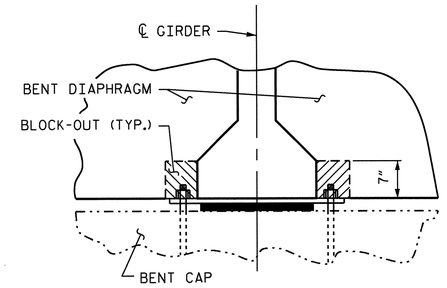

SECTION

BENT DIAPHRAGM BLOCKOUT DETAIL

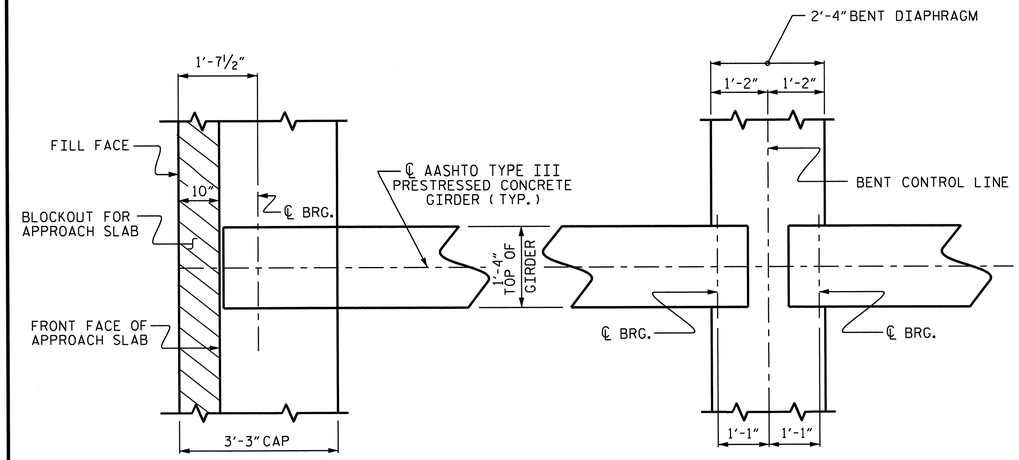

@ INTEGRAL END BENT

@ BENT DIAPHRAGM

PLAN OF GIRDER

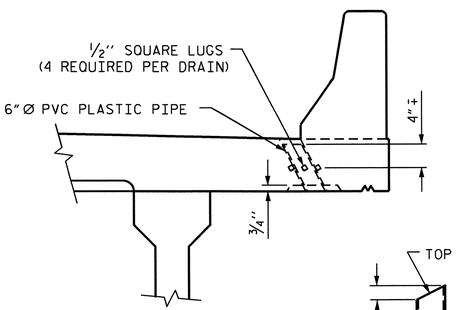

ELEVATION

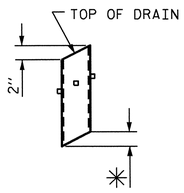

✳ TO BE SET TO MATCH SLOPE OF BOTTOM OF OVERHANG (17 DRAINS REQUIRED)

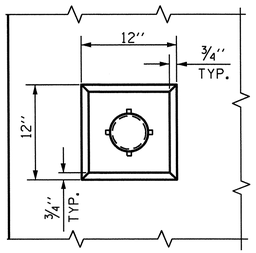

PLAN OF RECESS

PIPE DETAIL

TOP OF FLOOR DRAINS TO BE SET ⅜" BELOW SURFACE OF SLAB.

4 - ½" SQUARE LUGS TO BE GLUED TO THE P.V.C. PLASTIC PIPE AT EQUAL SPACES AROUND THE PIPE DRAIN APPROXIMATELY 4" FROM THE TOP OF THE PIPE.

THE 6" Ø PVC PLASTIC PIPE AND FITTINGS SHALL BE SCHEDULE 40 AND CONFORM TO ASTM D1785.

DRAIN DETAILS

NORTH CAROLINA PROFESSIONAL SEAL 025516 ENGINEER BEENA E. MATHEW
2.21.13

PROJECT NO. R-2303B

SAMPSON COUNTY

STATION: 660+21.00 -L-

SHEET 2 OF 2

STATE OF NORTH CAROLINA
DEPARTMENT OF TRANSPORTATION
RALEIGH

SUPERSTRUCTURE

TYPICAL SECTION DETAILS

(RIGHT LANE)

REVISIONS						SHEET NO.
NO.	BY:	DATE:	NO.	BY:	DATE:	S-120
1			3			TOTAL SHEETS
2			4			146

STR. #4

DRAWN BY : PEGGY PARISI DATE : 9-15-11
CHECKED BY : K.P. SEDAI DATE : 10-15-12
DESIGN ENGINEER OF RECORD: BEENA MATHEW DATE : 8-15-11

19-FEB-2013 08:56
Z:\TIPProjects-R\R2303B\Structures\Plans\str04\pparisi\R-2303B_SD_ts_04.dgn
padkins

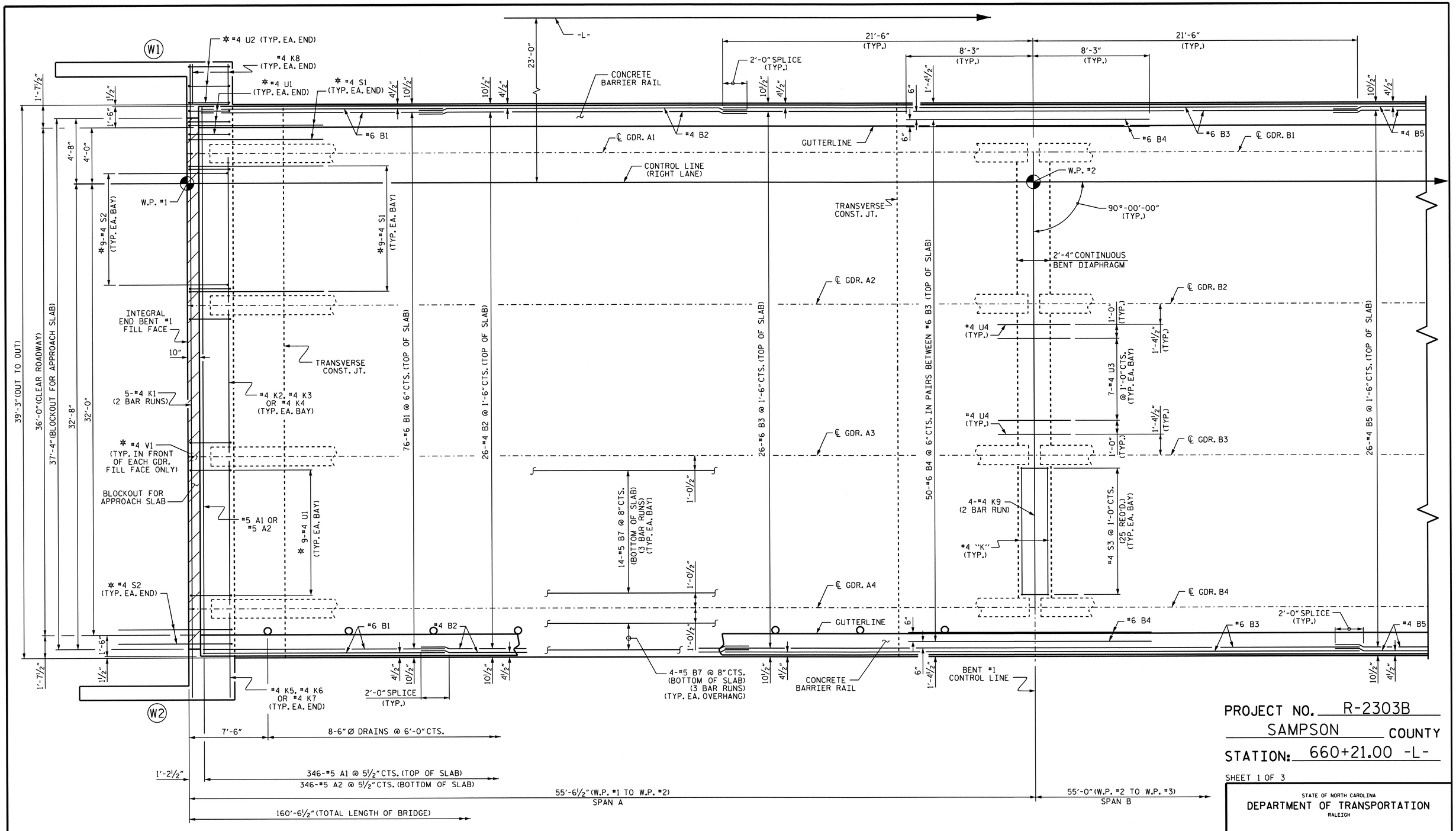

PLAN OF SPANS

FOR LOCATION OF INTERMEDIATE DIAPHRAGMS, SEE "GIRDER LAYOUT."
✲ #4 U1, #4 U2, #4 V1, #4 S1 & #4 S2 BARS TO MATCH WITH #4 "V" BARS IN INTEGRAL END BENT CAP.

PROJECT NO. R-2303B

SAMPSON COUNTY

STATION: 660+21.00 -L-

SHEET 1 OF 3

STATE OF NORTH CAROLINA
DEPARTMENT OF TRANSPORTATION
RALEIGH

SUPERSTRUCTURE

PLAN OF SPANS

(RIGHT LANE)

REVISIONS						SHEET NO.
NO.	BY:	DATE:	NO.	BY:	DATE:	S-121
1			3			TOTAL SHEETS
2			4			146

NORTH CAROLINA PROFESSIONAL SEAL 025516 ENGINEER EMILY E. MURRAY 2.21.13

DRAWN BY : PEGGY PARISI DATE : 9-15-11
CHECKED BY : K.P. SEDAI DATE : 10-15-12
DESIGN ENGINEER OF RECORD: BEENA MATHEW DATE : 8-15-11

19-FEB-2013 08:56
Z:\TIPProjects-R\R2303B\Structures\Plans\str04\pparisi\R-2303B_SD_ts_04.dgn
padkins

STR. #4

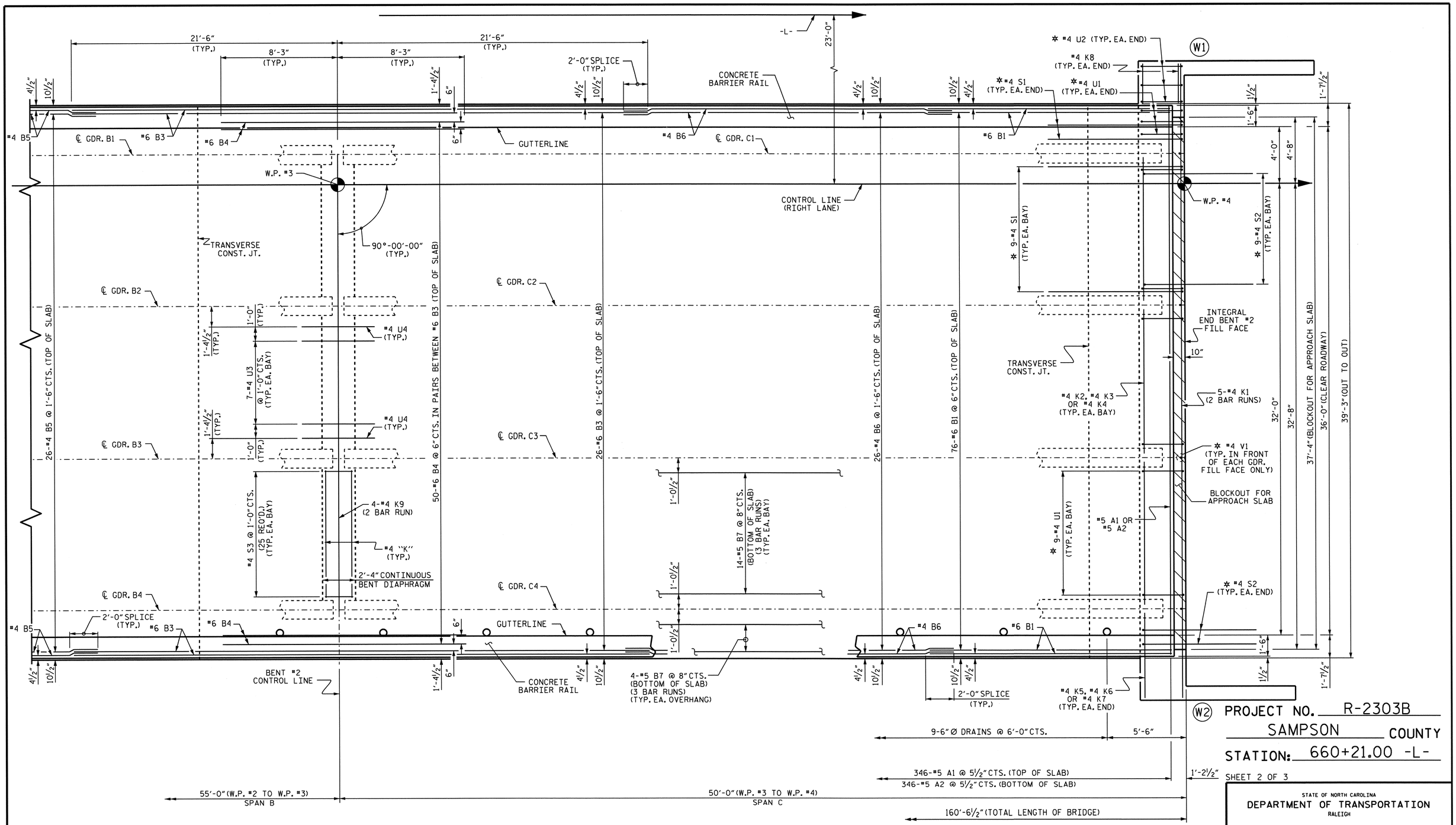

PLAN OF SPANS

FOR LOCATION OF INTERMEDIATE DIAPHRAGMS, SEE "GIRDER LAYOUT."
* #4 U1, #4 U2, #4 V1, #4 S1 & #4 S2 BARS TO MATCH WITH #4 "V" BARS IN INTEGRAL END BENT CAP.

W2 PROJECT NO. R-2303B

SAMPSON COUNTY

STATION: 660+21.00 -L-

SHEET 2 OF 3

STATE OF NORTH CAROLINA
DEPARTMENT OF TRANSPORTATION
RALEIGH

SUPERSTRUCTURE

PLAN OF SPANS

(RIGHT LANE)

NORTH CAROLINA PROFESSIONAL SEAL 025516 ENGINEER EMILY E. MURRAY
2-21-13

REVISIONS						SHEET NO.
NO.	BY:	DATE:	NO.	BY:	DATE:	S-122
1			3			TOTAL SHEETS
2			4			146

DRAWN BY : PEGGY PARISI DATE : 9-15-11
CHECKED BY : K.P. SEDAI DATE : 10-15-12
DESIGN ENGINEER OF RECORD: BEENA MATHEW DATE : 8-15-11

19-FEB-2013 08:55
Z:\TIPProjects-R\R2303B\Structures\Plans\str04\pparisi\R-2303B_SD_ts_04.dgn
padkins

STR. #4

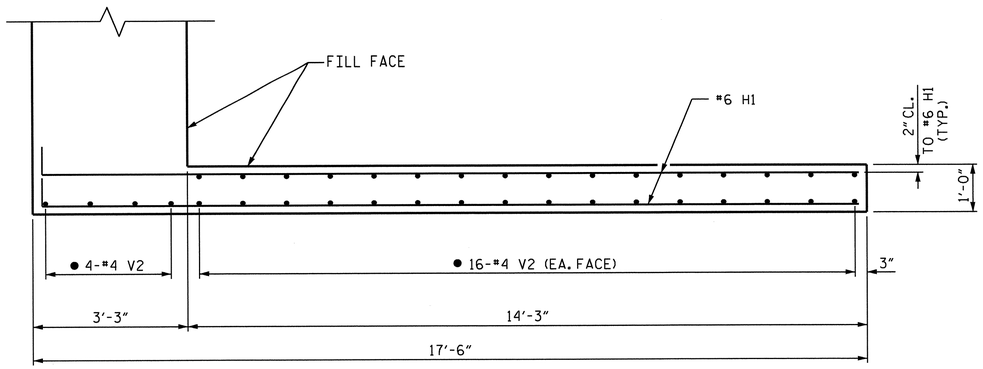

PLAN (W1)

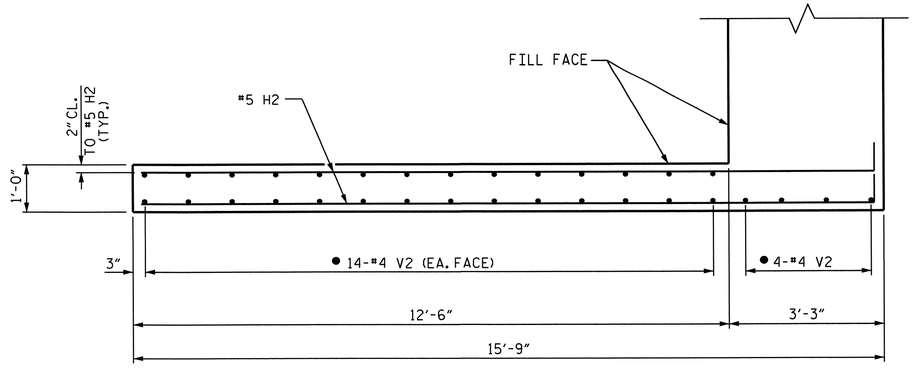

PLAN (W2)

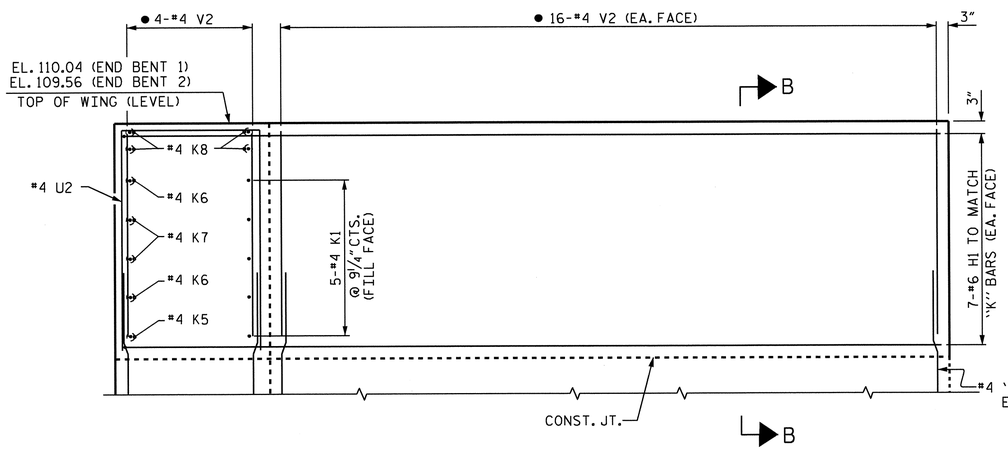

ELEVATION (W1)

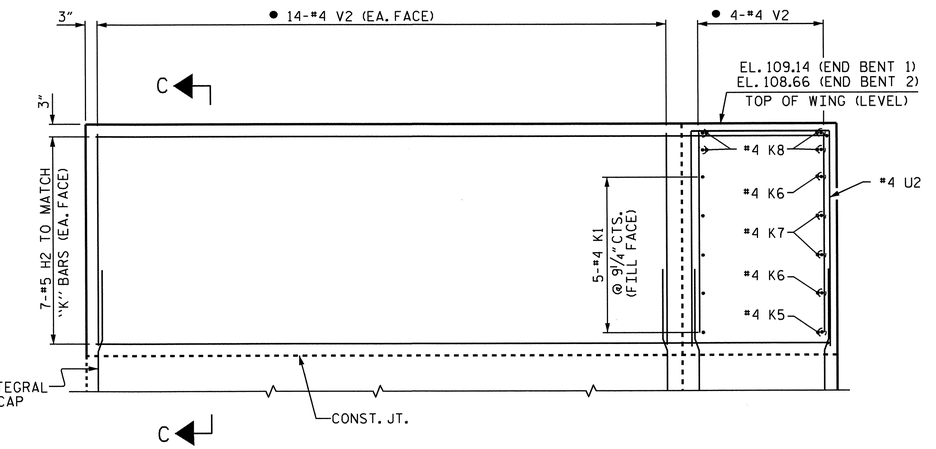

ELEVATION (W2)

UPPER WINGS AT INTEGRAL END BENTS

(FOR LOWER WING REINFORCING STEEL AND DETAILS, SEE INTEGRAL END BENT SHEETS)
FOR WING ORIENTATION, SEE "PLAN OF SPANS" SHEETS.
● #4 V2 BARS TO MATCH WITH #4 "V" BARS IN END BENT WINGS.

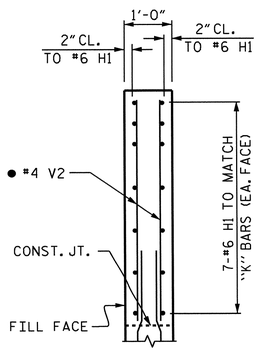

SECTION B-B

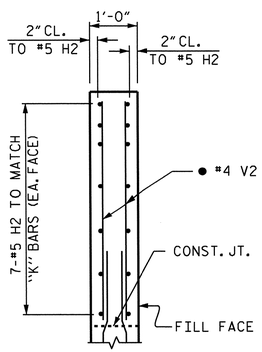

SECTION C-C

PROJECT NO. R-2303B
SAMPSON COUNTY
STATION: 660+21.00 -L-
SHEET 3 OF 3

STATE OF NORTH CAROLINA
DEPARTMENT OF TRANSPORTATION
RALEIGH

SUPERSTRUCTURE
PLAN OF SPAN DETAILS
(RIGHT LANE)

REVISIONS						SHEET NO.
NO.	BY:	DATE:	NO.	BY:	DATE:	S-123
1			3			TOTAL SHEETS
2			4			146

STR. #4

NORTH CAROLINA PROFESSIONAL SEAL 025516 ENGINEER EMILY E. MURRAY
2.21.13

DRAWN BY : PEGGY PARISI DATE : 9-15-11
CHECKED BY : K.P. SEDAI DATE : 10-15-12
DESIGN ENGINEER OF RECORD: BEENA MATHEW DATE : 8-15-11

19-FEB-2013 08:55
Z:\TIPProjects-R\R2303B\Structures\Plans\str04\pparisi\R-2303B_SD_ts_04.dgn
padkins

SPAN A

SPAN B

SPAN C

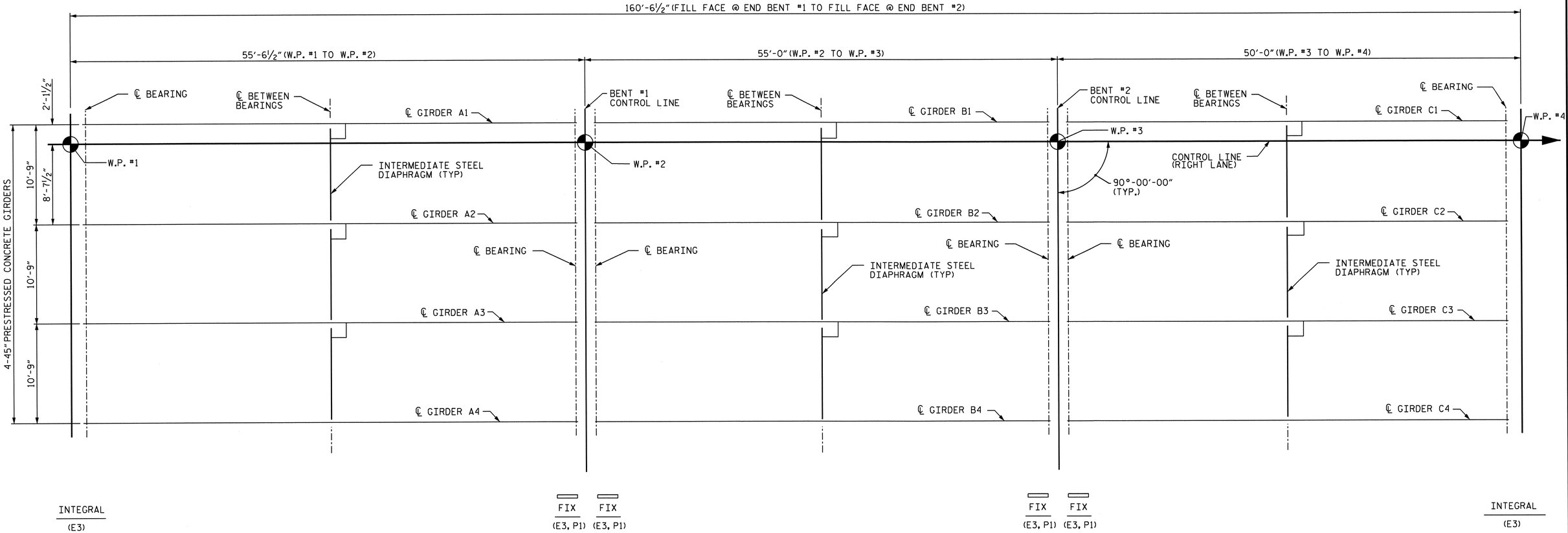

GIRDER LAYOUT

PROJECT NO. R-2303B

SAMPSON COUNTY

STATION: 660+21.00 -L-

STATE OF NORTH CAROLINA
DEPARTMENT OF TRANSPORTATION
RALEIGH

SUPERSTRUCTURE

GIRDER LAYOUT

(RIGHT LANE)

REVISIONS						SHEET NO.
NO.	BY:	DATE:	NO.	BY:	DATE:	S-124
1			3			TOTAL SHEETS
2			4			146

STR. #4

NORTH CAROLINA PROFESSIONAL SEAL 025516 ENGINEER BEENA MATHEW 2.21.13

DRAWN BY : PEGGY PARISI DATE : 9-15-11
CHECKED BY : K.P. SEDAI DATE : 10-15-12
DESIGN ENGINEER OF RECORD: BEENA MATHEW DATE : 8-15-11

19-FEB-2013 08:55
Z:\TIPProjects-R\R2303B\Structures\Plans\str04\pparisi\R-2303B_SD_ts_04.dgn
podkins

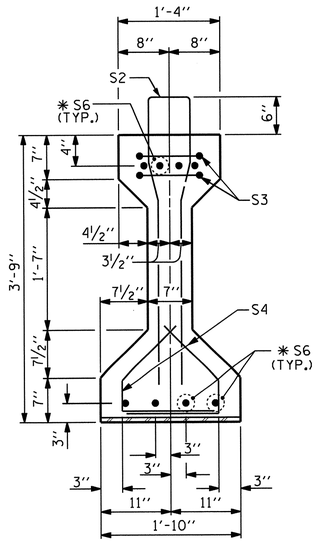

SECTION A-A

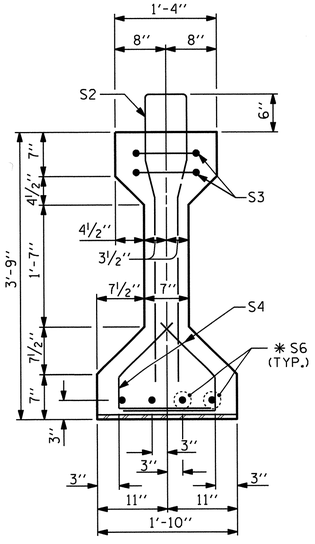

SECTION B-B

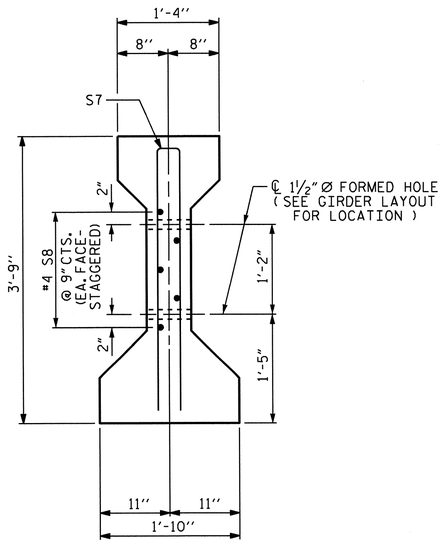

SECTION C-C

(S1 BARS NOT SHOWN)

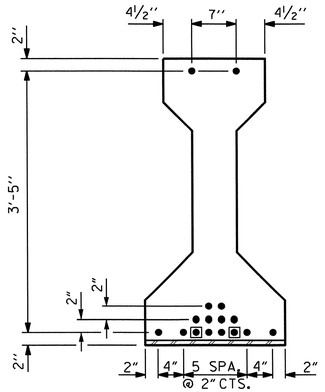

AT END OF GIRDER

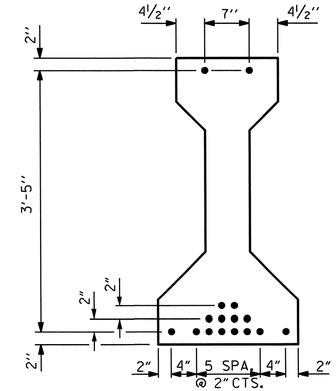

AT ℄ OF GIRDER

0.6" Ø LOW RELAXATION STRAND LAYOUT

▣ STRANDS DEBONDED FOR 4'-0" FROM END OF GIRDER

● FULLY BONDED STRANDS

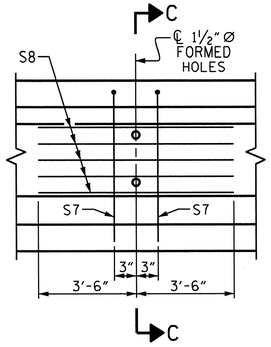

PARTIAL ELEVATION

SHOWING INTERMEDIATE DIAPHRAGM REINFORCING STEEL FOR ALL GIRDERS

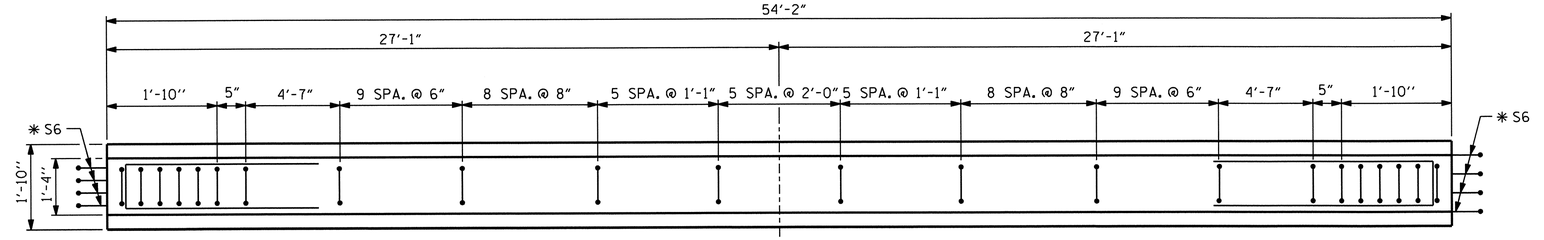

PLAN OF GIRDER

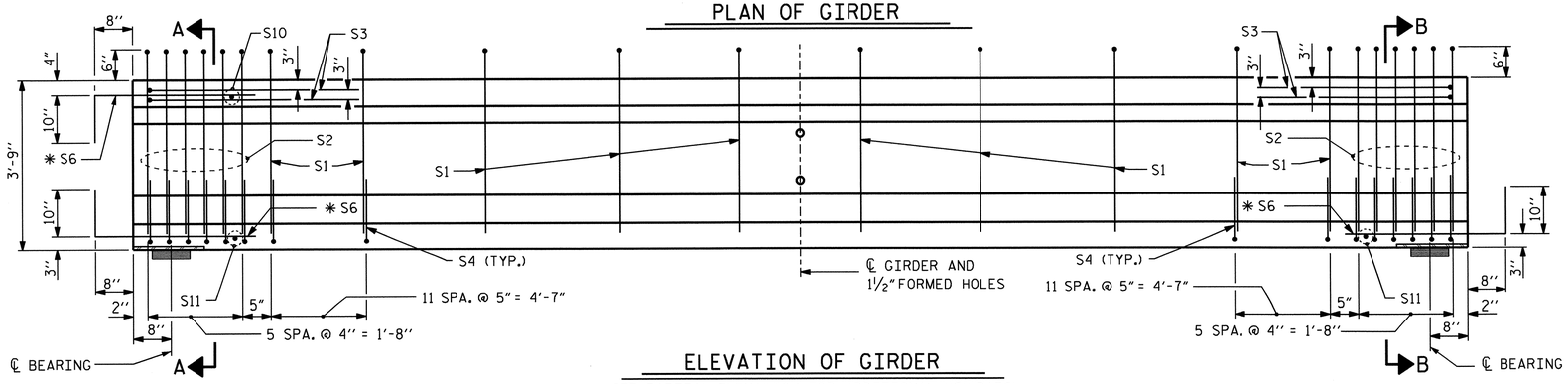

INTEGRAL END BENT

ELEVATION OF GIRDER

(SEE PARTIAL ELEVATION FOR ADDITIONAL "S" BARS)

FIX

DESIGN ENGINEER OF RECORD: BEENA MATHEW	DATE : 7-24-12
ASSEMBLED BY : PEGGY PARISI	DATE : 8-23-12
CHECKED BY : K.P. SEDAI	DATE : 10-17-12
DRAWN BY : ELR 8/91	REV. 10/17/00R RWW/LES
CHECKED BY : GRP 8/91	REV. 5/1/06R TLA/GM
	REV. 10/1/11 MAA/GM

19-FEB-2013 08:55
Z:\TIPProjects-R\R2303B\Structures\Plans\str04\pparisi\R-2303B_SD_ts_04.dgn
padkins

0.6" Ø L. R. GRADE 270 STRANDS

AREA (SQUARE INCHES)	ULTIMATE STRENGTH (LBS. PER STRAND)	APPLIED PRESTRESS (LBS. PER STRAND)
0.217	58,600	43,950

REINFORCING STEEL FOR ONE GIRDER

BAR	NUMBER	SIZE	TYPE	LENGTH	WEIGHT
S1	72	#4	1	8'-6"	409
S2	12	#6	1	8'-6"	153
S3	4	#4	3	8'-8"	23
S4	72	#4	2	2'-9"	132
✱S6	12	#5	STR	3'-8"	46
S7	2	#5	3	7'-2"	15
S8	5	#4	STR	7'-0"	23
S10	1	#3	STR	1'-0"	1
S11	2	#3	STR	1'-6"	1

✱NOTE: S6 BARS SHALL BE BENT BEFORE SHIPMENT. HEAT BENDING SHALL NOT BE ALLOWED.

BAR TYPES

ALL BAR DIMENSIONS ARE OUT-TO-OUT

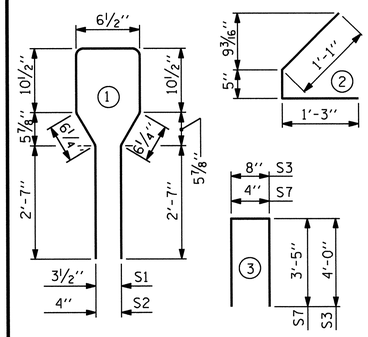

QUANTITIES FOR ONE GIRDER

	REINFORCING STEEL	5000 PSI CONCRETE	0.6" Ø L.R. STRANDS
	LB.	C.Y.	No.
	803	7.8	16

GIRDERS REQUIRED

NUMBER	LENGTH	TOTAL LENGTH
4	54'-2"	216'-8"

PROJECT NO. R-2303B

SAMPSON COUNTY

STATION: 660+21.00 -L-

SHEET 1 OF 5

STATE OF NORTH CAROLINA
DEPARTMENT OF TRANSPORTATION
RALEIGH

STANDARD

AASHTO TYPE III
PRESTRESSED CONCRETE GIRDER
CONTINUOUS FOR LIVE LOAD
SPAN A (RIGHT LANE)

NORTH CAROLINA PROFESSIONAL SEAL 025516 ENGINEER EMILY E. MURRAY
2-21-13

REVISIONS						SHEET NO.
NO.	BY:	DATE:	NO.	BY:	DATE:	S-125
1			3			TOTAL SHEETS
2			4			146

STR. #4

STD. NO. PCG5 (Sht. 2)

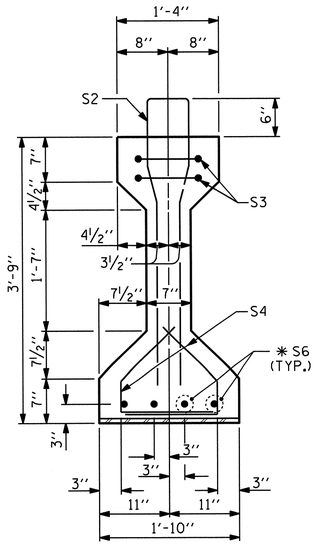

SECTION A-A

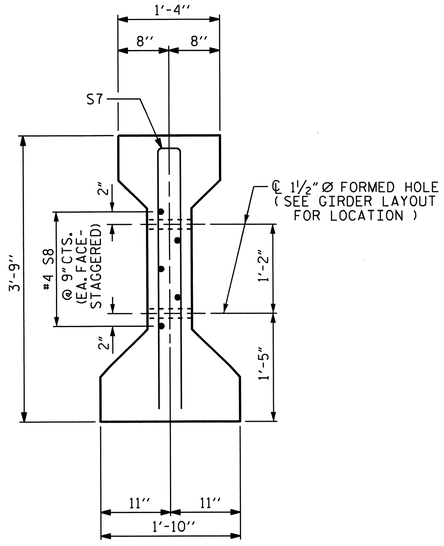

SECTION C-C

(S1 BARS NOT SHOWN)

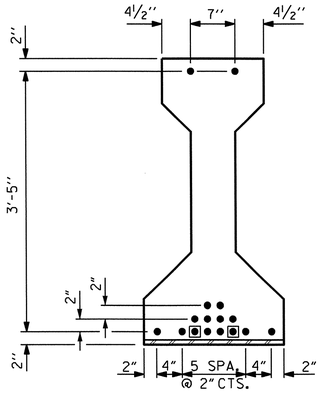

AT END OF GIRDER

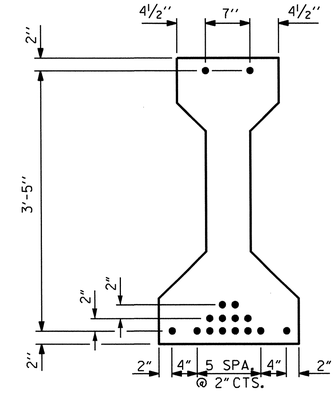

AT ℄ OF GIRDER

0.6" Ø LOW RELAXATION STRAND LAYOUT

▣ STRANDS DEBONDED FOR 6'-0" FROM END OF GIRDER
● FULLY BONDED STRANDS

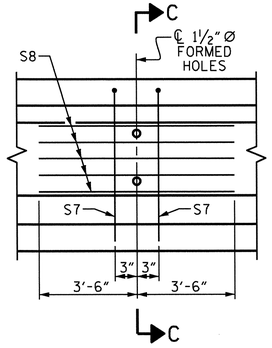

PARTIAL ELEVATION

SHOWING INTERMEDIATE DIAPHRAGM REINFORCING STEEL FOR ALL GIRDERS

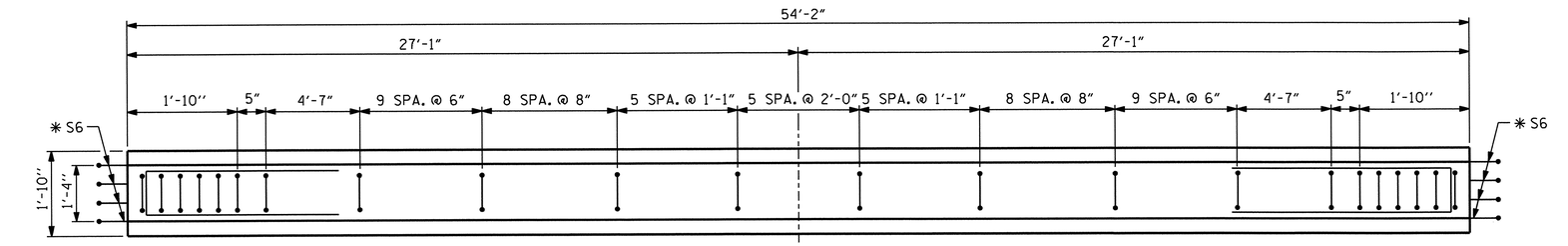

PLAN OF GIRDER

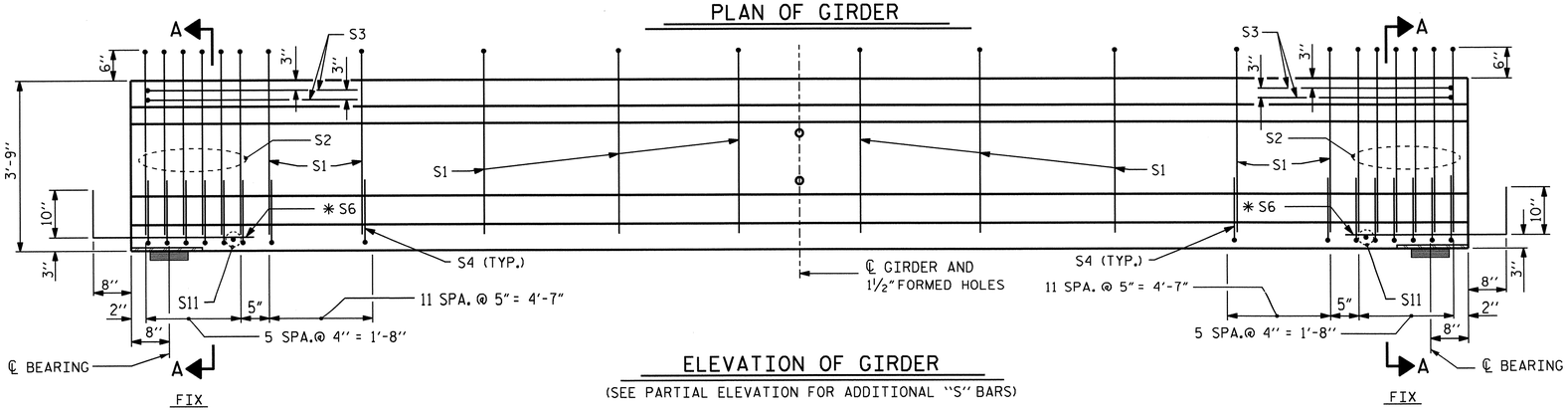

ELEVATION OF GIRDER

(SEE PARTIAL ELEVATION FOR ADDITIONAL "S" BARS)

0.6" Ø L. R. GRADE 270 STRANDS		
AREA (SQUARE INCHES)	ULTIMATE STRENGTH (LBS. PER STRAND)	APPLIED PRESTRESS (LBS. PER STRAND)
0.217	58,600	43,950

REINFORCING STEEL FOR ONE GIRDER

BAR	NUMBER	SIZE	TYPE	LENGTH	WEIGHT
S1	72	#4	1	8'-6"	409
S2	12	#6	1	8'-6"	153
S3	4	#4	3	8'-8"	23
S4	72	#4	2	2'-9"	132
✱S6	8	#5	STR	3'-8"	31
S7	2	#5	3	7'-2"	15
S8	5	#4	STR	7'-0"	23
S11	2	#3	STR	1'-6"	1

✱NOTE: S6 BARS SHALL BE BENT BEFORE SHIPMENT. HEAT BENDING SHALL NOT BE ALLOWED.

BAR TYPES

ALL BAR DIMENSIONS ARE OUT-TO-OUT

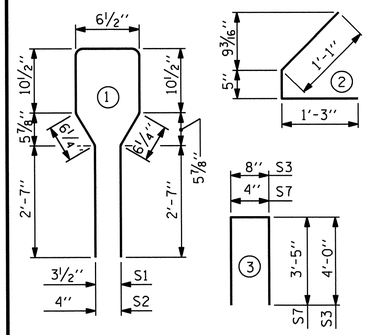

QUANTITIES FOR ONE GIRDER

	REINFORCING STEEL	5000 PSI CONCRETE	0.6" Ø L. R. STRANDS
	LB.	C.Y.	No.
	787	7.8	16

GIRDERS REQUIRED

NUMBER	LENGTH	TOTAL LENGTH
4	54'-2"	216'-8"

PROJECT NO. R-2303B

SAMPSON COUNTY

STATION: 660+21.00 -L-

SHEET 2 OF 5

STATE OF NORTH CAROLINA
DEPARTMENT OF TRANSPORTATION
RALEIGH

STANDARD

AASHTO TYPE III
PRESTRESSED CONCRETE GIRDER
CONTINUOUS FOR LIVE LOAD
SPAN B (RIGHT LANE)

REVISIONS						SHEET NO.
NO.	BY:	DATE:	NO.	BY:	DATE:	S-126
1			3			TOTAL SHEETS
2			4			146

STR. #4

STD. NO. PCG5 (Sht. 2)

NORTH CAROLINA PROFESSIONAL SEAL 025516 ENGINEER EMILY E. MURRAY
2.22.13

DESIGN ENGINEER OF RECORD: BEENA MATHEW	DATE: 7-24-12
ASSEMBLED BY: PEGGY PARISI	DATE: 8-23-12
CHECKED BY: K.P. SEDAI	DATE: 10-17-12
DRAWN BY: ELR 8/91	REV. 10/17/00R RWW/LES
CHECKED BY: GRP 8/91	REV. 5/1/06R TLA/GM
	REV. 10/1/11 MAA/GM

19-FEB-2013 08:54
Z:\TIPProjects-R\R2303B\Structures\Plans\str04\pparisi\R-2303B_SD_ts_04.dgn
padkins

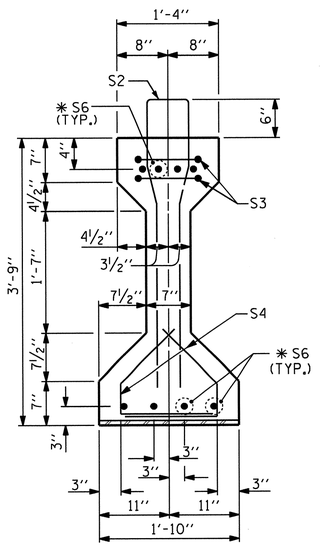

SECTION A-A

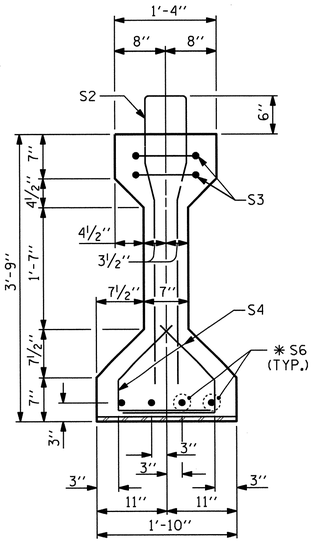

SECTION B-B

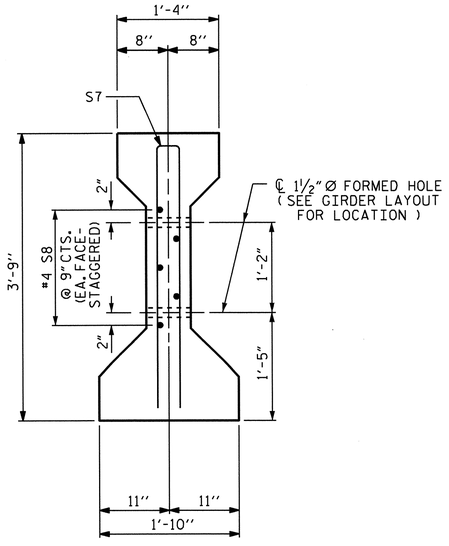

SECTION C-C

(S1 BARS NOT SHOWN)

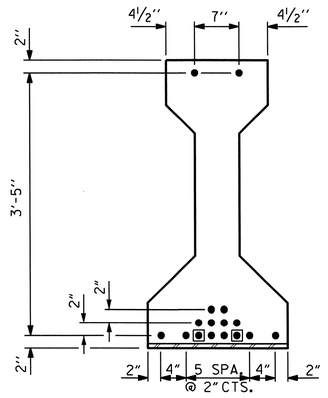

AT END OF GIRDER

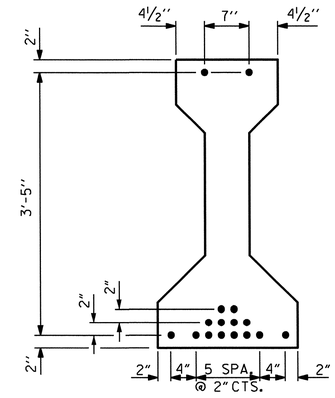

AT ℄ OF GIRDER

0.6" Ø LOW RELAXATION STRAND LAYOUT

▣ STRANDS DEBONDED FOR 4'-0" FROM END OF GIRDER
● FULLY BONDED STRANDS

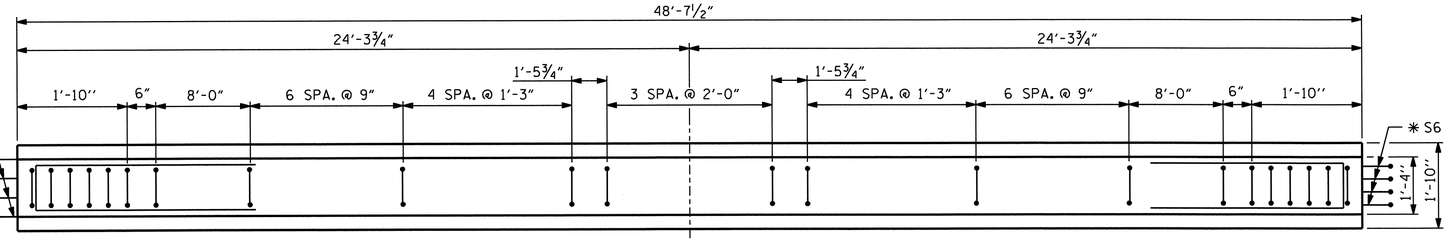

PLAN OF GIRDER

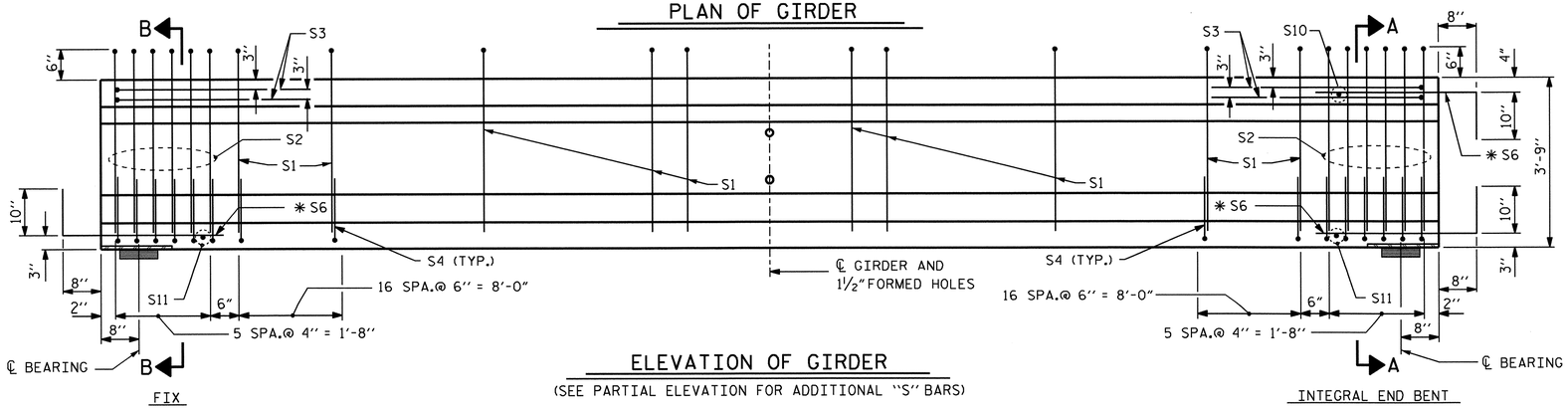

ELEVATION OF GIRDER

(SEE PARTIAL ELEVATION FOR ADDITIONAL "S" BARS)

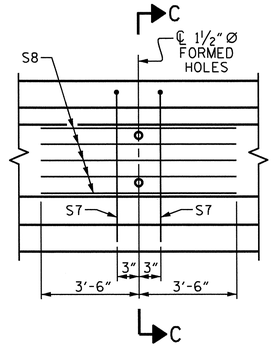

PARTIAL ELEVATION

SHOWING INTERMEDIATE DIAPHRAGM REINFORCING STEEL FOR ALL GIRDERS

0.6" Ø L. R. GRADE 270 STRANDS

AREA (SQUARE INCHES)	ULTIMATE STRENGTH (LBS. PER STRAND)	APPLIED PRESTRESS (LBS. PER STRAND)
0.217	58,600	43,950

REINFORCING STEEL FOR ONE GIRDER

BAR	NUMBER	SIZE	TYPE	LENGTH	WEIGHT
S1	58	#4	1	8'-6"	329
S2	12	#6	1	8'-6"	153
S3	4	#4	3	8'-8"	23
S4	92	#4	2	2'-9"	169
✱S6	12	#5	STR	3'-8"	46
S7	2	#5	3	7'-2"	15
S8	5	#4	STR	7'-0"	23
S10	1	#3	STR	1'-0"	1
S11	2	#3	STR	1'-6"	1

✱NOTE: S6 BARS SHALL BE BENT BEFORE SHIPMENT. HEAT BENDING SHALL NOT BE ALLOWED.

BAR TYPES

ALL BAR DIMENSIONS ARE OUT-TO-OUT

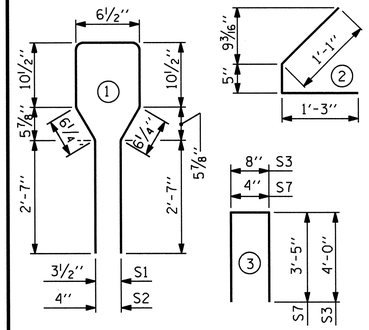

QUANTITIES FOR ONE GIRDER

	REINFORCING STEEL	5000 PSI CONCRETE	0.6" Ø L.R. STRANDS
	LB.	C.Y.	No.
	760	7.0	16

GIRDERS REQUIRED

NUMBER	LENGTH	TOTAL LENGTH
4	48'-7½"	194'-6"

PROJECT NO. R-2303B

SAMPSON COUNTY

STATION: 660+21.00 -L-

SHEET 3 OF 5

STATE OF NORTH CAROLINA
DEPARTMENT OF TRANSPORTATION
RALEIGH

STANDARD

AASHTO TYPE III PRESTRESSED CONCRETE GIRDER CONTINUOUS FOR LIVE LOAD SPAN C (RIGHT LANE)

REVISIONS						SHEET NO.
NO.	BY:	DATE:	NO.	BY:	DATE:	S-127
1			3			TOTAL SHEETS
2			4			146

STR. #4

STD. NO. PCG5 (Sht. 2)

DESIGN ENGINEER OF RECORD: BEENA MATHEW	DATE : 7-24-12
ASSEMBLED BY : PEGGY PARISI	DATE : 8-23-12
CHECKED BY : K.P. SEDAI	DATE : 10-17-12
DRAWN BY : ELR 8/91	REV. 10/17/00R RWW/LES
CHECKED BY : GRP 8/91	REV. 5/1/06R TLA/GM
	REV. 10/1/11 MAA/GM

NORTH CAROLINA PROFESSIONAL SEAL 025516 ENGINEER EMILY E. MURRAY 2.21.13

19-FEB-2013 08:54
Z:\TIPProjects-R\R2303B\Structures\Plans\str04\pparisi\R-2303B_SD_ts_04.dgn
padkins

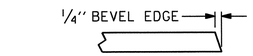

SECTION ''G''

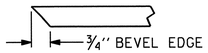

SECTION ''F''

(SEE NOTES)

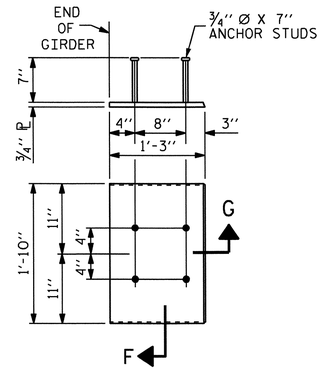

EMBEDDED PLATE ''B-1'' DETAILS
FOR AASHTO TYPE III GIRDER

(2 REQ'D PER GIRDER)

NOTES

ALL PRESTRESSING STRANDS SHALL BE 7-WIRE LOW-RELAXATION GRADE 270 STRANDS AND SHALL CONFORM TO AASHTO M203 EXCEPT FOR SAMPLING REQUIREMENTS WHICH SHALL BE IN ACCORDANCE WITH THE STANDARD SPECIFICATIONS.

ALL REINFORCING STEEL SHALL BE GRADE 60.

EMBEDDED PLATE ''B-1'' SHALL BE GALVANIZED IN ACCORDANCE WITH THE STANDARD SPECIFICATIONS. BEVEL EDGES OF PLATE ''B-1'' TO GIVE CLOSE FIT BUT NOT TIGHT FIT TO STEEL CASTING FORM.

ANCHOR STUDS SHALL CONFORM TO AASHTO M169 GRADES 1010 THROUGH 1020 OR APPROVED EQUAL, AND SHALL MEET THE TYPE ''B'' REQUIREMENTS OF SUBSECTION 7.3 OF THE ANSI/AASHTO/AWS D1.5 BRIDGE WELDING CODE.

AT ENDS OF GIRDERS TO BE EMBEDDED IN CONCRETE DIAPHRAGMS OR END WALLS, PRESTRESSING STRANDS MAY EXTEND A MAXIMUM OF 2'' BEYOND THE GIRDER ENDS. OTHERWISE, PRESTRESSING STRANDS SHALL BE CUT FLUSH WITH THE GIRDER ENDS.

THE TRANSFER OF LOAD FROM THE ANCHORAGES TO THE GIRDER SHALL BE DONE WHEN CONCRETE HAS REACHED A COMPRESSIVE STRENGTH OF NOT LESS THAN 4000 PSI.

DEPENDING ON THE TYPE OF SYSTEM USED TO SUPPORT THE DECK SLAB FORMS, PRESET ANCHORS MAY BE NECESSARY IN THE PRESTRESSED CONCRETE GIRDER.

THE TOP SURFACE OF THE GIRDER, EXCLUDING THE OUTSIDE 4'', SHALL BE RAKED TO A DEPTH OF 1/4''.

DEAD LOAD DEFLECTION TABLE FOR SPANS A & B

0.6" Ø LOW RELAXATION	GIRDERS 1 AND 4											GIRDERS 2 AND 3										
TENTH POINTS	0	.1	.2	.3	.4	.5	.6	.7	.8	.9	0	0	.1	.2	.3	.4	.5	.6	.7	.8	.9	0
CAMBER (GIRDER ALONE IN PLACE) ↑	0	0.033	0.063	0.087	0.102	0.107	0.102	0.087	0.063	0.033	0	0	0.033	0.063	0.087	0.102	0.107	0.102	0.087	0.063	0.033	0
* DEFLECTION DUE TO SUPERIMPOSED D.L. ↓	0	0.012	0.023	0.031	0.037	0.038	0.037	0.031	0.023	0.012	0	0	0.014	0.026	0.036	0.042	0.045	0.042	0.036	0.026	0.014	0
FINAL CAMBER ↑	0	1/4"	1/2"	11/16"	3/4"	13/16"	3/4"	11/16"	1/2"	1/4"	0	0	1/4"	7/16"	5/8"	11/16"	3/4"	11/16"	5/8"	7/16"	1/4"	0

* INCLUDES FUTURE WEARING SURFACE IN SUPERIMPOSED DEAD LOAD.
ALL VALUES ARE SHOWN IN FEET (DECIMAL FORM), EXCEPT "FINAL CAMBER", WHICH IS GIVEN IN INCHES (FRACTION FORM).

DEAD LOAD DEFLECTION TABLE FOR SPAN C

0.6" Ø LOW RELAXATION	GIRDERS 1 AND 4											GIRDERS 2 AND 3										
TENTH POINTS	0	.1	.2	.3	.4	.5	.6	.7	.8	.9	0	0	.1	.2	.3	.4	.5	.6	.7	.8	.9	0
CAMBER (GIRDER ALONE IN PLACE) ↑	0	0.029	0.054	0.074	0.087	0.091	0.087	0.074	0.054	0.029	0	0	0.029	0.054	0.074	0.087	0.091	0.087	0.074	0.054	0.029	0
* DEFLECTION DUE TO SUPERIMPOSED D.L. ↓	0	0.008	0.015	0.020	0.023	0.025	0.023	0.020	0.015	0.008	0	0	0.009	0.017	0.023	0.027	0.029	0.027	0.023	0.017	0.009	0
FINAL CAMBER ↑	0	1/4"	1/2"	5/8"	3/4"	13/16"	3/4"	5/8"	1/2"	1/4"	0	0	1/4"	7/16"	5/8"	11/16"	3/4"	11/16"	5/8"	7/16"	1/4"	0

* INCLUDES FUTURE WEARING SURFACE IN SUPERIMPOSED DEAD LOAD.
ALL VALUES ARE SHOWN IN FEET (DECIMAL FORM), EXCEPT "FINAL CAMBER", WHICH IS GIVEN IN INCHES (FRACTION FORM).

PROJECT NO. R-2303B

SAMPSON COUNTY

STATION: 660+21.00 -L-

SHEET 4 OF 5

STATE OF NORTH CAROLINA
DEPARTMENT OF TRANSPORTATION
RALEIGH

STANDARD

PRESTRESSED CONCRETE GIRDER
CONTINUOUS FOR LIVE LOAD
DETAILS
(RIGHT LANE)

REVISIONS						SHEET NO.
NO.	BY:	DATE:	NO.	BY:	DATE:	S-128
1			3			TOTAL SHEETS
2			4			146

STR. #4

STD. NO. PCG9 (Sht. 2)

NORTH CAROLINA PROFESSIONAL SEAL 025516 ENGINEER E. L. MURRAY
2.21.13

DESIGN ENGINEER OF RECORD: BEENA MATHEW DATE: 7-24-12	
ASSEMBLED BY: PEGGY PARISI DATE: 8-23-12	
CHECKED BY: K.P. SEDAI DATE: 10-18-12	
DRAWN BY: ELR 11/91	REV. 7/10/01RR LES/RDR
CHECKED BY: GRP 11/91	REV. 5/1/06 TLA/GM
	REV. 10/1/11 MAA/GM

19-FEB-2013 08:54
Z:\TIPProjects-R\R2303B\Structures\Plans\str04\pparisi\R-2303B_SD_ts_04.dgn
padkins

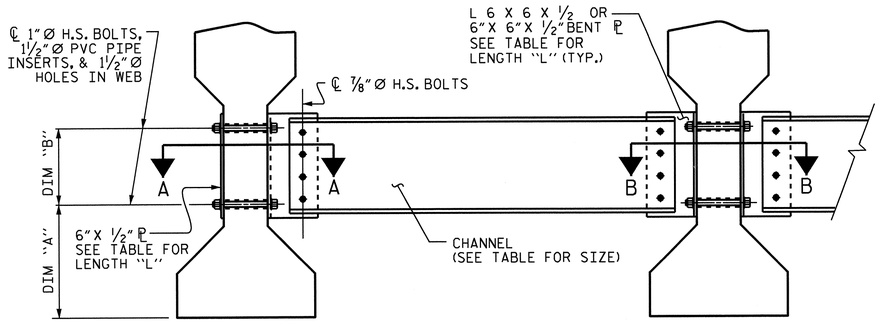

EXTERIOR GIRDER INTERIOR GIRDER

PART SECTION AT INTERMEDIATE DIAPHRAGM

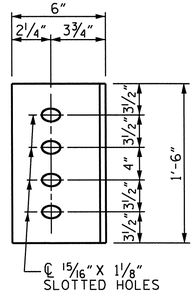

DIAPHRAGM FACE

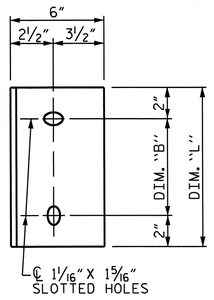

WEB FACE

CONNECTOR PLATE DETAILS

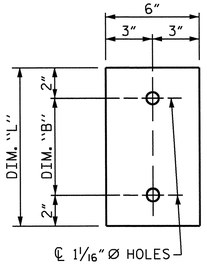

PLATE DETAILS

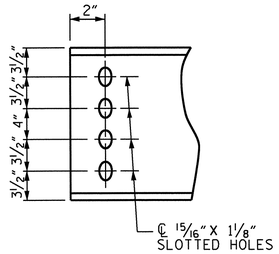

CHANNEL END

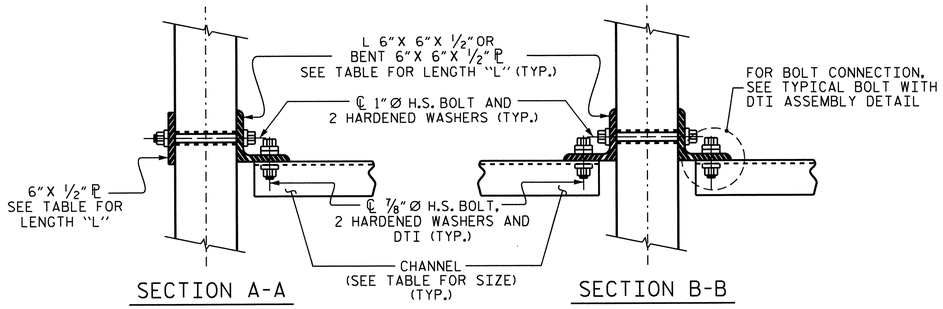

SECTION A-A SECTION B-B

CONNECTION DETAILS

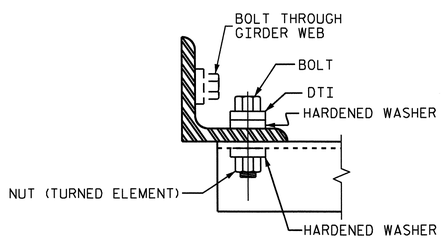

BOLT WITH DTI ASSEMBLY DETAIL

STRUCTURAL STEEL NOTES

ALL INTERMEDIATE DIAPHRAGM STEEL AND CONNECTOR PLATES SHALL BE AASHTO M270 GRADE 50 OR APPROVED EQUAL.

TENSION ON THE ASTM A325 BOLTS THROUGH THE CHANNEL MEMBER SHALL BE CALIBRATED USING DIRECT TENSION INDICATOR WASHERS IN ACCORDANCE WITH THE STANDARD SPECIFICATIONS.

TENSION ON THE ASTM A449 BOLTS THROUGH THE GIRDER WEB SHALL BE SNUG TIGHTENED FOLLOWED BY AN ADDITIONAL ¼ TURN.

THE PLATES, BENT PLATES, CHANNELS, AND ANGLES SHALL BE GALVANIZED OR METALLIZED IN ACCORDANCE WITH THE STANDARD SPECIFICATIONS. FOR THERMAL SPRAYED COATINGS (METALLIZATION), SEE SPECIAL PROVISIONS.

FOR METALLIZATION, APPLY AN 8 MIL THICK 99.99 PERCENT ZINC (W-Zn-1) THERMAL SPRAYED COATING WITH A 0.5 MIL THICK SEAL COAT TO ALL STEEL DIAPHRAGM SURFACES IN ACCORDANCE WITH THE THERMAL SPRAYED COATINGS SPECIAL PROVISION AND SECTION 442 OF THE STANDARD SPECIFICATIONS.

GALVANIZE THE HIGH STRENGTH BOLTS, NUTS, WASHERS AND DIRECT TENSION INDICATORS IN ACCORDANCE WITH THE STANDARD SPECIFICATIONS.

USE AN ASTM F436 HARDENED WASHER WITH STANDARD AND SLOTTED HOLES UNDER EACH BOLT HEAD AND NUT.

FOR BOLTS THROUGH THE GIRDER WEB, PROVIDE SUFFICIENT LENGTH OF THREADS ON ALL BOLTS TO ACCOMMODATE WASHERS AND THE THICKNESS OF CONNECTING MEMBER PLUS AT LEAST ¼" PROJECTION BEYOND THE NUT.

INTERMEDIATE DIAPHRAGM ASSEMBLY SHALL COMPLY WITH SECTION 1072 OF THE STANDARD SPECIFICATIONS.

SUBMIT TWO SETS OF WORKING DRAWINGS FOR THE INTERMEDIATE DIAPHRAGM ASSEMBLY FOR REVIEW. COMMENTS AND ACCEPTANCE. AFTER REVIEW, COMMENTS, AND ACCEPTANCE, SUBMIT SEVEN SETS FOR DISTRIBUTION.

IN THE EXTERIOR BAYS, PLACE TEMPORARY STRUTS BETWEEN PRESTRESSED GIRDERS ADJACENT TO THE STEEL DIAPHRAGMS. STRUTS SHALL REMAIN IN PLACE 3 DAYS AFTER CONCRETE IS PLACED.

THE COST OF THE STEEL DIAPHRAGMS AND ASSEMBLIES SHALL BE INCLUDED IN THE UNIT PRICE BID FOR PRESTRESSED CONCRETE GIRDERS.

TABLE

GIRDER TYPE	CHANNEL SIZE	DIM "A"	DIM "B"	DIM "L"
III	MC 18 x 42.7	1'-5"	1'-2"	1'-6"

PROJECT NO. R-2303B

SAMPSON COUNTY

STATION: 660+21.00 -L-

SHEET 5 OF 5

STATE OF NORTH CAROLINA
DEPARTMENT OF TRANSPORTATION
RALEIGH

STANDARD
INTERMEDIATE STEEL DIAPHRAGMS FOR TYPE III PRESTRESSED CONCRETE GIRDERS
(RIGHT LANE)

REVISIONS						SHEET NO.
NO.	BY:	DATE:	NO.	BY:	DATE:	S-129
1			3			TOTAL SHEETS
2			4			146

STR. #4 STD. NO. PCG10 (SHT 3)

NORTH CAROLINA PROFESSIONAL SEAL 025516 ENGINEER AMY E. MURRAY 2.21.13

DESIGN ENGINEER OF RECORD: BEENA MATHEW	DATE : 7-24-12
ASSEMBLED BY : PEGGY PARISI	DATE : 8-23-12
CHECKED BY : K.P. SEDAI	DATE : 10-17-12
DRAWN BY : TLA 6/05	ADDED 10/21/05
CHECKED BY : VC 6/05	REV. 5/1/06RRR KMM/GM
	REV. 10/1/11 MAA/GM

19-FEB-2013 08:54
Z:\TIPProjects-R\R2303B\Structures\Plans\str04\pparisi\R-2303B_SD_ts_04.dgn
podkins

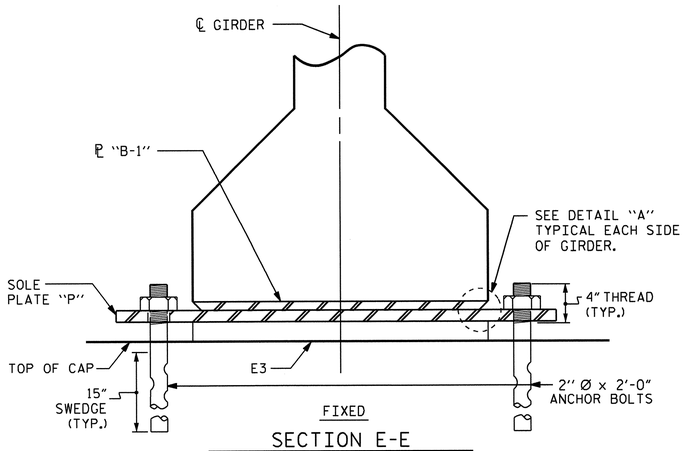

FIXED

SECTION E-E
AT INTERIOR BENTS

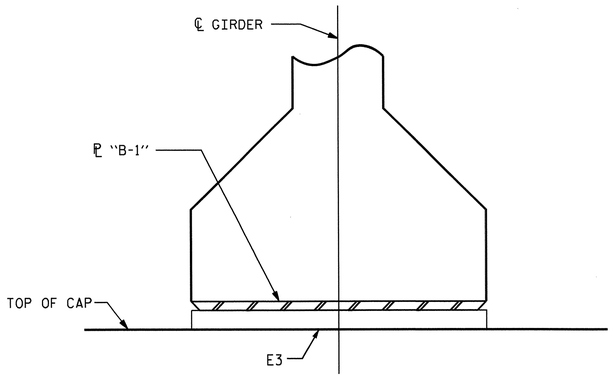

INTEGRAL

SECTION F-F
AT INTEGRAL END BENTS

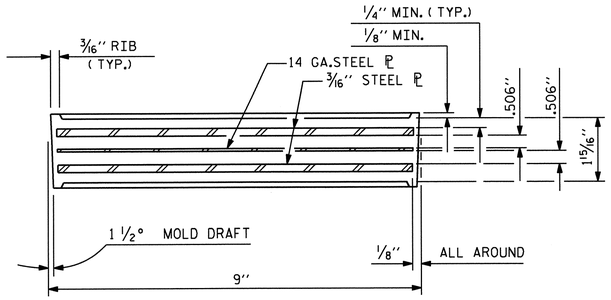

TYPICAL SECTION OF ELASTOMERIC BEARINGS

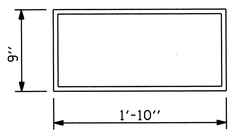

E3 (24 REQ'D.)

PLAN VIEW OF ELASTOMERIC BEARING

TYPE IV

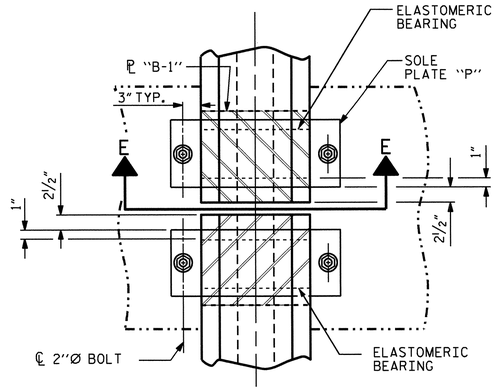

TYPICAL PLAN
(SHOWING CONTINUOUS BENT)

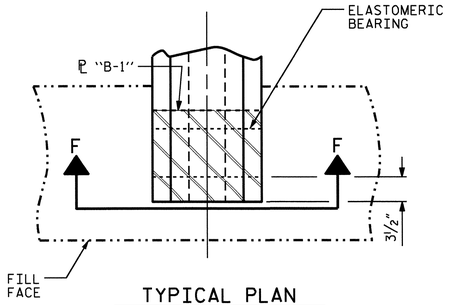

TYPICAL PLAN
(SHOWING INTEGRAL END BENT)

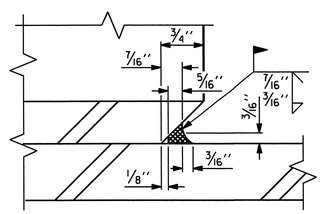

DETAIL "A"

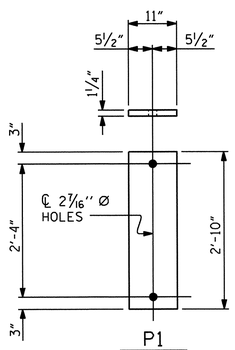

P1
(FIXED)
P1 (16 REQ'D)

SOLE PLATE DETAILS ("P")

NOTES

AT ALL FIXED POINTS OF SUPPORT, NUTS FOR ANCHOR BOLTS ARE TO BE TIGHTENED FINGER TIGHT AND THEN BACKED OFF 1/2 TURN. THE THREAD OF THE NUT AND BOLT SHALL THEN BE BURRED WITH A SHARP POINTED TOOL.

STEEL SOLE PLATES, ANCHOR BOLTS, NUTS, AND WASHERS SHALL BE GALVANIZED IN ACCORDANCE WITH THE STANDARD SPECIFICATIONS.

PRIOR TO WELDING, GRIND THE GALVANIZED SURFACE OF THE PORTION OF THE EMBEDDED PLATE AND SOLE PLATE THAT ARE TO BE WELDED. AFTER WELDING, DAMAGED GALVANIZED SURFACES SHALL BE REPAIRED IN ACCORDANCE WITH THE STANDARD SPECIFICATIONS.

WHEN WELDING THE SOLE PLATE TO THE EMBEDDED PLATE IN THE GIRDER, USE TEMPERATURE INDICATING WAX PENS, OR OTHER SUITABLE MEANS, TO ENSURE THAT THE TEMPERATURE OF THE SOLE PLATE DOES NOT EXCEED 300°F. TEMPERATURES ABOVE THIS MAY DAMAGE THE ELASTOMER.

SOLE PLATE "P", BOLTS, NUTS, WASHERS, AND PIPE SLEEVE SHALL BE INCLUDED IN THE PAY ITEM FOR PRESTRESSED CONCRETE GIRDERS.

ANCHOR BOLTS SHALL MEET THE REQUIREMENTS OF ASTM A449. NUTS SHALL MEET THE REQUIREMENTS OF AASHTO M291-DH OR AASHTO M292-2H. WASHERS SHALL MEET THE REQUIREMENTS OF AASHTO M293. SHOP DRAWINGS ARE NOT REQUIRED FOR ANCHOR BOLT, NUTS AND WASHERS. SHOP INSPECTION IS REQUIRED.

ALL SURFACES OF BEARING PLATES SHALL BE SMOOTH AND STRAIGHT.

THE ELASTOMER IN THE STEEL REINFORCED BEARINGS SHALL HAVE A SHEAR MODULUS OF 0.160 KSI, IN ACCORDANCE WITH AASHTO M251.

FOR STEEL REINFORCED ELASTOMERIC BEARINGS, SEE SPECIAL PROVISIONS.

ALL BEARING PLATES SHALL BE AASHTO M270 GRADE 36.

MAXIMUM ALLOWABLE SERVICE LOADS	
D.L.+L.L. (NO IMPACT)	
TYPE IV	190 k

PROJECT NO. R-2303B

SAMPSON COUNTY

STATION: 660+21.00 -L-

DESIGN ENGINEER OF RECORD: BEENA MATHEW DATE : 7-24-12		
ASSEMBLED BY : PEGGY PARISI DATE : 8-23-12		
CHECKED BY : K.P. SEDAI DATE : 10-18-12		
DRAWN BY : WJH 8/89	REV. 5/1/06	TLA/GM
CHECKED BY : CRK 8/89	REV. 10/1/11	MAA/GM
	REV. 10/24/12	AAC/MAA

19-FEB-2013 08:54
Z:\TIPProjects-R\R2303B\Structures\Plans\str04\pparisi\R-2303B_SD_ts_04.dgn
padkins

NORTH CAROLINA PROFESSIONAL SEAL 025516 ENGINEER KELLY E. MURRAY
2-21-13

STATE OF NORTH CAROLINA
DEPARTMENT OF TRANSPORTATION
RALEIGH
STANDARD

ELASTOMERIC BEARING DETAILS

PRESTRESSED CONCRETE GIRDER SUPERSTRUCTURE (RIGHT LANE)

REVISIONS						SHEET NO.
NO.	BY:	DATE:	NO.	BY:	DATE:	S-130
1			3			TOTAL SHEETS
2			4			146

STR. #4 STD. NO. EB3 (SHT 3)

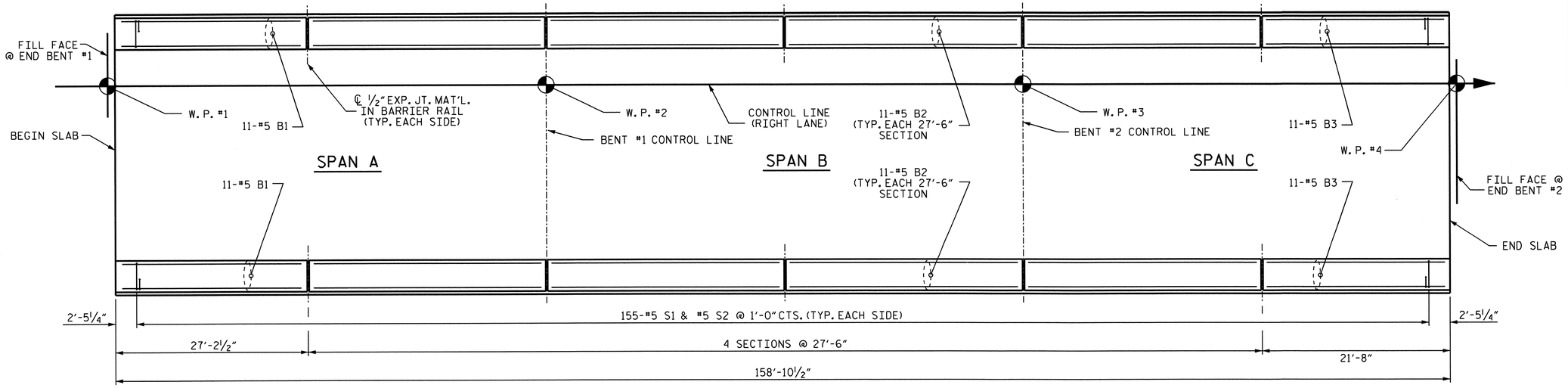

PLAN

BAR TYPES

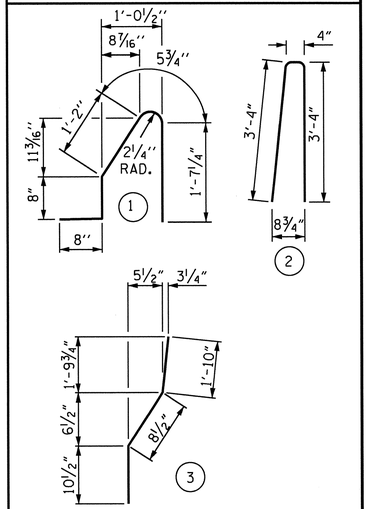

ALL BAR DIMENSIONS ARE OUT TO OUT

BILL OF MATERIAL

FOR CONCRETE BARRIER RAIL ONLY

BAR	NO.	SIZE	TYPE	LENGTH	WEIGHT
* B1	22	#5	STR	26'-10"	616
* B2	88	#5	STR	27'-1"	2486
* B3	22	#5	STR	21'-3"	488
* S1	310	#5	1	4'-7"	1482
* S2	310	#5	2	7'-0"	2263
* S5	8	#5	3	3'-5"	29
* S6	8	#5	STR	3'-3"	27

* EPOXY COATED REINFORCING STEEL	7391 LBS.
CLASS AA CONCRETE	43.1 CU. YDS.
CONCRETE BARRIER RAIL	317.75 LIN. FT.

NOTES

THE BARRIER RAIL IN EACH SPAN SHALL NOT BE CAST UNTIL ALL SLAB CONCRETE IN THAT SPAN HAS BEEN CAST AND HAS REACHED A MINIMUM COMPRESSIVE STRENGTH OF 3,000 PSI.

ALL REINFORCING STEEL IN BARRIER RAILS SHALL BE EPOXY COATED.

GROOVED CONTRACTION JOINTS, 1/2" IN DEPTH, SHALL BE TOOLED IN ALL EXPOSED FACES OF THE BARRIER RAIL AND IN ACCORDANCE WITH ARTICLE 825-10(B) OF THE STANDARD SPECIFICATIONS. THE CONTRACTION JOINT SHALL BE LOCATED AT EACH THIRD POINT BETWEEN BARRIER RAIL EXPANSION JOINTS. ONLY ONE CONTRACTION JOINT IS REQUIRED AT MIDPOINT OF BARRIER RAIL SEGMENTS LESS THAN 20 FEET IN LENGTH AND NO CONTRACTION JOINTS ARE REQUIRED FOR THOSE SEGMENTS LESS THAN 10 FEET IN LENGTH.

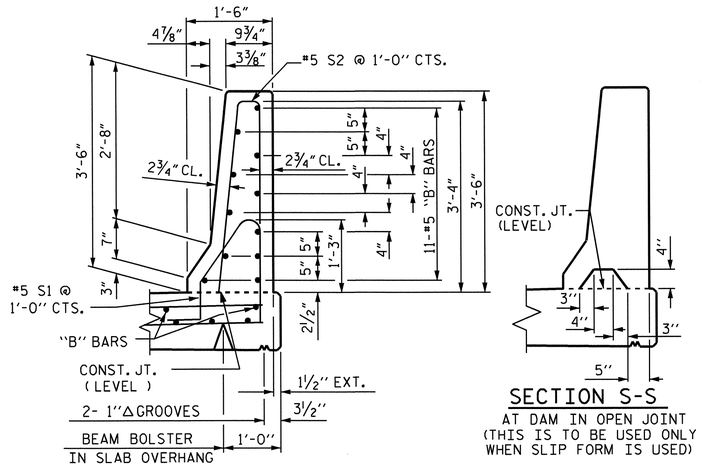

SECTION THRU RAIL

SECTION S-S

AT DAM IN OPEN JOINT (THIS IS TO BE USED ONLY WHEN SLIP FORM IS USED)

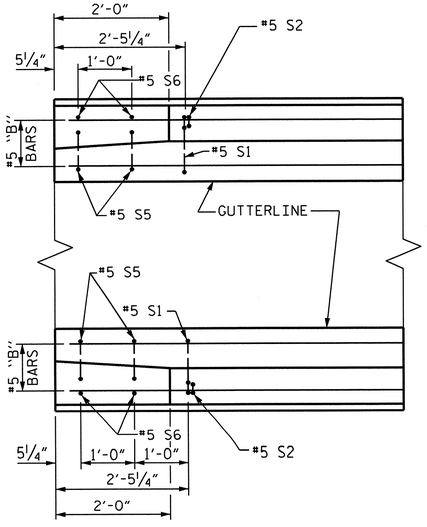

PLAN

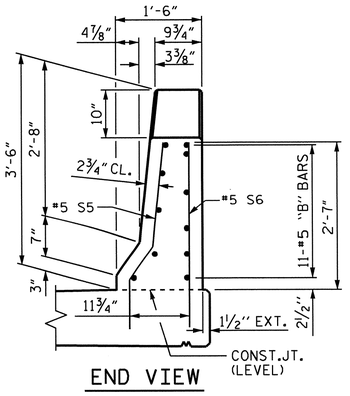

END VIEW

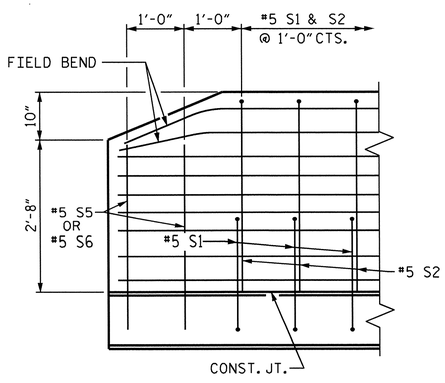

SIDE VIEW

END OF RAIL DETAILS

℄ 1/2" EXP. JT. MAT'L HELD IN PLACE WITH GALVANIZED NAILS.

(NOTE: OMIT EXP. JT. MAT'L. WHEN SLIP FORM IS USED.)

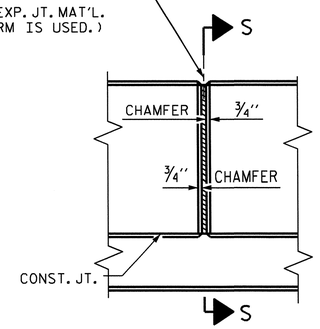

ELEVATION AT EXPANSION JOINTS

BARRIER RAIL DETAILS

PROJECT NO. R-2303B

SAMPSON COUNTY

STATION: 660+21.00 -L-

STATE OF NORTH CAROLINA
DEPARTMENT OF TRANSPORTATION
RALEIGH

STANDARD
CONCRETE BARRIER RAIL
(RIGHT LANE)

REVISIONS						SHEET NO.
NO.	BY:	DATE:	NO.	BY:	DATE:	S-131
1			3			TOTAL SHEETS
2			4			146

STR. #4

STD. NO. CBR1

DESIGN ENGINEER OF RECORD: BEENA MATHEW	DATE : 7-24-12	
ASSEMBLED BY : PEGGY PARISI	DATE : 8-23-12	
CHECKED BY : K.P. SEDAI	DATE : 10-18-12	
DRAWN BY : ARB 5/87	REV. 10/1/11	MAA/GM
CHECKED BY : SJD 9/87	REV. 7/12	MAA/GM
	REV. 10/12	MAA/GM

NORTH CAROLINA PROFESSIONAL SEAL 025516 ENGINEER ELMER S. MURRAY 2-21-13

19-FEB-2013 08:53
Z:\TIPProjects-R\R2303B\Structures\Plans\str04\pparisi\R-2303B_SD_ts_04.dgn
padkins

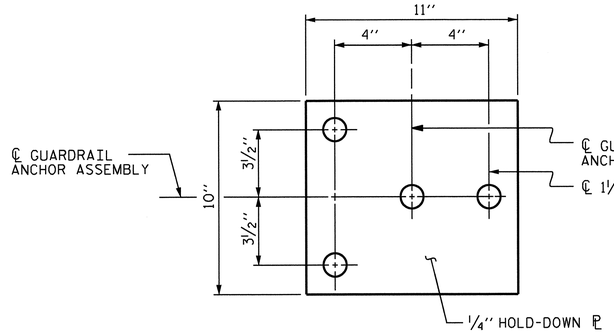

PLAN

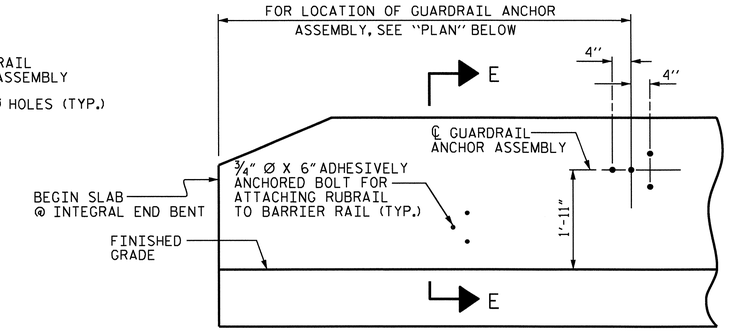

ELEVATION

FOR LOCATION OF RUBRAIL, SEE ROADWAY STD. 862.03

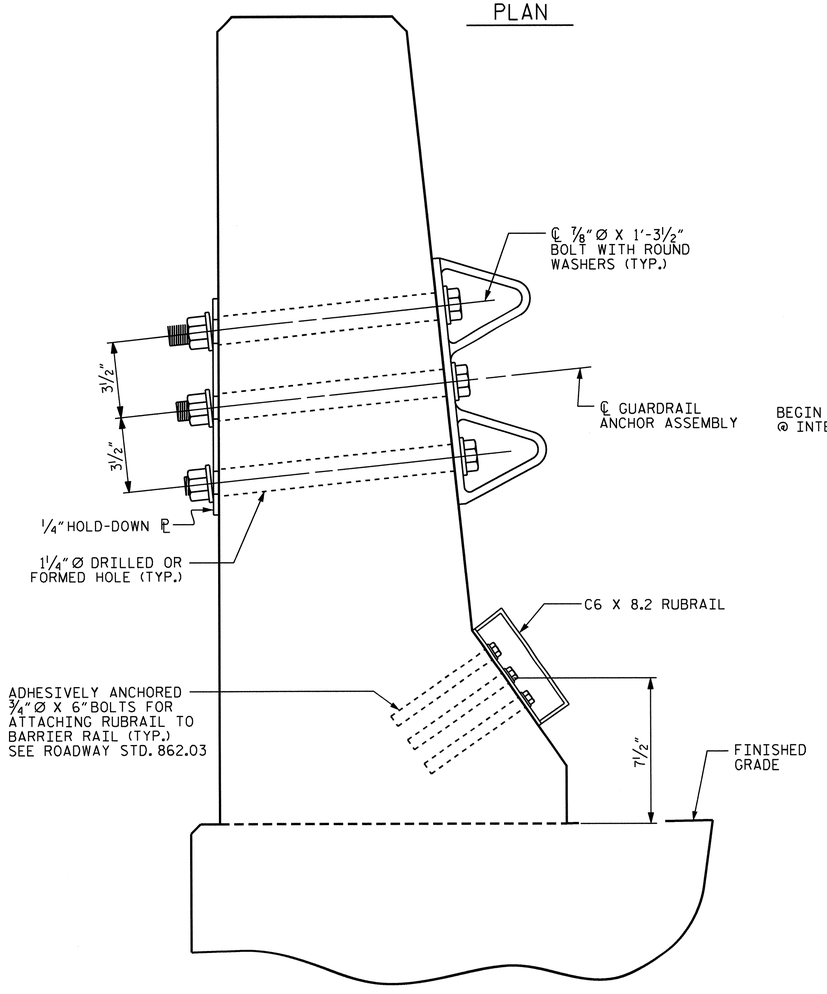

SECTION E-E

GUARDRAIL ANCHOR ASSEMBLY DETAILS

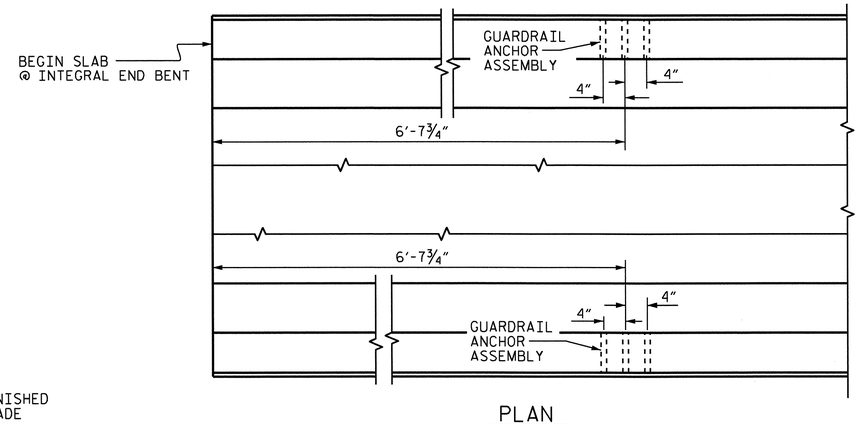

PLAN

LOCATION OF ANCHORS FOR GUARDRAIL

END BENT #1 SHOWN, END BENT #2 SIMILAR.

NOTES

THE GUARDRAIL ANCHOR ASSEMBLY SHALL CONSIST OF A ¼'' HOLD-DOWN PLATE AND 4 - ⅞'' Ø BOLTS WITH NUTS AND WASHERS, RUBRAIL, AND ADHESIVELY ANCHORED BOLTS.

THE HOLD-DOWN PLATE SHALL CONFORM TO AASHTO M270 GRADE 36. AFTER FABRICATION, THE HOLD-DOWN PLATE SHALL BE HOT-DIP GALVANIZED IN ACCORDANCE WITH AASHTO M111.

BOLTS SHALL CONFORM TO THE REQUIREMENTS OF ASTM A307 AND NUTS SHALL CONFORM TO THE REQUIREMENTS OF AASHTO M291. BOLTS, NUTS AND WASHERS SHALL BE GALVANIZED. (AT THE CONTRACTOR'S OPTION, STAINLESS STEEL BOLTS, NUTS AND WASHERS MAY BE USED AS AN ALTERNATE FOR THE ⅞'' Ø GALVANIZED BOLTS, NUTS AND WASHERS. THEY SHALL CONFORM TO OR EXCEED THE MECHANICAL REQUIREMENTS OF ASTM A307. THE USE OF THIS ALTERNATE SHALL BE APPROVED BY THE ENGINEER.)

THE GUARDRAIL ANCHOR ASSEMBLY IS REQUIRED AT ALL POINTS WHERE APPROACH GUARDRAIL IS TO BE ATTACHED TO THE END OF BARRIER RAIL. FOR POINTS OF ATTACHMENT, SEE SKETCH.

AFTER INSTALLATION, THE EXPOSED THREAD OF THE BOLT SHALL BE BURRED WITH A SHARP POINTED TOOL.

THE COST OF THE GUARDRAIL ANCHOR ASSEMBLY SHALL BE INCLUDED IN THE UNIT CONTRACT PRICE BID FOR CONCRETE BARRIER RAIL.

THE 1 ¼'' Ø HOLES SHALL BE FORMED OR DRILLED WITH A CORE BIT. IMPACT TOOLS WILL NOT BE PERMITTED. ANY CONCRETE DAMAGED BY THIS WORK SHALL BE REPAIRED TO THE SATISFACTION OF THE ENGINEER.

THE C6 X 8.2 RUBRAIL IS TO BE ADHESIVELY ANCHORED TO THE RAIL USING THREE ¾" Ø X 6" BOLTS WITH WASHERS. LEVEL ONE FIELD TESTING IS REQUIRED, AND THE YIELD LOAD OF THE ¾" Ø BOLT IS 12 KIPS. FOR ADHESIVELY ANCHORED ANCHOR BOLTS OR DOWELS, SEE STANDARD SPECIFICATIONS. SEE ROADWAY STANDARD 862.03 FOR DETAILS AND LOCATION OF THE RUBRAIL.

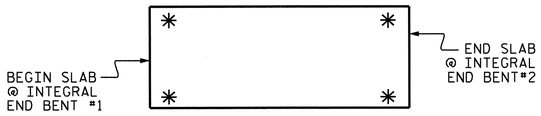

SKETCH SHOWING POINTS OF ATTACHMENTS

✳ DENOTES GUARDRAIL ANCHOR ASSEMBLY

PROJECT NO. R-2303B

SAMPSON COUNTY

STATION: 660+21.00 -L-

STATE OF NORTH CAROLINA
DEPARTMENT OF TRANSPORTATION
RALEIGH

STANDARD

GUARDRAIL ANCHORAGE FOR BARRIER RAIL

(RIGHT LANE)

REVISIONS						SHEET NO.
NO.	BY:	DATE:	NO.	BY:	DATE:	S-132
1			3			TOTAL SHEETS
2			4			146

NORTH CAROLINA PROFESSIONAL SEAL 025516 ENGINEER EMILY E. MURRAY 2-21-13

DESIGN ENGINEER OF RECORD: BEENA MATHEW DATE: 7-24-12			
ASSEMBLED BY: PEGGY PARISI DATE: 8-23-12			
CHECKED BY: K.P. SEDAI DATE: 10-18-12			
DRAWN BY: TLA 5/06	REV. 10/1/11	MAA/GM	
CHECKED BY: GM 5/06	REV. 7/12	MAA/GM	
	REV. 10/12	MAA/GM	

19-FEB-2013 08:53
Z:\TIPProjects-R\R2303B\Structures\Plans\str04\pparisi\R-2303B_SD_ts_04.dgn
padkins

STR. #4 (SHT 1) STD. NO. GRA2

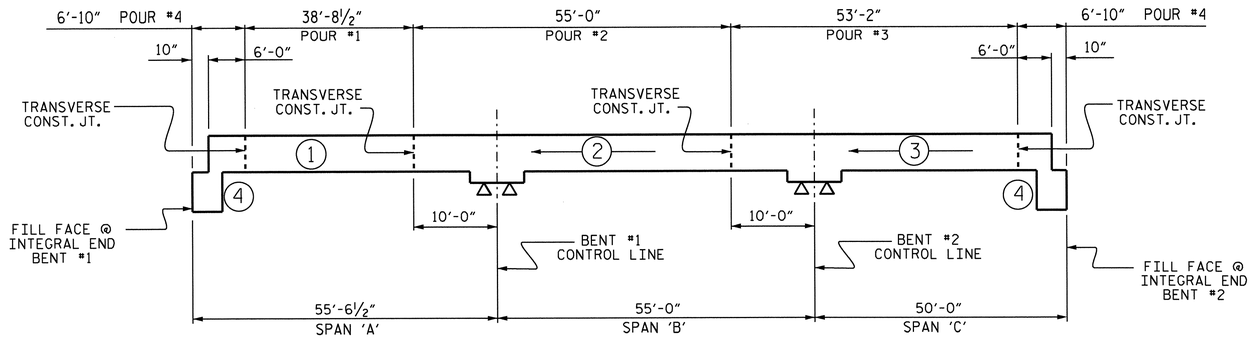

POURING SEQUENCE

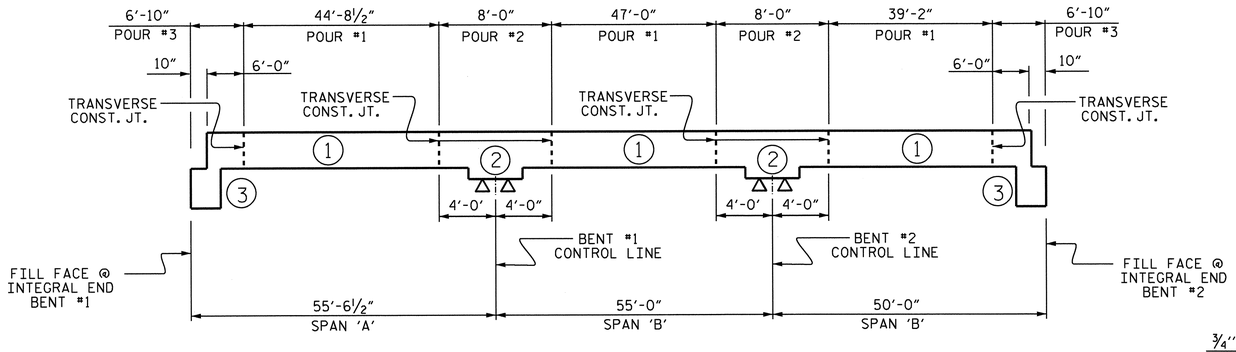

OPTIONAL POURING SEQUENCE

POUR #2 CANNOT BE STARTED UNTIL BOTH ADJACENT POUR #1 REACH A MINIMUM OF 3000 P.S.I.

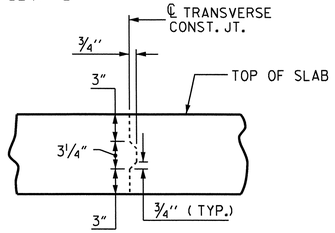

TRANSVERSE CONSTRUCTION JOINT DETAIL

NOTE: REINFORCING STEEL IN SLAB NOT SHOWN. LONGITUDINAL REINFORCING STEEL SHALL BE CONTINUOUS THRU JOINT

BILL OF MATERIAL

SPANS A, B & C

BAR	NO.	SIZE	TYPE	LENGTH	WEIGHT
✻ A1	346	#5	STR	38'-11"	14044
A2	346	#5	STR	38'-11"	14044
✻ B1	156	#6	STR	11'-0"	2577
✻ B2	28	#4	STR	26'-3"	491
✻ B3	56	#6	STR	43'-0"	3617
✻ B4	100	#6	STR	16'-6"	2478
✻ B5	28	#4	STR	16'-0"	299
✻ B6	28	#4	STR	20'-8"	387
B7	150	#5	STR	54'-4"	8500
H1	28	#6	5	18'-2"	764
H2	28	#5	5	16'-3"	475
K1	20	#4	STR	23'-4"	312
K2	6	#4	STR	8'-7"	34
K3	12	#4	STR	9'-1"	73
K4	12	#4	STR	9'-10"	79
K5	4	#4	STR	5'-1"	14
K6	8	#4	STR	5'-4"	29
K7	8	#4	STR	5'-9"	31
K8	16	#4	STR	2'-8"	29
K9	16	#4	STR	17'-0"	182
K10	12	#4	STR	7'-5"	59
K11	12	#4	STR	9'-7"	77
K12	12	#4	STR	9'-10"	79
K13	12	#4	STR	9'-1"	73
✻ S1	62	#4	1	11'-11"	494
✻ S2	62	#4	1	9'-10"	407
S3	150	#4	3	2'-9"	276
U1	66	#4	2	9'-11"	437
U2	12	#4	2	11'-9"	94
✻ U3	42	#4	4	13'-4"	374
✻ U4	12	#4	4	11'-4"	91
V1	8	#4	STR	3'-4"	18
V2	136	#4	STR	4'-6"	409

REINFORCING STEEL = 26088 LBS.

✻EPOXY COATED REINFORCING STEEL = 25259 LBS.

BAR TYPES

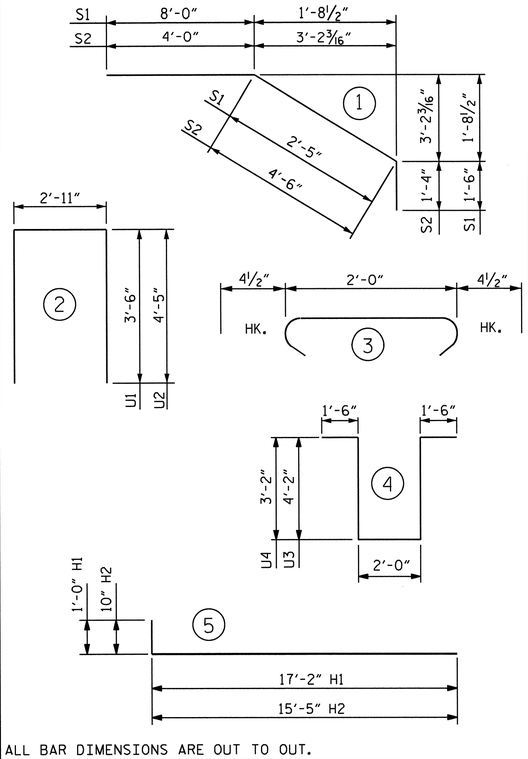

ALL BAR DIMENSIONS ARE OUT TO OUT.

SUPERSTRUCTURE BILL OF MATERIAL

		CLASS AA CONCRETE	REINFORCING STEEL	EPOXY COATED REINFORCING STEEL
		(CU. YDS.)	(LBS.)	(LBS.)
SPANS A, B AND C	POUR 1	50.0	26088	25259
	POUR 2	81.3		
	POUR 3	78.9		
	POUR 4✲	69.7		
TOTALS✻✻		279.9	26088	25259

✻✻ QUANTITIES FOR BARRIER RAIL ARE NOT INCLUDED

✲ POUR 4 QUANTITY INCLUDES UPPER POUR OF WINGS & INTEGRAL END BENT

SUPERSTRUCTURE REINFORCING STEEL LENGTHS ARE BASED ON THE FOLLOWING MINIMUM SPLICE LENGTHS

BAR SIZE	SUPERSTRUCTURE EXCEPT APPROACH SLABS, PARAPET, AND BARRIER RAIL		APPROACH SLABS		PARAPET AND BARRIER RAIL
	EPOXY COATED	UNCOATED	EPOXY COATED	UNCOATED	
#4	2'-0"	1'-9"	2'-0"	1'-9"	2'-9"
#5	2'-6"	2'-2"	2'-6"	2'-2"	3'-5"
#6	3'-0"	2'-7"	3'-10"	2'-7"	4'-4"
#7	5'-3"	3'-6"			
#8	6'-10"	4'-7"			

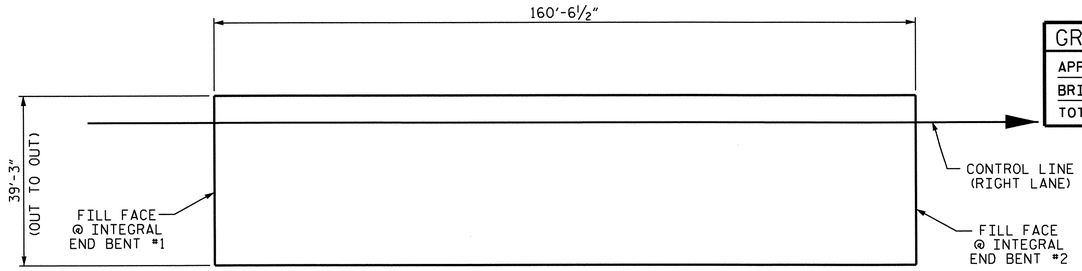

LAYOUT FOR COMPUTING AREA REINFORCED CONCRETE DECK SLAB

(SQ. FT. = 6301)

GROOVING BRIDGE FLOORS

APPROACH SLABS	1606	SQ.FT.
BRIDGE DECK	5232	SQ.FT.
TOTAL	6838	SQ.FT.

PROJECT NO. R-2303B

SAMPSON COUNTY

STATION: 660+21.00 -L-

STATE OF NORTH CAROLINA
DEPARTMENT OF TRANSPORTATION
RALEIGH

STANDARD
SUPERSTRUCTURE BILL OF MATERIAL
(RIGHT LANE)

REVISIONS						SHEET NO.
NO.	BY:	DATE:	NO.	BY:	DATE:	S-133
1			3			TOTAL SHEETS
2			4			146

NORTH CAROLINA PROFESSIONAL SEAL 025516 ENGINEER EMILY S. MURRAY 2-21-13

DESIGN ENGINEER OF RECORD: BEENA MATHEW DATE : 7-24-12

ASSEMBLED BY : PEGGY PARISI DATE : 11-5-10
CHECKED BY : K.P. SEDAI DATE : 10-18-12

DRAWN BY : JMB 5/87
CHECKED BY : SJD 9/87

REV. 8/16/99 RWW/LES
REV. 5/1/06 TLA/GM
REV. 10/1/11 MAA/GM

19-FEB-2013 08:53
Z:\TIPProjects-R\R2303B\Structures\Plans\str04\pparisi\R-2303B_SD_ts_04.dgn
podkins

STR. #4 STD. NO. BOM2

NOTES:

INSTALL THE 4" DIA. DRAIN PIPE THROUGH THE WING WALL AS REQUIRED FOR REINFORCED BRIDGE APPROACH FILLS, SEE THE ROADWAY PLANS. REINFORCING STEEL IN THE WING WALL MAY BE SHIFTED AS NECESSARY TO CLEAR THE DRAIN PIPE.

UPPER PORTION OF INTEGRAL END BENT CAP AND UPPER PORTION OF WINGS SHALL BE POURED WITH THE SUPERSTRUCTURE. SEE SUPERSTRUCTURE PLANS.

THE TOP SURFACE OF THE END BENT CAP AND WINGS, EXCLUDING THE BEARING AREA, SHALL BE RAKED TO A DEPTH OF 1/4".

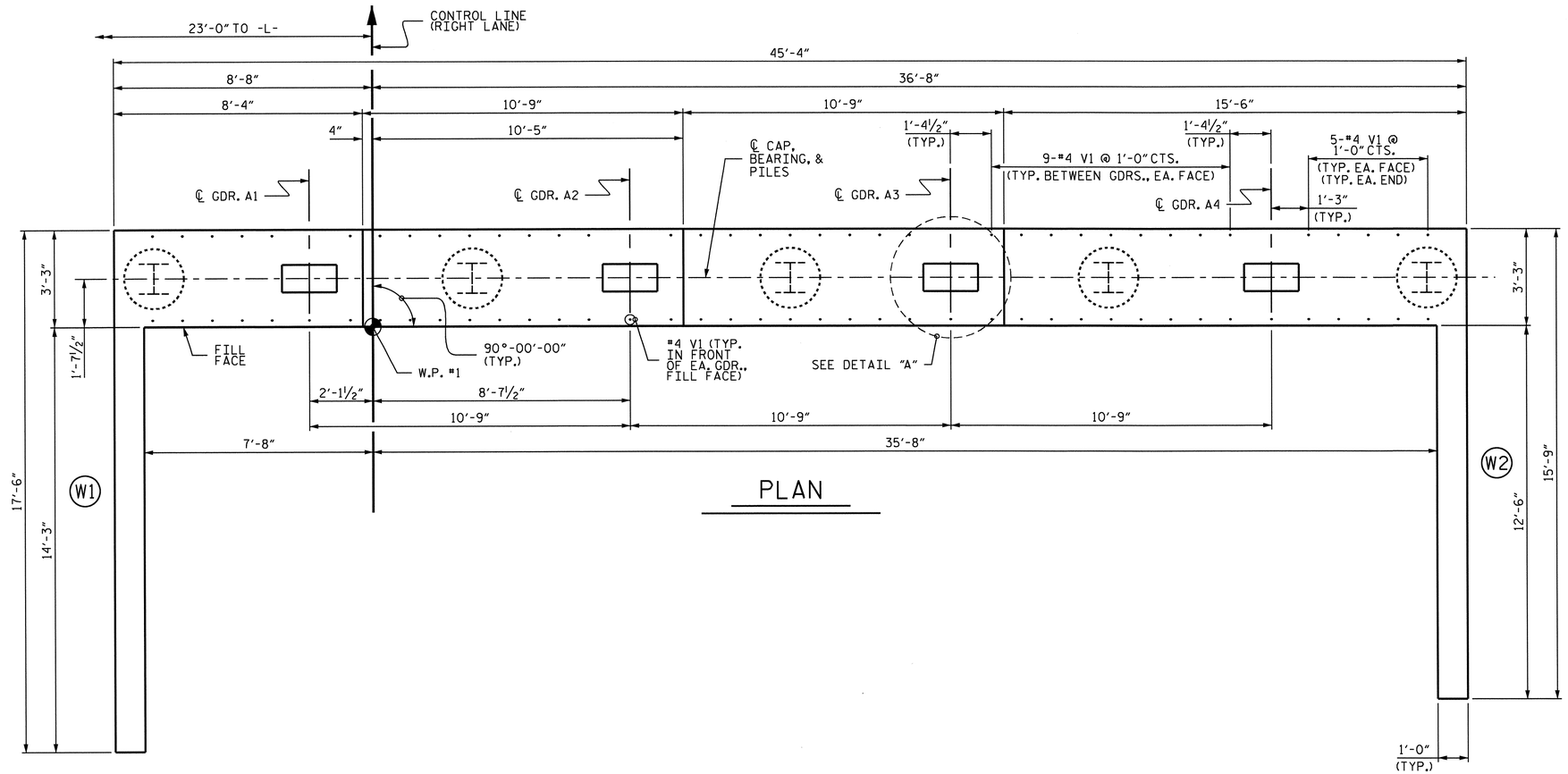

PLAN

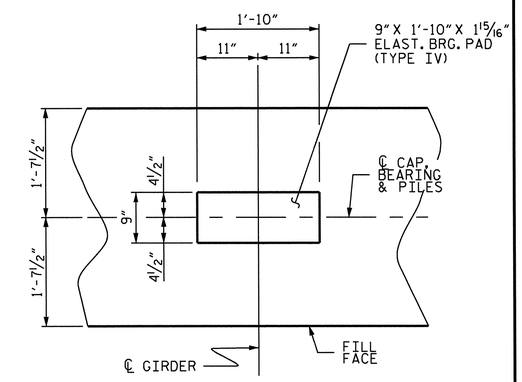

DETAIL "A"
(TYP. EA. GDR.)

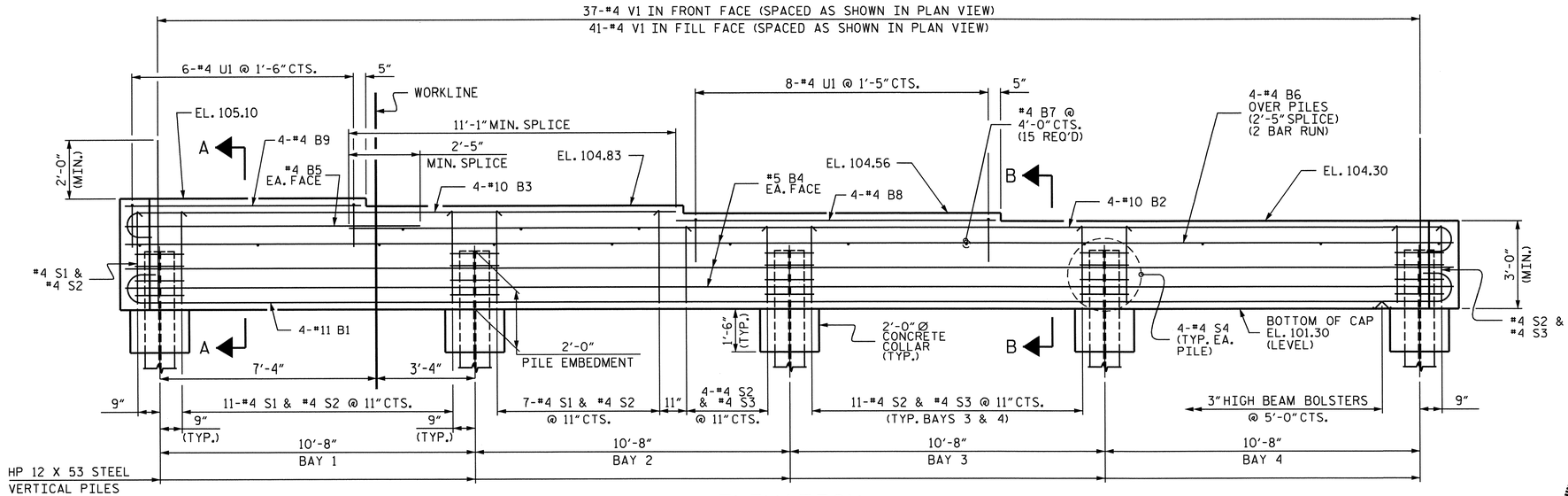

ELEVATION

PROJECT NO. R-2303B
SAMPSON COUNTY
STATION: 660+21.00 -L-

SHEET 1 OF 3

STATE OF NORTH CAROLINA
DEPARTMENT OF TRANSPORTATION
RALEIGH

SUBSTRUCTURE

END BENT #1
(INTEGRAL)
(RIGHT LANE)

NORTH CAROLINA PROFESSIONAL SEAL 025516 ENGINEER EMILY E. CHURRAY
2-21-13

REVISIONS						SHEET NO.
NO.	BY:	DATE:	NO.	BY:	DATE:	S-134
1			3			TOTAL SHEETS
2			4			146

STR #4

DESIGN ENGINEER OF RECORD: A. M. LEE, PE DATE: 3-20-12
DRAWN BY: A. M. LEE, PE DATE: 4/2012
CHECKED BY: M.M. AHMED DATE: 10/2012

19-FEB-2013 08:52
Z:\TIPProjects-R\R2303B\Structures\Plans\str04\amlee\R2303B_SD_04_EB.dgn
padkins

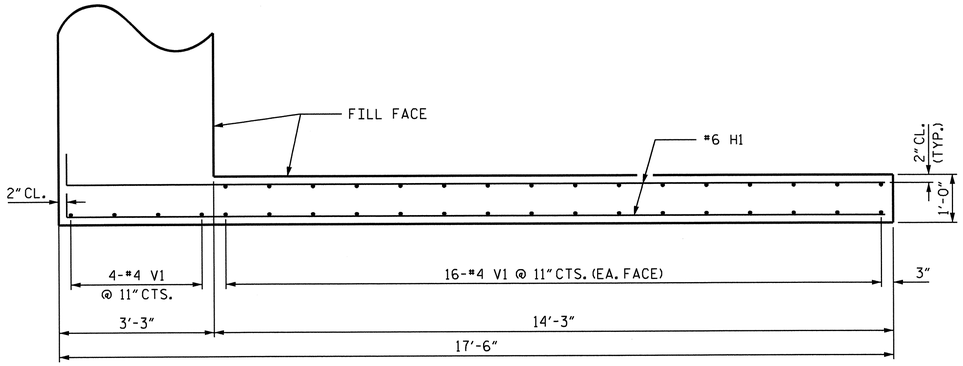

PLAN OF WING (W1)

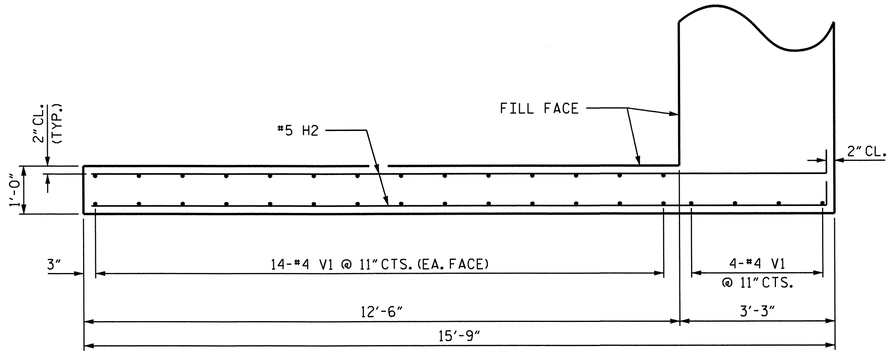

PLAN OF WING (W2)

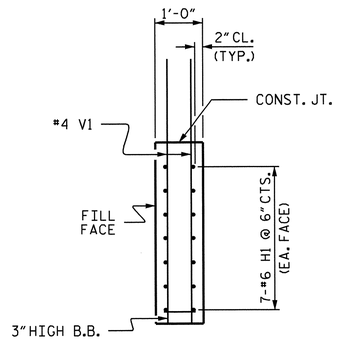

SECTION X-X

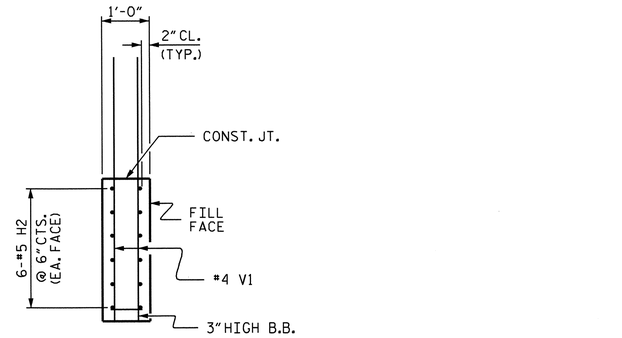

SECTION Y-Y

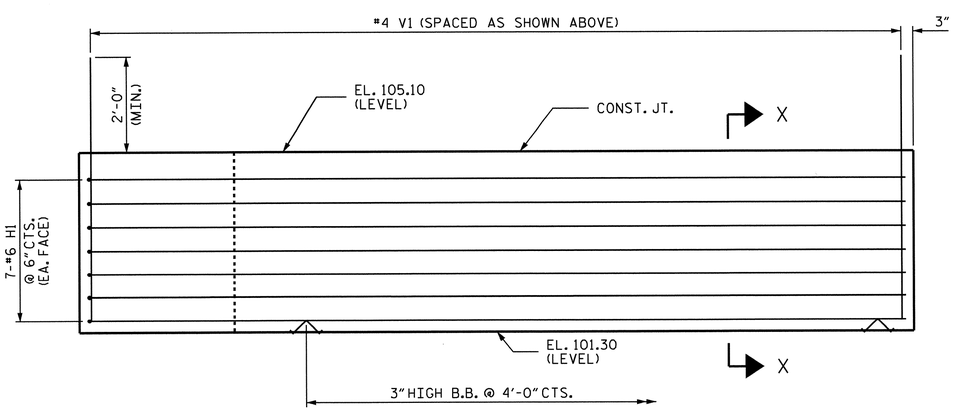

ELEVATION OF WING (W1)

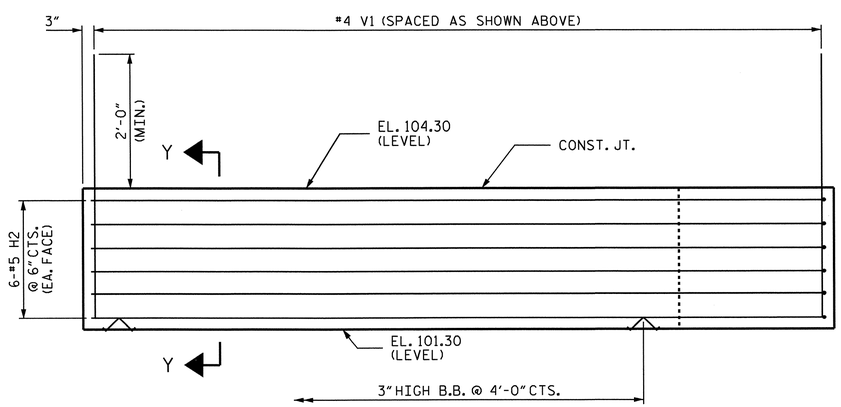

ELEVATION OF WING (W2)

DESIGN ENGINEER OF RECORD: A. M. LEE, PE	DATE : 3-20-12
DRAWN BY : A. M. LEE, PE	DATE : 4/2012
CHECKED BY : M.M. AHMED	DATE : 10/2012

19-FEB-2013 08:52
Z:\TIPProjects-R\R2303B\Structures\Plans\str04\amlee\R2303B_SD_04_EB.dgn
padkins

NORTH CAROLINA PROFESSIONAL SEAL 025516 ENGINEER CLARK E. MURRAY 2-21-13

PROJECT NO. R-2303B
SAMPSON COUNTY
STATION: 660+21.00 -L-

SHEET 2 OF 3

STATE OF NORTH CAROLINA
DEPARTMENT OF TRANSPORTATION
RALEIGH

SUBSTRUCTURE

END BENT #1 (INTEGRAL) (RIGHT LANE)

REVISIONS						SHEET NO.
NO.	BY:	DATE:	NO.	BY:	DATE:	S-135
1			3			TOTAL SHEETS
2			4			146

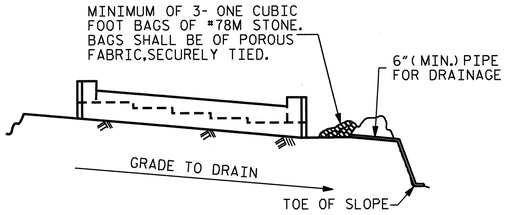

BAGGED STONE AND PIPE SHALL BE PLACED IMMEDIATELY AFTER COMPLETION OF END BENT EXCAVATION. PIPE MAY BE EITHER CONCRETE, CORRUGATED STEEL, CORRUGATED ALUMINUM ALLOY, OR CORRUGATED PLASTIC. PERFORATED PIPE WILL NOT BE ALLOWED.

BAGGED STONE SHALL REMAIN IN PLACE UNTIL THE ENGINEER DIRECTS THAT IT BE REMOVED. THE CONTRACTOR SHALL REMOVE AND DISPOSE OF SILT ACCUMULATIONS AT BAGGED STONE WHEN SO DIRECTED BY THE ENGINEER. BAGS SHALL BE REMOVED AND REPLACED WHENEVER THE ENGINEER DETERMINES THAT THEY HAVE DETERIORATED AND LOST THEIR EFFECTIVENESS.

NO SEPARATE PAYMENT WILL BE MADE FOR THIS WORK AND THE ENTIRE COST OF THIS WORK SHALL BE INCLUDED IN THE UNIT CONTRACT PRICE BID FOR THE SEVERAL PAY ITEMS.

TEMPORARY DRAINAGE AT END BENT

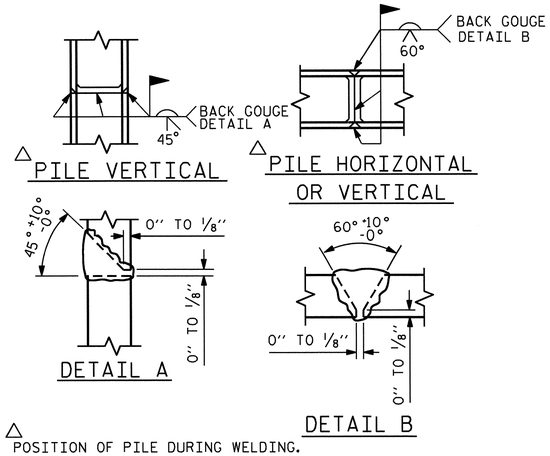

△ PILE VERTICAL

△ PILE HORIZONTAL OR VERTICAL

DETAIL A

DETAIL B

△ POSITION OF PILE DURING WELDING.

PILE SPLICE DETAILS

BAR TYPES

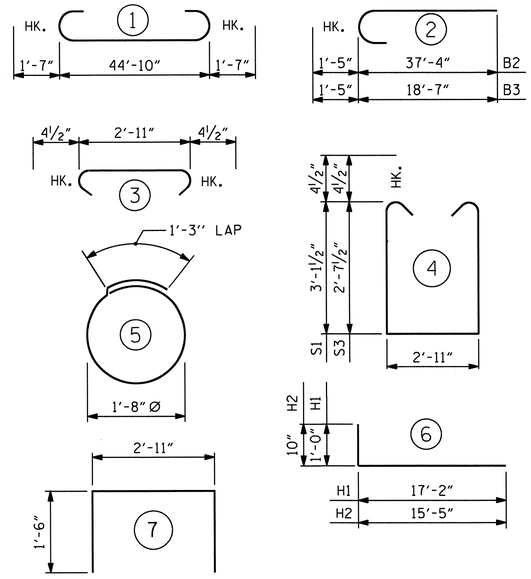

ALL BAR DIMENSIONS ARE OUT TO OUT.

BILL OF MATERIAL

END BENT #1

BAR	NO.	SIZE	TYPE	LENGTH	WEIGHT
B1	4	#11	1	48'-0"	1020
B2	4	#10	2	38'-9"	667
B3	4	#10	2	20'-0"	344
B4	6	#5	STR	45'-0"	282
B5	2	#4	STR	10'-0"	13
B6	8	#4	STR	23'-9"	127
B7	15	#4	STR	2'-11"	29
B8	4	#4	STR	10'-9"	29
B9	4	#4	STR	8'-0"	21
H1	14	#6	6	18'-2"	382
H2	12	#5	6	16'-3"	203
S1	19	#4	4	9'-11"	126
S2	46	#4	3	3'-8"	113
S3	27	#4	4	8'-11"	161
S4	20	#4	5	6'-6"	87
U1	14	#4	7	5'-11"	55
V1	146	#4	STR	5'-7"	545

REINFORCING STEEL	LBS.	4204
CLASS A CONCRETE BREAKDOWN:		
POUR #1 - CAP, COLLARS, AND LOWER WINGS	C.Y.	22.5
HP 12 X 53 STEEL PILES		
NO. 5	LIN. FT.	350
PILE REDRIVES	EA.	3

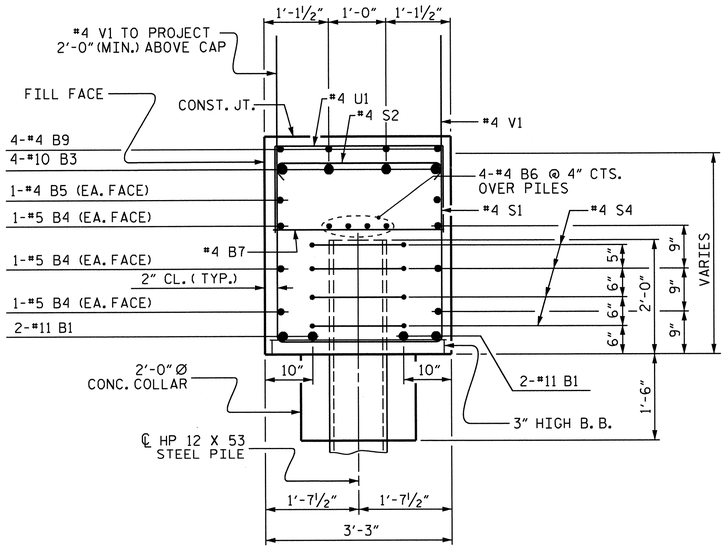

SECTION A-A

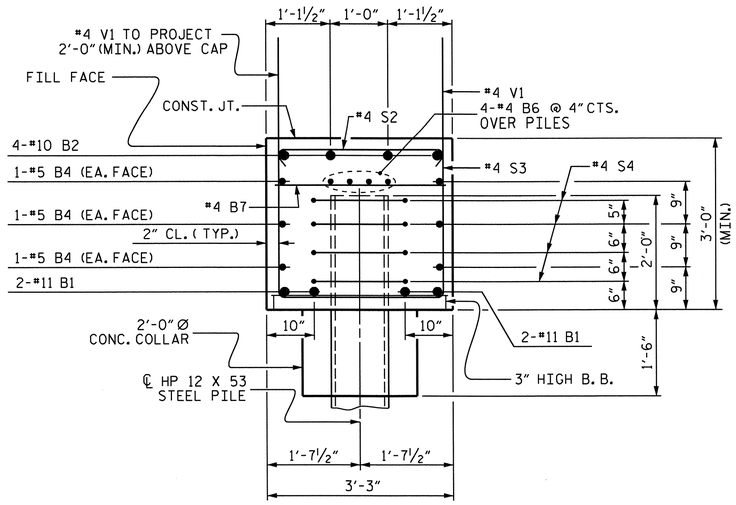

SECTION B-B

PROJECT NO. R-2303B

SAMPSON COUNTY

STATION: 660+21.00 -L-

SHEET 3 OF 3

STATE OF NORTH CAROLINA
DEPARTMENT OF TRANSPORTATION
RALEIGH

SUBSTRUCTURE
END BENT #1
(INTEGRAL)
(RIGHT LANE)

REVISIONS						SHEET NO.
NO.	BY:	DATE:	NO.	BY:	DATE:	S-136
1			3			TOTAL SHEETS
2			4			146

STR #4

NORTH CAROLINA PROFESSIONAL SEAL 025516 ENGINEER C. M. MURRAY
2-21-13

DESIGN ENGINEER OF RECORD: A. M. LEE, PE DATE: 3-20-12

DRAWN BY: A. M. LEE, PE DATE: 4/2012

CHECKED BY: M.M. AHMED DATE: 10/2012

19-FEB-2013 08:52
Z:\TIPProjects-R\R2303B\Structures\Plans\str04\amlee\R2303B_SD_04_EB.dgn
padkins

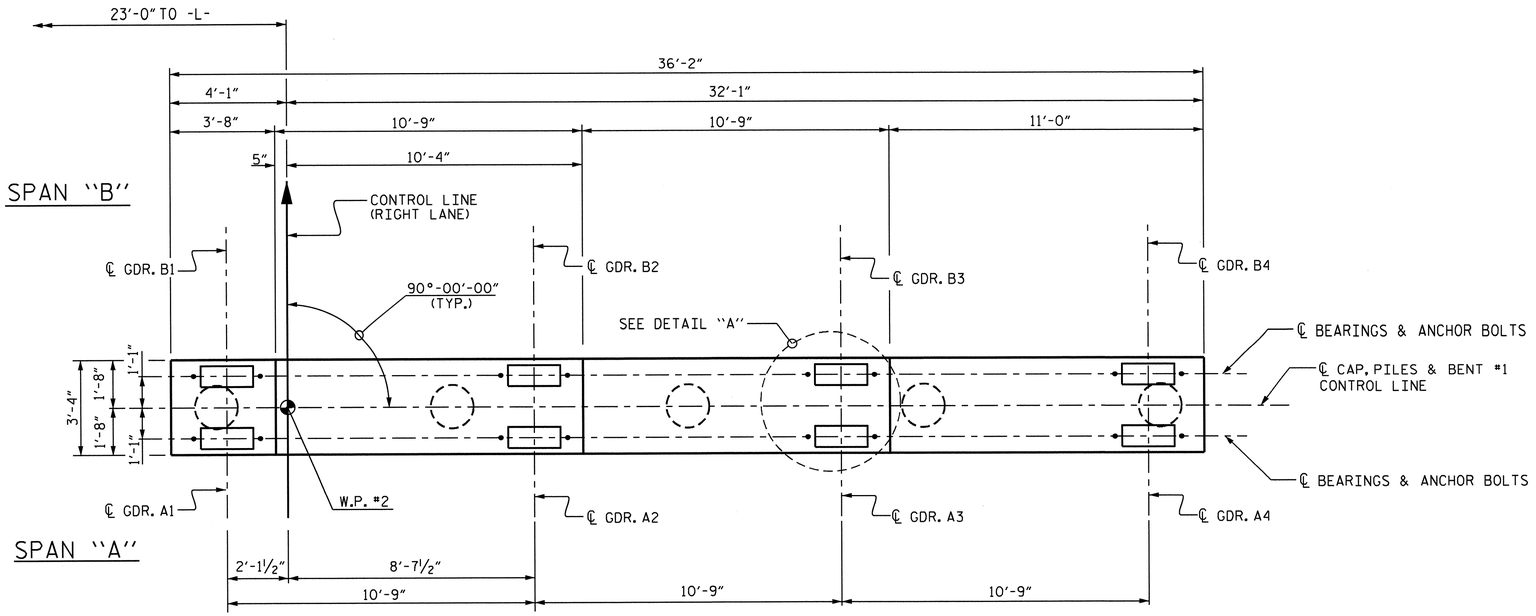

PLAN

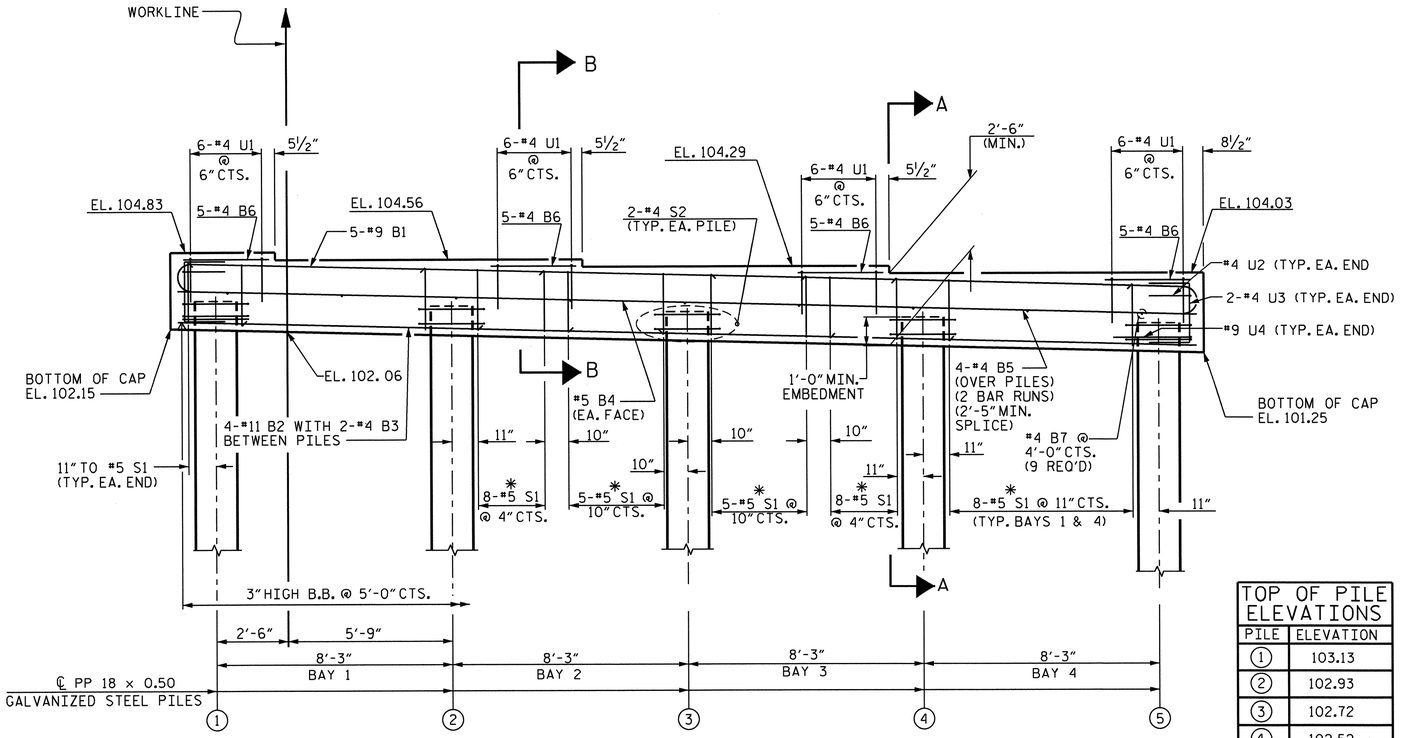

ELEVATION

* INVERT ALTERNATE STIRUPPS

TOP OF PILE ELEVATIONS	
PILE	ELEVATION
1	103.13
2	102.93
3	102.72
4	102.52
5	102.31

NOTES:

STIRRUPS IN THE CAP MAY BE SHIFTED AS NECESSARY TO CLEAR ANCHOR BOLTS.

FOR BENT #1, GALVANIZE THE TOP 30 FEET OF EACH PILE IN ACCORDANCE WITH SECTION 1076 OF THE STANDARD SPECIFICATIONS.

CONCRETE DISPLACED BY THE FILLED 18" STEEL PIPE PILES HAS BEEN DEDUCTED FROM THE QUANTITY OF CLASS A CONCRETE FOR THE BENT CAP.

FOR REINFORCING STEEL IN PIPE PILES, SEE "18" STEEL PIPE PILE" SHEET.

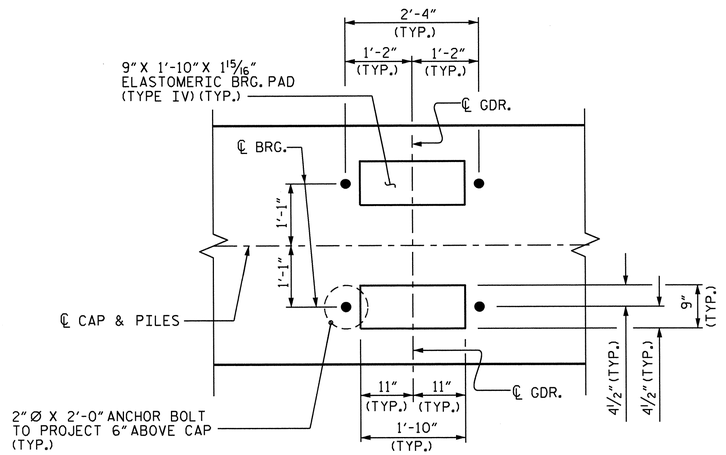

DETAIL "A"

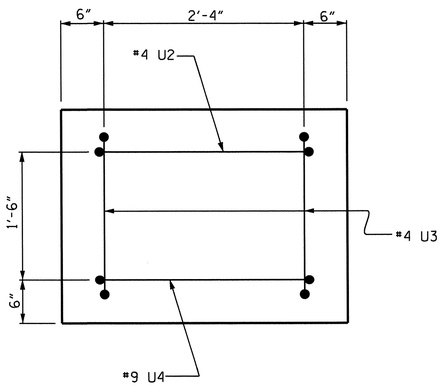

END VIEW
(TYP. BOTH ENDS)

PROJECT NO. R-2303B

SAMPSON COUNTY

STATION: 660+21.00 -L-

SHEET 1 OF 2

STATE OF NORTH CAROLINA
DEPARTMENT OF TRANSPORTATION
RALEIGH

SUBSTRUCTURE

BENT #1

(RIGHT LANE)

REVISIONS						SHEET NO.
NO.	BY:	DATE:	NO.	BY:	DATE:	S-137
1			3			TOTAL SHEETS
2			4			146

STR. #4

NORTH CAROLINA PROFESSIONAL SEAL 025516 ENGINEER ELMER E. MURRAY 2.21.13

DESIGN ENGINEER OF RECORD: MADONNA RORIE	DATE : 4-12-12
DRAWN BY : M.D.PISO	DATE : 06-08-12
CHECKED BY : P.A.PARISI	DATE : 10-10-12

19-FEB-2013 08:51
Z:\TIPProjects-R\R2303B\Structures\Plans\str04\mdpiso\micrstation\R-2303B_SD_B1.dgn
padkins

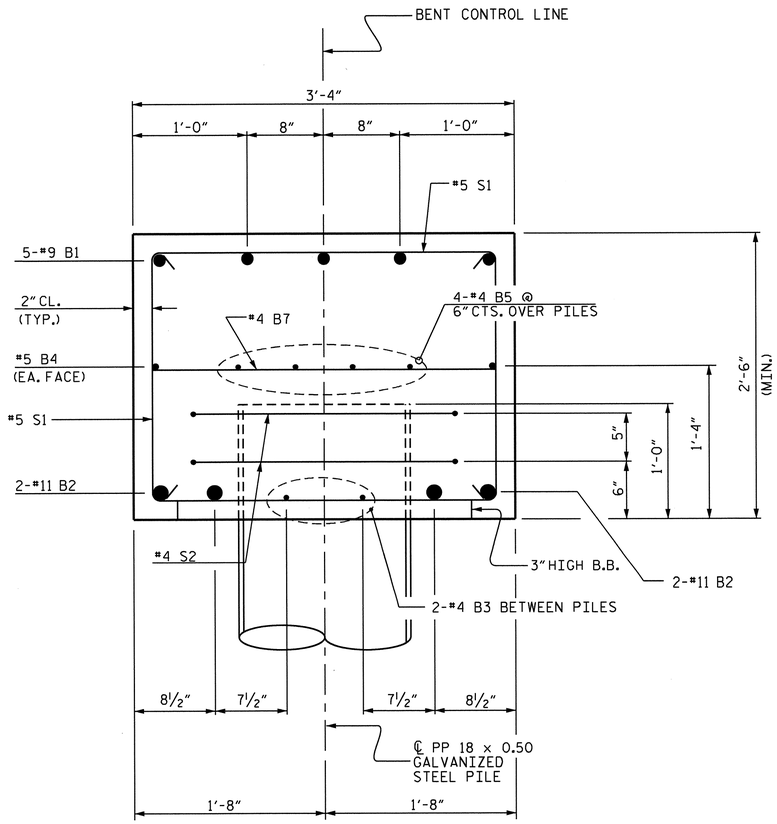

SECTION A-A

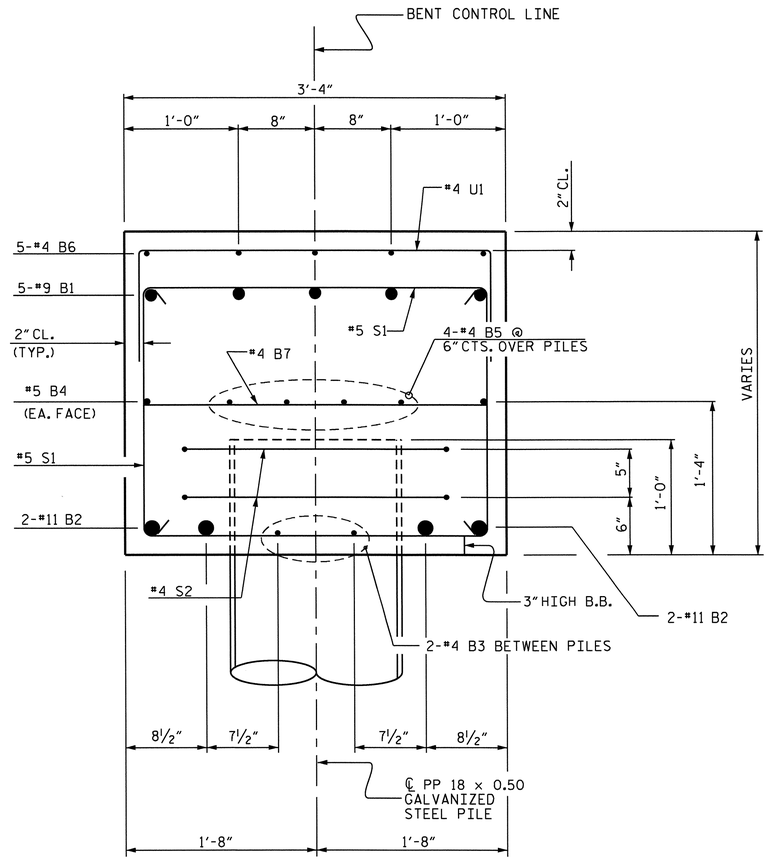

SECTION B-B

BAR TYPES

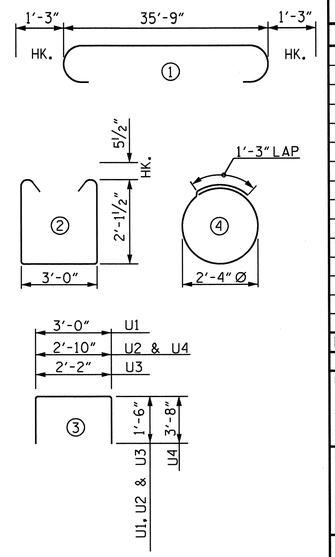

ALL BAR DIMENSIONS ARE OUT TO OUT

BILL OF MATERIAL

BENT #1

BAR	NO.	SIZE	TYPE	LENGTH	WEIGHT
B1	5	#9	1	38'-3"	650
B2	4	#11	STR.	35'-10"	762
B3	8	#4	STR.	6'-3"	33
B4	2	#5	STR.	35'-10"	75
B5	8	#4	STR.	19'-2"	102
B6	20	#4	STR.	3'-4"	45
B7	9	#4	STR.	3'-0"	18
S1	44	#5	2	8'-2"	375
S2	10	#4	4	8'-7"	57
U1	24	#4	3	6'-0"	96
U2	2	#4	3	5'-10"	8
U3	4	#4	3	5'-2"	14
U4	2	#9	3	10'-2"	69
REINFORCING STEEL					2,304 LBS.

CLASS A CONCRETE
POUR #1 CAP 11.5 C.Y.
TOTAL CONCRETE 11.5 C.Y.

PP 18 x 0.50 GALVANIZED STEEL PILES
NO. 5 375 LIN. FT.
PILE REDRIVES 3 EA.
PIPE PILE PLATES 5 EA.

PROJECT NO. R-2303B
SAMPSON COUNTY
STATION: 660+21.00 -L-

SHEET 2 OF 2

STATE OF NORTH CAROLINA
DEPARTMENT OF TRANSPORTATION
RALEIGH

SUBSTRUCTURE

BENT #1

(RIGHT LANE)

REVISIONS						SHEET NO.
NO.	BY:	DATE:	NO.	BY:	DATE:	S-138
1			3			TOTAL SHEETS
2			4			146

STR. #4

NORTH CAROLINA PROFESSIONAL SEAL 025516 ENGINEER EMILY R. EMARRAY
2.21.13

DESIGN ENGINEER OF RECORD: MADONNA RORIE DATE: 4-12-12
DRAWN BY: M.D.PISO DATE: 06-08-12
CHECKED BY: P.A.PARISI DATE: 10-10-12

19-FEB-2013 08:51
Z:\TIPProjects-R\R2303B\Structures\Plans\str04\mdpiso\micrstation\R-2303B_SD_B1.dgn
padkins

NOTES:

STIRRUPS IN THE CAP MAY BE SHIFTED AS NECESSARY TO CLEAR ANCHOR BOLTS.

FOR BENT #2, GALVANIZE THE TOP 30 FEET OF EACH PILE IN ACCORDANCE WITH SECTION 1076 OF THE STANDARD SPECIFICATIONS.

CONCRETE DISPLACED BY THE FILLED 18" STEEL PIPE PILES HAS BEEN DEDUCTED FROM THE QUANTITY OF CLASS A CONCRETE FOR THE BENT CAP.

FOR REINFORCING STEEL IN PIPE PILES, SEE "18" STEEL PIPE PILE" SHEET.

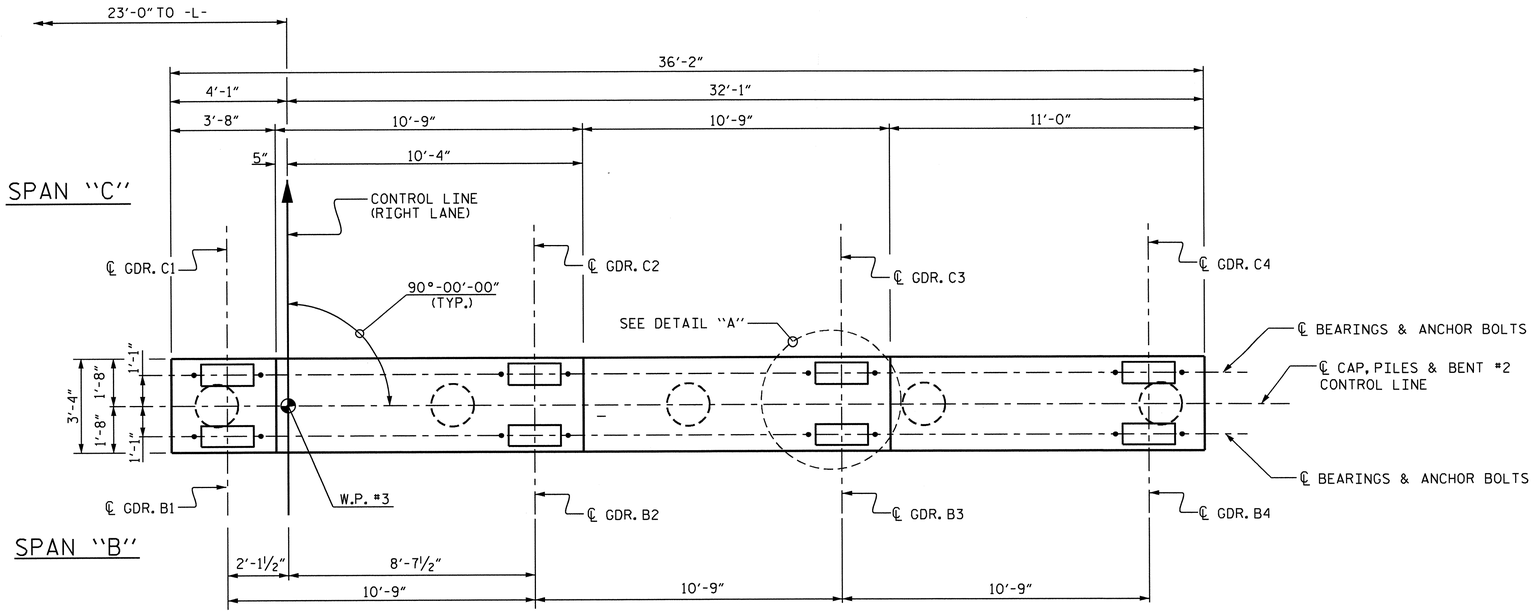

PLAN

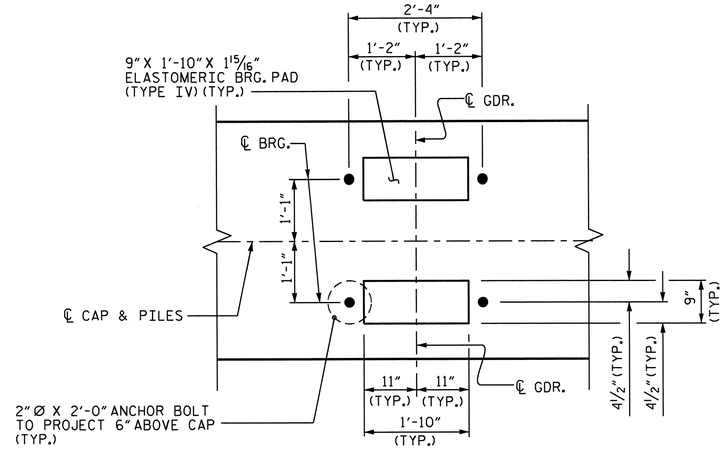

DETAIL "A"

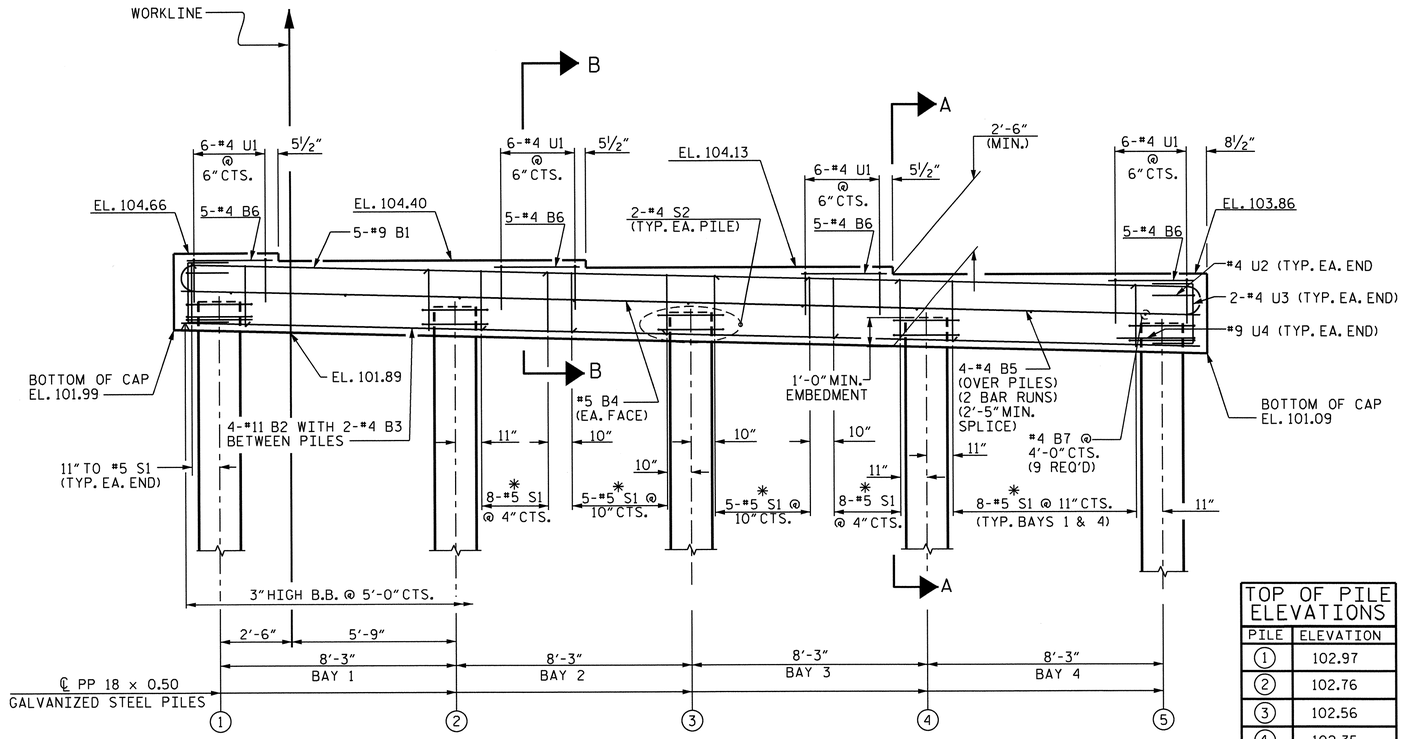

ELEVATION

* INVERT ALTERNATE STIRRUPS

TOP OF PILE ELEVATIONS	
PILE	ELEVATION
1	102.97
2	102.76
3	102.56
4	102.35
5	102.14

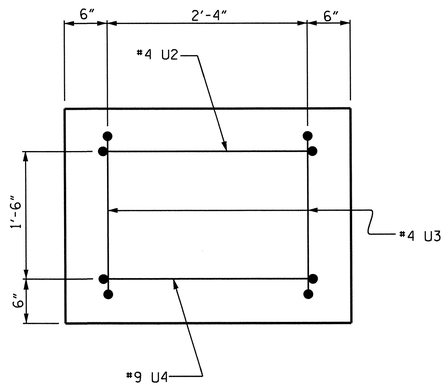

END VIEW

(TYP. BOTH ENDS)

PROJECT NO. R-2303B

SAMPSON COUNTY

STATION: 660+21.00 -L-

SHEET 1 OF 2

STATE OF NORTH CAROLINA
DEPARTMENT OF TRANSPORTATION
RALEIGH

SUBSTRUCTURE

BENT #2

(RIGHT LANE)

NORTH CAROLINA PROFESSIONAL SEAL 025516 ENGINEER EMILY E. MURRAY

2-21-13

REVISIONS						SHEET NO.
NO.	BY:	DATE:	NO.	BY:	DATE:	S-139
1			3			TOTAL SHEETS
2			4			146

STR. #4

DESIGN ENGINEER OF RECORD: MADONNA RORIE DATE: 4-12-12

DRAWN BY: M.D.PISO DATE: 06-08-12

CHECKED BY: P.A.PARISI DATE: 10-10-12

19-FEB-2013 08:51
Z:\TIPProjects-R\R2303B\Structures\Plans\str04\mdpiso\micrstation\R-2303B_SD_B2.dgn
padkins

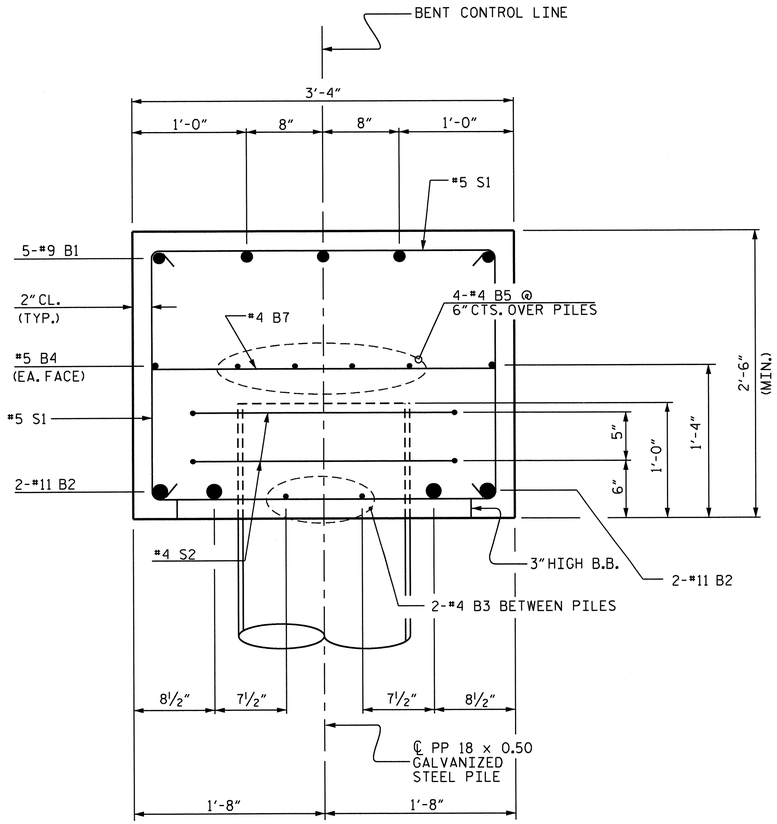

SECTION A-A

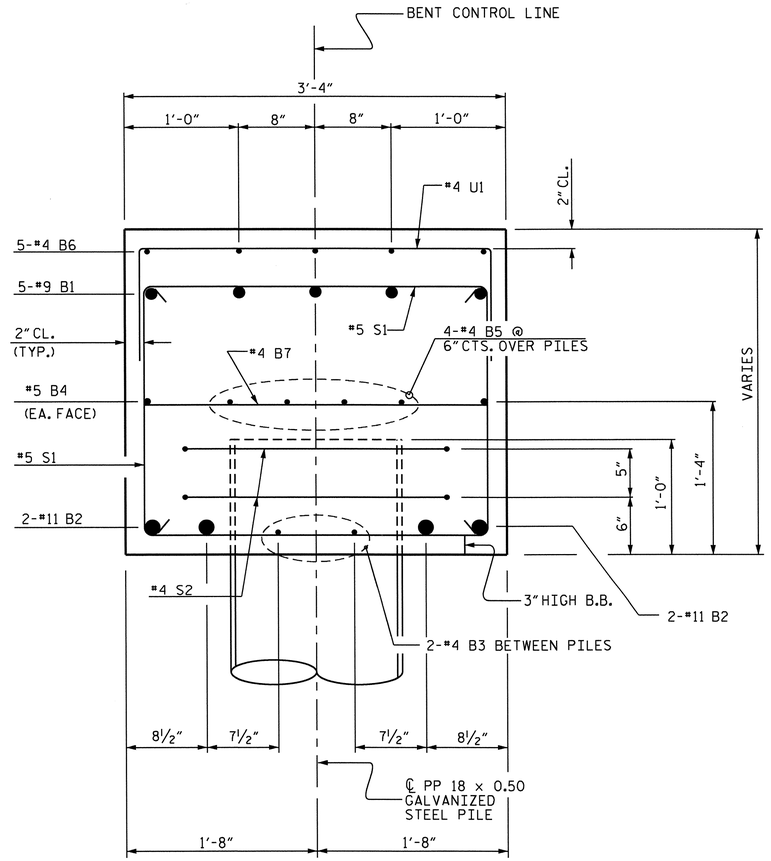

SECTION B-B

BAR TYPES

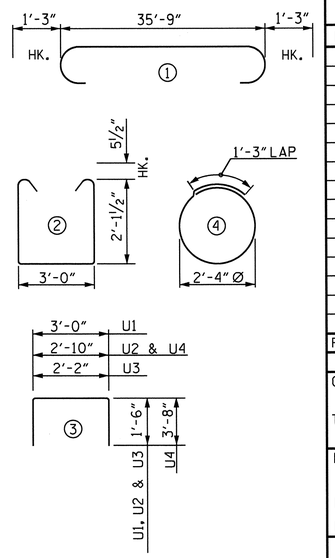

ALL BAR DIMENSIONS ARE OUT TO OUT

BILL OF MATERIAL

BENT #2

BAR	NO.	SIZE	TYPE	LENGTH	WEIGHT
B1	5	#9	1	38'-3"	650
B2	4	#11	STR.	35'-10"	762
B3	8	#4	STR.	6'-3"	33
B4	2	#5	STR.	35'-10"	75
B5	8	#4	STR.	19'-2"	102
B6	20	#4	STR.	3'-4"	45
B7	9	#4	STR.	3'-0"	18
S1	44	#5	2	8'-2"	375
S2	10	#4	4	8'-7"	57
U1	24	#4	3	6'-0"	96
U2	2	#4	3	5'-10"	8
U3	4	#4	3	5'-2"	14
U4	2	#9	3	10'-2"	69
REINFORCING STEEL					2,304 LBS.

CLASS A CONCRETE	
POUR #1 CAP	11.5 C.Y.
TOTAL CONCRETE	11.5 C.Y.

PP 18 x 0.50 GALVANIZED STEEL PILES	
NO. 5	375 LIN. FT.
PILE REDRIVES	3 EA.
PIPE PILE PLATES	5 EA.

PROJECT NO. R-2303B

SAMPSON COUNTY

STATION: 660+21.00 -L-

SHEET 2 OF 2

STATE OF NORTH CAROLINA
DEPARTMENT OF TRANSPORTATION
RALEIGH

SUBSTRUCTURE

BENT #2

(RIGHT LANE)

REVISIONS						SHEET NO.
NO.	BY:	DATE:	NO.	BY:	DATE:	S-140
1			3			TOTAL SHEETS
2			4			146

STR. #4

NORTH CAROLINA PROFESSIONAL SEAL 025516 ENGINEER EMILY B. MURRAY
2.21.13

DESIGN ENGINEER OF RECORD: MADONNA RORIE DATE : 4-12-12

DRAWN BY : M.D.PISO DATE : 06-08-12

CHECKED BY : P.A.PARISI DATE : 10-10-12

19-FEB-2013 08:51
Z:\TIPProjects-R\R2303B\Structures\Plans\str04\mdpiso\micrstation\R-2303B_SD_B2.dgn
padkins

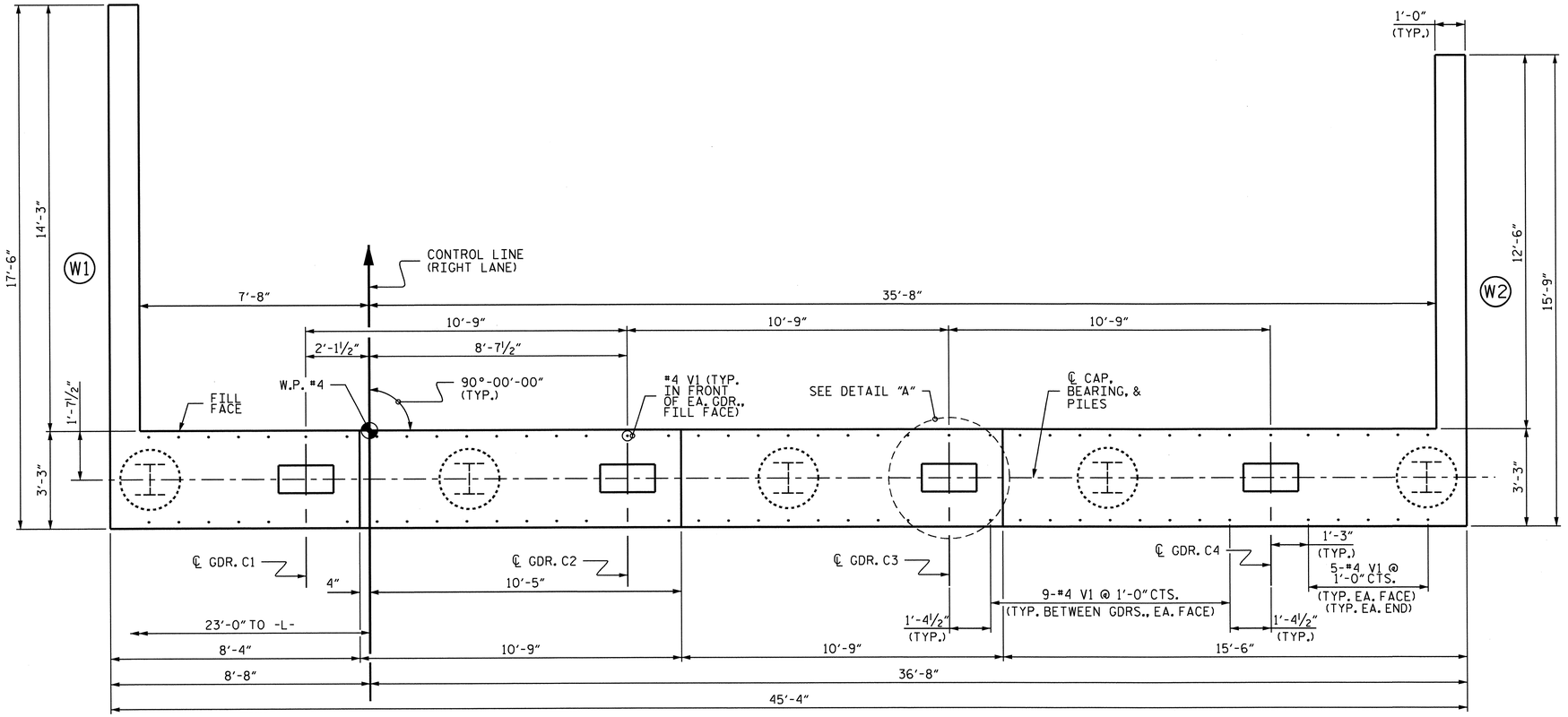

PLAN

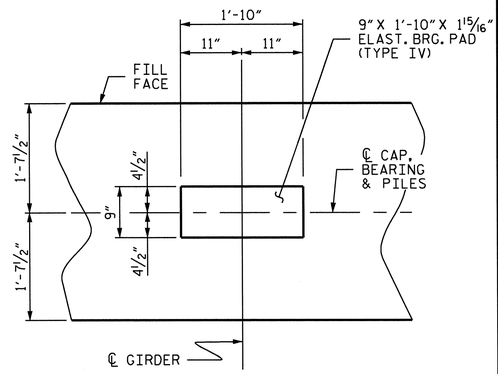

DETAIL "A"
(TYP. EA. GDR.)

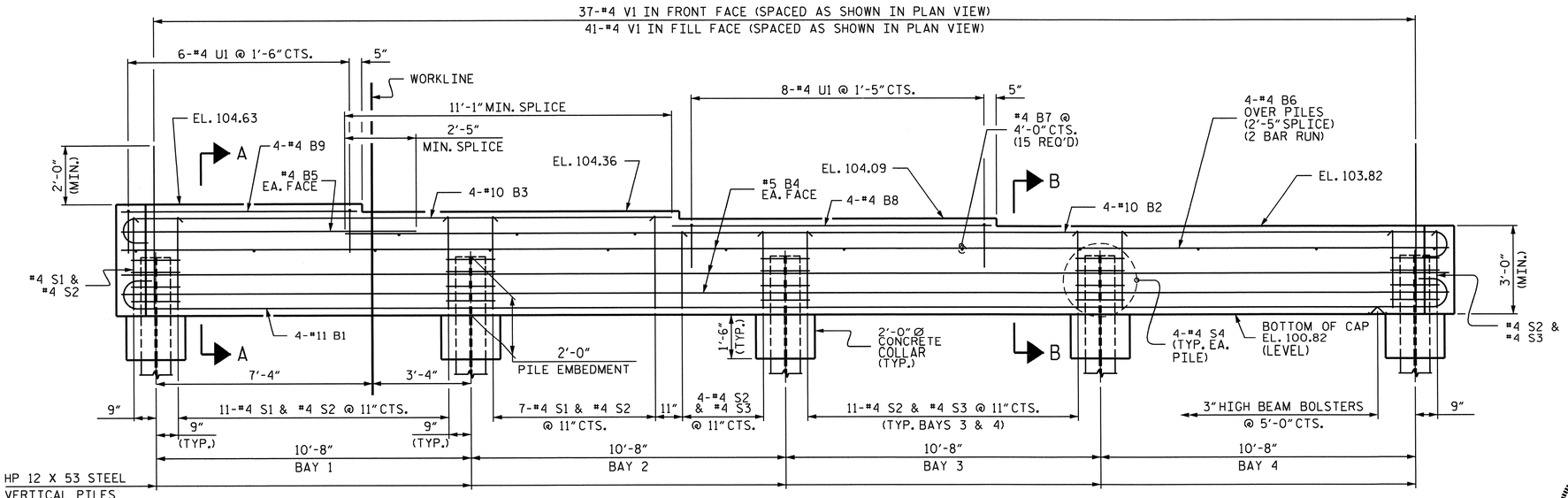

ELEVATION

NOTES:

INSTALL THE 4" DIA. DRAIN PIPE THROUGH THE WING WALL AS REQUIRED FOR REINFORCED BRIDGE APPROACH FILLS, SEE THE ROADWAY PLANS. REINFORCING STEEL IN THE WING WALL MAY BE SHIFTED AS NECESSARY TO CLEAR THE DRAIN PIPE.

UPPER PORTION OF INTEGRAL END BENT CAP AND UPPER PORTION OF WINGS SHALL BE POURED WITH THE SUPERSTRUCTURE. SEE SUPERSTRUCTURE PLANS.

THE TOP SURFACE OF THE END BENT CAP AND WINGS, EXCLUDING THE BEARING AREA, SHALL BE RAKED TO A DEPTH OF 1/4".

PROJECT NO. R-2303B

SAMPSON COUNTY

STATION: 660+21.00 -L-

SHEET 1 OF 3

STATE OF NORTH CAROLINA
DEPARTMENT OF TRANSPORTATION
RALEIGH

SUBSTRUCTURE

END BENT #2 (INTEGRAL) (RIGHT LANE)

REVISIONS						SHEET NO.
NO.	BY:	DATE:	NO.	BY:	DATE:	S-141
1			3			TOTAL SHEETS
2			4			146

NORTH CAROLINA PROFESSIONAL SEAL 025516 ENGINEER EMILY E. MURRAY
2-21-17

DESIGN ENGINEER OF RECORD: A. M. LEE, PE DATE: 3-20-12

DRAWN BY: A. M. LEE, PE DATE: 4/2012

CHECKED BY: M.M. AHMED DATE: 10/2012

19-FEB-2013 08:50
Z:\TIPProjects-R\R2303B\Structures\Plans\str04\amlee\R2303B_SD_04_EB.dgn
padkins

STR #4

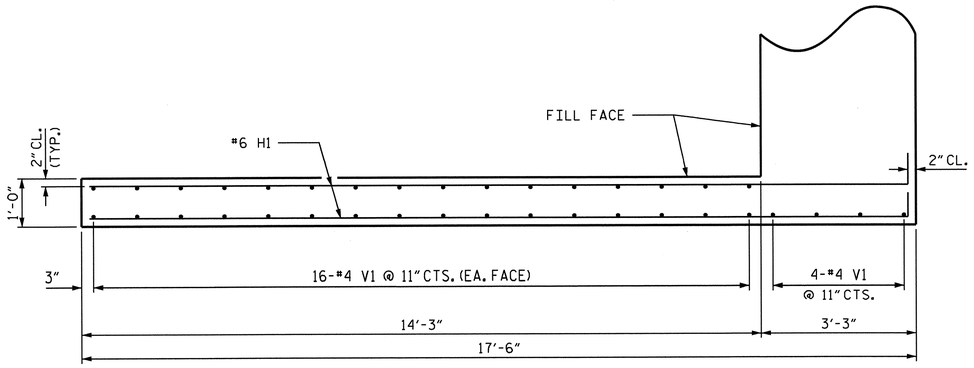

PLAN OF WING (W1)

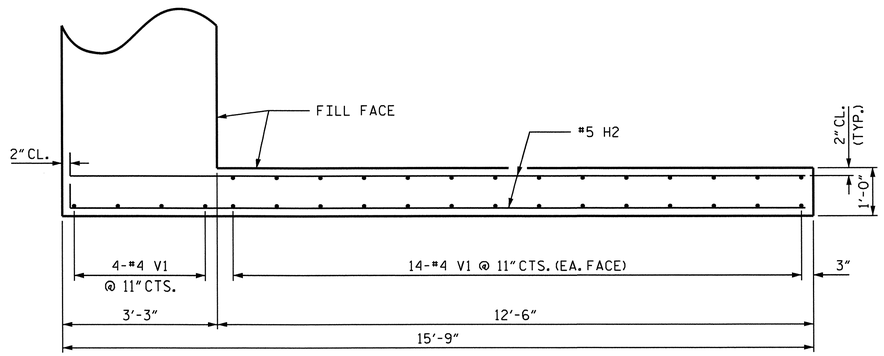

PLAN OF WING (W2)

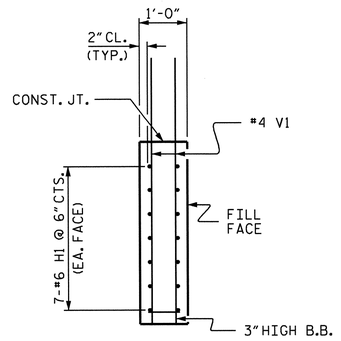

SECTION X-X

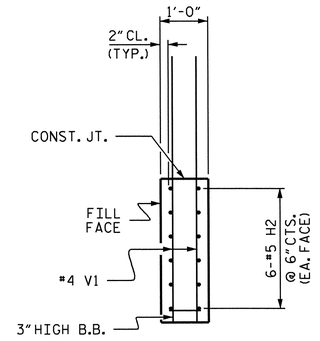

SECTION Y-Y

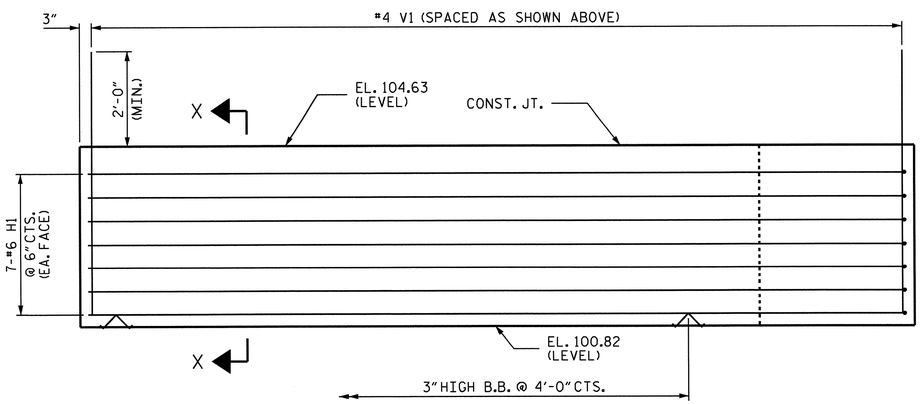

ELEVATION OF WING (W1)

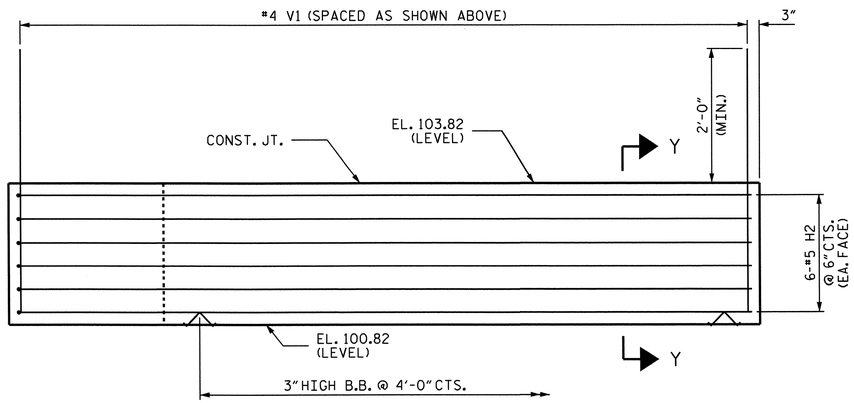

ELEVATION OF WING (W2)

DESIGN ENGINEER OF RECORD: A. M. LEE, PE	DATE : 3-20-12
DRAWN BY : A. M. LEE, PE	DATE : 4/2012
CHECKED BY : M.M. AHMED	DATE : 10/2012

19-FEB-2013 08:50
Z:\TIPProjects-R\R2303B\Structures\Plans\str04\amlee\R2303B_SD_04_EB.dgn
padkins

NORTH CAROLINA PROFESSIONAL SEAL 025516 ENGINEER EMILY E. MURRAY
2.21.13

PROJECT NO. R-2303B
SAMPSON COUNTY
STATION: 660+21.00 -L-
SHEET 2 OF 3

STATE OF NORTH CAROLINA
DEPARTMENT OF TRANSPORTATION
RALEIGH

SUBSTRUCTURE

END BENT #2 (INTEGRAL) (RIGHT LANE)

REVISIONS						SHEET NO.
NO.	BY:	DATE:	NO.	BY:	DATE:	S-142
1			3			TOTAL SHEETS
2			4			146

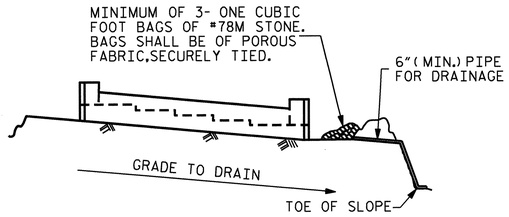

BAGGED STONE AND PIPE SHALL BE PLACED IMMEDIATELY AFTER COMPLETION OF END BENT EXCAVATION. PIPE MAY BE EITHER CONCRETE, CORRUGATED STEEL, CORRUGATED ALUMINUM ALLOY, OR CORRUGATED PLASTIC. PERFORATED PIPE WILL NOT BE ALLOWED.

BAGGED STONE SHALL REMAIN IN PLACE UNTIL THE ENGINEER DIRECTS THAT IT BE REMOVED. THE CONTRACTOR SHALL REMOVE AND DISPOSE OF SILT ACCUMULATIONS AT BAGGED STONE WHEN SO DIRECTED BY THE ENGINEER. BAGS SHALL BE REMOVED AND REPLACED WHENEVER THE ENGINEER DETERMINES THAT THEY HAVE DETERIORATED AND LOST THEIR EFFECTIVENESS.

NO SEPARATE PAYMENT WILL BE MADE FOR THIS WORK AND THE ENTIRE COST OF THIS WORK SHALL BE INCLUDED IN THE UNIT CONTRACT PRICE BID FOR THE SEVERAL PAY ITEMS.

TEMPORARY DRAINAGE AT END BENT

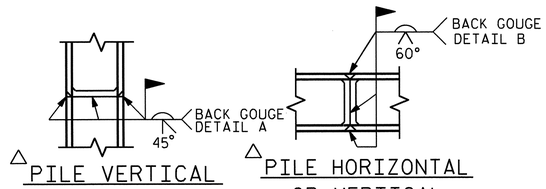

△ PILE VERTICAL

△ PILE HORIZONTAL OR VERTICAL

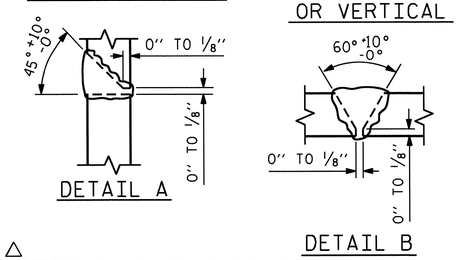

△ POSITION OF PILE DURING WELDING.

PILE SPLICE DETAILS

BAR TYPES

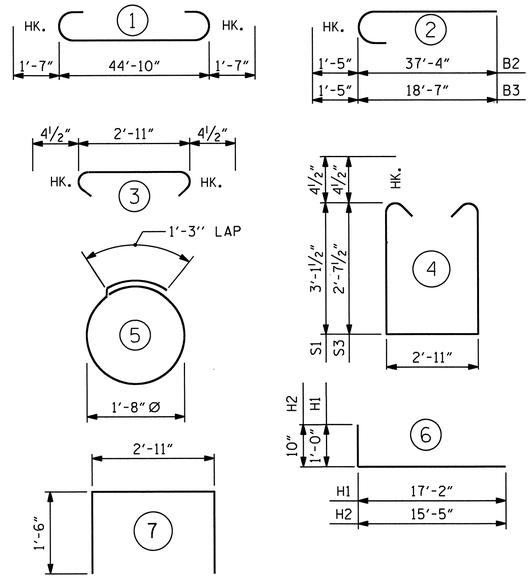

ALL BAR DIMENSIONS ARE OUT TO OUT.

BILL OF MATERIAL
END BENT #2

BAR	NO.	SIZE	TYPE	LENGTH	WEIGHT
B1	4	#11	1	48'-0"	1020
B2	4	#10	2	38'-9"	667
B3	4	#10	2	20'-0"	344
B4	6	#5	STR	45'-0"	282
B5	2	#4	STR	10'-0"	13
B6	8	#4	STR	23'-9"	127
B7	15	#4	STR	2'-11"	29
B8	4	#4	STR	10'-9"	29
B9	4	#4	STR	8'-0"	21
H1	14	#6	6	18'-2"	382
H2	12	#5	6	16'-3"	203
S1	19	#4	4	9'-11"	126
S2	46	#4	3	3'-8"	113
S3	27	#4	4	8'-11"	161
S4	20	#4	5	6'-6"	87
U1	14	#4	7	5'-11"	55
V1	146	#4	STR	5'-7"	545

REINFORCING STEEL	LBS.	4204
CLASS A CONCRETE BREAKDOWN:		
POUR #1 - CAP, COLLARS, AND LOWER WINGS	C.Y.	22.5
HP 12 X 53 STEEL PILES NO. 5	LIN. FT.	350
PILE REDRIVES	EA.	3

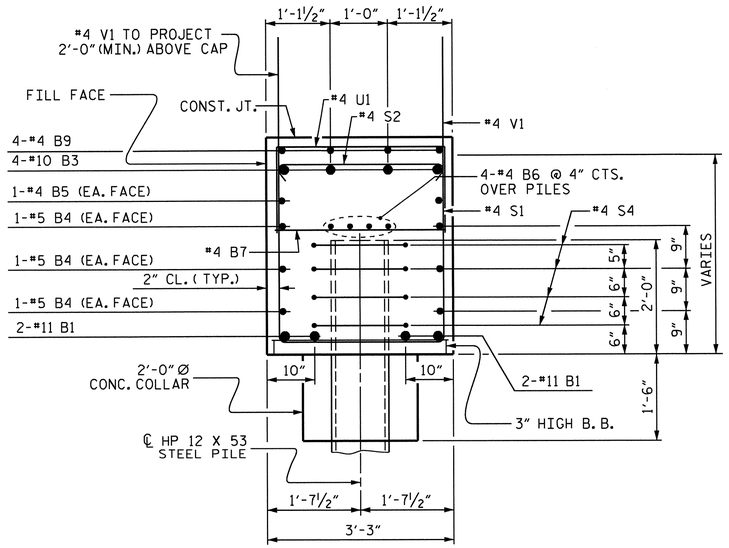

SECTION A-A

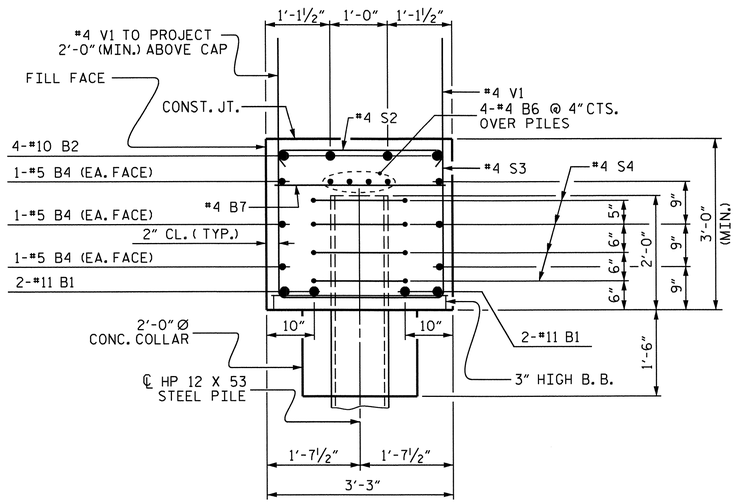

SECTION B-B

DESIGN ENGINEER OF RECORD: A. M. LEE, PE	DATE : 3-20-12
DRAWN BY : A. M. LEE, PE	DATE : 4/2012
CHECKED BY : M.M. AHMED	DATE : 10/2012

19-FEB-2013 08:50
Z:\TIPProjects-R\R2303B\Structures\Plans\str04\amlee\R2303B_SD_04_EB.dgn
padkins

NORTH CAROLINA PROFESSIONAL SEAL 025516 ENGINEER DAVID E. MURRAY
2-21-13

PROJECT NO. R-2303B

SAMPSON COUNTY

STATION: 660+21.00 -L-

SHEET 3 OF 3

STATE OF NORTH CAROLINA
DEPARTMENT OF TRANSPORTATION
RALEIGH

SUBSTRUCTURE

END BENT #2 (INTEGRAL) (RIGHT LANE)

REVISIONS						SHEET NO.
NO.	BY:	DATE:	NO.	BY:	DATE:	S-143
1			3			TOTAL SHEETS
2			4			146

STR #4

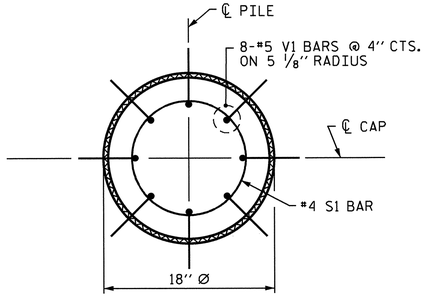

PLAN

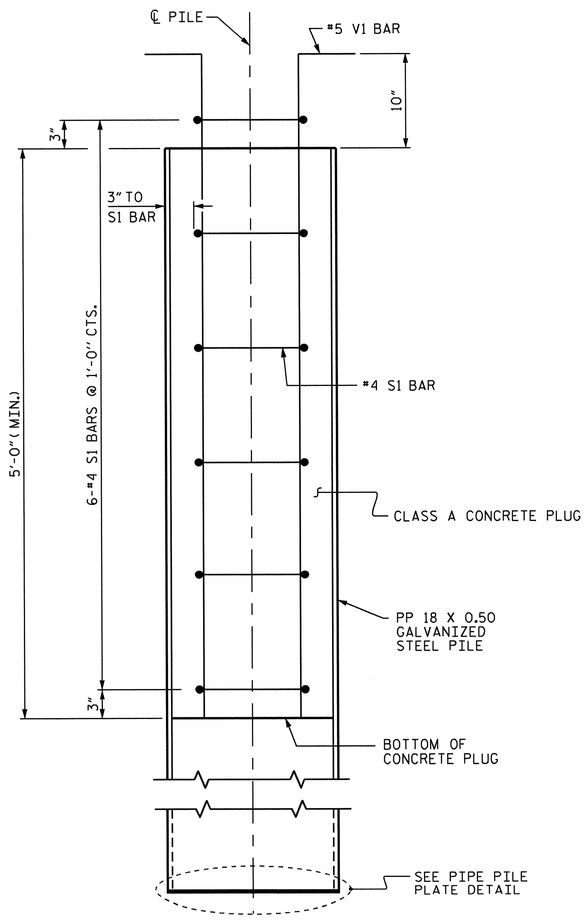

ELEVATION

PP 18 X 0.50 GALVANIZED STEEL PILE

(CLOSED END)

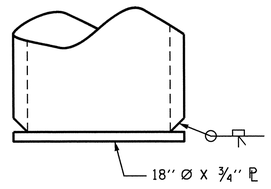

PIPE PILE PLATE DETAIL

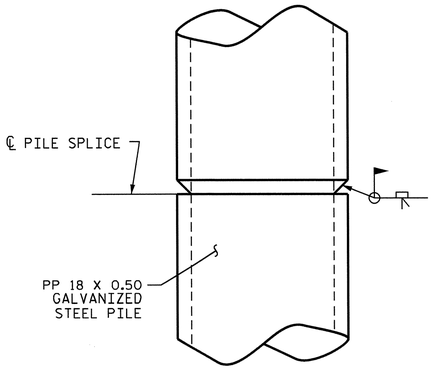

PIPE PILE SPLICE DETAIL

NOTES

PIPE PILES SHALL BE IN ACCORDANCE WITH SECTION 1084 OF THE STANDARD SPECIFICATIONS.

GALVANIZE THE TOP 30 FEET OF EACH PILE IN ACCORDANCE WITH SECTION 1076 OF THE STANDARD SPECIFICATIONS. GALVANIZING OR METALLIZING PIPE PILE PLATES IS NOT REQUIRED.

PIPE PILE PLATES SHALL BE IN ACCORDANCE WITH SECTION 450 OF THE STANDARD SPECIFICATIONS.

REMOVE AND REPLACE OR REPAIR TO THE SATISFACTION OF THE ENGINEER PILES THAT ARE DAMAGED, DEFORMED OR COLLAPSED DURING INSTALLATION OR DRIVING.

PILE SPLICES SHALL BE IN ACCORDANCE WITH THE STANDARD SPECIFICATIONS AND AWS D1.1.

FOR CLOSED END PIPE PILES, REMOVE ALL SOIL AND WATER FROM INSIDE THE PILES JUST PRIOR TO PLACING REINFORCING STEEL AND CONCRETE FOR THE CONCRETE PLUG.

FORM THE CONCRETE PLUG SUCH THAT THE REINFORCING STEEL OR CONCRETE DOES NOT MOVE AND THE CLEARANCE FROM THE REINFORCING STEEL TO THE INSIDE OF THE PILE IS MAINTAINED AFTER CONCRETE PLACEMENT. DO NOT PLACE CONCRETE IN THE BENT CAP UNTIL THE CONCRETE PLUG HAS ATTAINED A MINIMUM COMPRESSIVE STRENGTH OF 1500 PSI.

THE REINFORCING STEEL, CLASS A CONCRETE, AND GALVANIZING ARE CONSIDERED INCIDENTAL TO THE CONTRACT UNIT PRICE BID PER LINEAR FOOT FOR PP 18 X 0.50 GALVANIZED STEEL PILES.

BILL OF MATERIAL FOR ONE PP 18 X 0.50 GALVANIZED STEEL PILE

BAR	NO.	SIZE	TYPE	LENGTH	WEIGHT
S1	6	#4	1	4'-5"	18
V1	8	#5	2	6'-8"	56
REINFORCING STEEL =				74	lbs

CLASS A CONCRETE

5'-0" MINIMUM PLUG 0.3 CY

BAR TYPES

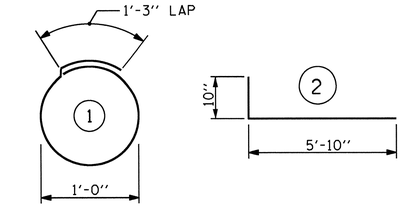

ALL BAR DIMENSIONS ARE OUT TO OUT.

PROJECT NO. R-2303B

SAMPSON COUNTY

STATION: 660+12.00 -L-

STATE OF NORTH CAROLINA
DEPARTMENT OF TRANSPORTATION
RALEIGH

STANDARD

18" STEEL PIPE PILE

(RIGHT LANE)

REVISIONS						SHEET NO.
NO.	BY:	DATE:	NO.	BY:	DATE:	S-144
1			3			TOTAL SHEETS
2			4			146

STR. #4 STD. NO. SPP3

DESIGN ENGINEER OF RECORD: MADONNA RORIE DATE : 4-12-12			
ASSEMBLED BY : M.D.PISO	DATE : 09-24-12		
CHECKED BY : P.A.PARISI	DATE : 10-10-12		
DRAWN BY : RWW 1/01	REV. 10/1/05	LBG/TLA	
CHECKED BY : LES 1/01	REV. 5/1/06R	MAA/KMM	
	REV. 10/1/11	MAA/GM	

NORTH CAROLINA PROFESSIONAL SEAL 025516 ENGINEER MADONNA A. RORIE
2.21.13

19-FEB-2013 08:49
Z:\TIPProjects-R\R2303B\Structures\Plans\str04\mdpiso\micrstation\R-2303B_SD_B2.dgn
padkins

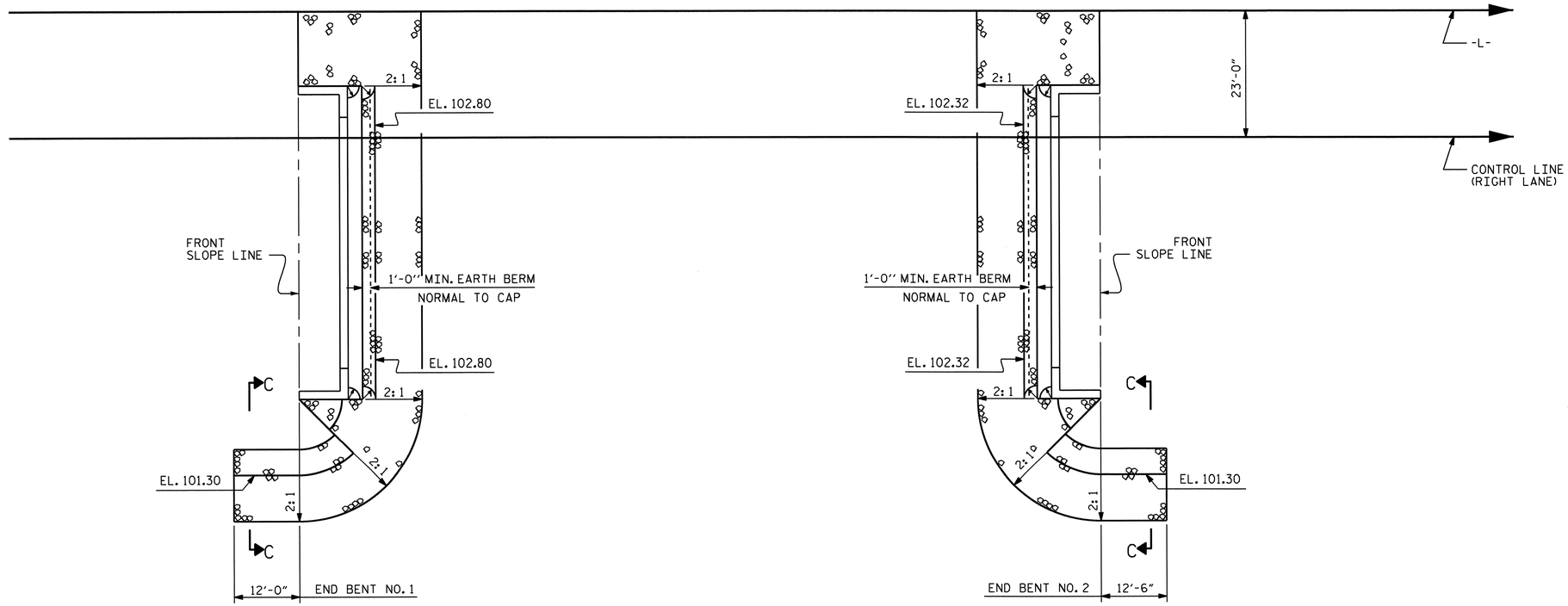

PLAN

ESTIMATED QUANTITIES		
	RIP RAP CLASS II (2'-0" THICK)	GEOTEXTILE FOR DRAINAGE
	TONS	SQUARE YARDS
END BENT 1	250	278
END BENT 2	224	248

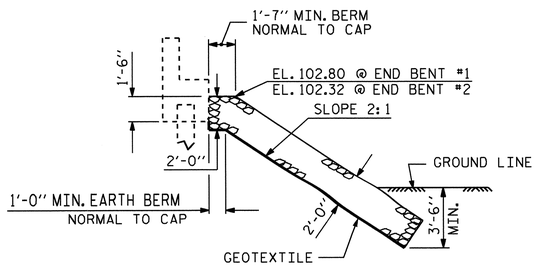

℄ SECTION
BERM RIP RAPPED

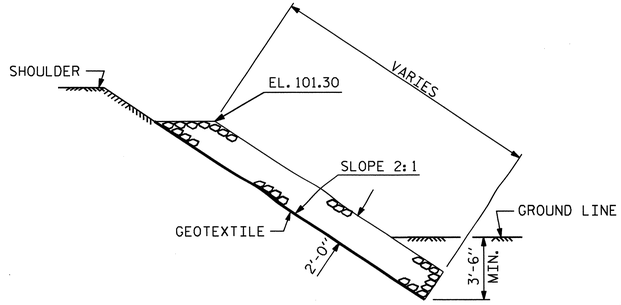

SECTION C-C

PROJECT NO. R-2303B
SAMPSON COUNTY
STATION: 660+21.00 -L-

STATE OF NORTH CAROLINA
DEPARTMENT OF TRANSPORTATION
RALEIGH

STANDARD

RIP RAP DETAILS

(RIGHT LANE)

NORTH CAROLINA PROFESSIONAL SEAL 025516 ENGINEER MARY E. MURRAY
2-21-13

REVISIONS						SHEET NO.
NO.	BY:	DATE:	NO.	BY:	DATE:	S-145
1			3			TOTAL SHEETS
2			4			146

ASSEMBLED BY : PEGGY ADKINS DATE : 10-10-12		
CHECKED BY : M.D. PISO DATE : 10-12-12		
DRAWN BY : REK 1/84	REV. 5/1/06R	TLA/GM
CHECKED BY : RDU 1/84	REV. 10/1/11	MAA/GM
	REV. 12/21/11	MAA/GM

19-FEB-2013 08:49
Z:\TIPProjects-R\R2303B\Structures\Plans\str04\pparlsl\R2303B_sd_RR_04.dgn
padkins

STR. #4

STD. NO. RR1 (Sht 2)

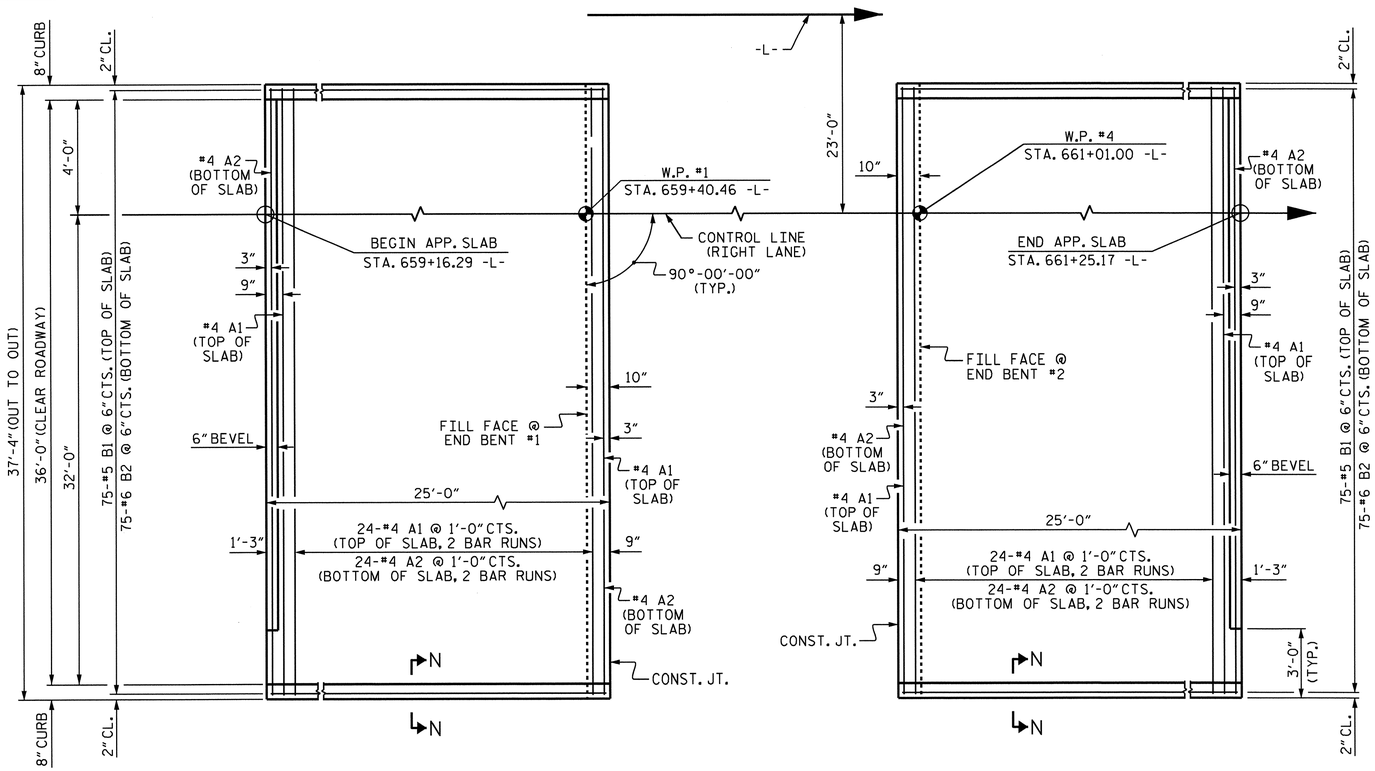

PLAN @ END BENT #1

PLAN @ END BENT #2

DIMENSIONS SHOWN ARE TYPICAL FOR BOTH APPROACH SLABS

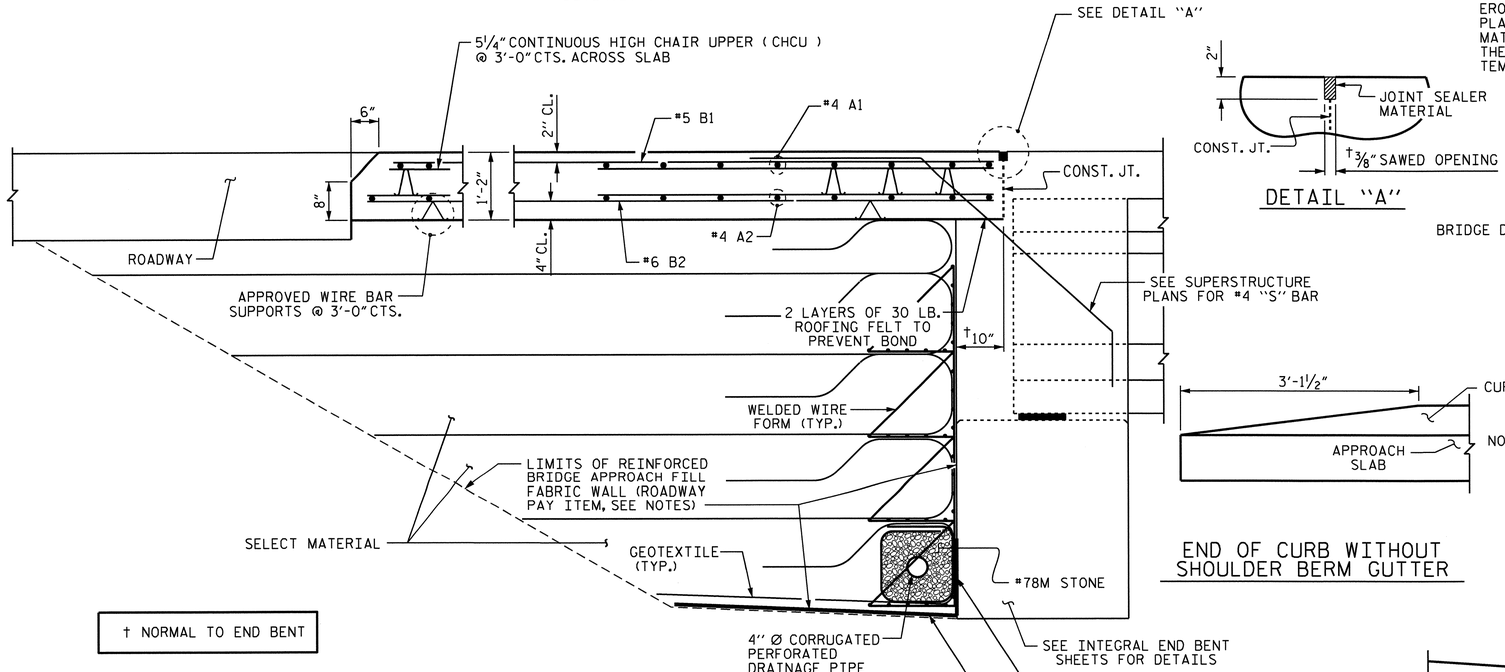

† NORMAL TO END BENT

SECTION THRU SLAB

DETAIL "A"

END OF CURB WITHOUT SHOULDER BERM GUTTER

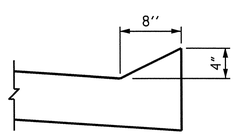

SECTION N-N

NOTES

APPROACH SLAB SHALL NOT BE CONSTRUCTED PRIOR TO COMPLETION OF THE BRIDGE DECK.

FOR REINFORCED BRIDGE APPROACH FILL FABRIC WALL INCLUDING GEOTEXTILE, IMPERMEABLE GEOMEMBRANE, 4" Ø DRAINAGE PIPE, #78M STONE, WELDED WIRE FORM, AND SELECT MATERIAL, SEE ROADWAY PLANS.

AREA BETWEEN THE WINGWALL AND APPROACH SLAB SHALL BE GRADED TO DRAIN THE WATER AWAY FROM THE FILL FACE OF THE BRIDGE AND SHALL BE PAVED. SEE ROADWAY PLANS.

THE JOINT OPENING AT THE APPROACH SLAB/DECK INTERFACE SHALL BE SAWED NO MORE THAN 12 HOURS AFTER THE APPROACH SLAB IS CAST. THE JOINT SHALL BE CLEANED OF ALL DEBRIS BEFORE THE SEALANT IS APPLIED. THE JOINT SEALER MATERIAL SHALL CONFORM TO THE REQUIREMENTS OF SECTION 1028-3 OF THE STANDARD SPECIFICATIONS.

BILL OF MATERIAL

FOR ONE APPROACH SLAB (2 REQ'D)

BAR	NO.	SIZE	TYPE	LENGTH	WEIGHT
* A1	52	#4	STR	19'-6"	677
A2	52	#4	STR	19'-5"	674
* B1	75	#5	STR	24'-2"	1890
B2	75	#6	STR	24'-8"	2779
REINFORCING STEEL					3453 LBS.
* EPOXY COATED REINFORCING STEEL					2567 LBS.
CLASS AA CONCRETE					40.4 C.Y.

SPLICE CHART

BAR	SPLICE LENGTH
#4 A1	2'-0"
#4 A2	1'-9"

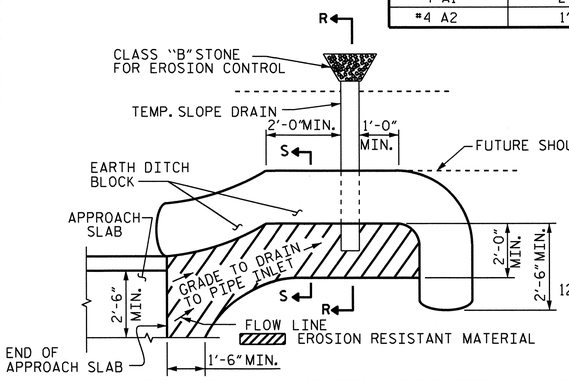

NOTE: IMMEDIATELY AFTER THE CONSTRUCTION OF THE APPROACH SLAB, THE CONTRACTOR SHALL PROVIDE TEMPORARY BERM AND SLOPE DRAIN. CONTRACTOR SHALL GRADE TO PIPE INLET AND PROVIDE EROSION RESISTANT MATERIAL AS SHOWN. THE EROSION RESISTANT MATERIAL SHALL BE EITHER 1) ASPHALT PLANT MIX, TYPE 1 OR TYPE 2, MIN. 2" DEPTH, 2) EROSION CONTROL MAT, OR 3) CONCRETE, AS DIRECTED BY THE ENGINEER. THE SLOPE DRAIN SHALL CONSIST OF A NON-PERFORATED TEMPORARY DRAINAGE PIPE, 12 INCHES IN DIAMETER.

PLAN VIEW

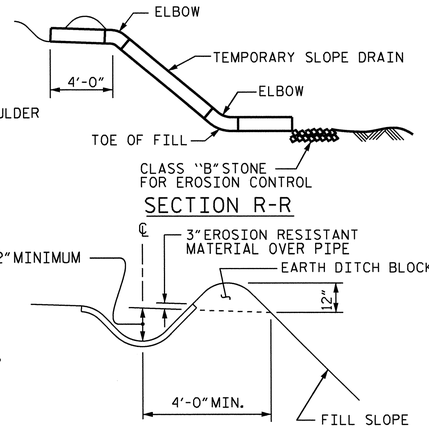

SECTION R-R

SECTION S-S

TEMPORARY BERM AND SLOPE DRAIN DETAILS

(TO BE USED WHEN SHOULDER BERM GUTTER IS REQUIRED)

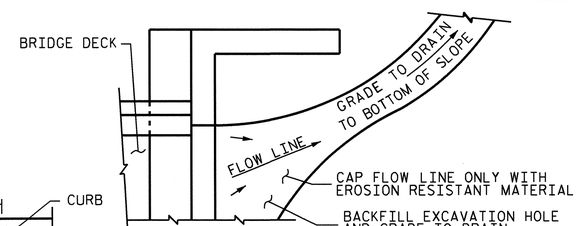

NOTE: IF THE APPROACH SLAB IS NOT CONSTRUCTED IMMEDIATELY AFTER THE BACKFILLING OF THE END BENT EXCAVATION, GRADE TO DRAIN TO THE BOTTOM OF THE SLOPE AND PROVIDE EROSION RESISTANT MATERIAL, SUCH AS FIBERGLASS ROVING OR AS DIRECTED BY THE ENGINEER TO PREVENT SOIL EROSION AND TO PROTECT THE AREA ADJACENT TO THE STRUCTURE. THE CONTRACTOR WILL BE REQUIRED TO REMOVE THESE MATERIALS PRIOR TO CONSTRUCTION OF THE APPROACH SLAB.

TEMPORARY DRAINAGE DETAIL

PROJECT NO. R-2303B

SAMPSON COUNTY

STATION: 660+21.00 -L-

STATE OF NORTH CAROLINA
DEPARTMENT OF TRANSPORTATION
RALEIGH

STANDARD

BRIDGE APPROACH SLAB FOR INTEGRAL ABUTMENT

(RIGHT LANE)

NORTH CAROLINA PROFESSIONAL SEAL 025516 ENGINEER KEVIN E. MURRAY 2-21-13

REVISIONS						SHEET NO.
NO.	BY:	DATE:	NO.	BY:	DATE:	S-146
1			3			TOTAL SHEETS
2			4			146

ASSEMBLED BY : PEGGY PARISI DATE : 8-23-12
CHECKED BY : K.P. SEDAI DATE : 10-23-12

DRAWN BY : TLA 10/05
CHECKED BY : GM 5/06

ADDED 5/1/06RR KMM/GM
REV. 10/1/11 MAA/GM
REV. 12/21/11 MAA/GM

19-FEB-2013 08:48
Z:\TIPProjects-R\R2303B\Structures\Plans\str04\pparisi\R2303B_SD_AP_04.dgn
padkins

STR. #4

STD. NO. BAS5 (SHT 2)

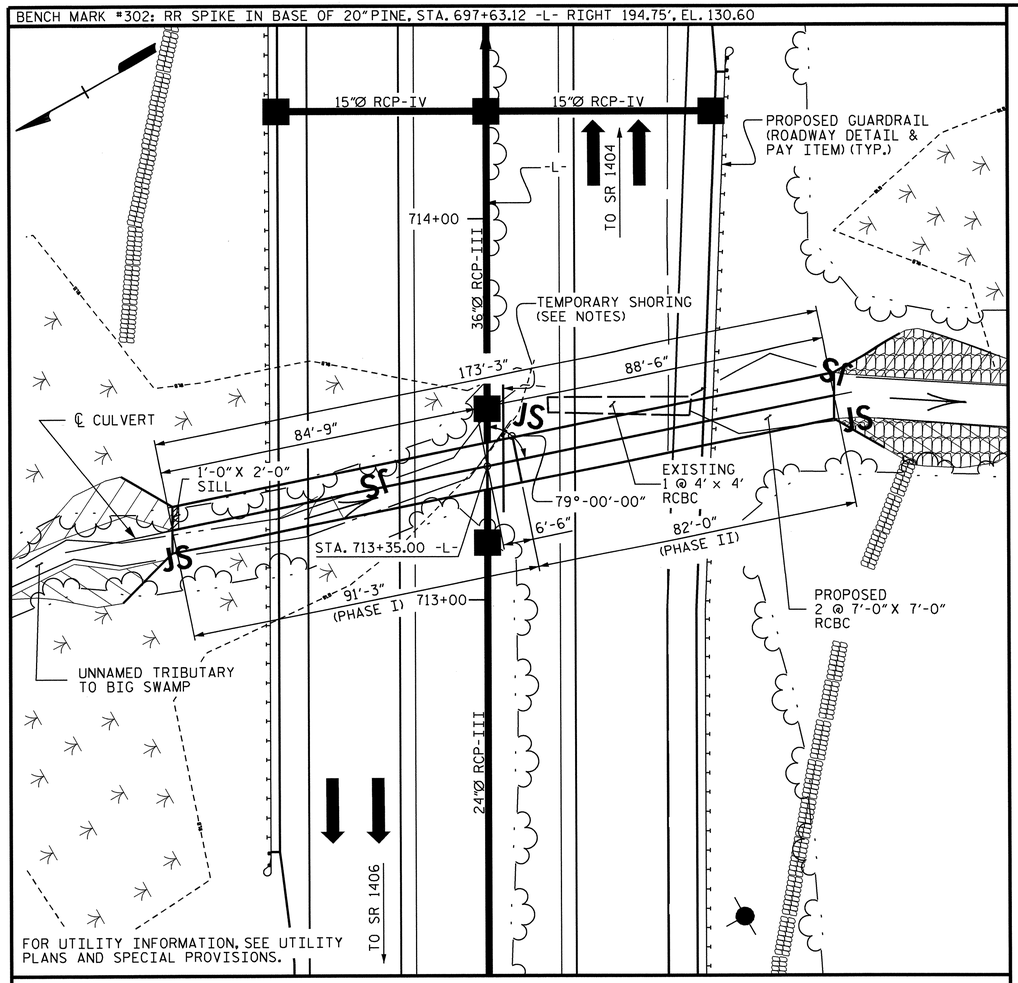

LOCATION SKETCH

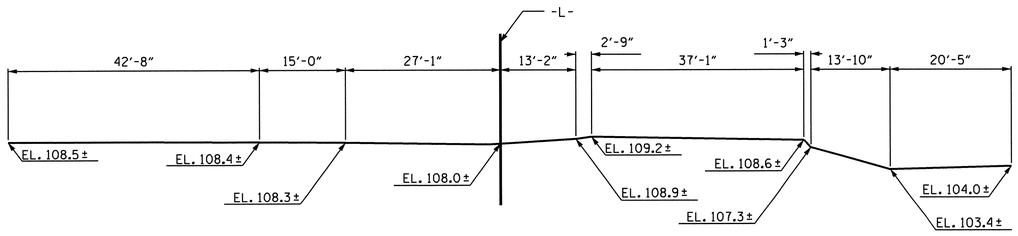

PROFILE ALONG ℄ CULVERT

ADDED 11-1-90

DESIGN ENGINEER OF RECORD: CEDRIC BUTLER DATE : 7-24-12		
ASSEMBLED BY : A.M. LEE, PE DATE : 1/2013 CHECKED BY : M.L. RORIE, PE DATE : 1/2013	SPECIAL	
DRAWN BY : R.W.WRIGHT DATE : OCT. 1989 CHECKED BY : A.R.BISSETTE DATE : OCT. 1989	STANDARD	

GRADE DATA

GRADE POINT ELEVATION @ STA. 713+35.00 -L-	= 124.41'
BED ELEVATION @ STA. 713+35.00 -L-	= 106.8'
ROADWAY SLOPES	= 3:1

HYDRAULIC DATA

DESIGN DISCHARGE	= 600 C.F.S
FREQUENCY OF DESIGN FLOOD	= 50 YEARS
DESIGN HIGH WATER ELEVATION	= 114.9'
DRAINAGE AREA	= 0.78 SQ. MILES
BASE DISCHARGE (Q100)	= 700 C.F.S
BASE HIGH WATER ELEVATION	= 115.8'

OVERTOPPING FLOOD DATA

OVERTOPPING DISCHARGE	= 1900 C.F.S
FREQUENCY OF OVERTOPPING FLOOD	= 500 + YEARS
OVERTOPPING FLOOD ELEVATION	= 125.0'

STRUCTURE QUANTITIES (STAGE I)

CLASS A CONCRETE		
BARREL @ 1.465 CY/FT	133.7	C.Y.
SILL	0.5	C.Y.
WINGS ETC.	15.1	C.Y.
TOTAL	149.3	C.Y.
REINFORCING STEEL		
BARREL	17327	LBS.
WINGS ETC.	886	LBS.
TOTAL	18213	LBS.
FOUNDATION COND. MAT'L.	129	TONS

STRUCTURE QUANTITIES (STAGE II)

CLASS A CONCRETE		
BARREL @ 1.465 CY/FT	120.1	C.Y.
WINGS ETC.	15.1	C.Y.
TOTAL	135.2	C.Y.
REINFORCING STEEL		
BARREL	15339	LBS.
WINGS ETC.	886	LBS.
TOTAL	16225	LBS.
FOUNDATION COND. MAT'L.	116	TONS

TOTAL STRUCTURE QUANTITIES

CLASS A CONCRETE		
STAGE I	149.3	C.Y.
STAGE II	135.2	C.Y.
TOTAL	284.5	C.Y.
REINFORCING STEEL		
STAGE I	18213	LBS.
STAGE II	16225	LBS.
TOTAL	34438	LBS.
FOUNDATION COND. MAT'L.		
STAGE I	129	TONS
STAGE II	116	TONS
TOTAL	245	TONS
CULVERT EXCAVATION	LUMP SUM	
REMOVAL OF EXISTING STRUCTURE	LUMP SUM	

NOTES

ASSUMED LIVE LOAD ---------- HL-93 OR ALTERNATE LOADING.

DESIGN FILL---------- 10.81'

FOR OTHER DESIGN DATA AND NOTES SEE STANDARD NOTE SHEET.

3"Ø WEEP HOLES INDICATED TO BE IN ACCORDANCE WITH THE SPECIFICATIONS.

CONCRETE IN CULVERT TO BE POURED IN THE FOLLOWING ORDER:

1. STAGE ONE WING FOOTINGS AND FLOOR SLAB INCLUDING 4" OF ALL VERTICAL WALLS.
2. THE REMAINING PORTIONS OF THE STAGE ONE WALLS AND WINGS FULL HEIGHT FOLLOWED BY ROOF SLAB AND HEADWALLS.
3. STAGE TWO WING FOOTINGS AND FLOOR SLAB INCLUDING 4" OF ALL VERTICAL WALLS.
4. THE REMAINING PORTIONS OF THE STAGE TWO WALLS AND WINGS FULL HEIGHT FOLLOWED BY ROOF SLAB AND HEADWALLS.

THE RESIDENT ENGINEER SHALL CHECK THE LENGTH OF CULVERT BEFORE STAKING IT OUT TO MAKE CERTAIN THAT IT WILL PROPERLY TAKE CARE OF THE FILL.

DIMENSIONS FOR WING LAYOUT AS WELL AS ADDITIONAL REINFORCING STEEL EMBEDDED IN BARREL ARE SHOWN ON WING SHEET.

TRANSVERSE CONSTRUCTION JOINTS SHALL BE USED IN THE BARREL, SPACED TO LIMIT THE POURS TO A MAXIMUM OF 70 FT. LOCATION OF JOINTS SHALL BE SUBJECT TO APPROVAL OF THE ENGINEER.

STEEL IN THE BOTTOM SLAB MAY BE SPLICED AT THE PERMITTED CONSTRUCTION JOINT AT THE CONTRACTOR'S OPTION. EXTRA WEIGHT OF STEEL DUE TO THE SPLICES SHALL BE PAID FOR BY THE CONTRACTOR.

AT THE CONTRACTOR'S OPTION, HE MAY SPLICE THE VERTICAL REINFORCING STEEL IN THE INTERIOR FACE OF EXTERIOR WALL AND BOTH FACES OF INTERIOR WALLS ABOVE LOWER WALL CONSTRUCTION JOINT. THE SPLICE LENGTH SHALL BE AS PROVIDED IN THE SPLICE LENGTH CHART SHOWN ON THE PLANS. EXTRA WEIGHT OF STEEL DUE TO THE SPLICES SHALL BE PAID FOR BY THE CONTRACTOR.

NO PRECAST REINFORCED BOX CULVERT OPTION WILL BE ALLOWED.

THE 24"Ø AND 36"Ø DIA. PIPE THROUGH THE SIDEWALL OF THE CULVERT SHALL BE LOCATED BY THE ENGINEER. THE REINFORCING STEEL SHALL BE FIELD BENT AS NECESSARY TO CLEAR PIPE.

FOR MAINTENANCE OF TRAFFIC, SEE TRAFFIC CONTROL PLANS.

A 3 FOOT STRIP OF FILTER FABRIC SHALL BE ATTACHED TO THE FILL FACE OF THE WING COVERING THE ENTIRE LENGTH OF THE EXPANSION JOINT.

FOR CULVERT DIVERSION DETAILS AND PAY ITEM, SEE EROSION CONTROL PLANS.

FOR CRANE SAFETY, SEE SPECIAL PROVISIONS.

FOR SUBMITTAL OF WORKING DRAWINGS, SEE SPECIAL PROVISIONS.

FOR GROUT FOR STRUCTURES, SEE SPECIAL PROVISIONS.

FOR FALSEWORK AND FORMWORK, SEE SPECIAL PROVISIONS.

FOR LIMITS OF TEMPORARY SHORING FOR MAINTENANCE OF TRAFFIC, SEE TRAFFIC CONTROL PLANS. FOR PAY ITEM FOR TEMPORARY SHORING FOR MAINTENANCE OF TRAFFIC, SEE ROADWAY PLANS.

AFTER SERVING AS A TEMPORARY STRUCTURE, THE EXISTING SINGLE BARREL 4' X 4' REINFORCED CONCRETE BOX CULVERT LOCATED AT THE SITE OF THE PROPOSED STRUCTURE SHALL BE REMOVED.

PROJECT NO. R-2303B

SAMPSON COUNTY

STATION: 713+35.00 -L-

SHEET 1 OF 5

NORTH CAROLINA PROFESSIONAL SEAL 17274 ENGINEER OMAR R. AZIZ
8-21-13

NORTH CAROLINA PROFESSIONAL SEAL 025516 ENGINEER EDWARD E. MURRAY
2-21-13

STATE OF NORTH CAROLINA
DEPARTMENT OF TRANSPORTATION
RALEIGH

BARREL STANDARD

DOUBLE 7 FT. X 7 FT. CONCRETE BOX CULVERT 79° SKEW

1971

REVISIONS						SHEET NO.
NO.	BY:	DATE:	NO.	BY:	DATE:	C-1
1			3			TOTAL SHEETS
2			4			5

STR #5 STD. NO. CB22A

LOAD AND RESISTANCE FACTOR RATING (LRFR) SUMMARY FOR REINFORCED CONCRETE BOX CULVERTS

LEVEL		VEHICLE	WEIGHT (W) (TONS)	CONTROLLING LOAD RATING (#)	MINIMUM RATING FACTORS (RF)	TONS = W x RF	STRENGTH I LIMIT STATE									COMMENT NUMBER
								MOMENT				SHEAR				
							LIVE-LOAD FACTORS (γ_{LL})	RATING FACTOR	BOX NO.	ELEMENT TYPE	DISTANCE FROM LEFT END OF ELEMENT (ft)	RATING FACTOR	BOX NO.	ELEMENT TYPE	DISTANCE FROM LEFT END OF ELEMENT (ft)	
DESIGN LOAD RATING		HL-93 (INVENTORY)	N/A	1	1.78	--	1.75	3.08	1	BOTTOM SLAB	7.48	1.78	1	TOP SLAB	6.79	
		HL-93 (OPERATING)	N/A		2.30	--	1.35	4.00	1	BOTTOM SLAB	7.48	2.30	1	TOP SLAB	6.79	
		HS-20 (INVENTORY)	36.000	2	2.57	92.69	1.75	4.12	1	BOTTOM SLAB	7.48	2.57	1	TOP SLAB	6.79	
		HS-20 (OPERATING)	36.000		3.34	120.15	1.35	5.34	1	BOTTOM SLAB	7.48	3.34	1	TOP SLAB	6.79	
LEGAL LOAD RATING	SINGLE VEHICLE (SV)	SNSH	13.500		4.80	64.87	1.40	6.84	1	TOP CORNER WALL	0.58	4.80	1	TOP SLAB	6.79	
		SNGARBS2	20.000		4.46	89.25	1.40	6.67	1	TOP CORNER WALL	0.58	4.46	1	TOP SLAB	6.79	
		SNAGRIS2	22.000		4.67	102.75	1.40	6.84	1	TOP CORNER WALL	0.58	4.67	1	TOP SLAB	6.79	
		SNCOTTS3	27.250		2.21	60.34	1.40	3.85	1	BOTTOM SLAB	7.48	2.21	1	TOP SLAB	6.79	
		SNAGGRS4	34.925	3	2.14	74.72	1.40	3.89	1	BOTTOM SLAB	7.48	2.14	1	TOP SLAB	6.79	
		SNS5A	35.550		2.16	76.71	1.40	3.64	1	BOTTOM SLAB	7.48	2.16	1	TOP SLAB	6.79	
		SNS6A	39.950		2.15	85.79	1.40	3.61	1	BOTTOM SLAB	7.48	2.15	1	TOP SLAB	6.79	
		SNS7B	42.000		2.15	90.19	1.40	3.61	1	BOTTOM SLAB	7.48	2.15	1	TOP SLAB	6.79	
	TRUCK TRACTOR SEMI-TRAILER (TTST)	TNAGRIT3	33.000		2.83	93.52	1.40	5.39	1	BOTTOM SLAB	7.48	2.83	1	TOP SLAB	6.79	
		TNT4A	33.075		2.64	87.23	1.40	4.33	1	BOTTOM SLAB	7.48	2.64	1	TOP SLAB	6.79	
		TNT6A	41.600		2.18	90.77	1.40	3.99	1	BOTTOM SLAB	7.48	2.18	1	TOP SLAB	6.79	
		TNT7A	42.000		2.46	103.20	1.40	4.33	1	BOTTOM SLAB	7.48	2.46	1	TOP SLAB	6.79	
		TNT7B	42.000		2.26	94.79	1.40	3.79	1	BOTTOM SLAB	7.48	2.26	1	TOP SLAB	6.79	
		TNAGRIT4	43.000		2.41	103.66	1.40	3.82	1	BOTTOM SLAB	7.48	2.41	1	BOTTOM SLAB	6.73	
		TNAGT5A	45.000		2.48	111.61	1.40	3.92	1	BOTTOM SLAB	7.48	2.48	1	BOTTOM SLAB	6.73	
		TNAGT5B	45.000		2.50	112.46	1.40	3.99	1	BOTTOM SLAB	7.48	2.50	1	TOP SLAB	6.79	

LOAD FACTORS:

DESIGN LOAD RATING FACTORS

LOAD TYPE	MAX FACTOR	MIN FACTOR
DC	1.25	0.90
DW	1.50	0.65
EV	1.30	0.90
EH	1.35	0.90
ES	1.35	0.90
LS	1.75	--
WA	1.00	--

NOTE:

RATING FACTORS ARE BASED ON THE STRENGTH I LIMIT STATE.

COMMENTS:

1.
2.
3.
4.

(#) CONTROLLING LOAD RATING

(1) DESIGN LOAD RATING (HL-93)

(2) DESIGN LOAD RATING (HS-20)

(3) LEGAL LOAD RATING **

** SEE CHART FOR VEHICLE TYPE

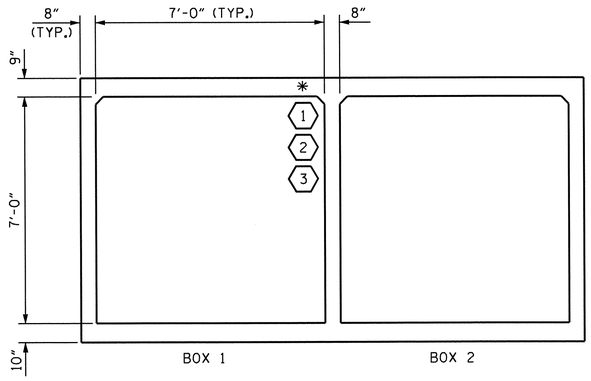

LRFR SUMMARY

(LOOKING DOWNSTREAM)

PROJECT NO. R-2303B

SAMPSON COUNTY

STATION: 713+35.00 -L-

SHEET 2 OF 5

STATE OF NORTH CAROLINA
DEPARTMENT OF TRANSPORTATION
RALEIGH

STANDARD

LRFR SUMMARY FOR REINFORCED CONCRETE BOX CULVERTS
(NON-INTERSTATE TRAFFIC)

REVISIONS						SHEET NO.
NO.	BY:	DATE:	NO.	BY:	DATE:	C-2
1			3			TOTAL SHEETS
2			4			5

STD. NO. LRFR5

NORTH CAROLINA PROFESSIONAL SEAL 025516 ENGINEER DAVID F. MURRAY 2-21-13

DESIGN ENGINEER OF RECORD: CEDRIC BUTLER	DATE: 7-24-12
ASSEMBLED BY : A.M. LEE, PE	DATE : 1/2013
CHECKED BY : T.L. AVERETTE, PE	DATE : 1/2013
DRAWN BY : WMC 7/11	REV. 10/1/11 MAA/GM
CHECKED BY : GM 7/11	

21-FEB-2013 07:15
Z:\TIPProjects-R\R2303B\Structures\Plans\str05\R2303B_SD_CU_DSN.dgn
padkins

21-FEB-2013 07:15
Z:\TIPProjects-R\R2303B\Structures\Plans\str05\R2303B_SD_
padkins

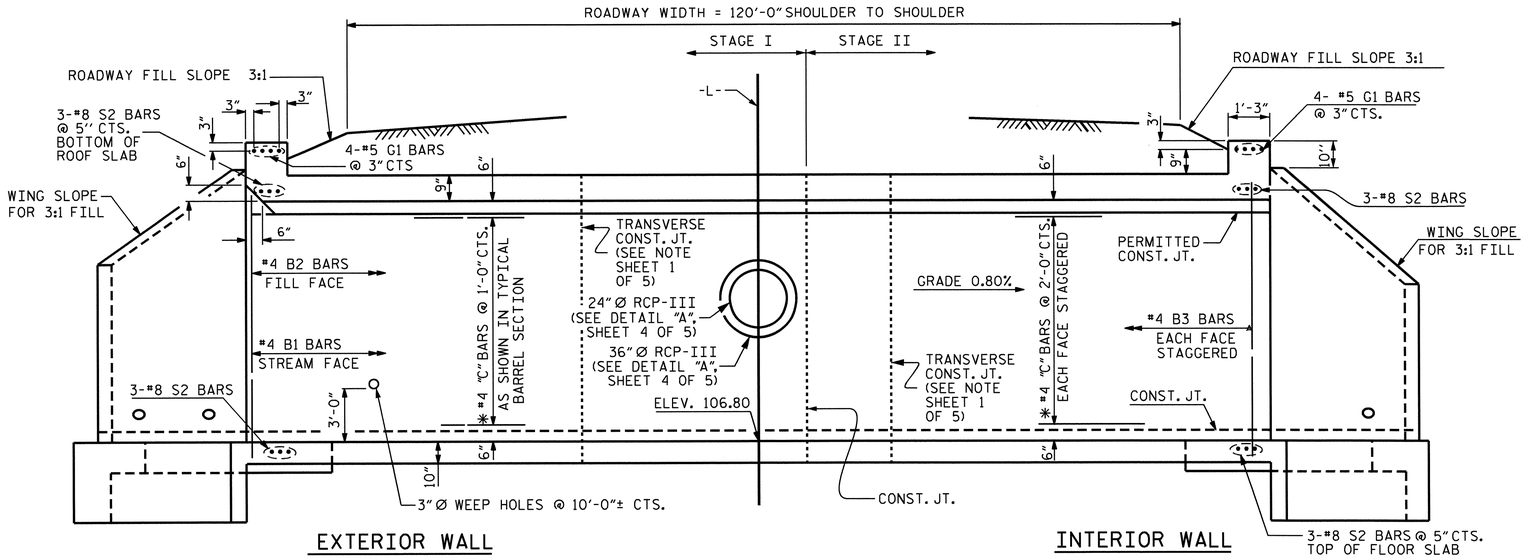

CULVERT SECTION NORMAL TO ROADWAY

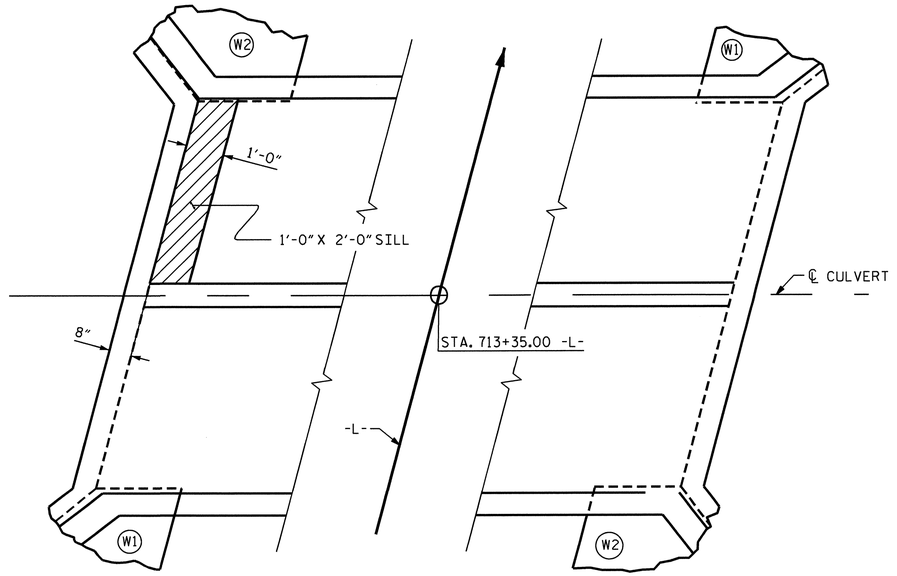

SILL LOCATION IN FLOOR SLAB

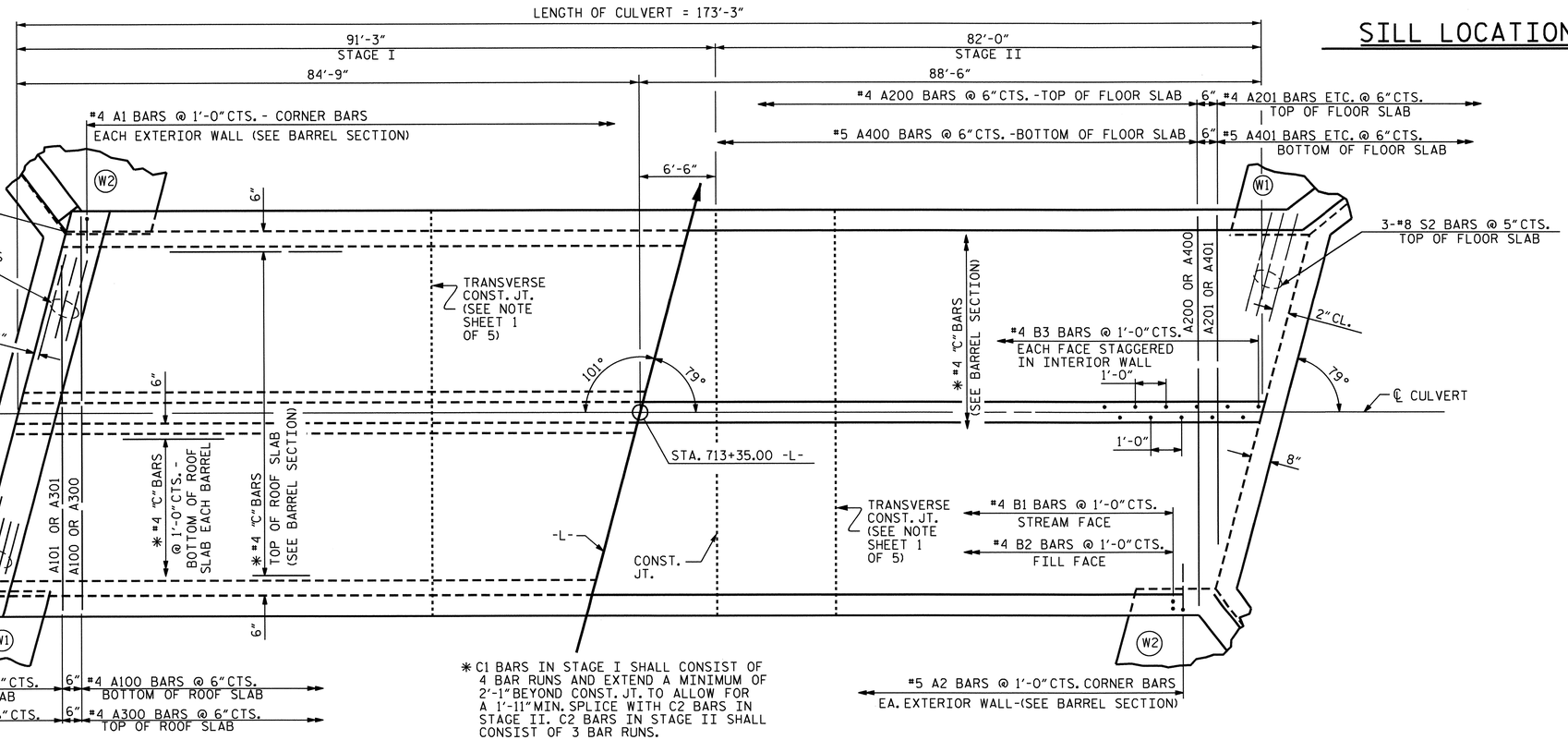

* C1 BARS IN STAGE I SHALL CONSIST OF 4 BAR RUNS AND EXTEND A MINIMUM OF 2'-1" BEYOND CONST. JT. TO ALLOW FOR A 1'-11" MIN. SPLICE WITH C2 BARS IN STAGE II. C2 BARS IN STAGE II SHALL CONSIST OF 3 BAR RUNS.

PART PLAN - ROOF SLAB

PART PLAN - FLOOR SLAB

REVISED 11-19-99 BY M.A.M. CHECKED BY R.W.W.
REDRAWN NOV. 1990 BY TSS CHECKED BY ARB

DESIGN ENGINEER OF RECORD: CEDRIC BUTLER DATE : 7-24-12

ASSEMBLED BY : A.M. LEE, PE DATE : 1/2013
CHECKED BY : M.L. RORIE, PE DATE : 1/2013

DRAWN BY : W.BRYAN STALEY II DATE : SEPT. 21, 1971
CHECKED BY : JOEL A. JOHNSON DATE : NOV. 12, 1971

SPECIAL
STANDARD

PROJECT NO. R-2303B
SAMPSON COUNTY
STATION: 713+35.00 -L-

SHEET 3 OF 5

STATE OF NORTH CAROLINA
DEPARTMENT OF TRANSPORTATION
RALEIGH

BARREL STANDARD
DOUBLE 7 FT. X 7 FT. CONCRETE BOX CULVERT
79° SKEW

1971

REVISIONS						SHEET NO.
NO.	BY:	DATE:	NO.	BY:	DATE:	C-3
1			3			TOTAL SHEETS
2			4			5

NORTH CAROLINA PROFESSIONAL SEAL 025516 ENGINEER MARY E. MURRAY
2-21-13

STR #5 STD. NO. CB22

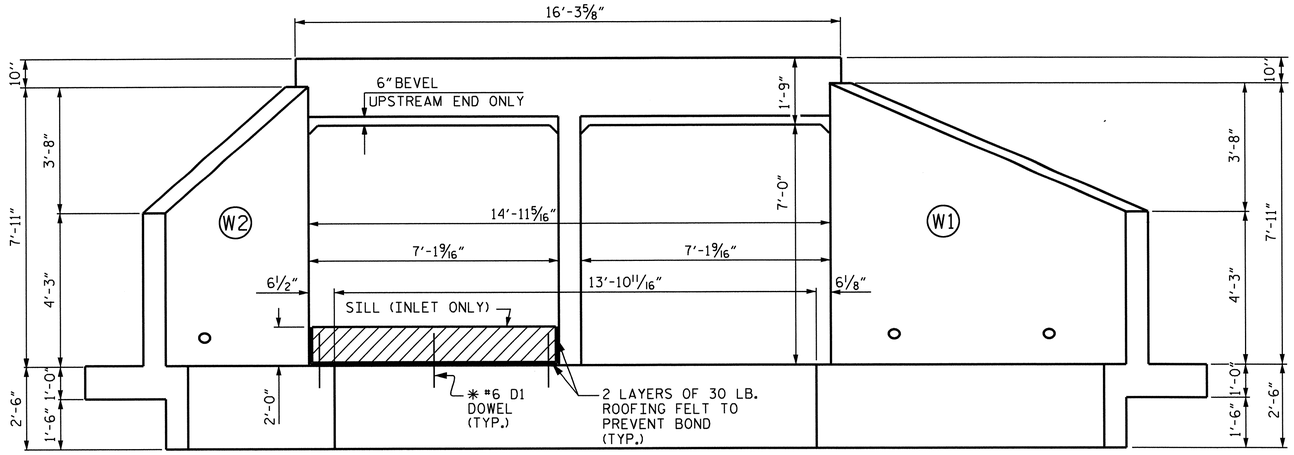

END ELEVATION NORMAL TO SKEW

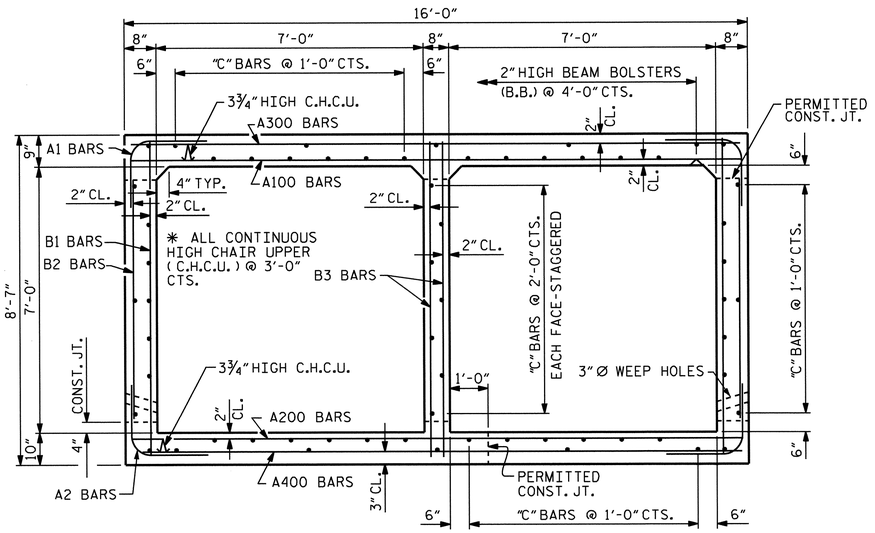

RIGHT ANGLE SECTION OF BARREL

THERE ARE 61 "C" BARS IN SECTION OF BARREL.
USE C1 BARS IN STAGE I AND C2 BARS IN STAGE II.

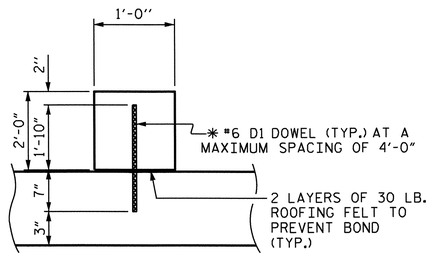

SECTION THROUGH SILL

* DOWELS MAY BE PUSHED INTO GREEN CONCRETE AFTER SLAB HAS BEEN FLOAT FINISHED.

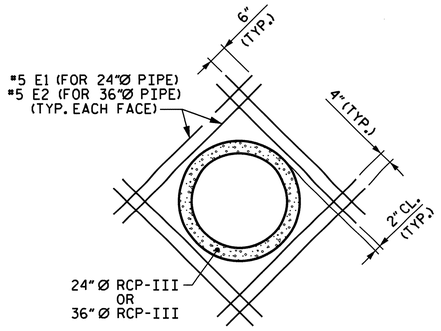

DETAIL "A"

REINFORCING STEEL SCHEDULE FOR CULVERT BARREL

STAGE I						STAGE II					
BAR	NO.	SIZE	TYPE	LENGTH	WEIGHT	BAR	NO.	SIZE	TYPE	LENGTH	WEIGHT
A1	183	#4	6	4'-2"	509	A1	165	#4	6	4'-2"	459
A2	183	#5	6	4'-6"	859	A2	165	#5	6	4'-6"	774
A100	179	#4	STR	15'-7"	1863	A100	161	#4	STR	15'-7"	1676
A101	2	#4	STR	10'-6"	14	A101	2	#4	STR	10'-6"	14
A102	2	#4	STR	5'-4"	7	A102	2	#4	STR	5'-4"	7
A103	1	#4	STR	2'-9"	2	A103	1	#4	STR	2'-9"	2
A200	179	#4	STR	15'-7"	1863	A200	161	#4	STR	15'-7"	1676
A201	2	#4	STR	10'-6"	14	A201	2	#4	STR	10'-6"	14
A202	2	#4	STR	5'-4"	7	A202	2	#4	STR	5'-4"	7
A203	1	#4	STR	2'-9"	2	A203	1	#4	STR	2'-9"	2
A300	179	#4	STR	15'-7"	1863	A300	161	#4	STR	15'-7"	1676
A301	2	#4	STR	10'-6"	14	A301	2	#4	STR	10'-6"	14
A302	2	#4	STR	5'-4"	7	A302	2	#4	STR	5'-4"	7
A303	1	#4	STR	2'-9"	2	A303	1	#4	STR	2'-9"	2
A400	179	#5	STR	15'-7"	2909	A400	161	#5	STR	15'-7"	2617
A401	2	#5	STR	10'-6"	22	A401	2	#5	STR	10'-6"	22
A402	2	#5	STR	5'-4"	11	A402	2	#5	STR	5'-4"	11
A403	1	#5	STR	2'-9"	3	A403	1	#5	STR	2'-9"	3
B1	183	#4	STR	8'-1"	988	B1	165	#4	STR	8'-1"	891
B2	183	#4	STR	6'-4"	774	B2	165	#4	STR	6'-4"	698
B3	183	#4	STR	8'-1"	988	B3	165	#4	STR	8'-1"	891
C1	244	#4	STR	25'-2"	4102	C2	183	#4	STR	29'-1"	3555
D1	3	#6	STR	2'-5"	11	G1	4	#5	STR	15'-11"	66
E1	16	#5	STR	4'-7"	76	S2	6	#8	STR	15'-11"	255
E2	16	#5	STR	5'-9"	96						
G1	4	#5	STR	15'-11"	66						
S2	6	#8	STR	15'-11"	255						

REINFORCING STEEL FOR BARREL (STAGE I) 17327 LBS.

REINFORCING STEEL FOR BARREL (STAGE II) 15339 LBS.

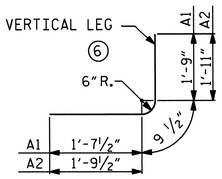

BAR TYPE

BAR DIMENSIONS ARE OUT TO OUT

SPLICE CHART		
BAR	SIZE	SPLICE LENGTH
A200	#4	1'-11"
A400	#5	1'-9"
B1	#4	1'-9"
B3	#4	1'-9"
C1	#4	1'-11"
C2	#4	1'-11"

PROJECT NO. R-2303B

SAMPSON COUNTY

STATION: 713+35.00 -L-

SHEET 4 OF 5

STATE OF NORTH CAROLINA
DEPARTMENT OF TRANSPORTATION
RALEIGH

DOUBLE 7 FT. X 7 FT. CONCRETE BOX CULVERT 79° SKEW

NORTH CAROLINA PROFESSIONAL SEAL 025516 ENGINEER B.Y.S. MURRAY 2.21.13

REVISIONS						SHEET NO.
NO.	BY:	DATE:	NO.	BY:	DATE:	C-4
1			3			TOTAL SHEETS
2			4			5

DESIGN ENGINEER OF RECORD: CEDRIC BUTLER DATE: 7-24-12

DRAWN BY: A.M. LEE, PE DATE: 1/2013

CHECKED BY: M.L. RORIE, PE DATE: 1/2013

21-FEB-2013 07:15
Z:\TIPProjects-R\R2303B\Structures\Plans\str05\R2303B_SD_CU_DSN.dgn
podkins

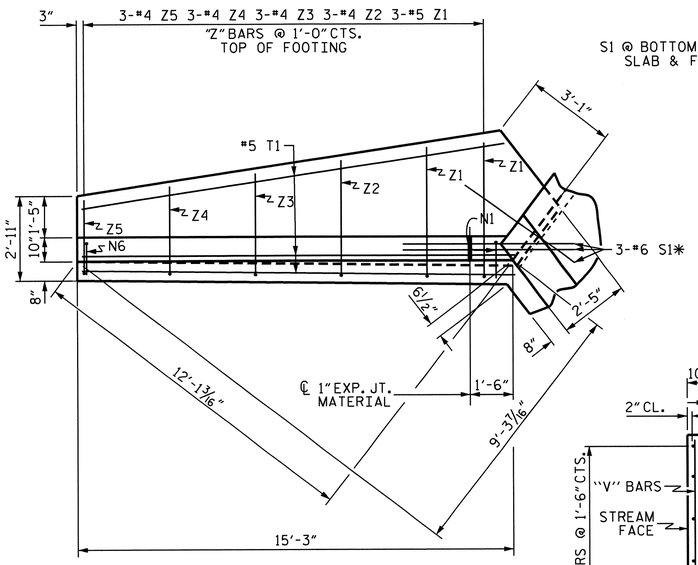

PLAN W2

S1 @ BOTTOM OF FLOOR SLAB & FOOTING

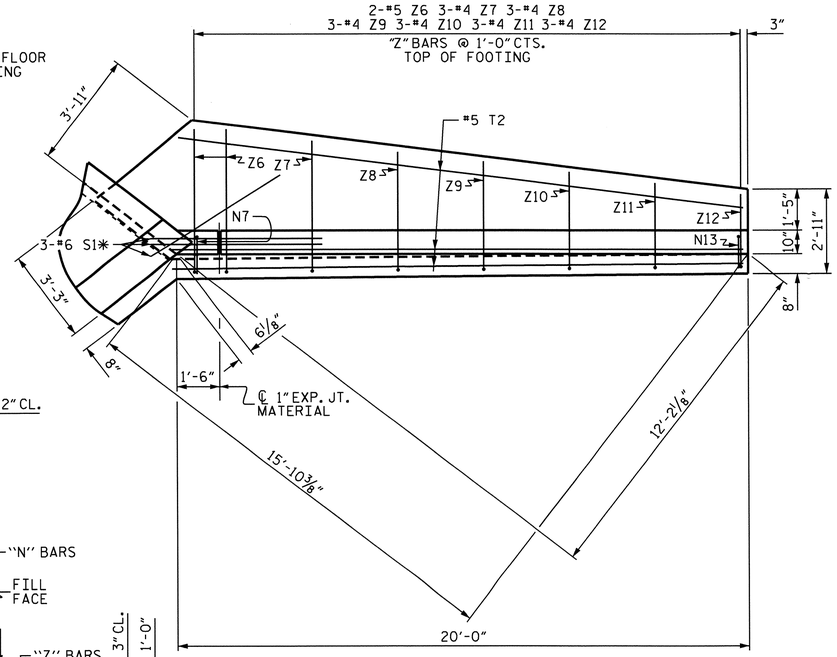

PLAN W1

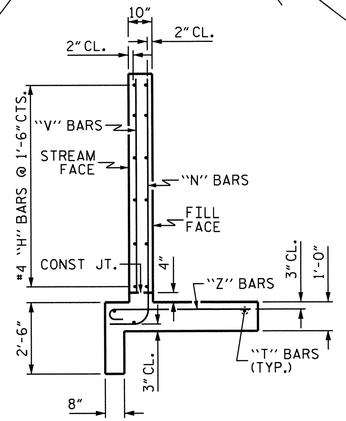

TYPICAL WING SECTION

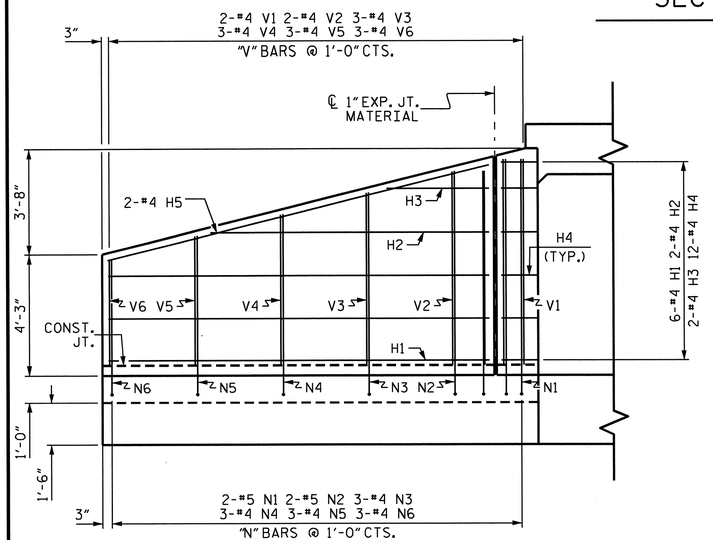

ELEVATION W2

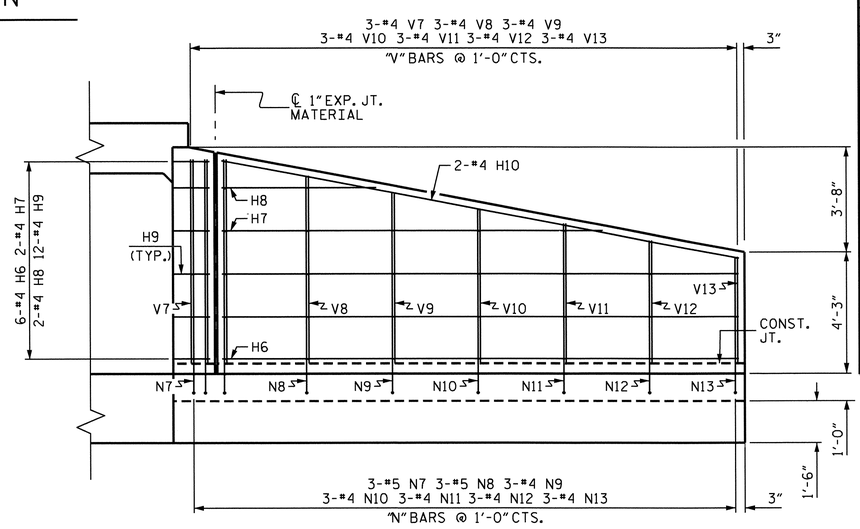

ELEVATION W1

BILL OF MATERIAL

BAR	NO.	SIZE	TYPE	LENGTH	WEIGHT
H1	12	#4	STR	13'-4"	107
H2	4	#4	STR	9'-9"	26
H3	4	#4	STR	3'-7"	10
H4	24	#4	1	3'-3"	52
H5	4	#4	STR	13'-9"	37
H6	12	#4	STR	18'-1"	145
H7	4	#4	STR	13'-4"	36
H8	4	#4	STR	5'-5"	14
H9	24	#4	2	3'-3"	52
H10	4	#4	STR	18'-5"	49
N1	4	#5	3	9'-3"	39
N2	4	#5	3	8'-10"	37
N3	6	#4	3	8'-1"	32
N4	6	#4	3	7'-4"	29
N5	6	#4	3	6'-7"	26
N6	6	#4	3	5'-10"	23
N7	6	#5	3	9'-2"	57
N8	6	#5	3	8'-8"	54
N9	6	#4	3	8'-1"	32
N10	6	#4	3	7'-6"	30
N11	6	#4	3	6'-11"	28
N12	6	#4	3	6'-4"	25
N13	6	#4	3	5'-10"	23
S1	12	#6	STR	6'-0"	108
T1	6	#5	STR	15'-2"	95
T2	6	#5	STR	19'-11"	125
V1	4	#4	STR	7'-2"	19
V2	4	#4	STR	6'-9"	18
V3	6	#4	STR	6'-0"	24
V4	6	#4	STR	5'-3"	21
V5	6	#4	STR	4'-6"	18
V6	6	#4	STR	3'-9"	15
V7	6	#4	STR	7'-2"	29
V8	6	#4	STR	6'-7"	26
V9	6	#4	STR	6'-0"	24
V10	6	#4	STR	5'-5"	22
V11	6	#4	STR	4'-11"	20
V12	6	#4	STR	4'-4"	17
V13	6	#4	STR	3'-9"	15
Z1	6	#5	4	5'-1"	32
Z2	6	#4	4	4'-6"	18
Z3	6	#4	4	4'-0"	16
Z4	6	#4	4	3'-6"	14
Z5	6	#4	4	3'-1"	12
Z6	4	#5	4	5'-7"	23
Z7	6	#4	4	5'-1"	20
Z8	6	#4	4	4'-8"	19
Z9	6	#4	4	4'-3"	17
Z10	6	#4	4	3'-11"	16
Z11	6	#4	4	3'-6"	14
Z12	6	#4	4	3'-1"	12

REINFORCING STEEL 1772 LBS
FOR 4 WINGS

CLASS A CONCRETE

4 WINGS	27.0 CY
2 HEADWALLS	1.5 CY
2 END CURTAIN WALLS	1.7 CY
TOTAL	30.2 CY

BAR TYPES

ALL BAR DIMENSIONS ARE OUT TO OUT.

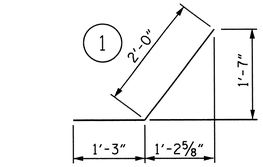

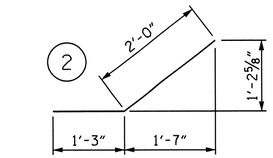

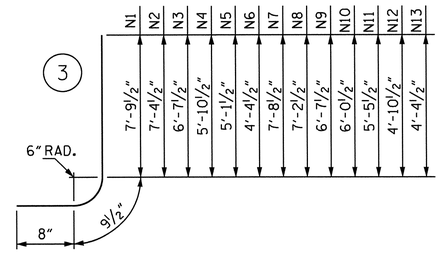

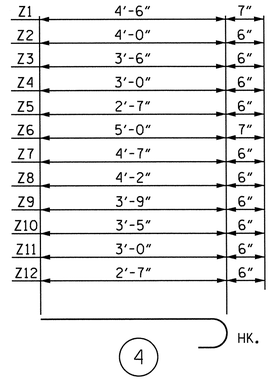

PROJECT NO. R-2303B
SAMPSON COUNTY
STATION: 713+35.00 -L-

SHEET 5 OF 5

STATE OF NORTH CAROLINA
DEPARTMENT OF TRANSPORTATION
RALEIGH

WINGS FOR CONCRETE BOX CULVERT

H = 7'-0" SLOPE = 3:1
79° SKEW

REVISIONS						SHEET NO.
NO.	BY:	DATE:	NO.	BY:	DATE:	C-5
1			3			TOTAL SHEETS
2			4			5

DESIGN ENGINEER OF RECORD: CEDRIC BUTLER	DATE : 7-24-12
ASSEMBLED BY : A. M. LEE, PE	DATE : 1/2013
CHECKED BY : M.L. RORIE, PE	DATE : 1/2013
DRAWN BY : CCJ 12/99	
CHECKED BY : RWW 03/00	

NORTH CAROLINA PROFESSIONAL SEAL 025516 ENGINEER E. MURRAY
2.21.13

STR #5

STANDARD NOTES

DESIGN DATA:

SPECIFICATIONS	A.A.S.H.T.O. (CURRENT)
LIVE LOAD	SEE PLANS
IMPACT ALLOWANCE	SEE A.A.S.H.T.O.
STRESS IN EXTREME FIBER OF	
STRUCTURAL STEEL - AASHTO M270 GRADE 36	20,000 LBS. PER SQ. IN.
- AASHTO M270 GRADE 50W	27,000 LBS. PER SQ. IN.
- AASHTO M270 GRADE 50	27,000 LBS. PER SQ. IN.
REINFORCING STEEL IN TENSION	
GRADE 60	24,000 LBS. PER SQ. IN.
CONCRETE IN COMPRESSION	1,200 LBS. PER SQ. IN.
CONCRETE IN SHEAR	SEE A.A.S.H.T.O.
STRUCTURAL TIMBER - TREATED OR	
UNTREATED - EXTREME FIBER STRESS	1,800 LBS. PER SQ. IN.
COMPRESSION PERPENDICULAR TO GRAIN OF TIMBER	375 LBS. PER SQ. IN.
EQUIVALENT FLUID PRESSURE OF EARTH	30 LBS. PER CU. FT. (MINIMUM)

MATERIAL AND WORKMANSHIP:

EXCEPT AS MAY OTHERWISE BE SPECIFIED ON PLANS OR IN THE SPECIAL PROVISIONS, ALL MATERIAL AND WORKMANSHIP SHALL BE IN ACCORDANCE WITH THE 2012 "STANDARD SPECIFICATIONS FOR ROADS AND STRUCTURES" OF THE N. C. DEPARTMENT OF TRANSPORTATION.

STEEL SHEET PILING FOR PERMANENT OR TEMPORARY APPLICATIONS SHALL BE HOT ROLLED.

CONCRETE:

UNLESS OTHERWISE REQUIRED ON PLANS, CLASS A CONCRETE SHALL BE USED FOR ALL PORTIONS OF ALL STRUCTURES WITH THE EXCEPTION THAT: CLASS AA CONCRETE SHALL BE USED IN BRIDGE SUPERSTRUCTURES, ABUTMENT BACKWALLS, AND APPROACH SLABS; AND CLASS B CONCRETE SHALL BE USED FOR SLOPE PROTECTION AND RIP RAP.

CONCRETE CHAMFERS:

UNLESS OTHERWISE NOTED ON THE PLANS, ALL EXPOSED CORNERS ON STRUCTURES SHALL BE CHAMFERED 3/4" WITH THE FOLLOWING EXCEPTIONS: TOP CORNERS OF CURBS MAY BE ROUNDED TO 1-1/2" RADIUS WHICH IS BUILT INTO CURB FORMS; CORNERS OF TRANSVERSE FLOOR EXPANSION JOINTS SHALL BE ROUNDED WITH A 1/4" FINISHING TOOL UNLESS OTHERWISE REQUIRED ON PLANS; AND CORNERS OF EXPANSION JOINTS IN THE ROADWAY FACES AND TOPS OF CURBS AND SIDEWALKS SHALL BE ROUNDED TO A 1/4" RADIUS WITH A FINISHING STONE OR TOOL UNLESS OTHERWISE REQUIRED ON PLANS.

DOWELS:

DOWELS WHEN INDICATED ON PLANS AS FOR CULVERT EXTENSIONS, SHALL BE EMBEDDED AT LEAST 12" INTO THE OLD CONCRETE AND GROUTED INTO PLACE WITH 1:2 CEMENT MORTAR.

ALLOWANCE FOR DEAD LOAD DEFLECTION, SETTLEMENT, ETC. IN CASTING SUPERSTRUCTURES:

BRIDGES SHALL BE BUILT ON THE GRADE OR VERTICAL CURVE SHOWN ON PLANS. SLABS, CURBS AND PARAPETS SHALL CONFORM TO THE GRADE OR CURVE.

ALL DIMENSIONS WHICH ARE GIVEN IN SECTION AND ARE AFFECTED BY DEAD LOAD DEFLECTIONS ARE DIMENSIONS AT CENTER LINE OF BEARING UNLESS OTHERWISE NOTED ON PLANS. IN SETTING FORMS FOR STEEL BEAM BRIDGES AND PRESTRESSED CONCRETE GIRDER BRIDGES, ADJUSTMENTS SHALL BE MADE DUE TO THE DEAD LOAD DEFLECTIONS FOR THE ELEVATIONS SHOWN. WHERE BLOCKS ARE SHOWN OVER BEAMS FOR BUILDING UP TO THE SLAB, THE VERTICAL DIMENSIONS OF THE BLOCKS SHALL BE ADJUSTED BETWEEN BEARINGS TO COMPENSATE FOR DEAD LOAD DEFLECTIONS, VERTICAL CURVE ORDINATE, AND ACTUAL BEAM CAMBER. WHERE BOTTOM OF SLAB IS IN LINE WITH BOTTOM OF TOP FLANGES, DEPTH OF SLAB BETWEEN BEARINGS SHALL BE ADJUSTED TO COMPENSATE FOR DEAD LOAD DEFLECTION, VERTICAL CURVE ORDINATE, AND ACTUAL BEAM CAMBER.

IN SETTING FALSEWORK AND FORMS FOR REINFORCED CONCRETE SPANS, AN ALLOWANCE SHALL BE MADE FOR DEAD LOAD DEFLECTIONS, SETTLEMENT OF FALSEWORK, AND PERMANENT CAMBER WHICH SHALL BE PROVIDED FOR IN ADDITION TO THE ELEVATIONS SHOWN. AFTER REMOVAL OF THE FALSEWORK, THE FINISHED STRUCTURES SHALL CONFORM TO THE PROFILE AND ELEVATIONS SHOWN ON THE PLANS AND CONSTRUCTION ELEVATIONS FURNISHED BY THE ENGINEER.

DETAILED DRAWINGS FOR FALSEWORK OR FORMS FOR BRIDGE SUPERSTRUCTURE AND ANY STRUCTURE OR PARTS OF A STRUCTURE AS NOTED ON THE PLANS SHALL BE SUBMITTED TO THE ENGINEER FOR APPROVAL BEFORE CONSTRUCTION OF THE FALSEWORK OR FORMS IS STARTED.

REINFORCING STEEL:

ALL REINFORCING STEEL SHALL BE DEFORMED. DIMENSIONS RELATIVE TO PLACEMENT OF REINFORCING ARE TO CENTERS OF BARS UNLESS OTHERWISE INDICATED IN THE PLANS. DIMENSIONS ON BAR DETAILS ARE TO CENTERS OF BARS OR ARE OUT TO OUT AS INDICATED ON PLANS.

WIRE BAR SUPPORTS SHALL BE PROVIDED FOR REINFORCING STEEL WHERE INDICATED ON THE PLANS. WHEN BAR SUPPORT PIECES ARE PLACED IN CONTINUOUS LINES, THEY SHALL BE SO PLACED THAT THE ENDS OF THE SUPPORTING WIRES SHALL BE LAPPED TO LOCK LEGS ON ADJOINING PIECES.

STRUCTURAL STEEL:

AT THE CONTRACTOR'S OPTION, HE MAY SUBSTITUTE 7/8" Ø SHEAR STUDS FOR THE 3/4" Ø STUDS SPECIFIED ON THE PLANS. THIS SUBSTITUTION SHALL BE MADE AT THE RATE OF 3 - 7/8" Ø STUDS FOR 4 - 3/4" Ø STUDS, AND STUD SPACING CHANGES SHALL BE MADE AS NECESSARY TO PROVIDE THE SAME EQUIVALENT NUMBER OF 7/8" Ø STUDS ALONG THE BEAM AS SHOWN FOR 3/4" Ø STUDS BASED ON THE RATIO OF 3 - 7/8" Ø STUDS FOR 4 - 3/4" Ø STUDS. STUDS OF THE LENGTH SPECIFIED ON THE PLANS MUST BE PROVIDED. THE MAXIMUM SPACING SHALL BE 2'-0".

EXCEPT AT THE INTERIOR SUPPORTS OF CONTINUOUS BEAMS WHERE THE COVER PLATE IS IN CONTACT WITH BEARING PLATE, THE CONTRACTOR MAY, AT HIS OPTION, SUBSTITUTE FOR THE COVER PLATES DESIGNATED ON THE PLANS COVER PLATES OF THE EQUIVALENT AREA PROVIDED THESE PLATES ARE AT LEAST 5/16" IN THICKNESS AND DO NOT EXCEED A WIDTH EQUAL TO THE FLANGE WIDTH LESS 2" OR A THICKNESS EQUAL TO 2 TIMES THE FLANGE THICKNESS. THE SIZE OF FILLET WELDS SHALL CONFORM TO THE REQUIREMENTS OF THE CURRENT ANSI/AASHTO/AWS "BRIDGE WELDING CODE". ELECTROSLAG WELDING WILL NOT BE PERMITTED.

WITH THE SOLE EXCEPTION OF EDGES AT SURFACES WHICH BEAR ON OTHER SURFACES, ALL SHARP EDGES AND ENDS OF SHAPES AND PLATES SHALL BE SLIGHTLY ROUNDED BY SUITABLE MEANS TO A RADIUS OF APPROXIMATELY 1/16 INCH OR EQUIVALENT FLAT SURFACE AT A SUITABLE ANGLE PRIOR TO PAINTING, GALVANIZING, OR METALLIZING.

HANDRAILS AND POSTS:

METAL STANDARDS AND FACES OF THE CONCRETE END POSTS FOR THE METAL RAIL SHALL BE SET NORMAL TO THE GRADE OF THE CURB, UNLESS OTHERWISE SHOWN ON PLANS. THE METAL RAIL AND TOPS OF CONCRETE POSTS USED WITH THE ALUMINUM RAIL SHALL BE BUILT PARALLEL TO THE GRADE OF THE CURB.

METAL HANDRAILS SHALL BE IN ACCORDANCE WITH THE PLANS. RAILS SHALL BE AS MANUFACTURED FOR BRIDGE RAILING. CASTINGS SHALL BE OF A UNIFORM APPEARANCE. FINS AND OTHER DEFORMATIONS RESULTING FROM CASTING OR OTHERWISE SHALL BE REMOVED IN A MANNER SO THAT A UNIFORM COLORING OF THE COMPLETED CASTING SHALL BE OBTAINED. CASTINGS WITH DISCOLORATIONS OR OF NON-UNIFORM COLORING WILL NOT BE ACCEPTED. CERTIFIED MILL REPORTS ARE REQUIRED FOR METAL RAILS AND POSTS.

SPECIAL NOTES:

GENERALLY, IN CASE OF DISCREPANCY, THIS STANDARD SHEET OF NOTES SHALL GOVERN OVER THE SPECIFICATIONS, BUT THE REMAINDER OF THE PLANS SHALL GOVERN OVER NOTES HEREON, AND SPECIAL PROVISIONS SHALL GOVERN OVER ALL. SEE SPECIFICATIONS ARTICLE 105-4.

ENGLISH

JANUARY, 1990

STD. NO. SN

REV. 6-16-95 EEM ω RGW REV. 5-7-03 RWW ω JTE REV. 10-1-11 MAA ω GM
REV. 8-16-99 RWW ω LES REV. 5-1-06 TLA ω GM