STATE	STATE PROJECT REFERENCE NO.	SHEET NO.	TOTAL SHEETS
N.C.	R-3324	UC-1	
STATE PROJ. NO.	F.A. PROJ. NO.	DESCRIPTION	

CONTRACT:34531 PROJECT TIP:R-3324

STATE OF NORTH CAROLINA
DIVISION OF HIGHWAYS

UTILITY CONSTRUCTION PLANS
BRUNSWICK COUNTY

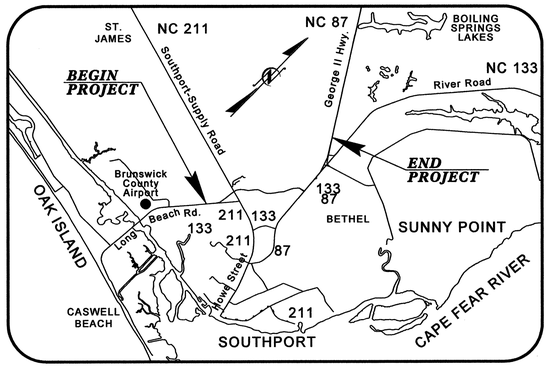

LOCATION: NEW ROUTE FROM NC 133 (LONG BEACH RD.) TO NC 133 @ NC 87 (RIVER RD.), NORTH OF SOUTHPORT

TYPE OF WORK: UTILITIES RELOCATION

NOTE: THIS IS A PARTIALLY CONTROLLED ACCESS PROJECT WITH ACCESS POINTS AS SHOWN ON THE PLANS.

CLEARING ON THIS PROJECT SHALL BE PERFORMED TO THE LIMITS ESTABLISHED BY METHOD III

NAD 83

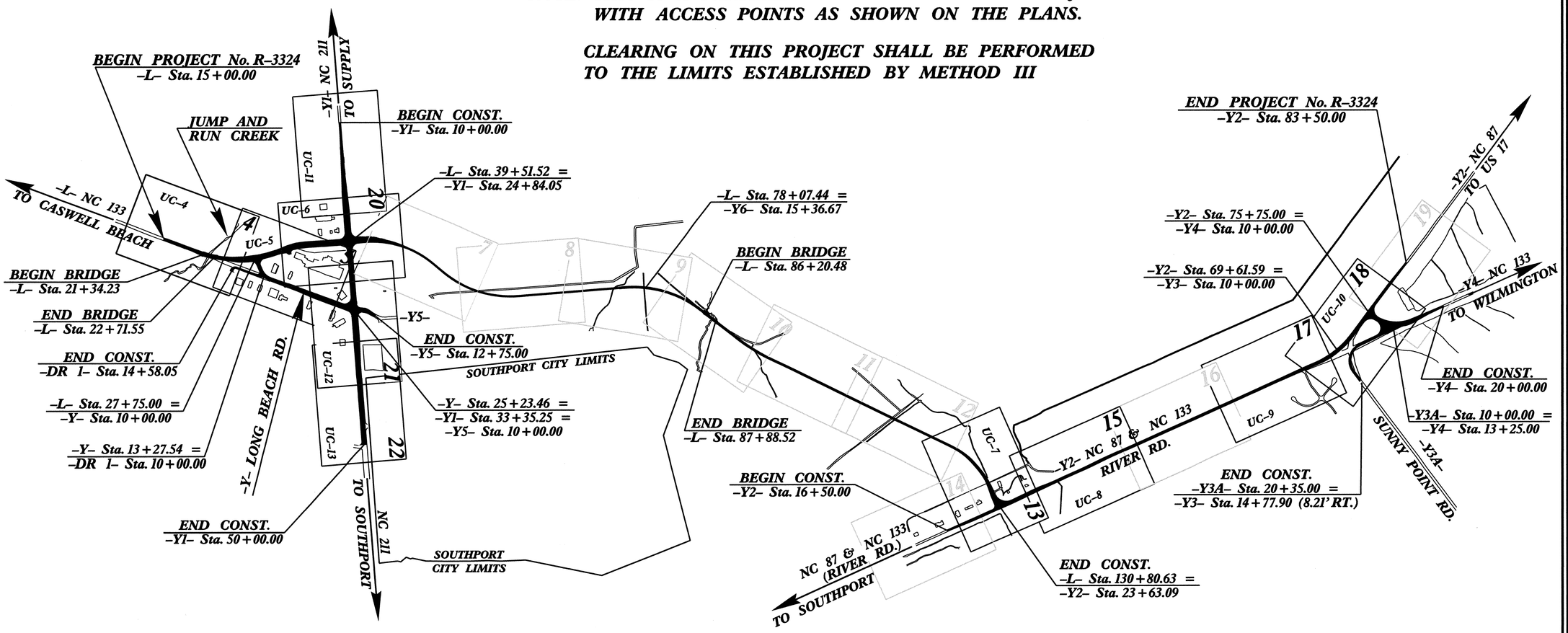

GRAPHIC SCALES

25 0 50 PLANS

25 0 50 PROFILE (HORIZONTAL)

2.5 0 5 PROFILE (VERTICAL)

INDEX OF SHEETS

SHEET No.	DESCRIPTION
UC-1	TITLE SHEET
UC-2	PLAN SHEET SYMBOLS
UC-3 TO UC-3J	GENERAL NOTES AND DETAILS
UC-4 TO UC-13	PLAN SHEETS
UC-14 TO UC-17	PROFILE SHEETS
UC-18 TO UC-23	LINES TO BE ABANDONED

UTILITY OWNERS ON PROJECT

(1.) BRUNSWICK COUNTY UTILITIES (WATER)

(2.) SOUTHEAST BRUNSWICK SANITARY DISTRICT (GRAVITY SEWER AND 6"/8" FORCE MAIN)

Municipal Services Engineering Company, P.A.
P.O. BOX 97 GARNER, N.C. 27529 (919) 772-5393
P.O. BOX 349 BOONE, N.C. 28607 (828) 262-1767
LICENSE NUMBER: C-0281

UTILITY DESIGN ENGINEER

NORTH CAROLINA PROFESSIONAL SEAL 024146 ENGINEER WILLIAM H. YADON

PREPARED IN THE OFFICE OF:
DIVISION OF HIGHWAYS
DESIGN SERVICES
UTILITY SECTION
1591 MAIL SERVICES CENTER
RALEIGH NC 27699-1591
PHONE (919) 250-4128
FAX (919) 250-4119

Roger Worthington, P.E.	UTILITIES SECTION ENGINEER
Steve McKee, P.E.	UTILITIES SQUAD LEADER PROJECT ENGINEER
Jamshid Hafshejani	UTILITIES PROJECT DESIGNER

PROJECT REFERENCE NO.	SHEET NO.
R-3324	UC-2

STATE OF NORTH CAROLINA
DIVISION OF HIGHWAYS

UTILITIES PLAN SHEET SYMBOLS

PROPOSED WATER SYMBOLS

- Water Line (Sized as Shown) — 12" WL
- 11¼ Degree Bend
- 22½ Degree Bend
- 45 Degree Bend
- 90 Degree Bend
- Plug
- Tee
- Cross
- Reducer
- Gate Valve — GV
- Butterfly Valve — BV
- Tapping Valve — TGV
- Line Stop — LS
- Line Stop with Bypass — LS/BP
- Blow Off — BO
- Fire Hydrant — PFH
- Relocate Fire Hydrant — REH
- Remove Fire Hydrant — REM FH
- Water Meter — PWM
- Relocate Water Meter — RWM
- Remove Water Meter — REM WM
- Water Pump Station — PS(W)
- RPZ Backflow Preventer — PRPZ
- DCV Backflow Preventer — PRFP
- Relocate RPZ Backflow Preventer — RRPZ
- Relocate DCV Backflow Preventer — RRFP

PROPOSED SEWER SYMBOLS

- Gravity Sewer Line (Sized as Shown) — 12" SS
- Force Main Sewer Line (Sized as Shown) — 12" FSS
- Manhole (Sized per Note)
- Sewer Pump Station — PS(SS)

PROPOSED MISCELLANOUS UTILITIES SYMBOLS

- Power Pole
- Telephone Pole
- Joint Use Pole
- Telephone Pedestal — TEL PED
- Utility Line by Others (Type as Shown)
- Trenchless Installation — 12" TL INSTALL
- Encasement by Open Cut — 24" ENCAS BY OC
- Encasement — 24" ENCASEMENT
- Thrust Block
- Air Release Valve — AR
- Utility Vault — UV
- Concrete Pier — CP
- Steel Pier — SP
- Plan Note — NOTE
- Pay Item Note — PAY ITEM

EXISTING UTILITIES SYMBOLS

- Power Pole
- Telephone Pole
- Joint Use Pole
- Utility Pole
- Utility Pole with Base
- H-Frame Pole
- Power Transmission Line Tower
- Water Manhole
- Power Manhole
- Telephone Manhole
- Sanitary Sewer Manhole
- Hand Hole for Cable
- Power Transformer
- Telephone Pedestal
- CATV Pedestal
- Gas Valve
- Gas Meter
- Located Miscellaneous Utility Object
- Abandoned According to Utility Records — AATUR
- End of Information — E.O.I.
- *Underground Power Line
- *Underground Telephone Cable
- *Underground Telephone Conduit
- *Underground Fiber Optics Telephone Cable
- *Underground TV Cable
- *Underground Fiber Optics TV Cable
- *Underground Gas Pipeline
- Aboveground Gas Pipeline — A/G Gas
- *Underground Water Line
- Aboveground Water Line — A/G Water
- *Underground Gravity Sanitary Sewer Line
- Aboveground Gravity Sanitary Sewer Line — A/G Sanitary Sewer
- *Underground SS Forced Main Line
- Underground Unknown Utility Line
- SUE Test Hole
- Water Meter
- Water Valve
- Fire Hydrant
- Sanitary Sewer Cleanout

*For Existing Utilities

- Utility Line Drawn from Record (Type as Shown)
- Designated Utility Line (Type as Shown)

PROJECT REFERENCE NO.	SHEET NO.
R-3324	UC-3
DESIGNED BY: B.DIXON	
DRAWN BY: R.MOSS	
CHECKED BY: B.DIXON	
APPROVED BY:	
REVISED:	
MUNICIPAL ENGINEERING SERVICES COMPANY, PA.	
P.O. BOX 97 GARNER, NC.27529 (919)772-5393	UTILITY CONSTRUCTION PLANS ONLY

NORTH CAROLINA PROFESSIONAL SEAL 019245 ENGINEER WILLIAM HENRY DIXON

UTILITY CONSTRUCTION

UTILITY CONSTRUCTION

GENERAL NOTES:

1. THE PROPOSED UTILITY CONSTRUCTION SHALL MEET THE APPLICABLE REQUIREMENTS OF THE NC DEPARTMENT OF TRANSPORTATION'S "STANDARD SPECIFICATIONS FOR ROADS AND STRUCTURES" DATED JANUARY 2012, BRUNSWICK COUNTY PUBLIC UTILITIES, SOUTHEAST BRUNSWICK SANITARY DISTRICT, AND THE TOWN OF SOUTHPORT WHICH EVER IS MOST STRINGENT.

2. THE EXISTING UTILITIES TO BE RELOCATED BELONG TO

(1.) BRUNSWICK COUNTY UTILITIES (WATER)

(2.) SOUTHEAST BRUNSWICK SANITARY DISTRICT (GRAVITY SEWER AND 6"/8" FORCE MAIN)

3. ALL WATER LINES TO BE INSTALLED WITHIN COMPLIANCE OF THE RULES AND REGULATIONS OF THE NORTH CAROLINA DEPARTMENT OF ENVIRONMENTAL AND NATURAL RESOURCES, DIVISION OF ENVIRONMENTAL HEALTH. ALL SEWER LINES TO BE INSTALLED WITHIN COMPLIANCE OF THE RULES AND REGULATIONS OF THE NORTH CAROLINA DEPARTMENT OF ENVIRONMENT AND NATURAL RESOURCES, DIVISION OF WATER QUALITY. PERFORM ALL WORK IN ACCORDANCE WITH THE APPLICABLE PLUMBING CODES.

4. THE UTILITY OWNERS OWN THE EXISTING UTILITY FACILITIES AND WILL OWN THE NEW UTILITY FACILITIES AFTER ACCEPTANCE BY THE DEPARTMENT. THE DEPARTMENT OWNS THE CONSTRUCTION CONTRACT AND HAS ADMINISTRATIVE AUTHORITY. COMMUNICATIONS AND DECISIONS BETWEEN THE CONTRACTOR AND UTILITY OWNER ARE NOT BINDING UPON THE DEPARTMENT OR THIS CONTRACT UNLESS AUTHORIZED BY THE ENGINEER. AGREEMENTS BETWEEN THE UTILITY OWNER AND CONTRACTOR FOR THE WORK THAT IS NOT PART OF THIS CONTRACT OR IS SECONDARY TO THIS CONTRACT ARE ALLOWED, BUT ARE NOT BINDING UPON THE DEPARTMENT.

5. PROVIDE ACCESS FOR THE DEPARTMENT PERSONNEL AND THE OWNER'S REPRESENTATIVES TO ALL PHASES OF CONSTRUCTION. NOTIFY DEPARTMENT PERSONNEL AND THE UTILITY OWNER TWO WEEKS PRIOR TO COMMENCEMENT OF ANY WORK AND ONE WEEK PRIOR TO SERVICE INTERRUPTION. KEEP UTILITY OWNERS' REPRESENTATIVES INFORMED OF WORK PROGRESS AND PROVIDE OPPROTUNITY FOR INSPECTION OF CONSTRUCTION AND TESTING.

6. THE PLANS DEPICT THE BEST AVAILABLE INFORMATION FOR THE LOCATION, SIZE, AND TYPE OF MATERIAL FOR ALL EXISTING UTILITIES. MAKE INVESTIGATIONS FOR DETERMINING THE EXACT LOCATION, SIZE, AND TYPE MATERIAL OF THE EXISTING FACILITIES AS NECESSARY FOR THE CONSTRUCTION OF THE PROPOSED UTILITIES AND FOR AVOIDING DAMAGE TO EXISTING FACILITIES. REPAIR ANY DAMAGE INCURRED TO EXISTING FACILITIES TO THE ORIGINAL OR BETTER CONDITION AT NO ADDITONAL COST TO THE DEPARTMENT.

7. MAKE FINAL CONNECTIONS OF THE NEW WORK TO THE EXISTING SYSTEM WHERE INDICATED ON THE PLANS, AS REQUIRED TO FIT THE ACTUAL CONDITIONS, OR AS DIRECTED.

8. MAKE CONNECTIONS BETWEEN EXISTING AND PROPOSED UTILITIES AT TIMES MOST CONVENIENT TO THE PUBLIC, WITHOUT ENDANGERING THE UTILITY SERVICE, AND IN ACCORDANCE WITH THE UTILITY OWNER'S REQUIREMENTS. MAKE CONNECTIONS ON WEEKENDS, AT NIGHT, AND ON HOLIDAYS IF NECESSARY.

9. ALL UTILITY MATERIALS SHALL BE APPROVED PRIOR TO DELIVERY TO THE PROJECT. SEE 1500-7, " SUBMITTALS AND RECORDS" IN SECTION 1500 OF THE STANDARD SPECIFICATIONS.

PROJECT SPECIFIC NOTES:

1. THERE SHALL BE NO INTERRUPTION OF WATER SERVICE IN THE MAIN TRANSMISSION LINE. INTERRUPTION OF WATER SERVICE TO INDIVIDUAL USERS SHALL BE LIMITED TO A MAXIMUM OF FOUR (4) HOURS.

2. THE CONTRACTOR SHALL BE RESPONSIBLE FOR FIELD VERIFYING LOCATION, SIZE, TYPE AND ELEVATION OF ALL UNDERGROUND UTILITIES, AS WELL AS RECONNECTING ANY WATER AND/OR SANITARY SEWER SERVICES DISTURBED DURING CONSTRUCTION, EVEN IF THEY ARE NOT SHOWN ON PLANS.

3. INDIVIDUAL SERVICE CONNECTION INTERRUPTIONS SHALL BE SCHEDULED BETWEEN REGULAR WORKING HOURS UNLESS OTHERWISE PERMITTED BY THE OWNER.

4. WATER SERVICES SHALL BE RESTORED WITHIN THE SAME WORKING DAY.

5. SEWER SERVICES SHALL BE RESTORED WITHIN THE SAME WORKING DAY.

6. OWNER, OR HIS AGENT, SHALL WITNESS ALL PRESSURE AND BIOLOGICAL TESTING.

7. THE CONTRACTOR SHALL TAKE ALL BIOLOGICAL SAMPLES AND SEND TO OWNERS PREFERRED LABORATORY FOR TESTING.

8. THE CONTRACTOR SHALL HAVE THE PARTS AVAILABLE ON HAND AND CAPABILITY TO REPAIR THE SERVICE MAINS IMMEDIATELY IF SERVICE IS INTERRUPTED DUE TO DAMAGE CAUSED BY THE CONTRACTOR.

LIST OF STANDARD DRAWINGS

N/A

PROJECT REFERENCE NO.	SHEET NO.
R-3324	UC-3A
DESIGNED BY: B.DIXON	
DRAWN BY: R.MOSS	
CHECKED BY: B.DIXON	
APPROVED BY:	
REVISED:	
MUNICIPAL ENGINEERING SERVICES COMPANY, PA.	
P.O. BOX 97 GARNER, NC.27529 (919)772-5393	UTILITY CONSTRUCTION PLANS ONLY

NORTH CAROLINA PROFESSIONAL SEAL 019249 ENGINEER WILLIAM HENRY DIXON

UTILITY CONSTRUCTION

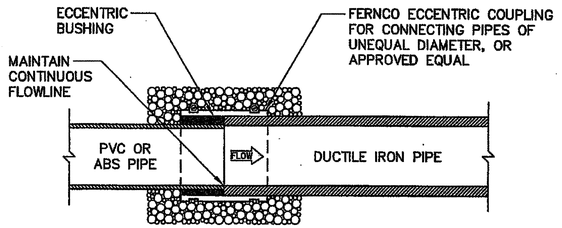

SECTION

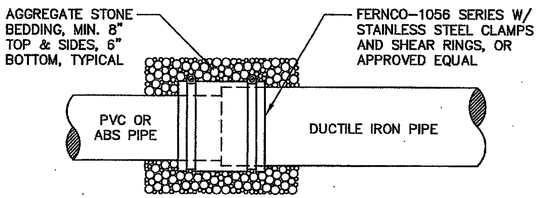

ELEVATION

NOTE: SEE STANDARD SEWER LINE TRENCH DETAIL FOR PIPE BEDDING BEYOND COUPLING.

STANDARD SEWER LINE COUPLING

NOT TO SCALE

SL011

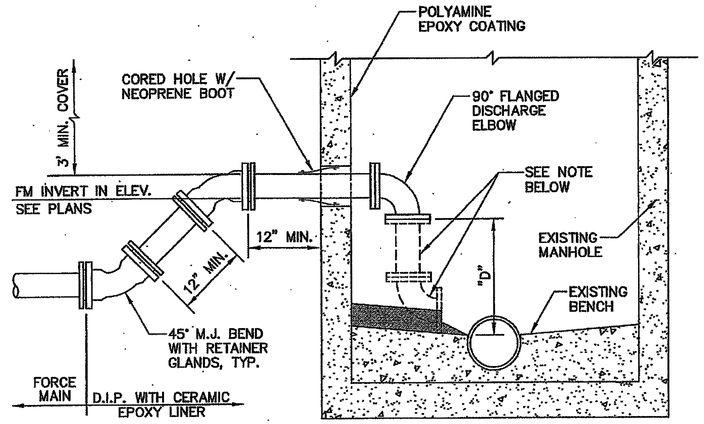

NOTE: IF DISTANCE "D" FROM DISCHARGE ELBOW TO EXISTING BENCH EXCEEDS 2'-0", PROVIDE ADDITIONAL PIPE AND 90° ELBOW, GROUT TO BENCH AS SHOWN.

FORCE MAIN – 3" THRU 8"ø CONNECTION TO EXISTING MANHOLE

NOT TO SCALE

SF001

FORCE MAIN NOTES

SF004

1. MINIMIZE LOCALIZED HIGH SPOTS IN THE LINE BY PLACING THE FORCE MAIN ON A UNIFORM GRADE WHILE OBSERVING THE MINIMUM COVER DEPTHS AND SEPARATIONS NOTED.
2. A MINIMUM 24" VERTICAL SEPARATION DISTANCE MUST BE MAINTAINED BETWEEN ALL FORCE MAIN SEWERS AND STORM SEWERS (MEASURED EDGE TO EDGE).
3. A MINIMUM 18" VERTICAL SEPARATION DISTANCE MUST BE MAINTAINED BETWEEN ALL FORCE MAIN SEWERS AND WATER LINES (MEASURED EDGE TO EDGE).

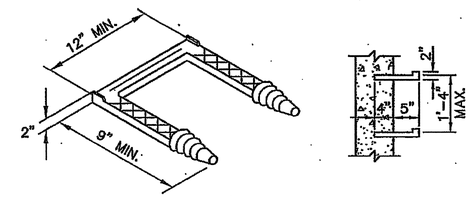

STANDARD MANHOLE STEP

NOT TO SCALE

SLD02

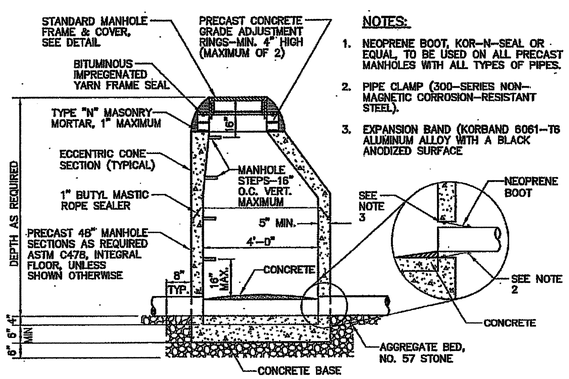

NOTES:

1. NEOPRENE BOOT, KOR-N-SEAL OR EQUAL, TO BE USED ON ALL PRECAST MANHOLES WITH ALL TYPES OF PIPES.
2. PIPE CLAMP (300-SERIES NON-MAGNETIC CORROSION-RESISTANT STEEL).
3. EXPANSION BAND (KORBAND 6061-T6 ALUMINUM ALLOY WITH A BLACK ANODIZED SURFACE

STANDARD PRECAST CONCRETE MANHOLE

NOT TO SCALE

SL001

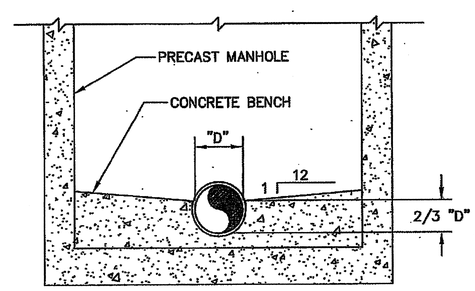

STANDARD MANHOLE CHANNEL & BENCH

NOT TO SCALE

SL003

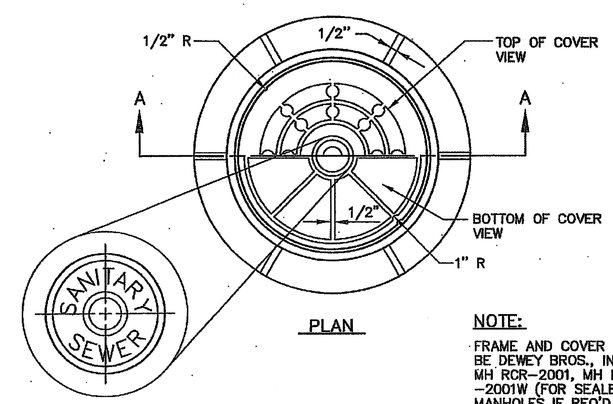

PLAN

DETAIL

NOTE:

FRAME AND COVER TO BE DEWEY BROS., INC. MH RCR-2001, MH RCR -2001W (FOR SEALED MANHOLES IF REQ'D.-AS SHOWN ON PLANS), OR APPROVED EQUAL.

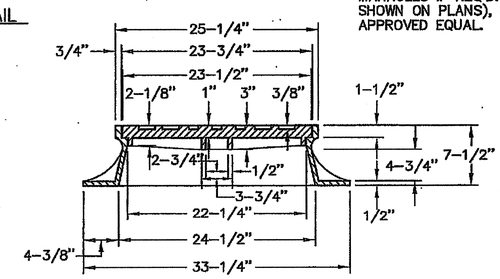

SECTION A-A

STANDARD MANHOLE FRAME AND COVER

NOT TO SCALE

SL004

PROJECT REFERENCE NO.	SHEET NO.
R-3324	UC-3B
DESIGNED BY: B.DIXON	
DRAWN BY: R.MOSS	
CHECKED BY: B.DIXON	
APPROVED BY:	
REVISED:	
MUNICIPAL ENGINEERING SERVICES COMPANY, PA.	
P.O. BOX 97 GARNER, NC.27529 (919)772-5393	UTILITY CONSTRUCTION PLANS ONLY

NORTH CAROLINA PROFESSIONAL SEAL 10446 ENGINEER WILLIAM HENRY DIXON 11/15/12

UTILITY CONSTRUCTION

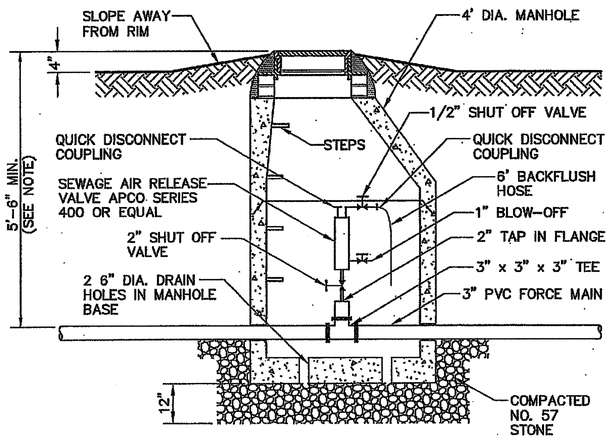

NOTES

1. INSTALL FORCE MAIN AT DEPTH TO SUIT MANHOLE.
2. VERIFY MANHOLE DEPTH REQUIRED WITH VALVE MANUFACTURER.

FORCE MAIN AIR RELEASE VALVE & MANHOLE

NOT TO SCALE

SF003

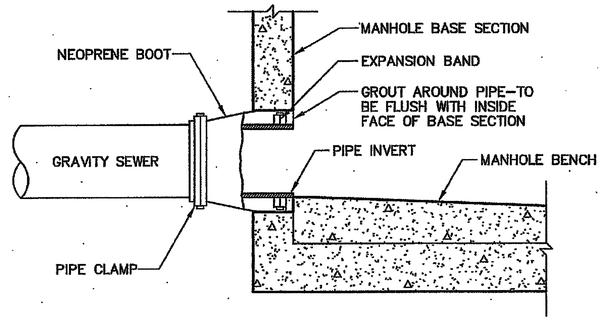

NOTES:

1. MATERIAL SPECIFICATIONS: NEOPRENE BOOT – ASTM C-923; PIPE CLAMP & EXPANSION CLAMP – STAINLESS STEEL, ASTM C-923.
2. TWO PIPE CLAMPS REQUIRED FOR PIPE O.D.'S 15" AND LARGER.

STANDARD MANHOLE BOOT

NOT TO SCALE

SL005

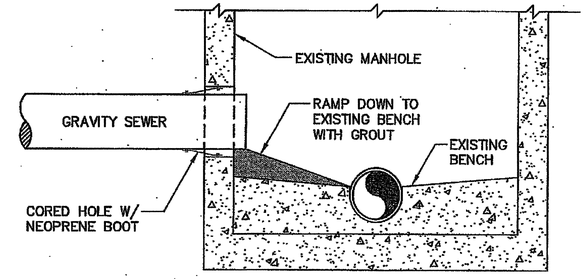

STANDARD SEWER LINE CONNECTION TO EXISTING MANHOLE

NOT TO SCALE

SL009

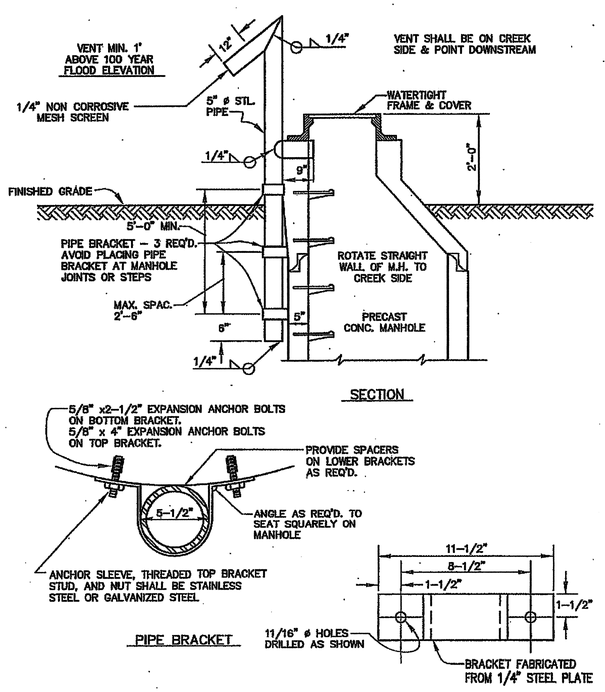

STANDARD VENT MANHOLE

NOT TO SCALE

SL003

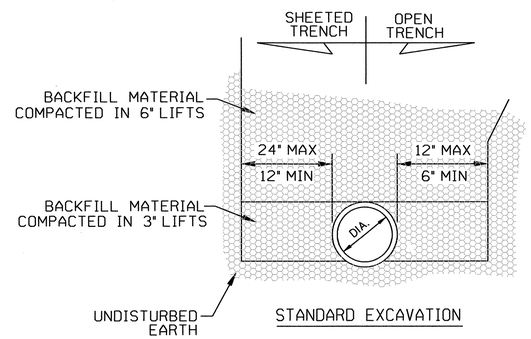

STANDARD EXCAVATION

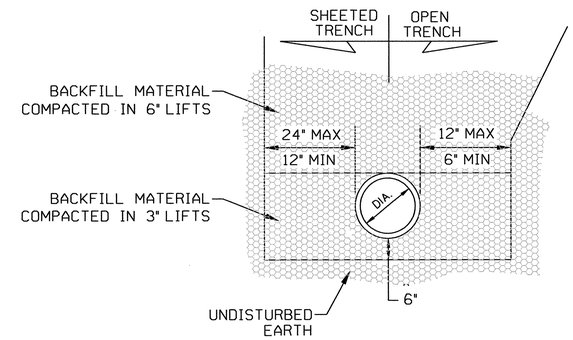

OVERCUT EXCAVATION

NOTES:

CONSTRUCTION OF TRENCHES SHALL BE IN ACCORDANCE WITH THE LATEST OSHA REGULATIONS. CONTRACTOR SHALL BE RESPOSIBLE FOR COMPLIANCE WITH ALL APPLICABLE REGULATIONS.

NO BOULDERS OR STONES IN EXCESS OF 4" IN SIZE SHALL BE USED AS PART OF THE INITIAL BACKFILL.

PIPE BEDDING MATERIAL SHALL BE # 57 WASHED STONE.

NOTE:

BELL HOLES NOT SHOWN

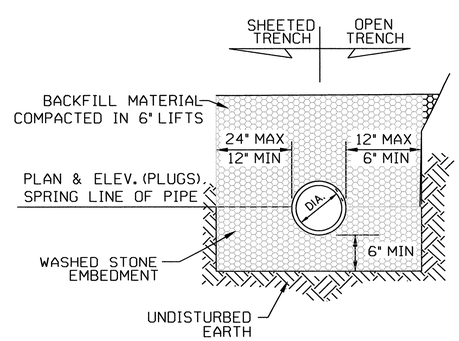

STANDARD EXCAVATION

IN WET CONDITIONS

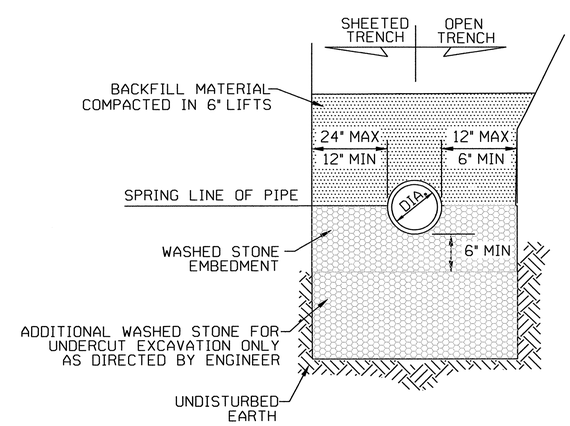

UNDERCUT EXCAVATION

IN UNSTABLE SOILS TYPES

MAXIMUM TRENCH WIDTH AT TOP OF PIPE

NOMINAL PIPE SIZE (INCHES)	TRENCH WIDTH (INCHES)
6	30
8	32
24	48

TYPICAL TRENCH DETAIL

PROJECT REFERENCE NO.	SHEET NO.
R-3324	UC-3C
DESIGNED BY: B.DIXON	
DRAWN BY: R.MOSS	
CHECKED BY: B.DIXON	
APPROVED BY:	
REVISED:	
MUNICIPAL ENGINEERING SERVICES COMPANY, PA.	
P.O. BOX 97 GARNER, NC.27529 (919)772-5393	UTILITY CONSTRUCTION PLANS ONLY

NORTH CAROLINA PROFESSIONAL SEAL 10446 ENGINEER WILLIAM HENRY DIXON

UTILITY CONSTRUCTION

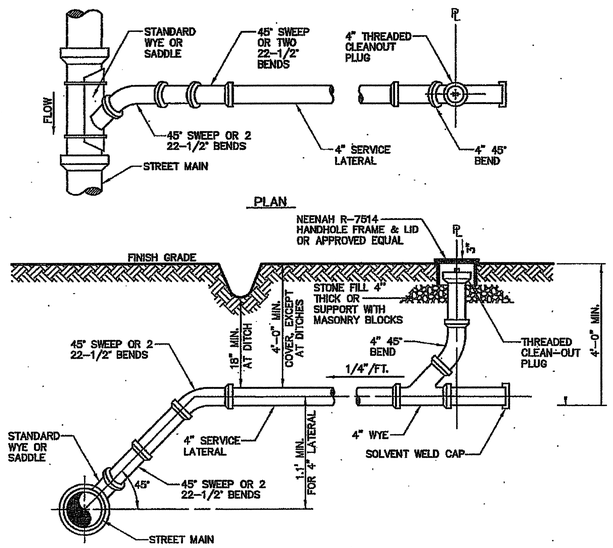

NOTES:

1. COORDINATE LOCATION & DEPTH OF LATERALS TO OCCUPIED LOTS WITH EACH PROPERTY OWNER.
2. ALL LATERALS SHALL BE INSTALLED AT 90° TO THE SEWER LINE UNLESS SHOWN OTHERWISE.
3. USE TYPICAL SERVICE LATERALS WHERE MINIMUM SLOPE AND COVER REQUIREMENTS CAN BE MET.
4. CLEANOUTS TO BE PROVIDED ON ALL LATERALS AT 50' INTERVALS AND AT CHANGES IN DIRECTION.

DEEP SANITARY SEWER SERVICE LATERAL CONNECTION

NOT TO SCALE

SL013A

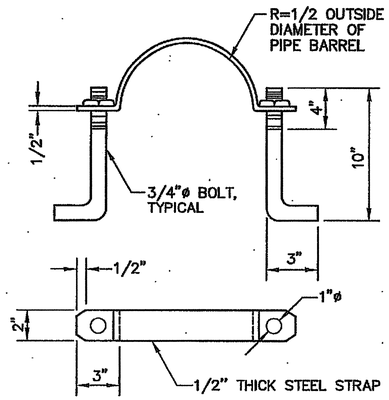

NOTES:

1. ANCHOR BOLTS AND STRAPS SHALL BE GALVANIZED AND HOT-ASPHALT DIPPED.
2. GALVANIZED STEEL OR IRON CAN BE USED.
3. FOR 24"ø PIPE AND LARGER USE 1"ø BOLTS.
4. BOLT HOLES TO BE DRILLED IN STRAP.
5. PROVIDE WASHERS UNDER STRAP SUCH THAT STRAP IS PULLED DOWN TIGHT.

PIER STRAP DETAIL

NOT TO SCALE

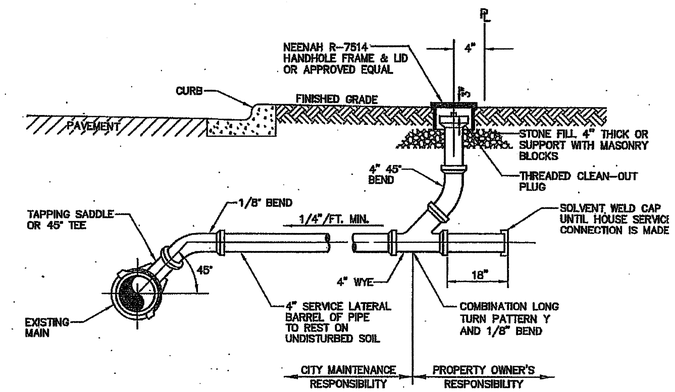

NOTES:

1. THE FULL LENGTH OF THE SERVICE DITCH SHALL BE COMPACTED IN 6" LAYERS WITH MECHANICAL TAMPING.
2. GUARD STAKE REQUIRED AT CLEANOUT LOCATION UNTIL LANDSCAPING IS COMPLETED.
3. LATERAL PIPE SHALL BE 4" PVC/DWV, ASTM 2665-68, SCHED. 40 (TYPE 1), SOLVENT CEMENTED JOINTS OR 4" CAST IRON SOLID PIPE.

SHALLOW SANITARY SEWER SERVICE LATERAL CONNECTION

NOT TO SCALE

SL013B

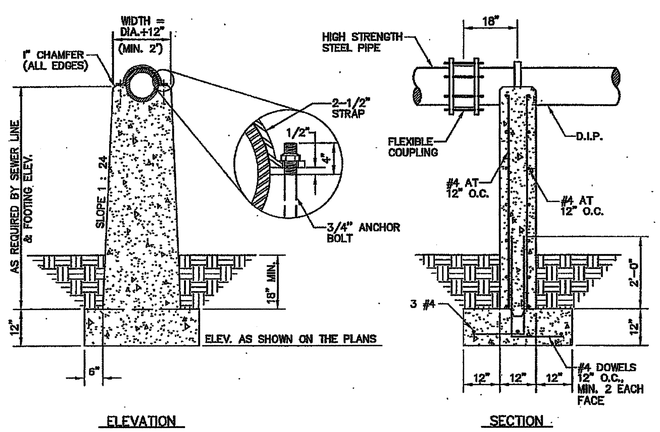

NOTES:

1. ALL CONCRETE TO BE 3600 PSI; FOOTING THICKNESS SAME AS BASE THICKNESS OF PIER, BUT NOT TO EXCEED 2'.
2. PIERS TO BE BUILT WITH LONG SIDE PARALLEL TO CREEK FLOW AND TO BE CENTERED ON FOOTING WHEN PIPE IS PARALLEL TO CREEK.
3. MINIMUM CONCRETE COVER FOR ALL REINFORCING STEEL: 3" WHEN EXPOSED TO EARTH, 2" WHEN EXPOSED TO WEATHER.
4. PIPE TO BE SET 1/2 IN PIER AND 1/2 PROTRUDING ABOVE PIER. WHEN PIERS ARE PLACED PARALLEL TO THE FLOW OF THE CREEK AND THE PIPE IS ON A SKEW WITH THE PIER, HOLDING STRAPS MAY STILL BE PLACED AT RIGHT ANGLES TO THE PIPE, PROVIDING THE ANCHOR BOLTS ARE SET WITH PROPER CONCRETE COVER AROUND THE BOLTS, OR 3" MINIMUM TO NEAREST FACE.

CONCRETE PIER DETAIL

NOT TO SCALE

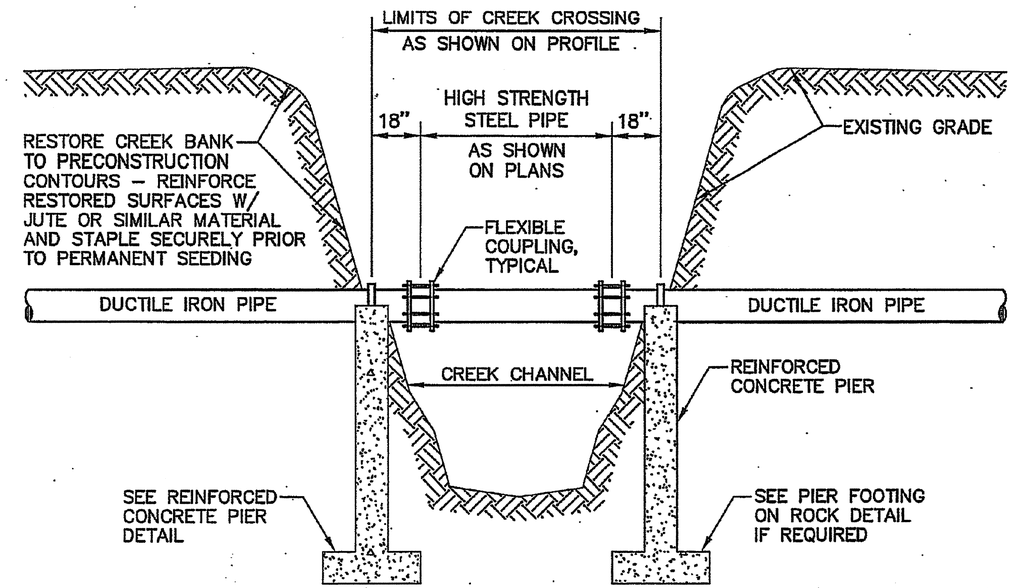

ELEVATED CREEK CROSSING

NOT TO SCALE

WS005

PROJECT REFERENCE NO.	SHEET NO.
R-3324	UC-3D
DESIGNED BY: B.DIXON	
DRAWN BY: R.MOSS	
CHECKED BY: B.DIXON	
APPROVED BY:	
REVISED:	
MUNICIPAL ENGINEERING SERVICES COMPANY. PA.	
P.O. BOX 97 GARNER, NC.27529 (919)772-5393	UTILITY CONSTRUCTION PLANS ONLY

NORTH CAROLINA PROFESSIONAL SEAL 10446 12/3/12 ENGINEER WILLIAM HENRY DIXON

UTILITY CONSTRUCTION

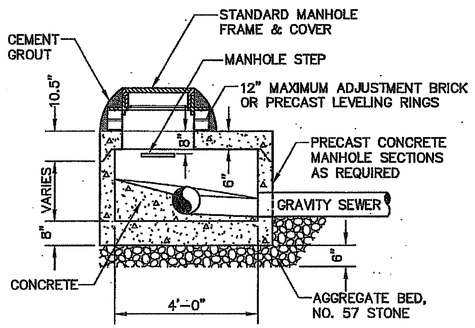

STANDARD SHALLOW MANHOLE

NOT TO SCALE

SL007

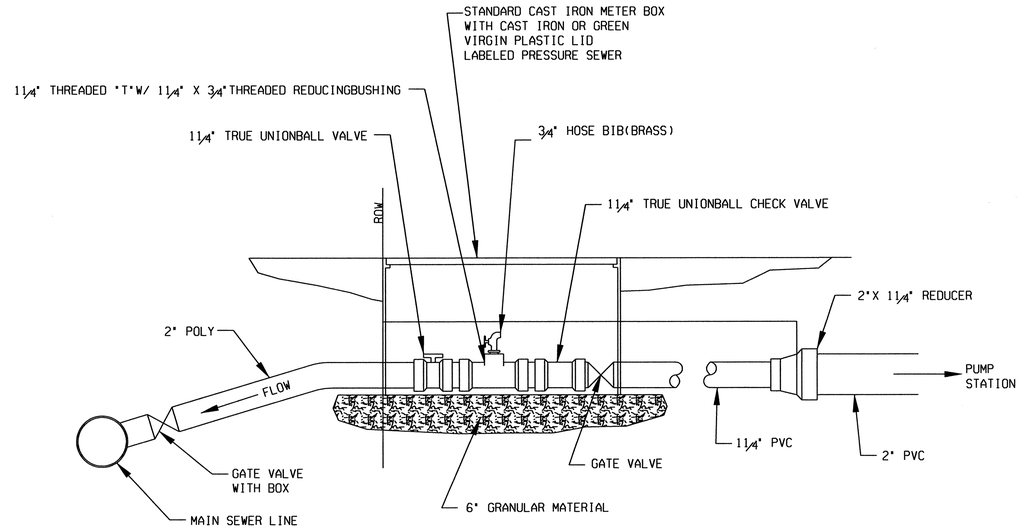

STANDARD PRESSURE SEWER CONNECTION

BLOCKING DIMENSIONS			
PIPE SIZE	(A)	(B)	(C)
UP TO 10"	4' - 0"	2' - 6"	1' - 6"
12" TO 16"	5' - 0"	4' - 0"	2' - 0"
18" TO 24"	8' - 0"	6' - 0"	3' - 0"

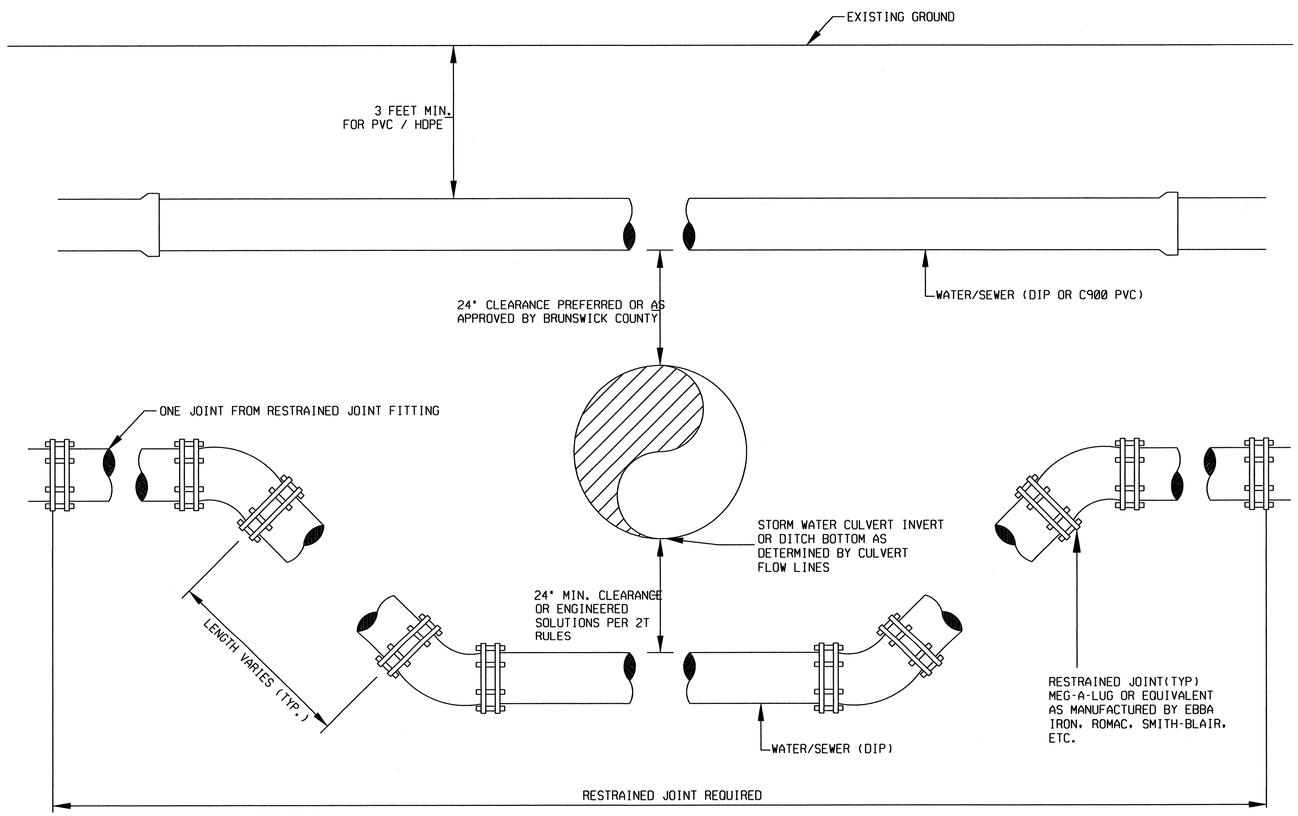

DITCH AND/OR STORM DRAIN CROSSING OFFSETS BETWEEN WATER/SEWER PRESSURE MAIN AND STORM DRAIN

NOTE:

1. USE THREADED RODS, MEGA-LUG OR EQUAL CAM-LOK, OR APPROVED EQUAL FOR JOINT RESTRAINT.
2. USE THRUST BLOCKING WHERE NEEDED TO REINFORCE JOINT RESTRAINT.

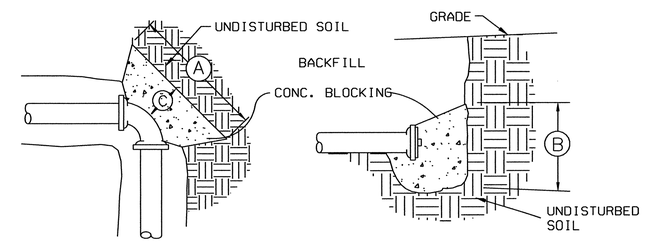

PLAN - BEND
SEE SECTION FOR DEPTH B

SECTION - PLUG
SEE PLAN FOR LENGTH A

NOTES:

1. 2500 P.S.I. CONC.
2. REMOVE LOOSE EARTH AND POUR AGAINST UNDISTURBED SOIL.
3. BACKFILL TO EXISTING/FINISH GRADE AFTER CONCRETE HAS CURED FOR 24 HOURS.
4. CONCRETE SHALL NOT COVER FLANGES, BOLTS, MEGA-LUGS, RODS, ETC.

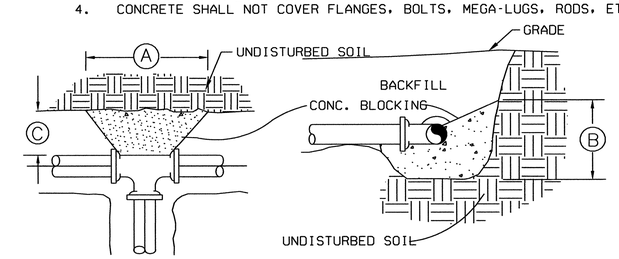

PLAN - TEE
SEE SECTION FOR DEPTH B

SECTION - BEND & TEE
SEE PLAN FOR LENGTH A

THRUST BLOCKS DETAIL

PROJECT REFERENCE NO.	SHEET NO.
R-3324	UC-3E
DESIGNED BY: B.DIXON	
DRAWN BY: R.MOSS	
CHECKED BY: B.DIXON	
APPROVED BY:	
REVISED:	
MUNICIPAL ENGINEERING SERVICES COMPANY, PA.	
P.O. BOX 97 GARNER, NC.27529 (919)772-5393	UTILITY CONSTRUCTION PLANS ONLY

NORTH CAROLINA PROFESSIONAL SEAL 10446 ENGINEER WILLIAM HENRY DIXON

UTILITY CONSTRUCTION

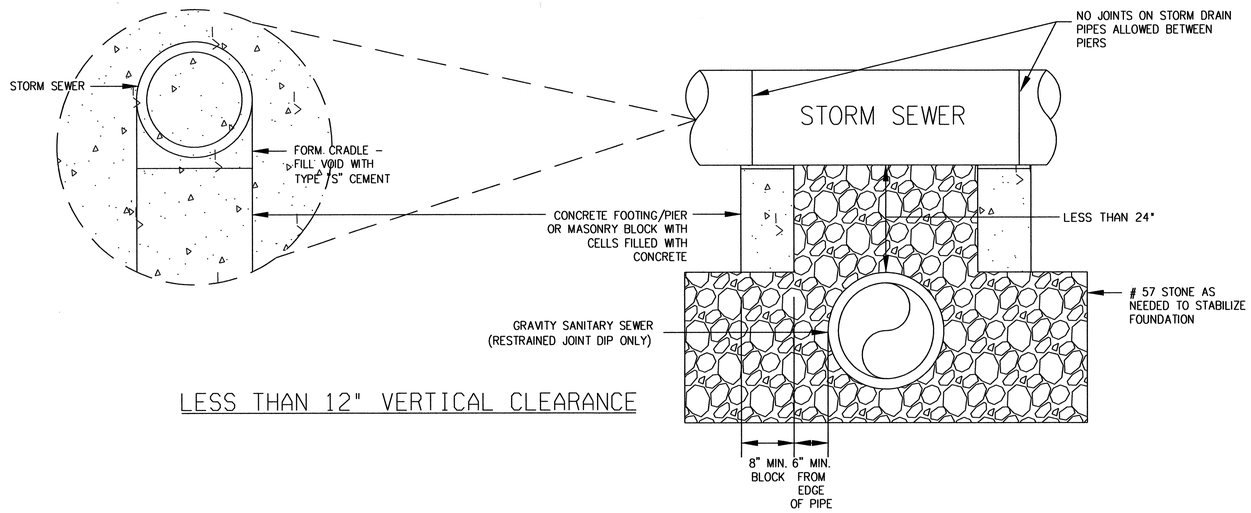

LESS THAN 12" VERTICAL CLEARANCE

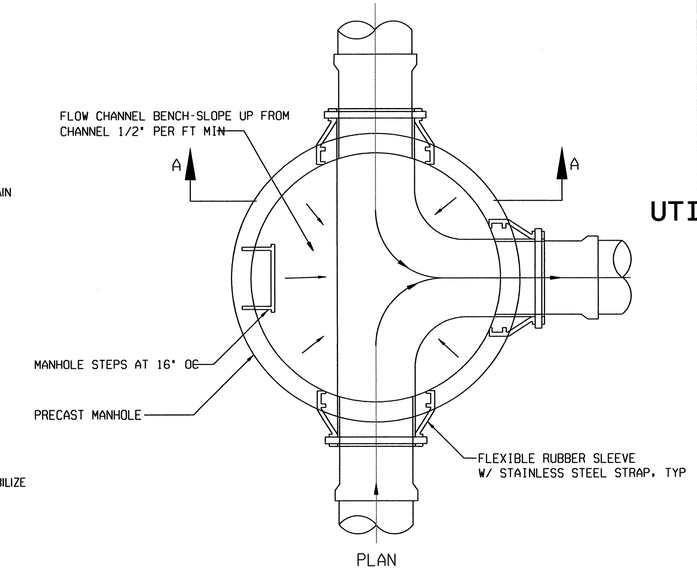

TYPICAL MANHOLE INVERTS DETAIL

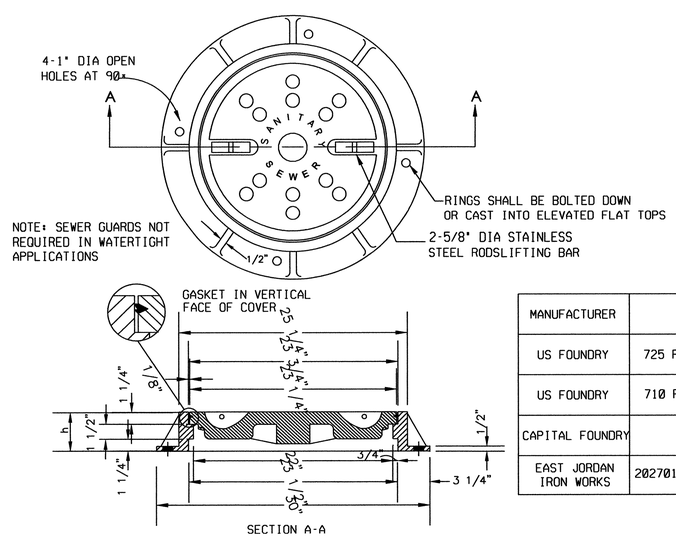

MANUFACTURER	MODEL NUMBER
US FOUNDRY	725 RING / DP-SSG COVER
US FOUNDRY	710 RING / DP-SSG COVER
CAPITAL FOUNDRY	MH-3000-WT
EAST JORDAN IRON WORKS	202701 RING / 202722 COVER

WATERTIGHT MANHOLE RING AND COVER DETAIL

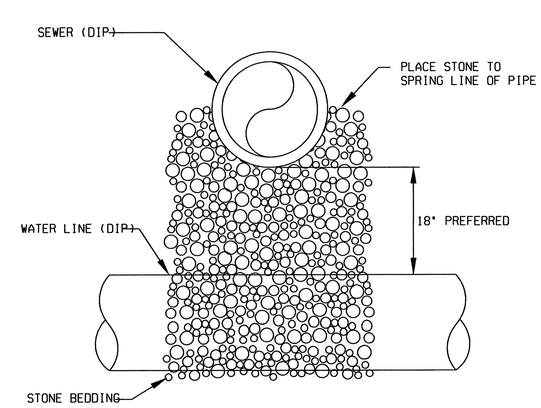

NOTES:

1. BOTH THE WATER MAIN AND THE SEWER MAIN SHALL BE FERROUS MATERIALS WITH JOINTS EQUIVALENT TO WATER MAIN STANDARDS FOR A MINIMUM DISTANCE OF 10 FEET ON EACH SIDE OF THE CROSSING.
2. ALTERNATIVELY, PIPES MAY BE SLEEVED WITH FERROUS MATERIALS FOR A MINIMUM DISTANCE OF 10 FEET ON EACH SIDE OF THE CROSSING AS APPROVED BY BRUNSWICK COUNTY ENGINEERING.

SEWER CROSSING ABOVE WATER LINE

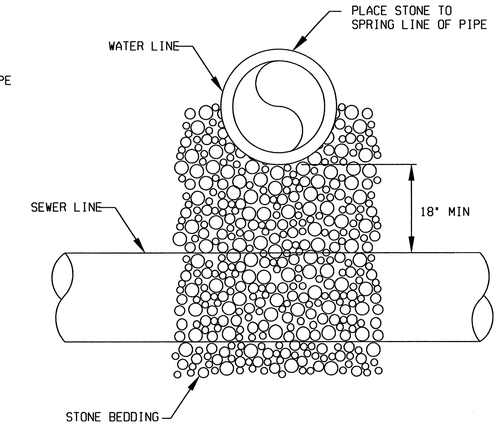

NOTES:

1. SOIL REPLACED UNDER THE WATER MAIN SHALL BE COMPACTED.
2. IF THE WATER MAIN CROSSES AT LESS THAN 18" ABOVE THE SEWER MAIN BOTH THE WATER MAIN AND THE SEWER MAIN SHALL BE FERROUS MATERIALS WITH JOINTS EQUIVALENT TO WATER MAIN STANDARDS FOR A MINIMUM DISTANCE OF 10 FEET ON EACH SIDE OF THE CROSSING, OR THEY MAY HAVE FERROUS SLEEVES PUT AROUND THEM AS APPROVED BY BRUNSWICK COUNTY ENGINEERING.

SEWER CROSSING BELOW WATER LINE

SEWER OFFSETS ABOVE AND BELOW WATER MAINS

PROJECT REFERENCE NO.	SHEET NO.
R-3324	UC-3F
DESIGNED BY: B.DIXON	
DRAWN BY: R.MOSS	
CHECKED BY: B.DIXON	
APPROVED BY:	
REVISED:	
MUNICIPAL ENGINEERING SERVICES COMPANY, PA.	
P.O. BOX 97 GARNER, NC.27529 (919)772-5393	UTILITY CONSTRUCTION PLANS ONLY

NORTH CAROLINA PROFESSIONAL SEAL 10446 ENGINEER WILLIAM HENRY DIXON

UTILITY CONSTRUCTION

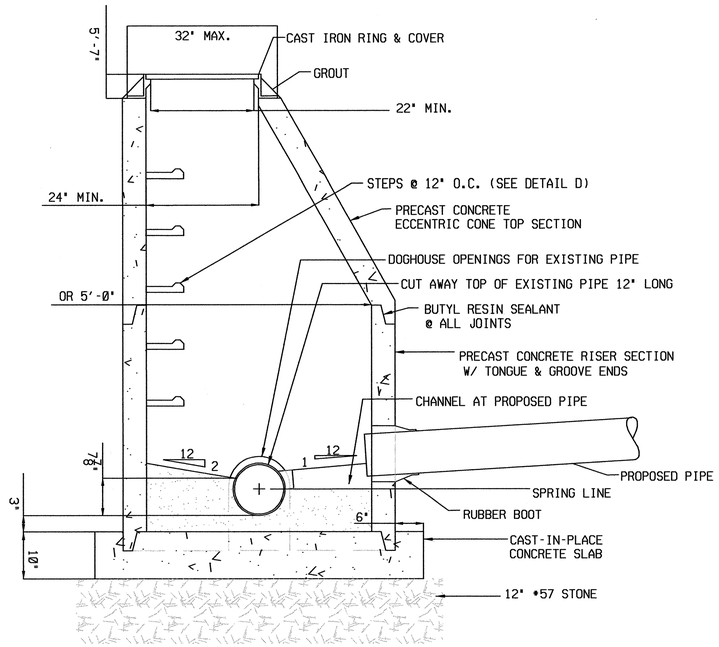

DOGHOUSE MANHOLE DETAIL
NOT TO SCALE

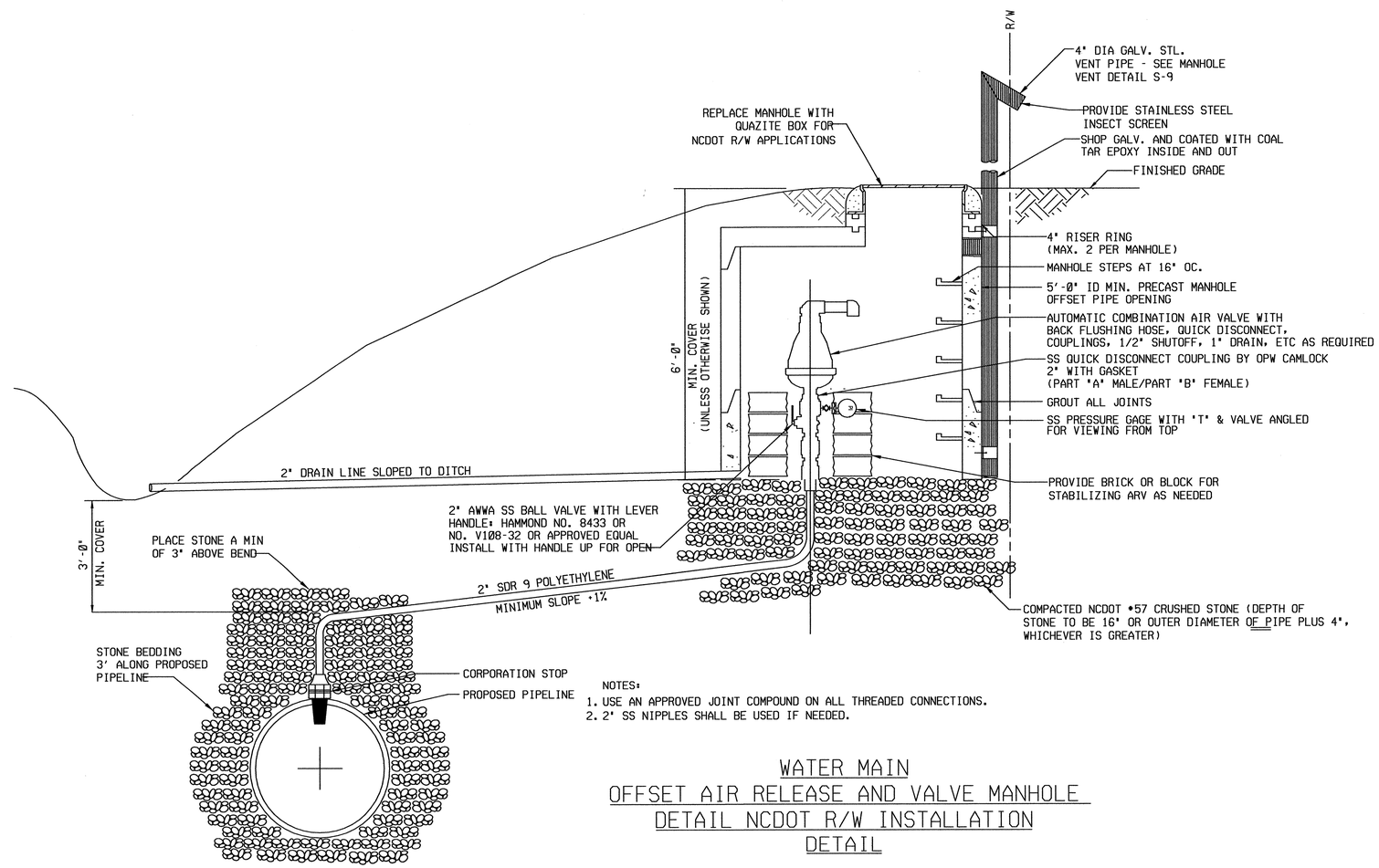

NOTES:
1. USE AN APPROVED JOINT COMPOUND ON ALL THREADED CONNECTIONS.
2. 2" SS NIPPLES SHALL BE USED IF NEEDED.

WATER MAIN
OFFSET AIR RELEASE AND VALVE MANHOLE
DETAIL NCDOT R/W INSTALLATION
DETAIL

PROJECT REFERENCE NO.	SHEET NO.
R-3324	UC-3G
DESIGNED BY: B.DIXON	
DRAWN BY: R.MOSS	
CHECKED BY: B.DIXON	
APPROVED BY:	
REVISED:	
MUNICIPAL ENGINEERING SERVICES COMPANY, PA.	
P.O. BOX 97 GARNER, NC.27529 (919)772-5393	UTILITY CONSTRUCTION PLANS ONLY

NORTH CAROLINA PROFESSIONAL SEAL 10446 ENGINEER WILLIAM HENRY DIXON

UTILITY CONSTRUCTION

NOTES:

1. LOCKED HYDRANT & LOCKED HYDRANT ADAPTER OR MUELLER 'AQUAGRIP' SYSTEM MAY BE USED IN PLACE OF RESTRAINT RODS.
2. VERTICAL MUELLER AQUA GRIP FIRE HYDRANT SHOE MAY BE USED WHERE MAIN DEPTH IS GREATER THAN 5-FEET.
3. USE SWIVEL HYDRANT TEE WITH 6" GATE VALVE DIRECTLY COUPLED TO HYDRANT TEE UNLESS OTHERWISE APPROVED BY BRUNSWICK COUNTY.
4. FIRE HYDRANT COLOR SHALL BE 'CHROME YELLOW' ENAMEL PAINT.

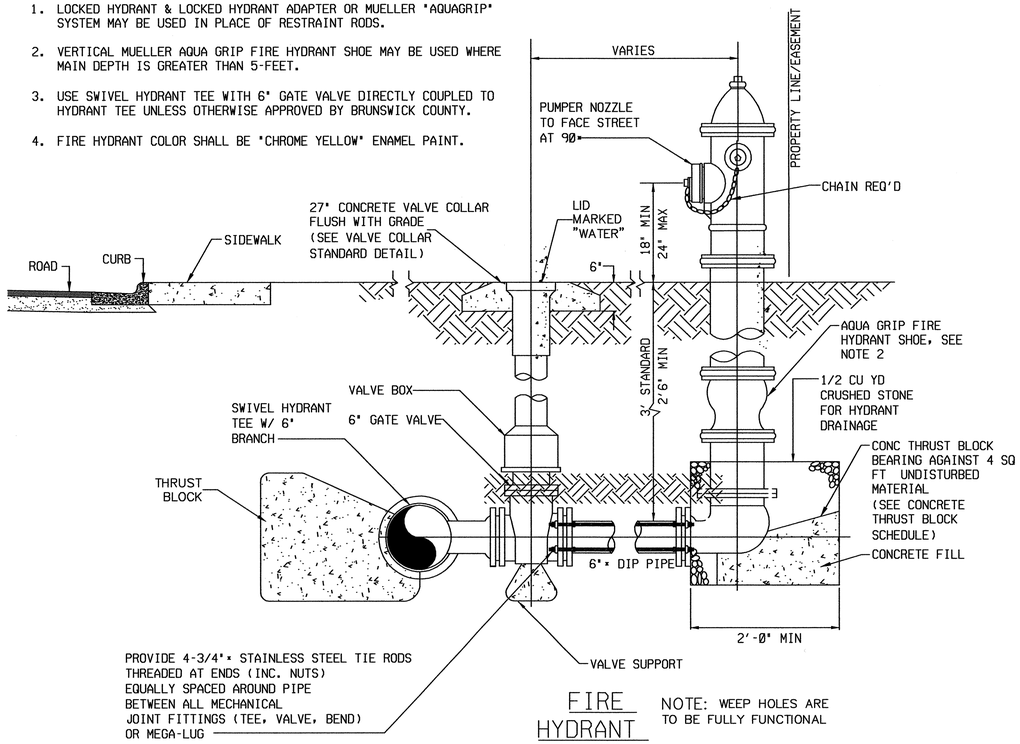

FIRE HYDRANT

NOTE: WEEP HOLES ARE TO BE FULLY FUNCTIONAL

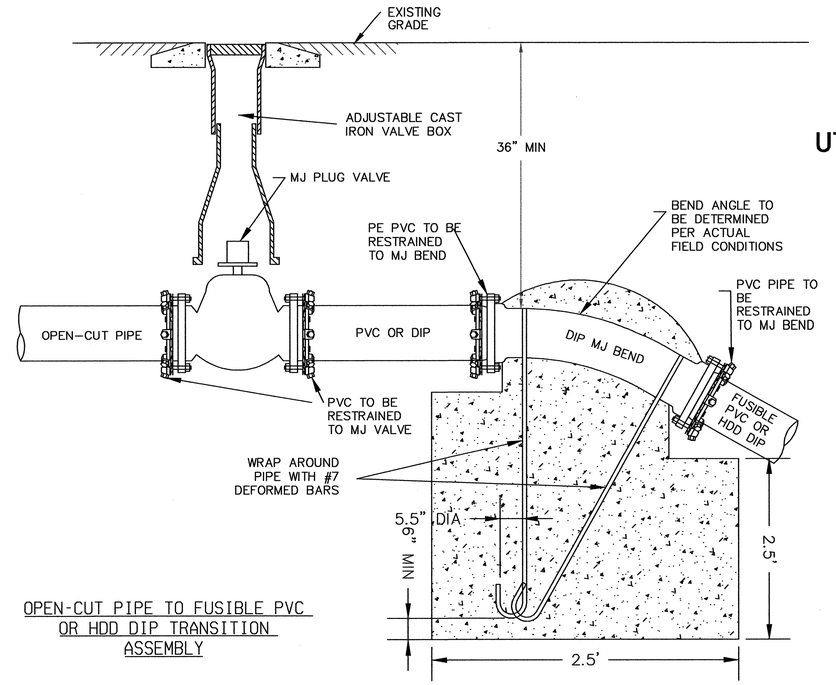

OPEN-CUT PIPE TO FUSIBLE PVC OR HDD DIP TRANSITION ASSEMBLY

NOTES:

1. VALVE MARKER TO BE INSTALLED UPRIGHT WITH THE CAST 'MV' FACING THE NEAREST STREET.
2. DIRECTION AND DISTANCE MUST BE ETCHED OR STAMPED INTO THE BRONZE INSERT.
3. ONE POST TO BE INSTALLED FOR EACH VALVE LOCATED OUTSIDE OF THE PAVEMENT.
4. VALVE MARKER TO BE INSTALLED AT THE RIGHT OF WAY.
5. NO VALVE MARKER REQUIRED FOR FIRE HYDRANT ISOLATION VALVES.
6. PAINT VALVE MARKER USING STANDARD LOCATING COLORS:
   a) WATER – BLUE
   b) SEWER – GREEN
   c) RECLAIMED – PURPLE

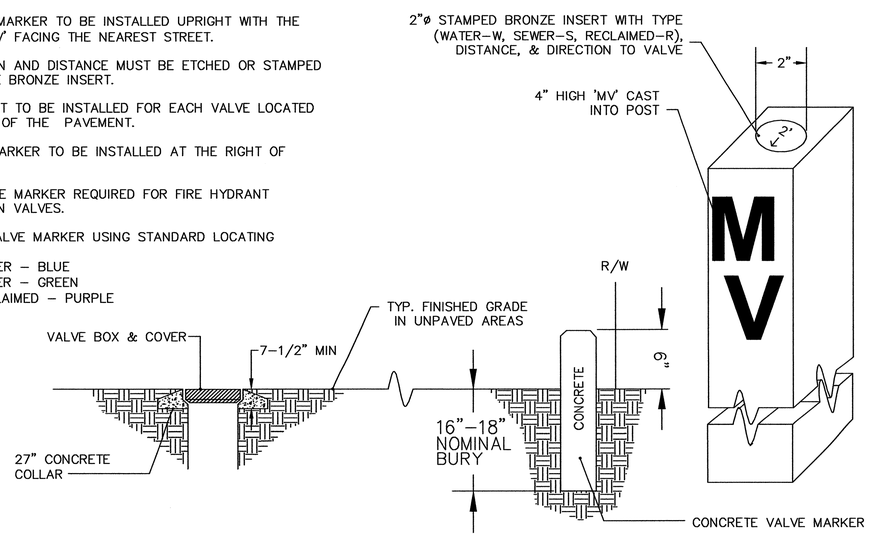

VALVE MARKER IN RIGHT OF WAY (PAVED) DETAIL

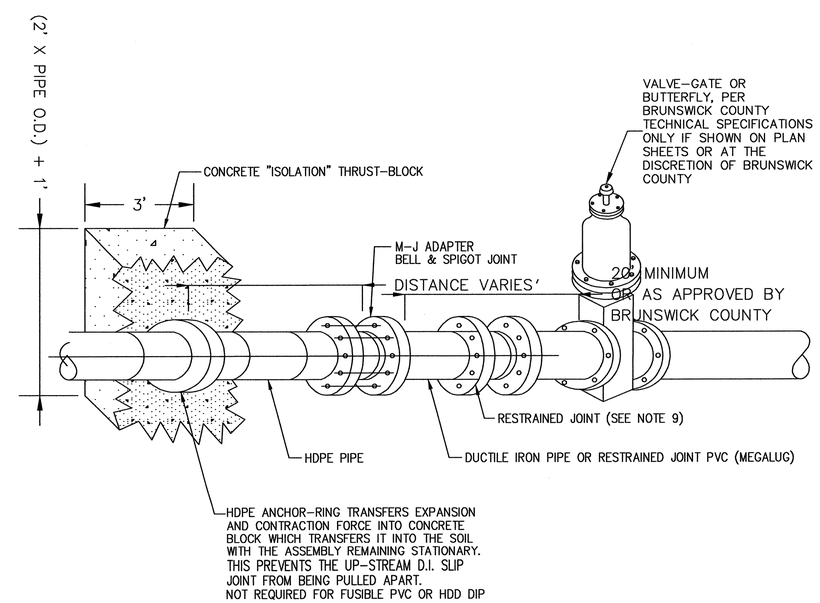

HDPE/MJ TRANSITION ASSEMBLY

PROJECT REFERENCE NO.	SHEET NO.
R-3324	UC-3H
DESIGNED BY: B.DIXON	
DRAWN BY: R.MOSS	
CHECKED BY: B.DIXON	
APPROVED BY:	
REVISED:	
MUNICIPAL ENGINEERING SERVICES COMPANY, PA.	
P.O. BOX 97 GARNER, NC.27529 (919)772-5393	UTILITY CONSTRUCTION PLANS ONLY

NORTH CAROLINA PROFESSIONAL SEAL 10446 ENGINEER WILLIAM HENRY DIXON 11/14/12

UTILITY CONSTRUCTION

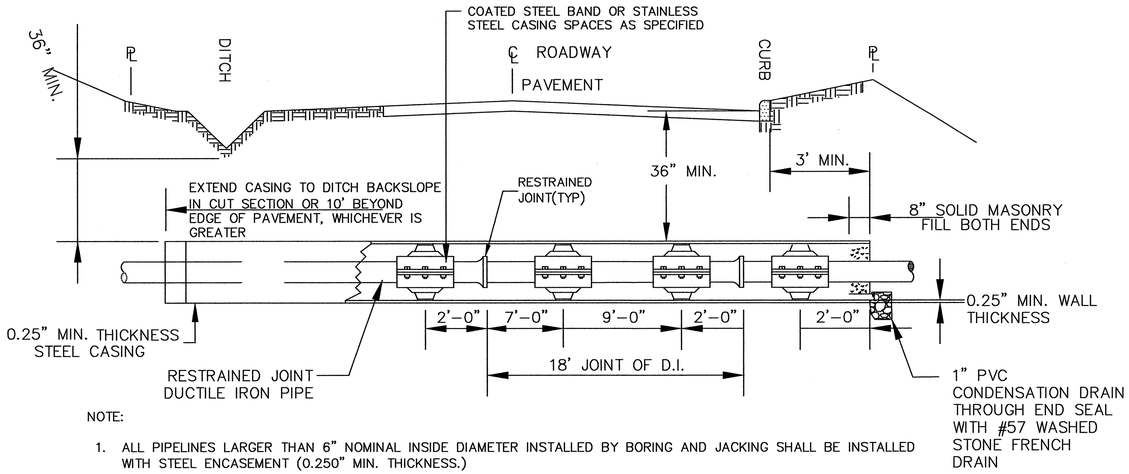

NOTE:

1. ALL PIPELINES LARGER THAN 6" NOMINAL INSIDE DIAMETER INSTALLED BY BORING AND JACKING SHALL BE INSTALLED WITH STEEL ENCASEMENT (0.250" MIN. THICKNESS.)
2. ENDS OF CASING SHALL BE SEALED USING A MODEL AC PULL-ON END SEAL GASKET, AS MANUFACTURED BY ADVANCE PRODUCT SYSTEMS, INC., OR APPROVED EQUAL IN LIEU OF MASONRY FILL.
3. STEEL CASING SHALL EXTEND A MINIMUM OF 3' BEYOND BACK OF CURB, SIDEWALK, OR PAVEMENT EDGE. FOR STREETS WITH A SHOULDER AND DITCH CROSS SECTION, CASING SHALL EXTEND TO BACK SLOPE OF DITCH IN CUT SECTIONS OR TO 10' BEYOND EDGE OF PAVEMENT, WHICHEVER IS GREATER.
4. WHEN CARRIER PIPE IS USED FOR CONVEYING LIQUID FLAMMABLE SUBSTANCES, VENT PIPES SHALL BE PROVIDED FROM ENDS OF CASING TO PROPERTY LINE.
5. CASING PIPE SECTION JOINTS SHALL BE WELDED COMPLETELY AROUND THE CIRCUMFERENCE OF EACH JOINT, NO GAPS IN WELDED BEAD ALLOWED.

JACK AND BORE FOR ROADWAYS DETAIL

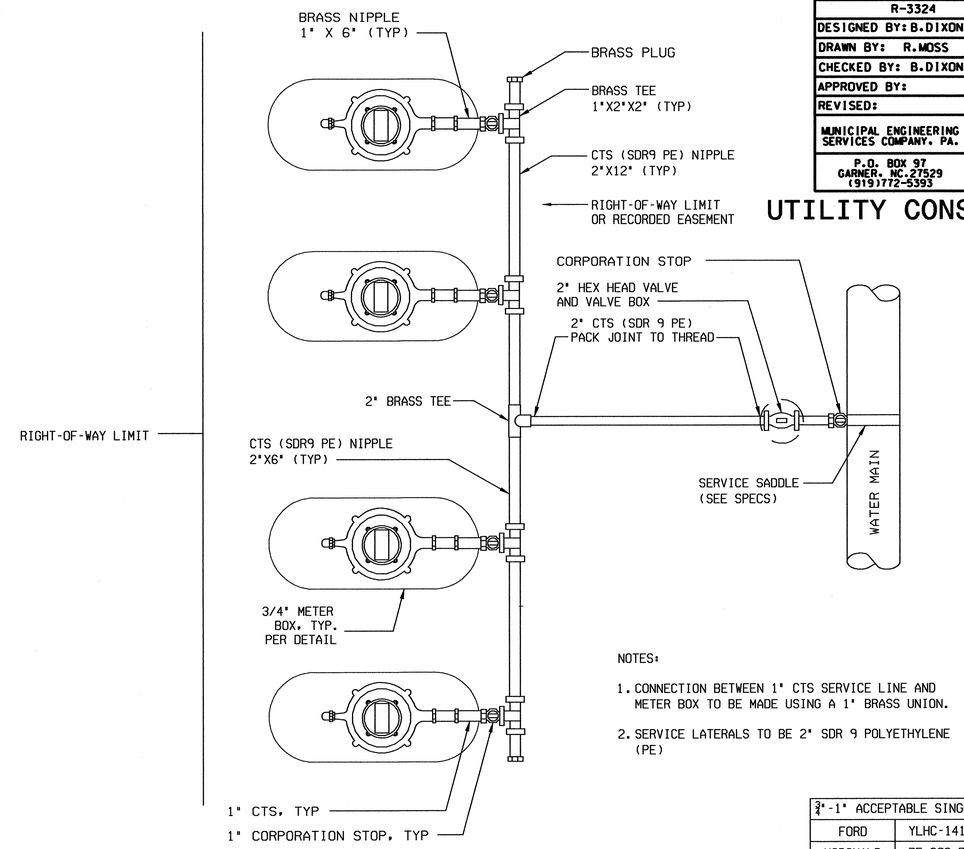

NOTES:

1. CONNECTION BETWEEN 1" CTS SERVICE LINE AND METER BOX TO BE MADE USING A 1" BRASS UNION.
2. SERVICE LATERALS TO BE 2" SDR 9 POLYETHYLENE (PE)

¾"-1" ACCEPTABLE SINGLE METER BOXES	
FORD	YLHC-141-243 TP
MCDONALD	75-208-PD2G2437
MUELLER	ECO 1554312

* OR APPROVED EQUAL-MUST ACCOMMODATE SENSUS METER

STANDARD GANG METER ASSEMBLY DETAIL

HDPE/MJ TRANSITION ASSEMBLY NOTES:

1. AN AS-BUILT PLAN AND PROFILE SHALL BE PROVIDED FROM ENTRY TO EXIT FOR EACH DIRECTIONAL BORE SECTION BY THE DIRECTIONAL BORE CONTRACTOR. THIS SHALL INCLUDE ACCURATE HORIZONTAL AND VERTICAL DIMENSIONS AND SHALL MEET OR EXCEED NCDOT VERTICAL REQUIREMENTS FROM HDD PIPE TO EDGE OF PAVEMENT.
2. ALL BORE SECTIONS SHALL BE HYDROSTATICALLY TESTED PER COUNTY STANDARDS AFTER INSTALLATION, AND PRIOR TO CONNECTION TO THE OPEN CUT WATER/SEWER LINE. A FINAL TEST WILL BE A PART OF THE TOTAL MAIN LINE SYSTEM TEST.
3. LENGTH OF CROSSING, LOCATION OF INSPECTION/OBSERVATION EXCAVATION, NUMBER OF HDD PIPE JOINTS, LOCATION OF DRILL MACHINE, AUGER ENTRANCE LOCATION AND TIE-IN POINTS ARE TO BE APPROVED BY COUNTY PRIOR TO ANY START OF WORK.
4. ON CONVENTIONAL HIGHWAYS, AS A MINIMUM, THE HDD PIPE SHALL EXTEND TO THE SHOULDER BREAK OR 10 FEET BEYOND THE EDGE OF PAVEMENT ON FILL SLOPES, WHICHEVER IS GREATER; 3 FEET BEYOND THE DITCH LINE IN CUTS; AND ON CURBED SECTIONS TO THE BACK OF THE SIDEWALK AREA. ON FREEWAYS, EXPRESSWAYS, AND OTHER CONTROLLED ACCESS HIGHWAYS, THE HDD PIPE WILL BE REQUIRED TO EXTEND TO THE ACCESS CONTROL LINES, TO THE OUTSIDE OF FRONTAGE ROADS, OR A SUFFICIENT DISTANCE TO ALLOW FOR FUTURE HIGHWAY IMPROVEMENTS, OR AS REQUIRED BY THE NCDOT ENCROACHMENT AGREEMENT.
5. THE BORE DEVELOPED FOR THE DIRECTIONALLY DRILLED PIPE SHALL BE KEPT AT A MINIMUM DIAMETER FOR THE PIPE INSTALLATION. THE AUGER HEAD SIZE SHALL BE APPROVED BY THE COUNTY PRIOR TO THE START OF WORK.
6. HORIZONTAL DIRECTIONAL DRILL OF NCDOT STATE ROADS TO BE APPROVED BY NCDOT PRIOR TO CONSTRUCTION. PIPE MATERIAL AND THICKNESS MAY VARY.
7. THE CONTRACTOR SHALL ALLOW SUFFICIENT LENGTHS OF PIPE TO EXTEND PAST THE TERMINATION POINT TO ALLOW FOR CONTRACTION. PULLED HDD PIPE SHALL BE ALLOWED TO RELAX 7 DAYS OR THE AMOUNT OF TIME RECOMMENDED BY THE MANUFACTURER PRIOR TO MAKING CONNECTIONS.
8. FUSIBLE PVC HAS BEEN APPROVED FOR USE WITHIN NCDOT RIGHT-OF-WAYS.
9. MINIMUM OF (3) RESTRAINED JOINTS ARE REQUIRED UPSTREAM AND DOWNSTREAM OF DIP/HDPE/FUSIBLE PVC MJ ADAPTER ON EACH END OF THE HORIZONTAL DIRECTIONALLY DRILLED PIPE UNLESS OTHERWISE APPROVED BY BRUNSWICK COUNTY.

HDPE DIAMETER CONVERSION TABLE	
NOMINAL OPEN CUT PIPE SIZE (INCHES)	NOMINAL HDPE DR9 HDD PIPE SIZE (INCHES)
3	3
4	6
6	8
8	10
10	12
12	16
14	18
16	20
18	24
20	24
24	30
30	36

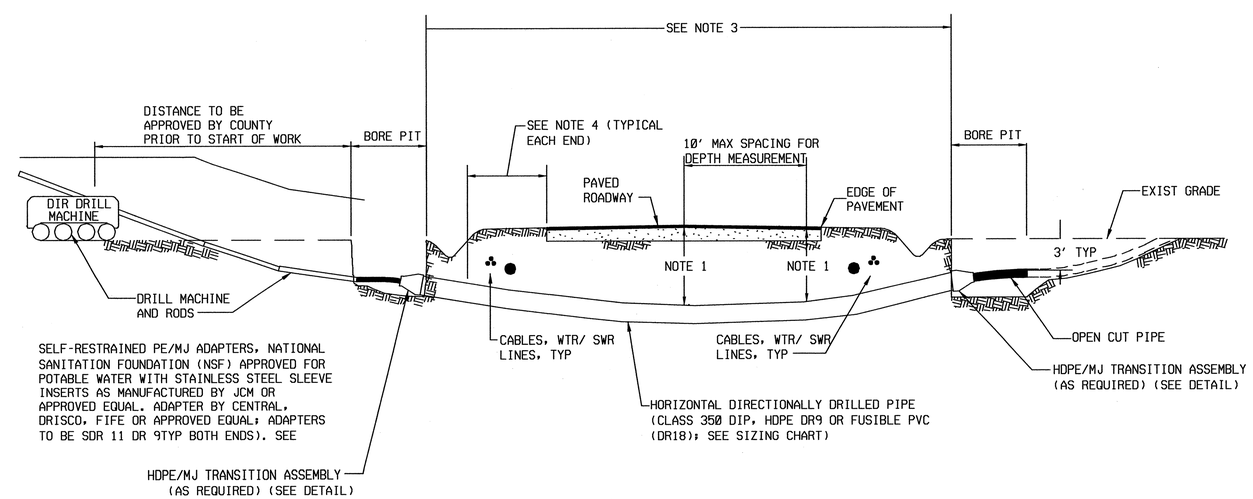

HDPE/MJ TRANSITION ASSEMBLY

PROJECT REFERENCE NO.	SHEET NO.
R-3324	UC-31
DESIGNED BY: B.DIXON	
DRAWN BY: R.MOSS	
CHECKED BY: B.DIXON	
APPROVED BY:	
REVISED:	
MUNICIPAL ENGINEERING SERVICES COMPANY, PA.	
P.O. BOX 97 GARNER, NC.27529 (919)772-5393	UTILITY CONSTRUCTION PLANS ONLY

NORTH CAROLINA PROFESSIONAL SEAL 10416 ENGINEER WILLIAM HENRY DIXON

UTILITY CONSTRUCTION

NOTES:

1. THIS DETAIL IS A GENERAL SCHEMATIC SHOWING ISOLATION VALVE LOCATIONS AND AIR RELEASE VALVES.
2. FINAL LOCATION OF PIPE APPURTENANCES SHALL BE COORDINATED WITH BRUNSWICK COUNTY ALONG WITH PIPE MATERIAL AND METHOD OF CONSTRUCTION.

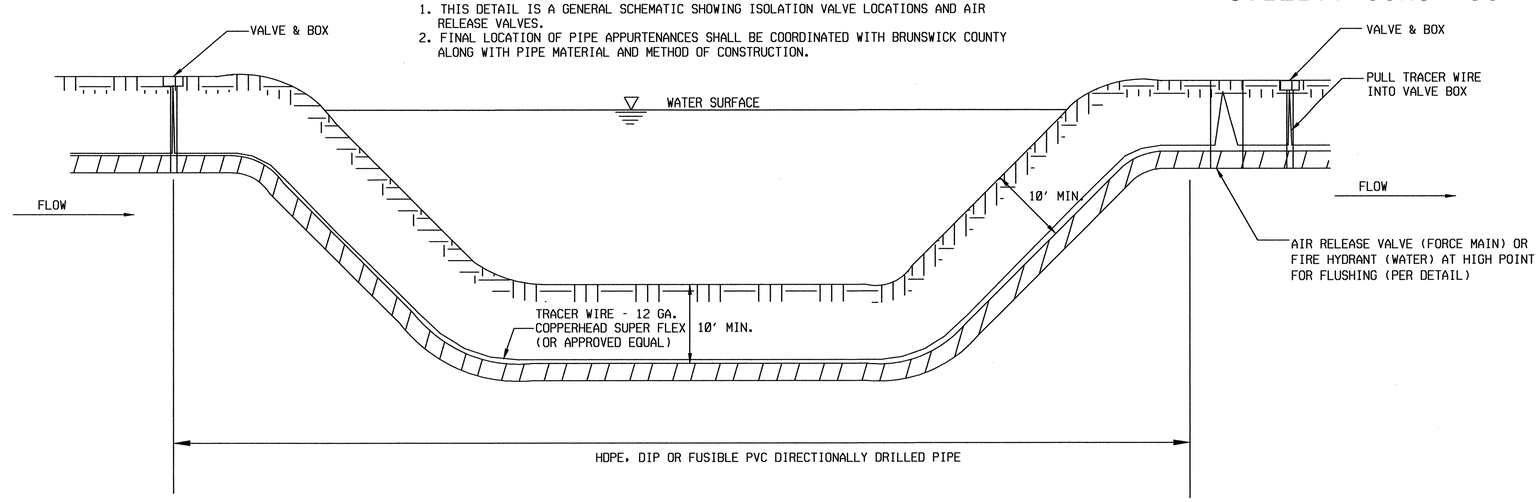

VALVE LOCATIONS FOR DIRECTIONAL DRILL OF PIPE UNDER WETLANDS/WATER BODY DETAIL

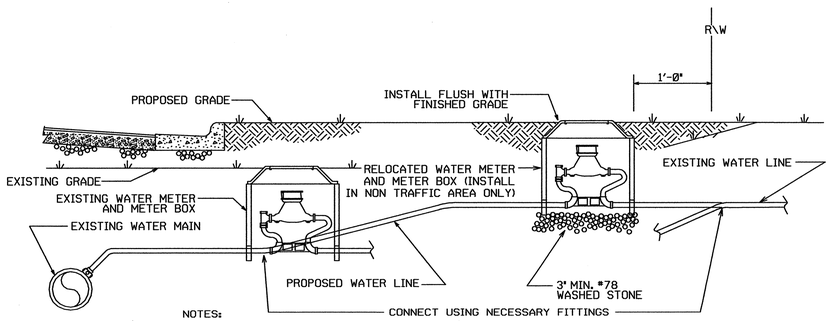

NOTES:

1. RELOCATION SHALL INCLUDE THE REMOVAL AND INSTALLATION AT THE APPROPRIATE LOCATION OF THE WATER METER, METER SETTER AND YOKE, METER VALVES, AND METER BOX WITH LID.
2. THE NEW WATER SERVICE LINE SHALL BE OF THE SAME TYPE AND GRADE AS THE EXISTING WATER SERVICE LINE UNLESS OTHERWISE SHOWN ON THE PLANS OR DIRECTED BY THE ENGINEER.
3. THE NEW WATER SERVICE LINE SHALL BE INSTALLED WITH A MINIMUM OF 36" COVER BELOW FINISHED GRADE.

WATER METER RELOCATION DETAIL

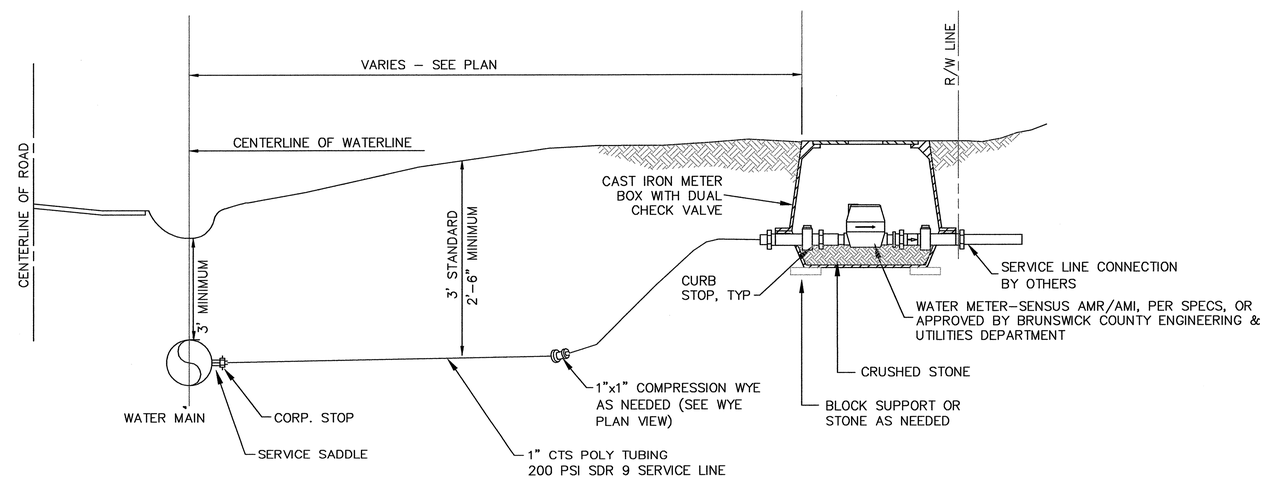

3/4" - 2" STANDARD WATER TAP INSTALLATION DETAIL

NOTE:

1) CONTRACTOR SHALL PLACE METER BOX IN NON-TRAFFIC AREA AT LOCATION SPECIFIED BY BRUNSWICK COUNTY ENGINEERING DEPARTMENT.
2) METERS SHALL BE SET BY BRUNSWICK COUNTY.
3) METER BOXES SHALL BE CAST IRON WITH DUAL CHECK VALVES.
4) 1 1/2" AND 2" METERS WILL REQUIRE 2" CTS POLY TUBING.
5) 1 1/2" AND 2" METERS WILL REQUIRE A METER BOX SIZED ADEQUATELY TO HOUSE A 1 1/2" OR 2" SENSUS METER.

PROJECT REFERENCE NO.	SHEET NO.
R-3324	UC-3J
DESIGNED BY: B.DIXON	
DRAWN BY: R.MOSS	
CHECKED BY: B.DIXON	
APPROVED BY:	
REVISED:	
MUNICIPAL ENGINEERING SERVICES COMPANY, PA.	
P.O. BOX 97 GARNER, NC.27529 (919)772-5393	UTILITY CONSTRUCTION PLANS ONLY

NORTH CAROLINA PROFESSIONAL SEAL 10446 ENGINEER WILLIAM HENRY DIXON

UTILITY CONSTRUCTION

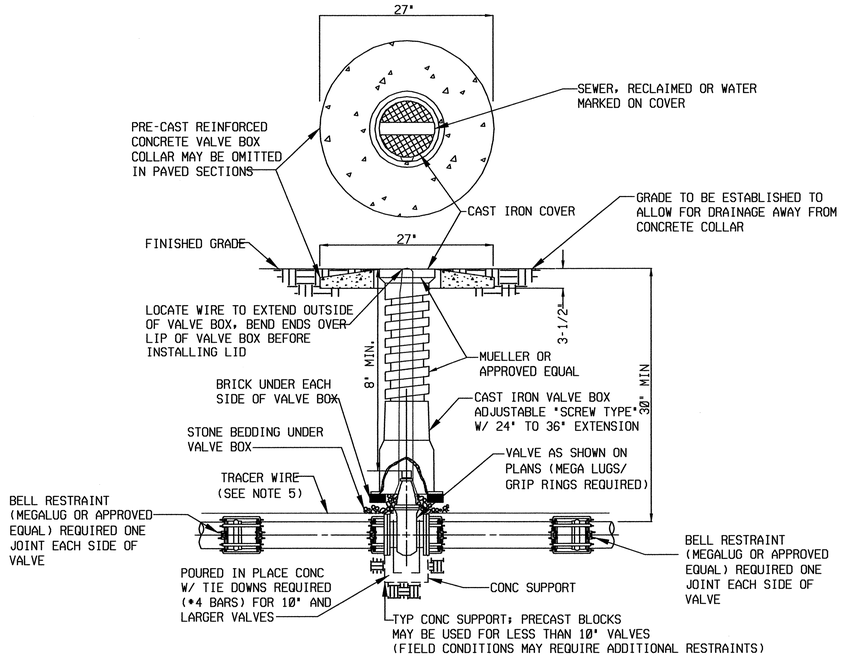

NOTES:

1. TOP OF VALVE BOX AND COLLAR SHALL BE PAINTED GREEN FOR SEWER FM, PURPLE FOR RECLAIMED WATER, AND BLUE FOR WATER.
2. EXTENSION STEM WILL BE REQUIRED TO BE WITHIN 2 FEET OF THE SURFACE IF OPERATING NUT WOULD OTHERWISE BE OVER 5 FEET BELOW GRADE. EXTENSIONS SHALL BE PERMANENTLY ATTACHED TO VALVE NUT AND SHALL BE PROVIDED WITH HORIZONTAL SPACERS FOR VERTICAL ALIGNMENT WITHIN THE VALVE BOX.
3. MINIMUM CLEARANCE TO EXTENSION IS 8".
4. WIRE COLORS REQUIRED: SEWER-GREEN/WATER-BLUE/RECLAIMED WATER-PURPLE OR GREEN WITH PURPLE STRIPE
5. 12 GA. COPPERHEAD SUPER FLEX TRACER WIRE OR APPROVED EQUAL.

VALVE BOX DETAIL

	PIPE SIZE (NOMINAL DIAMETER IN INCHES)							
		6	8	10	12	16	24	
"A" DIMEN. IN FEET		1.2	1.6	2.0	2.4	2.8	4.5	

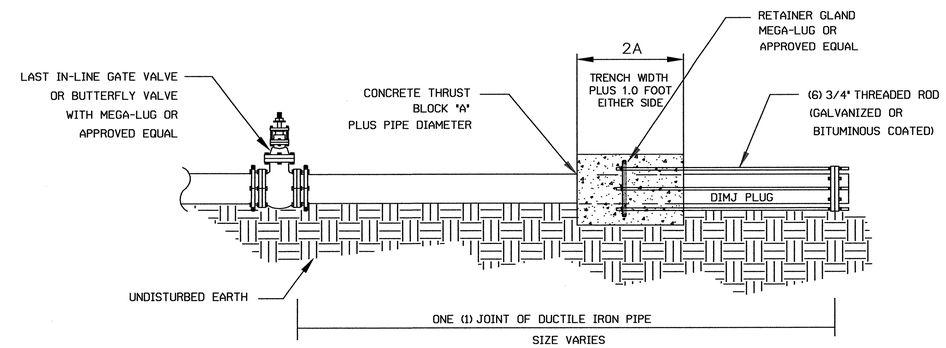

1. ALL FITTINGS MUST BE RESTRAINED WITH RETAINER GLAND, MEGA-LUG THRUST BLOCKS OR AN APPROVED EQUAL.
2. DIMENSION TABLE GIVEN IS A GUIDE ONLY. ENGINEER SHALL BE RESPONSIBLE TO CALCULATE THRUST BLOCK DIMENSIONS BASED ON ACTUAL SOIL AND OPERATING
3. FITTING JOINTS SHALL BE KEPT FREE OF CONCRETE. A LAYER OF POLYETHYLINE PLASTIC SHALL BE PLACED BETWEEN THE FITTING AND THE CONCRETE.

END OF LINE PLUG

PROJECT REFERENCE NO.	SHEET NO.
R-3324	UC-4
DESIGNED BY: B.DIXON	
DRAWN BY: R.MOSS	
CHECKED BY: B.DIXON	
APPROVED BY:	
REVISED:	
MUNICIPAL ENGINEERING SERVICES COMPANY, PA.	
P.O. BOX 97 GARNER, NC.27529 (919)772-5393	UTILITY CONSTRUCTION PLANS ONLY

NORTH CAROLINA SEAL 10436 ENGINEER WILLIAM HENRY DIXON

UTILITY CONSTRUCTION

ALL SEWER LINES ON THIS PROJECT ARE OWNED BY SOUTHEAST BRUNSWICK SANITARY DISTRICT. ALL FORCEMAINS ON THIS PROJECT ARE OWNED BY THE CITY OF SOUTHPORT, NC. ALL WATER LINES ON THIS PROJECT ARE OWNED BY BRUNSWICK COUNTY PUBLIC UTILITIES. THE CONTRACTOR WILL BE REQUIRED TO LIMIT INTERRUPTION OF SERVICE TO WATER AND SEWER TO A ONE TIME MAXIMUM 4 HOURS PERIOD FOR EACH.

ALL WATER LINES SHALL BE DUCTILE IRON CLASS 350 UNLESS OTHERWISE INDICATED.

ALL WATER MAIN VALVES 12" OR SMALLER SHALL BE GATE VALVES. WATER MAIN VALVES OVER 12" SHALL BE BUTTERFLY VALVES.

WHEN CROSSING WATERLINES UNDER PROPOSED AND/OR EXISTING DITCHES INSURE THAT WATERLINE WILL HAVE 4' COVER FROM FINISHED GRADE.

WHEN RESTRAINED JOINT PIPING IS CALLED FOR IT SHALL BE USED IN ADDITION TO THRUST BLOCKING.

SEE SHEET UC-18 FOR INFO CONCERNING ALL LINES TO BE ABANDONED.

ALL SEWER FORCE MAIN VALVES SHALL BE PLUG VALVES

THE CONTRACTOR SHALL USE PVC, C-900 DR-18 FOR THE 8" GRAVITY SEWER LINES. SEWER FORCEMAIN SHALL BE DUCTILE IRON.

THE CONTRACTOR SHALL PROVIDE ALL NECESSARY FITTINGS TO MAKE CONNECTIONS TO ALL EXISTING WATER AND SEWER LINES.

TOP ELEVATIONS OF MANHOLES IN FLOOD PLAIN AREAS SHALL BE AT LEAST 1' ABOVE 100 YEAR FLOOD ELEVATION OF 13.4' MSL.

NOTE 1-A
CONTACTOR SHALL VERIFY EXISTING PIPE SIZE AND PROVIDE APPROPRIATE SIZED SLEEVE TO MAKE PROPER CONNECTION TO EXISTING LINE.

DO NOT STOP FLOW IN EXISTING 12-INCH, 16-INCH AND 24-INCH WATERLINES.

NOTE:
THE CONTRACTOR'S ATTENTION IS DIRECTED TO SECTION 1550, 102 AND 107 OF THE STANDARD SPECIFICATIONS CONCERNING THE TRENCH LESS INSTALLATION. NO DAMAGE IS ALLOWED TO THE WETLANDS OR STREAM BY TRENCH LESS INSTALLATION. THE CONTRACTOR'S ENGINEER SHALL DESIGN THE METHOD AND PROVIDE ON-SITE OVERSIGHT.

NOTE:
SUBAQUEOUS LINES (TRENCH LESS) MUST BE REPLACED AT A DEPTH OF SEVEN FEET (7') MINIMUM BELOW THE LOWEST DEPTH OF CREEK AND THREE FEET (3') MINIMUM BELOW THE WET LAND AND IN OTHER AREAS.

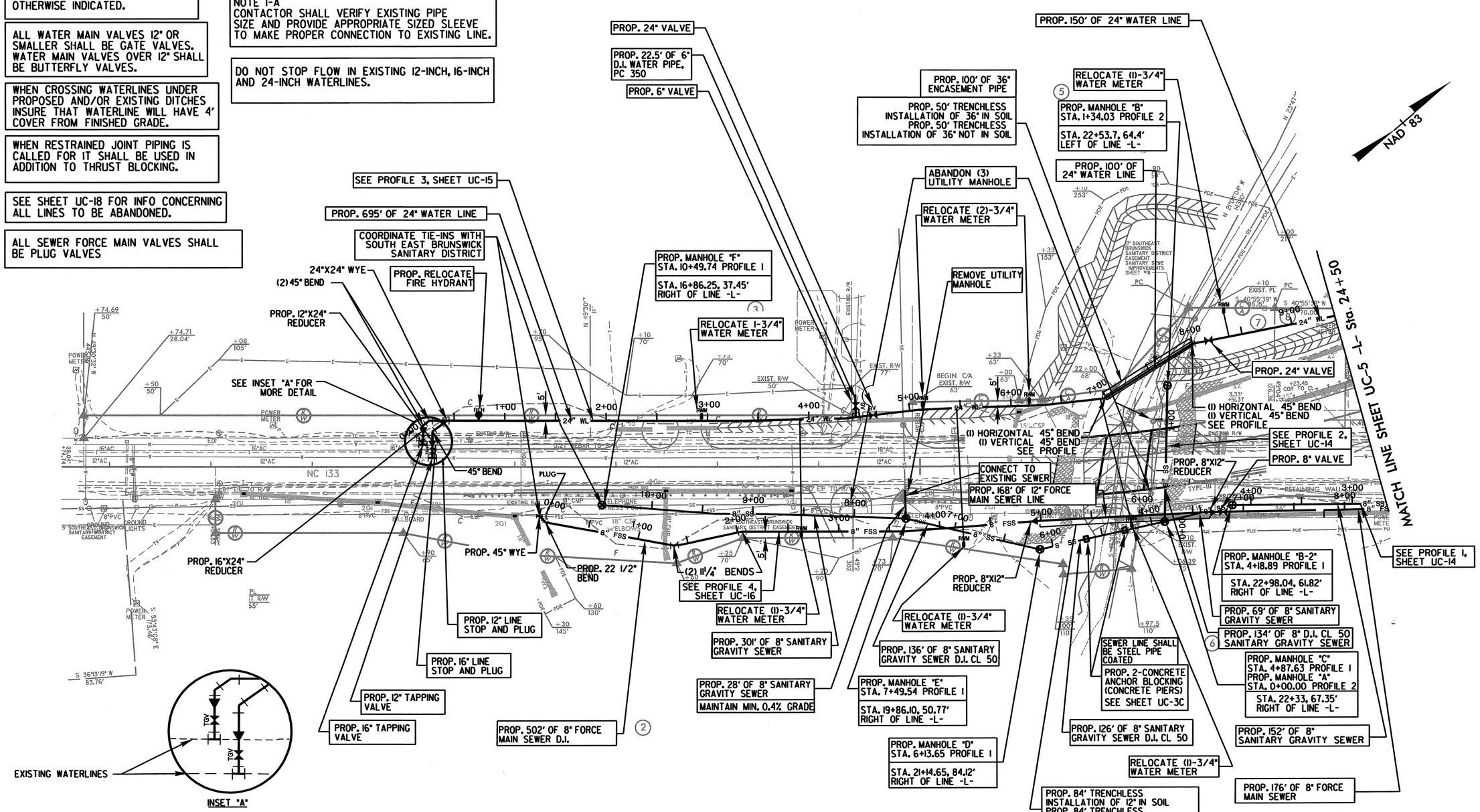

NOTE 1:
6" WATER LINE BEGINS ON STATION 8+52.53 OF 6" FORCE MAIN SEWER. INSTALL WITH AT LEAST 18" OF VERTICAL CLEARANCE. SEE PROFILE AND INSET D FOR EXAMPLE.

SEE SHEET UC-19 FOR INFO CONCERNING ALL LINES TO BE ABANDONED.

DUE TO CLOSE PROXIMITY OF PROPOSED TIE-IN POINTS OF 6" AND 8" LINES, ALIGNMENT IS STATIONED AS A CONTINUOUS LINE. REFER TO INSET B FOR TIE-IN DETAILS.

PROJECT REFERENCE NO.	SHEET NO.
R-3324	UC-5
DESIGNED BY: B.DIXON	
DRAWN BY: R.MOSS	
CHECKED BY: B.DIXON	
APPROVED BY:	
REVISED:	
MUNICIPAL ENGINEERING SERVICES COMPANY, PA.	
P.O. BOX 97 GARNER, NC 27529 (919)772-5393	UTILITY CONSTRUCTION PLANS ONLY

NORTH CAROLINA PROFESSIONAL SEAL 10446 ENGINEER WILLIAM HENRY DIXON

UTILITY CONSTRUCTION

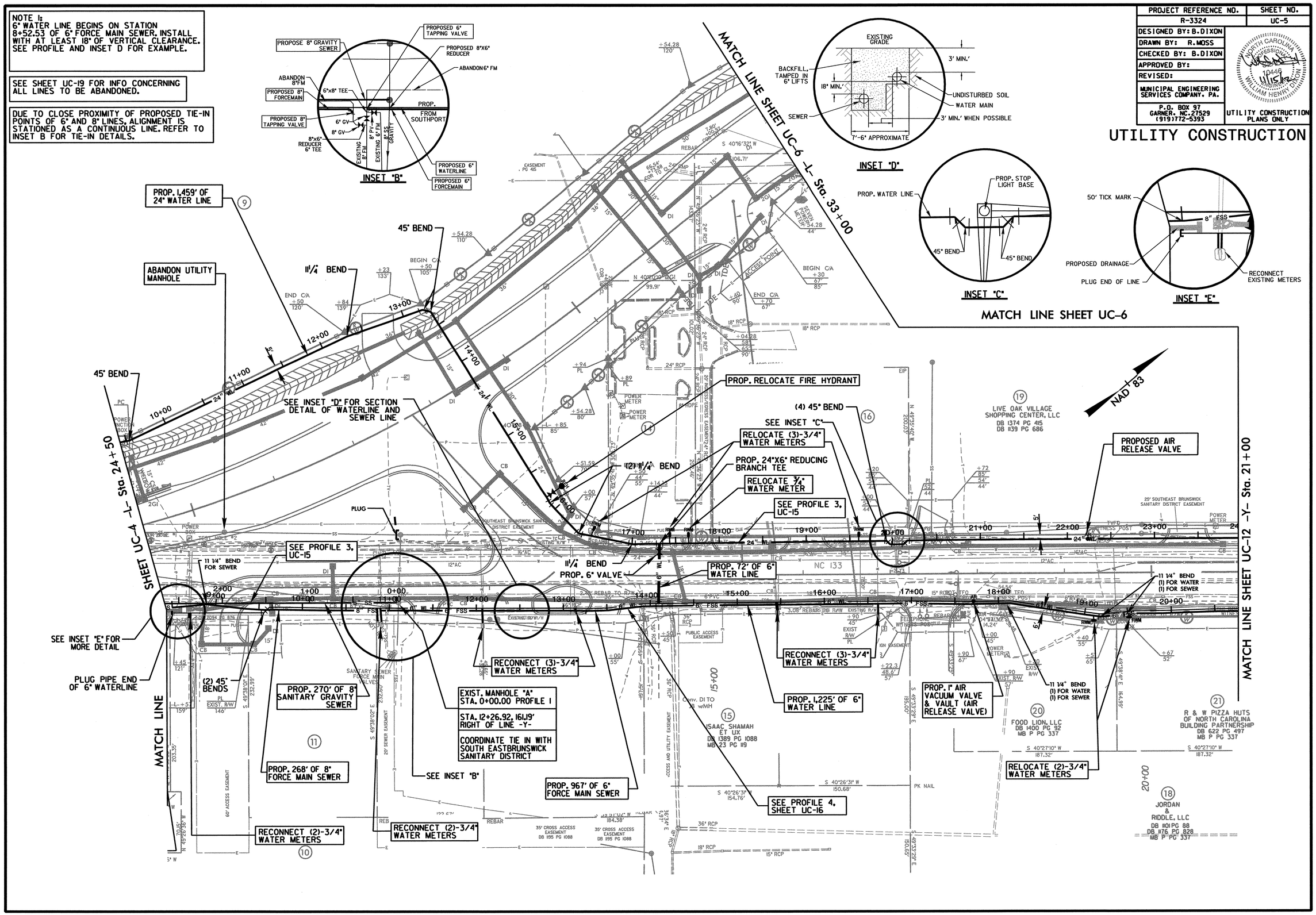

...\r3324_UC_05.dgn 11/14/2012 4:08:45 PM

PROJECT REFERENCE NO.	SHEET NO.
R-3324	UC-6
DESIGNED BY: B.DIXON	
DRAWN BY: R.MOSS	
CHECKED BY: B.DIXON	
APPROVED BY:	
REVISED:	
MUNICIPAL ENGINEERING SERVICES COMPANY, PA.	NORTH CAROLINA PROFESSIONAL ENGINEER SEAL 10446 11/15/12 WILLIAM HENRY DIXON
P.O. BOX 97 GARNER, NC 27529 (919)772-5393	UTILITY CONSTRUCTION PLANS ONLY

UTILITY CONSTRUCTION

NOTE 1-A
CONTACTOR SHALL VERIFY EXISTING PIPE SIZE AND PROVIDE APPROPRIATE SIZED SLEEVE TO MAKE PROPER CONNECTION TO EXISTING LINE.

SEE SHEET UC-20 FOR INFO CONCERNING ALL LINES TO BE ABANDONED.

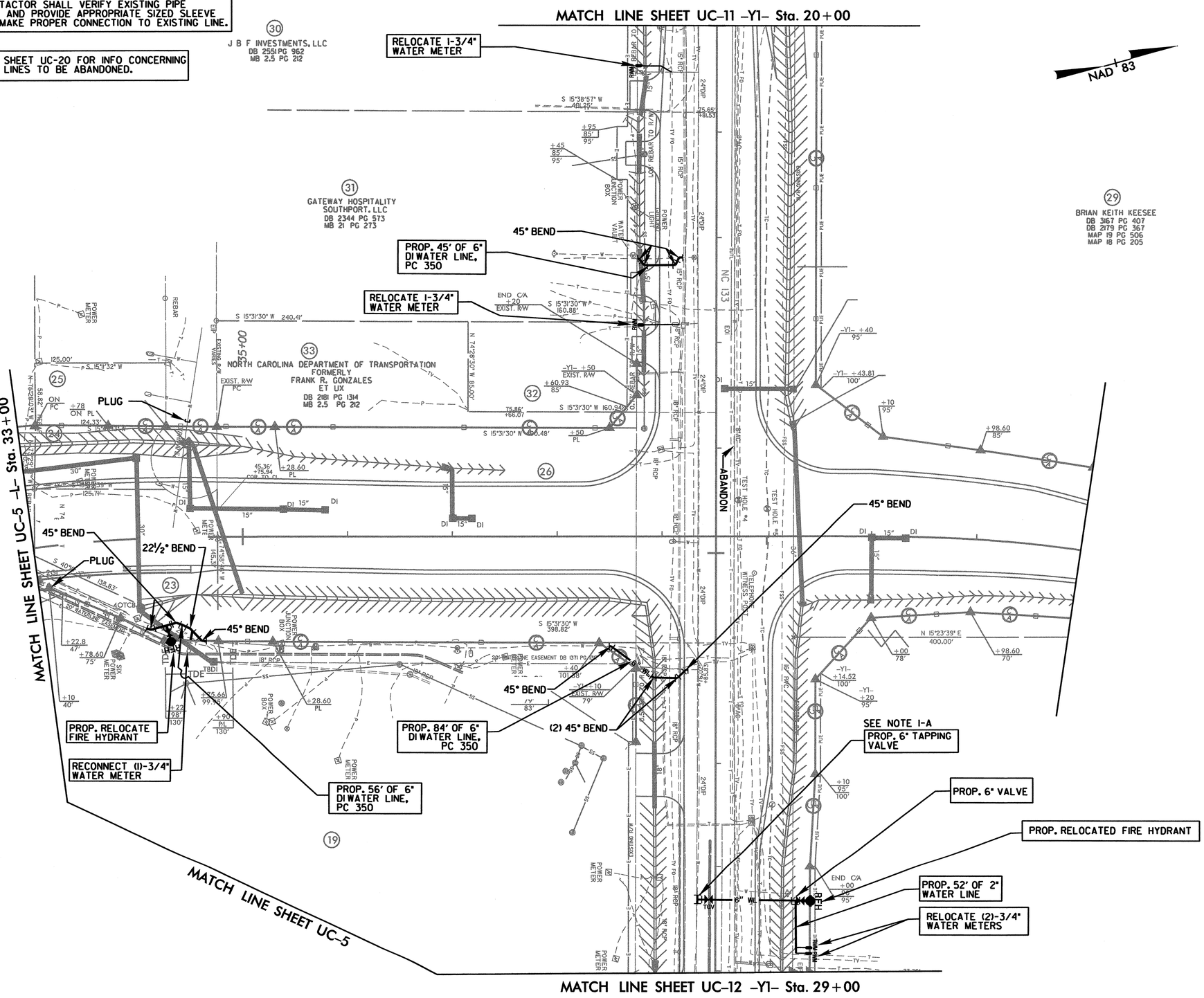

...\r3324_UC_06.dgn 11/14/2012 4:11:19 PM

PROJECT REFERENCE NO.	SHEET NO.
R-3324	UC-7
DESIGNED BY: B. DIXON	
DRAWN BY: R. MOSS	
CHECKED BY: B. DIXON	
APPROVED BY:	
REVISED:	
MUNICIPAL ENGINEERING SERVICES COMPANY, PA.	
P.O. BOX 97 GARNER, NC 27529 (919) 772-5393	UTILITY CONSTRUCTION PLANS ONLY

NORTH CAROLINA PROFESSIONAL SEAL 04416 ENGINEER WILLIAM HENRY DIXON

UTILITY CONSTRUCTION

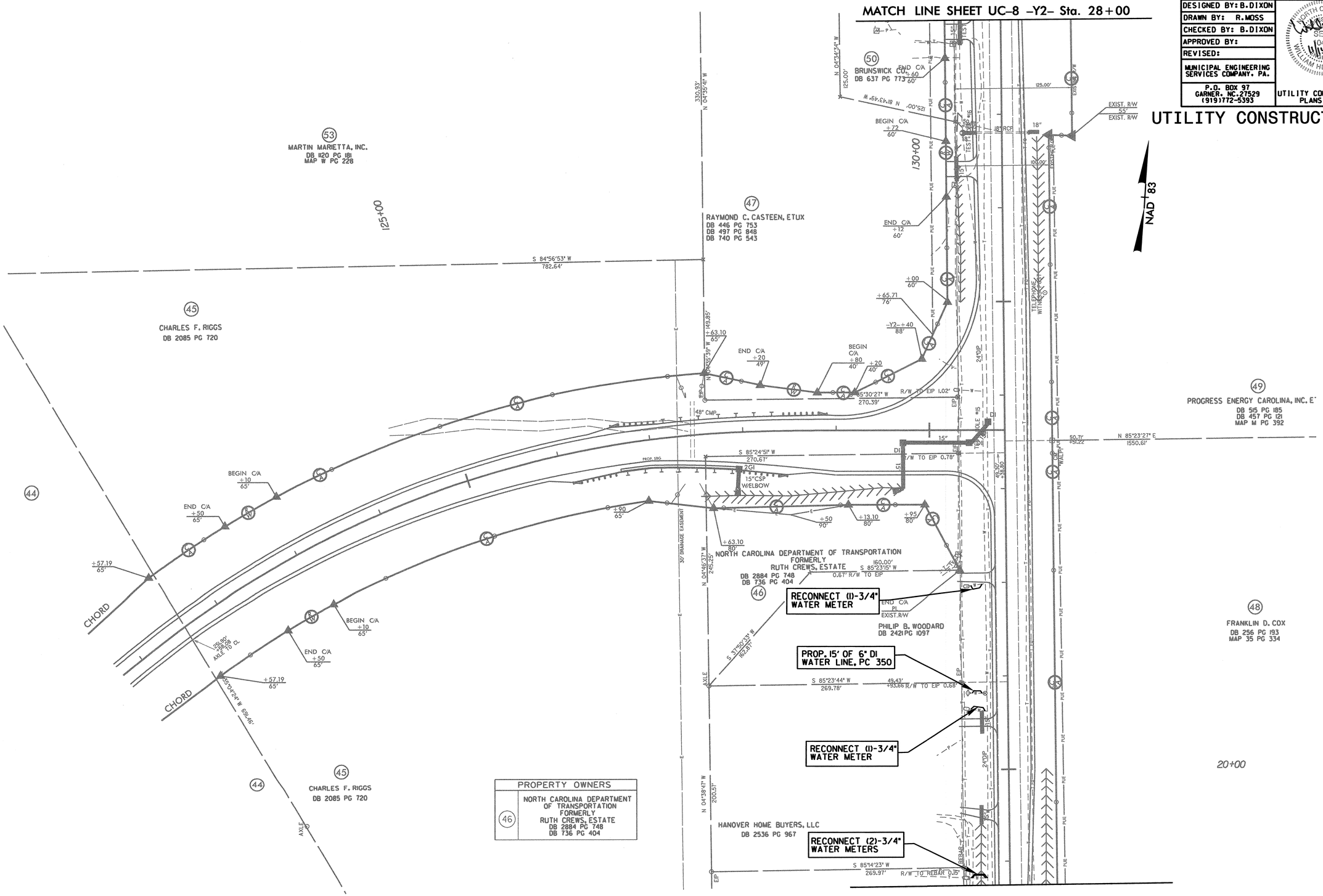

...\r3324_UC_07.dgn 11/14/2012 4:20:08 PM

PROJECT REFERENCE NO.	SHEET NO.
R-3324	UC-8
DESIGNED BY: B.DIXON	
DRAWN BY: R.MOSS	
CHECKED BY: B.DIXON	
APPROVED BY:	
REVISED:	
MUNICIPAL ENGINEERING SERVICES COMPANY, PA.	
P.O. BOX 97 GARNER, NC.27529 (919)772-5393	UTILITY CONSTRUCTION PLANS ONLY

NORTH CAROLINA PROFESSIONAL SEAL 10446 ENGINEER WILLIAM HENRY DIXON

UTILITY CONSTRUCTION

NOTE I-A
CONTACTOR SHALL VERIFY EXISTING PIPE SIZE AND PROVIDE APPROPRIATE SIZED SLEEVE TO MAKE PROPER CONNECTION TO EXISTING LINE.

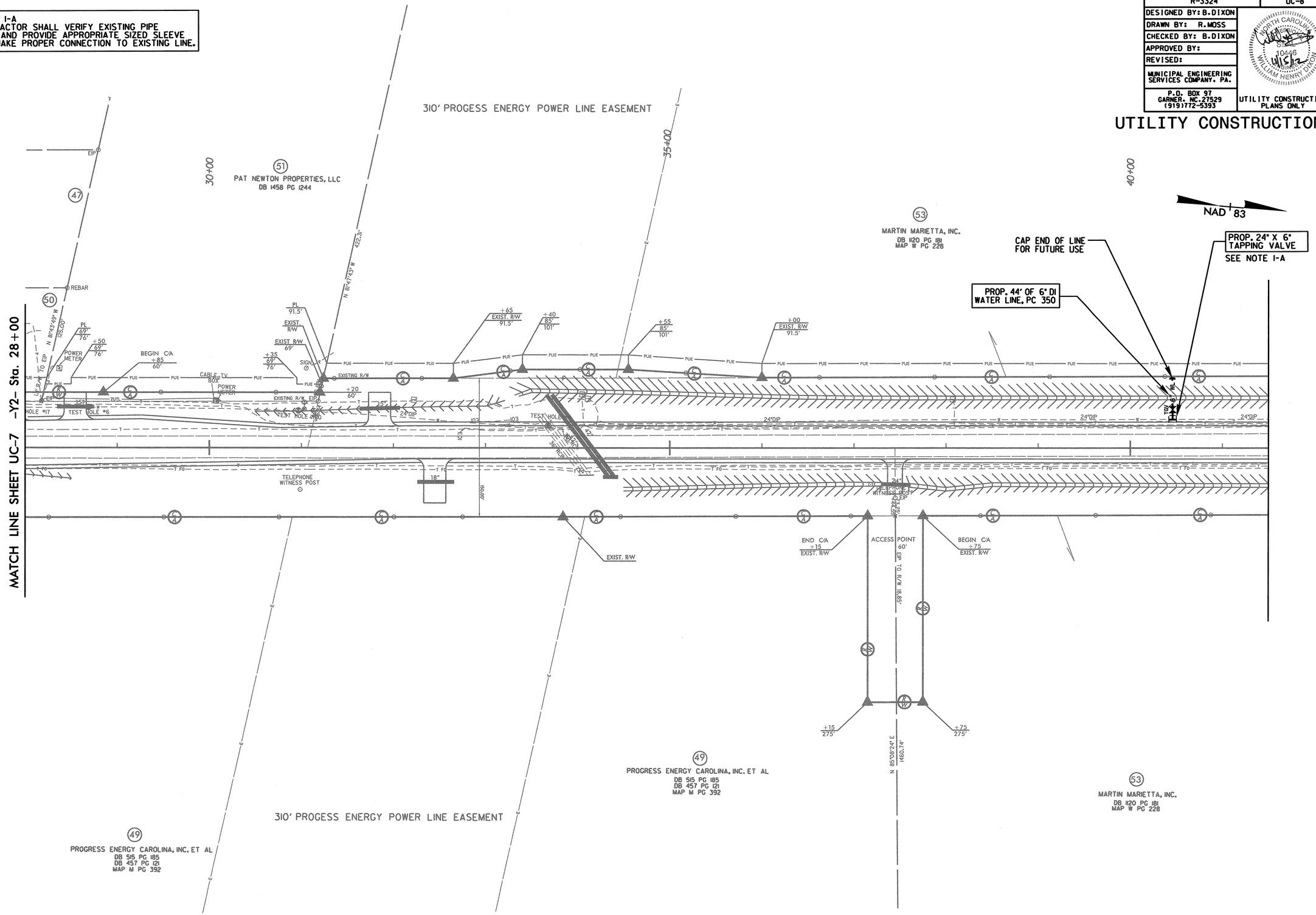

...\r3324_UC_08.dgn 11/14/2012 4:20:56 PM

PROJECT REFERENCE NO.	SHEET NO.
R-3324	UC-9
DESIGNED BY: B.DIXON	
DRAWN BY: R.MOSS	
CHECKED BY: B.DIXON	
APPROVED BY:	
REVISED:	
MUNICIPAL ENGINEERING SERVICES COMPANY, PA.	
P.O. BOX 97 GARNER, NC.27529 (919)772-5393	UTILITY CONSTRUCTION PLANS ONLY

NORTH CAROLINA PROFESSIONAL SEAL 16446 ENGINEER WILLIAM HENRY DIXON

UTILITY CONSTRUCTION

NOTE I-A
CONTACTOR SHALL VERIFY EXISTING PIPE SIZE AND PROVIDE APPROPRIATE SIZED SLEEVE TO MAKE PROPER CONNECTION TO EXISTING LINE.

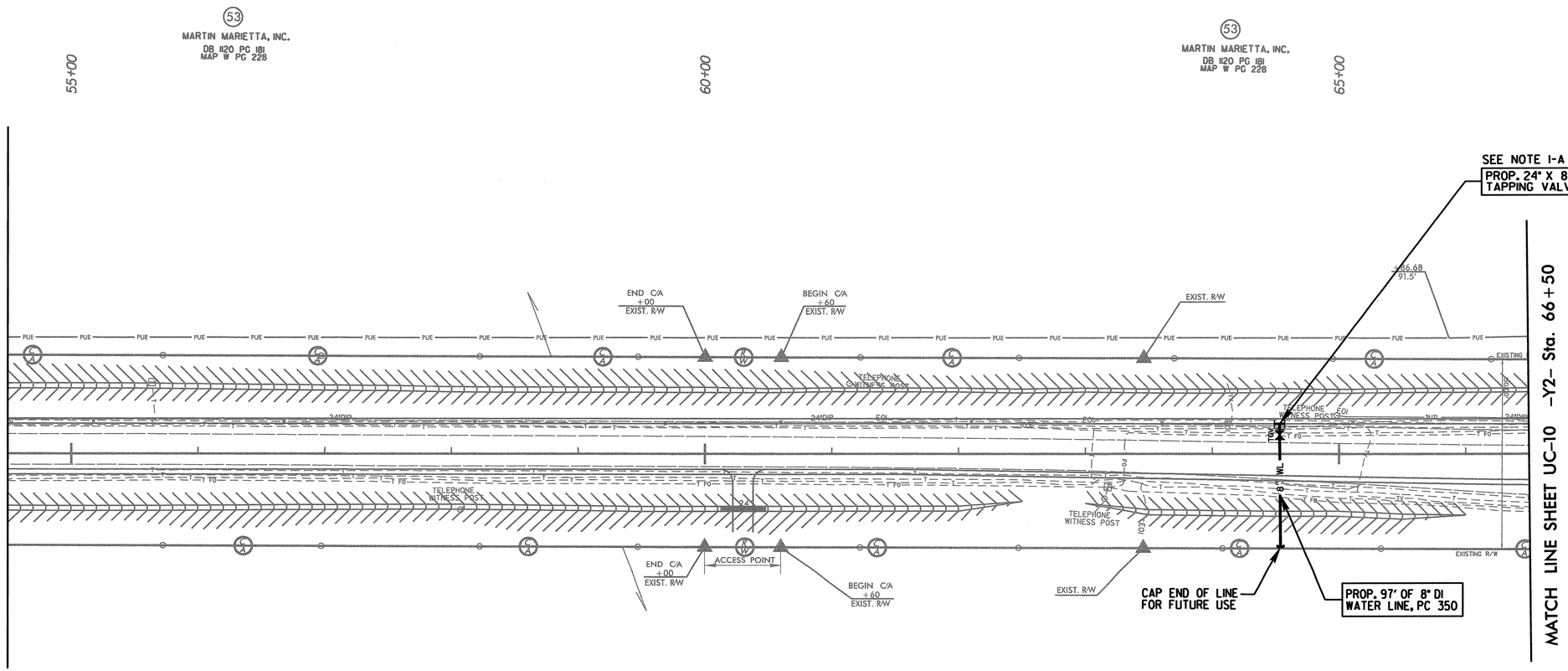

(53)
MARTIN MARIETTA, INC.
DB 1120 PG 181
MAP W PG 228

(53)
MARTIN MARIETTA, INC.
DB 1120 PG 181
MAP W PG 228

NOTE I-A
CONTACTOR SHALL VERIFY EXISTING PIPE SIZE AND PROVIDE APPROPRIATE SIZED SLEEVE TO MAKE PROPER CONNECTION TO EXISTING LINE.

PROJECT REFERENCE NO.	SHEET NO.
R-3324	UC-10
DESIGNED BY: B.DIXON	
DRAWN BY: R.MOSS	
CHECKED BY: B.DIXON	
APPROVED BY:	
REVISED:	
MUNICIPAL ENGINEERING SERVICES COMPANY, PA.	
P.O. BOX 97 GARNER, NC.27529 (919)772-5393	UTILITY CONSTRUCTION PLANS ONLY

NORTH CAROLINA PROFESSIONAL SEAL 11152 ENGINEER WILLIAM HENRY DIXON

UTILITY CONSTRUCTION

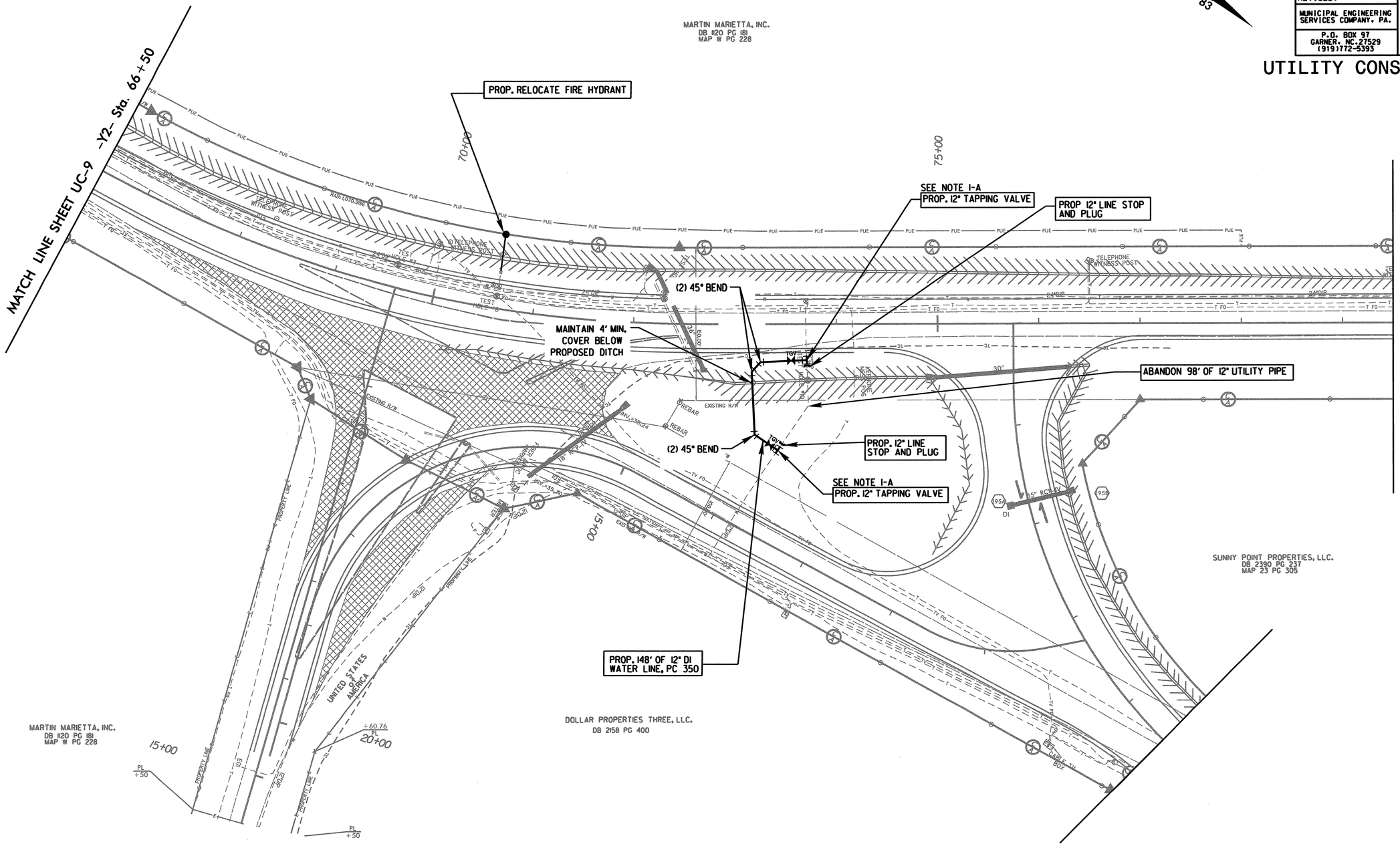

...\r3324_UC_10.dgn 11/14/2012 4:53:12 PM

PROJECT REFERENCE NO.	SHEET NO.
R-3324	UC-11
DESIGNED BY: B.DIXON	
DRAWN BY: R.MOSS	
CHECKED BY: B.DIXON	
APPROVED BY:	
REVISED:	
MUNICIPAL ENGINEERING SERVICES COMPANY. PA.	
P.O. BOX 97 GARNER. NC.27529 (919)772-5393	UTILITY CONSTRUCTION PLANS ONLY

NORTH CAROLINA SEAL 19442 ENGINEER WILLIAM HENRY DIXON

UTILITY CONSTRUCTION

NOTE 1-A
CONTACTOR SHALL VERIFY EXISTING PIPE SIZE AND PROVIDE APPROPRIATE SIZED SLEEVE TO MAKE PROPER CONNECTION TO EXISTING LINE.

SEE SHEET UC-21 FOR INFO CONCERNING ALL LINES TO BE ABANDONED.

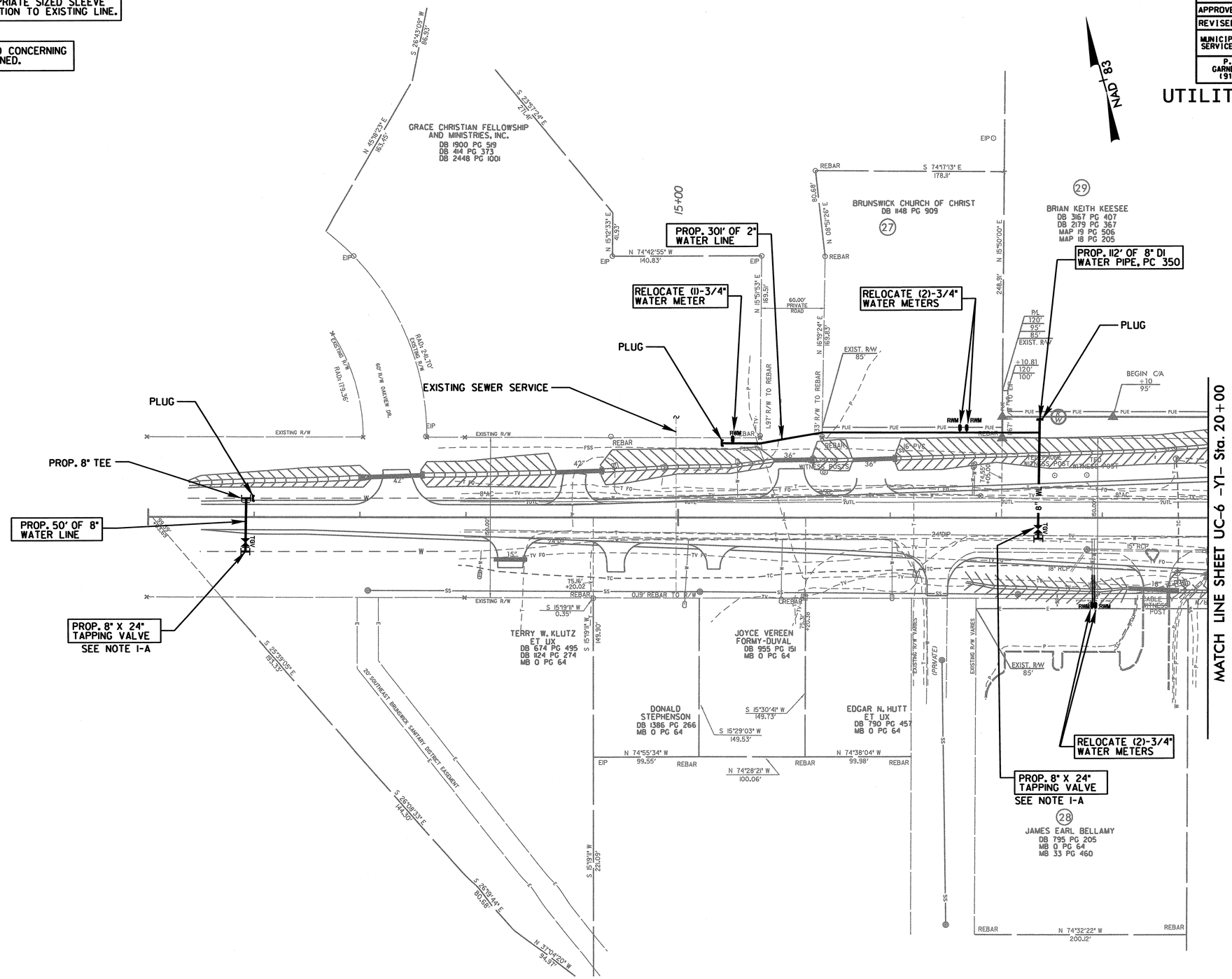

NOTE:
6" WATER LINE ENDS ON STATION 22+69.82 OF 6" FORCE MAIN SEWER. INSTALL WITH ATLEAST 18" OF VERTICAL CLEARANCE. SEE PROFILE AND INSET B FOR EXAMPLE.

SEE SHEET UC-22 FOR INFO CONCERNING ALL LINES TO BE ABANDONED.

NOTE I-A
CONTACTOR SHALL VERIFY EXISTING PIPE SIZE AND PROVIDE APPROPRIATE SIZED SLEEVE TO MAKE PROPER CONNECTION TO EXISTING LINE.

PROJECT REFERENCE NO.	SHEET NO.
R-3324	UC-12

DESIGNED BY: B.DIXON
DRAWN BY: R.MOSS
CHECKED BY: B.DIXON
APPROVED BY:
REVISED:

MUNICIPAL ENGINEERING SERVICES COMPANY, PA.
P.O. BOX 97
GARNER, NC.27529
(919)772-5393

NORTH CAROLINA PROFESSIONAL ENGINEER SEAL 10446 WILLIAM HENRY DIXON 11/15/12

UTILITY CONSTRUCTION PLANS ONLY

UTILITY CONSTRUCTION

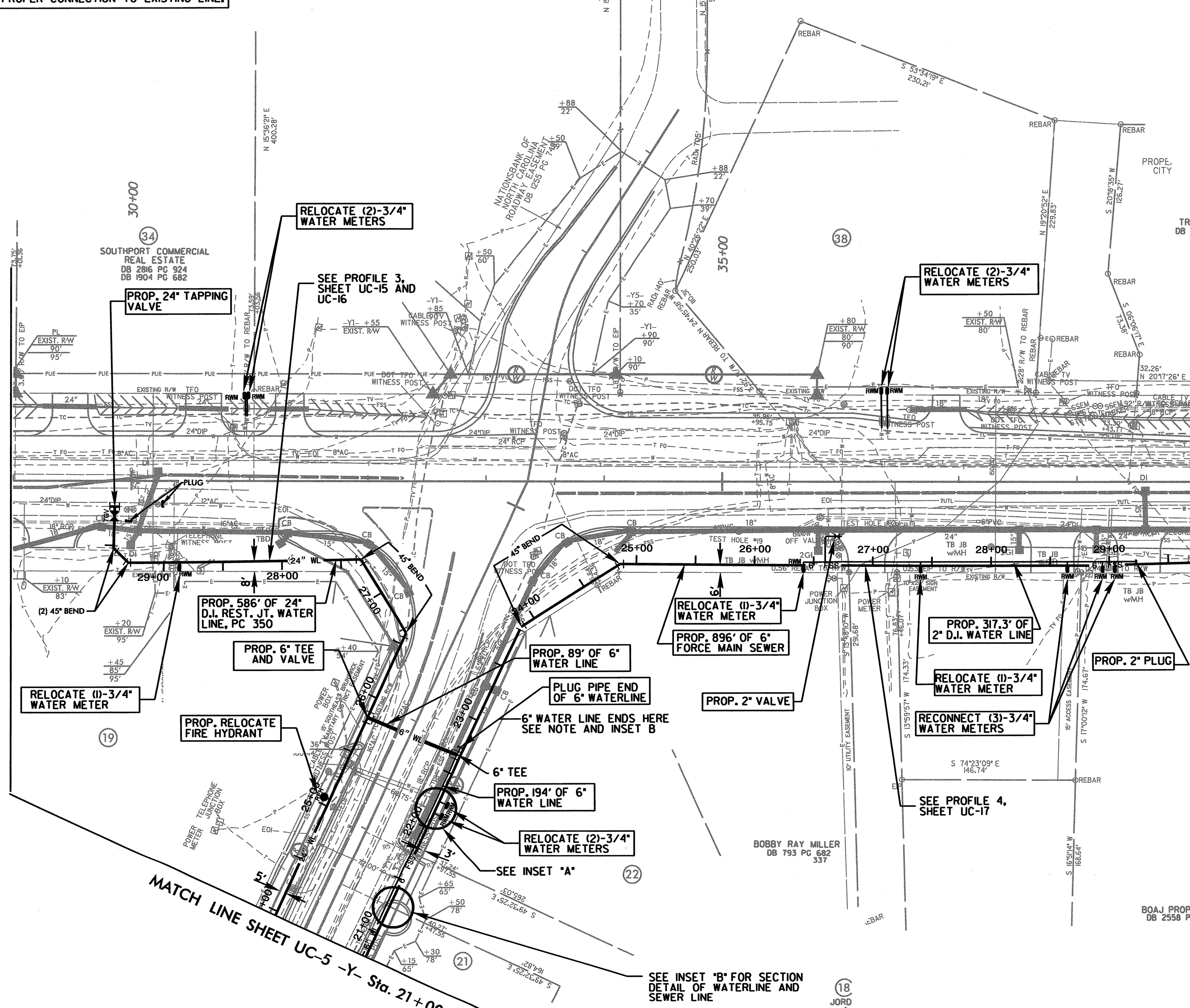

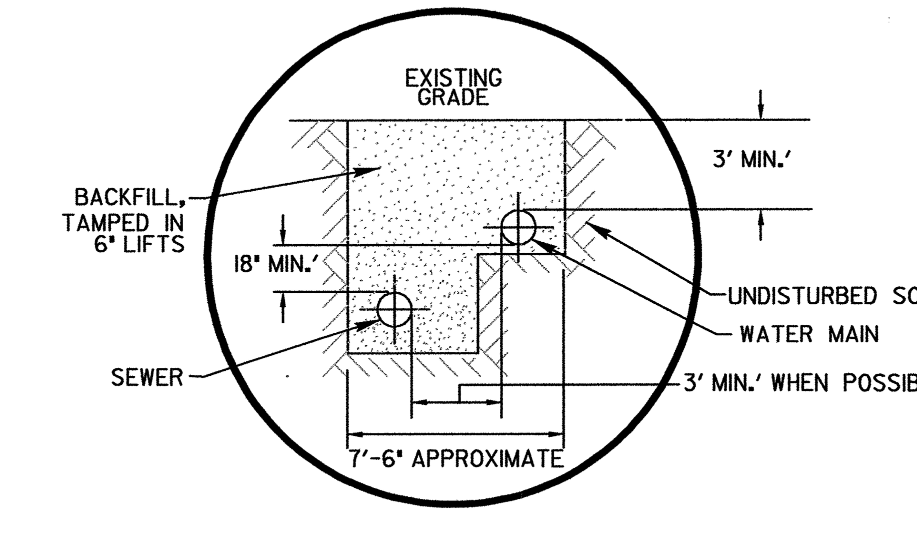

INSET "B"

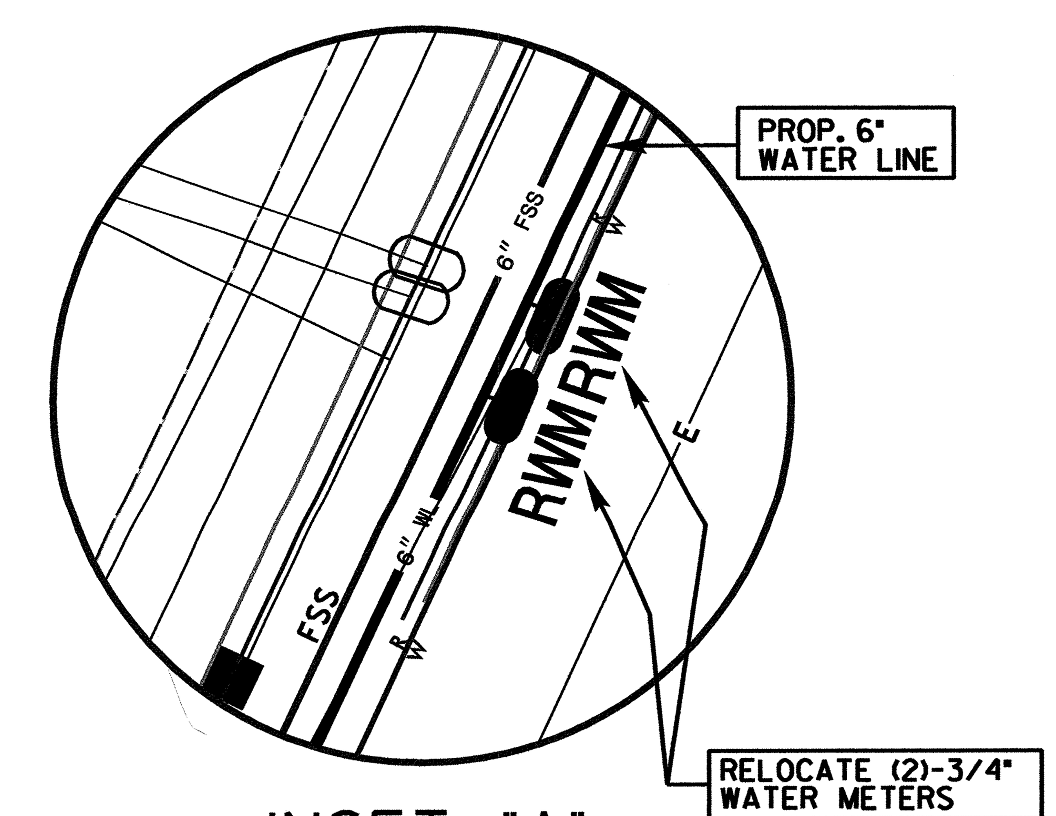

INSET "A"

...\r3324_UC_12.dgn 11/14/2012 4:24:10 PM

PROJECT REFERENCE NO.	SHEET NO.
R-3324	UC-13
DESIGNED BY: B.DIXON	
DRAWN BY: R.MOSS	
CHECKED BY: B.DIXON	
APPROVED BY:	
REVISED:	
MUNICIPAL ENGINEERING SERVICES COMPANY, PA.	
P.O. BOX 97 GARNER, NC.27529 (919)772-5393	UTILITY CONSTRUCTION PLANS ONLY

NORTH CAROLINA PROFESSIONAL SEAL 10446 ENGINEER WILLIAM HENRY DIXON 11/15/12

UTILITY CONSTRUCTION

NOTE I-A
CONTACTOR SHALL VERIFY EXISTING PIPE SIZE AND PROVIDE APPROPRIATE SIZED SLEEVE TO MAKE PROPER CONNECTION TO EXISTING LINE.

SEE SHEET UC-23 FOR INFO CONCERNING ALL LINES TO BE ABANDONED.

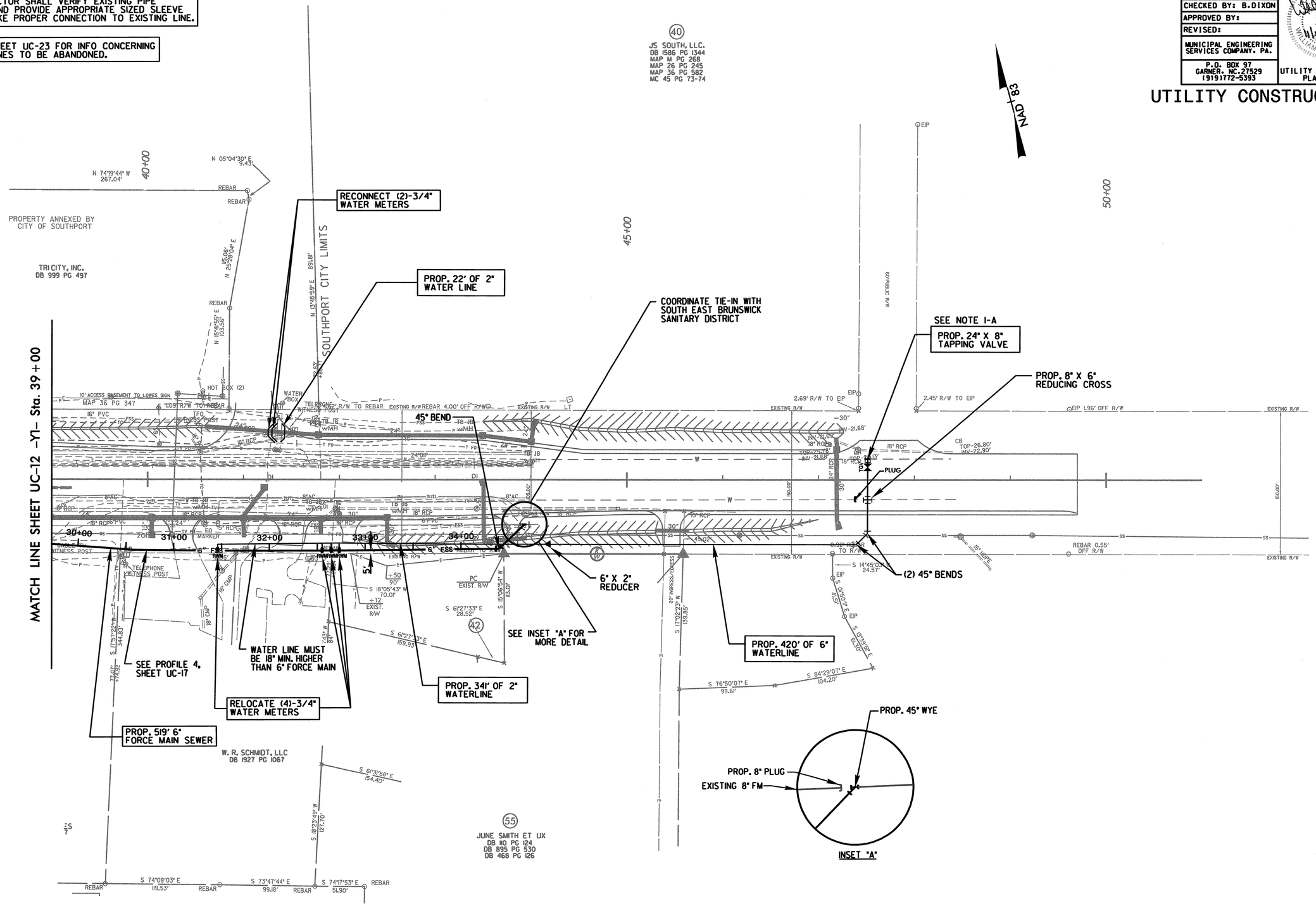

...\r3324_UC_13.dgn 11/14/2012 4:24:59 PM

PROJECT REFERENCE NO.	SHEET NO.
R-3324	UC-14
DESIGNED BY: B.DIXON	
DRAWN BY: R.MOSS	
CHECKED BY: B.DIXON	
APPROVED BY:	
REVISED:	
MUNICIPAL ENGINEERING SERVICES COMPANY. PA.	
P.O. BOX 97 GARNER, NC.27529 (919)772-5393	UTILITY CONSTRUCTION PLANS ONLY

NORTH CAROLINA PROFESSIONAL SEAL 10446 ENGINEER WILLIAM HENRY DIXON 11/15/12

UTILITY CONSTRUCTION

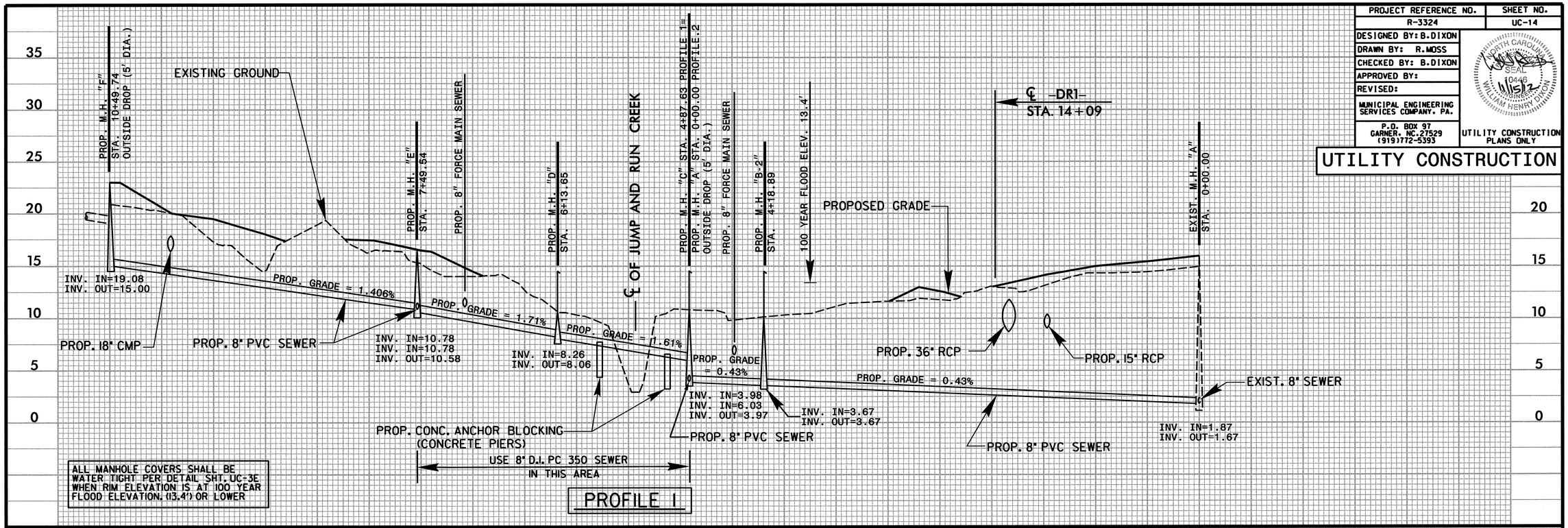

ALL MANHOLE COVERS SHALL BE WATER TIGHT PER DETAIL SHT. UC-3E WHEN RIM ELEVATION IS AT 100 YEAR FLOOD ELEVATION. (13.4') OR LOWER

PROFILE 1

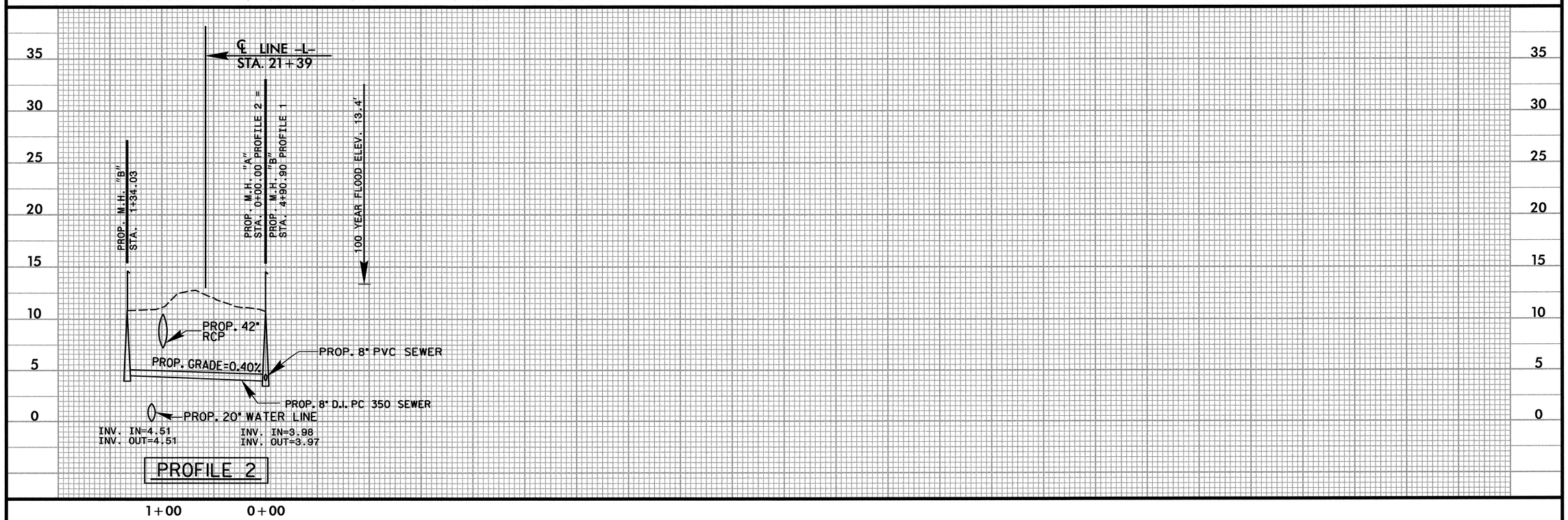

PROFILE 2

...\r3324_UC_14.dgn 11/14/2012 5:01:10 PM

PROJECT REFERENCE NO.	SHEET NO.
R-3324	UC-15
DESIGNED BY: B.DIXON	
DRAWN BY: R.MOSS	
CHECKED BY: B.DIXON	
APPROVED BY:	
REVISED:	
MUNICIPAL ENGINEERING SERVICES COMPANY, PA.	
P.O. BOX 97 GARNER, NC.27529 (919)772-5393	UTILITY CONSTRUCTION PLANS ONLY

NORTH CAROLINA PROFESSIONAL SEAL 10441 ENGINEER WILLIAM HENRY DIXON 11/15/12

UTILITY CONSTRUCTION

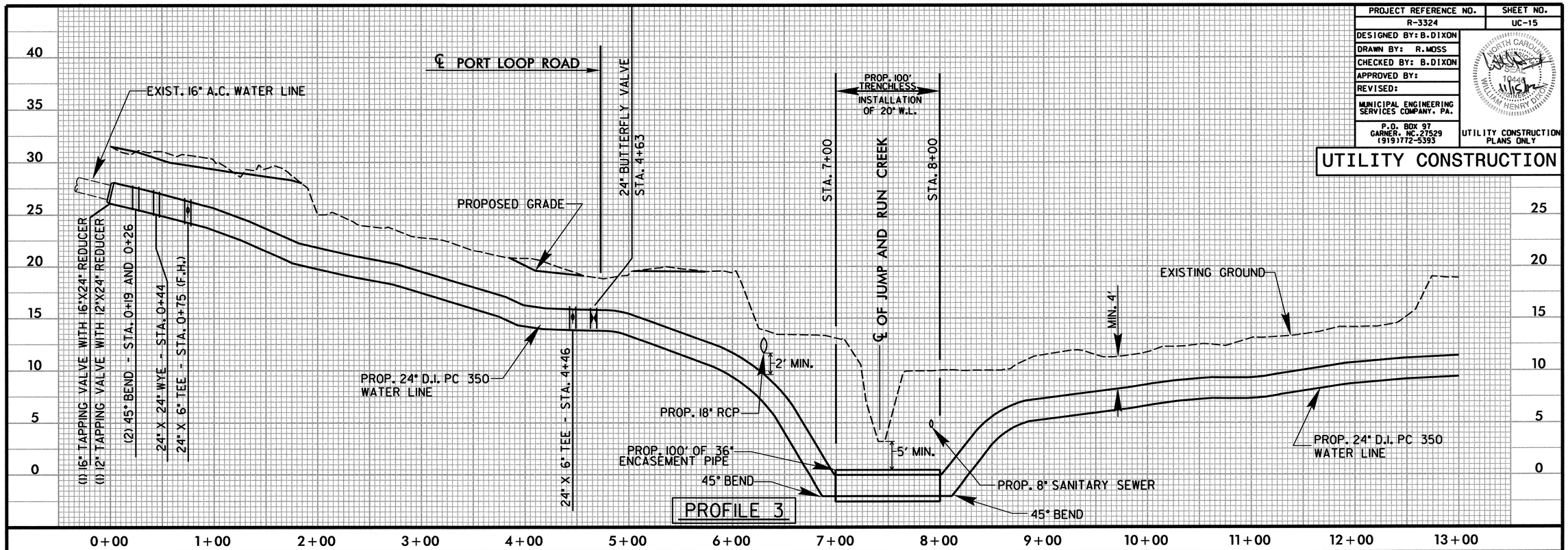

...\r3324_UC_15.dgn 11/14/2012 5:05:50 PM

PROJECT REFERENCE NO.	SHEET NO.
R-3324	UC-16

DESIGNED BY: B.DIXON
DRAWN BY: R.MOSS
CHECKED BY: B.DIXON
APPROVED BY:
REVISED:

MUNICIPAL ENGINEERING SERVICES COMPANY, PA.
P.O. BOX 97
GARNER, NC.27529
(919)772-5393

NORTH CAROLINA PROFESSIONAL ENGINEER SEAL 10446 WILLIAM HENRY DIXON 11/15/12

UTILITY CONSTRUCTION PLANS ONLY

UTILITY CONSTRUCTION

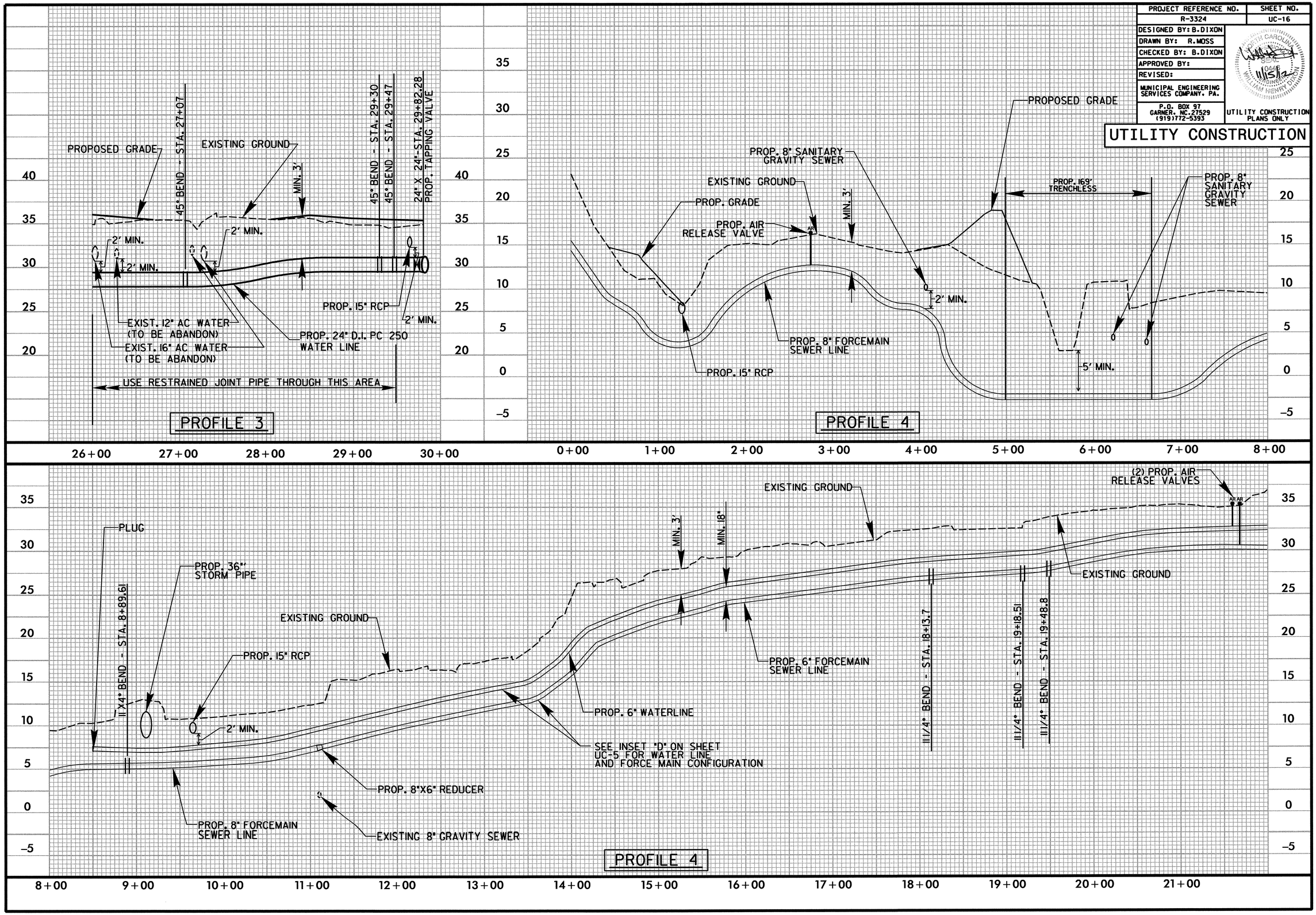

...\r3324_UC_16.dgn 11/14/2012 5:06:43 PM

PROJECT REFERENCE NO.	SHEET NO.
R-3324	UC-17
DESIGNED BY: B.DIXON	
DRAWN BY: R.MOSS	
CHECKED BY: B.DIXON	
APPROVED BY:	
REVISED:	
MUNICIPAL ENGINEERING SERVICES COMPANY, PA.	
P.O. BOX 97 GARNER, NC.27529 (919)772-5393	UTILITY CONSTRUCTION PLANS ONLY

UTILITY CONSTRUCTION

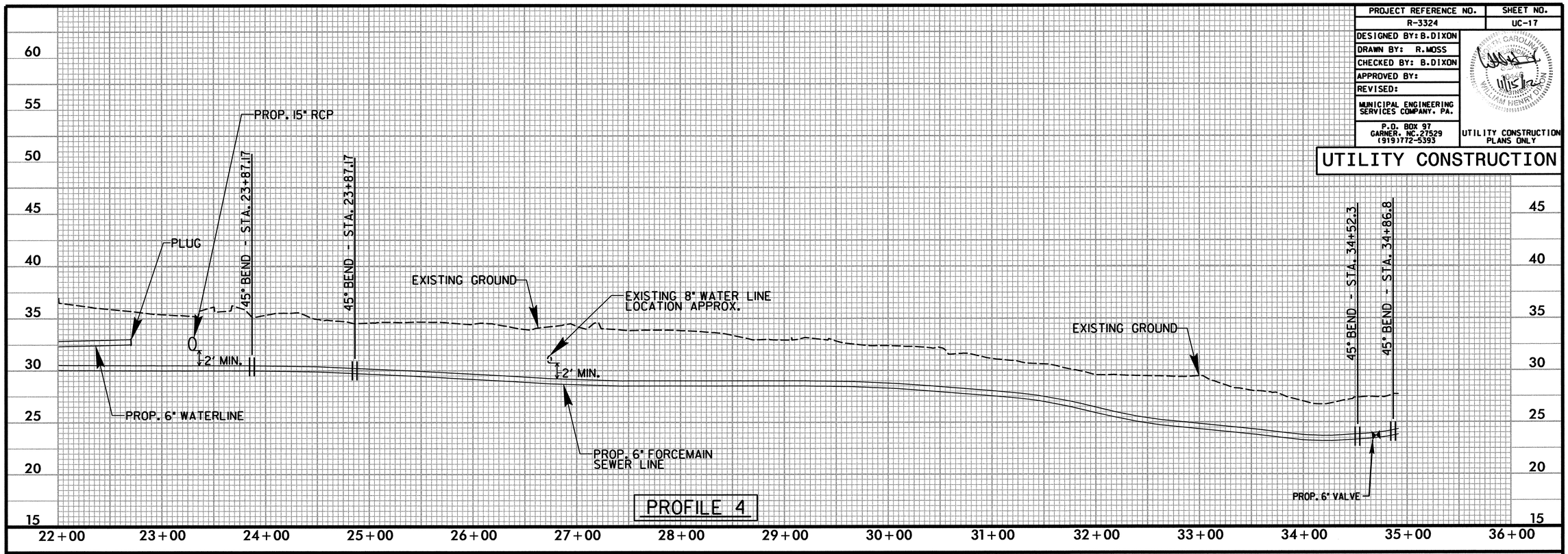

PROFILE 4

...\r3324_UC_17.dgn 11/14/2012 5:07:28 PM

PROJECT REFERENCE NO.	SHEET NO.
R-3324	UC-18
DESIGNED BY: B.DIXON	
DRAWN BY: R.MOSS	
CHECKED BY: B.DIXON	
APPROVED BY:	
REVISED:	
MUNICIPAL ENGINEERING SERVICES COMPANY, PA.	
P.O. BOX 97 GARNER, NC.27529 (919)772-5393	UTILITY CONSTRUCTION PLANS ONLY

NORTH CAROLINA PROFESSIONAL ENGINEER 10446 WILLIAM HENRY DIXON

UTILITY CONSTRUCTION

CORRESPONDING PLAN SHEET TO UC-18 IS UC-4

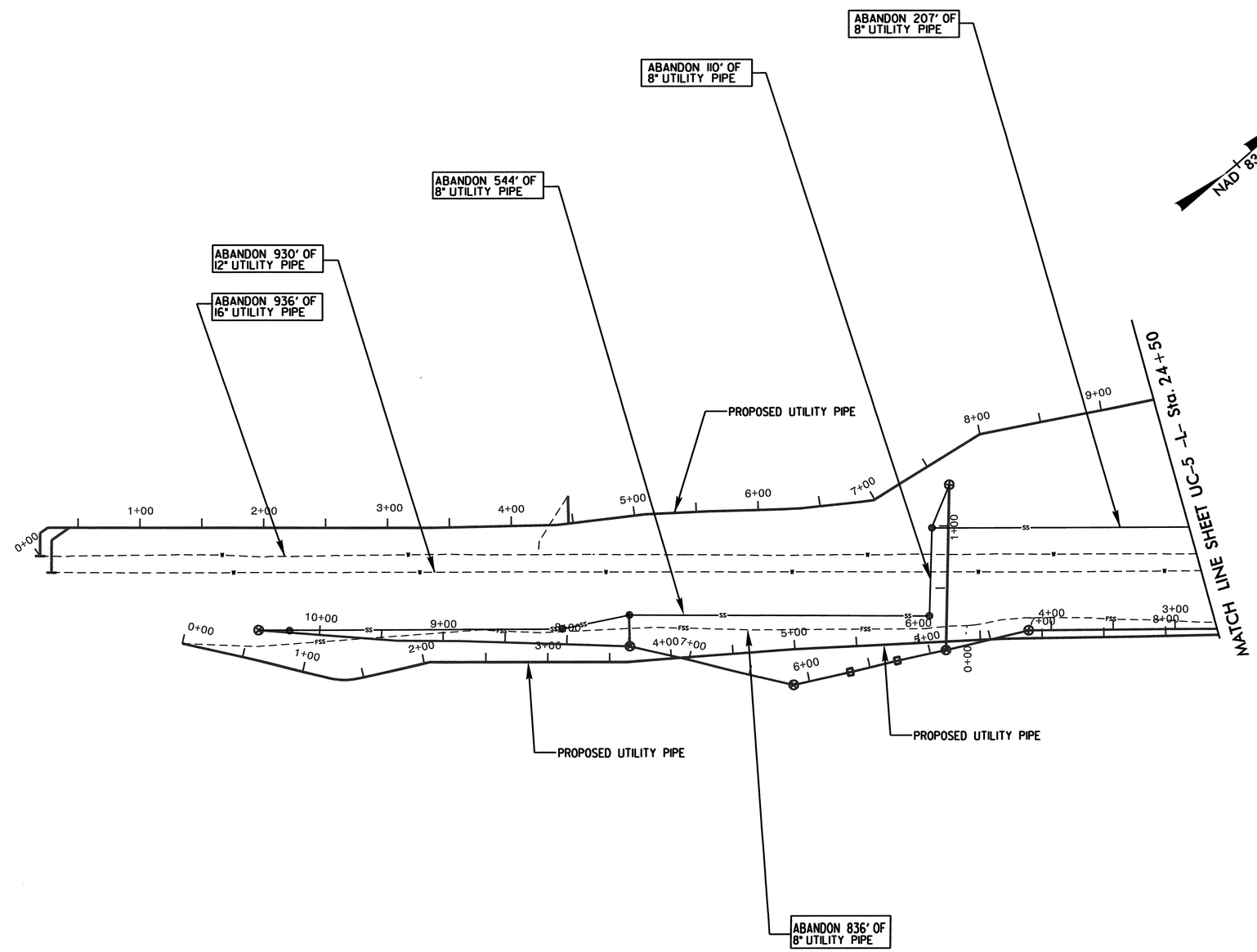

...\r3324_UC_18.dgn 11/14/2012 5:08:13 PM

PROJECT REFERENCE NO.	SHEET NO.
R-3324	UC-19
DESIGNED BY: B.DIXON	
DRAWN BY: R.MOSS	
CHECKED BY: B.DIXON	
APPROVED BY:	
REVISED:	
MUNICIPAL ENGINEERING SERVICES COMPANY, PA.	
P.O. BOX 97 GARNER, NC 27529 (919)772-5393	UTILITY CONSTRUCTION PLANS ONLY

NORTH CAROLINA PROFESSIONAL SEAL 10446 ENGINEER WILLIAM HENRY DIXON 11/15/12

UTILITY CONSTRUCTION

CORRESPONDING PLAN SHEET TO UC-19 IS UC-5

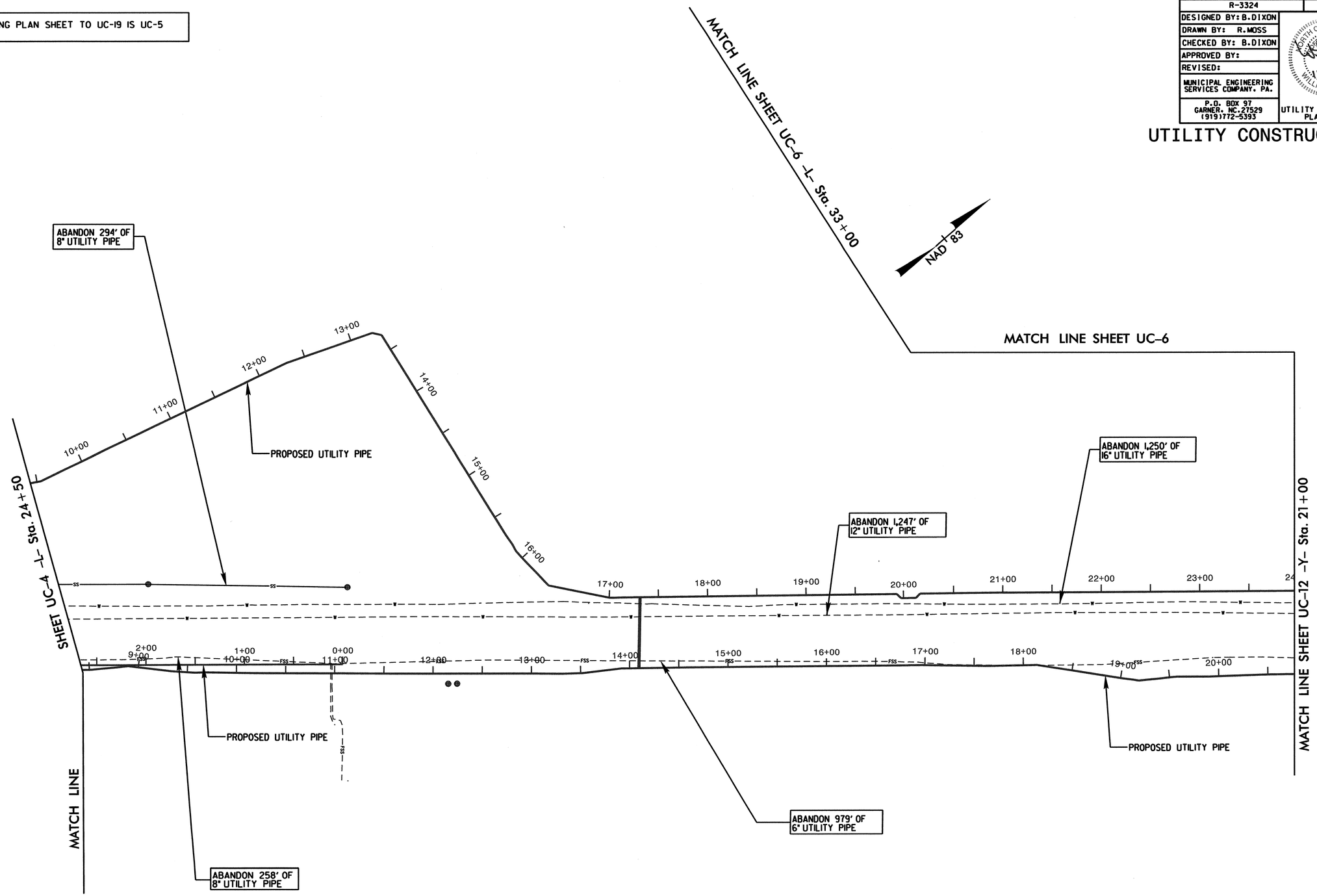

...\r3324_UC_19.dgn 11/14/2012 5:08:53 PM

PROJECT REFERENCE NO.	SHEET NO.
R-3324	UC-20
DESIGNED BY: B.DIXON	
DRAWN BY: R.MOSS	
CHECKED BY: B.DIXON	
APPROVED BY:	
REVISED:	
MUNICIPAL ENGINEERING SERVICES COMPANY, PA.	
P.O. BOX 97 GARNER, NC.27529 (919)772-5393	UTILITY CONSTRUCTION PLANS ONLY

NORTH CAROLINA PROFESSIONAL SEAL 10446 ENGINEER WILLIAM HENRY DIXON

UTILITY CONSTRUCTION

CORRESPONDING PLAN SHEET TO UC-20 IS UC-6

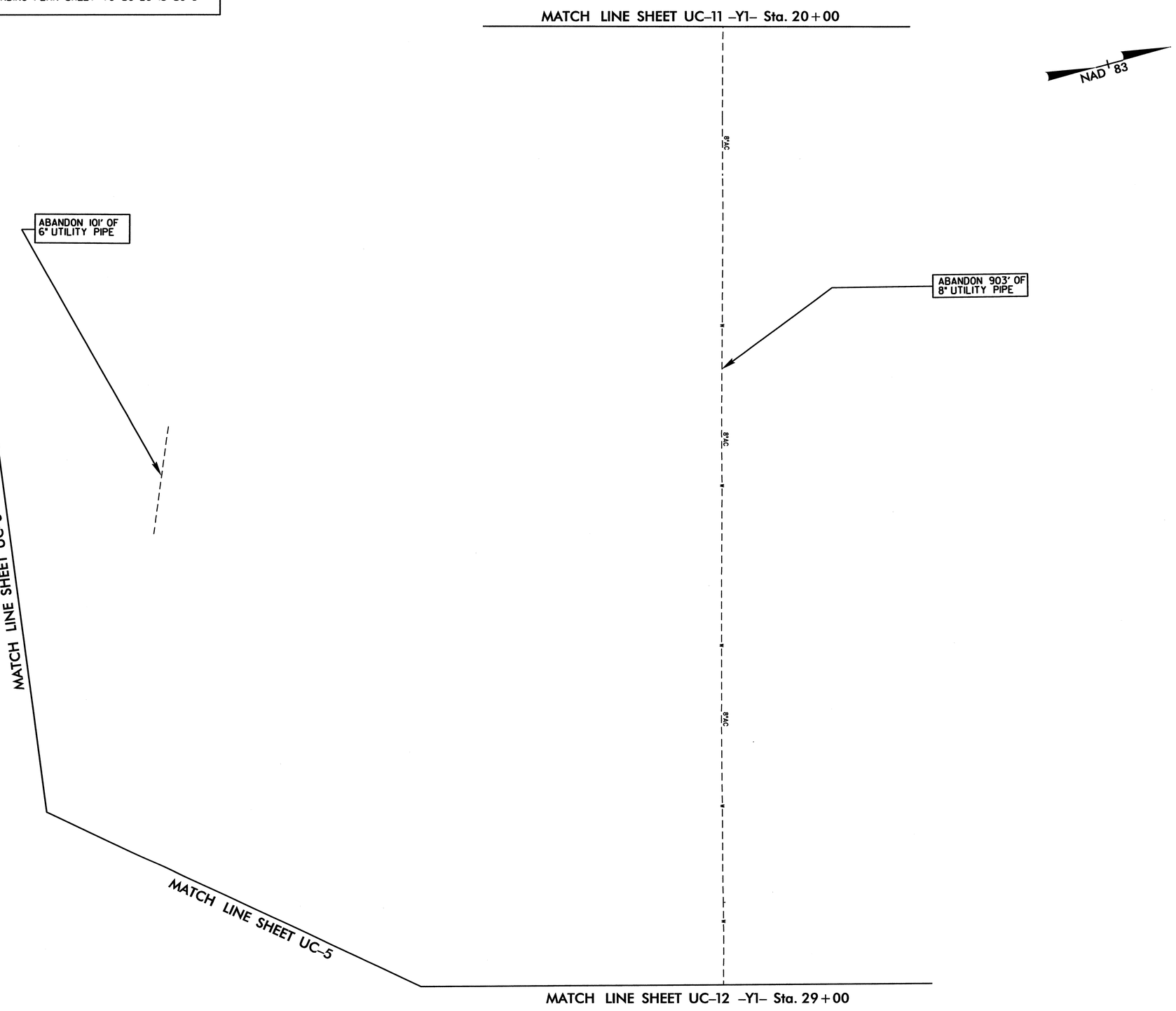

...\r3324_UC_20.dgn 11/14/2012 5:09:52 PM

CORRESPONDING PLAN SHEET TO UC-21IS UC-11

PROJECT REFERENCE NO.	SHEET NO.
R-3324	UC-21
DESIGNED BY: B.DIXON	
DRAWN BY: R.MOSS	
CHECKED BY: B.DIXON	
APPROVED BY:	
REVISED:	
MUNICIPAL ENGINEERING SERVICES COMPANY, PA.	
P.O. BOX 97 GARNER, NC.27529 (919)772-5393	UTILITY CONSTRUCTION PLANS ONLY

NORTH CAROLINA PROFESSIONAL SEAL 10446 ENGINEER WILLIAM HENRY DIXON

UTILITY CONSTRUCTION

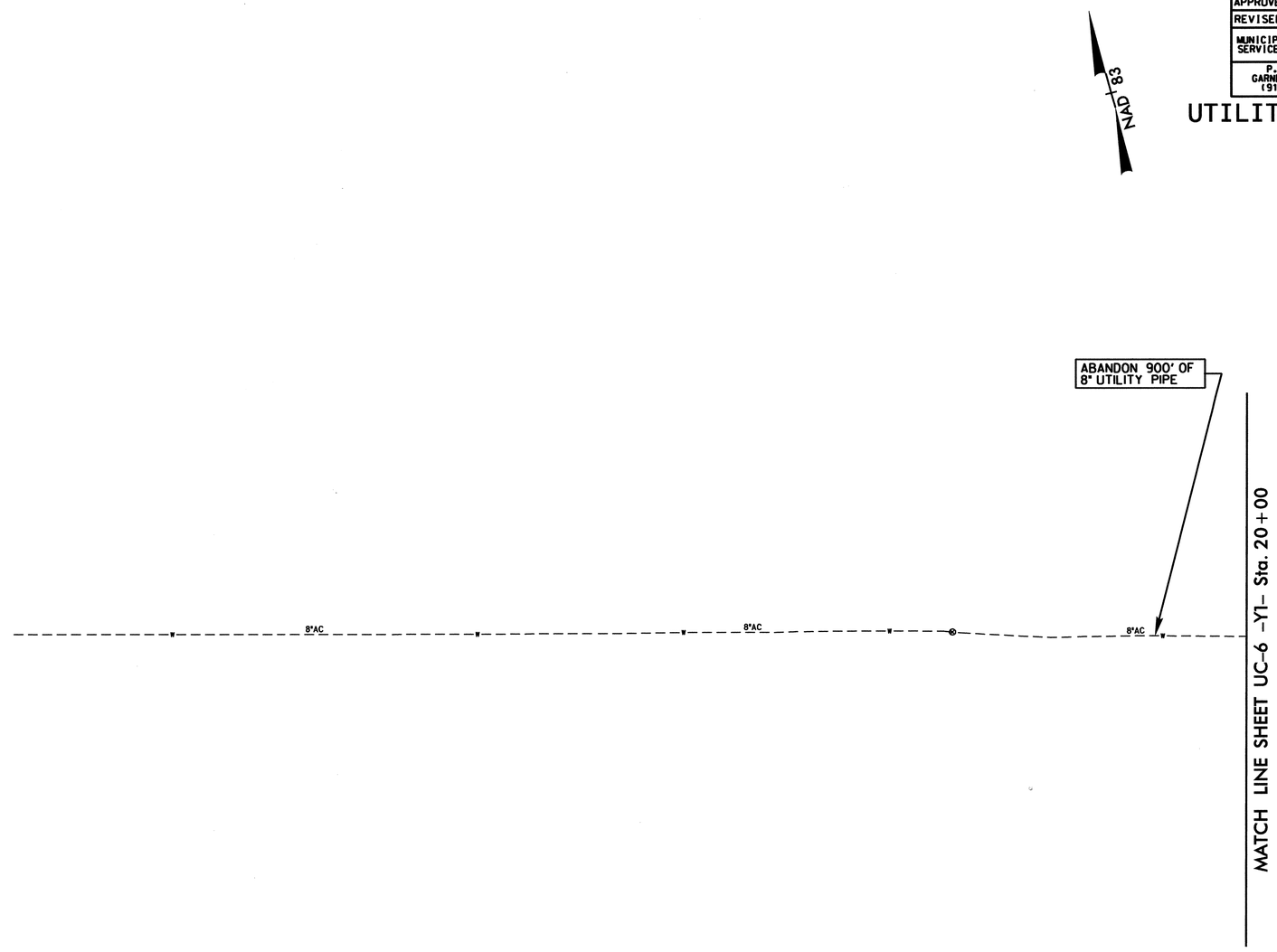

PROJECT REFERENCE NO.	SHEET NO.
R-3324	UC-22
DESIGNED BY: B.DIXON	
DRAWN BY: R.MOSS	
CHECKED BY: B.DIXON	
APPROVED BY:	
REVISED:	
MUNICIPAL ENGINEERING SERVICES COMPANY, PA.	
P.O. BOX 97 GARNER, NC.27529 (919)772-5393	UTILITY CONSTRUCTION PLANS ONLY

NORTH CAROLINA PROFESSIONAL SEAL 10446 ENGINEER WILLIAM HENRY DIXON 11/15/12

UTILITY CONSTRUCTION

CORRESPONDING PLAN SHEET TO UC-22 IS UC-12

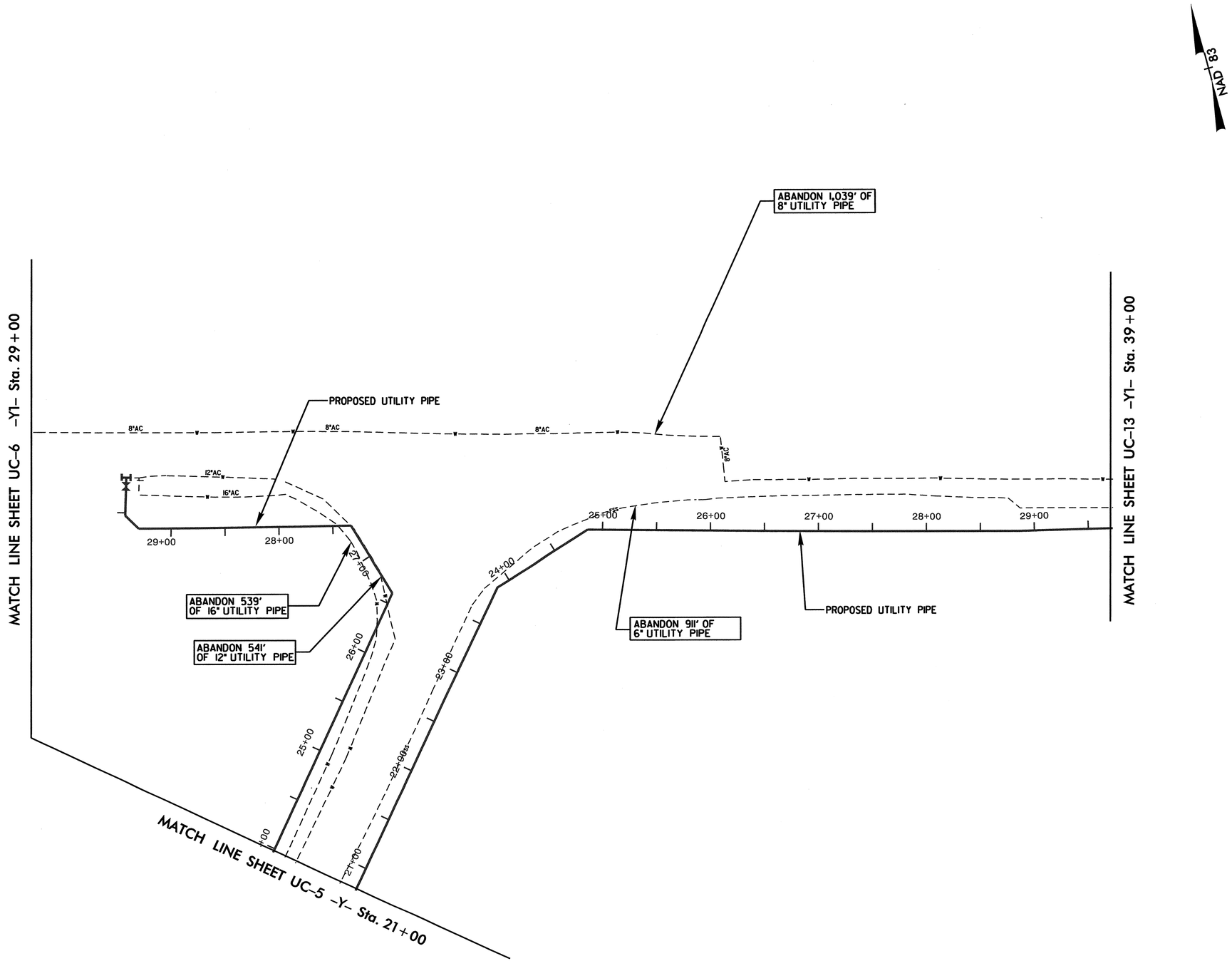

...\r3324_UC_22.dgn 11/14/2012 5:27:27 PM

PROJECT REFERENCE NO.	SHEET NO.
R-3324	UC-23
DESIGNED BY: B.DIXON	
DRAWN BY: R.MOSS	
CHECKED BY: B.DIXON	
APPROVED BY:	
REVISED:	
MUNICIPAL ENGINEERING SERVICES COMPANY, PA.	
P.O. BOX 97 GARNER, NC.27529 (919)772-5393	UTILITY CONSTRUCTION PLANS ONLY

NORTH CAROLINA PROFESSIONAL SEAL 19446 ENGINEER WILLIAM HENRY DIXON

UTILITY CONSTRUCTION

CORRESPONDING PLAN SHEET TO UC-23 IS UC-13

NAD 83

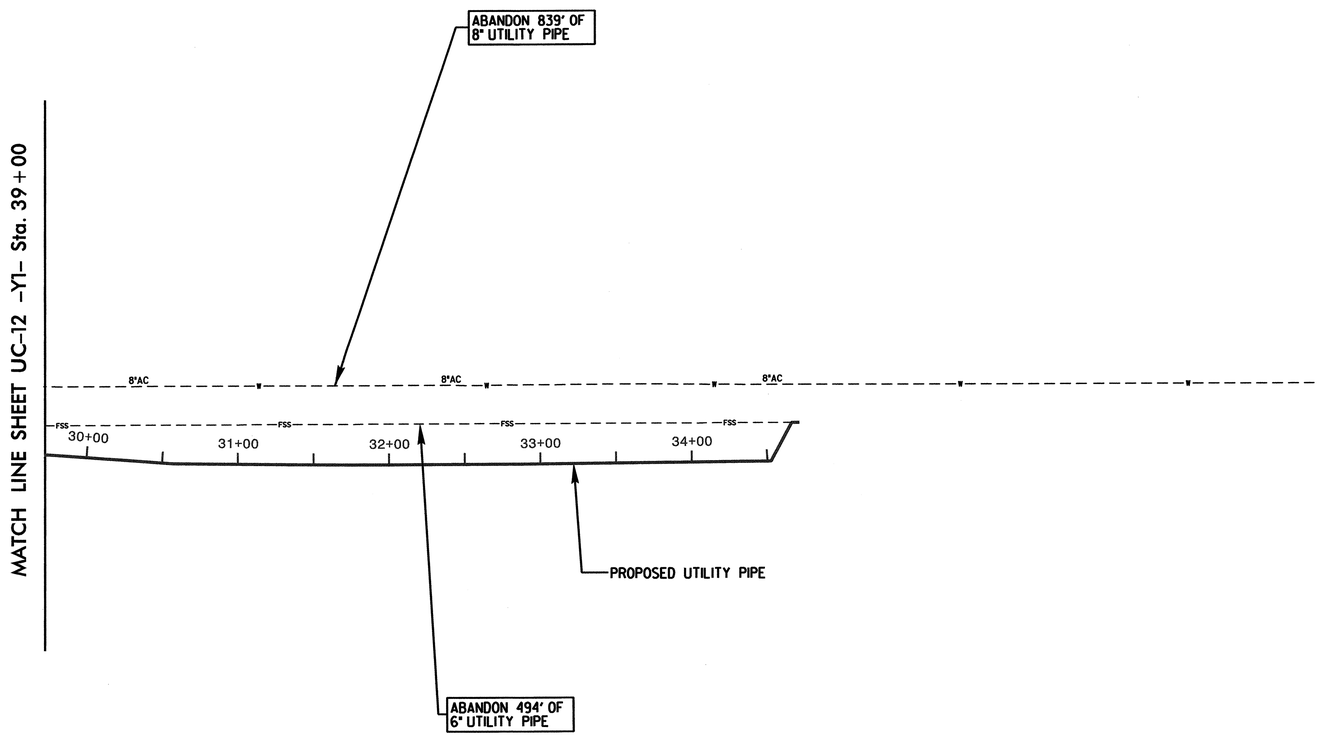

...\r3324_UC_23.dgn 11/14/2012 5:28:04 PM

TIP PROJECT: R-3324

See Sheet 1-A For Index of Sheets

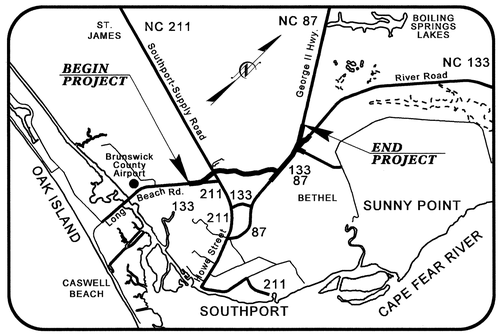

T.I.P. NO.	SHEET NO.
R-3324	UO-1

STATE OF NORTH CAROLINA
DIVISION OF HIGHWAYS

UTILITIES BY OTHERS PLANS
BRUNSWICK COUNTY

LOCATION: NEW ROUTE FROM NC 133 (LONG BEACH RD.) TO NC 133.

NAD 83/95

TYPE OF WORK: UTILITIES WORK

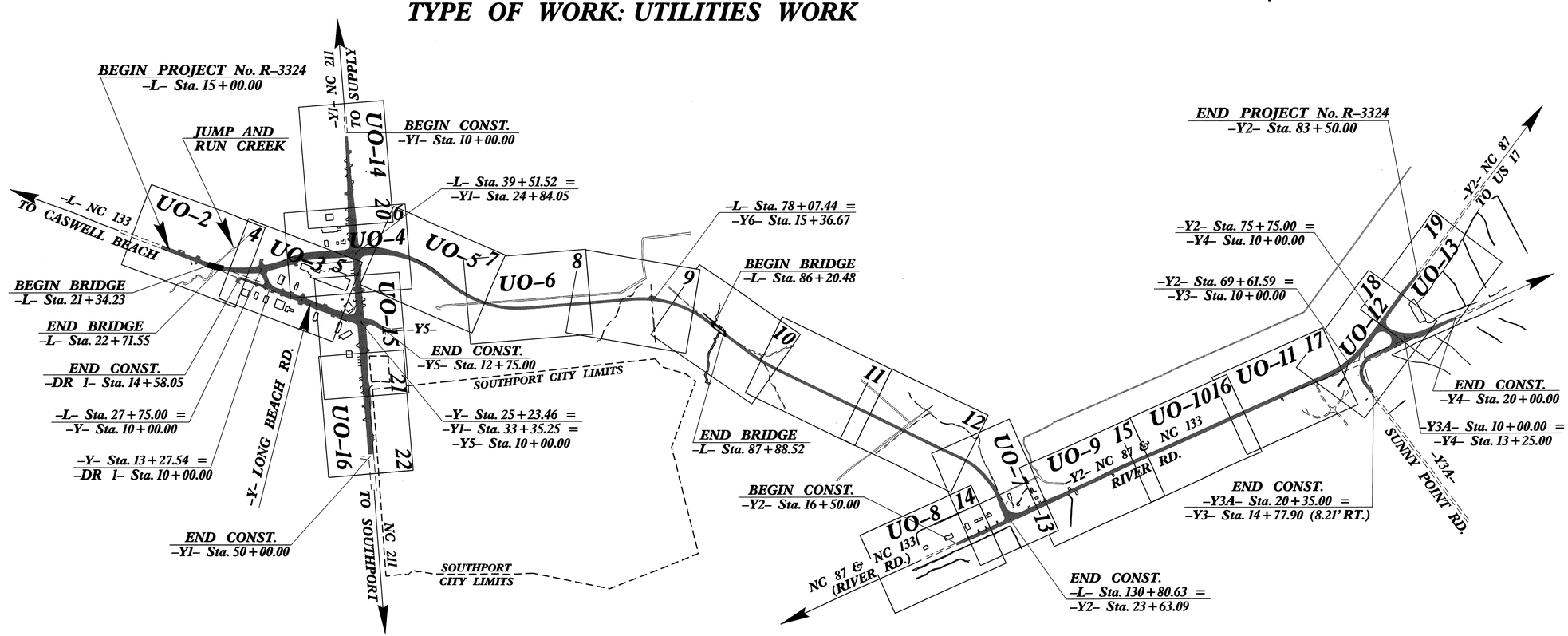

GRAPHIC SCALES

50 25 0 50 100
PLANS

50 25 0 50 100
PROFILE (HORIZONTAL)

10 5 0 10 20
PROFILE (VERTICAL)

INDEX OF SHEETS

SHEET NO.	DESCRIPTION
UO-1	TITLE SHEET
UO-2 THRU UO-16	UTILITY BY OTHERS PLAN SHEETS

UTILITY OWNERS ON PROJECT

(1) Brunswick EMC – Power
(2) Progress Energy – Power
(3) Atlantic Telephone Membership Corp. – Telephone
(4) AT&T – Telephone
(5) Time Warner Cable – CATV
(6) City of Southport – Prop. 16" Force Main sewer
(7) Brunswick County Public Utilities – 12" F.M. & 12" W.L.

PREPARED IN THE OFFICE OF:
DIVISION OF HIGHWAYS
UTILITIES UNIT
UTILITIES ENGINEERING
1591 MAIL SERVICES CENTER
RALEIGH NC 27699-1591
PHONE (919) 707-6690
FAX (919) 250-4151

Roger Worthington, P.E. — UTILITIES SECTION ENGINEER
Steve McKee, P.E. — UTILITIES SQUAD LEADER PROJECT ENGINEER
Jamshid Hafshejani — UTILITIES PROJECT DESIGNER

09/08/99
05-NOV-2012 13:54
R:\Utilities\Rdy_Ut\Proj\R-3324 UBO FILES\r3324_UO-1_rdy_tsh.dgn
$$$$USERNAME$$$$

PROJECT REFERENCE NO.	SHEET NO.
R-3324	UO-2

UTILITIES BY OTHERS

NOTE:
ALL PROPOSED UTILITY WORK SHOWN ON THIS SHEET WILL BE DONE BY OTHERS

PROPERTY OWNERS			
6	SOUTHEAST CINEMA ENTERTAINMENT, INC. DB 1835 PG 420 MB X PG 62 MB X PG 28	10	DAVIDSON ANIMAL HOSPITAL, PA DB 1835 PG 420 DB 2160 PG 844 DB 1195 PG 1088 MB Y PG 263
7	SOUTHPORT-OAK ISLAND CHAMBER OF COMMERCE DB 576 PG 382 DB 1134 PG 894	11	RONALD M. HUGHES DB 904 PG 482 MB X PG 28
8	KATHLEEN VILOSKI DB 2368 PG 1197		

PROPERTY OWNERS	
7	NORTH CAROLINA DEPARTMENT OF TRANSPORTATION FORMERLY SOUTHPORT-OAK ISLAND CHAMBER OF COMMERCE DB 3083 PG 1116 DB 576 PG 382 DB 1134 PG 894
8	KATHLEEN VILOSKI DB 2368 PG 1197

SHOULDER BERM GUTTER LOCATIONS
-L- Sta. 20+87 to BEGIN BRIDGE LT.
-L- END BRIDGE to Sta. 27+00 LT.
-L- Sta. 16+00 to Sta. 18+70 RT.
-L- END BRIDGE to Sta. 25+85 RT.
-L- Sta. 28+00 to Sta. 31+00 RT.

-L-
PIs Sta 20+73.01
Θs = 2° 57' 48.9"
Ls = 150.00'
LT = 100.01'
ST = 50.01'

PI Sta 25+50.41
Δ = 32° 50' 51.0" (LT)
D = 3° 57' 05.2"
L = 831.28'
T = 427.41'
R = 1,450.00'

NAD 83/95

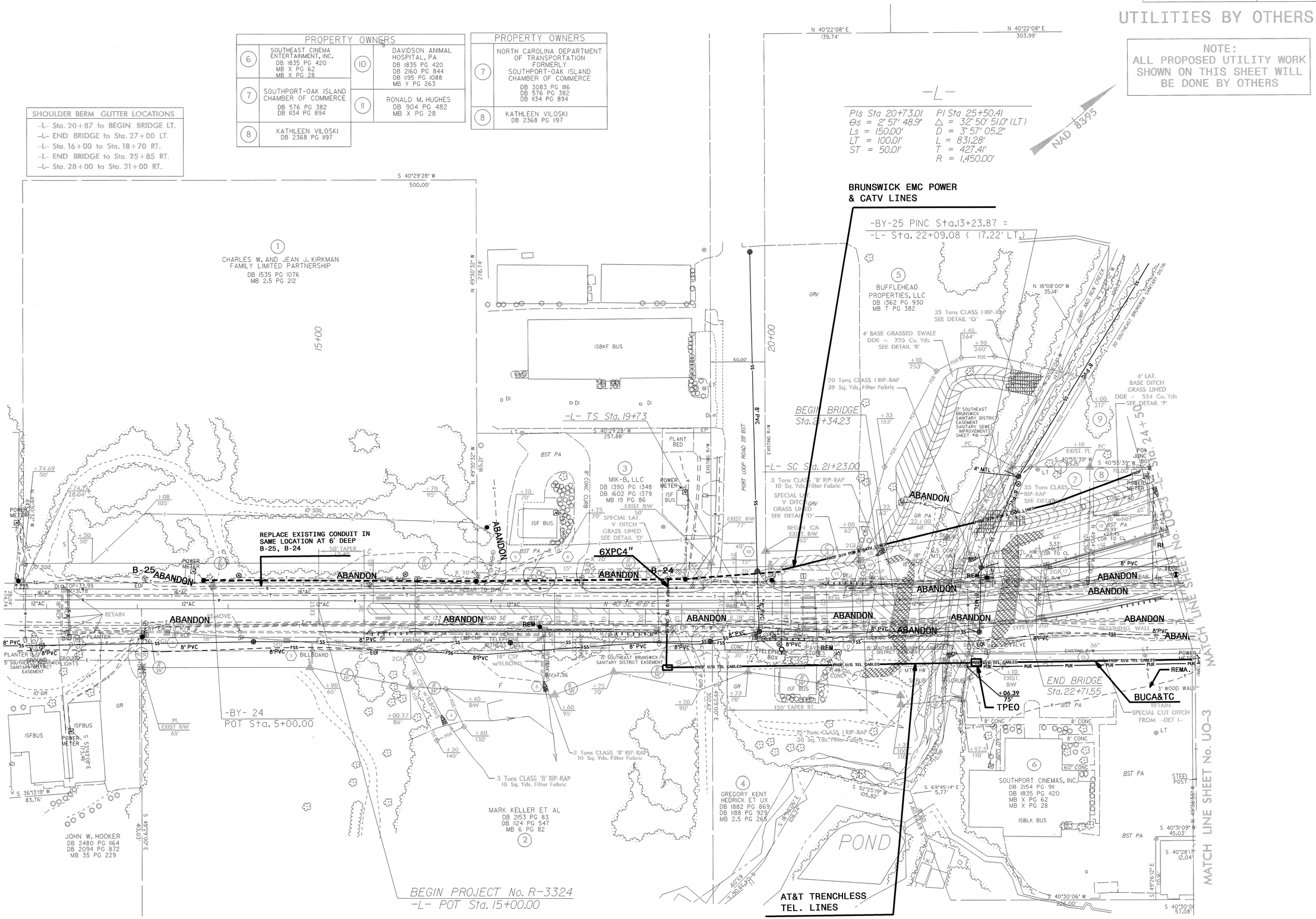

5/14/99

05-NOV-2012 13:52
dgn\UO-2.dgn

PROJECT REFERENCE NO.	SHEET NO.
R-3324	UO-3

UTILITIES BY OTHERS

NOTE:
ALL PROPOSED UTILITY WORK SHOWN ON THIS SHEET WILL BE DONE BY OTHERS

PROPERTY OWNERS	
10	DAVIDSON ANIMAL HOSPITAL, PA DB 1835 PG 420 DB 2160 PG 844 DB 1195 PG 1088 MB Y PG 263
12	GREGORY K. HEDRICK DB 1284 PG 974 DB 1155 PG 910 DB 2160 PG 844 DB 1176 PG 835
13	GREGORY K. HEDRICK DB 2412 PG 1036
14	133 PROPERTIES, LLC DB 2044 PG 471 DB 1134 PG 55

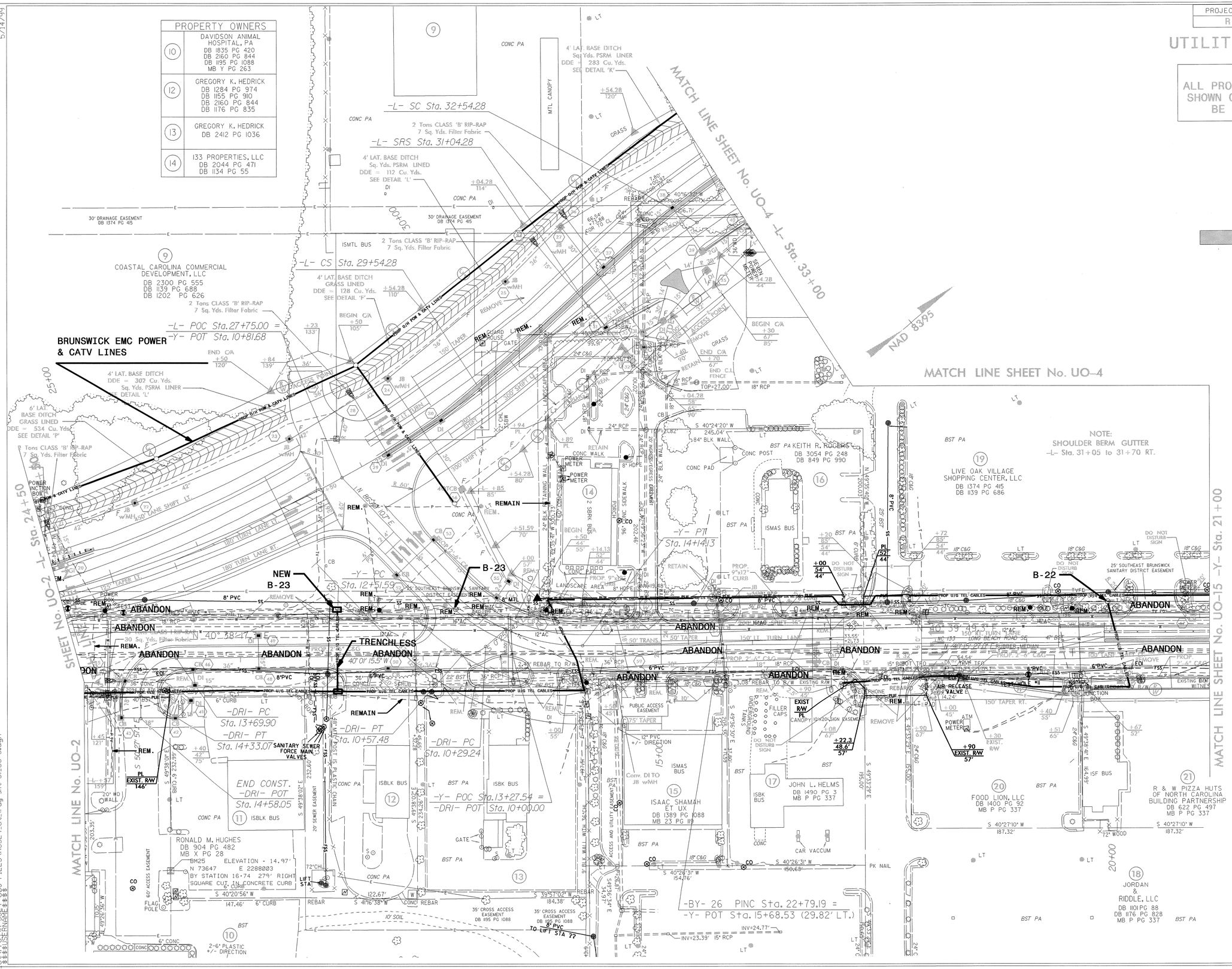

5/14/99

05-NOV-2012 13:50
Rdy Ut\Proj\R-3324\UO FILES\R3324_Ut_(rdy sht#5)_UO-3.dgn
$$$$USERNAME$$$$

PROJECT REFERENCE NO.	SHEET NO.
R-3324	UO-4

UTILITIES BY OTHERS

NOTE:
ALL PROPOSED UTILITY WORK SHOWN ON THIS SHEET WILL BE DONE BY OTHERS

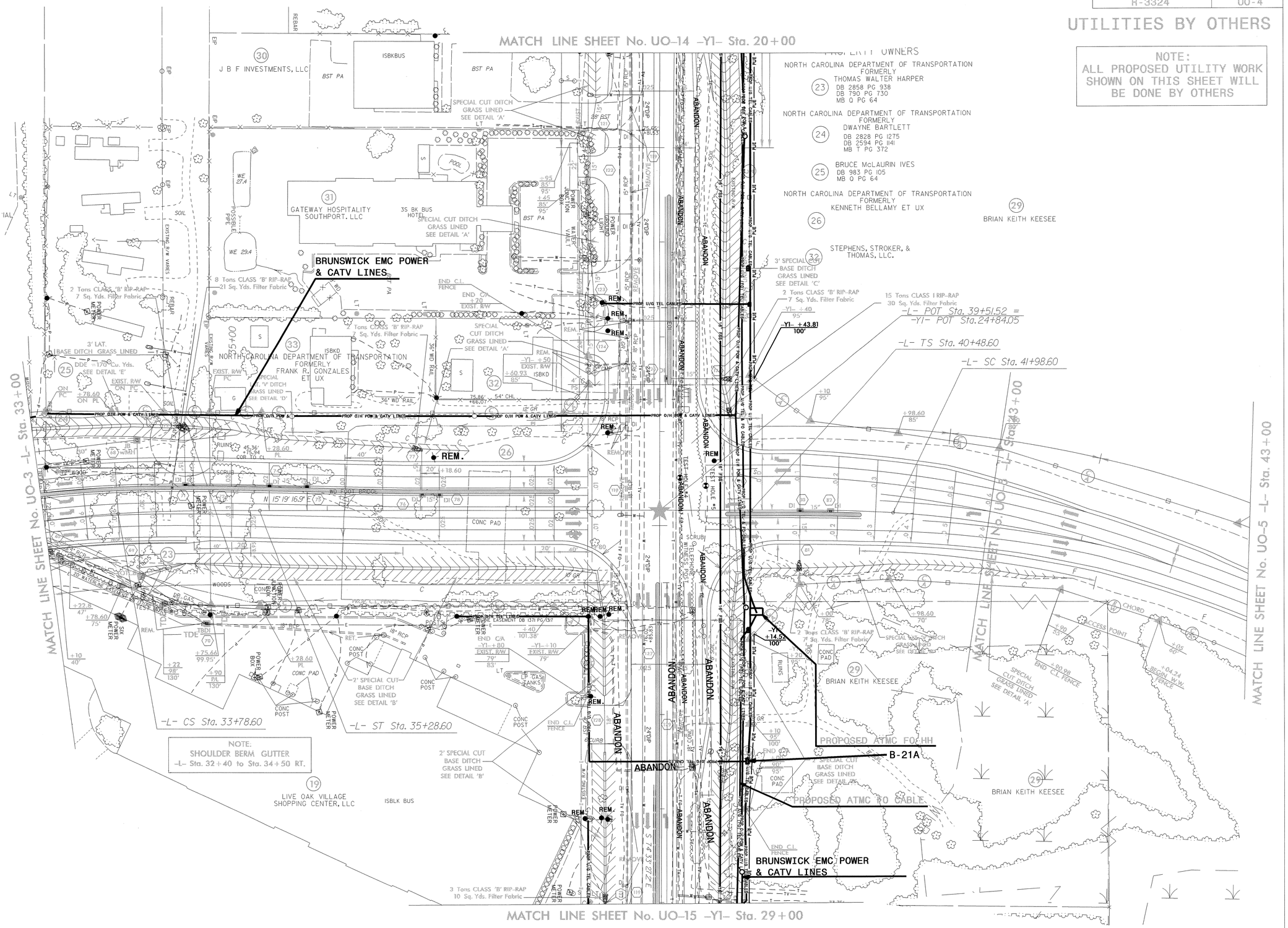

5/14/99

05-NOV-2012 13:48
dgn\Utilities\R-3324_UBO FILES\R3324_Ut_(rdy sht#6)_UO-4.dgn
$$$$USERNAME$$$$

PROJECT REFERENCE NO.	SHEET NO.
R-3324	UO-5

UTILITIES BY OTHERS

NOTE:
ALL PROPOSED UTILITY WORK SHOWN ON THIS SHEET WILL BE DONE BY OTHERS

-L-

PI Sta 46+11.79	PIs Sta 50+44.49	PIs Sta 52+44.49	PI Sta 57+42.12
Δ = 38° 00' 00.0" (RT)	Θs = 3° 34' 51.6"	Θs = 3° 21' 35.3"	Δ = 38° 34' 47.6" (LT)
D = 4° 46' 28.7"	Ls = 150.00'	Ls = 150.00'	D = 4° 28' 47.0"
L = 795.87'	LT = 100.02'	LT = 100.02'	L = 861.21'
T = 413.19'	ST = 50.02'	ST = 50.02'	T = 447.65'
R = 1,200.00'			R = 1,279.00'

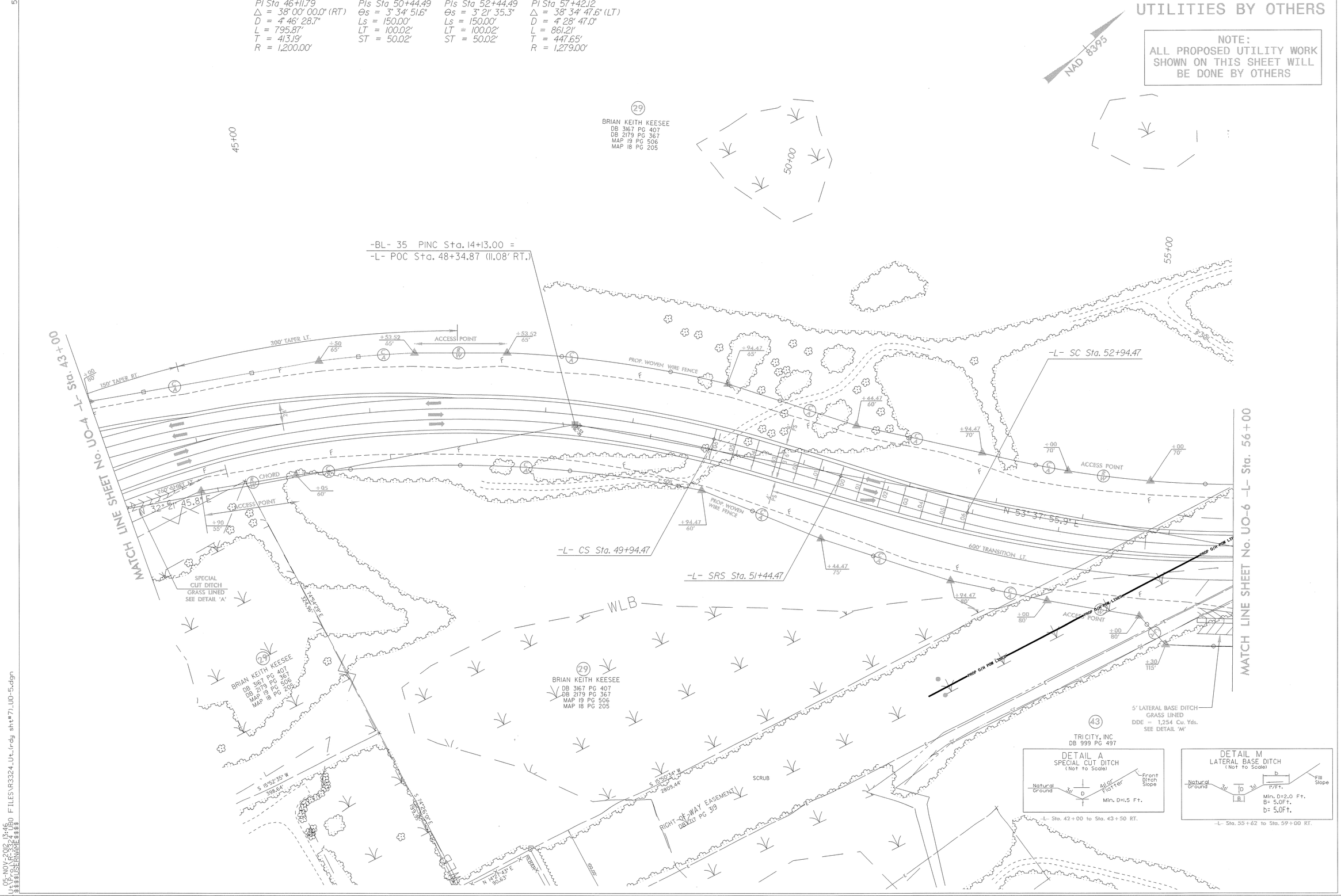

5/14/99

08-NOV-2013 13:16
Rdy UO_SHEET_03.dgn FILES\R3324_Ut_(rdy sht#7)_UO-5.dgn
$$$$USERNAME$$$$

PROJECT REFERENCE NO.	SHEET NO.
R-3324	UO-6

UTILITIES BY OTHERS

NOTE:
ALL PROPOSED UTILITY WORK SHOWN ON THIS SHEET WILL BE DONE BY OTHERS

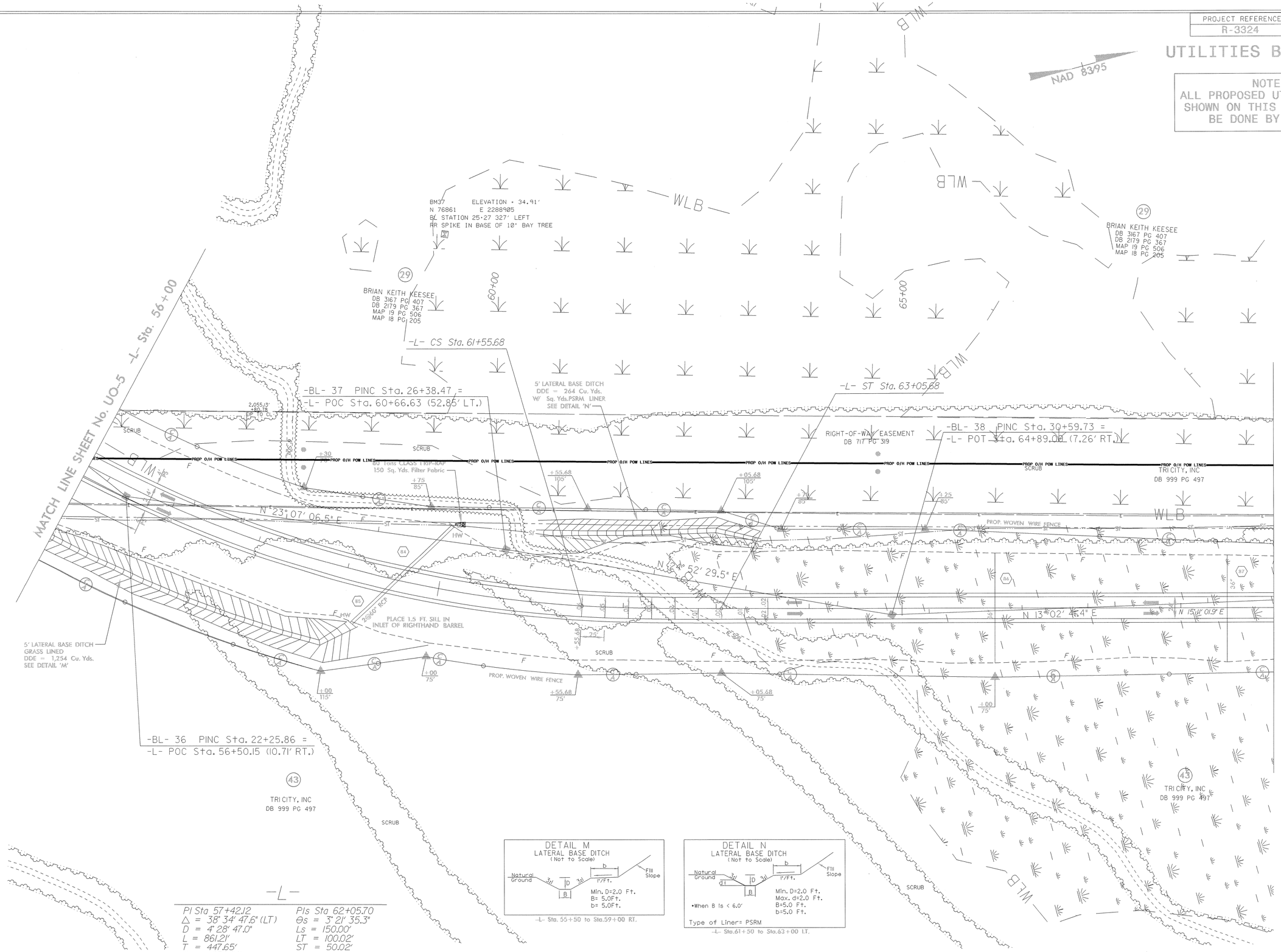

-L-

PI Sta 57+42.12	PIs Sta 62+05.70
Δ = 38° 34' 47.6" (LT)	Θs = 3° 21' 35.3"
D = 4° 28' 47.0"	Ls = 150.00'
L = 861.21'	LT = 100.02'
T = 447.65'	ST = 50.02'
R = 1,279.00'	

5/14/99

05-NOV-2012 13:45
Rdy_Ut\Proj\R-3324_UBO FILES\R3324_Ut_(rdy sht#8)_UO-6.dgn
$$$$USERNAME$$$$

PROJECT REFERENCE NO.	SHEET NO.
R-3324	UO-7

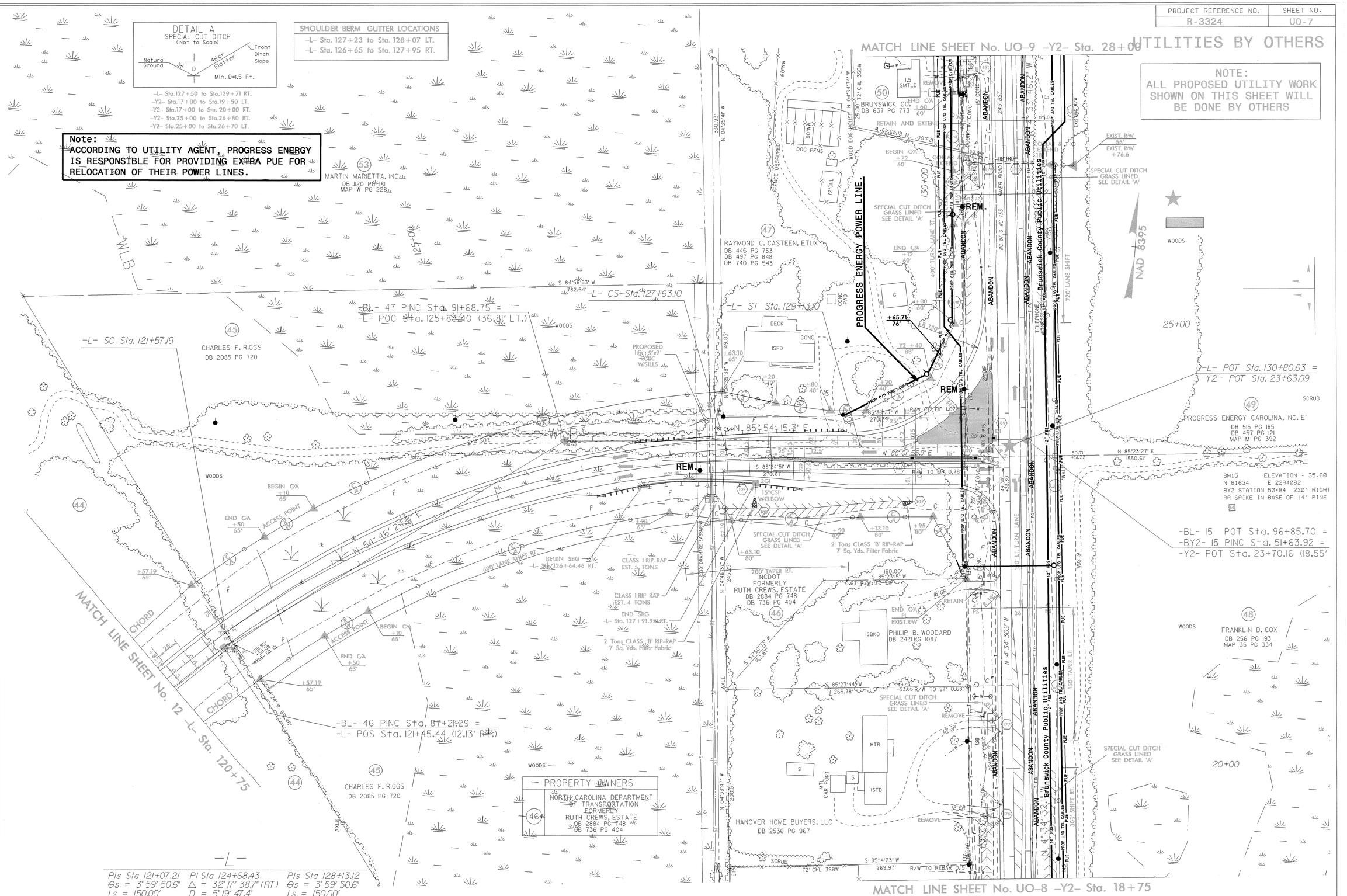

5/14/99

05-NOV-2012 13:43
dy_Ut\Proj\R-3324_UBO FILES\R3324_Ut_(rdy sht#13)_UO-7.dgn
$$$$USERNAME$$$$

PROJECT REFERENCE NO.	SHEET NO.
R-3324	UO-8

UTILITIES BY OTHERS

NOTE:
ALL PROPOSED UTILITY WORK SHOWN ON THIS SHEET WILL BE DONE BY OTHERS

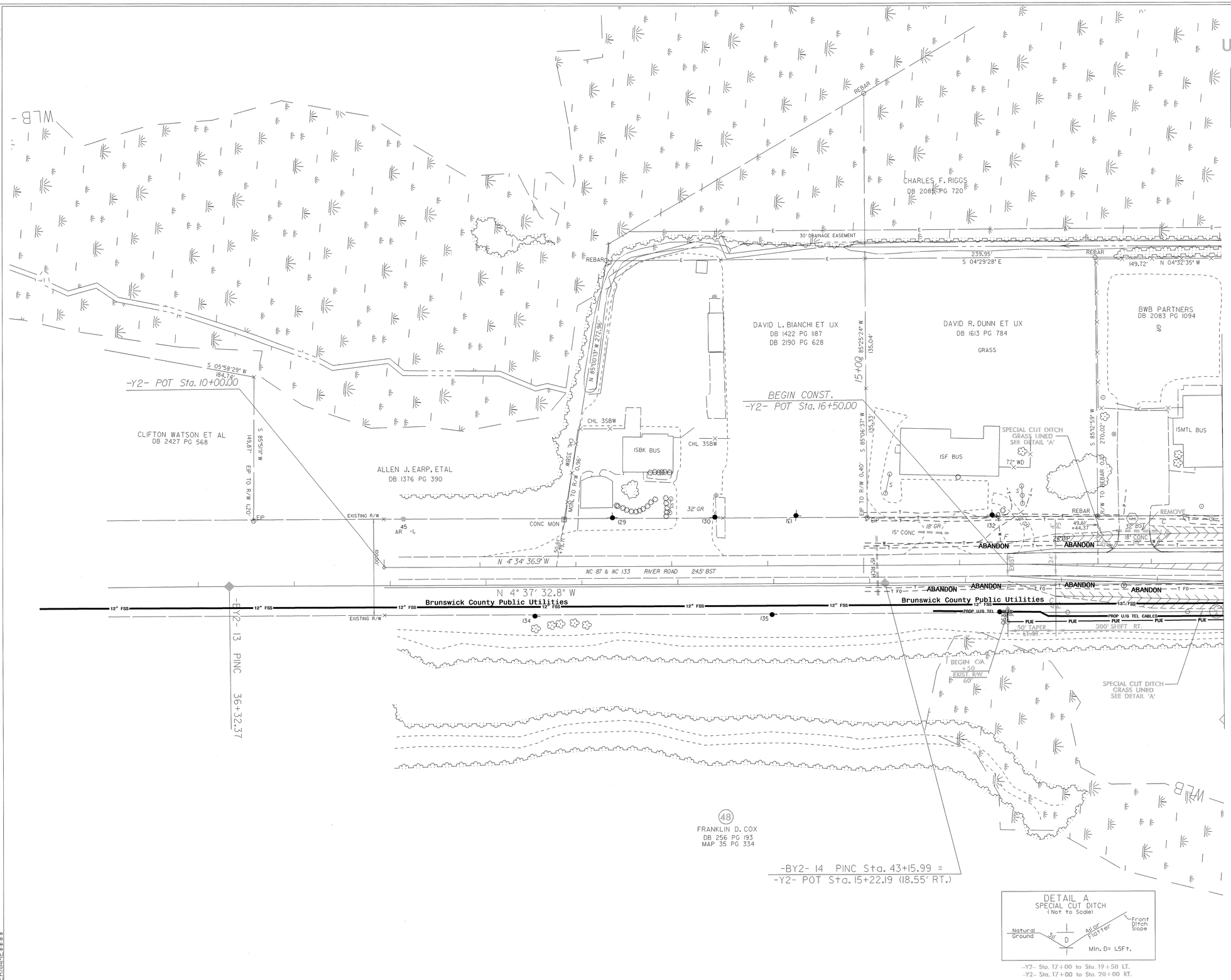

5/14/99

05-NOV-2012 13:41
dy_Ut\Pro\R-3324_UBO FILES\R3324_Ut_(rdy sht#14)_UO-8.dgn
$$$$USERNAME$$$$

PROJECT REFERENCE NO.	SHEET NO.
R-3324	UO-9

UTILITIES BY OTHERS

NOTE:
ALL PROPOSED UTILITY WORK SHOWN ON THIS SHEET WILL BE DONE BY OTHERS

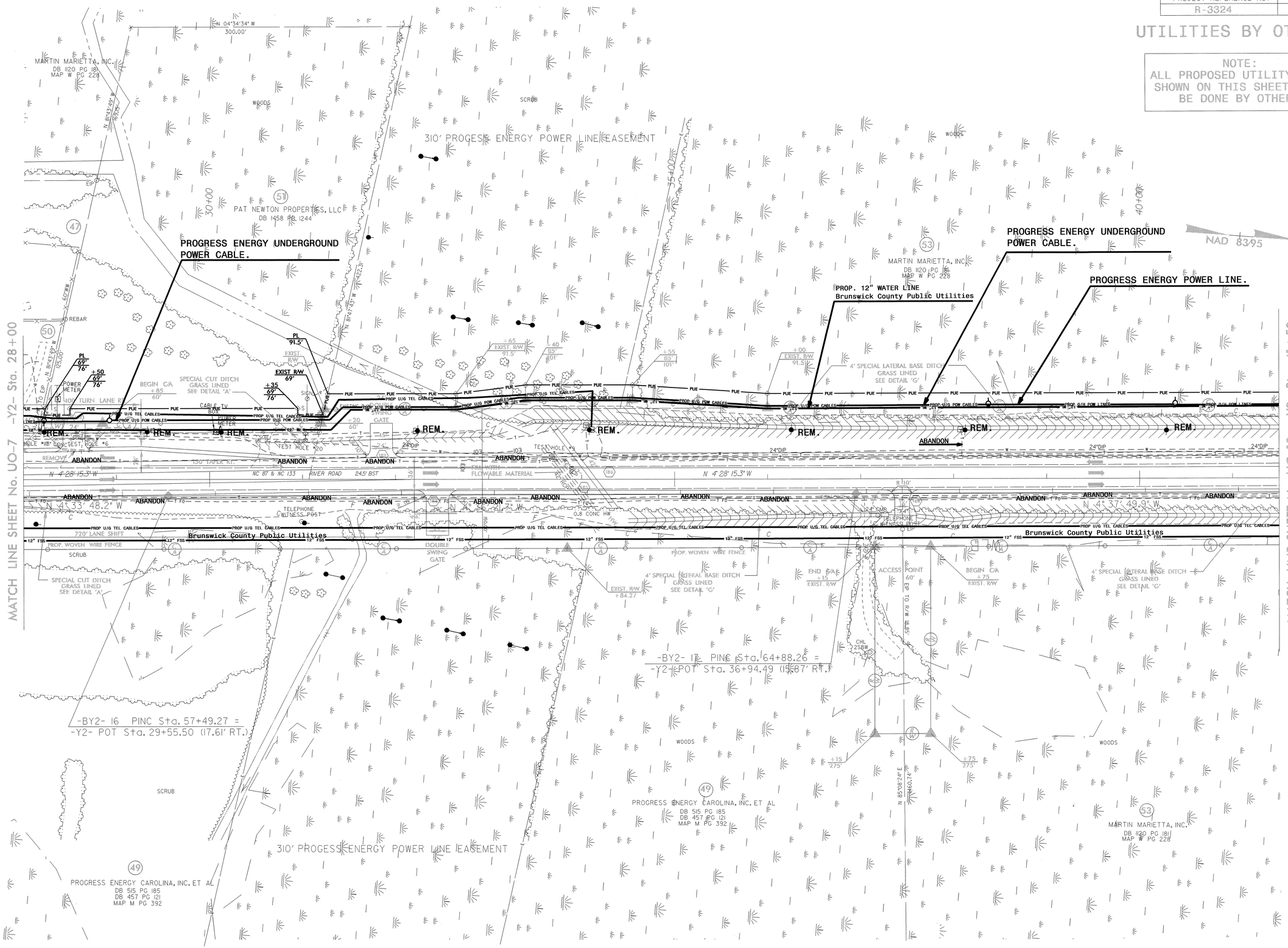

5/14/99

05-NOV-2012 13:39
Rdy_Ut\Proj\R-3324 UBO FILES\R3324_Ut_(rdy sht#15)_UO-9.dgn
$$$$USERNAME$$$$

PROJECT REFERENCE NO.	SHEET NO.
R-3324	UO-10

UTILITIES BY OTHERS

NOTE:
ALL PROPOSED UTILITY WORK SHOWN ON THIS SHEET WILL BE DONE BY OTHERS

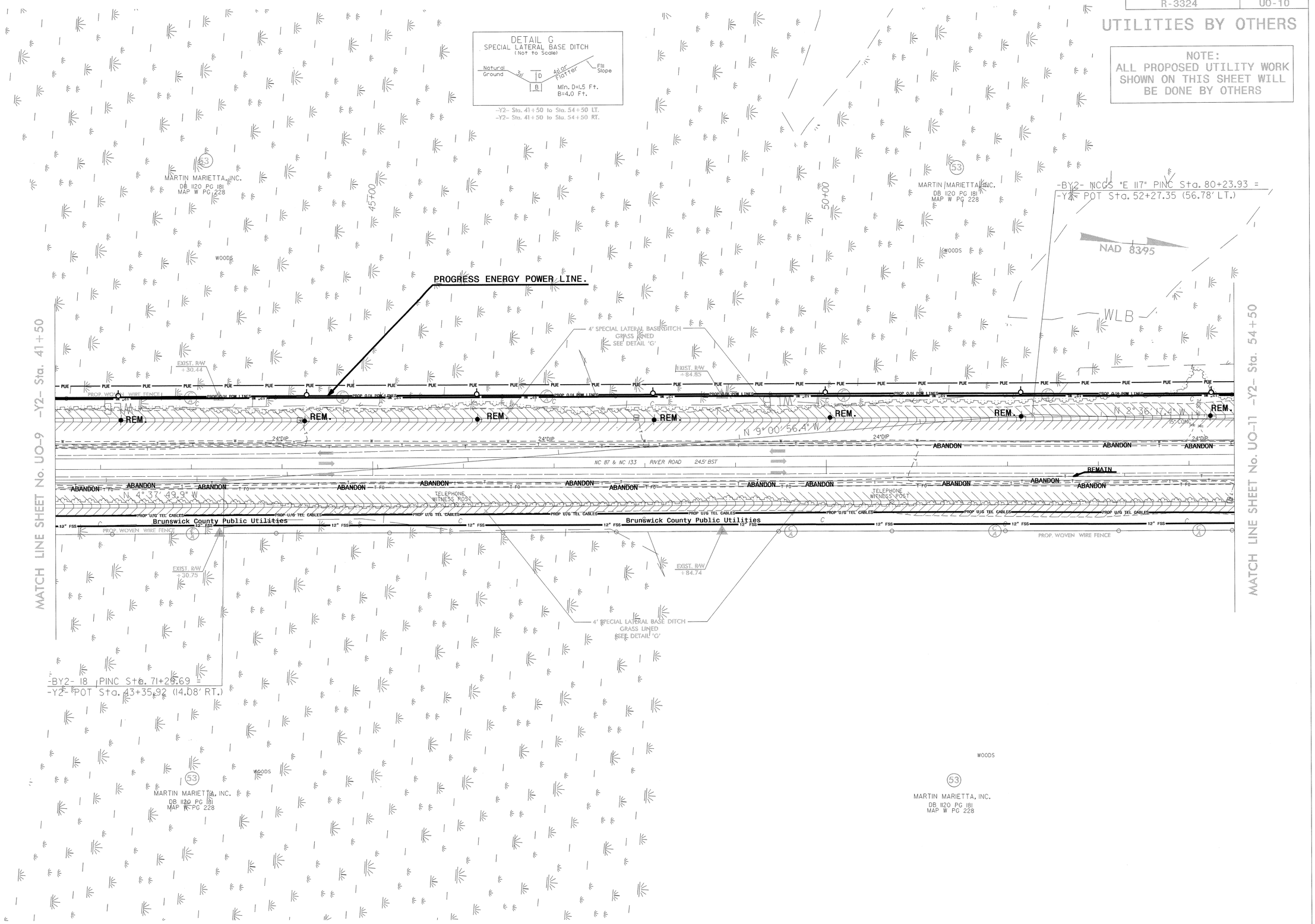

5/14/99

05-NOV-2012 11:44
I:\Proj\R-3324_UBO FILES\R3324_Ut_(rdy sht#16)_UO-10.dgn
$$$$USERNAME$$$$

PROJECT REFERENCE NO.	SHEET NO.
R-3324	UO-11

UTILITIES BY OTHERS

NOTE:
ALL PROPOSED UTILITY WORK SHOWN ON THIS SHEET WILL BE DONE BY OTHERS

NAD 83/95

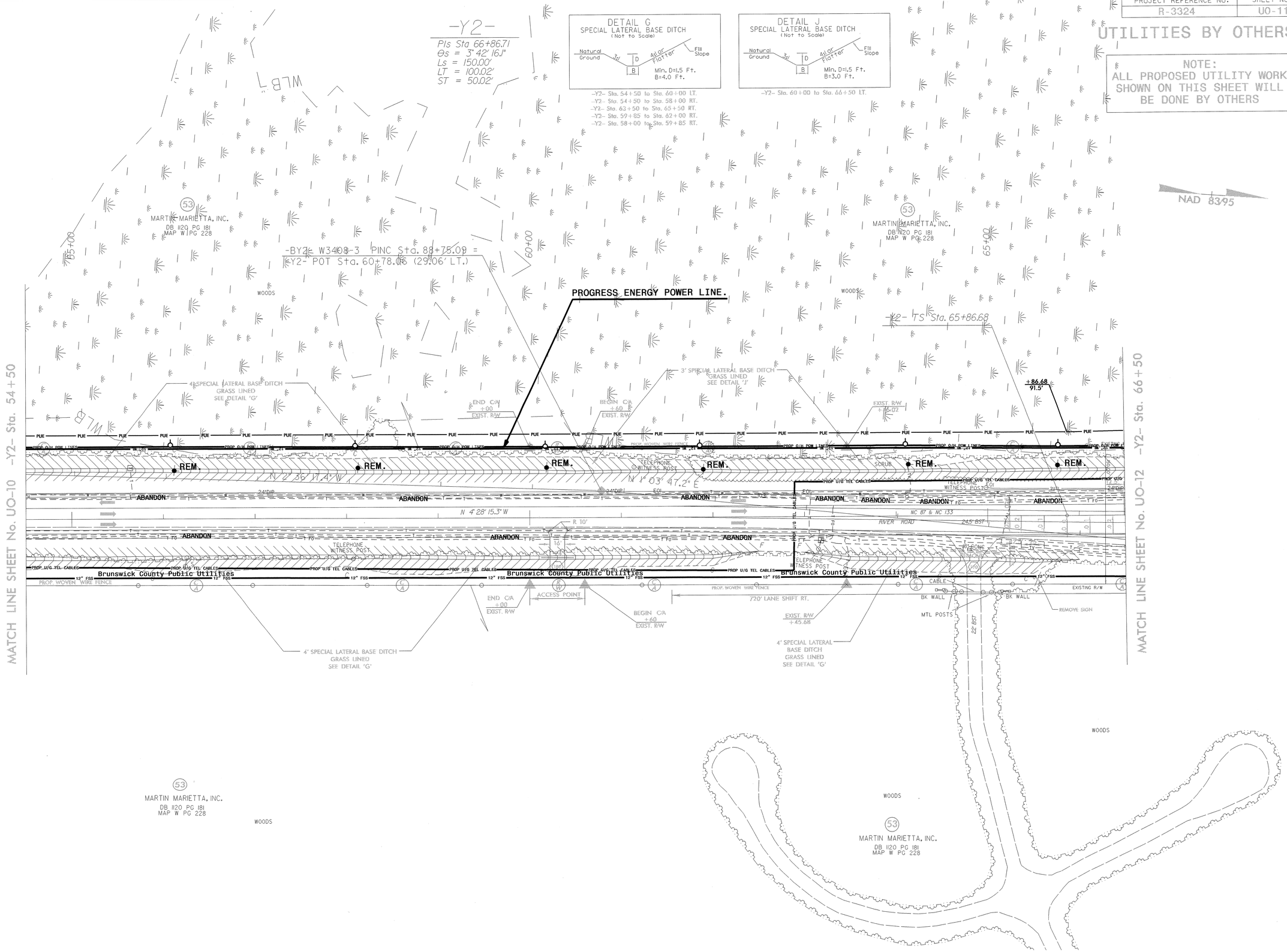

5/14/99

05-NOV-2002 11:13
Ut_Ops_Utilities_Mgr_Group FILES\R3324_Ut_rdy sht#17_UO-11.dgn
$$$$USERNAME$$$$

PROJECT REFERENCE NO.	SHEET NO.
R-3324	UO-12

UTILITIES BY OTHERS

NOTE:
ALL PROPOSED UTILITY WORK SHOWN ON THIS SHEET WILL BE DONE BY OTHERS

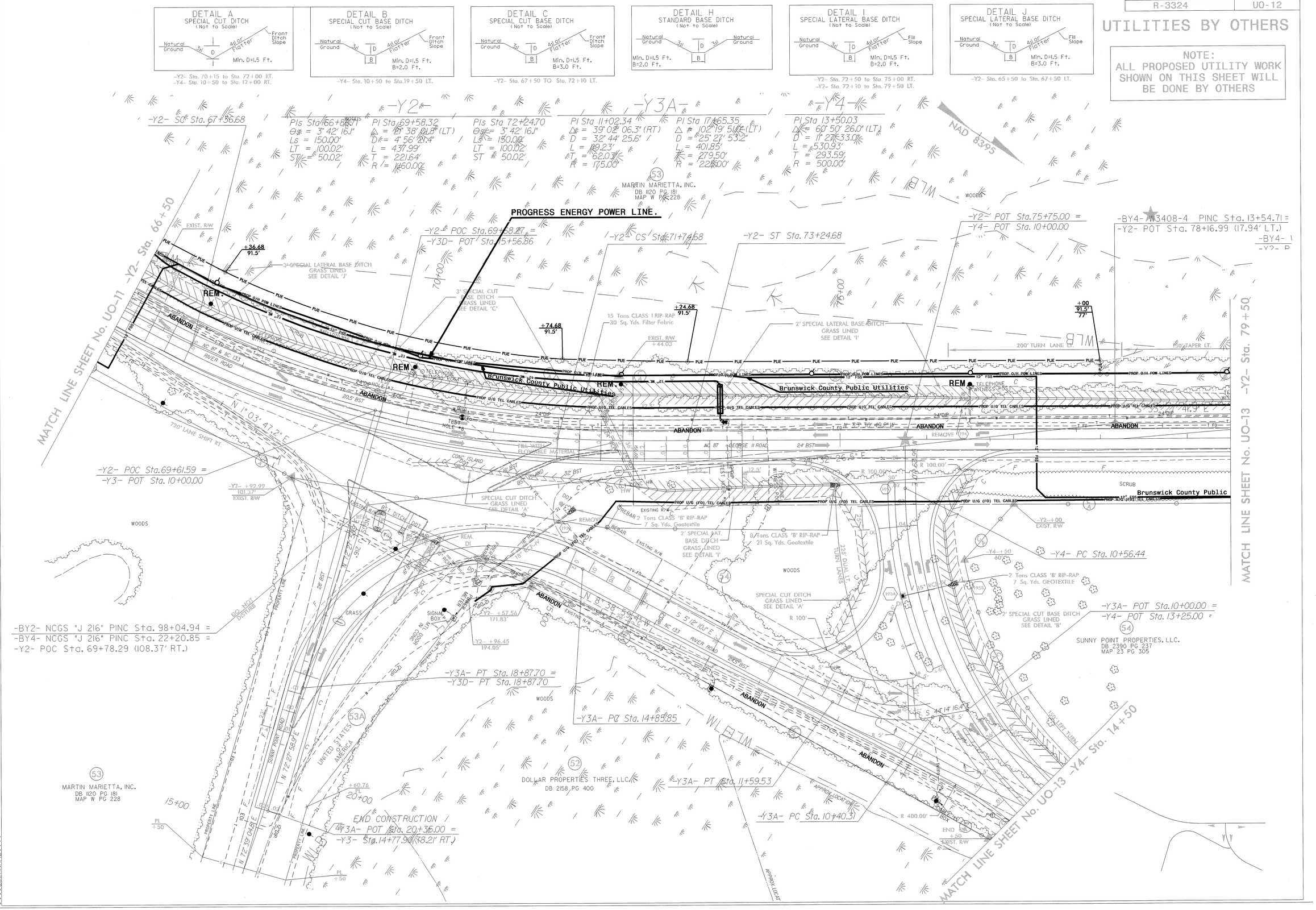

05-NOV-2012 11:42
$$$$USERNAME$$$$ FILES\R3324_Ut_Dr_dly sht#18_UO-12.dgn

PROJECT REFERENCE NO.	SHEET NO.
R-3324	UO-13

UTILITIES BY OTHERS

NOTE:
ALL PROPOSED UTILITY WORK SHOWN ON THIS SHEET WILL BE DONE BY OTHERS

-Y4-
PI Sta 13+50.03
Δ = 60° 50' 26.0" (LT)
D = 11° 27' 33.0"
L = 530.93'
T = 293.59'
R = 500.00'

-BY4- W3408-5 POT Sta. 5+00.00 =
-Y2- POT Sta. 86+71.71 (17.15' LT.)

W3408-114 PINC Sta. 9+10.27 =
-Y2- POT Sta. 82+61.44 (17.53' LT.)

MARTIN MARIETTA, INC.
DB 1120 PG 181
MAP W PG 228

PROGRESS ENERGY POWER LINE.

2' SPECIAL LATERAL BASE DITCH GRASS LINED SEE DETAIL 'I'

END C/A +50 EXIST. R/W

NAD 83/95

MATCH LINE SHEET No. UO-12 -Y2- Sta. 79+50

PROP O/H POW LINES

EXISTING R/W

TELEPHONE WITNESS POST

300' SHIFT RT.

PROP U/G TEL CABLES

24"DIP

ABANDON

N 33° 30' 49.2" W

NC 87 GEORGE II ROAD 24' BST

END CONSTRUCTION
-Y2- POT Sta. 83+50.00

Brunswick County Public Utilities

Utilities

END C/A +80 75'

30" CMP

REBAR

R/W TO REBAR 1.91'

N 77°16'39" E 313.32'

S 53°20'09" E 28.25'

MATCH LINE SHEET No. UO-12 -Y4- Sta. 14+50

SUNNY POINT PROPERTIES, LLC.
DB 2390 PG 237
MAP 23 PG 305

2' SPECIAL LATERAL BASE DITCH GRASS LINED SEE DETAIL 'I'

END C/A +27.83 60'

BEGIN C/A +87.38 EXIST R/W

150' LEFT SHIFT

CROSS POINT

END C/A +40 EXIST. R/W

DETAIL I
SPECIAL LATERAL BASE DITCH
(Not to Scale)

Natural Ground — 3:1 — D — B — 4:1 or Flatter — Fill Slope

Min. D=1.5 Ft.
B=2.0 Ft.

-Y2- Sta. 14+50 to Sta. 15+50 LT.

HOWE STREET, INC.
DB 2159 PG 992
MAP X PG 184

GRASS

APPROX. LOCATION

END CONSTRUCTION
-Y4- POT Sta. 20+50.00

-BY2- W3408-113 PINC Sta. 112+59.52 =
-Y4- POT Sta. 20+69.59 (18.50' LT.)

-Y4- PT Sta. 15+87.38

DOLLAR PROPERTIES THREE, LLC.
DB 2158 PG 400

-BY2- W3408-2 PINC Sta. 108+51.96 =
-Y4- POT Sta. 16+62.03 (18.56' LT.)

N 4°20' 44.5" W

NC 133 RIVER ROAD 24.5' BST

18" CMP

SCRUB

5/14/99

05-NOV-2002 11:41
R:\Hydraulics\Project FILES\R3324_Ut_Irdy sht#19_UO-13.dgn
$$$$USERNAME$$$$

PROJECT REFERENCE NO.	SHEET NO.
R-3324	UO-14

UTILITIES BY OTHERS

NOTE:
ALL PROPOSED UTILITY WORK SHOWN ON THIS SHEET WILL BE DONE BY OTHERS

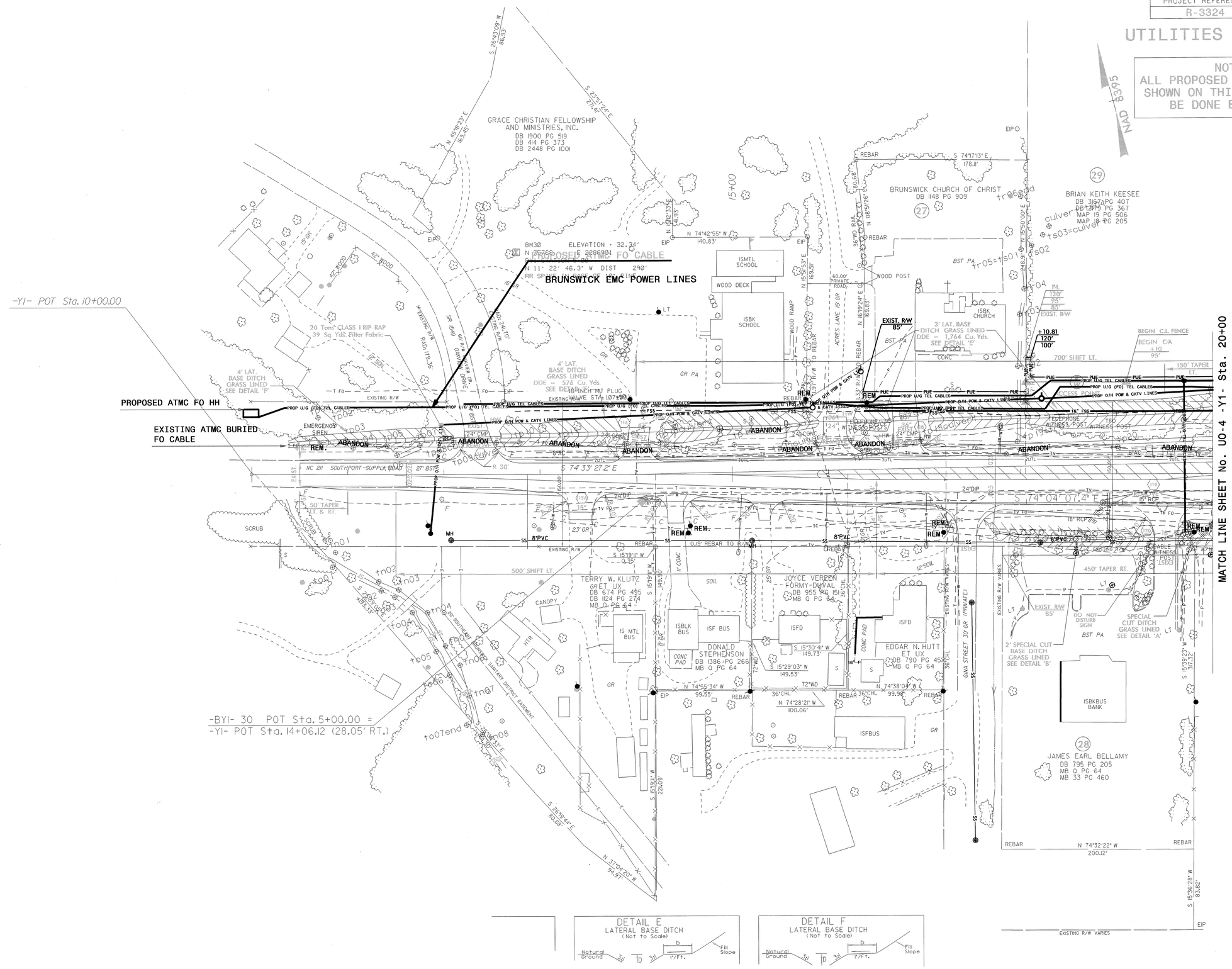

05-NOV-2012 11:38
I:\Ut\Proj\R-3324 UBD FILES\R3324_Ut_(rdy sht#20)_UO-14.dgn
$$$$USERNAME$$$$

PROJECT REFERENCE NO.	SHEET NO.
R-3324	UO-15

UTILITIES BY OTHERS

NOTE:
ALL PROPOSED UTILITY WORK SHOWN ON THIS SHEET WILL BE DONE BY OTHERS

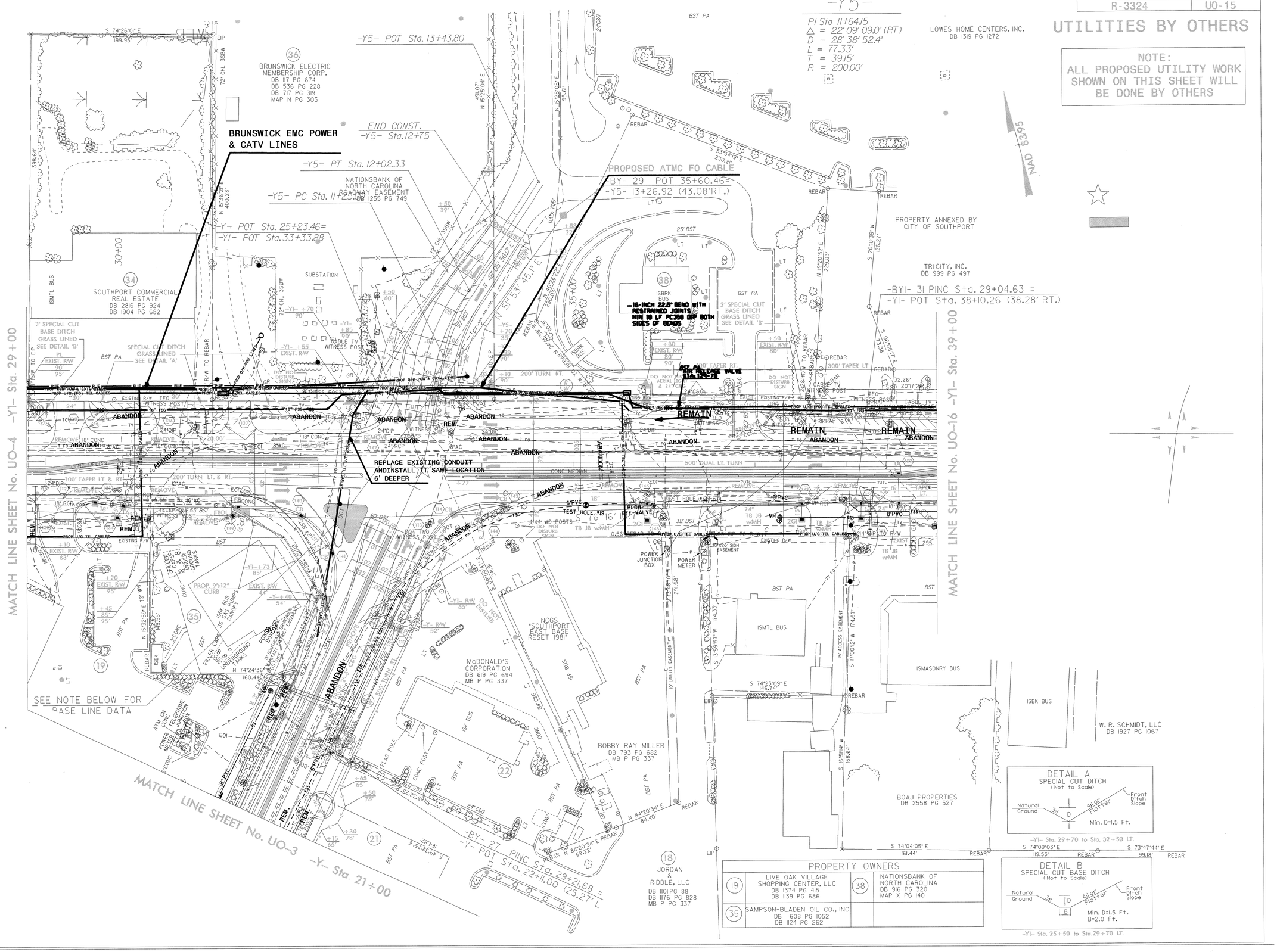

PROPERTY OWNERS			
19	LIVE OAK VILLAGE SHOPPING CENTER, LLC DB 1374 PG 415 DB 1139 PG 686	38	NATIONSBANK OF NORTH CAROLINA DB 916 PG 320 MAP X PG 140
35	SAMPSON-BLADEN OIL CO., INC DB 608 PG 1052 DB 1124 PG 262		

5/14/99

05-NOV-2012 11:36
y:\Proj\R-3324\UBO FILES\R3324_Ut_(rdy sht#21)_UO-15.dgn
$$$$USERNAME$$$$

PROJECT REFERENCE NO.	SHEET NO.
R-3324	UO-16

UTILITIES BY OTHERS

NOTE:
ALL PROPOSED UTILITY WORK SHOWN ON THIS SHEET WILL BE DONE BY OTHERS

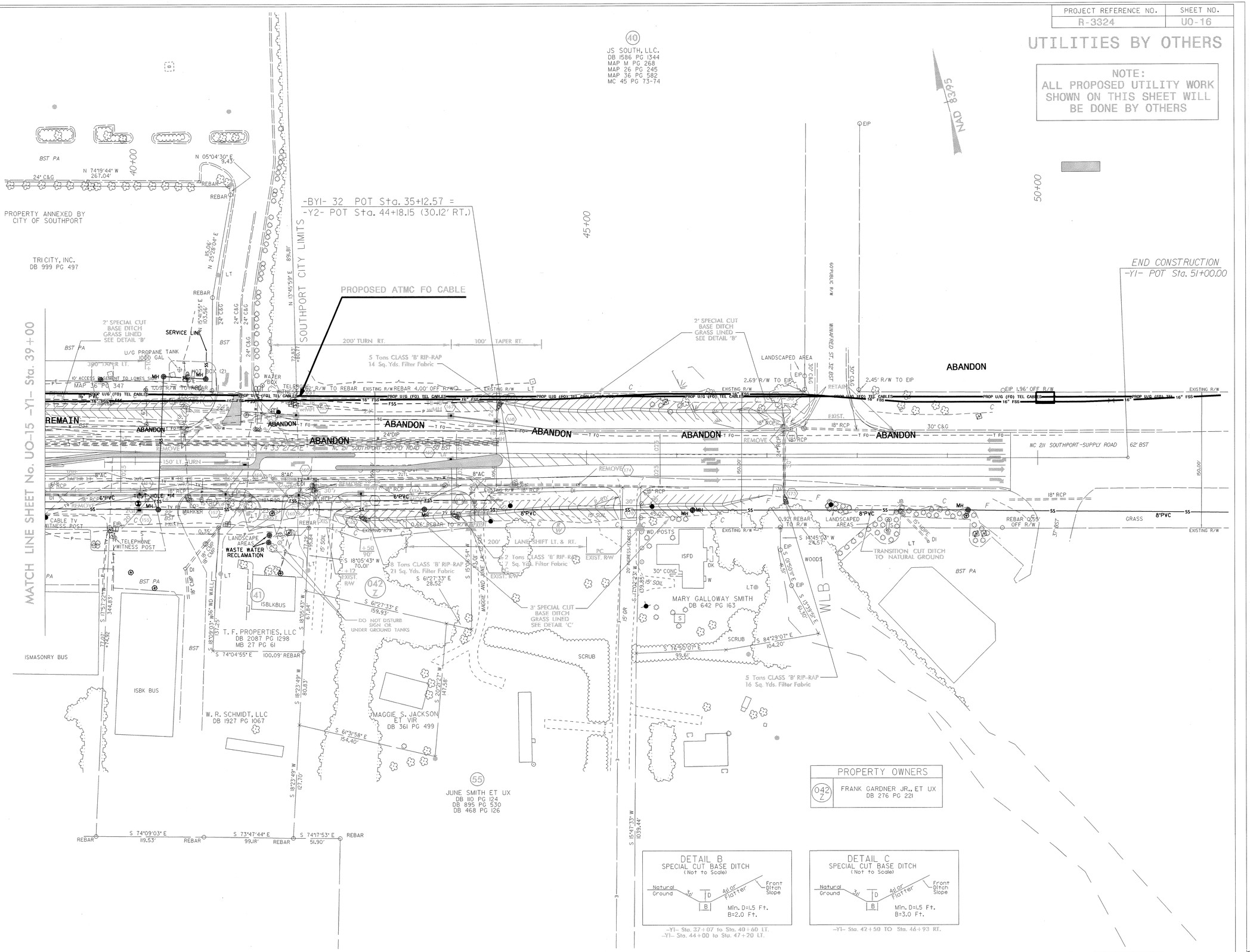

PROPERTY OWNERS	
042 Z	FRANK GARDNER JR., ET UX DB 276 PG 221

5/14/99

05-NOV-2012 11:34
Rdy_Ut\Proj\R-3324_UBO FILES\R3324_Ut_(rdy sht#22)_UO-16.dgn
$$$$USERNAME$$$$