TIP PROJECT: B-4712

CONTRACT: C203038

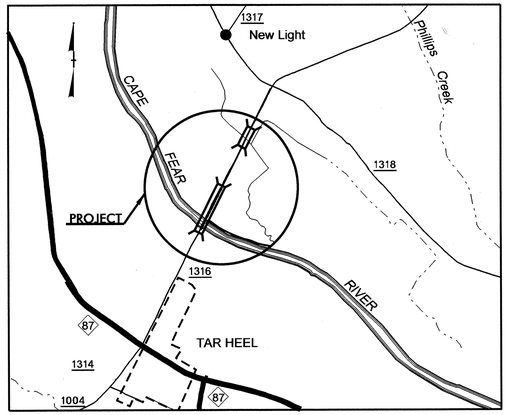

VICINITY MAP

STATE OF NORTH CAROLINA
DIVISION OF HIGHWAYS

BLADEN COUNTY

STATE	STATE PROJECT REFERENCE NO.	SHEET NO.	TOTAL SHEETS
N.C.	B-4712		

STATE PROJ. NO.	F. A. PROJ. NO.	DESCRIPTION
37912.1.1	BRZ-1316(6)	P.E.
37912.2.1	BRZ-1316(6)	R/W & UTILITIES
37912.3.1	BRZ-1316(18)	CONST.

BRIDGE NO. 188 AND NO. 189 OVER THE CAPE FEAR RIVER ON SR 1316

GRADING, PAVING, DRAINAGE, AND STRUCTURES

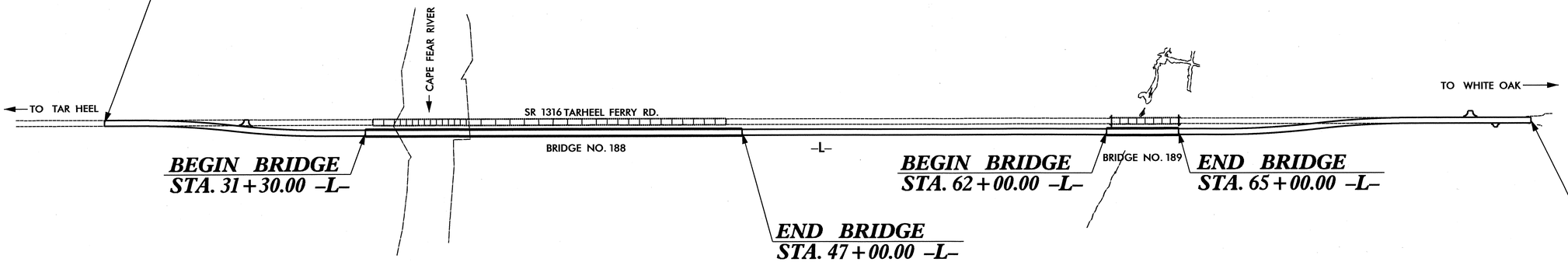

STRUCTURES

STATE OF NORTH CAROLINA DEPARTMENT OF TRANSPORTATION

DESIGN DATA

ADT 2013 = 3417
ADT 2033 = 5584
DHV = 13 %
D = 55 %
T = 18 % *
V = 60 MPH
* TTST = 13% DUAL = 5%
FUNC CLASS = RURAL COLLECTOR
SUB-REGIONAL TIER

PROJECT LENGTH

LENGTH ROADWAY TIP PROJECT B-4712 = 0.773 MI
LENGTH STRUCTURE TIP PROJECT B-4712 = 0.354 MI
TOTAL LENGTH TIP PROJECT B-4712 = 1.127 MI

Prepared In the Office of:

DIVISION OF HIGHWAYS

2012 STANDARD SPECIFICATIONS

LETTING DATE :

MARCH 19, 2013

B. C. HUNT, P.E.
PROJECT ENGINEER

L. E. SUTTON, P.E.
PROJECT DESIGN ENGINEER

STRUCTURES MANAGEMENT UNIT
1000 BIRCH RIDGE DR.
RALEIGH, N.C. 27610

DIVISION OF HIGHWAYS
STATE OF NORTH CAROLINA

F. A. PROJECT No. BRZ-1316(18)

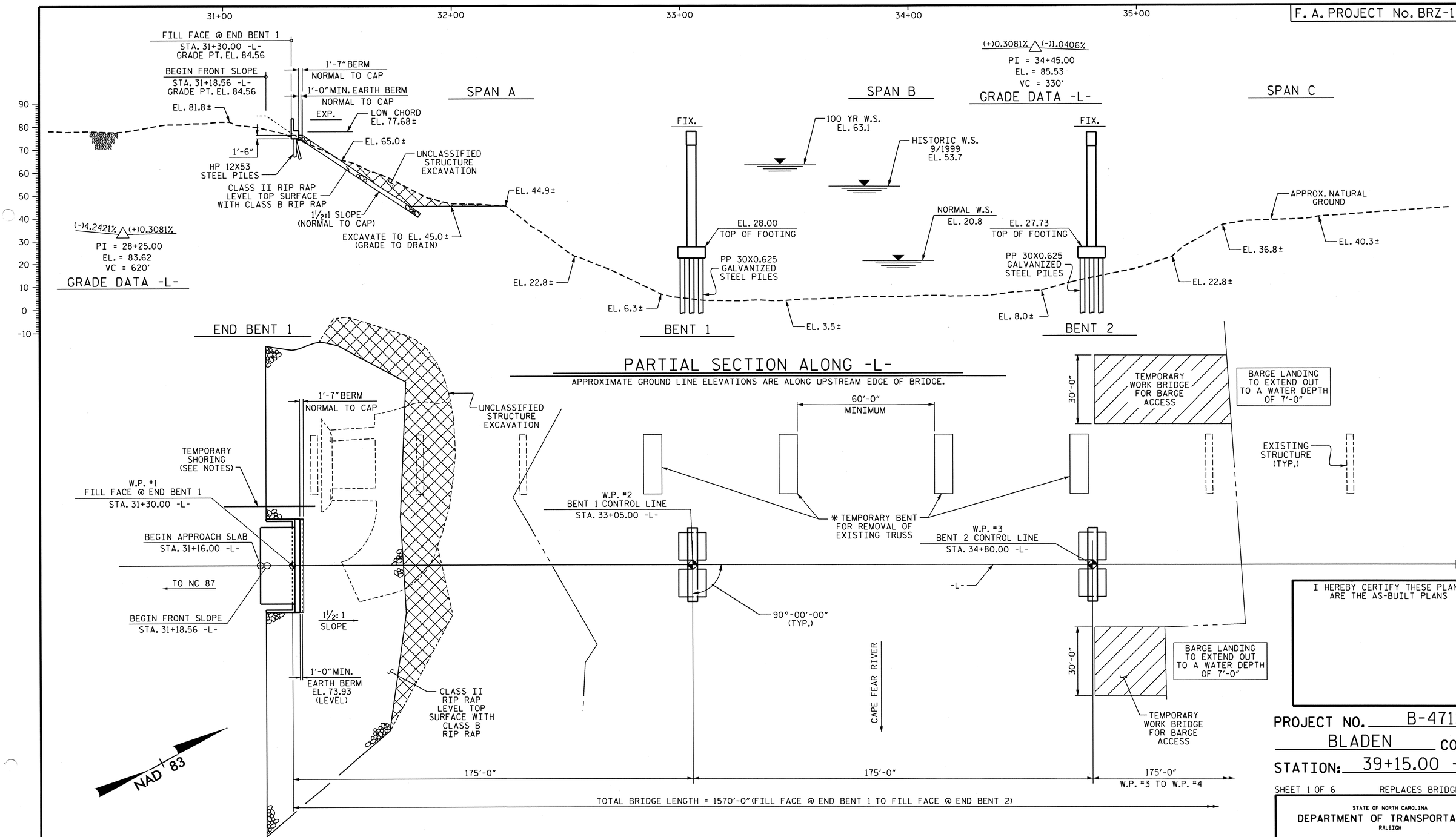

PARTIAL PLAN

(PILES NOT SHOWN IN PLAN VIEW FOR CLARITY)

* SIZE AND LOCATION OF TEMPORARY BENTS TO BE DETERMINED BY THE CONTRACTOR. A 60' MINIMUM HORIZONTAL NAVIGATIONAL OPENING MUST BE MAINTAINED IN THE RIVER CHANNEL

I HEREBY CERTIFY THESE PLANS ARE THE AS-BUILT PLANS

PROJECT NO. B-4712

BLADEN COUNTY

STATION: 39+15.00 -L-

SHEET 1 OF 6 REPLACES BRIDGE No. 188

STATE OF NORTH CAROLINA
DEPARTMENT OF TRANSPORTATION
RALEIGH

GENERAL DRAWING

BRIDGE ON SR 1316
OVER CAPE FEAR
RIVER BETWEEN NC 87
AND SR 1318

REVISIONS						SHEET NO.
NO.	BY:	DATE:	NO.	BY:	DATE:	S-1
1			3			TOTAL SHEETS
2			4			108

STR. #1

NORTH CAROLINA PROFESSIONAL SEAL 24091 ENGINEER BUCK CHARLES HUNT 1/3/13

NORTH CAROLINA PROFESSIONAL SEAL 21636 ENGINEER LAURA E. SUTTON 1/3/13

DRAWN BY : J.P. ADAMS DATE : 7/24/12
CHECKED BY : D.R. SMITH DATE : 8/2012

03-JAN-2013 12:07
R:\Structures\Plans\str01\B4712_SD_GD_01.dgn

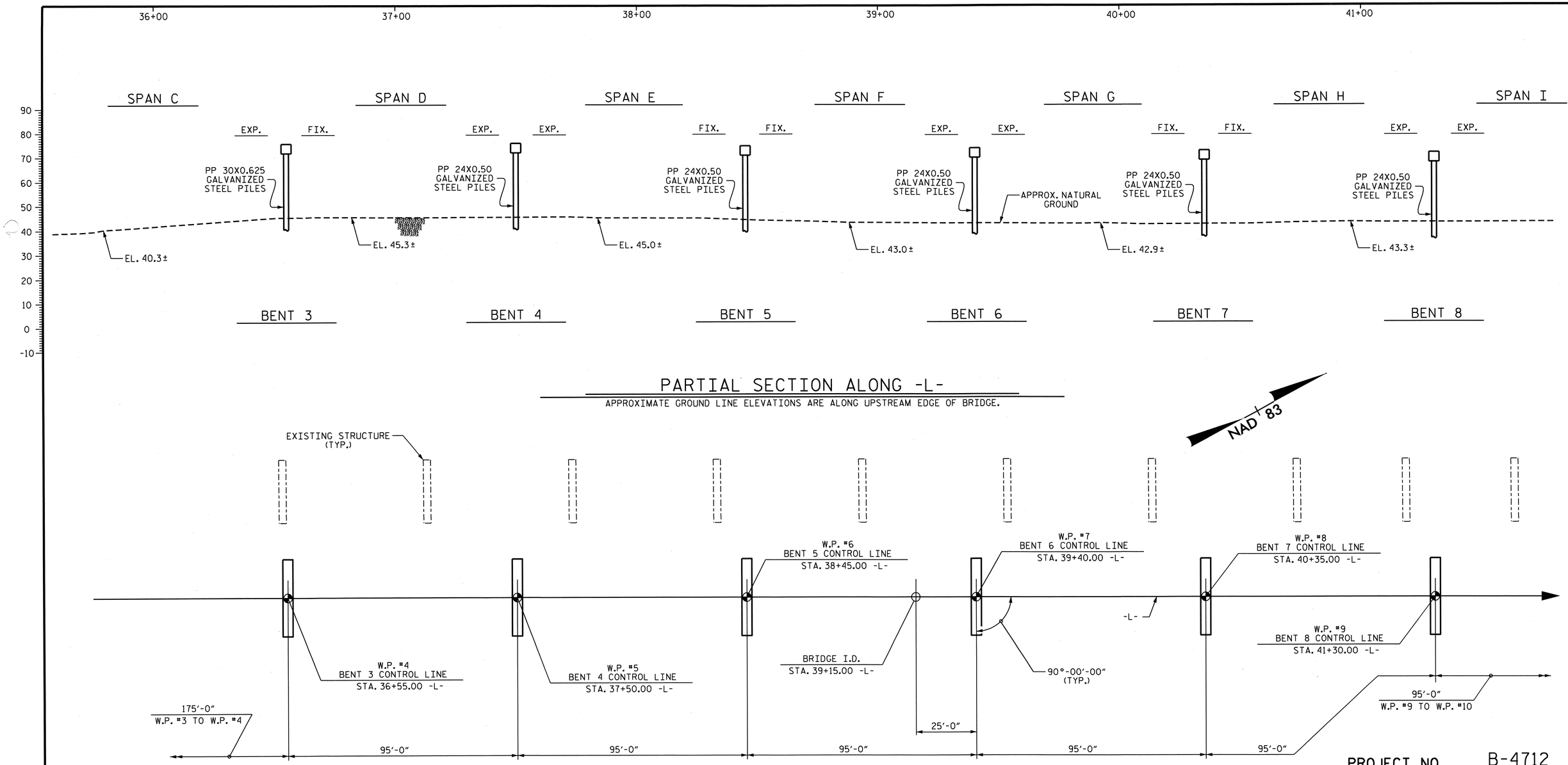

PARTIAL SECTION ALONG -L-

APPROXIMATE GROUND LINE ELEVATIONS ARE ALONG UPSTREAM EDGE OF BRIDGE.

PARTIAL PLAN

(PILES NOT SHOWN IN PLAN VIEW FOR CLARITY)

PROJECT NO. B-4712

BLADEN COUNTY

STATION: 39+15.00 -L-

SHEET 2 OF 6 REPLACES BRIDGE No. 188

STATE OF NORTH CAROLINA
DEPARTMENT OF TRANSPORTATION
RALEIGH

GENERAL DRAWING

BRIDGE ON SR 1316
OVER CAPE FEAR
RIVER BETWEEN NC 87
AND SR 1318

REVISIONS						SHEET NO.
NO.	BY:	DATE:	NO.	BY:	DATE:	S-2
1			3			TOTAL SHEETS
2			4			108

STR. #1

DRAWN BY : J.P. ADAMS DATE : 7/24/12
CHECKED BY : D.R. SMITH DATE : 8/2012

08-NOV-2012 13:06
R:\Structures\Plans\str01\B4712_SD_GD_01.dgn

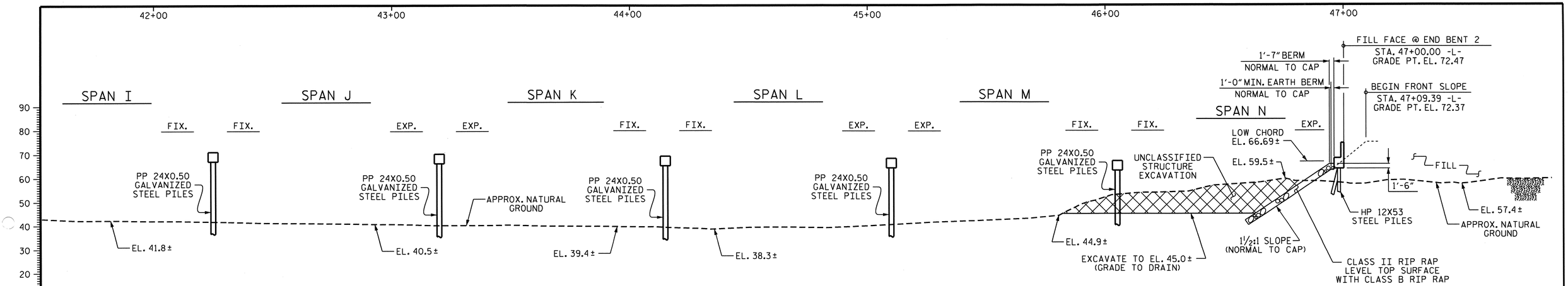

PARTIAL SECTION ALONG -L-

APPROXIMATE GROUND LINE ELEVATIONS ARE ALONG UPSTREAM EDGE OF BRIDGE.

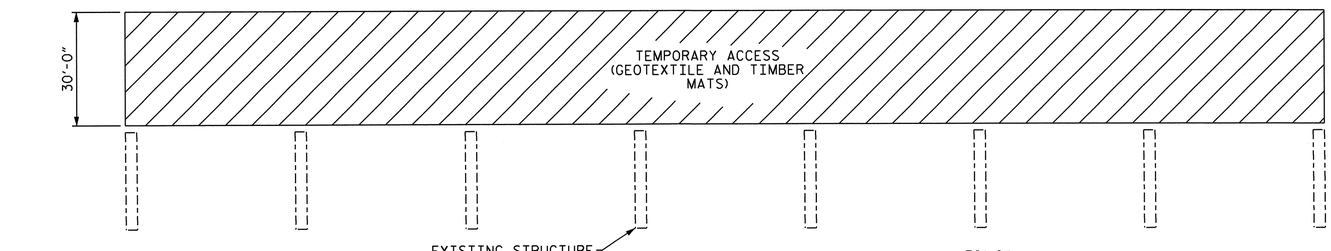

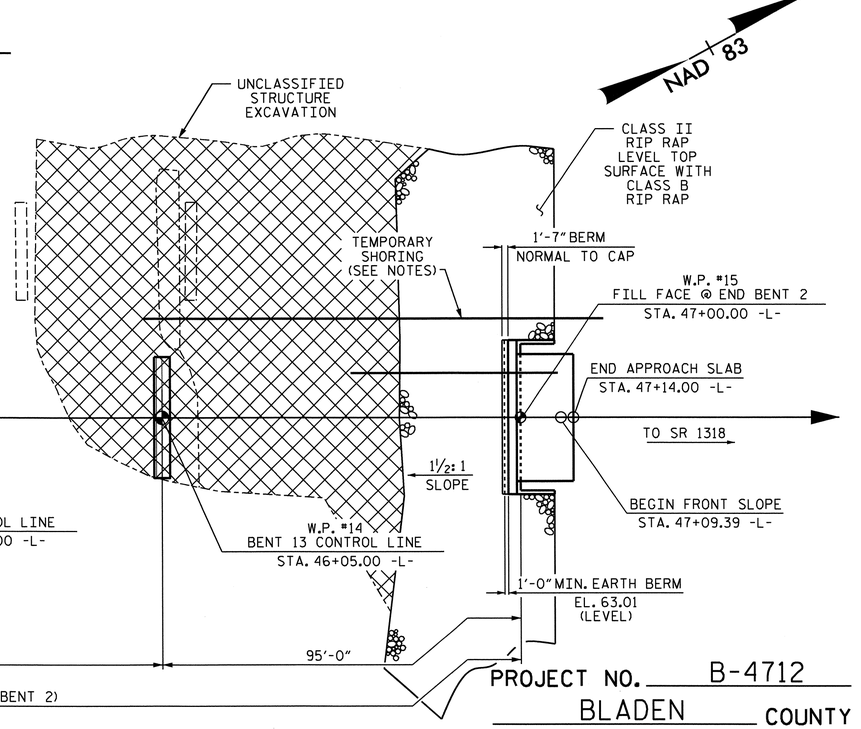

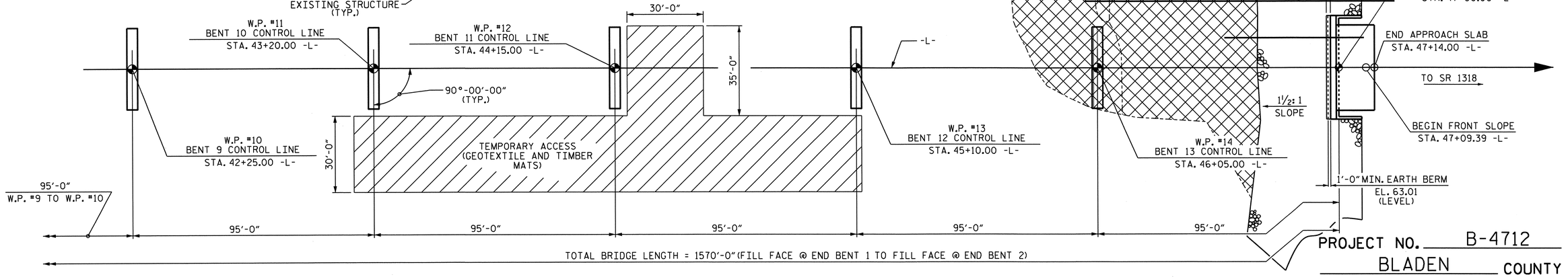

PARTIAL PLAN

(PILES NOT SHOWN IN PLAN VIEW FOR CLARITY)

NAD 83

PROJECT NO. B-4712

BLADEN COUNTY

STATION: 39+15.00 -L-

SHEET 3 OF 6 REPLACES BRIDGE No. 188

STATE OF NORTH CAROLINA
DEPARTMENT OF TRANSPORTATION
RALEIGH

GENERAL DRAWING

BRIDGE ON SR 1316
OVER CAPE FEAR
RIVER BETWEEN NC 87
AND SR 1318

REVISIONS						SHEET NO.
NO.	BY:	DATE:	NO.	BY:	DATE:	S-3
1			3			TOTAL SHEETS
2			4			108

STR. #1

NORTH CAROLINA PROFESSIONAL SEAL 21638 ENGINEER LAURA E. SUTTON 1/3/13

DRAWN BY : J.P. ADAMS DATE : 7/24/12
CHECKED BY : D.R. SMITH DATE : 8/2012

03-JAN-2013 12:07
R:\Structures\Plans\str01\B4712_SD_GD_01.dgn

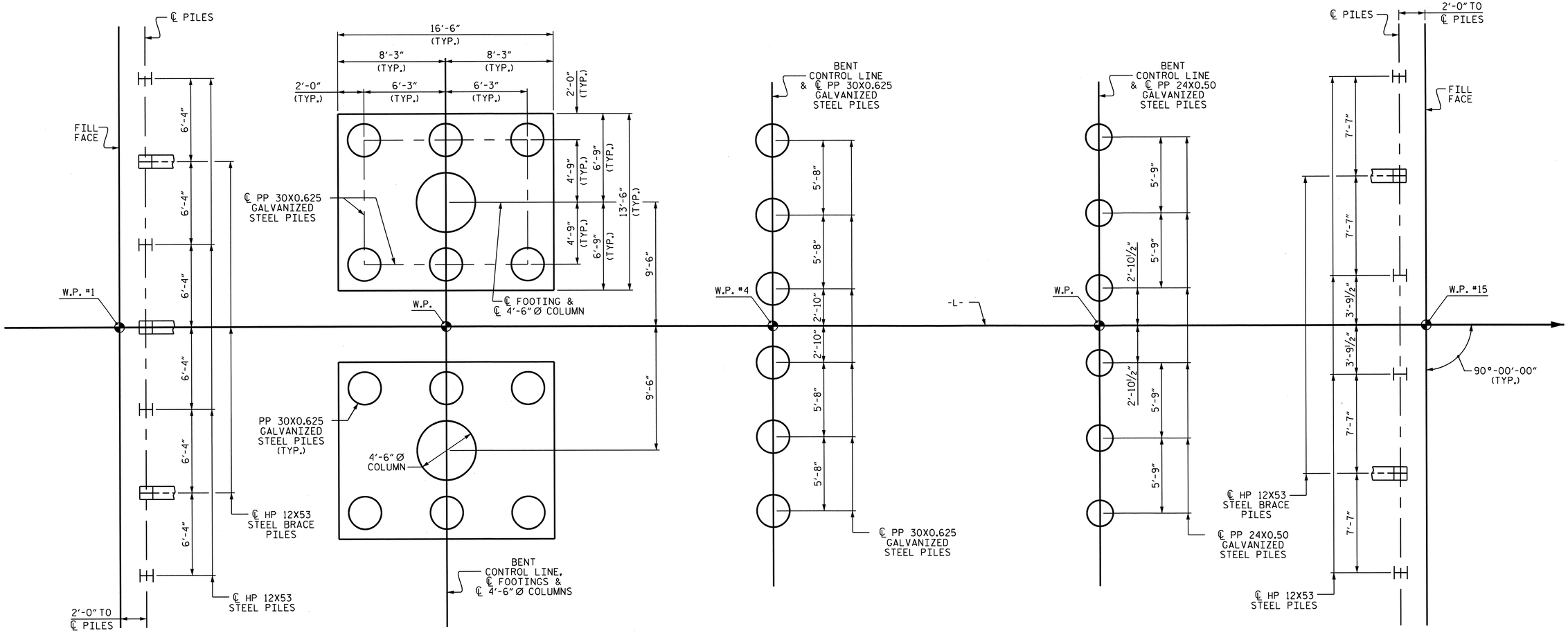

FOUNDATION LAYOUT

PILE LOCATION IS TO CENTERLINE OF PILE.
HP 12X53 STEEL BRACE PILES AT END BENTS ARE BATTERED 3 TO 12.
FOOTING DIMENSIONS ARE TYPICAL AT BENT 1 AND BENT 2.

NOTES

FOR PILES, SEE SECTION 450 OF THE STANDARD SPECIFICATIONS.

FOR PILE DRIVING CRITERIA, SEE SPECIAL PROVISIONS.

PILES AT END BENT 1 AND END BENT 2 ARE DESIGNED FOR A FACTORED RESISTANCE OF 120 TONS AND 115 TONS, RESPECTIVELY PER PILE.

PILES AT BENT 1 THROUGH BENT 13 ARE DESIGNED FOR FACTORED RESISTANCE OF 220, 220, 255, 210, 230, 210, 230, 210, 230, 210, 230, 210 AND 230 TONS, RESPECTIVELY PER PILE.

DRIVE PILES AT END BENT 1 AND END BENT 2 TO A REQUIRED DRIVING RESISTANCE OF 160 TONS.

DRIVE PILES AT BENT 1 THROUGH BENT 13 TO A REQUIRED DRIVING RESISTANCE OF 325, 340, 350, 285, 325, 295, 320, 285, 320, 290, 320, 290 AND 310 TONS, RESPECTIVELY PER PILE.

INSTALL PILES AT BENT 1 THROUGH BENT 13 TO A TIP ELEVATION NO HIGHER THAN EL. -40.0, -40.0, 0.0, 0.0, 0.0, 0.0, 8.0, 8.0, 10.0, 10.0, 10.0, 10.0 AND 19.0, RESPECTIVELY.

THE SCOUR CRITICAL ELEVATIONS FOR BENT 1 THROUGH BENT 13 ARE EL. -13.0, -9.0, 38.0, 38.0, 37.0, 35.0, 35.0, 35.0, 34.0, 32.0, 32.0, 32.0 AND 37.0, RESPECTIVELY. SCOUR CRITICAL ELEVATIONS ARE USED TO MONITOR POSSIBLE SCOUR PROBLEMS DURING THE LIFE OF THE STRUCTURE.

IT HAS BEEN ESTIMATED THAT A HAMMER WITH AN EQUIVALENT RATED ENERGY IN THE RANGE OF 75-155 FT-KIPS PER BLOW WILL BE REQUIRED TO DRIVE PILES AT BENT 1 THROUGH BENT 13. THIS ESTIMATED ENERGY RANGE DOES NOT RELEASE THE CONTRACTOR FROM PROVIDING DRIVING EQUIPMENT IN ACCORDANCE WITH SUBARTICLE 450-3(D)(2) OF THE STANDARD SPECIFICATIONS.

OBSERVE A 1 MONTH WAITING PERIOD AFTER CONSTRUCTING THE EMBANKMENT TO WITHIN 2 FEET OF FINISHED GRADE BEFORE BEGINNING END BENT CONSTRUCTION AT END BENT 1.

TESTING THE PRODUCTION PILES WITH THE PDA DURING DRIVING, RESTRIKING OR REDRIVING IS REQUIRED AT BENT 1 AND BENT 13. FOR PDA TESTING, SEE SECTION 450 OF THE STANDARD SPECIFICATIONS.

NORTH CAROLINA PROFESSIONAL SEAL 21638 ENGINEER LAURA E. SUTTON 1/03/13

DRAWN BY : J.P. ADAMS DATE : 7/23/12
CHECKED BY : D.R. SMITH DATE : 8/2012

03-JAN-2013 11:48
R:\Structures\Plans\str01\B4712_SD_GD_01.dgn

PROJECT NO. B-4712
BLADEN COUNTY
STATION: 39+15.00 -L-

SHEET 4 OF 6

STATE OF NORTH CAROLINA
DEPARTMENT OF TRANSPORTATION
RALEIGH

GENERAL DRAWING
BRIDGE ON SR 1316
OVER CAPE FEAR
RIVER BETWEEN NC 87
AND SR 1318

REVISIONS						SHEET NO.
NO.	BY:	DATE:	NO.	BY:	DATE:	S-4
1			3			TOTAL SHEETS
2			4			108

STR. #1

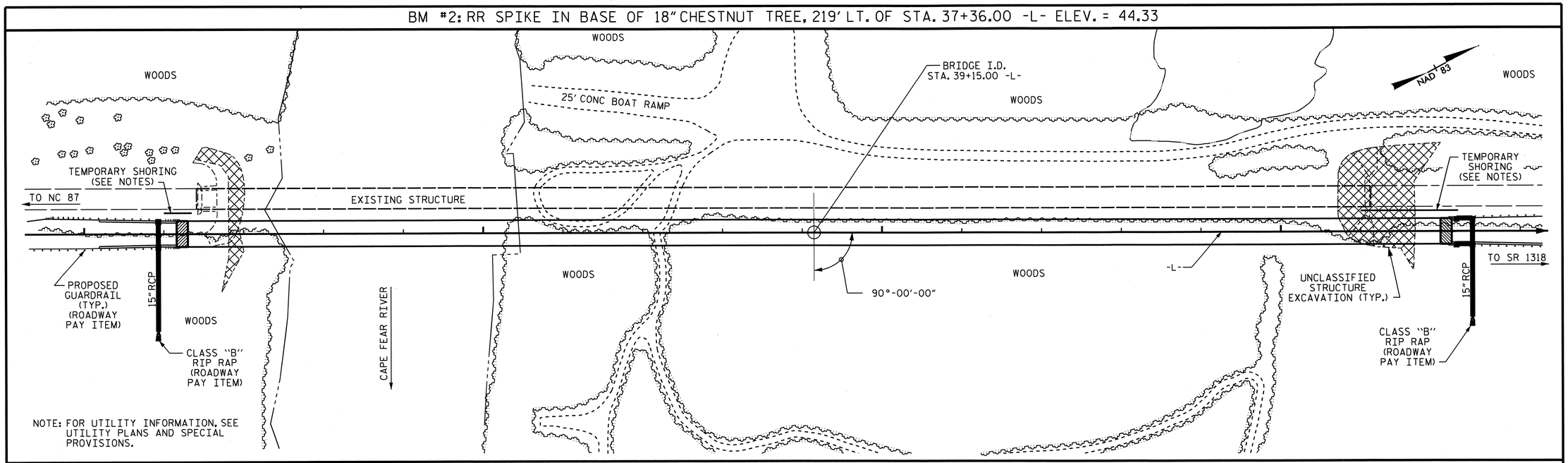

LOCATION SKETCH

NOTES

ASSUMED LIVE LOAD = HL-93 OR ALTERNATE LOADING.

THIS BRIDGE HAS BEEN DESIGNED IN ACCORDANCE WITH THE AASHTO LRFD BRIDGE DESIGN SPECIFICATIONS.

THIS BRIDGE IS LOCATED IN SEISMIC ZONE 2.

THIS STRUCTURE HAS BEEN DESIGNED IN ACCORDANCE WITH "HEC 18 - EVALUATING SCOUR AT BRIDGES".

FOR OTHER DESIGN DATA AND GENERAL NOTES, SEE SHEET SN.

FOR EROSION CONTROL MEASURES, SEE EROSION CONTROL PLANS.

FOR SUBMITTAL OF WORKING DRAWINGS, SEE SPECIAL PROVISIONS.

FOR FALSEWORK AND FORMWORK, SEE SPECIAL PROVISIONS.

FOR CRANE SAFETY, SEE SPECIAL PROVISIONS.

FOR GROUT FOR STRUCTURES, SEE SPECIAL PROVISIONS.

FOR CONSTRUCTION, MAINTENANCE AND REMOVAL OF TEMPORARY ACCESS AT STATION 39+15.00 -L-, SEE SPECIAL PROVISIONS.

FOR TEMPORARY BENTS, SEE SPECIAL PROVISIONS.

FOR BRIDGE DECK RIDEABILITY AND GROOVING AT STATION 39+15.00 -L-, SEE SPECIAL PROVISIONS.

FOR SECURING OF VESSELS, SEE SPECIAL PROVISIONS.

FOR MAINTENANCE OF WATER TRAFFIC, SEE SPECIAL PROVISIONS.

FOR WORK IN, OVER OR ADJACENT TO NAVIGABLE WATERS, SEE SPECIAL PROVISIONS.

FOR NAVIGATIONAL LIGHTING SYSTEM, SEE SPECIAL PROVISIONS.

THE FOOTINGS AT BENTS 1 & 2 ARE CONSIDERED MASS CONCRETE. FOR MASS CONCRETE, SEE SPECIAL PROVISIONS.

THE CONTRACTOR SHALL PROVIDE INDEPENDENT ASSURANCE SAMPLES OF REINFORCING STEEL AS FOLLOWS: FOR PROJECTS REQUIRING UP TO 400 TONS OF REINFORCING STEEL, ONE 30 INCH SAMPLE OF EACH SIZE BAR USED, AND FOR PROJECTS REQUIRING OVER 400 TONS OF REINFORCING STEEL, TWO 30 INCH SAMPLES OF EACH SIZE BAR USED. THE BARS FROM WHICH THE SAMPLES ARE TAKEN MUST THEN BE SPLICED WITH REPLACEMENT BARS OF THE SIZE AND LENGTH OF THE SAMPLE, PLUS A MINIMUM LAP SPLICE OF THIRTY BAR DIAMETERS. PAYMENT FOR THE SAMPLES OF REINFORCING STEEL SHALL BE CONSIDERED INCIDENTAL TO VARIOUS PAY ITEMS.

PRESTRESSED CONCRETE DECK PANELS MAY BE USED IN LIEU OF METAL STAY-IN-PLACE FORMS (PRESTRESSED CONCRETE GIRDER SPANS ONLY) IN ACCORDANCE WITH ARTICLE 420-3 OF THE STANDARD SPECIFICATIONS.

REMOVABLE FORMS MAY BE USED IN LIEU OF METAL STAY-IN-PLACE FORMS IN ACCORDANCE WITH ARTICLE 420-3 OF THE STANDARD SPECIFICATIONS.

NEEDLE BEAMS WILL NOT BE ALLOWED UNLESS OTHERWISE CALLED FOR ON THE PLANS OR APPROVED BY THE ENGINEER.

ALL STRUCTURAL STEEL SHALL BE AASHTO M270 GRADE 50W AND PAINTED IN ACCORDANCE WITH SYSTEM 4 OF ARTICLE 442-8 OF THE STANDARD SPECIFICATIONS UNLESS OTHERWISE NOTED ON THE PLANS.

INASMUCH AS THE PAINT SYSTEM ON THE EXISTING STRUCTURAL STEEL CONTAINS LEAD, THE CONTRACTOR'S ATTENTION IS DIRECTED TO ARTICLE 107-1 OF THE STANDARD SPECIFICATIONS. ANY COSTS RESULTING FROM COMPLIANCE WITH APPLICABLE STATE OR FEDERAL REGULATIONS PERTAINING TO HANDLING OF MATERIALS CONTAINING LEAD BASED PAINT SHALL BE INCLUDED IN THE BID PRICE FOR "REMOVAL OF EXISTING STRUCTURE AT STATION 39+15.00 -L-".

THE MATERIAL SHOWN IN THE CROSS-HATCHED AREA SHALL BE EXCAVATED FOR A DISTANCE OF 110 FEET LEFT AND 85 FEET RIGHT OF CENTERLINE ROADWAY AS DIRECTED BY THE ENGINEER. THIS WORK WILL BE PAID FOR AT THE CONTRACT LUMP SUM PRICE FOR UNCLASSIFIED STRUCTURE EXCAVATION. SEE SECTION 412 OF THE STANDARD SPECIFICATIONS.

FOR LIMITS OF TEMPORARY SHORING FOR MAINTENANCE OF TRAFFIC, SEE TRAFFIC CONTROL PLANS. FOR PAY ITEM FOR TEMPORARY SHORING FOR MAINTENANCE OF TRAFFIC, SEE ROADWAY PLANS.

AFTER SERVING AS A TEMPORARY STRUCTURE, THE EXISTING STRUCTURE CONSISTING OF 24 SPANS (2 @ 45'-0", 1 @ 300'-0" TRUSS, 9 @ 60'-0" AND 12 @ 45'-0") WITH A CONCRETE CAST-IN-PLACE DECK ON I-BEAMS WITH A CLEAR ROADWAY WIDTH OF 26'-0" ON END BENTS CONSISTING OF REINFORCED CONCRETE CAP AND CONCRETE PILES AND INTERIOR BENTS CONSISTING OF REINFORCED POST AND BEAM AND CONCRETE PILES AND LOCATED AT THE PROPOSED SITE SHALL BE REMOVED. THE EXISTING BRIDGE IS PRESENTLY NOT POSTED FOR LOAD LIMIT. SHOULD THE STRUCTURAL INTEGRITY OF THE BRIDGE DETERIORATE A LOAD LIMIT MAY BE POSTED AND MAY BE REDUCED AS FOUND NECESSARY DURING THE LIFE OF THE PROJECT. FOR REMOVAL OF EXISTING STRUCTURE AT STA. 39+15.00 -L-, SEE SPECIAL PROVISIONS.

THE SUBSTRUCTURE OF THE EXISTING BRIDGE INDICATED ON THE PLANS IS FROM THE BEST INFORMATION AVAILABLE. SINCE THIS INFORMATION IS SHOWN FOR THE CONVENIENCE OF THE CONTRACTOR, THE CONTRACTOR SHALL HAVE NO CLAIM WHATSOEVER AGAINST THE DEPARTMENT OF TRANSPORTATION FOR ANY DELAYS OR ADDITIONAL COST INCURRED BASED ON DIFFERENCES BETWEEN THE EXISTING BRIDGE SUBSTRUCTURE SHOWN ON THE PLANS AND THE ACTUAL CONDITIONS AT THE PROJECT SITE.

REMOVAL OF THE EXISTING BRIDGE SHALL BE PERFORMED SO AS NOT TO ALLOW DEBRIS TO FALL INTO THE WATER. THE CONTRACTOR SHALL REMOVE THE BRIDGE AND SUBMIT PLANS FOR DEMOLITION IN ACCORDANCE WITH ARTICLE 402-2 OF THE STANDARD SPECIFICATIONS.

FOR INTERIOR BENTS, ONLY PARTIAL GALVANIZING OF THE PILES IS REQUIRED. SEE INTERIOR BENT SHEETS FOR REQUIRED GALVANIZED LENGTHS. PAYMENT FOR PARTIALLY GALVANIZED PILES WILL BE MADE UNDER THE CONTRACT UNIT PRICE FOR GALVANIZED STEEL PILES.

HYDROGRAPHIC DATA

DESIGN DISCHARGE	= 112,000 CFS
FREQUENCY OF DESIGN FLOOD	= 50 YR
DESIGN HIGH WATER ELEVATION	= 62.00
DRAINAGE AREA	= 4875 SQ. MI.
BASE DISCHARGE (0100)	= 121,000 CFS
BASE HIGH WATER ELEVATION	= 63.10

OVERTOPPING FLOOD DATA

OVERTOPPING DISCHARGE	= N/A
FREQUENCY OF OVERTOPPING FLOOD	= 500 YR+
OVERTOPPING FLOOD ELEVATION	= 68.40

PROJECT NO. B-4712
BLADEN COUNTY
STATION: 39+15.00 -L-

SHEET 5 OF 6

NORTH CAROLINA PROFESSIONAL SEAL 21638 ENGINEER LAURA E. SUTTON 11/03/13

STATE OF NORTH CAROLINA
DEPARTMENT OF TRANSPORTATION
RALEIGH

GENERAL DRAWING
BRIDGE ON SR 1316
OVER CAPE FEAR
RIVER BETWEEN NC 87
AND SR 1318

REVISIONS						SHEET NO.
NO.	BY:	DATE:	NO.	BY:	DATE:	S-5
1			3			TOTAL SHEETS
2			4			108

STR. #1

DRAWN BY: J.P. ADAMS DATE: 7/24/12
CHECKED BY: D.R. SMITH DATE: 8/2012

13-NOV-2012 07:39
R:\Structures\Plans\str01\B4712_SD_GD_01.dgn

TOTAL BILL OF MATERIAL

	CONSTRUCTION, MAINTENANCE, & REMOVAL OF TEMPORARY ACCESS	REMOVAL OF EXISTING STRUCTURE	PDA TESTING	UNCLASSIFIED STRUCTURE EXCAVATION	REINFORCED CONCRETE DECK SLAB	GROOVING BRIDGE FLOORS	CLASS A CONCRETE	BRIDGE APPROACH SLABS	REINFORCING STEEL	SPIRAL COLUMN REINFORCING STEEL	54" PRESTRESSED CONCRETE GIRDERS		APPROX. STRUCTURAL STEEL
	LUMP SUM	LUMP SUM	EACH	LUMP SUM	SQ. FT.	SQ. FT.	CU. YDS.	LUMP SUM	LBS.	LBS.	NO.	LIN. FT.	LBS.
SUPERSTRUCTURE					54,222	46,036		LUMP SUM			44	4150.50	987,000
END BENT 1							34.2		5,936				
BENT 1			1				173.4		23,102	3,117			
BENT 2							173.4		23,102	3,117			
BENT 3							33.0		3,064				
BENT 4							19.8		2,637				
BENT 5							19.8		2,637				
BENT 6							19.8		2,637				
BENT 7							19.8		2,637				
BENT 8							19.8		2,637				
BENT 9							19.8		2,637				
BENT 10							19.8		2,637				
BENT 11							19.8		2,637				
BENT 12							19.8		2,637				
BENT 13			1				19.8		2,637				
END BENT 2							29.6		4,708				
TOTAL	LUMP SUM	LUMP SUM	2	LUMP SUM	54,222	46,036	641.6	LUMP SUM	86,282	6,234	44	4150.50	987,000

	HP 12X53 STEEL PILES		PP 24X0.50 GALVANIZED STEEL PILES		PP 30X0.625 GALVANIZED STEEL PILES		PILE REDRIVES	TWO BAR METAL RAIL	1'-2" X 2'-6" CONCRETE PARAPET	RIP RAP CLASS B	RIP RAP CLASS II (2'-0" THICK)	GEOTEXTILE FOR DRAINAGE	POT BEARINGS	ELASTOMERIC BEARINGS	EXPANSION JOINT SEALS	SOLAR ARRAY SUPPORT PLATFORM
	NO.	LIN. FT.	NO.	LIN. FT.	NO.	LIN. FT.	EACH	LIN. FT.	LIN. FT.	TONS	TONS	SQ. YDS.	LUMP SUM	LUMP SUM	LUMP SUM	LUMP SUM
SUPERSTRUCTURE								3161.00	3176.00				LUMP SUM	LUMP SUM	LUMP SUM	LUMP SUM
END BENT 1	7	455					4			280	1,120	1,245				
BENT 1					12	780	6									
BENT 2					12	780	6									
BENT 3					6	600	3									
BENT 4			6	630			3									
BENT 5			6	660			3									
BENT 6			6	630			3									
BENT 7			6	600			3									
BENT 8			6	630			3									
BENT 9			6	630			3									
BENT 10			6	570			3									
BENT 11			6	600			3									
BENT 12			6	570			3									
BENT 13			6	570			3									
END BENT 2	6	390					3			205	820	910				
TOTAL	13	845	30	6,090	30	2,160	52	3161.00	3176.00	485	1,940	2,155	LUMP SUM	LUMP SUM	LUMP SUM	LUMP SUM

PROJECT NO. B-4712

BLADEN COUNTY

STATION: 39+15.00 -L-

SHEET 6 OF 6

STATE OF NORTH CAROLINA
DEPARTMENT OF TRANSPORTATION
RALEIGH

GENERAL DRAWING

BRIDGE ON SR 1316
OVER CAPE FEAR
RIVER BETWEEN NC 87
AND SR 1318

REVISIONS						SHEET NO.
NO.	BY:	DATE:	NO.	BY:	DATE:	S-6
1			3			TOTAL SHEETS
2			4			108

NORTH CAROLINA PROFESSIONAL SEAL 21638 ENGINEER LAURA E. SUTTON 11/03/13

DRAWN BY: J.P. ADAMS DATE: 7/24/12
CHECKED BY: D.R. SMITH DATE: 8/2012

03-JAN-2013 11:48
R:\Structures\Plans\str01\B4712_SD_GD_01.dgn

STR. #1

LOAD AND RESISTANCE FACTOR RATING (LRFR) SUMMARY FOR STEEL GIRDERS

LEVEL		VEHICLE	WEIGHT (W) (TONS)	⟨#⟩ CONTROLLING LOAD RATING	MINIMUM RATING FACTORS (RF)	TONS = W x RF	STRENGTH I LIMIT STATE										SERVICE II LIMIT STATE						COMMENT NUMBER
								MOMENT					SHEAR						MOMENT					
							LIVE-LOAD FACTORS (γ_{LL})	DISTRIBUTION FACTORS (DF)	RATING FACTOR	SPAN	GIRDER LOCATION	DISTANCE FROM LEFT END OF SPAN (ft)	DISTRIBUTION FACTORS (DF)	RATING FACTOR	SPAN	GIRDER LOCATION	DISTANCE FROM LEFT END OF SPAN (ft)	LIVE-LOAD FACTORS	DISTRIBUTION FACTORS (DF)	RATING FACTOR	SPAN	GIRDER LOCATION	DISTANCE FROM LEFT END OF SPAN (ft)	
DESIGN LOAD RATING		HL-93 (INVENTORY)	N/A	⟨1⟩	**1.08**	--	1.75	0.821	**1.08**	C	EL	**0.00**	0.907	1.12	B	I	166.25	1.30	0.821	1.19	C	EL	0.00	
		HL-93 (OPERATING)	N/A	--	1.39	--	1.35	0.821	1.39	C	EL	0.00	0.907	1.45	B	I	166.25	1.00	0.821	1.54	C	EL	0.00	
		HS-20 (INVENTORY)	36.00	⟨2⟩	**1.89**	68.04	1.75	0.821	2.56	C	EL	104.53	0.907	**1.89**	B	I	**166.25**	1.30	0.821	2.50	C	EL	104.53	
		HS-20 (OPERATING)	36.00	--	2.45	88.20	1.35	0.821	3.31	C	EL	104.53	0.907	2.45	B	I	166.25	1.00	0.821	3.25	C	EL	104.53	
LEGAL LOAD RATING	SINGLE VEHICLE (SV)	SNSH	13.500	--	6.09	82.22	1.40	0.821	7.89	C	EL	104.53	0.907	6.09	B	I	166.25	1.30	0.821	6.19	C	EL	104.53	
		SNGARBS2	20.000	--	4.18	83.60	1.40	0.821	5.56	C	EL	104.53	0.907	4.18	B	I	166.25	1.30	0.821	4.36	C	EL	104.53	
		SNAGRIS2	22.000	--	3.82	84.04	1.40	0.821	5.15	C	EL	104.53	0.907	3.82	B	I	166.25	1.30	0.821	4.03	C	EL	104.53	
		SNCOTTS3	27.250	--	3.03	82.57	1.40	0.821	3.92	C	EL	104.53	0.907	3.03	B	I	166.25	1.30	0.821	3.08	C	EL	104.53	
		SNAGGRS4	34.925	--	2.40	83.82	1.40	0.821	3.16	C	EL	104.53	0.907	2.40	B	I	166.25	1.30	0.821	2.48	C	EL	104.53	
		SNS5A	35.550	--	2.39	84.96	1.40	0.821	3.11	C	EL	104.53	0.907	2.39	B	I	166.25	1.30	0.821	2.44	C	EL	104.53	
		SNS6A	39.950	--	2.14	85.49	1.40	0.821	2.80	C	EL	104.53	0.907	2.14	B	I	166.25	1.30	0.821	2.19	C	EL	104.53	
		SNS7B	42.000	--	2.05	86.10	1.40	0.821	2.67	C	EL	104.53	0.907	2.05	B	I	166.25	1.30	0.821	2.09	C	EL	104.53	
	TRUCK TRACTOR SEMI-TRAILER (TTST)	TNAGRIT3	33.000	--	2.58	85.14	1.40	0.821	3.41	C	EL	104.53	0.907	2.58	B	I	166.25	1.30	0.821	2.67	C	EL	104.53	
		TNT4A	33.075	--	2.56	84.67	1.40	0.821	3.40	C	EL	104.53	0.907	2.56	B	I	166.25	1.30	0.821	2.66	C	EL	104.53	
		TNT6A	41.600	--	2.11	87.78	1.40	0.821	2.74	C	EL	104.53	0.907	2.11	B	I	166.25	1.30	0.821	2.15	C	EL	104.53	
		TNT7A	42.000	--	2.07	86.94	1.40	0.821	2.72	C	EL	104.53	0.907	2.07	B	I	166.25	1.30	0.821	2.14	C	EL	104.53	
		TNT7B	42.000	--	2.04	85.68	1.40	0.821	2.76	C	EL	104.53	0.907	2.04	B	I	166.25	1.30	0.821	2.16	C	EL	104.53	
		TNAGRIT4	43.000	--	1.98	85.14	1.40	0.821	2.67	C	EL	104.53	0.907	1.98	B	I	166.25	1.30	0.821	2.09	C	EL	104.53	
		TNAGT5A	45.000	--	1.92	86.40	1.40	0.821	2.54	C	EL	104.53	0.907	1.92	B	I	166.25	1.30	0.821	2.00	C	EL	104.53	
		TNAGT5B	45.000	⟨3⟩	**1.89**	85.05	1.40	0.821	2.52	C	EL	104.53	0.907	**1.89**	B	I	**166.25**	1.30	0.821	1.98	C	EL	104.53	
FATIGUE		HL-93 (INVENTORY)	γ_{LL}=0.75																					

LOAD FACTORS:

DESIGN LOAD RATING FACTORS	LIMIT STATE	γ_{DC}	γ_{DW}
	STRENGTH I	1.25	1.50
	SERVICE II	1.00	1.00

NOTES:

MINIMUM RATING FACTORS ARE BASED ON THE STRENGTH I AND SERVICE II LIMIT STATES.

ALLOWABLE STRESS FOR SERVICE II LIMIT STATE ARE AS REQUIRED FOR DESIGN.

⟨#⟩ CONTROLLING LOAD RATING
⟨1⟩ DESIGN LOAD RATING (HL-93) **
⟨2⟩ DESIGN LOAD RATING (HS-20) **
⟨3⟩ LEGAL LOAD RATING **
** SEE CHART FOR VEHICLE TYPE

GIRDER LOCATION
I - INTERIOR GIRDER
EL - EXTERIOR LEFT GIRDER
ER - EXTERIOR RIGHT GIRDER

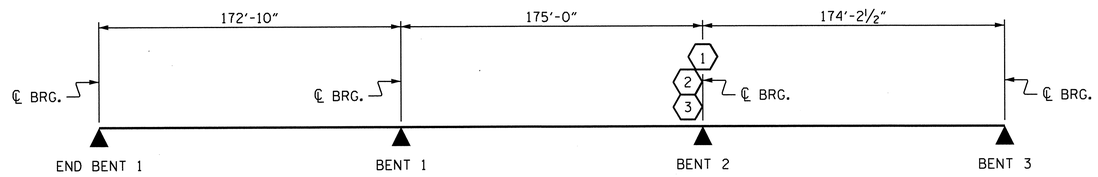

LRFR SUMMARY

PROJECT NO. B-4712

BLADEN COUNTY

STATION: 39+15.00-L-

STATE OF NORTH CAROLINA
DEPARTMENT OF TRANSPORTATION
RALEIGH

STANDARD

LRFR SUMMARY FOR STEEL GIRDERS

(NON-INTERSTATE TRAFFIC)

NORTH CAROLINA PROFESSIONAL SEAL 21638 ENGINEER LAURA E. SUTTON 11/5/13

ASSEMBLED BY : D.R. SMITH	DATE : 12-19-11
CHECKED BY : T.L. CLELLAND	DATE : 12-19-11
DRAWN BY : MAA 1/08	REV. 11/12/08RR MAA/GM
CHECKED BY : GM/DI 2/08	REV. 10/1/11 MAA/GM

REVISIONS						SHEET NO.
NO.	BY:	DATE:	NO.	BY:	DATE:	S-7
1			3			TOTAL SHEETS
2			4			108

08-NOV-2012 13:06

STR. #1 STD. NO. LRFR3

LOAD AND RESISTANCE FACTOR RATING (LRFR) SUMMARY FOR PRESTRESSED CONCRETE GIRDERS

LEVEL		VEHICLE	WEIGHT (W) (TONS)	CONTROLLING LOAD RATING (#)	MINIMUM RATING FACTORS (RF)	TONS = W x RF	STRENGTH I LIMIT STATE											SERVICE III LIMIT STATE							COMMENT NUMBER
								MOMENT					SHEAR						MOMENT							
							LIVE-LOAD FACTORS (γ_{LL})	DISTRIBUTION FACTORS (DF)	RATING FACTOR	SPAN	GIRDER LOCATION	DISTANCE FROM LEFT END OF SPAN (ft)	DISTRIBUTION FACTORS (DF)	RATING FACTOR	SPAN	GIRDER LOCATION	DISTANCE FROM LEFT END OF SPAN (ft)	LIVE-LOAD FACTORS (γ_{LL})	DISTRIBUTION FACTORS (DF)	RATING FACTOR	SPAN	GIRDER LOCATION	DISTANCE FROM LEFT END OF SPAN (ft)	
DESIGN LOAD RATING		HL-93 (INVENTORY)	N/A	(1)	**1.07**	--	1.75	0.821	1.69	D	EL	46.625	0.907	2.91	D	I	46.625	0.80	0.907	**1.07**	D	I	**46.625**	
		HL-93 (OPERATING)	N/A	--	2.19	--	1.35	0.821	2.19	D	EL	46.625	0.907	3.77	D	I	46.625	N/A	--	--	--	--	--	
		HS-20 (INVENTORY)	36.000	(2)	**1.47**	52.91	1.75	0.821	2.32	D	EL	46.625	0.907	3.46	D	I	46.625	0.80	0.759	**1.47**	D	I	**46.625**	
		HS-20 (OPERATING)	36.000	--	3.01	108.32	1.35	0.821	3.01	D	EL	46.625	0.907	4.49	D	I	46.625	N/A	--	--	--	--	--	
LEGAL LOAD RATING	SINGLE VEHICLE (SV)	SNSH	13.500	--	3.46	46.68	1.40	0.821	6.83	D	EL	46.625	0.907	9.77	D	I	46.625	0.80	0.759	3.46	D	I	46.625	
		SNGARBS2	20.000	--	2.52	50.32	1.40	0.821	4.97	D	EL	46.625	0.907	7.11	D	I	46.625	0.80	0.759	2.52	D	I	46.625	
		SNAGRIS2	22.000	--	2.36	51.88	1.40	0.821	4.65	D	EL	46.625	0.907	6.66	D	I	46.625	0.80	0.759	2.36	D	I	46.625	
		SNCOTTS3	27.250	--	1.72	46.84	1.40	0.821	3.39	D	EL	46.625	0.907	4.89	D	I	46.625	0.80	0.759	1.72	D	I	46.625	
		SNAGGRS4	34.925	--	1.41	49.35	1.40	0.821	2.79	D	EL	46.625	0.907	4.18	D	I	46.625	0.80	0.759	1.41	D	I	46.625	
		SNS5A	35.550	--	1.38	49.18	1.40	0.821	2.73	D	EL	46.625	0.907	4.29	D	I	46.625	0.80	0.759	1.38	D	I	46.625	
		SNS6A	39.950	--	1.26	50.32	1.40	0.821	2.49	D	EL	46.625	0.907	3.96	D	I	46.625	0.80	0.759	1.26	D	I	46.625	
		SNS7B	42.000	--	1.20	50.37	1.40	0.821	2.37	D	EL	46.625	0.907	3.96	D	I	46.625	0.80	0.759	1.20	D	I	46.625	
	TRUCK TRACTOR SEMI-TRAILER (TTST)	TNAGRIT3	33.000	--	1.53	50.60	1.40	0.821	3.03	D	EL	46.625	0.907	4.68	D	I	46.625	0.80	0.759	1.53	D	I	46.625	
		TNT4A	33.075	--	1.54	50.85	1.40	0.821	3.03	D	EL	46.625	0.907	4.51	D	I	46.625	0.80	0.759	1.54	D	I	46.625	
		TNT6A	41.600	--	1.25	51.92	1.40	0.821	2.46	D	EL	46.625	0.907	4.35	D	I	46.625	0.80	0.759	1.25	D	I	46.625	
		TNT7A	42.000	--	1.25	52.48	1.40	0.821	2.47	D	EL	46.625	0.907	4.23	D	I	46.625	0.80	0.759	1.25	D	I	46.625	
		TNT7B	42.000	--	1.28	53.81	1.40	0.821	2.53	D	EL	46.625	0.907	3.82	D	I	46.625	0.80	0.759	1.28	D	I	46.625	
		TNAGRIT4	43.000	--	1.23	52.77	1.40	0.821	2.42	D	EL	46.625	0.907	3.68	D	I	46.625	0.80	0.759	1.23	D	I	46.625	
		TNAGT5A	45.000	--	1.16	52.26	1.40	0.821	2.29	D	EL	46.625	0.907	3.73	D	I	46.625	0.80	0.759	1.16	D	I	46.625	
		TNAGT5B	45.000	(3)	**1.15**	51.79	1.40	0.821	2.27	D	EL	46.625	0.907	3.49	D	I	46.625	0.80	0.759	**1.15**	D	I	**46.625**	

LOAD FACTORS:

DESIGN LOAD RATING FACTORS	LIMIT STATE	γ_{DC}	γ_{DW}
	STRENGTH I	1.25	1.50
	SERVICE III	1.00	1.00

NOTES:

MINIMUM RATING FACTORS ARE BASED ON THE STRENGTH I AND SERVICE III LIMIT STATES.

ALLOWABLE STRESSES FOR SERVICE III LIMIT STATE ARE AS REQUIRED FOR DESIGN.

(#) CONTROLLING LOAD RATING

(1) DESIGN LOAD RATING (HL-93)

(2) DESIGN LOAD RATING (HS-20)

(3) LEGAL LOAD RATING **

** SEE CHART FOR VEHICLE TYPE

GIRDER LOCATION

I - INTERIOR GIRDER
EL - EXTERIOR LEFT GIRDER
ER - EXTERIOR RIGHT GIRDER

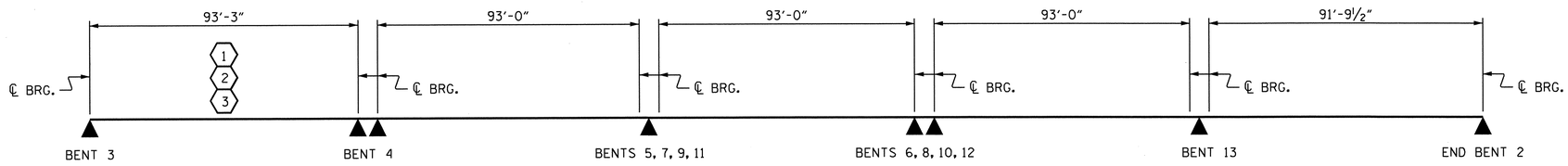

LRFR SUMMARY

PROJECT NO. B-4712

BLADEN COUNTY

STATION: 39+15.00-L-

STATE OF NORTH CAROLINA
DEPARTMENT OF TRANSPORTATION
RALEIGH

STANDARD

LRFR SUMMARY FOR PRESTRESSED CONCRETE GIRDERS
(NON-INTERSTATE TRAFFIC)

NORTH CAROLINA PROFESSIONAL SEAL 21638 ENGINEER LAURA E. SUTTON 11/03/13

REVISIONS						SHEET NO.
NO.	BY:	DATE:	NO.	BY:	DATE:	S-8
1			3			TOTAL SHEETS
2			4			108

STR. #1 STD. NO. LRFR1

ASSEMBLED BY :	DATE :
CHECKED BY :	DATE :
DRAWN BY : MAA 1/08	REV. 11/12/08RR MAA/GM
CHECKED BY : GM/DI 2/08	REV. 10/1/11 MAA/GM

08-NOV-2012 13:06
R:\structures\Plans\str01\B4712_SD_LR_01.dgn

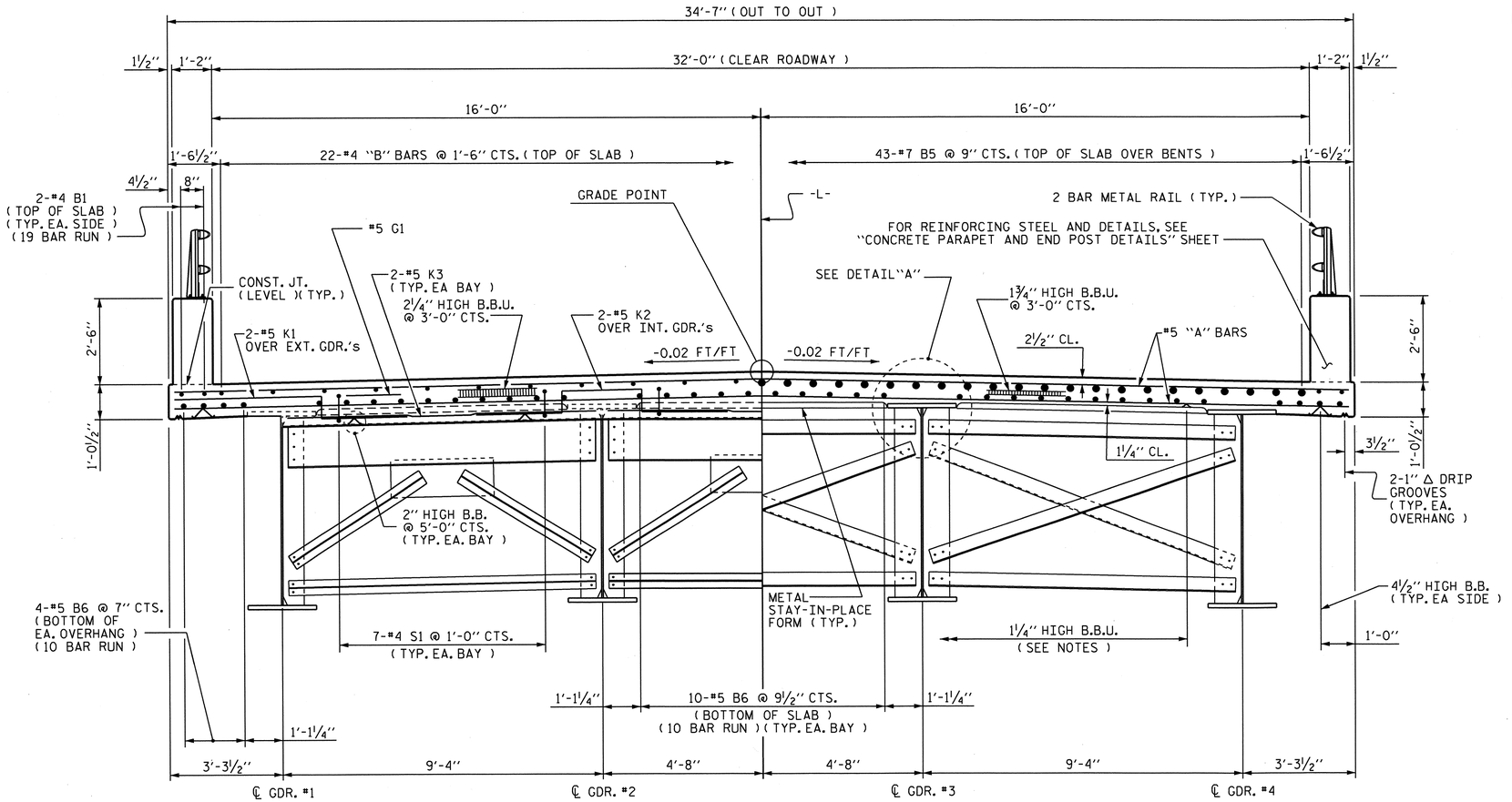

HALF-SECTION @
END BENT 1 & BENT 3 DIAPHRAGM

HALF-SECTION @
BENTS 1 & 2

TYPICAL SECTION

(SPANS A-B-C)

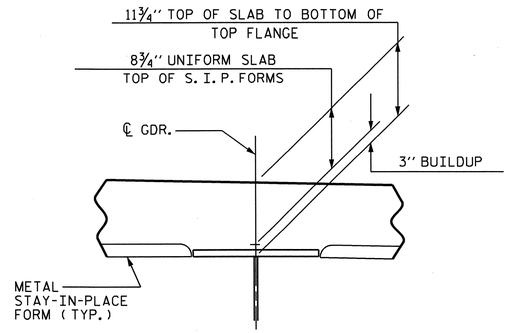

DETAIL "A"

(TYPICAL SPANS A-B-C)

NOTES

PROVIDE 1¼" HIGH BEAM BOLSTERS UPPER AT 4'-0" CTS. ATOP THE METAL STAY-IN-PLACE FORMS TO SUPPORT THE BOTTOM MAT OF "A" BARS. WHEN USING REMOVABLE FORMS, PROVIDE CONTINUOUS HIGH CHAIRS FOR METAL DECK (C.H.C.M.) @ 4'-0" CTS. WITH A HEIGHT TO SUPPORT THE BOTTOM MAT OF "A" BARS A CLEAR DISTANCE OF 2½" ABOVE THE TOP OF THE REMOVABLE FORM.

METAL STAY-IN-PLACE FORMS SHALL NOT BE WELDED TO GIRDER FLANGES IN THE ZONES REQUIRING CHARPY V-NOTCH TEST. SEE STRUCTURAL STEEL DETAIL SHEETS.

PREVIOUSLY CAST CONCRETE IN A CONTINUOUS UNIT SHALL HAVE ATTAINED A MINIMUM COMPRESSIVE STRENGTH OF 3,000 PSI BEFORE ADDITIONAL CONCRETE IS CAST IN THE UNIT.

PARAPET IN A CONTINUOUS UNIT SHALL NOT BE CAST UNTIL ALL SLAB CONCRETE IN THE UNIT HAS BEEN CAST AND HAS REACHED A MINIMUM COMPRESSIVE STRENGTH OF 3,000 PSI.

STRUCTURAL STEEL ERECTION IN A CONTINUOUS UNIT SHALL BE COMPLETE BEFORE FALSEWORK OR FORMS ARE PLACED ON THE UNIT.

#5G1 BARS MAY BE SHIFTED SLIGHTLY, AS NECESSARY, TO CLEAR REINFORCING STEEL AND STIRRUPS.

THE CONTRACTOR MAY, WHEN NECESSARY, PROPOSE A SCHEME FOR AVOIDING INTERFERENCE BETWEEN METAL STAY-IN-PLACE FORM SUPPORTS OR FORMS AND GIRDER STIFFENERS OR CONNECTOR PLATES. THE PROPOSAL SHALL BE INDICATED, AS APPROPRIATE, ON EITHER THE STEEL WORKING DRAWINGS OR THE METAL STAY-IN-PLACE FORM WORKING DRAWINGS.

THE CONTRACTOR SHALL ADJUST THE GIRDER BUILDUPS AS NECESSARY TO INCORPORATE A MAXIMUM PERMISSIBLE VARIATION IN POT BEARING DEPTH OF ½", SEE SPECIAL PROVISION FOR POT BEARINGS.

LONGITUDINAL STEEL MAY BE SHIFTED SLIGHTLY, AS NECESSARY, TO AVOID INTERFERENCE WITH STIRRUPS IN PRESTRESSED CONCRETE GIRDERS.

LONGITUDINAL STEEL MAY BE SHIFTED SLIGHTLY, AS NECESSARY, TO AVOID INTERFERENCE WITH 6" Ø DECK DRAINS.

6" Ø PIPE DRAINS ARE REQUIRED IN SPANS A AND C. SEE "PLAN OF SPAN" SHEETS FOR LOCATION. SEE "TYPICAL SECTION DETAILS", SHEET 2 OF 2 FOR DETAILS.

PROJECT NO. B-4712

BLADEN COUNTY

STATION: 39+15.00 -L-

SHEET 1 OF 3

STATE OF NORTH CAROLINA
DEPARTMENT OF TRANSPORTATION
RALEIGH

SUPERSTRUCTURE

TYPICAL SECTIONS

SPANS A-B-C

REVISIONS						SHEET NO.
NO.	BY:	DATE:	NO.	BY:	DATE:	S-9
1			3			TOTAL SHEETS
2			4			108

STR. #1

NORTH CAROLINA PROFESSIONAL SEAL 21638 ENGINEER LAURA E. SUTTON 11/03/13

DRAWN BY : MIKE BRITT DATE : 8-17-11
CHECKED BY : S.B. WILLIAMS DATE : 10/2011

08-NOV-2012 13:06
R:\structures\Plans\str01\B4712_SD_TS_01.dgn

NOTES

PROVIDE 1¼" HIGH BEAM BOLSTERS UPPER AT 4'-0" CTS. ATOP THE METAL STAY-IN-PLACE FORMS TO SUPPORT THE BOTTOM MAT OF "A" BARS. WHEN USING REMOVABLE FORMS, PROVIDE CONTINUOUS HIGH CHAIRS FOR METAL DECK (C.H.C.M.) @ 4'-0" CTS. WITH A HEIGHT TO SUPPORT THE BOTTOM MAT OF "A" BARS A CLEAR DISTANCE OF 2½" ABOVE THE TOP OF THE REMOVABLE FORM.

PREVIOUSLY CAST CONCRETE IN A CONTINUOUS UNIT SHALL HAVE ATTAINED A MINIMUM COMPRESSIVE STRENGTH OF 3,000 PSI BEFORE ADDITIONAL CONCRETE IS CAST IN THE UNIT.

PARAPET IN A CONTINUOUS UNIT SHALL NOT BE CAST UNTIL ALL SLAB CONCRETE IN THE UNIT HAS BEEN CAST AND HAS REACHED A MINIMUM COMPRESSIVE STRENGTH OF 3,000 PSI.

#5G1 BARS MAY BE SHIFTED SLIGHTLY, AS NECESSARY, TO CLEAR REINFORCING STEEL AND STIRRUPS.

LONGITUDINAL STEEL MAY BE SHIFTED SLIGHTLY, AS NECESSARY, TO AVOID INTERFERENCE WITH STIRRUPS IN PRESTRESSED CONCRETE GIRDERS.

LONGITUDINAL STEEL MAY BE SHIFTED SLIGHTLY, AS NECESSARY, TO AVOID INTERFERENCE WITH 6" Ø DECK DRAINS.

CONCRETE IN END BENT & BENT DIAPHRAGMS, EXCLUDING CONTINUOUS BENT DIAPHRAGMS, IN THE PRESTRESSED CONCRETE GIRDER SPANS MAY BE CLASS A IN LIEU OF CLASS AA. PAYMENT SHALL BE MADE UNDER THE UNIT CONTRACT PRICE FOR REINFORCED CONCRETE DECK SLAB.

6" Ø PIPE DRAINS ARE REQUIRED IN SPANS D THROUGH N. SEE "PLAN OF SPAN" SHEETS FOR LOCATION. SEE "TYPICAL SECTION DETAILS", SHEET 2 OF 2 FOR DETAILS.

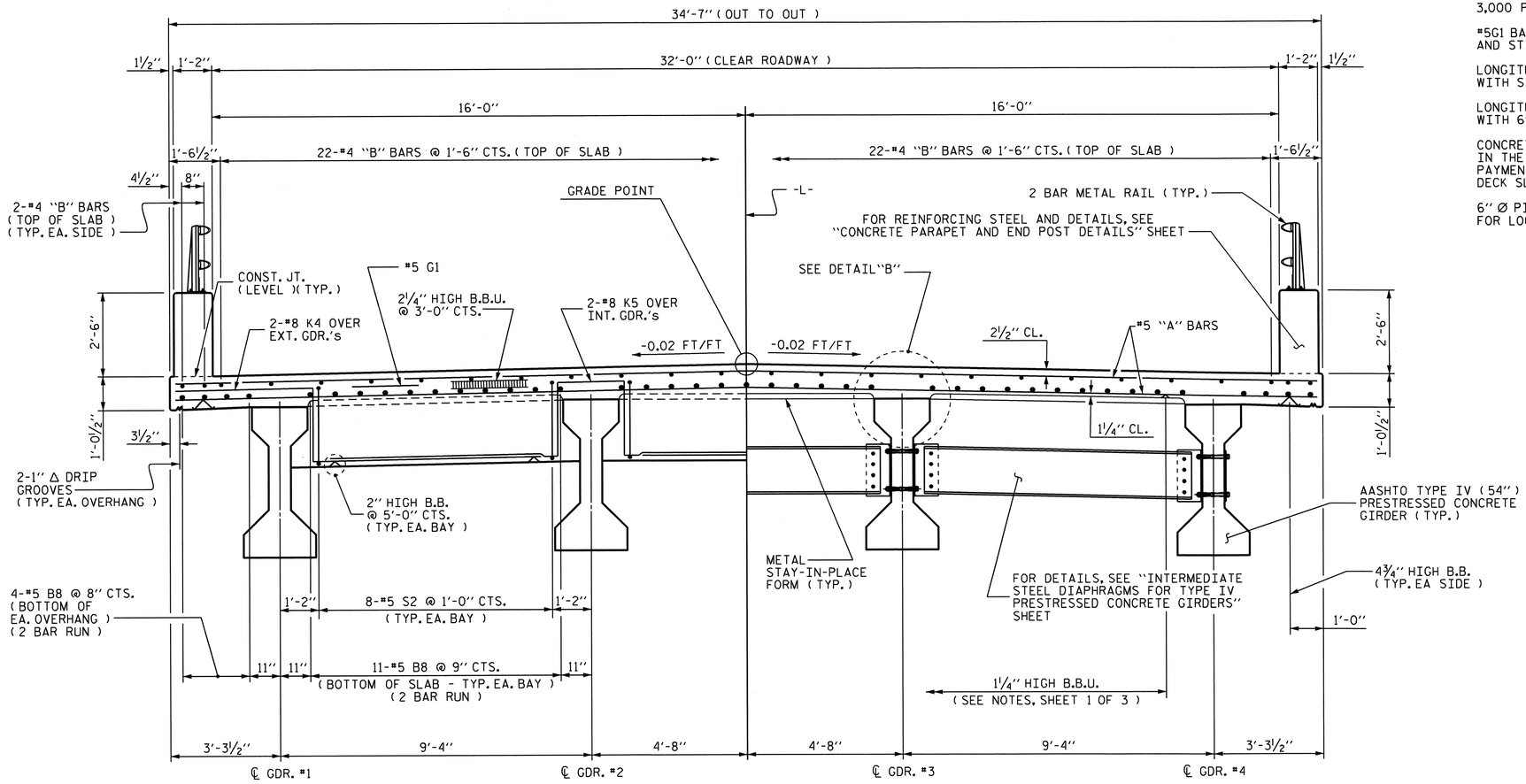

HALF-SECTION @ BENT DIAPHRAGM

HALF-SECTION @ INTERMEDIATE DIAPHRAGM
(TYPICAL SPANS D THROUGH N)

TYPICAL SECTION
(SPANS D THROUGH N)

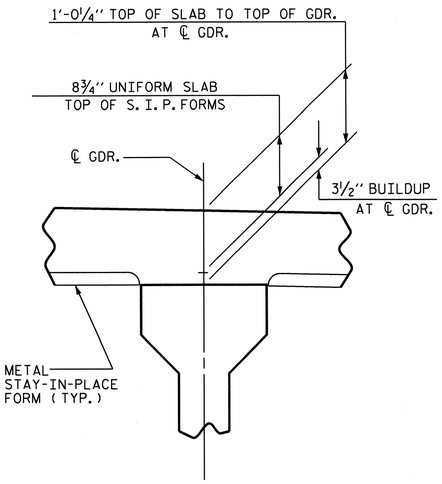

DETAIL "B"
(TYPICAL SPANS D THROUGH N)

PROJECT NO. B-4712

BLADEN COUNTY

STATION: 39+15.00 -L-

SHEET 2 OF 3

STATE OF NORTH CAROLINA
DEPARTMENT OF TRANSPORTATION
RALEIGH

SUPERSTRUCTURE

TYPICAL SECTIONS

SPANS D THROUGH N

REVISIONS						SHEET NO.
NO.	BY:	DATE:	NO.	BY:	DATE:	S-10
1			3			TOTAL SHEETS
2			4			108

NORTH CAROLINA PROFESSIONAL SEAL 21638 ENGINEER LAURA E. SUTTON 11/05/13

DRAWN BY : MIKE BRITT DATE : 8-17-11
CHECKED BY : S.B. WILLIAMS DATE : 10/2011

03-JAN-2013 11:48
R:\structures\Plans\str01\B4712_SD_TS_01.dgn

STR.#1

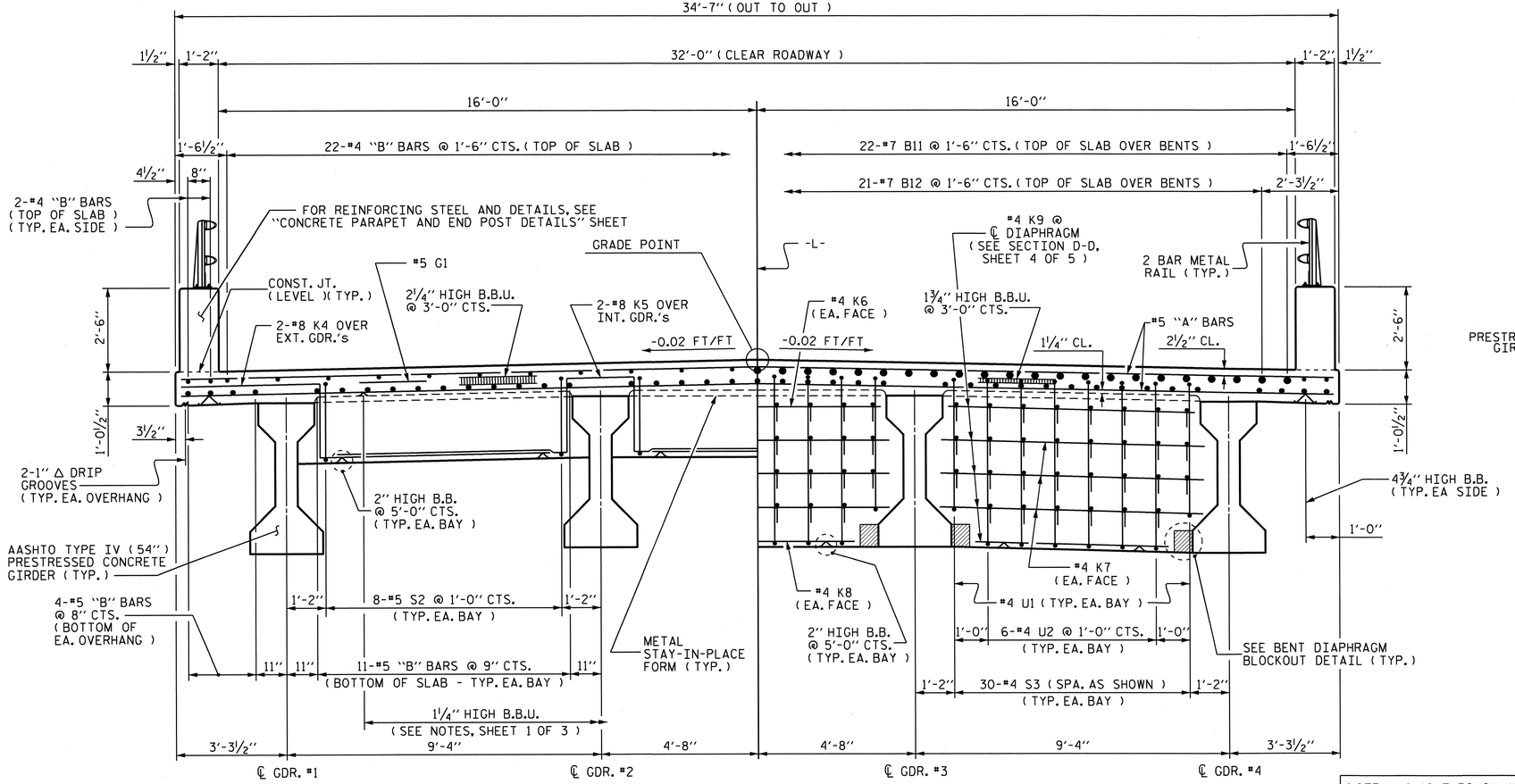

HALF-SECTION @ BENT DIAPHRAGM

HALF-SECTION @ CONTINUOUS BENT DIAPHRAGM

NOTE : #4 K6 THROUGH K9 BARS ARE TYP. EA. BAY

TYPICAL SECTION

(SPANS D THROUGH N)

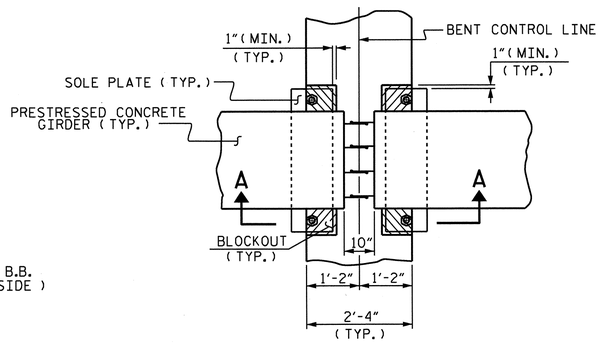

PLAN VIEW

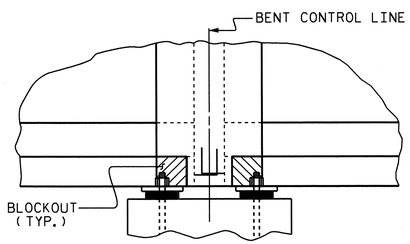

SECTION A-A

BENT DIAPHRAGM BLOCKOUT DETAIL

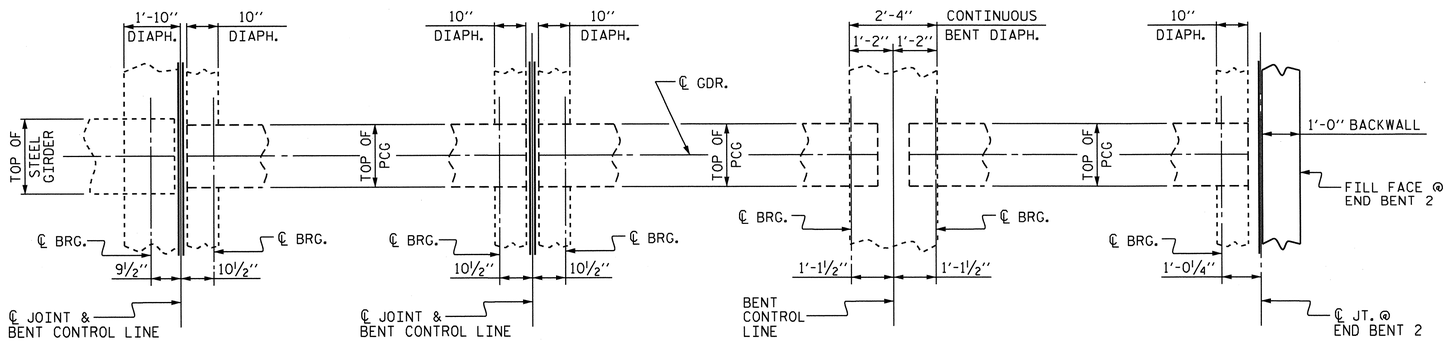

@ BENT 3 | @ BENTS 4, 6, 8, 10 & 12 | @ BENTS 5, 7, 9, 11 & 13 | @ END BENT 2

PLAN OF DIAPHRAGMS

(BENT 3 THROUGH END BENT 2)

PROJECT NO. B-4712

BLADEN COUNTY

STATION: 39+15.00 -L-

SHEET 3 OF 3

STATE OF NORTH CAROLINA
DEPARTMENT OF TRANSPORTATION
RALEIGH

SUPERSTRUCTURE

TYPICAL SECTIONS

SPANS D THROUGH N

REVISIONS						SHEET NO.
NO.	BY:	DATE:	NO.	BY:	DATE:	S-11
1			3			TOTAL SHEETS
2			4			108

STR.#1

NORTH CAROLINA PROFESSIONAL SEAL 21682 ENGINEER LAURA E. SUTTON 10/1/13

DRAWN BY : MIKE BRITT DATE : 8-18-11
CHECKED BY : S.B. WILLIAMS DATE : 10/2011

08-NOV-2012 13:06
R:\structures\Plans\str01\B4712_SD_TS_01.dgn

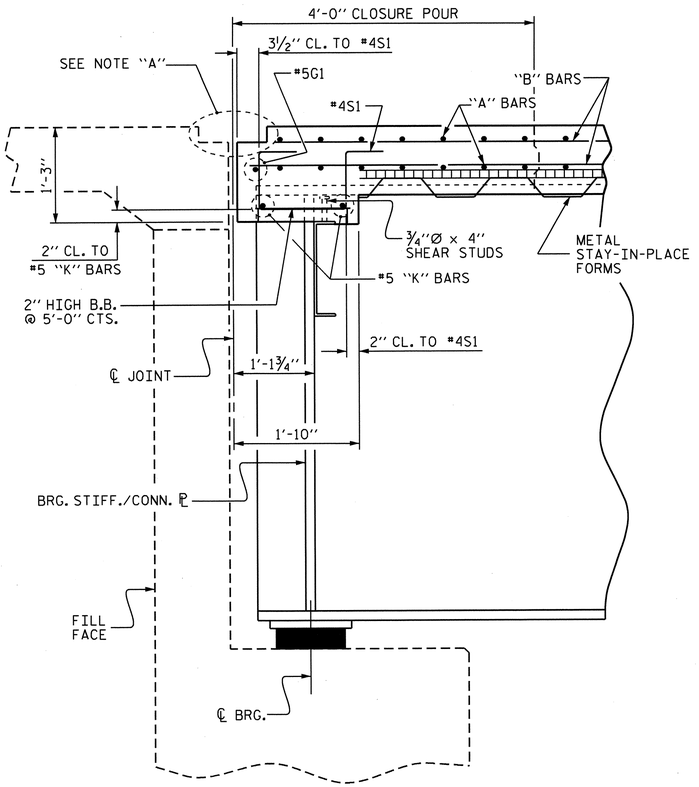

SECTION A-A

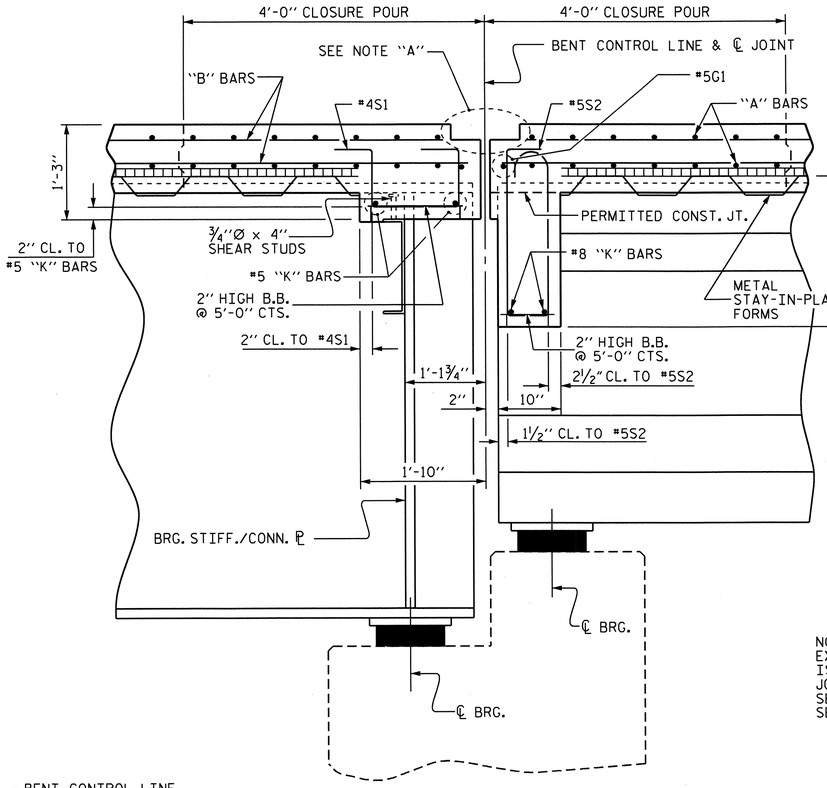

SECTION B-B

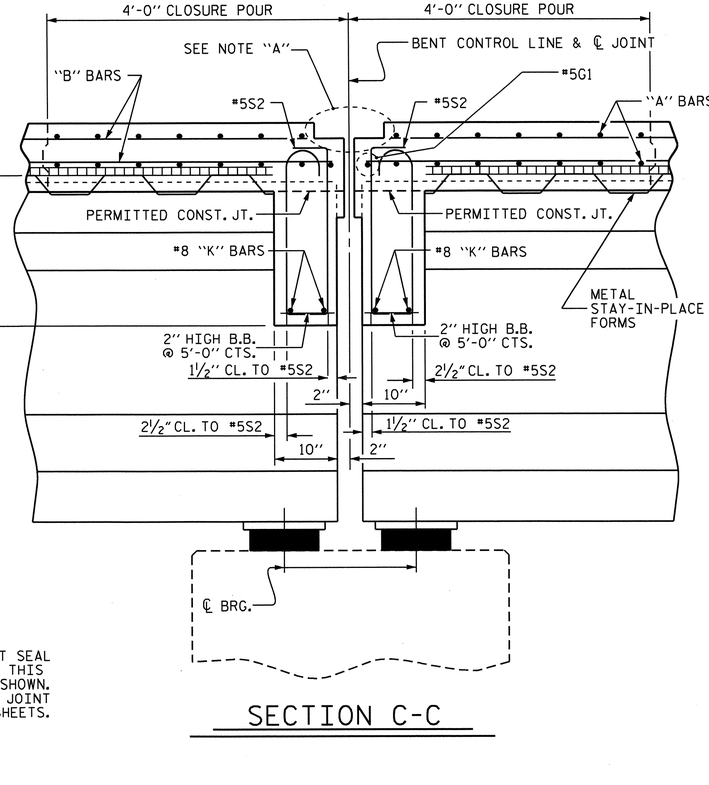

SECTION C-C

NOTE "A":
EXPANSION JOINT SEAL IS REQUIRED AT THIS JOINT BUT NOT SHOWN. SEE "EXPANSION JOINT SEAL DETAILS" SHEETS.

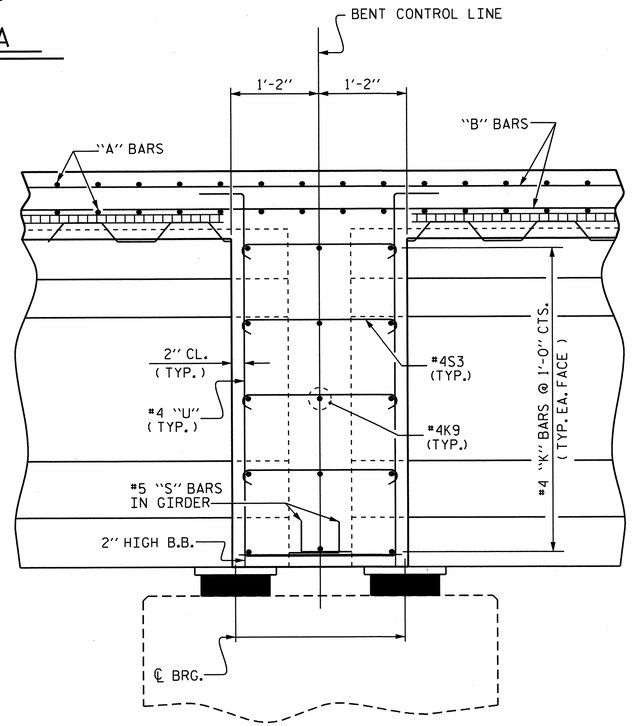

SECTION D-D

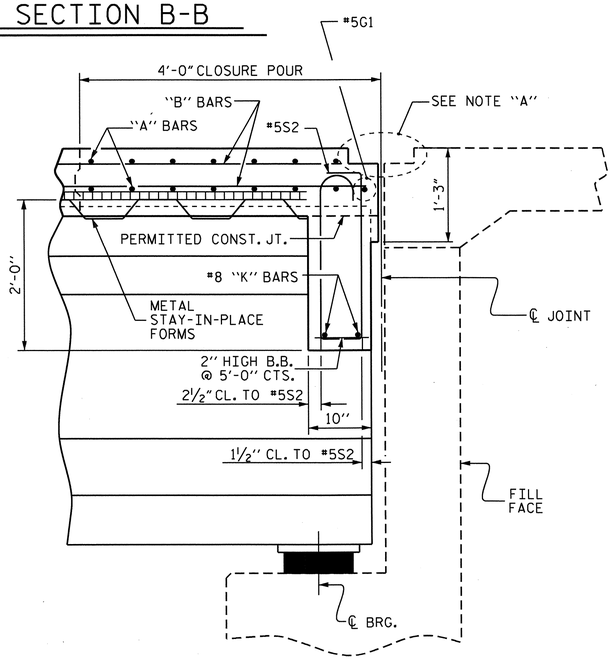

SECTION E-E

NORTH CAROLINA PROFESSIONAL SEAL 21638 ENGINEER LAURA E. SUTTON 10/03/13

PROJECT NO. B-4712
BLADEN COUNTY
STATION: 39+15.00 -L-

SHEET 1 OF 2

STATE OF NORTH CAROLINA
DEPARTMENT OF TRANSPORTATION
RALEIGH

SUPERSTRUCTURE

TYPICAL SECTION DETAILS

REVISIONS						SHEET NO.
NO.	BY:	DATE:	NO.	BY:	DATE:	S-12
1			3			TOTAL SHEETS
2			4			108

STR.#1

DRAWN BY : MIKE BRITT DATE : 8-17-11
CHECKED BY : S.B. WILLIAMS DATE : 10/2011

08-NOV-2012 13:06
R:\structures\Plans\str01\B4712_SD_TS_01.dgn

NOTES

COUPLING IN DRAIN PIPE WILL BE PERMITTED AS APPROVED BY THE ENGINEER.

4- ½'' SQ. LUGS TO BE GLUED TO THE PVC PLASTIC PIPE AT EQUAL SPACES AROUND THE PIPE DRAIN AT APPROXIMATELY 4'' FROM THE TOP OF THE PIPE.

BOLT SIZE TO BE THE SAME AS DIAPHRAGM AND CROSS FRAME CONNECTIONS. STAINLESS STEEL WORM DRIVE HOSE CLAMP SHALL BE COMMERCIAL QUALITY.

TOP OF FLOOR DRAINS TO BE SET ⅜'' BELOW SURFACE OF SLAB.

IN SPANS A & C, PVC DECK DRAINS SHALL BE PAINTED WITH TWO COATS OF BROWN PRIMER MEETING THE REQUIREMENTS OF ARTICLE 1080-12 OF THE STANDARD SPECIFICATIONS. EACH COAT SHALL BE 2 DRY MILS THICK. DECK DRAINS SHALL BE ROUGHENED PRIOR TO PAINTING. NO SEPARATE PAYMENT SHALL BE MADE FOR PAINTING PVC DECK DRAINS AS THIS IS CONSIDERED INCIDENTAL TO PAY ITEM FOR REINFORCED CONCRETE DECK SLAB.

THE 6'' Ø PVC PLASTIC PIPE AND FITTINGS SHALL BE SCHEDULE 40 AND CONFORM TO ASTM D1785.

PLATES FOR PIPE DRAIN BRACKETS SHALL CONFORM TO AASHTO M270 GRADE 36 STEEL OR APPROVED EQUAL.

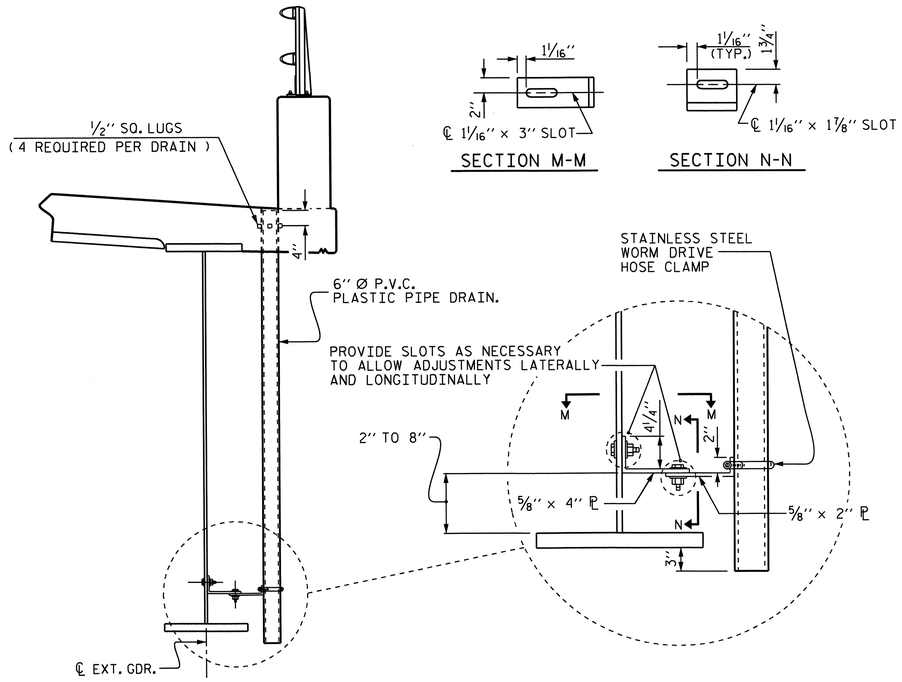

SECTION M-M

SECTION N-N

DRAIN CONNECTOR DETAIL (SPANS A & C)

(34 PIPE DRAINS REQUIRED IN SPANS A & C)

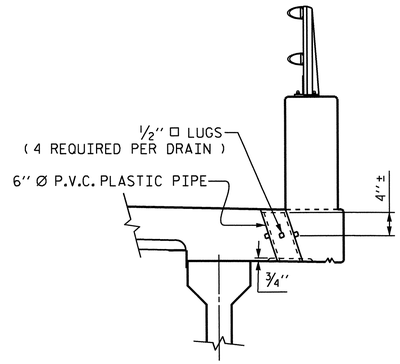

ELEVATION

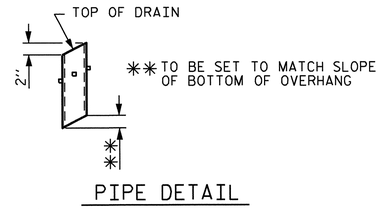

PIPE DETAIL

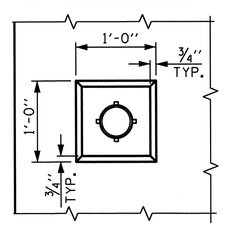

PLAN OF RECESS

DRAIN DETAILS (SPANS D THROUGH N)

(176 PIPE DRAINS REQUIRED IN SPANS D THROUGH N)

PROJECT NO. B-4712

BLADEN COUNTY

STATION: 39+15.00 -L-

SHEET 2 OF 2

STATE OF NORTH CAROLINA
DEPARTMENT OF TRANSPORTATION
RALEIGH

SUPERSTRUCTURE

TYPICAL SECTION DETAILS

REVISIONS						SHEET NO.
NO.	BY:	DATE:	NO.	BY:	DATE:	S-13
1			3			TOTAL SHEETS
2			4			108

NORTH CAROLINA PROFESSIONAL SEAL 21638 ENGINEER LAURA E. SUTTON 1/03/13

DRAWN BY : MIKE BRITT DATE : 8-17-11
CHECKED BY : S.B. WILLIAMS DATE : 10/2011

03-JAN-2013 11:48
R:\structures\Plans\str01\B4712_SD_TS_01.dgn

STR.#1

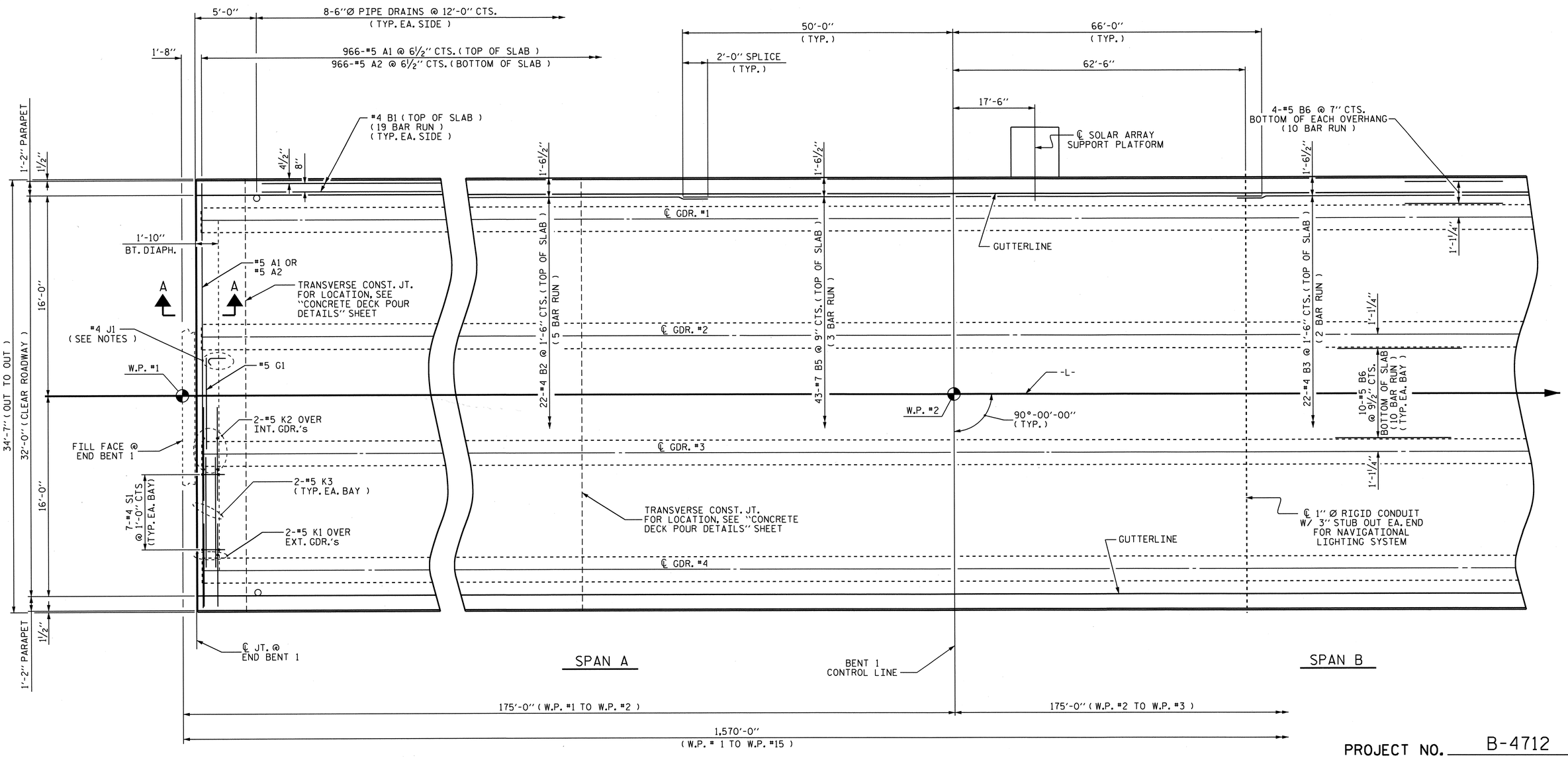

PARTIAL PLAN OF SPANS A-B-C

NOTES

FOR SECTION A-A, SEE "TYPICAL SECTION DETAILS", SHEET 1 OF 2.

FOR PARAPET DETAILS AND REINFORCING STEEL, SEE "CONCRETE PARAPET AND END POST DETAILS" SHEETS.

FOR PLACEMENT OF #4 J1 BARS, SEE "EXPANSION JOINT SEAL DETAILS" SHEETS.

FOR SOLAR ARRAY SUPPORT PLATFORM DETAILS, SEE "SOLAR ARRAY SUPPORT PLATFORM" SHEET.

FOR 1" Ø RIGID CONDUIT, SEE SPECIAL PROVISIONS FOR "NAVIGATIONAL LIGHTING SYSTEM".

NORTH CAROLINA PROFESSIONAL SEAL 21638 ENGINEER LAURA E. SUTTON 9/03/13

DRAWN BY : MIKE BRITT DATE : 8-19-11
CHECKED BY : S.B. WILLIAMS DATE : 10/2011

08-NOV-2012 13:06
R:\structures\Plans\str01\B4712_SD_PS_01.dgn

PROJECT NO. B-4712
BLADEN COUNTY
STATION: 39+15.00 -L-

SHEET 1 OF 8

STATE OF NORTH CAROLINA
DEPARTMENT OF TRANSPORTATION
RALEIGH

SUPERSTRUCTURE

PLAN OF SPANS

SPANS A-B-C

REVISIONS						SHEET NO.
NO.	BY:	DATE:	NO.	BY:	DATE:	S-14
1			3			TOTAL SHEETS
2			4			108

STR. #1

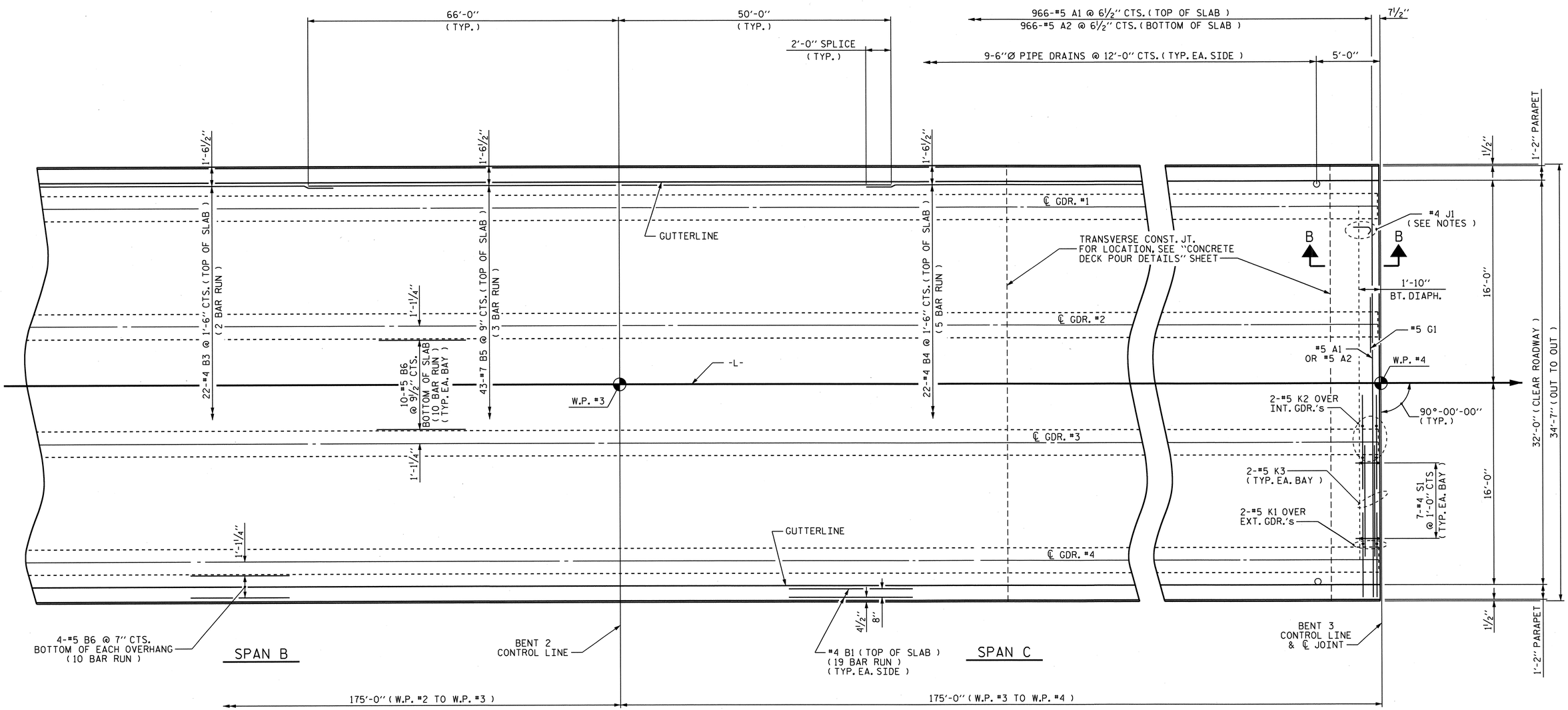

PARTIAL PLAN OF SPANS A-B-C

NOTES

FOR SECTION A-A, SEE "TYPICAL SECTION DETAILS", SHEET 1 OF 2.

FOR PARAPET DETAILS AND REINFORCING STEEL, SEE "CONCRETE PARAPET AND END POST DETAILS" SHEETS.

FOR PLACEMENT OF #4 J1 BARS, SEE "EXPANSION JOINT SEAL DETAILS" SHEETS.

FOR SOLAR ARRAY SUPPORT PLATFORM DETAILS, SEE "SOLAR ARRAY SUPPORT PLATFORM" SHEET.

NORTH CAROLINA PROFESSIONAL SEAL 21638 ENGINEER LAURA E. SUTTON 10/3/13

DRAWN BY : MIKE BRITT DATE : 8-23-11
CHECKED BY : S.B. WILLIAMS DATE : 10/2011

08-NOV-2012 13:06
R:\structures\Bridge\str01\B4712_SD_PS_01.dgn

PROJECT NO. B-4712
BLADEN COUNTY
STATION: 39+15.00 -L-

SHEET 2 OF 8

STATE OF NORTH CAROLINA
DEPARTMENT OF TRANSPORTATION
RALEIGH

SUPERSTRUCTURE

PLAN OF SPANS

SPANS A-B-C

REVISIONS						SHEET NO.
NO.	BY:	DATE:	NO.	BY:	DATE:	S-15
1			3			TOTAL SHEETS
2			4			108

STR. #1

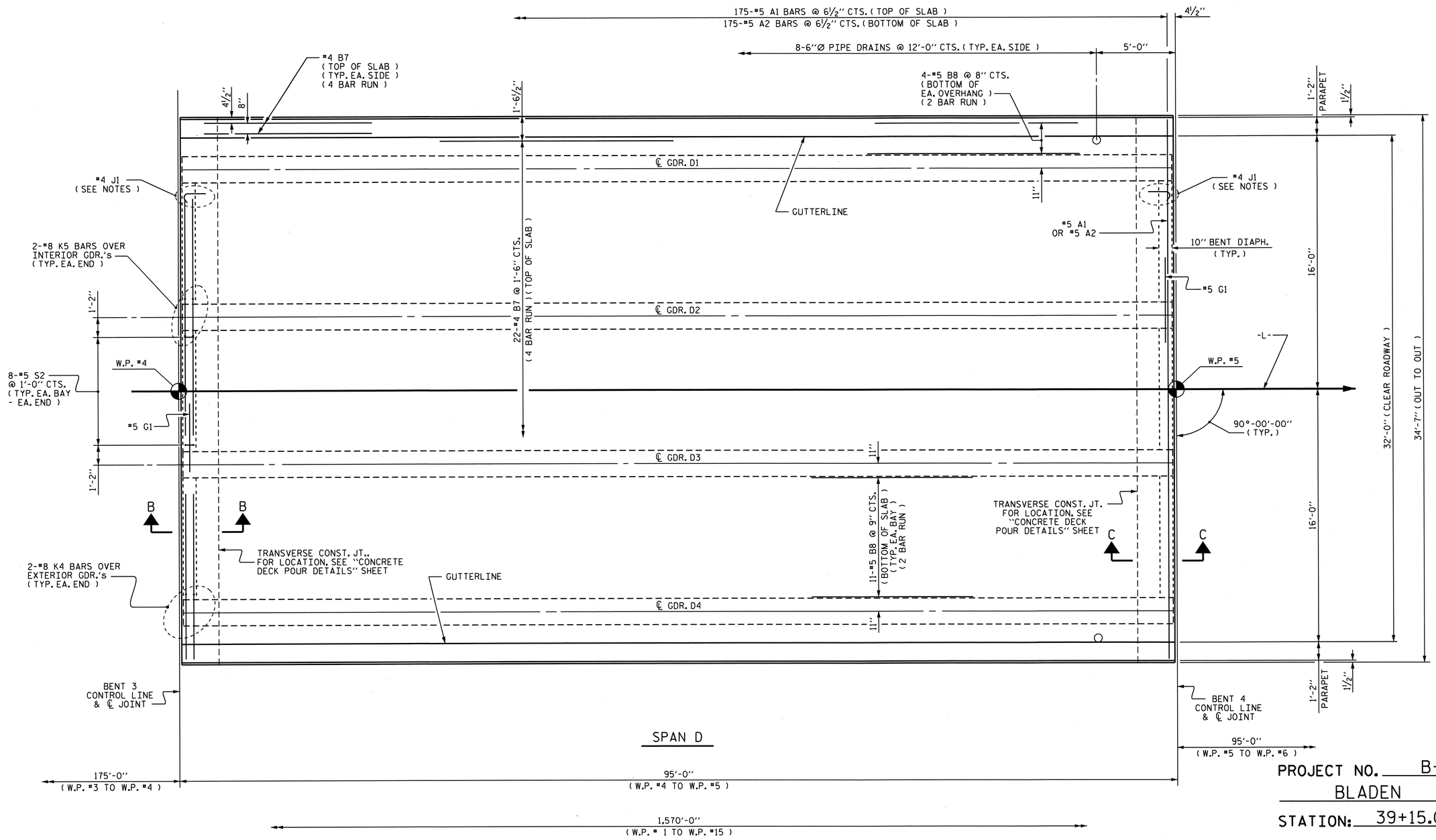

PLAN OF SPAN D

NOTES

FOR LOCATION OF INTERMEDIATE DIAPHRAGMS, SEE "GIRDER LAYOUT" SHEETS. FOR DETAILS, SEE "INTERMEDIATE STEEL DIAPHRAGMS FOR TYPE IV PRESTRESSED CONCRETE GIRDERS" SHEET.

FOR SECTIONS, SEE "TYPICAL SECTION DETAILS", SHEET 1 OF 2.

FOR PARAPET DETAILS AND REINFORCING STEEL, SEE "CONCRETE PARAPET AND END POST DETAILS" SHEETS.

FOR PLACEMENT OF #4 J1 BARS, SEE "EXPANSION JOINT SEAL DETAILS" SHEETS.

DRAWN BY : MIKE BRITT DATE : 8-24-11
CHECKED BY : S.B. WILLIAMS DATE : 10/2011

08-NOV-2012 13:06

NORTH CAROLINA PROFESSIONAL SEAL 21638 ENGINEER LAURA E. SUTTON 1/3/13

PROJECT NO. B-4712
BLADEN COUNTY
STATION: 39+15.00 -L-

SHEET 3 OF 8

STATE OF NORTH CAROLINA
DEPARTMENT OF TRANSPORTATION
RALEIGH

SUPERSTRUCTURE

PLAN OF SPANS

SPAN D

REVISIONS						SHEET NO.
NO.	BY:	DATE:	NO.	BY:	DATE:	S-16
1			3			TOTAL SHEETS
2			4			108

STR. #1

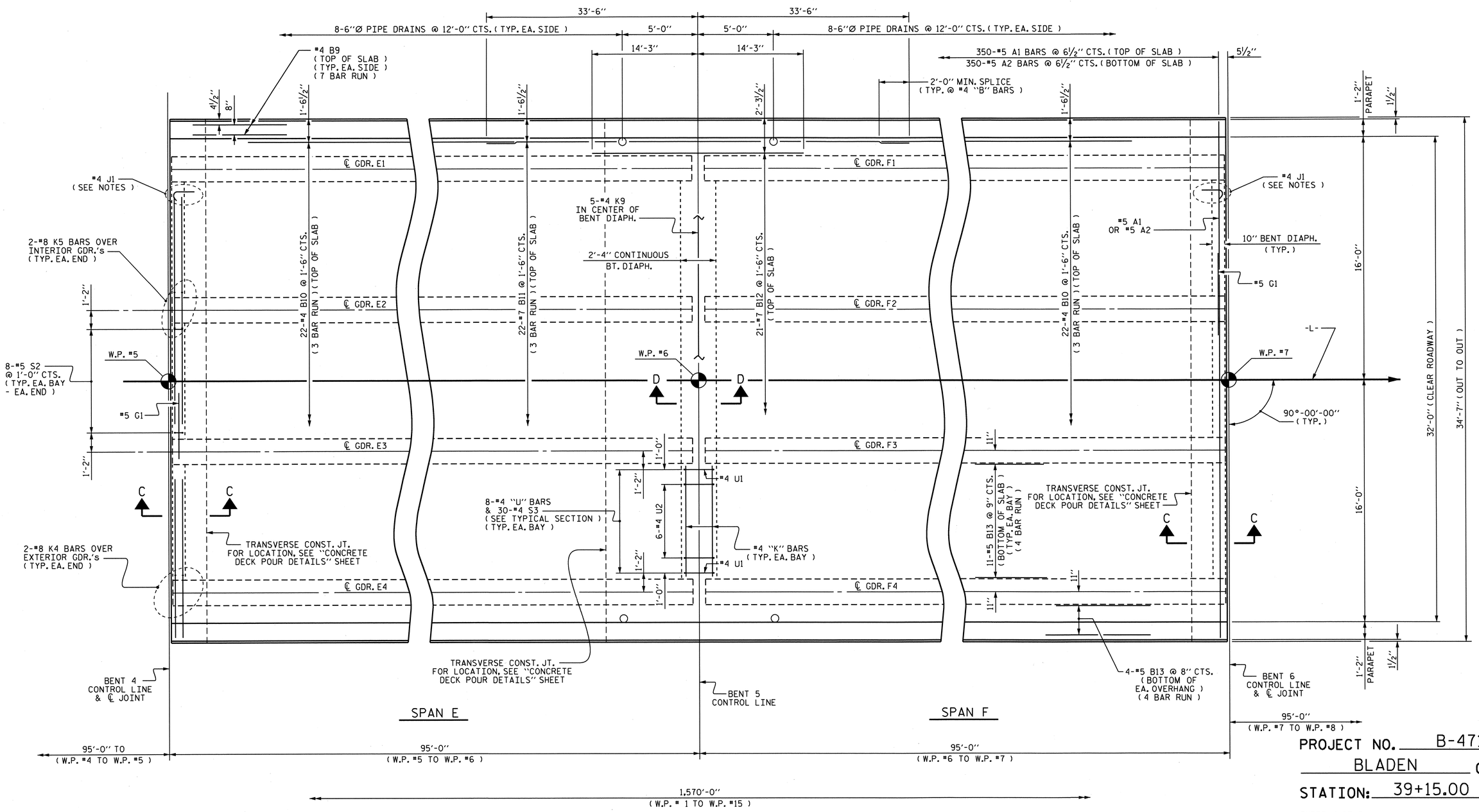

PLAN OF SPANS E-F

NOTES

FOR LOCATION OF INTERMEDIATE DIAPHRAGMS, SEE "GIRDER LAYOUT" SHEETS. FOR DETAILS, SEE "INTERMEDIATE STEEL DIAPHRAGMS FOR TYPE IV PRESTRESSED CONCRETE GIRDERS" SHEET.

FOR SECTIONS, SEE "TYPICAL SECTION DETAILS", SHEET 1 OF 2.

FOR PARAPET DETAILS AND REINFORCING STEEL, SEE "CONCRETE PARAPET AND END POST DETAILS" SHEETS.

FOR PLACEMENT OF #4 J1 BARS, SEE "EXPANSION JOINT SEAL DETAILS" SHEETS.

NORTH CAROLINA PROFESSIONAL SEAL 21638 ENGINEER LAURA E. SUTTON 11/05/13

DRAWN BY : MIKE BRITT DATE : 8-24-11
CHECKED BY : S.B. WILLIAMS DATE : 10/2011

08-NOV-2012 13:06
R:\structures\Plans\str01\B4712_SD_PS_01.dgn

PROJECT NO. B-4712
BLADEN COUNTY
STATION: 39+15.00 -L-

SHEET 4 OF 8

STATE OF NORTH CAROLINA
DEPARTMENT OF TRANSPORTATION
RALEIGH

SUPERSTRUCTURE

PLAN OF SPANS

SPANS E-F

REVISIONS						SHEET NO.
NO.	BY:	DATE:	NO.	BY:	DATE:	S-17
1			3			TOTAL SHEETS
2			4			108

STR. #1

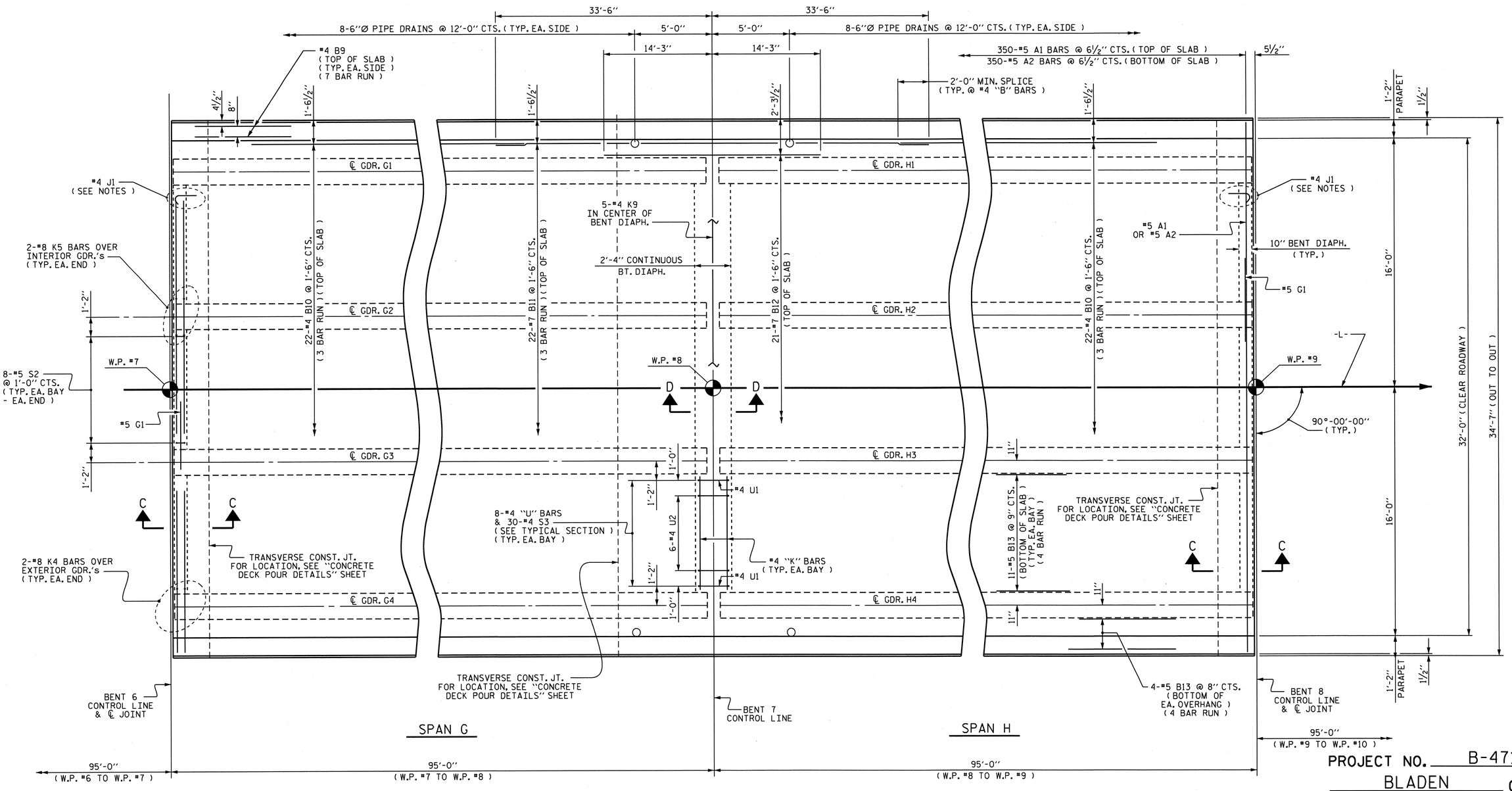

PLAN OF SPANS G-H

NOTES

FOR LOCATION OF INTERMEDIATE DIAPHRAGMS, SEE "GIRDER LAYOUT" SHEETS. FOR DETAILS, SEE "INTERMEDIATE STEEL DIAPHRAGMS FOR TYPE IV PRESTRESSED CONCRETE GIRDERS" SHEET.

FOR SECTIONS, SEE "TYPICAL SECTION DETAILS", SHEET 1 OF 2.

FOR PARAPET DETAILS AND REINFORCING STEEL, SEE "CONCRETE PARAPET AND END POST DETAILS" SHEETS.

FOR PLACEMENT OF #4 J1 BARS, SEE "EXPANSION JOINT SEAL DETAILS" SHEETS.

DRAWN BY : MIKE BRITT DATE : 9-29-10
CHECKED BY : S.B. WILLIAMS DATE : 10/2011

08-NOV-2012 13:06
R:\structures\Plans\str01\B4712_SD_PS_01.dgn

PROJECT NO. B-4712
BLADEN COUNTY
STATION: 39+15.00 -L-

SHEET 5 OF 8

STATE OF NORTH CAROLINA
DEPARTMENT OF TRANSPORTATION
RALEIGH

SUPERSTRUCTURE

PLAN OF SPANS

SPANS G-H

REVISIONS						SHEET NO.
NO.	BY:	DATE:	NO.	BY:	DATE:	S-18
1			3			TOTAL SHEETS
2			4			108

STR. #1

NORTH CAROLINA PROFESSIONAL SEAL 21638 ENGINEER LAURA E. SUTTON
11/5/13

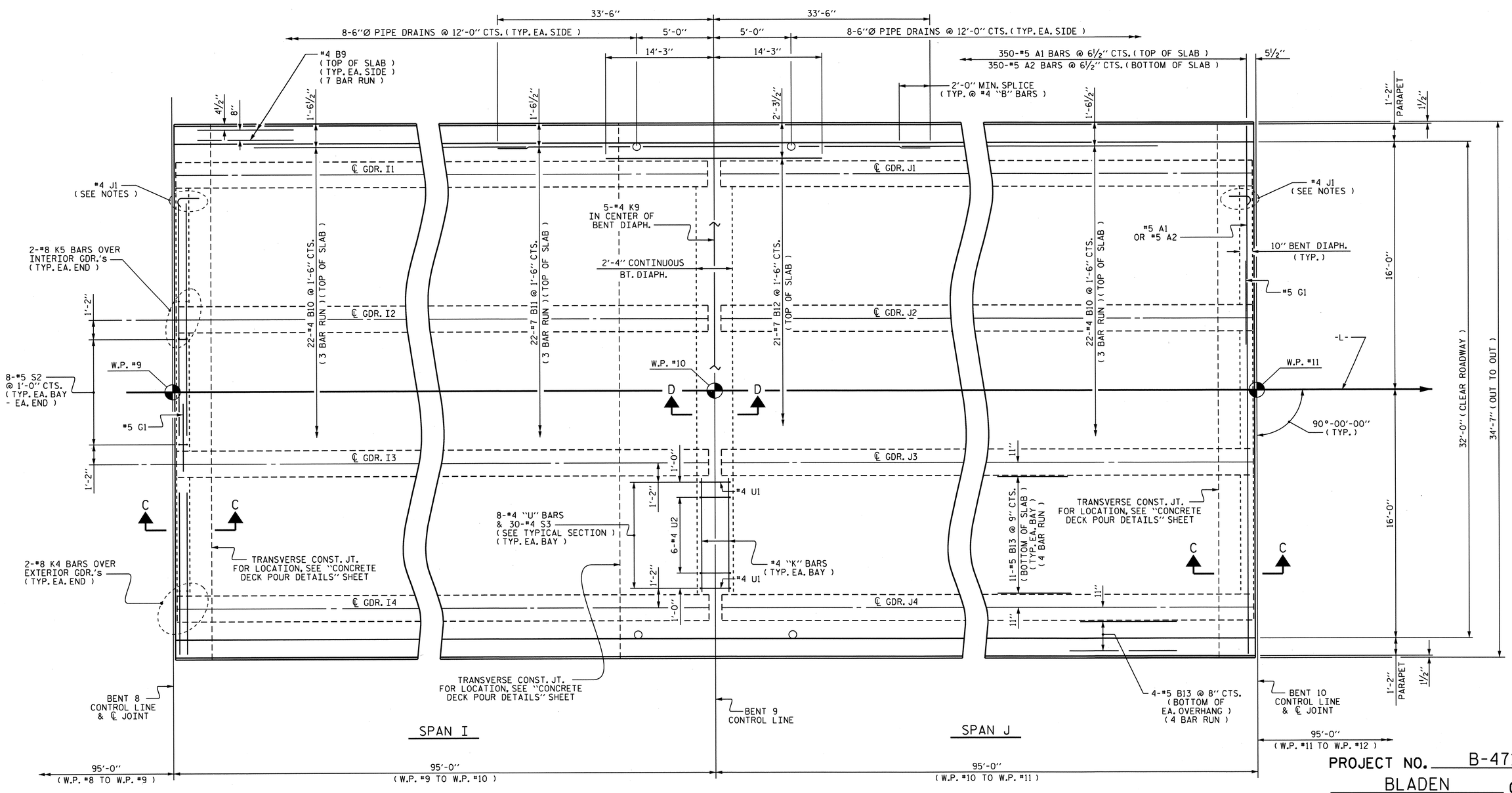

PLAN OF SPANS I-J

NOTES

FOR LOCATION OF INTERMEDIATE DIAPHRAGMS, SEE "GIRDER LAYOUT" SHEETS. FOR DETAILS, SEE "INTERMEDIATE STEEL DIAPHRAGMS FOR TYPE IV PRESTRESSED CONCRETE GIRDERS" SHEET.

FOR SECTIONS, SEE "TYPICAL SECTION DETAILS", SHEET 1 OF 2.

FOR PARAPET DETAILS AND REINFORCING STEEL, SEE "CONCRETE PARAPET AND END POST DETAILS" SHEETS.

FOR PLACEMENT OF #4 J1 BARS, SEE "EXPANSION JOINT SEAL DETAILS" SHEETS.

DRAWN BY : MIKE BRITT DATE : 9-29-10
CHECKED BY : S.B. WILLIAMS DATE : 10/2011

08-NOV-2012 13:06
R:\structures\Plans\str01\B4712_SD_PS_01.dgn

NORTH CAROLINA PROFESSIONAL SEAL 21638 ENGINEER LAURA E. SUTTON 1/03/13

PROJECT NO. B-4712
BLADEN COUNTY
STATION: 39+15.00 -L-

SHEET 6 OF 8

STATE OF NORTH CAROLINA
DEPARTMENT OF TRANSPORTATION
RALEIGH

SUPERSTRUCTURE

PLAN OF SPANS

SPANS I-J

REVISIONS						SHEET NO.
NO.	BY:	DATE:	NO.	BY:	DATE:	S-19
1			3			TOTAL SHEETS
2			4			108

STR. #1

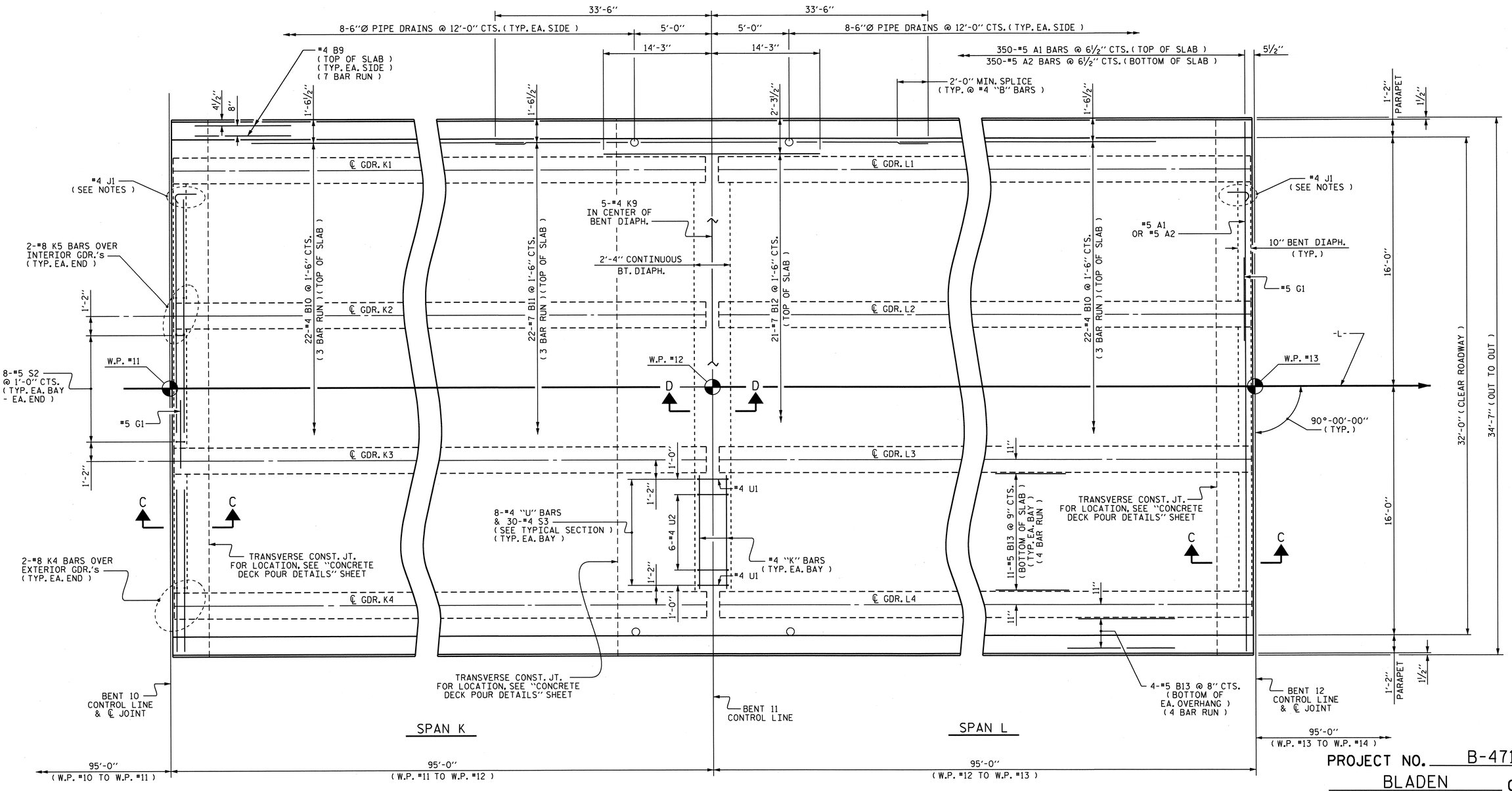

PLAN OF SPANS K-L

NOTES

FOR LOCATION OF INTERMEDIATE DIAPHRAGMS, SEE "GIRDER LAYOUT" SHEETS. FOR DETAILS, SEE "INTERMEDIATE STEEL DIAPHRAGMS FOR TYPE IV PRESTRESSED CONCRETE GIRDERS" SHEET.

FOR SECTIONS, SEE "TYPICAL SECTION DETAILS", SHEET 1 OF 2.

FOR PARAPET DETAILS AND REINFORCING STEEL, SEE "CONCRETE PARAPET AND END POST DETAILS" SHEETS.

FOR PLACEMENT OF #4 J1 BARS, SEE "EXPANSION JOINT SEAL DETAILS" SHEETS.

PROJECT NO. B-4712

BLADEN COUNTY

STATION: 39+15.00 -L-

SHEET 7 OF 8

STATE OF NORTH CAROLINA
DEPARTMENT OF TRANSPORTATION
RALEIGH

SUPERSTRUCTURE

PLAN OF SPANS

SPANS K-L

REVISIONS						SHEET NO.
NO.	BY:	DATE:	NO.	BY:	DATE:	S-20
1			3			TOTAL SHEETS
2			4			108

STR. #1

NORTH CAROLINA PROFESSIONAL SEAL 21838 ENGINEER LAURA E. SUTTON 10/3/13

DRAWN BY : MIKE BRITT DATE : 8-25-11
CHECKED BY : S.B. WILLIAMS DATE : 10/2011

08-NOV-2012 13:06
R:\structures\Plans\str01\B4712_SD_PS_01.dgn

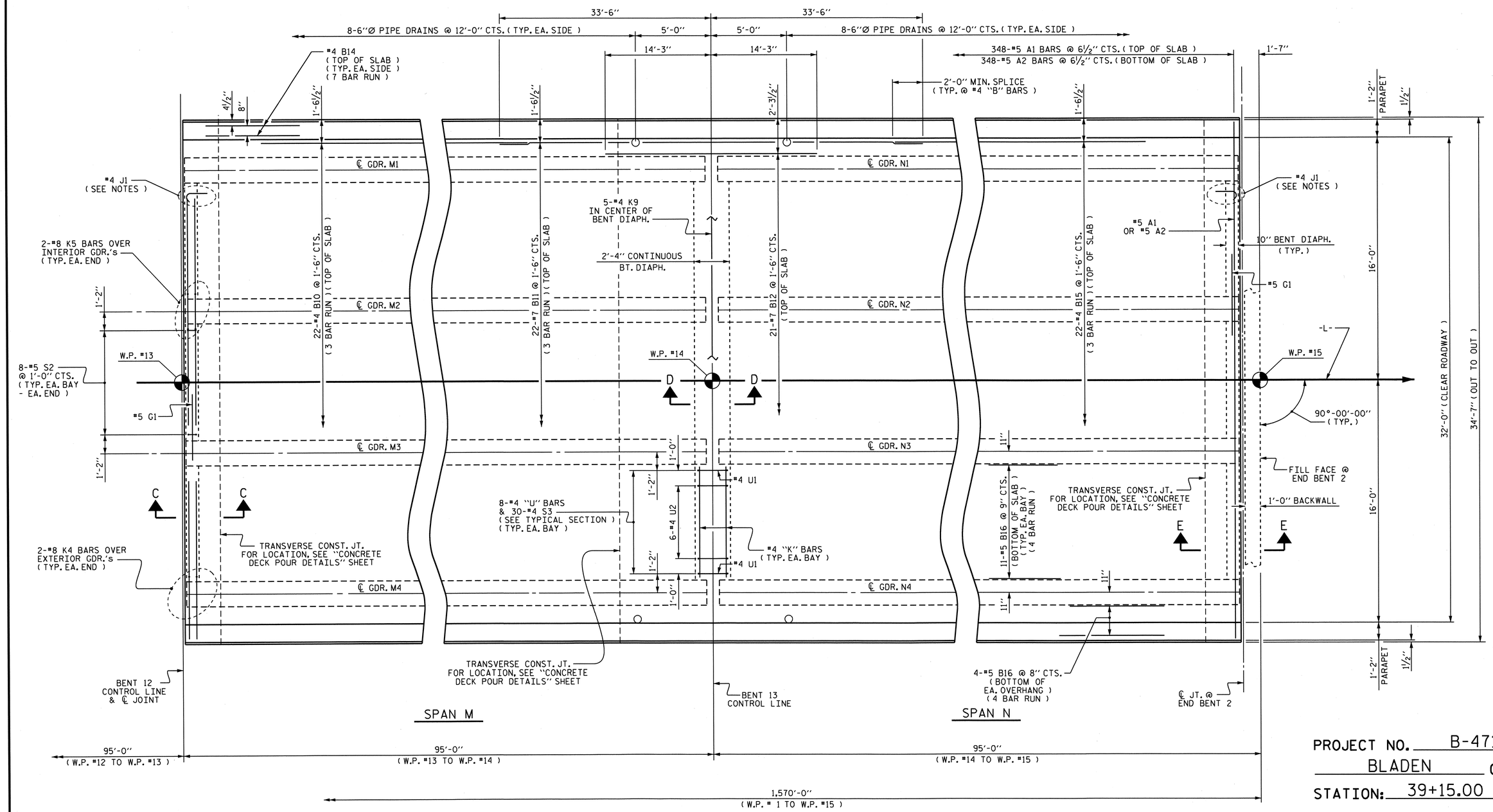

PLAN OF SPANS M-N

NOTES

FOR LOCATION OF INTERMEDIATE DIAPHRAGMS, SEE "GIRDER LAYOUT" SHEETS. FOR DETAILS, SEE "INTERMEDIATE STEEL DIAPHRAGMS FOR TYPE IV PRESTRESSED CONCRETE GIRDERS" SHEET.

FOR SECTIONS, SEE "TYPICAL SECTION DETAILS", SHEET 1 OF 2.

FOR PARAPET DETAILS AND REINFORCING STEEL, SEE "CONCRETE PARAPET AND END POST DETAILS" SHEETS.

FOR PLACEMENT OF #4 J1 BARS, SEE "EXPANSION JOINT SEAL DETAILS" SHEETS.

DRAWN BY : MIKE BRITT DATE : 9-29-10
CHECKED BY : S.B. WILLIAMS DATE : 2-2011

08-NOV-2012 13:06
R:\structures\Plans\str01\B4712_SD_PS_01.dgn

NORTH CAROLINA PROFESSIONAL SEAL 21638 ENGINEER LAURA E. SUTTON 10/3/13

PROJECT NO. B-4712
BLADEN COUNTY
STATION: 39+15.00 -L-

SHEET 8 OF 8

STATE OF NORTH CAROLINA
DEPARTMENT OF TRANSPORTATION
RALEIGH

SUPERSTRUCTURE

PLAN OF SPANS

SPANS M-N

REVISIONS						SHEET NO.
NO.	BY:	DATE:	NO.	BY:	DATE:	S-21
1			3			TOTAL SHEETS
2			4			108

STR. #1

△NOTE A :
BEARING STIFFENERS TO BE USED AS CONNECTOR PLATES IN THIS AREA.

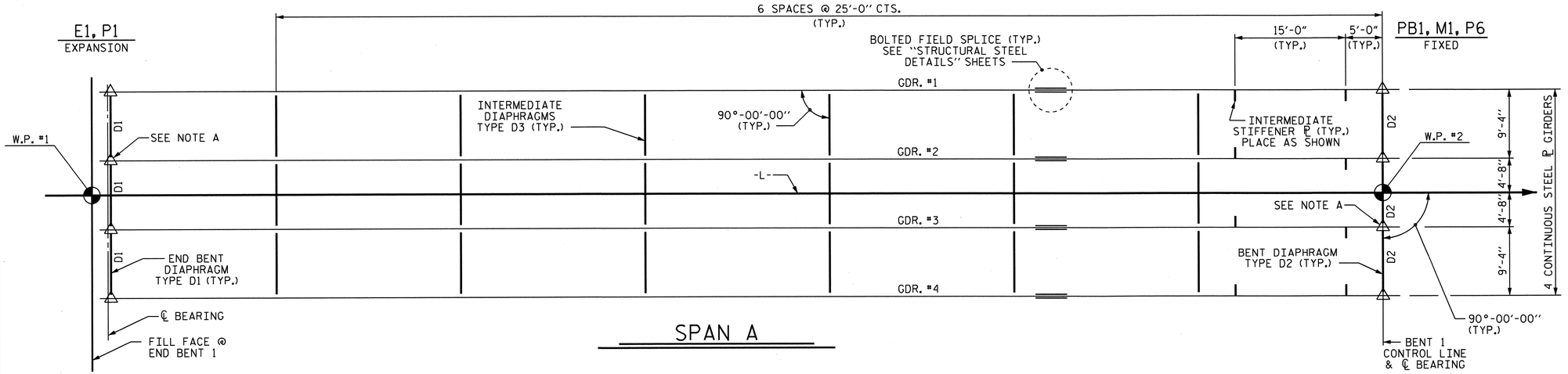

SPAN A

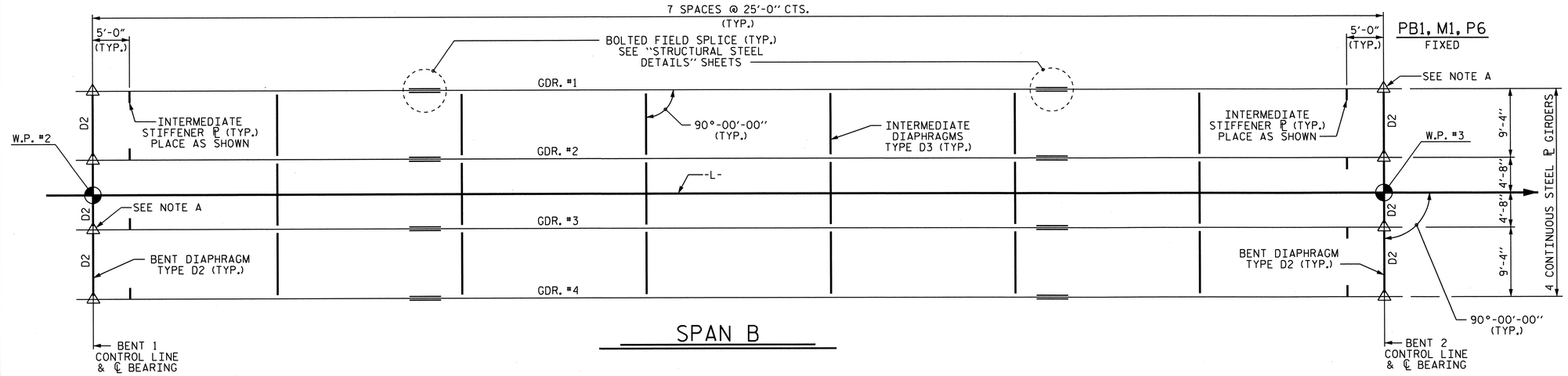

SPAN B

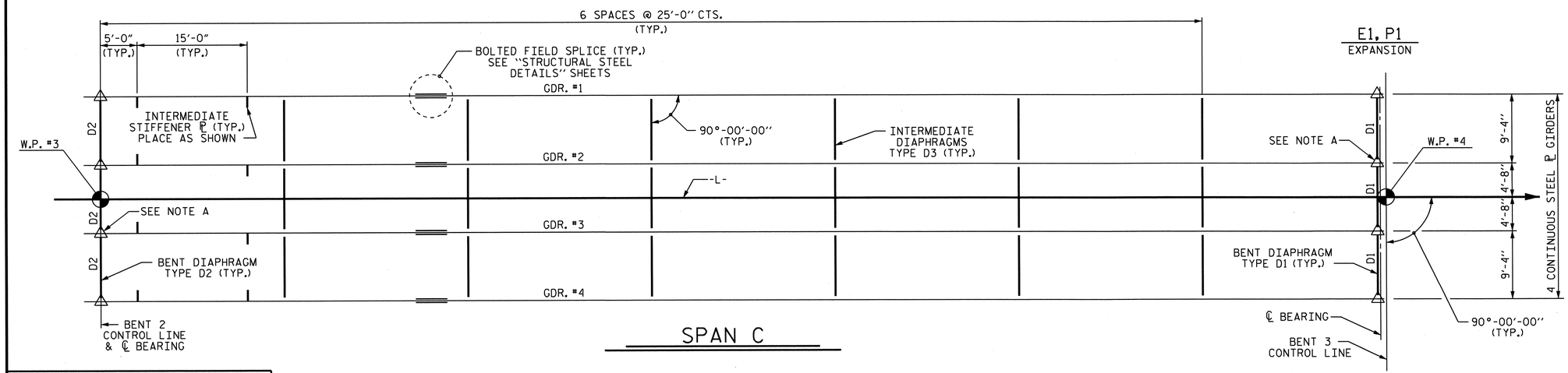

SPAN C

NORTH CAROLINA PROFESSIONAL SEAL 21638 ENGINEER LAURA E. SUTTON
11/05/12

PROJECT NO. B-4712
BLADEN COUNTY
STATION: 39+15.00 -L-

STATE OF NORTH CAROLINA
DEPARTMENT OF TRANSPORTATION
RALEIGH

SUPERSTRUCTURE

FRAMING PLAN

SPANS A-B-C

REVISIONS						SHEET NO.
NO.	BY:	DATE:	NO.	BY:	DATE:	S-22
1			3			TOTAL SHEETS
2			4			108

STR. #1

DRAWN BY : MIKE BRITT DATE : 8-31-11
CHECKED BY : S.B. WILLIAMS DATE : 10/2011

08-NOV-2012 13:06
R:\Structures\Plans\str01\B4712_SD_FP_01.dgn

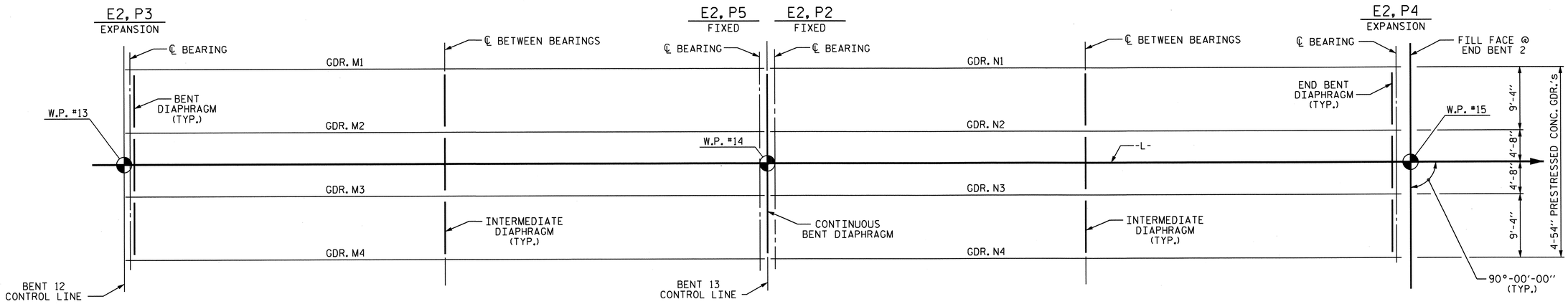

SPANS M-N

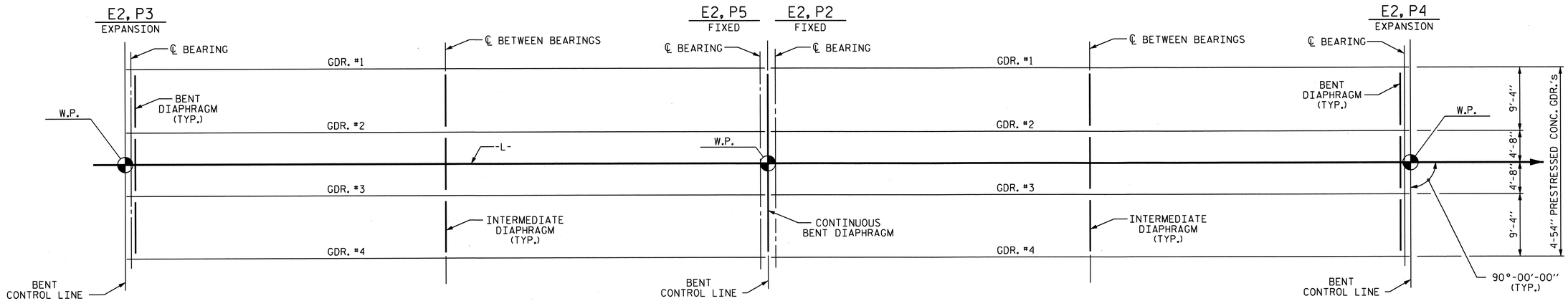

SPANS E-F, G-H, I-J OR K-L

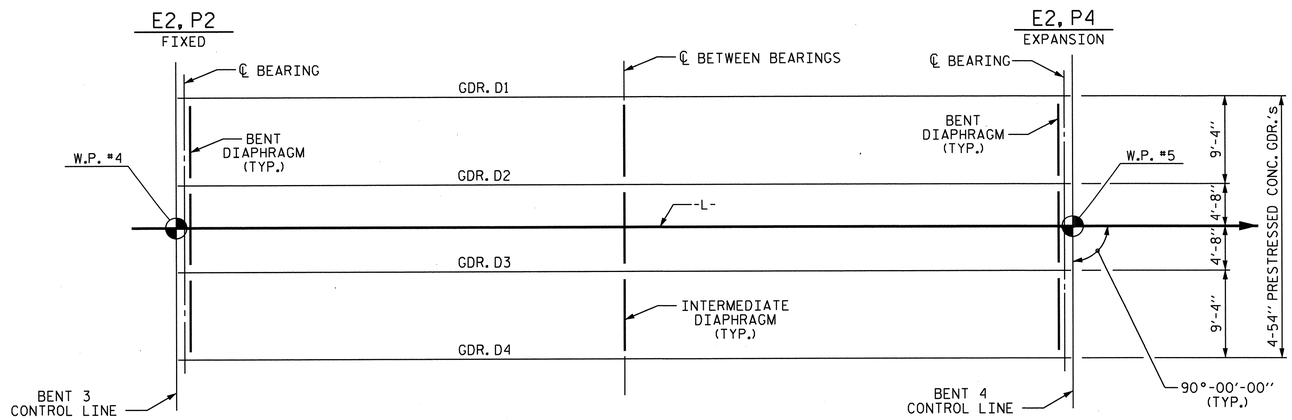

SPAN D

PROJECT NO. B-4712

BLADEN COUNTY

STATION: 39+15.00 -L-

STATE OF NORTH CAROLINA
DEPARTMENT OF TRANSPORTATION
RALEIGH

SUPERSTRUCTURE

GIRDER LAYOUT

SPANS D THROUGH N

REVISIONS						SHEET NO.
NO.	BY:	DATE:	NO.	BY:	DATE:	S-23
1			3			TOTAL SHEETS
2			4			108

NORTH CAROLINA PROFESSIONAL SEAL 21638 ENGINEER LAURA E. SUTTON 11/03/13

DRAWN BY : MIKE BRITT DATE : 8-25-11
CHECKED BY : S.B. WILLIAMS DATE : 10/2011

08-NOV-2012 13:06
D:\Scan_plots\Final Plans\stru01\B4712_SD_SB_01.dgn

STR. #1

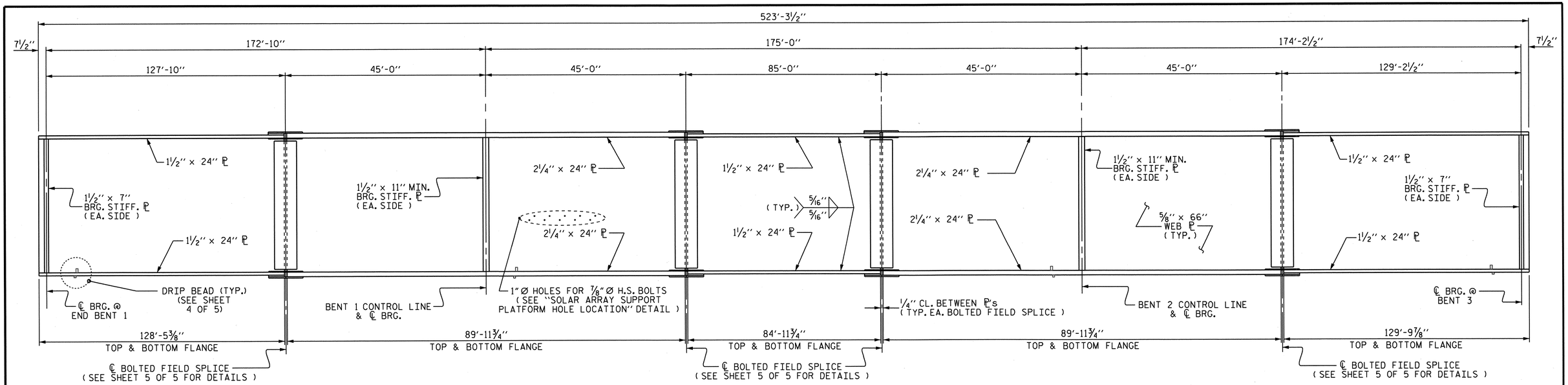

PLATE GIRDER ELEVATION

INTERMEDIATE STIFFENER AND CONNECTOR ℙ's NOT SHOWN, SEE "FRAMING PLAN" SHEETS.
SHEAR STUDS NOT SHOWN, SEE SHEET 2 OF 5 FOR SHEAR STUD LOCATIONS

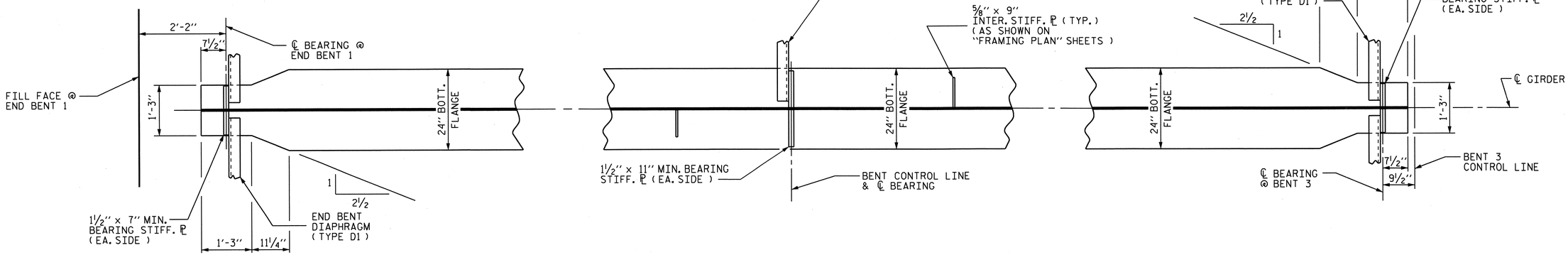

SPANS A-B-C BOTTOM FLANGE DETAIL

SEE FRAMING PLAN SHEETS FOR DIAPHRAGM LOCATIONS

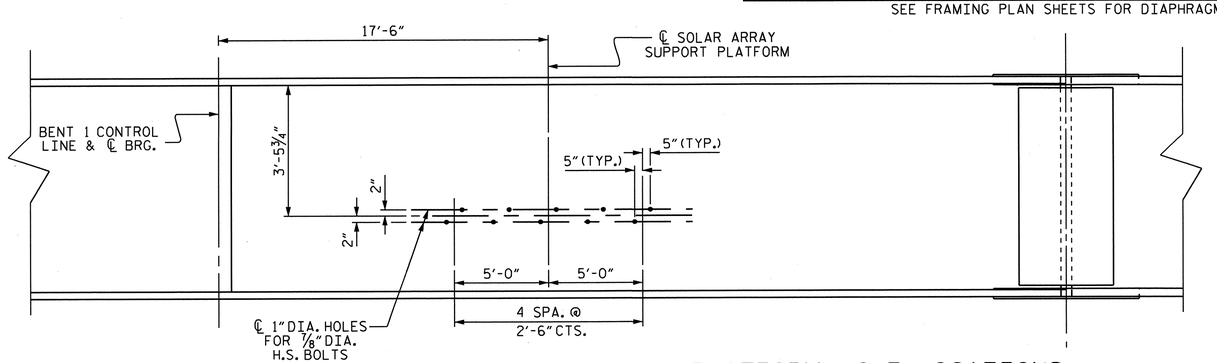

SOLAR ARRAY SUPPORT PLATFORM HOLE LOCATIONS

HOLE LOCATIONS SHALL BE VERIFIED PRIOR TO FABRICATION.

DRAWN BY : MIKE BRITT DATE : 9-7-11
CHECKED BY : S.B. WILLIAMS DATE : 10/2011

08-NOV-2012 13:06
R:\Structures\Plans\str01\B4712_SD_SS_01.dgn

PROJECT NO. B-4712
BLADEN COUNTY
STATION: 39+15.00 -L-

SHEET 1 OF 5

STATE OF NORTH CAROLINA
DEPARTMENT OF TRANSPORTATION
RALEIGH

SUPERSTRUCTURE

STRUCTURAL STEEL DETAILS

NORTH CAROLINA PROFESSIONAL SEAL 21638 ENGINEER LAURA E. SUTTON 11/5/13

REVISIONS						SHEET NO.
NO.	BY:	DATE:	NO.	BY:	DATE:	S-24
1			3			TOTAL SHEETS
2			4			108

STR. #1

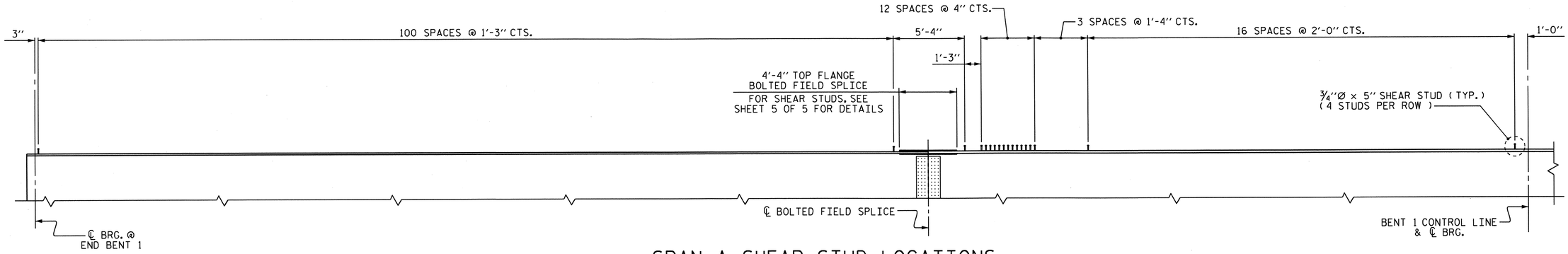

SPAN A SHEAR STUD LOCATIONS

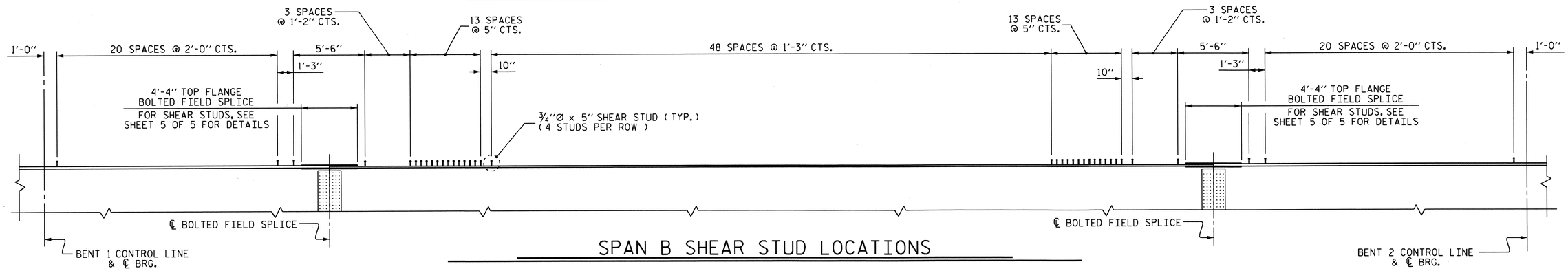

SPAN B SHEAR STUD LOCATIONS

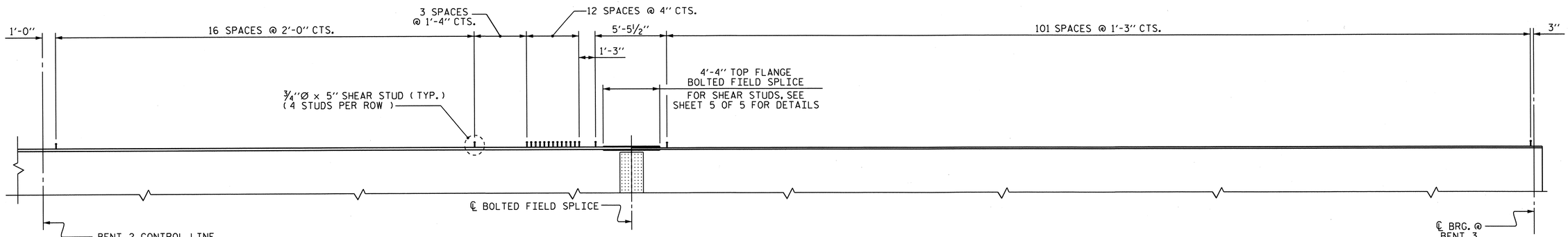

SPAN C SHEAR STUD LOCATIONS

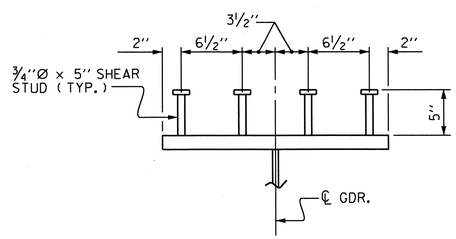

SHEAR STUD DETAIL

TYPICAL EXCEPT @ BOLTED FIELD SPLICE

PROJECT NO. B-4712

BLADEN COUNTY

STATION: 39+15.00 -L-

SHEET 2 OF 5

STATE OF NORTH CAROLINA
DEPARTMENT OF TRANSPORTATION
RALEIGH

SUPERSTRUCTURE

STRUCTURAL STEEL DETAILS

REVISIONS						SHEET NO.
NO.	BY:	DATE:	NO.	BY:	DATE:	S-25
1			3			TOTAL SHEETS
2			4			108

NORTH CAROLINA PROFESSIONAL SEAL 21638 ENGINEER LAURA E. SUTTON 11/03/13

DRAWN BY : MIKE BRITT DATE : 9-8-11
CHECKED BY : S.B. WILLIAMS DATE : 10/2011

08-NOV-2012 13:06
R:\Structures\Plans\str01\B4712_SD_SS_01.dgn

STR. #1

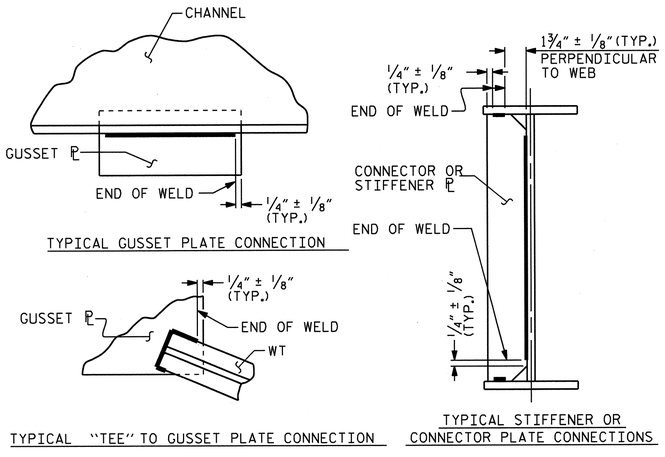

WELD TERMINATION DETAILS

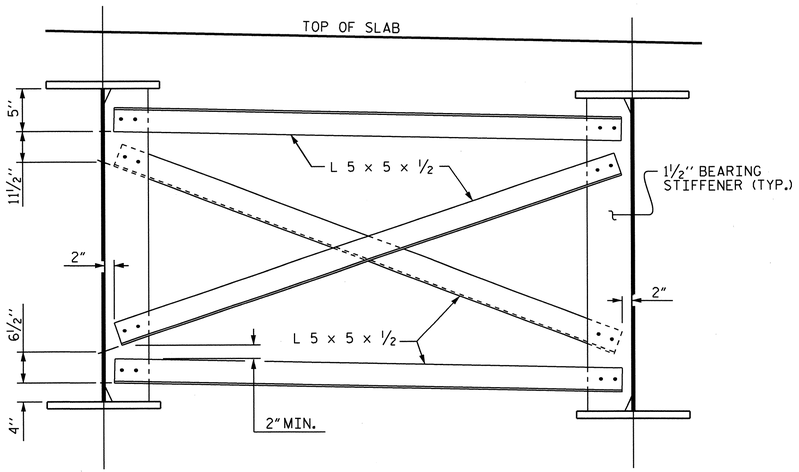

TYPICAL BENT DIAPHRAGM (TYPE D2)

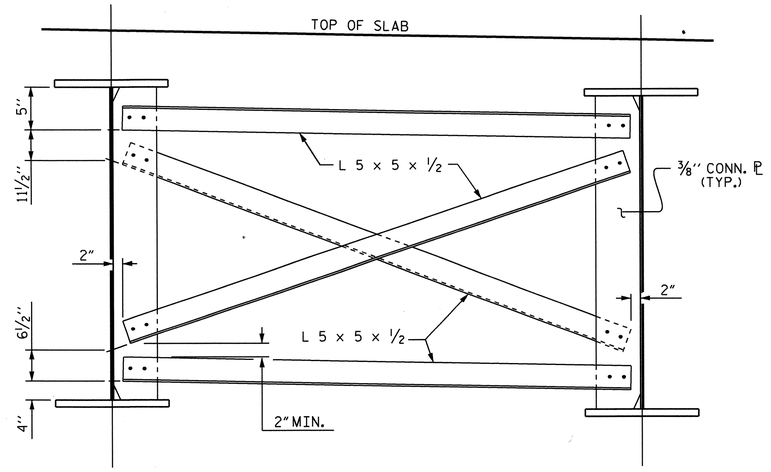

TYPICAL INTERMEDIATE DIAPHRAGM (TYPE D3)

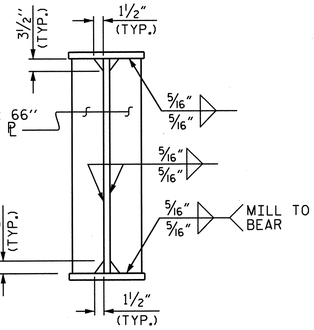

BEARING STIFFENER

(AT END BENT 1 & BENT 3)

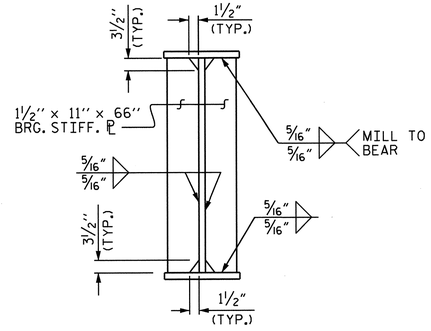

BEARING STIFFENER

(AT BENT 1 & BENT 2)

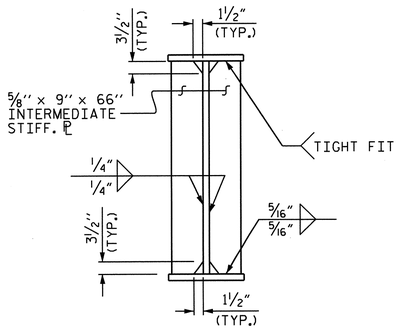

INTERMEDIATE STIFFENER

(SEE FRAMING PLAN FOR LOCATION)

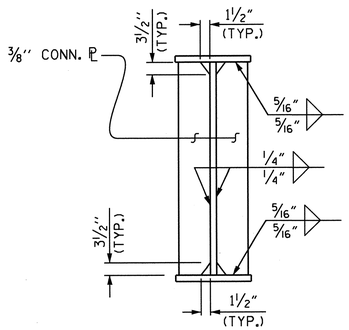

CONNECTOR PL

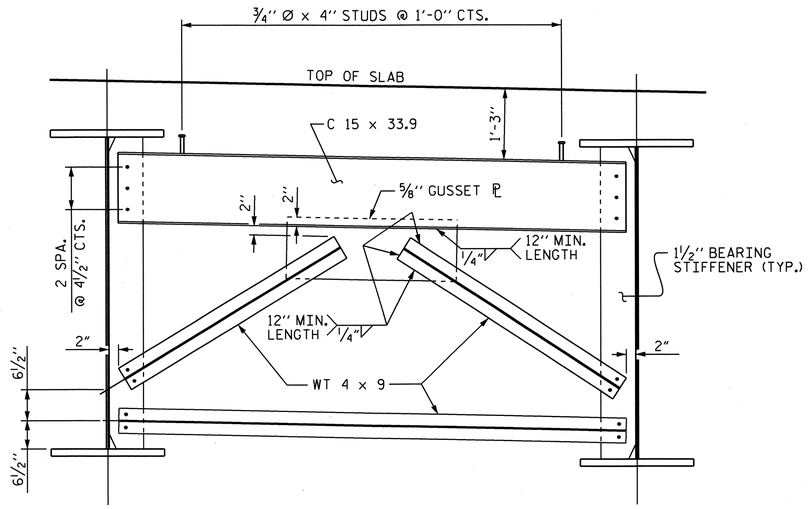

TYPICAL DIAPHRAGM (TYPE D1)

TO BE USED AT END BENT 1 & BENT 3

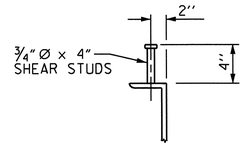

SHEAR STUD DETAIL

(TYP. END BENT 1 & BENT 3)

PROJECT NO. B-4712

BLADEN COUNTY

STATION: 39+15.00 -L-

SHEET 3 OF 5

STATE OF NORTH CAROLINA
DEPARTMENT OF TRANSPORTATION
RALEIGH

SUPERSTRUCTURE

STRUCTURAL STEEL DETAILS

REVISIONS						SHEET NO.
NO.	BY:	DATE:	NO.	BY:	DATE:	S-26
1			3			TOTAL SHEETS
2			4			108

STR. #1

DRAWN BY : MIKE BRITT DATE : 9-1-11
CHECKED BY : S.B. WILLIAMS DATE : 10/2011

08-NOV-2012 13:06
R:\Structures\Plans\str01\B4712_SD_SS_01.dgn

NORTH CAROLINA PROFESSIONAL SEAL 21638 ENGINEER LAURA E. SUTTON 11/13/13

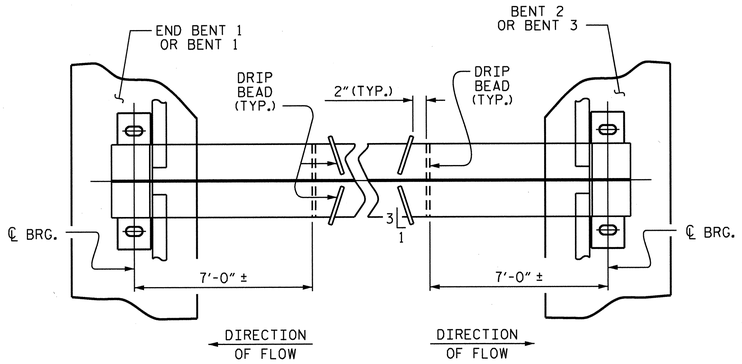

PART PLAN - BOTTOM FLANGE

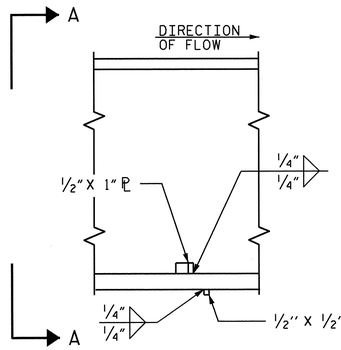

SECTION

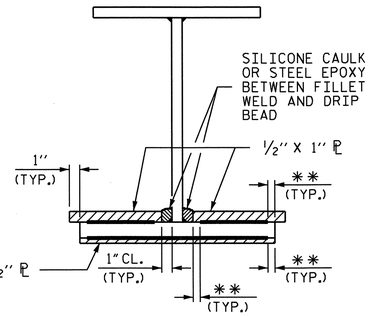

VIEW A-A

** SEE "WELD TERMINATION DETAILS" SHEET 3 OF 5

DRIP BEAD DETAILS

STRUCTURAL STEEL NOTES

ALL STRUCTURAL STEEL SHALL BE AASHTO M270 GRADE 50W AND PAINTED IN ACCORDANCE WITH SYSTEM 4 OF ARTICLE 442-8 OF THE STANDARD SPECIFICATIONS UNLESS OTHERWISE NOTED ON THE PLANS.

ALL DIMENSIONS SHOWN ARE HORIZONTAL OR VERTICAL, UNLESS OTHERWISE NOTED.

ALL FIELD CONNECTIONS TO BE ⅞" Ø HIGH STRENGTH BOLTS UNLESS OTHERWISE NOTED.

BEARING STIFFENERS ARE TO BE PLACED NORMAL TO THE WEB OF THE GIRDER AND SHALL BE PLUMB.

PERMITTED FLANGE AND WEB SHOP SPLICES SHALL NOT BE LOCATED WITHIN 15 FEET OF MAXIMUM DEAD LOAD DEFLECTION (NOR WITHIN 15 FEET OF INTERMEDIATE BEARINGS OF CONTINUOUS UNITS). KEEP 2 FEET MINIMUM BETWEEN WEB AND FLANGE SHOP SPLICES. KEEP 6" MINIMUM BETWEEN CONNECTOR PLATE OR INTERMEDIATE STIFFENER WELDS AND WEB OR FLANGE SHOP SPLICES.

STUDS ON GIRDERS MAY BE SHIFTED UP TO 1" IF NECESSARY TO CLEAR FLANGE SPLICE WELD.

TENSION ON THE AASHTO M164 BOLTS SHALL BE CALIBRATED USING DIRECT TENSION INDICATOR WASHERS IN ACCORDANCE WITH ARTICLE 440-8 OF THE STANDARD SPECIFICATIONS.

END OF GIRDERS SHALL BE PLUMB.

BEARING STIFFENER MAY REQUIRE COPING IF WIDER THAN BOTTOM FLANGE. BEARING STIFFENER PLATE WIDTH SHOWN IS A MINIMUM WIDTH. THE BEARING STIFFENER PLATE WIDTH, WHEN USED AS A CONNECTOR PLATE, MAY BE INCREASED AS NECESSARY IN ORDER TO CONNECT THE DIAPHRAGM MEMBERS WHEN REQUIRED.

STRUCTURAL STEEL ERECTION IN A CONTINUOUS UNIT SHALL BE COMPLETE BEFORE FALSEWORK OR FORMS ARE PLACED ON THE UNIT.

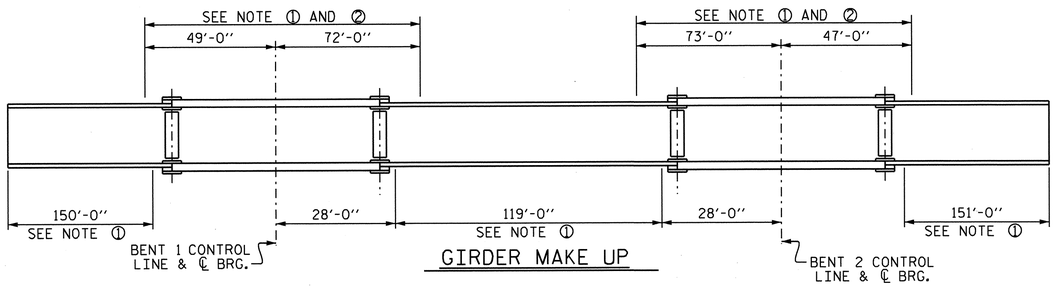

GIRDER MAKE UP

NOTE ① : CHARPY V-NOTCH TESTS ARE REQUIRED FOR ALL TOP OR BOTTOM FLANGE PLATES WHICH FALL WITHIN THESE LIMITS, ALL WEB PLATES, AND ALL SPLICE PLATES. IF A PERMITTED SHOP FLANGE SPLICE IS NOT USED, CHARPY V-NOTCH TESTS WILL BE REQUIRED FOR THE ENTIRE FLANGE PLATE. FOR CHARPY V-NOTCH TESTS, SEE ARTICLE 1072-7 OF THE STANDARD SPECIFICATIONS.

NOTE ② : NO WELDING OF FORMS OR FALSEWORK TO THE TOP FLANGE WILL BE PERMITTED IN THIS REGION

CHARPY V-NOTCH TESTS FOR CONTINUOUS PLATE GIRDERS

NOTE : ALL GIRDER DIMENSIONS IN THE ABOVE DETAIL ARE HORIZONTAL DIMENSIONS.

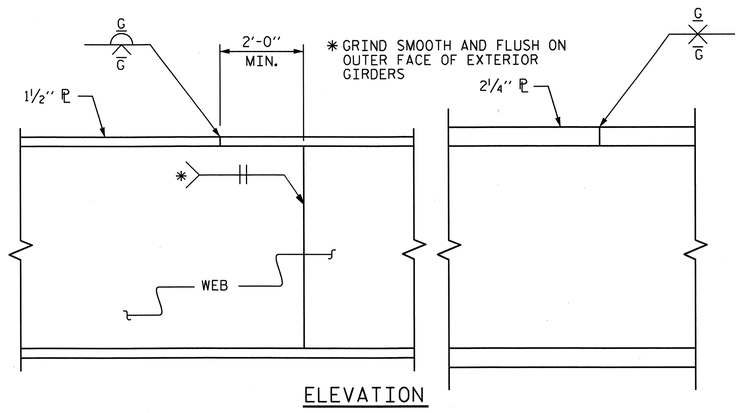

ELEVATION

TYPICAL FLANGE AND WEB BUTT JOINT

PROJECT NO. B-4712

BLADEN COUNTY

STATION: 39+15.00 -L-

SHEET 4 OF 5

STATE OF NORTH CAROLINA
DEPARTMENT OF TRANSPORTATION
RALEIGH

SUPERSTRUCTURE

STRUCTURAL STEEL DETAILS

REVISIONS						SHEET NO.
NO.	BY:	DATE:	NO.	BY:	DATE:	S-27
1			3			TOTAL SHEETS
2			4			108

STR. #1

NORTH CAROLINA PROFESSIONAL SEAL 21638 ENGINEER LAURA E. SUTTON 1/03/13

DRAWN BY : MIKE BRITT DATE : 9-1-11
CHECKED BY : S.B. WILLIAMS DATE : 10/2011

08-NOV-2012 13:06
R:\Structures\Plans\str01\B4712_SD_SS_01.dgn

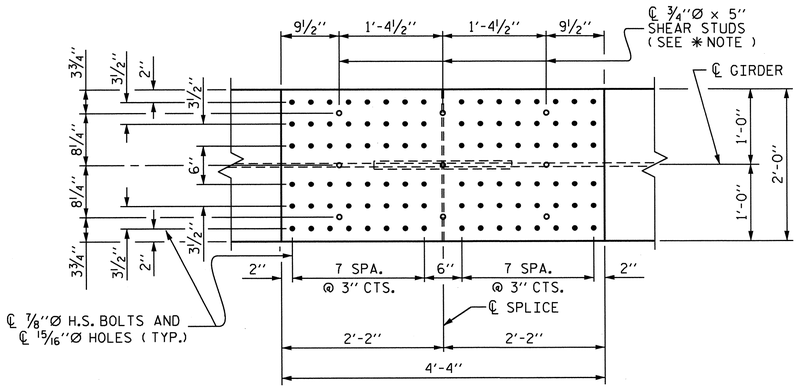

PLAN (TOP OF TOP FLANGE)

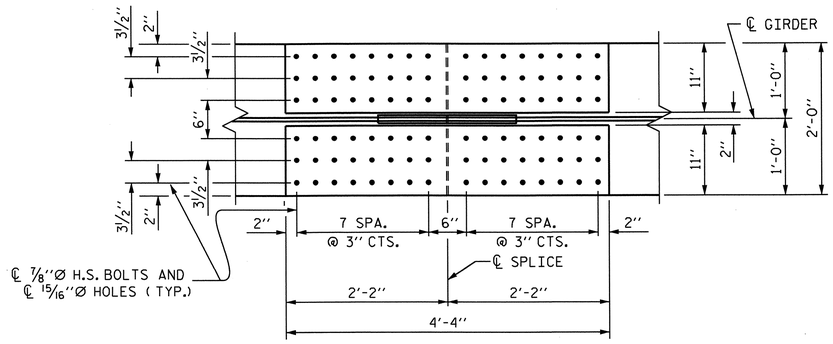

PLAN (TOP OF BOTTOM FLANGE)

✱ NOTE :
SHEAR STUDS ARE TO BE SHOP WELDED ON TOP OF PLATE BEFORE FIELD ASSEMBLY.

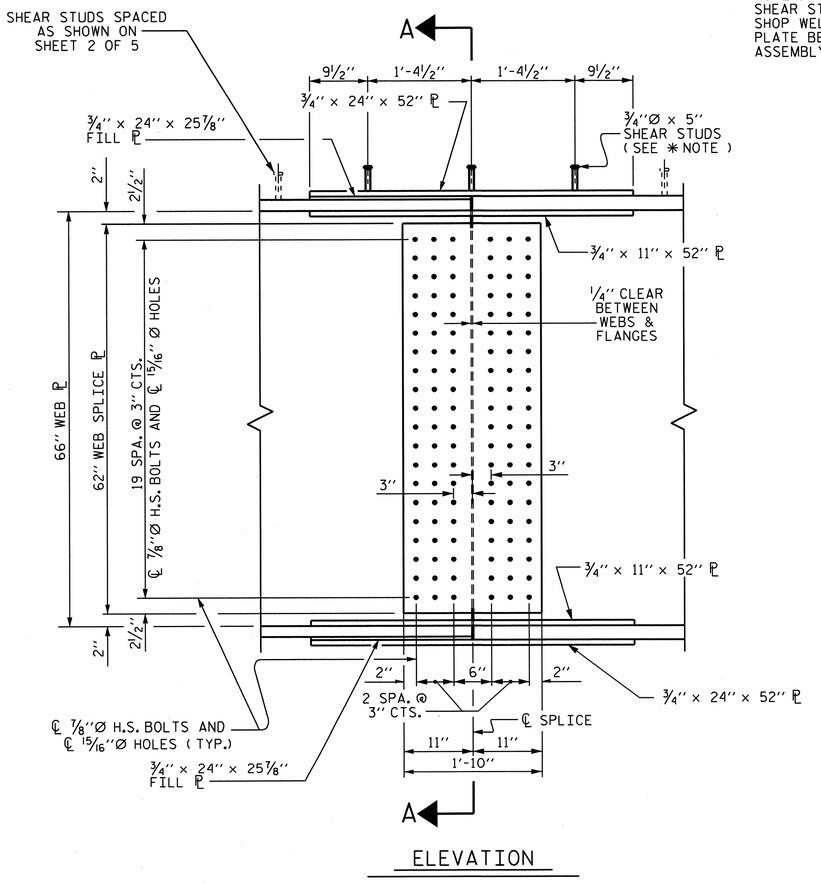

ELEVATION

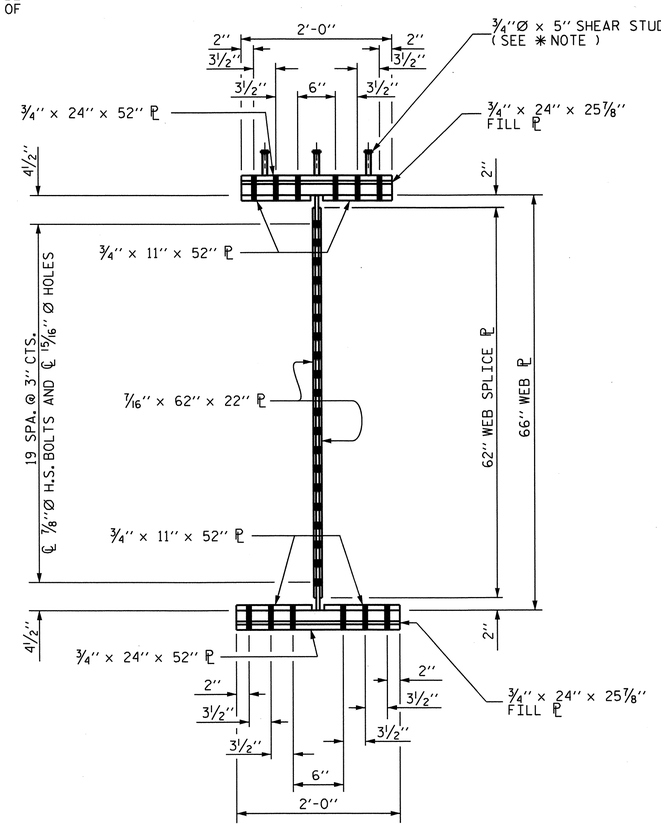

SECTION A-A

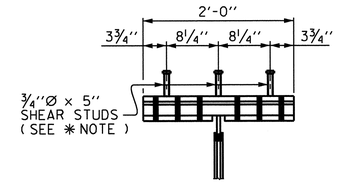

SHEAR STUD DETAIL FOR TOP FLANGE SPLICE PLATE

BOLTED FIELD SPLICE DETAILS

(TYPICAL EACH FIELD SPLICE)

DRAWN BY : MIKE BRITT DATE : 8-31-11
CHECKED BY : S.B. WILLIAMS DATE : 10/2011

08-NOV-2012 13:06
R:\Structures\Plans\str01\B4712_SD_SS_01.dgn

PROJECT NO. B-4712
BLADEN COUNTY
STATION: 39+15.00 -L-

SHEET 5 OF 5

STATE OF NORTH CAROLINA
DEPARTMENT OF TRANSPORTATION
RALEIGH

SUPERSTRUCTURE

STRUCTURAL STEEL DETAILS

REVISIONS						SHEET NO.
NO.	BY:	DATE:	NO.	BY:	DATE:	S-28
1			3			TOTAL SHEETS
2			4			108

STR. #1

NORTH CAROLINA PROFESSIONAL SEAL 21638 ENGINEER LAURA E. SUTTON
11/03/13

DEAD LOAD DEFLECTION TABLE FOR GIRDERS

SPAN A	GIRDERS 1 THROUGH 4																				
TWENTIETH POINTS	0	.05	.10	.15	.20	.25	.30	.35	.40	.45	.50	.55	.60	.65	.70	.75	.80	.85	.90	.95	0
DEFLECTION DUE TO WEIGHT OF GIRDER	0.000	0.024	0.047	0.068	0.087	0.102	0.115	0.123	0.128	0.129	0.126	0.120	0.110	0.098	0.083	0.068	0.052	0.036	0.022	0.009	0.000
DEFLECTION DUE TO WEIGHT OF SLAB *	0.000	0.059	0.116	0.168	0.215	0.254	0.285	0.307	0.320	0.322	0.316	0.301	0.277	0.247	0.212	0.173	0.133	0.094	0.057	0.025	0.000
DEFLECTION DUE TO WEIGHT OF PARAPET	0.000	0.009	0.017	0.025	0.032	0.038	0.042	0.046	0.048	0.048	0.047	0.045	0.041	0.037	0.032	0.026	0.020	0.014	0.009	0.004	0.000
TOTAL DEAD LOAD DEFLECTION	0.000	0.092	0.180	0.261	0.334	0.394	0.442	0.476	0.496	0.499	0.489	0.466	0.428	0.382	0.327	0.267	0.205	0.144	0.088	0.038	0.000
VERTICAL CURVE ORDINATE	0.000	0.000	0.001	0.002	0.002	0.003	0.004	0.004	0.005	0.006	0.006	0.007	0.008	0.008	0.009	0.010	0.010	0.011	0.010	0.007	0.000
REQUIRED CAMBER	0	1 1/8"	2 3/16"	3 1/8"	4 1/16"	4 3/4"	5 3/8"	5 3/4"	6"	6 1/16"	5 15/16"	5 11/16"	5 1/4"	4 11/16"	4 1/16"	3 5/16"	2 9/16"	1 7/8"	1 3/16"	9/16"	0

DEAD LOAD DEFLECTION TABLE FOR GIRDERS

SPAN B	GIRDERS 1 THROUGH 4																				
TWENTIETH POINTS	0	.05	.10	.15	.20	.25	.30	.35	.40	.45	.50	.55	.60	.65	.70	.75	.80	.85	.90	.95	0
DEFLECTION DUE TO WEIGHT OF GIRDER	0.000	-0.006	-0.008	-0.008	-0.006	-0.003	0.000	0.003	0.006	0.008	0.008	0.007	0.006	0.003	0.000	-0.004	-0.006	-0.008	-0.008	-0.006	0.000
DEFLECTION DUE TO WEIGHT OF SLAB *	0.000	-0.016	-0.025	-0.028	-0.027	-0.024	-0.019	-0.013	-0.009	-0.006	-0.005	-0.006	-0.009	-0.014	-0.020	-0.025	-0.028	-0.029	-0.026	-0.017	0.000
DEFLECTION DUE TO WEIGHT OF PARAPET	0.000	-0.002	-0.004	-0.004	-0.003	-0.003	-0.002	-0.001	0.000	0.000	0.001	0.000	0.000	-0.001	-0.002	-0.003	-0.004	-0.004	-0.004	-0.002	0.000
TOTAL DEAD LOAD DEFLECTION	0.000	-0.024	-0.037	-0.040	-0.036	-0.030	-0.021	-0.011	-0.003	0.002	0.004	0.001	-0.003	-0.012	-0.022	-0.032	-0.038	-0.041	-0.038	-0.025	0.000
VERTICAL CURVE ORDINATE	0.000	0.030	0.056	0.080	0.100	0.117	0.131	0.142	0.150	0.155	0.157	0.155	0.150	0.142	0.131	0.117	0.100	0.080	0.056	0.030	0.000
REQUIRED CAMBER	0	1/16"	1/4"	1/2"	3/4"	1 1/16"	1 5/16"	1 9/16"	1 3/4"	1 7/8"	1 15/16"	1 7/8"	1 3/4"	1 9/16"	1 5/16"	1 1/16"	3/4"	7/16"	3/16"	1/16"	0

DEAD LOAD DEFLECTION TABLE FOR GIRDERS

SPAN C	GIRDERS 1 THROUGH 4																				
TWENTIETH POINTS	0	.05	.10	.15	.20	.25	.30	.35	.40	.45	.50	.55	.60	.65	.70	.75	.80	.85	.90	.95	0
DEFLECTION DUE TO WEIGHT OF GIRDER	0.000	0.010	0.022	0.037	0.053	0.070	0.086	0.101	0.114	0.124	0.130	0.133	0.132	0.127	0.119	0.106	0.090	0.070	0.048	0.025	0.000
DEFLECTION DUE TO WEIGHT OF SLAB *	0.000	0.026	0.059	0.097	0.138	0.179	0.219	0.256	0.287	0.311	0.326	0.333	0.330	0.317	0.295	0.263	0.222	0.174	0.120	0.061	0.000
DEFLECTION DUE TO WEIGHT OF PARAPET	0.000	0.004	0.009	0.015	0.021	0.027	0.033	0.038	0.043	0.046	0.049	0.050	0.049	0.047	0.044	0.039	0.033	0.026	0.018	0.009	0.000
TOTAL DEAD LOAD DEFLECTION	0.000	0.040	0.090	0.149	0.212	0.276	0.338	0.395	0.444	0.481	0.505	0.516	0.511	0.491	0.458	0.408	0.345	0.270	0.186	0.095	0.000
VERTICAL CURVE ORDINATE	0.000	0.028	0.052	0.073	0.091	0.106	0.118	0.127	0.133	0.136	0.135	0.132	0.125	0.115	0.102	0.086	0.069	0.052	0.035	0.017	0.000
REQUIRED CAMBER	0	1 3/16"	1 11/16"	2 11/16"	3 5/8"	4 9/16"	5 1/2"	6 1/4"	6 15/16"	7 3/8"	7 11/16"	7 3/4"	7 5/8"	7 1/4"	6 3/4"	5 15/16"	4 15/16"	3 7/8"	2 5/8"	1 3/8"	0

* INCLUDES SLAB, BUILDUPS & STAY-IN-PLACE FORMS.
ALL VALUES ARE SHOWN IN FEET (DECIMAL FORM), EXCEPT "REQUIRED CAMBER", WHICH IS GIVEN IN INCHES (FRACTION FORM).
DEFLECTIONS ARE TAKEN AT TWENTIETH POINTS BETWEEN BEARINGS.

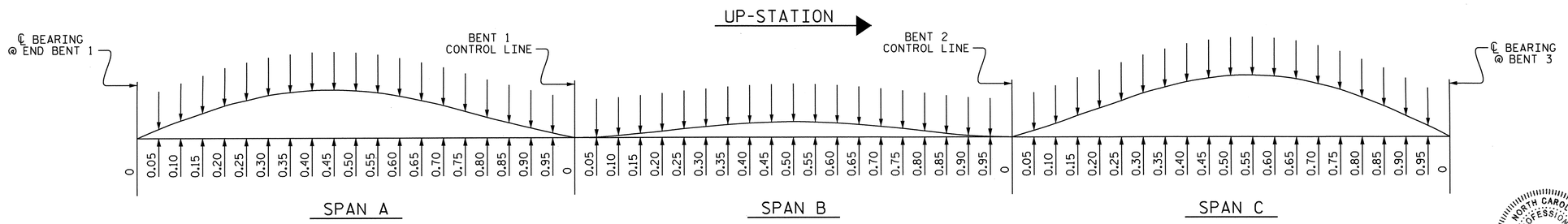

SCHEMATIC CAMBER ORDINATE

SLOPE FOR THE ZERO CAMBER BASE LINE VARIES

PROJECT NO. B-4712
BLADEN COUNTY
STATION: 39+15.00 -L-

STATE OF NORTH CAROLINA
DEPARTMENT OF TRANSPORTATION
RALEIGH

SUPERSTRUCTURE
DEAD LOAD DEFLECTIONS

SPANS A-B-C

NORTH CAROLINA PROFESSIONAL SEAL 21638 ENGINEER LAURA E. SUTTON 1/25/13

REVISIONS						SHEET NO.
NO.	BY:	DATE:	NO.	BY:	DATE:	S-29
1			3			TOTAL SHEETS
2			4			108

DRAWN BY : MIKE BRITT DATE : 9-13-11
CHECKED BY : S.B. WILLIAMS DATE : 10/2011

03-JAN-2013 11:48
R:\Structures\Plans\str01\B4712_SD_DL_01.dgn

STR. #1

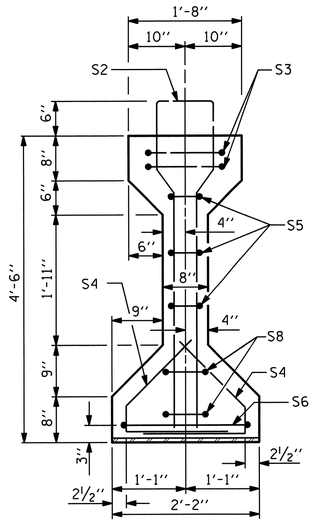

SECTION A-A

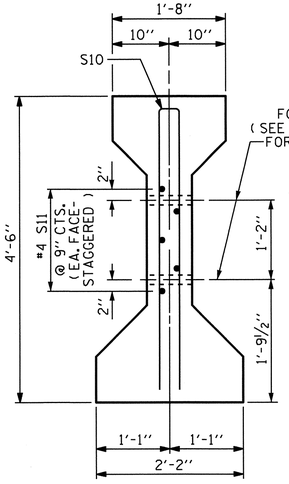

SECTION C-C

(S1 BARS NOT SHOWN)

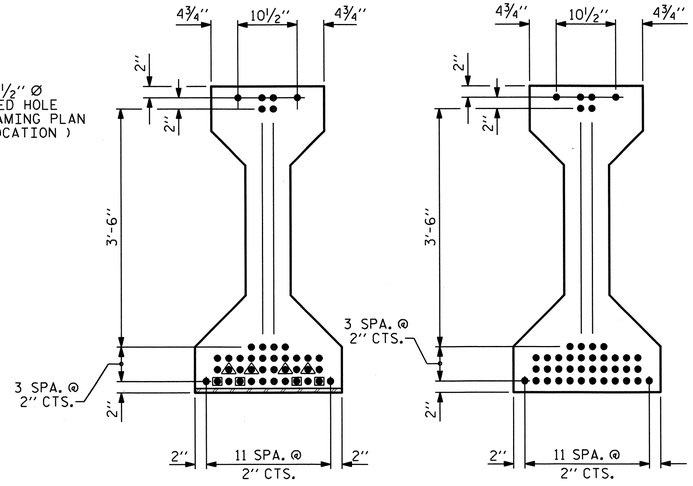

DEBONDING LEGEND

- ● FULLY BONDED STRANDS
- △ STRANDS DEBONDED FOR 4'-0" FROM END OF GIRDER
- ⊡ STRANDS DEBONDED FOR 8'-0" FROM END OF GIRDER

0.6" Ø LOW RELAXATION STRAND LAYOUT

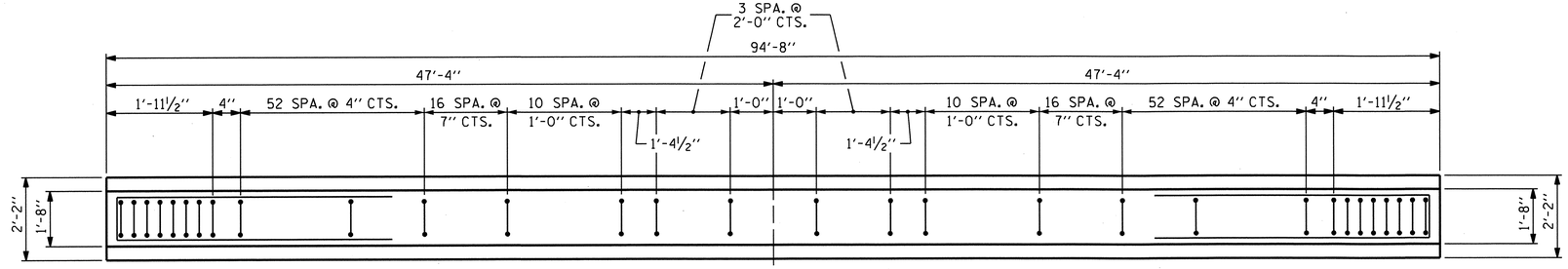

PLAN OF GIRDER

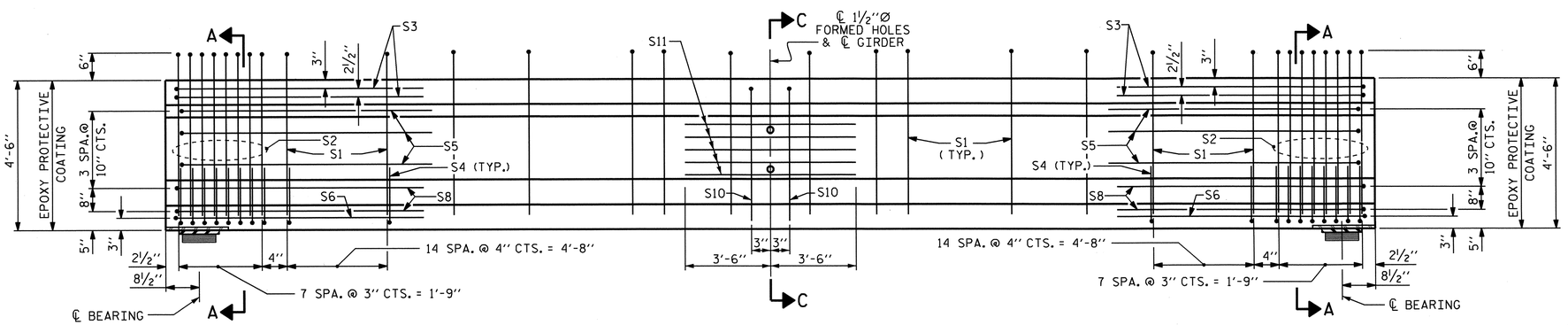

ELEVATION OF GIRDER

0.6" Ø L. R. GRADE 270 STRANDS		
AREA (SQUARE INCHES)	ULTIMATE STRENGTH (LBS. PER STRAND)	APPLIED PRESTRESS (LBS. PER STRAND)
0.217	58,600	43,950

REINFORCING STEEL FOR ONE GIRDER

BAR	NUMBER	SIZE	TYPE	LENGTH	WEIGHT
S1	166	#4	1	10'-8"	1183
S2	16	#6	1	10'-8"	256
S3	4	#4	2	9'-1"	24
S4	92	#4	3	3'-5"	210
S5	6	#4	2	8'-5"	34
S6	2	#4	2	9'-11"	13
S8	4	#4	2	8'-7"	23
S10	2	#5	2	8'-8"	18
S11	5	#4	STR	7'-0"	23

BAR TYPES

ALL BAR DIMENSIONS ARE OUT-TO-OUT

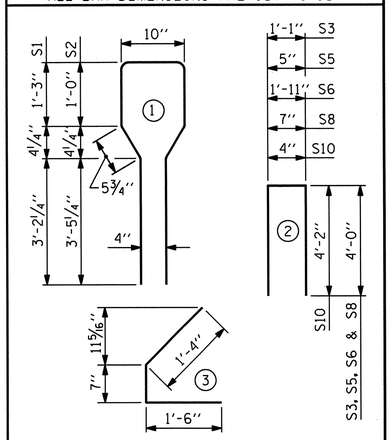

QUANTITIES FOR ONE GIRDER		
REINFORCING STEEL	8,500 PSI CONCRETE	0.6" Ø L. R. STRANDS
LBS.	C.Y.	No.
1,784	19.2	42

GIRDERS REQUIRED		
NUMBER	LENGTH	TOTAL LENGTH
4	94'-8"	378.67'

PROJECT NO. B-4712

BLADEN COUNTY

STATION: 39+15.00 -L-

SHEET 1 OF 3

STATE OF NORTH CAROLINA
DEPARTMENT OF TRANSPORTATION
RALEIGH

STANDARD

AASHTO TYPE IV
PRESTRESSED CONCRETE GIRDER

SPAN D

REVISIONS						SHEET NO.
NO.	BY:	DATE:	NO.	BY:	DATE:	S-30
1			3			TOTAL SHEETS
2			4			108

STR. #1

STD. NO. PCG3

ASSEMBLED BY : MIKE BRITT	DATE : 9-14-11	
CHECKED BY : S.B. WILLIAMS	DATE : 10/2011	
DRAWN BY : JMB 12/87	REV. 8/16/99RR	RWW/LES
CHECKED BY : ARB 12/87	REV. 5/1/06R	TLA/GM
	REV. 10/1/11	MAA/GM

NORTH CAROLINA PROFESSIONAL SEAL 21638 ENGINEER LAURA E. SUTTON 11/13/13

08-NOV-2012 13:06
R:\Structures\Plans\str01\B4712_SD_G*_01.dgn

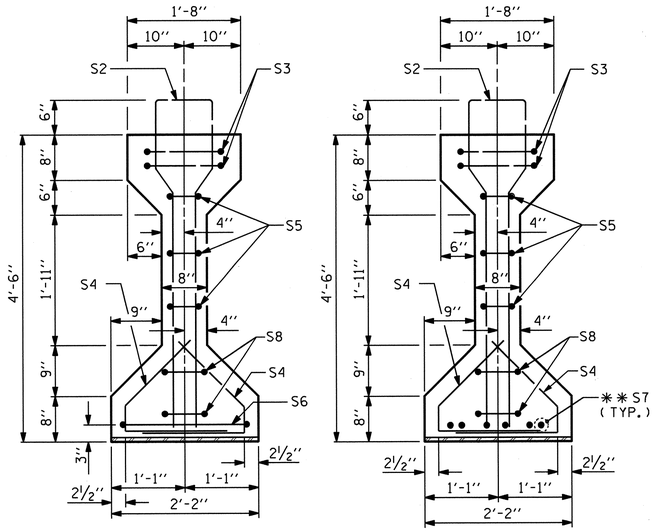

SECTION A-A

SECTION B-B

** FOR S7 BARS, SEE DETAIL "A" OF PRESTRESSED CONCRETE GIRDER DETAILS SHEET

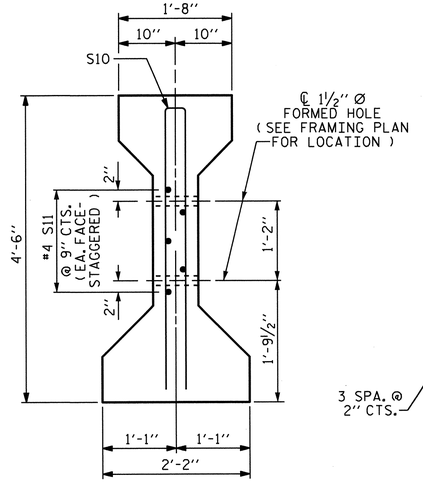

SECTION C-C

(S1 BARS NOT SHOWN)

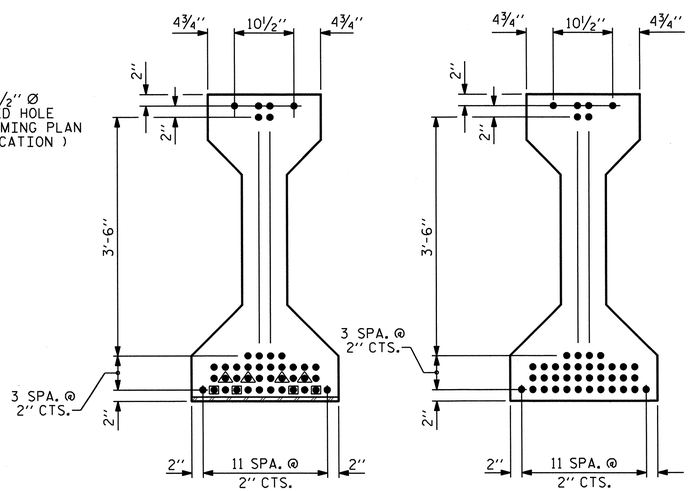

AT END OF GIRDER

AT ℄ OF GIRDER

0.6" Ø LOW RELAXATION STRAND LAYOUT

DEBONDING LEGEND

- ● FULLY BONDED STRANDS
- △ STRANDS DEBONDED FOR 4'-0" FROM END OF GIRDER
- ⊡ STRANDS DEBONDED FOR 8'-0" FROM END OF GIRDER

0.6" Ø L. R. GRADE 270 STRANDS		
AREA (SQUARE INCHES)	ULTIMATE STRENGTH (LBS. PER STRAND)	APPLIED PRESTRESS (LBS. PER STRAND)
0.217	58,600	43,950

REINFORCING STEEL FOR ONE GIRDER

BAR	NUMBER	SIZE	TYPE	LENGTH	WEIGHT
S1	166	#4	1	10'-8"	1183
S2	16	#6	1	10'-8"	256
S3	4	#4	2	9'-1"	24
S4	92	#4	3	3'-5"	210
S5	6	#4	2	8'-5"	34
S6	1	#4	2	9'-11"	7
*S7	6	#5	STR	3'-8"	23
S8	4	#4	2	8'-7"	23
S9	1	#3	STR	1'-10"	1
S10	2	#5	2	8'-8"	18
S11	5	#4	STR	7'-0"	23

*NOTE: S7 BARS SHALL BE BENT BEFORE SHIPMENT. HEAT BENDING SHALL NOT BE ALLOWED.

BAR TYPES

ALL BAR DIMENSIONS ARE OUT-TO-OUT

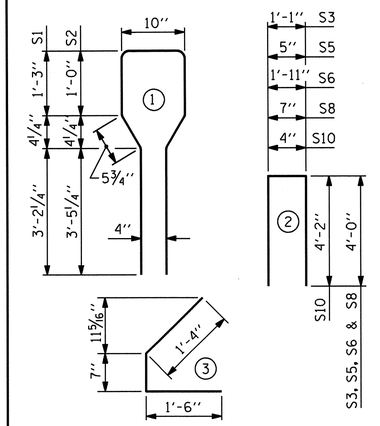

QUANTITIES FOR ONE GIRDER

REINFORCING STEEL	8,500 PSI CONCRETE	0.6" Ø L.R. STRANDS
LBS.	C.Y.	No.
1,802	19.2	42

GIRDERS REQUIRED

NUMBER	LENGTH	TOTAL LENGTH
36	94'-5"	3399.00'

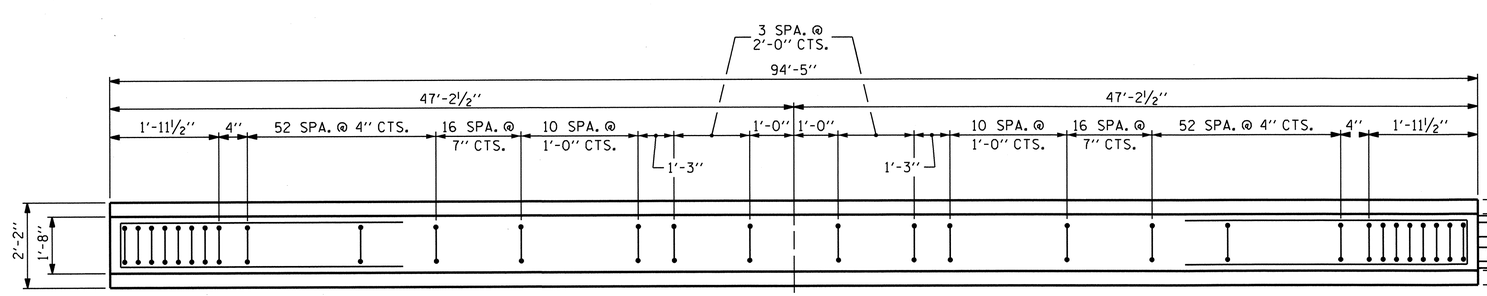

PLAN OF GIRDER

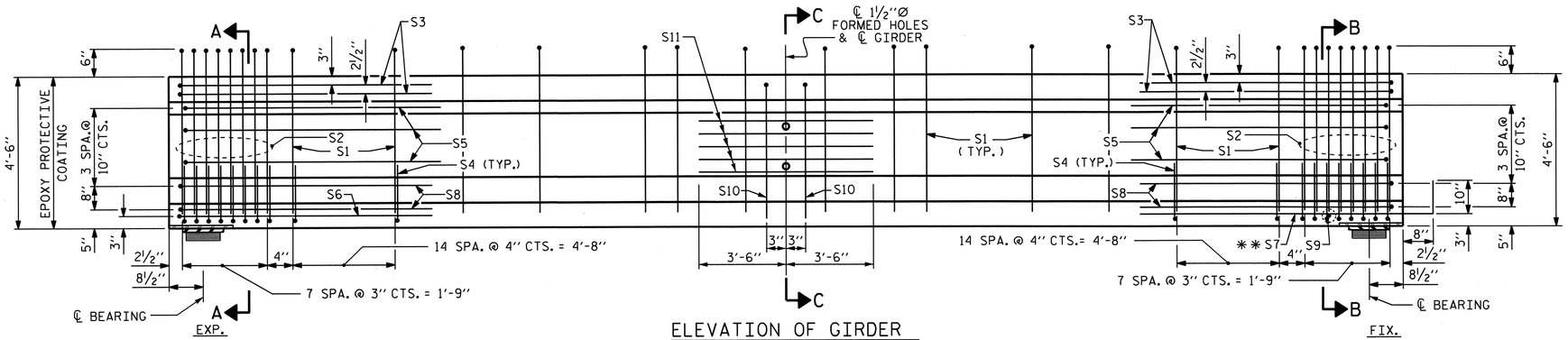

ELEVATION OF GIRDER

PROJECT NO. B-4712

BLADEN COUNTY

STATION: 39+15.00 -L-

SHEET 2 OF 3

STATE OF NORTH CAROLINA
DEPARTMENT OF TRANSPORTATION
RALEIGH

STANDARD

AASHTO TYPE IV
PRESTRESSED CONCRETE GIRDER
CONTINUOUS FOR LIVE LOAD

SPANS E THROUGH M

NORTH CAROLINA PROFESSIONAL SEAL 21638 ENGINEER LAURA E. SUTTON 10/9/13

REVISIONS						SHEET NO.
NO.	BY:	DATE:	NO.	BY:	DATE:	S-31
1			3			TOTAL SHEETS
2			4			108

STR. #1

STD. NO. PCG6

ASSEMBLED BY : MIKE BRITT	DATE : 9-14-11
CHECKED BY : S.B. WILLIAMS	DATE : 10/2011
DRAWN BY : ELR 8/91	REV. 10/17/00R RWW/LES
CHECKED BY : GRP 8/91	REV. 5/1/06R TLA/GM
	REV. 10/1/11 MAA/GM

08-NOV-2012 13:06
R:\Structures\Plans\str01\B4712_SD_G*_01.dgn

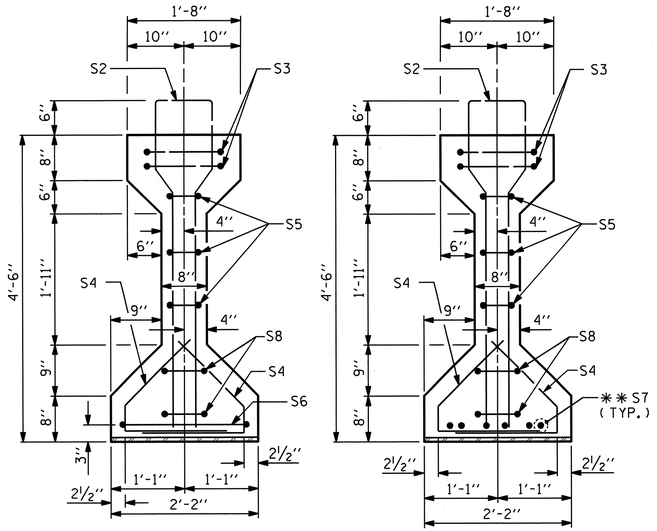

SECTION A-A

SECTION B-B

** FOR S7 BARS, SEE DETAIL "A" OF PRESTRESSED CONCRETE GIRDER DETAILS SHEET

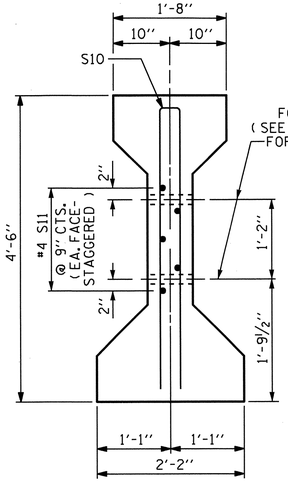

SECTION C-C

(S1 BARS NOT SHOWN)

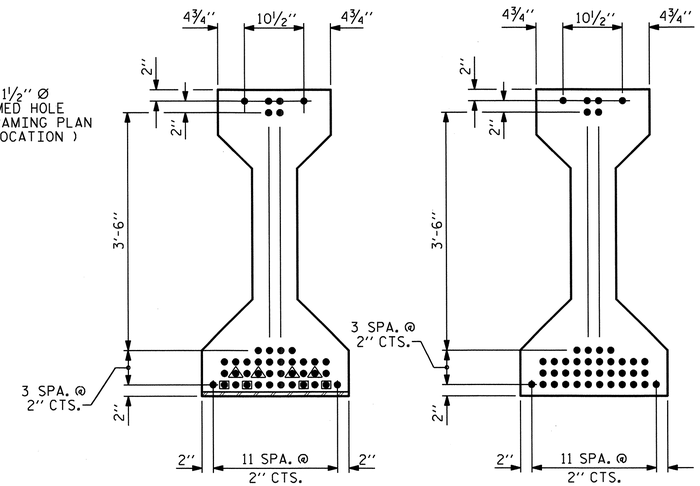

AT END OF GIRDER

AT ℄ OF GIRDER

0.6" Ø LOW RELAXATION STRAND LAYOUT

DEBONDING LEGEND

- ● FULLY BONDED STRANDS
- △ STRANDS DEBONDED FOR 4'-0" FROM END OF GIRDER
- ⊡ STRANDS DEBONDED FOR 8'-0" FROM END OF GIRDER

0.6" Ø L.R. GRADE 270 STRANDS		
AREA (SQUARE INCHES)	ULTIMATE STRENGTH (LBS. PER STRAND)	APPLIED PRESTRESS (LBS. PER STRAND)
0.217	58,600	43,950

REINFORCING STEEL FOR ONE GIRDER

BAR	NUMBER	SIZE	TYPE	LENGTH	WEIGHT
S1	166	#4	1	10'-8"	1183
S2	16	#6	1	10'-8"	256
S3	4	#4	2	9'-1"	24
S4	92	#4	3	3'-5"	210
S5	6	#4	2	8'-5"	34
S6	1	#4	2	9'-11"	7
*S7	6	#5	STR	3'-8"	23
S8	4	#4	2	8'-7"	23
S9	1	#3	STR	1'-10"	1
S10	2	#5	2	8'-8"	18
S11	5	#4	STR	7'-0"	23

*NOTE: S7 BARS SHALL BE BENT BEFORE SHIPMENT. HEAT BENDING SHALL NOT BE ALLOWED.

BAR TYPES

ALL BAR DIMENSIONS ARE OUT-TO-OUT

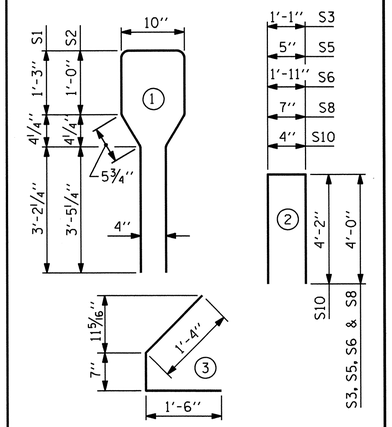

QUANTITIES FOR ONE GIRDER		
REINFORCING STEEL	8,500 PSI CONCRETE	0.6" Ø L.R. STRANDS
LBS.	C.Y.	No.
1,802	18.9	42

GIRDERS REQUIRED		
NUMBER	LENGTH	TOTAL LENGTH
4	93'-2½"	372.83'

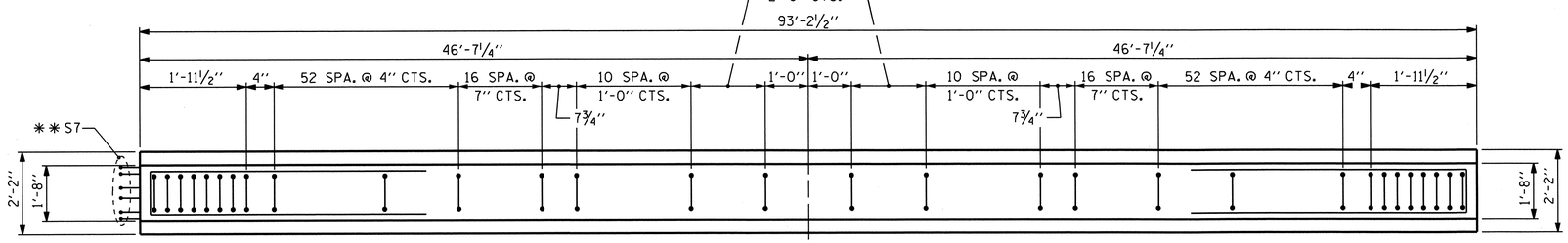

PLAN OF GIRDER

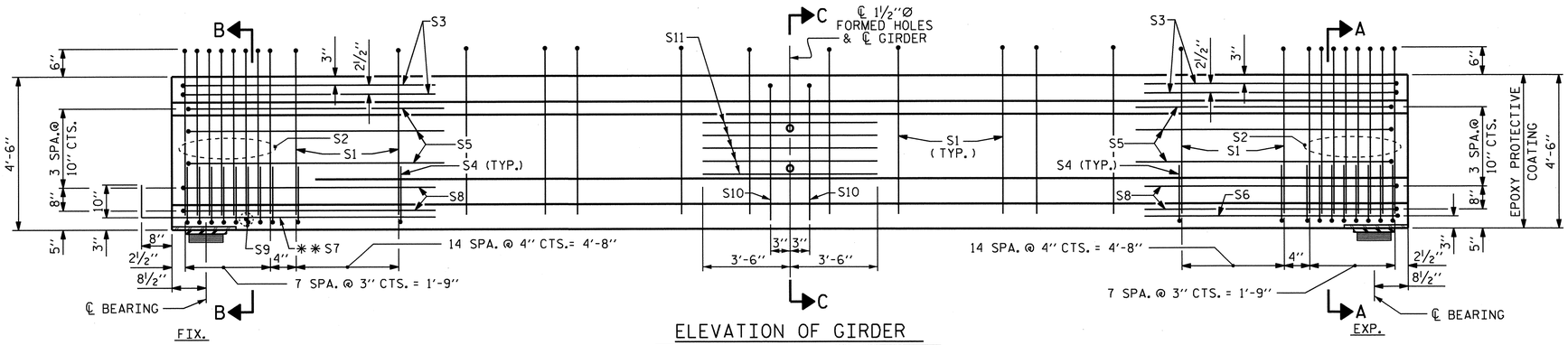

ELEVATION OF GIRDER

PROJECT NO. B-4712

BLADEN COUNTY

STATION: 39+15.00 -L-

SHEET 3 OF 3

STATE OF NORTH CAROLINA
DEPARTMENT OF TRANSPORTATION
RALEIGH

STANDARD

AASHTO TYPE IV
PRESTRESSED CONCRETE GIRDER
CONTINUOUS FOR LIVE LOAD

SPANS N

REVISIONS						SHEET NO.
NO.	BY:	DATE:	NO.	BY:	DATE:	S-32
1			3			TOTAL SHEETS
2			4			108

STR. #1

STD. NO. PCG6

NORTH CAROLINA PROFESSIONAL SEAL 21638 ENGINEER LAURA E. SUTTON 10/23/13

ASSEMBLED BY : MIKE BRITT	DATE : 9-14-11	REV. 10/17/00R	RWW/LES
CHECKED BY : S.B. WILLIAMS	DATE : 10/2011	REV. 5/1/06R	TLA/GM
DRAWN BY : ELR 8/91		REV. 10/1/11	MAA/GM
CHECKED BY : GRP 8/91			

08-NOV-2012 13:06
R:\Structures\Plans\str01\B4712_SD_G*_01.dgn

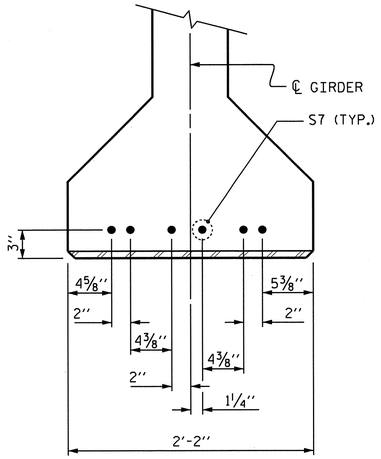

DETAIL "A"

(FOR SPANS E THROUGH N)

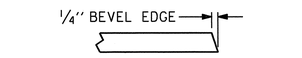

SECTION "G"

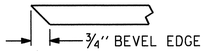

SECTION "F"

(SEE NOTES)

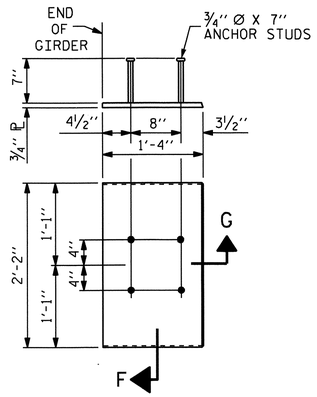

EMBEDDED PLATE "B-1" DETAILS

(2 REQ'D PER GIRDER)
TYPICAL FOR SPANS D THROUGH N

NOTES

ALL PRESTRESSING STRANDS SHALL BE 7-WIRE LOW-RELAXATION GRADE 270 STRANDS AND SHALL CONFORM TO AASHTO M203 EXCEPT FOR SAMPLING REQUIREMENTS WHICH SHALL BE IN ACCORDANCE WITH THE STANDARD SPECIFICATIONS.

ALL REINFORCING STEEL SHALL BE GRADE 60.

APPLY EPOXY PROTECTIVE COATING TO END OF GIRDER SURFACES INDICATED IN ELEVATION VIEW.

EMBEDDED PLATE "B-1" SHALL BE GALVANIZED IN ACCORDANCE WITH THE STANDARD SPECIFICATIONS. BEVEL EDGES OF PLATE "B-1" TO GIVE CLOSE FIT BUT NOT TIGHT FIT TO STEEL CASTING FORM.

ANCHOR STUDS SHALL CONFORM TO AASHTO M169 GRADES 1010 THROUGH 1020 OR APPROVED EQUAL, AND SHALL MEET THE TYPE "B" REQUIREMENTS OF SUBSECTION 7.3 OF THE ANSI/AASHTO/AWS D1.5 BRIDGE WELDING CODE.

AT ENDS OF GIRDERS TO BE EMBEDDED IN CONCRETE DIAPHRAGMS OR END WALLS, PRESTRESSING STRANDS MAY EXTEND A MAXIMUM OF 2" BEYOND THE GIRDER ENDS. OTHERWISE, PRESTRESSING STRANDS SHALL BE CUT FLUSH WITH THE GIRDER ENDS.

THE TRANSFER OF LOAD FROM THE ANCHORAGES TO THE GIRDER SHALL BE DONE WHEN CONCRETE HAS REACHED A COMPRESSIVE STRENGTH OF NOT LESS THAN 6500 PSI.

DEPENDING ON THE TYPE OF SYSTEM USED TO SUPPORT THE DECK SLAB FORMS, PRESET ANCHORS MAY BE NECESSARY IN THE PRESTRESSED CONCRETE GIRDER.

THE TOP SURFACE OF THE GIRDER, EXCLUDING THE OUTSIDE 4", SHALL BE RAKED TO A DEPTH OF 1/4".

DEAD LOAD DEFLECTION TABLE FOR GIRDERS

0.6" Ø LOW RELAXATION	SPAN D																					
	GIRDERS 1 & 4											GIRDERS 2 & 3										
TENTH POINTS	0	.1	.2	.3	.4	.5	.6	.7	.8	.9	0	0	.1	.2	.3	.4	.5	.6	.7	.8	.9	0
CAMBER (GIRDER ALONE IN PLACE) ↑	0	0.092	0.175	0.239	0.280	0.294	0.280	0.239	0.175	0.092	0	0	0.092	0.175	0.239	0.280	0.294	0.280	0.239	0.175	0.092	0
* DEFLECTION DUE TO SUPERIMPOSED D.L. ↓	0	0.040	0.076	0.104	0.122	0.128	0.122	0.104	0.076	0.040	0	0	0.045	0.084	0.115	0.135	0.142	0.135	0.115	0.084	0.045	0
FINAL CAMBER ↑	0	5/8"	1 3/16"	1 5/8"	1 7/8"	2"	1 7/8"	1 5/8"	1 3/16"	5/8"	0	0	9/16"	1 1/16"	1 1/2"	1 3/4"	1 13/16"	1 3/4"	1 1/2"	1 1/16"	9/16"	0

DEAD LOAD DEFLECTION TABLE FOR GIRDERS

0.6" Ø LOW RELAXATION	SPANS E THROUGH M																					
	GIRDERS 1 & 4											GIRDERS 2 & 3										
TENTH POINTS	0	.1	.2	.3	.4	.5	.6	.7	.8	.9	0	0	.1	.2	.3	.4	.5	.6	.7	.8	.9	0
CAMBER (GIRDER ALONE IN PLACE) ↑	0	0.092	0.174	0.239	0.279	0.293	0.279	0.239	0.174	0.092	0	0	0.092	0.174	0.239	0.279	0.293	0.279	0.239	0.174	0.092	0
* DEFLECTION DUE TO SUPERIMPOSED D.L. ↓	0	0.040	0.075	0.103	0.121	0.127	0.121	0.103	0.075	0.040	0	0	0.044	0.083	0.114	0.134	0.140	0.134	0.114	0.083	0.044	0
FINAL CAMBER ↑	0	5/8"	1 3/16"	1 5/8"	1 7/8"	2"	1 7/8"	1 5/8"	1 3/16"	5/8"	0	0	9/16"	1 1/16"	1 1/2"	1 3/4"	1 13/16"	1 3/4"	1 1/2"	1 1/16"	9/16"	0

DEAD LOAD DEFLECTION TABLE FOR GIRDERS

0.6" Ø LOW RELAXATION	SPAN N																					
	GIRDERS 1 & 4											GIRDERS 2 & 3										
TENTH POINTS	0	.1	.2	.3	.4	.5	.6	.7	.8	.9	0	0	.1	.2	.3	.4	.5	.6	.7	.8	.9	0
CAMBER (GIRDER ALONE IN PLACE) ↑	0	0.091	0.172	0.236	0.276	0.290	0.276	0.236	0.172	0.091	0	0	0.091	0.172	0.236	0.276	0.290	0.276	0.236	0.172	0.091	0
* DEFLECTION DUE TO SUPERIMPOSED D.L. ↓	0	0.038	0.072	0.098	0.115	0.121	0.115	0.098	0.072	0.038	0	0	0.042	0.079	0.108	0.127	0.133	0.127	0.108	0.079	0.042	0
FINAL CAMBER ↑	0	5/8"	1 3/16"	1 5/8"	1 15/16"	2"	1 15/16"	1 5/8"	1 3/16"	5/8"	0	0	9/16"	1 1/8"	1 9/16"	1 13/16"	1 7/8"	1 13/16"	1 9/16"	1 1/8"	9/16"	0

* INCLUDES FUTURE WEARING SURFACE
ALL VALUES ARE SHOWN IN FEET (DECIMAL FORM), EXCEPT " FINAL CAMBER ", WHICH IS GIVEN IN INCHES (FRACTION FORM).

ASSEMBLED BY : MIKE BRITT	DATE : 9-15-11		
CHECKED BY : S.B. WILLIAMS	DATE : 10/2011		
DRAWN BY : ELR 11/91	REV. 7/10/01RR	LES/RDR	
CHECKED BY : GRP 11/91	REV. 5/1/06	TLA/GM	
	REV. 10/1/11	MAA/GM	

08-NOV-2012 13:06
R:\Structures\Plans\str01\B4712_SD_G*_01.dgn

PROJECT NO. B-4712
BLADEN COUNTY
STATION: 39+15.00 -L-

STATE OF NORTH CAROLINA
DEPARTMENT OF TRANSPORTATION
RALEIGH
STANDARD

PRESTRESSED CONCRETE GIRDER DETAILS

NORTH CAROLINA PROFESSIONAL SEAL 21638 ENGINEER LAURA E. SUTTON 11/8/13

REVISIONS						SHEET NO.
NO.	BY:	DATE:	NO.	BY:	DATE:	S-33
1			3			TOTAL SHEETS
2			4			108

STR. #1

STD. NO. PCG9

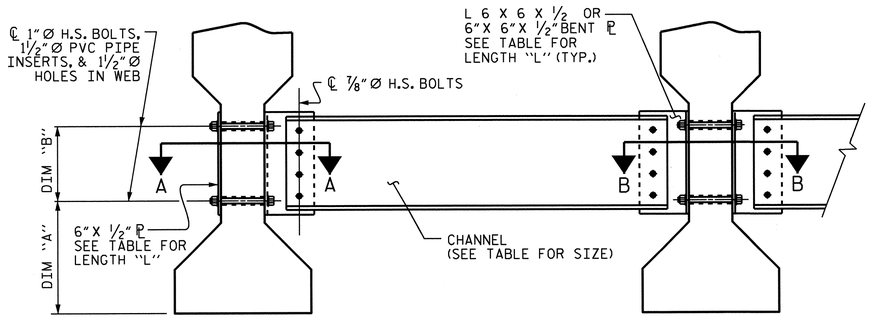

EXTERIOR GIRDER

INTERIOR GIRDER

PART SECTION AT INTERMEDIATE DIAPHRAGM

TABLE

GIRDER TYPE	CHANNEL SIZE	DIM "A"	DIM "B"	DIM "L"
IV	MC 18 x 42.7	1'-9½"	1'-2"	1'-6"

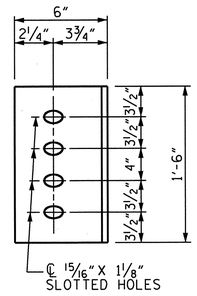

DIAPHRAGM FACE

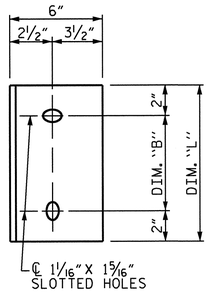

WEB FACE

CONNECTOR PLATE DETAILS

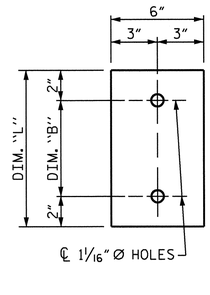

PLATE DETAILS

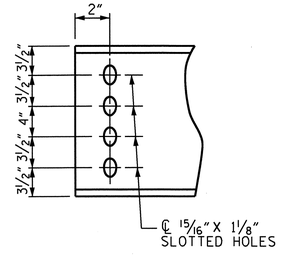

CHANNEL END

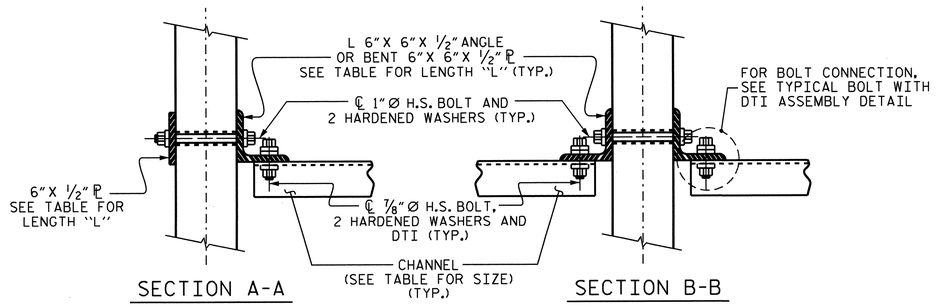

CONNECTION DETAILS

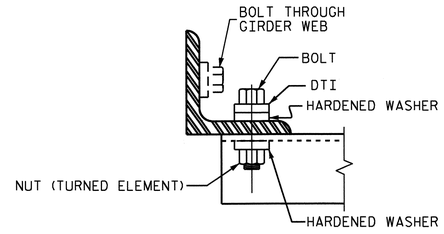

BOLT WITH DTI ASSEMBLY DETAIL

STRUCTURAL STEEL NOTES

ALL INTERMEDIATE DIAPHRAGM STEEL AND CONNECTOR PLATES SHALL BE AASHTO M270 GRADE 50 OR APPROVED EQUAL.

TENSION ON THE ASTM A325 BOLTS THROUGH THE CHANNEL MEMBER SHALL BE CALIBRATED USING DIRECT TENSION INDICATOR WASHERS IN ACCORDANCE WITH THE STANDARD SPECIFICATIONS.

TENSION ON THE ASTM A449 BOLTS THROUGH THE GIRDER WEB SHALL BE SNUG TIGHTENED FOLLOWED BY AN ADDITIONAL ¼ TURN.

THE PLATES, BENT PLATES, CHANNELS, AND ANGLES SHALL BE GALVANIZED OR METALLIZED IN ACCORDANCE WITH THE STANDARD SPECIFICATIONS. FOR THERMAL SPRAYED COATINGS (METALLIZATION), SEE SPECIAL PROVISIONS.

FOR METALLIZATION, APPLY AN 8 MIL THICK 99.99 PERCENT ZINC (W-Zn-1) THERMAL SPRAYED COATING WITH A 0.5 MIL THICK SEAL COAT TO ALL STEEL DIAPHRAGM SURFACES IN ACCORDANCE WITH THE THERMAL SPRAYED COATINGS SPECIAL PROVISION AND SECTION 442 OF THE STANDARD SPECIFICATIONS.

GALVANIZE THE HIGH STRENGTH BOLTS, NUTS, WASHERS AND DIRECT TENSION INDICATORS IN ACCORDANCE WITH THE STANDARD SPECIFICATIONS.

USE AN ASTM F436 HARDENED WASHER WITH STANDARD AND SLOTTED HOLES UNDER EACH BOLT HEAD AND NUT.

FOR BOLTS THROUGH THE GIRDER WEB, PROVIDE SUFFICIENT LENGTH OF THREADS ON ALL BOLTS TO ACCOMMODATE WASHERS AND THE THICKNESS OF CONNECTING MEMBER PLUS AT LEAST ¼" PROJECTION BEYOND THE NUT.

INTERMEDIATE DIAPHRAGM ASSEMBLY SHALL COMPLY WITH SECTION 1072 OF THE STANDARD SPECIFICATIONS.

SUBMIT TWO SETS OF WORKING DRAWINGS FOR THE INTERMEDIATE DIAPHRAGM ASSEMBLY FOR REVIEW, COMMENTS AND ACCEPTANCE. AFTER REVIEW, COMMENTS, AND ACCEPTANCE, SUBMIT SEVEN SETS FOR DISTRIBUTION.

IN THE EXTERIOR BAYS, PLACE TEMPORARY STRUTS BETWEEN PRESTRESSED GIRDERS ADJACENT TO THE STEEL DIAPHRAGMS. STRUTS SHALL REMAIN IN PLACE 3 DAYS AFTER CONCRETE IS PLACED.

THE COST OF THE STEEL DIAPHRAGMS AND ASSEMBLIES SHALL BE INCLUDED IN THE UNIT PRICE BID FOR PRESTRESSED CONCRETE GIRDERS.

PROJECT NO. B-4712

BLADEN COUNTY

STATION: 39+15.00 -L-

STATE OF NORTH CAROLINA
DEPARTMENT OF TRANSPORTATION
RALEIGH

STANDARD

INTERMEDIATE STEEL DIAPHRAGMS FOR TYPE IV PRESTRESSED CONCRETE GIRDERS

REVISIONS						SHEET NO.
NO.	BY:	DATE:	NO.	BY:	DATE:	S-34
1			3			TOTAL SHEETS
2			4			108

NORTH CAROLINA PROFESSIONAL SEAL 21638 ENGINEER LAURA E. SUTTON 8/23/13

ASSEMBLED BY : B.N. GRADY	DATE : 3/2012		
CHECKED BY : J.P. ADAMS	DATE : 4/2012		
DRAWN BY : TLA 6/05	ADDED 10/21/05		
CHECKED BY : VC 6/05	REV. 5/1/06RRR	KMM/GM	
	REV. 10/1/11	MAA/GM	

08-NOV-2012 13:06
R:\Structures\Plans\str01\B4712_SD_G*_01.dgn

STR. #1

STD. NO. PCG10

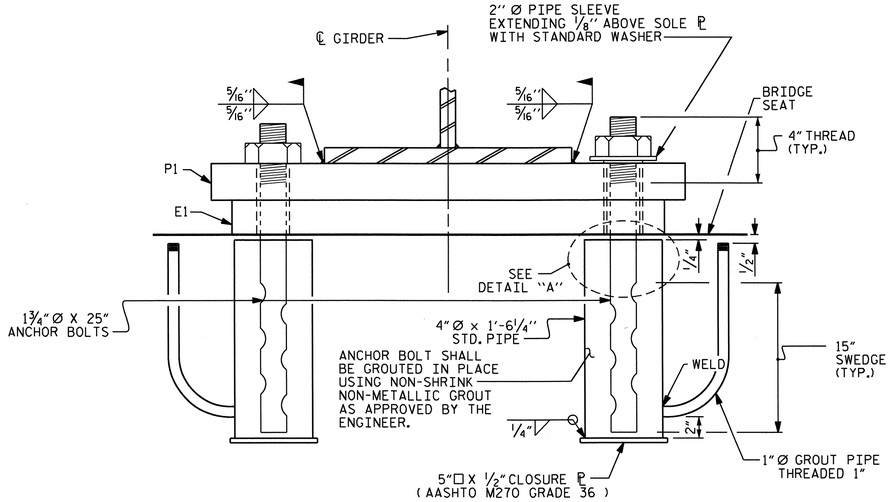

EXPANSION

END VIEW

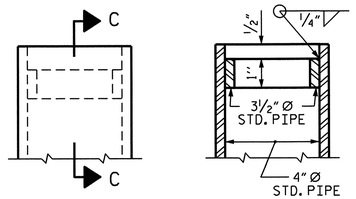

SECTION C-C

DETAIL "A"

SOLE PLATE DETAILS

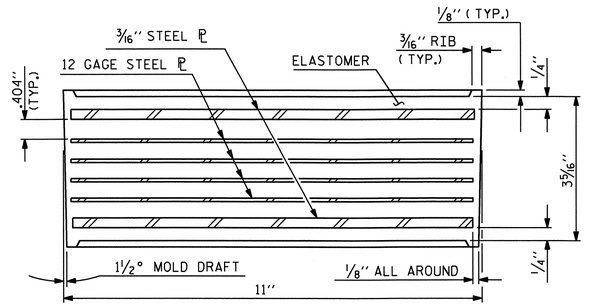

TYPICAL SECTION OF ELASTOMERIC BEARING (E1)

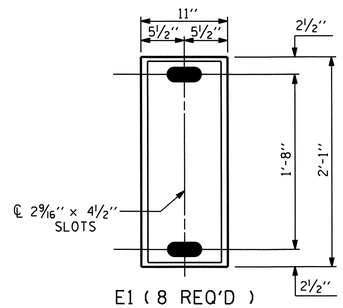

E1 (8 REQ'D)

PLAN VIEW OF ELASTOMERIC BEARING

TYPE IV

NOTES

AT ALL FIXED POINTS OF SUPPORT, NUTS FOR ANCHOR BOLTS ARE TO BE TIGHTENED FINGER TIGHT AND THEN BACKED OFF 1/2 TURN. THE THREAD OF THE NUT AND BOLT SHALL THEN BE BURRED WITH A SHARP POINTED TOOL.

THE 2" Ø PIPE SLEEVE SHALL BE CUT FROM SCHEDULE 40 PVC PLASTIC PIPE. THE PVC PLASTIC PIPE SHALL MEET THE REQUIREMENTS OF ASTM D1785.

THE PAYMENT FOR THE PIPE SLEEVES SHALL BE INCLUDED IN THE SEVERAL PAY ITEMS.

FOR AASHTO M270 GRADE 50W STRUCTURAL STEEL, SOLE PLATE SHALL BE AASHTO M270 GRADE 50W AND SHALL NOT BE GALVANIZED. ANCHOR BOLTS, NUTS AND WASHERS SHALL BE GALVANIZED IN ACCORDANCE WITH THE STANDARD SPECIFICATIONS.

ANCHOR BOLTS SHALL MEET THE REQUIREMENTS OF ASTM A449. NUTS SHALL MEET THE REQUIREMENTS OF AASHTO M291-DH OR AASHTO M292-2H. WASHERS SHALL MEET THE REQUIREMENTS OF AASHTO M293. SHOP DRAWINGS ARE NOT REQUIRED FOR ANCHOR BOLTS, NUTS AND WASHERS. SHOP INSPECTION IS REQUIRED.

WHEN FIELD WELDING THE SOLE PLATE TO THE GIRDER FLANGE, USE TEMPERATURE INDICATING WAX PENS, OR OTHER SUITABLE MEANS, TO ENSURE THAT THE TEMPERATURE OF THE SOLE PLATE DOES NOT EXCEED 300°F. TEMPERATURES ABOVE THIS MAY DAMAGE THE ELASTOMER.

ALL SURFACES OF BEARING PLATES SHALL BE SMOOTH AND STRAIGHT.

THE CLOSURE PLATE, GROUT PIPE AND STANDARD PIPE FOR THE EXPANSION ASSEMBLY NEED NOT BE GALVANIZED.

THE CONTRACTOR'S ATTENTION IS CALLED TO THE FOLLOWING PROCEDURE, WHICH MAY BE REQUIRED BY THE ENGINEER, TO RESET ELASTOMERIC BEARINGS DUE TO GIRDER TRANSLATION AND END ROTATION:

1. ONCE THE DECK HAS CURED, THE GIRDERS SHALL BE JACKED THEN THE ANCHOR BOLTS AND ELASTOMERIC BEARING SLOTS CENTERED AS NEARLY AS PRACTICAL ABOUT THE BEARING STIFFENER. THIS OPERATION SHALL BE PERFORMED AT APPROXIMATELY 60°F.
2. AFTER CENTERING THE ELASTOMERIC BEARING SLOTS AND ANCHOR BOLTS, THE ANCHOR BOLTS SHALL BE GROUTED.

THE CONTRACTOR MAY PROPOSE ALTERNATE METHODS, PROVIDED DETAILS ARE SUBMITTED TO THE ENGINEER FOR REVIEW AND APPROVAL.

ALL ELASTOMERIC BEARINGS SHALL BE 60 DUROMETER HARDNESS.

— LOAD RATINGS —	
60 DUROMETER	MAX.D.L.+L.L.
TYPE IV	267 K

PROJECT NO. B-4712

BLADEN COUNTY

STATION: 39+15.00 -L-

ASSEMBLED BY : MIKE BRITT	DATE : 9-20-11		
CHECKED BY : S.B. WILLIAMS	DATE : 10/2011		
DRAWN BY : EEM 10/95	REV. 7/10/01	LES/RDR	
CHECKED BY : PEK 10/95	REV. 5/1/06	TLA/GM	
	REV. 10/1/11	MAA/GM	

STATE OF NORTH CAROLINA
DEPARTMENT OF TRANSPORTATION
RALEIGH
STANDARD

ELASTOMERIC BEARING DETAILS

(STEEL SUPERSTRUCTURE)

SPANS A-B-C

REVISIONS						SHEET NO.
NO.	BY:	DATE:	NO.	BY:	DATE:	S-35
1			3			TOTAL SHEETS
2			4			108

NORTH CAROLINA PROFESSIONAL SEAL 21638 ENGINEER LAURA E. SUTTON 1/27/12

STR. #1

STD. NO. EB2

03-JAN-2013 11:48
R:\Structures\Plans\stc01\B4712_SD_BG_01.dgn

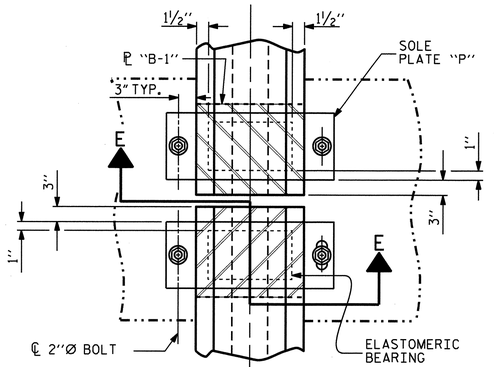

TYPICAL HALF-PLAN (SHOWING CONTINUOUS BENT)

TYPICAL HALF-PLAN (SHOWING SIMPLE SPAN BENT)

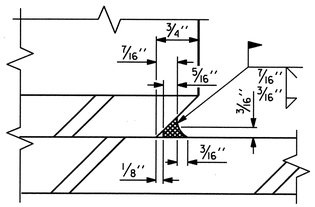

DETAIL "A"

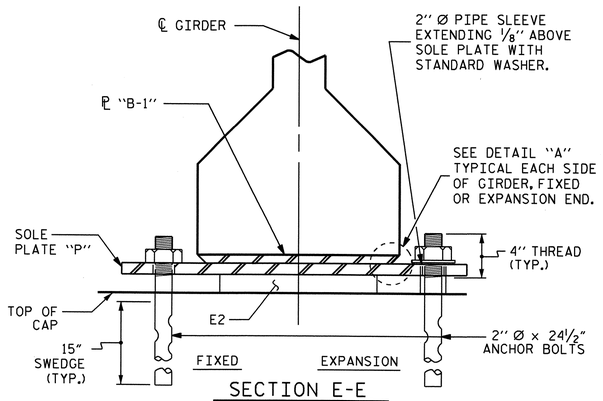

SECTION E-E

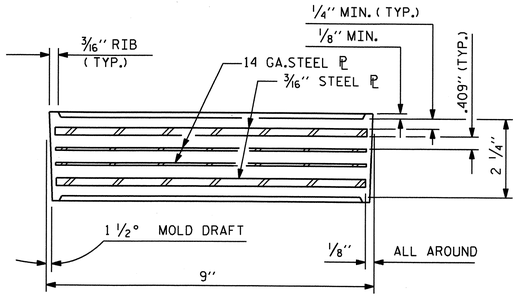

TYPICAL SECTION OF ELASTOMERIC BEARING (E2)

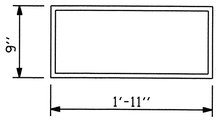

E2 (88 REQ'D)

PLAN VIEW OF ELASTOMERIC BEARING

TYPE V

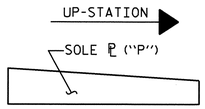

SOLE ℄ PLACEMENT DETAIL

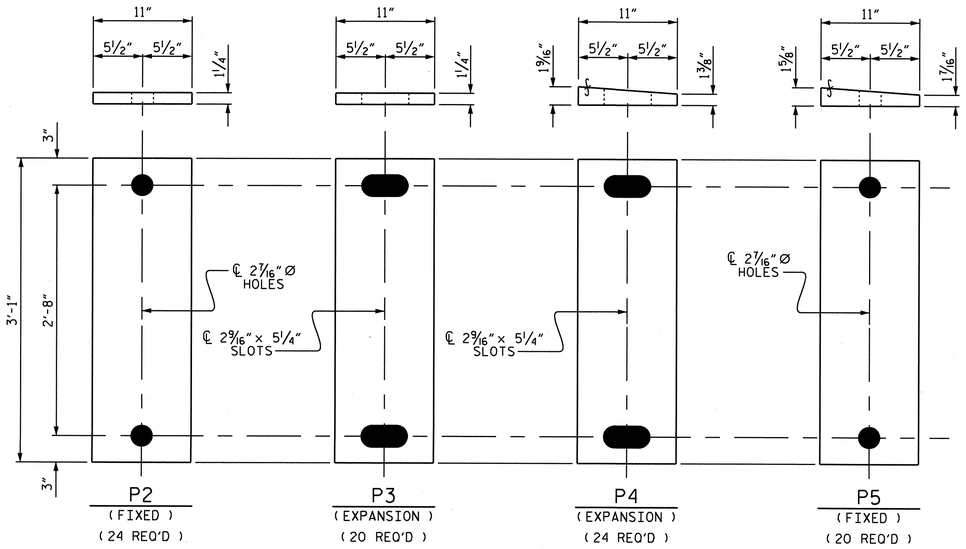

SOLE PLATE DETAILS

NOTES

AT ALL FIXED POINTS OF SUPPORT, NUTS FOR ANCHOR BOLTS ARE TO BE TIGHTENED FINGER TIGHT AND THEN BACKED OFF ½ TURN. THE THREAD OF THE NUT AND BOLT SHALL THEN BE BURRED WITH A SHARP POINTED TOOL.

THE 2" Ø PIPE SLEEVE SHALL BE CUT FROM SCHEDULE 40 PVC PLASTIC PIPE. THE PVC PLASTIC PIPE SHALL MEET THE REQUIREMENTS OF ASTM D1785.

STEEL SOLE PLATES, ANCHOR BOLTS, NUTS, AND WASHERS SHALL BE GALVANIZED IN ACCORDANCE WITH THE STANDARD SPECIFICATIONS.

PRIOR TO WELDING, GRIND THE GALVANIZED SURFACE OF THE PORTION OF THE EMBEDDED PLATE AND SOLE PLATE THAT ARE TO BE WELDED. AFTER WELDING, DAMAGED GALVANIZED SURFACES SHALL BE REPAIRED IN ACCORDANCE WITH THE STANDARD SPECIFICATIONS.

WHEN WELDING THE SOLE PLATE TO THE EMBEDDED PLATE IN THE GIRDER, USE TEMPERATURE INDICATING WAX PENS, OR OTHER SUITABLE MEANS, TO ENSURE THAT THE TEMPERATURE OF THE SOLE PLATE DOES NOT EXCEED 300°F. TEMPERATURES ABOVE THIS MAY DAMAGE THE ELASTOMER.

SOLE PLATE "P", BOLTS, NUTS, WASHERS, AND PIPE SLEEVE SHALL BE INCLUDED IN THE PAY ITEM FOR PRESTRESSED CONCRETE GIRDERS.

ANCHOR BOLTS SHALL MEET THE REQUIREMENTS OF ASTM A449. NUTS SHALL MEET THE REQUIREMENTS OF AASHTO M291-DH OR AASHTO M292-2H. WASHERS SHALL MEET THE REQUIREMENTS OF AASHTO M293. SHOP DRAWINGS ARE NOT REQUIRED FOR ANCHOR BOLT, NUTS AND WASHERS. SHOP INSPECTION IS REQUIRED.

ALL SURFACES OF BEARING PLATES SHALL BE SMOOTH AND STRAIGHT.

ALL ELASTOMERIC BEARINGS SHALL BE 60 DUROMETER HARDNESS.

— LOAD RATINGS —	
60 DUROMETER	MAX.D.L.+L.L.
TYPE V	260 K

PROJECT NO. B-4712

BLADEN COUNTY

STATION: 39+15.00 -L-

ASSEMBLED BY : MIKE BRITT	DATE : 9-20-11		
CHECKED BY : S.B. WILLIAMS	DATE : 10/2011		
DRAWN BY : EEM 2/97	REV. 10/17/00	RWW/LES	
CHECKED BY : VAP 2/97	REV. 5/1/06	TLA/GM	
	REV. 10/1/11	MAA/GM	

08-NOV-2012 13:06
R:\Structures\Plans\str01\B4712 SD BG 01.dgn

NORTH CAROLINA PROFESSIONAL SEAL 21638 ENGINEER LAURA E. SUTTON 11/07/13

STATE OF NORTH CAROLINA
DEPARTMENT OF TRANSPORTATION
RALEIGH
STANDARD

ELASTOMERIC BEARING DETAILS

PCG SUPERSTRUCTURE
SPANS D THROUGH N

REVISIONS						SHEET NO.
NO.	BY:	DATE:	NO.	BY:	DATE:	S-36
1			3			TOTAL SHEETS
2			4			108

STR. #1 SID NO. EB4

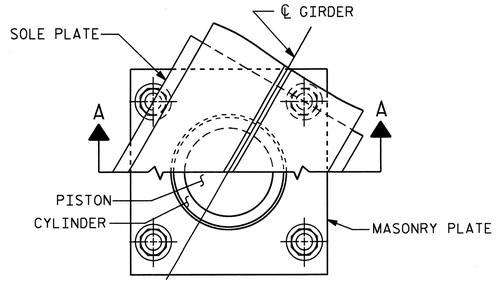

CUT-AWAY PLAN

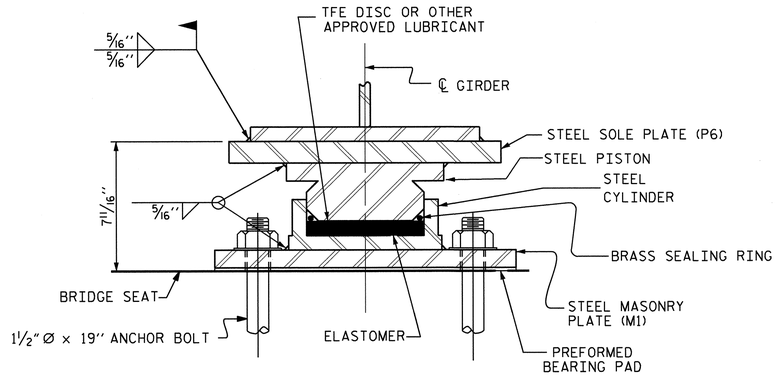

SECTION A-A

PB1, FIXED
(8 REQ'D.)

POT BEARING DETAILS

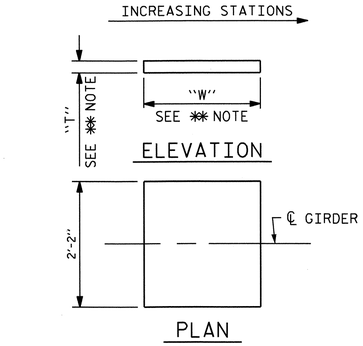

✻✻ NOTE:
DIMENSIONS ''W'' AND ''T'' ARE TO BE DETERMINED BY THE MANUFACTURER.

P6, FIXED
(8 REQ'D.)

SOLE PLATE DETAILS

NOTES

FOR POT BEARINGS, SEE SPECIAL PROVISIONS.

AT ALL POINTS OF SUPPORT AT BENTS 1 & 2, NUTS FOR ANCHOR BOLTS SHALL BE TIGHTENED FINGER TIGHT AND GIVEN AN ADDITIONAL 1/4 TURN. THE THREAD OF THE NUT AND BOLT SHALL THEN BE BURRED WITH A SHARP POINTED TOOL.

WHEN WELDING THE SOLE PLATE TO THE GIRDER, USE TEMPERATURE INDICATING WAX PENS, OR OTHER SUITABLE MEANS, TO ENSURE THAT THE TEMPERATURE OF THE BEARING DOES NOT EXCEED 250°F TEMPERATURES ABOVE THIS MAY DAMAGE THE TFE OR ELASTOMER.

SOLE PLATES SHOULD BE WELDED TO GIRDER FLANGES BEFORE FALSEWORK IS PLACED.

ALL SURFACES OF BEARING PLATES SHALL BE SMOOTH AND STRAIGHT.

FOR THERMAL SPRAYED COATINGS (METALLIZATION), SEE SPECIAL PROVISIONS.

THE CONTRACTOR MAY SUBSTITUTE DISC BEARINGS FOR THE POT BEARINGS SHOWN. FOR OPTIONAL DISC BEARINGS, SEE SPECIAL PROVISIONS.

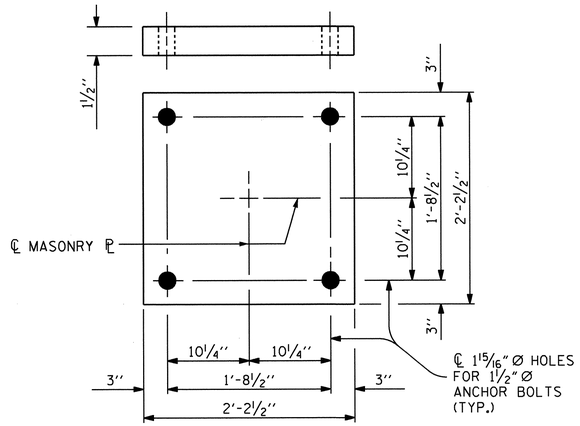

PLAN
M1 (8 REQ'D.)

MASONRY PLATE DETAILS

TABLE FOR LOADS AND MOVEMENT

BEARING	LOCATION	UNFACTORED VERTICAL LOAD (KIPS)				FACTORED LATERAL LOAD (KIPS)	TOTAL MOVEMENT (INCHES)
		DEAD		LIVE	TOTAL		
		DC	DW	LL+IM			
PB1 (FIXED)	BENTS 1 & 2	382K	47K	248K	677K	139K	0

PROJECT NO. B-4712
BLADEN COUNTY
STATION: 39+15.00 -L-

STATE OF NORTH CAROLINA
DEPARTMENT OF TRANSPORTATION
RALEIGH

STANDARD

POT BEARING DETAILS

SPANS A-B-C

REVISIONS						SHEET NO.
NO.	BY:	DATE:	NO.	BY:	DATE:	S-37
1			3			TOTAL SHEETS
2			4			108

NORTH CAROLINA PROFESSIONAL SEAL 21638 ENGINEER LAURA E. SUTTON 11/29/13

ASSEMBLED BY : MIKE BRITT	DATE : 9-15-11	REV. 5/7/03	RWW/JTE
CHECKED BY : S.B. WILLIAMS	DATE : 10/2011	REV. 5/1/06R	TLA/GM
DRAWN BY : RWW 8/99		REV. 10/1/11	MAA/GM
CHECKED BY : LES 8/99			

08-NOV-2012 13:06
R:\Structures\Plans\str01\B4712_SD_BG_01.dgn

STR. #1

STD. NO. PB1

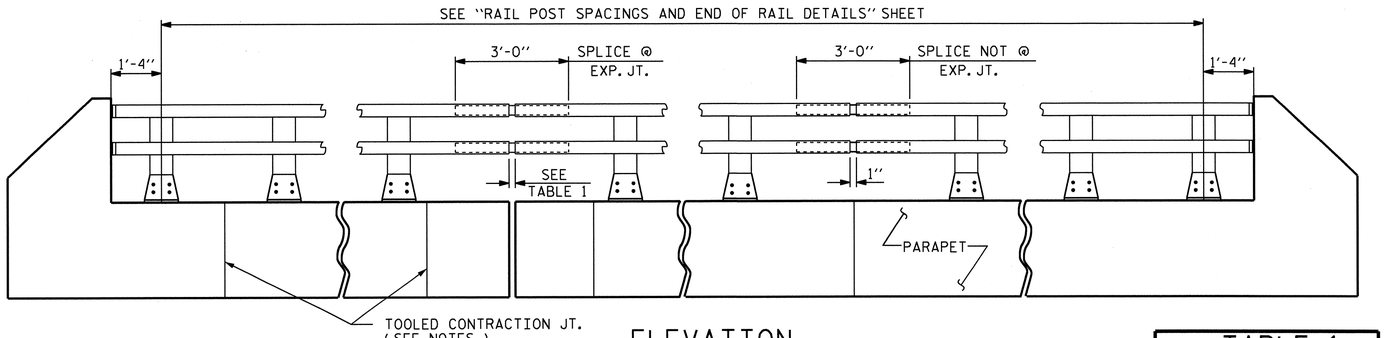

ELEVATION

NOTE : FOR ATTACHMENT OF METAL RAIL TO END POST, SEE STANDARD NO. BMR2.

TABLE 1	
℄ EXP. JT. @	RAIL OPENING
END BENT 1	2½"
BENT 3	2½"
BENT 4	2"
BENT 6	2"
BENT 8	2"
BENT 10	2"
BENT 12	2"
END BENT 2	1"

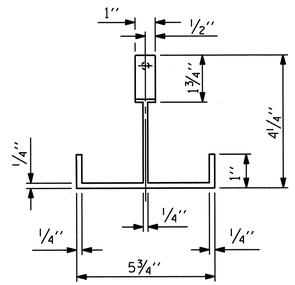

PLAN

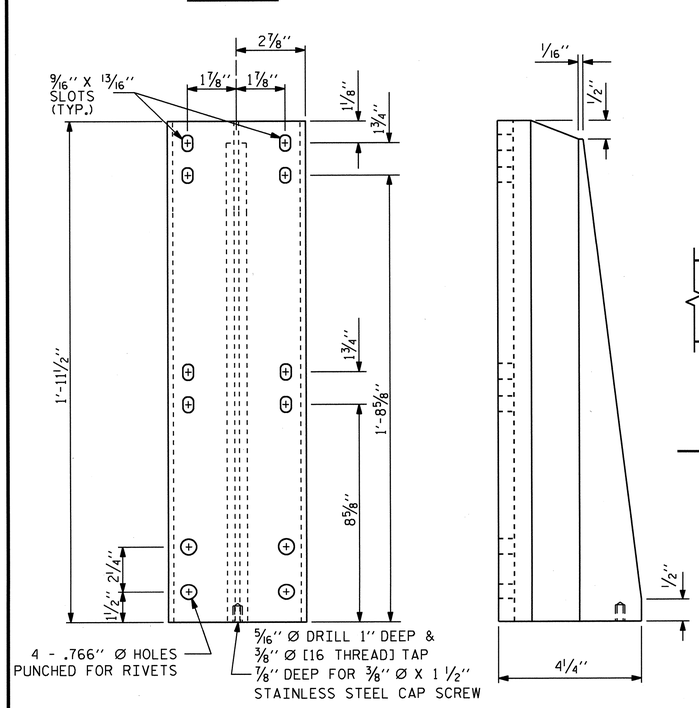

FRONT ELEVATION SIDE ELEVATION

DETAILS OF POST

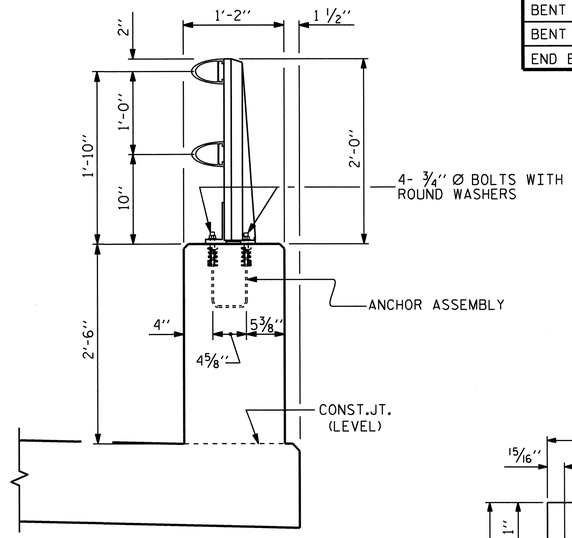

SECTION THRU PARAPET AND RAIL

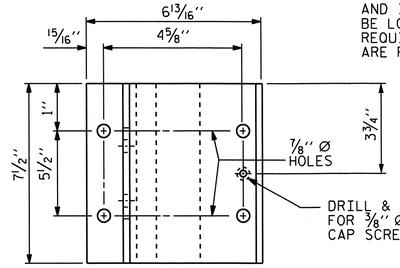

PLAN

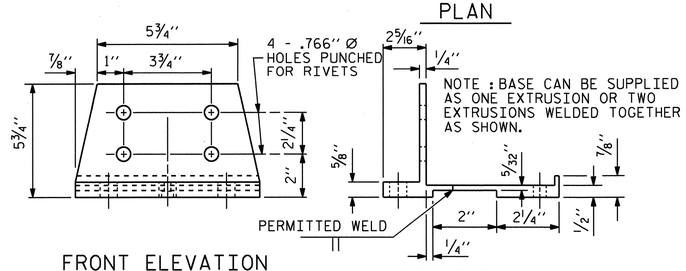

FRONT ELEVATION SIDE ELEVATION

POST BASE DETAILS

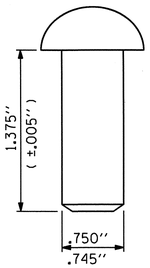

RIVET DETAIL

NOTES

AT THE CONTRACTOR'S OPTION, METAL RAIL MAY BE EITHER ALUMINUM OR GALVANIZED STEEL IN ACCORDANCE WITH THE REQUIREMENTS OF THE GENERAL NOTES AND THE FOLLOWING SPECIFICATIONS FOR THE ALTERNATE MATERIALS; HOWEVER, THE CONTRACTOR WILL BE REQUIRED TO USE THE SAME RAIL MATERIAL ON ALL STRUCTURES ON THE PROJECT FOR WHICH METAL RAIL IS DESIGNATED.

ALUMINUM RAILS

MATERIAL FOR POSTS, BASES AND RAILS, EXPANSION BARS AND CLAMP BARS SHALL BE ASTM B-221 ALLOY 6061-T6.

MATERIAL FOR RIVETS SHALL BE ASTM B316 ALLOY 6061-T6. RIVETS SHALL BE STANDARD BUTTON HEAD AND CONE POINT COLD DRIVEN AS PER DRAWING.

THE BASE OF RAIL POSTS, OR ANY OTHER ALUMINUM SURFACE IN CONTACT WITH CONCRETE SHALL BE THOROUGHLY COATED WITH AN ALUMINUM IMPREGNATED CAULKING COMPOUND OF APPROVED QUALITY.

MATERIAL FOR SHIMS TO BE ASTM B209 ALLOY 6061-T6.

GALVANIZED STEEL RAILS

MATERIAL AND GALVANIZING ARE TO CONFORM TO THE FOLLOWING SPECIFICATIONS:

POST, POST BASES, RAILS, EXPANSION BARS AND CLAMP BARS: AASHTO M270 GRADE 36 STRUCTURAL STEEL - GALVANIZED TO AASHTO M111.

RIVETS: RIVETS SHALL MEET THE REQUIREMENTS OF ASTM A502 FOR GRADE 1 RIVETS.

THE CUT ENDS OF GALVANIZED STEEL RAILING, AFTER GRINDING SMOOTH SHALL BE GIVEN TWO COATS OF ZINC RICH PAINT MEETING THE REQUIREMENTS OF FEDERAL SPECIFICATION MIL-P-26915 USAF TYPE 1, OR OF FEDERAL SPECIFICATIONS TT-P-641.

SHIMS: SHIMS SHALL MEET THE REQUIREMENTS OF ASTM A570 FOR GRADE 33 OR A611 FOR GRADE C AND SHALL BE GALVANIZED IN ACCORDANCE WITH AASHTO M111.

RAIL CAPS: RAIL CAPS SHALL MEET THE REQUIREMENTS OF ASTM A570 FOR GRADE 33 OR A611 FOR GRADE C AND SHALL BE GALVANIZED IN ACCORDANCE WITH AASHTO M111.

GENERAL NOTES

RAILING SHALL BE CONTINUOUS FROM END POST TO END POST OF BRIDGE. EACH JOINT IN RAIL LENGTH SHALL BE SPLICED AS DETAILED. PANEL LENGTHS OF RAIL SHALL BE ATTACHED TO A MINIMUM OF THREE POSTS.

FOR END OF RAIL TO CLEAR FACE OF CONCRETE END POST DIMENSION, SEE STANDARD NO. BMR2.

CAP SCREWS SHALL BE ASTM F593 ALLOY 305 STAINLESS STEEL. WASHERS SHALL MEET THE REQUIREMENTS OF ASTM F844 EXCEPT THEY SHALL BE MADE FROM ALLOY 304 STAINLESS STEEL.

CERTIFIED MILL REPORTS ARE REQUIRED FOR RAILS AND POSTS. SHOP INSPECTION IS NOT REQUIRED.

METAL RAIL POSTS SHALL BE SET NORMAL TO CURB GRADE.

METHOD OF MEASUREMENT FOR METAL RAILS: FOR LENGTH OF METAL RAILS TO BE PAID FOR, SEE THE STANDARD SPECIFICATIONS.

CURVED RAIL USAGE: WHERE RAILS ARE TO BE USED ON BRIDGES ON HORIZONTAL AND/OR VERTICAL CURVATURE THE CONTRACTOR MAY, AT HIS OPTION, HAVE THE REQUIRED CURVATURE IN THE RAIL FORMED IN THE SHOP OR IN THE FIELD. IN EITHER EVENT, THE RAIL SHALL CONFORM WITHOUT BUCKLING OR KINKING TO THE REQUIRED CURVATURE IN A UNIFORM MANNER ACCEPTABLE TO THE ENGINEER.

TO INSURE FUTURE IDENTIFICATION OF THE FABRICATOR, A PERMANENT IDENTIFYING MARK SHALL BE PLACED ON EACH POST. THE METHOD OF MARKING AND LOCATION SHALL BE SUCH THAT IT DOES NOT DETRACT FROM THE APPEARANCE OF THE POST, BUT REMAINS VISIBLE AFTER RAIL PLACEMENT.

SHIMS SHALL BE USED AS NECESSARY FOR POST ALIGNMENT.

ALLOY 6351-T5 MAY BE SUBSTITUTED FOR ALLOY 6061-T6 WHERE APPLICABLE.

MINOR VARIATIONS IN DETAILS OF METAL RAIL WILL BE CONSIDERED. DETAILS OF SUCH VARIATIONS, IF DESIRED, SHALL BE SUBMITTED FOR APPROVAL.

GROOVED CONTRACTION JOINTS, ½" IN DEPTH, SHALL BE TOOLED IN ALL EXPOSED FACES OF THE PARAPET AND IN ACCORDANCE WITH ARTICLE 825-10(B) OF THE STANDARD SPECIFICATIONS. A CONTRACTION JOINT SHALL BE LOCATED AT EACH THIRD POINT BETWEEN PARAPET EXPANSION JOINTS. ONLY ONE CONTRACTION JOINT IS REQUIRED AT MIDPOINT OF PARAPET SEGMENTS LESS THAN 20 FEET IN LENGTH AND NO CONTRACTION JOINTS ARE REQUIRED FOR THOSE SEGMENTS LESS THAN 10 FEET IN LENGTH.

PAY LENGTH = 3161.00 LIN. FT.

PROJECT NO. B-4712

BLADEN COUNTY

STATION: 39+15.00 -L-

SHEET 1 OF 2

STATE OF NORTH CAROLINA
DEPARTMENT OF TRANSPORTATION
RALEIGH

STANDARD

2 BAR METAL RAIL

REVISIONS						SHEET NO.
NO.	BY:	DATE:	NO.	BY:	DATE:	S-38
1			3			TOTAL SHEETS
2			4			108

STR. #1 STD. NO. BMR3

ASSEMBLED BY :	B.N. GRADY	DATE :	3/2012
CHECKED BY :	J.P. ADAMS	DATE :	4/2012
DRAWN BY : EEM 6/94	REV. 5/7/03R		RWW/JTE
CHECKED BY : RGW 6/94	REV. 5/1/06		TLA/GM
	REV. 10/1/11		MAA/GM

08-NOV-2012 13:06
R:\structures\Plans\str01\B4712_SD_2MR_01.dgn

NORTH CAROLINA PROFESSIONAL SEAL 21638 ENGINEER LAURA E. SUTTON 7/03/13

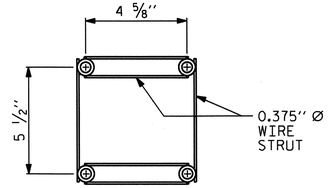

PLAN

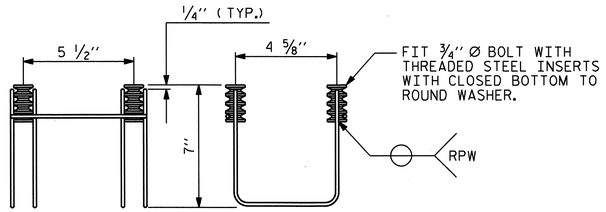

SIDE VIEW ELEVATION

4-BOLT METAL RAIL ANCHOR ASSEMBLY

(494 ASSEMBLIES REQUIRED)

NOTES

STRUCTURAL CONCRETE ANCHOR ASSEMBLY

THE STRUCTURAL CONCRETE ANCHOR ASSEMBLY SHALL CONSIST OF THE FOLLOWING COMPONENTS :

A. FERRULES SHALL BE MADE FROM STEEL MEETING THE REQUIREMENTS OF AASHTO M169, GRADE 12L14 AND SHALL HAVE A MINIMUM LENGTH OF THREADS OF 2'' FOR 3/4'' FERRULES.

B. 4 - 3/4'' Ø X 2 1/2'' BOLTS WITH WASHERS. BOLTS SHALL CONFORM TO THE REQUIREMENTS OF ASTM A307. BOLTS AND WASHERS SHALL BE GALVANIZED. AT THE CONTRACTOR'S OPTION, STAINLESS STEEL BOLTS AND WASHERS MAY BE USED AS AN ALTERNATE FOR THE 3/4'' Ø X 2 1/2'' GALVANIZED BOLTS AND WASHERS. THEY SHALL CONFORM TO OR EXCEED THE MECHANICAL REQUIREMENTS OF ASTM A307. THE USE OF THIS ALTERNATE SHALL BE APPROVED BY THE ENGINEER.

C. WIRE STRUT SHOWN IN THE CONCRETE ANCHOR ASSEMBLY DETAIL IS THE MINIMUM ALLOWABLE SIZE AND SHALL HAVE A MINIMUM TENSILE STRENGTH OF 100,000 PSI. AS AN OPTION, A 1/16'' Ø WIRE STRUT WITH A MINIMUM TENSILE STRENGTH OF 90,000 PSI IS ACCEPTABLE.

D. THE METAL RAIL ANCHOR ASSEMBLIES TO BE HOT DIPPED GALVANIZED TO CONFORM TO REQUIREMENTS OF AASHTO M111.

E. THE COST OF THE METAL RAIL ANCHOR ASSEMBLY WITH BOLTS AND WASHERS COMPLETE IN PLACE SHALL BE INCLUDED IN THE PRICE BID FOR LINEAR FEET OF METAL RAIL.

F. BOLTS TO BE TIGHTENED ONE-HALF TURN WITH A WRENCH FROM A FINGER-TIGHT POSITION.

THE CONTRACTOR MAY USE ADHESIVELY ANCHORED ANCHOR BOLTS IN PLACE OF THE METAL RAIL ANCHOR ASSEMBLY. LEVEL ONE FIELD TESTING IS REQUIRED, AND THE YIELD LOAD OF THE 3/4'' Ø BOLT IS 10 KIPS. FOR ADHESIVELY ANCHORED ANCHOR BOLTS OR DOWELS, SEE THE STANDARD SPECIFICATIONS.

WHEN ADHESIVELY ANCHORED ANCHOR BOLTS ARE USED, BOLTS SHALL MEET THE REQUIREMENTS OF ASTM F593 ALLOY 304 STAINLESS STEEL WITH MINIMUM 75,000 PSI ULTIMATE STRENGTH. NUTS SHALL MEET THE REQUIREMENTS OF ASTM F594 ALLOY 304 STAINLESS STEEL AND WASHERS SHALL MEET THE REQUIREMENTS OF ASTM F844 EXCEPT THEY SHALL BE MADE FROM ALLOY 304 STAINLESS STEEL.

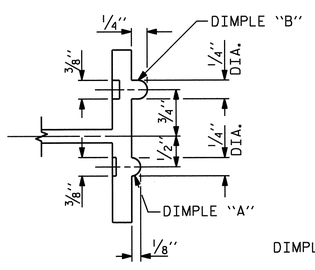

SECTION B - B

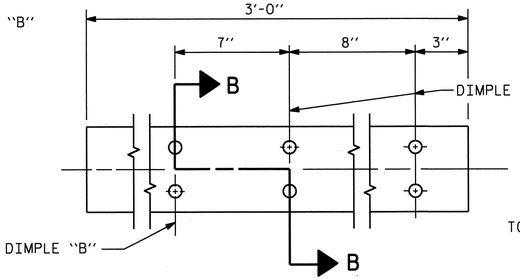

EXPANSION BAR DETAILS

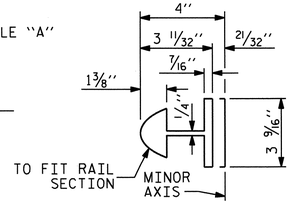

BAR SECTION

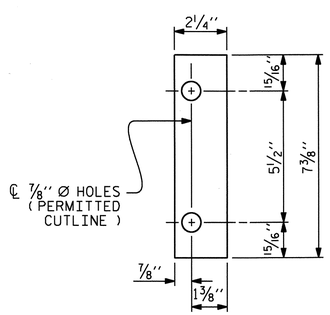

FRONT PLATE

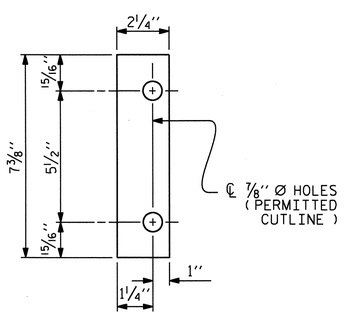

REAR PLATE

SHIM DETAILS

NOTE :
SHIMS MAY BE CUT ALONG PERMITTED CUTLINE OR SLOTTED TO EDGE OF PLATE TO FACILITATE PLACEMENT.

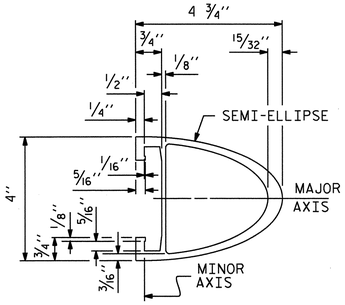

RAIL SECTION

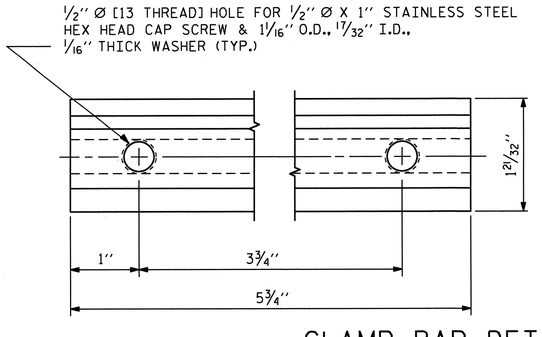

CLAMP BAR DETAIL

(4 REQUIRED PER POST)

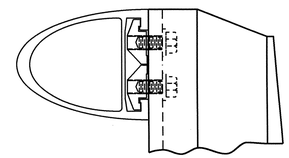

CLAMP ASSEMBLY

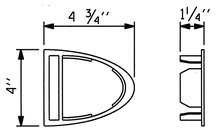

RAIL CAP

PROJECT NO. B-4712

BLADEN COUNTY

STATION: 39+15.00 -L-

SHEET 2 OF 2

STATE OF NORTH CAROLINA
DEPARTMENT OF TRANSPORTATION
RALEIGH

STANDARD

2 BAR METAL RAIL

REVISIONS						SHEET NO.
NO.	BY:	DATE:	NO.	BY:	DATE:	S-39
1			3			TOTAL SHEETS
2			4			108

ASSEMBLED BY :	B.N. GRADY	DATE :	3/2012
CHECKED BY :	J.P. ADAMS	DATE :	4/2012
DRAWN BY : EEM	6/94	REV. 8/16/99	MAB/LES
CHECKED BY : RGW	6/94	REV. 5/1/06R	KMM/GM
		REV. 10/1/11	MAA/GM

NORTH CAROLINA PROFESSIONAL SEAL 21638 ENGINEER LAURA E. SUTTON 11/03/12

STR. #1

STD. NO. BMR4

08-NOV-2012 13:06
R:\structures\Plans\str01\R4712 SD 2MR 01.dgn

SEE SHEET 2 OF 2
FOR RAIL POST SPACINGS

NOTES

STRUCTURAL CONCRETE INSERT

THE STRUCTURAL CONCRETE INSERT ASSEMBLY SHALL CONSIST OF THE FOLLOWING COMPONENTS:

A. FERRULES SHALL BE MADE FROM STEEL MEETING THE REQUIREMENTS OF AASHTO M169, GRADE 12L14 AND SHALL HAVE A MINIMUM LENGTH OF THREADS OF 1½".

B. 1 - ¾" Ø X 1⅝" BOLT WITH WASHER. BOLT SHALL CONFORM TO THE REQUIREMENTS OF ASTM A307. BOLT AND WASHER SHALL BE GALVANIZED. (AT THE CONTRACTOR'S OPTION, STAINLESS STEEL BOLT AND WASHER MAY BE USED AS AN ALTERNATE FOR THE ¾" Ø X 1⅝" GALVANIZED BOLT AND WASHER. THEY SHALL CONFORM TO OR EXCEED THE MECHANICAL REQUIREMENTS OF ASTM A307. THE USE OF THIS ALTERNATE SHALL BE APPROVED BY THE ENGINEER.)

C. WIRE STRUT SHOWN IN THE CONCRETE INSERT ASSEMBLY DETAIL IS THE MINIMUM ALLOWABLE SIZE AND SHALL HAVE A MINIMUM TENSILE STRENGTH OF 100,000 PSI. AS AN OPTION, A 7/16" Ø WIRE STRUT WITH A MINIMUM TENSILE STRENGTH OF 90,000 PSI IS ACCEPTABLE.

NOTES

METAL RAIL TO END POST CONNECTION

THE METAL RAIL TO END POST CONNECTION SHALL CONSIST OF THE FOLLOWING COMPONENTS:

A. ½" PLATES SHALL CONFORM TO AASHTO M270 GRADE 36 AND SHALL BE GALVANIZED AFTER FABRICATION.

B. ¾" STRUCTURAL CONCRETE INSERT SHALL HAVE A WORKING LOAD SHEAR CAPACITY OF 4800 LBS. THE FERRULES SHALL ENGAGE A ¾" Ø X 1⅝" BOLT WITH 2" O.D. WASHER IN PLACE. THE ¾" Ø X 1⅝" BOLT SHALL HAVE N. C. THREADS.

C. CAP SCREWS FOR RAIL ATTACHMENT TO ANGLE SHALL CONFORM TO THE REQUIREMENTS OF ASTM F593 ALLOY 305 STAINLESS STEEL. CAP SCREWS TO BE CENTERED IN SLOTS AT 60°F.

D. STANDARD CLAMP BARS (SEE METAL RAIL SHEET).

E. ½" Ø PIPE SLEEVES (IF REQUIRED) TO BE GALVANIZED.

THE COST OF THE STANDARD CLAMP BARS AND CAP SCREWS USED IN THE METAL RAIL TO END POST CONNECTION SHALL BE INCLUDED IN THE UNIT CONTRACT PRICE BID FOR LINEAR FEET OF 1 OR 2 BAR METAL RAILS.

THE ¾" STRUCTURAL CONCRETE INSERT WITH BOLT SHALL BE ASSEMBLED IN THE SHOP.

THE COST OF THE ¾" STRUCTURAL CONCRETE INSERT ASSEMBLY, AND THE ½" PLATES COMPLETE IN PLACE SHALL BE INCLUDED IN THE VARIOUS PAY ITEMS.

THE CONTRACTOR, AT HIS OPTION, MAY USE AN ADHESIVE BONDING SYSTEM IN LIEU OF THE STRUCTURAL CONCRETE INSERT EMBEDDED IN THE END POST. IF THE ADHESIVE BONDING SYSTEM IS USED, THE ¾" Ø X 1⅝" BOLT WITH WASHER SHALL BE REPLACED WITH A ¾"Ø X 6½" BOLT AND 2" O.D. WASHER. ALL SPECIFICATIONS THAT APPLY TO THE ¾" Ø X 1⅝" BOLT SHALL APPLY TO THE ¾"Ø X 6 ½" BOLT. FIELD TESTING OF THE ADHESIVE BONDING SYSTEM IS NOT REQUIRED.

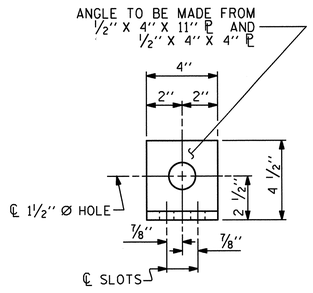

END VIEW

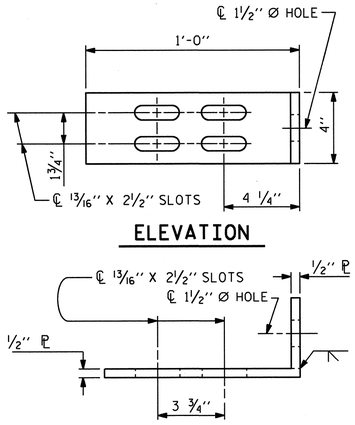

ELEVATION

TOP VIEW

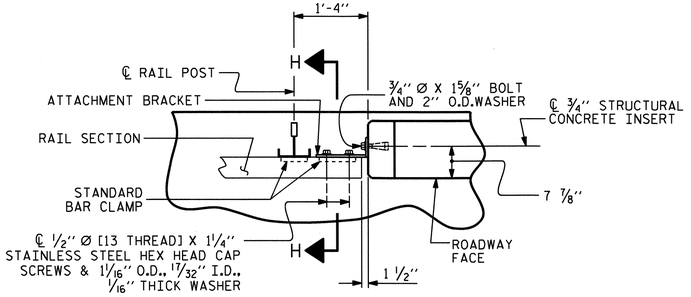

PLAN - RAIL AND END POST

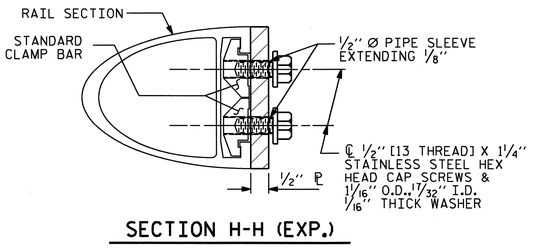

SECTION H-H (EXP.)

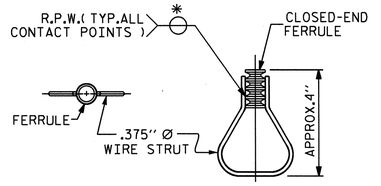

PLAN ELEVATION

STRUCTURAL CONCRETE INSERT

*EACH WELDED ATTACHMENT OF WIRE TO FERRULE SHALL DEVELOP THE TENSILE STRENGTH OF THE WIRE.

PROJECT NO. B-4712

BLADEN COUNTY

STATION: 39+15.00 -L-

SHEET 1 OF 2

DETAILS FOR ATTACHING METAL RAIL TO END POST

EXPANSION DETAILS SHOWN AT END BENTS

ASSEMBLED BY :	B.N. GRADY	DATE :	3/2012
CHECKED BY :	J.P. ADAMS	DATE :	4/2012
DRAWN BY : FCJ 1/88	REV. 5/7/03		RWW/JTE
CHECKED BY : CRK 3/89	REV. 5/1/06		TLA/GM
	REV. 10/1/11		MAA/GM

08-NOV-2012 13:06
R:\structures\Plans\str01\B4712_SD_2HR_01.dgn

NORTH CAROLINA PROFESSIONAL SEAL 21638 ENGINEER LAURA E. SUTTON 10/3/13

STATE OF NORTH CAROLINA
DEPARTMENT OF TRANSPORTATION
RALEIGH

STANDARD

RAIL POST SPACINGS AND END OF RAIL DETAILS

FOR ONE OR TWO BAR METAL RAILS

REVISIONS						SHEET NO.
NO.	BY:	DATE:	NO.	BY:	DATE:	S-40
1			3			TOTAL SHEETS
2			4			108

STR. #1

STD. NO. BMR2

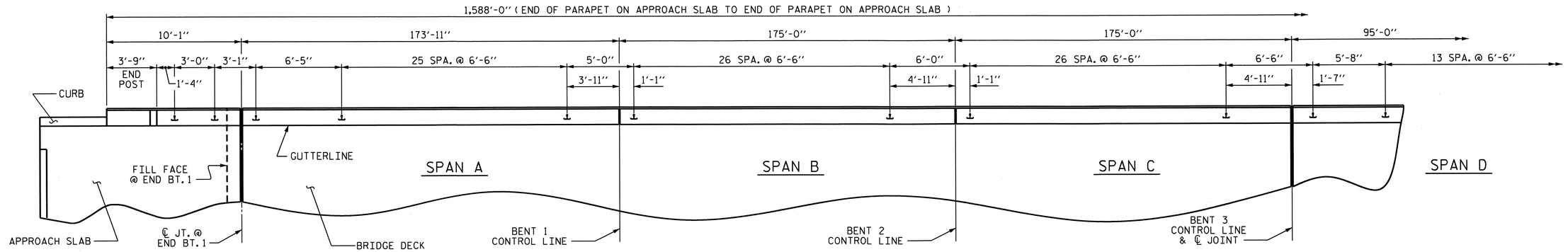

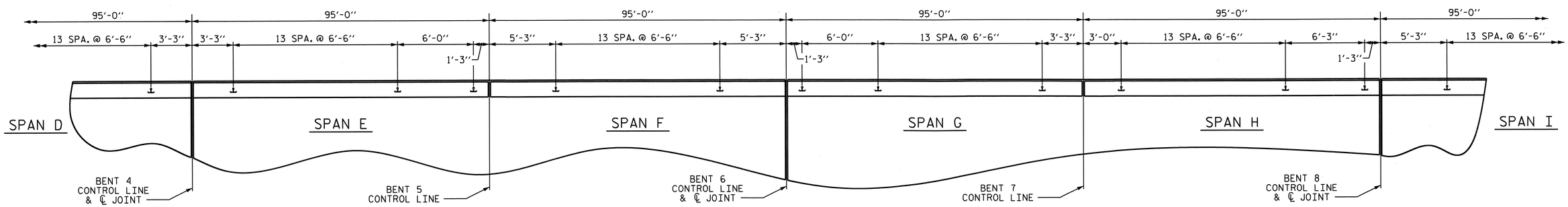

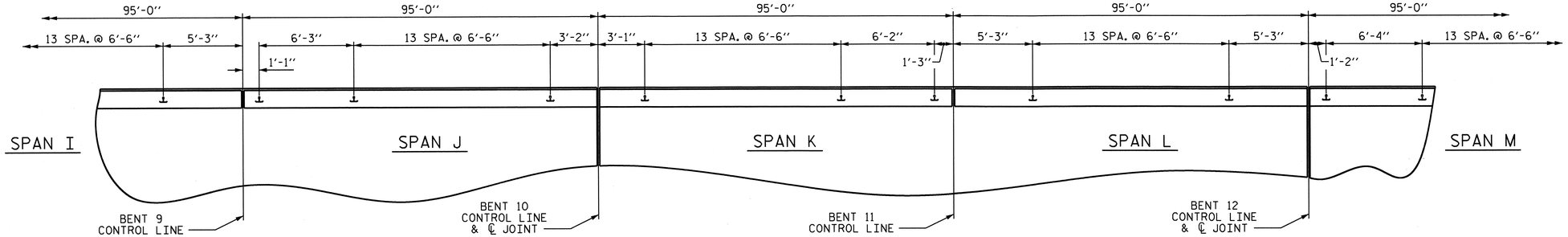

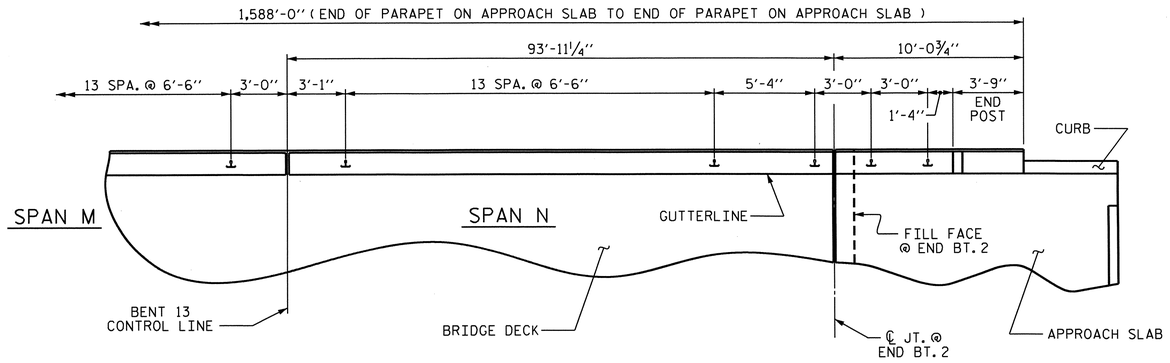

PLAN OF RAIL POST SPACINGS

(LEFT PARAPET SHOWN, RIGHT PARAPET SIMILAR)

DRAWN BY : B.N. GRADY DATE : 3/2012
CHECKED BY : J.P. ADAMS DATE : 4/2012

08-NOV-2012 13:06
R:\structures\Plans\str01\B4712_SD_2MR_01.dgn

PROJECT NO. B-4712
BLADEN COUNTY
STATION: 39+15.00 -L-

SHEET 2 OF 2

STATE OF NORTH CAROLINA
DEPARTMENT OF TRANSPORTATION
RALEIGH

SUPERSTRUCTURE
RAIL POST SPACINGS

NORTH CAROLINA PROFESSIONAL SEAL 21638 ENGINEER LAURA E. SUTTON 11/03/13

REVISIONS						SHEET NO.
NO.	BY:	DATE:	NO.	BY:	DATE:	S-41
1			3			TOTAL SHEETS
2			4			108

STR. #1

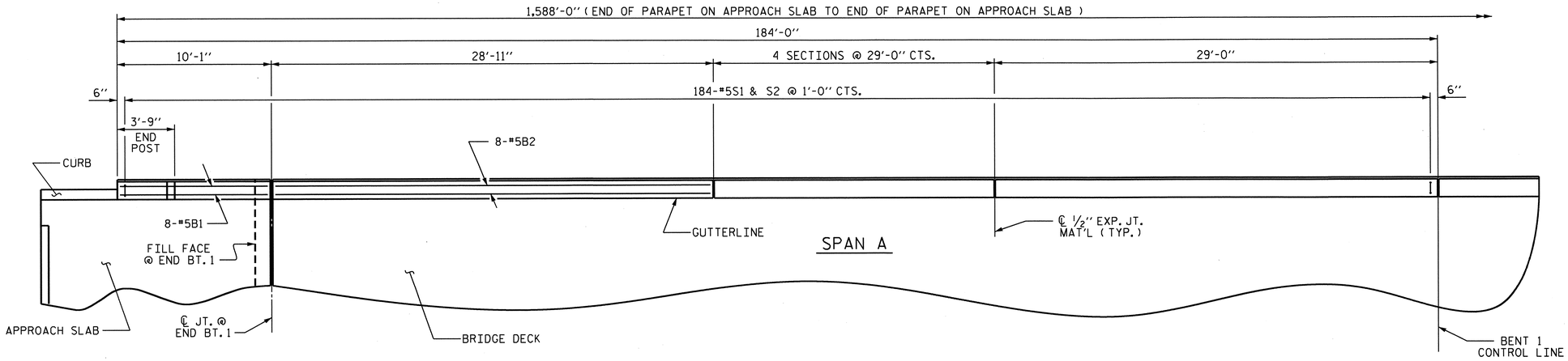

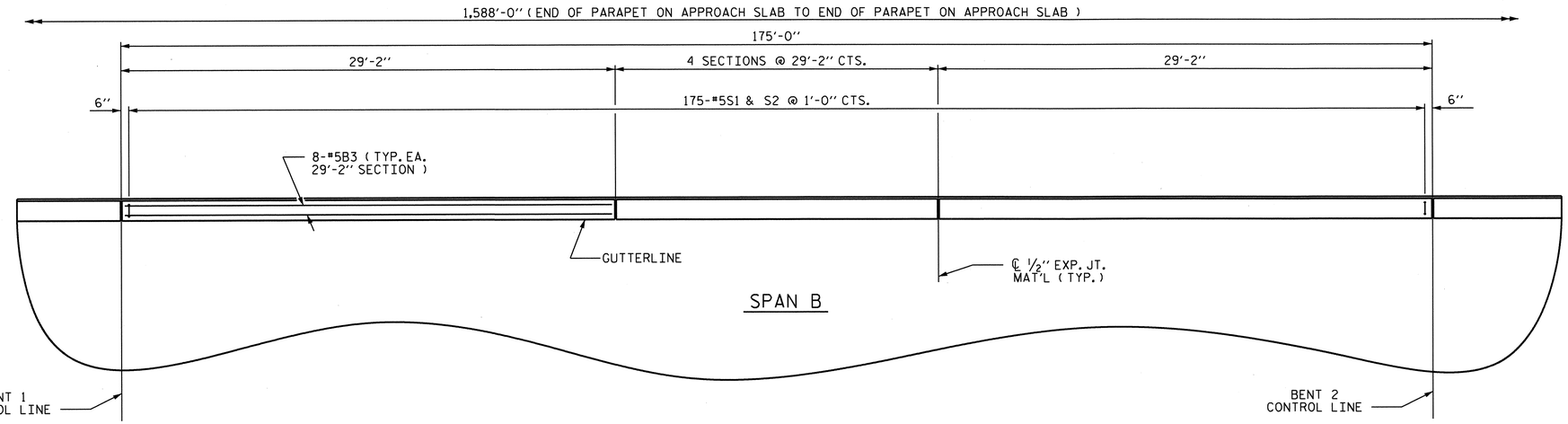

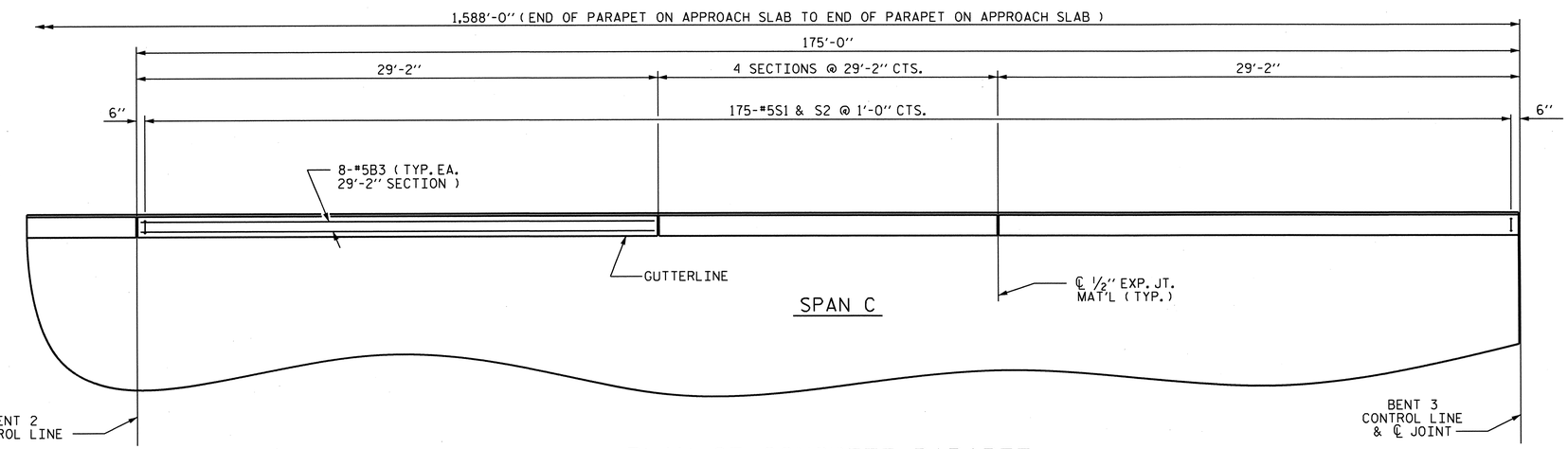

PLAN OF CONCRETE PARAPET

(LEFT PARAPET SHOWN, RIGHT PARAPET SIMILAR)

DRAWN BY : MIKE BRITT DATE : 9-27-11
CHECKED BY : S.B. WILLIAMS DATE : 11/2011

08-NOV-2012 13:05
R:\structures\Plans\str01\B4712_SD_2MR_01.dgn

NORTH CAROLINA PROFESSIONAL SEAL 21638 ENGINEER LAURA E. SUTTON 11/13/13

PROJECT NO. B-4712
BLADEN COUNTY
STATION: 39+15.00 -L-

SHEET 1 OF 3

STATE OF NORTH CAROLINA
DEPARTMENT OF TRANSPORTATION
RALEIGH

SUPERSTRUCTURE

CONCRETE PARAPET DETAILS

REVISIONS						SHEET NO.
NO.	BY:	DATE:	NO.	BY:	DATE:	S-42
1			3			TOTAL SHEETS
2			4			108

STR. #1

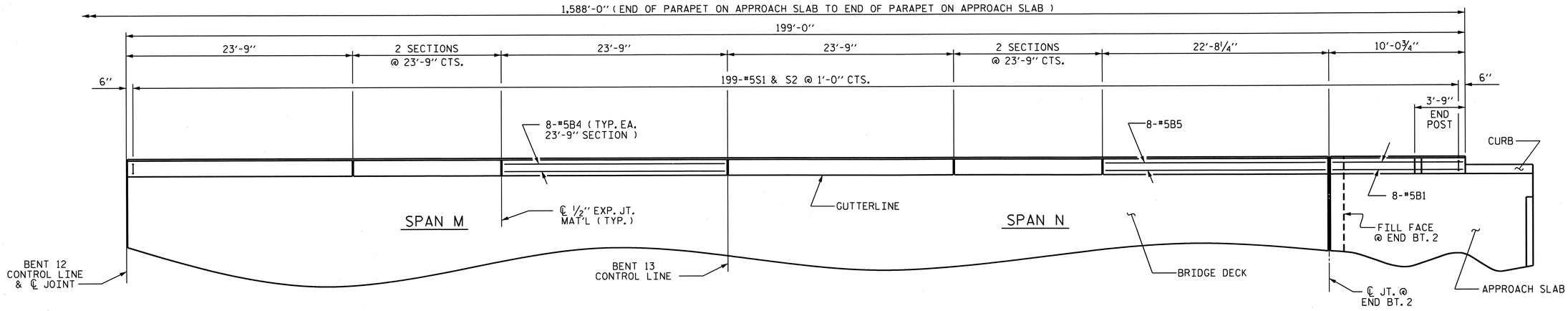

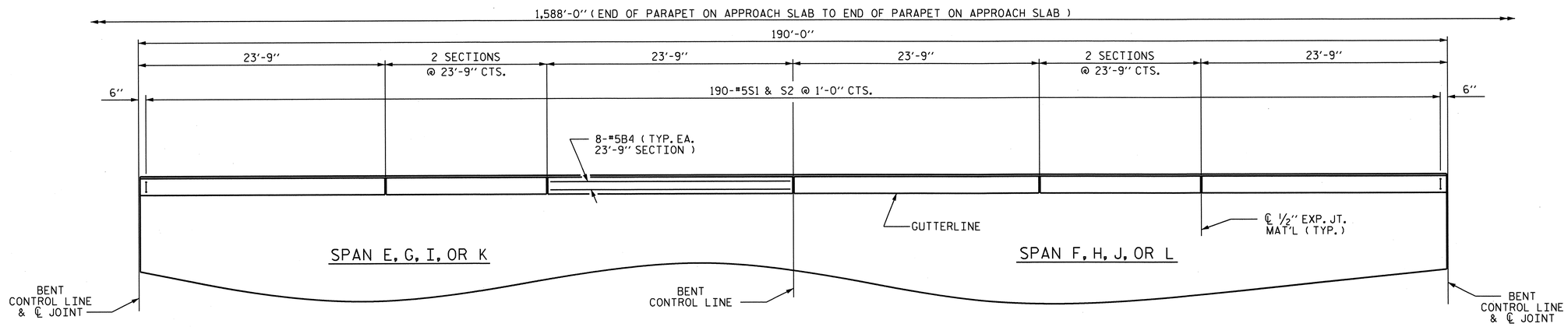

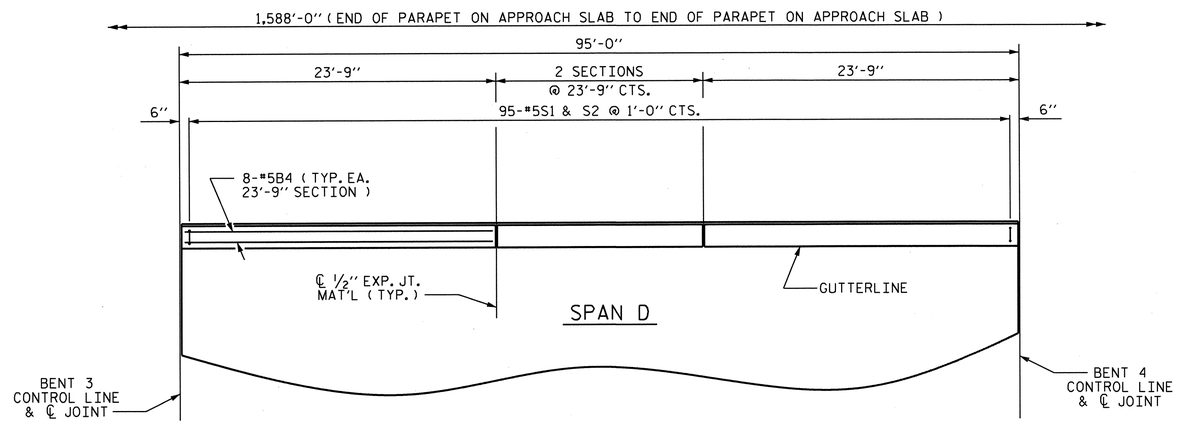

PLAN OF CONCRETE PARAPET

(LEFT PARAPET SHOWN, RIGHT PARAPET SIMILAR)

PROJECT NO. B-4712

BLADEN COUNTY

STATION: 39+15.00 -L-

SHEET 2 OF 3

STATE OF NORTH CAROLINA
DEPARTMENT OF TRANSPORTATION
RALEIGH

SUPERSTRUCTURE

CONCRETE PARAPET DETAILS

NORTH CAROLINA PROFESSIONAL SEAL 21638 ENGINEER LAURA E. SUTTON 11/03/13

REVISIONS						SHEET NO.
NO.	BY:	DATE:	NO.	BY:	DATE:	S-43
1			3			TOTAL SHEETS
2			4			108

DRAWN BY : MIKE BRITT DATE : 9-29-11
CHECKED BY : S.B. WILLIAMS DATE : 11/2011

08-NOV-2012 13:05
R:\structures\Plans\str01\B4712_SD_2MR_01.dgn

STR. #1

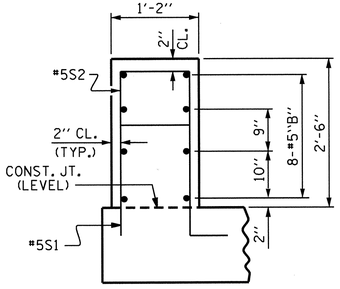

SECTION THROUGH RAIL

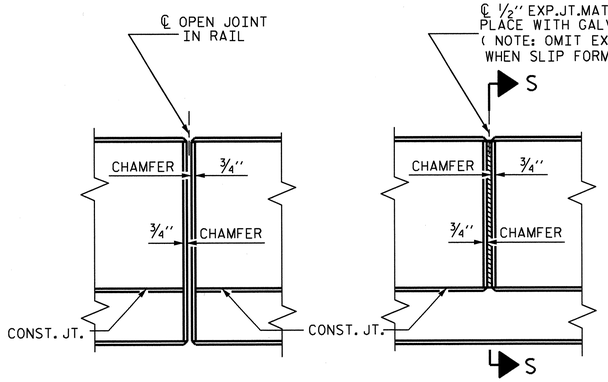

ELEVATION AT EXPANSION JOINTS

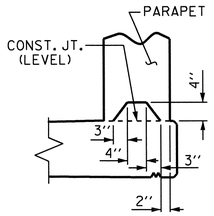

SECTION S-S
AT DAM IN OPEN JOINT
(THIS IS TO BE USED ONLY WHEN SLIP FORM IS USED)

CONCRETE PARAPET DETAILS

NOTES

CONCRETE PARAPET IN A CONTINUOUS UNIT SHALL NOT BE CAST UNTIL ALL SLAB CONCRETE IN THE UNIT HAS BEEN CAST AND HAS REACHED A MINIMUM COMPRESSIVE STRENGTH OF 3000 PSI.

ALL REINFORCING STEEL IN PARAPET AND END POSTS SHALL BE EPOXY COATED.

GROOVED CONTRACTION JOINTS, ½" IN DEPTH, SHALL BE TOOLED IN ALL EXPOSED FACES OF THE PARAPET AND IN ACCORDANCE WITH ARTICLE 825-10(B) OF THE STANDARD SPECIFICATIONS. A CONTRACTION JOINT SHALL BE LOCATED AT EACH THIRD POINT BETWEEN PARAPET EXPANSION JOINTS. ONLY ONE CONTRACTION JOINT IS REQUIRED AT MIDPOINT OF PARAPET SEGMENTS LESS THAN 20 FEET IN LENGTH AND NO CONTRACTION JOINTS ARE REQUIRED FOR THOSE SEGMENTS LESS THAN 10 FEET IN LENGTH.

THE #5S1 & #5S2 BARS MAY BE SHIFTED SLIGHTLY IN ORDER TO MAINTAIN A 2" MINIMUM CLEARANCE TO THE ½" EXPANSION JOINT MATERIAL IN THE PARAPET.

FOR DETAILS OF CONCRETE INSERTS IN END POSTS, SEE "RAIL POST SPACINGS AND END OF RAIL DETAILS" SHEET.

FOR DETAILS OF GUARDRAIL ANCHOR ASSEMBLIES, SEE "GUARDRAIL ANCHORAGE DETAILS FOR METAL RAILS" SHEET.

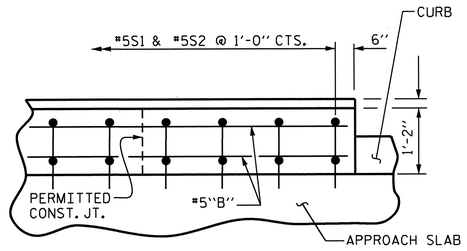

PLAN OF PARAPET

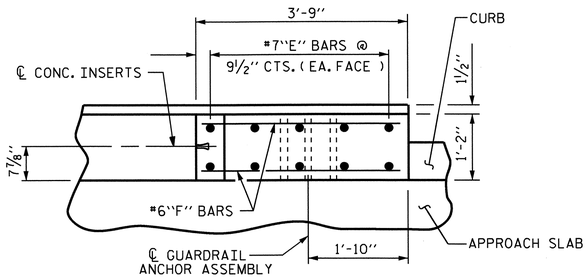

PLAN OF END POST

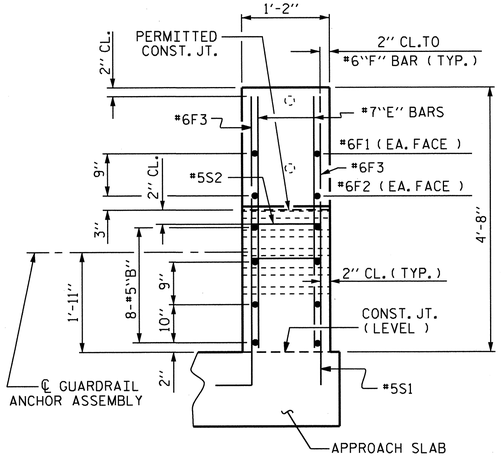

END VIEW

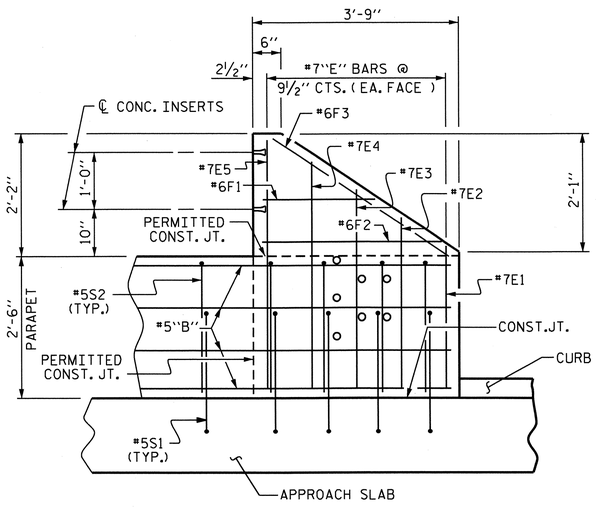

ELEVATION

PARAPET AND END POST FOR TWO BAR RAIL

BAR TYPES

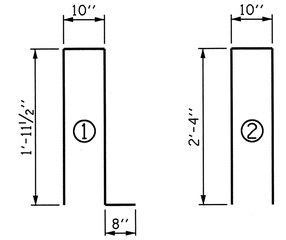

ALL BAR DIMENSIONS ARE OUT TO OUT.

BILL OF MATERIAL

PARAPET AND END POSTS

BAR	NO.	SIZE	TYPE	LENGTH	WEIGHT
✳B1	32	#5	STR	9'-8"	323
✳B2	96	#5	STR	28'-5"	2845
✳B3	192	#5	STR	28'-7"	5724
✳B4	688	#5	STR	23'-4"	16744
✳B5	16	#5	STR	22'-3"	371
✳E1	8	#7	STR	2'-6"	41
✳E2	8	#7	STR	3'-0"	49
✳E3	8	#7	STR	3'-6"	57
✳E4	8	#7	STR	4'-0"	65
✳E5	8	#7	STR	4'-4"	71
✳F1	8	#6	STR	1'-10"	22
✳F2	8	#6	STR	3'-0"	36
✳F3	8	#6	STR	3'-6"	42
✳S1	3176	#5	1	5'-5"	17943
✳S2	3176	#5	2	5'-6"	18219

✳ EPOXY COATED REINFORCING STEEL	LBS.	62,552
CLASS AA CONCRETE	C.Y.	343.9
1'-2" X 2'-6" CONCRETE PARAPET	L.F.	3176.00

PROJECT NO. B-4712

BLADEN COUNTY

STATION: 39+15.00 -L-

SHEET 3 OF 3

STATE OF NORTH CAROLINA
DEPARTMENT OF TRANSPORTATION
RALEIGH

SUPERSTRUCTURE

CONCRETE PARAPET AND END POST DETAILS

REVISIONS						SHEET NO.
NO.	BY:	DATE:	NO.	BY:	DATE:	S-44
1			3			TOTAL SHEETS
2			4			108

NORTH CAROLINA PROFESSIONAL SEAL 21638 ENGINEER LAURA E. SUTTON 11/03/13

DRAWN BY : MIKE BRITT DATE : 9-29-11
CHECKED BY : S.B. WILLIAMS DATE : 11/2011

08-NOV-2012 13:05
R:\structures\Plans\str01\B4712_SD_2MR_01.dgn

STR. #1

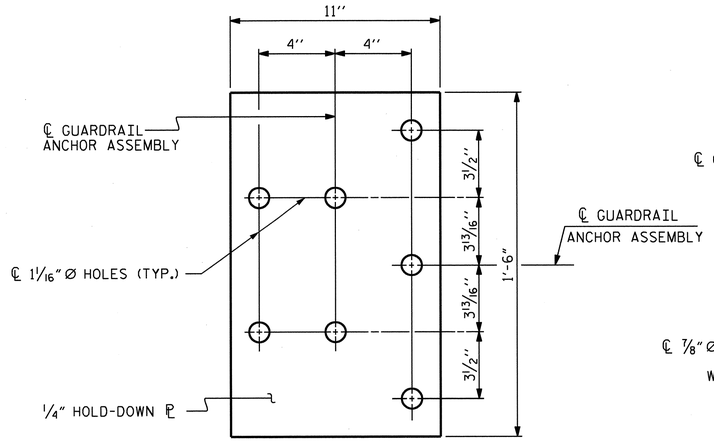

PLAN

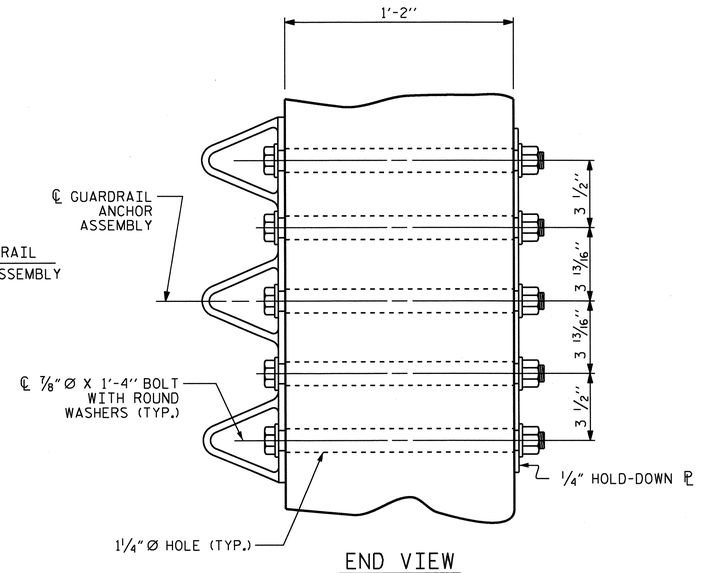

END VIEW

GUARDRAIL ANCHOR ASSEMBLY DETAILS

NOTES

THE GUARDRAIL ANCHOR ASSEMBLY SHALL CONSIST OF A 1/4'' HOLD DOWN PLATE AND 7 - 7/8'' Ø BOLTS WITH NUTS AND WASHERS.

THE HOLD-DOWN PLATE SHALL CONFORM TO AASHTO M270 GRADE 36. AFTER FABRICATION, THE HOLD-DOWN PLATE SHALL BE HOT-DIP GALVANIZED IN ACCORDANCE WITH AASHTO M111.

BOLTS SHALL CONFORM TO THE REQUIREMENTS OF ASTM A307 AND NUTS SHALL CONFORM TO THE REQUIREMENTS OF AASHTO M291. BOLTS, NUTS AND WASHERS SHALL BE GALVANIZED. AT THE CONTRACTOR'S OPTION, STAINLESS STEEL BOLTS, NUTS AND WASHERS MAY BE USED AS AN ALTERNATE FOR THE 7/8'' Ø GALVANIZED BOLTS, NUTS AND WASHERS. THEY SHALL CONFORM TO OR EXCEED THE MECHANICAL REQUIREMENTS OF ASTM A307. THE USE OF THIS ALTERNATE SHALL BE APPROVED BY THE ENGINEER.

THE GUARDRAIL ANCHOR ASSEMBLY IS REQUIRED AT ALL POINTS WHERE APPROACH GUARDRAIL IS TO BE ATTACHED TO THE END OF THE PARAPET. FOR POINTS OF ATTACHMENT, SEE SKETCH.

AFTER INSTALLATION, THE EXPOSED THREAD OF THE BOLT SHALL BE BURRED WITH A SHARP POINTED TOOL.

THE COST OF THE GUARDRAIL ANCHOR ASSEMBLIES WITH BOLTS, NUTS AND WASHERS COMPLETE IN PLACE, SHALL BE INCLUDED IN THE VARIOUS PAY ITEMS.

THE VERTICAL REINFORCING BARS MAY BE SHIFTED SLIGHTLY IN THE END POST TO CLEAR ASSEMBLY BOLTS.

THE 1 1/4'' Ø HOLES SHALL BE FORMED OR DRILLED WITH A CORE BIT. IMPACT TOOLS WILL NOT BE PERMITTED. ANY CONCRETE DAMAGED BY THIS WORK SHALL BE REPAIRED TO THE SATISFACTION OF THE ENGINEER.

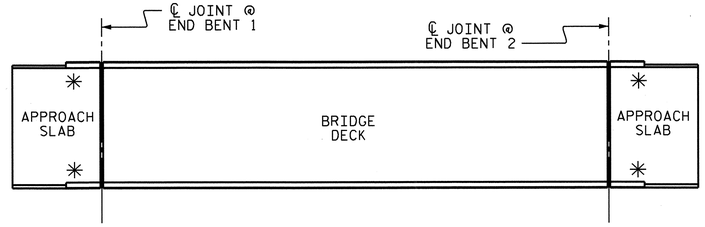

SKETCH SHOWING POINTS OF ATTACHMENT

✳ LOCATION OF GUARDRAIL ATTACHMENT

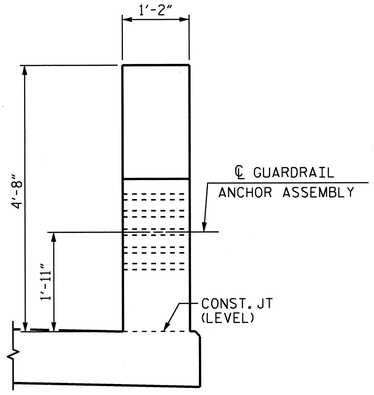

END VIEW
(TWO BAR METAL RAIL)

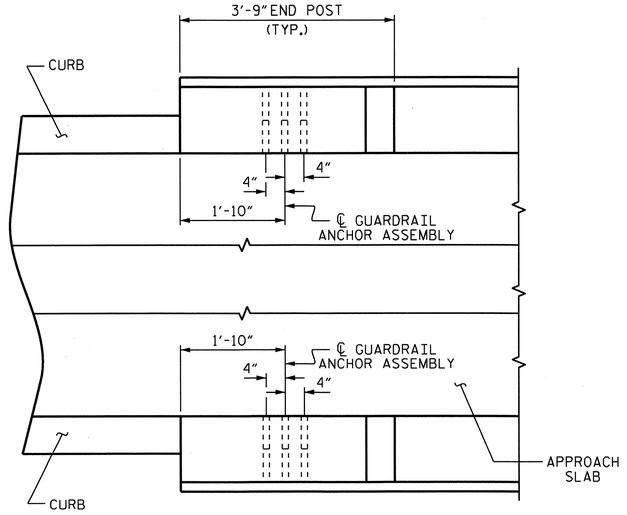

PLAN

LOCATION OF GUARDRAIL ANCHOR AT END POST

PROJECT NO. B-4712
BLADEN COUNTY
STATION: 39+15.00 -L-

STATE OF NORTH CAROLINA
DEPARTMENT OF TRANSPORTATION
RALEIGH
STANDARD

GUARDRAIL ANCHORAGE DETAILS FOR METAL RAILS

REVISIONS						SHEET NO.
NO.	BY:	DATE:	NO.	BY:	DATE:	S-45
1			3			TOTAL SHEETS
2			4			108

NORTH CAROLINA PROFESSIONAL SEAL 21638 ENGINEER LAURA E. SUTTON 1/03/13

ASSEMBLED BY : MIKE BRITT	DATE : 10-4-11		
CHECKED BY : S.B. WILLIAMS	DATE : 11/2011		
DRAWN BY : MAA 5/10	ADDED 5/6/10		
CHECKED BY : GM 5/10	REV. 10/1/11	MAA/GM	
	REV. 12/5/11	MAA/GM	

08-NOV-2012 13:05
R:\Structures\Plans\str01\B4712_SD_GR_01.dgn

STR. #1 STD. NO. GRA3

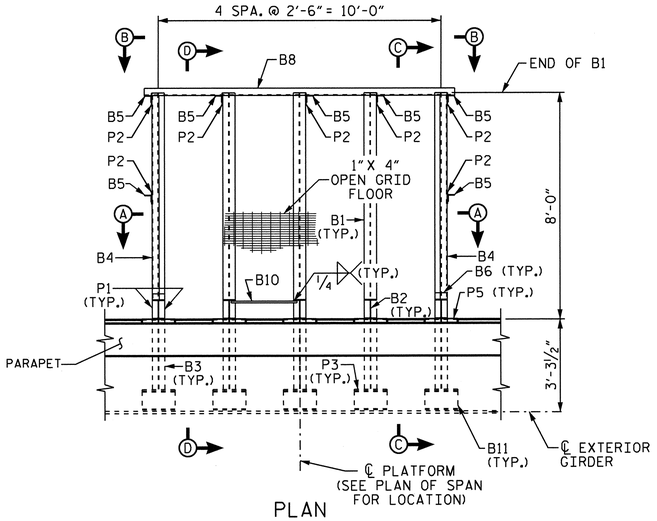

PLAN

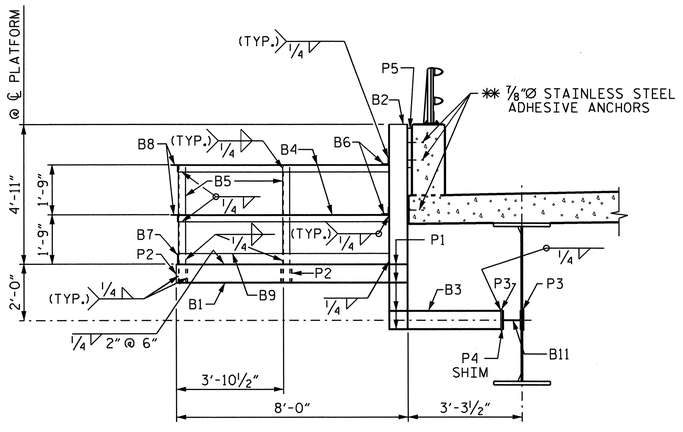

SECTION C-C

NOTES

FOR SOLAR ARRAY SUPPORT PLATFORM, SEE SPECIAL PROVISIONS.

ALL STRUCTURAL STEEL SHALL BE AASHTO M270 GRADE 50.

ALL FABRICATION SHALL CONFORM TO THE APPLICABLE SECTION OF THE STANDARD SPECIFICATIONS.

BAND ALL EDGES OF OPEN GRID FLOOR.

ALL FIELD CONNECTIONS TO BE ⅞"Ø HIGH STRENGTH BOLTS, UNLESS OTHERWISE NOTED, AND SHALL BE STAINLESS STEEL.

ADHESIVE ANCHOR SYSTEM SHALL HAVE A MINIMUM PULLOUT STRENGTH OF 50% OF THE YIELD LOAD. A MINIMUM OF EIGHT ANCHORS SHALL BE TESTED. IF ANY ANCHOR FAILS THE CONTRACTOR SHALL, AT HIS EXPENSE, TEST ALL ANCHORS UNLESS DIRECTED OTHERWISE BY THE ENGINEER.

✱✱ THE CONTRACTOR SHALL PROVIDE ANCHOR BOLTS OF SUFFICIENT LENGTH TO INCLUDE ALL PLATE THICKNESSES PLUS MEET THE MINIMUM EMBEDMENT DEPTH REQUIRED BY THE ADHESIVE MANUFACTURER.

OPEN GRID FLOOR SHALL BE WELDED SECURELY TO EACH HORIZONTAL FLOOR MEMBER.

THE ENTIRE COST FOR THE LABOR AND MATERIALS NECESSARY TO FABRICATE AND INSTALL SOLAR ARRAY SUPPORT PLATFORM SHALL BE INCLUDED IN THE LUMP SUM PRICE BID FOR THE "SOLAR ARRAY SUPPORT PLATFORM".

ALL STRUCTURAL MEMBERS, OPEN GRID FLOOR, BOLTS, NUTS, AND WASHERS SHALL BE GALVANIZED IN ACCORDANCE WITH THE STANDARD SPECIFICATIONS.

COMPLETELY SEAL ALL EDGES OF TIGHTLY CONTACTING SURFACES BY WELDING BEFORE GALVANIZING.

BILL OF MATERIAL

ITEM	NUMBER	DESCRIPTION
B1	5	W8×18
B2	5	W8×18
B3	5	W8×18
B4	4	L3×3×¼
B5	7	L3×3×¼
B6	4	L3×3×¼
B7	1	ℙ ¼×5
B8	2	L3×3×¼
B9	2	ℙ ¼×5
B10	5	¾"Ø RUNG
B11	5	W8×31
P1	40	ℙ 5/16×2½×7½
P2	7	ℙ ¼×5×8
P3	10	ℙ ½×9×14
P4	AS REQ'D	ℙ 3/16×8×14
P5	5	ℙ 1¾"×14×15

1"×4" OPEN GRID FLOOR WITH 3/16"×¾" BRG. BARS

⅞"Ø STAINLESS STEEL ADHESIVE ANCHORS (30 REQ'D.)

⅞"Ø H.S. BOLT WITH WASHER (20 REQ'D.)

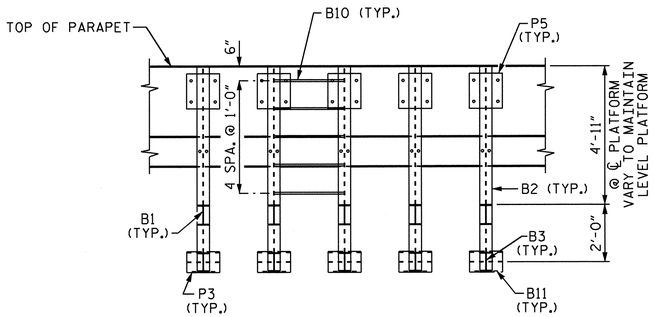

SECTION A-A

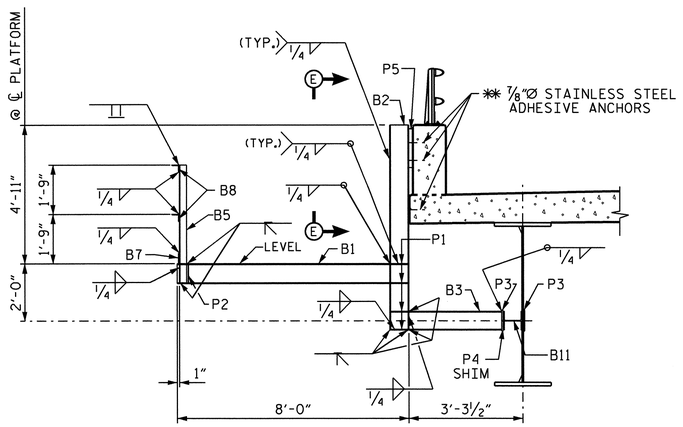

SECTION D-D

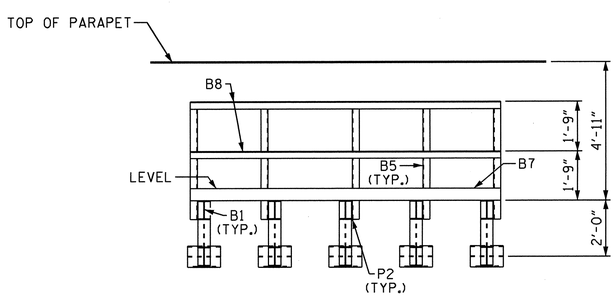

VIEW B-B

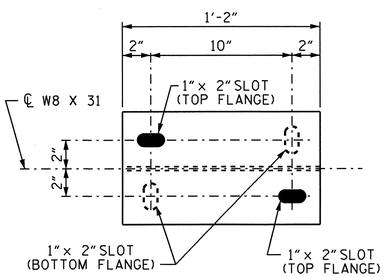

ELEVATION

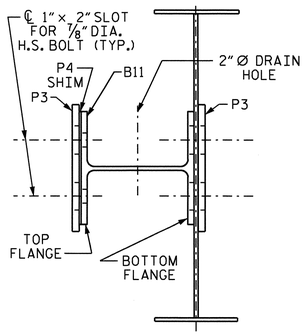

END VIEW

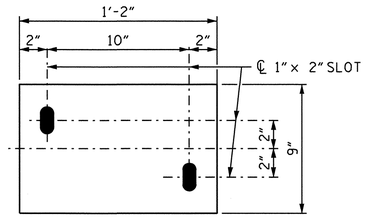

PLATE P3 DETAIL

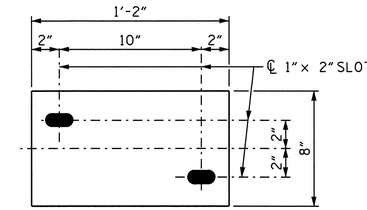

PLATE P4 SHIM DETAIL

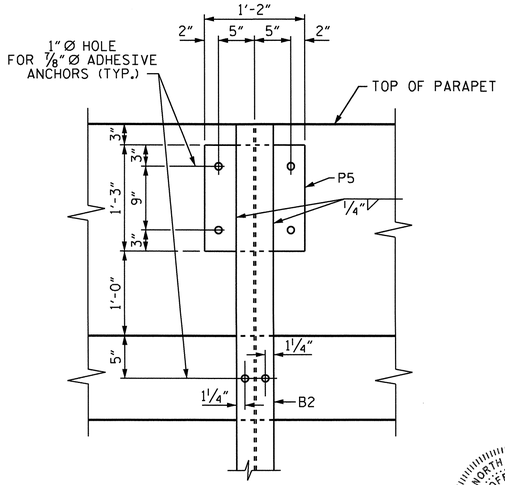

VIEW E-E

B11 DETAIL

PROJECT NO. B-4712

BLADEN COUNTY

STATION: 39+15.00 -L-

STATE OF NORTH CAROLINA
DEPARTMENT OF TRANSPORTATION
RALEIGH

SUPERSTRUCTURE

SOLAR ARRAY SUPPORT PLATFORM

REVISIONS						SHEET NO.
NO.	BY:	DATE:	NO.	BY:	DATE:	S-46
1			3			TOTAL SHEETS
2			4			108

NORTH CAROLINA PROFESSIONAL SEAL 21638 ENGINEER LAURA E. SUTTON 11/08/13

DRAWN BY : J.D. HAWK DATE : 4/12
CHECKED BY : D.R. SMITH DATE : 10/12

03-JAN-2013 11:48
R:\Structures\Plans\str01\B4712_SD_UT_01.dgn

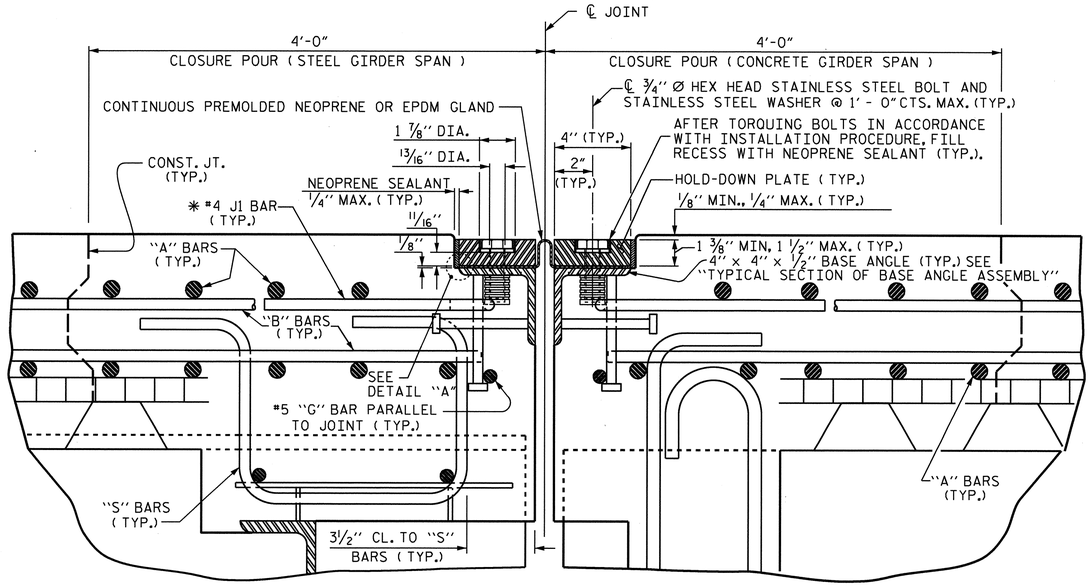

EXPANSION JOINT DETAILS

SECTION NORMAL TO JOINT
(JOINT @ BENT 3 SHOWN, ALL OTHERS SIMILAR)
(CLOSURE POUR NOT REQUIRED ON APPROACH SLABS)

* THE QUANTITY OF #4 J1 BARS ON THE BILL OF MATERIAL IS BASED ON 1'-0" CENTERS. J1 BARS SHALL BE PLACED AT EACH VERTICAL STUD ANCHOR BOLT. IN THE EVENT THAT THE NUMBER OF VERTICAL STUD ANCHORS EXCEEDS THE NUMBER OF J1 BARS SPECIFIED, ADDITIONAL J1 BARS WILL NOT BE REQUIRED.

MOVEMENT AND SETTING AT JOINT					
LOCATION	SKEW ANGLE	TOTAL MOVEMENT (ALONG ℄ RDWY)	PERPENDICULAR JOINT OPENING AT 45° F	PERPENDICULAR JOINT OPENING AT 60° F	PERPENDICULAR JOINT OPENING AT 90° F
END BENT 1	90°-00'-00"	2 1/16"	2 5/16"	2"	1 7/16"
BENT 3	90°-00'-00"	2 1/16"	2 5/16"	2"	1 7/16"
BENT 4	90°-00'-00"	1 9/16"	2 1/8"	1 13/16"	1 1/4"
BENT 6	90°-00'-00"	1 9/16"	2 1/8"	1 13/16"	1 1/4"
BENT 8	90°-00'-00"	1 9/16"	2 1/8"	1 13/16"	1 1/4"
BENT 10	90°-00'-00"	1 9/16"	2 1/8"	1 13/16"	1 1/4"
BENT 12	90°-00'-00"	1 9/16"	2 1/8"	1 13/16"	1 1/4"
END BENT 2	90°-00'-00"	13/16"	1 9/16"	1 7/16"	1 1/8"

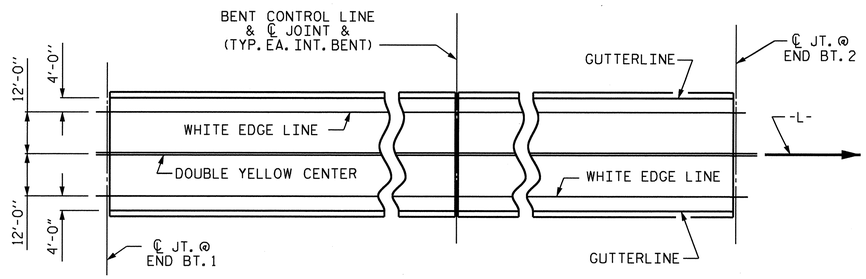

PAVEMENT MARKING ALIGNMENT SKETCH

INSTALLATION PROCEDURE

1. A TEMPLATE OR OTHER SUITABLE DEVICE SHALL BE USED TO FORM THE TOP OF THE EXPANSION JOINT SEAL BLOCKOUT TO THE PROPER DEPTH AND WIDTH. THE TEMPLATE SHALL BE 4 1/8" TO 4 1/4" WIDE AND OF SUCH THICKNESS AS TO PROVIDE FOR CORRECT FINAL ELEVATION OF TOP OF HOLD-DOWN PLATES. THE TEMPLATE SHALL BE ATTACHED TO THE BASE ANGLE ASSEMBLY WITH THE 3/4" Ø HEX HEAD BOLTS PROVIDED FOR THE HOLD-DOWN PLATES. A 1" Ø HOLE SHALL BE PROVIDED IN THE TEMPLATE CENTERED OVER EACH WEEP HOLE IN THE 4" X 4" X 1/2" BASE ANGLE. OTHER METHODS OF INSURING DRAINAGE THROUGH WEEP HOLES MAY BE EMPLOYED SUBJECT TO ENGINEER'S APPROVAL.
2. AFTER THE CONCRETE HAS BEEN CAST ON BOTH SIDES OF THE JOINT, REMOVE THE TEMPLATE. THOROUGHLY CLEAN THE BOLT HOLES AND THE ANGLE PLATE. REMOVE ANY EXCESS CONCRETE THAT COMES OUT OF THE WEEP HOLES. ANY DAMAGED STEEL SHALL BE COATED WITH A MINIMUM THICKNESS OF 4 DRY MILS OF ZINC-RICH PAINT IN ACCORDANCE WITH THE STANDARD SPECIFICATIONS.
3. LAY THE GLAND ON THE BASE ANGLE AND FIELD MARK THE GLAND FOR THE BOLT HOLES. HOLES IN THE GLAND SHALL BE PUNCHED 7/8" IN DIAMETER WITH A HAND PUNCH.
4. IN ORDER TO CHECK FOR PROPER ALIGNMENT, PLACE THE GLAND AND HOLD-DOWN PLATES ON THE BASE ANGLE. DO NOT APPLY NEOPRENE SEALANT. BOLT THE HOLD-DOWN PLATES TO THE BASE ANGLE BUT DO NOT TIGHTEN. THE ENGINEER SHALL INSPECT THE JOINT SEAL DEVICE FOR PROPER ALIGNMENT.
5. AFTER INSPECTION, REMOVE THE HOLD-DOWN PLATES AND GLAND. APPLY NEOPRENE SEALANT TO THE BASE ANGLE IN ACCORDANCE WITH THE "INSTALLATION SKETCH". PLACE GLAND AND HOLD-DOWN PLATES ON THE BASE ANGLE. BOLT THE HOLD-DOWN PLATES TO THE BASE ANGLE ASSEMBLY AND TORQUE THE BOLTS TO 88 FT-LBS WITH A TORQUE WRENCH. THE TORQUE WRENCH SHALL BE CALIBRATED IN ACCORDANCE WITH SECTION 440-10 (D) OF THE STANDARD SPECIFICATIONS. CHECK THE TORQUE AFTER THREE (3) HOURS AND, IF NECESSARY, RETIGHTEN TO 88 FT-LBS. A FINAL CHECK SHALL BE MADE AT SEVEN (7) DAYS. TORQUE SHALL NOT BE LESS THAN 80 FT-LBS AFTER SEVEN (7) DAYS.
6. AFTER PROPER TORQUING, CLEAN THE BOLT HOLE RECESSES AND THE RECESS BETWEEN THE JOINT SEAL DEVICE AND CONCRETE, COMPLETELY FILL THESE RECESSES WITH NEOPRENE SEALANT.

GENERAL NOTES

1. FOR EXPANSION JOINT SEALS, SEE SPECIAL PROVISIONS.
2. ALL PLATES AND ANGLES SHALL CONFORM TO AASHTO M270 GRADE 36 STEEL OR APPROVED EQUAL. ALL HOLD-DOWN BOLTS SHALL CONFORM TO ASTM F593 ALLOY 304 STAINLESS STEEL AND WASHERS SHALL CONFORM TO ASTM F844 EXCEPT THEY SHALL BE MADE FROM ALLOY 304 STAINLESS STEEL. ALL STUD ANCHORS SHALL CONFORM TO AASHTO M169, GRADES 1010 THRU 1020 OR APPROVED EQUAL. ALL CONCRETE INSERTS SHALL BE CLOSED END AND SHALL CONFORM TO AASHTO M169, GRADE 12L14. TENSILE CAPACITY SHALL BE 3000 LBS. MIN.
3. A PREMOLDED CORRUGATED OR NON-CORRUGATED GLAND SHALL BE USED FOR JOINTS SKEWED BETWEEN 50° THRU 130°. FOR JOINTS SKEWED LESS THAN 50° OR MORE THAN 130°, ONLY A CORRUGATED GLAND SHALL BE USED.
4. CLOSED END FERRULES AND STUD ANCHORS SHALL BE SHOP WELDED AND ALL HOLES SHALL BE SHOP DRILLED AS SHOWN ON PLANS. STUD ANCHORS SHALL BE ELECTRIC ARC END WELDED WITH COMPLETE FUSION.
5. SURFACES COMING IN CONTACT WITH NEOPRENE SHALL BE GROUND SMOOTH PRIOR TO METALLIZING.
6. UPON COMPLETION OF SHOP FABRICATION, THE HOLD DOWN PLATE AND BASE ANGLE ASSEMBLY, AS SHOWN IN THE " TYPICAL SECTION OF BASE ANGLE ASSEMBLY", SHALL BE METALLIZED. SEE SPECIAL PROVISION FOR THERMAL SPRAYED COATINGS (METALLIZATION).
7. BASE ANGLE ASSEMBLY SHALL BE CONTINUOUS FOR THE LENGTH OF THE JOINT. AT CROWN BREAKS, THE ENDS OF THE BASE ANGLE ASSEMBLY SHALL BE CUT PARALLEL TO THE BRIDGE CENTERLINE FOR SKEWS LESS THAN 80° AND GREATER THAN 100°. FINISHED WELD SHALL BE GROUND SMOOTH AND COATED WITH A MINIMUM THICKNESS OF 4 DRY MILS OF ZINC-RICH PAINT IN ACCORDANCE WITH THE STANDARD SPECIFICATIONS.
8. FIELD SPLICES OF HOLD-DOWN PLATES SHALL BE KEPT TO A MINIMUM. CONTRACTOR SHALL FURNISH DETAILED PLANS SHOWING PROPOSED SPLICE LOCATIONS FOR APPROVAL. HOLD-DOWN PLATES SHALL NOT EXCEED 20' LENGTHS UNLESS APPROVED BY THE ENGINEER.
9. NO ALTERNATE JOINT DETAILS SHALL BE PERMITTED IN LIEU OF THOSE SHOWN ON THESE PLANS.
10. THE CONTRACTOR MAY, AT HIS OPTION, USE ADHESIVELY ANCHORED ANCHOR BOLTS IN PLACE OF CONCRETE INSERTS FOR COVER PLATES. THE YIELD LOAD OF THE 3/4" Ø BOLT IS 10 KIPS. FIELD TESTING OF THE ADHESIVE BONDING SYSTEM IS NOT REQUIRED.

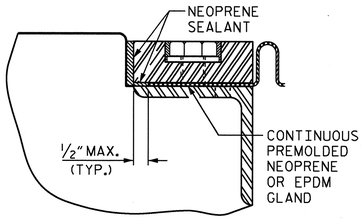

DETAIL "A"

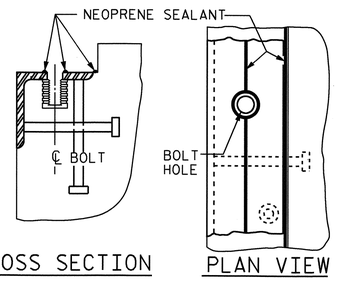

CROSS SECTION PLAN VIEW

INSTALLATION SKETCH

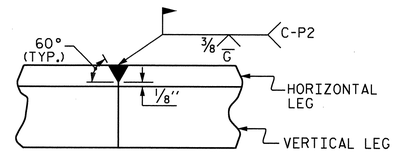

DETAIL- FIELD WELD SPLICE OF BASE ANGLE

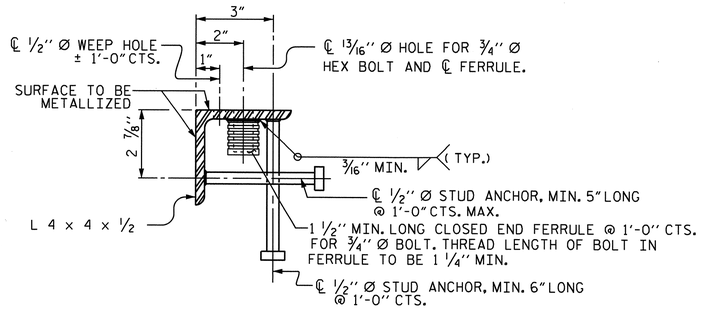

TYPICAL SECTION OF BASE ANGLE ASSEMBLY

PROJECT NO. B-4712
BLADEN COUNTY
STATION: 39+15.00 -L-

SHEET 1 OF 2

STATE OF NORTH CAROLINA
DEPARTMENT OF TRANSPORTATION
RALEIGH

SUPERSTRUCTURE

EXPANSION JOINT SEAL DETAILS

REVISIONS						SHEET NO.
NO.	BY:	DATE:	NO.	BY:	DATE:	S-47
1			3			TOTAL SHEETS
2			4			108

STR. #1

NORTH CAROLINA PROFESSIONAL SEAL 21638 ENGINEER LAURA E. SUTTON
1/03/13

DRAWN BY : MIKE BRITT DATE : 9-20-11
CHECKED BY : S.B. WILLIAMS DATE : 10/2011

08-NOV-2012 13:05
R:\structures\Plans\str01\B4712_SD_J5_01.dgn

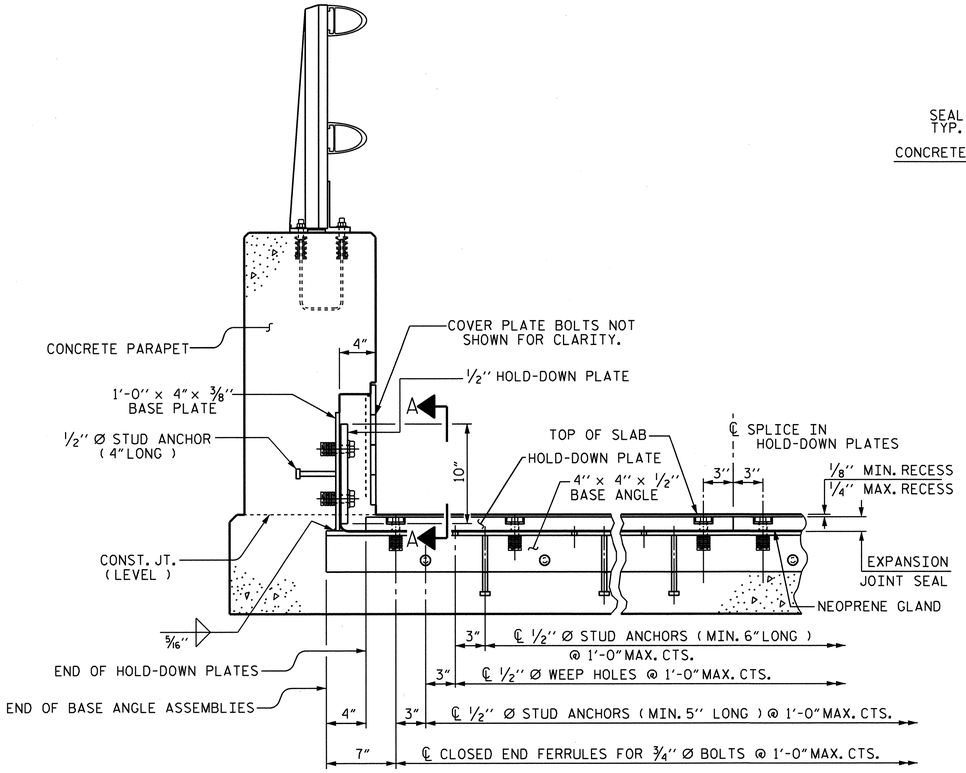

SECTION THRU RAIL NORMAL TO JOINT

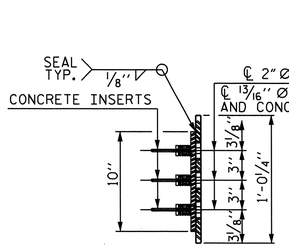

END VIEW

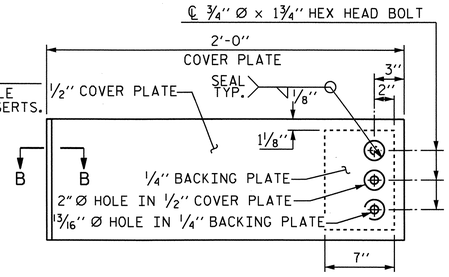

TYPE II - ELEVATION VIEW

COVER PLATE DETAILS

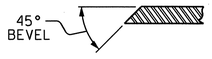

SECTION B - B

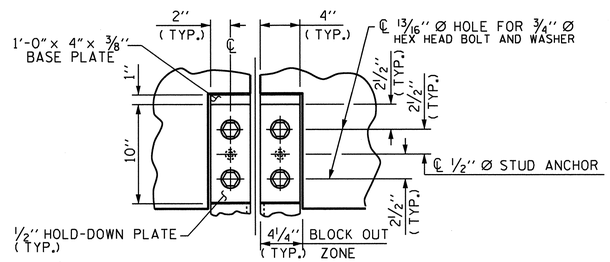

SECTION A - A

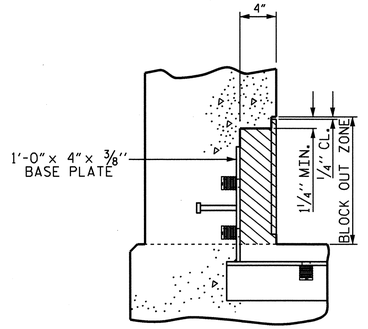

BLOCK OUT DETAIL

SEE "SECTION A-A" FOR OTHER DETAILS.

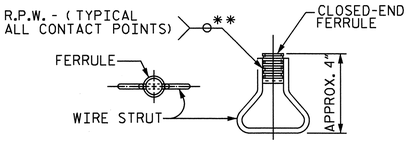

PLAN ELEVATION

CONCRETE INSERT

** EACH WELDED ATTACHMENT OF WIRE TO FERRULE SHALL DEVELOP THE TENSILE STRENGTH OF THE WIRE.

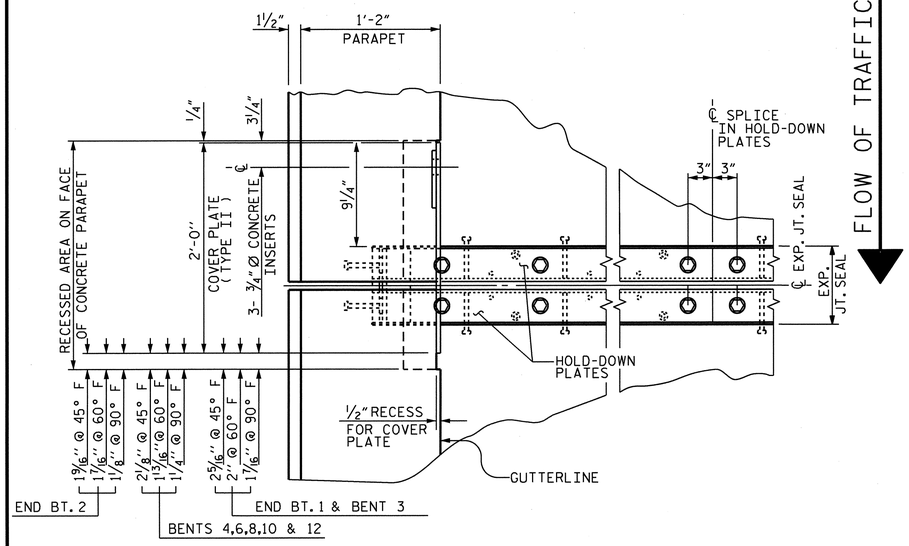

PLAN OF EXPANSION JOINT SEAL - LEFT SIDE

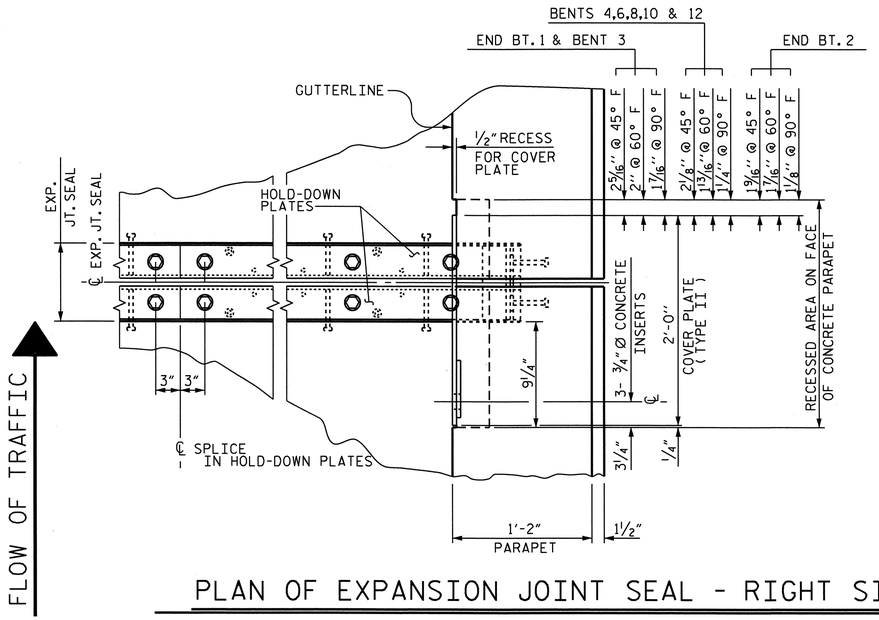

PLAN OF EXPANSION JOINT SEAL - RIGHT SIDE

PROJECT NO. B-4712

BLADEN COUNTY

STATION: 39+15.00 -L-

SHEET 2 OF 2

STATE OF NORTH CAROLINA
DEPARTMENT OF TRANSPORTATION
RALEIGH

SUPERSTRUCTURE

EXPANSION JOINT SEAL DETAILS FOR CONCRETE PARAPET

REVISIONS						SHEET NO.
NO.	BY:	DATE:	NO.	BY:	DATE:	S-48
1			3			TOTAL SHEETS
2			4			108

NORTH CAROLINA PROFESSIONAL SEAL 21628 ENGINEER LAURA E. SUTTON 1/23/13

DRAWN BY : MIKE BRITT DATE : 9-20-11
CHECKED BY : S.B. WILLIAMS DATE : 10/2011

08-NOV-2012 13:05
R:\structures\Plans\str01\B4712_SD_JS_01.dgn

STR. #1

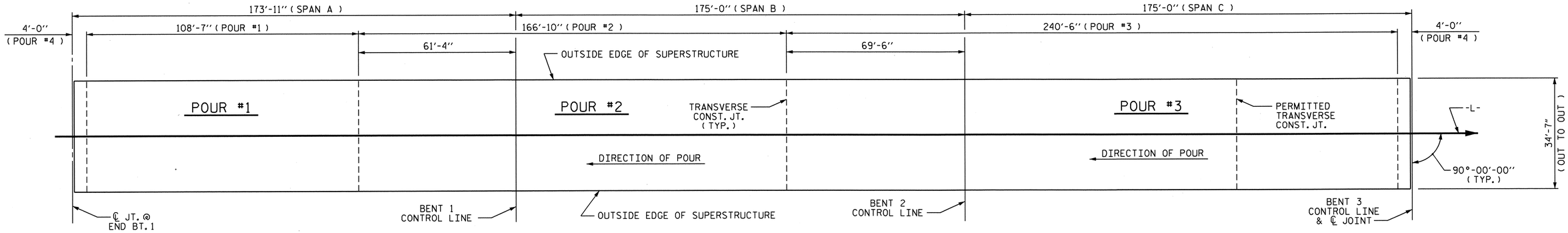

SPANS A-B-C

CLASS AA CONCRETE BREAKDOWN	
POUR #1 (SPANS A-B-C)	117.0 CU. YDS.
POUR #2 (SPANS A-B-C)	179.8 CU. YDS.
POUR #3 (SPANS A-B-C)	259.1 CU. YDS.
POUR #4 (SPANS A-B-C)	10.2 CU. YDS.
TOTAL	566.1 CU. YDS.
POUR #1 (SPAN D)	101.9 CU. YDS.
POUR #2 (SPAN D)	8.6 CU. YDS.
TOTAL	110.5 CU. YDS.
POUR #1 (SPAN E-F)	97.7 CU. YDS.
POUR #2 (SPAN E-F)	122.1 CU. YDS.
POUR #3 (SPAN E-F)	8.6 CU. YDS.
TOTAL	228.4 CU. YDS.
POUR #1 (SPAN G-H)	97.7 CU. YDS.
POUR #2 (SPAN G-H)	122.1 CU. YDS.
POUR #3 (SPAN G-H)	8.6 CU. YDS.
TOTAL	228.4 CU. YDS.
POUR #1 (SPAN I-J)	97.7 CU. YDS.
POUR #2 (SPAN I-J)	122.1 CU. YDS.
POUR #3 (SPAN I-J)	8.6 CU. YDS.
TOTAL	228.4 CU. YDS.
POUR #1 (SPAN K-L)	97.7 CU. YDS.
POUR #2 (SPAN K-L)	122.1 CU. YDS.
POUR #3 (SPAN K-L)	8.6 CU. YDS.
TOTAL	228.4 CU. YDS.
POUR #1 (SPAN M-N)	97.7 CU. YDS.
POUR #2 (SPAN M-N)	121.0 CU. YDS.
POUR #3 (SPAN M-N)	8.6 CU. YDS.
TOTAL	227.3 CU. YDS.

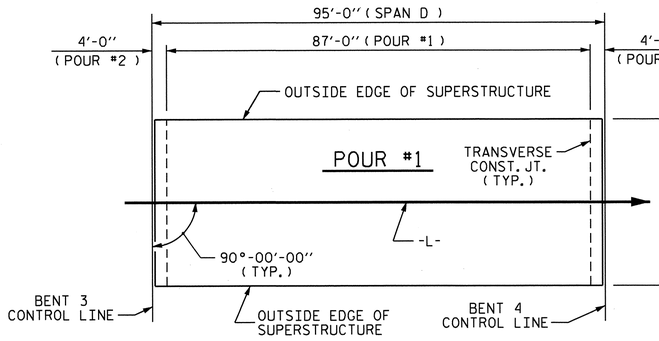

SPAN D

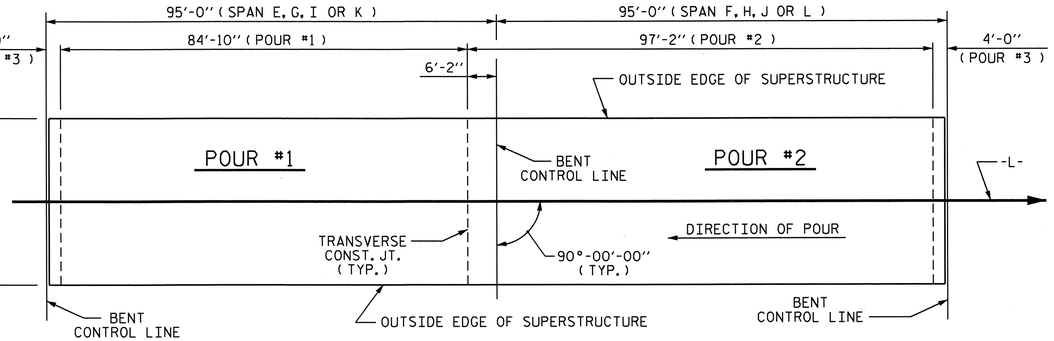

SPAN E-F, G-H, I-J OR K-L

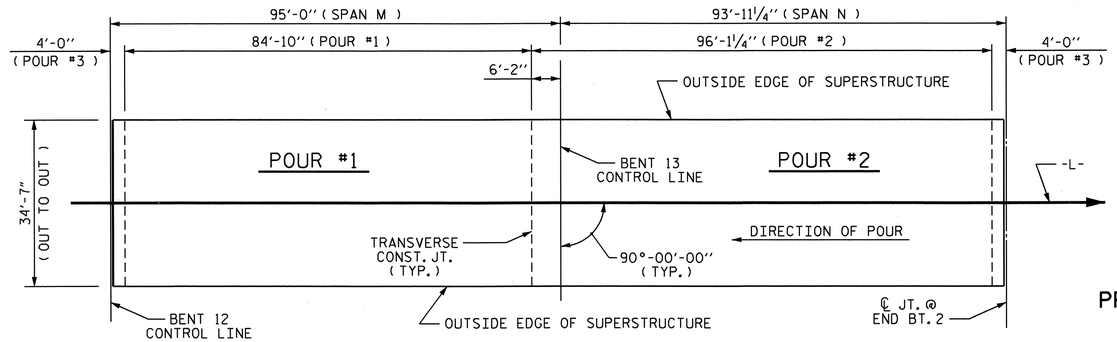

SPAN M-N

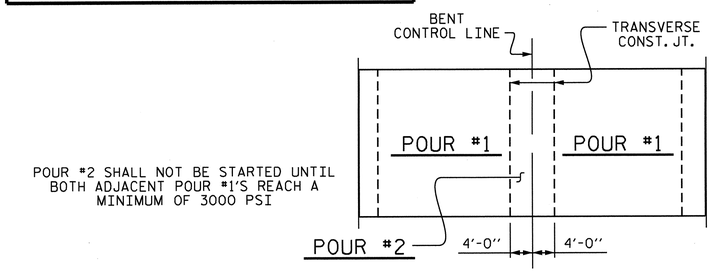

POUR #2 SHALL NOT BE STARTED UNTIL BOTH ADJACENT POUR #1'S REACH A MINIMUM OF 3000 PSI

OPTIONAL DECK POUR DETAIL - SPANS E THROUGH N

NOTE: MAINTAIN 4'-0" POUR #3 AT EACH END OF CONTINUOUS SPAN UNITS

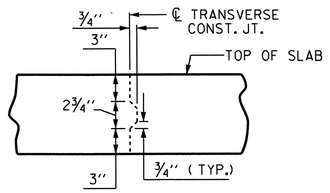

TRANSVERSE CONSTRUCTION JOINT DETAIL

NOTE: REINFORCING STEEL IN SLAB NOT SHOWN. LONGITUDINAL REINFORCING STEEL SHALL BE CONTINUOUS THROUGH JOINT.

PROJECT NO. B-4712

BLADEN COUNTY

STATION: 39+15.00 -L-

STATE OF NORTH CAROLINA
DEPARTMENT OF TRANSPORTATION
RALEIGH

SUPERSTRUCTURE

CONCRETE DECK POUR DETAILS

REVISIONS						SHEET NO.
NO.	BY:	DATE:	NO.	BY:	DATE:	S-49
1			3			TOTAL SHEETS
2			4			108

STR. #1

DRAWN BY : MIKE BRITT DATE : 10-4-11
CHECKED BY : J.P. ADAMS DATE : 1/2012

08-NOV-2012 13:05
R:\structures\Plans\str01\B4712_SD_BM_01.dgn

SPANS A-B-C

BAR	NO.	SIZE	TYPE	LENGTH	WEIGHT
✱ A1	966	#5	STR	34'-3"	34508
A2	966	#5	STR	34'-3"	34508
✱ B1	76	#4	STR	29'-5"	1493
✱ B2	110	#4	STR	26'-9"	1966
✱ B3	44	#4	STR	24'-6"	720
✱ B4	110	#4	STR	27'-0"	1984
✱ B5	258	#7	STR	42'-2"	22237
B6	380	#5	STR	54'-4"	21534
✱ G1	2	#5	STR	34'-3"	71
✱ J1	64	#4	6	1'-5"	61
✱ K1	8	#5	1	7'-5"	62
✱ K2	8	#5	2	8'-10"	74
✱ K3	12	#5	STR	8'-6"	106
✱ S1	42	#4	3	3'-8"	103
REINFORCING STEEL				LBS.	56,042
✱ EPOXY COATED REINFORCING STEEL				LBS.	63,385

SPAN D

BAR	NO.	SIZE	TYPE	LENGTH	WEIGHT
✱ A1	175	#5	STR	34'-3"	6251
A2	175	#5	STR	34'-3"	6251
✱ B7	104	#4	STR	25'-2"	1748
B8	82	#5	STR	48'-4"	4134
✱ J1	64	#4	6	1'-5"	61
✱ G1	2	#5	STR	34'-3"	71
✱ K4	8	#8	1	13'-1"	279
✱ K5	8	#8	2	20'-0"	427
✱ S2	48	#5	5	5'-11"	296
REINFORCING STEEL				LBS.	10,385
✱ EPOXY COATED REINFORCING STEEL				LBS.	9,133

SPANS E-F

BAR	NO.	SIZE	TYPE	LENGTH	WEIGHT
✱ A1	350	#5	STR	34'-3"	12503
A2	350	#5	STR	34'-3"	12503
✱ B9	28	#4	STR	28'-10"	539
✱ B10	132	#4	STR	22'-5"	1977
✱ B11	66	#7	STR	25'-10"	3485
✱ B12	21	#7	STR	28'-6"	1223
B13	164	#5	STR	49'-0"	8382
✱ J1	64	#4	6	1'-5"	61
✱ G1	2	#5	STR	34'-3"	71
✱ K4	8	#8	1	13'-1"	279
✱ K5	8	#8	2	20'-0"	427
K6	6	#4	STR	7'-4"	29
K7	18	#4	STR	7'-10"	94
K8	6	#4	STR	5'-9"	23
K9	5	#4	STR	28'-4"	95
✱ S2	48	#5	5	5'-11"	296
S3	90	#4	4	2'-9"	165
✱ U1	6	#4	2	13'-2"	53
✱ U2	18	#4	2	15'-2"	182
REINFORCING STEEL				LBS.	21,291
✱ EPOXY COATED REINFORCING STEEL				LBS.	21,096

SPANS G-H

BAR	NO.	SIZE	TYPE	LENGTH	WEIGHT
✱ A1	350	#5	STR	34'-3"	12503
A2	350	#5	STR	34'-3"	12503
✱ B9	28	#4	STR	28'-10"	539
✱ B10	132	#4	STR	22'-5"	1977
✱ B11	66	#7	STR	25'-10"	3485
✱ B12	21	#7	STR	28'-6"	1223
B13	164	#5	STR	49'-0"	8382
✱ J1	64	#4	6	1'-5"	61
✱ G1	2	#5	STR	34'-3"	71
✱ K4	8	#8	1	13'-1"	279
✱ K5	8	#8	2	20'-0"	427
K6	6	#4	STR	7'-4"	29
K7	18	#4	STR	7'-10"	94
K8	6	#4	STR	5'-9"	23
K9	5	#4	STR	28'-4"	95
✱ S2	48	#5	5	5'-11"	296
S3	90	#4	4	2'-9"	165
✱ U1	6	#4	2	13'-2"	53
✱ U2	18	#4	2	15'-2"	182
REINFORCING STEEL				LBS.	21,291
✱ EPOXY COATED REINFORCING STEEL				LBS.	21,096

BAR TYPES

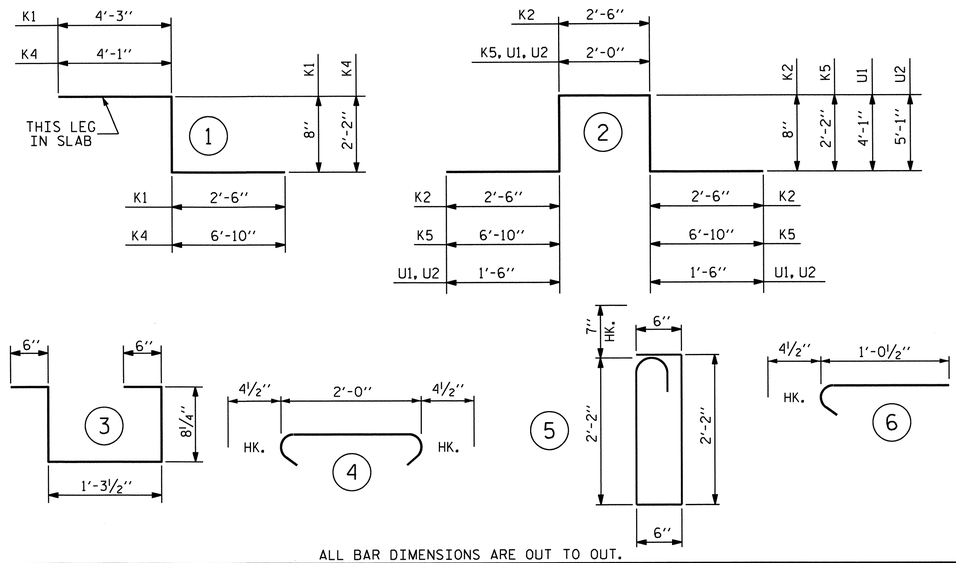

ALL BAR DIMENSIONS ARE OUT TO OUT.

SPANS I-J

BAR	NO.	SIZE	TYPE	LENGTH	WEIGHT
✱ A1	350	#5	STR	34'-3"	12503
A2	350	#5	STR	34'-3"	12503
✱ B9	28	#4	STR	28'-10"	539
✱ B10	132	#4	STR	22'-5"	1977
✱ B11	66	#7	STR	25'-10"	3485
✱ B12	21	#7	STR	28'-6"	1223
B13	164	#5	STR	49'-0"	8382
✱ J1	64	#4	6	1'-5"	61
✱ G1	2	#5	STR	34'-3"	71
✱ K4	8	#8	1	13'-1"	279
✱ K5	8	#8	2	20'-0"	427
K6	6	#4	STR	7'-4"	29
K7	18	#4	STR	7'-10"	94
K8	6	#4	STR	5'-9"	23
K9	5	#4	STR	28'-4"	95
✱ S2	48	#5	5	5'-11"	296
S3	90	#4	4	2'-9"	165
✱ U1	6	#4	2	13'-2"	53
✱ U2	18	#4	2	15'-2"	182
REINFORCING STEEL				LBS.	21,291
✱ EPOXY COATED REINFORCING STEEL				LBS.	21,096

SPANS K-L

BAR	NO.	SIZE	TYPE	LENGTH	WEIGHT
✱ A1	350	#5	STR	34'-3"	12503
A2	350	#5	STR	34'-3"	12503
✱ B9	28	#4	STR	28'-10"	539
✱ B10	132	#4	STR	22'-5"	1977
✱ B11	66	#7	STR	25'-10"	3485
✱ B12	21	#7	STR	28'-6"	1223
B13	164	#5	STR	49'-0"	8382
✱ J1	64	#4	6	1'-5"	61
✱ G1	2	#5	STR	34'-3"	71
✱ K4	8	#8	1	13'-1"	279
✱ K5	8	#8	2	20'-0"	427
K6	6	#4	STR	7'-4"	29
K7	18	#4	STR	7'-10"	94
K8	6	#4	STR	5'-9"	23
K9	5	#4	STR	28'-4"	95
✱ S2	48	#5	5	5'-11"	296
S3	90	#4	4	2'-9"	165
✱ U1	6	#4	2	13'-2"	53
✱ U2	18	#4	2	15'-2"	182
REINFORCING STEEL				LBS.	21,291
✱ EPOXY COATED REINFORCING STEEL				LBS.	21,096

SPANS M-N

BAR	NO.	SIZE	TYPE	LENGTH	WEIGHT
✱ A1	348	#5	STR	34'-3"	12432
A2	348	#5	STR	34'-3"	12432
✱ B10	66	#4	STR	22'-5"	988
✱ B11	66	#7	STR	25'-10"	3485
✱ B12	21	#7	STR	28'-6"	1223
✱ B14	28	#4	STR	28'-8"	536
✱ B15	66	#4	STR	22'-1"	974
B16	164	#5	STR	48'-9"	8339
✱ J1	64	#4	6	1'-5"	61
✱ G1	2	#5	STR	34'-3"	71
✱ K4	8	#8	1	13'-1"	279
✱ K5	8	#8	2	20'-0"	427
K6	6	#4	STR	7'-4"	29
K7	18	#4	STR	7'-10"	94
K8	6	#4	STR	5'-9"	23
K9	5	#4	STR	28'-4"	95
✱ S2	48	#5	5	5'-11"	296
S3	90	#4	4	2'-9"	165
✱ U1	6	#4	2	13'-2"	53
✱ U2	18	#4	2	15'-2"	182
REINFORCING STEEL				LBS.	21,177
✱ EPOXY COATED REINFORCING STEEL				LBS.	21,007

SUPERSTRUCTURE REINFORCING STEEL LENGTHS ARE BASED ON THE FOLLOWING MINIMUM SPLICE LENGTHS

BAR SIZE	SUPERSTRUCTURE EXCEPT APPROACH SLABS, PARAPET, AND BARRIER RAIL		APPROACH SLABS		PARAPET AND BARRIER RAIL
	EPOXY COATED	UNCOATED	EPOXY COATED	UNCOATED	
#4	2'-0"	1'-9"	2'-0"	1'-9"	2'-9"
#5	2'-6"	2'-2"	2'-6"	2'-2"	3'-5"
#6	3'-0"	2'-7"	3'-10"	2'-7"	4'-4"
#7	5'-3"	3'-6"			
#8	6'-10"	4'-7"			

SUPERSTRUCTURE BILL OF MATERIAL

	▲CLASS AA CONCRETE	REINFORCING STEEL	EPOXY COATED REINFORCING STEEL
	(CU.YDS.)	(LBS.)	(LBS.)
SPANS A-B-C	566.1	56,042	63,385
SPAN D	110.5	10,385	9,133
SPANS E-F	228.4	21,291	21,096
SPANS G-H	228.4	21,291	21,096
SPANS I-J	228.4	21,291	21,096
SPANS K-L	228.4	21,291	21,096
SPANS M-N	227.3	21,177	21,007
TOTALS✱✱	1817.5	172,768	177,909

✱✱ QUANTITIES FOR PARAPETS ARE NOT INCLUDED.

▲ FOR CONCRETE QUANTITY BREAKDOWNS, SEE "CONCRETE DECK POUR DETAILS" SHEET.

GROOVING BRIDGE FLOORS

APPROACH SLABS	802 SQ. FT.
BRIDGE DECK	45,234 SQ. FT.
TOTAL	46,036 SQ. FT.

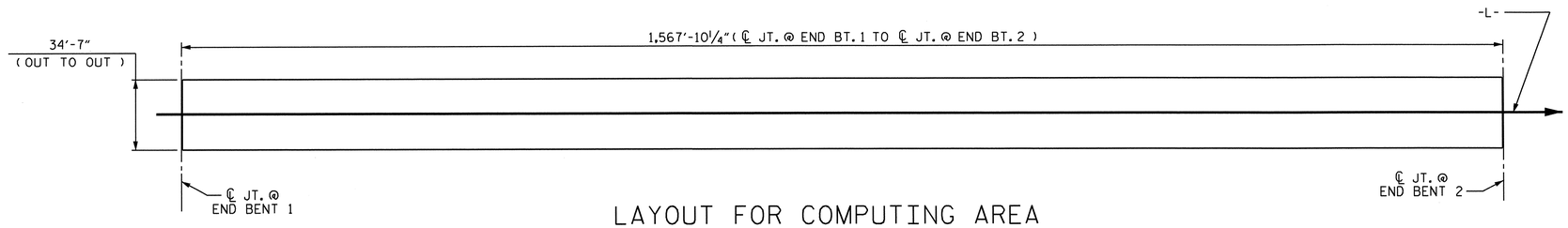

LAYOUT FOR COMPUTING AREA OF REINFORCED CONCRETE DECK SLAB (SQ. FT. = 54,222)

PROJECT NO. B-4712

BLADEN COUNTY

STATION: 39+15.00 -L-

STATE OF NORTH CAROLINA
DEPARTMENT OF TRANSPORTATION
RALEIGH

STANDARD

SUPERSTRUCTURE BILL OF MATERIAL

ASSEMBLED BY : MIKE BRITT	DATE : 10-11-11
CHECKED BY : S.B. WILLIAMS	DATE : 11/2011

DRAWN BY : JMB 5/87	REV. 8/16/99	RWW/LES
CHECKED BY : SJD 9/87	REV. 5/1/06	TLA/GM
	REV. 10/1/11	MAA/GM

REVISIONS						SHEET NO.
NO.	BY:	DATE:	NO.	BY:	DATE:	S-50
1			3			TOTAL SHEETS
2			4			108

NORTH CAROLINA PROFESSIONAL SEAL 21638 ENGINEER LAURA E. SUTTON 11/03/13

STR. #1

STD. NO. BOM1

03-JAN-2013 11:48
P:\Structures\Plans\str01\B4712_SD_BM_01.dgn

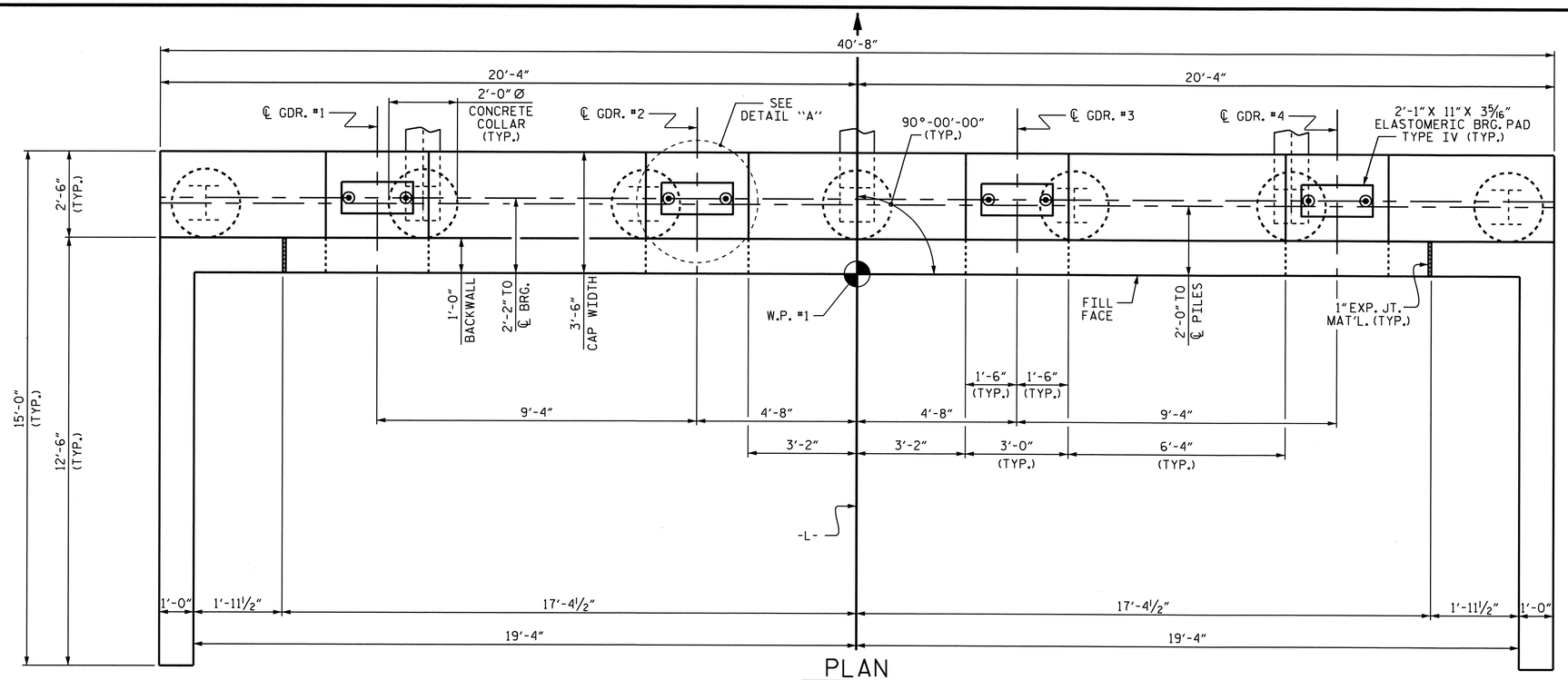

PLAN

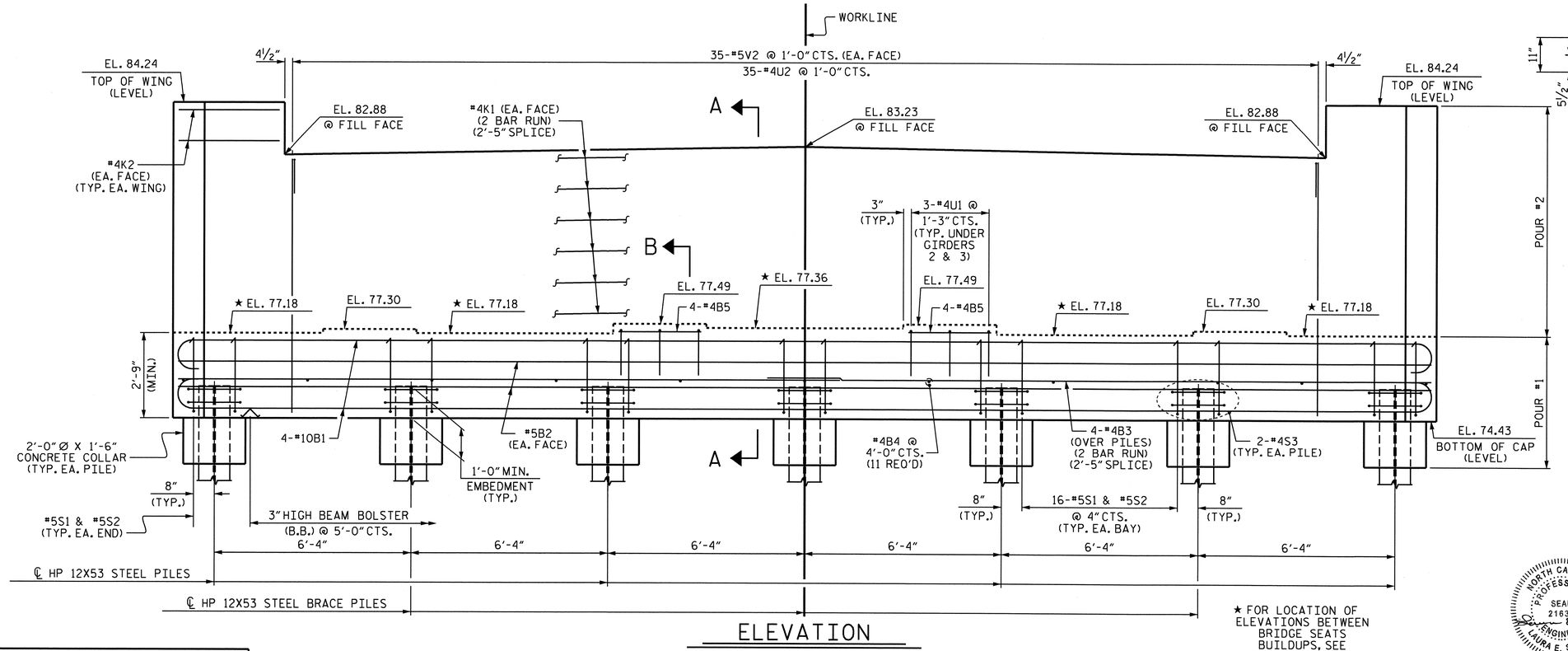

ELEVATION

★ FOR LOCATION OF ELEVATIONS BETWEEN BRIDGE SEATS BUILDUPS, SEE SECTION A-A ON SHEET 3 OF 3.

NOTES

STIRRUPS IN CAP MAY BE SHIFTED AS NECESSARY TO CLEAR ANCHOR BOLTS.

BACKWALL SHALL BE PLACED BEFORE APPLYING THE EPOXY PROTECTIVE COATING.

THE TOP SURFACE AREAS OF THE END BENT CAP SHALL BE CURED IN ACCORDANCE WITH THE STANDARD SPECIFICATIONS EXCEPT THE MEMBRANE CURING COMPOUND METHOD SHALL NOT BE USED.

THE TOP SURFACE OF THE CAP EXCEPT THE BRIDGE SEAT BUILDUPS SHALL BE SLOPED TRANSVERSELY FROM THE FILL FACE TO THE BACK FACE AT THE RATE OF 2%.

EPOXY COAT THE BENT CAP AFTER ADJUSTMENTS ARE MADE TO BEARINGS AND ANCHOR BOLTS ARE GROUTED.

INSTALL THE 4" DIA. DRAIN PIPE THROUGH THE WING WALL AS REQUIRED FOR REINFORCED BRIDGE APPROACH FILLS. SEE THE ROADWAY PLANS. REINFORCING STEEL IN THE WING WALL MAY BE SHIFTED AS NECESSARY TO CLEAR THE DRAIN PIPE.

FOR PIPE INSERT DETAILS, SEE BEARINGS SHEET.

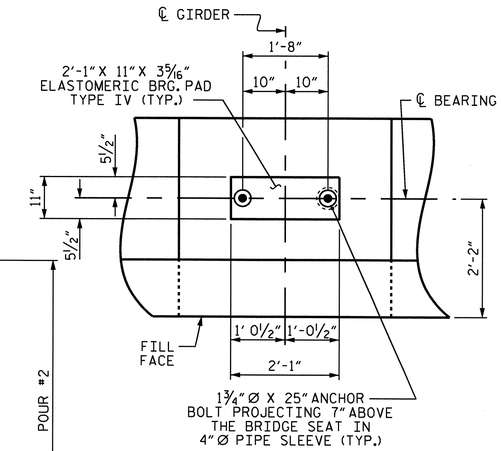

DETAIL "A"
(TYP. EA. GIRDER)

PROJECT NO. B-4712
BLADEN COUNTY
STATION: 39+15.00 -L-

SHEET 1 OF 3

STATE OF NORTH CAROLINA
DEPARTMENT OF TRANSPORTATION
RALEIGH

SUBSTRUCTURE

END BENT 1

REVISIONS						SHEET NO.
NO.	BY:	DATE:	NO.	BY:	DATE:	S-51
1			3			TOTAL SHEETS
2			4			108

DRAWN BY : J.P. ADAMS DATE : 2/28/12
CHECKED BY : D.R. SMITH DATE : 4/2012

NORTH CAROLINA PROFESSIONAL SEAL 21638 ENGINEER LAURA E. SUTTON 11/05/13

03-JAN-2013 11:48
D:\Src_01\cad\Proj\s1c01\B4712_SD_E# 01.dgn

STR. #1

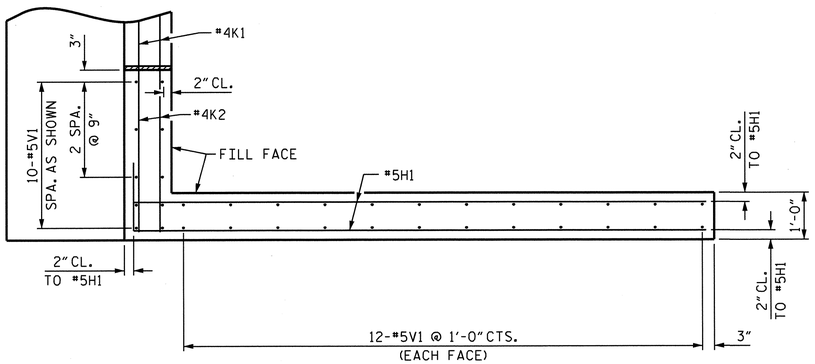

PLAN OF LEFT WING

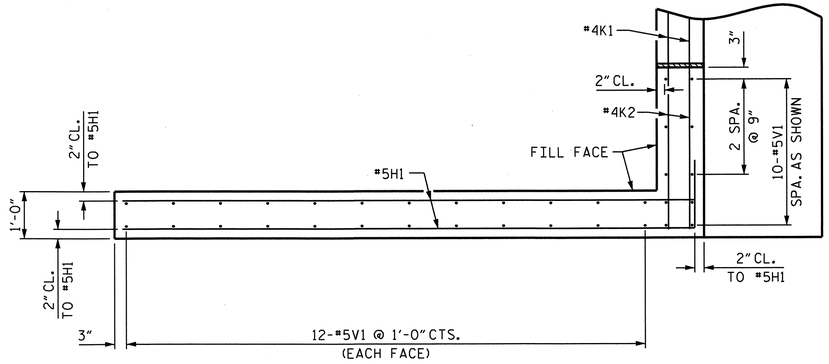

PLAN OF RIGHT WING

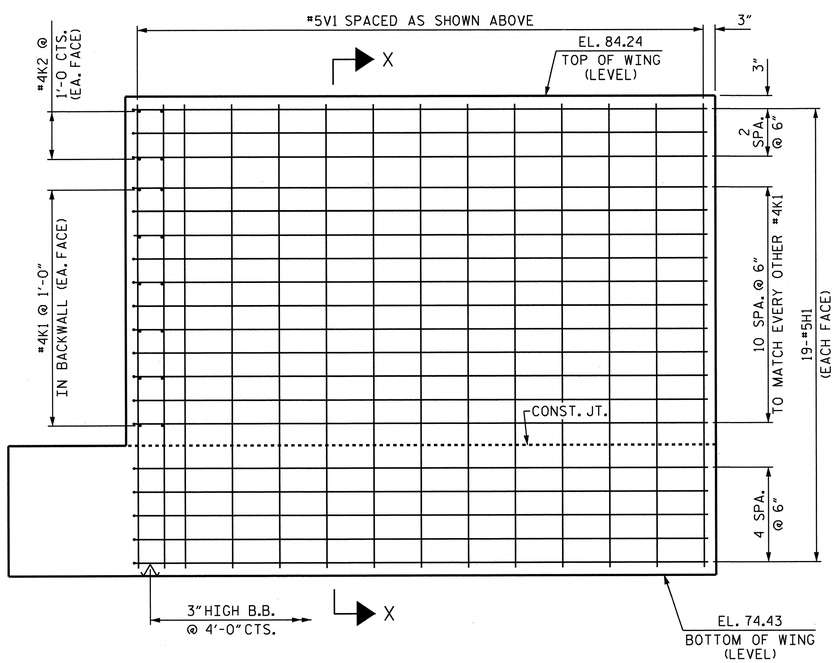

ELEVATION OF LEFT WING

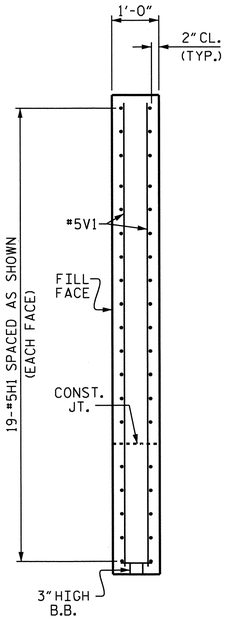

SECTION X-X

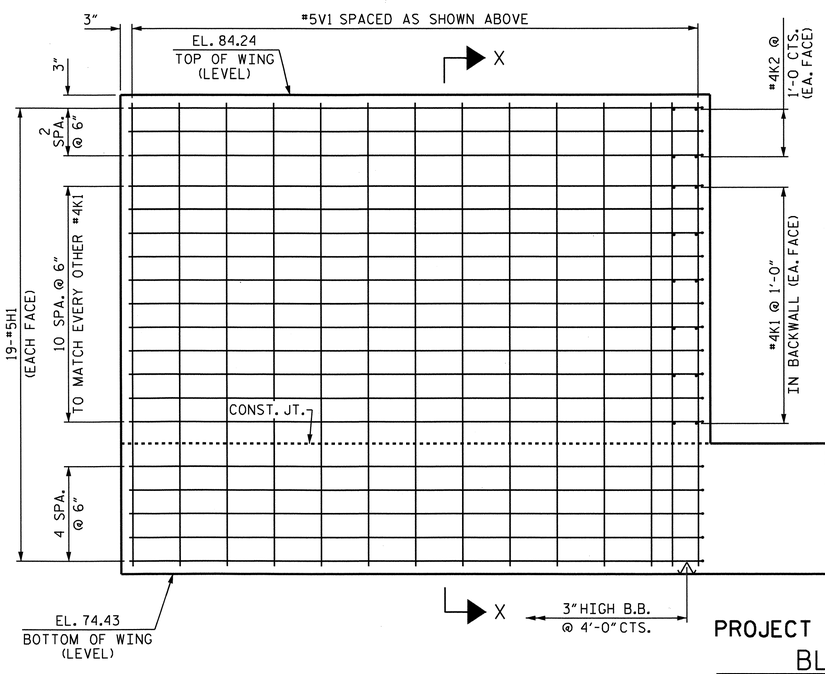

ELEVATION OF RIGHT WING

PROJECT NO. B-4712

BLADEN COUNTY

STATION: 39+15.00 -L-

SHEET 2 OF 3

STATE OF NORTH CAROLINA
DEPARTMENT OF TRANSPORTATION
RALEIGH

SUBSTRUCTURE

END BENT 1

NORTH CAROLINA PROFESSIONAL SEAL 21838 ENGINEER LAURA E. SUTTON 10/3/13

REVISIONS						SHEET NO.
NO.	BY:	DATE:	NO.	BY:	DATE:	S-52
1			3			TOTAL SHEETS
2			4			108

STR. #1

DRAWN BY : J.P. ADAMS DATE : 2/28/12
CHECKED BY : D.R. SMITH DATE : 4/2012

08-NOV-2012 13:05

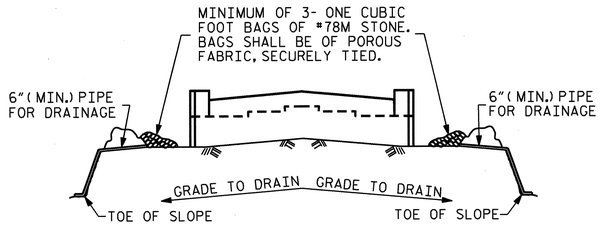

BAGGED STONE AND PIPE SHALL BE PLACED IMMEDIATELY AFTER COMPLETION OF END BENT EXCAVATION. PIPE MAY BE EITHER CONCRETE, CORRUGATED STEEL, CORRUGATED ALUMINUM ALLOY, OR CORRUGATED PLASTIC. PERFORATED PIPE WILL NOT BE ALLOWED.

BAGGED STONE SHALL REMAIN IN PLACE UNTIL THE ENGINEER DIRECTS THAT IT BE REMOVED. THE CONTRACTOR SHALL REMOVE AND DISPOSE OF SILT ACCUMULATIONS AT BAGGED STONE WHEN SO DIRECTED BY THE ENGINEER. BAGS SHALL BE REMOVED AND REPLACED WHENEVER THE ENGINEER DETERMINES THAT THEY HAVE DETERIORATED AND LOST THEIR EFFECTIVENESS.

NO SEPARATE PAYMENT WILL BE MADE FOR THIS WORK AND THE ENTIRE COST OF THIS WORK SHALL BE INCLUDED IN THE UNIT CONTRACT PRICE BID FOR THE SEVERAL PAY ITEMS.

TEMPORARY DRAINAGE AT END BENT

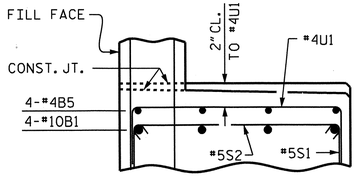

PARTIAL SECTION B

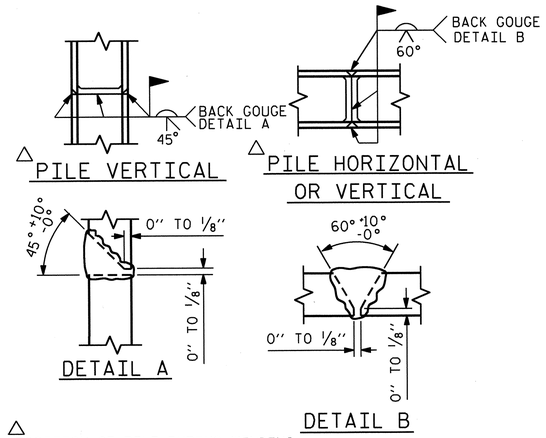

PILE SPLICE DETAILS

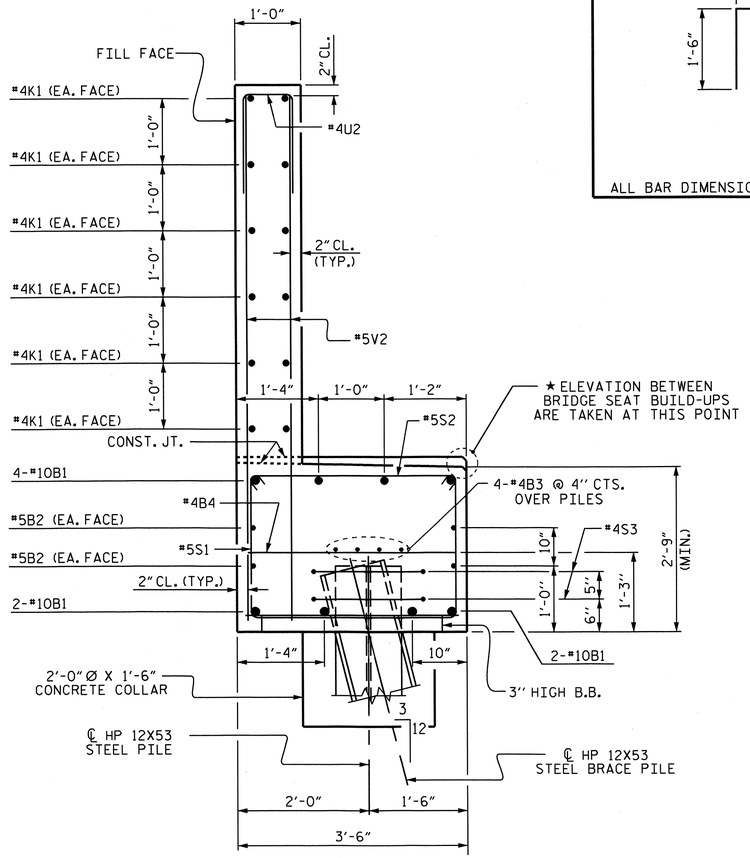

SECTION A-A

BAR TYPES

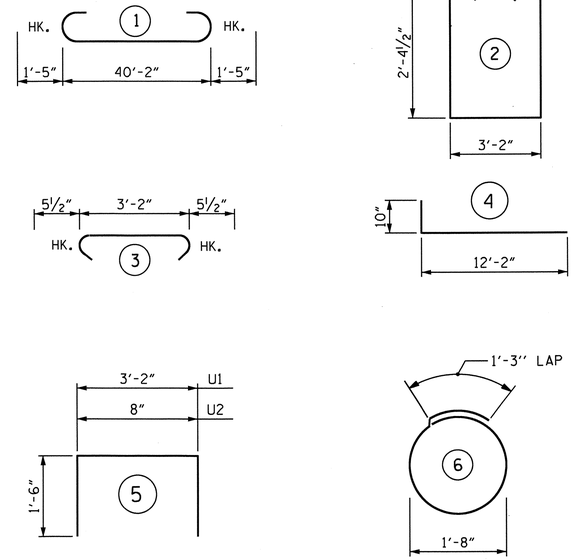

ALL BAR DIMENSIONS ARE OUT TO OUT.

BILL OF MATERIAL

END BENT 1

BAR	NO.	SIZE	TYPE	LENGTH	WEIGHT
B1	8	#10	1	43'-0"	1480
B2	4	#5	STR	40'-4"	168
B3	8	#4	STR	21'-5"	114
B4	11	#4	STR	3'-2"	23
B5	8	#4	STR	2'-8"	14
H1	76	#5	4	13'-0"	1030
K1	24	#4	STR	21'-5"	343
K2	8	#4	STR	2'-7"	14
S1	98	#5	2	8'-10"	903
S2	98	#5	3	4'-1"	417
S3	14	#4	6	6'-6"	61
U1	6	#4	5	6'-2"	25
U2	35	#4	5	3'-8"	86
V1	68	#5	STR	9'-5"	668
V2	70	#5	STR	8'-1"	590

REINFORCING STEEL LBS. 5,936

CLASS A CONCRETE BREAKDOWN

POUR #1 CAP, COLLARS & LOWER WINGS	C.Y.	19.2
POUR #2 BACKWALL & UPPER WINGS	C.Y.	15.0
TOTAL CLASS A CONCRETE	C.Y.	34.2

HP 12X53 STEEL PILES

NO. 7	LIN. FT.	455
PILE REDRIVES	EA.	4

PROJECT NO. B-4712

BLADEN COUNTY

STATION: 39+15.00 -L-

SHEET 3 OF 3

STATE OF NORTH CAROLINA
DEPARTMENT OF TRANSPORTATION
RALEIGH

SUBSTRUCTURE

END BENT 1

REVISIONS						SHEET NO.
NO.	BY:	DATE:	NO.	BY:	DATE:	S-53
1			3			TOTAL SHEETS
2			4			108

STR. #1

NORTH CAROLINA PROFESSIONAL SEAL 21638 ENGINEER LAURA E. SUTTON 10/3/13

DRAWN BY : J.P. ADAMS DATE : 2/28/12
CHECKED BY : D.R. SMITH DATE : 4/2012

08-NOV-2012 13:05
R:\Structures\Plans\str01\B4712_SD_E*_01.dgn

NOTES

STIRRUPS IN CAP MAY BE SHIFTED AS NECESSARY TO CLEAR ANCHOR BOLTS.

HOOKS ON "V" BARS MAY BE TURNED AS NECESSARY FOR PLACING REINFORCING STEEL.

GALVANIZE THE TOP OF EACH INTERIOR BENT PILE A MINIMUM OF 40 FEET. GALVANIZE IN ACCORDANCE WITH SECTION 1076 OF THE STANDARD SPECIFICATIONS.

FOR PILE SPLICE DETAILS, SEE "30" STEEL PIPE PILE" STANDARD.

THE FOOTINGS ARE CONSIDERED MASS CONCRETE. FOR MASS CONCRETE, SEE SPECIAL PROVISIONS.

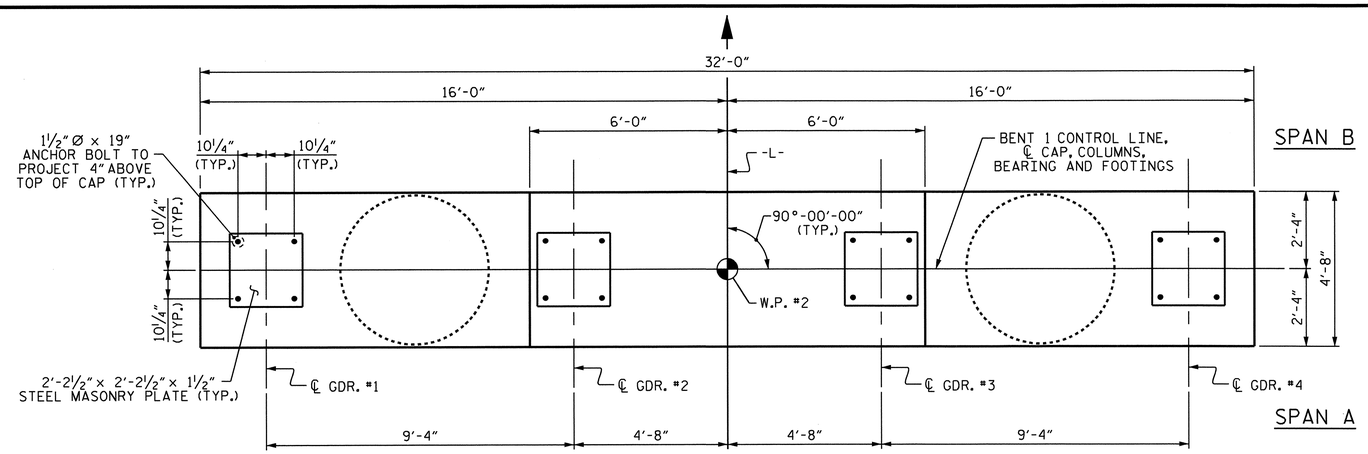

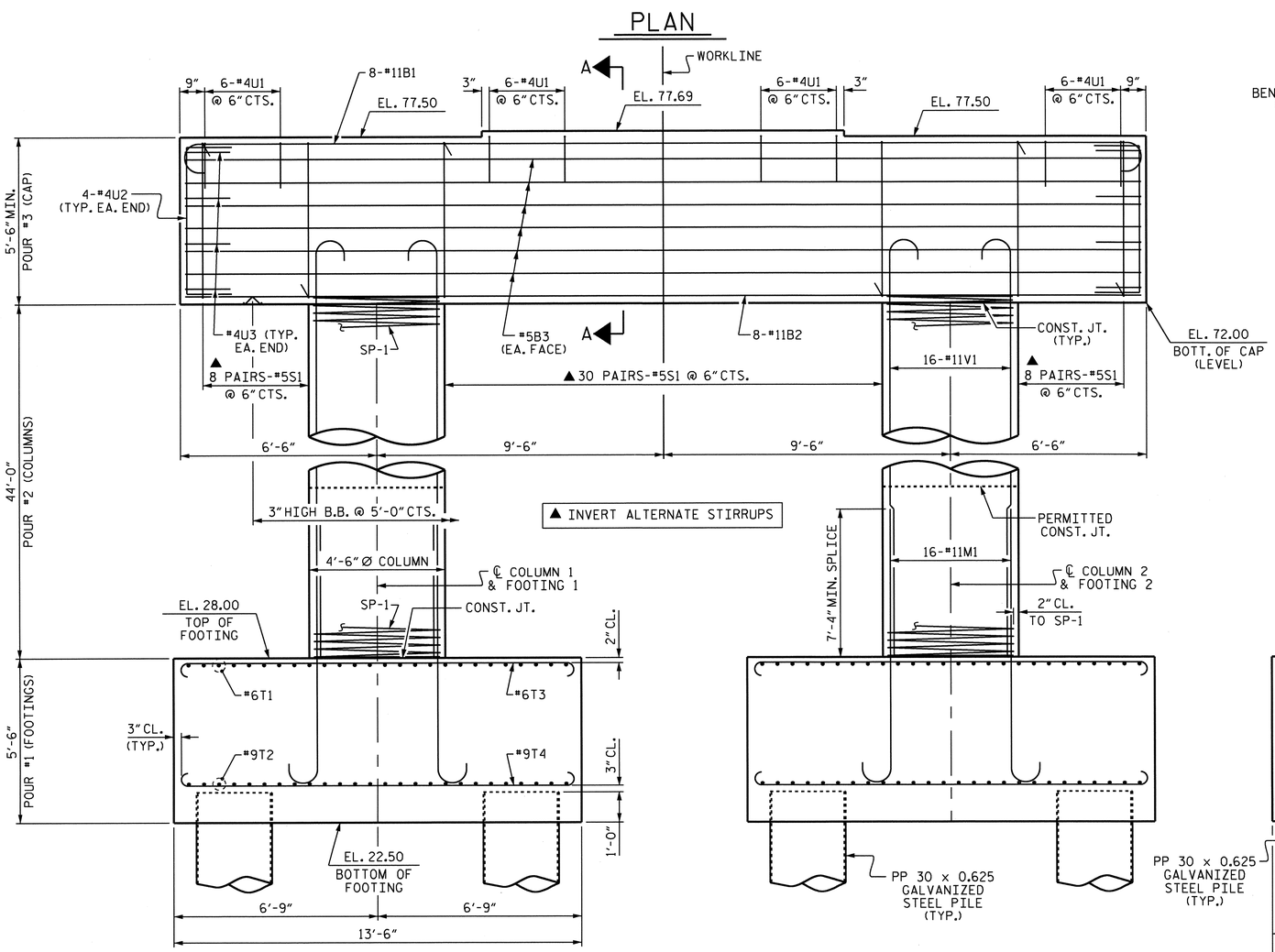

ELEVATION

REINFORCING STEEL DIMENSIONS AND DETAILS ARE TYPICAL FOR EACH COLUMN AND FOOTING

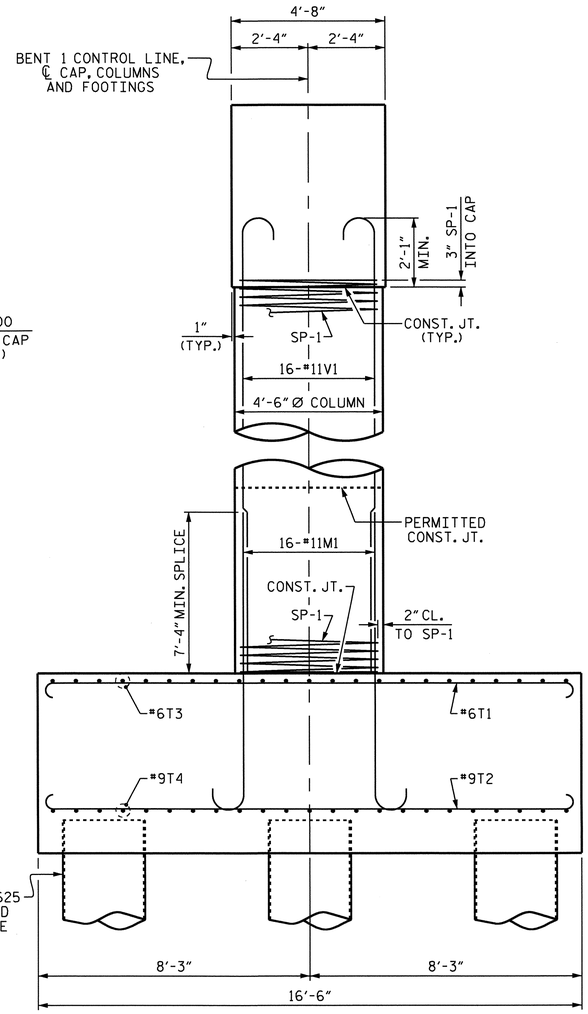

END VIEW

NORTH CAROLINA PROFESSIONAL SEAL 21838 ENGINEER LAURA E. SUTTON 10/03/13

PROJECT NO. B-4712

BLADEN COUNTY

STATION: 39+15.00 -L-

SHEET 1 OF 2

STATE OF NORTH CAROLINA
DEPARTMENT OF TRANSPORTATION
RALEIGH

SUBSTRUCTURE
BENT 1

REVISIONS						SHEET NO.
NO.	BY:	DATE:	NO.	BY:	DATE:	S-54
1			3			TOTAL SHEETS
2			4			108

DRAWN BY : B.N. GRADY DATE : 1/10/12
CHECKED BY : D.R. SMITH DATE : 3/2012

03-JAN-2013 11:48
R:\Structures\Plans\str01\B4712_SD_B1_01.dgn

STR. #1

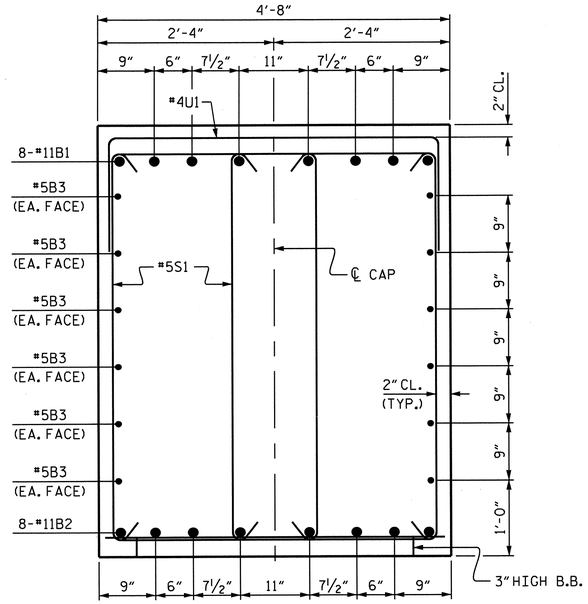

SECTION A-A

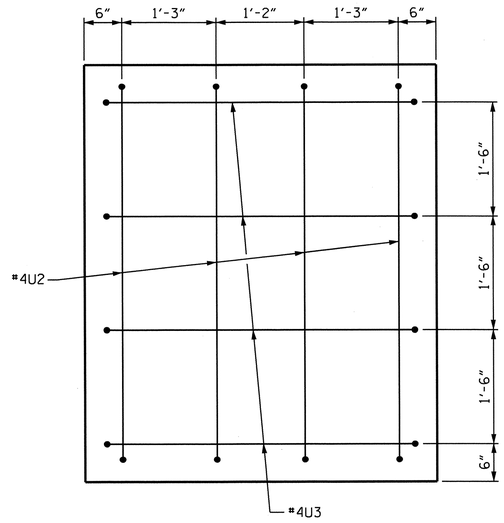

END VIEW
(TYP. EA. END)

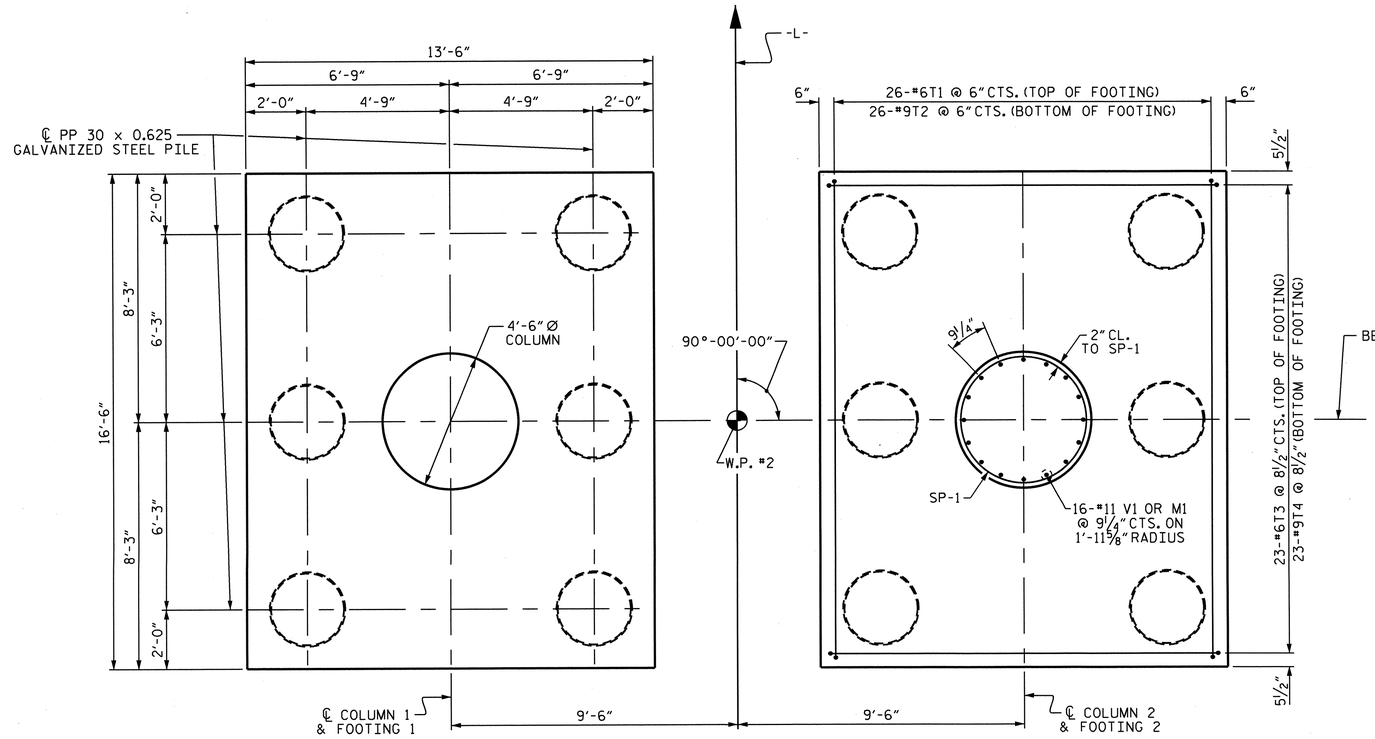

PLAN OF FOOTINGS & COLUMNS

REINFORCING STEEL, DIMENSIONS AND DETAILS ARE TYPICAL FOR EACH COLUMN AND FOOTING

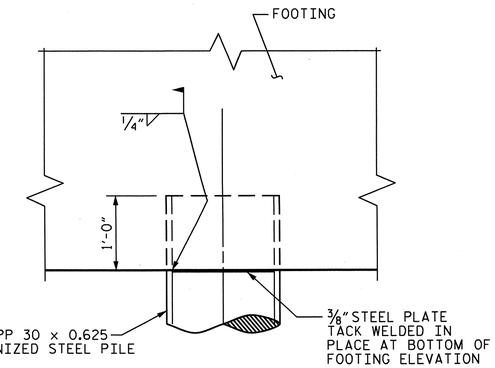

PIPE PILE
FOOTING DETAIL

BAR TYPES

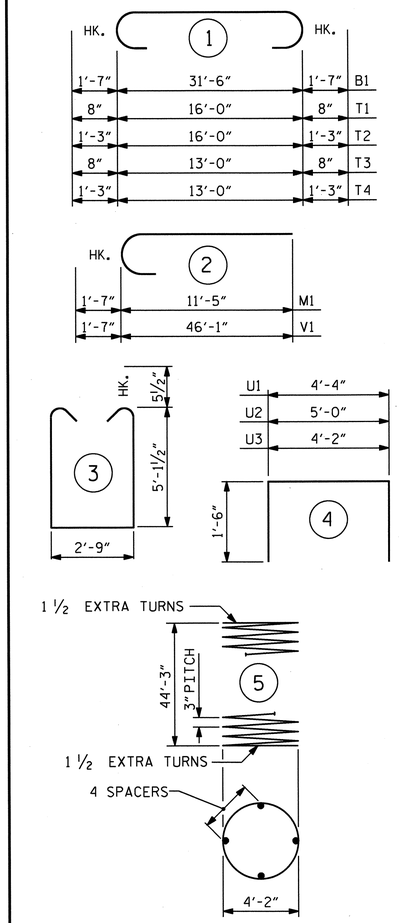

ALL BAR DIMENSIONS ARE OUT TO OUT.

BILL OF MATERIAL

BENT 1

BAR	NO.	SIZE	TYPE	LENGTH	WEIGHT
B1	8	#11	1	34'-8"	1473
B2	8	#11	STR	31'-8"	1346
B3	12	#5	STR	31'-8"	396
M1	32	#11	2	13'-0"	2210
S1	92	#5	3	13'-11"	1335
T1	52	#6	1	17'-4"	1354
T2	52	#9	1	18'-6"	3271
T3	46	#6	1	14'-4"	990
T4	46	#9	1	15'-6"	2424
U1	24	#4	4	7'-4"	118
U2	8	#4	4	8'-0"	43
U3	8	#4	4	7'-2"	38
V1	32	#11	2	47'-8"	8104
REINFORCING STEEL				LBS.	23,102
SP-1	2	**	5	2333'-1"	3117
SPIRAL COLUMN REINFORCING STEEL				LBS.	3,117

** THE SP-1 SPIRAL REINFORCING STEEL SHALL BE W20 OR D-20 COLD DRAWN WIRE OR #4 PLAIN OR DEFORMED BAR.

CLASS A CONCRETE BREAKDOWN			
POUR #1	FOOTINGS	C.Y.	90.8
POUR #2	COLUMNS	C.Y.	51.8
POUR #3	CAP	C.Y.	30.8
TOTAL CLASS A CONCRETE		C.Y.	173.4

PP 30X0.625 GALVANIZED STEEL PILES NO. 12	LIN. FT.	780
PILE REDRIVES	EA.	6
PDA TESTING	EA.	1

PROJECT NO. B-4712

BLADEN COUNTY

STATION: 39+15.00 -L-

SHEET 2 OF 2

STATE OF NORTH CAROLINA
DEPARTMENT OF TRANSPORTATION
RALEIGH

SUBSTRUCTURE
BENT 1

REVISIONS						SHEET NO.
NO.	BY:	DATE:	NO.	BY:	DATE:	S-55
1			3			TOTAL SHEETS
2			4			108

STR. #1

DRAWN BY : B.N. GRADY DATE : 1/11/12
CHECKED BY : D.R. SMITH DATE : 3/2012

08-NOV-2012 13:05
R:\Structures\Plans\str01\B4712_SD_B* 01.dgn

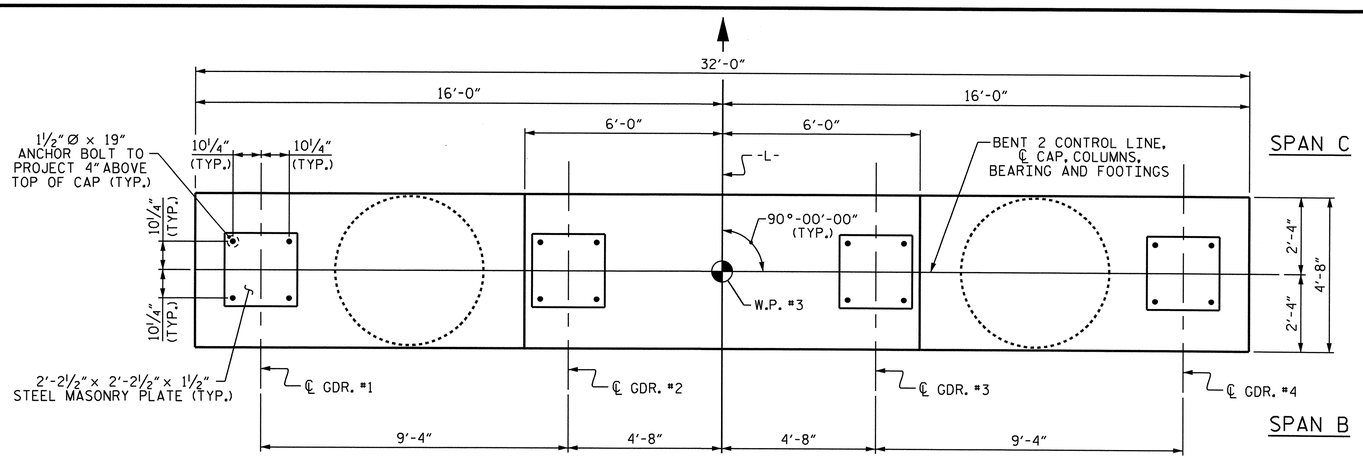

PLAN

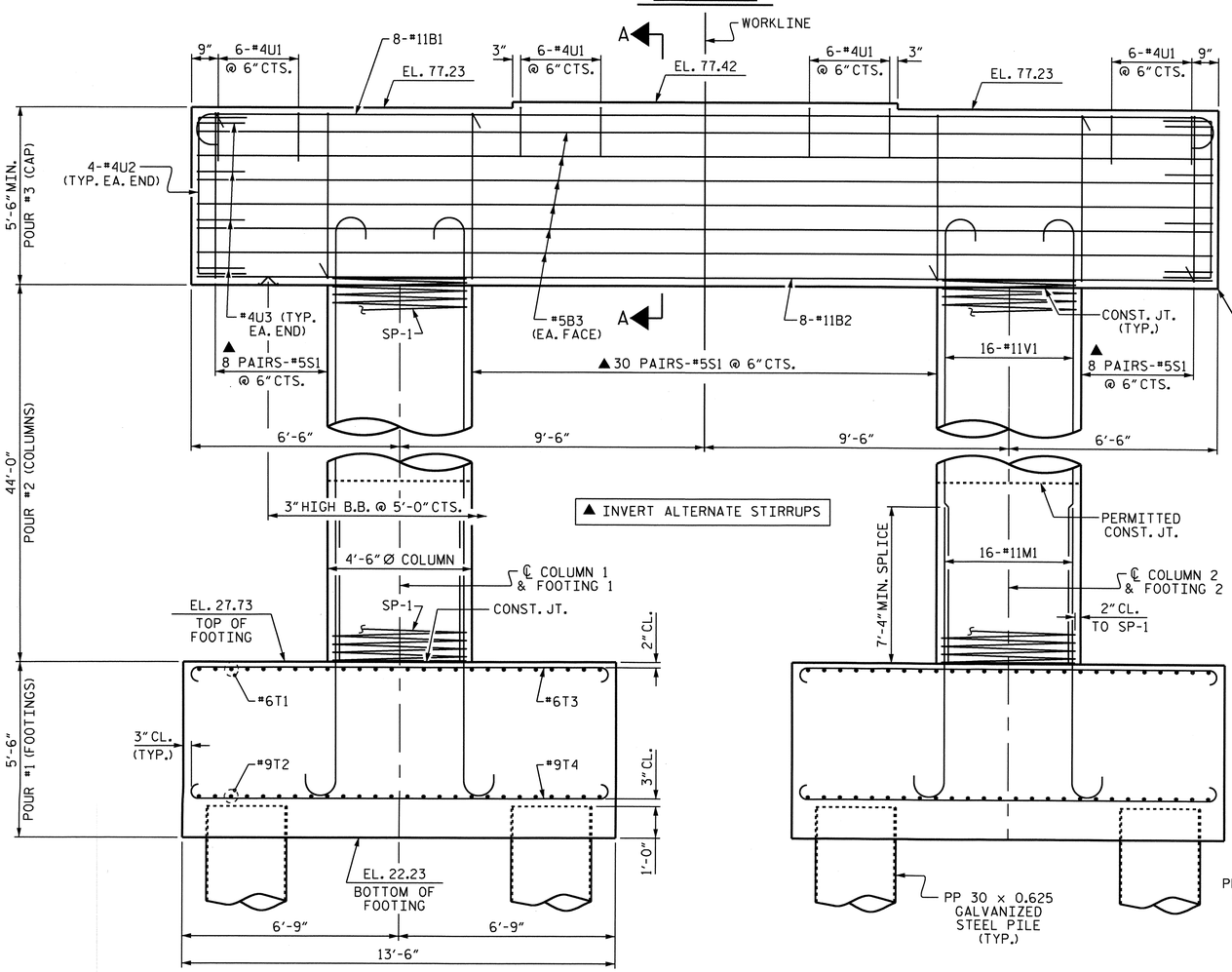

ELEVATION

REINFORCING STEEL, DIMENSIONS AND DETAILS ARE TYPICAL FOR EACH COLUMN AND FOOTING

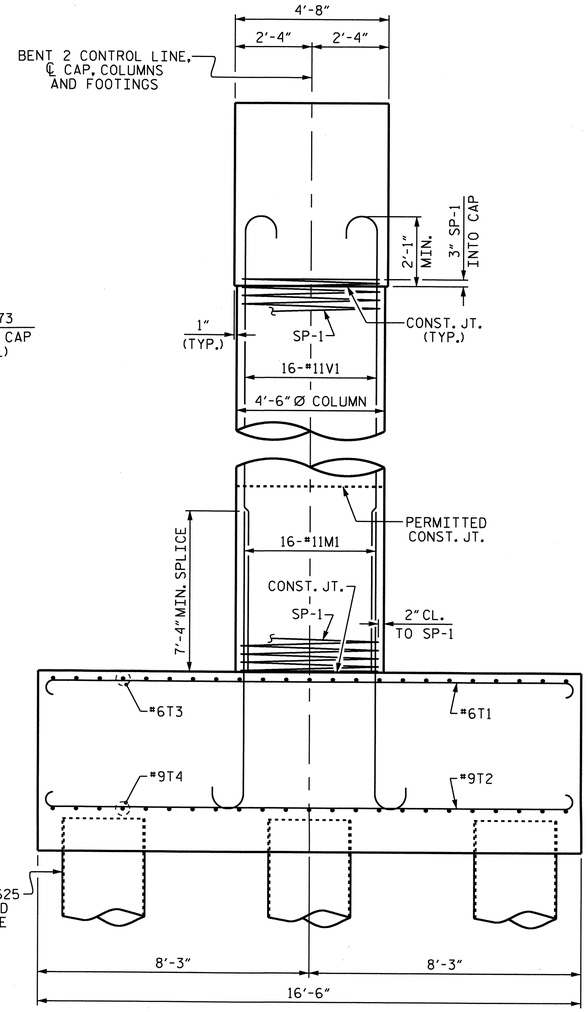

END VIEW

NOTES

STIRRUPS IN CAP MAY BE SHIFTED AS NECESSARY TO CLEAR ANCHOR BOLTS.

HOOKS ON "V" BARS MAY BE TURNED AS NECESSARY FOR PLACING REINFORCING STEEL.

GALVANIZE THE TOP OF EACH INTERIOR BENT PILE A MINIMUM OF 30 FEET. GALVANIZE IN ACCORDANCE WITH SECTION 1076 OF THE STANDARD SPECIFICATIONS.

FOR PILE SPLICE DETAILS, SEE " 30" STEEL PIPE PILE" STANDARD.

THE FOOTINGS ARE CONSIDERED MASS CONCRETE. FOR MASS CONCRETE, SEE SPECIAL PROVISIONS.

NORTH CAROLINA PROFESSIONAL SEAL 21638 ENGINEER LAURA E. SUTTON 1/03/13

PROJECT NO. B-4712

BLADEN COUNTY

STATION: 39+15.00 -L-

SHEET 1 OF 2

STATE OF NORTH CAROLINA
DEPARTMENT OF TRANSPORTATION
RALEIGH

SUBSTRUCTURE
BENT 2

REVISIONS						SHEET NO.
NO.	BY:	DATE:	NO.	BY:	DATE:	S-56
1			3			TOTAL SHEETS
2			4			108

DRAWN BY : B.N. GRADY DATE : 1/10/12
CHECKED BY : D.R. SMITH DATE : 3/2012

03-JAN-2013 11:48
P:\Structures\Bridge\s4601\B4712_SD_B1_01.dgn

STR. #1

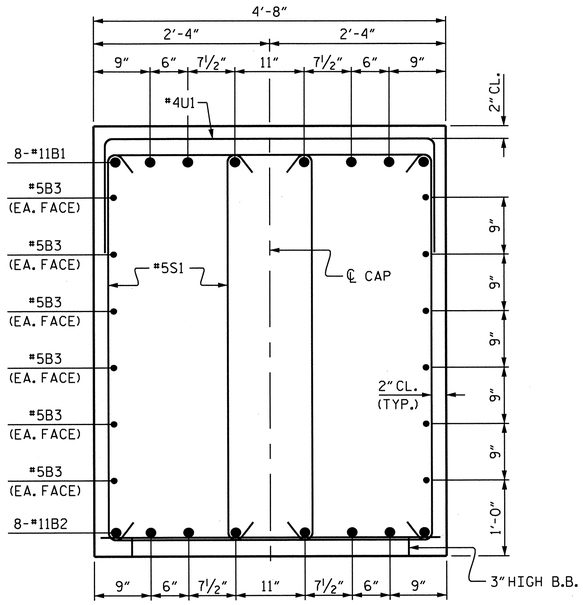

SECTION A-A

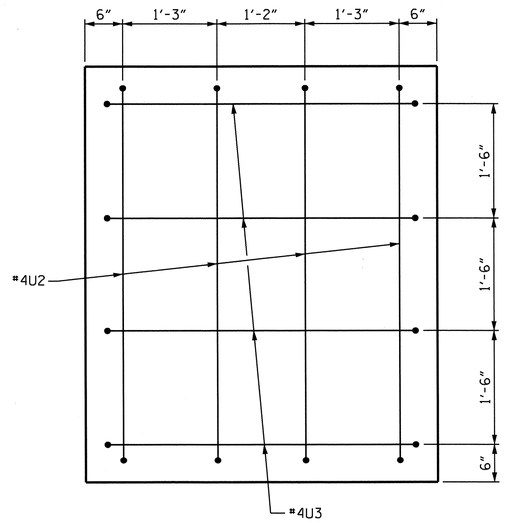

END VIEW
(TYP. EA. END)

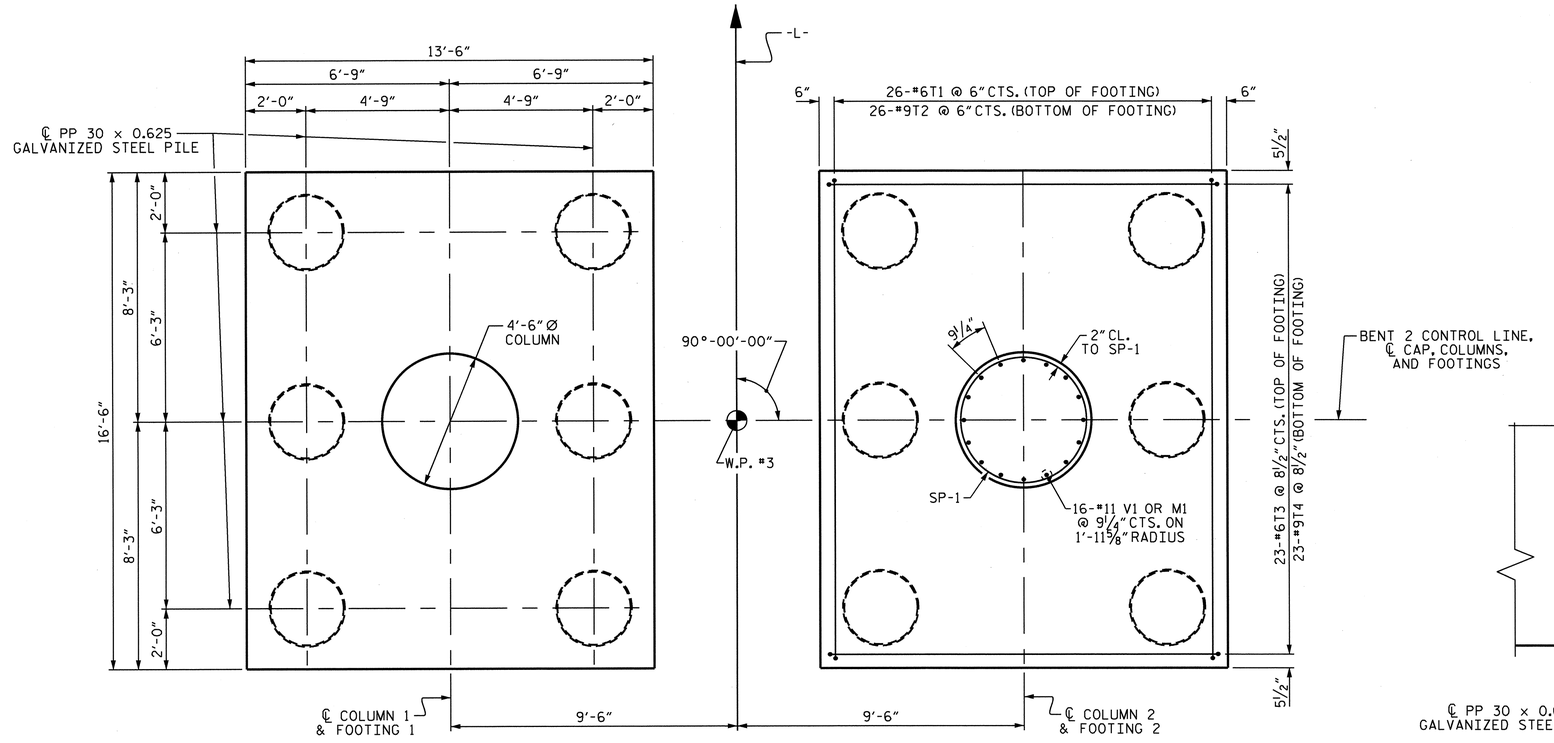

PLAN OF FOOTINGS & COLUMNS

REINFORCING STEEL, DIMENSIONS AND DETAILS ARE TYPICAL FOR EACH COLUMN AND FOOTING

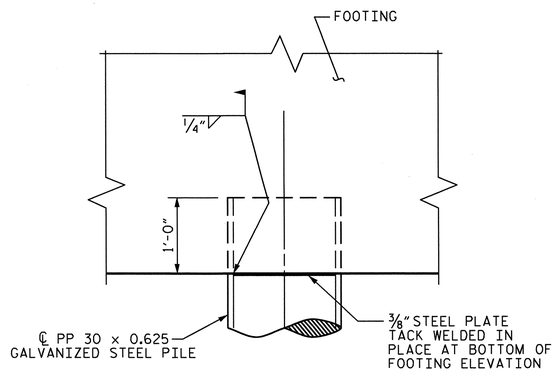

PIPE PILE FOOTING DETAIL

BAR TYPES

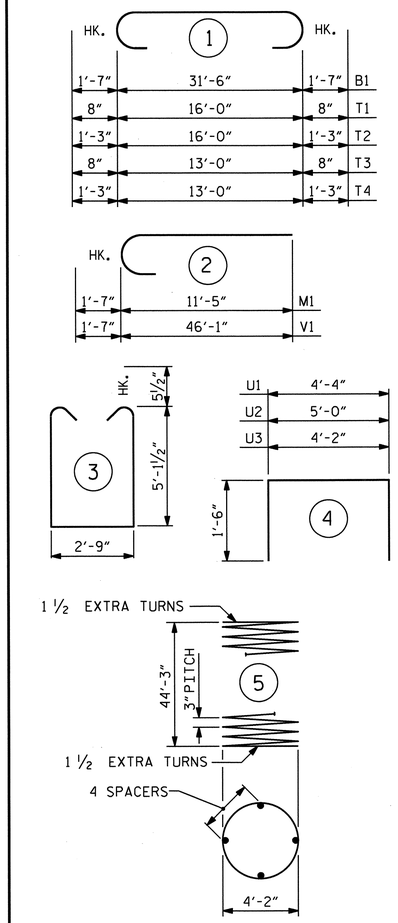

ALL BAR DIMENSIONS ARE OUT TO OUT.

BILL OF MATERIAL

BENT 2

BAR	NO.	SIZE	TYPE	LENGTH	WEIGHT
B1	8	#11	1	34'-8"	1473
B2	8	#11	STR	31'-8"	1346
B3	12	#5	STR	31'-8"	396
M1	32	#11	2	13'-0"	2210
S1	92	#5	3	13'-11"	1335
T1	52	#6	1	17'-4"	1354
T2	52	#9	1	18'-6"	3271
T3	46	#6	1	14'-4"	990
T4	46	#9	1	15'-6"	2424
U1	24	#4	4	7'-4"	118
U2	8	#4	4	8'-0"	43
U3	8	#4	4	7'-2"	38
V1	32	#11	2	47'-8"	8104
REINFORCING STEEL				LBS.	23,102
SP-1	2	**	5	2333'-1"	3117
SPIRAL COLUMN REINFORCING STEEL				LBS.	3,117

** THE SP-1 SPIRAL REINFORCING STEEL SHALL BE W20 OR D-20 COLD DRAWN WIRE OR #4 PLAIN OR DEFORMED BAR.

CLASS A CONCRETE BREAKDOWN			
POUR #1	FOOTINGS	C.Y.	90.8
POUR #2	COLUMNS	C.Y.	51.8
POUR #3	CAP	C.Y.	30.8
TOTAL CLASS A CONCRETE		C.Y.	173.4

PP 30X0.625 GALVANIZED STEEL PILES		
NO. 12	LIN. FT.	780
PILE REDRIVES	EA.	6

NORTH CAROLINA PROFESSIONAL SEAL 21638 ENGINEER LAURA E. SUTTON 1/23/13

PROJECT NO. B-4712

BLADEN COUNTY

STATION: 39+15.00 -L-

SHEET 2 OF 2

STATE OF NORTH CAROLINA
DEPARTMENT OF TRANSPORTATION
RALEIGH

SUBSTRUCTURE
BENT 2

REVISIONS						SHEET NO.
NO.	BY:	DATE:	NO.	BY:	DATE:	S-57
1			3			TOTAL SHEETS
2			4			108

STR. #1

DRAWN BY : B.N. GRADY DATE : 1/11/12
CHECKED BY : D.R. SMITH DATE : 3/2012

08-NOV-2012 13:05
B:\Structural Bridge\stc01\B4712_SD_#*_01.dgn

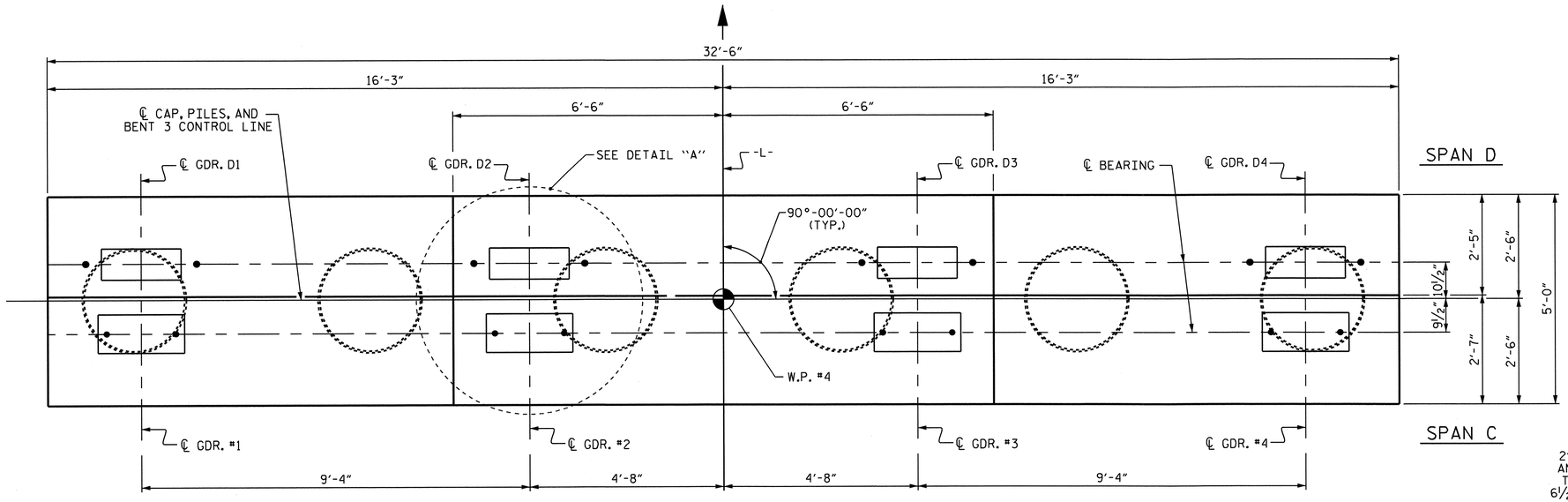

PLAN

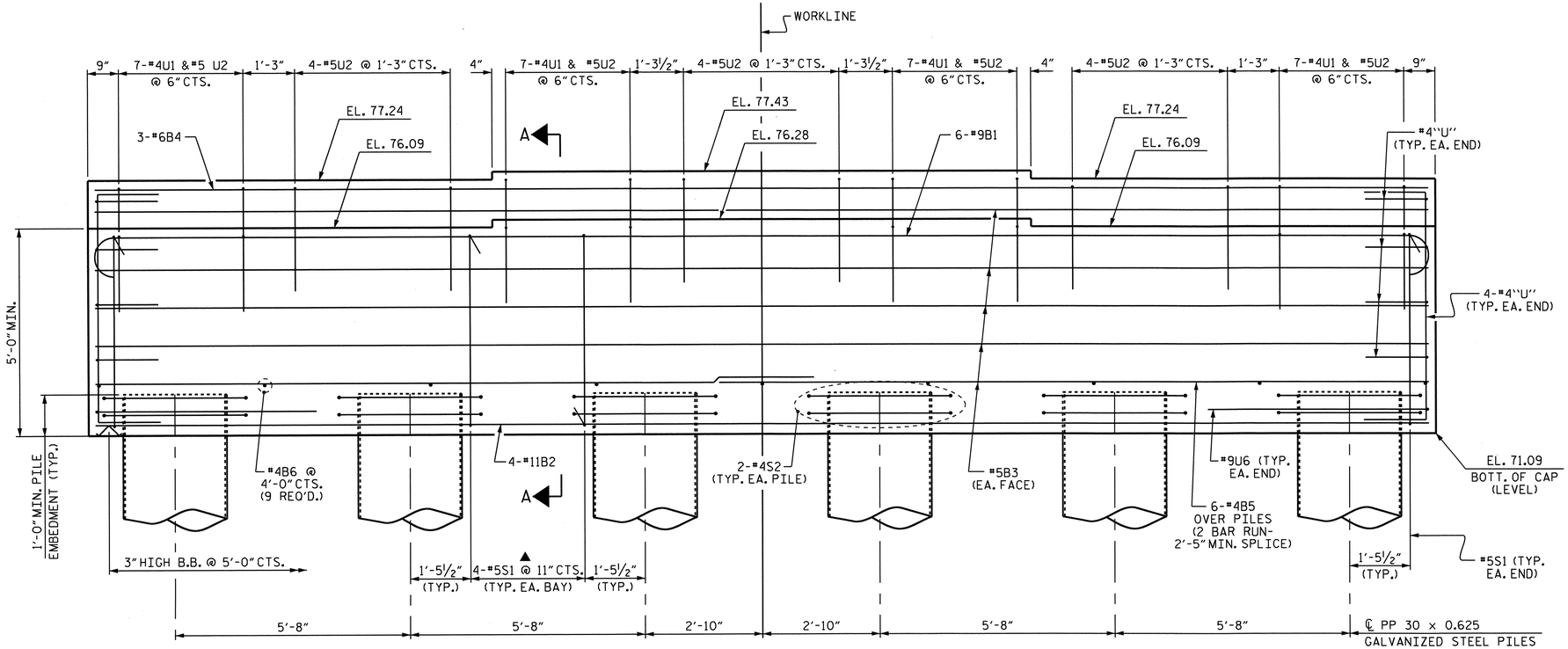

ELEVATION

▲ INVERT ALTERNATE STIRRUPS

NOTES

STIRRUPS IN CAP MAY BE SHIFTED AS NECESSARY TO CLEAR ANCHOR BOLTS.

GALVANIZE THE TOP OF EACH INTERIOR BENT PILE A MINIMUM OF 50 FEET. GALVANIZE IN ACCORDANCE WITH SECTION 1076 OF THE STANDARD SPECIFICATIONS.

FOR PIPE PILES, SEE " 30" STEEL PIPE PILE" SHEET.

FOR PIPE INSERT DETAILS, SEE BEARINGS SHEETS.

EPOXY COAT THE BENT CAP AFTER ADJUSTMENTS ARE MADE TO BEARINGS AND ANCHOR BOLTS ARE GROUTED.

THE TOP SURFACE AREAS OF THE BENT CAP SHALL BE CURED IN ACCORDANCE WITH THE STANDARD SPECIFICATIONS EXCEPT THE MEMBRANE CURING COMPOUND METHOD SHALL NOT BE USED.

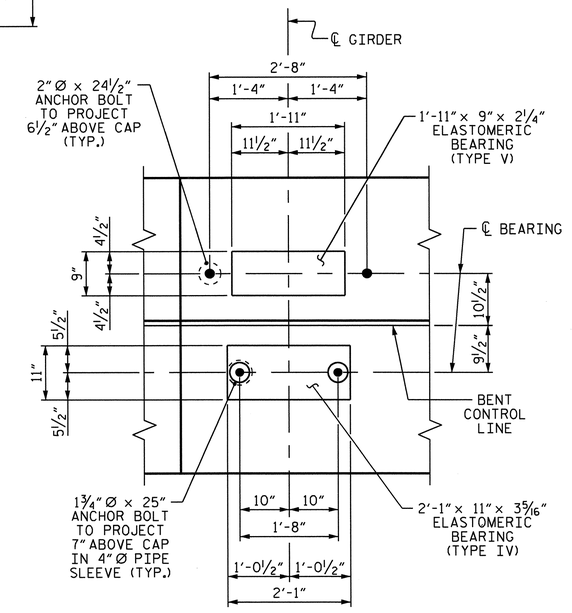

DETAIL "A"

PROJECT NO. B-4712

BLADEN COUNTY

STATION: 39+15.00 -L-

SHEET 1 OF 2

STATE OF NORTH CAROLINA
DEPARTMENT OF TRANSPORTATION
RALEIGH

SUBSTRUCTURE
BENT 3

NORTH CAROLINA PROFESSIONAL SEAL 21638 ENGINEER LAURA E. SUTTON 1/03/13

REVISIONS						SHEET NO.
NO.	BY:	DATE:	NO.	BY:	DATE:	S-58
1			3			TOTAL SHEETS
2			4			108

DRAWN BY : B.N. GRADY DATE : 1/17/12
CHECKED BY : D.R. SMITH DATE : 2/2012

03-JAN-2013 11:48
R:\Structures\Plans\str01\B4712_SD_B1_01.dgn

STR. #1

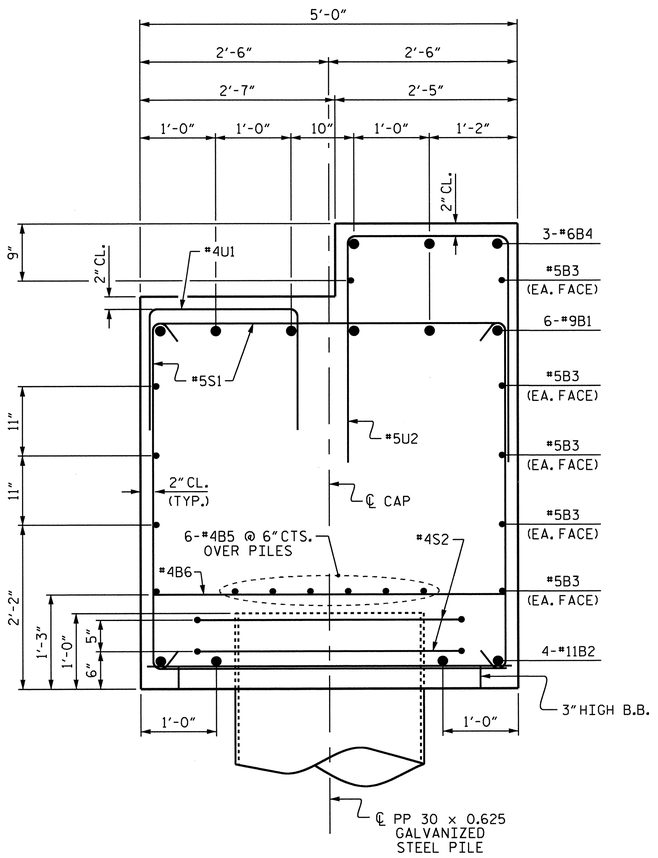

SECTION A-A

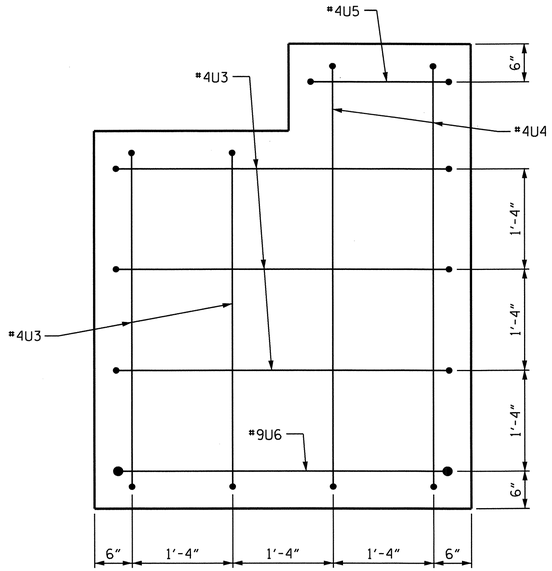

END VIEW

(TYP. EA. END)

BAR TYPES

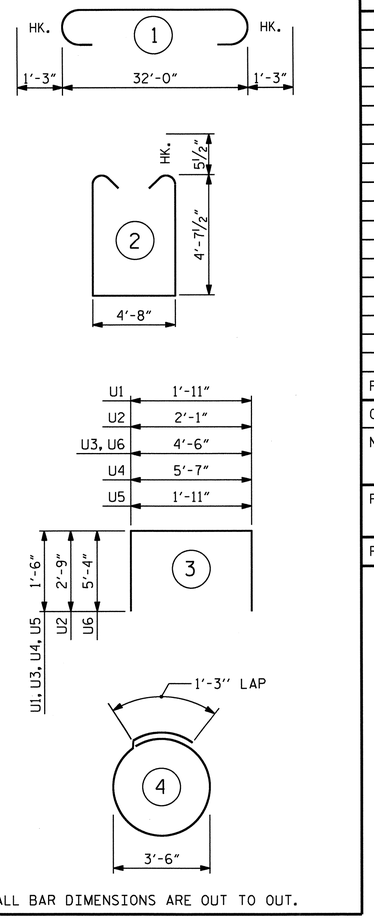

ALL BAR DIMENSIONS ARE OUT TO OUT.

BILL OF MATERIAL

BENT 3

BAR	NO.	SIZE	TYPE	LENGTH	WEIGHT
B1	6	#9	1	34'-6"	704
B2	4	#11	STR	32'-2"	684
B3	10	#5	STR	32'-2"	335
B4	3	#6	STR	32'-2"	145
B5	12	#4	STR	17'-4"	139
B6	9	#4	STR	4'-8"	28
S1	22	#5	2	14'-10"	340
S2	12	#4	4	12'-3"	98
U1	28	#4	3	4'-11"	92
U2	40	#5	3	7'-7"	316
U3	10	#4	3	7'-6"	50
U4	4	#4	3	8'-7"	23
U5	2	#4	3	4'-11"	7
U6	2	#9	3	15'-2"	103

REINFORCING STEEL	LBS.	3,064
CLASS A CONCRETE	C.Y.	33.0

NOTE: THE VOLUME OF CONCRETE DISPLACED BY THE PIPE PILES HAS BEEN DEDUCTED FROM THE TOTAL.

PP 30X0.625 GALVANIZED STEEL PILES		
NO. 6	LIN. FT.	600
PILE REDRIVES	EA.	3

PROJECT NO. B-4712

BLADEN COUNTY

STATION: 39+15.00 -L-

STATE OF NORTH CAROLINA
DEPARTMENT OF TRANSPORTATION
RALEIGH

SUBSTRUCTURE
BENT 3

REVISIONS						SHEET NO.
NO.	BY:	DATE:	NO.	BY:	DATE:	S-59
1			3			TOTAL SHEETS
2			4			108

NORTH CAROLINA PROFESSIONAL SEAL 21638 ENGINEER LAURA E. SUTTON 1/23/13

DRAWN BY : B.N. GRADY	DATE : 1/17/12
CHECKED BY : D.R. SMITH	DATE : 2/2012

03-JAN-2013 11:48
B:\Structures\Plans\str01\B4712_SD_B*_01.dgn

STR. #1

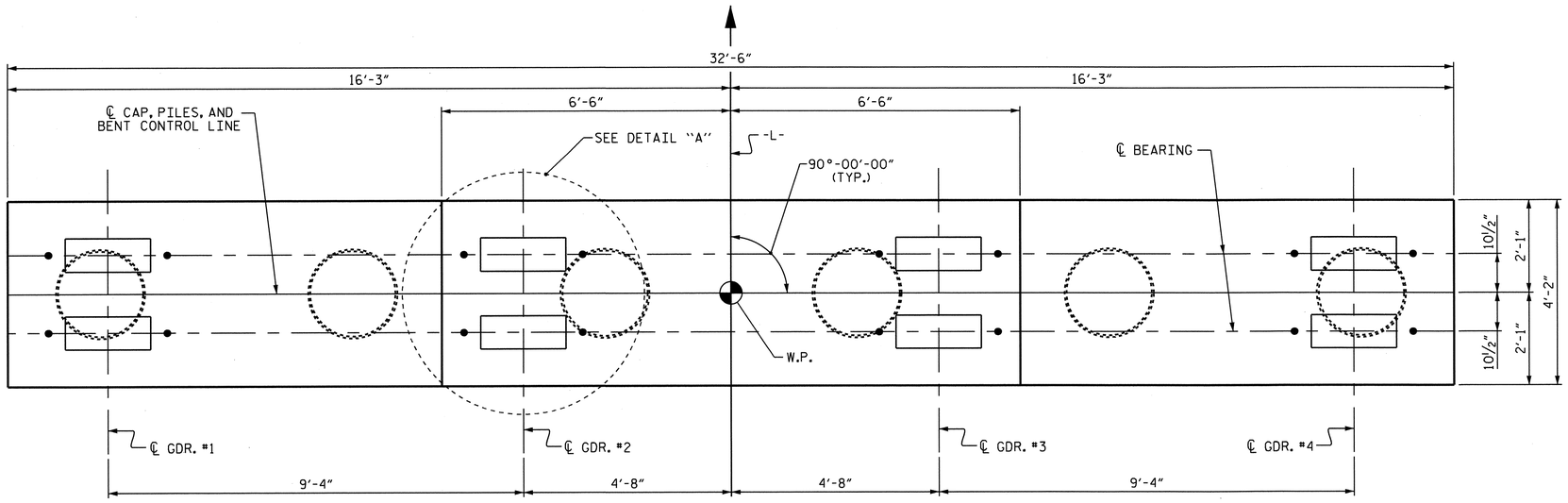

PLAN

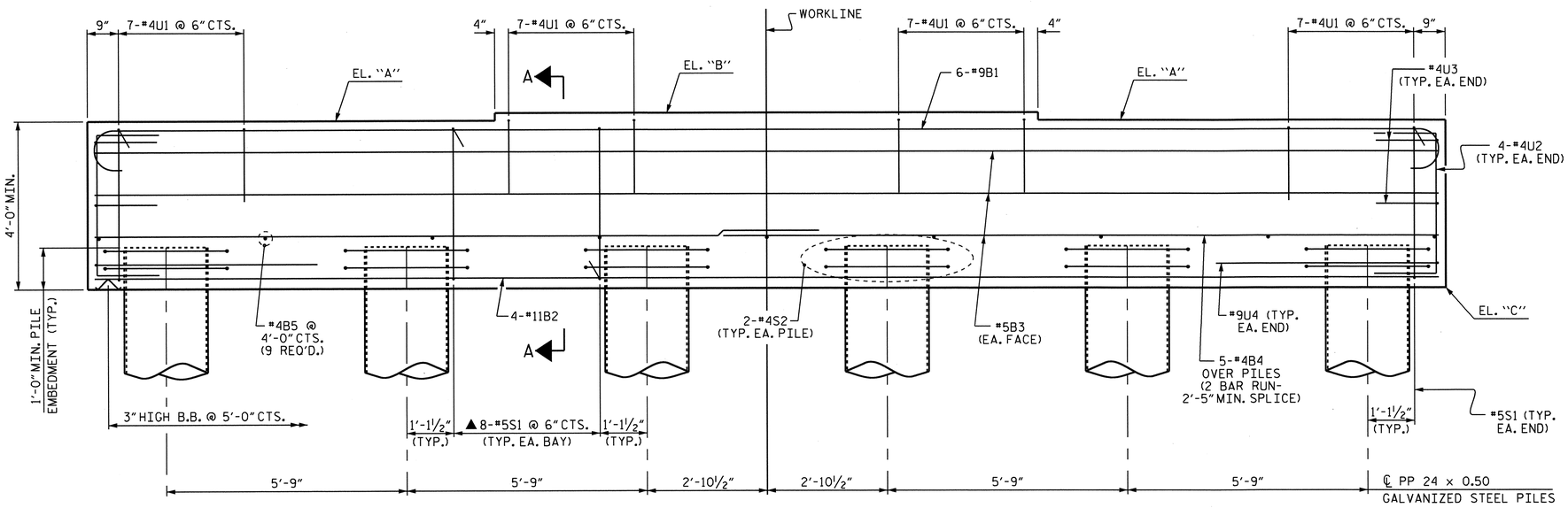

ELEVATION

▲ INVERT ALTERNATE STIRRUPS

	EL. "A"	EL. "B"	EL. "C"
BENT #4	76.26	76.44	72.26
BENT #6	74.28	74.46	70.28
BENT #8	72.30	72.49	68.30
BENT #10	70.32	70.51	66.32
BENT #12	68.35	68.53	64.35

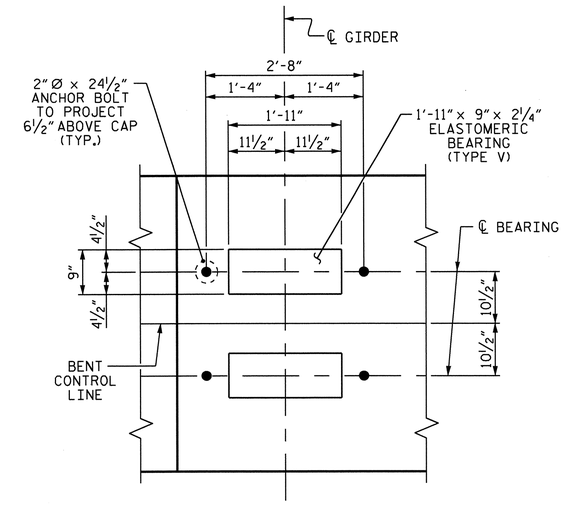

DETAIL A

(DIMENSIONS AND DETAILS ARE TYPICAL EACH BEARING)

NOTES

STIRRUPS IN CAP MAY BE SHIFTED AS NECESSARY TO CLEAR ANCHOR BOLTS.

GALVANIZE THE TOP OF EACH INTERIOR BENT PILE A MINIMUM OF 50 FEET. GALVANIZE IN ACCORDANCE WITH SECTION 1076 OF THE STANDARD SPECIFICATIONS.

FOR PIPE PILES, SEE "24" STEEL PIPE PILE" STANDARD.

EPOXY COAT THE BENT CAP AFTER ADJUSTMENTS ARE MADE TO BEARINGS AND ANCHOR BOLTS ARE GROUTED.

THE TOP SURFACE AREAS OF THE BENT CAP SHALL BE CURED IN ACCORDANCE WITH THE STANDARD SPECIFICATIONS EXCEPT THE MEMBRANE CURING COMPOUND METHOD SHALL NOT BE USED.

PROJECT NO. B-4712

BLADEN COUNTY

STATION: 39+15.00 -L-

SHEET 1 OF 2

STATE OF NORTH CAROLINA
DEPARTMENT OF TRANSPORTATION
RALEIGH

SUBSTRUCTURE
BENTS 4, 6, 8, 10 & 12

REVISIONS						SHEET NO.
NO.	BY:	DATE:	NO.	BY:	DATE:	S-60
1			3			TOTAL SHEETS
2			4			108

STR. #1

NORTH CAROLINA PROFESSIONAL SEAL 21638 ENGINEER LAURA E. SUTTON 11/03/13

DRAWN BY : B.N. GRADY DATE : 1/18/12
CHECKED BY : D.R. SMITH DATE : 2/2012

08-NOV-2012 13:05
R:\Structural\Bridge\str01\B4712_SD_B#_01.dgn

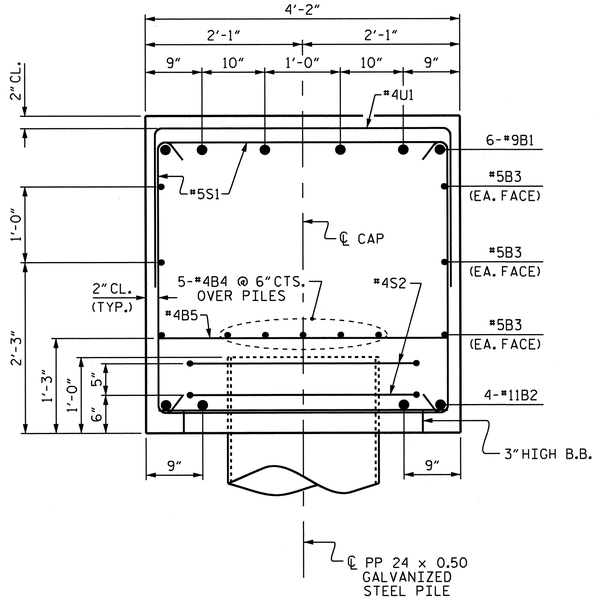

SECTION A-A

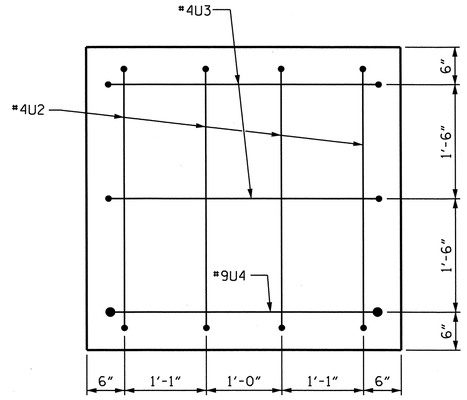

END VIEW
(TYP. EA. END)

BAR TYPES

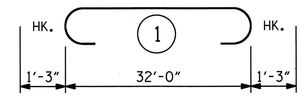

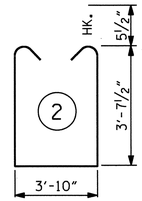

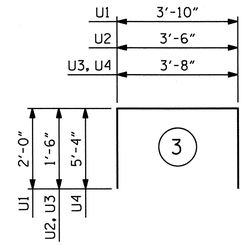

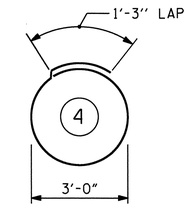

ALL BAR DIMENSIONS ARE OUT TO OUT.

BILL OF MATERIAL
FOR ONE BENT

BAR	NO.	SIZE	TYPE	LENGTH	WEIGHT
B1	6	#9	1	34'-6"	704
B2	4	#11	STR	32'-2"	684
B3	6	#5	STR	32'-2"	201
B4	10	#4	STR	17'-4"	116
B5	9	#4	STR	3'-10"	23
S1	42	#5	2	12'-0"	526
S2	12	#4	4	10'-9"	86
U1	28	#4	3	7'-10"	147
U2	8	#4	3	6'-6"	35
U3	4	#4	3	6'-8"	18
U4	2	#9	3	14'-4"	97

REINFORCING STEEL	LBS.	2,637
CLASS A CONCRETE	C.Y.	19.8

NOTE: THE VOLUME OF CONCRETE DISPLACED BY THE PIPE PILES HAS BEEN DEDUCTED FROM THE TOTAL.

PP 24X0.50 GALVANIZED STEEL PILES

	NO.	LIN. FT.
BENT 4	6	630
BENT 6	6	630
BENT 8	6	630
BENT 10	6	570
BENT 12	6	570

PILE REDRIVES	EA.	3

PROJECT NO. B-4712

BLADEN COUNTY

STATION: 39+15.00 -L-

SHEET 2 OF 2

STATE OF NORTH CAROLINA
DEPARTMENT OF TRANSPORTATION
RALEIGH

SUBSTRUCTURE
BENTS 4, 6, 8, 10 & 12

REVISIONS						SHEET NO.
NO.	BY:	DATE:	NO.	BY:	DATE:	S-61
1			3			TOTAL SHEETS
2			4			108

STR. #1

NORTH CAROLINA PROFESSIONAL SEAL 21838 ENGINEER LAURA E. SUTTON 1/31/13

DRAWN BY : B.N. GRADY DATE : 1/18/12
CHECKED BY : D.R. SMITH DATE : 2/2012

08-NOV-2012 13:05
R:\Structures\Plans\str01\B4712_SD_B*_01.dgn

NOTES

STIRRUPS IN CAP MAY BE SHIFTED AS NECESSARY TO CLEAR ANCHOR BOLTS.

GALVANIZE THE TOP OF EACH INTERIOR BENT PILE A MINIMUM OF 50 FEET. GALVANIZE IN ACCORDANCE WITH SECTION 1076 OF THE STANDARD SPECIFICATIONS.

FOR PIPE PILES, SEE "24" STEEL PIPE PILE" STANDARD.

THE TOP SURFACE AREAS OF THE BENT CAP SHALL BE CURED IN ACCORDANCE WITH THE STANDARD SPECIFICATIONS EXCEPT THE MEMBRANE CURING COMPOUND METHOD SHALL NOT BE USED.

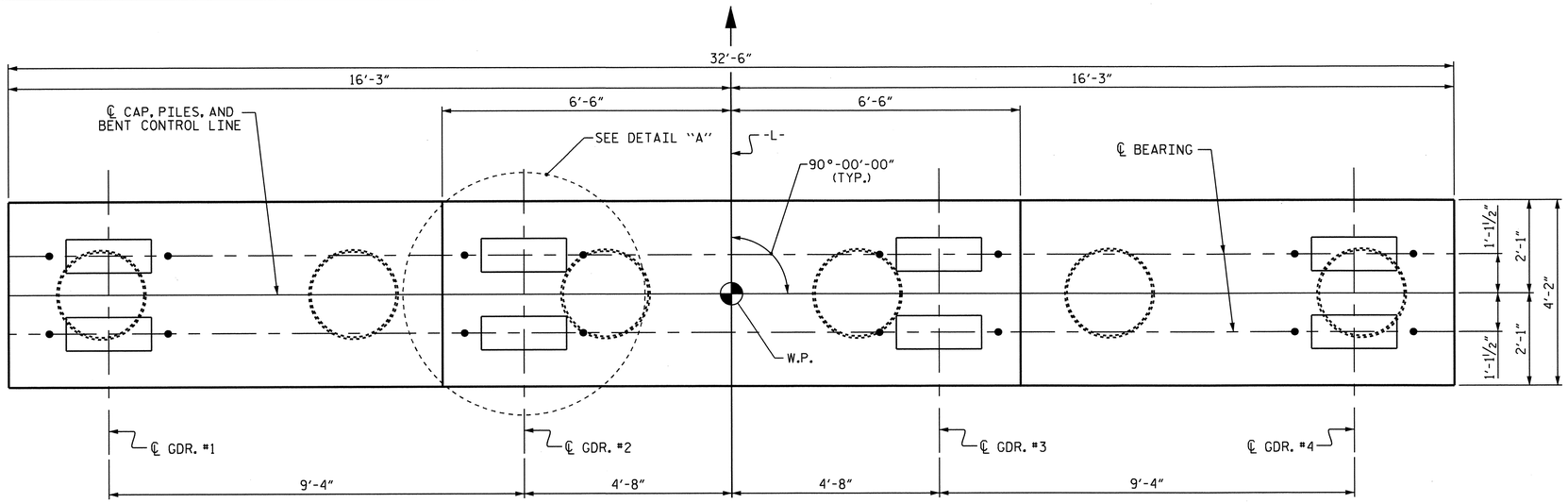

PLAN

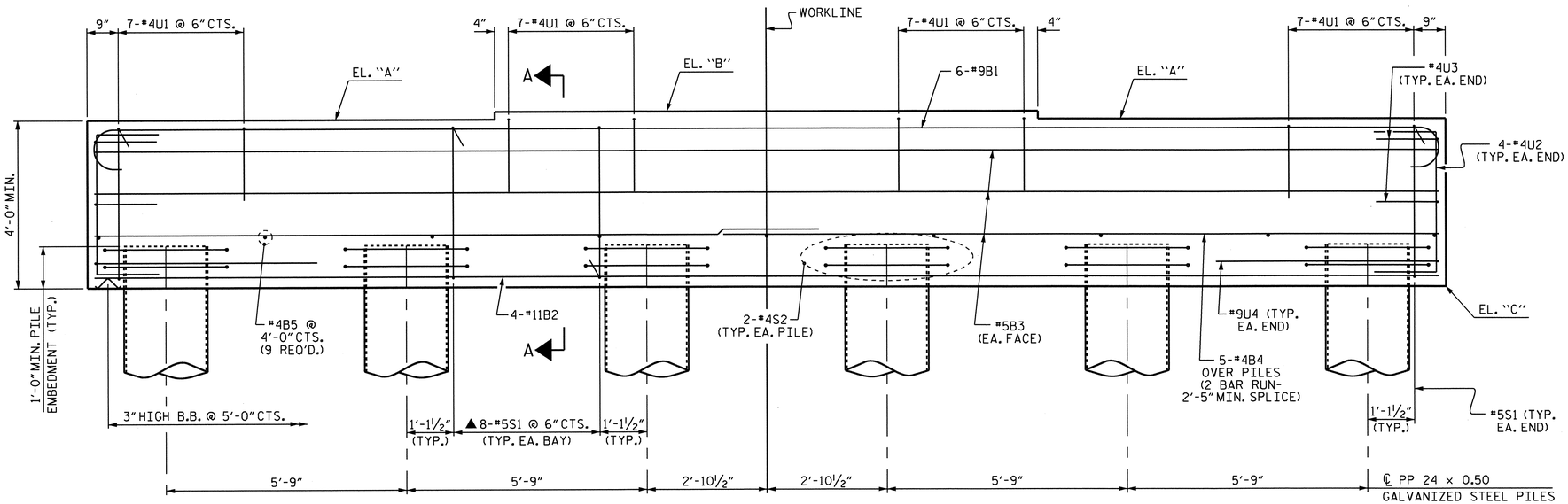

ELEVATION

▲ INVERT ALTERNATE STIRRUPS

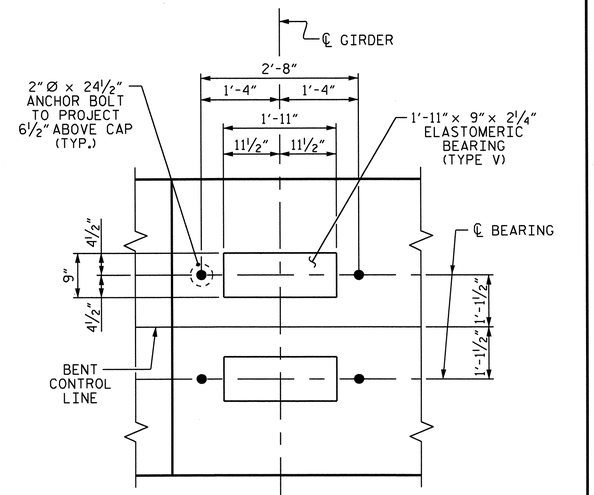

DETAIL A

(DIMENSIONS AND DETAILS ARE TYPICAL EACH BEARING)

	EL. "A"	EL. "B"	EL. "C"
BENT #5	75.26	75.45	71.26
BENT #7	73.29	73.47	69.29
BENT #9	71.31	71.50	67.31
BENT #11	69.33	69.52	65.33
BENT #13	67.36	67.54	63.36

PROJECT NO. B-4712

BLADEN COUNTY

STATION: 39+15.00 -L-

SHEET 1 OF 2

STATE OF NORTH CAROLINA
DEPARTMENT OF TRANSPORTATION
RALEIGH

SUBSTRUCTURE
BENTS 5, 7, 9, 11 & 13

NORTH CAROLINA PROFESSIONAL SEAL 21638 ENGINEER LAURA E. SUTTON 1/08/13

REVISIONS						SHEET NO.
NO.	BY:	DATE:	NO.	BY:	DATE:	S-62
1			3			TOTAL SHEETS
2			4			108

STR. #1

DRAWN BY : B.N. GRADY DATE : 1/18/12
CHECKED BY : D.R. SMITH DATE : 2/2012

03-JAN-2013 11:48
R:\Structures\Plans\str01\B4712_SD_B* 01.dgn

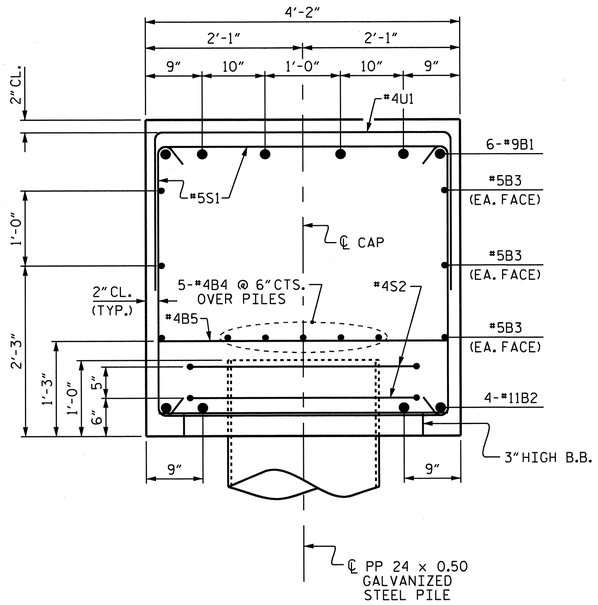

SECTION A-A

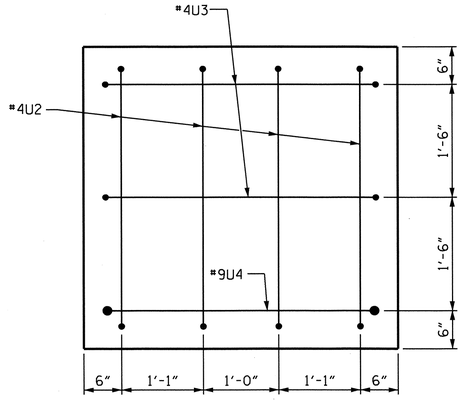

END VIEW
(TYP. EA. END)

BAR TYPES

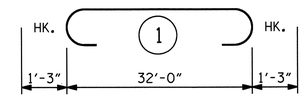

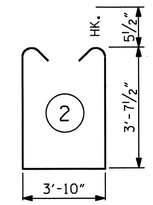

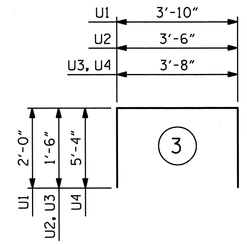

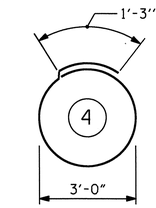

ALL BAR DIMENSIONS ARE OUT TO OUT.

BILL OF MATERIAL
FOR ONE BENT

BAR	NO.	SIZE	TYPE	LENGTH	WEIGHT
B1	6	#9	1	34'-6"	704
B2	4	#11	STR	32'-2"	684
B3	6	#5	STR	32'-2"	201
B4	10	#4	STR	17'-4"	116
B5	9	#4	STR	3'-10"	23
S1	42	#5	2	12'-0"	526
S2	12	#4	4	10'-9"	86
U1	28	#4	3	7'-10"	147
U2	8	#4	3	6'-6"	35
U3	4	#4	3	6'-8"	18
U4	2	#9	3	14'-4"	97

REINFORCING STEEL	LBS.	2,637
CLASS A CONCRETE	C.Y.	19.8

NOTE: THE VOLUME OF CONCRETE DISPLACED BY THE PIPE PILES HAS BEEN DEDUCTED FROM THE TOTAL.

PP 24X0.50 GALVANIZED STEEL PILES

	NO.	LIN. FT.
BENT 5	6	660
BENT 7	6	600
BENT 9	6	630
BENT 11	6	600
BENT 13	6	570

PILE REDRIVES	EA.	3
BENT 13 PDA TESTING	EA.	1

PROJECT NO. B-4712

BLADEN COUNTY

STATION: 39+15.00 -L-

SHEET 2 OF 2

STATE OF NORTH CAROLINA
DEPARTMENT OF TRANSPORTATION
RALEIGH

SUBSTRUCTURE
BENTS 5, 7, 9, 11 & 13

NORTH CAROLINA PROFESSIONAL SEAL 21638 ENGINEER LAURA E. SUTTON 11/5/13

REVISIONS						SHEET NO.
NO.	BY:	DATE:	NO.	BY:	DATE:	S-63
1			3			TOTAL SHEETS
2			4			108

STR. #1

DRAWN BY : B.N. GRADY DATE : 1/18/12
CHECKED BY : D.R. SMITH DATE : 2/2012

08-NOV-2012 13:05
R:\Structures\Plans\str01\B4712_SD_B*_01.dgn

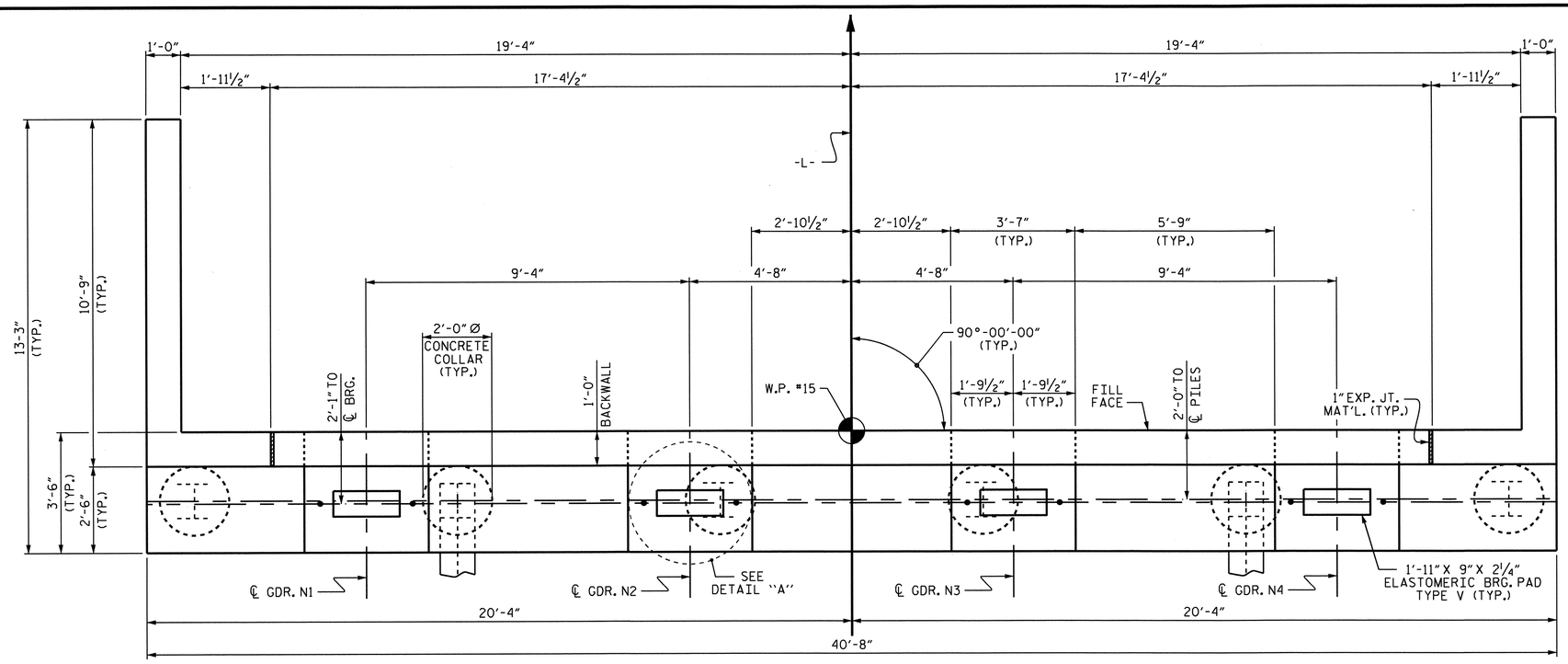

PLAN

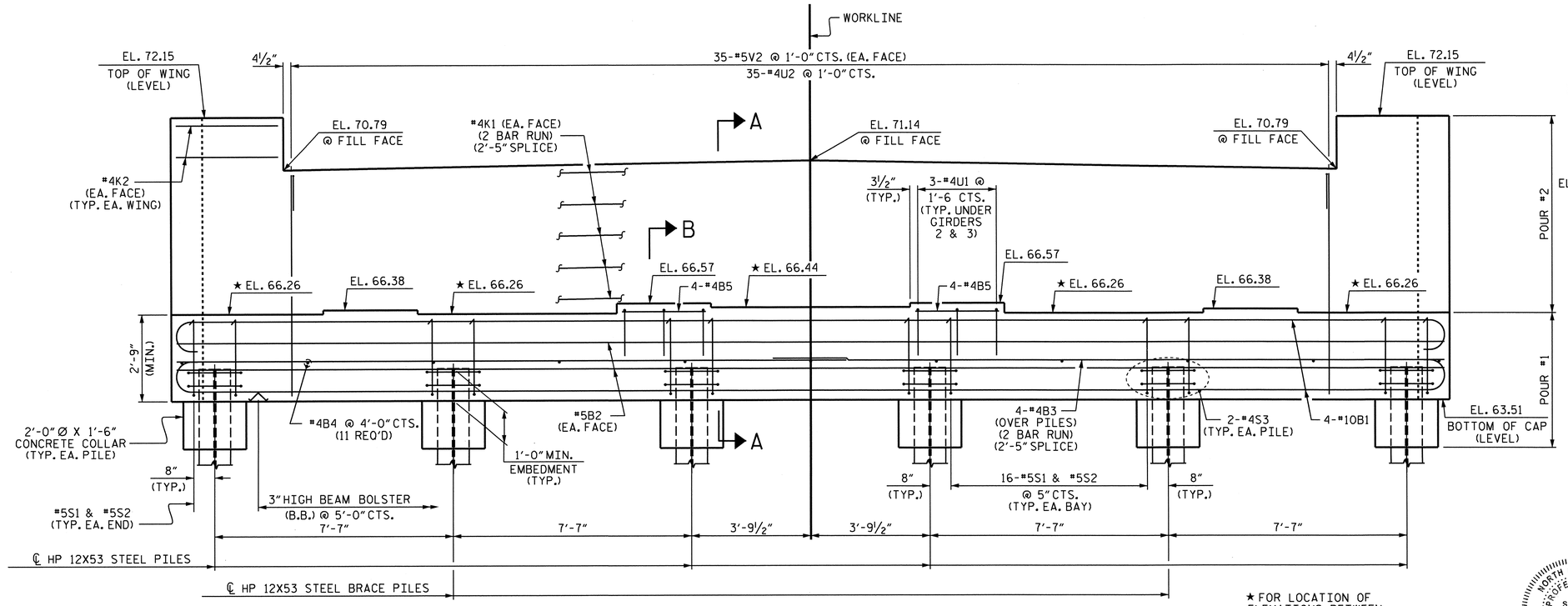

ELEVATION

★ FOR LOCATION OF ELEVATIONS BETWEEN BRIDGE SEATS BUILDUPS, SEE SECTION A-A ON SHEET 3 OF 3.

NOTES

STIRRUPS IN CAP MAY BE SHIFTED AS NECESSARY TO CLEAR ANCHOR BOLTS.

BACKWALL SHALL BE PLACED BEFORE APPLYING THE EPOXY PROTECTIVE COATING.

THE TOP SURFACE AREAS OF THE END BENT CAP SHALL BE CURED IN ACCORDANCE WITH THE STANDARD SPECIFICATIONS EXCEPT THE MEMBRANE CURING COMPOUND METHOD SHALL NOT BE USED.

THE TOP SURFACE OF THE CAP EXCEPT THE BRIDGE SEAT BUILDUPS SHALL BE SLOPED TRANSVERSELY FROM THE FILL FACE TO THE BACK FACE AT THE RATE OF 2%.

INSTALL THE 4" DIA. DRAIN PIPE THROUGH THE WING WALL AS REQUIRED FOR REINFORCED BRIDGE APPROACH FILLS, SEE THE ROADWAY PLANS. REINFORCING STEEL IN THE WING WALL MAY BE SHIFTED AS NECESSARY TO CLEAR THE DRAIN PIPE.

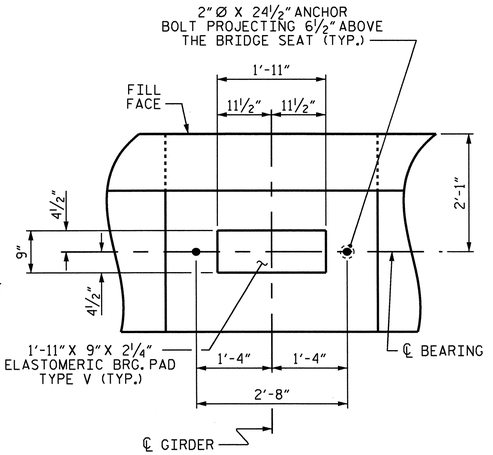

DETAIL "A"

(TYP. EA. GIRDER)

PROJECT NO. B-4712

BLADEN COUNTY

STATION: 39+15.00 -L-

SHEET 1 OF 3

STATE OF NORTH CAROLINA
DEPARTMENT OF TRANSPORTATION
RALEIGH

SUBSTRUCTURE

END BENT 2

REVISIONS						SHEET NO.
NO.	BY:	DATE:	NO.	BY:	DATE:	S-64
1			3			TOTAL SHEETS
2			4			108

STR. #1

DRAWN BY : J.P. ADAMS DATE : 2/28/12
CHECKED BY : D.R. SMITH DATE : 4/2012

03-JAN-2013 11:48
R:\Structures\Plans\str01\B4712_SD_E*_01.dgn

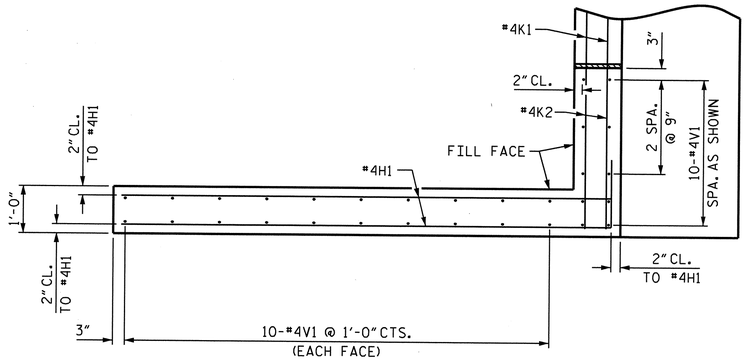

PLAN OF LEFT WING

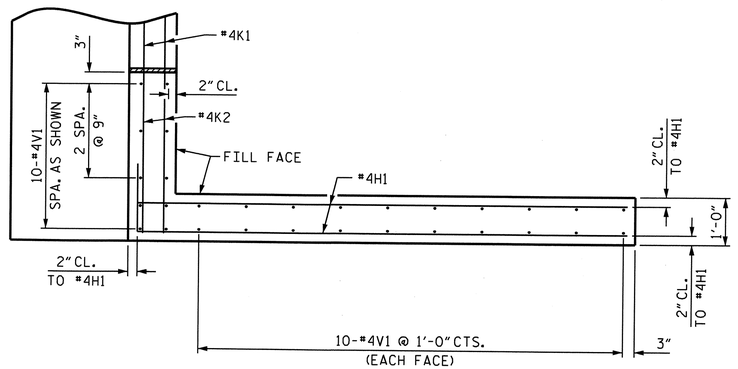

PLAN OF RIGHT WING

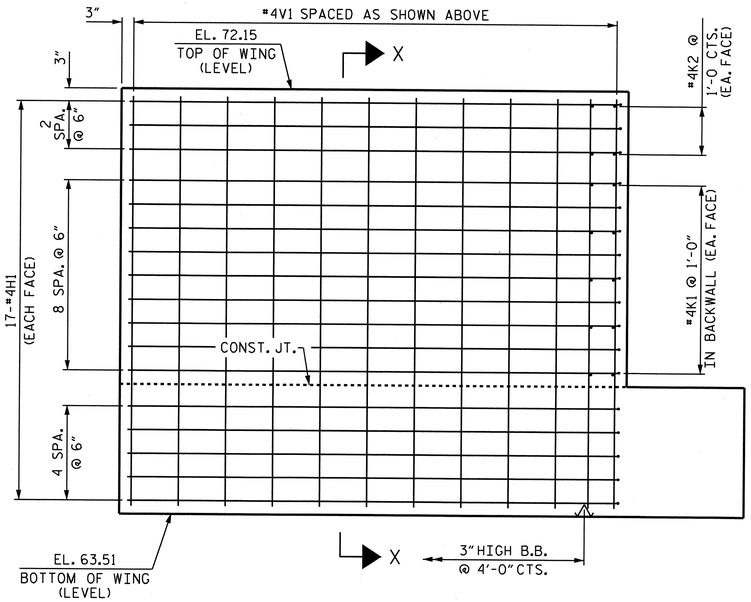

ELEVATION OF LEFT WING

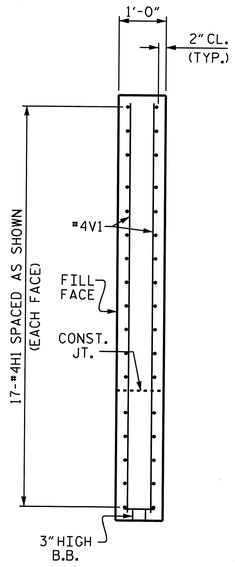

SECTION X-X

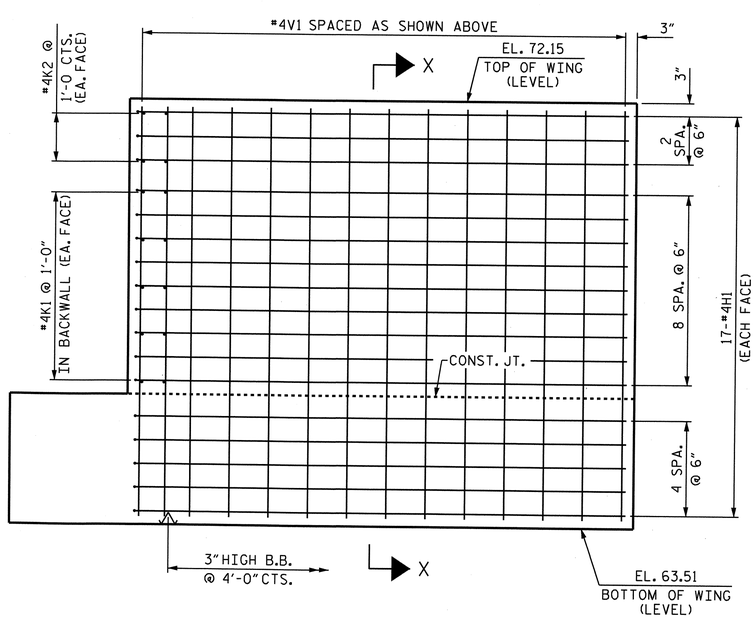

ELEVATION OF RIGHT WING

PROJECT NO. B-4712

BLADEN COUNTY

STATION: 39+15.00 -L-

SHEET 2 OF 3

STATE OF NORTH CAROLINA
DEPARTMENT OF TRANSPORTATION
RALEIGH

SUBSTRUCTURE

END BENT 2

NORTH CAROLINA PROFESSIONAL SEAL 21638 ENGINEER LAURA E. SUTTON 11/5/13

REVISIONS						SHEET NO.
NO.	BY:	DATE:	NO.	BY:	DATE:	S-65
1			3			TOTAL SHEETS
2			4			108

DRAWN BY : J.P. ADAMS DATE : 2/28/12
CHECKED BY : D.R. SMITH DATE : 4/2012

08-NOV-2012 13:05

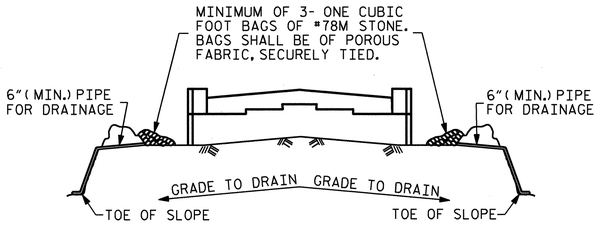

BAGGED STONE AND PIPE SHALL BE PLACED IMMEDIATELY AFTER COMPLETION OF END BENT EXCAVATION. PIPE MAY BE EITHER CONCRETE, CORRUGATED STEEL, CORRUGATED ALUMINUM ALLOY, OR CORRUGATED PLASTIC. PERFORATED PIPE WILL NOT BE ALLOWED.

BAGGED STONE SHALL REMAIN IN PLACE UNTIL THE ENGINEER DIRECTS THAT IT BE REMOVED. THE CONTRACTOR SHALL REMOVE AND DISPOSE OF SILT ACCUMULATIONS AT BAGGED STONE WHEN SO DIRECTED BY THE ENGINEER. BAGS SHALL BE REMOVED AND REPLACED WHENEVER THE ENGINEER DETERMINES THAT THEY HAVE DETERIORATED AND LOST THEIR EFFECTIVENESS.

NO SEPARATE PAYMENT WILL BE MADE FOR THIS WORK AND THE ENTIRE COST OF THIS WORK SHALL BE INCLUDED IN THE UNIT CONTRACT PRICE BID FOR THE SEVERAL PAY ITEMS.

TEMPORARY DRAINAGE AT END BENT

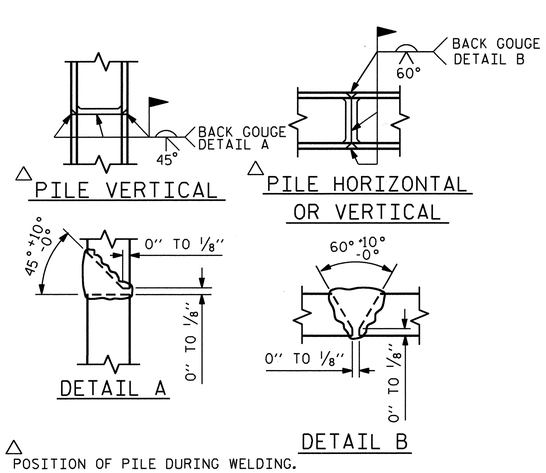

△ POSITION OF PILE DURING WELDING.

PILE SPLICE DETAILS

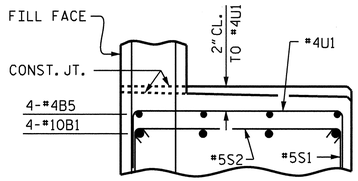

PARTIAL SECTION B

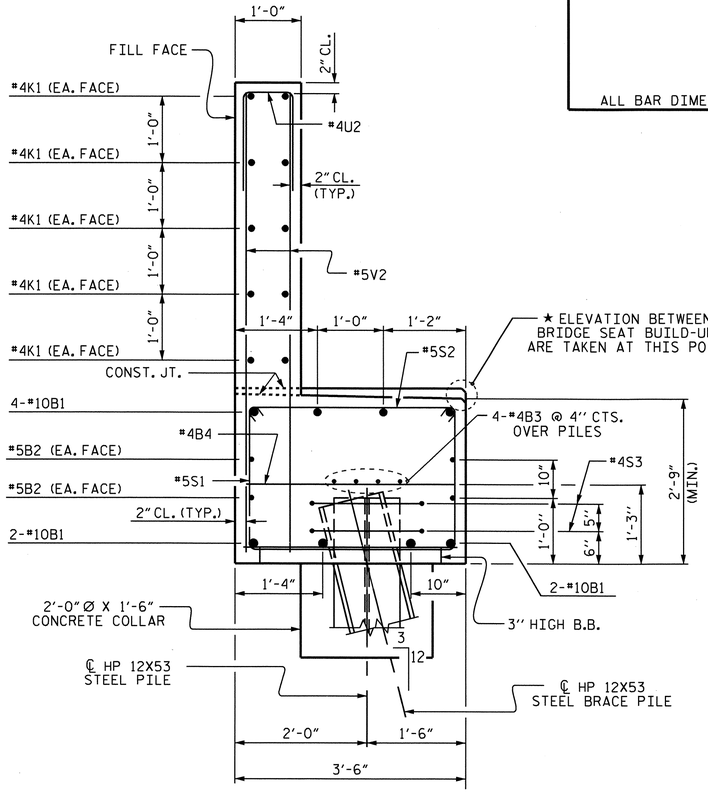

SECTION A-A

BAR TYPES

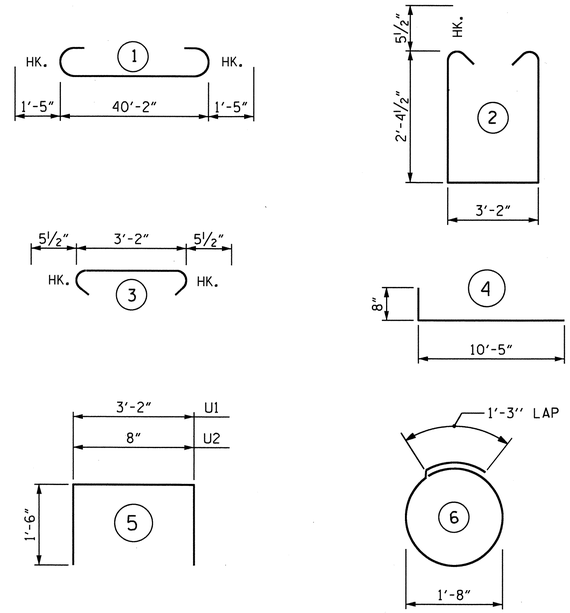

ALL BAR DIMENSIONS ARE OUT TO OUT.

BILL OF MATERIAL

END BENT 2

BAR	NO.	SIZE	TYPE	LENGTH	WEIGHT
B1	8	#10	1	43'-0"	1480
B2	4	#5	STR	40'-4"	168
B3	8	#4	STR	21'-5"	114
B4	11	#4	STR	3'-2"	23
B5	8	#4	STR	3'-3"	17
H1	68	#4	4	11'-1"	503
K1	20	#4	STR	21'-5"	286
K2	8	#4	STR	2'-7"	14
S1	82	#5	2	8'-10"	755
S2	82	#5	3	4'-1"	349
S3	12	#4	6	6'-6"	52
U1	6	#4	5	6'-2"	25
U2	35	#4	5	3'-8"	86
V1	60	#4	STR	8'-3"	331
V2	70	#5	STR	6'-11"	505

REINFORCING STEEL	LBS.	4,708
CLASS A CONCRETE BREAKDOWN		
POUR #1 CAP, COLLARS & LOWER WINGS	C.Y.	18.1
POUR #2 BACKWALL & UPPER WINGS	C.Y.	11.5
TOTAL CLASS A CONCRETE	C.Y.	29.6
HP 12X53 STEEL PILES		
NO. 6	LIN. FT.	390
PILE REDRIVES	EA.	3

PROJECT NO. B-4712

BLADEN COUNTY

STATION: 39+15.00 -L-

SHEET 3 OF 3

STATE OF NORTH CAROLINA
DEPARTMENT OF TRANSPORTATION
RALEIGH

SUBSTRUCTURE

END BENT 2

NORTH CAROLINA PROFESSIONAL SEAL 21638 ENGINEER LAURA E. SUTTON 1/03/13

REVISIONS						SHEET NO.
NO.	BY:	DATE:	NO.	BY:	DATE:	S-66
1			3			TOTAL SHEETS
2			4			108

STR. #1

DRAWN BY : J.P. ADAMS DATE : 2/28/12
CHECKED BY : D.R. SMITH DATE : 4/2012

08-NOV-2012 13:05
R:\Structures\Plans\str01\B4712_SD_E* 01.dgn

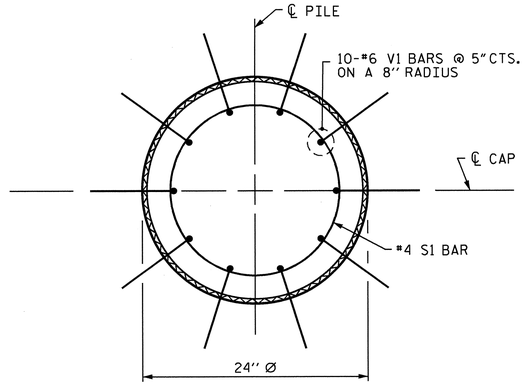

PLAN

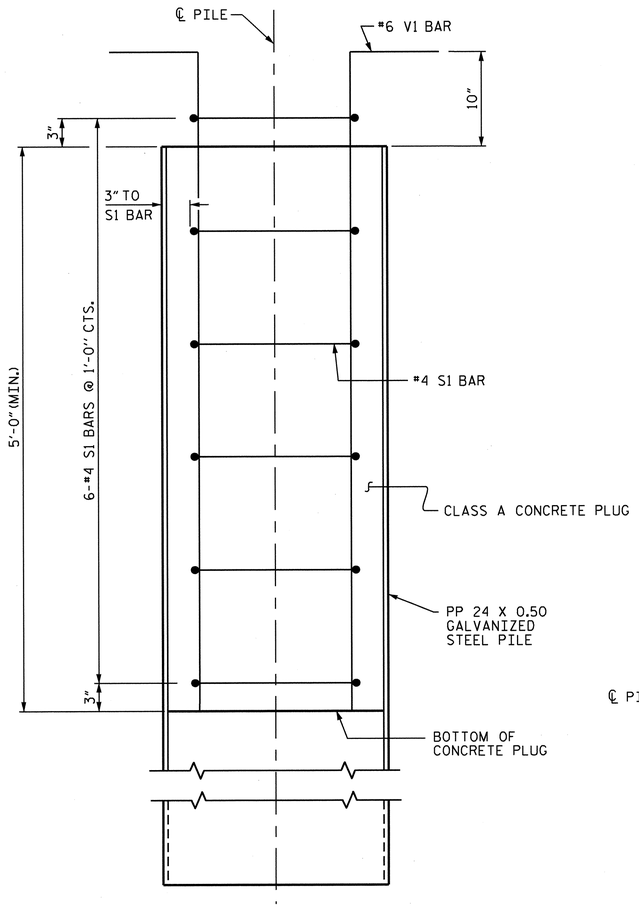

ELEVATION

PP 24 X 0.50 GALVANIZED STEEL PILE

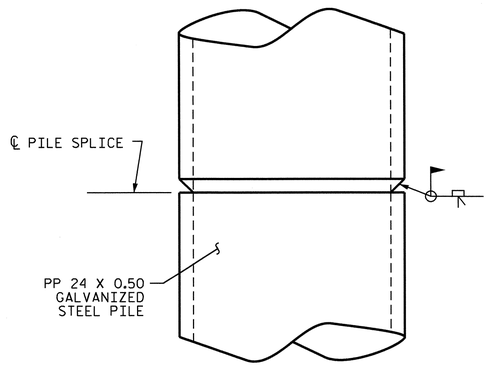

PIPE PILE SPLICE DETAIL

NOTES

PIPE PILES SHALL BE IN ACCORDANCE WITH SECTION 1084 OF THE STANDARD SPECIFICATIONS.

GALVANIZE STEEL PIPE PILES IN ACCORDANCE WITH SECTION 1076 OF THE STANDARD SPECIFICATIONS.

REMOVE AND REPLACE OR REPAIR TO THE SATISFACTION OF THE ENGINEER PILES THAT ARE DAMAGED, DEFORMED OR COLLAPSED DURING INSTALLATION OR DRIVING.

PILE SPLICES SHALL BE IN ACCORDANCE WITH THE STANDARD SPECIFICATIONS AND AWS D1.1.

FOR OPEN END PIPE PILES, REMOVE ENOUGH SOIL AND WATER FROM INSIDE THE PILES TO CONSTRUCT THE CONCRETE PLUG WITHOUT FOULING THE CONCRETE.

FORM THE CONCRETE PLUG SUCH THAT THE REINFORCING STEEL OR CONCRETE DOES NOT MOVE AND THE CLEARANCE FROM THE REINFORCING STEEL TO THE INSIDE OF THE PILE IS MAINTAINED AFTER CONCRETE PLACEMENT. DO NOT PLACE CONCRETE IN THE BENT CAP UNTIL THE CONCRETE PLUG HAS ATTAINED A MINIMUM COMPRESSIVE STRENGTH OF 1500 PSI.

THE REINFORCING STEEL, CLASS A CONCRETE, AND GALVANIZING ARE CONSIDERED INCIDENTAL TO THE CONTRACT UNIT PRICE BID PER LINEAR FOOT FOR PP 24X0.625 GALVANIZED STEEL PILES.

BILL OF MATERIAL FOR ONE PP 24X0.625 GALVANIZED STEEL PILE

BAR	NO.	SIZE	TYPE	LENGTH	WEIGHT
S1	6	#4	1	6'-0"	24
V1	10	#6	2	6'-10"	100
REINFORCING STEEL				LBS.	124
CLASS A CONCRETE 5'-0" MINIMUM PLUG				C.Y.	0.5

BAR TYPES

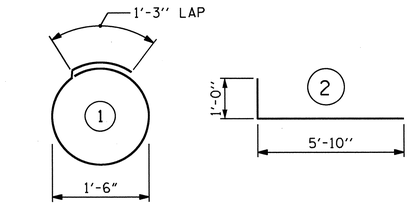

ALL BAR DIMENSIONS ARE OUT TO OUT.

PROJECT NO. B-4712

BLADEN COUNTY

STATION: 39+15.00 -L-

STATE OF NORTH CAROLINA
DEPARTMENT OF TRANSPORTATION
RALEIGH

STANDARD

24" STEEL PIPE PILE

BENT 3

REVISIONS						SHEET NO.
NO.	BY:	DATE:	NO.	BY:	DATE:	S-67
1			3			TOTAL SHEETS
2			4			108

STR. #1 STD. NO. SPP4

NORTH CAROLINA PROFESSIONAL SEAL 21638 ENGINEER LAURA E. SUTTON 11/13/13

ASSEMBLED BY : B.N. GRADY	DATE : 1/18/12
CHECKED BY : D.R. SMITH	DATE : 2/2012
DRAWN BY : TLA 8/05	ADDED 10/1/05
CHECKED BY : GM 9/05	REV. 5/1/06R MAA/KMM
	REV. 10/1/11 MAA/GM

08-NOV-2012 13:05
R:\Structures\Plans\str01\B4712_SD_B*_01.dgn

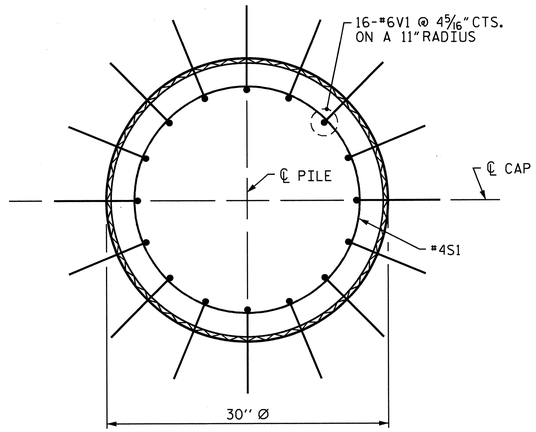

PLAN

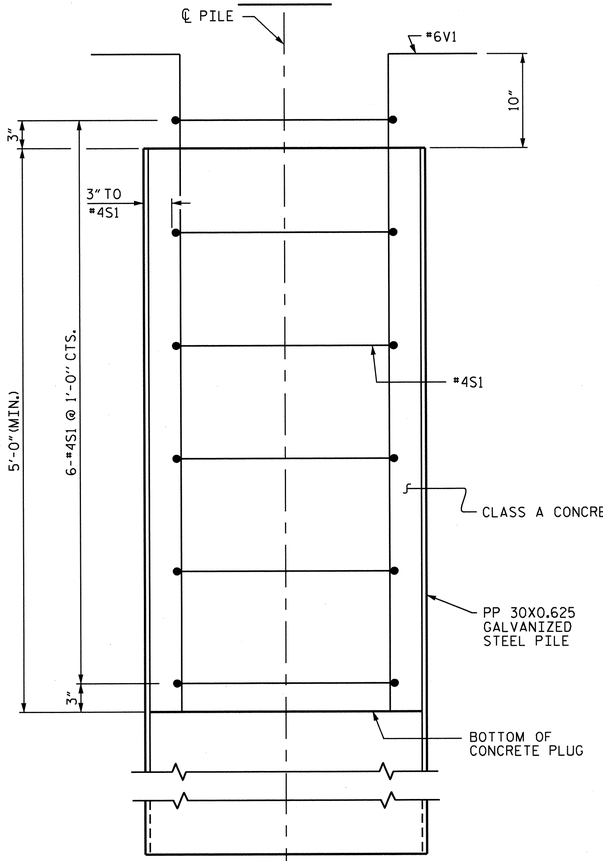

ELEVATION

PP 30X0.625 GALVANIZED STEEL PILE

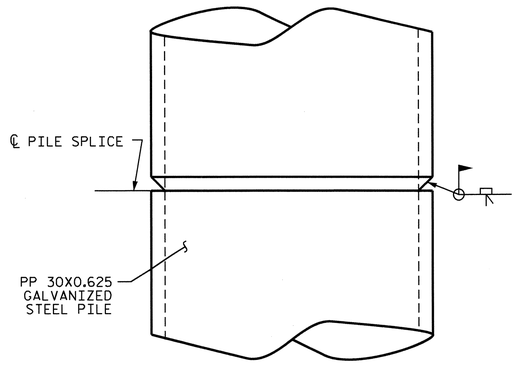

PIPE PILE SPLICE DETAIL

NOTES

PIPE PILES SHALL BE IN ACCORDANCE WITH SECTION 1084 OF THE STANDARD SPECIFICATIONS.

GALVANIZE STEEL PIPE PILES IN ACCORDANCE WITH SECTION 1076 OF THE STANDARD SPECIFICATIONS.

REMOVE AND REPLACE OR REPAIR TO THE SATISFACTION OF THE ENGINEER PILES THAT ARE DAMAGED, DEFORMED OR COLLAPSED DURING INSTALLATION OR DRIVING.

PILE SPLICES SHALL BE IN ACCORDANCE WITH THE STANDARD SPECIFICATIONS AND AWS D1.1.

FOR OPEN END PIPE PILES, REMOVE ENOUGH SOIL AND WATER FROM INSIDE THE PILES TO CONSTRUCT THE CONCRETE PLUG WITHOUT FOULING THE CONCRETE.

FORM THE CONCRETE PLUG SUCH THAT THE REINFORCING STEEL OR CONCRETE DOES NOT MOVE AND THE CLEARANCE FROM THE REINFORCING STEEL TO THE INSIDE OF THE PILE IS MAINTAINED AFTER CONCRETE PLACEMENT. DO NOT PLACE CONCRETE IN THE BENT CAP UNTIL THE CONCRETE PLUG HAS ATTAINED A MINIMUM COMPRESSIVE STRENGTH OF 1500 PSI.

THE REINFORCING STEEL, CLASS A CONCRETE, AND GALVANIZING ARE CONSIDERED INCIDENTAL TO THE CONTRACT UNIT PRICE BID PER LINEAR FOOT FOR PP 30X0.625 GALVANIZED STEEL PILES.

BILL OF MATERIAL FOR ONE PP 30X0.625 GALVANIZED STEEL PILE

BAR	NO.	SIZE	TYPE	LENGTH	WEIGHT
S1	6	#4	1	7'-7"	30
V1	16	#6	2	6'-10"	164
REINFORCING STEEL				LBS.	194
CLASS A CONCRETE 5'-0" MINIMUM PLUG				C.Y.	0.8

BAR TYPES

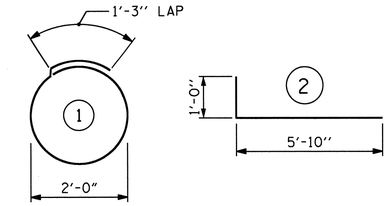

ALL BAR DIMENSIONS ARE OUT TO OUT.

PROJECT NO. B-4712

BLADEN COUNTY

STATION: 39+15.00 -L-

STATE OF NORTH CAROLINA
DEPARTMENT OF TRANSPORTATION
RALEIGH

STANDARD

30" STEEL PIPE PILE

BENTS 4 THROUGH 13

REVISIONS						SHEET NO.
NO.	BY:	DATE:	NO.	BY:	DATE:	S-68
1			3			TOTAL SHEETS
2			4			108

NORTH CAROLINA PROFESSIONAL SEAL 21638 ENGINEER LAURA E. SUTTON 1/03/13

ASSEMBLED BY : B.N. GRADY	DATE : 1/18/12
CHECKED BY : D.R. SMITH	DATE : 2/2012
DRAWN BY : TLA 8/05	ADDED 10/1/05
CHECKED BY : GM 9/05	REV. 5/1/06R MAA/KMM
	REV. 10/1/11 MAA/GM

08-NOV-2012 13:05
R:\Structures\Plans\str01\B4712_SD_B*_01.dgn

STR. #1

STD. NO. SPP5

ESTIMATED QUANTITIES			
BRIDGE @ STA. 39+15.00 -L-	CLASS B RIP RAP	RIP RAP CLASS II (2'-0" THICK)	GEOTEXTILE FOR DRAINAGE
	TONS	TONS	SQUARE YARDS
END BENT 1	280	1120	1245
END BENT 2	205	820	910

END BENT 1

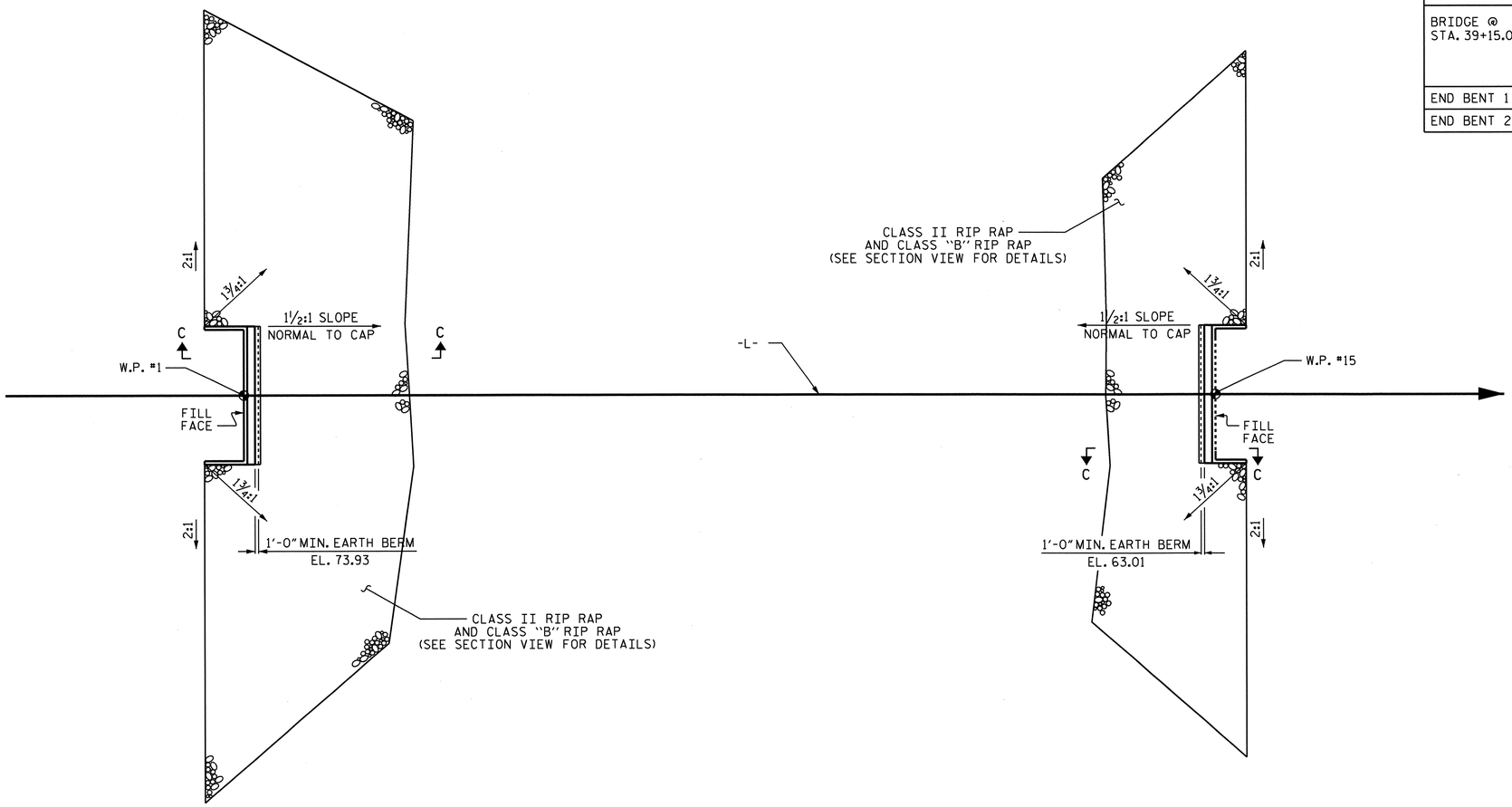

END BENT 2

PLAN OF RIP RAP

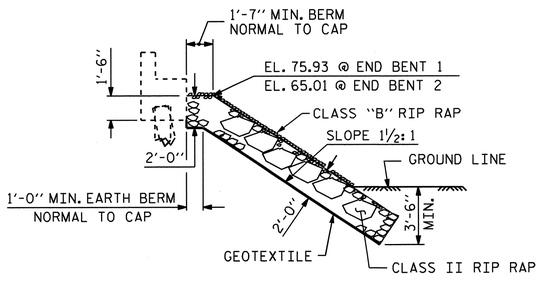

℄ SECTION
BERM RIP RAPPED

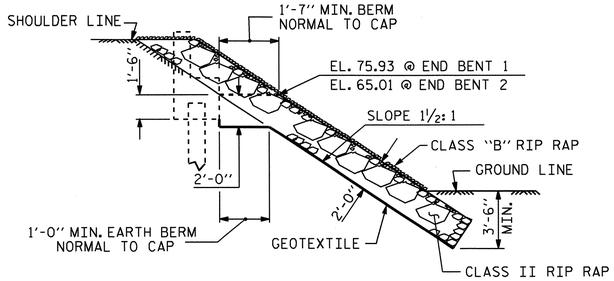

SECTION C-C

PROJECT NO. B-4712

BLADEN COUNTY

STATION: 39+15.00 -L-

STATE OF NORTH CAROLINA
DEPARTMENT OF TRANSPORTATION
RALEIGH

STANDARD

RIP RAP DETAILS

REVISIONS						SHEET NO.
NO.	BY:	DATE:	NO.	BY:	DATE:	S-69
1			3			TOTAL SHEETS
2			4			108

DRAWN BY : J. C. KHARVA DATE : 2/12
CHECKED BY : B. N. GRADY DATE : 2/12

03-JAN-2013 12:07
R:\structures\Plans\str01\B4712_SD_RR_01.dgn

STR. #1

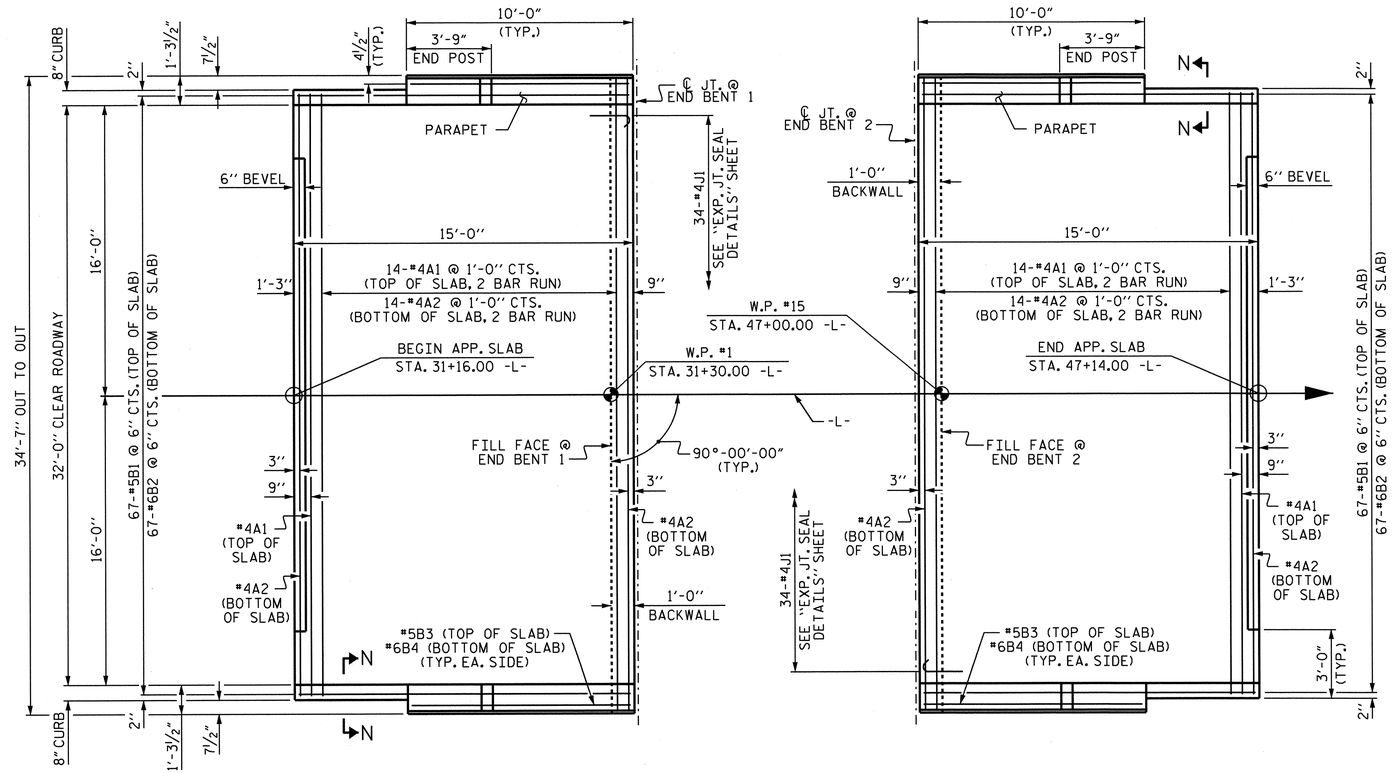

DIMENSIONS SHOWN ARE TYPICAL FOR BOTH APPROACH SLABS

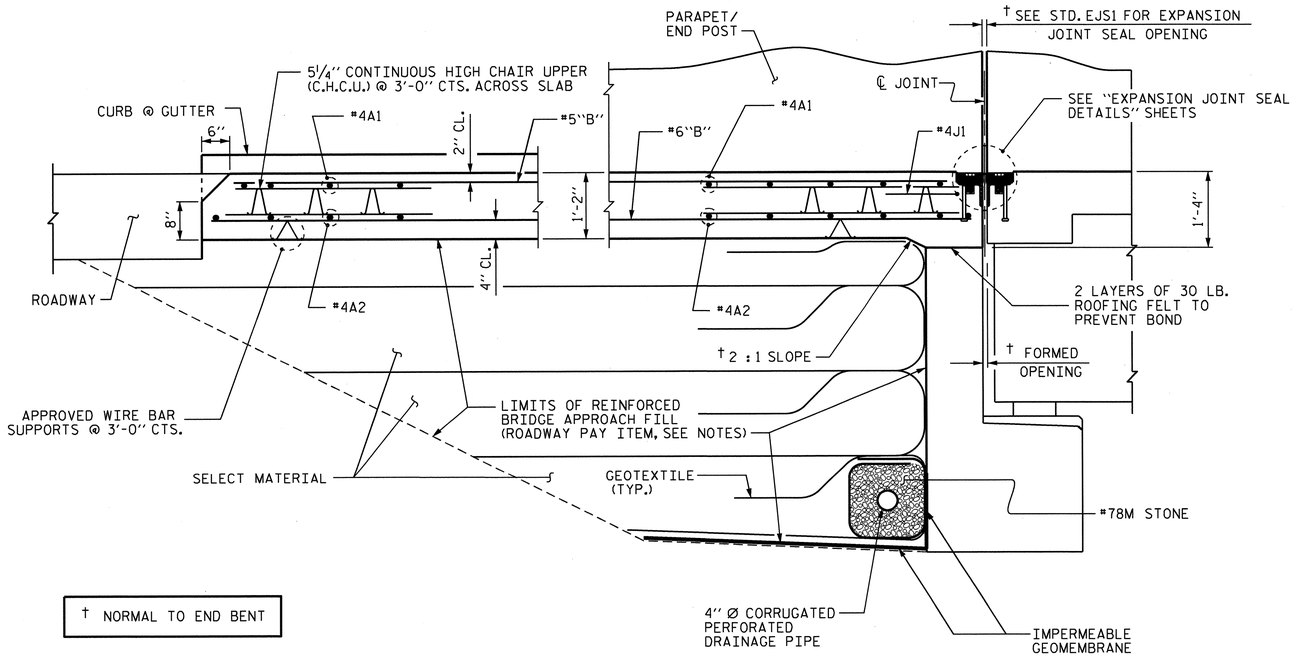

† NORMAL TO END BENT

SECTION THRU SLAB

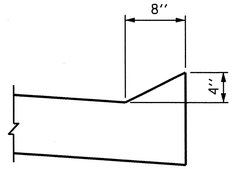

SECTION N-N

NOTES

APPROACH SLAB SHALL NOT BE CONSTRUCTED PRIOR TO COMPLETION OF THE BRIDGE DECK.

FOR REINFORCED BRIDGE APPROACH FILL INCLUDING GEOTEXTILE, IMPERMEABLE GEOMEMBRANE, 4" Ø DRAINAGE PIPE, #78M STONE, AND SELECT MATERIAL, SEE ROADWAY PLANS.

AREA BETWEEN THE WINGWALL AND APPROACH SLAB SHALL BE GRADED TO DRAIN THE WATER AWAY FROM THE FILL FACE OF THE BRIDGE AND SHALL BE PAVED. SEE ROADWAY PLANS.

FOR EXPANSION JOINT SEALS, SEE SPECIAL PROVISIONS.

THE COST OF THE CONCRETE PARAPET, END POSTS, AND 2 BAR METAL RAIL ON THE APPROACH SLAB SHALL BE INCLUDED IN THE CONTRACT PRICE BID FOR THE VARIOUS PAY ITEMS. SEE "CONCRETE PARAPET AND END POST DETAILS" AND "2 BAR METAL RAIL" SHEETS.

THE CONCRETE PARAPET AND END POSTS ON EACH APPROACH SLAB SHALL NOT BE CAST UNTIL ALL APPROACH SLAB CONCRETE HAS BEEN CAST AND HAS REACHED A MINIMUM COMPRESSIVE STRENGTH OF 3,000 PSI.

ALL REINFORCING STEEL IN CONCRETE PARAPET AND END POSTS SHALL BE EPOXY COATED.

THE QUANTITY OF #4J1 BARS IN THE BILL OF MATERIAL IS BASED ON 1'-0" CENTERS. J1 BARS SHALL BE PLACED AT EACH VERTICAL STUD ANCHOR BOLT. IN THE EVENT THAT THE NUMBER OF VERTICAL STUD ANCHORS EXCEEDS THE NUMBER OF J1 BARS SPECIFIED, ADDITIONAL J1 BARS WILL NOT BE REQUIRED.

BAR TYPE

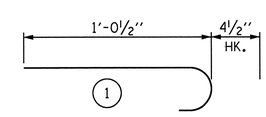

ALL BAR DIMENSION ARE OUT TO OUT.

BILL OF MATERIAL

FOR ONE APPROACH SLAB (2 REQ'D)

BAR	NO.	SIZE	TYPE	LENGTH	WEIGHT
* A1	30	#4	STR	18'-2"	364
A2	32	#4	STR	18'-0"	385
* B1	67	#5	STR	13'-10"	967
B2	67	#6	STR	14'-8"	1476
* B3	2	#5	STR	9'-4"	19
B4	2	#6	STR	9'-8"	29
* J1	34	#4	1	1'-5"	32
REINFORCING STEEL				LBS.	1,890
* EPOXY COATED REINFORCING STEEL				LBS.	1,382
CLASS AA CONCRETE				C.Y.	22.3

PROJECT NO. B-4712

BLADEN COUNTY

STATION: 39+15.00 -L-

SHEET 1 OF 2

STATE OF NORTH CAROLINA
DEPARTMENT OF TRANSPORTATION
RALEIGH
STANDARD

BRIDGE APPROACH SLAB FOR FLEXIBLE PAVEMENT

REVISIONS						SHEET NO.
NO.	BY:	DATE:	NO.	BY:	DATE:	S-70
1			3			TOTAL SHEETS
2			4			108

STR. #1 STD. NO. BAS2

ASSEMBLED BY : M.K. BEARD	DATE : 10/17/12	REV. 5/1/06RR	KMM/GM
CHECKED BY : J.D. HAWK	DATE : 10/12	REV. 10/1/11	MAA/GM
DRAWN BY : EEM 3/95		REV. 12/21/11	MAA/GM
CHECKED BY : VAP 3/95			

08-NOV-2012 13:05
R:\Structures\Plans\str01\B4712_SD_AS_01.dgn

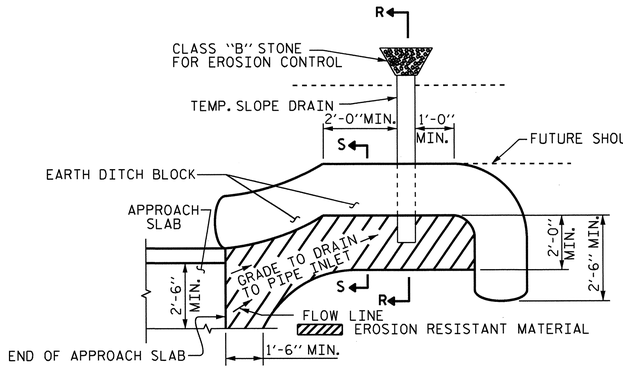

NOTE: IMMEDIATELY AFTER THE CONSTRUCTION OF THE APPROACH SLAB, THE CONTRACTOR SHALL PROVIDE TEMPORARY BERM AND SLOPE DRAIN. CONTRACTOR SHALL GRADE TO PIPE INLET AND PROVIDE EROSION RESISTANT MATERIAL AS SHOWN. THE EROSION RESISTANT MATERIAL SHALL BE EITHER 1) ASPHALT PLANT MIX, TYPE 1 OR TYPE 2, MIN. 2" DEPTH, 2) EROSION CONTROL MAT, OR 3) CONCRETE, AS DIRECTED BY THE ENGINEER. THE SLOPE DRAIN SHALL CONSIST OF A NON-PERFORATED TEMPORARY DRAINAGE PIPE, 12 INCHES IN DIAMETER.

PLAN VIEW

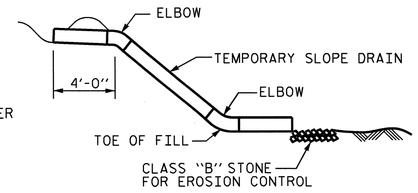

SECTION R-R

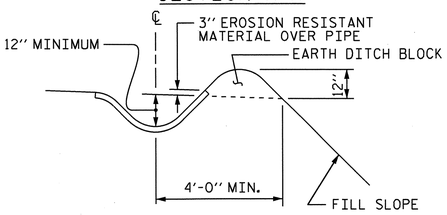

SECTION S-S

TEMPORARY BERM AND SLOPE DRAIN DETAILS

(TO BE USED WHEN SHOULDER BERM GUTTER IS REQUIRED)

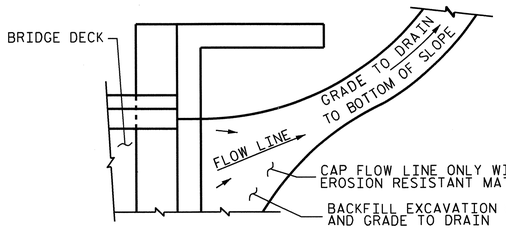

NOTE: IF THE APPROACH SLAB IS NOT CONSTRUCTED IMMEDIATELY AFTER THE BACKFILLING OF THE END BENT EXCAVATION, GRADE TO DRAIN TO THE BOTTOM OF THE SLOPE AND PROVIDE EROSION RESISTANT MATERIAL, SUCH AS FIBERGLASS ROVING OR AS DIRECTED BY THE ENGINEER TO PREVENT SOIL EROSION AND TO PROTECT THE AREA ADJACENT TO THE STRUCTURE. THE CONTRACTOR WILL BE REQUIRED TO REMOVE THESE MATERIALS PRIOR TO CONSTRUCTION OF THE APPROACH SLAB.

TEMPORARY DRAINAGE DETAIL

PROJECT NO. B-4712

BLADEN COUNTY

STATION: 39+15.00 -L-

SHEET 2 OF 2

STATE OF NORTH CAROLINA
DEPARTMENT OF TRANSPORTATION
RALEIGH

STANDARD

BRIDGE APPROACH SLAB DETAILS

REVISIONS						SHEET NO.
NO.	BY:	DATE:	NO.	BY:	DATE:	S-71
1			3			TOTAL SHEETS
2			4			108

STR. #1 STD. NO. BAS4

ASSEMBLED BY : M.K. BEARD		DATE : 10/17/12	
CHECKED BY : J.D. HAWK		DATE : 10/12	
DRAWN BY : FCJ	11/88	REV. 5/7/03	RWW/JTE
CHECKED BY : ARB	11/88	REV. 5/1/06RRR	MAA/KMM
		REV. 10/1/11	MAA/GM

08-NOV-2012 13:05
R:\Structures\Plans\str01\B4712_SD_AS_01.dgn

F. A. PROJECT No. BRZ-1316(18)

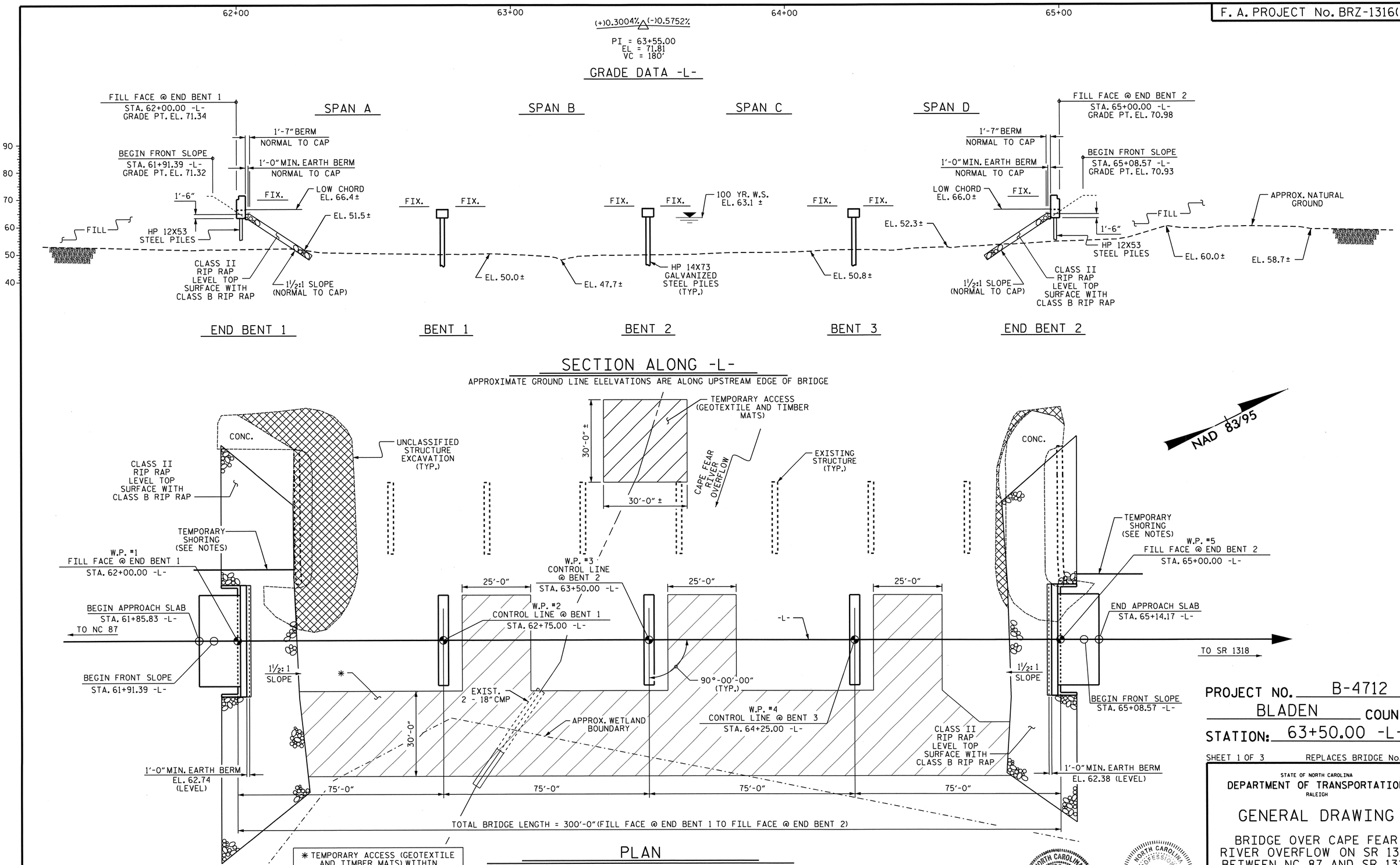

PLAN

(PILES NOT SHOWN IN PLAN VIEW FOR CLARITY)

* TEMPORARY ACCESS (GEOTEXTILE AND TIMBER MATS) WITHIN WETLAND BOUNDARY EXTEND OUT APPROX. 30' FROM PROPOSED STRUCTURE. EXTEND EXIST. 2 - 18" CMP, BACKFILL TO TOP OF PIPE WITH GEOTEXTILE AND #57 STONE

PROJECT NO. B-4712

BLADEN COUNTY

STATION: 63+50.00 -L-

SHEET 1 OF 3 REPLACES BRIDGE No. 189

STATE OF NORTH CAROLINA
DEPARTMENT OF TRANSPORTATION
RALEIGH

GENERAL DRAWING

BRIDGE OVER CAPE FEAR RIVER OVERFLOW ON SR 1316 BETWEEN NC 87 AND SR 1318

REVISIONS						SHEET NO.
NO.	BY:	DATE:	NO.	BY:	DATE:	S-72
1			3			TOTAL SHEETS
2			4			108

NORTH CAROLINA PROFESSIONAL SEAL 24091 ENGINEER BUCK CHARLES HUNT 1/3/13

NORTH CAROLINA PROFESSIONAL SEAL 21638 ENGINEER LAURA E. SUTTON 1/3/13

DRAWN BY : J.P. ADAMS DATE : 7/23/12
CHECKED BY : D.R. SMITH DATE : 8/2012

03-JAN-2013 12:08
R:\Structures\Plans\str02\B4712_sd_GD_02.dgn

STR. #2

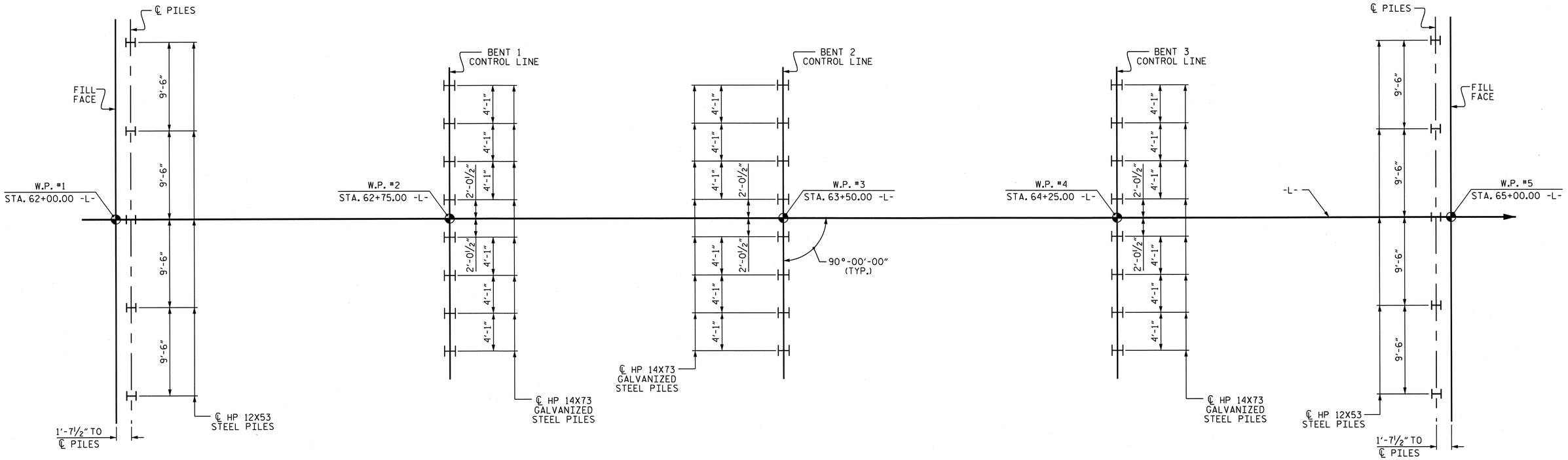

FOUNDATION LAYOUT

PILE LOCATION IS TO THE CENTERLINE PILE.

NOTES

FOR PILES, SEE SECTION 450 OF THE STANDARD SPECIFICATIONS.

FOR PILE DRIVING CRITERIA, SEE SPECIAL PROVISIONS.

PILES AT END BENT 1 AND END BENT 2 ARE DESIGNED FOR A FACTORED RESISTANCE OF 120 TONS PER PILE.

DRIVE PILES AT END BENT 1 AND END BENT 2 TO A REQUIRED DRIVING RESISTANCE OF 200 TONS PER PILE.

PILES AT BENT 1, BENT 2 AND BENT 3 ARE DESIGNED FOR A FACTORED RESISTANCE OF 160 TONS PER PILE.

DRIVE PILES AT BENT 1, BENT 2 AND BENT 3 TO A REQUIRED DRIVING RESISTANCE OF 280 TONS PER PILE. THIS REQUIRED DRIVING RESISTANCE INCLUDES ADDITIONAL RESISTANCE FOR DOWNDRAG OR SCOUR.

INSTALL PILES AT BENT 1, BENT 2 AND BENT 3 TO A TIP ELEVATION NO HIGHER THAN EL. 18.00.

THE SCOUR CRITICAL ELEVATION FOR BENT 1, BENT 2 AND BENT 3 IS EL. 42.00. SCOUR CRITICAL ELEVATIONS ARE USED TO MONITOR POSSIBLE SCOUR PROBLEMS DURING THE LIFE OF THE STRUCTURE.

IT HAS BEEN ESTIMATED THAT A HAMMER WITH AN EQUIVALENT RATED ENERGY IN THE RANGE OF 55,000 FT-LBS PER BLOWS TO 95,000 FT-LBS PER BLOW WILL BE REQUIRED TO DRIVE PILES AT BENT 1, BENT 2 AND BENT 3. THIS ESTIMATED ENERGY RANGE DOES NOT RELEASE THE CONTRACTOR FROM PROVIDING EQUIPMENT IN ACCORDANCE WITH SUBARTICLE 450-3(D)(2) OF THE STANDARD SPECIFICATIONS.

TESTING PILES WITH THE PDA DURING DRIVING, RESTRIKING OR REDRIVING MAY BE REQUIRED. THE ENGINEER WILL DETERMINE THE NEED FOR PDA TESTING. FOR PDA TESTING, SEE SECTION 450 OF THE STANDARD SPECIFICATIONS.

NORTH CAROLINA PROFESSIONAL SEAL 21638 ENGINEER LAURA E. SUTTON 11/03/13

DRAWN BY : J.P. ADAMS DATE : 7/23/12
CHECKED BY : D.R. SMITH DATE : 8/2012

07-NOV-2012 15:55
R:\Structures\Plans\str02\B4712_sd_GD_02.dgn

PROJECT NO. B-4712
BLADEN COUNTY
STATION: 63+50.00 -L-

SHEET 2 OF 3

STATE OF NORTH CAROLINA
DEPARTMENT OF TRANSPORTATION
RALEIGH

GENERAL DRAWING

BRIDGE OVER CAPE FEAR RIVER OVERFLOW ON SR 1316 BETWEEN NC 87 AND SR 1318

REVISIONS						SHEET NO.
NO.	BY:	DATE:	NO.	BY:	DATE:	S-73
1			3			TOTAL SHEETS
2			4			108

STR. #2

BM #2: RR SPIKE IN BASE OF 18" CHESTNUT TREE, 219' LT. OF STA. 37+36.00 L-, EL. 44.33

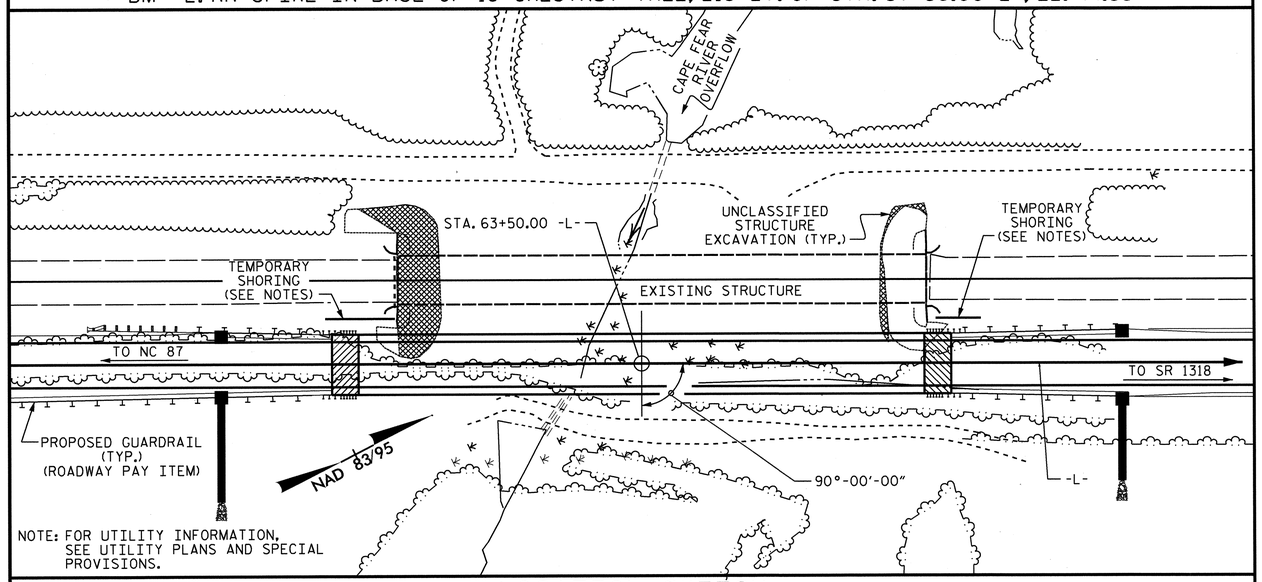

NOTE: FOR UTILITY INFORMATION, SEE UTILITY PLANS AND SPECIAL PROVISIONS.

LOCATION SKETCH

NOTES

ASSUMED LIVE LOAD = HL-93 OR ALTERNATE LOADING.

THIS BRIDGE HAS BEEN DESIGNED IN ACCORDANCE WITH THE AASHTO LRFD BRIDGE DESIGN SPECIFICATIONS.

THIS BRIDGE IS LOCATED IN SEISMIC ZONE 2.

THIS STRUCTURE HAS BEEN DESIGNED IN ACCORDANCE WITH "HEC 18 - EVALUATING SCOUR AT BRIDGES".

FOR OTHER DESIGN DATA AND GENERAL NOTES, SEE SHEET SN.

FOR EROSION CONTROL MEASURES, SEE EROSION CONTROL PLANS.

FOR SUBMITTAL OF WORKING DRAWINGS, SEE SPECIAL PROVISIONS.

FOR FALSEWORK AND FORMWORK, SEE SPECIAL PROVISIONS.

FOR CRANE SAFETY, SEE SPECIAL PROVISIONS.

FOR GROUT FOR STRUCTURES, SEE SPECIAL PROVISIONS.

FOR CONSTRUCTION, MAINTENANCE AND REMOVAL OF TEMPORARY ACCESS AT STATION 63+50.00 -L-, SEE SPECIAL PROVISIONS.

THE CONTRACTOR SHALL PROVIDE INDEPENDENT ASSURANCE SAMPLES OF REINFORCING STEEL AS FOLLOWS: FOR PROJECTS REQUIRING UP TO 400 TONS OF REINFORCING STEEL, ONE 30 INCH SAMPLE OF EACH SIZE BAR USED, AND FOR PROJECTS REQUIRING OVER 400 TONS OF REINFORCING STEEL, TWO 30 INCH SAMPLES OF EACH SIZE BAR USED. THE BARS FROM WHICH THE SAMPLES ARE TAKEN MUST THEN BE SPLICED WITH REPLACEMENT BARS OF THE SIZE AND LENGTH OF THE SAMPLE, PLUS A MINIMUM LAP SPLICE OF THIRTY BAR DIAMETERS. PAYMENT FOR THE SAMPLES OF REINFORCING STEEL SHALL BE CONSIDERED INCIDENTAL TO VARIOUS PAY ITEMS.

PRESTRESSED CONCRETE DECK PANELS MAY BE USED IN LIEU OF METAL STAY-IN-PLACE FORMS IN ACCORDANCE WITH ARTICLE 420-3 OF THE STANDARD SPECIFICATIONS.

REMOVABLE FORMS MAY BE USED IN LIEU OF METAL STAY-IN-PLACE FORMS IN ACCORDANCE WITH ARTICLE 420-3 OF THE STANDARD SPECIFICATIONS.

NEEDLE BEAMS WILL NOT BE ALLOWED UNLESS OTHERWISE CALLED FOR ON THE PLANS OR APPROVED BY THE ENGINEER.

THE MATERIAL SHOWN IN THE CROSS-HATCHED AREA ON SHALL BE EXCAVATED FOR A DISTANCE OF 85 FEET LEFT OF CENTERLINE ROADWAY AS DIRECTED BY THE ENGINEER. THIS WORK WILL BE PAID FOR AT THE CONTRACT LUMP SUM PRICE FOR UNCLASSIFIED STRUCTURE EXCAVATION. SEE SECTION 412 OF THE STANDARD SPECIFICATIONS.

INASMUCH AS THE PAINT SYSTEM ON THE EXISTING STRUCTURAL STEEL CONTAINS LEAD, THE CONTRACTOR'S ATTENTION IS DIRECTED TO ARTICLE 107-1 OF THE STANDARD SPECIFICATIONS. ANY COSTS RESULTING FROM COMPLIANCE WITH APPLICABLE STATE OR FEDERAL REGULATIONS PERTAINING TO HANDLING OF MATERIALS CONTAINING LEAD BASED PAINT SHALL BE INCLUDED IN THE BID PRICE FOR "REMOVAL OF EXISTING STRUCTURE AT STATION 63+50.00 -L-".

FOR LIMITS OF TEMPORARY SHORING FOR MAINTENANCE OF TRAFFIC, SEE TRAFFIC CONTROL PLANS. FOR PAY ITEM FOR TEMPORARY SHORING FOR MAINTENANCE OF TRAFFIC, SEE ROADWAY PLANS.

AFTER SERVING AS A TEMPORARY STRUCTURE, THE EXISTING STRUCTURE CONSISTING OF 8 SPANS (1 @ 35'-6", 6 @ 35'-0" AND 1 @ 35'-2") WITH A REINFORCED CONCRETE DECK ON I-BEAMS WITH A CLEAR ROADWAY WIDTH OF 26'-0" ON REINFORCED CONCRETE CAP AND REINFORCED CONCRETE PILES AND LOCATED AT THE PROPOSED SITE SHALL BE REMOVED. THE EXISTING BRIDGE IS PRESENTLY NOT POSTED FOR LOAD LIMIT. SHOULD THE STRUCTURAL INTEGRITY OF THE BRIDGE DETERIORATE A LOAD LIMIT MAY BE POSTED AND MAY BE REDUCED AS FOUND NECESSARY DURING THE LIFE OF THE PROJECT.

THE SUBSTRUCTURE OF THE EXISTING BRIDGE INDICATED ON THE PLANS IS FROM THE BEST INFORMATION AVAILABLE. SINCE THIS INFORMATION IS SHOWN FOR THE CONVENIENCE OF THE CONTRACTOR, THE CONTRACTOR SHALL HAVE NO CLAIM WHATSOEVER AGAINST THE DEPARTMENT OF TRANSPORTATION FOR ANY DELAYS OR ADDITIONAL COST INCURRED BASED ON DIFFERENCES BETWEEN THE EXISTING BRIDGE SUBSTRUCTURE SHOWN ON THE PLANS AND THE ACTUAL CONDITIONS AT THE PROJECT SITE.

REMOVAL OF THE EXISTING BRIDGE SHALL BE PERFORMED SO AS NOT TO ALLOW DEBRIS TO FALL INTO THE WATER. THE CONTRACTOR SHALL REMOVE THE BRIDGE AND SUBMIT PLANS FOR DEMOLITION IN ACCORDANCE WITH ARTICLE 402-2 OF THE STANDARD SPECIFICATIONS.

FOR INTERIOR BENTS, ONLY PARTIAL GALVANIZING OF THE PILES IS REQUIRED. SEE INTERIOR BENT SHEETS FOR REQUIRED GALVANIZED LENGTHS. PAYMENT FOR PARTIALLY GALVANIZED PILES WILL BE MADE UNDER THE CONTRACT UNIT PRICE FOR GALVANIZED STEEL PILES.

TOTAL BILL OF MATERIAL

	CONSTRUCTION, MAINTENANCE & REMOVAL OF TEMPORARY ACCESS	REMOVAL OF EXISTING STRUCTURE	PDA TESTING	UNCLASSIFIED STRUCTURE EXCAVATION	REINFORCED CONCRETE DECK SLAB	GROOVING BRIDGE FLOORS	CLASS A CONCRETE	BRIDGE APPROACH SLABS	REINFORCING STEEL	45" PRESTRESSED CONCRETE GIRDERS		HP 12X53 STEEL PILES		HP 14X73 GALVANIZED STEEL PILES		PILE REDRIVES	2 BAR METAL RAIL	1'-2"X 2'-6" CONCRETE PARAPET	RIP RAP CLASS B	RIP RAP CLASS II (2'-0" THICK)	GEOTEXTILE FOR DRAINAGE	ELASTOMERIC BEARINGS
	LUMP SUM	LUMP SUM	EACH	LUMP SUM	SQ. FT.	SQ. FT.	CU. YDS.	LUMP SUM	LBS.	NO.	LIN. FT.	NO.	LIN. FT.	NO.	LIN. FT.	EACH	LIN. FT.	LIN. FT.	TONS	TONS	SQ. YDS.	LUMP SUM
SUPERSTRUCTURE					10,375	9,452				16	1182.33						581.67	596.67				LUMP SUM
END BENT 1							17.2		2,835			5	375			3			120	475	525	
BENT 1							12.0		2,079					8	720	4						
BENT 2							12.0		2,079					8	720	4						
BENT 3							12.0		2,079					8	720	4						
END BENT 2							17.2		2,835			5	375			3			100	395	440	
TOTAL	LUMP SUM	LUMP SUM	1	LUMP SUM	10,375	9,452	70.4	LUMP SUM	11,907	16	1182.33	10	750	24	2,160	18	581.67	596.67	220	870	965	LUMP SUM

HYDROGRAPHIC DATA

DESIGN DISCHARGE	= 112000 CFS
FREQUENCY OF DESIGN FLOOD	= 50 YR
DESIGN HIGH WATER ELEVATION	= 61.9
DRAINAGE AREA	= N/A
BASE DISCHARGE (Q100)	= 121000 CFS
BASE HIGH WATER ELEVATION	= 63.1

OVERTOPPING FLOOD DATA

OVERTOPPING DISCHARGE	= N/A
FREQUENCY OF OVERTOPPING FLOOD	= 500 YR+
OVERTOPPING FLOOD ELEVATION	= 68.4

DRAWN BY : J.P. ADAMS DATE : 7/23/12
CHECKED BY : D.R. SMITH DATE : 8/2012

07-NOV-2012 15:55
R:\Structures\Plans\str02\B4712_sd_GD_02.dgn

PROJECT NO. B-4712
BLADEN COUNTY
STATION: 63+50.00 -L-

SHEET 3 OF 3

STATE OF NORTH CAROLINA
DEPARTMENT OF TRANSPORTATION
RALEIGH

GENERAL DRAWING

BRIDGE OVER CAPE FEAR RIVER OVERFLOW ON SR 1316 BETWEEN NC 87 AND SR 1318

NORTH CAROLINA PROFESSIONAL SEAL 21638 ENGINEER LAURA E. SUTTON 11/09/13

REVISIONS						SHEET NO.
NO.	BY:	DATE:	NO.	BY:	DATE:	S-74
1			3			TOTAL SHEETS
2			4			108

STR. #2

LOAD AND RESISTANCE FACTOR RATING (LRFR) SUMMARY FOR PRESTRESSED CONCRETE GIRDERS

LEVEL		VEHICLE	WEIGHT (W) (TONS)	CONTROLLING LOAD RATING (#)	MINIMUM RATING FACTORS (RF)	TONS = W x RF	STRENGTH I LIMIT STATE										SERVICE III LIMIT STATE						COMMENT NUMBER
								MOMENT					SHEAR					MOMENT						
							LIVE-LOAD FACTORS (γ_{LL})	DISTRIBUTION FACTORS (DF)	RATING FACTOR	SPAN	GIRDER LOCATION	DISTANCE FROM LEFT END OF SPAN (ft)	DISTRIBUTION FACTORS (DF)	RATING FACTOR	SPAN	GIRDER LOCATION	DISTANCE FROM LEFT END OF SPAN (ft)	LIVE-LOAD FACTORS (γ_{LL})	DISTRIBUTION FACTORS (DF)	RATING FACTOR	SPAN	GIRDER LOCATION	DISTANCE FROM LEFT END OF SPAN (ft)	
DESIGN LOAD RATING		HL-93 (INVENTORY)	N/A	1	1.02	--	1.75	0.827	1.47	B	ER	36.417	0.901	2.33	B	I	29.133	0.80	0.901	1.02	B	I	36.417	
		HL-93 (OPERATING)	N/A		1.91	--	1.35	0.827	1.91	B	ER	36.417	0.901	3.01	B	I	29.133	N/A	--	--	--	--	--	
		HS-20 (INVENTORY)	36.000	2	1.34	48.07	1.75	0.827	1.93	B	ER	36.417	0.901	2.74	B	I	29.133	0.80	0.76	1.34	B	I	36.417	
		HS-20 (OPERATING)	36.000		2.50	90.11	1.35	0.827	2.50	B	ER	36.417	0.901	3.55	B	I	29.133	N/A	--	--	--	--	--	
LEGAL LOAD RATING	SINGLE VEHICLE (SV)	SNSH	13.500		3.01	40.70	1.40	0.827	5.45	B	ER	36.417	0.901	7.63	B	I	29.133	0.80	0.76	3.01	B	I	36.417	
		SNGARBS2	20.000		2.25	44.93	1.40	0.827	4.06	B	ER	36.417	0.901	5.58	B	I	29.133	0.80	0.76	2.25	B	I	36.417	
		SNAGRIS2	22.000		2.13	46.80	1.40	0.827	3.85	B	ER	36.417	0.901	5.25	B	I	29.133	0.80	0.76	2.13	B	I	36.417	
		SNCOTTS3	27.250		1.50	40.88	1.40	0.827	2.71	B	ER	36.417	0.901	3.83	B	I	29.133	0.80	0.76	1.50	B	I	36.417	
		SNAGGRS4	34.925		1.25	43.78	1.40	0.827	2.27	B	ER	36.417	0.901	3.29	B	I	29.133	0.80	0.76	1.25	B	I	36.417	
		SNS5A	35.550		1.23	43.58	1.40	0.827	2.22	B	ER	36.417	0.901	3.39	B	I	29.133	0.80	0.76	1.23	B	I	36.417	
		SNS6A	39.950		1.12	44.93	1.40	0.827	2.03	B	ER	36.417	0.901	3.14	B	I	29.133	0.80	0.76	1.12	B	I	36.417	
		SNS7B	42.000		1.07	44.98	1.40	0.827	1.94	B	ER	36.417	0.901	3.15	B	I	29.133	0.80	0.76	1.07	B	I	36.417	
	TRUCK TRACTOR SEMI-TRAILER (TTST)	TNAGRIT3	33.000		1.37	45.26	1.40	0.827	2.48	B	ER	36.417	0.901	3.70	B	I	29.133	0.80	0.76	1.37	B	I	36.417	
		TNT4A	33.075		1.38	45.56	1.40	0.827	2.49	B	ER	36.417	0.901	3.55	B	I	29.133	0.80	0.76	1.38	B	I	36.417	
		TNT6A	41.600		1.13	46.85	1.40	0.827	2.04	B	ER	36.417	0.901	3.49	B	I	29.133	0.80	0.76	1.13	B	I	36.417	
		TNT7A	42.000		1.13	47.54	1.40	0.827	2.05	B	ER	36.417	0.901	3.39	B	I	29.133	0.80	0.76	1.13	B	I	36.417	
		TNT7B	42.000		1.17	49.17	1.40	0.827	2.12	B	ER	36.417	0.901	3.03	B	I	29.133	0.80	0.76	1.17	B	I	36.417	
		TNAGRIT4	43.000		1.11	47.89	1.40	0.827	2.01	B	ER	36.417	0.901	2.92	B	I	29.133	0.80	0.76	1.11	B	I	36.417	
		TNAGT5A	45.000		1.05	47.26	1.40	0.827	1.90	B	ER	36.417	0.901	2.98	B	I	29.133	0.80	0.76	1.05	B	I	36.417	
		TNAGT5B	45.000	3	1.04	46.69	1.40	0.827	1.88	B	ER	36.417	0.901	2.77	B	I	29.133	0.80	0.76	1.04	B	I	36.417	

LOAD FACTORS:

DESIGN LOAD RATING FACTORS	LIMIT STATE	γ_{DC}	γ_{DW}
	STRENGTH I	1.25	1.50
	SERVICE III	1.00	1.00

NOTES:

MINIMUM RATING FACTORS ARE BASED ON THE STRENGTH I AND SERVICE III LIMIT STATES.

ALLOWABLE STRESSES FOR SERVICE III LIMIT STATE ARE AS REQUIRED FOR DESIGN.

(#) CONTROLLING LOAD RATING

(1) DESIGN LOAD RATING (HL-93)

(2) DESIGN LOAD RATING (HS-20)

(3) LEGAL LOAD RATING **

** SEE CHART FOR VEHICLE TYPE

GIRDER LOCATION

I - INTERIOR GIRDER
EL - EXTERIOR LEFT GIRDER
ER - EXTERIOR RIGHT GIRDER

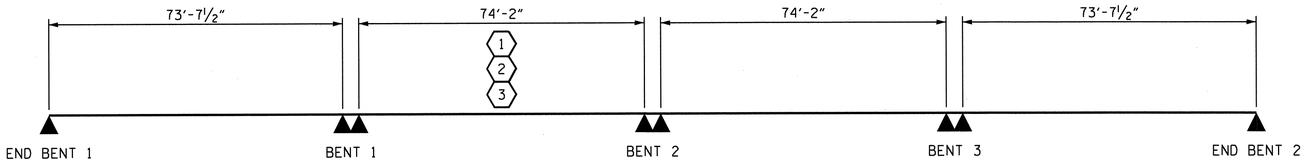

LRFR SUMMARY

PROJECT NO. B-4712

BLADEN COUNTY

STATION: 63+50.00 -L-

STATE OF NORTH CAROLINA
DEPARTMENT OF TRANSPORTATION
RALEIGH

STANDARD

LRFR SUMMARY FOR PRESTRESSED CONCRETE GIRDERS
(NON-INTERSTATE TRAFFIC)

REVISIONS						SHEET NO.
NO.	BY:	DATE:	NO.	BY:	DATE:	S-75
1			3			TOTAL SHEETS
2			4			108

NORTH CAROLINA PROFESSIONAL SEAL 21838 ENGINEER LAURA E. SUTTON 1/09/13

ASSEMBLED BY : T.L.CLELLAND DATE : 4/11	
CHECKED BY : J.D. HAWK DATE : 7/12	
DRAWN BY : MAA 1/08	REV. 11/12/08RR MAA/GM
CHECKED BY : GM/DI 2/08	REV. 10/1/11 MAA/GM

07-NOV-2012 15:25
R:\Structures\Plans\str02\B4712_sd_LR_02.dgn

STR. #2

STD. NO. LRFR1

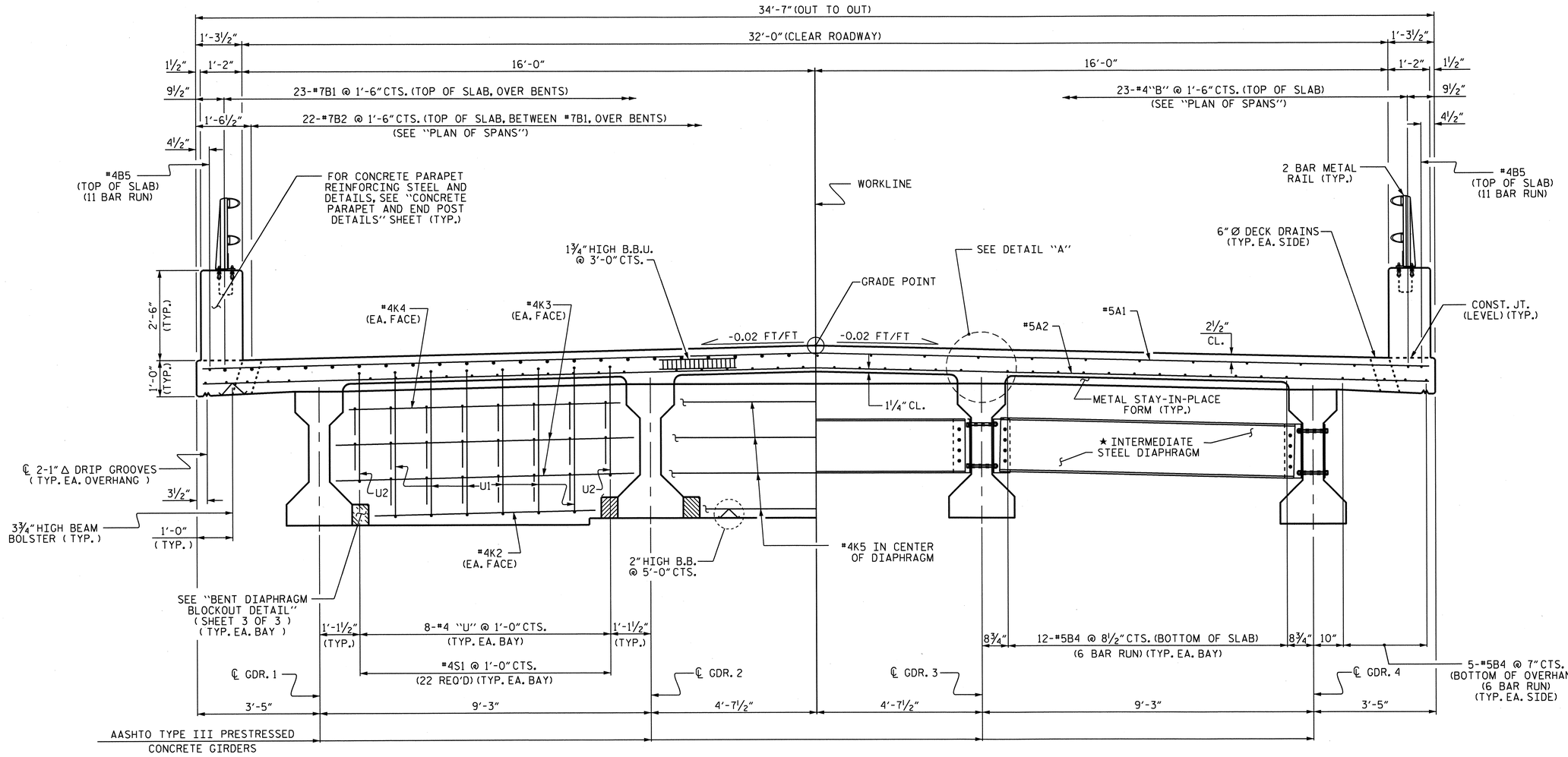

PARTIAL TYPICAL SECTION
(SHOWING CONTINUOUS FOR BENT DIAPHRAGMS)

PARTIAL TYPICAL SECTION
(SHOWING INTERMEDIATE DIAPHRAGMS)

TYPICAL SECTION

★ FOR INTERMEDIATE STEEL DIAPHRAGM DETAILS, SEE "INTERMEDIATE STEEL DIAPHRAGMS FOR TYPE III PRESTRESSED CONCRETE GIRDERS" SHEET.

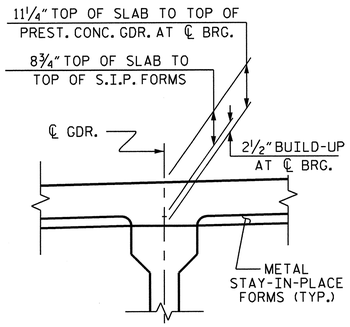

DETAIL "A"

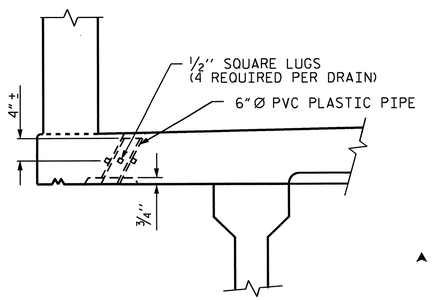

ELEVATION

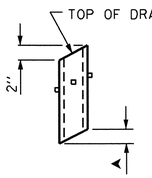

▲ TO BE SET TO MATCH SLOPE OF BOTTOM OF OVERHANG (56 DRAINS REQUIRED)

PIPE DETAIL

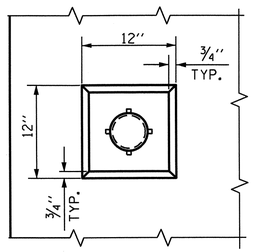

PLAN OF RECESS

DRAIN DETAILS

NOTES

TOP OF FLOOR DRAINS TO BE SET ⅜" BELOW SURFACE OF SLAB.

4 - ½" SQUARE LUGS TO BE GLUED TO THE P.V.C. PLASTIC PIPE AT EQUAL SPACES AROUND THE PIPE DRAIN APPROXIMATELY 4" FROM THE TOP OF THE PIPE.

THE 6" Ø PVC PLASTIC PIPE AND FITTINGS SHALL BE SCHEDULE 40 AND CONFORM TO ASTM D1785.

NORTH CAROLINA PROFESSIONAL SEAL 21638 ENGINEER LAURA E. SUTTON 10/3/3

PROJECT NO. B-4712
BLADEN COUNTY
STATION: 63+50.00 -L-
SHEET 1 OF 3

STATE OF NORTH CAROLINA
DEPARTMENT OF TRANSPORTATION
RALEIGH

SUPERSTRUCTURE
TYPICAL SECTION

REVISIONS						SHEET NO.
NO.	BY:	DATE:	NO.	BY:	DATE:	S-76
1			3			TOTAL SHEETS
2			4			108

STR. #2

DRAWN BY : M. L. BROWN DATE : 6-2011
CHECKED BY : A. V. ROYAL DATE : 7-2011

07-NOV-2012 15:25
R:\Structures\Plans\str02\B4712_sd_TS_02.dgn

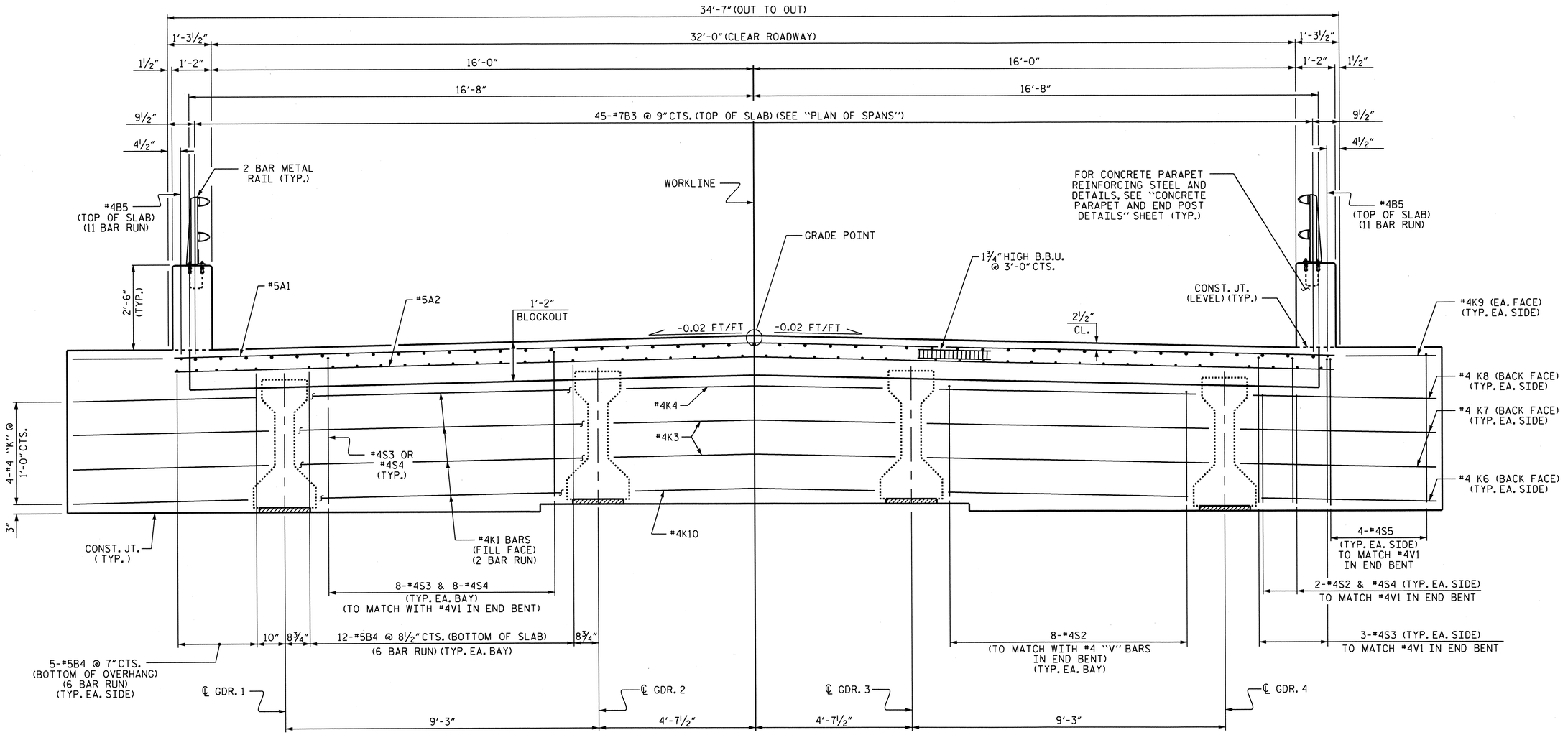

TYPICAL SECTION @ INTEGRAL ABUTMENT

(END BENT 1 SHOWN, END BENT 2 SIMILAR)
(FOR SECTION THROUGH END BENT, SEE SECTION A-A ON "TYPICAL SECTIONS DETAILS" SHEET.)

PROJECT NO. B-4712

BLADEN COUNTY

STATION: 63+50.00 -L-

SHEET 2 OF 3

STATE OF NORTH CAROLINA
DEPARTMENT OF TRANSPORTATION
RALEIGH

SUPERSTRUCTURE

TYPICAL SECTION

REVISIONS						SHEET NO.
NO.	BY:	DATE:	NO.	BY:	DATE:	S-77
1			3			TOTAL SHEETS
2			4			108

NORTH CAROLINA PROFESSIONAL SEAL 21638 ENGINEER LAURA E. SUTTON 11/13/13

DRAWN BY : M. L. BROWN DATE : 6-2011
CHECKED BY : A. V. ROYAL DATE : 7-2011

07-NOV-2012 15:25
R:\Structures\Plans\str02\B4712_sd_TS_02.dgn

STR. #2

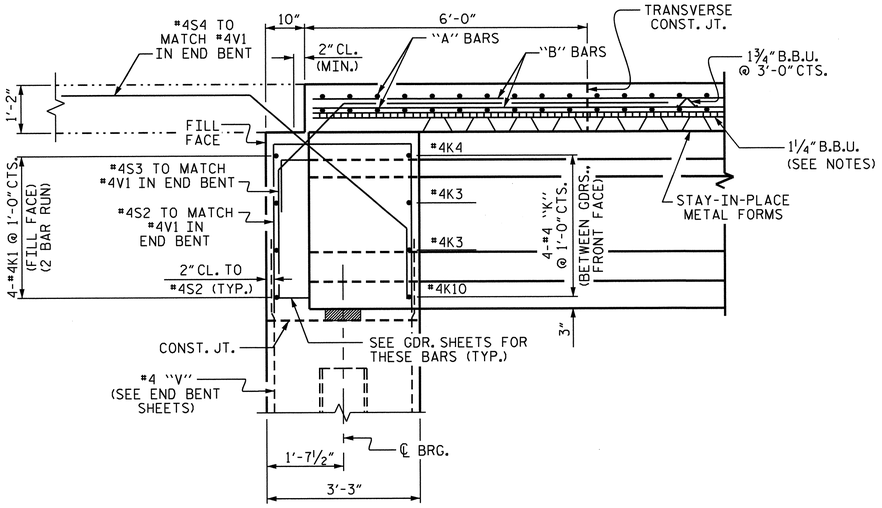

SECTION A-A

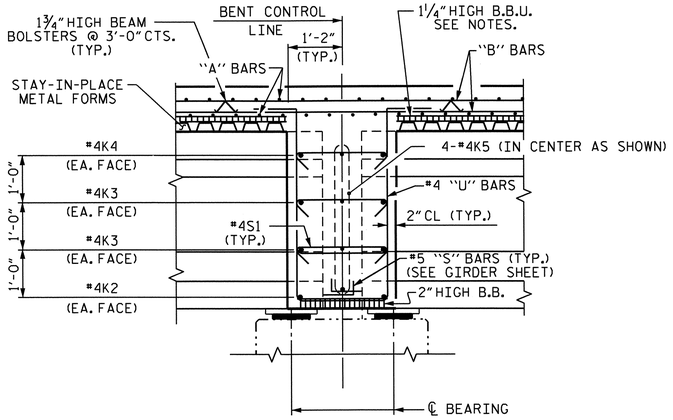

SECTION B-B

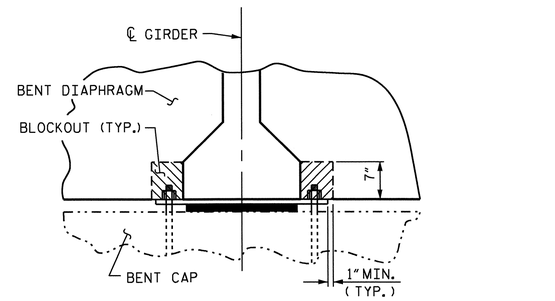

SECTION C-C

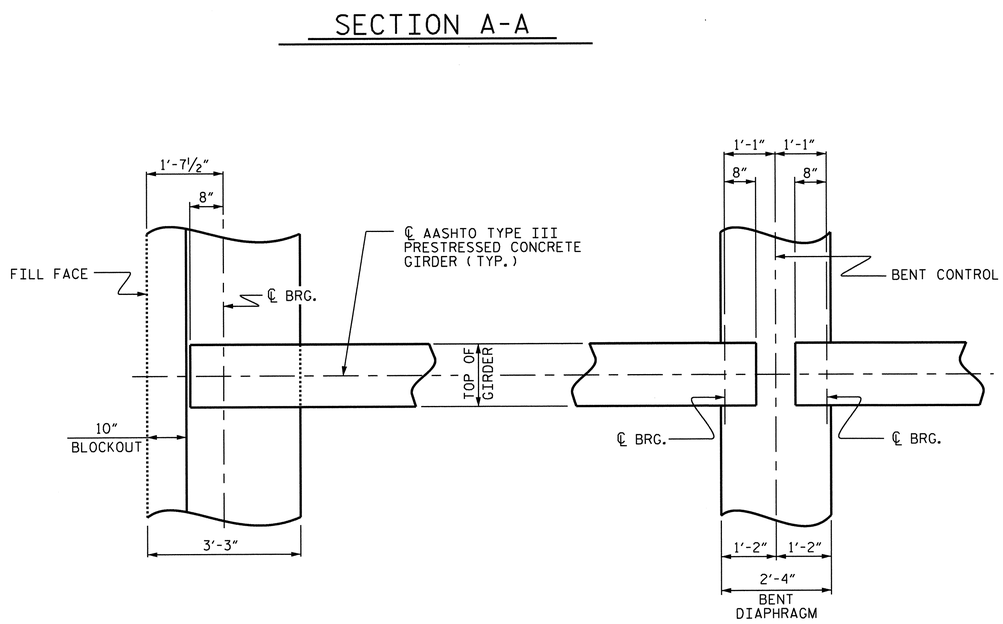

END BENT

BENT DIAPHRAGM

PLAN OF DIAPHRAGMS

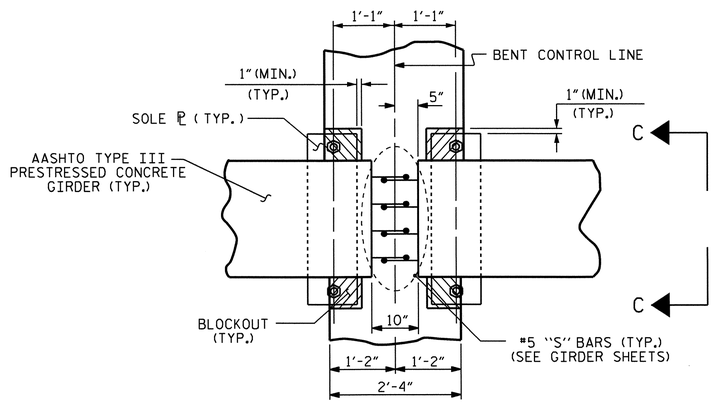

PLAN

BENT DIAPHRAGM BLOCKOUT DETAIL

NOTES

PROVIDE 1¼" HIGH BEAM BOLSTERS UPPER AT 4'-0" CTS. ATOP THE METAL STAY-IN-PLACE FORMS TO SUPPORT THE BOTTOM MAT OF 'A' BARS. WHEN USING REMOVABLE FORMS, PROVIDE CONTINUOUS HIGH CHAIRS FOR METAL DECK (C.H.C.M.) @ 4'-0" CTS. WITH A HEIGHT TO SUPPORT THE BOTTOM MAT OF 'A' BARS A CLEAR DISTANCE OF 2½" ABOVE THE TOP OF THE REMOVABLE FORM.

LONGITUDINAL STEEL MAY BE SHIFTED SLIGHTLY, AS NECESSARY, TO AVOID INTERFERENCE WITH STIRRUPS IN PRESTRESSED CONCRETE GIRDERS.

LONGITUDINAL STEEL MAY BE SHIFTED SLIGHTLY, AS NECESSARY, TO AVOID INTERFERENCE WITH 6" Ø DECK DRAINS.

PREVIOUSLY CAST CONCRETE IN A CONTINUOUS UNIT SHALL HAVE ATTAINED A MINIMUM COMPRESSIVE STRENGTH OF 3000 PSI BEFORE ADDITIONAL CONCRETE IS CAST IN THE UNIT.

CONCRETE PARAPET IN A CONTINUOUS UNIT SHALL NOT BE CAST UNTIL ALL SLAB CONCRETE IN THAT UNIT HAS BEEN CAST AND HAS REACHED A MINIMUM COMPRESSIVE STRENGTH OF 3,000 PSI.

FOR LOCATION OF SECTIONS, SEE "PLAN OF SPANS" SHEETS.

FOR WING DETAILS, SEE "PLAN OF SPANS WING DETAILS" SHEET.

PROJECT NO. B-4712

BLADEN COUNTY

STATION: 63+50.00 -L-

SHEET 3 OF 3

STATE OF NORTH CAROLINA
DEPARTMENT OF TRANSPORTATION
RALEIGH

SUPERSTRUCTURE

TYPICAL SECTION DETAILS

REVISIONS						SHEET NO.
NO.	BY:	DATE:	NO.	BY:	DATE:	S-78
1			3			TOTAL SHEETS
2			4			108

STR. #2

NORTH CAROLINA PROFESSIONAL SEAL 21638 ENGINEER LAURA E. SUTTON 1/8/13

DRAWN BY : M. L. BROWN DATE : 6-2011
CHECKED BY : A. V. ROYAL DATE : 7-2011

03-JAN-2013 12:08
R:\Structures\Plans\str02\B4712_sd_TS_02.dgn

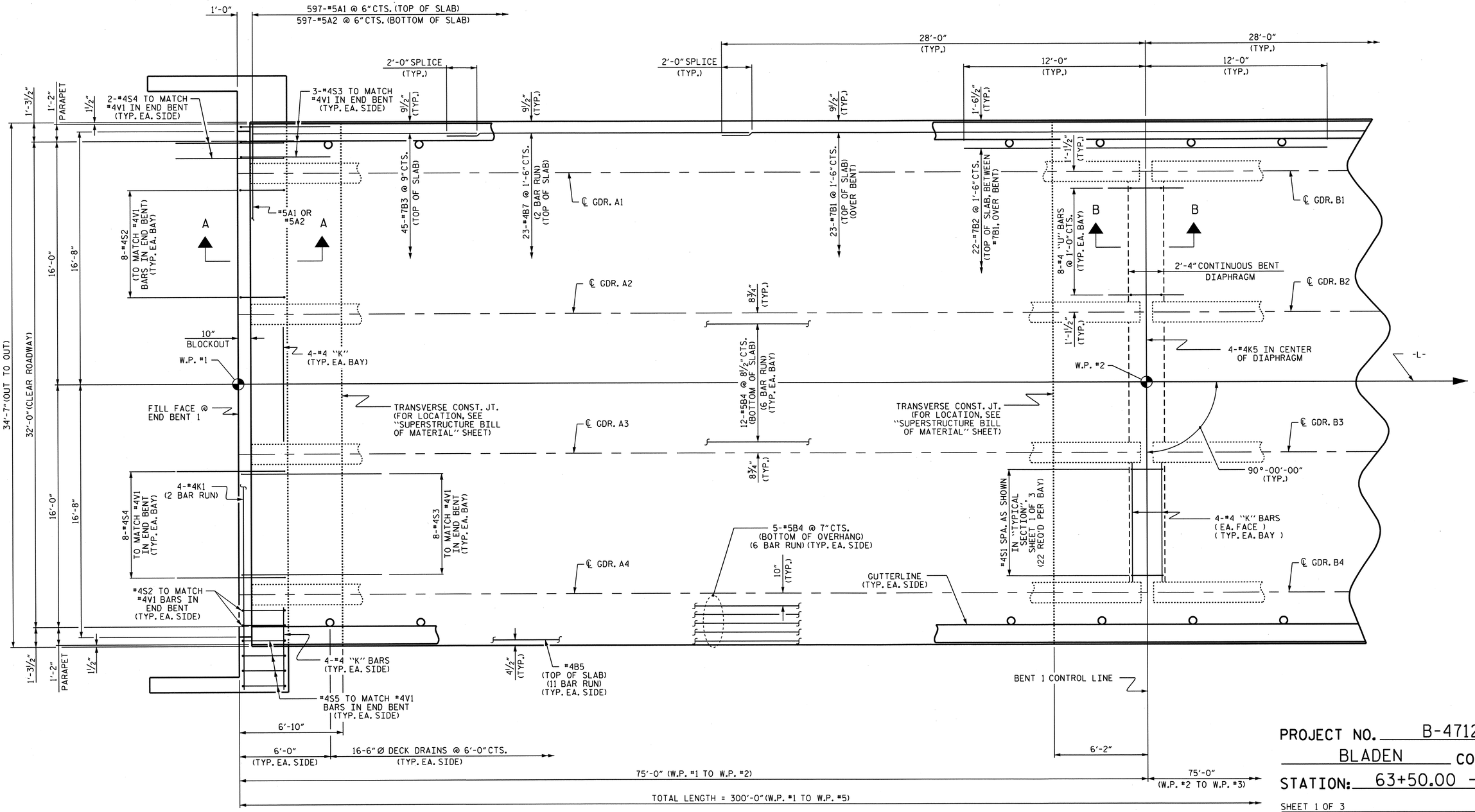

PARTIAL PLAN OF SPANS

NOTES

FOR CONCRETE PARAPET DETAILS AND REINFORCING STEEL, SEE "CONCRETE PARAPET AND END POST DETAILS" SHEETS.

FOR SECTIONS, SEE "TYPICAL SECTION DETAILS" SHEET.

SEE "PLAN OF SPANS WING DETAILS" SHEETS FOR ADDITIONAL REINFORCING STEEL IN WINGS.

DRAWN BY : M. L. BROWN DATE : 6-2011
CHECKED BY : A. V. ROYAL DATE : 7-2011

07-NOV-2012 15:25
R:\Structures\Plans\str02\B4712_sd_PS_02.dgn

PROJECT NO. B-4712
BLADEN COUNTY
STATION: 63+50.00 -L-

SHEET 1 OF 3

STATE OF NORTH CAROLINA
DEPARTMENT OF TRANSPORTATION
RALEIGH

SUPERSTRUCTURE

PLAN OF SPANS

NORTH CAROLINA PROFESSIONAL SEAL 21638 ENGINEER LAURA E. SUTTON 11/03/13

REVISIONS						SHEET NO.
NO.	BY:	DATE:	NO.	BY:	DATE:	S-79
1			3			TOTAL SHEETS
2			4			108

STR. #2

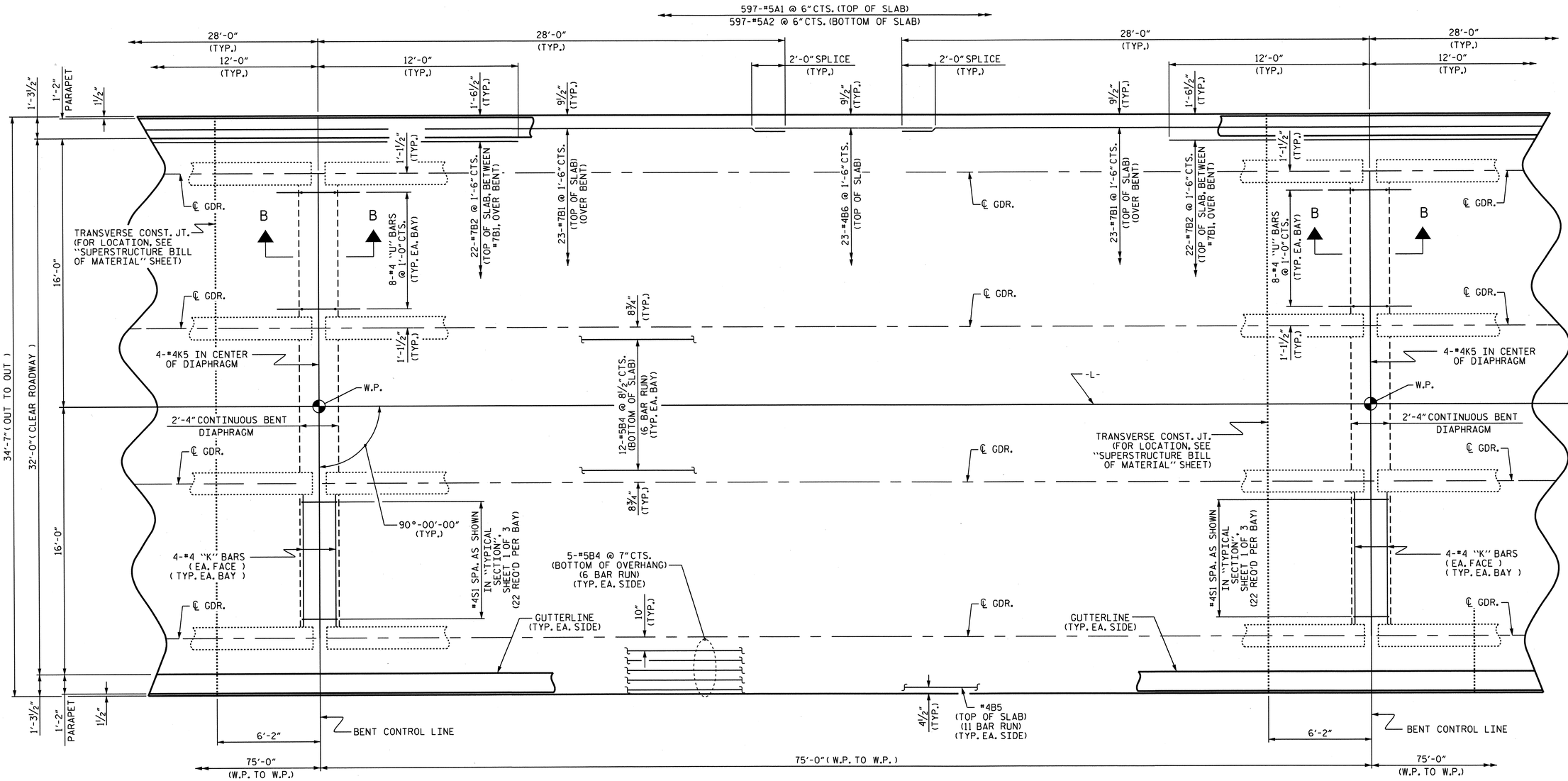

SPAN B OR C

PARTIAL PLAN OF SPANS

NOTES

FOR CONCRETE PARAPET DETAILS AND REINFORCING STEEL. SEE "CONCRETE PARAPET AND END POST DETAILS" SHEETS.

FOR SECTIONS, SEE "TYPICAL SECTION DETAILS" SHEET.

PROJECT NO. B-4712

BLADEN COUNTY

STATION: 63+50.00 -L-

SHEET 2 OF 5

STATE OF NORTH CAROLINA
DEPARTMENT OF TRANSPORTATION
RALEIGH

SUPERSTRUCTURE

PLAN OF SPANS

REVISIONS						SHEET NO.
NO.	BY:	DATE:	NO.	BY:	DATE:	S-80
1			3			TOTAL SHEETS
2			4			108

STR. #2

NORTH CAROLINA PROFESSIONAL SEAL 21638 ENGINEER LAURA E. SUTTON 11/03/13

DRAWN BY :	M. L. BROWN	DATE :	6-2011
CHECKED BY :	A. V. ROYAL	DATE :	7-2011

07-NOV-2012 15:25
R:\Structures\Plans\str02\B4712_sd_PS_02.dgn

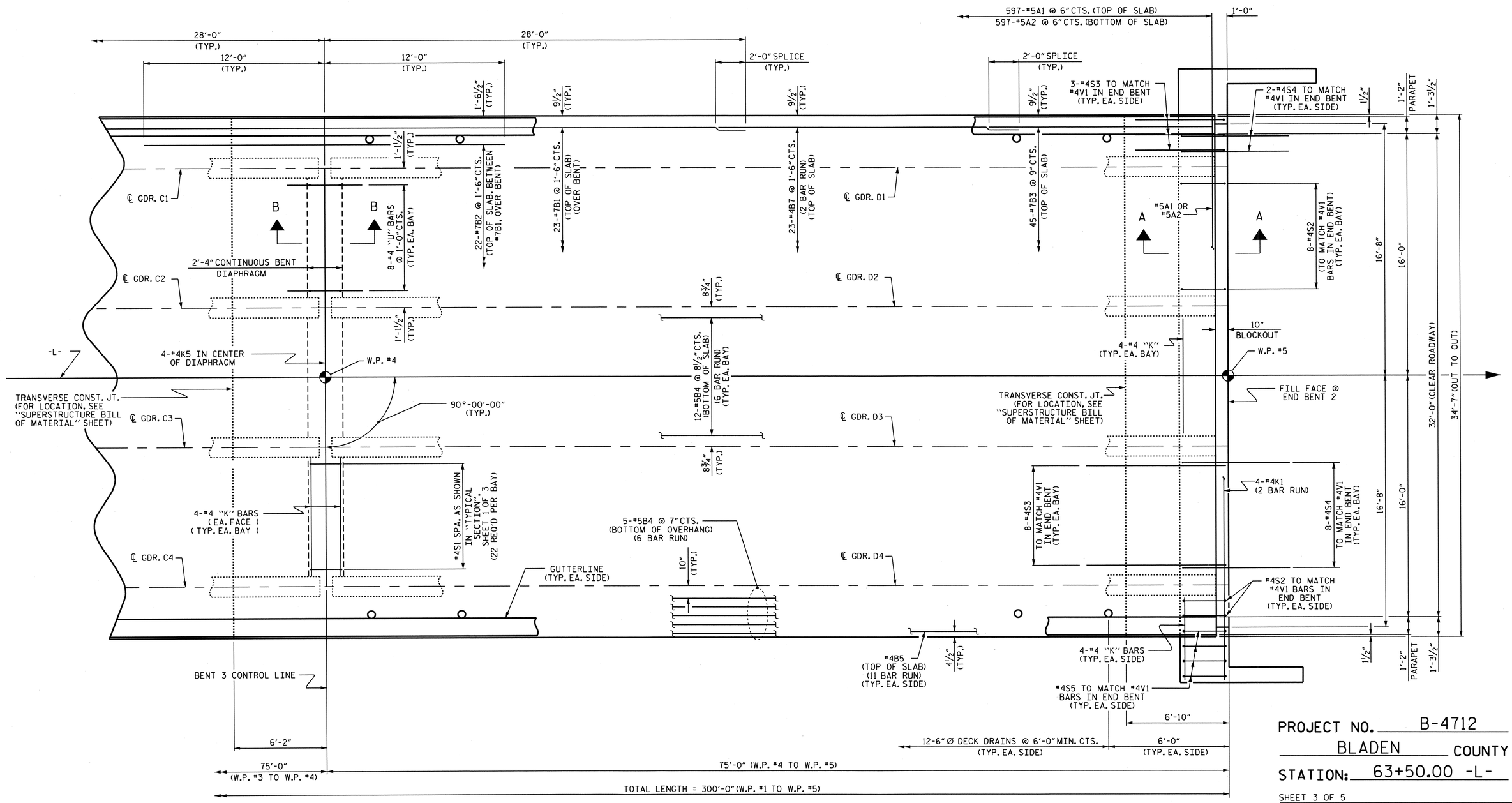

PARTIAL PLAN OF SPANS

NOTES

FOR CONCRETE PARAPET DETAILS AND REINFORCING STEEL. SEE "CONCRETE PARAPET AND END POST DETAILS" SHEETS.

FOR SECTIONS, SEE "TYPICAL SECTION DETAILS" SHEET.

SEE "PLAN OF SPANS WING DETAILS" SHEETS FOR ADDITIONAL REINFORCING STEEL IN WINGS.

NORTH CAROLINA PROFESSIONAL SEAL 21638 ENGINEER LAURA E. SUTTON 1/23/13

PROJECT NO. B-4712

BLADEN COUNTY

STATION: 63+50.00 -L-

SHEET 3 OF 5

STATE OF NORTH CAROLINA
DEPARTMENT OF TRANSPORTATION
RALEIGH

SUPERSTRUCTURE

PLAN OF SPANS

REVISIONS						SHEET NO.
NO.	BY:	DATE:	NO.	BY:	DATE:	S-81
1			3			TOTAL SHEETS
2			4			108

DRAWN BY : M. L. BROWN DATE : 6-2011
CHECKED BY : A. V. ROYAL DATE : 7-2011

07-NOV-2012 15:25
R:\Structures\Plans\str02\B4712_sd_PS_02.dgn

STR. #2

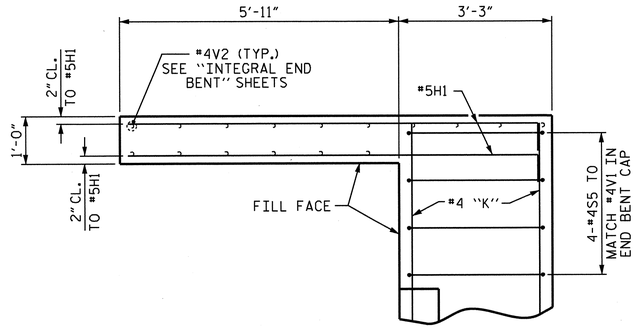

PLAN OF LEFT WING

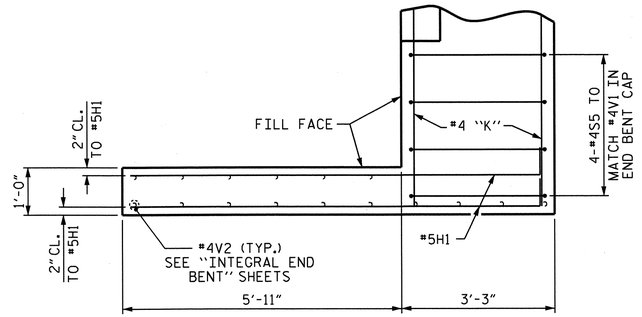

PLAN OF RIGHT WING

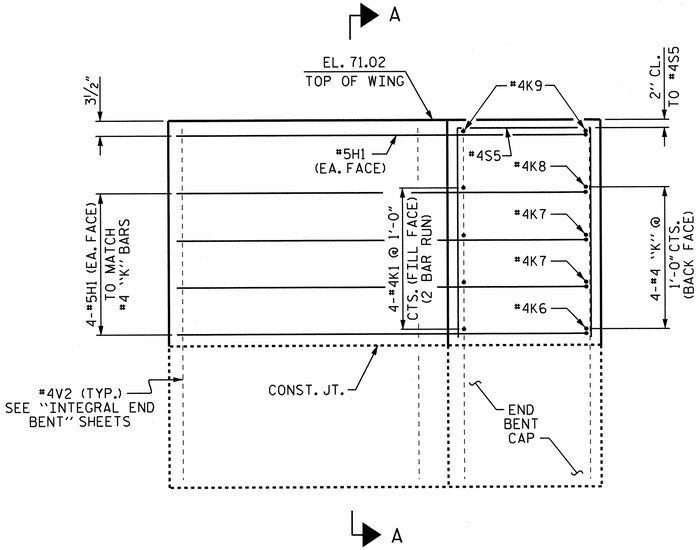

ELEVATION OF LEFT WING

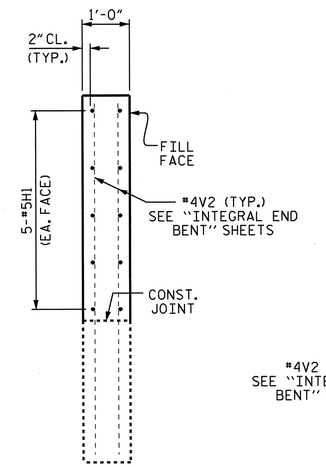

SECTION A-A

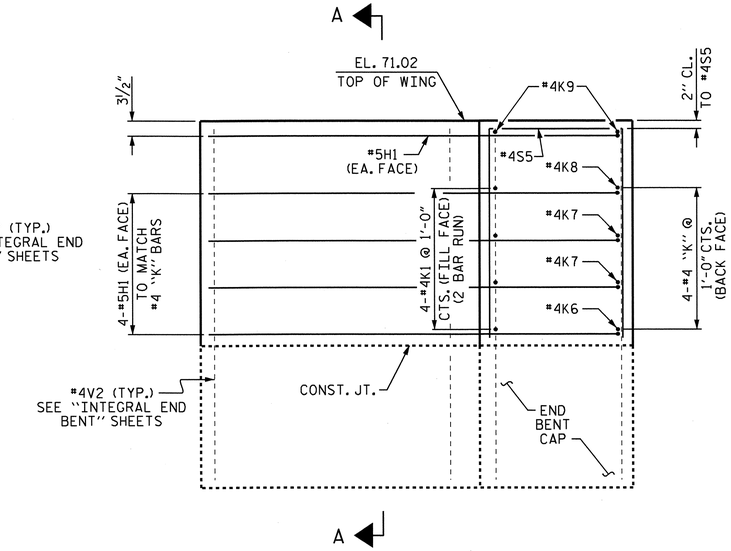

ELEVATION OF RIGHT WING

END BENT 1

DRAWN BY : J. G. KHARVA DATE : 1/11/12
CHECKED BY : J.P. ADAMS DATE : 2/2/12

07-NOV-2012 15:25
R:\Structures\Plans\str02\B4712_sd_PS_02.dgn

PROJECT NO. B-4712
BLADEN COUNTY
STATION: 63+50.00 -L-

SHEET 4 OF 5

STATE OF NORTH CAROLINA
DEPARTMENT OF TRANSPORTATION
RALEIGH

SUPERSTUCTURE

PLAN OF SPANS
WING DETAILS

REVISIONS						SHEET NO.
NO.	BY:	DATE:	NO.	BY:	DATE:	S-82
1			3			TOTAL SHEETS
2			4			108

STR. #2

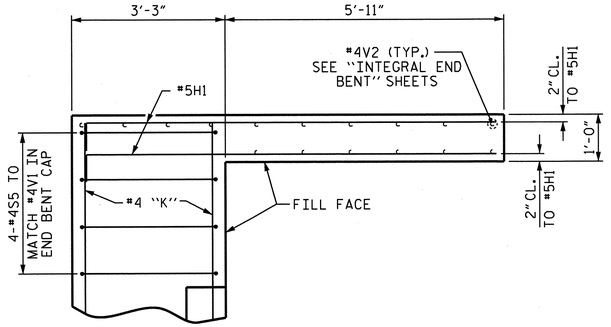

PLAN OF LEFT WING

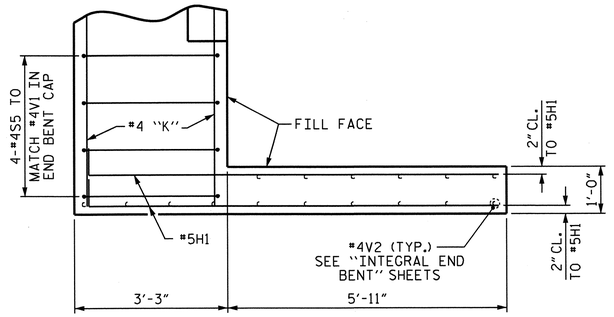

PLAN OF RIGHT WING

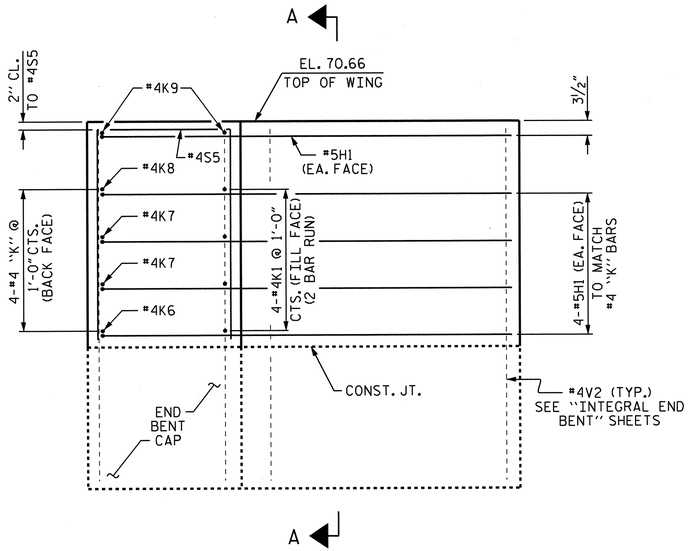

ELEVATION OF LEFT WING

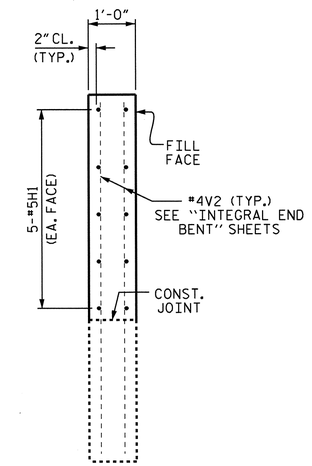

SECTION A-A

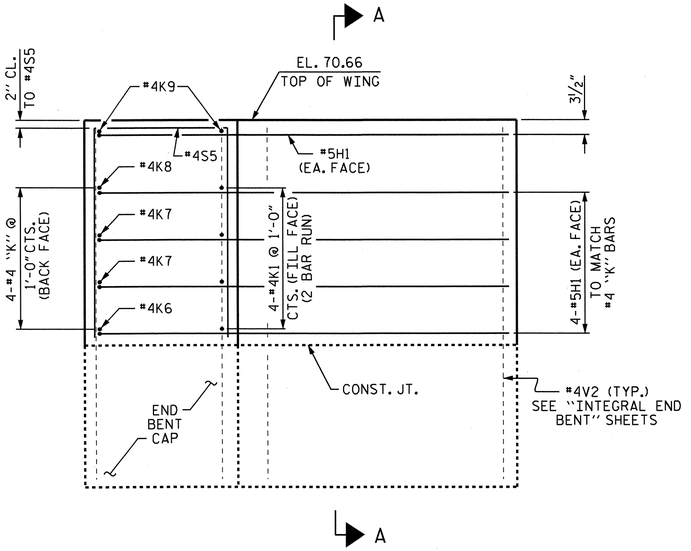

ELEVATION OF RIGHT WING

END BENT 2

DRAWN BY : J. G. KHARVA DATE : 1/11/12
CHECKED BY : J.P. ADAMS DATE : 2/2/12

07-NOV-2012 15:25
R:\Structures\Plans\str02\B4712_sd_PS_02.dgn

PROJECT NO. B-4712
BLADEN COUNTY
STATION: 63+50.00 -L-

SHEET 5 OF 5

STATE OF NORTH CAROLINA
DEPARTMENT OF TRANSPORTATION
RALEIGH

SUPERSTUCTURE

PLAN OF SPANS
WING DETAILS

REVISIONS						SHEET NO.
NO.	BY:	DATE:	NO.	BY:	DATE:	S-83
1			3			TOTAL SHEETS
2			4			108

STR. #2

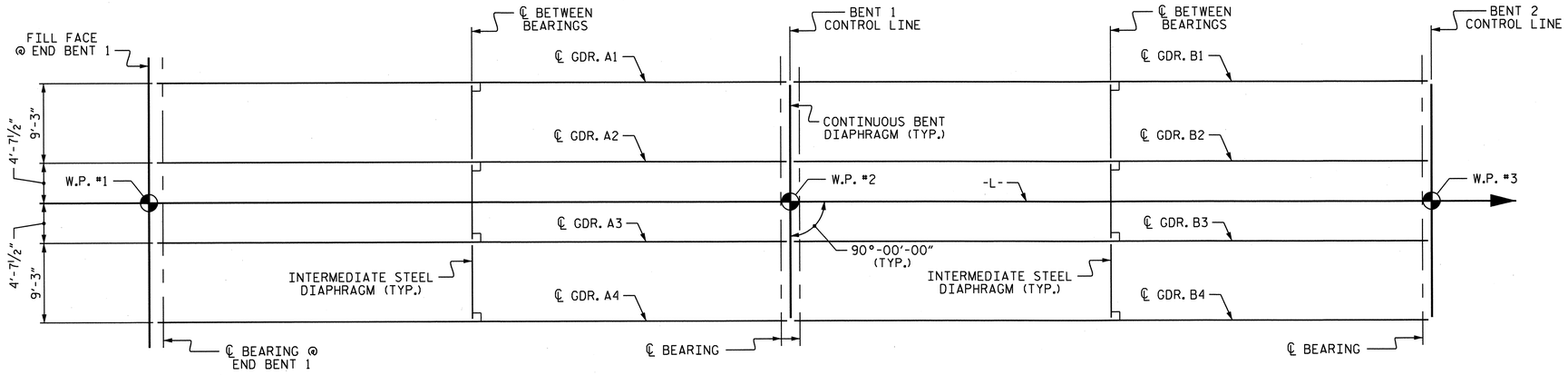

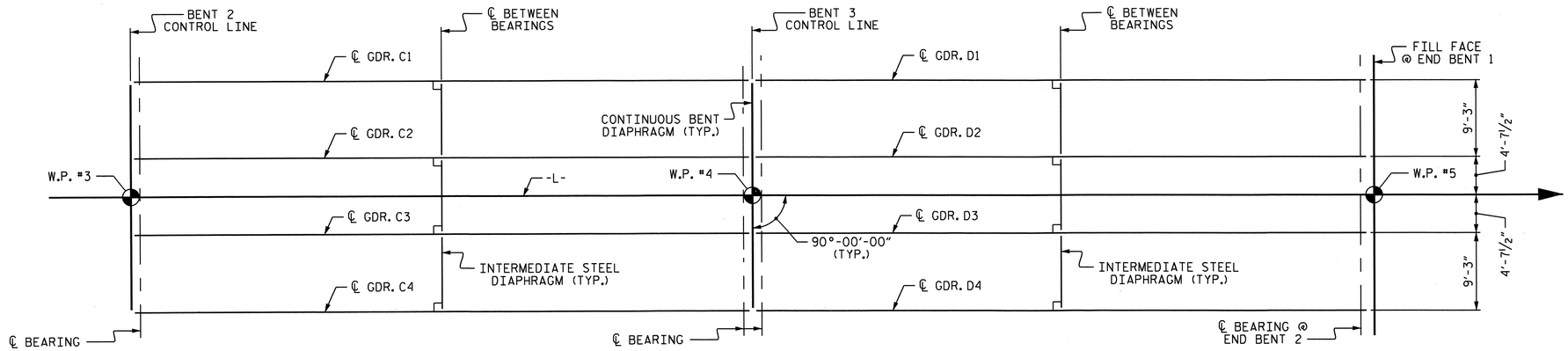

GIRDER LAYOUT

PROJECT NO. B-4712

BLADEN COUNTY

STATION: 63+50.00 -L-

STATE OF NORTH CAROLINA
DEPARTMENT OF TRANSPORTATION
RALEIGH

SUPERSTRUCTURE

GIRDER LAYOUT

REVISIONS						SHEET NO.
NO.	BY:	DATE:	NO.	BY:	DATE:	S-84
1			3			TOTAL SHEETS
2			4			108

NORTH CAROLINA PROFESSIONAL SEAL 21638 ENGINEER LAURA E. SUTTON 11/13/13

DRAWN BY : M. L. BROWN DATE : 6-2011
CHECKED BY : A. V. ROYAL DATE : 7-2011

07-NOV-2012 15:25
R:\Structures\Plans\str02\B4712_sd_FP_02.dgn

STR. #2

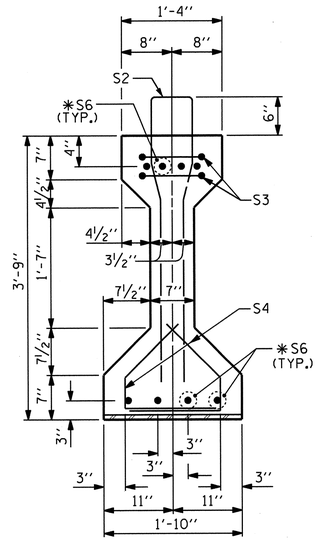

SECTION A-A

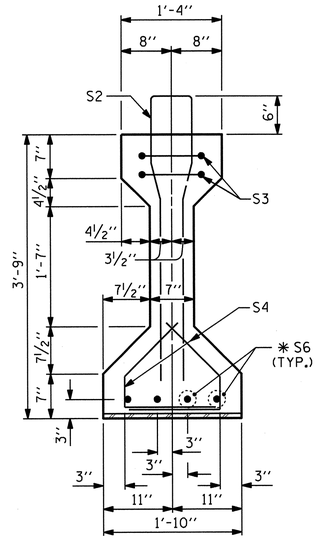

SECTION B-B

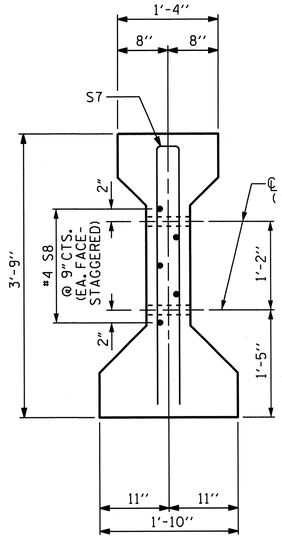

SECTION C-C

(S1 BARS NOT SHOWN)

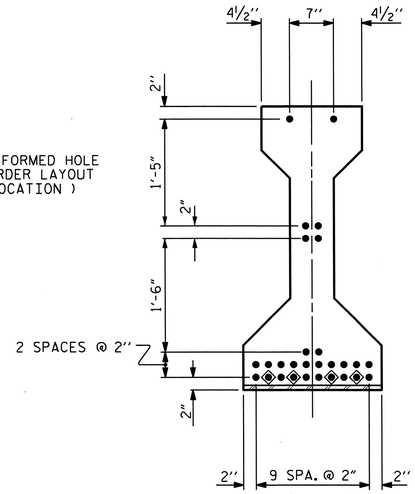

AT END OF GIRDER

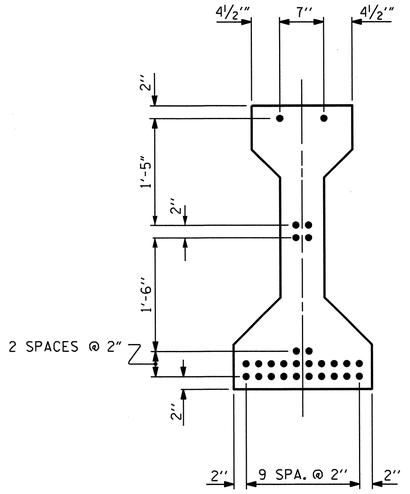

AT ℄ OF GIRDER

0.6" Ø LOW RELAXTION STRAND LAYOUT

(28 STRANDS REQUIRED)

DEBONDING LEGEND

- ● FULLY BONDED STRANDS
- ◈ STRANDS DEBONDED FOR 4'-0" FROM END OF GIRDER

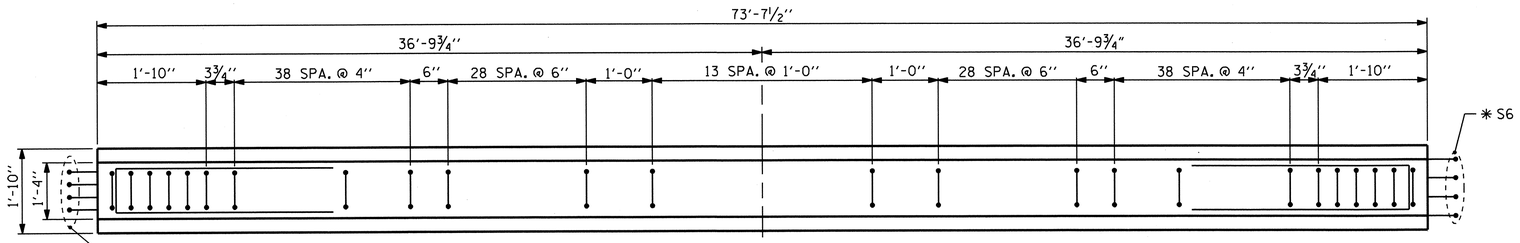

PLAN OF GIRDER

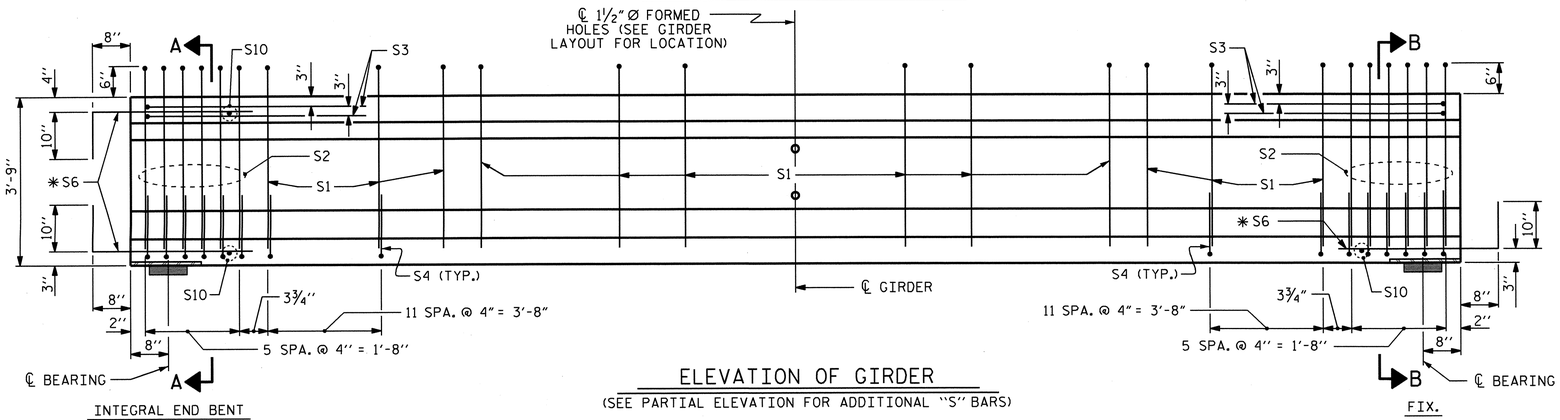

INTEGRAL END BENT

ELEVATION OF GIRDER

(SEE PARTIAL ELEVATION FOR ADDITIONAL "S" BARS)

FIX.

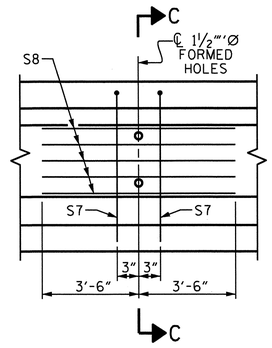

PARTIAL ELEVATION

SHOWING INTERMEDIATE DIAPHRAGM REINFORCING STEEL FOR ALL GIRDERS

0.6" Ø L. R. GRADE 270 STRANDS		
AREA (SQUARE INCHES)	ULTIMATE STRENGTH (LBS. PER STRAND)	APPLIED PRESTRESS (LBS. PER STRAND)
0.217	58,600	43,950

REINFORCING STEEL FOR ONE GIRDER

BAR	NUMBER	SIZE	TYPE	LENGTH	WEIGHT
S1	150	#4	1	8'-6"	852
S2	12	#6	1	8'-6"	153
S3	4	#4	3	8'-8"	23
S4	72	#4	2	2'-9"	132
*S6	12	#5	STR	3'-8"	46
S7	2	#5	3	7'-2"	15
S8	5	#4	STR	7'-0"	23
S10	3	#3	STR	1'-0"	1

*NOTE: S6 BARS SHALL BE BENT BEFORE SHIPMENT. HEAT BENDING SHALL NOT BE ALLOWED.

BAR TYPES

ALL BAR DIMENSIONS ARE OUT-TO-OUT

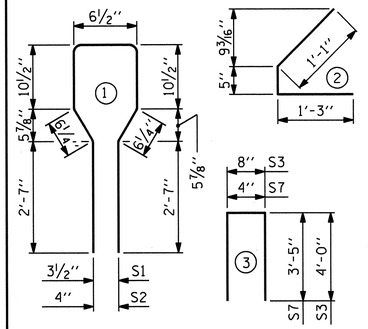

QUANTITIES FOR ONE GIRDER		
REINFORCING STEEL	8,000 PSI CONCRETE	0.6" Ø L.R. STRANDS
LBS.	C.Y.	No.
1,245	10.6	28

GIRDERS REQUIRED		
NUMBER	LENGTH	TOTAL LENGTH
8	73'-7½"	589.00

PROJECT NO. B-4712

BLADEN COUNTY

STATION: 63+50.00 -L-

SHEET 1 OF 2

STATE OF NORTH CAROLINA
DEPARTMENT OF TRANSPORTATION
RALEIGH
STANDARD

AASHTO TYPE III PRESTRESSED CONCRETE GIRDER CONTINUOUS FOR LIVE LOAD SPANS A & D

REVISIONS						SHEET NO.
NO.	BY:	DATE:	NO.	BY:	DATE:	S-85
1			3			TOTAL SHEETS
2			4			108

STR. #2

STD. NO. PCG5

NORTH CAROLINA PROFESSIONAL SEAL 21638 ENGINEER LAURA E. SUTTON 11/05/13

ASSEMBLED BY : M. L. BROWN	DATE : 6-2011		
CHECKED BY : A. V. ROYAL	DATE : 7-2011		
DRAWN BY : ELR 8/91	REV. 10/17/00R	RWW/LES	
CHECKED BY : GRP 8/91	REV. 5/1/06R	TLA/GM	
	REV. 10/1/11	MAA/GM	

07-NOV-2012 15:25
R:\Structures\Plans\str02\B4712_sd_G*_02.dgn

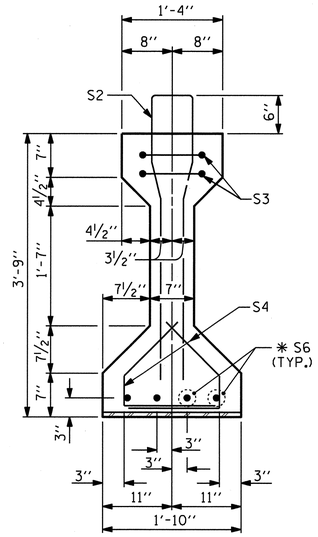

SECTION B-B

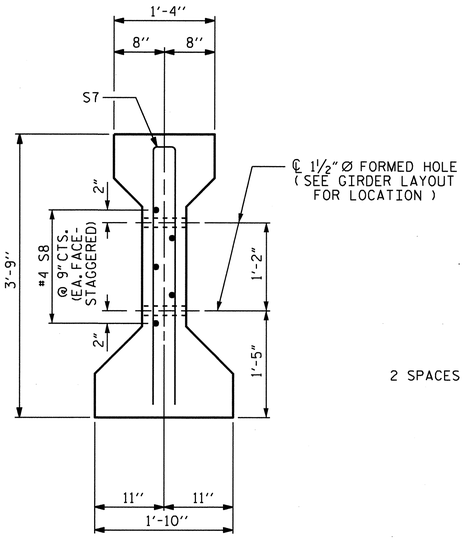

SECTION C-C

(S1 BARS NOT SHOWN)

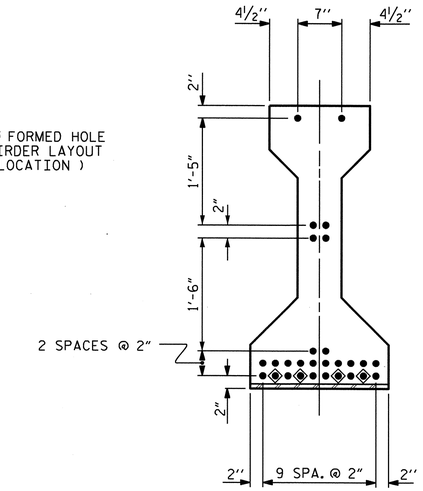

AT END OF GIRDER

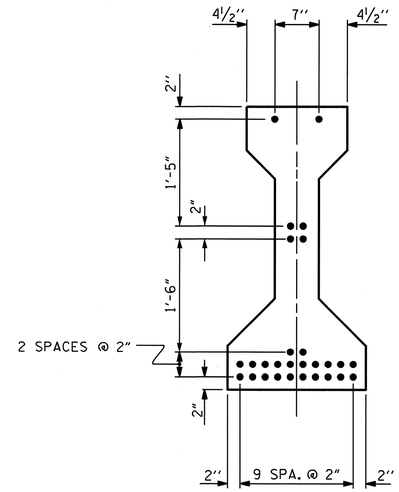

AT ℄ OF GIRDER

0.6" Ø LOW RELAXTION STRAND LAYOUT

(28 STRANDS REQUIRED)

DEBONDING LEGEND

- ● FULLY BONDED STRANDS
- ◈ STRANDS DEBONDED FOR 4'-0" FROM END OF GIRDER

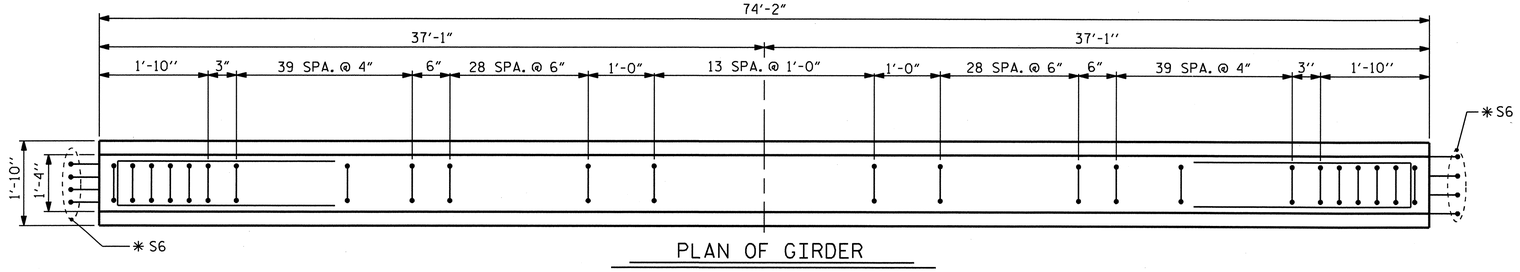

PLAN OF GIRDER

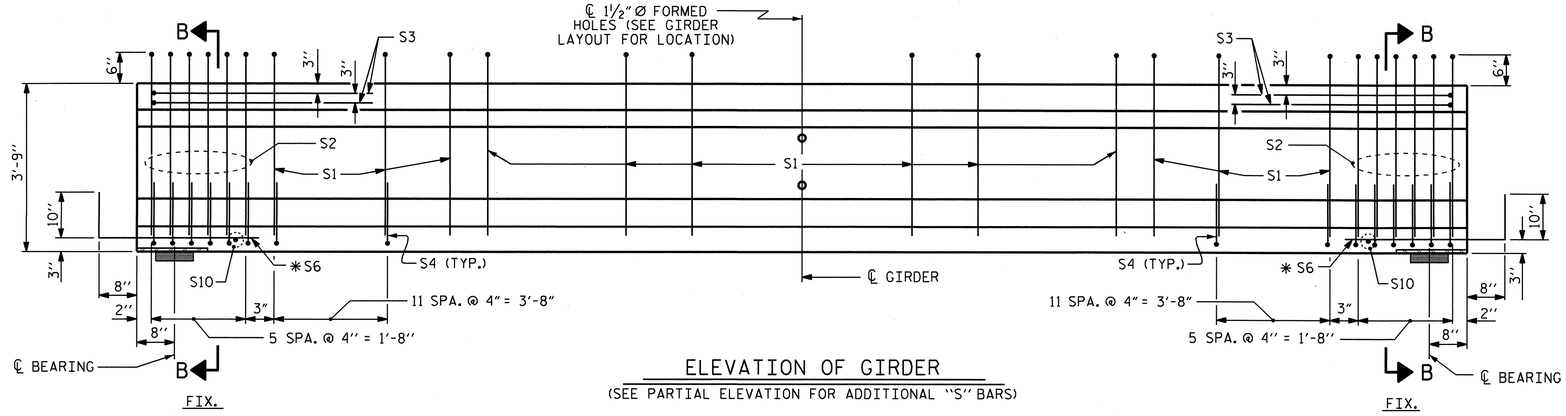

ELEVATION OF GIRDER

(SEE PARTIAL ELEVATION FOR ADDITIONAL "S" BARS)

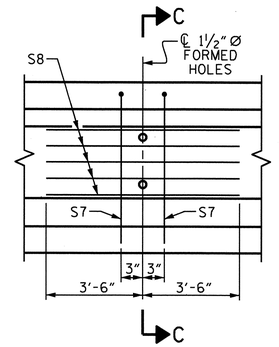

PARTIAL ELEVATION

SHOWING INTERMEDIATE DIAPHRAGM REINFORCING STEEL FOR ALL GIRDERS

0.6" Ø L. R. GRADE 270 STRANDS		
AREA (SQUARE INCHES)	ULTIMATE STRENGTH (LBS. PER STRAND)	APPLIED PRESTRESS (LBS. PER STRAND)
0.217	58,600	43,950

REINFORCING STEEL FOR ONE GIRDER

BAR	NUMBER	SIZE	TYPE	LENGTH	WEIGHT
S1	152	#4	1	8'-6"	863
S2	12	#6	1	8'-6"	153
S3	4	#4	3	8'-8"	23
S4	72	#4	2	2'-9"	132
✱ S6	8	#5	STR	3'-8"	31
S7	2	#5	3	7'-2"	15
S8	5	#4	STR	7'-0"	23
S10	2	#3	STR	1'-0"	1

✱ NOTE: S6 BARS SHALL BE BENT BEFORE SHIPMENT. HEAT BENDING SHALL NOT BE ALLOWED.

BAR TYPES

ALL BAR DIMENSIONS ARE OUT-TO-OUT

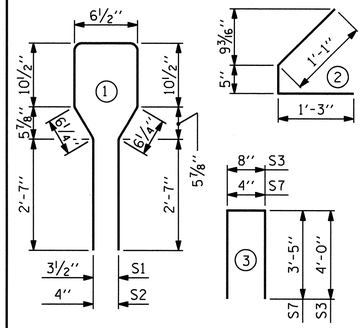

QUANTITIES FOR ONE GIRDER		
REINFORCING STEEL	8,000 PSI CONCRETE	0.6" Ø L. R. STRANDS
LBS.	C.Y.	No.
1,241	10.7	28

GIRDERS REQUIRED		
NUMBER	LENGTH	TOTAL LENGTH
8	74'-2"	593.33

PROJECT NO. B-4712

BLADEN COUNTY

STATION: 63+50.00 -L-

SHEET 2 OF 2

STATE OF NORTH CAROLINA
DEPARTMENT OF TRANSPORTATION
RALEIGH
STANDARD

AASHTO TYPE III PRESTRESSED CONCRETE GIRDER CONTINUOUS FOR LIVE LOAD SPANS B & C

REVISIONS						SHEET NO.
NO.	BY:	DATE:	NO.	BY:	DATE:	S-86
1			3			TOTAL SHEETS
2			4			108

ASSEMBLED BY : M. L. BROWN	DATE : 6-2011	REV. 10/17/00R RWW/LES	
CHECKED BY : A. V. ROYAL	DATE : 7-2011	REV. 5/1/06R TLA/GM	
DRAWN BY : ELR 8/91		REV. 10/1/11 MAA/GM	
CHECKED BY : GRP 8/91			

NORTH CAROLINA PROFESSIONAL SEAL 21638 ENGINEER LAURA E. SUTTON 10/3/13

07-NOV-2012 15:25
R:\Structural\Bridge\str02\B4712_sd_G1_02.dgn

STR. #2

SID NO. BCG5

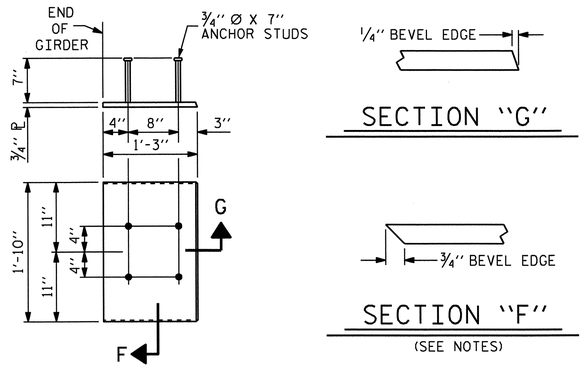

EMBEDDED PLATE "B-1" DETAILS FOR AASHTO TYPE III GIRDERS

(2 REQ'D PER GIRDER)

NOTES

ALL PRESTRESSING STRANDS SHALL BE 7-WIRE LOW-RELAXATION GRADE 270 STRANDS AND SHALL CONFORM TO AASHTO M203 EXCEPT FOR SAMPLING REQUIREMENTS WHICH SHALL BE IN ACCORDANCE WITH THE STANDARD SPECIFICATIONS.

ALL REINFORCING STEEL SHALL BE GRADE 60.

EMBEDDED PLATE "B-1" SHALL BE GALVANIZED IN ACCORDANCE WITH THE STANDARD SPECIFICATIONS. BEVEL EDGES OF PLATE "B-1" TO GIVE CLOSE FIT BUT NOT TIGHT FIT TO STEEL CASTING FORM.

ANCHOR STUDS SHALL CONFORM TO AASHTO M169 GRADES 1010 THROUGH 1020 OR APPROVED EQUAL, AND SHALL MEET THE TYPE "B" REQUIREMENTS OF SUBSECTION 7.3 OF THE ANSI/AASHTO/AWS D1.5 BRIDGE WELDING CODE.

AT ENDS OF GIRDERS TO BE EMBEDDED IN CONCRETE DIAPHRAGMS OR END WALLS, PRESTRESSING STRANDS MAY EXTEND A MAXIMUM OF 2" BEYOND THE GIRDER ENDS. OTHERWISE, PRESTRESSING STRANDS SHALL BE CUT FLUSH WITH THE GIRDER ENDS.

THE TRANSFER OF LOAD FROM THE ANCHORAGES TO THE GIRDER SHALL BE DONE WHEN CONCRETE HAS REACHED A COMPRESSIVE STRENGTH OF NOT LESS THAN 6300 PSI.

DEPENDING ON THE TYPE OF SYSTEM USED TO SUPPORT THE DECK SLAB FORMS, PRESET ANCHORS MAY BE NECESSARY IN THE PRESTRESSED CONCRETE GIRDER.

THE TOP SURFACE OF THE GIRDER, EXCLUDING THE OUTSIDE 4", SHALL BE RAKED TO A DEPTH OF 1/4".

DEAD LOAD DEFLECTION TABLE FOR GIRDERS

SPANS A & D

0.6" Ø LOW RELAXATION	GIRDERS #1 & #4											GIRDERS #2 & #3										
TENTH POINTS	0	.1	.2	.3	.4	.5	.6	.7	.8	.9	0	0	.1	.2	.3	.4	.5	.6	.7	.8	.9	0
CAMBER (GIRDER ALONE IN PLACE) ↑	0	0.072	0.137	0.187	0.220	0.231	0.220	0.187	0.137	0.072	0	0	0.072	0.137	0.187	0.220	0.231	0.220	0.187	0.137	0.072	0
* DEFLECTION DUE TO SUPERIMPOSED D.L. ↓	0	0.030	0.056	0.077	0.090	0.094	0.090	0.077	0.056	0.030	0	0	0.032	0.061	0.084	0.098	0.103	0.098	0.084	0.061	0.032	0
FINAL CAMBER ↑	0	1/2"	1"	1 5/16"	1 9/16"	1 5/8"	1 9/16"	1 5/16"	1"	1/2"	0	0	1/2"	15/16"	1 1/4"	1 7/16"	1 9/16"	1 7/16"	1 1/4"	15/16"	1/2"	0

SPANS B & C

0.6" Ø LOW RELAXATION	GIRDERS #1 & #4											GIRDERS #2 & #3										
TENTH POINTS	0	.1	.2	.3	.4	.5	.6	.7	.8	.9	0	0	.1	.2	.3	.4	.5	.6	.7	.8	.9	0
CAMBER (GIRDER ALONE IN PLACE) ↑	0	0.073	0.138	0.189	0.221	0.233	0.221	0.189	0.138	0.073	0	0	0.073	0.138	0.189	0.221	0.233	0.221	0.189	0.138	0.073	0
* DEFLECTION DUE TO SUPERIMPOSED D.L. ↓	0	0.031	0.058	0.079	0.092	0.097	0.092	0.079	0.058	0.031	0	0	0.033	0.063	0.086	0.101	0.106	0.101	0.086	0.063	0.033	0
FINAL CAMBER ↑	0	1/2"	15/16"	1 5/16"	1 9/16"	1 5/8"	1 9/16"	1 5/16"	15/16"	1/2"	0	0	1/2"	7/8"	1 1/4"	1 7/16"	1 1/2"	1 7/16"	1 1/4"	7/8"	1/2"	0

* INCLUDES FUTURE WEARING SURFACE
ALL VALUES ARE SHOWN IN FEET (DECIMAL FORM), EXCEPT
"FINAL CAMBER", WHICH IS GIVEN IN INCHES (FRACTION FORM).

PROJECT NO. B-4712

BLADEN COUNTY

STATION: 63+50.00 -L-

ASSEMBLED BY :	M. L. BROWN	DATE :	6-2011
CHECKED BY :	A. V. ROYAL	DATE :	7-2011
DRAWN BY :	ELR 11/91	REV. 7/10/01RR	LES/RDR
CHECKED BY :	GRP 11/91	REV. 5/1/06	TLA/GM
		REV. 10/1/11	MAA/GM

07-NOV-2012 15:25
R:\Structures\Plans\str02\B4712_sd_G*_02.dgn

NORTH CAROLINA PROFESSIONAL SEAL 21838 ENGINEER LAURA E. SUTTON 11/05/13

STATE OF NORTH CAROLINA
DEPARTMENT OF TRANSPORTATION
RALEIGH

STANDARD

PRESTRESSED CONCRETE GIRDER CONTINUOUS FOR LIVE LOAD DETAILS

REVISIONS						SHEET NO.
NO.	BY:	DATE:	NO.	BY:	DATE:	S-87
1			3			TOTAL SHEETS
2			4			108

STR. #2

STD. NO. PCG9

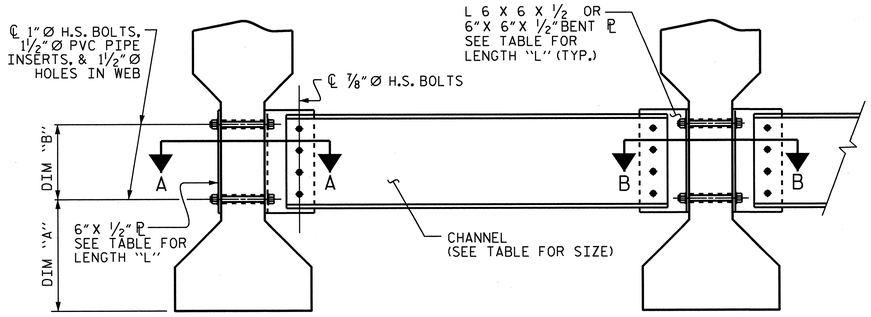

EXTERIOR GIRDER INTERIOR GIRDER

PART SECTION AT INTERMEDIATE DIAPHRAGM

TABLE

GIRDER TYPE	CHANNEL SIZE	DIM "A"	DIM "B"	DIM "L"
III	MC 18 x 42.7	1'-5"	1'-2"	1'-6"

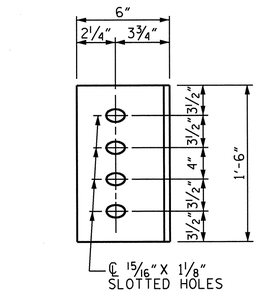

DIAPHRAGM FACE

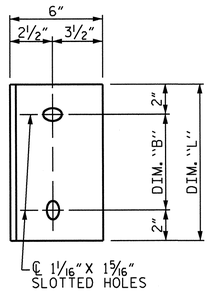

WEB FACE

CONNECTOR PLATE DETAILS

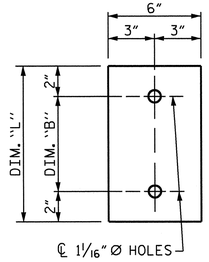

PLATE DETAILS

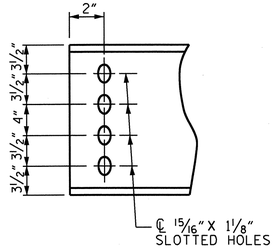

CHANNEL END

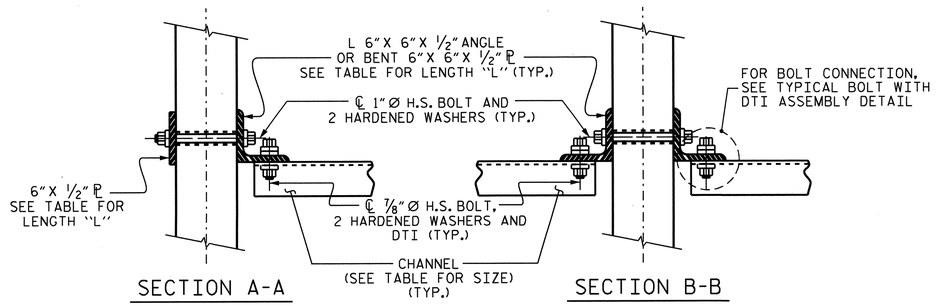

SECTION A-A SECTION B-B

CONNECTION DETAILS

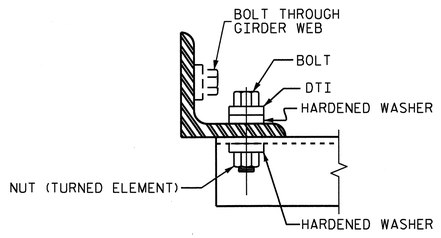

BOLT WITH DTI ASSEMBLY DETAIL

STRUCTURAL STEEL NOTES

ALL INTERMEDIATE DIAPHRAGM STEEL AND CONNECTOR PLATES SHALL BE AASHTO M270 GRADE 50 OR APPROVED EQUAL.

TENSION ON THE ASTM A325 BOLTS THROUGH THE CHANNEL MEMBER SHALL BE CALIBRATED USING DIRECT TENSION INDICATOR WASHERS IN ACCORDANCE WITH THE STANDARD SPECIFICATIONS.

TENSION ON THE ASTM A449 BOLTS THROUGH THE GIRDER WEB SHALL BE SNUG TIGHTENED FOLLOWED BY AN ADDITIONAL ¼ TURN.

THE PLATES, BENT PLATES, CHANNELS, AND ANGLES SHALL BE GALVANIZED OR METALLIZED IN ACCORDANCE WITH THE STANDARD SPECIFICATIONS. FOR THERMAL SPRAYED COATINGS (METALLIZATION), SEE SPECIAL PROVISIONS.

FOR METALLIZATION, APPLY AN 8 MIL THICK 99.99 PERCENT ZINC (W-Zn-1) THERMAL SPRAYED COATING WITH A 0.5 MIL THICK SEAL COAT TO ALL STEEL DIAPHRAGM SURFACES IN ACCORDANCE WITH THE THERMAL SPRAYED COATINGS SPECIAL PROVISION AND SECTION 442 OF THE STANDARD SPECIFICATIONS.

GALVANIZE THE HIGH STRENGTH BOLTS, NUTS, WASHERS AND DIRECT TENSION INDICATORS IN ACCORDANCE WITH THE STANDARD SPECIFICATIONS.

USE AN ASTM F436 HARDENED WASHER WITH STANDARD AND SLOTTED HOLES UNDER EACH BOLT HEAD AND NUT.

FOR BOLTS THROUGH THE GIRDER WEB, PROVIDE SUFFICIENT LENGTH OF THREADS ON ALL BOLTS TO ACCOMMODATE WASHERS AND THE THICKNESS OF CONNECTING MEMBER PLUS AT LEAST ¼" PROJECTION BEYOND THE NUT.

INTERMEDIATE DIAPHRAGM ASSEMBLY SHALL COMPLY WITH SECTION 1072 OF THE STANDARD SPECIFICATIONS.

SUBMIT TWO SETS OF WORKING DRAWINGS FOR THE INTERMEDIATE DIAPHRAGM ASSEMBLY FOR REVIEW, COMMENTS AND ACCEPTANCE. AFTER REVIEW, COMMENTS, AND ACCEPTANCE, SUBMIT SEVEN SETS FOR DISTRIBUTION.

IN THE EXTERIOR BAYS, PLACE TEMPORARY STRUTS BETWEEN PRESTRESSED GIRDERS ADJACENT TO THE STEEL DIAPHRAGMS. STRUTS SHALL REMAIN IN PLACE 3 DAYS AFTER CONCRETE IS PLACED.

THE COST OF THE STEEL DIAPHRAGMS AND ASSEMBLIES SHALL BE INCLUDED IN THE UNIT PRICE BID FOR PRESTRESSED CONCRETE GIRDERS.

PROJECT NO. B-4712

BLADEN COUNTY

STATION: 63+50.00 -L-

STATE OF NORTH CAROLINA
DEPARTMENT OF TRANSPORTATION
RALEIGH

STANDARD

INTERMEDIATE STEEL DIAPHRAGMS FOR TYPE III PRESTRESSED CONCRETE GIRDERS

REVISIONS						SHEET NO.
NO.	BY:	DATE:	NO.	BY:	DATE:	S-88
1			3			TOTAL SHEETS
2			4			108

STR. #2 STD. NO. PCG10

NORTH CAROLINA PROFESSIONAL SEAL 21638 ENGINEER LAURA E. SUTTON 11/05/13

ASSEMBLED BY : M. L. BROWN		DATE : 6-2011	
CHECKED BY : A. V. ROYAL		DATE : 7-2011	
DRAWN BY : TLA 6/05	ADDED 10/21/05		KMM/GM
CHECKED BY : VC 6/05	REV. 5/1/06RRR		KMM/GM
	REV. 10/1/11		MAA/GM

15-NOV-2012 11:34
R:\Structures\Plans\str02\B4712_sd_G*_02.dgn

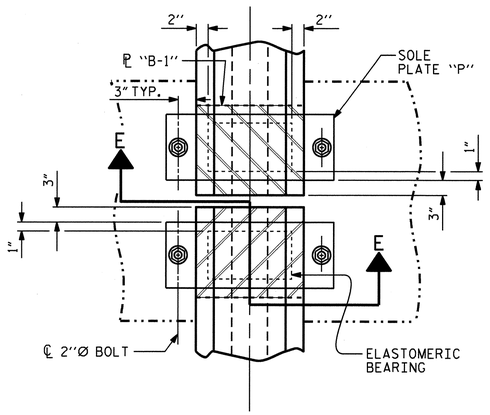

PLAN VIEW AT BENTS

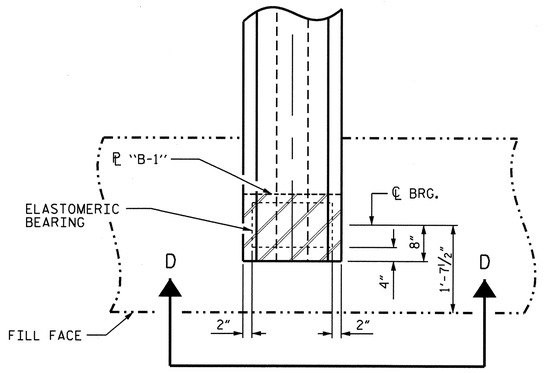

PLAN VIEW AT END BENTS

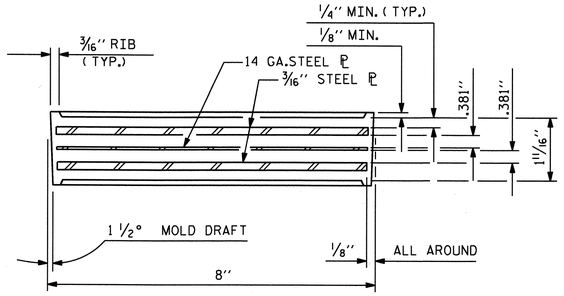

TYPICAL SECTION OF ELASTOMERIC BEARINGS

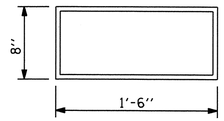

E2 (32 REQ'D)

PLAN VIEW OF ELASTOMERIC BEARING

TYPE III

NOTES

AT ALL FIXED POINTS OF SUPPORT, NUTS FOR ANCHOR BOLTS ARE TO BE TIGHTENED FINGER TIGHT AND THEN BACKED OFF ½ TURN. THE THREAD OF THE NUT AND BOLT SHALL THEN BE BURRED WITH A SHARP POINTED TOOL.

STEEL SOLE PLATES, ANCHOR BOLTS, NUTS, AND WASHERS SHALL BE GALVANIZED IN ACCORDANCE WITH THE STANDARD SPECIFICATIONS.

PRIOR TO WELDING, GRIND THE GALVANIZED SURFACE OF THE PORTION OF THE EMBEDDED PLATE AND SOLE PLATE THAT ARE TO BE WELDED. AFTER WELDING, DAMAGED GALVANIZED SURFACES SHALL BE REPAIRED IN ACCORDANCE WITH THE STANDARD SPECIFICATIONS.

WHEN WELDING THE SOLE PLATE TO THE EMBEDDED PLATE IN THE GIRDER, USE TEMPERATURE INDICATING WAX PENS, OR OTHER SUITABLE MEANS, TO ENSURE THAT THE TEMPERATURE OF THE SOLE PLATE DOES NOT EXCEED 300°F. TEMPERATURES ABOVE THIS MAY DAMAGE THE ELASTOMER.

SOLE PLATE "P", BOLTS, NUTS AND WASHERS SHALL BE INCLUDED IN THE PAY ITEM FOR PRESTRESSED CONCRETE GIRDERS.

ANCHOR BOLTS SHALL MEET THE REQUIREMENTS OF ASTM A449. NUTS SHALL MEET THE REQUIREMENTS OF AASHTO M291-DH OR AASHTO M292-2H. WASHERS SHALL MEET THE REQUIREMENTS OF AASHTO M293. SHOP DRAWINGS ARE NOT REQUIRED FOR ANCHOR BOLT, NUTS AND WASHERS. SHOP INSPECTION IS REQUIRED.

ALL SURFACES OF BEARING PLATES SHALL BE SMOOTH AND STRAIGHT.

ELASTOMER IN ALL BEARINGS SHALL BE 60 DUROMETER HARDNESS.

— LOAD RATINGS —	
60 DUROMETER	MAX.D.L.+L.L.
TYPE III	180 K

SECTION E-E

SECTION D-D

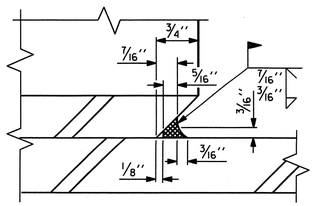

DETAIL "A"

SOLE ℄ PLACEMENT DETAIL

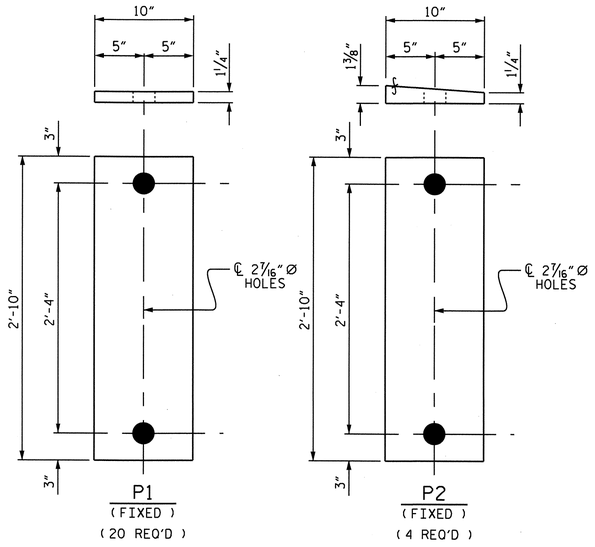

SOLE PLATE DETAILS

PROJECT NO. B-4712

BLADEN COUNTY

STATION: 63+50.00 -L-

STATE OF NORTH CAROLINA
DEPARTMENT OF TRANSPORTATION
RALEIGH
STANDARD

ELASTOMERIC BEARING DETAILS

PRESTRESSED CONCRETE GIRDER SUPERSTRUCTURE

ASSEMBLED BY : M. L. BROWN	DATE : 6-2011
CHECKED BY : A. V. ROYAL	DATE : 7-2011
DRAWN BY : WJH 8/89	REV. 7/10/01 RWW/LES
CHECKED BY : CRK 8/89	REV. 5/1/06 TLA/GM
	REV. 10/1/11 MAA/GM

REVISIONS						SHEET NO.
NO.	BY:	DATE:	NO.	BY:	DATE:	S-89
1			3			TOTAL SHEETS
2			4			108

07-NOV-2012 15:25
R:\Structures\Plans\str02\B4712_sd_BG_02.dgn

STR. #2

SID NO. EB3

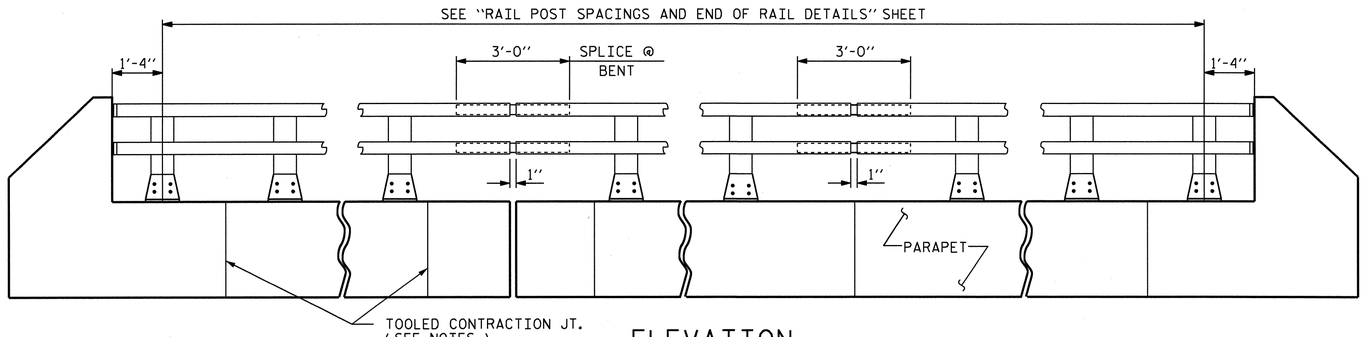

ELEVATION

NOTE : FOR ATTACHMENT OF METAL RAIL TO END POST, SEE STANDARD NO. BMR2.

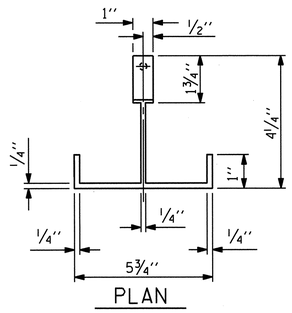

PLAN

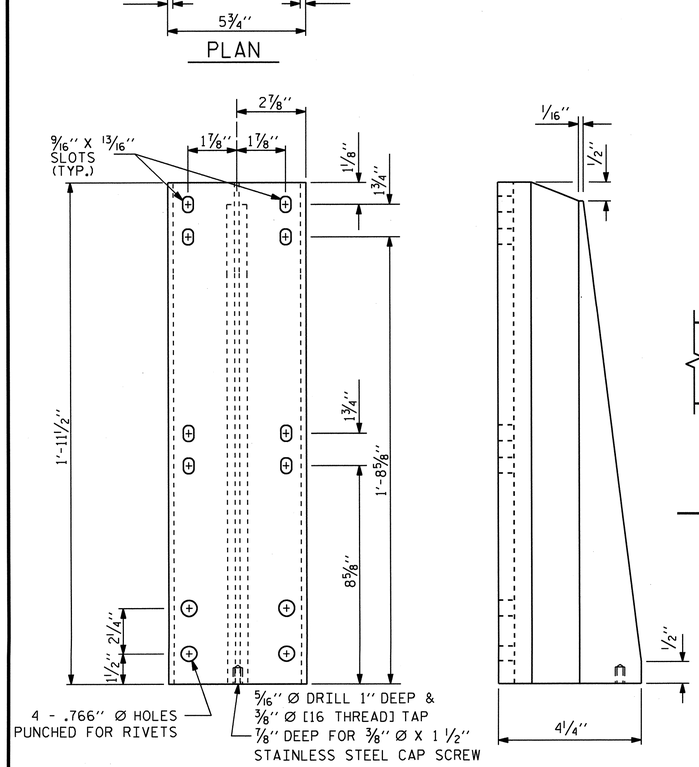

FRONT ELEVATION — SIDE ELEVATION

DETAILS OF POST

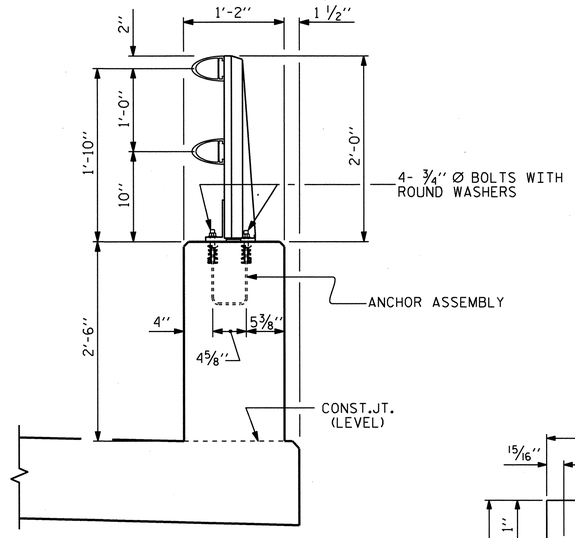

SECTION THRU PARAPET AND RAIL

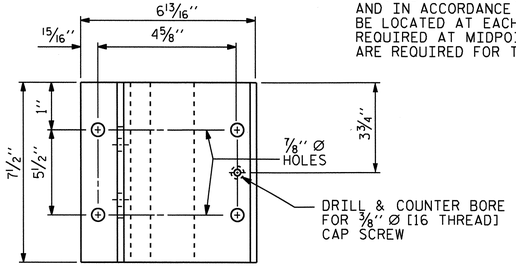

PLAN

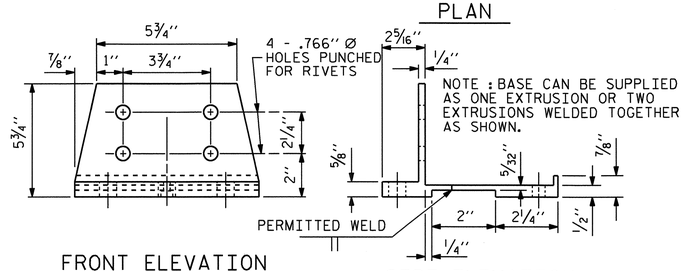

FRONT ELEVATION — SIDE ELEVATION

POST BASE DETAILS

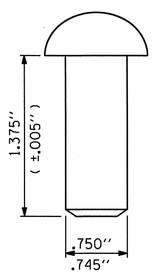

RIVET DETAIL

NOTES

AT THE CONTRACTOR'S OPTION, METAL RAIL MAY BE EITHER ALUMINUM OR GALVANIZED STEEL IN ACCORDANCE WITH THE REQUIREMENTS OF THE GENERAL NOTES AND THE FOLLOWING SPECIFICATIONS FOR THE ALTERNATE MATERIALS; HOWEVER, THE CONTRACTOR WILL BE REQUIRED TO USE THE SAME RAIL MATERIAL ON ALL STRUCTURES ON THE PROJECT FOR WHICH METAL RAIL IS DESIGNATED.

ALUMINUM RAILS

MATERIAL FOR POSTS, BASES AND RAILS, EXPANSION BARS AND CLAMP BARS SHALL BE ASTM B-221 ALLOY 6061-T6.

MATERIAL FOR RIVETS SHALL BE ASTM B316 ALLOY 6061-T6. RIVETS SHALL BE STANDARD BUTTON HEAD AND CONE POINT COLD DRIVEN AS PER DRAWING.

THE BASE OF RAIL POSTS, OR ANY OTHER ALUMINUM SURFACE IN CONTACT WITH CONCRETE SHALL BE THOROUGHLY COATED WITH AN ALUMINUM IMPREGNATED CAULKING COMPOUND OF APPROVED QUALITY.

MATERIAL FOR SHIMS TO BE ASTM B209 ALLOY 6061-T6.

GALVANIZED STEEL RAILS

MATERIAL AND GALVANIZING ARE TO CONFORM TO THE FOLLOWING SPECIFICATIONS:

POST, POST BASES, RAILS, EXPANSION BARS AND CLAMP BARS: AASHTO M270 GRADE 36 STRUCTURAL STEEL - GALVANIZED TO AASHTO M111.

RIVETS: RIVETS SHALL MEET THE REQUIREMENTS OF ASTM A502 FOR GRADE 1 RIVETS.

THE CUT ENDS OF GALVANIZED STEEL RAILING, AFTER GRINDING SMOOTH SHALL BE GIVEN TWO COATS OF ZINC RICH PAINT MEETING THE REQUIREMENTS OF FEDERAL SPECIFICATION MIL-P-26915 USAF TYPE 1, OR OF FEDERAL SPECIFICATIONS TT-P-641.

SHIMS: SHIMS SHALL MEET THE REQUIREMENTS OF ASTM A570 FOR GRADE 33 OR A611 FOR GRADE C AND SHALL BE GALVANIZED IN ACCORDANCE WITH AASHTO M111.

RAIL CAPS: RAIL CAPS SHALL MEET THE REQUIREMENTS OF ASTM A570 FOR GRADE 33 OR A611 FOR GRADE C AND SHALL BE GALVANIZED IN ACCORDANCE WITH AASHTO M111.

GENERAL NOTES

RAILING SHALL BE CONTINUOUS FROM END POST TO END POST OF BRIDGE. EACH JOINT IN RAIL LENGTH SHALL BE SPLICED AS DETAILED. PANEL LENGTHS OF RAIL SHALL BE ATTACHED TO A MINIMUM OF THREE POSTS.

FOR END OF RAIL TO CLEAR FACE OF CONCRETE END POST DIMENSION, SEE STANDARD NO. BMR2.

CAP SCREWS SHALL BE ASTM F593 ALLOY 305 STAINLESS STEEL. WASHERS SHALL MEET THE REQUIREMENTS OF ASTM F844 EXCEPT THEY SHALL BE MADE FROM ALLOY 304 STAINLESS STEEL.

CERTIFIED MILL REPORTS ARE REQUIRED FOR RAILS AND POSTS. SHOP INSPECTION IS NOT REQUIRED.

METAL RAIL POSTS SHALL BE SET NORMAL TO CURB GRADE.

METHOD OF MEASUREMENT FOR METAL RAILS: FOR LENGTH OF METAL RAILS TO BE PAID FOR, SEE THE STANDARD SPECIFICATIONS.

CURVED RAIL USAGE: WHERE RAILS ARE TO BE USED ON BRIDGES ON HORIZONTAL AND/OR VERTICAL CURVATURE THE CONTRACTOR MAY, AT HIS OPTION, HAVE THE REQUIRED CURVATURE IN THE RAIL FORMED IN THE SHOP OR IN THE FIELD. IN EITHER EVENT, THE RAIL SHALL CONFORM WITHOUT BUCKLING OR KINKING TO THE REQUIRED CURVATURE IN A UNIFORM MANNER ACCEPTABLE TO THE ENGINEER.

TO INSURE FUTURE IDENTIFICATION OF THE FABRICATOR, A PERMANENT IDENTIFYING MARK SHALL BE PLACED ON EACH POST. THE METHOD OF MARKING AND LOCATION SHALL BE SUCH THAT IT DOES NOT DETRACT FROM THE APPEARANCE OF THE POST, BUT REMAINS VISIBLE AFTER RAIL PLACEMENT.

SHIMS SHALL BE USED AS NECESSARY FOR POST ALIGNMENT.

ALLOY 6351-T5 MAY BE SUBSTITUTED FOR ALLOY 6061-T6 WHERE APPLICABLE.

MINOR VARIATIONS IN DETAILS OF METAL RAIL WILL BE CONSIDERED. DETAILS OF SUCH VARIATIONS, IF DESIRED, SHALL BE SUBMITTED FOR APPROVAL.

GROOVED CONTRACTION JOINTS, 1/2" IN DEPTH, SHALL BE TOOLED IN ALL EXPOSED FACES OF THE PARAPET AND IN ACCORDANCE WITH ARTICLE 825-10(B) OF THE STANDARD SPECIFICATIONS. A CONTRACTION JOINT SHALL BE LOCATED AT EACH THIRD POINT BETWEEN PARAPET EXPANSION JOINTS. ONLY ONE CONTRACTION JOINT IS REQUIRED AT MIDPOINT OF PARAPET SEGMENTS LESS THAN 20 FEET IN LENGTH AND NO CONTRACTION JOINTS ARE REQUIRED FOR THOSE SEGMENTS LESS THAN 10 FEET IN LENGTH.

PAY LENGTH = 581.67 LIN. FT.

PROJECT NO. B-4712

BLADEN COUNTY

STATION: 63+50.00 -L-

SHEET 1 OF 2

STATE OF NORTH CAROLINA
DEPARTMENT OF TRANSPORTATION
RALEIGH

STANDARD

2 BAR METAL RAIL

ASSEMBLED BY : M.L. BROWN	DATE : 6-2011
CHECKED BY : A.V. ROYAL	DATE : 7-2011

DRAWN BY : EEM	6/94	REV. 5/7/03R	RWW/JTE
CHECKED BY : RGW	6/94	REV. 5/1/06	TLA/GM
		REV. 10/1/11	MAA/GM

REVISIONS						SHEET NO.
NO.	BY:	DATE:	NO.	BY:	DATE:	S-90
1			3			TOTAL SHEETS
2			4			108

STR. #2

STD. NO. BMR3

NORTH CAROLINA PROFESSIONAL SEAL 21638 ENGINEER LAURA E. SUTTON — 11/03/13

07-NOV-2012 15:25
R:\Structures\Plans\str02\B4712_sd_2MR_02.dgn

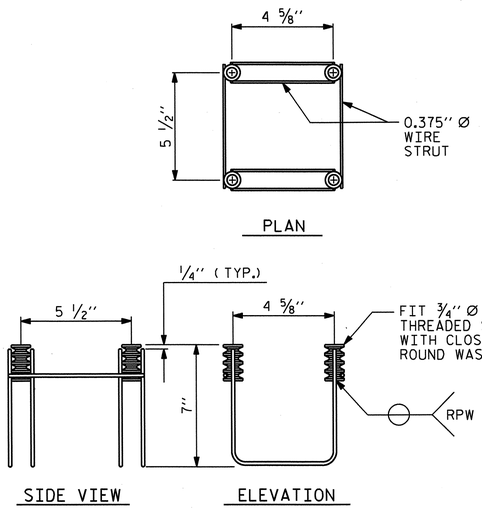

4-BOLT METAL RAIL ANCHOR ASSEMBLY

(100 ASSEMBLIES REQUIRED)

NOTES

STRUCTURAL CONCRETE ANCHOR ASSEMBLY

THE STRUCTURAL CONCRETE ANCHOR ASSEMBLY SHALL CONSIST OF THE FOLLOWING COMPONENTS :

A. FERRULES SHALL BE MADE FROM STEEL MEETING THE REQUIREMENTS OF AASHTO M169, GRADE 12L14 AND SHALL HAVE A MINIMUM LENGTH OF THREADS OF 2'' FOR 3/4'' FERRULES.

B. 4 - 3/4'' Ø X 2 1/2'' BOLTS WITH WASHERS. BOLTS SHALL CONFORM TO THE REQUIREMENTS OF ASTM A307. BOLTS AND WASHERS SHALL BE GALVANIZED. AT THE CONTRACTOR'S OPTION, STAINLESS STEEL BOLTS AND WASHERS MAY BE USED AS AN ALTERNATE FOR THE 3/4'' Ø X 2 1/2'' GALVANIZED BOLTS AND WASHERS. THEY SHALL CONFORM TO OR EXCEED THE MECHANICAL REQUIREMENTS OF ASTM A307. THE USE OF THIS ALTERNATE SHALL BE APPROVED BY THE ENGINEER.

C. WIRE STRUT SHOWN IN THE CONCRETE ANCHOR ASSEMBLY DETAIL IS THE MINIMUM ALLOWABLE SIZE AND SHALL HAVE A MINIMUM TENSILE STRENGTH OF 100,000 PSI. AS AN OPTION, A 1/16'' Ø WIRE STRUT WITH A MINIMUM TENSILE STRENGTH OF 90,000 PSI IS ACCEPTABLE.

D. THE METAL RAIL ANCHOR ASSEMBLIES TO BE HOT DIPPED GALVANIZED TO CONFORM TO REQUIREMENTS OF AASHTO M111.

E. THE COST OF THE METAL RAIL ANCHOR ASSEMBLY WITH BOLTS AND WASHERS COMPLETE IN PLACE SHALL BE INCLUDED IN THE PRICE BID FOR LINEAR FEET OF METAL RAIL.

F. BOLTS TO BE TIGHTENED ONE-HALF TURN WITH A WRENCH FROM A FINGER-TIGHT POSITION.

THE CONTRACTOR MAY USE ADHESIVELY ANCHORED ANCHOR BOLTS IN PLACE OF THE METAL RAIL ANCHOR ASSEMBLY. LEVEL ONE FIELD TESTING IS REQUIRED, AND THE YIELD LOAD OF THE 3/4'' Ø BOLT IS 10 KIPS. FOR ADHESIVELY ANCHORED ANCHOR BOLTS OR DOWELS, SEE THE STANDARD SPECIFICATIONS.

WHEN ADHESIVELY ANCHORED ANCHOR BOLTS ARE USED, BOLTS SHALL MEET THE REQUIREMENTS OF ASTM F593 ALLOY 304 STAINLESS STEEL WITH MINIMUM 75,000 PSI ULTIMATE STRENGTH. NUTS SHALL MEET THE REQUIREMENTS OF ASTM F594 ALLOY 304 STAINLESS STEEL AND WASHERS SHALL MEET THE REQUIREMENTS OF ASTM F844 EXCEPT THEY SHALL BE MADE FROM ALLOY 304 STAINLESS STEEL.

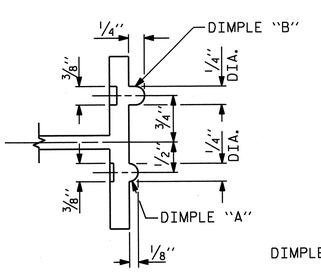

SECTION B - B

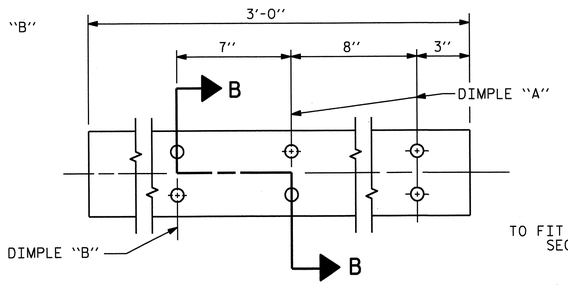

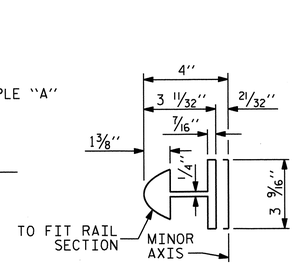

BAR SECTION

EXPANSION BAR DETAILS

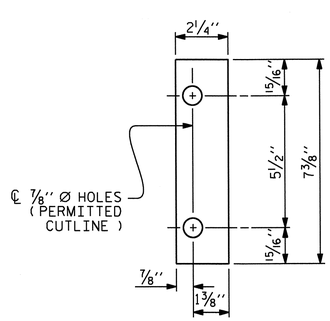

FRONT PLATE

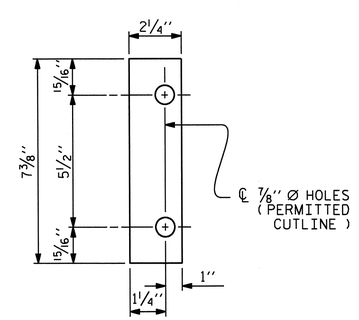

REAR PLATE

SHIM DETAILS

NOTE :
SHIMS MAY BE CUT ALONG PERMITTED CUTLINE OR SLOTTED TO EDGE OF PLATE TO FACILITATE PLACEMENT.

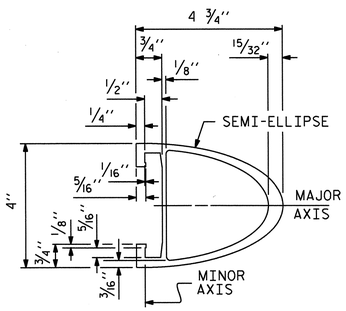

RAIL SECTION

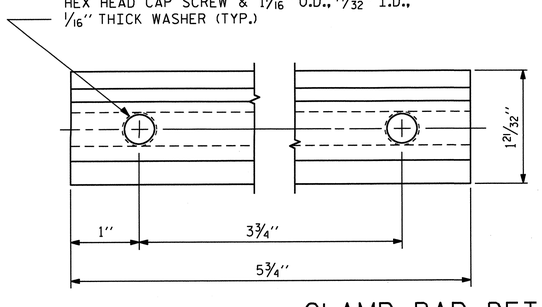

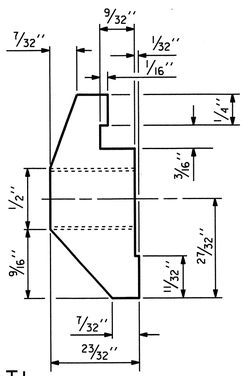

CLAMP BAR DETAIL

(4 REQUIRED PER POST)

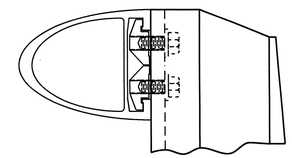

CLAMP ASSEMBLY

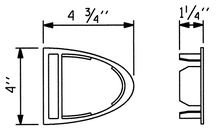

RAIL CAP

PROJECT NO. B-4712

BLADEN COUNTY

STATION: 63+50.00 -L-

SHEET 2 OF 2

STATE OF NORTH CAROLINA
DEPARTMENT OF TRANSPORTATION
RALEIGH

STANDARD

2 BAR METAL RAIL

REVISIONS						SHEET NO.
NO.	BY:	DATE:	NO.	BY:	DATE:	S-91
1			3			TOTAL SHEETS
2			4			108

STR. #2

STD. NO. BMR4

ASSEMBLED BY : M.L. BROWN	DATE : 6-2011	
CHECKED BY : A.V. ROYAL	DATE : 7-2011	
DRAWN BY : EEM 6/94	REV. 8/16/99	MAB/LES
CHECKED BY : RGW 6/94	REV. 5/1/06R	KMM/GM
	REV. 10/1/11	MAA/GM

NORTH CAROLINA PROFESSIONAL SEAL 21638 ENGINEER LAURA E. SUTTON 11/03/13

07-NOV-2012 15:24
R:\Structures\Plans\str02\B4712_sd_2MR_02.dgn

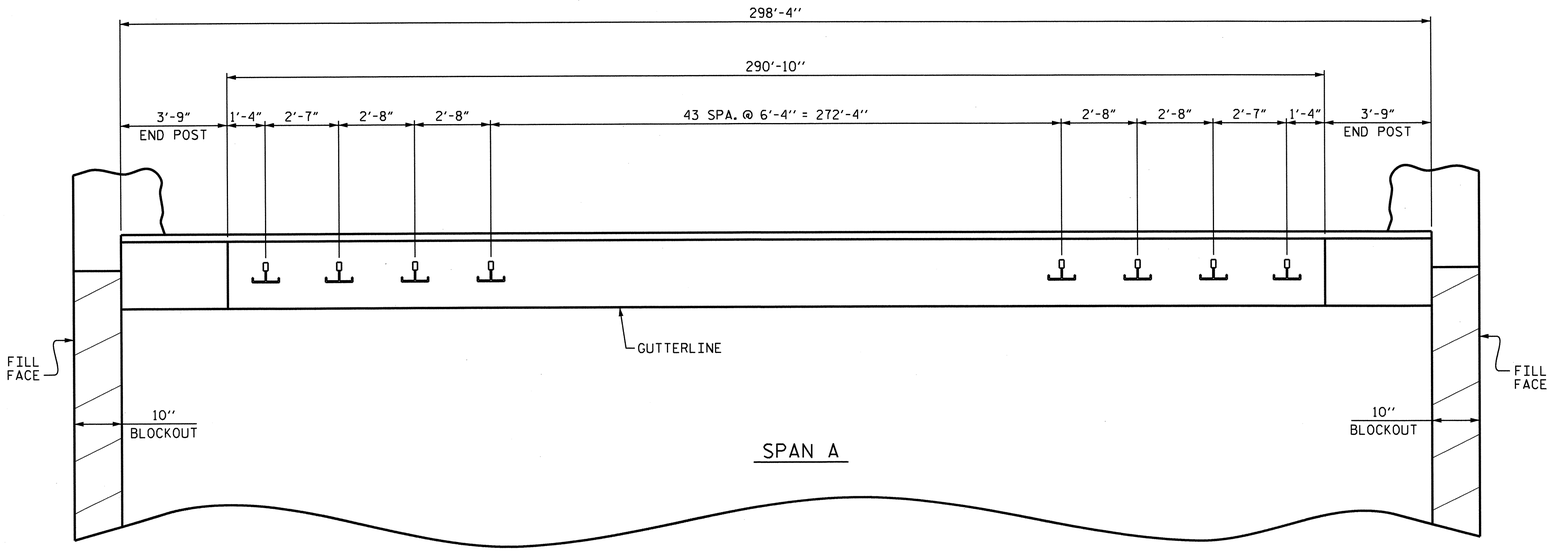

PLAN OF RAIL POST SPACINGS

LEFT SIDE SHOWN, RIGHT SIDE SIMILAR

NOTES

STRUCTURAL CONCRETE INSERT

THE STRUCTURAL CONCRETE INSERT ASSEMBLY SHALL CONSIST OF THE FOLLOWING COMPONENTS:

A. FERRULES SHALL BE MADE FROM STEEL MEETING THE REQUIREMENTS OF AASHTO M169, GRADE 12L14 AND SHALL HAVE A MINIMUM LENGTH OF THREADS OF 1½".

B. 1 - ¾" Ø X 1⅝" BOLT WITH WASHER. BOLT SHALL CONFORM TO THE REQUIREMENTS OF ASTM A307. BOLT AND WASHER SHALL BE GALVANIZED. (AT THE CONTRACTOR'S OPTION, STAINLESS STEEL BOLT AND WASHER MAY BE USED AS AN ALTERNATE FOR THE ¾" Ø X 1⅝" GALVANIZED BOLT AND WASHER. THEY SHALL CONFORM TO OR EXCEED THE MECHANICAL REQUIREMENTS OF ASTM A307. THE USE OF THIS ALTERNATE SHALL BE APPROVED BY THE ENGINEER.)

C. WIRE STRUT SHOWN IN THE CONCRETE INSERT ASSEMBLY DETAIL IS THE MINIMUM ALLOWABLE SIZE AND SHALL HAVE A MINIMUM TENSILE STRENGTH OF 100,000 PSI. AS AN OPTION, A 7/16" Ø WIRE STRUT WITH A MINIMUM TENSILE STRENGTH OF 90,000 PSI IS ACCEPTABLE.

NOTES

METAL RAIL TO END POST CONNECTION

THE METAL RAIL TO END POST CONNECTION SHALL CONSIST OF THE FOLLOWING COMPONENTS:

A. ½" PLATES SHALL CONFORM TO AASHTO M270 GRADE 36 AND SHALL BE GALVANIZED AFTER FABRICATION.

B. ¾" STRUCTURAL CONCRETE INSERT SHALL HAVE A WORKING LOAD SHEAR CAPACITY OF 4800 LBS. THE FERRULES SHALL ENGAGE A ¾" Ø X 1⅝" BOLT WITH 2" O.D. WASHER IN PLACE. THE ¾" Ø X 1⅝" BOLT SHALL HAVE N. C. THREADS.

C. CAP SCREWS FOR RAIL ATTACHMENT TO ANGLE SHALL CONFORM TO THE REQUIREMENTS OF ASTM F593 ALLOY 305 STAINLESS STEEL. CAP SCREWS TO BE CENTERED IN SLOTS AT 60°F.

D. STANDARD CLAMP BARS (SEE METAL RAIL SHEET).

E. ½" Ø PIPE SLEEVES (IF REQUIRED) TO BE GALVANIZED.

THE COST OF THE STANDARD CLAMP BARS AND CAP SCREWS USED IN THE METAL RAIL TO END POST CONNECTION SHALL BE INCLUDED IN THE UNIT CONTRACT PRICE BID FOR LINEAR FEET OF 1 OR 2 BAR METAL RAILS.

THE ¾" STRUCTURAL CONCRETE INSERT WITH BOLT SHALL BE ASSEMBLED IN THE SHOP.

THE COST OF THE ¾" STRUCTURAL CONCRETE INSERT ASSEMBLY, AND THE ½" PLATES COMPLETE IN PLACE SHALL BE INCLUDED IN THE VARIOUS PAY ITEMS.

THE CONTRACTOR, AT HIS OPTION, MAY USE AN ADHESIVE BONDING SYSTEM IN LIEU OF THE STRUCTURAL CONCRETE INSERT EMBEDDED IN THE END POST. IF THE ADHESIVE BONDING SYSTEM IS USED, THE ¾" Ø X 1⅝" BOLT WITH WASHER SHALL BE REPLACED WITH A ¾"Ø X 6½" BOLT AND 2" O.D. WASHER. ALL SPECIFICATIONS THAT APPLY TO THE ¾" Ø X 1⅝" BOLT SHALL APPLY TO THE ¾"Ø X 6 ½" BOLT. FIELD TESTING OF THE ADHESIVE BONDING SYSTEM IS NOT REQUIRED.

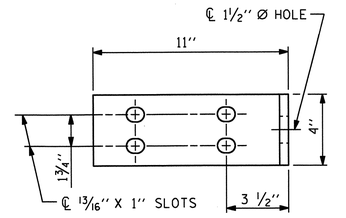

ELEVATION

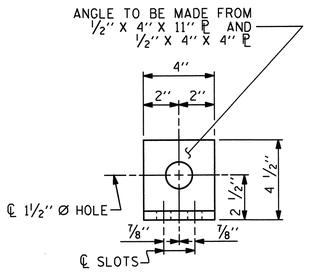

END VIEW

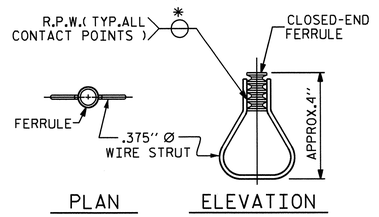

PLAN ELEVATION

STRUCTURAL CONCRETE INSERT

*EACH WELDED ATTACHMENT OF WIRE TO FERRULE SHALL DEVELOP THE TENSILE STRENGTH OF THE WIRE.

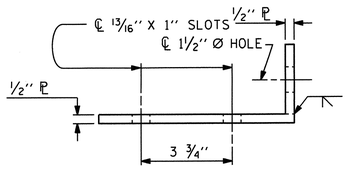

TOP VIEW

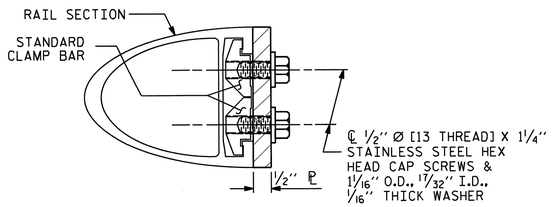

SECTION H-H

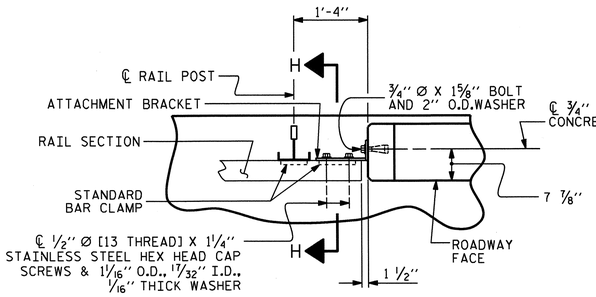

PLAN - RAIL AND END POST

DETAILS FOR ATTACHING METAL RAIL TO END POST

PROJECT NO. B-4712

BLADEN COUNTY

STATION: 63+50.00 -L-

STATE OF NORTH CAROLINA
DEPARTMENT OF TRANSPORTATION
RALEIGH

STANDARD

RAIL POST SPACINGS AND END OF RAIL DETAILS

FOR TWO BAR METAL RAILS

REVISIONS						SHEET NO.
NO.	BY:	DATE:	NO.	BY:	DATE:	S-92
1			3			TOTAL SHEETS
2			4			108

STR. #2 STD. NO. BMR2

ASSEMBLED BY : M.L. BROWN		DATE : 6/2011
CHECKED BY : A.V. ROYAL		DATE : 7/2011
DRAWN BY : FCJ 1/88	REV. 5/7/03	RWW/JTE
CHECKED BY : CRK 3/89	REV. 5/1/06	TLA/GM
	REV. 10/1/11	MAA/GM

07-NOV-2012 15:24
R:\Structures\Plans\str02\R4712_sd_2MR_02.dgn

NORTH CAROLINA PROFESSIONAL SEAL 21638 ENGINEER LAURA E. SUTTON 11/9/12

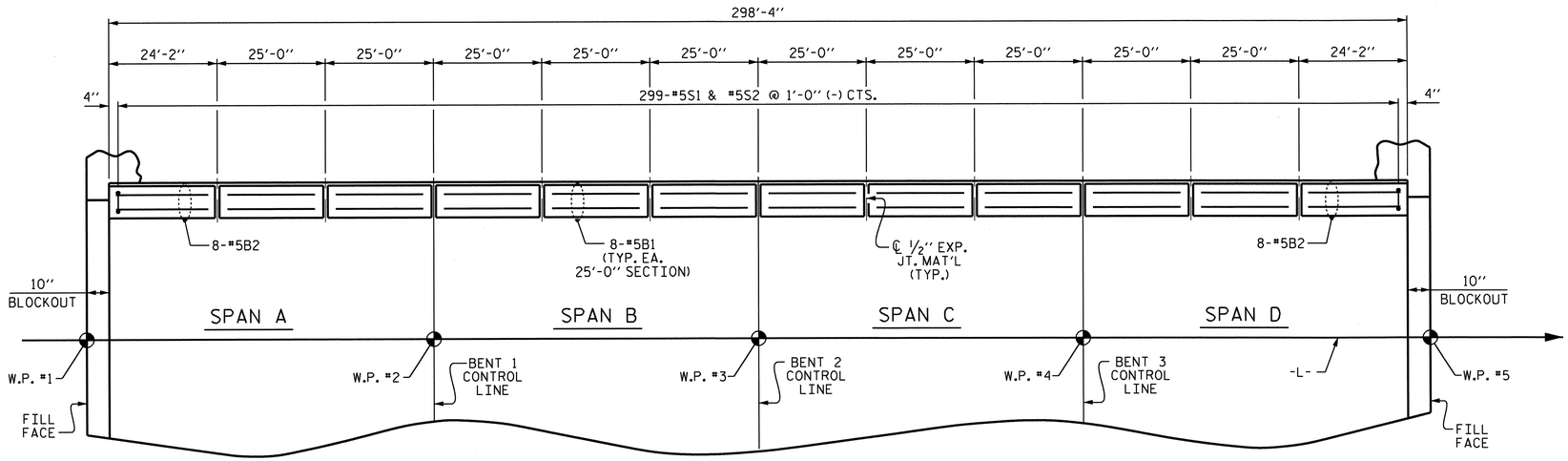

PLAN OF PARAPET

LEFT SIDE SHOWN, RIGHT SIDE SIMILAR

NOTES

CONCRETE PARAPET IN A CONTINUOUS UNIT SHALL NOT BE CAST UNTIL ALL SLAB CONCRETE IN THE UNIT HAS BEEN CAST AND HAS REACHED A MINIMUM COMPRESSIVE STRENGTH OF 3000 PSI.

ALL REINFORCING STEEL IN PARAPET AND END POSTS SHALL BE EPOXY COATED.

GROOVED CONTRACTION JOINTS, ½" IN DEPTH, SHALL BE TOOLED IN ALL EXPOSED FACES OF THE PARAPET AND IN ACCORDANCE WITH ARTICLE 825-10(B) OF THE STANDARD SPECIFICATIONS. A CONTRACTION JOINT SHALL BE LOCATED AT EACH THIRD POINT BETWEEN PARAPET EXPANSION JOINTS. ONLY ONE CONTRACTION JOINT IS REQUIRED AT MIDPOINT OF PARAPET SEGMENTS LESS THAN 20 FEET IN LENGTH AND NO CONTRACTION JOINTS ARE REQUIRED FOR THOSE SEGMENTS LESS THAN 10 FEET IN LENGTH.

THE #5S1 & #5S2 BARS MAY BE SHIFTED SLIGHTLY IN ORDER TO MAINTAIN A 2" MINIMUM CLEARANCE TO THE ½" EXPANSION JOINT MATERIAL IN THE CONCRETE PARAPET.

FOR DETAILS OF CONCRETE INSERTS IN END POSTS, SEE "RAIL POST SPACINGS AND END OF RAIL DETAILS" SHEET.

FOR DETAILS OF GUARDRAIL ANCHOR ASSEMBLIES, SEE "GUARDRAIL ANCHORAGE DETAILS FOR METAL RAILS" SHEET.

BAR TYPES

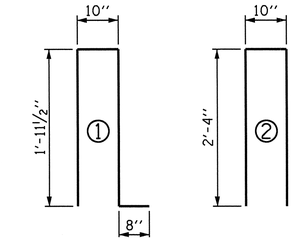

ALL BAR DIMENSIONS ARE OUT TO OUT.

BILL OF MATERIAL

PARAPET AND END POSTS

BAR	NO.	SIZE	TYPE	LENGTH	WEIGHT
✱B1	160	#5	STR	24'-7"	4102
✱B2	32	#5	STR	23'-9"	793
✱E1	8	#7	STR	2'-6"	41
✱E2	8	#7	STR	3'-0"	49
✱E3	8	#7	STR	3'-6"	57
✱E4	8	#7	STR	4'-0"	65
✱E5	8	#7	STR	4'-4"	71
✱F1	8	#6	STR	1'-10"	22
✱F2	8	#6	STR	3'-0"	36
✱F3	8	#6	STR	3'-6"	42
✱S1	598	#5	1	5'-5"	3378
✱S2	598	#5	2	5'-6"	3430
✱ EPOXY COATED REINFORCING STEEL			LBS.		12,086
CLASS AA CONCRETE			C.Y.		65.3
1'-2" X 2'-6" CONCRETE PARAPET			L.F.		596.67

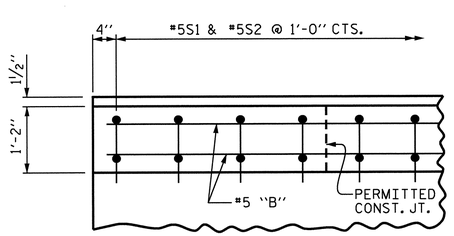

PLAN OF PARAPET

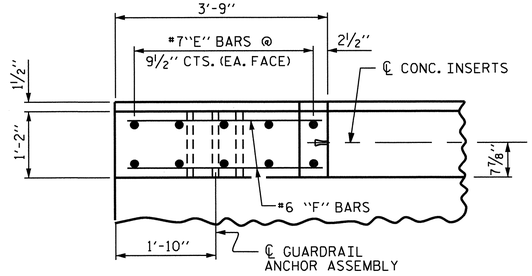

PLAN OF END POST

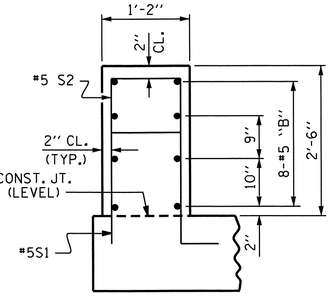

SECTION THROUGH RAIL

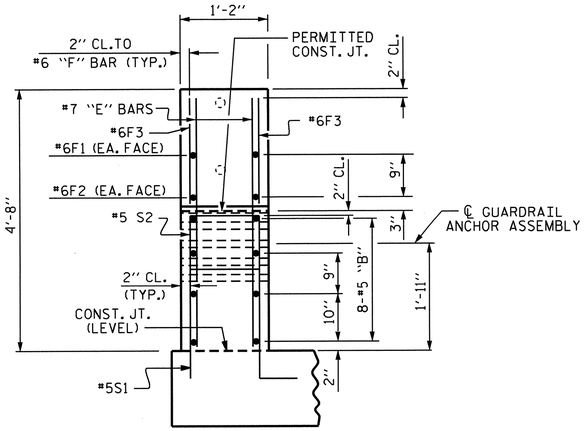

END VIEW

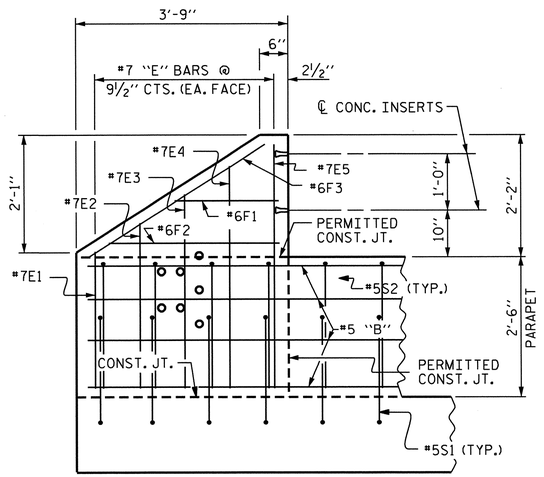

ELEVATION

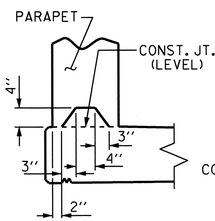

SECTION S-S

AT DAM IN OPEN JOINT
(THIS IS TO BE USED ONLY WHEN SLIP FORM IS USED)

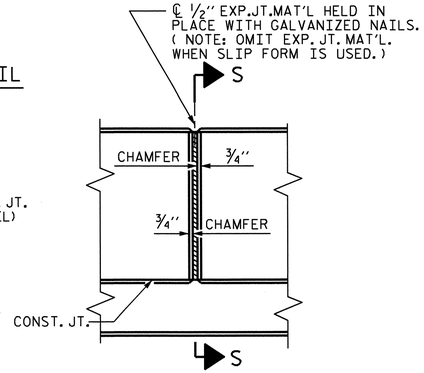

ELEVATION AT EXPANSION JOINTS

CONCRETE PARAPET DETAILS

PARAPET AND END POST FOR TWO BAR RAIL

PROJECT NO. B-4712

BLADEN COUNTY

STATION: 63+50.00 -L-

STATE OF NORTH CAROLINA
DEPARTMENT OF TRANSPORTATION
RALEIGH

SUPERSTRUCTURE

CONCRETE PARAPET AND END POST DETAILS

REVISIONS						SHEET NO.
NO.	BY:	DATE:	NO.	BY:	DATE:	S-93
1			3			TOTAL SHEETS
2			4			108

NORTH CAROLINA PROFESSIONAL SEAL 21638 ENGINEER LAURA E. SUTTON
11/3/13

STR. #2

DRAWN BY : M.L. BROWN DATE : 6/2011
CHECKED BY : A.V. ROYAL DATE : 7/2011

03-JAN-2013 12:08
R:\Structures\Plans\str02\B4712_sd_2MR_02.dgn

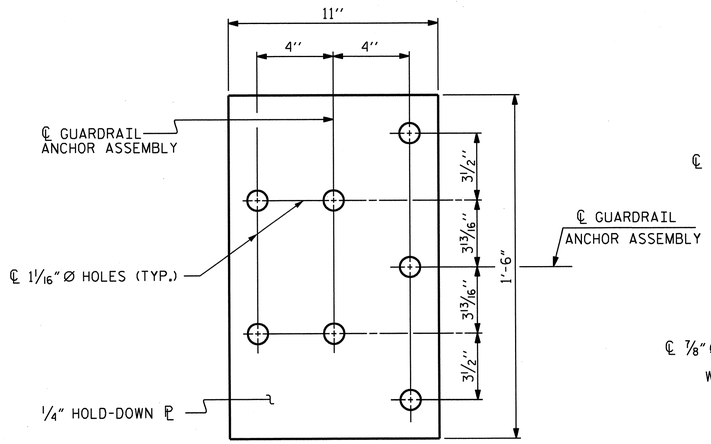

PLAN

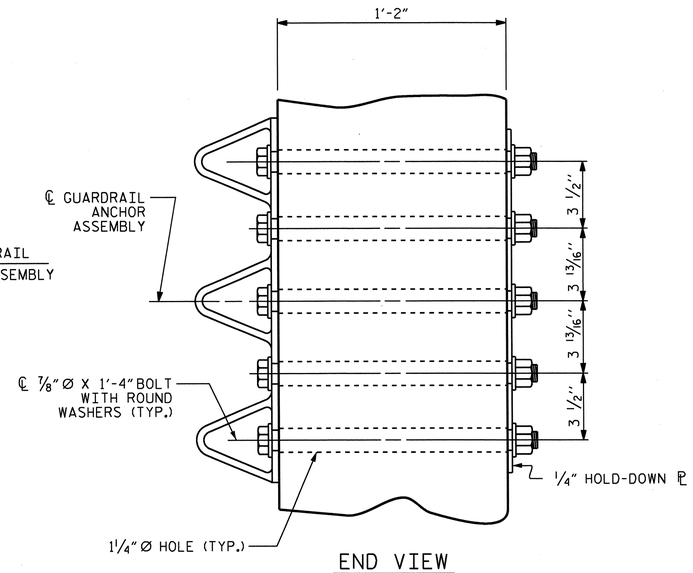

END VIEW

GUARDRAIL ANCHOR ASSEMBLY DETAILS

NOTES

THE GUARDRAIL ANCHOR ASSEMBLY SHALL CONSIST OF A 1/4'' HOLD DOWN PLATE AND 7 - 7/8'' Ø BOLTS WITH NUTS AND WASHERS.

THE HOLD-DOWN PLATE SHALL CONFORM TO AASHTO M270 GRADE 36. AFTER FABRICATION, THE HOLD-DOWN PLATE SHALL BE HOT-DIP GALVANIZED IN ACCORDANCE WITH AASHTO M111.

BOLTS SHALL CONFORM TO THE REQUIREMENTS OF ASTM A307 AND NUTS SHALL CONFORM TO THE REQUIREMENTS OF AASHTO M291. BOLTS, NUTS AND WASHERS SHALL BE GALVANIZED. AT THE CONTRACTOR'S OPTION, STAINLESS STEEL BOLTS, NUTS AND WASHERS MAY BE USED AS AN ALTERNATE FOR THE 7/8'' Ø GALVANIZED BOLTS, NUTS AND WASHERS. THEY SHALL CONFORM TO OR EXCEED THE MECHANICAL REQUIREMENTS OF ASTM A307. THE USE OF THIS ALTERNATE SHALL BE APPROVED BY THE ENGINEER.

THE GUARDRAIL ANCHOR ASSEMBLY IS REQUIRED AT ALL POINTS WHERE APPROACH GUARDRAIL IS TO BE ATTACHED TO THE END OF THE PARAPET. FOR POINTS OF ATTACHMENT, SEE SKETCH.

AFTER INSTALLATION, THE EXPOSED THREAD OF THE BOLT SHALL BE BURRED WITH A SHARP POINTED TOOL.

THE COST OF THE GUARDRAIL ANCHOR ASSEMBLIES WITH BOLTS, NUTS AND WASHERS COMPLETE IN PLACE, SHALL BE INCLUDED IN THE VARIOUS PAY ITEMS.

THE VERTICAL REINFORCING BARS MAY BE SHIFTED SLIGHTLY IN THE END POST TO CLEAR ASSEMBLY BOLTS.

THE 1 1/4'' Ø HOLES SHALL BE FORMED OR DRILLED WITH A CORE BIT. IMPACT TOOLS WILL NOT BE PERMITTED. ANY CONCRETE DAMAGED BY THIS WORK SHALL BE REPAIRED TO THE SATISFACTION OF THE ENGINEER.

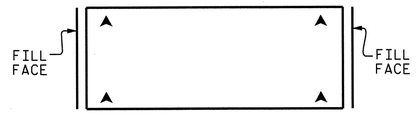

SKETCH SHOWING POINTS OF ATTACHMENT

▲ LOCATION OF GUARDRAIL ATTACHMENT

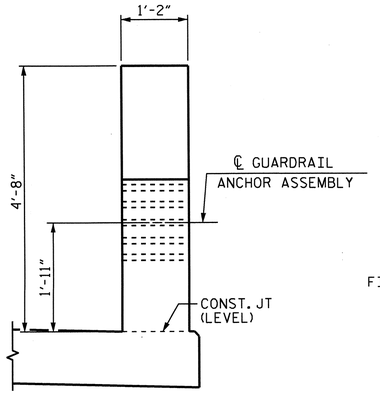

END VIEW

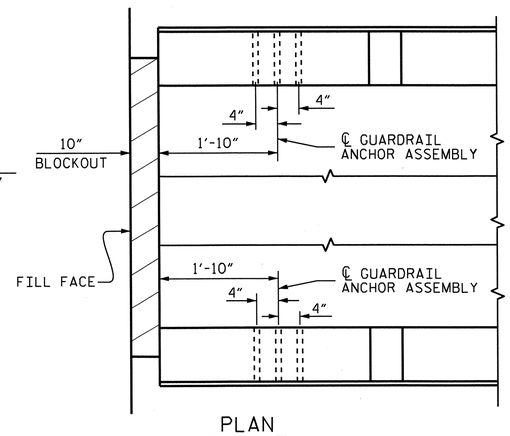

PLAN

LOCATION OF GUARDRAIL ANCHOR AT END POST

END BENT 1 SHOWN, END BENT 2 SIMILAR

PROJECT NO. B-4712

BLADEN COUNTY

STATION: 63+50.00 -L-

ASSEMBLED BY : M.L. BROWN	DATE : 6/2011		
CHECKED BY : A.V. ROYAL	DATE : 7/2011		
DRAWN BY : MAA 5/10	ADDED 5/6/10		
CHECKED BY : GM 5/10	REV. 10/1/11 MAA/GM		
	REV. 12/5/11 MAA/GM		

07-NOV-2012 15:24
R:\Structures\Plans\str02\B4712_sd_GR_02.dgn

STATE OF NORTH CAROLINA
DEPARTMENT OF TRANSPORTATION
RALEIGH
STANDARD
GUARDRAIL ANCHORAGE DETAILS FOR METAL RAILS

NORTH CAROLINA PROFESSIONAL SEAL 21628 ENGINEER LAURA E. SUTTON 1/09/13

REVISIONS						SHEET NO.
NO.	BY:	DATE:	NO.	BY:	DATE:	S-94
1			3			TOTAL SHEETS
2			4			108

STR. #2 STD. NO. GRA3

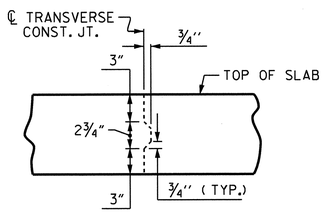

TRANSVERSE CONSTRUCTION JOINT DETAIL

NOTE: REINFORCING STEEL IN SLAB NOT SHOWN.
LONGITUDINAL REINFORCING STEEL SHALL BE CONTINUOUS THROUGH JOINT

SUPERSTRUCTURE REINFORCING STEEL LENGTHS ARE BASED ON THE FOLLOWING MINIMUM SPLICE LENGTHS

BAR SIZE	SUPERSTRUCTURE EXCEPT APPROACH SLABS, PARAPET, AND BARRIER RAIL		APPROACH SLABS		PARAPET AND BARRIER RAIL
	EPOXY COATED	UNCOATED	EPOXY COATED	UNCOATED	
#4	2'-0"	1'-9"	2'-0"	1'-9"	2'-9"
#5	2'-6"	2'-2"	2'-6"	2'-2"	3'-5"
#6	3'-0"	2'-7"	3'-10"	2'-7"	4'-4"
#7	5'-3"	3'-6"			
#8	6'-10"	4'-7"			

GROOVING BRIDGE FLOORS

APPROACH SLABS	816 SQ. FT.
BRIDGE DECK	8,636 SQ. FT.
TOTAL	9,452 SQ. FT.

SUPERSTRUCTURE BILL OF MATERIAL

	CLASS AA CONCRETE	REINFORCING STEEL	EPOXY COATED REINFORCING STEEL
	(CU. YDS.)	(LBS.)	(LBS.)
POUR #1	68.0	———	———
POUR #2	90.4	———	———
POUR #3	90.4	———	———
POUR #4	89.7	———	———
POUR #5	55.0	———	———
TOTAL **	393.5	38,585	38,805

** QUANTITIES FOR CONCRETE PARAPET AND END POSTS ARE NOT INCLUDED

BAR TYPE

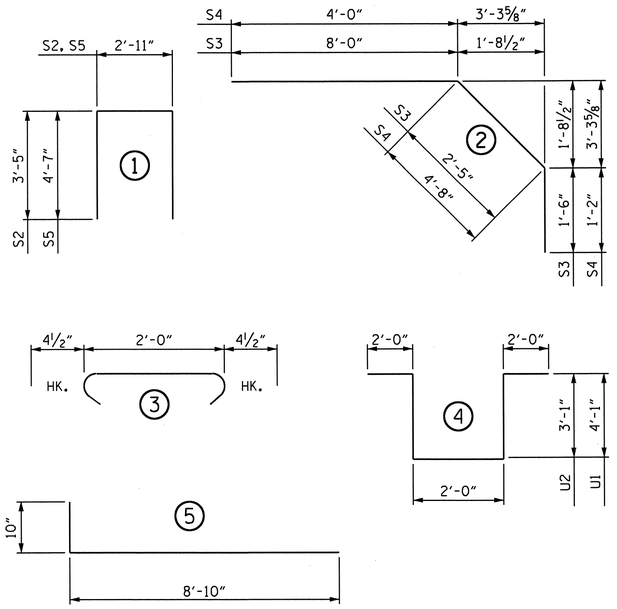

ALL BAR DIMENSIONS ARE OUT TO OUT

BILL OF MATERIAL

BAR	NO.	SIZE	TYPE	LENGTH	WEIGHT
*A1	597	#5	STR	34'-3"	21326
A2	597	#5	STR	34'-3"	21326
*B1	69	#7	STR	56'-0"	7898
*B2	66	#7	STR	24'-0"	3238
*B3	90	#7	STR	14'-10"	2729
B4	276	#5	STR	51'-6"	14825
*B5	22	#4	STR	28'-11"	425
*B6	46	#4	STR	23'-0"	707
*B7	92	#4	STR	18'-7"	1142
H1	40	#5	5	9'-8"	403
K1	16	#4	STR	21'-1"	225
K2	18	#4	STR	5'-11"	71
K3	48	#4	STR	8'-4"	267
K4	24	#4	STR	7'-7"	122
K5	12	#4	STR	28'-0"	224
K6	4	#4	STR	5'-2"	14
K7	8	#4	STR	5'-10"	31
K8	4	#4	STR	5'-5"	14
K9	8	#4	STR	2'-8"	14
K10	6	#4	STR	7'-1"	28
S1	198	#4	3	2'-9"	364
*S2	56	#4	1	9'-9"	365
*S3	60	#4	2	11'-11"	478
*S4	56	#4	2	9'-10"	368
*S5	16	#4	1	12'-1"	129
U1	54	#4	4	14'-2"	511
U2	18	#4	4	12'-2"	146
REINFORCING STEEL				LBS.	38,585
* EPOXY COATED REINFORCING STEEL				LBS.	38,805

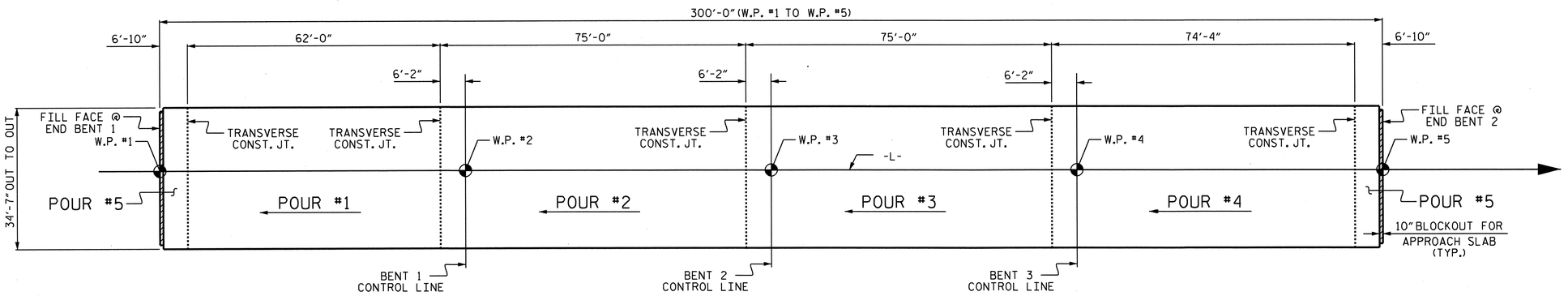

LAYOUT FOR COMPUTING AREA OF REINFORCED CONCRETE DECK SLAB & POURING SEQUENCE (SQ. FT. = 10,375)

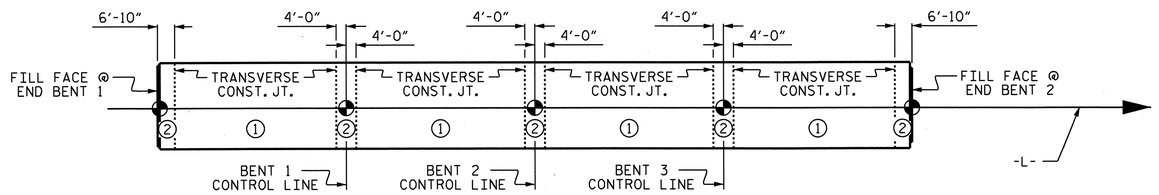

OPTIONAL DECK POURING DETAIL

POUR ② SHALL NOT BE STARTED UNTIL BOTH ADJACENT ① POURS REACH A MINIMUM OR 3000 PSI

PROJECT NO. B-4712
BLADEN COUNTY
STATION: 63+50.00 -L-

STATE OF NORTH CAROLINA
DEPARTMENT OF TRANSPORTATION
RALEIGH
SUPERSTRUCTURE

BILL OF MATERIAL

NORTH CAROLINA PROFESSIONAL SEAL 21638 ENGINEER LAURA E. SUTTON 7/03/13

REVISIONS						SHEET NO.
NO.	BY:	DATE:	NO.	BY:	DATE:	S-95
1			3			TOTAL SHEETS
2			4			108

DRAWN BY : M. L. BROWN DATE : 6-2011
CHECKED BY : A. V. ROYAL DATE : 7-2011

07-NOV-2012 15:24
R:\Structures\Plans\str02\B4712_sd_BM_02.dgn

STR. #2

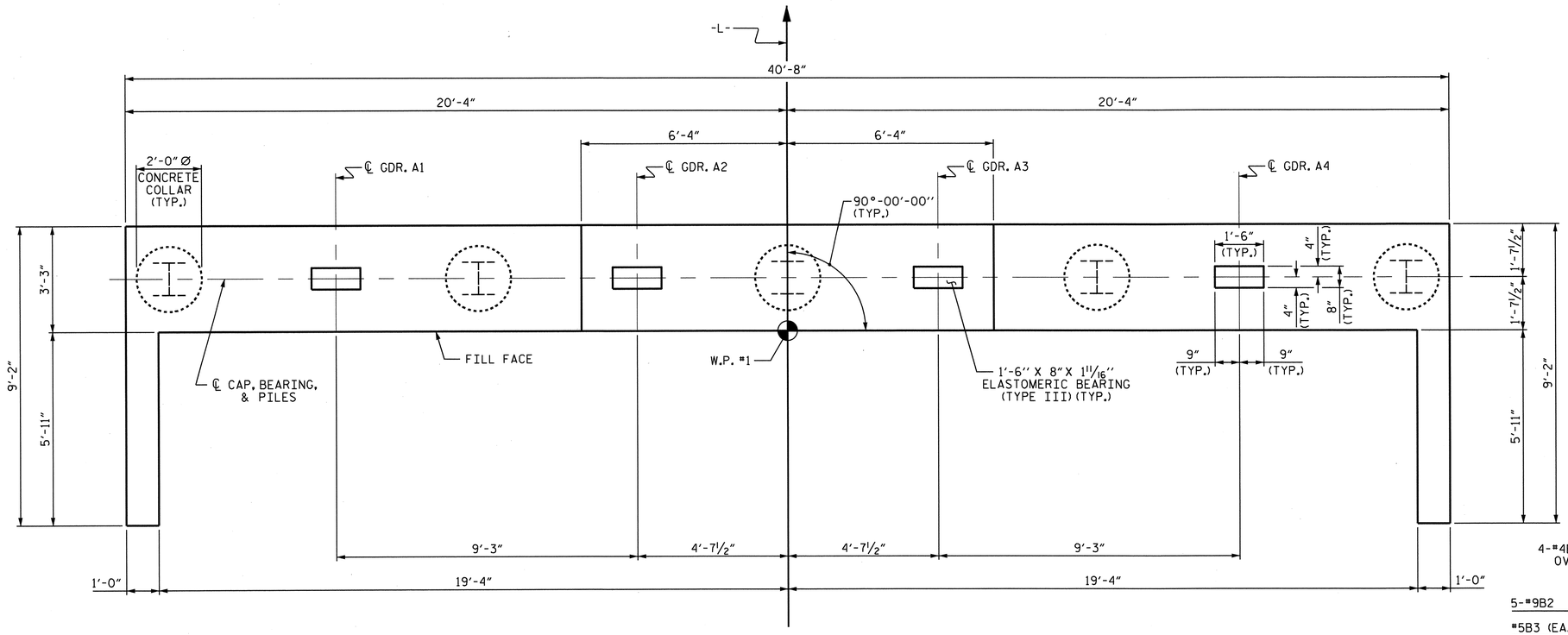

PLAN

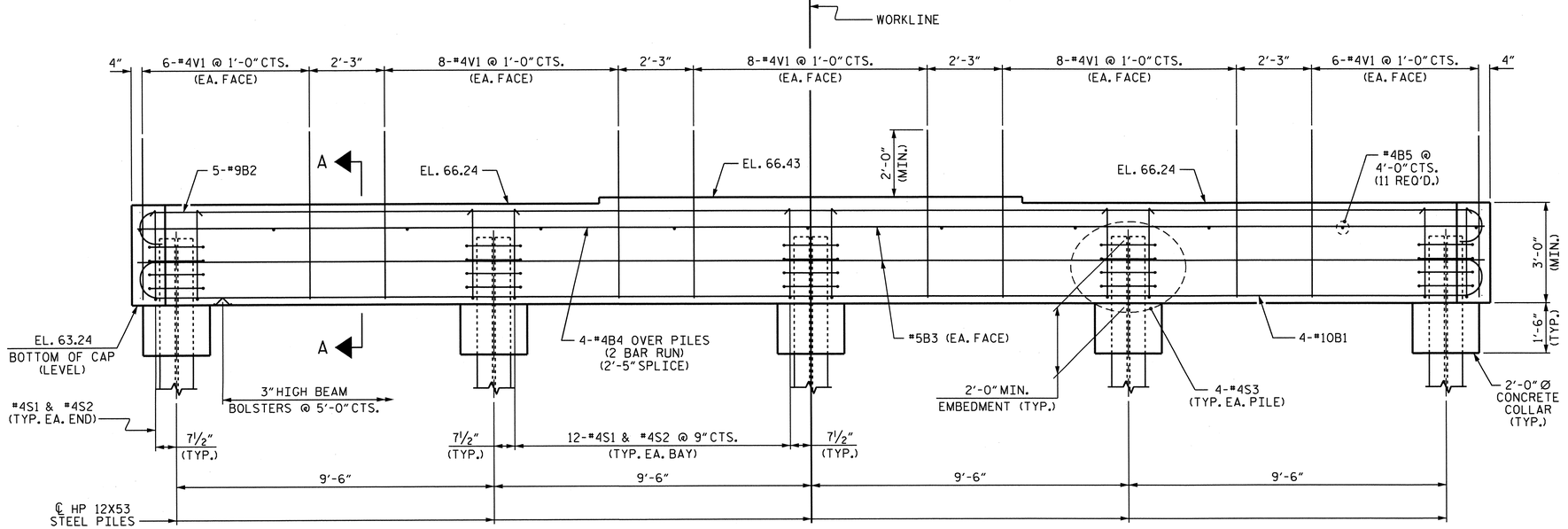

ELEVATION

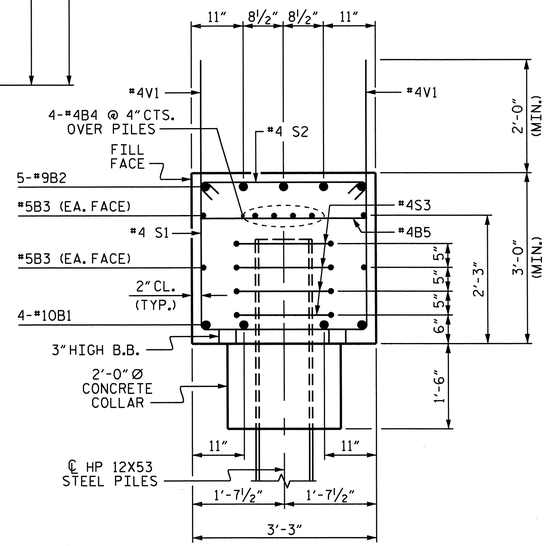

SECTION A-A

NOTES

THE TOP SURFACE OF THE END BENT CAP AND WINGS, EXCEPT THE BEARING AREA, SHALL BE RAKED TO A DEPTH OF ¼".

THE UPPER PORTION OF THE WINGS SHALL BE POURED WITH THE SUPERSTRUCTURE. CONCRETE AND REINFORCING STEEL QUANTITIES ARE INCLUDED IN THE SUPERSTRUCTURE BILL OF MATERIAL. FOR DETAILS, SEE SUPERSTRUCTURE PLANS.

INSTALL THE 4" DIA. DRAIN PIPE THROUGH THE WING WALL AS REQUIRED FOR REINFORCED BRIDGE APPROACH FILLS, SEE THE ROADWAY PLANS. REINFORCING STEEL IN THE WING WALL MAY BE SHIFTED AS NECESSARY TO CLEAR THE DRAIN PIPE.

PROJECT NO. B-4712

BLADEN COUNTY

STATION: 63+50.00 -L-

SHEET 1 OF 2

STATE OF NORTH CAROLINA
DEPARTMENT OF TRANSPORTATION
RALEIGH

SUBSTRUCTURE

INTEGRAL END BENT 1

REVISIONS						SHEET NO.
NO.	BY:	DATE:	NO.	BY:	DATE:	S-96
1			3			TOTAL SHEETS
2			4			108

STR. #2

NORTH CAROLINA PROFESSIONAL SEAL 21638 ENGINEER LAURA E. SUTTON 11/05/13

DRAWN BY : R. L. CHESSON DATE : 2/2012
CHECKED BY : B. N. GRADY DATE : 2/2012

07-NOV-2012 15:24
R:\Structures\Plans\str02\B4712_sd_E*_02.dgn

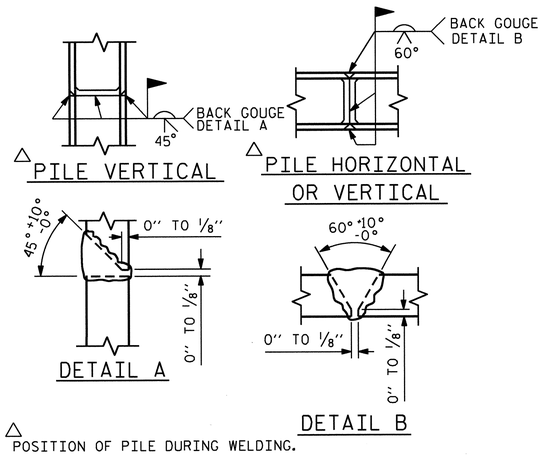

△ POSITION OF PILE DURING WELDING.

PILE SPLICE DETAILS

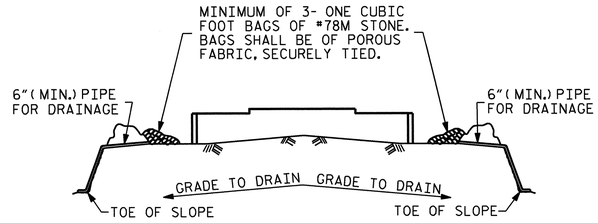

BAGGED STONE AND PIPE SHALL BE PLACED IMMEDIATELY AFTER COMPLETION OF END BENT EXCAVATION. PIPE MAY BE EITHER CONCRETE, CORRUGATED STEEL, CORRUGATED ALUMINUM ALLOY, OR CORRUGATED PLASTIC. PERFORATED PIPE WILL NOT BE ALLOWED.

BAGGED STONE SHALL REMAIN IN PLACE UNTIL THE ENGINEER DIRECTS THAT IT BE REMOVED. THE CONTRACTOR SHALL REMOVE AND DISPOSE OF SILT ACCUMULATIONS AT BAGGED STONE WHEN SO DIRECTED BY THE ENGINEER. BAGS SHALL BE REMOVED AND REPLACED WHENEVER THE ENGINEER DETERMINES THAT THEY HAVE DETERIORATED AND LOST THEIR EFFECTIVENESS.

NO SEPARATE PAYMENT WILL BE MADE FOR THIS WORK AND THE ENTIRE COST OF THIS WORK SHALL BE INCLUDED IN THE UNIT CONTRACT PRICE BID FOR THE SEVERAL PAY ITEMS.

TEMPORARY DRAINAGE AT END BENT

BAR TYPES

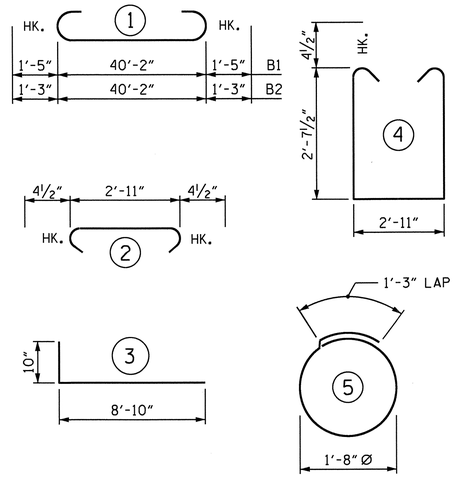

ALL BAR DIMENSIONS ARE OUT TO OUT.

BILL OF MATERIAL

END BENT 1

BAR	NO.	SIZE	TYPE	LENGTH	WEIGHT
B1	4	#10	1	43'-0"	740
B2	5	#9	1	42'-8"	725
B3	4	#5	STR	40'-4"	168
B4	8	#4	STR	21'-5"	114
B5	11	#4	STR	2'-11"	21
H1	16	#5	3	9'-8"	161
S1	50	#4	4	8'-11"	298
S2	50	#4	2	3'-8"	122
S3	20	#4	5	6'-6"	87
V1	72	#4	STR	5'-0"	240
V2	32	#4	STR	7'-5"	159

REINFORCING STEEL	LBS.	2,835
CLASS A CONCRETE	C.Y.	17.2
HP 12X53 STEEL PILES		
NO. 5	LIN. FT.	375
PILE REDRIVES	EA.	3

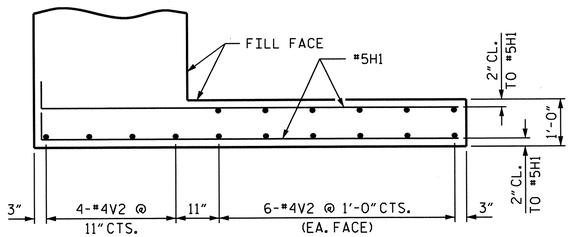

PLAN OF LEFT WING

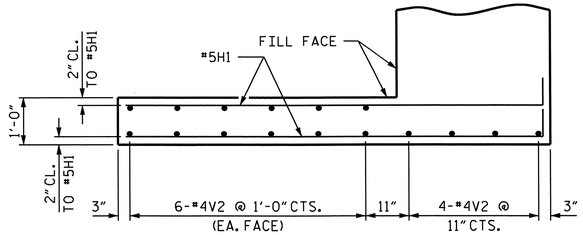

PLAN OF RIGHT WING

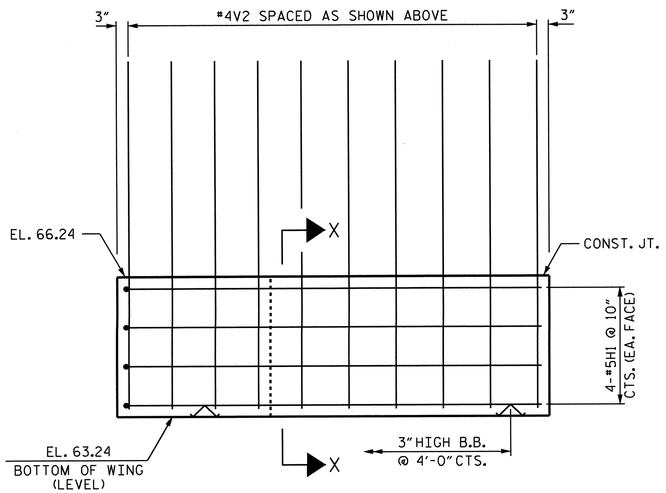

ELEVATION OF LEFT WING

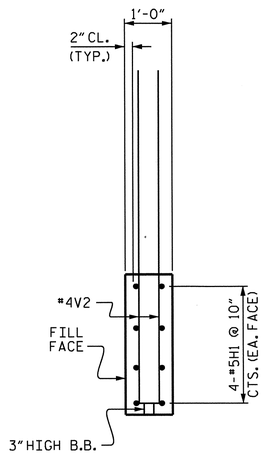

SECTION X-X

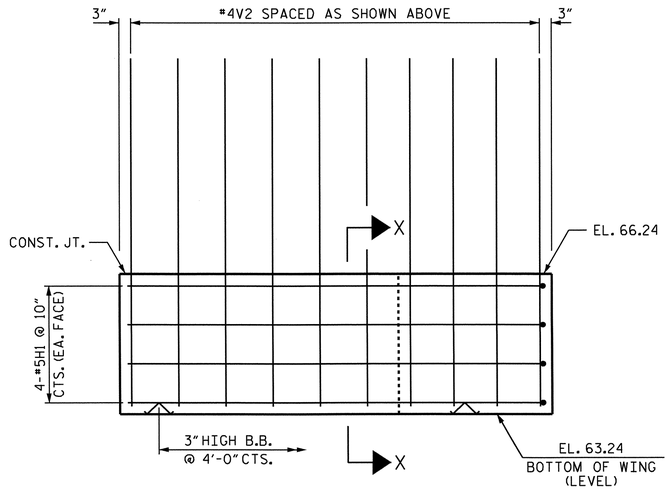

ELEVATION OF RIGHT WING

PROJECT NO. B-4712

BLADEN COUNTY

STATION: 63+50.00 -L-

SHEET 2 OF 2

STATE OF NORTH CAROLINA
DEPARTMENT OF TRANSPORTATION
RALEIGH

SUBSTRUCTURE

INTEGRAL END BENT 1

REVISIONS						SHEET NO.
NO.	BY:	DATE:	NO.	BY:	DATE:	S-97
1			3			TOTAL SHEETS
2			4			108

STR. #2

NORTH CAROLINA PROFESSIONAL SEAL 21638 ENGINEER LAURA E. SUTTON 1/3/13

DRAWN BY : R. L. CHESSON DATE : 2/2012
CHECKED BY : B. N. GRADY DATE : 2/2012

03-JAN-2013 12:08
R:\Structures\Plans\str02\B4712_sd_E*_02.dgn

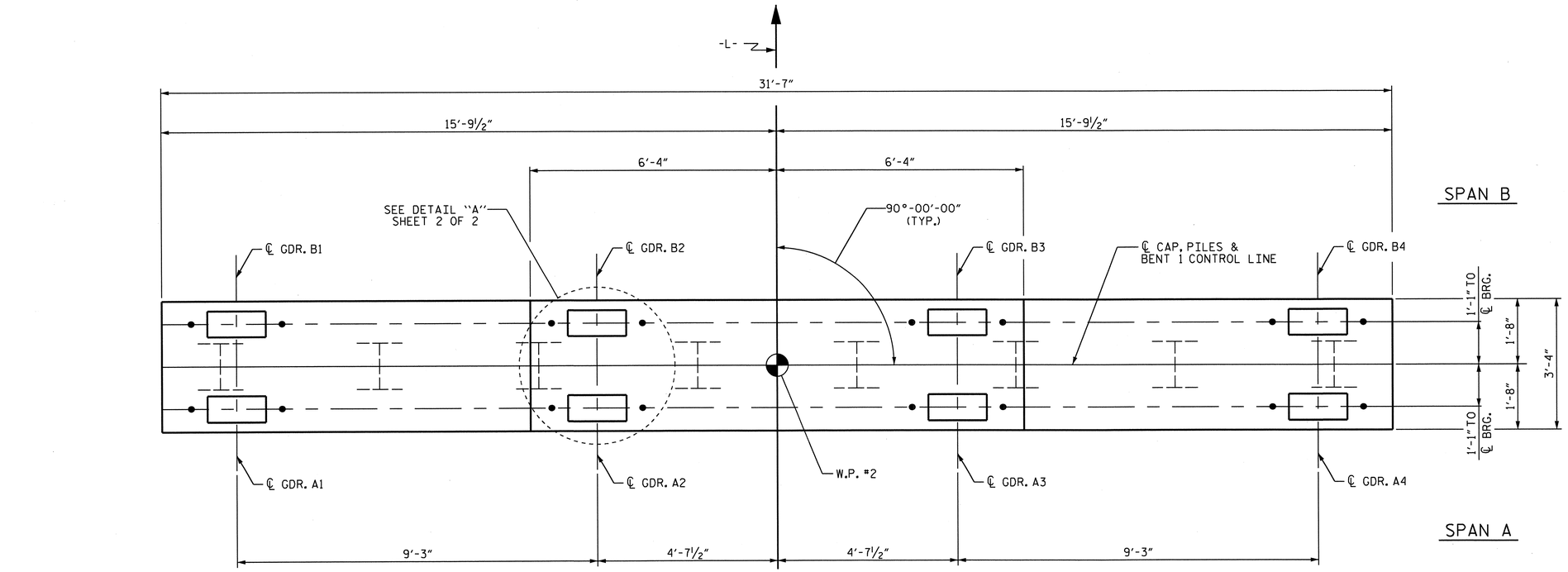

PLAN

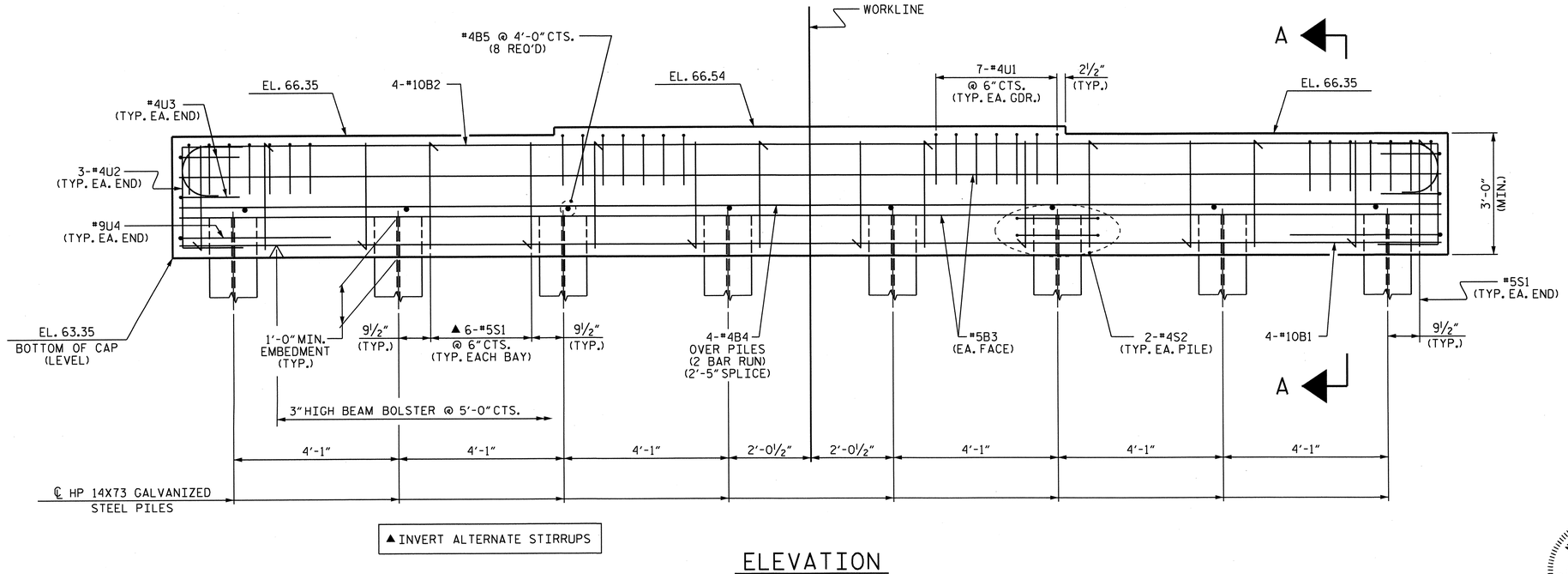

▲ INVERT ALTERNATE STIRRUPS

ELEVATION

NOTES

STIRRUPS IN CAP MAY BE SHIFTED AS NECESSARY TO CLEAR ANCHOR BOLTS.

GALVANIZE THE TOP OF EACH INTERIOR BENT PILE A MINIMUM OF 35 FEET. GALVANIZE IN ACCORDANCE WITH SECTION 1076 OF THE STANDARD SPECIFICATIONS.

PROJECT NO. B-4712

BLADEN COUNTY

STATION: 63+50.00 -L-

SHEET 1 OF 2

STATE OF NORTH CAROLINA
DEPARTMENT OF TRANSPORTATION
RALEIGH

SUBSTRUCTURE

BENT 1

REVISIONS						SHEET NO.
NO.	BY:	DATE:	NO.	BY:	DATE:	S-98
1			3			TOTAL SHEETS
2			4			108

STR. #2

NORTH CAROLINA PROFESSIONAL SEAL 21638 ENGINEER LAURA E. SUTTON 11/03/13

DRAWN BY : R. L. CHESSON DATE : 02/2012
CHECKED BY : B. N. GRADY DATE : 02/2012

07-NOV-2012 15:24
R:\Structures\Plans\str02\B4712_sd_B*_02.dgn

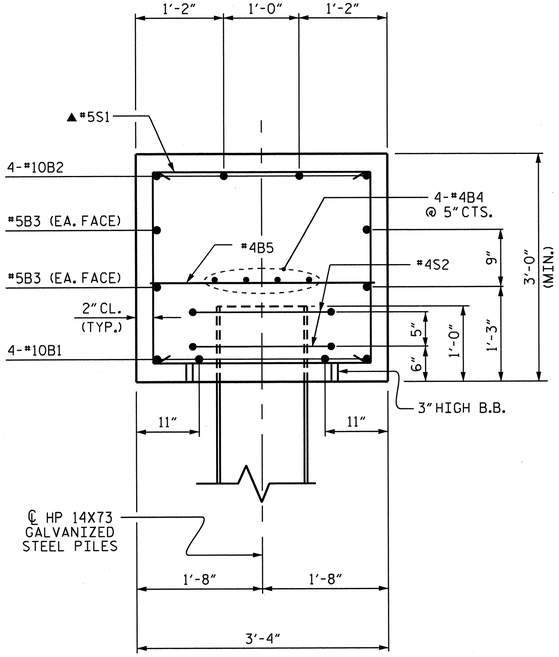

SECTION A-A

▲ INVERT ALTERNATE STIRRUPS

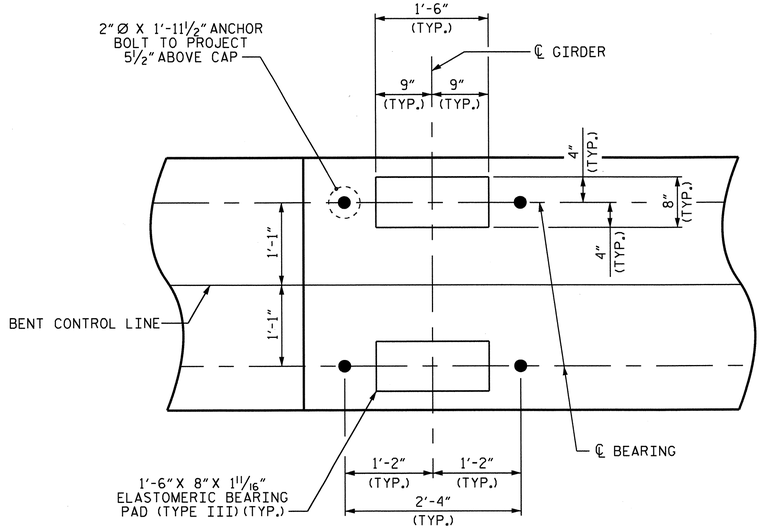

DETAIL "A"

BAR TYPES

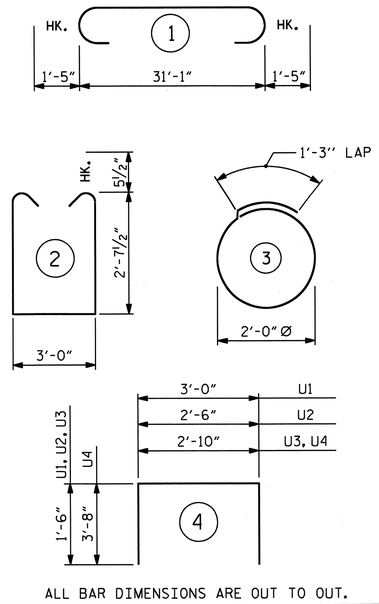

ALL BAR DIMENSIONS ARE OUT TO OUT.

BILL OF MATERIAL

BENT 1

BAR	NO.	SIZE	TYPE	LENGTH	WEIGHT
B1	4	#10	STR	31'-3"	538
B2	4	#10	1	33'-11"	584
B3	4	#5	STR	31'-3"	130
B4	8	#4	STR	16'-10"	90
B5	8	#4	STR	3'-0"	16
S1	44	#5	2	9'-2"	421
S2	16	#4	3	7'-7"	81
U1	28	#4	4	6'-0"	112
U2	6	#4	4	5'-6"	22
U3	4	#4	4	5'-10"	16
U4	2	#9	4	10'-2"	69

REINFORCING STEEL	LBS.	2,079
CLASS A CONCRETE	C.Y.	12.0
HP 14X73 GALVANIZED STEEL PILES NO. 8	LIN. FT.	720
PILE REDRIVES	EA.	4

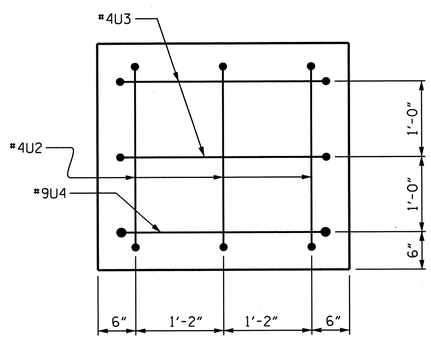

END VIEW

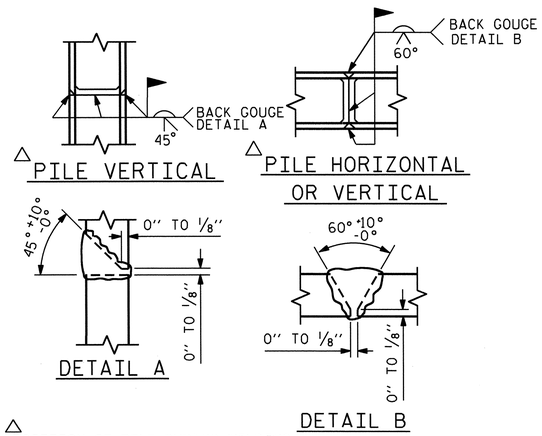

△ POSITION OF PILE DURING WELDING.

PILE SPLICE DETAILS

PROJECT NO. B-4712

BLADEN COUNTY

STATION: 63+50.00 -L-

SHEET 2 OF 2

STATE OF NORTH CAROLINA
DEPARTMENT OF TRANSPORTATION
RALEIGH

SUBSTRUCTURE

BENT 1

NORTH CAROLINA PROFESSIONAL SEAL 21638 ENGINEER LAURA E. SUTTON 9/09/13

REVISIONS						SHEET NO.
NO.	BY:	DATE:	NO.	BY:	DATE:	S-99
1			3			TOTAL SHEETS
2			4			108

STR. #2

DRAWN BY : R. L. CHESSON DATE : 02/2012
CHECKED BY : B. N. GRADY DATE : 02/2012

07-NOV-2012 15:24
R:\Structures\Plans\str02\B4712_sd_B*_02.dgn

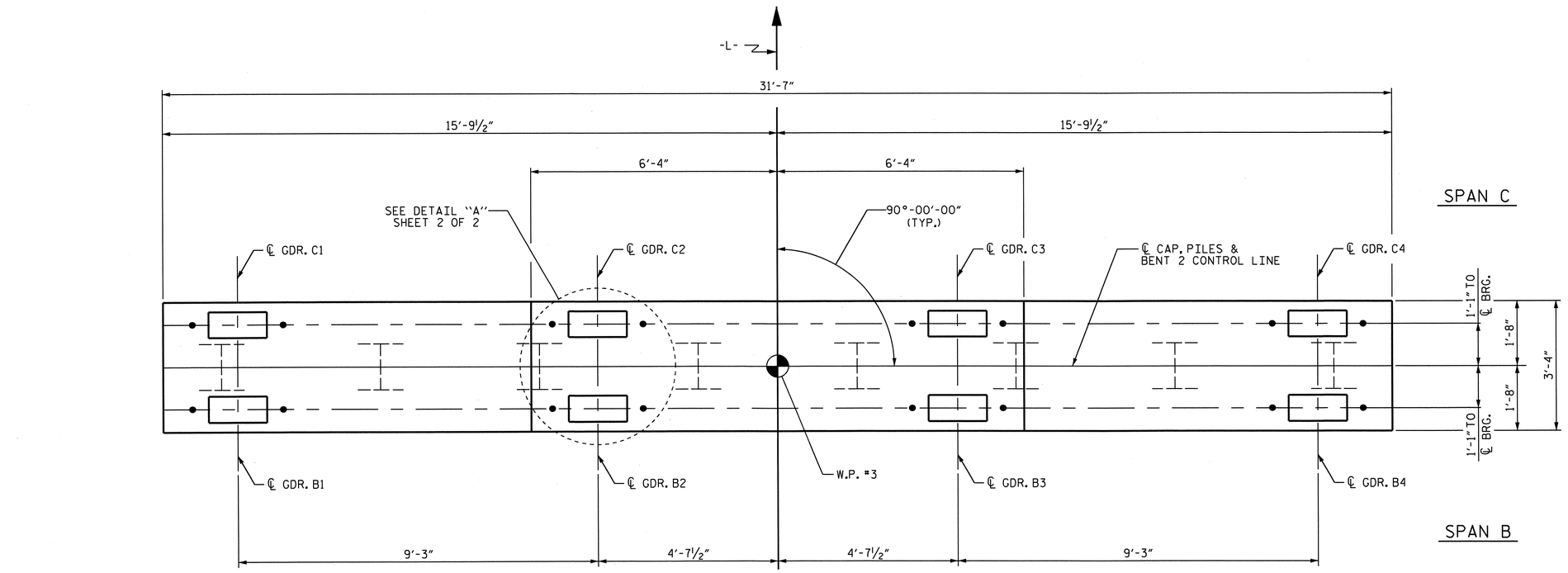

PLAN

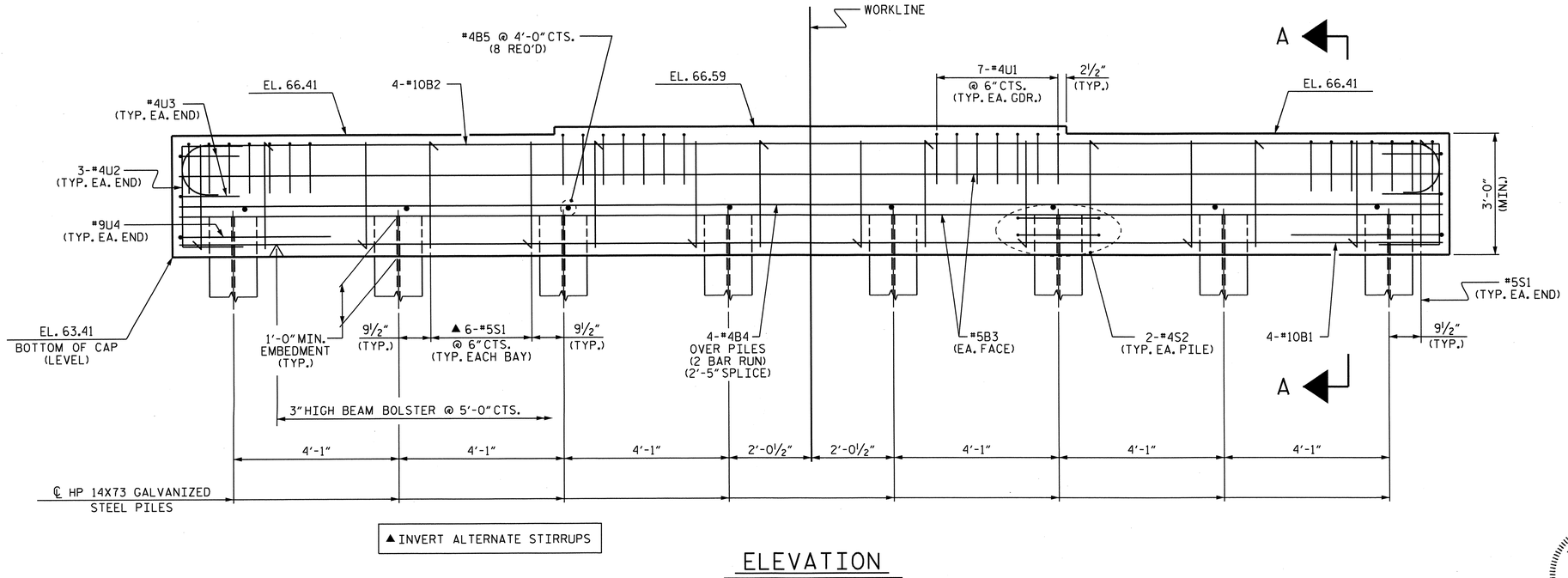

▲ INVERT ALTERNATE STIRRUPS

ELEVATION

NOTES

STIRRUPS IN CAP MAY BE SHIFTED AS NECESSARY TO CLEAR ANCHOR BOLTS.

GALVANIZE THE TOP OF EACH INTERIOR BENT PILE A MINIMUM OF 35 FEET. GALVANIZE IN ACCORDANCE WITH SECTION 1076 OF THE STANDARD SPECIFICATIONS.

PROJECT NO. B-4712

BLADEN COUNTY

STATION: 63+50.00 -L-

SHEET 1 OF 2

STATE OF NORTH CAROLINA
DEPARTMENT OF TRANSPORTATION
RALEIGH

SUBSTRUCTURE

BENT 2

REVISIONS						SHEET NO.
NO.	BY:	DATE:	NO.	BY:	DATE:	S-100
1			3			TOTAL SHEETS
2			4			108

STR. #2

NORTH CAROLINA PROFESSIONAL SEAL 21638 ENGINEER LAURA E. SUTTON 11/03/13

DRAWN BY : R. L. CHESSON DATE : 02/2012
CHECKED BY : B. N. GRADY DATE : 02/2012

07-NOV-2012 15:24
R:\Structures\Plans\str02\B4712_sd_B*_02.dgn

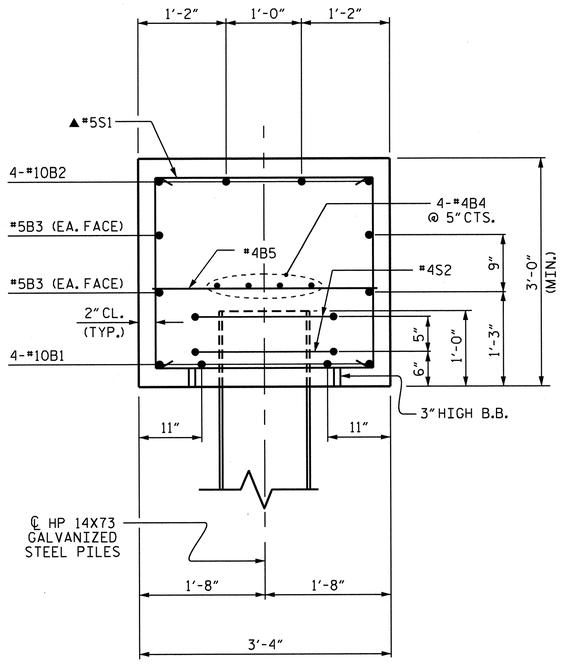

SECTION A-A

▲ INVERT ALTERNATE STIRRUPS

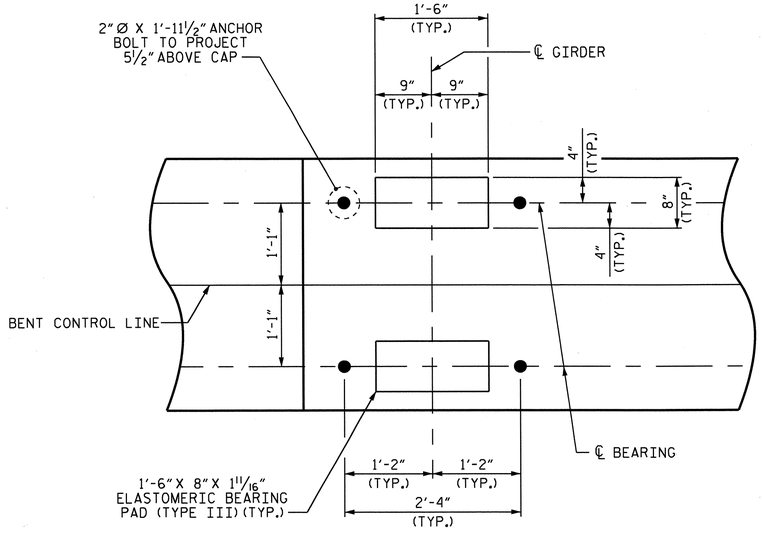

DETAIL "A"

BAR TYPES

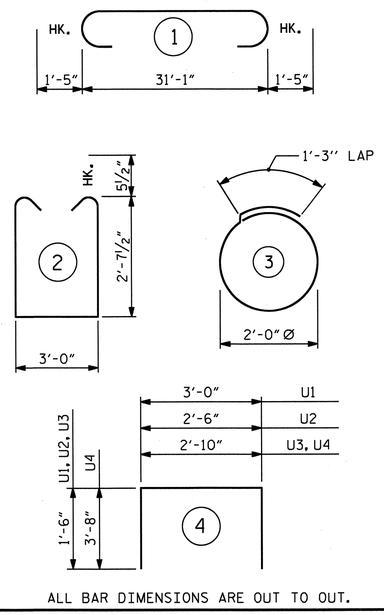

ALL BAR DIMENSIONS ARE OUT TO OUT.

BILL OF MATERIAL

BENT 2

BAR	NO.	SIZE	TYPE	LENGTH	WEIGHT
B1	4	#10	STR	31'-3"	538
B2	4	#10	1	33'-11"	584
B3	4	#5	STR	31'-3"	130
B4	8	#4	STR	16'-10"	90
B5	8	#4	STR	3'-0"	16
S1	44	#5	2	9'-2"	421
S2	16	#4	3	7'-7"	81
U1	28	#4	4	6'-0"	112
U2	6	#4	4	5'-6"	22
U3	4	#4	4	5'-10"	16
U4	2	#9	4	10'-2"	69

REINFORCING STEEL	LBS.	2,079
CLASS A CONCRETE	C.Y.	12.0
HP 14X73 GALVANIZED STEEL PILES NO. 8	LIN. FT.	720
PILE REDRIVES	EA.	4

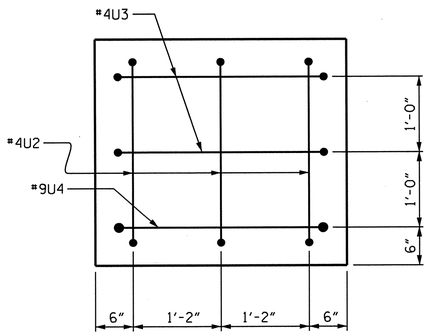

END VIEW

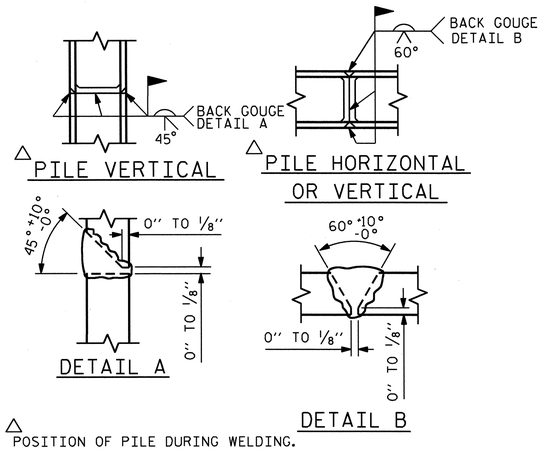

△ POSITION OF PILE DURING WELDING.

PILE SPLICE DETAILS

PROJECT NO. B-4712

BLADEN COUNTY

STATION: 63+50.00 -L-

SHEET 2 OF 2

STATE OF NORTH CAROLINA
DEPARTMENT OF TRANSPORTATION
RALEIGH

SUBSTRUCTURE

BENT 2

REVISIONS						SHEET NO.
NO.	BY:	DATE:	NO.	BY:	DATE:	S-101
1			3			TOTAL SHEETS
2			4			108

STR. #2

NORTH CAROLINA PROFESSIONAL SEAL 21638 ENGINEER LAURA E. SUTTON 11/05/13

DRAWN BY : R. L. CHESSON DATE : 02/2012
CHECKED BY : B. N. GRADY DATE : 02/2012

07-NOV-2012 15:24
R:\Structures\Plans\str02\B4712_sd_B*_02.dgn

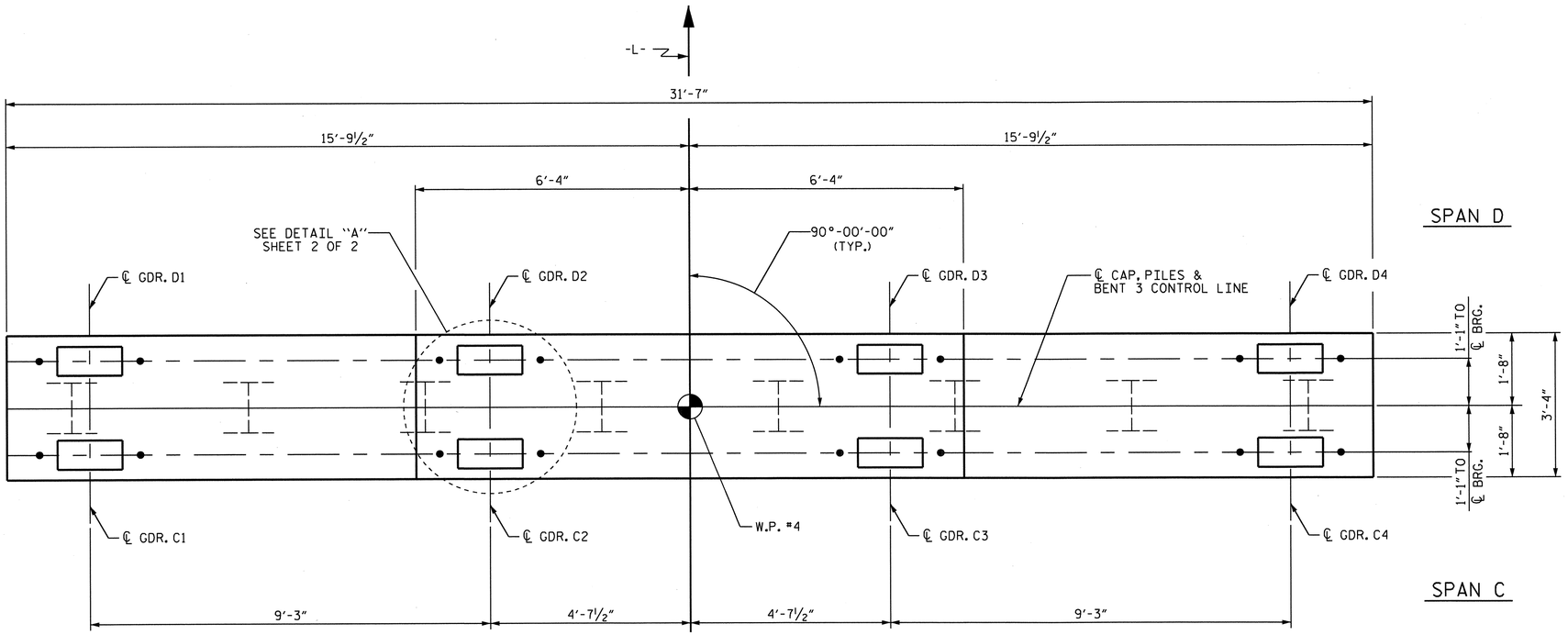

PLAN

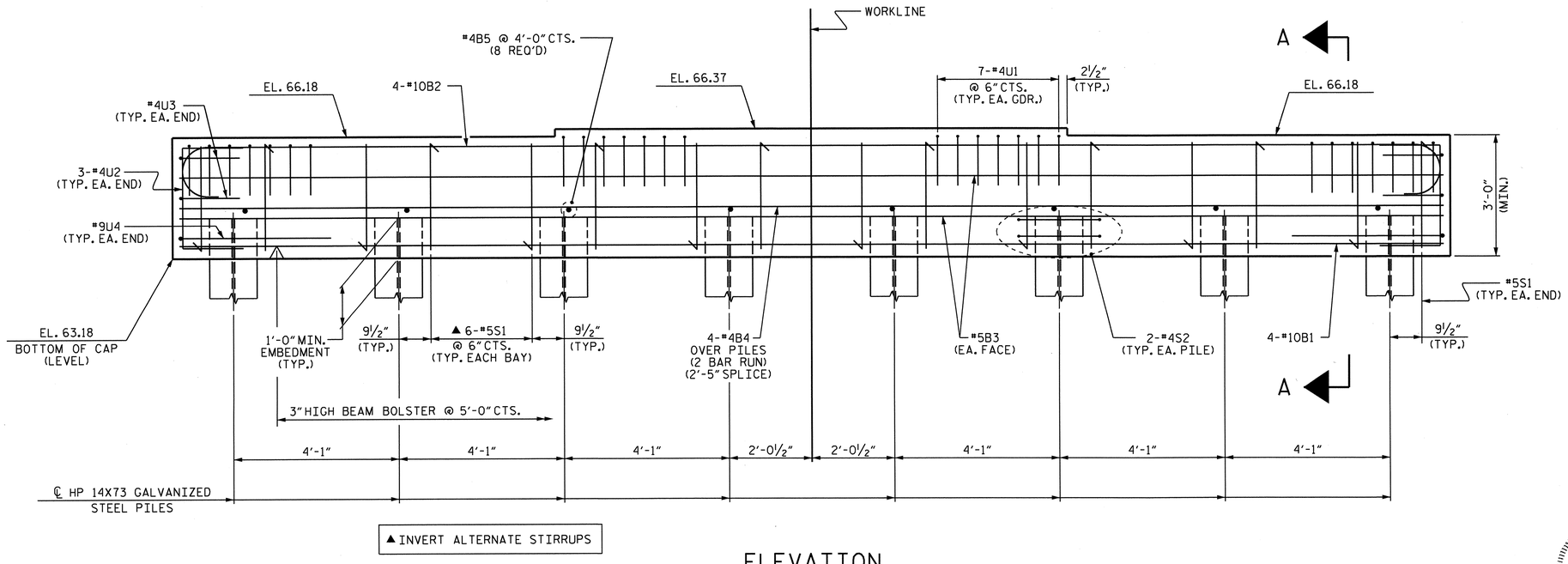

▲ INVERT ALTERNATE STIRRUPS

ELEVATION

NOTES

STIRRUPS IN CAP MAY BE SHIFTED AS NECESSARY TO CLEAR ANCHOR BOLTS.

GALVANIZE THE TOP OF EACH INTERIOR BENT PILE A MINIMUM OF 35 FEET. GALVANIZE IN ACCORDANCE WITH SECTION 1076 OF THE STANDARD SPECIFICATIONS.

PROJECT NO. B-4712

BLADEN COUNTY

STATION: 63+50.00 -L-

SHEET 1 OF 2

STATE OF NORTH CAROLINA
DEPARTMENT OF TRANSPORTATION
RALEIGH

SUBSTRUCTURE

BENT 3

REVISIONS						SHEET NO.
NO.	BY:	DATE:	NO.	BY:	DATE:	S-102
1			3			TOTAL SHEETS
2			4			108

NORTH CAROLINA PROFESSIONAL SEAL 21638 ENGINEER LAURA E. SUTTON 03/13

DRAWN BY : R. L. CHESSON DATE : 02/2012
CHECKED BY : B. N. GRADY DATE : 02/2012

07-NOV-2012 15:24
R:\Structures\Plans\str02\B4712_sd_B*_02.dgn

STR. #2

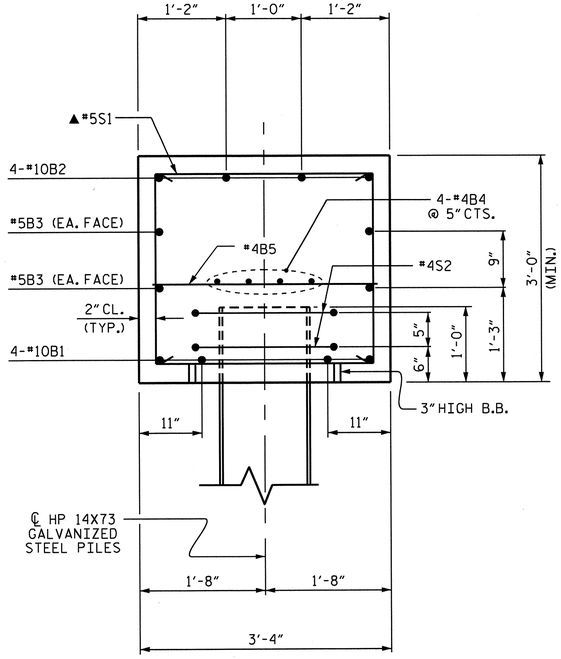

SECTION A-A

▲ INVERT ALTERNATE STIRRUPS

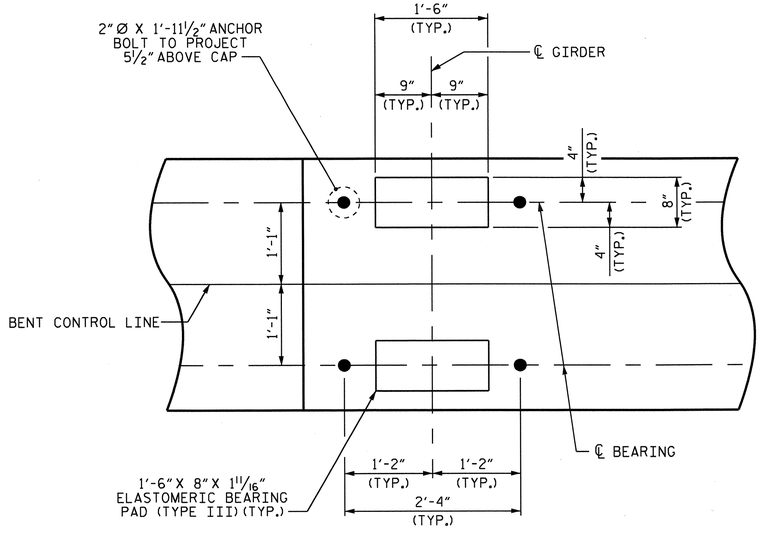

DETAIL "A"

BAR TYPES

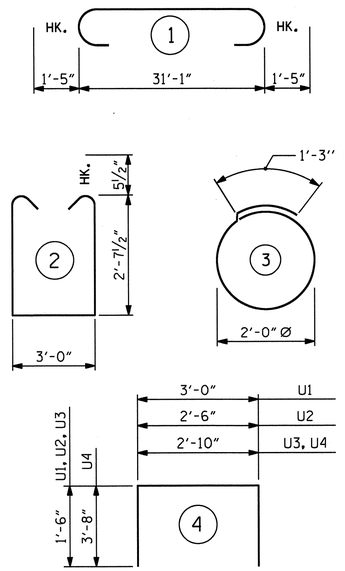

ALL BAR DIMENSIONS ARE OUT TO OUT.

BILL OF MATERIAL

BENT 3

BAR	NO.	SIZE	TYPE	LENGTH	WEIGHT
B1	4	#10	STR	31'-3"	538
B2	4	#10	1	33'-11"	584
B3	4	#5	STR	31'-3"	130
B4	8	#4	STR	16'-10"	90
B5	8	#4	STR	3'-0"	16
S1	44	#5	2	9'-2"	421
S2	16	#4	3	7'-7"	81
U1	28	#4	4	6'-0"	112
U2	6	#4	4	5'-6"	22
U3	4	#4	4	5'-10"	16
U4	2	#9	4	10'-2"	69

REINFORCING STEEL	LBS.	2,079
CLASS A CONCRETE	C.Y.	12.0
HP 14X73 GALVANIZED STEEL PILES NO. 8	LIN. FT.	720
PILE REDRIVES	EA.	4

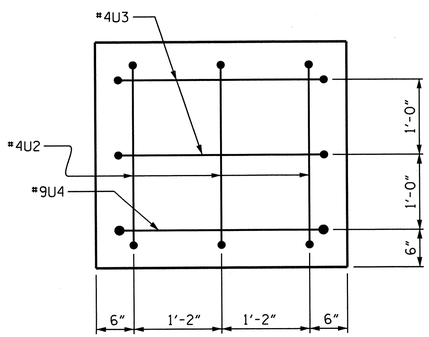

END VIEW

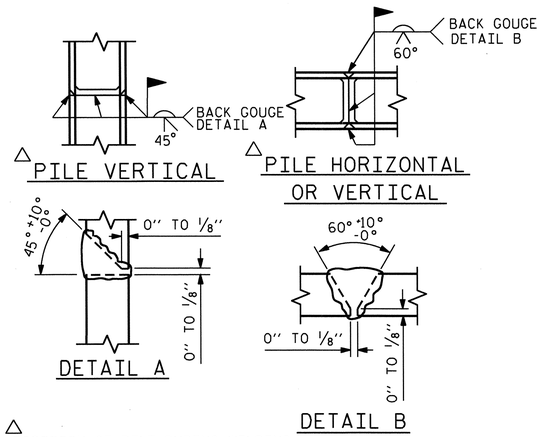

△ POSITION OF PILE DURING WELDING.

PILE SPLICE DETAILS

PROJECT NO. B-4712

BLADEN COUNTY

STATION: 63+50.00 -L-

SHEET 2 OF 2

STATE OF NORTH CAROLINA
DEPARTMENT OF TRANSPORTATION
RALEIGH

SUBSTRUCTURE

BENT 3

REVISIONS						SHEET NO.
NO.	BY:	DATE:	NO.	BY:	DATE:	S-103
1			3			TOTAL SHEETS
2			4			108

NORTH CAROLINA PROFESSIONAL SEAL 21638 ENGINEER LAURA E. SUTTON 1/03/13

DRAWN BY : R. L. CHESSON DATE : 02/2012
CHECKED BY : B. N. GRADY DATE : 02/2012

07-NOV-2012 15:24
R:\Structures\Plans\str02\B4712_sd_B*_02.dgn

STR. #2

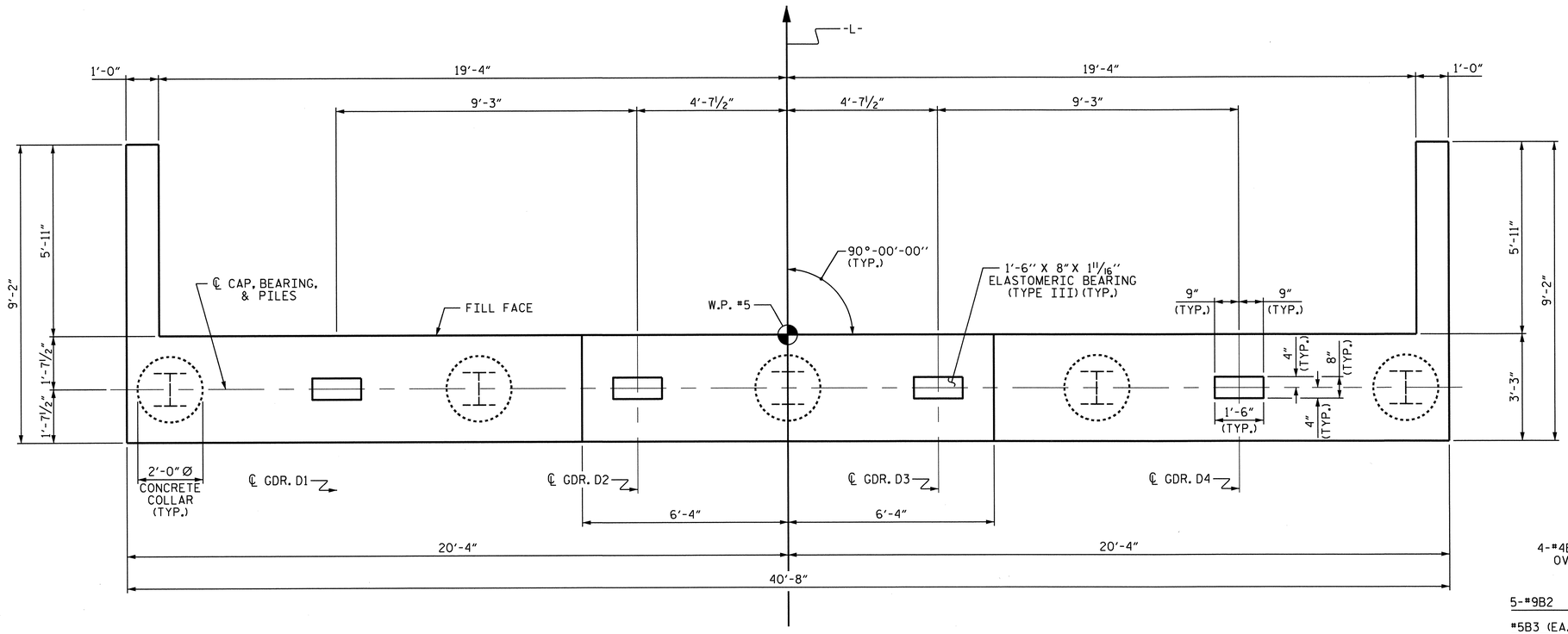

PLAN

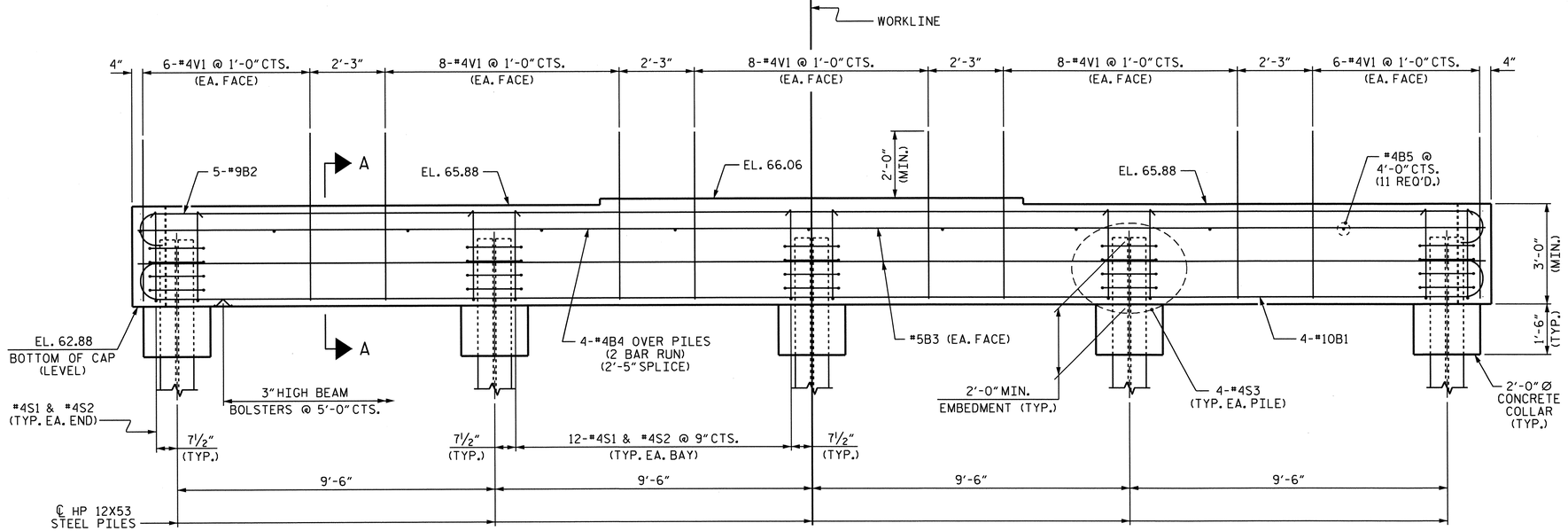

ELEVATION

NOTES

THE TOP SURFACE OF THE END BENT CAP AND WINGS, EXCEPT THE BEARING AREA, SHALL BE RAKED TO A DEPTH OF ¼".

THE UPPER PORTION OF THE WINGS SHALL BE POURED WITH THE SUPERSTRUCTURE. CONCRETE AND REINFORCING STEEL QUANTITIES ARE INCLUDED IN THE SUPERSTRUCTURE BILL OF MATERIAL. FOR DETAILS, SEE SUPERSTRUCTURE PLANS.

INSTALL THE 4" DIA. DRAIN PIPE THROUGH THE WING WALL AS REQUIRED FOR REINFORCED BRIDGE APPROACH FILLS, SEE THE ROADWAY PLANS. REINFORCING STEEL IN THE WING WALL MAY BE SHIFTED AS NECESSARY TO CLEAR THE DRAIN PIPE.

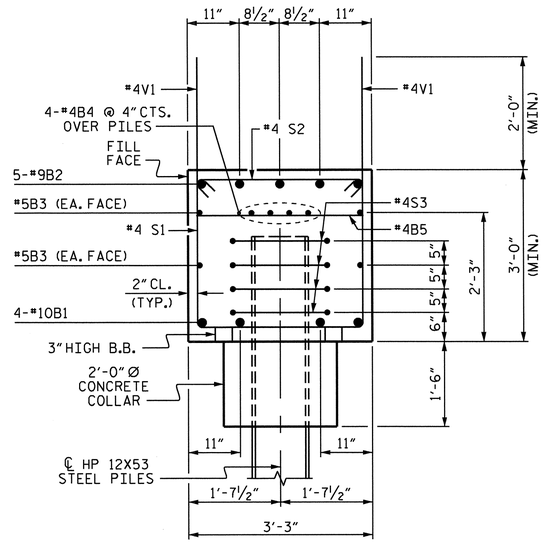

SECTION A-A

PROJECT NO. B-4712

BLADEN COUNTY

STATION: 63+50.00 -L-

SHEET 1 OF 2

STATE OF NORTH CAROLINA
DEPARTMENT OF TRANSPORTATION
RALEIGH

SUBSTRUCTURE

INTEGRAL END BENT 2

REVISIONS						SHEET NO.
NO.	BY:	DATE:	NO.	BY:	DATE:	S-104
1			3			TOTAL SHEETS
2			4			108

STR. #2

NORTH CAROLINA PROFESSIONAL SEAL 21638 ENGINEER LAURA E. SUTTON 1/3/13

DRAWN BY : R. L. CHESSON DATE : 2/2012
CHECKED BY : B. N. GRADY DATE : 2/2012

03-JAN-2013 12:08
R:\Structures\Plans\str02\B4712_sd_E*_02.dgn

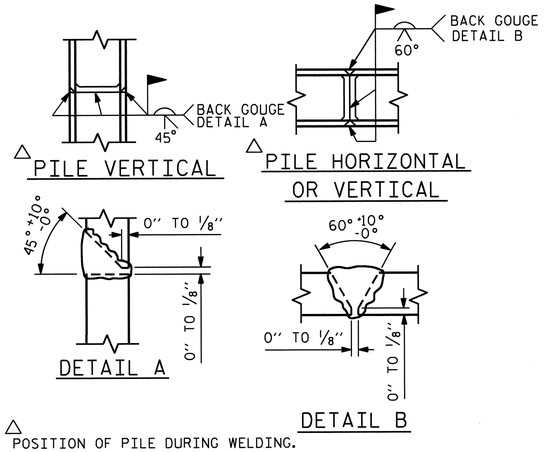

PILE SPLICE DETAILS

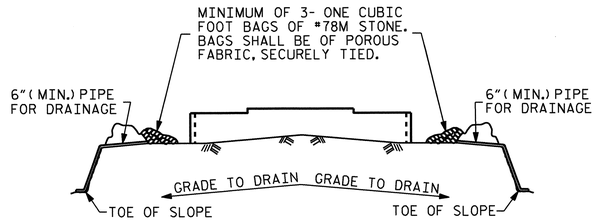

BAGGED STONE AND PIPE SHALL BE PLACED IMMEDIATELY AFTER COMPLETION OF END BENT EXCAVATION. PIPE MAY BE EITHER CONCRETE, CORRUGATED STEEL, CORRUGATED ALUMINUM ALLOY, OR CORRUGATED PLASTIC. PERFORATED PIPE WILL NOT BE ALLOWED.

BAGGED STONE SHALL REMAIN IN PLACE UNTIL THE ENGINEER DIRECTS THAT IT BE REMOVED. THE CONTRACTOR SHALL REMOVE AND DISPOSE OF SILT ACCUMULATIONS AT BAGGED STONE WHEN SO DIRECTED BY THE ENGINEER. BAGS SHALL BE REMOVED AND REPLACED WHENEVER THE ENGINEER DETERMINES THAT THEY HAVE DETERIORATED AND LOST THEIR EFFECTIVENESS.

NO SEPARATE PAYMENT WILL BE MADE FOR THIS WORK AND THE ENTIRE COST OF THIS WORK SHALL BE INCLUDED IN THE UNIT CONTRACT PRICE BID FOR THE SEVERAL PAY ITEMS.

TEMPORARY DRAINAGE AT END BENT

BAR TYPES

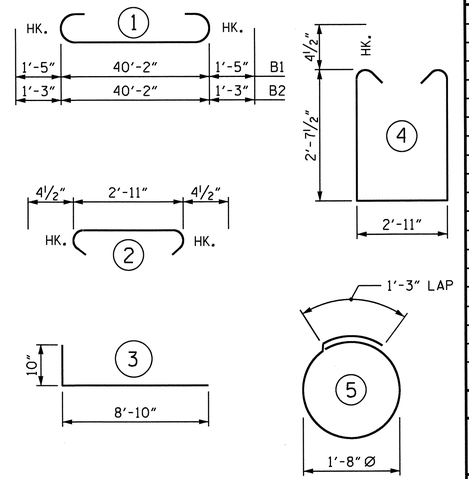

ALL BAR DIMENSIONS ARE OUT TO OUT.

BILL OF MATERIAL
END BENT 2

BAR	NO.	SIZE	TYPE	LENGTH	WEIGHT
B1	4	#10	1	43'-0"	740
B2	5	#9	1	42'-8"	725
B3	4	#5	STR	40'-4"	168
B4	8	#4	STR	21'-5"	114
B5	11	#4	STR	2'-11"	21
H1	16	#5	3	9'-8"	161
S1	50	#4	4	8'-11"	298
S2	50	#4	2	3'-8"	122
S3	20	#4	5	6'-6"	87
V1	72	#4	STR	5'-0"	240
V2	32	#4	STR	7'-5"	159

REINFORCING STEEL	LBS.	2,835
CLASS A CONCRETE	C.Y.	17.2
HP 12X53 STEEL PILES NO. 5	LIN. FT.	375
PILE REDRIVES	EA.	3

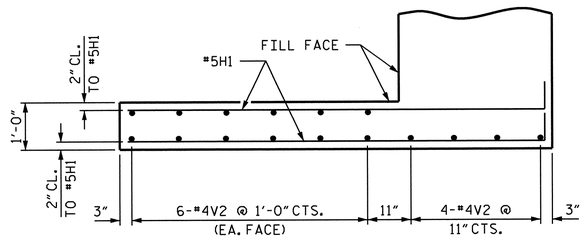

PLAN OF LEFT WING

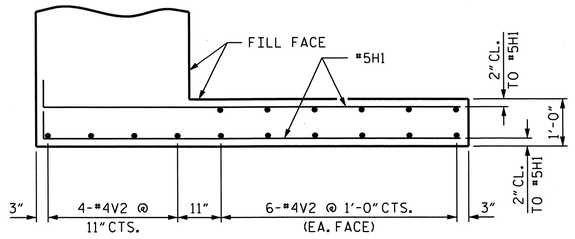

PLAN OF RIGHT WING

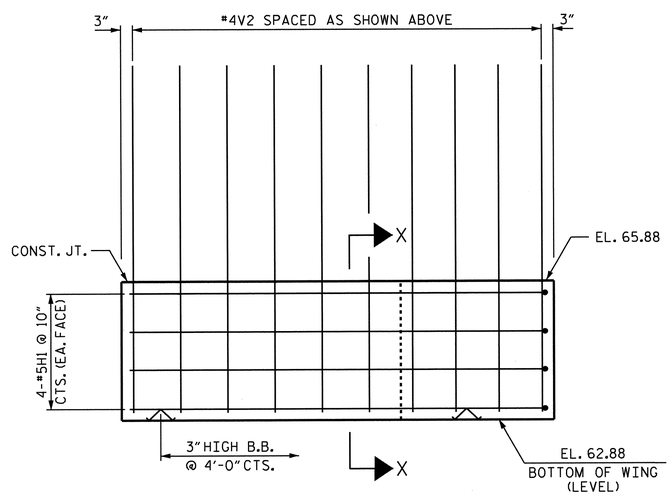

ELEVATION OF LEFT WING

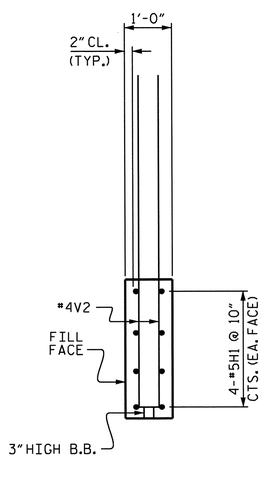

SECTION X-X

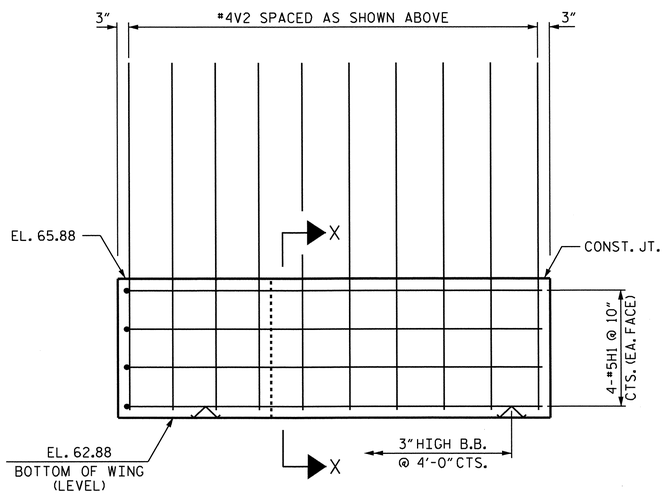

ELEVATION OF RIGHT WING

PROJECT NO. B-4712

BLADEN COUNTY

STATION: 63+50.00 -L-

SHEET 2 OF 2

STATE OF NORTH CAROLINA
DEPARTMENT OF TRANSPORTATION
RALEIGH

SUBSTRUCTURE

INTEGRAL END BENT 2

REVISIONS						SHEET NO.
NO.	BY:	DATE:	NO.	BY:	DATE:	S-105
1			3			TOTAL SHEETS
2			4			108

STR. #2

NORTH CAROLINA PROFESSIONAL SEAL 21638 ENGINEER LAURA E. SUTTON 1/3/13

DRAWN BY : R. L. CHESSON DATE : 2/2012
CHECKED BY : B. N. GRADY DATE : 2/2012

03-JAN-2013 12:08
R:\Structures\Plans\str02\B4712_sd_E*_02.dgn

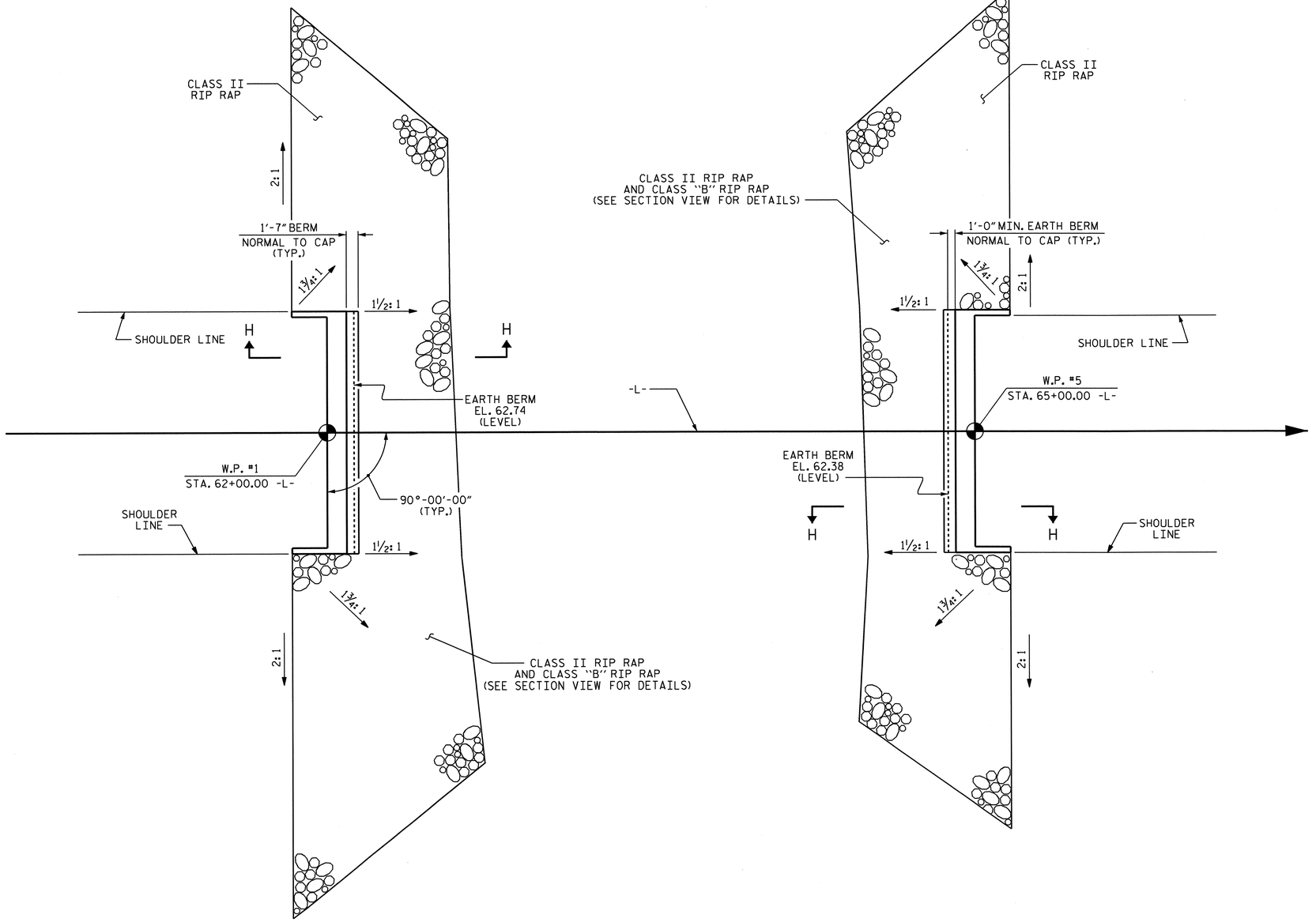

END BENT 1

END BENT 2

PLAN OF RIP RAP

ESTIMATED QUANTITIES			
BRIDGE @ STA. 63+50.00 -L-	CLASS B RIP RAP	RIP RAP CLASS II (2'-0" THICK)	GEOTEXTILE FOR DRAINAGE
	TONS	TONS	SQUARE YARDS
END BENT 1	120	475	525
END BENT 2	100	395	440

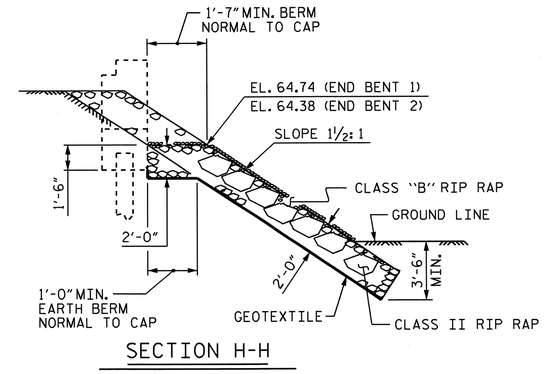

SECTION H-H

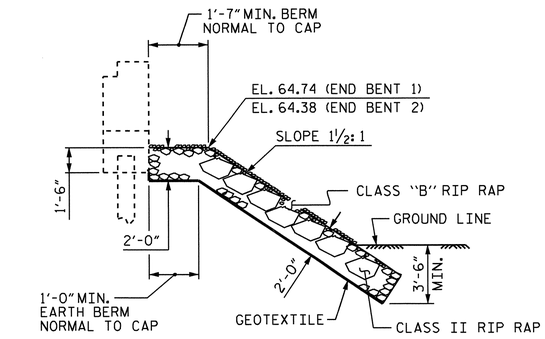

℄ SECTION BERM RIP RAPPED

PROJECT NO. B-4712

BLADEN COUNTY

STATION: 63+50.00 -L-

STATE OF NORTH CAROLINA
DEPARTMENT OF TRANSPORTATION
RALEIGH
STANDARD

RIP RAP DETAILS

ASSEMBLED BY : M. L. BROWN DATE : 08/11	
CHECKED BY : A. V. ROYAL DATE : 08/11	
DRAWN BY : REK 1/84	REV. 5/1/06R TLA/GM
CHECKED BY : RDU 1/84	REV. 10/1/11 MAA/GM
	REV. 12/21/11 MAA/GM

NORTH CAROLINA PROFESSIONAL SEAL 21638 ENGINEER LAURA E. SUTTON 1/3/13

REVISIONS						SHEET NO.
NO.	BY:	DATE:	NO.	BY:	DATE:	S-106
1			3			TOTAL SHEETS
2			4			108

STR. #2

STD. NO. RR1

03-JAN-2013 12:08

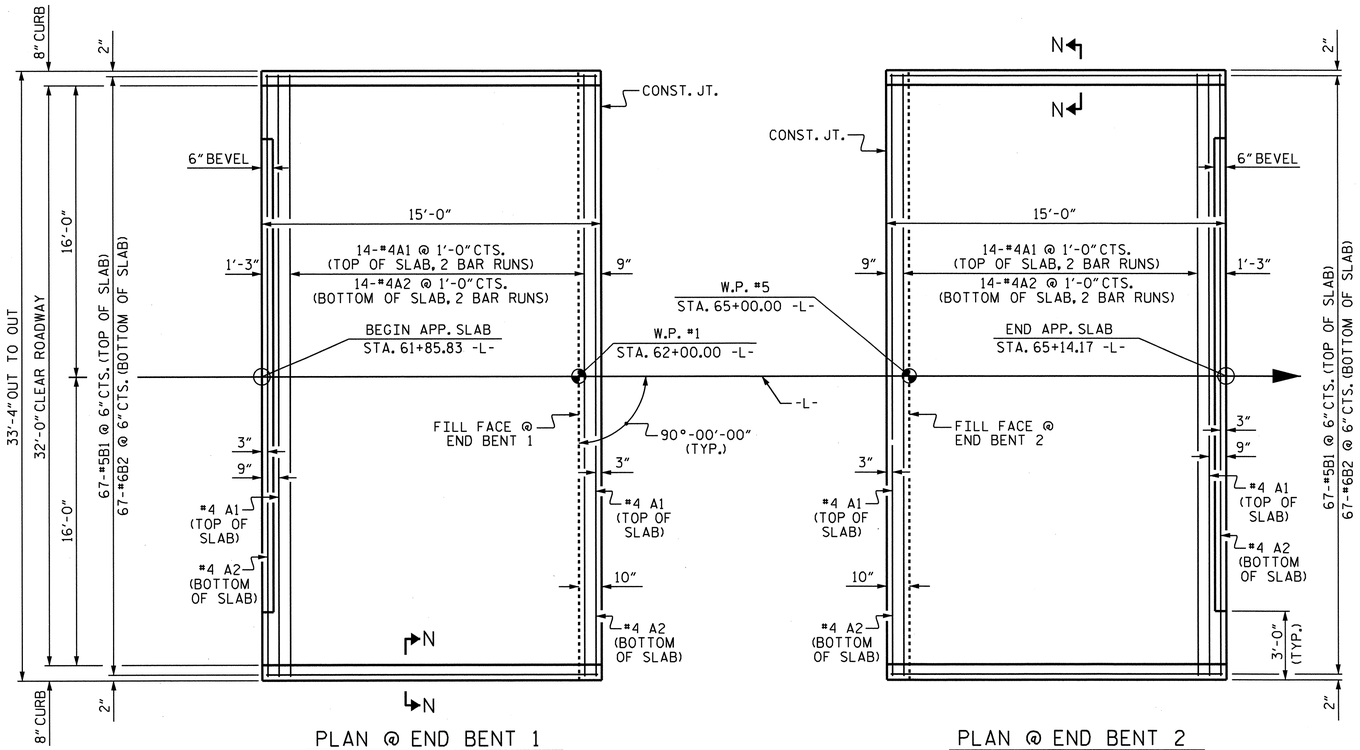

DIMENSIONS SHOWN ARE TYPICAL FOR BOTH APPROACH SLABS

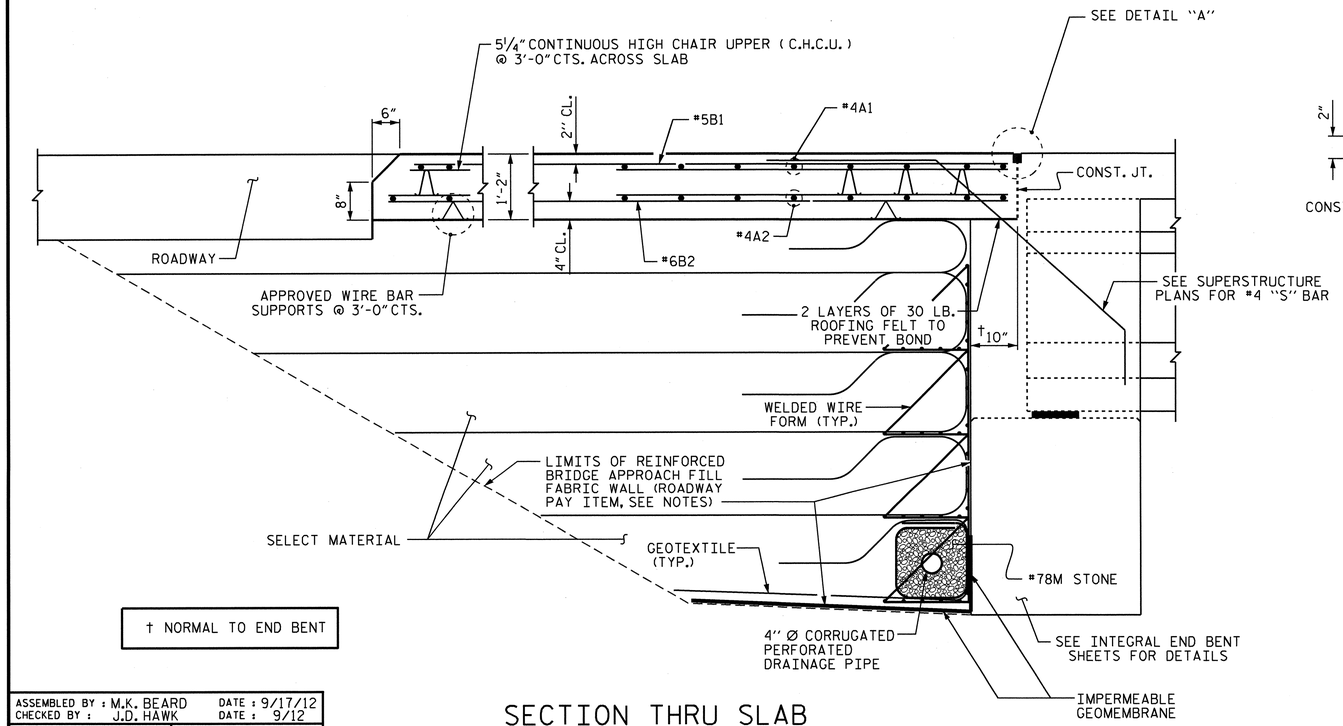

† NORMAL TO END BENT

SECTION THRU SLAB

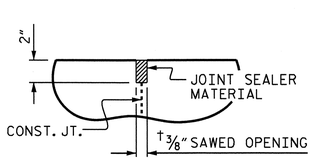

DETAIL "A"

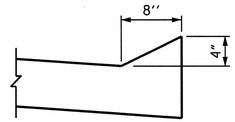

SECTION N-N

NOTES

APPROACH SLAB SHALL NOT BE CONSTRUCTED PRIOR TO COMPLETION OF THE BRIDGE DECK.

FOR REINFORCED BRIDGE APPROACH FILL FABRIC WALL INCLUDING GEOTEXTILE, IMPERMEABLE GEOMEMBRANE, 4" Ø DRAINAGE PIPE, #78M STONE, WELDED WIRE FORM, AND SELECT MATERIAL, SEE ROADWAY PLANS.

AREA BETWEEN THE WINGWALL AND APPROACH SLAB SHALL BE GRADED TO DRAIN THE WATER AWAY FROM THE FILL FACE OF THE BRIDGE AND SHALL BE PAVED. SEE ROADWAY PLANS.

THE JOINT OPENING AT THE APPROACH SLAB/DECK INTERFACE SHALL BE SAWED NO MORE THAN 12 HOURS AFTER THE APPROACH SLAB IS CAST. THE JOINT SHALL BE CLEANED OF ALL DEBRIS BEFORE THE SEALANT IS APPLIED. THE JOINT SEALER MATERIAL SHALL CONFORM TO THE REQUIREMENTS OF SECTION 1028-3 OF THE STANDARD SPECIFICATIONS.

BILL OF MATERIAL

FOR ONE APPROACH SLAB (2 REQ'D)

BAR	NO.	SIZE	TYPE	LENGTH	WEIGHT
* A1	32	#4	STR	17'-6"	374
A2	32	#4	STR	17'-5"	372
* B1	67	#5	STR	14'-2"	990
B2	67	#6	STR	14'-8"	1476
REINFORCING STEEL				LBS.	1,848
* EPOXY COATED REINFORCING STEEL				LBS.	1,364
CLASS AA CONCRETE				C. Y.	21.6

PROJECT NO. B-4712

BLADEN COUNTY

STATION: 63+50.00 -L-

SHEET 1 OF 2

STATE OF NORTH CAROLINA
DEPARTMENT OF TRANSPORTATION
RALEIGH

STANDARD

BRIDGE APPROACH SLAB
FOR INTEGRAL ABUTMENT

REVISIONS						SHEET NO.
NO.	BY:	DATE:	NO.	BY:	DATE:	S-107
1			3			TOTAL SHEETS
2			4			108

NORTH CAROLINA PROFESSIONAL SEAL 21838 ENGINEER LAURA E. SUTTON 11/03/13

ASSEMBLED BY : M.K. BEARD	DATE : 9/17/12
CHECKED BY : J.D. HAWK	DATE : 9/12
DRAWN BY : TLA 10/05	ADDED 5/1/06RR KMM/GM
CHECKED BY : GM 5/06	REV. 10/1/11 MAA/GM
	REV. 12/21/11 MAA/GM

07-NOV-2012 15:24
R:\Structures\Plans\str03\B4712_sd_AS_02.dgn

STD. NO. BAS5

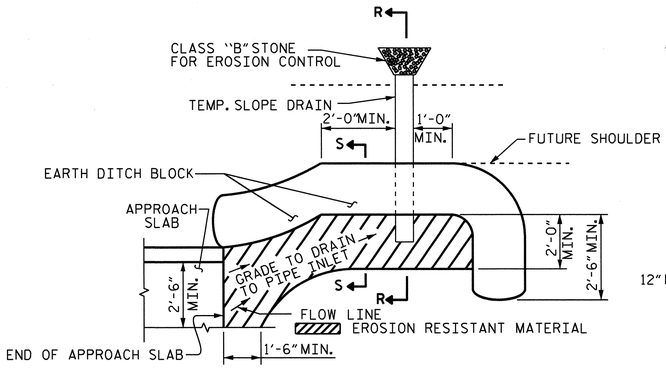

NOTE: IMMEDIATELY AFTER THE CONSTRUCTION OF THE APPROACH SLAB, THE CONTRACTOR SHALL PROVIDE TEMPORARY BERM AND SLOPE DRAIN. CONTRACTOR SHALL GRADE TO PIPE INLET AND PROVIDE EROSION RESISTANT MATERIAL AS SHOWN. THE EROSION RESISTANT MATERIAL SHALL BE EITHER 1) ASPHALT PLANT MIX, TYPE 1 OR TYPE 2, MIN. 2" DEPTH, 2) EROSION CONTROL MAT, OR 3) CONCRETE, AS DIRECTED BY THE ENGINEER. THE SLOPE DRAIN SHALL CONSIST OF A NON-PERFORATED TEMPORARY DRAINAGE PIPE, 12 INCHES IN DIAMETER.

PLAN VIEW

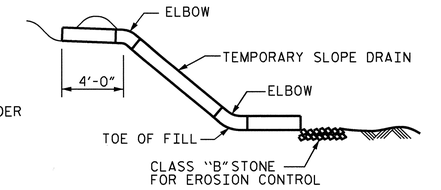

SECTION R-R

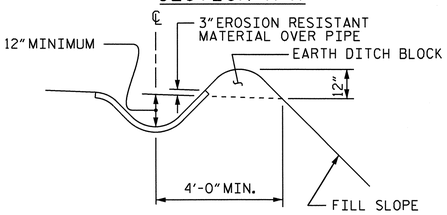

SECTION S-S

TEMPORARY BERM AND SLOPE DRAIN DETAILS

(TO BE USED WHEN SHOULDER BERM GUTTER IS REQUIRED)

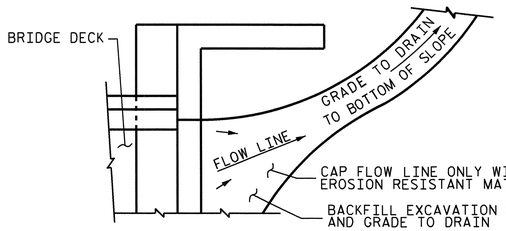

NOTE: IF THE APPROACH SLAB IS NOT CONSTRUCTED IMMEDIATELY AFTER THE BACKFILLING OF THE END BENT EXCAVATION, GRADE TO DRAIN TO THE BOTTOM OF THE SLOPE AND PROVIDE EROSION RESISTANT MATERIAL, SUCH AS FIBERGLASS ROVING OR AS DIRECTED BY THE ENGINEER TO PREVENT SOIL EROSION AND TO PROTECT THE AREA ADJACENT TO THE STRUCTURE. THE CONTRACTOR WILL BE REQUIRED TO REMOVE THESE MATERIALS PRIOR TO CONSTRUCTION OF THE APPROACH SLAB.

TEMPORARY DRAINAGE DETAIL

ASSEMBLED BY : M.K. BEARD		DATE : 9/17/12	
CHECKED BY : J.D. HAWK		DATE : 9/12	
DRAWN BY : FCJ	11/88	REV. 5/7/03	RWW/JTE
CHECKED BY : ARB	11/88	REV. 5/1/06RRR	MAA/KMM
		REV. 10/1/11	MAA/GM

07-NOV-2012 15:24
R:\Structures\Plans\str02\B4712_sd_AS_02.dgn

PROJECT NO. B-4712

BLADEN COUNTY

STATION: 63+50.00 -L-

SHEET 2 OF 2

STATE OF NORTH CAROLINA
DEPARTMENT OF TRANSPORTATION
RALEIGH

STANDARD

BRIDGE APPROACH SLAB DETAILS

NORTH CAROLINA PROFESSIONAL SEAL 21638 ENGINEER LAURA E. SUTTON
1/08/13

REVISIONS						SHEET NO.
NO.	BY:	DATE:	NO.	BY:	DATE:	S-108
1			3			TOTAL SHEETS
2			4			108

STD. NO. BAS4

STANDARD NOTES

DESIGN DATA:

SPECIFICATIONS	A.A.S.H.T.O. (CURRENT)
LIVE LOAD	SEE PLANS
IMPACT ALLOWANCE	SEE A.A.S.H.T.O.
STRESS IN EXTREME FIBER OF	
STRUCTURAL STEEL - AASHTO M270 GRADE 36	20,000 LBS. PER SQ. IN.
- AASHTO M270 GRADE 50W	27,000 LBS. PER SQ. IN.
- AASHTO M270 GRADE 50	27,000 LBS. PER SQ. IN.
REINFORCING STEEL IN TENSION	
GRADE 60	24,000 LBS. PER SQ. IN.
CONCRETE IN COMPRESSION	1,200 LBS. PER SQ. IN.
CONCRETE IN SHEAR	SEE A.A.S.H.T.O.
STRUCTURAL TIMBER - TREATED OR	
UNTREATED - EXTREME FIBER STRESS	1,800 LBS. PER SQ. IN.
COMPRESSION PERPENDICULAR TO GRAIN OF TIMBER	375 LBS. PER SQ. IN.
EQUIVALENT FLUID PRESSURE OF EARTH	30 LBS. PER CU. FT. (MINIMUM)

MATERIAL AND WORKMANSHIP:

EXCEPT AS MAY OTHERWISE BE SPECIFIED ON PLANS OR IN THE SPECIAL PROVISIONS, ALL MATERIAL AND WORKMANSHIP SHALL BE IN ACCORDANCE WITH THE 2012 "STANDARD SPECIFICATIONS FOR ROADS AND STRUCTURES" OF THE N. C. DEPARTMENT OF TRANSPORTATION.

STEEL SHEET PILING FOR PERMANENT OR TEMPORARY APPLICATIONS SHALL BE HOT ROLLED.

CONCRETE:

UNLESS OTHERWISE REQUIRED ON PLANS, CLASS A CONCRETE SHALL BE USED FOR ALL PORTIONS OF ALL STRUCTURES WITH THE EXCEPTION THAT: CLASS AA CONCRETE SHALL BE USED IN BRIDGE SUPERSTRUCTURES, ABUTMENT BACKWALLS, AND APPROACH SLABS; AND CLASS B CONCRETE SHALL BE USED FOR SLOPE PROTECTION AND RIP RAP.

CONCRETE CHAMFERS:

UNLESS OTHERWISE NOTED ON THE PLANS, ALL EXPOSED CORNERS ON STRUCTURES SHALL BE CHAMFERED 3/4" WITH THE FOLLOWING EXCEPTIONS: TOP CORNERS OF CURBS MAY BE ROUNDED TO 1-1/2" RADIUS WHICH IS BUILT INTO CURB FORMS; CORNERS OF TRANSVERSE FLOOR EXPANSION JOINTS SHALL BE ROUNDED WITH A 1/4" FINISHING TOOL UNLESS OTHERWISE REQUIRED ON PLANS; AND CORNERS OF EXPANSION JOINTS IN THE ROADWAY FACES AND TOPS OF CURBS AND SIDEWALKS SHALL BE ROUNDED TO A 1/4" RADIUS WITH A FINISHING STONE OR TOOL UNLESS OTHERWISE REQUIRED ON PLANS.

DOWELS:

DOWELS WHEN INDICATED ON PLANS AS FOR CULVERT EXTENSIONS, SHALL BE EMBEDDED AT LEAST 12" INTO THE OLD CONCRETE AND GROUTED INTO PLACE WITH 1:2 CEMENT MORTAR.

ALLOWANCE FOR DEAD LOAD DEFLECTION, SETTLEMENT, ETC. IN CASTING SUPERSTRUCTURES:

BRIDGES SHALL BE BUILT ON THE GRADE OR VERTICAL CURVE SHOWN ON PLANS. SLABS, CURBS AND PARAPETS SHALL CONFORM TO THE GRADE OR CURVE.

ALL DIMENSIONS WHICH ARE GIVEN IN SECTION AND ARE AFFECTED BY DEAD LOAD DEFLECTIONS ARE DIMENSIONS AT CENTER LINE OF BEARING UNLESS OTHERWISE NOTED ON PLANS. IN SETTING FORMS FOR STEEL BEAM BRIDGES AND PRESTRESSED CONCRETE GIRDER BRIDGES, ADJUSTMENTS SHALL BE MADE DUE TO THE DEAD LOAD DEFLECTIONS FOR THE ELEVATIONS SHOWN. WHERE BLOCKS ARE SHOWN OVER BEAMS FOR BUILDING UP TO THE SLAB, THE VERTICAL DIMENSIONS OF THE BLOCKS SHALL BE ADJUSTED BETWEEN BEARINGS TO COMPENSATE FOR DEAD LOAD DEFLECTIONS, VERTICAL CURVE ORDINATE, AND ACTUAL BEAM CAMBER. WHERE BOTTOM OF SLAB IS IN LINE WITH BOTTOM OF TOP FLANGES, DEPTH OF SLAB BETWEEN BEARINGS SHALL BE ADJUSTED TO COMPENSATE FOR DEAD LOAD DEFLECTION, VERTICAL CURVE ORDINATE, AND ACTUAL BEAM CAMBER.

IN SETTING FALSEWORK AND FORMS FOR REINFORCED CONCRETE SPANS, AN ALLOWANCE SHALL BE MADE FOR DEAD LOAD DEFLECTIONS, SETTLEMENT OF FALSEWORK, AND PERMANENT CAMBER WHICH SHALL BE PROVIDED FOR IN ADDITION TO THE ELEVATIONS SHOWN. AFTER REMOVAL OF THE FALSEWORK, THE FINISHED STRUCTURES SHALL CONFORM TO THE PROFILE AND ELEVATIONS SHOWN ON THE PLANS AND CONSTRUCTION ELEVATIONS FURNISHED BY THE ENGINEER.

DETAILED DRAWINGS FOR FALSEWORK OR FORMS FOR BRIDGE SUPERSTRUCTURE AND ANY STRUCTURE OR PARTS OF A STRUCTURE AS NOTED ON THE PLANS SHALL BE SUBMITTED TO THE ENGINEER FOR APPROVAL BEFORE CONSTRUCTION OF THE FALSEWORK OR FORMS IS STARTED.

REINFORCING STEEL:

ALL REINFORCING STEEL SHALL BE DEFORMED. DIMENSIONS RELATIVE TO PLACEMENT OF REINFORCING ARE TO CENTERS OF BARS UNLESS OTHERWISE INDICATED IN THE PLANS. DIMENSIONS ON BAR DETAILS ARE TO CENTERS OF BARS OR ARE OUT TO OUT AS INDICATED ON PLANS.

WIRE BAR SUPPORTS SHALL BE PROVIDED FOR REINFORCING STEEL WHERE INDICATED ON THE PLANS. WHEN BAR SUPPORT PIECES ARE PLACED IN CONTINUOUS LINES, THEY SHALL BE SO PLACED THAT THE ENDS OF THE SUPPORTING WIRES SHALL BE LAPPED TO LOCK LEGS ON ADJOINING PIECES.

STRUCTURAL STEEL:

AT THE CONTRACTOR'S OPTION, HE MAY SUBSTITUTE 7/8" Ø SHEAR STUDS FOR THE 3/4" Ø STUDS SPECIFIED ON THE PLANS. THIS SUBSTITUTION SHALL BE MADE AT THE RATE OF 3 - 7/8" Ø STUDS FOR 4 - 3/4" Ø STUDS, AND STUD SPACING CHANGES SHALL BE MADE AS NECESSARY TO PROVIDE THE SAME EQUIVALENT NUMBER OF 7/8" Ø STUDS ALONG THE BEAM AS SHOWN FOR 3/4" Ø STUDS BASED ON THE RATIO OF 3 - 7/8" Ø STUDS FOR 4 - 3/4" Ø STUDS. STUDS OF THE LENGTH SPECIFIED ON THE PLANS MUST BE PROVIDED. THE MAXIMUM SPACING SHALL BE 2'-0".

EXCEPT AT THE INTERIOR SUPPORTS OF CONTINUOUS BEAMS WHERE THE COVER PLATE IS IN CONTACT WITH BEARING PLATE, THE CONTRACTOR MAY, AT HIS OPTION, SUBSTITUTE FOR THE COVER PLATES DESIGNATED ON THE PLANS COVER PLATES OF THE EQUIVALENT AREA PROVIDED THESE PLATES ARE AT LEAST 5/16" IN THICKNESS AND DO NOT EXCEED A WIDTH EQUAL TO THE FLANGE WIDTH LESS 2" OR A THICKNESS EQUAL TO 2 TIMES THE FLANGE THICKNESS. THE SIZE OF FILLET WELDS SHALL CONFORM TO THE REQUIREMENTS OF THE CURRENT ANSI/AASHTO/AWS "BRIDGE WELDING CODE". ELECTROSLAG WELDING WILL NOT BE PERMITTED.

WITH THE SOLE EXCEPTION OF EDGES AT SURFACES WHICH BEAR ON OTHER SURFACES, ALL SHARP EDGES AND ENDS OF SHAPES AND PLATES SHALL BE SLIGHTLY ROUNDED BY SUITABLE MEANS TO A RADIUS OF APPROXIMATELY 1/16 INCH OR EQUIVALENT FLAT SURFACE AT A SUITABLE ANGLE PRIOR TO PAINTING, GALVANIZING, OR METALLIZING.

HANDRAILS AND POSTS:

METAL STANDARDS AND FACES OF THE CONCRETE END POSTS FOR THE METAL RAIL SHALL BE SET NORMAL TO THE GRADE OF THE CURB, UNLESS OTHERWISE SHOWN ON PLANS. THE METAL RAIL AND TOPS OF CONCRETE POSTS USED WITH THE ALUMINUM RAIL SHALL BE BUILT PARALLEL TO THE GRADE OF THE CURB.

METAL HANDRAILS SHALL BE IN ACCORDANCE WITH THE PLANS. RAILS SHALL BE AS MANUFACTURED FOR BRIDGE RAILING. CASTINGS SHALL BE OF A UNIFORM APPEARANCE. FINS AND OTHER DEFORMATIONS RESULTING FROM CASTING OR OTHERWISE SHALL BE REMOVED IN A MANNER SO THAT A UNIFORM COLORING OF THE COMPLETED CASTING SHALL BE OBTAINED. CASTINGS WITH DISCOLORATIONS OR OF NON-UNIFORM COLORING WILL NOT BE ACCEPTED. CERTIFIED MILL REPORTS ARE REQUIRED FOR METAL RAILS AND POSTS.

SPECIAL NOTES:

GENERALLY, IN CASE OF DISCREPANCY, THIS STANDARD SHEET OF NOTES SHALL GOVERN OVER THE SPECIFICATIONS, BUT THE REMAINDER OF THE PLANS SHALL GOVERN OVER NOTES HEREON, AND SPECIAL PROVISIONS SHALL GOVERN OVER ALL. SEE SPECIFICATIONS ARTICLE 105-4.

ENGLISH

JANUARY, 1990

STD. NO. SN

REV. 6-16-95 EEM W/ RGW REV. 5-7-03 RWW W/ JTE REV. 10-1-11 MAA W/ GM
REV. 8-16-99 RWW W/ LES REV. 5-1-06 TLA W/ GW