TIP PROJECT: U-0209B

CONTRACT: C202824

STATE OF NORTH CAROLINA
DIVISION OF HIGHWAYS

MECKLENBURG COUNTY

STATE	STATE PROJECT REFERENCE NO.	SHEET NO.	TOTAL SHEETS
N.C.	U-0209B		

STATE PROJ. NO.	F. A. PROJ. NO.	DESCRIPTION
34749.1.1	MAFR-FR-18-2(17)	PE
34749.2.GV2	NHFSTP-0074(94)	R/W & UTIL
34749.3.GV4	NHFSTP-0074(137)	CONSTR.

LOCATION: US 74 (INDEPENDENCE BOULEVARD) FROM NC 24/27 TO SHARON FOREST DRIVE

TYPE OF WORK: MILLING, WIDENING, PAVING, CURB & GUTTER, SIDEWALK, DRAINAGE & STRUCTURES

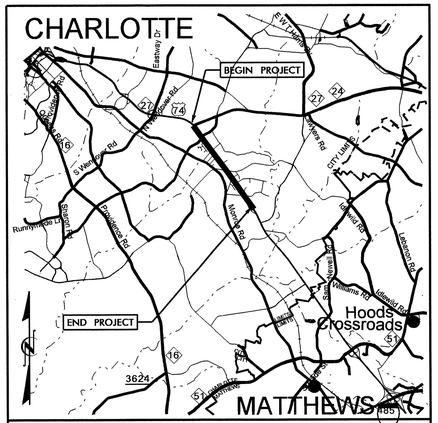

VICINITY MAP

N.T.S.

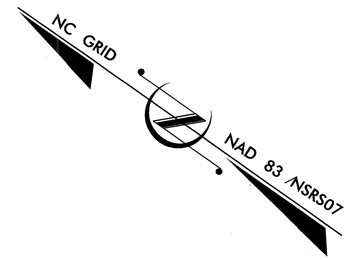

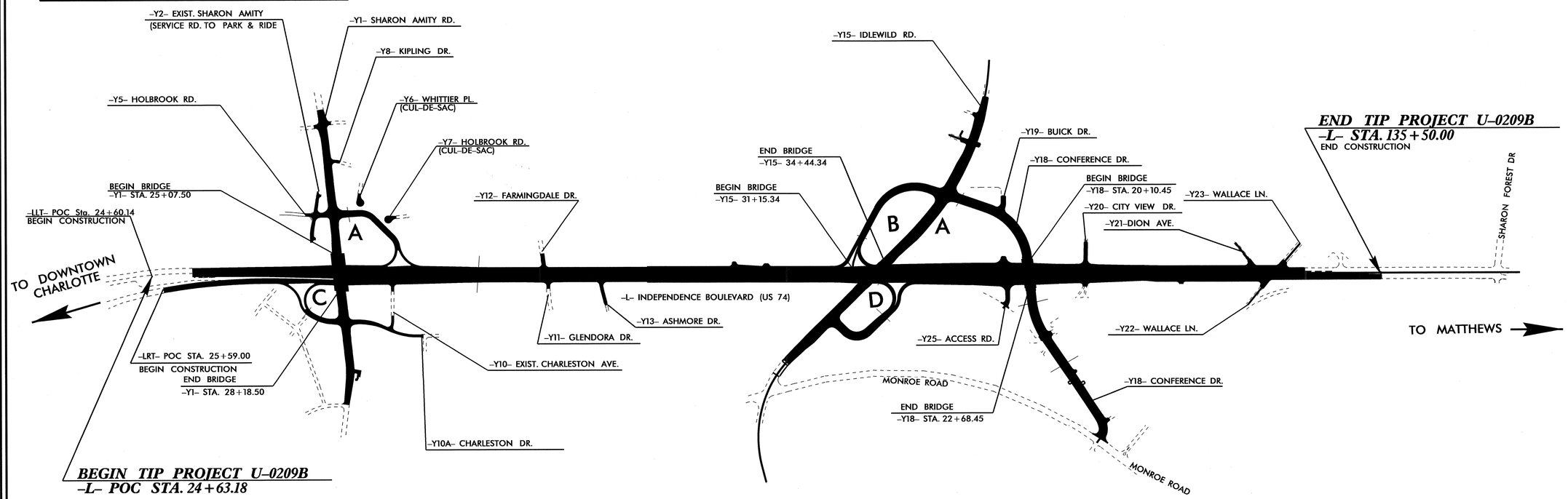

STRUCTURES

THIS PROJECT IS WITHIN THE MUNICIPAL BOUNDARIES OF THE CITY OF CHARLOTTE

STATE OF NORTH CAROLINA DEPARTMENT OF TRANSPORTATION

DESIGN DATA

ADT 2012 =
ADT 2022 = 133,880
DHV = 10 %
D = 60 %
T = 10 % *
V = 50 MPH
URBAN EXPRESSWAY
* (TTST 4% + DUAL 6%)

PROJECT LENGTH

LENGTH ROADWAY TIP PROJECT U-0209B = 2.10 Miles
TOTAL LENGTH TIP PROJECT U-0209B = 2.10 Miles

Prepared In the Office of:

DIVISION OF HIGHWAYS

1000 BIRCH RIDGE DR., RALEIGH, NC 27610

2012 STANDARD SPECIFICATIONS

LETTING DATE:
FEBRUARY 19, 2013

B. C. Hunt, PE
PROJECT ENGINEER

W.F. FISCHER, P.E.
PROJECT DESIGN ENGINEER

STRUCTURES MANAGEMENT UNIT

DIVISION OF HIGHWAYS STATE OF NORTH CAROLINA

P.E.
STATE HIGHWAY DESIGN ENGINEER

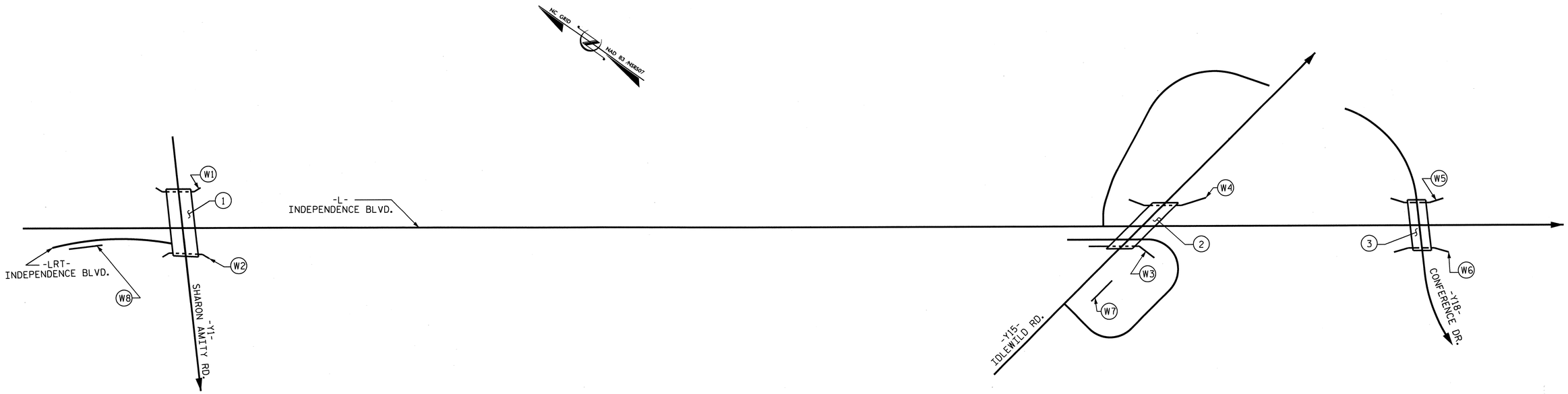

STR.	STATION	DESCRIPTION	SHEETS
1	41+57.69 -L-	BRIDGE ON -Y1- (SHARON AMITY RD.) OVER INDEPENDENCE BLVD.	S-1 THRU S-40
2	89+79.05 -L-	BRIDGE ON -Y15- (IDLEWILD RD.) OVER INDEPENDENCE BLVD.	S-41 THRU S-80
3	103+73.08 -L-	BRIDGE ON -Y18- (CONFERENCE DR.) OVER INDEPENDENCE BLVD.	S-81 THRU S-117
W1	25+07.50 -Y1-	MECHANICALLY STABILIZED EARTH WALL ALONG -L- (WALL #1)	W-1, W-7, W-8
W2	28+18.50 -Y1-	MECHANICALLY STABILIZED EARTH WALL ALONG -L- (WALL #2)	W-2, W-7, W-8
W3	31+15.34 -Y15-	MECHANICALLY STABILIZED EARTH WALL ALONG -L- (WALL #3)	W-3, W-7, W-8
W4	34+44.34 -Y15-	MECHANICALLY STABILIZED EARTH WALL ALONG -L- (WALL #4)	W-4, W-7, W-8
W5	20+10.45 -Y18-	MECHANICALLY STABILIZED EARTH WALL ALONG -L- (WALL #5)	W-5, W-7, W8
W6	22+68.45 -Y18-	MECHANICALLY STABILIZED EARTH WALL ALONG -L- (WALL #6)	W-6, W-7, W8
W7	23+20.00 -Y15-	SEGMENTAL GRAVITY RETAINING WALL ALONG -Y15- (WALL #7)	W-9
W8	26+55.00 -LRT-	SEGMENTAL GRAVITY RETAINING WALL ALONG -LRT- (WALL #8)	W-10

PROJECT NO. U-0209B
MECKLENBURG COUNTY
STATION:

STATE OF NORTH CAROLINA
DEPARTMENT OF TRANSPORTATION
RALEIGH

INDEX SHEET

REVISIONS					
NO.	BY:	DATE:	NO.	BY:	DATE:
1			3		
2			4		

DRAWN BY : B.C. HUNT DATE : 1/2012
CHECKED BY : J.D. HAWK DATE : 7/2012

07-NOV-2012 08:38
R:\Structures\Plans\U0209B_SD_TSH.dgn
lsutton

F.A. PROJECT: NHFSTP-0074(137)

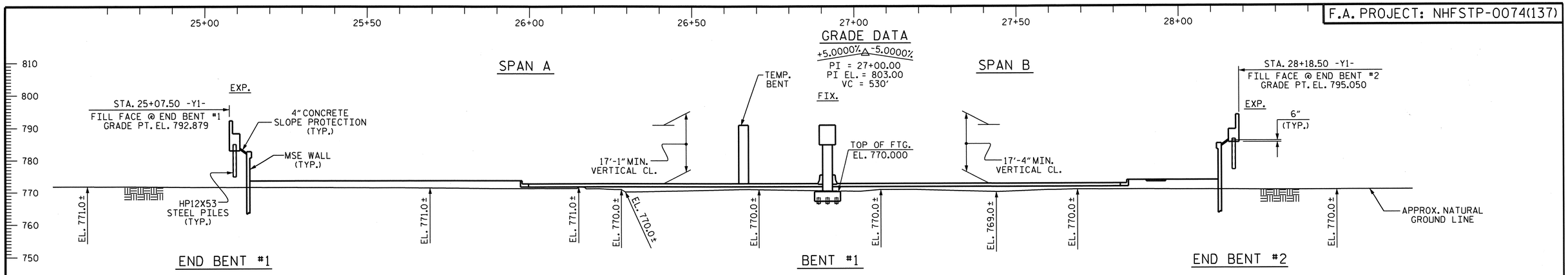

SECTION ALONG -Y1-

SECTION TAKEN AT RIGHT ANGLES TO BENTS AND END BENTS

HORIZONTAL CURVE DATA

PI STA. 41+44.80 -LLT-
△ = 0°-54'-58.8" (RT.)
D = 0°-28'-38.9"
L = 191.92'
T = 95.96'
R = 12,000.00'

PI STA. 40+91.77 -LRT-
△ = 1°-35'-10.1" (LT.)
D = 0°-42'-58.3"
L = 221.47'
T = 110.74'
R = 8,000.00'

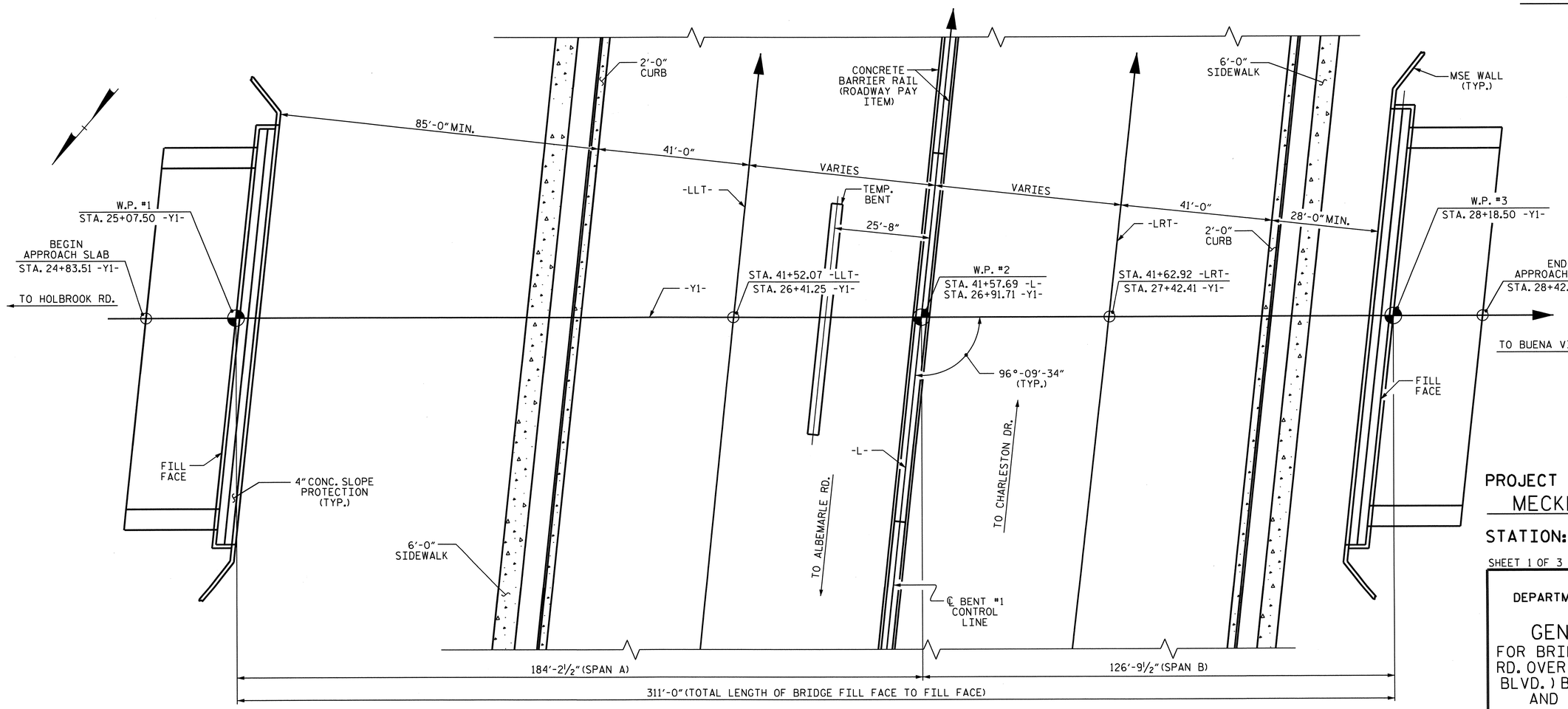

PLAN

PILES NOT SHOWN FOR CLARITY

NORTH CAROLINA PROFESSIONAL SEAL 14091 ENGINEER DAVID CHARLES HINES 11/14/12

NORTH CAROLINA PROFESSIONAL SEAL 30878 ENGINEER KEVIN FISCHER 11/20/12

PROJECT NO. U-0209B

MECKLENBURG COUNTY

STATION: 41+57.69 -L-
26+91.71 -Y1-

SHEET 1 OF 3

BRIDGE No. 1171

STATE OF NORTH CAROLINA
DEPARTMENT OF TRANSPORTATION
RALEIGH

GENERAL DRAWING

FOR BRIDGE ON SHARON AMITY RD. OVER US 74 (INDEPENDENCE BLVD.) BETWEEN HOLBROOK RD. AND BUENA VISTA AVE.

REVISIONS						SHEET NO.
NO.	BY:	DATE:	NO.	BY:	DATE:	S-1
1			3			TOTAL SHEETS
2			4			117

STR. #1

DRAWN BY : B.L. GREEN DATE : 10/10/11
CHECKED BY : M. K. BEARD DATE : 10/28/11

11-SEP-2012 09:01
R:\structures\Plans\Str1\U0209B_SD_GD_01.dgn
lsutton

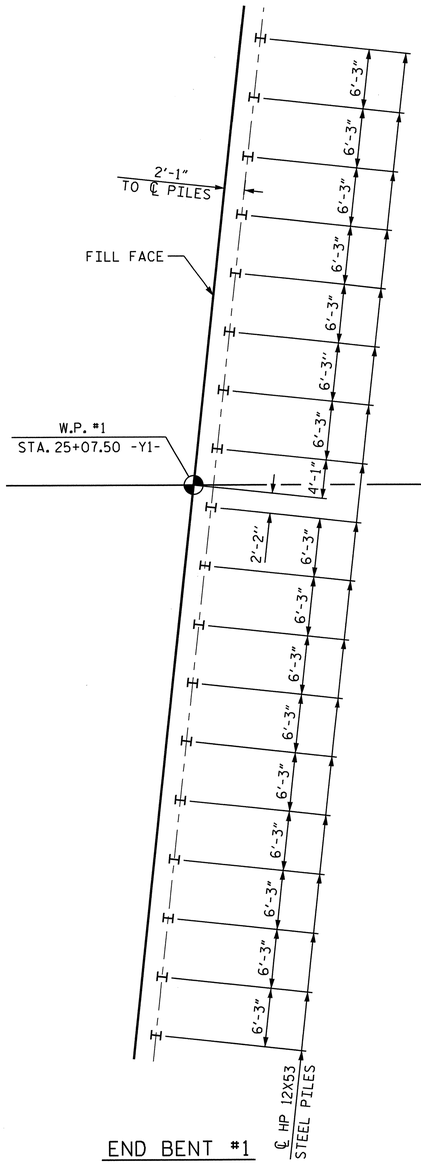

END BENT #1

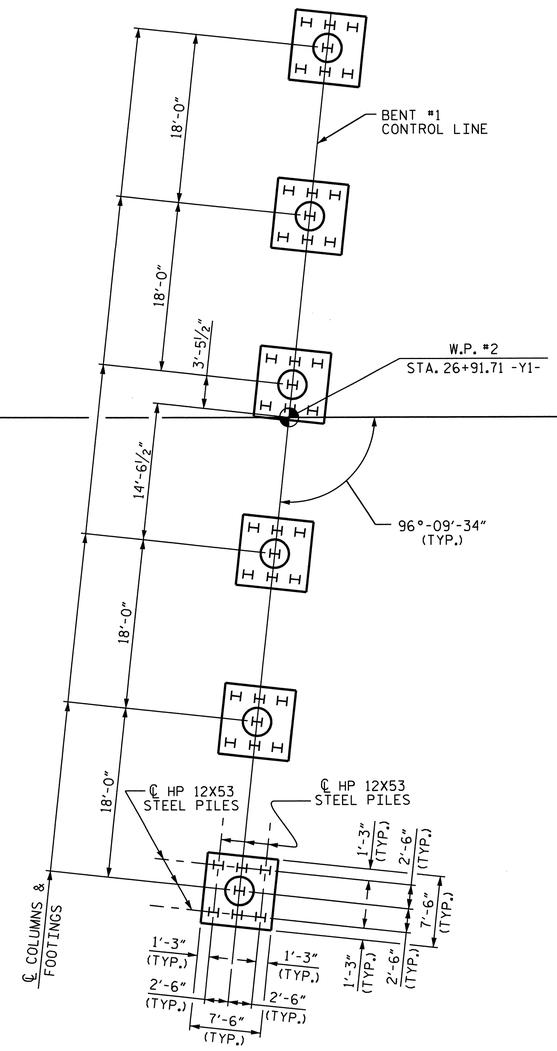

BENT #1

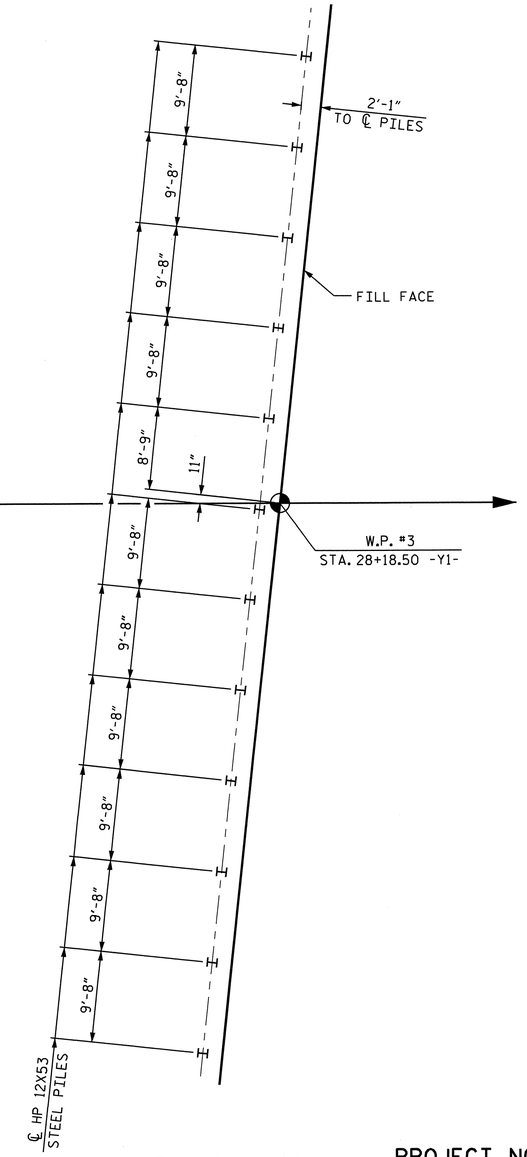

END BENT #2

FOUNDATION LAYOUT

DIMENSIONS LOCATING PILES ARE SHOWN TO THE PILE CENTERLINE.

FOUNDATION NOTES

FOR PILES, SEE SECTION 450 OF THE STANDARD SPECIFICATIONS.

PILES AT END BENT #1 AND END BENT #2 ARE DESIGNED FOR A FACTORED RESISTANCE OF 120 TONS PER PILE. PILES AT BENT #1 ARE DESIGNED FOR A FACTORED RESISTANCE OF 150 TONS PER PILE.

DRIVE PILES AT END BENT #1 AND END BENT #2 TO A REQUIRED DRIVING RESISTANCE OF 265 TONS PER PILE. THIS REQUIRED DRIVING RESISTANCE INCLUDES ADDITIONAL RESISTANCE FOR DOWNDRAG.

DRIVE PILES AT BENT #1 TO A REQUIRED DRIVING RESISTANCE OF 265 TONS PER PILE.

TESTING PILES WITH THE PDA DURING DRIVING, RESTRIKING OR REDRIVING MAY BE REQUIRED. THE ENGINEER WILL DETERMINE THE NEED FOR PDA TESTING. FOR PDA TESTING SEE SECTION 450 OF THE STANDARD SPECIFICATIONS.

IT HAS BEEN ESTIMATED THAT A HAMMER WITH AN EQUIVALENT RATED ENERGY IN THE RANGE OF 80-100 FT-KIPS PER BLOW WILL BE REQUIRED TO DRIVE PILES AT END BENT #1, END BENT #2 AND BENT #1. THE ESTIMATED ENERGY RANGE DOES NOT RELEASE THE CONTRACTOR FROM PROVIDING DRIVING EQUIPMENT IN ACCORDANCE WITH SUBARTICLE 450-3(D)(2) OF THE STANDARD SPECIFICATIONS.

OBSERVE A 6 MONTH WAITING PERIOD AFTER CONSTRUCTING THE EMBANKMENT TO WITHIN 2 FEET OF FINISHED GRADE BEFORE BEGINNING END BENT CONSTRUCTION AT END BENT #1 AND END BENT #2.

PROJECT NO. U-0209B
MECKLENBURG COUNTY
STATION: 41+57.69 -L-

SHEET 2 OF 3

STATE OF NORTH CAROLINA
DEPARTMENT OF TRANSPORTATION
RALEIGH

GENERAL DRAWING
FOR BRIDGE ON
SHARON AMITY OVER
US 74 BETWEEN
SR 1308 AND SR 1470

NORTH CAROLINA PROFESSIONAL SEAL 30878 ENGINEER KEVIN FISCHER
11/20/12

REVISIONS						SHEET NO.
NO.	BY:	DATE:	NO.	BY:	DATE:	S-2
1			3			TOTAL SHEETS
2			4			117

STR. #1

DRAWN BY : B. L. GREEN DATE : 10/10/11
CHECKED BY : M. K. BEARD DATE : 10/28/11

11-SEP-2012 09:01
R:\structures\Plans\Str1\U0209B_SD_GD_01.dgn
lsutton

BM #22: RAILROAD SPIKE SET IN LIGHT POLE, 113.2' RT. OF STA. 29+50.51 -Y1- EL. 771.01

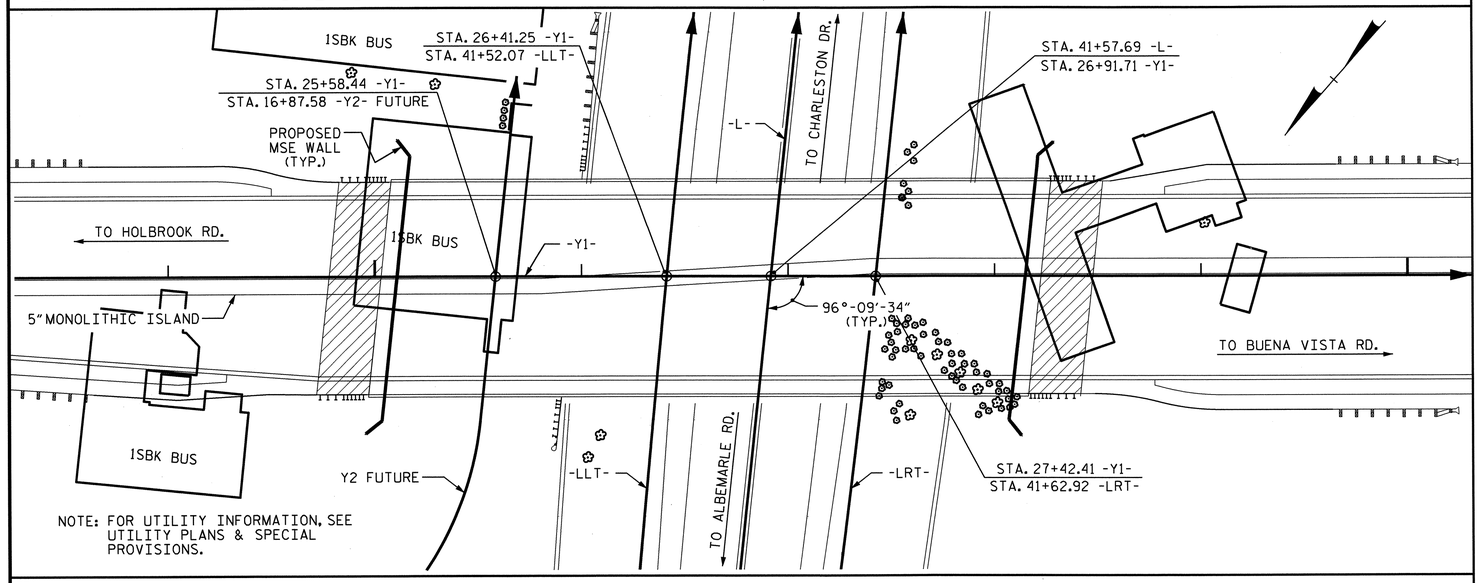

NOTE: FOR UTILITY INFORMATION, SEE UTILITY PLANS & SPECIAL PROVISIONS.

LOCATION SKETCH

NOTES

ASSUMED LIVE LOAD = HL 93 OR ALTERNATE LOADING.

THIS BRIDGE HAS BEEN DESIGNED IN ACCORDANCE WITH THE AASHTO LRFD BRIDGE DESIGN SPECIFICATIONS.

THIS BRIDGE IS LOCATED IN SEISMIC ZONE 1.

FOR OTHER DESIGN DATA AND GENERAL NOTES, SEE SHEET SN.

FOR SUBMITTAL OF WORKING DRAWINGS, SEE SPECIAL PROVISIONS.

FOR FALSEWORK AND FORMWORK, SEE SPECIAL PROVISIONS.

FOR CRANE SAFETY, SEE SPECIAL PROVISIONS.

FOR GROUT FOR STRUCTURES, SEE SPECIAL PROVISIONS.

THE CONTRACTOR SHALL PROVIDE INDEPENDENT ASSURANCE SAMPLES OF REINFORCING STEEL AS FOLLOWS: FOR PROJECTS REQUIRING UP TO 400 TONS OF REINFORCING STEEL, ONE 30 INCH SAMPLE OF EACH SIZE BAR USED, AND FOR PROJECTS REQUIRING OVER 400 TONS OF REINFORCING STEEL, TWO 30 INCH SAMPLES OF EACH SIZE BAR USED. THE BARS FROM WHICH THE SAMPLES ARE TAKEN MUST THEN BE SPLICED WITH REPLACEMENT BARS OF THE SIZE AND LENGTH OF THE SAMPLE, PLUS A MINIMUM LAP SPLICE OF THIRTY BAR DIAMETERS. PAYMENT FOR THE SAMPLES OF REINFORCING STEEL SHALL BE CONSIDERED INCIDENTAL TO VARIOUS PAY ITEMS.

FOR MAINTENANCE AND PROTECTION OF TRAFFIC BENEATH PROPOSED STRUCTURE, SEE SPECIAL PROVISIONS.

REMOVABLE FORMS MAY BE USED IN LIEU OF METAL STAY-IN-PLACE FORMS IN ACCORDANCE WITH ARTICLE 420-3 OF THE STANDARD SPECIFICATIONS.

NEEDLE BEAMS WILL NOT BE ALLOWED UNLESS OTHERWISE CALLED FOR ON THE PLANS OR APPROVED BY THE ENGINEER.

ALL STRUCTURAL STEEL SHALL BE AASHTO M270 GRADE 50W AND PAINTED IN ACCORDANCE WITH SYSTEM 4 OF ARTICLE 442-8 OF THE STANDARD SPECIFICATIONS UNLESS OTHERWISE NOTED ON THE PLANS.

THE CLASS AA CONCRETE IN THE BRIDGE DECK SHALL CONTAIN FLY ASH OR GROUND GRANULATED BLAST FURNACE SLAG AT THE SUBSTITUTION RATE SPECIFIED IN ARTICLE 1024-1 AND IN ACCORDANCE WITH ARTICLES 1024-5 AND 1024-6 OF THE STANDARD SPECIFICATIONS. NO PAYMENT WILL BE MADE FOR THIS SUBSTITUTION AS IT IS CONSIDERED INCIDENTAL TO THE COST OF THE REINFORCED CONCRETE DECK SLAB.

GIRDER ERECTION SEQUENCE

THE STRUCTURAL STEEL SHALL BE SUPPORTED DURING ERECTION IN ITS CAMBERED POSITION. ONE EXTERIOR GIRDER AND ITS ADJACENT INTERIOR GIRDER SHALL BE ERECTED WITH ALL DIAPHRAGMS AND LATERAL BRACING BETWEEN THE GIRDERS IN PLACE AND ALL BOLTS TIGHTENED PRIOR TO RELEASE OF THE GIRDERS. THE REMAINING GIRDERS SHALL THEN BE ERECTED WITH DIAPHRAGMS CONNECTING THE GIRDER TO THE ADJACENT ERECTED GIRDER AND ALL BOLTS TIGHTENED BEFORE RELEASING THE GIRDER.

ONE TEMPORARY BENT SHALL BE USED.

THE TEMPORARY BENT SHALL REMAIN IN PLACE UNTIL ALL CROSS FRAMES AND LATERAL BRACING ARE IN PLACE AND HIGH STRENGTH BOLTS TIGHTENED.

THE LOCATION OF THE TEMPORARY BENT SHOWN ON SHEET S-1 IS AN APPROXIMATE LOCATION AND SHALL BE ADJUSTED BY THE CONTRACTOR AS NECESSARY.

PLANS FOR THE TEMPORARY BENT, ERECTION SEQUENCE AND TEMPORARY BENT REMOVAL SHALL BE SUBMITTED TO THE ENGINEER FOR REVIEW.

THE TEMPORARY BENT SHALL BE DESIGNED BY A PROFESSIONAL ENGINEER REGISTERED IN THE STATE OF NORTH CAROLINA.

DURING THE GIRDER ERECTION PROCEDURE, THE CONTRACTOR IS RESPONSIBLE FOR PROVIDING TEMPORARY LATERAL BRACING AND OTHER MEANS OF SUPPORT, AS REQUIRED, TO ENSURE STABILITY OF THE GIRDERS, AVOID UPLIFT OF THE GIRDERS AT THE TEMPORARY ERECTION BENTS AND MAINTAIN PLUMBNESS OF THE GIRDER WEBS.

THE CONTRACTOR'S ERECTION PLAN SHALL INCLUDE A METHOD OF TEMPORARY BENT REMOVAL THAT WILL UNIFORMLY APPLY THE STRUCTURAL STEEL WEIGHT TO THE BRIDGE CROSS FRAMES.

THE CONTRACTOR MAY SUBMIT ALTERNATE ERECTION METHODS. PLANS FOR SUCH ERECTION METHODS SHALL BE APPROVED BY THE ENGINEER.

FOR TEMPORARY BENTS, SEE SPECIAL PROVISIONS.

TOTAL BILL OF MATERIAL

	FOUNDATION EXCAVATION	PDA TESTING	REINFORCED CONCRETE DECK SLAB	GROOVING BRIDGE FLOORS	CLASS A CONCRETE	BRIDGE APPROACH SLABS	REINFORCING STEEL	SPIRAL COLUMN REINFORCING STEEL	STRUCTURAL STEEL	HP 12X53 STEEL PILES		PILE REDRIVES	THREE BAR METAL RAIL	4" SLOPE PROTECTION	ELASTOMERIC BEARINGS	FOAM JOINT SEALS	ELECTRICAL CONDUIT SYSTEM FOR SIGNALS	DISC BEARINGS
	LUMP SUM	EA.	SQ. FT.	SQ. FT.	CU. YDS.	LUMP SUM	LBS.	LBS.	APPROX. LBS.	NO.	LIN. FT.	EA.	LIN. FT.	SQ. YDS.	LUMP SUM	LUMP SUM	LUMP SUM	LUMP SUM
SUPERSTRUCTURE			31,686	26,249		LUMP SUM			1,398,700				602.30		LUMP SUM	LUMP SUM	LUMP SUM	LUMP SUM
END BENT #1					88.0		11,869			18	1,800	9		25				
BENT #1	LUMP SUM				147.3		25,688	1,901		42	3,780	21						
END BENT #2					71.4		10,368			12	1,200	6		25				
TOTAL	LUMP SUM	1	31,686	26,249	306.7	LUMP SUM	47,925	1,901	1,398,700	72	6,780	36	602.30	50	LUMP SUM	LUMP SUM	LUMP SUM	LUMP SUM

PROJECT NO. U-0209B
MECKLENBURG COUNTY
STATION: 41+57.69 -L-

SHEET 3 OF 3

STATE OF NORTH CAROLINA
DEPARTMENT OF TRANSPORTATION
RALEIGH

GENERAL DRAWING
FOR BRIDGE ON SHARON AMITY RD. OVER US 74 (INDEPENDENCE BLVD.) BETWEEN HOLBROOK RD. AND BUENA VISTA AVE.

NORTH CAROLINA PROFESSIONAL SEAL 30878 ENGINEER KEVIN FISCHER
11/20/12

REVISIONS						SHEET NO.
NO.	BY:	DATE:	NO.	BY:	DATE:	S-3
1			3			TOTAL SHEETS
2			4			117

STR. #1

DRAWN BY : J.D. HAWK DATE : 11/12
CHECKED BY : M.K. BEARD DATE : 11/12

14-NOV-2012 09:32
R:\structures\Plans\Str1\U0209B_SD_GD_01.dgn
lsutton

LOAD AND RESISTANCE FACTOR RATING (LRFR) SUMMARY FOR STEEL GIRDERS

LEVEL		VEHICLE	WEIGHT (W) (TONS)	CONTROLLING LOAD RATING (#)	MINIMUM RATING FACTORS (RF)	TONS = W x RF	STRENGTH I LIMIT STATE											SERVICE II LIMIT STATE						COMMENT NUMBER
								MOMENT					SHEAR						MOMENT					
							LIVE-LOAD FACTORS (γ_{LL})	DISTRIBUTION FACTORS (DF)	RATING FACTOR	SPAN	GIRDER LOCATION	DISTANCE FROM LEFT END OF SPAN (ft)	DISTRIBUTION FACTORS (DF)	RATING FACTOR	SPAN	GIRDER LOCATION	DISTANCE FROM LEFT END OF SPAN (ft)	LIVE-LOAD FACTORS (γ_{LL})	DISTRIBUTION FACTORS (DF)	RATING FACTOR	SPAN	GIRDER LOCATION	DISTANCE FROM LEFT END OF SPAN (ft)	
DESIGN LOAD RATING		HL-93 (INVENTORY)	N/A	1	1.08	--	1.75	0.775	1.08	A	I	181.86	1.016	1.41	A	I	181.86	1.30	0.775	1.20	A	I	181.86	
		HL-93 (OPERATING)	N/A		1.40	--	1.35	0.775	1.40	A	I	181.86	1.016	1.83	A	I	181.86	1.00	0.775	1.56	A	I	181.86	
		HS-20 (INVENTORY)	36.00	2	1.90	68.400	1.75	0.775	1.90	B	I	37.33	1.016	2.48	A	I	181.86	1.30	0.704	2.25	A	I	72.74	
		HS-20 (OPERATING)	36.00		2.47	88.920	1.35	0.775	2.47	B	I	37.33	1.016	3.21	A	I	181.86	1.00	0.704	2.93	A	I	72.74	
LEGAL LOAD RATING	SINGLE VEHICLE (SV)	SNSH	13.500		5.57	75.195	1.40	0.775	5.59	B	I	37.33	1.016	8.13	A	I	181.86	1.30	0.704	5.57	A	I	72.74	
		SNGARBS2	20.000		3.92	78.400	1.40	0.775	4.03	B	I	37.33	1.016	5.53	A	I	181.86	1.30	0.704	3.92	A	I	72.74	
		SNAGRIS2	22.000		3.63	79.860	1.40	0.775	3.76	B	I	37.33	1.016	5.04	A	I	181.86	1.30	0.704	3.63	A	I	72.74	
		SNCOTTS3	27.250		2.77	75.483	1.40	0.775	2.80	B	I	37.33	1.016	4.03	A	I	181.86	1.30	0.704	2.77	A	I	72.74	
		SNAGGRS4	34.925		2.23	77.883	1.40	0.775	2.30	B	I	37.33	1.016	3.17	A	I	181.86	1.30	0.704	2.23	A	I	72.74	
		SNS5A	35.550		2.19	77.855	1.40	0.775	2.27	B	I	37.33	1.016	3.13	A	I	181.86	1.30	0.704	2.19	A	I	72.74	
		SNS6A	39.950		1.97	78.702	1.40	0.775	2.07	B	I	37.33	1.016	2.80	A	I	181.86	1.30	0.704	1.97	A	I	72.74	
		SNS7B	42.000		1.88	78.960	1.40	0.775	1.97	B	I	37.33	1.016	2.67	A	I	181.86	1.30	0.704	1.88	A	I	72.74	
	TRUCK TRACTOR SEMI-TRAILER (TTST)	TNAGRIT3	33.000		2.40	79.200	1.40	0.775	2.55	B	I	37.33	1.016	3.38	A	I	181.86	1.30	0.704	2.40	A	I	72.74	
		TNT4A	33.075		2.39	79.049	1.40	0.775	2.50	B	I	37.33	1.016	3.36	A	I	181.86	1.30	0.704	2.39	A	I	72.74	
		TNT6A	41.600		1.93	80.288	1.40	0.775	2.05	B	I	37.33	1.016	2.72	A	I	181.86	1.30	0.704	1.93	A	I	72.74	
		TNT7A	42.000		1.92	80.640	1.40	0.775	2.05	B	I	37.33	1.016	2.69	A	I	181.86	1.30	0.704	1.92	A	I	72.74	
		TNT7B	42.000		1.94	81.480	1.40	0.775	2.05	B	I	37.33	1.016	2.67	A	I	181.86	1.30	0.704	1.94	A	I	72.74	
		TNAGRIT4	43.000		1.88	80.840	1.40	0.775	1.99	B	I	37.33	1.016	2.60	A	I	181.86	1.30	0.704	1.88	A	I	72.74	
		TNAGT5A	45.000		1.79	80.550	1.40	0.775	1.91	B	I	37.33	1.016	2.50	A	I	181.86	1.30	0.704	1.79	A	I	72.74	
		TNAGT5B	45.000	3	1.78	80.100	1.40	0.775	1.88	B	I	37.33	1.016	2.48	A	I	181.86	1.30	0.704	1.78	A	I	72.74	
FATIGUE		HL-93 (INVENTORY)	γ_{LL}=0.75																					

LOAD FACTORS:

DESIGN LOAD RATING FACTORS	LIMIT STATE	γ_{DC}	γ_{DW}
	STRENGTH I	1.25	1.50
	SERVICE II	1.00	1.00

NOTES:

MINIMUM RATING FACTORS ARE BASED ON THE STRENGTH I AND SERVICE II LIMIT STATES.

ALLOWABLE STRESS FOR SERVICE II LIMIT STATE ARE AS REQUIRED FOR DESIGN.

(#) CONTROLLING LOAD RATING

(1) DESIGN LOAD RATING (HL-93) **

(2) DESIGN LOAD RATING (HS-20) **

(3) LEGAL LOAD RATING **

** SEE CHART FOR VEHICLE TYPE

GIRDER LOCATION

I - INTERIOR GIRDER
EL - EXTERIOR LEFT GIRDER
ER - EXTERIOR RIGHT GIRDER

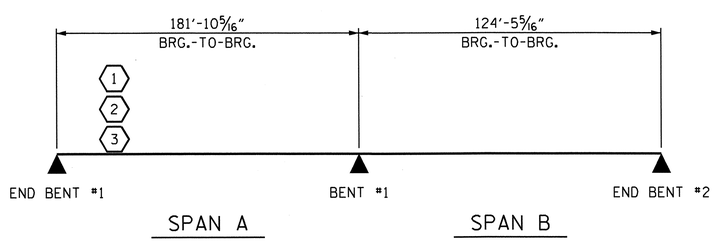

LRFR SUMMARY

PROJECT NO. U-0209B
MECKLENBURG COUNTY
STATION: 41+57.69 -L-

NORTH CAROLINA PROFESSIONAL SEAL 20878 ENGINEER KEVIN FISCHER
11/20/12

STATE OF NORTH CAROLINA
DEPARTMENT OF TRANSPORTATION
RALEIGH

STANDARD

LRFR SUMMARY FOR STEEL GIRDERS
(NON-INTERSTATE TRAFFIC)

REVISIONS						SHEET NO.
NO.	BY:	DATE:	NO.	BY:	DATE:	S-4
1			3			TOTAL SHEETS
2			4			117

STR. #1 STD. NO. LRFR3

ASSEMBLED BY : R. L. CHESSON DATE : 11/12
CHECKED BY : H. T. DIEU DATE : 11/12
DRAWN BY : MAA 1/08 REV. 11/12/08RR MAA/GM
CHECKED BY : GM/DI 2/08 REV. 10/1/11 MAA/GM

14-NOV-2012 09:32
R:\structures\Plans\Str1\U0209B_SD_LR_01.dgn
lsutton

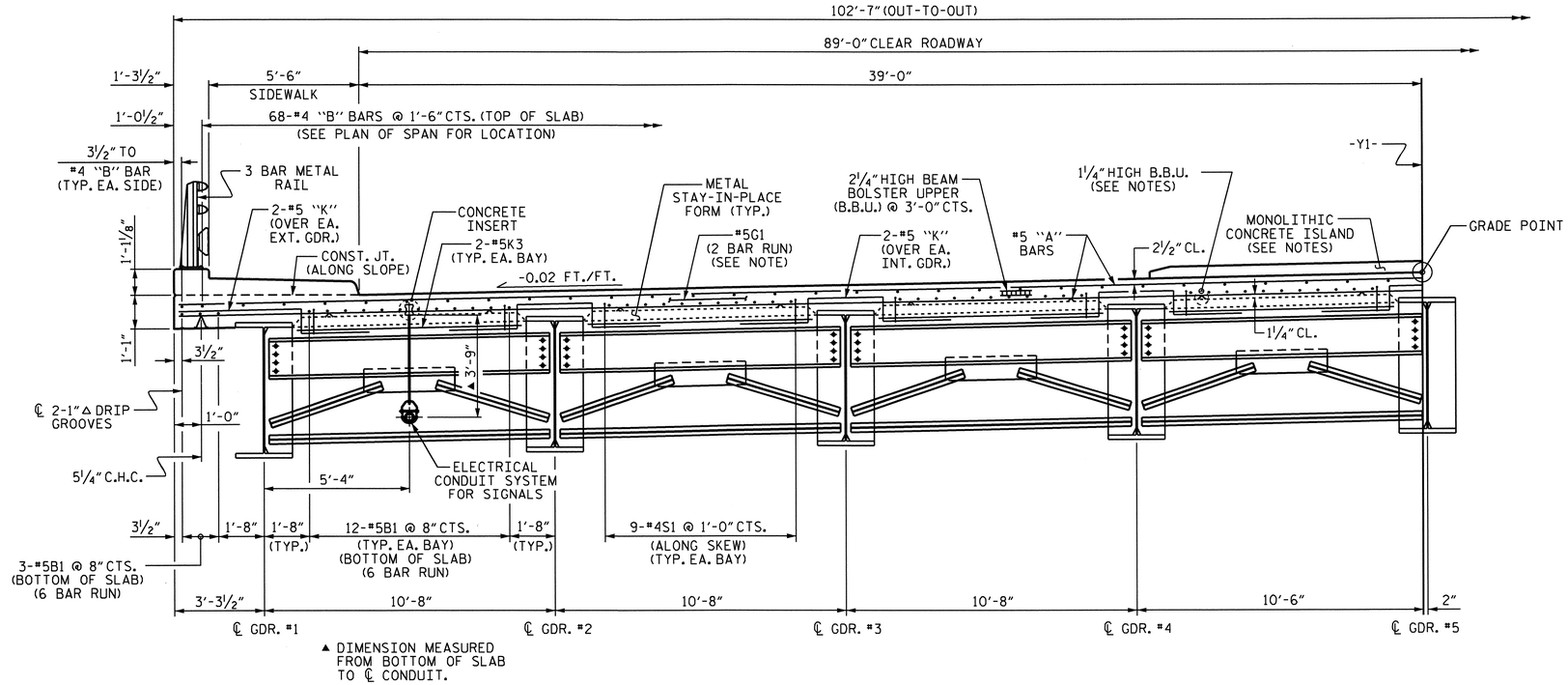

HALF SECTION

(SHOWING END BENT DIAPHRAGMS)

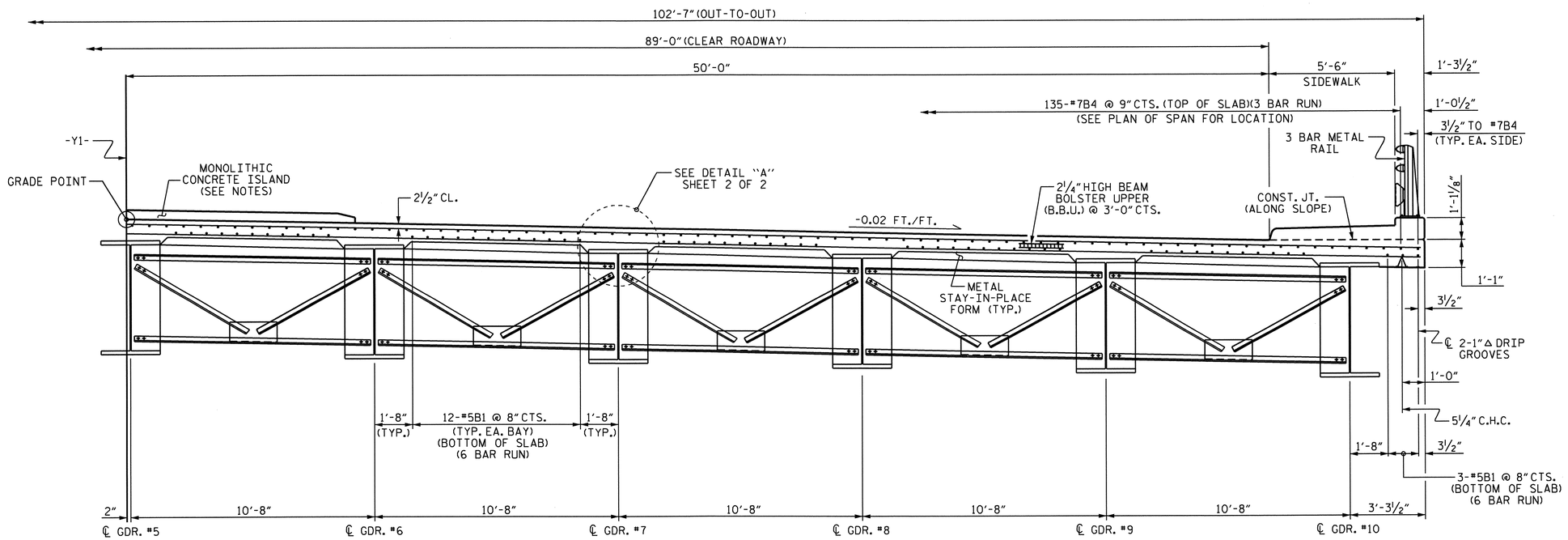

HALF SECTION

(SHOWING INTERMEDIATE AND BENT DIAPHRAGMS)

NOTES

PROVIDE 1¼" HIGH BEAM BOLSTERS UPPER AT 4'-0" CTS. ATOP THE METAL STAY-IN-PLACE FORMS TO SUPPORT THE BOTTOM MAT OF 'A' BARS. WHEN USING REMOVABLE FORMS, PROVIDE CONTINUOUS HIGH CHAIRS FOR METAL DECK (C.H.C.M.) @ 4'-0" CTS. WITH A HEIGHT TO SUPPORT THE BOTTOM MAT OF 'A' BARS A CLEAR DISTANCE OF 2½" ABOVE THE TOP OF THE REMOVABLE FORM.

METAL STAY-IN-PLACE FORMS SHALL NOT BE WELDED TO BEAM OR GIRDER FLANGES IN THE ZONES REQUIRING CHARPY V-NOTCH TEST. SEE STRUCTURAL STEEL DETAIL SHEETS.

PREVIOUSLY CAST CONCRETE IN A CONTINUOUS UNIT SHALL HAVE ATTAINED A MINIMUM COMPRESSIVE STRENGTH OF 3,000 PSI BEFORE ADDITIONAL CONCRETE IS CAST IN THE UNIT.

THE CONTRACTOR MAY, WHEN NECESSARY, PROPOSE A SCHEME FOR AVOIDING INTERFERENCE BETWEEN METAL STAY-IN-PLACE FORM SUPPORTS OR FORMS AND GIRDER STIFFENERS OR CONNECTOR PLATES. THE PROPOSAL SHALL BE INDICATED, AS APPROPRIATE, ON EITHER THE STEEL WORKING DRAWINGS OR THE METAL STAY-IN-PLACE FORM WORKING DRAWINGS.

STRUCTURAL STEEL ERECTION IN A CONTINUOUS UNIT SHALL BE COMPLETED BEFORE FALSEWORK OR FORMS ARE PLACED ON THE UNIT.

THE CONTRACTOR SHALL ADJUST THE GIRDER BUILDUPS AS NECESSARY TO INCORPORATE A MAXIMUM PERMISSIBLE VARIATION IN DISC BEARING DEPTH OF ½". SEE SPECIAL PROVISION FOR DISC BEARINGS.

FOR LOCATION OF THE MONOLITHIC CONCRETE ISLAND, SEE "MONOLITHIC CONCRETE ISLAND" SHEET.

FOR DETAILS OF ELECTRICAL CONDUIT SYSTEM, SEE "ELECTRICAL CONDUIT SYSTEM FOR SIGNALS" SHEET.

NORTH CAROLINA PROFESSIONAL SEAL 30878 ENGINEER KEVIN FISCHER

11/20/12

PROJECT NO. U-0209B

MECKLENBURG COUNTY

STATION: 41+57.69 -L-

SHEET 1 OF 2

STATE OF NORTH CAROLINA
DEPARTMENT OF TRANSPORTATION
RALEIGH

SUPERSTRUCTURE

TYPICAL SECTION

REVISIONS						SHEET NO.
NO.	BY:	DATE:	NO.	BY:	DATE:	S-5
1			3			TOTAL SHEETS
2			4			117

STR. #1

DRAWN BY : M.K. BEARD DATE : 9/2/11
CHECKED BY : J.P. ADAMS DATE : 10/10/11

07-SEP-2012 11:11
R:\structures\Plans\Str1\U0209B_SD_TS_01.dgn
lsutton

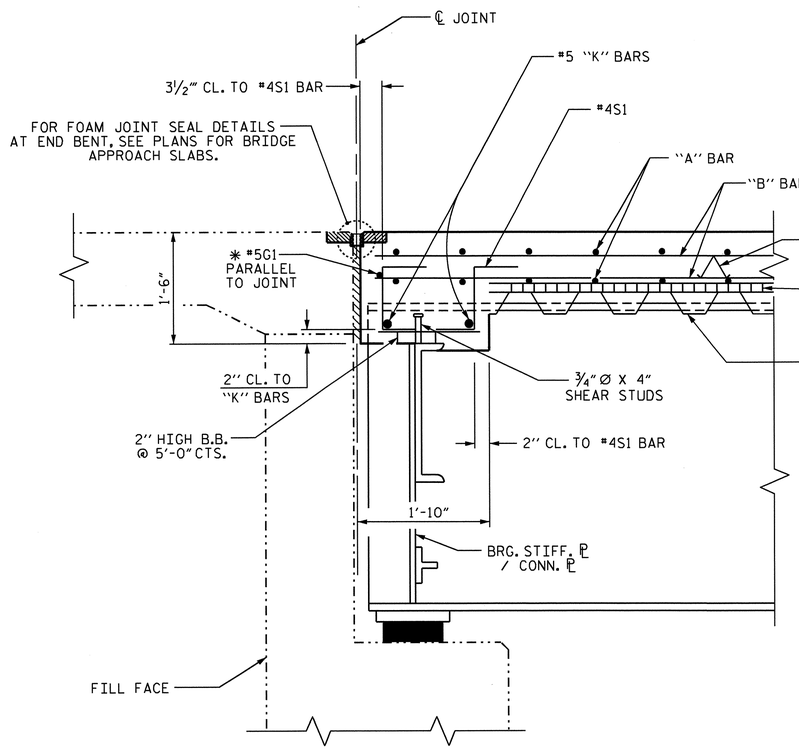

SECTION @ END BENTS

✳ #5G1 BAR MAY BE SHIFTED SLIGHTLY, AS NECESSARY, TO CLEAR DIAPHRAGM AND REINFORCING STEEL.

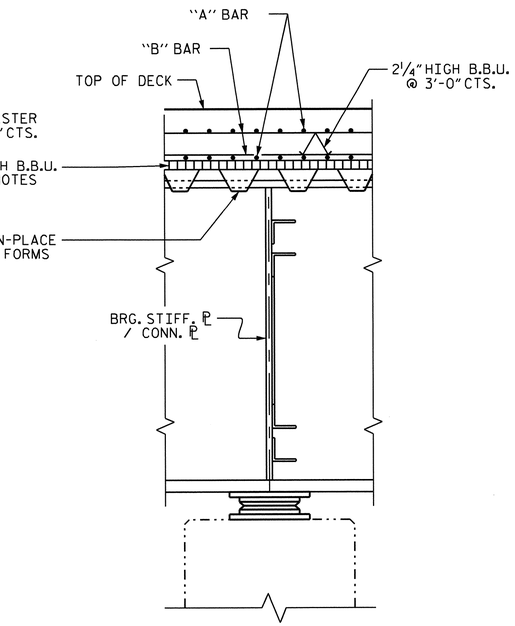

SECTION THRU BENT

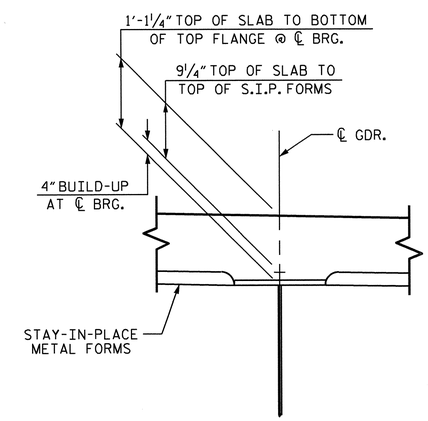

DETAIL "A"

PROJECT NO. U-0209B
MECKLENBURG COUNTY
STATION: 41+57.69 -L-

SHEET 2 OF 2

STATE OF NORTH CAROLINA
DEPARTMENT OF TRANSPORTATION
RALEIGH

SUPERSTRUCTURE

TYPICAL SECTION

NORTH CAROLINA PROFESSIONAL SEAL 30878 ENGINEER KEVIN FISCHER
11/20/12

REVISIONS						SHEET NO.
NO.	BY:	DATE:	NO.	BY:	DATE:	S-6
1			3			TOTAL SHEETS
2			4			117

STR. #1

DRAWN BY : M.K. BEARD DATE : 9/6/11
CHECKED BY : J.P. ADAMS DATE : 10/10/11

07-SEP-2012 11:11
R:\structures\Plans\Str1\U0209B_SD_TS_01.dgn
isutton

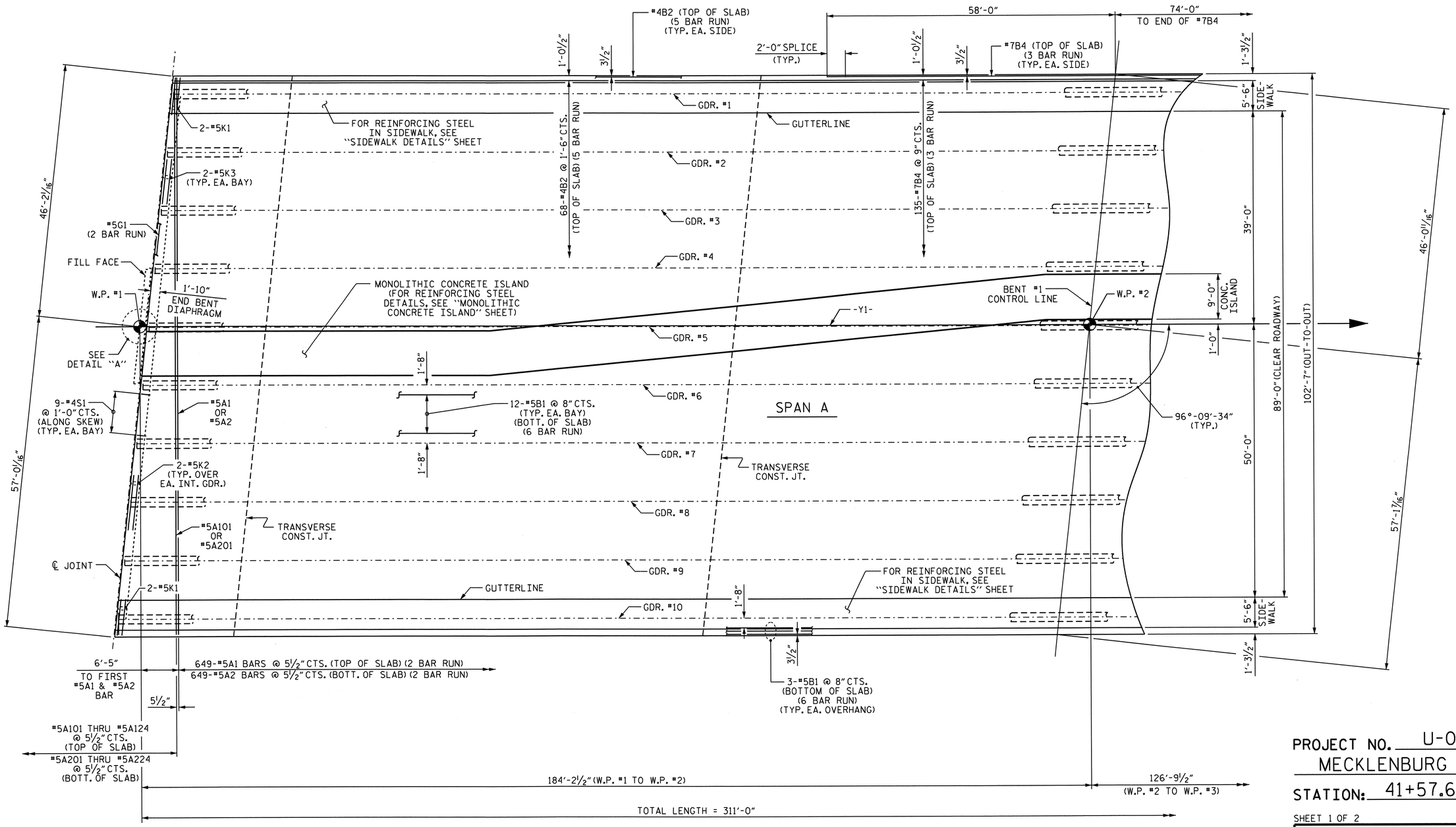

PROJECT NO. U-0209B
MECKLENBURG COUNTY
STATION: 41+57.69 -L-

SHEET 1 OF 2

#5A101/A201 THRU #5A110/A210 ARE 2 BAR RUNS

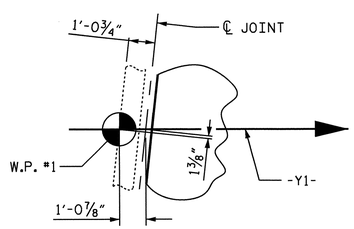

DETAIL "A"

PARTIAL PLAN OF SPANS

SEE "SUPERSTRUCTURE BILL OF MATERIAL" SHEET FOR TRANSVERSE CONST. JT. LOCATIONS & DETAILS.

NORTH CAROLINA PROFESSIONAL SEAL 20878 ENGINEER KEVIN FISCHER
11/20/12

STATE OF NORTH CAROLINA
DEPARTMENT OF TRANSPORTATION
RALEIGH

SUPERSTRUCTURE

PLAN OF SPANS
(SPAN "A")

REVISIONS						SHEET NO.
NO.	BY:	DATE:	NO.	BY:	DATE:	S-7
1			3			TOTAL SHEETS
2			4			117

STR. #1

DRAWN BY : M.K. BEARD DATE : 9/9/11
CHECKED BY : J.P. ADAMS DATE : 10/10/11

07-SEP-2012 11:11
R:\structures\Plans\Str1\U0209B_SD_PS_01.dgn
lsutton

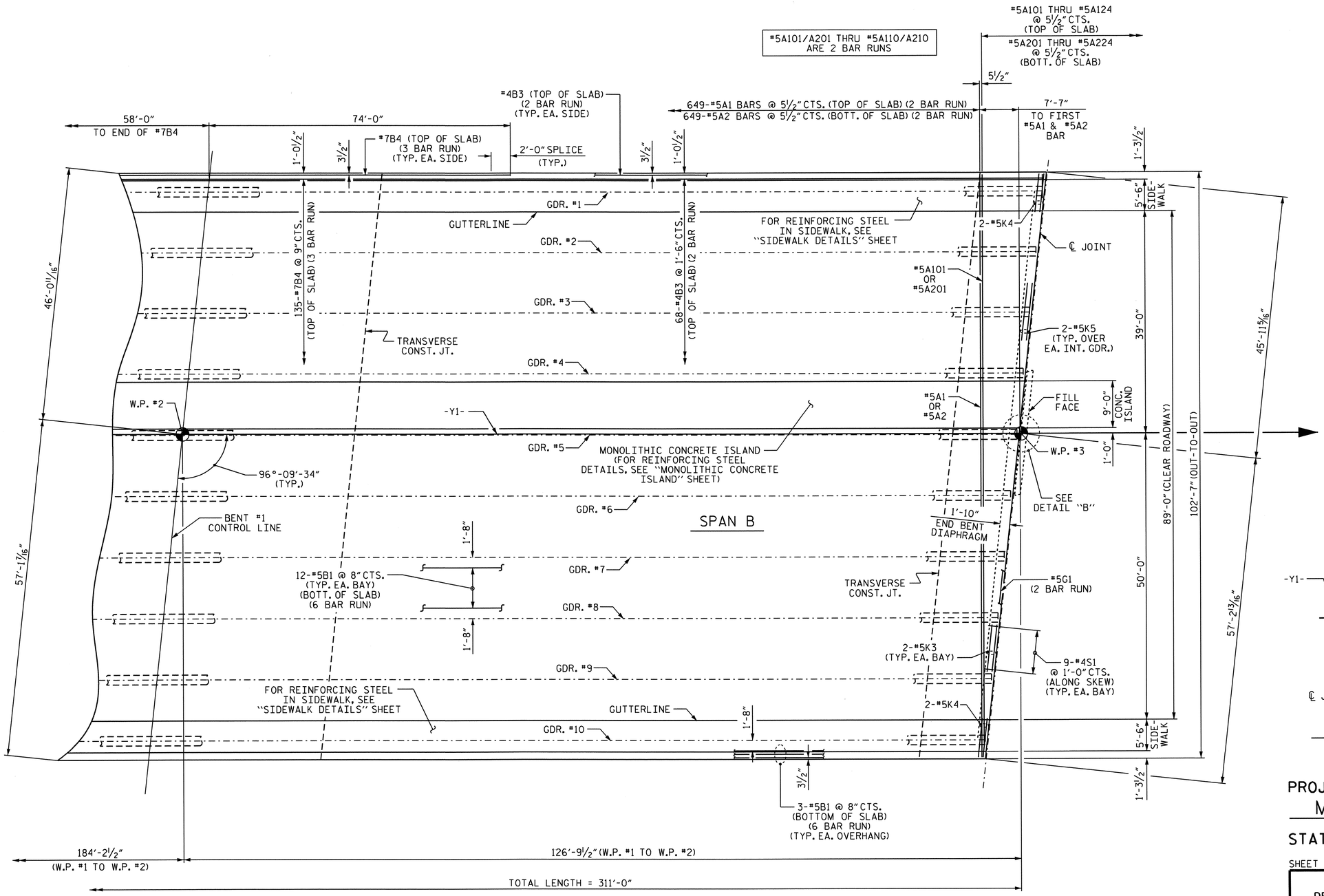

PARTIAL PLAN OF SPANS

SEE "SUPERSTRUCTURE BILL OF MATERIAL" SHEET FOR
TRANSVERSE CONST. JT. LOCATIONS & DETAILS.

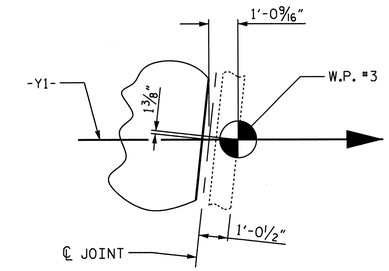

DETAIL "B"

PROJECT NO. U-0209B

MECKLENBURG COUNTY

STATION: 41+57.69 -L-

SHEET 2 OF 2

STATE OF NORTH CAROLINA
DEPARTMENT OF TRANSPORTATION
RALEIGH

SUPERSTRUCTURE

PLAN OF SPANS
(SPAN "B")

NORTH CAROLINA PROFESSIONAL SEAL 30878 ENGINEER KEVIN FISCHER
11/20/12

REVISIONS						SHEET NO.
NO.	BY:	DATE:	NO.	BY:	DATE:	S-8
1			3			TOTAL SHEETS
2			4			117

STR. #1

DRAWN BY : M.K. BEARD DATE : 9/9/11
CHECKED BY : J.P. ADAMS DATE : 10/10/11

07-SEP-2012 11:11
R:\structures\Plans\Str1\U0209B_SD_PS_01.dgn
lsutton

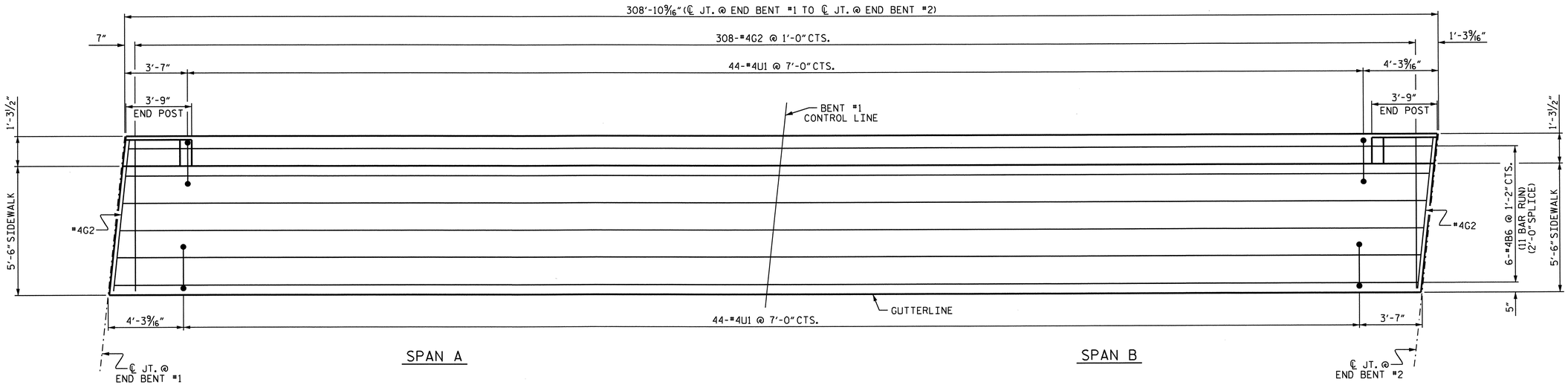

PLAN OF SIDEWALK

LEFT SIDE SHOWN, RIGHT SIDE SIMILAR

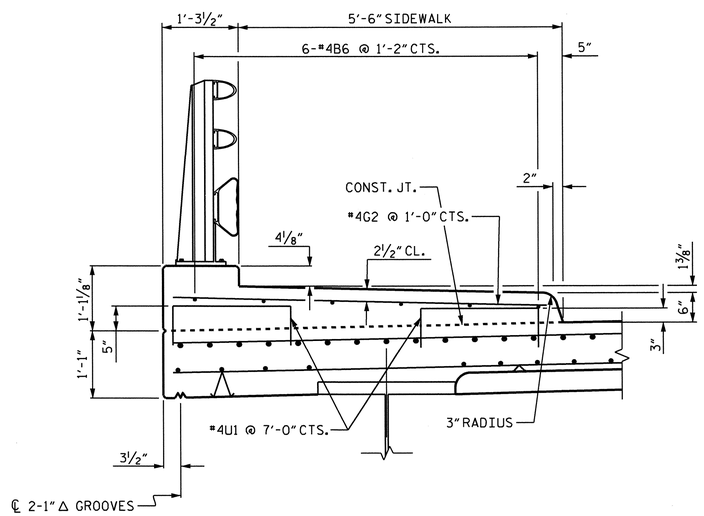

SECTION THRU SIDEWALK

LEFT SIDE SHOWN, RIGHT SIDE SIMILAR.

NOTES

THE CONCRETE AND REINFORCING STEEL REQUIRED FOR THE SIDEWALKS IS INCLUDED IN THE SUPERSTRUCTURE BILL OF MATERIAL AND PAYMENT IS INCLUDED IN THE SQUARE FOOT PRICE BID FOR "REINFORCED CONCRETE DECK SLAB".

THE #4U1 BARS MAY BE PUSHED INTO GREEN CONCRETE AFTER SPAN HAS BEEN SCREEDED OFF.

SIDEWALK IN A CONTINUOUS UNIT SHALL NOT BE CAST UNTIL ALL SLAB CONCRETE IN THE UNIT HAS BEEN CAST AND HAS REACHED A MINIMUM COMPRESSIVE STRENGTH OF 3000 PSI.

THE JOINT IN THE DECK AT THE END BENTS SHALL BE SAWED PRIOR TO THE CASTING OF THE SIDEWALKS.

ALL REINFORCING STEEL IN SIDEWALKS SHALL BE EPOXY COATED.

GROOVED CONTRACTION JOINTS, 1/2" IN DEPTH, SHALL BE TOOLED IN ALL EXPOSED FACES OF THE SIDEWALK IN ACCORDANCE WITH ARTICLE 825-10(B) OF THE STANDARD SPECIFICATIONS. THE CONTRACTION JOINTS SHALL BE LOCATED AT A SPACING OF 8 FT. TO 10 FT. BETWEEN EXPANSION JOINTS. NO CONTRACTION JOINT WILL BE REQUIRED FOR SEGMENTS LESS THAN 10 FT. IN LENGTH.

PROJECT NO. U-0209B
MECKLENBURG COUNTY
STATION: 41+57.69 -L-

STATE OF NORTH CAROLINA
DEPARTMENT OF TRANSPORTATION
RALEIGH

SUPERSTRUCTURE

SIDEWALK DETAILS

NORTH CAROLINA PROFESSIONAL SEAL 30878 ENGINEER KEVIN FISCHER
11/20/12

REVISIONS						SHEET NO.
NO.	BY:	DATE:	NO.	BY:	DATE:	S-9
1			3			TOTAL SHEETS
2			4			117

STR. #1

DRAWN BY : M.K. BEARD DATE : 8/16/11
CHECKED BY : J.P. ADAMS DATE : 10/10/11

07-SEP-2012 11:11
R:\Structures\Plans\Str1\U0209B_SD_SW_01.dgn
lsutton

NOTES

THE CONCRETE AND REINFORCING STEEL REQUIRED FOR THE CONCRETE ISLAND ON THE BRIDGE DECK IS INCLUDED IN THE SUPERSTRUCTURE BILL OF MATERIAL AND PAYMENT IS INCLUDED IN THE SQUARE FOOT PRICE BID FOR "REINFORCED CONCRETE DECK SLAB".

CONCRETE ISLAND IN A CONTINUOUS UNIT SHALL NOT BE CAST UNTIL ALL SLAB CONCRETE IN THE UNIT HAS BEEN CAST AND HAS REACHED A MINIMUM COMPRESSIVE STRENGTH OF 3000 PSI.

THE JOINT IN THE DECK AT THE END BENTS SHALL BE SAWED PRIOR TO CASTING OF THE CONCRETE ISLAND. THE JOINT IN THE CONCRETE ISLAND SHALL BE FORMED TO MATCH THE SAWED OPENING FOR THE FOAM JOINT SEALS.

ALL REINFORCING STEEL IN CONCRETE ISLAND SHALL BE EPOXY COATED.

GROOVED CONTRACTION JOINTS, ½" IN DEPTH SHALL BE TOOLED IN ALL EXPOSED FACES OF THE CONCRETE ISLAND IN ACCORDANCE WITH ARTICLE 825-10(B) OF THE STANDARD SPECIFICATIONS. THE CONTRACTION JOINTS SHALL BE LOCATED AT A SPACING OF 8 FT. TO 10 FT. BETWEEN EXPANSIONS JOINTS. NO CONTRACTIONS JOINTS WILL BE REQUIRED FOR SEGMENTS LESS THAN 10 FT. IN LENGTH.

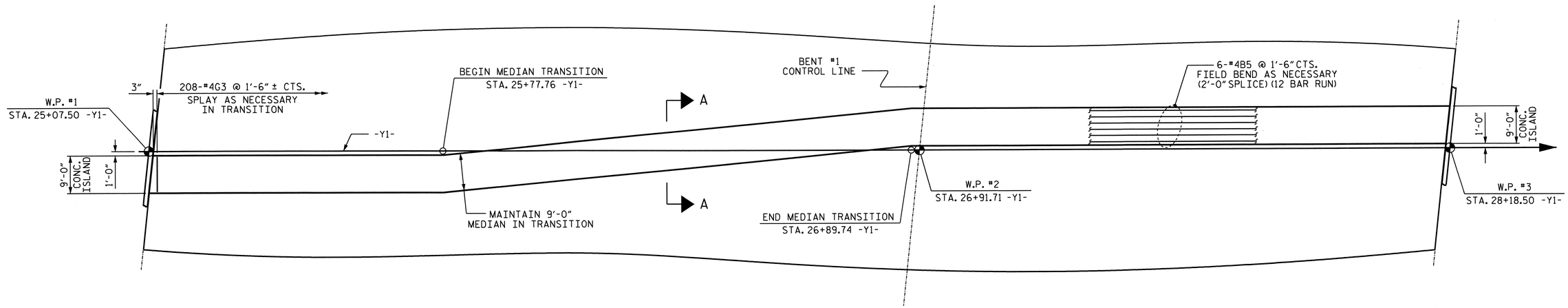

PLAN OF MONOLITHIC CONCRETE ISLAND

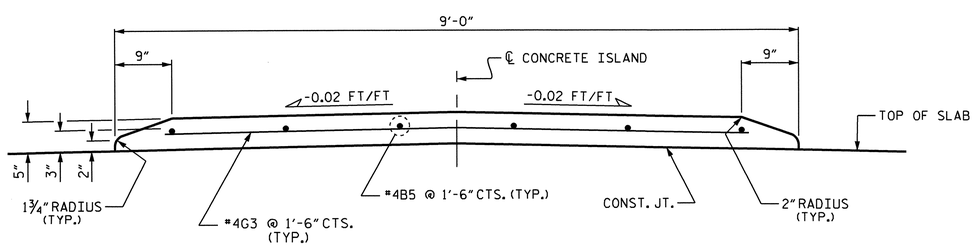

SECTION A-A THRU MONOLITHIC CONCRETE ISLAND

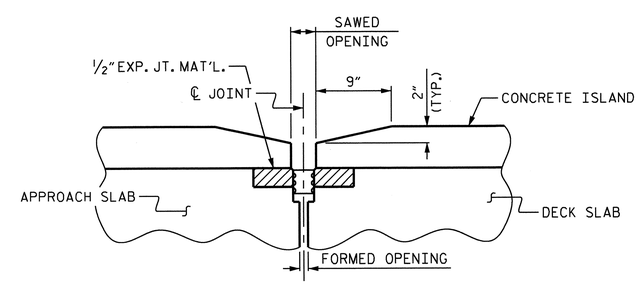

SECTION THRU ISLAND AT END BENTS

END BENT #1 SHOWN, END BENT #2 SIMILAR

PROJECT NO. U-0209B
MECKLENBURG COUNTY
STATION: 41+57.69 -L-

STATE OF NORTH CAROLINA
DEPARTMENT OF TRANSPORTATION
RALEIGH

SUPERSTRUCTURE

MONOLITHIC CONCRETE ISLAND

NORTH CAROLINA PROFESSIONAL SEAL 30878 ENGINEER KEVIN FISCHER
11/20/12

REVISIONS						SHEET NO.
NO.	BY:	DATE:	NO.	BY:	DATE:	S-10
1			3			TOTAL SHEETS
2			4			117

STR. #1

DRAWN BY : M.K. BEARD DATE : 8/18/11
CHECKED BY : J.P. ADAMS DATE : 10/10/11

07-SEP-2012 11:11
R:\structures\Plans\Str1\U0209B_SD_MD_01.dgn
lsutton

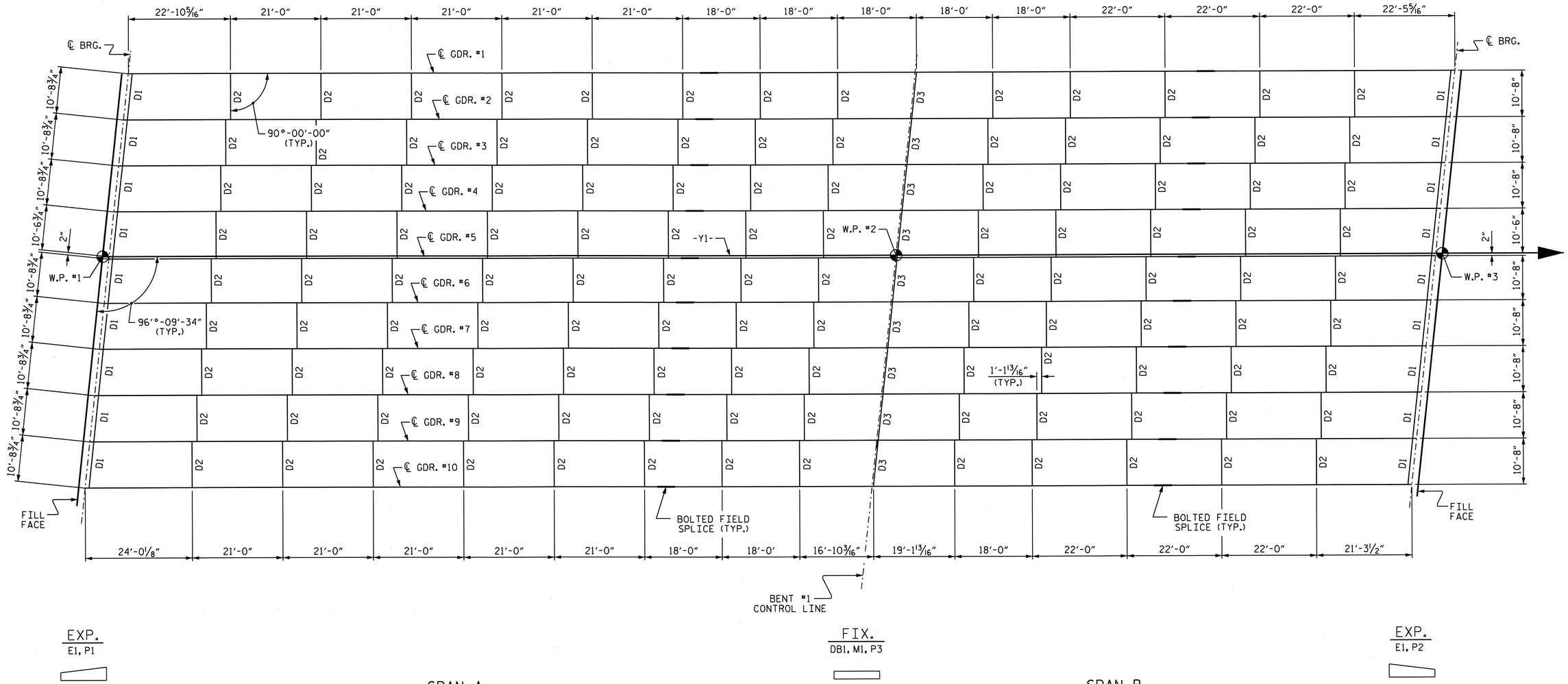

FRAMING PLAN

PROJECT NO. U-0209B
MECKLENBURG COUNTY
STATION: 41+57.69 -L-

STATE OF NORTH CAROLINA
DEPARTMENT OF TRANSPORTATION
RALEIGH

SUPERSTRUCTURE

FRAMING PLAN

NORTH CAROLINA PROFESSIONAL SEAL 20878 ENGINEER KEVIN FISCHER
11/20/12

REVISIONS						SHEET NO.
NO.	BY:	DATE:	NO.	BY:	DATE:	S-11
1			3			TOTAL SHEETS
2			4			117

STR. #1

DRAWN BY : M.K. BEARD DATE : 11/12
CHECKED BY : J.P. ADAMS DATE : 11/12

14-NOV-2012 09:32
R:\structures\Plans\Str1\U0209B_SD_FP_01.dgn
lsutton

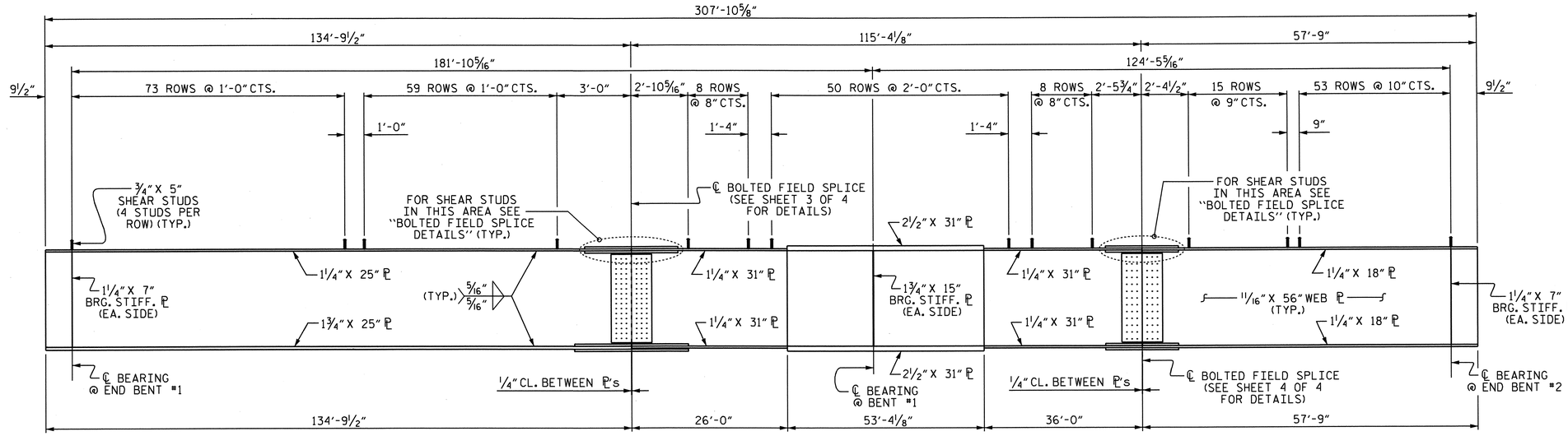

ELEVATION OF GIRDER

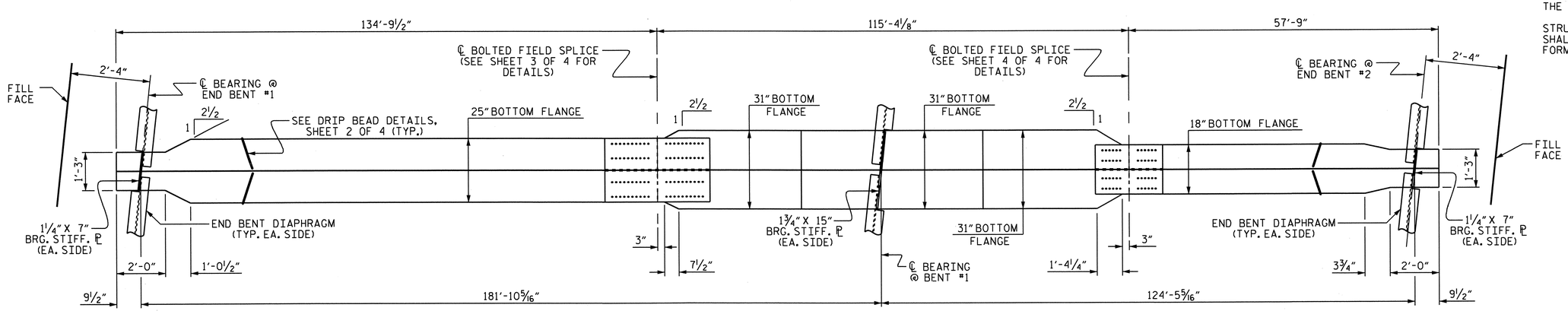

BOTTOM FLANGE DETAIL

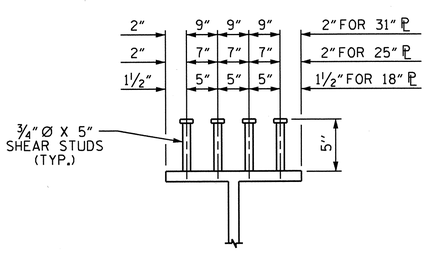

SHEAR STUD DETAILS

(EXCEPT AT BOLTED FIELD SPLICE)

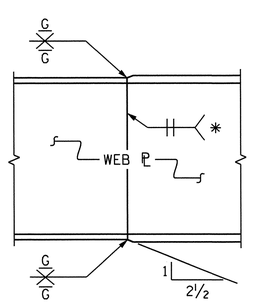

ELEVATION

PERMISSIBLE SHOP FLANGE & WEB SPLICE

* GRIND SMOOTH AND FLUSH ON OUTER FACE OF EXTERIOR GIRDER

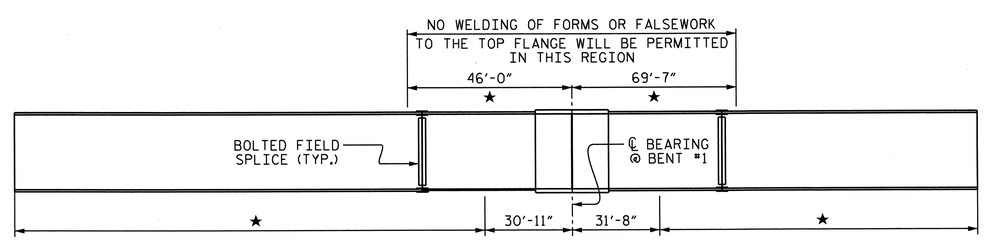

CHARPY V-NOTCH TESTS FOR CONTINUOUS PLATE GIRDERS

★ CHARPY V-NOTCH TESTS ARE REQUIRED FOR ALL TOP OR BOTTOM FLANGE PLATES WHICH FALL WITHIN THESE LIMITS. CHARPY V-NOTCH TEST ARE REQUIRED FOR ALL WEB PLATES AND ALL SPLICE PLATES. IF THE PERMITTED SHOP FLANGE SPLICE IS NOT USED, CHARPY V-NOTCH TESTS WILL BE REQUIRED FOR THE ENTIRE FLANGE PLATE. FOR CHARPY V-NOTCH TESTS, SEE ARTICLE 1072-7 OF THE STANDARD SPECIFICATIONS.

NOTES

ALL STRUCTURAL STEEL SHALL BE AASHTO M270 GRADE 50W AND PAINTED IN ACCORDANCE WITH SYSTEM 4 OF ARTICLE 442-8 OF THE STANDARD SPECIFICATIONS UNLESS OTHERWISE NOTED ON THE PLANS.

ALL DIMENSIONS SHOWN ARE HORIZONTAL OR VERTICAL, UNLESS OTHERWISE NOTED.

ALL FIELD CONNECTIONS TO BE 7/8" DIA. HIGH STRENGTH BOLTS UNLESS OTHERWISE NOTED.

BEARING STIFFENERS SHALL BE PLUMB.

BEARING STIFFENERS MAY REQUIRE COPING IF WIDER THAN BOTTOM FLANGE.

PERMITTED FLANGE AND WEB SHOP SPLICES SHALL NOT BE LOCATED WITHIN 15 FEET OF MAXIMUM DEAD LOAD DEFLECTION (NOR WITHIN 15 FEET OF INTERMEDIATE BEARINGS OF CONTINUOUS UNITS). KEEP 2 FEET MINIMUM BETWEEN WEB AND FLANGE SHOP SPLICES. KEEP 6" MINIMUM BETWEEN CONNECTOR PLATE OR TRANSVERSE STIFFENER WELDS AND WEB OR FLANGE SHOP SPLICES.

STUDS ON GIRDERS MAY BE SHIFTED UP TO 1" IF NECESSARY TO CLEAR FLANGE SPLICE WELD.

TENSION ON THE AASHTO M164 BOLTS SHALL BE CALIBRATED USING DIRECT TENSION INDICATOR WASHERS IN ACCORDANCE WITH ARTICLE 440-8 OF THE STANDARD SPECIFICATIONS.

END OF GIRDERS SHALL BE PLUMB.

FABRICATORS SHALL DETAIL DIAPHRAGM MEMBERS AND CONNECTIONS FOR FULL DEAD LOAD FIT UP. GIRDERS SHALL BE PLUMB AFTER THE FULL AMOUNT OF DEAD LOAD IS APPLIED.

STRUCTURAL STEEL IN A CONTINUOUS UNIT SHALL BE COMPLETE BEFORE FALSEWORK OR FORMS ARE PLACED ON THE UNIT.

NORTH CAROLINA PROFESSIONAL SEAL 30878 ENGINEER KEVIN FISCHER

11/20/12

PROJECT NO. U-0209B
MECKLENBURG COUNTY
STATION: 41+57.69 -L-

SHEET 1 OF 4

STATE OF NORTH CAROLINA
DEPARTMENT OF TRANSPORTATION
RALEIGH

SUPERSTRUCTURE

STRUCTURAL STEEL DETAILS

REVISIONS						SHEET NO.
NO.	BY:	DATE:	NO.	BY:	DATE:	S-12
1			3			TOTAL SHEETS
2			4			117

STR. #1

DRAWN BY : M.K. BEARD DATE : 11/12
CHECKED BY : J.P. ADAMS DATE : 11/12

14-NOV-2012 09:32
R:\structures\Plans\Str1\U0209B_SD_SS_01.dgn
lsutton

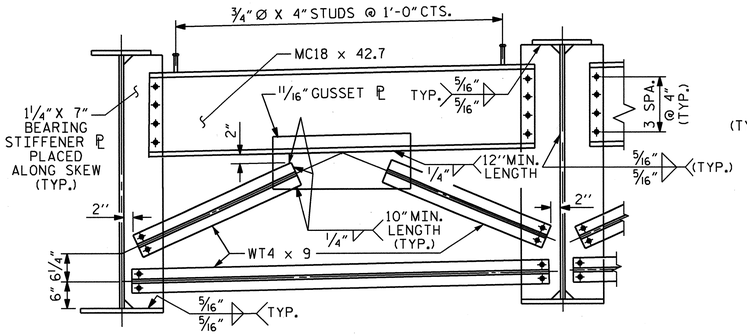

END BENT DIAPHRAGM (D1)

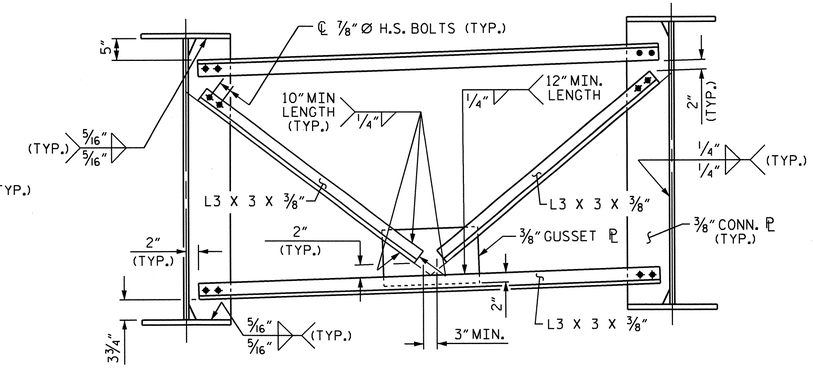

INTERMEDIATE DIAPHRAGM (D2)

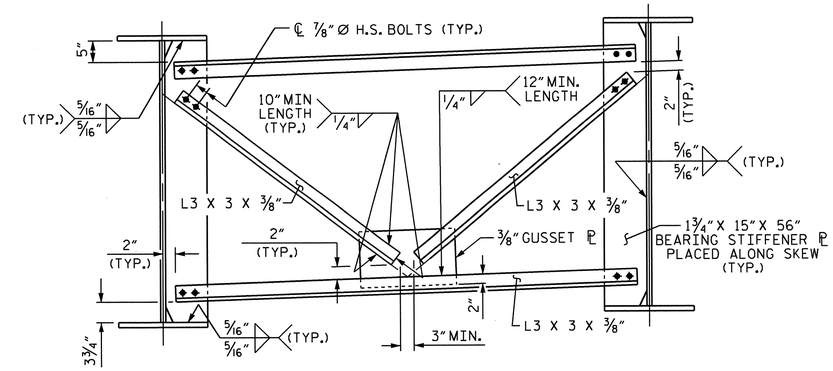

BENT DIAPHRAGM (D3)

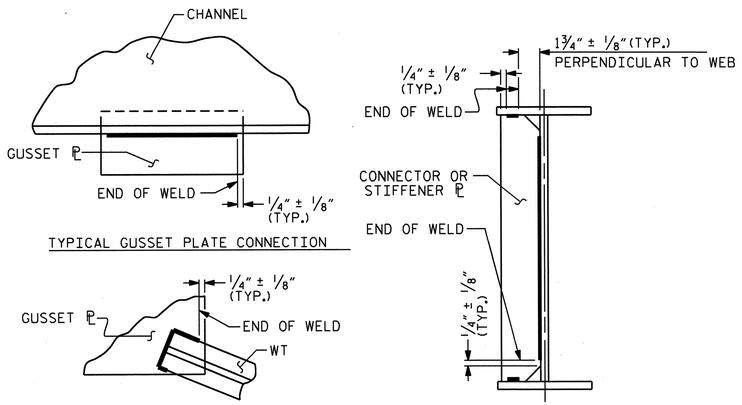

WELD TERMINATION DETAILS

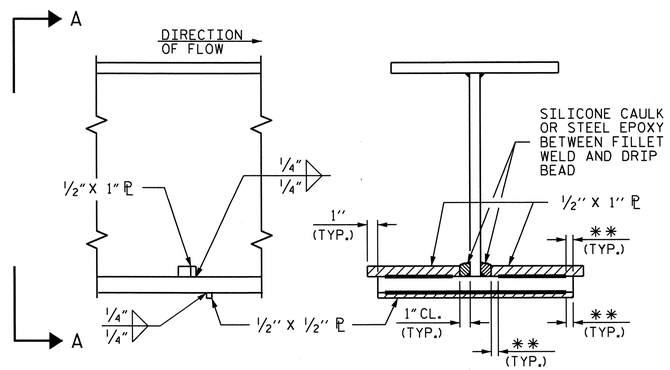

SECTION

VIEW A-A

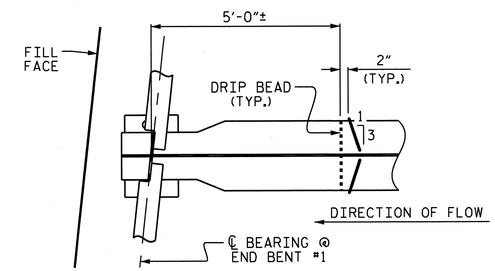

PART PLAN - BOTTOM FLANGE

END BENT #1 SHOWN, END BENT #2 SIMILAR

DRIP BEAD DETAILS

** SEE "WELD TERMINATION DETAIL"

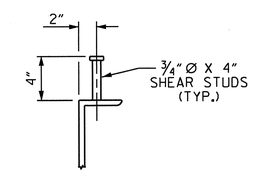

SHEAR STUD DETAILS

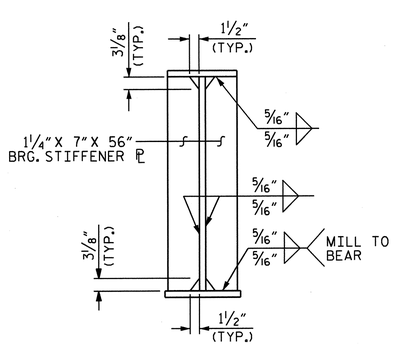

BEARING STIFFENER

@ END BENT DIAPHRAGM

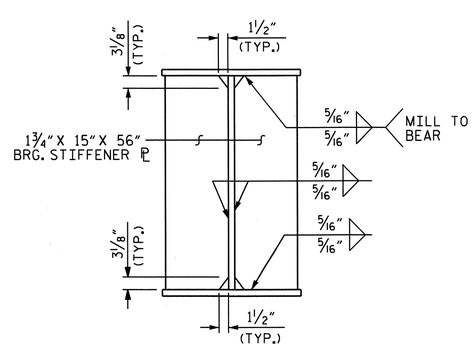

BEARING STIFFENER

@ BENT DIAPHRAGM
BEARING STIFFENER MAY REQUIRE COPING IF WIDER THAN BOTTOM FLANGE.

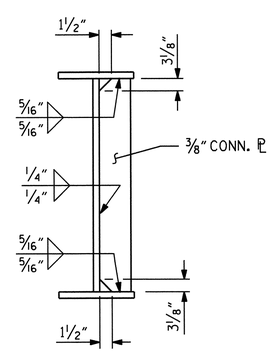

CONNECTOR PLATE

NORTH CAROLINA PROFESSIONAL SEAL 50878 ENGINEER KEVIN FISCHER 11/20/12

PROJECT NO. U-0209B
MECKLENBURG COUNTY
STATION: 41+57.69 -L-

SHEET 2 OF 4

STATE OF NORTH CAROLINA
DEPARTMENT OF TRANSPORTATION
RALEIGH

SUPERSTRUCTURE

STRUCTURAL STEEL DETAILS

REVISIONS						SHEET NO.
NO.	BY:	DATE:	NO.	BY:	DATE:	S-13
1			3			TOTAL SHEETS
2			4			117

STR. #1

DRAWN BY : M.K. BEARD DATE : 11/12
CHECKED BY : J.P. ADAMS DATE : 11/12

14-NOV-2012 09:32
R:\structures\Plans\Str1\U0209B_SD_SS_01.dgn
lsutton

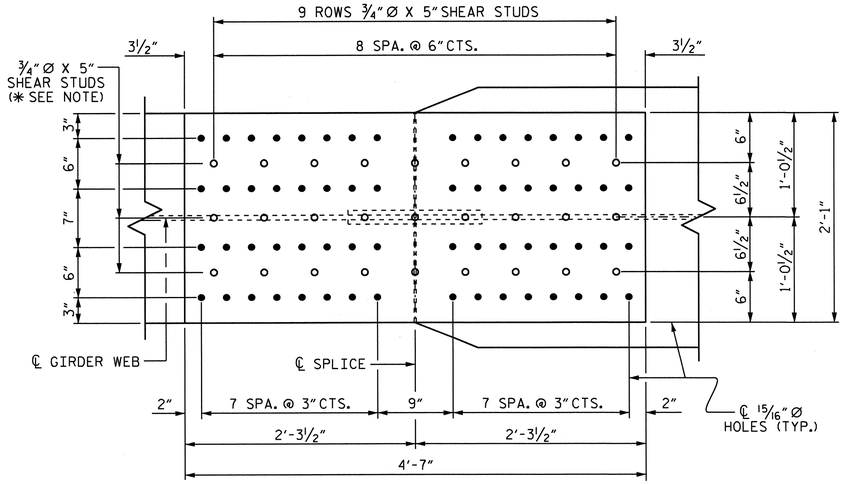

PLAN (TOP OF FLANGE)

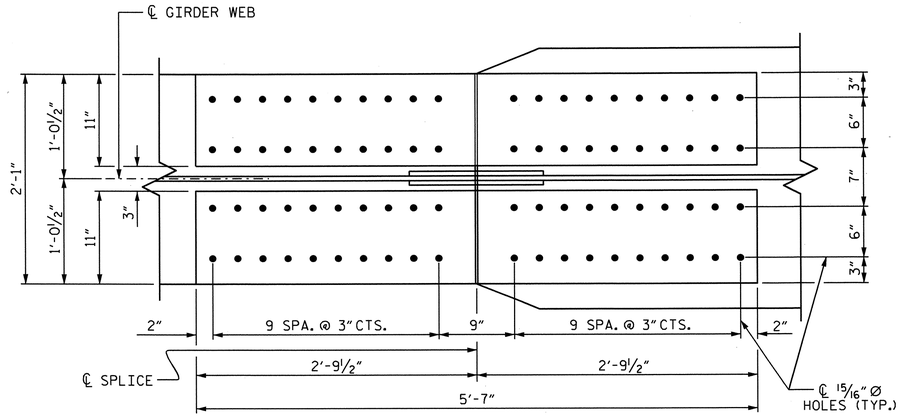

PLAN (TOP OF BOTTOM FLANGE)

✱ NOTE:
SHEAR STUDS ARE TO BE SHOP WELDED ON TOP PLATE BEFORE FIELD ASSEMBLY.

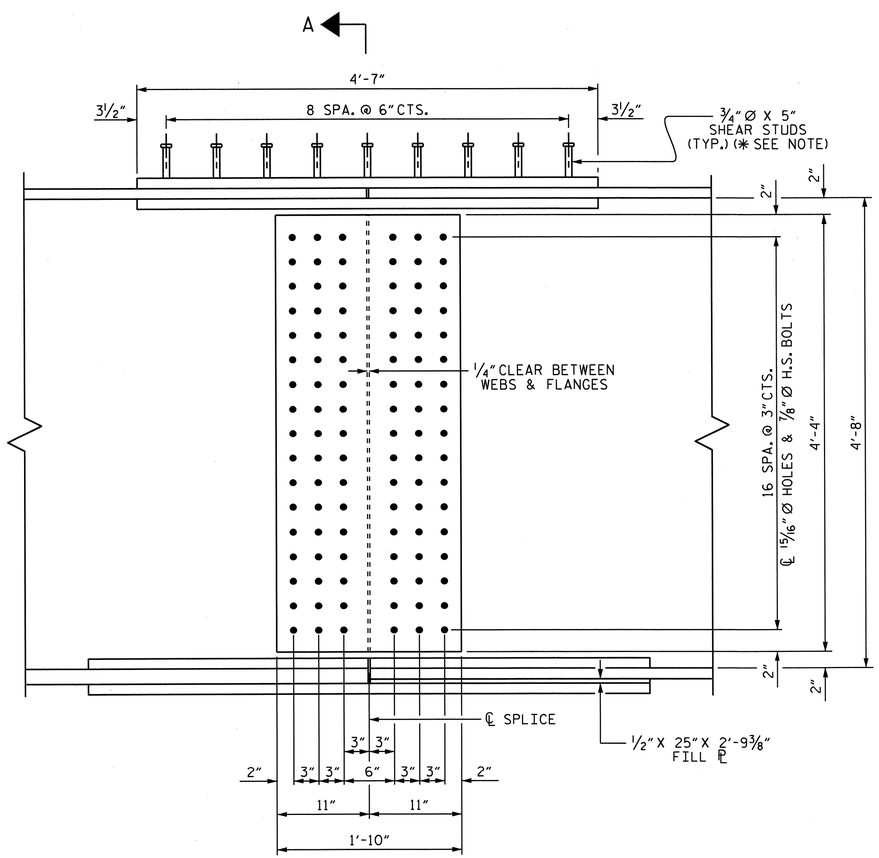

ELEVATION

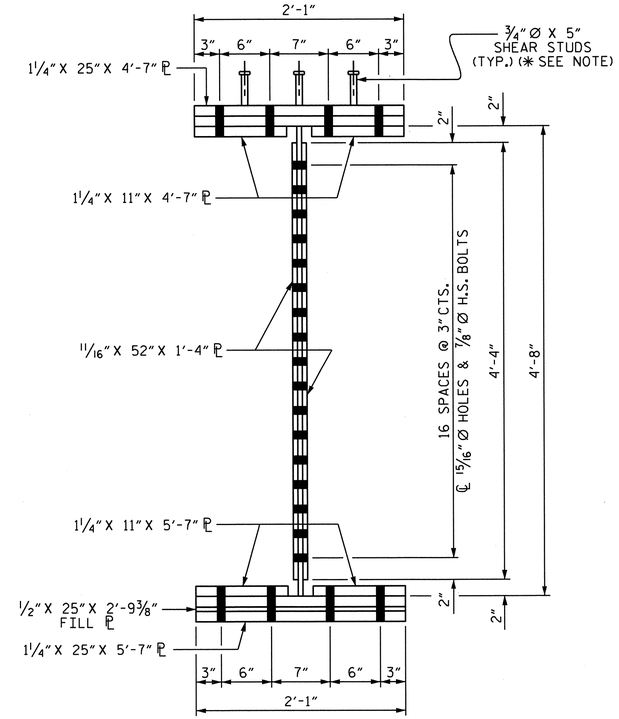

SECTION A-A

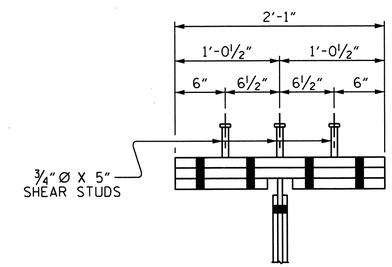

SHEAR STUD DETAIL
FOR TOP FLANGE SPLICE PLATE

BOLTED FIELD SPLICE DETAILS FOR SPAN "A"

PROJECT NO. U-0209B
MECKLENBURG COUNTY
STATION: 41+57.69 -L-

SHEET 3 OF 4

STATE OF NORTH CAROLINA
DEPARTMENT OF TRANSPORTATION
RALEIGH

SUPERSTRUCTURE

STRUCTURAL STEEL DETAILS

NORTH CAROLINA PROFESSIONAL SEAL 30878 ENGINEER KEVIN FISCHER
11/20/12

REVISIONS						SHEET NO.
NO.	BY:	DATE:	NO.	BY:	DATE:	S-14
1			3			TOTAL SHEETS
2			4			117

STR. #1

DRAWN BY : M.K. BEARD DATE : 11/12
CHECKED BY : J.P. ADAMS DATE : 11/12

14-NOV-2012 09:32
R:\structures\Plans\Str1\U0209B_SD_SS_01.dgn
lsutton

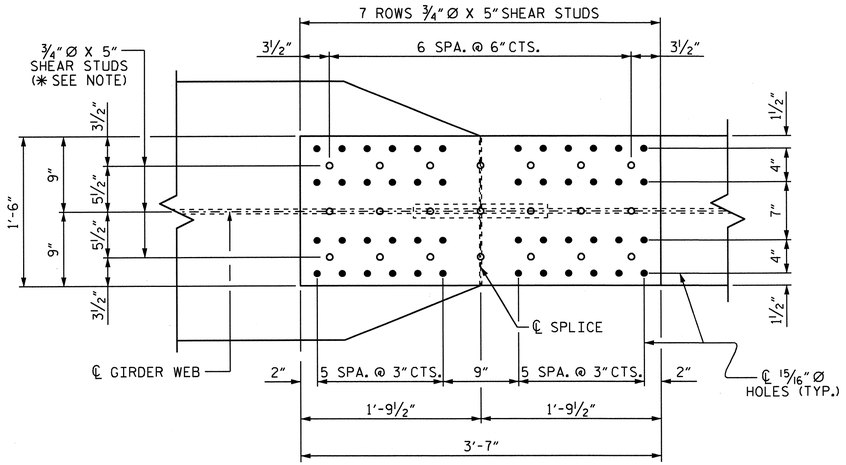

PLAN (TOP OF FLANGE)

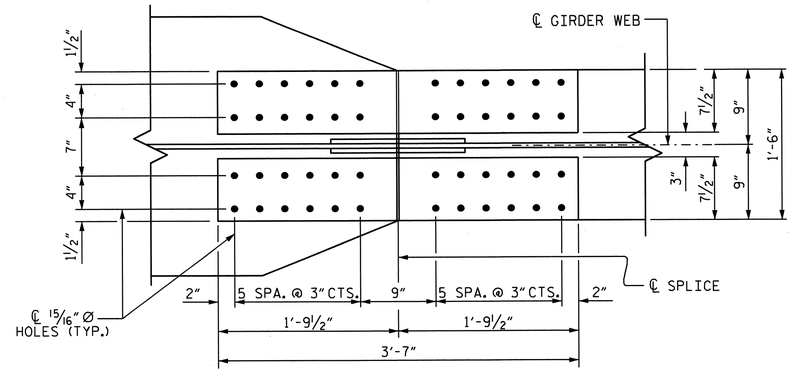

PLAN (TOP OF BOTTOM FLANGE)

✱ NOTE:
SHEAR STUDS ARE TO BE SHOP WELDED ON TOP PLATE BEFORE FIELD ASSEMBLY.

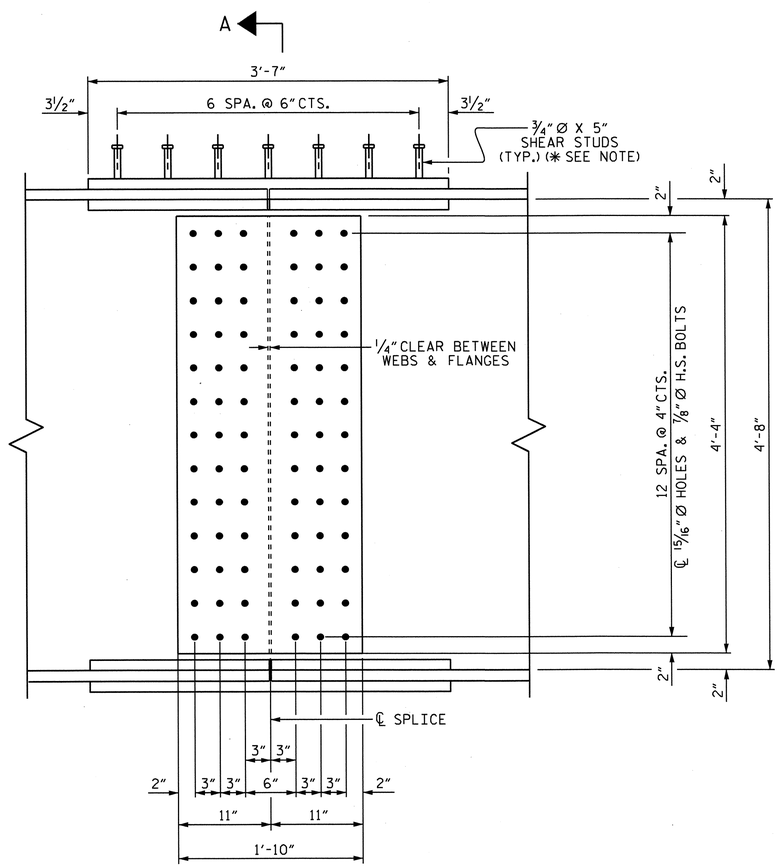

ELEVATION

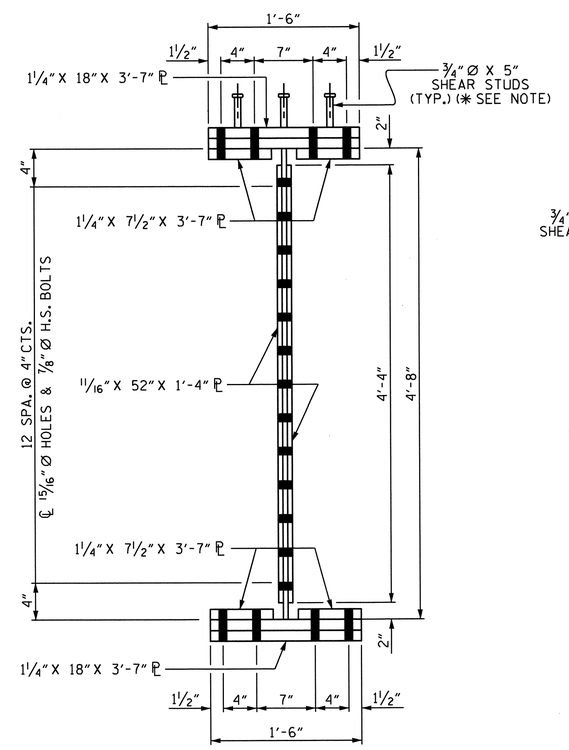

SECTION A-A

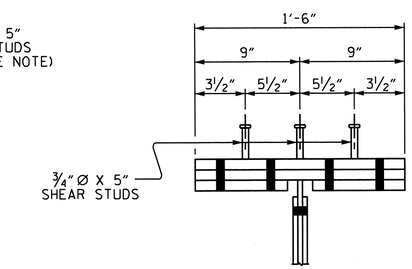

SHEAR STUD DETAIL
FOR TOP FLANGE SPLICE PLATE

PROJECT NO. U-0209B
MECKLENBURG COUNTY
STATION: 41+57.69 -L-

SHEET 4 OF 4

STATE OF NORTH CAROLINA
DEPARTMENT OF TRANSPORTATION
RALEIGH

SUPERSTRUCTURE

STRUCTURAL STEEL DETAILS

NORTH CAROLINA PROFESSIONAL SEAL 030878 ENGINEER KEVIN FISCHER
11/20/12

REVISIONS						SHEET NO.
NO.	BY:	DATE:	NO.	BY:	DATE:	S-15
1			3			TOTAL SHEETS
2			4			117

STR. #1

BOLTED FIELD SPLICE DETAILS FOR SPAN "B"

DRAWN BY : M.K. BEARD DATE : 11/12
CHECKED BY : J.P. ADAMS DATE : 11/12

14-NOV-2012 09:32
R:\structures\Plans\Str1\U0209B_SD_SS_01.dgn
lsutton

DEAD LOAD DEFLECTION TABLE FOR GIRDERS

	SPAN A																				
	GIRDER 1 & 10																				
TWENTIETH POINTS	0	.05	.10	.15	.20	.25	.30	.35	.40	.45	.50	.55	.60	.65	.70	.75	.80	.85	.90	.95	0
DEFLECTION DUE TO WEIGHT OF GIRDER	0.000	0.039	0.077	0.112	0.142	0.168	0.188	0.202	0.209	0.210	0.205	0.194	0.178	0.157	0.133	0.108	0.081	0.056	0.034	0.015	0.000
DEFLECTION DUE TO WEIGHT OF SLAB ✱	0.000	0.113	0.222	0.322	0.410	0.484	0.542	0.582	0.603	0.606	0.590	0.558	0.511	0.452	0.383	0.309	0.233	0.161	0.098	0.043	0.000
DEFLECTION DUE TO WEIGHT OF SIDEWALK & RAIL	0.000	0.012	0.024	0.034	0.044	0.052	0.058	0.063	0.065	0.066	0.064	0.061	0.056	0.050	0.042	0.034	0.026	0.018	0.011	0.005	0.000
TOTAL DEAD LOAD DEFLECTION	0.000	0.164	0.323	0.468	0.596	0.704	0.788	0.847	0.877	0.882	0.859	0.813	0.745	0.659	0.558	0.451	0.340	0.235	0.143	0.063	0.000
VERTICAL CURVE ORDINATE	0.000	0.148	0.281	0.398	0.499	0.585	0.655	0.710	0.749	0.772	0.780	0.772	0.749	0.710	0.655	0.585	0.499	0.398	0.281	0.148	0.000
REQUIRED CAMBER	0	3 3/4"	7 1/4"	10 3/8"	13 1/8"	15 7/16"	17 5/16"	18 11/16"	19 1/2"	19 7/8"	19 11/16"	19"	17 15/16"	16 7/16"	14 9/16"	12 7/16"	10 1/16"	7 5/8'	5 1/16"	2 9/16"	0

✱ INCLUDES SLAB, BUILDUPS & STAY-IN-PLACE FORMS.
ALL VALUES ARE SHOWN IN FEET (DECIMAL FORM), EXCEPT " FINAL CAMBER ", WHICH IS GIVEN IN INCHES (FRACTION FORM).

DEAD LOAD DEFLECTION TABLE FOR GIRDERS

	SPAN A																				
	GIRDER 2 & 3																				
TWENTIETH POINTS	0	.05	.10	.15	.20	.25	.30	.35	.40	.45	.50	.55	.60	.65	.70	.75	.80	.85	.90	.95	0
DEFLECTION DUE TO WEIGHT OF GIRDER	0.000	0.043	0.084	0.122	0.155	0.183	0.205	0.220	0.228	0.229	0.224	0.212	0.194	0.172	0.146	0.117	0.089	0.061	0.037	0.017	0.000
DEFLECTION DUE TO WEIGHT OF SLAB ✱	0.000	0.113	0.222	0.322	0.410	0.484	0.542	0.582	0.603	0.606	0.590	0.558	0.511	0.452	0.383	0.309	0.233	0.161	0.098	0.043	0.000
DEFLECTION DUE TO WEIGHT OF SIDEWALK & RAIL	0.000	0.011	0.022	0.033	0.042	0.049	0.055	0.059	0.062	0.062	0.061	0.058	0.053	0.047	0.040	0.033	0.025	0.017	0.011	0.005	0.000
TOTAL DEAD LOAD DEFLECTION	0.000	0.167	0.328	0.477	0.607	0.716	0.802	0.861	0.893	0.897	0.875	0.828	0.758	0.671	0.569	0.459	0.347	0.239	0.146	0.065	0.000
VERTICAL CURVE ORDINATE	0.000	0.148	0.281	0.398	0.499	0.585	0.655	0.710	0.749	0.772	0.780	0.772	0.749	0.710	0.655	0.585	0.499	0.398	0.281	0.148	0.000
REQUIRED CAMBER	0	3 3/4"	7 5/16"	10 1/2"	13 1/4"	15 5/8"	17 1/2"	18 7/8"	19 11/16"	20"	19 7/8"	19 3/16"	18 1/16"	16 9/16"	14 11/16"	12 1/2"	10 1/8"	7 5/8"	5 1/8"	2 9/16"	0

✱ INCLUDES SLAB, BUILDUPS & STAY-IN-PLACE FORMS.
ALL VALUES ARE SHOWN IN FEET (DECIMAL FORM), EXCEPT " FINAL CAMBER ", WHICH IS GIVEN IN INCHES (FRACTION FORM).

DEAD LOAD DEFLECTION TABLE FOR GIRDERS

	SPAN A																				
	GIRDER 4 - 6																				
TWENTIETH POINTS	0	.05	.10	.15	.20	.25	.30	.35	.40	.45	.50	.55	.60	.65	.70	.75	.80	.85	.90	.95	0
DEFLECTION DUE TO WEIGHT OF GIRDER	0.000	0.043	0.084	0.122	0.155	0.183	0.205	0.220	0.228	0.229	0.224	0.212	0.194	0.172	0.146	0.117	0.089	0.061	0.037	0.017	0.000
DEFLECTION DUE TO WEIGHT OF SLAB ✱	0.000	0.113	0.222	0.322	0.410	0.484	0.542	0.582	0.603	0.606	0.590	0.558	0.511	0.452	0.383	0.309	0.233	0.161	0.098	0.043	0.000
DEFLECTION DUE TO WEIGHT OF SIDEWALK & RAIL	0.000	0.010	0.019	0.028	0.035	0.042	0.047	0.050	0.052	0.053	0.052	0.049	0.045	0.040	0.034	0.028	0.021	0.015	0.009	0.004	0.000
TOTAL DEAD LOAD DEFLECTION	0.000	0.166	0.325	0.472	0.600	0.709	0.794	0.852	0.883	0.888	0.866	0.819	0.750	0.664	0.563	0.454	0.343	0.237	0.144	0.064	0.000
VERTICAL CURVE ORDINATE	0.000	0.148	0.281	0.398	0.499	0.585	0.655	0.710	0.749	0.772	0.780	0.772	0.749	0.710	0.655	0.585	0.499	0.398	0.281	0.148	0.000
REQUIRED CAMBER	0	3 3/4"	7 1/4'	10 7/16"	13 3/16"	15 1/2"	17 3/8"	18 3/4"	19 9/16"	19 15/16"	19 3/4"	19 1/16"	18"	16 1/2"	14 5/8"	12 7/16"	10 1/8"	7 5/8"	5 1/8"	2 9/16"	0

✱ INCLUDES SLAB, BUILDUPS & STAY-IN-PLACE FORMS.
ALL VALUES ARE SHOWN IN FEET (DECIMAL FORM), EXCEPT " FINAL CAMBER ", WHICH IS GIVEN IN INCHES (FRACTION FORM).

PROJECT NO. U-0209B
MECKLENBURG COUNTY
STATION: 41+57.69 -L-

SHEET 1 OF 4

NORTH CAROLINA PROFESSIONAL SEAL 20878 ENGINEER KEVIN FISCHER
11/20/12

STATE OF NORTH CAROLINA
DEPARTMENT OF TRANSPORTATION
RALEIGH

SUPERSTRUCTURE

DEAD LOAD DEFLECTIONS

REVISIONS						SHEET NO.
NO.	BY:	DATE:	NO.	BY:	DATE:	S-16
1			3			TOTAL SHEETS
2			4			117

STR. #1

DRAWN BY : M.K. BEARD DATE : 11/12
CHECKED BY : J.P. ADAMS DATE : 11/12

14-NOV-2012 09:32
R:\structures\Plans\Str1\U0209B_SD_DL_01.dgn
lsutton

DEAD LOAD DEFLECTION TABLE FOR GIRDERS

	SPAN A																				
	GIRDER 7																				
TWENTIETH POINTS	0	.05	.10	.15	.20	.25	.30	.35	.40	.45	.50	.55	.60	.65	.70	.75	.80	.85	.90	.95	0
DEFLECTION DUE TO WEIGHT OF GIRDER	0.000	0.043	0.084	0.122	0.155	0.183	0.205	0.220	0.228	0.229	0.224	0.212	0.194	0.172	0.146	0.117	0.089	0.061	0.037	0.017	0.000
DEFLECTION DUE TO WEIGHT OF SLAB *	0.000	0.113	0.222	0.322	0.410	0.484	0.542	0.582	0.603	0.606	0.590	0.558	0.511	0.452	0.383	0.309	0.233	0.161	0.098	0.043	0.000
DEFLECTION DUE TO WEIGHT OF SIDEWALK & RAIL	0.000	0.000	0.000	0.000	0.000	0.000	0.000	0.000	0.000	0.000	0.000	0.000	0.000	0.000	0.000	0.000	0.000	0.000	0.000	0.000	0.000
TOTAL DEAD LOAD DEFLECTION	0.000	0.156	0.306	0.444	0.565	0.667	0.747	0.802	0.831	0.835	0.814	0.770	0.705	0.624	0.529	0.426	0.322	0.222	0.178	0.060	0.000
VERTICAL CURVE ORDINATE	0.000	0.148	0.281	0.398	0.499	0.585	0.655	0.710	0.749	0.772	0.780	0.772	0.749	0.710	0.655	0.585	0.499	0.398	0.281	0.148	0.000
REQUIRED CAMBER	0	3 5/8"	7 1/16"	10 1/8"	12 3/4"	15"	16 13/16"	18 1/8"	18 15/16"	19 5/16"	19 1/8"	18 1/2"	17 7/16"	16"	14 3/16"	12 1/8"	9 7/8"	7 7/16"	5"	2 1/2"	0

* INCLUDES SLAB, BUILDUPS & STAY-IN-PLACE FORMS.
ALL VALUES ARE SHOWN IN FEET (DECIMAL FORM), EXCEPT " FINAL CAMBER ", WHICH IS GIVEN IN INCHES (FRACTION FORM).

DEAD LOAD DEFLECTION TABLE FOR GIRDERS

	SPAN A																				
	GIRDER 8 & 9																				
TWENTIETH POINTS	0	.05	.10	.15	.20	.25	.30	.35	.40	.45	.50	.55	.60	.65	.70	.75	.80	.85	.90	.95	0
DEFLECTION DUE TO WEIGHT OF GIRDER	0.000	0.043	0.084	0.122	0.155	0.183	0.205	0.220	0.228	0.229	0.224	0.212	0.194	0.172	0.146	0.117	0.089	0.061	0.037	0.017	0.000
DEFLECTION DUE TO WEIGHT OF SLAB *	0.000	0.113	0.222	0.322	0.410	0.484	0.542	0.582	0.603	0.606	0.590	0.558	0.511	0.452	0.383	0.309	0.233	0.161	0.098	0.043	0.000
DEFLECTION DUE TO WEIGHT OF SIDEWALK & RAIL	0.000	0.011	0.022	0.033	0.042	0.049	0.055	0.059	0.062	0.062	0.061	0.058	0.053	0.047	0.040	0.033	0.025	0.017	0.011	0.005	0.000
TOTAL DEAD LOAD DEFLECTION	0.000	0.167	0.328	0.477	0.607	0.716	0.802	0.861	0.893	0.897	0.875	0.828	0.758	0.671	0.569	0.459	0.347	0.239	0.146	0.065	0.000
VERTICAL CURVE ORDINATE	0.000	0.148	0.281	0.398	0.499	0.585	0.655	0.710	0.749	0.772	0.780	0.772	0.749	0.710	0.655	0.585	0.499	0.398	0.281	0.148	0.000
REQUIRED CAMBER	0	3 3/4"	7 5/16"	10 1/2"	13 1/4"	15 5/8"	17 1/2"	18 7/8"	19 11/16"	20"	19 7/8"	19 3/16"	18 1/16"	16 9/16"	14 11/16"	12 1/2"	10 1/8"	7 5/8"	5 1/8"	2 9/16"	0

* INCLUDES SLAB, BUILDUPS & STAY-IN-PLACE FORMS.
ALL VALUES ARE SHOWN IN FEET (DECIMAL FORM), EXCEPT " FINAL CAMBER ", WHICH IS GIVEN IN INCHES (FRACTION FORM).

PROJECT NO. U-0209B
MECKLENBURG COUNTY
STATION: 41+57.69 -L-

SHEET 2 OF 4

STATE OF NORTH CAROLINA
DEPARTMENT OF TRANSPORTATION
RALEIGH

SUPERSTRUCTURE

DEAD LOAD DEFLECTIONS

NORTH CAROLINA PROFESSIONAL SEAL 30878 ENGINEER KEVIN FISCHER
11/20/12

REVISIONS						SHEET NO.
NO.	BY:	DATE:	NO.	BY:	DATE:	S-17
1			3			TOTAL SHEETS
2			4			117

STR. #1

DRAWN BY : M.K. BEARD DATE : 11/12
CHECKED BY : J.P. ADAMS DATE : 11/12

14-NOV-2012 09:32
R:\structures\Plans\Str1\U0209B_SD_DL_01.dgn
lsutton

DEAD LOAD DEFLECTION TABLE FOR GIRDERS

	SPAN B																				
	GIRDER 1 & 10																				
TWENTIETH POINTS	0	.05	.10	.15	.20	.25	.30	.35	.40	.45	.50	.55	.60	.65	.70	.75	.80	.85	.90	.95	0
DEFLECTION DUE TO WEIGHT OF GIRDER	0.000	-0.008	-0.013	-0.017	-0.019	-0.020	-0.020	-0.019	-0.016	-0.013	-0.009	-0.006	-0.003	0.000	0.003	0.004	0.005	0.004	0.003	0.002	0.000
DEFLECTION DUE TO WEIGHT OF SLAB *	0.000	-0.021	-0.037	-0.047	-0.053	-0.056	-0.055	-0.050	-0.042	-0.032	-0.022	-0.011	-0.002	0.006	0.012	0.016	0.017	0.015	0.012	0.006	0.000
DEFLECTION DUE TO WEIGHT OF SIDEWALK & RAIL	0.000	-0.002	-0.004	-0.005	-0.005	-0.005	-0.005	-0.004	-0.004	-0.002	-0.001	0.000	0.001	0.002	0.002	0.002	0.002	0.002	0.001	0.001	0.000
TOTAL DEAD LOAD DEFLECTION	0.000	-0.031	-0.054	-0.069	-0.077	-0.081	-0.080	-0.073	-0.062	-0.047	-0.032	-0.017	-0.004	0.008	0.017	0.022	0.024	0.021	0.016	0.009	0.000
VERTICAL CURVE ORDINATE	0.000	0.069	0.132	0.186	0.234	0.274	0.307	0.332	0.351	0.362	0.365	0.362	0.351	0.332	0.307	0.274	0.234	0.186	0.132	0.069	0.000
REQUIRED CAMBER	0	7/16"	15/16"	1 3/8"	1 7/8"	2 5/16"	2 3/4"	3 1/8"	3 7/16"	3 3/4"	4"	4 1/8"	4 3/16"	4 1/16"	3 7/8"	3 9/16"	3 1/8"	2 1/2"	1 3/4"	15/16"	0

* INCLUDES SLAB, BUILDUPS & STAY-IN-PLACE FORMS.
ALL VALUES ARE SHOWN IN FEET (DECIMAL FORM), EXCEPT " FINAL CAMBER ", WHICH IS GIVEN IN INCHES (FRACTION FORM).

DEAD LOAD DEFLECTION TABLE FOR GIRDERS

	SPAN B																				
	GIRDER 2 & 3																				
TWENTIETH POINTS	0	.05	.10	.15	.20	.25	.30	.35	.40	.45	.50	.55	.60	.65	.70	.75	.80	.85	.90	.95	0
DEFLECTION DUE TO WEIGHT OF GIRDER	0.000	-0.008	-0.014	-0.018	-0.021	-0.022	-0.022	-0.020	-0.018	-0.014	-0.010	-0.006	-0.003	0.000	0.003	0.004	0.005	0.005	0.004	0.002	0.000
DEFLECTION DUE TO WEIGHT OF SLAB *	0.000	-0.021	-0.037	-0.047	-0.053	-0.056	-0.055	-0.050	-0.042	-0.032	-0.022	-0.011	-0.002	0.006	0.012	0.016	0.017	0.015	0.012	0.006	0.000
DEFLECTION DUE TO WEIGHT OF SIDEWALK & RAIL	0.000	-0.002	-0.004	-0.005	-0.005	-0.005	-0.005	-0.004	-0.003	-0.002	-0.001	0.000	0.001	0.002	0.002	0.002	0.002	0.002	0.001	0.001	0.000
TOTAL DEAD LOAD DEFLECTION	0.000	-0.031	-0.055	-0.070	-0.079	-0.083	-0.082	-0.074	-0.063	-0.048	-0.033	-0.017	-0.004	0.008	0.017	0.022	0.024	0.022	0.017	0.009	0.000
VERTICAL CURVE ORDINATE	0.000	0.069	0.132	0.186	0.234	0.274	0.307	0.332	0.351	0.362	0.365	0.362	0.351	0.332	0.307	0.274	0.234	0.186	0.132	0.069	0.000
REQUIRED CAMBER	0	7/16"	15/16"	1 3/8"	1 7/8"	2 5/16"	2 11/16"	3 1/8"	3 7/16"	3 3/4"	4"	4 1/8"	4 3/16"	4 1/16"	3 7/8"	3 9/16"	3 1/8"	2 1/2"	1 13/16"	15/16"	0

* INCLUDES SLAB, BUILDUPS & STAY-IN-PLACE FORMS.
ALL VALUES ARE SHOWN IN FEET (DECIMAL FORM), EXCEPT " FINAL CAMBER ", WHICH IS GIVEN IN INCHES (FRACTION FORM).

DEAD LOAD DEFLECTION TABLE FOR GIRDERS

	SPAN B																				
	GIRDER 4 - 6																				
TWENTIETH POINTS	0	.05	.10	.15	.20	.25	.30	.35	.40	.45	.50	.55	.60	.65	.70	.75	.80	.85	.90	.95	0
DEFLECTION DUE TO WEIGHT OF GIRDER	0.000	-0.008	-0.014	-0.018	-0.021	-0.022	-0.022	-0.020	-0.018	-0.014	-0.010	-0.006	-0.003	0.000	0.003	0.004	0.005	0.005	0.004	0.002	0.000
DEFLECTION DUE TO WEIGHT OF SLAB *	0.000	-0.021	-0.037	-0.047	-0.053	-0.056	-0.055	-0.050	-0.042	-0.032	-0.022	-0.011	-0.002	0.006	0.012	0.016	0.017	0.015	0.012	0.006	0.000
DEFLECTION DUE TO WEIGHT OF SIDEWALK & RAIL	0.000	-0.002	-0.003	-0.004	-0.004	-0.004	-0.004	-0.004	-0.003	-0.002	-0.001	0.000	0.001	0.001	0.002	0.002	0.002	0.002	0.001	0.001	0.000
TOTAL DEAD LOAD DEFLECTION	0.000	-0.031	-0.054	-0.069	-0.078	-0.082	-0.081	-0.074	-0.063	-0.048	-0.033	-0.017	-0.004	0.007	0.017	0.022	0.024	0.022	0.017	0.009	0.000
VERTICAL CURVE ORDINATE	0.000	0.069	0.132	0.186	0.234	0.274	0.307	0.332	0.351	0.362	0.365	0.362	0.351	0.332	0.307	0.274	0.234	0.186	0.132	0.069	0.000
REQUIRED CAMBER	0	7/16"	15/16"	1 3/8"	1 7/8"	2 5/16"	2 11/16"	3 1/8"	3 7/16"	3 3/4"	4"	4 1/8"	4 3/16"	4 1/16"	3 7/8"	3 9/16"	3 1/8"	2 1/2"	1 13/16"	15/16"	0

* INCLUDES SLAB, BUILDUPS & STAY-IN-PLACE FORMS.
ALL VALUES ARE SHOWN IN FEET (DECIMAL FORM), EXCEPT " FINAL CAMBER ", WHICH IS GIVEN IN INCHES (FRACTION FORM).

PROJECT NO. U-0209B
MECKLENBURG COUNTY
STATION: 41+57.69 -L-

SHEET 3 OF 4

STATE OF NORTH CAROLINA
DEPARTMENT OF TRANSPORTATION
RALEIGH

SUPERSTRUCTURE

DEAD LOAD DEFLECTIONS

NORTH CAROLINA PROFESSIONAL SEAL 30878 ENGINEER KEVIN FISCHER
11/30/12

REVISIONS						SHEET NO.
NO.	BY:	DATE:	NO.	BY:	DATE:	S-18
1			3			TOTAL SHEETS
2			4			117

STR. #1

DRAWN BY : M.K. BEARD DATE : 11/12
CHECKED BY : J.P. ADAMS DATE : 11/12

14-NOV-2012 09:32
R:\structures\Plans\Str1\U0209B_SD_DL_01.dgn
lsutton

DEAD LOAD DEFLECTION TABLE FOR GIRDERS

	SPAN B																				
	GIRDER 7																				
TWENTIETH POINTS	0	.05	.10	.15	.20	.25	.30	.35	.40	.45	.50	.55	.60	.65	.70	.75	.80	.85	.90	.95	0
DEFLECTION DUE TO WEIGHT OF GIRDER	0.000	-0.008	-0.014	-0.018	-0.021	-0.022	-0.022	-0.020	-0.018	-0.014	-0.010	-0.006	-0.003	0.000	0.003	0.004	0.005	0.005	0.004	0.002	0.000
DEFLECTION DUE TO WEIGHT OF SLAB ✱	0.000	-0.021	-0.037	-0.047	-0.053	-0.056	-0.055	-0.050	-0.042	-0.032	-0.022	-0.011	-0.002	0.006	0.012	0.016	0.017	0.015	0.012	0.006	0.000
DEFLECTION DUE TO WEIGHT OF SIDEWALK & RAIL	0.000	0.000	0.000	0.000	0.000	0.000	0.000	0.000	0.000	0.000	0.000	0.000	0.000	0.000	0.000	0.000	0.000	0.000	0.000	0.000	0.000
TOTAL DEAD LOAD DEFLECTION	0.000	-0.029	-0.051	-0.065	-0.074	-0.078	-0.077	-0.070	-0.060	-0.046	-0.032	-0.017	-0.005	0.006	0.015	0.020	0.022	0.020	0.016	0.008	0.000
VERTICAL CURVE ORDINATE	0.000	0.069	0.132	0.186	0.234	0.274	0.307	0.332	0.351	0.362	0.365	0.362	0.351	0.332	0.307	0.274	0.234	0.186	0.132	0.069	0.000
REQUIRED CAMBER	0	1/2"	1"	1 7/16"	1 15/16"	2 3/8"	2 3/4"	3 1/8"	3 1/2"	3 13/16"	4"	4 1/8"	4 1/8"	4 1/16"	3 7/8"	3 1/2"	3 1/16"	2 1/2"	1 3/4"	15/16"	0

✱ INCLUDES SLAB, BUILDUPS & STAY-IN-PLACE FORMS.
ALL VALUES ARE SHOWN IN FEET (DECIMAL FORM), EXCEPT " FINAL CAMBER ", WHICH IS GIVEN IN INCHES (FRACTION FORM).

DEAD LOAD DEFLECTION TABLE FOR GIRDERS

	SPAN B																				
	GIRDER 8 & 9																				
TWENTIETH POINTS	0	.05	.10	.15	.20	.25	.30	.35	.40	.45	.50	.55	.60	.65	.70	.75	.80	.85	.90	.95	0
DEFLECTION DUE TO WEIGHT OF GIRDER	0.000	-0.008	-0.014	-0.018	-0.021	-0.022	-0.022	-0.020	-0.018	-0.014	-0.010	-0.006	-0.003	0.000	0.003	0.004	0.005	0.005	0.004	0.002	0.000
DEFLECTION DUE TO WEIGHT OF SLAB ✱	0.000	-0.021	-0.037	-0.047	-0.053	-0.056	-0.055	-0.050	-0.042	-0.032	-0.022	-0.011	-0.002	0.006	0.012	0.016	0.017	0.015	0.012	0.006	0.000
DEFLECTION DUE TO WEIGHT OF SIDEWALK & RAIL	0.000	-0.002	-0.004	-0.005	-0.005	-0.005	-0.005	-0.004	-0.003	-0.002	-0.001	0.000	0.001	0.002	0.002	0.002	0.002	0.002	0.001	0.001	0.000
TOTAL DEAD LOAD DEFLECTION	0.000	-0.031	-0.055	-0.070	-0.079	-0.083	-0.082	-0.074	-0.063	-0.048	-0.033	-0.017	-0.004	0.008	0.017	0.022	0.024	0.022	0.017	0.009	0.000
VERTICAL CURVE ORDINATE	0.000	0.069	0.132	0.186	0.234	0.274	0.307	0.332	0.351	0.362	0.365	0.362	0.351	0.332	0.307	0.274	0.234	0.186	0.132	0.069	0.000
REQUIRED CAMBER	0	7/16"	15/16"	1 3/8"	1 7/8"	2 5/16"	2 11/16"	3 1/8"	3 7/16"	3 3/4"	4"	4 1/8"	4 3/16"	4 1/16"	3 7/8"	3 9/16"	3 1/8"	2 1/2"	1 13/16"	15/16"	0

✱ INCLUDES SLAB, BUILDUPS & STAY-IN-PLACE FORMS.
ALL VALUES ARE SHOWN IN FEET (DECIMAL FORM), EXCEPT " FINAL CAMBER ", WHICH IS GIVEN IN INCHES (FRACTION FORM).

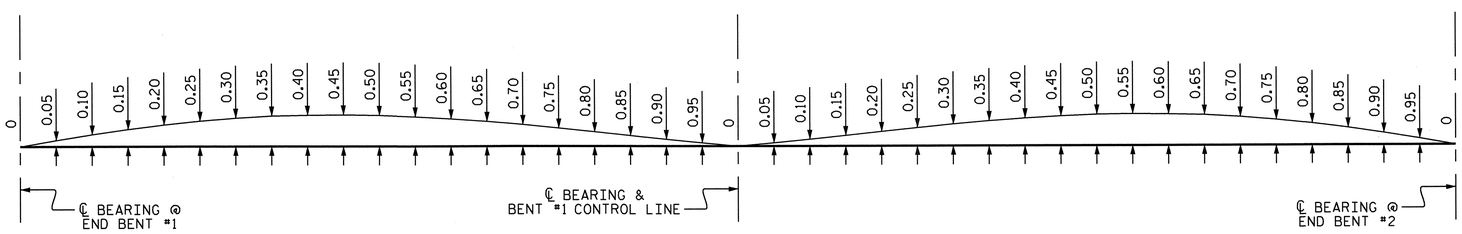

SPAN A SPAN B

SCHEMATIC CAMBER ORDINATES FOR ALL GIRDERS

SLOPE FOR THE ZERO CAMBER BASE LINE VARIES

PROJECT NO. U-0209B
MECKLENBURG COUNTY
STATION: 41+57.69 -L-

SHEET 4 OF 4

STATE OF NORTH CAROLINA
DEPARTMENT OF TRANSPORTATION
RALEIGH

SUPERSTRUCTURE

DEAD LOAD DEFLECTIONS

NORTH CAROLINA PROFESSIONAL SEAL 30878 ENGINEER KEVIN FISCHER
11/20/12

REVISIONS						SHEET NO.
NO.	BY:	DATE:	NO.	BY:	DATE:	S-19
1			3			TOTAL SHEETS
2			4			117

STR. #1

DRAWN BY : M.K. BEARD DATE : 11/12
CHECKED BY : J.P. ADAMS DATE : 11/12

14-NOV-2012 09:32
R:\structures\Plans\Str1\U0209B_SD_DL_01.dgn
lsutton

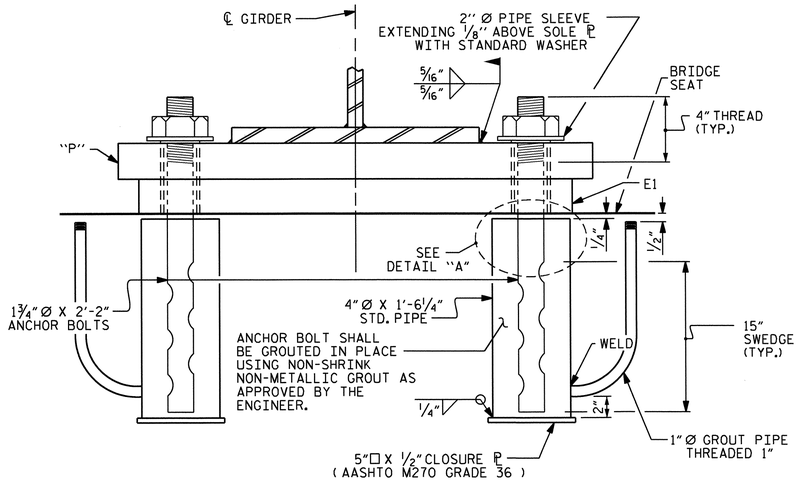

EXPANSION END VIEW

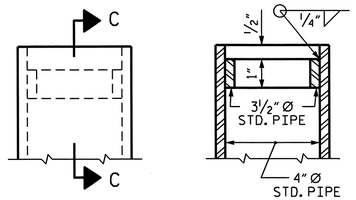

SECTION C-C

DETAIL "A"

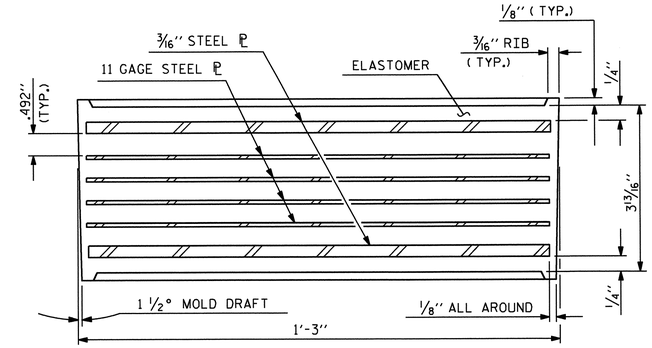

TYPICAL SECTION OF ELASTOMERIC BEARING

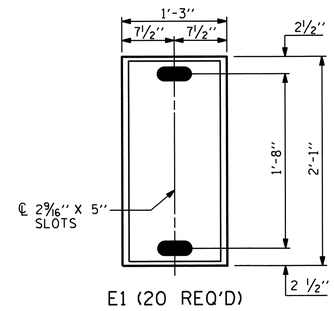

E1 (20 REQ'D)

PLAN VIEW OF ELASTOMERIC BEARING

TYPE VI

NOTES

AT ALL FIXED POINTS OF SUPPORT, NUTS FOR ANCHOR BOLTS ARE TO BE TIGHTENED FINGER TIGHT AND THEN BACKED OFF 1/2 TURN. THE THREAD OF THE NUT AND BOLT SHALL THEN BE BURRED WITH A SHARP POINTED TOOL.

THE 2" Ø PIPE SLEEVE SHALL BE CUT FROM SCHEDULE 40 PVC PLASTIC PIPE. THE PVC PLASTIC PIPE SHALL MEET THE REQUIREMENTS OF ASTM D1785.

THE PAYMENT FOR THE PIPE SLEEVES SHALL BE INCLUDED IN THE SEVERAL PAY ITEMS.

FOR AASHTO M270 GRADE 50W STRUCTURAL STEEL, SOLE PLATE SHALL BE AASHTO M270 GRADE 50W AND SHALL NOT BE GALVANIZED. ANCHOR BOLTS, NUTS AND WASHERS SHALL BE GALVANIZED IN ACCORDANCE WITH THE STANDARD SPECIFICATIONS.

ANCHOR BOLTS SHALL MEET THE REQUIREMENTS OF ASTM A449. NUTS SHALL MEET THE REQUIREMENTS OF AASHTO M291-DH OR AASHTO M292-2H. WASHERS SHALL MEET THE REQUIREMENTS OF AASHTO M293. SHOP DRAWINGS ARE NOT REQUIRED FOR ANCHOR BOLTS, NUTS AND WASHERS. SHOP INSPECTION IS REQUIRED.

WHEN FIELD WELDING THE SOLE PLATE TO THE GIRDER FLANGE, USE TEMPERATURE INDICATING WAX PENS, OR OTHER SUITABLE MEANS, TO ENSURE THAT THE TEMPERATURE OF THE SOLE PLATE DOES NOT EXCEED 300°F. TEMPERATURES ABOVE THIS MAY DAMAGE THE ELASTOMER.

ALL SURFACES OF BEARING PLATES SHALL BE SMOOTH AND STRAIGHT.

THE CLOSURE PLATE, GROUT PIPE AND STANDARD PIPE FOR THE EXPANSION ASSEMBLY NEED NOT BE GALVANIZED.

THE CONTRACTOR'S ATTENTION IS CALLED TO THE FOLLOWING PROCEDURE, WHICH MAY BE REQUIRED BY THE ENGINEER, TO RESET ELASTOMERIC BEARINGS DUE TO GIRDER TRANSLATION AND END ROTATION:

1. ONCE THE DECK HAS CURED, THE GIRDERS SHALL BE JACKED, THEN THE ANCHOR BOLTS AND ELASTOMERIC BEARING SLOTS SHALL BE CENTERED AS NEARLY AS PRACTICAL ABOUT THE BEARING STIFFENER. THIS OPERATION SHALL BE PERFORMED AT APPROXIMATELY 60°F.
2. AFTER CENTERING THE ELASTOMERIC BEARING SLOTS AND ANCHOR BOLTS, THE ANCHOR BOLTS SHALL BE GROUTED.

THE CONTRACTOR MAY PROPOSE ALTERNATE METHODS, PROVIDED DETAILS ARE SUBMITTED TO THE ENGINEER FOR REVIEW AND APPROVAL.

ELASTOMER IN ALL BEARING PADS SHALL BE 60 DUROMETER HARDNESS.

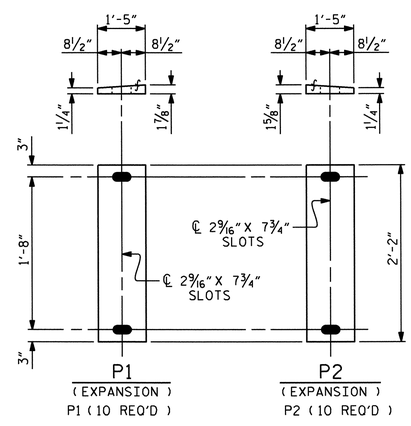

SOLE PLATE DETAILS

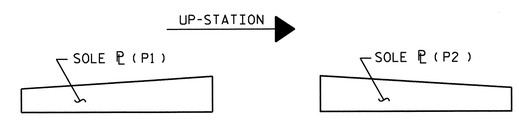

SOLE ℙ PLACEMENT DETAIL

—LOAD RATINGS—	
60 DUROMETER	MAX.D.L.+ L.L.
TYPE VI	352 k

PROJECT NO. U-0209B
MECKLENBURG COUNTY
STATION: 41+57.69 -L-

STATE OF NORTH CAROLINA
DEPARTMENT OF TRANSPORTATION
RALEIGH

STANDARD

ELASTOMERIC BEARING DETAILS

(STEEL SUPERSTRUCTURE)

NORTH CAROLINA PROFESSIONAL SEAL 30878 ENGINEER KEVIN FISCHER 11/20/12

REVISIONS						SHEET NO.
NO.	BY:	DATE:	NO.	BY:	DATE:	S-20
1			3			TOTAL SHEETS
2			4			117

STR. #1

STD. NO. EB2

ASSEMBLED BY : M.K. BEARD		DATE : 8/12/11	
CHECKED BY : J.P. ADAMS		DATE : 10/10/11	
DRAWN BY : EEM 10/95	REV. 7/10/01	LES/RDR	
CHECKED BY : PEK 10/95	REV. 5/1/06	TLA/GM	
	REV. 10/1/11	MAA/GM	

07-SEP-2012 11:11
R:\structures\Plans\Str1\U0209B_SD_BG_01.dgn
lsutton

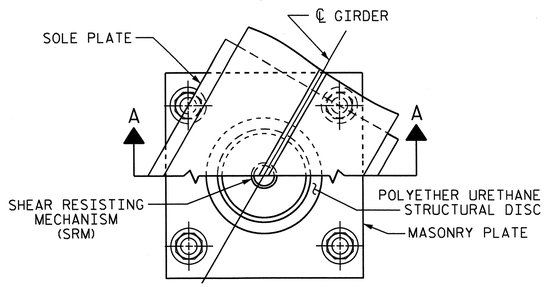

CUT-AWAY PLAN

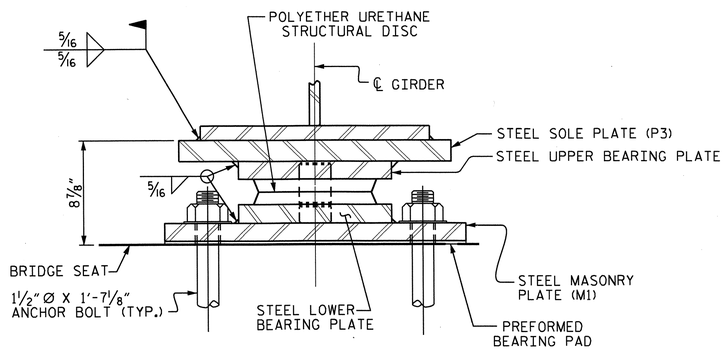

SECTION A-A

DB1, FIXED
(10 REQ'D)

DISC BEARING DETAILS

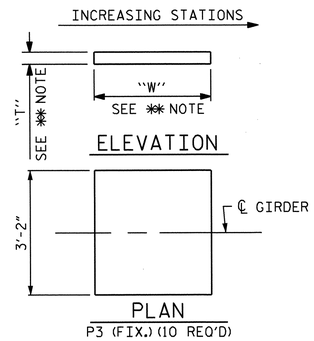

P3 (FIX.) (10 REQ'D)

✱✱ NOTE:
DIMENSIONS "W" AND "T" ARE TO BE DETERMINED BY THE MANUFACTURER.

SOLE PLATE DETAILS

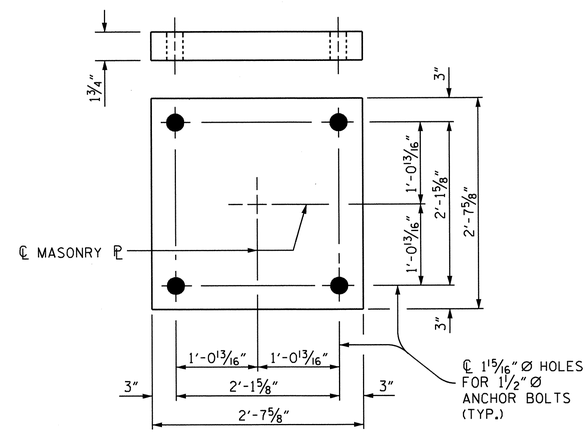

PLAN
M1 (10 REQ'D)

MASONRY PLATE DETAILS

NOTES

FOR DISC BEARINGS, SEE SPECIAL PROVISIONS.

FOR THERMAL SPRAYED COATINGS (METALLIZATION), SEE SPECIAL PROVISIONS.

AT ALL POINTS OF SUPPORT, NUTS FOR ANCHOR BOLTS SHALL BE TIGHTENED FINGER TIGHT AND GIVEN AN ADDITIONAL 1#4" TURN. THE THREAD OF THE NUT AND BOLT SHALL THEN BE BURRED WITH A SHARP POINTED TOOL.

WHEN WELDING THE SOLE PLATE TO THE GIRDER, USE TEMPERATURE INDICATING WAX PENS, OR OTHER SUITABLE MEANS, TO ENSURE THAT THE TEMPERATURE OF THE BEARING DOES NOT EXCEED 250°F TEMPERATURES ABOVE THIS MAY DAMAGE THE STRUCTURAL DISC.

SOLE PLATES SHOULD BE WELDED TO GIRDER FLANGES AND ANCHOR BOLTS SHOULD BE GROUTED BEFORE FALSEWORK IS PLACED.

ALL SURFACES OF BEARING PLATES SHALL BE SMOOTH AND STRAIGHT.

THE MINIMUM ROTATIONAL CAPACITY FOR ALL BEARINGS SHALL BE 0.02 RADIANS.

THE CONTRACTOR SHALL ADJUST THE GIRDER BUILDUPS AS NECESSARY TO INCORPORATE A MAXIMUM PERMISSIBLE VARIATION IN DISC BEARING DEPTH OF 1/2", SEE SPECIAL PROVISION FOR DISC BEARINGS.

TABLE FOR LOADS AND MOVEMENT

BEARING	LOCATION	UNFACTORED VERTICAL LOAD (KIPS) DEAD DC	DEAD DW	LIVE LL+IM	TOTAL	FACTORED LATERAL LOAD (KIPS)	TOTAL MOVEMENT (INCHES)
DB1 (FIXED)	BENT #1	453	54	278	785	162	———

PROJECT NO. U-0209B
MECKLENBURG COUNTY
STATION: 41+57.69 -L-

STATE OF NORTH CAROLINA
DEPARTMENT OF TRANSPORTATION
RALEIGH

SUPERSTRUCTURE

DISC BEARING DETAILS

NORTH CAROLINA PROFESSIONAL SEAL 30878 ENGINEER KEVIN FISCHER
11/20/12

REVISIONS						SHEET NO.
NO.	BY:	DATE:	NO.	BY:	DATE:	S-21
1			3			TOTAL SHEETS
2			4			117

STR. #1

DRAWN BY : M.K. BEARD DATE : 11/12
CHECKED BY : J.P. ADAMS DATE : 11/12

14-NOV-2012 09:32
R:\Structures\Plans\Str1\U0209B_SD_BG_01.dgn
lsutton

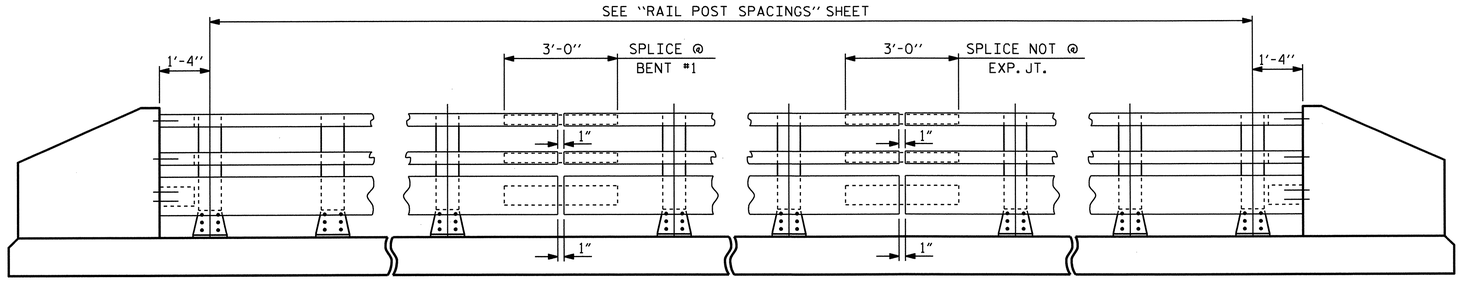

NOTE:
FOR ATTACHMENT OF METAL RAIL TO END POST, SEE STANDARD NO. BMR7.

ELEVATION

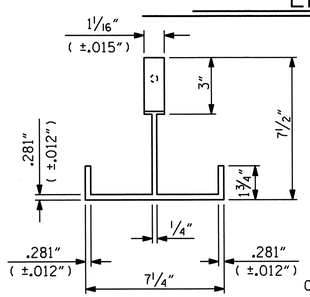

PLAN

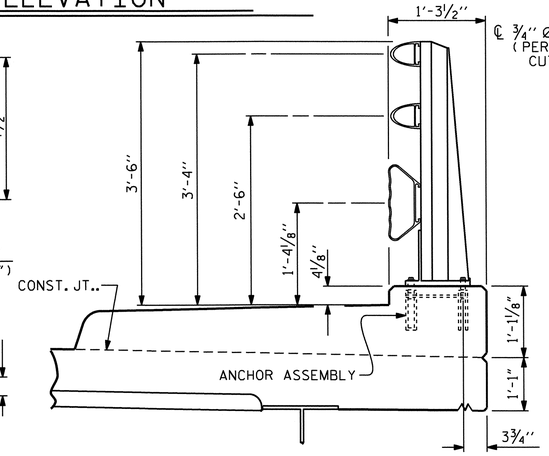

SECTION THRU RAIL

FOR ANCHOR ASSEMBLY, SEE "3 BAR METAL RAIL" STD.No.BMR6

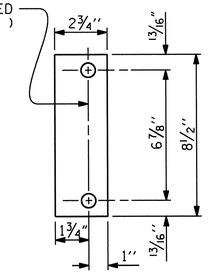

REAR PLATE

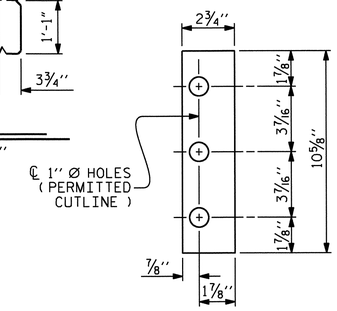

FRONT PLATE

SHIM DETAILS

NOTE :
SHIMS MAY BE CUT ALONG PERMITTED CUTLINE OR SLOTTED TO EDGE OF PLATE TO FACILITATE PLACEMENT.

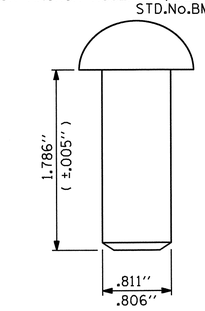

RIVET DETAIL

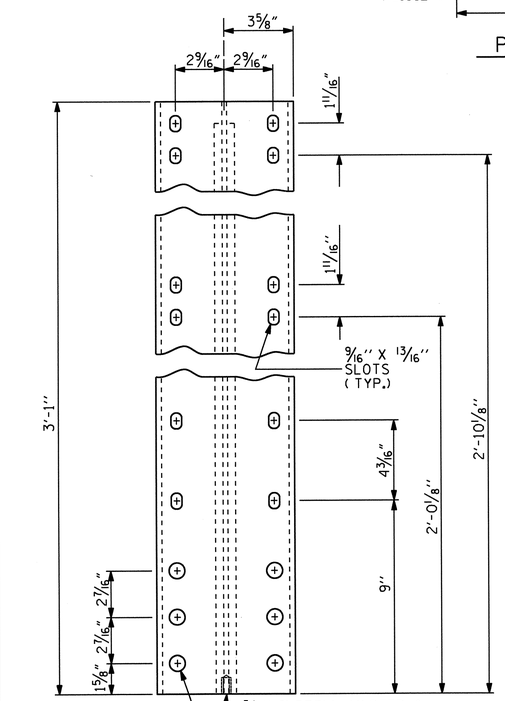

FRONT ELEVATION

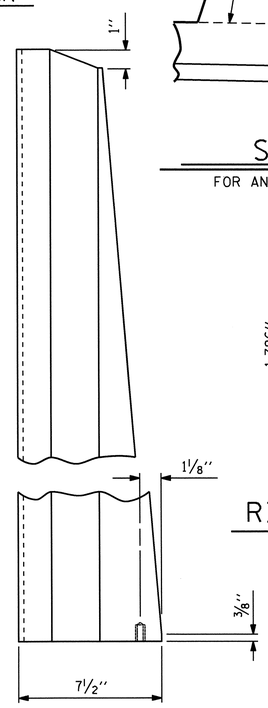

SIDE ELEVATION

DETAILS OF POST

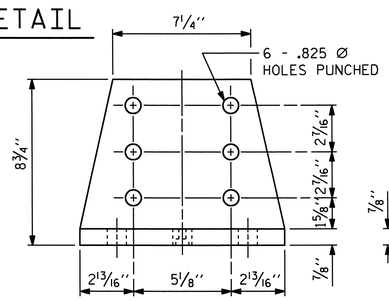

FRONT ELEVATION

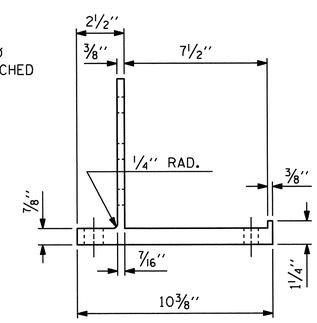

SIDE ELEVATION

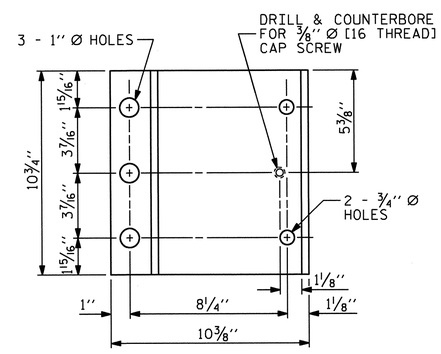

PLAN

POST BASE DETAILS

NOTES

AT THE CONTRACTOR'S OPTION, METAL RAIL MAY BE EITHER ALUMINUM OR GALVANIZED STEEL IN ACCORDANCE WITH THE REQUIREMENTS OF THE GENERAL NOTES AND THE FOLLOWING SPECIFICATIONS FOR THE ALTERNATE MATERIALS; HOWEVER, THE CONTRACTOR WILL BE REQUIRED TO USE THE SAME RAIL MATERIAL ON ALL STRUCTURES ON THE PROJECT FOR WHICH METAL RAIL IS DESIGNATED.

ALUMINUM RAILS

MATERIAL FOR POSTS, BASES AND RAILS, EXPANSION BARS AND CLAMP BARS SHALL BE ASTM B221 ALLOY 6061-T6.

MATERIAL FOR RIVETS SHALL BE ASTM B316 ALLOY 6061-T6. RIVETS SHALL BE STANDARD BUTTON HEAD AND CONE POINT COLD DRIVEN AS PER DRAWING.

THE BASE OF RAIL POSTS, OR ANY OTHER ALUMINUM SURFACE IN CONTACT WITH CONCRETE SHALL BE THOROUGHLY COATED WITH AN ALUMINUM IMPREGNATED CAULKING COMPOUND OF APPROVED QUALITY.

MATERIAL FOR SHIMS TO BE ASTM B209 ALLOY 6061-T6.

GALVANIZED STEEL RAILS

MATERIAL AND GALVANIZING ARE TO CONFORM TO THE FOLLOWING SPECIFICATIONS:

POST, POST BASES, RAILS, EXPANSION BARS AND CLAMP BARS : AASHTO M270 GRADE 36 STRUCTURAL STEEL - GALVANIZED TO AASHTO M111.

RIVETS: RIVETS SHALL MEET THE REQUIREMENTS OF ASTM A502 FOR GRADE 1 RIVETS.

THE CUT ENDS OF GALVANIZED STEEL RAILING, AFTER GRINDING SMOOTH SHALL BE GIVEN TWO COATS OF ZINC RICH PAINT MEETING THE REQUIREMENTS OF FEDERAL SPECIFICATION MIL-P-26915 USAF TYPE 1, OR OF FEDERAL SPECIFICATIONS TT-P-641.

SHIMS: SHIMS SHALL MEET THE REQUIREMENTS OF ASTM A570 FOR GRADE 33 OR A611 FOR GRADE C AND SHALL BE GALVANIZED IN ACCORDANCE WITH AASHTO M111.

RAIL CAPS: RAIL CAPS SHALL MEET THE REQUIREMENTS OF ASTM A570 FOR GRADE 33 OR A611 FOR GRADE C AND SHALL BE GALVANIZED IN ACCORDANCE WITH AASHTO M111.

GENERAL NOTES

RAILING SHALL BE CONTINUOUS FROM END POST TO END POST OF BRIDGE. EACH JOINT IN RAIL LENGTH SHALL BE SPLICED AS DETAILED. PANEL LENGTHS OF RAIL SHALL BE ATTACHED TO A MINIMUM OF THREE POSTS. PLACE ONE JOINT SPLICE JUST BEYOND THE 3RD RAIL POST FROM EACH END, TYPICALLY 14' FROM THE END. PLACE OTHER JOINTS AS NEEDED.

FOR END OF RAIL TO CLEAR FACE OF CONCRETE END POST DIMENSION, SEE STANDARD NO. BMR7.

CAP SCREWS SHALL BE ASTM F593 ALLOY 305 STAINLESS STEEL. WASHERS FOR RAIL ATTACHMENT SHALL MEET THE REQUIREMENTS OF ASTM F844 EXCEPT THEY SHALL BE MADE FROM ALLOY 304 STAINLESS STEEL.

CERTIFIED MILL REPORTS ARE REQUIRED FOR RAILS AND POSTS. SHOP INSPECTION IS NOT REQUIRED.

METAL RAIL POSTS SHALL BE SET NORMAL TO CURB GRADE.

METHOD OF MEASUREMENT FOR METAL RAILS: FOR LENGTH OF METAL RAILS TO BE PAID FOR, SEE THE STANDARD SPECIFICATIONS.

CURVED RAIL USAGE: WHERE RAILS ARE TO BE USED ON BRIDGES ON HORIZONTAL AND/OR VERTICAL CURVATURE THE CONTRACTOR MAY, AT HIS OPTION, HAVE THE REQUIRED CURVATURE IN THE RAIL FORMED IN THE SHOP OR IN THE FIELD. IN EITHER EVENT, THE RAIL SHALL CONFORM WITHOUT BUCKLING OR KINKING TO THE REQUIRED CURVATURE IN A UNIFORM MANNER ACCEPTABLE TO THE ENGINEER.

TO INSURE FUTURE IDENTIFICATION OF THE FABRICATOR, A PERMANENT IDENTIFYING MARK SHALL BE PLACED ON EACH POST. THE METHOD OF MARKING AND LOCATION SHALL BE SUCH THAT IT DOES NOT DETRACT FROM THE APPEARANCE OF THE POST, BUT REMAIN VISIBLE AFTER RAIL PLACEMENT.

SHIMS SHALL BE USED AS NECESSARY FOR POST ALIGNMENT.

ALLOY 6351-T5 MAY BE SUBSTITUTED FOR ALLOY 6061-T6 WHERE APPLICABLE.

MINOR VARIATIONS IN DETAILS OF METAL RAIL WILL BE CONSIDERED. DETAILS OF SUCH VARIATIONS, IF DESIRED, SHALL BE SUBMITTED FOR APPROVAL.

PAY LENGTH = 602.30 LIN. FT.

NORTH CAROLINA PROFESSIONAL SEAL 030878 ENGINEER KEVIN FISCHER 11/20/12

PROJECT NO. U-0209B
MECKLENBURG COUNTY
STATION: 41+57.69 -L-

SHEET 1 OF 3

STATE OF NORTH CAROLINA
DEPARTMENT OF TRANSPORTATION
RALEIGH

STANDARD

3 BAR METAL RAIL

REVISIONS						SHEET NO.
NO.	BY:	DATE:	NO.	BY:	DATE:	S-22
1			3			TOTAL SHEETS
2			4			117

STR. #1

STD. NO. BMR5

ASSEMBLED BY : M.K. BEARD		DATE : 8/15/11	
CHECKED BY : J.P. ADAMS		DATE : 10/10/11	
DRAWN BY : JMB 1/88	REV. 5/7/03	RWW/JTE	
CHECKED BY : GGH 1/88	REV. 5/1/06	TLA/GM	
	REV. 10/1/11	MAA/GM	

07-SEP-2012 11:10
R:\structures\Plans\Str1\U0209B_SD_3MR_01.dgn
lsutton

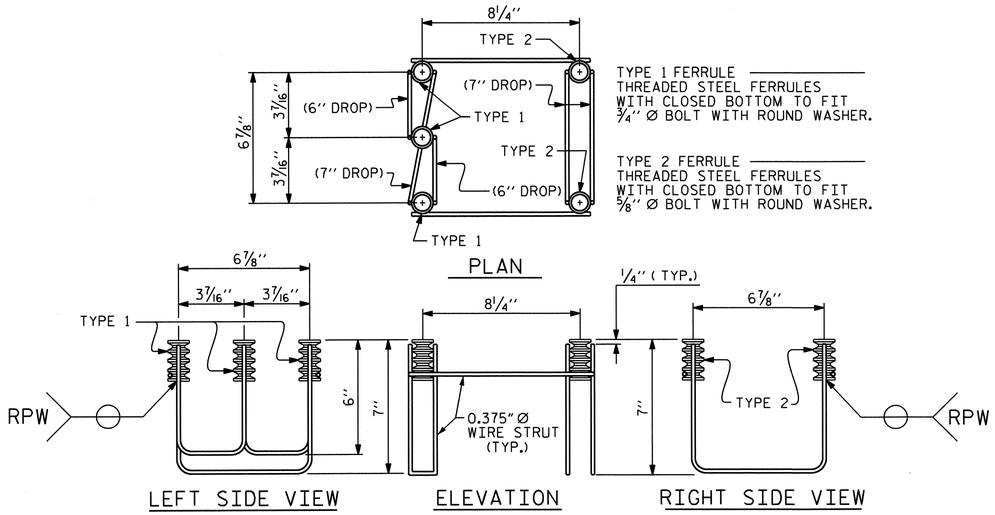

5-BOLT METAL RAIL ANCHOR ASSEMBLY

(98 ASSEMBLIES REQUIRED)

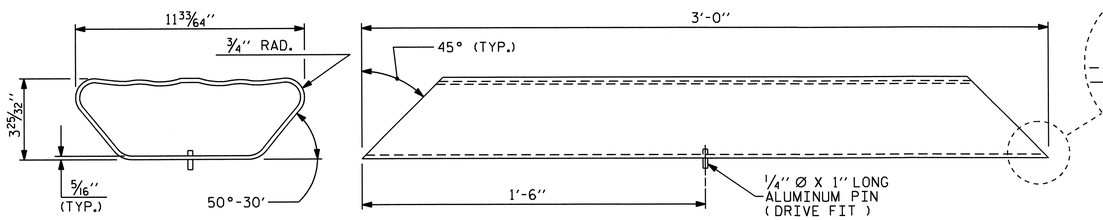

BOTTOM RAIL EXPANSION BAR

NOTES

STRUCTURAL CONCRETE ANCHOR ASSEMBLY

THE STRUCTURAL CONCRETE ANCHOR ASSEMBLY SHALL CONSIST OF THE FOLLOWING COMPONENTS:

A. FERRULES SHALL BE MADE FROM STEEL MEETING THE REQUIREMENTS OF AASHTO M169, GRADE 12L14 AND SHALL HAVE A MINIMUM LENGTH OF THREADS OF 2" FOR 3/4" FERRULES AND 1 3/4" FOR 5/8" FERRULES.

B. 3 - 3/4" Ø X 2 1/2" BOLTS WITH WASHERS. BOLTS SHALL CONFORM TO THE REQUIREMENTS OF ASTM A307. BOLTS AND WASHERS SHALL BE GALVANIZED. AT THE CONTRACTOR'S OPTION, STAINLESS STEEL BOLTS AND WASHERS MAY BE USED AS AN ALTERNATE FOR THE 3/4" Ø X 2 1/2" GALVANIZED BOLTS AND WASHERS. THEY SHALL CONFORM TO OR EXCEED THE MECHANICAL REQUIREMENTS OF ASTM A307. THE USE OF THIS ALTERNATE SHALL BE APPROVED BY THE ENGINEER.

C. 2 - 5/8" Ø X 2 1/4" BOLTS WITH WASHERS. BOLTS SHALL CONFORM TO THE REQUIREMENTS OF ASTM A307. BOLTS AND WASHERS SHALL BE GALVANIZED. AT THE CONTRACTOR'S OPTION, STAINLESS STEEL BOLTS AND WASHERS MAY BE USED AS AN ALTERNATE FOR THE 5/8" Ø X 2 1/4" GALVANIZED BOLTS AND WASHERS. THEY SHALL CONFORM TO OR EXCEED THE MECHANICAL REQUIREMENTS OF ASTM A307. THE USE OF THIS ALTERNATE SHALL BE APPROVED BY THE ENGINEER.

D. WIRE STRUT SHOWN IN THE CONCRETE ANCHOR ASSEMBLY DETAIL IS THE MINIMUM ALLOWABLE SIZE AND SHALL HAVE A MINIMUM TENSILE STRENGTH OF 100,000 PSI. AS AN OPTION, A 7/16" Ø WIRE STRUT WITH A MINIMUM TENSILE STRENGTH OF 90,000 PSI IS ACCEPTABLE.

E. THE METAL RAIL ANCHOR ASSEMBLIES TO BE HOT DIPPED GALVANIZED TO CONFORM TO REQUIREMENTS OF AASHTO M111.

F. THE COST OF THE METAL RAIL ANCHOR ASSEMBLY WITH BOLTS AND WASHERS COMPLETE IN PLACE SHALL BE INCLUDED IN THE PRICE BID FOR LINEAR FEET OF METAL RAIL.

G. BOLTS TO BE TIGHTENED ONE-HALF TURN WITH A WRENCH FROM A FINGER-TIGHT POSITION.

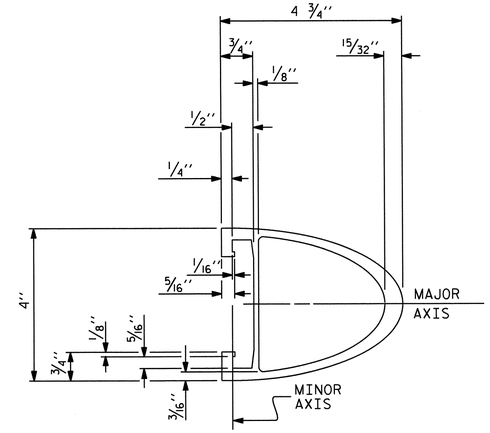

TOP & MIDDLE RAIL SECTION

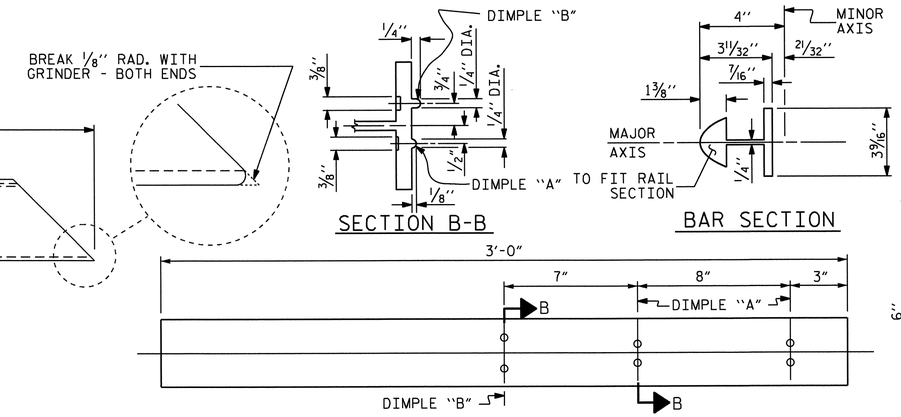

TOP & MIDDLE RAIL EXPANSION BAR

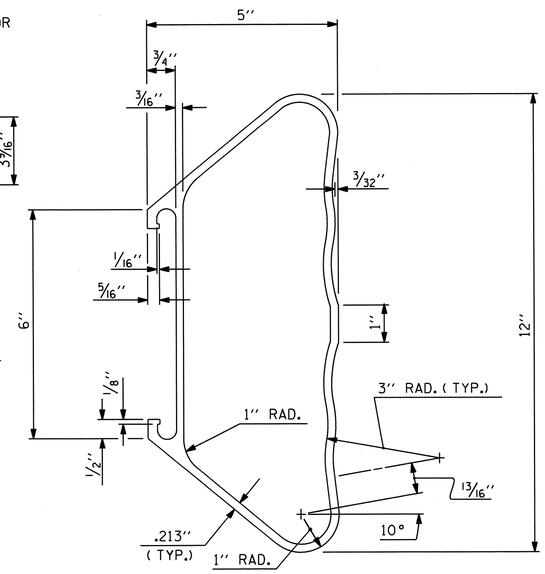

BOTTOM RAIL SECTION

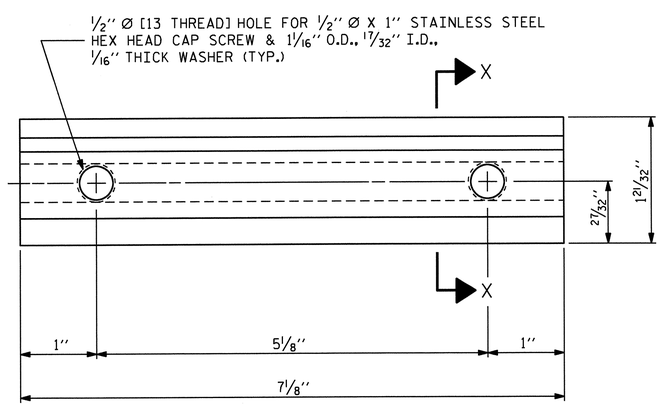

ELEVATION

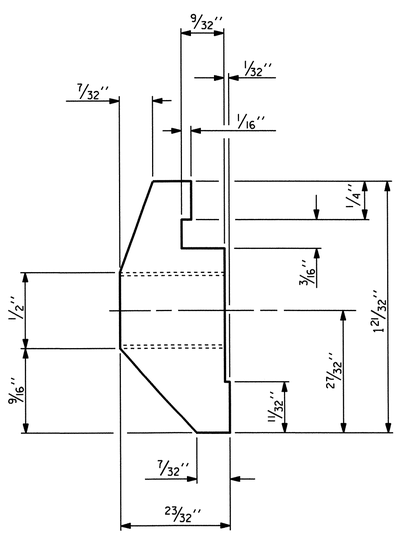

SECTION X-X

CLAMP BAR DETAIL

(6 REQUIRED PER POST)

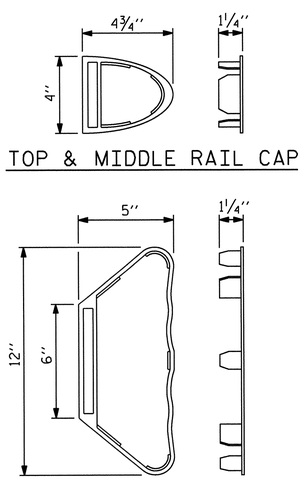

TOP & MIDDLE RAIL CAP

BOTTOM RAIL CAP

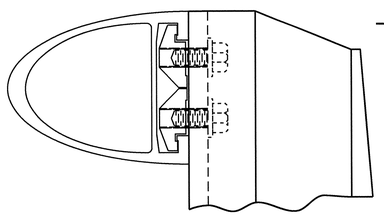

CLAMP ASSEMBLY

TOP RAIL SHOWN
(MIDDLE & BOTTOM RAIL ARE SIMILAR)

PROJECT NO. U-0209B
MECKLENBURG COUNTY
STATION: 41+57.69 -L-

SHEET 2 OF 3

STATE OF NORTH CAROLINA
DEPARTMENT OF TRANSPORTATION
RALEIGH

STANDARD

3 BAR METAL RAIL

NORTH CAROLINA PROFESSIONAL SEAL 30878 ENGINEER KEVIN FISCHER
11/20/12

REVISIONS								SHEET NO.
NO.	BY:	DATE:	NO.	BY:	DATE:			S-23
1			3					TOTAL SHEETS
2			4					117

STR. #1

STD. NO. BMR6

ASSEMBLED BY : M.K BEARD		DATE : 8/15/11	
CHECKED BY : J.P. ADAMS		DATE : 10/10/11	
DRAWN BY : JMB	1/88	REV. 5/7/03	RWW/JTE
CHECKED BY : GGH	1/88	REV. 5/1/06	TLA/GM
		REV. 10/1/11	MAA/GM

07-SEP-2012 11:10
R:\structures\Plans\Str1\U0209B_SD_3MR_01.dgn
lsutton

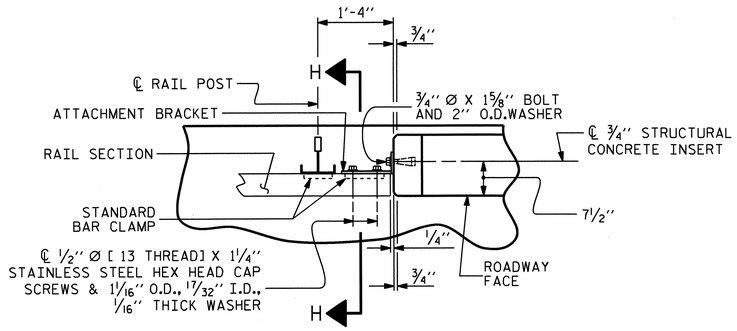

PLAN OF RAIL AND END POST

(STIFFENER ON 1/2" ℙ NOT SHOWN FOR CLARITY)

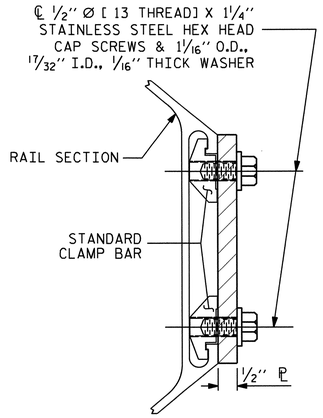

SECTION H-H

(FOR BOTTOM RAIL)

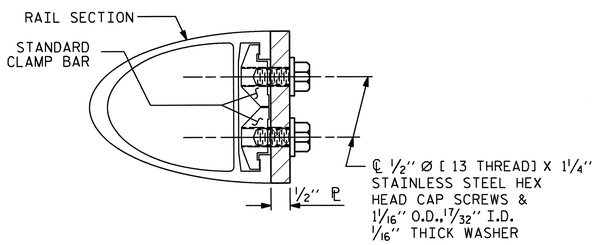

SECTION H-H

(FOR TOP & MIDDLE RAIL)

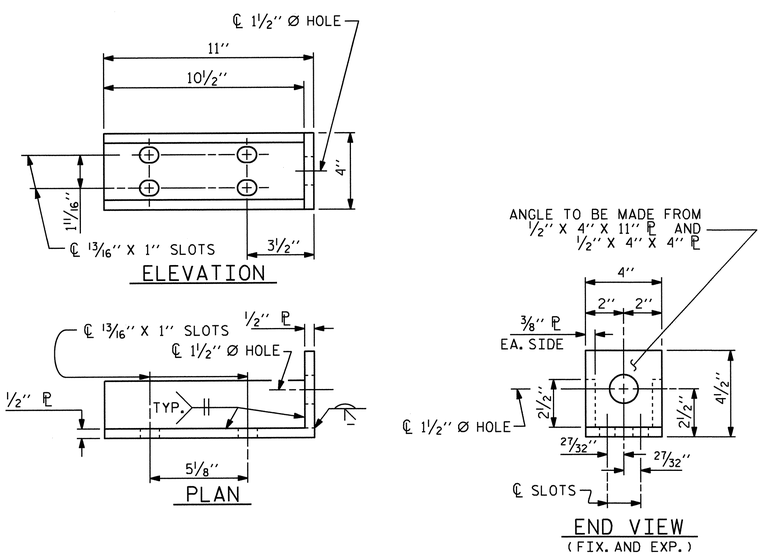

DETAILS FOR ATTACHMENT BRACKET

(TOP & MIDDLE RAIL ONLY)

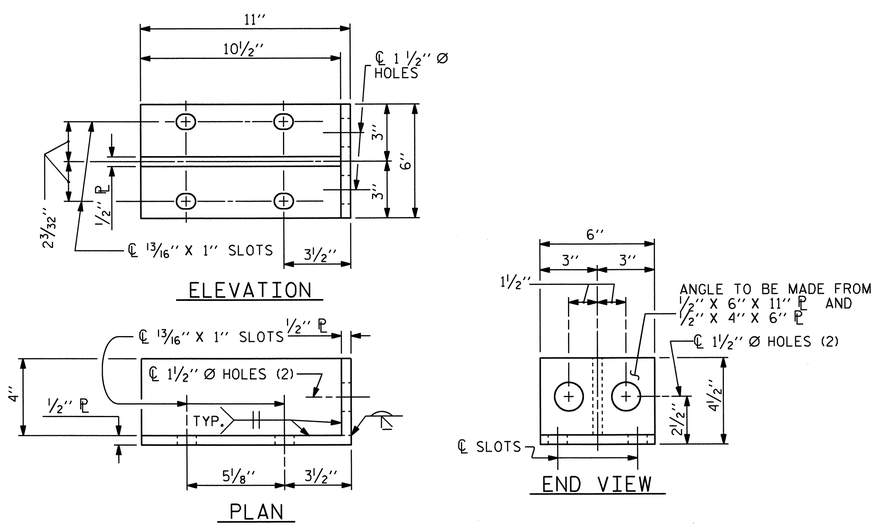

DETAILS FOR ATTACHMENT BRACKET

(BOTTOM RAIL ONLY)

NOTES

METAL RAIL TO END POST CONNECTION

THE METAL RAIL TO END POST CONNECTION SHALL CONSIST OF THE FOLLOWING COMPONENTS:

A. 1/2" PLATES SHALL CONFORM TO AASHTO M270 GRADE 36 AND SHALL BE GALVANIZED AFTER FABRICATION.

B. 3/4" STRUCTURAL CONCRETE INSERT SHALL HAVE A WORKING LOAD SHEAR CAPACITY OF 4800 LBS. THE FERRULES SHALL ENGAGE A 3/4" Ø X 1 5/8" BOLT WITH 2" O.D. WASHER IN PLACE. THE 3/4" Ø X 1 5/8" BOLT SHALL HAVE N. C. THREADS.

C. CAP SCREWS FOR RAIL ATTACHMENT TO ANGLE SHALL CONFORM TO THE REQUIREMENTS OF ASTM F593 ALLOY 305 STAINLESS STEEL. CAP SCREWS TO BE CENTERED IN SLOTS AT 60°F. WASHERS FOR RAIL ATTACHMENT SHALL MEET THE REQUIREMENTS OF ASTM F844 EXCEPT THEY SHALL BE MADE FROM ALLOY 304 STAINLESS STEEL.

D. STANDARD CLAMP BARS (STD. No. BMR6).

THE COST OF THE STANDARD CLAMP BARS AND CAP SCREWS USED IN THE METAL RAIL TO END POST CONNECTION SHALL BE INCLUDED IN THE UNIT CONTRACT PRICE BID FOR LINEAR FEET OF 3 BAR METAL RAIL.

THE 3/4" STRUCTURAL CONCRETE INSERT WITH BOLT SHALL BE ASSEMBLED IN THE SHOP.

THE COST OF THE 3/4" STRUCTURAL CONCRETE INSERT ASSEMBLY, AND THE 1/2" PLATES COMPLETE IN PLACE SHALL BE INCLUDED IN THE VARIOUS PAY ITEMS.

THE CONTRACTOR, AT HIS OPTION, MAY USE AN ADHESIVE BONDING SYSTEM IN LIEU OF THE STRUCTURAL CONCRETE INSERT EMBEDDED IN THE END POST. IF THE ADHESIVE BONDING SYSTEM IS USED, THE 3/4" Ø X 1 5/8" BOLT WITH WASHER SHALL BE REPLACED WITH A 3/4" Ø X 6 1/2" BOLT AND 2" O.D.WASHER. ALL SPECIFICATIONS THAT APPLY TO THE 3/4" Ø X 1 5/8" BOLT SHALL APPLY TO THE 3/4" Ø X 6 1/2" BOLT. FIELD TESTING OF THE ADHESIVE BONDING SYSTEM IS NOT REQUIRED.

NOTES

STRUCTURAL CONCRETE INSERT

THE STRUCTURAL CONCRETE INSERT ASSEMBLY SHALL CONSIST OF THE FOLLOWING COMPONENTS:

A. FERRULES SHALL BE MADE FROM STEEL MEETING THE REQUIREMENTS OF AASHTO M169, GRADE 12L14 AND SHALL HAVE A MINIMUM LENGTH OF THREADS OF 1 1/2".

B. 1 - 3/4" Ø X 1 5/8" BOLT WITH WASHER. BOLT SHALL CONFORM TO THE REQUIREMENTS OF ASTM A307. BOLT AND WASHER SHALL BE GALVANIZED. AT THE CONTRACTORS OPTION, STAINLESS STEEL BOLT AND WASHER MAY BE USED AS AN ALTERNATE FOR THE 3/4" Ø X 1 5/8" GALVANIZED BOLT AND WASHER. THEY SHALL CONFORM TO OR EXCEED THE MECHANICAL REQUIREMENTS OF ASTM A307. THE USE OF THIS ALTERNATE SHALL BE APPROVED BY THE ENGINEER.

C. WIRE STRUT SHOWN IN THE CONCRETE INSERT ASSEMBLY DETAIL IS THE MINIMUM ALLOWABLE SIZE AND SHALL HAVE A MINIMUM TENSILE STRENGTH OF 100,000 PSI. AS AN OPTION, A 7/16" Ø WIRE STRUT WITH A MINIMUM TENSILE STRENGTH OF 90,000 PSI IS ACCEPTABLE.

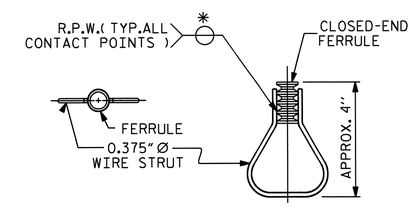

STRUCTURAL CONCRETE INSERT

* EACH WELDED ATTACHMENT OF WIRE TO FERRULE SHALL DEVELOP THE TENSILE STRENGTH OF THE WIRE.

PROJECT NO. U-0209B

MECKLENBURG COUNTY

STATION: 41+57.69 -L-

SHEET 3 OF 3

STATE OF NORTH CAROLINA
DEPARTMENT OF TRANSPORTATION
RALEIGH

STANDARD

3 BAR METAL RAIL

NORTH CAROLINA PROFESSIONAL SEAL 30878 ENGINEER KEVIN FISCHER
11/20/12

REVISIONS						SHEET NO.
NO.	BY:	DATE:	NO.	BY:	DATE:	S-24
1			3			TOTAL SHEETS
2			4			117

STR. #1

STD. NO. BMR7

ASSEMBLED BY : M.K. BEARD		DATE : 8/15/11	
CHECKED BY : J.P. ADAMS		DATE : 10/10/11	
DRAWN BY : JMB	1/88	REV. 5/7/03	RWW/JTE
CHECKED BY : GGH	1/88	REV. 5/1/06	TLA/GM
		REV. 10/1/11	MAA/GM

07-SEP-2012 11:10
R:\structures\Plans\Str1\U0209B_SD_3MR_01.dgn
lsutton

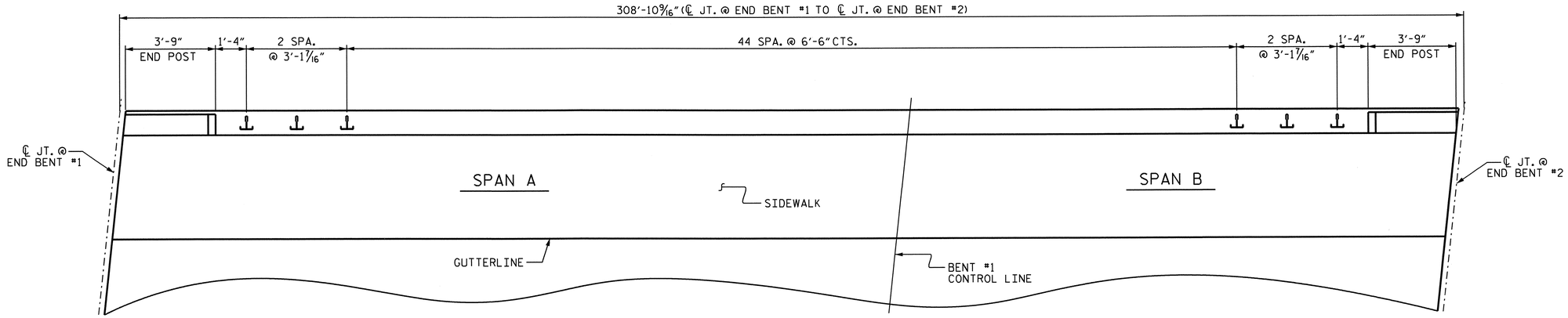

PLAN OF RAIL POST SPACING

LEFT SIDE SHOWN, RIGHT SIDE SIMILAR

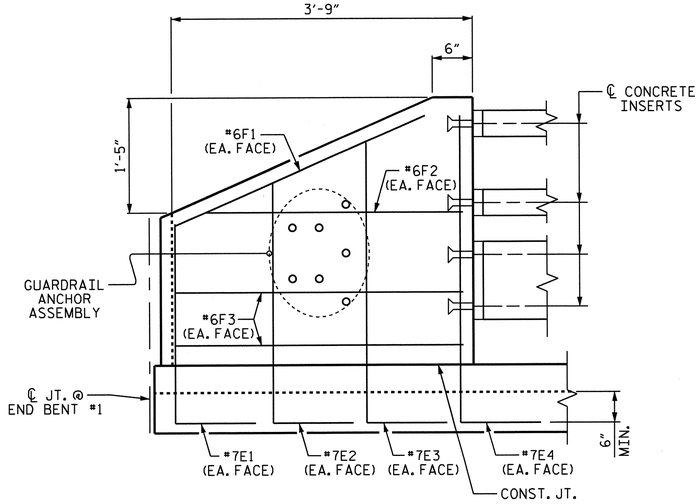

ELEVATION

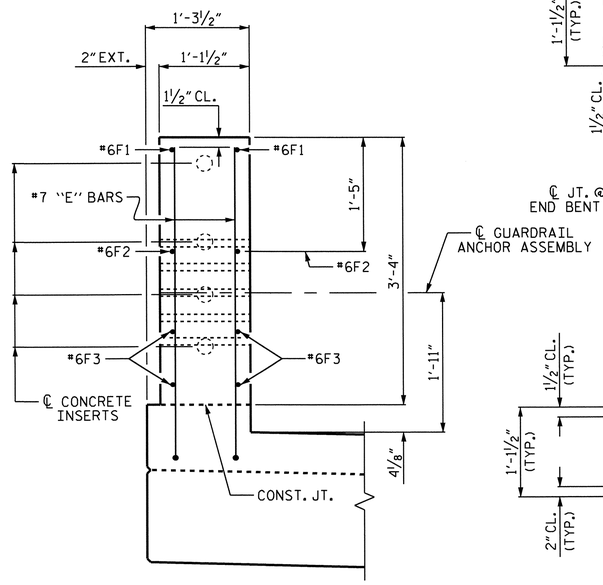

END VIEW

END POST DETAILS

END BENT #1 SHOWN, END BENT #2 SIMILAR.

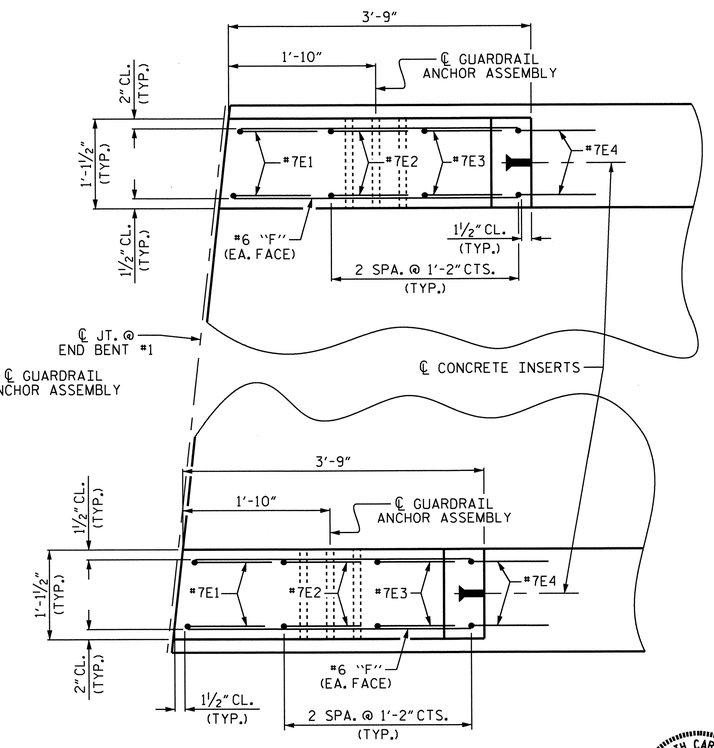

PLAN

PROJECT NO. U-0209B

MECKLENBURG COUNTY

STATION: 41+57.69 -L-

STATE OF NORTH CAROLINA
DEPARTMENT OF TRANSPORTATION
RALEIGH

SUPERSTRUCTURE

RAIL POST SPACING & END OF RAIL DETAILS

NORTH CAROLINA PROFESSIONAL SEAL 30878 ENGINEER KEVIN FISCHER 11/20/12

REVISIONS						SHEET NO.
NO.	BY:	DATE:	NO.	BY:	DATE:	S-25
1			3			TOTAL SHEETS
2			4			117

STR. #1

DRAWN BY : M.K. BEARD DATE : 8/16/11
CHECKED BY : J.P. ADAMS DATE : 10/10/11

07-SEP-2012 11:10
R:\structures\Plans\Str1\U0209B_SD_3MR_01.dgn
lsutton

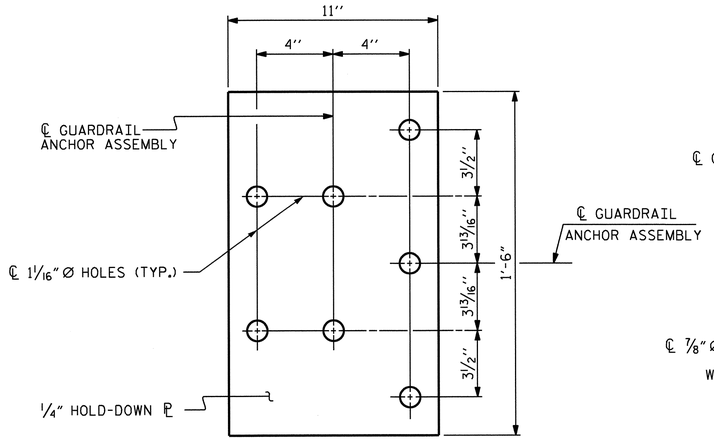

PLAN

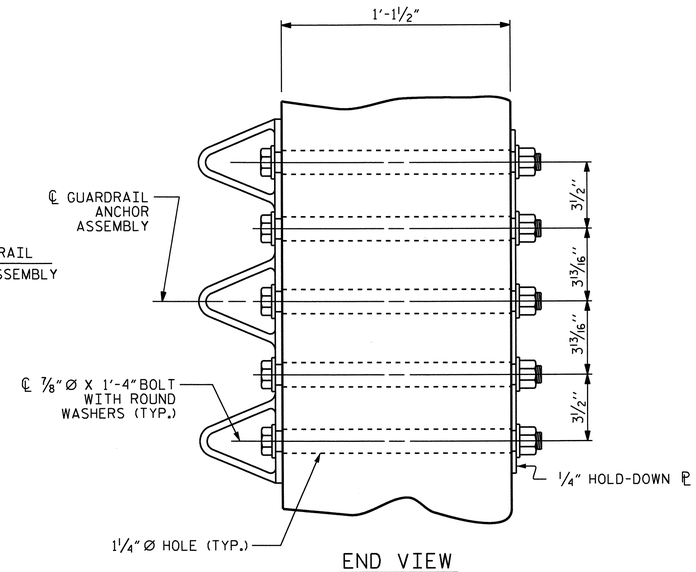

END VIEW

GUARDRAIL ANCHOR ASSEMBLY DETAILS

NOTES

THE GUARDRAIL ANCHOR ASSEMBLY SHALL CONSIST OF A 1/4" HOLD DOWN PLATE AND 7 - 7/8" Ø BOLTS WITH NUTS AND WASHERS.

THE HOLD-DOWN PLATE SHALL CONFORM TO AASHTO M270 GRADE 36. AFTER FABRICATION, THE HOLD-DOWN PLATE SHALL BE HOT-DIP GALVANIZED IN ACCORDANCE WITH AASHTO M111.

BOLTS SHALL CONFORM TO THE REQUIREMENTS OF ASTM A307 AND NUTS SHALL CONFORM TO THE REQUIREMENTS OF AASHTO M291. BOLTS, NUTS AND WASHERS SHALL BE GALVANIZED. AT THE CONTRACTOR'S OPTION, STAINLESS STEEL BOLTS, NUTS AND WASHERS MAY BE USED AS AN ALTERNATE FOR THE 7/8" Ø GALVANIZED BOLTS, NUTS AND WASHERS. THEY SHALL CONFORM TO OR EXCEED THE MECHANICAL REQUIREMENTS OF ASTM A307. THE USE OF THIS ALTERNATE SHALL BE APPROVED BY THE ENGINEER.

THE GUARDRAIL ANCHOR ASSEMBLY IS REQUIRED AT ALL POINTS WHERE APPROACH GUARDRAIL IS TO BE ATTACHED TO THE END OF THE PARAPET. FOR POINTS OF ATTACHMENT, SEE SKETCH.

AFTER INSTALLATION, THE EXPOSED THREAD OF THE BOLT SHALL BE BURRED WITH A SHARP POINTED TOOL.

THE COST OF THE GUARDRAIL ANCHOR ASSEMBLIES WITH BOLTS, NUTS AND WASHERS COMPLETE IN PLACE, SHALL BE INCLUDED IN THE VARIOUS PAY ITEMS.

THE VERTICAL REINFORCING BARS MAY BE SHIFTED SLIGHTLY IN THE END POST TO CLEAR ASSEMBLY BOLTS.

THE 1 1/4" Ø HOLES SHALL BE FORMED OR DRILLED WITH A CORE BIT. IMPACT TOOLS WILL NOT BE PERMITTED. ANY CONCRETE DAMAGED BY THIS WORK SHALL BE REPAIRED TO THE SATISFACTION OF THE ENGINEER.

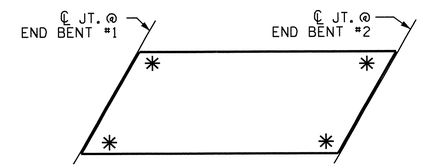

SKETCH SHOWING POINTS OF ATTACHMENT

✳ LOCATION OF GUARDRAIL ATTACHMENT

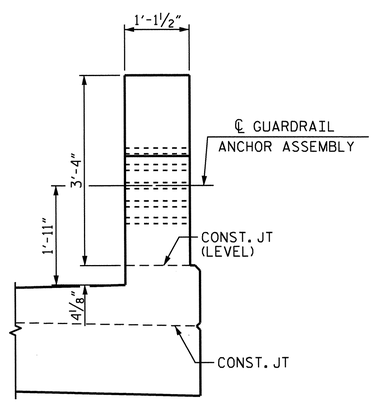

END VIEW
(THREE BAR METAL RAIL)

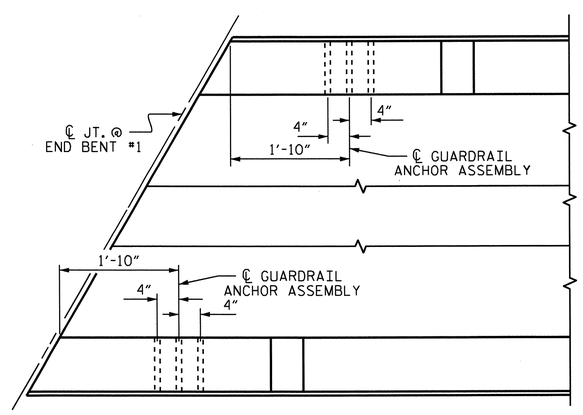

PLAN

LOCATION OF GUARDRAIL ANCHOR AT END POST

END BENT #1 SHOWN, END BENT #2 SIMILAR

PROJECT NO. U-0209B
MECKLENBURG COUNTY
STATION: 41+57.69 -L-

STATE OF NORTH CAROLINA
DEPARTMENT OF TRANSPORTATION
RALEIGH

STANDARD
GUARDRAIL ANCHORAGE DETAILS FOR METAL RAILS

NORTH CAROLINA PROFESSIONAL SEAL 30818 ENGINEER KEVIN FISHER 11/20/12

REVISIONS						SHEET NO.
NO.	BY:	DATE:	NO.	BY:	DATE:	S-26
1			3			TOTAL SHEETS
2			4			117

STR. #1

STD. NO. GRA3

ASSEMBLED BY : M.K. BEARD	DATE : 8/16/11
CHECKED BY : J.P. ADAMS	DATE :10/10/11
DRAWN BY : MAA 5/10	ADDED 5/6/10
CHECKED BY : GM 5/10	REV. 10/1/11 MAA/GM
	REV. 12/5/11 MAA/GM

11-SEP-2012 09:46
R:\structures\Plans\Str1\U0209B_SD_GR_01.dgn
lsutton

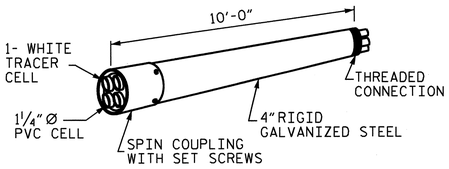

RIGID GALVANIZED (RGC)
MULTI-CELL RACEWAY

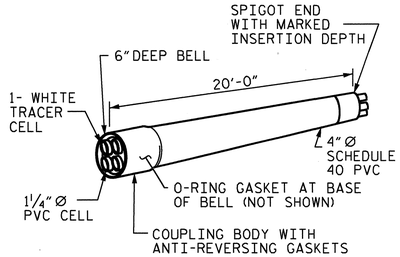

SCHEDULE 40 PVC
MULTI-CELL RACEWAY

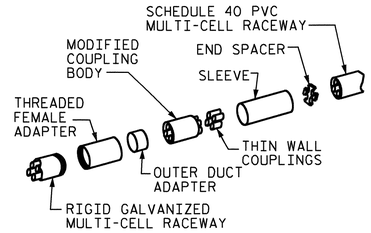

TRANSITION ADAPTER

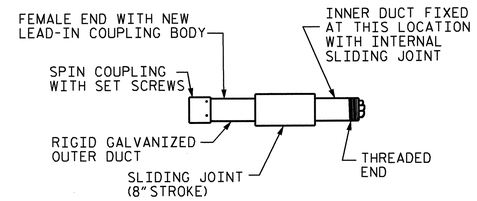

EXPANSION JOINT FITTING

DETAIL "D"
4" MULTI-CELL COMPONENTS

NOTES

THE CONTRACTOR SHALL BE RESPONSIBLE FOR DETERMINING THE TOTAL QUANTITY OF CONDUIT NEEDED TO COMPLETE THE WORK AND THAT THE CONDUIT(S) ARE PLACED AT THE NOTED DIMENSION AND ABOVE THE BOTTOM OF THE GIRDER.

THE INSTALLATION OF THE CONDUIT SYSTEM SHALL BE PAID FOR AS LUMP SUM. THE PRICE SHALL INCLUDE ALL CONDUIT, HANGERS, STABILIZERS, EXPANSION JOINTS, CONCRETE INSERTS, PVC SLEEVES AND ALL NECESSARY HARDWARE TO COMPLETE THE WORK.

THE CONTRACTOR SHALL FIELD VERIFY THAT THE CONDUIT SYSTEM IS NOT IN CONFLICT WITH THE GUARDRAIL POSTS.

SEE DETAIL "C" FOR HANGER ASSEMBLY INSTALLATION.

INSTALL SLEEVES PARALLEL TO GIRDERS. SEE DETAIL "B" FOR SLEEVE INSTALLATION.

PROVIDE TRANSITION ADAPTER AND EXPANSION JOINT FOR CONDUIT AT END BENT #1 AND END BENT #2.

INSTALL STABILIZER'S MIDWAY BETWEEN DECK EXPANSION JOINTS. STABILIZER CAN NOT BE USED INSTEAD OF A HANGER ASSEMBLY.

THE CONCRETE SCREW INSERT SHALL HAVE A ROD SIZE OF ⅝" AND A PULL FORCE OF 1260 lbs.

FOR ELECTRICAL CONDUIT SYSTEM FOR SIGNALS, SEE SPECIAL PROVISIONS.

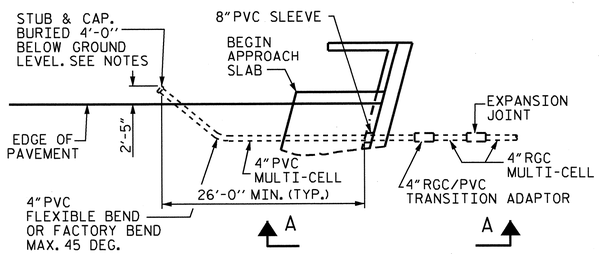

DETAIL "A"
TERMINATION OF CONDUIT AT WING WALL.
END BENT #1 SHOWN, END BENT #2 SIMILAR.

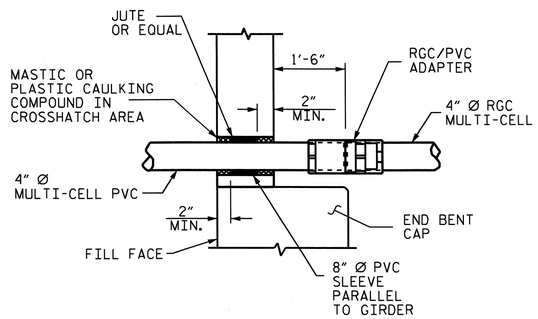

DETAIL "B"
PVC SLEEVE INSTALLATION & RGC/PVC ADAPTER AT BACKWALL.

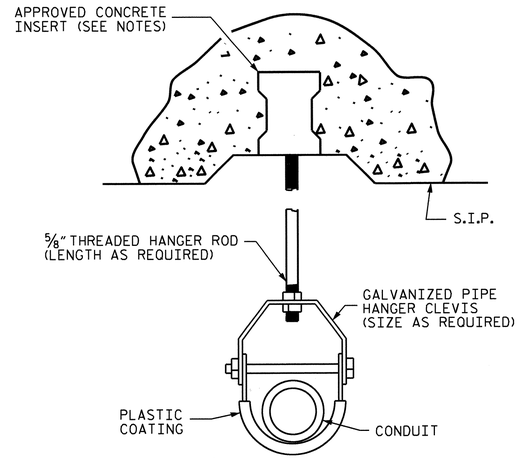

DETAIL "C"
HANGER ASSEMBLY

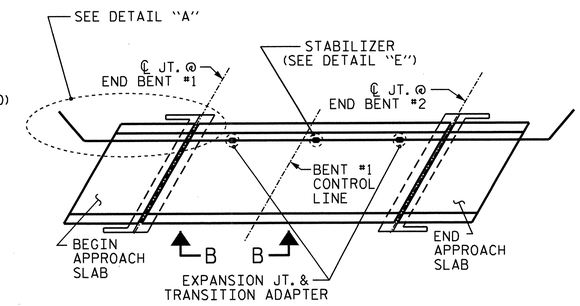

CONDUIT LAYOUT

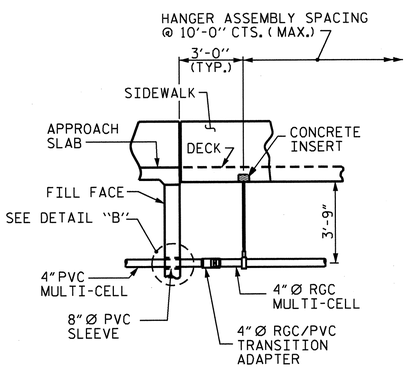

VIEW A-A

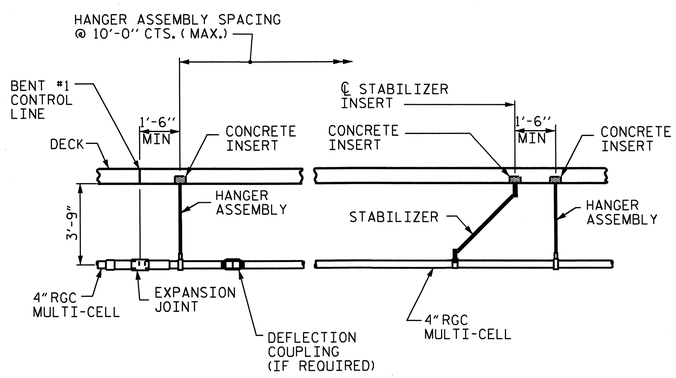

VIEW B-B
STEEL GIRDERS

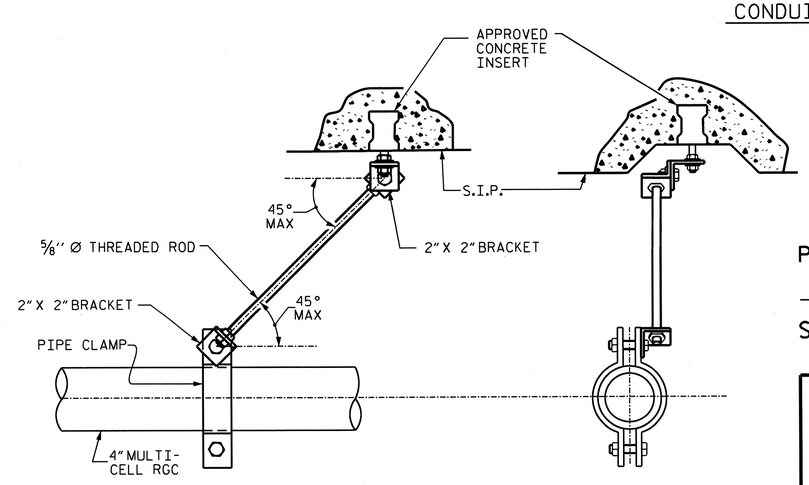

DETAIL "E"
STABILIZER

NORTH CAROLINA PROFESSIONAL SEAL 30878 ENGINEER KEVIN FISCHER 11/20/12

PROJECT NO. U-0209B
MECKLENBURG COUNTY
STATION: 41+57.69 -L-

STATE OF NORTH CAROLINA
DEPARTMENT OF TRANSPORTATION
RALEIGH
STANDARD
ELECTRICAL CONDUIT SYSTEM FOR SIGNALS

ELECTRIC CONDUIT DETAILS

ASSEMBLED BY : M.K. BEARD		DATE : 9/20/11	
CHECKED BY : J.P. ADAMS		DATE : 10/10/11	
DRAWN BY : RWW 2-4-03	REV. 5/1/06	TLA/GM	
CHECKED BY : DBM 2-4-03	REV. 10/1/11	MAA/GM	

REVISIONS						SHEET NO.
NO.	BY:	DATE:	NO.	BY:	DATE:	S-27
1			3			TOTAL SHEETS
2			4			117

STR. #1 STD. NO. ECS1

07-NOV-2012 08:38
R:\structures\Plans\Str1\U0209B_SD_UT_01.dgn
lsutton

SUPERSTRUCTURE REINFORCING STEEL LENGTHS ARE BASED ON THE FOLLOWING MINIMUM SPLICE LENGTHS

BAR SIZE	SUPERSTRUCTURE EXCEPT APPROACH SLABS, PARAPET, AND SIDEWALK		APPROACH SLABS		PARAPET AND SIDEWALK
	EPOXY COATED	UNCOATED	EPOXY COATED	UNCOATED	
#4	2'-0"	1'-9"	2'-0"	1'-9"	2'-9"
#5	2'-6"	2'-2"	2'-6"	2'-2"	3'-5"
#6	3'-0"	2'-7"	3'-10"	2'-7"	4'-4"
#7	5'-3"	3'-6"			
#8	6'-10"	4'-7"			

GROOVING BRIDGE FLOOR

APPROACH SLABS	3,507 SQ. FT.
BRIDGE DECK	22,742 SQ. FT.
TOTAL	26,249 SQ. FT.

SUPERSTRUCTURE BILL OF MATERIAL

	CLASS AA CONCRETE	REINFORCING STEEL	*EPOXY COATED REINFORCING STEEL
	(CU. YDS.)	(LBS.)	(LBS.)
POUR #1	338.0		
POUR #2	310.9		
POUR #3	340.7		
POUR #4	59.5		
SIDEWALK	107.6		
END POST	1.7		
CONCRETE ISLAND	40.7		
TOTAL	1199.1	111,382	132,483

BAR TYPE

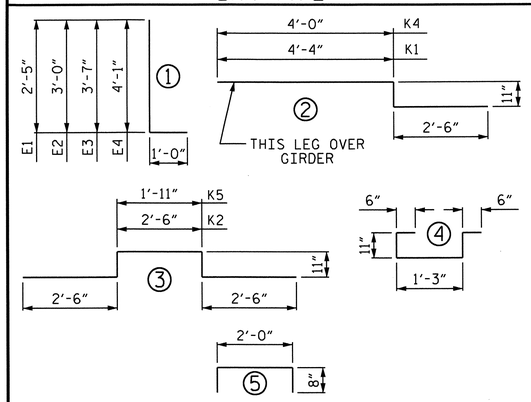

ALL BAR DIMENSIONS ARE OUT TO OUT

BILL OF MATERIAL

BAR	NO.	SIZE	TYPE	LENGTH	WEIGHT	BAR	NO.	SIZE	TYPE	LENGTH	WEIGHT	BAR	NO.	SIZE	TYPE	LENGTH	WEIGHT
* A1	1298	#5	STR	52'-5"	70962	A201	4	#5	STR	51'-1"	213	* B4	411	7	STR	47'-6"	39904
A2	1298	#5	STR	52'-3"	70737	A202	4	#5	STR	48'-11"	204	* B5	72	#4	STR	27'-9'	1335
						A203	4	#5	STR	46'-10"	195	* B6	132	#4	STR	29'-11"	2638
* A101	4	#5	STR	51'-3"	214	A204	4	#5	STR	44'-8"	186						
* A102	4	#5	STR	49'-1"	205	A205	4	#5	STR	42'-7"	178	* E1	8	#7	1	3'-5"	56
* A103	4	#5	STR	47'-0"	196	A206	4	#5	STR	40'-5"	169	* E2	8	#7	1	4'-0"	65
* A104	4	#5	STR	44'-10"	187	A207	4	#5	STR	38'-4"	160	* E3	8	#7	1	4'-7"	75
* A105	4	#5	STR	42'-9"	178	A208	4	#5	STR	36'-2"	151	* E4	8	#7	1	5'-1"	83
* A106	4	#5	STR	40'-7"	169	A209	4	#5	STR	34'-3"	143						
* A107	4	#5	STR	38'-6"	161	A210	4	#5	STR	31'-11"	133	* F1	8	#6	STR	3'-9"	45
* A108	4	#5	STR	36'-4"	152	A211	2	#5	STR	57'-2"	119	* F2	8	#6	STR	3'-2"	38
* A109	4	#5	STR	34'-3"	143	A212	2	#5	STR	52'-11"	110	* F3	16	#6	STR	3'-6"	84
* A110	4	#5	STR	32'-1"	134	A213	2	#5	STR	48'-10"	102						
* A111	2	#5	STR	57'-4"	120	A214	2	#5	STR	44'-5"	93	* G1	4	#5	STR	52'-9"	220
* A112	2	#5	STR	53'-1"	111	A215	2	#5	STR	40'-2"	84	* G2	620	#4	STR	6'-5"	2658
* A113	2	#5	STR	48'-10"	102	A216	2	#5	STR	36'-0"	75	* G3	208	#4	STR	8'-6"	1181
* A114	2	#5	STR	44'-7"	93	A217	2	#5	STR	31'-9"	66						
* A115	2	#5	STR	40'-4"	84	A218	2	#5	STR	27'-6"	57	* K1	4	#5	2	7'-9"	32
* A116	2	#5	STR	36'-2"	75	A219	2	#5	STR	23'-3"	48	* K2	16	#5	3	9'-4"	156
* A117	2	#5	STR	31'-11"	67	A220	2	#5	STR	19'-0"	40	* K3	36	#5	STR	10'-4"	388
* A118	2	#5	STR	27'-8"	58	A221	2	#5	STR	14'-9"	31	* K4	4	#5	2	7'-5"	31
* A119	2	#5	STR	23'-5"	49	A222	2	#5	STR	10'-6"	22	* K5	16	#5	3	8'-9"	146
* A120	2	#5	STR	19'-2"	40	A223	2	#5	STR	6'-3"	13						
* A121	2	#5	STR	14'-11"	31	A224	2	#5	STR	2'-0"	4	* S1	162	#4	4	4'-1"	442
* A122	2	#5	STR	10'-8"	22												
* A123	2	#5	STR	6'-5"	13	B1	684	#5	STR	53'-4"	38049	* U1	176	#4	5	3'-4"	392
* A124	2	#5	STR	2'-2"	5	* B2	350	#4	STR	27'-1"	6332						
						* B3	140	#4	STR	27'-11"	2611						

REINFORCING STEEL	111,382 LBS.
* EPOXY COATED REINFORCING STEEL	132,483 LBS.

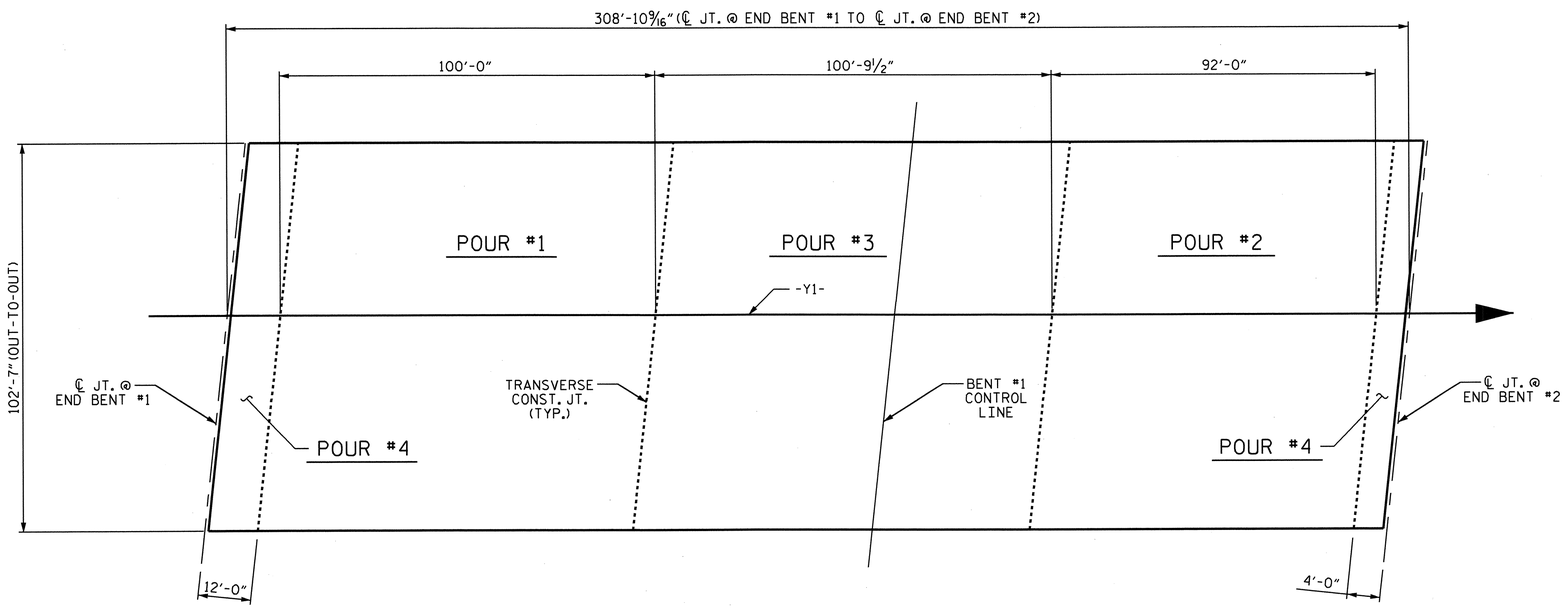

LAYOUT FOR COMPUTING AREA OF REINFORCED CONCRETE DECK SLAB & POURING SEQUENCE (SQ.FT. = 31,686)

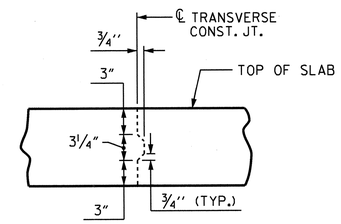

TRANSVERSE CONSTRUCTION JOINT DETAIL

REINFORCING STEEL IN SLAB NOT SHOWN.
LONGITUDINAL REINFORCING STEEL SHALL BE CONTINUOUS THROUGH JOINT.

PROJECT NO. U-0209B
MECKLENBURG COUNTY
STATION: 41+57.69 -L-

STATE OF NORTH CAROLINA
DEPARTMENT OF TRANSPORTATION
RALEIGH

SUPERSTRUCTURE

BILL OF MATERIAL

NORTH CAROLINA PROFESSIONAL SEAL 30818 ENGINEER KEVIN FISCHER
11/20/12

REVISIONS						SHEET NO.
NO.	BY:	DATE:	NO.	BY:	DATE:	S-28
1			3			TOTAL SHEETS
2			4			117

DRAWN BY : M.K. BEARD DATE : 9/15/11
CHECKED BY : J.P. ADAMS DATE : 10/10/11

07-NOV-2012 08:37
R:\structures\Plans\Str1\U0209B_SD_BM_01.dgn
lsutton

STR. #1

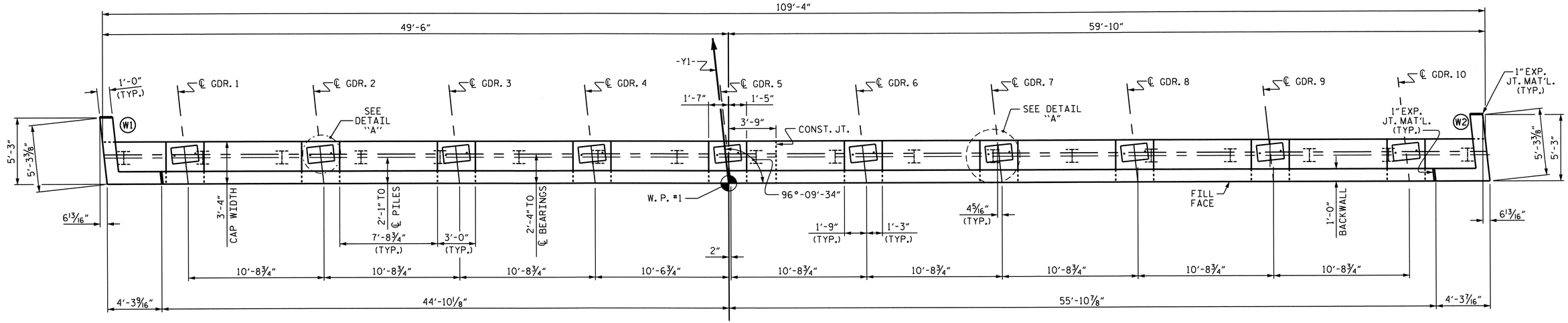

PLAN

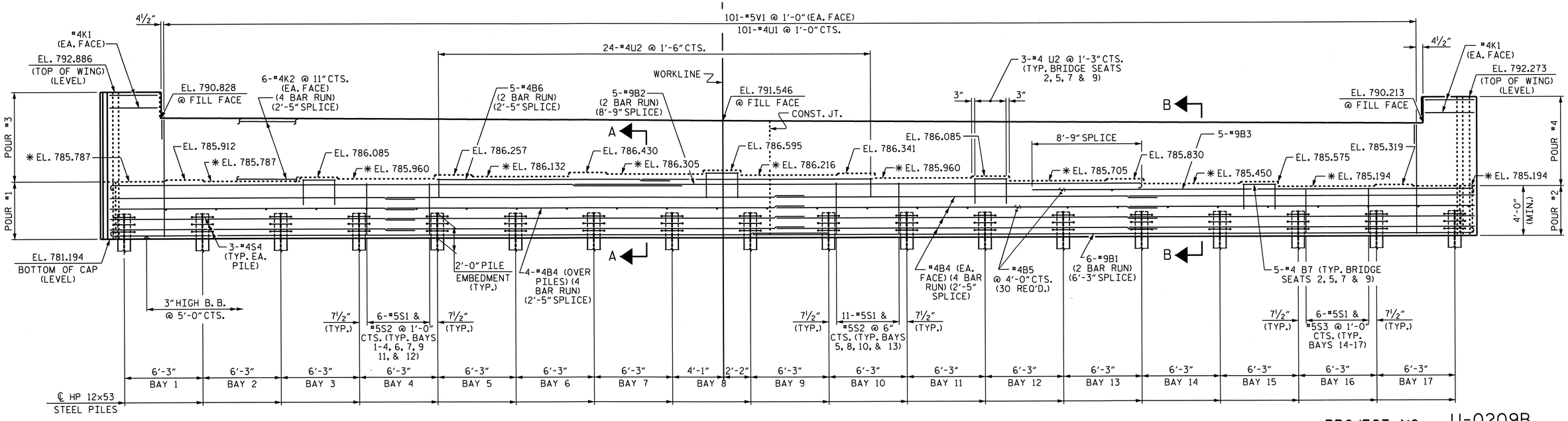

ELEVATION

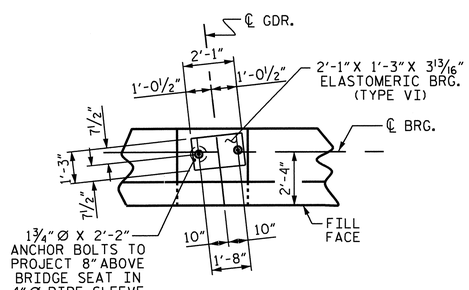

DETAIL "A"

(TYP. EA. GIRDER).

NOTES

STIRRUPS IN CAP MAY BE SHIFTED AS NECESSARY TO CLEAR ANCHOR BOLTS.

FOR PIPE INSERT DETAILS, SEE BEARINGS SHEET.

BACKWALL SHALL BE PLACED BEFORE APPLYING THE EPOXY PROTECTIVE COATING.

EPOXY COAT THE END BENT CAP AFTER ADJUSTMENTS ARE MADE TO BEARINGS AND ANCHOR BOLTS ARE GROUTED.

* THE TOP SURFACE OF THE CAP EXCEPT THE BRIDGE SEAT BUILDUPS SHALL BE SLOPED TRANSVERSELY FROM THE FILL FACE TO THE BACK FACE AT THE RATE OF 2%.

THE TOP SURFACE AREAS OF THE CAPS SHALL BE CURED IN ACCORDANCE WITH THE STANDARD SPECIFICATIONS EXCEPT THE MEMBRANE CURING COMPOUND METHOD SHALL NOT BE USED.

FOR GALVANIZED REINFORCING STRAPS, SEE MSE WALL PLANS.

FOR MSE RETAINING WALLS, SEE SPECIAL PROVISIONS.

PROJECT NO. U-0209B
MECKLENBURG COUNTY
STATION: 41+57.69 -L-

SHEET 1 OF 3

STATE OF NORTH CAROLINA
DEPARTMENT OF TRANSPORTATION
RALEIGH

SUBSTRUCTURE

END BENT #1

NORTH CAROLINA PROFESSIONAL SEAL 30878 ENGINEER KEVIN FISCHER
11/20/12

REVISIONS								SHEET NO.
NO.	BY:	DATE:	NO.	BY:	DATE:			S-29
1			3					TOTAL SHEETS
2			4					117

STR. #1

DRAWN BY : R. G. EMERSON DATE : 07/11
CHECKED BY : K. D. LAYNE DATE : 08/11

11-SEP-2012 09:00
R:\structures\Plans\Str1\U0209B_SD_E*_01.dgn
lsutton

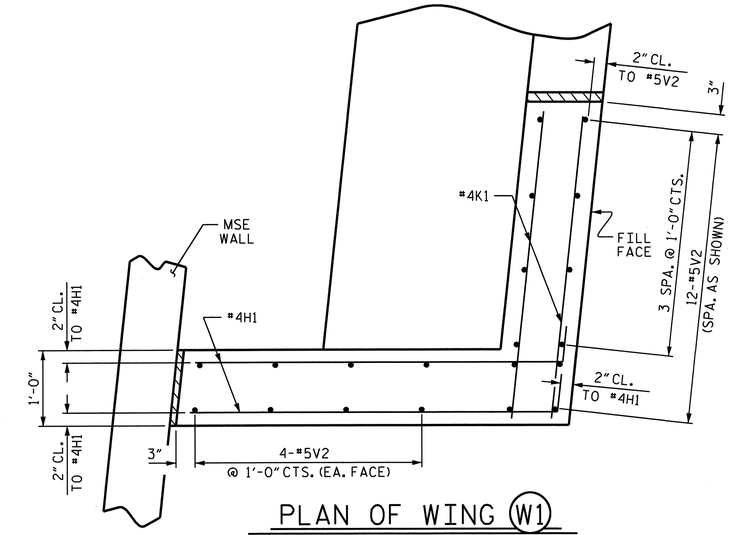

PLAN OF WING (W1)

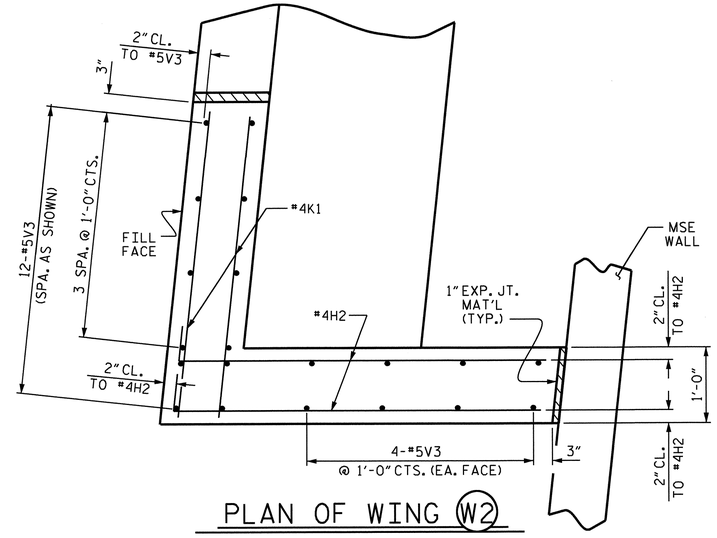

PLAN OF WING (W2)

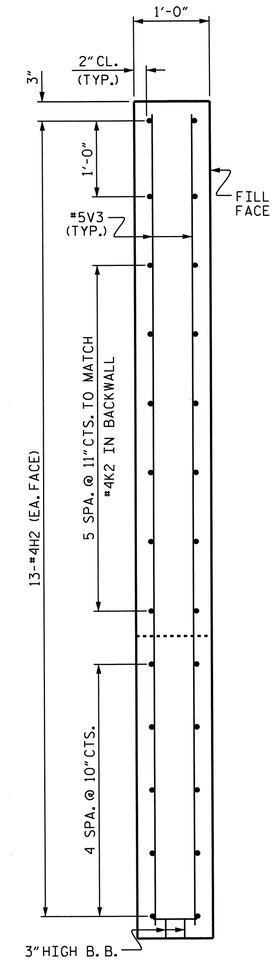

Y-Y

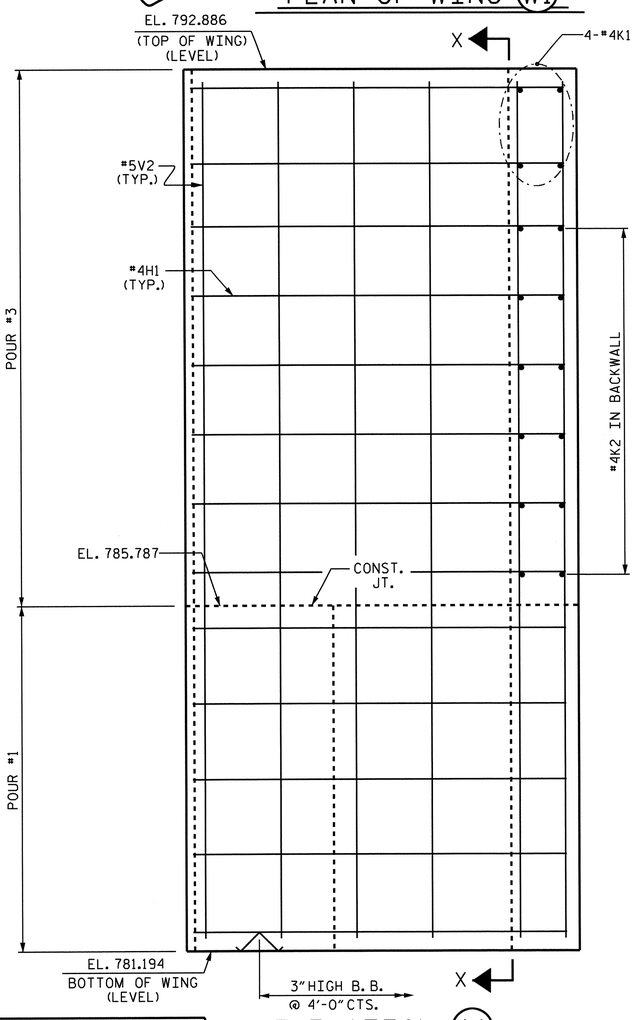

ELEVATION (W1)

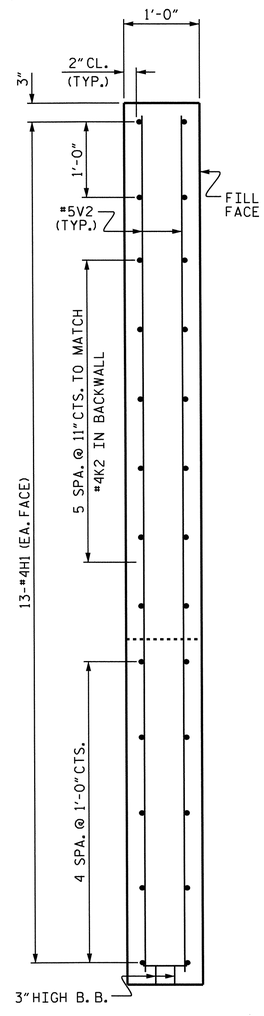

X-X

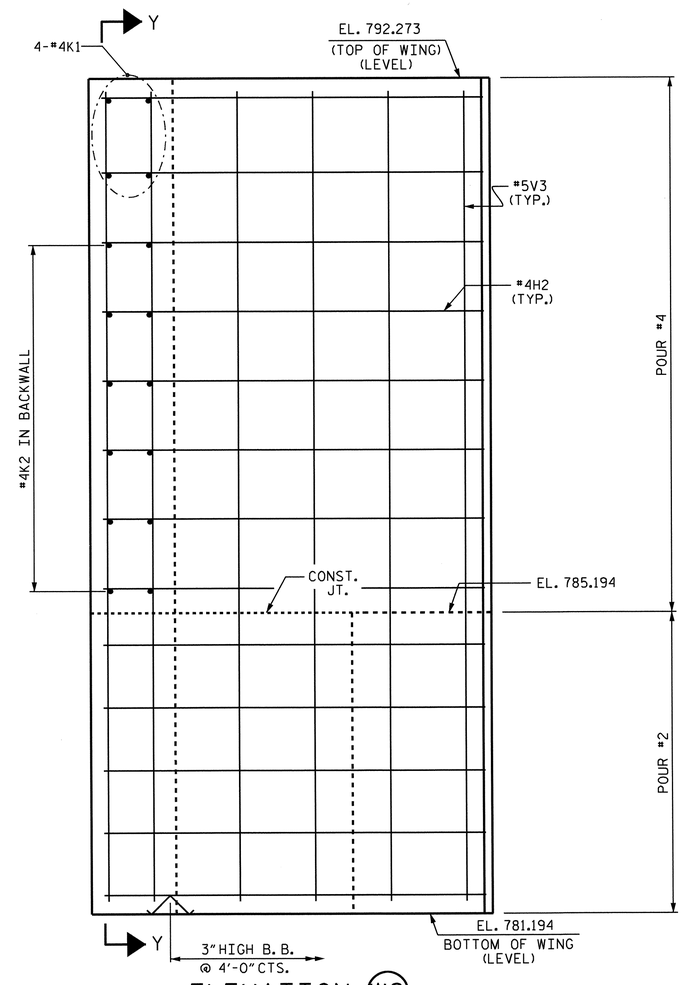

ELEVATION (W2)

PROJECT NO. U-0209B
MECKLENBURG COUNTY
STATION: 41+57.69 -L-

SHEET 2 OF 3

STATE OF NORTH CAROLINA
DEPARTMENT OF TRANSPORTATION
RALEIGH

SUBSTRUCTURE

END BENT #1

NORTH CAROLINA PROFESSIONAL SEAL 30878 ENGINEER KEVIN FISCHER
11/20/12

REVISIONS						SHEET NO.
NO.	BY:	DATE:	NO.	BY:	DATE:	S-30
1			3			TOTAL SHEETS
2			4			117

STR. #1

DRAWN BY : R. G. EMERSON DATE : 07/11
CHECKED BY : K. D. LAYNE DATE : 08/11

11-SEP-2012 09:00
R:\structures\Plans\Str1\U0209B_SD_E*_01.dgn
lsutton

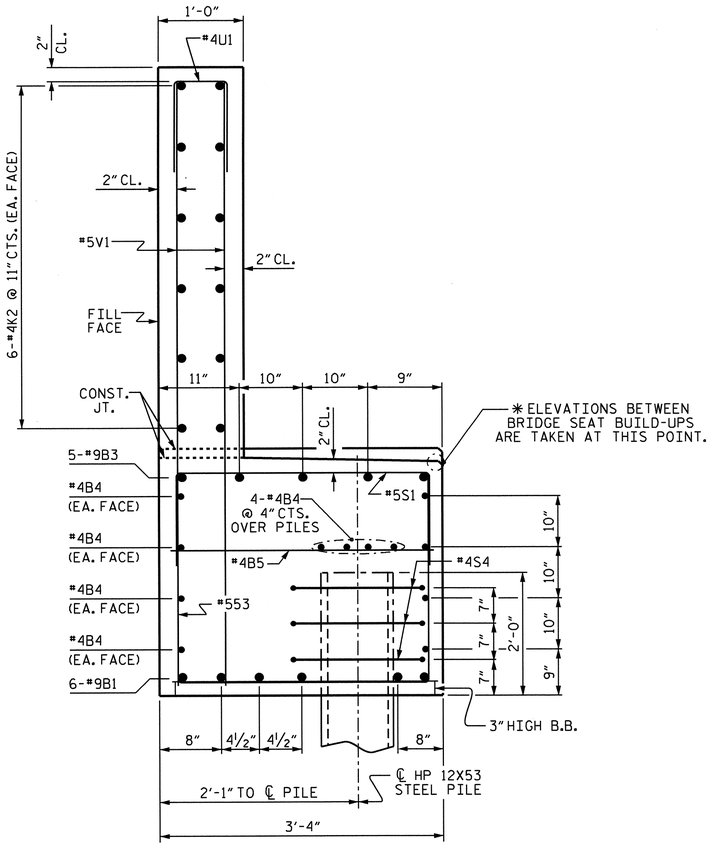

SECTION B-B

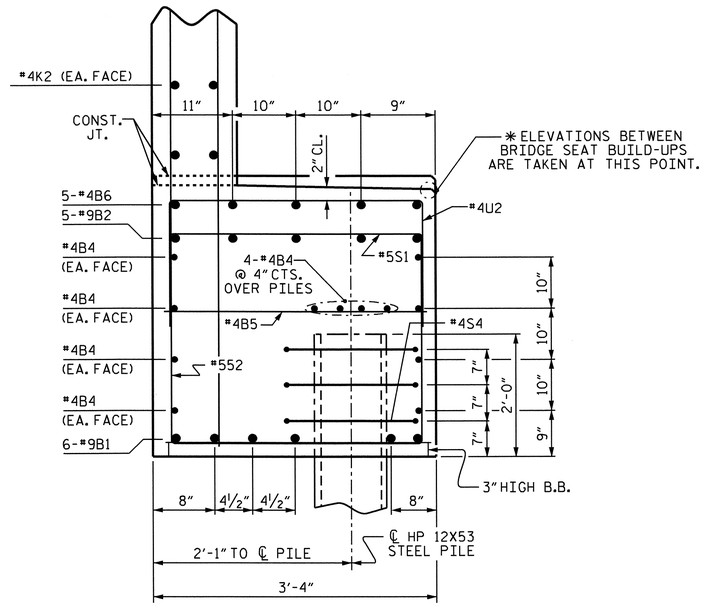

PARTIAL SECTION A-A

BAR TYPES

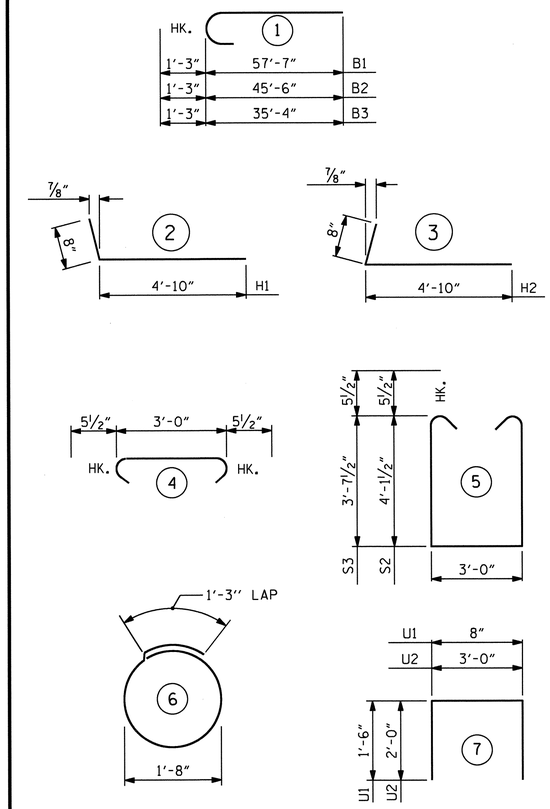

ALL BAR DIMENSIONS ARE OUT TO OUT.

BILL OF MATERIAL

END BENT #1

BAR	NO.	SIZE	TYPE	LENGTH	WEIGHT
B1	12	#9	1	58'-10"	2400
B2	10	#9	1	46'-9"	1590
B3	5	#9	1	36'-7"	622
B4	48	#4	STR	29'-1"	933
B5	30	#4	STR	3'-0"	60
B6	10	#4	STR	18'-8"	125
B7	20	#4	STR	2'-8"	36
H1	26	#4	2	5'-6"	96
H2	26	#4	3	5'-6"	96
K1	8	#4	STR	3'-11"	21
K2	48	#4	STR	29'-1"	933
S1	122	#5	4	3'-11"	498
S2	98	#5	5	12'-2"	1244
S3	24	#5	5	11'-2"	280
S4	54	#4	6	6'-6"	234
U1	101	#4	7	3'-8"	247
U2	36	#4	7	7'-0"	168
V1	202	#5	STR	8'-8"	1826
V2	20	#5	STR	11'-4"	236
V3	20	#5	STR	10'-9"	224
REINFORCING STEEL				LBS.	11,869

CLASS "A" CONCRETE BREAKDOWN

POUR #1	CAP & LOWER WING (LEFT END)	33.4 C.Y.
POUR #2	CAP & LOWER WING (RIGHT END)	31.0 C.Y.
POUR #3	UPPER WING & BACKWALL (LEFT END)	11.7 C.Y.
POUR #4	UPPER WING & BACKWALL (RIGHT END)	11.9 C.Y.
CLASS "A" CONCRETE TOTAL		88.0 C.Y.

HP 12x53 STEEL PILES NO. 18	LIN. FT.	1,800
PILE REDRIVES	EA.	9

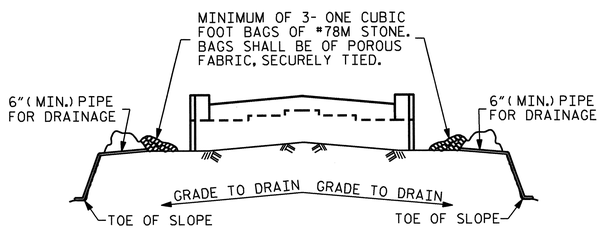

BAGGED STONE AND PIPE SHALL BE PLACED IMMEDIATELY AFTER COMPLETION OF END BENT EXCAVATION. PIPE MAY BE EITHER CONCRETE, CORRUGATED STEEL, CORRUGATED ALUMINUM ALLOY, OR CORRUGATED PLASTIC. PERFORATED PIPE WILL NOT BE ALLOWED.

BAGGED STONE SHALL REMAIN IN PLACE UNTIL THE ENGINEER DIRECTS THAT IT BE REMOVED. THE CONTRACTOR SHALL REMOVE AND DISPOSE OF SILT ACCUMULATIONS AT BAGGED STONE WHEN SO DIRECTED BY THE ENGINEER. BAGS SHALL BE REMOVED AND REPLACED WHENEVER THE ENGINEER DETERMINES THAT THEY HAVE DETERIORATED AND LOST THEIR EFFECTIVENESS.

NO SEPARATE PAYMENT WILL BE MADE FOR THIS WORK AND THE ENTIRE COST OF THIS WORK SHALL BE INCLUDED IN THE UNIT CONTRACT PRICE BID FOR THE SEVERAL PAY ITEMS.

TEMPORARY DRAINAGE AT END BENT

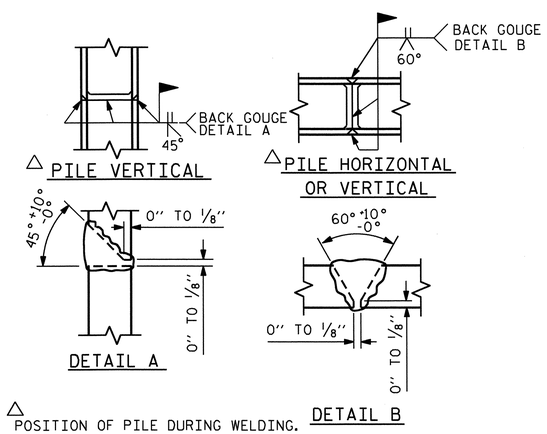

△ POSITION OF PILE DURING WELDING.

PILE SPLICE DETAILS

PROJECT NO. U-0209B

MECKLENBURG COUNTY

STATION: 41+57.69 -L-

SHEET 3 OF 3

STATE OF NORTH CAROLINA
DEPARTMENT OF TRANSPORTATION
RALEIGH

SUBSTRUCTURE

END BENT #1

NORTH CAROLINA PROFESSIONAL SEAL 030878 ENGINEER KEVIN FISCHER 11/20/12

REVISIONS						SHEET NO.
NO.	BY:	DATE:	NO.	BY:	DATE:	S-31
1			3			TOTAL SHEETS
2			4			117

STR. #1

DRAWN BY : R. G. EMERSON DATE : 07/11
CHECKED BY : K. D. LAYNE DATE : 08/11

sutton 11-SEP-2012 09:00
R:\Structures\Plans\Str1\U0209B_SD_E*_01.dgn
sutton

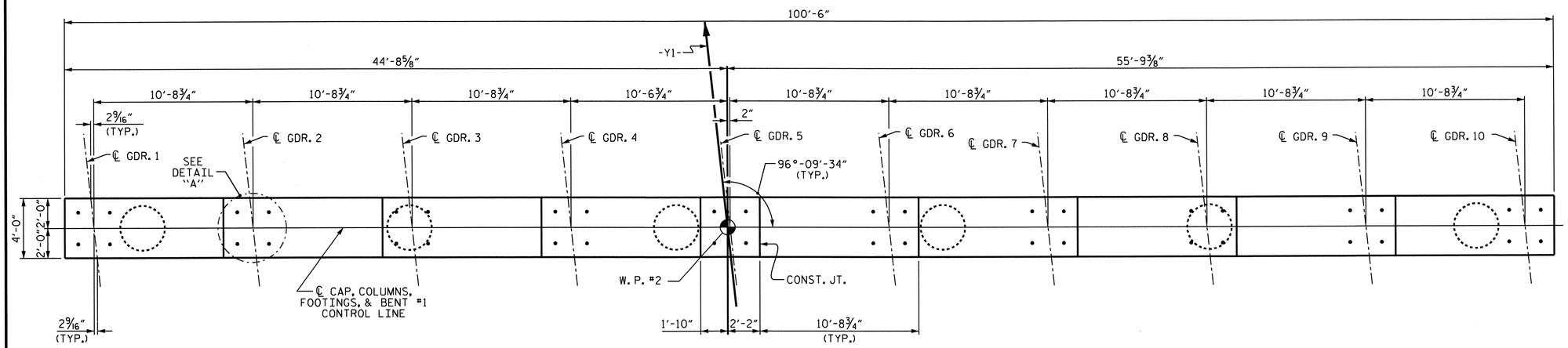

PLAN

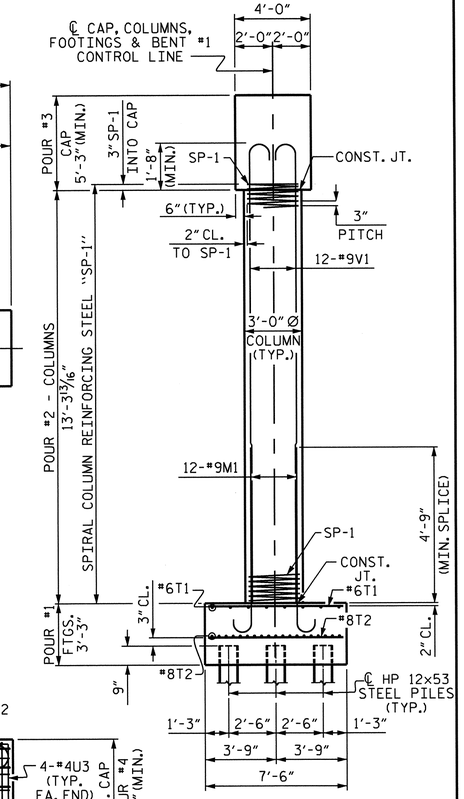

END ELEVATION

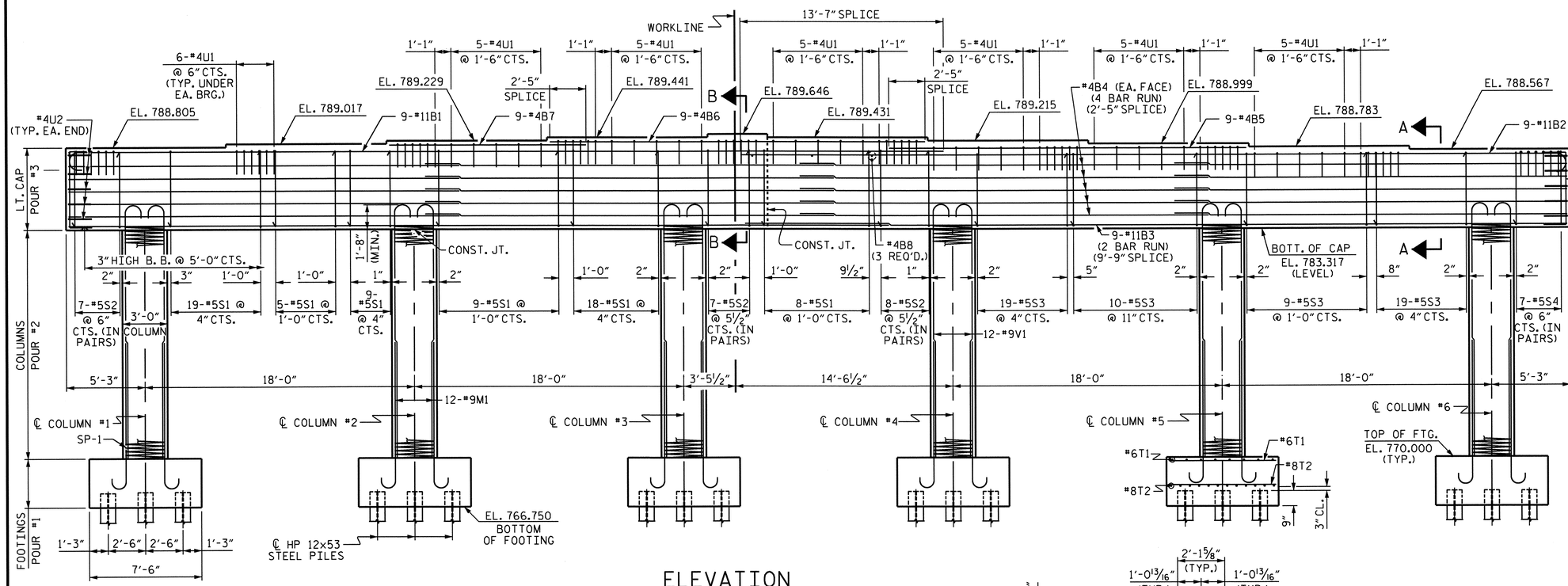

ELEVATION

REINFORCING STEEL, DIMENSIONS AND DETAILS ARE TYPICAL FOR EACH COLUMN AND FOOTING UNLESS OTHERWISE NOTED

NOTE: INVERT ALTERNATE STIRRUPS

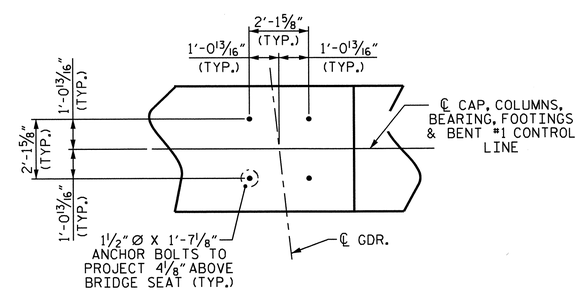

DETAIL "A"

NOTES

STIRRUPS IN CAP MAY BE SHIFTED AS NECESSARY TO CLEAR ANCHOR BOLTS.

HOOKS ON "V" BARS MAY BE TURNED AS NECESSARY FOR PLACING REINFORCING STEEL.

FOR PILE SPLICE DETAILS, SEE END BENT SHEETS.

PROJECT NO. U-0209B
MECKLENBURG COUNTY
STATION: 41+57.69 -L-

SHEET 1 OF 2

STATE OF NORTH CAROLINA
DEPARTMENT OF TRANSPORTATION
RALEIGH

SUBSTRUCTURE

BENT #1

NORTH CAROLINA PROFESSIONAL SEAL 30878 ENGINEER W. KEVIN FISCHER 11/20/12

REVISIONS						SHEET NO.
NO.	BY:	DATE:	NO.	BY:	DATE:	S-32
1			3			TOTAL SHEETS
2			4			117

STR. #1

DRAWN BY : R. G. EMERSON DATE : 08/11
CHECKED BY : K. D. LAYNE DATE : 9/9/11

11-SEP-2012 09:00
R:\structures\Plans\Str1\U0209B_SD_B*_01.dgn
lsutton

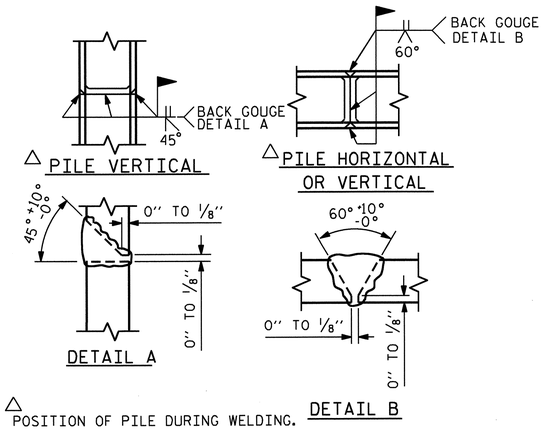

△ POSITION OF PILE DURING WELDING.

PILE SPLICE DETAILS

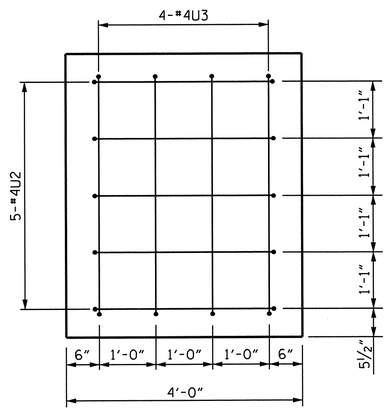

END OF CAP VIEW

(TYP. EA. END)

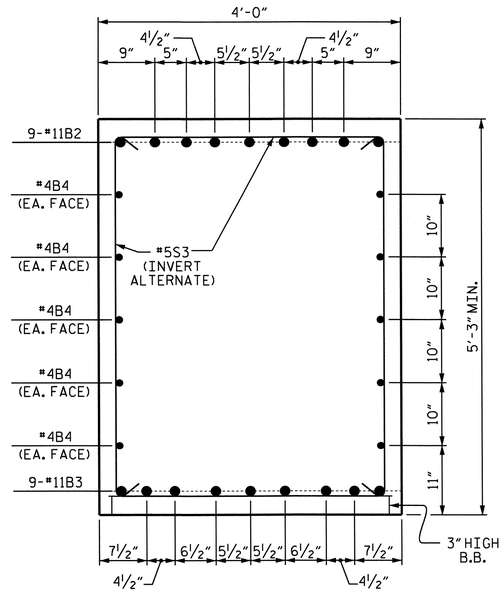

SECTION A-A

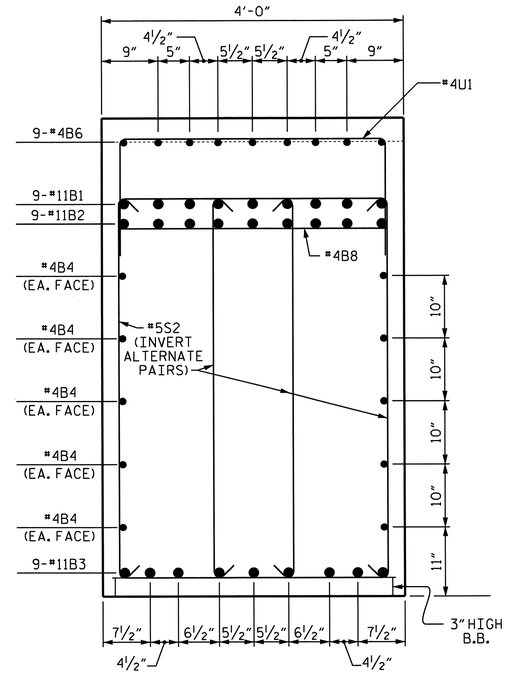

SECTION B-B

BAR TYPES

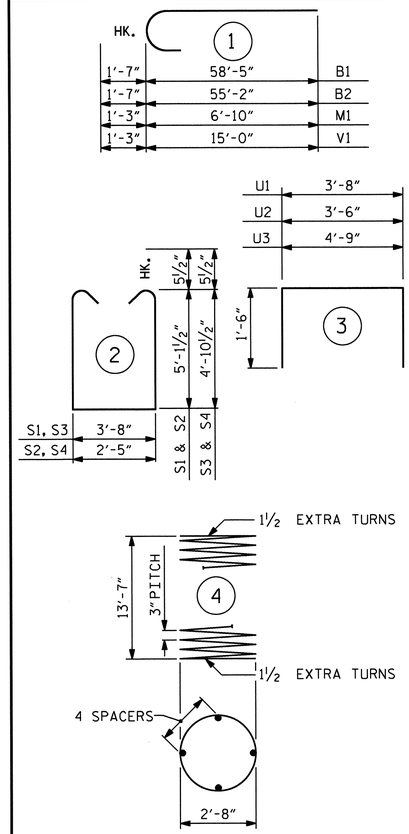

ALL BAR DIMENSIONS ARE OUT TO OUT.

BILL OF MATERIAL

BENT #1

BAR	NO.	SIZE	TYPE	LENGTH	WEIGHT
B1	9	#11	1	60'-0"	2869
B2	9	#11	1	56'-9"	2714
B3	18	#11	STR	55'-0"	5252
B4	40	#4	STR	26'-11"	719
B5	9	#4	STR	24'-1"	145
B6	9	#4	STR	25'-1"	151
B7	9	#4	STR	13'-2"	79
B8	3	#4	STR	3'-8"	7
M1	72	#9	1	8'-1"	1979
S1	68	#5	2	14'-10"	1052
S2	44	#5	2	13'-7"	623
S3	57	#5	2	14'-4"	852
S4	14	#5	2	13'-1"	191
T1	96	#6	STR	7'-2"	1033
T2	186	#8	STR	7'-2"	3559
U1	90	#4	3	6'-8"	401
U2	10	#4	3	6'-6"	43
U3	8	#4	3	7'-9"	41
V1	72	#9	1	16'-3"	3978
REINFORCING STEEL				LBS.	25,688
SP-1	6	**	4	474'-5"	1901
SPIRAL COLUMN REINFORCING STEEL				LBS.	1,901

CLASS "A" CONCRETE BREAKDOWN

POUR #1 (FOOTINGS)	40.6 C.Y.
POUR #2 (COLUMNS)	20.9 C.Y.
POUR #3 (CAP-LEFT END)	40.7 C.Y.
POUR #4 (CAP-RIGHT END)	45.1 C.Y.
TOTAL CLASS "A" CONCRETE	147.3 C.Y.

HP 12X53 STEEL PILES		
No. 42	LIN. FT.	3,780
PILE REDRIVES	EA.	21
FOUNDATION EXCAVATION		LUMP SUM

** THE SP-1 SPIRAL REINFORCING STEEL SHALL BE W20 OR D-20 COLD DRAWN WIRE OR #4 PLAIN OR DEFORMED BAR.

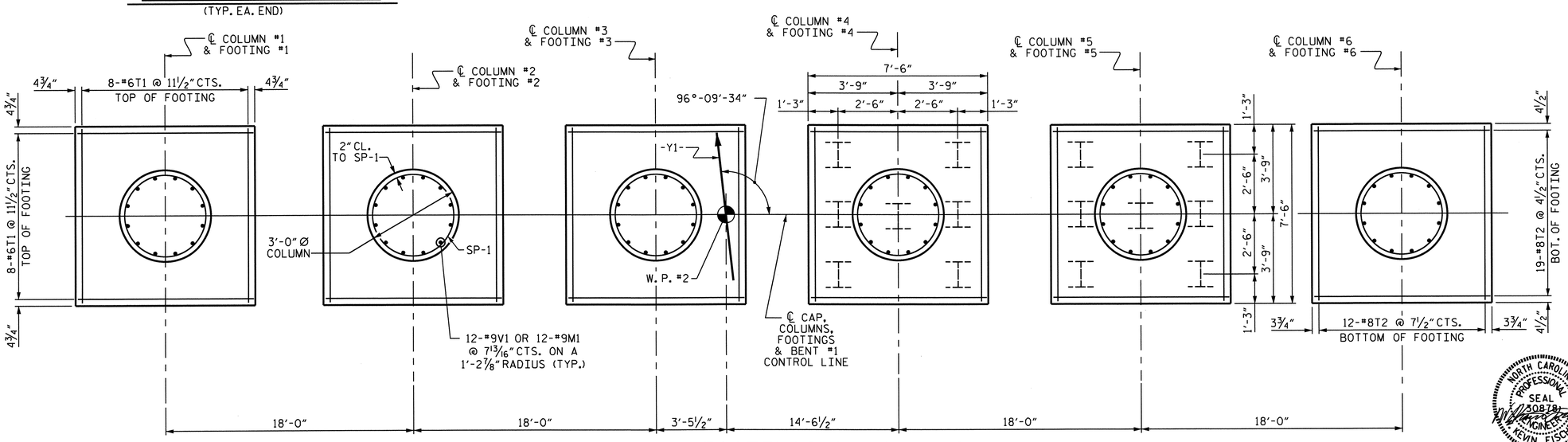

PLAN OF FOOTINGS & COLUMNS

REINFORCING STEEL, DIMENSIONS, AND DETAILS ARE TYPICAL FOR EACH COLUMN AND FOOTING UNLESS OTHERWISE NOTED.

PROJECT NO. U-0209B
MECKLENBURG COUNTY
STATION: 41+57.69 -L-

SHEET 2 OF 2

STATE OF NORTH CAROLINA
DEPARTMENT OF TRANSPORTATION
RALEIGH

SUBSTRUCTURE

BENT #1

NORTH CAROLINA PROFESSIONAL SEAL 30878 ENGINEER KEVIN FISCHER
11/20/12

REVISIONS						SHEET NO.
NO.	BY:	DATE:	NO.	BY:	DATE:	S-33
1			3			TOTAL SHEETS
2			4			117

DRAWN BY : R. G. EMERSON DATE : 07/11
CHECKED BY : K. D. LAYNE DATE : 9/9/11

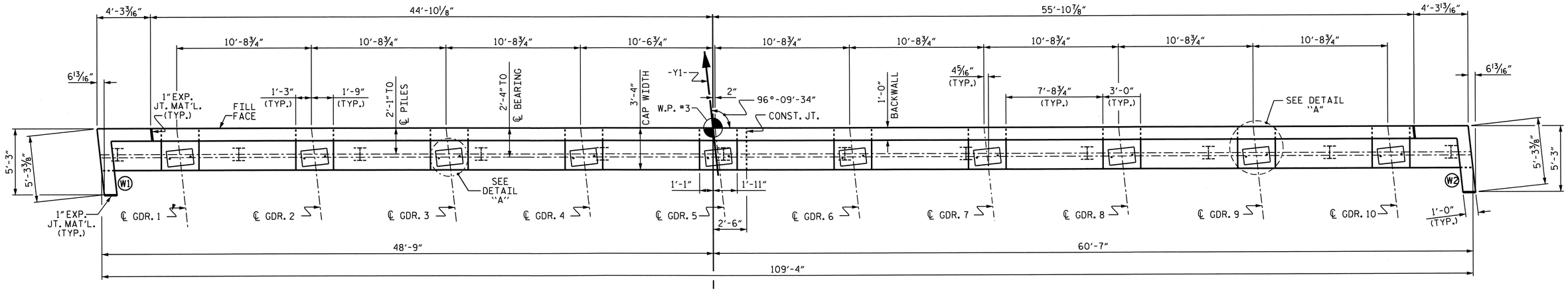

PLAN

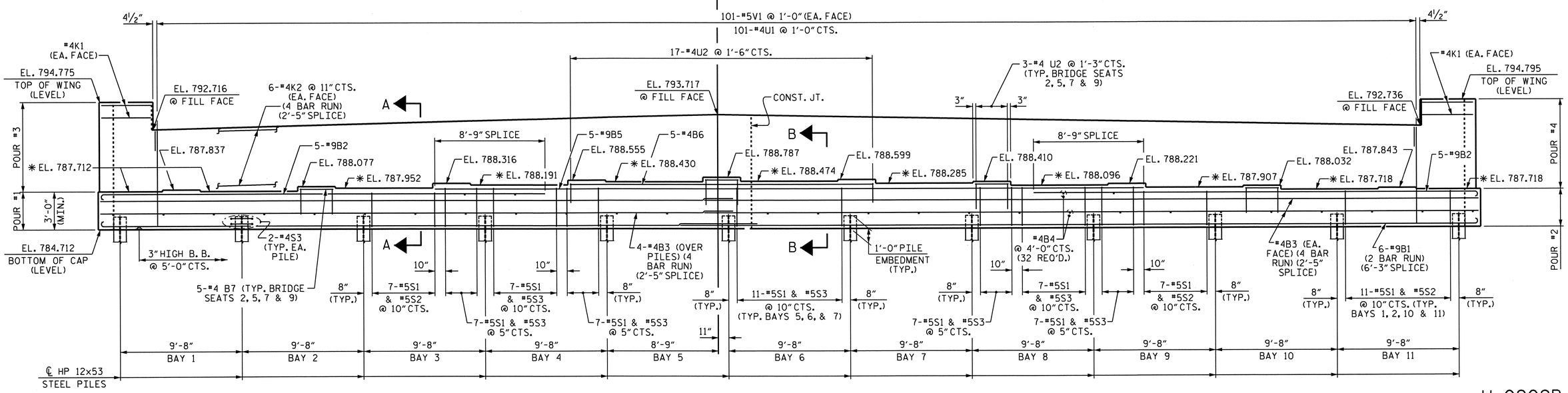

ELEVATION

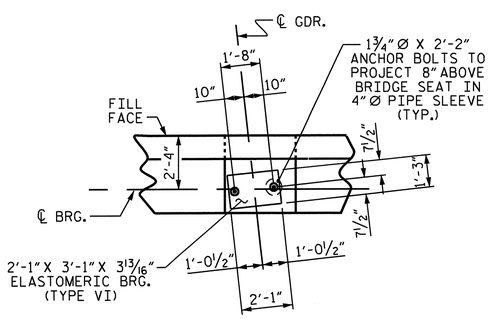

DETAIL "A"

(TYP. EA. GIRDER).

NOTES

STIRRUPS IN CAP MAY BE SHIFTED AS NECESSARY TO CLEAR ANCHOR BOLTS.

FOR PIPE INSERT DETAILS, SEE BEARINGS SHEET.

BACKWALL SHALL BE PLACED BEFORE APPLYING THE EPOXY PROTECTIVE COATING.

EPOXY COAT THE END BENT CAP AFTER ADJUSTMENTS ARE MADE TO BEARINGS AND ANCHOR BOLTS ARE GROUTED.

* THE TOP SURFACE OF THE CAP EXCEPT THE BRIDGE SEAT BUILDUPS SHALL BE SLOPED TRANSVERSELY FROM THE FILL FACE TO THE BACK FACE AT THE RATE OF 2%.

THE TOP SURFACE AREAS OF THE CAPS SHALL BE CURED IN ACCORDANCE WITH THE STANDARD SPECIFICATIONS EXCEPT THE MEMBRANE CURING COMPOUND METHOD SHALL NOT BE USED.

FOR GALVANIZED REINFORCING STRAPS, SEE MSE WALL PLANS.

FOR MSE RETAINING WALLS, SEE SPECIAL PROVISIONS.

NORTH CAROLINA PROFESSIONAL SEAL 30878 ENGINEER KEVIN FISCHER 11/20/12

PROJECT NO. U-0209B
MECKLENBURG COUNTY
STATION: 41+57.69 -L-

SHEET 1 OF 3

STATE OF NORTH CAROLINA
DEPARTMENT OF TRANSPORTATION
RALEIGH

SUBSTRUCTURE

END BENT #2

REVISIONS						SHEET NO.
NO.	BY:	DATE:	NO.	BY:	DATE:	S-34
1			3			TOTAL SHEETS
2			4			117

STR. #1

DRAWN BY : R. G. EMERSON DATE : 07/11
CHECKED BY : K. D. LAYNE DATE : 08/11

11-SEP-2012 09:00
R:\structures\Plans\Str1\U0209B_SD_E*_01.dgn
lsutton

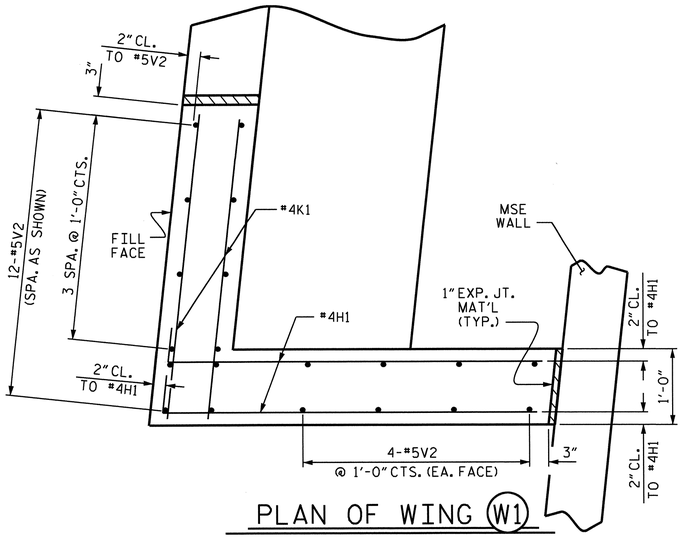

PLAN OF WING (W1)

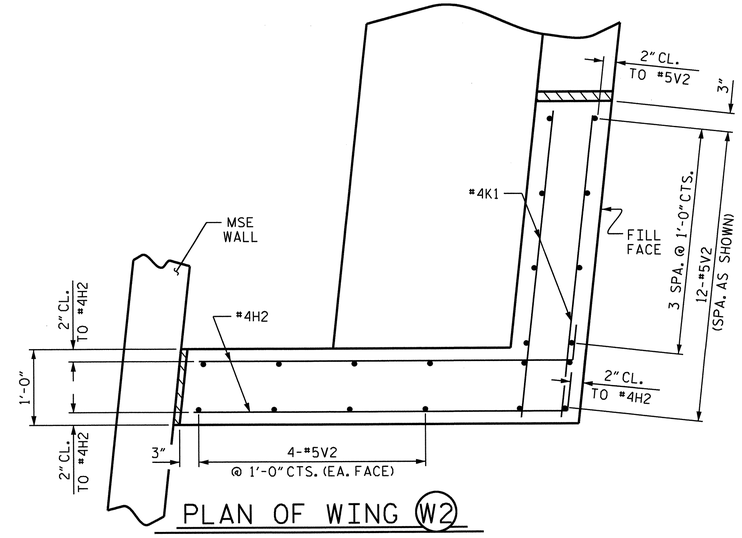

PLAN OF WING (W2)

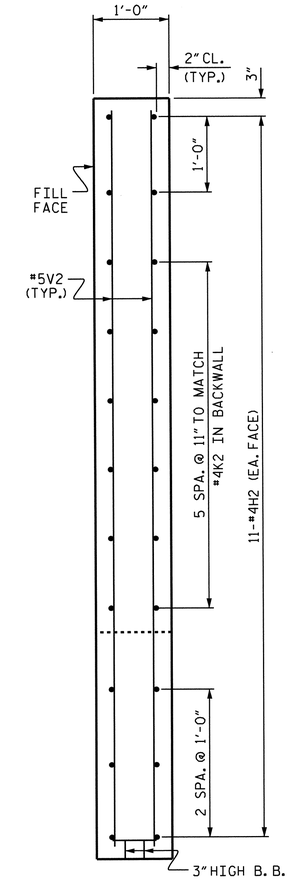

Y-Y

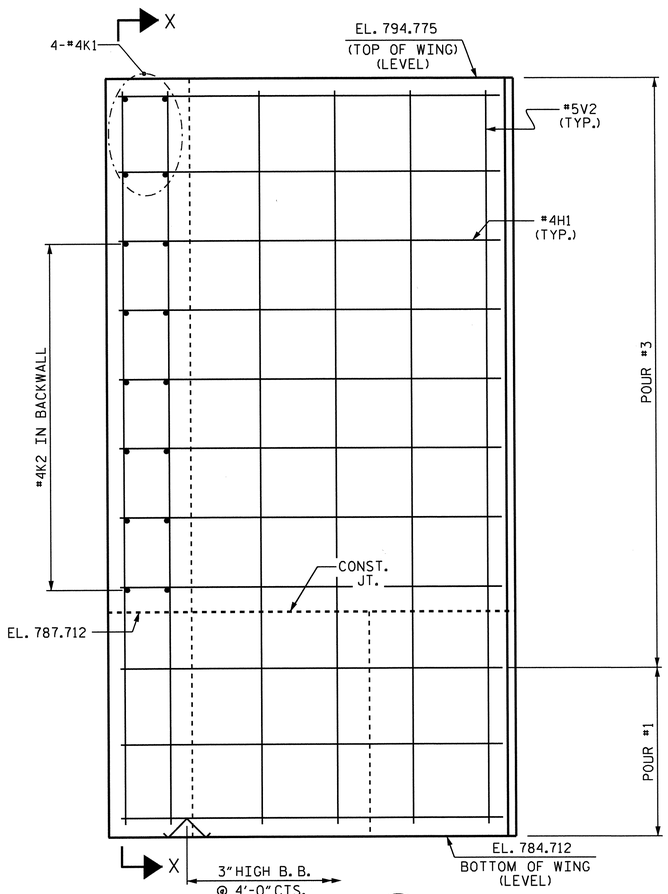

ELEVATION (W1)

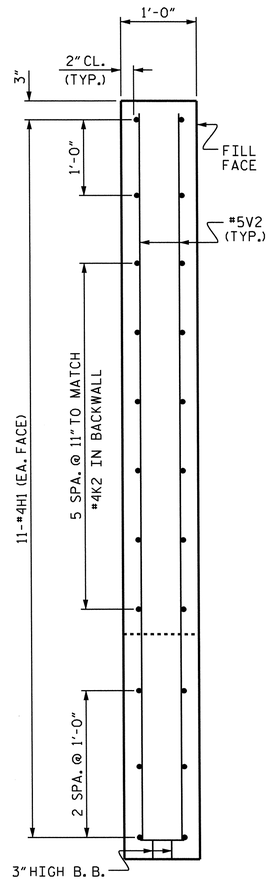

X-X

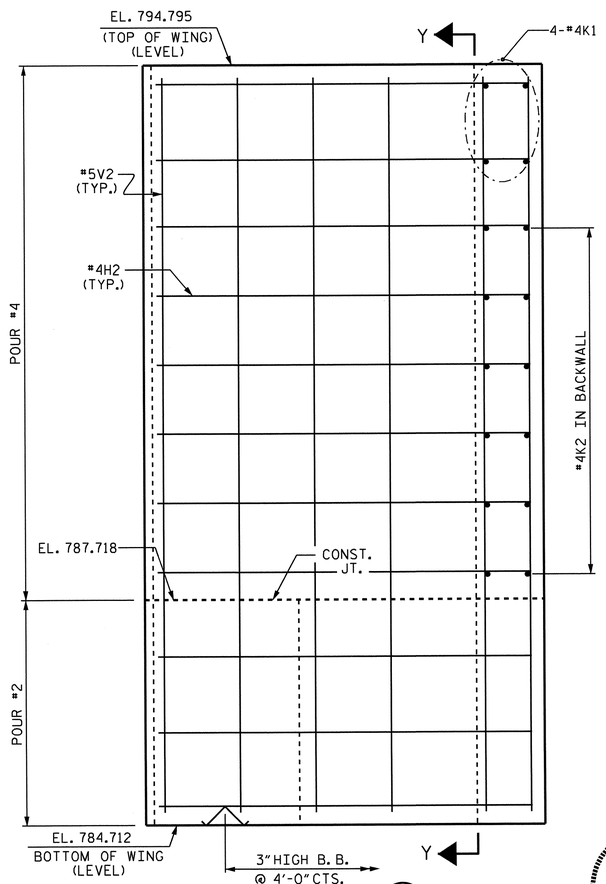

ELEVATION (W2)

PROJECT NO. U-0209B
MECKLENBURG COUNTY
STATION: 41+57.69 -L-

SHEET 2 OF 3

STATE OF NORTH CAROLINA
DEPARTMENT OF TRANSPORTATION
RALEIGH

SUBSTRUCTURE

END BENT #2

NORTH CAROLINA PROFESSIONAL SEAL 030878 ENGINEER KEVIN FISCHER 11/20/12

REVISIONS						SHEET NO.
NO.	BY:	DATE:	NO.	BY:	DATE:	S-35
1			3			TOTAL SHEETS
2			4			117

STR. #1

DRAWN BY : R. G. EMERSON DATE : 07/11
CHECKED BY : K. D. LAYNE DATE : 08/11

11-SEP-2012 08:59
R:\structures\Plans\Str1\U0209B_SD_E*_01.dgn
lsutton

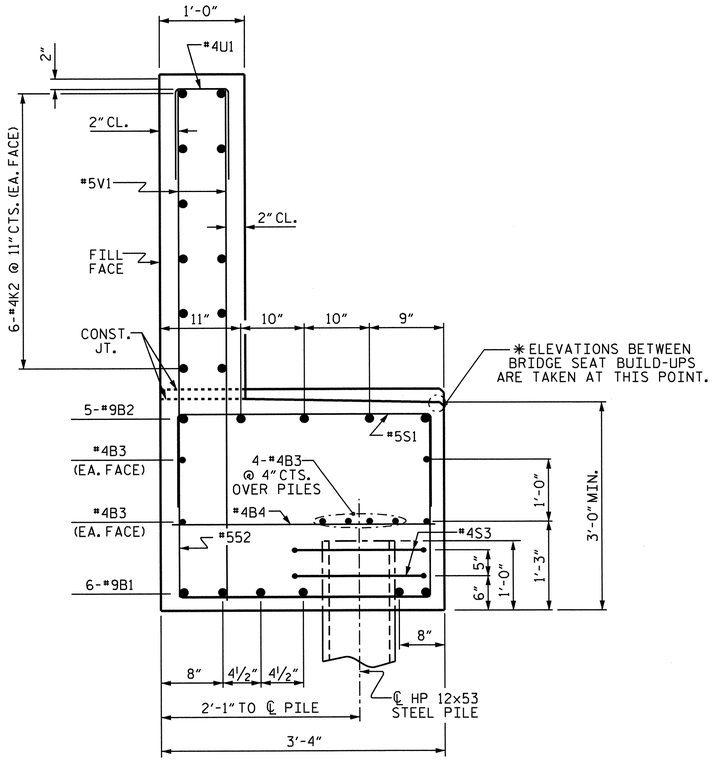

SECTION A-A

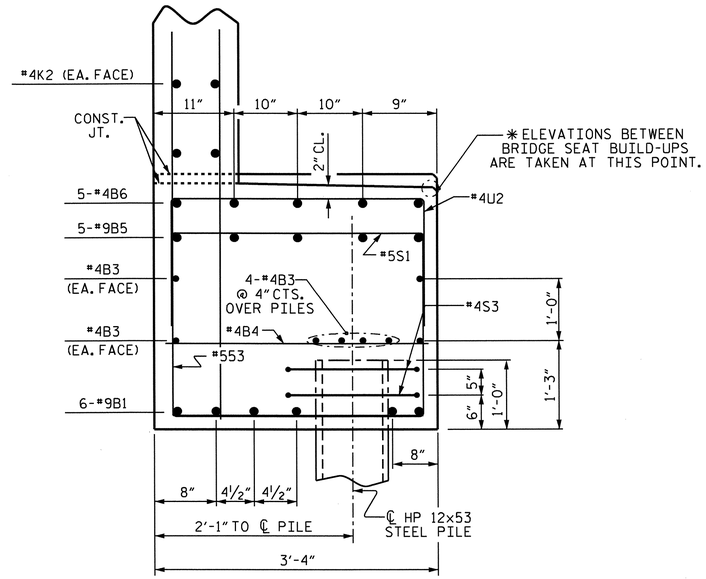

PARTIAL SECTION B-B

BAR TYPES

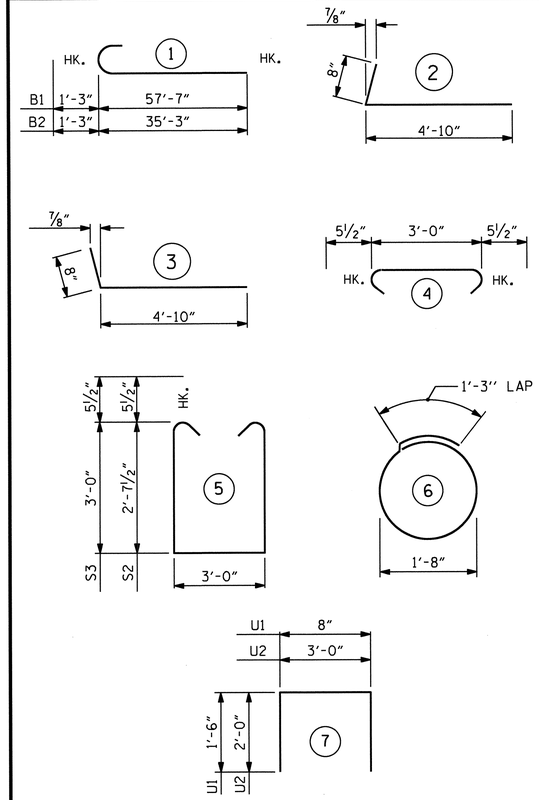

ALL BAR DIMENSIONS ARE OUT TO OUT.

BILL OF MATERIAL

END BENT #2

BAR	NO.	SIZE	TYPE	LENGTH	WEIGHT
B1	12	#9	1	58'-10"	2400
B2	10	#9	1	36'-6"	1241
B3	32	#4	STR	29'-1"	622
B4	32	#4	STR	3'-0"	64
B5	5	#9	STR	56'-3"	956
B6	5	#4	STR	24'-1"	80
B7	20	#4	STR	2'-8"	36
H1	22	#4	2	5'-6"	81
H2	22	#4	3	5'-6"	81
K1	8	#4	STR	3'-11"	21
K2	24	#4	STR	29'-1"	466
S1	133	#5	4	3'-11"	543
S2	133	#5	5	9'-2"	1272
S3	24	#4	6	6'-6"	104
U1	101	#4	7	3'-8"	247
U2	29	#4	7	7'-0"	136
V1	202	#5	STR	7'-8"	1615
V2	40	#5	STR	9'-8"	403

REINFORCING STEEL LBS. 10,368

CLASS "A" CONCRETE BREAKDOWN

POUR #1	CAP & LOWER WING (LEFT END)	23.1 C.Y.
POUR #2	CAP & LOWER WING (RIGHT END)	23.2 C.Y.
POUR #3	UPPER WING & BACKWALL (LEFT END)	13.3 C.Y.
POUR #4	UPPER WING & BACKWALL (RIGHT END)	11.8 C.Y.

CLASS "A" CONCRETE TOTAL 71.4 C.Y.

HP 12x53 STEEL PILES NO. 12 LIN. FT. 1,200

PILE REDRIVES EA. 6

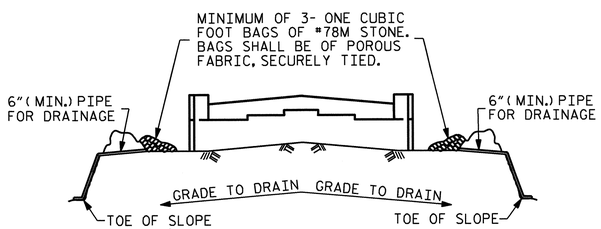

BAGGED STONE AND PIPE SHALL BE PLACED IMMEDIATELY AFTER COMPLETION OF END BENT EXCAVATION. PIPE MAY BE EITHER CONCRETE, CORRUGATED STEEL, CORRUGATED ALUMINUM ALLOY, OR CORRUGATED PLASTIC. PERFORATED PIPE WILL NOT BE ALLOWED.

BAGGED STONE SHALL REMAIN IN PLACE UNTIL THE ENGINEER DIRECTS THAT IT BE REMOVED. THE CONTRACTOR SHALL REMOVE AND DISPOSE OF SILT ACCUMULATIONS AT BAGGED STONE WHEN SO DIRECTED BY THE ENGINEER. BAGS SHALL BE REMOVED AND REPLACED WHENEVER THE ENGINEER DETERMINES THAT THEY HAVE DETERIORATED AND LOST THEIR EFFECTIVENESS.

NO SEPARATE PAYMENT WILL BE MADE FOR THIS WORK AND THE ENTIRE COST OF THIS WORK SHALL BE INCLUDED IN THE UNIT CONTRACT PRICE BID FOR THE SEVERAL PAY ITEMS.

TEMPORARY DRAINAGE AT END BENT

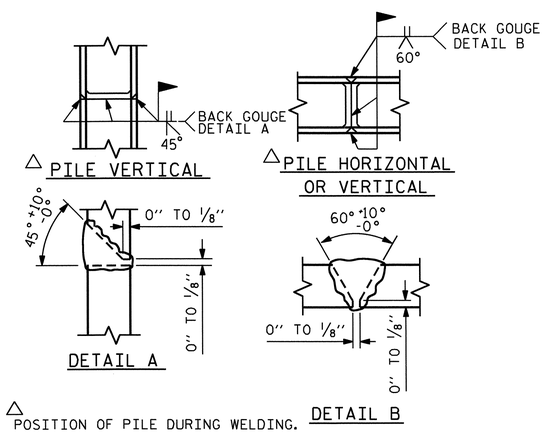

△ POSITION OF PILE DURING WELDING.

PILE SPLICE DETAILS

PROJECT NO. U-0209B

MECKLENBURG COUNTY

STATION: 41+57.69 -L-

SHEET 3 OF 3

STATE OF NORTH CAROLINA
DEPARTMENT OF TRANSPORTATION
RALEIGH

SUBSTRUCTURE

END BENT #2

NORTH CAROLINA PROFESSIONAL SEAL 20878 ENGINEER KEVIN FISCHER 11/20/12

REVISIONS						SHEET NO.
NO.	BY:	DATE:	NO.	BY:	DATE:	S-36
1			3			TOTAL SHEETS
2			4			117

STR. #1

DRAWN BY : R. G. EMERSON DATE : 07/11
CHECKED BY : K. D. LAYNE DATE : 08/11

lsutton 11-SEP-2012 08:59
R:\Structures\Plans\Str1\U0209B_SD_E*_01.dgn
lsutton

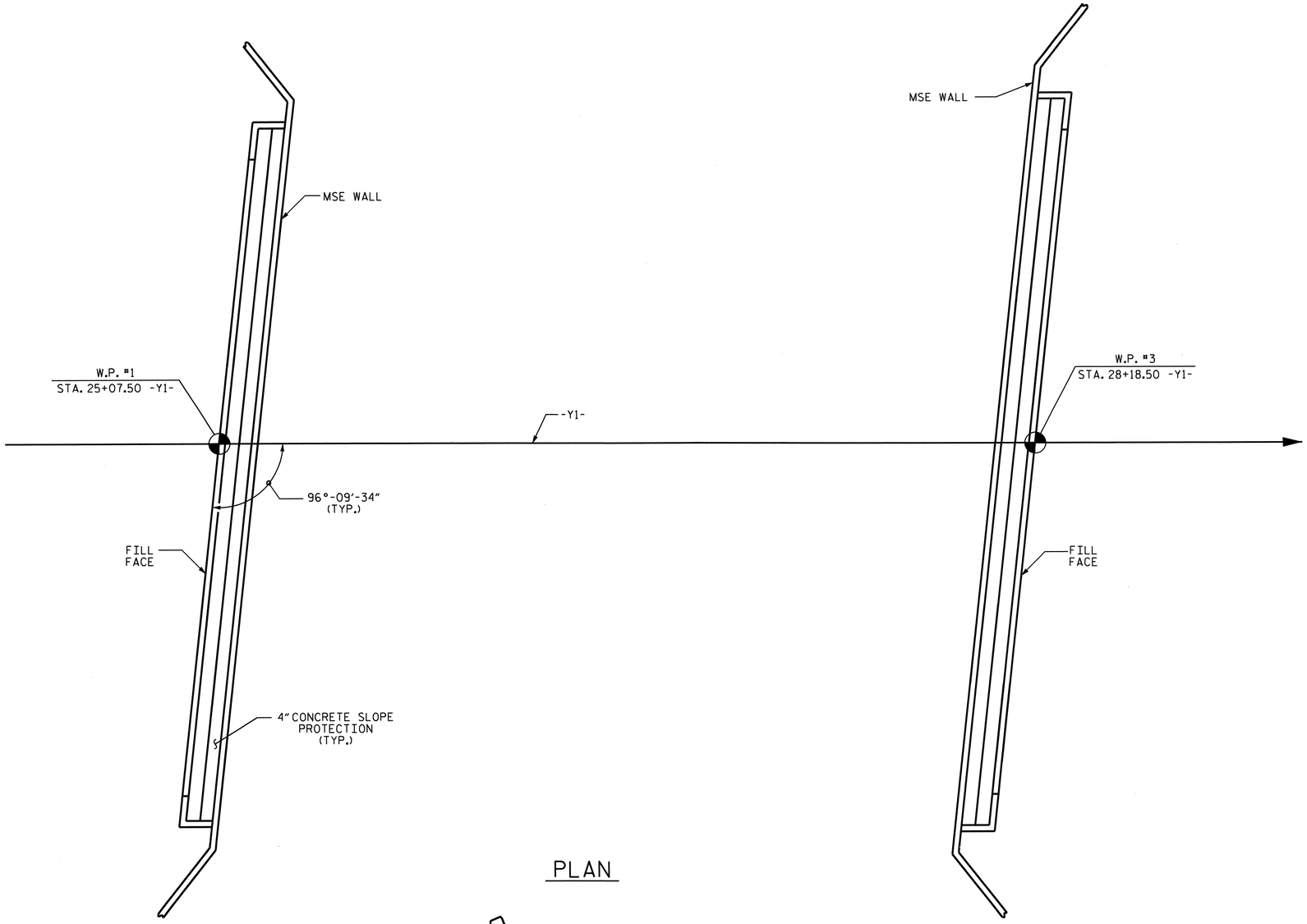

PLAN

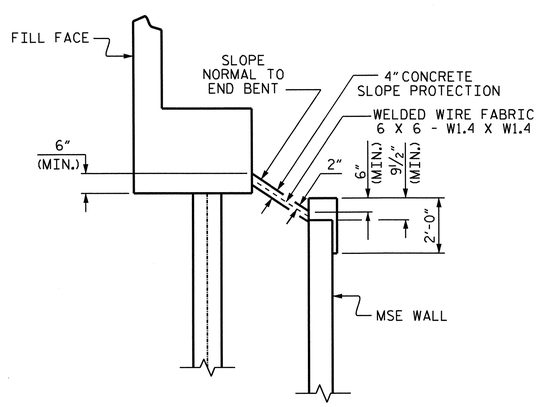

SECTION ALONG ℄ ROADWAY

NOTES

SLOPE PROTECTION SHALL BE PLACED UNDER THE ENDS OF THE BRIDGE AS SHOWN IN THE DETAILS. MEASUREMENT AND PAYMENT SHALL BE AS PRESCRIBED IN SECTION 462 OF THE STANDARD SPECIFICATIONS.

SLOPE PROTECTION SHALL CONSIST OF 4" POURED-IN-PLACE CONCRETE PAVING AS SHOWN IN THE DETAILS ON THIS SHEET. CONCRETE SHALL BE CLASS "B". THE CONCRETE SURFACE SHALL BE FINISHED TO THE SATISFACTION OF THE ENGINEER. WELDED WIRE FABRIC REINFORCING SHALL BE 6 X 6 - W1.4 X W1.4, 20" WIDE. THE COST OF THE WELDED WIRE FABRIC SHALL BE INCLUDED IN THE CONTRACT UNIT PRICE BID PER SQUARE YARD FOR SLOPE PROTECTION.

BRIDGE @ 41+57.69 -L-	4" SLOPE PROTECTION	WELDED WIRE FABRIC 20 INCHES WIDE
	SQUARE YARDS	APPROX. L.F.
END BENT #1	25	105
END BENT #2	25	105

PROJECT NO. U-0209B
MECKLENBURG COUNTY
STATION: 41+57.69 -L-

STATE OF NORTH CAROLINA
DEPARTMENT OF TRANSPORTATION
RALEIGH

SLOPE PROTECTION DETAILS

NORTH CAROLINA PROFESSIONAL SEAL 30878 ENGINEER KEVIN FISCHER
11/20/12

REVISIONS						SHEET NO.
NO.	BY:	DATE:	NO.	BY:	DATE:	S-37
1			3			TOTAL SHEETS
2			4			117

STR. #1

DRAWN BY : R. G. EMERSON DATE : 09/11
CHECKED BY : T. R. PETERSON DATE : 10/11

11-SEP-2012 09:56
R:\structures\Plans\Str1\U0209B_SD_SP_01.dgn
lsutton

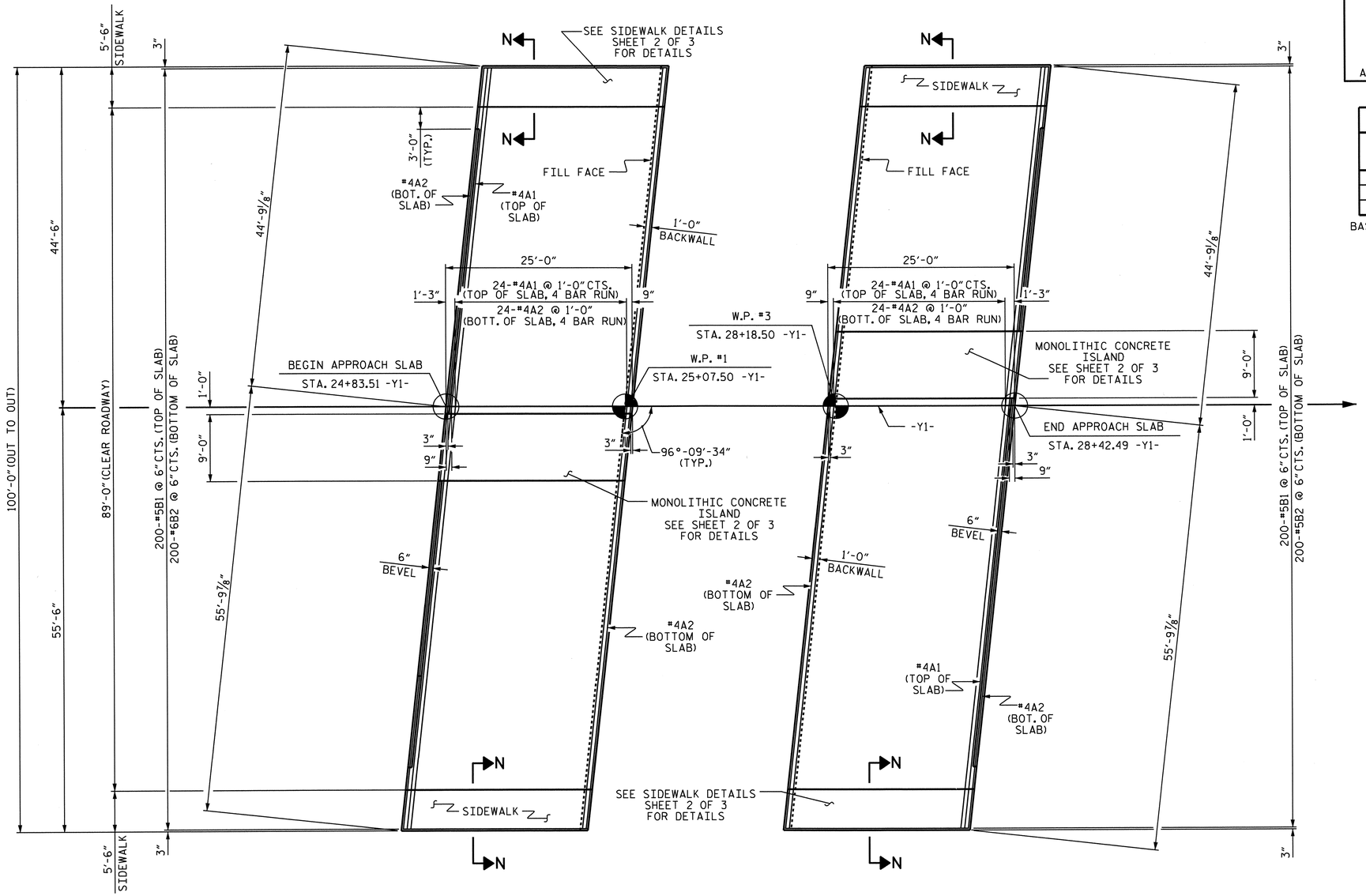

PLAN @ END BENT #1 PLAN @ END BENT #2

DIMENSIONS SHOWN ARE TYPICAL FOR BOTH APPROACH SLABS.

BAR TYPE

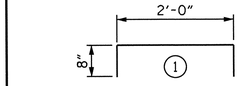

ALL BAR DIMENSIONS ARE OUT TO OUT

ELASTOMERIC CONCRETE

END BENT NO.	ELASTOMERIC CONCRETE (CU. FT.)
1	15.4
2	15.4
TOTAL	30.8

BASED ON THE MINIMUM BLOCKOUT SHOWN.

SPLICE CHART

#4A1	2'-0"
#4A2	1'-9"

BILL OF MATERIAL

FOR ONE APPROACH SLAB (2 REQUIRED)

BAR	NO.	SIZE	TYPE	LENGTH	WEIGHT
*A1	100	#4	STR	26'-7"	1776
A2	104	#4	STR	26'-5"	1835
*B1	200	#5	STR	23'-8"	4937
B2	200	#6	STR	24'-7"	7385
*B3	14	#4	STR	24'-8"	231
*G1	17	#4	STR	8'-6"	97
*G2	50	#4	STR	5'-0"	167
*U1	16	#4	1	3'-4"	36
REINFORCING STEEL				LBS.	9220
* EPOXY COATED REINFORCING STEEL				LBS.	7244

CLASS AA CONCRETE		
POUR #1 - APPROACH SLAB	C. Y.	108.2
POUR #2 - SIDEWALKS & ISLAND	C. Y.	9.1
TOTAL	C. Y.	117.3

NOTES

APPROACH SLAB SHALL NOT BE CONSTRUCTED PRIOR TO COMPLETION OF THE BRIDGE DECK.

THE JOINT SHALL BE SAWED PRIOR TO THE CASTING OF THE SIDEWALKS AND CONCRETE ISLAND.

GROOVED CONTRACTION JOINT, 1/2" IN DEPTH, SHALL BE TOOLED IN ALL EXPOSED FACES OF THE SIDEWALKS AND CONCRETE ISLAND IN ACCORDANCE WITH ARTICLE 825-10(B) OF THE STANDARD SPECIFICATIONS. THE CONTRACTION JOINT SHALL BE LOCATED AT A SPACING OF 8FT. TO 10FT. BETWEEN EXPANSION JOINTS. NO CONTRACTION JOINTS WILL BE REQUIRED FOR SEGMENTS LESS THAN 10 FEET IN LENGTH.

FOR FOAM JOINT SEALS, SEE SPECIAL PROVISIONS.

THE NOMINAL UNCOMPRESSED SEAL WIDTH OF THE FOAM JOINT SEAL SHALL BE 3/16" AT END BENT #1 AND 2 1/2" AT END BENT #2.

FOR ELASTOMERIC CONCRETE, SEE SPECIAL PROVISIONS.

FOR GALVANIZED REINFORCING STRAPS AND BACKFILL MATERIAL, SEE MSE RETAINING WALL PLANS AND SPECIAL PROVISIONS.

PROJECT NO. U-0209B
MECKLENBURG COUNTY
STATION: 41+57.69 -L-

SHEET 1 OF 3

STATE OF NORTH CAROLINA
DEPARTMENT OF TRANSPORTATION
RALEIGH

BRIDGE APPROACH SLAB FOR FLEXIBLE PAVEMENT

NORTH CAROLINA PROFESSIONAL SEAL 30878 ENGINEER K. KEVIN FISCHER
11/20/12

REVISIONS						SHEET NO.
NO.	BY:	DATE:	NO.	BY:	DATE:	S-38
1			3			TOTAL SHEETS
2			4			117

STR. #1

DRAWN BY : R. G. EMERSON DATE : 05/11
CHECKED BY : K. D. LAYNE DATE : 06/11

11-SEP-2012 08:59
R:\structures\Plans\Str1\U0209B_SD_AS_01.dgn
lsutton

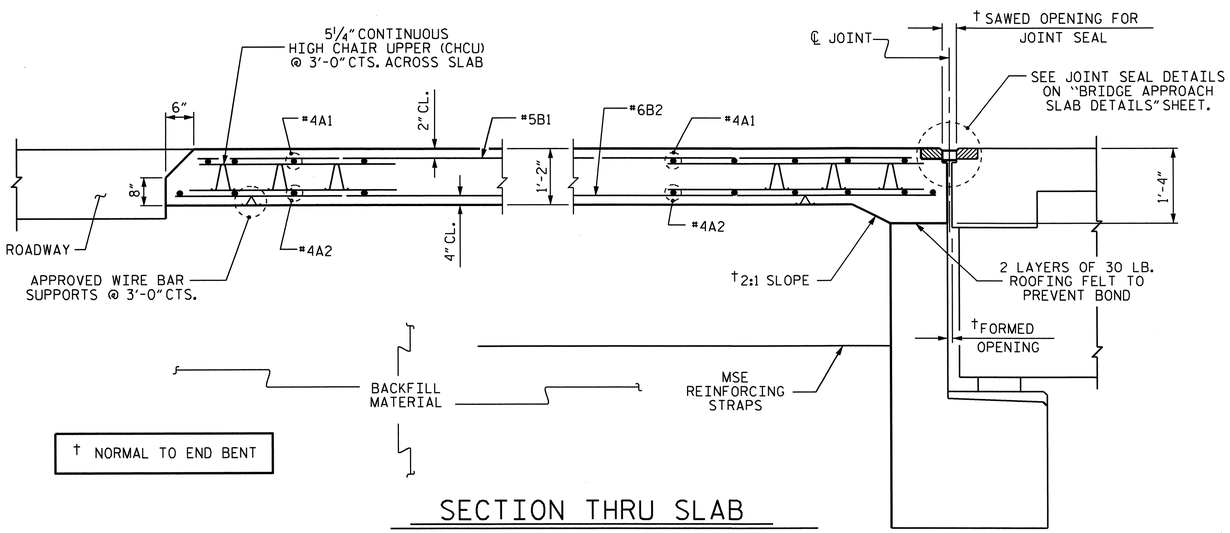

SECTION THRU SLAB

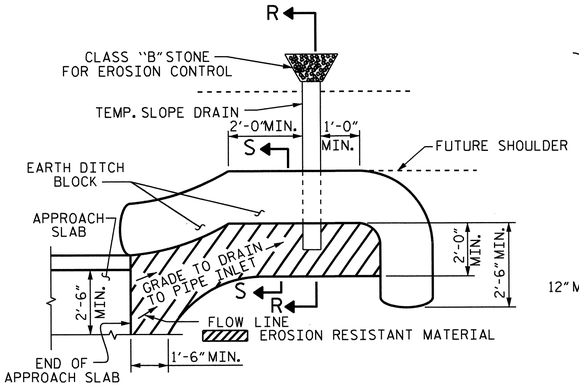

NOTE: IMMEDIATELY AFTER THE CONSTRUCTION OF THE APPROACH SLAB, THE CONTRACTOR SHALL PROVIDE TEMPORARY BERM AND SLOPE DRAIN. CONTRACTOR SHALL GRADE TO PIPE INLET AND PROVIDE EROSION RESISTANT MATERIAL AS SHOWN. THE EROSION RESISTANT MATERIAL SHALL BE EITHER 1) ASPHALT PLANT MIX, TYPE 1 OR TYPE 2, MIN. 2" DEPTH, 2) EROSION CONTROL MAT, OR 3) CONCRETE, AS DIRECTED BY THE ENGINEER. THE SLOPE DRAIN SHALL CONSIST OF A NON-PERFORATED TEMPORARY DRAINAGE PIPE, 12 INCHES IN DIAMETER.

PLAN VIEW

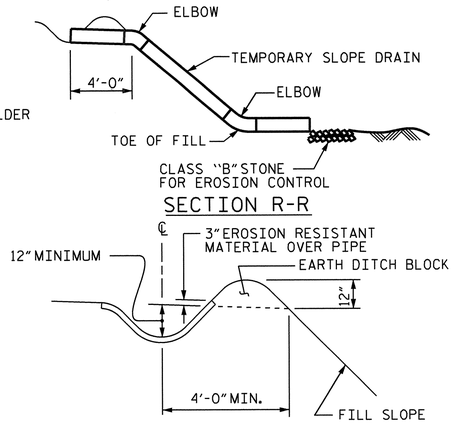

TEMPORARY BERM AND SLOPE DRAIN DETAILS

(TO BE USED WHEN SHOULDER BERM GUTTER IS REQUIRED)

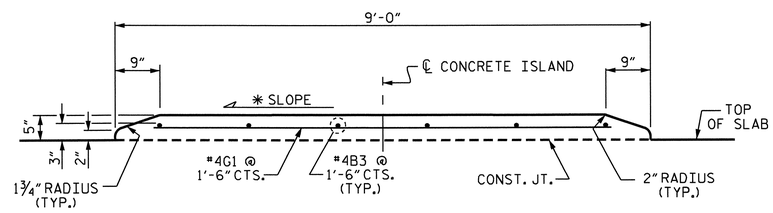

SECTION THRU MONOLITHIC CONCRETE ISLAND

END BENT #1 SHOWN, END BENT #2 SIMILAR
✱ SLOPE OF TOP OF ISLAND FOLLOWS DECK SLOPE

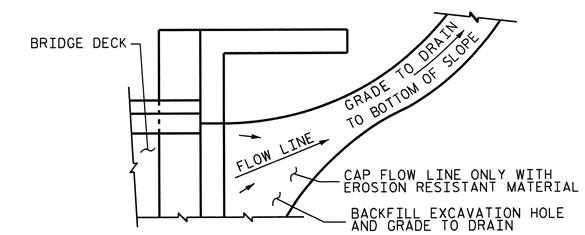

NOTE: IF THE APPROACH SLAB IS NOT CONSTRUCTED IMMEDIATELY AFTER THE BACKFILLING OF THE END BENT EXCAVATION, GRADE TO DRAIN TO THE BOTTOM OF THE SLOPE AND PROVIDE EROSION RESISTANT MATERIAL, SUCH AS FIBERGLASS ROVING OR AS DIRECTED BY THE ENGINEER TO PREVENT SOIL EROSION AND TO PROTECT THE AREA ADJACENT TO THE STRUCTURE. THE CONTRACTOR WILL BE REQUIRED TO REMOVE THESE MATERIALS PRIOR TO CONSTRUCTION OF THE APPROACH SLAB.

TEMPORARY DRAINAGE DETAIL

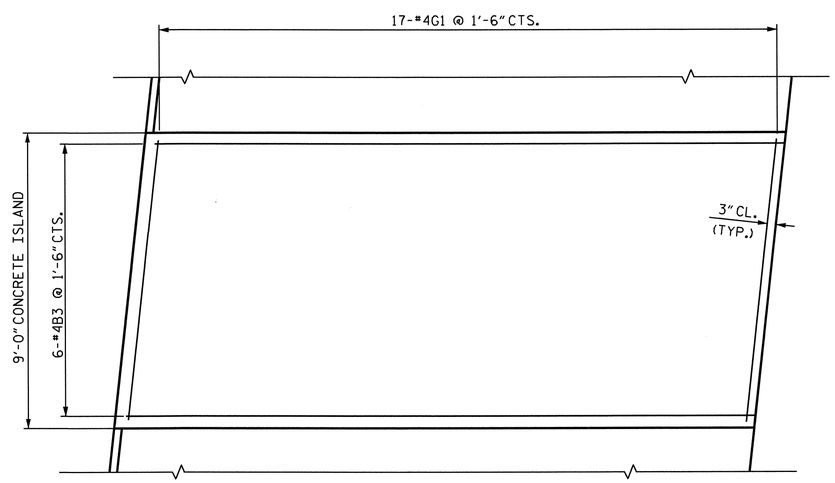

PLAN OF MONOLITHIC CONCRETE ISLAND

END BENT #1 SHOWN, END BENT #2 SIMILAR.
DISCONTINUE BEVEL UNDER ISLAND.

PROJECT NO. U-0209B
MECKLENBURG COUNTY
STATION: 41+57.69 -L-

SHEET 2 OF 3

STATE OF NORTH CAROLINA
DEPARTMENT OF TRANSPORTATION
RALEIGH

BRIDGE APPROACH SLAB DETAILS

NORTH CAROLINA PROFESSIONAL SEAL 20878 ENGINEER KEVIN FISCHER 11/20/12

REVISIONS						SHEET NO.
NO.	BY:	DATE:	NO.	BY:	DATE:	S-39
1			3			TOTAL SHEETS
2			4			117

STR. #1

DRAWN BY : R.G. EMERSON DATE : 05/11
CHECKED BY : K.D. LAYNE DATE : 06/11

11-SEP-2012 08:59
R:\structures\Plans\Str1\U0209B_SD_AS_01.dgn
lsutton

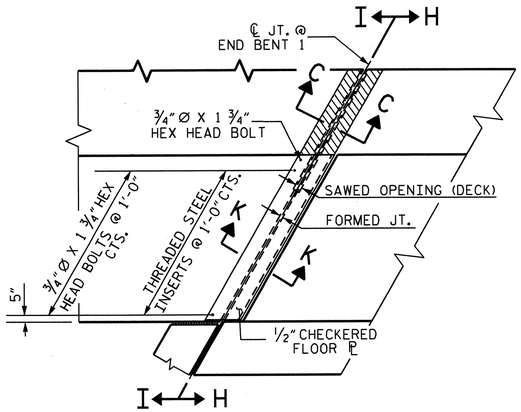

PLAN VIEW OF FOAM JOINT SEAL @ END BENT FOR SIDEWALK

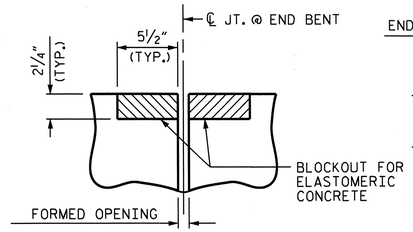

SECTION C-C
FOAM JOINT SEAL (PRE-SAWED ELASTOMERIC CONCRETE DIMENSIONS)

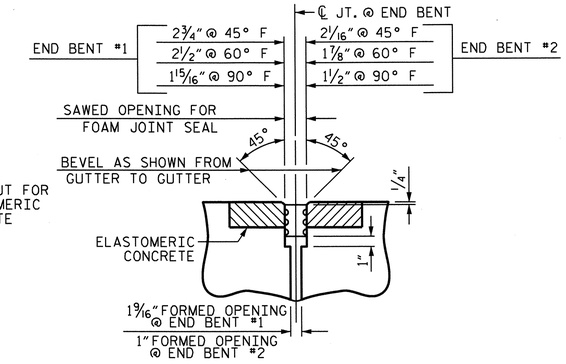

SECTION C-C
FOAM JOINT SEAL (EXPANSION)

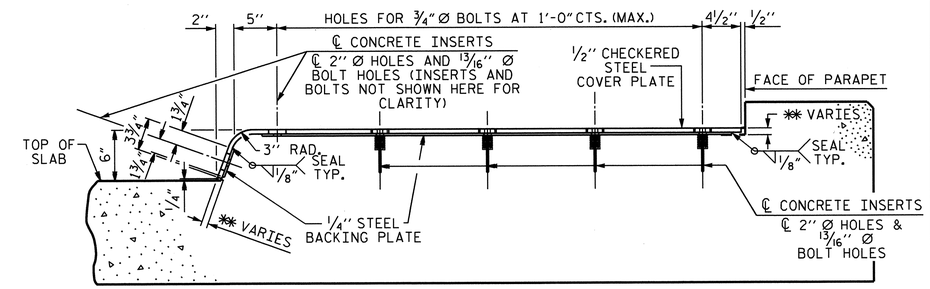

END VIEW
(NORMAL TO SIDEWALK)

✱✱ CONCRETE RECESS DIMENSIONS:
13/16" FOR THE SIDE OF THE JOINT HAVING THE ½" COVER PLATE WITH A ¼" BACKING PLATE.
9/16" FOR THE SIDE OF THE JOINT HAVING ONLY THE ½" COVER PLATE.

COVER PLATE DETAILS

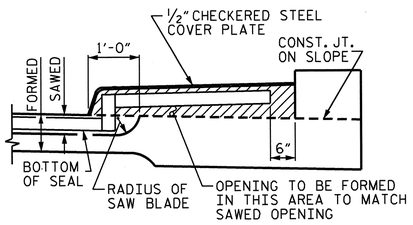

SECTION H-H

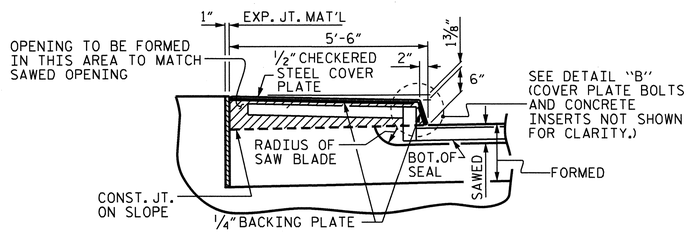

SECTION I-I

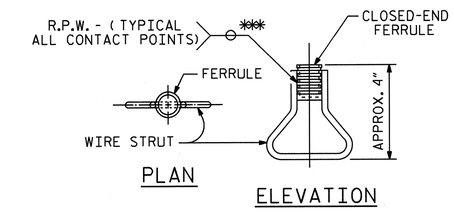

PLAN
ELEVATION

CONCRETE INSERT

✱✱✱ EACH WELDED ATTACHMENT OF WIRE TO FERRULE SHALL DEVELOP THE TENSILE STRENGTH OF THE WIRE.

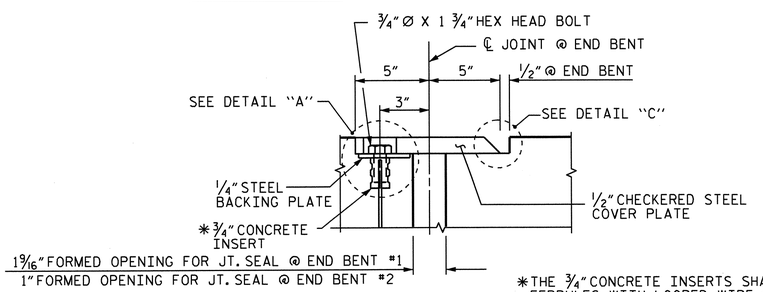

SECTION K-K

✱THE ¾" CONCRETE INSERTS SHALL BE CLOSED-END FERRULES WITH LOOPED WIRE STRUTS ATTACHED TO THEM. THE INSERTS SHALL CONFORM TO AASHTO M169, GRADE 12L14 AND SHALL HAVE A TENSILE WORKING LOAD CAPACITY OF 3000 LBS.

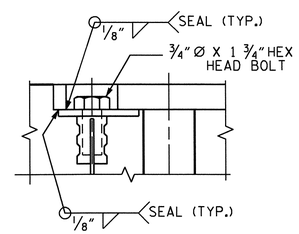

DETAIL "A"

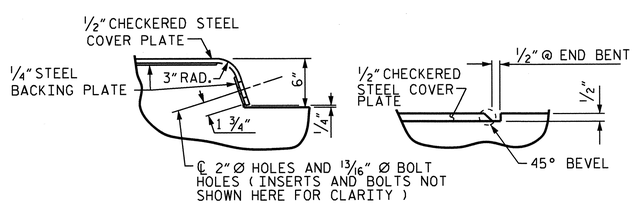

DETAIL "B"
DETAIL "C"

JOINT SEAL DETAILS @ END BENT

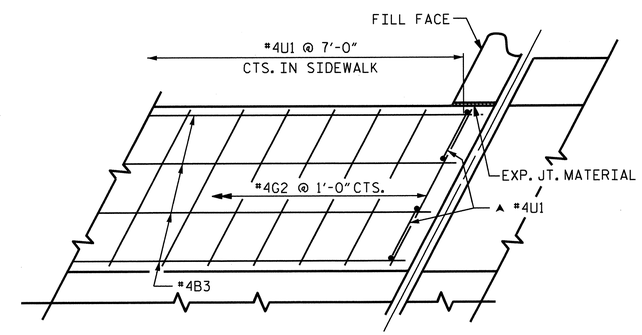

▲ THESE BARS ARE TO BE PLACED AFTER THE SAWING OF THE JOINT. THE HOLES SHALL BE DRILLED AND THE #4U1 GROUTED INTO PLACE.

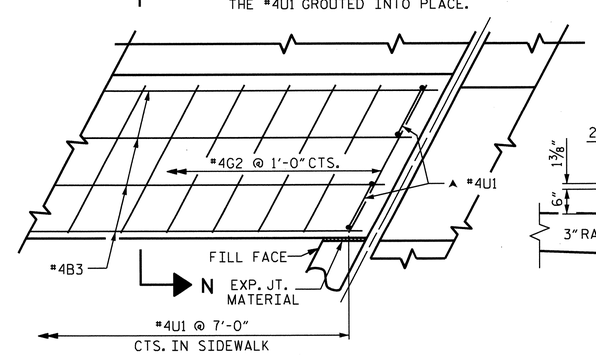

PLAN

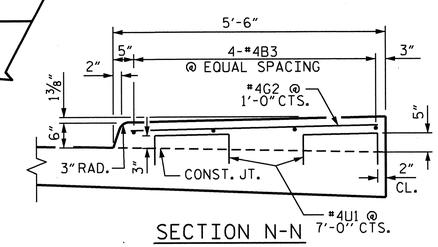

SECTION N-N

DETAILS OF SIDEWALK ON APPROACH SLAB

NOTES

THE STEEL PLATES SHALL CONFORM TO AASHTO M270 GRADE 36 OR APPROVED EQUAL. AFTER FABRICATION, THE PLATES SHALL BE COMMERCIALLY BLAST CLEANED AND EITHER COATED WITH A MINIMUM THICKNESS OF 4 MILS (DRY) OF ZINC-RICH PAINT, GALVANIZED OR METALLIZED TO A MINIMUM THICKNESS OF 6 MILS IN ACCORDANCE WITH THE STANDARD SPECIFICATIONS. FOR THERMAL SPRAYED COATINGS (METALLIZATION), SEE SPECIAL PROVISIONS.

THE ¾" DIAMETER HEX HEAD BOLTS SHALL CONFORM TO ASTM F593 ALLOY 304 STAINLESS STEEL.

NO SEPARATE PAYMENT WILL BE MADE FOR FURNISHING AND INSTALLING THE COVER PLATE. THE ENTIRE COST OF THIS WORK SHALL BE INCLUDED IN THE LUMP SUM PRICE FOR "FOAM JOINT SEALS".

PROJECT NO. U-0209B
MECKLENBURG COUNTY
STATION: 41+57.69 -L-

SHEET 3 OF 3

STATE OF NORTH CAROLINA
DEPARTMENT OF TRANSPORTATION
RALEIGH

STANDARD

BRIDGE APPROACH SLAB DETAILS

NORTH CAROLINA PROFESSIONAL SEAL 20878 ENGINEER KEVIN FISCHER 11/20/12

ASSEMBLED BY : R.G. EMERSON	DATE : 10/2011
CHECKED BY : K.D. LAYNE	DATE : 10/2011

DRAWN BY : FCJ 11/88	REV. 5/7/03 RWW/JTE
CHECKED BY : ARB 11/88	REV. 5/1/06RRR MAA/KMM
	REV. 10/1/11 MAA/GM

REVISIONS

NO.	BY:	DATE:	NO.	BY:	DATE:
1			3		
2			4		

SHEET NO. S-40
TOTAL SHEETS 117

STR. #1 STD. NO. BAS10

07-NOV-2012 08:37
R:\Structures\Plans\Str1\U0209B_SD_AS_01.dgn
lsutton

F.A. PROJECT: NHFSTP-0074(137)

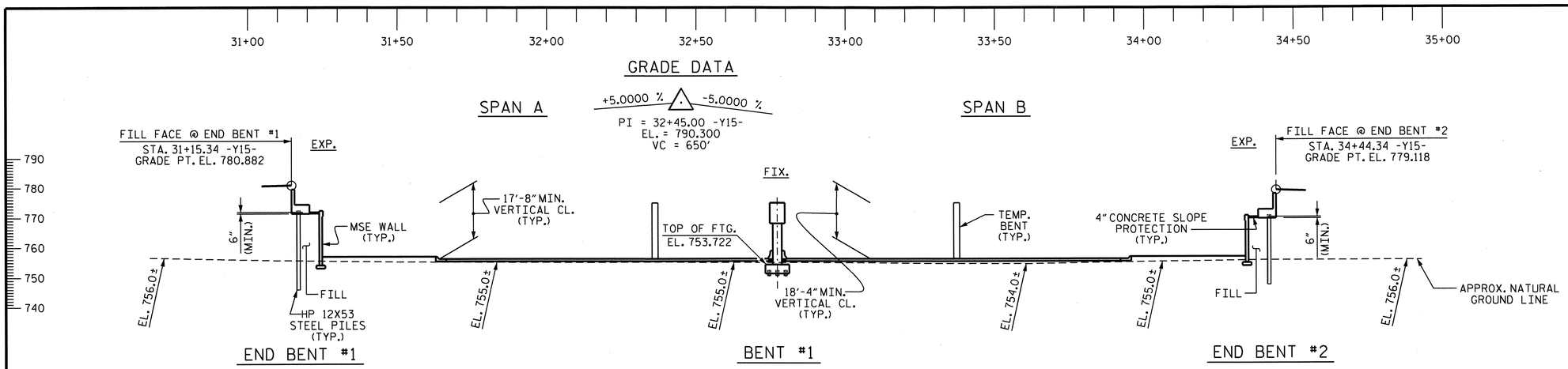

SECTION ALONG -Y15-

SECTIONS AT END BENTS AND BENT TAKEN AT RIGHT ANGLES

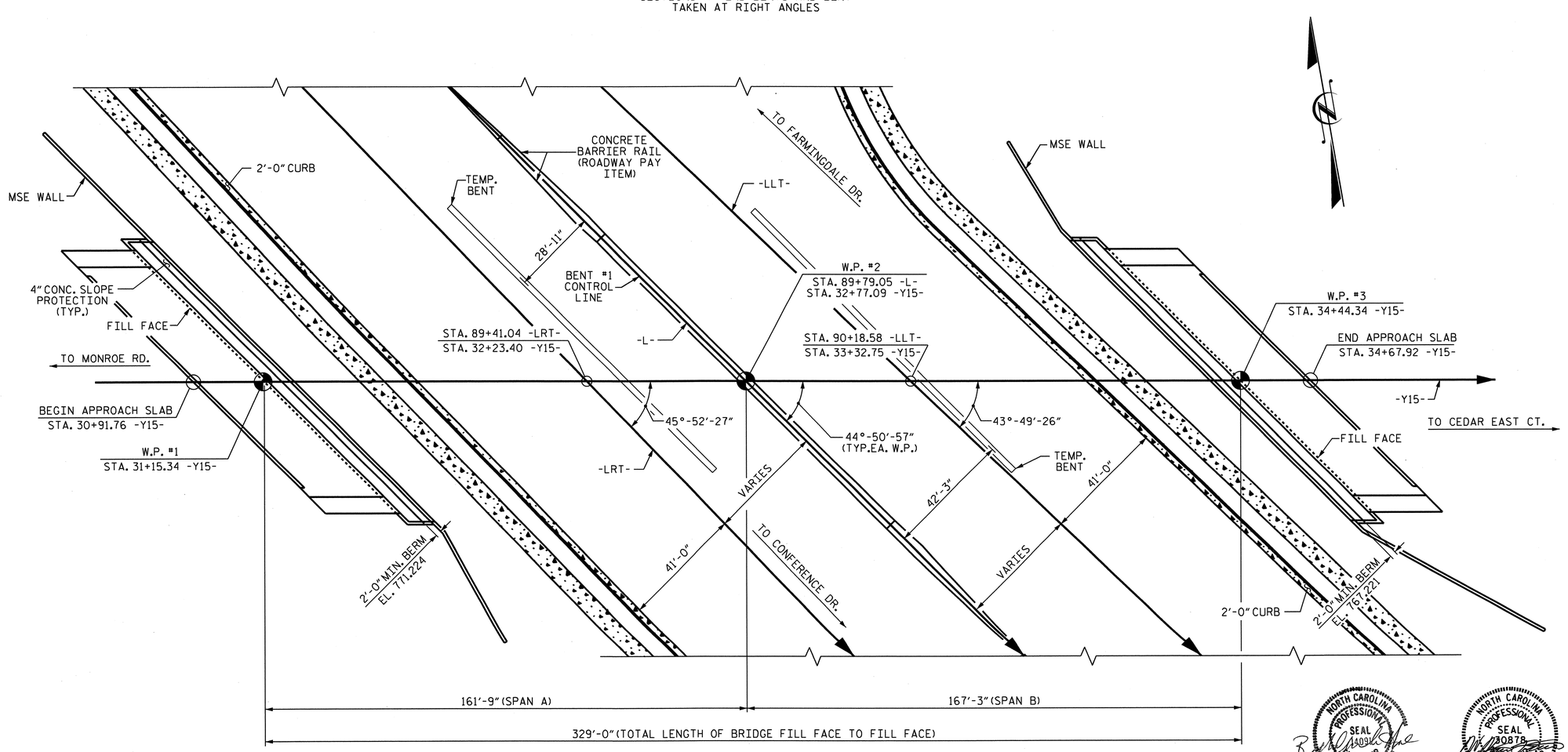

PLAN

PILES NOT SHOWN FOR CLARITY

NORTH CAROLINA PROFESSIONAL SEAL 14094 ENGINEER RICKY CHARLES KING 11/14/12

NORTH CAROLINA PROFESSIONAL SEAL 20878 ENGINEER KEVIN FISCHER 11/20/12

PROJECT NO. U-0209B

MECKLENBURG COUNTY

STATION: 89+79.05 -L-
32+77.09 -Y15-

SHEET 1 OF 3 BRIDGE No. 1172

STATE OF NORTH CAROLINA
DEPARTMENT OF TRANSPORTATION
RALEIGH

GENERAL DRAWING

FOR BRIDGE ON IDLEWILD RD. OVER US-74 (INDEPENDENCE BLVD.) BETWEEN MONROE RD. AND CEDAR EAST CT.

REVISIONS						SHEET NO.
NO.	BY:	DATE:	NO.	BY:	DATE:	S-41
1			3			TOTAL SHEETS
2			4			117

STR. #2

DRAWN BY : T.R. PETERSON DATE : 9/21/11
CHECKED BY : M.K. BEARD DATE : 11/3/11

07-NOV-2012 08:37
R:\Structures\Plans\Str2\U0209B_SD_GD_02.dgn
lsutton

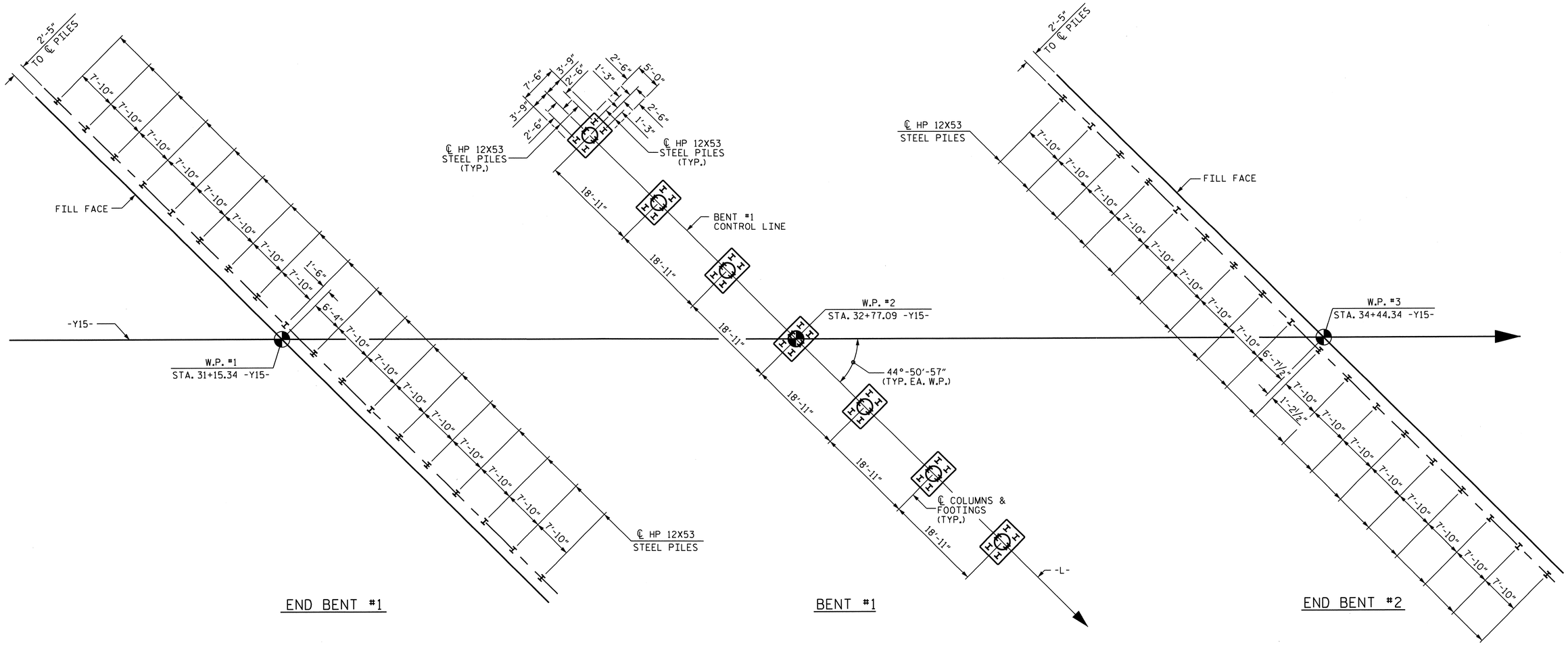

FOUNDATION LAYOUT

DIMENSIONS LOCATING PILES ARE SHOWN TO THE CENTERLINE OF PILES.

NOTES

FOR PILES, SEE SECTION 450 OF THE STANDARD SPECIFICATIONS.

PILES AT END BENT #1 ARE DESIGNED FOR A FACTORED RESISTANCE OF 105 TONS PER PILE.

DRIVE PILES AT END BENT #1 TO A REQUIRED DRIVING RESISTANCE OF 225 TONS PER PILE. THIS REQUIRED DRIVING RESISTANCE INCLUDES ADDITIONAL RESISTANCE FOR DOWNDRAG.

IT HAS BEEN ESTIMATED THAT A HAMMER WITH AN EQUIVALENT RATED ENERGY IN THE RANGE OF 70-90 FT-KIPS PER BLOW WILL BE REQUIRED TO DRIVE PILES AT END BENT #1, BENT #1, AND END BENT #2. THIS ESTIMATED ENERGY RANGE DOES NOT RELEASE THE CONTRACTOR FROM PROVIDING DRIVING EQUIPMENT IN ACCORDANCE WITH SUBARTICLE 450-3(D)(2) OF THE STANDARD SPECIFICATIONS.

OBSERVE A 3 MONTH WAITING PERIOD AFTER CONSTRUCTING THE EMBANKMENT TO WITHIN 2 FT OF FINISHED GRADE BEFORE BEGINNING END BENT CONSTRUCTION AT END BENT #1.

PILES AT BENT #1 ARE DESIGNED FOR A FACTORED RESISTANCE OF 135 TONS PER PILE.

DRIVE PILES AT BENT #1 TO A REQUIRED DRIVING RESISTANCE OF 225 TONS PER PILE.

PILES AT END BENT #2 ARE DESIGNED FOR A FACTORED RESISTANCE OF 105 TONS PER PILE.

DRIVE PILES AT END BENT #2 TO A REQUIRED DRIVING RESISTANCE OF 225 TONS PER PILE. THIS REQUIRED DRIVING RESISTANCE INCLUDES ADDITIONAL RESISTANCE FOR DOWNDRAG.

OBSERVE A 6 MONTH WAITING PERIOD AFTER CONSTRUCTING THE EMBANKMENT TO WITHIN 2 FT OF FINISHED GRADE BEFORE BEGINNING END BENT CONSTRUCTION AT END BENT #2.

TESTING PILES WITH THE PDA DURING DRIVING, RESTRIKING OR REDRIVING MAY BE REQUIRED. THE ENGINEER WILL DETERMINE THE NEED FOR PDA TESTING. FOR PDA TESTING, SEE SECTION 450 OF THE STANDARD SPECIFICATIONS.

PROJECT NO. U-0209B
MECKLENBURG COUNTY
STATION: 89+79.05 -L-

SHEET 2 OF 3

STATE OF NORTH CAROLINA
DEPARTMENT OF TRANSPORTATION
RALEIGH

GENERAL DRAWING
FOR BRIDGE ON IDLEWILD RD. OVER US-74 (INDEPENDENCE BLVD.) BETWEEN MONROE RD. AND CEDAR EAST CT.

NORTH CAROLINA PROFESSIONAL SEAL 30878 ENGINEER W. KEVIN FISCHER
11/20/12

REVISIONS						SHEET NO.
NO.	BY:	DATE:	NO.	BY:	DATE:	S-42
1			3			TOTAL SHEETS
2			4			117

STR. #2

DRAWN BY : T.R. PETERSON DATE : 9/3/11
CHECKED BY : M.K. BEARD DATE : 11/3/11

11-SEP-2012 08:48
R:\Structures\Plans\Str2\U0209B_SD_GD_02.dgn
lsutton

BM #20: WEST MOST OF TWO BOLTS IN CONCRETE BASE FOR SMALL SIGN, 54' LT OF STA. 12+91 -BY15-, EL. 756.61

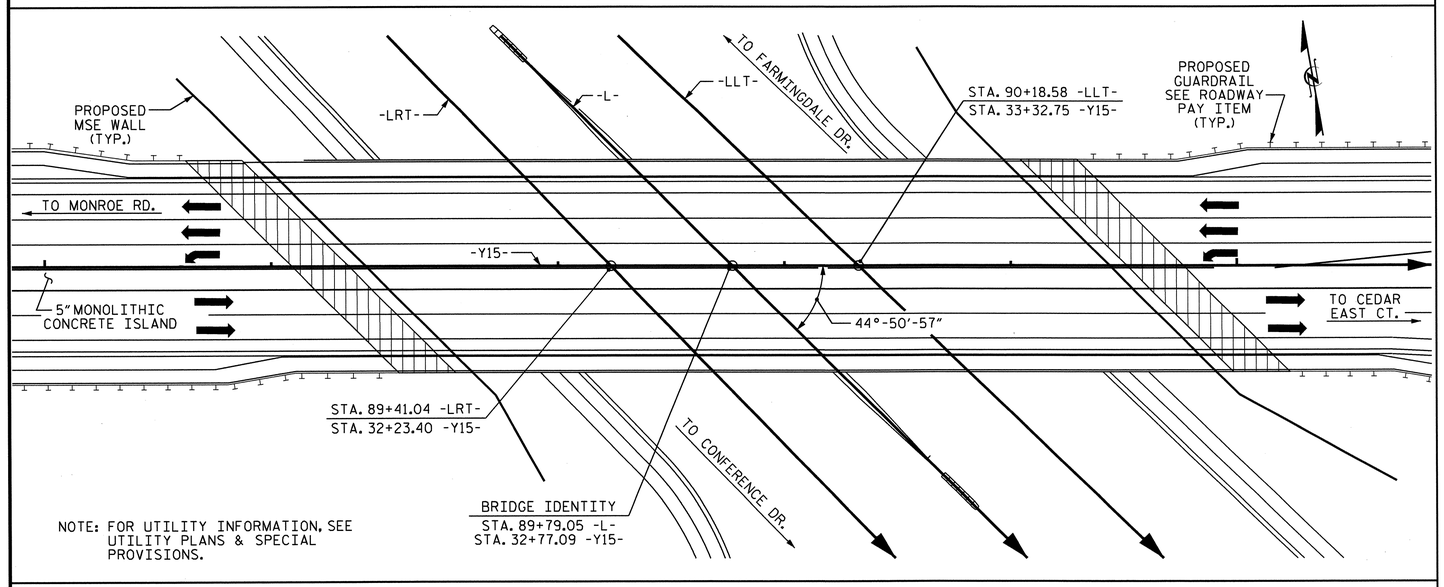

NOTE: FOR UTILITY INFORMATION, SEE UTILITY PLANS & SPECIAL PROVISIONS.

LOCATION SKETCH

NOTES

ASSUMED LIVE LOAD = HL 93 OR ALTERNATE LOADING.

THIS BRIDGE HAS BEEN DESIGNED IN ACCORDANCE WITH THE AASHTO LRFD BRIDGE DESIGN SPECIFICATIONS.

THIS BRIDGE IS LOCATED IN SEISMIC ZONE 1.

FOR OTHER DESIGN DATA AND GENERAL NOTES, SEE SHEET SN.

FOR SUBMITTAL OF WORKING DRAWINGS, SEE SPECIAL PROVISIONS.

FOR FALSEWORK AND FORMWORK, SEE SPECIAL PROVISIONS.

FOR CRANE SAFETY, SEE SPECIAL PROVISIONS.

FOR GROUT FOR STRUCTURES, SEE SPECIAL PROVISIONS.

THE CONTRACTOR SHALL PROVIDE INDEPENDENT ASSURANCE SAMPLES OF REINFORCING STEEL AS FOLLOWS: FOR PROJECTS REQUIRING UP TO 400 TONS OF REINFORCING STEEL, ONE 30 INCH SAMPLE OF EACH SIZE BAR USED, AND FOR PROJECTS REQUIRING OVER 400 TONS OF REINFORCING STEEL, TWO 30 INCH SAMPLES OF EACH SIZE BAR USED. THE BARS FROM WHICH THE SAMPLES ARE TAKEN MUST THEN BE SPLICED WITH REPLACEMENT BARS OF THE SIZE AND LENGTH OF THE SAMPLE, PLUS A MINIMUM LAP SPLICE OF THIRTY BAR DIAMETERS. PAYMENT FOR THE SAMPLES OF REINFORCING STEEL SHALL BE CONSIDERED INCIDENTAL TO VARIOUS PAY ITEMS.

FOR MAINTENANCE AND PROTECTION OF TRAFFIC BENEATH PROPOSED STRUCTURE, SEE SPECIAL PROVISIONS.

REMOVABLE FORMS MAY BE USED IN LIEU OF METAL STAY-IN-PLACE FORMS IN ACCORDANCE WITH ARTICLE 420-3 OF THE STANDARD SPECIFICATIONS.

NEEDLE BEAMS WILL NOT BE ALLOWED UNLESS OTHERWISE CALLED FOR ON THE PLANS OR APPROVED BY THE ENGINEER.

ALL STRUCTURAL STEEL SHALL BE AASHTO M270 GRADE 50W AND PAINTED IN ACCORDANCE WITH SYSTEM 4 OF ARTICLE 442-8 OF THE STANDARD SPECIFICATIONS UNLESS OTHERWISE NOTED ON THE PLANS.

THE CLASS AA CONCRETE IN THE BRIDGE DECK SHALL CONTAIN FLY ASH OR GROUND GRANULATED BLAST FURNACE SLAG AT THE SUBSTITUTION RATE SPECIFIED IN ARTICLE 1024-1 AND IN ACCORDANCE WITH ARTICLES 1024-5 AND 1024-6 OF THE STANDARD SPECIFICATIONS. NO PAYMENT WILL BE MADE FOR THIS SUBSTITUTION AS IT IS CONSIDERED INCIDENTAL TO THE COST OF THE REINFORCED CONCRETE DECK SLAB.

GIRDER ERECTION SEQUENCE

THE STRUCTURAL STEEL SHALL BE SUPPORTED DURING ERECTION IN ITS CAMBERED POSITION. ONE EXTERIOR GIRDER AND ITS ADJACENT INTERIOR GIRDER SHALL BE ERECTED WITH ALL DIAPHRAGMS AND LATERAL BRACING BETWEEN THE GIRDERS IN PLACE AND ALL BOLTS TIGHTENED PRIOR TO RELEASE OF THE GIRDERS. THE REMAINING GIRDERS SHALL THEN BE ERECTED WITH DIAPHRAGMS CONNECTING THE GIRDER TO THE ADJACENT ERECTED GIRDER AND ALL BOLTS TIGHTENED BEFORE RELEASING THE GIRDER.

A MINIMUM OF TWO TEMPORARY BENTS SHALL BE USED.

THE TEMPORARY BENTS SHALL REMAIN IN PLACE UNTIL ALL CROSS FRAMES AND LATERAL BRACING ARE IN PLACE AND HIGH STRENGTH BOLTS TIGHTENED.

THE LOCATION OF THE TEMPORARY BENTS SHOWN ON SHEET S-41 ARE APPROXIMATE LOCATIONS AND SHALL BE ADJUSTED BY THE CONTRACTOR AS NECESSARY.

PLANS FOR THE TEMPORARY BENTS, ERECTION SEQUENCE AND TEMPORARY BENT REMOVAL SHALL BE SUBMITTED TO THE ENGINEER FOR REVIEW.

THE TEMPORARY BENTS SHALL BE DESIGNED BY A PROFESSIONAL ENGINEER REGISTERED IN THE STATE OF NORTH CAROLINA.

DURING THE GIRDER ERECTION PROCEDURE, THE CONTRACTOR IS RESPONSIBLE FOR PROVIDING TEMPORARY LATERAL BRACING AND OTHER MEANS OF SUPPORT, AS REQUIRED, TO ENSURE STABILITY OF THE GIRDERS, AVOID UPLIFT OF THE GIRDERS AT THE TEMPORARY ERECTION BENTS AND MAINTAIN PLUMBNESS OF THE GIRDER WEBS.

THE CONTRACTOR'S ERECTION PLAN SHALL INCLUDE A METHOD OF TEMPORARY BENT REMOVAL THAT WILL UNIFORMLY APPLY THE STRUCTURAL STEEL WEIGHT TO THE BRIDGE CROSS FRAMES.

THE CONTRACTOR MAY SUBMIT ALTERNATE ERECTION METHODS. PLANS FOR SUCH ERECTION METHODS SHALL BE APPROVED BY THE ENGINEER.

FOR TEMPORARY BENTS, SEE SPECIAL PROVISIONS.

TOTAL BILL OF MATERIAL

	FOUNDATION EXCAVATION	PDA TESTING	REINFORCED CONCRETE DECK SLAB	GROOVING BRIDGE FLOORS	CLASS A CONCRETE	BRIDGE APPROACH SLABS	REINFORCING STEEL	SPIRAL COLUMN REINFORCING STEEL	STRUCTURAL STEEL	HP 12X53 STEEL PILES		PILE REDRIVES	THREE BAR METAL RAIL	4" SLOPE PROTECTION	ELASTOMERIC BEARINGS	FOAM JOINT SEALS	ELECTRICAL CONDUIT SYSTEM FOR SIGNALS	DISC BEARINGS
	LUMP SUM	EA.	SQ. FT.	SQ. FT.	CU. YDS.	LUMP SUM	LBS.	LBS.	APPROX. LBS.	NO.	LIN. FT.	EA.	LIN. FT.	SQ. YDS.	LUMP SUM	LUMP SUM	LUMP SUM	LUMP SUM
SUPERSTRUCTURE			29,860	23,341		LUMP SUM			1,240,500				634.58		LUMP SUM	LUMP SUM	LUMP SUM	LUMP SUM
END BENT #1					111.5		15,650			18	1,260	9		31				
BENT #1	LUMP SUM				166.5		26,226	2,431		42	2,730	21						
END BENT #2					114.3		15,709			18	2,070	9		31				
TOTAL	LUMP SUM	1	29,860	23,341	392.3	LUMP SUM	57,585	2,431	1,240,500	78	6,060	39	634.58	62	LUMP SUM	LUMP SUM	LUMP SUM	LUMP SUM

PROJECT NO. U-0209B
MECKLENBURG COUNTY
STATION: 89+79.05 -L-

SHEET 3 OF 3

STATE OF NORTH CAROLINA
DEPARTMENT OF TRANSPORTATION
RALEIGH

GENERAL DRAWING
FOR BRIDGE ON IDLEWILD RD. OVER US-74 (INDEPENDENCE BLVD.) BETWEEN MONROE RD. AND CEDAR EAST CT.

NORTH CAROLINA PROFESSIONAL SEAL 30878 ENGINEER KEVIN FISCHER 11/20/12

REVISIONS						SHEET NO.
NO.	BY:	DATE:	NO.	BY:	DATE:	S-43
1			3			TOTAL SHEETS
2			4			117

STR. #2

DRAWN BY : J.D. HAWK DATE : 11/12
CHECKED BY : M.K. BEARD DATE : 11/12

06-NOV-2012 12:23
R:\Structures\Plans\Str2\U0209B_SD_GD_02.dgn
LSUTTON

LOAD AND RESISTANCE FACTOR RATING (LRFR) SUMMARY FOR STEEL GIRDERS

LEVEL		VEHICLE	WEIGHT (W) (TONS)	CONTROLLING LOAD RATING (#)	MINIMUM RATING FACTORS (RF)	TONS = W × RF	STRENGTH I LIMIT STATE											SERVICE II LIMIT STATE						COMMENT NUMBER
							LIVE-LOAD FACTORS (γ_{LL})	MOMENT					SHEAR					LIVE-LOAD FACTORS (γ_{LL})	MOMENT					
								DISTRIBUTION FACTORS (DF)	RATING FACTOR	SPAN	GIRDER LOCATION	DISTANCE FROM LEFT END OF SPAN (ft)	DISTRIBUTION FACTORS (DF)	RATING FACTOR	SPAN	GIRDER LOCATION	DISTANCE FROM LEFT END OF SPAN (ft)		DISTRIBUTION FACTORS (DF)	RATING FACTOR	SPAN	GIRDER LOCATION	DISTANCE FROM LEFT END OF SPAN (ft)	
DESIGN LOAD RATING		HL-93 (INVENTORY)	N/A	1	1.08	--	1.75	0.69	1.08	A	I	134.27	1.18	1.10	B	I	0.00	1.30	0.69	1.34	A	I	157.97	
		HL-93 (OPERATING)	N/A		1.39	--	1.35	0.69	1.39	A	I	134.27	1.18	1.43	B	I	0.00	1.00	0.69	1.75	A	I	157.97	
		HS-20 (INVENTORY)	36.00	2	1.90	68.40	1.75	0.69	2.09	A	I	134.27	1.18	1.90	B	I	0.00	1.30	0.66	2.26	B	I	98.08	
		HS-20 (OPERATING)	36.00		2.47	88.92	1.35	0.69	2.71	A	I	134.27	1.18	2.47	B	I	0.00	1.00	0.66	2.94	B	I	98.08	
LEGAL LOAD RATING	SINGLE VEHICLE (SV)	SNSH	13.500		5.55	74.93	1.40	0.69	6.91	A	I	134.27	1.18	6.18	B	I	0.00	1.30	0.66	5.55	B	I	98.08	
		SNGARBS2	20.000		3.92	78.40	1.40	0.69	4.67	A	I	134.27	1.18	4.22	B	I	0.00	1.30	0.66	3.92	B	I	98.08	
		SNAGRIS2	22.000		3.63	79.86	1.40	0.69	4.24	A	I	134.27	1.18	3.85	B	I	0.00	1.30	0.66	3.63	B	I	98.08	
		SNCOTTS3	27.250		2.76	75.21	1.40	0.69	3.41	A	I	134.27	1.18	3.07	B	I	0.00	1.30	0.66	2.76	B	I	98.08	
		SNAGGRS4	34.925		2.23	77.88	1.40	0.69	2.67	A	I	134.27	1.18	2.42	B	I	0.00	1.30	0.66	2.23	B	I	98.08	
		SNS5A	35.550		2.19	77.85	1.40	0.69	2.62	A	I	134.27	1.18	2.39	B	I	0.00	1.30	0.66	2.19	B	I	98.08	
		SNS6A	39.950		1.97	78.70	1.40	0.69	2.34	A	I	134.27	1.18	2.14	B	I	0.00	1.30	0.66	1.97	B	I	98.08	
		SNS7B	42.000		1.88	78.96	1.40	0.69	2.23	A	I	134.27	1.18	2.05	B	I	0.00	1.30	0.66	1.88	B	I	98.08	
	TRUCK TRACTOR SEMI-TRAILER (TTST)	TNAGRIT3	33.000		2.41	79.53	1.40	0.69	2.84	A	I	134.27	1.18	2.59	B	I	0.00	1.30	0.66	2.41	B	I	98.08	
		TNT4A	33.075		2.40	79.38	1.40	0.69	2.83	A	I	134.27	1.18	2.56	B	I	0.00	1.30	0.66	2.40	B	I	98.08	
		TNT6A	41.600		1.93	80.29	1.40	0.69	2.25	A	I	134.27	1.18	2.09	B	I	0.00	1.30	0.66	1.93	B	I	98.08	
		TNT7A	42.000		1.93	81.06	1.40	0.69	2.24	A	I	134.27	1.18	2.07	B	I	0.00	1.30	0.66	1.93	B	I	98.08	
		TNT7B	42.000		1.95	81.90	1.40	0.69	2.24	A	I	134.27	1.18	2.05	B	I	0.00	1.30	0.66	1.95	B	I	98.08	
		TNAGRIT4	43.000		1.89	81.27	1.40	0.69	2.18	A	I	134.27	1.18	1.99	B	I	0.00	1.30	0.66	1.89	B	I	98.08	
		TNAGT5A	45.000		1.80	81.00	1.40	0.69	2.09	A	I	134.27	1.18	1.92	B	I	0.00	1.30	0.66	1.80	B	I	98.08	
		TNAGT5B	45.000	3	1.78	80.10	1.40	0.69	2.08	A	I	134.27	1.18	1.90	B	I	0.00	1.30	0.66	1.78	B	I	98.08	
FATIGUE		HL-93 (INVENTORY)	γ_{LL}=0.75	---	---																			

LOAD FACTORS:

DESIGN LOAD RATING FACTORS	LIMIT STATE	γ_{DC}	γ_{DW}
	STRENGTH I	1.25	1.50
	SERVICE II	1.00	1.00

NOTES:

MINIMUM RATING FACTORS ARE BASED ON THE STRENGTH I AND SERVICE II LIMIT STATES.

ALLOWABLE STRESS FOR SERVICE II LIMIT STATE ARE AS REQUIRED FOR DESIGN.

(#) CONTROLLING LOAD RATING

(1) DESIGN LOAD RATING (HL-93) **

(2) DESIGN LOAD RATING (HS-20) **

(3) LEGAL LOAD RATING **

** SEE CHART FOR VEHICLE TYPE

GIRDER LOCATION

I - INTERIOR GIRDER
EL - EXTERIOR LEFT GIRDER
ER - EXTERIOR RIGHT GIRDER

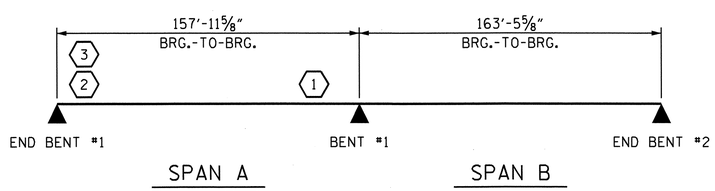

LRFR SUMMARY

PROJECT NO. U-0209B
MECKLENBURG COUNTY
STATION: 89+79.05 -L-

STATE OF NORTH CAROLINA
DEPARTMENT OF TRANSPORTATION
RALEIGH

STANDARD

LRFR SUMMARY FOR STEEL GIRDERS
(NON-INTERSTATE TRAFFIC)

NORTH CAROLINA PROFESSIONAL SEAL 30878 ENGINEER KEVIN FISCHER 11/30/12

REVISIONS						SHEET NO.
NO.	BY:	DATE:	NO.	BY:	DATE:	S-44
1			3			TOTAL SHEETS
2			4			117

ASSEMBLED BY : H.A. LOCKLEAR DATE : 10-12
CHECKED BY : H.T. DIEU DATE : 10-12
DRAWN BY : MAA 1/08
CHECKED BY : GM/DI 2/08
REV. 11/12/08RR MAA/GM
REV. 10/1/11 MAA/GM

06-NOV-2012 12:23
R:\Structures\Plans\Str2\U0209B_SD_LR_02.dgn
LSUTTON

STR. #2

STD. NO. LRFR3

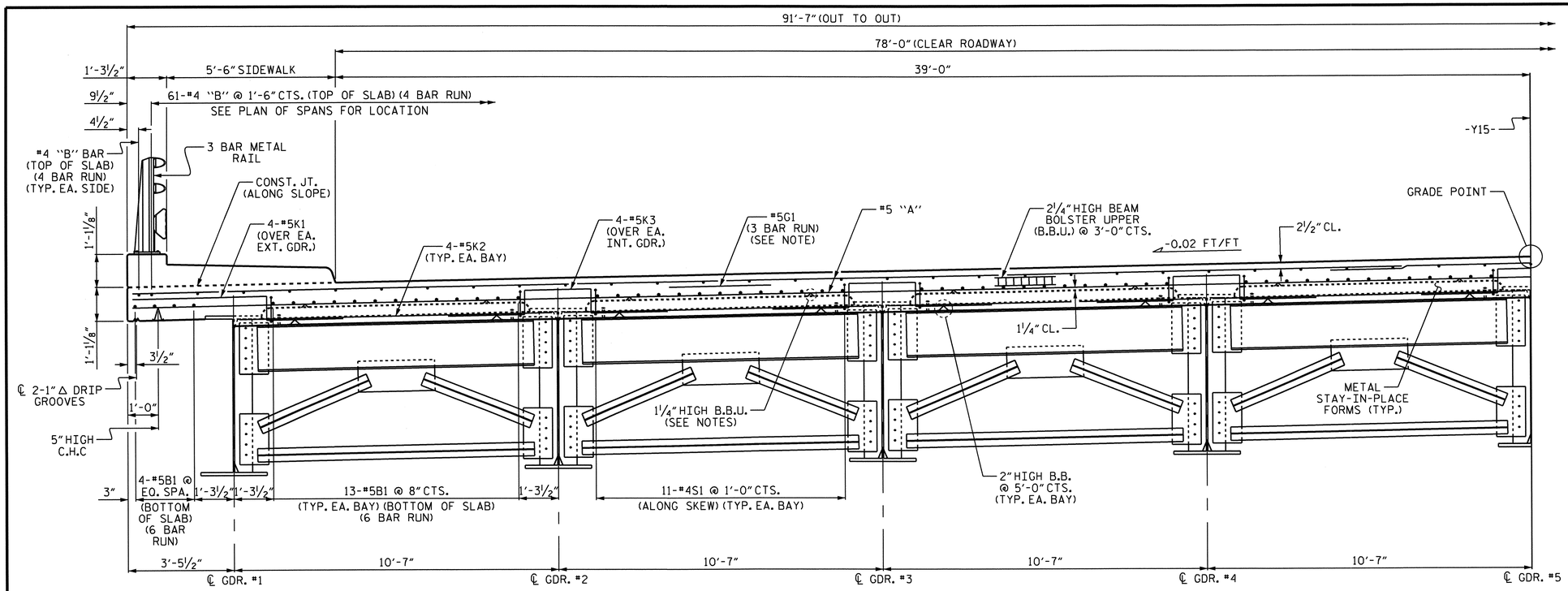

HALF SECTION

(SHOWING END BENT DIAPHRAGMS)

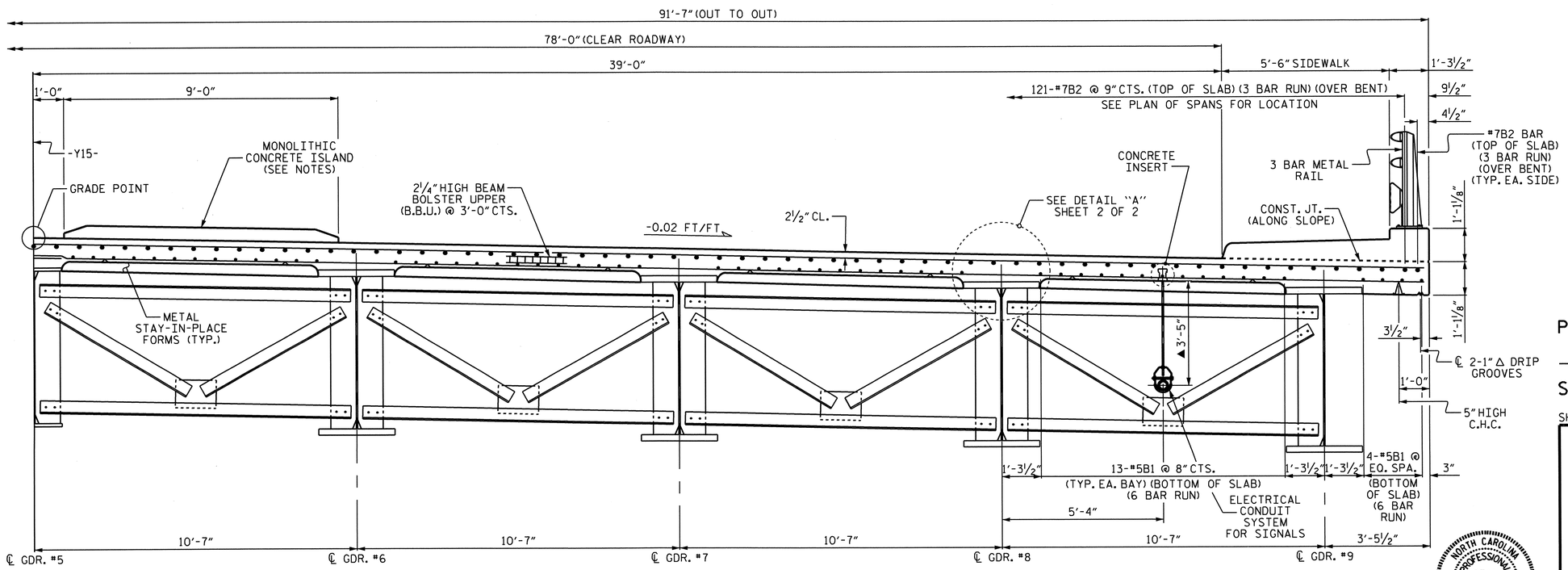

HALF SECTION

(SHOWING BENT & INTERMEDIATE DIAPHRAGMS)

▲ DIMENSION MEASURED FROM BOTTOM OF SLAB TO ℄ CONDUIT.

TYPICAL SECTION

NOTES

PROVIDE 1¼" HIGH BEAM BOLSTERS UPPER AT 4'-0" CTS. ATOP THE METAL STAY-IN-PLACE FORMS TO SUPPORT THE BOTTOM MAT OF 'A' BARS. WHEN USING REMOVABLE FORMS, PROVIDE CONTINUOUS HIGH CHAIRS FOR METAL DECK (C.H.C.M.) @ 4'-0" CTS. WITH A HEIGHT TO SUPPORT THE BOTTOM MAT OF 'A' BARS A CLEAR DISTANCE OF 2½" ABOVE THE TOP OF THE REMOVABLE FORM.

METAL STAY-IN-PLACE FORMS SHALL NOT BE WELDED TO BEAM OR GIRDER FLANGES IN THE ZONES REQUIRING CHARPY V-NOTCH TEST. SEE STRUCTURAL STEEL DETAIL SHEETS.

PREVIOUSLY CAST CONCRETE IN A CONTINUOUS UNIT SHALL HAVE ATTAINED A MINIMUM COMPRESSIVE STRENGTH OF 3,000 PSI BEFORE ADDITIONAL CONCRETE IS CAST IN THE UNIT.

THE CONTRACTOR MAY, WHEN NECESSARY, PROPOSE A SCHEME FOR AVOIDING INTERFERENCE BETWEEN METAL STAY-IN-PLACE FORM SUPPORTS OR FORMS AND GIRDER STIFFENERS OR CONNECTOR PLATES. THE PROPOSAL SHALL BE INDICATED, AS APPROPRIATE, ON EITHER THE STEEL WORKING DRAWINGS OR THE METAL STAY-IN-PLACE FORM WORKING DRAWINGS.

STRUCTURAL STEEL ERECTION IN A CONTINUOUS UNIT SHALL BE COMPLETED BEFORE FALSEWORK OR FORMS ARE PLACED ON THE UNIT.

THE CONTRACTOR SHALL ADJUST THE GIRDER BUILDUPS AS NECESSARY TO INCORPORATE A MAXIMUM PERMISSIBLE VARIATION IN DISC BEARING DEPTH OF ½". SEE SPECIAL PROVISION FOR DISC BEARINGS.

FOR LOCATION OF THE MONOLITHIC CONCRETE ISLAND, SEE "MONOLITHIC CONCRETE ISLAND" SHEET.

FOR DETAILS OF ELECTRICAL CONDUIT SYSTEM, SEE "ELECTRICAL CONDUIT SYSTEM FOR SIGNALS" SHEET.

PROJECT NO. U-0209B
MECKLENBURG COUNTY
STATION: 89+79.05 -L-

SHEET 1 OF 2

STATE OF NORTH CAROLINA
DEPARTMENT OF TRANSPORTATION
RALEIGH

SUPERSTRUCTURE

TYPICAL SECTION

NORTH CAROLINA PROFESSIONAL SEAL 030878 ENGINEER W. KEVIN FISCHER 11/20/12

REVISIONS						SHEET NO.
NO.	BY:	DATE:	NO.	BY:	DATE:	S-45
1			3			TOTAL SHEETS
2			4			117

STR. #2

DRAWN BY : T. BANKOVICH DATE : 2-2011
CHECKED BY : J.P. ADAMS DATE : 8/16/11

07-SEP-2012 11:05
R:\Structures\Plans\Str2\U0209B_SD_TS_02.dgn
lsutton

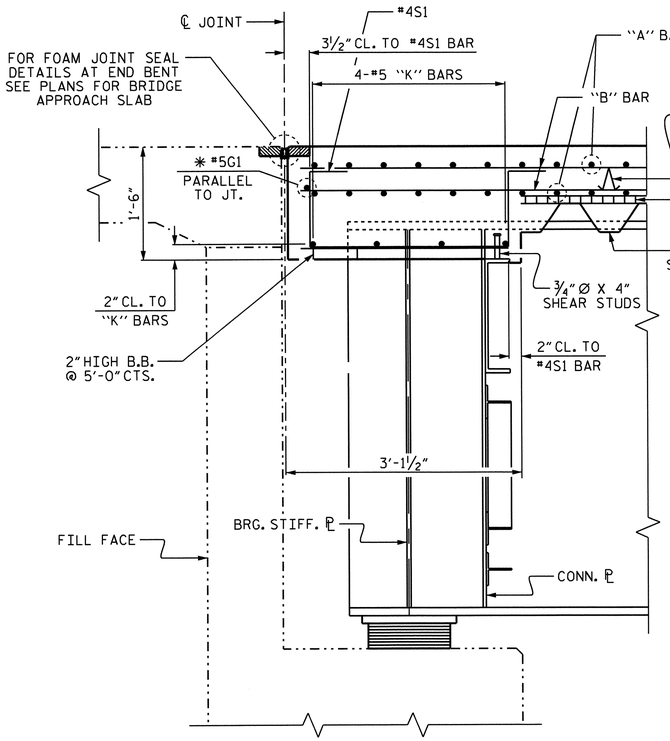

SECTION A-A

* THE #5G1 BAR MAY BE SHIFTED SLIGHTLY AS NECESSARY TO CLEAR REINFORCING STEEL AND STIRRUPS.

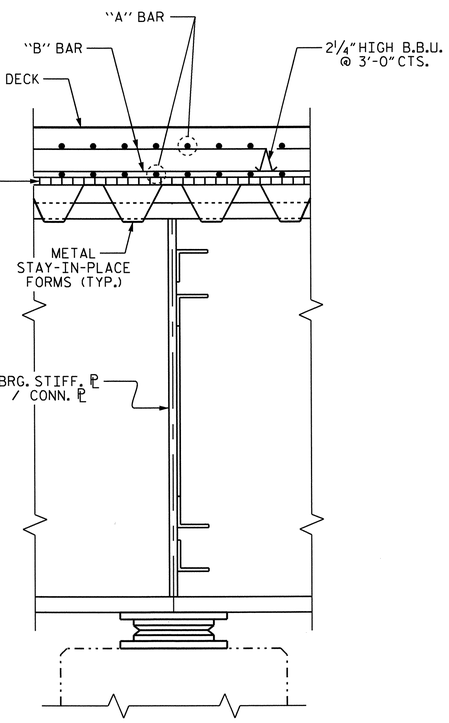

SECTION B-B

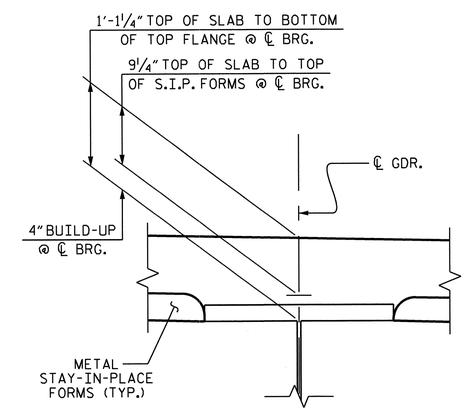

DETAIL "A"

(TYP. EA. GDR.)

PROJECT NO. U-0209B

MECKLENBURG COUNTY

STATION: 89+79.05 -L-

SHEET 2 OF 2

STATE OF NORTH CAROLINA
DEPARTMENT OF TRANSPORTATION
RALEIGH

SUPERSTRUCTURE

TYPICAL SECTION

NORTH CAROLINA PROFESSIONAL SEAL 30878 ENGINEER KEVIN FISCHER 11/20/12

REVISIONS						SHEET NO.
NO.	BY:	DATE:	NO.	BY:	DATE:	S-46
1			3			TOTAL SHEETS
2			4			117

STR. #2

DRAWN BY : T. BANKOVICH DATE : 2-2011
CHECKED BY : J.P. ADAMS DATE : 8/16/11

07-SEP-2012 11:05
R:\Structures\Plans\Str2\U0209B_SD_TS_02.dgn
lsutton

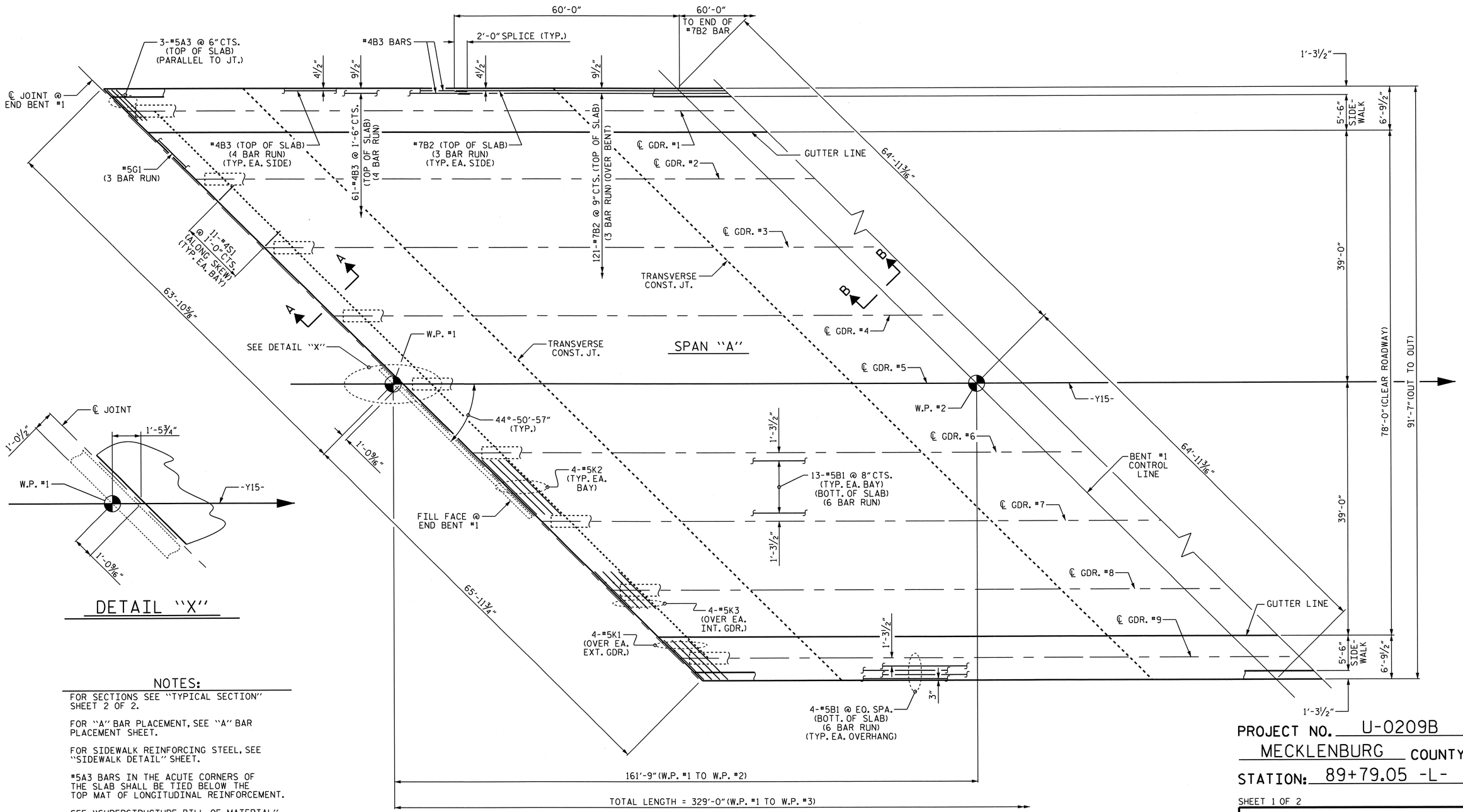

DETAIL "X"

NOTES:

FOR SECTIONS SEE "TYPICAL SECTION" SHEET 2 OF 2.

FOR "A" BAR PLACEMENT, SEE "A" BAR PLACEMENT SHEET.

FOR SIDEWALK REINFORCING STEEL, SEE "SIDEWALK DETAIL" SHEET.

#5A3 BARS IN THE ACUTE CORNERS OF THE SLAB SHALL BE TIED BELOW THE TOP MAT OF LONGITUDINAL REINFORCEMENT.

SEE "SUPERSTRUCTURE BILL OF MATERIAL" FOR TRANSVERSE CONST. JT. LOCATIONS & DETAILS.

PARTIAL PLAN OF SPANS

MONOLITHIC CONCRETE ISLAND NOT SHOWN FOR CLARITY

PROJECT NO. U-0209B
MECKLENBURG COUNTY
STATION: 89+79.05 -L-

SHEET 1 OF 2

STATE OF NORTH CAROLINA
DEPARTMENT OF TRANSPORTATION
RALEIGH

SUPERSTRUCTURE

PLAN OF SPANS

NORTH CAROLINA PROFESSIONAL SEAL 30878 ENGINEER KEVIN FISCHER 11/20/12

REVISIONS						SHEET NO.
NO.	BY:	DATE:	NO.	BY:	DATE:	S-47
1			3			TOTAL SHEETS
2			4			117

STR. #2

DRAWN BY : T. BANKOVICH DATE : 2-2011
CHECKED BY : J.P. ADAMS DATE : 8/16/11

07-SEP-2012 11:05
R:\Structures\Plans\Str2\U0209B_SD_PS_02.dgn
lsutton

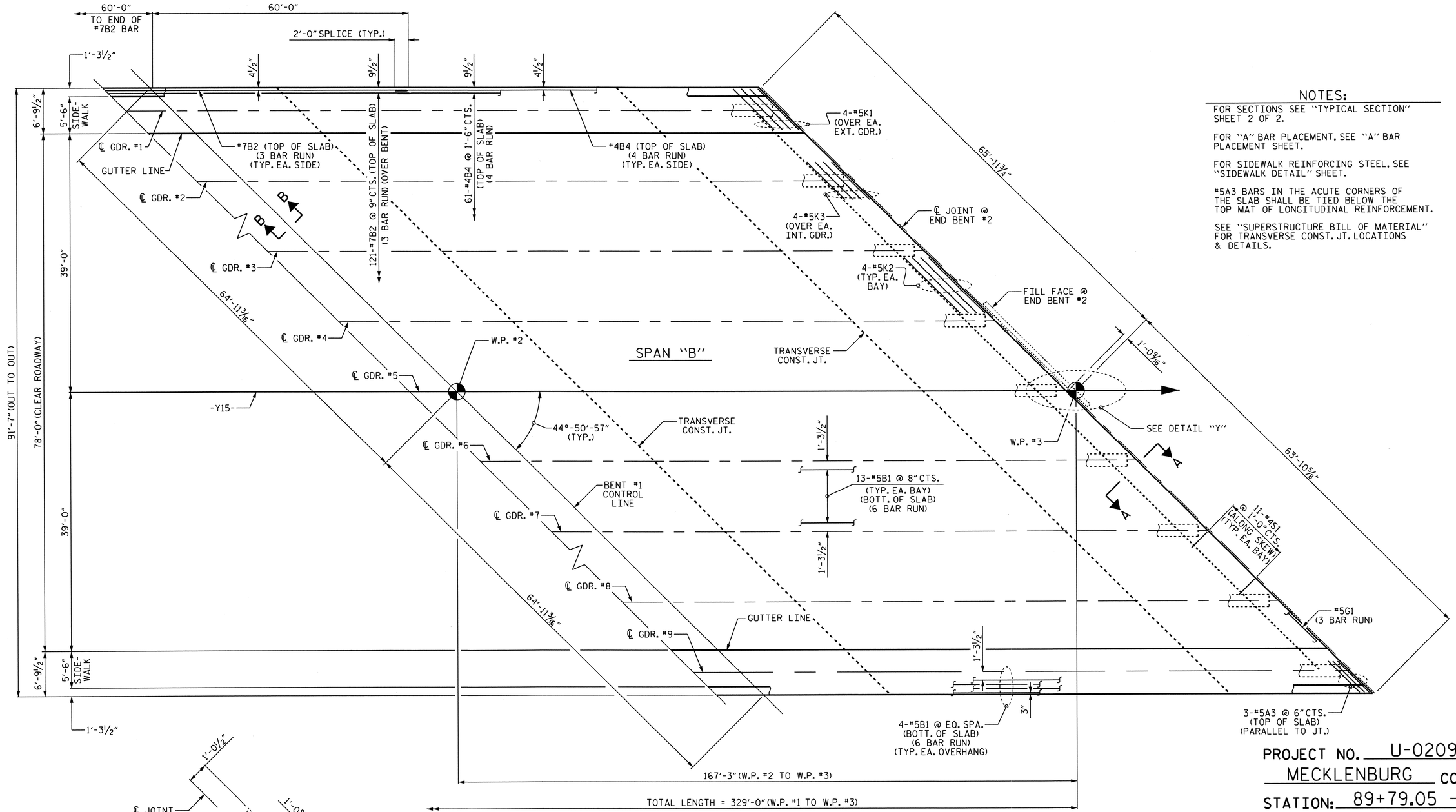

PARTIAL PLAN OF SPANS

MONOLITHIC CONCRETE ISLAND NOT SHOWN FOR CLARITY

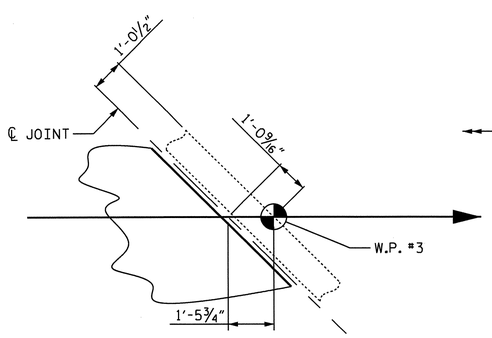

DETAIL "Y"

NOTES:

FOR SECTIONS SEE "TYPICAL SECTION" SHEET 2 OF 2.

FOR "A" BAR PLACEMENT, SEE "A" BAR PLACEMENT SHEET.

FOR SIDEWALK REINFORCING STEEL, SEE "SIDEWALK DETAIL" SHEET.

#5A3 BARS IN THE ACUTE CORNERS OF THE SLAB SHALL BE TIED BELOW THE TOP MAT OF LONGITUDINAL REINFORCEMENT.

SEE "SUPERSTRUCTURE BILL OF MATERIAL" FOR TRANSVERSE CONST. JT. LOCATIONS & DETAILS.

PROJECT NO. U-0209B
MECKLENBURG COUNTY
STATION: 89+79.05 -L-

SHEET 2 OF 2

STATE OF NORTH CAROLINA
DEPARTMENT OF TRANSPORTATION
RALEIGH

SUPERSTRUCTURE

PLAN OF SPANS

NORTH CAROLINA PROFESSIONAL SEAL 30879 ENGINEER KEVIN FISCHER 11/20/12

REVISIONS						SHEET NO.
NO.	BY:	DATE:	NO.	BY:	DATE:	S-48
1			3			TOTAL SHEETS
2			4			117

STR. #2

DRAWN BY : T. BANKOVICH DATE : 2-2011
CHECKED BY : J.P. ADAMS DATE : 8/16/11

07-SEP-2012 11:05
R:\Structures\Plans\Str2\U0209B_SD_PS_02.dgn
lsutton

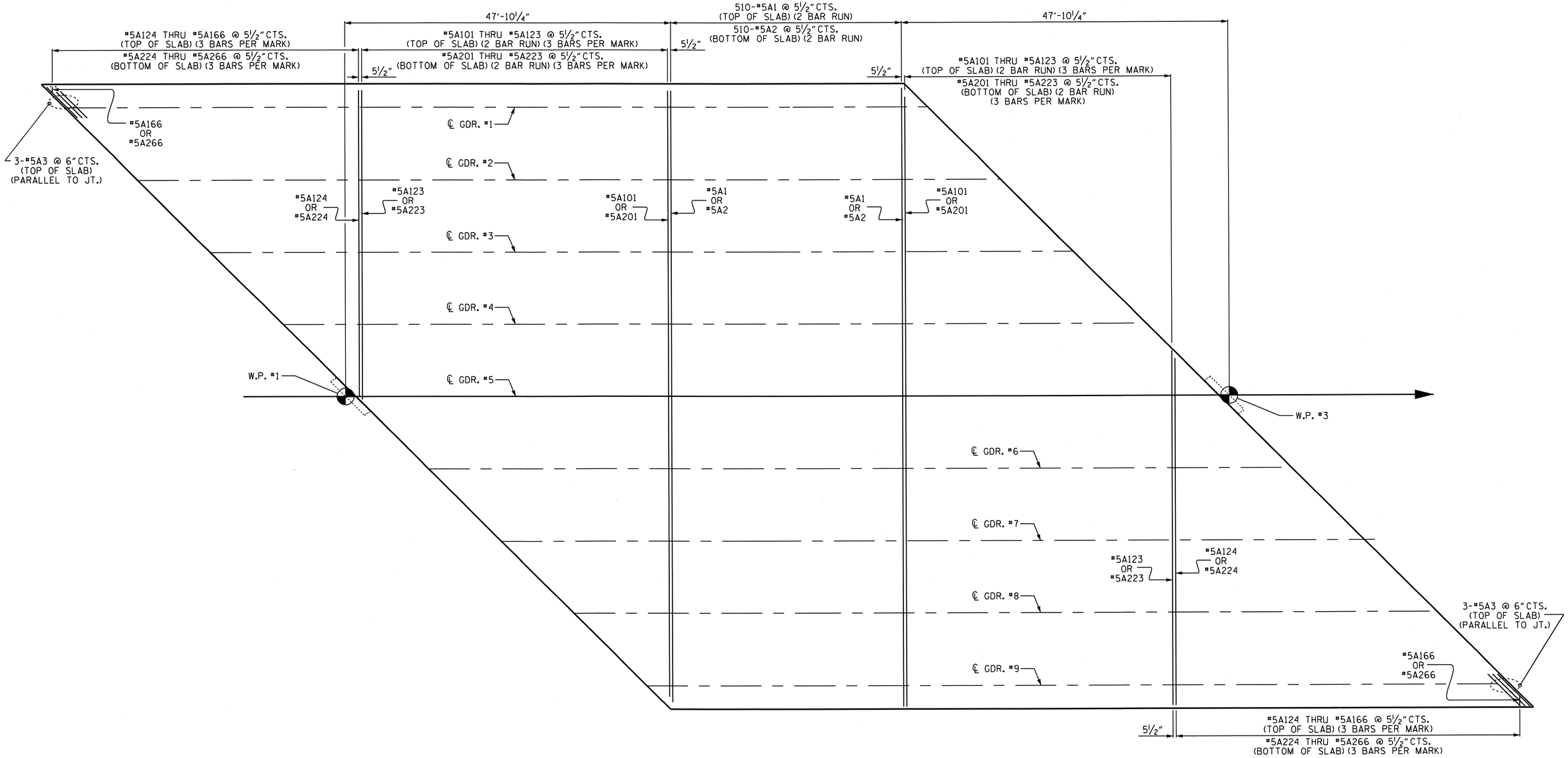

PROJECT NO. U-0209B

MECKLENBURG COUNTY

STATION: 89+79.05 -L-

"A" BAR PLACEMENT

STATE OF NORTH CAROLINA
DEPARTMENT OF TRANSPORTATION
RALEIGH

SUPERSTRUCTURE

"A" BAR PLACEMENT

NORTH CAROLINA PROFESSIONAL SEAL 30878 ENGINEER KEVIN FISCHER
11/20/12

REVISIONS						SHEET NO.
NO.	BY:	DATE:	NO.	BY:	DATE:	S-49
1			3			TOTAL SHEETS
2			4			117

STR. #2

DRAWN BY : T. BANKOVICH DATE : 2-2011
CHECKED BY : J.P. ADAMS DATE : 8/16/11

06-NOV-2012 12:23
R:\Structures\Plans\Str2\U0209B_SD_PS_02.dgn
LSUTTON

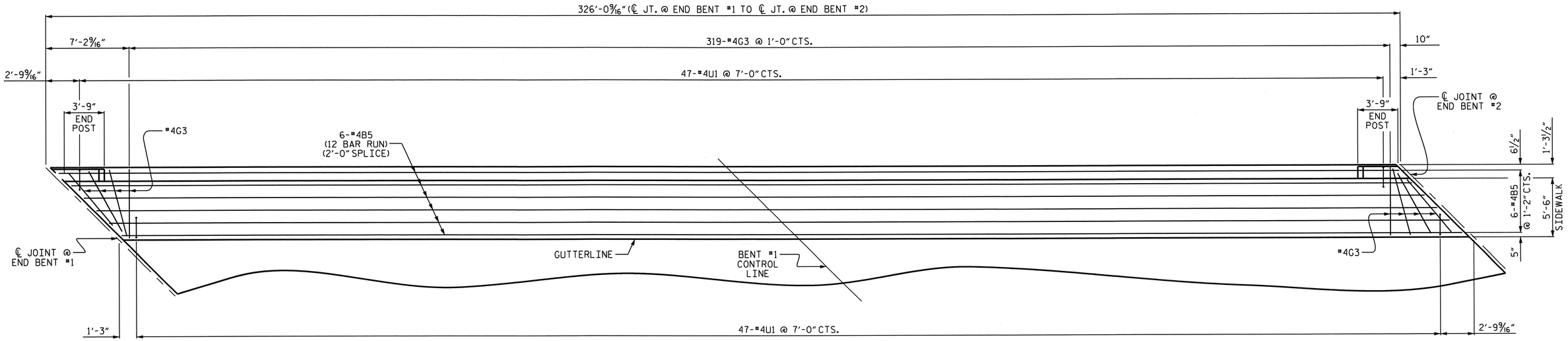

PLAN OF SIDEWALK

LEFT SIDE SHOWN, RIGHT SIDE SIMILAR

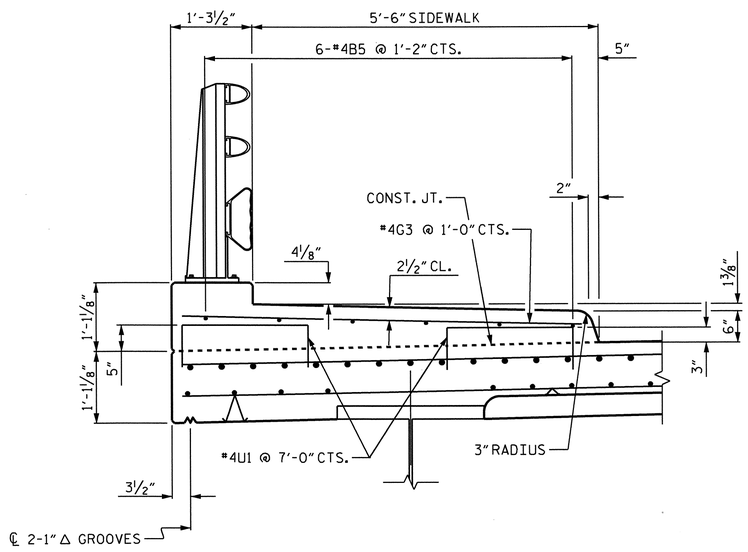

SECTION THRU SIDEWALK

LEFT SIDE SHOWN, RIGHT SIDE SIMILAR

NOTES

THE CONCRETE AND REINFORCING STEEL REQUIRED FOR THE SIDEWALKS IS INCLUDED IN THE SUPERSTRUCTURE BILL OF MATERIAL AND PAYMENT IS INCLUDED IN THE SQUARE FOOT PRICE BID FOR "REINFORCED CONCRETE DECK SLAB".

THE #4U1 BARS MAY BE PUSHED INTO GREEN CONCRETE AFTER SPAN HAS BEEN SCREEDED OFF.

SIDEWALK IN A CONTINUOUS UNIT SHALL NOT BE CAST UNTIL ALL SLAB CONCRETE IN THE UNIT HAS BEEN CAST AND HAS REACHED A MINIMUM COMPRESSIVE STRENGTH OF 3000 PSI.

THE JOINT IN THE DECK AT THE END BENTS SHALL BE SAWED PRIOR TO THE CASTING OF THE SIDEWALKS.

ALL REINFORCING STEEL IN SIDEWALKS SHALL BE EPOXY COATED.

GROOVED CONTRACTION JOINTS, 1/2" IN DEPTH, SHALL BE TOOLED IN ALL EXPOSED FACES OF THE SIDEWALK IN ACCORDANCE WITH ARTICLE 825-10(B) OF THE STANDARD SPECIFICATIONS. THE CONTRACTION JOINTS SHALL BE LOCATED AT A SPACING OF 8 FT. TO 10 FT. BETWEEN EXPANSION JOINTS. NO CONTRACTION JOINT WILL BE REQUIRED FOR SEGMENTS LESS THAN 10 FT. IN LENGTH.

PROJECT NO. U-0209B
MECKLENBURG COUNTY
STATION: 89+79.05 -L-

STATE OF NORTH CAROLINA
DEPARTMENT OF TRANSPORTATION
RALEIGH

SUPERSTRUCTURE

SIDEWALK DETAILS

NORTH CAROLINA PROFESSIONAL SEAL 20818 ENGINEER KEVIN FISCHER 11/20/12

REVISIONS						SHEET NO.
NO.	BY:	DATE:	NO.	BY:	DATE:	S-50
1			3			TOTAL SHEETS
2			4			117

STR. #2

DRAWN BY : T. BANKOVICH DATE : 2-2011
CHECKED BY : J.P. ADAMS DATE : 8/16/11

07-SEP-2012 11:05
R:\Structures\Plans\Str2\U0209B_SD_SW_02.dgn
lsutton

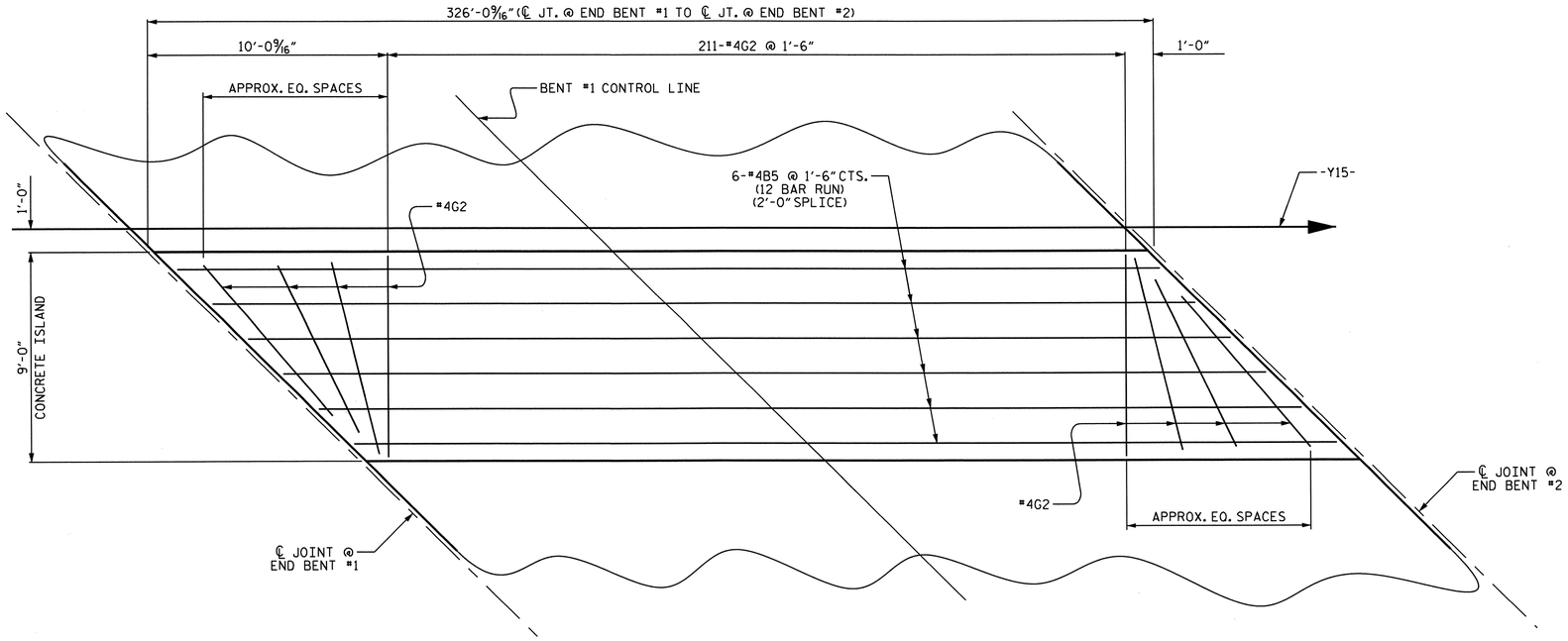

PLAN OF MONOLITHIC CONCRETE ISLAND

NOTES

THE CONCRETE AND REINFORCING STEEL REQUIRED FOR THE CONCRETE ISLAND ON THE BRIDGE DECK IS INCLUDED IN THE SUPERSTRUCTURE BILL OF MATERIAL AND PAYMENT IS INCLUDED IN THE SQUARE FOOT PRICE BID FOR "REINFORCED CONCRETE DECK SLAB".

CONCRETE ISLAND IN A CONTINUOUS UNIT SHALL NOT BE CAST UNTIL ALL SLAB CONCRETE IN THE UNIT HAS BEEN CAST AND HAS REACHED A MINIMUM COMPRESSIVE STRENGTH OF 3000 PSI.

THE JOINT IN THE DECK AT THE END BENTS SHALL BE SAWED PRIOR TO CASTING OF THE CONCRETE ISLAND. THE JOINT IN THE CONCRETE ISLAND SHALL BE FORMED TO MATCH THE SAWED OPENING FOR THE FOAM JOINT SEALS.

ALL REINFORCING STEEL IN CONCRETE ISLAND SHALL BE EPOXY COATED.

GROOVED CONTRACTION JOINTS, 1/2" IN DEPTH SHALL BE TOOLED IN ALL EXPOSED FACES OF THE CONCRETE ISLAND IN ACCORDANCE WITH ARTICLE 825-10(B) OF THE STANDARD SPECIFICATIONS. THE CONTRACTION JOINTS SHALL BE LOCATED AT A SPACING OF 8 FT. TO 10 FT. BETWEEN EXPANSIONS JOINTS. NO CONTRACTIONS JOINTS WILL BE REQUIRED FOR SEGMENTS LESS THAN 10 FT. IN LENGTH.

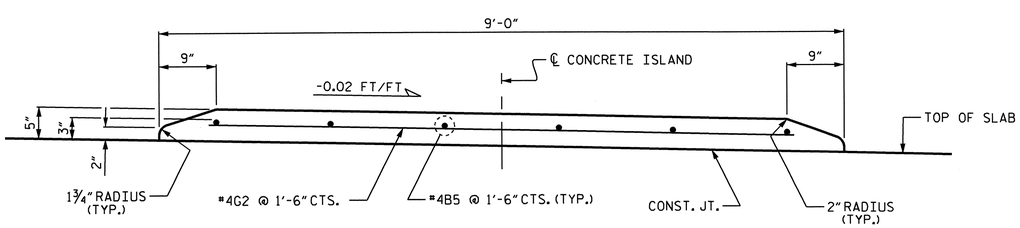

SECTION THRU MONOLITHIC CONCRETE ISLAND

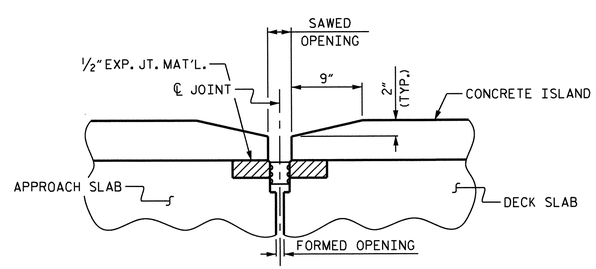

SECTION THRU ISLAND AT END BENTS

END BENT #1 SHOWN, END BENT #2 SIMILAR

PROJECT NO. U-0209B
MECKLENBURG COUNTY
STATION: 89+79.05 -L-

STATE OF NORTH CAROLINA
DEPARTMENT OF TRANSPORTATION
RALEIGH

SUPERSTRUCTURE

MONOLITHIC CONCRETE ISLAND

NORTH CAROLINA PROFESSIONAL SEAL 20878 ENGINEER KEVIN FISCHER
11/30/12

REVISIONS						SHEET NO.
NO.	BY:	DATE:	NO.	BY:	DATE:	S-51
1			3			TOTAL SHEETS
2			4			117

STR. #2

DRAWN BY : T. BANKOVICH DATE : 2-2010
CHECKED BY : J.P. ADAMS DATE : 8/16/11

07-SEP-2012 11:05
R:\Structures\Plans\Str2\U0209B_SD_MD_02.dgn
lsutton

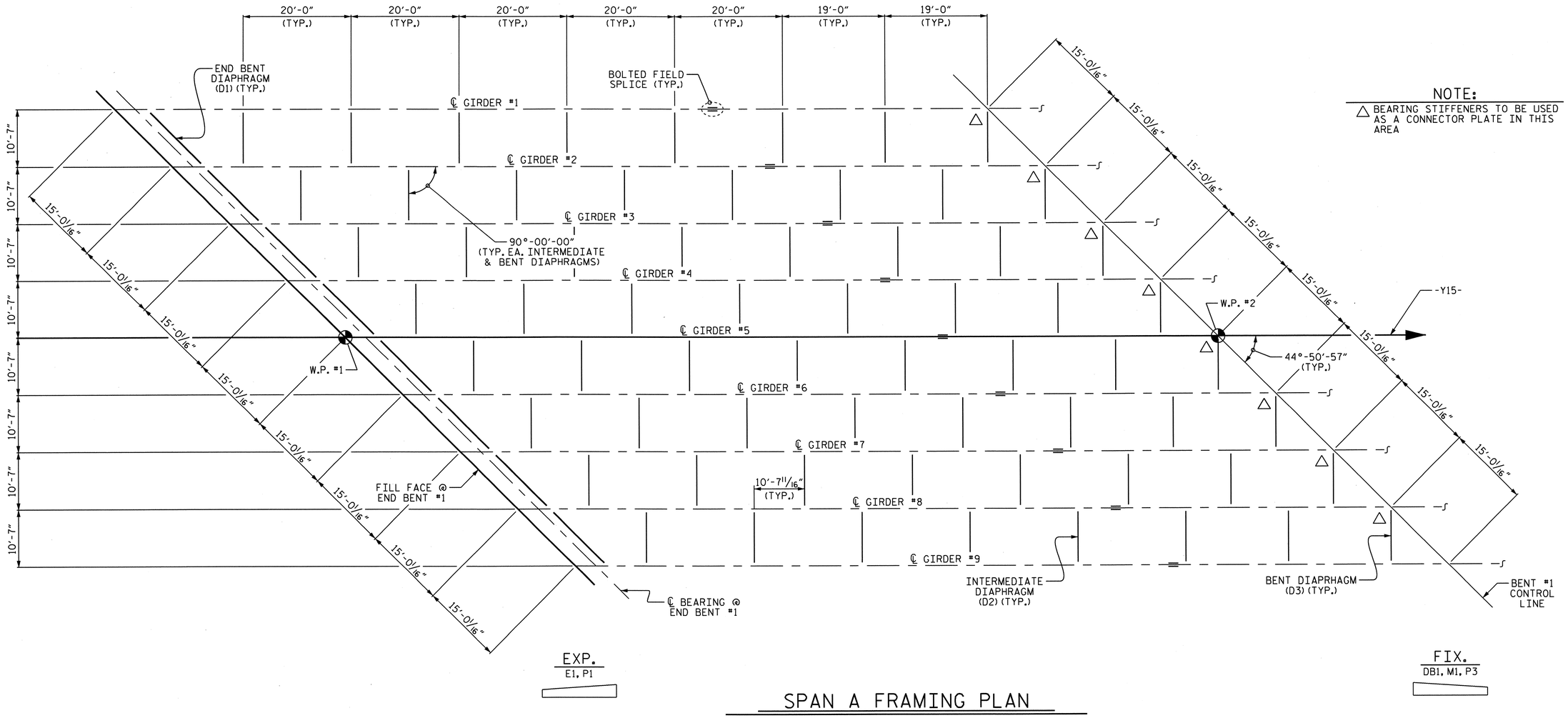

NOTE:

△ BEARING STIFFENERS TO BE USED AS A CONNECTOR PLATE IN THIS AREA

SPAN A FRAMING PLAN

PROJECT NO. U-0209B

MECKLENBURG COUNTY

STATION: 89+79.05 -L-

SHEET 1 OF 2

STATE OF NORTH CAROLINA
DEPARTMENT OF TRANSPORTATION
RALEIGH

SUPERSTRUCTURE

FRAMING PLAN

NORTH CAROLINA PROFESSIONAL SEAL 30878 ENGINEER KEVIN FISCHER 11/30/12

REVISIONS						SHEET NO.
NO.	BY:	DATE:	NO.	BY:	DATE:	S-52
1			3			TOTAL SHEETS
2			4			117

STR. #2

DRAWN BY : J.D. HAWK DATE : 11/12
CHECKED BY : J.P. ADAMS DATE : 11/12

06-NOV-2012 12:23
R:\Structures\Plans\Str2\U0209B_SD_FP_02.dgn
LSUTTON

NOTE:

△ BEARING STIFFENERS TO BE USED AS A CONNECTOR PLATE IN THIS AREA.

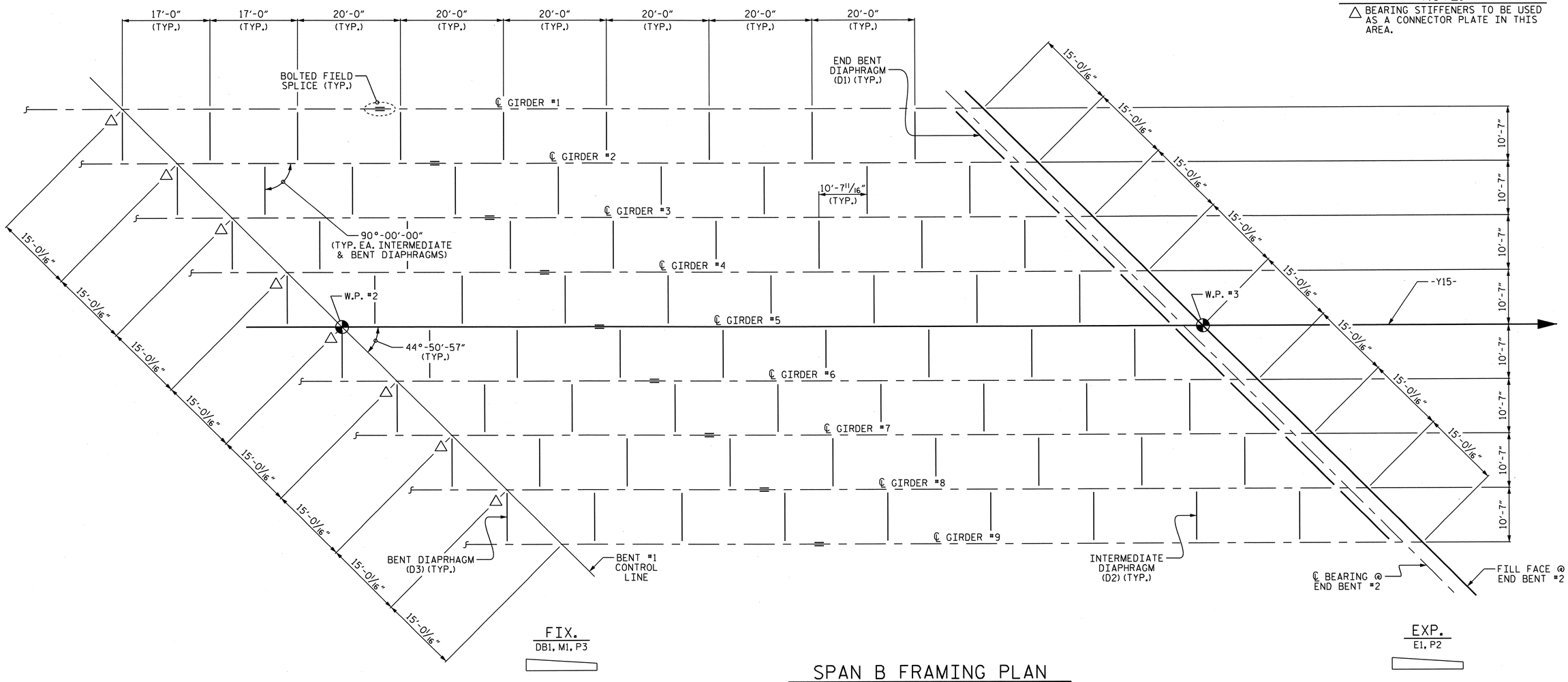

SPAN B FRAMING PLAN

PROJECT NO. U-0209B

MECKLENBURG COUNTY

STATION: 89+79.05 -L-

SHEET 2 OF 2

STATE OF NORTH CAROLINA
DEPARTMENT OF TRANSPORTATION
RALEIGH

SUPERSTRUCTURE

FRAMING PLAN

NORTH CAROLINA PROFESSIONAL SEAL 30878 ENGINEER KEVIN FISCHER
11/20/12

REVISIONS						SHEET NO.
NO.	BY:	DATE:	NO.	BY:	DATE:	S-53
1			3			TOTAL SHEETS
2			4			117

STR. #2

DRAWN BY : J.D. HAWK DATE : 11/12
CHECKED BY : J.P. ADAMS DATE : 11/12

06-NOV-2012 12:23
R:\Structures\Plans\Str2\U0209B_SD_FP_02.dgn
LSUTTON

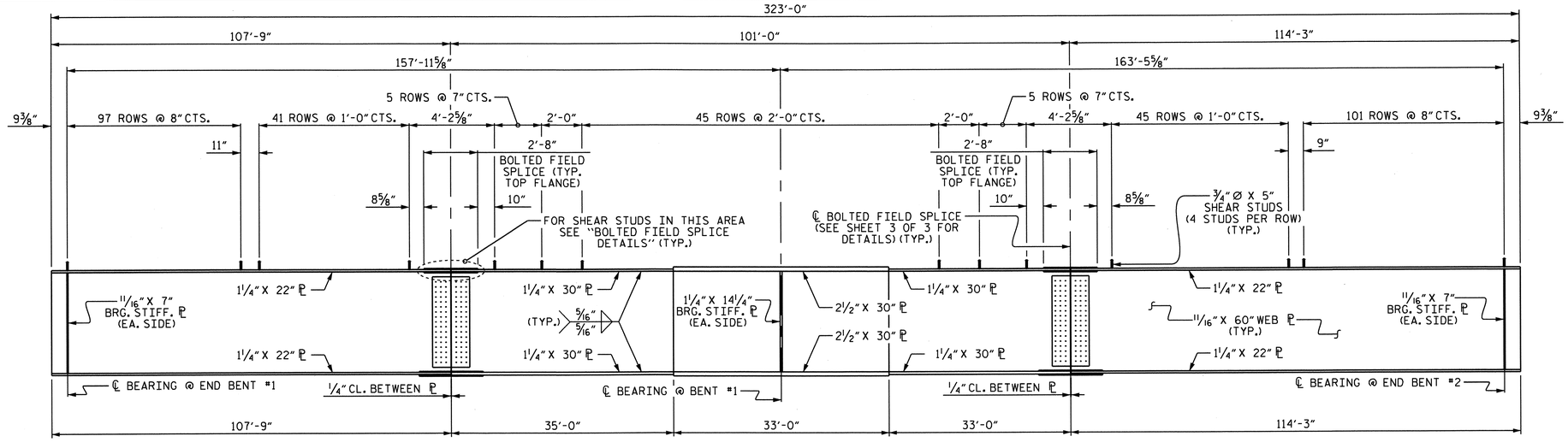

ELEVATION OF GIRDER

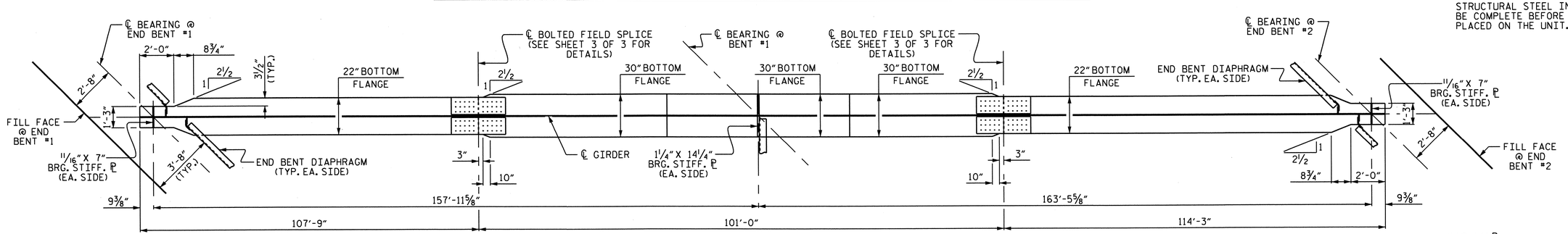

BOTTOM FLANGE DETAIL

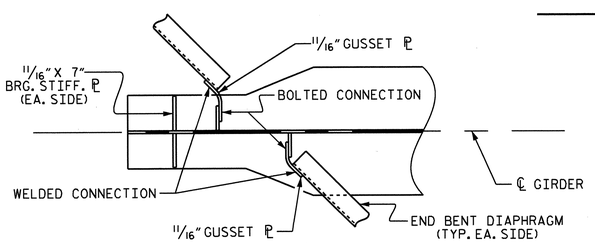

CONNECTOR ℙ DETAIL

(EACH END SIMILAR)

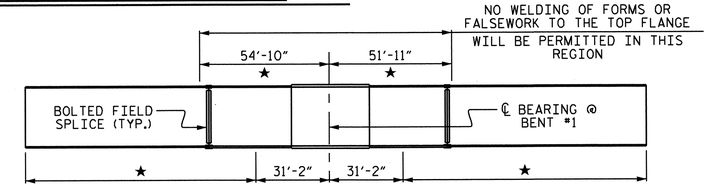

CHARPY V-NOTCH TESTS FOR CONTINUOUS PLATE GIRDERS

★ CHARPY V-NOTCH TESTS ARE REQUIRED FOR ALL TOP OR BOTTOM FLANGE PLATES WHICH FALL WITHIN THESE LIMITS. CHARPY V-NOTCH TEST ARE REQUIRED FOR ALL WEB PLATES AND ALL SPLICE PLATES. IF THE PERMITTED SHOP FLANGE SPLICE IS NOT USED, CHARPY V-NOTCH TESTS WILL BE REQUIRED FOR THE ENTIRE FLANGE PLATE. FOR CHARPY V-NOTCH TEST, SEE ARTICLE 1072-7 OF THE STANDARD SPECIFICATIONS.

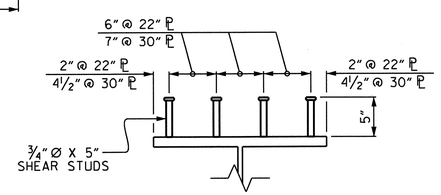

SHEAR STUD DETAIL

(TYPICAL EXCEPT AT BOLTED FIELD SPLICE)

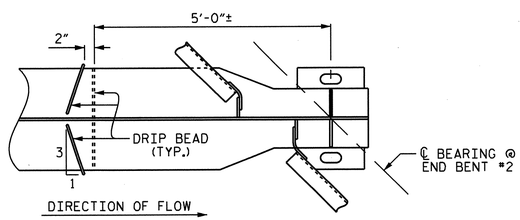

PART PLAN - BOTTOM FLANGE

END BENT #2 SHOWN, END BENT #1 SIMILAR

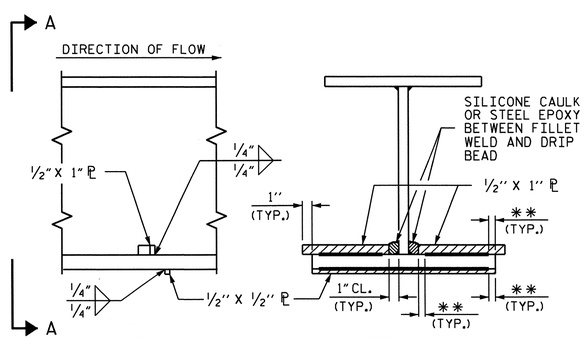

SECTION

VIEW A-A

DRIP BEAD DETAILS

** SEE "WELD TERMINATION DETAIL" SHEET 2 OF 3

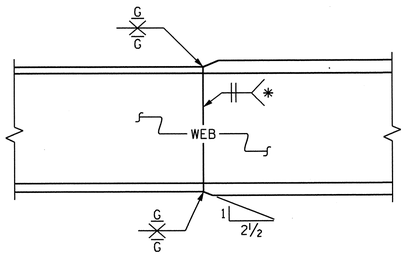

ELEVATION

PERMISSIBLE SHOP FLANGE & WEB SPLICE

* GRIND SMOOTH AND FLUSH ON OUTER FACE OF EXTERIOR GIRDER

NOTES

ALL STRUCTURAL STEEL SHALL BE AASHTO M270 GRADE 50W AND PAINTED IN ACCORDANCE WITH SYSTEM 4 OF ARTICLE 442-8 OF THE STANDARD SPECIFICATIONS UNLESS OTHERWISE NOTED ON THE PLANS.

ALL DIMENSIONS SHOWN ARE HORIZONTAL OR VERTICAL, UNLESS OTHERWISE NOTED.

ALL FIELD CONNECTIONS TO BE ⅞" DIA. HIGH STRENGTH BOLTS UNLESS OTHERWISE NOTED.

BEARING STIFFENERS ARE TO BE PLACED NORMAL TO THE WEB OF THE GIRDER AND SHALL BE PLUMB.

PERMITTED FLANGE AND WEB SHOP SPLICES SHALL NOT BE LOCATED WITHIN 15 FEET OF MAXIMUM DEAD LOAD DEFLECTION (NOR WITHIN 15 FEET OF INTERMEDIATE BEARINGS OF CONTINUOUS UNITS). KEEP 2 FEET MINIMUM BETWEEN WEB AND FLANGE SHOP SPLICES. KEEP 6" MINIMUM BETWEEN CONNECTOR PLATE OR TRANSVERSE STIFFENER WELDS AND WEB OR FLANGE SHOP SPLICES.

STUDS ON GIRDERS MAY BE SHIFTED UP TO 1" IF NECESSARY TO CLEAR FLANGE SPLICE WELD.

TENSION ON THE AASHTO M164 BOLTS SHALL BE CALIBRATED USING DIRECT TENSION INDICATOR WASHERS IN ACCORDANCE WITH ARTICLE 440-8 OF THE STANDARD SPECIFICATIONS.

END OF GIRDERS SHALL BE PLUMB.

FABRICATORS SHALL DETAIL DIAPHRAGM MEMBERS AND CONNECTIONS FOR FULL DEAD LOAD FIT UP. GIRDERS SHALL BE PLUMB AFTER THE FULL AMOUNT OF DEAD LOAD IS APPLIED.

STRUCTURAL STEEL IN A CONTINUOUS UNIT SHALL BE COMPLETE BEFORE FALSEWORK OR FORMS ARE PLACED ON THE UNIT.

PROJECT NO. U-0209B
MECKLENBURG COUNTY
STATION: 89+79.05 -L-

SHEET 1 OF 3

STATE OF NORTH CAROLINA
DEPARTMENT OF TRANSPORTATION
RALEIGH

SUPERSTRUCTURE

STRUCTURAL STEEL DETAILS

NORTH CAROLINA PROFESSIONAL SEAL 20878 ENGINEER KEVIN FISCHER 11/20/12

REVISIONS						SHEET NO.
NO.	BY:	DATE:	NO.	BY:	DATE:	S-54
1			3			TOTAL SHEETS
2			4			117

STR. #2

DRAWN BY : J.D. HAWK DATE : 11/12
CHECKED BY : J.P. ADAMS DATE : 11/12

07-NOV-2012 08:44
R:\Structures\Plans\Str2\U0209B_SD_SS_02.dgn
lsutton

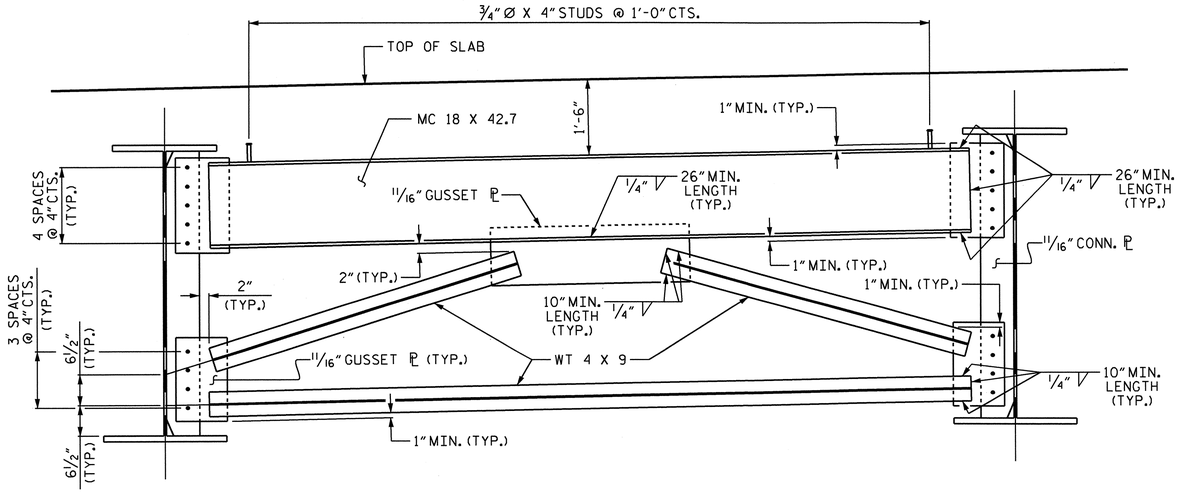

TYPICAL END BENT DIAPHRAGM (D1)

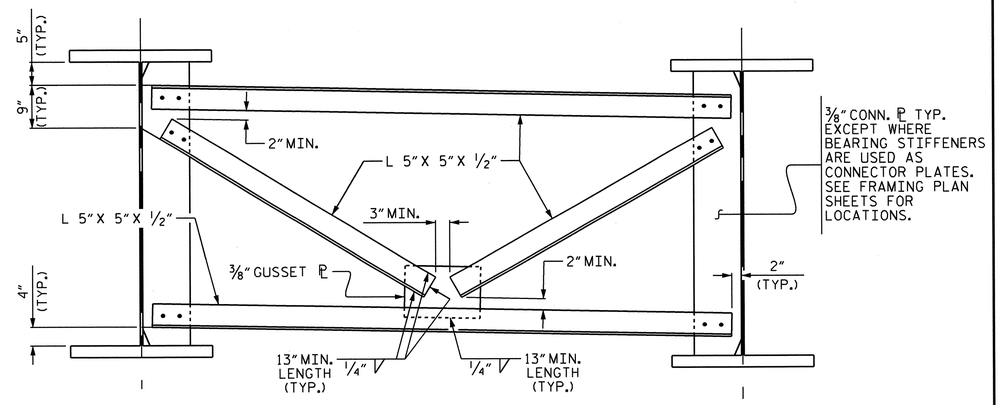

TYPICAL BENT DIAPHRAGM (D3)

1 1/4" THICK PLATE WHERE BEARING STIFFENERS ARE USED AS CONNECTOR PLATES FOR BENT DIAPHRAGMS

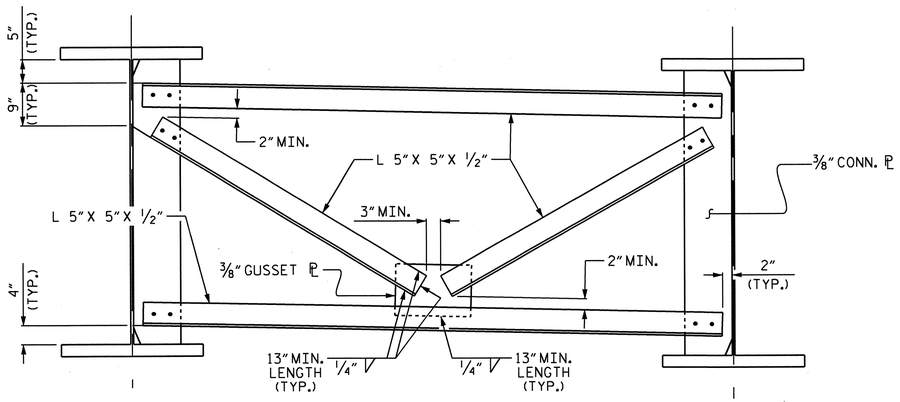

TYPICAL INTERMEDIATE DIAPHRAGM (D2)

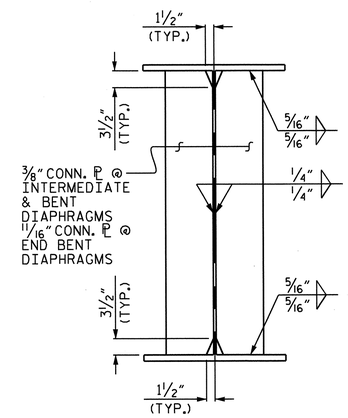

CONNECTOR PLATE

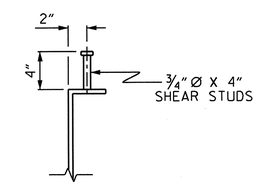

SHEAR STUD DETAIL

(TYP. EA. END BENT DIAPHRAGM)

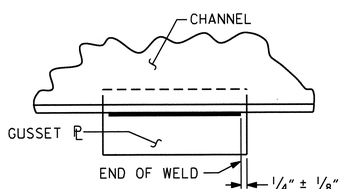

TYPICAL GUSSET PLATE CONNECTION

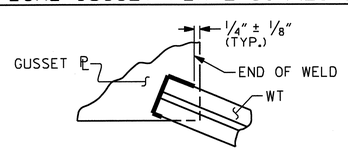

TYPICAL "TEE" TO GUSSET PLATE CONNECTION

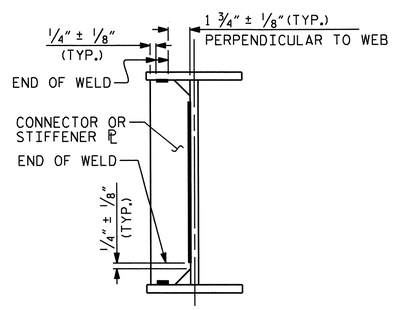

TYPICAL STIFFENER OF CONNECTOR PLATE CONNECTIONS

WELD TERMINATION DETAILS

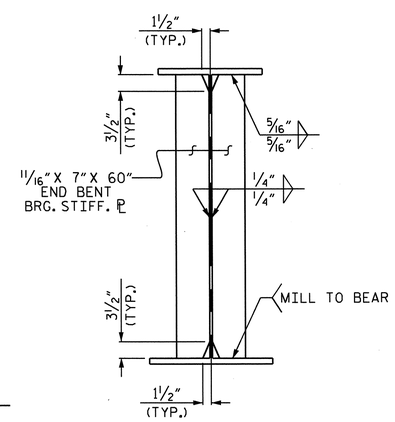

BEARING STIFFENER

AT END BENT DIAPHRAGM

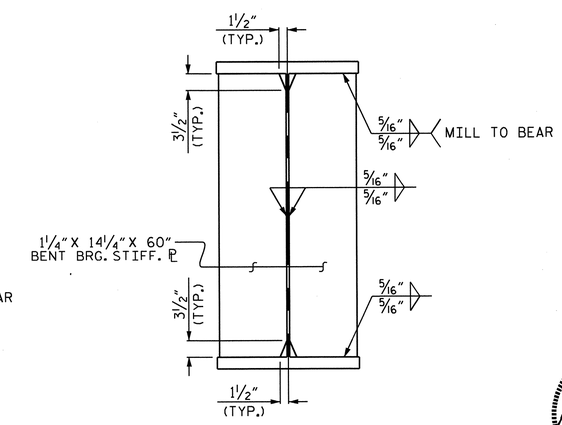

BEARING STIFFENER

AT BENT DIAPHRAGM

PROJECT NO. U-0209B
MECKLENBURG COUNTY
STATION: 89+79.05 -L-

SHEET 2 OF 3

STATE OF NORTH CAROLINA
DEPARTMENT OF TRANSPORTATION
RALEIGH

SUPERSTRUCTURE

STRUCTURAL STEEL DETAILS

NORTH CAROLINA PROFESSIONAL SEAL 30878 ENGINEER KEVIN FISCHER 11/20/12

REVISIONS						SHEET NO.
NO.	BY:	DATE:	NO.	BY:	DATE:	S-55
1			3			TOTAL SHEETS
2			4			117

STR. #2

DRAWN BY : J.D. HAWK DATE : 11/12
CHECKED BY : J.P. ADAMS DATE : 11/12

06-NOV-2012 12:23
R:\Structures\Plans\Str2\U0209B_SD_SS_02.dgn
LSUTTON

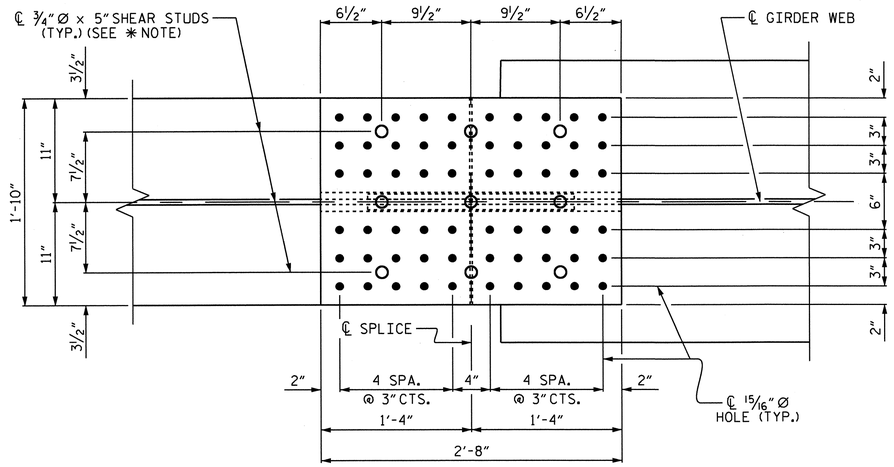

PLAN (TOP OF TOP FLANGE)

✱ NOTE: SHEAR STUDS ARE TO BE SHOP WELDED ON TOP PLATE BEFORE FIELD ASSEMBLY

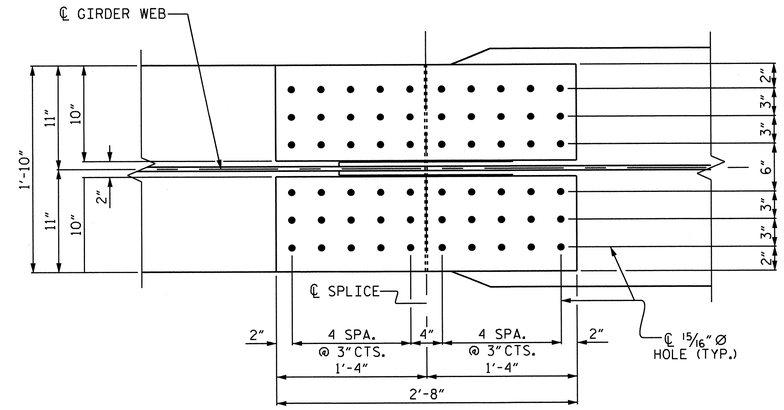

PLAN (TOP OF BOTTOM FLANGE)

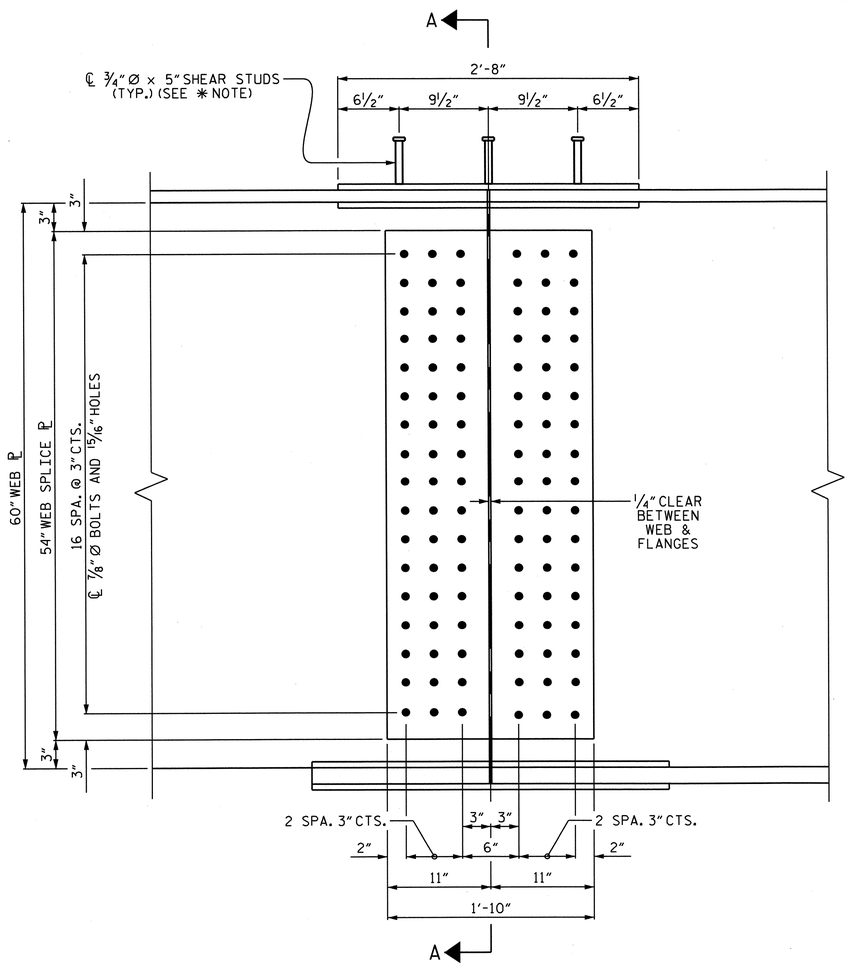

ELEVATION

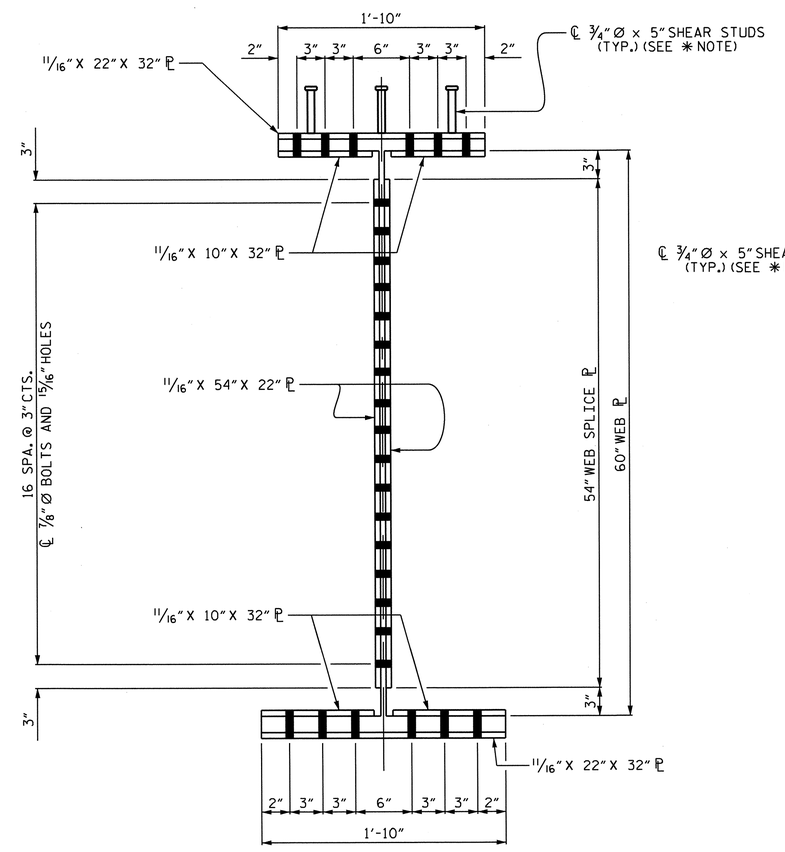

SECTION A-A

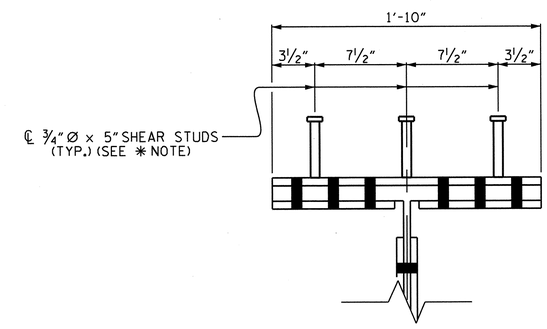

SHEAR STUD DETAIL FOR TOP FLANGE SPLICE PLATE

PROJECT NO. U-0209B
MECKLENBURG COUNTY
STATION: 89+79.05 -L-

SHEET 3 OF 3

STATE OF NORTH CAROLINA
DEPARTMENT OF TRANSPORTATION
RALEIGH

SUPERSTRUCTURE

STRUCTURAL STEEL DETAILS

NORTH CAROLINA PROFESSIONAL SEAL 30878 ENGINEER KEVIN FISCHER 11/20/12

REVISIONS						SHEET NO.
NO.	BY:	DATE:	NO.	BY:	DATE:	S-56
1			3			TOTAL SHEETS
2			4			117

STR. #2

DRAWN BY : J.D. HAWK DATE : 11/12
CHECKED BY : J.P. ADAMS DATE : 11/12

BOLTED FIELD SPLICE

(TYP. EA. BOLTED FIELD SPLICE)

06-NOV-2012 12:23
R:\Structures\Plans\Str2\U0209B_SD_SS_02.dgn
LSUTTON

DEAD LOAD DEFLECTION TABLE FOR GIRDERS

SPAN A

GIRDER #1 & #9

TWENTIETH POINTS	0	0.05	0.10	0.15	0.20	0.25	0.30	0.35	0.40	0.45	0.50	0.55	0.60	0.65	0.70	0.75	0.80	0.85	0.90	0.95	0
DEFLECTION DUE TO WEIGHT OF GIRDER	0	0.016	0.032	0.046	0.058	0.067	0.074	0.078	0.079	0.077	0.073	0.065	0.057	0.047	0.036	0.026	0.016	0.008	0.003	0.000	0
DEFLECTION DUE TO WEIGHT OF SLAB *	0	0.052	0.101	0.146	0.184	0.215	0.236	0.249	0.252	0.246	0.231	0.209	0.181	0.149	0.115	0.081	0.050	0.025	0.008	0.000	0
DEFLECTION DUE TO WEIGHT OF SIDEWALK & RAIL	0	0.006	0.010	0.015	0.019	0.023	0.025	0.026	0.027	0.027	0.025	0.023	0.020	0.016	0.013	0.009	0.006	0.003	0.001	0.000	0
TOTAL DEAD LOAD DEFLECTION	0	0.074	0.143	0.207	0.261	0.305	0.335	0.353	0.358	0.350	0.329	0.297	0.258	0.212	0.164	0.116	0.072	0.036	0.012	0.000	0
VERTICAL CURVE ORDINATE	0	0.091	0.173	0.245	0.307	0.360	0.403	0.437	0.461	0.475	0.480	0.475	0.461	0.437	0.403	0.360	0.307	0.245	0.173	0.091	0
REQUIRED CAMBER	0	2"	3 13/16"	5 7/16"	6 13/16"	8"	8 7/8"	9 1/2"	9 13/16"	9 7/8"	9 11/16"	9 1/4"	8 5/8"	7 13/16"	6 13/16"	5 11/16"	4 9/16"	3 3/8"	2 3/16"	1 1/8"	0

GIRDER #2, #3, #4, #5, #6, #7, & #8

TWENTIETH POINTS	0	0.05	0.10	0.15	0.20	0.25	0.30	0.35	0.40	0.45	0.50	0.55	0.60	0.65	0.70	0.75	0.80	0.85	0.90	0.95	0
DEFLECTION DUE TO WEIGHT OF GIRDER	0	0.018	0.035	0.050	0.063	0.073	0.081	0.085	0.086	0.084	0.079	0.071	0.062	0.051	0.039	0.028	0.017	0.009	0.003	0.000	0
DEFLECTION DUE TO WEIGHT OF SLAB *	0	0.052	0.101	0.146	0.184	0.215	0.236	0.249	0.252	0.246	0.231	0.209	0.181	0.149	0.115	0.081	0.050	0.025	0.008	0.000	0
DEFLECTION DUE TO WEIGHT OF SIDEWALK & RAIL	0	0.008	0.016	0.024	0.030	0.036	0.039	0.041	0.042	0.041	0.039	0.036	0.031	0.026	0.021	0.015	0.010	0.005	0.002	0.000	0
TOTAL DEAD LOAD DEFLECTION	0	0.078	0.152	0.220	0.277	0.324	0.356	0.375	0.380	0.371	0.349	0.316	0.274	0.226	0.175	0.124	0.077	0.039	0.013	0.000	0
VERTICAL CURVE ORDINATE	0	0.091	0.173	0.245	0.307	0.360	0.403	0.437	0.461	0.475	0.480	0.475	0.461	0.437	0.403	0.360	0.307	0.245	0.173	0.091	0
REQUIRED CAMBER	0	2 1/16"	3 7/8"	5 9/16"	7"	8 3/16"	9 1/8"	9 3/4"	10 1/16"	10 3/16"	9 15/16"	9 1/2"	8 13/16"	7 15/16"	6 15/16"	5 13/16"	4 5/8"	3 3/8"	2 1/4"	1 1/8"	0

SPAN B

GIRDER #1 & #9

TWENTIETH POINTS	0	0.05	0.10	0.15	0.20	0.25	0.30	0.35	0.40	0.45	0.50	0.55	0.60	0.65	0.70	0.75	0.80	0.85	0.90	0.95	0
DEFLECTION DUE TO WEIGHT OF GIRDER	0	0.003	0.009	0.017	0.028	0.040	0.053	0.067	0.079	0.089	0.096	0.101	0.102	0.100	0.095	0.085	0.073	0.058	0.040	0.020	0
DEFLECTION DUE TO WEIGHT OF SLAB *	0	0.010	0.028	0.054	0.089	0.129	0.172	0.214	0.252	0.285	0.309	0.324	0.329	0.322	0.303	0.274	0.234	0.185	0.128	0.065	0
DEFLECTION DUE TO WEIGHT OF SIDEWALK & RAIL	0	0.001	0.003	0.006	0.010	0.015	0.019	0.023	0.027	0.030	0.033	0.034	0.035	0.034	0.032	0.029	0.025	0.019	0.013	0.007	0
TOTAL DEAD LOAD DEFLECTION	0	0.014	0.040	0.077	0.127	0.184	0.244	0304	0.358	0.404	0.438	0.459	0.466	0.456	0.430	0.388	0.332	0.262	0.181	0.092	0
VERTICAL CURVE ORDINATE	0	0.098	0.185	0.262	0.329	0.385	0.432	0.468	0.493	0.509	0.514	0.509	0.493	0.468	0.432	0.385	0.329	0.262	0.185	0.098	0
REQUIRED CAMBER	0	1 5/16"	2 11/16"	4 1/16"	5 7/16"	6 13/16"	8 1/8"	9 1/4"	10 3/16"	10 15/16"	11 7/16"	11 5/8"	11 1/2"	11 1/16"	10 5/16"	9 5/16"	7 15/16"	6 5/16"	4 3/8"	2 1/4"	0

GIRDER #2, #3, #4, #5, #6, #7, & #8

TWENTIETH POINTS	0	0.05	0.10	0.15	0.20	0.25	0.30	0.35	0.40	0.45	0.50	0.55	0.60	0.65	0.70	0.75	0.80	0.85	0.90	0.95	0
DEFLECTION DUE TO WEIGHT OF GIRDER	0	0.003	0.009	0.018	0.030	0.044	0.058	0.073	0.086	0.097	0.105	0.110	0.112	0.109	0.103	0.093	0.080	0.063	0.043	0.022	0
DEFLECTION DUE TO WEIGHT OF SLAB *	0	0.010	0.028	0.054	0.089	0.129	0.172	0.214	0.252	0.285	0.309	0.324	0.329	0.322	0.303	0.274	0.234	0.185	0.128	0.065	0
DEFLECTION DUE TO WEIGHT OF SIDEWALK & RAIL	0	0.002	0.005	0.010	0.016	0.023	0.030	0.036	0.042	0.048	0.052	0.054	0.054	0.053	0.050	0.045	0.038	0.030	0.021	0.011	0
TOTAL DEAD LOAD DEFLECTION	0	0.015	0.042	0.082	0.135	0.196	0.260	0.323	0.380	0.430	0.466	0.488	0.495	0.484	0.456	0.412	0.352	0.278	0.192	0.098	0
VERTICAL CURVE ORDINATE	0	0.098	0.185	0.262	0.329	0.385	0.432	0.468	0.493	0.509	0.514	0.509	0.493	0.468	0.432	0.385	0.329	0.262	0.185	0.098	0
REQUIRED CAMBER	0	1 3/8"	2 3/4"	4 1/8"	5 9/16"	7"	8 5/16"	9 1/2"	10 1/2"	11 1/4"	11 3/4"	11 15/16"	11 7/8"	11 7/16"	10 5/8"	9 9/16"	8 3/16"	6 1/2"	4 1/2"	2 3/8"	0

* INCLUDES SLAB, BUILDUPS & STAY-IN-PLACE FORMS.
ALL VALUES ARE SHOWN IN FEET (DECIMAL FORM), EXCEPT "REQUIRED CAMBER", WHICH IS GIVEN IN INCHES (FRACTION FORM)

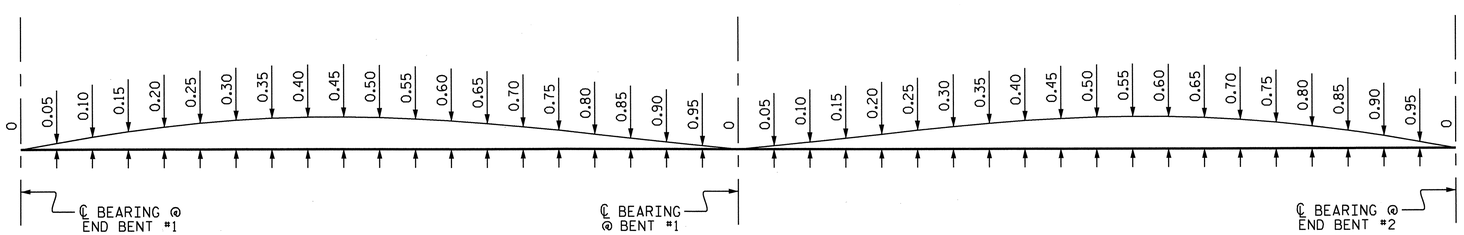

SCHEMATIC CAMBER ORDINATES FOR ALL GIRDERS

SLOPE FOR THE ZERO CAMBER BASE LINE VARIES

PROJECT NO. U-0209B
MECKLENBURG COUNTY
STATION: 89+79.05 -L-

STATE OF NORTH CAROLINA
DEPARTMENT OF TRANSPORTATION
RALEIGH

SUPERSTRUCTURE

DEAD LOAD DEFLECTIONS

NORTH CAROLINA PROFESSIONAL SEAL 50878 ENGINEER KEVIN FISCHER
11/20/12

REVISIONS						SHEET NO.
NO.	BY:	DATE:	NO.	BY:	DATE:	S-57
1			3			TOTAL SHEETS
2			4			117

STR. #2

DRAWN BY : J.D. HAWK DATE : 11/12
CHECKED BY : J.P. ADAMS DATE : 11/12

06-NOV-2012 12:23
R:\Structures\Plans\Str2\U0209B_SD_DL_02.dgn
LSUTTON

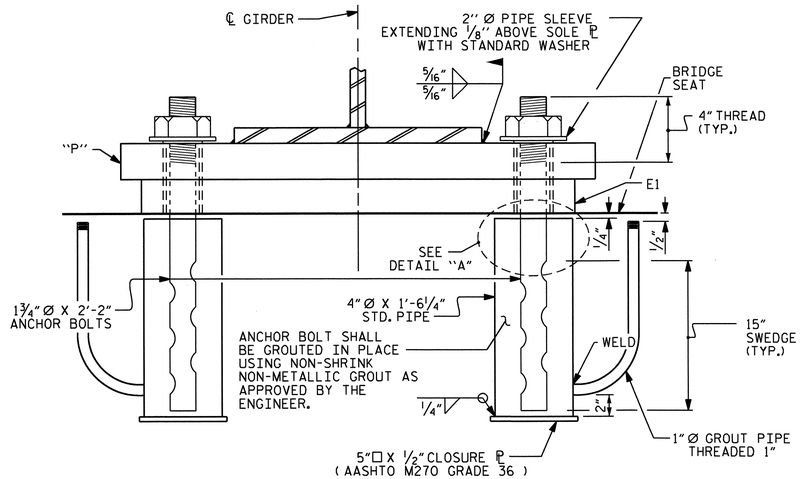

EXPANSION END VIEW

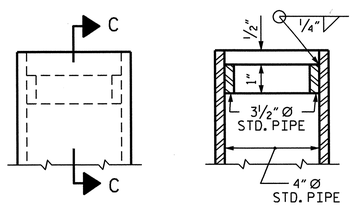

SECTION C-C

DETAIL "A"

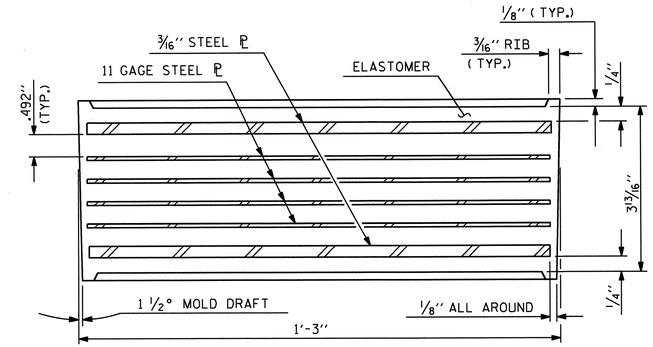

TYPICAL SECTION OF ELASTOMERIC BEARING

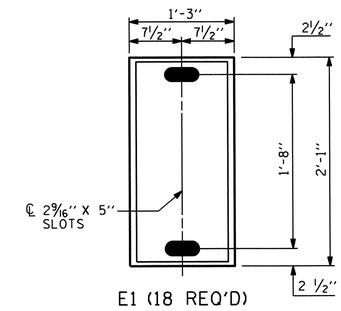

E1 (18 REQ'D)

PLAN VIEW OF ELASTOMERIC BEARING

TYPE VI

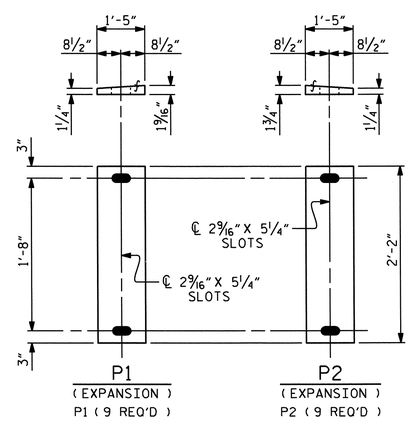

SOLE PLATE DETAILS

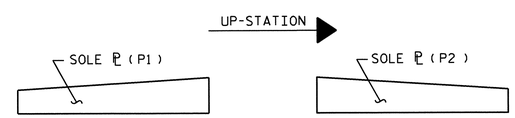

SOLE ℙ PLACEMENT DETAIL

NOTES

AT ALL FIXED POINTS OF SUPPORT, NUTS FOR ANCHOR BOLTS ARE TO BE TIGHTENED FINGER TIGHT AND THEN BACKED OFF 1/2 TURN. THE THREAD OF THE NUT AND BOLT SHALL THEN BE BURRED WITH A SHARP POINTED TOOL.

THE 2" Ø PIPE SLEEVE SHALL BE CUT FROM SCHEDULE 40 PVC PLASTIC PIPE. THE PVC PLASTIC PIPE SHALL MEET THE REQUIREMENTS OF ASTM D1785.

THE PAYMENT FOR THE PIPE SLEEVES SHALL BE INCLUDED IN THE SEVERAL PAY ITEMS.

FOR AASHTO M270 GRADE 50W STRUCTURAL STEEL, SOLE PLATE SHALL BE AASHTO M270 GRADE 50W AND SHALL NOT BE GALVANIZED. ANCHOR BOLTS, NUTS AND WASHERS SHALL BE GALVANIZED IN ACCORDANCE WITH THE STANDARD SPECIFICATIONS.

ANCHOR BOLTS SHALL MEET THE REQUIREMENTS OF ASTM A449. NUTS SHALL MEET THE REQUIREMENTS OF AASHTO M291-DH OR AASHTO M292-2H. WASHERS SHALL MEET THE REQUIREMENTS OF AASHTO M293. SHOP DRAWINGS ARE NOT REQUIRED FOR ANCHOR BOLTS, NUTS AND WASHERS. SHOP INSPECTION IS REQUIRED.

WHEN FIELD WELDING THE SOLE PLATE TO THE GIRDER FLANGE, USE TEMPERATURE INDICATING WAX PENS, OR OTHER SUITABLE MEANS, TO ENSURE THAT THE TEMPERATURE OF THE SOLE PLATE DOES NOT EXCEED 300°F. TEMPERATURES ABOVE THIS MAY DAMAGE THE ELASTOMER.

ALL SURFACES OF BEARING PLATES SHALL BE SMOOTH AND STRAIGHT.

THE CLOSURE PLATE, GROUT PIPE AND STANDARD PIPE FOR THE EXPANSION ASSEMBLY NEED NOT BE GALVANIZED.

THE CONTRACTOR'S ATTENTION IS CALLED TO THE FOLLOWING PROCEDURE, WHICH MAY BE REQUIRED BY THE ENGINEER, TO RESET ELASTOMERIC BEARINGS DUE TO GIRDER TRANSLATION AND END ROTATION:

1. ONCE THE DECK HAS CURED, THE GIRDERS SHALL BE JACKED, THEN THE ANCHOR BOLTS AND ELASTOMERIC BEARING SLOTS SHALL BE CENTERED AS NEARLY AS PRACTICAL ABOUT THE BEARING STIFFENER. THIS OPERATION SHALL BE PERFORMED AT APPROXIMATELY 60°F.
2. AFTER CENTERING THE ELASTOMERIC BEARING SLOTS AND ANCHOR BOLTS, THE ANCHOR BOLTS SHALL BE GROUTED.

THE CONTRACTOR MAY PROPOSE ALTERNATE METHODS, PROVIDED DETAILS ARE SUBMITTED TO THE ENGINEER FOR REVIEW AND APPROVAL.

ELASTOMER IN ALL BEARING PADS SHALL BE 60 DUROMETER HARDNESS.

—LOAD RATINGS—	
60 DUROMETER	MAX.D.L.+ L.L.
TYPE VI	352 k

PROJECT NO. U-0209B
MECKLENBURG COUNTY
STATION: 89+79.05 -L-

STATE OF NORTH CAROLINA
DEPARTMENT OF TRANSPORTATION
RALEIGH

STANDARD

ELASTOMERIC BEARING DETAILS

(STEEL SUPERSTRUCTURE)

NORTH CAROLINA PROFESSIONAL SEAL 30878 ENGINEER KEVIN FISCHER
11/20/12

REVISIONS						SHEET NO.
NO.	BY:	DATE:	NO.	BY:	DATE:	S-58
1			3			TOTAL SHEETS
2			4			117

STR. #2

STD. NO. EB2

ASSEMBLED BY : T. BANKOVICH	DATE : 2-2011	
CHECKED BY : J.P. ADAMS	DATE : 8/16/11	
DRAWN BY : EEM 10/95	REV. 7/10/01	LES/RDR
CHECKED BY : PEK 10/95	REV. 5/1/06	TLA/GM
	REV. 10/1/11	MAA/GM

07-SEP-2012 11:04
R:\Structures\Plans\Str2\U0209B_SD_BG_02.dgn
lsutton

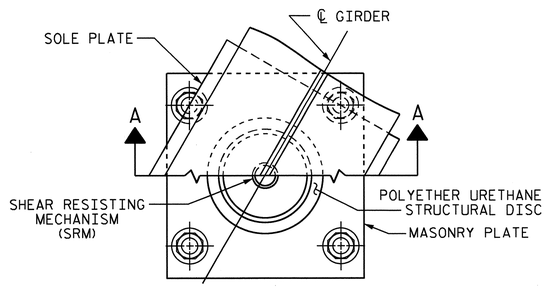

CUT-AWAY PLAN

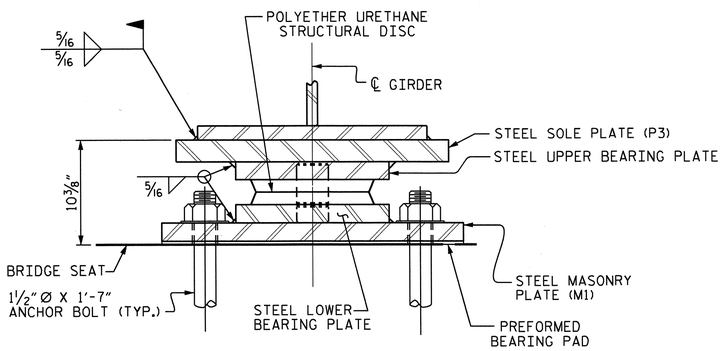

SECTION A-A

DB1, FIXED
(9 REQ'D)

DISC BEARING DETAILS

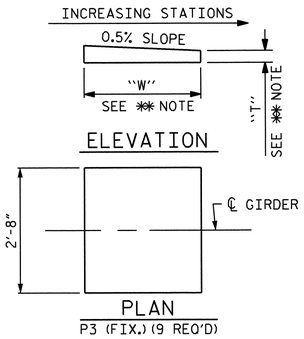

P3 (FIX.) (9 REQ'D)

✱✱ NOTE:
DIMENSIONS "W" AND "T" ARE TO BE DETERMINED BY THE MANUFACTURER.

SOLE PLATE DETAILS

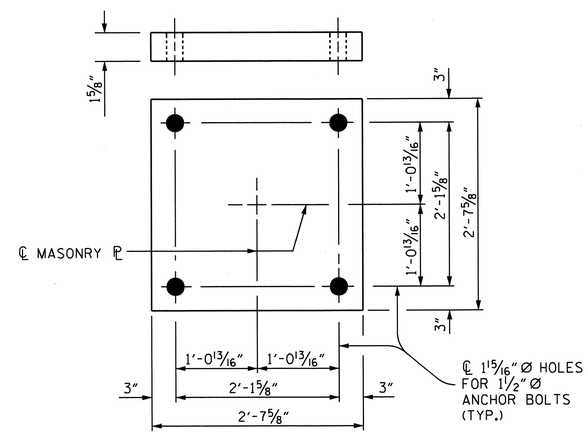

PLAN
M1 (9 REQ'D)

MASONRY PLATE DETAILS

NOTES

FOR DISC BEARINGS, SEE SPECIAL PROVISIONS.

FOR THERMAL SPRAYED COATINGS (METALLIZATION), SEE SPECIAL PROVISIONS.

AT ALL POINTS OF SUPPORT, NUTS FOR ANCHOR BOLTS SHALL BE TIGHTENED FINGER TIGHT AND GIVEN AN ADDITIONAL 1*4" TURN. THE THREAD OF THE NUT AND BOLT SHALL THEN BE BURRED WITH A SHARP POINTED TOOL.

WHEN WELDING THE SOLE PLATE TO THE GIRDER, USE TEMPERATURE INDICATING WAX PENS, OR OTHER SUITABLE MEANS, TO ENSURE THAT THE TEMPERATURE OF THE BEARING DOES NOT EXCEED 250°F TEMPERATURES ABOVE THIS MAY DAMAGE THE STRUCTURAL DISC.

SOLE PLATES SHOULD BE WELDED TO GIRDER FLANGES AND ANCHOR BOLTS SHOULD BE GROUTED BEFORE FALSEWORK IS PLACED.

ALL SURFACES OF BEARING PLATES SHALL BE SMOOTH AND STRAIGHT.

THE MINIMUM ROTATIONAL CAPACITY FOR ALL BEARINGS SHALL BE 0.02 RADIANS.

THE CONTRACTOR SHALL ADJUST THE GIRDER BUILDUPS AS NECESSARY TO INCORPORATE A MAXIMUM PERMISSIBLE VARIATION IN DISC BEARING DEPTH OF 1/2". SEE SPECIAL PROVISION FOR DISC BEARINGS.

TABLE FOR LOADS AND MOVEMENT

BEARING	LOCATION	UNFACTORED VERTICAL LOAD (KIPS) DEAD DC	DEAD DW	LIVE LL+IM	TOTAL	FACTORED LATERAL LOAD (KIPS)	TOTAL MOVEMENT (INCHES)
DB1 (FIXED)	BENT #1	492	54	301	847	174	———

PROJECT NO. U-0209B
MECKLENBURG COUNTY
STATION: 89+79.05 -L-

STATE OF NORTH CAROLINA
DEPARTMENT OF TRANSPORTATION
RALEIGH

SUPERSTRUCTURE

DISC BEARING DETAILS

NORTH CAROLINA PROFESSIONAL SEAL 20888 ENGINEER KEVIN FISCHER
11/20/12

REVISIONS						SHEET NO.
NO.	BY:	DATE:	NO.	BY:	DATE:	S-59
1			3			TOTAL SHEETS
2			4			117

STR. #2

DRAWN BY : J.D. HAWK DATE : 11/12
CHECKED BY : J.P. ADAMS DATE : 11/12

06-NOV-2012 12:23
R:\Structures\Plans\Str2\U0209B_SD_BG_02.dgn
LSUTTON

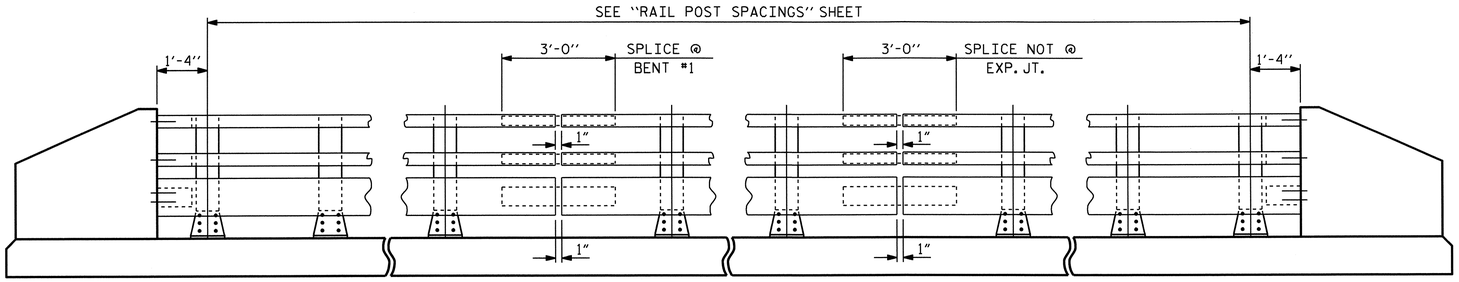

NOTE:
FOR ATTACHMENT OF METAL RAIL TO END POST, SEE STANDARD NO. BMR7.

ELEVATION

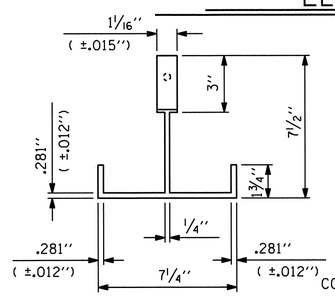

PLAN

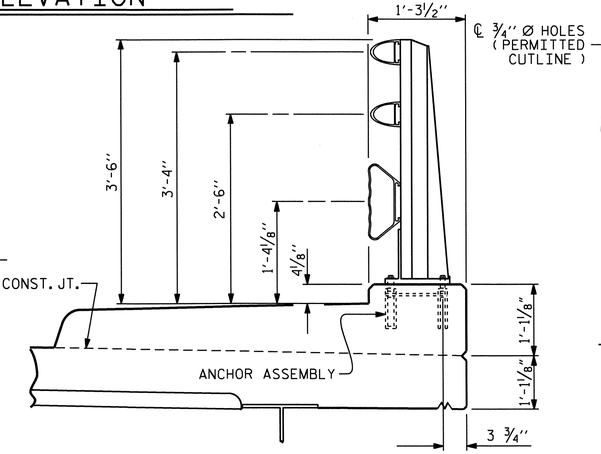

SECTION THRU RAIL

FOR ANCHOR ASSEMBLY, SEE "3 BAR METAL RAIL" STD.No.BMR6

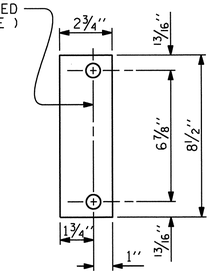

REAR PLATE

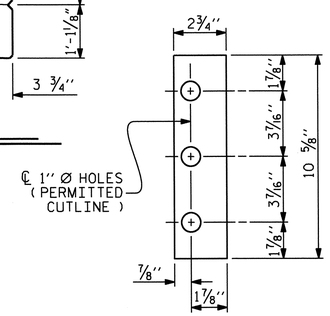

FRONT PLATE

SHIM DETAILS

NOTE :
SHIMS MAY BE CUT ALONG PERMITTED CUTLINE OR SLOTTED TO EDGE OF PLATE TO FACILITATE PLACEMENT.

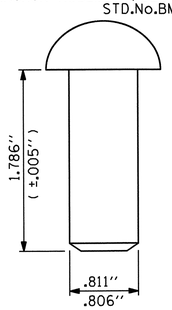

RIVET DETAIL

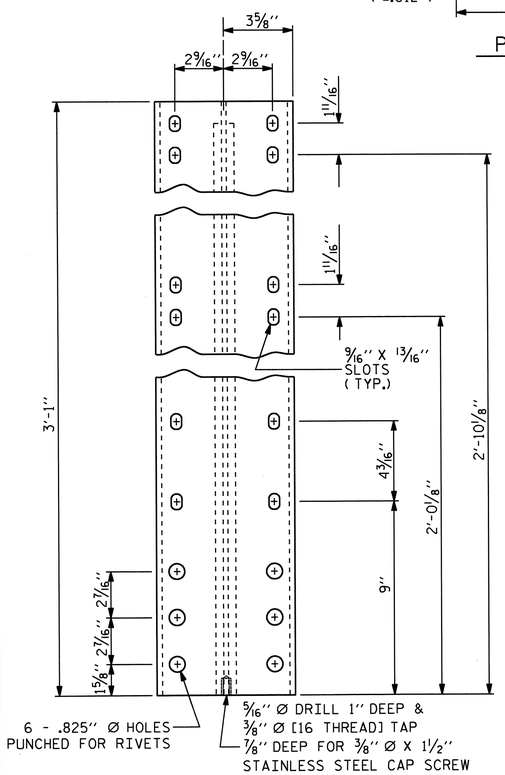

FRONT ELEVATION

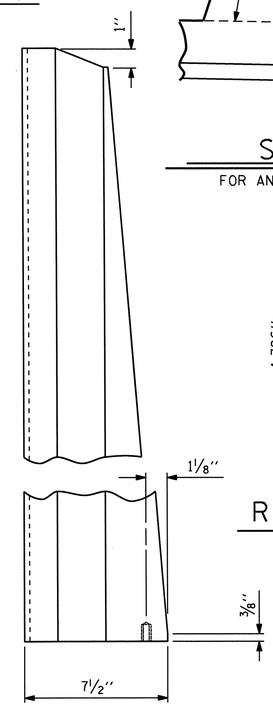

SIDE ELEVATION

DETAILS OF POST

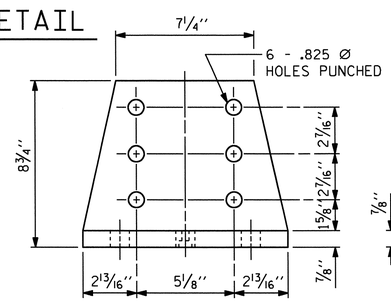

FRONT ELEVATION

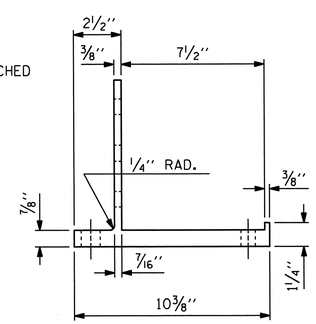

SIDE ELEVATION

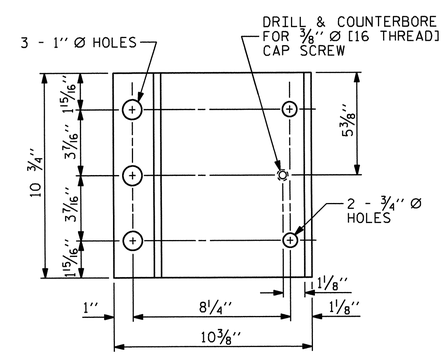

PLAN

POST BASE DETAILS

NOTES

AT THE CONTRACTOR'S OPTION, METAL RAIL MAY BE EITHER ALUMINUM OR GALVANIZED STEEL IN ACCORDANCE WITH THE REQUIREMENTS OF THE GENERAL NOTES AND THE FOLLOWING SPECIFICATIONS FOR THE ALTERNATE MATERIALS; HOWEVER, THE CONTRACTOR WILL BE REQUIRED TO USE THE SAME RAIL MATERIAL ON ALL STRUCTURES ON THE PROJECT FOR WHICH METAL RAIL IS DESIGNATED.

ALUMINUM RAILS

MATERIAL FOR POSTS, BASES AND RAILS, EXPANSION BARS AND CLAMP BARS SHALL BE ASTM B221 ALLOY 6061-T6.

MATERIAL FOR RIVETS SHALL BE ASTM B316 ALLOY 6061-T6. RIVETS SHALL BE STANDARD BUTTON HEAD AND CONE POINT COLD DRIVEN AS PER DRAWING.

THE BASE OF RAIL POSTS, OR ANY OTHER ALUMINUM SURFACE IN CONTACT WITH CONCRETE SHALL BE THOROUGHLY COATED WITH AN ALUMINUM IMPREGNATED CAULKING COMPOUND OF APPROVED QUALITY.

MATERIAL FOR SHIMS TO BE ASTM B209 ALLOY 6061-T6.

GALVANIZED STEEL RAILS

MATERIAL AND GALVANIZING ARE TO CONFORM TO THE FOLLOWING SPECIFICATIONS:

POST, POST BASES, RAILS, EXPANSION BARS AND CLAMP BARS : AASHTO M270 GRADE 36 STRUCTURAL STEEL - GALVANIZED TO AASHTO M111.

RIVETS: RIVETS SHALL MEET THE REQUIREMENTS OF ASTM A502 FOR GRADE 1 RIVETS.

THE CUT ENDS OF GALVANIZED STEEL RAILING, AFTER GRINDING SMOOTH SHALL BE GIVEN TWO COATS OF ZINC RICH PAINT MEETING THE REQUIREMENTS OF FEDERAL SPECIFICATION MIL-P-26915 USAF TYPE 1, OR OF FEDERAL SPECIFICATIONS TT-P-641.

SHIMS: SHIMS SHALL MEET THE REQUIREMENTS OF ASTM A570 FOR GRADE 33 OR A611 FOR GRADE C AND SHALL BE GALVANIZED IN ACCORDANCE WITH AASHTO M111.

RAIL CAPS: RAIL CAPS SHALL MEET THE REQUIREMENTS OF ASTM A570 FOR GRADE 33 OR A611 FOR GRADE C AND SHALL BE GALVANIZED IN ACCORDANCE WITH AASHTO M111.

GENERAL NOTES

RAILING SHALL BE CONTINUOUS FROM END POST TO END POST OF BRIDGE. EACH JOINT IN RAIL LENGTH SHALL BE SPLICED AS DETAILED. PANEL LENGTHS OF RAIL SHALL BE ATTACHED TO A MINIMUM OF THREE POSTS. PLACE ONE JOINT SPLICE JUST BEYOND THE 3RD RAIL POST FROM EACH END, TYPICALLY 14' FROM THE END. PLACE OTHER JOINTS AS NEEDED.

FOR END OF RAIL TO CLEAR FACE OF CONCRETE END POST DIMENSION, SEE STANDARD NO. BMR7.

CAP SCREWS SHALL BE ASTM F593 ALLOY 305 STAINLESS STEEL. WASHERS FOR RAIL ATTACHMENT SHALL MEET THE REQUIREMENTS OF ASTM F844 EXCEPT THEY SHALL BE MADE FROM ALLOY 304 STAINLESS STEEL.

CERTIFIED MILL REPORTS ARE REQUIRED FOR RAILS AND POSTS. SHOP INSPECTION IS NOT REQUIRED.

METAL RAIL POSTS SHALL BE SET NORMAL TO CURB GRADE.

METHOD OF MEASUREMENT FOR METAL RAILS: FOR LENGTH OF METAL RAILS TO BE PAID FOR, SEE THE STANDARD SPECIFICATIONS.

CURVED RAIL USAGE: WHERE RAILS ARE TO BE USED ON BRIDGES ON HORIZONTAL AND/OR VERTICAL CURVATURE THE CONTRACTOR MAY, AT HIS OPTION, HAVE THE REQUIRED CURVATURE IN THE RAIL FORMED IN THE SHOP OR IN THE FIELD. IN EITHER EVENT, THE RAIL SHALL CONFORM WITHOUT BUCKLING OR KINKING TO THE REQUIRED CURVATURE IN A UNIFORM MANNER ACCEPTABLE TO THE ENGINEER.

TO INSURE FUTURE IDENTIFICATION OF THE FABRICATOR, A PERMANENT IDENTIFYING MARK SHALL BE PLACED ON EACH POST. THE METHOD OF MARKING AND LOCATION SHALL BE SUCH THAT IT DOES NOT DETRACT FROM THE APPEARANCE OF THE POST, BUT REMAIN VISIBLE AFTER RAIL PLACEMENT.

SHIMS SHALL BE USED AS NECESSARY FOR POST ALIGNMENT.

ALLOY 6351-T5 MAY BE SUBSTITUTED FOR ALLOY 6061-T6 WHERE APPLICABLE.

MINOR VARIATIONS IN DETAILS OF METAL RAIL WILL BE CONSIDERED. DETAILS OF SUCH VARIATIONS, IF DESIRED, SHALL BE SUBMITTED FOR APPROVAL.

PAY LENGTH = 634.58 LIN. FT.

NORTH CAROLINA PROFESSIONAL SEAL 30878 ENGINEER KEVIN FISCHER 11/20/12

PROJECT NO. U-0209B
MECKLENBURG COUNTY
STATION: 89+79.05 -L-

SHEET 1 OF 3

STATE OF NORTH CAROLINA
DEPARTMENT OF TRANSPORTATION
RALEIGH

STANDARD

3 BAR METAL RAIL

REVISIONS						SHEET NO.
NO.	BY:	DATE:	NO.	BY:	DATE:	S-60
1			3			TOTAL SHEETS
2			4			117

STR. #2

STD. NO. BMR5

ASSEMBLED BY : T. BANKOVICH		DATE : 2-2011	
CHECKED BY : J.P. ADAMS		DATE : 8/16/11	
DRAWN BY : JMB 1/88	REV. 5/7/03	RWW/JTE	
CHECKED BY : GGH 1/88	REV. 5/1/06	TLA/GM	
	REV. 10/1/11	MAA/GM	

07-SEP-2012 11:04
R:\Structures\Plans\Str2\U0209B_SD_3MR_02.dgn
lsutton

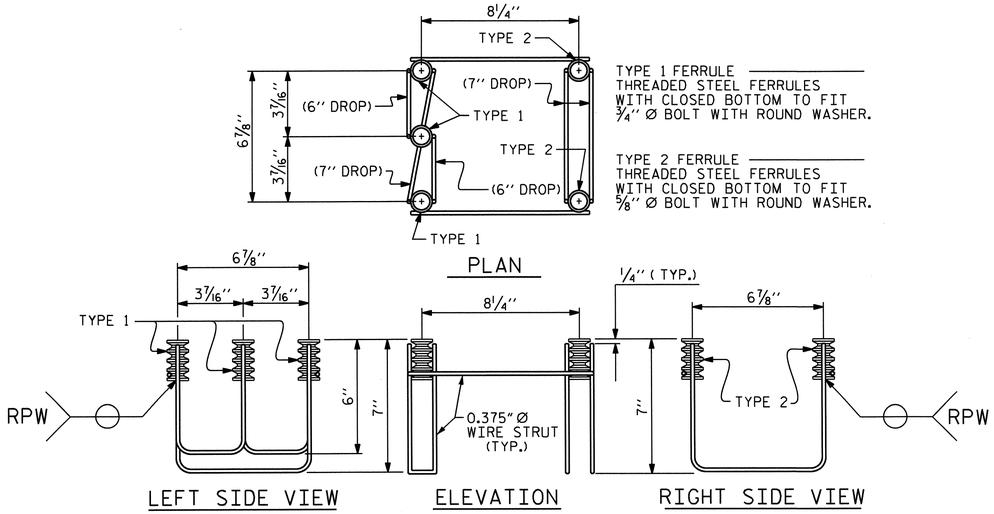

5-BOLT METAL RAIL ANCHOR ASSEMBLY

(104 ASSEMBLIES REQUIRED)

NOTES

STRUCTURAL CONCRETE ANCHOR ASSEMBLY

THE STRUCTURAL CONCRETE ANCHOR ASSEMBLY SHALL CONSIST OF THE FOLLOWING COMPONENTS:

A. FERRULES SHALL BE MADE FROM STEEL MEETING THE REQUIREMENTS OF AASHTO M169, GRADE 12L14 AND SHALL HAVE A MINIMUM LENGTH OF THREADS OF 2'' FOR ¾'' FERRULES AND 1¼'' FOR ⅝'' FERRULES.

B. 3 - ¾'' Ø X 2½'' BOLTS WITH WASHERS. BOLTS SHALL CONFORM TO THE REQUIREMENTS OF ASTM A307. BOLTS AND WASHERS SHALL BE GALVANIZED. AT THE CONTRACTOR'S OPTION, STAINLESS STEEL BOLTS AND WASHERS MAY BE USED AS AN ALTERNATE FOR THE ¾'' Ø X 2½'' GALVANIZED BOLTS AND WASHERS. THEY SHALL CONFORM TO OR EXCEED THE MECHANICAL REQUIREMENTS OF ASTM A307. THE USE OF THIS ALTERNATE SHALL BE APPROVED BY THE ENGINEER.

C. 2 - ⅝'' Ø X 2¼'' BOLTS WITH WASHERS. BOLTS SHALL CONFORM TO THE REQUIREMENTS OF ASTM A307. BOLTS AND WASHERS SHALL BE GALVANIZED. AT THE CONTRACTOR'S OPTION, STAINLESS STEEL BOLTS AND WASHERS MAY BE USED AS AN ALTERNATE FOR THE ⅝'' Ø X 2¼'' GALVANIZED BOLTS AND WASHERS. THEY SHALL CONFORM TO OR EXCEED THE MECHANICAL REQUIREMENTS OF ASTM A307. THE USE OF THIS ALTERNATE SHALL BE APPROVED BY THE ENGINEER.

D. WIRE STRUT SHOWN IN THE CONCRETE ANCHOR ASSEMBLY DETAIL IS THE MINIMUM ALLOWABLE SIZE AND SHALL HAVE A MINIMUM TENSILE STRENGTH OF 100,000 PSI. AS AN OPTION, A 7⁄16'' Ø WIRE STRUT WITH A MINIMUM TENSILE STRENGTH OF 90,000 PSI IS ACCEPTABLE.

E. THE METAL RAIL ANCHOR ASSEMBLIES TO BE HOT DIPPED GALVANIZED TO CONFORM TO REQUIREMENTS OF AASHTO M111.

F. THE COST OF THE METAL RAIL ANCHOR ASSEMBLY WITH BOLTS AND WASHERS COMPLETE IN PLACE SHALL BE INCLUDED IN THE PRICE BID FOR LINEAR FEET OF METAL RAIL.

G. BOLTS TO BE TIGHTENED ONE-HALF TURN WITH A WRENCH FROM A FINGER-TIGHT POSITION.

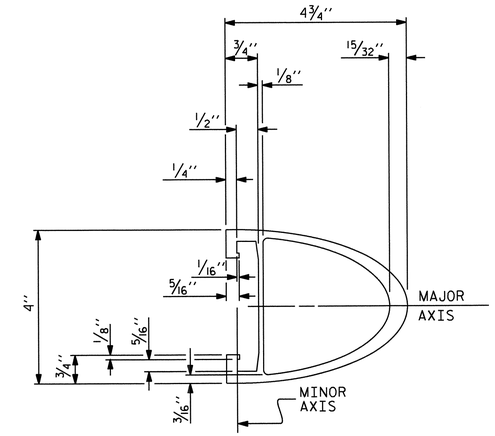

TOP & MIDDLE RAIL SECTION

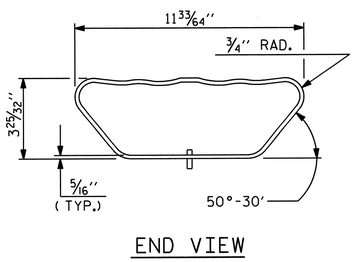

END VIEW

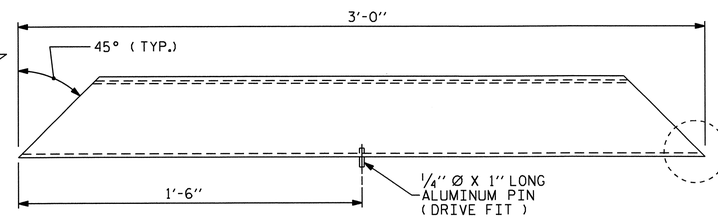

PLAN VIEW

BOTTOM RAIL EXPANSION BAR

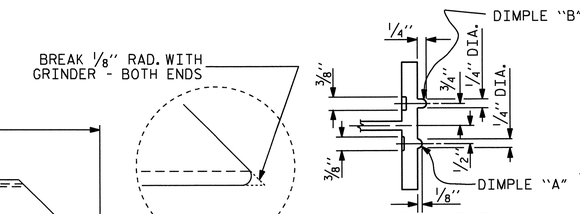

SECTION B-B

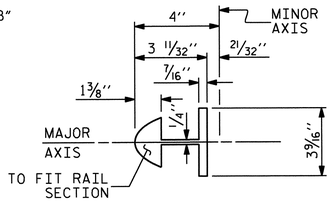

BAR SECTION

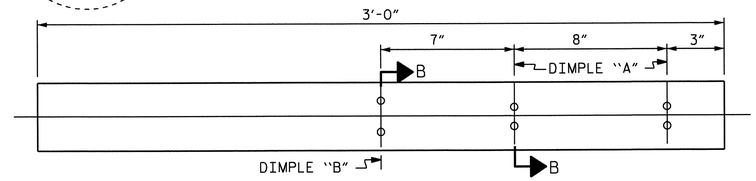

BACK ELEVATION

TOP & MIDDLE RAIL EXPANSION BAR

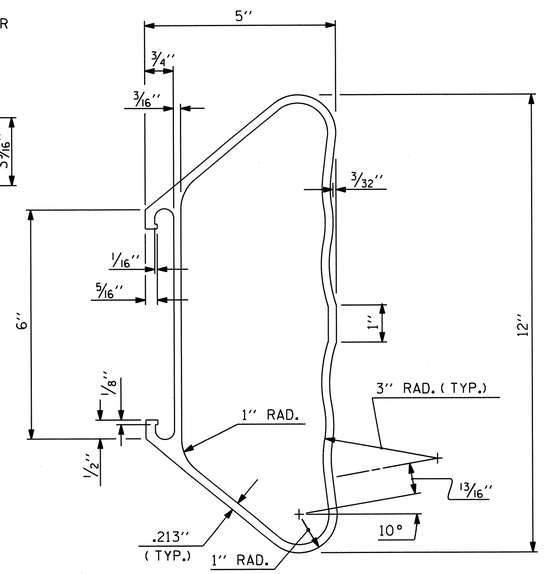

BOTTOM RAIL SECTION

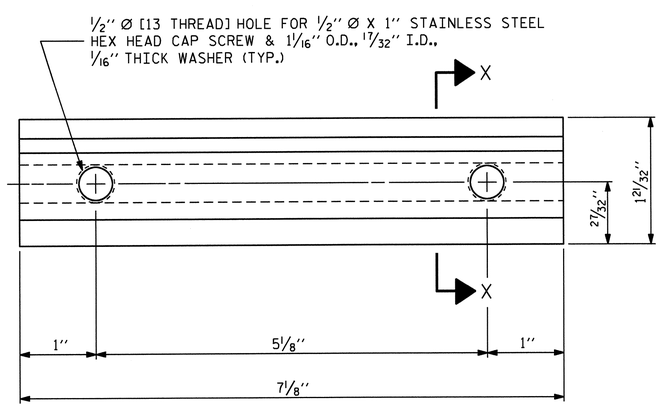

ELEVATION

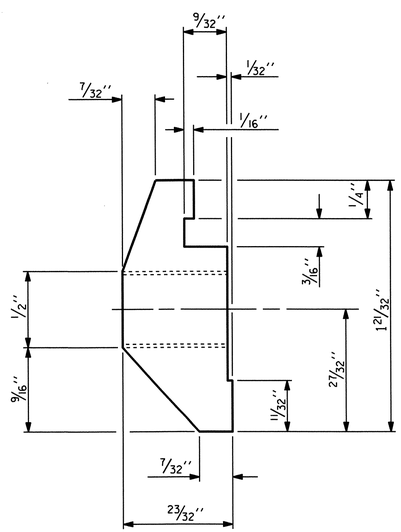

SECTION X-X

CLAMP BAR DETAIL

(6 REQUIRED PER POST)

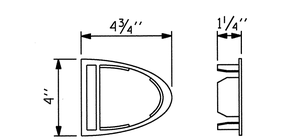

TOP & MIDDLE RAIL CAP

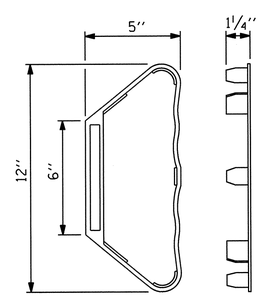

BOTTOM RAIL CAP

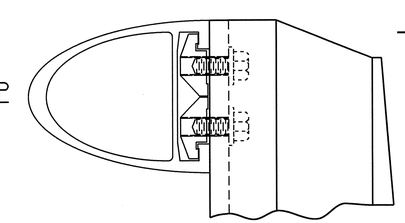

CLAMP ASSEMBLY

TOP RAIL SHOWN
(MIDDLE & BOTTOM RAIL ARE SIMILAR)

NORTH CAROLINA PROFESSIONAL SEAL 30879 ENGINEER KEVIN FISCHER 11/20/12

PROJECT NO. U-0209B
MECKLENBURG COUNTY
STATION: 89+79.05 -L-

SHEET 2 OF 3

STATE OF NORTH CAROLINA
DEPARTMENT OF TRANSPORTATION
RALEIGH

STANDARD

3 BAR METAL RAIL

ASSEMBLED BY : T. BANKOVICH		DATE : 2-2011	
CHECKED BY : J.P. ADAMS		DATE : 8/16/11	
DRAWN BY : JMB	1/88	REV. 5/7/03	RWW/JTE
CHECKED BY : GGH	1/88	REV. 5/1/06	TLA/GM
		REV. 10/1/11	MAA/GM

REVISIONS								SHEET NO.
NO.	BY:	DATE:	NO.	BY:	DATE:			S-61
1			3					TOTAL SHEETS
2			4					117

STR. #2

STD. NO. BMR6

07-SEP-2012 11:04
R:\Structures\Plans\Str2\U0209B_SD_3MR_02.dgn
lsutton

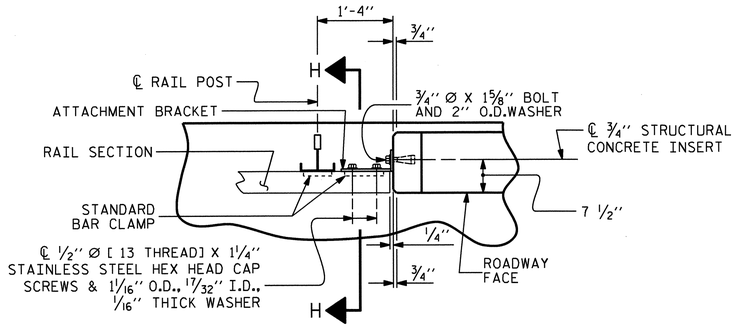

PLAN OF RAIL AND END POST

(STIFFENER ON 1/2" ℙ NOT SHOWN FOR CLARITY)

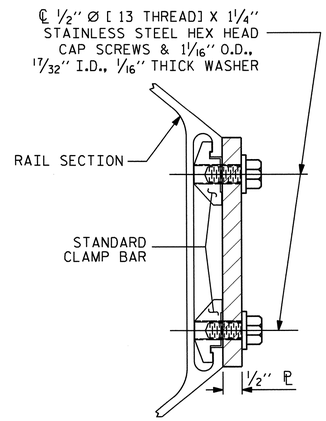

SECTION H-H

(FOR BOTTOM RAIL)

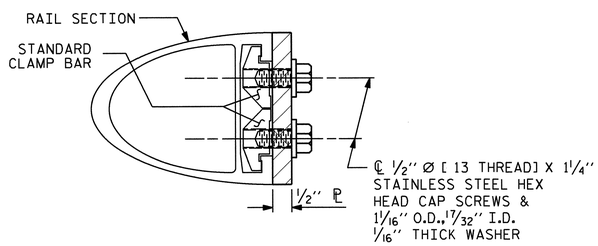

SECTION H-H

(FOR TOP & MIDDLE RAIL)

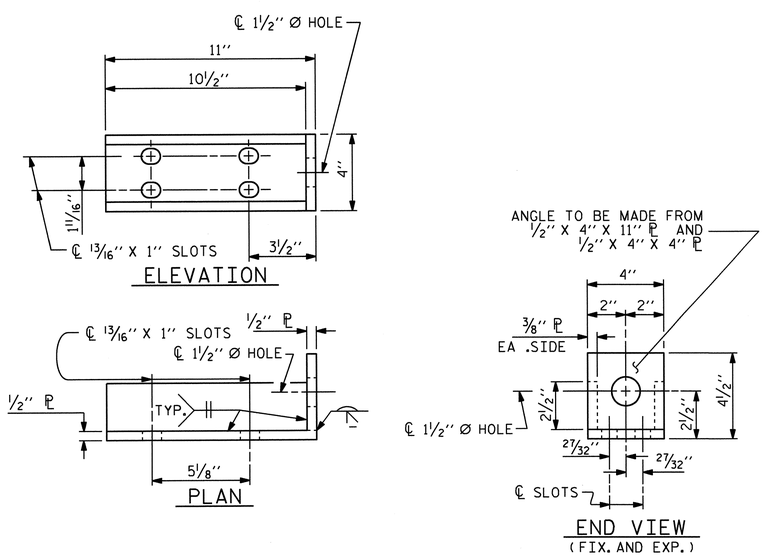

DETAILS FOR ATTACHMENT BRACKET

(TOP & MIDDLE RAIL ONLY)

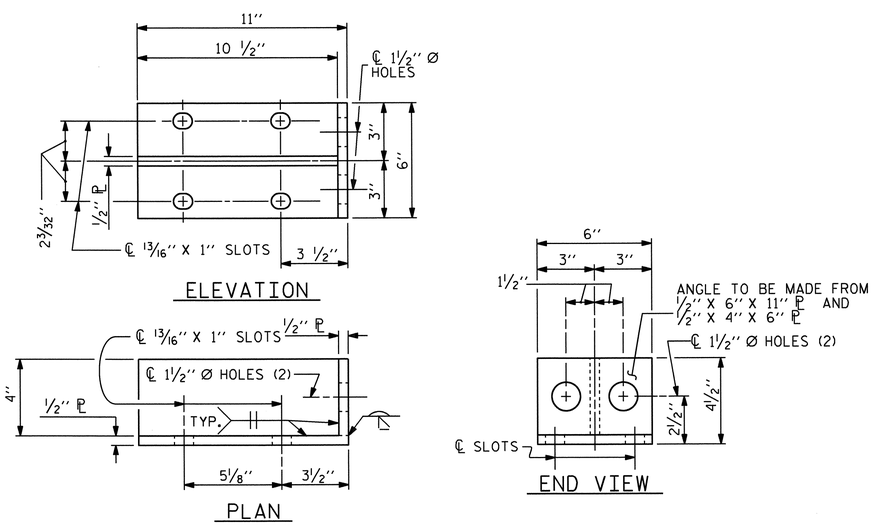

DETAILS FOR ATTACHMENT BRACKET

(BOTTOM RAIL ONLY)

NOTES

METAL RAIL TO END POST CONNECTION

THE METAL RAIL TO END POST CONNECTION SHALL CONSIST OF THE FOLLOWING COMPONENTS:

A. 1/2" PLATES SHALL CONFORM TO AASHTO M270 GRADE 36 AND SHALL BE GALVANIZED AFTER FABRICATION.

B. 3/4" STRUCTURAL CONCRETE INSERT SHALL HAVE A WORKING LOAD SHEAR CAPACITY OF 4800 LBS. THE FERRULES SHALL ENGAGE A 3/4" Ø X 1 5/8" BOLT WITH 2" O.D. WASHER IN PLACE. THE 3/4" Ø X 1 5/8" BOLT SHALL HAVE N. C. THREADS.

C. CAP SCREWS FOR RAIL ATTACHMENT TO ANGLE SHALL CONFORM TO THE REQUIREMENTS OF ASTM F593 ALLOY 305 STAINLESS STEEL. CAP SCREWS TO BE CENTERED IN SLOTS AT 60°F. WASHERS FOR RAIL ATTACHMENT SHALL MEET THE REQUIREMENTS OF ASTM F844 EXCEPT THEY SHALL BE MADE FROM ALLOY 304 STAINLESS STEEL.

D. STANDARD CLAMP BARS (STD. No. BMR6).

THE COST OF THE STANDARD CLAMP BARS AND CAP SCREWS USED IN THE METAL RAIL TO END POST CONNECTION SHALL BE INCLUDED IN THE UNIT CONTRACT PRICE BID FOR LINEAR FEET OF 3 BAR METAL RAIL.

THE 3/4" STRUCTURAL CONCRETE INSERT WITH BOLT SHALL BE ASSEMBLED IN THE SHOP.

THE COST OF THE 3/4" STRUCTURAL CONCRETE INSERT ASSEMBLY, AND THE 1/2" PLATES COMPLETE IN PLACE SHALL BE INCLUDED IN THE VARIOUS PAY ITEMS.

THE CONTRACTOR, AT HIS OPTION, MAY USE AN ADHESIVE BONDING SYSTEM IN LIEU OF THE STRUCTURAL CONCRETE INSERT EMBEDDED IN THE END POST. IF THE ADHESIVE BONDING SYSTEM IS USED, THE 3/4" Ø X 1 5/8" BOLT WITH WASHER SHALL BE REPLACED WITH A 3/4" Ø X 6 1/2" BOLT AND 2" O.D.WASHER. ALL SPECIFICATIONS THAT APPLY TO THE 3/4" Ø X 1 5/8" BOLT SHALL APPLY TO THE 3/4" Ø X 6 1/2" BOLT. FIELD TESTING OF THE ADHESIVE BONDING SYSTEM IS NOT REQUIRED.

NOTES

STRUCTURAL CONCRETE INSERT

THE STRUCTURAL CONCRETE INSERT ASSEMBLY SHALL CONSIST OF THE FOLLOWING COMPONENTS:

A. FERRULES SHALL BE MADE FROM STEEL MEETING THE REQUIREMENTS OF AASHTO M169, GRADE 12L14 AND SHALL HAVE A MINIMUM LENGTH OF THREADS OF 1 1/2".

B. 1 - 3/4" Ø X 1 5/8" BOLT WITH WASHER. BOLT SHALL CONFORM TO THE REQUIREMENTS OF ASTM A307. BOLT AND WASHER SHALL BE GALVANIZED. AT THE CONTRACTORS OPTION, STAINLESS STEEL BOLT AND WASHER MAY BE USED AS AN ALTERNATE FOR THE 3/4" Ø X 1 5/8" GALVANIZED BOLT AND WASHER. THEY SHALL CONFORM TO OR EXCEED THE MECHANICAL REQUIREMENTS OF ASTM A307. THE USE OF THIS ALTERNATE SHALL BE APPROVED BY THE ENGINEER.

C. WIRE STRUT SHOWN IN THE CONCRETE INSERT ASSEMBLY DETAIL IS THE MINIMUM ALLOWABLE SIZE AND SHALL HAVE A MINIMUM TENSILE STRENGTH OF 100,000 PSI. AS AN OPTION, A 7/16" Ø WIRE STRUT WITH A MINIMUM TENSILE STRENGTH OF 90,000 PSI IS ACCEPTABLE.

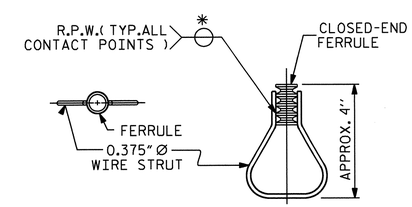

PLAN ELEVATION

STRUCTURAL CONCRETE INSERT

* EACH WELDED ATTACHMENT OF WIRE TO FERRULE SHALL DEVELOP THE TENSILE STRENGTH OF THE WIRE.

PROJECT NO. U-0209B

MECKLENBURG COUNTY

STATION: 89+79.05 -L-

SHEET 3 OF 3

STATE OF NORTH CAROLINA
DEPARTMENT OF TRANSPORTATION
RALEIGH

STANDARD

3 BAR METAL RAIL

NORTH CAROLINA PROFESSIONAL SEAL 13878 ENGINEER KEVIN FISCHER
11/20/12

ASSEMBLED BY : T. BANKOVICH	DATE : 2-2011
CHECKED BY : J.P. ADAMS	DATE : 8/16/11

DRAWN BY : JMB	1/88	REV. 5/7/03	RWW/JTE
CHECKED BY : GGH	1/88	REV. 5/1/06	TLA/GM
		REV. 10/1/11	MAA/GM

REVISIONS

NO.	BY:	DATE:	NO.	BY:	DATE:
1			3		
2			4		

SHEET NO. S-62

TOTAL SHEETS 117

STR. #2

STD. NO. BMR7

07-SEP-2012 11:04
R:\Structures\Plans\Str2\U0209B_SD_3MR_02.dgn
lsutton

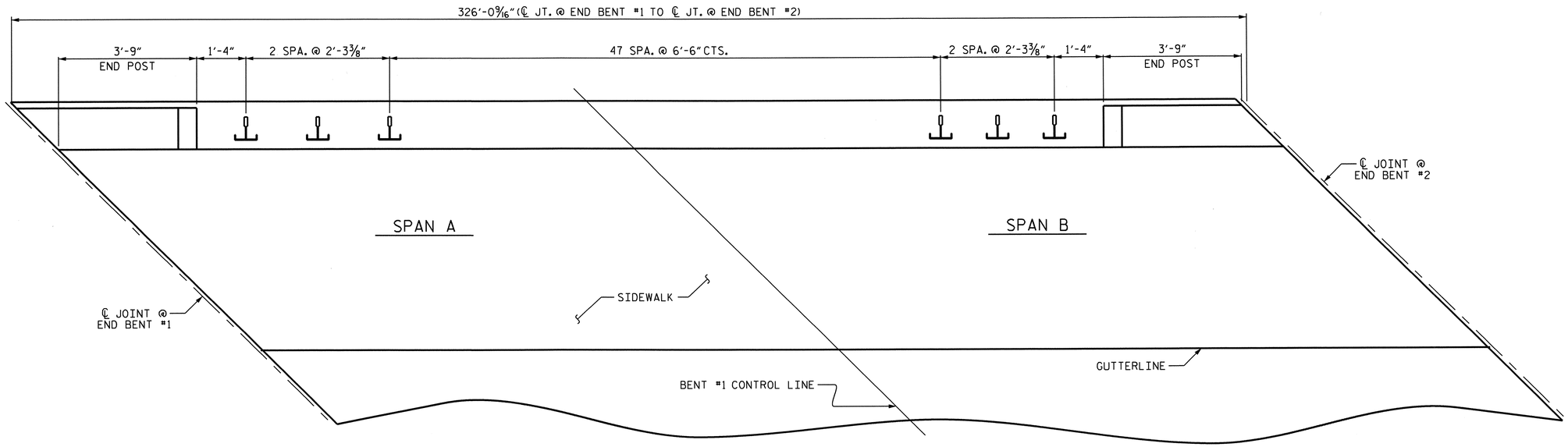

PLAN OF RAIL POST SPACING

LEFT SIDE SHOWN, RIGHT SIDE SIMILAR

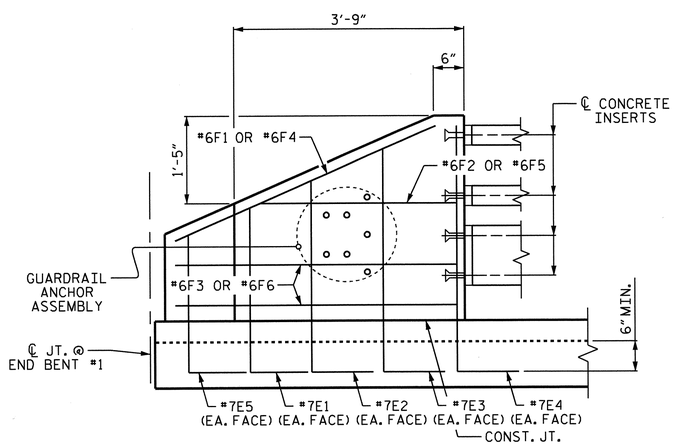

ELEVATION

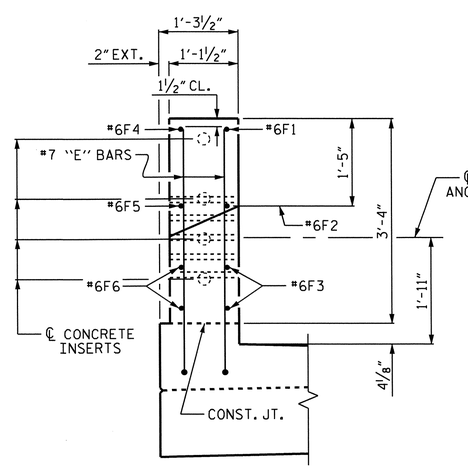

END VIEW

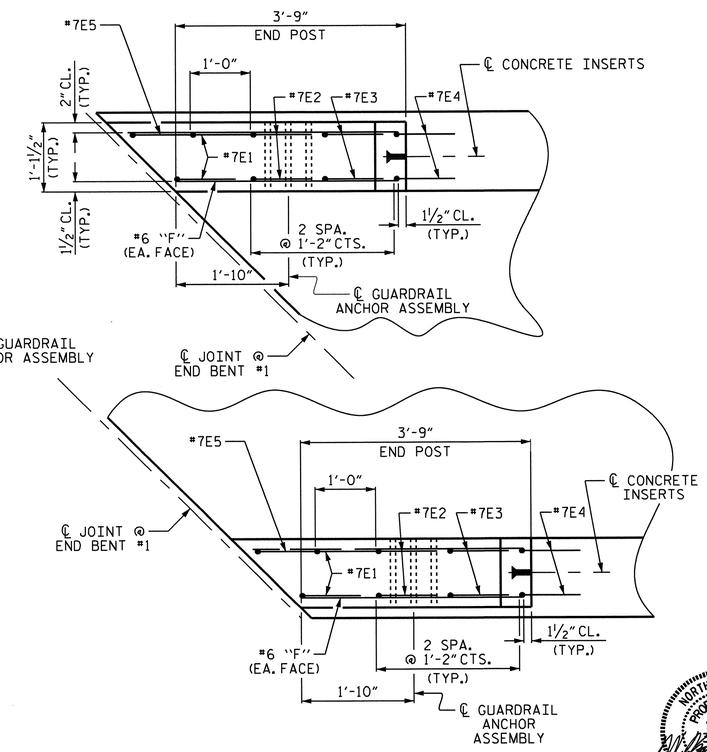

PLAN

END POST DETAILS

END BENT #1 SHOWN, END BENT #2 SIMILAR

PROJECT NO. U-0209B

MECKLENBURG COUNTY

STATION: 89+79.05 -L-

STATE OF NORTH CAROLINA
DEPARTMENT OF TRANSPORTATION
RALEIGH

SUPERSTRUCTURE

RAIL POST SPACING AND END OF RAIL DETAILS

NORTH CAROLINA PROFESSIONAL SEAL 20878 ENGINEER KEVIN FISCHER

11/20/12

REVISIONS								SHEET NO.
NO.	BY:	DATE:	NO.	BY:	DATE:			S-63
1			3					TOTAL SHEETS
2			4					117

STR. #2

DRAWN BY : T. BANKOVICH DATE : 2-2011
CHECKED BY : J.P. ADAMS DATE : 8/16/11

07-SEP-2012 11:04
R:\Structures\Plans\Str2\U0209B_SD_3MR_02.dgn
lsutton

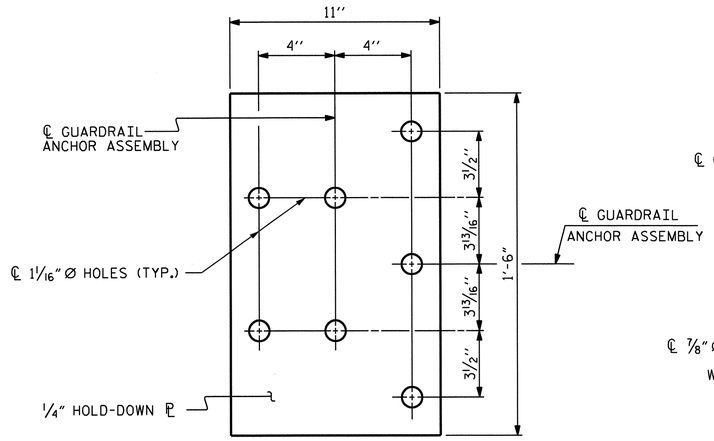

PLAN

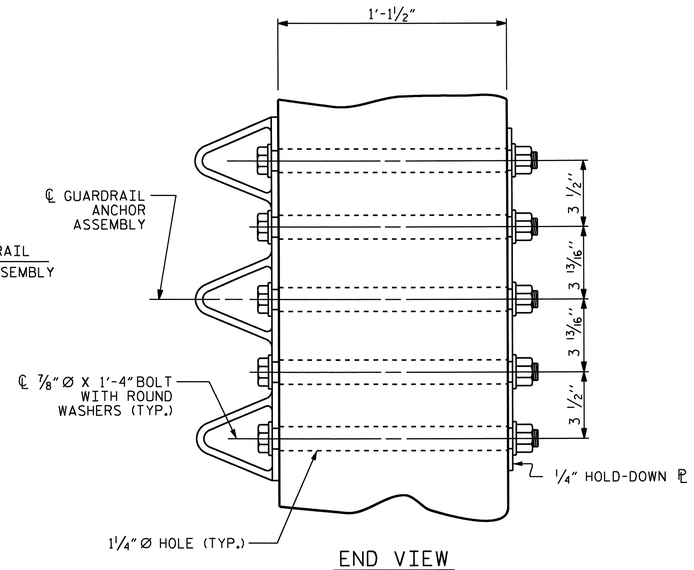

END VIEW

GUARDRAIL ANCHOR ASSEMBLY DETAILS

NOTES

THE GUARDRAIL ANCHOR ASSEMBLY SHALL CONSIST OF A 1/4'' HOLD DOWN PLATE AND 7 - 7/8'' Ø BOLTS WITH NUTS AND WASHERS.

THE HOLD-DOWN PLATE SHALL CONFORM TO AASHTO M270 GRADE 36. AFTER FABRICATION, THE HOLD-DOWN PLATE SHALL BE HOT-DIP GALVANIZED IN ACCORDANCE WITH AASHTO M111.

BOLTS SHALL CONFORM TO THE REQUIREMENTS OF ASTM A307 AND NUTS SHALL CONFORM TO THE REQUIREMENTS OF AASHTO M291. BOLTS, NUTS AND WASHERS SHALL BE GALVANIZED. AT THE CONTRACTOR'S OPTION, STAINLESS STEEL BOLTS, NUTS AND WASHERS MAY BE USED AS AN ALTERNATE FOR THE 7/8'' Ø GALVANIZED BOLTS, NUTS AND WASHERS. THEY SHALL CONFORM TO OR EXCEED THE MECHANICAL REQUIREMENTS OF ASTM A307. THE USE OF THIS ALTERNATE SHALL BE APPROVED BY THE ENGINEER.

THE GUARDRAIL ANCHOR ASSEMBLY IS REQUIRED AT ALL POINTS WHERE APPROACH GUARDRAIL IS TO BE ATTACHED TO THE END OF THE PARAPET. FOR POINTS OF ATTACHMENT, SEE SKETCH.

AFTER INSTALLATION, THE EXPOSED THREAD OF THE BOLT SHALL BE BURRED WITH A SHARP POINTED TOOL.

THE COST OF THE GUARDRAIL ANCHOR ASSEMBLIES WITH BOLTS, NUTS AND WASHERS COMPLETE IN PLACE, SHALL BE INCLUDED IN THE VARIOUS PAY ITEMS.

THE VERTICAL REINFORCING BARS MAY BE SHIFTED SLIGHTLY IN THE END POST TO CLEAR ASSEMBLY BOLTS.

THE 1 1/4'' Ø HOLES SHALL BE FORMED OR DRILLED WITH A CORE BIT. IMPACT TOOLS WILL NOT BE PERMITTED. ANY CONCRETE DAMAGED BY THIS WORK SHALL BE REPAIRED TO THE SATISFACTION OF THE ENGINEER.

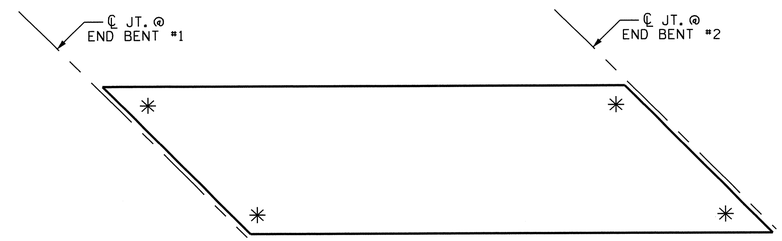

SKETCH SHOWING POINTS OF ATTACHMENT

✳ LOCATION OF GUARDRAIL ATTACHMENT

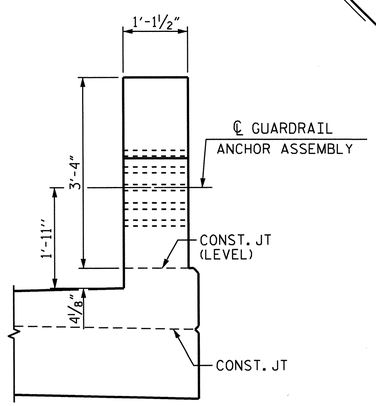

END VIEW

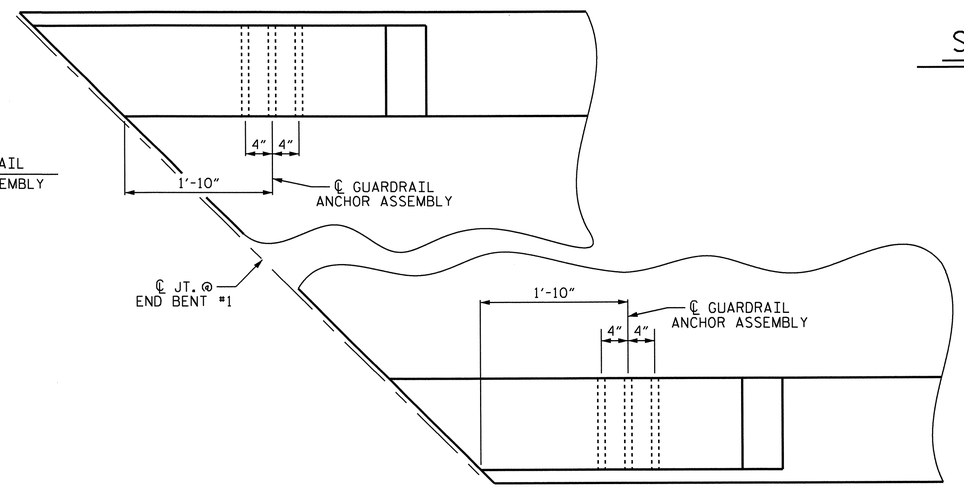

PLAN

LOCATION OF GUARDRAIL ANCHOR AT END POST

END BENT #1 SHOWN, END BENT #2 SIMILAR

PROJECT NO. U-0209B
MECKLENBURG COUNTY
STATION: 89+79.05 -L-

STATE OF NORTH CAROLINA
DEPARTMENT OF TRANSPORTATION
RALEIGH

STANDARD
GUARDRAIL ANCHORAGE DETAILS FOR METAL RAILS

NORTH CAROLINA PROFESSIONAL SEAL 030878 ENGINEER KEVIN FISCHER
11/20/12

REVISIONS						SHEET NO.
NO.	BY:	DATE:	NO.	BY:	DATE:	S-64
1			3			TOTAL SHEETS
2			4			117

STR. #2 STD. NO. GRA3

ASSEMBLED BY : T. BANKOVICH DATE : 2-2011 CHECKED BY : J.P. ADAMS DATE : 8/16/11	
DRAWN BY : MAA 5/10 CHECKED BY : GM 5/10	ADDED 5/6/10 REV. 10/1/11 MAA/GM REV. 12/5/11 MAA/GM

07-SEP-2012 11:04
R:\Structures\Plans\Str2\U0209B_SD_GR_02.dgn
lsutton

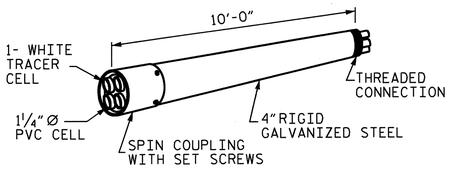

RIGID GALVANIZED (RGC) MULTI-CELL RACEWAY

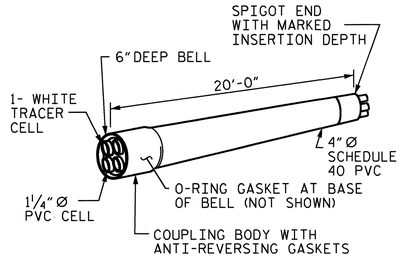

SCHEDULE 40 PVC MULTI-CELL RACEWAY

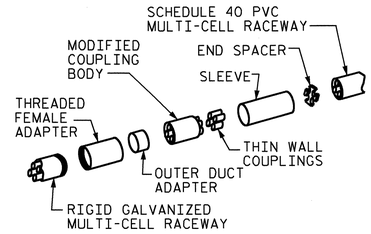

TRANSITION ADAPTER

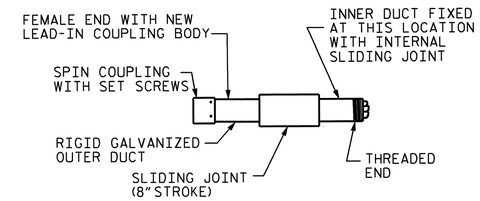

EXPANSION JOINT FITTING

DETAIL "D"

4" MULTI-CELL COMPONENTS

NOTES

THE CONTRACTOR SHALL BE RESPONSIBLE FOR DETERMINING THE TOTAL QUANTITY OF CONDUIT NEEDED TO COMPLETE THE WORK AND THAT THE CONDUIT(S) ARE PLACED AT THE NOTED DIMENSION AND ABOVE THE BOTTOM OF THE GIRDER.

THE INSTALLATION OF THE CONDUIT SYSTEM SHALL BE PAID FOR AS LUMP SUM. THE PRICE SHALL INCLUDE ALL CONDUIT, HANGERS, STABILIZERS, EXPANSION JOINTS, CONCRETE INSERTS, PVC SLEEVES AND ALL NECESSARY HARDWARE TO COMPLETE THE WORK.

THE CONTRACTOR SHALL FIELD VERIFY THAT THE CONDUIT SYSTEM IS NOT IN CONFLICT WITH THE GUARDRAIL POSTS.

SEE DETAIL "C" FOR HANGER ASSEMBLY INSTALLATION.

INSTALL SLEEVES PARALLEL TO GIRDERS. SEE DETAIL "B" FOR SLEEVE INSTALLATION.

PROVIDE TRANSITION ADAPTER AND EXPANSION JOINT FOR CONDUIT AT END BENT #1 AND END BENT #2.

INSTALL STABILIZER'S MIDWAY BETWEEN DECK EXPANSION JOINTS. STABILIZER CAN NOT BE USED INSTEAD OF A HANGER ASSEMBLY.

THE CONCRETE SCREW INSERT SHALL HAVE A ROD SIZE OF ⅝" AND A PULL FORCE OF 1260 lbs.

FOR ELECTRICAL CONDUIT SYSTEM FOR SIGNALS, SEE SPECIAL PROVISIONS.

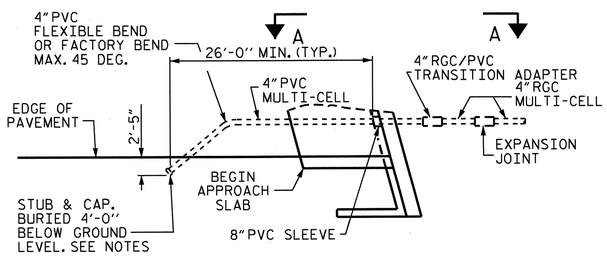

DETAIL "A"

TERMINATION OF CONDUIT AT WING WALL. END BENT #1 SHOWN, END BENT #2 SIMILAR.

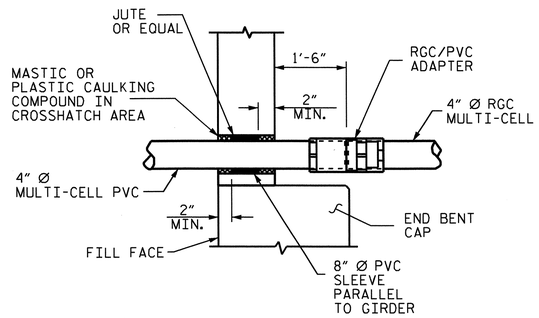

DETAIL "B"

PVC SLEEVE INSTALLATION & RGC/PVC ADAPTER AT BACKWALL.

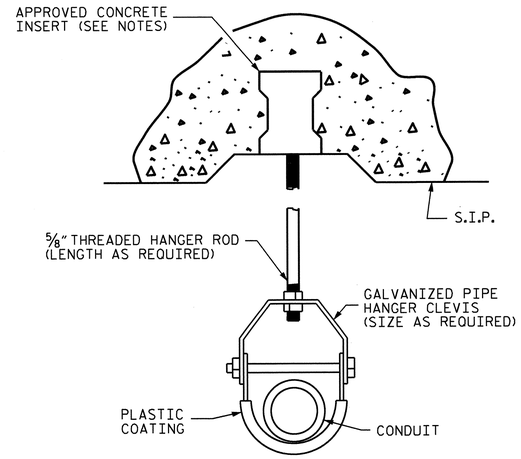

DETAIL "C"

HANGER ASSEMBLY

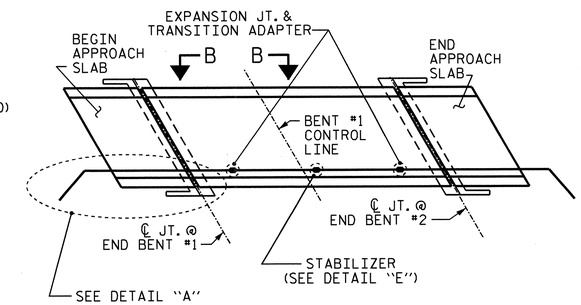

CONDUIT LAYOUT

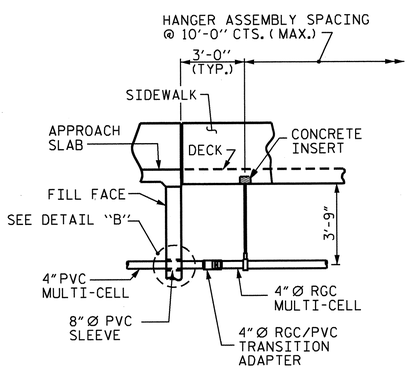

VIEW A-A

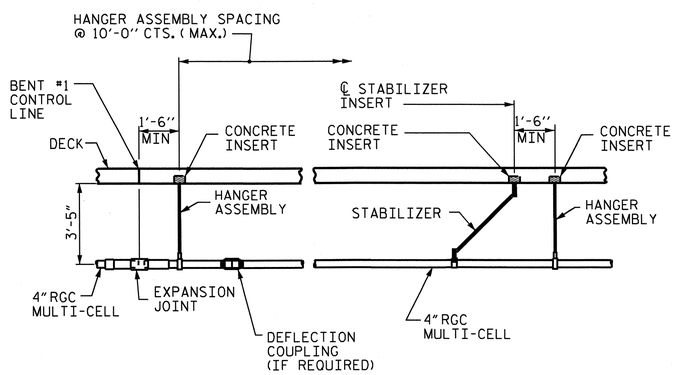

VIEW B-B

STEEL GIRDERS

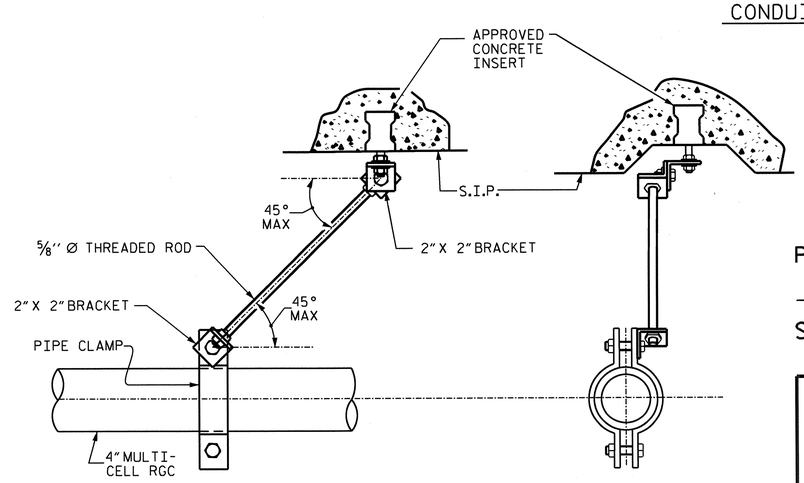

DETAIL "E"

STABILIZER

NORTH CAROLINA PROFESSIONAL SEAL 20878 ENGINEER KEVIN FISCHER 11/20/12

PROJECT NO. U-0209B

MECKLENBURG COUNTY

STATION: 89+79.05 -L-

STATE OF NORTH CAROLINA
DEPARTMENT OF TRANSPORTATION
RALEIGH

STANDARD

ELECTRICAL CONDUIT SYSTEM FOR SIGNALS

ELECTRIC CONDUIT DETAILS

ASSEMBLED BY : J.P. ADAMS		DATE : 11/7/11	
CHECKED BY : B.C. HUNT		DATE : 2/2012	
DRAWN BY : RWW 2-4-03	REV. 5/1/06	TLA/GM	
CHECKED BY : DBM 2-4-03	REV. 10/1/11	MAA/GM	

06-NOV-2012 13:18
R:\Structures\Plans\Str2\U0209B_SD_UT_02.dgn
LSUTTON

REVISIONS						SHEET NO.
NO.	BY:	DATE:	NO.	BY:	DATE:	S-65
1			3			TOTAL SHEETS
2			4			117

STR. #2

STD. NO. ECS1

BILL OF MATERIAL

BAR	NO.	SIZE	TYPE	LENGTH	WEIGHT
* A1	1020	#5	STR	46'-10"	49824
A2	1020	#5	STR	46'-8"	49647
* A3	6	#5	STR	6'-9"	42
* A101	12	#5	STR	46'-4"	580
* A102	12	#5	STR	45'-7"	571
* A103	12	#5	STR	44'-11"	562
* A104	12	#5	STR	44'-3"	554
* A105	12	#5	STR	43'-5"	543
* A106	12	#5	STR	42'-11"	537
* A107	12	#5	STR	42'-2"	528
* A108	12	#5	STR	41'-6"	519
* A109	12	#5	STR	40'-10"	511
* A110	12	#5	STR	40'-2"	503
* A111	12	#5	STR	39'-6"	494
* A112	12	#5	STR	38'-9"	485
* A113	12	#5	STR	38'-1"	477
* A114	12	#5	STR	37'-5"	468
* A115	12	#5	STR	36'-9"	460
* A116	12	#5	STR	36'-1"	452
* A117	12	#5	STR	35'-4"	442
* A118	12	#5	STR	34'-8"	434
* A119	12	#5	STR	34'-0"	426
* A120	12	#5	STR	33'-4"	417
* A121	12	#5	STR	32'-8"	409
* A122	12	#5	STR	31'-11"	399
* A123	12	#5	STR	31'-3"	391
* A124	6	#5	STR	58'-7"	367
* A125	6	#5	STR	57'-3"	358
* A126	6	#5	STR	55'-10"	349
* A127	6	#5	STR	54'-6"	341
* A128	6	#5	STR	53'-2"	333
* A129	6	#5	STR	51'-9"	324
* A130	6	#5	STR	50'-5"	316
* A131	6	#5	STR	49'-0"	307
* A132	6	#5	STR	47'-8"	298
* A133	6	#5	STR	46'-4"	290
* A134	6	#5	STR	44'-11"	281

BAR	NO.	SIZE	TYPE	LENGTH	WEIGHT
* A135	6	#5	STR	43'-7"	273
* A136	6	#5	STR	42'-2"	264
* A137	6	#5	STR	40'-10"	256
* A138	6	#5	STR	39'-6"	247
* A139	6	#5	STR	38'-1"	238
* A140	6	#5	STR	36'-9"	230
* A141	6	#5	STR	35'-4"	221
* A142	6	#5	STR	34'-0"	213
* A143	6	#5	STR	32'-7"	204
* A144	6	#5	STR	31'-3"	196
* A145	6	#5	STR	29'-11"	187
* A146	6	#5	STR	28'-6"	178
* A147	6	#5	STR	27'-2"	170
* A148	6	#5	STR	25'-9"	161
* A149	6	#5	STR	24'-5"	153
* A150	6	#5	STR	23'-1"	144
* A151	6	#5	STR	21'-8"	136
* A152	6	#5	STR	20'-4"	127
* A153	6	#5	STR	18'-11"	118
* A154	6	#5	STR	17'-7"	110
* A155	6	#5	STR	16'-3"	102
* A156	6	#5	STR	14'-10"	93
* A157	6	#5	STR	13'-6"	84
* A158	6	#5	STR	12'-1"	76
* A159	6	#5	STR	10'-9"	67
* A160	6	#5	STR	9'-4"	58
* A161	6	#5	STR	8'-0"	50
* A162	6	#5	STR	6'-8"	42
* A163	6	#5	STR	5'-3"	33
* A164	6	#5	STR	3'-11"	25
* A165	6	#5	STR	2'-6"	16
* A166	6	#5	STR	1'-2"	7
A201	12	#5	STR	46'-2"	578
A202	12	#5	STR	45'-5"	568
A203	12	#5	STR	44'-9"	560
A204	12	#5	STR	44'-1"	552
A205	12	#5	STR	43'-5"	543

BAR	NO.	SIZE	TYPE	LENGTH	WEIGHT
A206	12	#5	STR	42'-9"	535
A207	12	#5	STR	42'-0"	526
A208	12	#5	STR	41'-4"	517
A209	12	#5	STR	40'-8"	509
A210	12	#5	STR	40'-0"	501
A211	12	#5	STR	39'-4"	492
A212	12	#5	STR	38'-7"	483
A213	12	#5	STR	37'-11"	475
A214	12	#5	STR	37'-3"	466
A215	12	#5	STR	36'-5"	456
A216	12	#5	STR	35'-11"	450
A217	12	#5	STR	35'-2"	440
A218	12	#5	STR	34'-6"	432
A219	12	#5	STR	33'-10"	423
A220	12	#5	STR	33'-2"	415
A221	12	#5	STR	32'-6"	407
A222	12	#5	STR	31'-9"	397
A223	12	#5	STR	31'-1"	389
A224	6	#5	STR	58'-7"	367
A225	6	#5	STR	57'-3"	358
A226	6	#5	STR	55'-10"	349
A227	6	#5	STR	54'-6"	341
A228	6	#5	STR	53'-2"	333
A229	6	#5	STR	51'-9"	324
A230	6	#5	STR	50'-5"	316
A231	6	#5	STR	49'-0"	307
A232	6	#5	STR	47'-8"	298
A233	6	#5	STR	46'-4"	290
A234	6	#5	STR	44'-11"	281
A235	6	#5	STR	43'-7"	273
A236	6	#5	STR	42'-2"	264
A237	6	#5	STR	40'-10"	256
A238	6	#5	STR	39'-6"	247
A239	6	#5	STR	38'-1"	238
A240	6	#5	STR	36'-9"	230
A241	6	#5	STR	35'-4"	221
A242	6	#5	STR	34'-0"	213
A243	6	#5	STR	32'-7"	204

BAR	NO.	SIZE	TYPE	LENGTH	WEIGHT
A244	6	#5	STR	31'-3"	196
A245	6	#5	STR	29'-11"	187
A246	6	#5	STR	28'-6"	178
A247	6	#5	STR	27'-2"	170
A248	6	#5	STR	25'-9"	161
A249	6	#5	STR	24'-5"	153
A250	6	#5	STR	23'-1"	144
A251	6	#5	STR	21'-8"	136
A252	6	#5	STR	20'-4"	127
A253	6	#5	STR	18'-11"	118
A254	6	#5	STR	17'-7"	110
A255	6	#5	STR	16'-3"	102
A256	6	#5	STR	14'-10"	93
A257	6	#5	STR	13'-6"	84
A258	6	#5	STR	12'-1"	76
A259	6	#5	STR	10'-9"	67
A260	6	#5	STR	9'-4"	58
A261	6	#5	STR	8'-0"	50
A262	6	#5	STR	6'-8"	42
A263	6	#5	STR	5'-3"	33
A264	6	#5	STR	3'-11"	25
A265	6	#5	STR	2'-6"	16
A266	6	#5	STR	1'-2"	7
B1	672	#5	STR	56'-1"	39309
* B2	369	#7	STR	43'-6"	32809
* B3	252	#4	STR	27'-1"	4559
* B4	252	#4	STR	28'-5"	4784
* B5	216	#4	STR	29'-0"	4184
* E1	8	#7	1	3'-5"	56
* E2	8	#7	1	4'-0"	65
* E3	8	#7	1	4'-7"	75
* E4	8	#7	1	5'-1"	83
* E5	4	#7	1	3'-3"	27
* F1	4	#6	STR	3'-6"	21
* F2	4	#6	STR	3'-2"	19

BAR	NO.	SIZE	TYPE	LENGTH	WEIGHT
* F3	8	#6	STR	3'-5"	41
* F4	4	#6	STR	4'-5"	27
* F5	4	#6	STR	4'-2"	25
* F6	8	#6	STR	4'-7"	55
* G1	6	#5	STR	44'-11"	281
* G2	217	#4	STR	8'-6"	1232
* G3	650	#4	STR	6'-5"	2786
* K1	16	#5	2	9'-7"	160
* K2	64	#5	STR	14'-5"	962
* K3	56	#5	3	9'-11"	579
* S1	176	#4	4	5'-5"	637
* U1	188	#4	5	3'-4"	419

REINFORCING STEEL 108113 LBS.
* EPOXY COATED REINFORCING STEEL 122957 LBS.

BAR TYPE

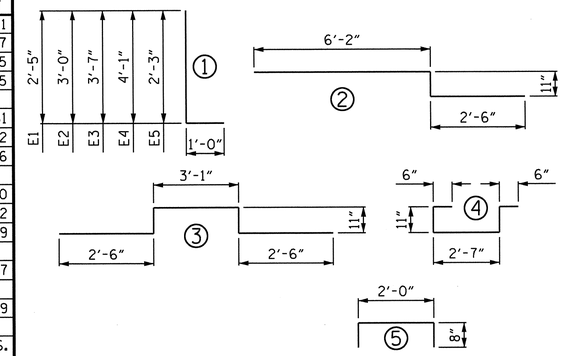

ALL BAR DIMENSIONS ARE OUT TO OUT.

SUPERSTRUCTURE BILL OF MATERIAL

	CLASS AA CONCRETE	REINFORCING STEEL	EPOXY COATED REINFORCING STEEL
	(CU. YDS.)	(LBS.)	(LBS.)
POUR #1	303.2		
POUR #2	303.2		
POUR #3	309.1		
POUR #4	85.2		
SIDEWALK	113.6		
END POST	1.9		
CONCRETE ISLAND	43.0		
TOTAL	1159.2	108113	122957

SUPERSTRUCTURE REINFORCING STEEL LENGTHS ARE BASED ON THE FOLLOWING MINIMUM SPLICE LENGTHS

BAR SIZE	SUPERSTRUCTURE EXCEPT APPROACH SLABS, PARAPET, AND SIDEWALK		APPROACH SLABS		PARAPET AND SIDEWALK
	EPOXY COATED	UNCOATED	EPOXY COATED	UNCOATED	
#4	2'-0"	1'-9"	2'-0"	1'-9"	2'-9"
#5	2'-6"	2'-2"	2'-6"	2'-2"	3'-5"
#6	3'-0"	2'-7"	3'-10"	2'-7"	4'-4"
#7	5'-3"	3'-6"			
#8	6'-10"	4'-7"			

GROOVING BRIDGE FLOOR

APPROACH SLABS	2919 SQ. FT.
BRIDGE DECK	20422 SQ. FT.
TOTAL	23341 SQ. FT.

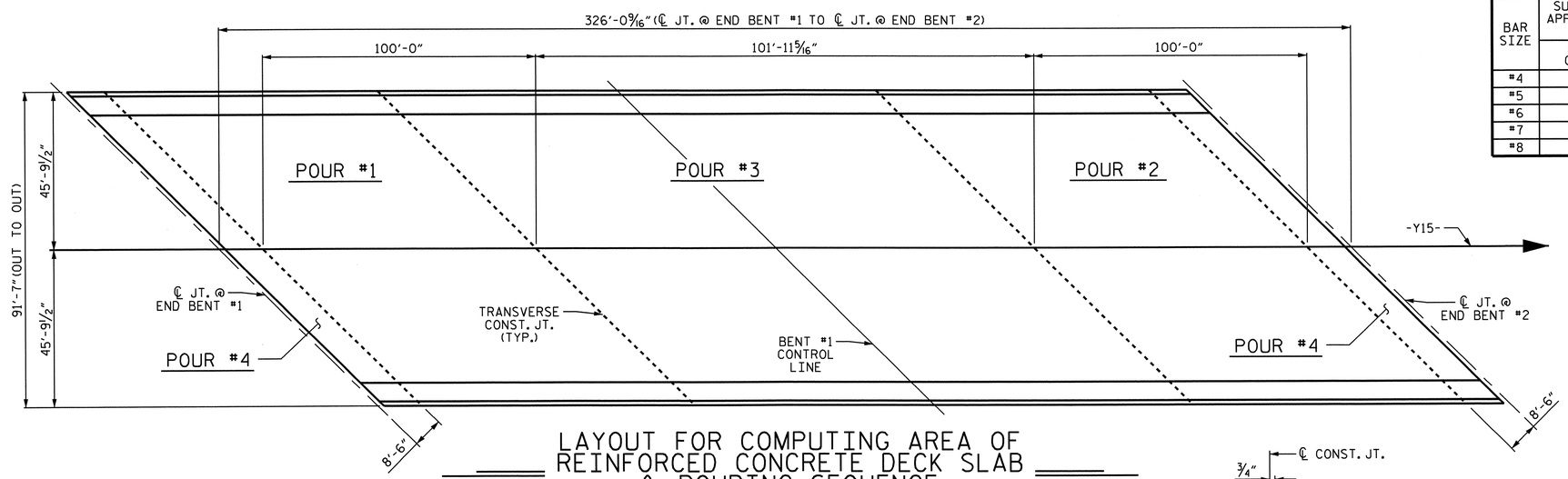

LAYOUT FOR COMPUTING AREA OF REINFORCED CONCRETE DECK SLAB & POURING SEQUENCE (SQ. FT. = 29,860)

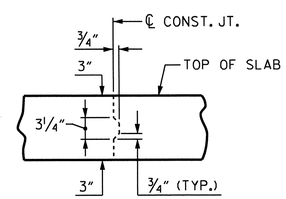

TRANSVERSE AND LONGITUDINAL CONSTRUCTION JOINT DETAIL

NOTE: REINFORCING STEEL IN SLAB NOT SHOWN. LONGITUDINAL REINFORCING STEEL SHALL BE CONTINUOUS THROUGH JOINT

PROJECT NO. U-0209B
MECKLENBURG COUNTY
STATION: 89+79.05 -L-

STATE OF NORTH CAROLINA
DEPARTMENT OF TRANSPORTATION
RALEIGH

SUPERSTRUCTURE

BILL OF MATERIAL

NORTH CAROLINA PROFESSIONAL SEAL 30870 ENGINEER KEVIN FISCHER 11/20/12

REVISIONS								SHEET NO.
NO.	BY:	DATE:	NO.	BY:	DATE:			S-66
1			3					TOTAL SHEETS
2			4					117

STR. #2

DRAWN BY : T. BANKOVICH DATE : 2-2011
CHECKED BY : J.P. ADAMS DATE : 8/16/11

11-SEP-2012 08:48
R:\Structures\Plans\Str2\U0209B_SD_BM_02.dgn
lsutton

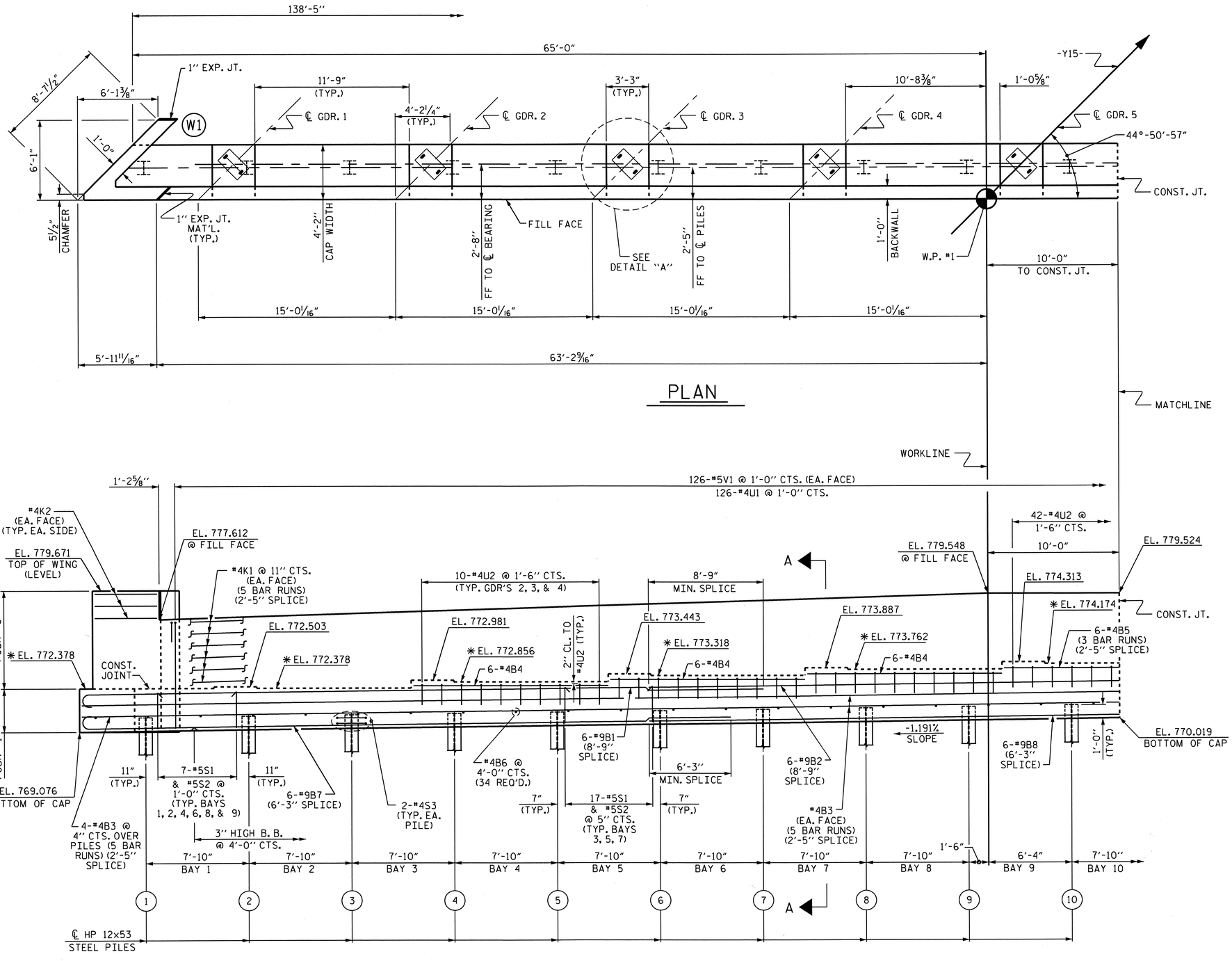

ELEVATION

FOR TOP OF PILE ELEVATIONS SEE SHEET 2 OF 4

NOTES

STIRRUPS IN CAP MAY BE SHIFTED AS NECESSARY TO CLEAR ANCHOR BOLTS.

FOR PIPE INSERT DETAILS, SEE BEARINGS SHEET.

BACKWALL SHALL BE PLACED BEFORE APPLYING THE EPOXY PROTECTIVE COATING.

EPOXY COAT THE END BENT CAP AFTER ADJUSTMENTS ARE MADE TO BEARINGS AND ANCHOR BOLTS ARE GROUTED.

THE TOP SURFACE AREAS OF THE CAPS SHALL BE CURED IN ACCORDANCE WITH THE STANDARD SPECIFICATIONS EXCEPT THE MEMBRANE CURING COMPOUND METHOD SHALL NOT BE USED.

* THE TOP SURFACE OF THE CAP EXCEPT THE BRIDGE SEAT BUILDUPS SHALL BE SLOPED TRANSVERSELY FROM THE FILL FACE TO THE BACK FACE AT THE RATE OF 2%.

FOR GALVANIZED REINFORCING STRAPS, SEE MSE WALL PLANS.

FOR MSE RETAINING WALLS, SEE SPECIAL PROVISIONS.

THE CONTRACTOR SHALL PROVIDE FOR INSTALLATION OF THE ELECTRICAL CONDUIT SYSTEM THROUGH THE END BENT BACKWALL. REINFORCING STEEL MAY BE SHIFTED AS NECESSARY. SEE ELECTRICAL CONDUIT SYSTEM FOR SIGNALS PLAN SHEET FOR DETAILS.

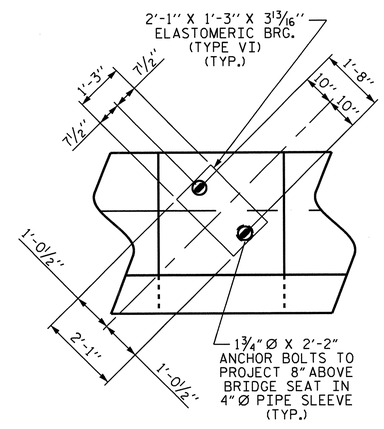

DETAIL "A"

(TYP. EA. GIRDER)

PROJECT NO. U-0209B

MECKLENBURG COUNTY

STATION: 89+79.05 -L-

SHEET 1 OF 4

STATE OF NORTH CAROLINA
DEPARTMENT OF TRANSPORTATION
RALEIGH

SUBSTRUCTURE

END BENT #1

NORTH CAROLINA PROFESSIONAL SEAL 30878 ENGINEER KEVIN FISCHER 11/20/12

REVISIONS								SHEET NO.
NO.	BY:	DATE:	NO.	BY:	DATE:			S-67
1			3					TOTAL SHEETS
2			4					117

STR.#2

DRAWN BY : B. L. GREEN DATE : 7/11

CHECKED BY : K. D. LAYNE DATE : 7/11

11-SEP-2012 08:48
R:\Structures\Plans\Str2\U0209B_SD_E*_02.dgn
lsutton

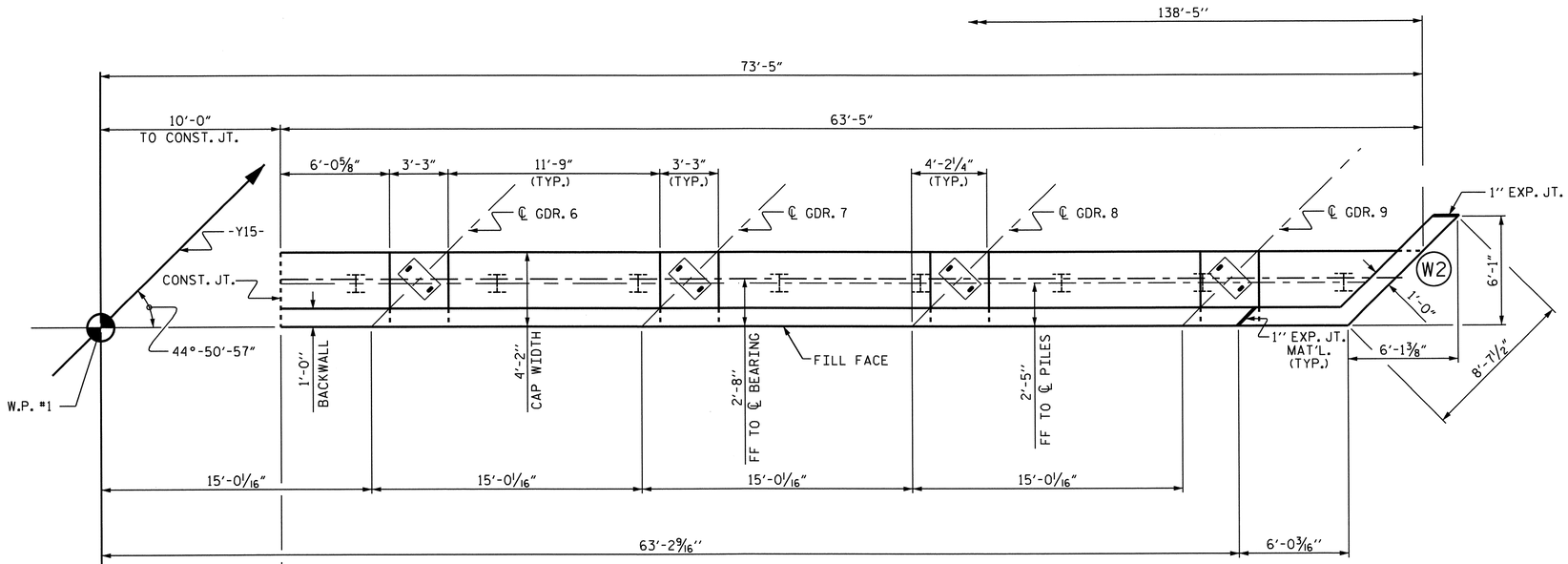

PLAN

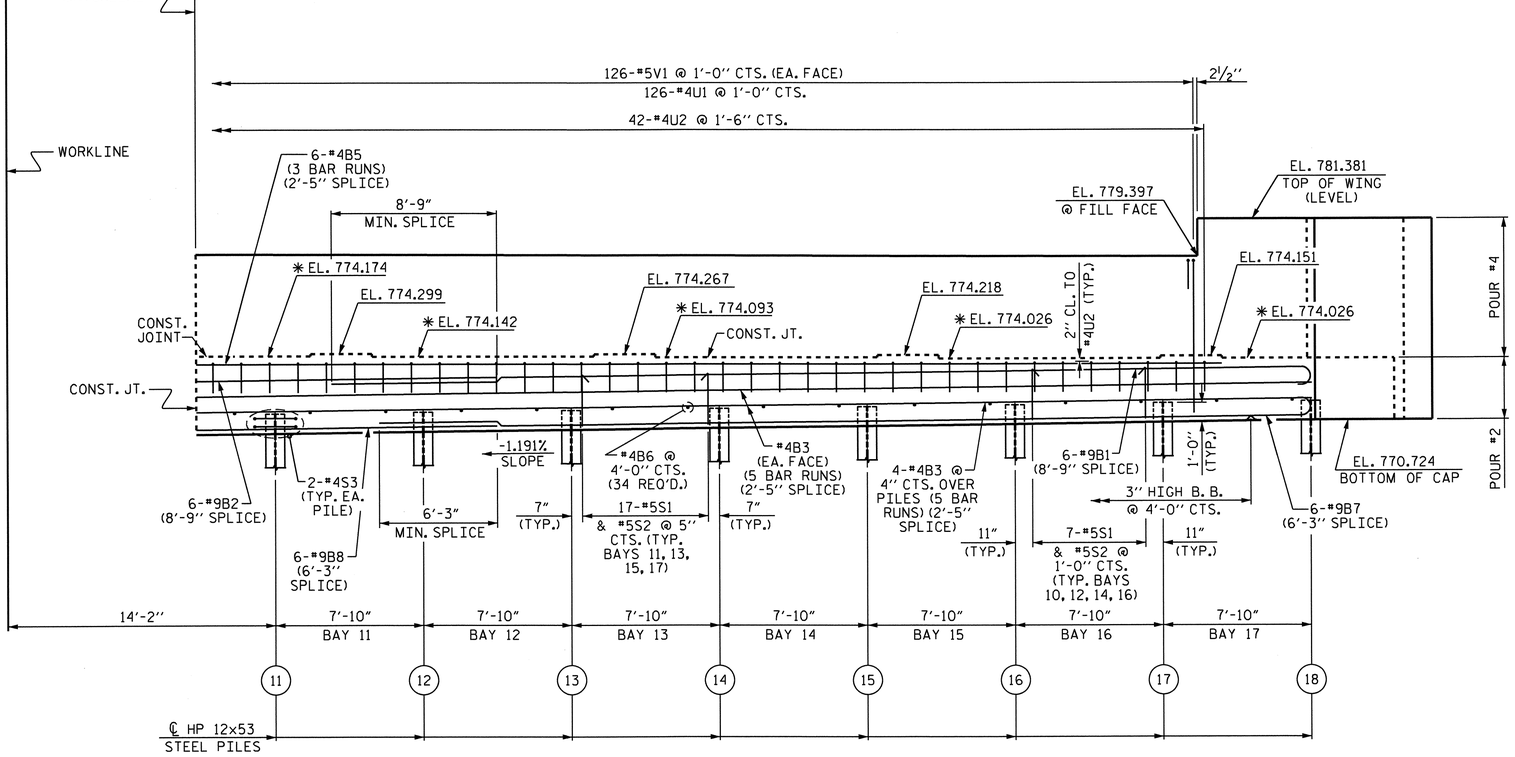

ELEVATION

PILE NO.	TOP OF PILE EL.
1	770.142
2	770.235
3	770.328
4	770.421
5	770.514
6	770.607
7	770.700
8	770.793
9	770.886
10	770.979
11	771.072
12	771.165
13	771.258
14	771.351
15	771.444
16	771.537
17	771.630
18	771.723

PROJECT NO. U-0209B
MECKLENBURG COUNTY
STATION: 89+79.05 -L-

SHEET 2 OF 4

STATE OF NORTH CAROLINA
DEPARTMENT OF TRANSPORTATION
RALEIGH

SUBSTRUCTURE

END BENT #1

NORTH CAROLINA PROFESSIONAL SEAL 030878 ENGINEER KEVIN FISCHER
11/20/12

REVISIONS						SHEET NO.
NO.	BY:	DATE:	NO.	BY:	DATE:	S-68
1			3			TOTAL SHEETS
2			4			117

STR.#2

DRAWN BY : B. L. GREEN DATE : 7/11
CHECKED BY : K. D. LAYNE DATE : 7/11

11-SEP-2012 08:47
R:\Structures\Plans\Str2\U0209B_SD_E*_02.dgn
lsutton

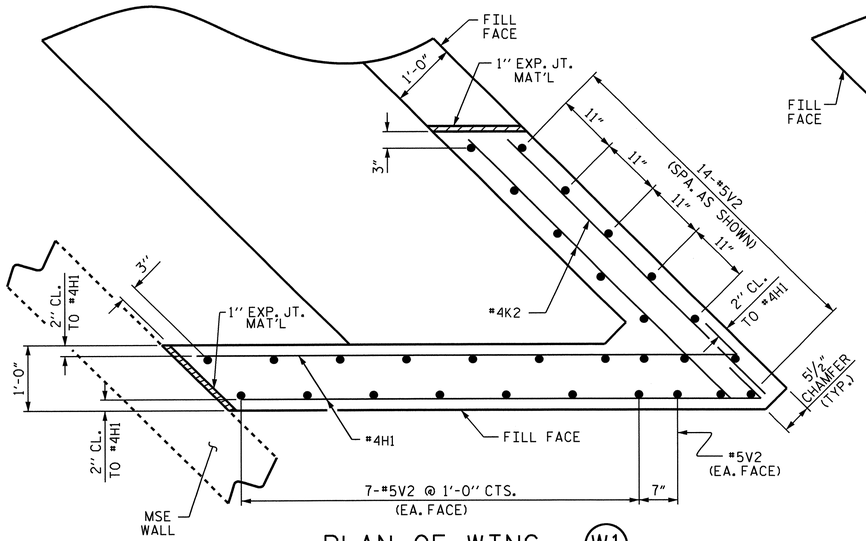

PLAN OF WING - (W1)

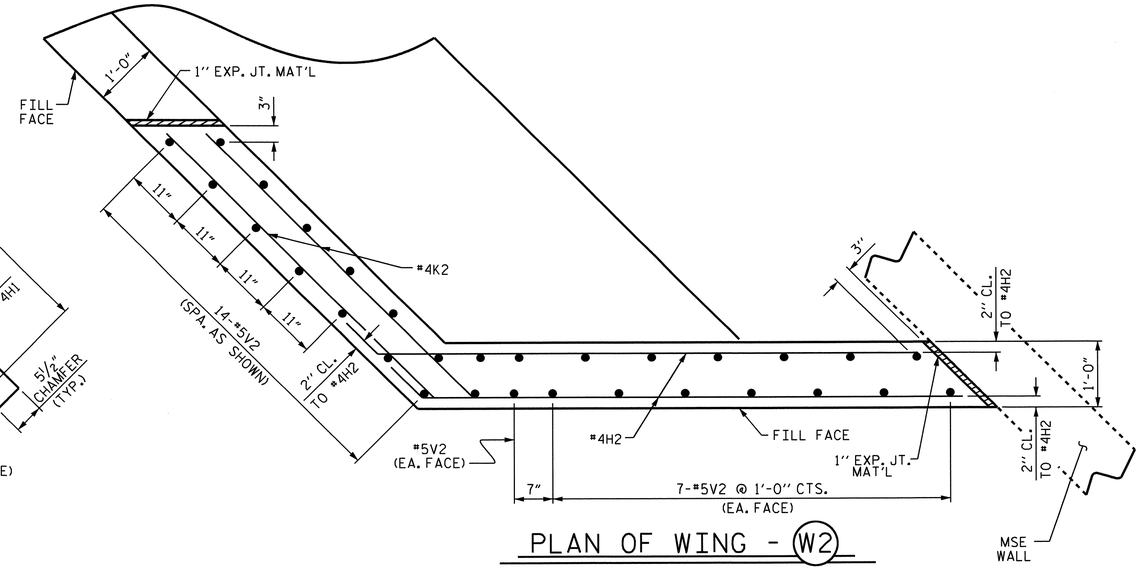

PLAN OF WING - (W2)

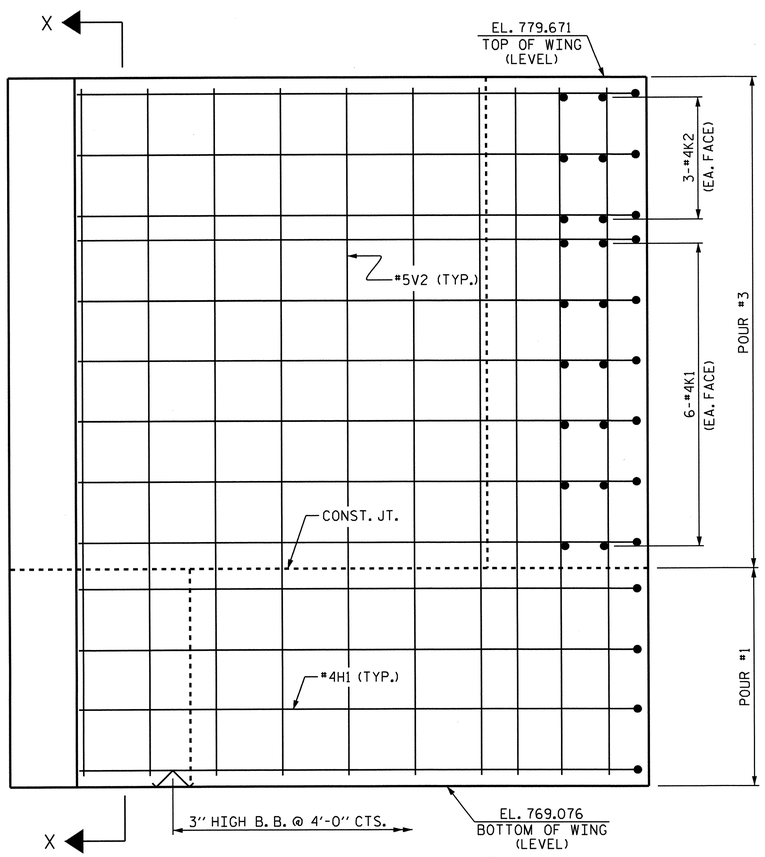

ELEVATION OF WING - (W1)

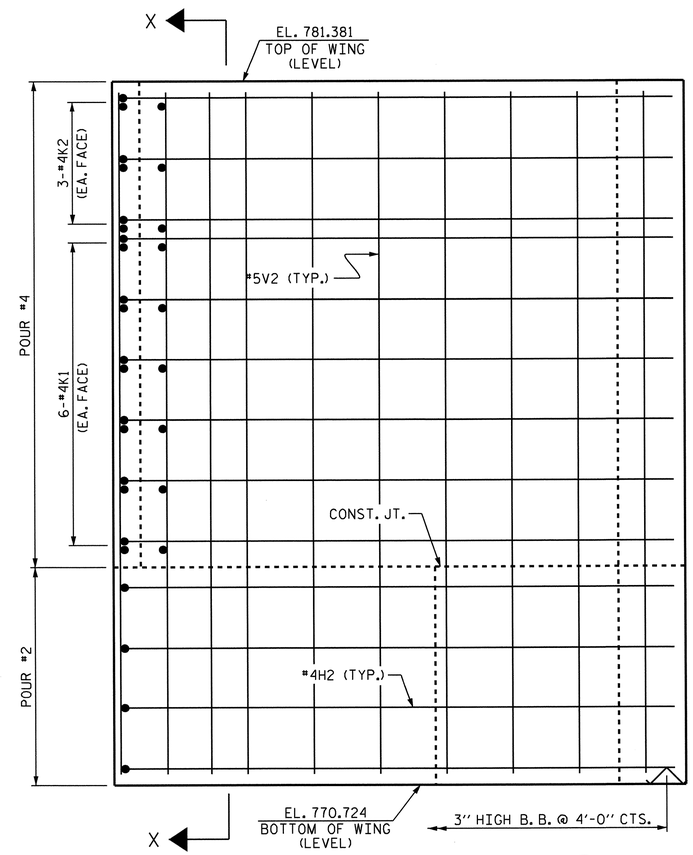

ELEVATION OF WING - (W2)

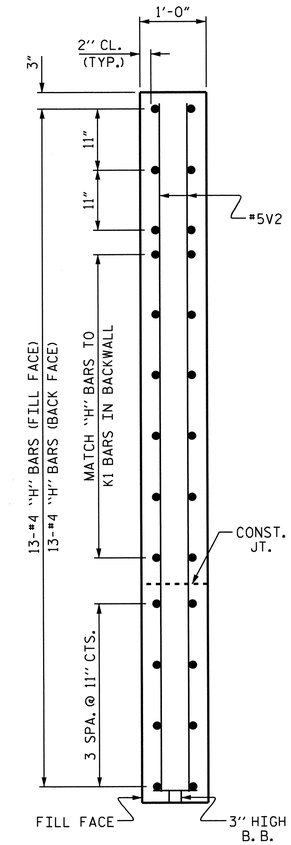

SECTION X-X

PROJECT NO. U-0209B
MECKLENBURG COUNTY
STATION: 89+79.05 -L-

SHEET 3 OF 4

STATE OF NORTH CAROLINA
DEPARTMENT OF TRANSPORTATION
RALEIGH

SUBSTRUCTURE

END BENT #1

NORTH CAROLINA PROFESSIONAL SEAL 20878 ENGINEER KEVIN FISCHER 11/20/12

REVISIONS						SHEET NO.
NO.	BY:	DATE:	NO.	BY:	DATE:	S-69
1			3			TOTAL SHEETS
2			4			117

STR.#2

DRAWN BY : B. L. GREEN DATE : 5/11
CHECKED BY : K. D. LAYNE DATE : 7/7/11

11-SEP-2012 08:47
R:\Structures\Plans\Str2\U0209B_SD_E*_02.dgn
lsutton

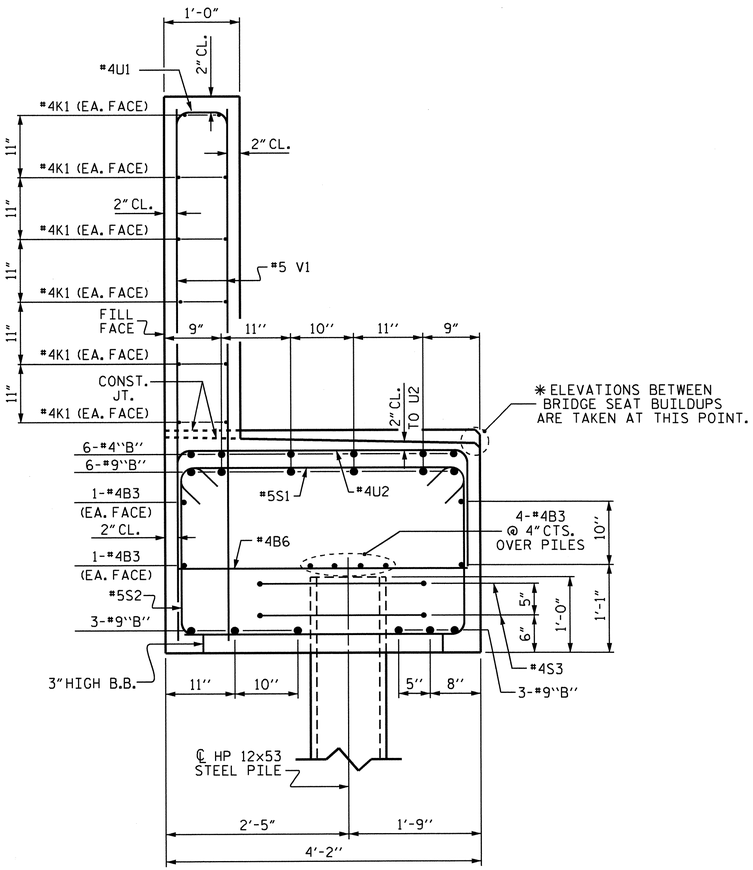

SECTION A-A

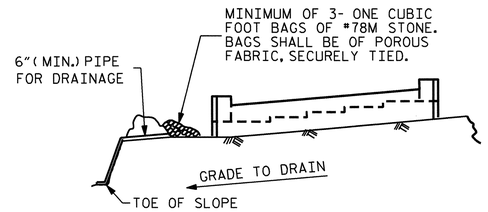

BAGGED STONE AND PIPE SHALL BE PLACED IMMEDIATELY AFTER COMPLETION OF END BENT EXCAVATION. PIPE MAY BE EITHER CONCRETE, CORRUGATED STEEL, CORRUGATED ALUMINUM ALLOY, OR CORRUGATED PLASTIC. PERFORATED PIPE WILL NOT BE ALLOWED.

BAGGED STONE SHALL REMAIN IN PLACE UNTIL THE ENGINEER DIRECTS THAT IT BE REMOVED. THE CONTRACTOR SHALL REMOVE AND DISPOSE OF SILT ACCUMULATIONS AT BAGGED STONE WHEN SO DIRECTED BY THE ENGINEER. BAGS SHALL BE REMOVED AND REPLACED WHENEVER THE ENGINEER DETERMINES THAT THEY HAVE DETERIORATED AND LOST THEIR EFFECTIVENESS.

NO SEPARATE PAYMENT WILL BE MADE FOR THIS WORK AND THE ENTIRE COST OF THIS WORK SHALL BE INCLUDED IN THE UNIT CONTRACT PRICE BID FOR THE SEVERAL PAY ITEMS.

TEMPORARY DRAINAGE AT END BENT

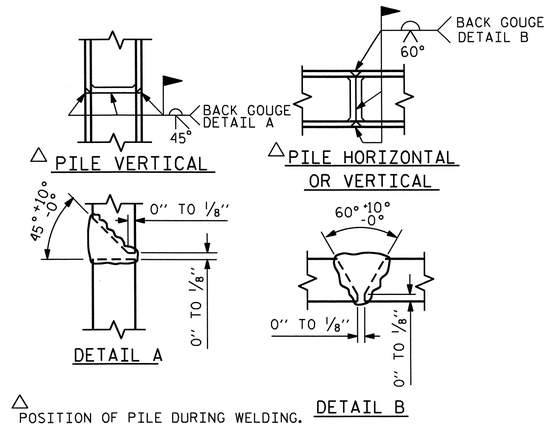

PILE SPLICE DETAILS

BAR TYPES

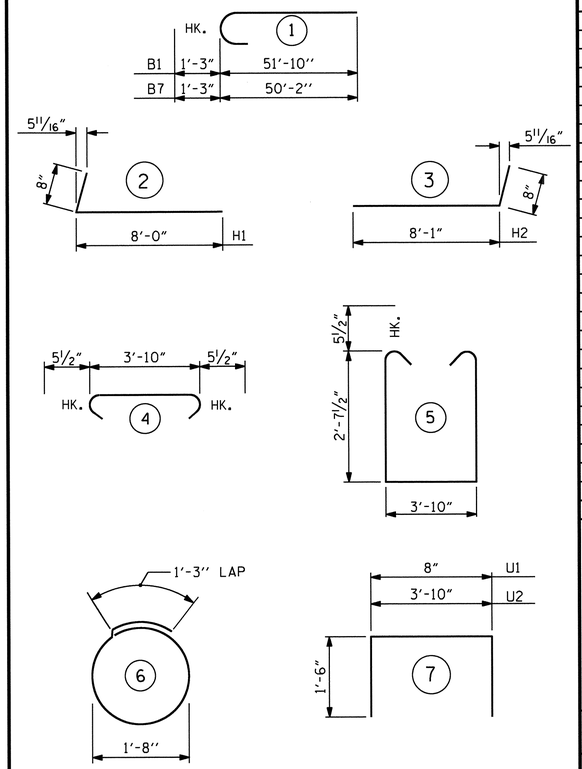

ALL BAR DIMENSIONS ARE OUT TO OUT.

BILL OF MATERIAL

END BENT #1

BAR	NO.	SIZE	TYPE	LENGTH	WEIGHT
B1	12	#9	1	53'-1"	2166
B2	6	#9	STR	51'-10"	1057
B3	40	#4	STR	29'-7"	790
B4	18	#4	STR	14'-10"	178
B5	18	#4	STR	22'-8"	273
B6	34	#4	STR	3'-10"	87
B7	12	#9	1	51'-5"	2098
B8	6	#9	STR	50'-2"	1023
H1	26	#4	2	8'-8"	151
H2	26	#4	3	8'-9"	152
K1	60	#4	STR	29'-7"	1186
K2	12	#4	STR	5'-6"	44
S1	189	#5	4	4'-9"	936
S2	189	#5	5	10'-0"	1971
S3	36	#4	6	6'-6"	156
U1	126	#4	7	3'-8"	309
U2	72	#4	7	6'-10"	329
V1	252	#5	STR	8'-0"	2103
V2	60	#5	STR	10'-3"	641

REINFORCING STEEL LBS. 15,650

CLASS "A" CONCRETE BREAKDOWN

POUR #1	CAP, LOWER WING (LEFT END)	43.2 CY.
POUR #2	CAP, LOWER WING (RIGHT END)	35.7 CY.
POUR #3	UPPER WING & BACKWALL (LEFT END)	18.5 CY.
POUR #4	UPPER WING & BACKWALL (RIGHT END)	14.1 CY.
CLASS "A" CONCRETE TOTAL		111.5 CY.

HP 12x53 STEEL PILES
No. 18 LIN. FT. 1,260

PILES REDRIVES EA. 9

PROJECT NO. U-0209B
MECKLENBURG COUNTY
STATION: 89+79.05 -L-

SHEET 4 OF 4

STATE OF NORTH CAROLINA
DEPARTMENT OF TRANSPORTATION
RALEIGH

SUBSTRUCTURE

END BENT #1

NORTH CAROLINA PROFESSIONAL SEAL 30878 ENGINEER KEVIN FISCHER 11/20/12

REVISIONS						SHEET NO.
NO.	BY:	DATE:	NO.	BY:	DATE:	S-70
1			3			TOTAL SHEETS
2			4			117

STR.#2

DRAWN BY : B. L. GREEN DATE : 6/11
CHECKED BY : K. D. LAYNE DATE : 7/7/11

R:\Structures\Plans\Str2\U0209B_SD_E*_02.dgn
11-SEP-2012 09:48
lsutton

NOTES

STIRRUPS IN CAP MAY BE SHIFTED AS NECESSARY TO CLEAR ANCHOR BOLTS.

HOOKS ON "V" BARS MAY BE TURNED AS NECESSARY FOR PLACING REINFORCING STEEL.

FOR PILE SPLICE DETAILS, SEE END BENT SHEETS.

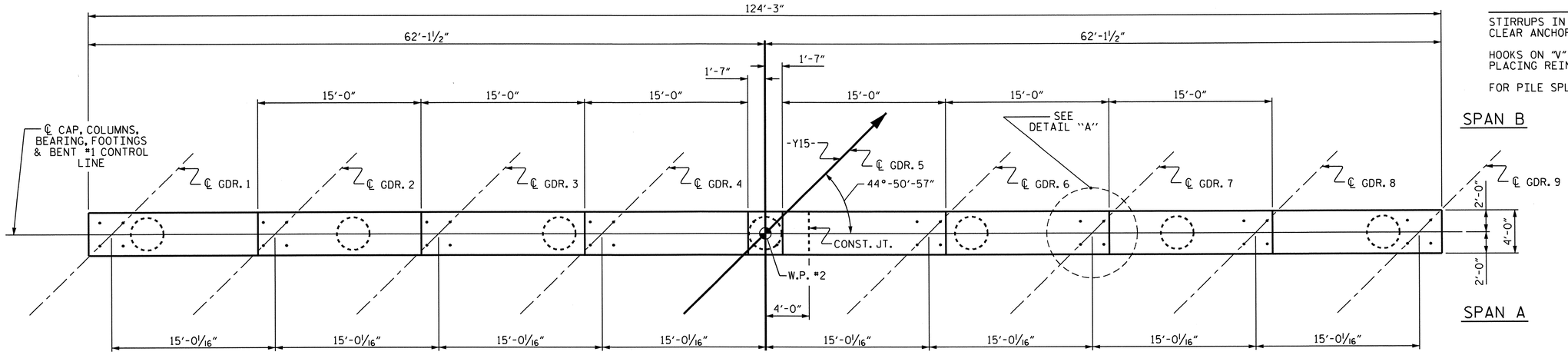

PLAN

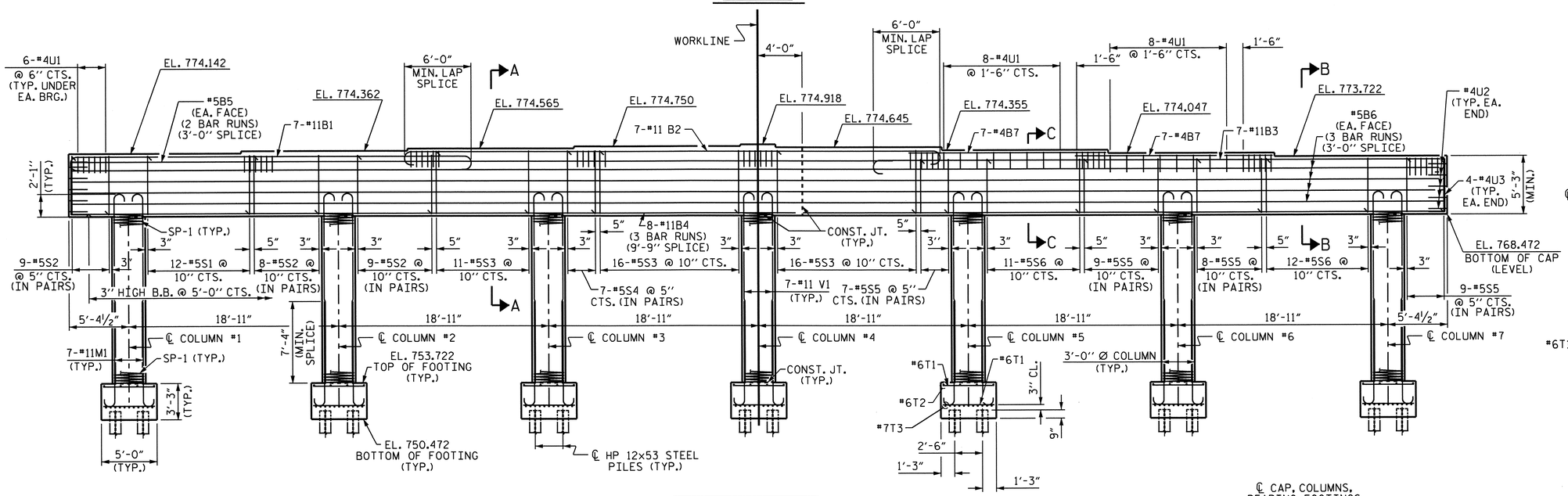

INVERT ALTERNATE STIRRUPS

ELEVATION

REINFORCING STEEL, DIMENSIONS AND DETAILS ARE TYPICAL FOR EACH COLUMN AND FOOTING UNLESS OTHERWISE NOTED.

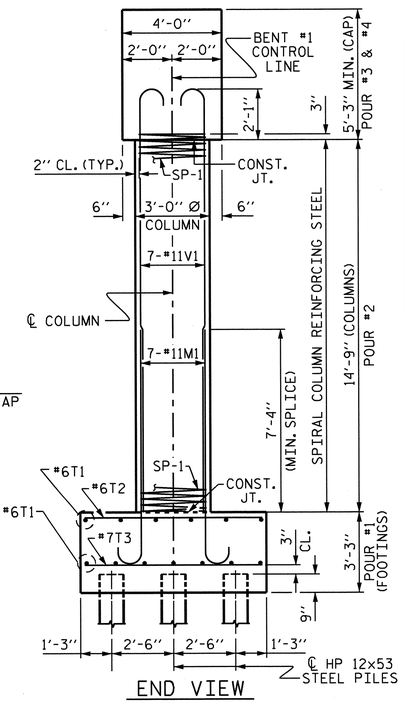

END VIEW

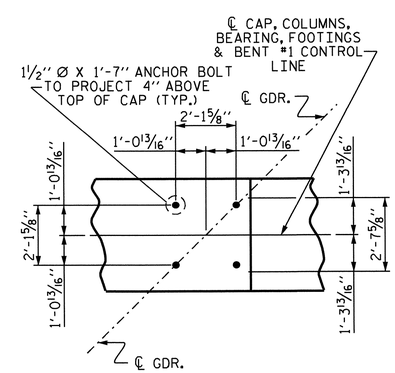

DETAIL "A"
TYPICAL AT EACH BEARING

PROJECT NO. U-0209B

MECKLENBURG COUNTY

STATION: 89+79.05 -L-

SHEET 1 OF 2

STATE OF NORTH CAROLINA
DEPARTMENT OF TRANSPORTATION
RALEIGH

SUBSTRUCTURE

BENT #1

NORTH CAROLINA PROFESSIONAL SEAL 039879 ENGINEER KEVIN FISCHER 11/20/12

REVISIONS								SHEET NO.
NO.	BY:	DATE:	NO.	BY:	DATE:			S-71
1			3					TOTAL SHEETS
2			4					117

STR. #2

DRAWN BY : B. L. GREEN DATE : 6/11
CHECKED BY : K. D. LAYNE DATE : 8/25/11

11-SEP-2012 08:47
R:\Structures\Plans\Str2\U0209B_SD_B*_02.dgn
lsutton

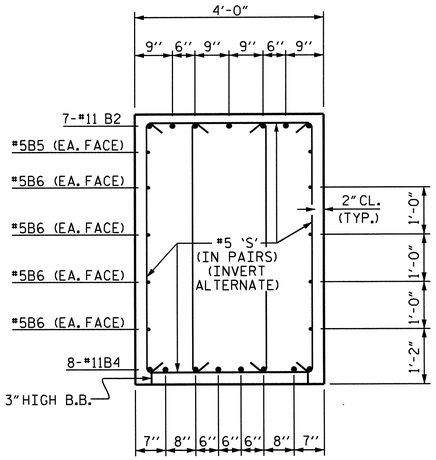

SECTION A-A

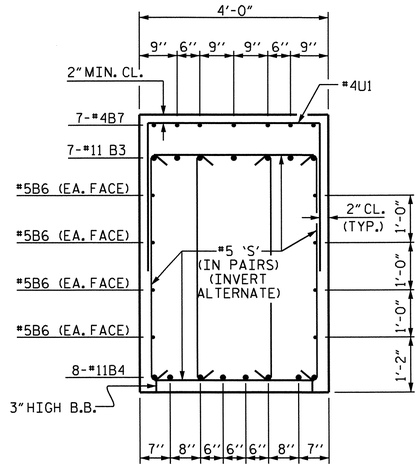

SECTION C-C

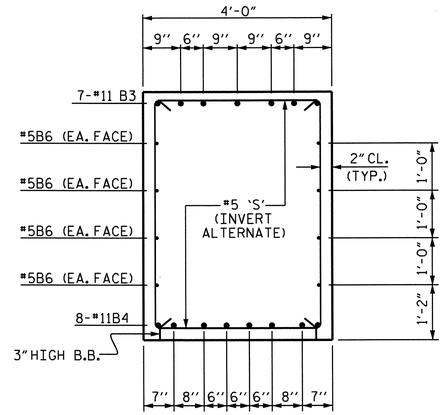

SECTION B-B

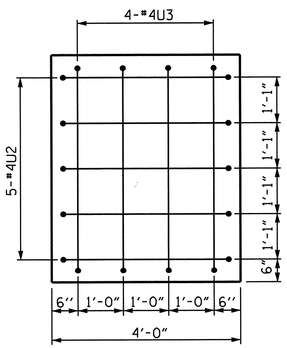

END VIEW

BAR TYPES

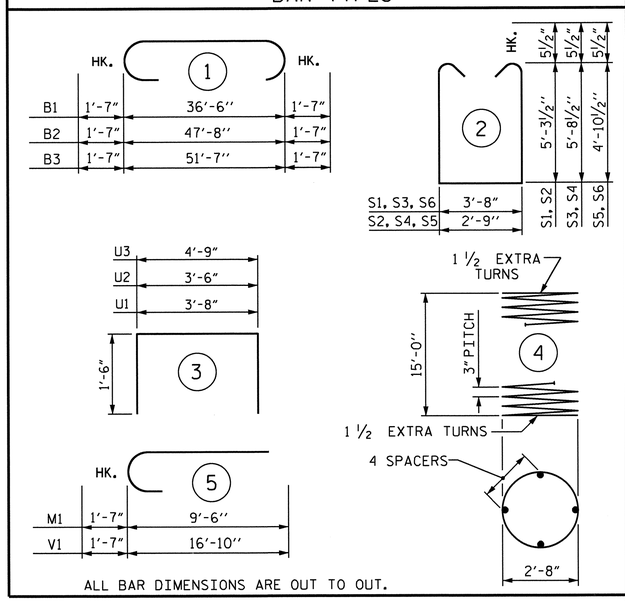

BILL OF MATERIAL

BENT #1

BAR	NO.	SIZE	TYPE	LENGTH	WEIGHT
B1	7	#11	1	39'-8"	1475
B2	7	#11	1	50'-10"	1891
B3	7	#11	1	54'-9"	2036
B4	24	#11	STR	47'-10"	6099
B5	4	#5	STR	38'-7"	161
B6	24	#5	STR	43'-4"	1085
B7	14	#4	STR	17'-10"	167
M1	49	#11	5	11'-1"	2885
S1	12	#5	2	15'-2"	190
S2	52	#5	2	14'-3"	773
S3	43	#5	2	16'-0"	718
S4	14	#5	2	15'-1"	220
S5	66	#5	2	13'-5"	924
S6	23	#5	2	14'-4"	344
T1	91	#6	STR	4'-8"	638
T2	28	#6	STR	7'-2"	301
T3	77	#7	STR	7'-2"	1128
U1	70	#4	3	6'-8"	312
U2	10	#4	3	6'-6"	43
U3	8	#4	3	7'-9"	41
V1	49	#11	5	18'-5"	4795
REINFORCING STEEL				LBS.	26,226
SP-1	7	**	4	519'-10"	2431
SPIRAL COLUMN REINFORCING STEEL				LBS.	2,431
CLASS "A" CONCRETE BREAKDOWN					
POUR #1 FOOTINGS					31.6 C.Y.
POUR #2 COLUMNS					27.0 C.Y.
POUR #3 CAP (LEFT END)					58.9 C.Y.
POUR #4 CAP (RIGHT END)					49.0 C.Y.
TOTAL CLASS "A" CONCRETE					166.5 C.Y.
HP 12X53 STEEL PILES					
NO. 42				LIN. FT.	2,730
PILE REDRIVES				EA.	21
FOUNDATION EXCAVATION					LUMP SUM

** THE "SP" SPIRAL REINFORCING STEEL SHALL BE W-20 OR D-20 COLD DRAWN WIRE OR #4 PLAIN OR DEFORMED BAR.

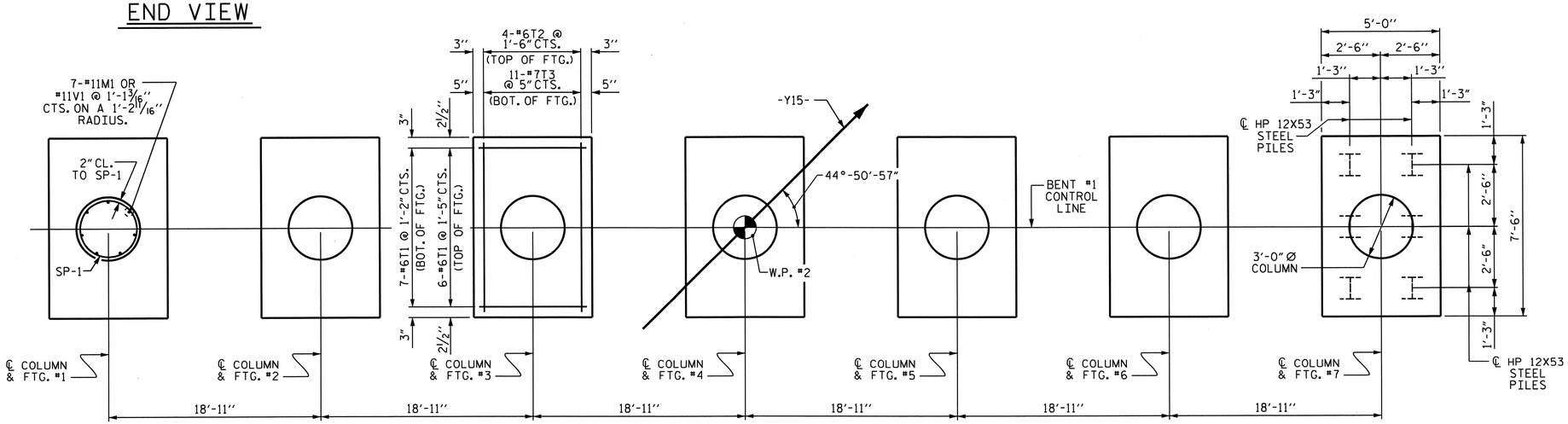

PLAN OF FOOTINGS & COLUMNS

REINFORCING STEEL, DIMENSIONS AND DETAILS ARE TYPICAL FOR EACH COLUMN AND FOOTING UNLESS OTHERWISE NOTED.

PROJECT NO. U-0209B
MECKLENBURG COUNTY
STATION: 89+79.05 -L-

SHEET 2 OF 2

STATE OF NORTH CAROLINA
DEPARTMENT OF TRANSPORTATION
RALEIGH

SUPERSTRUCTURE
BENT #1

NORTH CAROLINA PROFESSIONAL SEAL 30878 ENGINEER KEVIN FISCHER 11/20/12

REVISIONS						SHEET NO.
NO.	BY:	DATE:	NO.	BY:	DATE:	S-72
1			3			TOTAL SHEETS
2			4			117

STR. #2

DRAWN BY : B. L. GREEN DATE : 6/11
CHECKED BY : K. D. LAYNE DATE : 8/25/11

11-SEP-2012 09:44
R:\Structures\Plans\Str2\U0209B_SD_B*_02.dgn
lsutton

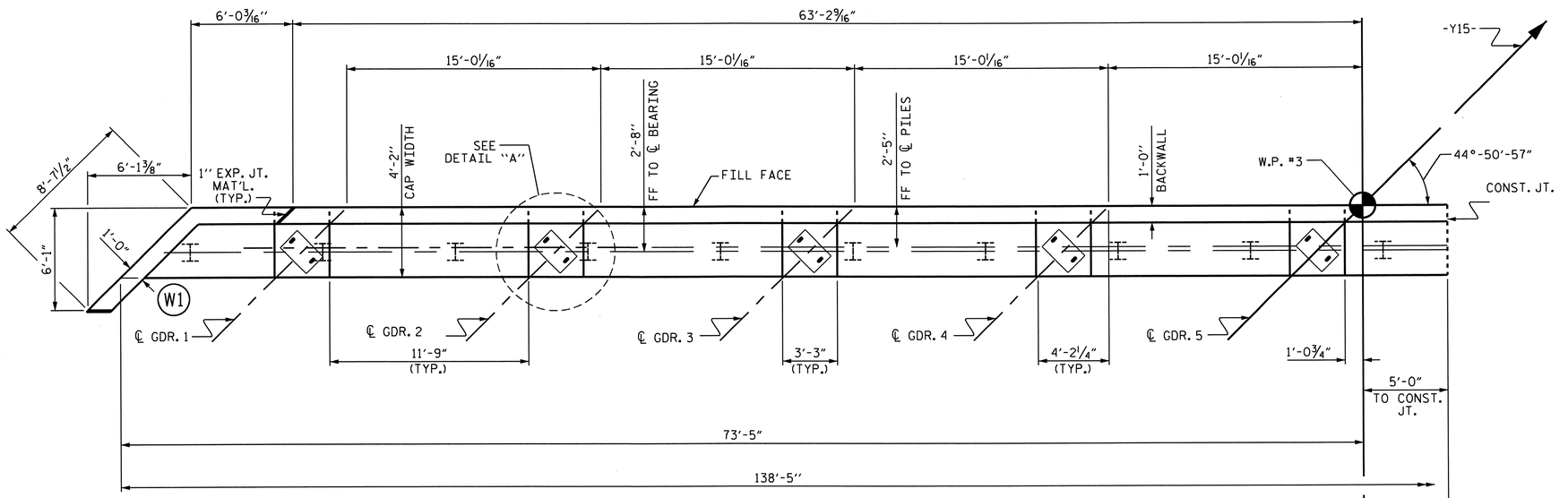

PLAN

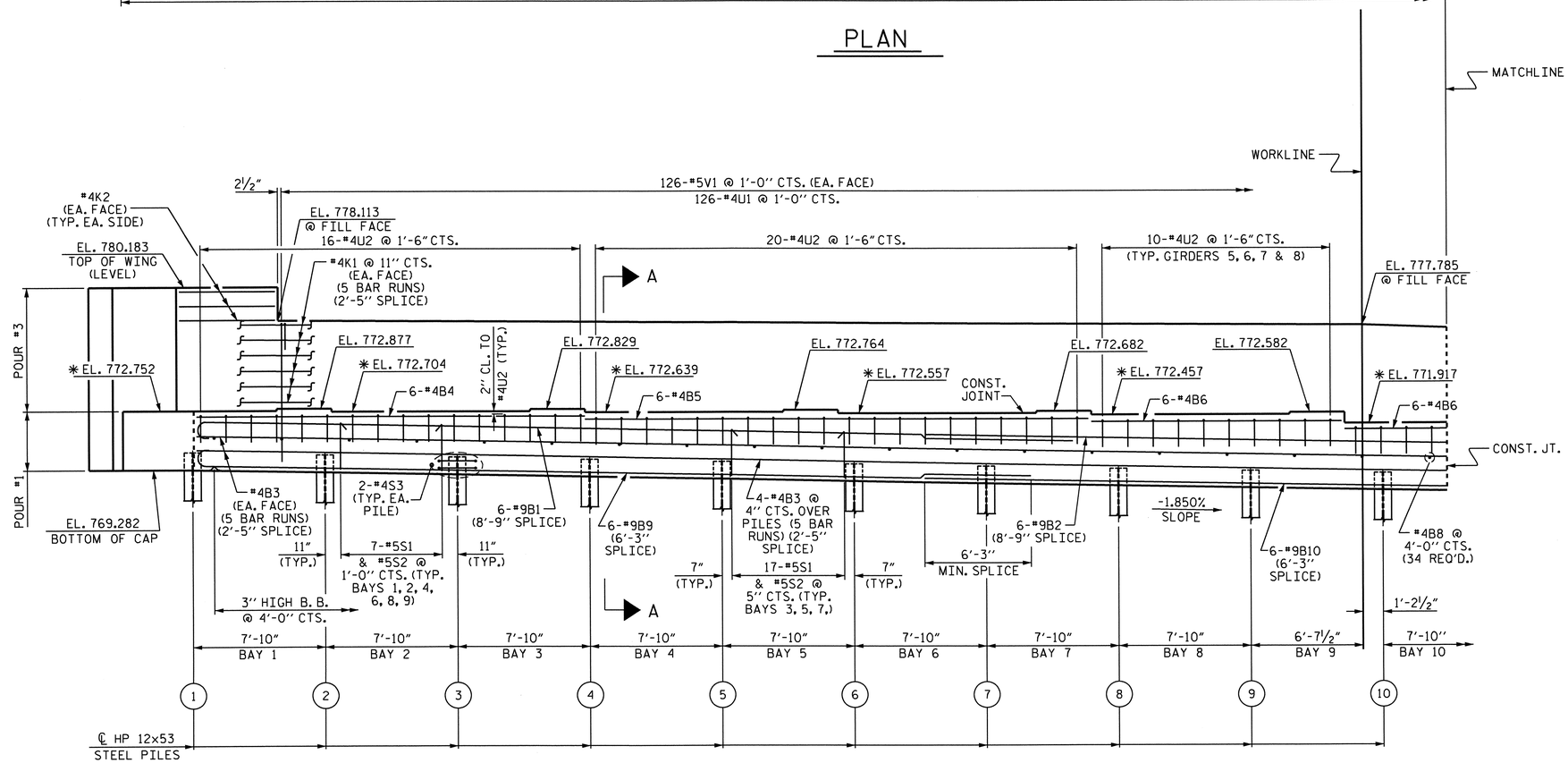

ELEVATION

FOR TOP OF PILE ELEVATIONS SEE SHEET 2 OF 4

NOTES

STIRRUPS IN CAP MAY BE SHIFTED AS NECESSARY TO CLEAR ANCHOR BOLTS.

FOR PIPE INSERT DETAILS, SEE BEARINGS SHEET.

BACKWALL SHALL BE PLACED BEFORE APPLYING THE EPOXY PROTECTIVE COATING.

EPOXY COAT THE END BENT CAP AFTER ADJUSTMENTS ARE MADE TO BEARINGS AND ANCHOR BOLTS ARE GROUTED.

THE TOP SURFACE AREAS OF THE CAPS SHALL BE CURED IN ACCORDANCE WITH THE STANDARD SPECIFICATIONS EXCEPT THE MEMBRANE CURING COMPOUND METHOD SHALL NOT BE USED.

* THE TOP SURFACE OF THE CAP EXCEPT THE BRIDGE SEAT BUILDUPS SHALL BE SLOPED TRANSVERSELY FROM THE FILL FACE TO THE BACK FACE AT THE RATE OF 2%.

FOR GALVANIZED REINFORCING STRAPS, SEE MSE WALL PLANS.

FOR MSE RETAINING WALLS, SEE SPECIAL PROVISIONS.

THE CONTRACTOR SHALL PROVIDE FOR INSTALLATION OF THE ELECTRICAL CONDUIT SYSTEM THROUGH THE END BENT BACKWALL. REINFORCING STEEL MAY BE SHIFTED AS NECESSARY. SEE ELECTRICAL CONDUIT SYSTEM FOR SIGNALS PLAN SHEET FOR DETAILS.

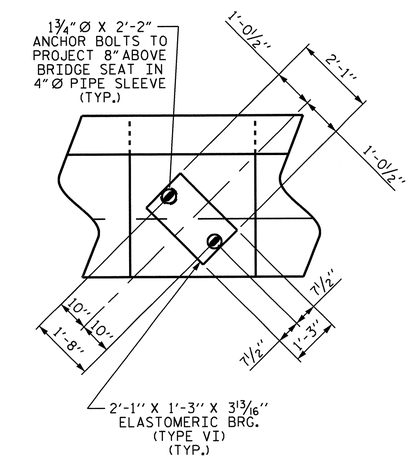

DETAIL "A"

(TYP. EA. GIRDER)

PROJECT NO. U-0209B

MECKLENBURG COUNTY

STATION: 89+79.05 -L-

SHEET 1 OF 4

STATE OF NORTH CAROLINA
DEPARTMENT OF TRANSPORTATION
RALEIGH

SUBSTRUCTURE

END BENT #2

NORTH CAROLINA PROFESSIONAL SEAL 30878 ENGINEER KEVIN FISCHER 11/20/12

REVISIONS						SHEET NO.
NO.	BY:	DATE:	NO.	BY:	DATE:	S-73
1			3			TOTAL SHEETS
2			4			117

STR.#2

DRAWN BY : B. L. GREEN DATE : 7/11
CHECKED BY : K. D. LAYNE DATE : 7/11

11-SEP-2012 08:47
R:\Structures\Plans\Str2\U0209B_SD_E*_02.dgn
lsutton

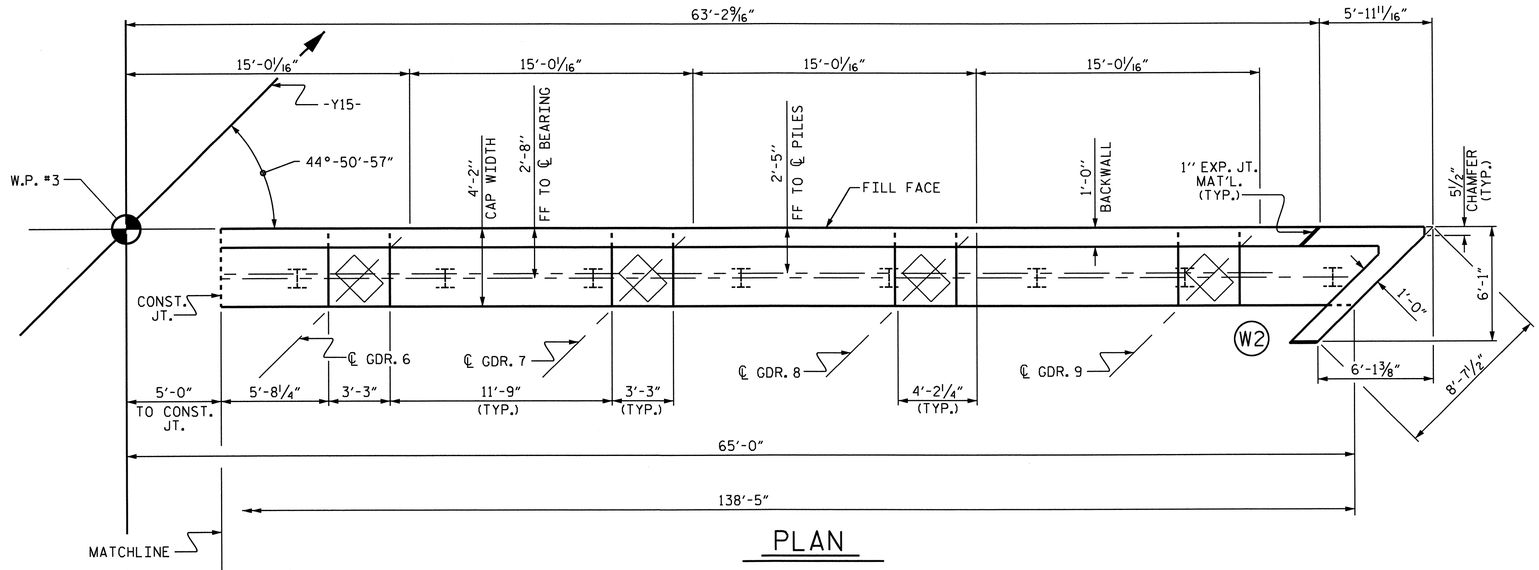

PLAN

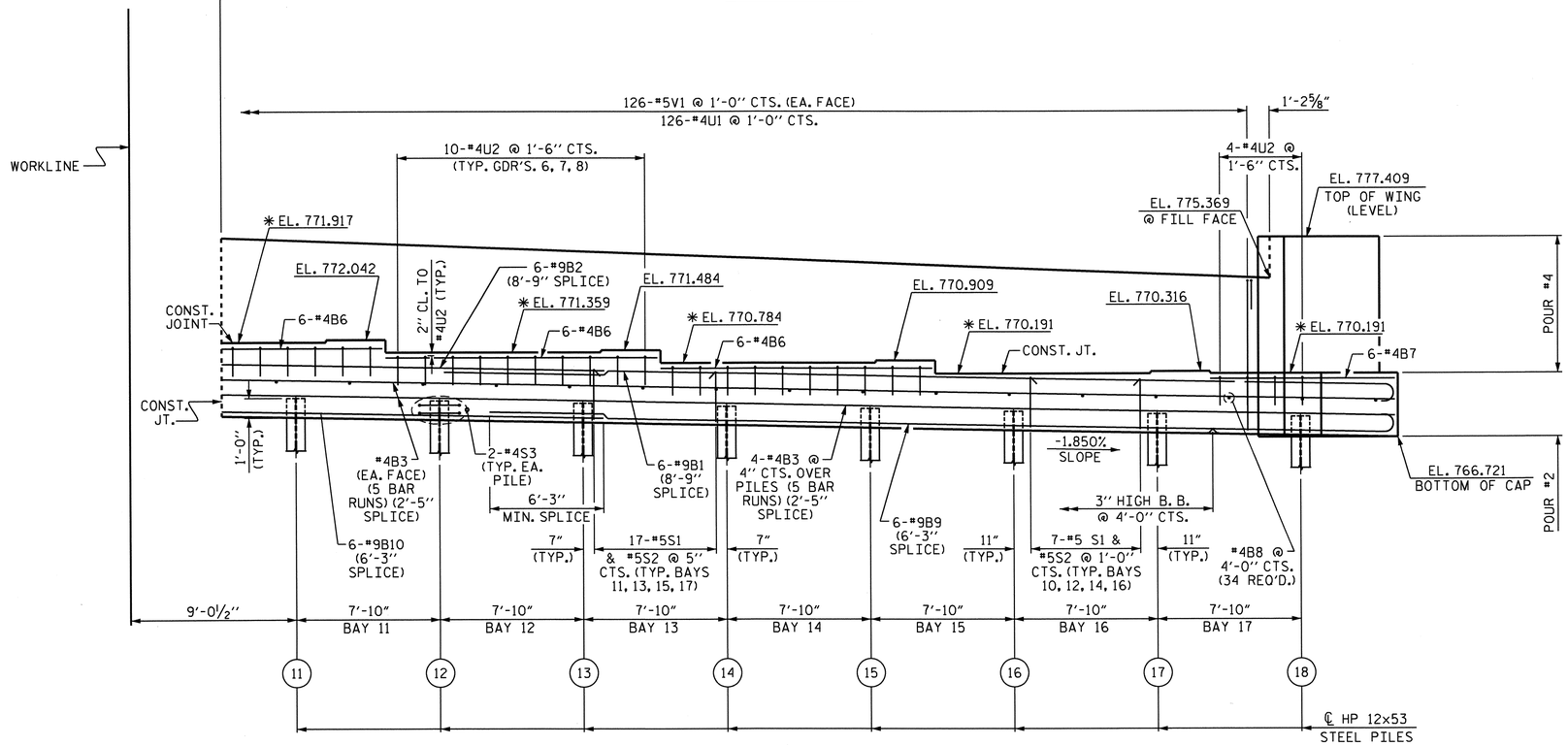

ELEVATION

PILE NO.	TOP OF PILE EL.
1	770.332
2	770.187
3	770.042
4	769.897
5	769.752
6	769.607
7	769.462
8	769.317
9	769.172
10	769.027
11	768.882
12	768.737
13	768.592
14	768.447
15	768.302
16	768.157
17	768.012
18	767.866

PROJECT NO. U-0209B
MECKLENBURG COUNTY
STATION: 89+79.05 -L-

SHEET 2 OF 4

STATE OF NORTH CAROLINA
DEPARTMENT OF TRANSPORTATION
RALEIGH

SUBSTRUCTURE

END BENT #2

NORTH CAROLINA PROFESSIONAL SEAL 30878 ENGINEER KEVIN FISCHER
11/20/12

REVISIONS						SHEET NO.
NO.	BY:	DATE:	NO.	BY:	DATE:	S-74
1			3			TOTAL SHEETS
2			4			117

STR.#2

DRAWN BY : B. L. GREEN DATE : 7/11
CHECKED BY : K. D. LAYNE DATE : 7/11

11-SEP-2012 08:47
R:\Structures\Plans\Str2\U0209B_SD_E*_02.dgn
lsutton

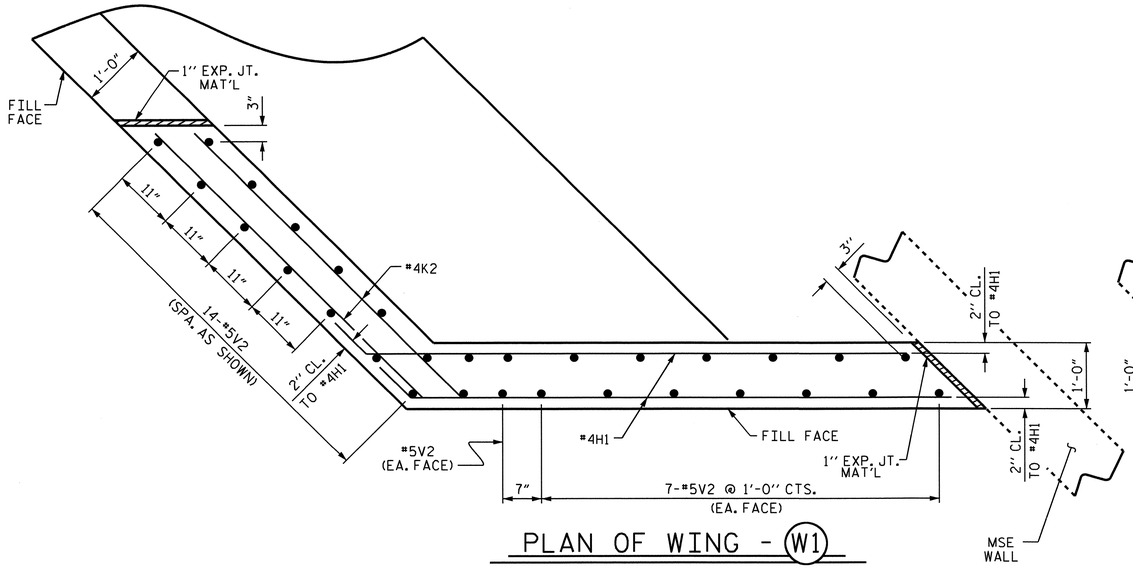

PLAN OF WING - (W1)

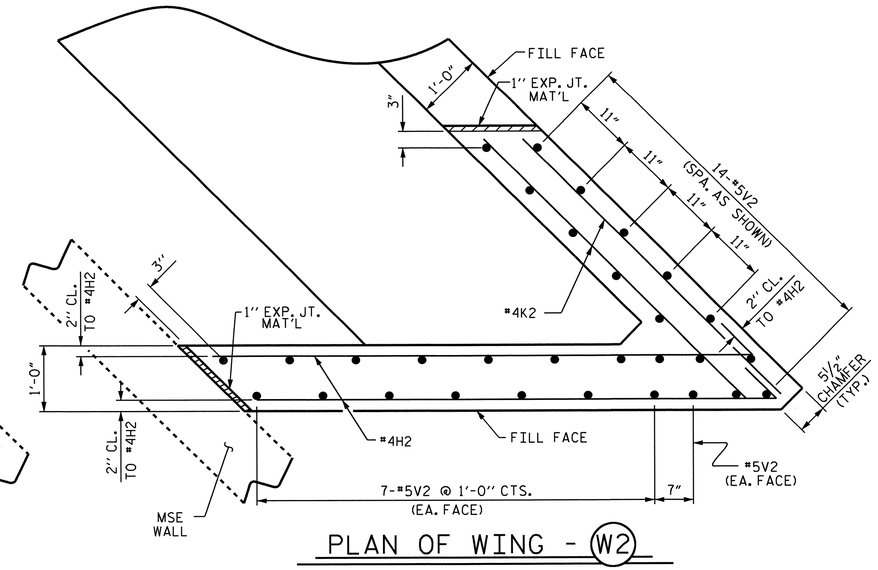

PLAN OF WING - (W2)

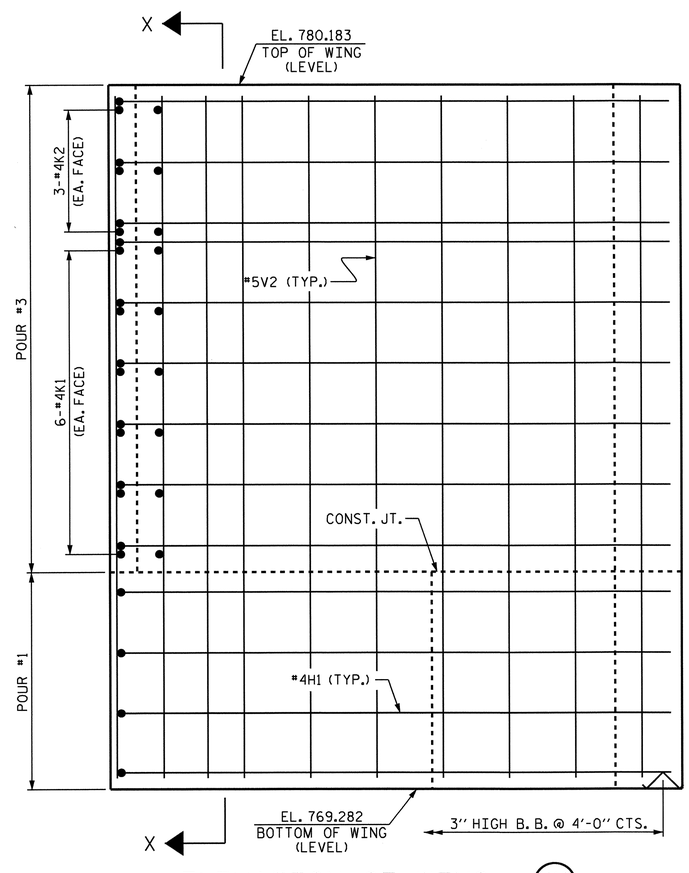

ELEVATION OF WING - (W1)

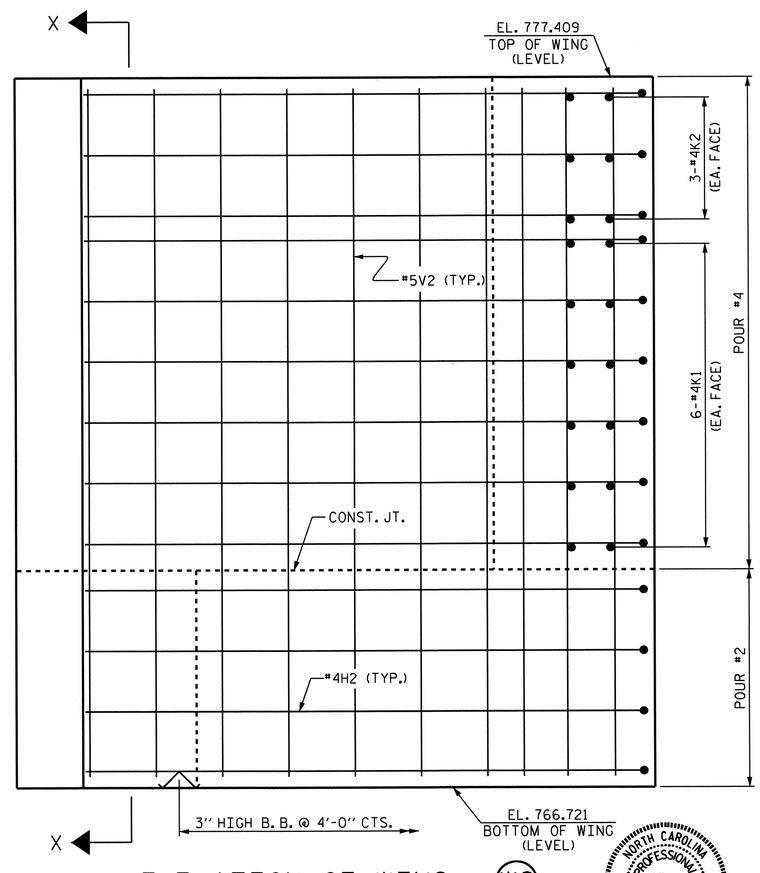

ELEVATION OF WING - (W2)

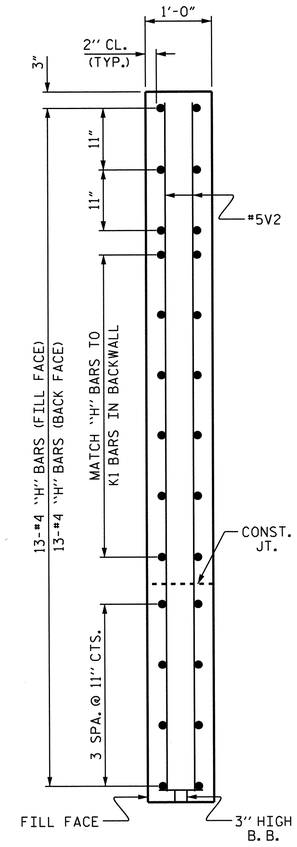

SECTION X-X

PROJECT NO. U-0209B

MECKLENBURG COUNTY

STATION: 89+79.05 -L-

SHEET 3 OF 4

STATE OF NORTH CAROLINA
DEPARTMENT OF TRANSPORTATION
RALEIGH

SUBSTRUCTURE

END BENT #2

NORTH CAROLINA PROFESSIONAL SEAL 30878 ENGINEER KEVIN FISCHER 11/20/12

REVISIONS						SHEET NO.
NO.	BY:	DATE:	NO.	BY:	DATE:	S-75
1			3			TOTAL SHEETS
2			4			117

STR.#2

DRAWN BY : B. L. GREEN DATE : 5/11
CHECKED BY : K. D. LAYNE DATE : 7/11/11

11-SEP-2012 08:47
R:\Structures\Plans\Str2\U0209B_SD_E*_02.dgn
lsutton

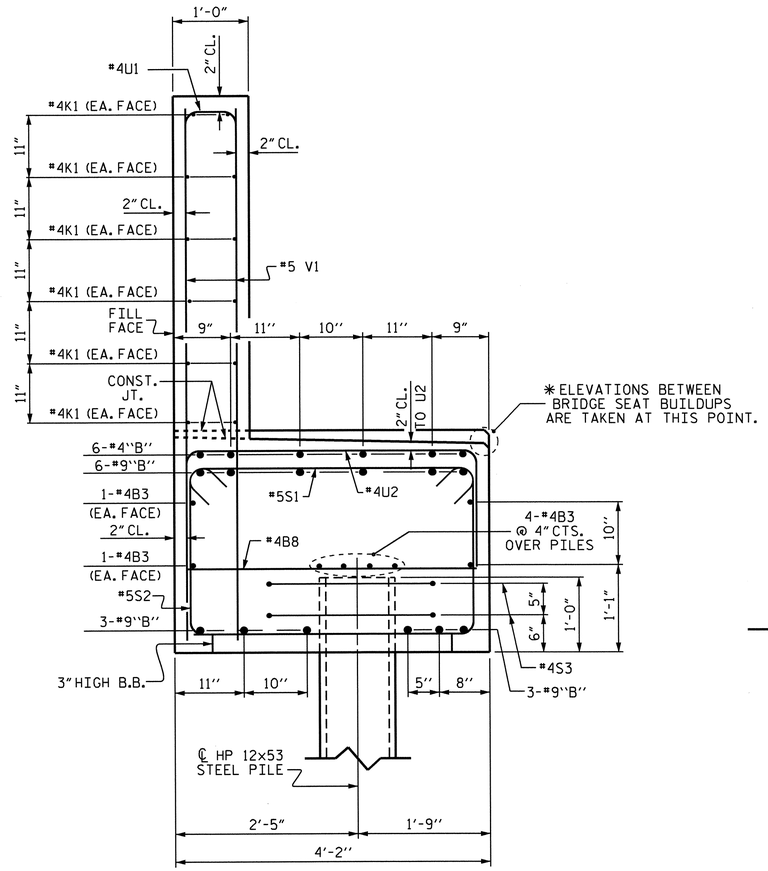

SECTION A-A

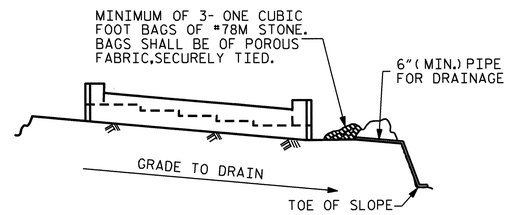

BAGGED STONE AND PIPE SHALL BE PLACED IMMEDIATELY AFTER COMPLETION OF END BENT EXCAVATION. PIPE MAY BE EITHER CONCRETE, CORRUGATED STEEL, CORRUGATED ALUMINUM ALLOY, OR CORRUGATED PLASTIC. PERFORATED PIPE WILL NOT BE ALLOWED.

BAGGED STONE SHALL REMAIN IN PLACE UNTIL THE ENGINEER DIRECTS THAT IT BE REMOVED. THE CONTRACTOR SHALL REMOVE AND DISPOSE OF SILT ACCUMULATIONS AT BAGGED STONE WHEN SO DIRECTED BY THE ENGINEER. BAGS SHALL BE REMOVED AND REPLACED WHENEVER THE ENGINEER DETERMINES THAT THEY HAVE DETERIORATED AND LOST THEIR EFFECTIVENESS.

NO SEPARATE PAYMENT WILL BE MADE FOR THIS WORK AND THE ENTIRE COST OF THIS WORK SHALL BE INCLUDED IN THE UNIT CONTRACT PRICE BID FOR THE SEVERAL PAY ITEMS.

TEMPORARY DRAINAGE AT END BENT

BAR TYPES

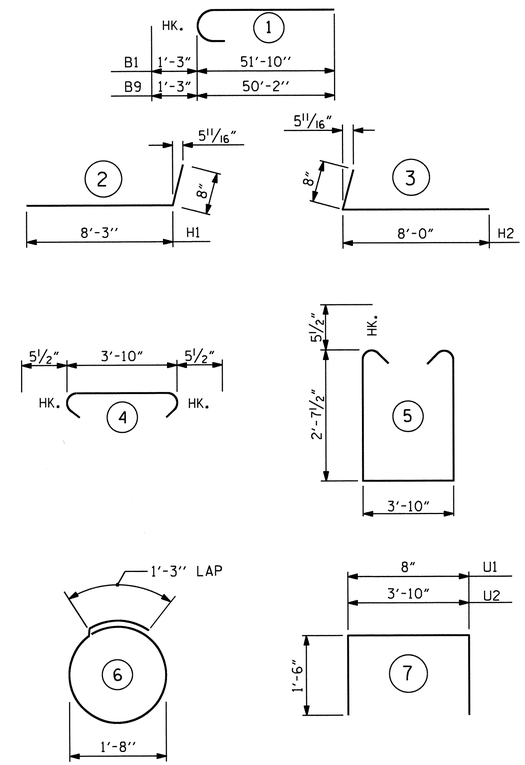

ALL BAR DIMENSIONS ARE OUT TO OUT.

BILL OF MATERIAL

END BENT #2

BAR	NO.	SIZE	TYPE	LENGTH	WEIGHT
B1	12	#9	1	53'-1"	2166
B2	6	#9	STR	51'-10"	1057
B3	40	#4	STR	29'-7"	790
B4	6	#4	STR	23'-0"	92
B5	6	#4	STR	29'-10"	120
B6	24	#4	STR	14'-10"	238
B7	6	#4	STR	6'-0"	24
B8	34	#4	STR	3'-10"	87
B9	12	#9	1	51'-5"	2098
B10	6	#9	STR	50'-2"	1023
H1	26	#4	2	8'-9"	152
H2	26	#4	3	8'-8"	151
K1	60	#4	STR	29'-7"	1186
K2	12	#4	STR	5'-6"	44
S1	189	#5	4	4'-9"	936
S2	189	#5	5	10'-0"	1971
S3	36	#4	6	6'-6"	156
U1	126	#4	7	3'-8"	309
U2	80	#4	7	6'-10"	365
V1	252	#5	STR	8'-0"	2103
V2	60	#5	STR	10'-3"	641

REINFORCING STEEL LBS. 15,709

CLASS "A" CONCRETE BREAKDOWN

POUR #1	CAP, LOWER WING (LEFT END)	47.2 CY.
POUR #2	CAP, LOWER WING (RIGHT END)	34.4 CY.
POUR #3	UPPER WING & BACKWALL (LEFT END)	17.2 CY.
POUR #4	UPPER WING & BACKWALL (RIGHT END)	15.5 CY.
CLASS "A" CONCRETE TOTAL		114.3 CY.

HP 12x53 STEEL PILES
No. 18 LIN. FT. 2,070

PILES REDRIVES EA. 9

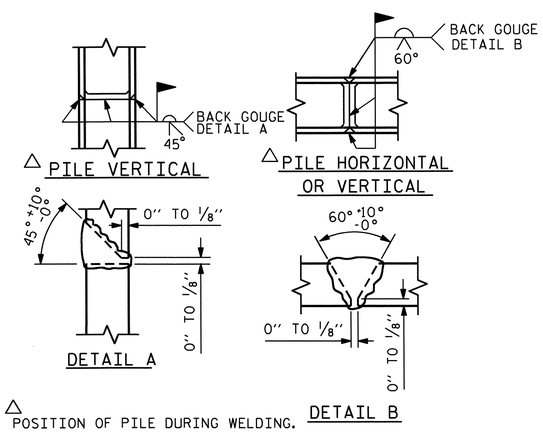

PILE SPLICE DETAILS

PROJECT NO. U-0209B
MECKLENBURG COUNTY
STATION: 89+79.05 -L-

SHEET 4 OF 4

STATE OF NORTH CAROLINA
DEPARTMENT OF TRANSPORTATION
RALEIGH

SUBSTRUCTURE

END BENT #2

NORTH CAROLINA PROFESSIONAL SEAL 20878 ENGINEER KEVIN FISCHER
11/20/12

REVISIONS						SHEET NO.
NO.	BY:	DATE:	NO.	BY:	DATE:	S-76
1			3			TOTAL SHEETS
2			4			117

STR.#2

DRAWN BY : B. L. GREEN DATE : 6/11
CHECKED BY : K. D. LAYNE DATE : 7/11/11

R:\Structures\Plans\Str2\U0209B_SD_E*_02.dgn
lsutton
11-SEP-2012 09:48

NOTES:

SLOPE PROTECTION SHALL BE PLACED UNDER THE ENDS OF THE BRIDGE AS SHOWN IN THE DETAILS. MEASUREMENT AND PAYMENT SHALL BE AS PRESCRIBED IN SECTION 462 OF THE STANDARD SPECIFICATIONS.

SLOPE PROTECTION SHALL CONSIST OF 4" POURED-IN-PLACE CONCRETE PAVING AS SHOWN IN THE DETAILS ON THIS SHEET. CONCRETE SHALL BE CLASS "B". THE CONCRETE SURFACE SHALL BE FINISHED TO THE SATISFACTION OF THE ENGINEER. WELDED WIRE FABRIC REINFORCING SHALL BE 6 X 6 - W1.4 X W1.4, 20" WIDE. THE COST OF THE WELDED WIRE FABRIC SHALL BE INCLUDED IN THE CONTRACT UNIT PRICE BID PER SQUARE YARD FOR SLOPE PROTECTION.

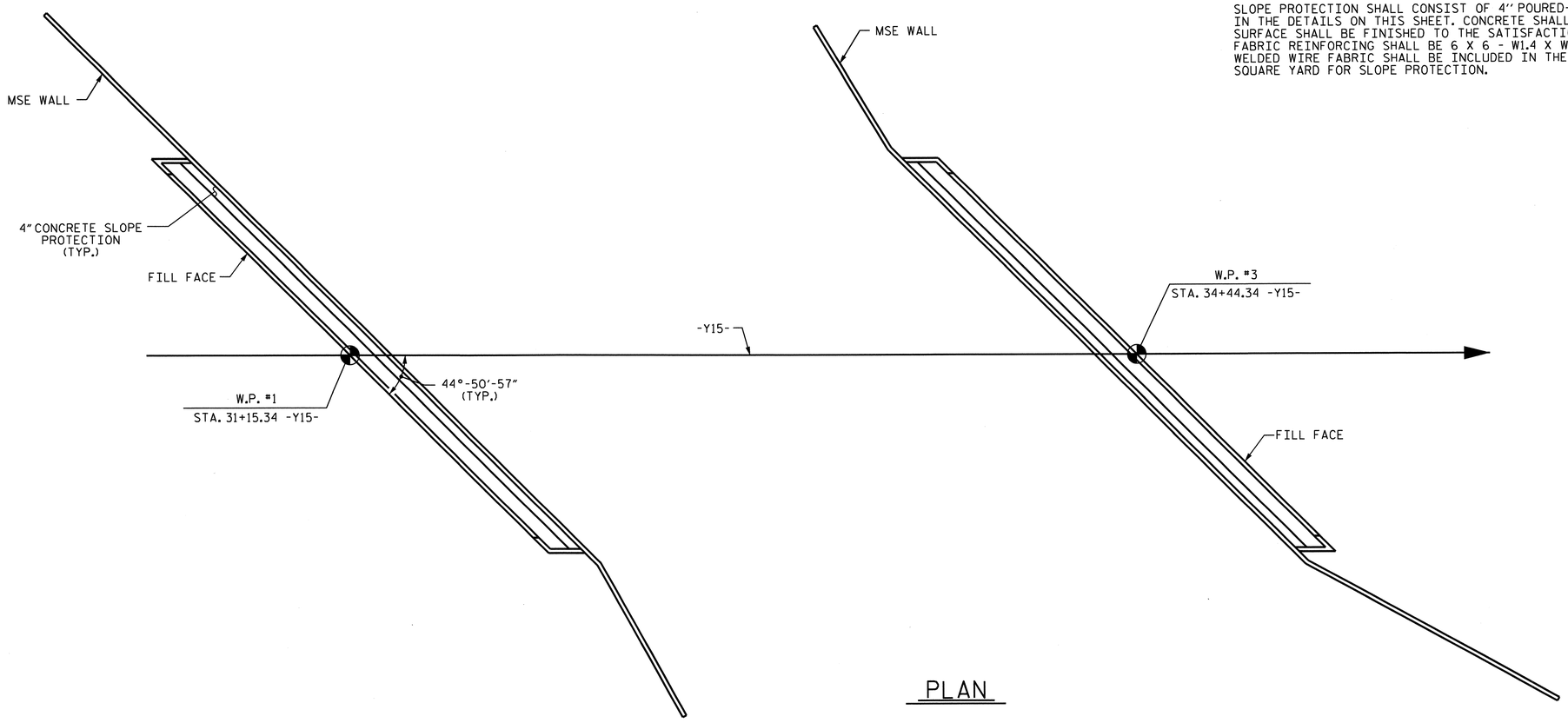

PLAN

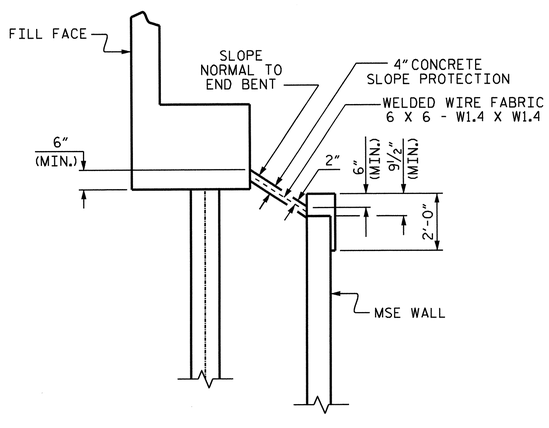

SECTION ALONG ℄ ROADWAY

BRIDGE @ 89+79.05 -L-	4" SLOPE PROTECTION	WELDED WIRE FABRIC 20 INCHES WIDE
	SQUARE YARDS	APPROX. L.F.
END BENT #1	31	135
END BENT #2	31	135

PROJECT NO. U-0209B
MECKLENBURG COUNTY
STATION: 89+79.05 -L-

STATE OF NORTH CAROLINA
DEPARTMENT OF TRANSPORTATION
RALEIGH

SLOPE PROTECTION DETAILS

NORTH CAROLINA PROFESSIONAL SEAL 030818 ENGINEER KEVIN FISCHER
11/20/12

REVISIONS						SHEET NO.
NO.	BY:	DATE:	NO.	BY:	DATE:	S-77
1			3			TOTAL SHEETS
2			4			117

STR. #2

DRAWN BY : R. G. EMERSON DATE : 09/11
CHECKED BY : T. R. PETERSON DATE : 10/11

11-SEP-2012 08:47
R:\Structures\Plans\Str2\U0209B_SD_SP_02.dgn
lsutton

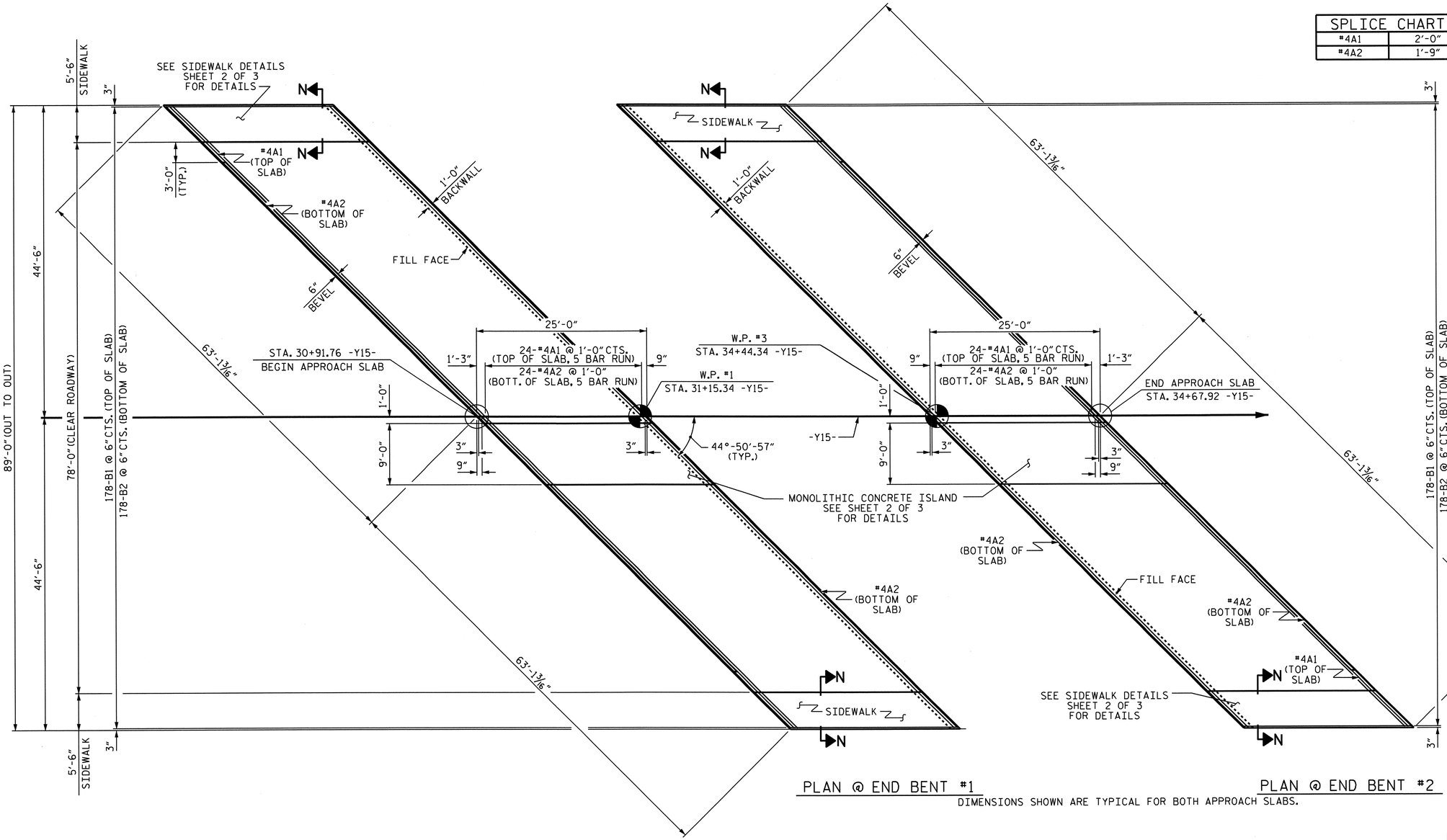

PLAN @ END BENT #1

PLAN @ END BENT #2

DIMENSIONS SHOWN ARE TYPICAL FOR BOTH APPROACH SLABS.

SPLICE CHART	
#4A1	2'-0"
#4A2	1'-9"

BILL OF MATERIAL
FOR ONE APPROACH SLAB (2 REQUIRED)

BAR	NO.	SIZE	TYPE	LENGTH	WEIGHT
*A1	125	#4	STR	26'-9"	2234
A2	130	#4	STR	26'-7"	2308
*B1	178	#5	STR	23'-2"	4301
B2	178	#6	STR	24'-6"	6550
*B3	14	#4	STR	24'-6"	229
*G1	17	#4	STR	12'-11"	147
*G2	50	#4	STR	7'-7"	253
*U1	16	#4	1	4-4"	46
REINFORCING STEEL				LBS.	8858
* EPOXY COATED REINFORCING STEEL				LBS.	7210
CLASS AA CONCRETE					
POUR #1 - APPROACH SLAB				C.Y.	95.2
POUR #2 - SIDEWALKS & ISLAND				C.Y.	9.1
TOTAL				C.Y.	104.3

BAR TYPE

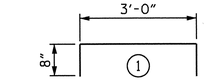

ALL BAR DIMENSIONS ARE OUT TO OUT

ELASTOMERIC CONCRETE	
END BENT NO.	ELASTOMERIC CONCRETE (CU. FT.)
1	19.0
2	19.0
TOTAL	38.0

* BASED ON THE MINIMUM BLOCKOUT SHOWN.

NOTES

APPROACH SLAB SHALL NOT BE CONSTRUCTED PRIOR TO COMPLETION OF THE BRIDGE DECK.

THE JOINT SHALL BE SAWED PRIOR TO THE CASTING OF THE SIDEWALK AND CONCRETE ISLAND.

GROOVED CONTRACTION JOINT, 1/2" IN DEPTH, SHALL BE TOOLED IN ALL EXPOSED FACES OF THE SIDEWALK AND CONCRETE ISLAND IN ACCORDANCE WITH ARTICLE 825-10(B) OF THE STANDARD SPECIFICATIONS. THE CONTRACTION JOINT SHALL BE LOCATED AT A SPACING OF 8FT. TO 10FT. BETWEEN EXPANSION JOINTS. NO CONTRACTION JOINTS WILL BE REQUIRED FOR SEGMENTS LESS THAN 10 FEET IN LENGTH.

FOR FOAM JOINT SEALS, SEE SPECIAL PROVISIONS.

THE NOMINAL UNCOMPRESSED SEAL WIDTH OF THE FOAM JOINT SEAL SHALL BE 2 1/2".

FOR ELASTOMERIC CONCRETE, SEE SPECIAL PROVISIONS.

FOR GALVANIZED REINFORCING STRAPS AND BACKFILL MATERIAL, SEE MSE RETAINING WALL PLANS AND SPECIAL PROVISIONS.

PROJECT NO. U-0209B
MECKLENBURG COUNTY
STATION: 89+79.05 -L-

SHEET 1 OF 3

NORTH CAROLINA PROFESSIONAL SEAL 30878 ENGINEER KEVIN FISCHER
11/20/12

STATE OF NORTH CAROLINA
DEPARTMENT OF TRANSPORTATION
RALEIGH

BRIDGE APPROACH SLAB FOR FLEXIBLE PAVEMENT

REVISIONS						SHEET NO.
NO.	BY:	DATE:	NO.	BY:	DATE:	S-78
1			3			TOTAL SHEETS
2			4			117

STR. #2

DRAWN BY : R. G. EMERSON DATE : 05/11
CHECKED BY : K. D. LAYNE DATE : 06/11

11-SEP-2012 08:47
R:\Structures\Plans\Str2\U0209B_SD_AS_02.dgn
lsutton

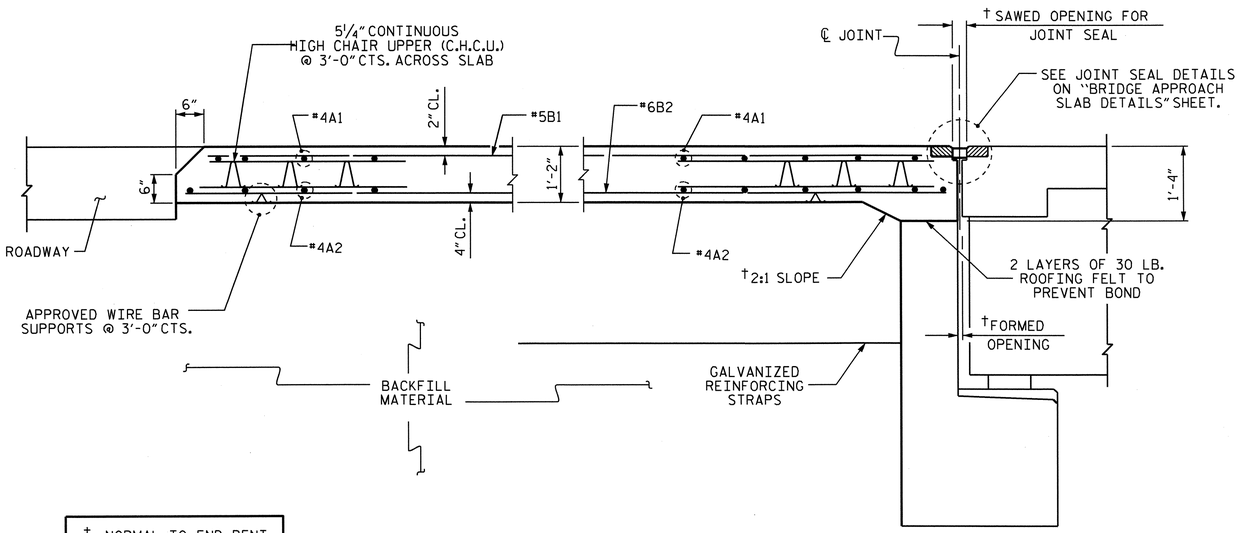

† NORMAL TO END BENT

SECTION THRU SLAB

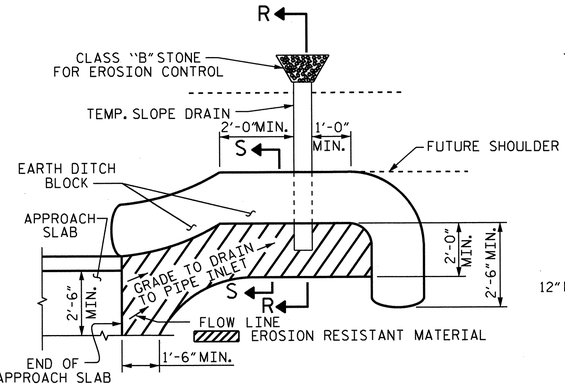

NOTE: IMMEDIATELY AFTER THE CONSTRUCTION OF THE APPROACH SLAB, THE CONTRACTOR SHALL PROVIDE TEMPORARY BERM AND SLOPE DRAIN. CONTRACTOR SHALL GRADE TO PIPE INLET AND PROVIDE EROSION RESISTANT MATERIAL AS SHOWN. THE EROSION RESISTANT MATERIAL SHALL BE EITHER 1) ASPHALT PLANT MIX, TYPE 1 OR TYPE 2, MIN. 2" DEPTH, 2) EROSION CONTROL MAT, OR 3) CONCRETE, AS DIRECTED BY THE ENGINEER. THE SLOPE DRAIN SHALL CONSIST OF A NON-PERFORATED TEMPORARY DRAINAGE PIPE, 12 INCHES IN DIAMETER.

PLAN VIEW

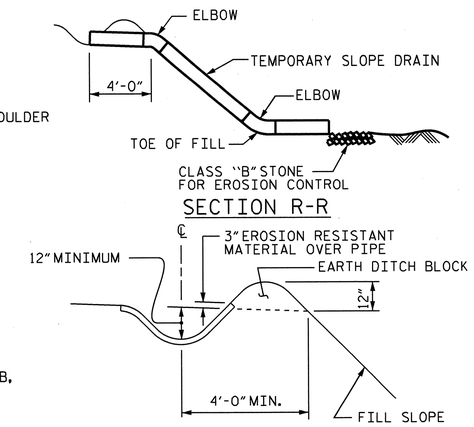

SECTION S-S

TEMPORARY BERM AND SLOPE DRAIN DETAILS

(TO BE USED WHEN SHOULDER BERM GUTTER IS REQUIRED)

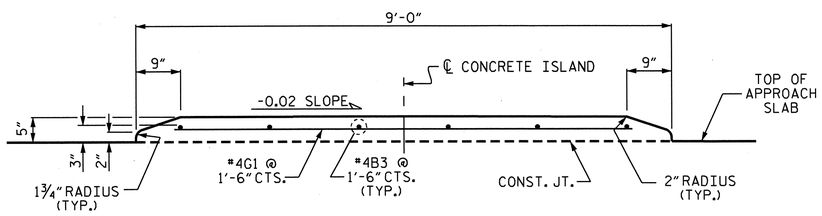

SECTION THRU MONOLITHIC CONCRETE ISLAND

NOTE: NO SEPARATE MEASUREMENT OR PAYMENT WILL BE MADE FOR MATERIALS OR LABOR REQUIRED TO CONSTRUCT THE CONCRETE ISLAND. THE ENTIRE COST OF THIS WORK SHALL BE INCLUDED IN THE LUMP SUM PRICE BID FOR THE BRIDGE APPROACH SLAB.

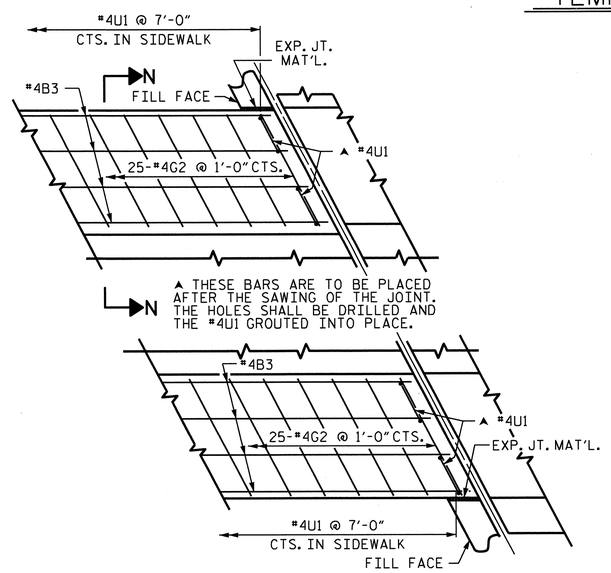

PLAN

DETAILS OF SIDEWALK ON APPROACH SLAB

END APPROACH SLAB SHOWN, BEGIN APPROACH SLAB SIMILAR

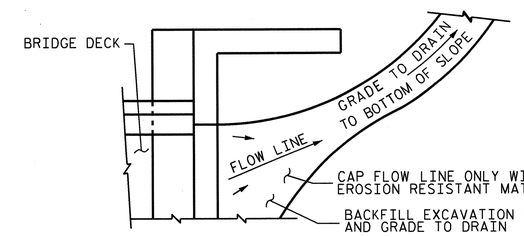

NOTE: IF THE APPROACH SLAB IS NOT CONSTRUCTED IMMEDIATELY AFTER THE BACKFILLING OF THE END BENT EXCAVATION, GRADE TO DRAIN TO THE BOTTOM OF THE SLOPE AND PROVIDE EROSION RESISTANT MATERIAL, SUCH AS FIBERGLASS ROVING OR AS DIRECTED BY THE ENGINEER TO PREVENT SOIL EROSION AND TO PROTECT THE AREA ADJACENT TO THE STRUCTURE. THE CONTRACTOR WILL BE REQUIRED TO REMOVE THESE MATERIALS PRIOR TO CONSTRUCTION OF THE APPROACH SLAB.

TEMPORARY DRAINAGE DETAIL

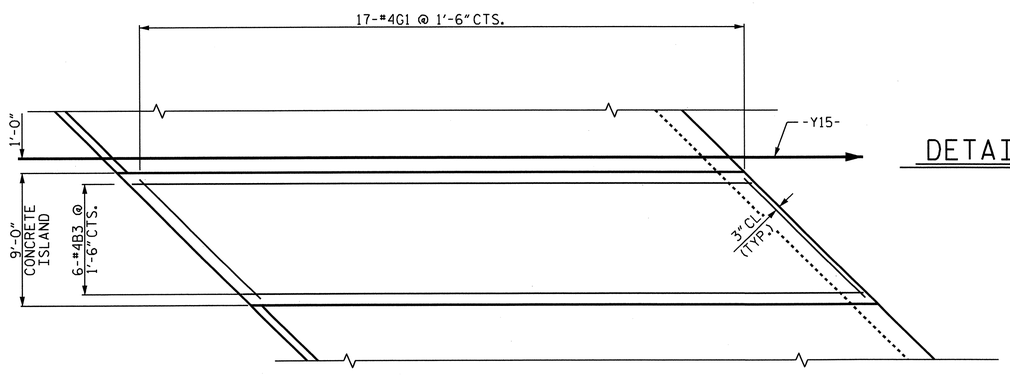

PLAN OF MONOLITHIC CONCRETE ISLAND

DISCONTINUE BEVEL UNDER ISLAND.

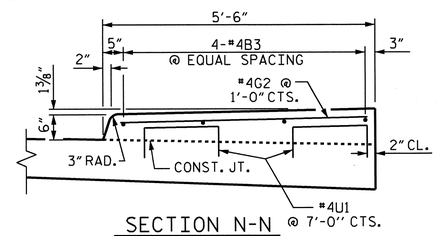

SECTION N-N

SIDEWALK DETAILS

PROJECT NO. U-0209B

MECKLENBURG COUNTY

STATION: 89+79.05 -L-

SHEET 2 OF 3

STATE OF NORTH CAROLINA
DEPARTMENT OF TRANSPORTATION
RALEIGH

BRIDGE APPROACH SLAB DETAILS

NORTH CAROLINA PROFESSIONAL SEAL 30878 ENGINEER KEVIN FISCHER 11/20/12

REVISIONS						SHEET NO.
NO.	BY:	DATE:	NO.	BY:	DATE:	S-79
1			3			TOTAL SHEETS
2			4			117

STR. #2 STD. NO. BAS10

ASSEMBLED BY: R. G. EMERSON		DATE: 05/11	
CHECKED BY: K. D. LAYNE		DATE: 06/11	
DRAWN BY : EEM 3/95	REV. 7/10/01	LES/RDR	
CHECKED BY : VAP 3/95	REV. 5/7/03R	RWW/JTE	
	REV. 5/1/06R	KMM/GM	

06-NOV-2012 12:23
R:\Structures\Plans\Str2\U0209B_SD_AS_02.dgn
LSUTTON

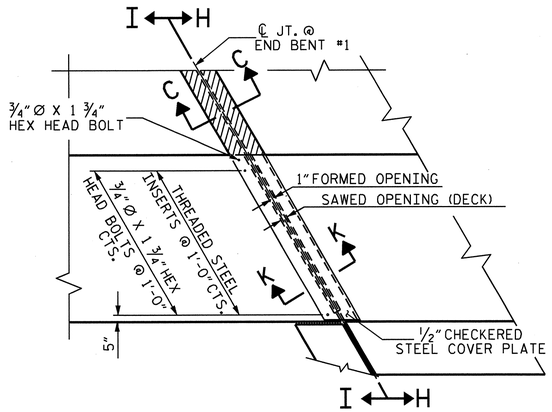

PLAN VIEW OF FOAM

JOINT SEAL @ END BENT FOR SIDEWALK

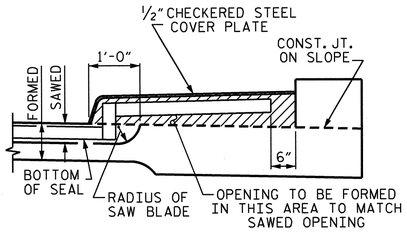

SECTION H-H

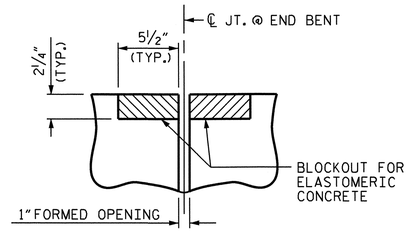

SECTION C-C

FOAM JOINT SEAL (PRE-SAWED ELASTOMERIC CONCRETE DIMENSIONS)

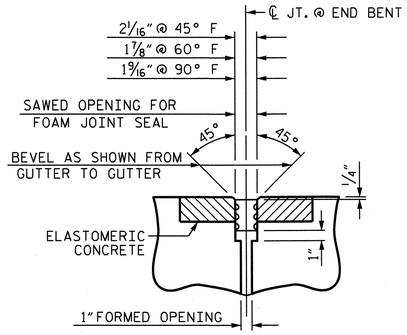

SECTION C-C

FOAM JOINT SEAL (EXPANSION)

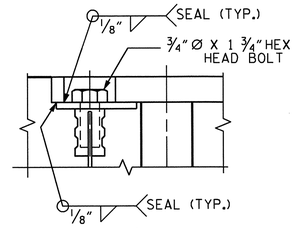

DETAIL "A"

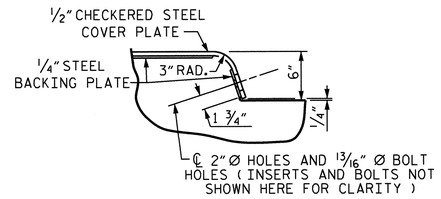

DETAIL "B"

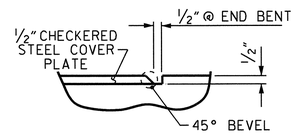

DETAIL "C"

JOINT SEAL DETAILS @ END BENT

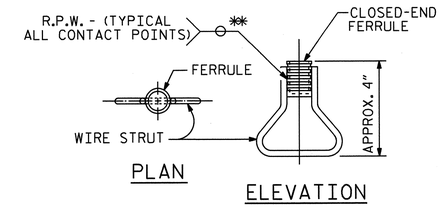

CONCRETE INSERT

** EACH WELDED ATTACHMENT OF WIRE TO FERRULE SHALL DEVELOP THE TENSILE STRENGTH OF THE WIRE.

NOTES

THE STEEL PLATES SHALL CONFORM TO AASHTO M270 GRADE 36 OR APPROVED EQUAL. AFTER FABRICATION, THE PLATES SHALL BE COMMERCIALLY BLAST CLEANED AND EITHER COATED WITH A MINIMUM THICKNESS OF 4 MILS (DRY) OF ZINC-RICH PAINT, GALVANIZED OR METALLIZED TO A MINIMUM THICKNESS OF 6 MILS IN ACCORDANCE WITH THE STANDARD SPECIFICATIONS. FOR THERMAL SPRAYED COATINGS (METALLIZATION), SEE SPECIAL PROVISIONS.

THE ¾" DIAMETER HEX HEAD BOLTS SHALL CONFORM TO ASTM F593 ALLOY 304 STAINLESS STEEL.

NO SEPARATE PAYMENT WILL BE MADE FOR FURNISHING AND INSTALLING THE COVER PLATE. THE ENTIRE COST OF THIS WORK SHALL BE INCLUDED IN THE LUMP SUM PRICE FOR "FOAM JOINT SEALS".

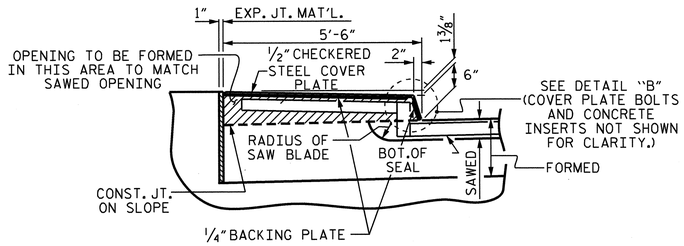

SECTION I-I

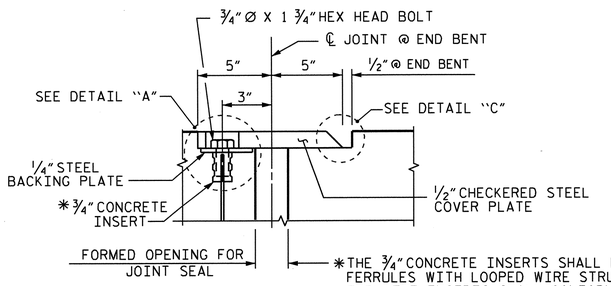

SECTION K-K

* THE ¾" CONCRETE INSERTS SHALL BE CLOSED-END FERRULES WITH LOOPED WIRE STRUTS ATTACHED TO THEM. THE INSERTS SHALL CONFORM TO AASHTO M169, GRADE 12L14 AND SHALL HAVE A TENSILE WORKING LOAD CAPACITY OF 3000 LBS.

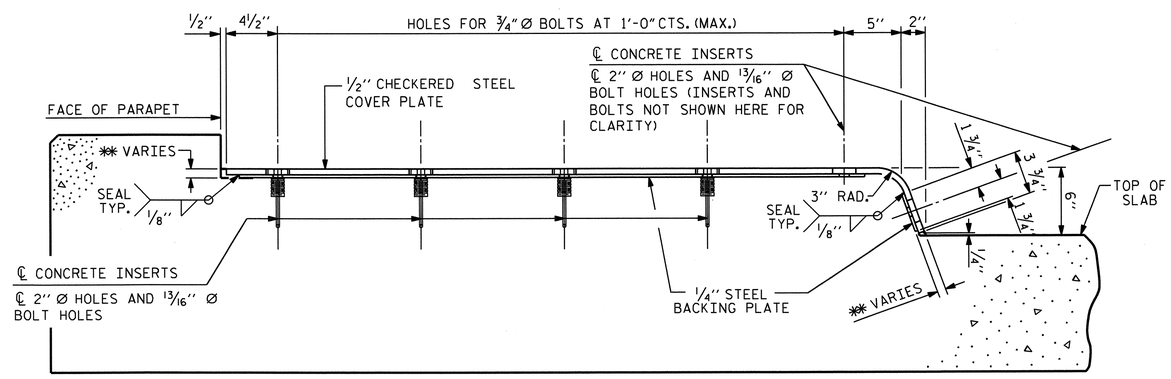

END VIEW

(NORMAL TO SIDEWALK)

** CONCRETE RECESS DIMENSIONS:
¹³⁄₁₆" FOR THE SIDE OF THE JOINT HAVING THE ½" COVER PLATE WITH A ¼" BACKING PLATE.
⁹⁄₁₆" FOR THE SIDE OF THE JOINT HAVING ONLY THE ½" COVER PLATE.

COVER PLATE DETAILS

NORTH CAROLINA PROFESSIONAL SEAL 30878 ENGINEER KEVIN FISCHER 11/20/12

PROJECT NO. U-0209B
MECKLENBURG COUNTY
STATION: 89+79.05 -L-

SHEET 3 OF 3

STATE OF NORTH CAROLINA
DEPARTMENT OF TRANSPORTATION
RALEIGH

STANDARD

BRIDGE APPROACH SLAB DETAILS

ASSEMBLED BY R. G. EMERSON:		DATE: 05/11			
CHECKED BY: K. D. LAYNE		DATE: 06/11			
DRAWN BY : FCJ 11/88	REV. 10/17/00	RWW/LES			
CHECKED BY : ARB 11/88	REV. 5/7/03	RWW/JTE			
	REV. 5/1/06RR	MAA/KMM			

REVISIONS						SHEET NO.
NO.	BY:	DATE:	NO.	BY:	DATE:	S-80
1			3			TOTAL SHEETS
2			4			117

STR. #2

STD. NO. BAS10

06-NOV-2012 12:23
R:\Structures\Plans\Str2\U0209B_SD_AS_02.dgn
LSUTTON

F.A. PROJECT NO. NHFSTP-0074(137)

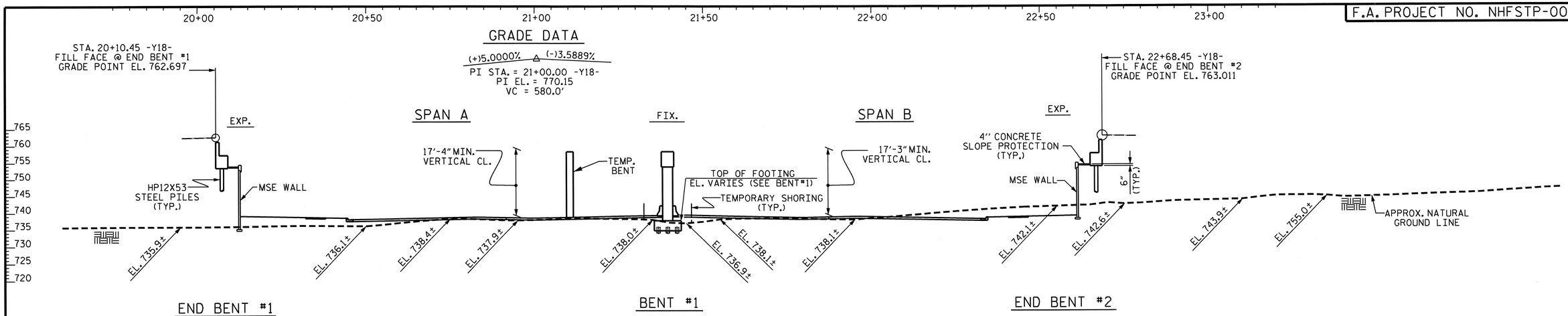

SECTION ALONG -Y18-

SECTION TAKEN AT RIGHT ANGLES TO BENT AND END BENTS

HORIZONTAL CURVE DATA

-Y18-	-LLT-	-LRT-
PI STA. 17+31.29	PI STA. 102+37.56	PI STA. 102+37.56
△ = 64°-40'-28.6" (RT)	D = 1°-01'-30.7" (RT)	△ = 1°-01'-30.7" (LT)
D = 10°-44'-58.8"	D = 0°-28'-38.9"	D = 0°-28'-38.9"
L = 601.64'	L = 214.72'	L = 214.72'
T = 337.43'	T = 107.36'	T = 107.36'
R = 533.00'	R = 12,000.00'	R = 12,000.00'

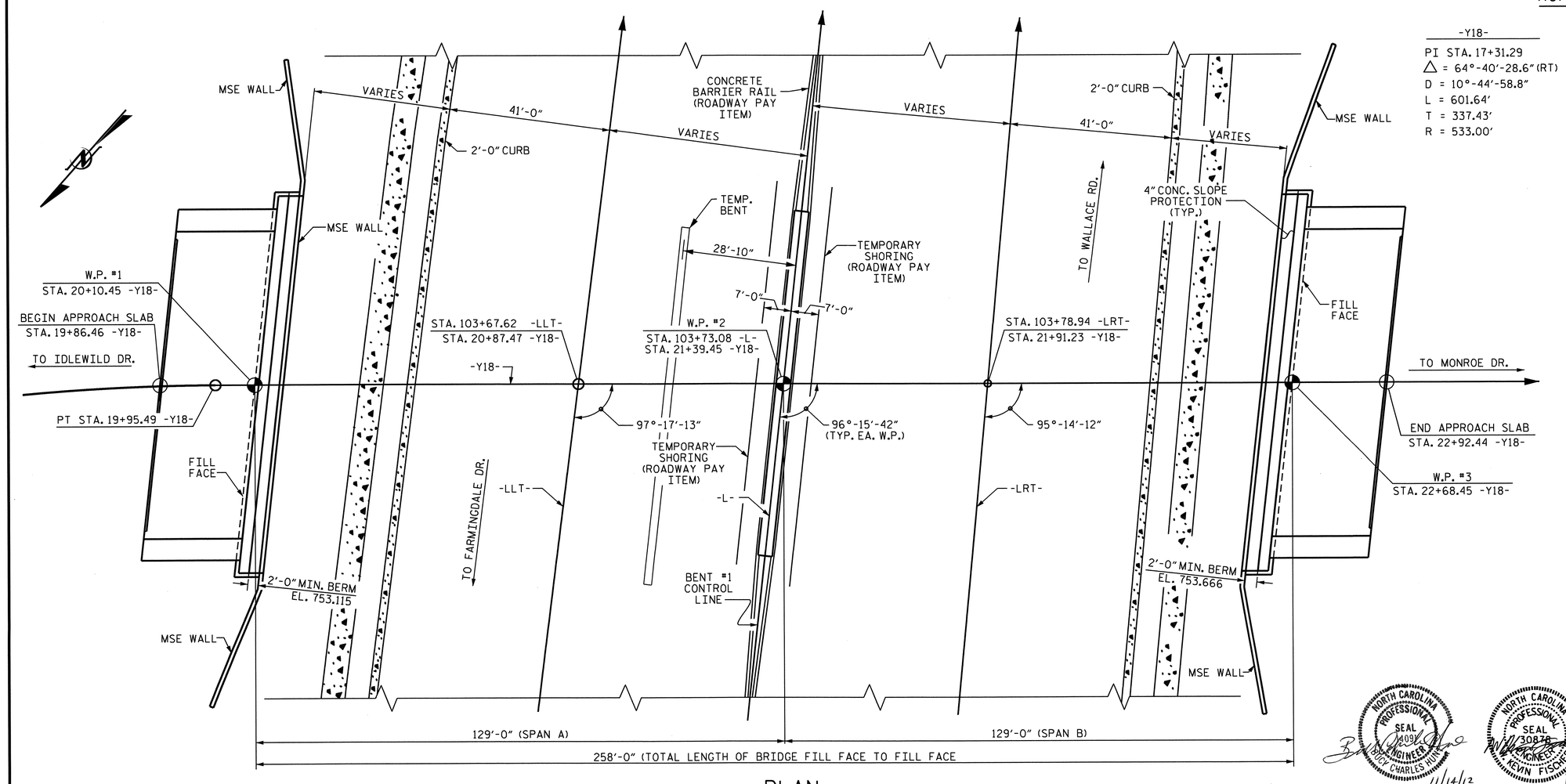

PLAN

PILES NOT SHOWN FOR CLARITY

PROJECT NO. U-0209B

MECKLENBURG COUNTY

STATION: 103+73.08 -L-
21+39.45 -Y18-

SHEET 1 OF 3

BRIDGE No. 1173

STATE OF NORTH CAROLINA
DEPARTMENT OF TRANSPORTATION
RALEIGH

GENERAL DRAWING

FOR BRIDGE ON CONFERENCE DR. OVER US 74 (INDEPENDENCE BLVD.) BETWEEN IDLEWILD RD. AND MONROE RD.

NORTH CAROLINA PROFESSIONAL SEAL 409 ENGINEER BRIAN CHARLES HUNT 11/14/12

NORTH CAROLINA PROFESSIONAL SEAL 30878 ENGINEER KEVIN FISCHER 11/20/12

REVISIONS						SHEET NO.
NO.	BY:	DATE:	NO.	BY:	DATE:	S-81
1			3			TOTAL SHEETS
2			4			117

STR. #3

DRAWN BY : T.R. PETERSON DATE : 10/3/11
CHECKED BY : M.K. BEARD DATE : 10/31/11

11-SEP-2012 08:06
R:\Structures\Plans\Str3\U0209B_SD_GD_03.dgn
lsutton

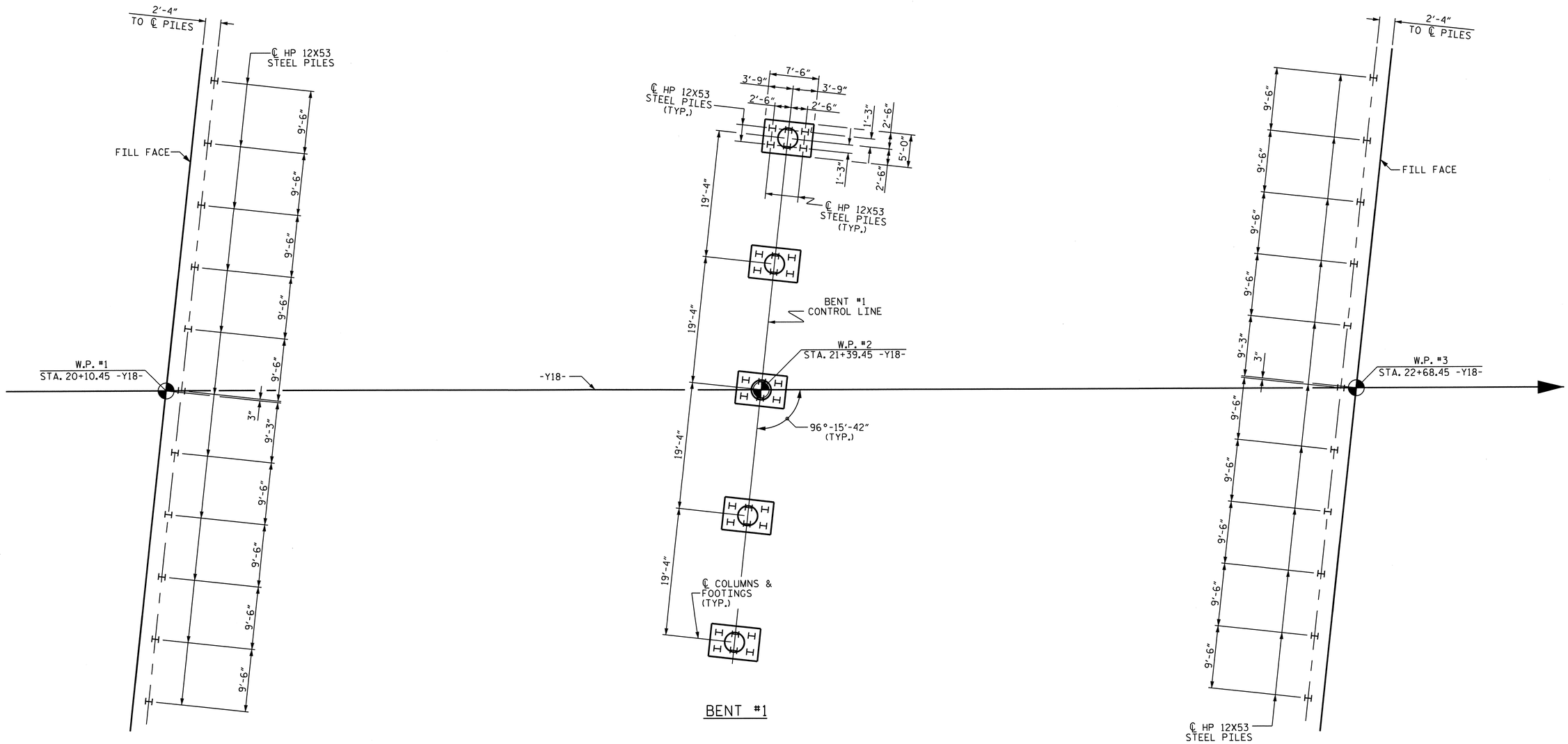

END BENT #1

BENT #1

END BENT #2

FOUNDATION LAYOUT

DIMENSIONS LOCATING PILES ARE SHOWN TO THE CENTERLINE OF PILES.

NOTES

FOR PILES, SEE SECTION 450 OF THE STANDARD SPECIFICATIONS.

PILES AT END BENT #1 ARE DESIGNED FOR A FACTORED RESISTANCE OF 125 TONS PER PILE.

DRIVE PILES AT END BENT #1 TO A REQUIRED DRIVING RESISTANCE OF 210 TONS PER PILE.

IT HAS BEEN ESTIMATED THAT A HAMMER WITH AN EQUIVALENT RATED ENERGY IN THE RANGE OF 60-80 FT-KIPS PER BLOW WILL BE REQUIRED TO DRIVE PILES AT END BENT #1, BENT #1, AND END BENT #2. THIS ESTIMATED ENERGY RANGE DOES NOT RELEASE THE CONTRACTOR FROM PROVIDING DRIVING EQUIPMENT IN ACCORDANCE WITH SUBARTICLE 450-3(D)(2) OF THE STANDARD SPECIFICATIONS.

PILES AT BENT #1 ARE DESIGNED FOR A FACTORED RESISTANCE OF 150 TONS PER PILE.

DRIVE PILES AT BENT #1 TO A REQUIRED DRIVING RESISTANCE OF 250 TONS PER PILE.

PILES AT END BENT #2 ARE DESIGNED FOR A FACTORED RESISTANCE OF 125 TONS PER PILE.

DRIVE PILES AT END BENT #2 TO A REQUIRED DRIVING RESISTANCE OF 250 TONS PER PILE. THIS REQUIRED DRIVING RESISTANCE INCLUDES ADDITIONAL RESISTANCE FOR DOWNDRAG.

OBSERVE A 3 MONTH WAITING PERIOD AFTER CONSTRUCTING THE EMBANKMENT TO WITHIN 2 FT OF FINISHED GRADE BEFORE BEGINNING END BENT CONSTRUCTION AT END BENT #2.

TESTING PILES WITH THE PDA DURING DRIVING, RESTRIKING OR REDRIVING MAY BE REQUIRED. THE ENGINEER WILL DETERMINE THE NEED FOR PDA TESTING. FOR PDA TESTING, SEE SECTION 450 OF THE STANDARD SPECIFICATIONS.

NORTH CAROLINA PROFESSIONAL SEAL 30879 ENGINEER KEVIN FISCHER
11/20/12

PROJECT NO. U-0209B
MECKLENBURG COUNTY
STATION: 103+73.08 -L-

SHEET 2 OF 3

STATE OF NORTH CAROLINA
DEPARTMENT OF TRANSPORTATION
RALEIGH

GENERAL DRAWING
FOR BRIDGE ON
CONFERENCE DR. OVER US 74
(INDEPENDENCE BLVD.) BETWEEN
IDLEWILD RD. AND MONROE RD.

REVISIONS						SHEET NO.
NO.	BY:	DATE:	NO.	BY:	DATE:	S-82
1			3			TOTAL SHEETS
2			4			117

STR. #3

DRAWN BY : T.R. PETERSON DATE : 10/3/11
CHECKED BY : M.K. BEARD DATE : 10/31/11

11-SEP-2012 08:05
R:\Structures\Plans\Str3\U0209B_SD_GD_03.dgn
lsutton

BM. #16: REBAR WITH ALUMINUM CAP, 3' RT. OF STA. 34+75 -BY15- EL. 744.51

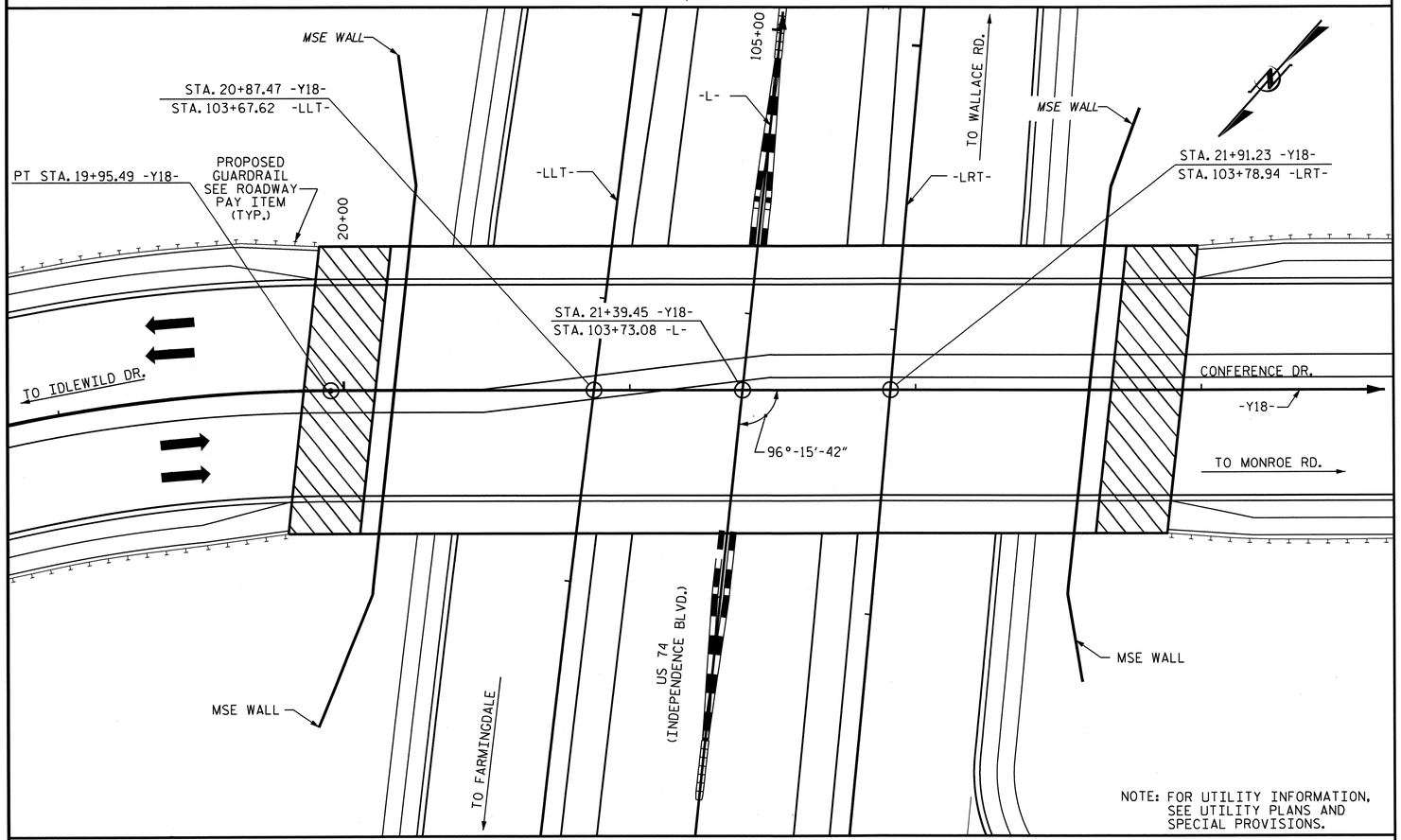

NOTE: FOR UTILITY INFORMATION, SEE UTILITY PLANS AND SPECIAL PROVISIONS.

LOCATION SKETCH

NOTES

ASSUMED LIVE LOAD = HL 93 OR ALTERNATE LOADING.

THIS BRIDGE HAS BEEN DESIGNED IN ACCORDANCE WITH THE AASHTO LRFD BRIDGE DESIGN SPECIFICATIONS.

THIS BRIDGE IS LOCATED IN SEISMIC ZONE 1.

FOR OTHER DESIGN DATA AND GENERAL NOTES, SEE SHEET SN.

FOR SUBMITTAL OF WORKING DRAWINGS, SEE SPECIAL PROVISIONS.

FOR FALSEWORK AND FORMWORK, SEE SPECIAL PROVISIONS.

FOR CRANE SAFETY, SEE SPECIAL PROVISIONS.

FOR GROUT FOR STRUCTURES, SEE SPECIAL PROVISIONS.

THE CONTRACTOR SHALL PROVIDE INDEPENDENT ASSURANCE SAMPLES OF REINFORCING STEEL AS FOLLOWS: FOR PROJECTS REQUIRING UP TO 400 TONS OF REINFORCING STEEL, ONE 30 INCH SAMPLE OF EACH SIZE BAR USED, AND FOR PROJECTS REQUIRING OVER 400 TONS OF REINFORCING STEEL, TWO 30 INCH SAMPLES OF EACH SIZE BAR USED. THE BARS FROM WHICH THE SAMPLES ARE TAKEN MUST THEN BE SPLICED WITH REPLACEMENT BARS OF THE SIZE AND LENGTH OF THE SAMPLE, PLUS A MINIMUM LAP SPLICE OF THIRTY BAR DIAMETERS. PAYMENT FOR THE SAMPLES OF REINFORCING STEEL SHALL BE CONSIDERED INCIDENTAL TO VARIOUS PAY ITEMS.

FOR MAINTENANCE AND PROTECTION OF TRAFFIC BENEATH PROPOSED STRUCTURE, SEE SPECIAL PROVISIONS.

REMOVABLE FORMS MAY BE USED IN LIEU OF METAL STAY-IN-PLACE FORMS IN ACCORDANCE WITH ARTICLE 420-3 OF THE STANDARD SPECIFICATIONS.

NEEDLE BEAMS WILL NOT BE ALLOWED UNLESS OTHERWISE CALLED FOR ON THE PLANS OR APPROVED BY THE ENGINEER.

ALL STRUCTURAL STEEL SHALL BE AASHTO M270 GRADE 50W AND PAINTED IN ACCORDANCE WITH SYSTEM 4 OF ARTICLE 442-8 OF THE STANDARD SPECIFICATIONS UNLESS OTHERWISE NOTED ON THE PLANS.

THE CLASS AA CONCRETE IN THE BRIDGE DECK SHALL CONTAIN FLY ASH OR GROUND GRANULATED BLAST FURNACE SLAG AT THE SUBSTITUTION RATE SPECIFIED IN ARTICLE 1024-1 AND IN ACCORDANCE WITH ARTICLES 1024-5 AND 1024-6 OF THE STANDARD SPECIFICATIONS. NO PAYMENT WILL BE MADE FOR THIS SUBSTITUTION AS IT IS CONSIDERED INCIDENTAL TO THE COST OF THE REINFORCED CONCRETE DECK SLAB.

FOR LIMITS OF TEMPORARY SHORING FOR MAINTENANCE OF TRAFFIC, SEE TRAFFIC CONTROL PLANS. FOR PAY ITEM FOR TEMPORARY SHORING FOR MAINTENANCE OF TRAFFIC, SEE ROADWAY PLANS.

GIRDER ERECTION SEQUENCE

THE STRUCTURAL STEEL SHALL BE SUPPORTED DURING ERECTION IN ITS CAMBERED POSITION. ONE EXTERIOR GIRDER AND ITS ADJACENT INTERIOR GIRDER SHALL BE ERECTED WITH ALL DIAPHRAGMS AND LATERAL BRACING BETWEEN THE GIRDERS IN PLACE AND ALL BOLTS TIGHTENED PRIOR TO RELEASE OF THE GIRDERS. THE REMAINING GIRDERS SHALL THEN BE ERECTED WITH DIAPHRAGMS CONNECTING THE GIRDER TO THE ADJACENT ERECTED GIRDER AND ALL BOLTS TIGHTENED BEFORE RELEASING THE GIRDER.

A MINIMUM OF ONE TEMPORARY BENT SHALL BE USED.

THE TEMPORARY BENT SHALL REMAIN IN PLACE UNTIL ALL CROSS FRAMES AND LATERAL BRACING ARE IN PLACE AND HIGH STRENGTH BOLTS TIGHTENED.

THE LOCATION OF THE TEMPORARY BENT SHOWN ON SHEET S-81 IS AN APPROXIMATE LOCATION AND SHALL BE ADJUSTED BY THE CONTRACTOR AS NECESSARY.

PLANS FOR THE TEMPORARY BENT, ERECTION SEQUENCE AND TEMPORARY BENT REMOVAL SHALL BE SUBMITTED TO THE ENGINEER FOR REVIEW.

THE TEMPORARY BENT SHALL BE DESIGNED BY A PROFESSIONAL ENGINEER REGISTERED IN THE STATE OF NORTH CAROLINA.

DURING THE GIRDER ERECTION PROCEDURE, THE CONTRACTOR IS RESPONSIBLE FOR PROVIDING TEMPORARY LATERAL BRACING AND OTHER MEANS OF SUPPORT, AS REQUIRED, TO ENSURE STABILITY OF THE GIRDERS, AVOID UPLIFT OF THE GIRDERS AT THE TEMPORARY ERECTION BENTS AND MAINTAIN PLUMBNESS OF THE GIRDER WEBS.

THE CONTRACTOR'S ERECTION PLAN SHALL INCLUDE A METHOD OF TEMPORARY BENT REMOVAL THAT WILL UNIFORMLY APPLY THE STRUCTURAL STEEL WEIGHT TO THE BRIDGE CROSS FRAMES.

THE CONTRACTOR MAY SUBMIT ALTERNATE ERECTION METHODS. PLANS FOR SUCH ERECTION METHODS SHALL BE APPROVED BY THE ENGINEER.

FOR TEMPORARY BENTS, SEE SPECIAL PROVISIONS.

TOTAL BILL OF MATERIAL

	FOUNDATION EXCAVATION	PDA TESTING	REINFORCED CONCRETE DECK SLAB	GROOVING BRIDGE FLOORS	CLASS A CONCRETE	BRIDGE APPROACH SLABS	REINFORCING STEEL	SPIRAL COLUMN REINFORCING STEEL	STRUCTURAL STEEL	HP 12X53 STEEL PILES		PILE REDRIVES	THREE BAR METAL RAIL	4" SLOPE PROTECTION	ELASTOMERIC BEARINGS	FOAM JOINT SEALS	ELECTRICAL CONDUIT SYSTEM FOR SIGNALS	DISC BEARINGS
	LUMP SUM	EA.	SQ. FT.	SQ. FT.	CU. YDS.	LUMP SUM	LBS.	LBS.	APPROX. LBS.	NO.	LIN. FT.	EA.	LIN. FT.	SQ. YDS.	LUMP SUM	LUMP SUM	LUMP SUM	LUMP SUM
SUPERSTRUCTURE			23,437	19,325		LUMP SUM			796,600				496.40		LUMP SUM	LUMP SUM	LUMP SUM	LUMP SUM
END BENT #1					58.3		9,078			11	715	6		22				
BENT #1	LUMP SUM				109.4		19,587	1,763		30	1,500	15						
END BENT #2					57.7		9,050			11	700	6		22				
TOTAL	LUMP SUM	1	23,437	19,325	225.4	LUMP SUM	37,715	1,763	796,600	52	2,915	27	496.40	44	LUMP SUM	LUMP SUM	LUMP SUM	LUMP SUM

PROJECT NO. U-0209B
MECKLENBURG COUNTY
STATION: 103+73.08 -L-

SHEET 3 OF 3

STATE OF NORTH CAROLINA
DEPARTMENT OF TRANSPORTATION
RALEIGH

GENERAL DRAWING
FOR BRIDGE ON CONFERENCE DR. OVER US 74 (INDEPENDENCE BLVD.) BETWEEN IDLEWILD RD. AND MONROE RD.

NORTH CAROLINA PROFESSIONAL SEAL 20878 ENGINEER KEVIN FISCHER
11/20/12

REVISIONS						SHEET NO.
NO.	BY:	DATE:	NO.	BY:	DATE:	S-83
1			3			TOTAL SHEETS
2			4			117

STR. #3

DRAWN BY : J.D. HAWK DATE : 11/12
CHECKED BY : M.K. BEARD DATE : 11/12

07-NOV-2012 08:15
R:\Structures\Plans\Str3\U0209B_SD_GD_03.dgn
lsutton

LOAD AND RESISTANCE FACTOR RATING (LRFR) SUMMARY FOR STEEL GIRDERS

LEVEL		VEHICLE	WEIGHT (W) (TONS)	CONTROLLING LOAD RATING (#)	MINIMUM RATING FACTORS (RF)	TONS = W × RF	STRENGTH I LIMIT STATE											SERVICE II LIMIT STATE						COMMENT NUMBER
							LIVE-LOAD FACTORS (γ_{LL})	MOMENT					SHEAR					LIVE-LOAD FACTORS (γ_{LL})	MOMENT					
								DISTRIBUTION FACTORS (DF)	RATING FACTOR	SPAN	GIRDER LOCATION	DISTANCE FROM LEFT END OF SPAN (ft)	DISTRIBUTION FACTORS (DF)	RATING FACTOR	SPAN	GIRDER LOCATION	DISTANCE FROM LEFT END OF SPAN (ft)		DISTRIBUTION FACTORS (DF)	RATING FACTOR	SPAN	GIRDER LOCATION	DISTANCE FROM LEFT END OF SPAN (ft)	
DESIGN LOAD RATING		HL-93 (INVENTORY)	N/A	1	1.09	--	1.75	0.786	1.09	A	I	126.65	1.082	1.20	A	I	126.65	1.30	1.082	1.31	A	I	126.65	
		HL-93 (OPERATING)	N/A		1.41	--	1.35	0.786	1.41	A	I	126.65	1.082	1.56	A	I	126.65	1.00	1.082	1.70	A	I	126.65	
		HS-20 (INVENTORY)	36.00	2	2.06	74.16	1.75	0.950	2.11	A	E	50.66	0.950	2.07	A	E	50.66	1.30	1.082	2.06	A	I	126.65	
		HS-20 (OPERATING)	36.00		2.67	96.12	1.35	0.950	2.73	A	E	50.66	0.950	2.69	A	E	50.66	1.00	1.082	2.67	A	I	126.65	
LEGAL LOAD RATING	SINGLE VEHICLE (SV)	SNSH	13.500		4.97	67.10	1.40	0.950	6.33	A	E	50.66	0.950	4.97	A	E	50.66	1.30	1.082	6.65	A	I	126.65	
		SNGARBS2	20.000		3.56	71.20	1.40	0.950	4.54	A	E	50.66	0.950	3.56	A	E	50.66	1.30	1.082	4.55	A	I	126.65	
		SNAGRIS2	22.000		3.32	73.04	1.40	0.950	4.22	A	E	50.66	0.950	3.32	A	E	50.66	1.30	1.082	4.17	A	I	126.65	
		SNCOTTS3	27.250		2.48	67.58	1.40	0.950	3.16	A	E	50.66	0.950	2.48	A	E	50.66	1.30	1.082	3.30	A	I	126.65	
		SNAGGRS4	34.925		2.02	70.55	1.40	0.950	2.57	A	E	50.66	0.950	2.02	A	E	50.66	1.30	1.082	2.63	A	I	126.65	
		SNS5A	35.550		1.99	70.74	1.40	0.950	2.53	A	E	50.66	0.950	1.99	A	E	50.66	1.30	1.082	2.59	A	I	126.65	
		SNS6A	39.950		1.80	71.91	1.40	0.950	2.29	A	E	50.66	0.950	1.80	A	E	50.66	1.30	1.082	2.33	A	I	126.65	
		SNS7B	42.000		1.72	72.24	1.40	0.950	2.19	A	E	50.66	0.950	1.72	A	E	50.66	1.30	1.082	2.23	A	I	126.65	
	TRUCK TRACTOR SEMI-TRAILER (TTST)	TNAGRIT3	33.000		2.20	72.60	1.40	0.950	2.80	A	E	50.66	0.950	2.20	A	E	50.66	1.30	1.082	2.81	A	I	126.65	
		TNT4A	33.075		2.18	72.10	1.40	0.950	2.79	A	E	50.66	0.950	2.18	A	E	50.66	1.30	1.082	2.78	A	I	126.65	
		TNT6A	41.600		1.77	73.63	1.40	0.950	2.26	A	E	50.66	0.950	1.77	A	E	50.66	1.30	1.082	2.29	A	I	126.65	
		TNT7A	42.000		1.77	74.34	1.40	0.950	2.25	A	E	50.66	0.950	1.77	A	E	50.66	1.30	1.082	2.26	A	I	126.65	
		TNT7B	42.000		1.79	75.18	1.40	0.950	2.28	A	E	50.66	0.950	1.79	A	E	50.66	1.30	1.082	2.22	A	I	126.65	
		TNAGRIT4	43.000		1.73	74.39	1.40	0.950	2.21	A	E	50.66	0.950	1.73	A	E	50.66	1.30	1.082	2.16	A	I	126.65	
		TNAGT5A	45.000		1.65	74.25	1.40	0.950	2.10	A	E	50.66	0.950	1.65	A	E	50.66	1.30	1.082	2.09	A	I	126.65	
		TNAGT5B	45.000	3	1.63	73.35	1.40	0.950	2.08	A	E	50.66	0.950	1.63	A	E	50.66	1.30	1.082	2.07	A	I	126.65	
FATIGUE		HL-93 (INVENTORY)	γ_{LL}=0.75																					

LOAD FACTORS:

DESIGN LOAD RATING FACTORS	LIMIT STATE	γ_{DC}	γ_{DW}
	STRENGTH I	1.25	1.50
	SERVICE II	1.00	1.00

NOTES:

MINIMUM RATING FACTORS ARE BASED ON THE STRENGTH I AND SERVICE II LIMIT STATES.

ALLOWABLE STRESS FOR SERVICE II LIMIT STATE ARE AS REQUIRED FOR DESIGN.

(#) CONTROLLING LOAD RATING

(1) DESIGN LOAD RATING (HL-93) ∗∗

(2) DESIGN LOAD RATING (HS-20) ∗∗

(3) LEGAL LOAD RATING ∗∗

∗∗ SEE CHART FOR VEHICLE TYPE

GIRDER LOCATION

I - INTERIOR GIRDER

E - EXTERIOR GIRDER

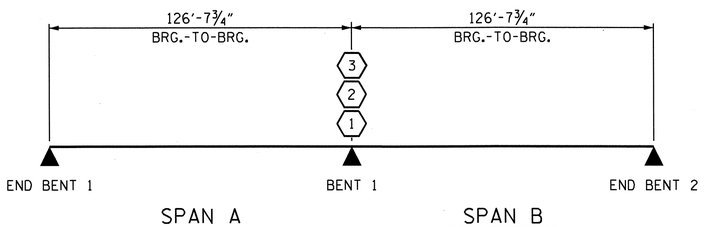

LRFR SUMMARY

PROJECT NO. U-0209B

MECKLENBURG COUNTY

STATION: 103+73.08 -L-

STATE OF NORTH CAROLINA
DEPARTMENT OF TRANSPORTATION
RALEIGH

STANDARD

LRFR SUMMARY FOR STEEL GIRDERS
(NON-INTERSTATE TRAFFIC)

NORTH CAROLINA PROFESSIONAL SEAL 30878 ENGINEER KEVIN FISCHER 11/20/12

REVISIONS								SHEET NO.
NO.	BY:	DATE:	NO.	BY:	DATE:			S-84
1			3					TOTAL SHEETS
2			4					117

STR. #3 STD. NO. LRFR3

ASSEMBLED BY : H.T. DIEU	DATE : 11/12
CHECKED BY : H.A. LOCKLEAR	DATE : 11/12
DRAWN BY : MAA 1/08	REV. 11/12/08RR MAA/GM
CHECKED BY : GM/DI 2/08	REV. 10/1/11 MAA/GM

06-NOV-2012 14:57
R:\Structures\Plans\Str3\U0209B_SD_LR_03.dgn
LSUTTON

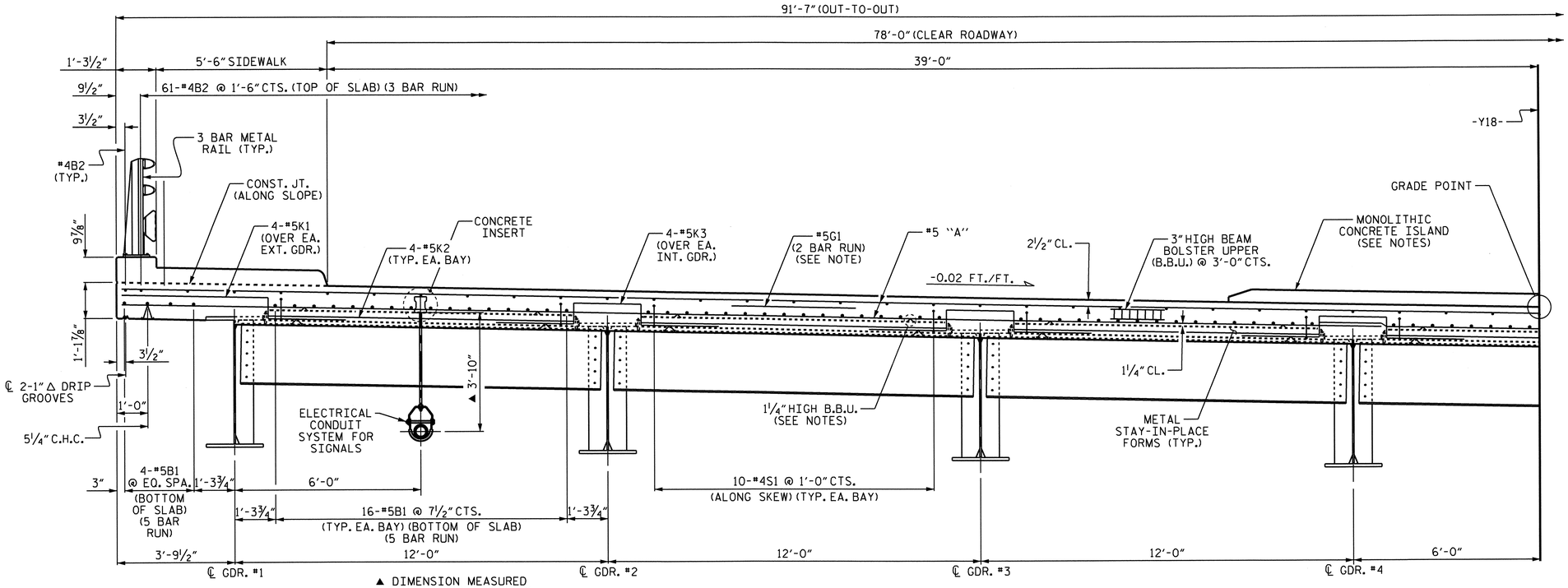

▲ DIMENSION MEASURED FROM BOTTOM OF SLAB TO ℄ CONDUIT.

HALF SECTION
(SHOWING END BENT DIAPHRAGMS)

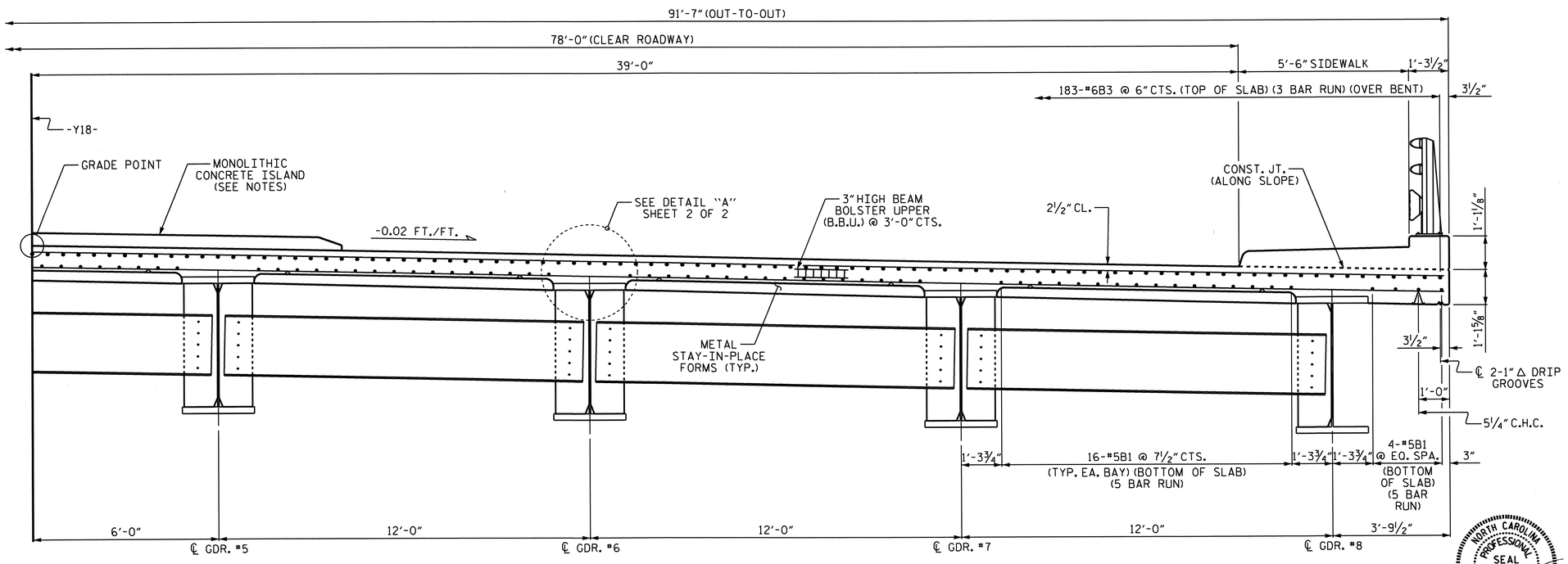

HALF SECTION
(SHOWING INTERMEDIATE & BENT DIAPHRAGMS)

TYPICAL SECTION

NOTES

PROVIDE 1¼" HIGH BEAM BOLSTERS UPPER AT 4'-0" CTS. ATOP THE METAL STAY-IN-PLACE FORMS TO SUPPORT THE BOTTOM MAT OF 'A' BARS. WHEN USING REMOVABLE FORMS, PROVIDE CONTINUOUS HIGH CHAIRS FOR METAL DECK (C.H.C.M.) @ 4'-0" CTS. WITH A HEIGHT TO SUPPORT THE BOTTOM MAT OF 'A' BARS A CLEAR DISTANCE OF 2½" ABOVE THE TOP OF THE REMOVABLE FORM.

METAL STAY-IN-PLACE FORMS SHALL NOT BE WELDED TO BEAM OR GIRDER FLANGES IN THE ZONES REQUIRING CHARPY V-NOTCH TEST. SEE STRUCTURAL STEEL DETAIL SHEETS.

PREVIOUSLY CAST CONCRETE IN A CONTINUOUS UNIT SHALL HAVE ATTAINED A MINIMUM COMPRESSIVE STRENGTH OF 3,000 PSI BEFORE ADDITIONAL CONCRETE IS CAST IN THE UNIT.

THE CONTRACTOR MAY, WHEN NECESSARY, PROPOSE A SCHEME FOR AVOIDING INTERFERENCE BETWEEN METAL STAY-IN-PLACE FORM SUPPORTS OR FORMS AND GIRDER STIFFENERS OR CONNECTOR PLATES. THE PROPOSAL SHALL BE INDICATED, AS APPROPRIATE, ON EITHER THE STEEL WORKING DRAWINGS OR THE METAL STAY-IN-PLACE FORM WORKING DRAWINGS.

STRUCTURAL STEEL ERECTION IN A CONTINUOUS UNIT SHALL BE COMPLETED BEFORE FALSEWORK OR FORMS ARE PLACED ON THE UNIT.

THE CONTRACTOR SHALL ADJUST THE GIRDER BUILDUPS AS NECESSARY TO INCORPORATE A MAXIMUM PERMISSIBLE VARIATION IN DISC BEARING DEPTH OF ½", SEE SPECIAL PROVISION FOR DISC BEARINGS.

FOR LOCATION OF THE MONOLITHIC CONCRETE ISLAND, SEE "MONOLITHIC CONCRETE ISLAND" SHEET.

FOR DETAILS OF ELECTRICAL CONDUIT SYSTEM, SEE "ELECTRICAL CONDUIT SYSTEM FOR SIGNALS" SHEET.

PROJECT NO. U-0209B
MECKLENBURG COUNTY
STATION: 103+73.08 -L-

SHEET 1 OF 2

STATE OF NORTH CAROLINA
DEPARTMENT OF TRANSPORTATION
RALEIGH

SUPERSTRUCTURE

TYPICAL SECTION

NORTH CAROLINA PROFESSIONAL SEAL 30878 ENGINEER KEVIN FISCHER
11/20/12

REVISIONS						SHEET NO.
NO.	BY:	DATE:	NO.	BY:	DATE:	S-85
1			3			TOTAL SHEETS
2			4			117

STR. #3

DRAWN BY : T. BANKOVICH DATE : 1-2011
CHECKED BY : M.K. BEARD DATE : 4/19/11

07-SEP-2012 11:00
R:\Structures\Plans\Str3\U0209B_SD_TS_03.dgn
lsutton

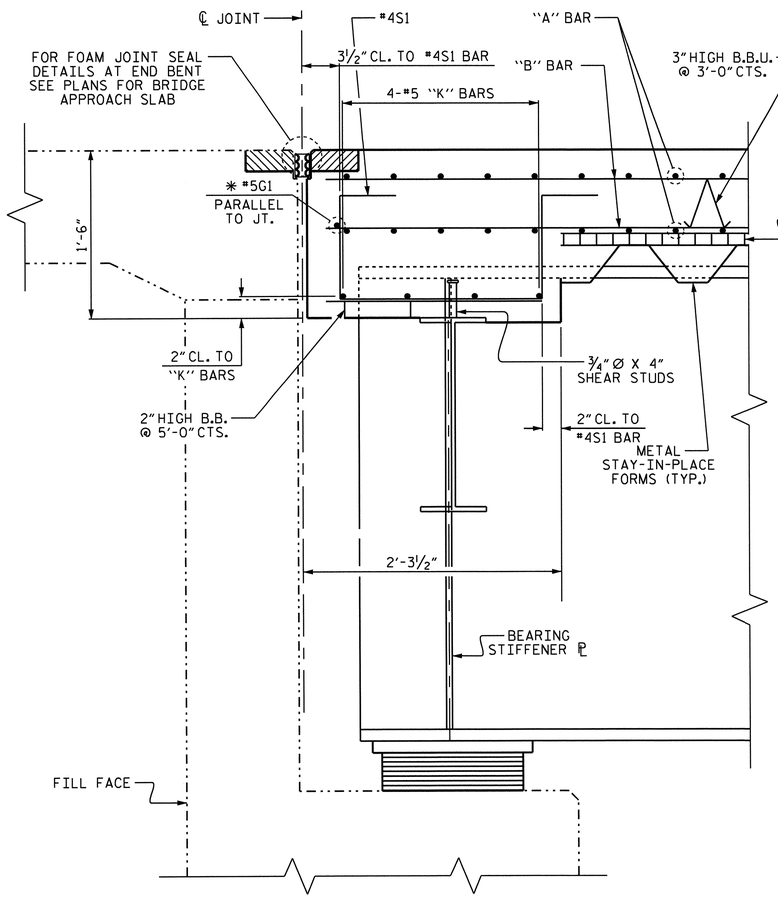

SECTION A-A

✳ THE #5G1 BAR MAY BE SHIFTED SLIGHTLY AS NECESSARY TO CLEAR REINFORCING STEEL AND STIRRUPS.

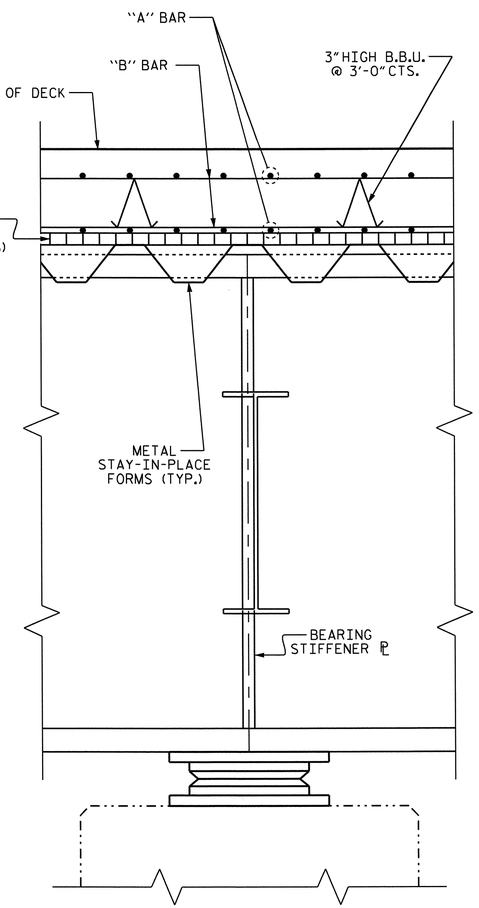

SECTION B-B

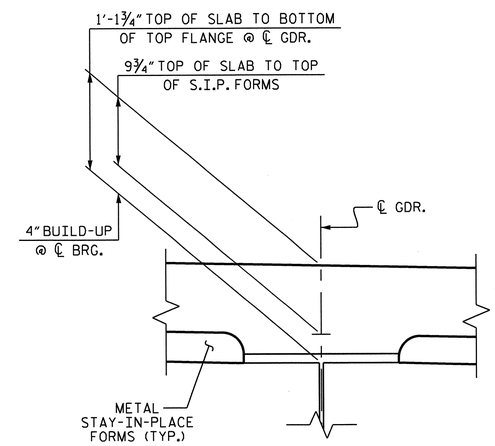

DETAIL "A"

(TYP. EA. GDR.)

PROJECT NO. U-0209B

MECKLENBURG COUNTY

STATION: 103+73.08 -L-

SHEET 2 OF 2

STATE OF NORTH CAROLINA
DEPARTMENT OF TRANSPORTATION
RALEIGH

SUPERSTRUCTURE

TYPICAL SECTION

NORTH CAROLINA PROFESSIONAL SEAL 30878 ENGINEER KEVIN FISCHER 11/20/12

REVISIONS						SHEET NO.
NO.	BY:	DATE:	NO.	BY:	DATE:	S-86
1			3			TOTAL SHEETS
2			4			117

STR. #3

DRAWN BY : T. BANKOVICH DATE : 1-2011
CHECKED BY : M.K. BEARD DATE : 4/19/11

07-SEP-2012 11:00
R:\Structures\Plans\Str3\U0209B_SD_TS_03.dgn
lsutton

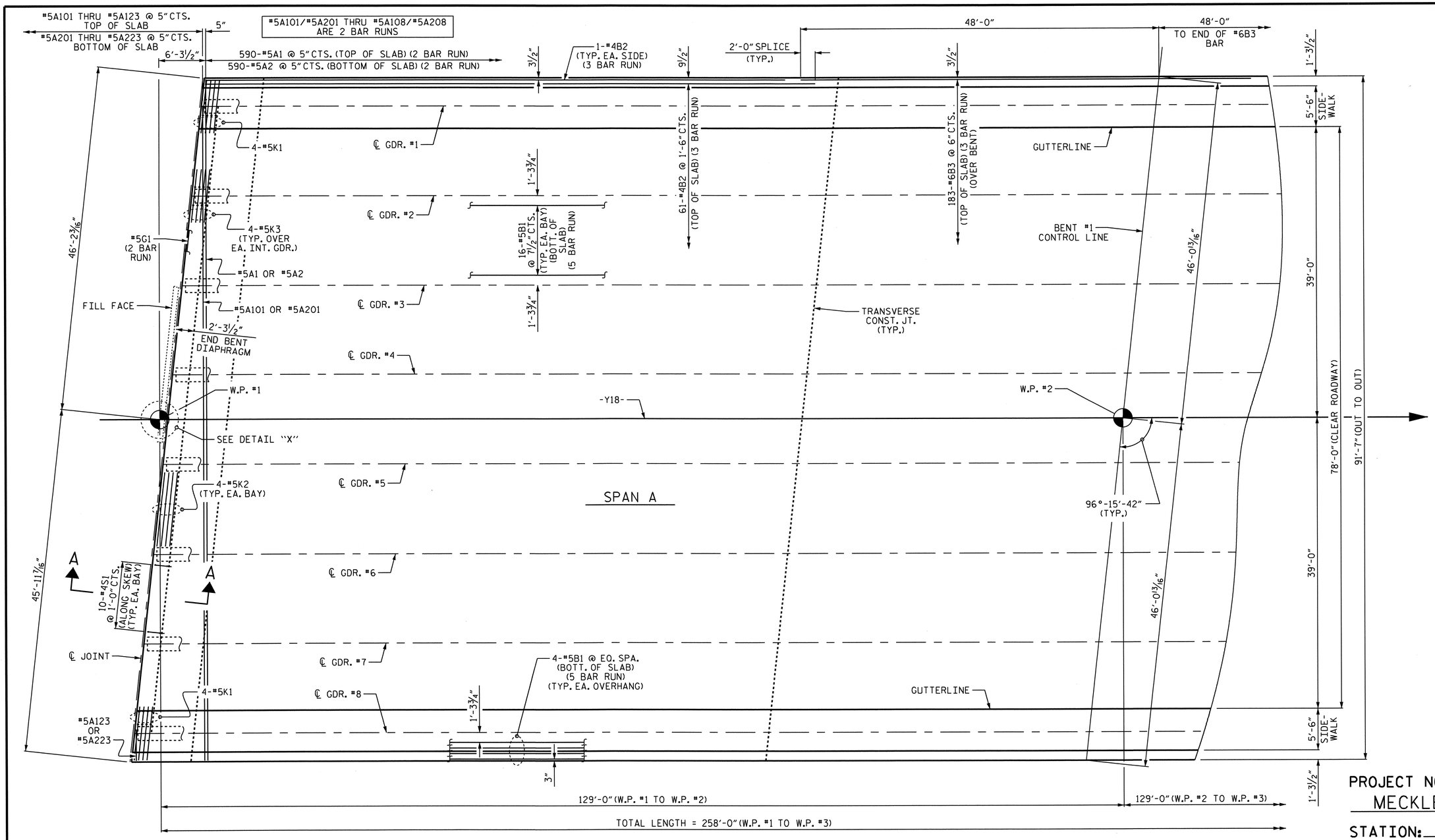

PARTIAL PLAN OF SPANS

MONOLITHIC CONCRETE ISLAND NOT SHOWN FOR CLARITY

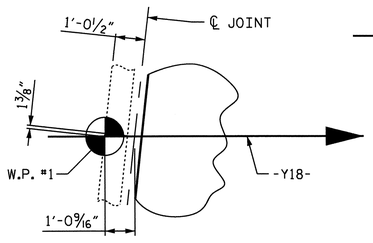

DETAIL "X"

NOTES:

FOR SECTION A-A, SEE "TYPICAL SECTION" SHEET 2 OF 2.

FOR SIDEWALK REINFORCING STEEL, SEE "SIDEWALK DETAIL" SHEET.

SEE "SUPERSTRUCTURE BILL OF MATERIAL" SHEET FOR TRANSVERSE CONST. JT. LOCATIONS & DETAILS.

NORTH CAROLINA PROFESSIONAL SEAL 30878 ENGINEER KEVIN FISCHER 11/20/12

PROJECT NO. U-0209B
MECKLENBURG COUNTY
STATION: 103+73.08 -L-

SHEET 1 OF 2

STATE OF NORTH CAROLINA
DEPARTMENT OF TRANSPORTATION
RALEIGH

SUPERSTRUCTURE

PLAN OF SPANS
SPAN A

REVISIONS						SHEET NO.
NO.	BY:	DATE:	NO.	BY:	DATE:	S-87
1			3			TOTAL SHEETS
2			4			117

STR. #3

DRAWN BY : T. BANKOVICH DATE : 1-2011
CHECKED BY : M.K. BEARD DATE : 4/19/11

07-SEP-2012 11:00
R:\Structures\Plans\Str3\U0209B_SD_PS_03.dgn
lsutton

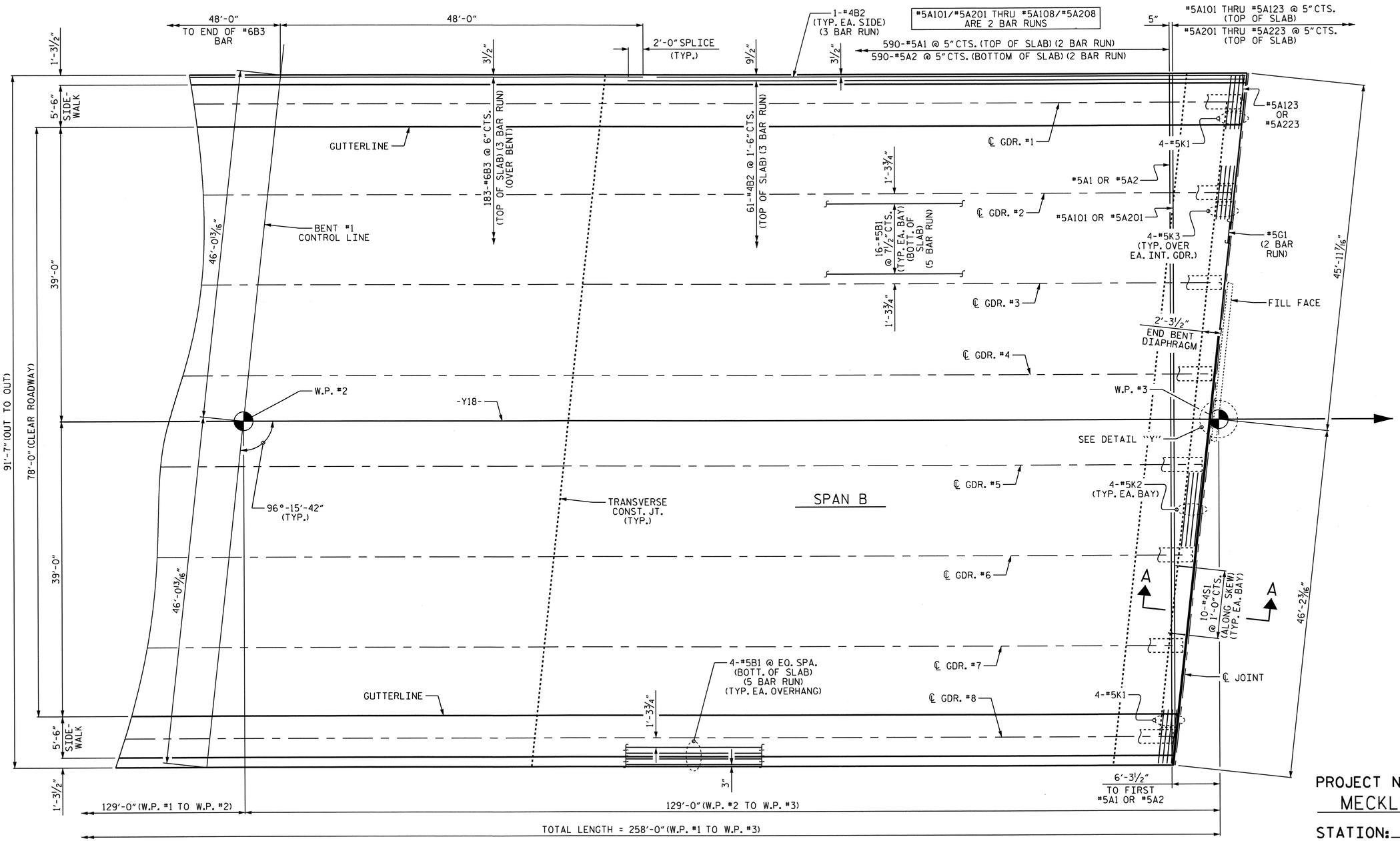

PARTIAL PLAN OF SPANS

MONOLITHIC CONCRETE ISLAND NOT SHOWN FOR CLARITY

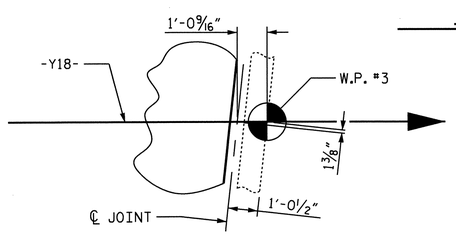

DETAIL "Y"

NOTES:

FOR SECTION A-A, SEE "TYPICAL SECTION" SHEET 2 OF 2.

FOR SIDEWALK REINFORCING STEEL, SEE "SIDEWALK DETAIL" SHEET.

SEE "SUPERSTRUCTURE BILL OF MATERIAL" SHEET FOR TRANSVERSE CONST. JT. LOCATIONS & DETAILS.

NORTH CAROLINA PROFESSIONAL SEAL 30878 ENGINEER KEVIN FISCHER 11/20/12

PROJECT NO. U-0209B
MECKLENBURG COUNTY
STATION: 103+73.08 -L-

SHEET 2 OF 2

STATE OF NORTH CAROLINA
DEPARTMENT OF TRANSPORTATION
RALEIGH

SUPERSTRUCTURE

PLAN OF SPANS
SPAN B

REVISIONS						SHEET NO.
NO.	BY:	DATE:	NO.	BY:	DATE:	S-88
1			3			TOTAL SHEETS
2			4			117

STR. #3

DRAWN BY : T. BANKOVICH DATE : 1-2011
CHECKED BY : M.K. BEARD DATE : 4/19/11

07-SEP-2012 11:00
R:\Structures\Plans\Str3\U0209B_SD_PS_03.dgn
lsutton

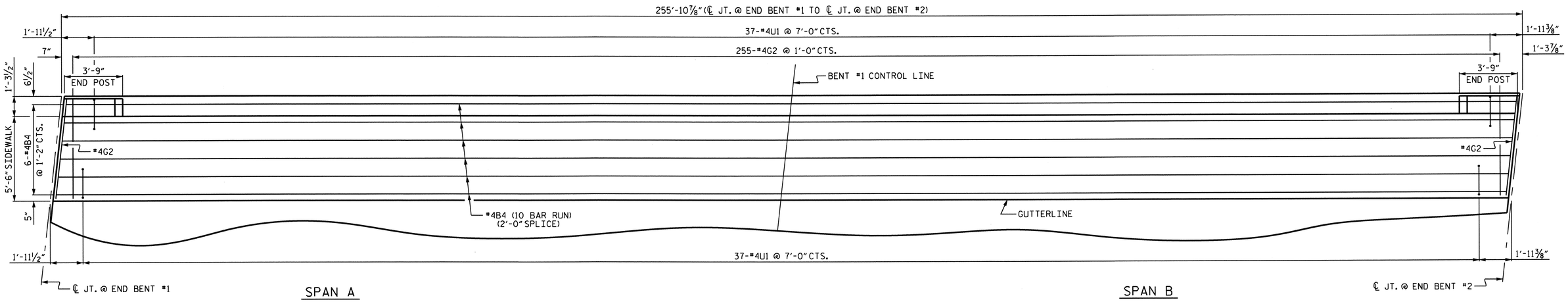

PLAN OF SIDEWALK

LEFT SIDE SHOWN, RIGHT SIDE SIMILAR

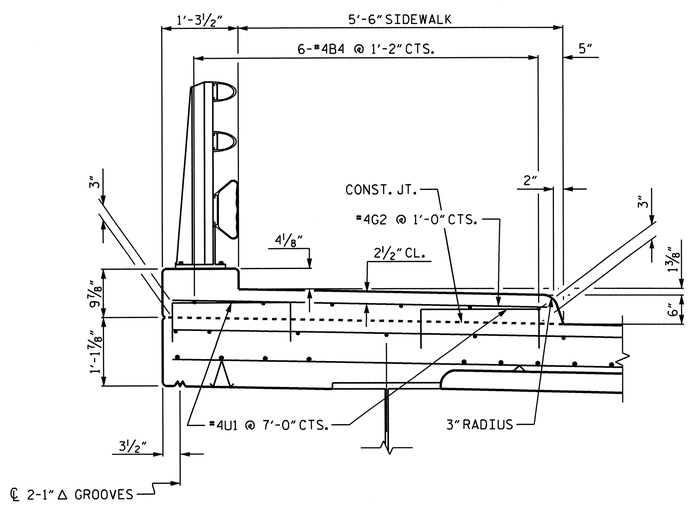

SECTION THRU LEFT SIDEWALK

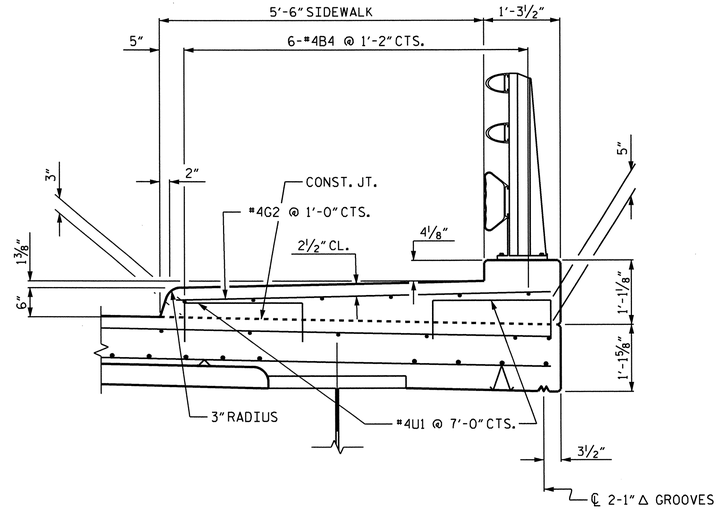

SECTION THRU RIGHT SIDEWALK

NOTES

THE CONCRETE AND REINFORCING STEEL REQUIRED FOR THE SIDEWALKS IS INCLUDED IN THE SUPERSTRUCTURE BILL OF MATERIAL AND PAYMENT IS INCLUDED IN THE SQUARE FOOT PRICE BID FOR "REINFORCED CONCRETE DECK SLAB".

THE #4U1 BARS MAY BE PUSHED INTO GREEN CONCRETE AFTER SPAN HAS BEEN SCREEDED OFF.

SIDEWALK IN A CONTINUOUS UNIT SHALL NOT BE CAST UNTIL ALL SLAB CONCRETE IN THE UNIT HAS BEEN CAST AND HAS REACHED A MINIMUM COMPRESSIVE STRENGTH OF 3000 PSI.

THE JOINT IN THE DECK AT THE END BENTS SHALL BE SAWED PRIOR TO THE CASTING OF THE SIDEWALKS.

ALL REINFORCING STEEL IN SIDEWALKS SHALL BE EPOXY COATED.

GROOVED CONTRACTION JOINTS, ½" IN DEPTH, SHALL BE TOOLED IN ALL EXPOSED FACES OF THE SIDEWALK IN ACCORDANCE WITH ARTICLE 825-10(B) OF THE STANDARD SPECIFICATIONS. THE CONTRACTION JOINTS SHALL BE LOCATED AT A SPACING OF 8 FT. TO 10 FT. BETWEEN EXPANSION JOINTS. NO CONTRACTION JOINT WILL BE REQUIRED FOR SEGMENTS LESS THAN 10 FT. IN LENGTH.

PROJECT NO. U-0209B
MECKLENBURG COUNTY
STATION: 103+73.08 -L-

STATE OF NORTH CAROLINA
DEPARTMENT OF TRANSPORTATION
RALEIGH

SUPERSTRUCTURE

SIDEWALK DETAILS

NORTH CAROLINA PROFESSIONAL SEAL 30878 ENGINEER KEVIN FISCHER
11/20/12

REVISIONS						SHEET NO.
NO.	BY:	DATE:	NO.	BY:	DATE:	S-89
1			3			TOTAL SHEETS
2			4			117

STR. #3

DRAWN BY : T. BANKOVICH DATE : 1-2011
CHECKED BY : M.K. BEARD DATE : 4/19/11

07-SEP-2012 11:00
R:\Structures\Plans\Str3\U0209B_SD_SW_03.dgn
lsutton

NOTES

THE CONCRETE AND REINFORCING STEEL REQUIRED FOR THE CONCRETE ISLAND ON THE BRIDGE DECK IS INCLUDED IN THE SUPERSTRUCTURE BILL OF MATERIAL AND PAYMENT IS INCLUDED IN THE SQUARE FOOT PRICE BID FOR "REINFORCED CONCRETE DECK SLAB".

CONCRETE ISLAND IN A CONTINUOUS UNIT SHALL NOT BE CAST UNTIL ALL SLAB CONCRETE IN THE UNIT HAS BEEN CAST AND HAS REACHED A MINIMUM COMPRESSIVE STRENGTH OF 3000 PSI.

THE JOINT IN THE DECK AT THE END BENTS SHALL BE SAWED PRIOR TO CASTING OF THE CONCRETE ISLAND. THE JOINT IN THE CONCRETE ISLAND SHALL BE FORMED TO MATCH THE SAWED OPENING FOR THE FOAM JOINT SEALS.

ALL REINFORCING STEEL IN CONCRETE ISLAND SHALL BE EPOXY COATED.

GROOVED CONTRACTION JOINTS, ½" IN DEPTH SHALL BE TOOLED IN ALL EXPOSED FACES OF THE CONCRETE ISLAND IN ACCORDANCE WITH ARTICLE 825-10(B) OF THE STANDARD SPECIFICATIONS. THE CONTRACTION JOINTS SHALL BE LOCATED AT A SPACING OF 8 FT. TO 10 FT. BETWEEN EXPANSIONS JOINTS. NO CONTRACTIONS JOINTS WILL BE REQUIRED FOR SEGMENTS LESS THAN 10 FT. IN LENGTH.

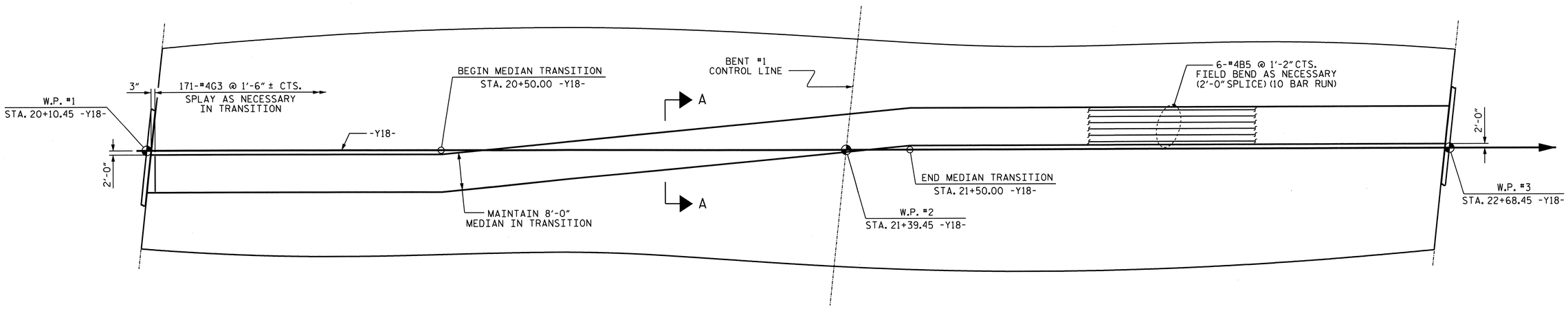

PLAN OF MONOLITHIC CONCRETE ISLAND

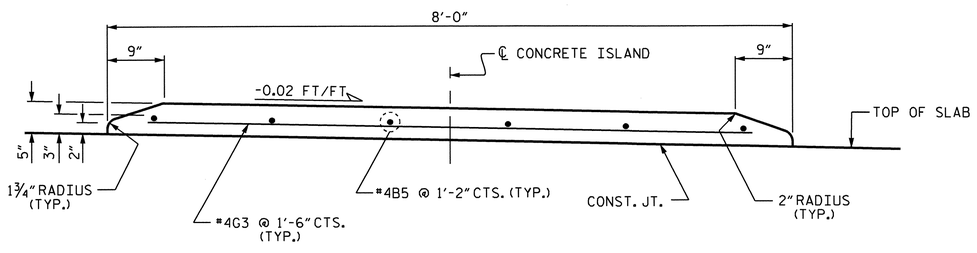

SECTION A-A THRU MONOLITHIC CONCRETE ISLAND

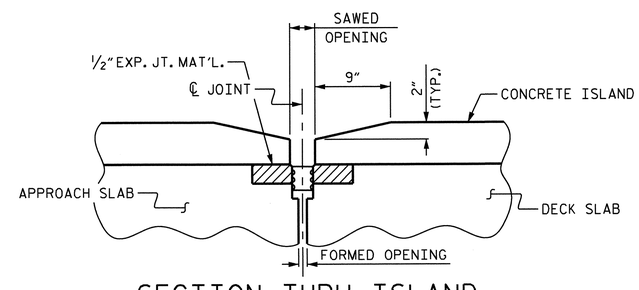

SECTION THRU ISLAND AT END BENTS

END BENT #1 SHOWN, END BENT #2 SIMILAR

PROJECT NO. U-0209B
MECKLENBURG COUNTY
STATION: 103+73.08 -L-

STATE OF NORTH CAROLINA
DEPARTMENT OF TRANSPORTATION
RALEIGH

SUPERSTRUCTURE

MONOLITHIC CONCRETE ISLAND

NORTH CAROLINA PROFESSIONAL SEAL 30878 ENGINEER KEVIN FISCHER
11/20/12

REVISIONS						SHEET NO.
NO.	BY:	DATE:	NO.	BY:	DATE:	S-90
1			3			TOTAL SHEETS
2			4			117

STR. #3

DRAWN BY : T. BANKOVICH DATE : 1-2011
CHECKED BY : M.K. BEARD DATE : 4/19/11

07-SEP-2012 11:00
R:\Structures\Plans\Str3\U0209B_SD_MD_03.dgn
lsutton

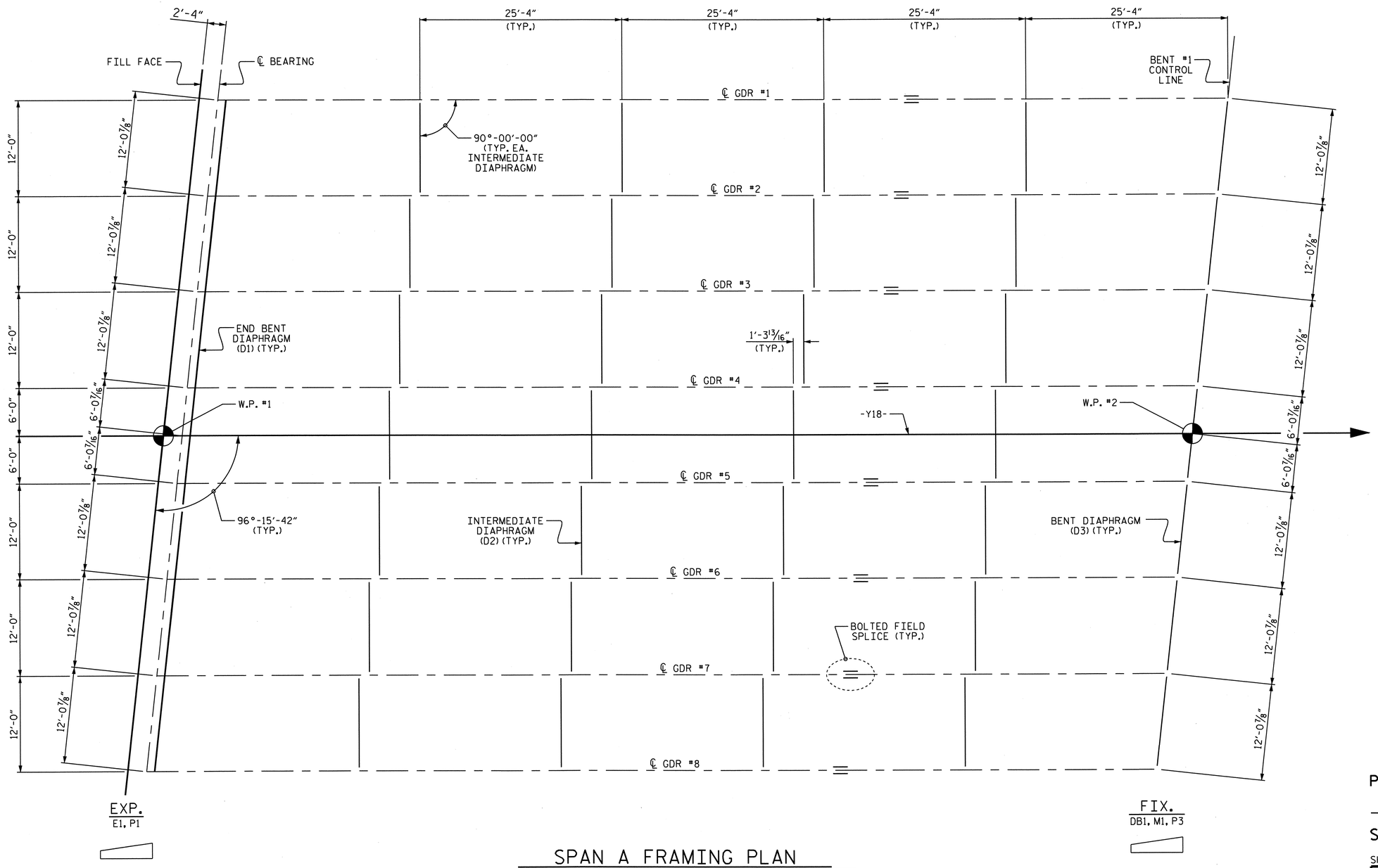

SPAN A FRAMING PLAN

PROJECT NO. U-0209B
MECKLENBURG COUNTY
STATION: 103+73.08 -L-

SHEET 1 OF 2

STATE OF NORTH CAROLINA
DEPARTMENT OF TRANSPORTATION
RALEIGH

SUPERSTRUCTURE

FRAMING PLAN

NORTH CAROLINA PROFESSIONAL SEAL 30878 ENGINEER KEVIN FISCHER 11/20/12

REVISIONS						SHEET NO.
NO.	BY:	DATE:	NO.	BY:	DATE:	S-91
1			3			TOTAL SHEETS
2			4			117

STR. #3

DRAWN BY : J.D. HAWK DATE : 11/12
CHECKED BY : M.K. BEARD DATE : 11/12

06-NOV-2012 14:57
R:\Structures\Plans\Str3\U0209B_SD_FP_03.dgn
LSUTTON

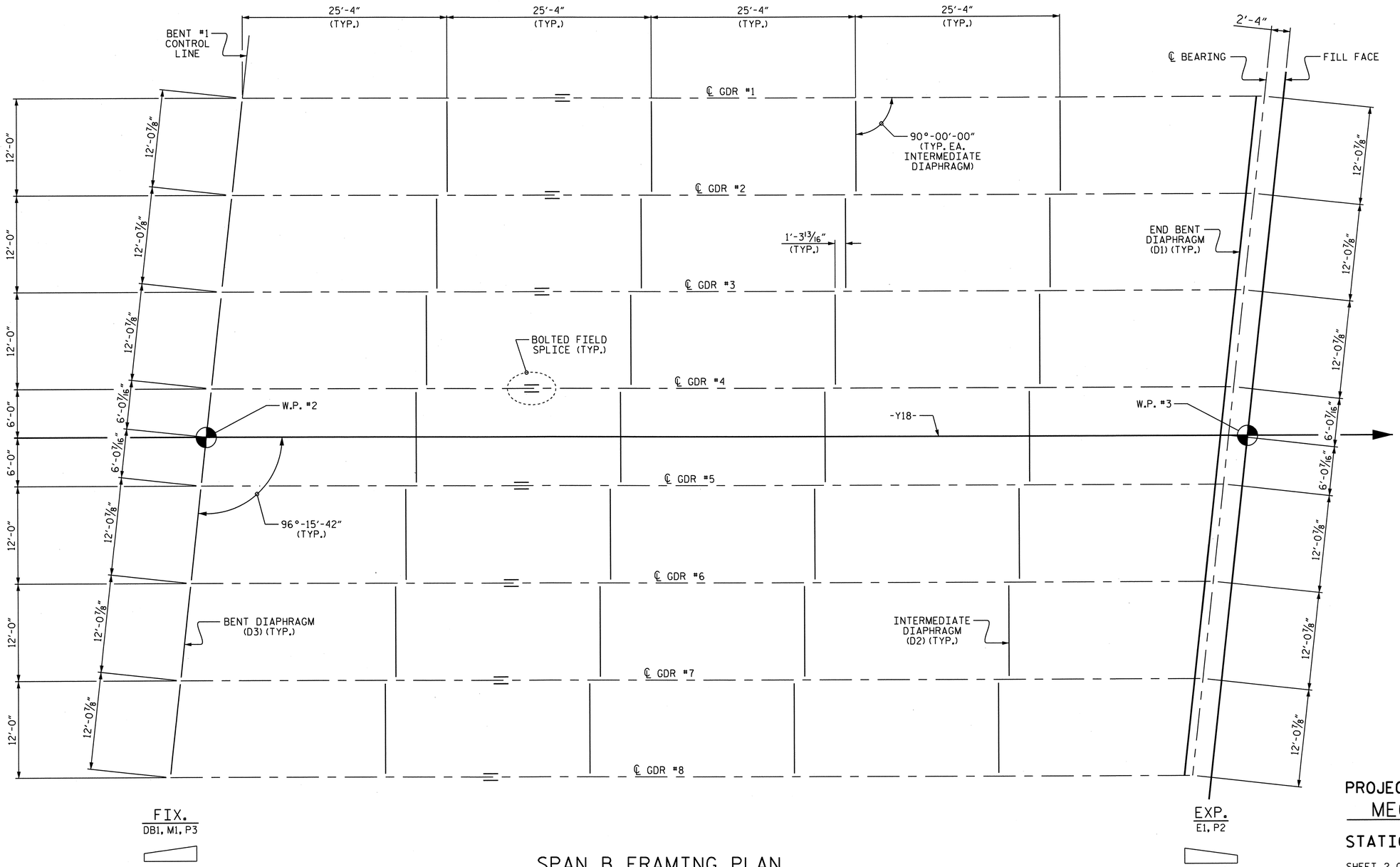

SPAN B FRAMING PLAN

PROJECT NO. U-0209B
MECKLENBURG COUNTY
STATION: 103+73.08 -L-

SHEET 2 OF 2

STATE OF NORTH CAROLINA
DEPARTMENT OF TRANSPORTATION
RALEIGH

SUPERSTRUCTURE

FRAMING PLAN

NORTH CAROLINA PROFESSIONAL SEAL 30878 ENGINEER KEVIN FISCHER
11/20/12

REVISIONS						SHEET NO.
NO.	BY:	DATE:	NO.	BY:	DATE:	S-92
1			3			TOTAL SHEETS
2			4			117

STR. #3

DRAWN BY : J.D. HAWK DATE : 11/12
CHECKED BY : M.K. BEARD DATE : 11/12

06-NOV-2012 14:57
R:\Structures\Plans\Str3\U0209B_SD_FP_03.dgn
LSUTTON

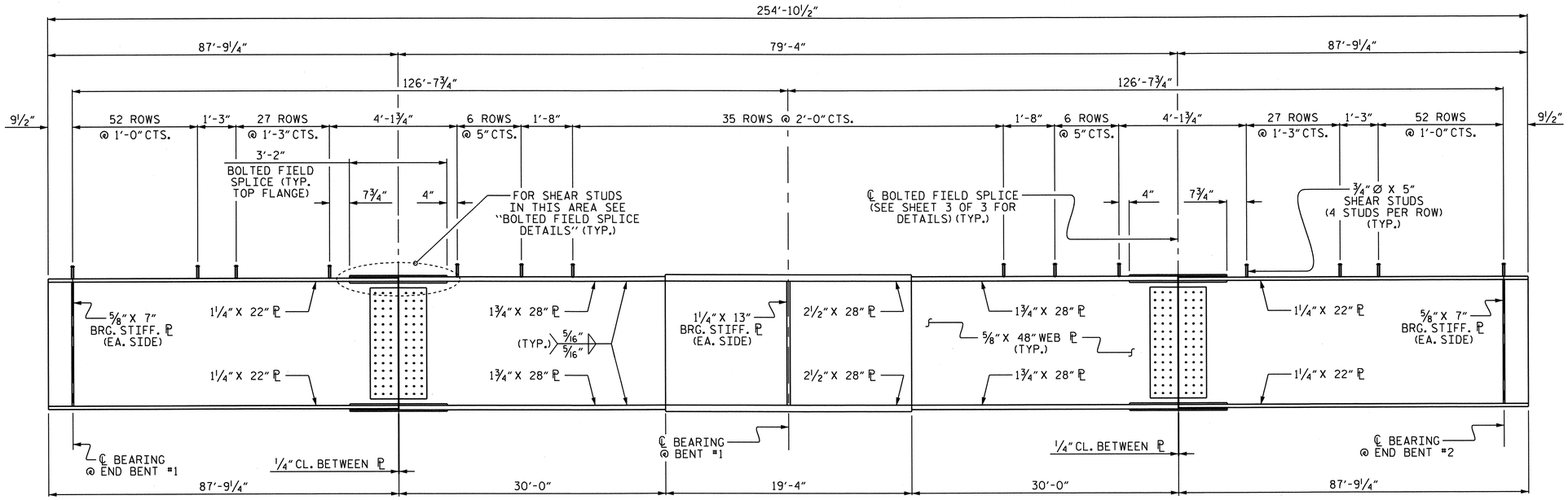

ELEVATION OF GIRDER

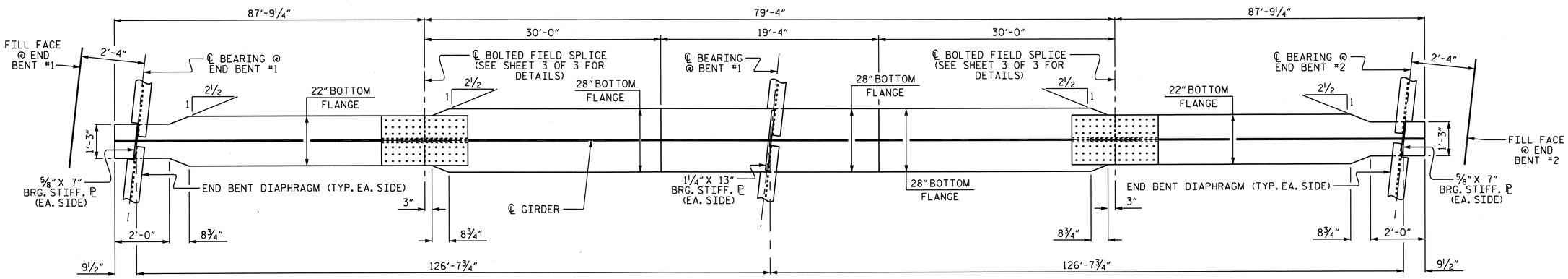

BOTTOM FLANGE DETAIL

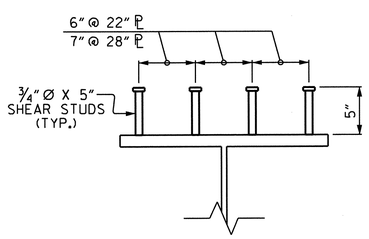

SHEAR STUD DETAIL

(EXCEPT AT BOLTED FIELD SPLICE)

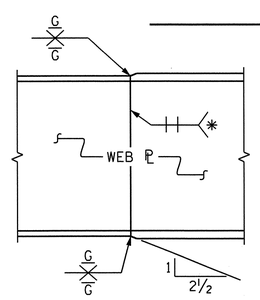

ELEVATION

PERMISSIBLE SHOP FLANGE & WEB SPLICE

* GRIND SMOOTH AND FLUSH ON OUTER FACE OF EXTERIOR GIRDER

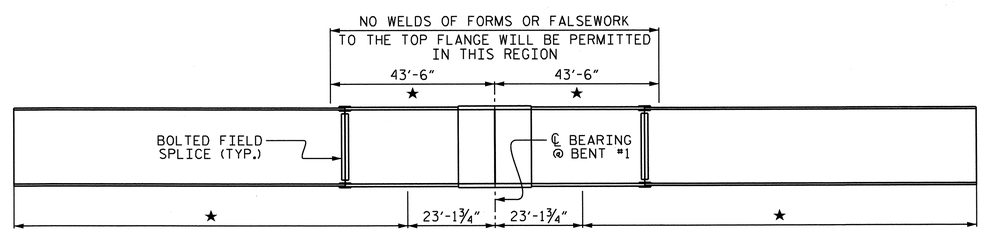

CHARPY V-NOTCH TESTS FOR CONTINUOUS PLATE GIRDERS

★ CHARPY V-NOTCH TEST ARE REQUIRED FOR ALL TOP OR BOTTOM FLANGE PLATES WHICH FALL WITHIN THESE LIMITS. CHARPY V-NOTCH TEST ARE REQUIRED FOR ALL WEB PLATES AND ALL SPLICE PLATES. IF THE PERMITTED SHOP FLANGE SPLICE IS NOT USED, CHARPY V-NOTCH TESTS WILL BE REQUIRED FOR THE ENTIRE FLANGE PLATE. FOR CHARPY V-NOTCH TESTS, SEE ARTICLE 1072-7 OF THE STANDARD SPECIFICATIONS.

NOTES

ALL STRUCTURAL STEEL SHALL BE AASHTO M270 GRADE 50W AND PAINTED IN ACCORDANCE WITH SYSTEM 4 OF ARTICLE 442-8 OF THE STANDARD SPECIFICATIONS UNLESS OTHERWISE NOTED ON THE PLANS.

ALL DIMENSIONS SHOWN ARE HORIZONTAL OR VERTICAL, UNLESS OTHERWISE NOTED.

ALL FIELD CONNECTIONS TO BE ⅞" DIA. HIGH STRENGTH BOLTS UNLESS OTHERWISE NOTED.

BEARING STIFFENERS AND SHALL BE PLUMB.

BEARING STIFFENERS MAY REQUIRE COPING IF WIDER THAN BOTTOM FLANGE.

PERMITTED FLANGE AND WEB SHOP SPLICES SHALL NOT BE LOCATED WITHIN 15 FEET OF MAXIMUM DEAD LOAD DEFLECTION (NOR WITHIN 15 FEET OF INTERMEDIATE BEARINGS OF CONTINUOUS UNITS). KEEP 2 FEET MINIMUM BETWEEN WEB AND FLANGE SHOP SPLICES. KEEP 6" MINIMUM BETWEEN CONNECTOR PLATE OR TRANSVERSE STIFFENER WELDS AND WEB OR FLANGE SHOP SPLICES.

STUDS ON GIRDERS MAY BE SHIFTED UP TO 1" IF NECESSARY TO CLEAR FLANGE SPLICE WELD.

TENSION ON THE AASHTO M164 BOLTS SHALL BE CALIBRATED USING DIRECT TENSION INDICATOR WASHERS IN ACCORDANCE WITH ARTICLE 440-8 OF THE STANDARD SPECIFICATIONS.

END OF GIRDERS SHALL BE PLUMB.

FABRICATORS SHALL DETAIL DIAPHRAGM MEMBERS AND CONNECTIONS FOR FULL DEAD LOAD FIT UP. GIRDERS SHALL BE PLUMB AFTER THE FULL AMOUNT OF DEAD LOAD IS APPLIED.

STRUCTURAL STEEL IN A CONTINUOUS UNIT SHALL BE COMPLETE BEFORE FALSEWORK OR FORMS ARE PLACED ON THE UNIT.

PROJECT NO. U-0209B
MECKLENBURG COUNTY
STATION: 103+73.08 -L-

SHEET 1 OF 3

STATE OF NORTH CAROLINA
DEPARTMENT OF TRANSPORTATION
RALEIGH

SUPERSTRUCTURE

STRUCTURAL STEEL DETAILS

NORTH CAROLINA PROFESSIONAL SEAL 30878 ENGINEER K. KEVIN FISCHER 11/20/12

REVISIONS						SHEET NO.
NO.	BY:	DATE:	NO.	BY:	DATE:	S-93
1			3			TOTAL SHEETS
2			4			117

STR. #3

DRAWN BY : J.D. HAWK DATE : 11/12
CHECKED BY : M.K. BEARD DATE : 11/12

07-NOV-2012 08:42
R:\Structures\Plans\Str3\U0209B_SD_SS_03.dgn
lsutton

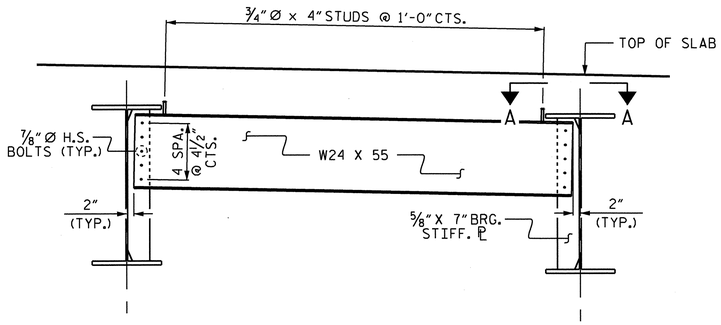

TYPICAL END BENT DIAPHRAGM (D1)

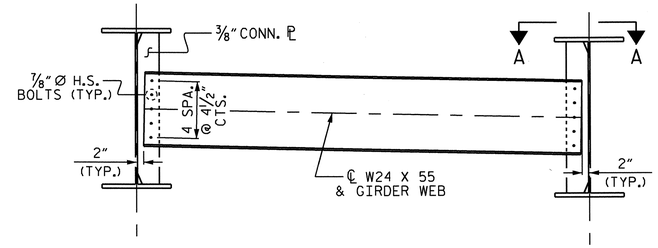

TYPICAL INTERMEDIATE DIAPHRAGM (D2)

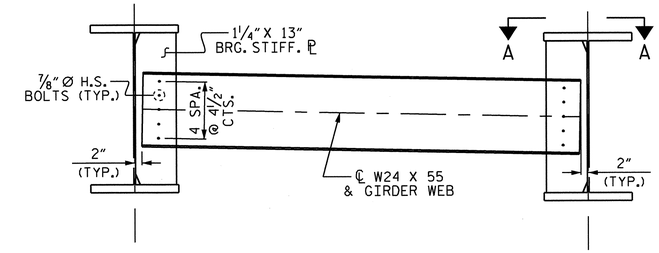

TYPICAL BENT DIAPHRAGM (D3)

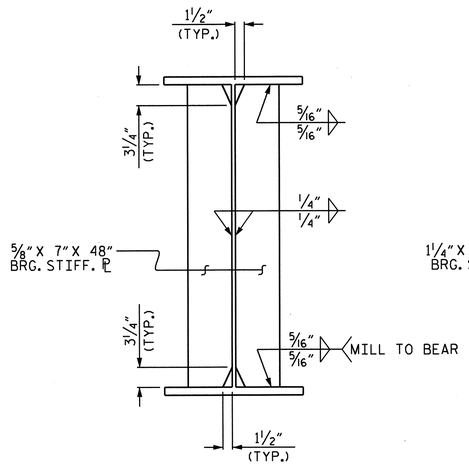

BEARING STIFFENER

AT END BENT DIAPHRAGM

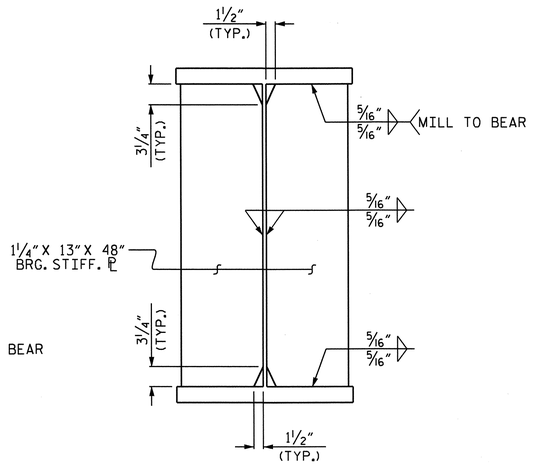

BEARING STIFFENER

AT BENT DIAPHRAGM

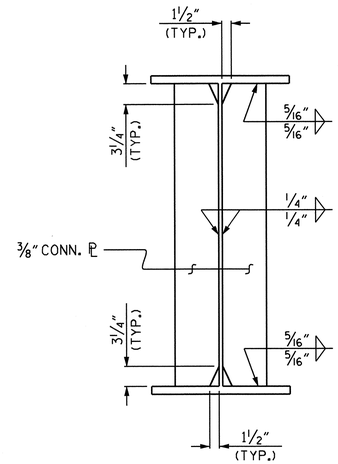

CONNECTOR PLATE

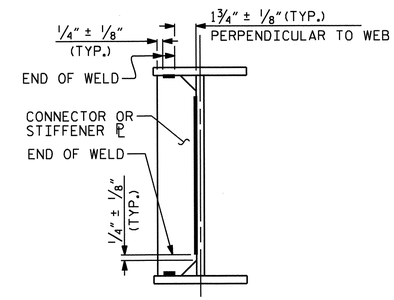

WELD TERMINATION DETAIL

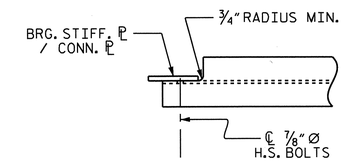

SECTION A-A

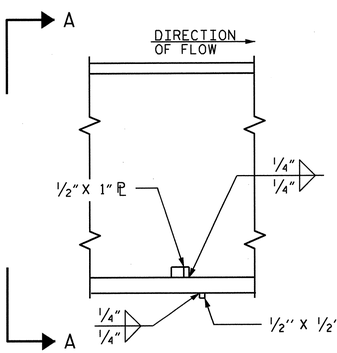

SECTION

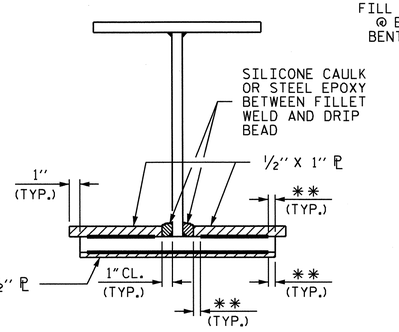

VIEW A-A

DRIP BEAD DETAILS

** SEE "WELD TERMINATION DETAIL"

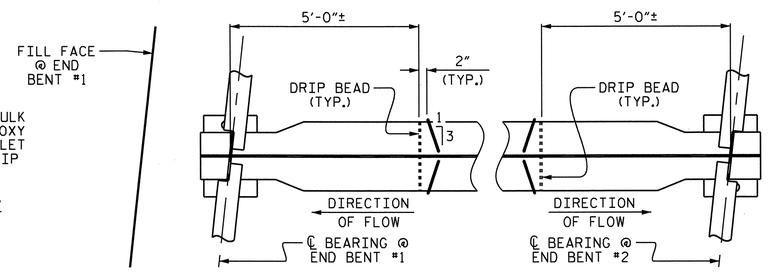

PART PLAN - BOTTOM FLANGE

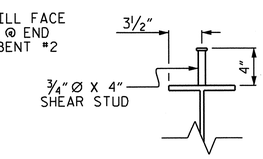

SHEAR STUD DETAIL

(TYP. EA. END BENT DIAPHRAGM)

PROJECT NO. U-0209B

MECKLENBURG COUNTY

STATION: 103+73.08 -L-

SHEET 2 OF 3

STATE OF NORTH CAROLINA
DEPARTMENT OF TRANSPORTATION
RALEIGH

SUPERSTRUCTURE

STRUCTURAL STEEL DETAILS

NORTH CAROLINA PROFESSIONAL SEAL 30878 ENGINEER KEVIN FISCHER
11/20/12

REVISIONS						SHEET NO.
NO.	BY:	DATE:	NO.	BY:	DATE:	S-94
1			3			TOTAL SHEETS
2			4			117

STR. #3

DRAWN BY : J.D. HAWK DATE : 11/12
CHECKED BY : M.K. BEARD DATE : 11/12

06-NOV-2012 14:57
R:\Structures\Plans\Str3\U0209B_SD_SS_03.dgn
LSUTTON

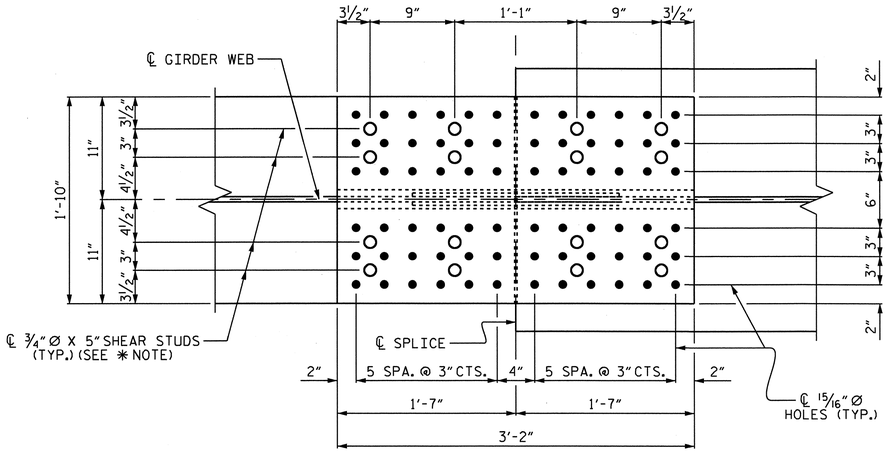

PLAN (TOP OF TOP FLANGE)

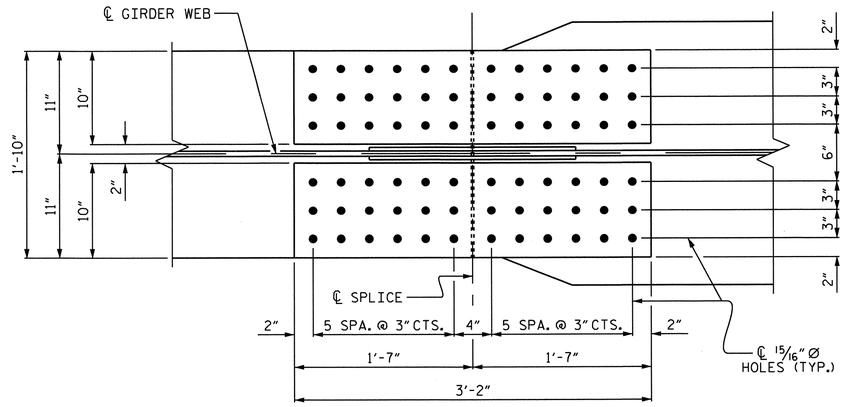

PLAN (TOP OF BOTTOM FLANGE)

✱ NOTE:
SHEAR STUDS ARE TO BE SHOP WELDED ON TOP OF PLATE BEFORE FIELD ASSEMBLY

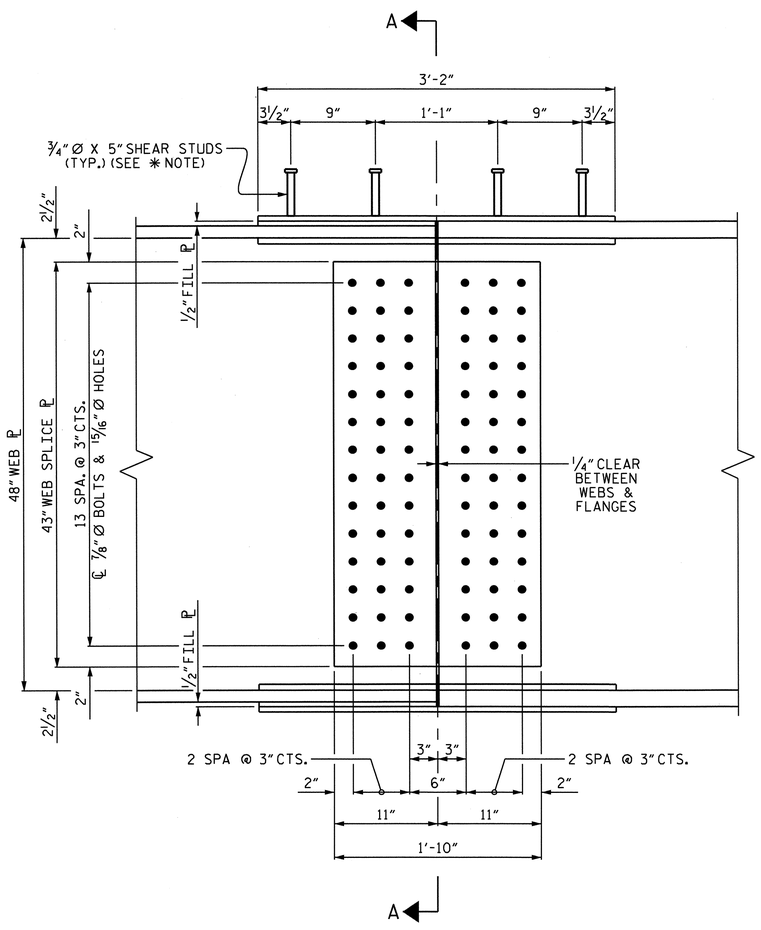

ELEVATION

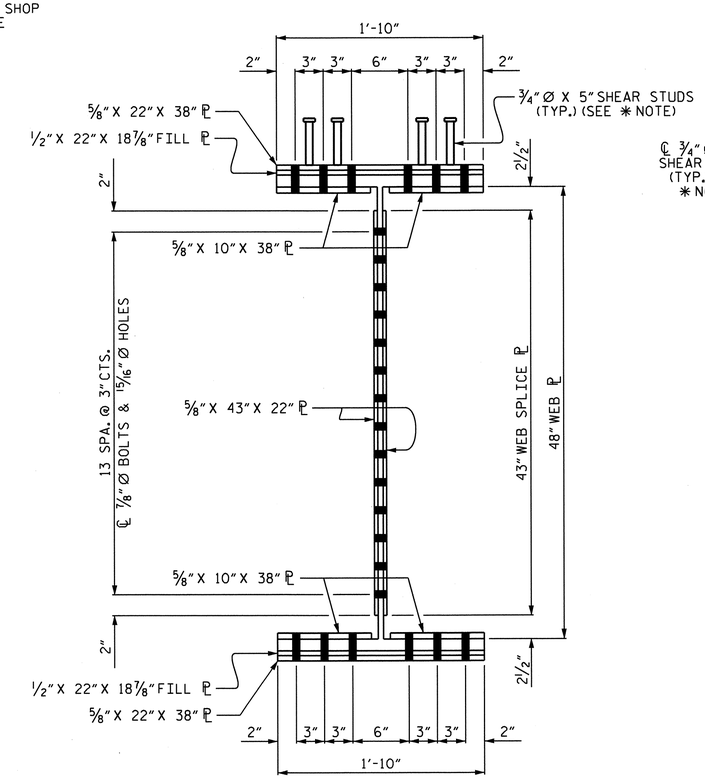

SECTION A-A

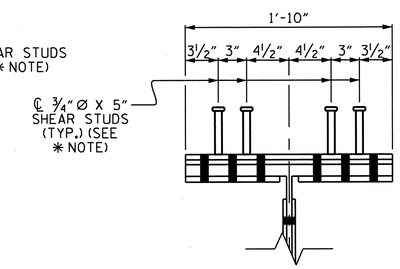

SHEAR STUD DETAIL FOR TOP FLANGE SPLICE PLATE

PROJECT NO. U-0209B
MECKLENBURG COUNTY
STATION: 103+73.08 -L-

SHEET 3 OF 3

STATE OF NORTH CAROLINA
DEPARTMENT OF TRANSPORTATION
RALEIGH

SUPERSTRUCTURE

STRUCTURAL STEEL DETAILS

NORTH CAROLINA PROFESSIONAL SEAL 30878 ENGINEER KEVIN FISCHER 11/20/12

REVISIONS						SHEET NO.
NO.	BY:	DATE:	NO.	BY:	DATE:	S-95
1			3			TOTAL SHEETS
2			4			117

STR. #3

BOLTED FIELD SPLICE DETAILS

(TYP. EA. BOLTED FIELD SPLICE)

DRAWN BY :	J.D. HAWK	DATE :	11/12
CHECKED BY :	M.K. BEARD	DATE :	11/12

06-NOV-2012 14:57
R:\Structures\Plans\Str3\U0209B_SD_SS_03.dgn
LSUTTON

DEAD LOAD DEFLECTION TABLE FOR GIRDERS

SPAN A

GIRDER #1 & #8

TWENTIETH POINTS	BRG.	0.05	0.10	0.15	0.20	0.25	0.30	0.35	0.40	0.45	0.50	0.55	0.60	0.65	0.70	0.75	0.80	0.85	0.90	0.95	BRG.
DEFLECTION DUE TO WEIGHT OF GIRDER	0	0.010	0.020	0.029	0.037	0.044	0.048	0.051	0.052	0.051	0.048	0.044	0.039	0.032	0.026	0.019	0.013	0.008	0.003	0.001	0
DEFLECTION DUE TO WEIGHT OF SLAB *	0	0.042	0.081	0.117	0.148	0.173	0.191	0.202	0.205	0.202	0.191	0.175	0.154	0.129	0.103	0.076	0.052	0.030	0.014	0.004	0
DEFLECTION DUE TO WEIGHT OF SIDEWALK & RAIL	0	0.003	0.006	0.009	0.012	0.014	0.015	0.016	0.016	0.016	0.015	0.014	0.013	0.011	0.009	0.006	0.004	0.003	0.001	0.000	0
TOTAL DEAD LOAD DEFLECTION	0	0.055	0.107	0.155	0.197	0.231	0.254	0.269	0.273	0.269	0.254	0.233	0.206	0.172	0.138	0.101	0.069	0.041	0.018	0.005	0
VERTICAL CURVE ORDINATE	0	0.055	0.107	0.151	0.190	0.223	0.249	0.270	0.285	0.294	0.297	0.294	0.285	0.270	0.249	0.223	0.190	0.151	0.107	0.056	0
REQUIRED CAMBER	0	1 5/16"	2 9/16"	3 11/16"	4 5/8"	5 7/16"	6 1/16"	6 7/16"	6 11/16"	6 3/4"	6 5/8"	6 5/16"	5 7/8"	5 5/16"	4 5/8"	3 7/8"	3 1/8"	2 5/16"	1 1/2"	3/4"	0

GIRDER #2 & #7

TWENTIETH POINTS	BRG.	0.05	0.10	0.15	0.20	0.25	0.30	0.35	0.40	0.45	0.50	0.55	0.60	0.65	0.70	0.75	0.80	0.85	0.90	0.95	BRG.
DEFLECTION DUE TO WEIGHT OF GIRDER	0	0.011	0.022	0.032	0.041	0.047	0.052	0.055	0.056	0.055	0.052	0.048	0.042	0.035	0.028	0.021	0.014	0.008	0.004	0.001	0
DEFLECTION DUE TO WEIGHT OF SLAB *	0	0.042	0.081	0.117	0.148	0.173	0.191	0.202	0.205	0.202	0.191	0.175	0.154	0.129	0.103	0.076	0.052	0.030	0.014	0.004	0
DEFLECTION DUE TO WEIGHT OF SIDEWALK & RAIL	0	0.003	0.006	0.009	0.011	0.013	0.014	0.015	0.015	0.015	0.015	0.013	0.012	0.010	0.008	0.006	0.004	0.003	0.001	0.000	0
TOTAL DEAD LOAD DEFLECTION	0	0.056	0.109	0.158	0.200	0.233	0.257	0.272	0.276	0.272	0.258	0.236	0.208	0.174	0.139	0.103	0.070	0.041	0.019	0.005	0
VERTICAL CURVE ORDINATE	0	0.056	0.107	0.151	0.190	0.223	0.249	0.270	0.285	0.294	0.297	0.294	0.285	0.270	0.249	0.223	0.190	0.151	0.107	0.056	0
REQUIRED CAMBER	0	1 5/16"	2 5/8"	3 11/16"	4 11/16"	5 1/2"	6 1/16"	6 1/2"	6 3/4"	6 13/16"	6 11/16"	6 3/8"	5 15/16"	5 5/16"	4 5/8"	3 15/16"	3 1/8"	2 5/16"	1 1/2"	3/4"	0

GIRDER #3, #4, #5, & #6

TWENTIETH POINTS	BRG.	0.05	0.10	0.15	0.20	0.25	0.30	0.35	0.40	0.45	0.50	0.55	0.60	0.65	0.70	0.75	0.80	0.85	0.90	0.95	BRG.
DEFLECTION DUE TO WEIGHT OF GIRDER	0	0.011	0.022	0.032	0.041	0.047	0.052	0.055	0.056	0.055	0.052	0.048	0.042	0.035	0.028	0.021	0.014	0.008	0.004	0.001	0
DEFLECTION DUE TO WEIGHT OF SLAB *	0	0.042	0.081	0.117	0.148	0.173	0.191	0.202	0.205	0.202	0.191	0.175	0.154	0.129	0.103	0.076	0.052	0.030	0.014	0.004	0
DEFLECTION DUE TO WEIGHT OF SIDEWALK & RAIL	0	0.006	0.012	0.018	0.0223	0.026	0.029	0.031	0.032	0.031	0.030	0.027	0.024	0.021	0.017	0.013	0.009	0.005	0.002	0.001	0
TOTAL DEAD LOAD DEFLECTION	0	0.059	0.115	0.167	0.212	0.246	0.272	0.288	0.293	0.288	0.273	0.250	0.220	0.185	0.148	0.110	0.075	0.043	0.020	0.006	0
VERTICAL CURVE ORDINATE	0	0.056	0.107	0.151	0.190	0.223	0.249	0.270	0.285	0.294	0.297	0.294	0.285	0.270	0.249	0.223	0.190	0.151	0.107	0.056	0
REQUIRED CAMBER	0	1 3/8"	2 11/16"	3 13/16"	4 13/16"	5 5/8"	6 1/4"	6 11/16"	6 15/16"	7"	6 13/16"	6 9/16"	6 1/16"	5 7/16"	4 3/4"	4"	3 3/16"	2 5/16"	1 1/2"	3/4"	0

SPAN B

GIRDER #1 & #8

TWENTIETH POINTS	BRG.	0.05	0.10	0.15	0.20	0.25	0.30	0.35	0.40	0.45	0.50	0.55	0.60	0.65	0.70	0.75	0.80	0.85	0.90	0.95	BRG.
DEFLECTION DUE TO WEIGHT OF GIRDER	0	0.001	0.003	0.008	0.013	0.019	0.026	0.032	0.039	0.044	0.048	0.051	0.052	0.051	0.048	0.044	0.037	0.029	0.020	0.010	0
DEFLECTION DUE TO WEIGHT OF SLAB *	0	0.004	0.014	0.030	0.052	0.076	0.103	0.129	0.154	0.175	0.191	0.202	0.205	0.202	0.191	0.173	0.148	0.117	0.081	0.042	0
DEFLECTION DUE TO WEIGHT OF SIDEWALK & RAIL	0	0.000	0.001	0.003	0.004	0.006	0.009	0.011	0.013	0.014	0.015	0.016	0.016	0.016	0.015	0.014	0.012	0.009	0.006	0.003	0
TOTAL DEAD LOAD DEFLECTION	0	0.005	0.018	0.041	0.069	0.101	0.138	0.172	0.206	0.233	0.254	0.269	0.273	0.269	0.254	0.231	0.197	0.155	0.107	0.055	0
VERTICAL CURVE ORDINATE	0	0.056	0.107	0.151	0.190	0.223	0.249	0.270	0.285	0.294	0.297	0.294	0285	0.270	0.249	0.223	0.190	0.151	0.107	0.056	0
REQUIRED CAMBER	0	3/4"	1 1/2"	2 5/16"	3 1/8"	3 7/8"	4 5/8"	5 5/16"	5 7/8"	6 5/16"	6 5/8"	6 3/4"	6 11/16"	6 7/16"	6 1/16"	5 7/16"	4 5/8"	3 11/16"	2 9/16"	1 5/16"	0

GIRDER #2 & #7

TWENTIETH POINTS	BRG.	0.05	0.10	0.15	0.20	0.25	0.30	0.35	0.40	0.45	0.50	0.55	0.60	0.65	0.70	0.75	0.80	0.85	0.90	0.95	BRG.
DEFLECTION DUE TO WEIGHT OF GIRDER	0	0.001	0.004	0.008	0.014	0.021	0.028	0.035	0.042	0.048	0.052	0.055	0.056	0.055	0.052	0.047	0.041	0.032	0.022	0.011	0
DEFLECTION DUE TO WEIGHT OF SLAB *	0	0.004	0.014	0.001	0.052	0.076	0.103	0.129	0.154	0.175	0.191	0.202	0.204	0.202	0.191	0.173	0.148	0.117	0.081	0.042	0
DEFLECTION DUE TO WEIGHT OF SIDEWALK & RAIL	0	0.000	0.001	0.003	0.004	0.006	0.008	0.010	0.012	0.013	0.015	0.015	0.015	0.015	0.014	0.013	0.011	0.009	0.006	0.003	0
TOTAL DEAD LOAD DEFLECTION	0	0.005	0.019	0.041	0.070	0.103	0.139	0.174	0.208	0.236	0.258	0.272	0.276	0.272	0.257	0.233	0.200	0.158	0.109	0.056	0
VERTICAL CURVE ORDINATE	0	0.056	0.107	0.151	0.190	0.223	0.249	0.270	0.285	0.294	0.297	0.294	0.285	0.270	0.249	0.223	0.190	0.151	0.107	0.056	0
REQUIRED CAMBER	0	3/4"	1 1/2"	2 5/16"	3 1/8"	3 15/16"	4 5/8"	5 5/16"	5 15/16"	6 3/8"	6 11/16"	6 13/16"	6 3/4"	6 1/2"	6 1/16"	5 1/2"	4 11/16"	3 11/16"	2 5/8"	1 3/8"	0

GIRDER #3, #4, #5, & #6

TWENTIETH POINTS	BRG.	0.05	0.10	0.15	0.20	0.25	0.30	0.35	0.40	0.45	0.50	0.55	0.60	0.65	0.70	0.75	0.80	0.85	0.90	0.95	BRG.
DEFLECTION DUE TO WEIGHT OF GIRDER	0	0.001	0.004	0.008	0.014	0.021	0.028	0.035	0.042	0.048	0.052	0.055	0.056	0.055	0.052	0.047	0.041	0.032	0.022	0.011	0
DEFLECTION DUE TO WEIGHT OF SLAB *	0	0.004	0.014	0.030	0.052	0.076	0.103	0.129	0.154	0.175	0.191	0.202	0.205	0.202	0.191	0.173	0.148	0.117	0.081	0.042	0
DEFLECTION DUE TO WEIGHT OF SIDEWALK & RAIL	0	0.001	0.002	0.005	0.009	0.013	0.017	0.021	0.024	0.027	0.030	0.031	0.032	0.031	0.029	0.026	0.023	0.018	0.012	0.006	0
TOTAL DEAD LOAD DEFLECTION	0	0.006	0.020	0.043	0.075	0.110	0.148	0.185	0.220	0.250	0.273	0.288	0.293	0.288	0.272	0.246	0.212	0.167	0.115	0.059	0
VERTICAL CURVE ORDINATE	0	0.056	0.107	0.151	0.190	0.223	0.249	0.270	0.285	0.294	0.297	0.294	0.285	0.270	0.249	0.223	0.190	0.151	0.107	0.056	0
REQUIRED CAMBER	0	3/4"	1 1/2"	2 5/16"	3 3/16"	4"	4 3/4"	5 7/16"	6 1/16"	6 1/2"	6 13/16"	7"	6 15/16"	6 11/16"	6 1/4"	5 5/8"	4 13/16"	3 13/16"	2 11/16"	1 3/8"	0

* INCLUDES SLAB, BUILDUPS & STAY-IN-PLACE FORMS.
ALL VALUES ARE SHOWN IN FEET (DECIMAL FORM), EXCEPT "REQUIRED CAMBER", WHICH IS GIVEN IN INCHES (FRACTION FORM)

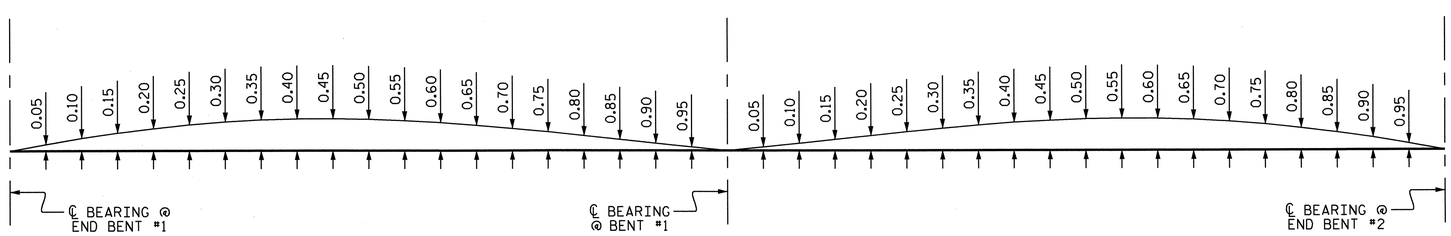

SPAN "A" SPAN "B"

SCHEMATIC CAMBER ORDINATES FOR ALL GIRDERS

SLOPE FOR THE ZERO CAMBER BASE LINE VARIES

PROJECT NO. U-0209B
MECKLENBURG COUNTY
STATION: 103+73.08 -L-

STATE OF NORTH CAROLINA
DEPARTMENT OF TRANSPORTATION
RALEIGH

SUPERSTRUCTURE

DEAD LOAD DEFLECTIONS

NORTH CAROLINA PROFESSIONAL SEAL 30878 ENGINEER KEVIN FISCHER 11/20/12

REVISIONS						SHEET NO.
NO.	BY:	DATE:	NO.	BY:	DATE:	S-96
1			3			TOTAL SHEETS
2			4			117

STR. #3

DRAWN BY : J.D. HAWK DATE : 11/12
CHECKED BY : M.K. BEARD DATE : 11/12

06-NOV-2012 14:57
R:\Structures\Plans\Str3\U0209B_SD_DL_03.dgn
LSUTTON

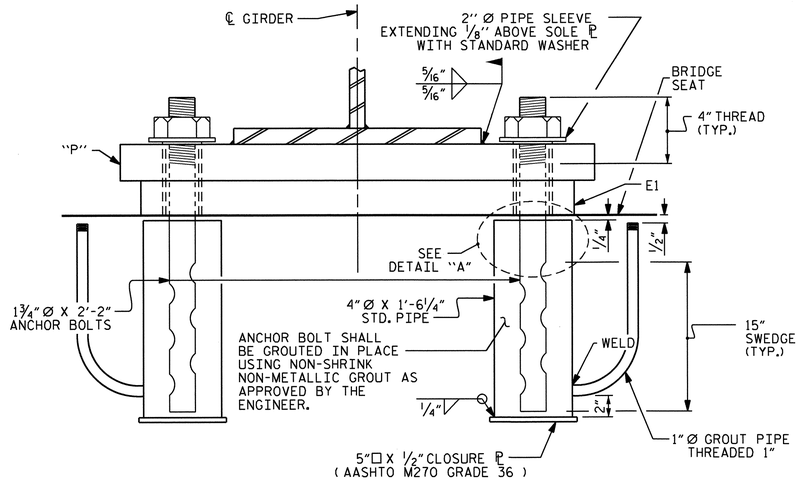

EXPANSION END VIEW

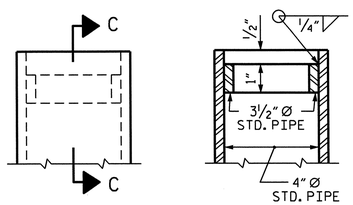

SECTION C-C

DETAIL "A"

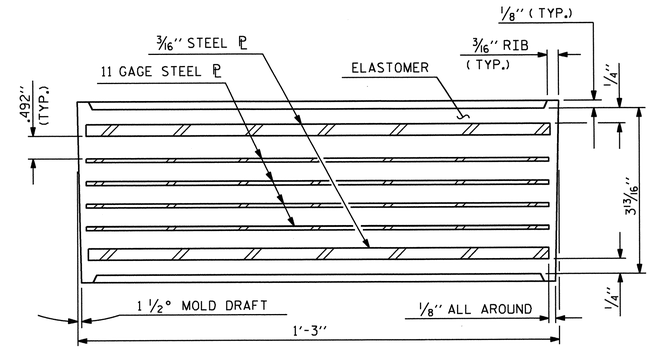

TYPICAL SECTION OF ELASTOMERIC BEARING

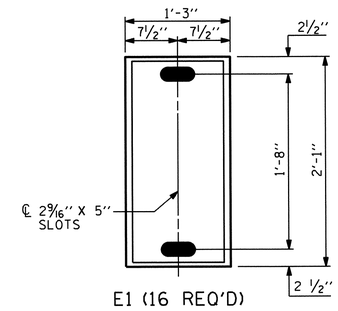

E1 (16 REQ'D)

PLAN VIEW OF ELASTOMERIC BEARING

TYPE VI

NOTES

AT ALL FIXED POINTS OF SUPPORT, NUTS FOR ANCHOR BOLTS ARE TO BE TIGHTENED FINGER TIGHT AND THEN BACKED OFF 1/2 TURN. THE THREAD OF THE NUT AND BOLT SHALL THEN BE BURRED WITH A SHARP POINTED TOOL.

THE 2" Ø PIPE SLEEVE SHALL BE CUT FROM SCHEDULE 40 PVC PLASTIC PIPE. THE PVC PLASTIC PIPE SHALL MEET THE REQUIREMENTS OF ASTM D1785.

THE PAYMENT FOR THE PIPE SLEEVES SHALL BE INCLUDED IN THE SEVERAL PAY ITEMS.

FOR AASHTO M270 GRADE 50W STRUCTURAL STEEL, SOLE PLATE SHALL BE AASHTO M270 GRADE 50W AND SHALL NOT BE GALVANIZED. ANCHOR BOLTS, NUTS AND WASHERS SHALL BE GALVANIZED IN ACCORDANCE WITH THE STANDARD SPECIFICATIONS.

ANCHOR BOLTS SHALL MEET THE REQUIREMENTS OF ASTM A449. NUTS SHALL MEET THE REQUIREMENTS OF AASHTO M291-DH OR AASHTO M292-2H. WASHERS SHALL MEET THE REQUIREMENTS OF AASHTO M293. SHOP DRAWINGS ARE NOT REQUIRED FOR ANCHOR BOLTS, NUTS AND WASHERS. SHOP INSPECTION IS REQUIRED.

WHEN FIELD WELDING THE SOLE PLATE TO THE GIRDER FLANGE, USE TEMPERATURE INDICATING WAX PENS, OR OTHER SUITABLE MEANS, TO ENSURE THAT THE TEMPERATURE OF THE SOLE PLATE DOES NOT EXCEED 300°F. TEMPERATURES ABOVE THIS MAY DAMAGE THE ELASTOMER.

ALL SURFACES OF BEARING PLATES SHALL BE SMOOTH AND STRAIGHT.

THE CLOSURE PLATE, GROUT PIPE AND STANDARD PIPE FOR THE EXPANSION ASSEMBLY NEED NOT BE GALVANIZED.

THE CONTRACTOR'S ATTENTION IS CALLED TO THE FOLLOWING PROCEDURE, WHICH MAY BE REQUIRED BY THE ENGINEER, TO RESET ELASTOMERIC BEARINGS DUE TO GIRDER TRANSLATION AND END ROTATION:

1. ONCE THE DECK HAS CURED, THE GIRDERS SHALL BE JACKED, THEN THE ANCHOR BOLTS AND ELASTOMERIC BEARING SLOTS SHALL BE CENTERED AS NEARLY AS PRACTICAL ABOUT THE BEARING STIFFENER. THIS OPERATION SHALL BE PERFORMED AT APPROXIMATELY 60°F.
2. AFTER CENTERING THE ELASTOMERIC BEARING SLOTS AND ANCHOR BOLTS, THE ANCHOR BOLTS SHALL BE GROUTED.

THE CONTRACTOR MAY PROPOSE ALTERNATE METHODS, PROVIDED DETAILS ARE SUBMITTED TO THE ENGINEER FOR REVIEW AND APPROVAL.

ELASTOMER IN ALL BEARING PADS SHALL BE 60 DUROMETER HARDNESS.

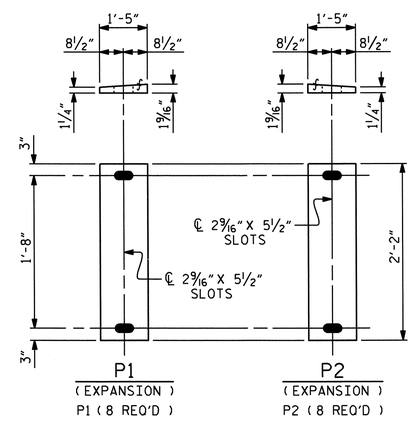

SOLE PLATE DETAILS

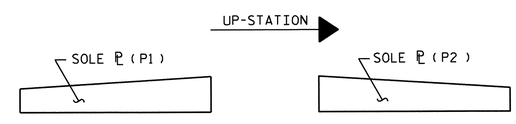

SOLE ℙ PLACEMENT DETAIL

—LOAD RATINGS—	
60 DUROMETER	MAX.D.L.+ L.L.
TYPE VI	352 k

PROJECT NO. U-0209B
MECKLENBURG COUNTY
STATION: 103+73.08 -L-

STATE OF NORTH CAROLINA
DEPARTMENT OF TRANSPORTATION
RALEIGH

STANDARD

ELASTOMERIC BEARING DETAILS

(STEEL SUPERSTRUCTURE)

NORTH CAROLINA PROFESSIONAL SEAL 20878 ENGINEER KEVIN FISCHER
11/20/12

REVISIONS						SHEET NO.
NO.	BY:	DATE:	NO.	BY:	DATE:	S-97
1			3			TOTAL SHEETS
2			4			117

STR. #3

STD. NO. EB2

ASSEMBLED BY : T. BANKOVICH		DATE : 1-2011	
CHECKED BY : M.K. BEARD		DATE : 4/19/11	
DRAWN BY : EEM 10/95	REV. 7/10/01	LES/RDR	
CHECKED BY : PEK 10/95	REV. 5/1/06	TLA/GM	
	REV. 10/1/11	MAA/GM	

07-SEP-2012 10:59
R:\Structures\Plans\Str3\U0209B_SD_BG_03.dgn
lsutton

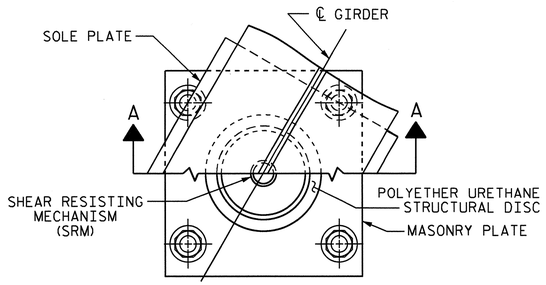

CUT-AWAY PLAN

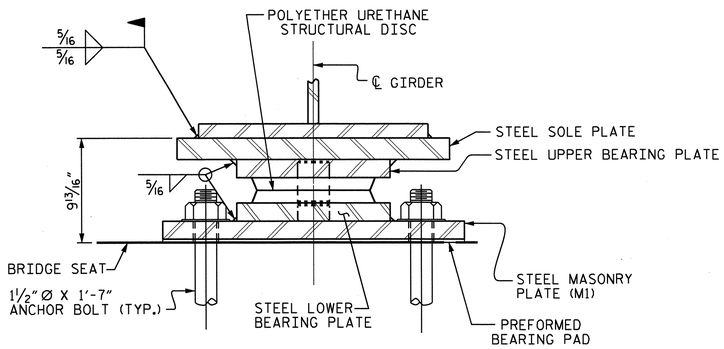

SECTION A-A

DB1, FIXED
(8 REQ'D)

DISC BEARING DETAILS

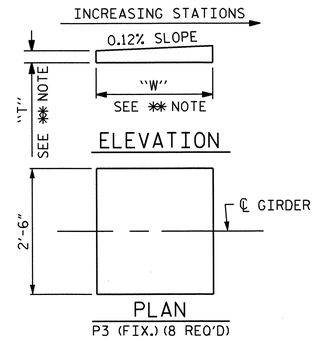

P3 (FIX.) (8 REQ'D)

✱✱ NOTE:
DIMENSIONS "W" AND "T" ARE TO BE DETERMINED BY THE MANUFACTURER.

SOLE PLATE DETAILS

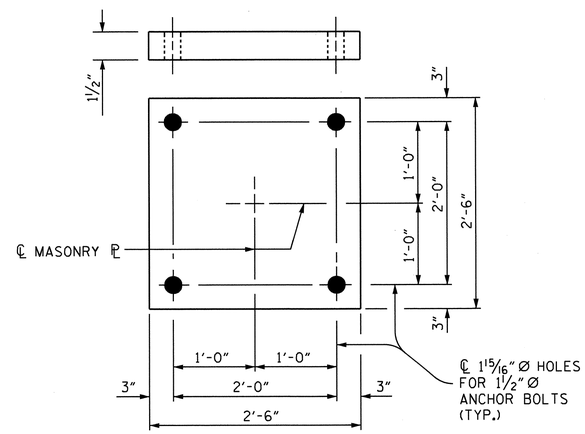

PLAN
M1 (8 REQ'D)

MASONRY PLATE DETAILS

NOTES

FOR DISC BEARINGS, SEE SPECIAL PROVISIONS.

FOR THERMAL SPRAYED COATINGS (METALLIZATION), SEE SPECIAL PROVISIONS.

AT ALL POINTS OF SUPPORT, NUTS FOR ANCHOR BOLTS SHALL BE TIGHTENED FINGER TIGHT AND GIVEN AN ADDITIONAL 1/4" TURN. THE THREAD OF THE NUT AND BOLT SHALL THEN BE BURRED WITH A SHARP POINTED TOOL.

WHEN WELDING THE SOLE PLATE TO THE GIRDER, USE TEMPERATURE INDICATING WAX PENS, OR OTHER SUITABLE MEANS, TO ENSURE THAT THE TEMPERATURE OF THE BEARING DOES NOT EXCEED 250°F TEMPERATURES ABOVE THIS MAY DAMAGE THE STRUCTURAL DISC.

SOLE PLATES SHOULD BE WELDED TO GIRDER FLANGES AND ANCHOR BOLTS SHOULD BE GROUTED BEFORE FALSEWORK IS PLACED.

ALL SURFACES OF BEARING PLATES SHALL BE SMOOTH AND STRAIGHT.

THE MINIMUM ROTATIONAL CAPACITY FOR ALL BEARINGS SHALL BE 0.02 RADIANS.

THE CONTRACTOR SHALL ADJUST THE GIRDER BUILDUPS AS NECESSARY TO INCORPORATE A MAXIMUM PERMISSIBLE VARIATION IN DISC BEARING DEPTH OF 1/2". SEE SPECIAL PROVISION FOR DISC BEARINGS.

PROJECT NO. U-0209B
MECKLENBURG COUNTY
STATION: 103+73.08 -L-

TABLE FOR LOADS AND MOVEMENT

BEARING	LOCATION	UNFACTORED VERTICAL LOAD (KIPS)				FACTORED LATERAL LOAD (KIPS)	TOTAL MOVEMENT (INCHES)
		DEAD		LIVE	TOTAL		
		DC	DW	LL+IM			
DB1 (FIXED)	BENT #1	432	48	271	751	154	———

STATE OF NORTH CAROLINA
DEPARTMENT OF TRANSPORTATION
RALEIGH

SUPERSTRUCTURE

DISC BEARING DETAILS

NORTH CAROLINA PROFESSIONAL SEAL 20878 ENGINEER KEVIN FISCHER 11/20/12

REVISIONS						SHEET NO.
NO.	BY:	DATE:	NO.	BY:	DATE:	S-98
1			3			TOTAL SHEETS
2			4			117

STR. #3

DRAWN BY : J.D. HAWK DATE : 11/12
CHECKED BY : M.K. BEARD DATE : 11/12

06-NOV-2012 14:57
R:\Structures\Plans\Str3\U0209B_SD_BG_03.dgn
LSUTTON

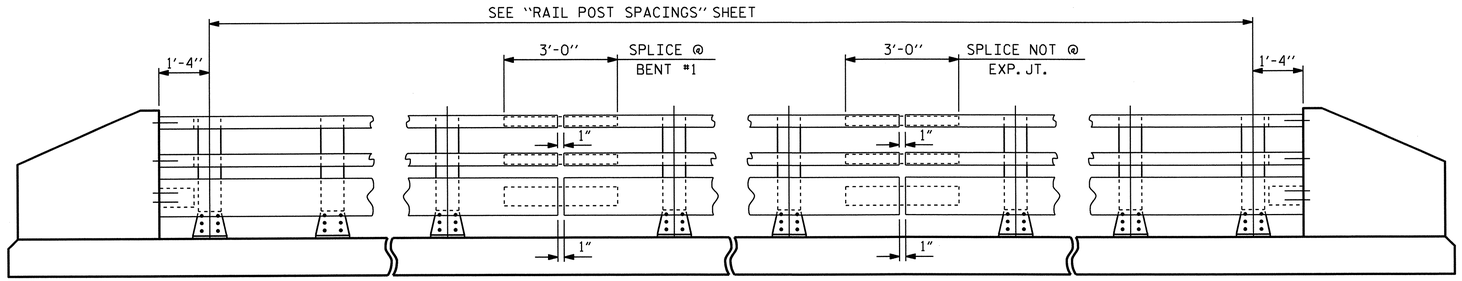

NOTE:
FOR ATTACHMENT OF METAL RAIL TO END POST, SEE STANDARD NO. BMR7.

ELEVATION

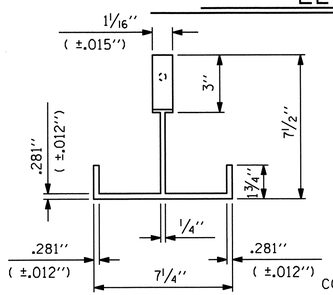

PLAN

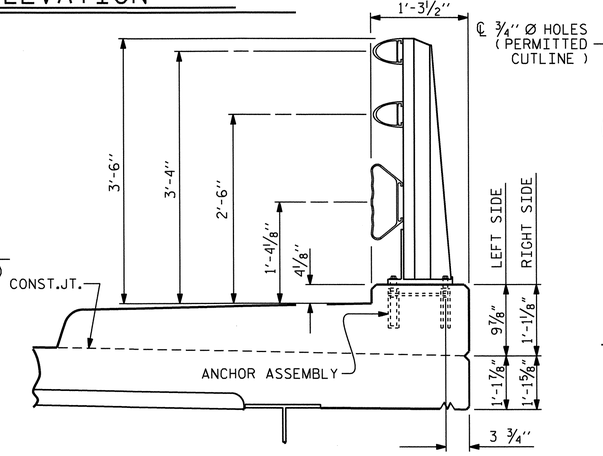

SECTION THRU RAIL

FOR ANCHOR ASSEMBLY, SEE "3 BAR METAL RAIL" STD.No.BMR6

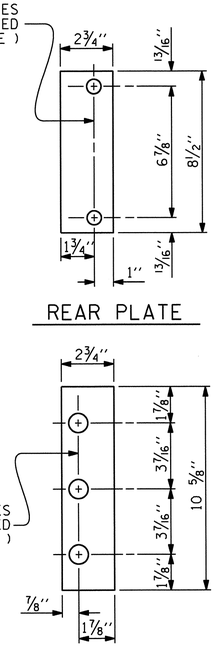

REAR PLATE

FRONT PLATE

SHIM DETAILS

NOTE :
SHIMS MAY BE CUT ALONG PERMITTED CUTLINE OR SLOTTED TO EDGE OF PLATE TO FACILITATE PLACEMENT.

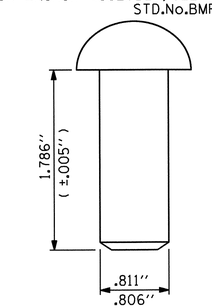

RIVET DETAIL

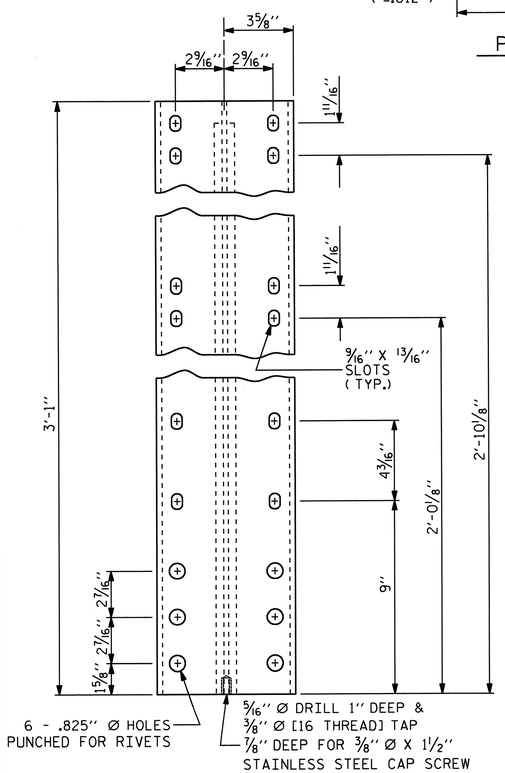

FRONT ELEVATION

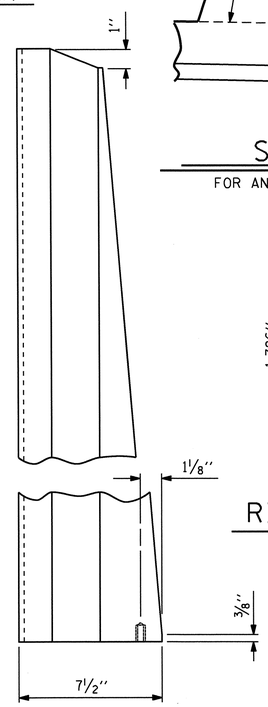

SIDE ELEVATION

DETAILS OF POST

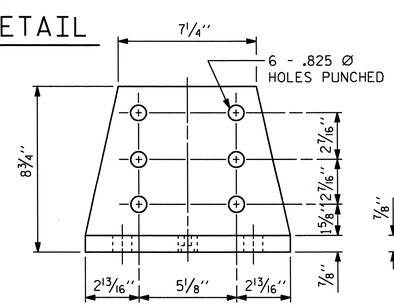

FRONT ELEVATION

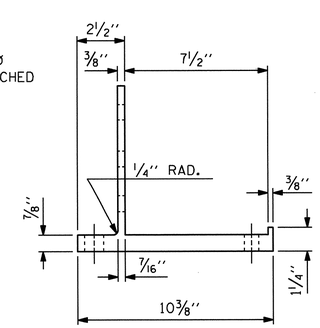

SIDE ELEVATION

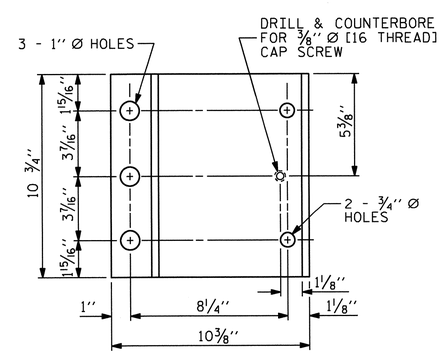

PLAN

POST BASE DETAILS

NOTES

AT THE CONTRACTOR'S OPTION, METAL RAIL MAY BE EITHER ALUMINUM OR GALVANIZED STEEL IN ACCORDANCE WITH THE REQUIREMENTS OF THE GENERAL NOTES AND THE FOLLOWING SPECIFICATIONS FOR THE ALTERNATE MATERIALS; HOWEVER, THE CONTRACTOR WILL BE REQUIRED TO USE THE SAME RAIL MATERIAL ON ALL STRUCTURES ON THE PROJECT FOR WHICH METAL RAIL IS DESIGNATED.

ALUMINUM RAILS

MATERIAL FOR POSTS, BASES AND RAILS, EXPANSION BARS AND CLAMP BARS SHALL BE ASTM B221 ALLOY 6061-T6.

MATERIAL FOR RIVETS SHALL BE ASTM B316 ALLOY 6061-T6. RIVETS SHALL BE STANDARD BUTTON HEAD AND CONE POINT COLD DRIVEN AS PER DRAWING.

THE BASE OF RAIL POSTS, OR ANY OTHER ALUMINUM SURFACE IN CONTACT WITH CONCRETE SHALL BE THOROUGHLY COATED WITH AN ALUMINUM IMPREGNATED CAULKING COMPOUND OF APPROVED QUALITY.

MATERIAL FOR SHIMS TO BE ASTM B209 ALLOY 6061-T6.

GALVANIZED STEEL RAILS

MATERIAL AND GALVANIZING ARE TO CONFORM TO THE FOLLOWING SPECIFICATIONS:

POST, POST BASES, RAILS, EXPANSION BARS AND CLAMP BARS : AASHTO M270 GRADE 36 STRUCTURAL STEEL - GALVANIZED TO AASHTO M111.

RIVETS: RIVETS SHALL MEET THE REQUIREMENTS OF ASTM A502 FOR GRADE 1 RIVETS.

THE CUT ENDS OF GALVANIZED STEEL RAILING, AFTER GRINDING SMOOTH SHALL BE GIVEN TWO COATS OF ZINC RICH PAINT MEETING THE REQUIREMENTS OF FEDERAL SPECIFICATION MIL-P-26915 USAF TYPE 1, OR OF FEDERAL SPECIFICATIONS TT-P-641.

SHIMS: SHIMS SHALL MEET THE REQUIREMENTS OF ASTM A570 FOR GRADE 33 OR A611 FOR GRADE C AND SHALL BE GALVANIZED IN ACCORDANCE WITH AASHTO M111.

RAIL CAPS: RAIL CAPS SHALL MEET THE REQUIREMENTS OF ASTM A570 FOR GRADE 33 OR A611 FOR GRADE C AND SHALL BE GALVANIZED IN ACCORDANCE WITH AASHTO M111.

GENERAL NOTES

RAILING SHALL BE CONTINUOUS FROM END POST TO END POST OF BRIDGE. EACH JOINT IN RAIL LENGTH SHALL BE SPLICED AS DETAILED. PANEL LENGTHS OF RAIL SHALL BE ATTACHED TO A MINIMUM OF THREE POSTS. PLACE ONE JOINT SPLICE JUST BEYOND THE 3RD RAIL POST FROM EACH END, TYPICALLY 14' FROM THE END. PLACE OTHER JOINTS AS NEEDED.

FOR END OF RAIL TO CLEAR FACE OF CONCRETE END POST DIMENSION, SEE STANDARD NO. BMR7.

CAP SCREWS SHALL BE ASTM F593 ALLOY 305 STAINLESS STEEL. WASHERS FOR RAIL ATTACHMENT SHALL MEET THE REQUIREMENTS OF ASTM F844 EXCEPT THEY SHALL BE MADE FROM ALLOY 304 STAINLESS STEEL.

CERTIFIED MILL REPORTS ARE REQUIRED FOR RAILS AND POSTS. SHOP INSPECTION IS NOT REQUIRED.

METAL RAIL POSTS SHALL BE SET NORMAL TO CURB GRADE.

METHOD OF MEASUREMENT FOR METAL RAILS: FOR LENGTH OF METAL RAILS TO BE PAID FOR, SEE THE STANDARD SPECIFICATIONS.

CURVED RAIL USAGE: WHERE RAILS ARE TO BE USED ON BRIDGES ON HORIZONTAL AND/OR VERTICAL CURVATURE THE CONTRACTOR MAY, AT HIS OPTION, HAVE THE REQUIRED CURVATURE IN THE RAIL FORMED IN THE SHOP OR IN THE FIELD. IN EITHER EVENT, THE RAIL SHALL CONFORM WITHOUT BUCKLING OR KINKING TO THE REQUIRED CURVATURE IN A UNIFORM MANNER ACCEPTABLE TO THE ENGINEER.

TO INSURE FUTURE IDENTIFICATION OF THE FABRICATOR, A PERMANENT IDENTIFYING MARK SHALL BE PLACED ON EACH POST. THE METHOD OF MARKING AND LOCATION SHALL BE SUCH THAT IT DOES NOT DETRACT FROM THE APPEARANCE OF THE POST, BUT REMAIN VISIBLE AFTER RAIL PLACEMENT.

SHIMS SHALL BE USED AS NECESSARY FOR POST ALIGNMENT.

ALLOY 6351-T5 MAY BE SUBSTITUTED FOR ALLOY 6061-T6 WHERE APPLICABLE.

MINOR VARIATIONS IN DETAILS OF METAL RAIL WILL BE CONSIDERED. DETAILS OF SUCH VARIATIONS, IF DESIRED, SHALL BE SUBMITTED FOR APPROVAL.

PAY LENGTH = 496.40 LIN. FT.

NORTH CAROLINA PROFESSIONAL SEAL 20878 ENGINEER KEVIN FISCHER 11/20/12

PROJECT NO. U-0209B
MECKLENBURG COUNTY
STATION: 103+73.08 -L-

SHEET 1 OF 3

STATE OF NORTH CAROLINA
DEPARTMENT OF TRANSPORTATION
RALEIGH

STANDARD

3 BAR METAL RAIL

REVISIONS						SHEET NO.
NO.	BY:	DATE:	NO.	BY:	DATE:	S-99
1			3			TOTAL SHEETS
2			4			117

STR. #3

STD. NO. BMR5

ASSEMBLED BY : T. BANKOVICH		DATE : 1-2011	
CHECKED BY : M.K. BEARD		DATE : 4/19/11	
DRAWN BY : JMB 1/88	REV. 5/7/03	RWW/JTE	
CHECKED BY : GGH 1/88	REV. 5/1/06	TLA/GM	
	REV. 10/1/11	MAA/GM	

11-SEP-2012 09:43
R:\Structures\Plans\Str3\U0209B_SD_3MR_03.dgn
lsutton

NOTES

STRUCTURAL CONCRETE ANCHOR ASSEMBLY

THE STRUCTURAL CONCRETE ANCHOR ASSEMBLY SHALL CONSIST OF THE FOLLOWING COMPONENTS:

A. FERRULES SHALL BE MADE FROM STEEL MEETING THE REQUIREMENTS OF AASHTO M169, GRADE 12L14 AND SHALL HAVE A MINIMUM LENGTH OF THREADS OF 2'' FOR 3/4'' FERRULES AND 1 3/4'' FOR 5/8'' FERRULES.

B. 3 - 3/4'' Ø X 2 1/2'' BOLTS WITH WASHERS. BOLTS SHALL CONFORM TO THE REQUIREMENTS OF ASTM A307. BOLTS AND WASHERS SHALL BE GALVANIZED. AT THE CONTRACTOR'S OPTION, STAINLESS STEEL BOLTS AND WASHERS MAY BE USED AS AN ALTERNATE FOR THE 3/4'' Ø X 2 1/2'' GALVANIZED BOLTS AND WASHERS. THEY SHALL CONFORM TO OR EXCEED THE MECHANICAL REQUIREMENTS OF ASTM A307. THE USE OF THIS ALTERNATE SHALL BE APPROVED BY THE ENGINEER.

C. 2 - 5/8'' Ø X 2 1/4'' BOLTS WITH WASHERS. BOLTS SHALL CONFORM TO THE REQUIREMENTS OF ASTM A307. BOLTS AND WASHERS SHALL BE GALVANIZED. AT THE CONTRACTOR'S OPTION, STAINLESS STEEL BOLTS AND WASHERS MAY BE USED AS AN ALTERNATE FOR THE 5/8'' Ø X 2 1/4'' GALVANIZED BOLTS AND WASHERS. THEY SHALL CONFORM TO OR EXCEED THE MECHANICAL REQUIREMENTS OF ASTM A307. THE USE OF THIS ALTERNATE SHALL BE APPROVED BY THE ENGINEER.

D. WIRE STRUT SHOWN IN THE CONCRETE ANCHOR ASSEMBLY DETAIL IS THE MINIMUM ALLOWABLE SIZE AND SHALL HAVE A MINIMUM TENSILE STRENGTH OF 100,000 PSI. AS AN OPTION, A 7/16'' Ø WIRE STRUT WITH A MINIMUM TENSILE STRENGTH OF 90,000 PSI IS ACCEPTABLE.

E. THE METAL RAIL ANCHOR ASSEMBLIES TO BE HOT DIPPED GALVANIZED TO CONFORM TO REQUIREMENTS OF AASHTO M111.

F. THE COST OF THE METAL RAIL ANCHOR ASSEMBLY WITH BOLTS AND WASHERS COMPLETE IN PLACE SHALL BE INCLUDED IN THE PRICE BID FOR LINEAR FEET OF METAL RAIL.

G. BOLTS TO BE TIGHTENED ONE-HALF TURN WITH A WRENCH FROM A FINGER-TIGHT POSITION.

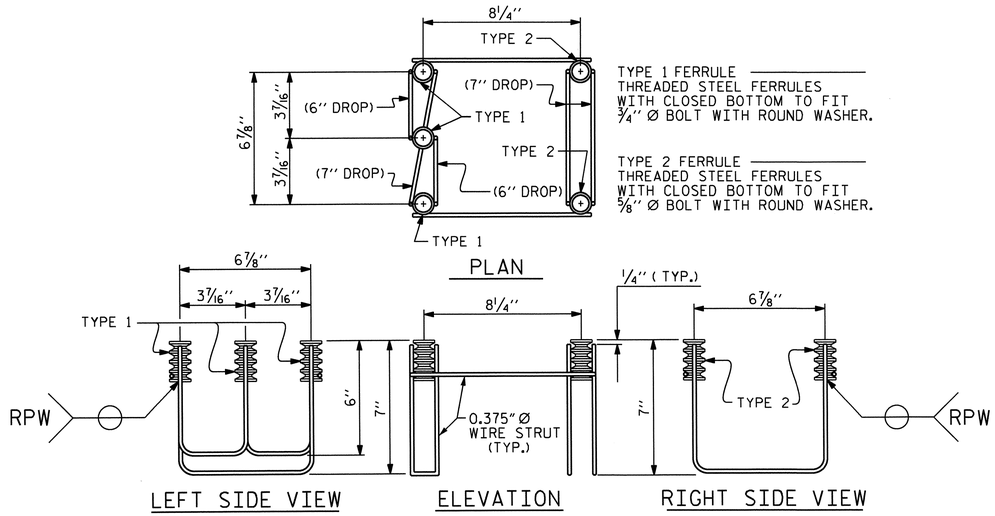

5-BOLT METAL RAIL ANCHOR ASSEMBLY

(82 ASSEMBLIES REQUIRED)

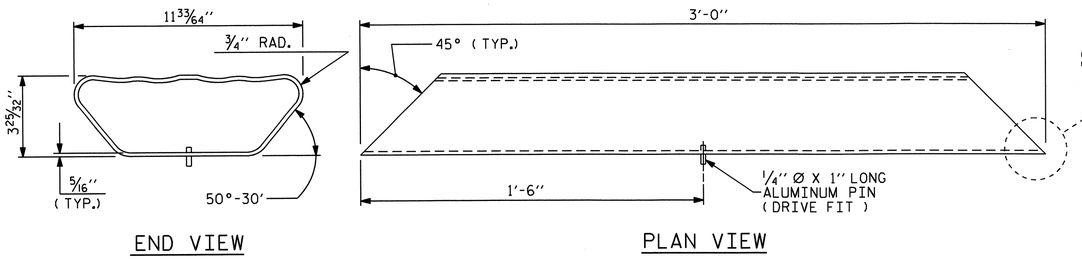

BOTTOM RAIL EXPANSION BAR

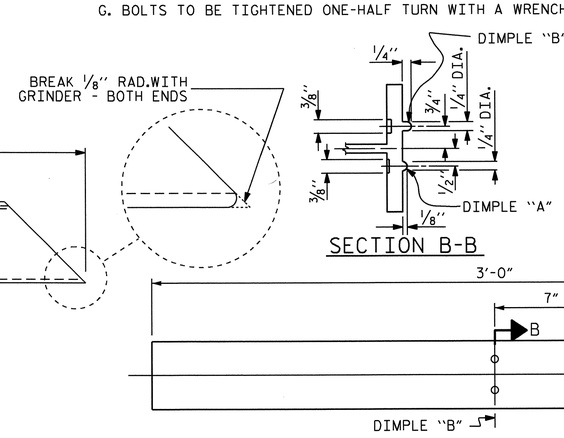

TOP & MIDDLE RAIL EXPANSION BAR

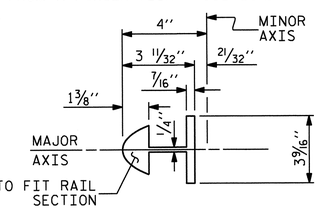

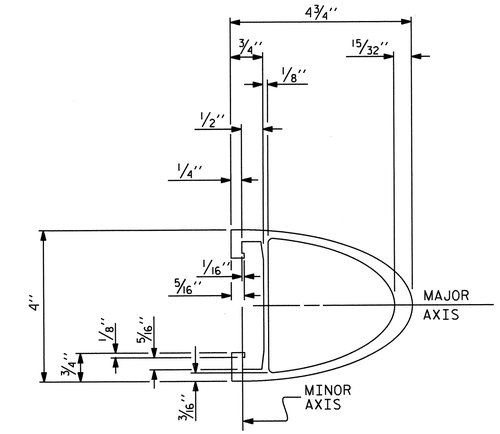

TOP & MIDDLE RAIL SECTION

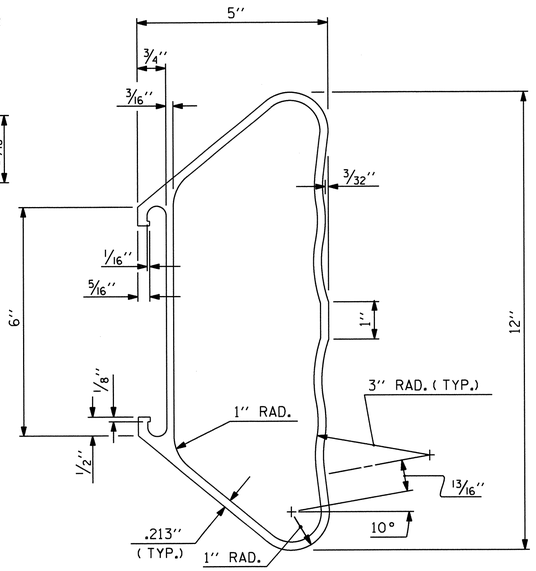

BOTTOM RAIL SECTION

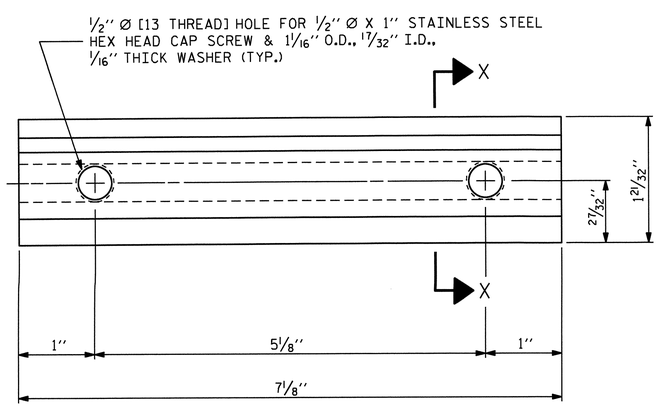

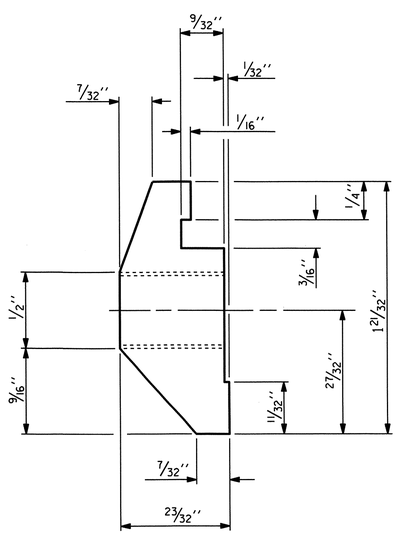

CLAMP BAR DETAIL

(6 REQUIRED PER POST)

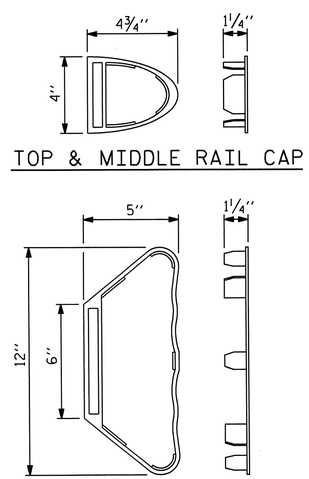

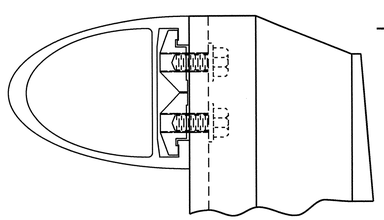

CLAMP ASSEMBLY

TOP RAIL SHOWN
(MIDDLE & BOTTOM RAIL ARE SIMILAR)

PROJECT NO. U-0209B
MECKLENBURG COUNTY
STATION: 103+73.08 -L-

SHEET 2 OF 3

STATE OF NORTH CAROLINA
DEPARTMENT OF TRANSPORTATION
RALEIGH

STANDARD

3 BAR METAL RAIL

NORTH CAROLINA PROFESSIONAL SEAL 30838 ENGINEER KEVIN FISCHER 11/20/12

REVISIONS							SHEET NO.
NO.	BY:	DATE:	NO.	BY:	DATE:		S-100
1			3				TOTAL SHEETS
2			4				117

STR. #3

STD. NO. BMR6

ASSEMBLED BY : T. BANKOVICH		DATE : 1-2011	
CHECKED BY : M.K. BEARD		DATE : 4/19/11	
DRAWN BY : JMB	1/88	REV. 5/7/03	RWW/JTE
CHECKED BY : GGH	1/88	REV. 5/1/06	TLA/GM
		REV. 10/1/11	MAA/GM

07-SEP-2012 10:59
R:\Structures\Plans\Str3\U0209B_SD_3MR_03.dgn
lsutton

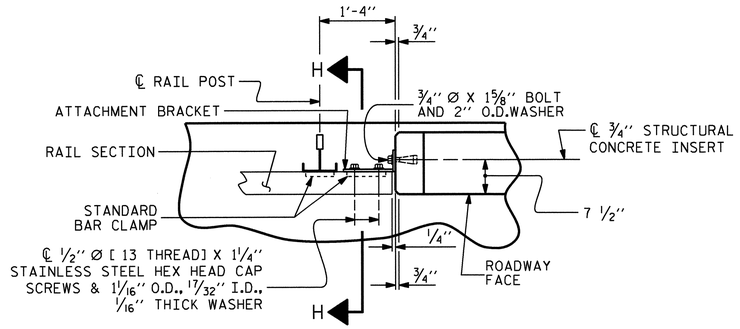

PLAN OF RAIL AND END POST

(STIFFENER ON 1/2" ℙ NOT SHOWN FOR CLARITY)

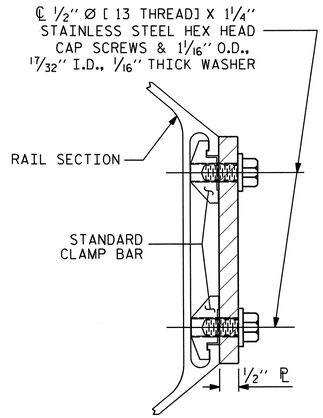

SECTION H-H

(FOR BOTTOM RAIL)

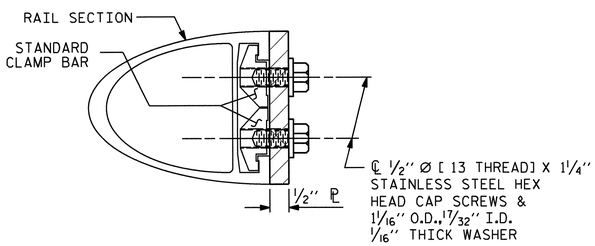

SECTION H-H

(FOR TOP & MIDDLE RAIL)

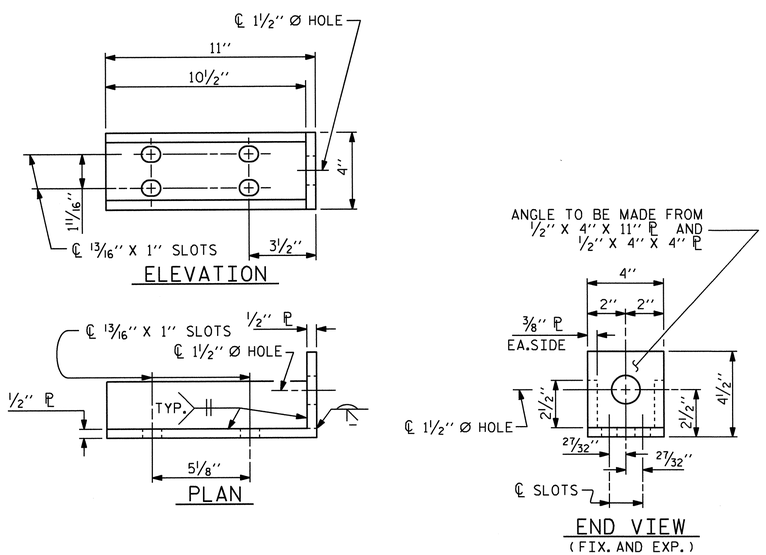

DETAILS FOR ATTACHMENT BRACKET

(TOP & MIDDLE RAIL ONLY)

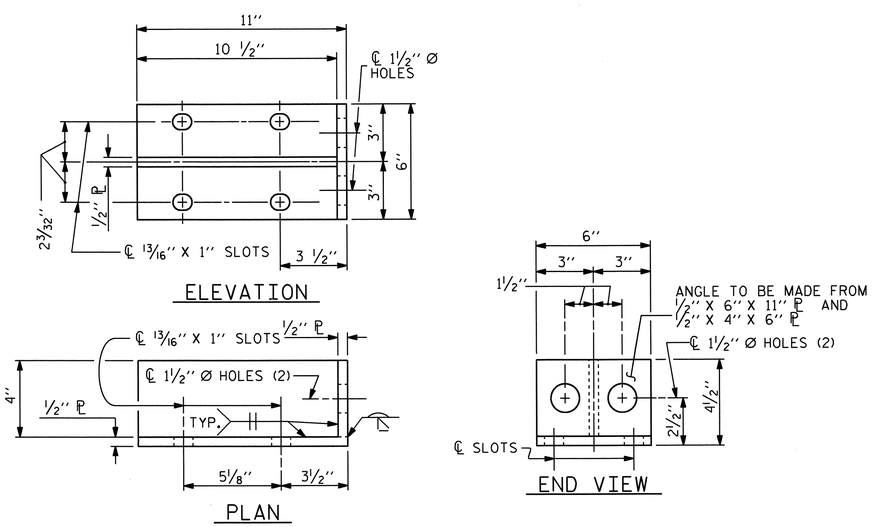

DETAILS FOR ATTACHMENT BRACKET

(BOTTOM RAIL ONLY)

NOTES

METAL RAIL TO END POST CONNECTION

THE METAL RAIL TO END POST CONNECTION SHALL CONSIST OF THE FOLLOWING COMPONENTS:

A. 1/2" PLATES SHALL CONFORM TO AASHTO M270 GRADE 36 AND SHALL BE GALVANIZED AFTER FABRICATION.

B. 3/4" STRUCTURAL CONCRETE INSERT SHALL HAVE A WORKING LOAD SHEAR CAPACITY OF 4800 LBS. THE FERRULES SHALL ENGAGE A 3/4" Ø X 1 5/8" BOLT WITH 2" O.D. WASHER IN PLACE. THE 3/4" Ø X 1 5/8" BOLT SHALL HAVE N. C. THREADS.

C. CAP SCREWS FOR RAIL ATTACHMENT TO ANGLE SHALL CONFORM TO THE REQUIREMENTS OF ASTM F593 ALLOY 305 STAINLESS STEEL. CAP SCREWS TO BE CENTERED IN SLOTS AT 60°F. WASHERS FOR RAIL ATTACHMENT SHALL MEET THE REQUIREMENTS OF ASTM F844 EXCEPT THEY SHALL BE MADE FROM ALLOY 304 STAINLESS STEEL.

D. STANDARD CLAMP BARS (STD. No. BMR6).

THE COST OF THE STANDARD CLAMP BARS AND CAP SCREWS USED IN THE METAL RAIL TO END POST CONNECTION SHALL BE INCLUDED IN THE UNIT CONTRACT PRICE BID FOR LINEAR FEET OF 3 BAR METAL RAIL.

THE 3/4" STRUCTURAL CONCRETE INSERT WITH BOLT SHALL BE ASSEMBLED IN THE SHOP.

THE COST OF THE 3/4" STRUCTURAL CONCRETE INSERT ASSEMBLY, AND THE 1/2" PLATES COMPLETE IN PLACE SHALL BE INCLUDED IN THE VARIOUS PAY ITEMS.

THE CONTRACTOR, AT HIS OPTION, MAY USE AN ADHESIVE BONDING SYSTEM IN LIEU OF THE STRUCTURAL CONCRETE INSERT EMBEDDED IN THE END POST. IF THE ADHESIVE BONDING SYSTEM IS USED, THE 3/4" Ø X 1 5/8" BOLT WITH WASHER SHALL BE REPLACED WITH A 3/4" Ø X 6 1/2" BOLT AND 2" O.D.WASHER. ALL SPECIFICATIONS THAT APPLY TO THE 3/4" Ø X 1 5/8" BOLT SHALL APPLY TO THE 3/4" Ø X 6 1/2" BOLT. FIELD TESTING OF THE ADHESIVE BONDING SYSTEM IS NOT REQUIRED.

NOTES

STRUCTURAL CONCRETE INSERT

THE STRUCTURAL CONCRETE INSERT ASSEMBLY SHALL CONSIST OF THE FOLLOWING COMPONENTS:

A. FERRULES SHALL BE MADE FROM STEEL MEETING THE REQUIREMENTS OF AASHTO M169, GRADE 12L14 AND SHALL HAVE A MINIMUM LENGTH OF THREADS OF 1 1/2".

B. 1 - 3/4" Ø X 1 5/8" BOLT WITH WASHER. BOLT SHALL CONFORM TO THE REQUIREMENTS OF ASTM A307. BOLT AND WASHER SHALL BE GALVANIZED. AT THE CONTRACTORS OPTION, STAINLESS STEEL BOLT AND WASHER MAY BE USED AS AN ALTERNATE FOR THE 3/4" Ø X 1 5/8" GALVANIZED BOLT AND WASHER. THEY SHALL CONFORM TO OR EXCEED THE MECHANICAL REQUIREMENTS OF ASTM A307. THE USE OF THIS ALTERNATE SHALL BE APPROVED BY THE ENGINEER.

C. WIRE STRUT SHOWN IN THE CONCRETE INSERT ASSEMBLY DETAIL IS THE MINIMUM ALLOWABLE SIZE AND SHALL HAVE A MINIMUM TENSILE STRENGTH OF 100,000 PSI. AS AN OPTION, A 7/16" Ø WIRE STRUT WITH A MINIMUM TENSILE STRENGTH OF 90,000 PSI IS ACCEPTABLE.

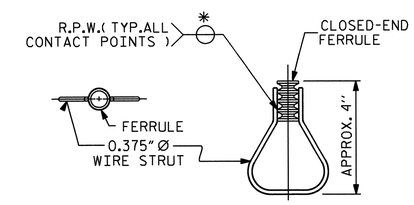

STRUCTURAL CONCRETE INSERT

* EACH WELDED ATTACHMENT OF WIRE TO FERRULE SHALL DEVELOP THE TENSILE STRENGTH OF THE WIRE.

PROJECT NO. U-0209B

MECKLENBURG COUNTY

STATION: 103+73.08 -L-

SHEET 3 OF 3

STATE OF NORTH CAROLINA
DEPARTMENT OF TRANSPORTATION
RALEIGH

STANDARD

3 BAR METAL RAIL

NORTH CAROLINA PROFESSIONAL SEAL 20878 ENGINEER KEVIN FISCHER 11/20/12

ASSEMBLED BY : T. BANKOVICH	DATE : 1-2011
CHECKED BY : M.K. BEARD	DATE : 4/19/11

DRAWN BY : JMB	1/88	REV. 5/7/03	RWW/JTE
CHECKED BY : GGH	1/88	REV. 5/1/06	TLA/GM
		REV. 10/1/11	MAA/GM

REVISIONS

NO.	BY:	DATE:	NO.	BY:	DATE:
1			3		
2			4		

SHEET NO. S-101

TOTAL SHEETS 117

STR. #3

STD. NO. BMR7

07-SEP-2012 10:59
R:\Structures\Plans\Str3\U0209B_SD_3MR_03.dgn
lsutton

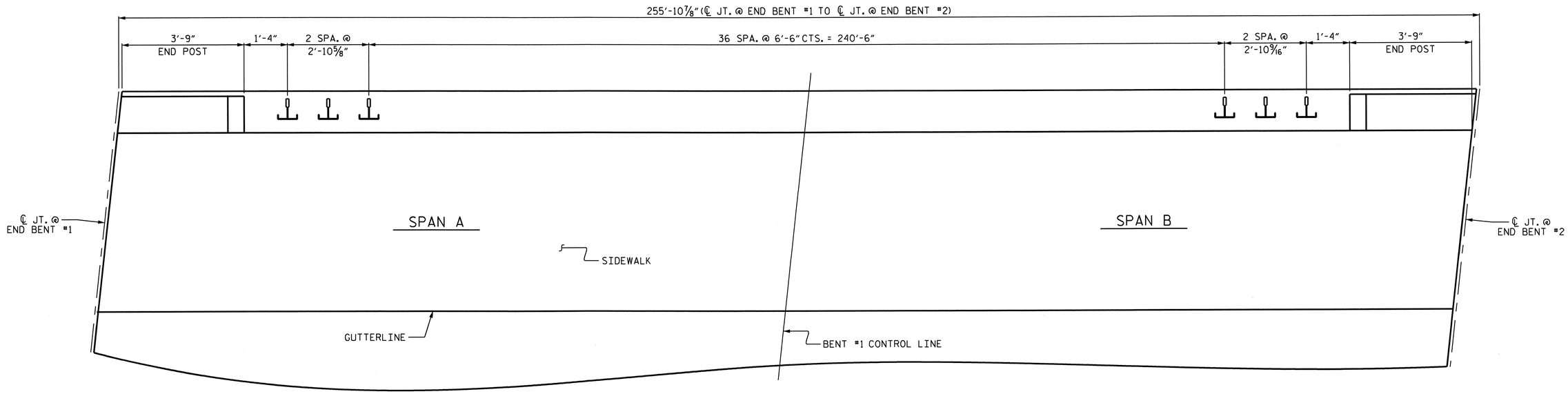

PLAN OF RAIL POST SPACING

LEFT SIDE SHOWN, RIGHT SIDE SIMILAR

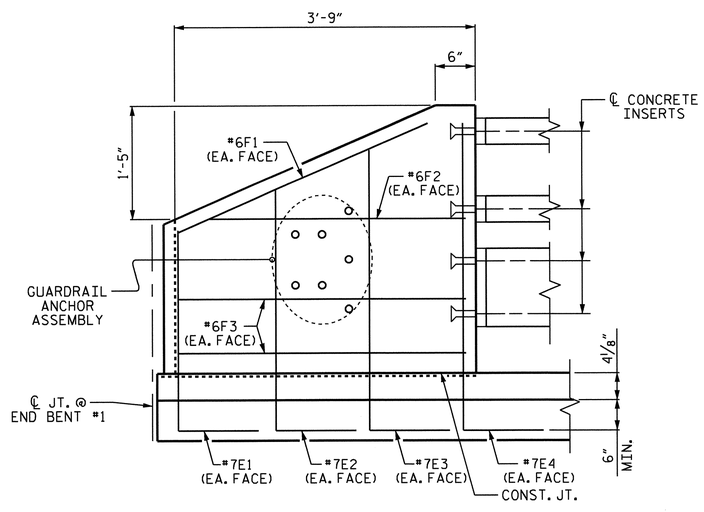

ELEVATION

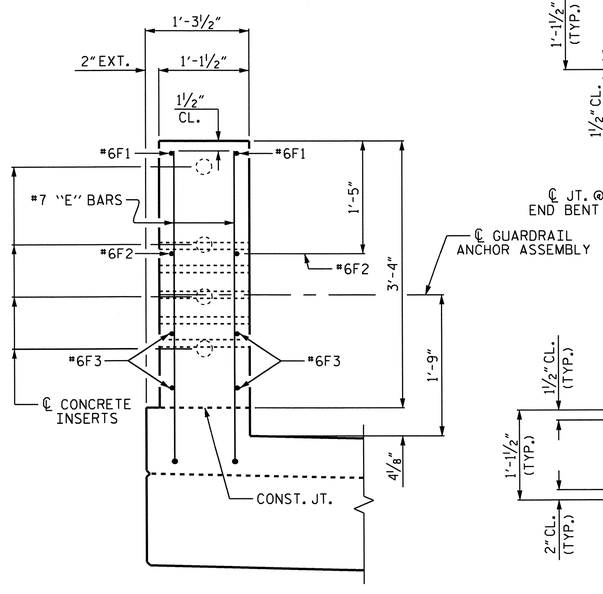

END VIEW

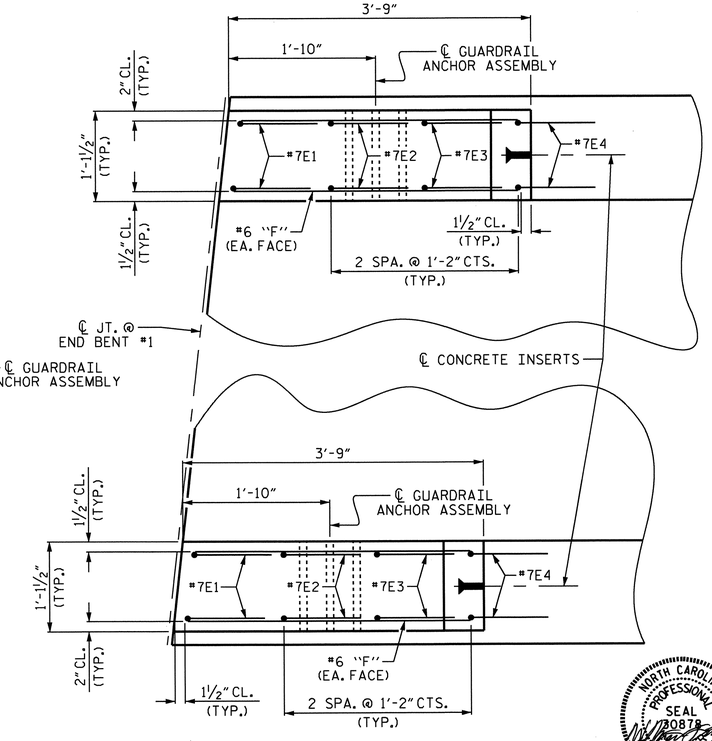

PLAN

END POST DETAILS

END BENT #1 SHOWN, END BENT #2 SIMILAR

PROJECT NO. U-0209B
MECKLENBURG COUNTY
STATION: 103+73.08 -L-

STATE OF NORTH CAROLINA
DEPARTMENT OF TRANSPORTATION
RALEIGH

SUPERSTRUCTURE

RAIL POST SPACING AND END OF RAIL DETAILS

NORTH CAROLINA PROFESSIONAL SEAL 30878 ENGINEER KEVIN FISCHER
11/20/12

REVISIONS						SHEET NO.
NO.	BY:	DATE:	NO.	BY:	DATE:	S-102
1			3			TOTAL SHEETS
2			4			117

STR. #3

DRAWN BY : T. BANKOVICH DATE : 1-2011
CHECKED BY : M.K. BEARD DATE : 4/19/11

07-SEP-2012 10:59
R:\Structures\Plans\Str3\U0209B_SD_3MR_03.dgn
lsutton

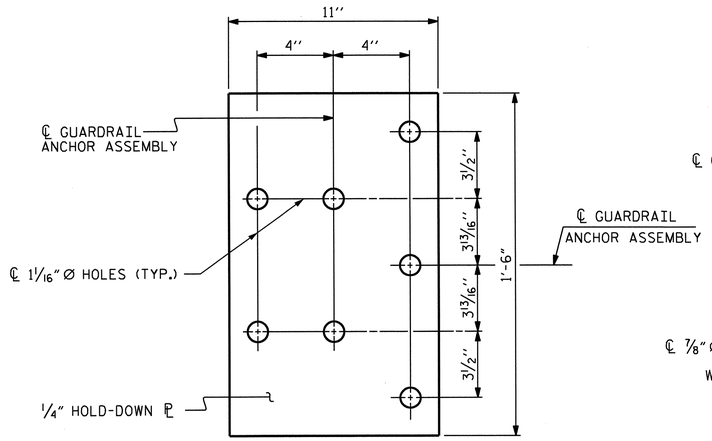

PLAN

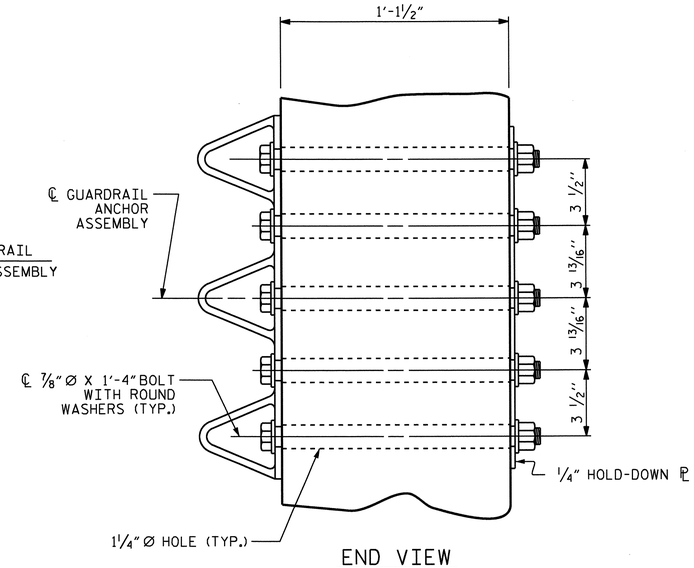

END VIEW

GUARDRAIL ANCHOR ASSEMBLY DETAILS

NOTES

THE GUARDRAIL ANCHOR ASSEMBLY SHALL CONSIST OF A 1/4" HOLD DOWN PLATE AND 7 - 7/8" Ø BOLTS WITH NUTS AND WASHERS.

THE HOLD-DOWN PLATE SHALL CONFORM TO AASHTO M270 GRADE 36. AFTER FABRICATION, THE HOLD-DOWN PLATE SHALL BE HOT-DIP GALVANIZED IN ACCORDANCE WITH AASHTO M111.

BOLTS SHALL CONFORM TO THE REQUIREMENTS OF ASTM A307 AND NUTS SHALL CONFORM TO THE REQUIREMENTS OF AASHTO M291. BOLTS, NUTS AND WASHERS SHALL BE GALVANIZED. AT THE CONTRACTOR'S OPTION, STAINLESS STEEL BOLTS, NUTS AND WASHERS MAY BE USED AS AN ALTERNATE FOR THE 7/8" Ø GALVANIZED BOLTS, NUTS AND WASHERS. THEY SHALL CONFORM TO OR EXCEED THE MECHANICAL REQUIREMENTS OF ASTM A307. THE USE OF THIS ALTERNATE SHALL BE APPROVED BY THE ENGINEER.

THE GUARDRAIL ANCHOR ASSEMBLY IS REQUIRED AT ALL POINTS WHERE APPROACH GUARDRAIL IS TO BE ATTACHED TO THE END OF THE PARAPET. FOR POINTS OF ATTACHMENT, SEE SKETCH.

AFTER INSTALLATION, THE EXPOSED THREAD OF THE BOLT SHALL BE BURRED WITH A SHARP POINTED TOOL.

THE COST OF THE GUARDRAIL ANCHOR ASSEMBLIES WITH BOLTS, NUTS AND WASHERS COMPLETE IN PLACE, SHALL BE INCLUDED IN THE VARIOUS PAY ITEMS.

THE VERTICAL REINFORCING BARS MAY BE SHIFTED SLIGHTLY IN THE END POST TO CLEAR ASSEMBLY BOLTS.

THE 1 1/4" Ø HOLES SHALL BE FORMED OR DRILLED WITH A CORE BIT. IMPACT TOOLS WILL NOT BE PERMITTED. ANY CONCRETE DAMAGED BY THIS WORK SHALL BE REPAIRED TO THE SATISFACTION OF THE ENGINEER.

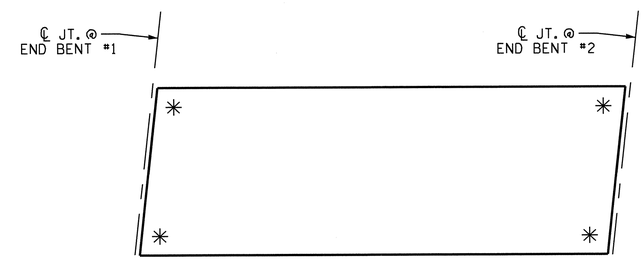

SKETCH SHOWING POINTS OF ATTACHMENT

* LOCATION OF GUARDRAIL ATTACHMENT

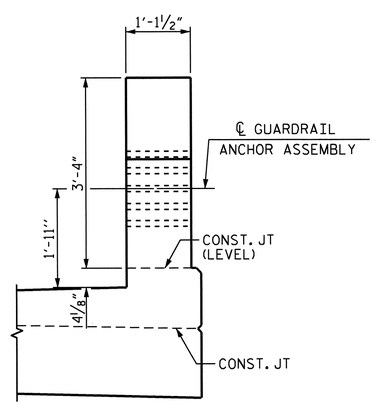

END VIEW

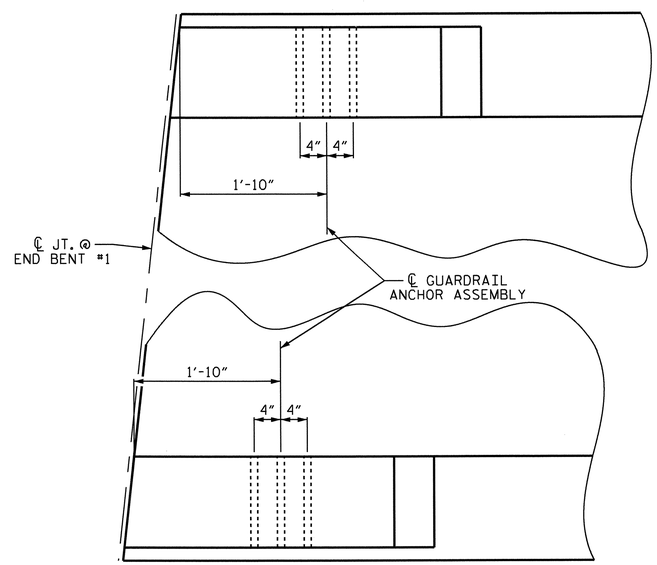

PLAN

LOCATION OF GUARDRAIL ANCHOR AT END POST

END BENT #1 SHOWN, END BENT #2 SIMILAR

PROJECT NO. U-0209B
MECKLENBURG COUNTY
STATION: 103+73.08 -L-

STATE OF NORTH CAROLINA
DEPARTMENT OF TRANSPORTATION
RALEIGH

STANDARD
GUARDRAIL ANCHORAGE DETAILS FOR METAL RAILS

NORTH CAROLINA PROFESSIONAL SEAL 20879 ENGINEER KEVIN FISCHER 11/20/12

REVISIONS						SHEET NO.
NO.	BY:	DATE:	NO.	BY:	DATE:	S-103
1			3			TOTAL SHEETS
2			4			117

STR. #3 STD. NO. GRA3

ASSEMBLED BY : T. BANKOVICH	DATE : 1-2011
CHECKED BY : M.K. BEARD	DATE : 4/19/11
DRAWN BY : MAA 5/10	ADDED 5/6/10
CHECKED BY : GM 5/10	REV. 10/1/11 MAA/GM
	REV. 12/5/11 MAA/GM

07-SEP-2012 10:59
R:\Structures\Plans\Str3\U0209B_SD_GR_03.dgn
lsutton

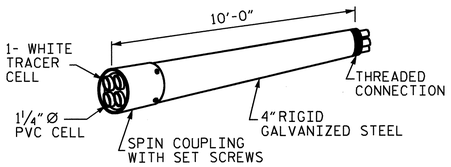

RIGID GALVANIZED (RGC)
MULTI-CELL RACEWAY

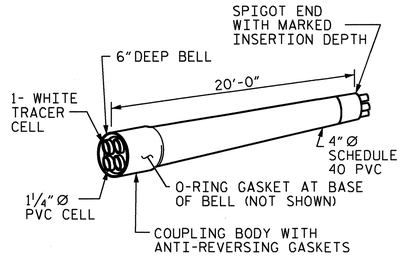

SCHEDULE 40 PVC
MULTI-CELL RACEWAY

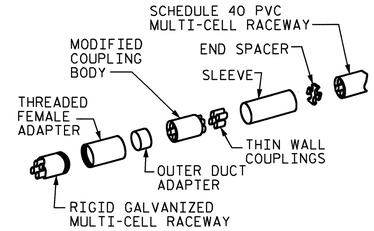

TRANSITION ADAPTER

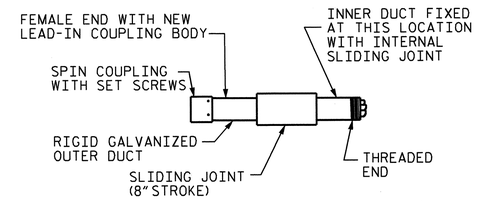

EXPANSION JOINT FITTING

DETAIL "D"
4"MULTI-CELL COMPONENTS

NOTES

THE CONTRACTOR SHALL BE RESPONSIBLE FOR DETERMINING THE TOTAL QUANTITY OF CONDUIT NEEDED TO COMPLETE THE WORK AND THAT THE CONDUIT(S) ARE PLACED AT THE NOTED DIMENSION AND ABOVE THE BOTTOM OF THE GIRDER.

THE INSTALLATION OF THE CONDUIT SYSTEM SHALL BE PAID FOR AS LUMP SUM. THE PRICE SHALL INCLUDE ALL CONDUIT, HANGERS, STABILIZERS, EXPANSION JOINTS, CONCRETE INSERTS, PVC SLEEVES AND ALL NECESSARY HARDWARE TO COMPLETE THE WORK.

THE CONTRACTOR SHALL FIELD VERIFY THAT THE CONDUIT SYSTEM IS NOT IN CONFLICT WITH THE GUARDRAIL POSTS.

SEE DETAIL "C" FOR HANGER ASSEMBLY INSTALLATION.

INSTALL SLEEVES PARALLEL TO GIRDERS. SEE DETAIL "B" FOR SLEEVE INSTALLATION.

PROVIDE TRANSITION ADAPTER AND EXPANSION JOINT FOR CONDUIT AT END BENT #1 AND END BENT #2.

INSTALL STABILIZER'S MIDWAY BETWEEN DECK EXPANSION JOINTS. STABILIZER CAN NOT BE USED INSTEAD OF A HANGER ASSEMBLY.

THE CONCRETE SCREW INSERT SHALL HAVE A ROD SIZE OF ⅝" AND A PULL FORCE OF 1260 lbs.

FOR ELECTRICAL CONDUIT SYSTEM FOR SIGNALS, SEE SPECIAL PROVISIONS.

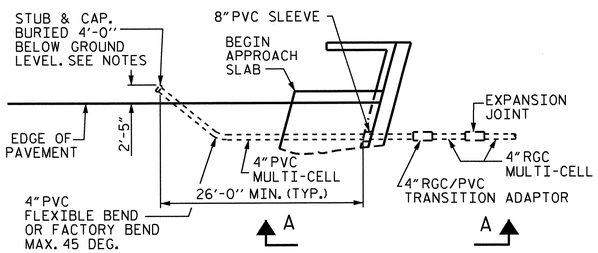

DETAIL "A"
TERMINATION OF CONDUIT AT WING WALL

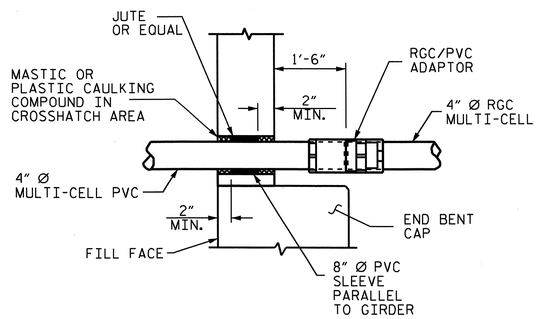

DETAIL "B"
PVC SLEEVE INSTALLATION & RGC/PVC ADAPTOR AT BACKWALL.

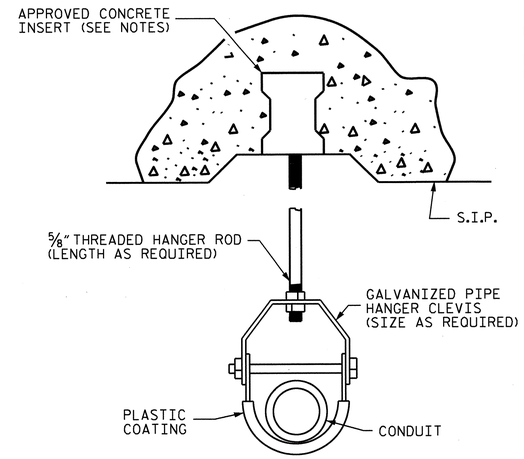

DETAIL "C"
HANGER ASSEMBLY

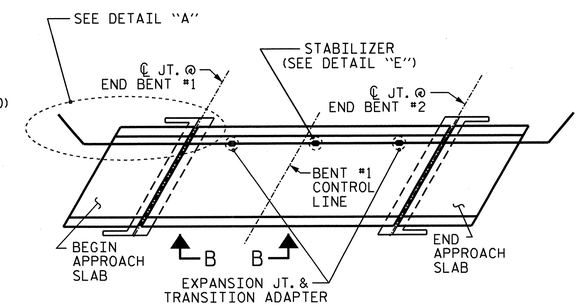

CONDUIT LAYOUT

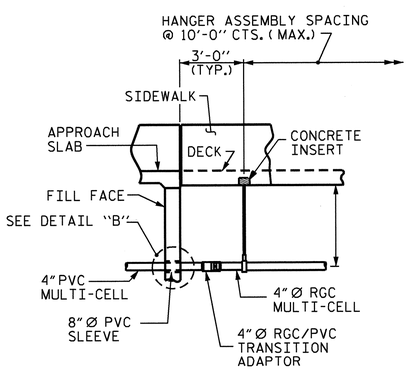

VIEW A-A

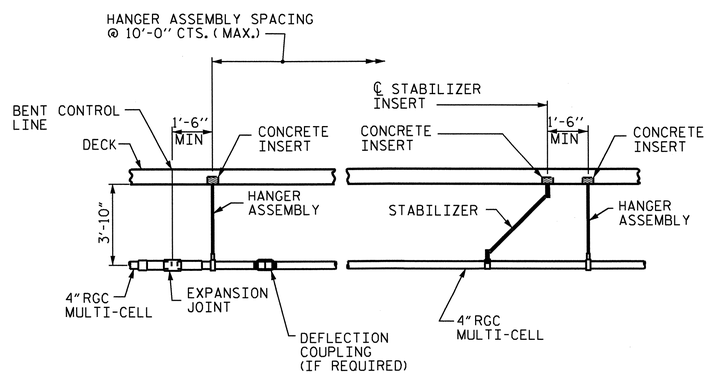

VIEW B-B
STEEL GIRDERS

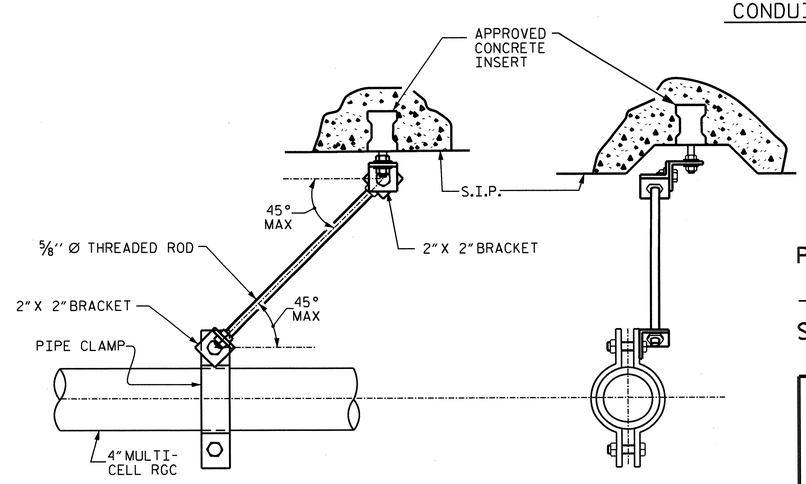

DETAIL "E"
STABILIZER

NORTH CAROLINA PROFESSIONAL SEAL 20878 ENGINEER KEVIN FISCHER
11/20/12

PROJECT NO. U-0209B
MECKLENBURG COUNTY
STATION: 103+73.08 -L-

STATE OF NORTH CAROLINA
DEPARTMENT OF TRANSPORTATION
RALEIGH

STANDARD

ELECTRICAL CONDUIT SYSTEM FOR SIGNALS

ELECTRIC CONDUIT DETAILS

ASSEMBLED BY : M.K. BEARD		DATE : 9/20/11	
CHECKED BY : B.C. HUNT		DATE : 9/27/11	
DRAWN BY : RWW	2-4-03	REV. 5/1/06	TLA/GM
CHECKED BY : DBM	2-4-03	REV. 10/1/11	MAA/GM

REVISIONS						SHEET NO.
NO.	BY:	DATE:	NO.	BY:	DATE:	S-104
1			3			TOTAL SHEETS
2			4			117

STR. #3

STD. NO. ECS1

06-NOV-2012 14:57
R:\Structures\Plans\Str3\U0209B_SD_UT_03.dgn
LSUTTON

SUPERSTRUCTURE REINFORCING STEEL LENGTHS ARE BASED ON THE FOLLOWING MINIMUM SPLICE LENGTHS

BAR SIZE	SUPERSTRUCTURE EXCEPT APPROACH SLABS, PARAPET, AND SIDEWALK		APPROACH SLABS		PARAPET AND SIDEWALK
	EPOXY COATED	UNCOATED	EPOXY COATED	UNCOATED	
#4	2'-0"	1'-9"	2'-0"	1'-9"	2'-9"
#5	2'-6"	2'-2"	2'-6"	2'-2"	3'-5"
#6	3'-0"	2'-7"	3'-10"	2'-7"	4'-4"
#7	5'-3"	3'-6"			
#8	6'-10"	4'-7"			

GROOVING BRIDGE FLOOR

APPROACH SLABS	3,033 SQ. FT.
BRIDGE DECK	16,292 SQ. FT.
TOTAL	19,325 SQ. FT.

BAR TYPE

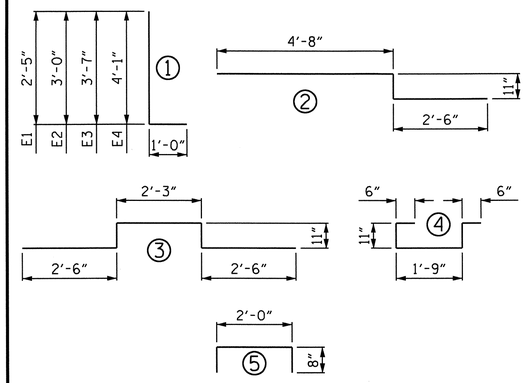

ALL BAR DIMENSIONS ARE OUT TO OUT.

BILL OF MATERIAL

BAR	NO.	SIZE	TYPE	LENGTH	WEIGHT	BAR	NO.	SIZE	TYPE	LENGTH	WEIGHT	BAR	NO.	SIZE	TYPE	LENGTH	WEIGHT
* A1	1180	#5	STR	46'-10"	57640	*A122	2	#5	STR	7'-11"	17	A222	2	#5	STR	7'-11"	17
A2	1180	#5	STR	46'-8"	57435	* A123	2	#5	STR	4'-1"	9	A223	2	#5	STR	4'-1"	9
* A101	4	#5	STR	45'-1"	188	A201	4	#5	STR	44'-11"	187	B1	600	#5	STR	52'-10"	33063
*A102	4	#5	STR	43'-2"	180	A202	4	#5	STR	43'-0"	179	* B2	378	#4	STR	28'-7"	7217
* A103	4	#5	STR	41'-3"	172	A203	4	#5	STR	41'-1"	171	* B3	549	#6	STR	34'-0"	28036
* A104	4	#5	STR	39'-4"	164	A204	4	#5	STR	39'-2"	163	* B4	120	#4	STR	27'-4"	2191
* A105	4	#5	STR	37'-6"	156	A205	4	#5	STR	37'-4"	156	* B5	60	#4	STR	27'-5"	1099
* A106	4	#5	STR	35'-7"	148	A206	4	#5	STR	35'-5"	148						
* A107	4	#5	STR	33'-8"	140	A207	4	#5	STR	33'-6"	140	* E1	8	#7	1	3'-5"	56
* A108	4	#5	STR	31'-9"	132	A208	4	#5	STR	31'-7"	132	* E2	8	#7	1	4'-0"	65
* A109	2	#5	STR	57'-3"	119	A209	2	#5	STR	57'-3"	119	* E3	8	#7	1	4'-7"	75
* A110	2	#5	STR	53'-6"	112	A210	2	#5	STR	53'-6"	112	* E4	8	#7	1	5'-1"	83
* A111	2	#5	STR	49'-8"	104	A211	2	#5	STR	49'-8"	104						
*A112	2	#5	STR	45'-11"	96	A212	2	#5	STR	45'-11"	96	* F1	8	#6	STR	3'-9"	45
* A113	2	#5	STR	42'-1"	88	A213	2	#5	STR	42'-1"	88	* F2	8	#6	STR	3'-2"	38
* A114	2	#5	STR	38'-4"	80	A214	2	#5	STR	38'-4"	80	* F3	16	#6	STR	3'-6"	84
* A115	2	#5	STR	34'-6"	72	A215	2	#5	STR	34'-6"	72						
* A116	2	#5	STR	30'-8"	64	A216	2	#5	STR	30'-8"	64	* G1	4	#5	STR	47'-2"	197
* A117	2	#5	STR	26'-11"	56	A217	2	#5	STR	26'-11"	56	* G2	514	#4	STR	6'-5"	2203
* A118	2	#5	STR	23'-1"	48	A218	2	#5	STR	23'-1"	48	* G3	171	#4	STR	7'-6"	857
* A119	2	#5	STR	19'-4"	40	A219	2	#5	STR	19'-4"	40						
*A120	2	#5	STR	15'-6"	32	A220	2	#5	STR	15'-6"	32	* K1	16	#5	2	8'-1"	135
* A121	2	#5	STR	11'-9"	25	A221	2	#5	STR	11'-9"	25	* K2	56	#5	STR	11'-7"	677
												* K3	48	#5	3	9'-1"	455
												* S1	140	#4	4	4'-7"	429
												* U1	148	#4	5	3'-4"	330

REINFORCING STEEL	92,736 LBS.
* EPOXY COATED REINFORCING STEEL	104,154 LBS.

SUPERSTRUCTURE BILL OF MATERIAL

	CLASS AA CONCRETE	REINFORCING STEEL	EPOXY COATED REINFORCING STEEL
	(CU. YDS.)	(LBS.)	(LBS.)
POUR #1	253.3		
POUR #2	253.3		
POUR #3	268.7		
POUR #4	30.2		
SIDEWALK	80.4		
END POST	1.7		
CONCRETE ISLAND	77.2		
TOTAL	964.8	92,736	104,154

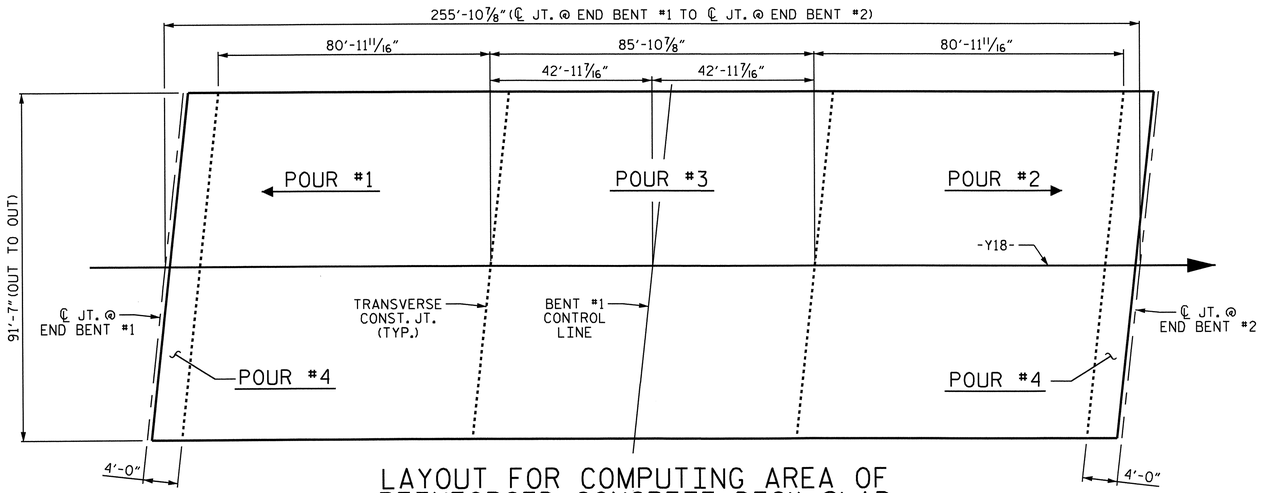

LAYOUT FOR COMPUTING AREA OF REINFORCED CONCRETE DECK SLAB & POURING SEQUENCE (SQ. FT. = 23,437)

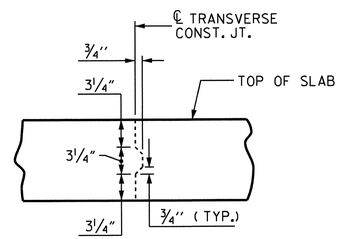

TRANSVERSE CONSTRUCTION JOINT DETAIL

NOTE: REINFORCING STEEL IN SLAB NOT SHOWN. LONGITUDINAL REINFORCING STEEL SHALL BE CONTINUOUS THROUGH JOINT

PROJECT NO. U-0209B
MECKLENBURG COUNTY
STATION: 103+73.08 -L-

STATE OF NORTH CAROLINA
DEPARTMENT OF TRANSPORTATION
RALEIGH

SUPERSTRUCTURE

BILL OF MATERIAL

NORTH CAROLINA PROFESSIONAL SEAL 20878 ENGINEER KEVIN FISCHER
11/20/12

REVISIONS						SHEET NO.
NO.	BY:	DATE:	NO.	BY:	DATE:	S-105
1			3			TOTAL SHEETS
2			4			117

STR. #3

DRAWN BY : T. BANKOVICH DATE : 1-2011
CHECKED BY : M.K. BEARD DATE : 4/19/11

11-SEP-2012 08:05
R:\Structures\Plans\Str3\U0209B_SD_BM_03.dgn
lsutton

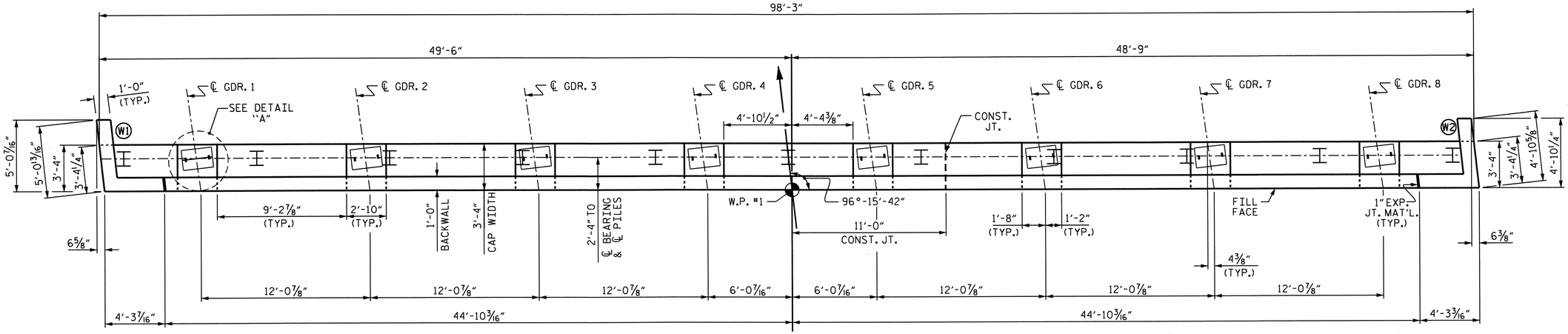

PLAN

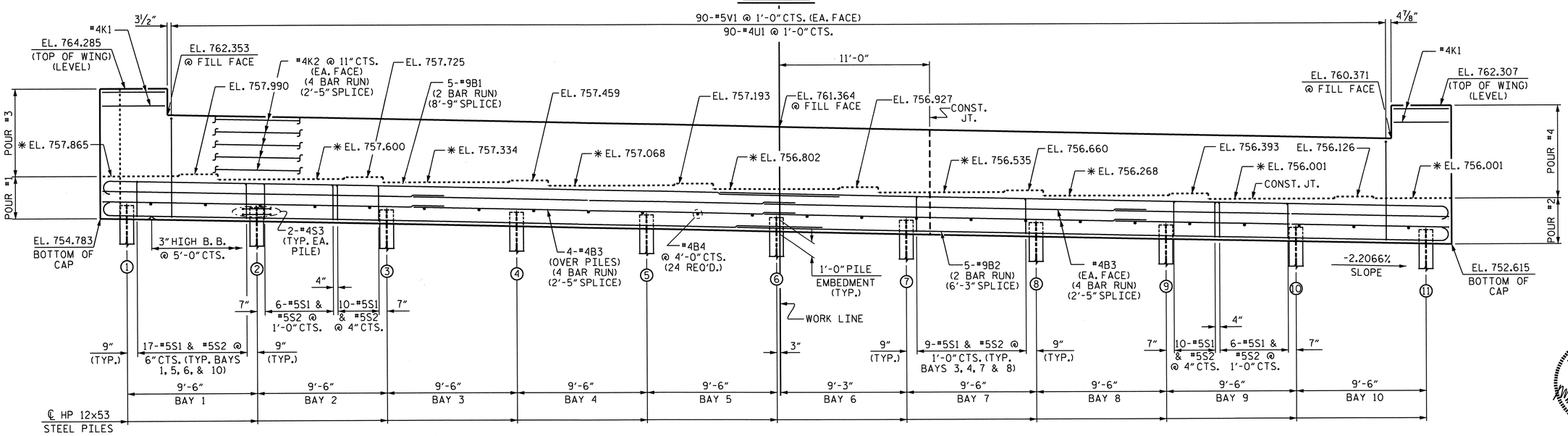

ELEVATION

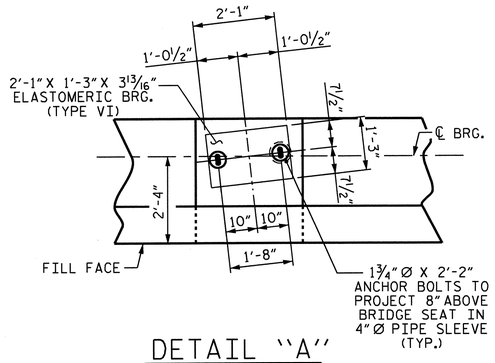

DETAIL "A"

NOTES

STIRRUPS IN CAP MAY BE SHIFTED AS NECESSARY TO CLEAR ANCHOR BOLTS.

FOR PIPE INSERT DETAILS, SEE BEARINGS SHEET.

BACKWALL SHALL BE PLACED BEFORE APPLYING THE EPOXY PROTECTIVE COATING.

EPOXY COAT THE END BENT CAP AFTER ADJUSTMENTS ARE MADE TO BEARINGS AND ANCHOR BOLTS ARE GROUTED.

* THE TOP SURFACE OF THE CAP EXCEPT THE BRIDGE SEAT BUILDUPS SHALL BE SLOPED TRANSVERSELY FROM THE FILL FACE TO THE BACK FACE AT THE RATE OF 2%.

THE TOP SURFACE AREAS OF THE CAPS SHALL BE CURED IN ACCORDANCE WITH THE STANDARD SPECIFICATIONS EXCEPT THE MEMBRANE CURING COMPOUND METHOD SHALL NOT BE USED.

FOR GALVANIZED REINFORCING STRAPS, SEE MSE WALL PLANS.

FOR MSE RETAINING WALLS, SEE SPECIAL PROVISIONS.

PILE No.	TOP OF PILE EL.
1	755.755
2	755.546
3	755.336
4	755.127
5	754.917
6	754.707
7	754.498
8	754.288
9	754.079
10	753.869
11	753.659

NORTH CAROLINA PROFESSIONAL SEAL 30879 ENGINEER KEVIN FISCHER 11/20/12

PROJECT NO. U-0209B
MECKLENBURG COUNTY
STATION: 103+73.08 -L-

SHEET 1 OF 3

STATE OF NORTH CAROLINA
DEPARTMENT OF TRANSPORTATION
RALEIGH

SUBSTRUCTURE

END BENT #1

REVISIONS						SHEET NO.
NO.	BY:	DATE:	NO.	BY:	DATE:	S-106
1			3			TOTAL SHEETS
2			4			117

STR. #3

DRAWN BY : R. G. EMERSON DATE : 06/11
CHECKED BY : K. D. LAYNE DATE : 06/24/11

11-SEP-2012 08:05
R:\Structures\Plans\Str3\U0209B_SD_E*_03.dgn
lsutton

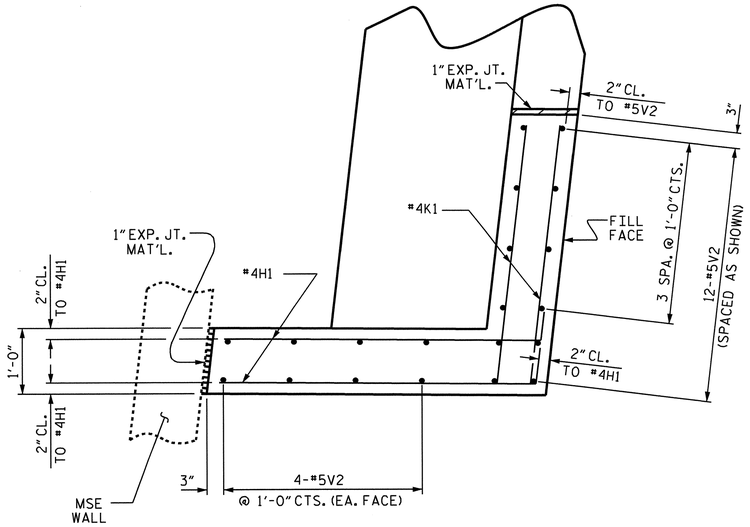

PLAN OF WING (W1)

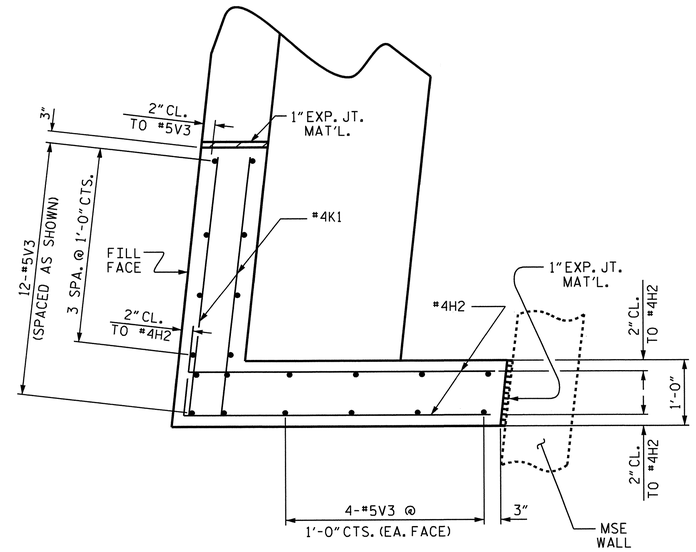

PLAN OF WING (W2)

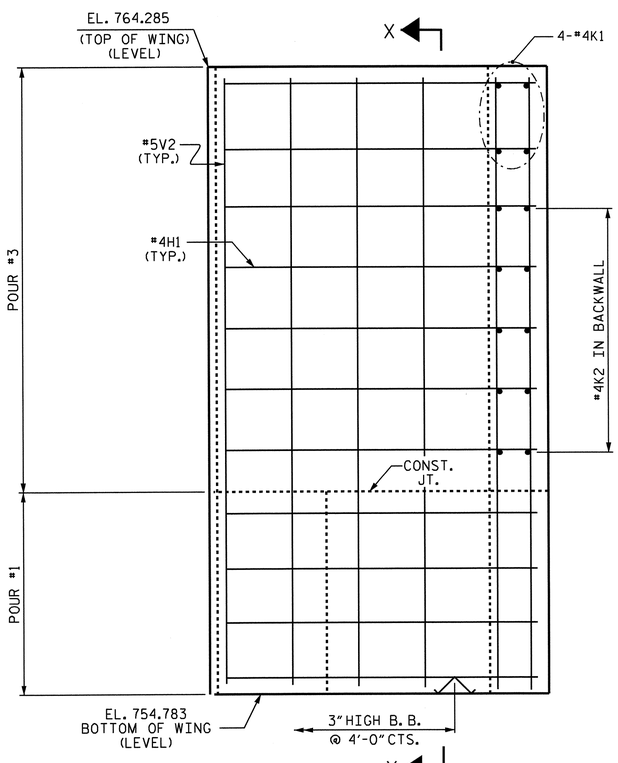

ELEVATION (W1)

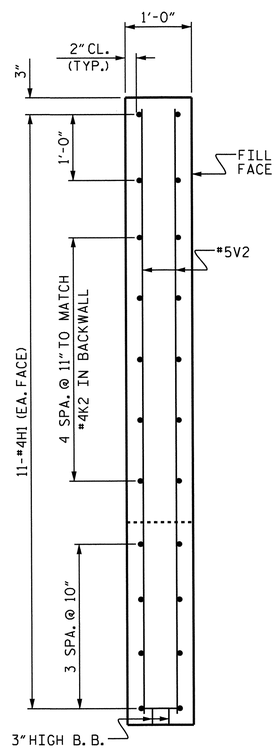

X-X

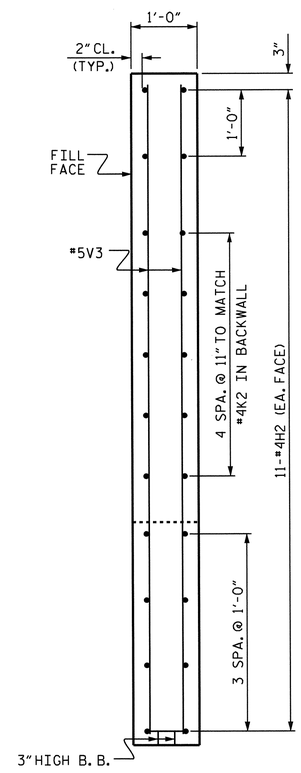

Y-Y

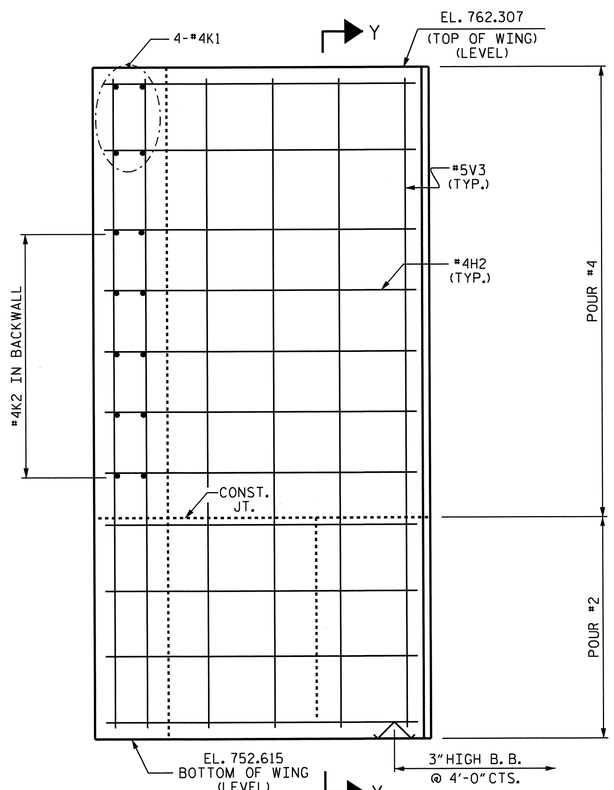

ELEVATION (W2)

NORTH CAROLINA PROFESSIONAL SEAL 30878 ENGINEER KEVIN FISCHER 11/30/12

PROJECT NO. U-0209B

MECKLENBURG COUNTY

STATION: 103+73.08 -L-

SHEET 2 OF 3

STATE OF NORTH CAROLINA
DEPARTMENT OF TRANSPORTATION
RALEIGH

SUBSTRUCTURE

END BENT #1

REVISIONS						SHEET NO.
NO.	BY:	DATE:	NO.	BY:	DATE:	S-107
1			3			TOTAL SHEETS
2			4			117

STR. #3

DRAWN BY : R. G. EMERSON DATE : 06/11
CHECKED BY : K. D. LAYNE DATE : 06/24/11

11-SEP-2012 08:05
R:\Structures\Plans\Str3\U0209B_SD_E*_03.dgn
lsutton

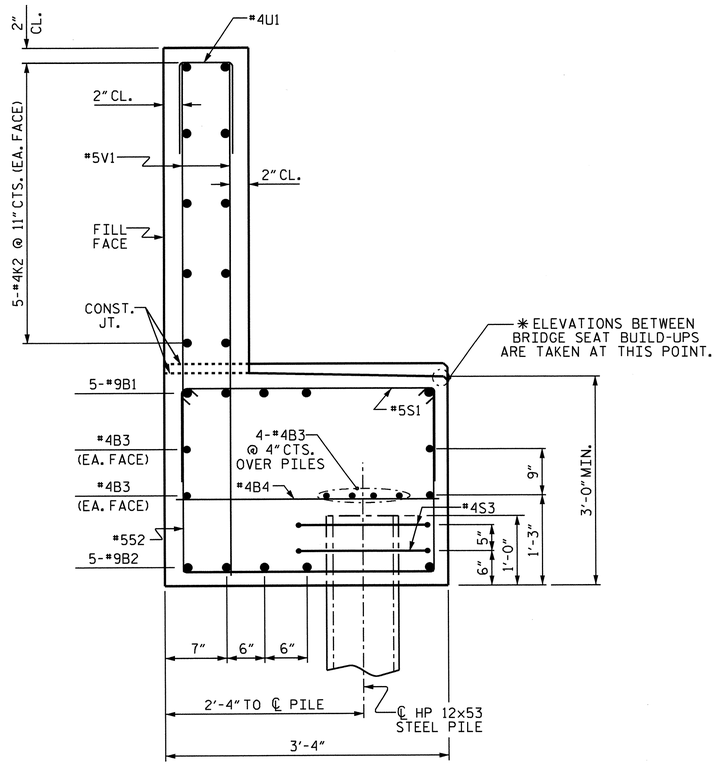

SECTION THRU CAP

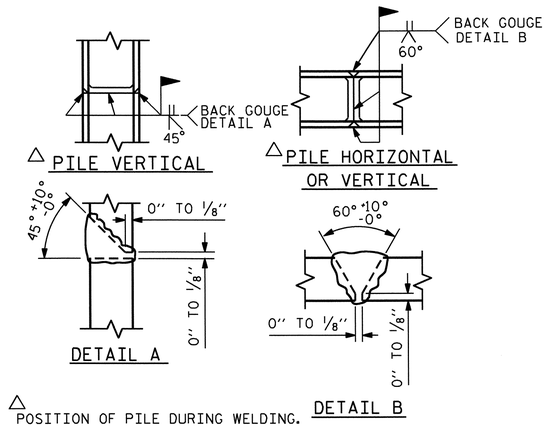

△ POSITION OF PILE DURING WELDING.

PILE SPLICE DETAILS

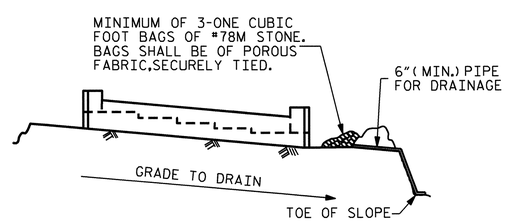

BAGGED STONE AND PIPE SHALL BE PLACED IMMEDIATELY AFTER COMPLETION OF END BENT EXCAVATION. PIPE MAY BE EITHER CONCRETE, CORRUGATED STEEL, CORRUGATED ALUMINUM ALLOY, OR CORRUGATED PLASTIC. PERFORATED PIPE WILL NOT BE ALLOWED.

BAGGED STONE SHALL REMAIN IN PLACE UNTIL THE ENGINEER DIRECTS THAT IT BE REMOVED. THE CONTRACTOR SHALL REMOVE AND DISPOSE OF SILT ACCUMULATIONS AT BAGGED STONE WHEN SO DIRECTED BY THE ENGINEER. BAGS SHALL BE REMOVED AND REPLACED WHENEVER THE ENGINEER DETERMINES THAT THEY HAVE DETERIORATED AND LOST THEIR EFFECTIVENESS.

NO SEPARATE PAYMENT WILL BE MADE FOR THIS WORK AND THE ENTIRE COST OF THIS WORK SHALL BE INCLUDED IN THE UNIT CONTRACT PRICE BID FOR THE SEVERAL PAY ITEMS.

TEMPORARY DRAINAGE AT END BENT

BAR TYPES

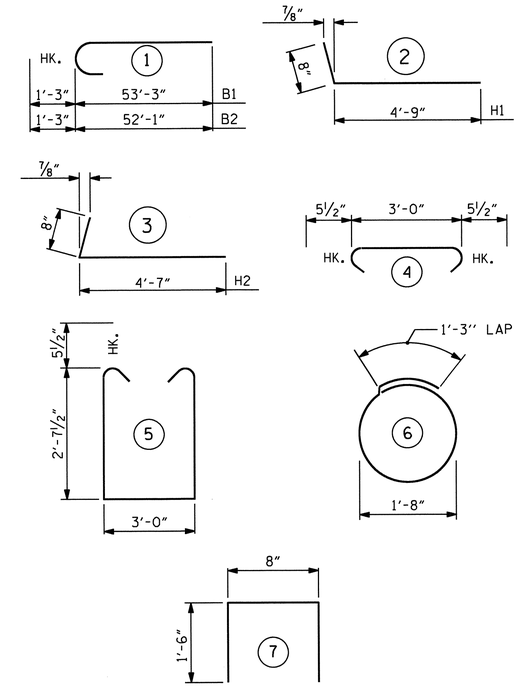

ALL BAR DIMENSIONS ARE OUT TO OUT.

BILL OF MATERIAL
END BENT #1

BAR	NO.	SIZE	TYPE	LENGTH	WEIGHT
B1	10	#9	1	54'-6"	1853
B2	10	#9	1	53'-4"	1813
B3	32	#4	STR	26'-4"	563
B4	24	#4	STR	3'-0"	48
H1	22	#4	2	5'-5"	80
H2	22	#4	3	5'-3"	77
K1	8	#4	STR	3'-11"	21
K2	40	#4	STR	26'-4"	704
S1	136	#5	4	3'-11"	556
S2	136	#5	5	9'-2"	1300
S3	22	#4	6	6'-6"	96
U1	90	#4	7	3'-8"	220
V1	180	#5	STR	7'-3"	1361
V2	20	#5	STR	9'-2"	191
V3	20	#5	STR	9'-4"	195

REINFORCING STEEL LBS. 9,078

CLASS "A" CONCRETE BREAKDOWN

POUR #1 CAP & LOWER WING (LEFT END) 23.9 C.Y.

POUR #2 CAP & LOWER WING (RIGHT END) 15.2 C.Y.

POUR #3 UPPER WING & BACKWALL (LEFT END) 11.5 C.Y.

POUR #4 UPPER WING & BACKWALL (RIGHT END) 7.7 C.Y.

CLASS "A" CONCRETE TOTAL 58.3 C.Y.

HP 12x53 STEEL PILES
NO. 11 LIN. FT. 715

PILE REDRIVES EA. 6

PROJECT NO. U-0209B
MECKLENBURG COUNTY
STATION: 103+73.08 -L-

SHEET 3 OF 3

STATE OF NORTH CAROLINA
DEPARTMENT OF TRANSPORTATION
RALEIGH

SUBSTRUCTURE

END BENT #1

NORTH CAROLINA PROFESSIONAL SEAL 30878 ENGINEER KEVIN FISCHER
11/20/12

REVISIONS						SHEET NO.
NO.	BY:	DATE:	NO.	BY:	DATE:	S-108
1			3			TOTAL SHEETS
2			4			117

STR. #3

DRAWN BY : R. G. EMERSON DATE : 06/11
CHECKED BY : K. D. LAYNE DATE : 06/24/11

11-SEP-2012 08:05
R:\Structures\Plans\Str3\U0209B_SD_E*_03.dgn
lsutton

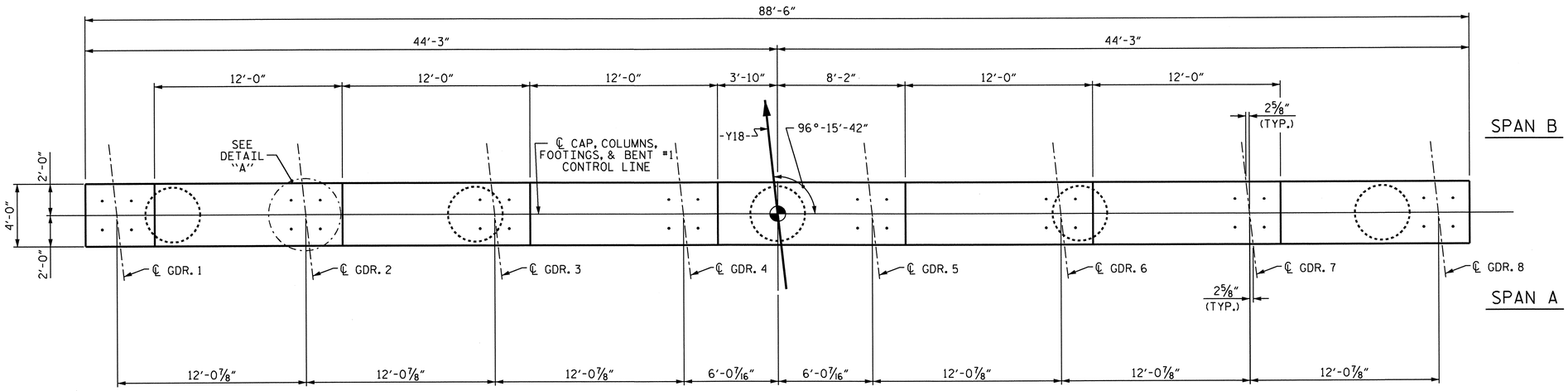

PLAN

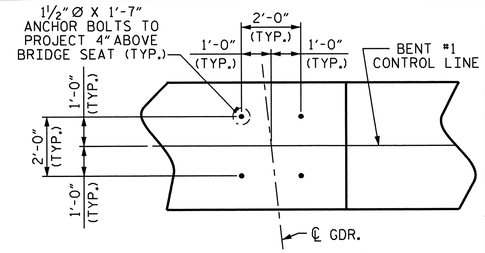

DETAIL "A"

TYP. @ EACH BEARING

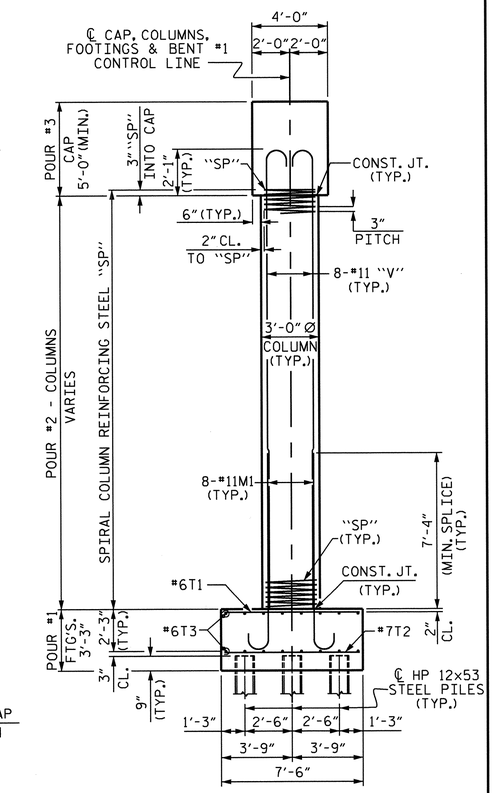

END ELEVATION

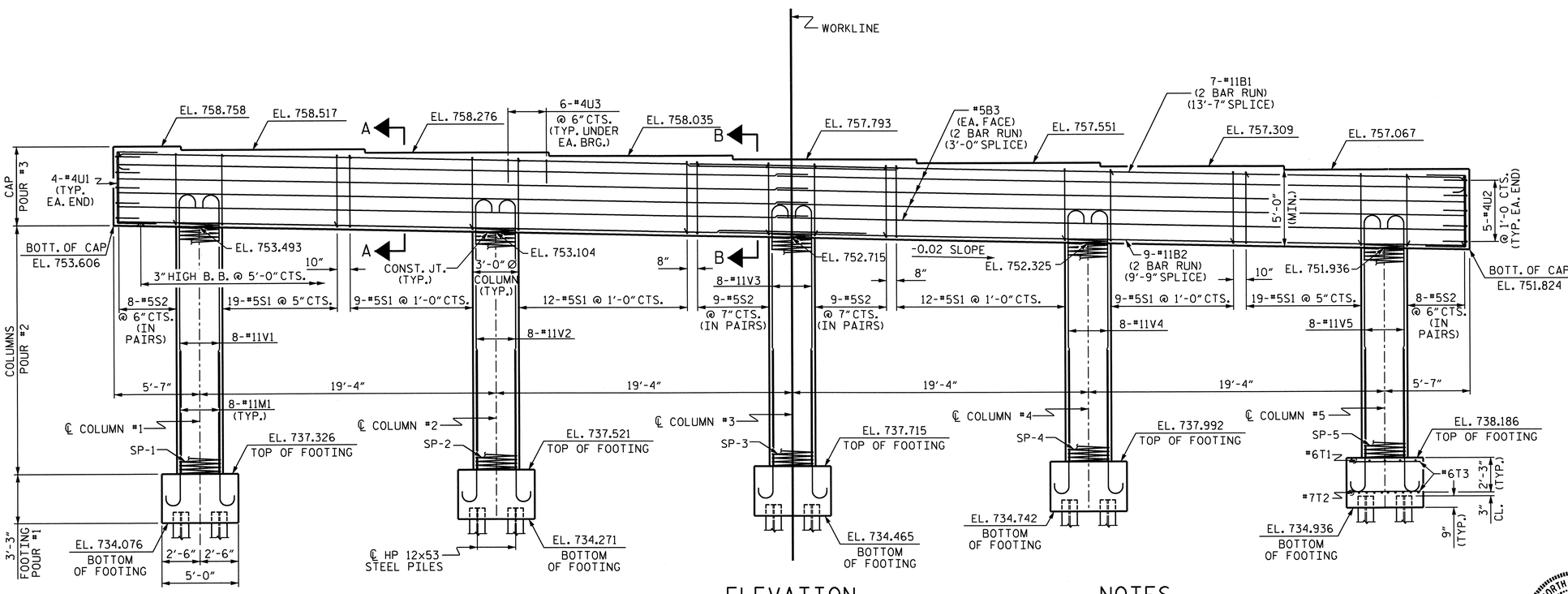

NOTE: INVERT ALTERNATE STIRRUPS

ELEVATION

REINFORCING STEEL, DIMENSIONS, & DETAILS ARE TYPICAL FOR EACH COLUMN & FOOTING UNLESS OTHERWISE NOTED.

NOTES

STIRRUPS IN CAP MAY BE SHIFTED AS NECESSARY TO CLEAR ANCHOR BOLTS.

HOOKS ON "V" BARS MAY BE TURNED AS NECESSARY FOR PLACING REINFORCING STEEL.

FOR PILE SPICE DETAILS, SEE END BENT SHEETS.

NORTH CAROLINA PROFESSIONAL SEAL 30878 ENGINEER KEVIN FISCHER 11/20/12

PROJECT NO. U-0209B

MECKLENBURG COUNTY

STATION: 103+73.08 -L-

SHEET 1 OF 2

STATE OF NORTH CAROLINA
DEPARTMENT OF TRANSPORTATION
RALEIGH

SUBSTRUCTURE

BENT #1

REVISIONS						SHEET NO.
NO.	BY:	DATE:	NO.	BY:	DATE:	S-109
1			3			TOTAL SHEETS
2			4			117

STR. #3

DRAWN BY : R. G. EMERSON DATE : 07/11
CHECKED BY : K. D. LAYNE DATE : 08/25/11

11-SEP-2012 08:43
R:\Structures\Plans\Str3\U0209B_SD_B*_03.dgn
lsutton

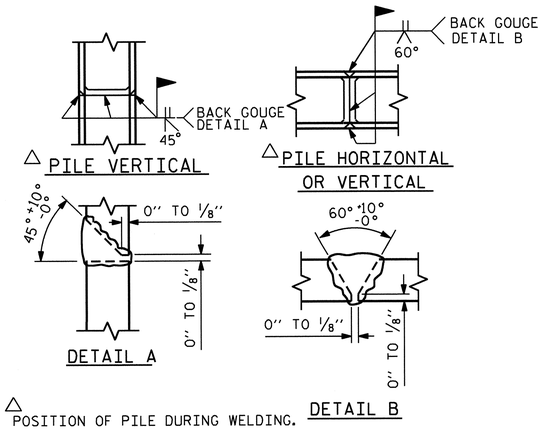

△ POSITION OF PILE DURING WELDING.

PILE SPLICE DETAILS

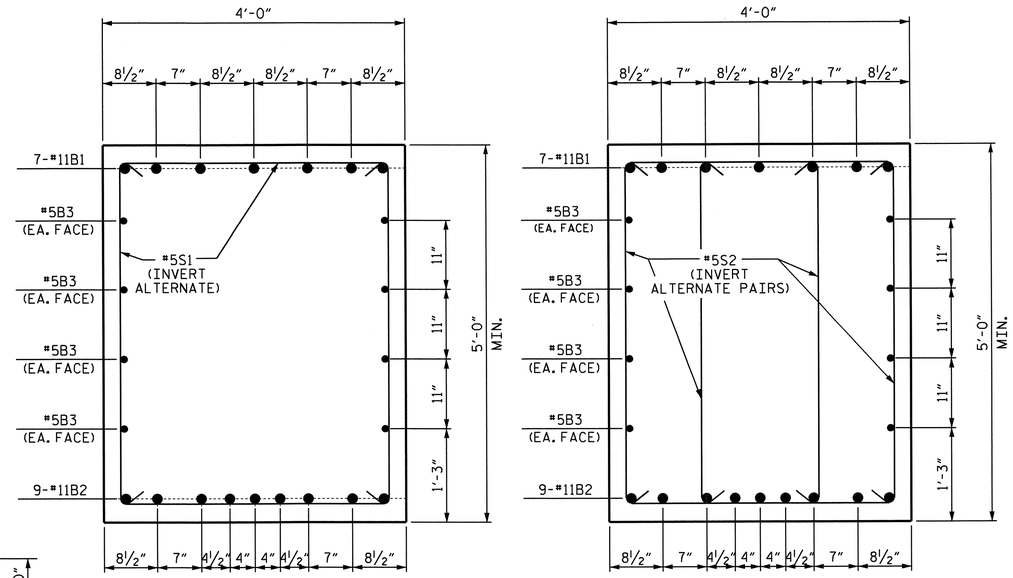

SECTION A-A

SECTION B-B

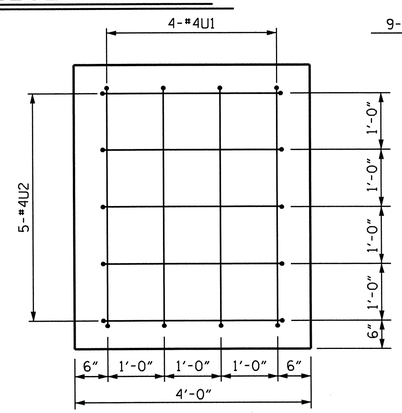

END OF CAP VIEW

(TYP. EA. END)

BAR TYPES

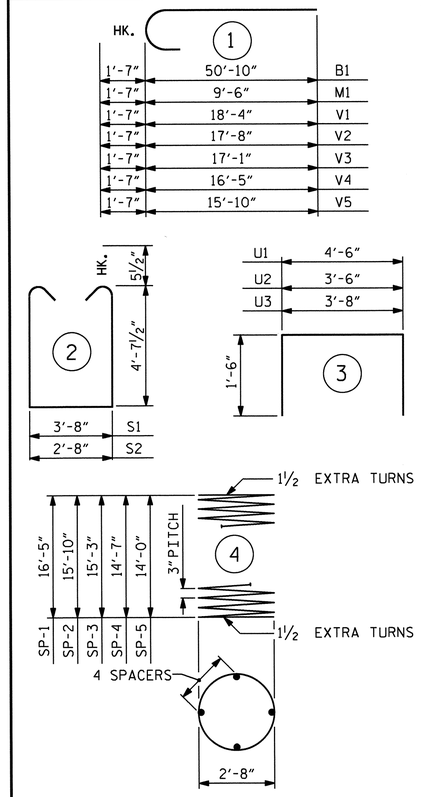

ALL BAR DIMENSIONS ARE OUT TO OUT.

BILL OF MATERIAL

BENT #1

BAR	NO.	SIZE	TYPE	LENGTH	WEIGHT
B1	14	#11	1	52'-5"	3899
B2	18	#11	STR	49'-0"	4686
B3	16	#5	STR	45'-7"	761
M1	40	#11	1	11'-1"	2355
S1	80	#5	2	13'-10"	1154
S2	68	#5	2	12'-10"	910
T1	25	#6	STR	7'-2"	269
T2	50	#7	STR	7'-2"	732
T3	80	#6	STR	4'-8"	561
U1	8	#4	3	7'-6"	40
U2	10	#4	3	6'-6"	43
U3	48	#4	3	6'-8"	214
V1	8	#11	1	19'-11"	847
V2	8	#11	1	19'-3"	818
V3	8	#11	1	18'-8"	793
V4	8	#11	1	18'-0"	765
V5	8	#11	1	17'-5"	740
REINFORCING STEEL				LBS.	19,587
SP-1	1	**	4	567'-3"	379
SP-2	1	**	4	548'-8"	367
SP-3	1	**	4	528'-1"	353
SP-4	1	**	4	507'-5"	339
SP-5	1	**	4	486'-10"	325
SPIRAL COLUMN REINFORCING STEEL				LBS.	1763

CLASS "A" CONCRETE BREAKDOWN

POUR #1	FOOTINGS	22.6 C.Y.
POUR #2	COLUMNS	19.6 C.Y.
POUR #3	CAP	67.2 C.Y.
TOTAL CLASS "A" CONCRETE		109.4 C.Y.

HP 12X53 STEEL PILES		
No. 30	LIN. FT.	1,500
FOUNDATION EXCAVATION		LUMP SUM
PILE REDRIVES	EACH	15

** THE SP-1 THRU SP-5 SPIRAL REINFORCING STEEL SHALL BE W20 OR D-20 COLD DRAWN WIRE OR #4 PLAIN OR DEFORMED BAR.

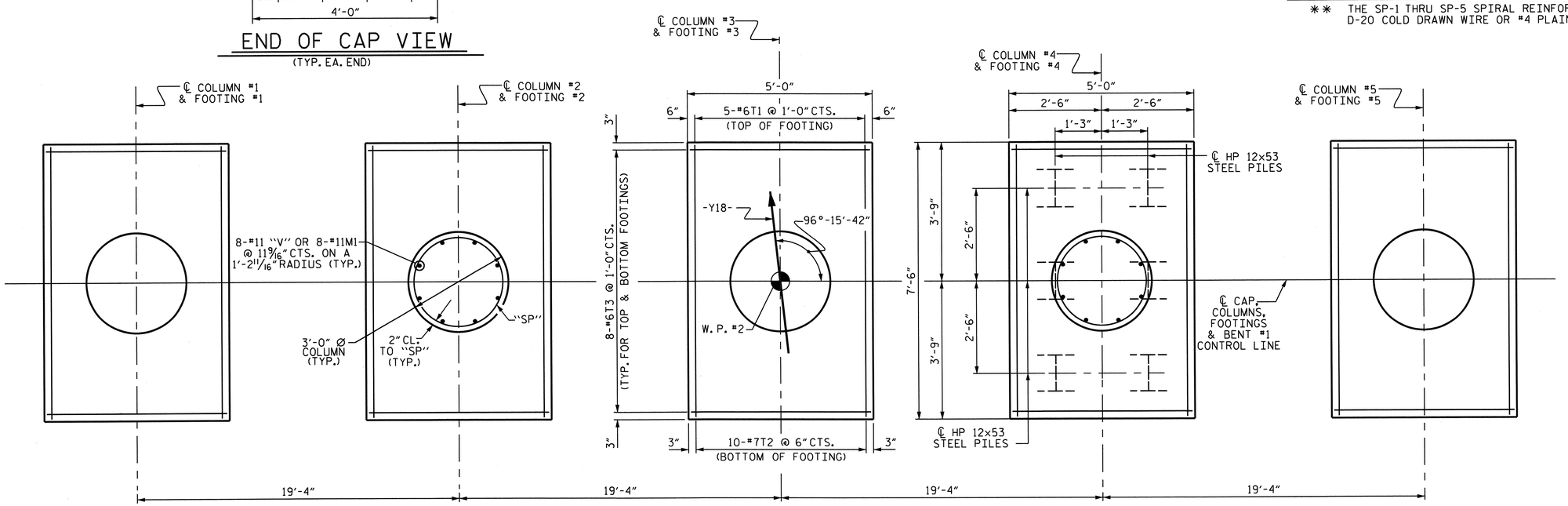

PLAN OF FOOTINGS & COLUMNS

REINFORCING STEEL, DIMENSIONS, AND DETAILS ARE TYPICAL FOR EACH COLUMN AND FOOTING UNLESS OTHERWISE NOTED.

NORTH CAROLINA PROFESSIONAL SEAL 20878 ENGINEER KEVIN FISCHER 11/20/12

PROJECT NO. U-0209B
MECKLENBURG COUNTY
STATION: 103+73.08 -L-

SHEET 2 OF 2

STATE OF NORTH CAROLINA
DEPARTMENT OF TRANSPORTATION
RALEIGH

SUBSTRUCTURE

BENT #1

REVISIONS							SHEET NO.
NO.	BY:	DATE:	NO.	BY:	DATE:		S-110
1			3				TOTAL SHEETS
2			4				117

STR. #3

DRAWN BY : R. G. EMERSON DATE : 07/11
CHECKED BY : K. D. LAYNE DATE : 08/25/11

11-SEP-2012 08:32
R:\Structures\Plans\Str3\U0209B_SD_B*_03.dgn
lsutton

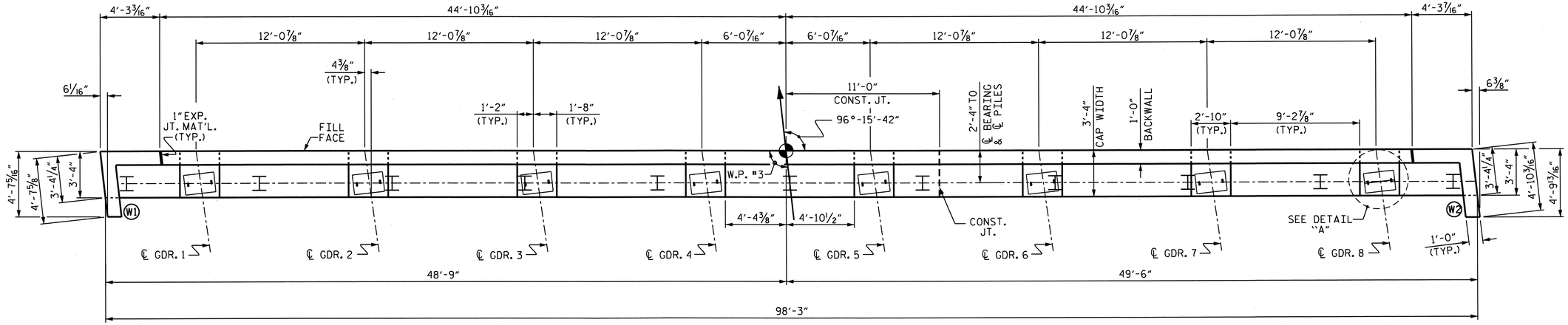

PLAN

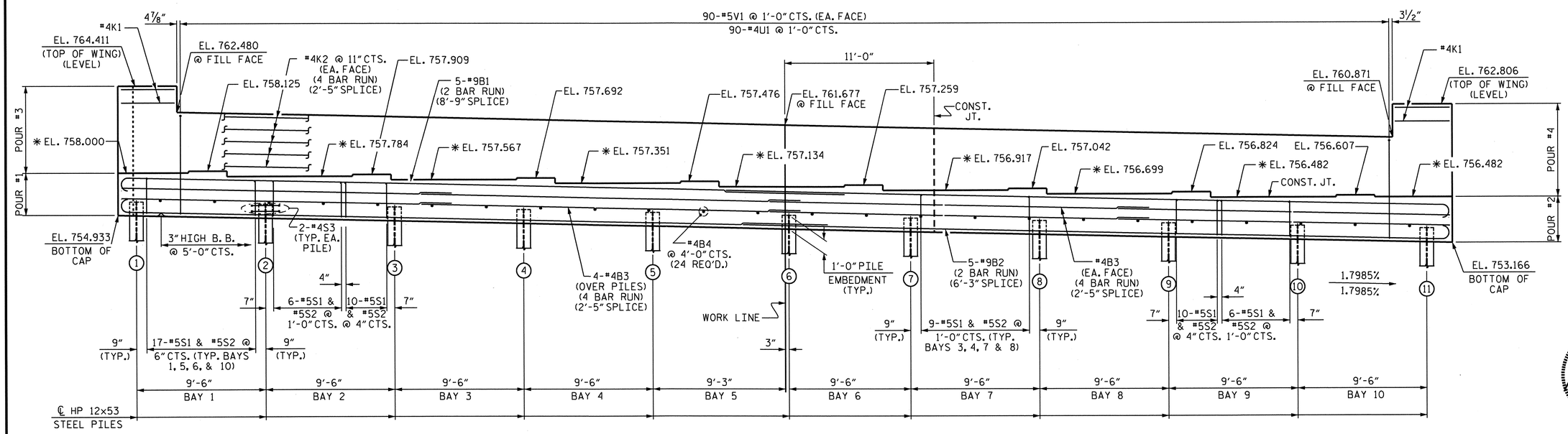

ELEVATION

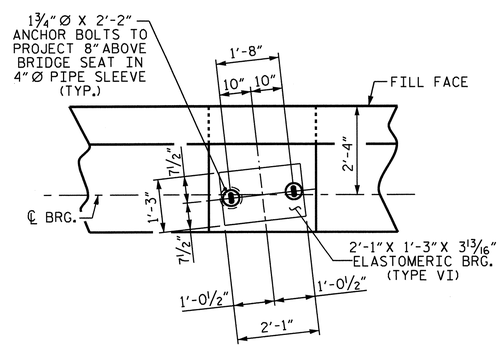

DETAIL "A"

NOTES

STIRRUPS IN CAP MAY BE SHIFTED AS NECESSARY TO CLEAR ANCHOR BOLTS.

FOR PIPE INSERT DETAILS, SEE BEARINGS SHEET.

BACKWALL SHALL BE PLACED BEFORE APPLYING THE EPOXY PROTECTIVE COATING.

EPOXY COAT THE END BENT CAP AFTER ADJUSTMENTS ARE MADE TO BEARINGS AND ANCHOR BOLTS ARE GROUTED.

* THE TOP SURFACE OF THE CAP EXCEPT THE BRIDGE SEAT BUILDUPS SHALL BE SLOPED TRANSVERSELY FROM THE FILL FACE TO THE BACK FACE AT THE RATE OF 2%.

THE TOP SURFACE AREAS OF THE CAPS SHALL BE CURED IN ACCORDANCE WITH THE STANDARD SPECIFICATIONS EXCEPT THE MEMBRANE CURING COMPOUND METHOD SHALL NOT BE USED.

FOR GALVANIZED REINFORCING STRAPS, SEE MSE WALL PLANS.

FOR MSE RETAINING WALLS, SEE SPECIAL PROVISIONS.

PILE No.	TOP OF PILE EL.
1	755.913
2	755.743
3	755.572
4	755.401
5	755.230
6	755.059
7	754.889
8	754.718
9	754.547
10	754.376
11	754.205

NORTH CAROLINA PROFESSIONAL SEAL 020878 ENGINEER KEVIN FISCHER 11/20/12

PROJECT NO. U-0209B
MECKLENBURG COUNTY
STATION: 103+73.08 -L-

SHEET 1 OF 3

STATE OF NORTH CAROLINA
DEPARTMENT OF TRANSPORTATION
RALEIGH

SUBSTRUCTURE

END BENT #2

REVISIONS								SHEET NO.
NO.	BY:	DATE:	NO.	BY:	DATE:			S-111
1			3					TOTAL SHEETS
2			4					117

STR. #3

DRAWN BY : R. G. EMERSON DATE : 06/11
CHECKED BY : K. D. LAYNE DATE : 06/24/11

06-NOV-2012 14:57
R:\Structures\Plans\Str3\U0209B_SD_E*_03.dgn
LSUTTON

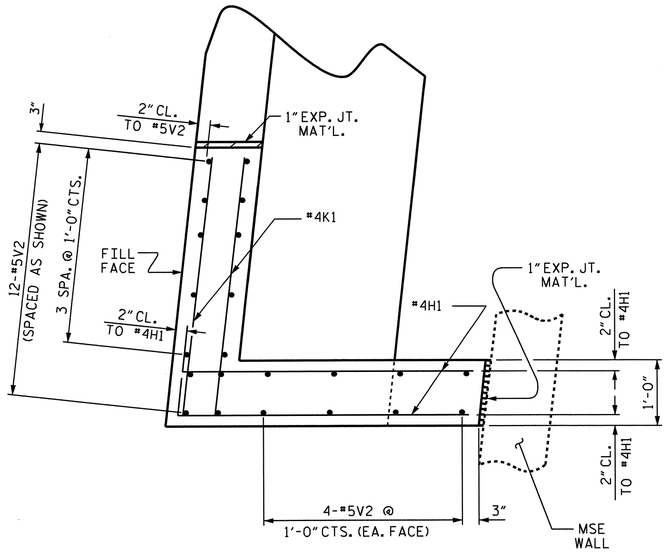

PLAN OF WING (W1)

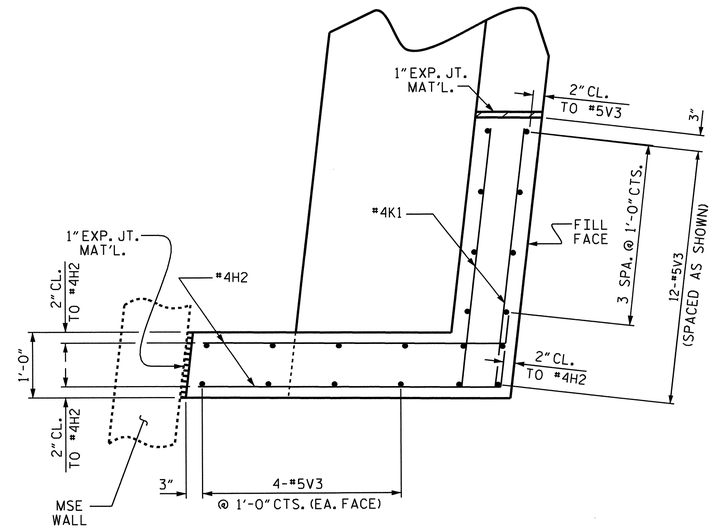

PLAN OF WING (W2)

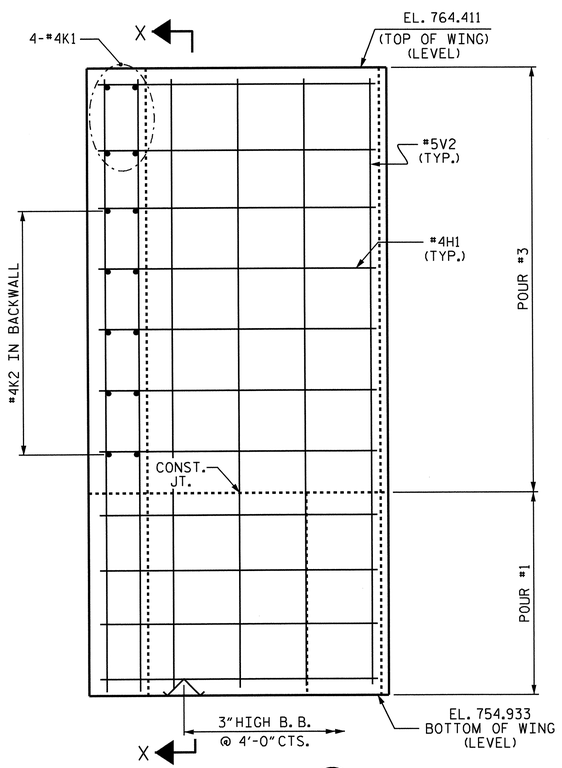

ELEVATION (W1)

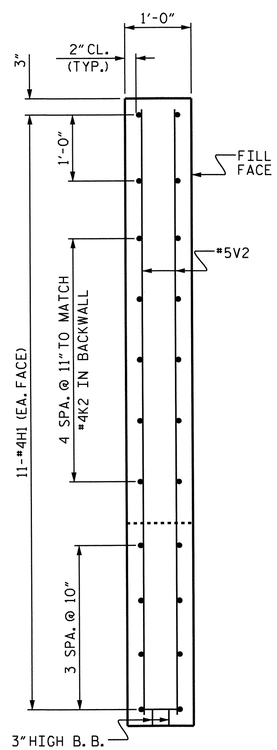

X-X

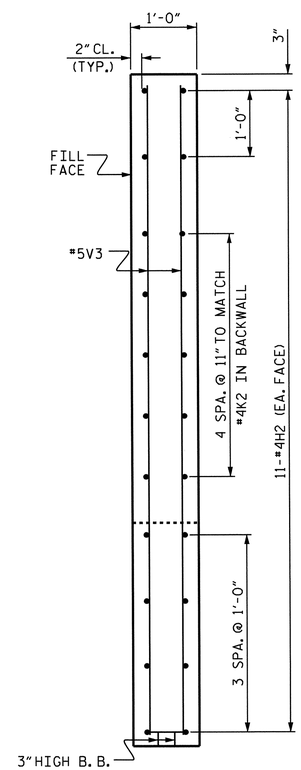

Y-Y

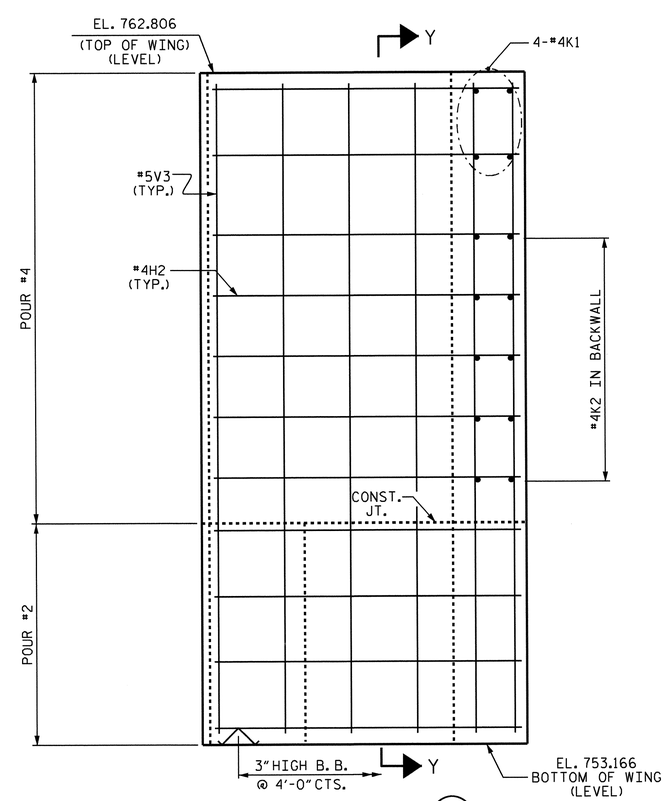

ELEVATION (W2)

NORTH CAROLINA PROFESSIONAL SEAL 30878 ENGINEER KEVIN FISCHER
11/20/12

PROJECT NO. U-0209B
MECKLENBURG COUNTY
STATION: 103+73.08 -L-

SHEET 2 OF 3

STATE OF NORTH CAROLINA
DEPARTMENT OF TRANSPORTATION
RALEIGH

SUBSTRUCTURE

END BENT #2

REVISIONS						SHEET NO.
NO.	BY:	DATE:	NO.	BY:	DATE:	S-112
1			3			TOTAL SHEETS
2			4			117

STR. #3

DRAWN BY : R. G. EMERSON DATE : 06/11
CHECKED BY : K. D. LAYNE DATE : 06/24/11

11-SEP-2012 08:05
R:\Structures\Plans\Str3\U0209B_SD_E*_03.dgn
lsutton

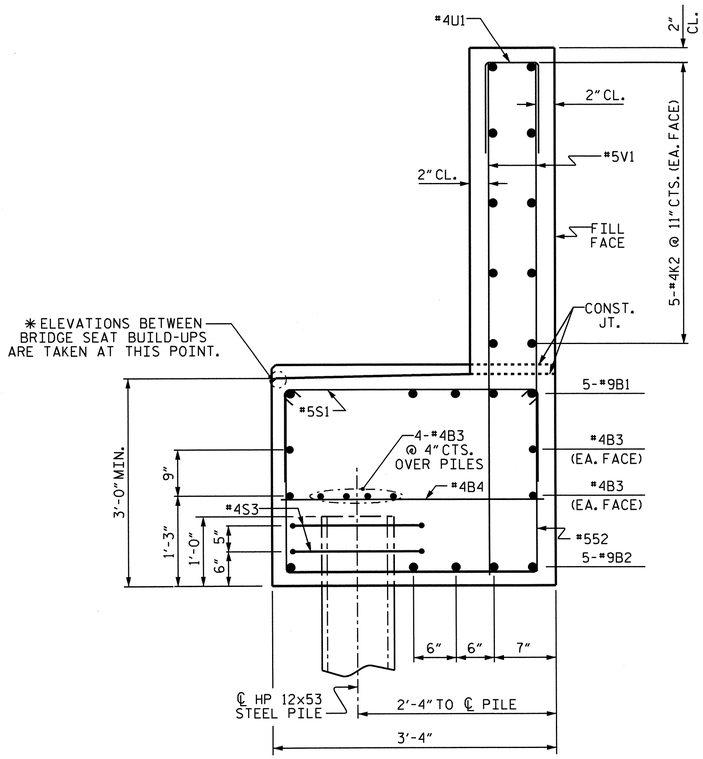

SECTION THRU CAP

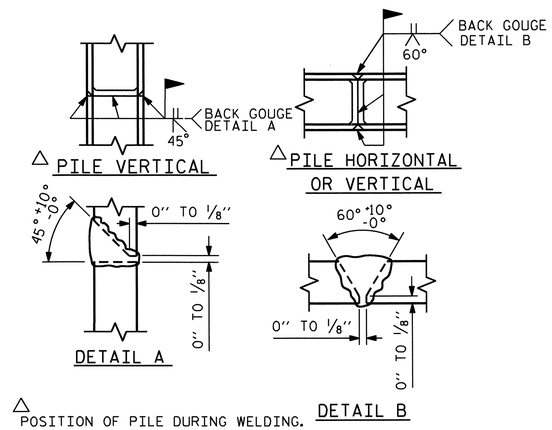

PILE SPLICE DETAILS

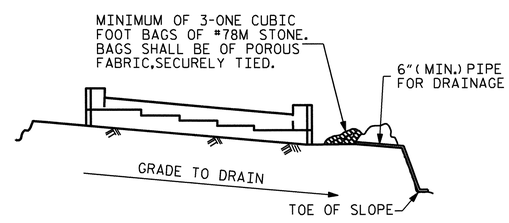

BAGGED STONE AND PIPE SHALL BE PLACED IMMEDIATELY AFTER COMPLETION OF END BENT EXCAVATION. PIPE MAY BE EITHER CONCRETE, CORRUGATED STEEL, CORRUGATED ALUMINUM ALLOY, OR CORRUGATED PLASTIC. PERFORATED PIPE WILL NOT BE ALLOWED.

BAGGED STONE SHALL REMAIN IN PLACE UNTIL THE ENGINEER DIRECTS THAT IT BE REMOVED. THE CONTRACTOR SHALL REMOVE AND DISPOSE OF SILT ACCUMULATIONS AT BAGGED STONE WHEN SO DIRECTED BY THE ENGINEER. BAGS SHALL BE REMOVED AND REPLACED WHENEVER THE ENGINEER DETERMINES THAT THEY HAVE DETERIORATED AND LOST THEIR EFFECTIVENESS.

NO SEPARATE PAYMENT WILL BE MADE FOR THIS WORK AND THE ENTIRE COST OF THIS WORK SHALL BE INCLUDED IN THE UNIT CONTRACT PRICE BID FOR THE SEVERAL PAY ITEMS.

TEMPORARY DRAINAGE AT END BENT

BAR TYPES

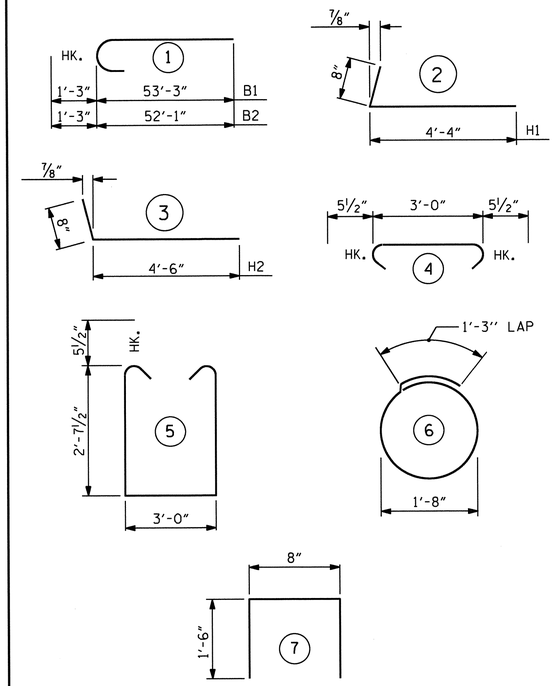

ALL BAR DIMENSIONS ARE OUT TO OUT.

BILL OF MATERIAL

END BENT #2

BAR	NO.	SIZE	TYPE	LENGTH	WEIGHT
B1	10	#9	1	54'-6"	1853
B2	10	#9	1	53'-4"	1813
B3	32	#4	STR	26'-4"	563
B4	24	#4	STR	3'-0"	48
H1	22	#4	2	5'-0"	73
H2	22	#4	3	5'-2"	76
K1	8	#4	STR	3'-11"	21
K2	40	#4	STR	26'-4"	704
S1	136	#5	4	3'-11"	556
S2	136	#5	5	9'-2"	1300
S3	22	#4	6	6'-6"	96
U1	90	#4	7	3'-8"	220
V1	180	#5	STR	7'-2"	1345
V2	20	#5	STR	9'-1"	189
V3	20	#5	STR	9'-3"	193
REINFORCING STEEL				LBS.	9,050

CLASS "A" CONCRETE BREAKDOWN

POUR #1	CAP & LOWER WING (LEFT END)	23.6 C.Y.
POUR #2	CAP & LOWER WING (RIGHT END)	15.2 C.Y.
POUR #3	UPPER WING & BACKWALL (LEFT END)	11.3 C.Y.
POUR #4	UPPER WING & BACKWALL (RIGHT END)	7.6 C.Y.
CLASS "A" CONCRETE TOTAL		57.7 C.Y.

HP 12x53 STEEL PILES NO. 11	LIN. FT.	700
PILE REDRIVES	EA.	6

PROJECT NO. U-0209B
MECKLENBURG COUNTY
STATION: 103+73.08 -L-

SHEET 3 OF 3

STATE OF NORTH CAROLINA
DEPARTMENT OF TRANSPORTATION
RALEIGH

SUBSTRUCTURE

END BENT #2

NORTH CAROLINA PROFESSIONAL SEAL 30878 ENGINEER KEVIN FISCHER

REVISIONS						SHEET NO.
NO.	BY:	DATE:	NO.	BY:	DATE:	S-113
1			3			TOTAL SHEETS
2			4			117

STR. #3

DRAWN BY : R. G. EMERSON DATE : 06/11
CHECKED BY : K. D. LAYNE DATE : 06/24/11

11-SEP-2012 08:05
R:\Structures\Plans\Str3\U0209B_SD_E*_03.dgn
lsutton

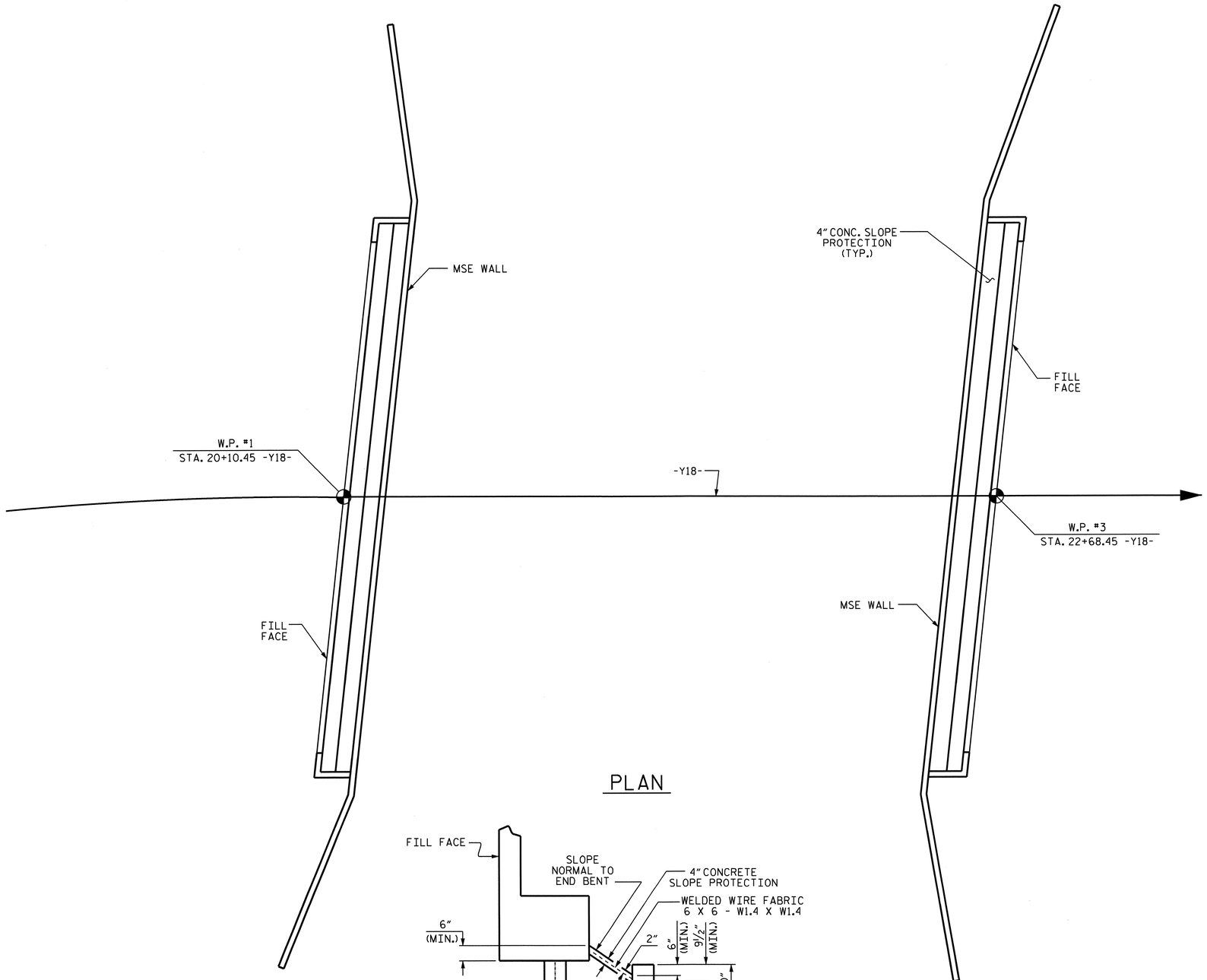

PLAN

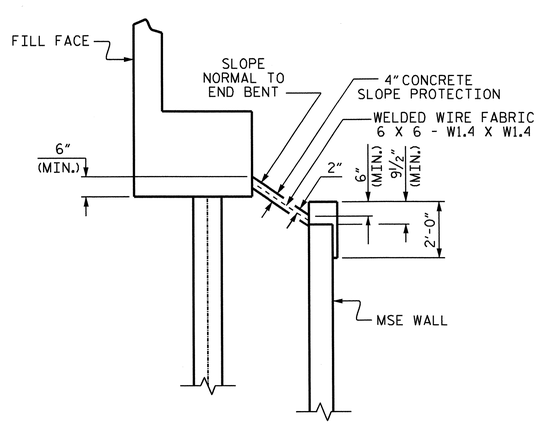

SECTION ALONG ℄ ROADWAY

NOTES:

SLOPE PROTECTION SHALL BE PLACED UNDER THE ENDS OF THE BRIDGE AS SHOWN IN THE DETAILS. MEASUREMENT AND PAYMENT SHALL BE AS PRESCRIBED IN SECTION 462 OF THE STANDARD SPECIFICATIONS.

SLOPE PROTECTION SHALL CONSIST OF 4" POURED-IN-PLACE CONCRETE PAVING AS SHOWN IN THE DETAILS ON THIS SHEET. CONCRETE SHALL BE CLASS "B". THE CONCRETE SURFACE SHALL BE FINISHED TO THE SATISFACTION OF THE ENGINEER. WELDED WIRE FABRIC REINFORCING SHALL BE 6 X 6 - W1.4 X W1.4, 20" WIDE. THE COST OF THE WELDED WIRE FABRIC SHALL BE INCLUDED IN THE CONTRACT UNIT PRICE BID PER SQUARE YARD FOR SLOPE PROTECTION.

BRIDGE @ 103+73.08 -L-	4" SLOPE PROTECTION	WELDED WIRE FABRIC 20 INCHES WIDE
	SQUARE YARDS	APPROX. L.F.
END BENT #1	22	95
END BENT #2	22	95

PROJECT NO. U-0209B
MECKLENBURG COUNTY
STATION: 103+73.08 -L-

STATE OF NORTH CAROLINA
DEPARTMENT OF TRANSPORTATION
RALEIGH

SLOPE PROTECTION DETAILS

NORTH CAROLINA PROFESSIONAL SEAL 20878 ENGINEER KEVIN FISCHER
11/20/12

REVISIONS						SHEET NO.
NO.	BY:	DATE:	NO.	BY:	DATE:	S-114
1			3			TOTAL SHEETS
2			4			117

STR. #3

DRAWN BY : R. G. EMERSON DATE : 09/11
CHECKED BY : T. R. PETERSON DATE : 10/11

11-SEP-2012 08:05
R:\Structures\Plans\Str3\U0209B_SD_SP_03.dgn
lsutton

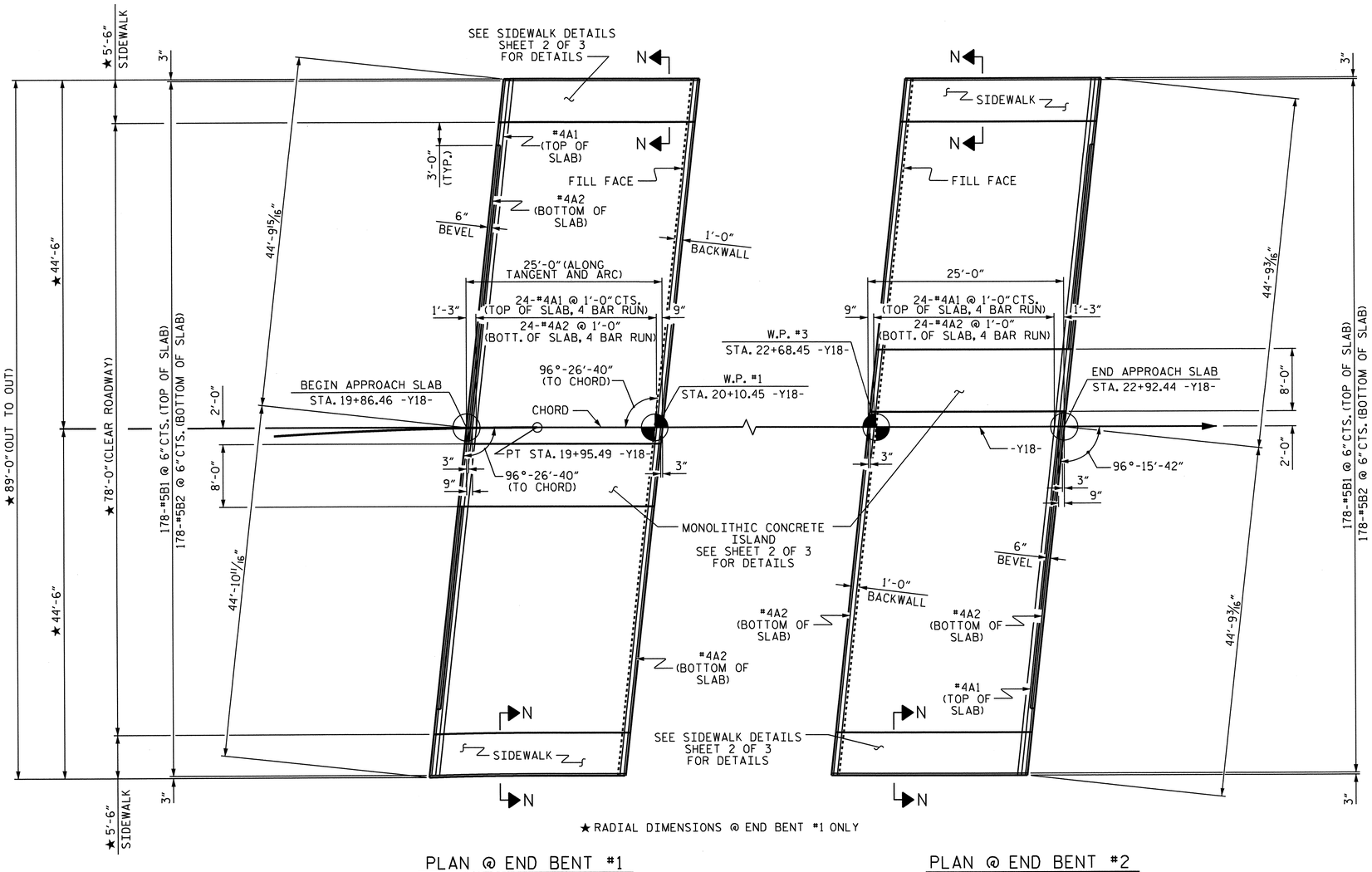

PLAN @ END BENT #1

PLAN @ END BENT #2

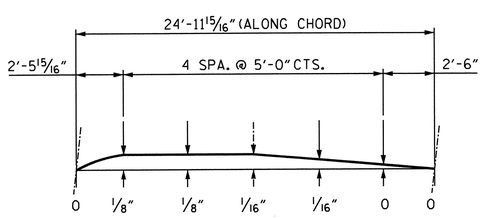

ARC OFFSET- LEFT SIDE APPROACH SLAB @ END BENT #1

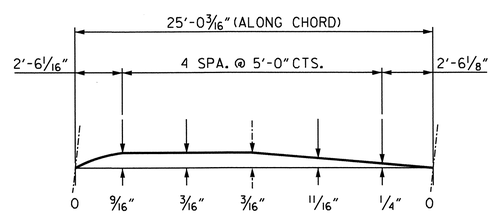

ARC OFFSET- RIGHT SIDE APPROACH SLAB @ END BENT #1

BAR TYPE

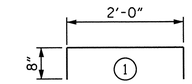

ALL BAR DIMENSIONS ARE OUT TO OUT

ELASTOMERIC CONCRETE

END BENT NO.	ELASTOMERIC CONCRETE (CU. FT.)
1	13.5
2	13.5
TOTAL	27.0

BASED ON THE MINIMUM BLOCKOUT SHOWN.

SPLICE CHART

#4A1	2'-0"
#4A2	1'-9"

BILL OF MATERIAL

FOR ONE APPROACH SLAB (2 REQUIRED)

BAR	NO.	SIZE	TYPE	LENGTH	WEIGHT
*A1	100	#4	STR	23'-10"	1592
A2	104	#4	STR	23'-8"	1644
*B1	178	#5	STR	23'-8"	4394
B2	178	#6	STR	24'-7"	6573
*B3	14	#4	STR	24'-8"	231
*G1	17	#4	STR	7'-6"	85
*G2	50	#4	STR	5'-0"	167
*U1	16	#4	1	3'-4"	36
REINFORCING STEEL				LBS.	8217
* EPOXY COATED REINFORCING STEEL				LBS.	6505

CLASS AA CONCRETE		
POUR #1 - APPROACH SLAB	C.Y.	83.4
POUR #2 - SIDEWALKS & ISLAND	C.Y.	8.5
TOTAL	C.Y.	91.9

NOTES

APPROACH SLAB SHALL NOT BE CONSTRUCTED PRIOR TO COMPLETION OF THE BRIDGE DECK.

THE JOINT SHALL BE SAWED PRIOR TO THE CASTING OF THE SIDEWALK AND CONCRETE ISLAND.

GROOVED CONTRACTION JOINT, 1/2" IN DEPTH, SHALL BE TOOLED IN ALL EXPOSED FACES OF THE SIDEWALK AND CONCRETE ISLAND IN ACCORDANCE WITH ARTICLE 825-10(B) OF THE STANDARD SPECIFICATIONS. THE CONTRACTION JOINT SHALL BE LOCATED AT A SPACING OF 8FT. TO 10FT. BETWEEN EXPANSION JOINTS. NO CONTRACTION JOINTS WILL BE REQUIRED FOR SEGMENTS LESS THAN 10 FEET IN LENGTH.

FOR GALVANIZED REINFORCING STRAPS AND BACKFILL MATERIAL, SEE MSE WALL PLANS AND SPECIAL PROVISIONS.

FOR FOAM JOINT SEALS, SEE SPECIAL PROVISIONS.

THE NOMINAL UNCOMPRESSED SEAL WIDTH OF THE FOAM JOINT SEAL SHALL BE 2 1/2".

FOR ELASTOMERIC CONCRETE, SEE SPECIAL PROVISIONS.

PROJECT NO. U-0209B
MECKLENBURG COUNTY
STATION: 103+73.08 -L-

SHEET 1 OF 3

STATE OF NORTH CAROLINA
DEPARTMENT OF TRANSPORTATION
RALEIGH

BRIDGE APPROACH SLAB FOR FLEXIBLE PAVEMENT

NORTH CAROLINA PROFESSIONAL SEAL 020878 ENGINEER KEVIN FISCHER

REVISIONS						SHEET NO.
NO.	BY:	DATE:	NO.	BY:	DATE:	S-115
1			3			TOTAL SHEETS
2			4			117

STR. #3

DRAWN BY : R. G. EMERSON DATE : 05/11
CHECKED BY : K. D. LAYNE DATE : 06/11

11-SEP-2012 08:05
R:\Structures\Plans\Str3\U0209B_SD_AS_03.dgn
lsutton

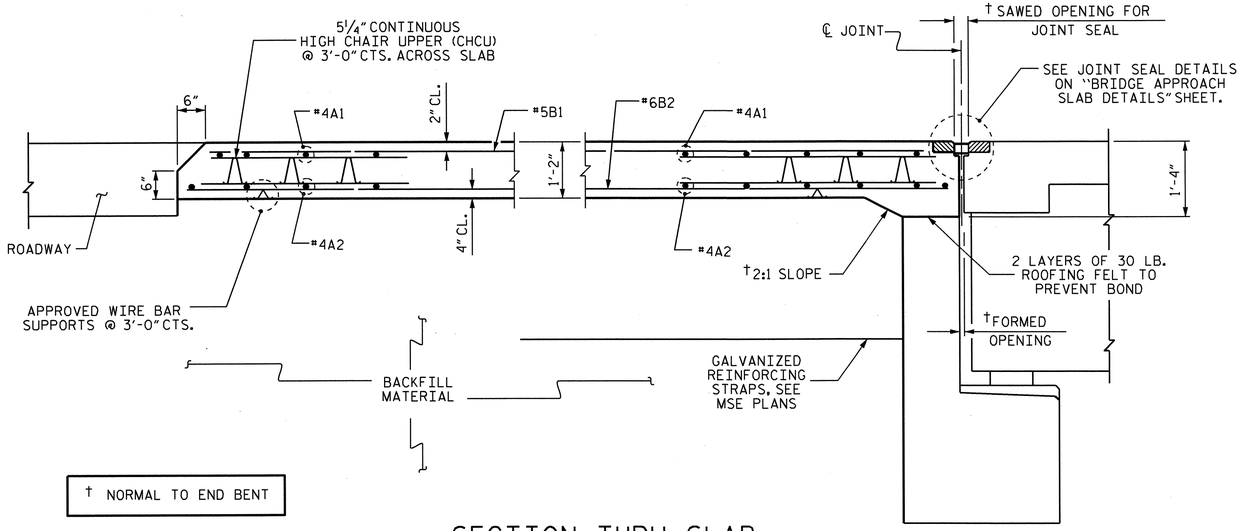

SECTION THRU SLAB

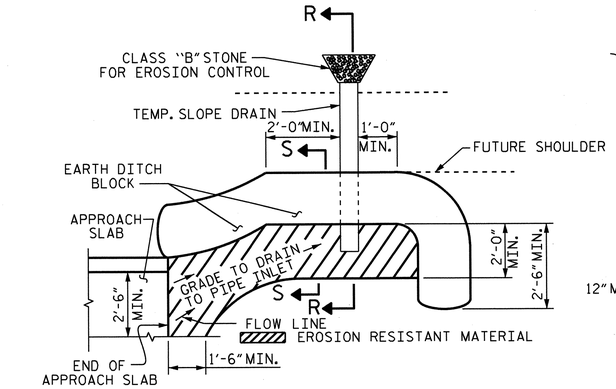

NOTE: IMMEDIATELY AFTER THE CONSTRUCTION OF THE APPROACH SLAB, THE CONTRACTOR SHALL PROVIDE TEMPORARY BERM AND SLOPE DRAIN. CONTRACTOR SHALL GRADE TO PIPE INLET AND PROVIDE EROSION RESISTANT MATERIAL AS SHOWN. THE EROSION RESISTANT MATERIAL SHALL BE EITHER 1) ASPHALT PLANT MIX, TYPE 1 OR TYPE 2, MIN. 2" DEPTH, 2) EROSION CONTROL MAT, OR 3) CONCRETE, AS DIRECTED BY THE ENGINEER. THE SLOPE DRAIN SHALL CONSIST OF A NON-PERFORATED TEMPORARY DRAINAGE PIPE, 12 INCHES IN DIAMETER.

PLAN VIEW

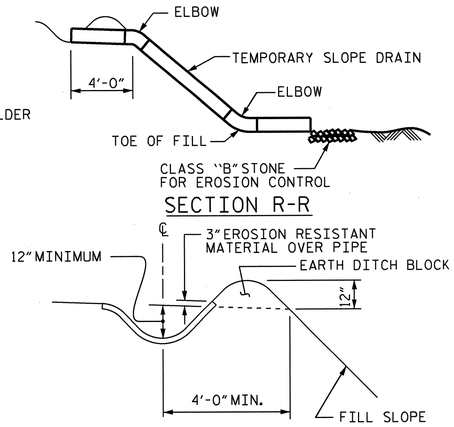

TEMPORARY BERM AND SLOPE DRAIN DETAILS

(TO BE USED WHEN SHOULDER BERM GUTTER IS REQUIRED)

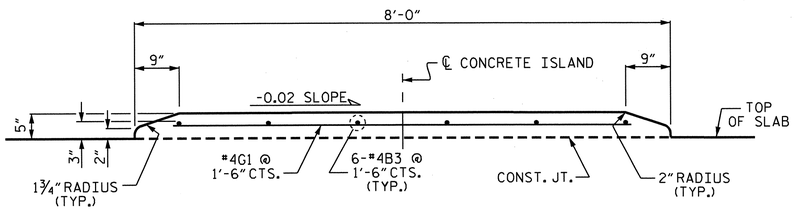

SECTION THRU MONOLITHIC CONCRETE ISLAND

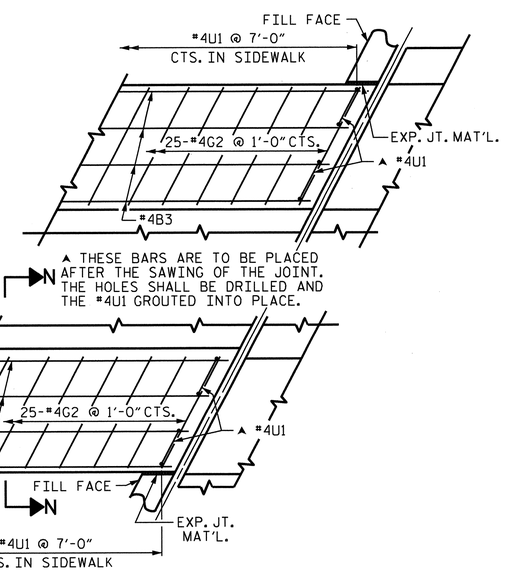

PLAN

DETAILS OF SIDEWALK ON APPROACH SLAB

END APPROACH SLAB SHOWN, BEGIN APPROACH SLAB SIMILAR

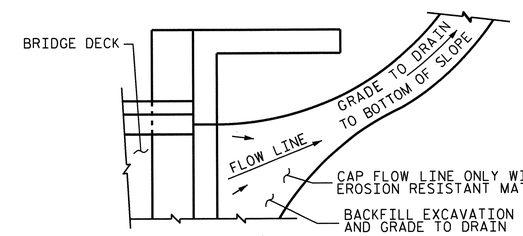

NOTE: IF THE APPROACH SLAB IS NOT CONSTRUCTED IMMEDIATELY AFTER THE BACKFILLING OF THE END BENT EXCAVATION, GRADE TO DRAIN TO THE BOTTOM OF THE SLOPE AND PROVIDE EROSION RESISTANT MATERIAL, SUCH AS FIBERGLASS ROVING OR AS DIRECTED BY THE ENGINEER TO PREVENT SOIL EROSION AND TO PROTECT THE AREA ADJACENT TO THE STRUCTURE. THE CONTRACTOR WILL BE REQUIRED TO REMOVE THESE MATERIALS PRIOR TO CONSTRUCTION OF THE APPROACH SLAB.

TEMPORARY DRAINAGE DETAIL

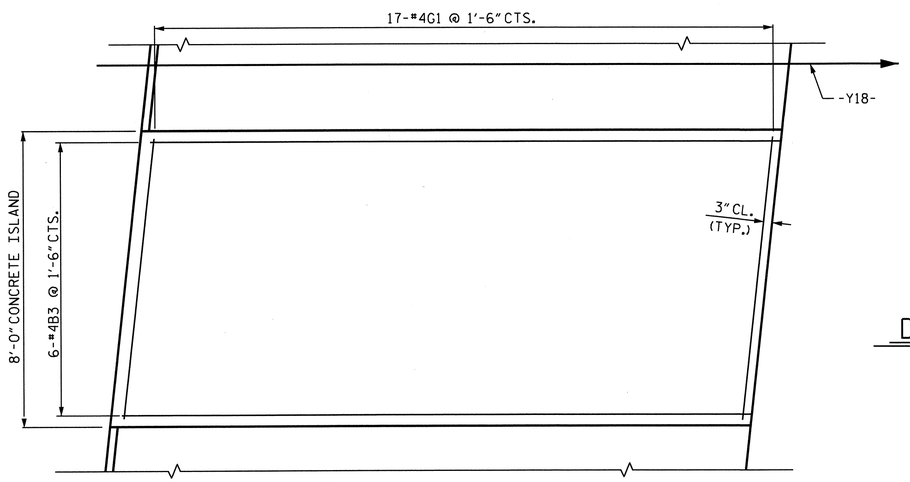

PLAN OF MONOLITHIC CONCRETE ISLAND

DISCONTINUE BEVEL UNDER ISLAND.

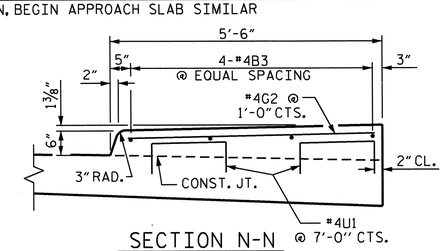

SECTION N-N

SIDEWALK DETAILS

PROJECT NO. U-0209B

MECKLENBURG COUNTY

STATION: 103+73.08 -L-

SHEET 2 OF 3

STATE OF NORTH CAROLINA
DEPARTMENT OF TRANSPORTATION
RALEIGH

STANDARD

BRIDGE APPROACH SLAB DETAILS

NORTH CAROLINA PROFESSIONAL SEAL 030878 ENGINEER KEVIN FISCHER 11/20/12

REVISIONS						SHEET NO.
NO.	BY:	DATE:	NO.	BY:	DATE:	S-116
1			3			TOTAL SHEETS
2			4			117

STR. #3 STD. NO. BAS10

ASSEMBLED BY: R. G. EMERSON	DATE: 05/11		
CHECKED BY: K. D. LAYNE	DATE: 06/11		
DRAWN BY : EEM 3/95	REV. 7/10/01	LES/RDR	
CHECKED BY : VAP 3/95	REV. 5/7/03R	RWW/JTE	
	REV. 5/1/06R	KWM/GM	

06-NOV-2012 14:57
R:\Structures\Plans\Str3\U0209B_SD_AS_03.dgn
LSUTTON

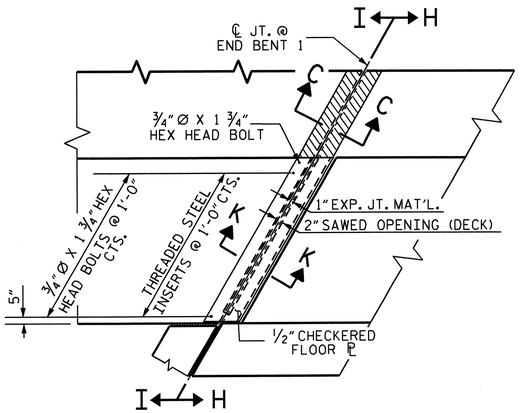

PLAN VIEW OF EVAZOTE JOINT SEAL @ END BENT FOR SIDEWALK

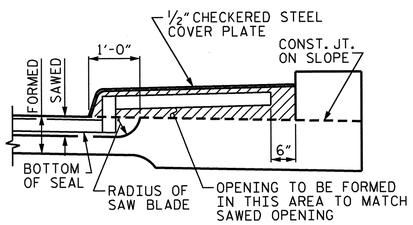

SECTION H-H

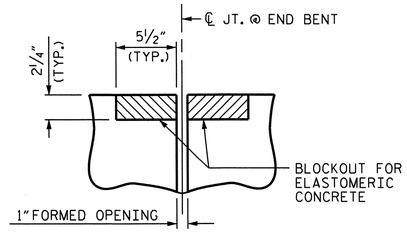

SECTION C-C

EVAZOTE JOINT SEAL (PRE-SAWED ELASTOMERIC CONCRETE DIMENSIONS)

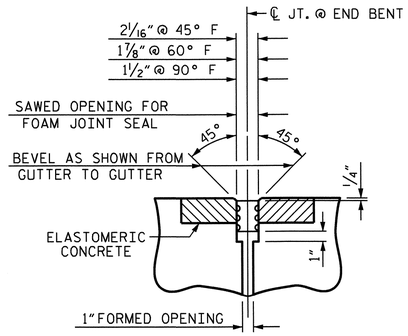

SECTION C-C

EVAZOTE JOINT SEAL (EXPANSION)

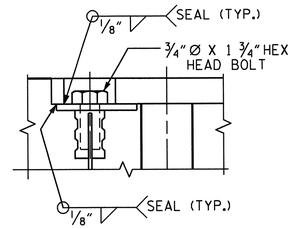

DETAIL "A"

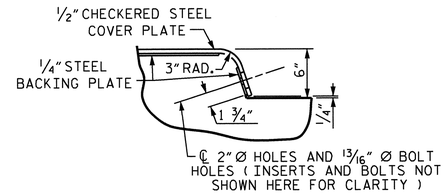

DETAIL "B"

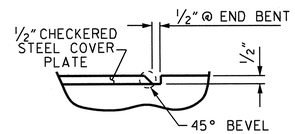

DETAIL "C"

JOINT SEAL DETAILS @ END BENT

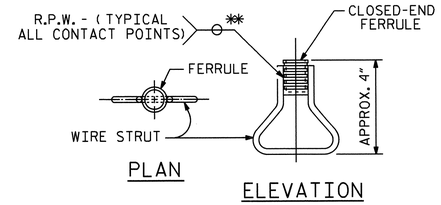

CONCRETE INSERT

** EACH WELDED ATTACHMENT OF WIRE TO FERRULE SHALL DEVELOP THE TENSILE STRENGTH OF THE WIRE.

NOTES

THE STEEL PLATES SHALL CONFORM TO AASHTO M270 GRADE 36 OR APPROVED EQUAL. AFTER FABRICATION, THE PLATES SHALL BE COMMERCIALLY BLAST CLEANED AND EITHER COATED WITH A MINIMUM THICKNESS OF 4 MILS (DRY) OF ZINC-RICH PAINT, GALVANIZED OR METALLIZED TO A MINIMUM THICKNESS OF 6 MILS IN ACCORDANCE WITH THE STANDARD SPECIFICATIONS. FOR THERMAL SPRAYED COATINGS (METALLIZATION), SEE SPECIAL PROVISIONS.

THE 3/4" DIAMETER HEX HEAD BOLTS SHALL CONFORM TO ASTM F593 ALLOY 304 STAINLESS STEEL.

NO SEPARATE PAYMENT WILL BE MADE FOR FURNISHING AND INSTALLING THE COVER PLATE. THE ENTIRE COST OF THIS WORK SHALL BE INCLUDED IN THE LUMP SUM PRICE FOR "EVAZOTE JOINT SEALS".

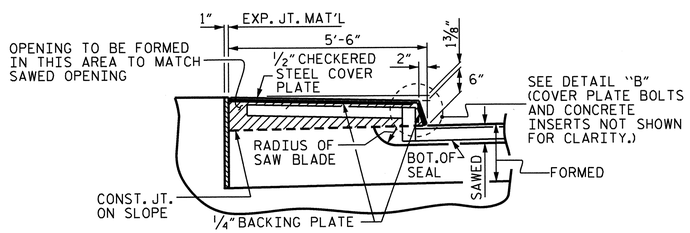

SECTION I-I

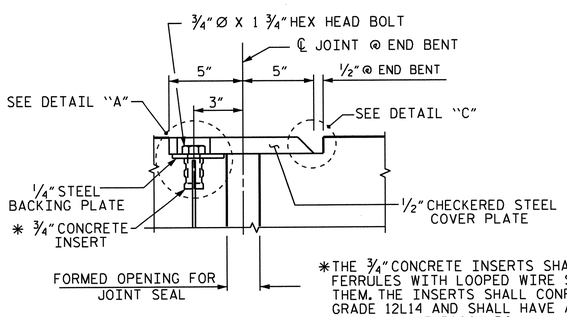

SECTION K-K

*THE 3/4" CONCRETE INSERTS SHALL BE CLOSED-END FERRULES WITH LOOPED WIRE STRUTS ATTACHED TO THEM. THE INSERTS SHALL CONFORM TO AASHTO M169, GRADE 12L14 AND SHALL HAVE A TENSILE WORKING LOAD CAPACITY OF 3000 LBS.

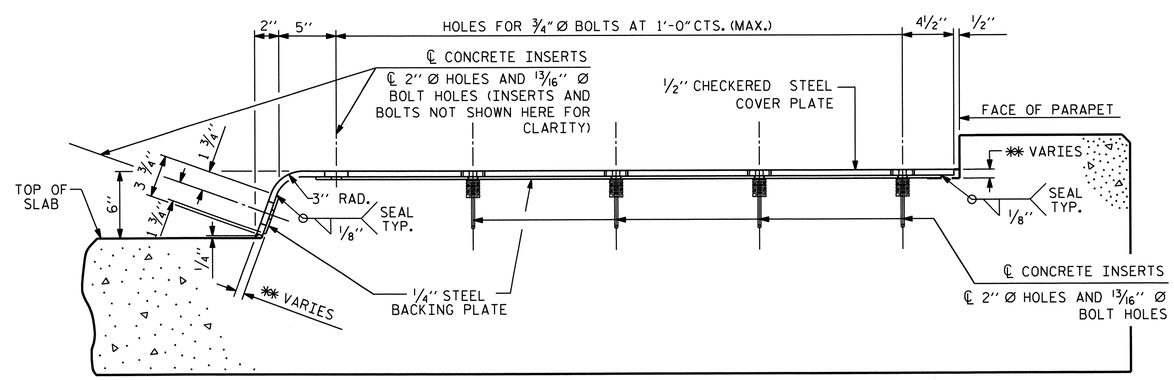

END VIEW

(NORMAL TO SIDEWALK)

** CONCRETE RECESS DIMENSIONS:
13/16" FOR THE SIDE OF THE JOINT HAVING THE 1/2" COVER PLATE WITH A 1/4" BACKING PLATE.
9/16" FOR THE SIDE OF THE JOINT HAVING ONLY THE 1/2" COVER PLATE.

COVER PLATE DETAILS

PROJECT NO. U-0209B
MECKLENBURG COUNTY
STATION: 103+73.08 -L-

SHEET 3 OF 3

STATE OF NORTH CAROLINA
DEPARTMENT OF TRANSPORTATION
RALEIGH

STANDARD

BRIDGE APPROACH SLAB DETAILS

NORTH CAROLINA PROFESSIONAL SEAL 20878 ENGINEER KEVIN FISCHER 11/20/12

REVISIONS								SHEET NO.
NO.	BY:	DATE:	NO.	BY:	DATE:			S-117
1			3					TOTAL SHEETS
2			4					117

STR. #3

STD. NO. BAS10

ASSEMBLED BY: R. G. EMERSON		DATE: 05/11	
CHECKED BY: K. D. LAYNE		DATE: 06/11	
DRAWN BY : FCJ 11/88	REV. 10/17/00	RWW/LES	
CHECKED BY : ARB 11/88	REV. 5/7/03	RWW/JTE	
	REV. 5/1/06RR	MAA/KMM	

11-SEP-2012 08:05
R:\Structures\Plans\Str3\U0209B_SD_AS_03.dgn
lsutton

GEOTECHNICAL ENGINEER	ENGINEER
NORTH CAROLINA PROFESSIONAL SEAL 028669 ENGINEER RICHARD SCOTT WEBB 11/1/11	
SIGNATURE DATE	SIGNATURE DATE

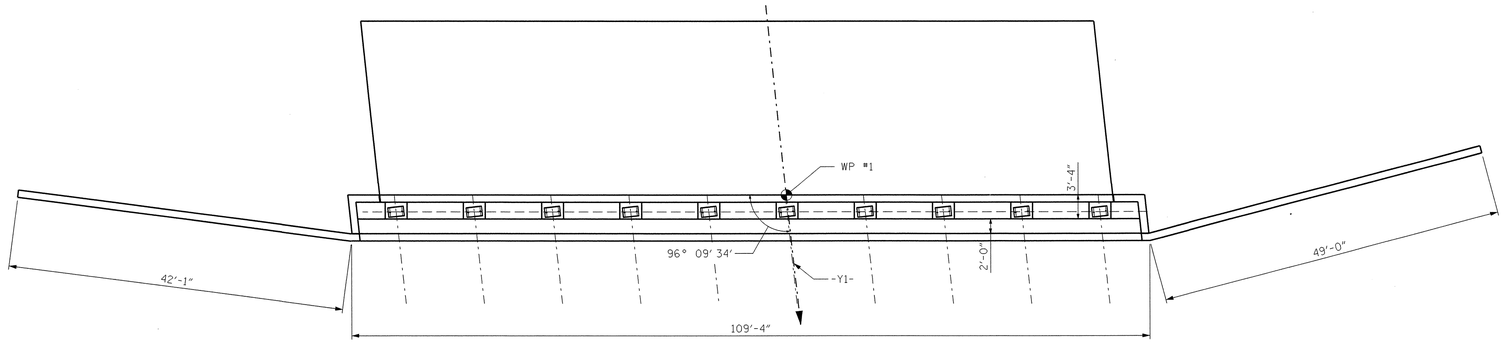

PLAN

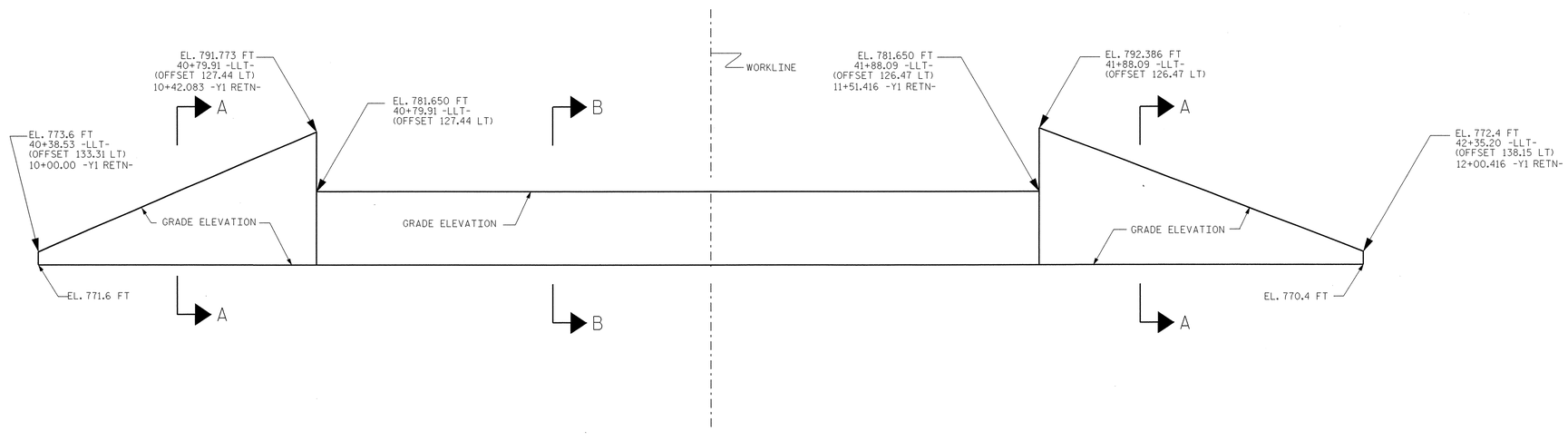

ELEVATION

-Y1 RETN- @ END BENT #1

LOOKING DOWN STATION ON -Y1-, WALL UNFOLDED

SHARON AMITY ROAD

PROJECT NO.: U-0209B

MECKLENBURG **COUNTY**

STATION: 25+07.50 -Y1-

SHEET 1 OF 8

GEOTECHNICAL ENGINEERING UNIT

☐ EASTERN REGIONAL OFFICE

☐ WESTERN REGIONAL OFFICE

☒ CONTRACT OFFICE

STATE OF NORTH CAROLINA
DEPARTMENT OF TRANSPORTATION
RALEIGH

END BENT #1
MSE WALL ENVELOPE
STR. #1

REVISIONS						SHEET NO.
NO.	BY	DATE	NO.	BY	DATE	W-1
1			3			TOTAL SHEETS
2			4			10

PREPARED BY:	RSW	DATE: 9/15/11
REVIEWED BY:	GCB	DATE: 9/25/11

GEOTECHNICAL ENGINEER	ENGINEER
NORTH CAROLINA PROFESSIONAL SEAL 028669 ENGINEER RICHARD SCOTT WEBB 7/12/12	
SIGNATURE DATE	SIGNATURE DATE

IN SITU SOIL WAS EXCAVATED TO REMOVE CONTAMINANTS AND BACKFILLED.
LOCATE LIMITS OF EXCAVATION AND TAKE ACTION (FOR EXAMPLE, PLACE SLIP JOINTS)
TO LIMIT DIFFERENTIAL SETTLEMENT.

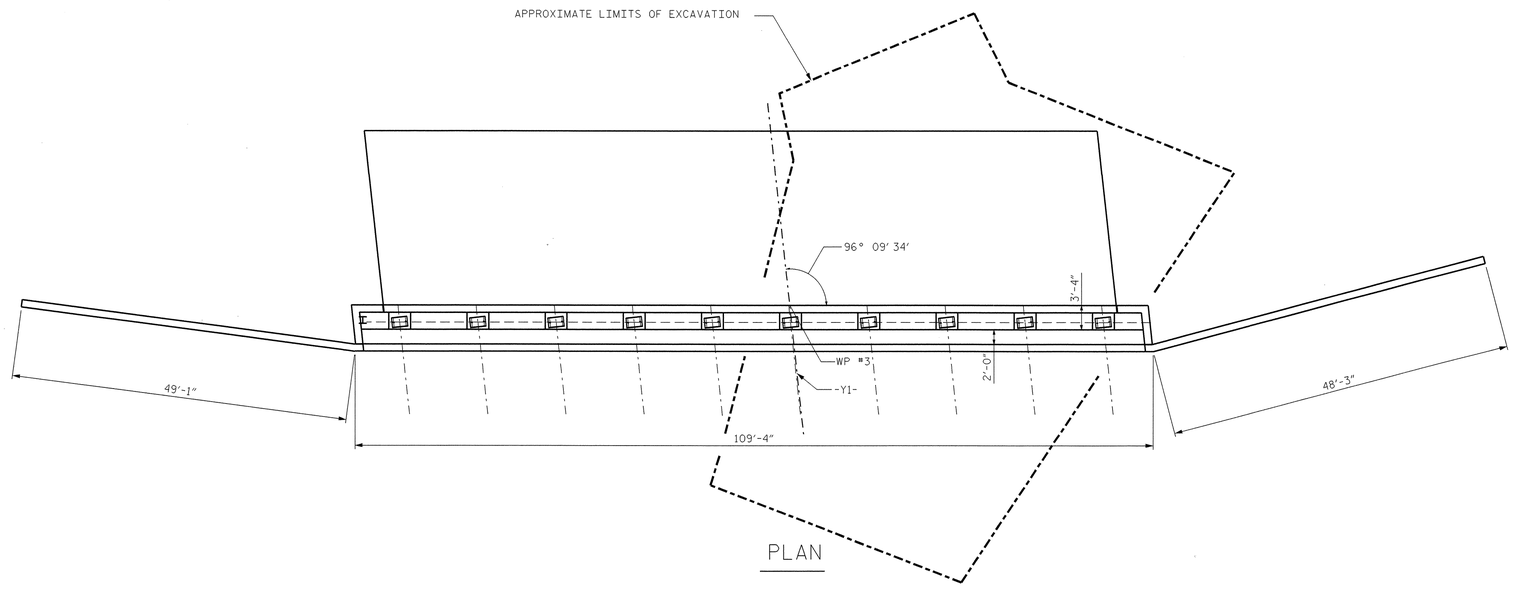

PLAN

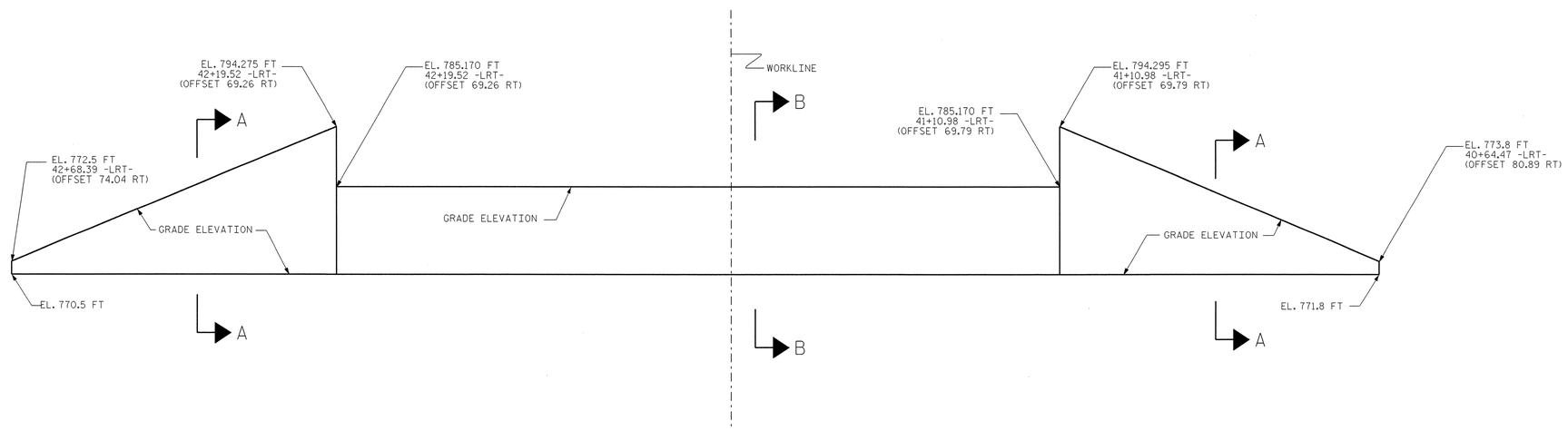

ELEVATION

-Y1 RETS- @ END BENT #2

LOOKING UP STATION ON -Y1-, WALL UNFOLDED

SHARON AMITY ROAD

PROJECT NO.: U-0209B

MECKLENBURG **COUNTY**

STATION: 28+18.50 -Y1-

SHEET 2 OF 8

GEOTECHNICAL ENGINEERING UNIT

☐ EASTERN REGIONAL OFFICE

☐ WESTERN REGIONAL OFFICE

☒ CONTRACT OFFICE

STATE OF NORTH CAROLINA
DEPARTMENT OF TRANSPORTATION
RALEIGH

END BENT #2
MSE WALL ENVELOPE
STR. #1

REVISIONS							SHEET NO.
NO.	BY	DATE	NO.	BY	DATE		W-2
1			3				TOTAL SHEETS
2			4				10

PREPARED BY:	RSW	DATE: 7/3/12
REVIEWED BY:	GCB	DATE: 7/3/11

GEOTECHNICAL ENGINEER	ENGINEER
NORTH CAROLINA PROFESSIONAL SEAL 028669 ENGINEER RICHARD SCOTT WEBB	
SIGNATURE / DATE 11/1/11	SIGNATURE / DATE

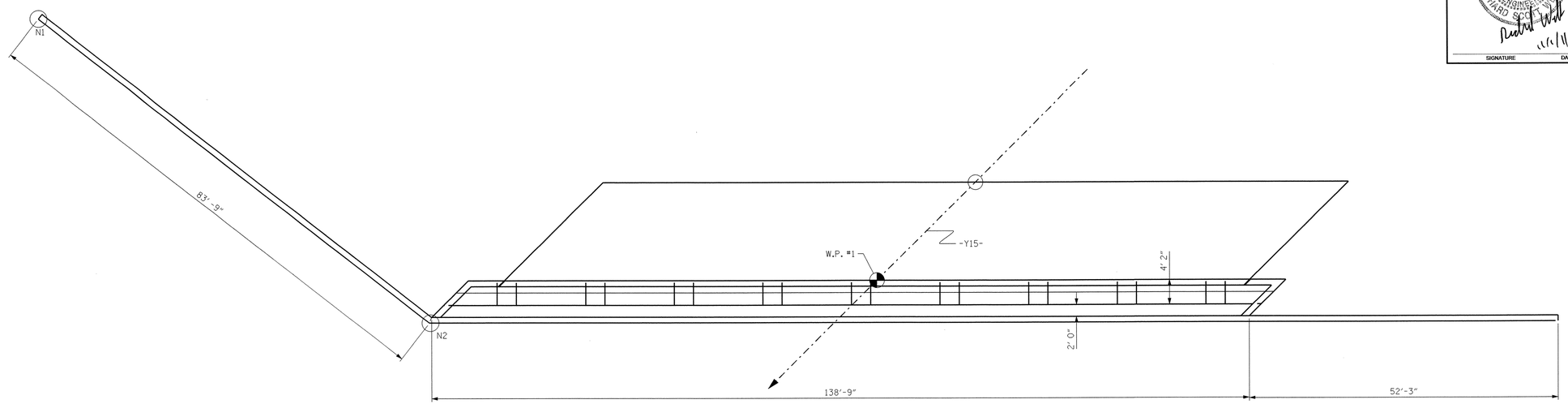

PLAN

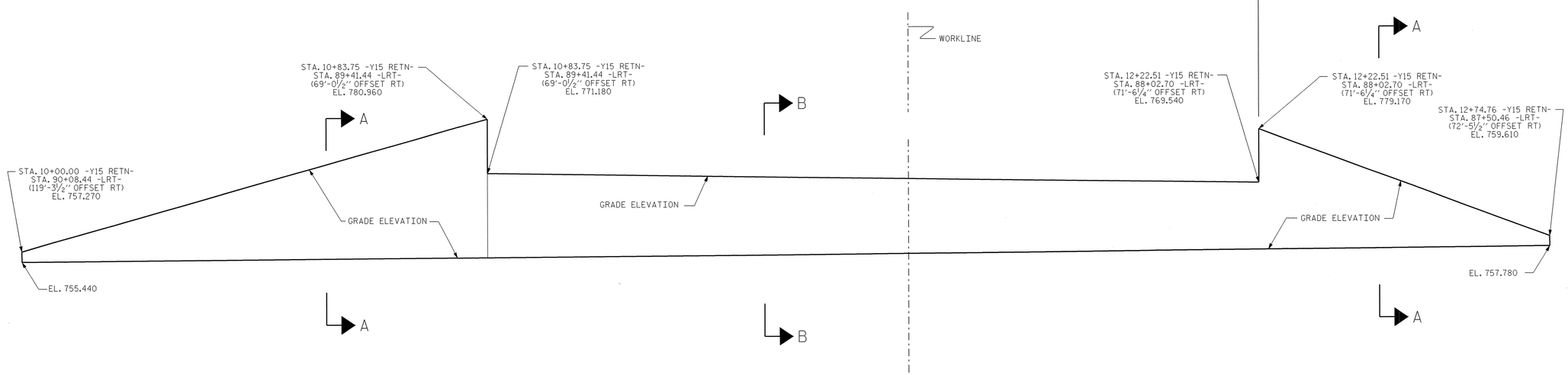

ELEVATION

-Y15 RETN- @ END BENT #1

VIEW DOWN STATION
WALL UNFOLDED

IDLEWILD ROAD

PROJECT NO.: U-0209B

MECKLENBURG **COUNTY**

STATION: 31+15.34 -Y15-

SHEET 3 OF 8

GEOTECHNICAL ENGINEERING UNIT

☐ EASTERN REGIONAL OFFICE

☐ WESTERN REGIONAL OFFICE

☒ CONTRACT OFFICE

STATE OF NORTH CAROLINA
DEPARTMENT OF TRANSPORTATION
RALEIGH

END BENT #1
MSE WALL ENVELOPE
STR. #2

REVISIONS						SHEET NO.
NO.	BY	DATE	NO.	BY	DATE	W-3
1			3			TOTAL SHEETS
2			4			10

PREPARED BY:	RSW	DATE: 9/15/11
REVIEWED BY:	GCB	DATE: 9/25/11

GEOTECHNICAL ENGINEER	ENGINEER
NORTH CAROLINA PROFESSIONAL SEAL 028669 ENGINEER RICHARD SCOTT WEBB — 11/1/11	
SIGNATURE DATE	SIGNATURE DATE

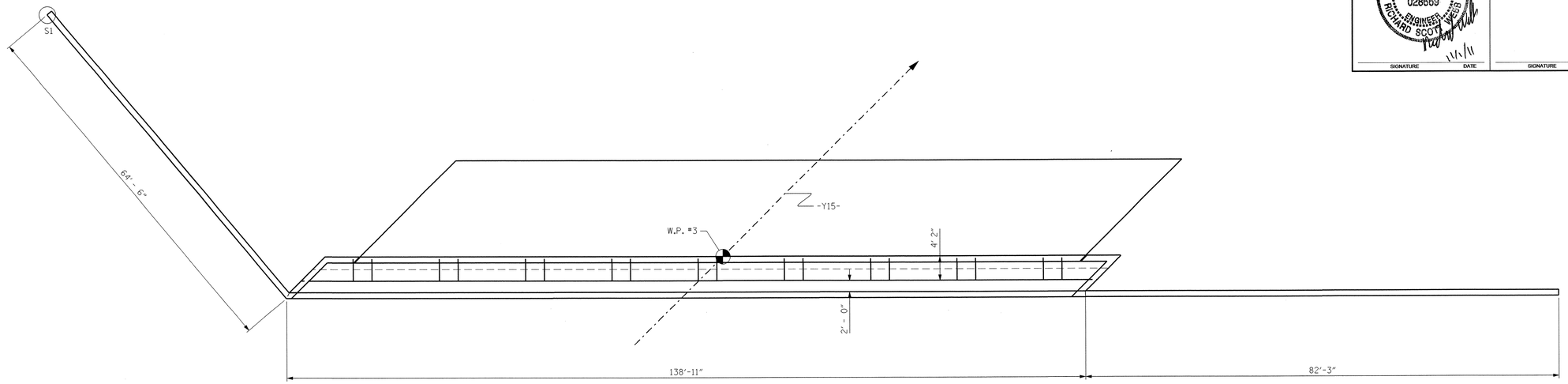

PLAN

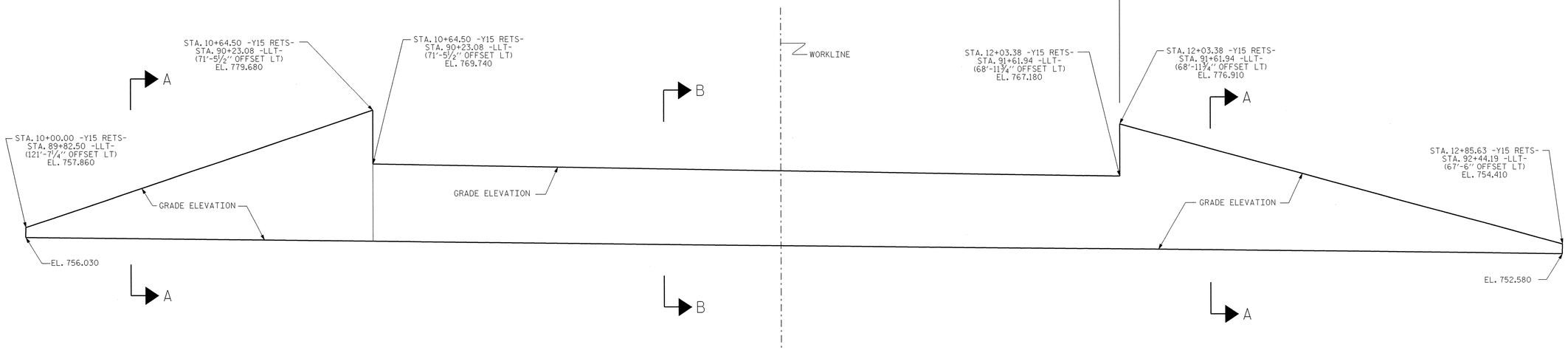

ELEVATION

-Y15 RETS- @ END BENT #2

VIEW UP STATION
WALL UNFOLDED

IDLEWILD ROAD

PROJECT NO.: U-0209B
MECKLENBURG ***COUNTY***
STATION: 34+44.34 -Y15-

SHEET 4 OF 8

GEOTECHNICAL ENGINEERING UNIT

☐ ***EASTERN REGIONAL OFFICE***
☐ ***WESTERN REGIONAL OFFICE***
☒ ***CONTRACT OFFICE***

STATE OF NORTH CAROLINA
DEPARTMENT OF TRANSPORTATION
RALEIGH

END BENT #2
MSE WALL ENVELOPE
STR. #2

REVISIONS							SHEET NO.
NO.	BY	DATE	NO.	BY	DATE		W-4
1			3				TOTAL SHEETS
2			4				10

PREPARED BY:	RSW	DATE: 9/15/11
REVIEWED BY:	GCB	DATE: 9/25/11

GEOTECHNICAL ENGINEER	ENGINEER
NORTH CAROLINA PROFESSIONAL SEAL 026860 ENGINEER RICHARD SCHWEIGER	
SIGNATURE DATE 11/1/11	SIGNATURE DATE

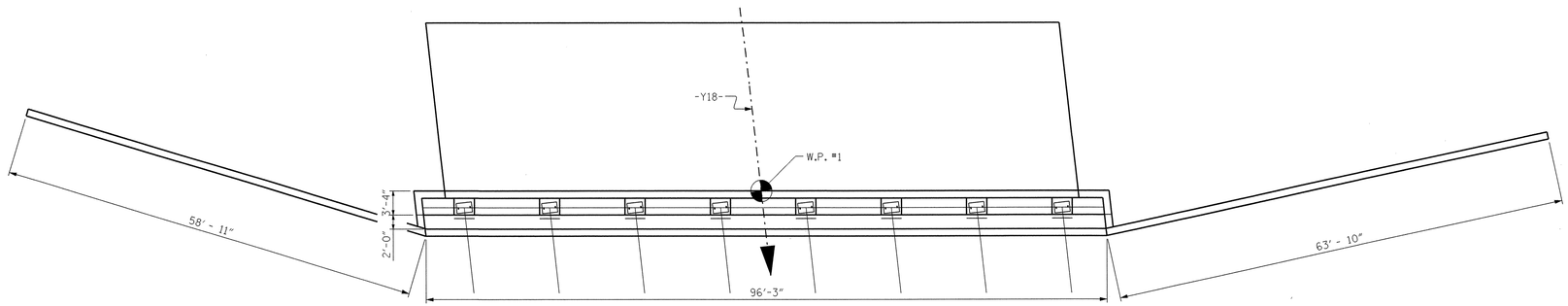

PLAN

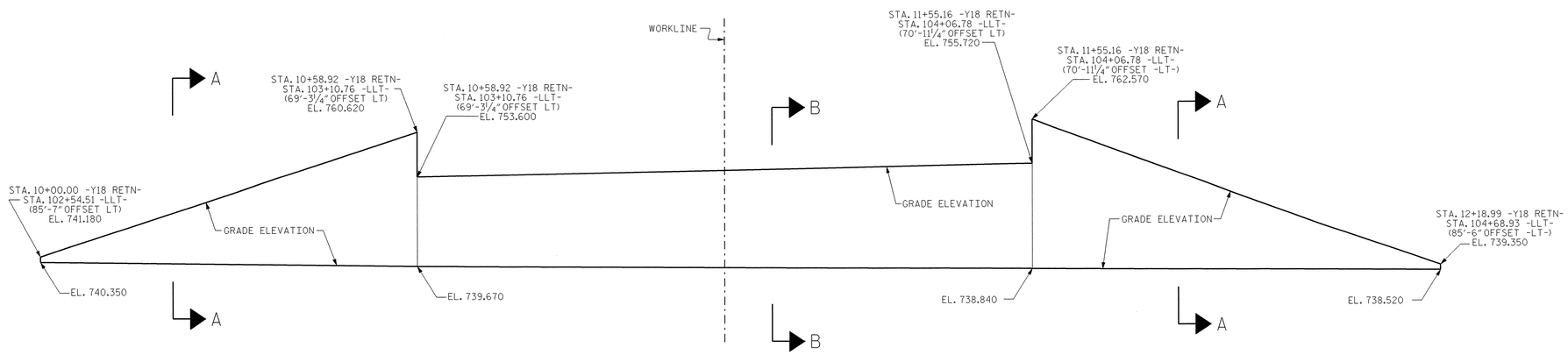

ELEVATION

-Y18 RETN- @ END BENT #1

VIEW DOWN STATION
WALL UNFOLDED

CONFERENCE DRIVE

PROJECT NO.: U-0209B

MECKLENBURG **COUNTY**

STATION: 20+10.45 -Y18-

SHEET 5 OF 8

GEOTECHNICAL ENGINEERING UNIT

☐ EASTERN REGIONAL OFFICE
☐ WESTERN REGIONAL OFFICE
☒ CONTRACT OFFICE

STATE OF NORTH CAROLINA
DEPARTMENT OF TRANSPORTATION
RALEIGH

END BENT #1
MSE WALL ENVELOPE

STR. #3

REVISIONS						SHEET NO.
NO.	BY	DATE	NO.	BY	DATE	W-5
1			3			TOTAL SHEETS
2			4			10

PREPARED BY:	RSW	DATE: 9/15/11
REVIEWED BY:	GCB	DATE: 9/25/11

GEC245964 11/1/2011 U-0209BWalls rswebb GEC-Oce860-34bond

GEOTECHNICAL ENGINEER	ENGINEER
NORTH CAROLINA PROFESSIONAL SEAL 026563 ENGINEER RICHARD SCOTT WEBB 11/1/11	
SIGNATURE DATE	SIGNATURE DATE

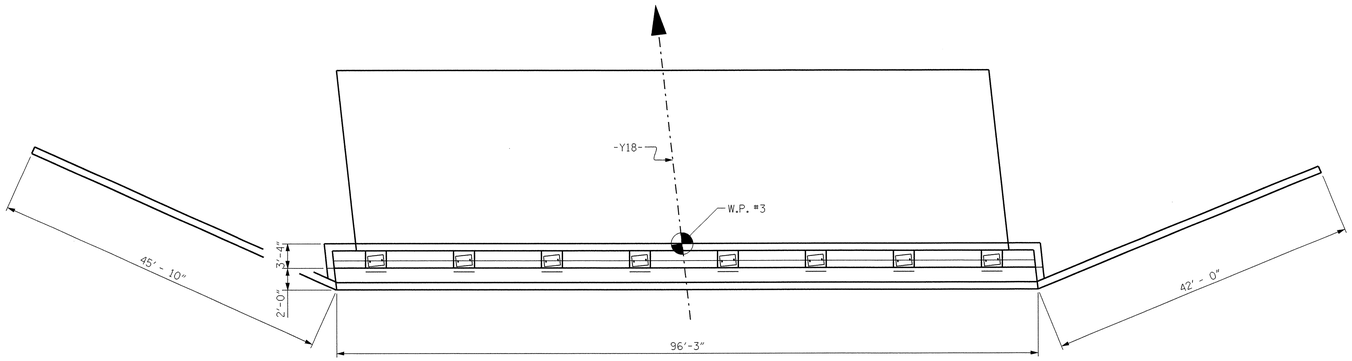

PLAN

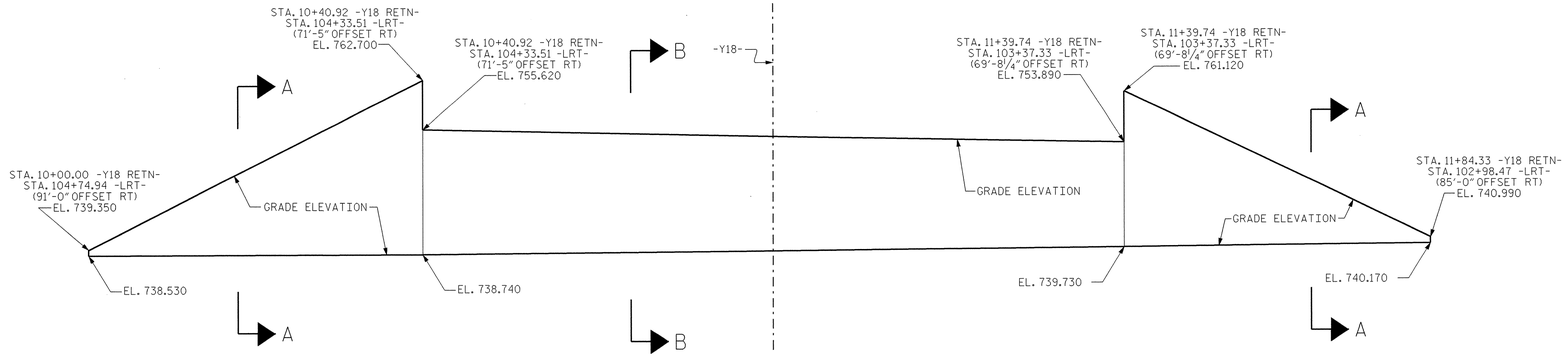

ELEVATION

-Y18 RETS- @ END BENT #2

VIEW UP STATION
WALL UNFOLDED

CONFERENCE DRIVE

PROJECT NO.: U-0209B

MECKLENBURG **COUNTY**

STATION: 22+68.45 -Y18-

SHEET 6 OF 8

GEOTECHNICAL ENGINEERING UNIT

☐ EASTERN REGIONAL OFFICE
☐ WESTERN REGIONAL OFFICE
☒ CONTRACT OFFICE

STATE OF NORTH CAROLINA
DEPARTMENT OF TRANSPORTATION
RALEIGH

END BENT #2
MSE WALL ENVELOPE

STR. #3

REVISIONS						SHEET NO.
NO.	BY	DATE	NO.	BY	DATE	W-6
1			3			TOTAL SHEETS
2			4			10

PREPARED BY:	RSW	DATE: 9/15/11
REVIEWED BY:	GCB	DATE: 9/25/11

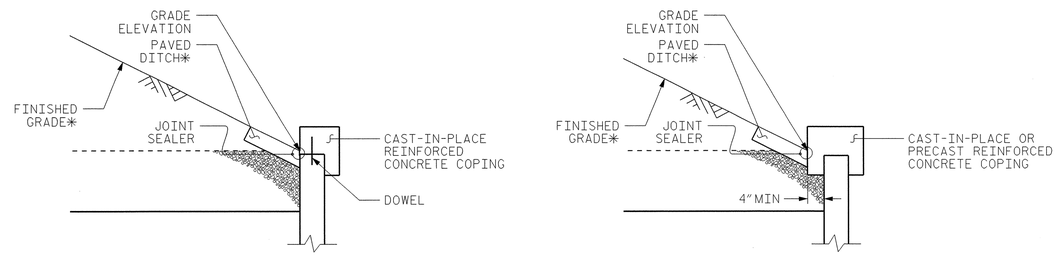

COPING DETAILS

AT THE CONTRACTOR'S OPTION, CONNECT COPING TO PANELS WITH DOWELS OR EXTEND COPING DOWN BACK OF PANELS.
*SEE ROADWAY PLANS FOR FINISHED GRADE AND DITCH DETAILS.

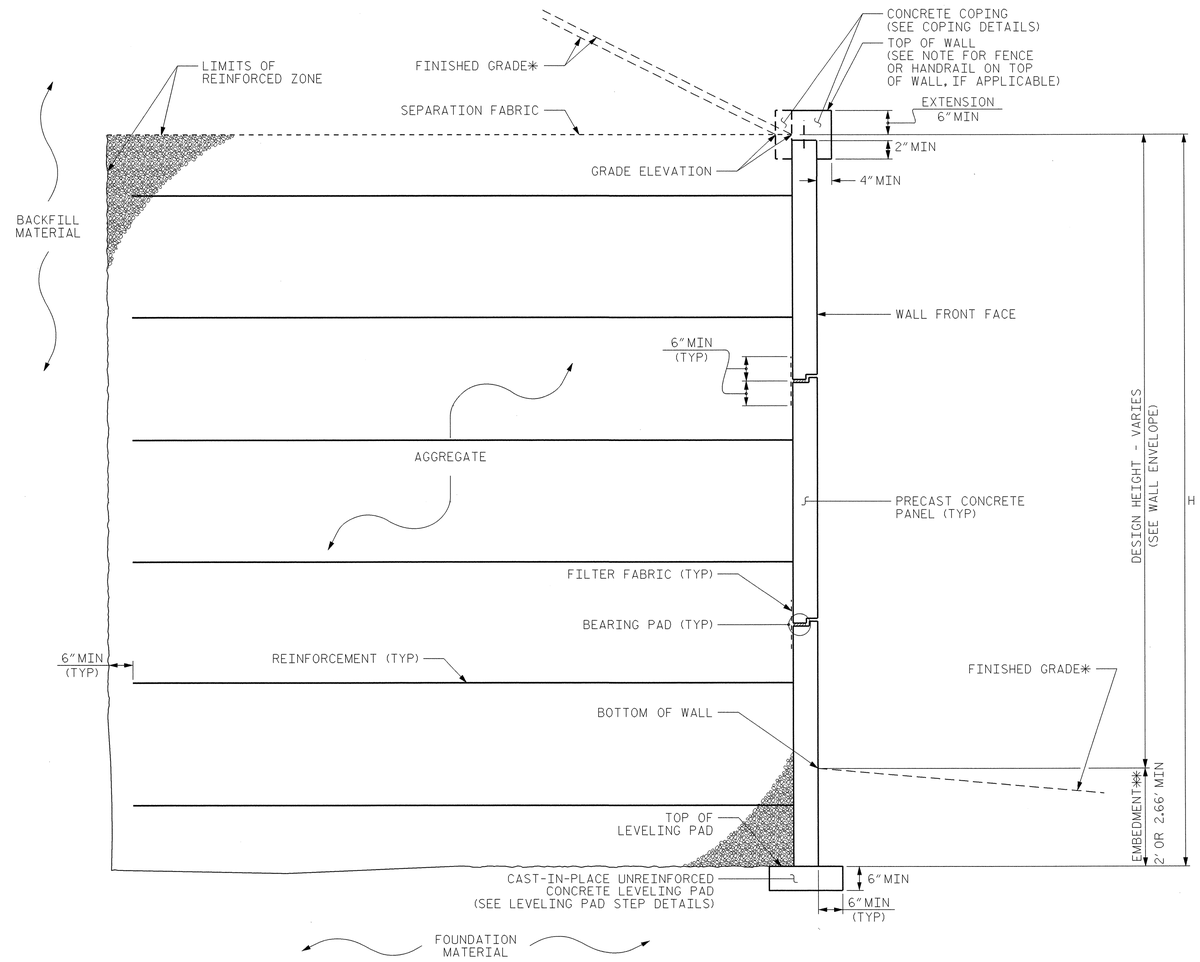

SECTION A-A

*SEE ROADWAY PLANS FOR FINISHED GRADE AND DITCH DETAILS.
FINISHED GRADE REFERS TO GRADE OF PROPOSED NOT FUTURE CONSTRUCTION.

** 2 FEET AT STRUCTURE 1 (SHARON AMITY) END BENT 1 AND 2.66 FEET AT STRUCTURE 1 EB 2 AND STRUCTRE 2 AND 3 (IDLEWILD RD AND CONFERENCE DR).

PREPARED BY:	RSW	DATE:	9/15/11
REVIEWED BY:	GCB	DATE:	9/25/11

GEOTECHNICAL ENGINEER	ENGINEER
NORTH CAROLINA PROFESSIONAL SEAL 028639 ENGINEER RICHARD SCOTT WEBB 11/1/11	
SIGNATURE DATE	SIGNATURE DATE

NOTES:

FOR MECHANICALLY STABILIZED EARTH (MSE) RETAINING WALLS, SEE MECHANICALLY STABILIZED EARTH RETAINING WALLS PROVISION.

USE COARSE AGGREGATE IN THE REINFORCED ZONE FOR RETAINING WALLS NO. 1, 2, 3, 4, 5, AND 6.

USE AN MSE WALL SYSTEM WITH PRECAST CONCRETE PANELS FOR RETAINING WALL NO. 1, 2, 3, 4, 5, and 6.

DESIGN RETAINING WALLS NO. 1, 2, 3, 4, 5, AND 6 FOR WALL HEIGHTS EQUAL TO THE DESIGN HEIGHT PLUS EMBEDMENT.

DESIGN RETAINING WALL NO. FOR THE FOLLOWING:
1) MINIMUM DESIGN LIFE = 100 YEARS
2) MAXIMUM FACTORED VERTICAL STRESS ON FOUNDATION MATERIAL = 3.0 TSF
3) AGGREGATE PARAMETERS:

STANDARD SIZE NO. (IN ACCORDANCE WITH SECTION 1005 OF THE STANDARD SPECIFICATIONS)	UNIT WEIGHT (γ) PCF	FRICTION ANGLE (ϕ) DEGREES	COHESION (c) PSF
5, 57, 57M, 6M, 67 AND 78M (COARSE AGGREGATE)	110	38	0

4) IN-SITU ASSUMED MATERIAL PARAMETERS:

MATERIAL TYPE	UNIT WEIGHT (γ) PCF	FRICTION ANGLE (ϕ) DEGREES	COHESION (c) PSF
BACKFILL	120	30	0
FOUNDATION	120	30	0

WHERE RETAINING WALLS NO. 1, 2, 3, 4, 5, AND 6 HAVE A HEIGHT GREATER THAN TEN FEET DESIGN RETAINING WALLS FOR A LIVE LOAD (TRAFFIC) SURCHARGE.

DO NOT PLACE LEVELING PAD CONCRETE, AGGREGATE OR REINFORCEMENT FOR RETAINING WALLS NO. 1, 2, 3, 4, 5, AND 6 UNTIL EXCAVATION DIMENSIONS AND FOUNDATION MATERIAL ARE APPROVED.

PANEL MUST BE SQUARE OR RECTANGULAR (NOT CRUCIFORM) SO AS TO PROVIDE CONTINUOUS VERTICAL JOINTS FROM THE TOP TO THE BOTTOM OF THE WALL.

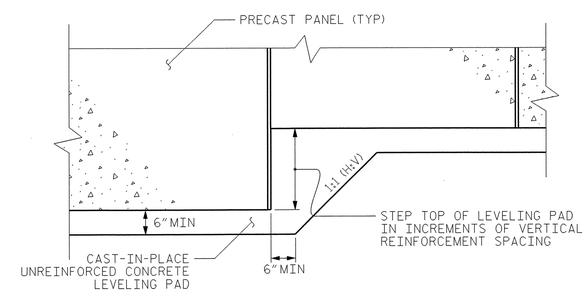

PRECAST CONCRETE PANELS

LEVELING PAD STEP DETAILS

PROJECT NO.: U-0209B
MECKLENBURG **COUNTY**
STATION:
SHEET 7 OF 8

GEOTECHNICAL ENGINEERING UNIT
☐ EASTERN REGIONAL OFFICE
☐ WESTERN REGIONAL OFFICE
☒ CONTRACT OFFICE
STATE OF NORTH CAROLINA DEPARTMENT OF TRANSPORTATION RALEIGH

MSE WALL TYPICAL SECTION AND DETAILS

REVISIONS						SHEET NO.
NO.	BY	DATE	NO.	BY	DATE	W-7
1			3			TOTAL SHEETS
2			4			10

GEOTECHNICAL ENGINEER	ENGINEER
NORTH CAROLINA PROFESSIONAL SEAL 028669 ENGINEER RICHARD SCOTT WEBB 11/1/11	
SIGNATURE DATE	SIGNATURE DATE

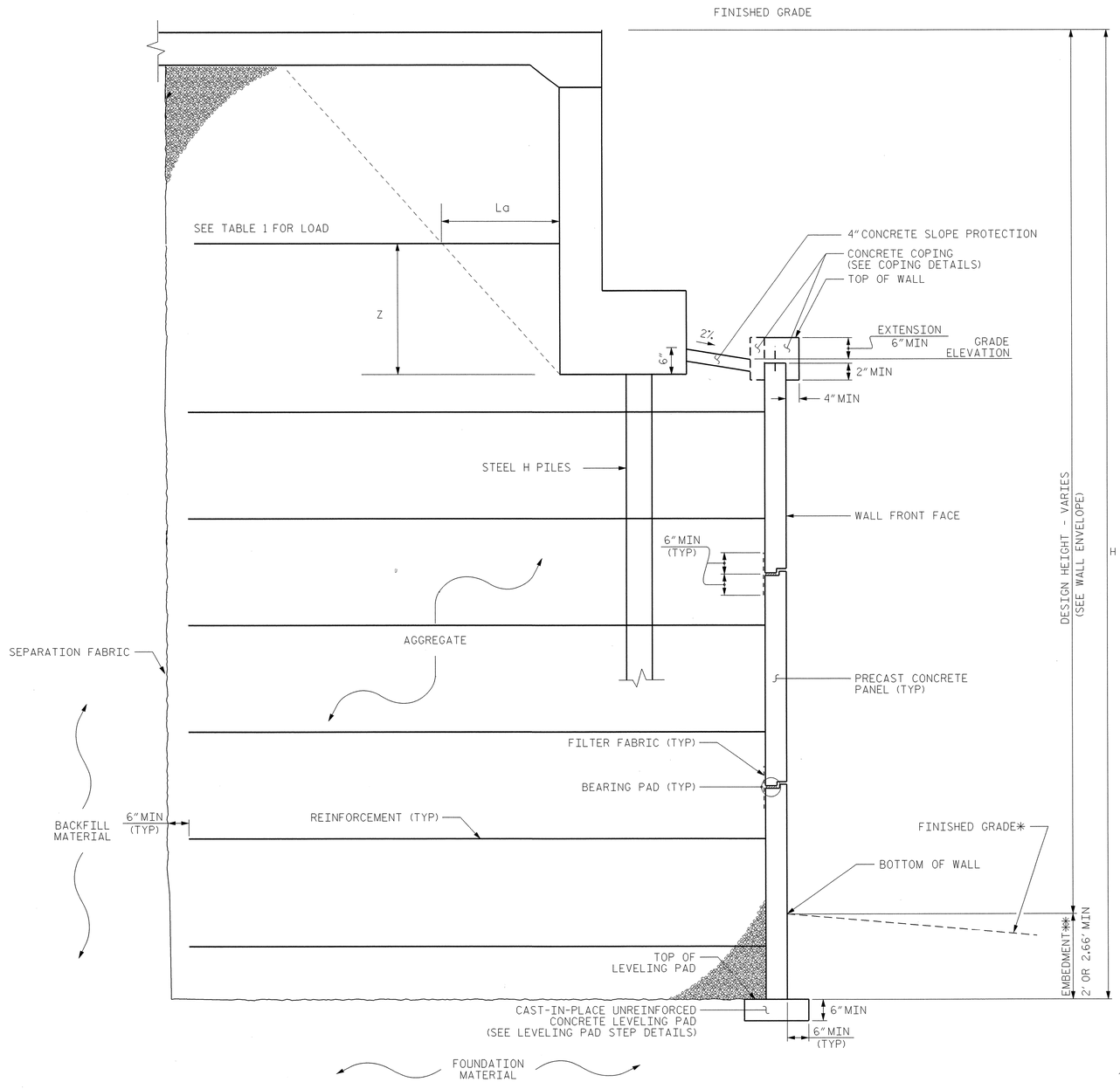

SECTION B-B

*SEE ROADWAY PLANS FOR FINISHED GRADE AND DITCH DETAILS.
FINISHED GRADE REFERS TO GRADE OF PROPOSED NOT FUTURE CONSTRUCTION.

** 2 FEET AT STRUCTURE 1 (SHARON AMITY) END BENT 1 AND 2.66 FEET AT STRUCTURE 1 EB 2 AND STRUCTRE 2 AND 3 (IDLEWILD RD AND CONFERENCE DR).

NOTES:

PILE FOUNDATIONS FOR THE END BENT CAPS AT RETAINING WALL NO. 1, 2, 3, 4, 5, AND 6 WILL INTERFERE WITH THE RETAINING WALL REINFORCEMENT. SEE "FOUNDATION LAYOUT" SHEET FOR FOUNDATION LOCATIONS.

DESIGN REINFORCEMENT CONNECTED TO END BENT CAPS FOR THE FACTORED LOAD AND LENGTH OF REINFORCEMENT IN ACTIVE ZONE SHOWN. CAST REINFORCEMENT CONNECTORS INTO THE CAP BACKWALL. MAINTAIN A CLEARANCE OF AT LEAST 3" BETWEEN CONNECTORS AND REINFORCING STEEL IN THE CAP.

TABLE 1- FACTORED LOADS FOR END BENT REINFORCEMENT

LOCATION	STATION	LOAD (KIP/FT)	Z (FEET)	La (FEET)
SHARON AMITY ROAD STRUCTURE #1	EB1 Y1 25+07.50	3.1	4.1	4
	EB2 Y1 28+18.50	2.9	3.9	4
IDLEWILD ROAD STRUCTURE #2	EB1 Y15 31+15.34	3.3	4.2	4
	EB2 Y15 34+44.34	3.3	4.2	4
CONFERENCE DRIVE STRUCTURE #3	EB1 Y18 20+10.45	2.2	3.3	4
	EB2 Y18 22+68.45	2.5	3.6	4

TABLE 2- ESTIMATED QUANTITIES

LOCATION	STATION	AREA (SQUARE FEET)	
SHARON AMITY ROAD STRUCTURE #1	EB1 Y1 25+07.50	2300	MSE RETAINING WALL NO. 1
	EB2 Y1 28+18.50	2800	MSE RETAINING WALL NO. 2
IDLEWILD ROAD STRUCTURE #2	EB1 Y15 31+15.34	3700	MSE RETAINING WALL NO. 3
	EB2 Y15 34+44.34	3900	MSE RETAINING WALL NO. 4
CONFERENCE DRIVE STRUCTURE #3	EB1 Y18 20+10.45	3200	MSE RETAINING WALL NO. 5
	EB2 Y18 22+68.45	2700	MSE RETAINING WALL NO. 6

PROJECT NO.: U-0209B
MECKLENBURG **COUNTY**
STATION:
SHEET 8 OF 8

PREPARED BY:	RSW	DATE: 9/15/11
REVIEWED BY:	GCB	DATE: 9/25/11

GEOTECHNICAL ENGINEERING UNIT

☐ EASTERN REGIONAL OFFICE
☐ WESTERN REGIONAL OFFICE
☒ CONTRACT OFFICE

STATE OF NORTH CAROLINA DEPARTMENT OF TRANSPORTATION RALEIGH

MSE WALL TYPICAL SECTION AND DETAILS

REVISIONS							SHEET NO.
NO.	BY	DATE	NO.	BY	DATE		W-8
1			3				TOTAL SHEETS
2			4				10

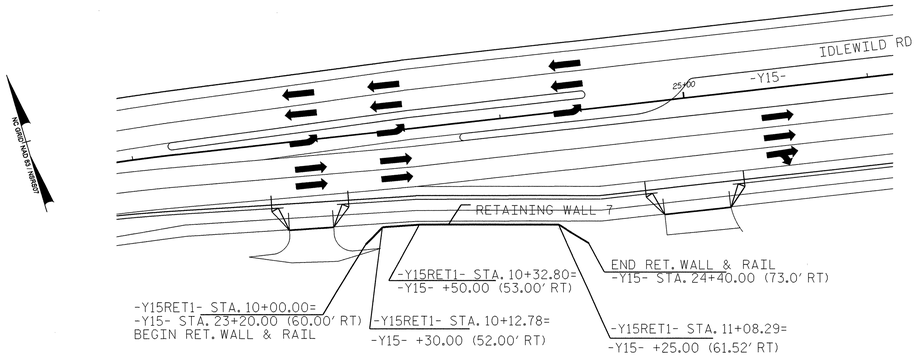

PLAN VIEW

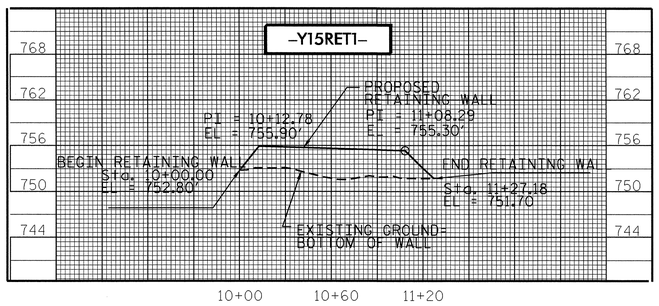

ELEVATION VIEW

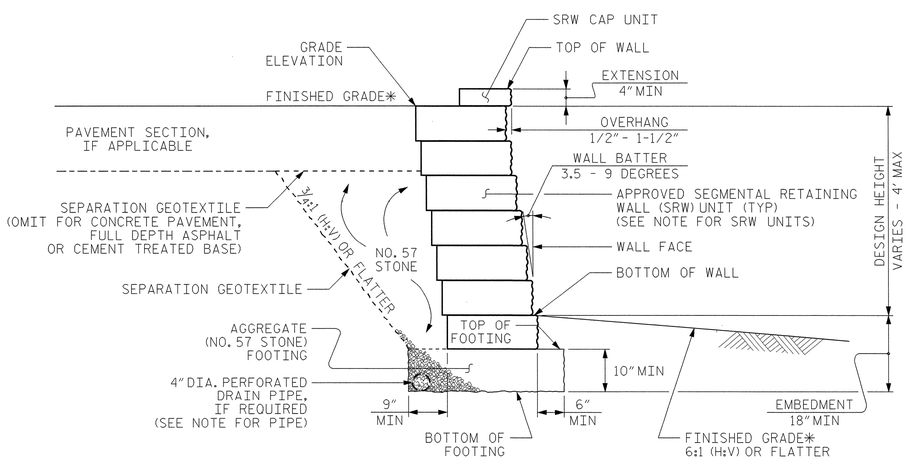

STANDARD SEGMENTAL GRAVITY WALL WITHOUT SLOPE

*SEE ROADWAY PLANS FOR FINISHED GRADE DETAILS.

NOTES:

FOR STANDARD SEGMENTAL GRAVITY RETAINING WALLS, SEE SEGMENTAL GRAVITY RETAINING WALLS PROVISION.

FOR STEEL BEAM GUARDRAIL, SEE ROADWAY PLANS AND SECTION 862 OF THE STANDARD SPECIFICATIONS.

DO NOT ATTACH FENCES OR HANDRAILS TO STANDARD SEGMENTAL GRAVITY WALLS.

DO NOT USE STANDARD SEGMENTAL GRAVITY WALLS FOR INTERSTATE HIGHWAY OR RAILROAD PROJECTS.

DO NOT USE STANDARD SEGMENTAL GRAVITY WALLS WHEN SURCHARGE LOADS WILL BE WITHIN 5'-6" OF THE BACK OF SRW CAP UNITS.

DO NOT USE STANDARD SEGMENTAL GRAVITY WALLS WHEN VERY LOOSE OR SOFT SOIL OR MUCK IS BELOW WALLS.

SEGMENTAL RETAINING WALL (SRW) UNITS ARE APPROVED FOR EITHER 2' OR 4' MAXIMUM DESIGN HEIGHTS. FOR DETAILS AND DIMENSIONS OF APPROVED SRW UNITS AND MAXIMUM DESIGN HEIGHTS, SEE www.ncdot.org/doh/preconstruct/highway/geotech/seggravwalls

DO NOT MIX APPROVED SRW UNITS FROM DIFFERENT VENDORS ON THE SAME STANDARD SEGMENTAL GRAVITY WALL. USE THE SAME SIZE APPROVED SRW UNITS FOR EACH WALL SECTION.

BEFORE BEGINNING STANDARD SEGMENTAL GRAVITY WALL CONSTRUCTION, SURVEY WALL LOCATIONS AND SUBMIT WALL PROFILE VIEWS (WALL ENVELOPES) FOR REVIEW. FOR WALL ENVELOPES, INCLUDE BOTTOM OF WALL, EXISTING GROUND AND GRADE ELEVATIONS AND OTHER ELEVATIONS AS NEEDED AT INTERVALS OF 25' OR LESS ALONG WALLS. DO NOT START WALL CONSTRUCTION UNTIL WALL ENVELOPES ARE ACCEPTED.

A DRAIN PIPE IS REQUIRED IF GROUNDWATER IS ABOVE BOTTOM OF FOOTINGS.

DO NOT PLACE NO. 57 STONE FOR FOOTINGS UNTIL EXCAVATION DIMENSIONS AND FOUNDATION MATERIAL ARE APPROVED.

GEOTECHNICAL ENGINEER	ENGINEER
NORTH CAROLINA PROFESSIONAL SEAL 028669 ENGINEER RICHARD SCOTT WEBB — 7/12/12	
SIGNATURE DATE	SIGNATURE DATE

ESTIMATED QUANTITY
SEGMENTAL GRAVITY RETAINING WALL (SQUARE FEET)
400

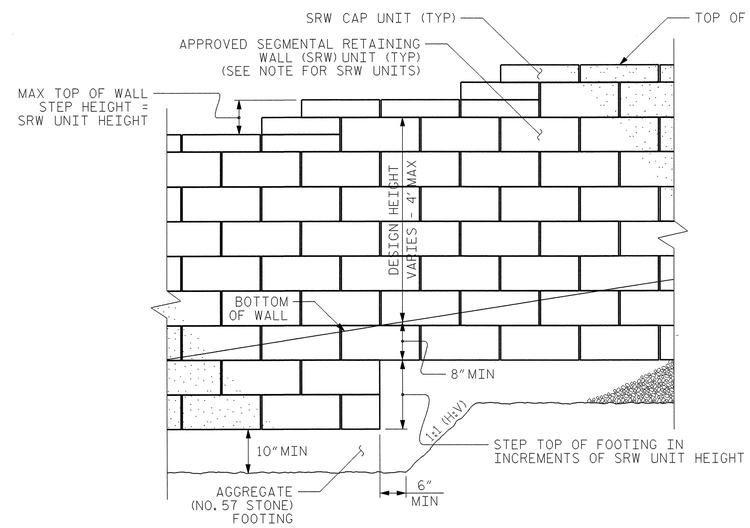

STANDARD SEGMENTAL GRAVITY WALL - PARTIAL ELEVATION

PROJECT NO.: U-0209B

MECKLENBURG **COUNTY**

STATION: -Y15- STA. 23+20 TO 24+40

SHEET OF 1 OF 1

GEOTECHNICAL ENGINEERING UNIT

STATE OF NORTH CAROLINA DEPARTMENT OF TRANSPORTATION RALEIGH

STANDARD SEGMENTAL GRAVITY RETAINING WALL

SHEET NO. W-9

TOTAL SHEETS 10

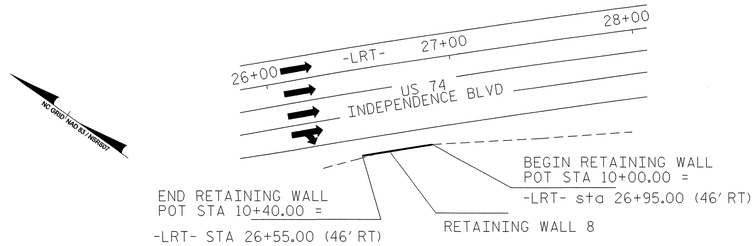

PLAN VIEW

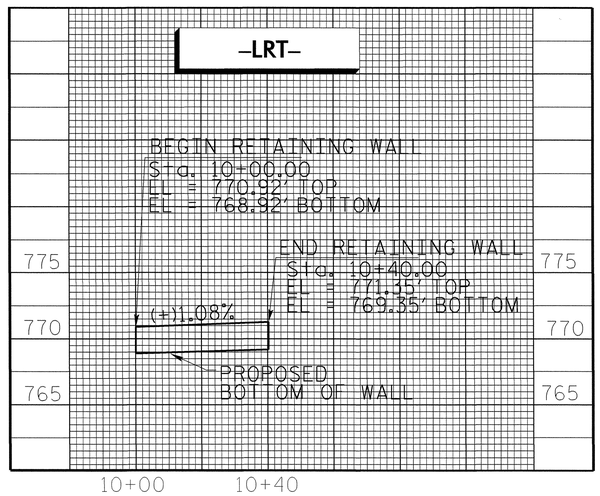

ELEVATION VIEW

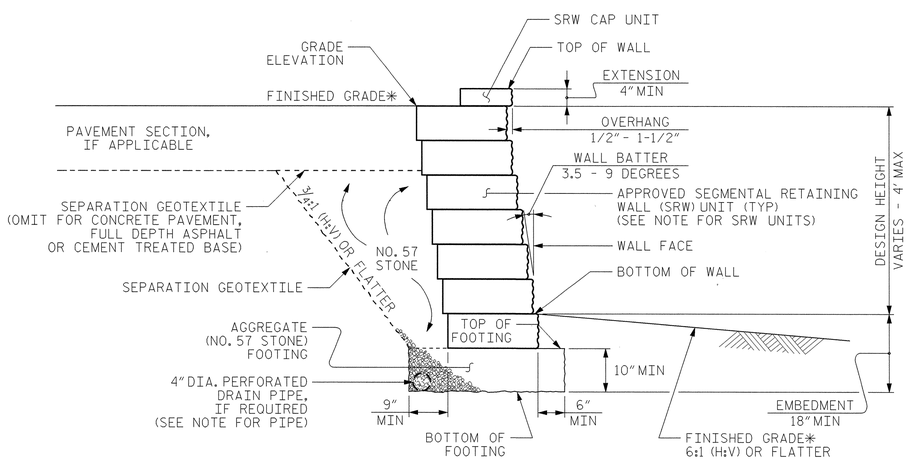

STANDARD SEGMENTAL GRAVITY WALL WITHOUT SLOPE

*SEE ROADWAY PLANS FOR FINISHED GRADE DETAILS.

NOTES:

FOR STANDARD SEGMENTAL GRAVITY RETAINING WALLS, SEE SEGMENTAL GRAVITY RETAINING WALLS PROVISION.

FOR STEEL BEAM GUARDRAIL, SEE ROADWAY PLANS AND SECTION 862 OF THE STANDARD SPECIFICATIONS.

DO NOT ATTACH FENCES OR HANDRAILS TO STANDARD SEGMENTAL GRAVITY WALLS.

DO NOT USE STANDARD SEGMENTAL GRAVITY WALLS FOR INTERSTATE HIGHWAY OR RAILROAD PROJECTS.

DO NOT USE STANDARD SEGMENTAL GRAVITY WALLS WHEN SURCHARGE LOADS WILL BE WITHIN 5'-6" OF THE BACK OF SRW CAP UNITS.

DO NOT USE STANDARD SEGMENTAL GRAVITY WALLS WHEN VERY LOOSE OR SOFT SOIL OR MUCK IS BELOW WALLS.

SEGMENTAL RETAINING WALL (SRW) UNITS ARE APPROVED FOR EITHER 2' OR 4' MAXIMUM DESIGN HEIGHTS. FOR DETAILS AND DIMENSIONS OF APPROVED SRW UNITS AND MAXIMUM DESIGN HEIGHTS, SEE www.ncdot.org/doh/preconstruct/highway/geotech/seggravwalls

DO NOT MIX APPROVED SRW UNITS FROM DIFFERENT VENDORS ON THE SAME STANDARD SEGMENTAL GRAVITY WALL. USE THE SAME SIZE APPROVED SRW UNITS FOR EACH WALL SECTION.

BEFORE BEGINNING STANDARD SEGMENTAL GRAVITY WALL CONSTRUCTION, SURVEY WALL LOCATIONS AND SUBMIT WALL PROFILE VIEWS (WALL ENVELOPES) FOR REVIEW. FOR WALL ENVELOPES, INCLUDE BOTTOM OF WALL, EXISTING GROUND AND GRADE ELEVATIONS AND OTHER ELEVATIONS AS NEEDED AT INTERVALS OF 25' OR LESS ALONG WALLS. DO NOT START WALL CONSTRUCTION UNTIL WALL ENVELOPES ARE ACCEPTED.

A DRAIN PIPE IS REQUIRED IF GROUNDWATER IS ABOVE BOTTOM OF FOOTINGS.

DO NOT PLACE NO. 57 STONE FOR FOOTINGS UNTIL EXCAVATION DIMENSIONS AND FOUNDATION MATERIAL ARE APPROVED.

GEOTECHNICAL ENGINEER	ENGINEER
NORTH CAROLINA PROFESSIONAL SEAL 028669 ENGINEER RICHARD SCOTT WEBB 7/12/12	
SIGNATURE DATE	SIGNATURE DATE

ESTIMATED QUANTITY
SEGMENTAL GRAVITY RETAINING WALL (SQUARE FEET)
80

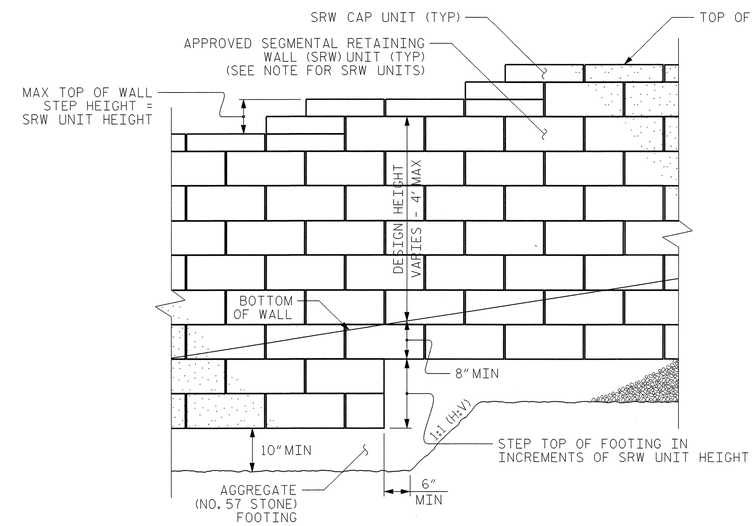

STANDARD SEGMENTAL GRAVITY WALL - PARTIAL ELEVATION

PROJECT NO.: U-0209B

MECKLENBURG **COUNTY**

STATION: -LRT- 26+55 to 26+95

SHEET OF 1 OF 1

GEOTECHNICAL ENGINEERING UNIT

STATE OF NORTH CAROLINA DEPARTMENT OF TRANSPORTATION RALEIGH

STANDARD SEGMENTAL GRAVITY RETAINING WALL

SHEET NO. W-10

TOTAL SHEETS 10

STANDARD NOTES

DESIGN DATA:

SPECIFICATIONS	A.A.S.H.T.O. (CURRENT)
LIVE LOAD	SEE PLANS
IMPACT ALLOWANCE	SEE A.A.S.H.T.O.
STRESS IN EXTREME FIBER OF	
STRUCTURAL STEEL - AASHTO M270 GRADE 36	20,000 LBS. PER SQ. IN.
- AASHTO M270 GRADE 50W	27,000 LBS. PER SQ. IN.
- AASHTO M270 GRADE 50	27,000 LBS. PER SQ. IN.
REINFORCING STEEL IN TENSION	
GRADE 60	24,000 LBS. PER SQ. IN.
CONCRETE IN COMPRESSION	1,200 LBS. PER SQ. IN.
CONCRETE IN SHEAR	SEE A.A.S.H.T.O.
STRUCTURAL TIMBER - TREATED OR	
UNTREATED - EXTREME FIBER STRESS	1,800 LBS. PER SQ. IN.
COMPRESSION PERPENDICULAR TO GRAIN OF TIMBER	375 LBS. PER SQ. IN.
EQUIVALENT FLUID PRESSURE OF EARTH	30 LBS. PER CU. FT. (MINIMUM)

MATERIAL AND WORKMANSHIP:

EXCEPT AS MAY OTHERWISE BE SPECIFIED ON PLANS OR IN THE SPECIAL PROVISIONS, ALL MATERIAL AND WORKMANSHIP SHALL BE IN ACCORDANCE WITH THE 2012 "STANDARD SPECIFICATIONS FOR ROADS AND STRUCTURES" OF THE N. C. DEPARTMENT OF TRANSPORTATION.

STEEL SHEET PILING FOR PERMANENT OR TEMPORARY APPLICATIONS SHALL BE HOT ROLLED.

CONCRETE:

UNLESS OTHERWISE REQUIRED ON PLANS, CLASS A CONCRETE SHALL BE USED FOR ALL PORTIONS OF ALL STRUCTURES WITH THE EXCEPTION THAT: CLASS AA CONCRETE SHALL BE USED IN BRIDGE SUPERSTRUCTURES, ABUTMENT BACKWALLS, AND APPROACH SLABS; AND CLASS B CONCRETE SHALL BE USED FOR SLOPE PROTECTION AND RIP RAP.

CONCRETE CHAMFERS:

UNLESS OTHERWISE NOTED ON THE PLANS, ALL EXPOSED CORNERS ON STRUCTURES SHALL BE CHAMFERED 3/4" WITH THE FOLLOWING EXCEPTIONS: TOP CORNERS OF CURBS MAY BE ROUNDED TO 1-1/2" RADIUS WHICH IS BUILT INTO CURB FORMS; CORNERS OF TRANSVERSE FLOOR EXPANSION JOINTS SHALL BE ROUNDED WITH A 1/4" FINISHING TOOL UNLESS OTHERWISE REQUIRED ON PLANS; AND CORNERS OF EXPANSION JOINTS IN THE ROADWAY FACES AND TOPS OF CURBS AND SIDEWALKS SHALL BE ROUNDED TO A 1/4" RADIUS WITH A FINISHING STONE OR TOOL UNLESS OTHERWISE REQUIRED ON PLANS.

DOWELS:

DOWELS WHEN INDICATED ON PLANS AS FOR CULVERT EXTENSIONS, SHALL BE EMBEDDED AT LEAST 12" INTO THE OLD CONCRETE AND GROUTED INTO PLACE WITH 1:2 CEMENT MORTAR.

ALLOWANCE FOR DEAD LOAD DEFLECTION, SETTLEMENT, ETC. IN CASTING SUPERSTRUCTURES:

BRIDGES SHALL BE BUILT ON THE GRADE OR VERTICAL CURVE SHOWN ON PLANS. SLABS, CURBS AND PARAPETS SHALL CONFORM TO THE GRADE OR CURVE.

ALL DIMENSIONS WHICH ARE GIVEN IN SECTION AND ARE AFFECTED BY DEAD LOAD DEFLECTIONS ARE DIMENSIONS AT CENTER LINE OF BEARING UNLESS OTHERWISE NOTED ON PLANS. IN SETTING FORMS FOR STEEL BEAM BRIDGES AND PRESTRESSED CONCRETE GIRDER BRIDGES, ADJUSTMENTS SHALL BE MADE DUE TO THE DEAD LOAD DEFLECTIONS FOR THE ELEVATIONS SHOWN. WHERE BLOCKS ARE SHOWN OVER BEAMS FOR BUILDING UP TO THE SLAB, THE VERTICAL DIMENSIONS OF THE BLOCKS SHALL BE ADJUSTED BETWEEN BEARINGS TO COMPENSATE FOR DEAD LOAD DEFLECTIONS, VERTICAL CURVE ORDINATE, AND ACTUAL BEAM CAMBER. WHERE BOTTOM OF SLAB IS IN LINE WITH BOTTOM OF TOP FLANGES, DEPTH OF SLAB BETWEEN BEARINGS SHALL BE ADJUSTED TO COMPENSATE FOR DEAD LOAD DEFLECTION, VERTICAL CURVE ORDINATE, AND ACTUAL BEAM CAMBER.

IN SETTING FALSEWORK AND FORMS FOR REINFORCED CONCRETE SPANS, AN ALLOWANCE SHALL BE MADE FOR DEAD LOAD DEFLECTIONS, SETTLEMENT OF FALSEWORK, AND PERMANENT CAMBER WHICH SHALL BE PROVIDED FOR IN ADDITION TO THE ELEVATIONS SHOWN. AFTER REMOVAL OF THE FALSEWORK, THE FINISHED STRUCTURES SHALL CONFORM TO THE PROFILE AND ELEVATIONS SHOWN ON THE PLANS AND CONSTRUCTION ELEVATIONS FURNISHED BY THE ENGINEER.

DETAILED DRAWINGS FOR FALSEWORK OR FORMS FOR BRIDGE SUPERSTRUCTURE AND ANY STRUCTURE OR PARTS OF A STRUCTURE AS NOTED ON THE PLANS SHALL BE SUBMITTED TO THE ENGINEER FOR APPROVAL BEFORE CONSTRUCTION OF THE FALSEWORK OR FORMS IS STARTED.

REINFORCING STEEL:

ALL REINFORCING STEEL SHALL BE DEFORMED. DIMENSIONS RELATIVE TO PLACEMENT OF REINFORCING ARE TO CENTERS OF BARS UNLESS OTHERWISE INDICATED IN THE PLANS. DIMENSIONS ON BAR DETAILS ARE TO CENTERS OF BARS OR ARE OUT TO OUT AS INDICATED ON PLANS.

WIRE BAR SUPPORTS SHALL BE PROVIDED FOR REINFORCING STEEL WHERE INDICATED ON THE PLANS. WHEN BAR SUPPORT PIECES ARE PLACED IN CONTINUOUS LINES, THEY SHALL BE SO PLACED THAT THE ENDS OF THE SUPPORTING WIRES SHALL BE LAPPED TO LOCK LEGS ON ADJOINING PIECES.

STRUCTURAL STEEL:

AT THE CONTRACTOR'S OPTION, HE MAY SUBSTITUTE 7/8" Ø SHEAR STUDS FOR THE 3/4" Ø STUDS SPECIFIED ON THE PLANS. THIS SUBSTITUTION SHALL BE MADE AT THE RATE OF 3 - 7/8" Ø STUDS FOR 4 - 3/4" Ø STUDS, AND STUD SPACING CHANGES SHALL BE MADE AS NECESSARY TO PROVIDE THE SAME EQUIVALENT NUMBER OF 7/8" Ø STUDS ALONG THE BEAM AS SHOWN FOR 3/4" Ø STUDS BASED ON THE RATIO OF 3 - 7/8" Ø STUDS FOR 4 - 3/4" Ø STUDS. STUDS OF THE LENGTH SPECIFIED ON THE PLANS MUST BE PROVIDED. THE MAXIMUM SPACING SHALL BE 2'-0".

EXCEPT AT THE INTERIOR SUPPORTS OF CONTINUOUS BEAMS WHERE THE COVER PLATE IS IN CONTACT WITH BEARING PLATE, THE CONTRACTOR MAY, AT HIS OPTION, SUBSTITUTE FOR THE COVER PLATES DESIGNATED ON THE PLANS COVER PLATES OF THE EQUIVALENT AREA PROVIDED THESE PLATES ARE AT LEAST 5/16" IN THICKNESS AND DO NOT EXCEED A WIDTH EQUAL TO THE FLANGE WIDTH LESS 2" OR A THICKNESS EQUAL TO 2 TIMES THE FLANGE THICKNESS. THE SIZE OF FILLET WELDS SHALL CONFORM TO THE REQUIREMENTS OF THE CURRENT ANSI/AASHTO/AWS "BRIDGE WELDING CODE". ELECTROSLAG WELDING WILL NOT BE PERMITTED.

WITH THE SOLE EXCEPTION OF EDGES AT SURFACES WHICH BEAR ON OTHER SURFACES, ALL SHARP EDGES AND ENDS OF SHAPES AND PLATES SHALL BE SLIGHTLY ROUNDED BY SUITABLE MEANS TO A RADIUS OF APPROXIMATELY 1/16 INCH OR EQUIVALENT FLAT SURFACE AT A SUITABLE ANGLE PRIOR TO PAINTING, GALVANIZING, OR METALLIZING.

HANDRAILS AND POSTS:

METAL STANDARDS AND FACES OF THE CONCRETE END POSTS FOR THE METAL RAIL SHALL BE SET NORMAL TO THE GRADE OF THE CURB, UNLESS OTHERWISE SHOWN ON PLANS. THE METAL RAIL AND TOPS OF CONCRETE POSTS USED WITH THE ALUMINUM RAIL SHALL BE BUILT PARALLEL TO THE GRADE OF THE CURB.

METAL HANDRAILS SHALL BE IN ACCORDANCE WITH THE PLANS. RAILS SHALL BE AS MANUFACTURED FOR BRIDGE RAILING. CASTINGS SHALL BE OF A UNIFORM APPEARANCE. FINS AND OTHER DEFORMATIONS RESULTING FROM CASTING OR OTHERWISE SHALL BE REMOVED IN A MANNER SO THAT A UNIFORM COLORING OF THE COMPLETED CASTING SHALL BE OBTAINED. CASTINGS WITH DISCOLORATIONS OR OF NON-UNIFORM COLORING WILL NOT BE ACCEPTED. CERTIFIED MILL REPORTS ARE REQUIRED FOR METAL RAILS AND POSTS.

SPECIAL NOTES:

GENERALLY, IN CASE OF DISCREPANCY, THIS STANDARD SHEET OF NOTES SHALL GOVERN OVER THE SPECIFICATIONS, BUT THE REMAINDER OF THE PLANS SHALL GOVERN OVER NOTES HEREON, AND SPECIAL PROVISIONS SHALL GOVERN OVER ALL. SEE SPECIFICATIONS ARTICLE 105-4.

ENGLISH

JANUARY, 1990