T.I.P. NO.	SHEET NO.
U-2803	UC-1

STATE OF NORTH CAROLINA
DIVISION OF HIGHWAYS

UTILITY CONSTRUCTION PLANS
ORANGE COUNTY

LOCATION: CARRBORO – SR 1919 (SMITH LEVEL ROAD) FROM SOUTH OF ROCK HAVEN ROAD TO BRIDGE NO 88 OVER MORGAN CREEK

TYPE OF WORK: WATER AND SANITARY SEWER UTILITY

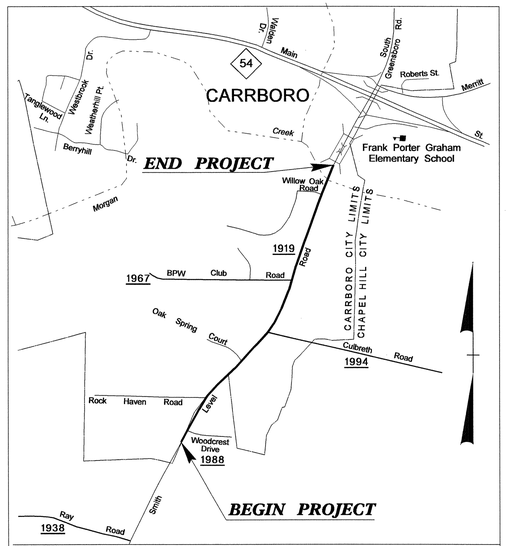

VICINITY MAP

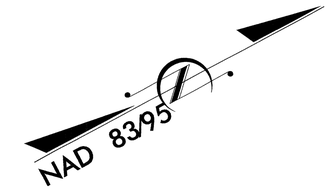

STA. 55+73.27 –L– END TIP PROJECT U-2803

STA. 13+00.00 –L– BEGIN TIP PROJECT U-2803

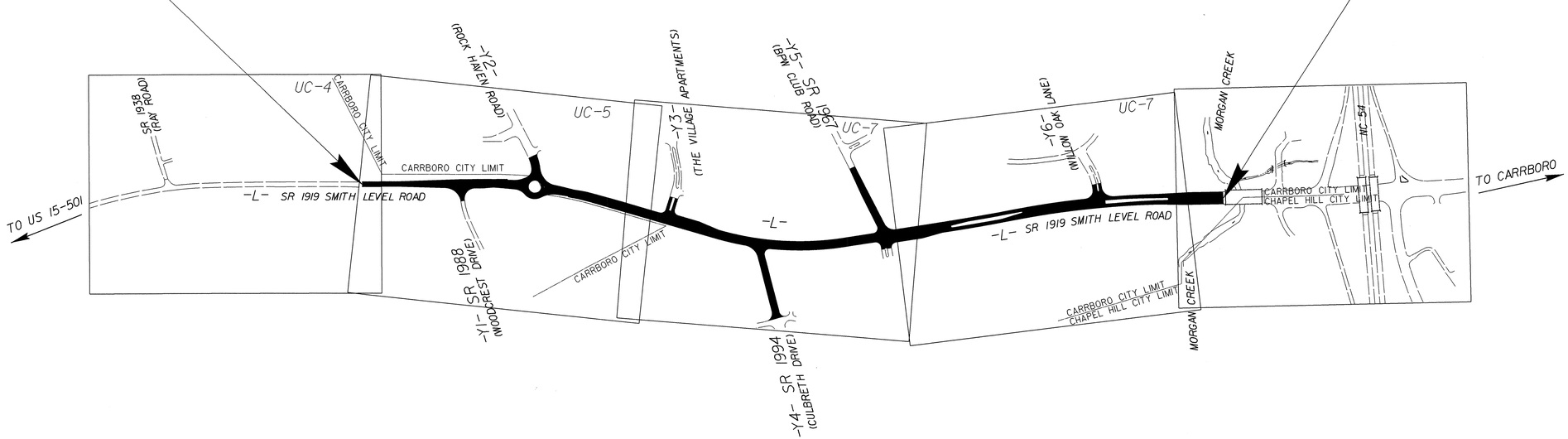

GRAPHIC SCALES

50 25 0 50 100
PLANS

50 25 0 50 100
PROFILE (HORIZONTAL)

10 5 0 10 20
PROFILE (VERTICAL)

INDEX OF SHEETS

SHEET NO.	DESCRIPTION
UC-1	TITLE SHEET
UC-1A	SYMBOLOGY SHEET
UC-2 THRU UC-2C	UTILITY NOTES
UC-3 THRU UC-3D	DETAIL SHEETS
UC-4 THRU UC-7	UTILITY CONSTRUCTION PLAN SHEETS
UC-8 THRU UC-16	PROFILE SHEETS

WATER AND SEWER OWNERS ON PROJECT

(1) WATER – OWASA
(2) SANITARY SEWER – OWASA

NORTH CAROLINA PROFESSIONAL SEAL 6833 ENGINEER JAMES S. MCKEE 10/24/12

PREPARED IN THE OFFICE OF:
DIVISION OF HIGHWAYS
UTILITIES UNIT
ENGINEER SECTION
1555 MAIL SERVICES CENTER
RALEIGH NC 27699-1555
PHONE (919) 707-6690
FAX (919) 250-4119

Roger Worthington, P.E. — UTILITIES SECTION ENGINEER
Steve McKee, P.E. — UTILITIES SQUAD LEADER PROJECT ENGINEER
John Nigro, P.E. — UTILITIES PROJECT DESIGNER

TIP PROJECT: U-2803

09/08/99

24-OCT-2012 15:09
R:\Utilities\Proj\U2803_Ut_Title_UC1_psh.dgn
$$$$USERNAME$$$$

3/15/06

PROJECT REFERENCE NO.	SHEET NO.
U-2803	UC-1A

Note: Not to Scale

S.U.E. = Subsurface Utility Engineering

STATE OF NORTH CAROLINA
DIVISION OF HIGHWAYS

CONVENTIONAL PLAN SHEET SYMBOLS

BOUNDARIES AND PROPERTY:

- State Line
- County Line
- Township Line
- City Line
- Reservation Line
- Property Line
- Existing Iron Pin — EIP
- Property Corner
- Property Monument — ECM
- Parcel/Sequence Number — 123
- Existing Fence Line
- Proposed Woven Wire Fence
- Proposed Chain Link Fence
- Proposed Barbed Wire Fence
- Existing Wetland Boundary — WLB
- Proposed Wetland Boundary — WLB
- Existing Endangered Animal Boundary — EAB
- Existing Endangered Plant Boundary — EPB

BUILDINGS AND OTHER CULTURE:

- Gas Pump Vent or U/G Tank Cap
- Sign — S
- Well — W
- Small Mine
- Foundation
- Area Outline
- Cemetery
- Building
- School
- Church
- Dam

HYDROLOGY:

- Stream or Body of Water
- Hydro, Pool or Reservoir
- Jurisdictional Stream — JS
- Buffer Zone 1 — BZ 1
- Buffer Zone 2 — BZ 2
- Flow Arrow
- Disappearing Stream
- Spring
- Swamp Marsh
- Proposed Lateral, Tail, Head Ditch — FLOW
- False Sump

RAILROADS:

- Standard Gauge — CSX TRANSPORTATION
- RR Signal Milepost — MILEPOST 35
- Switch — SWITCH
- RR Abandoned
- RR Dismantled

RIGHT OF WAY:

- Baseline Control Point
- Existing Right of Way Marker
- Existing Right of Way Line
- Proposed Right of Way Line — RW
- Proposed Right of Way Line with Iron Pin and Cap Marker — RW
- Proposed Right of Way Line with Concrete or Granite Marker — RW
- Existing Control of Access — CA
- Proposed Control of Access — CA
- Existing Easement Line — E
- Proposed Temporary Construction Easement — E
- Proposed Temporary Drainage Easement — TDE
- Proposed Permanent Drainage Easement — PDE
- Proposed Permanent Utility Easement — PUE

ROADS AND RELATED FEATURES:

- Existing Edge of Pavement
- Existing Curb
- Proposed Slope Stakes Cut — C
- Proposed Slope Stakes Fill — F
- Proposed Wheel Chair Ramp — WCR
- Proposed Wheel Chair Ramp Curb Cut — WCC
- Curb Cut for Future Wheel Chair Ramp — CCFR
- Existing Metal Guardrail
- Proposed Guardrail
- Existing Cable Guiderail
- Proposed Cable Guiderail
- Equality Symbol
- Pavement Removal

VEGETATION:

- Single Tree
- Single Shrub
- Hedge
- Woods Line
- Orchard
- Vineyard — Vineyard

EXISTING STRUCTURES:

MAJOR:

- Bridge, Tunnel or Box Culvert — CONC
- Bridge Wing Wall, Head Wall and End Wall — CONC WW

MINOR:

- Head and End Wall — CONC HW
- Pipe Culvert
- Footbridge
- Drainage Box: Catch Basin, DI or JB — CB
- Paved Ditch Gutter
- Storm Sewer Manhole — S
- Storm Sewer — S

UTILITIES:

POWER:

- Existing Power Pole
- Proposed Power Pole
- Existing Joint Use Pole
- Proposed Joint Use Pole
- Power Manhole — P
- Power Line Tower
- Power Transformer
- U/G Power Cable Hand Hole — HH
- H-Frame Pole
- Recorded U/G Power Line — P
- Designated U/G Power Line (S.U.E.*) — P

TELEPHONE:

- Existing Telephone Pole
- Proposed Telephone Pole
- Telephone Manhole — T
- Telephone Booth
- Telephone Pedestal — T
- Telephone Cell Tower
- U/G Telephone Cable Hand Hole — HH
- Recorded U/G Telephone Cable — T
- Designated U/G Telephone Cable (S.U.E.*) — T
- Recorded U/G Telephone Conduit — TC
- Designated U/G Telephone Conduit (S.U.E.*) — TC
- Recorded U/G Fiber Optics Cable — T FO
- Designated U/G Fiber Optics Cable (S.U.E.*) — T FO

WATER:

- Water Manhole — W
- Water Meter
- Water Valve
- Water Hydrant
- Recorded U/G Water Line — W
- Designated U/G Water Line (S.U.E.*) — W
- Above Ground Water Line — A/G Water

TV:

- TV Satellite Dish
- TV Pedestal — C
- TV Tower
- U/G TV Cable Hand Hole — HH
- Recorded U/G TV Cable — TV
- Designated U/G TV Cable (S.U.E.*) — TV
- Recorded U/G Fiber Optic Cable — TV FO
- Designated U/G Fiber Optic Cable (S.U.E.*) — TV FO

GAS:

- Gas Valve
- Gas Meter
- Recorded U/G Gas Line — G
- Designated U/G Gas Line (S.U.E.*) — G
- Above Ground Gas Line — A/G Gas

SANITARY SEWER:

- Sanitary Sewer Manhole
- Sanitary Sewer Cleanout
- U/G Sanitary Sewer Line — SS
- Above Ground Sanitary Sewer — A/G Sanitary Sewer
- Recorded SS Forced Main Line — FSS
- Designated SS Forced Main Line (S.U.E.*) — FSS

MISCELLANEOUS:

- Utility Pole
- Utility Pole with Base
- Utility Located Object
- Utility Traffic Signal Box — S
- Utility Unknown U/G Line — ?UTL
- U/G Tank; Water, Gas, Oil
- A/G Tank; Water, Gas, Oil
- U/G Test Hole (S.U.E.*)
- Abandoned According to Utility Records — AATUR
- End of Information — E.O.I.

UTILITY CONSTRUCTION

PROJECT REFERENCE NO.	SHEET NO.
U-2803	UC-2
DESIGNED BY: JAN	
DRAWN BY: JAN	
CHECKED BY: JSM	
APPROVED BY: JSM	
REVISED:	
NORTH CAROLINA DEPARTMENT OF TRANSPORTATION	
UTILITIES ENGINEERING SEC. PHONE:(919)707-6690 FAX:(919)250-4151	UTILITY CONSTRUCTION PLANS ONLY

NORTH CAROLINA PROFESSIONAL SEAL 16832 ENGINEER JAMES S. MONROE

GENERAL NOTES:

1. THE PROPOSED UTILITY CONSTRUCTION SHALL MEET THE APPLICABLE REQUIREMENTS OF THE NCDOT "STANDARD SPECIFICATIONS FOR ROAD AND STRUCTURES" DATED JANUARY 2012 AND ORANGE WATER AND SEWER AUTHORITY STANDARDS AND SPECIFICATIONS DATED AUGUST 2003 OR LATEST REVISED VERSION.

2. THE EXISTING UTILITIES BELONG TO OWASA .

3. ALL WATER LINES TO BE INSTALLED WITHIN COMPLIANCE OF THE RULES AND REGULATIONS OF THE NORTH CAROLINA DEPARTMENT OF ENVIRONMENTAL AND NATURAL RESOURCES, DIVISION OF ENVIRONMENTAL HEALTH. ALL SEWER LINES TO BE INSTALLED WITHIN COMPLIANCE OF THE RULES AND REGULATIONS OF THE NORTH CAROLINA DEPARTMENT OF ENVIRONMENT AND NATURAL RESOURCES, DIVISION OF WATER QUALITY. PERFORM ALL WORK IN ACCORDANCE WITH THE APPLICABLE PLUMBING CODES.

4. THE UTILITY OWNER OWNS THE EXISTING UTILITY FACILITIES AND WILL OWN THE NEW UTILITY FACILITIES AFTER ACCEPTANCE BY THE DEPARTMENT. THE DEPARTMENT OWNS THE CONSTRUCTION CONTRACT AND HAS ADMINISTRATIVE AUTHORITY. COMMUNICATIONS AND DECISIONS BETWEEN THE CONTRACTOR AND UTILITY OWNER ARE NOT BINDING UPON THE DEPARTMENT OR THIS CONTRACT UNLESS AUTHORIZED BY THE ENGINEER. AGREEMENTS BETWEEN THE UTILITY OWNER AND CONTRACTOR FOR THE WORK THAT IS NOT PART OF THIS CONTRACT OR IS SECONDARY TO THIS CONTRACT ARE ALLOWED, BUT ARE NOT BINDING UPON THE DEPARTMENT.

5. PROVIDE ACCESS FOR THE DEPARTMENT PERSONNEL AND THE OWNER'S REPRESENTATIVES TO ALL PHASES OF CONSTRUCTION. NOTIFY DEPARTMENT PERSONNEL AND THE UTILITY OWNER TWO WEEKS PRIOR TO COMMENCEMENT OF ANY WORK AND ONE WEEK PRIOR TO SERVICE INTERRUPTION. KEEP UTILITY OWNERS' REPRESENTATIVES INFORMED OF WORK PROGRESS AND PROVIDE OPPROTUNITY FOR INSPECTION OF CONSTRUCTION AND TESTING.

6. THE PLANS DEPICT THE BEST AVAILABLE INFORMATION FOR THE LOCATION, SIZE, AND TYPE OF MATERIAL FOR ALL EXISTING UTILITIES. MAKE INVESTIGATIONS FOR DETERMINING THE EXACT LOCATION, SIZE, AND TYPE MATERIAL OF THE EXISTING FACILITIES AS NECESSARY FOR THE CONSTRUCTION OF THE PROPOSED UTILITIES AND FOR AVOIDING DAMAGE TO EXISTING FACILITIES. REPAIR ANY DAMAGE INCURRED TO EXISTING FACILITIES TO THE ORIGINAL OR BETTER CONDITION AT NO ADDITONAL COST TO THE DEPARTMENT.

7. MAKE FINAL CONNECTIONS OF THE NEW WORK TO THE EXISTING SYSTEM WHERE INDICATED ON THE PLANS, AS REQUIRED TO FIT THE ACTUAL CONDITIONS, OR AS DIRECTED.

8. MAKE CONNECTIONS BETWEEN EXISTING AND PROPOSED UTILITIES AT TIMES MOST CONVENIENT TO THE PUBLIC, WITHOUT ENDANGERING THE UTILITY SERVICE, AND IN ACCORDANCE WITH THE UTILITY OWNER'S REQUIREMENTS. MAKE CONNECTIONS ON WEEKENDS, AT NIGHT, AND ON HOLIDAYS IF NECESSARY.

9. ALL UTILITY MATERIALS SHALL BE APPROVED PRIOR TO DELIVERY TO THE PROJECT. SEE 1500-7, " SUBMITTALS AND RECORDS" IN SECTION 1500 OF THE STANDARD SPECIFICATIONS.

10. ALL MATERIALS NECESSARY TO RELOCATE OR RECONNECT WATER METERS ARE INCIDENTAL TO THE UNIT COST FOR RECONNECT OR RELOCATE WATER METER.

ORANGE WATER & SEWER AUTHORITY UTILITY NOTES:

1. PRECONSTRUCTION CONFERENCE - A PRECONSTRUCTION CONFERENCE WITH THE OWASA CONSTRUCTION INSPECTOR IS REQUIRED BEFORE BEGINNING ANY WATER OR SEWER UTILITY CONSTRUCTION.

2. CONTACT THE NATIONAL CALL BEFORE YOU DIG 811 TO HAVE OWASA FACILITIES LOCATED BEFORE BEGINNING ANY EXCAVATION.

3. FIELD CHANGES ARE NOT CONSIDERED APPROVED BY OWASA UNLESS REVISED PLANS HAVE BEEN SUBMITTED TO OWASA FOR REVIEW AND APPROVAL. CONTRACTORS THAT PROCEED WITH CONSTRUCTION PRIOR TO THIS APPROVAL DO SO AT THEIR OWN RISK.

4. SEWER STATEMENT - SEWER LINES UNDER CONSTRUCTION SHALL BE PLUGGED WITH A MECHANICAL PLUG AT THE FIRST MANHOLE UPSTREAM FROM THE POINT OF CONNECTION. PLUG SHALL BE PLACED IN THE OUTLET CONNECTION AND SECURED WITH STEEL CABLE. PLUG SHALL REMAIN IN PLACE UNTIL ACCEPTANCE OF LINES BY OWASA.

5. CONTRACTOR SHALL PROTECT ALL EXISTING OWASA SEWER MANHOLES. WATER, STONE, DIRT, OR ANY OTHER DEBRIS SHALL NOT BE ALLOWED TO ENTER THE OWASA SANITARY SEWER SYSTEM DURING FLUSHING OPERATIONS OR AT ANY OTHER TIME. CONSTRUCTION TAKING PLACE IN THE VICINITY OF ANY EXISTING OWASA SEWER LINES OR MANHOLES SHALL NOT CAUSE ANY INFLOW OF SURFACE WATER OR DEBRIS TO ENTER THE OWASA SANITARY SEWER SYSTEM. EXISTING OWASA MANHOLES LOCATED IN CONSTRUCTION SITES ARE TO BE KEPT CLEAR AND ACCESSIBLE TO OWASA PERSONNEL AT ALL TIMES. THE CONTRACTOR SHALL BE RESPONSIBLE FOR ANY DAMAGES INCURRED TO THE OWASA SANITARY SEWER SYSTEM AND ANY FINES IMPOSED BY THE STATE OF NORTH CAROLINA DIVISION OF WATER QUALITY DUE TO SEWER SPILLS OR OVERFLOWS.

6. WATER VALVES EXISTING VALVES SHALL BE OPERATED BY OWASA PERSONNEL ONLY. VALVES THAT SEPARATE PURITY APPROVED WATER AND UNAPPROVED WATER ARE TO REMAIN CLOSED AT ALL TIMES. VALVES MAY BE TEMPORARILY OPENED FOR LOADING AND FLUSHING BY THE OWASA INSPECTOR ONLY.

7. CONTRACTOR SHALL PROTECT ALL OWASA METER VAULTS, FIRE HYDRANTS, VALVE BOXES, AND MANHOLES. ALL EXISTING OWASA FACILITIES ARE TO BE KEPT CLEAR AND ACCESSIBLE TO OWASA PERSONNEL AT ALL TIMES. SEWER USE ORDINANCE DISCHARGE FROM THIS PROJECT MUST BE IN COMPLIANCE WITH THE OWASA SEWER USE ORDINANCE. SEWER SERVICES LOCATED WITHIN PUBLIC RIGHT-OF-WAYS OR OWASA SEWER EASEMENTS MUST BE CONSTRUCTED OF DUCTILE IRON PIPE FROM THE TAP UP TO AND INCLUDING THE FIRST CLEAN-OUT. EXCEPT FOR DEAD END MANHOLES, ALL 4" SEWER SERVICES MUST BE TAPPED INTO THE SEWER MAIN. ALL 6" SERVICES MUST BE CONNECTED TO A MANHOLE.

8. EXISTING VALVES - CONTRACTOR RESPONSIBLE FOR VERIFYING THAT EXISTING VALVE AT THE POINT OF CONNECTION TO THE OWASA SYSTEM IS ADEQUATE FOR PERFORMING AND PASSING HYDROSTATIC PRESSURE AND LEAKAGE TEST. CONTRACTOR, AT HIS EXPENSE, MAY OPTIONALLY REPLACE VALVE OR INSTALL A NEW VALVE FOR THE PURPOSE OF PERFORMING A PRESSURE TEST FOR NEW MAIN INSTALLATION.

9. IF CONTRACTOR ELECTS TO PRESSURE TEST AGAINST EXISTING VALVE, CONTRACTOR ACCEPTS RESPONSIBILITY FOR ENSURING PASSING PRESSURE TEST IN ACCORDANCE WITH OWASA REQUIREMENTS. IN ANY CASE, NO CLAIM WHATSOEVER SHALL BE MADE AGAINST NCDOT FOR FAILURE OF PRESSURE TEST.

10. DECHLORINATION REQUIREMENTS - THE CONTRACTOR SHALL BE RESPONSIBLE FOR NEUTRALIZATION OF CHLORINATED WATER AT THE POINT OF DISCHARGE FROM THE MAIN BEING TESTED. THIS SHALL OCCUR FOLLOWING CHLORINATION TO DISINFECT A MAIN OR ANY OTHER TIME WHEN ELEVATED LEVELS OF CHLORINE COULD POTENTIALLY BE DISCHARGED INTO THE ENVIRONMENT BY THE CONTRACTOR. AT THE TIME THE DISINFECTION AND PURITY TESTING PROCEDURES ARE DISCUSSED WITH THE OWASA CONSTRUCTION INSPECTOR, THE PROCEDURE FOR DECHLORINATION WILL BE COVERED. ABSOLUTELY NO FLUSHING, DISINFECTION, OR PURITY SAMPLING IS TO TAKE PLACE WITHOUT PRIOR APPROVAL OF A SAMPLING PLAN BY THE OWASA INSPECTOR.

11. CROSS-CONNECTION CONTROL ORDINANCE BACKFLOW PREVENTION WILL BE REQUIRED IN ACCORDANCE WITH OWASA CROSS-CONNECTION CONTROL ORDINANCE AND MANUAL.

12. EXISTING WATER AND/OR SEWER LINES ENCOUNTERED DURING CONSTRUCTION MUST BE SUPPORTED IN A MANNER ACCEPTABLE TO THE OWASA CONSTRUCTION INSPECTOR.

13. WATER OUTAGES NECESSARY FOR THE CONNECTION OF NEW CONSTRUCTION TO EXISTING PIPE LINES MUST BE COORDINATED IN ADVANCE WITH THE OWASA CONSTRUCTION INSPECTOR AND THE AFFECTED PARTIES IN ACCORDANCE WITH OWASA POLICY. A TWO WEEK NOTICE IS REQUIRED.

PROJECT SPECIFIC NOTES:

STANDARD DETAILS TO BE USED:

840.52 PRECAST MANHOLE 4', 5', & 6' DIAMETER NO STEPS ARE REQUIRED
840.54 MANHOLE FRAME AND COVER
1515.01 WATER METER
1515.02 FIRE HYDRANT
1520.01 SEWER CLEAN OUT
1525.02 PRECAST CONCRETE SANITARY SEWER MANHOLE OUTSIDE DROP
1525.06 PRECAST CONCRETE SANITARY MANHOLE WITH CAST-IN PLACE BOTTOM

1. ALL PROPOSED WATER LINES OVER 2" SHALL BE RESTRAINED JOINT DUCTILE IRON PC 350. "GRIPPER" STYLE GASKETS ARE ACCEPTABLE TO RESTRAIN PIPE.

2. ALL SERVICE LINES TO WATER METERS SHALL BE COPPER, TYPE K.

3. WATER METER RELOCATIONS, WHEN CONNECTED TO NEW WATER MAINS, THE APPURTENANCES NEEDED TO MAKE THAT CONNECTION SHALL BE INCIDENTAL TO THE COST OF THE WATER METER RELOCATION.

4. ALL MANHOLE COVER ADJUSTMENTS TO BE DONE IN ACCORDANCE WITH NCDOT AND OWASA SPECIFICATIONS. SEE SHEET UC-2A FOR BREAKDOWN AND REBUILDING OF EXISTING MANHOLES LOCATIONS.

5. WATER LINE TIE-IN NEEDS TO BE COORDINATED WITH OWNER AND RESIDENT ENGINEER FOR THE TIE-INS MAY BE REQUIRED ON WEEKENDS OR AT NIGHT.

6. FLOWABLE FILL IS TO BE USED WHERE THE SEPARATION BETWEEN EXISTING AND PROPOSED UTILITIES AND DRAINAGE PIPES ARE LESS THAN 2' (FEET).

UTILITY CONSTRUCTION

7. WHERE PROPOSED WATER AND SANITARY SEWER LINES ARE TO BE LOCATED OUTSIDE OF THE CLEARING LIMITS SPECIFIED IN METHOD 2 CLEARING CONTRACTOR SHALL CLEAR TO THE PUE LINE OR RIGHT OF WAY.

8. SANITARY SEWER CLEANOUTS TO BE 4" DUCTILE IRON PC 350.

5/14/99
R:\Utilities\Proj\U2803_Ut_Title_UC1.psh.dgn 24-OCT-2012 13:29

PROJECT REFERENCE NO.	SHEET NO.
U-2803	UC-2A
DESIGNED BY: JAN	
DRAWN BY: JAN	
CHECKED BY: JSM	
APPROVED BY: JSM	
REVISED:	
NORTH CAROLINA DEPARTMENT OF TRANSPORTATION	
UTILITIES ENGINEERING SEC. PHONE:(919)707-6690 FAX:(919)250-4151	UTILITY CONSTRUCTION PLANS ONLY

NORTH CAROLINA PROFESSIONAL SEAL 6832 ENGINEER JAMES S. MOSER 10/24/12

UTILITY CONSTRUCTION

BREAKDOWN AND REBUILD MANHOLE (PRECAST MANHOLE)

STATION/OFFSET	PROP ELEV/EX ELEV	COMMENTS
34+14.5/22.0 RT	445.62/444.24	ROTATE CONE
36+22.4/18.2 RT	436.79/436.06	
38+27.8/15.8 RT	422.82/422.07	
39+99.3/18.7 RT	411.07/410.22	
43+96.8/20.4 RT	383.31/382.25	
45+92.2/21.5 RT	368.50/367.64	
48+24.1/22.3 RT	351.11/350.26	
51.36.6/24.9 RT	330.07/329.08	ROTATE CONE
53+02.8/23.0 RT	322.68/321.67	

BREAKDOWN AND REBUILD MANHOLE (MASONRY MANHOLE)

STATION/OFFSET	PROP ELEV/EX ELEV	COMMENTS
16+96.2/10.9 LT	488.05/487.28	
18+92.1/22.7 RT	482.75/482.49	
19+90.4/23.4 RT	480.76/479.78	ROTATE CONE
19+96.0/12.6 LT	481.00/480.95	
20+43.0/30.0 RT	480.02/479.82	
21+95.3/13.1 LT	476.59/476.27	
22+39.5/21.2 RT	475.09/474.90	
23+44.0/14.2 LT	472.37/471.98	
28+57.1/19.0 RT	457.68/456.84	
30+03.0/16.2 RT	453.80/452.92	
30+05.4/16.4 LT	453.78/453.02	
30+26.1/21.7 RT	453.15/451.69	ROTATE CONE
32+05.7/19.1 RT	450.24/448.25	
32+19.0/20.2 RT	449.98/448.05	
32+92.5/18.8 RT	448.29/446.41	
35+96.8/17.9 LT	436.69/436.19	
39+09.7/15.4 LT	417.14/415.50	
42+49.6/17.5 LT	393.99/393.17	
45+50.8/14.3 LT	372.04/370.45	
48+40.2/15.1 LT	350.71/349.94	
51+11.6/13.5 LT	332.32/331.58	

Beginning chain WL-1 description

Point WAT3901 N 778,671.44 E 1,975,950.81 Sta 0+00.000

Course from WAT3901 to WAT3902 N 28° 32′ 14.980″ E Dist 1.66

Point WAT3902 N 778,672.89 E 1,975,951.60 Sta 0+01.658

Course from WAT3902 to WAT3903 S 61° 27′ 45.020″ E Dist 8.88

Point WAT3903 N 778,668.65 E 1,975,959.40 Sta 0+10.543

Course from WAT3903 to WAT3904 N 28° 05′ 09.411″ E Dist 217.70

Point WAT3904 N 778,860.72 E 1,976,061.90 Sta 2+28.247

Course from WAT3904 to WAT3905 N 33° 05′ 09.411″ E Dist 18.00

Point WAT3905 N 778,875.80 E 1,976,071.72 Sta 2+46.247

Course from WAT3905 to WAT3906 N 38° 05′ 09.411″ E Dist 18.00

Point WAT3906 N 778,889.97 E 1,976,082.83 Sta 2+64.247

Course from WAT3906 to WAT3907 N 33° 05′ 09.411″ E Dist 19.30

Point WAT3907 N 778,906.13 E 1,976,093.36 Sta 2+83.542

Course from WAT3907 to WAT3908 N 28° 49′ 55.295″ E Dist 232.28

Point WAT3908 N 779,109.62 E 1,976,205.38 Sta 5+15.823

Course from WAT3908 to WAT3909 N 33° 47′ 28.081″ E Dist 91.06

Point WAT3909 N 779,185.30 E 1,976,256.02 Sta 6+06.883

Course from WAT3909 to WAT3910 N 33° 19′ 08.190″ E Dist 14.31

Point WAT3910 N 779,197.25 E 1,976,263.88 Sta 6+21.192

Course from WAT3910 to WAT3911 N 28° 19′ 08.190″ E Dist 65.12

Point WAT3911 N 779,254.58 E 1,976,294.77 Sta 6+86.310

Course from WAT3911 to WAT3912 N 28° 14′ 40.808″ E Dist 89.58

Point WAT3912 N 779,333.49 E 1,976,337.16 Sta 7+75.885

Course from WAT3912 to WAT3913 N 32° 56′ 57.577″ E Dist 24.58

Point WAT3913 N 779,354.12 E 1,976,350.53 Sta 8+00.465

Course from WAT3913 to WAT3914 N 44° 11′ 57.577″ E Dist 49.44

Point WAT3914 N 779,389.56 E 1,976,385.00 Sta 8+49.902

Course from WAT3914 to WAT3915 N 67° 56′ 22.389″ E Dist 25.23

Point WAT3915 N 779,399.03 E 1,976,408.37 Sta 8+75.128

Course from WAT3915 to WAT3916 N 46° 25′ 14.354″ E Dist 30.49

Point WAT3916 N 779,420.05 E 1,976,430.46 Sta 9+05.614

Course from WAT3916 to WAT3917 N 46° 25′ 14.354″ E Dist 24.69

Point WAT3917 N 779,437.07 E 1,976,448.35 Sta 9+30.309

Course from WAT3917 to WAT3918 N 35° 10′ 14.354″ E Dist 18.00

Point WAT3918 N 779,451.79 E 1,976,458.72 Sta 9+48.309

Course from WAT3918 to WAT3919 N 12° 40′ 14.354″ E Dist 20.69

Point WAT3919 N 779,471.98 E 1,976,463.26 Sta 9+69.003

Course from WAT3919 to WAT3920 N 13° 12′ 02.542″ E Dist 13.33

Point WAT3920 N 779,484.95 E 1,976,466.30 Sta 9+82.332

Course from WAT3920 to WAT3921 N 15° 47′ 22.311″ E Dist 23.30

Point WAT3921 N 779,507.38 E 1,976,472.64 Sta 10+05.635

Course from WAT3921 to WAT3922 N 19° 19′ 41.804″ E Dist 21.85

Point WAT3922 N 779,528.00 E 1,976,479.87 Sta 10+27.489

Course from WAT3922 to WAT3923 N 41° 49′ 41.804″ E Dist 133.10

Point WAT3923 N 779,627.18 E 1,976,568.64 Sta 11+60.590

Course from WAT3923 to WAT3924 N 44° 54′ 55.549″ E Dist 322.03

Point WAT3924 N 779,855.22 E 1,976,796.01 Sta 14+82.619

Course from WAT3924 to WAT3925 N 42° 12′ 59.623″ E Dist 60.68

Point WAT3925 N 779,900.17 E 1,976,836.79 Sta 15+43.302

Course from WAT3925 to WAT3926 N 30° 57′ 59.623″ E Dist 30.90

Point WAT3926 N 779,926.66 E 1,976,852.68 Sta 15+74.200

Course from WAT3926 to WAT3927 N 43° 51′ 51.011″ E Dist 276.44

Point WAT3927 N 780,125.97 E 1,977,044.24 Sta 18+50.640

Course from WAT3927 to WAT3928 N 39° 10′ 51.372″ E Dist 74.60

Point WAT3928 N 780,183.79 E 1,977,091.37 Sta 19+25.239

Course from WAT3928 to WAT3929 N 36° 53′ 52.151″ E Dist 86.16

Point WAT3929 N 780,252.70 E 1,977,143.10 Sta 20+11.400

Course from WAT3929 to WAT3930 N 35° 05′ 03.189″ E Dist 109.62

Point WAT3930 N 780,342.40 E 1,977,206.11 Sta 21+21.016

Course from WAT3930 to WAT3931 N 34° 13′ 29.177″ E Dist 9.86

Point WAT3931 N 780,350.55 E 1,977,211.65 Sta 21+30.873

Course from WAT3931 to WAT3932 N 34° 13′ 29.177″ E Dist 6.11

Point WAT3932 N 780,355.60 E 1,977,215.09 Sta 21+36.987

Course from WAT3932 to WAT3933 N 29° 17′ 28.695″ E Dist 120.32

Point WAT3933 N 780,460.54 E 1,977,273.96 Sta 22+57.312

Course from WAT3933 to WAT3934 N 23° 35′ 23.490″ E Dist 147.05

Point WAT3934 N 780,595.30 E 1,977,332.81 Sta 24+04.357

Course from WAT3934 to WAT3935 N 20° 04′ 24.776″ E Dist 182.76

Point WAT3935 N 780,766.96 E 1,977,395.54 Sta 25+87.122

Course from WAT3935 to WAT3936 N 65° 50′ 02.884″ E Dist 23.22

Point WAT3936 N 780,776.47 E 1,977,416.72 Sta 26+10.343

Course from WAT3936 to WAT3937 N 21° 33′ 06.552″ E Dist 52.21

Point WAT3937 N 780,825.03 E 1,977,435.90 Sta 26+62.549

Course from WAT3937 to WAT3938 N 21° 42′ 41.763″ E Dist 147.51

Point WAT3938 N 780,962.07 E 1,977,490.47 Sta 28+10.062

Course from WAT3938 to WAT3939 N 19° 21′ 40.279″ E Dist 143.58

Point WAT3939 N 781,097.54 E 1,977,538.07 Sta 29+53.644

Course from WAT3939 to WAT3940 N 14° 21′ 40.279″ E Dist 17.96

Point WAT3940 N 781,114.93 E 1,977,542.52 Sta 29+71.604

Course from WAT3940 to WAT3941 N 9° 22′ 20.015″ E Dist 18.04

Point WAT3941 N 781,132.73 E 1,977,545.46 Sta 29+89.644

Course from WAT3941 to WAT3942 N 9° 41′ 41.937″ E Dist 17.47

Point WAT3942 N 781,149.95 E 1,977,548.40 Sta 30+07.111

Course from WAT3942 to WAT3943 N 11° 57′ 38.304″ E Dist 14.01

Point WAT3943 N 781,163.66 E 1,977,551.31 Sta 30+21.122

Course from WAT3943 to WAT3944 N 10° 31′ 28.192″ E Dist 18.00

Point WAT3944 N 781,181.36 E 1,977,554.60 Sta 30+39.122

5/14/99
:\Utilities\Proj\U2803\U2803_Ut_Title_UC1_psh.dgn
24-OCT-2012 13:30
$$$$USERNAME$$$$

WL-1 description

Course from WAT3944 to WAT3945 N 18° 07′ 35.665″ E Dist 56.49				
Point WAT3945	N	781,235.05 E	1,977,572.17 Sta	30+95.616
Course from WAT3945 to WAT3946 N 19° 20′ 31.685″ E Dist 203.67				
Point WAT3946	N	781,427.22 E	1,977,639.63 Sta	32+99.288
Course from WAT3946 to WAT3947 N 19° 04′ 23.952″ E Dist 180.76				
Point WAT3947	N	781,598.06 E	1,977,698.70 Sta	34+80.049
Course from WAT3947 to WAT3948 N 25° 55′ 36.048″ W Dist 68.23				
Point WAT3948	N	781,659.42 E	1,977,668.87 Sta	35+48.276
Course from WAT3948 to WAT3949 N 19° 05′ 45.745″ E Dist 17.83				
Point WAT3949	N	781,676.27 E	1,977,674.70 Sta	35+66.105
Course from WAT3949 to WAT3950 N 23° 02′ 59.216″ E Dist 122.97				
Point WAT3950	N	781,789.42 E	1,977,722.85 Sta	36+89.076
Course from WAT3950 to WAT3951 N 24° 27′ 47.479″ E Dist 57.91				
Point WAT3951	N	781,842.13 E	1,977,746.83 Sta	37+46.987
Course from WAT3951 to WAT3952 N 24° 32′ 04.792″ E Dist 122.45				
Point WAT3952	N	781,953.53 E	1,977,797.68 Sta	38+69.436
Course from WAT3952 to WAT3953 N 74° 22′ 35.695″ E Dist 48.84				
Point WAT3953	N	781,966.68 E	1,977,844.72 Sta	39+18.280
Course from WAT3953 to WAT3954 N 29° 22′ 35.695″ E Dist 2.83				
Point WAT3954	N	781,969.15 E	1,977,846.10 Sta	39+21.108

Beginning chain WL-2 description

Point WAT3366	N	780,320.85 E	1,977,190.77 Sta	0+00.000
Course from WAT3366 to WAT3367 S 54° 06′ 30.561″ E Dist 44.58				
Point WAT3367	N	780,294.72 E	1,977,226.89 Sta	0+44.583
Course from WAT3367 to WAT3368 S 76° 17′ 56.563″ E Dist 105.91				
Point WAT3368	N	780,269.63 E	1,977,329.78 Sta	1+50.488
Course from WAT3368 to WAT3369 S 76° 17′ 56.563″ E Dist 127.35				
Point WAT3369	N	780,239.47 E	1,977,453.50 Sta	2+77.836
Course from WAT3369 to WAT3371 S 13° 24′ 49.215″ W Dist 48.29				
Point WAT3371	N	780,192.50 E	1,977,442.30 Sta	3+26.121
Course from WAT3371 to WAT3372 S 76° 17′ 56.563″ E Dist 1.57				
Point WAT3372	N	780,192.13 E	1,977,443.83 Sta	3+27.691

Beginning chain WL-3 description

Point WAT3384	N	780,864.86 E	1,977,014.87 Sta	0+00.000
Course from WAT3384 to WAT3385 S 89° 25′ 20.992″ E Dist 3.00				
Point WAT3385	N	780,864.83 E	1,977,017.87 Sta	0+03.000
Course from WAT3385 to WAT3386 S 0° 34′ 39.007″ W Dist 18.00				
Point WAT3386	N	780,846.83 E	1,977,017.69 Sta	0+21.000
Course from WAT3386 to WAT3387 S 1° 16′ 35.053″ W Dist 22.33				
Point WAT3387	N	780,824.51 E	1,977,017.20 Sta	0+43.329
Course from WAT3387 to WAT3388 S 1° 39′ 25.487″ W Dist 7.82				
Point WAT3388	N	780,816.69 E	1,977,016.97 Sta	0+51.146
Course from WAT3388 to WAT3389 S 89° 02′ 07.921″ E Dist 115.32				
Point WAT3389	N	780,814.75 E	1,977,132.27 Sta	1+66.464
Course from WAT3389 to WAT3390 S 85° 52′ 45.391″ E Dist 71.69				
Point WAT3390	N	780,809.60 E	1,977,203.78 Sta	2+38.156
Course from WAT3390 to WAT3391 S 80° 57′ 28.878″ E Dist 17.72				
Point WAT3391	N	780,806.82 E	1,977,221.28 Sta	2+55.877
Course from WAT3391 to WAT3392 S 75° 52′ 45.391″ E Dist 18.00				
Point WAT3392	N	780,802.42 E	1,977,238.74 Sta	2+73.877
Course from WAT3392 to WAT3393 S 70° 52′ 45.392″ E Dist 18.00				
Point WAT3393	N	780,796.53 E	1,977,255.74 Sta	2+91.877
Course from WAT3393 to WAT3394 S 69° 55′ 35.224″ E Dist 141.45				
Point WAT3394	N	780,747.98 E	1,977,388.60 Sta	4+33.327

Beginning chain WL-4 description

Point WAT3472	N	780,369.08 E	1,977,115.45 Sta	0+00.000
Course from WAT3472 to WAT3473 S 50° 58′ 24.778″ E Dist 72.12				
Point WAT3473	N	780,323.66 E	1,977,171.48 Sta	0+72.124
Course from WAT3473 to WAT3474 S 54° 38′ 37.047″ E Dist 17.69				
Point WAT3474	N	780,313.43 E	1,977,185.91 Sta	0+89.815

PROJECT REFERENCE NO.	SHEET NO.
U-2803	UC-2B
DESIGNED BY: JAN	
DRAWN BY: JAN	
CHECKED BY: JSM	
APPROVED BY: JSM	
REVISED:	
NORTH CAROLINA DEPARTMENT OF TRANSPORTATION	
UTILITIES ENGINEERING SEC. PHONE:(919)707-6690 FAX:(919)250-4151	UTILITY CONSTRUCTION PLANS ONLY

NORTH CAROLINA PROFESSIONAL SEAL 19332 ENGINEER JAMES S. MONROE

UTILITY CONSTRUCTION

5/14/99

24-OCT-2012 13:30
U:\u2803_Rdy_UC\U2803_Ut_Title_UC1_psh.dgn
$$$$USERNAME$$$$

PROJECT REFERENCE NO.	SHEET NO.
U-2803	UC-2C
DESIGNED BY: JAN	
DRAWN BY: JAN	
CHECKED BY: JSM	
APPROVED BY: JSM	
REVISED:	
NORTH CAROLINA DEPARTMENT OF TRANSPORTATION	
UTILITIES ENGINEERING SEC. PHONE:(919)707-6690 FAX:(919)250-4151	UTILITY CONSTRUCTION PLANS ONLY

NORTH CAROLINA PROFESSIONAL SEAL 16832 ENGINEER JAMES S. MOORE

UTILITY CONSTRUCTION

Beginning chain WL-5 description

Point WAT3355	N	781,880.81 E	1,977,671.12 Sta	0+00.000
Course from WAT3355 to WAT3356 S 61° 53′ 16.008″ E Dist 61.16				
Point WAT3356	N	781,852.00 E	1,977,725.06 Sta	0+61.156
Course from WAT3356 to WAT3357 S 65° 37′ 24.305″ E Dist 24.10				
Point WAT3357	N	781,842.05 E	1,977,747.01 Sta	0+85.254

Beginning chain WL-6 description

Point WAT3358	N	779,512.56 E	1,976,350.25 Sta	0+00.000
Course from WAT3358 to WAT3359 S 82° 26′ 47.662″ E Dist 1.00				
Point WAT3359	N	779,512.43 E	1,976,351.24 Sta	0+01.000
Course from WAT3359 to WAT3360 N 52° 33′ 12.338″ E Dist 10.65				
Point WAT3360	N	779,518.90 E	1,976,359.69 Sta	0+11.648
Course from WAT3360 to WAT3361 N 75° 03′ 12.338″ E Dist 14.31				
Point WAT3361	N	779,522.59 E	1,976,373.52 Sta	0+25.954
Course from WAT3361 to WAT3362 S 59° 56′ 47.662″ E Dist 18.00				
Point WAT3362	N	779,513.58 E	1,976,389.10 Sta	0+43.954
Course from WAT3362 to WAT3363 S 56° 55′ 27.033″ E Dist 50.09				
Point WAT3363	N	779,486.24 E	1,976,431.07 Sta	0+94.047
Course from WAT3363 to WAT3364 S 54° 49′ 45.646″ E Dist 18.00				
Point WAT3364	N	779,475.87 E	1,976,445.78 Sta	1+12.047
Course from WAT3364 to WAT3365 S 77° 19′ 45.646″ E Dist 17.92				
Point WAT3365	N	779,471.94 E	1,976,463.27 Sta	1+29.970

Beginning chain PRSL-1 description

Point SEW34	N	779,931.10 E	1,976,814.31 Sta	0+00.000
Course from SEW34 to SEW35 S 30° 19′ 16.512″ E Dist 31.01				
Point SEW35	N	779,904.34 E	1,976,829.96 Sta	0+31.006

Beginning chain PRSL2 description

Point SEW36	N	781,416.47 E	1,977,555.78 Sta	0+00.000
Course from SEW36 to SEW37 S 18° 56′ 38.354″ W Dist 34.00				
Point SEW37	N	781,384.31 E	1,977,544.74 Sta	0+34.000

Beginning chain SL-3 description

Point SEW3	N	782,063.89 E	1,977,857.81 Sta	0+00.000
Course from SEW3 to SEW4 S 8° 57′ 00.733″ E Dist 32.87				
Point SEW4	N	782,031.42 E	1,977,862.93 Sta	0+32.866
Course from SEW4 to SEW5 S 19° 08′ 47.101″ W Dist 308.00				
Point SEW5	N	781,740.45 E	1,977,761.91 Sta	3+40.869
Course from SEW5 to SEW6 S 21° 10′ 47.914″ W Dist 51.97				
Point SEW6	N	781,691.99 E	1,977,743.13 Sta	3+92.842
Course from SEW6 to SEW7 S 71° 19′ 58.249″ W Dist 63.52				
Point SEW7	N	781,671.66 E	1,977,682.95 Sta	4+56.360

Beginning chain CO1 description

Point WAT3448	N	781,488.72 E	1,977,617.94 Sta	0+00.000
Course from WAT3448 to WAT3449 N 75° 12′ 03.599″ W Dist 66.05				
Point WAT3449	N	781,505.59 E	1,977,554.09 Sta	0+66.048

Beginning chain CO2 description

Point 32002	N	781,484.96 E	1,977,616.62 Sta	0+00.000
Course from 32002 to 32003 N 75° 13′ 28.081″ W Dist 66.02				
Point 32003	N	781,501.79 E	1,977,552.79 Sta	0+66.017

5/14/99
24-OCT-2012 14:02
$$$$USERNAME$$$$
\Utilities\Proj\U2803_Ut_Title_UC1_psh.dgn

PROJECT REFERENCE NO.	SHEET NO.
U-2803	UC-3
DESIGNED BY: JAN	
DRAWN BY: JAN	
CHECKED BY: JSM	
APPROVED BY: JSM	
REVISED:	
NORTH CAROLINA DEPARTMENT OF TRANSPORTATION	
UTILITIES ENGINEERING SEC. PHONE:(919)250-4128 FAX:(919)250-4119	UTILITY CONSTRUCTION PLANS ONLY

NORTH CAROLINA PROFESSIONAL SEAL 18832 ENGINEER JAMES S. MOORE 10/24/12

UTILITY CONSTRUCTION

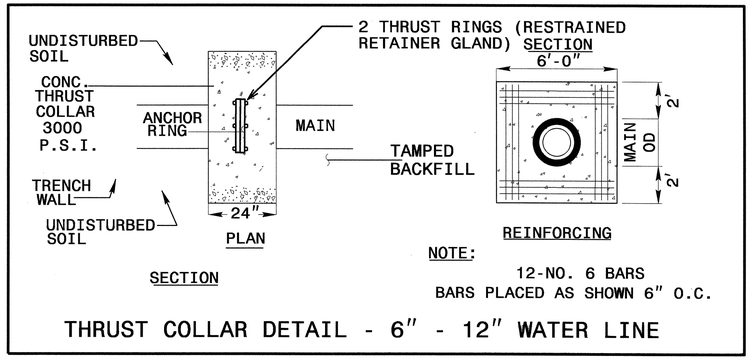

THRUST COLLAR DETAIL - 6" - 12" WATER LINE

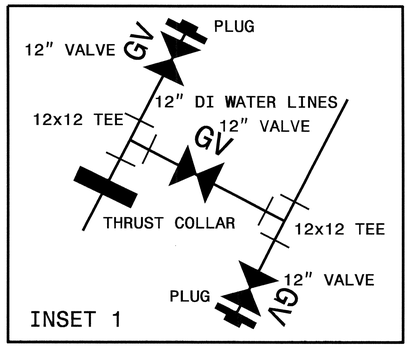

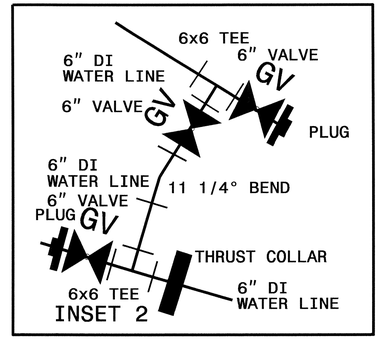

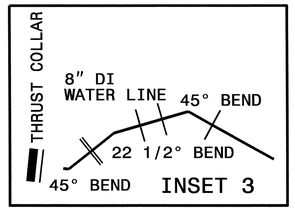

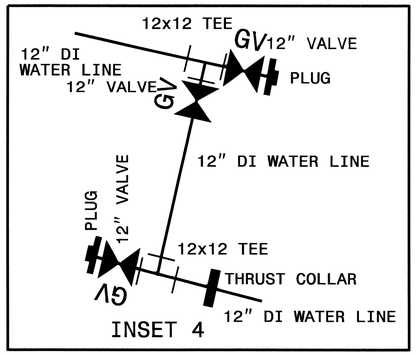

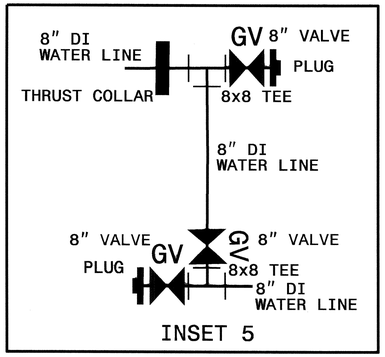

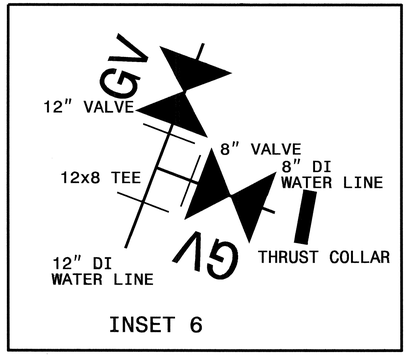

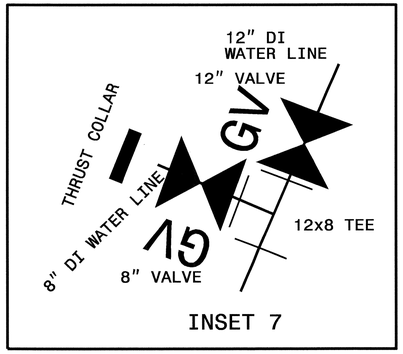

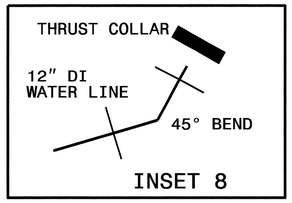

WATER MAIN TRENCH DETAIL

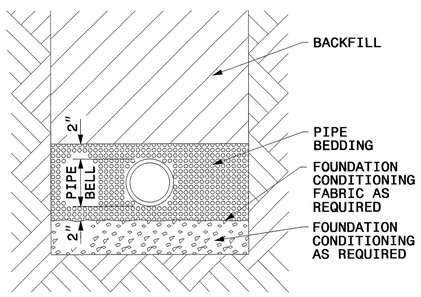

PLACE FOUNDATION CONDITIONING MATERIAL BELOW BEDDING IF REQUIRED, AS DIRECTED BY ENGINEER. PIPE BEDDED IN SELECT MATERIAL, CLASS II (TYPE 1) OR CLASS III. TRENCH BACKFILLED IN LOOSE 6" LAYERS COMPACTED TO TOP OF TRENCH USING LOCAL EXCAVATED MATERIAL IF APPROVED BY THE ENGINEER, OR SELECT MATERIAL. ALL MATERIAL SHALL BE FREE OF ROCKS, FOREIGN MATERIAL, AND FROZEN EARTH. COMPACTION SHALL BE TO APPROXIMATELY 95% DENSITY IN ACCORDANCE WITH AASHTO T-99 AS MODIFIED BY THE DEPARTMENT OF TRANSPORTATION.

MAXIMUM TRENCH WIDTH AT TOP OF PIPE

NOMINAL PIPE SIZE (INCHES)	TRENCH WIDTH (INCHES)
4	28
6	30
8	32
10	34
12	36
14	38
16	40
18	42

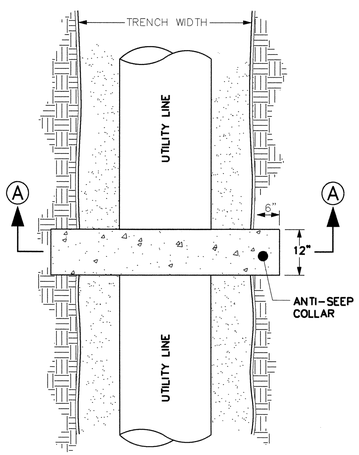

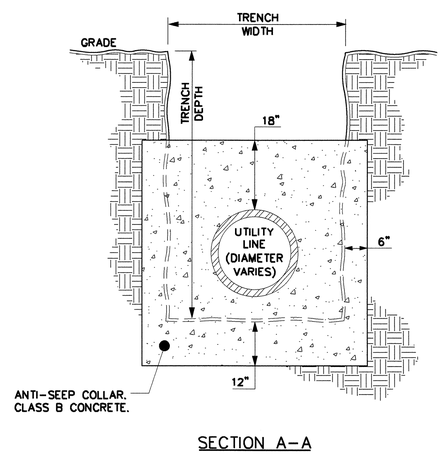

ANTI-SEEP COLLAR

ALL DETAILS AND INSETS THIS SHEET NOT TO SCALE AND EXAGGERATED FOR CLARITY

5/14/99

24-OCT-2012 13:32
$$$$USERNAME$$$$
$$$$DGN$$$$

PROJECT REFERENCE NO.	SHEET NO.
U-2803	UC-3A
DESIGNED BY: JAN	
DRAWN BY: JAN	
CHECKED BY: JSM	
APPROVED BY: JSM	
REVISED:	
NORTH CAROLINA DEPARTMENT OF TRANSPORTATION	
UTILITIES ENGINEERING SEC. PHONE:(919)250-4128 FAX:(919)250-4119	UTILITY CONSTRUCTION PLANS ONLY

NORTH CAROLINA PROFESSIONAL SEAL 16832 ENGINEER JAMES S. MCKEE

UTILITY CONSTRUCTION

Details Provided by APPIAN Consulting Engineers - WWW.APPIANENGINEERS.COM

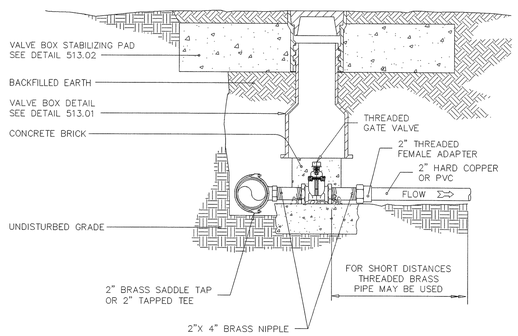

OWASA Quality Service Since 1977 — 400 Jones Ferry Road, PO Box 366, Carrboro, NC 27510-0366 — ORANGE WATER AND SEWER AUTHORITY — USE WITH THE OWASA STANDARD SPECIFICATIONS ONLY — Voice (919) 968-4421, FAX (919) 968-4464, www.owasa.org

STANDARD 2" TAP

SCALE:	DETAIL #
Not To Scale	2
REVISION DATE: September 6, 2012	SHEET # of

Details Provided by APPIAN Consulting Engineers - WWW.APPIANENGINEERS.COM 04/06/2010 - 5:05:40 PM

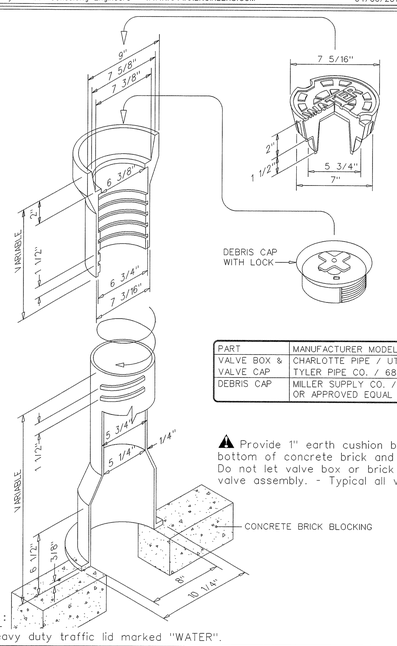

PART	MANUFACTURER MODEL / Cat. No.
VALVE BOX & VALVE CAP	CHARLOTTE PIPE / UTL-273 TYLER PIPE CO. / 6850
DEBRIS CAP	MILLER SUPPLY CO. / DC-590 OR APPROVED EQUAL

⚠ Provide 1" earth cushion between bottom of concrete brick and valve. Do not let valve box or brick rest on valve assembly. - Typical all valves.

NOTES:
1. Use heavy duty traffic lid marked "WATER".

OWASA Quality Service Since 1977 — 400 Jones Ferry Road, PO Box 366, Carrboro, NC 27510-0366 — ORANGE WATER AND SEWER AUTHORITY — USE WITH THE OWASA STANDARD SPECIFICATIONS ONLY — Voice (919) 968-4421, FAX (919) 968-4464, www.owasa.org

STANDARD SCREW VALVE BOX DETAIL

SCALE:	DETAIL #
Not To Scale	513.01
REVISION DATE: August 15, 2003	SHEET # 1 of 1

Details Provided by APPIAN Consulting Engineers - WWW.APPIANENGINEERS.COM 04/06/2010 - 5:06:32 PM

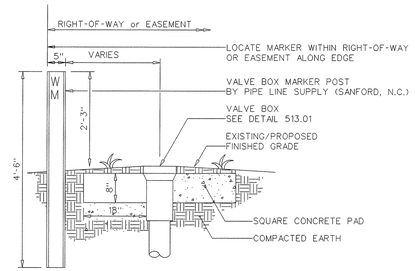

FIELD AND EASEMENT OR SIDE OF ROAD LOCATION

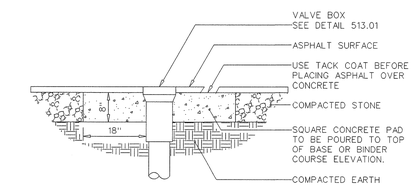

IN STREET LOCATION

NOTES:
1. Concrete to be minimum 3,000 PSI @ 28 days.

OWASA Quality Service Since 1977 — 400 Jones Ferry Road, PO Box 366, Carrboro, NC 27510-0366 — ORANGE WATER AND SEWER AUTHORITY — USE WITH THE OWASA STANDARD SPECIFICATIONS ONLY — Voice (919) 968-4421, FAX (919) 968-4464, www.owasa.org

VALVE BOX STABILIZING PAD DETAILS

SCALE:	DETAIL #
Not To Scale	2
REVISION DATE: August 15, 2003	SHEET # 513.02

Details Provided by APPIAN Consulting Engineers - WWW.APPIANENGINEERS.COM 04/06/2010 - 5:07:27 PM

PART	MANUFACTURER MODEL / Cat. No.
BUTTERFLY VALVE 250 PSI CLASS	CLOW (M&H) / 4500-02 FLANGED MUELLER / LINSEAL XP 2508 FLANGED
FLOOR DRAIN	JAY R. SMITH MFG. CO. / 3001

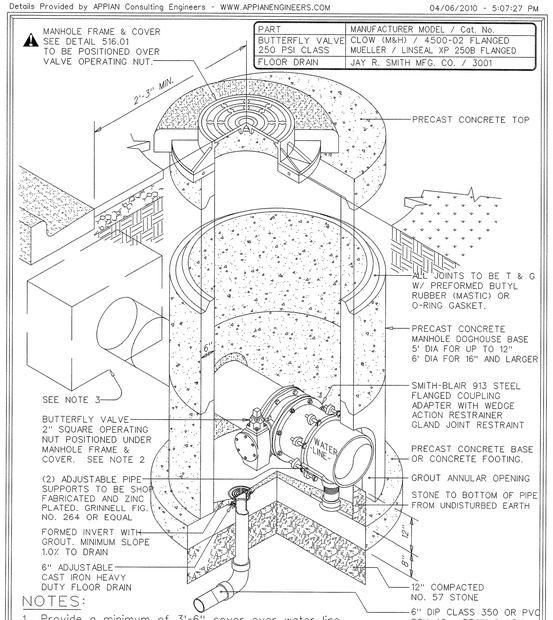

NOTES:
1. Provide a minimum of 3'-6" cover over water line.
2. All bolts to be stainless steel.
3. Thrust blocking to be provided on both sides of manhole. See OWASA detail 512.08.

OWASA Quality Service Since 1977 — 400 Jones Ferry Road, PO Box 366, Carrboro, NC 27510-0366 — ORANGE WATER AND SEWER AUTHORITY — USE WITH THE OWASA STANDARD SPECIFICATIONS ONLY — Voice (919) 968-4421, FAX (919) 968-4464, www.owasa.org

BUTTERFLY VALVE (16" and LARGER) in PRECAST MANHOLE

SCALE:	DETAIL #
Not To Scale	513.06
REVISION DATE: April 13, 2007	SHEET # 1 of 1

Details Provided by APPIAN Consulting Engineers - WWW.APPIANENGINEERS.COM 04/07/2010 - 3:57:49 PM

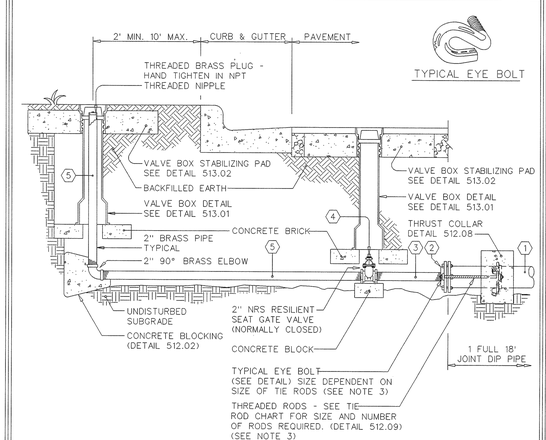

1 MAIN	2 MJ PLUG	3 NIPPLE	4 GATE VALVE	5 BLOW-OFF ASSEMBLY
4"	4" TAPPED FOR 2"	2" x 6"L BRASS	2" NRS	2" BRASS
6"	6" TAPPED FOR 2"	2" x 6"L BRASS	2" NRS	2" BRASS
8"	8" TAPPED FOR 2"	2" x 6"L BRASS	2" NRS	2" BRASS

NOTES:
1. No discharge from blow-off should go directly into a creek. OWASA must declorinate discharge before it enters a body of water.
2. Provide erosion and sedementation control for discharge.
3. In lieu of rodded fittings, contractor may use a wedge action restrained gland joint restraint on fittings.

OWASA Quality Service Since 1977 — 400 Jones Ferry Road, PO Box 366, Carrboro, NC 27510-0366 — ORANGE WATER AND SEWER AUTHORITY — USE WITH THE OWASA STANDARD SPECIFICATIONS ONLY — Voice (919) 968-4421, FAX (919) 968-4464, www.owasa.org

PERMANENT 2" BLOW-OFF ASSEMBLY FOR MAINS UP TO 8"

SCALE:	DETAIL #
Not To Scale	514.04
REVISION DATE: August 15, 2003	SHEET # 1 of 1

Details Provided by OWASA Engineers - WWW.OWASA.ORG

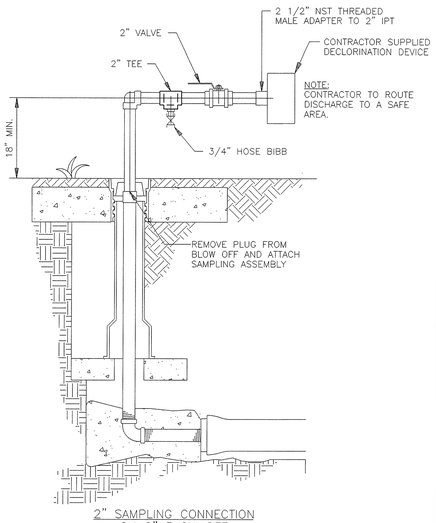

2" SAMPLING CONNECTION ON 2" BLOW OFF

NOTE:
ALL PIPING, VALVES AND FITTINGS SHALL BE IN ACCORDANCE WITH OWASA SPECIFICATIONS.

OWASA Quality Service Since 1977 — 400 Jones Ferry Road, PO Box 366, Carrboro, NC 27510-0366 — ORANGE WATER AND SEWER AUTHORITY — USE WITH THE OWASA STANDARD SPECIFICATIONS ONLY — Voice (919) 968-4421, FAX (919) 968-4464, www.owasa.org

PURITY SAMPLING CONNECTION DETAILS - 2" BLOW OFF LINE

SCALE:	DETAIL #
Not To Scale	514.07
REVISION DATE: February 7, 2005	SHEET # 1 of 1

Details Provided by APPIAN Consulting Engineers - WWW.APPIANENGINEERS.COM

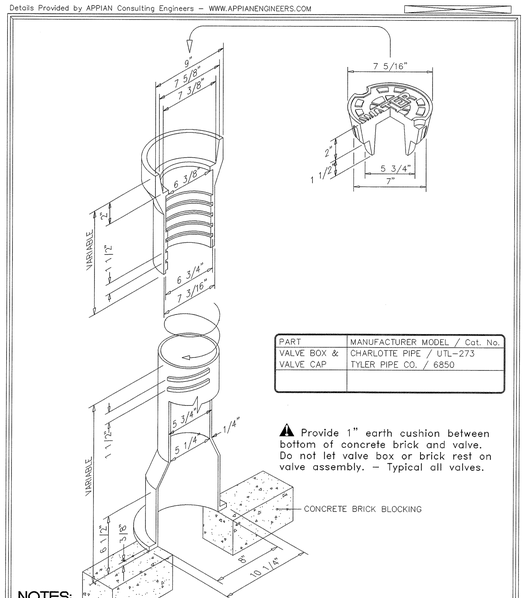

PART	MANUFACTURER MODEL / Cat. No.
VALVE BOX & VALVE CAP	CHARLOTTE PIPE / UTL-273 TYLER PIPE CO. / 6850

⚠ Provide 1" earth cushion between bottom of concrete brick and valve. Do not let valve box or brick rest on valve assembly. - Typical all valves.

NOTES:
1. Use heavy duty traffic lid marked "WATER".

OWASA Quality Service Since 1977 — 400 Jones Ferry Road, PO Box 366, Carrboro, NC 27510-0366 — ORANGE WATER AND SEWER AUTHORITY — USE WITH THE OWASA STANDARD SPECIFICATIONS ONLY — Voice (919) 968-4421, FAX (919) 968-4464, www.owasa.org

STANDARD SCREW VALVE BOX DETAIL

SCALE:	DETAIL #
Not To Scale	513.01
REVISION DATE: August 15, 2012	SHEET # 1 of 1

5/14/99

24-OCT-2012 13:34
R:\Utilities\Adjustments\Proj\u2803_ut_details_uc3.dgn
$$$$USERNAME$$$$

PROJECT REFERENCE NO.	SHEET NO.
U-2803	UC-3B

DESIGNED BY: JAN
DRAWN BY: JAN
CHECKED BY: JSM
APPROVED BY: JSM
REVISED:

NORTH CAROLINA DEPARTMENT OF TRANSPORTATION

UTILITIES ENGINEERING SEC.
PHONE:(919)250-4128
FAX:(919)250-4119

UTILITY CONSTRUCTION PLANS ONLY

NORTH CAROLINA PROFESSIONAL ENGINEER SEAL 16832 JAMES S. MCKEE

UTILITY CONSTRUCTION

Details Provided by APPIAN Consulting Engineers - WWW.APPIANENGINEERS.COM 04/06/2010 - 5:09:47 PM

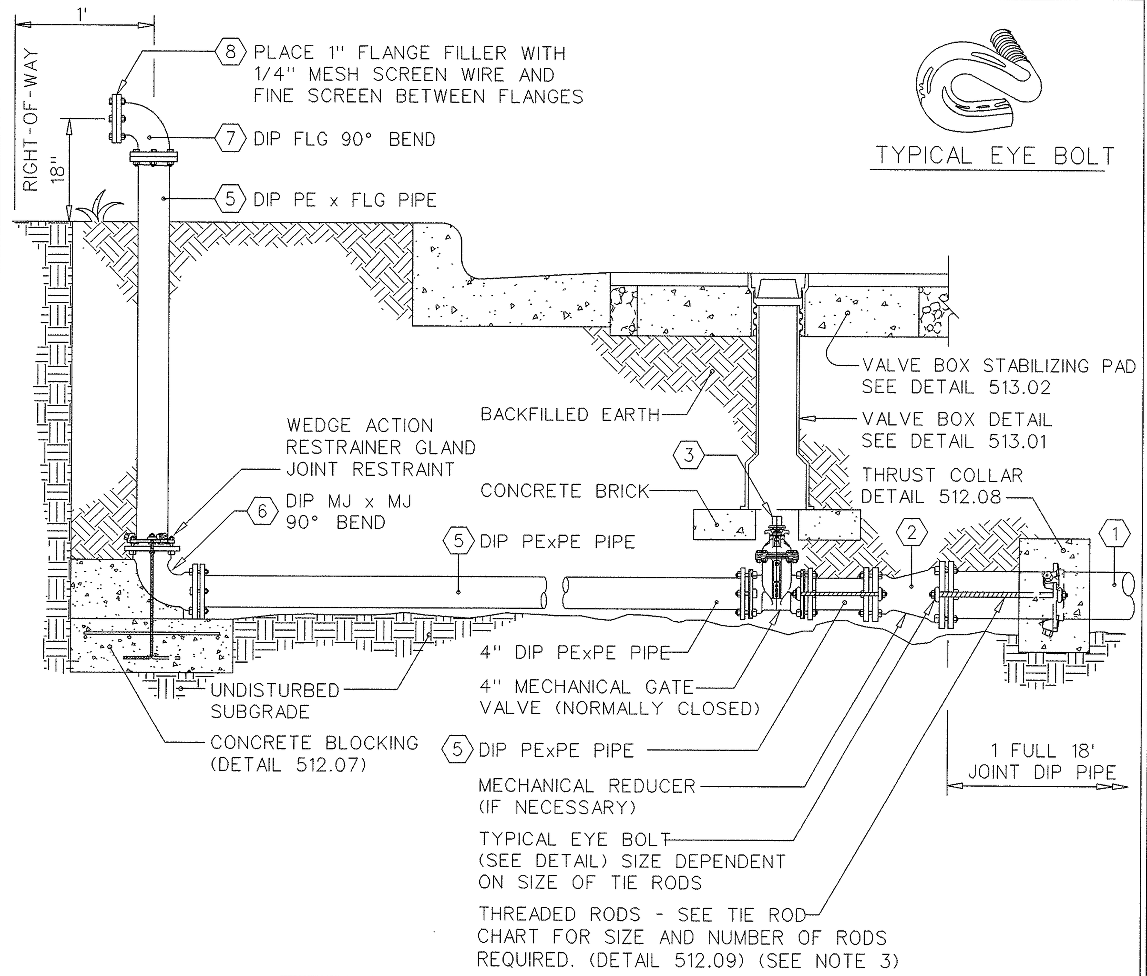

(1) MAIN	(2) REDUCER	(3) GATE VALVE	(5) PIPE AS NOTED	(6) 90° MJ BEND	(7) 90° FLG BEND	(8) FLANGE FILLER
12"	12"x4"	4"	4"	4"	4"	4"
16"	16"x6"	6"	6"	6"	6"	6"
18"	18"x6"	6"	6"	6"	6"	6"
20"	20"x6"	6"	6"	6"	6"	6"
24"	24"x6"	6"	6"	6"	6"	6"
30"	30"x6"	6"	6"	6"	6"	6"

NOTES:

1. No discharge from blow-off should go directly into a creek. OWASA must declorinate discharge before it enters a body of water.
2. Provide erosion and sedementation control for discharge.
3. In lieu of rodded fittings and eye bolts, contractor may use a wedge action restrainer gland joint restraint on fittings.

400 Jones Ferry Road PO Box 366 Carrboro, NC 27510-0366 **ORANGE WATER AND SEWER AUTHORITY** Voice (919) 968-4421 FAX (919) 968-4464 www.owasa.org
USE WITH THE OWASA STANDARD SPECIFICATIONS ONLY
OWASA Quality Service Since 1977

PERMANENT BLOW-OFF ASSEMBLY FOR MAINS 12" AND LARGER

SCALE: Not To Scale | DETAIL # 2514.06 | REVISION DATE: August 15, 2003 | SHEET #: 1 of 1

Details Provided by APPIAN Consulting Engineers - WWW.APPIANENGINEERS.COM 04/07/2010 - 8:57:17 AM

PART	MANUFACTURER MODEL / Cat. No.
METER BOX	CDR SYSTEMS CORP. / WA04-1118-12C MID-STATES PLASTICS, INC. / MSBCF 1118-12
METER SETTER	FORD (3/4") / VBHH72-12W-11-33 FORD (1") / VBHH74-12W-11-44 MUELLER (3/4" & 1") / H-2404-2A & TWO H-14222 COUPLINGS
METER	INSTALLED BY OWASA UPON PAYMENT OF FEES
TAPPING	SEE DETAIL 512.06

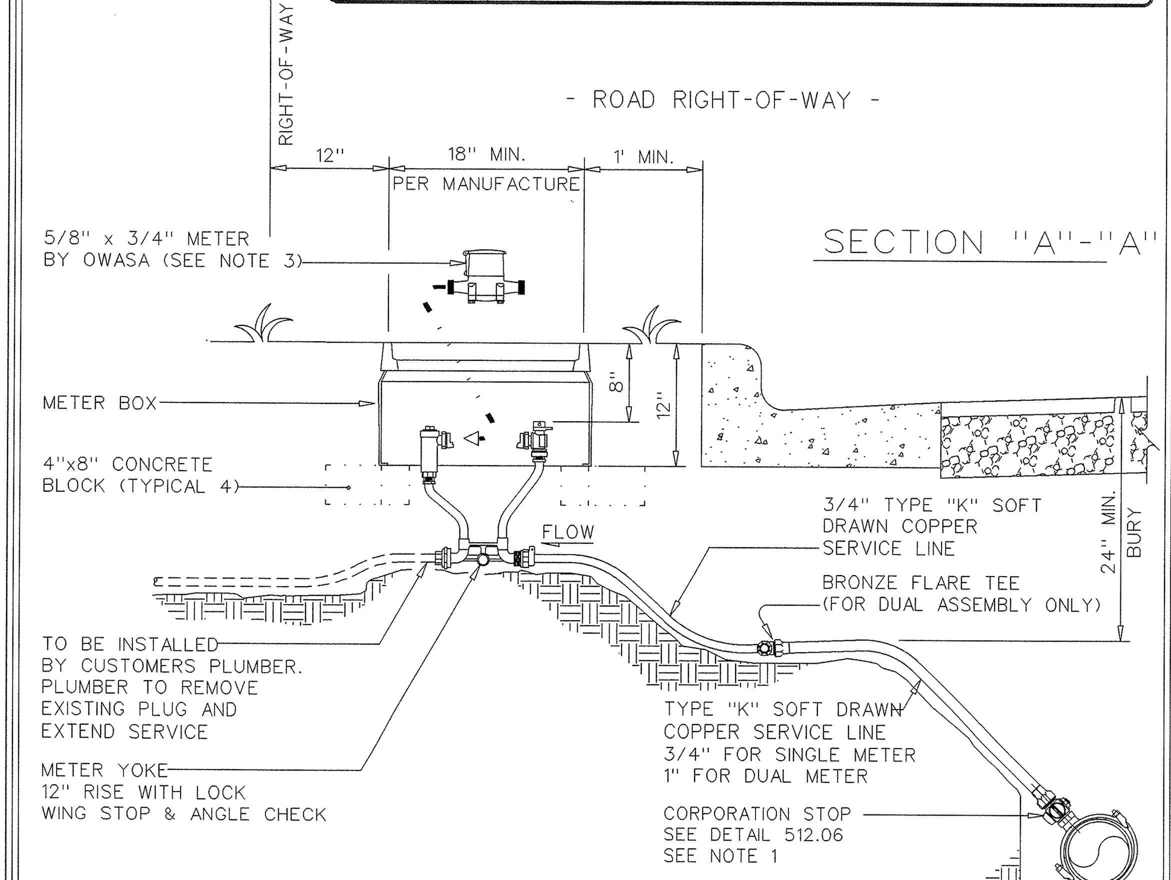

NOTES:

1. Bronze service saddles shall be used on all service connections. Direct taps shall be made only as directed by an OWASA representative. See tapping detail 512.06.
2. Omitted
3. If installation is for stub-out meter, meter should be purchased from OWASA. (At applicants expense)
4. Meter must be level across meter connections.
5. Substitution requires approval by OWASA's Director of Engineering.
6. New meter setters will be provided by OWASA for each relocated meter.

400 Jones Ferry Road PO Box 366 Carrboro, NC 27510-0366 **ORANGE WATER AND SEWER AUTHORITY** Voice (919) 968-4421 FAX (919) 968-4464 www.owasa.org
USE WITH THE OWASA STANDARD SPECIFICATIONS ONLY
OWASA Quality Service Since 1977

3/4" SINGLE & 1" DUAL SERVICE INSTALLATION

SCALE: Not To Scale | DETAIL # 2515.01 | REVISION DATE: April 13, 2007 | SHEET #: 1 of 2

Details Provided by APPIAN Consulting Engineers - WWW.APPIANENGINEERS.COM 04/07/2010 - 8:59:30 AM

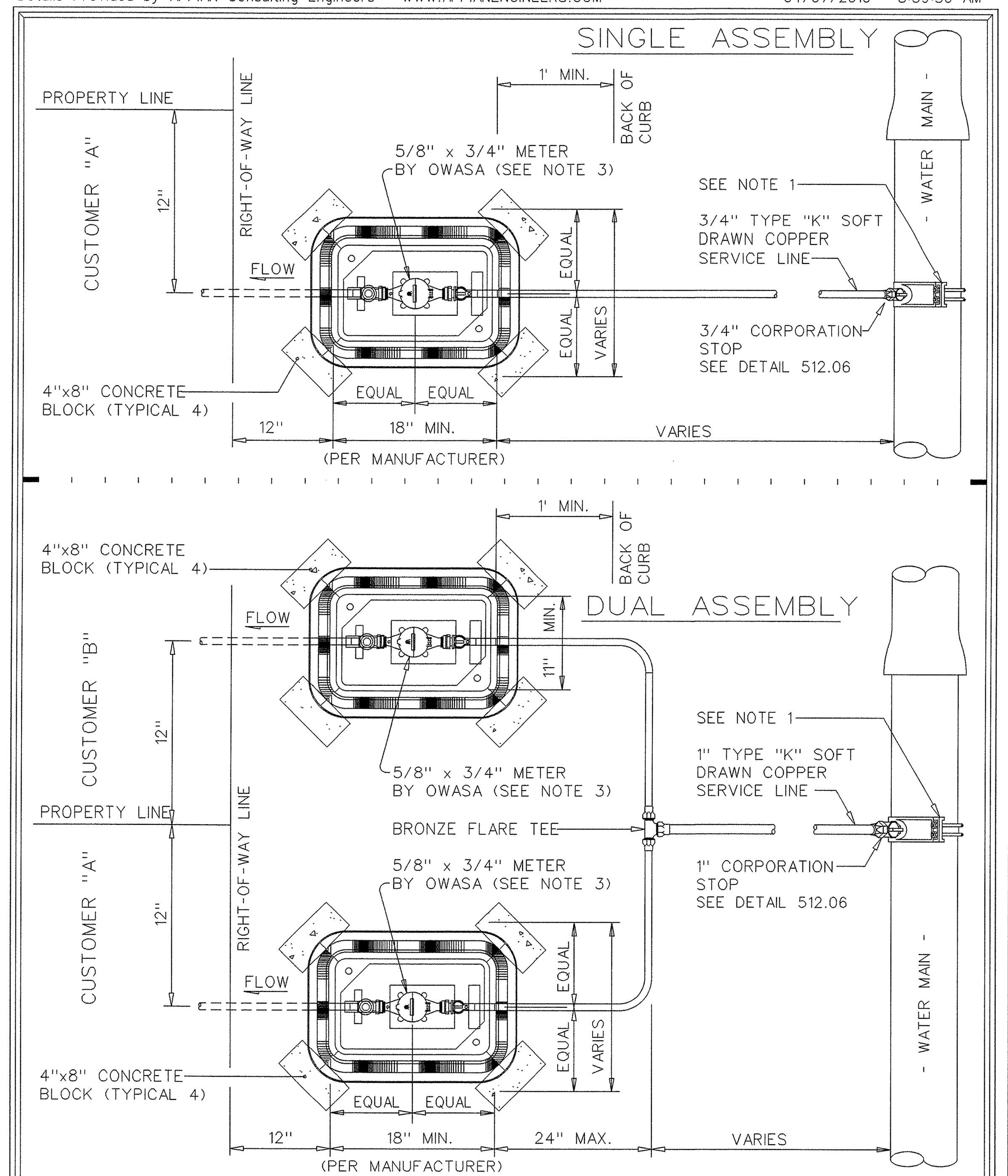

400 Jones Ferry Road PO Box 366 Carrboro, NC 27510-0366 **ORANGE WATER AND SEWER AUTHORITY** Voice (919) 968-4421 FAX (919) 968-4464 www.owasa.org
USE WITH THE OWASA STANDARD SPECIFICATIONS ONLY
OWASA Quality Service Since 1977

3/4" SINGLE & 1" DUAL SERVICE INSTALLATION

SCALE: Not To Scale | DETAIL # 2515.01 | REVISION DATE: April 13, 2007 | SHEET #: 2 of 2

Details Provided by APPIAN Consulting Engineers - WWW.APPIANENGINEERS.COM 04/06/2010 - 5:11:10 PM

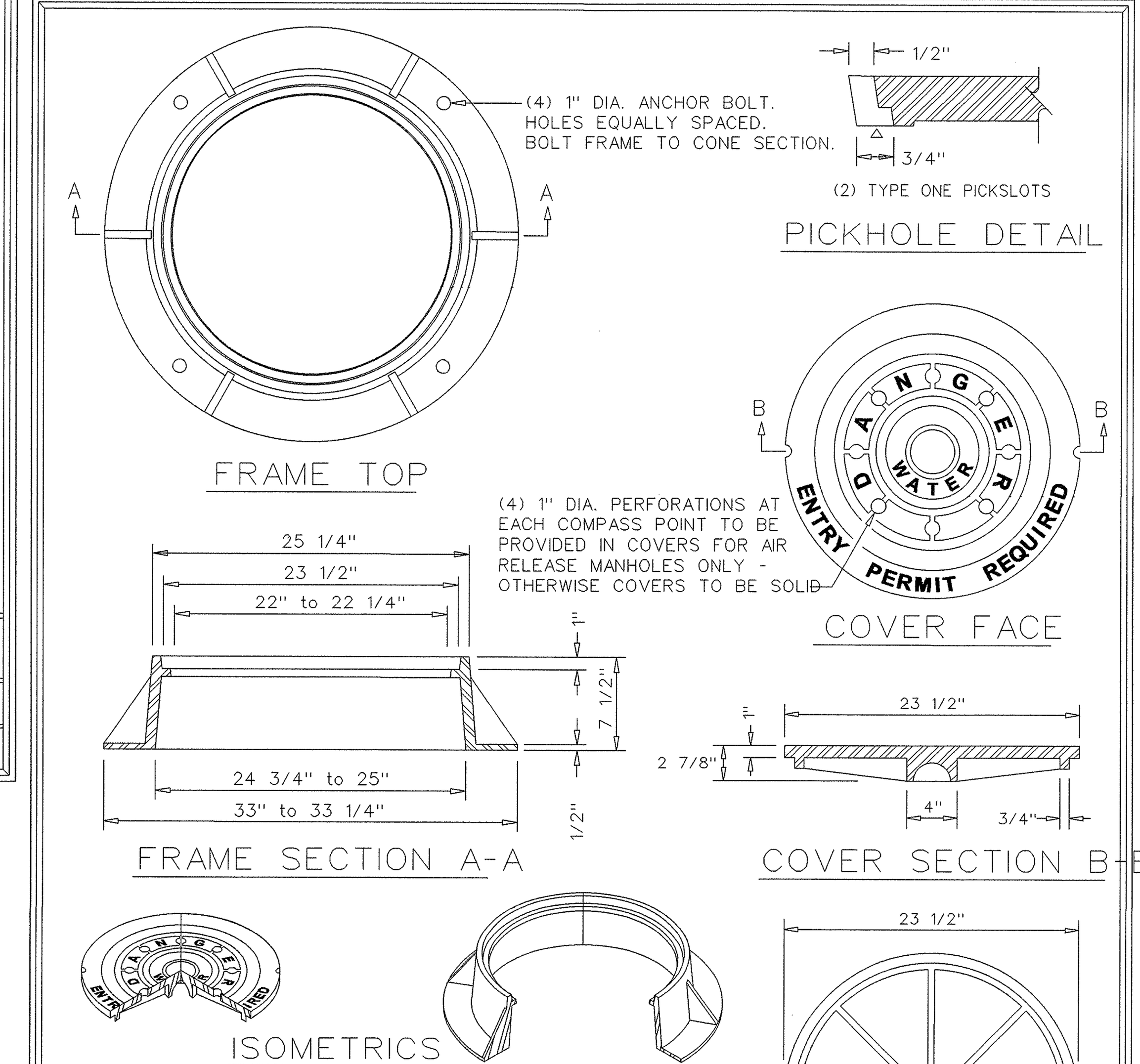

APPROVED MODELS	EAST JORDAN IRON WORKS V-1384	US FOUNDRY USF-669	CAPITOL FOUNDRY MH-2001
COVER WEIGHT	135 Lbs.	125 Lbs.	120 Lbs.
FRAME WEIGHT	180 Lbs.	190 Lbs.	190 Lbs.
LOAD RATING	HEAVY DUTY	HEAVY DUTY	HEAVY DUTY
MATERIAL	ASTM A 48 CLASS 35B	ASTM A 48 CLASS 35B	ASTM A 48 CLASS 35B
FINISH	UNCOATED	UNCOATED	UNCOATED

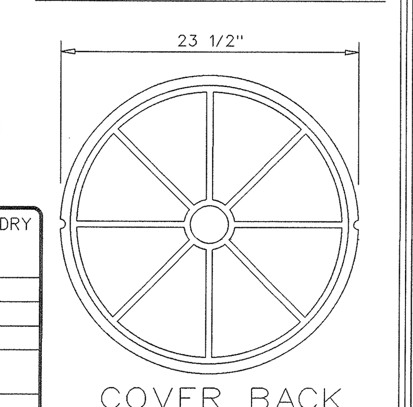

400 Jones Ferry Road PO Box 366 Carrboro, NC 27510-0366 **ORANGE WATER AND SEWER AUTHORITY** Voice (919) 968-4421 FAX (919) 968-4464 www.owasa.org
USE WITH THE OWASA STANDARD SPECIFICATIONS ONLY
OWASA Quality Service Since 1977

STANDARD WATER MANHOLE FRAME and COVER

SCALE: Not To Scale | DETAIL # 2516.01 | REVISION DATE: April 13, 2007 | SHEET #: 1 of 1

Details Provided by APPIAN Consulting Engineers — WWW.APPIANENGINEERS.COM RText (RText)

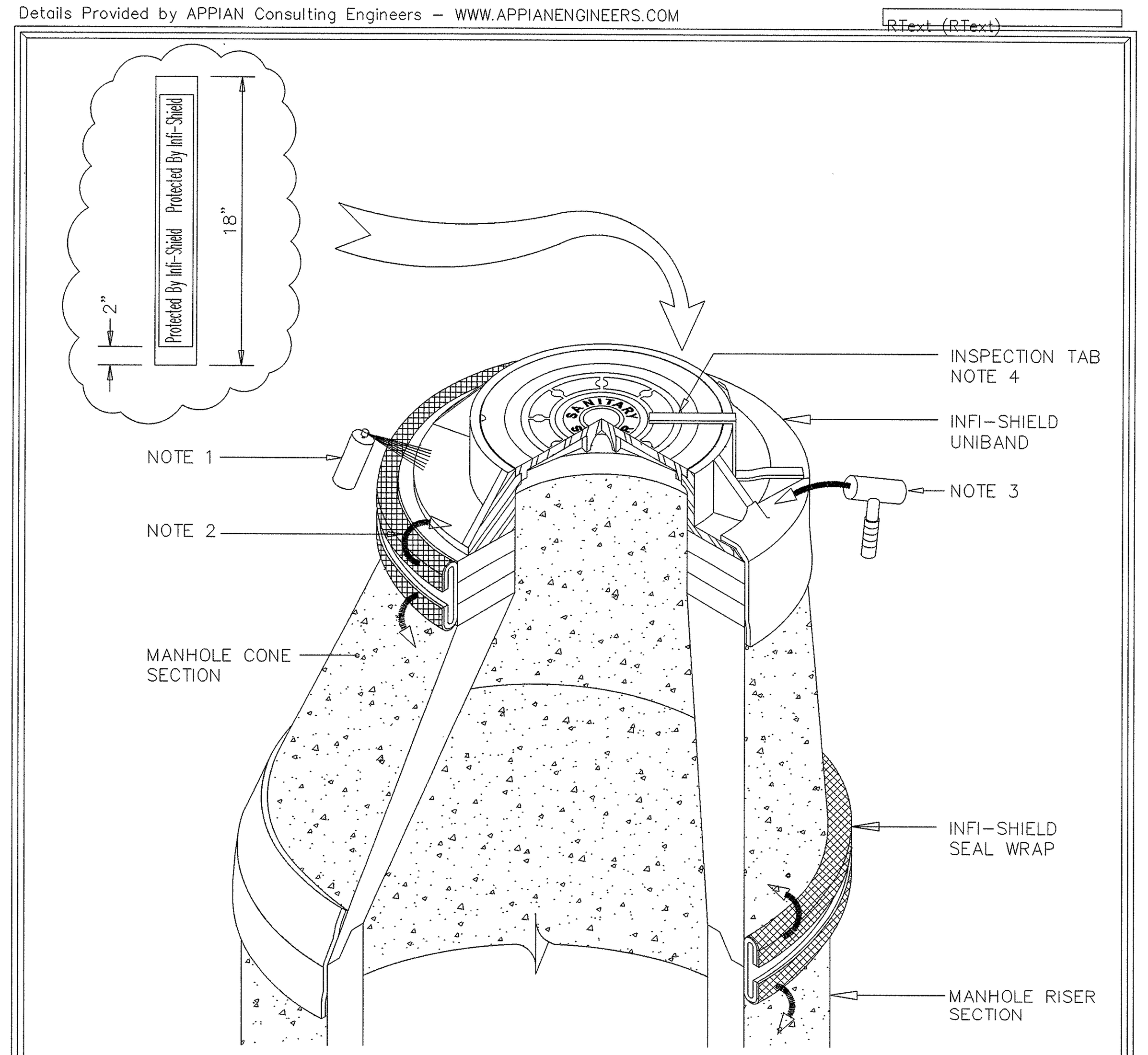

MANHOLE APPLICATION

INSTALLATION NOTES:

1. Clean casting frame, riser rings and cone section. Spray primer to areas where attaching non-hardening butyl mastic.
2 Install the Infi-shield External Seal on the outside surface of the adjustment ring area covering all grade rings. Remove protective tape and fold back on to the structure.
3. Useing a rubber hammer, tap the sealing surface area.
4. Ensure lid and casting is clean. Attach inspection tab to manhole lid and backfill.
5. Contact Sealing Systems Inc. for additional installation instructions @ 800-478-2054.

400 Jones Ferry Road PO Box 366 Carrboro, NC 27510-0366 **ORANGE WATER AND SEWER AUTHORITY** Voice (919) 968-4421 FAX (919) 968-4464 www.owasa.org
USE WITH THE OWASA STANDARD SPECIFICATIONS ONLY
OWASA Quality Service Since 1977

INFI-SHIELD EXTERNAL SEALING DETAIL

SCALE: Not To Scale | DETAIL # 2532.09 | REVISION DATE: April 13, 2007 | SHEET #: 1 of 1

Details Provided by OWASA Engineers — WWW.OWASA.ORG

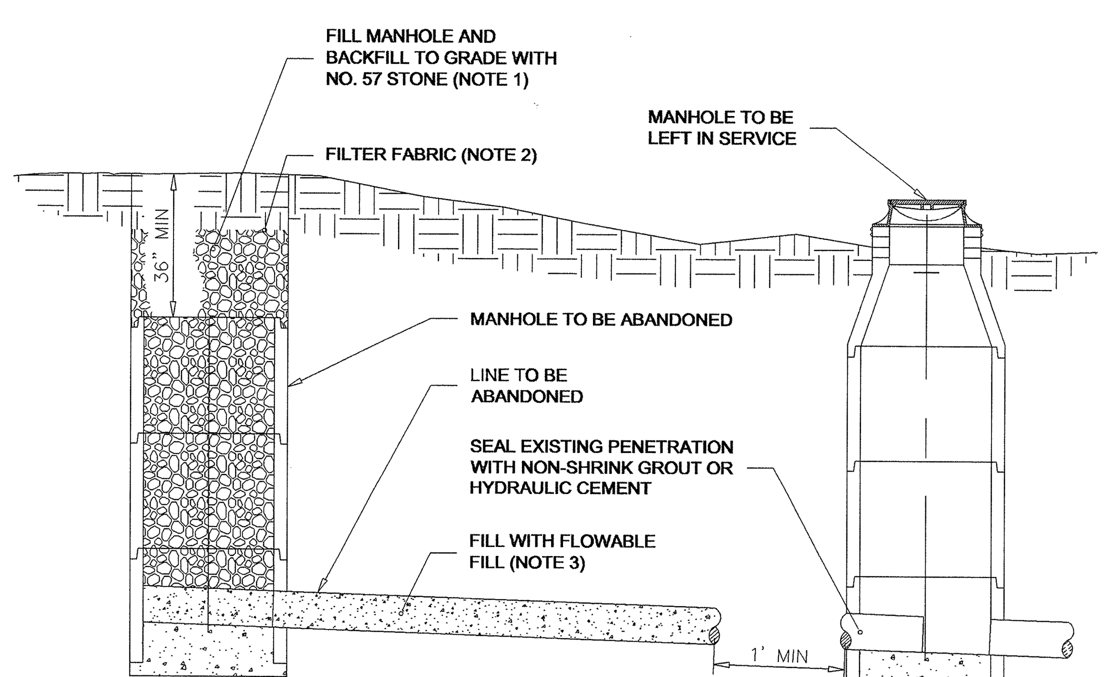

NOTES:

1. BACKFILL WITH NO. 57 STONE COMPACTED IN PLACE OR WITH FLOWABLE FILL CONCRETE (50 PSI MINIMUM/ 150 PSI MAXIMUM).
2. OUTSIDE ROADWAY RIGHT OF WAYS, FILTER FABRIC SHALL BE PLACED OVER THE STONE AND SUITABLE MATERIAL OF A COMPACTABLE NATURE PLACED OVER CONCRETE MANHOLE PAD. FILTER FABRIC SHALL BE EXTENDED 1' BEYOND THE DIAMETER OF THE MANHOLE TO BE ABANDONED.
3. REMOVE OR FILL PIPES WITH FLOWABLE FILL CONCRETE (50 PSI MINIMUM/ 150 PSI MAXIMUM) IN ACCORDANCE WITH THE FOLLOWING CRITERIA:
   a. PIPES LARGER THAN 24-**INCHES** DIAMETER.
   b. PIPES LOCATED WITHIN ROADWAY SECTION AND MEETING ONE OF THE FOLLOWING CONDITIONS:
      I. PIPES THAT ARE 12-INCHES DIAMETER UP TO AND INCLUDING PIPES THAT ARE 24-INCHES DIAMETER AND ARE BURIED LESS THAN 20 FEET BELOW FINISHED GRADE.
      II. PIPES THAT ARE 6-INCHES DIAMETER UP TO 12-INCHES DIAMETER THAT ARE NOT CAST IRON, DUCTILE IRON, PVC, OR HDPE AND ARE BURIED LESS THAN 12 FEET BELOW FINISHED GRADE.
   c. PIPES LOCATED BELOW GROUNDWATER TABLE THAT COULD BECOME A CONDUIT FOR WATER MOVEMENT.

400 Jones Ferry Road PO Box 366 Carrboro, NC 27510-0366 **ORANGE WATER AND SEWER AUTHORITY** Voice (919) 968-4421 FAX (919) 968-4464 www.owasa.org
USE WITH THE OWASA STANDARD SPECIFICATIONS ONLY
OWASA Quality Service Since 1977

SANITARY SEWER LINE AND MANHOLE ABANDONMENT DETAIL

SCALE: Not To Scale | DETAIL # 2536.05 | REVISION DATE: June 12, 2012 | SHEET #: 1 of 1

Details Provided by APPIAN Consulting Engineers — WWW.APPIANENGINEERS.COM

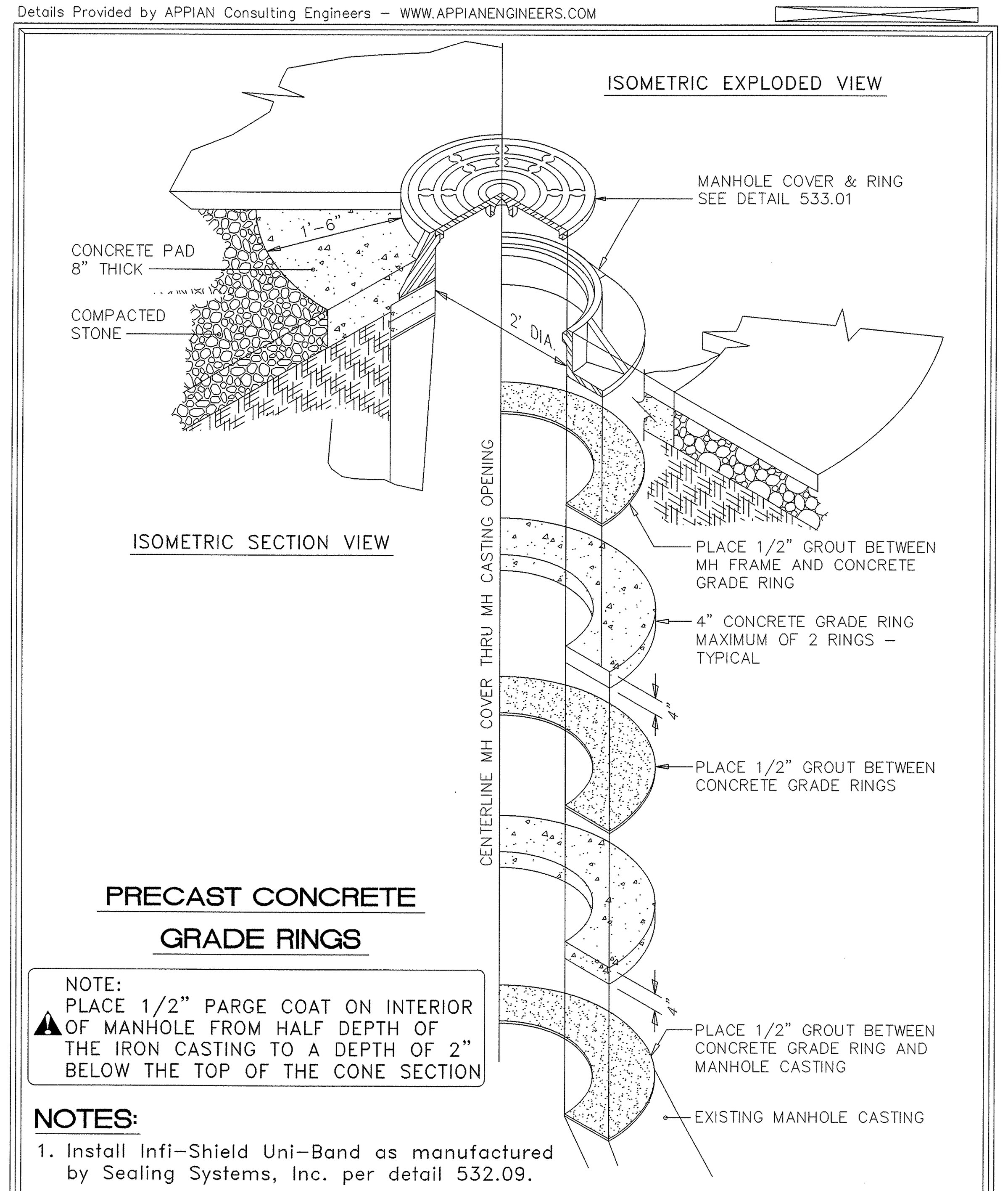

PRECAST CONCRETE GRADE RINGS

NOTE:
PLACE 1/2" PARGE COAT ON INTERIOR OF MANHOLE FROM HALF DEPTH OF THE IRON CASTING TO A DEPTH OF 2" BELOW THE TOP OF THE CONE SECTION

NOTES:

1. Install Infi-Shield Uni-Band as manufactured by Sealing Systems, Inc. per detail 532.09.

400 Jones Ferry Road PO Box 366 Carrboro, NC 27510-0366 **ORANGE WATER AND SEWER AUTHORITY** Voice (919) 968-4421 FAX (919) 968-4464 www.owasa.org
USE WITH THE OWASA STANDARD SPECIFICATIONS ONLY
OWASA Quality Service Since 1977

MANHOLE RING AND COVER GRADE ADJUSTMENT

SCALE: Not To Scale | DETAIL # 2532.06 | REVISION DATE: December 1, 2009 | SHEET #: 3 of 3

5/14/99

24-OCT-2012 13:34
R:\Utilities\Rdy_Ut\Proj\u2803_ut_details_uc3.dgn
$$$$USERNAME$$$$

PROJECT REFERENCE NO.	SHEET NO.
U-2803	UC-3C
DESIGNED BY: JAN	
DRAWN BY: JAN	
CHECKED BY: JSM	
APPROVED BY: JSM	
REVISED:	
NORTH CAROLINA DEPARTMENT OF TRANSPORTATION	
UTILITIES ENGINEERING SEC. PHONE:(919)250-4128 FAX:(919)250-4119	UTILITY CONSTRUCTION PLANS ONLY

NORTH CAROLINA PROFESSIONAL SEAL 5532 ENGINEER JAMES S. MUNGE 10/24/13

UTILITY CONSTRUCTION

Details Provided by APPIAN Consulting Engineers - WWW.APPIANENGINEERS.COM 04/06/2010 - 4:57:59 PM

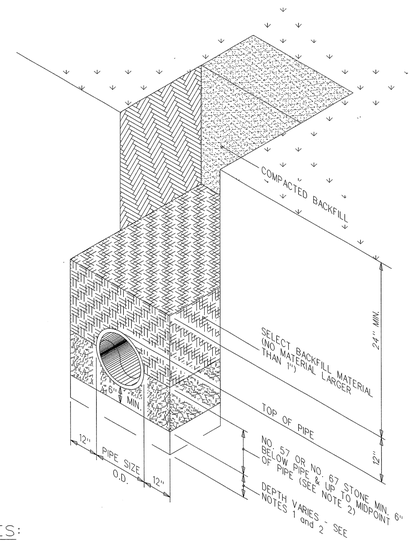

NOTES:

1. Foundation stone shall be required when soil conditions are unsuitable.
2. An additional 1 inch depth of cushioning material will be required for each additional 2 feet of trench depth in excess of 16 feet up to a maximum of 12 inches of cushioning material.

OWASA Quality Service Since 1977 — 400 Jones Ferry Road, PO Box 366, Carrboro, NC 27510-0366 — ORANGE WATER AND SEWER AUTHORITY — USE WITH THE OWASA STANDARD SPECIFICATIONS ONLY — Voice (919) 968-4421, FAX (919) 968-4464, www.owasa.org

SANITARY SEWER BEDDING DETAIL

SCALE:	DETAIL #
Not To Scale	531.03
REVISION DATE:	SHEET #
August 15, 2003	of

Details Provided by APPIAN Consulting Engineers - WWW.APPIANENGINEERS.COM 04/06/2010 - 4:59:13 PM

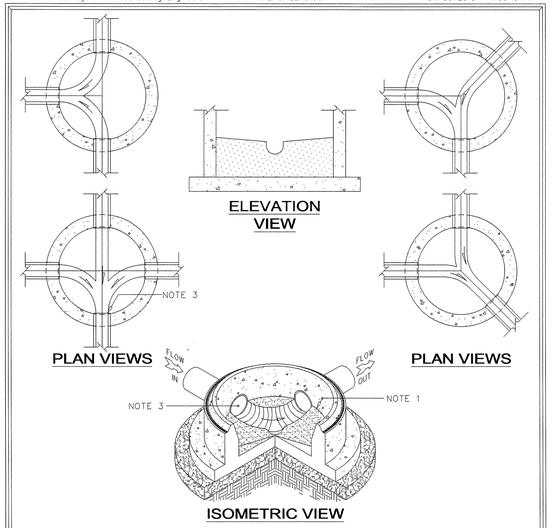

NOTES:

1. Benches shall be sloped at 1/2 inch per foot (4 percent). Inverts shall be 3/4 the height of crown for outlet pipe and uniformly shaped to match outlet pipe.
2. Precast inverts are not permitted.
3. Radius of invert must have enough room to be able to insert air plugs and TV equipment.

OWASA Quality Service Since 1977 — 400 Jones Ferry Road, PO Box 366, Carrboro, NC 27510-0366 — ORANGE WATER AND SEWER AUTHORITY — USE WITH THE OWASA STANDARD SPECIFICATIONS ONLY — Voice (919) 968-4421, FAX (919) 968-4464, www.owasa.org

STANDARD SEWER INVERT PLANS FOR MANHOLE

SCALE:	DETAIL #
Not To Scale	≥ 532.02
REVISION DATE:	SHEET #
December 4, 2009	1 of 1

Details Provided by APPIAN Consulting Engineers - WWW.APPIANENGINEERS.COM 04/07/2010 - 9:05:16 AM

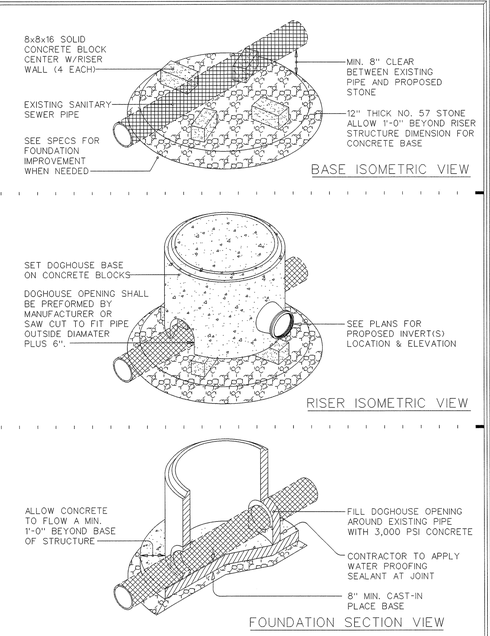

OWASA Quality Service Since 1977 — 400 Jones Ferry Road, PO Box 366, Carrboro, NC 27510-0366 — ORANGE WATER AND SEWER AUTHORITY — USE WITH THE OWASA STANDARD SPECIFICATIONS ONLY — Voice (919) 968-4421, FAX (919) 968-4464, www.owasa.org

PRECAST CONCRETE DOGHOUSE MANHOLE

SCALE:	DETAIL #
Not To Scale	≥ 532.08
REVISION DATE:	SHEET #
April 13, 2007	1 of 2

Details Provided by APPIAN Consulting Engineers - WWW.APPIANENGINEERS.COM 04/07/2010 - 9:06:26 AM

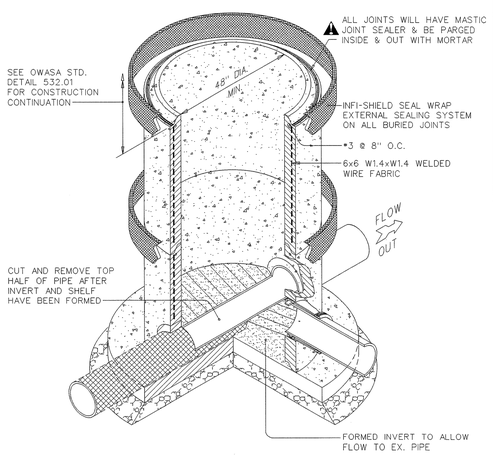

NOTES:

1. All service laterals into manhole to be core drilled and booted.
2. Maximum depth 4' dia. manhole = 10' (see specifications). Use 5' dia. manhole for depth greater than 10'.

OWASA Quality Service Since 1977 — 400 Jones Ferry Road, PO Box 366, Carrboro, NC 27510-0366 — ORANGE WATER AND SEWER AUTHORITY — USE WITH THE OWASA STANDARD SPECIFICATIONS ONLY — Voice (919) 968-4421, FAX (919) 968-4464, www.owasa.org

PRECAST CONCRETE DOGHOUSE MANHOLE

SCALE:	DETAIL #
Not To Scale	≥ 532.08
REVISION DATE:	SHEET #
April 13, 2007	2 of 2

Details Provided by APPIAN Consulting Engineers - WWW.APPIANENGINEERS.COM 04/06/2010 - 5:00:46 PM

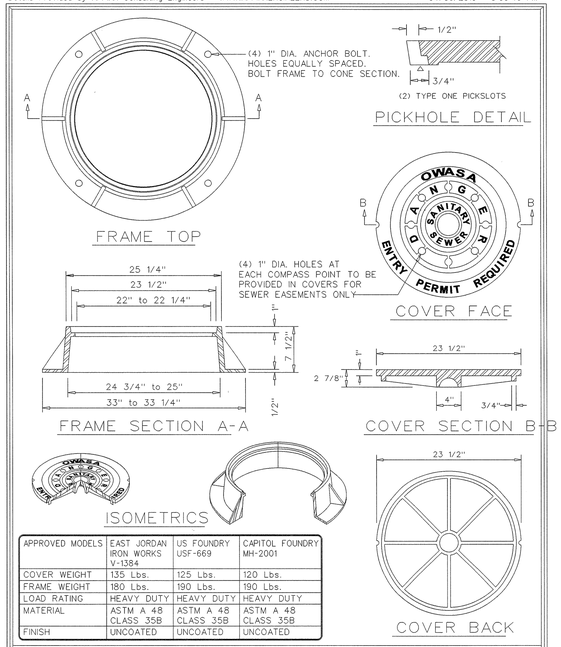

APPROVED MODELS	EAST JORDAN IRON WORKS V-1384	US FOUNDRY USF-669	CAPITOL FOUNDRY MH-2001
COVER WEIGHT	135 Lbs.	125 Lbs.	120 Lbs.
FRAME WEIGHT	180 Lbs.	190 Lbs.	190 Lbs.
LOAD RATING	HEAVY DUTY	HEAVY DUTY	HEAVY DUTY
MATERIAL	ASTM A 48 CLASS 35B	ASTM A 48 CLASS 35B	ASTM A 48 CLASS 35B
FINISH	UNCOATED	UNCOATED	UNCOATED

OWASA Quality Service Since 1977 — 400 Jones Ferry Road, PO Box 366, Carrboro, NC 27510-0366 — ORANGE WATER AND SEWER AUTHORITY — USE WITH THE OWASA STANDARD SPECIFICATIONS ONLY — Voice (919) 968-4421, FAX (919) 968-4464, www.owasa.org

SANITARY SEWER MANHOLE FRAME and COVER

SCALE:	DETAIL #
Not To Scale	≥ 533.01
REVISION DATE:	SHEET #
April 13, 2007	1 of 1

Details Provided by APPIAN Consulting Engineers - WWW.APPIANENGINEERS.COM 04/06/2010 - 5:02:26 PM

US FOUNDRY 7610 FC or CAPITOL FOUNDRY VB-9 BY-PASS VALVE BOX ITEM NUMBER VB-9*S	
MATERIAL SPECIFICATION	COATING
GRAY IRON ASTM A48 CLASS 30	BITUMEN

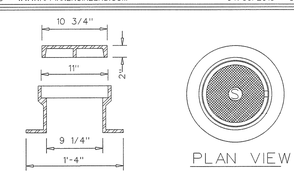

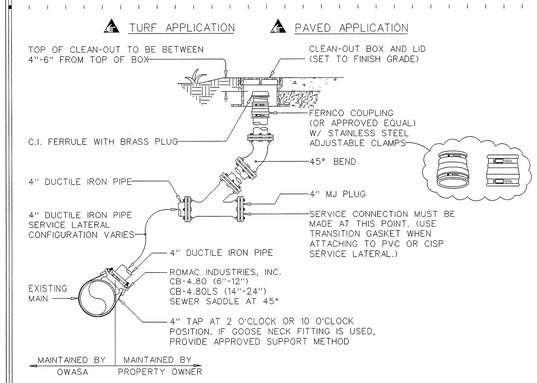

NOTES:

1. This detail depicts a typical layout. Variations may be approved.
2. Service saddles may be used only on existing sewer mains. Tees / Wyes shall be used for new construction.

OWASA Quality Service Since 1977 — 400 Jones Ferry Road, PO Box 366, Carrboro, NC 27510-0366 — ORANGE WATER AND SEWER AUTHORITY — USE WITH THE OWASA STANDARD SPECIFICATIONS ONLY — Voice (919) 968-4421, FAX (919) 968-4464, www.owasa.org

4" SEWER TAP and STUB-OUT PAVED APPLICATION CLEAN OUT

SCALE:	DETAIL #
Not To Scale	≥ 534.01
REVISION DATE:	SHEET #
April 13, 2007	1 of 1

5/14/99
24-OCT-2012 13:35
$:\Utilities\Utl_Prj\u2803_ut_details_uc3_.dgn
$DEBAME$:$DEBAME$

PROJECT REFERENCE NO.	SHEET NO.
U-2803	UC-3D

DESIGNED BY: JAN	
DRAWN BY: JAN	
CHECKED BY: JSM	
APPROVED BY: JSM	
REVISED:	
NORTH CAROLINA DEPARTMENT OF TRANSPORTATION	
UTILITIES ENGINEERING SEC. PHONE:(919)250-4128 FAX:(919)250-4119	UTILITY CONSTRUCTION PLANS ONLY

NORTH CAROLINA PROFESSIONAL SEAL 6832 ENGINEER JAMES S. MCKEE

UTILITY CONSTRUCTION

Details Provided by APPIAN Consulting Engineers – WWW.APPIANENGINEERS.COM

RText (RText)

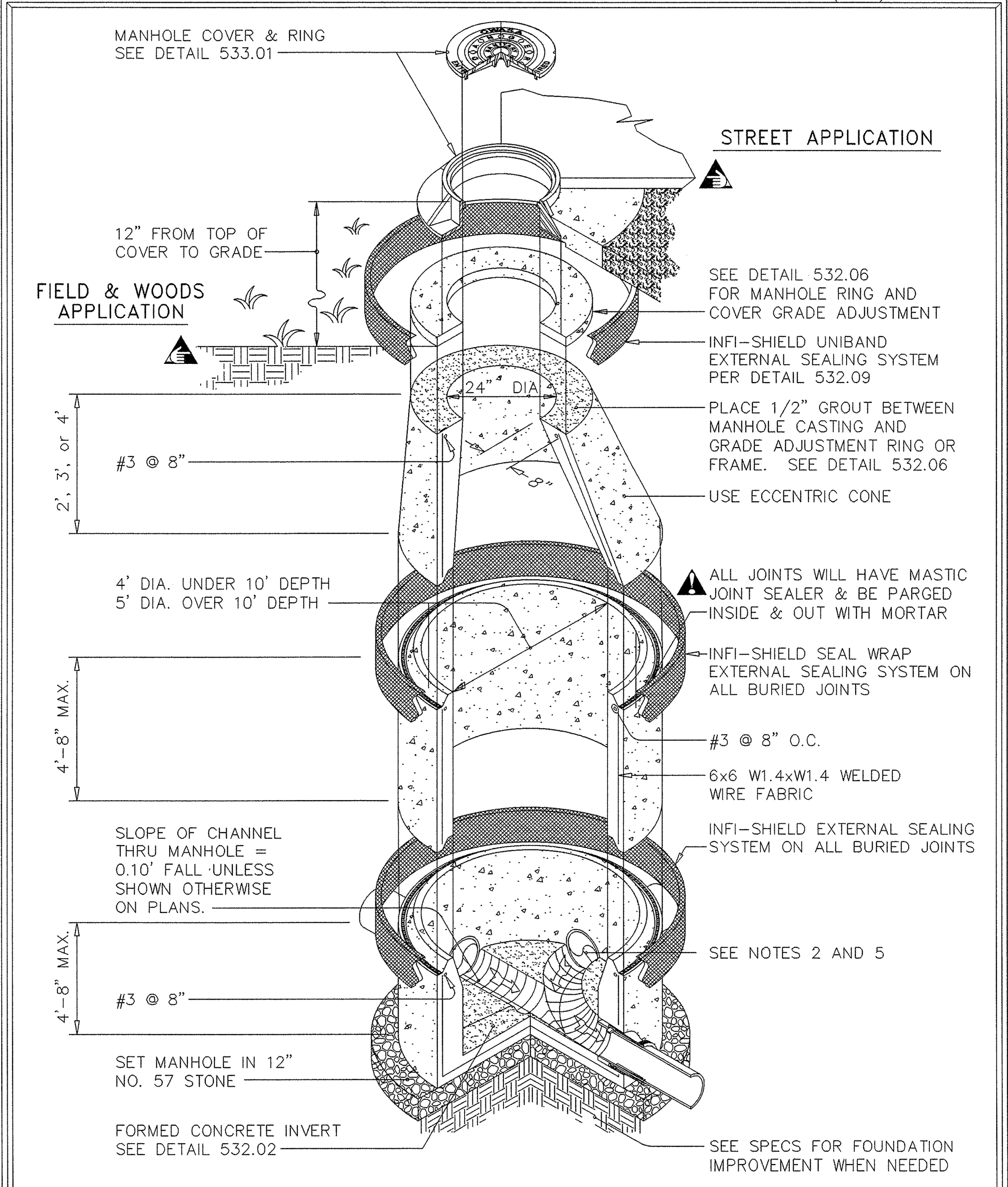

OWASA Quality Service Since 1977 | 400 Jones Ferry Road PO Box 366 Carrboro, NC 27510-0366 | **ORANGE WATER AND SEWER AUTHORITY** | Voice (919) 968-4421 FAX (919) 968-4464 www.owasa.org | USE WITH THE OWASA STANDARD SPECIFICATIONS ONLY

STANDARD ECCENTRIC MANHOLE DETAIL

SCALE: Not To Scale | DETAIL #: 532.01 | REVISION DATE: April 13, 2007 | SHEET #: 1 of 2

Details Provided by APPIAN Consulting Engineers – WWW.APPIANENGINEERS.COM

RText (RText)

PART	MANUFACTURER MODEL / Cat. No.
SLEEVE BOOTS	KOR-N-SEAL or PSX

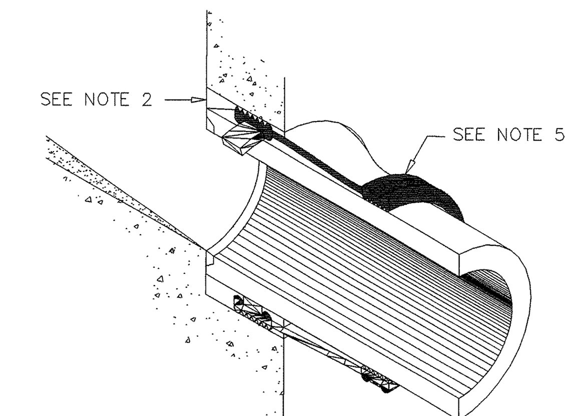

NOTES:

1. Concrete strength to be 4,000 PSI minimum.
2. Pipes will be grouted inside and out.
3. Joints will have mastic joint sealer and be parged inside and out with mortar.
4. Reinforcement design to conform to the requirements of ASTM C478.
5. Flexible sleeve boots cast in place or installed with stainless steel expander rings as manufactured by Kor-N-Seal or PSX shall be used for pipe connections. Boots shall be secured to pipe using (2) stainless steel bands. Precast inverts will not be accepted, unless otherwise directed by OWASA's inspectors.

OWASA Quality Service Since 1977 | 400 Jones Ferry Road PO Box 366 Carrboro, NC 27510-0366 | **ORANGE WATER AND SEWER AUTHORITY** | Voice (919) 968-4421 FAX (919) 968-4464 www.owasa.org | USE WITH THE OWASA STANDARD SPECIFICATIONS ONLY

STANDARD ECCENTRIC MANHOLE DETAIL

SCALE: Not To Scale | DETAIL #: 532.01 | REVISION DATE: April 13, 2007 | SHEET #: 2 of 2

Details Provided by APPIAN Consulting Engineers – WWW.APPIANENGINEERS.COM

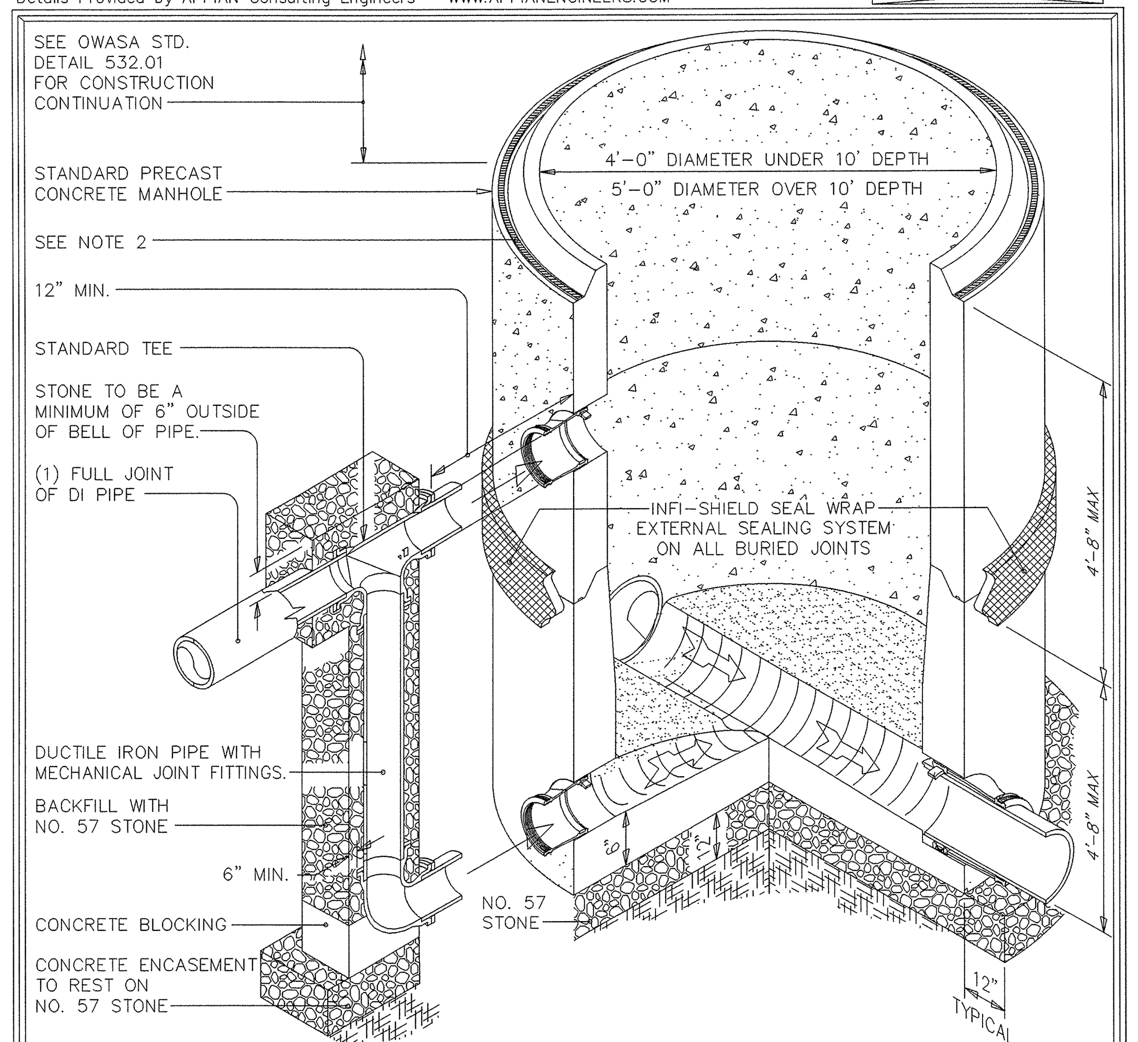

NOTES:

1. Concrete to be minimum 4,000 PSI.
2. Concrete casting joints shall have 2 rings of flexible butyl resin seal installed.
3. Flexible sleeve boots cast in place or installed with stainless steel expander rings as manufactored by KOR-N-SEAL or PSX shall be used for pipe connections. Boots shall be secured to pipe using two (2) stainless steel bands. Precast inverts will not be accepted.
4. Inside drops are not approved for the OWASA wastewater collection system.
5. This detail is applicable for services and for drop connections to existing brick manholes.
6. An outside drop must be a minimum of 18" in length.

OWASA Quality Service Since 1977 | 400 Jones Ferry Road PO Box 366 Carrboro, NC 27510-0366 | **ORANGE WATER AND SEWER AUTHORITY** | Voice (919) 968-4421 FAX (919) 968-4464 www.owasa.org | USE WITH THE OWASA STANDARD SPECIFICATIONS ONLY

STANDARD OUTSIDE DROP MANHOLE DETAIL

SCALE: Not To Scale | DETAIL #: 532.03 | REVISION DATE: December 3, 2009 | SHEET #: 1 of 1

Details Provided by OWASA Engineers – WWW.OWASA.ORG

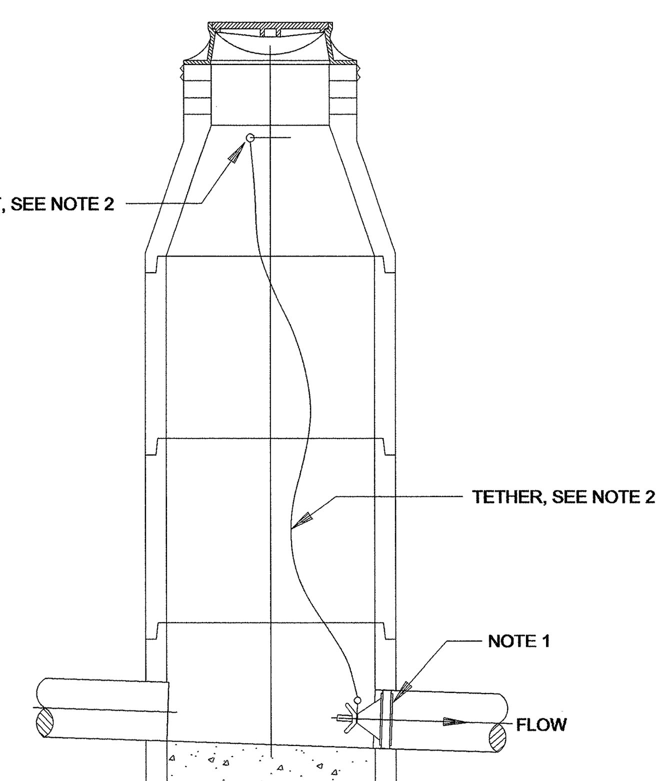

NOTES:

1. PIPE PLUG SHALL BE A "CHERNE" IRON-GRIP BY-PASS STYLE MECHANICAL PLUG OR APPROVED EQUAL.
2. PIPE PLUG SHALL BE TETHERED TO THE MANHOLE TOP STEP OR OTHER PERMANENT ANCHOR POINT WITH A CORROSION AND ABRASION RESISTANT STAINLESS STEEL CABLE. ATTACHED TO THE CABLE SHALL BE A CORROSION RESISTANT METAL TAG WITH THE PLUG OWNERS NAME, ADDRESS AND 24-HOUR CONTACT INFORMATION.

OWASA Quality Service Since 1977 | 400 Jones Ferry Road PO Box 366 Carrboro, NC 27510-0366 | **ORANGE WATER AND SEWER AUTHORITY** | Voice (919) 968-4421 FAX (919) 968-4464 www.owasa.org | USE WITH THE OWASA STANDARD SPECIFICATIONS ONLY

SANITARY SEWER MANHOLE PLUGGING DETAIL

SCALE: Not To Scale | DETAIL #: 532.04 | REVISION DATE: February 28, 2005 | SHEET #: 2 of 2

Details Provided by OWASA Engineers – WWW.OWASA.ORG

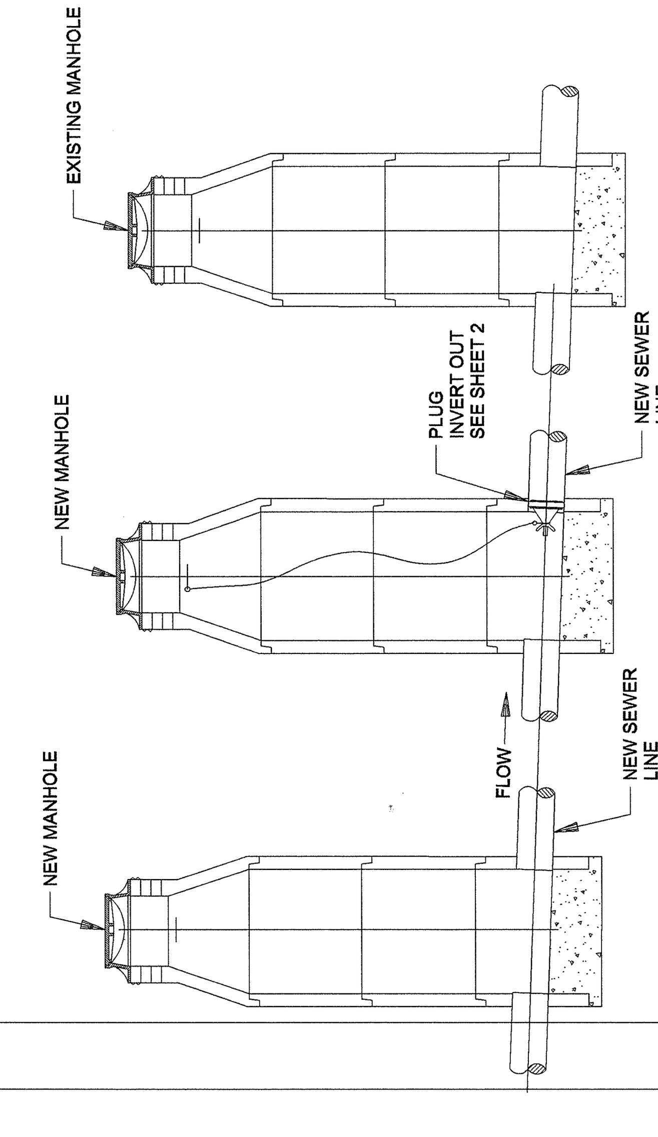

NOTES:

1. PRIOR TO OWASA ACCEPTANCE, ALL NEW SEWER LINES SHALL BE ISOLATED FROM EXISTING PARTS OF THE SYSTEM BY MEANS OF A MECHANICAL PLUG. SEE SHEET 2 FOR PLUGGING DETAILS.

OWASA Quality Service Since 1977 | 400 Jones Ferry Road PO Box 366 Carrboro, NC 27510-0366 | **ORANGE WATER AND SEWER AUTHORITY** | Voice (919) 968-4421 FAX (919) 968-4464 www.owasa.org | USE WITH THE OWASA STANDARD SPECIFICATIONS ONLY

SANITARY SEWER MANHOLE PLUGGING DETAIL

SCALE: Not To Scale | DETAIL #: 532.04 | REVISION DATE: February 28, 2005 | SHEET #: 1 of 2

Details Provided by APPIAN Consulting Engineers – WWW.APPIANENGINEERS.COM

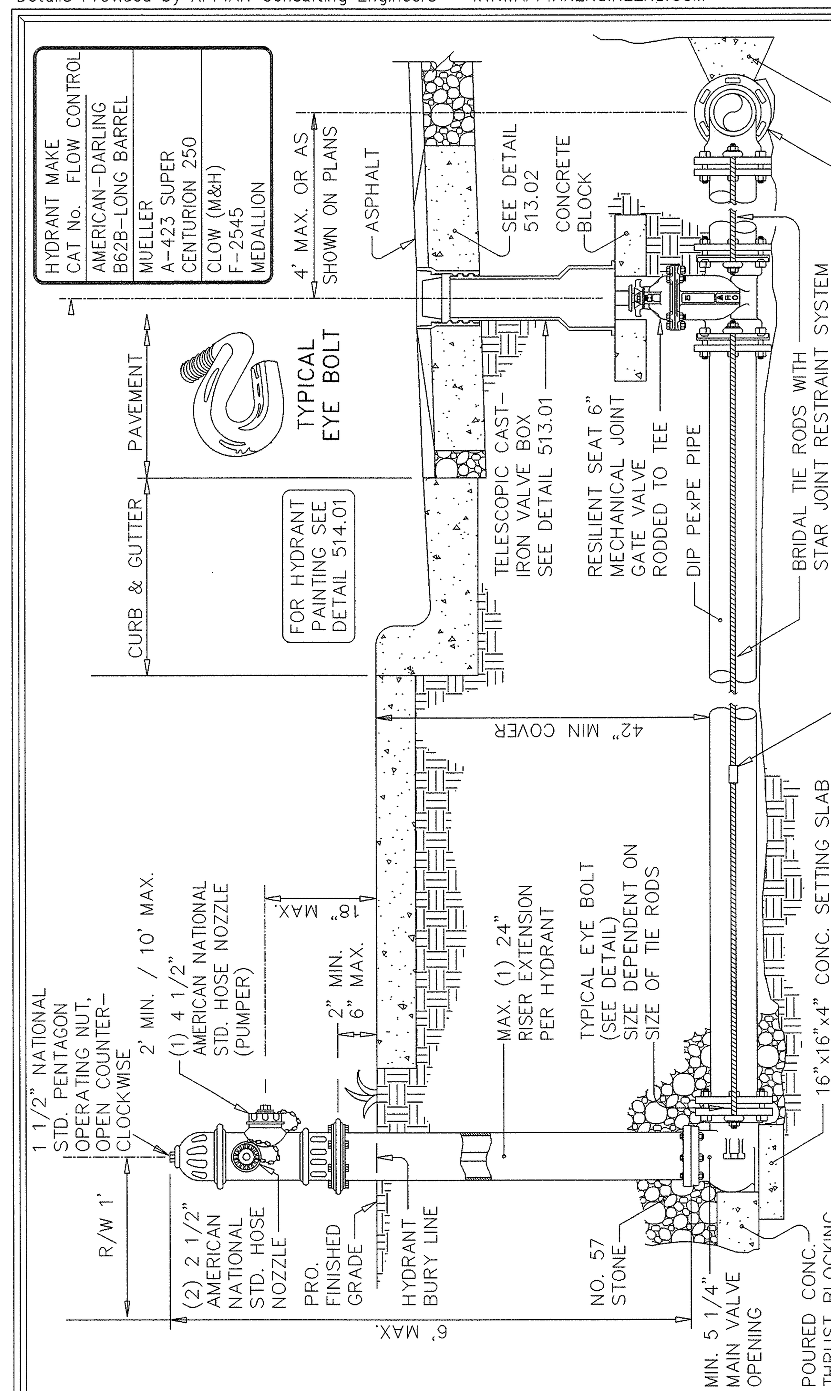

NOTES:

1. Wedge action restrainer gland joint restraints are preferred, and may be used with tie rods.
2. Hydrants to be placed with pumper nozzle facing the street or as otherwise directed by OWASA.
3. When valve box is placed outside of pavement, provide concrete stabilization pad. (detail 513.02)
4. Minimum of (2) 3/4" diameter rods w/standard coating.
5. Where hydrant is set behind guardrail, centerline of pumper nozzle tobe a minimum of 12" and a maximum of 18" above top of guardrail. Center of hydrant to be a minimum of 3 feet from guardrail.
6. Fire hydrant to be oiled & greased and cap to be sprayed (Non-petroleum – based) after installation.
7. Do not locate hydrants in sidewalks or block pedestrian flow.

OWASA Quality Service Since 1977 | 400 Jones Ferry Road PO Box 366 Carrboro, NC 27510-0366 | **ORANGE WATER AND SEWER AUTHORITY** | Voice (919) 968-4421 FAX (919) 968-4464 www.owasa.org | USE WITH THE OWASA STANDARD SPECIFICATIONS ONLY

TYPICAL RODDED FIRE HYDRANT STREETS with CURB & GUTTER

SCALE: Not To Scale | DETAIL #: 514.03 | REVISION DATE: December 3, 2009 | SHEET #: 1 of 2

Details Provided by APPIAN Consulting Engineers – WWW.APPIANENGINEERS.COM

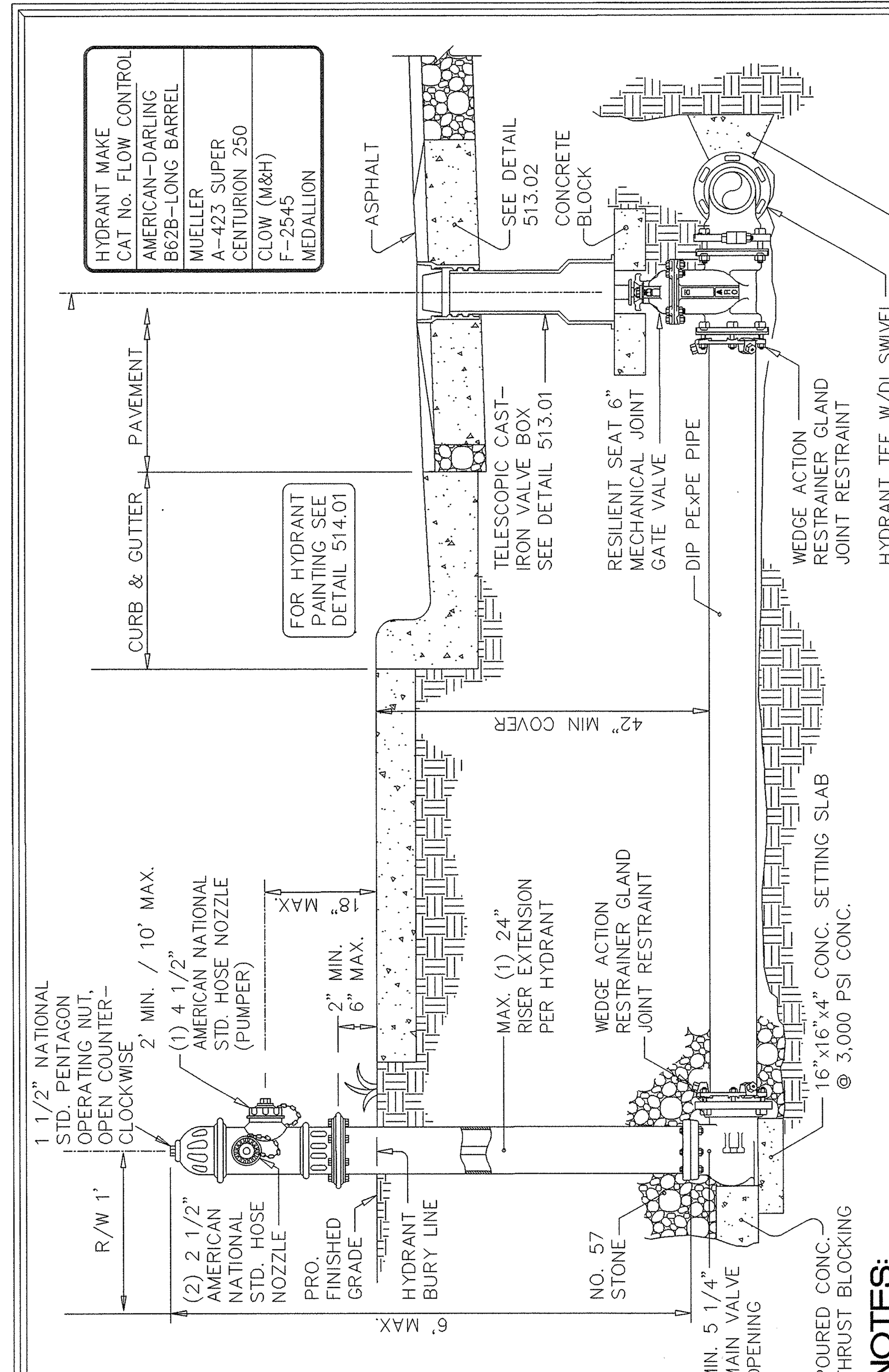

NOTES:

1. Omitted
2. Hydrants to be placed with pumper nozzle facing the street or as otherwise directed by OWASA.
3. When valve box is placed outside of pavement, provide concrete stabilization pad. (detail 513.02)
4. Omitted
5. Where hydrant is set behind guardrail, centerline of pumper nozzle to be a minimum of 12" and a maximum of 18" above top of guardrail. Center of hydrant to be a minimum of 3 feet from guardrail.
6. Fire hydrant to be oiled & greased and cap to be sprayed (Non-petroleum – based) after installation.
7. Do not locate hydrants in sidewalks or block pedestrian flow.

OWASA Quality Service Since 1977 | 400 Jones Ferry Road PO Box 366 Carrboro, NC 27510-0366 | **ORANGE WATER AND SEWER AUTHORITY** | Voice (919) 968-4421 FAX (919) 968-4464 www.owasa.org | USE WITH THE OWASA STANDARD SPECIFICATIONS ONLY

TYP. RESTRAINED JT. FIRE HYDRANT STREETS with CURB & GUTTER

SCALE: Not To Scale | DETAIL #: 514.03 | REVISION DATE: December 3, 2009 | SHEET #: 2 of 2

5/14/99

24-OCT-2012 13:37 R:\Utilities\Rdu_Ut\Proj\u2803_ut_details_uc3.dgn $$$$USERNAME$$$$

PROJECT REFERENCE NO.	SHEET NO.
U-2803	UC-4
DESIGNED BY: JAN	
DRAWN BY: JAN	
CHECKED BY: JSM	
APPROVED BY: JSM	
REVISED:	
NORTH CAROLINA DEPARTMENT OF TRANSPORTATION	
UTILITIES ENGINEERING SEC. PHONE:(919)707-6690 FAX:(919)250-4119	UTILITY CONSTRUCTION PLANS ONLY

NORTH CAROLINA PROFESSIONAL SEAL 6832 ENGINEER JAMES S. MCKEE 10/24/12

UTILITY CONSTRUCTION

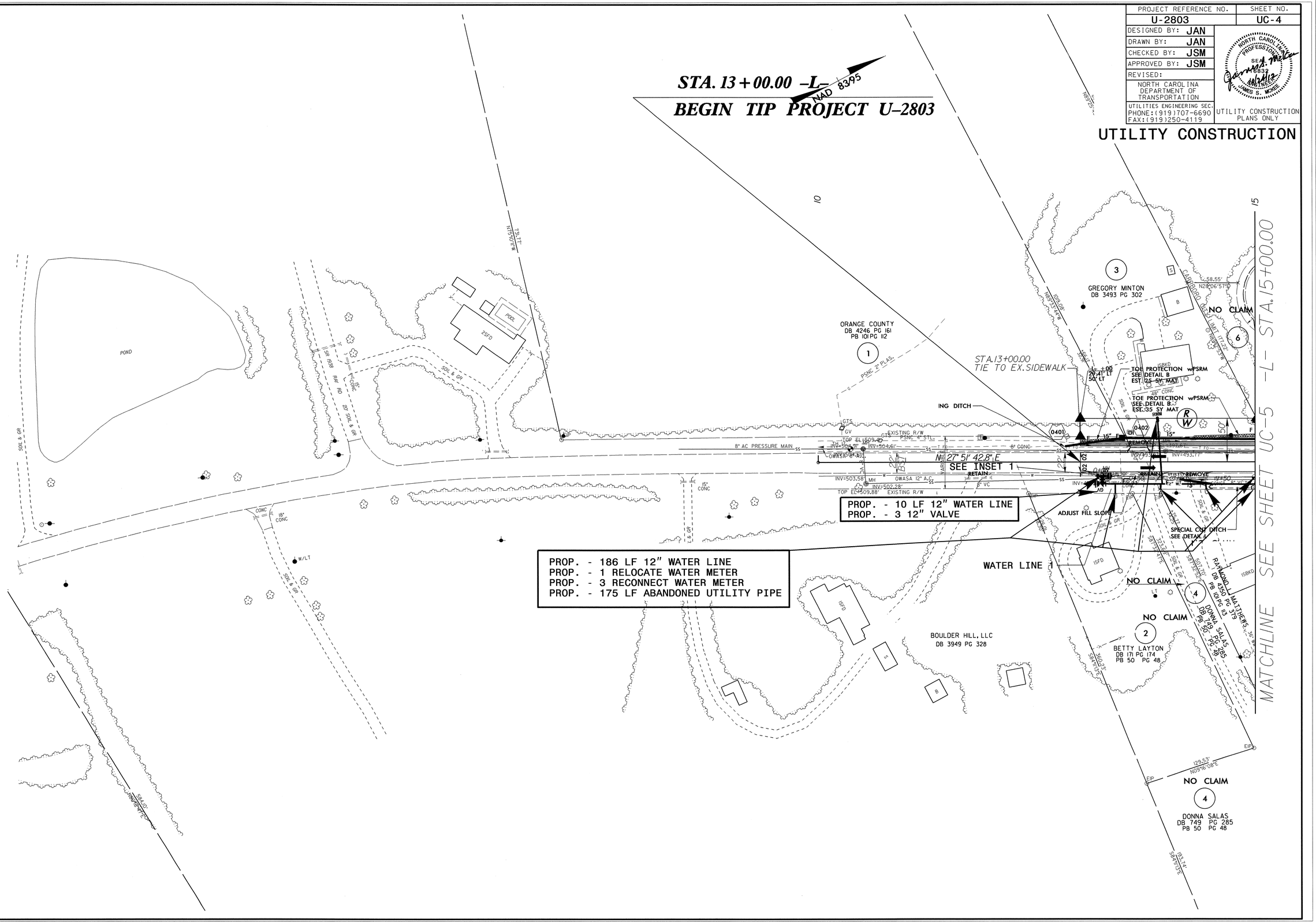

5/14/99

R:\Utilities\Projects\U2803_Ut_4\UC4_psh.dgn
24-OCT-2012 13:41

PROJECT REFERENCE NO.	SHEET NO.
U-2803	UC-5

DESIGNED BY: JAN
DRAWN BY: JAN
CHECKED BY: JSM
APPROVED BY: JSM
REVISED:

NORTH CAROLINA DEPARTMENT OF TRANSPORTATION
UTILITIES ENGINEERING SEC.
PHONE:(919)707-6690
FAX:(919)250-4119

NORTH CAROLINA PROFESSIONAL SEAL ENGINEER JAMES S. MCKEE 10/24/12

UTILITY CONSTRUCTION PLANS ONLY

UTILITY CONSTRUCTION

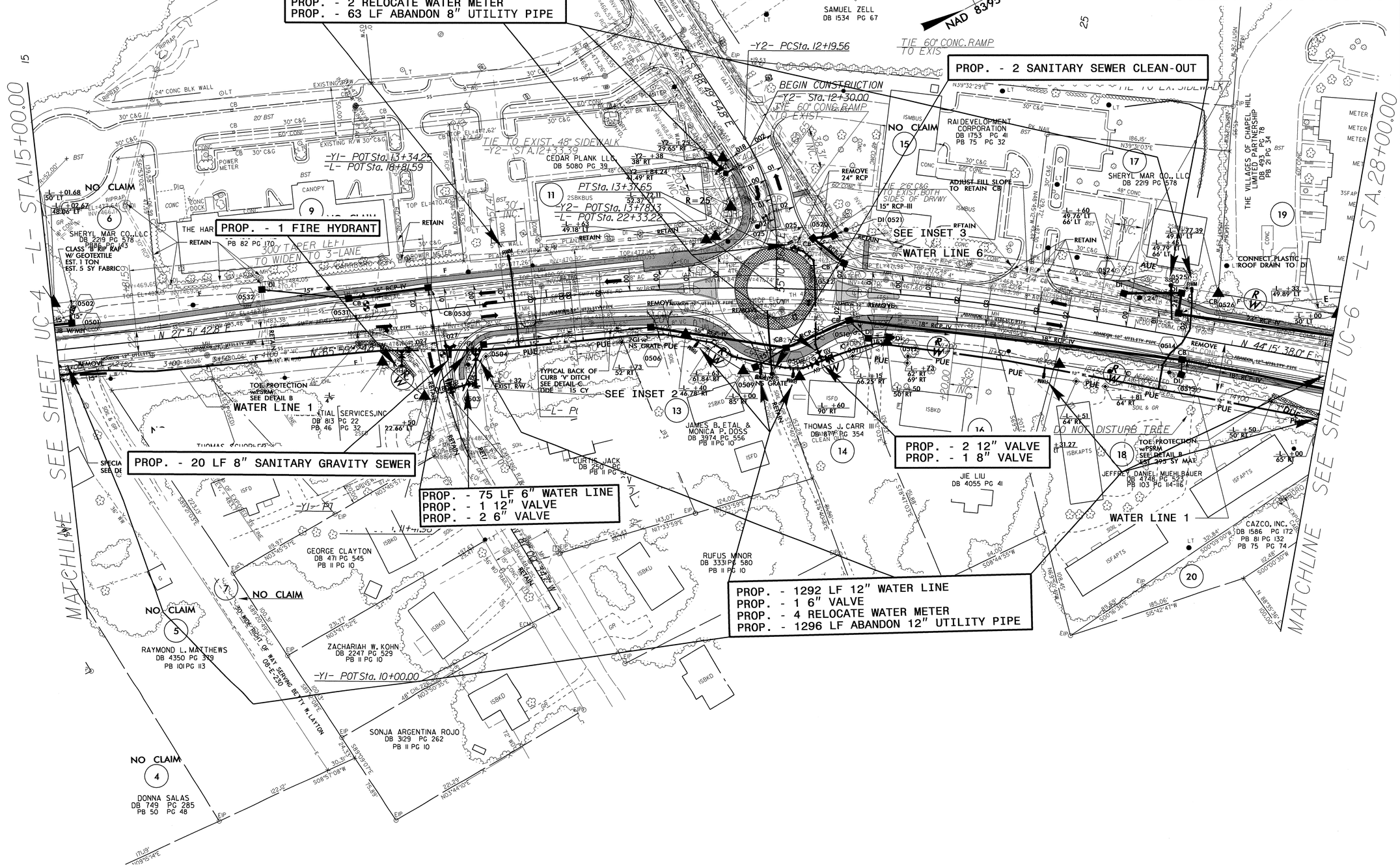

PROJECT REFERENCE NO.	SHEET NO.
U-2803	UC-6
DESIGNED BY: JAN	
DRAWN BY: JAN	
CHECKED BY: JSM	
APPROVED BY: JSM	
REVISED:	
NORTH CAROLINA DEPARTMENT OF TRANSPORTATION	
UTILITIES ENGINEERING SEC. PHONE:(919)707-6690 FAX:(919)250-4119	UTILITY CONSTRUCTION PLANS ONLY

NORTH CAROLINA PROFESSIONAL SEAL 16833 ENGINEER JAMES S. MCKEE 10/24/12

UTILITY CONSTRUCTION

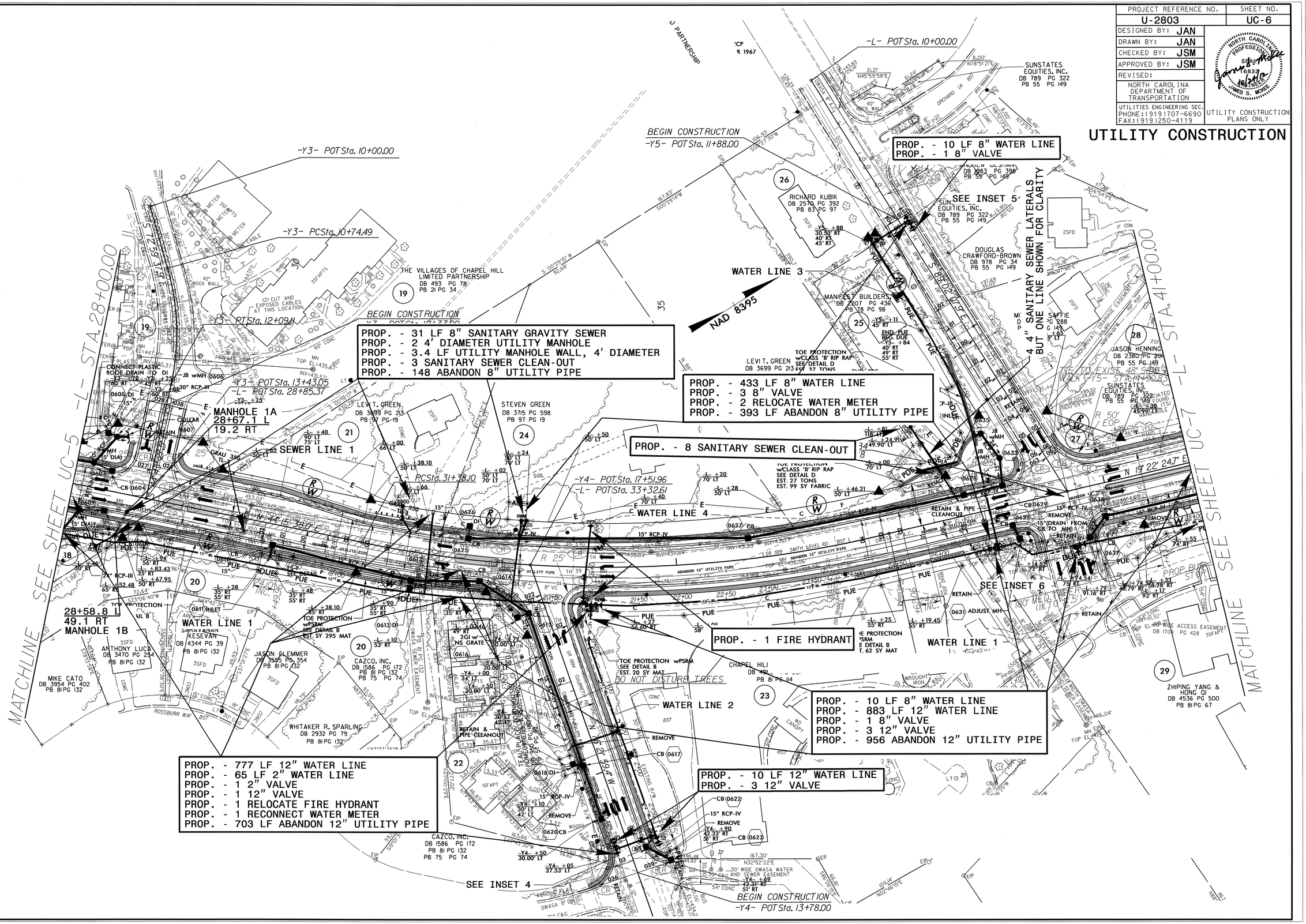

24-OCT-2012 13:43
R:\Utilities\Projects\U2803_Jan\U2803_Utl_6_UC6_psh.dgn

PROJECT REFERENCE NO.	SHEET NO.
U 2803	UC-7
DESIGNED BY: JAN	
DRAWN BY: JAN	
CHECKED BY: JSM	
APPROVED BY: JSM	
REVISED:	
NORTH CAROLINA DEPARTMENT OF TRANSPORTATION	
UTILITIES ENGINEERING SEC. PHONE:(919)707-6690 FAX:(919)250-4119	UTILITY CONSTRUCTION PLANS ONLY

NORTH CAROLINA PROFESSIONAL SEAL 16832 ENGINEER JAMES S. MOORE 10/24/12

UTILITY CONSTRUCTION

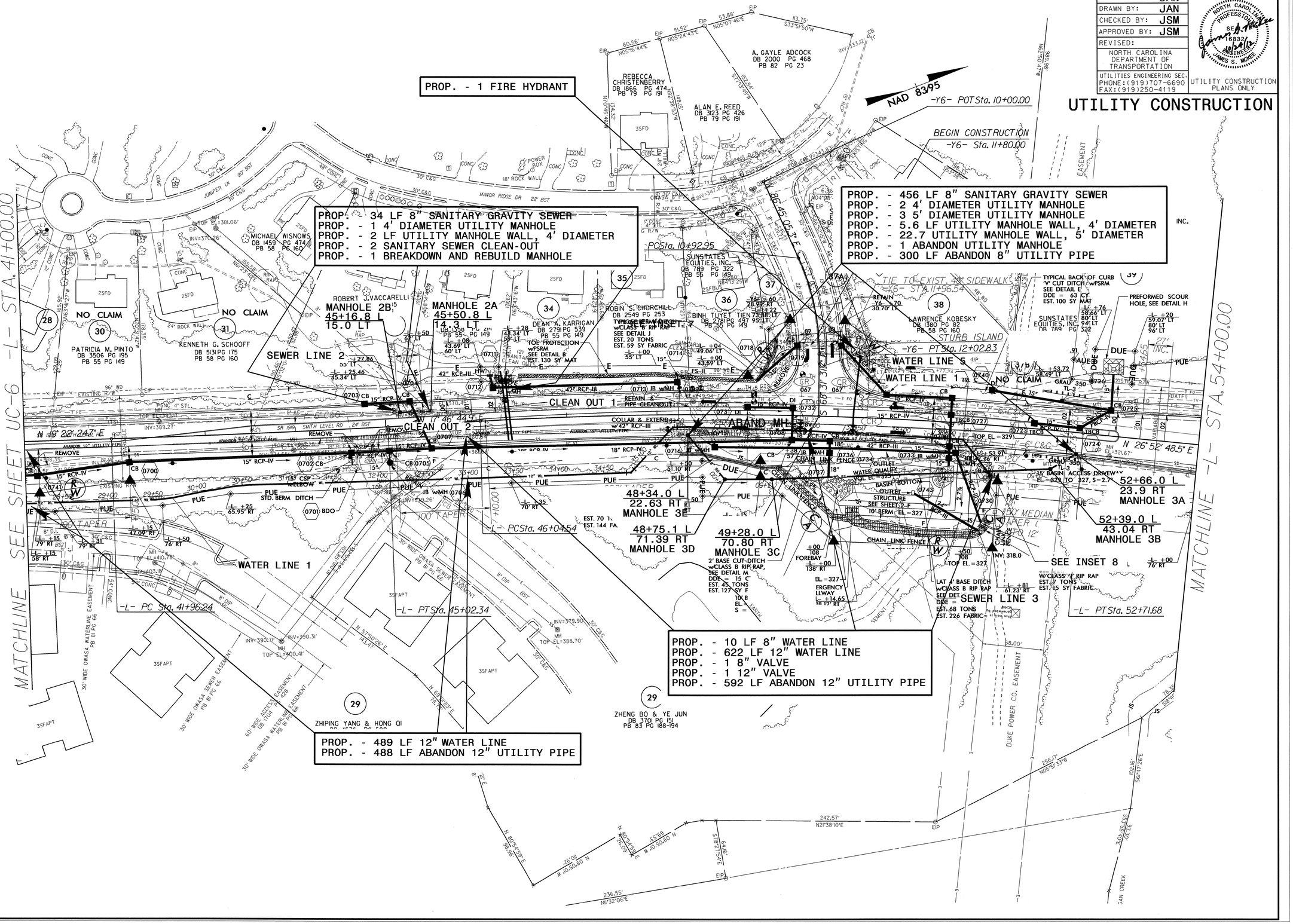

PROJECT REFERENCE NO.	SHEET NO.
U-2803	UC-8

DESIGNED BY: JAN
DRAWN BY: JAN
CHECKED BY: JSM
APPROVED BY: JSM
REVISED:

NORTH CAROLINA DEPARTMENT OF TRANSPORTATION
UTILITIES ENGINEERING SEC.
PHONE:(919)707-6690
FAX:(919)250-4151

NORTH CAROLINA PROFESSIONAL SEAL 16833 ENGINEER JAMES S. MOORE 10/24/12

UTILITY CONSTRUCTION PLANS ONLY

UTILITY CONSTRUCTION

SCALE
HOR 1"=50'
VERT 1"=10'

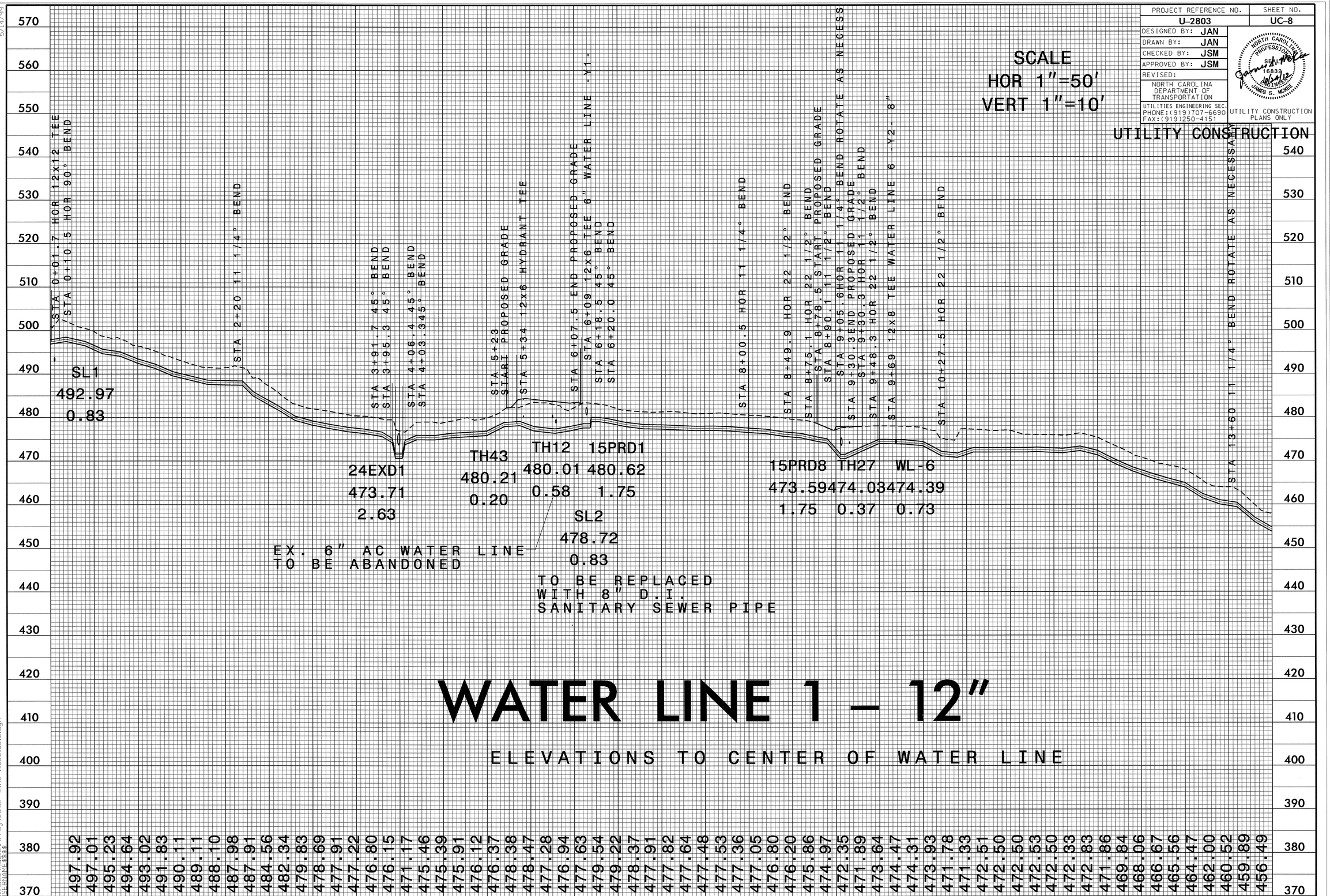

WATER LINE 1 – 12"

ELEVATIONS TO CENTER OF WATER LINE

5/14/99

24-OCT-2012 14:18
R:\Utilities\Utl\Proj\Water Line Luc8.ucl0.dgn
$$$$USERNAME$$$$

PROJECT REFERENCE	NO.	SHEET NO.
U-2803		UC-9

DESIGNED BY: JAN
DRAWN BY: JAN
CHECKED BY: JSM
APPROVED BY: JSM
REVISED:

NORTH CAROLINA DEPARTMENT OF TRANSPORTATION
UTILITIES ENGINEERING SEC.
PHONE:(919)707-6690
FAX:(919)250-4151

NORTH CAROLINA PROFESSIONAL SEAL ENGINEER JAMES S. MOREL 12/04/12

UTILITY CONSTRUCTION PLANS ONLY

UTILITY CONSTRUCTION

SCALE
HOR 1"=50'
VERT 1"=10'

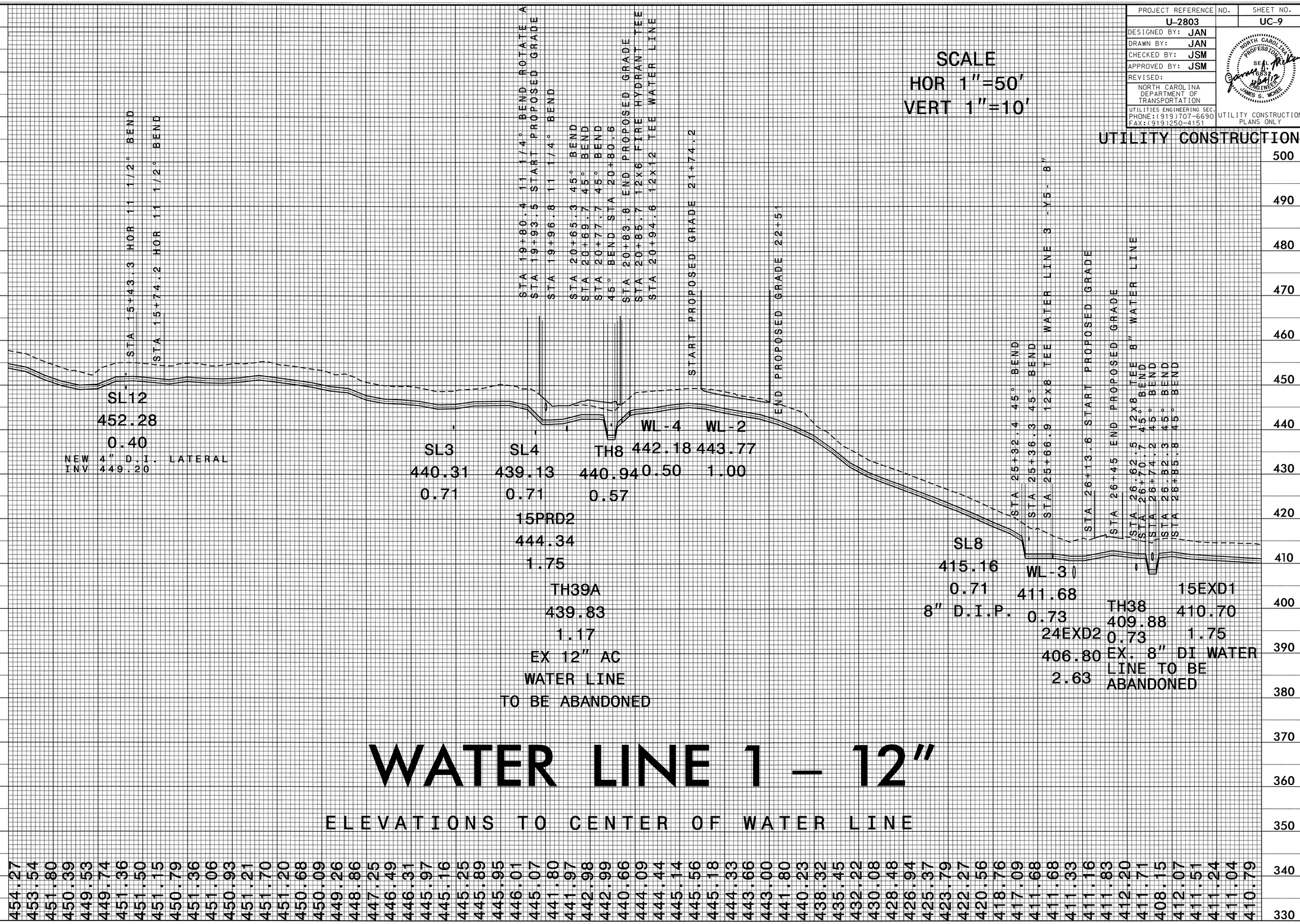

WATER LINE 1 – 12"

ELEVATIONS TO CENTER OF WATER LINE

24-OCT-2012 13:45
R:\Utilities\Rdu\Proj\Water Line 1_uc8_uc10.dgn
$$$$USERNAME$$$$

PROJECT REFERENCE NO.	SHEET NO.
U-2803	UC-10

DESIGNED BY: JAN
DRAWN BY: JAN
CHECKED BY: JSM
APPROVED BY: JSM
REVISED:

NORTH CAROLINA DEPARTMENT OF TRANSPORTATION
UTILITIES ENGINEERING SEC.
PHONE:(919)707-6690
FAX:(919)250-4151

NORTH CAROLINA PROFESSIONAL SEAL 16839 ENGINEER JAMES S. MCKEE 10/24/12

UTILITY CONSTRUCTION PLANS ONLY

UTILITY CONSTRUCTION

SCALE
HOR 1"=50'
VERT 1"=10'

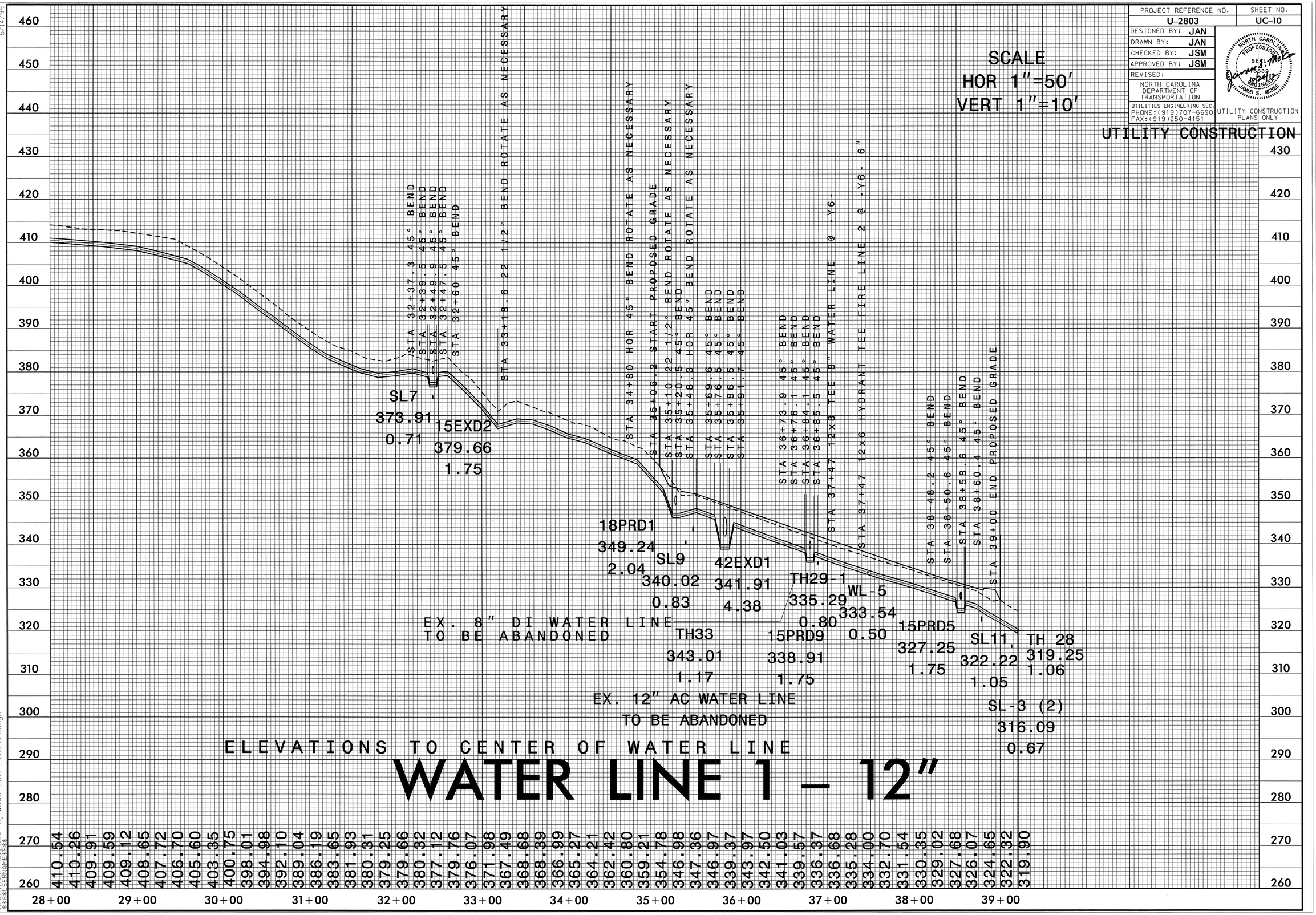

5/14/99

24-OCT-2012 13:46
R:\Utilities\Utils\Proj\Water Line 1_uc8_uc10.dgn
$$$$USERNAME$$$$

PROJECT REFERENCE NO.	SHEET NO.
U-2803	UC-11

DESIGNED BY: JAN
DRAWN BY: JAN
CHECKED BY: JSM
APPROVED BY: JSM
REVISED:

NORTH CAROLINA DEPARTMENT OF TRANSPORTATION
UTILITIES ENGINEERING SEC.

NORTH CAROLINA PROFESSIONAL SEAL 16832 ENGINEER JAMES S. MCKEE

UTILITY CONSTRUCTION PLANS ONLY

UTILITY CONSTRUCTION

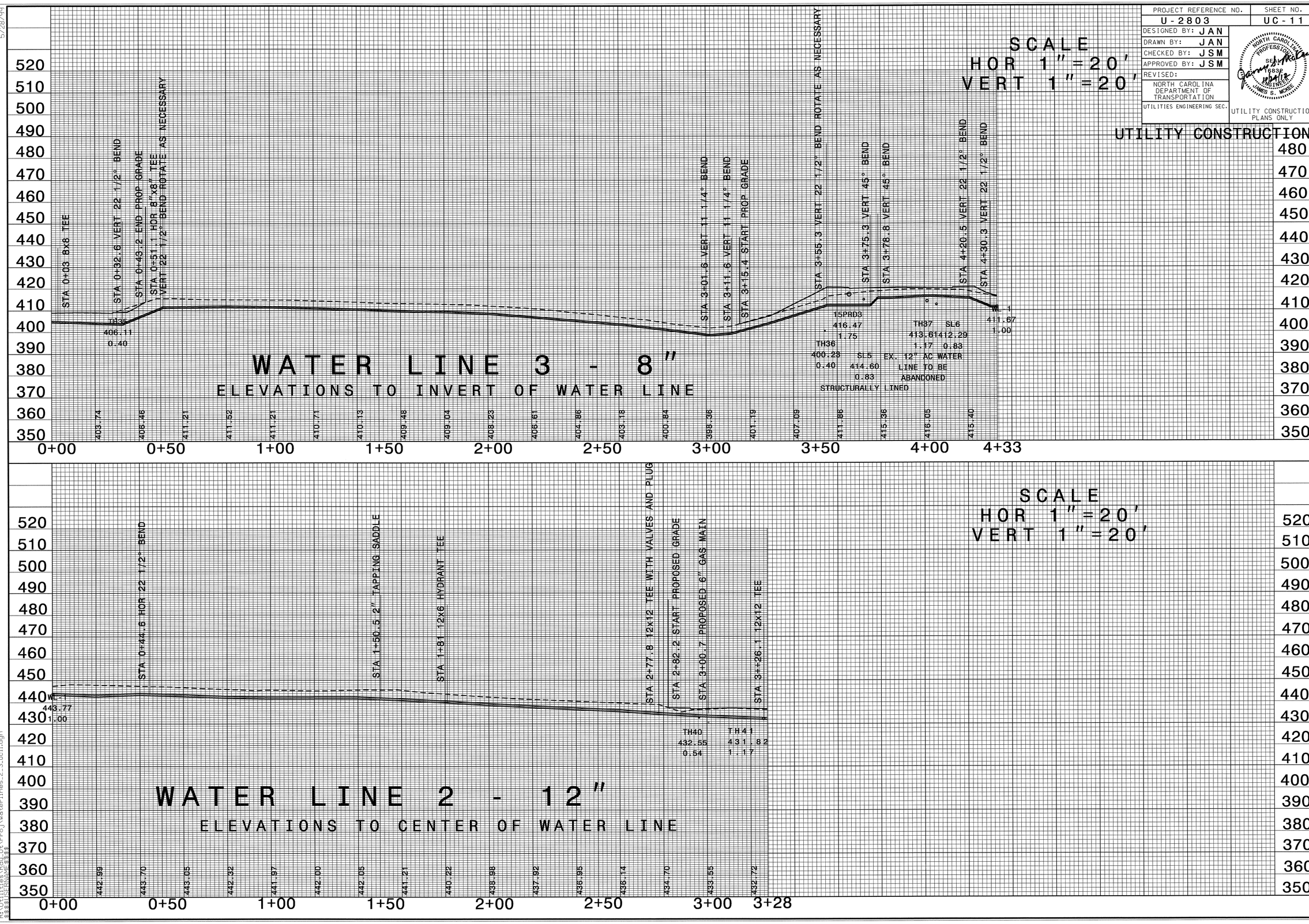

5/28/99

24-OCT-2002 13:47
R:\Utilities\Proj\waterlines_2_3_ucl1.dgn
$$$$USERNAME$$$$

PROJECT REFERENCE NO.	SHEET NO.
U 2803	UC-12

DESIGNED BY: JAN
DRAWN BY: JAN
CHECKED BY: JSM
APPROVED BY: JSM
REVISED:

NORTH CAROLINA DEPARTMENT OF TRANSPORTATION

UTILITIES ENGINEERING SEC.
PHONE:(919)707-6690
FAX:(919)250-4151

UTILITY CONSTRUCTION PLANS ONLY

NORTH CAROLINA PROFESSIONAL SEAL 5832 ENGINEER JAMES S. MCKEE

UTILITY CONSTRUCTION

SCALE
HOR 1"=10'
VERT 1"=10'

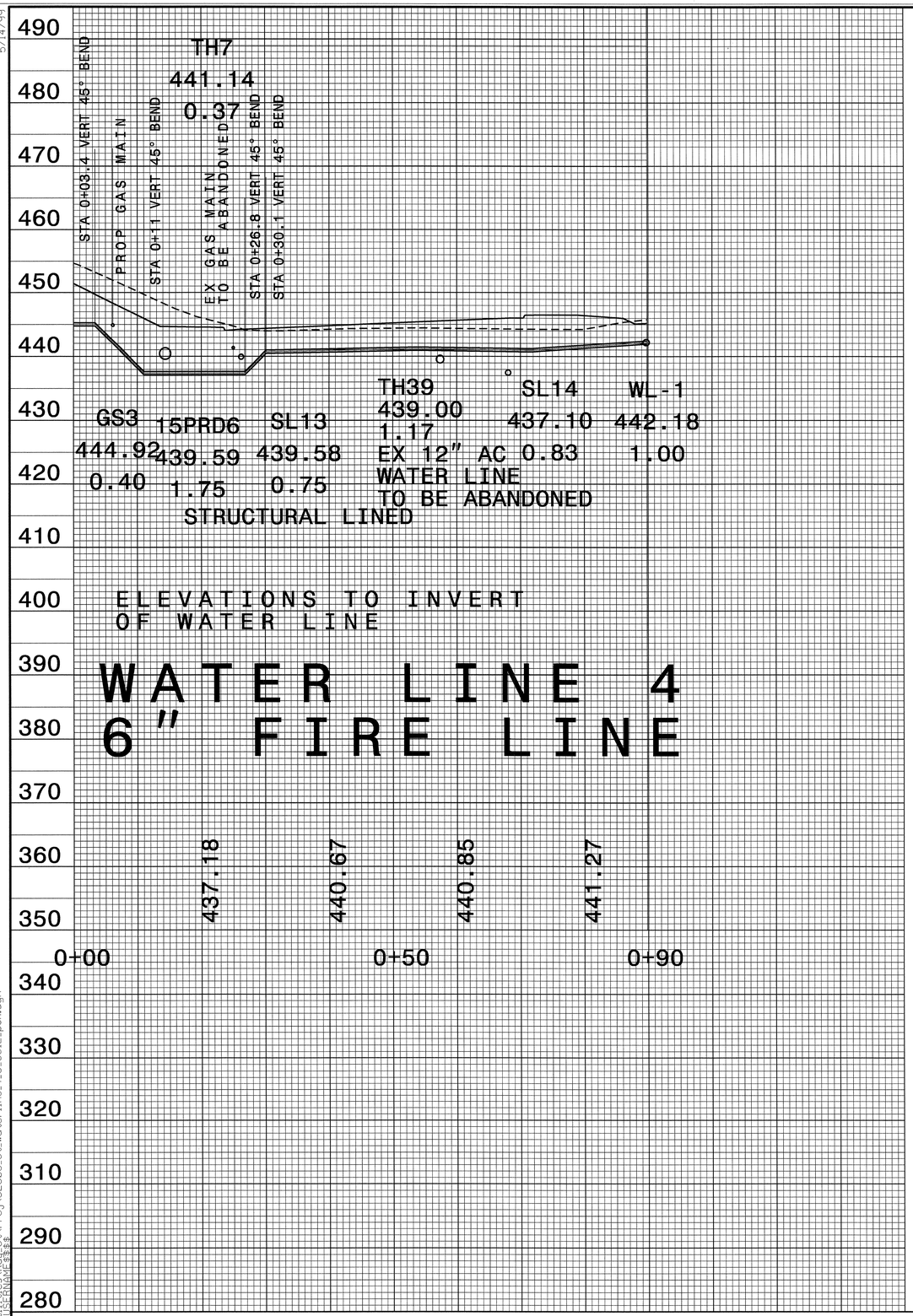

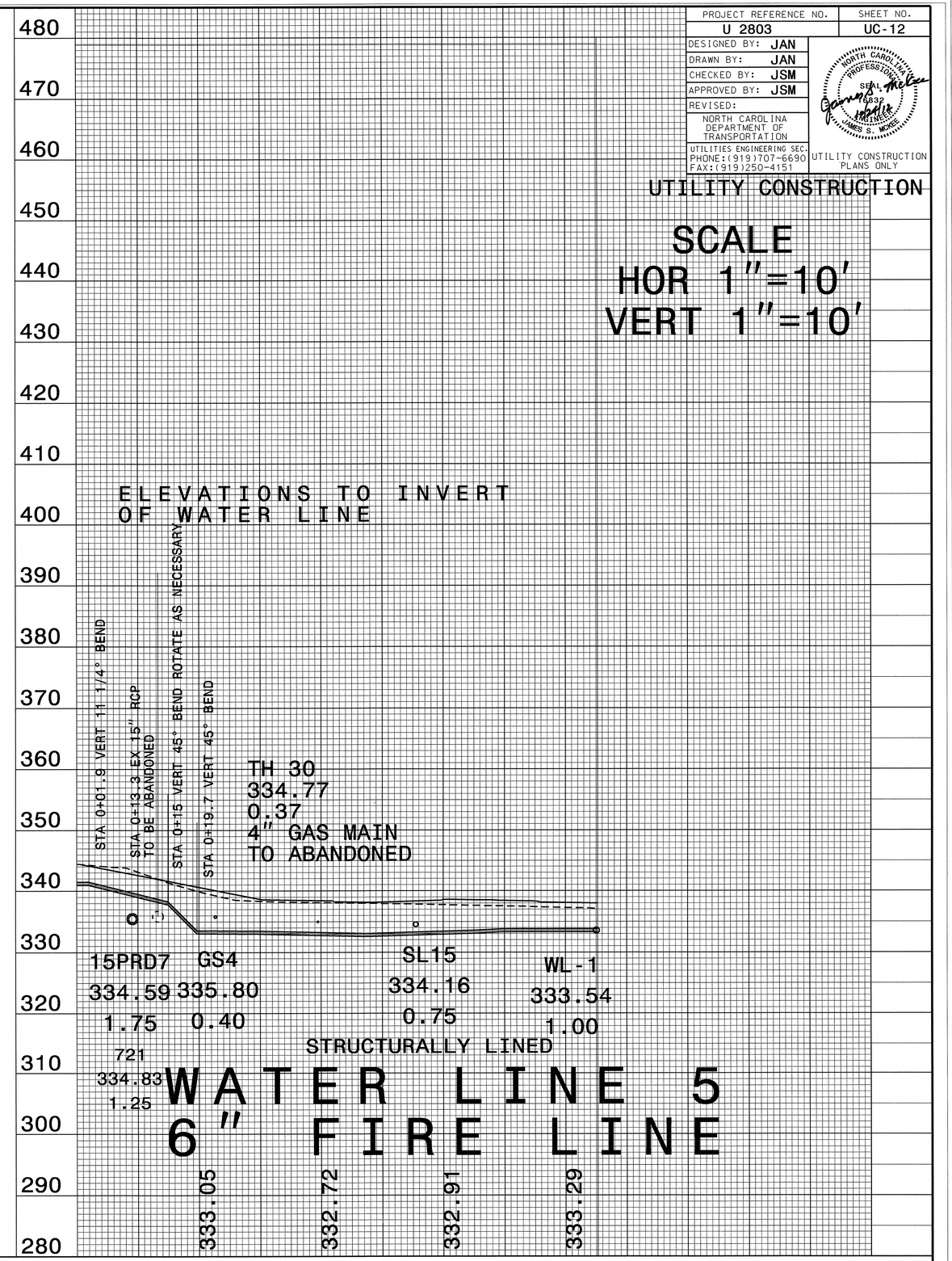

5/14/99

24-OCT-2012 13:47
R:\Utilities\Projects\U2803_Ut_Proj\U2803_Ut_waterline_4_5_UC12_psh.dgn
$$$$USERNAME$$$$

PROJECT REFERENCE NO.	SHEET NO.
U-2803	UC-13

DESIGNED BY: JAN
DRAWN BY: JAN
CHECKED BY: JSM
APPROVED BY: JSM
REVISED:

NORTH CAROLINA DEPARTMENT OF TRANSPORTATION

UTILITIES ENGINEERING SEC.
PHONE:(919)707-6690
FAX:(919)250-4151

NORTH CAROLINA PROFESSIONAL SEAL 5832 ENGINEER JAMES S. MOORE 10/24/12

UTILITY CONSTRUCTION PLANS ONLY

SCALE
HOR 1"=10'
VERT 1"=10'

UTILITY CONSTRUCTION

WATER LINE 6 - 8"

ELEVATIONS TO INVERT
OF WATER LINE

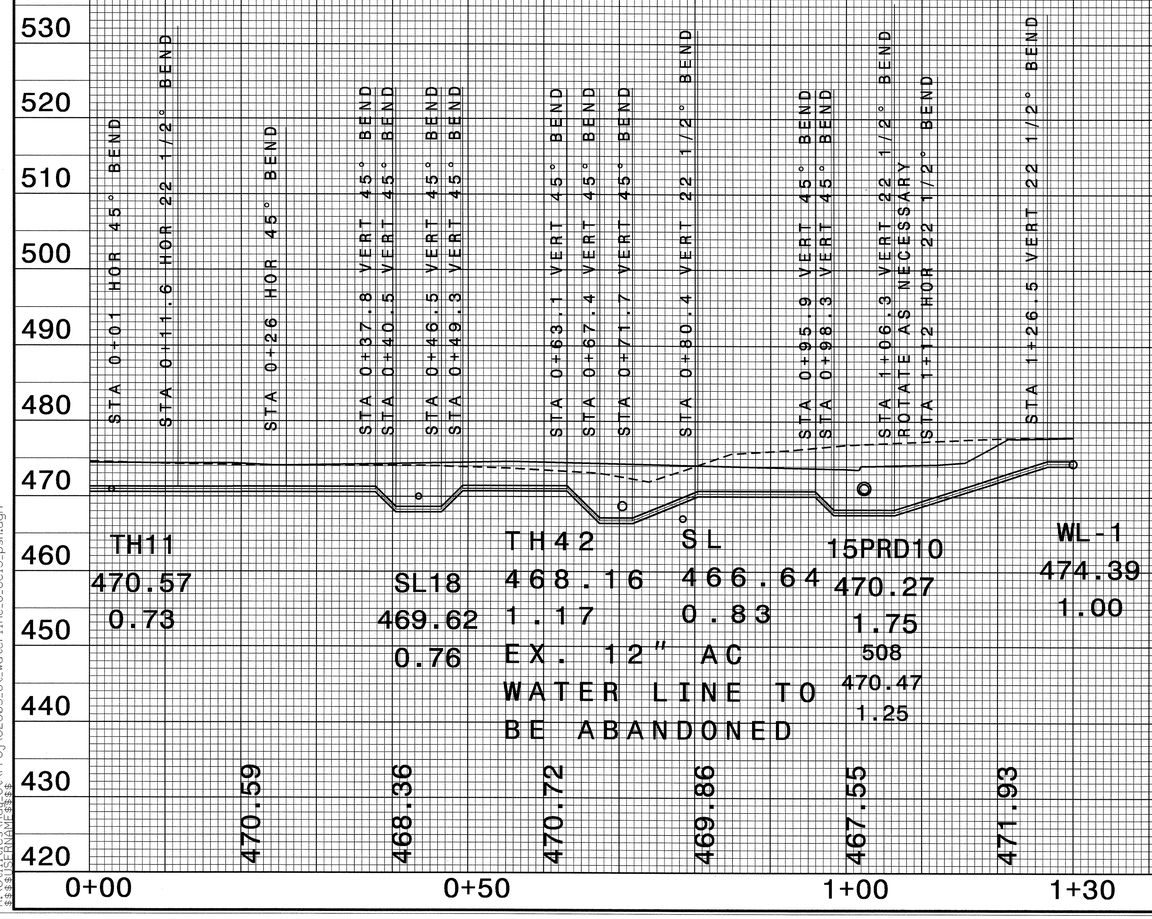

5/14/99

24-OCT-2012 13:48
R:\Utilities\Rdy_Ut\Proj\U2803_Ut_waterline-6_UC13_psh.dgn
$$$$USERNAME$$$$

PROJECT REFERENCE NO.	SHEET NO.
U-2803	UC-14

DESIGNED BY: JAN
DRAWN BY: JAN
CHECKED BY: JSM
APPROVED BY: JSM
REVISED:

NORTH CAROLINA DEPARTMENT OF TRANSPORTATION

UTILITIES ENGINEERING SEC.
PHONE:(919)707-6690
FAX:(919)250-4151

NORTH CAROLINA PROFESSIONAL SEAL 6832 ENGINEER JAMES S. MOHER

UTILITY CONSTRUCTION PLANS ONLY

UTILITY CONSTRUCTION

SEWER LINE 1

SCALE
HOR 1"=10'
VERT 1"=10

MANHOLE 1A
STA 0+00
4' DIAMETER
RIM 457.40
PROP INV IN 448.30
EX INV OUT 448.13

MANHOLE 1B
STA 0+31
4' DIAMETER
RIM 454.40
PROP INV IN 4" 449.00
PROP INV OUT 448.46

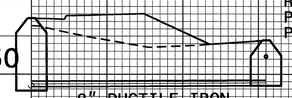

8" DUCTILE IRON
PC 350 @ 0.50%

SL12
452.15
4" LATERAL
VERIFY INVERT

INV448.30

INV448.46

SN-1
0+00.0
ELEV.457.4

SN-10
0+31.0
ELEV.454.4

0+00

0+31

PIPE TO BE 8"
DUCTILE IRON PC 350
WITH PROTECTO 401 COATING

SEWER LINE 2

SCALE
HOR 1"=10'
VERT 1"=10

MANHOLE 2A BREAK DOWN AND REBUILD
INSTALL NEW BOOT
STA 0+00
4' DIAMETER
EX RIM 370.45
PROP RIM 372.04
EX AND PROP
INV IN 366.95
EX INV OUT 366.45

MANHOLE 2B
STA 0+34
4' DIAMETER DROP MANHOLE
RIM 374.46
EX INV IN 369.47
PROP INV OUT 367.12

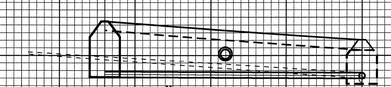

8" DUCTILE IRON
PC 350 @ 0.50%
704 15PRD4
369.55 369.32 SL19
1.25 1.75 366.91
0.76

INV 367.12

INV 366.95

PIPE TO BE 8"
DUCTILE IRON PC 350
WITH PROTECTO 401 COATING

SN-11
0+34.0
ELEV.374.46

SN-2
0+00.0
ELEV.372.04

0+34

0+00

5/14/99

24-OCT-2012 13:49
R:\Utilities\Rdu_Ut\Proj\U2803_Ut_sewerline_1_2_UC14_psh.dgn
$$$$USERNAME$$$$

PROJECT REFERENCE NO.	SHEET NO.
U-2803	UC-15

DESIGNED BY: JAN
DRAWN BY: JAN
CHECKED BY: JSM
APPROVED BY: JSM
REVISED:

NORTH CAROLINA DEPARTMENT OF TRANSPORTATION

UTILITIES ENGINEERING SEC.
PHONE:(919)707-6690
FAX:(919)250-4151

NORTH CAROLINA PROFESSIONAL SEAL 18533 ENGINEER JAMES S. MCKEE 10/24/12

UTILITY CONSTRUCTION PLANS ONLY

UTILITY CONSTRUCTION

SCALE
HOR 1'=20'
VERT 1"=20'

SEWER LINE 3

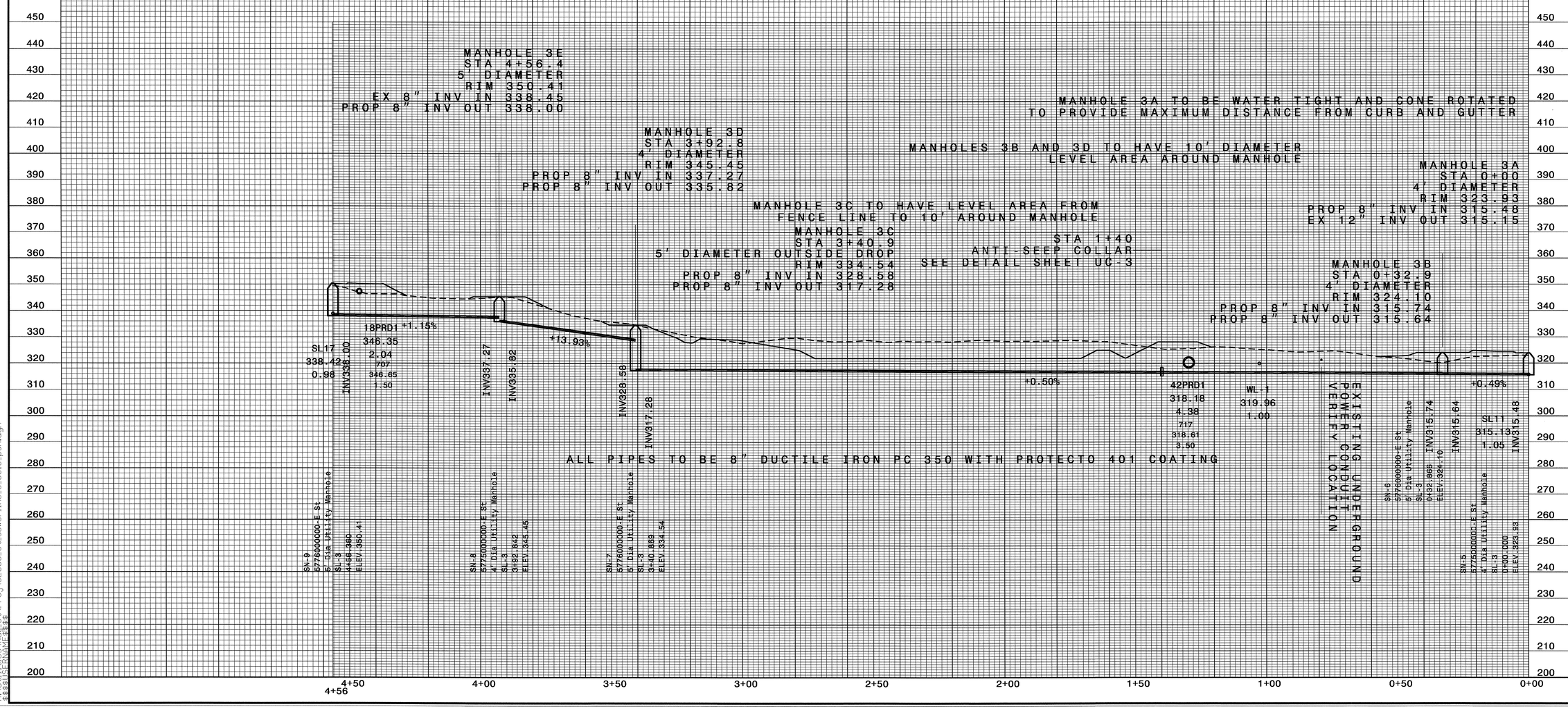

5/14/99

24-OCT-2012 13:50
R:\Utilities\Ut\Proj\U2803_Ut_sewerline_3_UC15.pshdgn
$$$$USERNAME$$$$

PROJECT REFERENCE NO.	SHEET NO.
U-2803	UC-16

DESIGNED BY: JAN
DRAWN BY: JAN
CHECKED BY: JSM
APPROVED BY: JSM
REVISED:

NORTH CAROLINA DEPARTMENT OF TRANSPORTATION

UTILITIES ENGINEERING SEC.
PHONE:(919)707-6690
FAX:(919)250-4151

NORTH CAROLINA PROFESSIONAL SEAL 16833 ENGINEER JAMES S. MCKEE

UTILITY CONSTRUCTION PLANS ONLY

UTILITY CONSTRUCTION

SCALE
HOR 1"=10'
VERT 1"=10'

CLEAN OUT 2

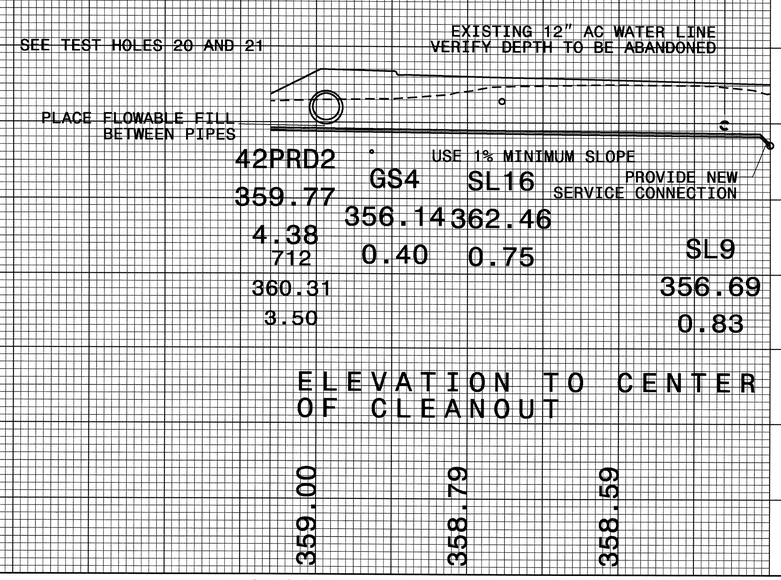

SCALE
HOR 1"=10'
VERT 1"=10'

CLEAN OUT 1

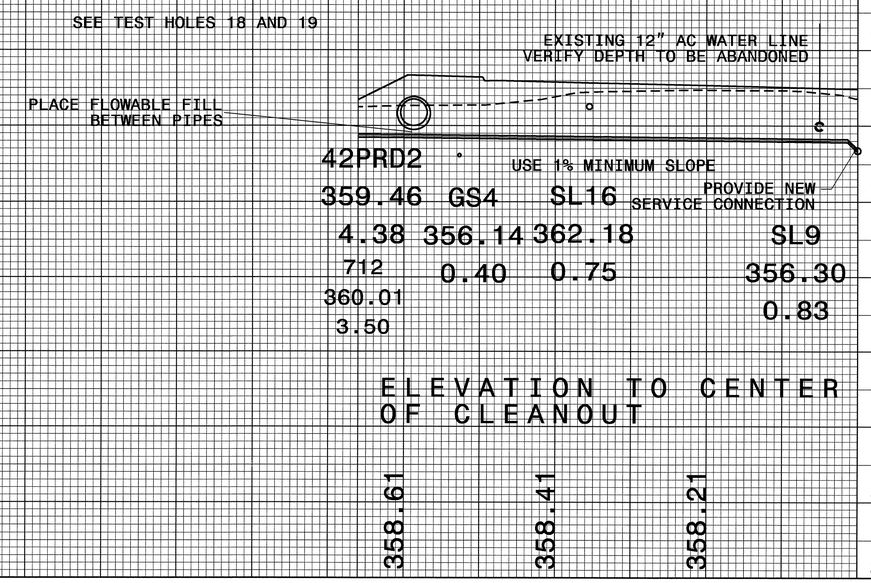

5/14/99

24-OCT-2012 13:51
R:\Utilities\Proj\U2803_Ut_cleanouts_UC16.pshdgn
$$$$USERNAME$$$$

T.I.P. NO.	SHEET NO.
U-2803	UO-1

STATE OF NORTH CAROLINA
DIVISION OF HIGHWAYS

UTILITIES BY OTHERS PLANS
ORANGE COUNTY

LOCATION: CARRBORO – SR 1919 (SMITH LEVEL ROAD)
FROM SOUTH OF ROCK HAVEN ROAD TO
BRIDGE NO. 88 OVER MORGAN CREEK

TYPE OF WORK: UTILITIES BY OTHERS

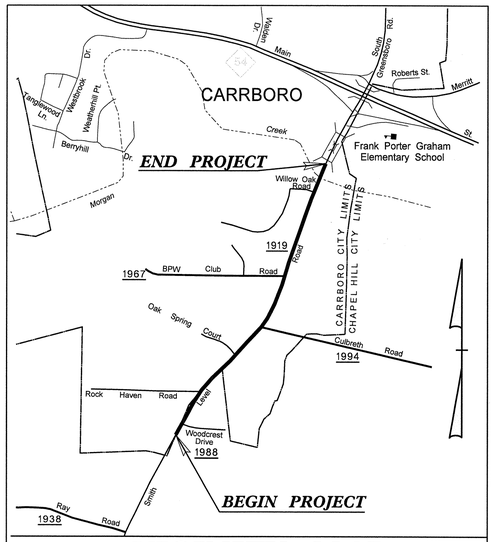

VICINITY MAP

STA. 55+73.27 –L– END TIP PROJECT U-2803

STA. 13+00.00 –L– BEGIN TIP PROJECT U-2803

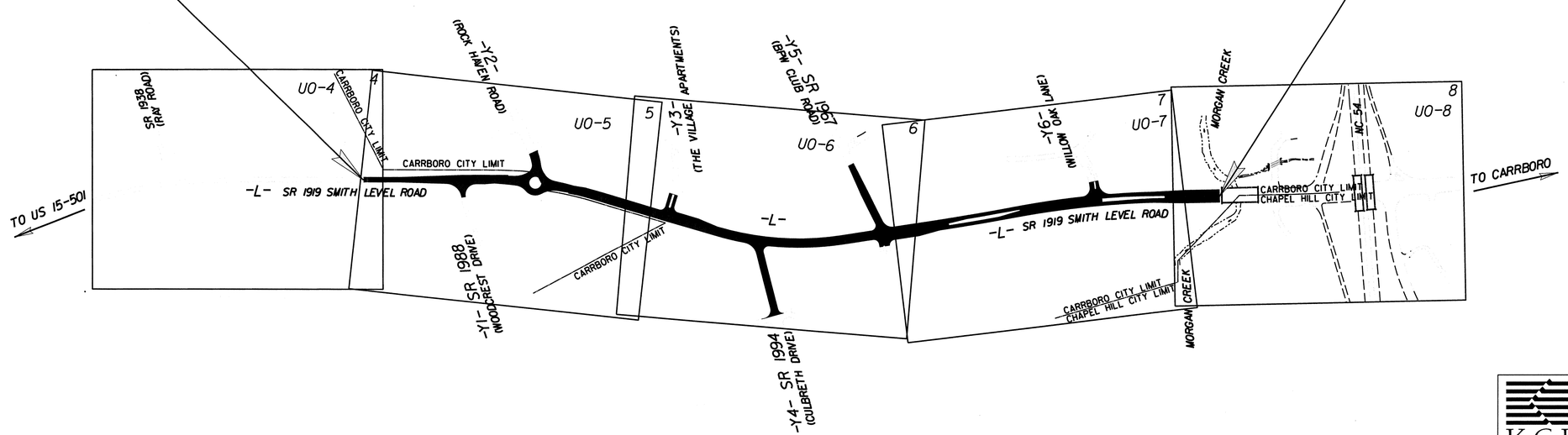

KCI ASSOCIATES OF N.C.
CIVIL ENGINEERS
ENVIRONMENTAL - CEI
LAND SURVEYING
SUBSURFACE UTILITY ENGINEERING
SUITE 220, LANDMARK CENTER II,
4601 SIX FORKS ROAD
RALEIGH, NORTH CAROLINA 27609
(919) 783-9214
WWW.KCI.COM

GRAPHIC SCALES

50 25 0 50 100
PLANS

50 25 0 50 100
PROFILE (HORIZONTAL)

10 5 0 10 20
PROFILE (VERTICAL)

INDEX OF SHEETS

SHEET NO.	DESCRIPTION
UO-1	TITLE SHEET
UO-1A	GENERAL NOTES
UO-1B	CONVENTIONAL PLAN SHEET SYMBOLS
UO-04 THRU UO-08	UBO PLAN SHEETS

UTILITY OWNERS ON PROJECT

(A) DUKE ENERGY – POWER DISTRIBUTION
(B) PIEDMONT ELECTRIC MEMBERSHIP COOP – POWER DISTRIBUTION
(C) AT&T – TELEPHONE
(D) LEVEL 3 COMMUNICATIONS – FIBER OPTIC
(E) TIME WARNER – CABLE TV
(F) PSNC GAS – NATURAL GAS

PREPARED IN THE OFFICE OF:
DIVISION OF HIGHWAYS
UTILITIES UNIT
UTILITIES ENGINEERING SECTION
1591 MAIL SERVICES CENTER
RALEIGH NC 27699-1591
PHONE (919) 707-6690
FAX (919) 250-4119

Roger Worthington, P.E.	UTILITIES SECTION ENGINEER
Steve McKee, P.E.	UTILITIES SQUAD LEADER PROJECT ENGINEER
John Nigro, P.E.	UTILITIES PROJECT DESIGNER

TIP PROJECT: U-2803

09/28/99

7:42:44 PM
u2803_rdy.tsh - UB0.dgn
Joshua Barbour Division: P005 Power Emp

PROJECT REFERENCE NO.	SHEET NO.
U-2803	U0-1A

CIVIL ENGINEERS
ENVIRONMENTAL - CEI
LAND SURVEYING
SUBSURFACE UTILITY ENGINEERING
KCI ASSOCIATES OF N.C.
SUITE 220, LANDMARK CENTER II,
4601 SIX FORKS ROAD
RALEIGH, NORTH CAROLINA 27609
(919) 783-9214
WWW.KCI.COM

UTILITY CONTACTS

UTILITY	CONTACT NAME	CONTACT PHONE NUMBER
PIEDMONT ELECTRIC MEMBERSHIP COOP	RON HURDLE	(336)-229-2301
DUKE ENERGY (POWER DISTRIBUTION)	DON DANIELS	(919) 818-3136
PSNC (NATURAL GAS)	NAKIMA BOGAN	(919) 367-2720
TIME WARNER CABLE	GEORGE STOTLER	(919) 573-7667
LEVEL 3 COMMUNICATIONS	SETH DWYER	(919) 757-7039
AT&T	BILLY GRINER	(919) 612-9856

LEGEND

PROP O/H POW LINES	PROPOSED OVERHEAD POWER LINE (DUKE ENERGY)
PROP O/H POW TEL & FO LINES	PROPOSED OVERHEAD POWER/TELEPHONE/FIBER OPTIC LINES (DUKE ENERGY/NORTH STATE COMMUNICATIONS)
PROP O/H POW & TEL LINES	PROPOSED OVERHEAD POWER/TELEPHONE LINES (DUKE ENERGY/AT&T)
PROP U/G GAS LINE	PROPOSED GAS LINE
// //	EXISTING UTILITY TO BE ABANDONED IN PLACE (BY CORRESPONDING UTILITY COMPANY)
REM	EXISTING UTILITY POLE TO BE REMOVED (BY CORRESPONDING UTILITY COMPANY)
RENEW	EXISTING UTILITY POLE TO BE RENEWED (BY CORRESPONDING UTILITY COMPANY)

6/2/95
7:44:03 PM
u2803-rdy.tsh - U00.dgn
Design Partner: Investpro P905 Power Emp

01/20/11

PROJECT REFERENCE NO.	SHEET NO.
U-2803	U0-01-B

Note: Not to Scale

S.U.E. = Subsurface Utility Engineering

STATE OF NORTH CAROLINA
DIVISION OF HIGHWAYS

CONVENTIONAL PLAN SHEET SYMBOLS

BOUNDARIES AND PROPERTY:

- State Line
- County Line
- Township Line
- City Line
- Reservation Line
- Property Line
- Existing Iron Pin — EIP
- Property Corner
- Property Monument — ECM
- Parcel/Sequence Number — 123
- Existing Fence Line
- Proposed Woven Wire Fence
- Proposed Chain Link Fence
- Proposed Barbed Wire Fence
- Existing Wetland Boundary — WLB
- Proposed Wetland Boundary — WLB
- Existing Endangered Animal Boundary — EAB
- Existing Endangered Plant Boundary — EPB

BUILDINGS AND OTHER CULTURE:

- Gas Pump Vent or U/G Tank Cap
- Sign — S
- Well — W
- Small Mine
- Foundation
- Area Outline
- Cemetery
- Building
- School
- Church
- Dam

HYDROLOGY:

- Stream or Body of Water
- Hydro, Pool or Reservoir
- Jurisdictional Stream — JS
- Buffer Zone 1 — BZ 1
- Buffer Zone 2 — BZ 2
- Flow Arrow
- Disappearing Stream
- Spring
- Wetland
- Proposed Lateral, Tail, Head Ditch — FLOW
- False Sump

RAILROADS:

- Standard Gauge — CSX TRANSPORTATION
- RR Signal Milepost — MILEPOST 35
- Switch — SWITCH
- RR Abandoned
- RR Dismantled

RIGHT OF WAY:

- Baseline Control Point
- Existing Right of Way Marker
- Existing Right of Way Line
- Proposed Right of Way Line — RW
- Proposed Right of Way Line with Iron Pin and Cap Marker — RW
- Proposed Right of Way Line with Concrete or Granite Marker — RW
- Existing Control of Access — CA
- Proposed Control of Access — CA
- Existing Easement Line — E
- Proposed Temporary Construction Easement — E
- Proposed Temporary Drainage Easement — TDE
- Proposed Permanent Drainage Easement — PDE
- Proposed Permanent Drainage / Utility Easement — DUE
- Proposed Permanent Utility Easement — PUE
- Proposed Temporary Utility Easement — TUE
- Proposed Aerial Utility Easement — AUE
- Proposed Permanent Easement with Iron Pin and Cap Marker

ROADS AND RELATED FEATURES:

- Existing Edge of Pavement
- Existing Curb
- Proposed Slope Stakes Cut — C
- Proposed Slope Stakes Fill — F
- Proposed Curb Ramp — CR
- Curb Cut Future Ramp — CCFR
- Existing Metal Guardrail
- Proposed Guardrail
- Existing Cable Guiderail
- Proposed Cable Guiderail
- Equality Symbol
- Pavement Removal

VEGETATION:

- Single Tree
- Single Shrub
- Hedge
- Woods Line
- Orchard
- Vineyard — Vineyard

EXISTING STRUCTURES:

MAJOR:

- Bridge, Tunnel or Box Culvert — CONC
- Bridge Wing Wall, Head Wall and End Wall — CONC WW

MINOR:

- Head and End Wall — CONC HW
- Pipe Culvert
- Footbridge
- Drainage Box: Catch Basin, DI or JB — CB
- Paved Ditch Gutter
- Storm Sewer Manhole — S
- Storm Sewer — S

UTILITIES:

POWER:

- Existing Power Pole
- Proposed Power Pole
- Existing Joint Use Pole
- Proposed Joint Use Pole
- Power Manhole — P
- Power Line Tower
- Power Transformer
- U/G Power Cable Hand Hole
- H-Frame Pole
- Recorded U/G Power Line — P
- Designated U/G Power Line (S.U.E.*) — P

TELEPHONE:

- Existing Telephone Pole
- Proposed Telephone Pole
- Telephone Manhole — T
- Telephone Booth
- Telephone Pedestal — T
- Telephone Cell Tower
- U/G Telephone Cable Hand Hole — HH
- Recorded U/G Telephone Cable — T
- Designated U/G Telephone Cable (S.U.E.*) — T
- Recorded U/G Telephone Conduit — TC
- Designated U/G Telephone Conduit (S.U.E.*) — TC
- Recorded U/G Fiber Optics Cable — T FO
- Designated U/G Fiber Optics Cable (S.U.E.*) — T FO

WATER:

- Water Manhole — W
- Water Meter
- Water Valve
- Water Hydrant
- Recorded U/G Water Line — W
- Designated U/G Water Line (S.U.E.*) — W
- Above Ground Water Line — A/G Water

TV:

- TV Satellite Dish
- TV Pedestal — C
- TV Tower
- U/G TV Cable Hand Hole — HH
- Recorded U/G TV Cable — TV
- Designated U/G TV Cable (S.U.E.*) — TV
- Recorded U/G Fiber Optic Cable — TV FO
- Designated U/G Fiber Optic Cable (S.U.E.*) — TV FO

GAS:

- Gas Valve
- Gas Meter
- Recorded U/G Gas Line — G
- Designated U/G Gas Line (S.U.E.*) — G
- Above Ground Gas Line — A/G Gas

SANITARY SEWER:

- Sanitary Sewer Manhole
- Sanitary Sewer Cleanout
- U/G Sanitary Sewer Line — SS
- Above Ground Sanitary Sewer — A/G Sanitary Sewer
- Recorded SS Forced Main Line — FSS
- Designated SS Forced Main Line (S.U.E.*) — FSS

MISCELLANEOUS:

- Utility Pole
- Utility Pole with Base
- Utility Located Object
- Utility Traffic Signal Box — S
- Utility Unknown U/G Line — ?UTL
- U/G Tank; Water, Gas, Oil
- A/G Tank; Water, Gas, Oil
- U/G Test Hole (S.U.E.*)
- Abandoned According to Utility Records — AATUR
- End of Information — E.O.I.

PROJECT REFERENCE NO.	SHEET NO.
U-2803	U0-4

KCI ASSOCIATES OF N.C.

CIVIL ENGINEERS
ENVIRONMENTAL - CEI
LAND SURVEYING
SUBSURFACE UTILITY ENGINEERING

SUITE 220, LANDMARK CENTER II,
4601 SIX FORKS ROAD
RALEIGH, NORTH CAROLINA 27609
(919) 783-9214
WWW.KCI.COM

UBO SUMMARY BY SHEET:

1. PIEDMONT ELECTRIC MEMBERSHIP COOP- WILL RELOCATE OH POWER LINE AS SHOWN
2. DUKE ENERGY- NO FACILITIES ON THIS SHEET
3. PSNC- WILL RELOCATE GAS LINE 1 PRIOR TO THE DATE OF AVAILABILITY
4. TIME WARNER CATV- WILL RELOCATE EX AERIAL FACILITIES TO PIEDMONT POLES
5. LEVEL 3 COMMUNICATIONS- HAS NO FACILITIES WITHIN THE PROJECT LIMITS
6. AT&T- WILL RELOCATE OH AND UNDERGROUND FACILITIES TO THE RELOCATED PIEDMONT EMC POLES. ANY POLES OWNED BY AT&T WILL BE ELIMINATED OR RELOCATED TO ELIMINATE CONFLICT.

UTILITY BY OTHERS

NOTE:
ALL PROPOSED UTILITY WORK SHOWN ON THIS SHEET WILL BE DONE BY OTHERS

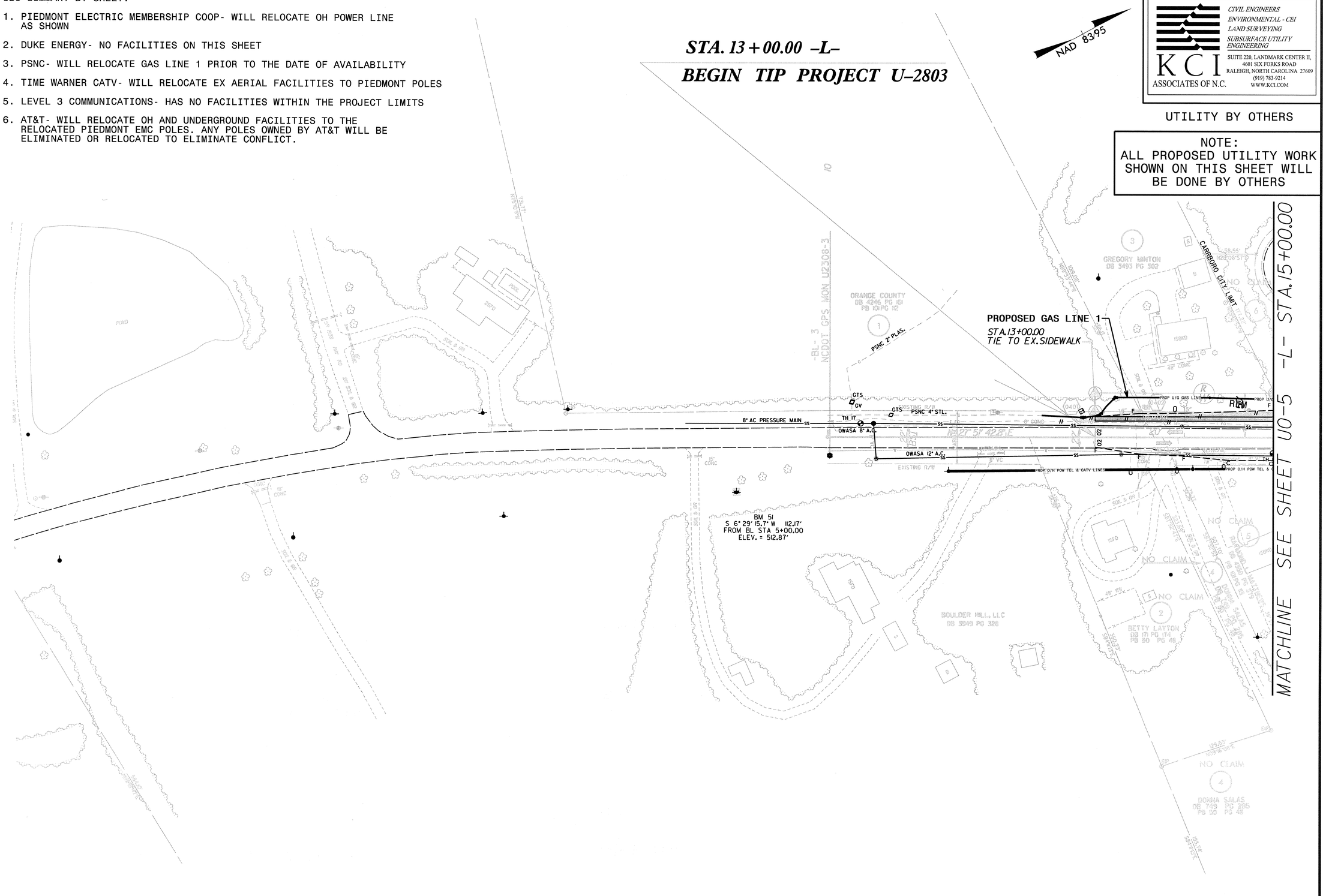

REVISIONS

8/17/99

7:51:31 PM
u2803_rdu_psh4 - UBO.dgn
Joshua Boshaw Riverstone 2005 Power Emp

PROJECT REFERENCE NO.	SHEET NO.
U-2803	U0-5

KCI ASSOCIATES OF N.C.

CIVIL ENGINEERS
ENVIRONMENTAL - CEI
LAND SURVEYING
SUBSURFACE UTILITY ENGINEERING

SUITE 220, LANDMARK CENTER II,
4601 SIX FORKS ROAD
RALEIGH, NORTH CAROLINA 27609
(919) 783-9214
WWW.KCI.COM

UTILITY BY OTHERS

UBO SUMMARY BY SHEET:

1. PIEDMONT ELECTRIC MEMBERSHIP COOP- WILL RELOCATE OH POWER LINE AS SHOWN
2. DUKE ENERGY- NO FACILITIES ON THIS SHEET
3. PSNC- WILL RELOCATE GAS LINE 1 PRIOR TO THE DATE OF AVAILABILITY. PSNC WILL RELOCATE GAS LINE 2 IN ACCORDANCE WITH THE CONTRACT SPECIAL PROVISIONS.
4. TIME WARNER CATV- WILL RELOCATE EX AERIAL FACILITIES TO PIEDMONT POLES
5. LEVEL 3 COMMUNICATIONS- HAS NO FACILITIES WITHIN THE PROJECT LIMITS
6. AT&T- WILL RELOCATE OH AND UNDERGROUND FACILITIES TO THE RELOCATED PIEDMONT EMC POLES. ANY POLES OWNED BY AT&T WILL BE ELIMINATED OR RELOCATED TO ELIMINATE CONFLICT.

NOTE:
ALL PROPOSED UTILITY WORK SHOWN ON THIS SHEET WILL BE DONE BY OTHERS

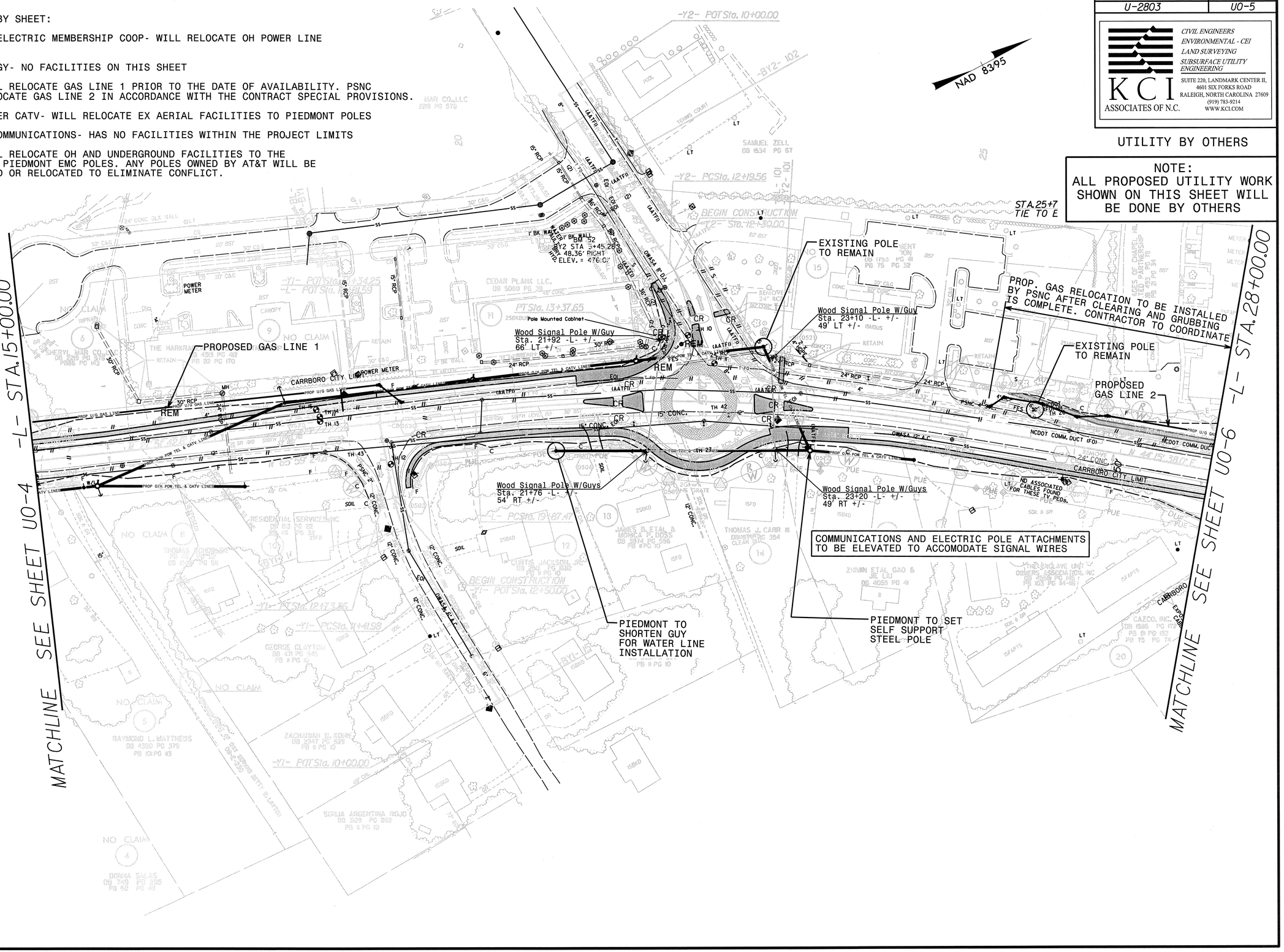

UBO SUMMARY BY SHEET:

1. PIEDMONT ELECTRIC MEMBERSHIP COOP- WILL RELOCATE OH POWER LINE AS SHOWN
2. DUKE ENERGY- NO FACILITIES ON THIS SHEET
3. PSNC- WILL RELOCATE GAS LINE 1 PRIOR TO THE DATE OF AVAILABILITY. GAS LINES 2 AND 3 WILL BE RELOCATED IN ACCORDANCE WITH THE CONTRACT SPECIAL PROVISIONS.
4. TIME WARNER CATV- WILL RELOCATE EX AERIAL FACILITIES TO PIEDMONT POLES
5. LEVEL 3 COMMUNICATIONS- HAS NO FACILITIES WITHIN THE PROJECT LIMITS
6. AT&T- WILL RELOCATE OH AND UNDERGROUND FACILITIES TO THE RELOCATED PIEDMONT EMC POLES. ANY POLES OWNED BY AT&T WILL BE ELIMINATED OR RELOCATED TO ELIMINATE CONFLICT.

PROJECT REFERENCE NO.	SHEET NO.
U-2803	U0-6

KCI ASSOCIATES OF N.C.
CIVIL ENGINEERS
ENVIRONMENTAL - CEI
LAND SURVEYING
SUBSURFACE UTILITY ENGINEERING
SUITE 220, LANDMARK CENTER II, 4601 SIX FORKS ROAD
RALEIGH, NORTH CAROLINA 27609
(919) 783-9214
WWW.KCI.COM

UTILITY BY OTHERS

NOTE:
ALL PROPOSED UTILITY WORK SHOWN ON THIS SHEET WILL BE DONE BY OTHERS

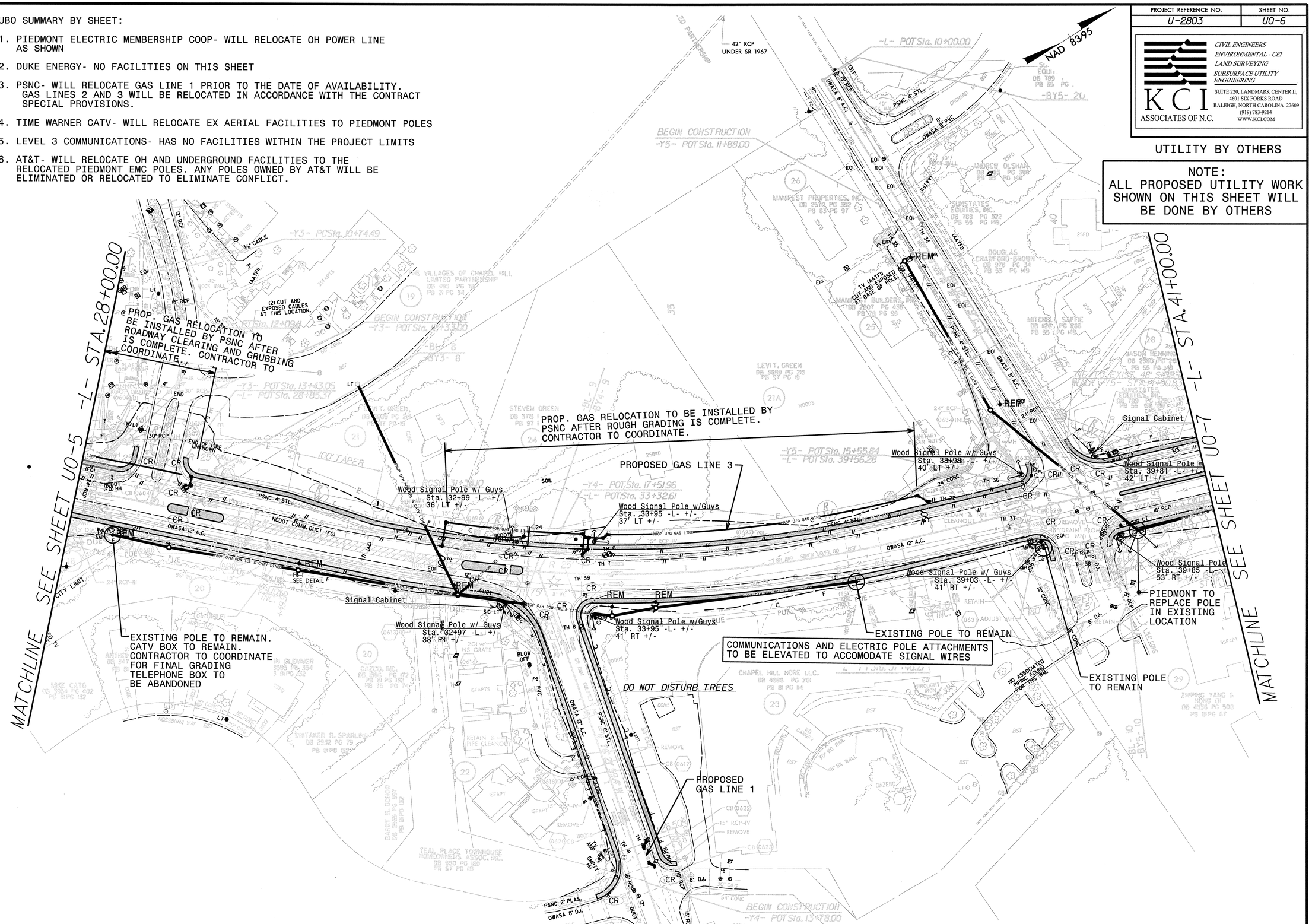

REVISIONS

UBO SUMMARY BY SHEET:

1. PIEDMONT ELECTRIC MEMBERSHIP COOP- WILL RELOCATE OH POWER LINE AS SHOWN
2. DUKE ENERGY- DUKE MAINTAINS AERIAL AND UNDERGROUND FACILITIES ON THIS SHEET THAT WILL NOT BE RELOCATED. THE CONTRACTOR IS TO USE EXTREME CAUTION WHEN WORKING NEAR THESE FACILITIES.
3. PSNC- WILL RELOCATE GAS LINE 4 IN ACCORDANCE WITH THE CONTRACT SPECIAL PROVISIONS
4. TIME WARNER CATV- WILL RELOCATE EX AERIAL FACILITIES TO PIEDMONT POLES
5. LEVEL 3 COMMUNICATIONS- HAS NO FACILITIES WITHIN THE PROJECT LIMITS
6. AT&T- WILL RELOCATE OH AND UNDERGROUND FACILITIES TO THE RELOCATED PIEDMONT EMC POLES. ANY POLES OWNED BY AT&T WILL BE ELIMINATED OR RELOCATED TO ELIMINATE CONFLICT.

PROJECT REFERENCE NO.	SHEET NO.
U-2803	U0-7

KCI ASSOCIATES OF N.C.
CIVIL ENGINEERS
ENVIRONMENTAL - CEI
LAND SURVEYING
SUBSURFACE UTILITY ENGINEERING
SUITE 220, LANDMARK CENTER II,
4601 SIX FORKS ROAD
RALEIGH, NORTH CAROLINA 27609
(919) 783-9214
WWW.KCI.COM

UTILITY BY OTHERS

NOTE:
ALL PROPOSED UTILITY WORK SHOWN ON THIS SHEET WILL BE DONE BY OTHERS

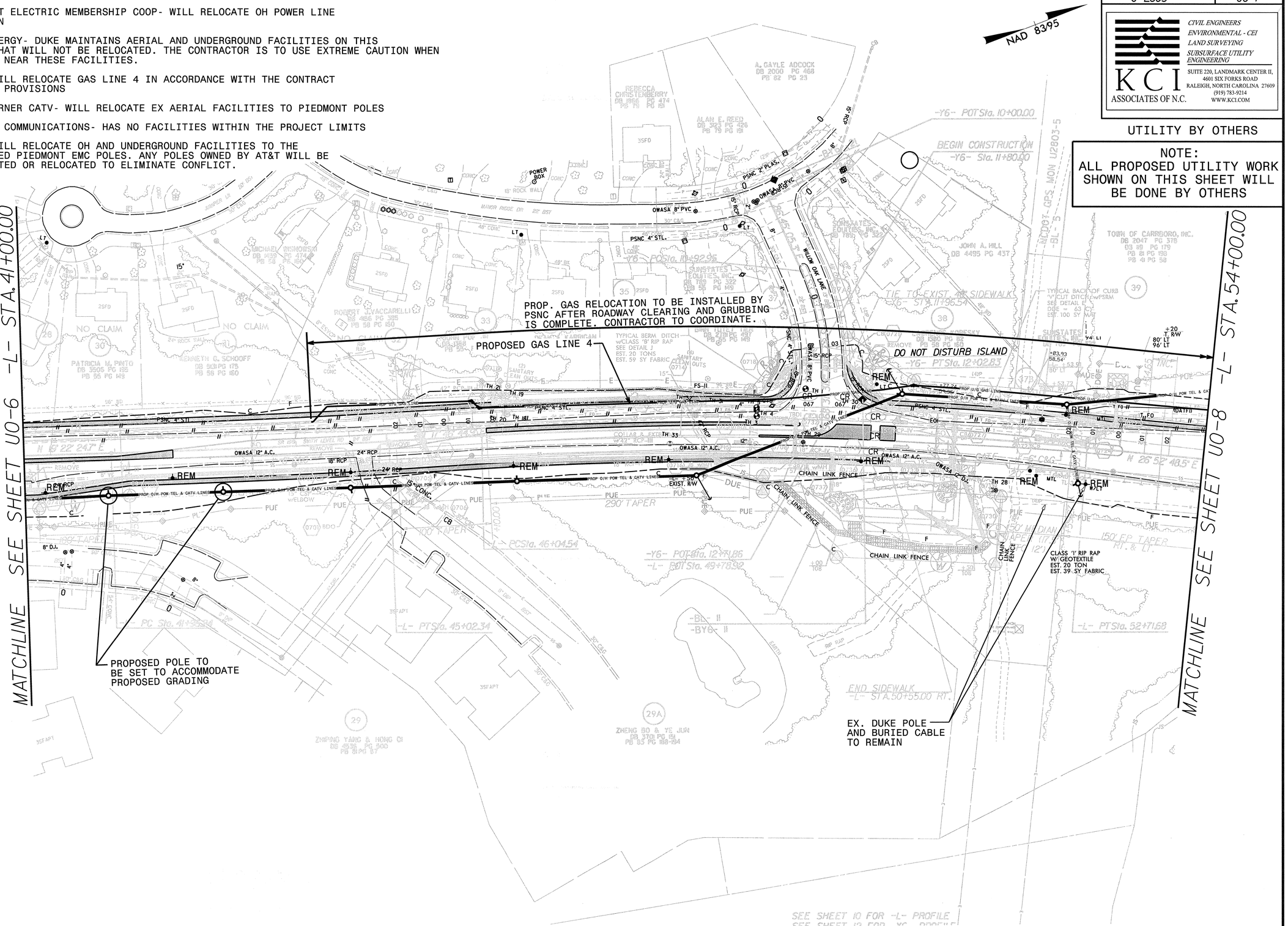

REVISIONS

UBO SUMMARY BY SHEET:

1. PIEDMONT ELECTRIC MEMBERSHIP COOP- WILL RELOCATE OH POWER LINE AS SHOWN
2. DUKE ENERGY- DUKE MAINTAINS AERIAL AND UNDERGROUND FACILITIES ON THIS SHEET THAT WILL NOT BE RELOCATED. THE CONTRACTOR IS TO USE EXTREME CAUTION WHEN WORKING NEAR THESE FACILITIES.
3. PSNC- WILL RELOCATE GAS LINE 4 IN ACCORDANCE WITH THE CONTRACT SPECIAL PROVISIONS.
4. TIME WARNER CATV- WILL RELOCATE EX AERIAL FACILITIES TO PIEDMONT POLES
5. LEVEL 3 COMMUNICATIONS- HAS NO FACILITIES WITHIN THE PROJECT LIMITS
6. AT&T- WILL RELOCATE OH AND UNDERGROUND FACILITIES TO THE RELOCATED PIEDMONT EMC POLES. ANY POLES OWNED BY AT&T WILL BE ELIMINATED OR RELOCATED TO ELIMINATE CONFLICT.

PROJECT REFERENCE NO.	SHEET NO.
U-2803	UO-8

KCI ASSOCIATES OF N.C.
CIVIL ENGINEERS
ENVIRONMENTAL - CEI
LAND SURVEYING
SUBSURFACE UTILITY ENGINEERING
SUITE 220, LANDMARK CENTER II, 4601 SIX FORKS ROAD
RALEIGH, NORTH CAROLINA 27609
(919) 783-9214
WWW.KCI.COM

UTILITY BY OTHERS

NOTE:
ALL PROPOSED UTILITY WORK SHOWN ON THIS SHEET WILL BE DONE BY OTHERS

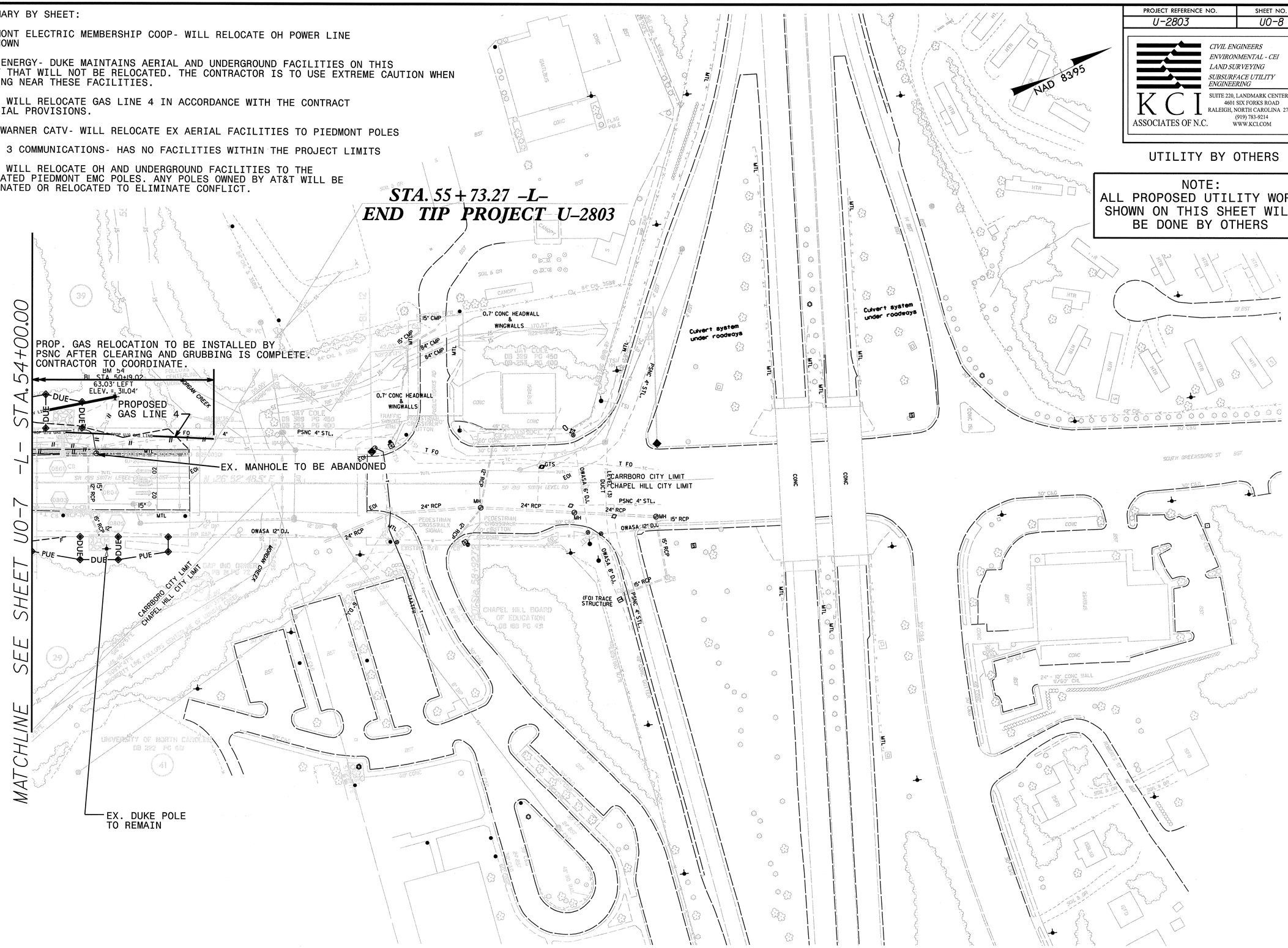

REVISIONS