09/28/99

TIP PROJECT: R-5000

CONTRACT: C203133

STRUCTURES

STATE OF NORTH CAROLINA
DIVISION OF HIGHWAYS

JACKSON COUNTY

STATE	STATE PROJECT REFERENCE NO.	SHEET NO.	TOTAL SHEETS
N.C.	R-5000		

WBS NO.	F. A. PROJ. NO.	DESCRIPTION
41156.1.1		P.E.
41156.2.1		R/W UTIL.
41156.3.1		CONST.

LOCATION: NEW LOCATION CONNECTOR ROAD FROM NC 116 TO EAST OF NC 107

TYPE OF WORK: GRADING, DRAINAGE, PAVING, CURB & GUTTER, AND STRUCTURE

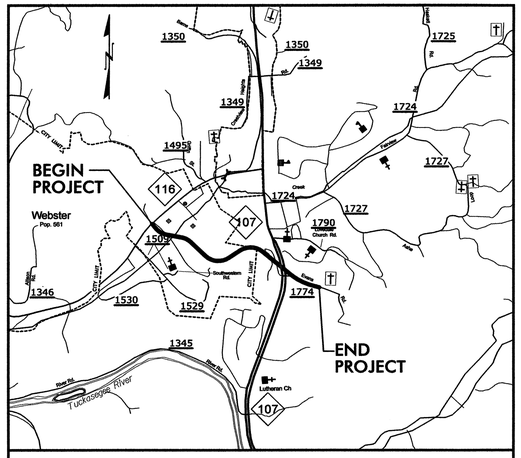

VICINITY MAP

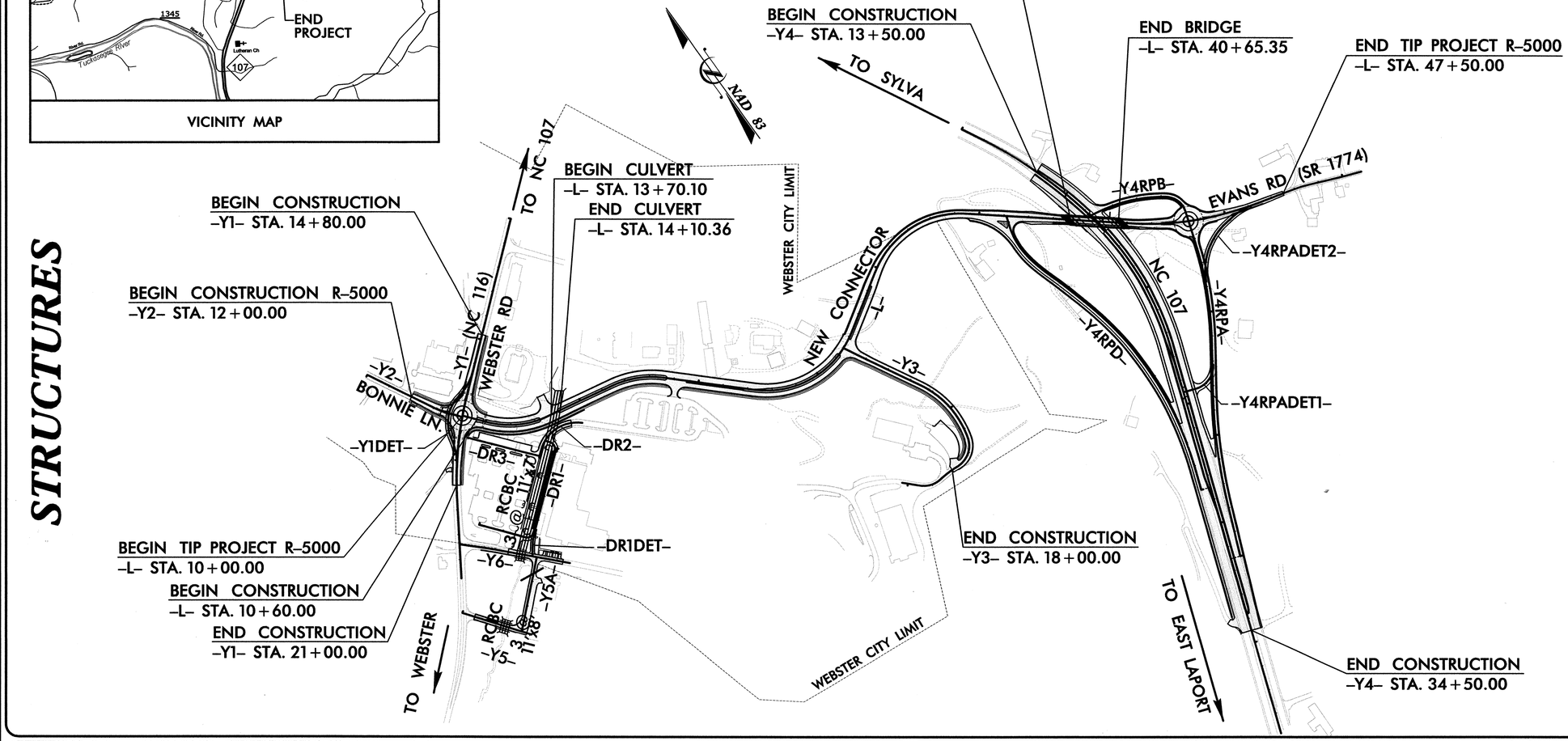

STATE OF NORTH CAROLINA · DEPARTMENT OF TRANSPORTATION

DESIGN DATA

ADT 2012 = 2,900
ADT 2035 = 6,700
DHV = 11 %
D = 55 %
T = 3 % *
V = 35 MPH
(* TTST 1% + DUALS 2%)
FUNC CLASS =
URBAN COLLECTOR

PROJECT LENGTH

LENGTH ROADWAY TIP PROJECT R-5000 = 0.662 MILES
LENGTH STRUCTURE TIP PROJECT R-5000 = 0.037 MILES
TOTAL LENGTH TIP PROJECT R-5000 = 0.699 MILES

Prepared In the Office of:
MULKEY
ENGINEERS & CONSULTANTS
PO Box 33127
Raleigh, N.C. 27636
(919) 851-1912
(919) 851-1918 (FAX)
www.mulkeyinc.com
NC License No. C-1021

FOR THE NORTH CAROLINA DEPT. OF TRANSPORTATION

2012 STANDARD SPECIFICATIONS

LETTING DATE:
NOVEMBER 20, 2012

L. KEVIN AUSTIN, PE
STRUCTURE DESIGN ENGINEER

STEPHEN WILLIAMS
DIVISION 14
DESIGN CONSTRUCTION ENGINEER

STRUCTURE DESIGN ENGINEER

NORTH CAROLINA PROFESSIONAL SEAL 19661 ENGINEER KEVIN AUSTIN
7/23/12

L. Kevin Austin P.E.
SIGNATURE:

DIVISION OF HIGHWAYS STATE OF NORTH CAROLINA

P.E.
STATE HIGHWAY DESIGN ENGINEER

7/24/2012
R:\Structures\R-5000_SD_TSH.dgn
7:11:47 AM

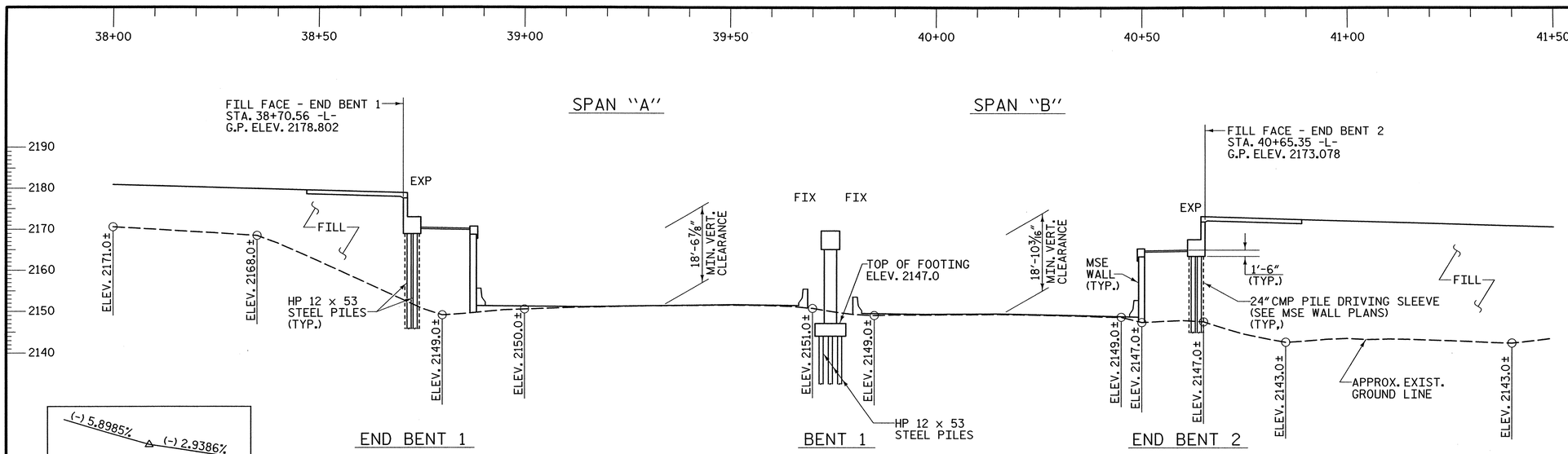

(-) 5.8985% (-) 2.9386%

P.V.I. 37+10.00
ELEV. 2183.520
V_C 150.00'
-VERTICAL CURVE DATA-
-L- (NEW CONNECTOR)

SECTION ALONG ℄ -L- (NEW CONNECTOR)

(BENTS ON SECTION AT RIGHT ANGLES TO ℄ BENT)

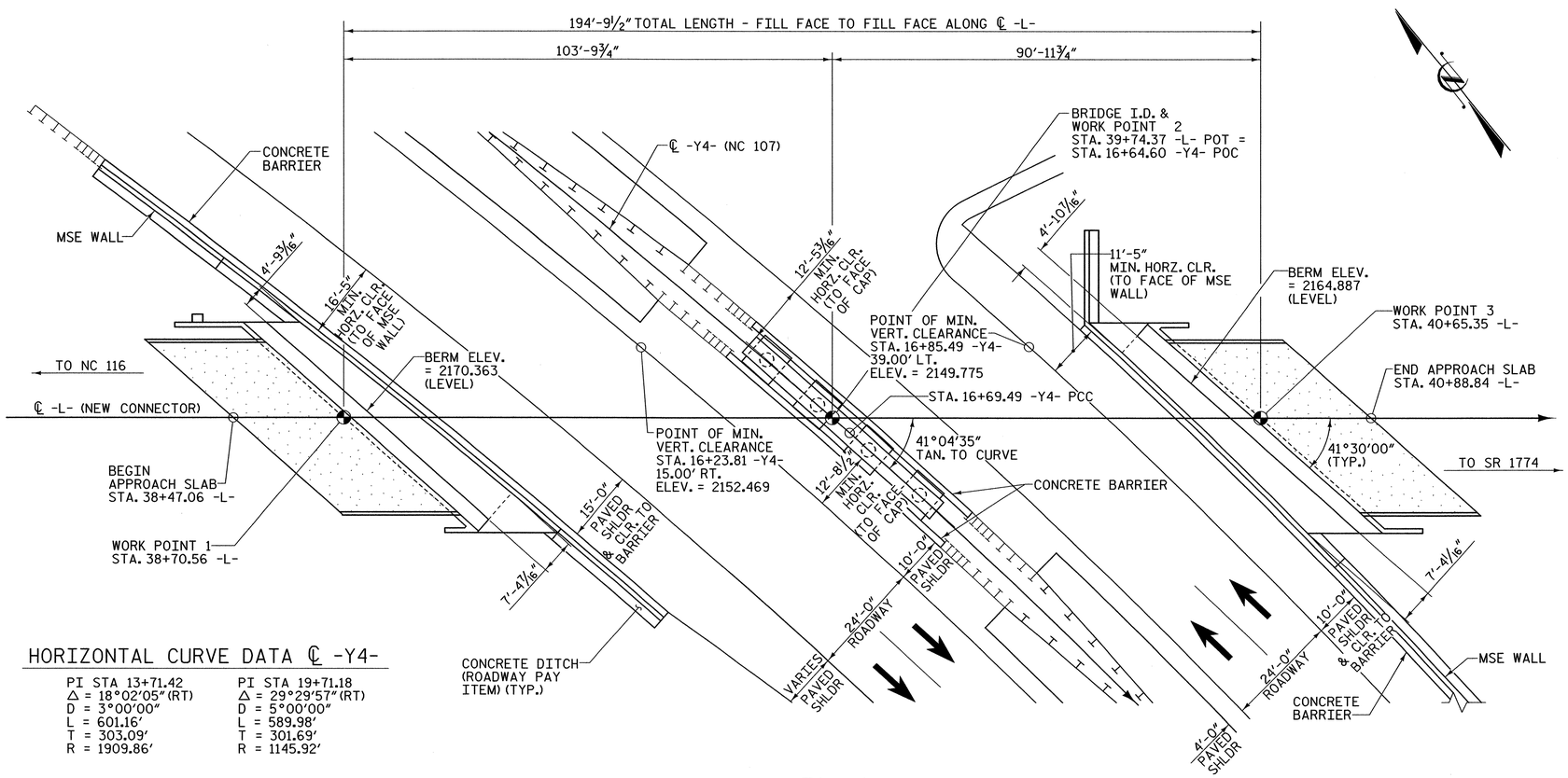

HORIZONTAL CURVE DATA ℄ -Y4-

PI STA 13+71.42	PI STA 19+71.18
Δ = 18°02'05" (RT)	Δ = 29°29'57" (RT)
D = 3°00'00"	D = 5°00'00"
L = 601.16'	L = 589.98'
T = 303.09'	T = 301.69'
R = 1909.86'	R = 1145.92'

PLAN

(PILES NOT SHOWN FOR CARITY)

DRAWN BY : W. B. ALLEN DATE : 8/11
CHECKED BY : W. A. DAVIS DATE : 12/11

PLANS PREPARED BY:

MULKEY
ENGINEERS & CONSULTANTS
PO Box 33127
Raleigh, NC 27636
(919) 851-1912
(919) 851-1918 (FAX)
WWW.MULKEYINC.COM
NC LICENSE NO. C-1021

NORTH CAROLINA PROFESSIONAL ENGINEER SEAL 1966 KEVIN AUSTIN 7/23/12

PROJECT NO. R-5000

JACKSON COUNTY

STATION: 39+74.37 -L- P.O.T. = 16+64.60 -Y4- P.O.C.

SHEET 1 OF 4 BRIDGE NO. 391

STATE OF NORTH CAROLINA
DEPARTMENT OF TRANSPORTATION
RALEIGH

GENERAL DRAWING

FOR BRIDGE ON NEW CONNECTOR
OVER NC 107 BETWEEN
NC 116 AND SR 1774

REVISIONS					
NO.	BY:	DATE:	NO.	BY:	DATE:
1			3		
2			4		

SHEET NO. S-1

TOTAL SHEETS

7/24/2012 7:47:45 AM R:\Structures\R-5000_SD_GD_0.dgn

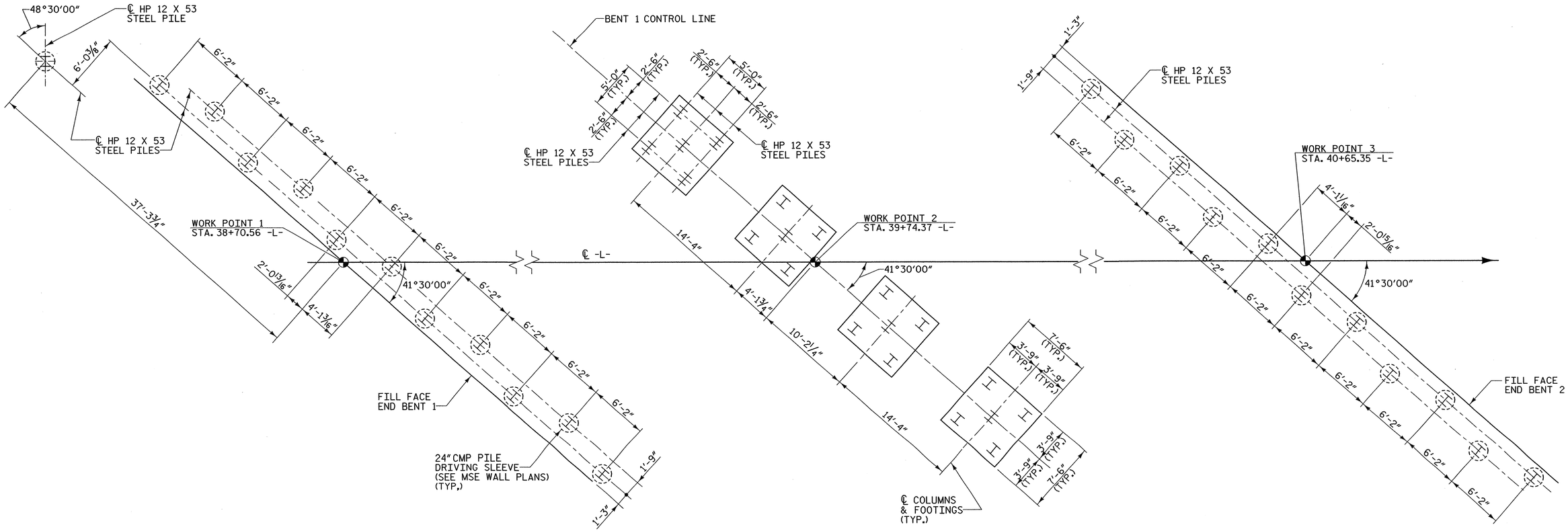

FOUNDATION LAYOUT

NOTES

ALL PILES ARE HP 12 × 53.

DIMENSIONS LOCATING PILES ARE SHOWN TO THE PILE CENTERLINE AT THE BOTTOM OF THE CAP.

PILES AT END BENT NO. 1 ARE DESIGNED FOR A FACTORED RESISTANCE OF 89 TONS PER PILE.

DRIVE PILES AT END BENT NO. 1 TO A REQUIRED DRIVING RESISTANCE OF 148 TONS PER PILE.

PILES AT END BENT NO. 2 ARE DESIGNED FOR A FACTORED RESISTANCE OF 82 TONS PER PILE.

DRIVE PILES AT END BENT 2 TO A REQUIRED DRIVING RESISTANCE OF 137 TONS PER PILE.

PILES OF THE EXTERIOR FOOTINGS AT BENT 1 ARE DESIGNED FOR A FACTORED RESISTANCE OF 71 TONS PER PILE.

DRIVE PILES OF EXTERIOR FOOTINGS AT BENT 1 TO A REQUIRED DRIVING RESISTANCE OF 118 TONS PER PILE.

PILES OF THE INTERIOR FOOTINGS AT BENT 1 ARE DESIGNED FOR A FACTORED RESISTANCE OF 58 TONS PER PILE.

DRIVE PILES OF INTERIOR FOOTINGS AT BENT 1 TO A REQUIRED DRIVING RESISTANCE OF 97 TONS PER PILE.

STEEL H PILE POINTS ARE REQUIRED FOR H PILES AT ALL BENTS. FOR STEEL PILE POINTS, SEE SECTION 450 OF THE STANDARD SPECIFICATIONS.

FOR PILES, SEE SECTION 450 OF THE STANDARD SPECIFICATIONS.

UNDERCUT IS REQUIRED FOR THE CONSTRUCTION OF END BENT 2. COORDINATE SHORING INSTALLATION WITH UNDERCUT AND EXCAVATION OPERATIONS. THE ANTICIPATED EXCAVATION ELEVATION ADJACENT TO NC 107 IS 2138 FEET, NAVD. THE GROUND SURFACE NORMAL TO THE FACE OF SHORING IS ANTICIPATED TO BE 6:1 OR FLATTER.

CONSTRUCT MSE WALL AT END BENT 1 BEFORE INSTALLING FOUNDATIONS FOR END BENT 1.

CONSTRUCT MSE WALL AT END BENT 2 BEFORE INSTALLING FOUNDATIONS FOR END BENT 2.

SETTLEMENT MONITORING USING SURVEY HUBS IS REQUIRED AT END BENT 1 AND END BENT 2.

OBSERVE A ONE MONTH WAITING PERIOD AFTER CONSTRUCTING THE APPROACH FILL ABOVE THE MSE RETAINING WALL TO FINISHED GRADE BEFORE BEGINING THE END BENT CONSTRUCTION AT END BENT 1.

OBSERVE A TWO MONTH WAITING PERIOD AFTER CONSTRUCTING THE APPROACH FILL ABOVE THE MSE RETAINING WALL TO FINISHED GRADE BEFORE BEGINING THE END BENT CONSTRUCTION AT END BENT 2.

NORTH CAROLINA PROFESSIONAL ENGINEER SEAL 19661 L. KEVIN AUSTIN 7/6/12

PLANS PREPARED BY:

MULKEY
ENGINEERS & CONSULTANTS
PO Box 33127
Raleigh, N.C. 27636
(919) 851-1913
(919) 851-1918 (FAX)
WWW.MULKEYINC.COM
NC LICENSE NO. C-1321

PROJECT NO. R-5000

JACKSON COUNTY

STATION: 39+74.37 -L- P.O.T.

SHEET 2 OF 4

STATE OF NORTH CAROLINA
DEPARTMENT OF TRANSPORTATION
RALEIGH

GENERAL DRAWING

FOR BRIDGE ON NEW CONNECTOR OVER NC 107 BETWEEN NC 116 AND SR 1774

REVISIONS						SHEET NO.
NO.	BY:	DATE:	NO.	BY:	DATE:	S-2
1			3			TOTAL SHEETS
2			4			32

DRAWN BY : W. B. ALLEN DATE : 4/12
CHECKED BY : W. A. DAVIS DATE : 5/12

7/6/2012 7:32:44 AM R:\Structures\R-5000_SD_FL_0.dgn

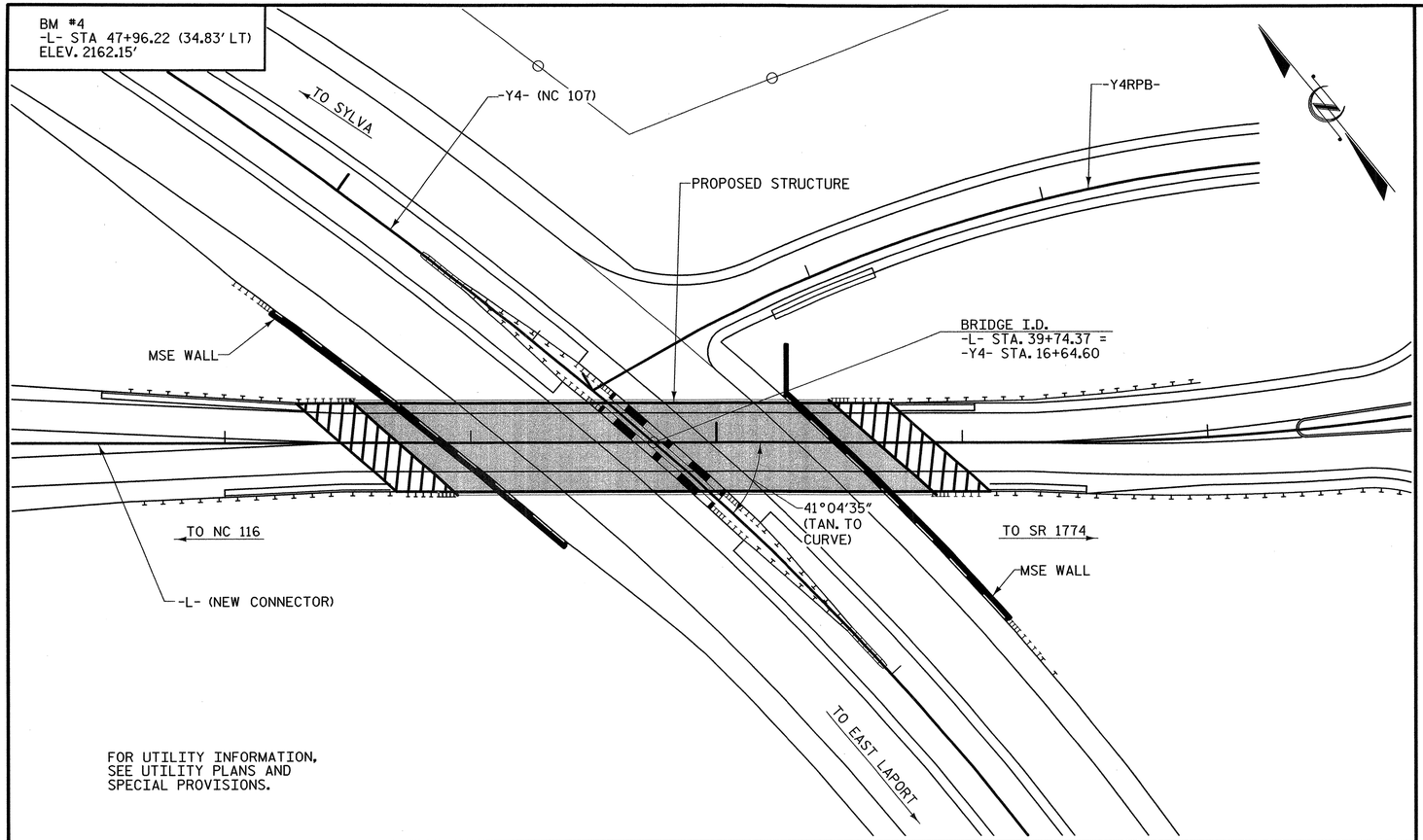

LOCATION SKETCH

NOTES

ASSUMED LIVE LOAD = HL-93 OR ALTERNATE LOADING.

FOR OTHER DESIGN DATA AND GENERAL NOTES, SEE SHEET SN.

FOR EROSION CONTROL MEASURES, SEE EROSION CONTROL PLANS.

THIS BRIDGE HAS BEEN DESIGNED IN ACCORDANCE WITH THE AASHTO LRFD BRIDGE DESIGN SPECIFICATIONS.

REMOVABLE FORMS MAY BE USED IN LIEU OF METAL STAY-IN-PLACE FORMS IN ACCORDANCE WITH ARTICLE 420-3 OF THE STANDARD SPECIFICATIONS.

FOR MAINTENANCE AND PROTECTION OF TRAFFIC BENEATH PROPOSED STRUCTURE, SEE SPECIAL PROVISIONS.

CLASS AA CONCRETE IN THE BRIDGE DECK SHALL CONTAIN FLY ASH OR GROUND GRANULATED BLAST FURNANCE SLAG AT THE SUBSTITUTION RATE SPECIFIED IN ARTICLE 1024-1 AND IN ACCORDANCE WITH ARTICLES 1024-5 AND 1024-6 OF THE STANDARD SPECIFICATIONS. NO PAYMENT WILL BE MADE FOR THE SUBSTITUTION AS IT IS CONSIDERED INCIDENTAL TO THE COST OF THE REINFORCED CONCRETE DECK SLAB.

FOR LIMITS OF TEMPORARY SHORING FOR MAINTENANCE OF TRAFFIC, SEE TRAFFIC CONTROL PLANS. FOR PAY ITEM FOR TEMPORARY SHORING FOR MAINTENANCE OF TRAFFIC, SEE ROADWAY PLANS.

THE CONTRACTOR SHALL PROVIDE INDEPENDENT ASSURANCE SAMPLES OF REINFORCING STEEL AS FOLLOWS: FOR PROJECTS REQUIRING UP TO 400 TONS OF REINFORCING STEEL, ONE 30 INCH SAMPLE OF EACH SIZE BAR USED, AND FOR PROJECTS REQUIRING OVER 400 TONS OF REINFORCING STEEL, TWO 30 INCH SAMPLES OF EACH SIZE BAR USED. THE BARS FROM WHICH THE SAMPLES ARE TAKEN MUST THEN BE SPLICED WITH REPLACEMENT BARS OF THE SIZE AND LENGTH OF THE SAMPLE, PLUS A MINIMUM LAP OF THIRTY BAR DIAMETERS. PAYMENT FOR SAMPLES OF REINFORCING STEEL SHALL BE CONSIDERED INCIDENTAL TO VARIOUS PAY ITEMS.

NEEDLE BEAMS WILL NOT BE ALLOWED UNLESS OTHERWISE CALLED FOR ON THE PLANS OR APPROVED BY THE ENGINEER.

FOR SUBMITTAL OF WORKING DRAWINGS, SEE SPECIAL PROVISIONS.

FOR FALSEWORK AND FORMWORK, SEE SPECIAL PROVISIONS.

FOR CRANE SAFETY, SEE SPECIAL PROVISIONS.

FOR GROUT FOR STRUCTURES, SEE SPECIAL PROVISIONS.

THIS BRIDGE IS LOCATED IN SEISMIC ZONE 1.

FOR FOUNDATION NOTES, SEE "GENERAL DRAWING" SHEET 2 OF 4.

TOTAL BILL OF MATERIAL

	FOUNDATION EXCAVATION	REINFORCED CONCRETE DECK SLAB	GROOVING BRIDGE FLOORS	CLASS "A" CONCRETE	BRIDGE APPROACH SLABS	REINFORCING STEEL	SPIRAL COLUMN REINFORCING STEEL	54" PRESTESSED CONCRETE GIRDERS		HP 12 X 53 STEEL PILES		STEEL PILE POINTS	TWO BAR METAL RAIL	1'-2" X 2'-6" CONCRETE PARAPET	4" SLOPE PROTECTION	ELASTOMERIC BEARINGS	FOAM JOINT SEALS
	LUMP SUM	SQ. FEET	SQ. FEET	CU. YARDS	LUMP SUM	LBS.	LBS.	NO.	FEET	NO.	LIN. FT.	EACH	LIN. FT.	LIN. FT.	SQ. YDS.	LUMP SUM	LUMP SUM
SUPERSTRUCTURE		7394	7796		LUMP SUM			8	748.67				365.39	383.05		LUMP SUM	LUMP SUM
END BENT 1				57.0		8306				12	480	12			49		
BENT 1	LUMP SUM			91.1		10433	1965			20	700	20					
END BENT 2				54.0		7869				11	495	11			44		
TOTAL	LUMP SUM	7394	7796	202.1	LUMP SUM	26608	1965	8	748.67	43	1675	43	365.39	383.05	93	LUMP SUM	LUMP SUM

PROJECT NO. R-5000

JACKSON COUNTY

STATION: 39+74.37 -L- P.O.T.

SHEET 3 OF 4

NORTH CAROLINA PROFESSIONAL ENGINEER SEAL 19661 L. KEVIN AUSTIN 7/6/12

PLANS PREPARED BY:

MULKEY
ENGINEERS & CONSULTANTS
PO Box 33127
Raleigh, N.C. 27636
(919) 851-1918
(919) 851-1918 (FAX)
www.mulkeyinc.com
NC LICENSE NO. C-1021

STATE OF NORTH CAROLINA
DEPARTMENT OF TRANSPORTATION
RALEIGH

GENERAL DRAWING

FOR BRIDGE ON NEW CONNECTOR OVER NC 107 BETWEEN NC 116 AND SR 1774

REVISIONS						SHEET NO.
NO.	BY:	DATE:	NO.	BY:	DATE:	S-3
1			3			TOTAL SHEETS
2			4			32

DRAWN BY : W. B. ALLEN DATE : 8/11
CHECKED BY : W. A. DAVIS DATE : 5/12

7/6/2012 3:09:33 PM R:\Structures\R-5000_SD_00_02.dgn

LOAD AND RESISTANCE FACTOR RATING (LRFR) SUMMARY FOR PRESTRESSED CONCRETE GIRDERS

LEVEL		VEHICLE	WEIGHT (W) (TONS)	CONTROLLING LOAD RATING (#)	MINIMUM RATING FACTORS (RF)	TONS = W × RF	STRENGTH I LIMIT STATE										SERVICE III LIMIT STATE						COMMENT NUMBER
								MOMENT					SHEAR					MOMENT						
							LIVE-LOAD FACTORS (γLL)	DISTRIBUTION FACTORS (DF)	RATING FACTOR	SPAN	GIRDER LOCATION	DISTANCE FROM LEFT END OF SPAN (ft)	DISTRIBUTION FACTORS (DF)	RATING FACTOR	SPAN	GIRDER LOCATION	DISTANCE FROM LEFT END OF SPAN (ft)	LIVE-LOAD FACTORS (γLL)	DISTRIBUTION FACTORS (DF)	RATING FACTOR	SPAN	GIRDER LOCATION	DISTANCE FROM LEFT END OF SPAN (ft)	
DESIGN LOAD RATING		HL-93 (INVENTORY)	N/A	1	1.01	--	1.75	0.770	1.74	B	I	51.45	1.175	1.01	B	I	8.58	0.80	0.770	1.37	B	I	42.88	
		HL-93 (OPERATING)	N/A		1.33	--	1.35	0.770	2.25	B	I	51.45	1.175	1.33	B	I	8.58	N/A	--	--	--	--	--	
		HS-20 (INVENTORY)	36.000	2	1.37	49.32	1.75	0.770	2.32	B	I	51.45	1.175	1.37	B	I	17.15	0.80	0.770	1.83	B	I	42.88	
		HS-20 (OPERATING)	36.000		1.80	64.80	1.35	0.770	3.01	B	I	51.45	1.175	1.80	B	I	17.15	N/A	--	--	--	--	--	
LEGAL LOAD RATING	SINGLE VEHICLE (SV)	SNSH	13.500		4.20	56.70	1.40	0.770	6.69	B	I	51.45	1.175	4.35	B	I	17.15	0.80	0.770	4.20	B	I	42.88	
		SNGARBS2	20.000		3.03	60.60	1.40	0.770	4.86	B	I	51.45	1.175	3.03	B	I	17.15	0.80	0.770	3.10	B	I	42.88	
		SNAGRIS2	22.000		2.79	61.38	1.40	0.770	4.59	B	I	51.45	1.175	2.79	B	I	17.15	0.80	0.770	2.92	B	I	42.88	
		SNCOTTS3	27.250		2.10	57.23	1.40	0.770	3.34	B	I	51.45	1.175	2.12	B	I	17.15	0.80	0.770	2.10	B	I	42.88	
		SNAGGRS4	34.925		1.72	60.07	1.40	0.770	2.76	B	I	51.45	1.175	1.72	B	I	17.15	0.80	0.770	1.74	B	I	42.88	
		SNS5A	35.550		1.70	60.44	1.40	0.770	2.72	B	I	51.45	1.175	1.73	B	I	17.15	0.80	0.770	1.70	B	I	42.88	
		SNS6A	39.950		1.56	62.32	1.40	0.770	2.48	B	I	51.45	1.175	1.57	B	I	17.15	0.80	0.770	1.56	B	I	42.88	
		SNS7B	42.000		1.49	62.58	1.40	0.770	2.37	B	I	51.45	1.175	1.53	B	I	17.15	0.80	0.770	1.49	B	I	42.88	
	TRUCK TRACTOR SEMI-TRAILER (TTST)	TNAGRIT3	33.000		1.88	62.04	1.40	0.770	3.04	B	I	42.88	1.175	1.88	B	I	17.15	0.80	0.770	1.90	B	I	42.88	
		TNT4A	33.075		1.85	61.19	1.40	0.770	3.02	B	I	51.45	1.175	1.85	B	I	17.15	0.80	0.770	1.89	B	I	42.88	
		TNT6A	41.600		1.56	64.90	1.40	0.770	2.47	B	I	51.45	1.175	1.61	B	I	17.15	0.80	0.770	1.56	B	I	42.88	
		TNT7A	42.000		1.55	65.10	1.40	0.770	2.48	B	I	51.45	1.175	1.58	B	I	17.15	0.80	0.770	1.55	B	I	42.88	
		TNT7B	42.000		1.50	63.00	1.40	0.770	2.51	B	I	51.45	1.175	1.50	B	I	17.15	0.80	0.770	1.59	B	I	42.88	
		TNAGRIT4	43.000		1.45	62.35	1.40	0.770	2.45	B	I	51.45	1.175	1.45	B	I	17.15	0.80	0.770	1.53	B	I	42.88	
		TNAGT5A	45.000		1.43	64.35	1.40	0.770	2.31	B	I	51.45	1.175	1.43	B	I	17.15	0.80	0.770	1.45	B	I	42.88	
		TNAGT5B	45.000	3	1.38	62.10	1.40	0.770	2.27	B	I	51.45	1.175	1.38	B	I	17.15	0.80	0.770	1.43	B	I	42.88	

LOAD FACTORS:

DESIGN LOAD RATING FACTORS	LIMIT STATE	γ_{DC}	γ_{DW}
	STRENGTH I	1.25	1.50
	SERVICE III	1.00	1.00

NOTES:

MINIMUM RATING FACTORS ARE BASED ON THE STRENGTH I AND SERVICE III LIMIT STATES.

ALLOWABLE STRESSES FOR SERVICE III LIMIT STATE ARE AS REQUIRED FOR DESIGN.

COMMENTS:

1.
2.
3.
4.

(#) CONTROLLING LOAD RATING

(1) DESIGN LOAD RATING (HL-93)
(2) DESIGN LOAD RATING (HS-20)
(3) LEGAL LOAD RATING **
** SEE CHART FOR VEHICLE TYPE

GIRDER LOCATION

I - INTERIOR GIRDER
EL - EXTERIOR LEFT GIRDER
ER - EXTERIOR RIGHT GIRDER

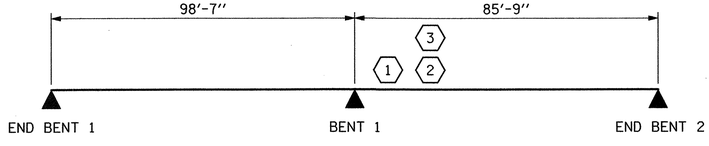

LRFR SUMMARY

PROJECT NO. R-5000
JACKSON COUNTY
STATION: 39+74.37 -L- P.O.T.

SHEET 4 OF 4

PLANS PREPARED BY:
MULKEY
ENGINEERS & CONSULTANTS
PO BOX 33127
RALEIGH, N.C. 27636
(919) 851-1912
(919) 851-1918 (FAX)
WWW.MULKEYINC.COM
NC LICENSE NO. C-1021

THIS STANDARD DRAWING REVIEWED & ADOPTED FOR USE AT THE REFERENCED LOCATION BY THE UNDERSIGNED:

NORTH CAROLINA PROFESSIONAL ENGINEER SEAL 19661 L. KEVIN AUSTIN 7/6/12

STATE OF NORTH CAROLINA
DEPARTMENT OF TRANSPORTATION
RALEIGH

STANDARD
LRFR SUMMARY FOR PRESTRESSED CONCRETE GIRDERS
(NON-INTERSTATE TRAFFIC)

REVISIONS						SHEET NO.
NO.	BY:	DATE:	NO.	BY:	DATE:	S-4
1			3			TOTAL SHEETS
2			4			32

STD. NO. LRFR1

ASSEMBLED BY :	Z. H. BROWN	DATE :	4/12
CHECKED BY :	W. A. DAVIS	DATE :	5/12
DRAWN BY : MAA 1/08	REV. 11/12/08RR		MAA/GM
CHECKED BY : GM/DI 2/08	REV. 10/1/11		MAA/GM

7/6/2012 7:34:07 AM R:\Structures\R-5000_SD_LRFR.dgn

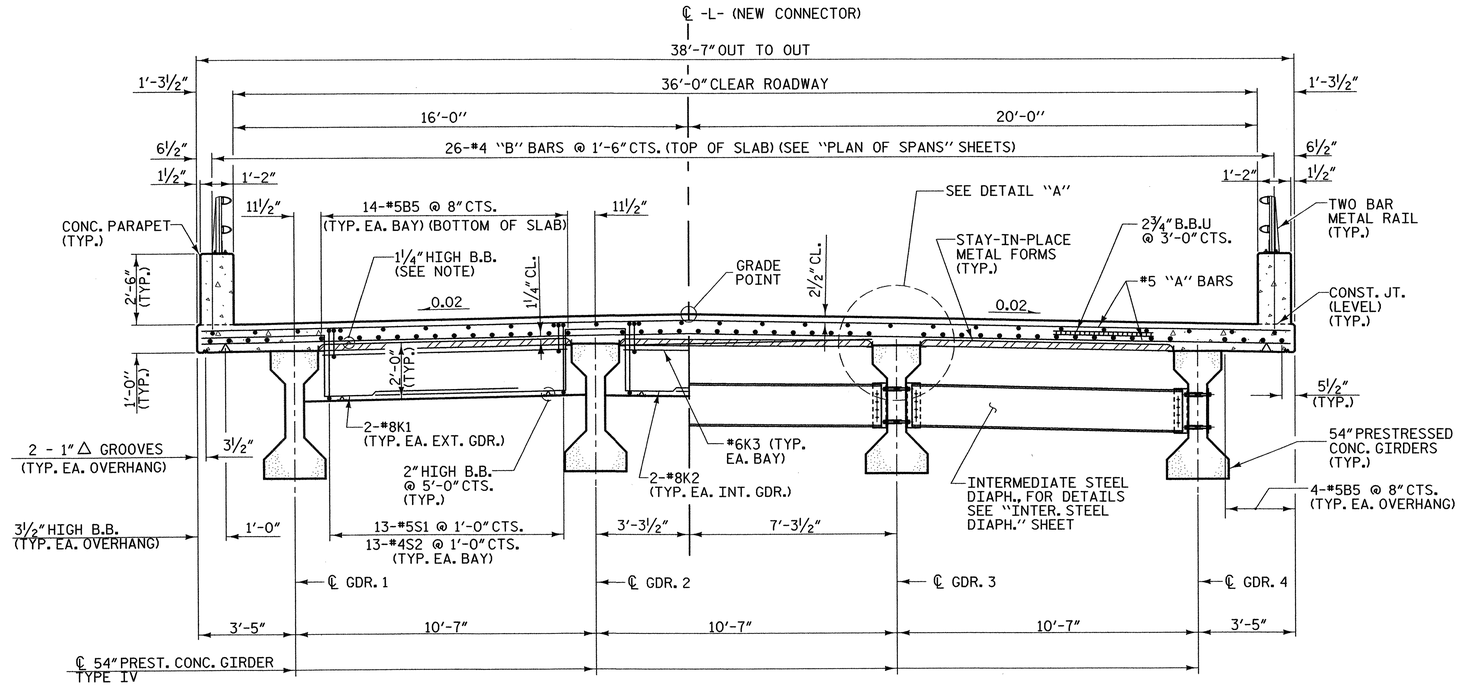

TYPICAL HALF SECTION
(SHOWING END BENT DIAPHRAGMS)

TYPICAL HALF SECTION
(SHOWING INTERMEDIATE STEEL DIAPHRAGMS)

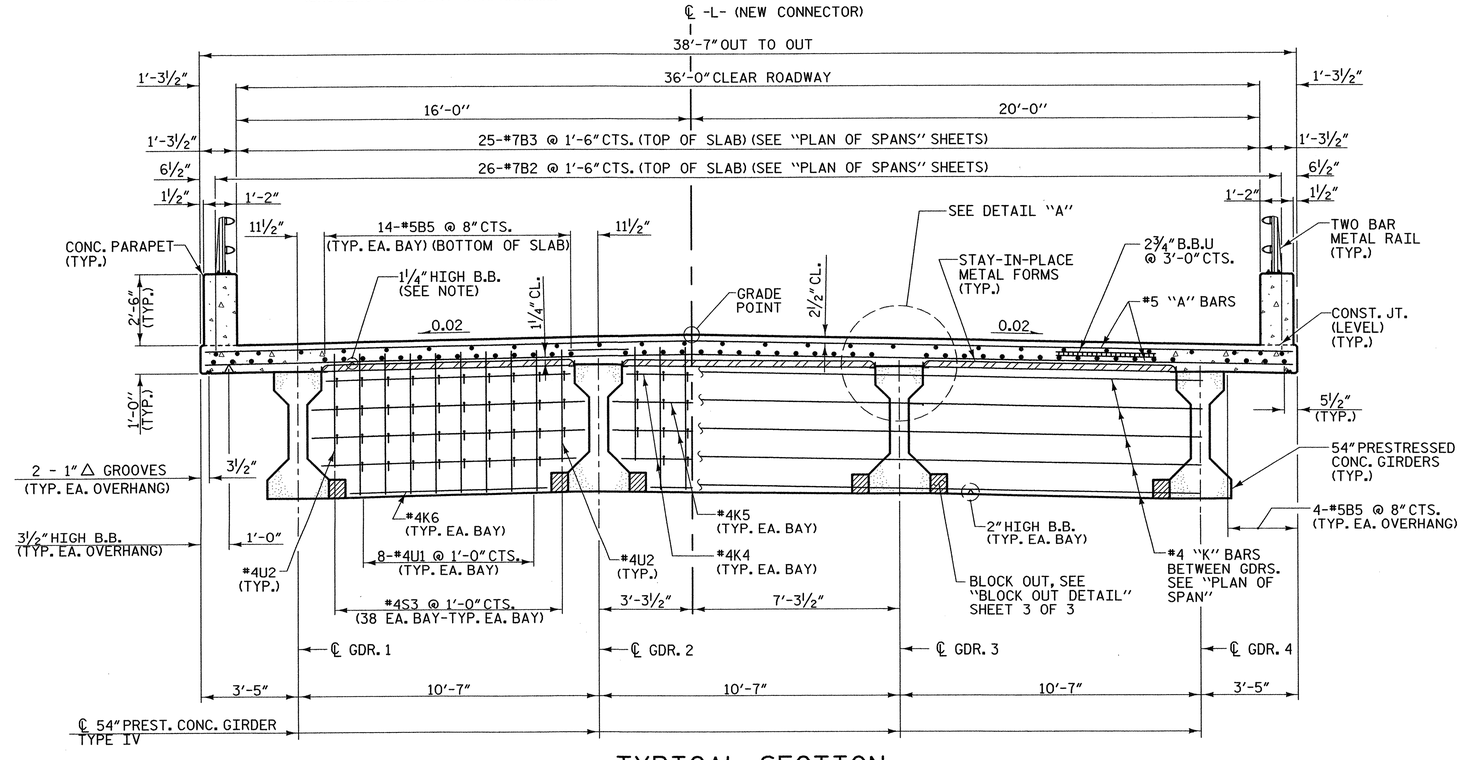

TYPICAL SECTION
(SHOWING CONTINUOUS BENT DIAPHRAGMS)

NOTES:

PROVIDE 1¼" HIGH BEAM BOLSTERS UPPER (BBU) AT 4'-0" CENTERS ATOP THE METAL STAY-IN-PLACE FORMS TO SUPPORT THE BOTTOM MAT OF "A" BARS. WHEN USING REMOVABLE FORMS, PROVIDE CONTINUOUS HIGH CHAIRS FOR METAL DECK (C.H.C.M.) @ 4'-0" CTS. WITH A HEIGHT TO SUPPORT THE BOTTOM MAT OF "A" BARS A CLEAR DISTANCE OF 2½" ABOVE THE TOP OF THE REMOVABLE FORM.

LONGITUDINAL STEEL MAY BE SHIFTED AS NECESSARY TO AVOID INTERFERENCE WITH STIRRUPS IN PRESTRESSED CONCRETE GIRDERS AND DRAIN PIPES IN THE DECK.

PREVIOUSLY CAST CONCRETE IN A CONTINUOUS UNIT SHALL HAVE ATTAINED A MINIMUM COMPRESSIVE STRENGTH OF 3,000 PSI BEFORE ADDTIONAL CONCRETE IS CAST IN THE UNIT.

*5G1 BAR MAY BE SHIFTED SLIGHTLY, AS NECESSARY, TO CLEAR REINFORCING STEEL AND STIRRUPS.

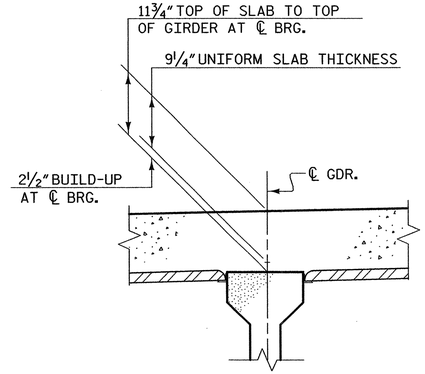

DETAIL "A"

PROJECT NO. R-5000

JACKSON COUNTY

STATION: 39+74.37 -L- P.O.T.

NORTH CAROLINA PROFESSIONAL ENGINEER 19661 L. KEVIN AUSTIN 7/6/12

PLANS PREPARED BY:

MULKEY
ENGINEERS & CONSULTANTS
PO Box 33157
RALEIGH, N.C. 27636
(919) 851-1918 (PHONE)
(919) 851-1918 (FAX)
WWW.MULKEYINC.COM
NC LICENSE NO. C-1021

STATE OF NORTH CAROLINA
DEPARTMENT OF TRANSPORTATION
RALEIGH

SUPERSTRUCTURE

TYPICAL SECTION

REVISIONS						SHEET NO.
NO.	BY:	DATE:	NO.	BY:	DATE:	S-5
1			3			TOTAL SHEETS
2			4			32

DRAWN BY : Z. H. BROWN DATE : 10/11
CHECKED BY : W. A. DAVIS DATE : 4/12

7/6/2012 7:34:39 AM R:\Structures\R-5000_SD_TS_0.dgn

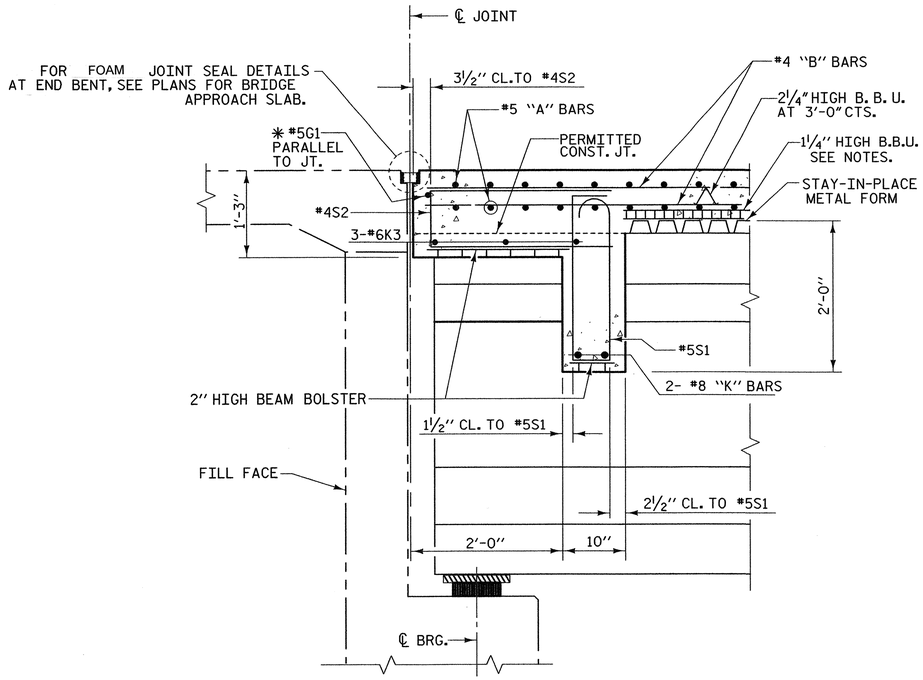

SECTION THRU END BENT DIAPHRAGM

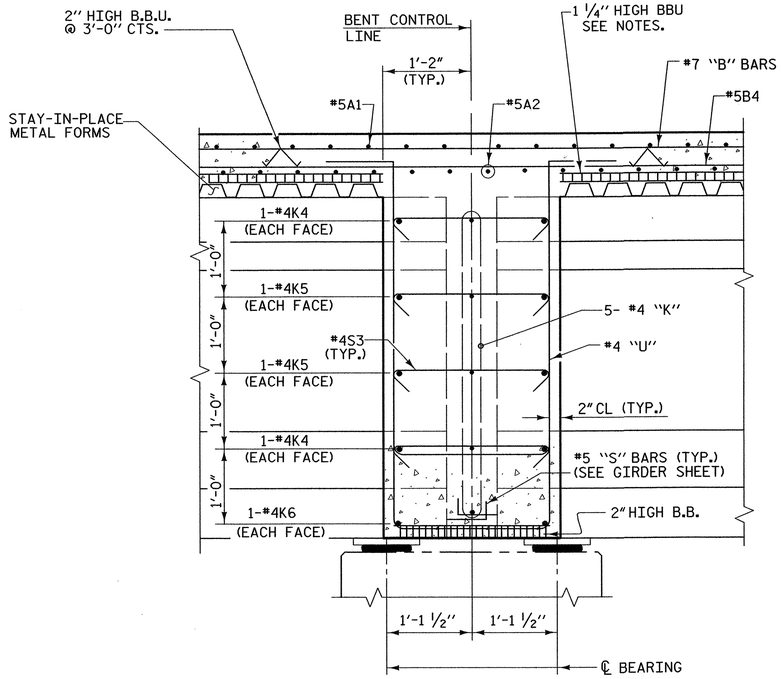

SECTION THRU CONTINUOUS BENT DIAPHRAGM

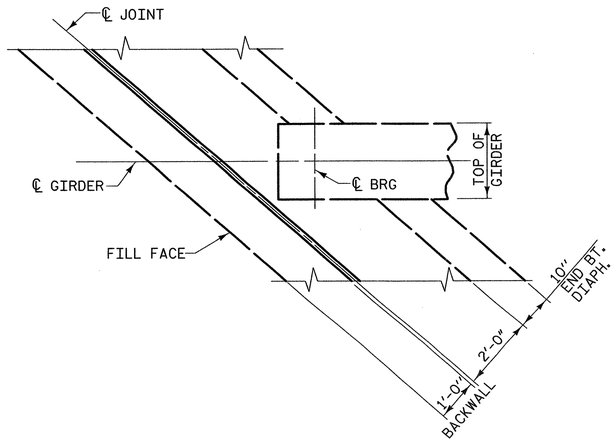

PLAN OF END BENT DIAPHRAGM

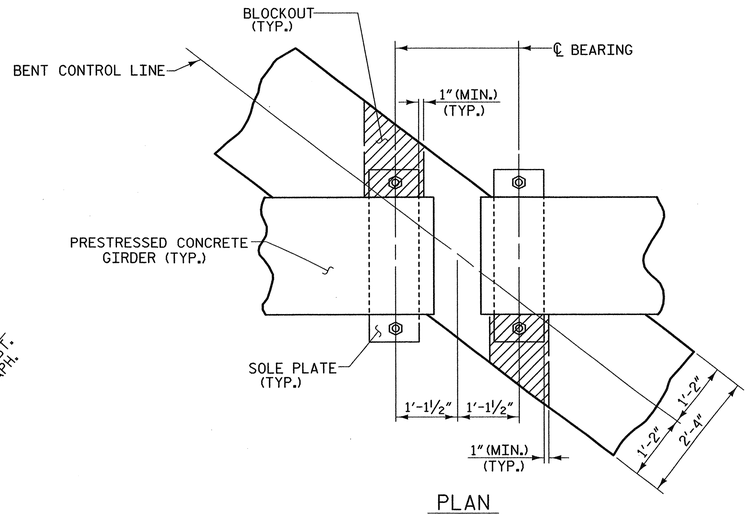

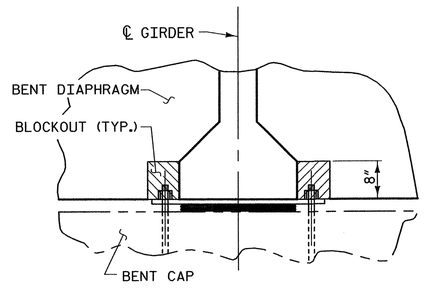

BENT DIAPHRAGM BLOCK-OUT DETAIL

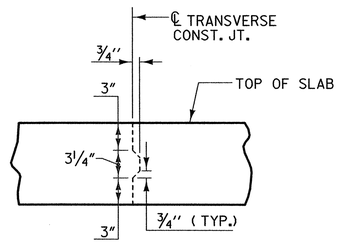

TRANSVERSE CONSTRUCTION JOINT DETAIL

NOTE: REINFORCING STEEL IN SLAB NOT SHOWN. LONGITUDINAL REINFORCING STEEL SHALL BE CONTINUOUS THRU JOINT

PROJECT NO. R-5000

JACKSON COUNTY

STATION: 39+74.37 -L- P.O.T.

SHEET 2 OF 2

STATE OF NORTH CAROLINA
DEPARTMENT OF TRANSPORTATION
RALEIGH

SUPERSTRUCTURE

TYPICAL SECTION DETAILS

NORTH CAROLINA PROFESSIONAL ENGINEER SEAL 19661 L. KEVIN AUSTIN 7/6/12

PLANS PREPARED BY:

MULKEY
ENGINEERS & CONSULTANTS
PO Box 33127
RALEIGH, N.C. 27636
(919) 851-1212
(919) 851-1213 (FAX)
WWW.MULKEYINC.COM
NC LICENSE NO. C-1031

REVISIONS						SHEET NO.
NO.	BY:	DATE:	NO.	BY:	DATE:	S-6
1			3			TOTAL SHEETS
2			4			32

DRAWN BY : W. B. ALLEN DATE : 11/11
CHECKED BY : W. A. DAVIS DATE : 12/11

7/6/2012 7:35:23 AM R:\Structures\R-5000_SD_TS_02.dgn

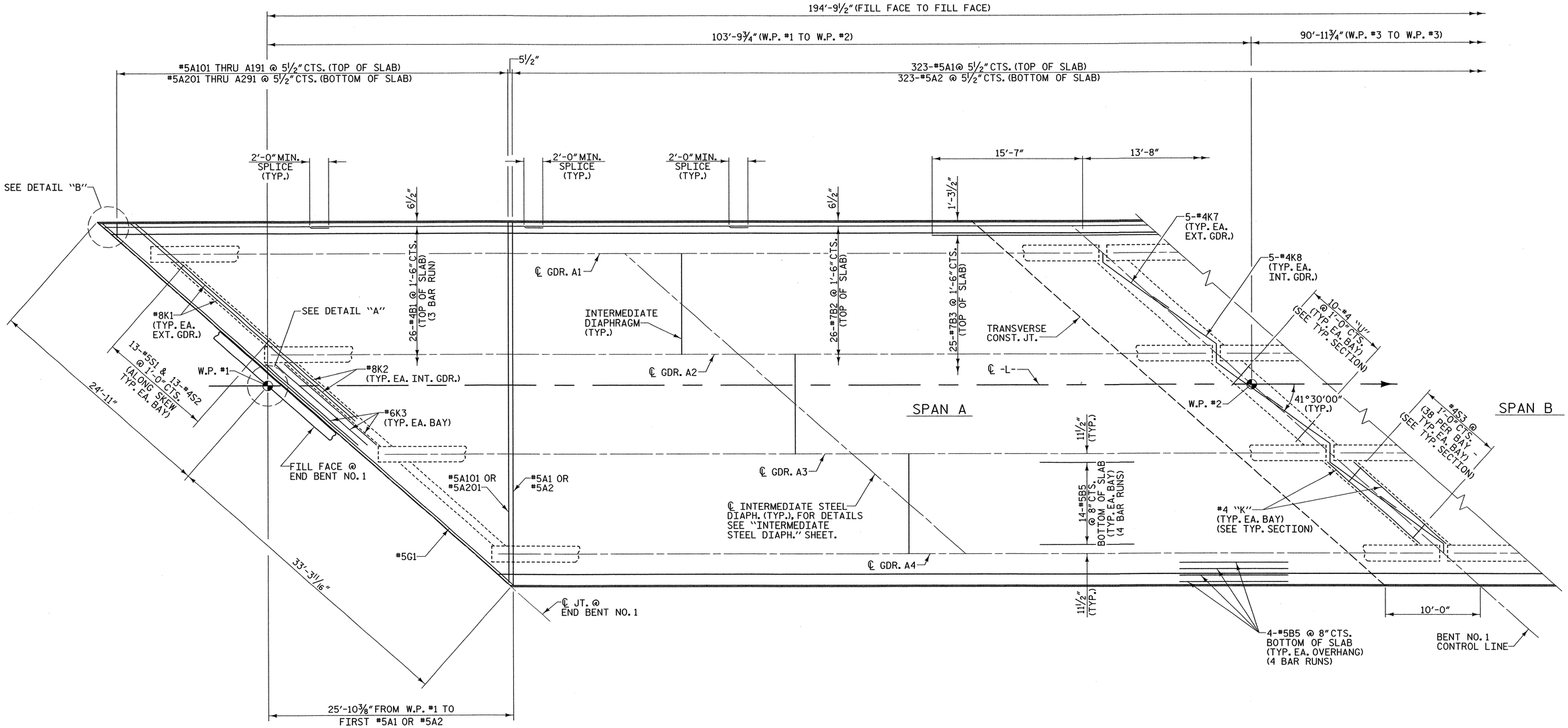

PLAN OF SPANS A & B

NOTE: FOR BRIDGE WIDTH DIMENSIONS SEE SHEET 2 OF 2

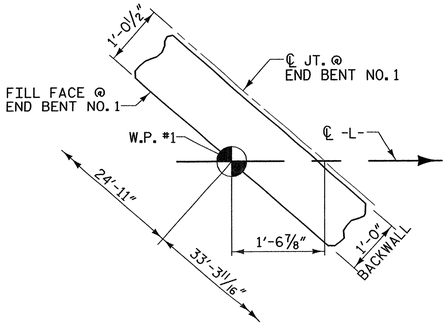

DETAIL "A"

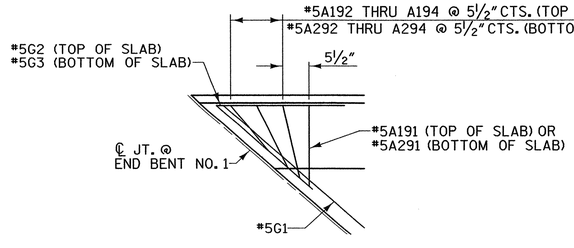

DETAIL "B"

PROJECT NO. R-5000

JACKSON COUNTY

STATION: 39+74.37 -L- P.O.T.

SHEET 1 OF 2

STATE OF NORTH CAROLINA
DEPARTMENT OF TRANSPORTATION
RALEIGH

SUPERSTRUCTURE

PLAN OF SPANS A & B

NORTH CAROLINA PROFESSIONAL 19661 ENGINEER L. KEVIN AUSTIN 7/6/12

PLANS PREPARED BY:

MULKEY
ENGINEERS & CONSULTANTS
PO Box 33127
RALEIGH, N.C. 27636
(919) 851-1918
(919) 851-1918 (FAX)
WWW.MULKEYINC.COM
NC LICENSE NO. C-1031

REVISIONS						SHEET NO.
NO.	BY:	DATE:	NO.	BY:	DATE:	S-7
1			3			TOTAL SHEETS
2			4			32

DRAWN BY : W. B. ALLEN DATE : 11/11
CHECKED BY : W. A. DAVIS DATE : 12/11

7/6/2012 7:36:16 AM R:\Structures\R-5000_SD_SL.dgn

194'-9½" (FILL FACE TO FILL FACE)

103'-9¾" (W.P. #1 TO W.P. #2)

90'-11¾" (W.P. #3 TO W.P. #3)

21'-4 3/16" FROM W.P. #3 TO FIRST #5A1 OR #5A2

15'-7"

13'-8"

5'-3" MIN. SPLICE (TYP.)

2'-0" MIN. SPLICE (TYP.)

2'-0" MIN. SPLICE (TYP.)

℄ JT. @ END BENT NO. 2

27'-3¼"

13-#5S1 & 13-#4S2 @ 1'-0" CTS. (ALONG SKEW TYP. EA. BAY)

1'-3½"

1'-2"

1½"

1'-3½"

6½"

6½"

6½"

38'-7"

36'-0" (CLEAR ROADWAY)

16'-0"

20'-0"

25-#7B3 @ 1'-6" CTS. (TOP OF SLAB)

26-#7B2 @ 1'-6" CTS. (TOP OF SLAB)

26-#7B3 @ 1'-6" CTS. (TOP OF SLAB)

26-#4B4 @ 1'-6" CTS. (TOP OF SLAB) (2 BAR RUN)

5-#4K7 (TYP. EA. EXT. GDR.)

5-#4K8 (TYP. EA. INT. GDR.)

℄ GDR. B1

INTERMEDIATE DIAPHRAGM (TYP.)

#8K1 (TYP. EA. EXT. GDR.)

SEE DETAIL "C"

W.P. #2

℄ -L-

℄ GDR. B2

W.P. #3

#8K2 (TYP. EA. INT. GDR.)

#6K3 (TYP. EA. BAY)

FILL FACE @ END BENT NO. 2

30'-11 7/16"

41°30'00" (TYP.)

SPAN A

SPAN B

#5A1 OR #5A2

11½" (TYP.)

#4S3 @ 1'-0" CTS. (38 PER BAY) TYP. EA. BAY) (SEE TYP. SECTION)

10-#4 "U" @ 1'-0" CTS. (TYP. EA. BAY) (SEE TYP. SECTION)

℄ GDR. B3

#5A101 OR #5A201

14-#5B5 @ 8" CTS. BOTTOM OF SLAB (TYP. EA. BAY) (4 BAR RUNS)

#5G1

#4 "K" (TYP. EA. BAY) (SEE TYP. SECTION)

TRANSVERSE CONST. JT.

℄ INTERMEDIATE STEEL DIAPH. (TYP.), FOR DETAILS SEE "INTERMEDIATE STEEL DIAPH." SHEET.

℄ GDR. B4

11½" (TYP.)

SEE DETAIL "D"

10'-0"

BENT NO. 1 CONTROL LINE

4-#5B5 @ 8" CTS. BOTTOM OF SLAB (TYP. EA. OVERHANG) (4 BAR RUNS)

5½"

323-#5A1@ 5½" CTS. (TOP OF SLAB)
323-#5A2 @ 5½" CTS. (BOTTOM OF SLAB)

#5A101 THRU A191 @ 5½" CTS. (TOP OF SLAB)
#5A201 THRU A291 @ 5½" CTS. (BOTTOM OF SLAB)

PLAN OF SPANS A & B

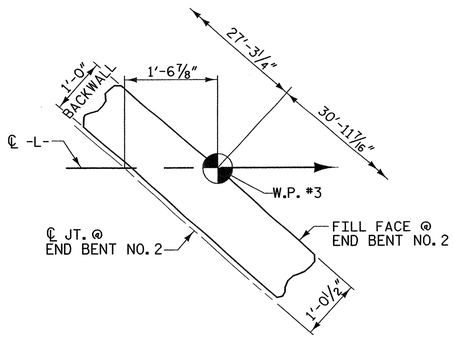

DETAIL "C"

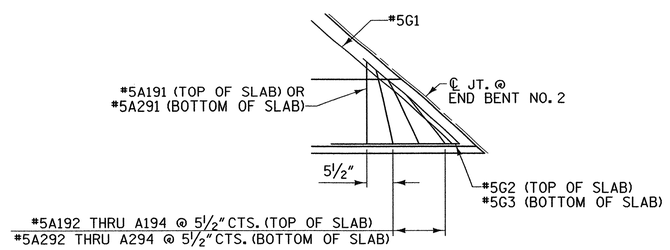

DETAIL "D"

PROJECT NO. R-5000

JACKSON COUNTY

STATION: 39+74.37 -L- P.O.T.

SHEET 2 OF 2

STATE OF NORTH CAROLINA
DEPARTMENT OF TRANSPORTATION
RALEIGH

SUPERSTRUCTURE

PLAN OF SPANS A & B

NORTH CAROLINA PROFESSIONAL ENGINEER 19661 L. KEVIN AUSTIN 7/6/12

PLANS PREPARED BY:

MULKEY
ENGINEERS & CONSULTANTS
PO Box 33127
RALEIGH, N.D. 27636
(919) 851-1212
(919) 851-1213 (FAX)
WWW.MULKEYINC.COM
NC LICENSE NO. C-1031

REVISIONS						SHEET NO.
NO.	BY:	DATE:	NO.	BY:	DATE:	S-8
1			3			TOTAL SHEETS
2			4			32

DRAWN BY : W. B. ALLEN DATE : 11/11
CHECKED BY : W. A. DAVIS DATE : 12/11

7/6/2012 7:36:44 AM R:\Structures\R-5000_SD_S2_0.dgn

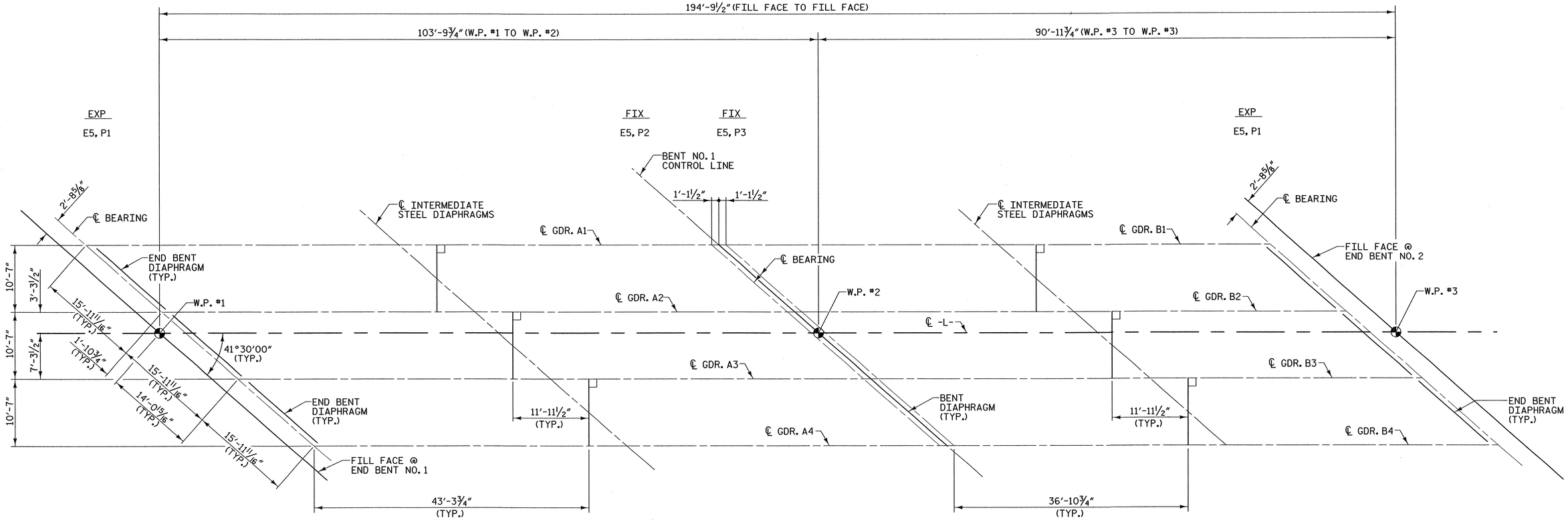

SPAN A

SPAN B

FRAMING PLAN

PROJECT NO. R-5000

JACKSON COUNTY

STATION: 39+74.37 -L- P.O.T.

NORTH CAROLINA PROFESSIONAL SEAL 19661 ENGINEER KEVIN AUSTIN 7/6/12

PLANS PREPARED BY:

MULKEY
ENGINEERS & CONSULTANTS
PO Box 93127
Raleigh, NC 27636
(919) 851-1912
(919) 851-1918 (FAX)
WWW.MULKEYINC.COM
NC LICENSE NO. C-1031

STATE OF NORTH CAROLINA
DEPARTMENT OF TRANSPORTATION
RALEIGH

SUPERSTRUCTURE

FRAMING PLAN

REVISIONS						SHEET NO.
NO.	BY:	DATE:	NO.	BY:	DATE:	S-9
1			3			TOTAL SHEETS
2			4			32

DRAWN BY : W. B. ALLEN DATE : 11/11
CHECKED BY : W. A. DAVIS DATE : 12/11

7/6/2012 7:37:21 AM R:\Structures\R-5000_SD_FP.dwgn

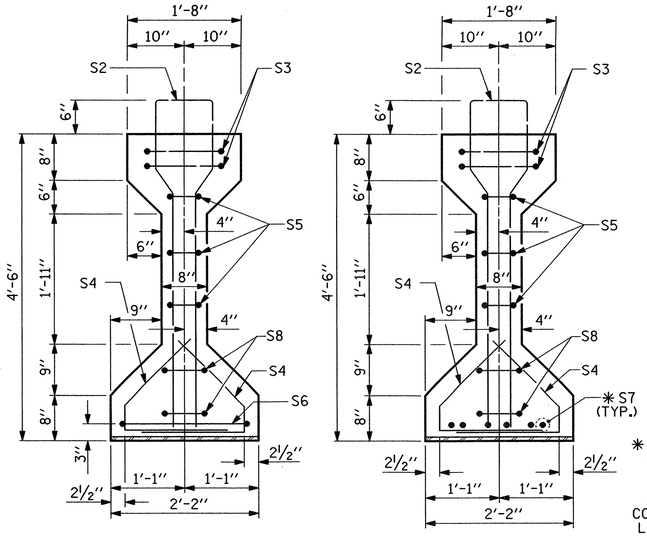

SECTION A-A

SECTION B-B

✱ FOR S7 BARS, SEE DETAIL "A" OF PRESTRESSED CONCRETE GIRDER CONTINUOUS FOR LIVE LOAD DETAILS SHEET

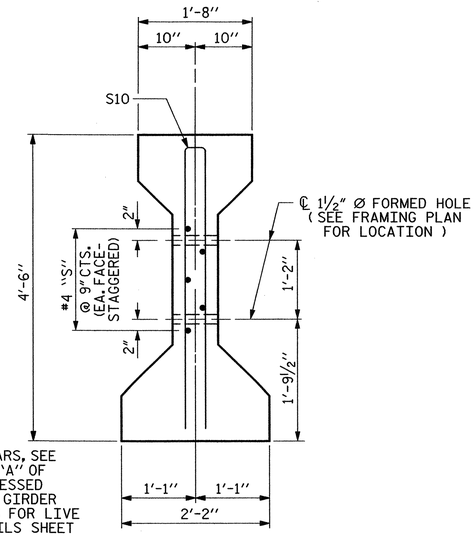

SECTION C-C

(S1 BARS NOT SHOWN)

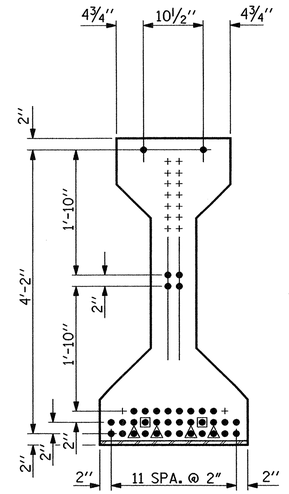

AT END OF GIRDER

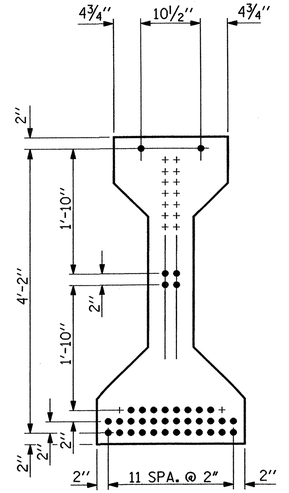

AT ℄ OF GIRDER

0.6" Ø LOW RELAXATION STRAND LAYOUT

△ DENOTES SHEATHED STRAND. BOND SHALL BE BROKEN ON THESE STRANDS FOR A DISTANCE OF 8'-0" FROM THE END OF GIRDER.

□ DENOTES SHEATHED STRAND. BOND SHALL BE BROKEN ON THESE STRANDS FOR A DISTANCE OF 10'-0" FROM THE END OF GIRDER.

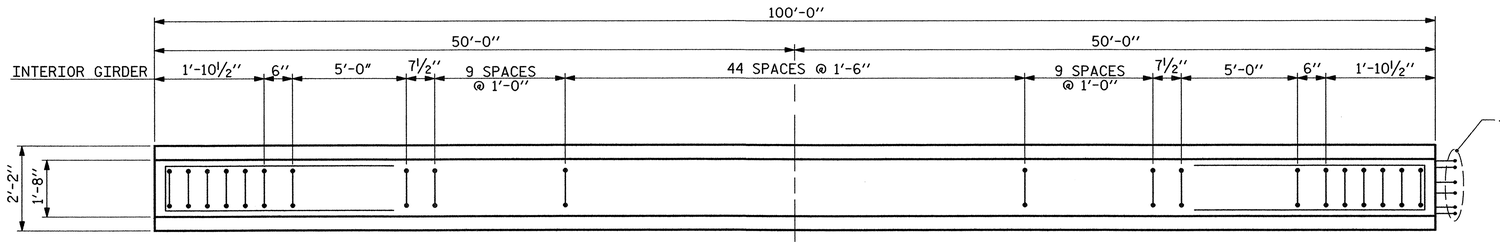

PLAN OF GIRDER

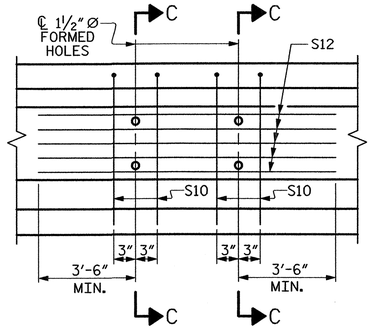

PARTIAL ELEVATION

SHOWING INTERMEDIATE DIAPHRAGM REINFORCING STEEL FOR GIRDER Nos. 2 & 3

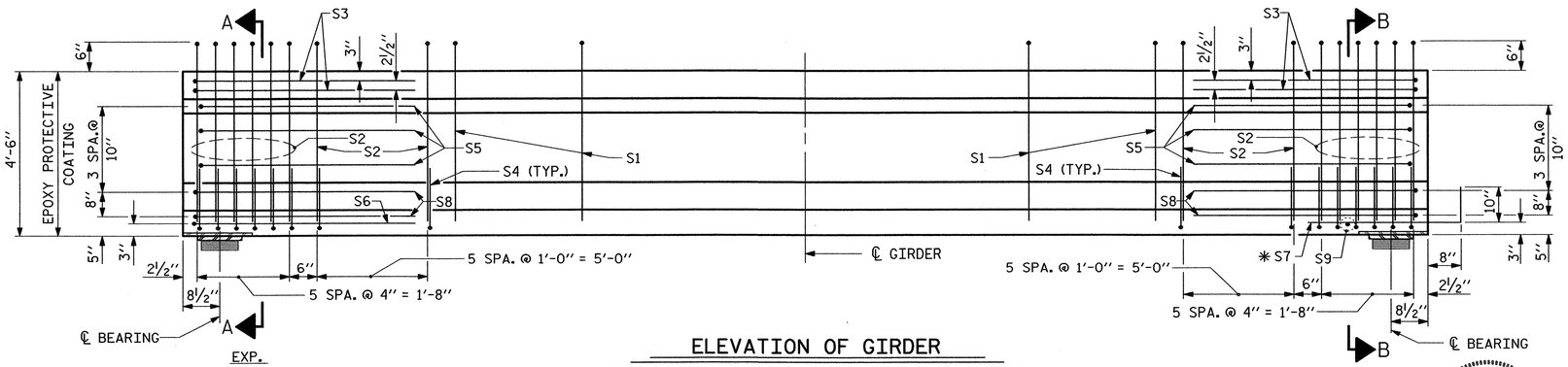

ELEVATION OF GIRDER

(SEE PARTIAL ELEVATION FOR ADDITIONAL "S" BARS)

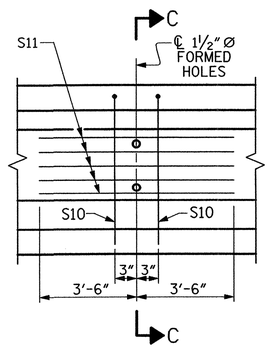

PARTIAL ELEVATION

SHOWING INTERMEDIATE DIAPHRAGM REINFORCING STEEL FOR GIRDER Nos. 1 & 4

PLANS PREPARED BY:

MULKEY
ENGINEERS & CONSULTANTS
PO Box 33127
Raleigh, N.C. 27636
(919) 851-1912
(919) 851-1918 (FAX)
WWW.MULKEYINC.COM
NC LICENSE NO. C-1021

NORTH CAROLINA PROFESSIONAL ENGINEER SEAL 19661 L. KEVIN AUSTIN 7/6/12

ASSEMBLED BY : Z. H. BROWN	DATE : 10/11
CHECKED BY : W. A. DAVIS	DATE : 12/11
DRAWN BY : ELR 8/91	REV. 10/17/00R RWW/LES
CHECKED BY : GRP 8/91	REV. 5/1/06R TLA/GM
	REV. 10/1/11 MAA/GM

0.6" Ø L. R. GRADE 270 STRANDS

AREA (SQUARE INCHES)	ULTIMATE STRENGTH (LBS. PER STRAND)	APPLIED PRESTRESS (LBS. PER STRAND)
0.217	58,600	43,950

REINFORCING STEEL FOR ONE GIRDER

	BAR	NUMBER	SIZE	TYPE	LENGTH	WEIGHT
	S1	63	#4	1	10'-8"	449
	S2	24	#6	1	10'-8"	385
	S3	4	#4	2	9'-1"	24
	S4	48	#4	3	3'-5"	110
	S5	6	#4	2	8'-5"	34
	S6	1	#4	2	9'-11"	7
	✱S7	6	#5	STR	3'-8"	23
	S8	4	#4	2	8'-7"	23
	S9	1	#3	STR	1'-10"	1
EXTERIOR GDR.	S10	2	#5	2	8'-8"	18
INTERIOR GDR.	S10	4	#5	2	8'-8"	36
EXTERIOR GDR.	S11	5	#4	STR	7'-0"	23
INTERIOR GDR.	S12	5	#4	STR	12'-10"	43

✱NOTE: S7 BARS SHALL BE BENT BEFORE SHIPMENT. HEAT BENDING SHALL NOT BE ALLOWED.

BAR TYPES

ALL BAR DIMENSIONS ARE OUT-TO-OUT

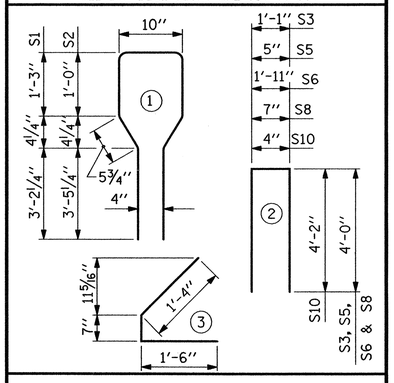

QUANTITIES FOR ONE GIRDER

	REINFORCING STEEL LB.	10000 PSI CONCRETE C.Y.	0.6" Ø L.R. STRANDS No.
EXTERIOR GIRDER	1097	20.3	38
INTERIOR GIRDER	1135	20.3	38

GIRDERS REQUIRED

NUMBER	LENGTH	TOTAL LENGTH
4	100'-0"	400'-0"

PROJECT NO. R-5000

JACKSON COUNTY

STATION: 39+74.37 -L- P.O.T.

STATE OF NORTH CAROLINA
DEPARTMENT OF TRANSPORTATION
RALEIGH

STANDARD

AASHTO TYPE IV
PRESTRESSED CONCRETE GIRDER
CONTINUOUS FOR LIVE LOAD
SPAN A

REVISIONS						SHEET NO.
NO.	BY:	DATE:	NO.	BY:	DATE:	S-10
1			3			TOTAL SHEETS
2			4			32

STD. NO. PCG6 (Sht. 1)

7/6/2012 14:50:07 PM RnStructuresVR-5000_S10_0_0.dgn

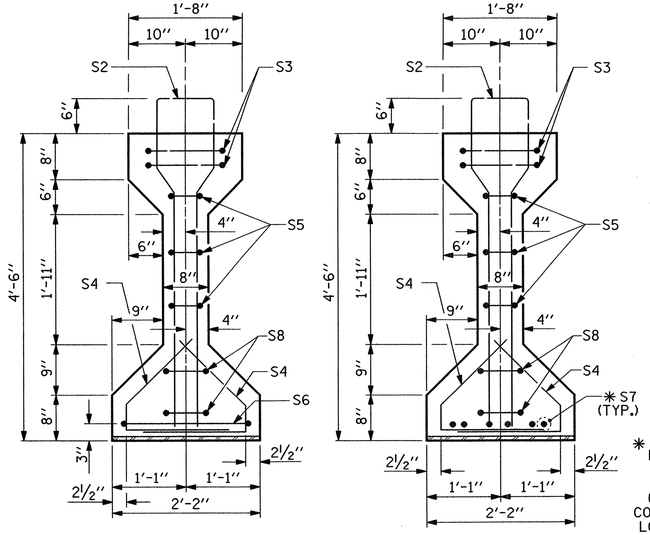

SECTION A-A

SECTION B-B

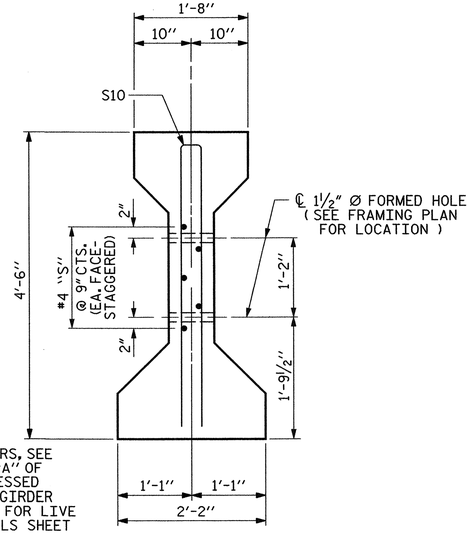

SECTION C-C

(S1 BARS NOT SHOWN)

✱ FOR S7 BARS, SEE DETAIL "A" OF PRESTRESSED CONCRETE GIRDER CONTINUOUS FOR LIVE LOAD DETAILS SHEET

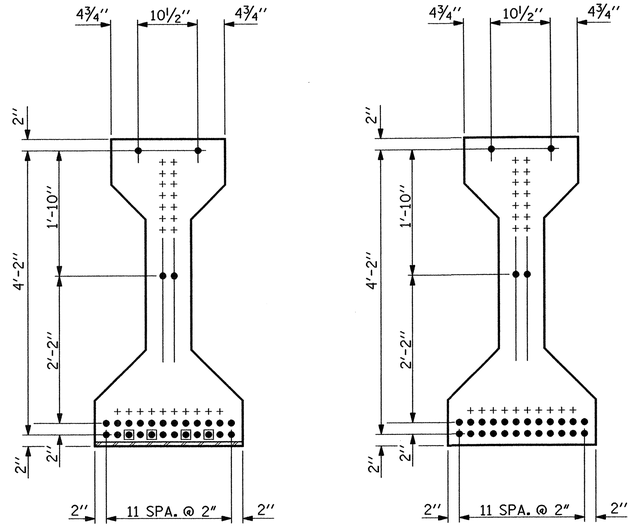

AT END OF GIRDER

AT ℄ OF GIRDER

0.6" Ø LOW RELAXATION STRAND LAYOUT

□ DENOTES SHEATHED STRAND. BOND SHALL BE BROKEN ON THESE STRANDS FOR A DISTANCE OF 10'-0" FROM THE END OF GIRDER.

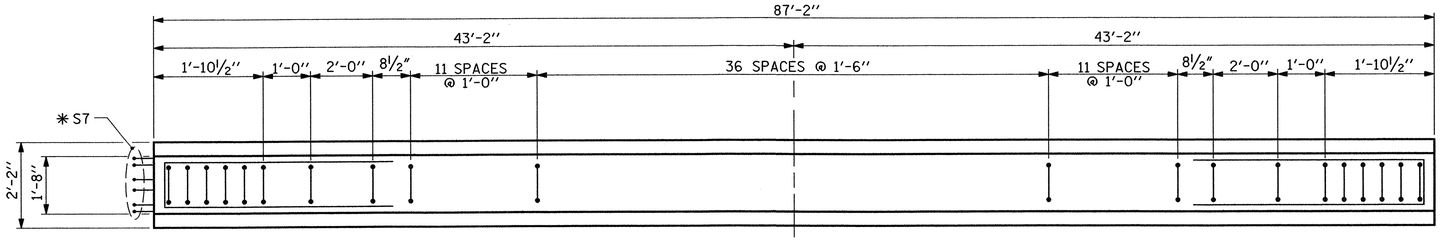

PLAN OF GIRDER

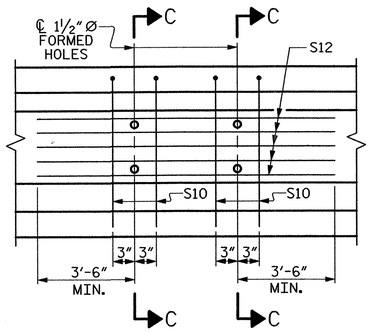

PARTIAL ELEVATION

SHOWING INTERMEDIATE DIAPHRAGM REINFORCING STEEL FOR GIRDER Nos. 2 &3

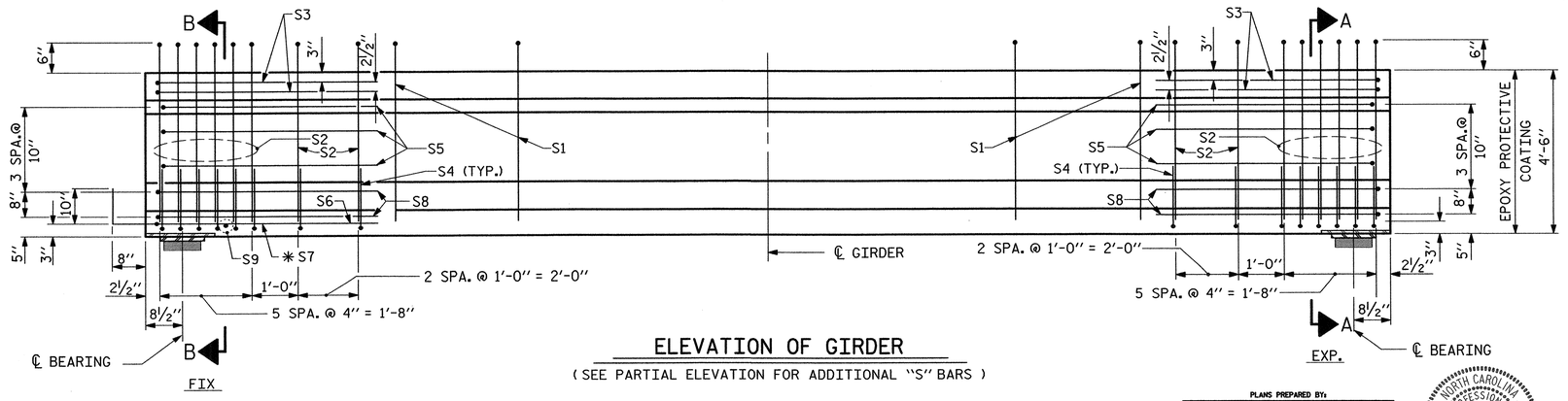

ELEVATION OF GIRDER

(SEE PARTIAL ELEVATION FOR ADDITIONAL "S" BARS)

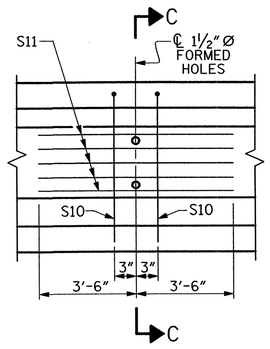

PARTIAL ELEVATION

SHOWING INTERMEDIATE DIAPHRAGM REINFORCING STEEL FOR GIRDER Nos. 1 & 4

0.6" Ø L. R. GRADE 270 STRANDS

AREA (SQUARE INCHES)	ULTIMATE STRENGTH (LBS. PER STRAND)	APPLIED PRESTRESS (LBS. PER STRAND)
0.217	58,600	43,950

REINFORCING STEEL FOR ONE GIRDER

	BAR	NUMBER	SIZE	TYPE	LENGTH	WEIGHT
	S1	59	#4	1	10'-8"	420
	S2	18	#6	1	10'-8"	288
	S3	4	#4	2	9'-1"	24
	S4	48	#4	3	3'-5"	110
	S5	6	#4	2	8'-5"	34
	S6	1	#4	2	9'-11"	7
	✱S7	6	#5	STR	3'-8"	23
	S8	4	#4	2	8'-7"	23
	S9	1	#3	STR	1'-10"	1
EXTERIOR GDR.	S10	2	#5	2	8'-8"	18
INTERIOR GDR.	S10	4	#5	2	8'-8"	36
EXTERIOR GDR.	S11	5	#4	STR	7'-0"	23
INTERIOR GDR.	S12	5	#4	STR	12'-10"	43

✱NOTE: S7 BARS SHALL BE BENT BEFORE SHIPMENT. HEAT BENDING SHALL NOT BE ALLOWED.

BAR TYPES

ALL BAR DIMENSIONS ARE OUT-TO-OUT

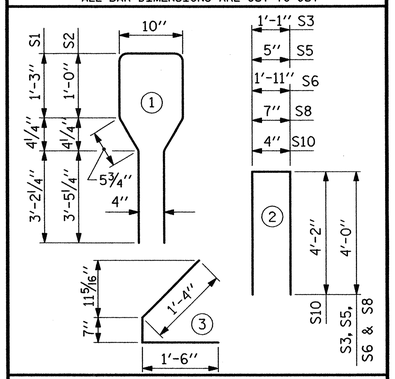

QUANTITIES FOR ONE GIRDER

	REINFORCING STEEL LB.	8000 PSI CONCRETE C.Y.	0.6" Ø L.R. STRANDS No.
EXTERIOR GIRDER	971	17.7	28
INTERIOR GIRDER	1009	17.7	28

GIRDERS REQUIRED

NUMBER	LENGTH	TOTAL LENGTH
4	87'-2"	348'-8"

PROJECT NO. R-5000

JACKSON COUNTY

STATION: 39+74.37 -L- P.O.T.

STATE OF NORTH CAROLINA
DEPARTMENT OF TRANSPORTATION
RALEIGH

STANDARD
AASHTO TYPE IV
PRESTRESSED CONCRETE GIRDER
CONTINUOUS FOR LIVE LOAD
SPAN B

REVISIONS						SHEET NO.
NO.	BY:	DATE:	NO.	BY:	DATE:	S-11
1			3			TOTAL SHEETS
2			4			32

ASSEMBLED BY :	Z. H. BROWN	DATE :	10/11
CHECKED BY :	W. A. DAVIS	DATE :	12/11
DRAWN BY : ELR 8/91	REV. 10/17/00R		RWW/LES
CHECKED BY : GRP 8/91	REV. 5/1/06R		TLA/GM
	REV. 10/1/11		MAA/GM

PLANS PREPARED BY:
MULKEY
ENGINEERS & CONSULTANTS
PO Box 33127
RALEIGH, N.C. 27636
(919) 851-1912
(919) 851-1918 (FAX)
WWW.MULKEYINC.COM
NC LICENSE NO. C-1021

NORTH CAROLINA PROFESSIONAL SEAL 19661 ENGINEER KEVIN AUSTIN
7/6/12

STD. NO. PCG6 (Sht. 1)

7/6/2012 12:09:07 PM R:\Structures\R-5000_SD_G_02.dgn

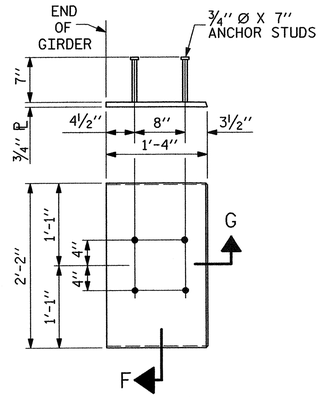

EMBEDDED PLATE "B-1" DETAILS FOR AASHTO TYPE IV GIRDER

(2 REQ'D PER GIRDER)

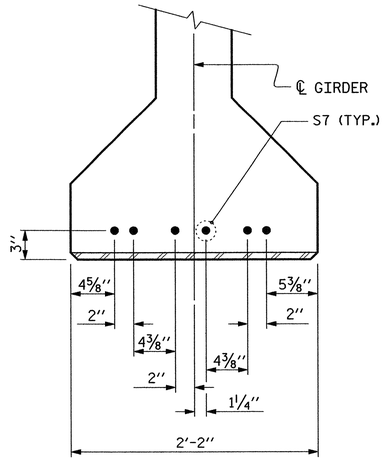

DETAIL "A"

(FOR AASHTO TYPE IV GIRDERS)

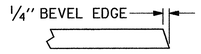

SECTION "G"

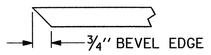

SECTION "F"

(SEE NOTES)

NOTES

ALL PRESTRESSING STRANDS SHALL BE 7-WIRE LOW-RELAXATION GRADE 270 STRANDS AND SHALL CONFORM TO AASHTO M203 EXCEPT FOR SAMPLING REQUIREMENTS WHICH SHALL BE IN ACCORDANCE WITH THE STANDARD SPECIFICATIONS.

ALL REINFORCING STEEL SHALL BE GRADE 60.

APPLY EPOXY PROTECTIVE COATING TO END OF GIRDER SURFACES INDICATED IN ELEVATION VIEW.

EMBEDDED PLATE "B-1" SHALL BE GALVANIZED IN ACCORDANCE WITH THE STANDARD SPECIFICATIONS. BEVEL EDGES OF PLATE "B-1" TO GIVE CLOSE FIT BUT NOT TIGHT FIT TO STEEL CASTING FORM.

ANCHOR STUDS SHALL CONFORM TO AASHTO M169 GRADES 1010 THROUGH 1020 OR APPROVED EQUAL, AND SHALL MEET THE TYPE "B" REQUIREMENTS OF SUBSECTION 7.3 OF THE ANSI/AASHTO/AWS D1.5 BRIDGE WELDING CODE.

AT ENDS OF GIRDERS TO BE EMBEDDED IN CONCRETE DIAPHRAGMS OR END WALLS, PRESTRESSING STRANDS MAY EXTEND A MAXIMUM OF 2" BEYOND THE GIRDER ENDS. OTHERWISE, PRESTRESSING STRANDS SHALL BE CUT FLUSH WITH THE GIRDER ENDS.

THE TRANSFER OF LOAD FROM THE ANCHORAGES TO THE GIRDER SHALL BE DONE WHEN CONCRETE HAS REACHED A COMPRESSIVE STRENGTH OF NOT LESS THAN 7000 PSI FOR SPAN A AND 6000 PSI FOR SPAN B.

DEPENDING ON THE TYPE OF SYSTEM USED TO SUPPORT THE DECK SLAB FORMS, PRESET ANCHORS MAY BE NECESSARY IN THE PRESTRESSED CONCRETE GIRDER.

THE TOP SURFACE OF THE GIRDER, EXCLUDING THE OUTSIDE 4", SHALL BE RAKED TO A DEPTH OF 1/4".

WHEN DRAPED STRANDS ARE DETAILED, THE LONGITUDINAL LOCATION OF THE HOLD DOWN DEVICES SHALL BE WITHIN 6" OF THE LOCATION SHOWN AND THE CENTER OF GRAVITY OF THE GROUP OF DRAPED STRANDS SHALL BE LOCATED WITHIN 1/2" OF THE THEORETICAL LOCATION SHOWN.

THE CONTRACTOR HAS THE OPTION TO PROVIDE, AT NO ADDITIONAL COST TO THE DEPARTMENT, 2 ADDITIONAL STRANDS AT THE TOP OF THE GIRDER TO FACILITATE TYING OF THE REINFORCING STEEL. THESE STRANDS SHALL BE PULLED TO A LOAD OF 4500 lbs.

DEAD LOAD DEFLECTION TABLE FOR GIRDERS

	SPAN A																				
GIRDER 1 & GIRDER 4	℄ BRG.	.05	.10	.15	.20	.25	.30	.35	.40	.45	.50	.55	.60	.65	.70	.75	.80	.85	.90	.95	℄ BRG.
CAMBER (GIRDER ALONE IN PLACE) ↑	0.000	0.054	0.109	0.147	0.185	0.211	0.238	0.252	0.267	0.272	0.277	0.272	0.267	0.252	0.238	0.211	0.185	0.147	0.109	0.054	0.000
DEFLEC. DUE TO SUPERIMPOSED DEAD LOAD * ↓	0.000	0.022	0.043	0.064	0.084	0.101	0.117	0.127	0.137	0.140	0.143	0.139	0.135	0.125	0.114	0.098	0.082	0.061	0.041	0.021	0.000
FINAL CAMBER ↑	0	3/8"	13/16"	1"	1 3/16"	1 5/16"	1 7/16"	1 1/2"	1 9/16"	1 9/16"	1 5/8"	1 5/8"	1 9/16"	1 9/16"	1 7/16"	1 3/8"	1 3/16"	1"	13/16"	3/8"	0
GIRDER 2 & GIRDER 3	℄ BRG.		.10		.20		.30		.40		.50		.60		.70		.80		.90		℄ BRG.
CAMBER (GIRDER ALONE IN PLACE) ↑	0.000	0.054	0.109	0.147	0.185	0.211	0.238	0.252	0.267	0.272	0.277	0.272	0.267	0.252	0.238	0.211	0.185	0.147	0.109	0.054	0.000
DEFLEC. DUE TO SUPERIMPOSED DEAD LOAD * ↓	0.000	0.025	0.050	0.074	0.098	0.117	0.136	0.147	0.159	0.163	0.167	0.162	0.158	0.146	0.133	0.114	0.095	0.072	0.048	0.024	0.000
FINAL CAMBER ↑	0	3/8"	11/16"	7/8"	1 1/16"	1 1/8"	1 1/4"	1 1/4"	1 5/16"	1 5/16"	1 5/16"	1 5/16"	1 5/16"	1 1/4"	1 1/4"	1 3/16"	1 1/16"	7/8"	11/16"	3/8"	0

	SPAN B										
GIRDER 1 & GIRDER 4	℄ BRG.	.10	.20	.30	.40	.50	.60	.70	.80	.90	℄ BRG.
CAMBER (GIRDER ALONE IN PLACE) ↑	0.000	0.067	0.117	0.150	0.170	0.176	0.170	0.150	0.117	0.067	0.000
DEFLEC. DUE TO SUPERIMPOSED DEAD LOAD * ↓	0.000	0.025	0.048	0.067	0.080	0.085	0.082	0.070	0.051	0.026	0.000
FINAL CAMBER ↑	0	1/2"	13/16"	1"	1 1/16"	1 1/16"	1 1/16"	1"	13/16"	1/2"	0
GIRDER 2 & GIRDER 3	℄ BRG.	.10	.20	.30	.40	.50	.60	.70	.80	.90	℄ BRG.
CAMBER (GIRDER ALONE IN PLACE) ↑	0.000	0.067	0.117	0.150	0.170	0.176	0.170	0.150	0.117	0.067	0.000
DEFLEC. DUE TO SUPERIMPOSED DEAD LOAD * ↓	0.000	0.031	0.061	0.085	0.101	0.107	0.102	0.087	0.063	0.032	0.000
FINAL CAMBER ↑	0	7/16"	11/16"	3/4"	13/16"	13/16"	13/16"	3/4"	11/16"	7/16"	0

DEFLECTION AND GIRDER CAMBER ARE IN FEET.

FINAL CAMBER IS IN INCHES.

VALUES ARE SHOWN AT TENTH POINTS BETWEEN BEARINGS.

* FUTURE WEARING SURFACE INCLUDED.

PROJECT NO. R-5000

JACKSON COUNTY

STATION: 39+74.37 -L- P.O.T.

PLANS PREPARED BY:

MULKEY
ENGINEERS & CONSULTANTS
PO Box 33127
Raleigh, N.C. 27636
(919) 851-1912
(919) 851-1918 (FAX)
WWW.MULKEYINC.COM
NC LICENSE NO. C-1031

THIS STANDARD DRAWING REVIEWED & ADOPTED FOR USE AT THE REFERENCED LOCATION BY THE UNDERSIGNED:

NORTH CAROLINA PROFESSIONAL SEAL 19661 ENGINEER L. KEVIN AUSTIN

7/6/12

STATE OF NORTH CAROLINA
DEPARTMENT OF TRANSPORTATION
RALEIGH

STANDARD

PRESTRESSED CONCRETE GIRDER CONTINUOUS FOR LIVE LOAD DETAILS

REVISIONS						SHEET NO.
NO.	BY:	DATE:	NO.	BY:	DATE:	S-12
1			3			TOTAL SHEETS
2			4			32

ASSEMBLED BY : W. B. ALLEN	DATE : 11/11	REV. 7/10/01RR	LES/RDR
CHECKED BY : W. A. DAVIS	DATE : 12/11	REV. 5/1/06	TLA/GM
DRAWN BY : ELR 11/91		REV. 10/1/11	MAA/GM
CHECKED BY : GRP 11/91			

7/6/2012 7:42:53 AM R:\Structures\R-5000_SD_G_04.dgn

STD. NO. PCG9 (Sht. 3)

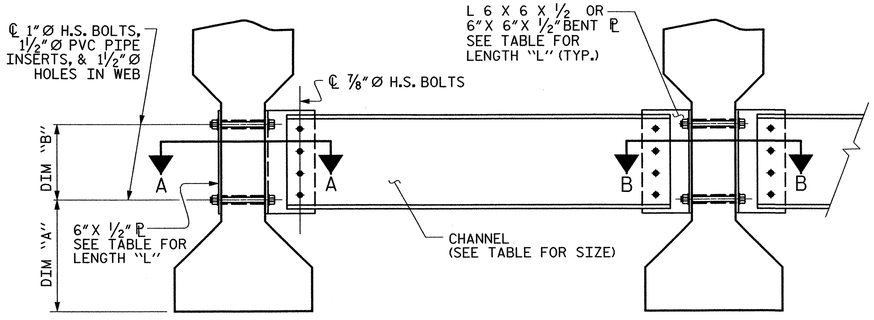

EXTERIOR GIRDER

INTERIOR GIRDER

PART SECTION AT INTERMEDIATE DIAPHRAGM

(TYPE III OR TYPE IV GIRDER SHOWN)

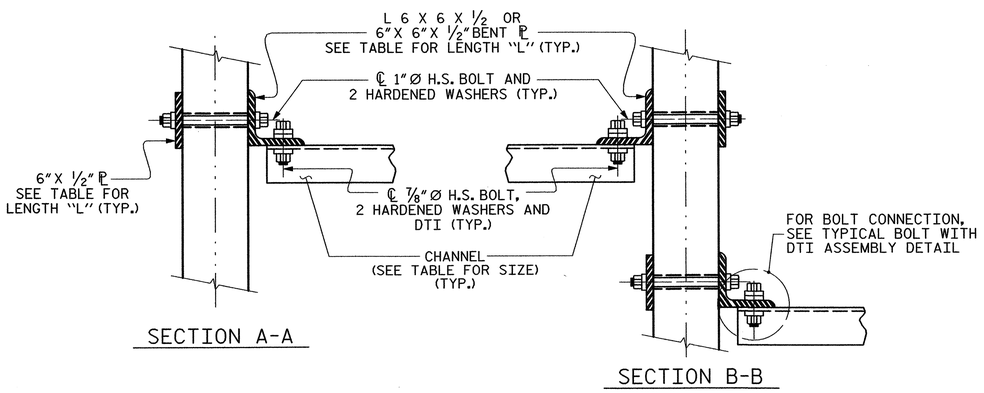

SECTION A-A

SECTION B-B

CONNECTION DETAILS

(FOR SKEW < 70° OR SKEW > 110°)

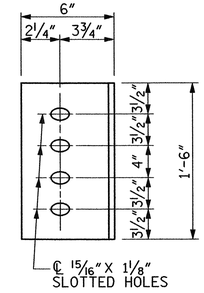

DIAPHRAGM FACE
(TYPE III OR TYPE IV GDR.)

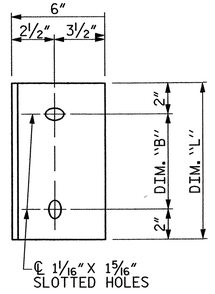

WEB FACE

CONNECTOR PLATE DETAILS

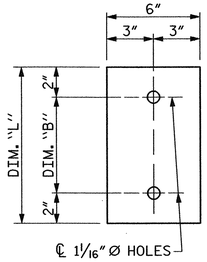

PLATE DETAILS

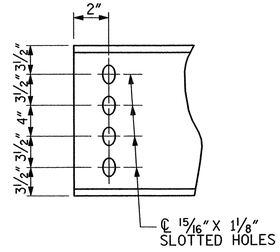

CHANNEL END
(TYPE III OR TYPE IV GDR.)

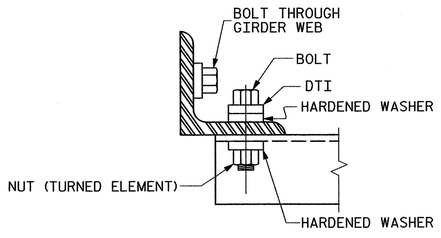

BOLT WITH DTI ASSEMBLY DETAIL

STRUCTURAL STEEL NOTES

ALL INTERMEDIATE DIAPHRAGM STEEL AND CONNECTOR PLATES SHALL BE AASHTO M270 GRADE 50 OR APPROVED EQUAL.

TENSION ON THE ASTM A325 BOLTS THROUGH THE CHANNEL MEMBER SHALL BE CALIBRATED USING DIRECT TENSION INDICATOR WASHERS IN ACCORDANCE WITH THE STANDARD SPECIFICATIONS.

TENSION ON THE ASTM A449 BOLTS THROUGH THE GIRDER WEB SHALL BE SNUG TIGHTENED FOLLOWED BY AN ADDITIONAL ¼ TURN.

THE PLATES, BENT PLATES, CHANNELS, AND ANGLES SHALL BE GALVANIZED OR METALLIZED IN ACCORDANCE WITH THE STANDARD SPECIFICATIONS. FOR THERMAL SPRAYED COATINGS (METALLIZATION), SEE SPECIAL PROVISIONS.

FOR METALLIZATION, APPLY AN 8 MIL THICK 99.99 PERCENT ZINC (W-Zn-1) THERMAL SPRAYED COATING WITH A 0.5 MIL THICK SEAL COAT TO ALL STEEL DIAPHRAGM SURFACES IN ACCORDANCE WITH THE THERMAL SPRAYED COATINGS SPECIAL PROVISION AND SECTION 442 OF THE STANDARD SPECIFICATIONS.

GALVANIZE THE HIGH STRENGTH BOLTS, NUTS, WASHERS AND DIRECT TENSION INDICATORS IN ACCORDANCE WITH THE STANDARD SPECIFICATIONS.

USE AN ASTM F436 HARDENED WASHER WITH STANDARD AND SLOTTED HOLES UNDER EACH BOLT HEAD AND NUT.

FOR BOLTS THROUGH THE GIRDER WEB, PROVIDE SUFFICIENT LENGTH OF THREADS ON ALL BOLTS TO ACCOMMODATE WASHERS AND THE THICKNESS OF CONNECTING MEMBER PLUS AT LEAST ¼"PROJECTION BEYOND THE NUT.

INTERMEDIATE DIAPHRAGM ASSEMBLY SHALL COMPLY WITH SECTION 1072 OF THE STANDARD SPECIFICATIONS.

SUBMIT TWO SETS OF WORKING DRAWINGS FOR THE INTERMEDIATE DIAPHRAGM ASSEMBLY FOR REVIEW, COMMENTS AND ACCEPTANCE. AFTER REVIEW, COMMENTS, AND ACCEPTANCE, SUBMIT SEVEN SETS FOR DISTRIBUTION.

IN THE EXTERIOR BAYS, PLACE TEMPORARY STRUTS BETWEEN PRESTRESSED GIRDERS ADJACENT TO THE STEEL DIAPHRAGMS. STRUTS SHALL REMAIN IN PLACE 3 DAYS AFTER CONCRETE IS PLACED.

THE COST OF THE STEEL DIAPHRAGMS AND ASSEMBLIES SHALL BE INCLUDED IN THE UNIT PRICE BID FOR PRESTRESSED CONCRETE GIRDERS.

TABLE

GIRDER TYPE	CHANNEL SIZE	DIM "A"	DIM "B"	DIM "L"
II	MC 12 x 31	1'-2½"	10"	1'-2"
III	MC 18 x 42.7	1'-5"	1'-2"	1'-6"
IV	MC 18 x 42.7	1'-9½"	1'-2"	1'-6"

PROJECT NO. R-5000

JACKSON COUNTY

STATION: 39+74.37 -L- P.O.T.

PLANS PREPARED BY:

MULKEY
ENGINEERS & CONSULTANTS
PO Box 33127
Raleigh, N.C. 27636
(919) 851-1912
(919) 851-1918 (FAX)
WWW.MULKEYINC.COM
NC LICENSE NO. C-1021

THIS STANDARD DRAWING REVIEWED & ADOPTED FOR USE AT THE REFERENCED LOCATION BY THE UNDERSIGNED:

NORTH CAROLINA PROFESSIONAL ENGINEER SEAL 19661 L. KEVIN AUSTIN

7/6/12

STATE OF NORTH CAROLINA
DEPARTMENT OF TRANSPORTATION
RALEIGH

STANDARD INTERMEDIATE STEEL DIAPHRAGMS FOR TYPE II, III, & IV PRESTRESSED CONCRETE GIRDERS

REVISIONS						SHEET NO.
NO.	BY:	DATE:	NO.	BY:	DATE:	S-13
1			3			TOTAL SHEETS
2			4			32

STD. NO. PCG10

ASSEMBLED BY :	Z. H. BROWN	DATE :	10/11
CHECKED BY :	W. A. DAVIS	DATE :	12/11
DRAWN BY : TLA	6/05	ADDED 10/21/05	
CHECKED BY : VC	6/05	REV. 5/1/06RRR	KMM/GM
		REV. 10/1/11	MAA/GM

7/6/2012 7:43:19 AM R:\Structures\R-5000_SD_G_03.dgn

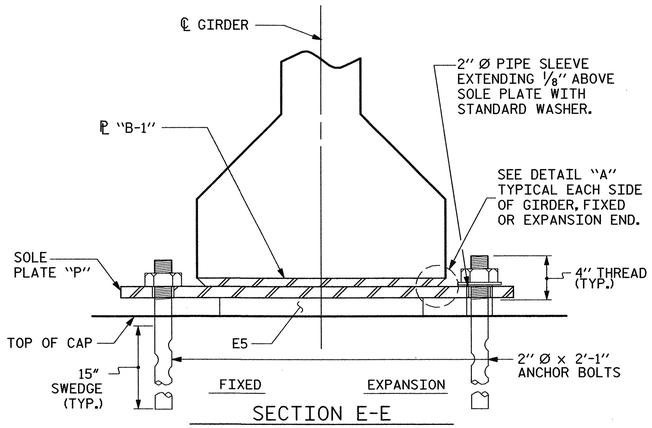

SECTION E-E

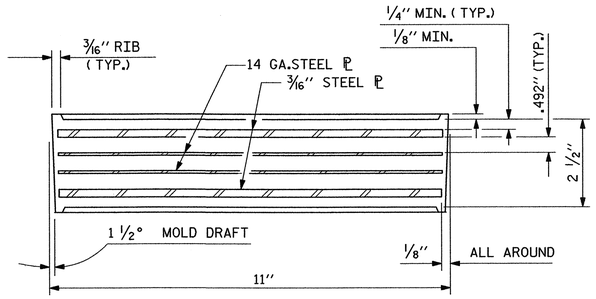

TYPICAL SECTION OF ELASTOMERIC BEARINGS

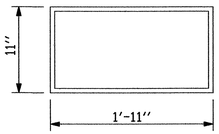

E5 (16 REQ'D)

PLAN VIEW OF ELASTOMERIC BEARING

TYPE VI

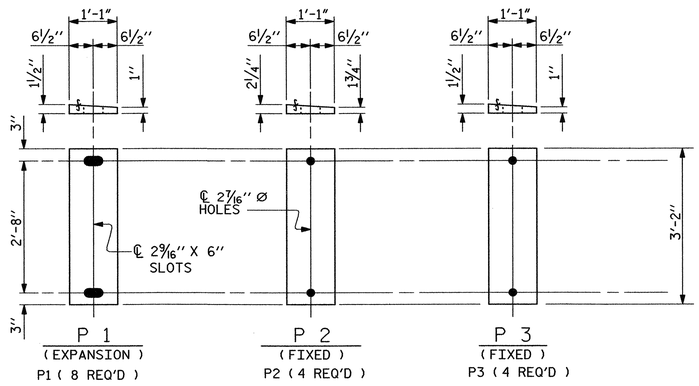

SOLE PLATE DETAILS ("P")

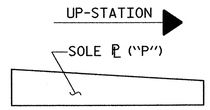

SOLE ℄ PLACEMENT DETAIL

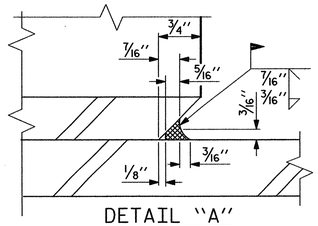

DETAIL "A"

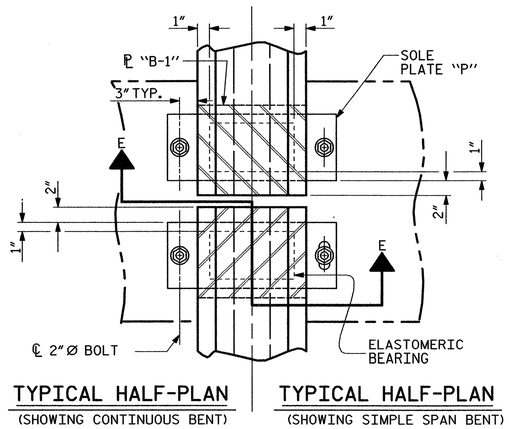

TYPICAL HALF-PLAN (SHOWING CONTINUOUS BENT)

TYPICAL HALF-PLAN (SHOWING SIMPLE SPAN BENT)

NOTES

AT ALL FIXED POINTS OF SUPPORT, NUTS FOR ANCHOR BOLTS ARE TO BE TIGHTENED FINGER TIGHT AND THEN BACKED OFF 1/2 TURN. THE THREAD OF THE NUT AND BOLT SHALL THEN BE BURRED WITH A SHARP POINTED TOOL.

THE 2" Ø PIPE SLEEVE SHALL BE CUT FROM SCHEDULE 40 PVC PLASTIC PIPE. THE PVC PLASTIC PIPE SHALL MEET THE REQUIREMENTS OF ASTM D1785.

STEEL SOLE PLATES, ANCHOR BOLTS, NUTS, AND WASHERS SHALL BE GALVANIZED IN ACCORDANCE WITH THE STANDARD SPECIFICATIONS.

PRIOR TO WELDING, GRIND THE GALVANIZED SURFACE OF THE PORTION OF THE EMBEDDED PLATE AND SOLE PLATE THAT ARE TO BE WELDED. AFTER WELDING, DAMAGED GALVANIZED SURFACES SHALL BE REPAIRED IN ACCORDANCE WITH THE STANDARD SPECIFICATIONS.

WHEN WELDING THE SOLE PLATE TO THE EMBEDDED PLATE IN THE GIRDER, USE TEMPERATURE INDICATING WAX PENS, OR OTHER SUITABLE MEANS, TO ENSURE THAT THE TEMPERATURE OF THE SOLE PLATE DOES NOT EXCEED 300°F. TEMPERATURES ABOVE THIS MAY DAMAGE THE ELASTOMER.

SOLE PLATE "P", BOLTS, NUTS, WASHERS, AND PIPE SLEEVE SHALL BE INCLUDED IN THE PAY ITEM FOR PRESTRESSED CONCRETE GIRDERS.

ANCHOR BOLTS SHALL MEET THE REQUIREMENTS OF ASTM A449. NUTS SHALL MEET THE REQUIREMENTS OF AASHTO M291-DH OR AASHTO M292-2H. WASHERS SHALL MEET THE REQUIREMENTS OF AASHTO M293. NO SHOP DRAWINGS ARE REQUIRED FOR ANCHOR BOLTS, NUTS AND WASHERS. SHOP INSPECTION IS REQUIRED.

ALL SURFACES OF BEARING PLATES SHALL BE SMOOTH AND STRAIGHT.

LOAD RATINGS	
	MAX.D.L.+ L.L.
TYPE V	180 K
TYPE VI	211 K
TYPE VII	264 K

PROJECT NO. R-5000

JACKSON COUNTY

STATION: 39+74.37 -L- P.O.T.

PLANS PREPARED BY:

MULKEY
ENGINEERS & CONSULTANTS
PO Box 33127
Raleigh, N.C. 27636
(919) 851-1912
(919) 851-1918 (FAX)
WWW.MULKEYINC.COM
NC LICENSE NO. C-1021

THIS STANDARD DRAWING REVIEWED & ADOPTED FOR USE AT THE REFERENCED LOCATION BY THE UNDERSIGNED:

NORTH CAROLINA PROFESSIONAL ENGINEER SEAL 19661 L. KEVIN AUSTIN

7/6/12

STATE OF NORTH CAROLINA
DEPARTMENT OF TRANSPORTATION
RALEIGH

ELASTOMERIC BEARING DETAILS

ASSEMBLED BY : Z. H. BROWN	DATE : 10/11
CHECKED BY : W. A. DAVIS	DATE : 12/11

DRAWN BY : EEM 2/97	REV. 10/17/00	RWW/LES
CHECKED BY : VAP 2/97	REV. 5/1/06	TLA/GM
	REV. 10/1/11	MAA/GM

REVISIONS						SHEET NO.
NO.	BY:	DATE:	NO.	BY:	DATE:	S-14
1			3			TOTAL SHEETS
2			4			32

STD. NO. EB4 (SHT 2)

7/6/2012 7:43:55 AM R:\Structures\R-5000_SD_0_05.dgn

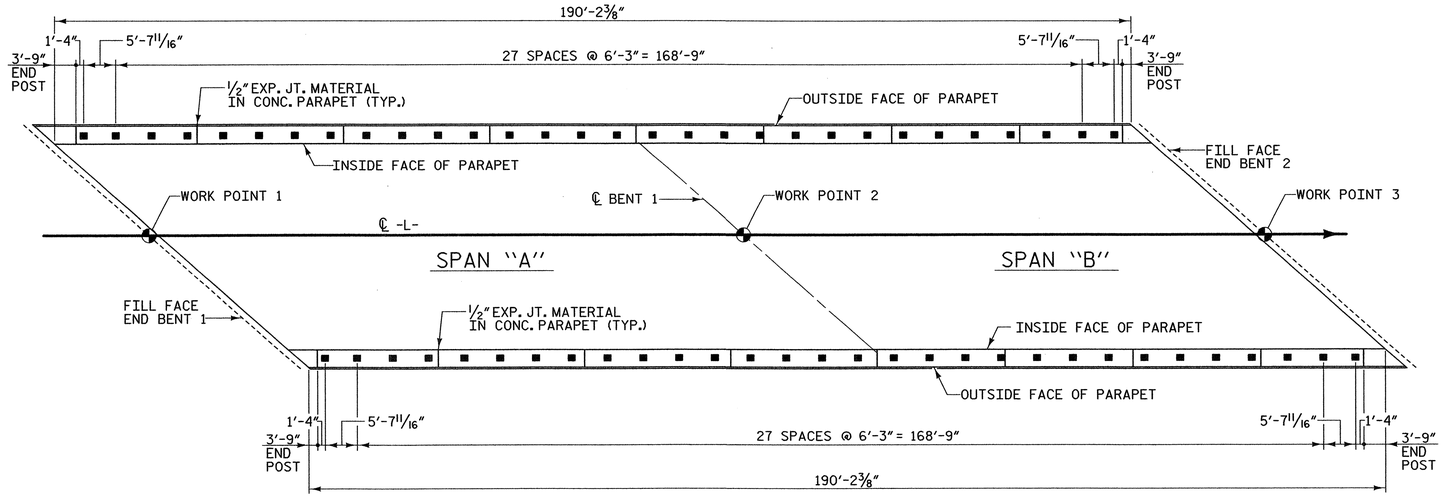

PLAN OF RAIL POST SPACINGS

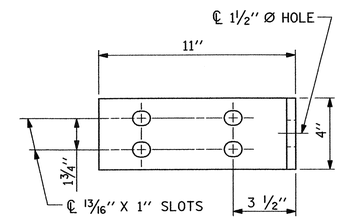

ELEVATION

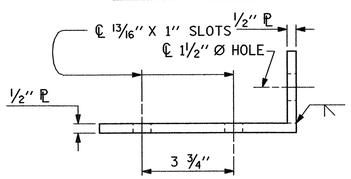

TOP VIEW

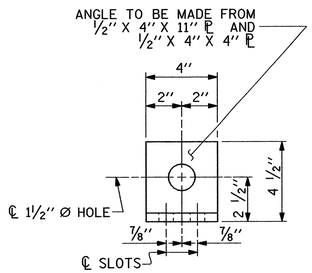

END VIEW (FIX AND EXP.)

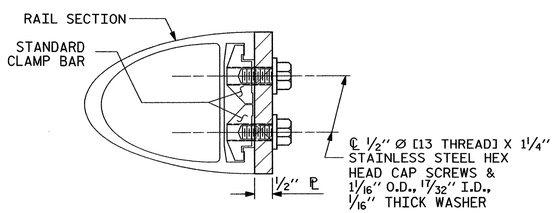

SECTION H-H (FIX)

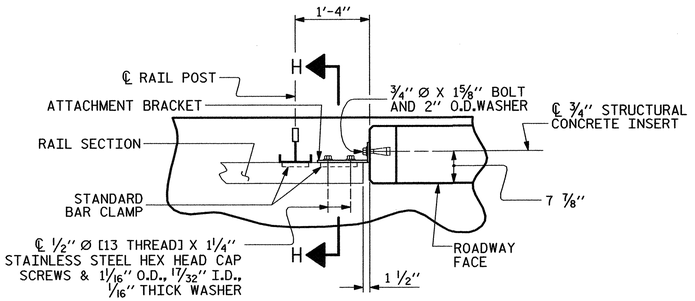

PLAN - RAIL AND END POST

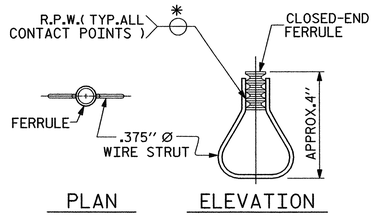

STRUCTURAL CONCRETE INSERT

✱ EACH WELDED ATTACHMENT OF WIRE TO FERRULE SHALL DEVELOP THE TENSILE STRENGTH OF THE WIRE.

NOTES

STRUCTURAL CONCRETE INSERT

THE STRUCTURAL CONCRETE INSERT ASSEMBLY SHALL CONSIST OF THE FOLLOWING COMPONENTS:

A. FERRULES SHALL BE MADE FROM STEEL MEETING THE REQUIREMENTS OF AASHTO M169, GRADE 12L14 AND SHALL HAVE A MINIMUM LENGTH OF THREADS OF 1½".

B. 1 - ¾" Ø X 1⅝" BOLT WITH WASHER. BOLT SHALL CONFORM TO THE REQUIREMENTS OF ASTM A307. BOLT AND WASHER SHALL BE GALVANIZED. (AT THE CONTRACTOR'S OPTION, STAINLESS STEEL BOLT AND WASHER MAY BE USED AS AN ALTERNATE FOR THE ¾" Ø X 1⅝" GALVANIZED BOLT AND WASHER. THEY SHALL CONFORM TO OR EXCEED THE MECHANICAL REQUIREMENTS OF ASTM A307. THE USE OF THIS ALTERNATE SHALL BE APPROVED BY THE ENGINEER.)

C. WIRE STRUT SHOWN IN THE CONCRETE INSERT ASSEMBLY DETAIL IS THE MINIMUM ALLOWABLE SIZE AND SHALL HAVE A MINIMUM TENSILE STRENGTH OF 100,000 PSI. AS AN OPTION, A 7/16" Ø WIRE STRUT WITH A MINIMUM TENSILE STRENGTH OF 90,000 PSI IS ACCEPTABLE.

NOTES

METAL RAIL TO END POST CONNECTION

THE METAL RAIL TO END POST CONNECTION SHALL CONSIST OF THE FOLLOWING COMPONENTS:

A. ½" PLATES SHALL CONFORM TO AASHTO M270 GRADE 36 AND SHALL BE GALVANIZED AFTER FABRICATION.

B. ¾" STRUCTURAL CONCRETE INSERT SHALL HAVE A WORKING LOAD SHEAR CAPACITY OF 4800 LBS. THE FERRULES SHALL ENGAGE A ¾"Ø X 1⅝" BOLT WITH 2" O.D. WASHER IN PLACE. THE ¾"Ø X 1⅝" BOLT SHALL HAVE N. C. THREADS.

C. CAP SCREWS FOR RAIL ATTACHMENT TO ANGLE SHALL CONFORM TO THE REQUIREMENTS OF ASTM F593 ALLOY 305 STAINLESS STEEL. CAP SCREWS TO BE CENTERED IN SLOTS AT 60°F.

D. STANDARD CLAMP BARS (SEE METAL RAIL SHEET).

E. ½" Ø PIPE SLEEVES (IF REQUIRED) TO BE GALVANIZED.

THE COST OF THE STANDARD CLAMP BARS AND CAP SCREWS USED IN THE METAL RAIL TO END POST CONNECTION SHALL BE INCLUDED IN THE UNIT CONTRACT PRICE BID FOR LINEAR FEET OF 1 OR 2 BAR METAL RAILS.

THE ¾" STRUCTURAL CONCRETE INSERT WITH BOLT SHALL BE ASSEMBLED IN THE SHOP.

THE COST OF THE ¾" STRUCTURAL CONCRETE INSERT ASSEMBLY, AND THE ½" PLATES COMPLETE IN PLACE SHALL BE INCLUDED IN THE VARIOUS PAY ITEMS.

THE CONTRACTOR, AT HIS OPTION, MAY USE AN ADHESIVE BONDING SYSTEM IN LIEU OF THE STRUCTURAL CONCRETE INSERT EMBEDDED IN THE END POST. IF THE ADHESIVE BONDING SYSTEM IS USED, THE ¾" Ø X 1⅝" BOLT WITH WASHER SHALL BE REPLACED WITH A ¾"Ø X 6½" BOLT AND 2" O.D. WASHER. ALL SPECIFICATIONS THAT APPLY TO THE ¾" Ø X 1⅝" BOLT SHALL APPLY TO THE ¾"Ø X 6 ½" BOLT. FIELD TESTING OF THE ADHESIVE BONDING SYSTEM IS NOT REQUIRED.

PROJECT NO. R-5000

JACKSON COUNTY

STATION: 39+74.37 -L- P.O.T.

FIXED

DETAILS FOR ATTACHING METAL RAIL TO END POST

ASSEMBLED BY :	W. B. ALLEN	DATE :	11/11
CHECKED BY :	W. A. DAVIS	DATE :	12/11
DRAWN BY : FCJ 1/88	REV. 5/7/03		RWW/JTE
CHECKED BY : CRK 3/89	REV. 5/1/06		TLA/GM
	REV. 10/1/11		MAA/GM

PLANS PREPARED BY:

MULKEY ENGINEERS & CONSULTANTS
PO Box 33127
Raleigh, N.C. 27636
(919) 851-1912
(919) 851-1918 (FAX)
WWW.MULKEYINC.COM
NC License No. C-1031

THIS STANDARD DRAWING REVIEWED & ADOPTED FOR USE AT THE REFERENCED LOCATION BY THE UNDERSIGNED:

NORTH CAROLINA PROFESSIONAL ENGINEER 1966 KEVIN AUSTIN

7/6/12

STATE OF NORTH CAROLINA
DEPARTMENT OF TRANSPORTATION
RALEIGH

STANDARD

RAIL POST SPACINGS AND END OF RAIL DETAILS

FOR ONE OR TWO BAR METAL RAILS

REVISIONS						SHEET NO.
NO.	BY:	DATE:	NO.	BY:	DATE:	S-15
1			3			TOTAL SHEETS
2			4			32

STD. NO. BMR2

7/6/2012 7:46:50 AM R:\Structures\R-5000_SD_2MR.dgn

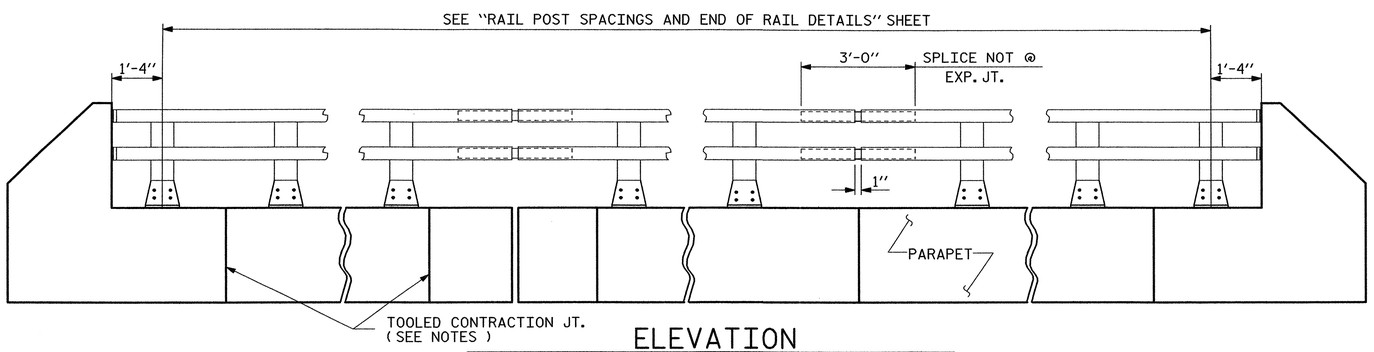

ELEVATION

NOTE : FOR ATTACHMENT OF METAL RAIL TO END POST, SEE STANDARD NO. BMR2.

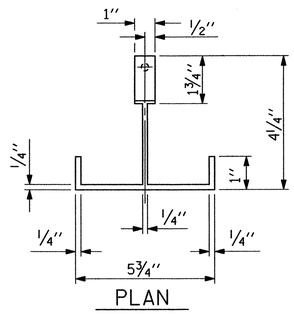

PLAN

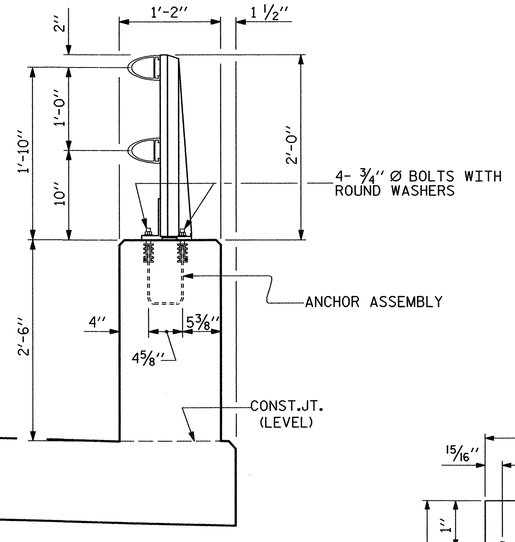

SECTION THRU PARAPET AND RAIL

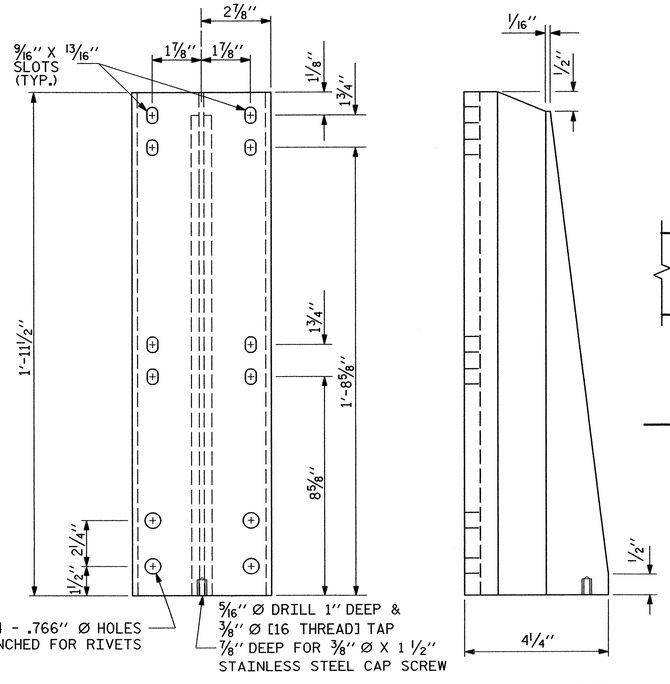

FRONT ELEVATION

SIDE ELEVATION

DETAILS OF POST

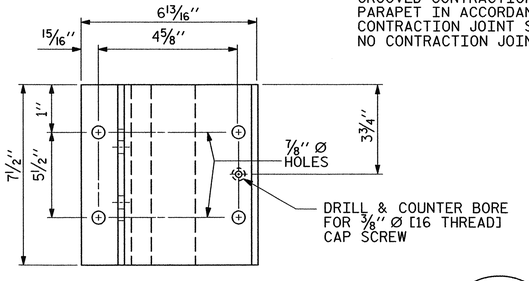

PLAN

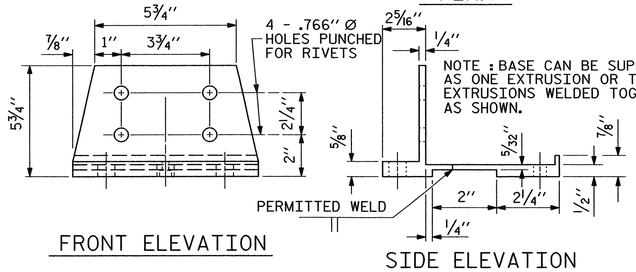

FRONT ELEVATION

SIDE ELEVATION

POST BASE DETAILS

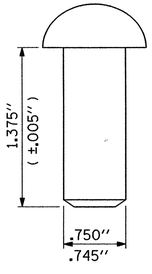

RIVET DETAIL

NOTES

AT THE CONTRACTOR'S OPTION, METAL RAIL MAY BE EITHER ALUMINUM OR GALVANIZED STEEL IN ACCORDANCE WITH THE REQUIREMENTS OF THE GENERAL NOTES AND THE FOLLOWING SPECIFICATIONS FOR THE ALTERNATE MATERIALS; HOWEVER, THE CONTRACTOR WILL BE REQUIRED TO USE THE SAME RAIL MATERIAL ON ALL STRUCTURES ON THE PROJECT FOR WHICH METAL RAIL IS DESIGNATED.

ALUMINUM RAILS

MATERIAL FOR POSTS, BASES AND RAILS, EXPANSION BARS AND CLAMP BARS SHALL BE ASTM B-221 ALLOY 6061-T6.

MATERIAL FOR RIVETS SHALL BE ASTM B316 ALLOY 6061-T6. RIVETS SHALL BE STANDARD BUTTON HEAD AND CONE POINT COLD DRIVEN AS PER DRAWING.

THE BASE OF RAIL POSTS, OR ANY OTHER ALUMINUM SURFACE IN CONTACT WITH CONCRETE SHALL BE THOROUGHLY COATED WITH AN ALUMINUM IMPREGNATED CAULKING COMPOUND OF APPROVED QUALITY.

MATERIAL FOR SHIMS TO BE ASTM B209 ALLOY 6061-T6.

GALVANIZED STEEL RAILS

MATERIAL AND GALVANIZING ARE TO CONFORM TO THE FOLLOWING SPECIFICATIONS:

POST, POST BASES, RAILS, EXPANSION BARS AND CLAMP BARS: AASHTO M270 GRADE 36 STRUCTURAL STEEL - GALVANIZED TO AASHTO M111.

RIVETS: RIVETS SHALL MEET THE REQUIREMENTS OF ASTM A502 FOR GRADE 1 RIVETS.

THE CUT ENDS OF GALVANIZED STEEL RAILING, AFTER GRINDING SMOOTH SHALL BE GIVEN TWO COATS OF ZINC RICH PAINT MEETING THE REQUIREMENTS OF FEDERAL SPECIFICATION MIL-P-26915 USAF TYPE 1, OR OF FEDERAL SPECIFICATIONS TT-P-641.

SHIMS: SHIMS SHALL MEET THE REQUIREMENTS OF ASTM A570 FOR GRADE 33 OR A611 FOR GRADE C AND SHALL BE GALVANIZED IN ACCORDANCE WITH AASHTO M111.

RAIL CAPS: RAIL CAPS SHALL MEET THE REQUIREMENTS OF ASTM A570 FOR GRADE 33 OR A611 FOR GRADE C AND SHALL BE GALVANIZED IN ACCORDANCE WITH AASHTO M111.

GENERAL NOTES

RAILING SHALL BE CONTINUOUS FROM END POST TO END POST OF BRIDGE. EACH JOINT IN RAIL LENGTH SHALL BE SPLICED AS DETAILED. PANEL LENGTHS OF RAIL SHALL BE ATTACHED TO A MINIMUM OF THREE POSTS.

FOR END OF RAIL TO CLEAR FACE OF CONCRETE END POST DIMENSION, SEE STANDARD NO. BMR2.

CAP SCREWS SHALL BE ASTM F593 ALLOY 305 STAINLESS STEEL. WASHERS SHALL MEET THE REQUIREMENTS OF ASTM F844 EXCEPT THEY SHALL BE MADE FROM ALLOY 304 STAINLESS STEEL.

CERTIFIED MILL REPORTS ARE REQUIRED FOR RAILS AND POSTS. SHOP INSPECTION IS NOT REQUIRED.

METAL RAIL POSTS SHALL BE SET NORMAL TO CURB GRADE.

METHOD OF MEASUREMENT FOR METAL RAILS: FOR LENGTH OF METAL RAILS TO BE PAID FOR, SEE THE STANDARD SPECIFICATIONS.

CURVED RAIL USAGE: WHERE RAILS ARE TO BE USED ON BRIDGES ON HORIZONTAL AND/OR VERTICAL CURVATURE THE CONTRACTOR MAY, AT HIS OPTION, HAVE THE REQUIRED CURVATURE IN THE RAIL FORMED IN THE SHOP OR IN THE FIELD. IN EITHER EVENT, THE RAIL SHALL CONFORM WITHOUT BUCKLING OR KINKING TO THE REQUIRED CURVATURE IN A UNIFORM MANNER ACCEPTABLE TO THE ENGINEER.

TO INSURE FUTURE IDENTIFICATION OF THE FABRICATOR, A PERMANENT IDENTIFYING MARK SHALL BE PLACED ON EACH POST. THE METHOD OF MARKING AND LOCATION SHALL BE SUCH THAT IT DOES NOT DETRACT FROM THE APPEARANCE OF THE POST, BUT REMAINS VISIBLE AFTER RAIL PLACEMENT.

SHIMS SHALL BE USED AS NECESSARY FOR POST ALIGNMENT.

ALLOY 6351-T5 MAY BE SUBSTITUTED FOR ALLOY 6061-T6 WHERE APPLICABLE.

MINOR VARIATIONS IN DETAILS OF METAL RAIL WILL BE CONSIDERED. DETAILS OF SUCH VARIATIONS, IF DESIRED, SHALL BE SUBMITTED FOR APPROVAL.

GROOVED CONTRACTION JOINTS, 1/2" IN DEPTH, SHALL BE TOOLED IN ALL EXPOSED FACES OF THE PARAPET IN ACCORDANCE WITH ARTICLE 825-10(B) OF THE STANDARD SPECIFICATIONS. THE CONTRACTION JOINT SHALL BE LOCATED AT A SPACING OF 8FT. TO 10FT. BETWEEN EXPANSION JOINTS. NO CONTRACTION JOINTS WILL BE REQUIRED FOR SEGMENTS LESS THAN 10 FEET IN LENGTH.

PAY LENGTH = 365'-4 3/4" LIN. FT.

PROJECT NO. R-5000

JACKSON COUNTY

STATION: 39+74.37 -L- P.O.T.

SHEET 1 OF 2

PLANS PREPARED BY:

MULKEY
ENGINEERS & CONSULTANTS
PO Box 33127
Raleigh, NC 27636
(919) 851-1918
(919) 851-1918 (FAX)
WWW.MULKEYINC.COM
NC LICENSE NO. C-1021

THIS STANDARD DRAWING REVIEWED & ADOPTED FOR USE AT THE REFERENCED LOCATION BY THE UNDERSIGNED:

NORTH CAROLINA PROFESSIONAL 19661 ENGINEER L. KEVIN AUSTIN

7/6/12

STATE OF NORTH CAROLINA
DEPARTMENT OF TRANSPORTATION
RALEIGH

STANDARD

2 BAR METAL RAIL

REVISIONS						SHEET NO.
NO.	BY:	DATE:	NO.	BY:	DATE:	S-16
1			3			TOTAL SHEETS
2			4			32

STD. NO. BMR3

ASSEMBLED BY :	W. B. ALLEN	DATE :	11/11
CHECKED BY :	W. A. DAVIS	DATE :	12/11
DRAWN BY : EEM 6/94	REV. 5/7/03R		RWW/JTE
CHECKED BY : RGW 6/94	REV. 5/1/06		TLA/GM
	REV. 10/1/11		MAA/GM

7/6/2012 7:47:05 AM R:\Structures\R-5000_SD_2MR_02.dgn

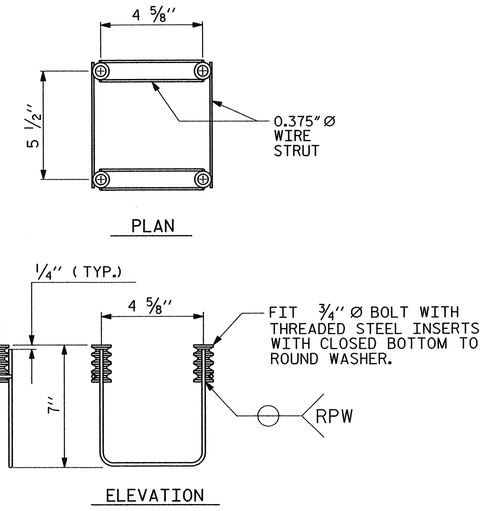

4-BOLT METAL RAIL ANCHOR ASSEMBLY

(60 ASSEMBLIES REQUIRED)

NOTES

STRUCTURAL CONCRETE ANCHOR ASSEMBLY

THE STRUCTURAL CONCRETE ANCHOR ASSEMBLY SHALL CONSIST OF THE FOLLOWING COMPONENTS :

A. FERRULES SHALL BE MADE FROM STEEL MEETING THE REQUIREMENTS OF AASHTO M169, GRADE 12L14 AND SHALL HAVE A MINIMUM LENGTH OF THREADS OF 2" FOR 3/4" FERRULES.

B. 4 - 3/4" Ø X 2 1/2" BOLTS WITH WASHERS. BOLTS SHALL CONFORM TO THE REQUIREMENTS OF ASTM A307. BOLTS AND WASHERS SHALL BE GALVANIZED. AT THE CONTRACTOR'S OPTION, STAINLESS STEEL BOLTS AND WASHERS MAY BE USED AS AN ALTERNATE FOR THE 3/4" Ø X 2 1/2" GALVANIZED BOLTS AND WASHERS. THEY SHALL CONFORM TO OR EXCEED THE MECHANICAL REQUIREMENTS OF ASTM A307. THE USE OF THIS ALTERNATE SHALL BE APPROVED BY THE ENGINEER.

C. WIRE STRUT SHOWN IN THE CONCRETE ANCHOR ASSEMBLY DETAIL IS THE MINIMUM ALLOWABLE SIZE AND SHALL HAVE A MINIMUM TENSILE STRENGTH OF 100,000 PSI. AS AN OPTION, A 7/16" Ø WIRE STRUT WITH A MINIMUM TENSILE STRENGTH OF 90,000 PSI IS ACCEPTABLE.

D. THE METAL RAIL ANCHOR ASSEMBLIES TO BE HOT DIPPED GALVANIZED TO CONFORM TO REQUIREMENTS OF AASHTO M111.

E. THE COST OF THE METAL RAIL ANCHOR ASSEMBLY WITH BOLTS AND WASHERS COMPLETE IN PLACE SHALL BE INCLUDED IN THE PRICE BID FOR LINEAR FEET OF METAL RAIL.

F. BOLTS TO BE TIGHTENED ONE-HALF TURN WITH A WRENCH FROM A FINGER-TIGHT POSITION.

THE CONTRACTOR MAY USE ADHESIVELY ANCHORED ANCHOR BOLTS IN PLACE OF THE METAL RAIL ANCHOR ASSEMBLY. LEVEL ONE FIELD TESTING IS REQUIRED, AND THE YIELD LOAD OF THE 3/4" Ø BOLT IS 10 KIPS. FOR ADHESIVELY ANCHORED ANCHOR BOLTS OR DOWELS, SEE THE STANDARD SPECIFICATIONS.

WHEN ADHESIVELY ANCHORED ANCHOR BOLTS ARE USED, BOLTS SHALL MEET THE REQUIREMENTS OF ASTM F593 ALLOY 304 STAINLESS STEEL WITH MINIMUM 75,000 PSI ULTIMATE STRENGTH. NUTS SHALL MEET THE REQUIREMENTS OF ASTM F594 ALLOY 304 STAINLESS STEEL AND WASHERS SHALL MEET THE REQUIREMENTS OF ASTM F844 EXCEPT THEY SHALL BE MADE FROM ALLOY 304 STAINLESS STEEL.

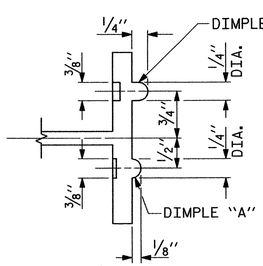

SECTION B - B

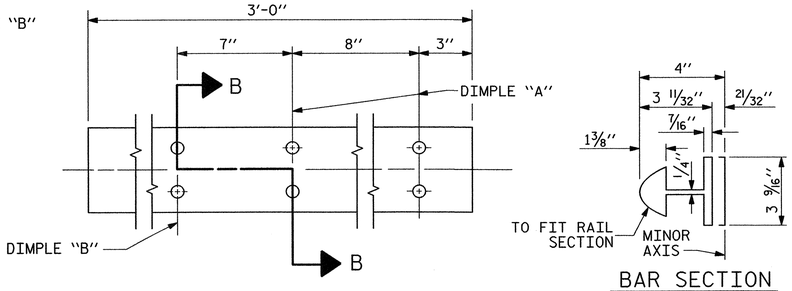

EXPANSION BAR DETAILS

BAR SECTION

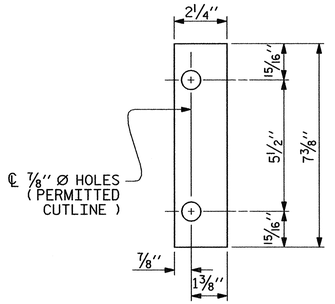

FRONT PLATE

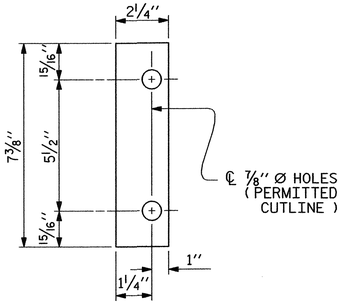

REAR PLATE

SHIM DETAILS

NOTE :
SHIMS MAY BE CUT ALONG PERMITTED CUTLINE OR SLOTTED TO EDGE OF PLATE TO FACILITATE PLACEMENT.

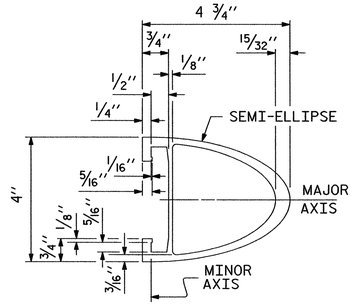

RAIL SECTION

1/2" Ø [13 THREAD] HOLE FOR 1/2" Ø X 1" STAINLESS STEEL HEX HEAD CAP SCREW & 1 1/16" O.D., 17/32" I.D., 1/16" THICK WASHER (TYP.)

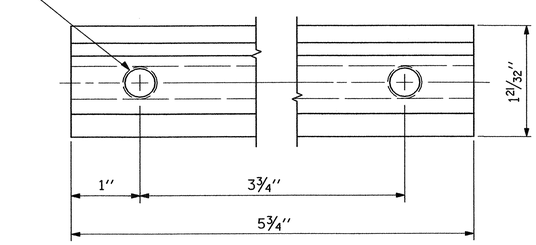

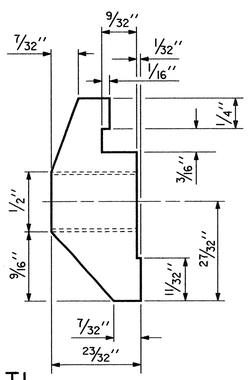

CLAMP BAR DETAIL

(4 REQUIRED PER POST)

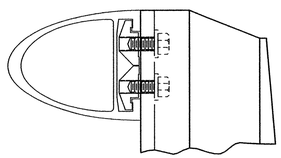

CLAMP ASSEMBLY

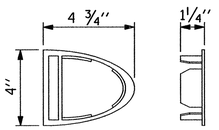

RAIL CAP

PROJECT NO. R-5000

JACKSON COUNTY

STATION: 39+74.37 -L- P.O.T.

SHEET 2 OF 2

ASSEMBLED BY : W. B. ALLEN		DATE : 11/11			
CHECKED BY : W. A. DAVIS		DATE : 12/11			
DRAWN BY : EEM 6/94	REV. 8/16/99	MAB/LES			
CHECKED BY : RGW 6/94	REV. 5/1/06R	KMM/GM			
	REV. 10/1/11	MAA/GM			

PLANS PREPARED BY:

MULKEY
ENGINEERS & CONSULTANTS
PO Box 33127
RALEIGH, N.C. 27636
(919) 851-1912
(919) 851-1918 (FAX)
WWW.MULKEYINC.COM
NC LICENSE NO. C-1021

THIS STANDARD DRAWING REVIEWED & ADOPTED FOR USE AT THE REFERENCED LOCATION BY THE UNDERSIGNED:

NORTH CAROLINA PROFESSIONAL ENGINEER SEAL 1966 KEVIN AUSTIN

7/6/12

STATE OF NORTH CAROLINA
DEPARTMENT OF TRANSPORTATION
RALEIGH

STANDARD

2 BAR METAL RAIL

REVISIONS						SHEET NO.
NO.	BY:	DATE:	NO.	BY:	DATE:	S-17
1			3			TOTAL SHEETS
2			4			32

STD. NO. BMR4

7/6/2012 7:47:36 AM R:\Structures\R-5000_SD_2MR_03.dgn

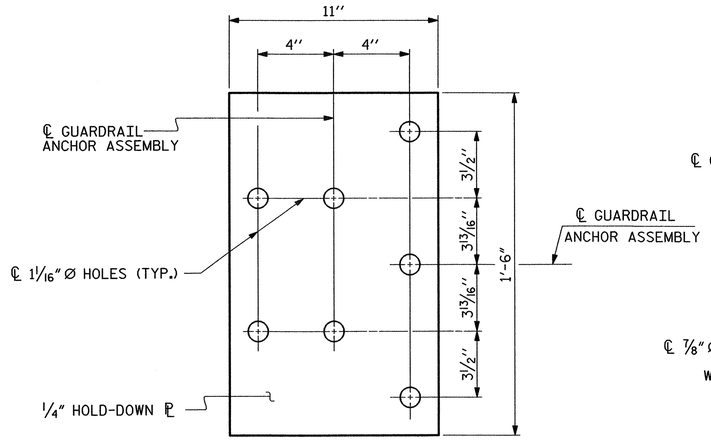

PLAN

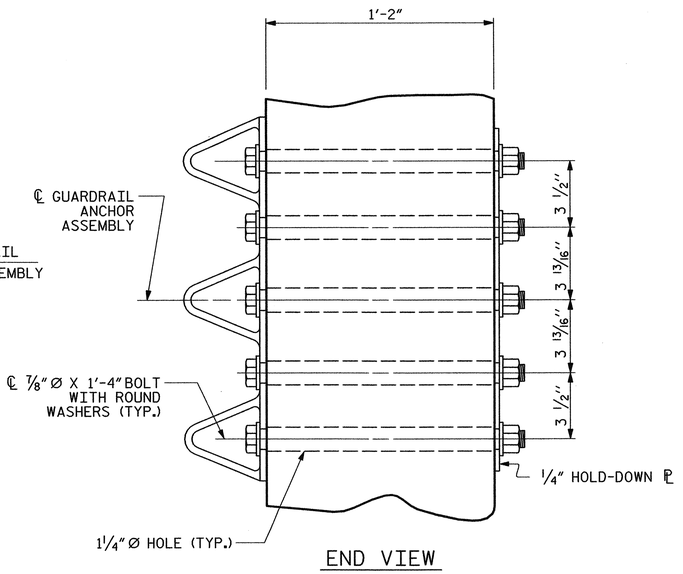

END VIEW

GUARDRAIL ANCHOR ASSEMBLY DETAILS

NOTES

THE GUARDRAIL ANCHOR ASSEMBLY SHALL CONSIST OF A 1/4'' HOLD DOWN PLATE AND 7 - 7/8'' Ø BOLTS WITH NUTS AND WASHERS.

THE HOLD-DOWN PLATE SHALL CONFORM TO AASHTO M270 GRADE 36. AFTER FABRICATION, THE HOLD-DOWN PLATE SHALL BE HOT-DIP GALVANIZED IN ACCORDANCE WITH AASHTO M111.

BOLTS SHALL CONFORM TO THE REQUIREMENTS OF ASTM A307 AND NUTS SHALL CONFORM TO THE REQUIREMENTS OF AASHTO M291. BOLTS, NUTS AND WASHERS SHALL BE GALVANIZED. AT THE CONTRACTOR'S OPTION, STAINLESS STEEL BOLTS, NUTS AND WASHERS MAY BE USED AS AN ALTERNATE FOR THE 7/8'' Ø GALVANIZED BOLTS, NUTS AND WASHERS. THEY SHALL CONFORM TO OR EXCEED THE MECHANICAL REQUIREMENTS OF ASTM A307. THE USE OF THIS ALTERNATE SHALL BE APPROVED BY THE ENGINEER.

THE GUARDRAIL ANCHOR ASSEMBLY IS REQUIRED AT ALL POINTS WHERE APPROACH GUARDRAIL IS TO BE ATTACHED TO THE END OF THE PARAPET. FOR POINTS OF ATTACHMENT, SEE SKETCH.

AFTER INSTALLATION, THE EXPOSED THREAD OF THE BOLT SHALL BE BURRED WITH A SHARP POINTED TOOL.

THE COST OF THE GUARDRAIL ANCHOR ASSEMBLIES WITH BOLTS, NUTS AND WASHERS COMPLETE IN PLACE, SHALL BE INCLUDED IN THE VARIOUS PAY ITEMS.

THE VERTICAL REINFORCING BARS MAY BE SHIFTED SLIGHTLY IN THE END POST TO CLEAR ASSEMBLY BOLTS.

THE 1 1/4'' Ø HOLES SHALL BE FORMED OR DRILLED WITH A CORE BIT. IMPACT TOOLS WILL NOT BE PERMITTED. ANY CONCRETE DAMAGED BY THIS WORK SHALL BE REPAIRED TO THE SATISFACTION OF THE ENGINEER.

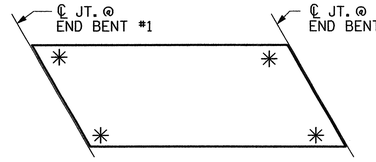

SKETCH SHOWING POINTS OF ATTACHMENT

*LOCATION OF GUARDRAIL ATTACHMENT

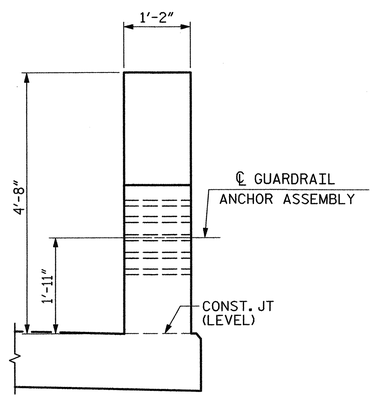

END VIEW
(TWO BAR METAL RAIL)

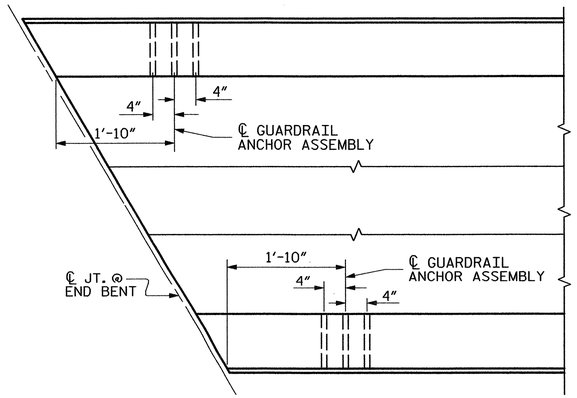

PLAN

LOCATION OF GUARDRAIL ANCHOR AT END POST

PROJECT NO. R-5000

JACKSON COUNTY

STATION: 39+74.37 -L- P.O.T.

ASSEMBLED BY : Z. H. BROWN	DATE : 10/11	ADDED 5/6/10 REV. 10/1/11 MAA/GM	
CHECKED BY : W. A. DAVIS	DATE : 12/11		
DRAWN BY : MAA 5/10			
CHECKED BY : GM 5/10			

PLANS PREPARED BY:

MULKEY
ENGINEERS & CONSULTANTS
PO Box 33127
RALEIGH, N.C. 27636
(919) 851-1918
(919) 851-1918 (FAX)
WWW.MULKEYINC.COM
NC LICENSE NO. C-1021

THIS STANDARD DRAWING REVIEWED & ADOPTED FOR USE AT THE REFERENCED LOCATION BY THE UNDERSIGNED:

NORTH CAROLINA PROFESSIONAL SEAL 19661 ENGINEER KEVIN AUSTIN

7/6/12

STATE OF NORTH CAROLINA
DEPARTMENT OF TRANSPORTATION
RALEIGH

STANDARD

GUARDRAIL ANCHORAGE DETAILS FOR METAL RAILS

REVISIONS						SHEET NO.
NO.	BY:	DATE:	NO.	BY:	DATE:	S-18
1			3			TOTAL SHEETS
2			4			32

(SHT 6) STD. NO. GRA3

7/6/2012 1:48:14 AM R:\Structures\R-5000_SD_GR_D.dgn

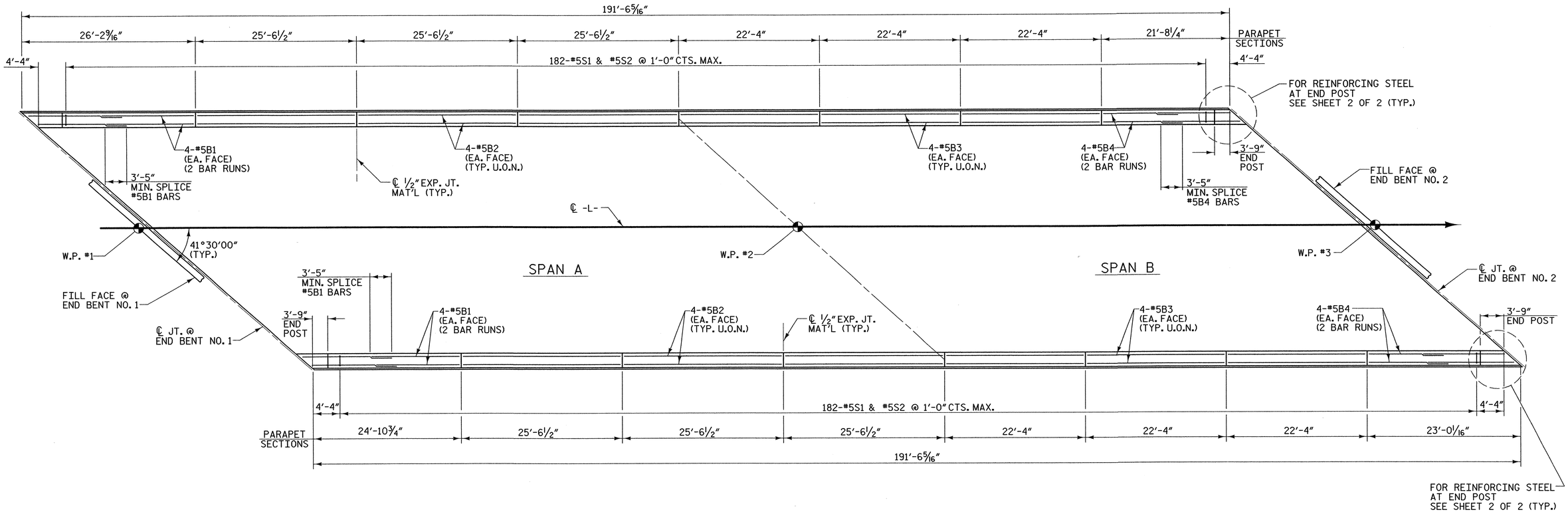

PLAN OF PARAPET

ALL DIMENSIONS ARE MEASURED ALONG OUTSIDE FACE OF PARAPET

U.O.N. = UNLESS OTHERWISE NOTED

PROJECT NO. R-5000

JACKSON COUNTY

STATION: 39+74.37 -L- P.O.T.

SHEET 1 OF 2

STATE OF NORTH CAROLINA
DEPARTMENT OF TRANSPORTATION
RALEIGH

SUPERSTRUCTURE

1'-2" x 2'-6" CONCRETE PARAPET AND END POST

NORTH CAROLINA PROFESSIONAL ENGINEER SEAL 19661 KEVIN AUSTIN 7/6/12

PLANS PREPARED BY:

MULKEY
ENGINEERS & CONSULTANTS
PO BOX 33127
RALEIGH, NC 27636
(919) 851-1912
(919) 851-1918 (FAX)
WWW.MULKEYINC.COM
NC LICENSE NO. C-1021

REVISIONS						SHEET NO.
NO.	BY:	DATE:	NO.	BY:	DATE:	S-19
1			3			TOTAL SHEETS
2			4			32

DRAWN BY : W. B. ALLEN DATE : 11/11
CHECKED BY : W. A. DAVIS DATE : 12/11

7/6/2012 7:48:46 AM R:\Structures\R-5000_SD_PR_00.dgn

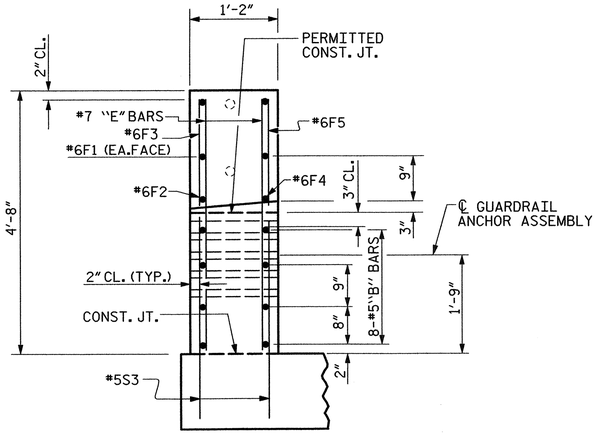

END VIEW

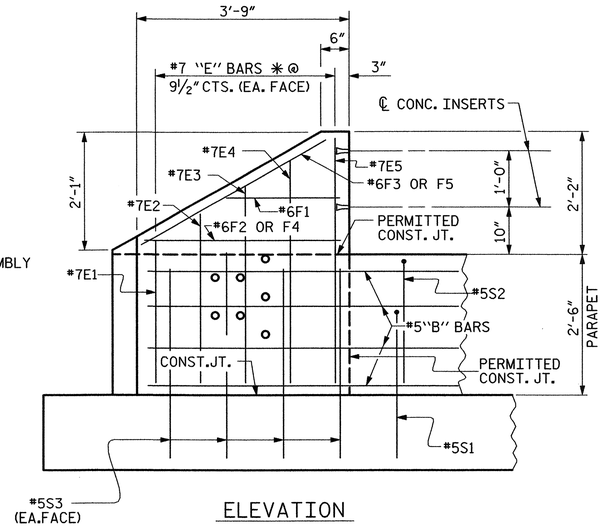

ELEVATION

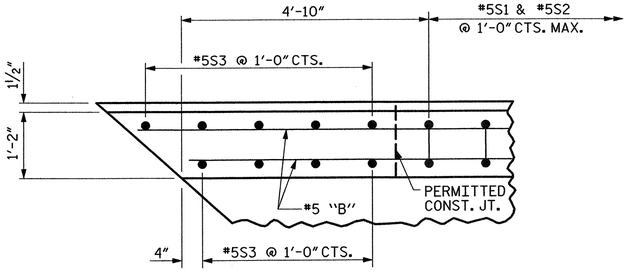

PLAN OF PARAPET

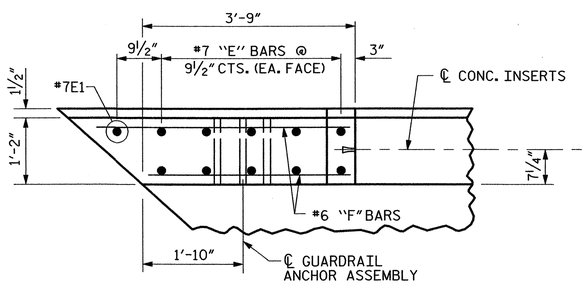

PLAN OF END POST

PARAPET AND END POST FOR TWO BAR RAIL

NOTES

THE PARAPET IN THE CONTINUOUS UNIT SHALL NOT BE CAST UNTIL ALL SLAB CONCRETE IN THAT SPAN HAS BEEN CAST AND HAS REACHED A MINIMUM COMPRESSIVE STRENGTH OF 3,000 PSI.

WHEN EVAZOTE JOINT SEAL IS REQUIRED, THE JOINT IN THE DECK SHALL BE SAWED PRIOR TO THE CASTING OF THE PARAPET.

ALL REINFORCING STEEL IN PARAPET SHALL BE EPOXY COATED.

THE #5S1 & #5S2 BARS MAY BE SHIFTED SLIGHTLY IN ORDER TO MAINTAIN A 2" MIMIMUM CLEARANCE TO THE ½"EXPANSION JOINT MATERIAL IN PARAPET.

FOR DETAILS OF CONCRETE INSERTS IN END POSTS. SEE "RAIL POST SPACINGS AND END OF RAIL DETAILS" SHEET.

FOR DETAILS OF GUARDRAIL ANCHOR ASSEMBLIES. SEE "GUARDRAIL ANCHORAGE DETAILS FOR METAL RAILS" SHEET.

THE #5S3 BARS SHALL BE INSTALLED, USING AN ADHESIVE ANCHORING SYSTEM, AFTER SAWING THE JOINT. THE YIELD LOAD FOR THE #5S2 BARS IS 18.6 KIPS. FIELD TESTING FOR THE ADHESIVE BONDING SYSTEM IS NOT REQUIRED.

VERTICAL GROOVED CONTRACTION JOINTS, ½" IN DEPTH, SHALL BE TOOLED IN ALL EXPOSED FACES OF THE PARAPET AND IN ACCORDANCE WITH ARTICLE 825-10(B) OF THE STANDARD SPECIFICATIONS. THE CONTRACTION JOINT SHALL BE LOCATED AT EACH THIRD POINT BETWEEN PARAPET EXPANSION JOINTS. ONLY ONE CONTRACTION JOINT IS REQUIRED AT MIDPOINT OF PARAPET SEGMENTS LESS THAN 20 FEET IN LENGTH AND NO CONTRACTION JOINTS ARE REQUIRED FOR THOSE SEGMENTS LESS THAN 10 FEET IN LENGTH.

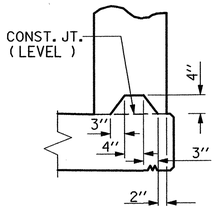

SECTION S-S
AT DAM IN OPEN JOINT
(THIS IS TO BE USED ONLY WHEN SLIP FORM IS USED)

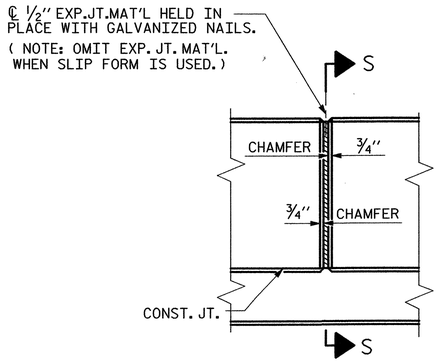

ELEVATION AT EXPANSION JOINTS

BAR TYPE

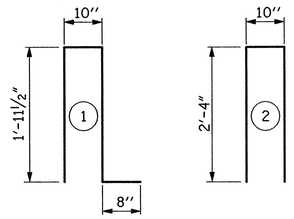

ALL BAR DIMENSIONS ARE OUT TO OUT

BILL OF MATERIAL

FOR CONCRETE PARAPET & END POST ONLY

BAR	NO.	SIZE	TYPE	LENGTH	WEIGHT
✱B1	32	#5	STR	14'-6"	484
✱B2	48	#5	STR	25'-2"	1260
✱B3	48	#5	STR	21'-11"	1097
✱B4	32	#5	STR	12'-11"	431
✱E1	8	#7	STR	2'-6"	41
✱E2	8	#7	STR	3'-0"	49
✱E3	8	#7	STR	3'-6"	57
✱E4	8	#7	STR	4'-0"	65
✱E5	8	#7	STR	4'-4"	71
✱F1	8	#6	STR	2'-3"	27
✱F2	4	#6	STR	4'-6"	27
✱F3	4	#6	STR	4'-5"	26
✱F4	4	#6	STR	3'-6"	21
✱F5	4	#6	STR	3'-5"	21
✱S1	364	#5	1	5'-5"	2056
✱S2	364	#5	2	5'-6"	2088
✱S3	36	#5	STR	3'-0"	113
✱EPOXY COATED REINFORCING STEEL					7934 LBS.
CLASS AA CONCRETE					42.2 CU. YDS.
CONCRETE PARAPET					383.05 LIN. FT.

PROJECT NO. R-5000

JACKSON COUNTY

STATION: 39+74.37 -L- P.O.T.

SHEET 2 OF 2

STATE OF NORTH CAROLINA
DEPARTMENT OF TRANSPORTATION
RALEIGH

SUPERSTRUCTURE

1'-2" x 2'-6"
CONCRETE PARAPET
AND END POST

NORTH CAROLINA PROFESSIONAL 19661 ENGINEER L. KEVIN AUSTIN 7/6/12

PLANS PREPARED BY:
MULKEY
ENGINEERS & CONSULTANTS
PO Box 33157
Raleigh, NC 27636
(919) 851-1912
(919) 851-1918 (FAX)
WWW.MULKEYINC.COM
NC LICENSE NO. C-1031

REVISIONS						SHEET NO.
NO.	BY:	DATE:	NO.	BY:	DATE:	S-20
1			3			TOTAL SHEETS
2			4			32

DRAWN BY : W. B. ALLEN DATE : 11/11
CHECKED BY : W. A. DAVIS DATE : 12/11

7/6/2012 7:49:09 AM R:\Structures\R-5000_SD_PR_02.dgn

REINFORCING BAR SCHEDULE

REINFORCING STEEL						REINFORCING STEEL						REINFORCING STEEL					
BAR	NO.	SIZE	TYPE	LENGTH	WEIGHT	BAR	NO.	SIZE	TYPE	LENGTH	WEIGHT	BAR	NO.	SIZE	TYPE	LENGTH	WEIGHT
A1*	323	#5	STR	38'-3"	12886	A173*	2	#5	STR	8'-8"	18	A253	2	#5	STR	16'-10"	35
A2	323	#5	STR	38'-3"	12886	A174*	2	#5	STR	8'-3"	17	A254	2	#5	STR	16'-5"	34
						A175*	2	#5	STR	7'-11"	17	A255	2	#5	STR	16'-0"	33
A101*	2	#5	STR	37'-11"	79	A176*	2	#5	STR	7'-6"	16	A256	2	#5	STR	15'-7"	33
A102*	2	#5	STR	37'-6"	78	A177*	2	#5	STR	7'-1"	15	A257	2	#5	STR	15'-2"	32
A103*	2	#5	STR	37'-1"	77	A178*	2	#5	STR	6'-8"	14	A258	2	#5	STR	14'-9"	31
A104*	2	#5	STR	36'-8"	76	A179*	2	#5	STR	6'-3"	13	A259	2	#5	STR	14'-4"	30
A105*	2	#5	STR	36'-3"	76	A180*	2	#5	STR	5'-10"	12	A260	2	#5	STR	14'-0"	29
A106*	2	#5	STR	35'-10"	75	A181*	2	#5	STR	5'-5"	11	A261	2	#5	STR	13'-7"	28
A107*	2	#5	STR	35'-6"	74	A182*	2	#5	STR	5'-1"	11	A262	2	#5	STR	13'-2"	27
A108*	2	#5	STR	35'-1"	73	A183*	2	#5	STR	4'-8"	10	A263	2	#5	STR	12'-9"	27
A109*	2	#5	STR	34'-8"	72	A184*	2	#5	STR	4'-3"	9	A264	2	#5	STR	12'-4"	26
A110*	2	#5	STR	34'-3"	71	A185*	2	#5	STR	3'-10"	8	A265	2	#5	STR	11'-11"	25
A111*	2	#5	STR	33'-10"	71	A186*	2	#5	STR	3'-5"	7	A266	2	#5	STR	11'-6"	24
A112*	2	#5	STR	33'-5"	70	A187*	2	#5	STR	3'-0"	6	A267	2	#5	STR	11'-2"	23
A113*	2	#5	STR	33'-0"	69	A188*	2	#5	STR	2'-7"	5	A268	2	#5	STR	10'-9"	22
A114*	2	#5	STR	32'-7"	68	A189*	2	#5	STR	2'-2"	5	A269	2	#5	STR	10'-4"	22
A115*	2	#5	STR	32'-3"	67	A190*	2	#5	STR	1'-10"	4	A270	2	#5	STR	9'-11"	21
A116*	2	#5	STR	31'-10"	66	A191*	2	#5	STR	1'-5"	3	A271	2	#5	STR	9'-6"	20
A117*	2	#5	STR	31'-5"	66	A192*	2	#5	STR	1'-3"	3	A272	2	#5	STR	9'-1"	19
A118*	2	#5	STR	31'-0"	65	A193*	2	#5	STR	1'-2"	2	A273	2	#5	STR	8'-8"	18
A119*	2	#5	STR	30'-7"	64	A194*	2	#5	STR	1'-0"	2	A274	2	#5	STR	8'-3"	17
A120*	2	#5	STR	30'-2"	63							A275	2	#5	STR	7'-11"	17
A121*	2	#5	STR	29'-9"	62	A201	2	#5	STR	37'-11"	79	A276	2	#5	STR	7'-6"	16
A122*	2	#5	STR	29'-5"	61	A202	2	#5	STR	37'-6"	78	A277	2	#5	STR	7'-1"	15
A123*	2	#5	STR	29'-0"	60	A203	2	#5	STR	37'-1"	77	A278	2	#5	STR	6'-8"	14
A124*	2	#5	STR	28'-7"	60	A204	2	#5	STR	36'-8"	76	A279	2	#5	STR	6'-3"	13
A125*	2	#5	STR	28'-2"	59	A205	2	#5	STR	36'-3"	76	A280	2	#5	STR	5'-10"	12
A126*	2	#5	STR	27'-9"	58	A206	2	#5	STR	35'-10"	75	A281	2	#5	STR	5'-5"	11
A127*	2	#5	STR	27'-4"	57	A207	2	#5	STR	35'-6"	74	A282	2	#5	STR	5'-1"	11
A128*	2	#5	STR	26'-11"	56	A208	2	#5	STR	35'-1"	73	A283	2	#5	STR	4'-8"	10
A129*	2	#5	STR	26'-6"	55	A209	2	#5	STR	34'-8"	72	A284	2	#5	STR	4'-3"	9
A130*	2	#5	STR	26'-2"	55	A210	2	#5	STR	34'-3"	71	A285	2	#5	STR	3'-10"	8
A131*	2	#5	STR	25'-9"	54	A211	2	#5	STR	33'-10"	71	A286	2	#5	STR	3'-5"	7
A132*	2	#5	STR	25'-4"	53	A212	2	#5	STR	33'-5"	70	A287	2	#5	STR	3'-0"	6
A133*	2	#5	STR	24'-11"	52	A213	2	#5	STR	33'-0"	69	A288	2	#5	STR	2'-7"	5
A134*	2	#5	STR	24'-6"	51	A214	2	#5	STR	32'-7"	68	A289	2	#5	STR	2'-2"	5
A135*	2	#5	STR	24'-1"	50	A215	2	#5	STR	32'-3"	67	A290	2	#5	STR	1'-10"	4
A136*	2	#5	STR	23'-8"	49	A216	2	#5	STR	31'-10"	66	A291	2	#5	STR	1'-5"	3
A137*	2	#5	STR	23'-4"	49	A217	2	#5	STR	31'-5"	66	A292	2	#5	STR	1'-3"	3
A138*	2	#5	STR	22'-11"	48	A218	2	#5	STR	31'-0"	65	A293	2	#5	STR	1'-2"	2
A139*	2	#5	STR	22'-6"	47	A219	2	#5	STR	30'-7"	64	A294	2	#5	STR	1'-0"	2
A140*	2	#5	STR	22'-1"	46	A220	2	#5	STR	30'-2"	63						
A141*	2	#5	STR	21'-8"	45	A221	2	#5	STR	29'-9"	62	B1*	78	#4	STR	24'-0"	1250
A142*	2	#5	STR	21'-3"	44	A222	2	#5	STR	29'-5"	61	B2*	26	#7	STR	56'-0"	2976
A143*	2	#5	STR	20'-10"	43	A223	2	#5	STR	29'-0"	60	B3*	26	#7	STR	18'-0"	957
A144*	2	#5	STR	20'-5"	43	A224	2	#5	STR	28'-7"	60	B4*	52	#4	STR	29'-10"	1036
A145*	2	#5	STR	20'-1"	42	A225	2	#5	STR	28'-2"	59	B5	200	#5	STR	49'-6"	10326
A146*	2	#5	STR	19'-8"	41	A226	2	#5	STR	27'-9"	58						
A147*	2	#5	STR	19'-3"	40	A227	2	#5	STR	27'-4"	57	G1*	2	#5	STR	57'-8"	120
A148*	2	#5	STR	18'-10"	39	A228	2	#5	STR	26'-11"	56	G2*	2	#5	9	4'-6"	9
A149*	2	#5	STR	18'-5"	38	A229	2	#5	STR	26'-6"	55	G3	2	#5	9	4'-6"	9
A150*	2	#5	STR	18'-0"	38	A230	2	#5	STR	26'-2"	55						
A151*	2	#5	STR	17'-7"	37	A231	2	#5	STR	25'-9"	54	K1*	8	#8	1	17'-9"	379
A152*	2	#5	STR	17'-3"	36	A232	2	#5	STR	25'-4"	53	K2*	8	#8	2	23'-7"	504
A153*	2	#5	STR	16'-10"	35	A233	2	#5	STR	24'-11"	52	K3	18	#6	STR	12'-11"	349
A154*	2	#5	STR	16'-5"	34	A234	2	#5	STR	24'-6"	51	K4	12	#4	STR	12'-11"	104
A155*	2	#5	STR	16'-0"	33	A235	2	#5	STR	24'-1"	50	K5	12	#4	STR	13'-11"	112
A156*	2	#5	STR	15'-7"	33	A236	2	#5	STR	23'-8"	49	K6	6	#4	STR	11'-3"	45
A157*	2	#5	STR	15'-2"	32	A237	2	#5	STR	23'-4"	49	K7	10	#4	5	9'-6"	63
A158*	2	#5	STR	14'-9"	31	A238	2	#5	STR	22'-11"	48	K8	10	#4	6	19'-0"	127
A159*	2	#5	STR	14'-4"	30	A239	2	#5	STR	22'-6"	47						
A160*	2	#5	STR	14'-0"	29	A240	2	#5	STR	22'-1"	46	S1*	78	#5	3	5'-10"	475
A161*	2	#5	STR	13'-7"	28	A241	2	#5	STR	21'-8"	45	S2*	78	#4	4	5'-5"	282
A162*	2	#5	STR	13'-2"	27	A242	2	#5	STR	21'-3"	44	S3	114	#4	7	2'-9"	209
A163*	2	#5	STR	12'-9"	27	A243	2	#5	STR	20'-10"	43						
A164*	2	#5	STR	12'-4"	26	A244	2	#5	STR	20'-5"	43	U1	24	#4	8	15'-2"	243
A165*	2	#5	STR	11'-11"	25	A245	2	#5	STR	20'-1"	42	U2	6	#4	8	13'-2"	53
A166*	2	#5	STR	11'-6"	24	A246	2	#5	STR	19'-8"	41						
A167*	2	#5	STR	11'-2"	23	A247	2	#5	STR	19'-3"	40						
A168*	2	#5	STR	10'-9"	22	A248	2	#5	STR	18'-10"	39						
A169*	2	#5	STR	10'-4"	22	A249	2	#5	STR	18'-5"	38	REINFORCING STEEL				LBS.	28263
A170*	2	#5	STR	9'-11"	21	A250	2	#5	STR	18'-0"	38						
A171*	2	#5	STR	9'-6"	20	A251	2	#5	STR	17'-7"	37	EPOXY COATED REINFORCING STEEL				LBS.	24611
A172*	2	#5	STR	9'-1"	19	A252	2	#5	STR	17'-3"	36						

DRAWN BY : W. B. ALLEN DATE : 11/11
CHECKED BY : W. A. DAVIS DATE : 12/11

* INDICATES EPOXY COATED REINFORCING STEEL

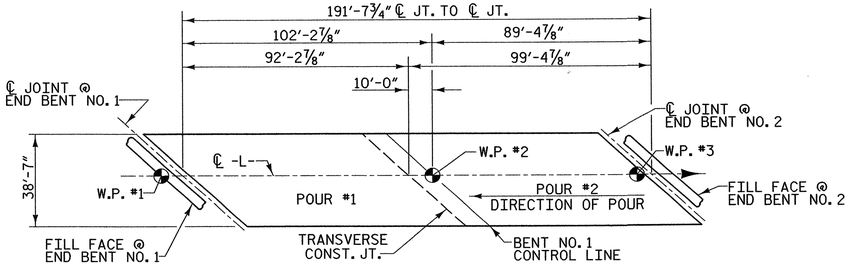

POURING SEQUENCE SKETCH

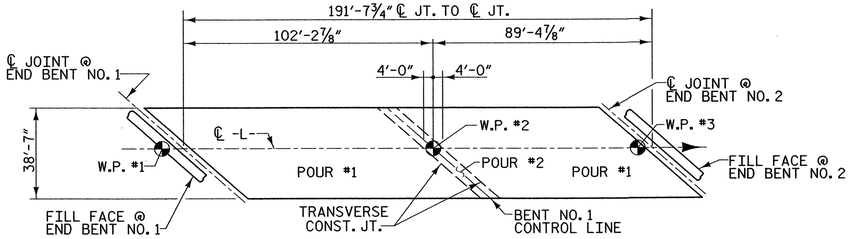

OPTIONAL POURING SEQUENCE SKETCH

NOTE: POUR 2 CANNOT BE STARTED UNTIL BOTH ADJACENT POURS REACH MINIMUM OF 3000 PSI

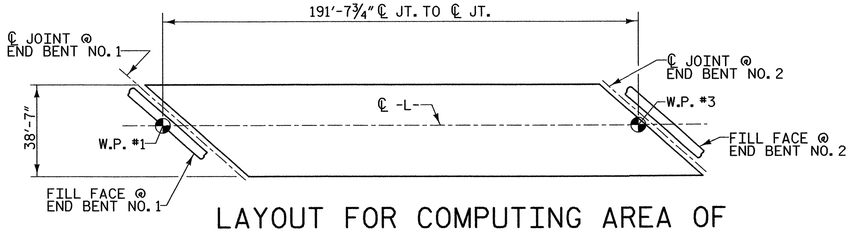

LAYOUT FOR COMPUTING AREA OF REINFORCED CONCRETE DECK SLAB

(SQ. FT. = 7,394)

GROOVING BRIDGE FLOORS		
APPROACH SLABS	1538	SQ. FT.
BRIDGE DECK	6258	SQ. FT.
TOTAL	7796	SQ. FT.

SUPERSTRUCTURE REINFORCING STEEL LENGTHS ARE BASED ON THE FOLLOWING MINIMUM SPLICE LENGTHS

BAR SIZE	SUPERSTRUCTURE EXCEPT APPROACH SLABS, PARAPET, AND BARRIER RAIL		APPROACH SLABS		PARAPET AND BARRIER RAIL
	EPOXY COATED	UNCOATED	EPOXY COATED	UNCOATED	
#4	2'-0"	1'-9"	2'-0"	1'-9"	2'-9"
#5	2'-6"	2'-2"	2'-6"	2'-2"	3'-5"
#6	3'-0"	2'-7"	3'-10"	2'-7"	4'-4"
#7	5'-3"	3'-6"			
#8	6'-10"	4'-7"			

POUR SEQUENCE BREAKDOWN

SPANS A & B	CLASS AA CONCRETE (CU. YDS.)
POUR #1	121.0
POUR #2	149.0
** TOTALS	270.0

** QUANTITIES FOR PARAPET ARE NOT INCLUDED.

BAR TYPES

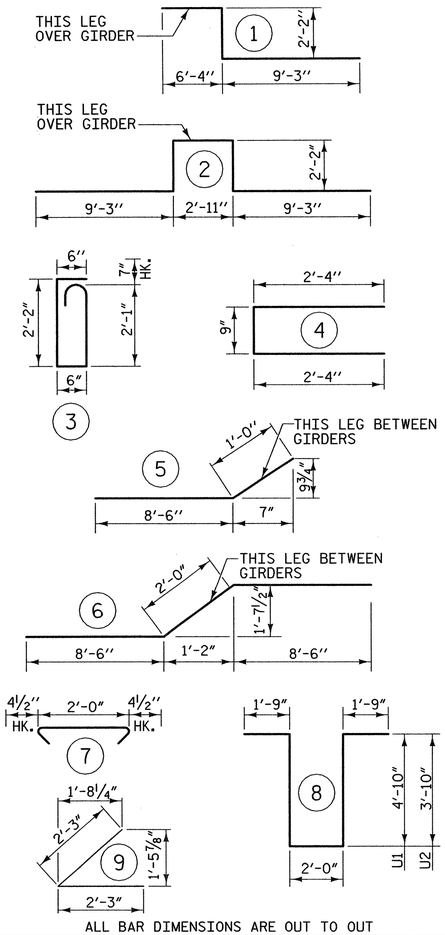

ALL BAR DIMENSIONS ARE OUT TO OUT

SUPERSTRUCTURE BILL OF MATERIAL

	CLASS AA CONCRETE	REINFORCING STEEL	EPOXY COATED REINFORCING STEEL
	(CU. YDS.)	(LBS.)	(LBS.)
** TOTALS	270.0	28263	24611

** QUANTITIES FOR PARAPET ARE NOT INCLUDED.

PROJECT NO. R-5000

JACKSON COUNTY

STATION: 39+74.37 -L- P.O.T.

NORTH CAROLINA PROFESSIONAL ENGINEER SEAL 19661 L. KEVIN AUSTIN 7/6/12

PLANS PREPARED BY:

MULKEY ENGINEERS & CONSULTANTS
PO Box 33127
Raleigh, NC 27636
(919) 851-1912
(919) 851-1916 (FAX)
WWW.MULKEYINC.COM
NC LICENSE NO. C-1031

STATE OF NORTH CAROLINA
DEPARTMENT OF TRANSPORTATION
RALEIGH

SUPERSTRUCTURE

BILL OF MATERIAL

REVISIONS						SHEET NO.
NO.	BY:	DATE:	NO.	BY:	DATE:	S-21
1			3			TOTAL SHEETS
2			4			32

7/6/2012 7:49:45 AM R:\Structures\R-5000_SD_BM_OM.dgn

NOTES

STIRRUPS IN THE CAP MAY BE SHIFTED AS NECESSARY TO CLEAR ANCHOR BOLTS.

FOR PILE SPLICE DETAILS, SEE SHEET 3 OF 3.

FOR TEMPORARY DRAINAGE AT END BENTS, SEE SHEET 3 OF 3.

FOR BLOCKOUT IN WING WALL DETAIL, SEE END BENT 2 SHEET 3 OF 3.

BACKWALL SHALL BE PLACED BEFORE APPLYING THE EPOXY PROTECTIVE COATING.

THE TOP SURFACE AREA OF THE END BENT CAP SHALL BE CURED IN ACCORDANCE WITH THE STANDARD SPECIFICATIONS EXCEPT THAT THE MEMBRANE CURING COMPOUND METHOD SHALL NOT BE USED.

THE TOP SURFACE OF THE END BENT CAP EXCEPT THE BRIDGE SEAT BUILDUPS SHALL BE SLOPED TRANSVERSELY FROM THE FILL FACE TO THE BACK FACE AT THE RATE OF 2%.

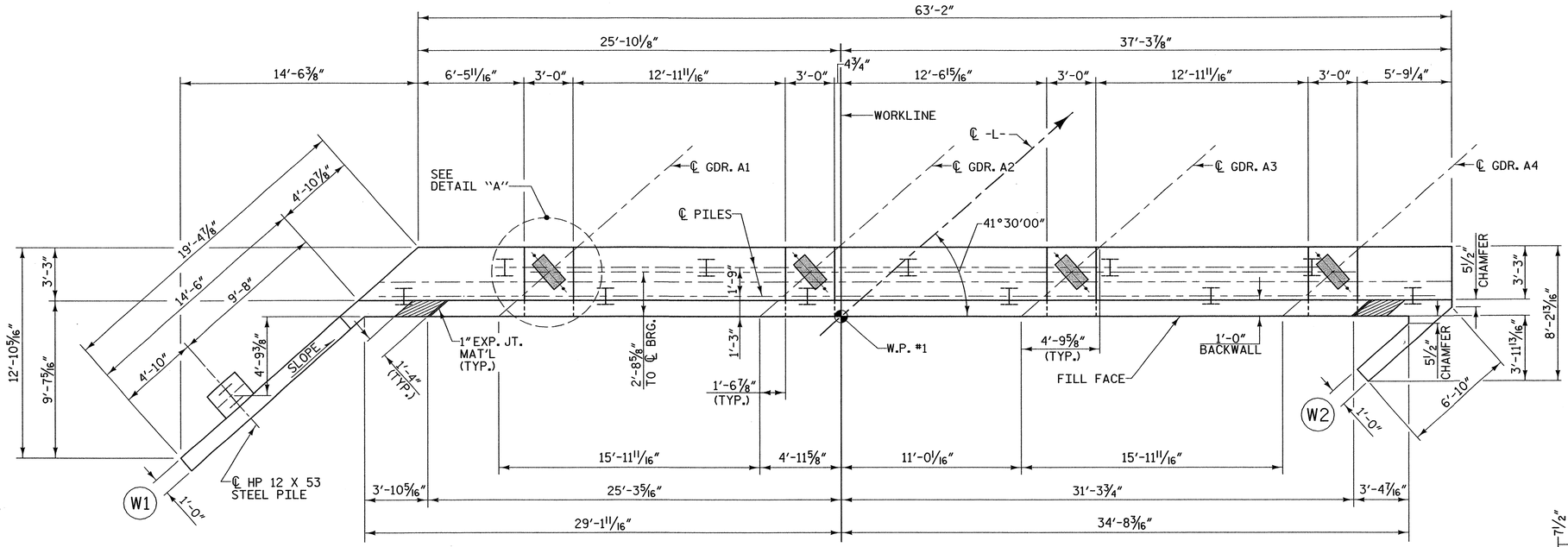

PLAN

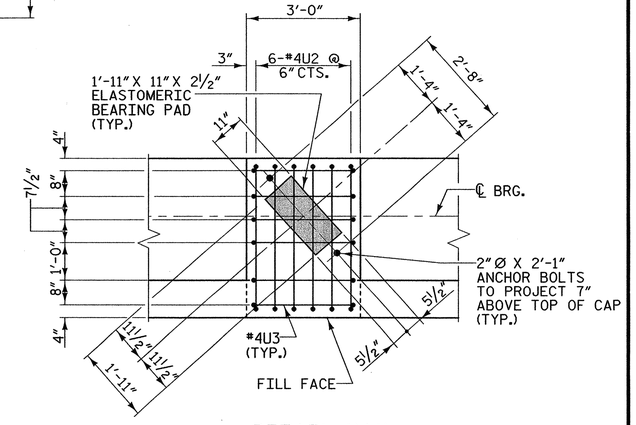

DETAIL "A"
(TYP. EACH GIRDER)

(#4 "U" BARS USED AT BRIDGE SEAT 1 ONLY)

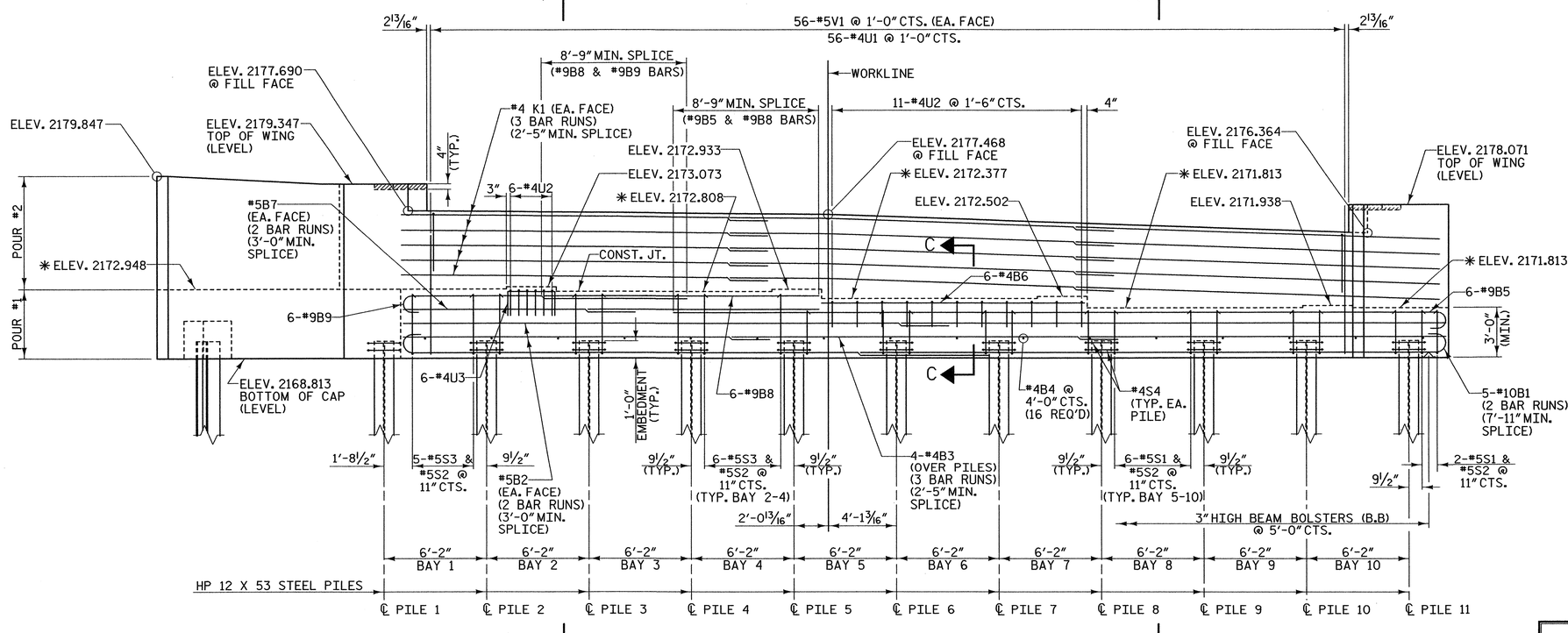

ELEVATION

PROJECT NO. R-5000

JACKSON COUNTY

STATION: 39+74.37 -L- P.O.T.

SHEET 1 OF 3

STATE OF NORTH CAROLINA
DEPARTMENT OF TRANSPORTATION
RALEIGH

SUBSTRUCTURE

END BENT NO. 1

NORTH CAROLINA PROFESSIONAL SEAL 1966 ENGINEER KEVIN AUSTIN 7/6/12

PLANS PREPARED BY:

MULKEY
ENGINEERS & CONSULTANTS
PO Box 151187
Raleigh, NC 27636
(919) 851-1912
(919) 851-1918 (FAX)
www.mulkeyinc.com
NO LICENSE NO. C-1021

REVISIONS						SHEET NO.
NO.	BY:	DATE:	NO.	BY:	DATE:	S-22
1			3			TOTAL SHEETS
2			4			32

DRAWN BY : W. B. ALLEN DATE : 4/12
CHECKED BY : W. A. DAVIS DATE : 4/12

7/6/2012 3:08:34 PM R:\Structures\R-5000_SD_EL.0.dgn

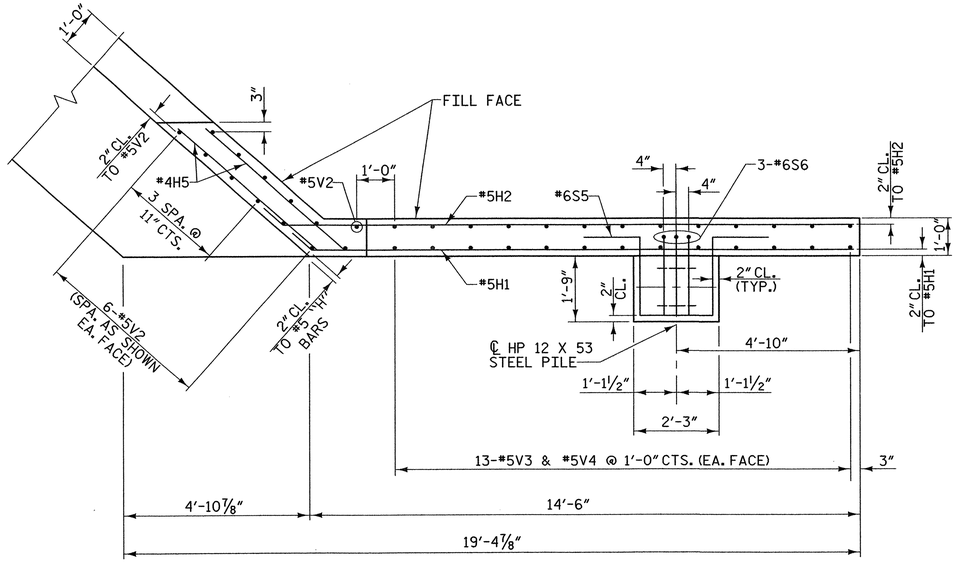

PLAN OF LEFT WING - W1

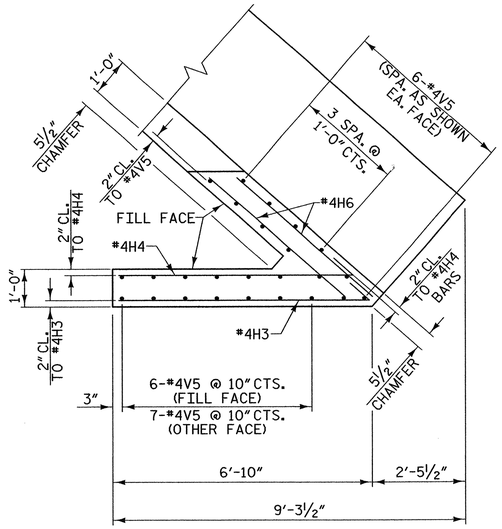

PLAN OF RIGHT WING - W2

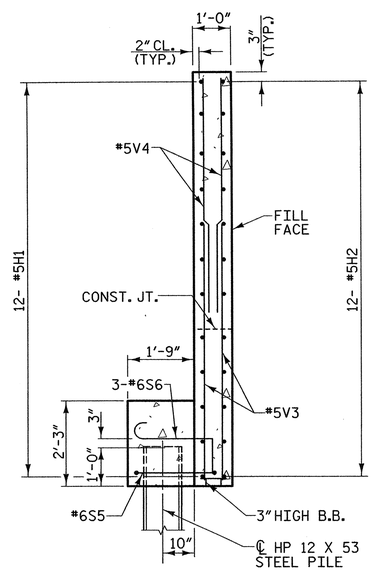

SECTION X-X

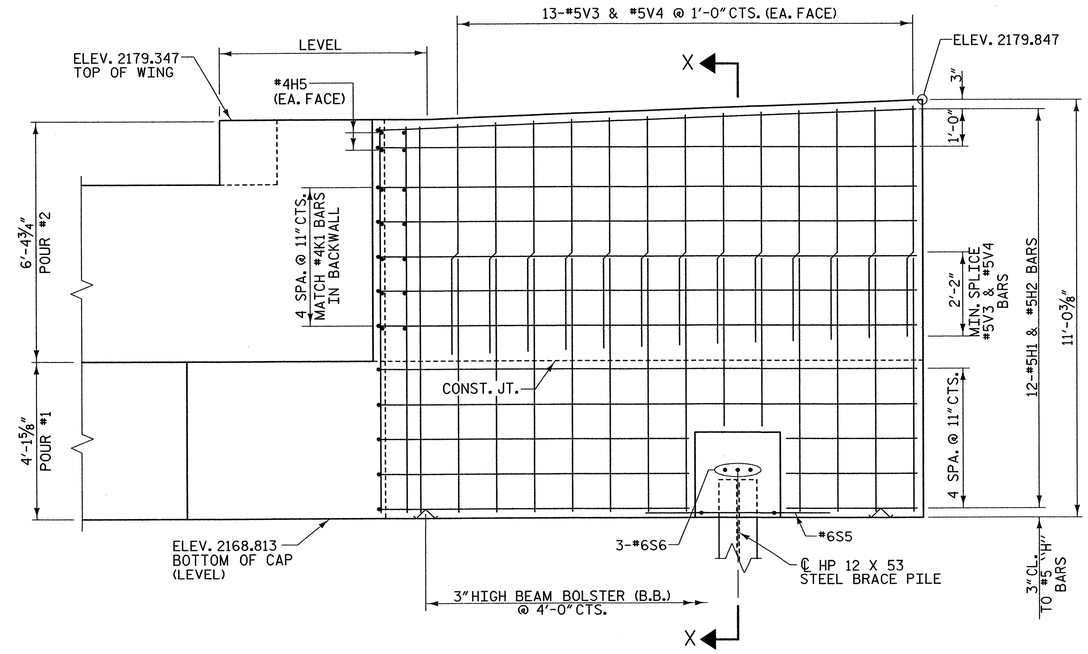

ELEVATION OF LEFT WING - W1

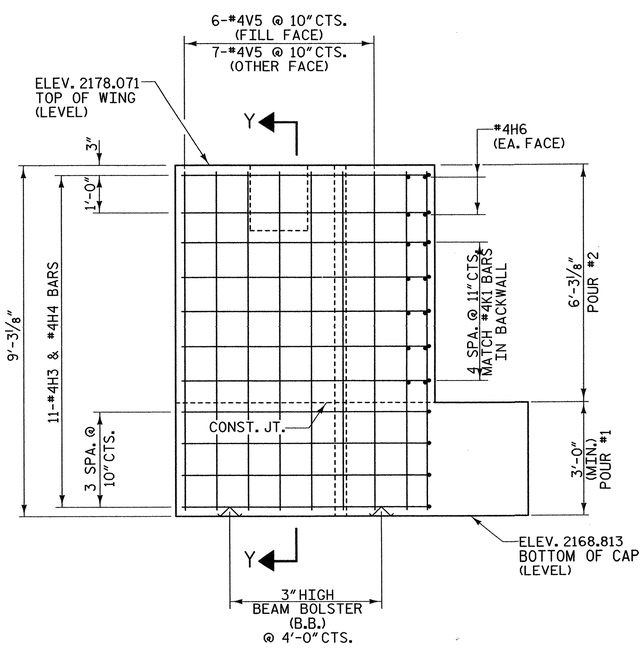

ELEVATION OF RIGHT WING - W2

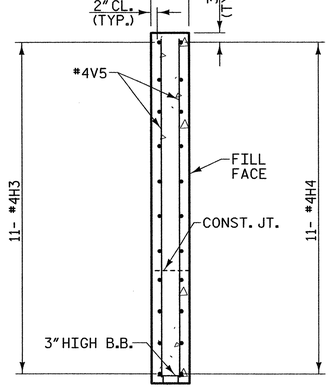

SECTION Y-Y

PROJECT NO. R-5000

JACKSON COUNTY

STATION: 39+74.37 -L- P.O.T.

SHEET 2 OF 3

STATE OF NORTH CAROLINA
DEPARTMENT OF TRANSPORTATION
RALEIGH

SUBSTRUCTURE

END BENT NO. 1

NORTH CAROLINA PROFESSIONAL SEAL 19661 ENGINEER KEVIN AUSTIN
7/6/12

PLANS PREPARED BY:

MULKEY
ENGINEERS & CONSULTANTS
PO Box 33127
RALEIGH, N.C. 27636
(919) 851-1912
(919) 851-1918 (FAX)
WWW.MULKEYINC.COM
NC LICENSE NO. C-1031

REVISIONS						SHEET NO.
NO.	BY:	DATE:	NO.	BY:	DATE:	S-23
1			3			TOTAL SHEETS
2			4			32

DRAWN BY : W. B. ALLEN DATE : 4/12
CHECKED BY : W. A. DAVIS DATE : 4/12

7/6/2012 7:55:17 AM R:\Structures\R-5000_SD_E1_02.dgn

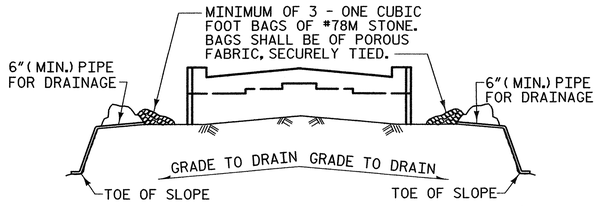

BAGGED STONE AND PIPE SHALL BE PLACED IMMEDIATELY AFTER COMPLETION OF END BENT EXCAVATION. PIPE MAY BE EITHER CONCRETE,CORRUGATED STEEL,CORRUGATED ALUMINUM ALLOY, OR CORRUGATED PLASTIC. PERFORATED PIPE WILL NOT BE ALLOWED.

BAGGED STONE SHALL REMAIN IN PLACE UNTIL THE ENGINEER DIRECTS THAT IT BE REMOVED. THE CONTRACTOR SHALL REMOVE AND DISPOSE OF SILT ACCUMULATIONS AT BAGGED STONE WHEN SO DIRECTED BY THE ENGINEER. BAGS SHALL BE REMOVED AND REPLACED WHENEVER THE ENGINEER DETERMINES THAT THEY HAVE DETERIORATED AND LOST THEIR EFFECTIVENESS.

NO SEPARATE PAYMENT WILL BE MADE FOR THIS WORK AND THE ENTIRE COST OF THIS WORK SHALL BE INCLUDED IN THE LUMP SUM BID PRICE FOR PLACEMENT OF SUBSTRUCTURE.

TEMPORARY DRAINAGE AT END BENT

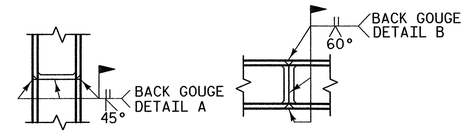

*PILE VERTICAL

*PILE HORIZONTAL OR VERTICAL

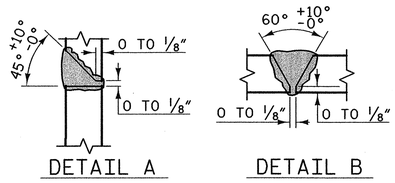

DETAIL A DETAIL B

PILE SPLICE DETAILS

*POSITION OF PILE DURING WELDING.

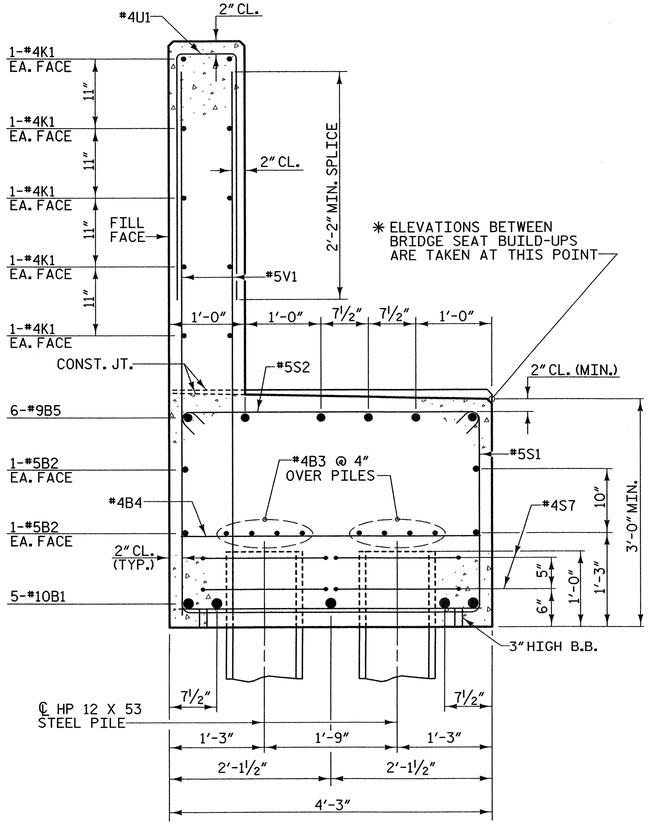

SECTION A-A

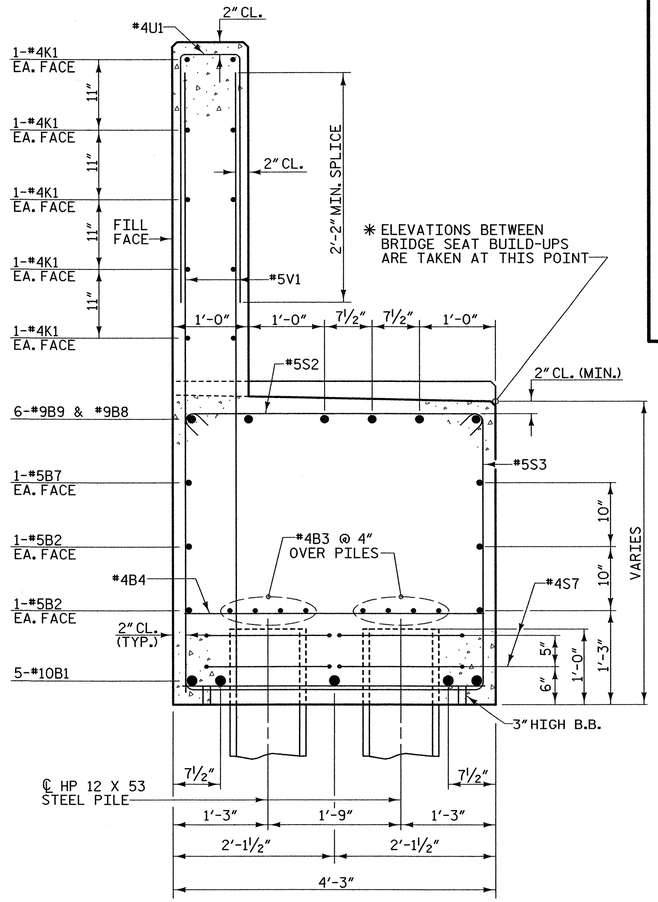

SECTION B-B

BAR TYPES

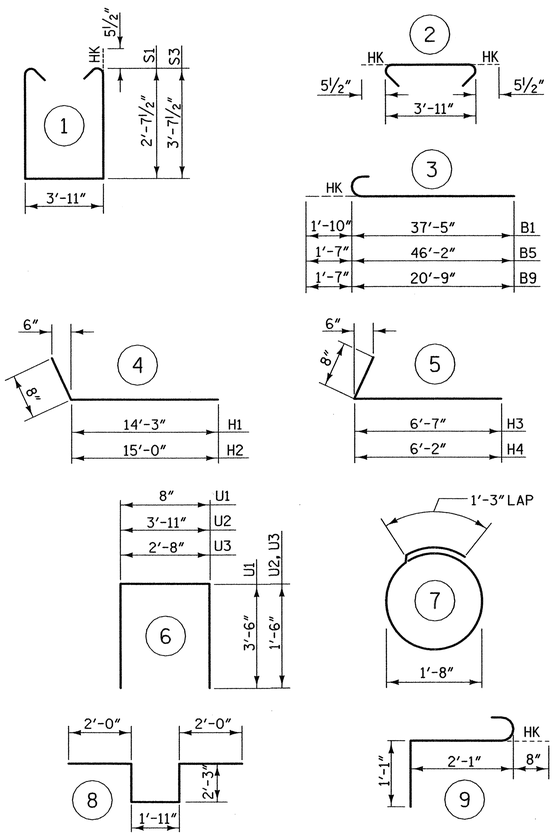

ALL BAR DIMENSIONS ARE OUT TO OUT

BILL OF MATERIAL

FOR END BENT 1

BAR	NO.	SIZE	TYPE	LENGTH	WEIGHT
B1	10	#10	3	39'-3"	1689
B2	8	#5	STR	35'-0"	292
B3	24	#4	STR	23'-11"	383
B4	16	#4	STR	3'-11"	42
B5	6	#9	3	47'-9"	974
B6	6	#4	STR	15'-10"	63
B7	4	#5	STR	16'-3"	68
B8	6	#9	STR	16'-8"	340
B9	6	#9	3	22'-4"	456
H1	12	#5	4	14'-11"	187
H2	12	#5	4	15'-8"	196
H3	11	#4	5	7'-3"	53
H4	11	#4	5	6'-8"	49
H5	4	#5	STR	4'-10"	20
H6	4	#5	STR	4'-9"	20
K1	30	#4	STR	23'-11"	479
S1	38	#5	1	10'-1"	400
S2	61	#5	2	4'-10"	308
S3	23	#5	1	12'-1"	290
S4	22	#4	7	6'-6"	96
S5	1	#6	8	10'-5"	16
S6	3	#6	9	4'-10"	22
U1	56	#4	6	7'-8"	287
U2	17	#4	6	6'-11"	79
U3	6	#4	6	5'-8"	23
V1	112	#5	STR	7'-2"	837
V2	13	#5	STR	10'-2"	138
V3	26	#5	STR	6'-10"	185
V4	26	#5	STR	6'-1"	165
V5	25	#4	STR	8'-11"	149

TOTAL REINFORCING STEEL =	8306 lbs.
CLASS "A" CONCRETE - CU. YARDS	
POUR 1	40.2 cu. yds.
POUR 2	16.8 cu. yds.
TOTAL	57.0 cu. yds.
HP 12 X 53 STEEL PILES	
12 PILES REQUIRED - LIN. FEET	480
STEEL PILE POINTS - EACH	12

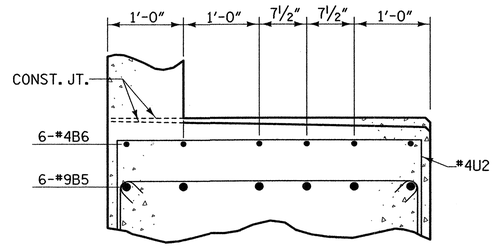

SECTION C-C

PROJECT NO. R-5000

JACKSON COUNTY

STATION: 39+74.37 -L- P.O.T.

SHEET 3 OF 3

STATE OF NORTH CAROLINA
DEPARTMENT OF TRANSPORTATION
RALEIGH

SUBSTRUCTURE

END BENT NO. 1

NORTH CAROLINA PROFESSIONAL SEAL 19661 ENGINEER L. KEVIN AUSTIN 7/6/12

PLANS PREPARED BY:

MULKEY ENGINEERS & CONSULTANTS
PO Box 33127
RALEIGH, N.C. 27636
(919) 851-1912
(919) 851-1918 (FAX)
WWW.MULKEYINC.COM
NC LICENSE NO. C-1031

REVISIONS						SHEET NO.
NO.	BY:	DATE:	NO.	BY:	DATE:	S-24
1			3			TOTAL SHEETS
2			4			32

DRAWN BY : W. B. ALLEN DATE : 4/12
CHECKED BY : W. A. DAVIS DATE : 4/12

7/6/2012 7:56:23 AM R:\Structures\R-5000_SD_EL03.dgn

NOTES:

STIRRUPS IN THE CAP MAY BE SHIFTED AS NECESSARY TO CLEAR ANCHOR BOLTS.

HOOKS ON "M" BARS MAY BE TURNED AS NECESSARY FOR PLACING REINFORCING STEEL.

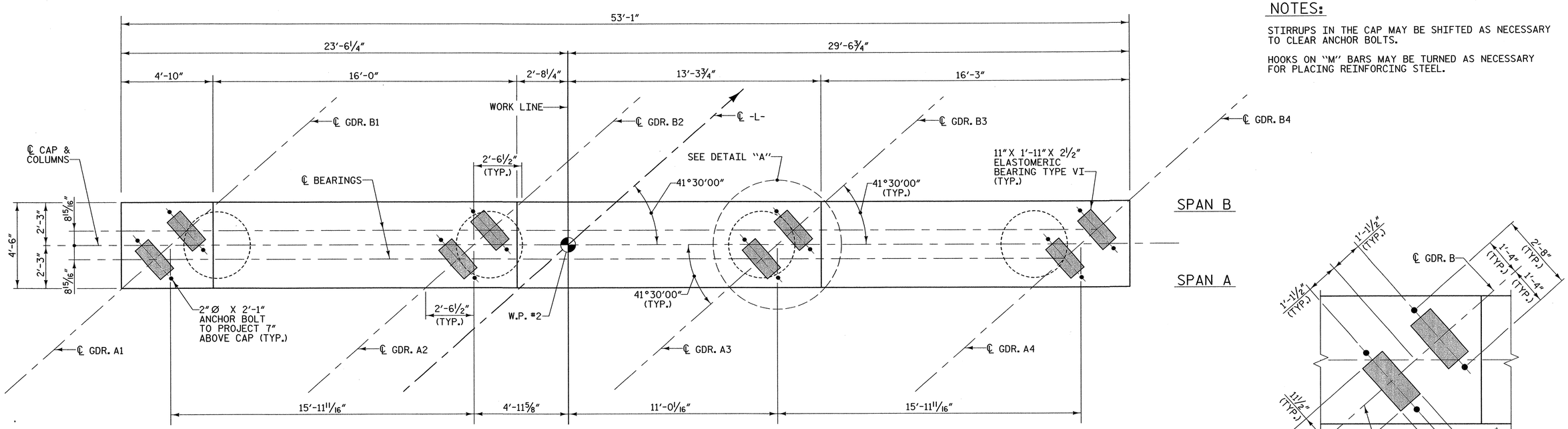

PLAN

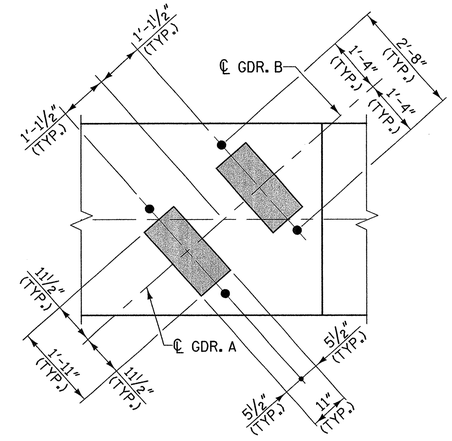

DETAIL "A"
(TYPICAL EACH GIRDER)

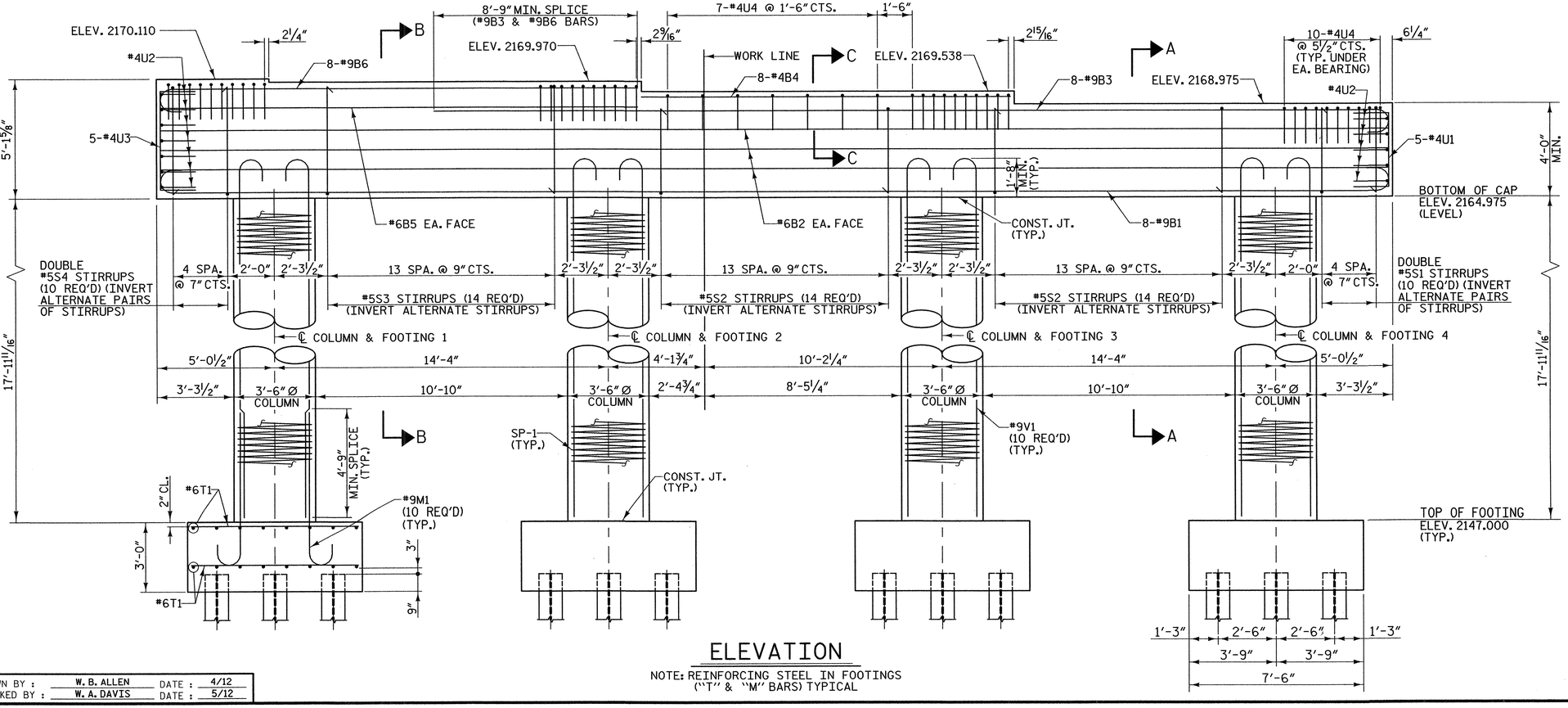

ELEVATION

NOTE: REINFORCING STEEL IN FOOTINGS ("T" & "M" BARS) TYPICAL

NORTH CAROLINA PROFESSIONAL ENGINEER SEAL 19661 KEVIN AUSTIN 7/6/12

PLANS PREPARED BY:

MULKEY
ENGINEERS & CONSULTANTS
PO Box 33127
RALEIGH, N.C. 27636
(919) 851-1912
(919) 851-1918 (FAX)
WWW.MULKEYINC.COM
NC LICENSE NO. C-1021

PROJECT NO. R-5000

JACKSON COUNTY

STATION: 39+74.37 -L- P.O.T.

SHEET 1 OF 2

STATE OF NORTH CAROLINA
DEPARTMENT OF TRANSPORTATION
RALEIGH

SUBSTRUCTURE

BENT NO. 1

REVISIONS						SHEET NO.
NO.	BY:	DATE:	NO.	BY:	DATE:	S-25
1			3			TOTAL SHEETS
2			4			32

DRAWN BY : W. B. ALLEN DATE : 4/12
CHECKED BY : W. A. DAVIS DATE : 5/12

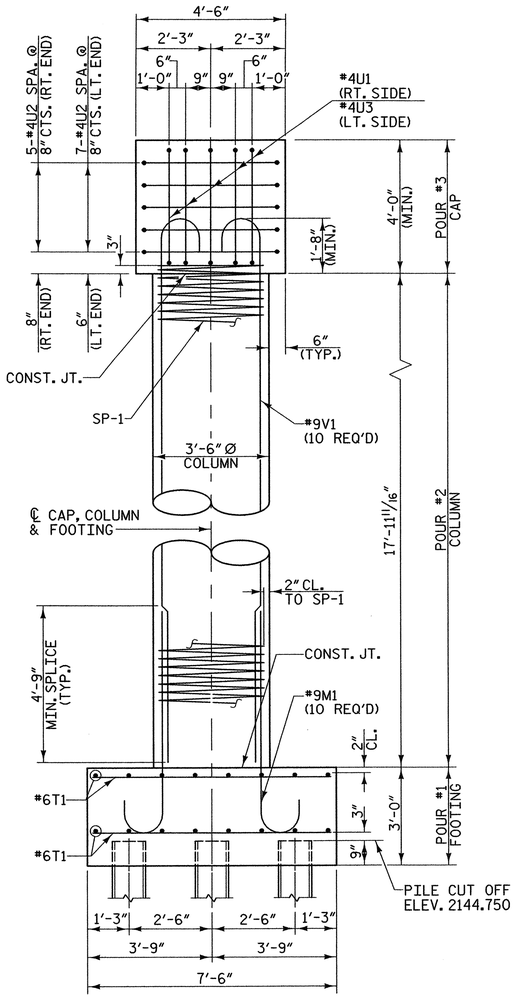

END ELEVATION

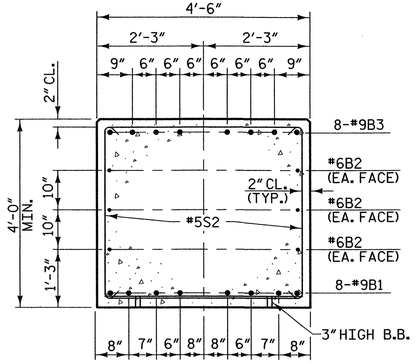

SECTION A-A

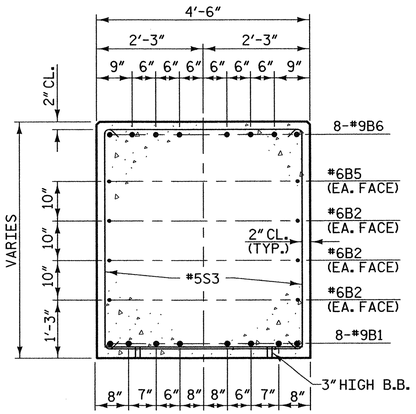

SECTION B-B

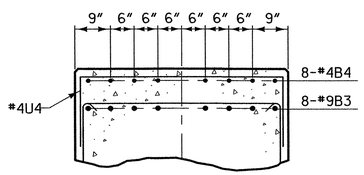

SECTION C-C

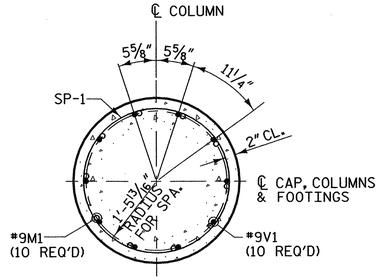

SECTION THRU COLUMN

BAR TYPES

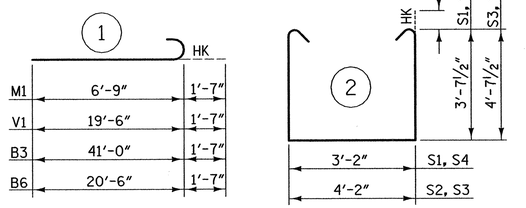

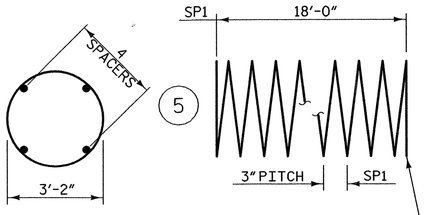

ALL BAR DIMENSIONS ARE OUT TO OUT

BILL OF MATERIAL

BENT NO. 1

BAR	NO.	SIZE	TYPE	LENGTH	WEIGHT
B1	8	#9	3	55'-11"	1521
B2	6	#6	STR	52'-9"	475
B3	8	#9	1	42'-7"	1158
B4	8	#4	STR	15'-10"	85
B5	2	#6	STR	20'-6"	62
B6	8	#9	1	22'-1"	601
M1	40	#9	1	8'-4"	1133
S1	10	#5	2	11'-4"	118
S2	28	#5	2	12'-4"	360
S3	14	#5	2	14'-4"	209
S4	10	#5	2	13'-4"	139
T1	128	#6	STR	7'-2"	1378
U1	5	#4	4	6'-5"	21
U2	12	#4	4	7'-0"	56
U3	5	#4	4	7'-6"	25
U4	47	#4	4	7'-2"	225
V1	40	#9	1	21'-1"	2867

TOTAL REINFORCING STEEL = 10433 lbs.

SP-1	4	#4	5	735'-4"	1965

SPIRAL COLUMN REINFORCING STEEL = 1965 lbs.

CLASS "A" CONCRETE - CU. YARDS

POUR 1 (FOOTINGS)	25.0 cu. yds.
POUR 2 (COLUMNS)	25.6 cu. yds.
POUR 3 (CAP)	40.5 cu. yds.
TOTAL	91.1 cu. yds.

HP 12 X 53 STEEL PILES	
20 PILES REQUIRED - LIN. FEET	700
STEEL PILE POINTS - EACH	20

** THE "SP" SPIRAL REINFORCING STEEL SHALL BE W20 OR D-20 COLD DRAWN WIRE OR #4 PLAIN OR DEFORMED BAR.

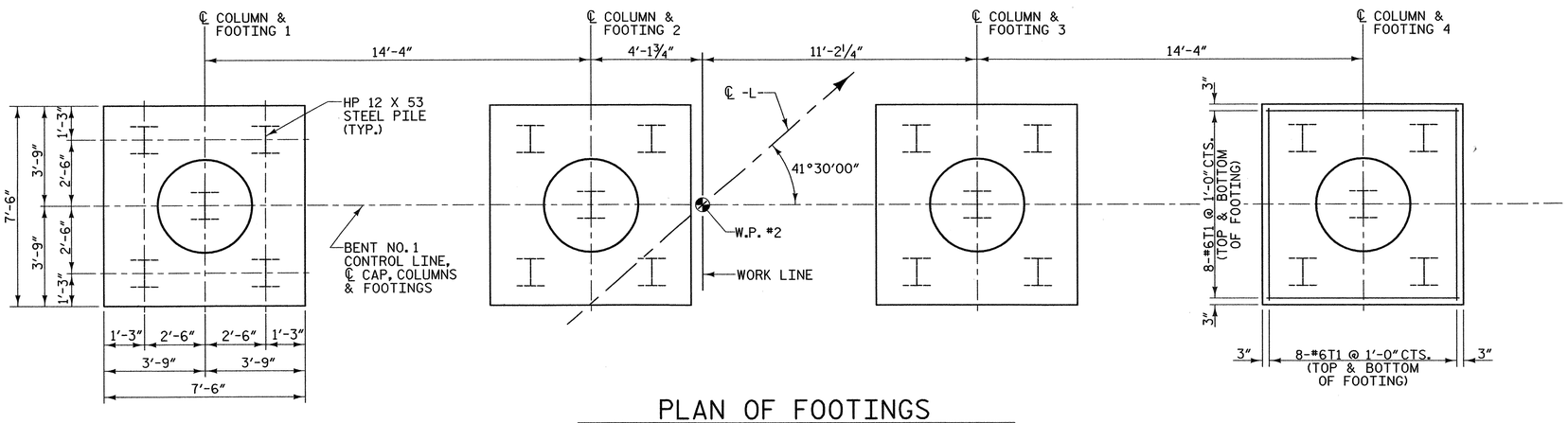

PLAN OF FOOTINGS

DIMENSIONS AND REINFORCING STEEL ARE TYPICAL FOR EACH FOOTING

DRAWN BY : W. B. ALLEN DATE : 4/12
CHECKED BY : W. A. DAVIS DATE : 5/12

PROJECT NO. R-5000

JACKSON COUNTY

STATION: 39+74.37 -L- P.O.T.

SHEET 2 OF 2

STATE OF NORTH CAROLINA
DEPARTMENT OF TRANSPORTATION
RALEIGH

SUBSTRUCTURE

BENT NO. 1

NORTH CAROLINA PROFESSIONAL SEAL 19661 ENGINEER L. KEVIN AUSTIN 7/6/12

PLANS PREPARED BY:

MULKEY
ENGINEERS & CONSULTANTS
PO Box 33127
RALEIGH, N.C. 27636
(919) 851-1913
(919) 851-1918 (FAX)
WWW.MULKEYINC.COM
NC LICENSE NO. C-1321

REVISIONS						SHEET NO.
NO.	BY:	DATE:	NO.	BY:	DATE:	S-26
1			3			TOTAL SHEETS
2			4			32

7/6/2012 3:20:44 PM R:\Structures\R-5000_SD_BI_02.dgn

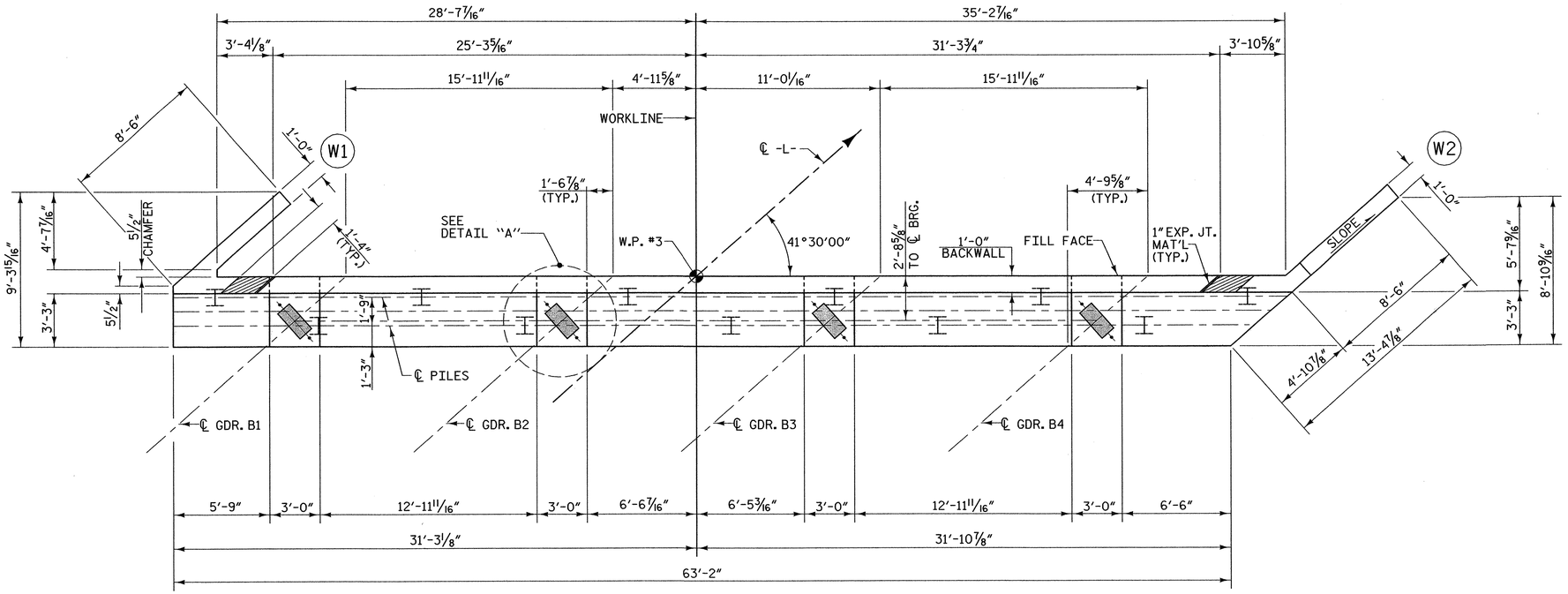

PLAN

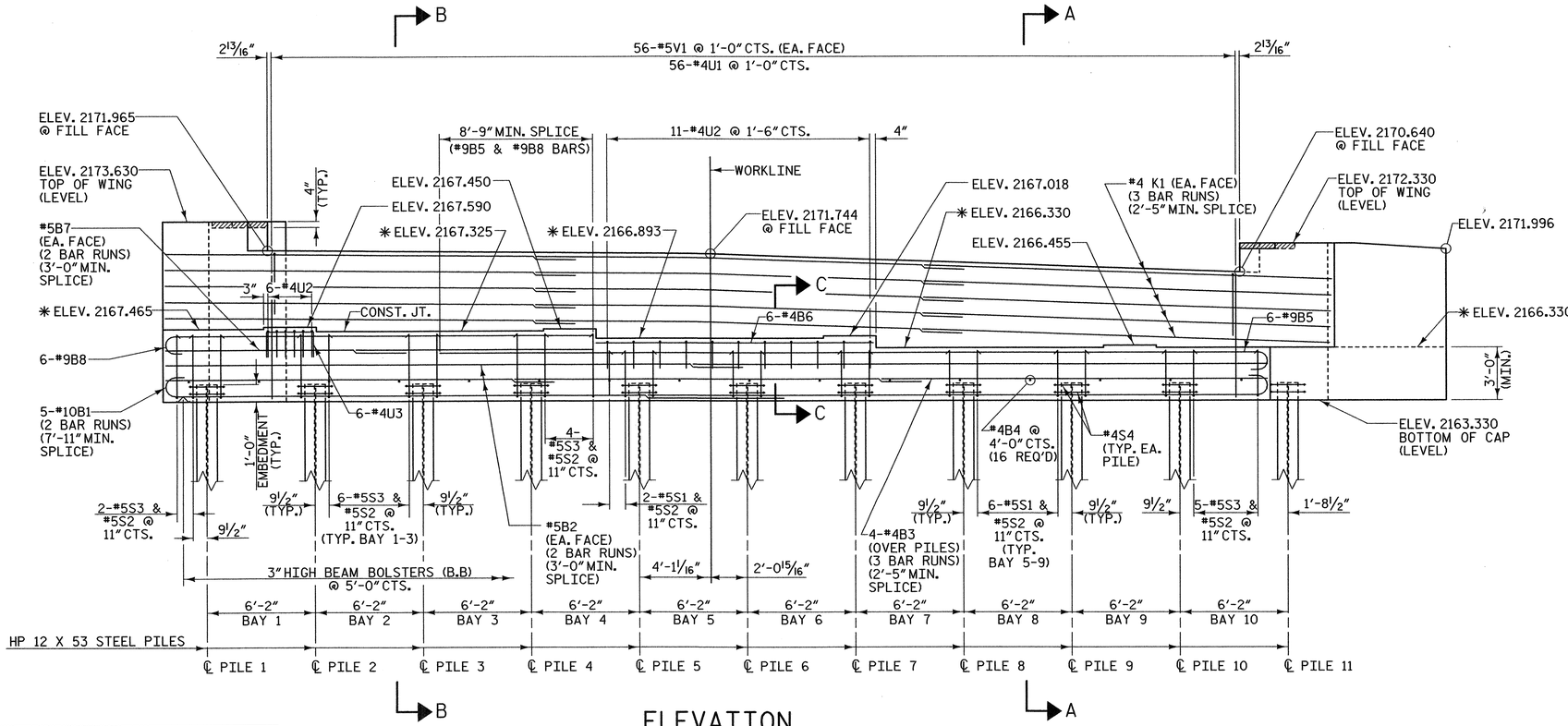

ELEVATION

NOTES

STIRRUPS IN THE CAP MAY BE SHIFTED AS NECESSARY TO CLEAR ANCHOR BOLTS.

FOR PILE SPLICE DETAILS, SEE END BENT 1, SHEET 3 OF 3.

FOR TEMPORARY DRAINAGE AT END BENTS, SEE END BENT 1, SHEET 3 OF 3.

FOR BLOCKOUT IN WING WALL DETAIL, SEE SHEET 3 OF 3.

BACKWALL SHALL BE PLACED BEFORE APPLYING THE EPOXY PROTECTIVE COATING.

THE TOP SURFACE AREA OF THE END BENT CAP SHALL BE CURED IN ACCORDANCE WITH THE STANDARD SPECIFICATIONS EXCEPT THAT THE MEMBRANE CURING COMPOUND METHOD SHALL NOT BE USED.

THE TOP SURFACE OF THE END BENT CAP EXCEPT THE BRIDGE SEAT BUILDUPS SHALL BE SLOPED TRANSVERSELY FROM THE FILL FACE TO THE BACK FACE AT THE RATE OF 2%.

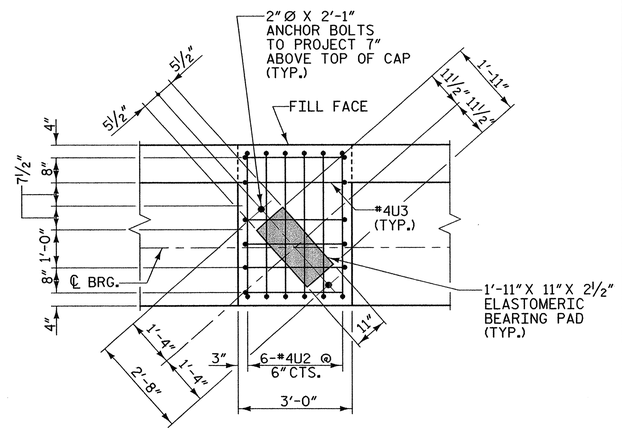

DETAIL "A"
(TYP. EACH GIRDER)

(#4 "U" BARS USED AT BRIDGE SEAT 1 ONLY)

PROJECT NO. R-5000

JACKSON COUNTY

STATION: 39+74.37 -L- P.O.T.

SHEET 1 OF 3

STATE OF NORTH CAROLINA
DEPARTMENT OF TRANSPORTATION
RALEIGH

SUBSTRUCTURE

END BENT NO. 2

REVISIONS						SHEET NO.
NO.	BY:	DATE:	NO.	BY:	DATE:	S-27
1			3			TOTAL SHEETS
2			4			32

NORTH CAROLINA PROFESSIONAL ENGINEER SEAL 19661 L. KEVIN AUSTIN 7/6/12

PLANS PREPARED BY:

MULKEY
ENGINEERS & CONSULTANTS
PO Box 33127
Raleigh, N.C. 27636
(919) 851-1912
(919) 851-1918 (FAX)
WWW.MULKEYINC.COM
NC LICENSE NO. C-1031

DRAWN BY : W. B. ALLEN DATE : 4/12
CHECKED BY : W. A. DAVIS DATE : 4/12

7/6/2012 3:23:01 PM R:\Structures\R-5000_SD_E2_0.dgn

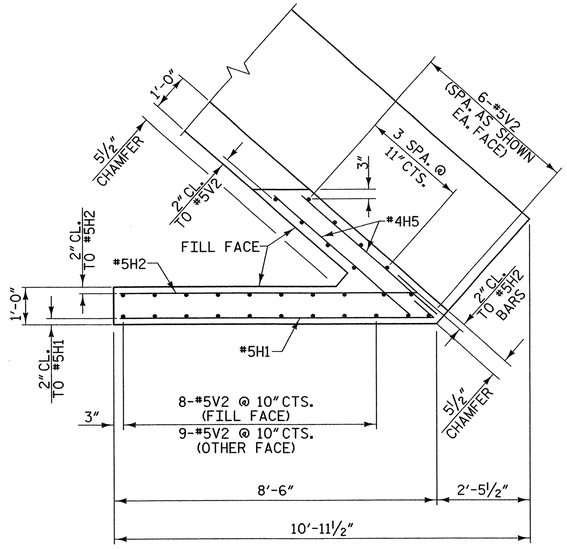

PLAN OF LEFT WING - W1

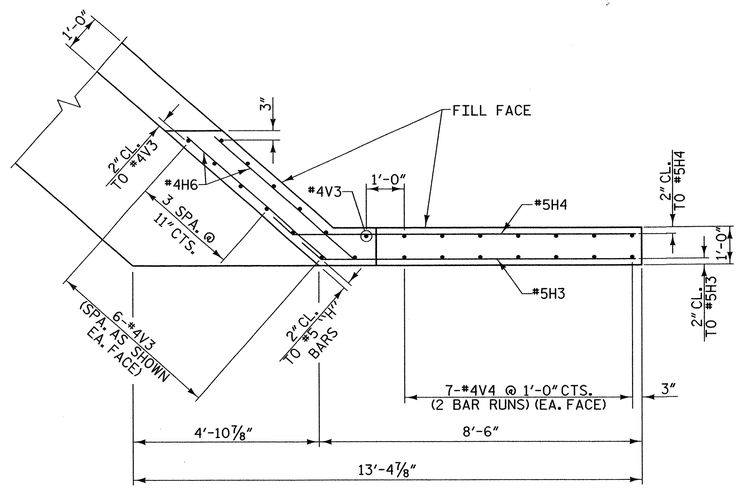

PLAN OF RIGHT WING - W2

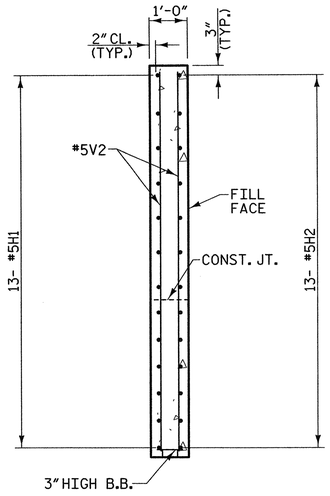

SECTION X-X

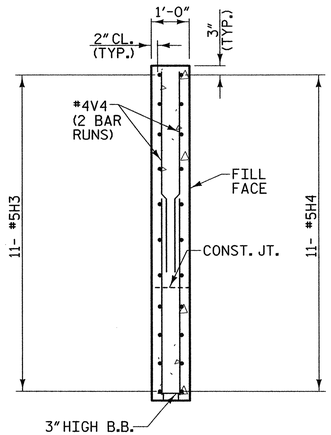

SECTION Y-Y

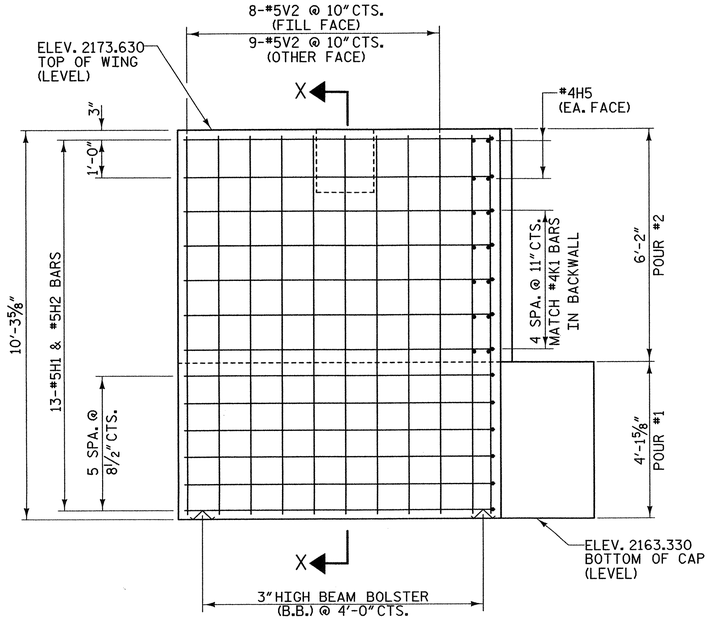

ELEVATION OF LEFT WING - W1

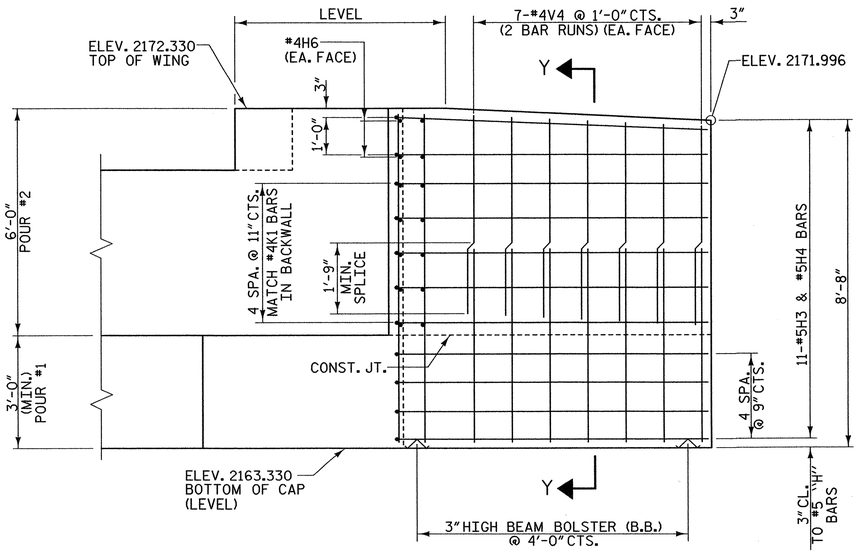

ELEVATION OF RIGHT WING - W2

PROJECT NO. R-5000

JACKSON COUNTY

STATION: 39+74.37 -L- P.O.T.

STATE OF NORTH CAROLINA
DEPARTMENT OF TRANSPORTATION
RALEIGH

SUBSTRUCTURE

END BENT NO. 2

NORTH CAROLINA PROFESSIONAL SEAL 19661 ENGINEER L. KEVIN AUSTIN 7/6/12

PLANS PREPARED BY:

MULKEY
ENGINEERS & CONSULTANTS
PO Box 33127
RALEIGH, N.C. 27636
(919) 851-1912
(919) 851-1918 FAX
WWW.MULKEYINC.COM
NC LICENSE NO. C-1031

REVISIONS						SHEET NO.
NO.	BY:	DATE:	NO.	BY:	DATE:	S-28
1			3			TOTAL SHEETS
2			4			32

DRAWN BY : W. B. ALLEN DATE : 4/12
CHECKED BY : W. A. DAVIS DATE : 4/12

7/6/2012 8:00:59 AM R:\Structures\R-5000_SD_E2_02.dgn

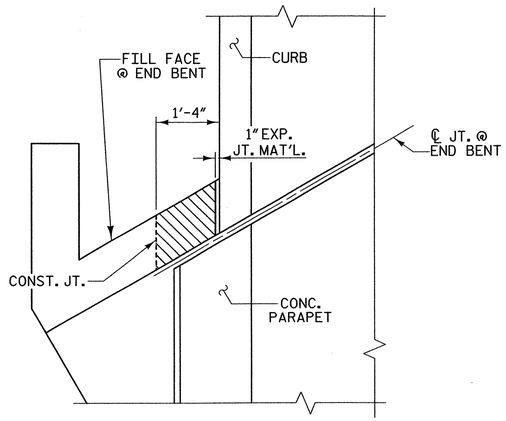

PLAN

NOTE:
THE CONCRETE IN THE SHADED AREA OF THE WING SHALL BE POURED AFTER THE JOINT BETWEEN THE DECK AND APPROACH SLAB HAS BEEN SAWED AND THE PARAPET IS CAST IF SLIP FORMING IS USED.

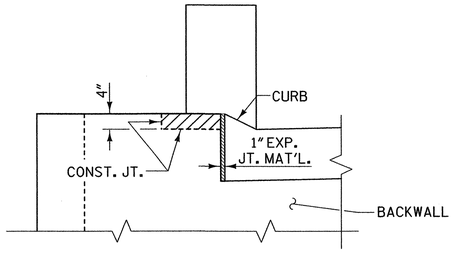

ELEVATION

BLOCKOUT IN WING WALL

LEFT WING SHOWN, RIGHT WING SIMILAR

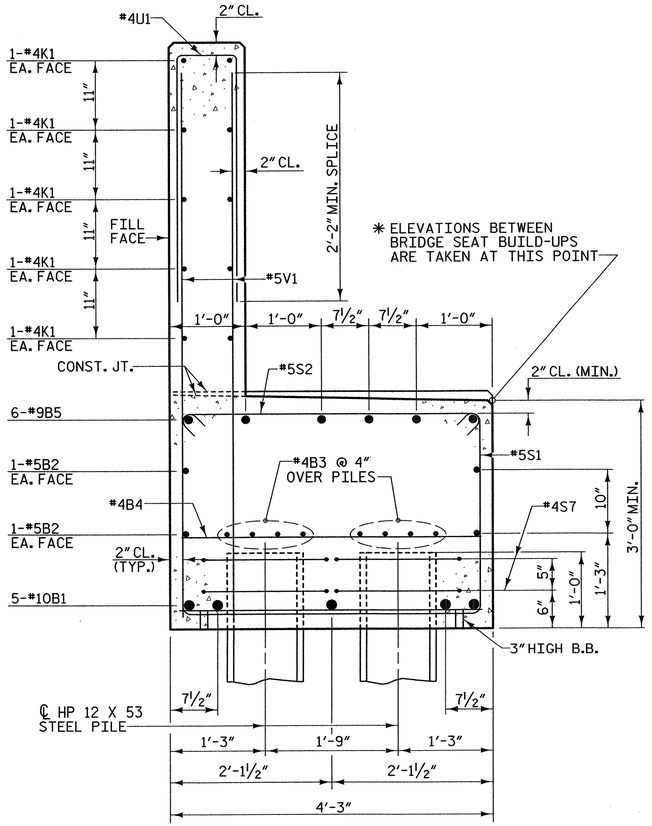

SECTION A-A

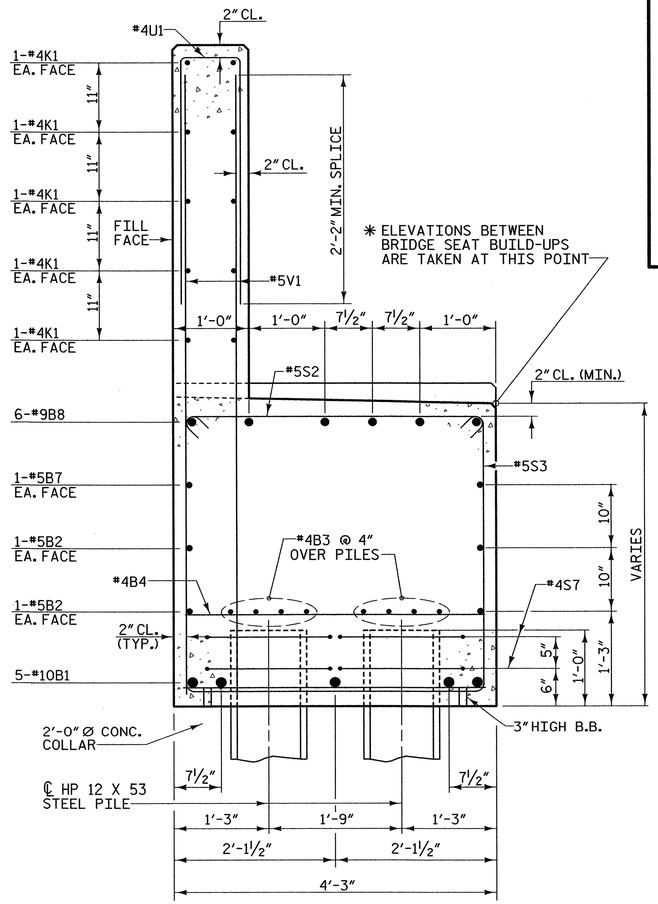

SECTION B-B

BAR TYPES

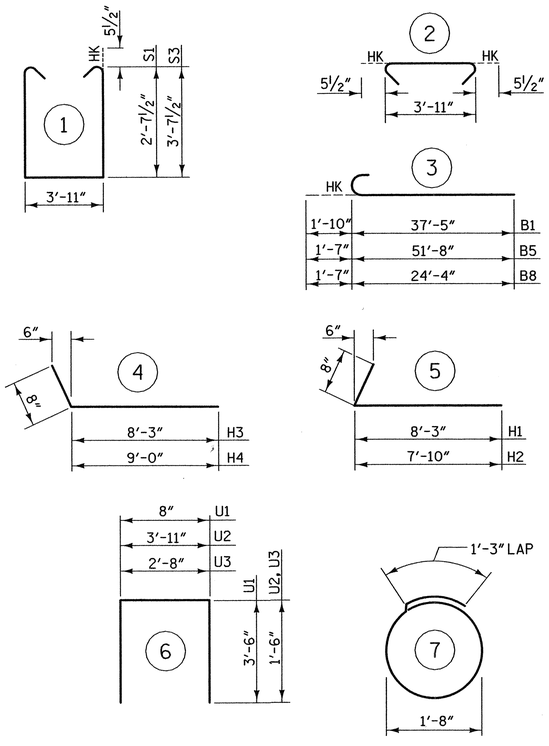

ALL BAR DIMENSIONS ARE OUT TO OUT

BILL OF MATERIAL

FOR END BENT 2

BAR	NO.	SIZE	TYPE	LENGTH	WEIGHT
B1	10	#10	3	39'-3"	1689
B2	8	#5	STR	35'-0"	292
B3	24	#4	STR	23'-11"	383
B4	16	#4	STR	3'-11"	42
B5	6	#9	3	53'-3"	1086
B6	6	#4	STR	15'-10"	63
B7	4	#5	STR	13'-9"	57
B8	6	#9	3	25'-11"	529
H1	13	#5	5	8'-11"	121
H2	13	#5	5	8'-6"	115
H3	11	#5	4	8'-11"	102
H4	11	#5	4	9'-8"	111
H5	4	#4	STR	4'-8"	12
H6	4	#4	STR	4'-10"	13
K1	30	#4	STR	23'-11"	479
S1	37	#5	1	10'-1"	389
S2	61	#5	2	4'-10"	308
S3	24	#5	1	12'-1"	302
S4	22	#4	7	6'-6"	96
U1	56	#4	6	7'-8"	287
U2	17	#4	6	6'-11"	79
U3	6	#4	6	5'-8"	23
V1	112	#5	STR	7'-0"	818
V2	29	#5	STR	9'-11"	300
V3	13	#4	STR	8'-8"	75
V4	28	#4	STR	5'-3"	98

TOTAL REINFORCING STEEL =	7869 lbs.
CLASS "A" CONCRETE - CU. YARDS	
POUR 1	38.6 cu. yds.
POUR 2	15.4 cu. yds.
TOTAL	54.0 cu. yds.
HP 12 X 53 STEEL PILES	
11 PILES REQUIRED - LIN. FEET	495
STEEL PILE POINTS - EACH	11

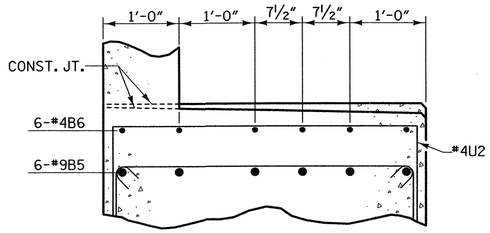

SECTION C-C

PROJECT NO. R-5000

JACKSON COUNTY

STATION: 39+74.37 -L- P.O.T.

SHEET 3 OF 3

STATE OF NORTH CAROLINA
DEPARTMENT OF TRANSPORTATION
RALEIGH

SUBSTRUCTURE

END BENT NO. 2

NORTH CAROLINA PROFESSIONAL ENGINEER SEAL 1966 L. KEVIN AUSTIN 7/6/12

PLANS PREPARED BY:

MULKEY
ENGINEERS & CONSULTANTS
PO Box 33127
RALEIGH, N.C. 27636
(919) 851-1913
(919) 851-1915 (FAX)
WWW.MULKEYINC.COM
NC LICENSE NO. C-1021

REVISIONS						SHEET NO.
NO.	BY:	DATE:	NO.	BY:	DATE:	S-29
1			3			TOTAL SHEETS
2			4			32

DRAWN BY : W. B. ALLEN DATE : 4/12
CHECKED BY : W. A. DAVIS DATE : 4/12

7/6/2012 8:02:02 AM R:\Structures\R-5000_SD_EB_03.dgn

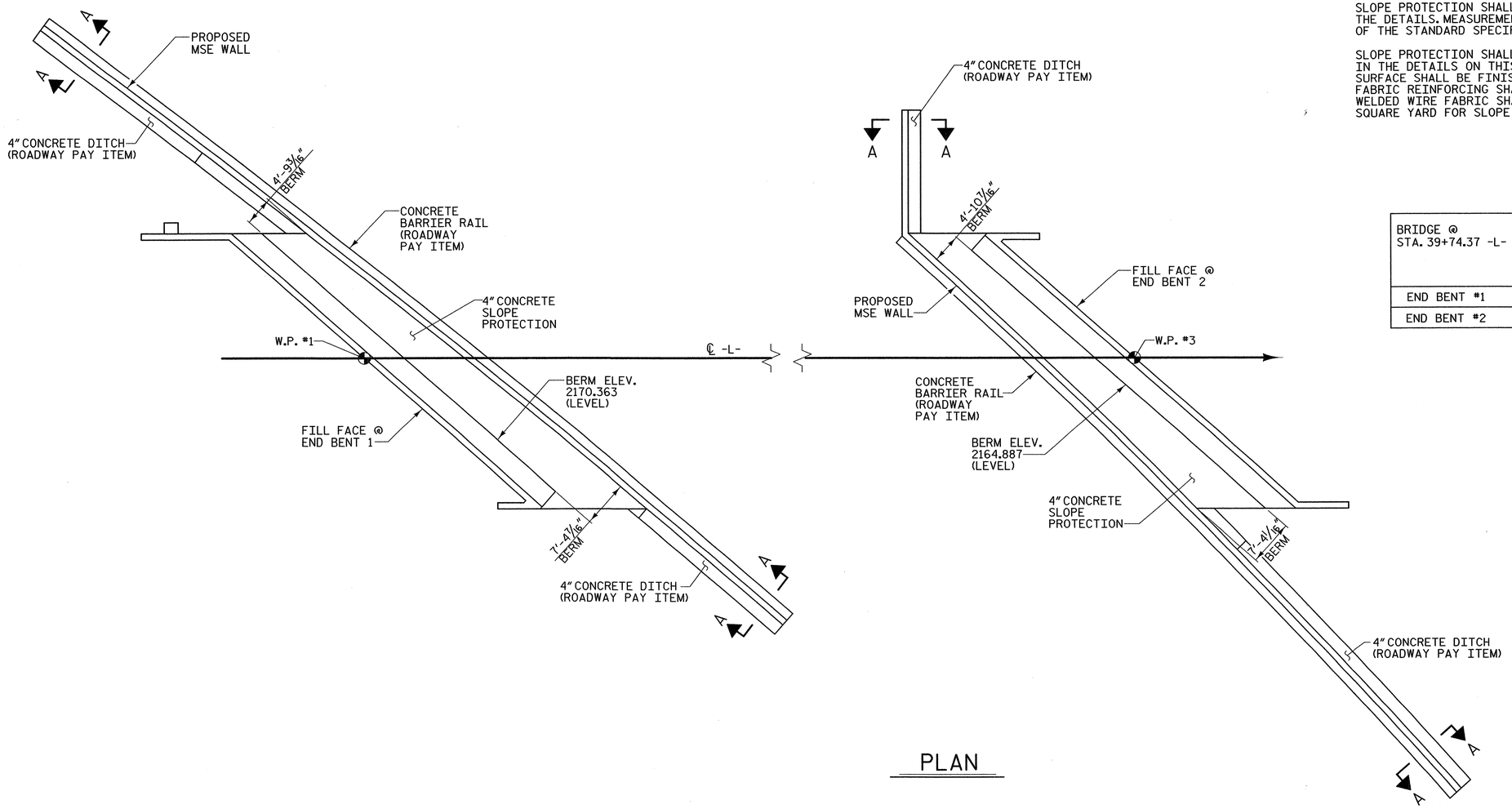

PLAN

NOTES

SLOPE PROTECTION SHALL BE PLACED UNDER THE ENDS OF THE BRIDGE AS SHOWN IN THE DETAILS. MEASUREMENT AND PAYMENT SHALL BE AS PRESCRIBED IN SECTION 462 OF THE STANDARD SPECIFICATIONS.

SLOPE PROTECTION SHALL CONSIST OF 4'' POURED-IN-PLACE CONCRETE PAVING AS SHOWN IN THE DETAILS ON THIS SHEET. CONCRETE SHALL BE CLASS ''B''. THE CONCRETE SURFACE SHALL BE FINISHED TO THE SATISFACTION OF THE ENGINEER. WELDED WIRE FABRIC REINFORCING SHALL BE 6 X 6 - W1.4 X W1.4, 20'' WIDE. THE COST OF THE WELDED WIRE FABRIC SHALL BE INCLUDED IN THE CONTRACT UNIT PRICE BID PER SQUARE YARD FOR SLOPE PROTECTION.

BRIDGE @ STA. 39+74.37 -L-	4" SLOPE PROTECTION	* WELDED WIRE FABRIC 20 INCHES WIDE
	SQUARE YARDS	APPROX. L.F.
END BENT #1	49	204
END BENT #2	44	204

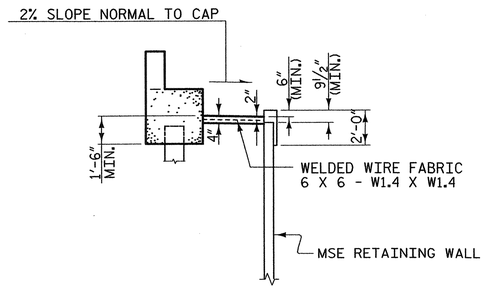

SECTION ALONG ℄ ROADWAY

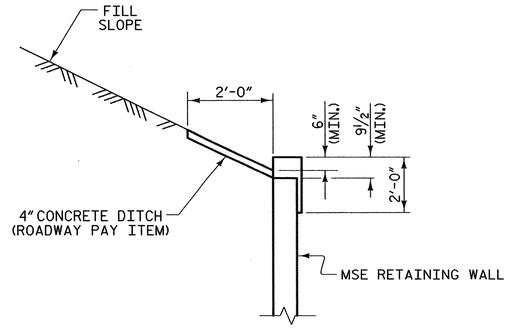

SECTION A-A

PROJECT NO. R-5000

JACKSON COUNTY

STATION: 39+74.37 -L- P.O.T.

STATE OF NORTH CAROLINA
DEPARTMENT OF TRANSPORTATION
RALEIGH

SLOPE PROTECTION DETAILS

REVISIONS						SHEET NO.
NO.	BY:	DATE:	NO.	BY:	DATE:	S-30
1			3			TOTAL SHEETS
2			4			32

NORTH CAROLINA PROFESSIONAL SEAL 19661 ENGINEER L. KEVIN AUSTIN 7/6/12

PLANS PREPARED BY:

MULKEY
ENGINEERS & CONSULTANTS
PO Box 33127
RALEIGH, N.C. 27636
(919) 851-1912
(919) 851-1918 (FAX)
WWW.MULKEYINC.COM
NC LICENSE NO. C-1021

DRAWN BY : W. B. ALLEN DATE : 4/12
CHECKED BY : W. A. DAVIS DATE : 5/12

7/6/2012 8:02:30 AM R:\Structures\R-5000_SD_SP_01.dgn

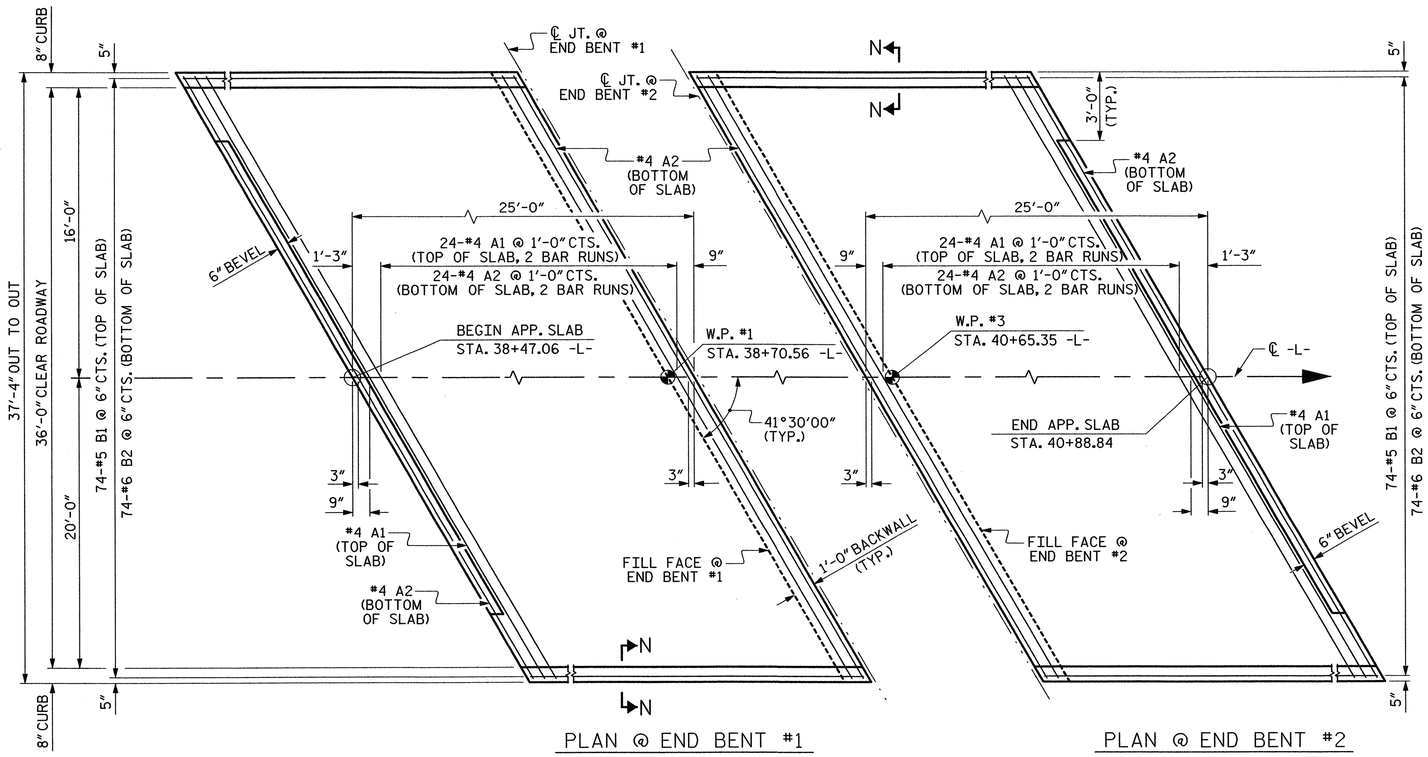

PLAN @ END BENT #1 PLAN @ END BENT #2

DIMENSIONS SHOWN ARE TYPICAL FOR BOTH APPROACH SLABS

NOTES

APPROACH SLAB SHALL NOT BE CONSTRUCTED PRIOR TO COMPLETION OF THE BRIDGE DECK.

FOR REINFORCED BRIDGE APPROACH FILL INCLUDING GEOTEXTILE, IMPERMEABLE GEOMEMBRANE, 4" Ø DRAINAGE PIPE, #78M STONE, AND SELECT MATERIAL, SEE ROADWAY PLANS.

AREA BETWEEN THE WINGWALL AND APPROACH SLAB SHALL BE GRADED TO DRAIN THE WATER AWAY FROM THE FILL FACE OF THE BRIDGE AND SHALL BE PAVED. SEE ROADWAY PLANS.

THE JOINT SHALL BE SAWED PRIOR TO THE CASTING OF THE BARRIER RAIL OR PARAPET AND END POST.

WITH FOAM JOINT SEAL

FOR FOAM JOINT SEALS, SEE SPECIAL PROVISIONS.

THE NOMINAL UNCOMPRESSED SEAL WIDTH OF THE FOAM JOINT SEAL SHALL BE 2".

FOR ELASTOMERIC CONCRETE, SEE SPECIAL PROVISIONS.

BILL OF MATERIAL

APPROACH SLAB AT EB #1

BAR	NO.	SIZE	TYPE	LENGTH	WEIGHT
✱A1	50	#4	STR	28'-11"	966
A2	52	#4	STR	28'-10"	1002
✱B1	74	#5	STR	23'-4"	1801
B2	74	#6	STR	24'-8"	2742
REINFORCING STEEL				LBS.	3744
✱EPOXY COATED REINFORCING STEEL				LBS.	2767
CLASS AA CONCRETE				C. Y.	40.3

APPROACH SLAB AT EB #2

BAR	NO.	SIZE	TYPE	LENGTH	WEIGHT
✱A1	50	#4	STR	28'-11"	966
A2	52	#4	STR	28'-10"	1002
✱B1	74	#5	STR	23'-4"	1801
B2	74	#6	STR	24'-8"	2742
REINFORCING STEEL				LBS.	3744
✱EPOXY COATED REINFORCING STEEL				LBS.	2767
CLASS AA CONCRETE				C. Y.	40.3

SPLICE LENGTHS

BAR SIZE	EPOXY COATED	UNCOATED
#4	2'-0"	1'-9"
#5	2'-6"	2'-2"
#6	3'-10"	2'-7"

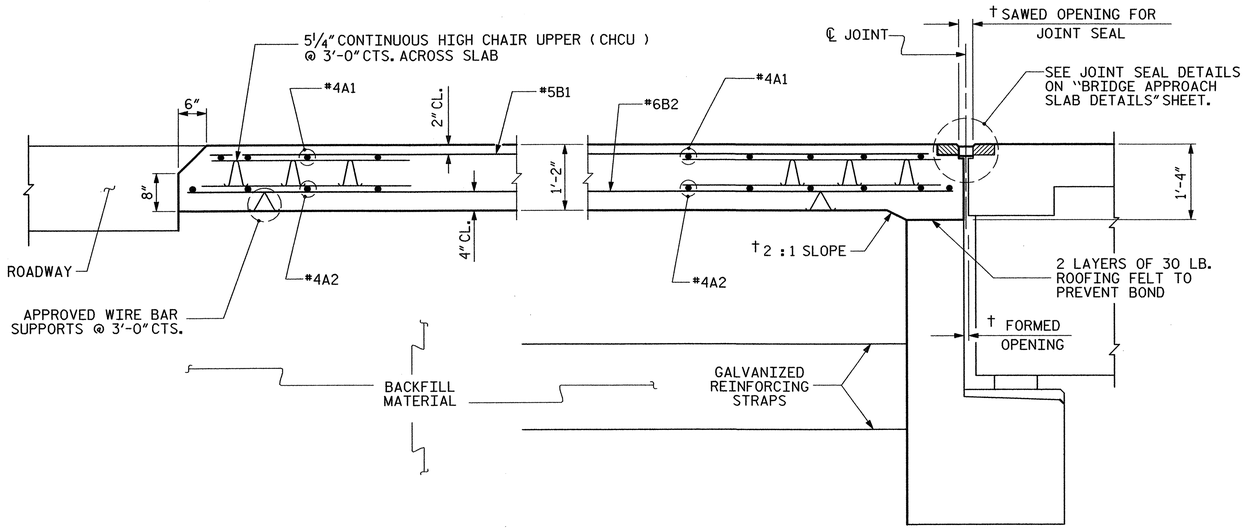

† NORMAL TO END BENT

SECTION THRU SLAB

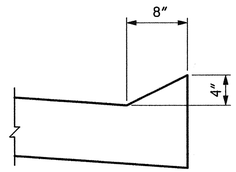

SECTION N-N

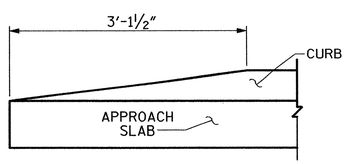

END OF CURB WITHOUT SHOULDER BERM GUTTER

CURB DETAILS

PLANS PREPARED BY:

MULKEY
ENGINEERS & CONSULTANTS
PO Box 33127
Raleigh, N.C. 27636
(919) 851-1918
(919) 851-1915 (FAX)
WWW.MULKEYINC.COM
NC LICENSE NO. C-1021

THIS STANDARD DRAWING REVIEWED & ADOPTED FOR USE AT THE REFERENCED LOCATION BY THE UNDERSIGNED:

NORTH CAROLINA PROFESSIONAL SEAL 19661 ENGINEER L. KEVIN AUSTIN
7/6/12

PROJECT NO. R-5000

JACKSON COUNTY

STATION: 39+74.37 -L- P.O.T.

SHEET 1 OF 2

STATE OF NORTH CAROLINA
DEPARTMENT OF TRANSPORTATION
RALEIGH

STANDARD

BRIDGE APPROACH SLAB FOR FLEXIBLE PAVEMENT

REVISIONS						SHEET NO.
NO.	BY:	DATE:	NO.	BY:	DATE:	S-31
1			3			TOTAL SHEETS
2			4			32

ASSEMBLED BY :	W. B. ALLEN	DATE :	11/11
CHECKED BY :	W. A. DAVIS	DATE :	4/12
DRAWN BY : EEM 3/95	REV. 5/7/03R		RWW/JTE
CHECKED BY : VAP 3/95	REV. 5/1/06RR		KMM/GM
	REV. 10/1/11		MAA/GM

7/6/202 8:03:42 AM R:\Structures\R-5000_SD_AS_0.dgn

STD. NO. BAS2 (SHT 2a)

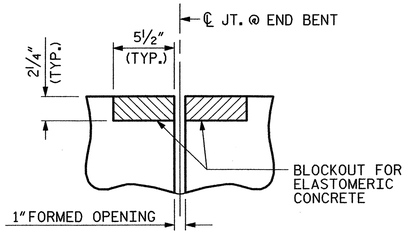

SECTION C-C

FOAM JOINT SEAL
(PRE-SAWED ELASTOMERIC
CONCRETE DIMENSIONS)

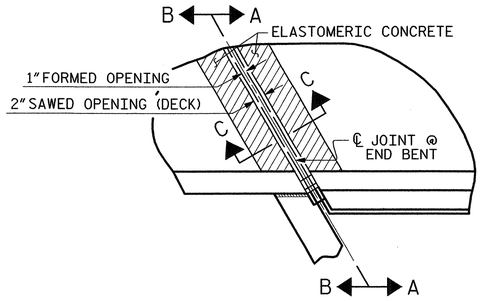

PLAN

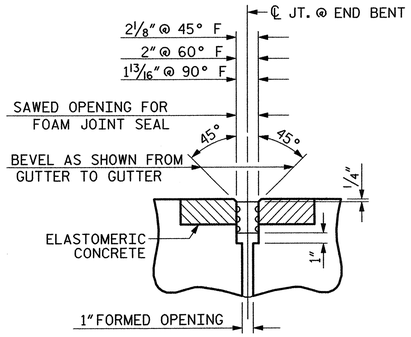

SECTION C-C

FOAM JOINT SEAL
(EXPANSION)

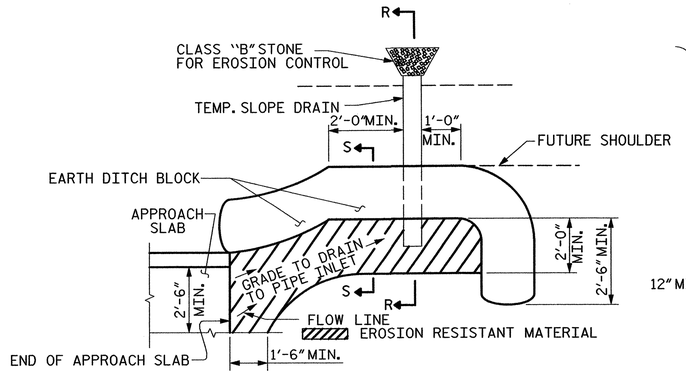

NOTE: IMMEDIATELY AFTER THE CONSTRUCTION OF THE APPROACH SLAB, THE CONTRACTOR SHALL PROVIDE TEMPORARY BERM AND SLOPE DRAIN. CONTRACTOR SHALL GRADE TO PIPE INLET AND PROVIDE EROSION RESISTANT MATERIAL AS SHOWN. THE EROSION RESISTANT MATERIAL SHALL BE EITHER 1) ASPHALT PLANT MIX, TYPE 1 OR TYPE 2, MIN. 2" DEPTH, 2) EROSION CONTROL MAT, OR 3) CONCRETE, AS DIRECTED BY THE ENGINEER. THE SLOPE DRAIN SHALL CONSIST OF A NON-PERFORATED TEMPORARY DRAINAGE PIPE, 12 INCHES IN DIAMETER.

PLAN VIEW

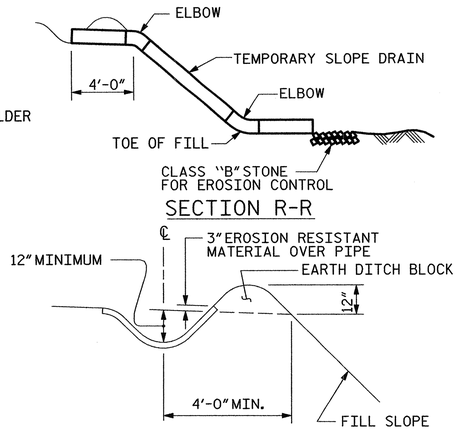

SECTION R-R

SECTION S-S

TEMPORARY BERM AND SLOPE DRAIN DETAILS

(TO BE USED WHEN SHOULDER BERM GUTTER IS REQUIRED)

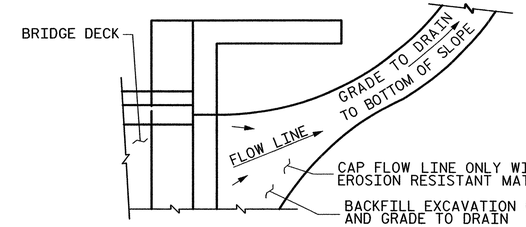

NOTE: IF THE APPROACH SLAB IS NOT CONSTRUCTED IMMEDIATELY AFTER THE BACKFILLING OF THE END BENT EXCAVATION, GRADE TO DRAIN TO THE BOTTOM OF THE SLOPE AND PROVIDE EROSION RESISTANT MATERIAL, SUCH AS FIBERGLASS ROVING OR AS DIRECTED BY THE ENGINEER TO PREVENT SOIL EROSION AND TO PROTECT THE AREA ADJACENT TO THE STRUCTURE. THE CONTRACTOR WILL BE REQUIRED TO REMOVE THESE MATERIALS PRIOR TO CONSTRUCTION OF THE APPROACH SLAB.

TEMPORARY DRAINAGE DETAIL

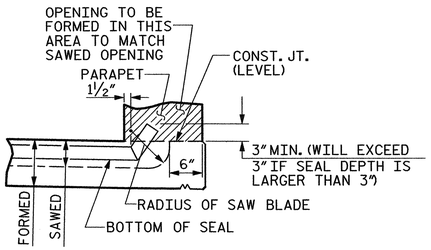

SECTION A-A

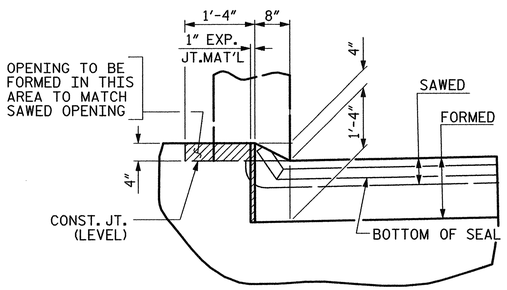

SECTION B-B

JOINT SEAL DETAILS @ END BENT

FOAM JOINT SEAL TO BE CUT, HEAT WELDED AND TURNED UP PARALLEL TO SLOPED FACE OF THE BARRIER RAIL.

THE JOINT SHALL BE SAWED PRIOR TO THE CASTING OF THE BARRIER RAIL.

ELASTOMERIC CONCRETE	
END BENT NO.	ELASTOMERIC CONCRETE * (CU. FT.)
1	9.3
2	9.3
TOTAL	18.6

* BASED ON THE MINIMUM BLOCKOUT SHOWN.

PROJECT NO. R-5000

JACKSON COUNTY

STATION: 39+74.37 -L- P.O.T.

SHEET 2 OF 2

STATE OF NORTH CAROLINA
DEPARTMENT OF TRANSPORTATION
RALEIGH

STANDARD

BRIDGE APPROACH
SLAB DETAILS

REVISIONS						SHEET NO.
NO.	BY:	DATE:	NO.	BY:	DATE:	S-32
1			3			TOTAL SHEETS
2			4			32

PLANS PREPARED BY:
MULKEY
ENGINEERS & CONSULTANTS
PO Box 33127
Raleigh, N.C. 27636
(919) 851-1918
(919) 851-1918 (FAX)
WWW.MULKEYINC.COM
NC LICENSE NO. C-1021

THIS STANDARD DRAWING REVIEWED & ADOPTED FOR USE AT THE REFERENCED LOCATION BY THE UNDERSIGNED:

NORTH CAROLINA PROFESSIONAL ENGINEER SEAL 19661 KEVIN AUSTIN
7/6/12

ASSEMBLED BY :	W. B. ALLEN	DATE :	11/11
CHECKED BY :	W. A. DAVIS	DATE :	4/12
DRAWN BY : FCJ	11/88	REV. 5/7/03	RWW/JTE
CHECKED BY : ARB	11/88	REV. 5/1/06RRR	MAA/KMM
		REV. 10/1/11	MAA/GM

7/6/2012 8:46:2 AM R:\Structures\R-5000_SD_AS_02.dgn

STD. NO. BAS4 (SHT 1a)

BM #1: -BY1- STA. 7+84.00, 11' RIGHT, 8" SPIKE SET IN 24" PINE TREE STUMP. ELEV. 2127.78

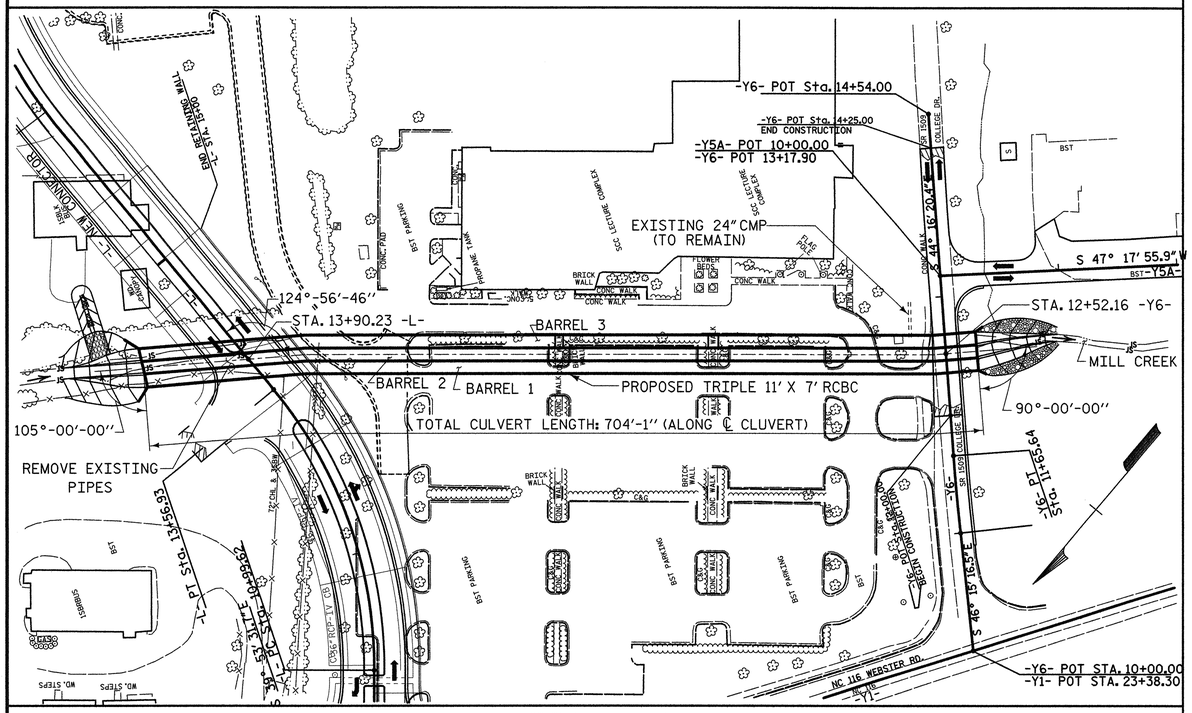

LOCATION SKETCH

PHASE I PHASE II

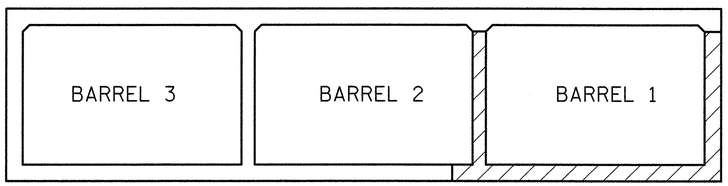

CONSTRCTION SEQUENCE
(LOOKING DOWNSTREAM)

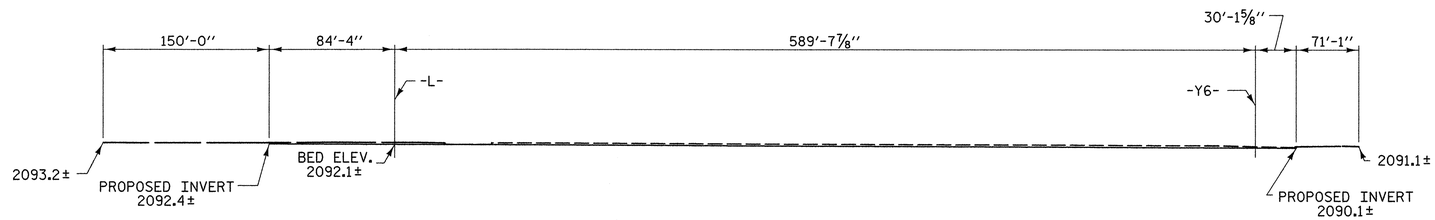

PROFILE ALONG ℄ CULVERT

GRADE DATA

GRADE POINT EL. @ STA. 13+90.23 -L- = 2113.70
BED EL. @ STA. 13+90.23 -L- = 2092.13 FT
ROADWAY SLOPES = 2:1

HYDRAULIC DATA

DESIGN DISCHARGE = 900 C.F.S.
FREQUENCY OF DESIGN FLOOD = 50 YRS.
DESIGN HIGH WATER ELEVATION = 2101.8 FT
DRAINAGE AREA = 2.47 SQ. MI.
BASIC DISCHARGE (Q100) = 1100 C.F.S.
BASIC HIGH WATER ELEVATION = 2103.0 FT

OVERTOPPING FLOOD DATA

OVERTOPPING DISCHARGE = 2150 ± C.F.S
FREQUENCY OF OVERTOPPING FLOOD = 500 ± YRS.
OVERTOPPING FLOOD ELEVATION = 2113.71 FT

PROPOSED OVERTOPPING OCCURS AT
STA. 14+67.40 -L- SAG

STRUCTURE QUANTITIES

CLASS A CONCRETE PART A		
BARREL @ 5.503 CY/FT	792.9	C.Y.
CLASS A CONCRETE PART B		
BARREL @ 3.512 CY/FT	1475.0	C.Y.
CLASS A CONCRETE PART C		
BARREL @ 3.069 CY/FT	429.7	C.Y.
WING, SILLS, LIGHT POSTS ETC.	39.0	C.Y.
TOTAL	2,736.6	C.Y.
REINFORCING STEEL		
BARREL	364,830	LBS.
WINGS ETC.	1,236	LBS.
TOTAL	366,066	LBS.
CULVERT EXCAVATION	LUMP SUM	
FOUNDATION COND. MAT'L.	5934 TONS	
PLAIN RIP RAP, CLASS B	254 TONS	

NOTES

ASSUMED LIVE LOAD ----------HL-93 OR ALTERNATE LOADING.

DESIGN FILL----------PART A= 23.3', PART B= 2.3', PART C= 5.5'

FOR OTHER DESIGN DATA AND NOTES SEE STANDARD NOTE SHEET.

3"Ø WEEP HOLES INDICATED TO BE IN ACCORDANCE WITH THE SPECIFICATIONS.

CONCRETE IN CULVERTS TO BE POURED IN THE FOLLOWING ORDER:

1. WING FOOTINGS AND FLOOR SLAB INCLUDING 4" OF VERTICAL WALL OF PHASE I, THE INSIDE BARREL WALL OF PHASE I AND THE WING FOR PHASE I.
2. THE REMAINING PORTIONS OF THE WALLS AND WINGS FULL HEIGHT FOLLOWED BY ROOF SLAB AND HEADWALLS.

THE RESIDENT ENGINEER SHALL CHECK THE LENGTH OF CULVERT BEFORE STAKING IT OUT TO MAKE CERTAIN THAT IT WILL PROPERLY TAKE CARE OF THE FILL.

DIMENSIONS FOR WING LAYOUT AS WELL AS ADDITIONAL REINFORCING STEEL EMBEDDED IN BARREL ARE SHOWN ON WING SHEET.

TRANSVERSE CONSTRUCTION JOINTS SHALL BE USED IN THE BARREL, SPACED TO LIMIT THE POURS TO A MAXIMUM OF 70 FT. LOCATION OF JOINTS SHALL BE SUBJECT TO APPROVAL OF THE ENGINEER.

AT THE CONTRACTOR'S OPTION, HE MAY SPLICE THE VERTICAL REINFORCING STEEL IN THE INTERIOR FACE OF EXTERIOR WALL AND BOTH FACES OF INTERIOR WALLS ABOVE LOWER WALL CONSTRUCTION JOINT. THE SPLICE LENGTH SHALL BE AS PROVIDED IN THE SPLICE LENGTH CHART SHOWN ON THE PLANS. EXTRA WEIGHT OF STEEL DUE TO THE SPLICES SHALL BE PAID FOR BY THE CONTRACTOR.

FOR CULVERT DIVERSION DETAILS AND PAY ITEM, SEE EROSION CONTROL PLANS.

DETAILED DRAWINGS FOR THE FALSEWORK AND FORMS FOR THE PART A SECTION OF THIS BOX CULVERT SHALL BE SUMBITTED. SEE SHEET SN.

NO WORK SHALL BE DONE ON THE CULVERT AT STA. 13+90.23 -L- UNTIL THE AREA OF THE BOX CULVERT HAS BEEN UNDERCUT TO AN ELEVATION 3 FT. BELOW THE BOTTOM OF THE PROPOSED FLOOR SLAB TO REMOVE UNSUITABLE MATERIAL. THIS ELEVATION WILL BE WRAPPED ON ALL SIDES WITH TYPE 2 GEOTEXTILE AND BACKFILLED WITH #57 STONE PROPERLY COMPACTED TO THE ELEVATION OF THE BOTTOM OF THE PROPOSED FLOOR SLAB. THE LIMITS OF THIS UNDERCUT EXCAVATION SHALL BE AT LEAST THE LIMITS OF THE BOX CULVERT INCLUDING THE WINGS. NO SEPARATE PAYMENT WILL BE MADE FOR ANY TEMPORARY SHEETING, UNDERCUT, GEOTEXTILE, OR #57 STONE AS REQUIRED TO CONSTRUCT THE PROPOSED CULVERT. PAYMENT IS INCLUDED IN THE LUMP SUM PRICE FOR CULVERT EXCAVATION.

A 3 FOOT STRIP OF FILTER FABRIC SHALL BE ATTACHED TO THE FILL FACE OF THE WING COVERING THE ENTIRE LENGTH OF THE EXPANSION JOINT.

AT THE CONTRACTOR'S OPTION HE MAY SUBMIT, TO THE ENGINEER FOR APPROVAL, DESIGN AND DETAIL DRAWINGS FOR A PRECAST REINFORCED CONCRETE BOX CULVERT IN LIEU OF THE CAST-IN-PLACE CULVERT SHOWN ON THE PLANS. THE DESIGN SHALL PROVIDE THE SAME SIZE AND NUMBER OF BARRELS AS USED ON THE CAST-IN-PLACE DESIGN. FOR OPTIONAL PRECAST REINFORCED CONCRETE BOX CULVERT, SEE SPECIAL PROVISIONS.

FOR TEMPORARY SHORING, SEE TEMPORARY SHORING SPECIAL PROVISIONS. SEE ROADWAY PLANS.

FOR SUBMITTAL OF WORKING DRAWINGS, SEE SPECIAL PROVISIONS.

FOR CRANE SAFETY, SEE SPECIAL PROVISIONS.

DRAWN BY : Z. H. BROWN DATE : 11/3/11
CHECKED BY : W. A. DAVIS DATE : 2/29/12

NORTH CAROLINA PROFESSIONAL SEAL 19661 ENGINEER L. KEVIN AUSTIN 10/11/12

PLANS PREPARED BY:

MULKEY
ENGINEERS & CONSULTANTS
PO Box 33127
Raleigh, N.C. 27636
(919) 851-1912
(919) 851-1918 (FAX)
WWW.MULKEYINC.COM
NC LICENSE NO. C-1081

PROJECT NO. R-5000
JACKSON COUNTY
STATION: 13+90.23 -L-
SHEET 1 OF 12 BRIDGE NO. C-389

STATE OF NORTH CAROLINA
DEPARTMENT OF TRANSPORTATION
RALEIGH

TRIPLE 11 FT. X 7 FT. CONCRETE BOX CULVERT

REVISIONS						SHEET NO.
NO.	BY:	DATE:	NO.	BY:	DATE:	C-1
1			3			TOTAL SHEETS
2			4			18

STD. NO. CB13A

10/11/2012 10:36:36 AM R:\Structures\Culverts\R-5000_CULVERTLOL.dgn

LOAD AND RESISTANCE FACTOR RATING (LRFR)
SUMMARY FOR REINFORCED CONCRETE BOX CULVERTS

LEVEL		VEHICLE	WEIGHT (W) (TONS)	⟨#⟩ CONTROLLING LOAD RATING	MINIMUM RATING FACTORS (RF)	TONS = W × RF	STRENGTH I LIMIT STATE									COMMENT NUMBER
								MOMENT				SHEAR				
							LIVE-LOAD FACTORS (γ_{LL})	RATING FACTOR	BOX NO.	ELEMENT TYPE	DISTANCE FROM LEFT END OF ELEMENT (ft)	RATING FACTOR	BOX NO.	ELEMENT TYPE	DISTANCE FROM LEFT END OF ELEMENT (ft)	
DESIGN LOAD RATING		HL-93 (INVENTORY)	N/A	⟨1⟩	1.01	--	1.75	1.39	1	BOTTOM SLAB	11.750	1.01	1	TOP SLAB	10.813	
		HL-93 (OPERATING)	N/A		1.30	--	1.35	1.80	1	BOTTOM SLAB	11.750	1.30	1	TOP SLAB	10.813	
		HS-20 (INVENTORY)	36.000	⟨2⟩	1.01	36.36	1.75	1.40	1	TOP SLAB	6.250	1.01	1	TOP SLAB	10.813	
		HS-20 (OPERATING)	36.000		1.30	46.80	1.35	1.82	1	TOP SLAB	6.250	1.30	1	TOP SLAB	10.813	
LEGAL LOAD RATING	SINGLE VEHICLE (SV)	SNSH	13.500		1.01	13.64	1.40	1.40	1	TOP SLAB	6.250	1.01	1	TOP SLAB	10.813	
		SNGARBS2	20.000		1.01	20.20	1.40	1.40	1	TOP SLAB	6.250	1.01	1	TOP SLAB	10.813	
		SNAGRIS2	22.000		1.01	22.22	1.40	1.40	1	TOP SLAB	6.250	1.01	1	TOP SLAB	10.813	
		SNCOTTS3	27.250	⟨3⟩	1.00	27.25	1.40	1.40	1	TOP SLAB	6.250	1.00	1	TOP SLAB	10.813	
		SNAGGRS4	34.925		1.01	35.27	1.40	1.40	1	TOP SLAB	6.250	1.01	1	TOP SLAB	10.813	
		SNS5A	35.550		1.01	35.91	1.40	1.40	1	TOP SLAB	6.250	1.01	1	TOP SLAB	10.813	
		SNS6A	39.950		1.01	40.35	1.40	1.35	1	BOTTOM SLAB	11.750	1.01	1	TOP SLAB	10.813	
		SNS7B	42.000		1.01	42.42	1.40	1.30	1	BOTTOM SLAB	11.750	1.01	1	TOP SLAB	10.813	
	TRUCK TRACTOR SEMI-TRAILER (TTST)	TNAGRIT3	33.000		1.01	33.33	1.40	1.40	1	TOP SLAB	6.250	1.01	1	TOP SLAB	10.813	
		TNT4A	33.075		1.01	33.41	1.40	1.40	1	TOP SLAB	6.250	1.01	1	TOP SLAB	10.813	
		TNT6A	41.600		1.01	42.02	1.40	1.35	1	BOTTOM SLAB	11.750	1.01	1	TOP SLAB	10.813	
		TNT7A	42.000		1.01	42.42	1.40	1.40	1	TOP SLAB	6.250	1.01	1	TOP SLAB	10.813	
		TNT7B	42.000		1.01	42.42	1.40	1.40	1	TOP SLAB	6.250	1.01	1	TOP SLAB	10.813	
		TNAGRIT4	43.000		1.01	43.43	1.40	1.23	1	BOTTOM SLAB	11.750	1.01	1	TOP SLAB	10.813	
		TNAGT5A	45.000		1.01	45.45	1.40	1.21	1	BOTTOM SLAB	11.750	1.01	1	TOP SLAB	10.813	
		TNAGT5B	45.000		1.01	45.45	1.40	1.21	1	BOTTOM SLAB	11.750	1.01	1	TOP SLAB	10.813	

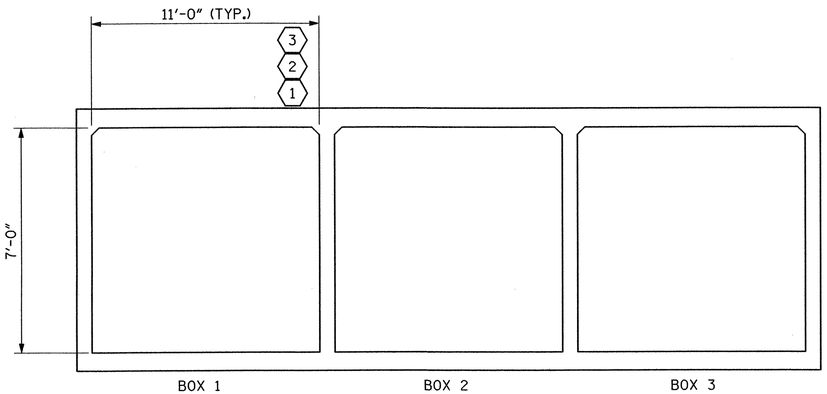

LRFR SUMMARY

(LOOKING DOWNSTREAM)

LOAD FACTORS:

DESIGN LOAD RATING FACTORS

LOAD TYPE	MAX FACTOR	MIN FACTOR
DC	1.25	0.90
DW	1.50	0.65
EV	1.30	0.90
EH	1.35	0.90
ES	1.35	0.90
LS	1.75	--
WA	1.00	--

NOTE:

RATING FACTORS ARE BASED ON THE STRENGTH I LIMIT STATE.

COMMENTS:

1.

2.

3.

4.

⟨#⟩ CONTROLLING LOAD RATING

⟨1⟩ DESIGN LOAD RATING (HL-93)

⟨2⟩ DESIGN LOAD RATING (HS-20)

⟨3⟩ LEGAL LOAD RATING **

** SEE CHART FOR VEHICLE TYPE

PROJECT NO. R-5000

JACKSON COUNTY

STATION: 13+90.23 -L-

NORTH CAROLINA PROFESSIONAL ENGINEER 1966 L. KEVIN AUSTIN 7/6/12

PLANS PREPARED BY:

MULKEY
ENGINEERS & CONSULTANTS
PO Box 33127
Raleigh, N.C. 27636
(919)851-1912
(919)851-1918 (FAX)
WWW.MULKEYINC.COM
NC LICENSE NO. C-1051

STATE OF NORTH CAROLINA
DEPARTMENT OF TRANSPORTATION
RALEIGH

STANDARD

LRFR SUMMARY FOR REINFORCED CONCRETE BOX CULVERTS
(NON-INTERSTATE TRAFFIC)

REVISIONS						SHEET NO.
NO.	BY:	DATE:	NO.	BY:	DATE:	C-2
1			3			TOTAL SHEETS
2			4			18

STD. NO. LRFR5

ASSEMBLED BY : Z. H. BROWN DATE : 6/15/12
CHECKED BY : W. A. DAVIS DATE : 6/22/12
DRAWN BY : WMC 7/11
CHECKED BY : GM 7/11
REV. 10/1/11 MAA/GM

7/6/2012 8:41:46 AM R:\Structures\Culverts\Design\CUL\LRFR\LRFR5_12.dgn

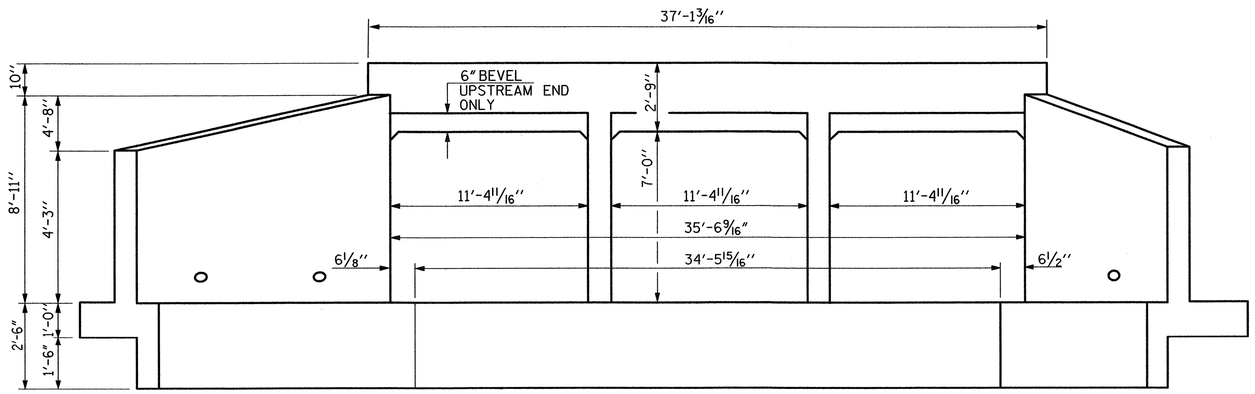

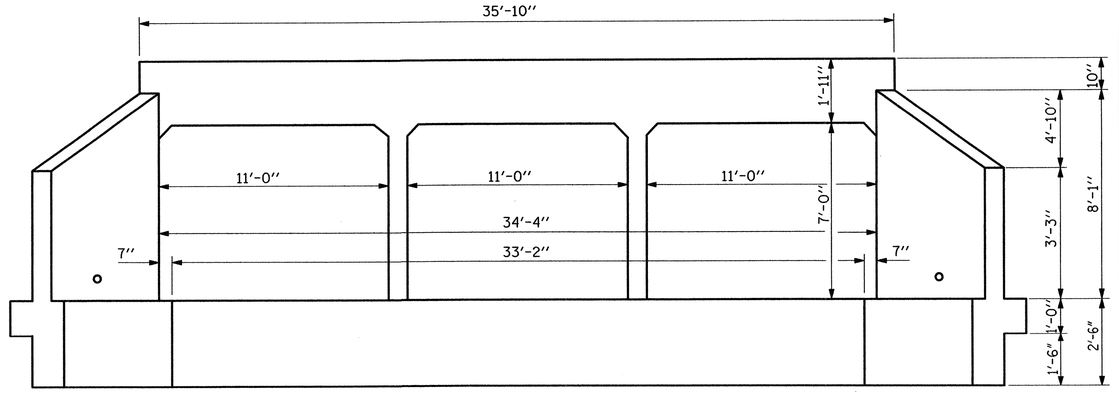

END ELEVATION NORMAL TO SKEW (INLET)

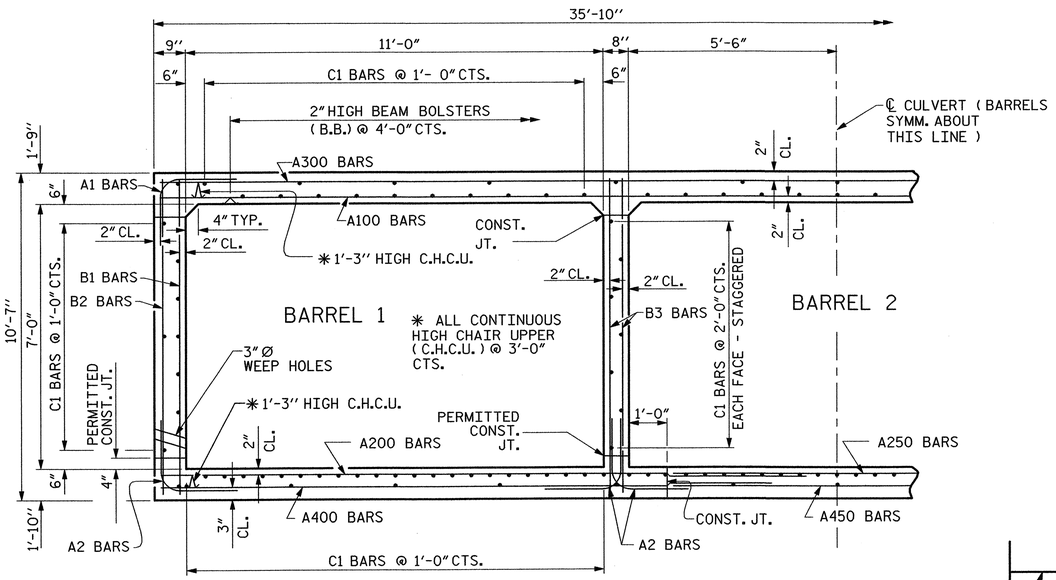

PART A
RIGHT ANGLE SECTION OF BARREL

THERE ARE 158 "C" BARS IN SECTION OF BARREL.
(LOOKING UPSTREAM)

END ELEVATION (OUTLET)

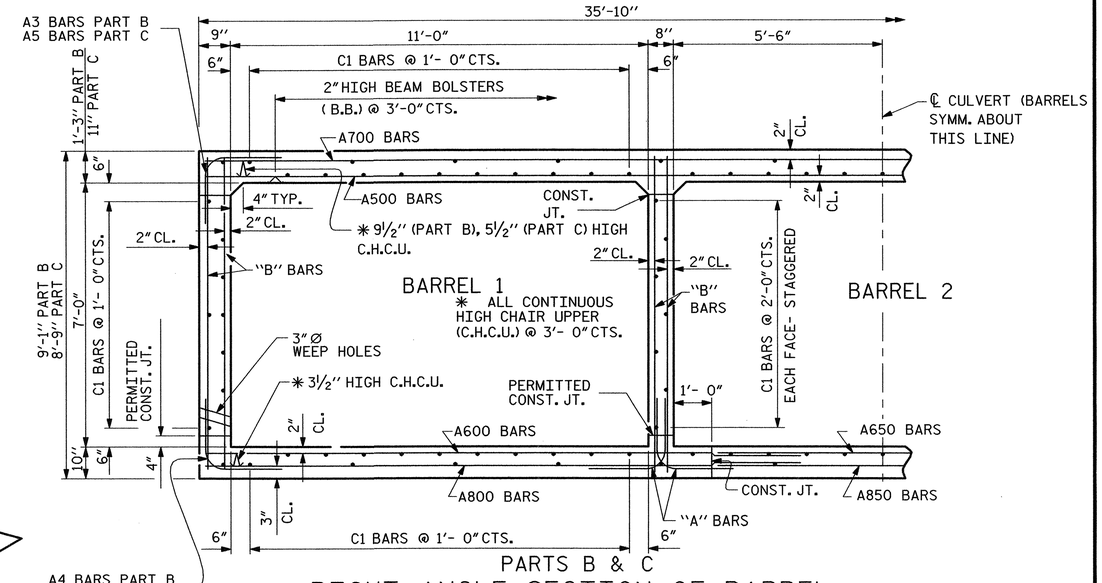

PARTS B & C
RIGHT ANGLE SECTION OF BARREL

THERE ARE 122 "C" BARS IN SECTION OF BARREL.
(LOOKING UPSTREAM)

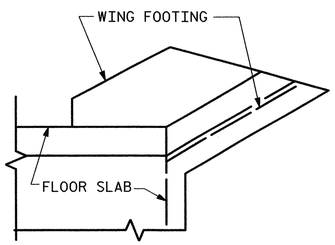

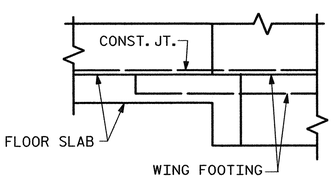

DETAIL
CONNECTION OF WING FOOTING AND FLOOR SLAB WHEN SLAB IS THICKER THAN FOOTING

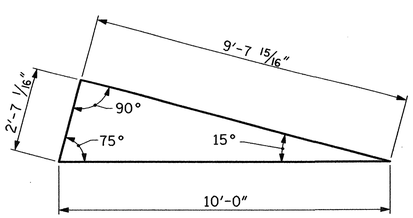

SKEW TRIANGLE

NORTH CAROLINA PROFESSIONAL 1966 ENGINEER L. KEVIN AUSTIN 7/6/12

PLANS PREPARED BY:
MULKEY
ENGINEERS & CONSULTANTS
PO Box 33127
RALEIGH, N.C. 27636
(919) 851-1913 (FAX)
WWW.MULKEYINC.COM
NC LICENSE NO. C-1021

PROJECT NO. R-5000
JACKSON COUNTY
STATION: 13+90.23 -L-
SHEET 2 OF 12

STATE OF NORTH CAROLINA
DEPARTMENT OF TRANSPORTATION
RALEIGH

TRIPLE 11 FT. X 7 FT. CONCRETE BOX CULVERT

REVISIONS						SHEET NO.
NO.	BY:	DATE:	NO.	BY:	DATE:	C-3
1			3			TOTAL SHEETS
2			4			18

DRAWN BY : Z. H. BROWN DATE : 11/3/11
CHECKED BY : W. A. DAVIS DATE : 2/29/12

STD. NO. CB13

7/6/2012 8:43:47 AM R:\Structures\Culverts\R-5000_CULVERT1_0.dgn

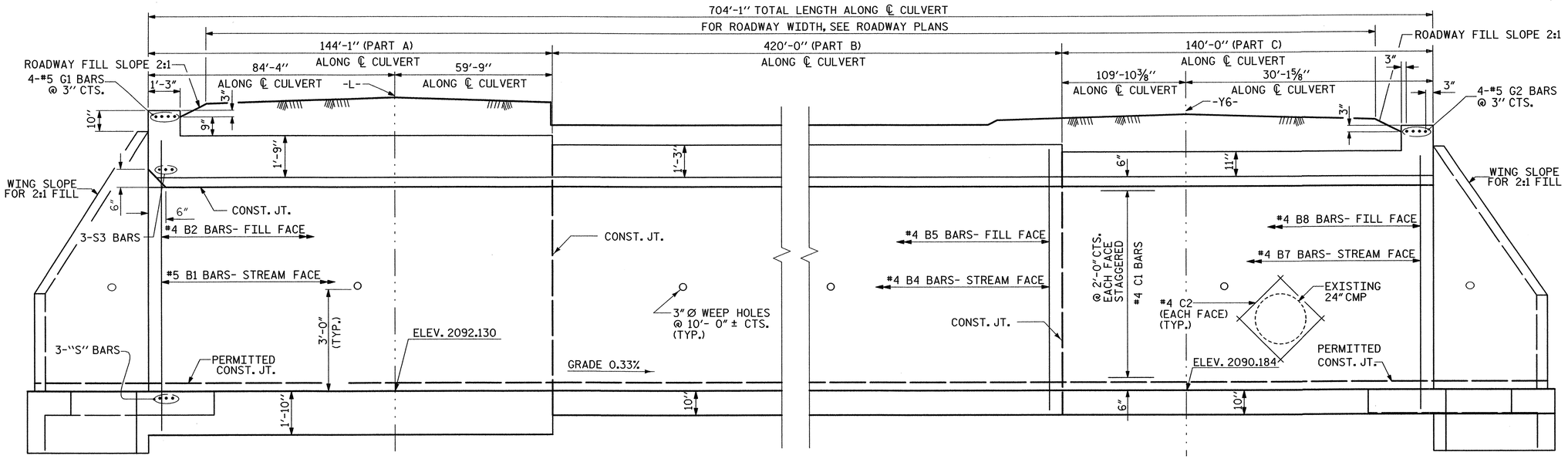

EXTERIOR WALL

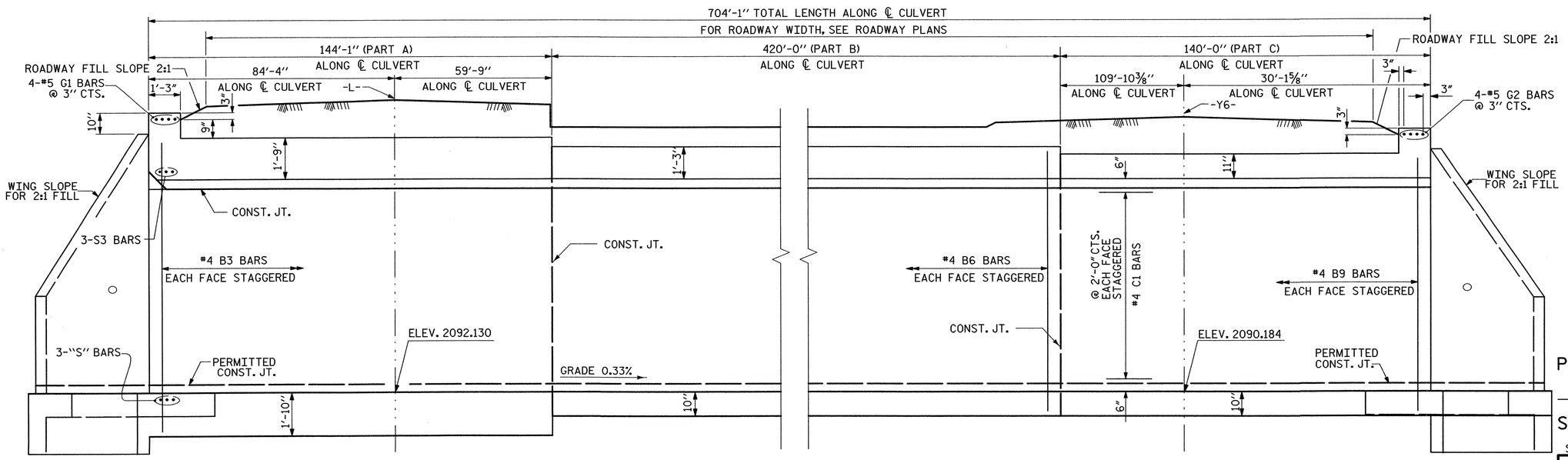

INTERIOR WALL

CULVERT SECTION NORMAL TO ROADWAY

(SILLS NOT SHOWN FOR CLARITY)

PROJECT NO. R-5000

JACKSON COUNTY

STATION: 13+90.23 -L-

SHEET 3 OF 12

STATE OF NORTH CAROLINA
DEPARTMENT OF TRANSPORTATION
RALEIGH

TRIPLE 11 FT. X 7 FT.
CONCRETE BOX CULVERT

NORTH CAROLINA PROFESSIONAL SEAL 19661 ENGINEER L. KEVIN AUSTIN
7/6/12

PLANS PREPARED BY:

MULKEY
ENGINEERS & CONSULTANTS
PO Box 33127
Raleigh, N.C. 27636
(919) 851-1912
(919) 851-1918 (FAX)
www.mulkeyinc.com
NC License No. C-1031

REVISIONS						SHEET NO.
NO.	BY:	DATE:	NO.	BY:	DATE:	C-4
1			3			TOTAL SHEETS
2			4			18

DRAWN BY : Z. H. BROWN DATE : 11/3/11
CHECKED BY : W. A. DAVIS DATE : 2/29/12

7/6/2012 8:17:23 AM R:\Structures\Culverts\R-5000_CULVERT1_0.dgn

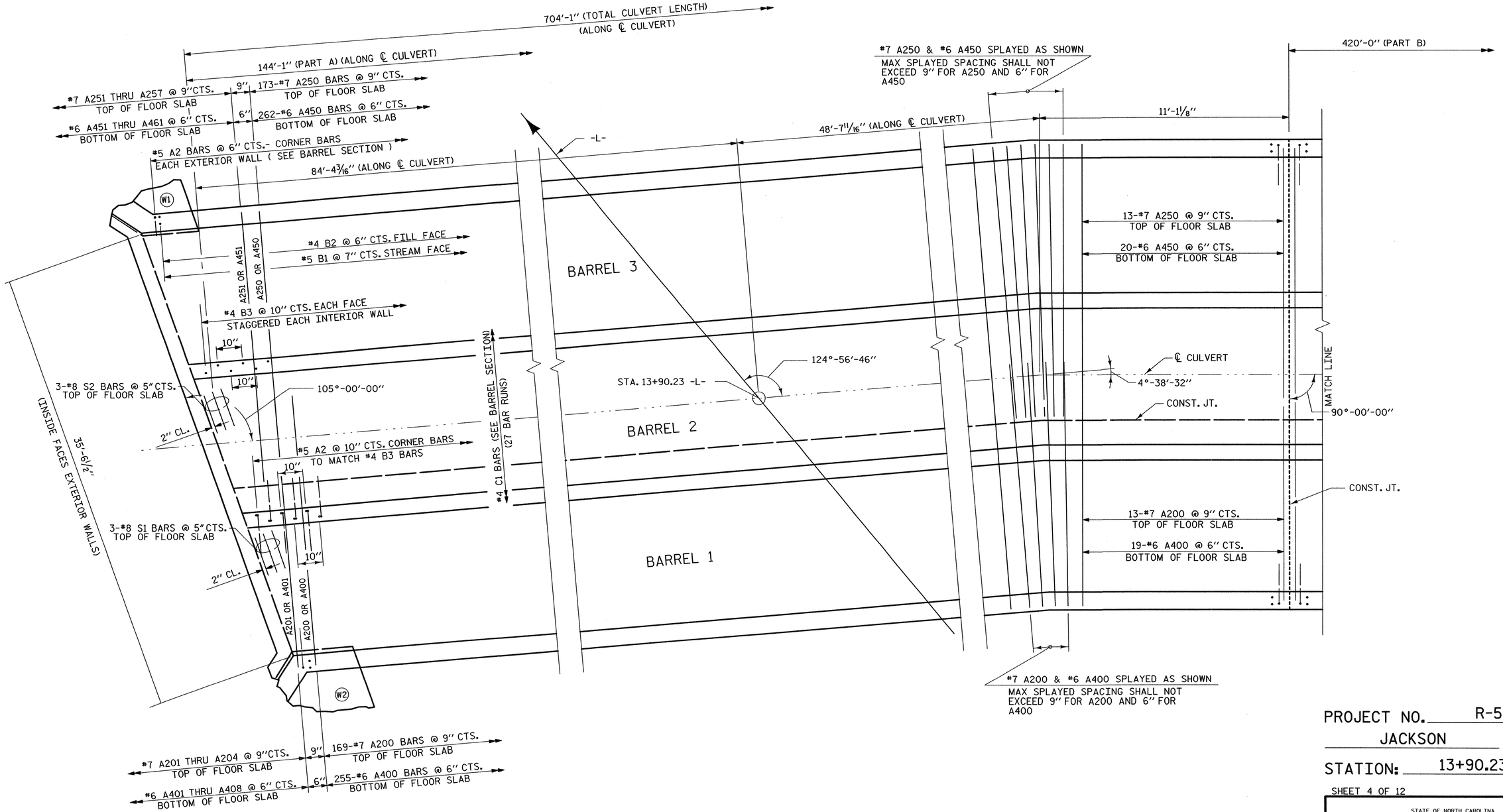

PLAN OF FLOOR SLAB

PROJECT NO. R-5000

JACKSON COUNTY

STATION: 13+90.23 -L-

SHEET 4 OF 12

STATE OF NORTH CAROLINA
DEPARTMENT OF TRANSPORTATION
RALEIGH

TRIPLE 11 FT. X 7 FT. CONCRETE BOX CULVERT

NORTH CAROLINA PROFESSIONAL ENGINEER 19661 KEVIN AUSTIN 7/6/12

PLANS PREPARED BY:

MULKEY
ENGINEERS & CONSULTANTS
PO Box 33127
RALEIGH, N.D. 27636
(919) 851-1912
(919) 851-1918 (FAX)
WWW.MULKEYNC.COM
NC LICENSE NO. C-1031

REVISIONS						SHEET NO.
NO.	BY:	DATE:	NO.	BY:	DATE:	C-5
1			3			TOTAL SHEETS
2			4			18

DRAWN BY : Z. H. BROWN DATE : 11/3/11
CHECKED BY : W. A. DAVIS DATE : 2/29/12

7/6/2012 8:18:08 AM R:\Structures\Culverts\R-5000_CULVERT1_01.dgn

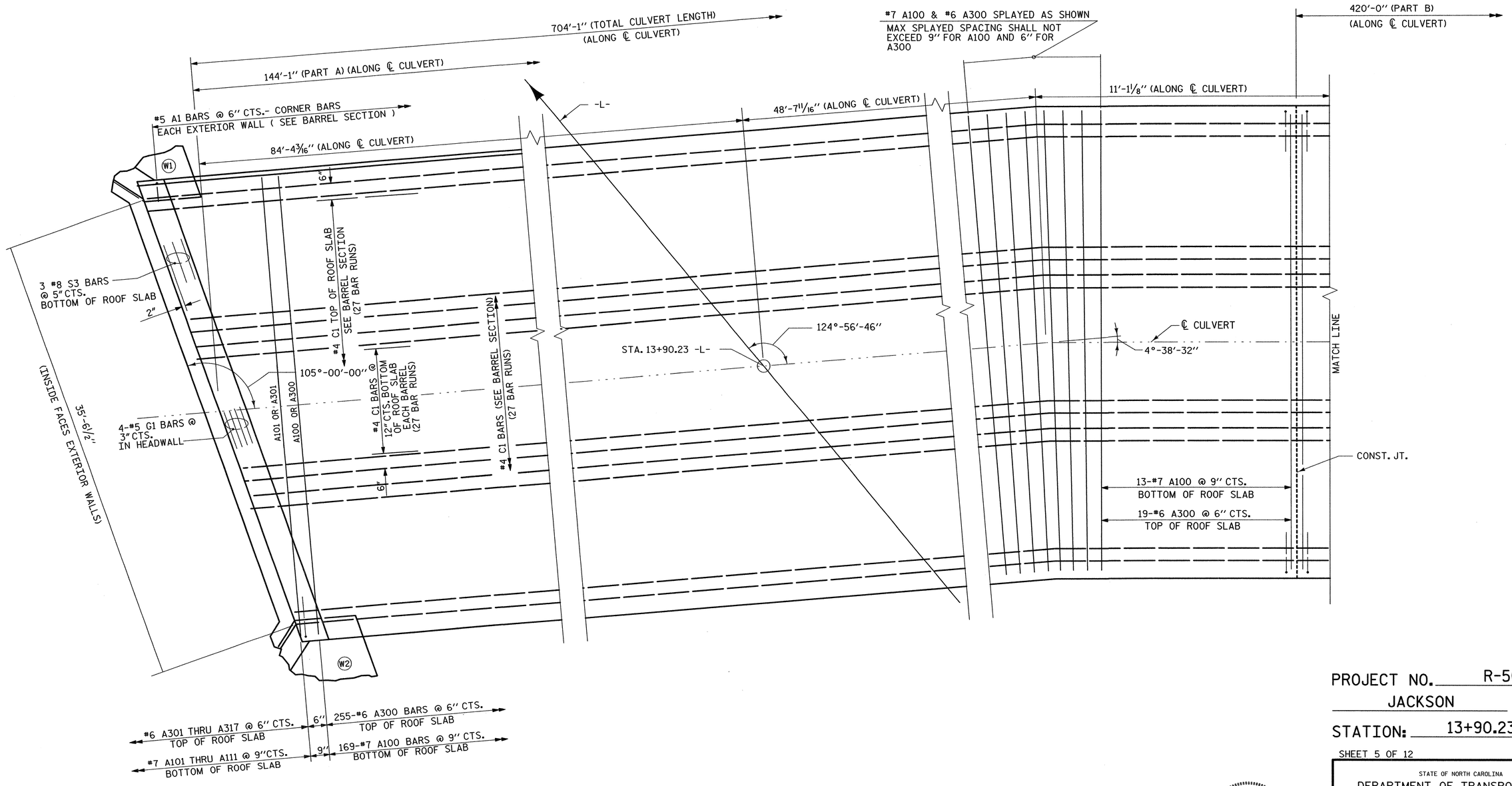

PLAN OF ROOF SLAB

PROJECT NO. R-5000

JACKSON COUNTY

STATION: 13+90.23 -L-

SHEET 5 OF 12

STATE OF NORTH CAROLINA
DEPARTMENT OF TRANSPORTATION
RALEIGH

TRIPLE 11 FT. X 7 FT.
CONCRETE BOX CULVERT

NORTH CAROLINA PROFESSIONAL ENGINEER SEAL 19661 L. KEVIN AUSTIN 7/6/12

PLANS PREPARED BY:

MULKEY
ENGINEERS & CONSULTANTS
PO Box 33127
RALEIGH, N.C. 27636
(919) 851-1912
(919) 851-1918 (FAX)
WWW.MULKEYINC.COM
NC LICENSE NO. C-1021

REVISIONS						SHEET NO.
NO.	BY:	DATE:	NO.	BY:	DATE:	C-6
1			3			TOTAL SHEETS
2			4			18

DRAWN BY : Z. H. BROWN DATE : 11/3/11
CHECKED BY : W. A. DAVIS DATE : 2/29/12

7/6/2012 8:48:50 AM R:\Structures\Culverts\R-5000_CULVERTL0.dgn

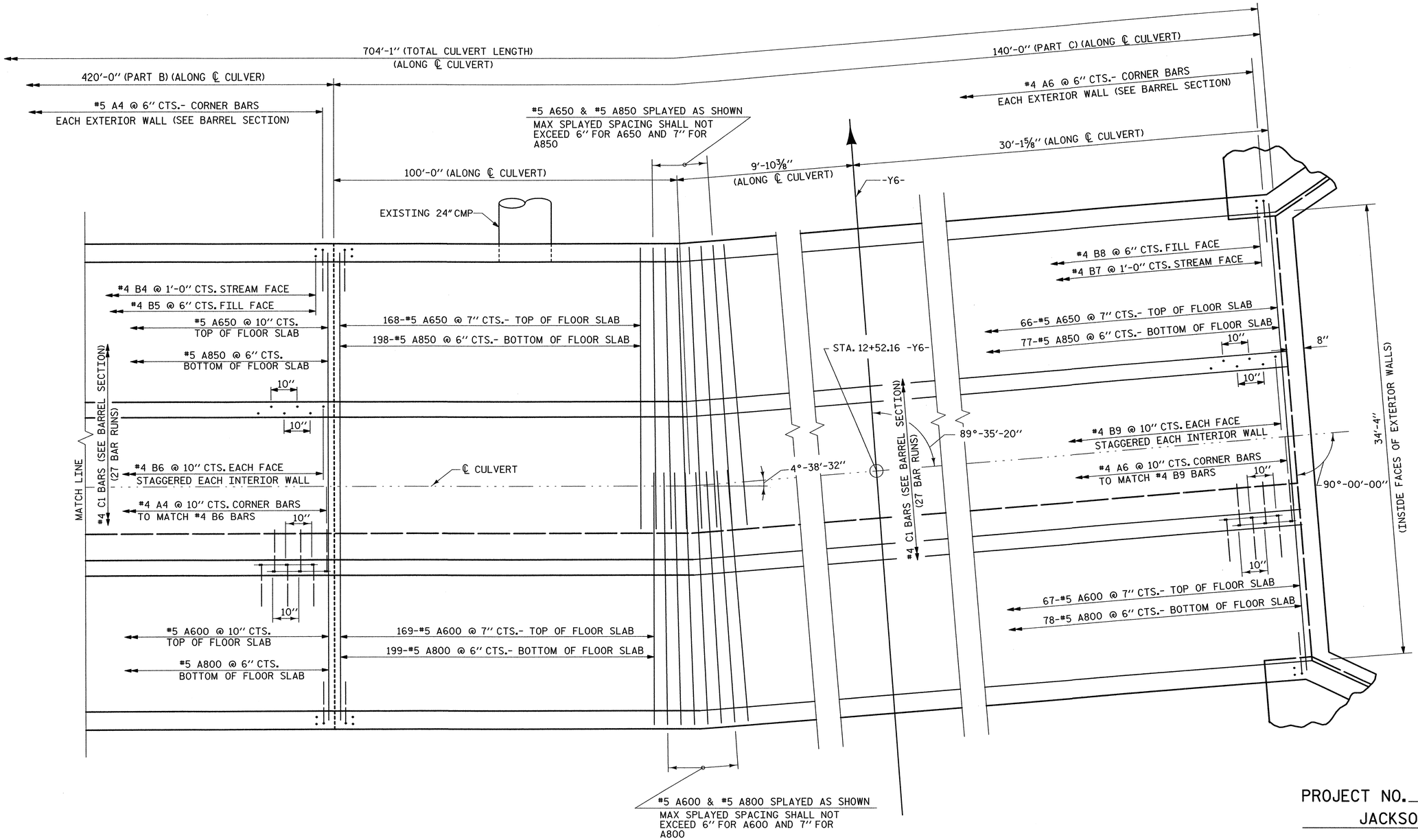

PLAN OF FLOOR SLAB

PROJECT NO. R-5000

JACKSON COUNTY

STATION: 13+90.23 -L-

SHEET 6 OF 12

NORTH CAROLINA PROFESSIONAL ENGINEER L. KEVIN AUSTIN 19661 7/6/12

PLANS PREPARED BY:

MULKEY
ENGINEERS & CONSULTANTS
PO Box 33127
RALEIGH, N.C. 27636
(919) 851-1912
(919) 851-1916 (FAX)
WWW.MULKEYINC.COM
NC LICENSE NO. C-1021

STATE OF NORTH CAROLINA
DEPARTMENT OF TRANSPORTATION
RALEIGH

TRIPLE 11 FT. X 7 FT. CONCRETE BOX CULVERT

REVISIONS						SHEET NO.
NO.	BY:	DATE:	NO.	BY:	DATE:	C-7
1			3			TOTAL SHEETS
2			4			18

DRAWN BY : Z. H. BROWN DATE : 11/3/11
CHECKED BY : W. A. DAVIS DATE : 2/29/12

7/6/2012 8:59:24 AM R:\Structures\Culverts\R-5000_CULVERTL0.dgn

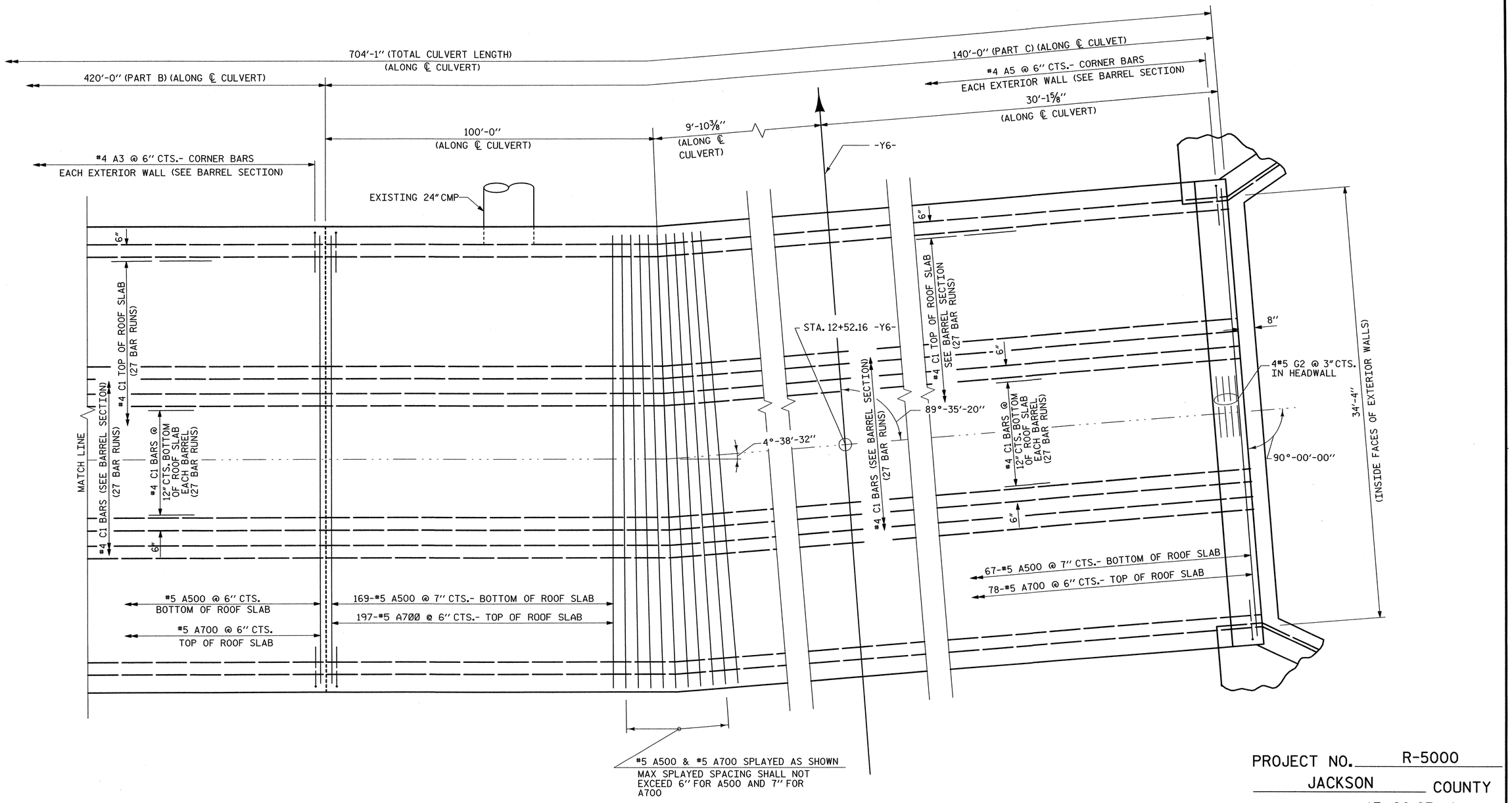

PLAN OF ROOF SLAB

PROJECT NO. R-5000

JACKSON COUNTY

STATION: 13+90.23 -L-

SHEET 7 OF 12

STATE OF NORTH CAROLINA
DEPARTMENT OF TRANSPORTATION
RALEIGH

TRIPLE 11 FT. X 7 FT. CONCRETE BOX CULVERT

NORTH CAROLINA PROFESSIONAL ENGINEER 19661 L. KEVIN AUSTIN 7/6/12

PLANS PREPARED BY:

MULKEY
ENGINEERS & CONSULTANTS
PO Box 33127
RALEIGH, N.C. 27636
(919) 851-1912
(919) 851-1918 (FAX)
WWW.MULKEYINC.COM
NC LICENSE NO. C-1021

REVISIONS						SHEET NO.
NO.	BY:	DATE:	NO.	BY:	DATE:	C-8
1			3			TOTAL SHEETS
2			4			18

DRAWN BY : Z. H. BROWN DATE : 11/3/11
CHECKED BY : W. A. DAVIS DATE : 2/29/12

7/6/2012 8:19:50 AM R:\Structures\Culverts\R-5000_CULVERT1_0.dgn

BILL OF MATERIAL

PHASE I

PART A

BAR	NO.	SIZE	TYPE	LENGTH	WEIGHT
A1	280	#5	1	6'-5"	1874
A2	621	#5	1	4'-11"	3185
A200	186	#7	STR	16'-11"	6431
A201	1	#7	STR	14'-1"	29
A202	1	#7	STR	11'-3"	23
A203	1	#7	STR	8'-6"	17
A204	1	#7	STR	5'-8"	12
A400	280	#6	STR	16'-0"	6729
A401	1	#6	STR	14'-9"	22
A402	1	#6	STR	12'-11"	19
A403	1	#6	STR	11'-0"	17
A404	1	#6	STR	9'-2"	14
A405	1	#6	STR	7'-3"	11
A406	1	#6	STR	5'-5"	8
A407	1	#6	STR	3'-7"	5
A408	1	#6	STR	1'-8"	3
B1	236	#5	STR	10'-2"	2503
B2	280	#4	STR	10'-2"	1902
B3	341	#4	STR	10'-2"	2316
C1	276	#4	STR	28'-2"	5193
D1	3	#6	STR	2'-4"	11
S1	3	#8	STR	18'-0"	144
REINFORCING STEEL					30,468 LBS.

PART B

BAR	NO.	SIZE	TYPE	LENGTH	WEIGHT
A3	840	#4	1	5'-10"	3273
A4	1848	#5	1	4'-5"	8513
A600	504	#5	STR	15'-7"	8192
A800	840	#5	STR	15'-7"	13653
B4	420	#4	STR	8'-8"	2432
B5	840	#4	STR	8'-8"	4863
B6	1008	#4	STR	8'-8"	5836
C1	544	#4	STR	28'-2"	10236
REINFORCING STEEL					56,998 LBS.

PART C

BAR	NO.	SIZE	TYPE	LENGTH	WEIGHT
A5	283	#4	1	4'-11"	929
A6	620	#4	1	4'-5"	1829
A600	242	#5	STR	15'-7"	3912
A800	283	#5	STR	15'-7"	4575
B7	142	#4	STR	8'-4"	790
B8	283	#4	STR	8'-4"	1575
B9	337	#4	STR	8'-4"	1876
C1	170	#4	STR	28'-2"	3180
REINFORCING STEEL					18,731 LBS.

PHASE II

PART A

BAR	NO.	SIZE	TYPE	LENGTH	WEIGHT
A1	299	#5	1	6'-5"	2001
A2	299	#5	1	4'-11"	1533
A100	188	#7	STR	35'-6"	13642
A101	1	#7	STR	32'-7"	67
A102	1	#7	STR	29'-9"	61
A103	1	#7	STR	27'-0"	55
A104	1	#7	STR	24'-2"	49
A105	1	#7	STR	21'-5"	44
A106	1	#7	STR	18'-7"	38
A107	1	#7	STR	15'-10"	32
A108	1	#7	STR	13'-0"	27
A109	1	#7	STR	10'-2"	21
A110	1	#7	STR	7'-5"	15
A111	1	#7	STR	4'-7"	9
A250	192	#7	STR	22'-1"	8667
A251	1	#7	STR	21'-5"	44
A252	1	#7	STR	18'-7"	38
A253	1	#7	STR	15'-10"	32
A254	1	#7	STR	13'-0"	27
A255	1	#7	STR	10'-2"	21
A256	1	#7	STR	7'-5"	15
A257	1	#7	STR	4'-7"	9
A300	282	#6	STR	35'-6"	15037
A301	1	#6	STR	32'-7"	49
A302	1	#6	STR	30'-8"	46
A303	1	#6	STR	28'-10"	43
A304	1	#6	STR	27'-0"	41
A305	1	#6	STR	25'-1"	38
A306	1	#6	STR	23'-3"	35
A307	1	#6	STR	21'-5"	32
A308	1	#6	STR	19'-6"	29
A309	1	#6	STR	17'-8"	27
A310	1	#6	STR	15'-9"	24
A311	1	#6	STR	13'-11"	21
A312	1	#6	STR	12'-1"	18
A313	1	#6	STR	10'-2"	15
A314	1	#6	STR	8'-4"	13
A315	1	#6	STR	6'-5"	10
A316	1	#6	STR	4'-7"	7
A317	1	#6	STR	2'-9"	4
A450	288	#6	STR	22'-1"	9553
A451	1	#6	STR	21'-5"	32
A452	1	#6	STR	19'-6"	29
A453	1	#6	STR	17'-8"	27
A454	1	#6	STR	15'-9"	24
A455	1	#6	STR	13'-11"	21
A456	1	#6	STR	12'-1"	18
A457	1	#6	STR	10'-2"	15
A458	1	#6	STR	8'-4"	13
A459	1	#6	STR	6'-5"	10
A460	1	#6	STR	5'-7"	8
A461	1	#6	STR	2'-9"	4
B1	256	#5	STR	10'-2"	2715
B2	300	#4	STR	10'-2"	2037
B3	350	#4	STR	10'-2"	2377
C1	672	#4	STR	28'-2"	12644
D1	3	#6	STR	2'-4"	11
D2	12	#6	STR	1'-4"	24
D3	12	#6	STR	0'-10"	15
G1	4	#5	STR	36'-9"	153
S2	3	#8	STR	22'-10"	183
S3	3	#8	STR	36'-9"	294
REINFORCING STEEL					72,143 LBS.

PART B

BAR	NO.	SIZE	TYPE	LENGTH	WEIGHT
A3	840	#4	1	5'-10"	3273
A4	840	#5	1	4'-5"	3870
A500	840	#5	STR	35'-6"	31102
A650	504	#5	STR	22'-1"	11609
A700	840	#5	STR	35'-6"	31102
A850	840	#5	STR	22'-1"	19348
B4	420	#4	STR	8'-8"	2432
B5	840	#4	STR	8'-8"	4863
B6	1008	#4	STR	8'-8"	5836
C1	1408	#4	STR	28'-2"	26492
D2	32	#6	STR	1'-4"	64
D3	32	#6	STR	0'-10"	40
F1	24	#5	STR	13'-9"	344
F3	39	#3	2	6'-8"	98
REINFORCING STEEL					140,473 LBS.

PART C

BAR	NO.	SIZE	TYPE	LENGTH	WEIGHT
A5	281	#4	1	4'-11"	923
A6	281	#4	1	4'-5"	829
A500	242	#5	STR	35'-6"	8960
A650	240	#5	STR	22'-1"	5528
A700	283	#5	STR	35'-6"	10478
A850	281	#5	STR	22'-1"	6472
B7	139	#4	STR	8'-4"	774
B8	281	#4	STR	8'-4"	1564
B9	335	#4	STR	8'-4"	1865
C1	440	#4	STR	28'-2"	8279
C2	8	#4	STR	2'-6"	13
D2	12	#6	STR	1'-4"	24
D3	12	#6	STR	0'-10"	15
F2	8	#5	STR	13'-5"	112
F3	13	#3	2	6'-8"	33
G2	4	#5	STR	35'-6"	148
REINFORCING STEEL					46,017 LBS.

SPLICE LENGTH CHART

BAR	SIZE	SPLICE LENGTH
A200	#7	3'-6"
A400	#6	2'-7"
A600	#5	2'-2"
A800	#5	2'-2"
"B"	#5	2'-2"
"B"	#4	1'-9"
C1	#4	1'-11"
S1	#8	4'-7"

BAR TYPES

ALL BAR DIMENSIONS ARE OUT TO OUT.

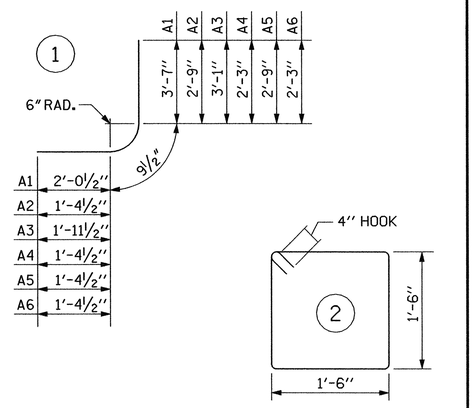

PROJECT NO. R-5000

JACKSON COUNTY

STATION: 13+90.23 -L-

SHEET 8 OF 12

PLANS PREPARED BY:

MULKEY
ENGINEERS & CONSULTANTS
PO Box 33127
RALEIGH, N.D. 27636
(919) 851-1915
(919) 851-1919 (FAX)
WWW.MULKEYINC.COM
NC LICENSE NO. C-1031

STATE OF NORTH CAROLINA
DEPARTMENT OF TRANSPORTATION
RALEIGH

TRIPLE 11 FT. X 7 FT. CONCRETE BOX CULVERT

REVISIONS						SHEET NO.
NO.	BY:	DATE:	NO.	BY:	DATE:	C-9
1			3			TOTAL SHEETS
2			4			18

DRAWN BY : Z. H. BROWN DATE : 11/3/11
CHECKED BY : W. A. DAVIS DATE : 3/22/12

7/6/2012 9a06sii.AM R:\Structures\Culverts\R-5000_CULVERTL_0i.dgn

NOTES

#5 "F" BARS ARE INCLUDED IN BILL OF MATERIAL FOR REINFORCING STEEL ON SHEET C-8

CONCRETE FOR LIGHT POSTS IS INCLUDED IN CLASS "A" CONCRETE ON SHEET C-1

THE ENGINEER SHALL CONFIRM THE LIGHT POST LOCATIONS BEFORE CONSTRUCTING THE INTERIOR WALL BETWEEN BARRELS 2 AND 3.

Ⓝ INDICATES LIGHT PEDESTAL LOCATIONS

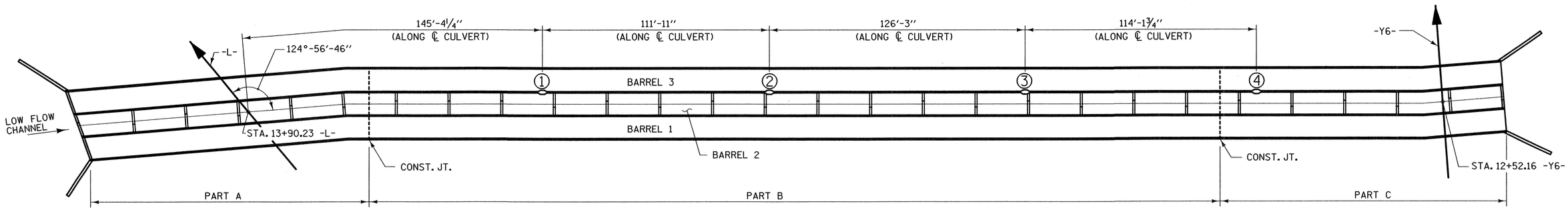

PLAN

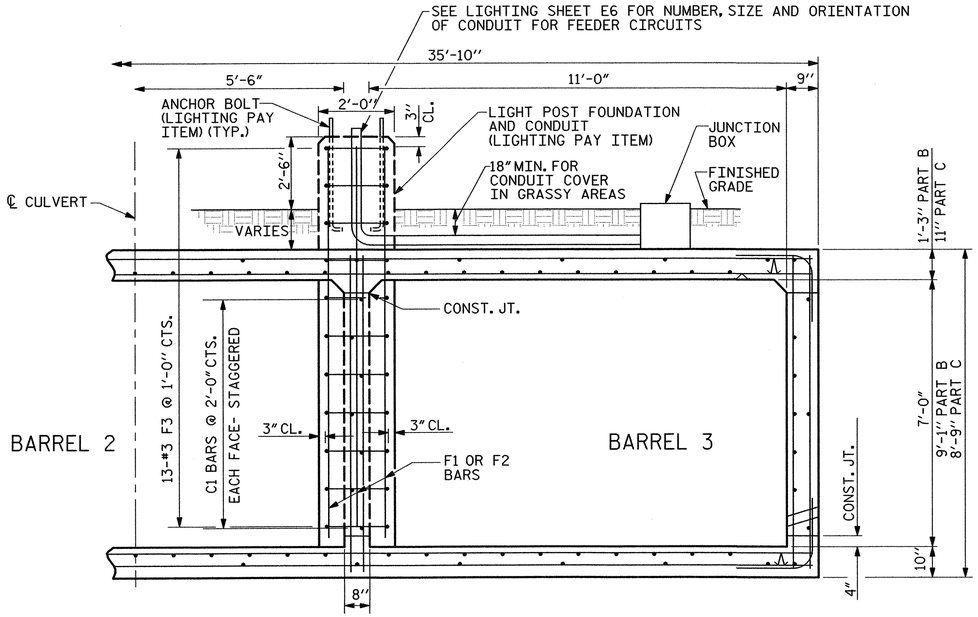

RIGHT ANGLE SECTION OF BARREL

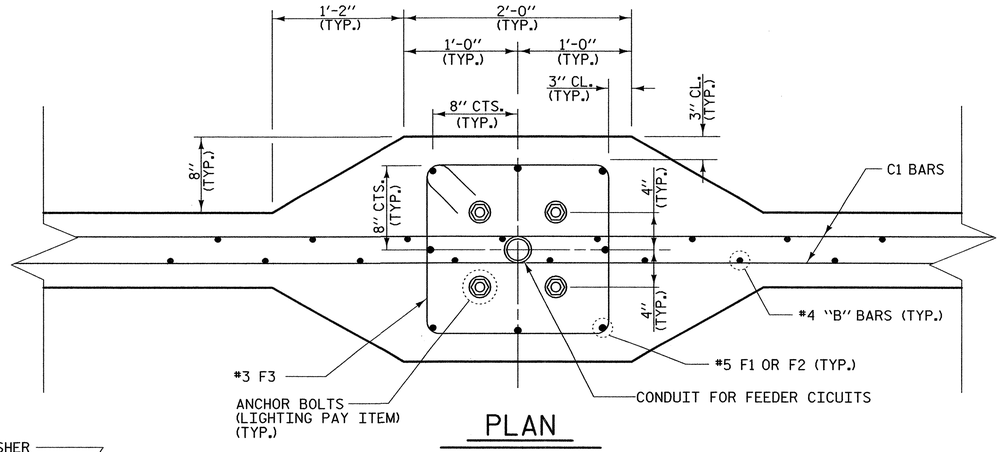

PLAN

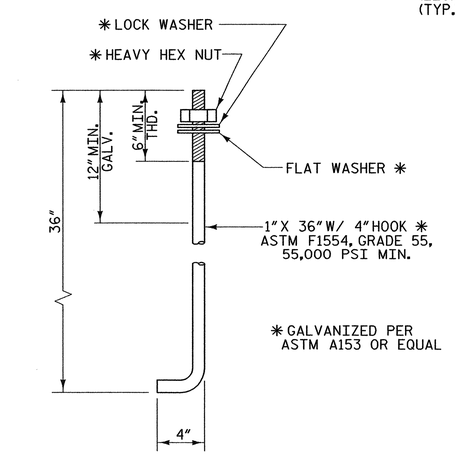

ANCHOR BOLT DETAIL

(LIGHTING PAY ITEM)

PROJECT NO. R-5000

JACKSON COUNTY

STATION: 13+90.23 -L-

SHEET 9 OF 12

STATE OF NORTH CAROLINA
DEPARTMENT OF TRANSPORTATION
RALEIGH

DETAILS FOR LIGHT POST

PLANS PREPARED BY:

MULKEY
ENGINEERS & CONSULTANTS
P.O. Box 33127
Raleigh, NC 27636
(919) 851-1912
(919) 851-1912 (FAX)
WWW.MULKEYINC.COM
NC LICENSE NO. C-1021

NORTH CAROLINA PROFESSIONAL 19661 ENGINEER KEVIN AUSTIN 7/6/12

REVISIONS						SHEET NO.
NO.	BY:	DATE:	NO.	BY:	DATE:	C-10
1			3			TOTAL SHEETS
2			4			18

DRAWN BY : Z. H. BROWN DATE : 11/3/11
CHECKED BY : W. A. DAVIS DATE : 2/29/12

7/6/2012 8:20:21 AM R:\Structures\Culverts\R-5000_CULVERTL.dgn

NOTES

BED MATERIAL PLACED BETWEEN SILLS IN THE CULVERT SHALL PROVIDE A CONTINUOUS LOW FLOW CHANNEL BETWEEN THE LOWER SILLS. THE MATERIAL SHALL BE NATURAL STONE WITH A GRADATION SIZE SIMILAR TO THAT OF CLASS B RIPRAP. STONES LARGER THAN 6'' SHALL NOT BE PLACED WITHIN THE LOW FLOW CHANNEL. BED MATERIAL IS SUBJECT TO APPROVAL BY THE ENGINEER.

SILLS ARE TO BE 1.0 FT. WIDE AND CAST SEPARATELY AND ATTACHED BY DOWELS.

THE 1'-0'' HIGH AND THE 6'' HIGH SILLS ARE TO BE SEPERATE UNITS.

THE TOP OF LOW FLOW SILL SHOULD MATCH STREAM BED ELEVATION IN LOW FLOW CHANNEL OF STREAM.

*6 "D" BARS ARE INCLUDED IN "REINFORCING STEEL" QUANTITY ON SHEET C-8.

SILL CONCRETE QUANTITY IS INCLUDED IN "CLASS A" CONCRETE QUANTITY ON SHEET C-1.

CLASS B RIP RAP ------- 254 TONS

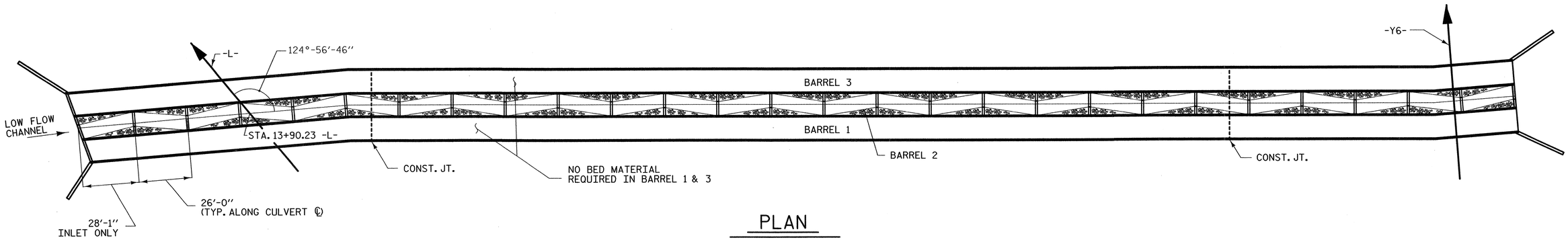

PLAN

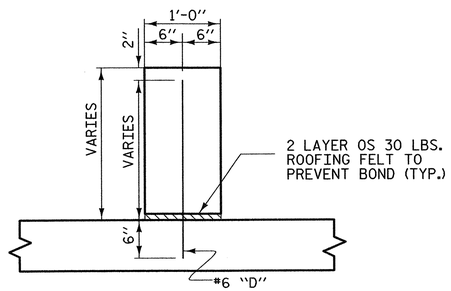

SECTION THROUGH SILL

*DOWELS MAY BE PUSHED INTO GREEN CONCRETE AFTER SLAB HAS BEEN FLOAT FINISHED.

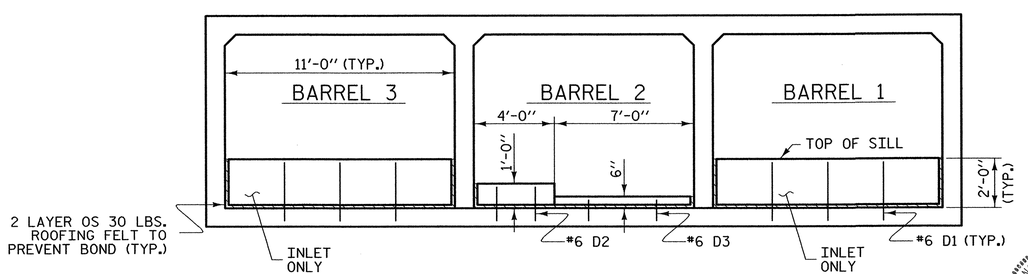

SILL DETAILS

(LOOKING DOWNSTREAM)

NORTH CAROLINA PROFESSIONAL 1966 ENGINEER L. KEVIN AUSTIN 7/6/12

PLANS PREPARED BY:

MULKEY
ENGINEERS & CONSULTANTS
PO Box 33127
Raleigh, N.C. 27636
(919) 851-1212
(919) 851-1213 (FAX)
WWW.MULKEYINC.COM
NC LICENSE NO. C-1021

PROJECT NO. R-5000

JACKSON COUNTY

STATION: 13+90.23 -L-

SHEET 10 OF 12

STATE OF NORTH CAROLINA
DEPARTMENT OF TRANSPORTATION
RALEIGH

SILL DETAILS

REVISIONS						SHEET NO.
NO.	BY:	DATE:	NO.	BY:	DATE:	C-11
1			3			TOTAL SHEETS
2			4			18

DRAWN BY : Z. H. BROWN DATE : 11/3/11
CHECKED BY : W. A. DAVIS DATE : 2/29/12

7/6/2012 8:21:04 AM R:\Structures\Culverts\R-5000_CULVERTL.dgn

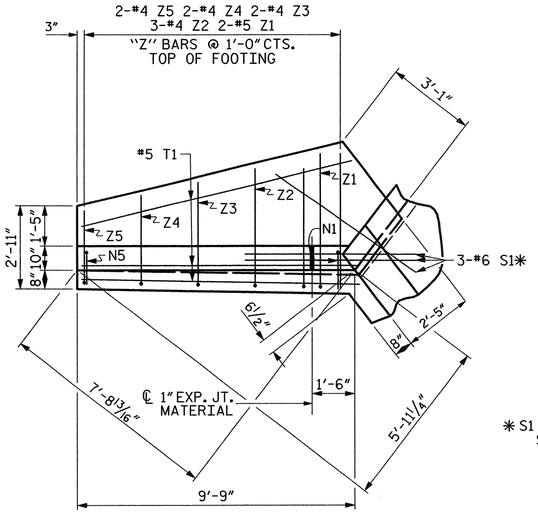

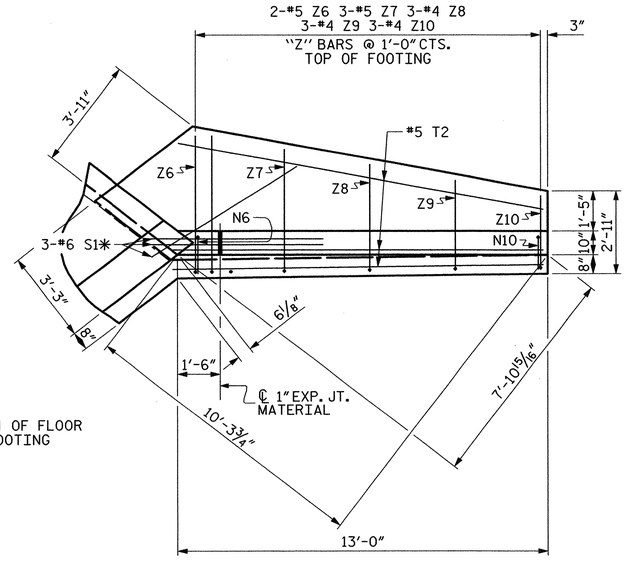

* S1 @ BOTTOM OF FLOOR SLAB & FOOTING

PLAN W2

PLAN W1

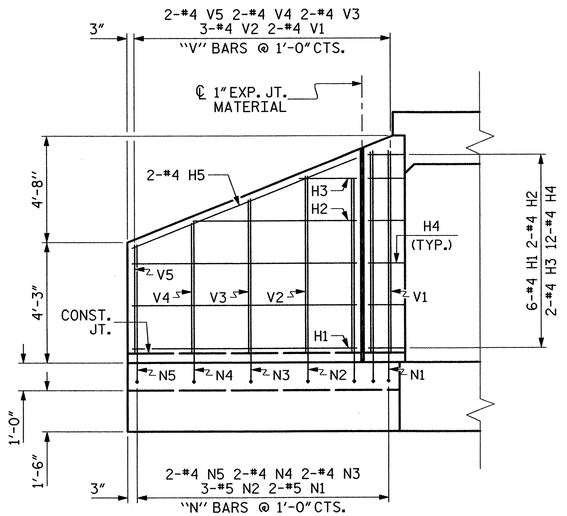

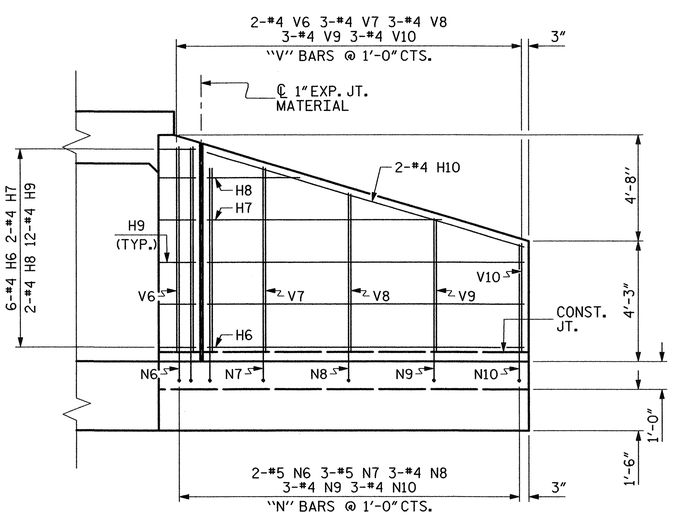

ELEVATION W2

ELEVATION W1

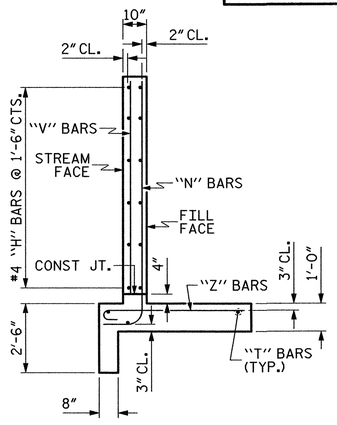

TYPICAL WING SECTION

BAR TYPES

ALL BAR DIMENSIONS ARE OUT TO OUT.

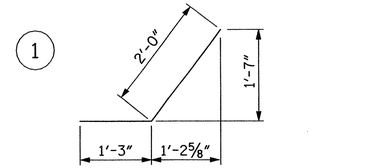

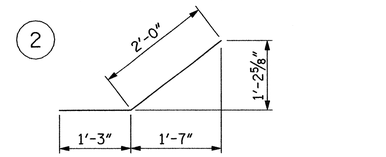

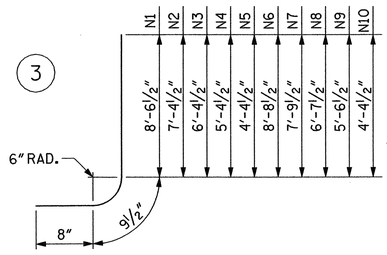

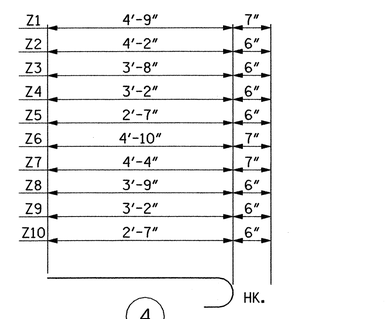

BILL OF MATERIAL

BAR	NO.	SIZE	TYPE	LENGTH	WEIGHT
H1	6	#4	STR	7'-10"	31
H2	2	#4	STR	6'-2"	8
H3	2	#4	STR	3'-2"	4
H4	12	#4	1	3'-3"	26
H5	2	#4	STR	8'-5"	11
H6	6	#4	STR	11'-1"	44
H7	2	#4	STR	8'-9"	12
H8	2	#4	STR	4'-9"	6
H9	12	#4	2	3'-3"	26
H10	2	#4	STR	11'-10"	16
N1	2	#5	3	10'-0"	21
N2	3	#5	3	8'-10"	28
N3	2	#4	3	7'-10"	10
N4	2	#4	3	6'-10"	9
N5	2	#4	3	5'-10"	8
N6	2	#5	3	10'-2"	21
N7	3	#5	3	9'-3"	29
N8	3	#4	3	8'-1"	16
N9	3	#4	3	7'-0"	14
N10	3	#4	3	5'-10"	12
S1	6	#6	STR	6'-0"	54
T1	3	#5	STR	9'-9"	31
T2	3	#5	STR	13'-0"	41
V1	2	#4	STR	8'-0"	11
V2	3	#4	STR	6'-10"	14
V3	2	#4	STR	5'-10"	8
V4	2	#4	STR	4'-10"	6
V5	2	#4	STR	3'-10"	5
V6	2	#4	STR	8'-1"	11
V7	3	#4	STR	7'-2"	14
V8	3	#4	STR	6'-1"	12
V9	3	#4	STR	4'-11"	10
V10	3	#4	STR	3'-10"	8
Z1	2	#5	4	5'-4"	11
Z2	3	#4	4	4'-8"	9
Z3	2	#4	4	4'-2"	6
Z4	2	#4	4	3'-8"	5
Z5	2	#4	4	3'-1"	4
Z6	2	#5	4	5'-5"	11
Z7	3	#5	4	4'-11"	15
Z8	3	#4	4	4'-3"	9
Z9	3	#4	4	3'-8"	7
Z10	3	#4	4	3'-1"	6

REINFORCING STEEL FOR 2 WINGS	660 LBS

CLASS A CONCRETE		
2 WINGS	9.1	CY
1 HEADWALLS	1.7	CY
1 END CURTAIN WALLS	2.1	CY
TOTAL	12.9	CY

PROJECT NO. R-5000

JACKSON COUNTY

STATION: 13+90.23 -L-

SHEET 11 OF 12

STATE OF NORTH CAROLINA
DEPARTMENT OF TRANSPORTATION
RALEIGH

STANDARD WINGS FOR CONCRETE BOX CULVERT

H = 7'-0" SLOPE = 2:1
75° OR 105° SKEW

NORTH CAROLINA PROFESSIONAL SEAL 19661 ENGINEER L. KEVIN AUSTIN 7/6/12

PLANS PREPARED BY:

MULKEY
ENGINEERS & CONSULTANTS
PO Box 33127
Raleigh, NC 27636
(919) 851-1912
(919) 851-1918 (FAX)
WWW.MULKEYINC.COM
NC LICENSE NO. C-1031

REVISIONS						SHEET NO.
NO.	BY:	DATE:	NO.	BY:	DATE:	C-12
1			3			TOTAL SHEETS
2			4			18

STD. NO. CW7507

ASSEMBLED BY : Z. H. BROWN	DATE : 11/3/11
CHECKED BY : W. A. DAVIS	DATE : 2/29/12
DRAWN BY : CCJ 12/99	
CHECKED BY : RWW 03/00	

7/6/2012 827136 AM R:\Structures\Culverts\DSWING.dgn

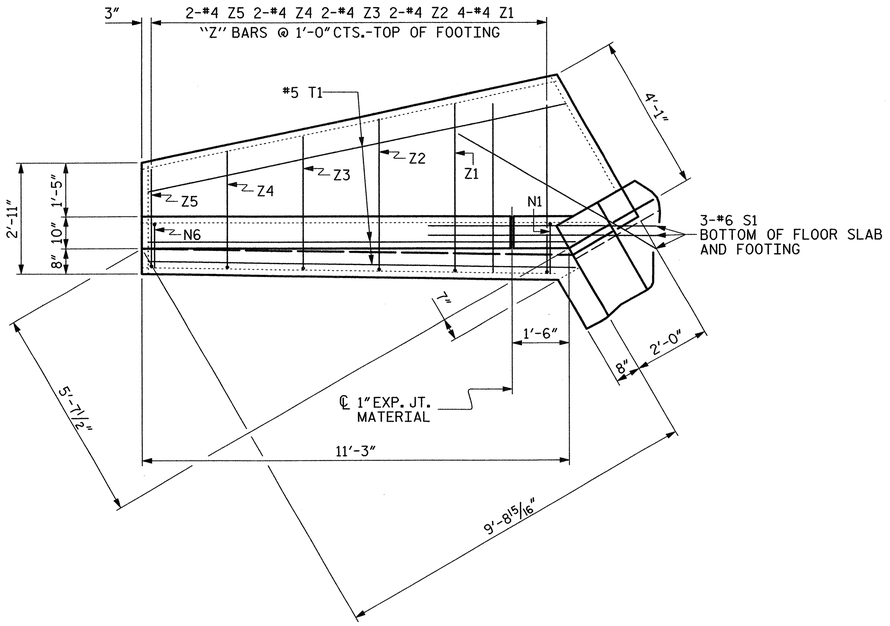

PLAN

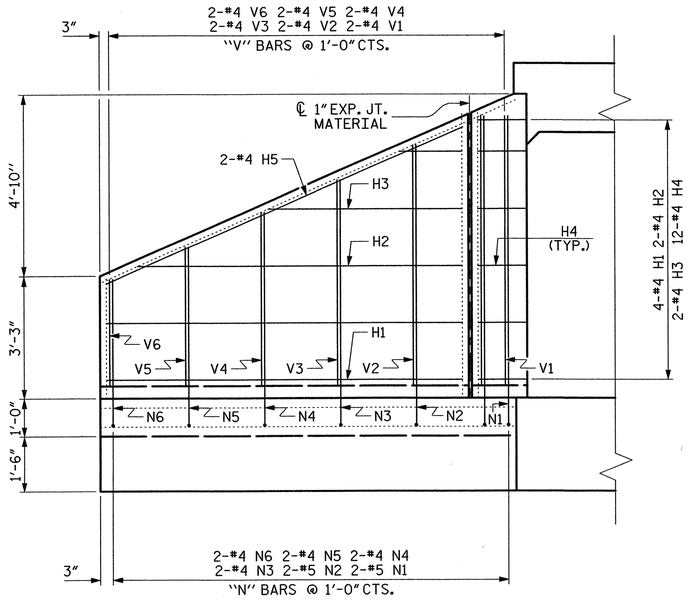

ELEVATION

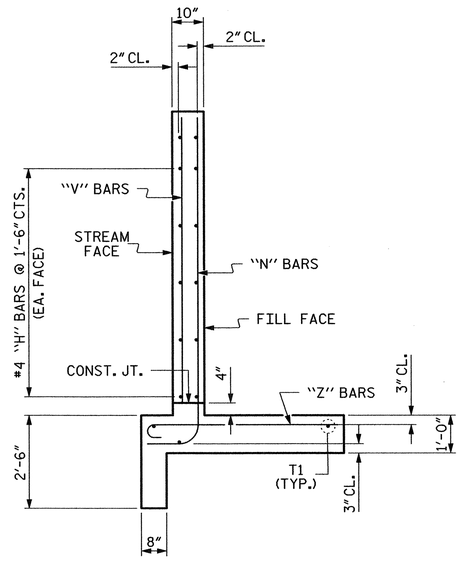

TYPICAL WING SECTION

BAR TYPES

ALL BAR DIMENSIONS ARE OUT TO OUT.

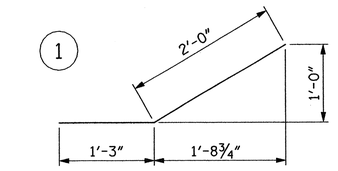

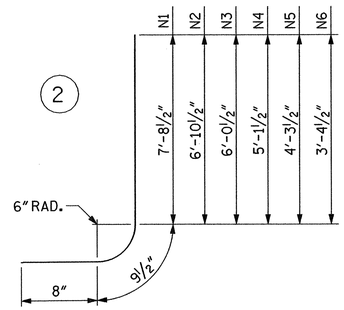

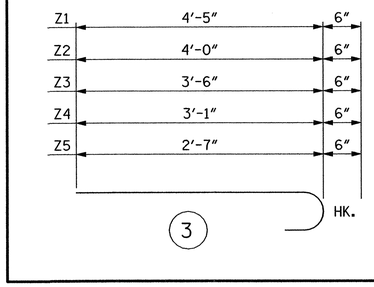

BILL OF MATERIAL

BAR	NO.	SIZE	TYPE	LENGTH	WEIGHT
H1	8	#4	STR	9'-4"	50
H2	4	#4	STR	8'-6"	23
H3	4	#4	STR	5'-1"	14
H4	24	#4	1	3'-3"	52
H5	4	#4	STR	10'-3"	27
N1	4	#5	2	9'-2"	38
N2	4	#5	2	8'-4"	35
N3	4	#4	2	7'-6"	20
N4	4	#4	2	6'-7"	18
N5	4	#4	2	5'-9"	15
N6	4	#4	2	4'-10"	13
S1	6	#6	STR	6'-0"	54
T1	6	#5	STR	11'-3"	70
V1	4	#4	STR	7'-1"	19
V2	4	#4	STR	6'-4"	17
V3	4	#4	STR	5'-5"	14
V4	4	#4	STR	4'-7"	12
V5	4	#4	STR	3'-8"	10
V6	4	#4	STR	2'-10"	8
Z1	8	#4	3	4'-11"	26
Z2	4	#4	3	4'-6"	12
Z3	4	#4	3	4'-0"	11
Z4	4	#4	3	3'-7"	10
Z5	4	#4	3	3'-1"	8

TOTAL REINFORCING STEEL
FOR 2 WINGS 576 LBS

CLASS A CONCRETE
2 WINGS 8.6 CY
1 HEADWALLS 1.7 CY
1 END CURTAIN WALLS 1.9 CY
TOTAL 12.2 CY

ASSEMBLED BY : Z. H. BROWN DATE : 11/3/11
CHECKED BY : W. A. DAVIS DATE : 2/29/12

DRAWN BY : CCJ 10/99
CHECKED BY : RWW 03/00

PROJECT NO. R-5000
JACKSON COUNTY
STATION: 13+90.23 -L-

SHEET 12 OF 12

STATE OF NORTH CAROLINA
DEPARTMENT OF TRANSPORTATION
RALEIGH

STANDARD WINGS FOR CONCRETE BOX CULVERT

H = 7'-0" SLOPE = 2:1
90° SKEW

NORTH CAROLINA PROFESSIONAL ENGINEER SEAL 19661 KEVIN AUSTIN 7/6/12

PLANS PREPARED BY:

MULKEY
ENGINEERS & CONSULTANTS
PO Box 33127
Raleigh, N.C. 27636
(919) 851-1212
(919) 851-1213 (FAX)
www.mulkeyinc.com
NC LICENSE NO. C-1031

REVISIONS						SHEET NO.
NO.	BY:	DATE:	NO.	BY:	DATE:	C-13
1			3			TOTAL SHEETS
2			4			18

STD. NO. CW9007

7/6/2012 8:28:22 AM R:\Structures\Culverts\SQWING.dgn

BM #5: CHISLED "X" ON SW CORNER OF CONC. PAD FOR LAMP POST, STA 16+48.00 -BY1- LEFT, ELEV. 2113.73

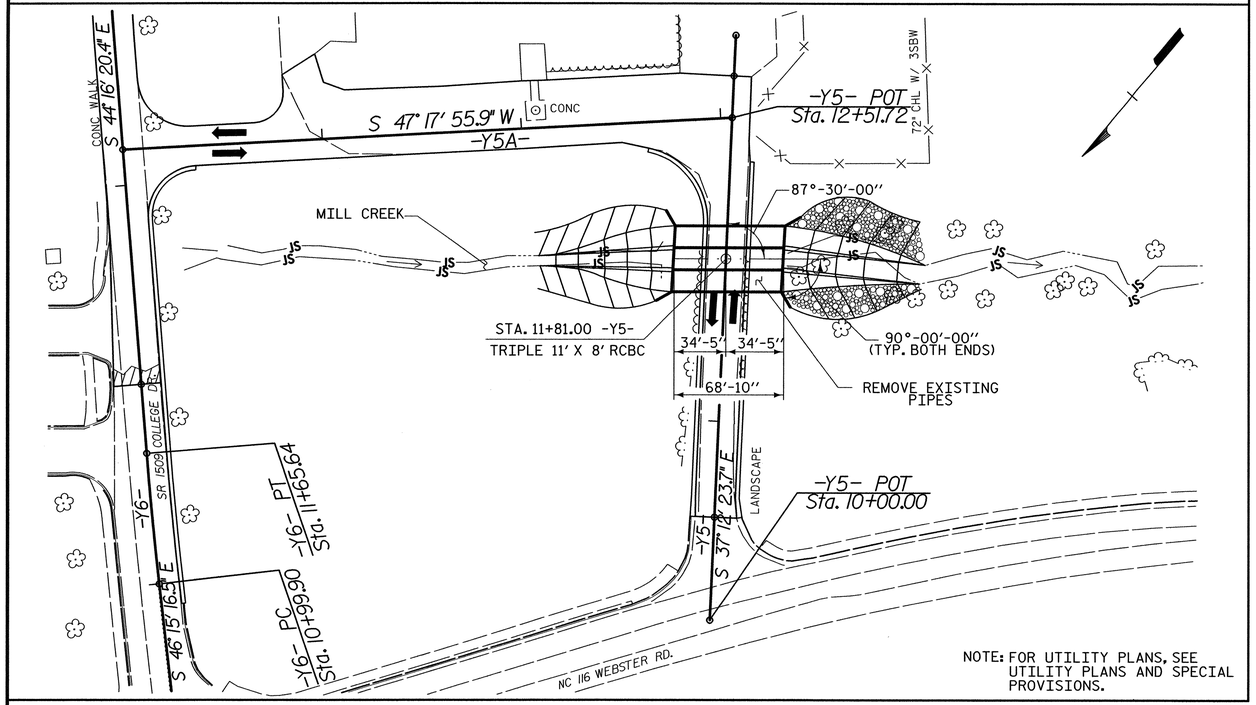

NOTE: FOR UTILITY PLANS, SEE UTILITY PLANS AND SPECIAL PROVISIONS.

LOCATION SKETCH

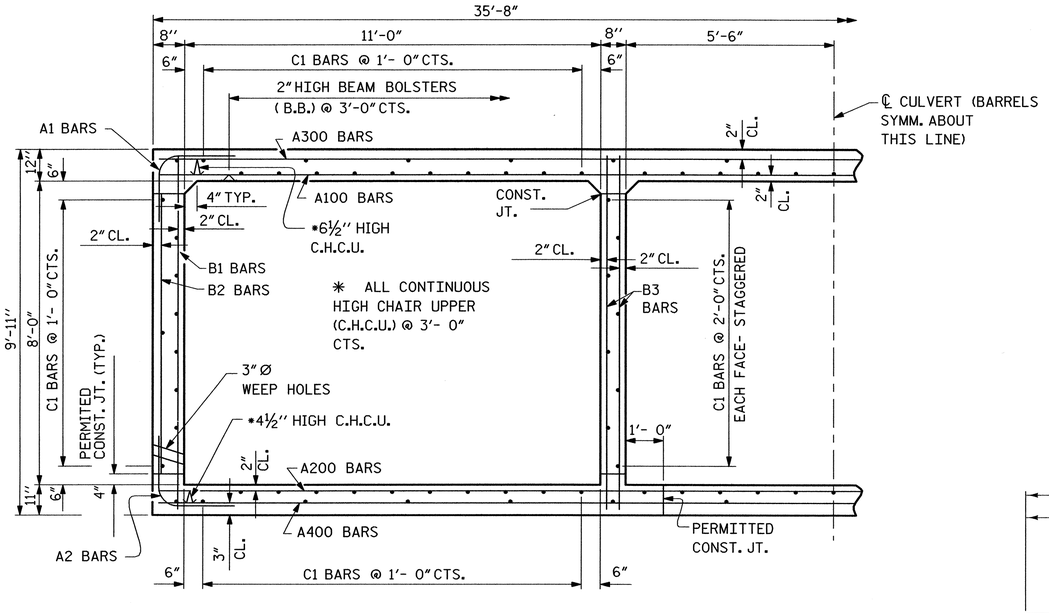

RIGHT ANGLE SECTION OF BARREL

THERE ARE 126 "C" BARS IN SECTION OF BARREL.

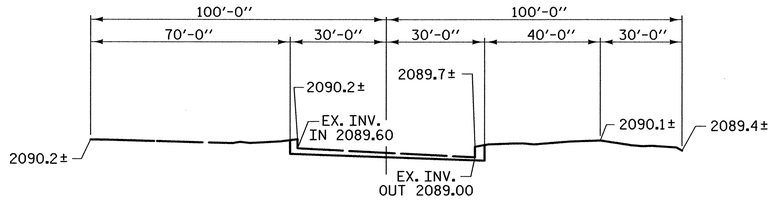

PROFILE ALONG ℄ CULVERT

GRADE DATA

GRADE POINT EL. @ STA. 11+81.00 -Y5- = 2103.83
BED EL. @ STA. 11+81.00 -Y5- = 2089.00 FT
ROADWAY SLOPES = 2:1

HYDRAULIC DATA

DESIGN DISCHARGE = 800 C.F.S.
FREQUENCY OF DESIGN FLOOD = 25 YRS.
DESIGN HIGH WATER ELEVATION = 2098.4 FT
DRAINAGE AREA = 2.56 SQ. MI.
BASIC DISCHARGE (Q100) = 1100 C.F.S.
BASIC HIGH WATER ELEVATION = 2099.7 FT

OVERTOPPING FLOOD DATA

OVERTOPPING DISCHARGE = 1700 ± C.F.S
FREQUENCY OF OVERTOPPING FLOOD = 500 ± YRS.
OVERTOPPING FLOOD ELEVATION = 2101.82 FT

PROPOSED OVERTOPPING OCCURS AT STA. 12+61.00 -Y5- ± SAG ELEV. = 2101.82

STRUCTURE QUANTITIES

CLASS A CONCRETE		
BARREL @ 3.334 CY/FT	229.5	C.Y.
WINGS, SILLS, ETC.	31.2	C.Y.
TOTAL	260.7	C.Y.
REINFORCING STEEL		
BARREL	32,296	LBS.
WINGS ETC.	1,453	LBS.
TOTAL	33,749	LBS.
CULVERT EXCAVATION	LUMP SUM	
FOUNDATION COND. MAT'L.	193 TONS	
RIP RAP, CLASS B	172 TONS	

NOTES

ASSUMED LIVE LOAD ----------HL-93 OR ALTERNATE LOADING.

DESIGN FILL----------6.83'

FOR OTHER DESIGN DATA AND NOTES SEE STANDARD NOTE SHEET.

3"Ø WEEP HOLES INDICATED TO BE IN ACCORDANCE WITH THE SPECIFICATIONS.

CONCRETE IN CULVERTS TO BE POURED IN THE FOLLOWING ORDER:

1. WING FOOTINGS AND FLOOR SLAB INCLUDING 4" OF ALL VERTICAL WALLS.
2. THE REMAINING PORTIONS OF THE WALLS AND WINGS FULL HEIGHT FOLLOWED BY ROOF SLAB AND HEADWALLS.

THE RESIDENT ENGINEER SHALL CHECK THE LENGTH OF CULVERT BEFORE STAKING IT OUT TO MAKE CERTAIN THAT IT WILL PROPERLY TAKE CARE OF THE FILL.

DIMENSIONS FOR WING LAYOUT AS WELL AS ADDITIONAL REINFORCING STEEL EMBEDDED IN BARREL ARE SHOWN ON WING SHEET.

AT THE CONTRACTOR'S OPTION, HE MAY SPLICE THE VERTICAL REINFORCING STEEL IN THE INTERIOR FACE OF EXTERIOR WALL AND BOTH FACES OF INTERIOR WALLS ABOVE LOWER WALL CONSTRUCTION JOINT. THE SPLICE LENGTH SHALL BE AS PROVIDED IN THE SPLICE LENGTH CHART SHOWN ON THE PLANS. EXTRA WEIGHT OF STEEL DUE TO THE SPLICES SHALL BE PAID FOR BY THE CONTRACTOR.

AT THE CONTRACTOR'S OPTION HE MAY SUBMIT, TO THE ENGINEER FOR APPROVAL, DESIGN AND DETAIL DRAWINGS FOR A PRECAST REINFORCED CONCRETE BOX CULVERT IN LIEU OF THE CAST-IN-PLACE CULVERT SHOWN ON THE PLANS. THE DESIGN SHALL PROVIDE THE SAME SIZE AND NUMBER OF BARRELS AS USED ON THE CAST-IN-PLACE DESIGN. FOR OPTIONAL PRECAST REINFORCED CONCRETE BOX CULVERT, SEE SPECIAL PROVISIONS.

FOR CULVERT DIVERSION DETAILS AND PAY ITEM, SEE EROSION CONTROL PLANS.

A THREE FOOT STRIP OF FILTER FABRIC SHALL BE ATTACHED TO THE FILL FACE OF THE WING COVERING THE ENTIRE LENGTH OF THE EXPANSION JOINT.

NO WORK SHALL BE DONE ON THE CULVERT AT STA. 11+81.00 -Y5- UNTIL THE AREA OF THE BOX CULVERT HAS BEEN UNDERCUT TO AN ELEVATION 3 FT. BELOW THE BOTTOM OF THE PROPOSED FLOOR SLAB TO REMOVE UNSUITABLE MATERIAL. THIS ELEVATION WILL BE WRAPPED ON ALL SIDES WITH TYPE 2 GEOTEXTILE AND BACKFILLED WITH #57 STONE PROPERLY COMPACTED TO THE ELEVATION OF THE BOTTOM OF THE PROPOSED FLOOR SLAB. THE LIMITS OF THIS UNDERCUT EXCAVATION SHALL BE AT LEAST THE LIMITS OF THE BOX CULVERT INCLUDING THE WINGS. NO SEPARATE PAYMENT WILL BE MADE FOR ANY TEMPORARY SHEETING, UNDERCUT, GEOTEXTILE, OR #57 STONE AS REQUIRED TO CONSTRUCT THE PROPOSED CULVERT. PAYMENT IS INCLUDED IN THE LUMP SUM PRICE FOR CULVERT EXCAVATION.

FOR SUBMITTAL OF WORKING DRAWINGS, SEE SPECIAL PROVISIONS.

FOR CRANE SAFETY, SEE SPECIAL PROVISIONS.

NORTH CAROLINA PROFESSIONAL SEAL 19661 ENGINEER K. KEVIN AUSTIN 7/23/12

PLANS PREPARED BY:

MULKEY
ENGINEERS & CONSULTANTS
PO BOX 33127
RALEIGH, NC 27636
(919) 851-1912
(919) 851-1918 (FAX)
WWW.MULKEYINC.COM
NC LICENSE NO. C-1021

PROJECT NO. R-5000
JACKSON COUNTY
STATION: 11+81.00 -Y5-
SHEET 1 OF 4 BRIDGE NO. C-390

STATE OF NORTH CAROLINA
DEPARTMENT OF TRANSPORTATION
RALEIGH

TRIPLE 11 FT. X 8 FT. CONCRETE BOX CULVERT

REVISIONS						SHEET NO.
NO.	BY:	DATE:	NO.	BY:	DATE:	C-14
1			3			TOTAL SHEETS
2			4			18

ASSEMBLED BY : Z. H. BROWN	DATE : 11/3/11	SPECIAL
CHECKED BY : W. A. DAVIS	DATE : 3/20/12	
DRAWN BY : J. E. MANGUM	DATE : 10/25/89	STANDARD
CHECKED BY : A.R. BISSETTE	DATE : AUG. 1989	

STD. NO. CB13A

7/24/2012 7:59:58 AM R:\Structures\Culverts\R-5000_CULVERT2.dgn

LOAD AND RESISTANCE FACTOR RATING (LRFR) SUMMARY FOR REINFORCED CONCRETE BOX CULVERTS

LEVEL		VEHICLE	WEIGHT (W) (TONS)	⟨#⟩ CONTROLLING LOAD RATING	MINIMUM RATING FACTORS (RF)	TONS = W x RF	STRENGTH I LIMIT STATE									COMMENT NUMBER
								MOMENT				SHEAR				
							LIVE-LOAD FACTORS (γ_{LL})	RATING FACTOR	BOX NO.	ELEMENT TYPE	DISTANCE FROM LEFT END OF ELEMENT (ft)	RATING FACTOR	BOX NO.	ELEMENT TYPE	DISTANCE FROM LEFT END OF ELEMENT (ft)	
DESIGN LOAD RATING		HL-93 (INVENTORY)	N/A	⟨1⟩	1.37	--	1.75	1.48	1	TOP SLAB	6.167	1.37	1	BOTTOM SLAB	11.007	
		HL-93 (OPERATING)	N/A		1.77	--	1.35	1.92	1	TOP SLAB	6.167	1.77	1	BOTTOM SLAB	11.007	
		HS-20 (INVENTORY)	36.000	⟨2⟩	1.37	49.32	1.75	1.37	1	TOP SLAB	11.667	1.76	1	TOP SLAB	10.947	
		HS-20 (OPERATING)	36.000		1.77	63.72	1.35	1.77	1	TOP SLAB	11.667	2.29	1	TOP SLAB	10.947	
LEGAL LOAD RATING	SINGLE VEHICLE (SV)	SNSH	13.500		1.37	18.50	1.40	1.37	1	TOP SLAB	11.667	1.76	1	TOP SLAB	10.947	
		SNGARBS2	20.000		1.37	27.40	1.40	1.37	1	TOP SLAB	11.667	1.76	1	TOP SLAB	10.947	
		SNAGRIS2	22.000		1.37	30.14	1.40	1.37	1	TOP SLAB	11.667	1.76	1	TOP SLAB	10.947	
		SNCOTTS3	27.250		1.37	37.33	1.40	1.37	1	TOP SLAB	11.667	1.76	1	TOP SLAB	10.947	
		SNAGGRS4	34.925		1.35	47.15	1.40	1.35	1	TOP SLAB	11.667	1.39	1	BOTTOM SLAB	11.007	
		SNS5A	35.550		1.37	48.70	1.40	1.37	1	TOP SLAB	11.667	1.37	1	BOTTOM SLAB	11.007	
		SNS6A	39.950		1.22	48.74	1.40	1.37	1	TOP SLAB	11.667	1.22	1	BOTTOM SLAB	11.007	
		SNS7B	42.000		1.25	52.50	1.40	1.37	1	TOP SLAB	11.667	1.25	1	BOTTOM SLAB	11.007	
	TRUCK TRACTOR SEMI-TRAILER (TTST)	TNAGRIT3	33.000		1.37	45.21	1.40	1.37	1	TOP SLAB	11.667	1.47	1	BOTTOM SLAB	11.007	
		TNT4A	33.075		1.37	45.31	1.40	1.37	1	TOP SLAB	11.667	1.48	1	BOTTOM SLAB	11.007	
		TNT6A	41.600		1.30	54.08	1.40	1.37	1	TOP SLAB	11.667	1.30	1	BOTTOM SLAB	11.007	
		TNT7A	42.000		1.37	57.54	1.40	1.37	1	TOP SLAB	11.667	1.42	1	BOTTOM SLAB	11.007	
		TNT7B	42.000		1.37	57.54	1.40	1.37	1	TOP SLAB	11.667	1.42	1	BOTTOM SLAB	11.007	
		TNAGRIT4	43.000		1.13	48.59	1.40	1.31	2	TOP SLAB	11.667	1.13	1	BOTTOM SLAB	11.007	
		TNAGT5A	45.000		1.08	48.60	1.40	1.36	1	TOP SLAB	11.667	1.08	1	BOTTOM SLAB	11.007	
		TNAGT5B	45.000	⟨3⟩	1.08	48.60	1.40	1.36	1	TOP SLAB	11.667	1.08	1	BOTTOM SLAB	11.007	

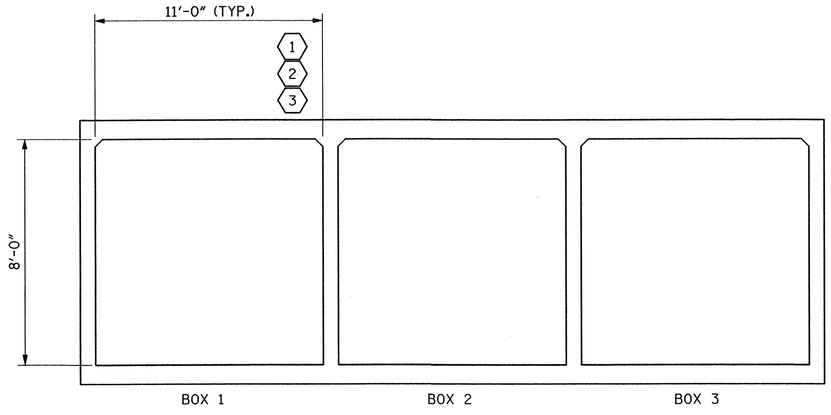

LRFR SUMMARY

(LOOKING DOWNSTREAM)

LOAD FACTORS:

DESIGN LOAD RATING FACTORS

LOAD TYPE	MAX FACTOR	MIN FACTOR
DC	1.25	0.90
DW	1.50	0.65
EV	1.30	0.90
EH	1.35	0.90
ES	1.35	0.90
LS	1.75	--
WA	1.00	--

NOTE:

RATING FACTORS ARE BASED ON THE STRENGTH I LIMIT STATE.

COMMENTS:

1.
2.
3.
4.

⟨#⟩ CONTROLLING LOAD RATING

⟨1⟩ DESIGN LOAD RATING (HL-93)

⟨2⟩ DESIGN LOAD RATING (HS-20)

⟨3⟩ LEGAL LOAD RATING **

** SEE CHART FOR VEHICLE TYPE

PROJECT NO. R-5000

JACKSON COUNTY

STATION: 11+81.00 -Y5-

NORTH CAROLINA PROFESSIONAL ENGINEER SEAL 19661 KEVIN AUSTIN 7/6/12

PLANS PREPARED BY:

MULKEY
ENGINEERS & CONSULTANTS
PO Box 33127
Raleigh, N.C. 27636
(919) 851-1212
(919) 851-1918 (FAX)
WWW.MULKEYINC.COM
NC LICENSE NO. C-1021

STATE OF NORTH CAROLINA
DEPARTMENT OF TRANSPORTATION
RALEIGH

STANDARD

LRFR SUMMARY FOR REINFORCED CONCRETE BOX CULVERTS
(NON-INTERSTATE TRAFFIC)

REVISIONS						SHEET NO.
NO.	BY:	DATE:	NO.	BY:	DATE:	C-15
1			3			TOTAL SHEETS
2			4			18

STD. NO. LRFR5

ASSEMBLED BY : Z. H. BROWN DATE : 6/15/12
CHECKED BY : W. A. DAVIS DATE : 6/22/12

DRAWN BY : WMC 7/11
CHECKED BY : GM 7/11

REV. 10/1/11 MAA/GM

7/6/2012 8:42:55 AM R:\Structures\Culverts\Design\CULV2\LRFR\LRFR5_j2.dgn

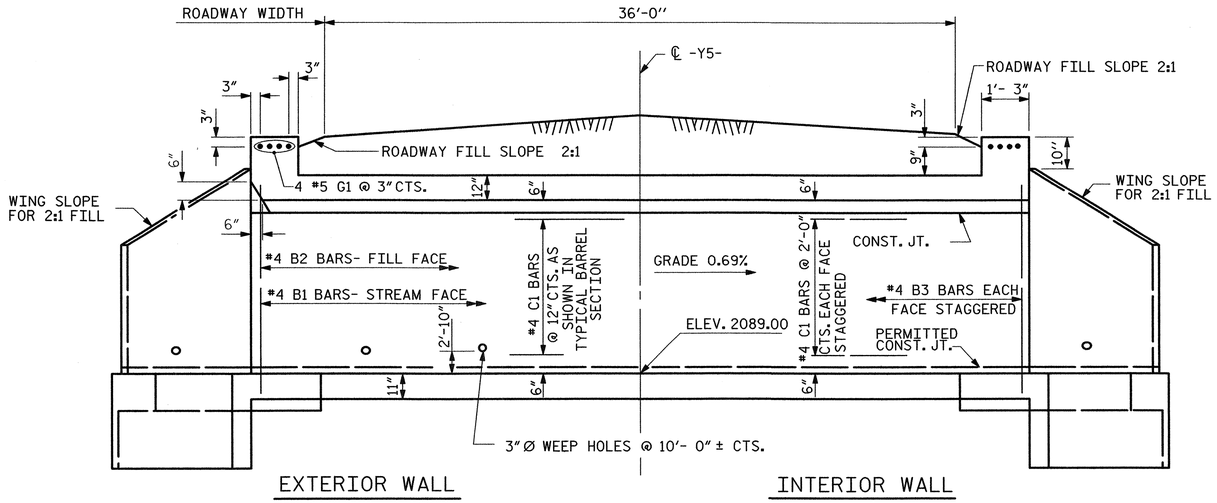

CULVERT SECTION NORMAL TO ROADWAY

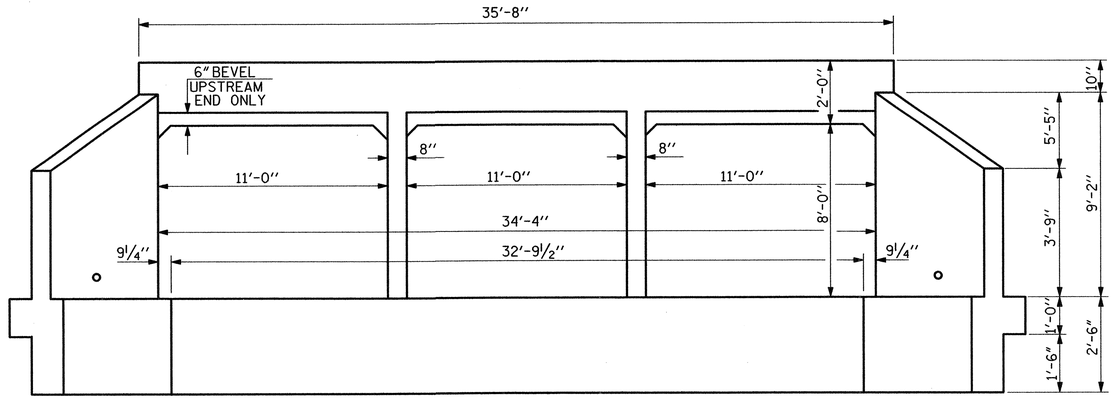

END ELEVATION

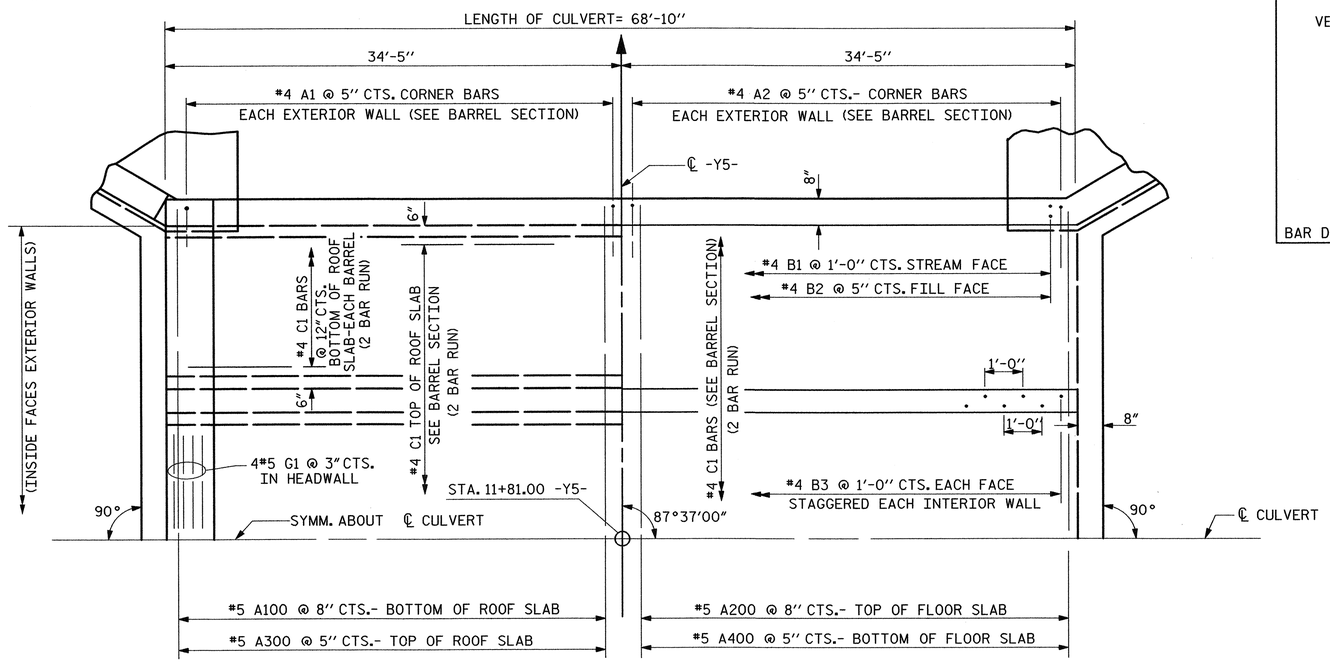

PART PLAN - ROOF SLAB

PART PLAN - FLOOR SLAB

BAR TYPE

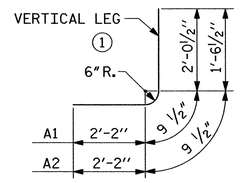

BAR DIMENSIONS ARE OUT TO OUT

BILL OF MATERIAL

BAR	NO.	SIZE	TYPE	LENGTH	WEIGHT
A1	330	#4	1	5'-0"	1102
A2	330	#4	1	4'-6"	992
A100	103	#5	STR	35'-3"	3787
A200	103	#5	STR	35'-3"	3787
A300	165	#5	STR	35'-3"	6066
A400	165	#5	STR	35'-3"	6066
B1	138	#4	STR	9'-6"	876
B2	330	#4	STR	7'-6"	1727
B3	274	#4	STR	9'-3"	1647
C1	252	#4	STR	33'-8"	5934
D1	6	#6	STR	2'-4"	21
D2	6	#6	STR	1'-4"	12
D3	6	#6	STR	10"	8
G1	8	#5	STR	35'-3"	294
REINFORCING STEEL				LBS	32,319

SPLICE LENGTH CHART

BAR	SIZE	SPLICE LENGTH
B1	#4	1'-9"
B3	#4	1'-9"
C1	#4	1'-11"

PROJECT NO. R-5000

JACKSON COUNTY

STATION: 11+81.00 -Y5-

SHEET 2 OF 4

STATE OF NORTH CAROLINA
DEPARTMENT OF TRANSPORTATION
RALEIGH

BARREL STANDARD TRIPLE 11 FT. X 8 FT. CONCRETE BOX CULVERT

1971

REVISIONS						SHEET NO.
NO.	BY:	DATE:	NO.	BY:	DATE:	C-16
1			3			TOTAL SHEETS
2			4			18

NORTH CAROLINA PROFESSIONAL ENGINEER SEAL 19661 L. KEVIN AUSTIN 7/6/12

PLANS PREPARED BY:

MULKEY ENGINEERS & CONSULTANTS
PO Box 33127
Raleigh, NC 27636
(919) 851-1912
(919) 851-1918 (FAX)
WWW.MULKEYINC.COM
NC LICENSE NO. C-1021

ASSEMBLED BY : Z. H. BROWN	DATE : 11/3/11	SPECIAL	
CHECKED BY : W. A. DAVIS	DATE : 3/20/12		
DRAWN BY : JOEL JOHNSON	DATE : MAR. 1971	STANDARD	
CHECKED BY : GARY BROOME	DATE : MAR. 1971		

STD. NO. CB13

7/6/2012 8:30:36 AM R:\Structures\Culverts\R-5000_CULVERT2_0.dgn

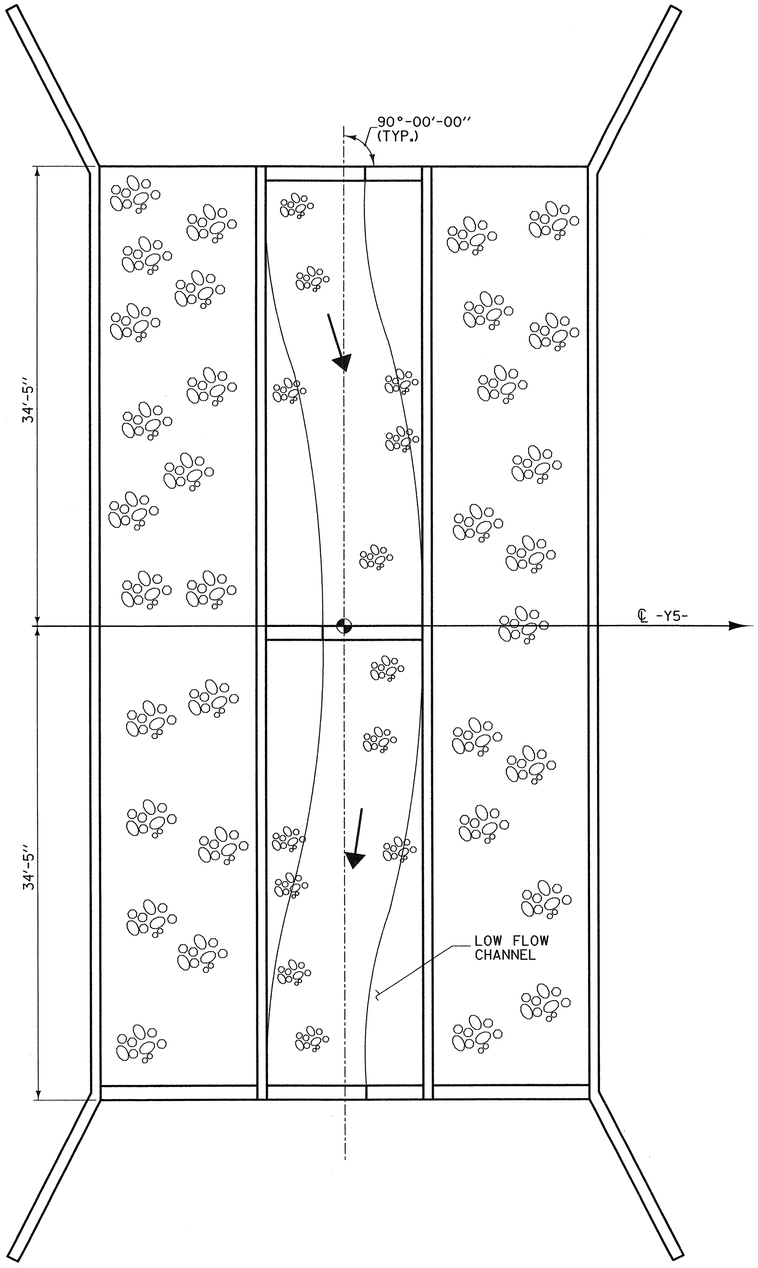

PLAN

NOTES:

BED MATERIAL PLACED BETWEEN SILLS IN THE CULVERT SHALL PROVIDE A CONTINUOUS LOW FLOW CHANNEL BETWEEN THE LOWER SILLS. THE MATERIAL SHALL BE NATURAL STONE WITH A GRADATION SIZE SIMILAR TO THAT OF CLASS B RIPRAP. STONES LARGER THAN 6 INCHES SHALL NOT BE PLACED WITHIN THE LOW FLOW CHANNEL. BED MATERIAL IS SUBJECT TO APPROVAL BY THE ENGINEER.

SILLS ARE TO BE 1' WIDE AND CAST SEPERATELY AND ATTACHED BY DOWELS.

THE 1' HIGH AND 6 INCH HIGH SILLS ARE TO BE SEPERATE UNITS.

THE TOP OF LOW FLOW SILL SHOULD MATCH STREAM BED ELEVATION IN LOW FLOW CHANNEL OF STREAM.

#6 'D' BARS ARE INCLUDED IN "REINFORCING STEEL" QUANTITY ON SHEET C-14.

SILL CONCRETE QUANTITY IS INCLUDED IN CLASS 'A' CONCRETE ON SHEET C-13.

CLASS B RIP RAP--------172 TONS

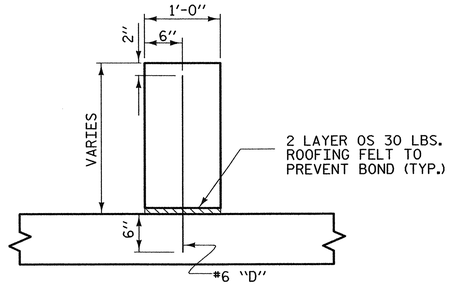

SECTION THROUGH SILL

*DOWELS MAY BE PUSHED INTO GREEN CONCRETE AFTER SLAB HAS BEEN FLOAT FINISHED.

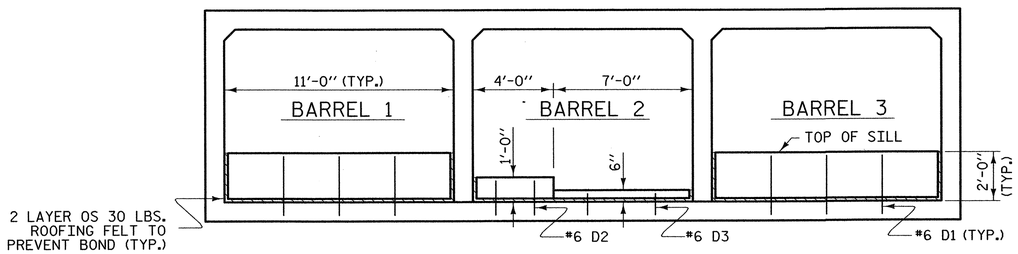

SILL DETAILS

(LOOKING DOWNSTREAM)

PROJECT NO. R-5000

JACKSON COUNTY

STATION: 11+81.00 -Y5-

SHEET 3 OF 4

STATE OF NORTH CAROLINA
DEPARTMENT OF TRANSPORTATION
RALEIGH

TRIPLE 11 FT. X 8 FT. CONCRETE BOX CULVERT SILL DETAILS

NORTH CAROLINA PROFESSIONAL SEAL 19661 ENGINEER KEVIN AUSTIN
7/6/12

PLANS PREPARED BY:

MULKEY
ENGINEERS & CONSULTANTS
PO BOX 33127
RALEIGH, N.C. 27636
(919) 851-1915
(919) 851-1918 (FAX)
WWW.MULKEYINC.COM
NC LICENSE NO. C-1021

REVISIONS						SHEET NO.
NO.	BY:	DATE:	NO.	BY:	DATE:	C-17
1			3			TOTAL SHEETS
2			4			18

DRAWN BY : Z. H. BROWN DATE : 11/3/11
CHECKED BY : W. A. DAVIS DATE : 3/20/12

7/6/2012 8:31:01 AM R:\Structures\Culverts\R-5000_CULVERT2_01.dgn

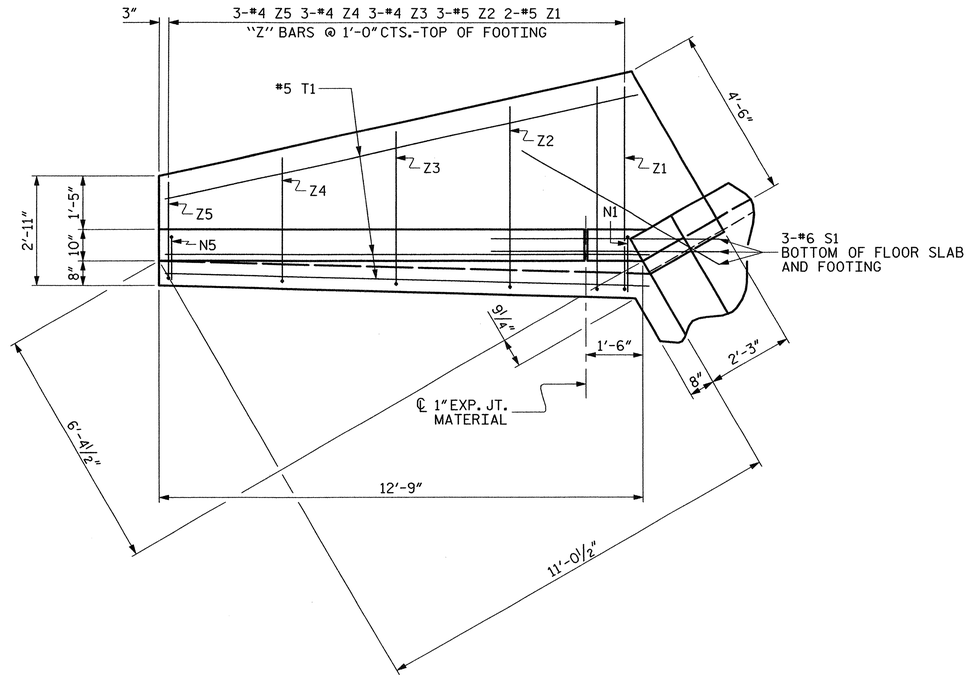

PLAN

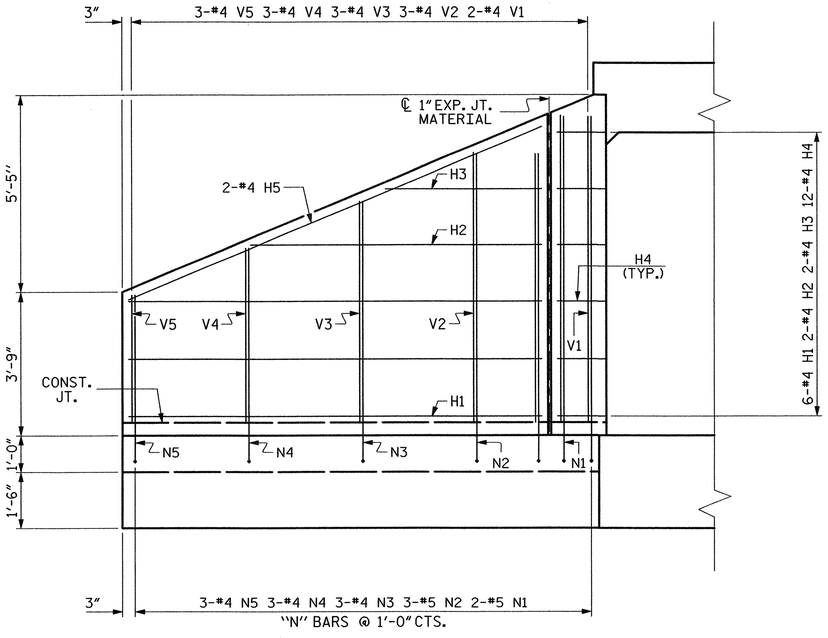

ELEVATION

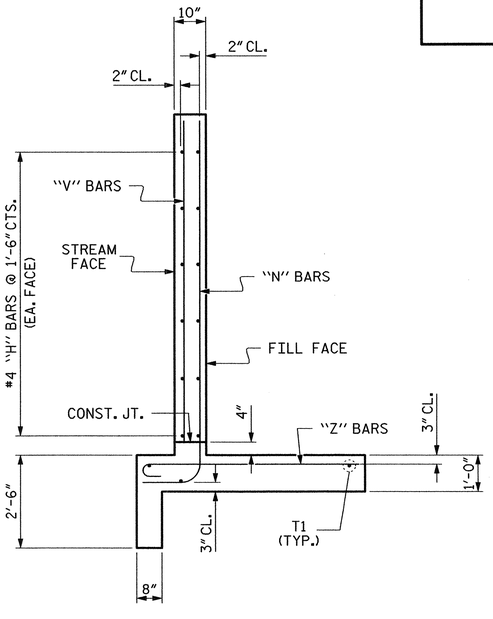

TYPICAL WING SECTION

BAR TYPES

ALL BAR DIMENSIONS ARE OUT TO OUT.

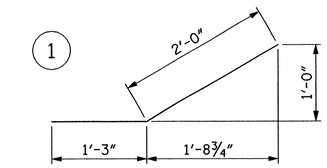

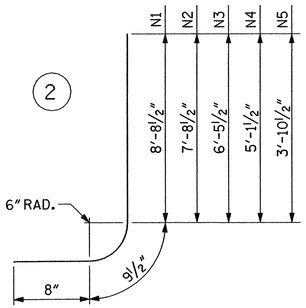

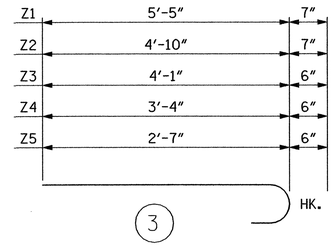

BILL OF MATERIAL

BAR	NO.	SIZE	TYPE	LENGTH	WEIGHT
H1	24	#4	STR	10'-10"	174
H2	8	#4	STR	7'-8"	41
H3	8	#4	STR	4'-1"	22
H4	48	#4	1	3'-3"	104
H5	8	#4	STR	11'-9"	63
N1	8	#5	2	10'-2"	85
N2	12	#5	2	9'-2"	115
N3	12	#4	2	7'-11"	63
N4	12	#4	2	6'-7"	53
N5	12	#4	2	5'-4"	43
S1	12	#6	STR	6'-0"	108
T1	12	#5	STR	12'-9"	160
V1	8	#4	STR	8'-1"	43
V2	12	#4	STR	7'-1"	57
V3	12	#4	STR	5'-10"	47
V4	12	#4	STR	4'-7"	37
V5	12	#4	STR	3'-4"	27
Z1	8	#5	3	6'-0"	50
Z2	12	#5	3	5'-5"	68
Z3	12	#4	3	4'-7"	37
Z4	12	#4	3	3'-10"	31
Z5	12	#4	3	3'-1"	25

REINFORCING STEEL
FOR 4 WINGS 1453 LBS

CLASS A CONCRETE

4 WINGS	21.4	CY
2 HEADWALLS	3.3	CY
2 END CURTAIN WALLS	4.0	CY
TOTAL	28.7	CY

PROJECT NO. R-5000

JACKSON COUNTY

STATION: 11+81.00 -Y5-

SHEET 4 OF 4

STATE OF NORTH CAROLINA
DEPARTMENT OF TRANSPORTATION
RALEIGH

STANDARD WINGS FOR CONCRETE BOX CULVERT

H = 8'-0" SLOPE = 2:1

90° SKEW

NORTH CAROLINA PROFESSIONAL ENGINEER 19661 L. KEVIN AUSTIN 7/6/12

PLANS PREPARED BY:

MULKEY
ENGINEERS & CONSULTANTS
PO Box 33127
Raleigh, NC 27636
(919) 851-1912
(919) 851-1912 (FAX)
WWW.MULKEYINC.COM
NC LICENSE NO. C-1021

REVISIONS						SHEET NO.
NO.	BY:	DATE:	NO.	BY:	DATE:	C-18
1			3			TOTAL SHEETS
2			4			18

STD. NO. CW9008

ASSEMBLED BY : Z. H. BROWN	DATE : 11/3/11
CHECKED BY : W. A. DAVIS	DATE : 3/20/12
DRAWN BY : CCJ 10/99	
CHECKED BY : RWW 03/00	

7/6/2012 8:32:27 AM R:\Structures\Culverts\R-5000_CULVERT2_02.dgn

PROJECT REFERENCE NO.	SHEET NO.
R-5000	W-1
	OF 6

PLANS PREPARED BY:

MULKEY
ENGINEERS & CONSULTANTS
PO BOX 33157
RALEIGH, N.C. 27636
(919) 851-1918
(919) 851-1918 (FAX)
WWW.MULKEYINC.COM
NC LICENSE NO. C-1031

STRUCTURES ENGINEER

NORTH CAROLINA PROFESSIONAL SEAL 13661 ENGINEER KEVIN AUSTIN
7/23/12

REVISIONS

8/17/99

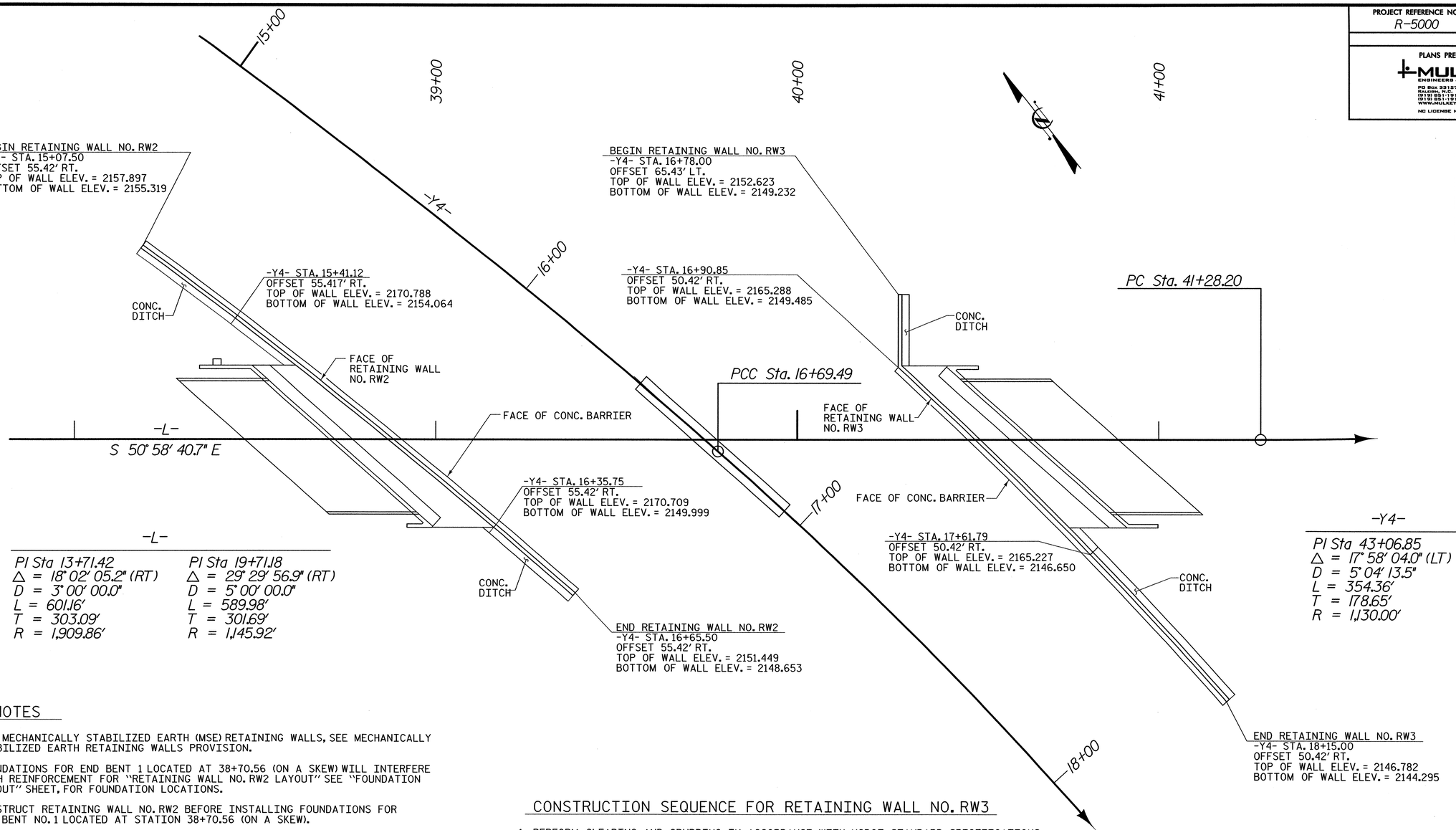

-L-

PI Sta 13+71.42
△ = 18° 02' 05.2" (RT)
D = 3° 00' 00.0"
L = 601.16'
T = 303.09'
R = 1,909.86'

PI Sta 19+71.18
△ = 29° 29' 56.9" (RT)
D = 5° 00' 00.0"
L = 589.98'
T = 301.69'
R = 1,145.92'

-Y4-

PI Sta 43+06.85
△ = 17° 58' 04.0" (LT)
D = 5° 04' 13.5"
L = 354.36'
T = 178.65'
R = 1,130.00'

NOTES

FOR MECHANICALLY STABILIZED EARTH (MSE) RETAINING WALLS, SEE MECHANICALLY STABILIZED EARTH RETAINING WALLS PROVISION.

FOUNDATIONS FOR END BENT 1 LOCATED AT 38+70.56 (ON A SKEW) WILL INTERFERE WITH REINFORCEMENT FOR "RETAINING WALL NO. RW2 LAYOUT" SEE "FOUNDATION LAYOUT" SHEET, FOR FOUNDATION LOCATIONS.

CONSTRUCT RETAINING WALL NO. RW2 BEFORE INSTALLING FOUNDATIONS FOR END BENT NO. 1 LOCATED AT STATION 38+70.56 (ON A SKEW).

DESIGN RETAINING WALL NO. RW2 FOR VERTICAL PIPES (PILE DRIVING SLEEVE) EXTENDING THROUGH THE WALL REINFORCED ZONE AT THE PILE LOCATIONS. VERIFY PIPE LOCATION AND ELEVATION BEFORE BEGINNING MSE WALL DESIGN AND CONSTRUCTION.

FOUNDATIONS FOR END BENT 1 LOCATED AT 40+65.35 (ON A SKEW) WILL INTERFERE WITH REINFORCEMENT FOR "RETAINING WALL NO. RW3 LAYOUT" SEE "FOUNDATION LAYOUT" SHEET, FOR FOUNDATION LOCATIONS.

CONSTRUCT RETAINING WALL NO. RW3 BEFORE INSTALLING FOUNDATIONS FOR END BENT NO. 2 LOCATED AT STATION 40+65.35 (ON A SKEW).

UNDERCUT IS REQUIRED FOR THE CONSTRUCTION OF RETAINING WALL NO. RW3. COORDINATE SHORING INSTALLATION WITH UNDERCUT AND EXCAVATION OPERATIONS. THE ANTICIPATED EXCAVATION ELEVATION ADJACENT TO NC-107 IS 2138 FEET, NAVD. THE GROUND SURFACE NORMAL TO THE FACE OF THE SHORING IS ANTICIPATED TO BE 6(H):1(V) OF FLATTER.

DO NOT PLACE LEVELING PAD CONCRETE, AGGREGATE OR REINFORCEMENT FOR RETAINING WALL NO. RW3 UNTIL EXCAVATION DIMENSIONS AND FOUNDATION MATERIALS ARE APPROVED.

DESIGN RETAINING WALL NO. RW3 FOR VERTICAL PIPES (PILE DRIVING SLEEVE) EXTENDING THROUGH THE WALL REINFORCED ZONE AT THE PILE LOCATIONS. VERIFY PIPE LOCATION AND ELEVATION BEFORE BEGINNING MSE WALL DESIGN AND CONSTRUCTION.

TEMPORARY SHORING IS REQUIRED FOR RETAINING WALL NO. RW3 IN ACCORDANCE WITH TEMPORARY SHORING PROVISION. SEE ROADWAY AND TRAFFIC CONTROL PLANS.

FOR ADDITIONAL NOTES, SEE SHEET W-5.

CONSTRUCTION SEQUENCE FOR RETAINING WALL NO. RW3

1. PERFORM CLEARING AND GRUBBING IN ACCORDANCE WITH NCDOT STANDARD SPECIFICATIONS.
2. REMOVE ORGANIC AND /OR DEBRIS LADEN FILLS (ABOVE ELEVATION 2138.0 FEET) IN THE AREA SHOWN IN THE ROADWAY RECOMMENDATIONS REPORT AND ROADWAY PLANS AS DIRECTED BY THE ENGINEER (SHORING WILL LIKELY BE REQUIRED ALONG NC 107, DEWATERING MAY ALSO BE REQUIRED.
3. VERIFY THE BOTTOM OF THE EXCAVATION FOR THE PRESENCE OF SAWDUST POCKETS AND OTHER WEAK/ORGANIC SUBGRADE. PROBE ROD, ROD SOUNDINGS, AND/OR HAND AUGER/ DCP TESTING SHOULD BE EMPLOYED TO EXPLORE SOIL CONDITIONS BENEATH THE BOTTOM OF THE EXCAVATION.
4. PERFORM ADDITIONAL EXCAVATION AS NECESSARY AND REPLACE WITH NCDOT CLASS II OR BETTER SOILS.
5. PLACE THE CLASS II OR BETTER SOILS IN THE EXCAVATED AREAS TO THE BOTTOM OF RETAINING WALL AT END BENT 2.
6. PLACE VERTICAL 24" CORRUGATED METAL PIPES (CMP) AT THE END BENT PILE LOCATIONS THROUGH WHICH THE PILES WILL BE DRIVEN FOLLOWING WALL CONSTRUCTION AND FILL PLACEMENT.
7. CONSTRUCT THE MSE WALL AT END BENT 2 (RETAINING WALL NO. RW3) WHILE PLACING THE APPROACH FILLS.
8. PLACE ADDITIONAL APPROACH FILLS ABOVE RETAINING WALL NO. RW3 AS SHOWN IN THE PLANS AND DIRECTED BY THE ENGINEER. SLOPING FILLS OR USE OF TEMPORARY RETENTION MEASURES MAY HAVE TO BE EMPLOYED.
9. WAIT UNTIL THE MAJORITY OF THE SETTLEMENT IS COMPLETED, UTILIZING SETTLEMENT MONITORING AS DETAILED IN THE PLANS AND THE BRIDGE INVESTIGATION REPORT.
10. DRIVE END BENT 2 PILES AFTER THE MAJORITY OF THE SETTLEMENT HAS BEEN COMPLETED AND PILE DRIVING HAS BEEN AUTHORIZED TO PROCEED BY THE ENGINEER.
11. CONSTRUCT END BENT ABUTMENT WALL ON TOP OF MSE WALL AS SHOWN ON THE PLANS.

BILL OF MATERIAL

MSE RETAINING WALL NO. 1	MSE RETAINING WALL NO. 2	MSE RETAINING WALL NO. 3
SQ. FEET	SQ. FEET	SQ. FEET
4617	2281	2031

7/23/2012
12:24:46 PM
C:\Projects\R-5000_WALL_PLAN.dgn

PROJECT REFERENCE NO.	SHEET NO.
R-5000	W-2
	OF 6

PLANS PREPARED BY:

MULKEY ENGINEERS & CONSULTANTS
PO Box 33127
RALEIGH, N.C. 27636
(919) 851-1912
(919) 851-1918 (FAX)
WWW.MULKEYINC.COM
NC LICENSE NO. C-1021

STRUCTURES ENGINEER

NORTH CAROLINA PROFESSIONAL ENGINEER 19661 L. KEVIN AUSTIN
7/6/12

REVISIONS

8/17/99

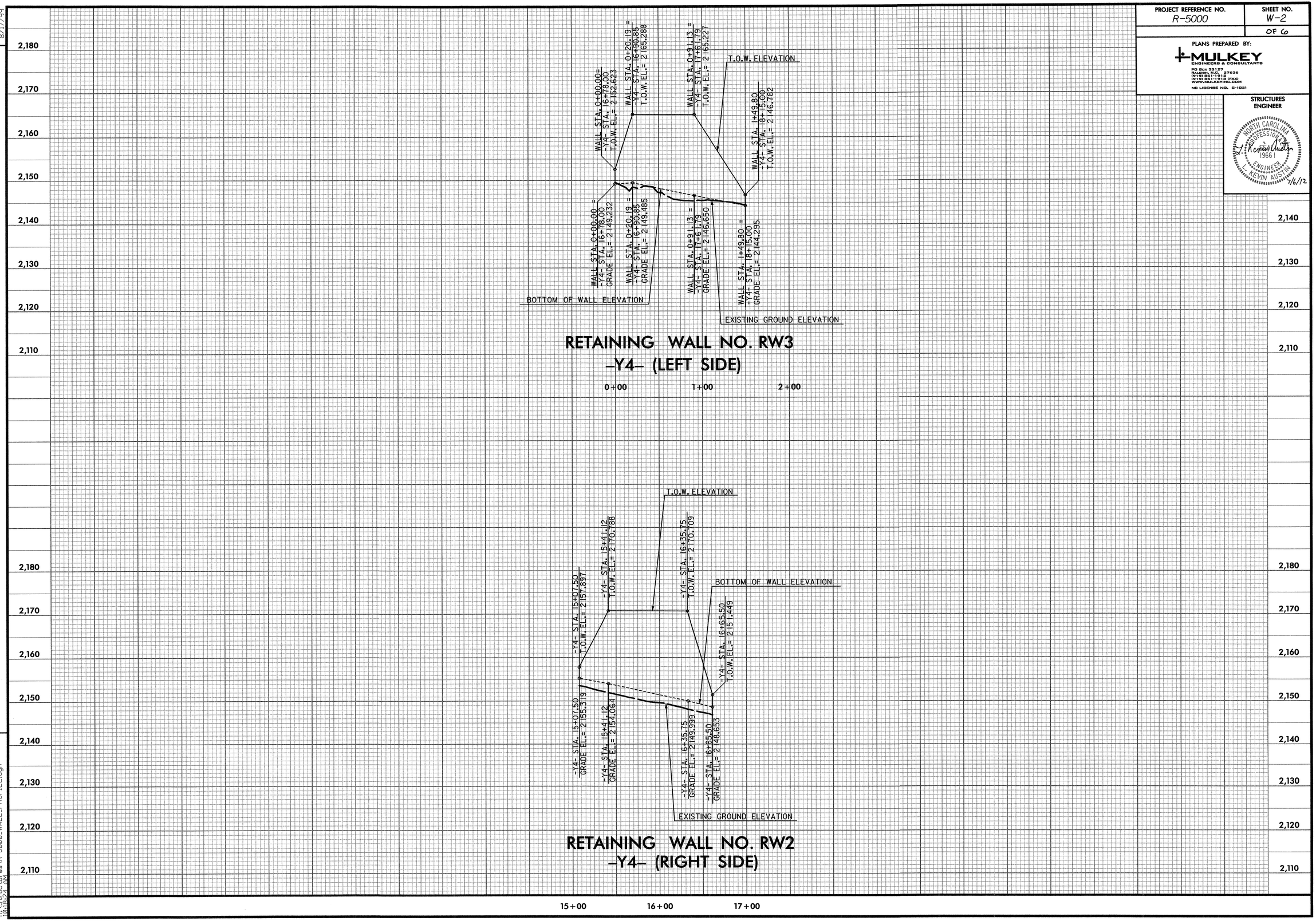

7/6/2012
R:\Structures\R-5000_WALL_PROFILE.dgn
10:18:24 AM

PROJECT REFERENCE NO.	SHEET NO.
R-5000	W-3
	OF 6

PLANS PREPARED BY:
MULKEY
ENGINEERS & CONSULTANTS
PO Box 33127
Raleigh, N.D. 27636
(919) 851-1915
(919) 851-1918 (FAX)
WWW.MULKEYINC.COM
NC LICENSE NO. C-1081

STRUCTURES ENGINEER

NORTH CAROLINA PROFESSIONAL SEAL 19661 ENGINEER KEVIN AUSTIN
7/6/12

REVISIONS

8/17/99

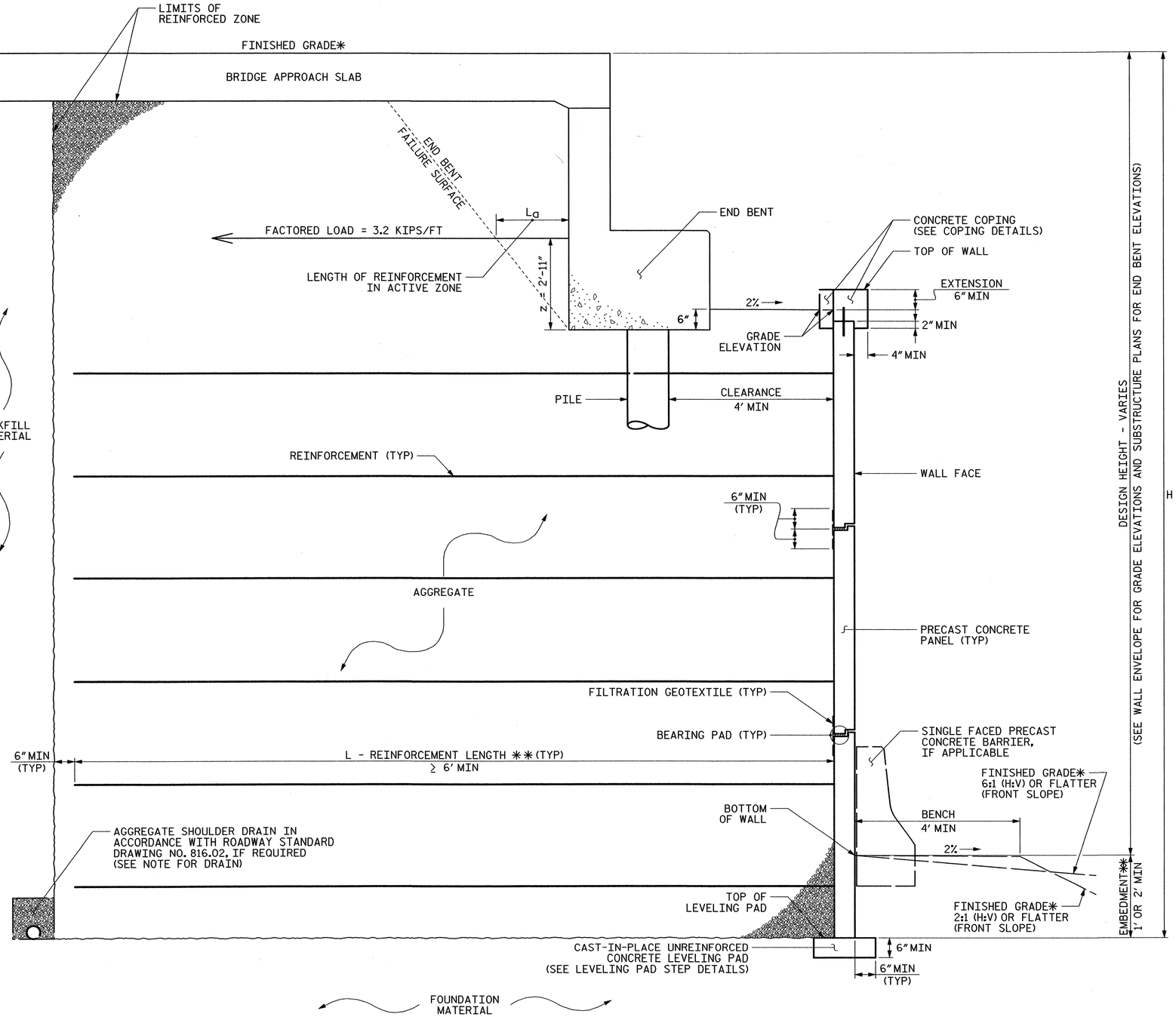

MSE ABUTMENT WALL WITH PRECAST PANELS - TYPICAL SECTION

* SEE ROADWAY PLANS FOR FINISHED GRADE DETAILS.
** SEE MSE RETAINING WALLS PROVISION FOR EMBEDMENT AND REINFORCEMENT LENGTH REQUIREMENTS.

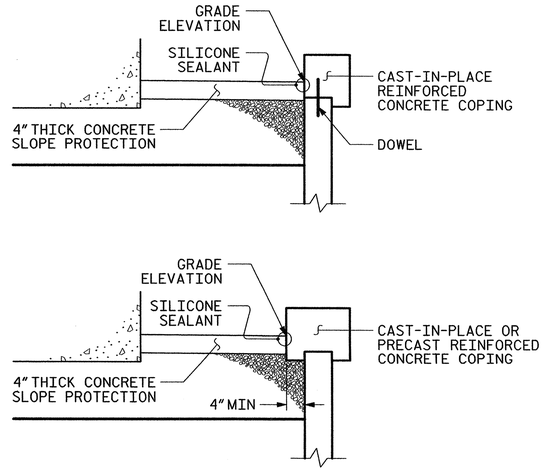

COPING DETAILS

AT THE CONTRACTOR'S OPTION, CONNECT COPING TO PANELS WITH DOWELS OR EXTEND COPING DOWN BACK OF PANELS.

7/6/2012
R-5000_Structures\R-5000_WALL_PLAN.dgn
10:52:24 AM

PROJECT REFERENCE NO.	SHEET NO.
R-5000	W-4
	OF 6

PLANS PREPARED BY:
MULKEY
ENGINEERS & CONSULTANTS
PO Box 33127
RALEIGH, N.C. 27636
(919) 851-1912
(919) 851-1918 (FAX)
WWW.MULKEYINC.COM
NC LICENSE NO. C-1021

STRUCTURES ENGINEER

NORTH CAROLINA PROFESSIONAL ENGINEER SEAL 19661 KEVIN AUSTIN
7/6/12

REVISIONS
8/17/99

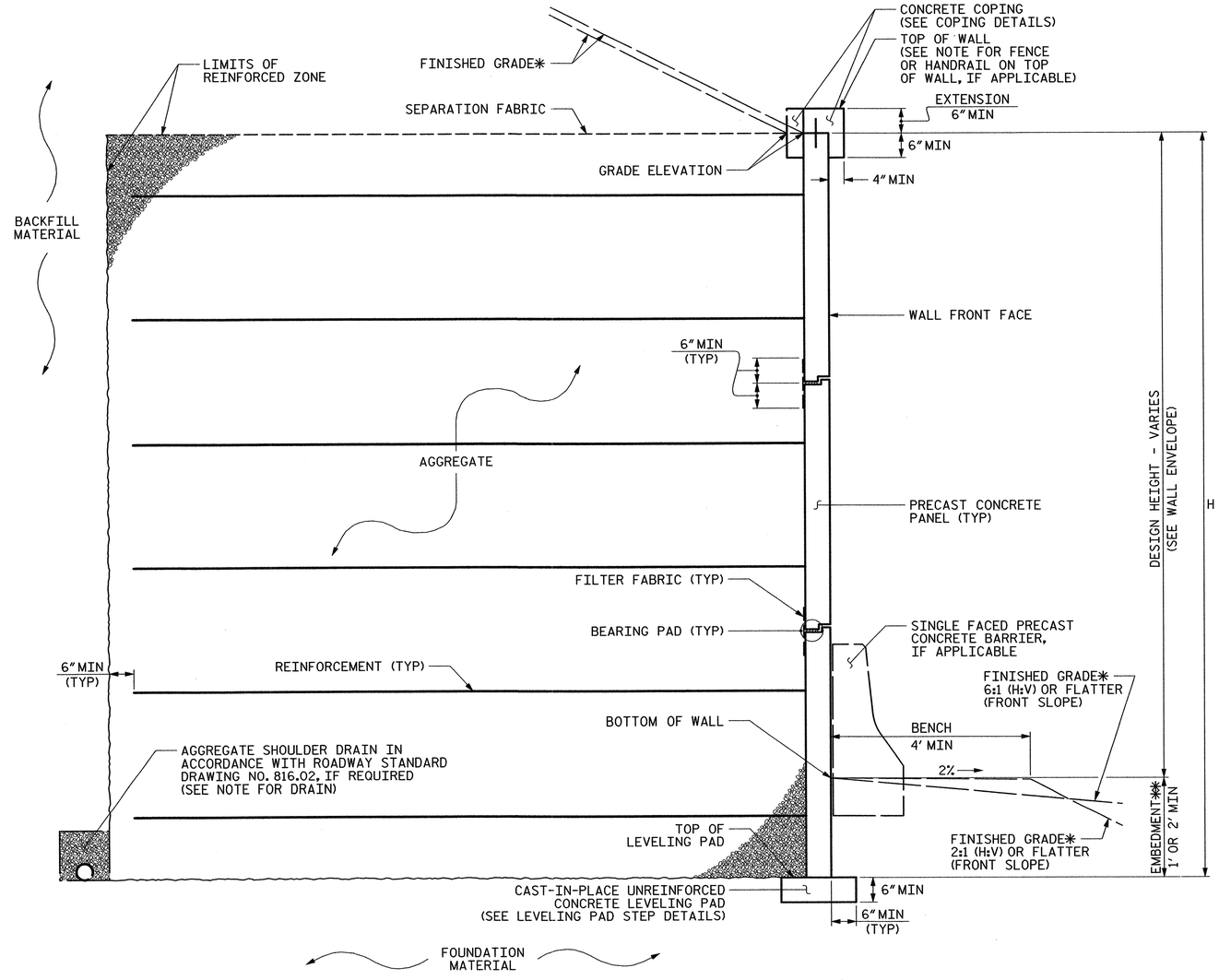

MSE WALL WITH PRECAST PANELS - TYPICAL SECTION

* SEE ROADWAY PLANS FOR FINISHED GRADE AND DITCH DETAILS.
** SEE MSE RETAINING WALLS PROVISION FOR EMBEDMENT REQUIREMENTS.

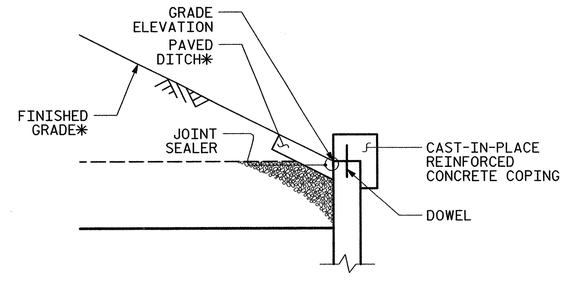

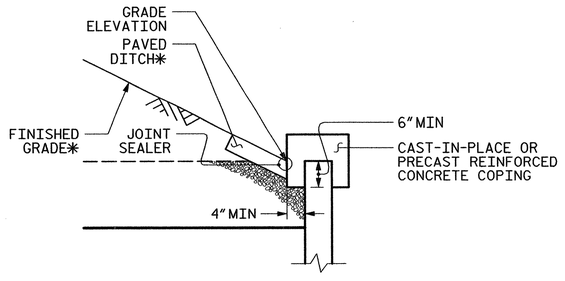

COPING DETAILS

AT THE CONTRACTOR'S OPTION, CONNECT COPING TO PANELS WITH DOWELS OR EXTEND COPING DOWN BACK OF PANELS.
* SEE ROADWAY PLANS FOR FINISHED GRADE AND DITCH DETAILS.

7/6/2012
R-5000_Structures\R-5000_WALL_PLAN.dgn
11:15:17 AM

PROJECT REFERENCE NO.	SHEET NO.
R-5000	W-5
R/W SHEET NO.	

PLANS PREPARED BY:
MULKEY
ENGINEERS & CONSULTANTS
PO Box 33127
Raleigh N.C. 27636
(919) 851-1918
(919) 851-1918 (FAX)
WWW.MULKEYINC.COM
NC LICENSE NO. C-1031

STRUCTURES ENGINEER

NORTH CAROLINA PROFESSIONAL SEAL 19661 ENGINEER L. KEVIN AUSTIN
11/6/12

REVISIONS

NOTES AND DESIGN PARAMETERS FOR RETAINING WALL NO. RW1 ADDED TO THE PLANS.

8/17/99

NOTES:

FOR STEEL BEAM GUARDRAIL, SEE ROADWAY PLANS AND SECTION 862 OF THE STANDARD SPECIFICATIONS.

FOR SINGLE FACED PRECAST CONCRETE BARRIER, SEE ROADWAY PLANS AND SECTION 857 OF THE STANDARD SPECIFICATIONS.

A FENCE OR HANDRAIL IS REQUIRED ON TOP OF RETAINING WALL NO. RW1. SEE ROADWAY PLANS FOR FENCE OR HANDRAIL ATTACHMENT DETAILS.

USE AN MSE WALL SYSTEM WITH PRECAST CONCRETE PANELS THAT MEET SECTION 1077 OF THE STANDARD SPECIFICATIONS FOR RETAINING WALL NO. RW1, RW2 & RW3.

AT THE CONTRACTOR'S OPTION, HE MAY SUBMIT TO THE ENGINEER FOR APPROVAL, DESIGN AND DETAIL DRAWINGS FOR A SEGMENTAL RETAINING WALL FOR RETAINING WALL NO. RW1 IN LIEU OF THE MSE WALL SYSTEM WITH PRECAST PANELS SHOWN ON THE PLANS. THE SRW UNITS FOR THE SEGMENTAL WALL SHALL BE FREEZE-THAW DURABLE.

CAST-IN-PLACE REINFORCED CONCRETE COPING IS REQUIRED FOR RETAINING WALL NO. RW2 & RW3.

BEFORE BEGINNING MSE WALL DESIGN FOR RETAINING WALL NO. RW2 & RW3, SURVEY WALL LOCATION AND SUBMIT A REVISED WALL PROFILE VIEW (WALL ENVELOPE) FOR REVIEW. DO NOT START WALL DESIGN OR CONSTRUCTION UNTIL THE REVISED WALL ENVELOPE IS ACCEPTED.

DESIGN RETAINING WALL NO. RW1 FOR THE FOLLOWING:

1.) H= DESIGN HEIGHT + EMBEDMENT

2.) DESIGN LIFE = 100 YEAR

3.) MAXIMUM FACTORED VERTICAL STESS ON FOUNDATION MATERIAL = 4500 LB/SF

4.) MINIMUM REINFORCEMENT LENGTH (L) = 70% WALL HEIGHT

5.) AGGREGATE PARAMETERS:

AGGREGATE TYPE *	UNIT WEIGHT (GAMMA) LB/CF	FRICTION ANGLE (PHI) DEGREES	COHESION (C) LB/SF
COARSE	110	38	0
FINE	125	34	0

* SEE MSE RETAINING WALLS PROVISION FOR COARSE AND FINE AGGREGATE MATERIAL REQUIREMENTS.

6.) IN-SITU ASSUMED MATERIAL PARAMETERS:

MATERIAL TYPE	UNIT WEIGHT (GAMMA) LB/CF	FRICTION ANGLE (PHI) DEGREES	COHESION (C) LB/SF
BACKFILL	120	30	0
FOUNDATION	120	30	0

DESIGN RETAINING WALL NO. RW2 AND RW3 FOR THE FOLLOWING:

1.) H= DESIGN HEIGHT + EMBEDMENT

2.) DESIGN LIFE = 100 YEAR

3.) MAXIMUM FACTORED VERTICAL STESS ON FOUNDATION MATERIAL = 6100 LB/SF

4.) MINIMUM REINFORCEMENT LENGTH (L) = 80% WALL HEIGHT

5.) AGGREGATE PARAMETERS:

AGGREGATE TYPE *	UNIT WEIGHT (GAMMA) LB/CF	FRICTION ANGLE (PHI) DEGREES	COHESION (C) LB/SF
COARSE	110	38	0
FINE	125	34	0

* SEE MSE RETAINING WALLS PROVISION FOR COARSE AND FINE AGGREGATE MATERIAL REQUIREMENTS.

6.) IN-SITU ASSUMED MATERIAL PARAMETERS:

MATERIAL TYPE	UNIT WEIGHT (GAMMA) LB/CF	FRICTION ANGLE (PHI) DEGREES	COHESION (C) LB/SF
BACKFILL	120	30	0
FOUNDATION	120	32	0

DESIGN RETAINING WALL NO. RW2 & RW3 FOR A LIVE LOAD (TRAFFIC) SURCHARGE.

DESIGN REINFORCEMENT CONNECTED TO END BENT CAPS FOR FACTORED LOAD AND LENGTH OF REINFORCEMENT IN ACTIVE ZONE (La) SHOWN. CAST REINFORCEMENT CONNECTORS INTO CAP BACKWALL FOR END BENT NO. 1 LOCATED AT STATION 38+70.56. MAINTAIN A CLEARANCE OF AT LEAST 3"BETWEEN CONNECTORS AND REINFORCING STEEL IN CAP.

DESIGN REINFORCEMENT CONNECTED TO END BENT CAPS FOR FACTORED LOAD AND LENGTH OF REINFORCEMENT IN ACTIVE ZONE (La) SHOWN. CAST REINFORCEMENT CONNECTORS INTO CAP BACKWALL FOR END BENT NO. 2 LOCATED AT STATION 40+65.35. MAINTAIN A CLEARANCE OF AT LEAST 3"BETWEEN CONNECTORS AND REINFORCING STEEL IN CAP.

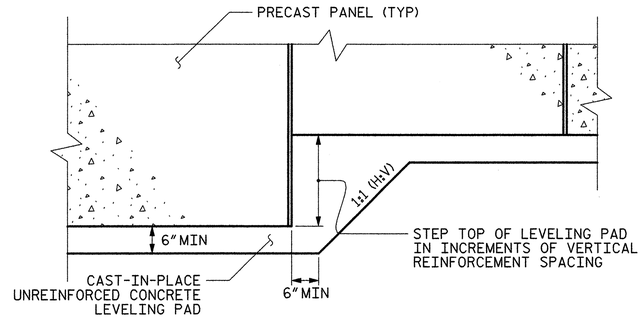

PRECAST CONCRETE PANELS

LEVELING PAD STEP DETAILS

11/6/2012
R:\Structures\R-5000_WALL_PLAN.dgn
10:22:24 PM

8/17/99

REVISIONS

PLAN OF RETAINING WALL NO. 1
–L– STA. 10+42.60 RT TO –L– STA. 15+00.00 RT

PROJECT REFERENCE NO.	SHEET NO.
	W-6
	OF 6

ROADWAY DESIGN ENGINEER

NORTH CAROLINA PROFESSIONAL SEAL 25474 ENGINEER W. CRAIG PARKER

7-10-12

HYDRAULICS ENGINEER

PLANS PREPARED BY:

MULKEY
ENGINEERS & CONSULTANTS
PO Box 33127
Raleigh, NC 27636
(919) 851-1918
(919) 851-1918 (FAX)
WWW.MULKEYINC.COM
NC License No. C-1021

DETAIL OF RETAINING WALL
-L- STA. 10+44.56 TO -L- STA. 15+00.00

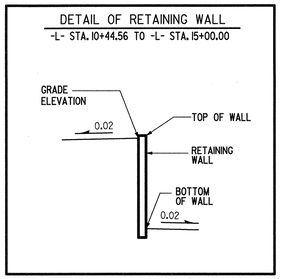

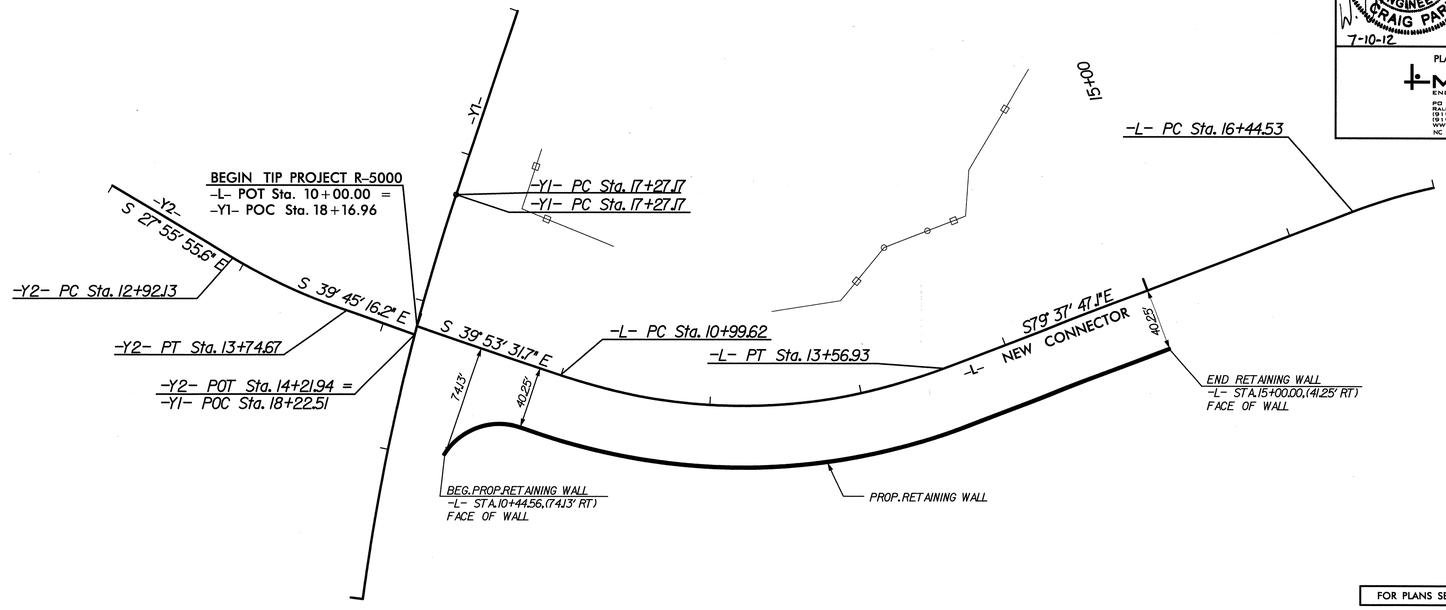

FOR PLANS SEE SHEET NO. 4

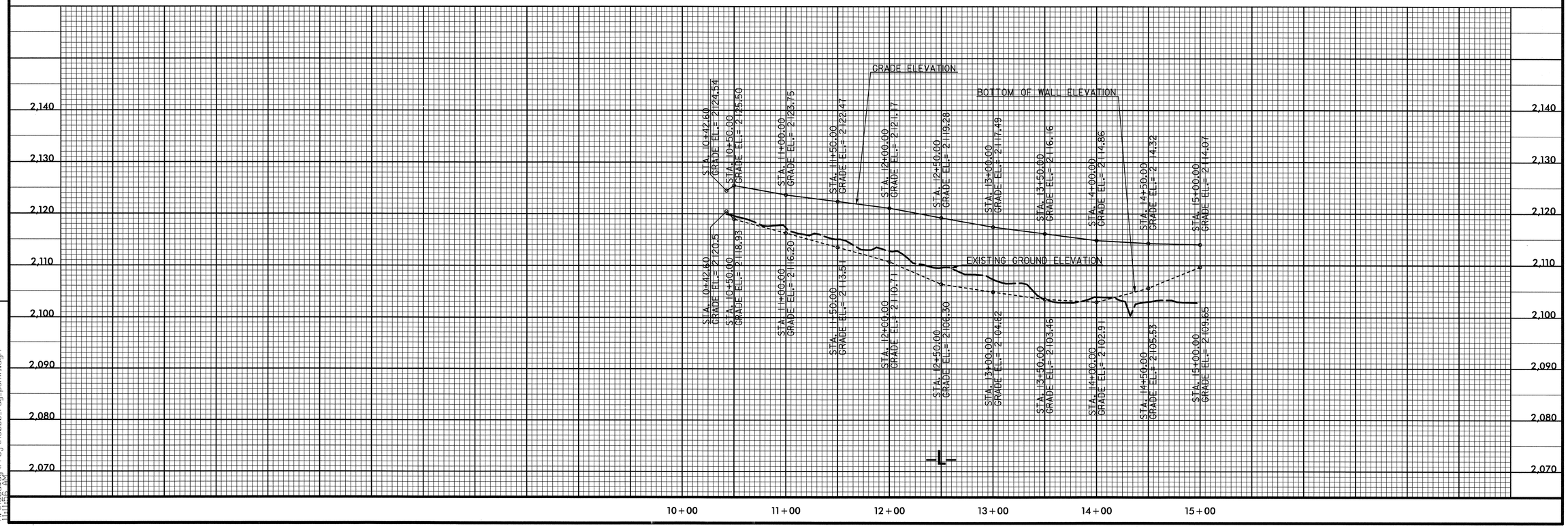

7/10/2012
R:\Roadway\Proj\R5000_rdy_pshW1.dgn
11:11:56 AM

STANDARD NOTES

DESIGN DATA:

SPECIFICATIONS	A.A.S.H.T.O. (CURRENT)
LIVE LOAD	SEE PLANS
IMPACT ALLOWANCE	SEE A.A.S.H.T.O.
STRESS IN EXTREME FIBER OF	
STRUCTURAL STEEL - AASHTO M270 GRADE 36	20,000 LBS. PER SQ. IN.
- AASHTO M270 GRADE 50W	27,000 LBS. PER SQ. IN.
- AASHTO M270 GRADE 50	27,000 LBS. PER SQ. IN.
REINFORCING STEEL IN TENSION	
GRADE 60	24,000 LBS. PER SQ. IN.
CONCRETE IN COMPRESSION	1,200 LBS. PER SQ. IN.
CONCRETE IN SHEAR	SEE A.A.S.H.T.O.
STRUCTURAL TIMBER - TREATED OR	
UNTREATED - EXTREME FIBER STRESS	1,800 LBS. PER SQ. IN.
COMPRESSION PERPENDICULAR TO GRAIN OF TIMBER	375 LBS. PER SQ. IN.
EQUIVALENT FLUID PRESSURE OF EARTH	30 LBS. PER CU. FT. (MINIMUM)

MATERIAL AND WORKMANSHIP:

EXCEPT AS MAY OTHERWISE BE SPECIFIED ON PLANS OR IN THE SPECIAL PROVISIONS, ALL MATERIAL AND WORKMANSHIP SHALL BE IN ACCORDANCE WITH THE 2012 "STANDARD SPECIFICATIONS FOR ROADS AND STRUCTURES" OF THE N. C. DEPARTMENT OF TRANSPORTATION.

STEEL SHEET PILING FOR PERMANENT OR TEMPORARY APPLICATIONS SHALL BE HOT ROLLED.

CONCRETE:

UNLESS OTHERWISE REQUIRED ON PLANS, CLASS A CONCRETE SHALL BE USED FOR ALL PORTIONS OF ALL STRUCTURES WITH THE EXCEPTION THAT: CLASS AA CONCRETE SHALL BE USED IN BRIDGE SUPERSTRUCTURES, ABUTMENT BACKWALLS, AND APPROACH SLABS; AND CLASS B CONCRETE SHALL BE USED FOR SLOPE PROTECTION AND RIP RAP.

CONCRETE CHAMFERS:

UNLESS OTHERWISE NOTED ON THE PLANS, ALL EXPOSED CORNERS ON STRUCTURES SHALL BE CHAMFERED 3/4" WITH THE FOLLOWING EXCEPTIONS: TOP CORNERS OF CURBS MAY BE ROUNDED TO 1-1/2" RADIUS WHICH IS BUILT INTO CURB FORMS; CORNERS OF TRANSVERSE FLOOR EXPANSION JOINTS SHALL BE ROUNDED WITH A 1/4" FINISHING TOOL UNLESS OTHERWISE REQUIRED ON PLANS; AND CORNERS OF EXPANSION JOINTS IN THE ROADWAY FACES AND TOPS OF CURBS AND SIDEWALKS SHALL BE ROUNDED TO A 1/4" RADIUS WITH A FINISHING STONE OR TOOL UNLESS OTHERWISE REQUIRED ON PLANS.

DOWELS:

DOWELS WHEN INDICATED ON PLANS AS FOR CULVERT EXTENSIONS, SHALL BE EMBEDDED AT LEAST 12" INTO THE OLD CONCRETE AND GROUTED INTO PLACE WITH 1:2 CEMENT MORTAR.

ALLOWANCE FOR DEAD LOAD DEFLECTION, SETTLEMENT, ETC. IN CASTING SUPERSTRUCTURES:

BRIDGES SHALL BE BUILT ON THE GRADE OR VERTICAL CURVE SHOWN ON PLANS. SLABS, CURBS AND PARAPETS SHALL CONFORM TO THE GRADE OR CURVE.

ALL DIMENSIONS WHICH ARE GIVEN IN SECTION AND ARE AFFECTED BY DEAD LOAD DEFLECTIONS ARE DIMENSIONS AT CENTER LINE OF BEARING UNLESS OTHERWISE NOTED ON PLANS. IN SETTING FORMS FOR STEEL BEAM BRIDGES AND PRESTRESSED CONCRETE GIRDER BRIDGES, ADJUSTMENTS SHALL BE MADE DUE TO THE DEAD LOAD DEFLECTIONS FOR THE ELEVATIONS SHOWN. WHERE BLOCKS ARE SHOWN OVER BEAMS FOR BUILDING UP TO THE SLAB, THE VERTICAL DIMENSIONS OF THE BLOCKS SHALL BE ADJUSTED BETWEEN BEARINGS TO COMPENSATE FOR DEAD LOAD DEFLECTIONS, VERTICAL CURVE ORDINATE, AND ACTUAL BEAM CAMBER. WHERE BOTTOM OF SLAB IS IN LINE WITH BOTTOM OF TOP FLANGES, DEPTH OF SLAB BETWEEN BEARINGS SHALL BE ADJUSTED TO COMPENSATE FOR DEAD LOAD DEFLECTION, VERTICAL CURVE ORDINATE, AND ACTUAL BEAM CAMBER.

IN SETTING FALSEWORK AND FORMS FOR REINFORCED CONCRETE SPANS, AN ALLOWANCE SHALL BE MADE FOR DEAD LOAD DEFLECTIONS, SETTLEMENT OF FALSEWORK, AND PERMANENT CAMBER WHICH SHALL BE PROVIDED FOR IN ADDITION TO THE ELEVATIONS SHOWN. AFTER REMOVAL OF THE FALSEWORK, THE FINISHED STRUCTURES SHALL CONFORM TO THE PROFILE AND ELEVATIONS SHOWN ON THE PLANS AND CONSTRUCTION ELEVATIONS FURNISHED BY THE ENGINEER.

DETAILED DRAWINGS FOR FALSEWORK OR FORMS FOR BRIDGE SUPERSTRUCTURE AND ANY STRUCTURE OR PARTS OF A STRUCTURE AS NOTED ON THE PLANS SHALL BE SUBMITTED TO THE ENGINEER FOR APPROVAL BEFORE CONSTRUCTION OF THE FALSEWORK OR FORMS IS STARTED.

REINFORCING STEEL:

ALL REINFORCING STEEL SHALL BE DEFORMED. DIMENSIONS RELATIVE TO PLACEMENT OF REINFORCING ARE TO CENTERS OF BARS UNLESS OTHERWISE INDICATED IN THE PLANS. DIMENSIONS ON BAR DETAILS ARE TO CENTERS OF BARS OR ARE OUT TO OUT AS INDICATED ON PLANS.

WIRE BAR SUPPORTS SHALL BE PROVIDED FOR REINFORCING STEEL WHERE INDICATED ON THE PLANS. WHEN BAR SUPPORT PIECES ARE PLACED IN CONTINUOUS LINES, THEY SHALL BE SO PLACED THAT THE ENDS OF THE SUPPORTING WIRES SHALL BE LAPPED TO LOCK LEGS ON ADJOINING PIECES.

STRUCTURAL STEEL:

AT THE CONTRACTOR'S OPTION, HE MAY SUBSTITUTE 7/8" Ø SHEAR STUDS FOR THE 3/4" Ø STUDS SPECIFIED ON THE PLANS. THIS SUBSTITUTION SHALL BE MADE AT THE RATE OF 3 - 7/8" Ø STUDS FOR 4 - 3/4" Ø STUDS, AND STUD SPACING CHANGES SHALL BE MADE AS NECESSARY TO PROVIDE THE SAME EQUIVALENT NUMBER OF 7/8" Ø STUDS ALONG THE BEAM AS SHOWN FOR 3/4" Ø STUDS BASED ON THE RATIO OF 3 - 7/8" Ø STUDS FOR 4 - 3/4" Ø STUDS. STUDS OF THE LENGTH SPECIFIED ON THE PLANS MUST BE PROVIDED. THE MAXIMUM SPACING SHALL BE 2'-0".

EXCEPT AT THE INTERIOR SUPPORTS OF CONTINUOUS BEAMS WHERE THE COVER PLATE IS IN CONTACT WITH BEARING PLATE, THE CONTRACTOR MAY, AT HIS OPTION, SUBSTITUTE FOR THE COVER PLATES DESIGNATED ON THE PLANS COVER PLATES OF THE EQUIVALENT AREA PROVIDED THESE PLATES ARE AT LEAST 5/16" IN THICKNESS AND DO NOT EXCEED A WIDTH EQUAL TO THE FLANGE WIDTH LESS 2" OR A THICKNESS EQUAL TO 2 TIMES THE FLANGE THICKNESS. THE SIZE OF FILLET WELDS SHALL CONFORM TO THE REQUIREMENTS OF THE CURRENT ANSI/AASHTO/AWS "BRIDGE WELDING CODE". ELECTROSLAG WELDING WILL NOT BE PERMITTED.

WITH THE SOLE EXCEPTION OF EDGES AT SURFACES WHICH BEAR ON OTHER SURFACES, ALL SHARP EDGES AND ENDS OF SHAPES AND PLATES SHALL BE SLIGHTLY ROUNDED BY SUITABLE MEANS TO A RADIUS OF APPROXIMATELY 1/16 INCH OR EQUIVALENT FLAT SURFACE AT A SUITABLE ANGLE PRIOR TO PAINTING, GALVANIZING, OR METALLIZING.

HANDRAILS AND POSTS:

METAL STANDARDS AND FACES OF THE CONCRETE END POSTS FOR THE METAL RAIL SHALL BE SET NORMAL TO THE GRADE OF THE CURB, UNLESS OTHERWISE SHOWN ON PLANS. THE METAL RAIL AND TOPS OF CONCRETE POSTS USED WITH THE ALUMINUM RAIL SHALL BE BUILT PARALLEL TO THE GRADE OF THE CURB.

METAL HANDRAILS SHALL BE IN ACCORDANCE WITH THE PLANS. RAILS SHALL BE AS MANUFACTURED FOR BRIDGE RAILING. CASTINGS SHALL BE OF A UNIFORM APPEARANCE. FINS AND OTHER DEFORMATIONS RESULTING FROM CASTING OR OTHERWISE SHALL BE REMOVED IN A MANNER SO THAT A UNIFORM COLORING OF THE COMPLETED CASTING SHALL BE OBTAINED. CASTINGS WITH DISCOLORATIONS OR OF NON-UNIFORM COLORING WILL NOT BE ACCEPTED. CERTIFIED MILL REPORTS ARE REQUIRED FOR METAL RAILS AND POSTS.

SPECIAL NOTES:

GENERALLY, IN CASE OF DISCREPANCY, THIS STANDARD SHEET OF NOTES SHALL GOVERN OVER THE SPECIFICATIONS, BUT THE REMAINDER OF THE PLANS SHALL GOVERN OVER NOTES HEREON, AND SPECIAL PROVISIONS SHALL GOVERN OVER ALL. SEE SPECIFICATIONS ARTICLE 105-4.

ENGLISH

JANUARY, 1990

STD. NO. SN

REV. 6-16-95 EEM (W) RGW REV. 5-7-03 RWW (W) JTE REV. 10-1-11 MAA (W) GM
REV. 8-16-99 RWW (W) LES REV. 5-1-06 TLA (W) GM