09/08/99

TIP PROJECT: B-4497

CONTRACT: C202951

See Sheet 1-A For Index of Sheets
See Sheet 1-B For Conventional Symbols

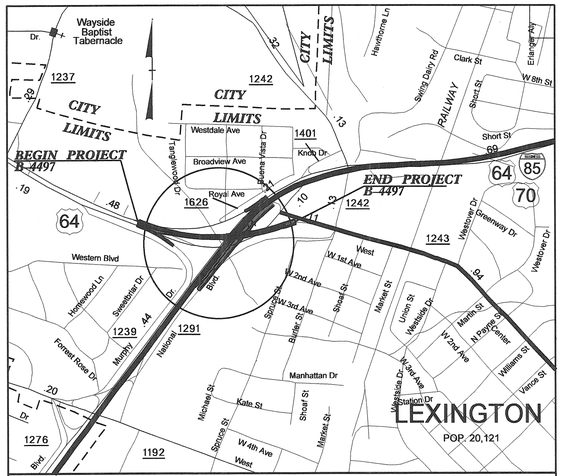

VICINITY MAP

SEE SHEETS 2-J & 2-K FOR OFF-SITE DETOURS

STATE OF NORTH CAROLINA
DIVISION OF HIGHWAYS

DAVIDSON COUNTY

STATE	STATE PROJECT REFERENCE NO.	SHEET NO.	TOTAL SHEETS
N.C.	B-4497	1	

STATE PROJ. NO.	F. A. PROJ. NO.	DESCRIPTION
38391.1.1	BRSTP-64(80)	P.E.
38391.2.1	BRSTP-64(80)	RW/UTIL
38391.3.1	BRSTP-64(80)	CONST.

LOCATION: REPLACE BRIDGE 39 OVER US 29-70 / I-85BUS ON US 64

TYPE OF WORK: GRADING, PAVING, DRAINAGE, AND STRUCTURE

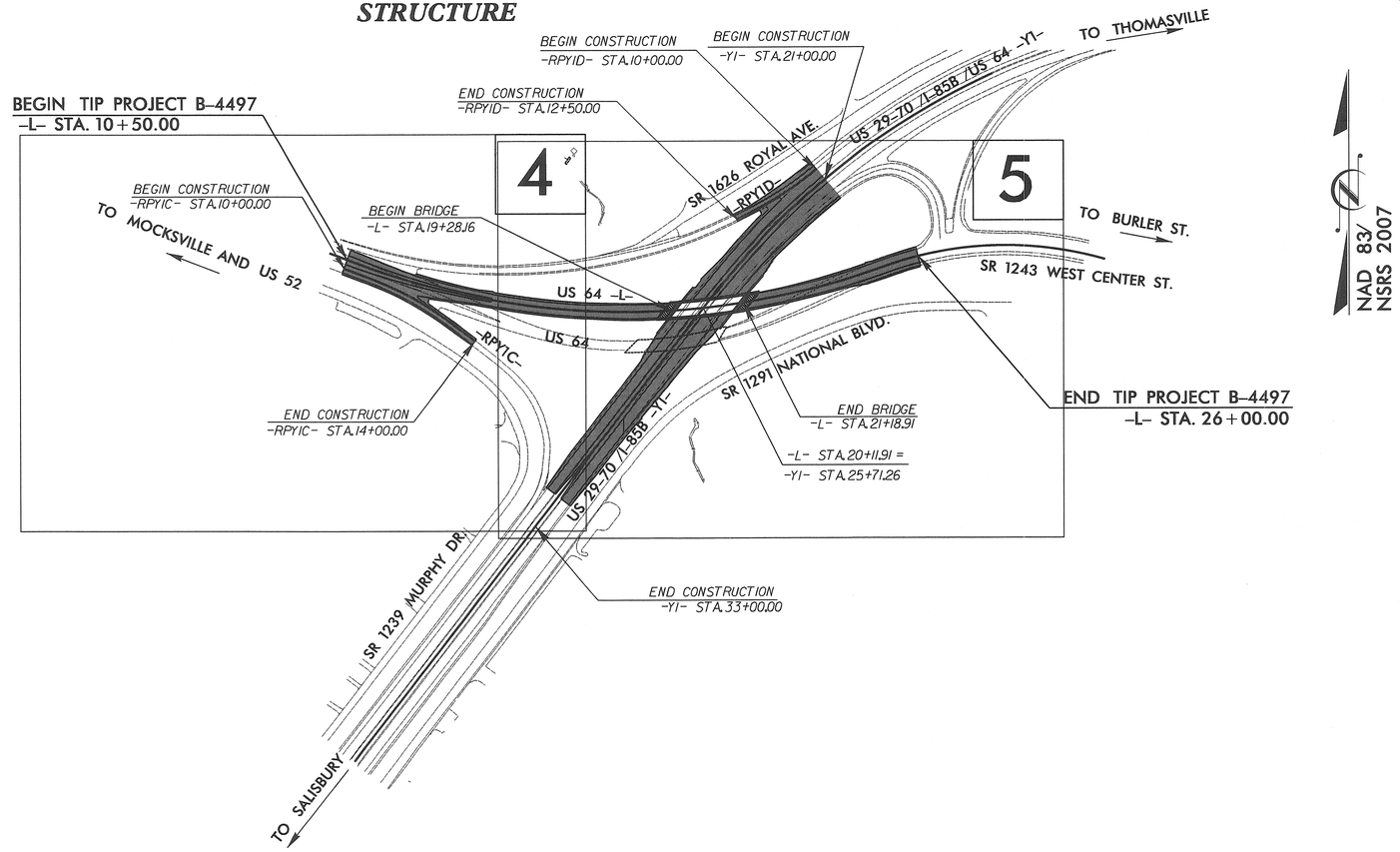

THERE IS CONTROL OF ACCESS ON THIS PROJECT.

GRAPHIC SCALES

50 25 0 50 100
PLANS

50 25 0 50 100
PROFILE (HORIZONTAL)

10 5 0 10 20
PROFILE (VERTICAL)

DESIGN DATA

ADT 2012 = 22,040 VPD
ADT 2035 = 38,600 VPD
DHV = 10 %
D = 55 %
* T = 17 %
V = 50 MPH
* (TTST 12% + DUAL 5%)
FUNC. CLASS.
URBAN ARTERIAL
STATEWIDE TIER

PROJECT LENGTH

LENGTH ROADWAY TIP PROJECT B-4497 = 0.258 MILE
LENGTH STRUCTURE TIP PROJECT B-4497 = 0.036 MILE
TOTAL LENGTH TIP PROJECT B-4497 = 0.294 MILE

Prepared In the Office of:
DIVISION OF HIGHWAYS
1000 Birch Ridge Dr., Raleigh NC, 27610

2012 STANDARD SPECIFICATIONS

RIGHT OF WAY DATE:
NOVEMBER 1, 2011

LETTING DATE:
NOVEMBER 20, 2012

ANTHONY A. HOUSER, PE
PROJECT ENGINEER

JEFFREY L. TEAGUE, PE
PROJECT DESIGN ENGINEER

HYDRAULICS ENGINEER
6 SEP 2012
SIGNATURE:
NORTH CAROLINA PROFESSIONAL SEAL 19775 ENGINEER SAM D. LOVINGOOD

ROADWAY DESIGN ENGINEER

NORTH CAROLINA PROFESSIONAL SEAL 033298 ENGINEER JEFFREY L. TEAGUE
SIGNATURE: Jeffrey L. Teague 9/6/12

STATE OF NORTH CAROLINA DEPARTMENT OF TRANSPORTATION

14-AUG-2012 16:44
R:\Roadway\Proj\b-4497_rdy_tsh.dgn
$$$$USERNAME$$$$

PROJECT REFERENCE NO.	SHEET NO.
B-4497	1-A

ROADWAY DESIGN ENGINEER

NORTH CAROLINA PROFESSIONAL SEAL 033298 ENGINEER JEFFREY L. TEAGUE

Jeffrey L. Teague 9/27/12

INDEX OF SHEETS

SHEET NUMBER	SHEET
1	TITLE SHEET
1-A	INDEX OF SHEETS, GENERAL NOTES, AND LIST OF STANDARD DRAWINGS
1-B	CONVENTIONAL SYMBOLS
1-C THRU 1-D	SURVEY CONTROL SHEETS
1-E	CENTERLINE COORDINATE LIST
2 THRU 2-B	PAVEMENT SCHEDULE, TYPICAL SECTIONS, WEDGING DETAILS, DETAIL OF SHOULDER BERM GUTTER, DETAIL OF TEMPORARY WIDENING AND STRUCTURE TYPICAL SECTION
2-C	GORE DETAILS
2-D	SKETCH SHOWING BRIDGE/PAVEMENT RELATIONSHIP
2-E	DRAINAGE DITCH DETAILS
2-F	ROCK CROSS VANE DETAIL
2-G	SHEAR POINT DIAGRAM
2-H THRU 2-I	INTERCHANGE DETAIL
2-J THRU 2-K	OFF-SITE DETOURS
2-L	DETAIL OF GUARDRAIL AT OVER-HEAD SIGN ASSEMBLY
2-M	DETAIL OF GUARDRAIL ANCHOR UNIT NJ-25 TYING TO CONCRETE BARRIER
2-N	DETIAL OF CONCRETE BARRIER TRANSITION
2-O	DETIAL OF REINFORCED CONCRETE ENDWALL
2-P	DETIAL OF BARRIER OVER TRAFFIC BEARING DROP INLET
2-Q	DETIAL OF JUNCTION BOX
2-R	DETIAL OF SHOULDER BERM GUTTER TO EXPRESSWAY GUTTER TRANSITION SECTION
3 (2 SHEETS)	SUMMARY OF QUANTITIES
3-A	SUMMARY OF GUARDRAIL, EARTHWORK SUMMARY, ASPHALT PAVEMENT REMOVAL SUMMARY, AND SHOULDER BERM GUTTER SUMMARY
3-B THRU 3-C	DRAINAGE SUMMARY
3-D	PARCEL INDEX SHEET
4 THRU 5	PLAN SHEETS
6 THRU 7	PROFILE SHEETS
TMP-1 THRU TMP-22	TRANSPORTATION MANAGEMENT PLANS
PMP-1 THRU PMP-6	PAVEMENT MARKING PLANS
EC-1 THRU EC-8	EROSION CONTROL PLANS
RF-1	REFORESTATION DETAIL SHEET
SIGN-1 THRU SIGN-10	SIGNING PLANS
SIG-1 THRU SIG-4	SIGNAL PLANS
UC-1 THRU UC-5	UTILITY CONSTRUCTION PLANS
UO-1 THRU UO-3	UTILITIES BY OTHERS PLANS
X-1A	CROSS-SECTION SUMMARY SHEET
X-1 THRU X-18	CROSS-SECTIONS
S-1 THRU S-34	STRUCTURE PLANS
W-1 THRU W-4	RETAINING WALL PLANS

2012 ROADWAY ENGLISH STANDARD DRAWINGS

EFFECTIVE: 01-17-12

The following Roadway Standards as appear in "Roadway Standard Drawings" Highway Design Branch - N. C. Department of Transportation - Raleigh, N. C., Dated January, 2012 are applicable to this project and by reference hereby are considered a part of these plans:

STD.NO.	TITLE
DIVISION 2 - EARTHWORK	
200.03	Method of Clearing - Method III
225.01	Guide for Grading Subgrade - Interstate and Freeway
225.02	Guide for Grading Subgrade - Secondary and Local
225.03	Deceleration and Acceleration Lanes
225.04	Method of Obtaining Superelevation - Two Lane Pavement
225.05	Method of Obtaining Superelevation - Divided Highways
225.09	Guide for Shoulder and Ditch Transition at Grade Separations
DIVISION 3 - PIPE CULVERTS	
300.01	Method of Pipe Installation
DIVISION 5 - SUBGRADE, BASES AND SHOULDERS	
560.01	Method of Shoulder Construction - High Side of Superelevated Curve - Method I
560.02	Method of Shoulder Construction - High Side of Superelevated Curve - Method II (Sheet 2 of 3 is no longer applicable)
DIVISION 6 - ASPHALT BASES AND PAVEMENTS	
610.01	Guide for Paving Shoulders Under Bridges - Method I
654.01	Pavement Repairs
DIVISION 8 - INCIDENTALS	
840.00	Concrete Base Pad for Drainage Structures
840.04	Concrete Open Throat Catch Basin - 12" thru 48" Pipe
840.05	Brick Open Throat Catch Basin - 12" thru 48" Pipe
840.14	Concrete Drop Inlet - 12" thru 30" Pipe
840.15	Brick Drop Inlet - 12" thru 30" Pipe
840.16	Drop Inlet Frame and Grates - for use with Std. Dwg 840.14 and 840.15
840.17	Concrete Grated Drop Inlet Type 'A' - 12" thru 72" Pipe
840.18	Concrete Grated Drop Inlet Type 'B' - 12" thru 36" Pipe
840.20	Frames and Wide Slot Flat Grates
840.24	Frames and Narrow Slot Sag Grates
840.25	Anchorage for Frames - Brick or Concrete or Precast
840.26	Brick Grated Drop Inlet Type 'A' - 12" thru 72" Pipe
840.27	Brick Grated Drop Inlet Type 'B' - 12" thru 36" Pipe
840.29	Frames and Narrow Slot Flat Grates
840.31	Concrete Junction Box - 12" thru 66" Pipe
840.32	Brick Junction Box - 12" thru 66" Pipe
840.34	Traffic Bearing Junction Box - for Use with Pipes 42" and Under
840.35	Traffic Bearing Grated Drop Inlet - for Cast Iron Double Frame and Grates
840.45	Precast Drainage Structure
840.46	Traffic Bearing Precast Drainage Structure
840.54	Manhole Frame and Cover
840.66	Drainage Structure Steps
846.01	Concrete Curb, Gutter and Curb & Gutter
846.04	Drop Inlet Installation in Shoulder Berm Gutter
852.01	Concrete Islands
852.06	Method for Placement of Drop Inlets in Concrete Islands
854.02	Double Faced Concrete Barrier - Types 'T', 'T1' and 'T2'
854.05	Concrete Median Transition Barrier - Location of Overhead Assembly
857.01	Precast Reinforced Concrete Barrier - 41" Single Faced
862.01	Guardrail Placement
862.02	Guardrail Installation
862.03	Structure Anchor Units
862.04	Anchoring End of Guardrail - B-77 and B-83 Anchor Units
876.01	Rip Rap in Channels
876.02	Guide for Rip Rap at Pipe Outlets
876.04	Drainage Ditches with Class 'B' Rip Rap

GENERAL NOTES

GENERAL NOTES:

2012 SPECIFICATIONS
EFFECTIVE: 01-17-12
REVISED: 11/01/11

GRADE LINE:
GRADING AND SURFACING:

THE GRADE LINES SHOWN DENOTE THE FINISHED ELEVATION OF THE PROPOSED SURFACING AT GRADE POINTS SHOWN ON THE TYPICAL SECTIONS. GRADE LINES MAY BE ADJUSTED AT THEIR BEGINNING AND ENDING AND AT STRUCTURES AS DIRECTED BY THE ENGINEER IN ORDER TO SECURE A PROPER TIE-IN.

CLEARING:

CLEARING ON THIS PROJECT SHALL BE PERFORMED TO THE LIMITS ESTABLISHED BY METHOD III.

SUPERELEVATION:

ALL CURVES ON THIS PROJECT SHALL BE SUPERELEVATED IN ACCORDANCE WITH STD. NO. 225.04 AND NO. 225.05 USING THE RATE OF SUPERELEVATION AND RUNOFF SHOWN ON THE PLANS. SUPERELEVATION IS TO BE REVOLVED ABOUT THE GRADE POINTS SHOWN ON THE TYPICAL SECTIONS.

SHOULDER CONSTRUCTION:

ASPHALT, EARTH, AND CONCRETE SHOULDER CONSTRUCTION ON THE HIGH SIDE OF SUPERELEVATED CURVES SHALL BE IN ACCORDANCE WITH STD. NO. 560.01 AND NO. 560.02.

GUARDRAIL:

THE GUARDRAIL LOCATIONS SHOWN ON THE PLANS MAY BE ADJUSTED DURING CONSTRUCTION AS DIRECTED BY THE ENGINEER. THE CONTRACTOR SHOULD CONSULT WITH THE ENGINEER PRIOR TO ORDERING GUARDRAIL MATERIAL.

TEMPORARY SHORING:

SHORING REQUIRED FOR THE MAINTENANCE OF TRAFFIC WILL BE PAID FOR AS "EXTRA WORK" IN ACCORDANCE WITH SECTION 104-7.

END BENTS:

THE ENGINEER SHALL CHECK THE STRUCTURE END BENT PLANS, DETAILS, AND CROSS-SECTION PRIOR TO SETTING OF THE SLOPE STAKES FOR THE EMBANKMENT OR EXCAVATION APPROACHING A BRIDGE.

UTILITIES:

UTILITY OWNERS ON THIS PROJECT ARE

CITY OF LEXINGTON

ANY RELOCATION OF EXISTING UTILITIES WILL BE ACCOMPLISHED BY OTHERS, EXCEPT AS SHOWN ON THE PLANS.

8/17/99

27-SEP-2012 16:17
R:\Roadway\Proj\B-4497_Rdy_sheet1a.dgn
$$$$USERNAME$$$$

04/16/11

PROJECT REFERENCE NO.	SHEET NO.
B-4497	1-B

Note: Not to Scale

S.U.E. = Subsurface Utility Engineering

STATE OF NORTH CAROLINA
DIVISION OF HIGHWAYS

CONVENTIONAL PLAN SHEET SYMBOLS

BOUNDARIES AND PROPERTY:

- State Line
- County Line
- Township Line
- City Line
- Reservation Line
- Property Line
- Existing Iron Pin — EIP
- Property Corner
- Property Monument — ECM
- Parcel/Sequence Number — 123
- Existing Fence Line
- Proposed Woven Wire Fence
- Proposed Chain Link Fence
- Proposed Barbed Wire Fence
- Existing Wetland Boundary — WLB
- Proposed Wetland Boundary — WLB
- Existing Endangered Animal Boundary — EAB
- Existing Endangered Plant Boundary — EPB
- Known Soil Contamination: Boundary or Site
- Potential Soil Contamination: Boundary or Site

BUILDINGS AND OTHER CULTURE:

- Gas Pump Vent or U/G Tank Cap
- Sign — S
- Well — W
- Small Mine
- Foundation
- Area Outline
- Cemetery
- Building
- School
- Church
- Dam

HYDROLOGY:

- Stream or Body of Water
- Hydro, Pool or Reservoir
- Jurisdictional Stream — JS
- Buffer Zone 1 — BZ 1
- Buffer Zone 2 — BZ 2
- Flow Arrow
- Disappearing Stream
- Spring
- Wetland
- Proposed Lateral, Tail, Head Ditch — FLOW
- False Sump

RAILROADS:

- Standard Gauge — CSX TRANSPORTATION
- RR Signal Milepost — MILEPOST 35
- Switch — SWITCH
- RR Abandoned
- RR Dismantled

RIGHT OF WAY:

- Baseline Control Point
- Existing Right of Way Marker
- Existing Right of Way Line
- Proposed Right of Way Line — RW
- Proposed Right of Way Line with Iron Pin and Cap Marker — RW
- Proposed Right of Way Line with Concrete or Granite Marker — RW
- Existing Control of Access — CA
- Proposed Control of Access — CA
- Existing Easement Line — E
- Proposed Temporary Construction Easement — E
- Proposed Temporary Drainage Easement — TDE
- Proposed Permanent Drainage Easement — PDE
- Proposed Permanent Drainage / Utility Easement — DUE
- Proposed Permanent Utility Easement — PUE
- Proposed Temporary Utility Easement — TUE
- Proposed Aerial Utility Easement — AUE
- Proposed Permanent Easement with Iron Pin and Cap Marker

ROADS AND RELATED FEATURES:

- Existing Edge of Pavement
- Existing Curb
- Proposed Slope Stakes Cut — C
- Proposed Slope Stakes Fill — F
- Proposed Curb Ramp — CR
- Curb Cut Future Ramp — CCFR
- Existing Metal Guardrail
- Proposed Guardrail
- Existing Cable Guiderail
- Proposed Cable Guiderail
- Equality Symbol
- Pavement Removal

VEGETATION:

- Single Tree
- Single Shrub
- Hedge
- Woods Line
- Orchard
- Vineyard — Vineyard

EXISTING STRUCTURES:

MAJOR:

- Bridge, Tunnel or Box Culvert — CONC
- Bridge Wing Wall, Head Wall and End Wall — CONC WW

MINOR:

- Head and End Wall — CONC HW
- Pipe Culvert
- Footbridge
- Drainage Box: Catch Basin, DI or JB — CB
- Paved Ditch Gutter
- Storm Sewer Manhole — S
- Storm Sewer — S

UTILITIES:

POWER:

- Existing Power Pole
- Proposed Power Pole
- Existing Joint Use Pole
- Proposed Joint Use Pole
- Power Manhole — P
- Power Line Tower
- Power Transformer
- U/G Power Cable Hand Hole
- H-Frame Pole
- Recorded U/G Power Line — P
- Designated U/G Power Line (S.U.E.*) — P

TELEPHONE:

- Existing Telephone Pole
- Proposed Telephone Pole
- Telephone Manhole — T
- Telephone Booth
- Telephone Pedestal — T
- Telephone Cell Tower
- U/G Telephone Cable Hand Hole — HH
- Recorded U/G Telephone Cable — T
- Designated U/G Telephone Cable (S.U.E.*) — T
- Recorded U/G Telephone Conduit — TC
- Designated U/G Telephone Conduit (S.U.E.*) — TC
- Recorded U/G Fiber Optics Cable — T FO
- Designated U/G Fiber Optics Cable (S.U.E.*) — T FO

WATER:

- Water Manhole — W
- Water Meter
- Water Valve
- Water Hydrant
- Recorded U/G Water Line — W
- Designated U/G Water Line (S.U.E.*) — W
- Above Ground Water Line — A/G Water

TV:

- TV Satellite Dish
- TV Pedestal — C
- TV Tower
- U/G TV Cable Hand Hole — HH
- Recorded U/G TV Cable — TV
- Designated U/G TV Cable (S.U.E.*) — TV
- Recorded U/G Fiber Optic Cable — TV FO
- Designated U/G Fiber Optic Cable (S.U.E.*) — TV FO

GAS:

- Gas Valve
- Gas Meter
- Recorded U/G Gas Line — G
- Designated U/G Gas Line (S.U.E.*) — G
- Above Ground Gas Line — A/G Gas

SANITARY SEWER:

- Sanitary Sewer Manhole
- Sanitary Sewer Cleanout
- U/G Sanitary Sewer Line — SS
- Above Ground Sanitary Sewer — A/G Sanitary Sewer
- Recorded SS Forced Main Line — FSS
- Designated SS Forced Main Line (S.U.E.*) — FSS

MISCELLANEOUS:

- Utility Pole
- Utility Pole with Base
- Utility Located Object
- Utility Traffic Signal Box — S
- Utility Unknown U/G Line — ?UTL
- U/G Tank; Water, Gas, Oil
- Underground Storage Tank, Approx. Loc. — UST
- A/G Tank; Water, Gas, Oil
- Geoenvironmental Boring
- U/G Test Hole (S.U.E.*)
- Abandoned According to Utility Records — AATUR
- End of Information — E.O.I.

PROJECT REFERENCE NO.	SHEET NO.
B-4497	1-C
Location and Surveys	

SURVEY CONTROL SHEET B-4497

```
****************************************
BM 1        ELEVATION = 778.96
N 760432       E 1622498
L STATION 10+00.00
 N 3°42'14.54" W  DIST   264.92
BM1-TOP NE BOLT PARKING LOT LIGHT POST
****************************************
****************************************
BM 2        ELEVATION = 760.52
N 759977       E 1623204
L STATION 17+11.00 34 RIGHT
BM2-RR SPIKE IN 30" POPLAR
****************************************
****************************************
BM 3        ELEVATION = 748.07
N 760091       E 1624610
L STATION 31+01.00
 S 34°26'39.75" E  DIST     68.45
BM3-TOP NW BOLT "X" SCRIBE
****************************************
****************************************
BM 4        ELEVATION = 745.51
N 760729       E 1624796
Y1 STATION 10+37.00 58 LEFT
BM4-NE CORNER OF WING WALL
****************************************
****************************************
BM 5       ELEVATION = 753.40
N 758771       E 1622382
Y1 STATION 40+84.80
 S 74°58'10" W  DIST   203.03
BM5-TOP NE FLANGE BOLT
****************************************
```

BL

POINT	DESC.	NORTH	EAST	ELEVATION	L STATION	OFFSET
3	BL-3	760098.8161	1622489.5046	779.47	OUTSIDE PROJECT LIMITS	
1	B4497-1	759898.5650	1623280.9260	766.03	17+87.51	109.90 RT
2	B4497-2	760175.8976	1624026.3491	747.48	25+57.64	31.86 LT
4	BL-4	760197.5795	1624568.2604	747.60	30+84.84	47.43 LT

BY1

POINT	DESC.	NORTH	EAST	ELEVATION	Y1 STATION	OFFSET
5	BY1-5	760728.3078	1624784.8414	745.16	10+48.84	57.16 LT
6	BY1-6	760469.2997	1624158.0050	732.95	17+58.59	98.48 LT
7	BY1-7	760178.0743	1623864.6462	735.49	21+97.95	160.58 LT
1	B4497-1	759898.5650	1623280.9260	766.03	28+04.32	103.89 RT
8	BY1-8	759426.0935	1622901.6532	758.43	34+10.11	113.82 RT
9	BY1-9	758843.5433	1622492.6320	751.25	OUTSIDE PROJECT LIMITS	

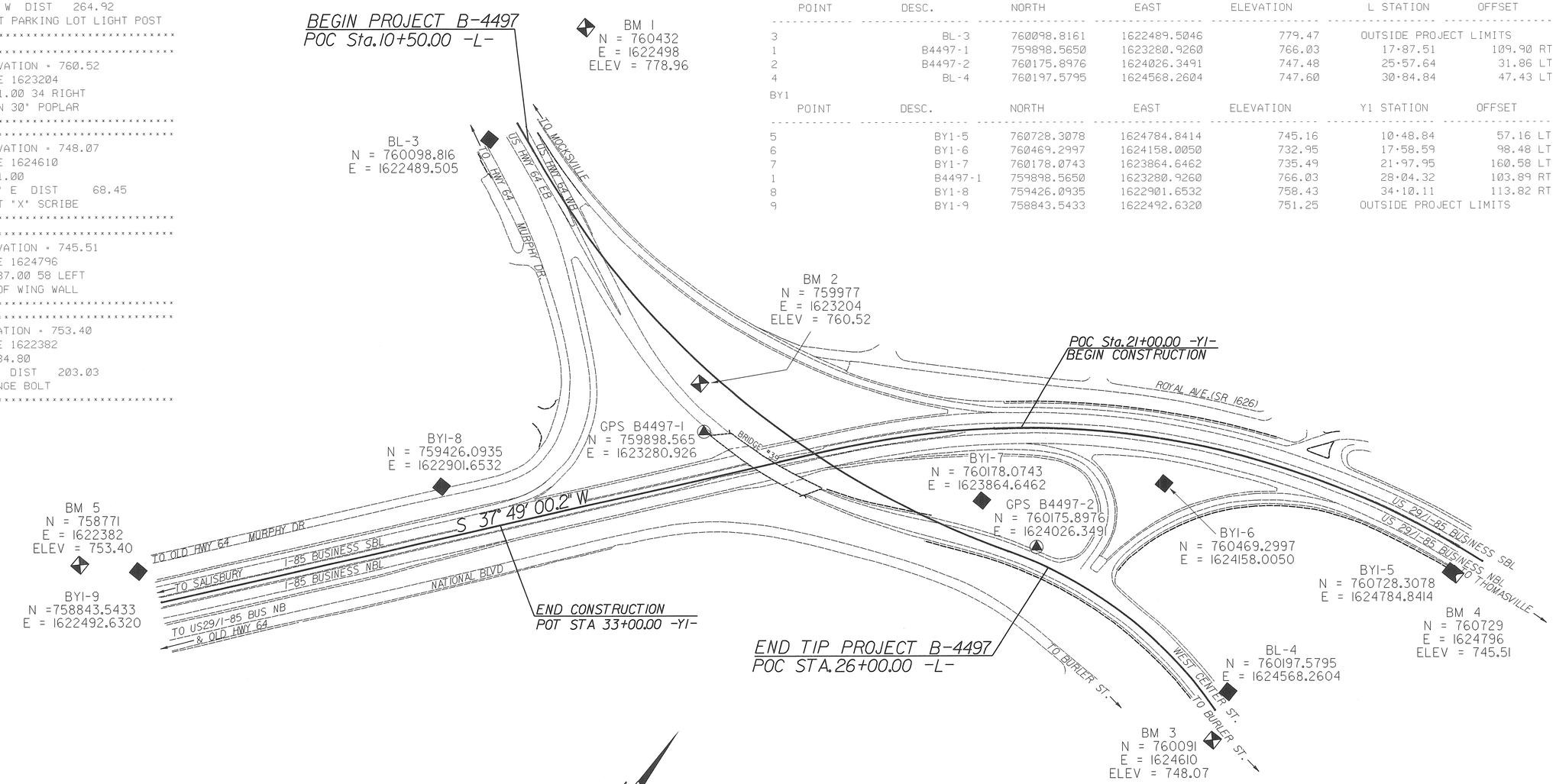

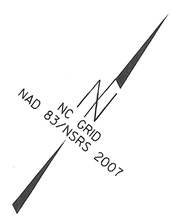

DATUM DESCRIPTION

THE LOCALIZED COORDINATE SYSTEM DEVELOPED FOR THIS PROJECT IS BASED ON THE STATE PLANE COORDINATES ESTABLISHED BY NCDOT FOR MONUMENT "B4497-1"
WITH NAD 83/NSRS 2007 STATE PLANE GRID COORDINATES OF
NORTHING: 759898.565(ft) EASTING: 1623280.926(ft)
ELEVATION: 766.03(ft)
THE AVERAGE COMBINED GRID FACTOR USED ON THIS PROJECT (GROUND TO GRID) IS: 0.999892001
THE N.C. LAMBERT GRID BEARING AND LOCALIZED HORIZONTAL GROUND DISTANCE FROM "B4497-1" TO -L- STATION 10+00.00 IS
N 70°39'25" W 811.19
ALL LINEAR DIMENSIONS ARE LOCALIZED HORIZONTAL DISTANCES
VERTICAL DATUM USED IS NAVD 88

NOTE: DRAWING NOT TO SCALE

NOTES:

1. *THE CONTROL DATA FOR THIS PROJECT CAN BE FOUND ELECTRONICALLY BY SELECTING PROJECT CONTROL DATA AT:*
   HTTP://WWW.NCDOT.ORG/DOH/PRECONSTRUCT/HIGHWAY/LOCATION/PROJECT/

   THE FILES TO BE FOUND ARE AS FOLLOWS:
   B4497_LS_CONTROL_100113.HTML

   SITE CALIBRATION INFORMATION HAS NOT BEEN PROVIDED FOR THIS PROJECT. IF FURTHER INFORMATION IS NEEDED, PLEASE CONTACT THE LOCATION AND SURVEYS UNIT.

▲ *INDICATES GEODETIC CONTROL MONUMENTS USED OR SET FOR HORIZONTAL PROJECT CONTROL BY THE NCDOT LOCATION AND SURVEYS UNIT.*
PROJECT CONTROL ESTABLISHED USING GLOBAL POSITIONING SYSTEM.
NETWORK ESTABLISHED FROM EXISTING HARN MONUMENTATION

6/2/99
14-AUG-2012 15:09
R:\Roadway\Proj\B4497_LS_1c.dgn
$$$$USERNAME$$$$

PROJECT REFERENCE NO.	SHEET NO.
B-4497	1-D
Location and Surveys	

SURVEY CONTROL SHEET B-4497
FINAL

DESIGN ALIGNMENTS

L

TYPE	STATION	NORTH	EAST
PC	10+00.00	760167.2492	1622515.5288
PRC	10+71.17	760142.1310	1622582.1206
PRC	25+01.41	760127.7770	1623982.0001
PT	31+01.09	760147.4244	1624571.5469

RPY1C

TYPE	STATION	NORTH	EAST
PC	10+00.00	760126.6261	1622553.5682
PT	10+21.07	760119.0923	1622573.2428
PC	10+62.98	760104.0221	1622612.3508
PT	13+45.61	759965.8526	1622857.7768
POT	14+00.00	759932.6067	1622900.8181

RPY1D

TYPE	STATION	NORTH	EAST
PC	10+00.00	760387.4587	1623806.7144
PT	12+08.10	760273.1708	1623633.3282
POT	12+50.00	760254.1951	1623595.9765

Y1

TYPE	STATION	NORTH	EAST
PC	10+00.00	760791.3721	1624824.8923
CS	23+72.21	760171.9177	1623633.2367
ST	26+52.21	759955.0247	1623456.2617
POT	40+84.80	758823.3152	1622577.8890

ROW MARKER PERMANENT EASEMENT

ALIGN	STATION	OFFSET	NORTH	EAST
L	16+50.00	-230.96	760244.7606	1623162.7228
L	16+50.00	-325.00	760338.5086	1623170.0875
L	17+50.00	-350.00	760359.0290	1623254.4193
L	18+00.00	-261.96	760270.3314	1623295.3638

ROW MARKER PERMANENT EASEMENT

ALIGN	STATION	OFFSET	NORTH	EAST
Y1	28+10.00	-230.00	759689.3552	1623541.2113
Y1	27+33.00	-169.80	759787.0963	1623540.8637
Y1	29+85.00	-122.61	759616.9531	1623349.0782
Y1	29+85.00	-175.00	759584.8320	1623390.4635

DATUM DESCRIPTION

THE LOCALIZED COORDINATE SYSTEM DEVELOPED FOR THIS PROJECT IS BASED ON THE STATE PLANE COORDINATES ESTABLISHED BY NCDOT FOR MONUMENT "B4497-1"
WITH NAD 83/NSRS 2007 STATE PLANE GRID COORDINATES OF
NORTHING: 759898.565(ft) EASTING: 1623280.926(ft)
ELEVATION: 766.03(ft)
THE AVERAGE COMBINED GRID FACTOR USED ON THIS PROJECT (GROUND TO GRID) IS: 0.999892001
THE N.C. LAMBERT GRID BEARING AND
LOCALIZED HORIZONTAL GROUND DISTANCE FROM
"B4497-1" TO -L- STATION 10+00.00 IS
N 70°39'25" W 811.19
ALL LINEAR DIMENSIONS ARE LOCALIZED HORIZONTAL DISTANCES
VERTICAL DATUM USED IS NAVD 88

NOTES:

1. *THE CONTROL DATA FOR THIS PROJECT CAN BE FOUND ELECTRONICALLY BY SELECTING PROJECT CONTROL DATA AT:*
   HTTP://WWW.NCDOT.ORG/DOH/PRECONSTRUCT/HIGHWAY/LOCATION/PROJECT/

   THE FILES TO BE FOUND ARE AS FOLLOWS:
   B4497_LS_CONTROL_100113.HTML

   SITE CALIBRATION INFORMATION HAS NOT BEEN PROVIDED FOR THIS PROJECT. IF FURTHER INFORMATION IS NEEDED, PLEASE CONTACT THE LOCATION AND SURVEYS UNIT.

▲ *INDICATES GEODETIC CONTROL MONUMENTS USED OR SET FOR HORIZONTAL PROJECT CONTROL BY THE NCDOT LOCATION AND SURVEYS UNIT.*
PROJECT CONTROL ESTABLISHED USING GLOBAL POSITIONING SYSTEM.
NETWORK ESTABLISHED FROM EXISTING HARN MONUMENTATION

NOTE: DRAWING NOT TO SCALE

PROJ. REFERENCE NO.	SHEET NO.
B-4497	1-E

Disclaimer: This coordinate list is provided for the convenience of interested contractors and is intended for use during the project bidding process only. Coordinates are localized to this particular project and any conversion to state grid coordinates or other formats will be the responsibility of the recipient. While every effort has been made to provide up-to-date, accurate information, NCDOT makes no express guarantee as to the validity or potential for revision of this information prior to project letting.

STATE OF NORTH CAROLINA
DIVISION OF HIGHWAYS

CENTERLINE COORDINATE LIST

Point #	Chain	Station	Northing (Y)	Easting (X)
1	L	10+00.00	760167.2492	1622515.5288
2	L	11+00.00	760131.9595	1622609.0941
3	L	12+00.00	760099.7101	1622703.7402
4	L	13+00.00	760072.2314	1622799.8799
5	L	14+00.00	760049.5920	1622897.2728
6	L	15+00.00	760031.8486	1622995.6755
7	L	16+00.00	760019.0453	1623094.8420
8	L	17+00.00	760011.2144	1623194.5244
9	L	18+00.00	760008.3753	1623294.4737
10	L	19+00.00	760010.5351	1623394.4400
11	L	20+00.00	760017.6884	1623494.1733
12	L	21+00.00	760029.8174	1623593.4246
13	L	22+00.00	760046.8917	1623691.9455
14	L	23+00.00	760068.8687	1623789.4900
15	L	24+00.00	760095.6934	1623885.8142
16	L	25+00.00	760127.2988	1623980.6774
17	L	26+00.00	760156.4936	1624076.2731
18	L	27+00.00	760175.5376	1624174.3964
19	L	28+00.00	760184.2206	1624273.9729
20	L	29+00.00	760182.4474	1624373.9115
21	L	30+00.00	760170.2375	1624473.1173
22	L	31+00.00	760147.7246	1624570.5033
23	L	31+01.09	760147.4244	1624571.5469

Point #	Chain	Station	Northing (Y)	Easting (X)

Point #	Chain	Station	Northing (Y)	Easting (X)

Point #	Chain	Station	Northing (Y)	Easting (X)

Point #	Chain	Station	Northing (Y)	Easting (X)

PROJECT REFERENCE NO.	SHEET NO.
B-4497	2

ROADWAY DESIGN ENGINEER

NORTH CAROLINA PROFESSIONAL SEAL 033298 ENGINEER JEFFREY L. TEAGUE

Jeffrey L. Teague 9/6/12

PAVEMENT DESIGN ENGINEER

NORTH CAROLINA PROFESSIONAL SEAL 22896 ENGINEER CLARK S. MORRISON

Clark S. Morrison 9/6/12

PAVEMENT SCHEDULE

FINAL PAVEMENT DESIGN

C1	PROP. APPROX. 3" ASPHALT CONCRETE SURFACE COURSE, TYPE S9.5C, AT AN AVERAGE RATE OF 168 LBS. PER SQ. YD. IN EACH OF TWO LAYERS.	E4	PROP. APPROX. 7" ASPHALT CONCRETE BASE COURSE, TYPE B25.0B, AT AN AVERAGE RATE OF 399 LBS. PER SQ. YD. IN EACH OF TWO LAYERS.
C2	PROP. VAR. DEPTH ASPHALT CONCRETE SURFACE COURSE, TYPE S9.5C, AT AN AVERAGE RATE OF 112 LBS. PER SQ. YD. PER 1" DEPTH TO BE PLACED IN LAYERS NOT TO EXCEED 2" IN DEPTH.	E5	PROP. VAR. DEPTH ASPHALT CONCRETE BASE COURSE, TYPE B25.0C, AT AN AVERAGE RATE OF 114 LBS. PER SQ. YD. PER 1" DEPTH TO BE PLACED IN LAYERS NOT LESS THAN 3" IN DEPTH OR GREATER THAN 5½" IN DEPTH.
C3	PROP. APPROX. 1¼" ASPHALT CONCRETE SURFACE COURSE, TYPE SF9.5A, AT AN AVERAGE RATE OF 137.5 LBS. PER SQ. YD.	E6	PROP. VAR. DEPTH ASPHALT CONCRETE BASE COURSE, TYPE B25.0B, AT AN AVERAGE RATE OF 114 LBS. PER SQ. YD. PER 1" DEPTH TO BE PLACED IN LAYERS NOT LESS THAN 3" IN DEPTH OR GREATER THAN 5½" IN DEPTH.
D1	PROP. APPROX. 4" ASPHALT CONCRETE INTERMEDIATE COURSE, TYPE I19.0C, AT AN AVERAGE RATE OF 456 LBS. PER SQ. YD.	J1	PROP. 6" AGGREGATE BASE COURSE
D2	PROP. APPROX. 4" ASPHALT CONCRETE INTERMEDIATE COURSE, TYPE I19.0B, AT AN AVERAGE RATE OF 456 LBS. PER SQ. YD.	P	PRIME COAT AT THE RATE OF 0.35 GAL. PER SQ. YD.
D3	PROP. VAR. DEPTH ASPHALT CONCRETE INTERMEDIATE COURSE, TYPE I19.0C, AT AN AVERAGE RATE OF 114 LBS. PER SQ. YD. PER 1" DEPTH, TO BE PLACED IN LAYERS NOT LESS THAN 2½" IN DEPTH OR GREATER THAN 4" IN DEPTH.	R	DOUBLE FACED CONCRETE BARRIER, TYPE T1
D4	PROP. VAR. DEPTH ASPHALT CONCRETE INTERMEDIATE COURSE, TYPE I19.0B, AT AN AVERAGE RATE OF 114 LBS. PER SQ. YD. PER 1" DEPTH, TO BE PLACED IN LAYERS NOT LESS THAN 2½" IN DEPTH OR GREATER THAN 4" IN DEPTH.	T	EARTH MATERIAL.
E1	PROP. APPROX. 10" ASPHALT CONCRETE BASE COURSE, TYPE B25.0C, AT AN AVERAGE RATE OF 570 LBS. PER SQ. YD. IN EACH OF TWO LAYERS.	U	EXISTING PAVEMENT.
E2	PROP. APPROX. 7" ASPHALT CONCRETE BASE COURSE, TYPE B25.0C, AT AN AVERAGE RATE OF 399 LBS. PER SQ. YD. IN EACH OF TWO LAYERS.	W1	VARIABLE DEPTH ASPHALT PAVEMENT (SEE STANDARD WEDGING DETAIL No. 1)
E3	PROP. APPROX. 10" ASPHALT CONCRETE BASE COURSE, TYPE B25.0B, AT AN AVERAGE RATE OF 570 LBS. PER SQ. YD. IN EACH OF TWO LAYERS.	W2	VARIABLE DEPTH ASPHALT PAVEMENT (SEE STANDARD WEDGING DETAIL No. 2)
		W3	VARIABLE DEPTH ASPHALT PAVEMENT (SEE STANDARD WEDGING DETAIL No. 3)

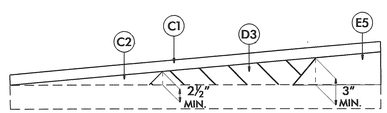

Wedging Detail For Resurfacing

STANDARD WEDGING DETAIL NO. 1

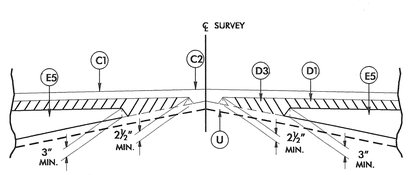

Detail Showing Method of Wedging

STANDARD WEDGING DETAIL NO. 2

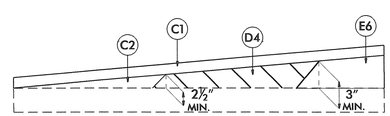

Wedging Detail For Resurfacing

STANDARD WEDGING DETAIL NO. 3

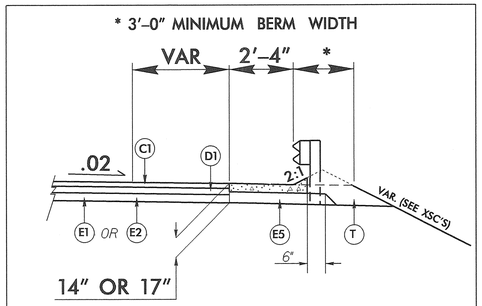

DETAIL OF SHOULDER BERM GUTTER

-L- STA. 14+50.00 TO -L- STA. 19+23.90 LT
-L- STA. 21+67.13 TO -L- STA. 24+60.00 LT
-L- STA. 24+50.00 TO -L- STA. 25+50.00 RT
-Y1- STA. 25+87.67 TO -L- STA. 29+00.00 LT
-Y1- STA. 25+15.00 TO -L- STA. 25+42.30 RT

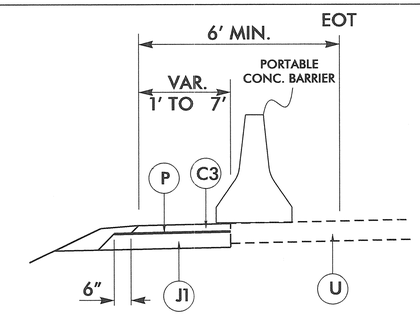

DETAIL OF TEMPORARY SHOULDER WIDENING
(SEE TRAFFIC CONTROL PLANS FOR PHASING AND LOCATION OF PCB.)

-Y1- STA. 23+75 TO -Y1- STA. 27+80 RT
-Y1- STA. 23+80 TO -Y1- STA. 27+75 LT

6/2/99
30-AUG-2012 15:49
R:\Roadway\Proj\b-4497_rdy_typ.dgn
$$$$USERNAME$$$$

PROJECT REFERENCE NO.	SHEET NO.
B-4497	2-A

ROADWAY DESIGN ENGINEER

NORTH CAROLINA PROFESSIONAL SEAL 033298 ENGINEER JEFFREY L. TEAGUE

Jeffrey L. Teague 9/6/12

PAVEMENT DESIGN ENGINEER

NORTH CAROLINA PROFESSIONAL SEAL 22896 ENGINEER CLARK S. MORRISON

Clark S. Morrison 9/6/12

℄ -L- US 64

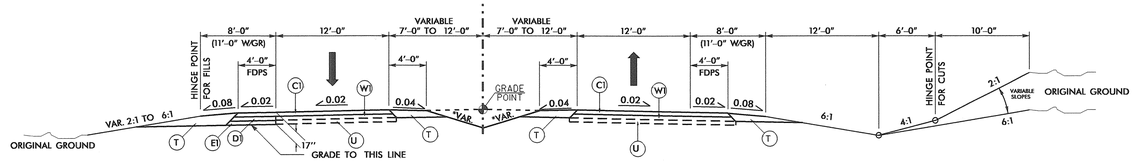

TYPICAL SECTION NO. 1

USE TYPICAL SECTION NO. 1 FOR

-L- STA. 10+50.00 TO -L- STA. 13+00.00

*SEE CROSS-SECTIONS FOR MEDIAN DITCH TRANSITION

℄ -L- US 64

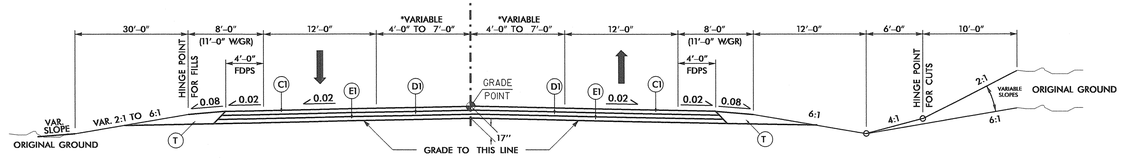

TYPICAL SECTION NO. 2

USE TYPICAL SECTION NO. 2 FOR

-L- STA. 13+00.00 TO -L- STA. 19+28.16 (BEGIN BRIDGE)

-L- STA. 21+18.91 (END BRIDGE) TO -L- STA. 23+50.00

* SEE PLANS FOR 5" MONO CONC ISLAND LOCATION & LEFT TURN LANE

*SEE SHEET NOS. 2, 4 & 5 FOR SHOULDER BERM GUTTER LOCATION

℄ -L- US 64

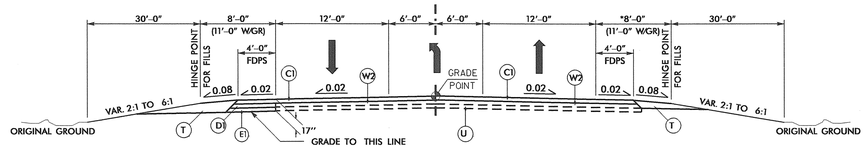

TYPICAL SECTION NO. 3

USE TYPICAL SECTION NO. 3 FOR

-L- STA. 23+50.00 TO -L- STA. 26+00.00

*SEE SHEET NOS. 2 & 5 FOR SHOULDER BERM GUTTER LOCATION

℄ -Y1- US 29-70/I-85B

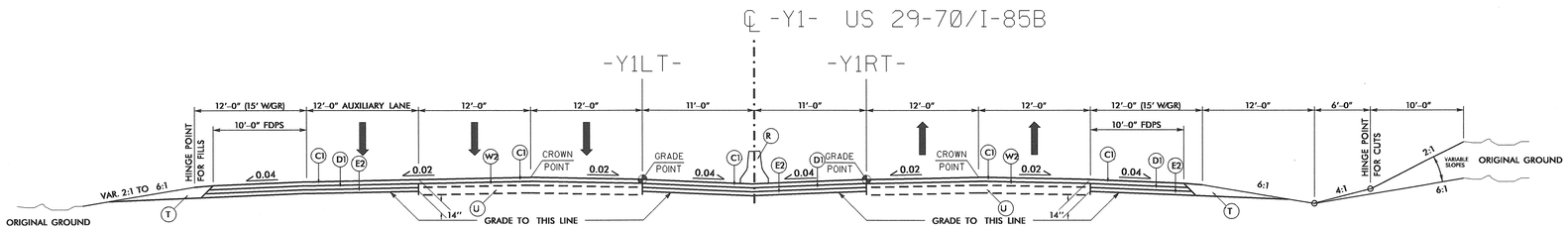

TYPICAL SECTION NO. 4

USE TYPICAL SECTION NO. 4 FOR

-Y1- STA. 21+00.00 TO -Y1- STA. 32+00.00

*SEE CROSS-SECTIONS FOR MEDIAN DITCH TRANSITION

*SEE SHEET NOS. 2 & 5 FOR SHOULDER BERM GUTTER LOCATION

*SEE SHEET NO. 2-N FOR MEDIAN BARRIER TRANSITIONS

℄ -RPY1C-

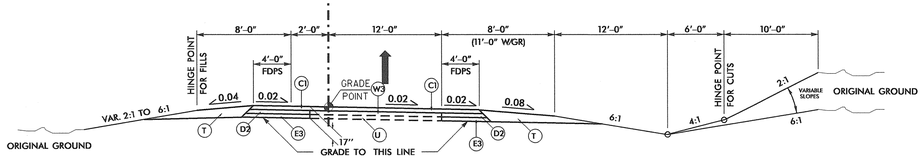

TYPICAL SECTION NO. 5

USE TYPICAL SECTION NO. 5 FOR

-RPY1C- STA. 12+50.00 TO -RPY1C- STA. 14+00.00

℄ -RPY1D-

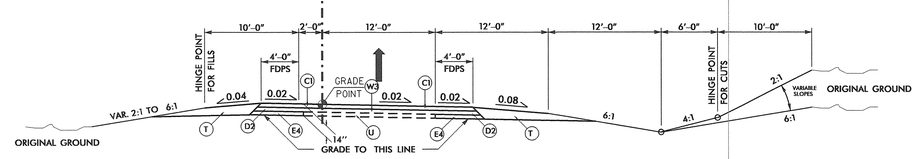

TYPICAL SECTION NO. 6

USE TYPICAL SECTION NO. 6 FOR

-RPY1D- STA. 11+90.00 TO -RPY1D- STA. 12+50.00

SEE SHEET 2 FOR FULL PAVEMENT SCHEDULE WITH PLACEMENT INSTRUCTIONS

PAVEMENT SCHEDULE (FINAL PAVEMENT DESIGN)	
C1	3" S9.5C
C2	VAR. S9.5C
C3	1.25" SF9.5A
D1	4" I19.0C
D2	4" I19.0B
D3	VAR. I19.0C
D4	VAR. I19.0B
E1	10" B25.0C
E2	7" B25.0C
E3	10" B25.0B
E4	7" B25.0B
E5	VAR. B25.0C
E6	VAR. B25.0B
J1	6" ABC
P	PRIME COAT
R	CONC. BARRIER
T	EARTH MATERIAL
U	EXIST. PAVEMENT
W1	WEDGING
W2	WEDGING
W3	WEDGING

6/2/99

05-SEP-2012 22:49
R:\Roadway\Proj\b-4497_rdy_typ.dgn
$$$$USERNAME$$$$

PROJECT REFERENCE NO.	SHEET NO.
B-4497	2-B

ROADWAY DESIGN ENGINEER

NORTH CAROLINA PROFESSIONAL SEAL 033298 ENGINEER JEFFREY L. TEAGUE

Jeffrey L. Teague 9/6/12

DESIGN DATA	-L-	-Y1-
2012 ADT	22,040	20,200
2035 ADT	38,600	34,000
DHV (%)	10	10
D (%)	55	60
DUAL (%)	5	4
TTST (%)	12	5
V (MPH)	50	60
FUNC CLASS	URBAN ARTERIAL	FREEWAY

MINIMUM VERTICAL CLEARANCE = 16-6"

× BRIDGE RAIL TO BE DETERMINED BY STRUCTURE DESIGN UNIT

** SET UP TO ACCOMMODATE FUTURE LANE

* SINGLE FACED PRECAST CONCRETE BARRIER (SEE STD. 857.01)

VERTICAL ABUTMENT WALL DETERMINED BY GEOTECHNICAL ENGINEERING UNIT

NOTES:

1. SEE SHEET 5 FOR PLAN VIEW
2. SEE SHEET 2-A FOR -L- TYPICAL SECTION
3. SEE SHEET 2-A FOR -Y1- TYPICAL SECTION

-L- STRUCTURE

-L- (US 64) STRUCTURE OVER -Y1- (US 29-70/I-85B)

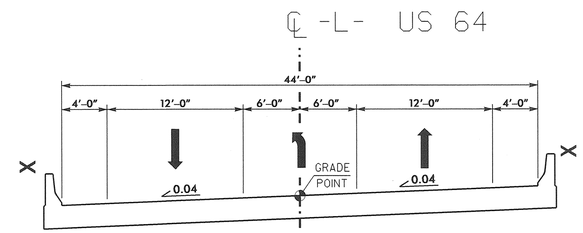

TYPICAL SECTION ON STRUCTURE

-L- STA. 19+28.16 TO -L- STA. 21+18.91

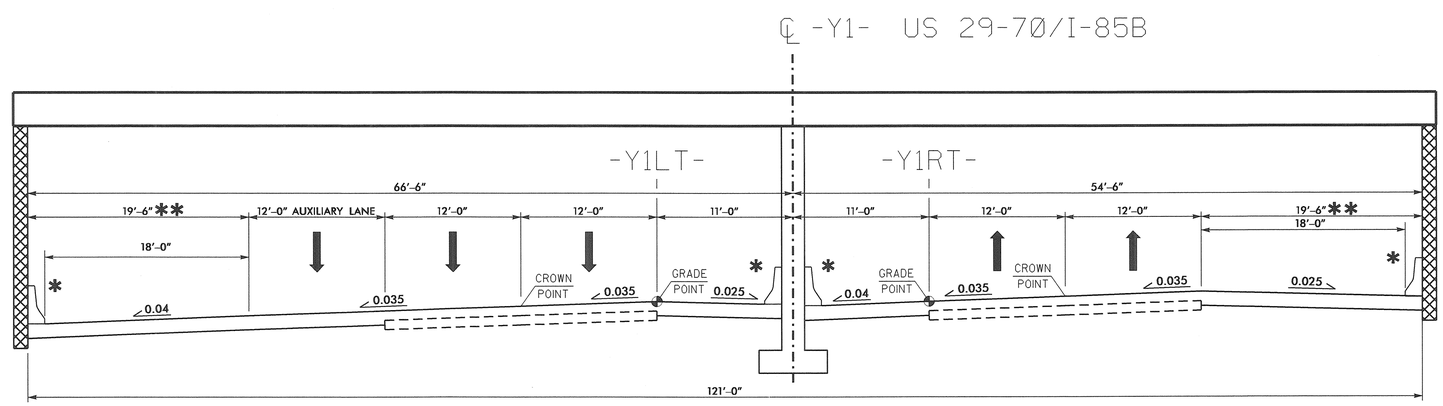

DETAIL OF ROADWAY UNDER PROPOSED STRUCTURE

6/2/99
14-AUG-2012 15:01
R:\Roadway\Proj\b-4497_rdy_typ.dgn
$$$$USERNAME$$$$

PROJECT REFERENCE NO.	SHEET NO.
B-4497	2-C

ROADWAY DESIGN ENGINEER

NORTH CAROLINA PROFESSIONAL SEAL 033298 ENGINEER JEFFREY L. TEAGUE

Jeffrey L. Teague 9/6/12

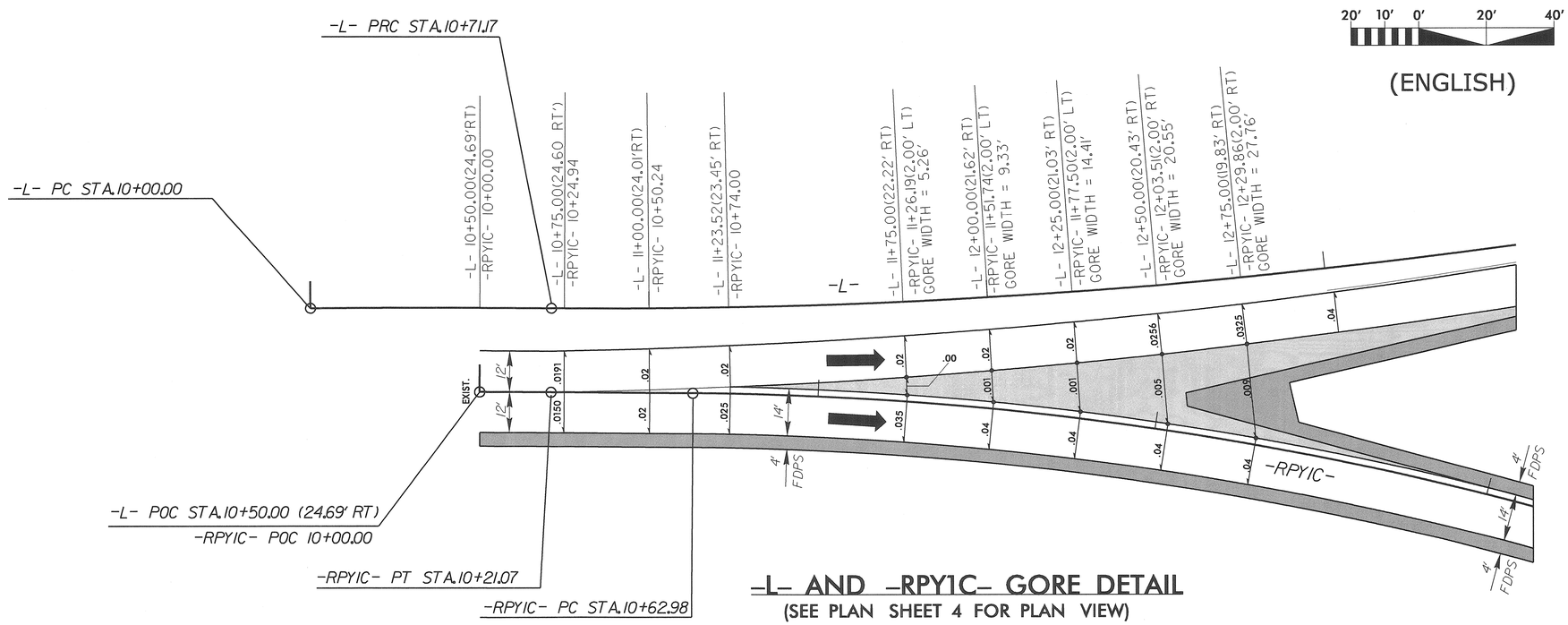

-L- AND -RPY1C- GORE DETAIL

(SEE PLAN SHEET 4 FOR PLAN VIEW)

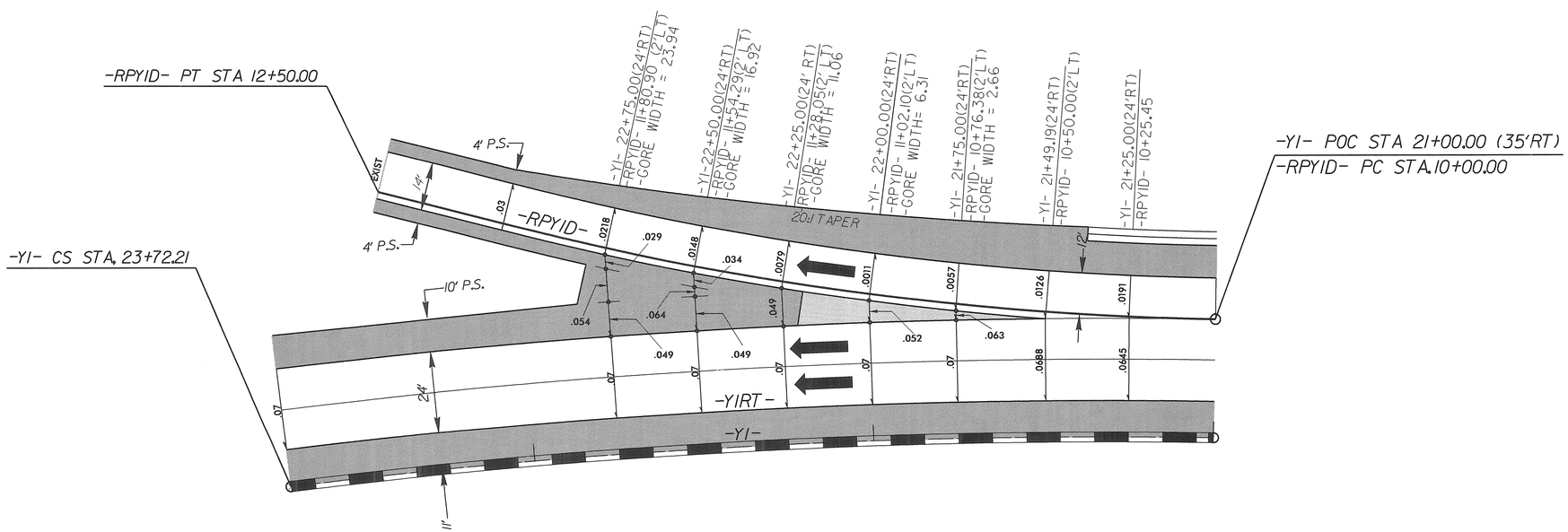

-Y1- AND -RPY1D- GORE DETAIL

(SEE PLAN SHEET 5 FOR PLAN VIEW)

6/2/99

15-AUG-2012 10:45
R:\Roadway\Proj\b-4497_rdy_typ.dgn
$$$$USERNAME$$$$

PROJECT REFERENCE NO.	SHEET NO.
B-4497	2-D
RW SHEET NO.	

ROADWAY DESIGN ENGINEER

NORTH CAROLINA PROFESSIONAL SEAL 033298 ENGINEER JEFFREY L. TEAGUE

Jeffrey L. Teague 9/6/12

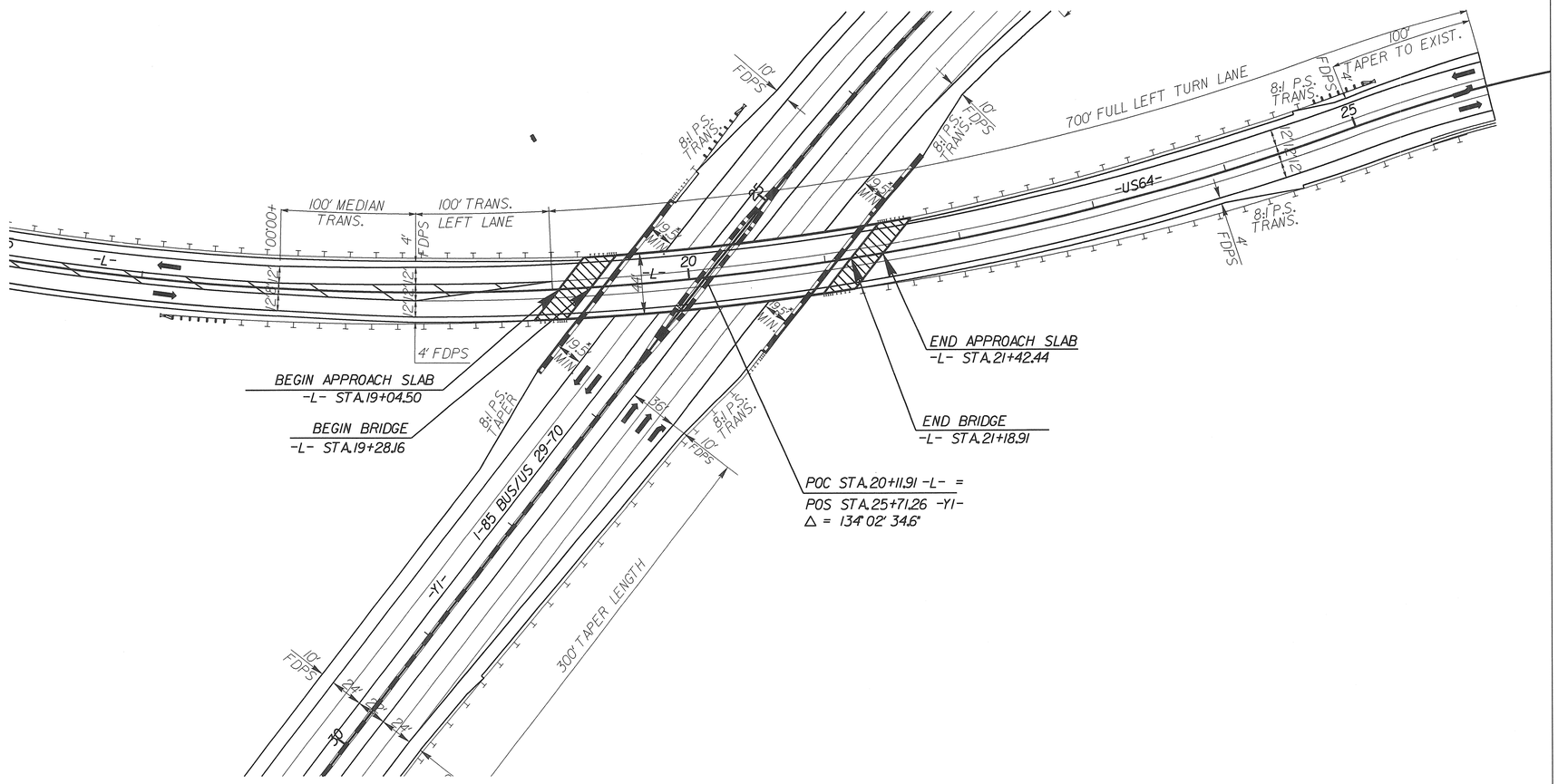

DETAIL SHOWING PAVEMENT/BRIDGE RELATIONSHIP
FOR -L- (US 64) STRUCTURE OVER -Y1- (I-85 BUS)

FOR STRUCTURE PLAN VIEW, SEE SHEET NO. 5
FOR STRUCTURE TYPICAL SECTION, SEE SHEET NO. 2-B
FOR WALL PLANS, SEE SHEET NO. W-1 THRU W-4
FOR STRUCTURE PLANS, SEE SHEET NO. S-1 THRU S-34

REVISIONS

8/17/99

06-SEP-2012 20:53
R:\Roadway\Proj\B-4497_Rdy_dtl_2d.dgn
$$$$USERNAME$$$$

PROJECT REFERENCE NO.	SHEET NO.
B-4497	2-E

HYDRAULICS ENGINEER

NORTH CAROLINA PROFESSIONAL SEAL 19778 ENGINEER RAY D. GOMPERT

6 SEP 2012

DETAIL 1
SPECIAL MEDIAN DITCH
(Not to Scale)

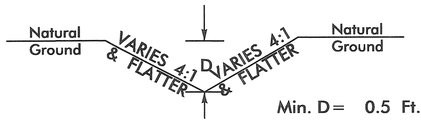

Min. D= 0.5 Ft.

FROM –L– STA. 10+50 TO STA. 12+00 MEDIAN
FROM –Y1– STA. 31+00 TO STA. 32+50 MEDIAN

DETAIL 2
SPECIAL CUT DITCH
(Not to Scale)

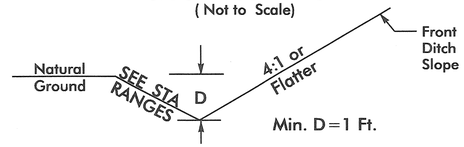

Min. D=1 Ft.

FROM –L– STA. 11+00 TO STA. 13+50 RT BACK SLOPE 6:1
FROM –Y1– STA. 23+50 TO STA. 24+75 RT BACK SLOPE 4:1
FROM –Y1– STA. 26+00 TO STA. 26+50 LT BACK SLOPE 6:1

DETAIL 3
STANDARD BASE DITCH
(Not to Scale)

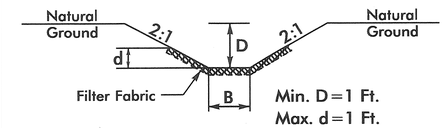

Min. D=1 Ft.
Max. d=1 Ft.
B=2 Ft.

*When B is < 6.0'

Type of Liner= B Rip-Rap

FROM –L– STA. 13+50 TO STA. 14+35 RT

DETAIL 4
STANDARD 'V' DITCH
(Not to Scale)

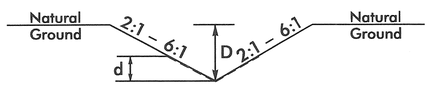

Min. D= 1Ft.
Max. d= 1Ft.

Type of Liner= PSRM

FROM –L– STA. 14+00 TO STA. 14+50 RT

DETAIL 5
SPECIAL CUT DITCH
(Not to Scale)

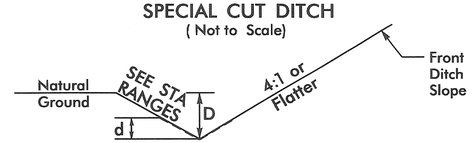

Min. D=1 Ft.
Max d=1 Ft.

Type of Liner= PSRM

FROM –L– STA. 12+50 TO STA. 14+50 LT BACK SLOPE 4:1

DETAIL 6
TOE PROTECTION
(Not to Scale)

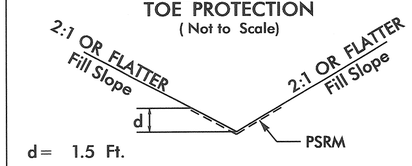

d= 1.5 Ft.

Type of Liner= PSRM

FROM –L– STA. 14+50 TO STA. 19+00 LT

DETAIL 8
STANDARD BASE DITCH
(Not to Scale)

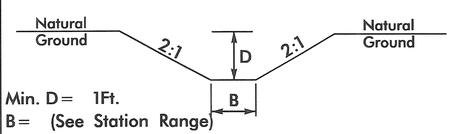

Min. D= 1Ft.
B= (See Station Range)

AT –L– STA. 24+56 LT, B=2', DDE=11CY

DETAIL 9
SPECIAL CUT DITCH
(Not to Scale)

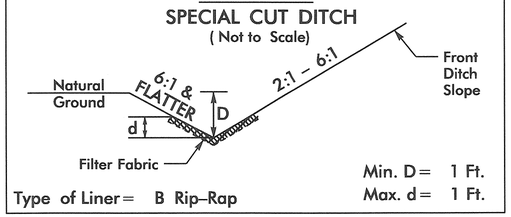

Min. D= 1 Ft.
Max. d= 1 Ft.

Type of Liner= B Rip-Rap

FROM –Y1– STA. 26+50 TO STA. 26+80 LT

DETAIL 10
STANDARD BASE DITCH
(Not to Scale)

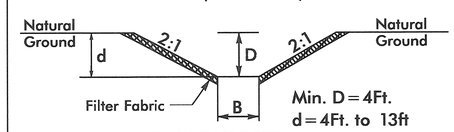

Min. D=4Ft.
d=4Ft. to 13ft
B=VARIES 7Ft. to 4Ft.

RIP RAP CHANNEL SIDE SLOPES FROM CHANNEL BED TO TOP OF CUT

Type of Liner= CL 1 Rip-Rap

AT –Y1– STA. 28+25 LT B=VARIES 4' to 7'
AT –L– STA. 17+27 LT B=VARIES 4' to 7'

6/2/99
15-AUG-2012 10:45
R:\Hydraulics\Proj\b-4497_rdy_typ.dgn
$$$$USERNAME$$$$

PROJECT REFERENCE NO.	SHEET NO.
B-4497	2-F
R/W SHEET NO.	

HYDRAULICS ENGINEER
6 SEP 2012
NORTH CAROLINA PROFESSIONAL SEAL 19773 ENGINEER R. LOVINO

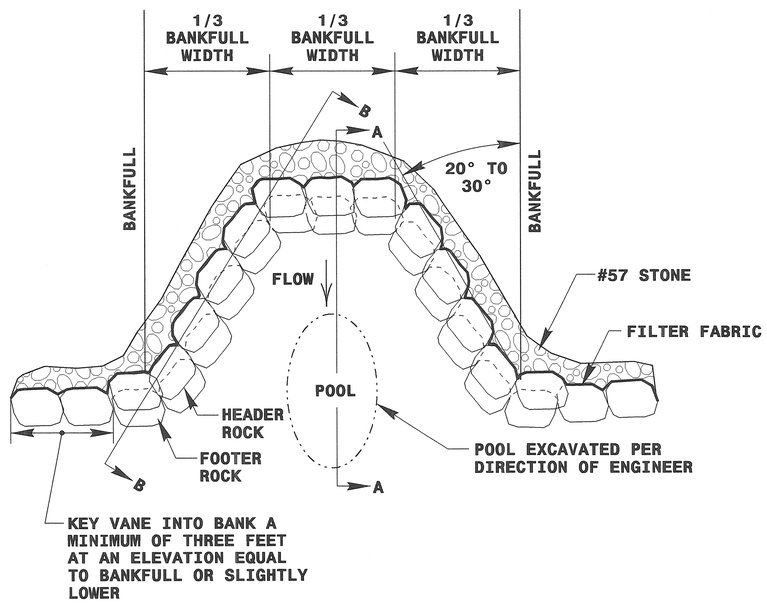

PLAN VIEW

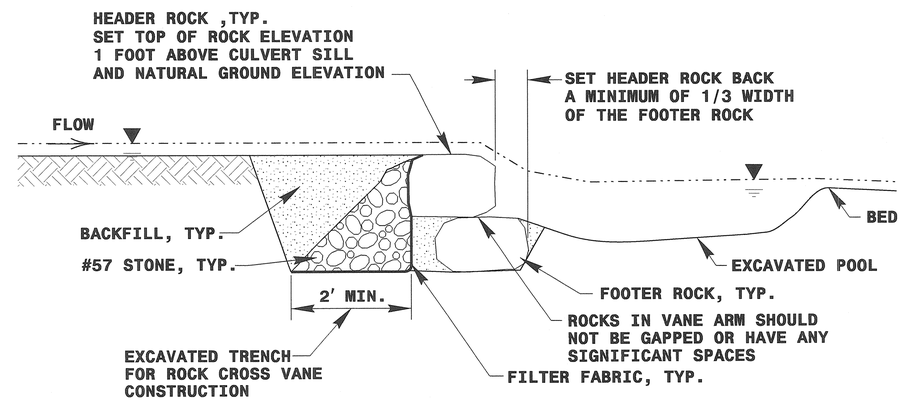

SECTION A-A

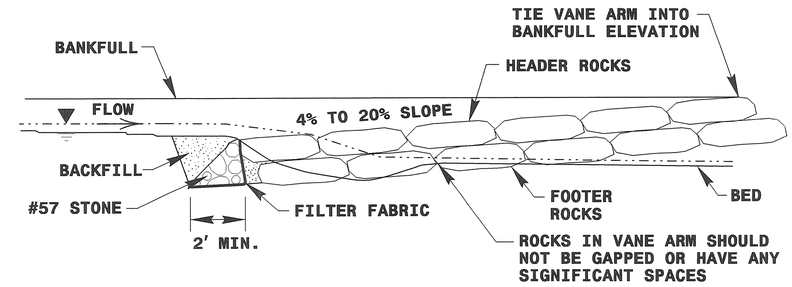

SECTION B-B

STATION	BOULDER DIMENSIONS (FT)		
	HEIGHT	LENGTH	WIDTH
ALL	2'	4'	3'

LOCATION	
CULVERT	x' DOWNSTREAM OF __ BARREL
-L- 18+36	6' SOUTH

NOTES:
1. DEEPEST PART OF POOL TO BE IN LINE WITH WHERE VANE ARM TIES INTO BANKFULL.
2. DO NOT EXCAVATE POOL TOO CLOSE TO FOOTER BOULDERS.
3. CLASS "A" STONE CAN BE USED TO REDUCE VOIDS BETWEEN HEADERS AND FOOTERS.
4. COMPACT BANKFULL TO EXTENT POSSIBLE OR AT THE DIRECTION OF THE ENGINEER.
5. POOL DEPTH SHOULD BE 2 TO 3 TIMES BANKFULL DEPTH.

ROCK CROSS VANE DETAIL

NOT TO SCALE

12/15/05

14-AUG-2012 15:01
R:\Drainage\rock cross vane detail_21.dgn
$$$$USERNAME$$$$

PROJECT REFERENCE NO.	SHEET NO.
B-4497	2-G
R/W SHEET NO.	

ROADWAY DESIGN ENGINEER

NORTH CAROLINA PROFESSIONAL SEAL 033298 ENGINEER JEFFREY L. TEAGUE

9/6/12

SHEAR POINT DIAGRAM

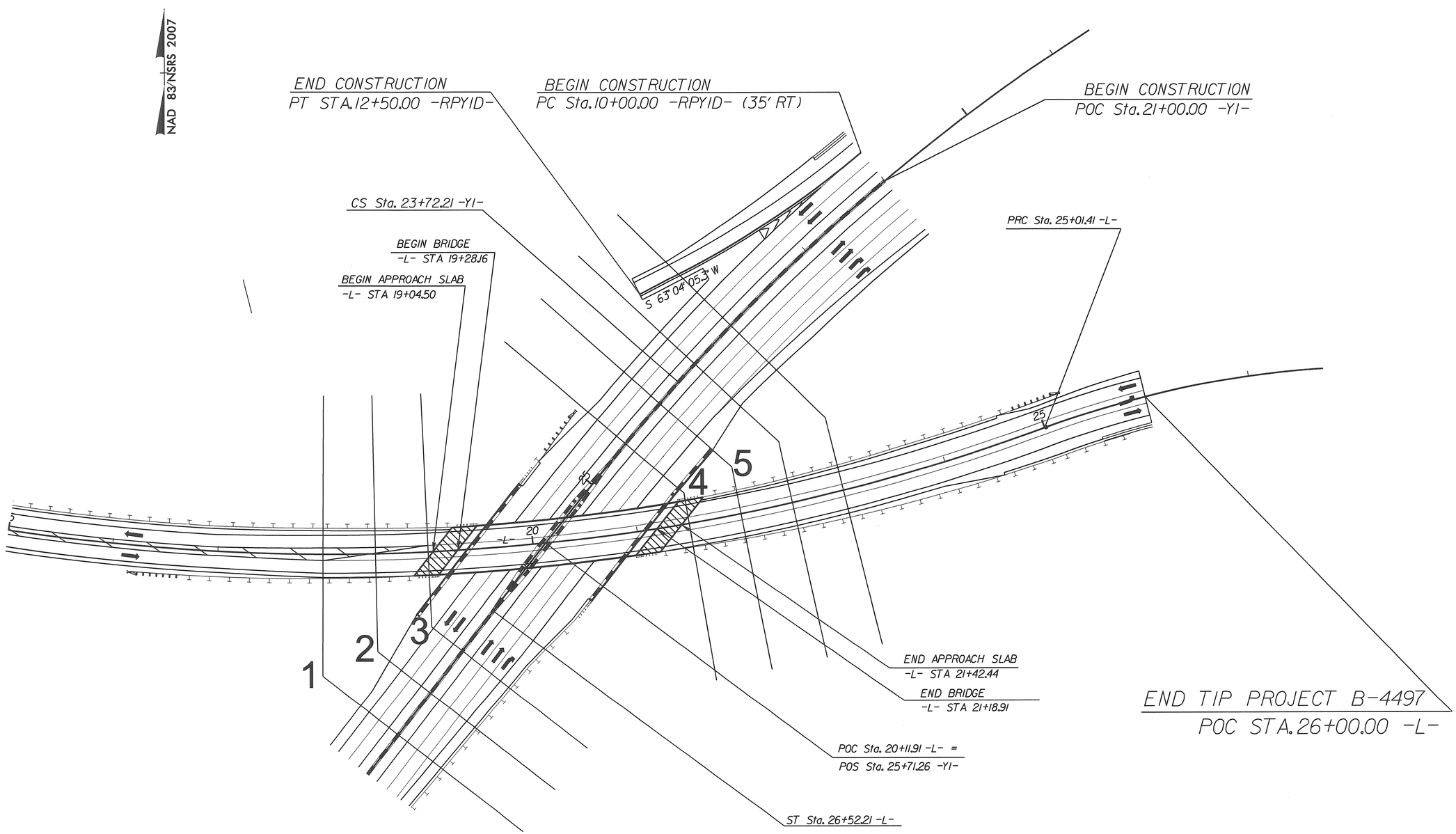

5/14/99

06-SEP-2012 20:53
R:\Roadway\Proj\B-4497_Rdy_spd.dgn
$$$$USERNAME$$$$

PROJECT REFERENCE NO.	SHEET NO.
B-4497	2-H
R/W SHEET NO.	

ROADWAY DESIGN ENGINEER

NORTH CAROLINA PROFESSIONAL SEAL 033298 ENGINEER JEFFREY L. TEAGUE

Jeffrey L. Teague 9/6/12

NAD 83/NSRS 2007

INTERCHANGE DETAIL

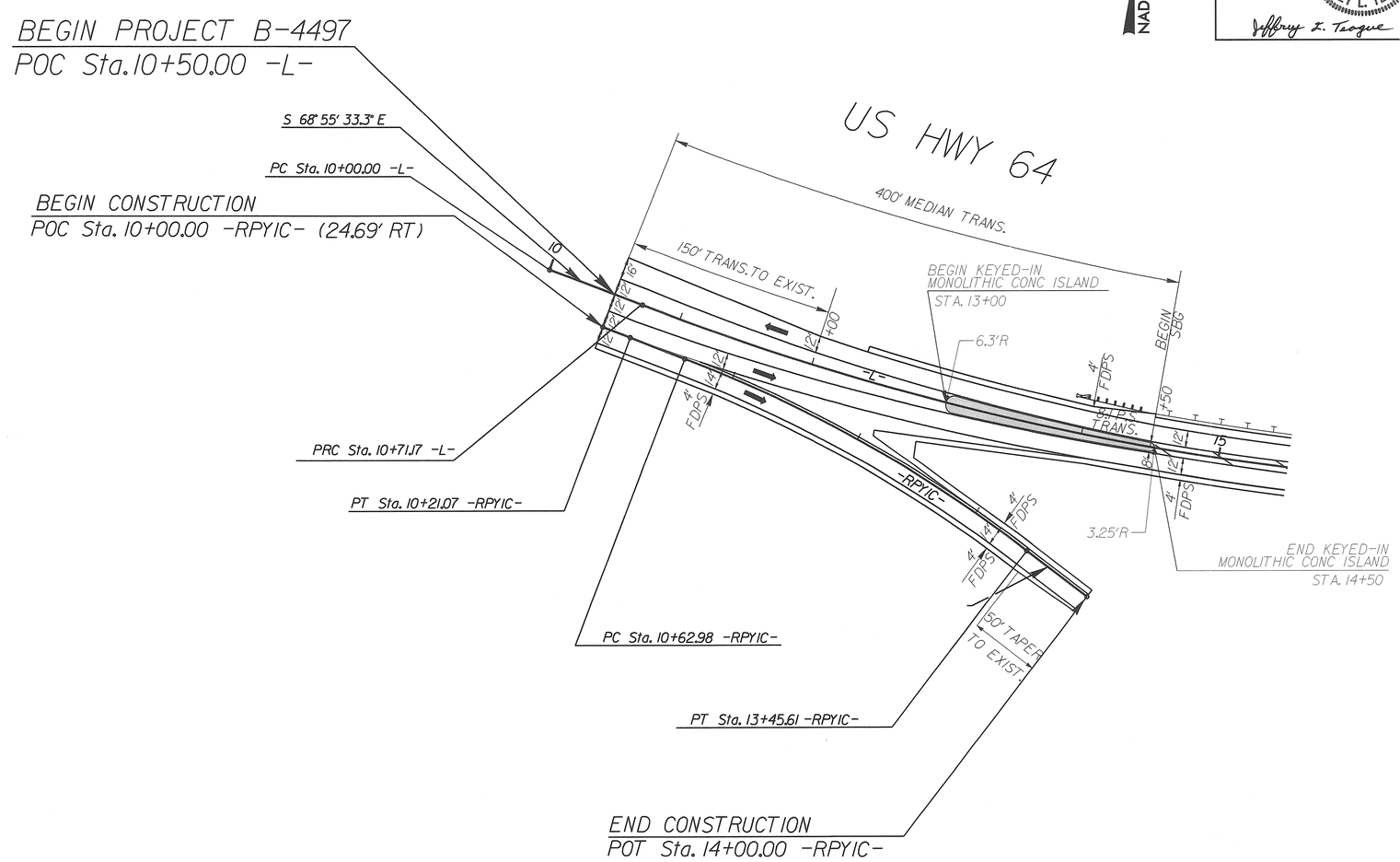

FOR PLANS, SEE SHEET NOS. 4,5

FOR -L- PROFILE, SEE SHEET NO. 6
FOR -RPY1C- PROFILE, SEE SHEET NO. 6

REVISIONS

8/17/99

05-SEP-2012 09:36
R:\Roadway\Proj\b-4497_rdy_psh_2H.dgn
$$$$USERNAME$$$$

PROJECT REFERENCE NO.	SHEET NO.
B-4497	2-1
R/W SHEET NO.	

ROADWAY DESIGN ENGINEER

NORTH CAROLINA PROFESSIONAL SEAL 033298 ENGINEER JEFFREY L. TERGUE

Jeffrey L. Tergue 9/6/12

INTERCHANGE DETAIL

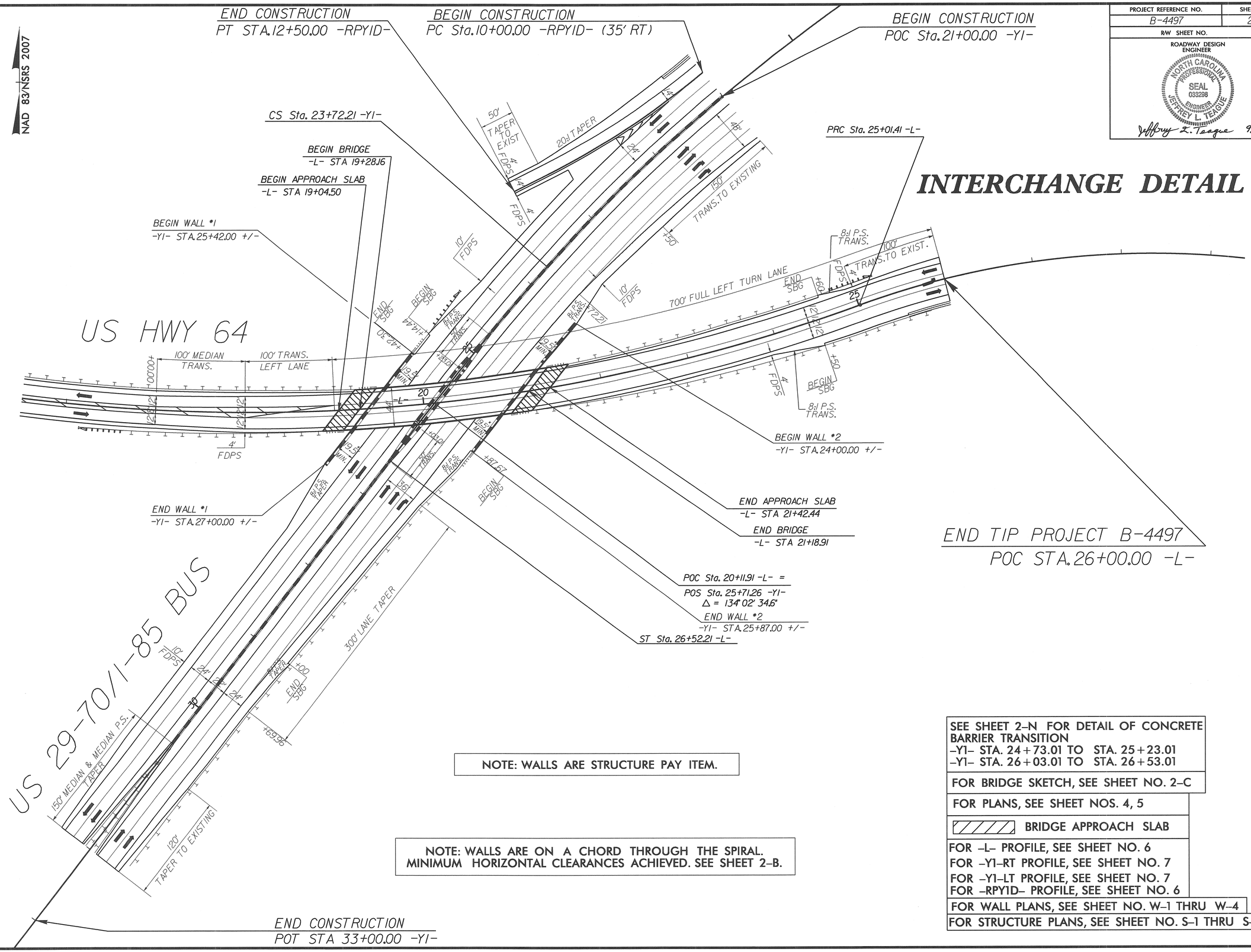

NOTE: WALLS ARE STRUCTURE PAY ITEM.

NOTE: WALLS ARE ON A CHORD THROUGH THE SPIRAL. MINIMUM HORIZONTAL CLEARANCES ACHIEVED. SEE SHEET 2-B.

SEE SHEET 2-N FOR DETAIL OF CONCRETE BARRIER TRANSITION
-Y1- STA. 24+73.01 TO STA. 25+23.01
-Y1- STA. 26+03.01 TO STA. 26+53.01

FOR BRIDGE SKETCH, SEE SHEET NO. 2-C

FOR PLANS, SEE SHEET NOS. 4, 5

BRIDGE APPROACH SLAB

FOR -L- PROFILE, SEE SHEET NO. 6
FOR -Y1-RT PROFILE, SEE SHEET NO. 7
FOR -Y1-LT PROFILE, SEE SHEET NO. 7
FOR -RPY1D- PROFILE, SEE SHEET NO. 6

FOR WALL PLANS, SEE SHEET NO. W-1 THRU W-4

FOR STRUCTURE PLANS, SEE SHEET NO. S-1 THRU S-34

REVISIONS

8/17/99

06-SEP-2012 20:53
R:\Roadway\Proj\b-4497_rdy_psh_21.dgn
$$$$USERNAME$$$$

REVISIONS

PROJECT REFERENCE NO.	SHEET NO.
B-4497	2-J
R/W SHEET NO.	

US 64 EAST DETOUR

DETOUR ROUTE

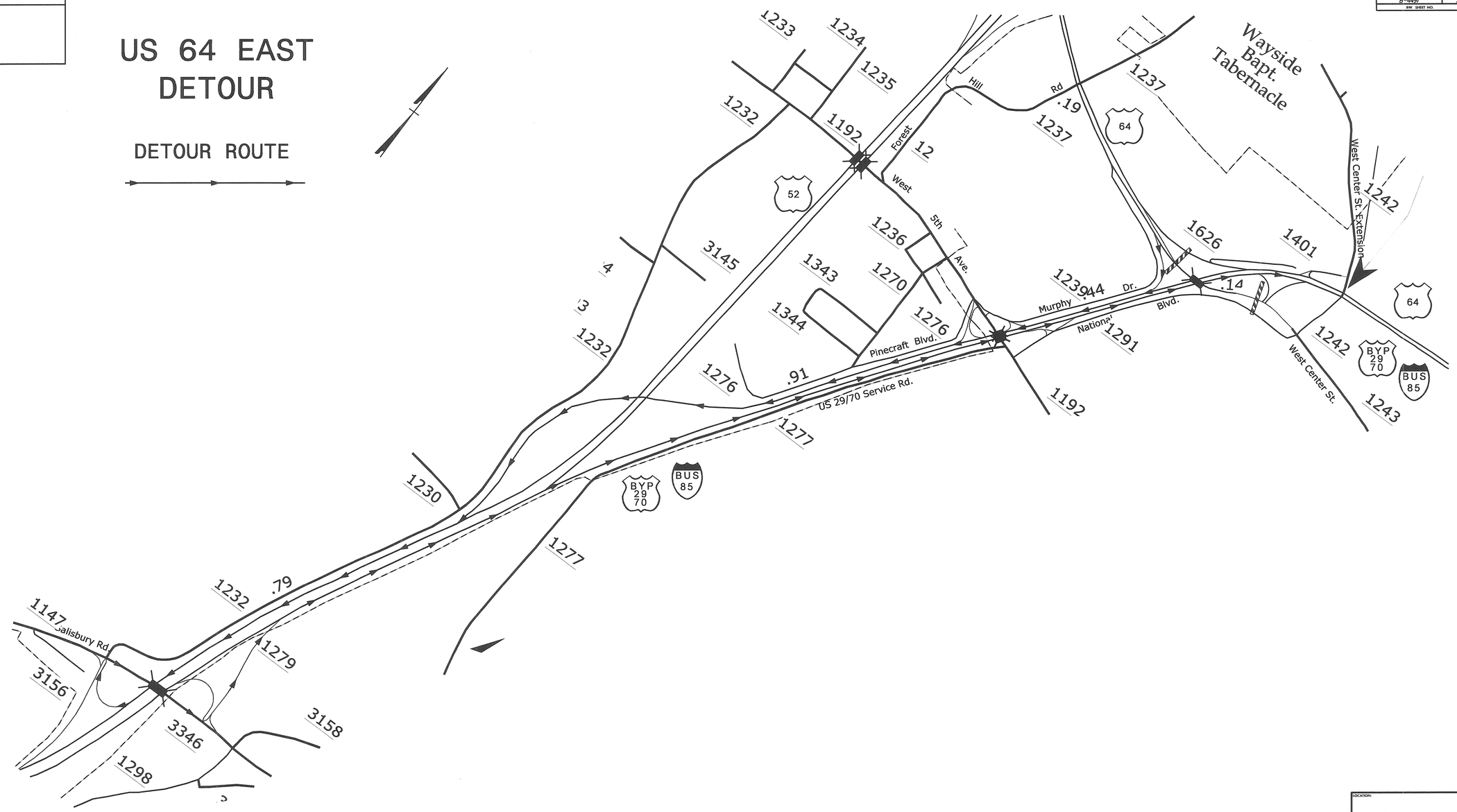

GRAPHIC SCALE
300 150 0 300 600
PLANS

LOCATION:	
TIP NO.:	COUNTY:
DESIGNED BY:	
CHECKED BY:	DATE:

REVISIONS

PROJECT REFERENCE NO.	SHEET NO.
B-4497	2-K
R/W SHEET NO.	

US 64 WEST DETOUR

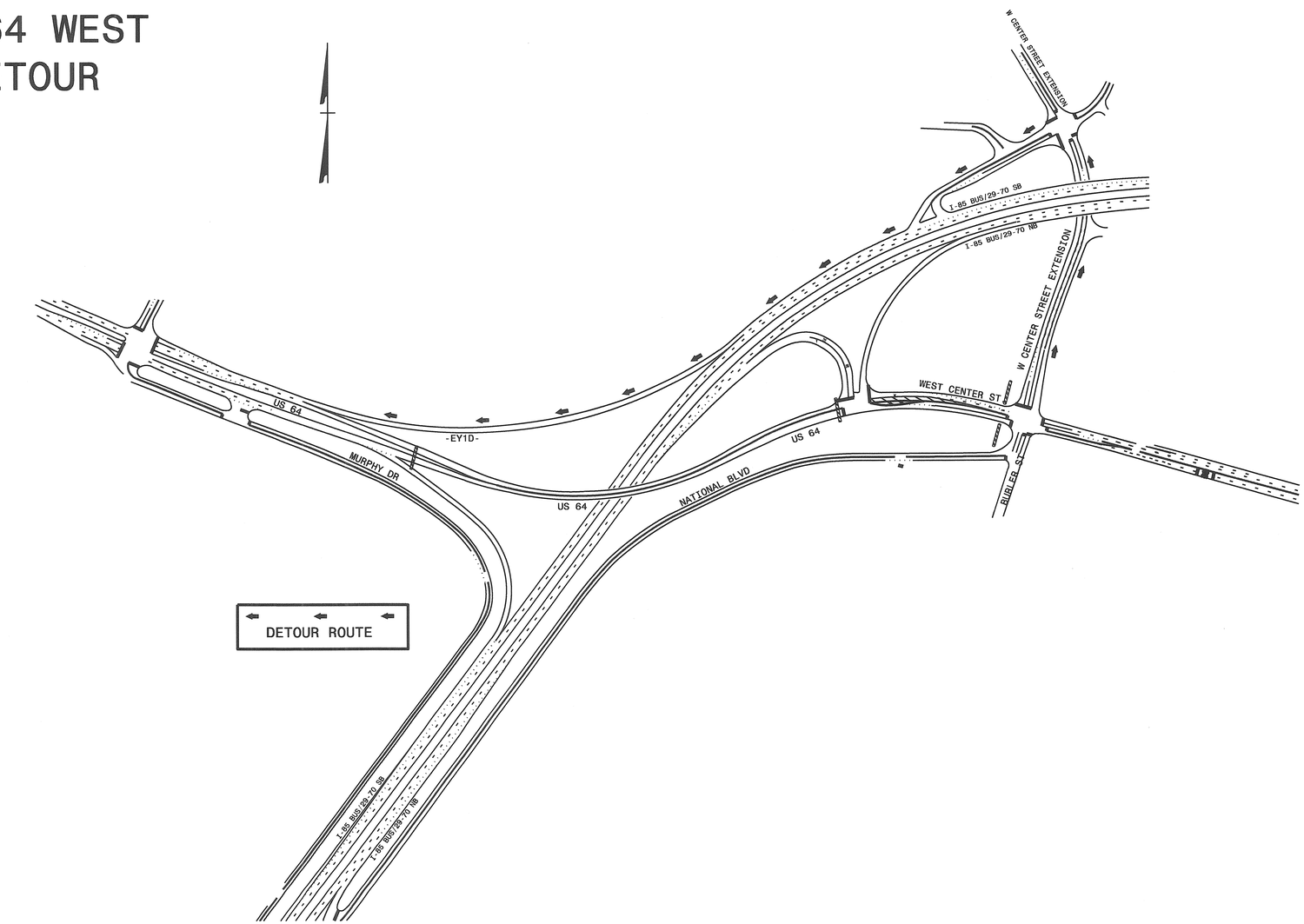

GRAPHIC SCALE
100 50 0 100 200
PLANS

LOCATION:	
TIP NO.:	COUNTY:
DESIGNED BY:	
CHECKED BY:	DATE:

PROJECT REFERENCE NO.	SHEET NO.
B-4497	2-L

ROADWAY DESIGN ENGINEER

NORTH CAROLINA PROFESSIONAL SEAL 033238 ENGINEER JEFFREY L. TEAGUE

Jeffrey L. Teague 9/6/12

DETAIL OF GUARDRAIL AT OVERHEAD SIGN ASSEMBLY -L- POC STA. 10+50 (RT)

NOTES:

1.) SEE SHEET SIGN-9 FOR LOCATION OF OVERHEAD SIGN ASSEMBLY.

2.) SEE SHEET SIGN-3 FOR DETAIL OF OVERHEAD SIGN ASSEMBLY.

REVISIONS

8/17/99

15-AUG-2012 10:45
R:\Roadway\Proj\b-4497_rdy_dtl_21.dgn
$$$$USERNAME$$$$

PROJECT REFERENCE NO.	SHEET NO.
B-4497	2-M

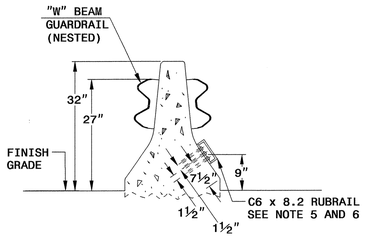

SECTION A-A

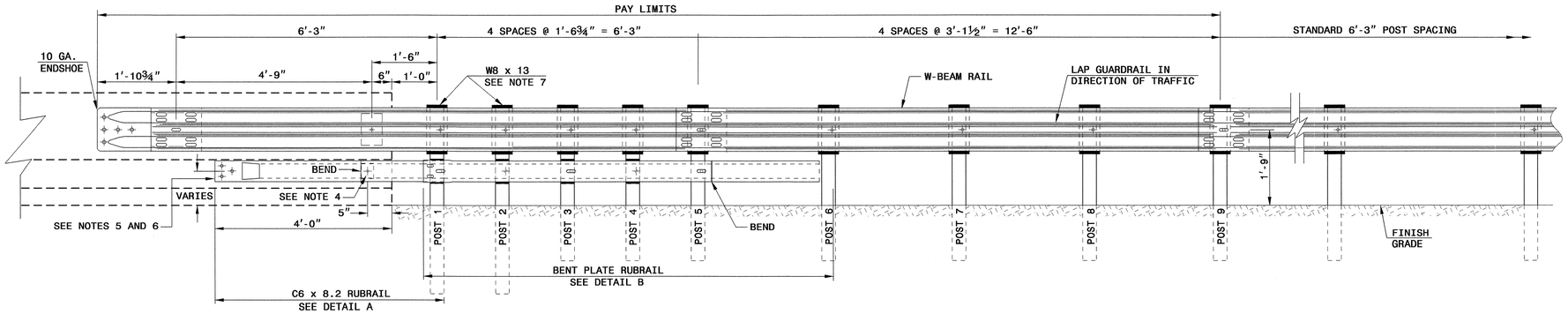

ELEVATION

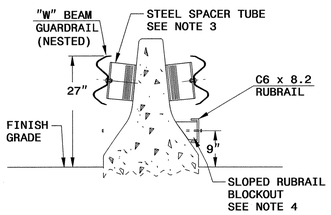

SECTION B-B

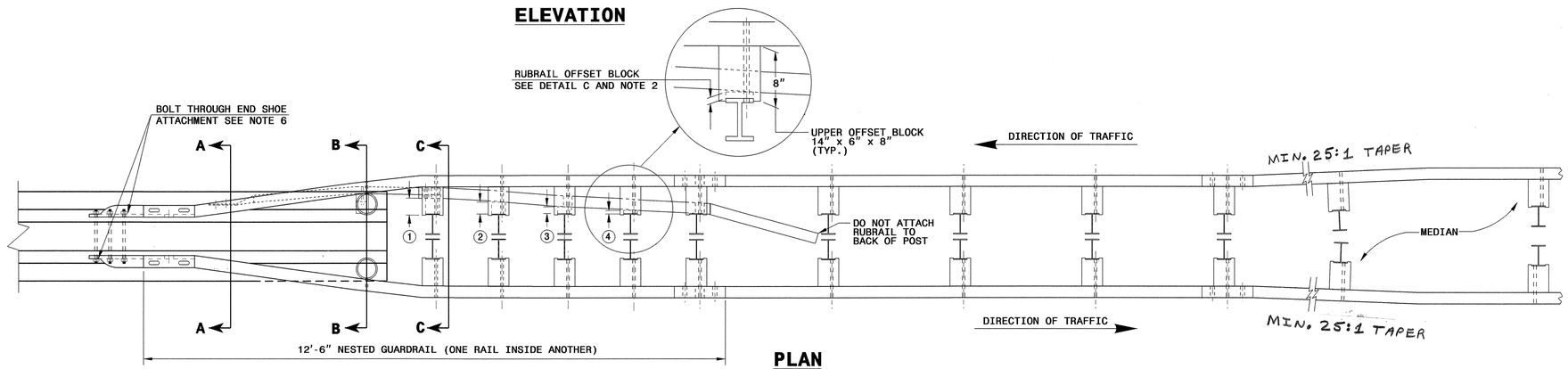

PLAN

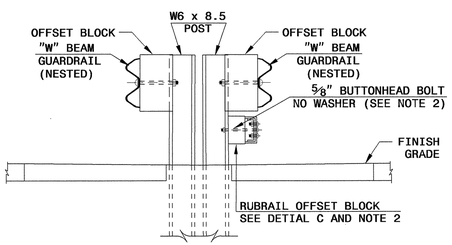

SECTION C-C

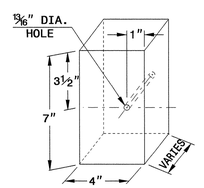

RUBRAIL BLOCKS 7" HIGH x 4" WIDE		
POST	THICKNESS	BOLT LENGTH
1	4¼"	9"
2	3¼"	5" *
3	2"	6"
4	1"	3" *

* BOLTS FOR POSTS 2 AND 4 ARE USED TO ATTACH BLOCK TO POST. RUBRAIL NOT ATTACHED TO BLOCK.

DETAIL C
RUBRAIL BLOCKOUT

GENERAL NOTES:

1) APPROACH END OF ANCHOR UNIT HAS RUBRAIL. POSTS 1 THROUGH 5 REQUIRE AN ADDITIONAL HOLE TO ATTACH LOWER BLOCKOUTS AND/OR RUBRAIL.
2) RUBRAIL BLOCKOUTS LOCATED ON POSTS 1 THROUGH 4 ARE OFFSET DRILLED AND SECURED WITH ⅝" BUTTONHEAD BOLTS (SEE CHART FOR BOLT LENGTHS). SECURE BLOCKS ONLY TO POSTS 2 AND 4. SECURE RUBRAIL AND BLOCKOUTS TO POSTS 1 AND 3. RUBRAIL IS SECURED TO POST 5 WITH A ⅝" x 4½" BUTTONHEAD BOLT. RUBRAIL IS FLARED TO BACK OF POST 6 AND NOT SECURED.
3) STEEL SPACER TUBE IS A SCHEDULE 40 GALVANIZED PIPE 6" INSIDE DIAMETER x 9" LONG. ATTACH TUBE TO GUARDRAIL ONLY WITH ⅝" x 1¼" LONG BUTTONHEAD BOLT AND RECTANGULAR PLATE WASHER.
4) SEE DETAIL D FOR SLOPED RUBRAIL BLOCKOUT. BLOCKOUT IS ATTACHED TO RAIL ELEMENT ONLY. USE ⅜" x 3" LAG BOLT WITH FLAT WASHER.
5) SHOP FABRICATE THE C6x8.2 RUBRAIL END TO BE CONSISTENT WITH THE SLOPE OF THE JERSEY SHAPE AND ATTACH FLUSH WITH THE SLOPED TOE OF THE BARRIER.
6) ANCHORAGE:
   (a) AT NEW OR EXISTING BARRIERS, RUBRAIL SHALL BE ANCHORED USING THREE ⅝" x 6" CHEMICALLY ANCHORED BOLTS WITH WASHERS. MAXIMUM PROJECTION FOR BOLTS SHALL BE ½".
   (b) AT NEW OR EXISTING BARRIERS, THE W-BEAM END SHOE SHALL BE ANCHORED USING FIVE ⅞" CHEMICALLY ANCHORED THREADED RODS WITH NUTS AND WASHERS. MAXIMUM PROJECTION FOR THREADED RODS SHALL BE ½". THE W-BEAM END SHOE SHALL BE INSTALLED BEHIND THE NESTED W-BEAM ELEMENTS.
7) POSTS 1 AND 2 ARE 7'-6" LONG. ALL OTHER POSTS IN THE ANCHOR UNIT ARE 6'-0".

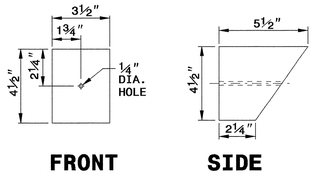

DETAIL D
SLOPED RUBRAIL BLOCKOUT

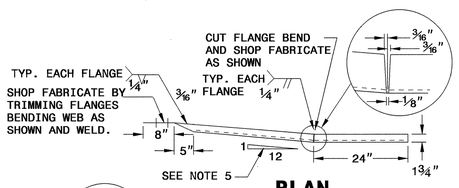

PLAN

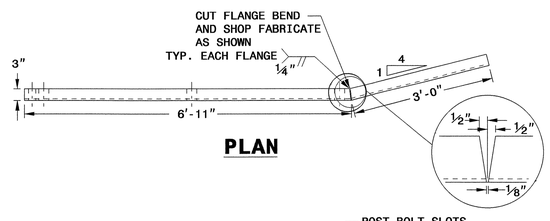

PLAN

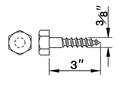

DETAIL E
LAG BOLT

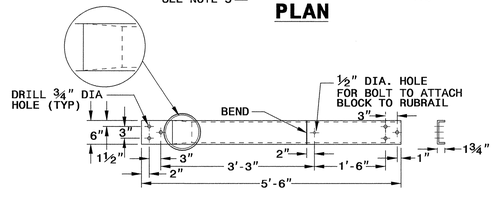

ELEVATION

DETAIL A
C6 x 8.2 RUBRAIL

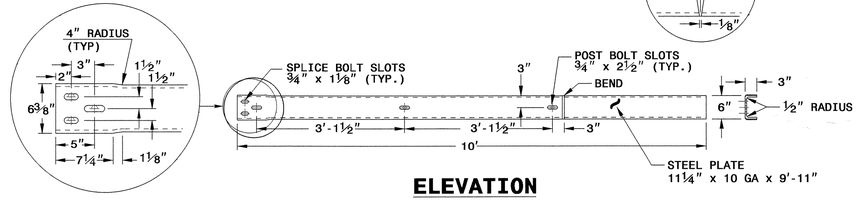

ELEVATION

DETAIL B
BENT PLATE RUBRAIL

NORTH CAROLINA PROFESSIONAL SEAL 022966 ENGINEER JOELIS HOOPER
9/7/12

CONTRACT STANDARDS AND DEVELOPMENT UNIT
Office 919-707-6950 FAX 919-250-4119

GUARDRAIL ANCHOR UNIT NJ-25 TYING TO CONCRETE BARRIER

ORIGINAL BY:	E.E. WARD	DATE:	5-5-03
MODIFIED BY:		DATE:	
CHECKED BY:		DATE:	8/8/12
FILE SPEC.:			

DGN: 5ddnr01 DATE: 9/7/2012 TIME: 2:36:17 PM

PROJECT REFERENCE NO.	SHEET NO.
B-4497	2-N

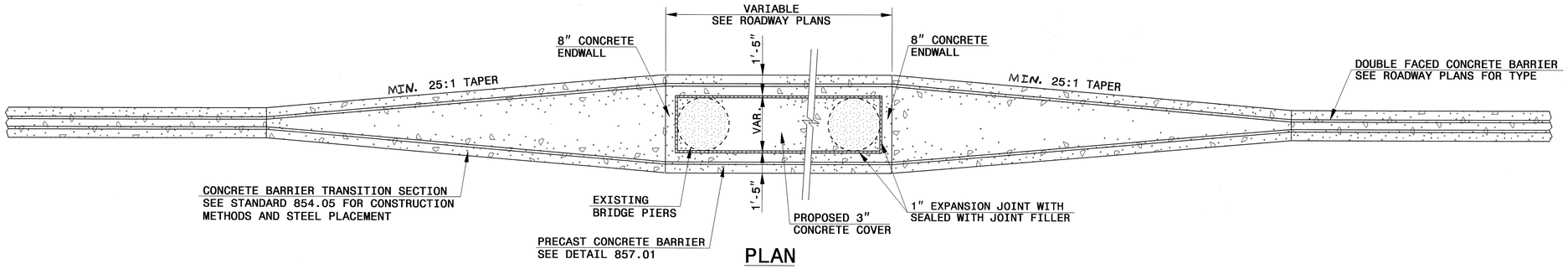

PLAN

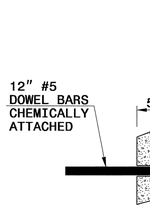

INSET 'B'

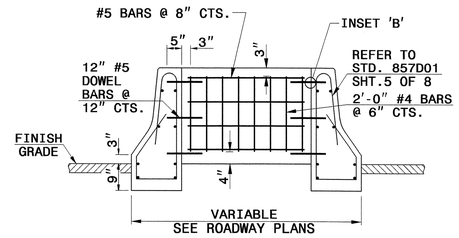

8" CONCRETE ENDWALL

GENERAL NOTES:

CONCRETE BARRIER TO BE CONSTRUCTED OF CLASS 'AA' CONCRETE. (SEE SPECIFICATIONS SECTION 854).

EXPANSION AND CONTRACTION JOINTS SHALL BE CONSTRUCTED AS SHOWN IN STANDARD DRAWING 854.01.

EXPANSION JOINTS SHALL BE SEALED WITH JOINT FILLER. (SEE SECTION 1028 OF THE SPECIFICATIONS).

ALTERNATIVE METHODS FOR STEEL FABRICATION PLACEMENT SHALL BE SUBMITTED FOR REVIEW.

SEE STANDARD DRAWING 854.05 FOR STEEL LAYOUT OF TRANSITION BARRIER.

*THE 2" DIMENSION FROM FINSIH GRADE TO THE BASE IS A MINIMUM DIMENSION.

INSET FIRST 1" DIA. GALVANIZED BAR 12'-6" AND SPACE THE REMAINING 1' BARS AT 25'-0".

USE AN APPROVED BONDING SYSTEM IN ACCORDANCE WITH SECTION 1081-1, TYPE 3A OF THE STANDARD SPECIFICATIONS.

SEAL ALL EXPANSION JOINTS WITH JOINT FILLER (SEE SECTION 1028 OF THE SPECIFICATIONS).

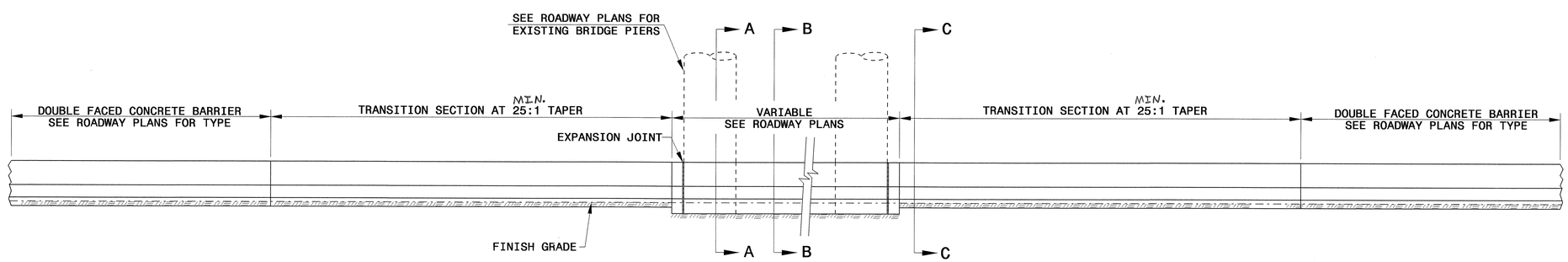

ELEVATION

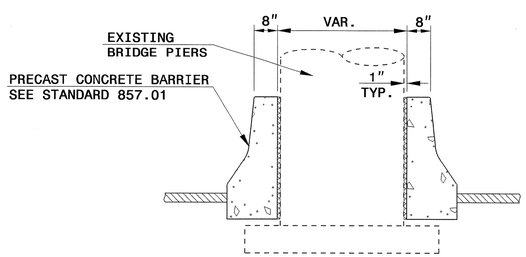

SECTION A-A

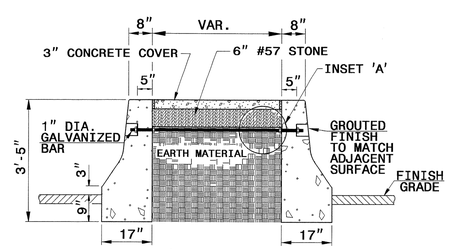

SECTION B-B

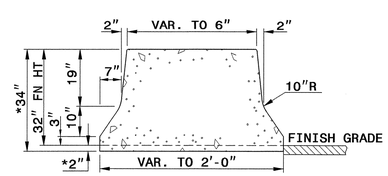

SECTION C-C

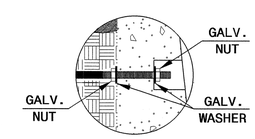

INSET 'A'

NORTH CAROLINA PROFESSIONAL SEAL 022966 ENGINEER JOHN S. HOUPE
9/7/12

CONTRACT STANDARDS AND DEVELOPMENT UNIT
Office 919-707-6950 FAX 919-250-4119

DETAIL OF CONCRETE BARRIER TRANSITION

ORIGINAL BY:	E.E. WARD	DATE:	7-28-03
MODIFIED BY:	E.E. WARD	DATE:	8-26-04
CHECKED BY:		DATE:	
FILE SPEC.:	\usr\details\stand\transition barrier.dgn		

$$$$SYSTIME$$$$
$$$$USERNAME$$$$ $$$$DGN$$$$

PROJECT REFERENCE NO.	SHEET NO.
B-4497	2-0

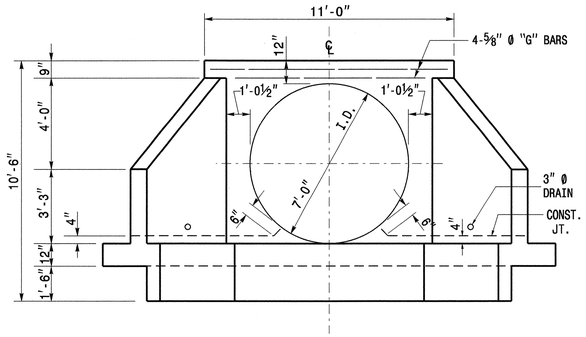

END ELEVATION

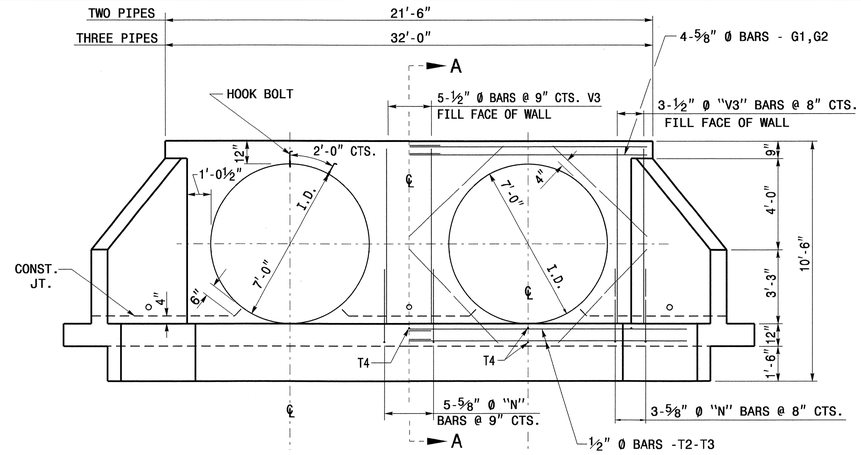

END ELEVATION

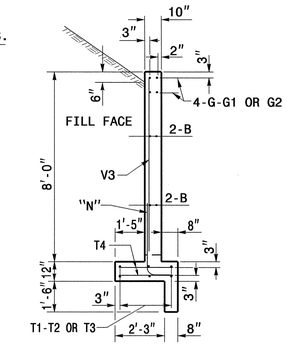

SECTION A-A FOR ALL ENDWALLS

NOTES:

ALL CONCRETE TO BE CLASS "A".

ALL REINFORCING STEEL SHALL BE ASTMA615-GRADE 60.

ALL REINFORCING STEEL SHALL BE DEFORMED BARS. WHERE SPLICING OF REINFORCMENT IS NECESSARY, BARS ARE TO BE LAPPED 45 DIAMETERS. ALL DIMENSIONS RELATIVE TO REINFORCEMENT ARE TO CENTERS OF BARS.

THE FOOTING, CURTAIN WALL AND 4" OF WALL ARE TO BE POURED IN ONE OPERATION ALLOWING NO TIME FOR INITIAL SET TO TAKE PLACE BETWEEN THEM. THE REMAINING WALL SHALL THEN BE POURED IN ONE OPERATION.

ALL EXPOSED CORNERS ARE TO BE CHAMFERED 1".

3" DIAMETER DRAINS SHALL BE PLACED IN WALL AS SHOWN AND BE 6" ABOVE NORMAL FLOW LINE.

ALL MATERIAL AND WORKMANSHIP AS PER N.C.DEPARTMENT OF TRANSPORTATION STANDARD SPECIFICATIONS.

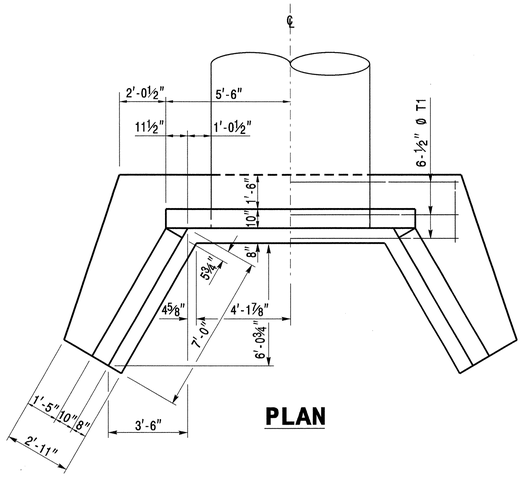

PLAN

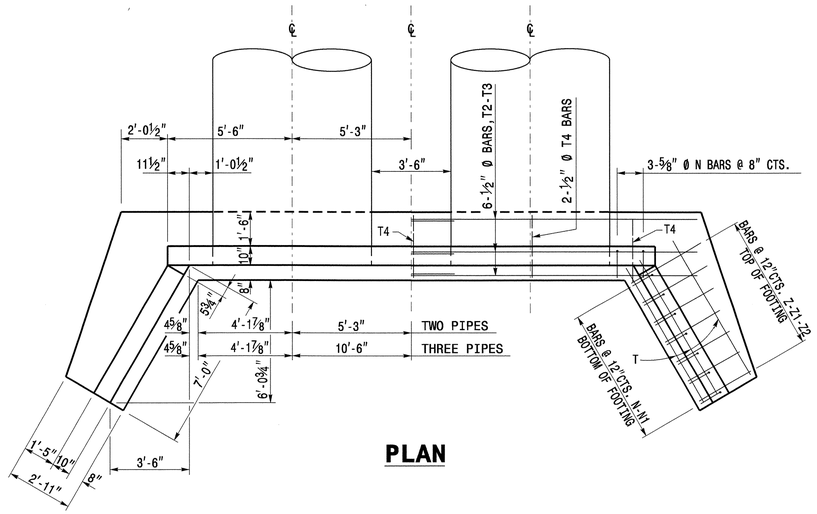

PLAN

BILL OF MATERIAL FOR ONE ENDWALL

REINFORCING STEEL			1 PIPE		2 PIPES		3 PIPES	
BAR	SIZE	LENGTH	NO.	WEIGHT	NO.	WEIGHT	NO.	WEIGHT
B	#4	6'-0"	8	32	16	64	24	96
G	#5	10'-9"	4	45	-	-	-	-
G1	#5	11'-9"	-	-	8	98	-	-
G2	#5	17'-0"	-	-	-	-	8	142
H	#4	9'-0"	10	60	10	60	10	60
H1	#4	7'-0"	6	28	6	28	6	28
H2	#4	3'-9"	4	10	4	10	4	10
N	#5	4'-6"	10	47	15	70	20	94
N1	#4	4'-1"	10	27	10	27	10	27
T	#4	6'-6"	6	26	6	26	6	26
T1	#4	15'-0"	6	60	-	-	-	-
T2	#4	13'-9"	-	-	12	110	-	-
T3	#4	19'-0"	-	-	-	-	12	152
T4	#4	2'-9"	4	7	7	13	10	18
V	#4	5'-9"	6	23	6	23	6	23
V1	#4	4'-6"	6	18	6	18	6	18
V2	#4	2'-9"	8	15	8	15	8	15
V3	#4	7'-6"	6	30	11	55	16	80
Z	#5	4'-9"	4	20	4	20	4	20
Z1	#4	4'-3"	4	11	4	11	4	11
Z2	#4	3'-6"	6	14	6	14	6	14
TOTAL REINF. STEEL (lbs.)				473		662		834
CLASS "A" CONC. (cu. yds.)				7.9		10.8		13.8

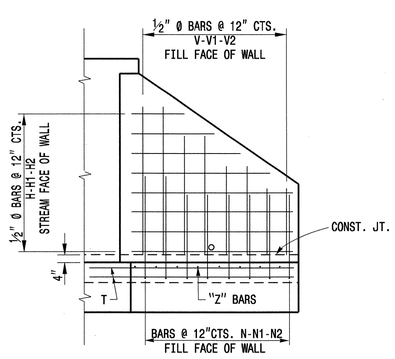

ELEVATION OF WING SHOWING REINFORCEMENT

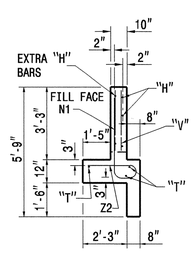

END OF WING

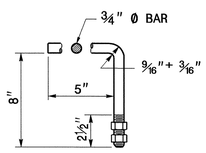

HOOK BOLT

HOOK BOLTS (ANCHORS SHALL BE CONSTRUCTED AT 2'-0" CTS. ALONG THE CIRCUMFERENCE OF THE 7'-0" CSPA. THE HOOK BOLTS SHALL BE EMBEDDED IN THE CONCRETE ENDWALL 8" IN DEPTH. THE GALVANIZED¾" DIA. HOOK BOLTS MUST MEET ASTM A-307 OR ASTM A-836. BOTH BOLTS AND NUTS MUST BE IN ACCORDANCE WITH ASTM A-153 FOR GALVANIZING.

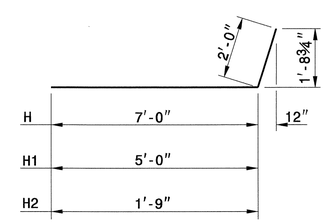

BARS H-H1-H2

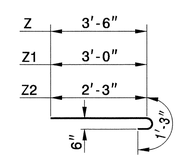

BARS Z-Z1-Z2

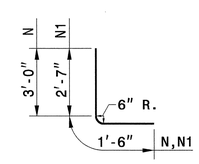

BARS N-N1

CONTRACT STANDARDS & DEVELOPMENT UNIT
STANDARDS AND SPECIAL DESIGN
Office 919-707-6950 FAX 919-250-4119

DETAIL OF REINFORCED CONCRETE ENDWALL FOR 84" DIAMETER PIPE - 90° SKEW

ORIGINAL BY: R.S.WICKER DATE: 6-46
MODIFIED BY: R.E.D.&T.S.S. DATE: 6-96 & 5-00
CHECKED BY: DATE: 9/23/11
FILE SPEC.: details/nbritt/english/hydro/endwall90sk.dgn

23-SEP-2011 14:09
$$$$CONTRACTS\Contracts\Special Details\nbritt\english\hydro\84 endwall 90sk.dgn
$$$$USERNAME$$$$

PROJECT REFERENCE NO.	SHEET NO.
B-4497	2-P

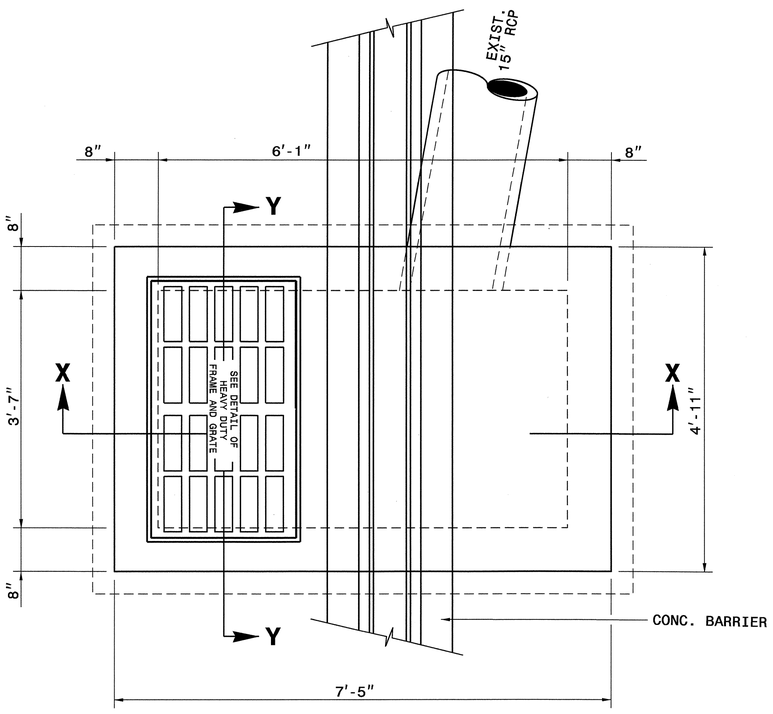

PLAN

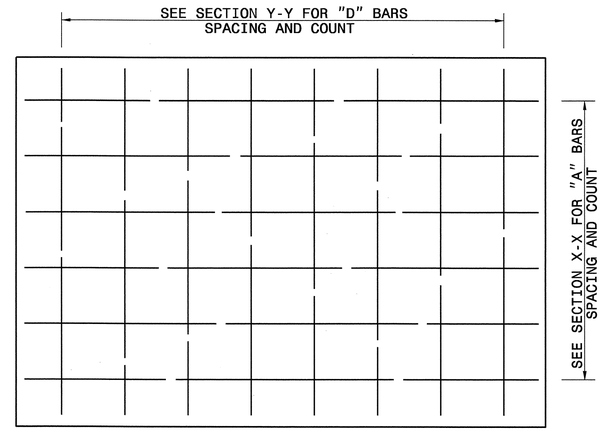

PLAN OF BASE

GENERAL NOTES:
- USE CLASS 'AA' CONCRETE FOR CAST IN PLACE CONCRETE BOX.
- USE CLASS 'AA' FOR THE FOOTING BASE.
- CHAMFER ALL EXPOSED CONCRETE CORNERS 1".
- USE FORMS TO CONSTRUCT THE BOTTOM SLAB.
- IF PIPES ARE SET IN THE BASE FOLLOW CONSTRUCTION PROCEDURES SHOWN BY STD. DWG. 840.00.
- INCLUDE REINFORCING STEEL COST IN THE UNIT OR LINEAR FOOT BID PRICE FOR "MASONRY DRAINAGE STRUCTURE".
- REFERENCE STD. DWG. 840.25 FOR FRAME ANCHORAGE.
- PROVIDE GRATED DROP INLETS OVER 3'-6" DEEP WITH STEPS SPACED 12" ON CENTER AS DIRECTED BY STD. DWG. 840.66.
- FRAME AND GRATES ARE SEPARATE CONTRACT ITEMS.

BILL OF MATERIALS

BAR	SIZE	LENGTH	QUANTITY	WEIGHT
A	#5	10'-7½"	6	66.5
B	#5	5'-5"	28	158.2
C	#5	4'-7½"	26	125.4
D	#5	7'-11½"	8	66.4
E	#5	7'-1"	32	236.4
F	#5	4'-7"	30	143.4
G	#5	4'-1"	14	59.6
H	#5	3'-3"	18	61.0
REINF. STEEL (TOTAL WEIGHT LBS.)				916.9
CONCRETE IN BASE (CUBIC YARDS)				1.1
CONCRETE IN WALLS (CUBIC YARDS)				2.3
CONCRETE TOTAL (CUBIC YARDS)				3.4

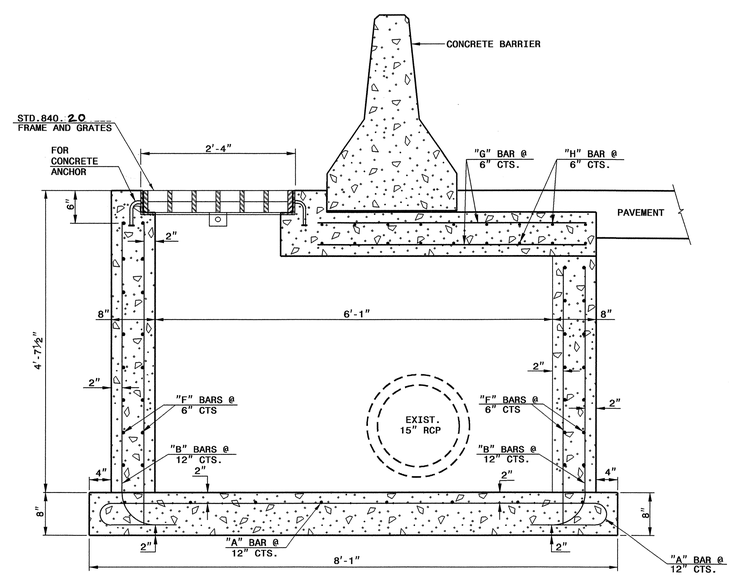

SECTION X-X

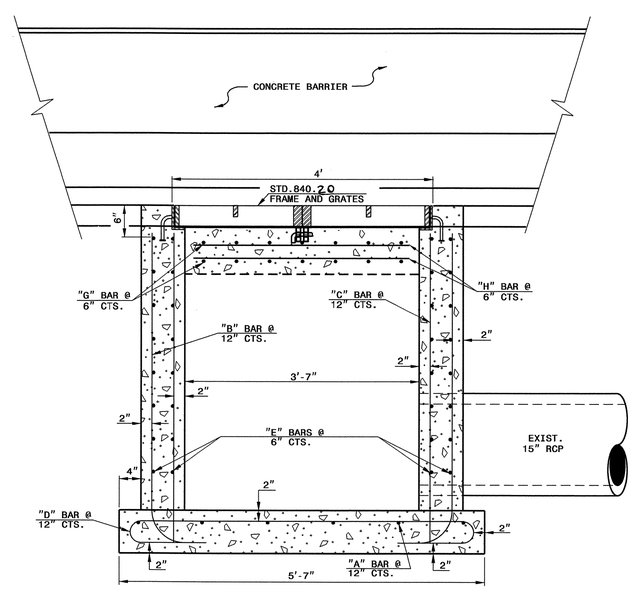

SECTION Y-Y

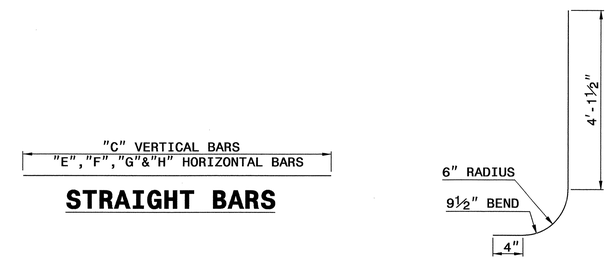

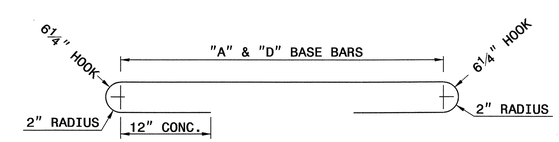

NORTH CAROLINA PROFESSIONAL SEAL 022966 ENGINEER
9/7/12

CONTRACT STANDARDS AND DEVELOPMENT UNIT
Office 919-250-4128 FAX 919-250-4119

BARRIER OVER TRAFFIC BEARING DROP INLET

ORIGINAL BY: T.Spell DATE: 7-14-11
MODIFIED BY: DATE:
CHECKED BY: DATE: 8/18/11
FILE SPEC.: usr/details/stand/singlegratediunderbarrier.dgn

16-AUG-2011 13:40
S:\Contracts\Contracts\Special Details\jhowerton\singlegrate DI under Median Barrier.dgn
$$$$USERNAME$$$$

PROJECT REFERENCE NO.	SHEET NO.
B-4497	2-Q

GENERAL NOTES:

USE CLASS "B" CONCRETE THROUGHOUT.

OPTIONAL CONSTRUCTION - MONOLITHIC POUR, 2" KEYWAY, OR #4 BAR DOWELS AT 12" CENTERS AS DIRECTED BY THE ENGINEER.

USE FORMS FOR THE CONSTRUCTION OF THE BOTTOM SLAB, SEE STD. DRAWING 840.00.

CHAMFER ALL EXPOSED CORNERS 1".

2" MINIMUM CONCRETE COVERAGE ON ALL REBAR.

"Z" BAR TO BE USED TO REINFORCE OPENING AROUND 84 INCH WSP.

HEIGHT DIMENSIONS MAY BE ADJUSTED DOWN FOR SMALLER PIPES AS DIRECTED BY THE ENGINEER.

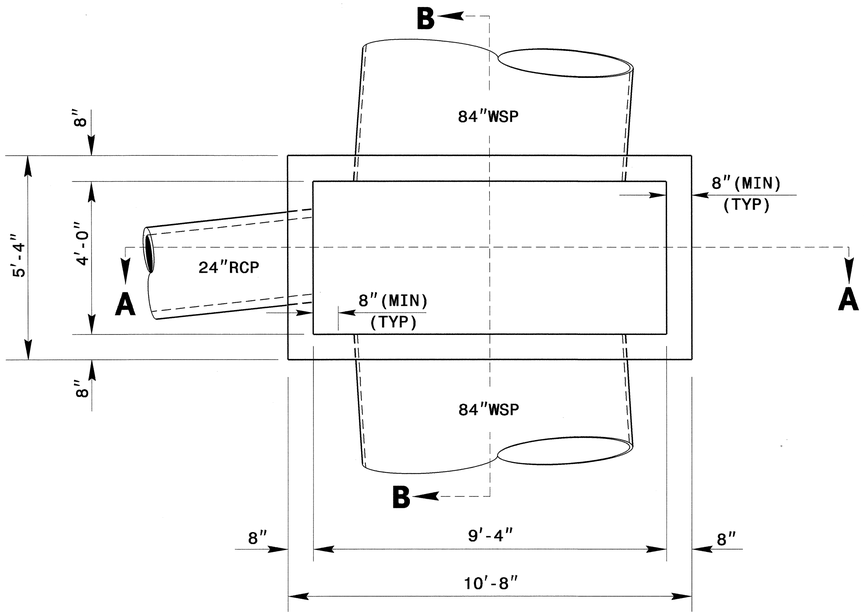

PLAN VIEW

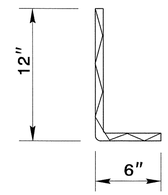

DOWEL

BILL OF MATERIALS

BAR	NO.	SIZE	LENGTH	WEIGHT
H	80	#5	5'-0"	417
H1	48	#5	10'-4"	517
V	48	#5	8'-5"	421
Z	7	#5	4'-0"	29
TOTAL REINF. STEEL (LBS.)				1416
TOTAL CONC. (CU. YDS.)				9.2

* NO DEDUCTION HAS BEEN MADE FOR PIPES

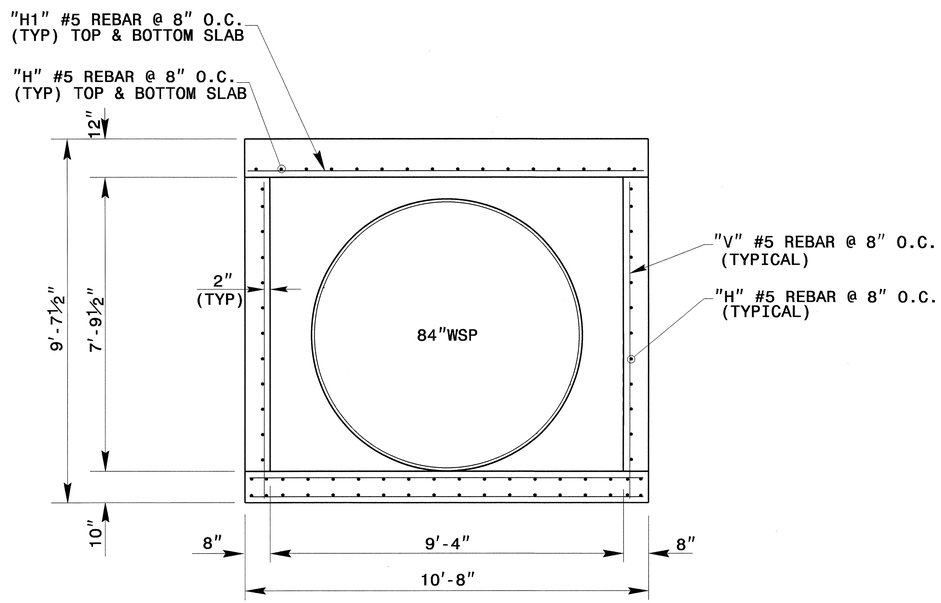

SECTION A-A

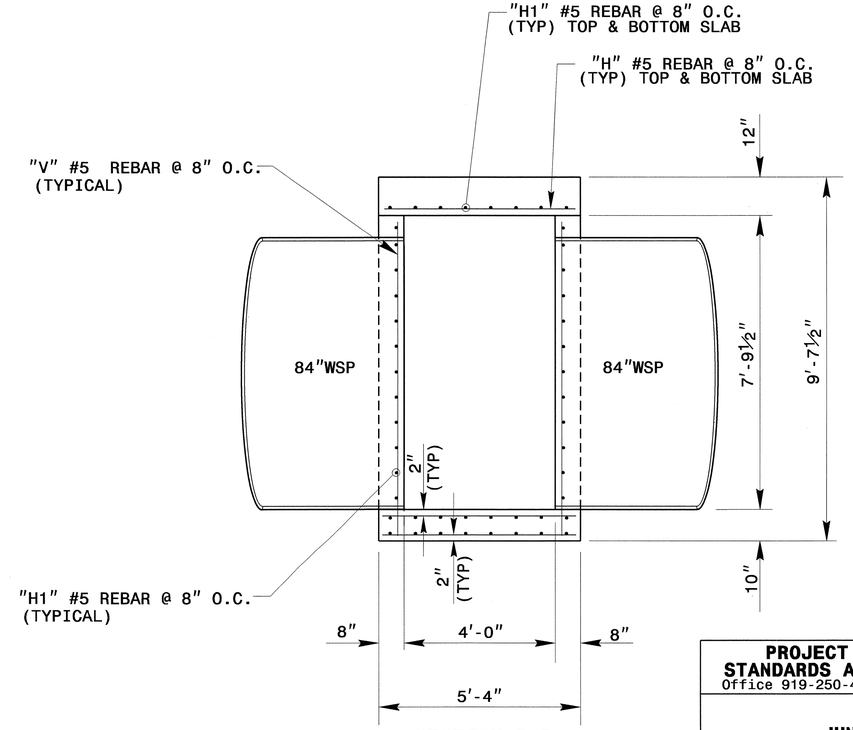

SECTION B-B

NORTH CAROLINA PROFESSIONAL SEAL 022966 ENGINEER JOHN S. HOWESTON III 9/7/12

PROJECT SERVICES UNIT
STANDARDS AND SPECIAL DESIGN
Office 919-250-4128 FAX 919-250-4119

JUNCTION BOX

ORIGINAL BY:	nbritt	DATE:	05/07/08
MODIFIED BY:	kkempf	DATE:	8/10/12
CHECKED BY:		DATE:	8/13/12
FILE SPEC.:	special details/kkempf/english/b4497_jb 84in.dgn		

5/14/99

$$$$$SYSTIME$$$$
$$$$$$$$UN$ $$ $$ $$ $$ $$
$$$$$$$$LENNINE$$$$

PROJECT REFERENCE NO.	SHEET NO.
B-4497	2-R

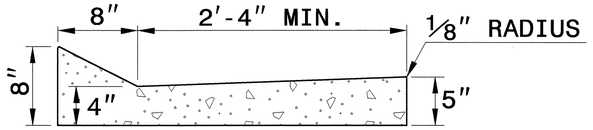

SHOULDER BERM GUTTER

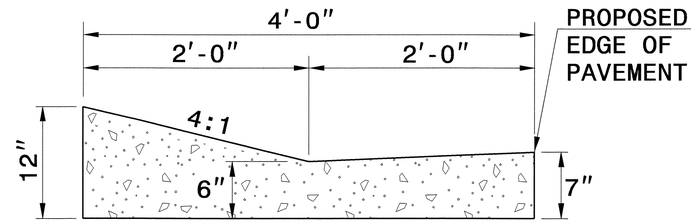

EXPRESSWAY GUTTER

NOTE: SEE STD. DWG. 846.01 FOR ADDITIONAL CURB AND GUTTER INFORMATION.

SEE ROADWAY PLANS FOR LOCATION OF CURB TRANSITION.

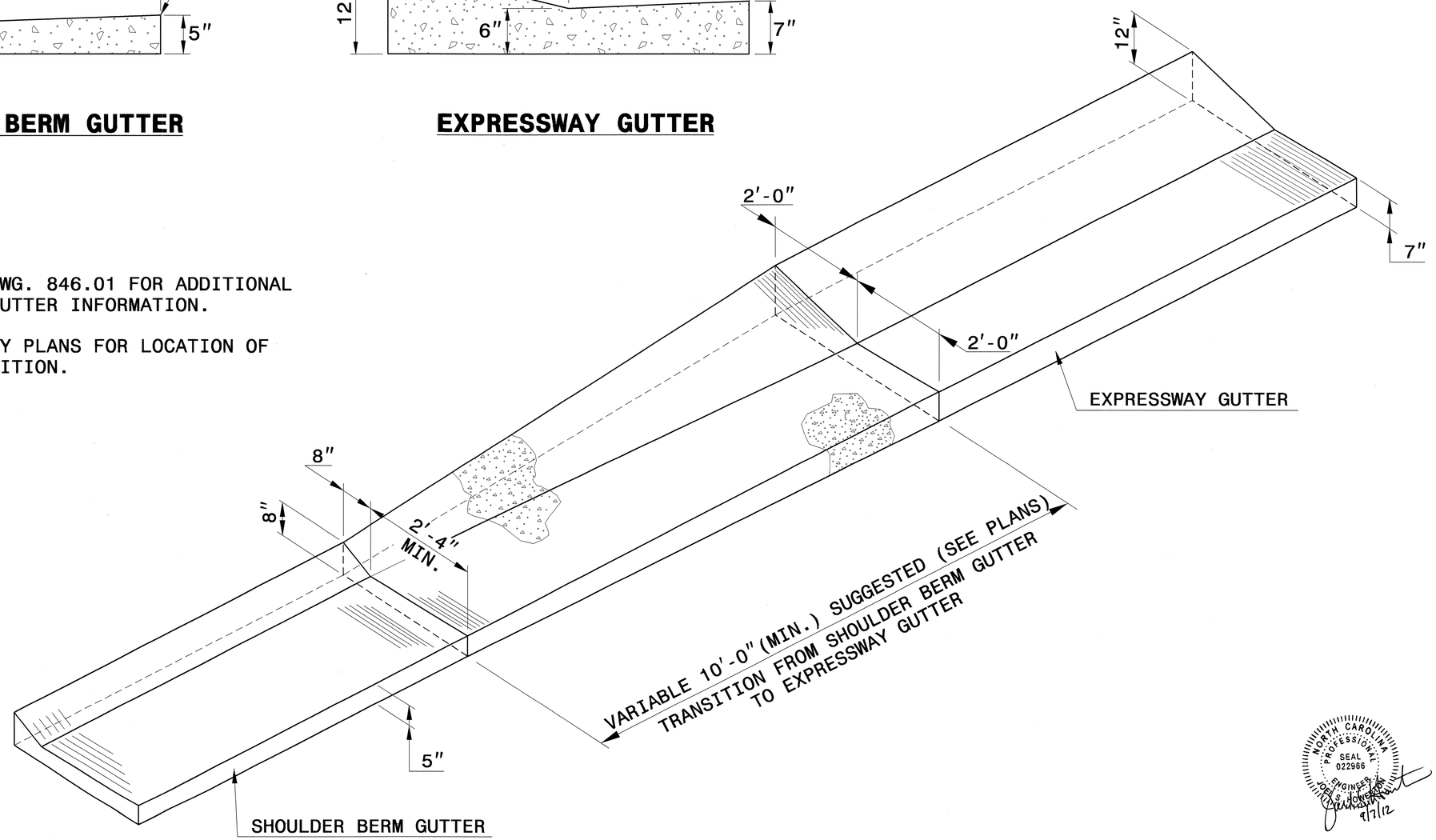

ISOMETRIC VIEW OF TRANSITION

NORTH CAROLINA PROFESSIONAL SEAL 022966 ENGINEER
9/7/12

CONTRACT STANDARDS AND DEVELOPMENT UNIT
Office 919-707-6950 FAX 919-250-4119

DETAIL OF SHOULDER BERM GUTTER TO EXPRESSWAY GUTTER TRANSITION SECTION

ORIGINAL BY: T.S.Spell DATE: 8-13-02
MODIFIED BY: DATE:
CHECKED BY: DATE: 8/14/12
FILE SPEC.: v:/sr/details/stand/cgtransit.dgn

5/14/99

$$$$SYSTIME$$$$
$$$$TIME$$$$
$$$$DGN$$$$
$$$$USERNAME$$$$

PROJECT REFERENCE NO.	SHEET NO.
B-4497	3 (1 of 2)

STATE OF NORTH CAROLINA
DIVISION OF HIGHWAYS

SUMMARY OF QUANTITIES

STATE OF NORTH CAROLINA
DIVISION OF HIGHWAYS
ROADWAY SUMMARY OF QUANTITIES FOR CONTRACT - C202951

ItemNumber	Sec #	Quantity	Unit	Description
0000100000-N	800	Lump Sum		MOBILIZATION
0000400000-N	801	Lump Sum		CONSTRUCTION SURVEYING
0050000000-E	226	1	ACR	SUPPLEMENTARY CLEARING & GRUBBING
0057000000-E	226	500	CY	UNDERCUT EXCAVATION
0063000000-N	SP	Lump Sum		GRADING
0106000000-E	230	40,000	CY	BORROW EXCAVATION
0134000000-E	240	580	CY	DRAINAGE DITCH EXCAVATION
0196000000-E	270	200	SY	GEOTEXTILE FOR SOIL STABILIZATION
0318000000-E	300	135	TON	FOUNDATION CONDITIONING MATERIAL, MINOR STRUCTURES
0320000000-E	300	380	SY	FOUNDATION CONDITIONING GEOTEXTILE
0343000000-E	310	92	LF	15" SIDE DRAIN PIPE
0344000000-E	310	36	LF	18" SIDE DRAIN PIPE
0345000000-E	310	92	LF	24" SIDE DRAIN PIPE
0348000000-E	310	2	EA	**" SIDE DRAIN PIPE ELBOWS (15")
0366000000-E	310	52	LF	15" RC PIPE CULVERTS, CLASS III
0378000000-E	310	232	LF	24" RC PIPE CULVERTS, CLASS III
0448200000-E	310	500	LF	15" RC PIPE CULVERTS, CLASS IV
0582000000-E	310	96	LF	15" CS PIPE CULVERTS, 0.064" THICK
0594000000-E	310	40	LF	24" CS PIPE CULVERTS, 0.064" THICK
0636000000-E	310	2	EA	**" CS PIPE ELBOWS, *****" THICK (15", 0.064")
0973100000-E	330	320	LF	**" WELDED STEEL PIPE, ****" THICK, GRADE B IN SOIL (84", 1")
0973300000-E	330	160	LF	**" WELDED STEEL PIPE, ****" THICK, GRADE B NOT IN SOIL (84", 1")
0986000000-E	SP	100	LF	GENERIC PIPE ITEM 84" STEEL PIPE (OPEN TRENCH)
0995000000-E	340	395	LF	PIPE REMOVAL
1077000000-E	SP	5	TON	#57 STONE
1099500000-E	505	300	CY	SHALLOW UNDERCUT
1099700000-E	505	570	TON	CLASS IV SUBGRADE STABILIZATION
1121000000-E	520	55	TON	AGGREGATE BASE COURSE
1220000000-E	545	100	TON	INCIDENTAL STONE BASE
1275000000-E	600	48	GAL	PRIME COAT
1330000000-E	607	2,620	SY	INCIDENTAL MILLING
1489000000-E	610	120	TON	ASPHALT CONC BASE COURSE, TYPE B25.0B
1491000000-E	610	5,650	TON	ASPHALT CONC BASE COURSE, TYPE B25.0C
1498000000-E	610	100	TON	ASPHALT CONC INTERMEDIATE COURSE, TYPE I19.0B
1503000000-E	610	3,510	TON	ASPHALT CONC INTERMEDIATE COURSE, TYPE I19.0C
1523000000-E	610	3,660	TON	ASPHALT CONC SURFACE COURSE, TYPE S9.5C
1525000000-E	610	10	TON	ASPHALT CONC SURFACE COURSE, TYPE SF9.5A
1575000000-E	620	645	TON	ASPHALT BINDER FOR PLANT MIX
1693000000-E	654	26	TON	ASPHALT PLANT MIX, PAVEMENT REPAIR
2220000000-E	838	16	CY	REINFORCED ENDWALLS
2275000000-E	SP	426	CY	FLOWABLE FILL
2286000000-N	840	21	EA	MASONRY DRAINAGE STRUCTURES
2297000000-E	840	9.5	CY	MASONRY DRAINAGE STRUCTURES
2308000000-E	840	21	LF	MASONRY DRAINAGE STRUCTURES
2364000000-N	840	1	EA	FRAME WITH TWO GRATES, STD 840.16
2364200000-N	840	5	EA	FRAME WITH TWO GRATES, STD 840.20
2366000000-N	840	4	EA	FRAME WITH TWO GRATES, STD 840.24
2367000000-N	840	6	EA	FRAME WITH TWO GRATES, STD 840.29
2396000000-N	840	4	EA	FRAME WITH COVER, STD 840.54
2451000000-N	852	1	EA	CONCRETE TRANSITIONAL SECTION FOR DROP INLET
2556000000-E	846	1,210	LF	SHOULDER BERM GUTTER
2577000000-E	846	90	LF	CONCRETE EXPRESSWAY GUTTER
2655000000-E	852	160	SY	5" MONOLITHIC CONCRETE ISLANDS (KEYED IN)
2703000000-E	854	770	LF	CONCRETE BARRIER, TYPE ******* (T1)
2710000000-N	854	2	EA	CONCRETE BARRIER TRANSITION SECTION
2724000000-E	857	506	LF	PRECAST REINFORCED CONCRETE BARRIER, SINGLE FACED
2759000000-N	SP	1	EA	GENERIC PAVING ITEM MEDIAN HAZARD PROTECTION
3030000000-E	862	2,500	LF	STEEL BM GUARDRAIL
3150000000-N	862	10	EA	ADDITIONAL GUARDRAIL POSTS
3180000000-N	862	1	EA	GUARDRAIL ANCHOR UNITS, TYPE ********** (NJ-25)
3210000000-N	862	1	EA	GUARDRAIL ANCHOR UNITS, TYPE CAT-1
3270000000-N	SP	5	EA	GUARDRAIL ANCHOR UNITS, TYPE 350
3317000000-N	862	6	EA	GUARDRAIL ANCHOR UNITS, TYPE B-77
3360000000-E	863	3,725	LF	REMOVE EXISTING GUARDRAIL
3628000000-E	876	245	TON	RIP RAP, CLASS I
3642000000-E	876	5	TON	RIP RAP, CLASS A
3649000000-E	876	65	TON	RIP RAP, CLASS B
3651000000-E	SP	15	TON	BOULDERS
3656000000-E	876	2,515	SY	GEOTEXTILE FOR DRAINAGE
4048000000-E	902	4	CY	REINFORCED CONCRETE SIGN FOUNDATIONS
4054000000-E	902	1	CY	PLAIN CONCRETE SIGN FOUNDATIONS
4057000000-E	SP	6	CY	OVERHEAD FOOTING
4060000000-E	903	1,268	LB	SUPPORTS, BREAKAWAY STEEL BEAM
4066000000-E	903	2,020	LB	SUPPORTS, SIMPLE STEEL BEAM
4072000000-E	903	1,030	LF	SUPPORTS, 3-LB STEEL U-CHANNEL
4082100000-N	SP	Lump Sum		SUPPORTS, OVERHEAD SIGN STRUCTURE AT STA ****** (10+50 -L-)
4096000000-N	904	1	EA	SIGN ERECTION, TYPE D
4102000000-N	904	48	EA	SIGN ERECTION, TYPE E
4108000000-N	904	6	EA	SIGN ERECTION, TYPE F
4109000000-N	904	2	EA	SIGN ERECTION, TYPE *** (OVERHEAD) (A)
4110000000-N	904	6	EA	SIGN ERECTION, TYPE *** (GROUND MOUNTED) (A)
4152000000-N	907	4	EA	DISPOSAL OF SIGN SYSTEM, STEEL BEAM
4155000000-N	907	52	EA	DISPOSAL OF SIGN SYSTEM, U-CHANNEL
4400000000-E	1110	1,673	SF	WORK ZONE SIGNS (STATIONARY)
4405000000-E	1110	630	SF	WORK ZONE SIGNS (PORTABLE)
4410000000-E	1110	185	SF	WORK ZONE SIGNS (BARRICADE MOUNTED)
4415000000-N	1115	3	EA	FLASHING ARROW BOARD
4420000000-N	1120	3	EA	PORTABLE CHANGEABLE MESSAGE SIGN
4422000000-N	1120	5	DAY	PORTABLE CHANGEABLE MESSAGE SIGN (SHORT TERM)
4430000000-N	1130	532	EA	DRUMS
4445000000-E	1145	180	LF	BARRICADES (TYPE III)
4455000000-N	1150	120	DAY	FLAGGER
4465000000-N	1160	5	EA	TEMPORARY CRASH CUSHIONS
4480000000-N	1165	6	EA	TMA
4485000000-E	1170	2,890	LF	PORTABLE CONCRETE BARRIER
4510000000-N	SP	320	HR	LAW ENFORCEMENT
4650000000-N	1251	35	EA	TEMPORARY RAISED PAVEMENT MARKERS
4710000000-E	1205	205	LF	THERMOPLASTIC PAVEMENT MARKING LINES (24", 120 MILS)
4721000000-E	1205	12	EA	THERMOPLASTIC PAVEMENT MARKING CHARACTER (120 MILS)
4725000000-E	1205	29	EA	THERMOPLASTIC PAVEMENT MARKING SYMBOL (90 MILS)
4810000000-E	1205	12,279	LF	PAINT PAVEMENT MARKING LINES (4")
4815000000-E	1205	50,865	LF	PAINT PAVEMENT MARKING LINES (6")
4820000000-E	1205	3,609	LF	PAINT PAVEMENT MARKING LINES (8")
4847000000-E	1205	31,800	LF	POLYUREA PAVEMENT MARKING LINES (4", **********) (HIGHLY REFLECTIVE ELEMENTS)
4847110000-E	1205	2,700	LF	POLYUREA PAVEMENT MARKING LINES (8", **********) (HIGHLY REFLECTIVE ELEMENTS)
4850000000-E	1205	13,200	LF	REMOVAL OF PAVEMENT MARKING LINES (4")
4855000000-E	1205	2,460	LF	REMOVAL OF PAVEMENT MARKING LINES (6")
4860000000-E	1205	340	LF	REMOVAL OF PAVEMENT MARKING LINES (8")
4875000000-N	1205	26	EA	REMOVAL OF PAVEMENT MARKING SYMBOLS & CHARACTERS
4905000000-N	1253	150	EA	SNOWPLOWABLE PAVEMENT MARKERS
4935000000-N	1267	36	EA	FLEXIBLE DELINEATORS (CRYSTAL)
4940000000-N	1267	16	EA	FLEXIBLE DELINEATORS (YELLOW)
5691500000-E	1520	300	LF	12" SANITARY GRAVITY SEWER
5775000000-E	1525	3	EA	4' DIA UTILITY MANHOLE
5798000000-E	1530	184	LF	ABANDON **" UTILITY PIPE (42")
5804000000-E	1530	24	LF	ABANDON 12" UTILITY PIPE
5816000000-N	1530	1	EA	ABANDON UTILITY MANHOLE
5836000000-E	1540	190	LF	24" ENCASEMENT PIPE
5872200000-E	1550	90	LF	TRENCHLESS INSTALLATION OF 24" IN SOIL
5872210000-E	1550	90	LF	TRENCHLESS INSTALLATION OF 24" NOT IN SOIL
6000000000-E	1605	3,525	LF	TEMPORARY SILT FENCE
6006000000-E	1610	1,060	TON	STONE FOR EROSION CONTROL, CLASS A
6009000000-E	1610	1,000	TON	STONE FOR EROSION CONTROL, CLASS B
6012000000-E	1610	860	TON	SEDIMENT CONTROL STONE
6015000000-E	1615	15.5	ACR	TEMPORARY MULCHING
6018000000-E	1620	500	LB	SEED FOR TEMPORARY SEEDING
6021000000-E	1620	2	TON	FERTILIZER FOR TEMPORARY SEEDING
6024000000-E	1622	800	LF	TEMPORARY SLOPE DRAINS
6029000000-E	SP	100	LF	SAFETY FENCE
6030000000-E	1630	1,640	CY	SILT EXCAVATION
6036000000-E	1631	9,400	SY	MATTING FOR EROSION CONTROL
6038000000-E	SP	1,350	SY	PERMANENT SOIL REINFORCEMENT MAT
6042000000-E	1632	1,250	LF	1/4" HARDWARE CLOTH
6045000000-E	SP	60	LF	**" TEMPORARY PIPE (15")
6070000000-N	1639	5	EA	SPECIAL STILLING BASINS
6071010000-E	SP	650	LF	WATTLE
6071020000-E	SP	350	LB	POLYACRYLAMIDE (PAM)
6071030000-E	1640	655	LF	COIR FIBER BAFFLE
6084000000-E	1660	12	ACR	SEEDING & MULCHING
6087000000-E	1660	9	ACR	MOWING
6090000000-E	1661	200	LB	SEED FOR REPAIR SEEDING
6093000000-E	1661	0.5	TON	FERTILIZER FOR REPAIR SEEDING
6096000000-E	1662	400	LB	SEED FOR SUPPLEMENTAL SEEDING

5/28/99
14-AUG-2012 15:00
R:\Roadway\Proj\b-4497_rdy_sum.dgn
$$$$USERNAME$$$$

STATE OF NORTH CAROLINA
SUMMARY OF QUANTITIES

PROJECT REFERENCE No.	SHEET No.
B-4497	3 (2 of 2)

ItemNumber	Sec #	Quantity	Unit	Description
6108000000-E	1665	12	TON	FERTILIZER TOPDRESSING
6111000000-E	SP	90	LF	IMPERVIOUS DIKE
6114500000-N	1667	20	MHR	SPECIALIZED HAND MOWING
6117000000-N	SP	25	EA	RESPONSE FOR EROSION CONTROL
6123000000-E	1670	0.25	ACR	REFORESTATION
7300000000-E	1715	300	LF	UNPAVED TRENCHING (**********) (1, 2")
7324000000-N	1716	2	EA	JUNCTION BOX (STANDARD SIZE)
7444000000-E	1725	225	LF	INDUCTIVE LOOP SAWCUT
7456000000-E	1726	1,150	LF	LEAD-IN CABLE (**********) (14-2)

12/06/07

COMPUTED BY: T.B. ROACH	DATE: 8/2012
CHECKED BY: C.E. HARRIS	DATE: 8/2012

STATE OF NORTH CAROLINA
DIVISION OF HIGHWAYS

PROJECT REFERENCE NO.	SHEET NO.
B-4497	3-A

★ SUMMARY OF EARTHWORK IN CUBIC YARDS

STATION	STATION	UNCL. EXCAV.	EMBANK. +%%	BORROW	WASTE
-L- STA. 10+50	-L- STA. 19+28.16(BR)	9,928	42,738	32,810	0
-RPY1C- STA. 10+00	-RPY1C- STA. 14+00	494	2	0	492
SUBTOTAL		10,422	42,740	32,810	492
-L- STA. 21+18.91(BR)	-L- STA. 26+00	4,179	6,806	2,627	0
SUBTOTAL		4,179	6,806	2,627	0
-Y1- (RT) STA. 21+00	-Y1- (RT) STA. 32+00	1,386	122	0	1,264
-RPY1D- STA. 10+00	-RPY1D- STA. 12+50	135	7	0	128
-Y1- (MED) STA. 21+00	-Y1- (MED) STA. 32+00	612	0	0	612
-Y1- (LT) STA. 21+00	-Y1- (LT) STA. 32+00	2,525	2,456	0	69
SUBTOTAL		4,658	2,585	0	2,073
TOTAL		19,259	52,131	35,437	2,565
MATERIAL TO FILL CHANNEL			484	484	
LOSS DUE TO CLEARING & GRUBBING		-100		100	
EST. SHOULDER MATERIAL			3,648	3,648	
WASTE IN LIEU OF BORROW				-2,565	-2,565
PROJECT TOTALS		19,159	56,263	37,104	0
5% TO REPLACE TOPSOIL ON BORROW PIT				1,855	
GRAND TOTALS		19,159		38,959	
SAY		20,000		40,000	

ESTIMATED UNDERCUT EXCAVATION = 500 C.Y.
ESTIMATED SHALLOW UNDERCUT = 300 C.Y.
ESTIMATED DDE = 580 C.Y.

★ Approximate quantities only. Unclassified Excavation, Fine Grading, Clearing and Grubbing, and Removal of Existing Pavement will be paid for at the contract lump sum price for "Grading."

Earthwork quantities are calculated by the Roadway Design Unit. These earthwork quantities are based in part on subsurface data provided by the Geotechnical Engineering Unit.

★ ASPHALT PAVEMENT REMOVAL SUMMARY IN SQUARE YARDS

SURVEY LINE	STATION	STATION	LOCATION LT/RT/CL	YD^2
L	13+00	18+20	EXIST. ROADBED	1933.61
L	20+53	23+50	EXIST. ROADBED	1375.64
L	23+50	26+00	LT	166.67
L	23+50	26+00	RT	333.33
Y1	21+00	23+00	CL	511.11
Y1	21+00	32+00	LT	733.33
Y1	22+62	32+00	RT	416.89
Y1	23+00	32+00	CL/RT	300
Y1	23+00	32+00	CL/LT	300
RPY1D	12+12	12+50	RT	16.89
RPY1D	11+85	12+50	LT	28.89
TEMP. PAVEMENT REMOVAL				
Y1	24+35	26+88	RT	56.22
Y1	23+75	24+35	RT	30.00
Y1	25+33	25+85	LT	8.67
Y1	27+30	27+75	LT	15.00
			TOTAL:	6,226.25
			SAY:	6,230

SHOULDER BERM GUTTER SUMMARY IN FEET

SURVEY LINE	STATION	STATION	LOCATION	LENGTH LF
L	14+50	19+23.90	LT	473.90
L	21+67.13	24+60	LT	292.87
L	24+50	25+50	RT	100
Y1	25+87.67	29+00	LT	312.33
Y1	25+15	25+42.30	RT	27.3
			TOTAL:	1,206.40
			SAY:	1,210

"N" = DISTANCE FROM EDGE OF LANE TO FACE OF GUARDRAIL.
TOTAL SHOULDER WIDTH = DISTANCE FROM EDGE OF TRAVEL LANE TO SHOULDER BREAK POINT.
FLARE LENGTH = DISTANCE FROM LAST SECTION OF PARALLEL GUARDRAIL TO END OF GUARDRAIL.
W = TOTAL WIDTH OF FLARE FROM BEGINNING OF TAPER TO END OF GUARDRAIL.
G = GATING IMPACT ATTENUATOR TYPE 350
NG = NON-GATING IMPACT ATTENUATOR TYPE 350

GUARDRAIL SUMMARY

SURVEY LINE	BEG. STA.	END STA.	LOCATION	LENGTH: STRAIGHT	LENGTH: SHOP CURVED	LENGTH: DOUBLE FACED	WARRANT POINT: APPROACH END	WARRANT POINT: TRAILING END	"N" DIST. FROM E.O.L.	TOTAL SHOUL. WIDTH	FLARE LENGTH: APPROACH END	FLARE LENGTH: TRAILING END	W: APPROACH END	W: TRAILING END	ANCHORS: B-77	GRAU 350	B-83	NJ-25 (SEE DETAIL 2-M)	XI MOD	CAT-1	YI MOD	BIC	AT-1	IMPACT ATTENUATOR TYPE 350: EA	G	NG	SINGLE FACED GUARDRAIL	REMOVE EXISTING GUARDRAIL	REMOVE AND STOCKPILE EXISTING GUARDRAIL	REMARKS
L	FOR SIGN SUPPORT -L- STA. 10+50.00		RT	181.25'				10+50 (SIGN SUPPORT)	8'		50'		1'			1				1										SEE DETAIL SHEET 2-L
L	16+15.14	19+08.89(BR)	RT	293.75'			17+50.00	19+08.89(BR)	8'	11'	275'		5'		1	1														
L	13+91.78	19+48.03(BR)	LT	556.25'			19+48.03(BR)	16+50.00	8'	11'	200'	50'	4'	1'	1	1														
L	20+95.63(BR)	25+76.88(EXIST RAIL)	RT	481.25'			20+95.63(BR)		8'/12'	11'/15'	400'		8'		1													550		TIE TO EXISTING GUARDRAIL
L	21+43.01(BR)	25+24.26	LT	381.25'			21+43.01(BR)	24+25.00	8'		50'	200'	1'	4'	1	1												495		
Y1	24+54.80	25+42.30	RT	87.50'				25+42.30	18'	21'	50'		1'		1	1												320		
Y1	25+87.67	31+87.67(EXIST RAIL)	LT	600'				25+87.67	12'	15'		60'		7.5'	1													530		TIE TO EXISTING GUARDRAIL
Y1	30+50.00	32+00.00(EXIST RAIL)	RT MED	150'														1										910		TIE TO EXISTING GUARDRAIL
Y1	30+50.00	32+00.00(EXIST RAIL)	LT MED	150'																								905		TIE TO EXISTING GUARDRAIL
			SUB-TOTAL	2,881.25'																										
			ANCHOR DEDUCTION	406.25'																										
			TOTAL	2,475'										TOTAL	6	5		1		1						TOTAL	3,710		
			SAY	2,500'																							SAY	3,725		

ANCHOR DEDUCTION

CAT-1: 1 X 6.25' = 6.25'
TYPE B-77: 6 X 18.75' = 112.5'
GRAU 350: 5 X 50' = 250'
NJ-25: 1 @ 18.75' (2 X 18.75') = 37.5'
GRAND TOTAL = 406.25'

ADDITIONAL POSTS : 10

06-SEP-2012 20:53
R:\Roadway\Proj\B-4497_rdy_sum.dgn
$$$$USERNAME$$$$

COMPUTED BY: T ROACH DATE: 5/1/2011

CHECKED BY: A FOSTER DATE: 5/10/2011

RD2530

NORTH CAROLINA DEPARTMENT OF TRANSPORTATION
DIVISION OF HIGHWAYS
STATEWIDE

PROJECT NO.	SHEET NO.
B-4497	3-B

Note: Invert Elevations indicated are for Bid Purposes only and shall not be used for project construction stakeout. See "Standard Specifications For Roads and Structures, Section 300-5".

LIST OF PIPES, ENDWALLS, ETC. (FOR PIPES 48 INCHES & UNDER)

STATION / SIZE / THICKNESS OR GAUGE	LOCATION (LT, RT, OR CL)	STRUCTURE NO. FROM	STRUCTURE NO. TO	TOP ELEVATION (FT)	INVERT ELEVATION (FT)	INVERT ELEVATION (FT)	SLOPE CRITICAL
SHEET 4							
-L- 11+50	CL	0401		777.00			
	CL	0401	0402		774.25	773.35	
-L- 12+75	CL	0402		776.10			
	LT	0402	0403		773.35	772.50	
-L- 14+45	LT	0404		774.60			
	LT	0404	0405		768.00	767.80	
-L- 14+34	RT	0406		765.54	761.54		
SHEET 5							
-L- 17+00	LT	0501		771.76			
	LT	0501	0502		769.26	764.94	
-L- 19+00	LT	0502		767.44			
	LT	0502	0503		764.94	726.55	
-L- 19+00	LT	0503		728.20			
	LT	0503	0504		725.80	715.97	
-Y1- 27+45	RT	0506		740.09			
	RT	0506	0507		736.59	736.52	
-Y1- 27+45	RT	0507		742.48			
	RT	0507	0508		736.52	735.83	
-Y1- 25+21	RT	0508		742.54			
	RT	0508	0509		735.83	735.81	
	RT	0509	0510		732.62	732.50	
-Y1- 25+21	RT	0509		742.29			
-Y1- 24+73	CL	0519		741.40			
	CL	0519	0512		738.65	738.46	
-Y1- 25+29	CL	0511		741.27			
	CL	0511	0512		738.67	738.46	
-Y1- 25+29	CL	0512		741.21			
	LT	0512	0513		736.43	735.20	
-Y1- 25+31	LT	0513		740.06			
	LT	0513	0514		735.20	730.38	
-Y1- 25+94	LT	0514		740.00			
	LT	0514	0516		730.38	723.91	
-Y1- 26+80	LT	0516		735.20			
	LT	0516	0517		723.91	721.50	
-Y1- 22+09	RT	0518		739.54			
-L- 23+84	LT	0521		752.34			
	LT	0521	0522		749.59	747.22	
-L- 24+56	LT	0522		749.97			
	LT	0522	0523		747.22	733.50	
-Y1- 32+45	RT	0524					
SHEET TOTALS							

SIDE DRAIN PIPE (RCP, CSP, CAAP, HDPE, or PVC) and C.S. PIPE

STATION	FROM	TO	SD 12"	SD 15"	SD 18"	SD 24"	SD 30"	SD 36"	SD 42"	SD 48"	DO NOT USE RCP	DO NOT USE CSP	DO NOT USE CAAP	DO NOT USE HDPE	C.S. 12" .064	C.S. 15" .064	C.S. 18" .064	C.S. 24" .064	C.S. 30" .079	C.S. 36" .079	C.S. 42" .109	C.S. 48" .109
	0502	0503		92																		
	0503	0504				72																
	0506	0507				20																
	0509	0510																40				
	0516	0517			36																	
	0522	0523														96						
SHEET TOTALS				92	36	92										96		40				

R.C. PIPE CLASS III, R.C. PIPE CLASS IV and other pipe

STATION	FROM	TO	III 12"	III 15"	III 18"	III 24"	III 30"	III 36"	III 42"	III 48"	IV 12"	IV 15"	IV 18"	IV 24"	IV 30"	IV 36"	IV 42"	IV 48"	** " R.C. PIPE (CLASS V)	*** " RC PIPE CULVERTS, CONTRACTOR DESIGN	*** " RC PIPE CULVERTS, CONTRACTOR DESIGN	15" SIDE DRAIN PIPE	18" SIDE DRAIN PIPE
	0401	0402										124											
	0402	0403										60											
	0404	0405		52																			
	0501	0502										188											
	0507	0508				228																	
	0508	0509				4																	
	0519	0512										52											
	0511	0512										8											
	0521	0522										68											
SHEET TOTALS				52		232						500											

ENDWALLS (STD. 838.01 OR STD. 838.11 (UNLESS NOTED OTHERWISE), CU. YARDS); QUANTITIES FOR DRAINAGE STRUCTURES (*TOTAL L.F. FOR PAY QUANTITY SHALL BE COL. 'A' + (1.3 X COL.'B')); FRAME, GRATES, AND HOOD STANDARD 840.03; CONCRETE TRANSITIONAL SECTION

STATION	FROM	TO	ENDWALLS R.C.P.	ENDWALLS C.S.P.	PER EACH (0' THRU 5.0')	LIN. FT. A 5.0' THRU 10.0'	LIN. FT. B 10.0' AND ABOVE	C.B. STD. 840.01 OR STD. 840.02	TYPE OF GRATE E	F	G	DROP INLET	CATCH BASIN	D.I. STD. 840.14 OR STD. 840.15	D.I. FRAME AND GRATE STD. 840.16 (2 GRATES)
-L- 11+50	0401				1										
-L- 12+75	0402				1										
-L- 14+45	0404				1	1.6						1		1	1
-L- 14+34	0406				1										
-L- 17+00	0501				1										
-L- 19+00	0502				1										
-L- 19+00	0503				1										
-Y1- 27+45	0506				1										
-Y1- 27+45	0507				1	1									
-Y1- 25+21	0508				1	1.7									
-Y1- 25+21	0509				1	4.7									
-Y1- 24+73	0519				1										
-Y1- 25+29	0511				1										
-Y1- 25+29	0512				1										
-Y1- 25+31	0513				1										
-Y1- 25+94	0514				1	4.6									
-Y1- 26+80	0516				1	5	1.3								
-Y1- 22+09	0518				1										
-L- 23+84	0521				1										
-L- 24+56	0522				1										
-Y1- 32+45	0524				1										
SHEET TOTALS					21	18.6	1.3					1		1	1

18.6+(1.3x1.3)
=20.3
SAY:21

STATION	FROM	TO	G.D.I. TYPE "A" STD. 840.17 OR 840.26	G.D.I. TYPE "B" STD. 840.18 OR 840.27	M.H. FRAME AND COVER STD. 840.54	G.D.I. FRAME WITH GRATE STD. 840.20	G.D.I. FRAME WITH TWO GRATES STD. 840.20	G.D.I. (N.S.) FRAME WITH GRATE STD. 840.24	G.D.I. (N.S.) FRAME WITH TWO GRATES STD. 840.24	J.B. STD. 840.31 OR 840.32	G.D.I. (N.S.) FRAME WITH TWO GRATES STD. 840.29	G.D.I. (N.S.) FRAME WITH GRATE STD. 840.29	BARRIER OVER T.B.D.I. SEE DETAIL 2-P	O.T.C.B. STD. 840.04 OR STD. 840.05	SIDE DRAIN PIPE ELBOWS NO. & SIZE	T.B.D.I. STD. 840.35	T.B.J.B. STD. 840.34	FLOWABLE FILL (CY)	SIDE DRAIN PIPE ELBOWS NO. & SIZE	CONC. & BRICK PIPE PLUG, C.Y. STD. 840.71	C.S.P. ELBOWS NO. & SIZE	PIPE REMOVAL LIN. FT.	REMARKS
-L- 11+50	0401			1					1													80	REMOVE PIPE, NOT SHOWN
-L- 12+75	0402			1							1												
	0402	0403																				60	REMOVE 12" RCP
-L- 14+34	0406			1					1														REMOVE EXIST. HW/ RETAIN 18" RCP
-L- 17+00	0501			1							1												
-L- 19+00	0502										1					1							
	0502	0503																	2@15"				
-L- 19+00	0503													1									2 SIDES OPEN, INVERTS 1' ABOVE GROUND LEVEL.
	0503	0504																421				90	REMOVE 90' OF 66" RCP. PLUG & FILL 479' OF 66" RCP
-Y1- 27+45	0506			1					1														
-Y1- 27+45	0507				1												1						
	0507	0508																4.5				65	REMOVE 18" RCP
-Y1- 25+21	0508				1												1						
-Y1- 25+21	0509			1							1												
-Y1- 24+73	0519						1									1							
-Y1- 25+29	0511						1									1							
-Y1- 25+29	0512						1									1							
	0512	0513																					RETAIN EXIST. 18" RCP
-Y1- 25+31	0513				1												1						
	0513	0514																					RETAIN EXIST. 18" RCP
-Y1- 25+94	0514		1				1																
	0514	0516																					RETAIN EXIST. 18" RCP
-Y1- 26+80	0516				1					1													
-Y1- 22+09	0518						1						1										
-L- 23+84	0521			1							1												REMOVE EXIST DI
	0521	0522																				60	REMOVE EXIST 15" RCP
-L- 24+56	0522			1							1												REMOVE EXIST CB
	0522	0523																			2@15"	40	REMOVE EXIST 15" CMP
-Y1- 32+45	0524								1							1							REPLACE AT EXIST ELEV.
SHEET TOTALS			1	8	4		5		4	1	6		1	1		5	3	426	2@15"		2@15"	395	

ABBREVIATIONS

C.B.	CATCH BASIN
N.D.I.	NARROW DROP INLET
D.I.	DROP INLET
G.D.I.	GRATED DROP INLET
G.D.I.(N.S.)	(NARROW SLOT)
J.B.	JUNCTION BOX
M.H.	MANHOLE
T.B.D.I.	TRAFFIC BEARING DROP INLET
T.B.J.B.	TRAFFIC BEARING JUNCTION BOX

COMPUTED BY: T Roach DATE: 5/1/2011

CHECKED BY: A Foster DATE: 5/10/2011

PROJECT NO.	SHEET NO.
B-4497	3-C

NORTH CAROLINA DEPARTMENT OF TRANSPORTATION
DIVISION OF HIGHWAYS
STATEWIDE

R/253045

Note: Invert Elevations indicated are for Bid Purposes only and shall not be used for project construction stakeout. See "Standard Specifications For Roads and Structures, Section 300-5".

LIST OF PIPES, ENDWALLS, ETC. (FOR PIPES 54" & OVER)

STATION	LOCATION (LT, RT, OR CL)*	STRUCTURE NO. FROM	STRUCTURE NO. TO	TOP ELEVATION	INVERT ELEVATION	INVERT ELEVATION	SLOPE CRITICAL	CLASS III R.C. PIPE (UNLESS NOTED OTHERWISE) 54"	60"	66"	72"	78"	84"	BITUMINOUS COATED C.S. PIPE TYPE B (UNLESS NOTED OTHERWISE) 54" .109	54" .138	54" .168	54" SHOP ELON-GATED .138	54" SHOP ELON-GATED .168	60" .138	60" .168	66" .138	66" .168	72" .139	72" .168	WELDED STEEL PIPE 60" 12	60" 10	66" 12	66" 10	72" 12	72" 10	84" 1"	REINFORCED ENDWALLS WITH R.C. - C.Y.	REINFORCED ENDWALLS WITH C.S. - C.Y.	MASONRY DRAINAGE STRUCTURES CUBIC YARDS	C.B. STD. 840.01 OR 840.02	FRAMES, GRATES & HOOD STANDARD 840.03 TYPE OF GRATE E	F	G	CONCRETE TRANSITIONAL SECTION DROP INLET	CATCH BASIN	JUNCTION BOX - SEE DETAIL 2-Q	REINF. CONC. FLARED END SECTIONS NO. & SIZE	CORR. STEEL FLARED END SECTIONS NO. & Size	CORR. STEEL ELBOWS NO. & SIZE	CONC. COLLARS CL. "B" C.Y. STD. 840.72	PIPE REMOVAL LIN. FT.	REMARKS
-L- 17+27	LT	0525																													7.9																			SEE DETAIL SHEET 2-O
		0525	0504		712.67	710.97																								188																			
-L- 18+00	LT	0504		719.30																													9.2								1									
		0504	0526		710.97	706.90																								392																			
-L- 19+60	LT	0526																													7.9																			SEE DETAIL SHEET 2-O
SHEET TOTALS																														580	15.8 SAY:16		9.2 SAY:9.5								1									

ABBREVIATIONS	
C.B.	CATCH BASIN
N.D.I.	NARROW DROP INLET
D.I.	DROP INLET
G.D.I.	GRATED DROP INLET
G.D.I.(N.S.)	GRATED DROP INLET (NARROW SLOT)
J.B.	JUNCTION BOX
M.H.	MANHOLE
T.B.D.I.	TRAFFIC BEARING DROP INLET
T.B.J.B.	TRAFFIC BEARING JUNCTION BOX

PROJ. REFERENCE NO.	SHEET NO.
B-4497	3-D

STATE OF NORTH CAROLINA
DIVISION OF HIGHWAYS

PARCEL INDEX SHEET

PARCEL No.	SHEET No.	PROPERTY OWNER NAME
1	4,5	ASSOCIATED INVESTMENTS LTD.
2	5	NATIONAL INDUSTRIES OF LEXINGTON, INC.
4	5	JOE KING CECIL III ET AL

PARCEL No.	SHEET No.	PROPERTY OWNER NAME

PROJECT REFERENCE NO.	SHEET NO.
B-4497	4
R/W SHEET NO.	
ROADWAY DESIGN ENGINEER	HYDRAULICS ENGINEER

NORTH CAROLINA PROFESSIONAL SEAL 033298 ENGINEER JEFFREY L. TERGLUTE
9/6/12

NORTH CAROLINA PROFESSIONAL SEAL 19778 ENGINEER GARY A. ROBINSON
6 SEP 2012

NAD 83/NSRS 2007

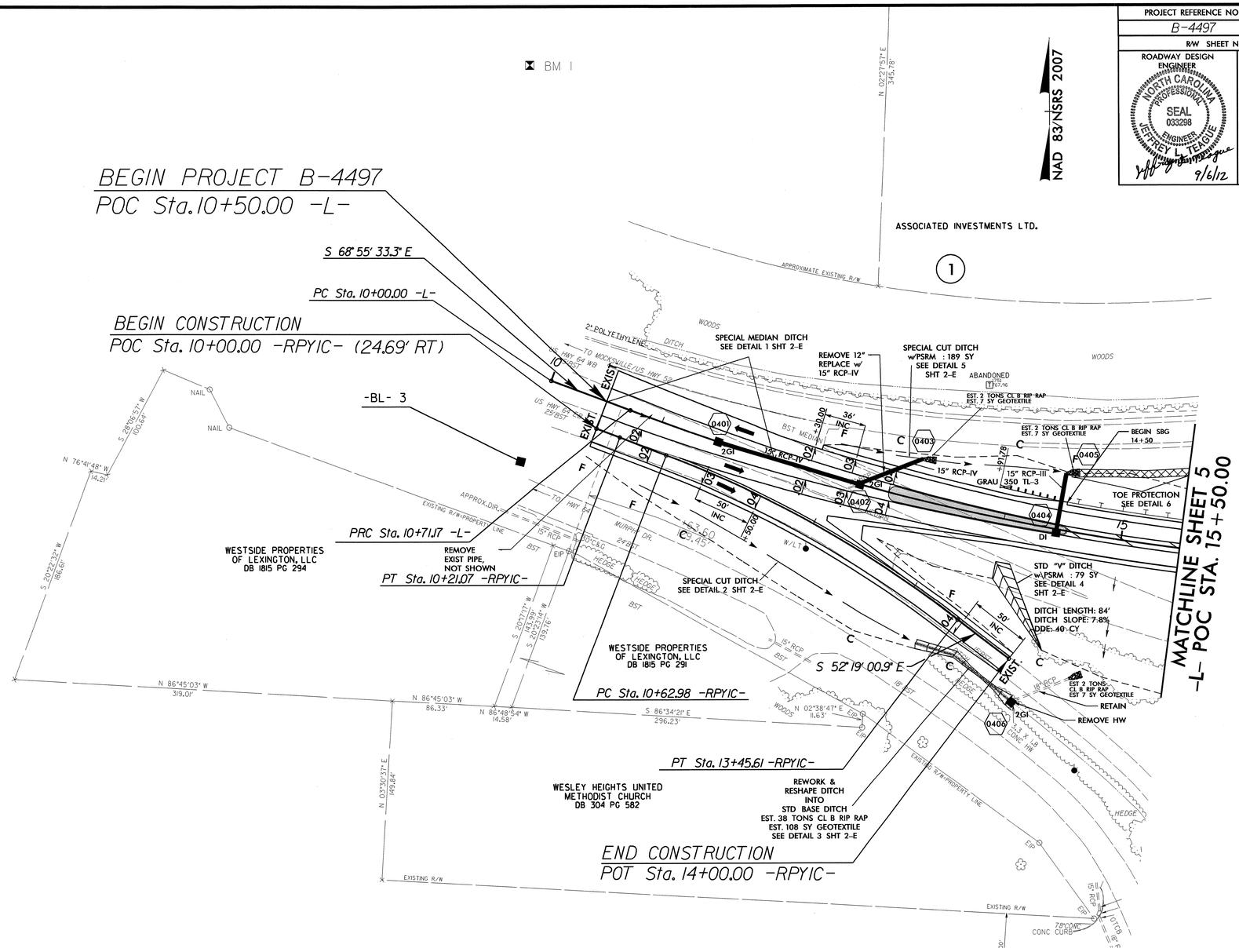

NOTE: INCIDENTAL MILLING AS DIRECTED BY THE ENGINEER FOR
-L- STA. 10+50.00 TO 11+50.00
-RPY1C- STA. 10+00.00 TO 11+00.00 AND
-RPY1C- STA. 13+00.00 TO 14+00.00

-L-	
PI Sta 10+35.59 Δ = 0° 48' 56.1" (RT) D = 1° 08' 45.3" L = 71.17' T = 35.59' R = 5,000.00'	PI Sta 18+18.41 Δ = 40° 58' 23.5" (LT) D = 2° 51' 53.2" L = 1,430.23' T = 747.24' R = 2,000.00' SE = 04 RO = 144'

-RPYIC-	
PI Sta 10+10.53 Δ = 0° 14' 33.4" (RT) D = 1° 09' 05.8" L = 21.07' T = 10.53' R = 4,975.31'	PI Sta 12+05.29 Δ = 16° 36' 32.5" (RT) D = 5° 52' 35.4" L = 282.64' T = 142.32' R = 975.00' SE = 04 RO = SEE PLANS

FOR DETAILED DIMENSIONS, SEE SHEET NO. 2-H
FOR DITCH DETAILS, SEE SHEET NO. 2-E
EROSION CONTROL PSRM MATTING
FOR -L- PROFILE, SEE SHEET NO. 6 FOR -RPY1C- PROFILE, SEE SHEET NO. 6
FOR STRUCTURE PLANS, SEE SHEET NO. S-1 THRU S-34
FOR WALL PLANS, SEE SHEET NO. W-1 THRU W-4

REVISIONS

8/17/99

06-SEP-2012 20:53
R:\Roadway\Proj\b-4497_rdy_psh_4.dgn
$$$$USER$$$$

PROJECT REFERENCE NO.	SHEET NO.
B-4497	5
RW SHEET NO.	
ROADWAY DESIGN ENGINEER	HYDRAULICS ENGINEER

NORTH CAROLINA PROFESSIONAL SEAL 033298 ENGINEER JEFFREY L. TERGUE — 9/6/12

NORTH CAROLINA PROFESSIONAL SEAL 19778 ENGINEER RAY D. DOVINGOOD — 6 SEP 2012

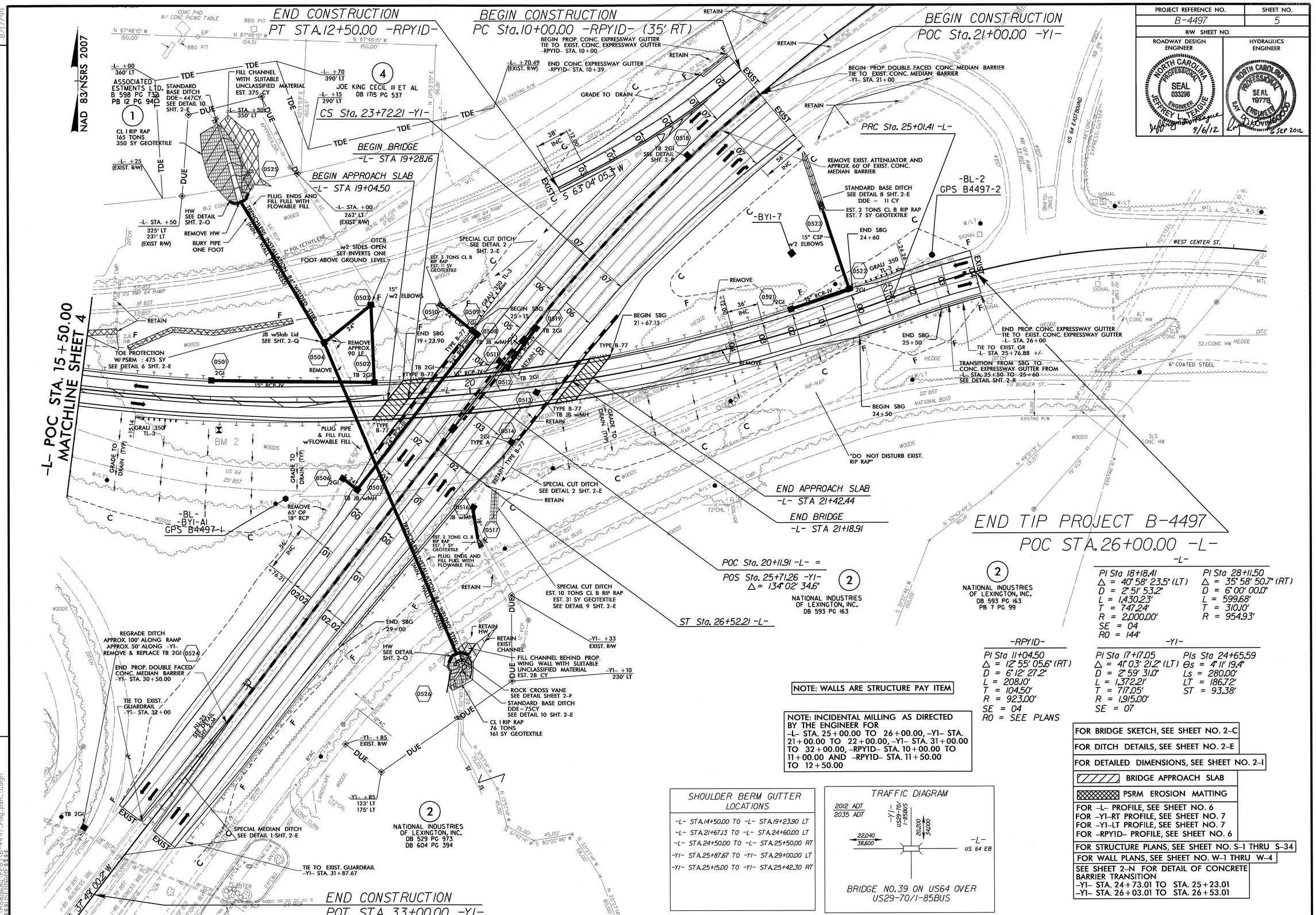

REVISIONS

8/17/99

06-SEP-2012 20:53
R:\Roadway\Proj\b-4497_rdy_psh_5.dgn
$$$$USERNAME$$$$

PROJECT REFERENCE NO.	SHEET NO.
B-4497	6

ROADWAY DESIGN ENGINEER — NORTH CAROLINA PROFESSIONAL SEAL 033298 ENGINEER JEFFREY L. TEAGUE — 9/6/12

HYDRAULICS ENGINEER — NORTH CAROLINA PROFESSIONAL SEAL 19775 ENGINEER RAY D. JOHNSON — 6 SEP 2012

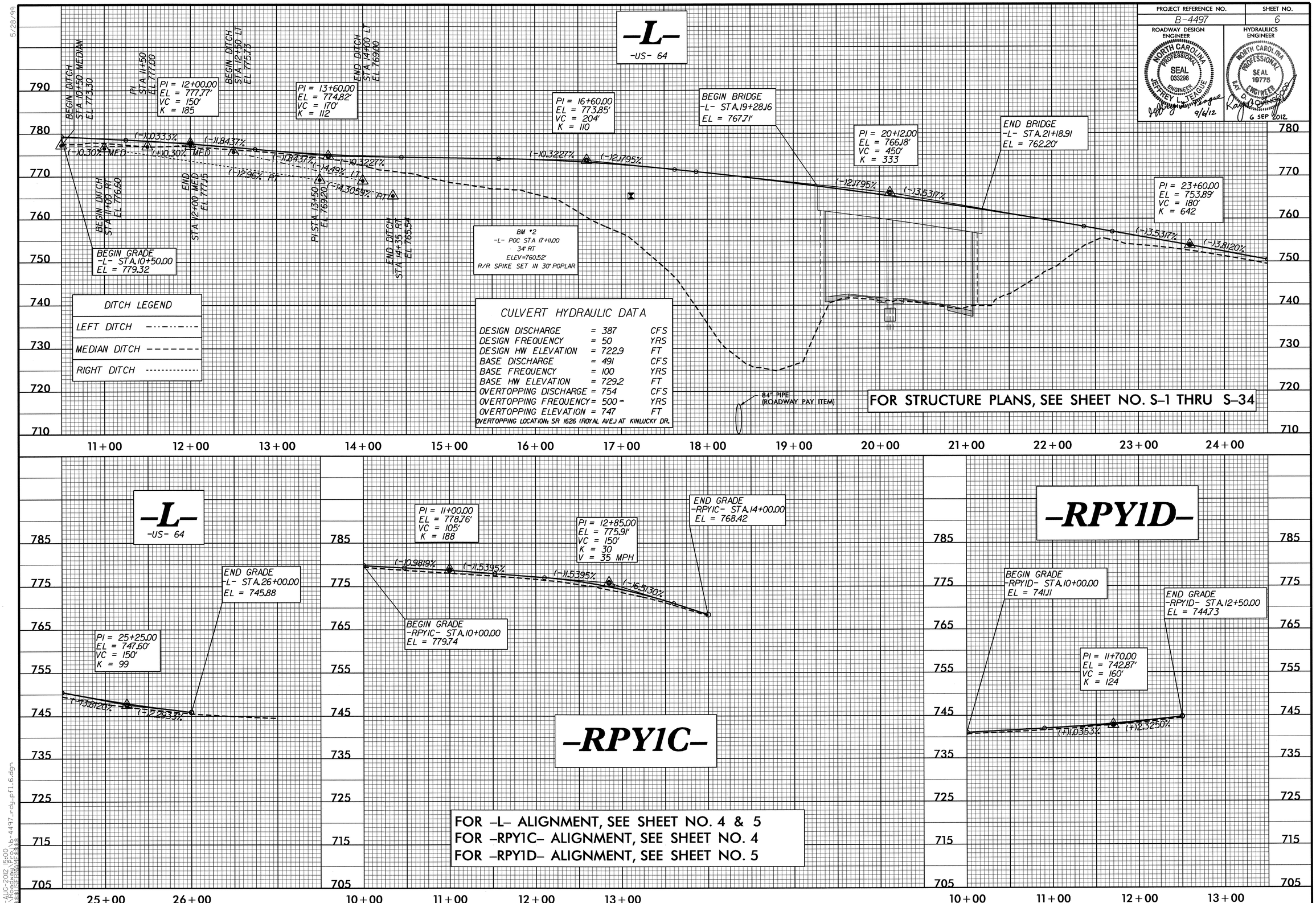

FOR -L- ALIGNMENT, SEE SHEET NO. 4 & 5
FOR -RPY1C- ALIGNMENT, SEE SHEET NO. 4
FOR -RPY1D- ALIGNMENT, SEE SHEET NO. 5

5/28/99

14-AUG-2012 15:00
R:\Hydro\B4497_rdy_pf1_6.dgn
$$$$USERNAME$$$$

PROJECT REFERENCE NO.	SHEET NO.
B-4497	7

ROADWAY DESIGN ENGINEER: NORTH CAROLINA PROFESSIONAL SEAL 033298 ENGINEER JEFFREY L. TERGUE — 9/6/12

HYDRAULICS ENGINEER: NORTH CAROLINA PROFESSIONAL SEAL 19775 ENGINEER RAY D. TOMPKINS — 6 SEP 2012

-Y1- (RT)

I-85 BUS SBL

CULVERT HYDRAULIC DATA

DESIGN DISCHARGE	= 387	CFS
DESIGN FREQUENCY	= 50	YRS
DESIGN HW ELEVATION	= 722.9	FT
BASE DISCHARGE	= 491	CFS
BASE FREQUENCY	= 100	YRS
BASE HW ELEVATION	= 729.2	FT
OVERTOPPING DISCHARGE	= 754	CFS
OVERTOPPING FREQUENCY	= 500-	YRS
OVERTOPPING ELEVATION	= 747	FT

OVERTOPPING LOCATION: SR 1626 (ROYAL AVE.) AT KINLUCKY DR.

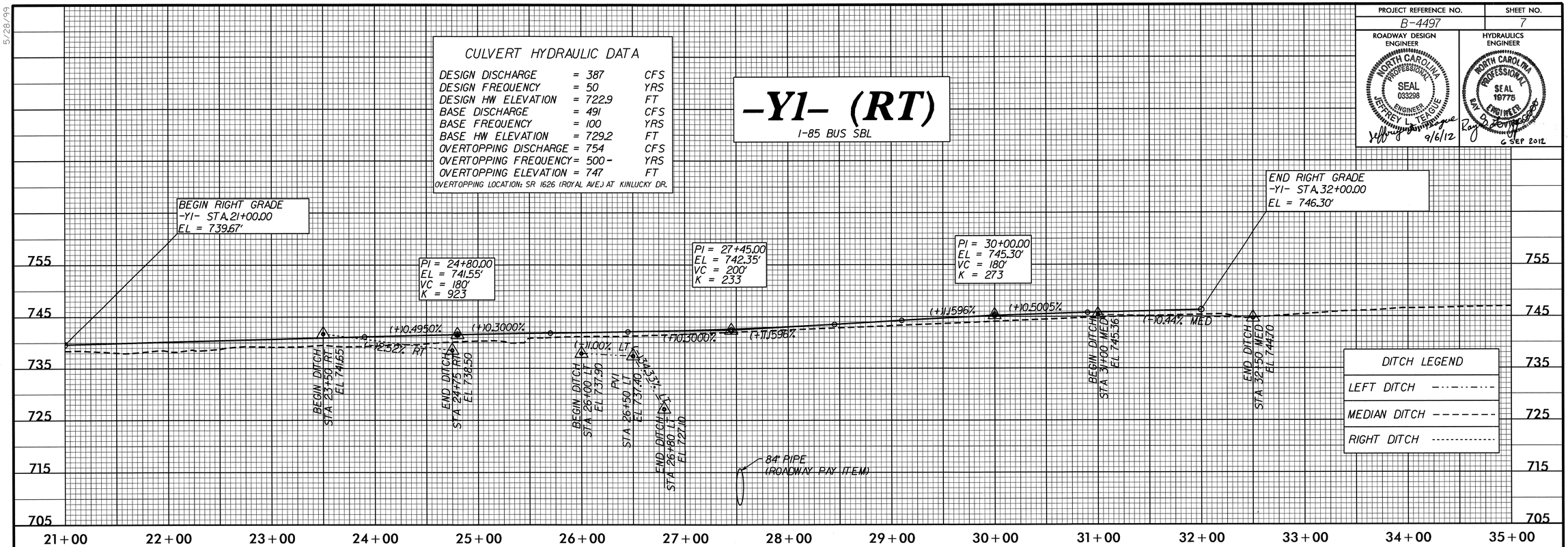

FOR -Y1- ALIGNMENT, SEE SHEET NO. 5

-Y1- (LT)

I-85 BUS NBL

CULVERT HYDRAULIC DATA

DESIGN DISCHARGE	= 387	CFS
DESIGN FREQUENCY	= 50	YRS
DESIGN HW ELEVATION	= 722.9	FT
BASE DISCHARGE	= 491	CFS
BASE FREQUENCY	= 100	YRS
BASE HW ELEVATION	= 729.2	FT
OVERTOPPING DISCHARGE	= 754	CFS
OVERTOPPING FREQUENCY	= 500-	YRS
OVERTOPPING ELEVATION	= 747	FT

OVERTOPPING LOCATION: SR 1626 (ROYAL AVE.) AT KINLUCKY DR.

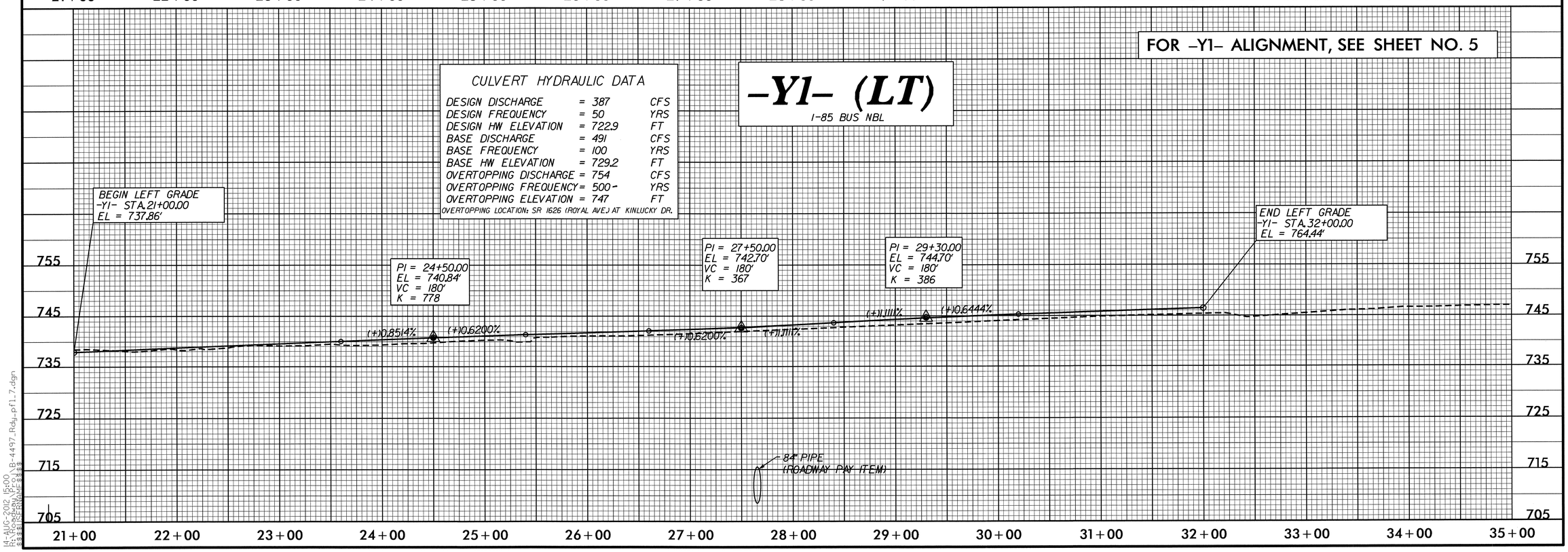

5/28/99
14-AUG-2012 15:00
R:\STRUCTURES\PROJECTS\B-4497_Rdy_pf1_7.dgn
$$$$USERNAME$$$$