09/08/99

TIP PROJECT: U-3810

CONTRACT: C202887

STATE OF NORTH CAROLINA
DIVISION OF HIGHWAYS

ONSLOW COUNTY

STATE	STATE PROJECT REFERENCE NO.	SHEET NO.	TOTAL SHEETS
N.C.	U-3810		

STATE PROJ. NO.	F.A. PROJ. NO.	DESCRIPTION
35801.1.1	STP-1406(4)	PE
35801.2.1	STP-1406(6)	R/W & UTIL
35801.3.1	STP-1406(7)	CONST

LOCATION: SR 1406 (PINEY GREEN ROAD) FROM US 17 (MARINE BOULEVARD) TO NC 24 (FREEDOM WAY)

TYPE OF WORK: GRADING, PAVING, DRAINAGE, WIDENING SIGNING, SIGNALS, CULVERTS, STRUCTURES AND RETAINING WALL

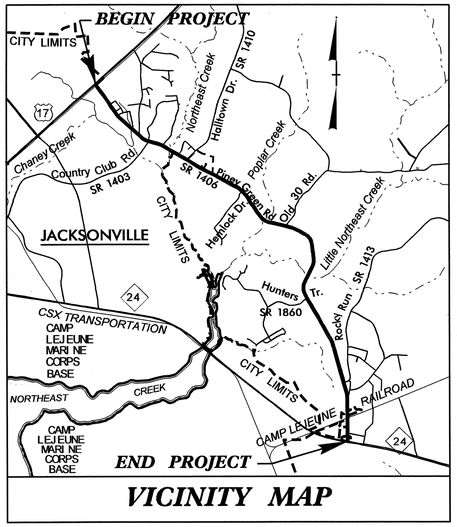

VICINITY MAP

STRUCTURES

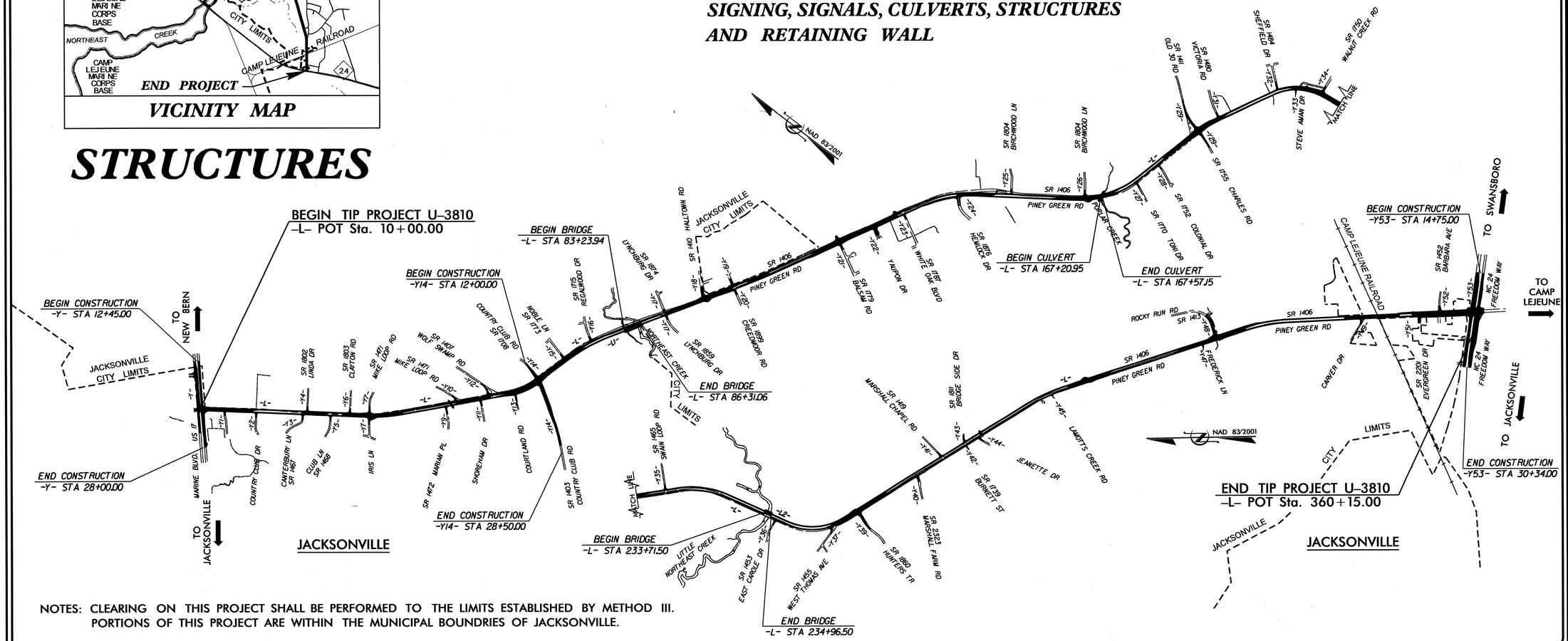

NOTES: CLEARING ON THIS PROJECT SHALL BE PERFORMED TO THE LIMITS ESTABLISHED BY METHOD III.
PORTIONS OF THIS PROJECT ARE WITHIN THE MUNICIPAL BOUNDRIES OF JACKSONVILLE.

STATE OF NORTH CAROLINA DEPARTMENT OF TRANSPORTATION

DESIGN DATA

ADT 2012 = 27,100
ADT 2032 = 36,300
DHV = 7 %
D = 60 %
T = 5 % *
V = 50 MPH
FUNC CLASS = URBAN ARTERIAL
* TTST 1 % + DUAL 4 %
TIER = SUB-REGIONAL

PROJECT LENGTH

LENGTH ROADWAY TIP PROJ. U-3810 = 6.543 MILES ±
LENGTH STRUCTURES TIP PROJ. U-3810 = 0.089 MILES ±
TOTAL LENGTH OF TIP PROJ. U-3810 = 6.632 MILES

Prepared In the Office of:
DIVISION OF HIGHWAYS
1000 Birch Ridge Dr., Raleigh NC, 27610

2012 STANDARD SPECIFICATIONS

LETTING DATE:
SEPTEMBER 18, 2012

OMAR R. AZIZI, PE
PROJECT ENGINEER

TIMOTHY L. COGGINS, PE
PROJECT DESIGN ENGINEER

STRUCTURES MANAGEMENT UNIT
1000 Birch Ridge Dr.
Raleigh, N.C. 27610

STATE OF NORTH CAROLINA DEPARTMENT OF TRANSPORTATION

12-JUN-2012 08:54
$$$$$$$$$$$$$$$$$$$$$$$$$$$$$$$$
rcjiffin

STATE OF NORTH CAROLINA
DIVISION OF HIGHWAYS

ONSLOW COUNTY

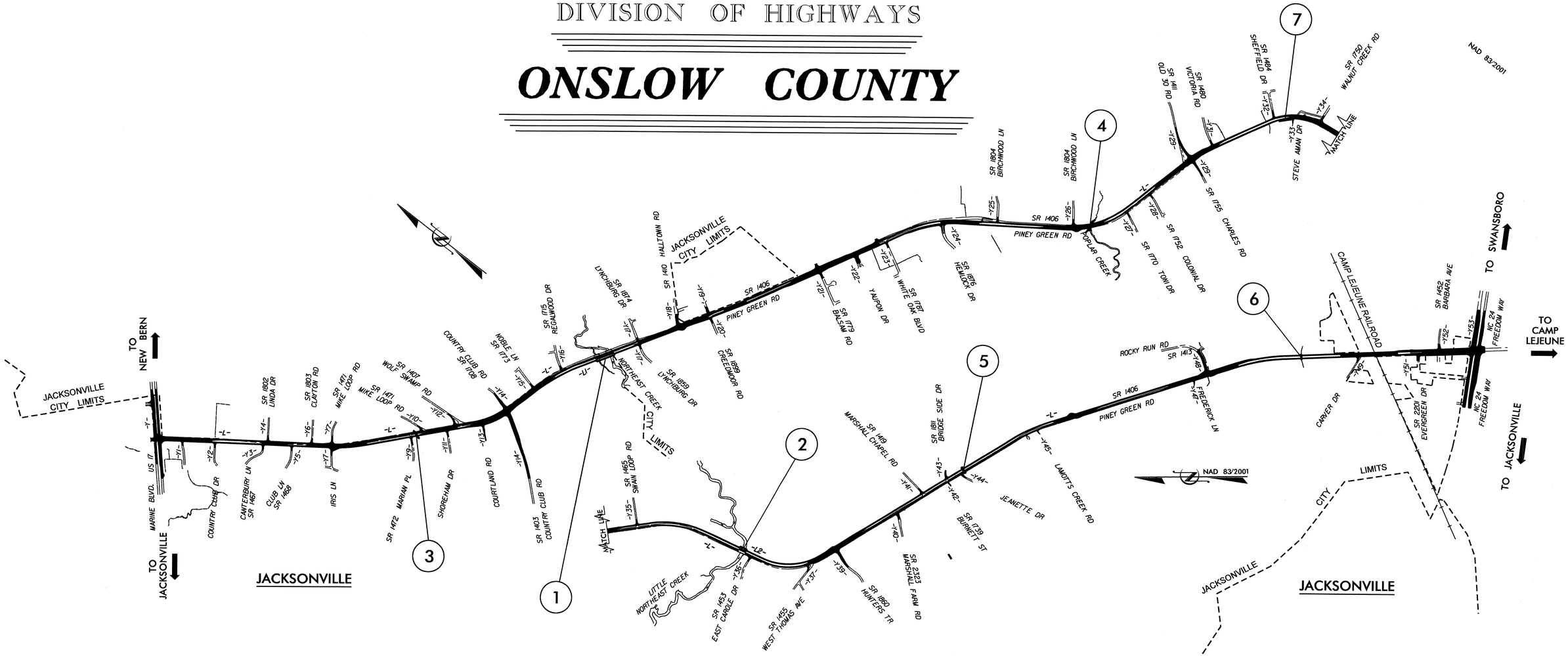

INDEX

STR. #	STATION	DESCRIPTION	SHEET #
1	84+77.50 -L-	BRIDGE OVER NORTHEAST CREEK ON SR 1406 BETWEEN SR 1715 AND SR 1859	S-1 THRU S-34
2	234+34.00 -L-	BRIDGE OVER LITTLE NORTHEAST CREEK ON SR 1406 BETWEEN SR 1465 AND SR 1453	S-35 THRU S-62
3	51+68.00 -L-	SINGLE 9 FT. X 8 FT. RCBC	C-1 THRU C-7
4	167+39.00 -L-	TRIPLE 10 FT. X 9 FT. RCBC	C-8 THRU C-16
5	274+68.00 -L-	SINGLE 11 FT. X 7 FT. RCBC	C-17 THRU C-22
6	329+70.00 -L-	SINGLE 9 FT. X 8 FT. RCBC	C-23 THRU C-28
7	201+50.00 -L-	SEGMENTAL GRAVITY RETAINING WALL	W-1 THRU W-2

PROJECT NO. U-3810
ONSLOW COUNTY

STATE OF NORTH CAROLINA
DEPARTMENT OF TRANSPORTATION
RALEIGH

INDEX

REVISIONS					
NO.	BY:	DATE:	NO.	BY:	DATE:
1			3		
2			4		

DRAWN BY : PEGGY PARISI DATE : 5-15-12
CHECKED BY : T.L. COGGINS DATE : 6-11-12

26-JUL-2012 12:40
R:\TIPProjects-U\U3810\structures\Plans\FinalPlans\u3810_sd_ti.dgn
tcoggins

F. A. PROJECT NO. STP-1406(7)

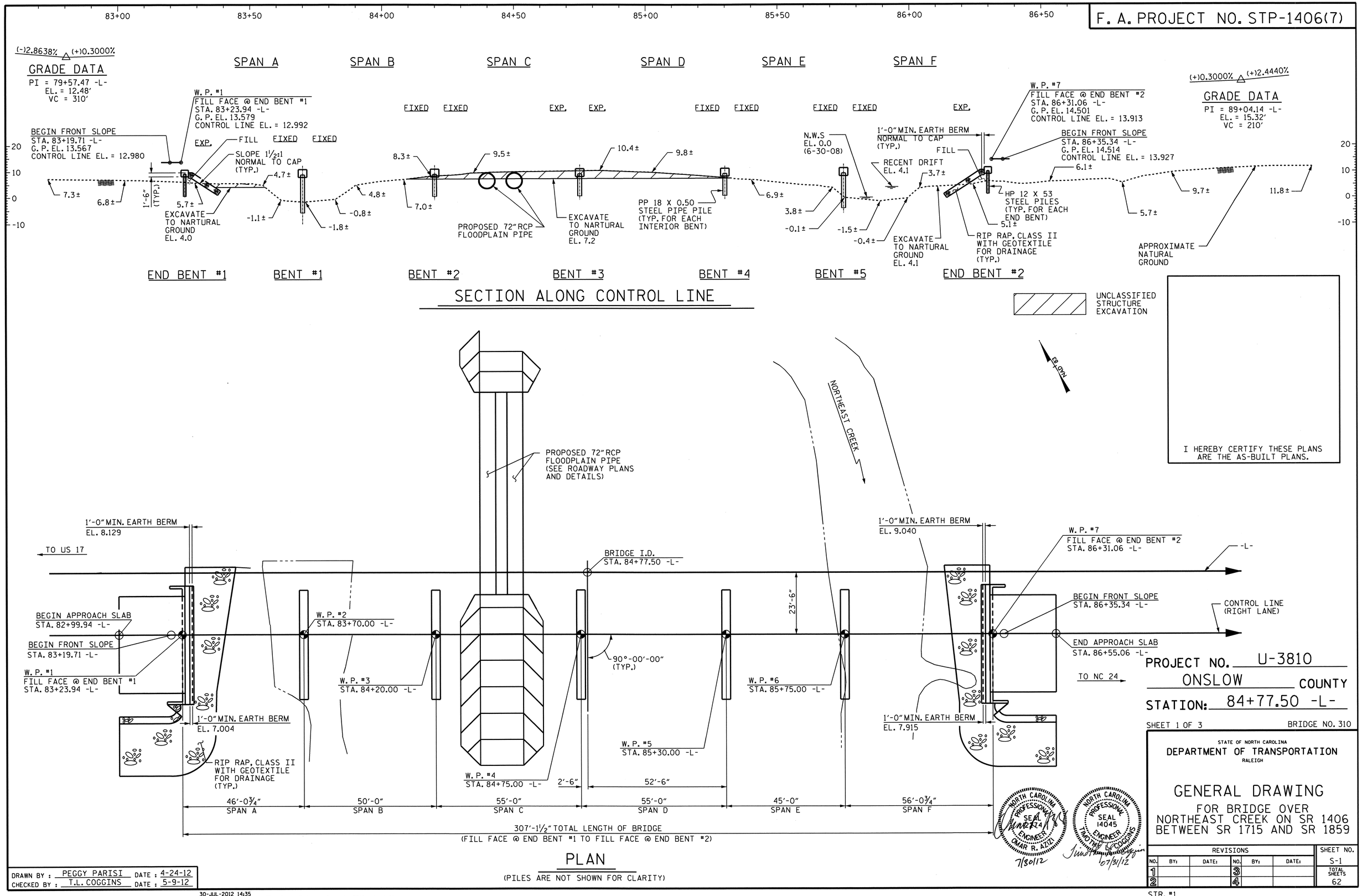

I HEREBY CERTIFY THESE PLANS ARE THE AS-BUILT PLANS.

NORTH CAROLINA PROFESSIONAL SEAL 024 ENGINEER OMAR R. AZIZI 7/30/12

NORTH CAROLINA PROFESSIONAL SEAL 14045 ENGINEER TIMOTHY L. COGGINS 07/31/12

PROJECT NO. U-3810

ONSLOW COUNTY

STATION: 84+77.50 -L-

SHEET 1 OF 3

BRIDGE NO. 310

STATE OF NORTH CAROLINA
DEPARTMENT OF TRANSPORTATION
RALEIGH

GENERAL DRAWING

FOR BRIDGE OVER
NORTHEAST CREEK ON SR 1406
BETWEEN SR 1715 AND SR 1859

REVISIONS						SHEET NO.
NO.	BY:	DATE:	NO.	BY:	DATE:	S-1
1			3			TOTAL SHEETS
2			4			62

STR. #1

DRAWN BY : PEGGY PARISI DATE : 4-24-12
CHECKED BY : T.L. COGGINS DATE : 5-9-12

30-JUL-2012 14:35
R:\structures\Plans\Final Plans\Bridges\Str. #1\u3810_sd_gd_01.dgn
nruffin

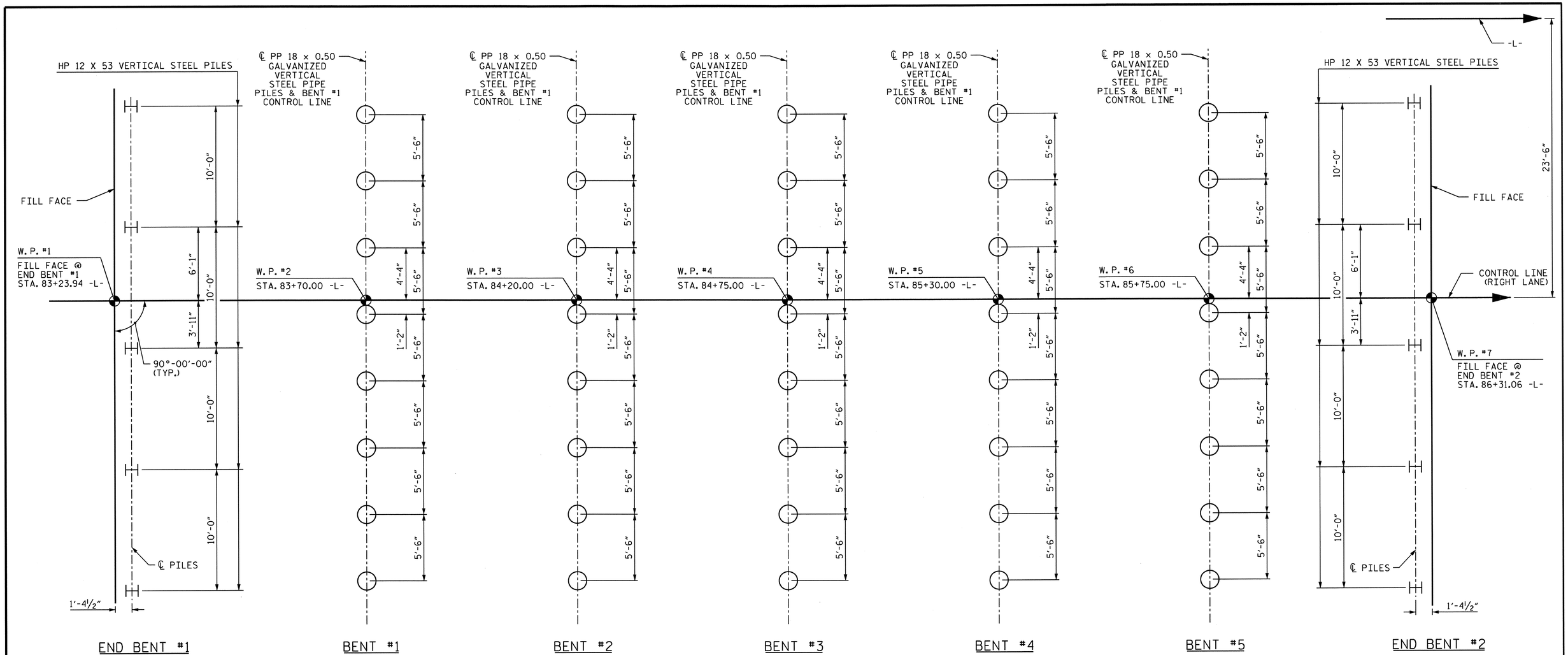

FOUNDATION LAYOUT

DIMENSIONS LOCATING PILS ARE SHOWN TO PILE CENTERLINE.

FOUNDATION NOTES:

FOR PILES, SEE SECTION 450 OF THE STANDARD SPECIFICATIONS.

PILES AT END BENT NO. 1 ARE DESIGNED FOR A FACTORED RESISTANCE OF 88 TONS PER PILE.

PILES AT END BENT NO. 2 ARE DESIGNED FOR A FACTORED RESISTANCE OF 99 TONS PER PILE.

PILES AT BENT NO. 1, BENT NO. 2, BENT NO. 3, BENT NO. 4 AND BENT NO. 5 ARE DESIGNED FOR A FACTORED RESISTANCE OF 135 TONS PER PILE.

DRIVE PILES AT END BENT NO. 1 TO A REQUIRED DRIVING RESISTANCE OF 147 TONS PER PILE.

DRIVE PILES AT END BENT NO. 2 TO A REQUIRED DRIVING RESISTANCE OF 165 TONS PER PILE.

DRIVE PILES AT BENT NO. 1, BENT NO. 2, BENT NO. 3, BENT NO. 4 AND BENT NO. 5 TO A REQUIRED DRIVING RESISTANCE OF 185 TONS PER PILE. THIS REQUIRED DRIVING RESISTANCE INCLUDES ADDITIONAL RESISTANCE FOR SCOUR.

INSTALL PILES AT BENT NO. 1 AND BENT NO. 2 TO A TIP ELEVATION NO HIGHER THAN -38 FT.

INSTALL PILES AT BENT NO. 3, BENT NO. 4 AND BENT NO. 5 TO A TIP ELEVATION NO HIGHER THAN -40 FT.

STEEL H-PILE POINTS ARE REQUIRED FOR STEEL H-PILES AT END BENT NO. 1 AND END BENT NO. 2. FOR STEEL PILE POINTS, SEE SECTION 450 OF THE STANDARD SPECIFICATIONS.

STEEL PIPE PILE CUTTING SHOES ARE REQUIRED FOR STEEL PIPE PILES AT BENT NO. 1, BENT NO. 2, BENT NO. 3, BENT NO. 4 AND BENT NO. 5. FOR STEEL POINTS, SEE SECTION 450 OF THE STANDARD SPECIFICATIONS.

TESTING THE FIRST PRODUCTION PILES WITH THE PDA DURING DRIVING, RESTRIKING OR REDRIVING IS REQUIRED AT BENT NO. 1, BENT NO. 2, BENT NO. 3, BENT NO. 4 AND BENT NO. 5. FOR PDA TESTING, SEE SECTION 450 OF THE STANDARD SPECIFICATIONS.

IT HAS BEEN ESTIMATED THAT A HAMMER WITH AN EQUIVALENT RATED ENERGY OF 30,000 TO 45,000 FT-LBS PER BLOW WILL BE REQUIRED TO DRIVE PILES AT END BENT NO. 1, BENT NO. 1, BENT NO. 2, BENT NO. 3, BENT NO. 4, BENT NO. 5 AND END BENT NO. 2. THE ESTIMATED ENERGY RANGE DOES NOT RELEASE THE CONTRACTOR FROM PROVIDING EQUIPMENT IN ACCORDANCE WITH SUBARTICLE 450-3 (D)(2) OF THE STANDARD SPECIFICATIONS.

OBSERVE A 2 MONTH WAITING PERIOD AFTER CONSTRUCTING THE EMBANKMENT TO THE BOTTOM OF CAP ELEVATION BEFORE BEGINNING END BENT CONSTRUCTION AT END BENT NO. 2.

NORTH CAROLINA PROFESSIONAL SEAL 14045 ENGINEER TIMOTHY L. COGGINS
8/8/12

PROJECT NO. U-3810
ONSLOW COUNTY
STATION: 84+77.50 -L-

SHEET 2 OF 3

STATE OF NORTH CAROLINA
DEPARTMENT OF TRANSPORTATION
RALEIGH

GENERAL DRAWING

FOR BRIDGE OVER
NORTHEAST CREEK ON SR 1406
BETWEEN SR 1715 AND SR 1859

REVISIONS						SHEET NO.
NO.	BY:	DATE:	NO.	BY:	DATE:	S-2
1			3			TOTAL SHEETS
2			4			62

STR. #1

ASSEMBLED BY : PEGGY PARISI	DATE : 4-24-12
CHECKED BY : T.L. COGGINS	DATE : 5-9-12
DRAWN BY : DGE 02/10	
CHECKED BY : MKT 02/10	

07-AUG-2012 15:57
Z:\TIPProjects-U\U3810\structures\Plans\FinalPlans\Bridges\Str. #1\u3810_sd_gd_01.dgn
pdkins

BM = BL-15: 30" #5 REBAR WITH ALUMINUM CAP, STA. 83+17.75 -L-; 0.26' LT; ELEV. 12.23.

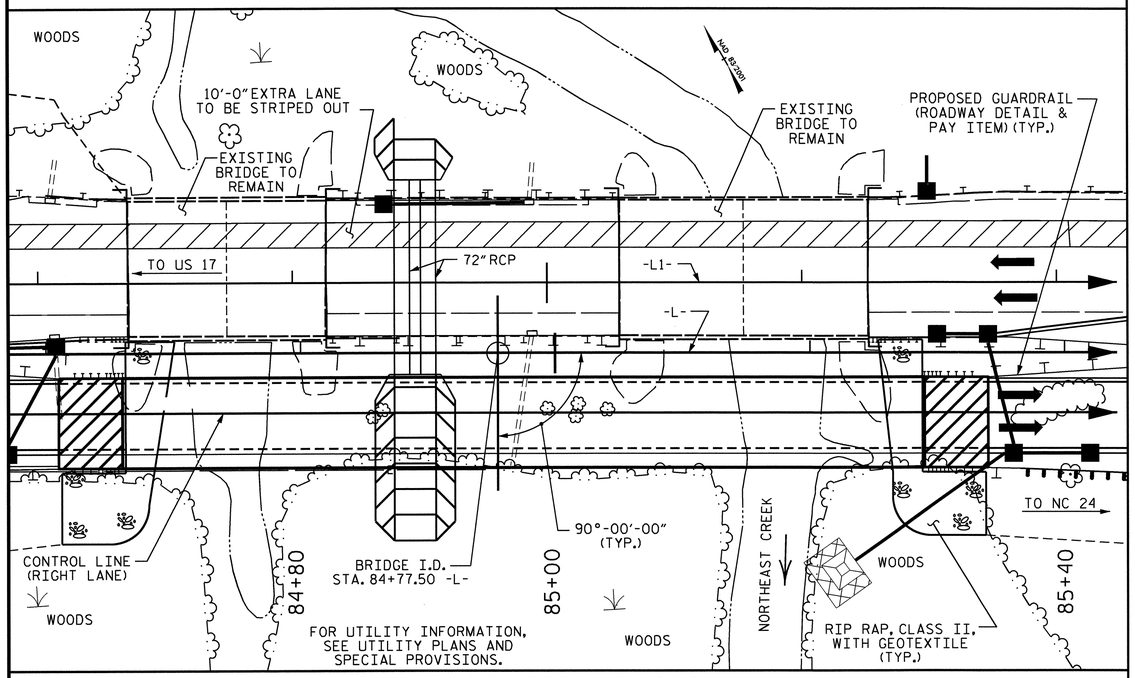

LOCATION SKETCH

NOTES:

ASSUMED LIVE LOAD = HL-93 OR ALTERNATE LOADING.

FOR OTHER DESIGN DATA AND GENERAL NOTES, SEE SHEET SN.

FOR EROSION CONTROL MEASURES, SEE EROSION CONTROL PLANS.

THIS BRIDGE HAS BEEN DESIGNED IN ACCORDANCE WITH THE AASHTO LRFD BRIDGE DESIGN SPECIFICATIONS.

ALL PAVEMENT MARKING WILL BE IN ACCORDANCE WITH THE PAVEMENT MARKING PLANS AND SHALL PROVIDE FOR BICYCLES.

THIS STRUCTURE HAS BEEN DESIGNED IN ACCORDANCE WITH HEC 18, "EVALUATING SCOUR AT BRIDGES", MAY, 2001.

THE CONTRACTOR SHALL PROVIDE INDEPENDENT ASSURANCE SAMPLES OF REINFORCING STEEL AS FOLLOWS: FOR PROJECTS REQUIRING UP TO 400 TONS OF REINFORCING STEEL, ONE 30 INCH SAMPLE OF EACH SIZE BAR USED, AND FOR PROJECTS REQUIRING OVER 400 TONS OF REINFORCING STEEL, TWO 30 INCH SAMPLES OF EACH SIZE BAR USED. THE BARS FROM WHICH THE SAMPLES ARE TAKEN MUST THEN BE SPLICED WITH REPLACEMENT BARS OF THE SIZE AND LENGTH OF THE SAMPLE, PLUS A MINIMUM LAP SPLICE OF THIRTY BAR DIAMETERS. PAYMENT FOR THE SAMPLES OF REINFORCING STEEL SHALL BE CONSIDERED INCIDENTAL TO VARIOUS PAY ITEMS.

FOR SUBMITTAL OF WORKING DRAWINGS, SEE SPECIAL PROVISIONS.

FOR FALSEWORK AND FORMWORK, SEE SPECIAL PROVISIONS.

FOR CRANE SAFETY, SEE SPECIAL PROVISIONS.

FOR GROUT FOR STRUCTURES, SEE SPECIAL PROVISIONS.

THIS BRIDGE IS LOCATED IN SEISMIC ZONE 1.

FOR ALL INTERIOR BENTS, ONLY PARTIAL GALVANIZING OF THE PILES IS REQUIRED. SEE INTERIOR BENT SHEET FOR REQUIRED GALVANIZED LENGTHS. PAYMENT FOR PARTIALLY GALVANIZED PILES WILL BE MADE UNDER THE CONTRACT UNIT PRICE FOR GALVANIZED STEEL PILES.

THE MATERIAL SHOWN IN THE CROSS-HATCHED AREA SHALL BE EXCAVATED FOR A DISTANCE OF APPROXIMATELY 2 FT. LEFT OF CENTERLINE ROADWAY AND 60 FT. RIGHT OF CENTERLINE ROADWAY AT END BENT #1 AND THE INTERIOR BENTS AND 50 FT. RIGHT OF CENTERLINE ROADWAY AT END BENT #2 AS DIRECTED BY THE ENGINEER. THIS WORK WILL BE PAID FOR AT THE CONTRACT LUMP SUM PRICE FOR UNCLASSIFIED STRUCTURE EXCAVATION. SEE SECTION 412 OF THE STANDARD SPECIFICATIONS.

THIS BRIDGE SHALL BE CONSTRUCTED USING TOP-DOWN CONSTRUCTION METHODS FOR SPANS A, B, AND E. SPANS C, D, AND F DO NOT REQUIRE TOP-DOWN CONSTRUCTION METHODS. THE USE OF A TEMPORARY CAUSEWAY OR WORK BRIDGE IS NOT PERMITTED.

TOTAL BILL OF MATERIAL

	PDA TESTING	UNCLASSIFIED STRUCTURE EXCAVATION	CONCRETE WEARING SURFACE	GROOVING BRIDGE FLOORS	CLASS AA CONCRETE	CLASS A CONCRETE	BRIDGE APPROACH SLABS	REINFORCING STEEL	EPOXY COATED REINFORCING STEEL	HP 12 X 53 STEEL PILES		PP 18x0.50 GALVANIZED STEEL PIPE PILES		STEEL PILE POINTS	PILE REDRIVES	2 BAR METAL RAIL	CONCRETE BARRIER RAIL	1'-2" X 2'-6" CONCRETE PARAPET	RIP RAP CLASS II (2'-0" THICK)	GEOTEXTILE FOR DRAINAGE	ELASTOMERIC BEARINGS	FOAM JOINT SEALS	3'-0" X 1'-9" PRESTRESSED CONCRETE CORED SLABS	
	EACH	LUMP SUM	SF	SF	CU. YDS.	CU. YDS.	LUMP SUM	LBS.	LBS.	NO.	LIN.FT.	NO.	LIN.FT.	EACH	EACH	LIN.FT.	LIN.FT.	LIN.FT.	TONS	SQ.YDS.	LUMP SUM	LUMP SUM	NO.	LIN.FT.
SUPERSTRUCTURE		LUMP SUM	9,146	9,443	88.7		LUMP SUM		2,670							297.38	304.88	304.88			LUMP SUM	LUMP SUM	78	3,955.25
END BENT NO. 1						15.3		2,384		5	350			5	5				261	290				
BENT NO. 1	1					14.5		2,194				8	680	8	8									
BENT NO. 2	1					14.5		2,194				8	680	8	8									
BENT NO. 3	1					14.5		2,194				8	760	8	8									
BENT NO. 4	1					14.5		2,194				8	760	8	8									
BENT NO. 5	1					14.5		2,194				8	760	8	8									
END BENT NO. 2						15.3		2,384		5	375			5	5				265	295				
TOTAL	5	LUMP SUM	9,146	9,443	88.7	103.1	LUMP SUM	15,738	2,670	10	725	40	3,640	50	50	297.38	304.88	304.88	526	585	LUMP SUM	LUMP SUM	78	3,955.25

HYDRAULIC DATA

DESIGN DISCHARGE	=	5,400 c.f.s.
FREQUENCY OF DESIGN FLOOD	=	50 YR.
DESIGN HIGH WATER ELEVATION	=	10.9'
DRAINAGE AREA	=	29.36 MI^2
BASE DISCHARGE (Q100)	=	6,100 c.f.s.
BASE HIGH WATER ELEVATION	=	11.6'

OVERTOPPING FLOOD DATA

OVERTOPPING DISCHARGE	=	8,172 c.f.s.
FREQUENCY OF OVERTOPPING FLOOD	=	100 YR.+
OVERTOPPING FLOOD ELEVATION	=	13.0'

NORTH CAROLINA PROFESSIONAL SEAL 14045 ENGINEER TIMOTHY L. COGGINS
07/27/12

PROJECT NO. U-3810
ONSLOW COUNTY
STATION: 84+77.50 -L-

SHEET 3 OF 3

STATE OF NORTH CAROLINA
DEPARTMENT OF TRANSPORTATION
RALEIGH

GENERAL DRAWING
FOR BRIDGE OVER
NORTHEAST CREEK ON SR 1406
BETWEEN SR 1715 AND SR 1859

REVISIONS						SHEET NO.
NO.	BY:	DATE:	NO.	BY:	DATE:	S-3
1			3			TOTAL SHEETS
2			4			62

STR. #1

DRAWN BY : PEGGY PARISI DATE : 4-24-12
CHECKED BY : T.L. COGGINS DATE : 5-9-12

27-JUL-2012 15:12
R:\TIPProjects-U\U3810\structures\Plans\FinalPlans\Bridges\Str. #1\u3810_sd_gd_01.dgn
tcoggins

LOAD AND RESISTANCE FACTOR RATING (LRFR) SUMMARY FOR PRESTRESSED CONCRETE GIRDERS

LEVEL		VEHICLE	WEIGHT (W) (TONS)	CONTROLLING LOAD RATING (#)	MINIMUM RATING FACTORS (RF)	TONS = W x RF	STRENGTH I LIMIT STATE											SERVICE III LIMIT STATE						COMMENT NUMBER
							LIVE-LOAD FACTORS (γ_{LL})	MOMENT					SHEAR					LIVE-LOAD FACTORS (γ_{LL})	MOMENT					
								DISTRIBUTION FACTORS (DF)	RATING FACTOR	SPAN	GIRDER LOCATION	DISTANCE FROM LEFT END OF SPAN (ft)	DISTRIBUTION FACTORS (DF)	RATING FACTOR	SPAN	GIRDER LOCATION	DISTANCE FROM LEFT END OF SPAN (ft)		DISTRIBUTION FACTORS (DF)	RATING FACTOR	SPAN	GIRDER LOCATION	DISTANCE FROM LEFT END OF SPAN (ft)	
DESIGN LOAD RATING		HL-93 (INVENTORY)	N/A	1	1.00	--	1.75	.277	1.12	C	ER	26.938	.520	1.01	C	ER	2.694	0.80	.277	1.00	C	ER	26.938	2
		HL-93 (OPERATING)	N/A		1.31	--	1.35	.277	1.45	C	ER	26.938	.520	1.31	C	ER	2.694	N/A	--	--	--	--	--	2
		HS-20 (INVENTORY)	36.000	2	1.27	45.720	1.75	.277	1.52	C	ER	26.938	.520	1.27	C	ER	2.694	0.80	.277	1.37	C	ER	26.938	2
		HS-20 (OPERATING)	36.000		1.64	59.040	1.35	.277	1.97	C	ER	26.938	.520	1.64	C	ER	2.694	N/A	--	--	--	--	--	2
LEGAL LOAD RATING	SINGLE VEHICLE (SV)	SNSH	13.500		2.87	38.745	1.40	.280	3.92	A	ER	21.938	.520	3.64	C	ER	2.694	0.80	.277	2.87	C	ER	26.938	1, 2
		SNGARBS2	20.000		2.23	44.600	1.40	.277	3.10	C	ER	26.938	.520	2.63	C	ER	2.694	0.80	.277	2.23	C	ER	26.938	2
		SNAGRIS2	22.000		2.15	47.300	1.40	.277	2.99	C	ER	26.938	.520	2.46	C	ER	2.694	0.80	.277	2.15	C	ER	26.938	2
		SNCOTTS3	27.250		1.43	38.968	1.40	.280	1.96	A	ER	21.938	.520	1.82	C	ER	2.694	0.80	.277	1.43	C	ER	26.938	1, 2
		SNAGGRS4	34.925		1.23	42.958	1.40	.277	1.71	C	ER	26.938	.520	1.54	C	ER	2.694	0.80	.277	1.23	C	ER	26.938	2
		SNS5A	35.550		1.20	42.660	1.40	.277	1.67	C	ER	26.938	.520	1.58	C	ER	2.694	0.80	.277	1.20	C	ER	26.938	2
		SNS6A	39.950		1.11	44.345	1.40	.277	1.55	C	ER	26.938	.520	1.45	C	ER	2.694	0.80	.277	1.11	C	ER	26.938	2
		SNS7B	42.000		1.06	44.520	1.40	.277	1.48	C	ER	26.938	.520	1.44	C	ER	2.694	0.80	.277	1.06	C	ER	26.938	2
	TRUCK TRACTOR SEMI-TRAILER (TTST)	TNAGRIT3	33.000		1.36	44.880	1.40	.277	1.90	C	ER	26.938	.520	1.71	C	ER	2.694	0.80	.277	1.36	C	ER	26.938	2
		TNT4A	33.075		1.37	45.313	1.40	.277	1.91	C	ER	26.938	.520	1.66	C	ER	2.694	0.80	.277	1.37	C	ER	26.938	2
		TNT6A	41.600		1.14	47.424	1.40	.277	1.59	C	ER	26.938	.520	1.56	C	ER	2.694	0.80	.277	1.14	C	ER	26.938	2
		TNT7A	42.000		1.15	48.300	1.40	.277	1.61	C	ER	26.938	.520	1.48	C	ER	2.694	0.80	.277	1.15	C	ER	26.938	2
		TNT7B	42.000		1.20	50.400	1.40	.277	1.68	C	ER	26.938	.520	1.39	C	ER	2.694	0.80	.277	1.20	C	ER	26.938	2
		TNAGRIT4	43.000		1.14	49.020	1.40	.277	1.59	C	ER	26.938	.520	1.35	C	ER	2.694	0.80	.277	1.14	C	ER	26.938	2
		TNAGT5A	45.000		1.07	48.150	1.40	.277	1.49	C	ER	26.938	.520	1.36	C	ER	2.694	0.80	.277	1.07	C	ER	26.938	2
		TNAGT5B	45.000	3	1.05	47.250	1.40	.277	1.46	C	ER	26.938	.520	1.28	C	ER	2.694	0.80	.277	1.05	C	ER	26.938	2

LOAD FACTORS:

DESIGN LOAD RATING FACTORS	LIMIT STATE	γ_{DC}	γ_{DW}
	STRENGTH I	1.25	1.50
	SERVICE III	1.00	1.00

NOTES:

MINIMUM RATING FACTORS ARE BASED ON THE STRENGTH I AND SERVICE III LIMIT STATES.

ALLOWABLE STRESSES FOR SERVICE III LIMIT STATE ARE AS REQUIRED FOR DESIGN.

COMMENTS:

1. SPAN A = SPAN E (BRG. TO BRG.)
2. SPAN C = SPAN D & F (BRG. TO BRG.)
3.
4.

(#) CONTROLLING LOAD RATING

- (1) DESIGN LOAD RATING (HL-93)
- (2) DESIGN LOAD RATING (HS-20)
- (3) LEGAL LOAD RATING **
- ** SEE CHART FOR VEHICLE TYPE

CORED SLAB UNIT LOCATION

- I - INTERIOR UNIT
- EL - EXTERIOR LEFT UNIT
- ER - EXTERIOR RIGHT UNIT

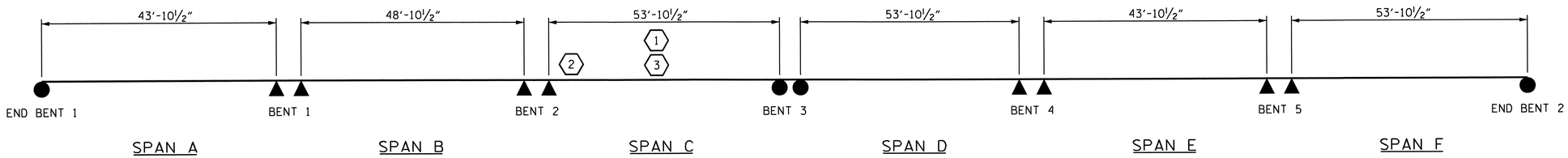

LRFR SUMMARY

PROJECT NO. U-3810
ONSLOW COUNTY
STATION: 84+77.50 -L-

STATE OF NORTH CAROLINA
DEPARTMENT OF TRANSPORTATION
RALEIGH

STANDARD
LRFR SUMMARY FOR PRESTRESSED CONCRETE CORED SLABS
(NON-INTERSTATE TRAFFIC)

NORTH CAROLINA PROFESSIONAL SEAL 14045 ENGINEER TIMOTHY L. COGGINS
07/27/12

REVISIONS						SHEET NO.
NO.	BY:	DATE:	NO.	BY:	DATE:	S-4
1			3			TOTAL SHEETS
2			4			62

ASSEMBLED BY : PEGGY PARISI DATE : 5-29-12
CHECKED BY : T.L. COGGINS DATE : 6-4-12
DRAWN BY : MAA 1/08
CHECKED BY : GM/DI 2/08
REV. 11/12/08RR MAA/GM
REV. 10/1/11 MAA/GM

12-JUN-2012 08:46
R:\Structures\Final Plans\Bridges\Str. #1\u3810_sd_gd_01.dgn
nruffin

STR. #1 STD. NO. LRFR1

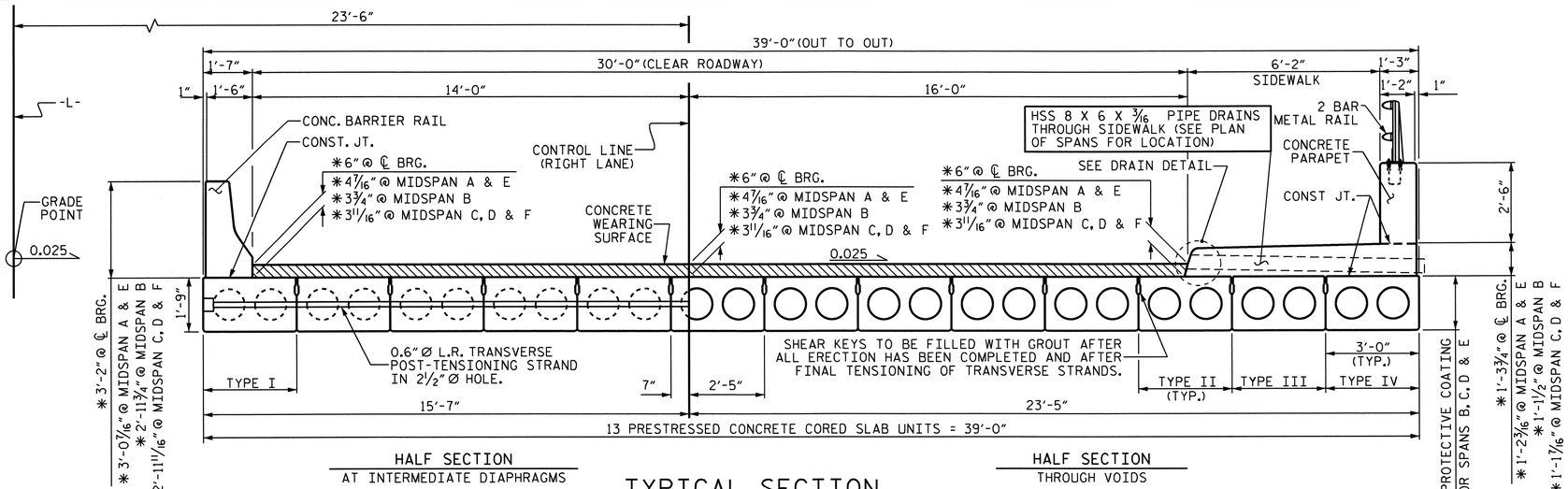

TYPICAL SECTION

* - THE MINIMUM AND MAXIMUM BARRIER RAIL HEIGHTS, SIDEWALK HEIGHTS AND CONCRETE WEARING SURFACE THICKNESSES ARE SHOWN. THE HEIGHT OF THE SIDEWALK, BARRIER RAIL AND CONCRETE WEARING SURFACE THICKNESS VARIES WHILE THE TOP OF THE BARRIER RAIL AND PARAPET FOLLOW THE PROFILE OF THE GUTTERLINE.

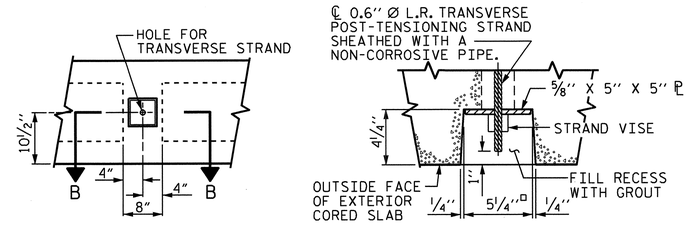

ELEVATION VIEW

SECTION B-B

GROUTED RECESS AT END OF POST-TENSIONED STRAND OF CORED SLABS

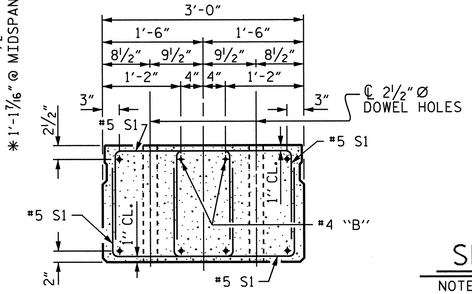

END ELEVATION

SHOWING PLACEMENT OF DOUBLE STIRRUPS AND LOCATION OF DOWEL HOLES. (STRAND LAYOUT NOT SHOWN.) INTERIOR SLAB UNIT SHOWN-EXTERIOR SLAB UNIT SIMILAR EXCEPT SHEAR KEY LOCATION.

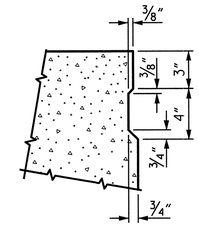

SHEAR KEY DETAIL

NOTE: OMIT SHEAR KEY ON OUTSIDE FACE OF EXTERIOR CORED SLABS.

EXPANSION END

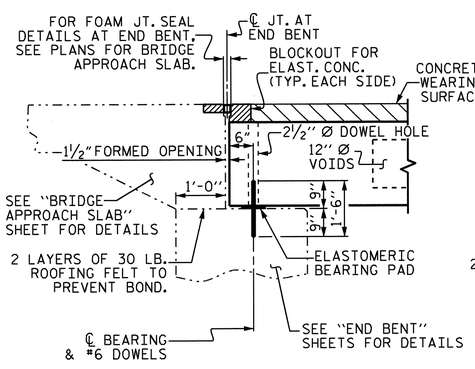

SECTION AT END BENTS #1 & #2

FIXED END FIXED END

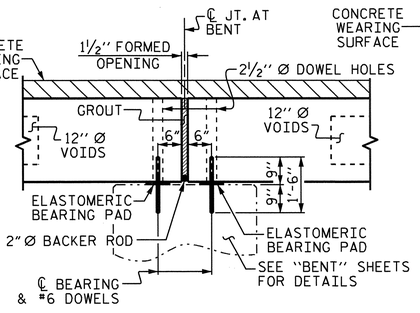

SECTION AT BENTS #1, #2, #4 & #5

EXPANSION END EXPANSION END

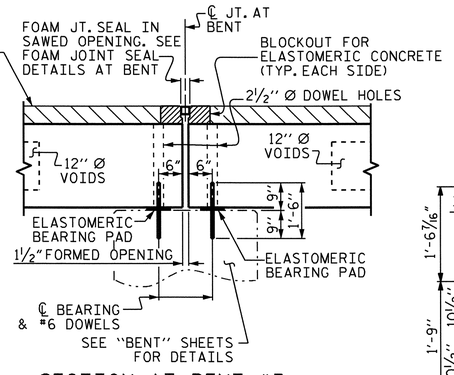

SECTION AT BENT #3

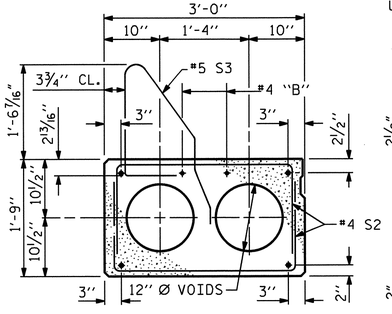

TYPE I - EXTERIOR SLAB SECTION (LEFT)

(FOR PRESTRESSED STRAND LAYOUT, SEE TYPE II - INTERIOR SLAB SECTION)

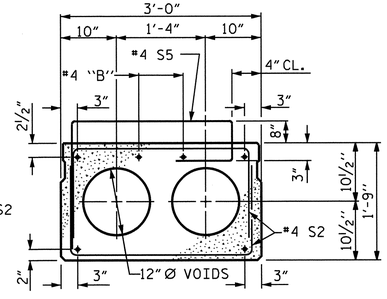

TYPE III - INTERIOR SLAB SIDEWALK SECTION

(FOR PRESTRESSED STRAND LAYOUT, SEE TYPE II - INTERIOR SLAB SECTION)

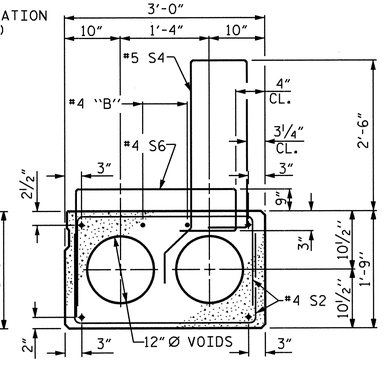

TYPE IV - EXTERIOR SLAB SIDEWALK SECTION (RIGHT)

(FOR PRESTRESSED STRAND LAYOUT, SEE TYPE II - INTERIOR SLAB SECTION)

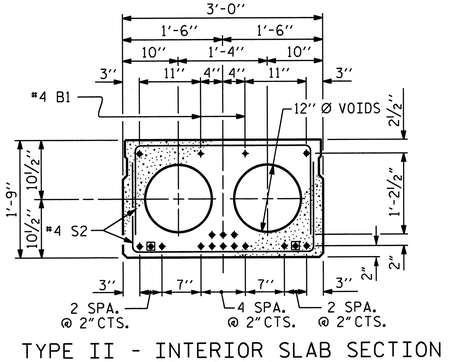

TYPE II - INTERIOR SLAB SECTION SPANS A & E

(16 STRANDS REQUIRED, 2 SHEATHED)

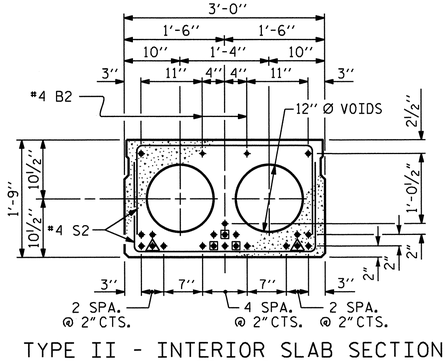

TYPE II - INTERIOR SLAB SECTION SPAN B

(21 STRANDS REQUIRED, 5 SHEATHED)

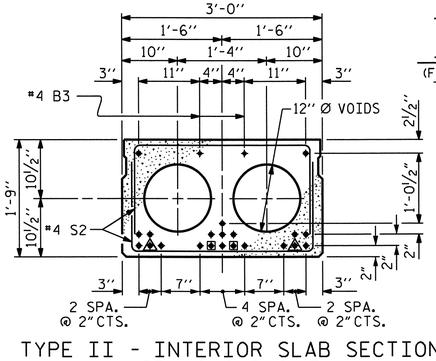

TYPE II - INTERIOR SLAB SECTION SPANS C, D & F

(21 STRANDS REQUIRED, 4 SHEATHED)

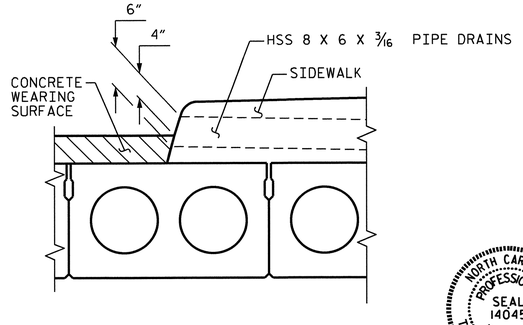

DRAIN DETAIL

0.6" Ø LOW RELAXATION STRAND LAYOUT

● BOND SHALL BE BROKEN ON THESE STRANDS FOR A DISTANCE OF 4'-0" FROM END OF CORED SLAB UNIT. SEE STANDARD SPECIFICATIONS, ARTICLE 1078-7.

▲ BOND SHALL BE BROKEN ON THESE STRANDS FOR A DISTANCE OF 8'-0" FROM END OF CORED SLAB UNIT. SEE STANDARD SPECIFICATIONS, ARTICLE 1078-7.

ASSEMBLED BY : M.D. PISO		DATE : 02-10-12	
CHECKED BY : P.A.PARISI		DATE : 05-01-12	
DRAWN BY : WJH 4/89	REV. 7/10/01RR	RWW/LES	
CHECKED BY : FCJ 5/89	REV. 5/1/06R	TLA/GM	
	REV. 10/1/11	MAA/GM	

PROJECT NO. U-3810

ONSLOW COUNTY

STATION: 84+77.50 -L-

STATE OF NORTH CAROLINA
DEPARTMENT OF TRANSPORTATION
RALEIGH

STANDARD
3'-0" X 1'-9"
PRESTRESSED CONCRETE
CORED SLAB UNIT

REVISIONS						SHEET NO.
NO.	BY:	DATE:	NO.	BY:	DATE:	S-5
1			3			TOTAL SHEETS
2			4			62

NORTH CAROLINA PROFESSIONAL SEAL 14045 ENGINEER TIMOTHY A. COGGINS
08/02/12

02-AUG-2012 16:48
R:\TIPProjects-U\U3810\structures\Plans\FinalPlans\Bridges\Str. #1\u3810_sd_cs_01.dgn
tcoggins

STR. #1

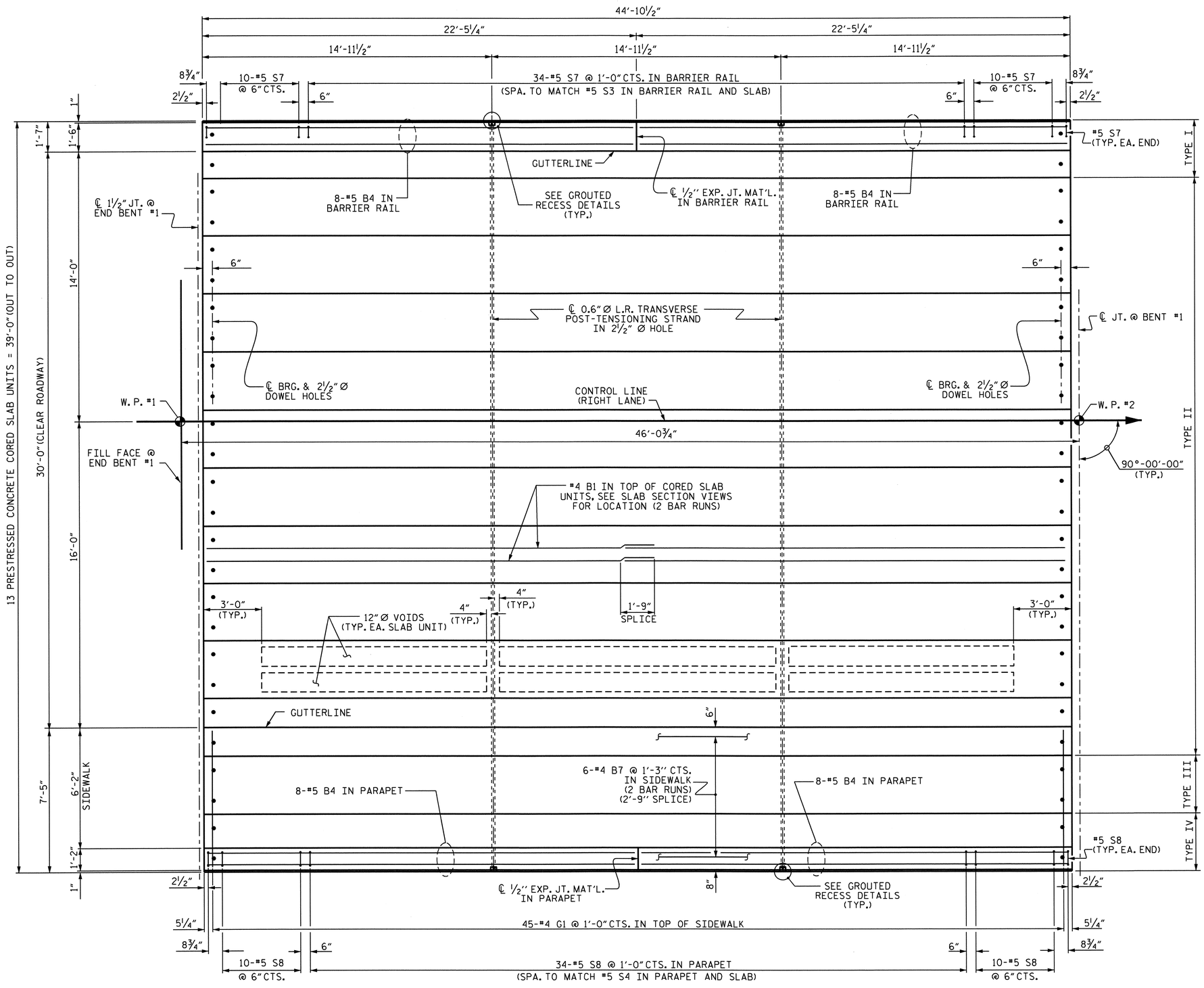

SPAN "A"

SHOWING REINFORCING STEEL IN BARRIER RAIL, PARAPET AND SIDEWALK.
SEE SHEET 3 OF 8 FOR REINFORCING STEEL DETAILS IN CORED SLAB UNITS.

DRAWN BY :	M.D.PISO	DATE :	02-10-12
CHECKED BY :	P.A.PARISI	DATE :	05-01-12

24-JUL-2012 10:52
W:\structures\Plans\FinalPlans\Bridges\Str. #1\u3810_sd_cs_01.dgn
bbarodawala

PROJECT NO. U-3810
ONSLOW COUNTY
STATION: 84+77.50 -L-

SHEET 1 OF 8

STATE OF NORTH CAROLINA
DEPARTMENT OF TRANSPORTATION
RALEIGH

SUPERSTRUCTURE

PLAN OF SPAN "A"

NORTH CAROLINA PROFESSIONAL SEAL 14045 ENGINEER TIMOTHY V. COGGINS
07/27/12

REVISIONS						SHEET NO.
NO.	BY:	DATE:	NO.	BY:	DATE:	S-6
1			3			TOTAL SHEETS
2			4			62

STR. #1

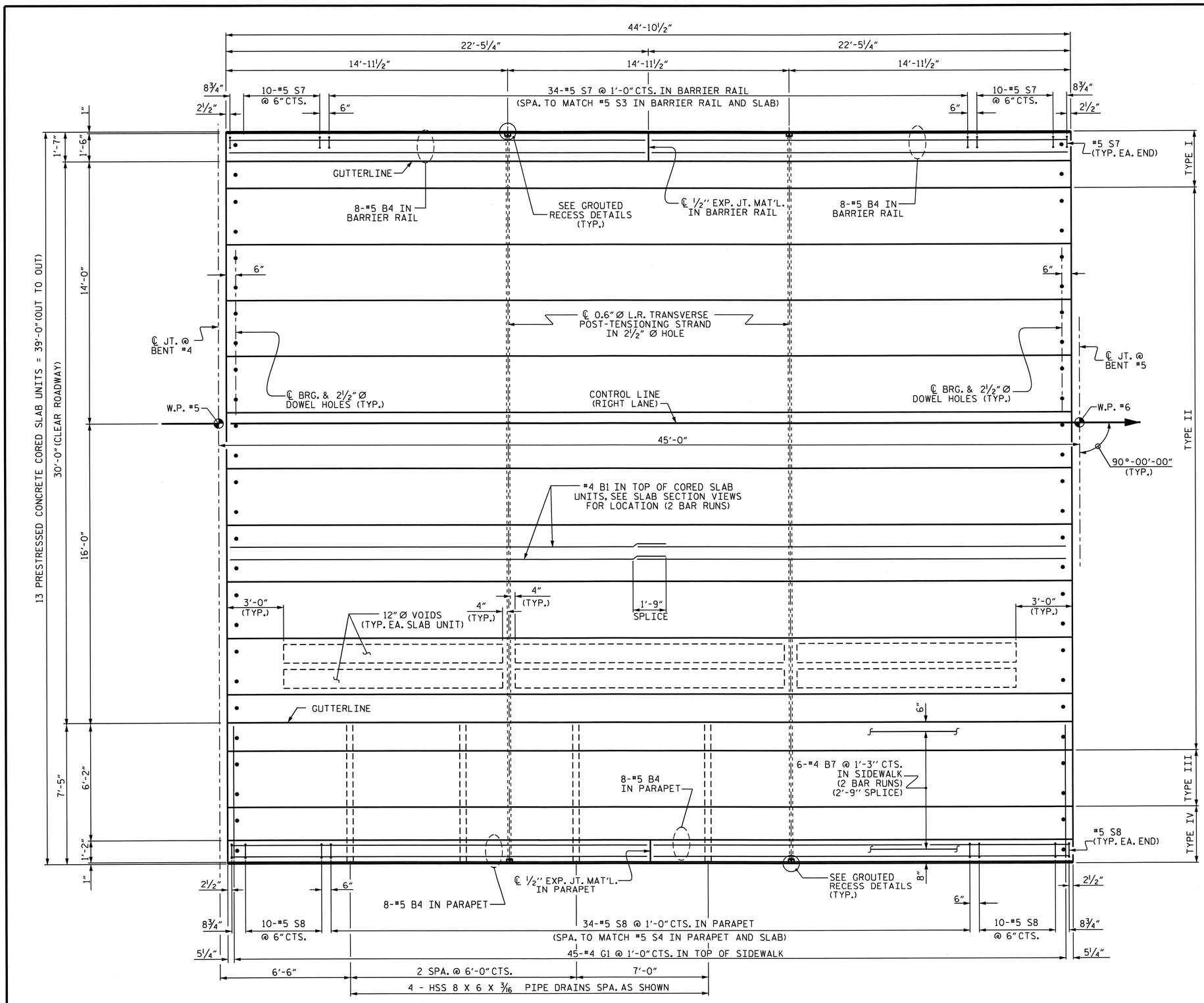

SPAN "E"

SHOWING REINFORCING STEEL IN BARRIER RAIL, PARAPET AND SIDEWALK.
SEE SHEET 3 OF 8 FOR REINFORCING STEEL DETAILS IN CORED SLAB UNITS.

PROJECT NO. U-3810
ONSLOW COUNTY
STATION: 84+77.50 -L-

SHEET 2 OF 8

STATE OF NORTH CAROLINA
DEPARTMENT OF TRANSPORTATION
RALEIGH

SUPERSTRUCTURE

PLAN OF SPAN "E"

NORTH CAROLINA PROFESSIONAL SEAL 14045 ENGINEER TIMOTHY L. COGGINS
08/03/12

REVISIONS						SHEET NO.
NO.	BY:	DATE:	NO.	BY:	DATE:	S-7
1			3			TOTAL SHEETS
2			4			62

DRAWN BY : M.D.PISO DATE : 02-10-12
CHECKED BY : P.A.PARTIST DATE : 05-01-12

02-AUG-2012 16:47
R:\TIPProjects-U\U3810\structures\Plans\FinalPlans\Bridges\Str. #1\u3810_sd_cs_01.dgn
tcoggins

STR. #1

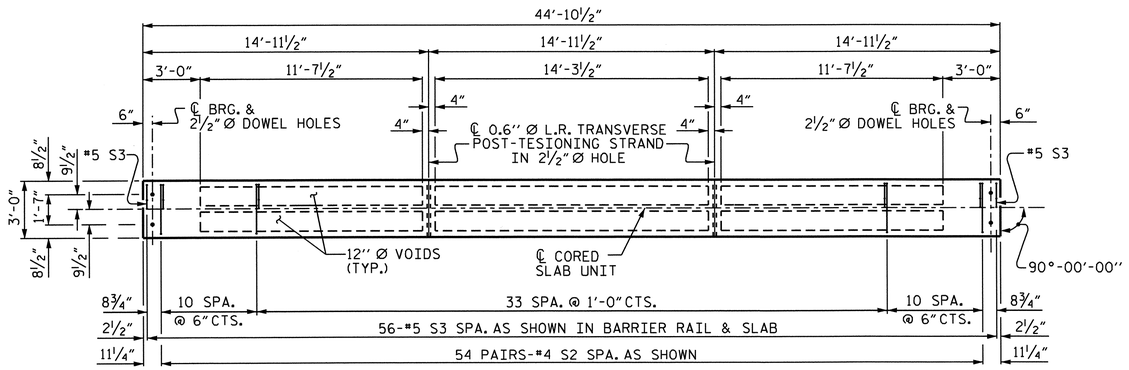

PLAN OF TYPE I CORED SLAB UNIT

FOR LOCATION OF S1 BARS AT ENDS OF SLAB, SEE "PART PLAN - EXTERIOR SECTIONS"

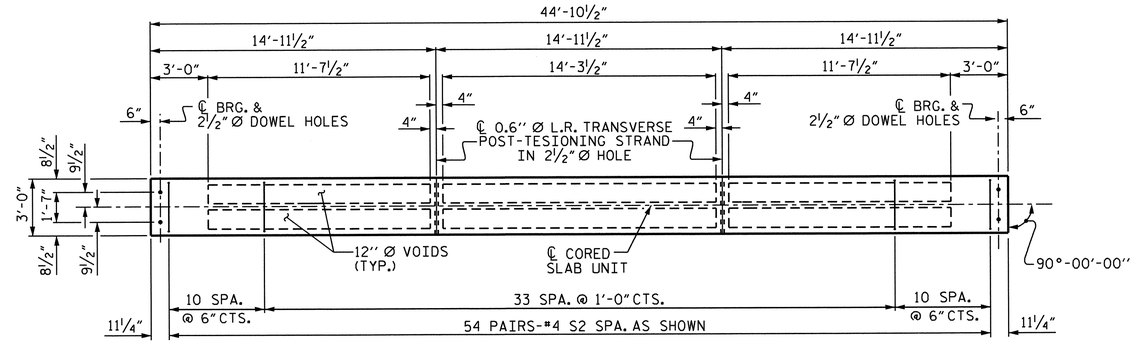

PLAN OF TYPE II CORED SLAB UNIT

FOR LOCATION OF S1 BARS AT ENDS OF SLAB, SEE "PART PLAN - EXTERIOR SECTIONS"

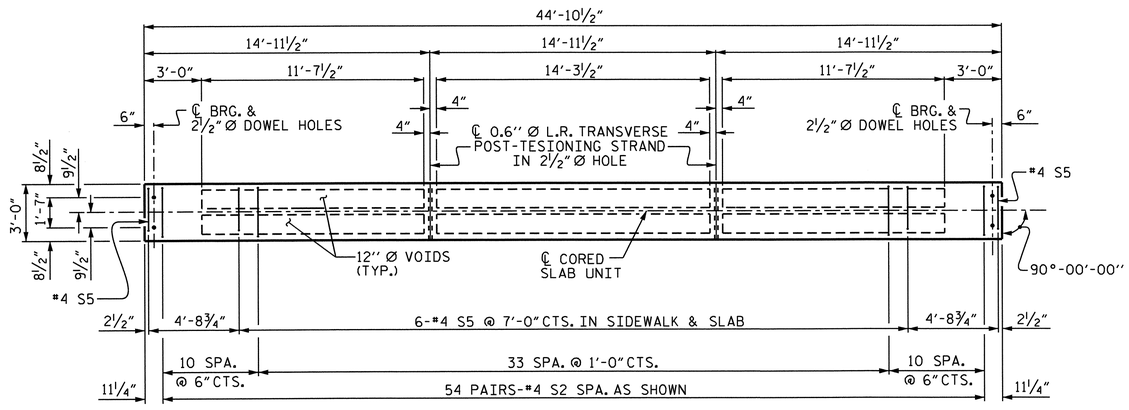

PLAN OF TYPE III CORED SLAB UNIT

FOR LOCATION OF S1 BARS AT ENDS OF SLAB, SEE "PART PLAN - EXTERIOR SECTIONS"

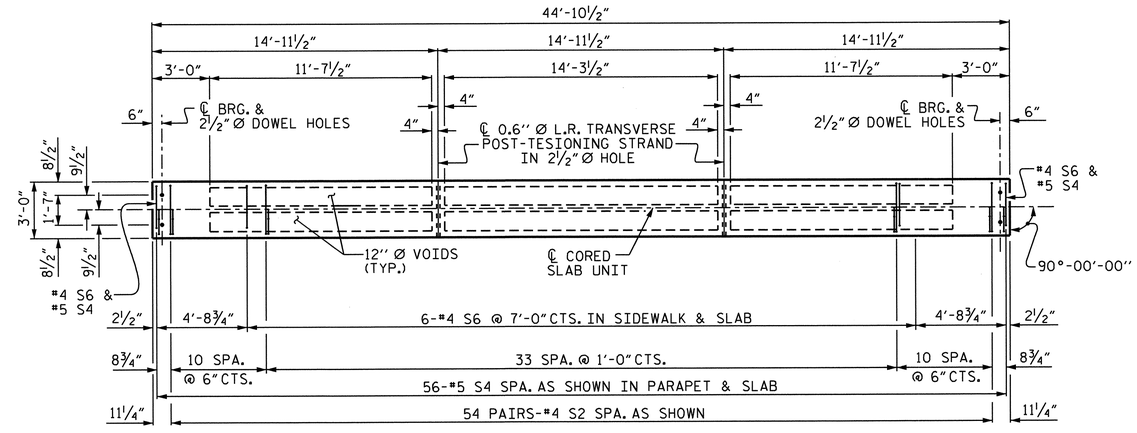

PLAN OF TYPE IV CORED SLAB UNIT

FOR LOCATION OF S1 BARS AT ENDS OF SLAB, SEE "PART PLAN - EXTERIOR SECTIONS"

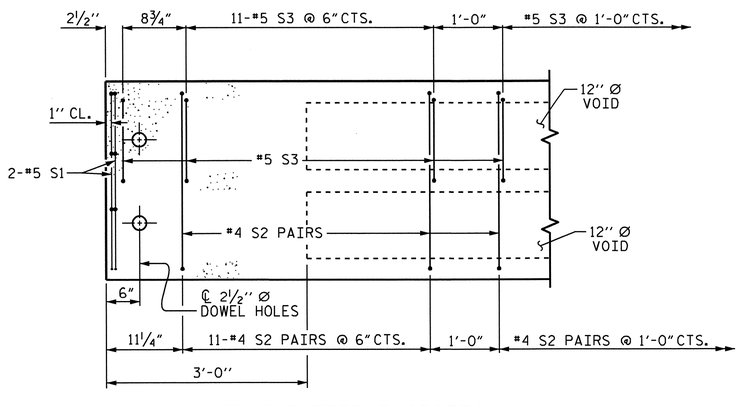

TYPE I EXTERIOR SECTION

TYPE II SIMILAR EXCEPT OMIT S3 BARS

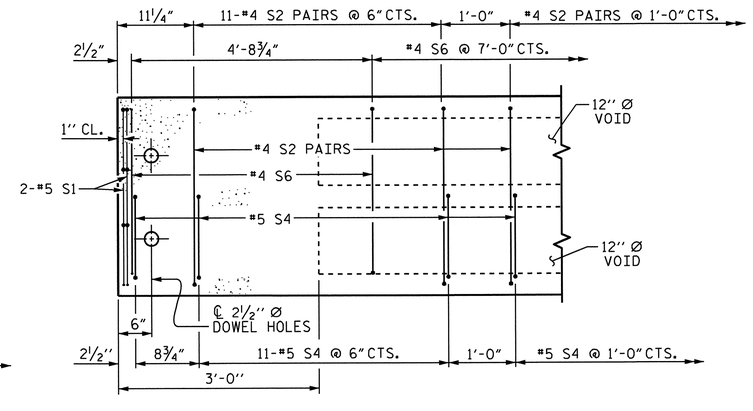

TYPE IV EXTERIOR SECTION

TYPE III SIMILAR EXCEPT OMIT S4 BARS AND SUBSTITUTE #4 S5 BARS FOR #4 S6 BARS

PART PLAN - EXTERIOR SECTIONS

PROJECT NO. U-3810
ONSLOW COUNTY
STATION: 84+77.50 -L-

SHEET 3 OF 8

STATE OF NORTH CAROLINA
DEPARTMENT OF TRANSPORTATION
RALEIGH

SUPERSTRUCTURE
PLAN OF SPANS "A" AND "E" DETAILS

NORTH CAROLINA PROFESSIONAL SEAL 14045 ENGINEER TIMOTHY A. COCKINS
07/27/12

REVISIONS								SHEET NO.
NO.	BY:	DATE:	NO.	BY:	DATE:			S-8
1			3					TOTAL SHEETS
2			4					62

DRAWN BY : M.D.PISO DATE : 02-10-12
CHECKED BY : P.A.PARISI DATE : 05-01-12

12-JUN-2012 08:46
R:\Structures\Final Plans\Bridges\Str. #1\u3810_sd_cs_01.dgn
nruffin

STR. #1

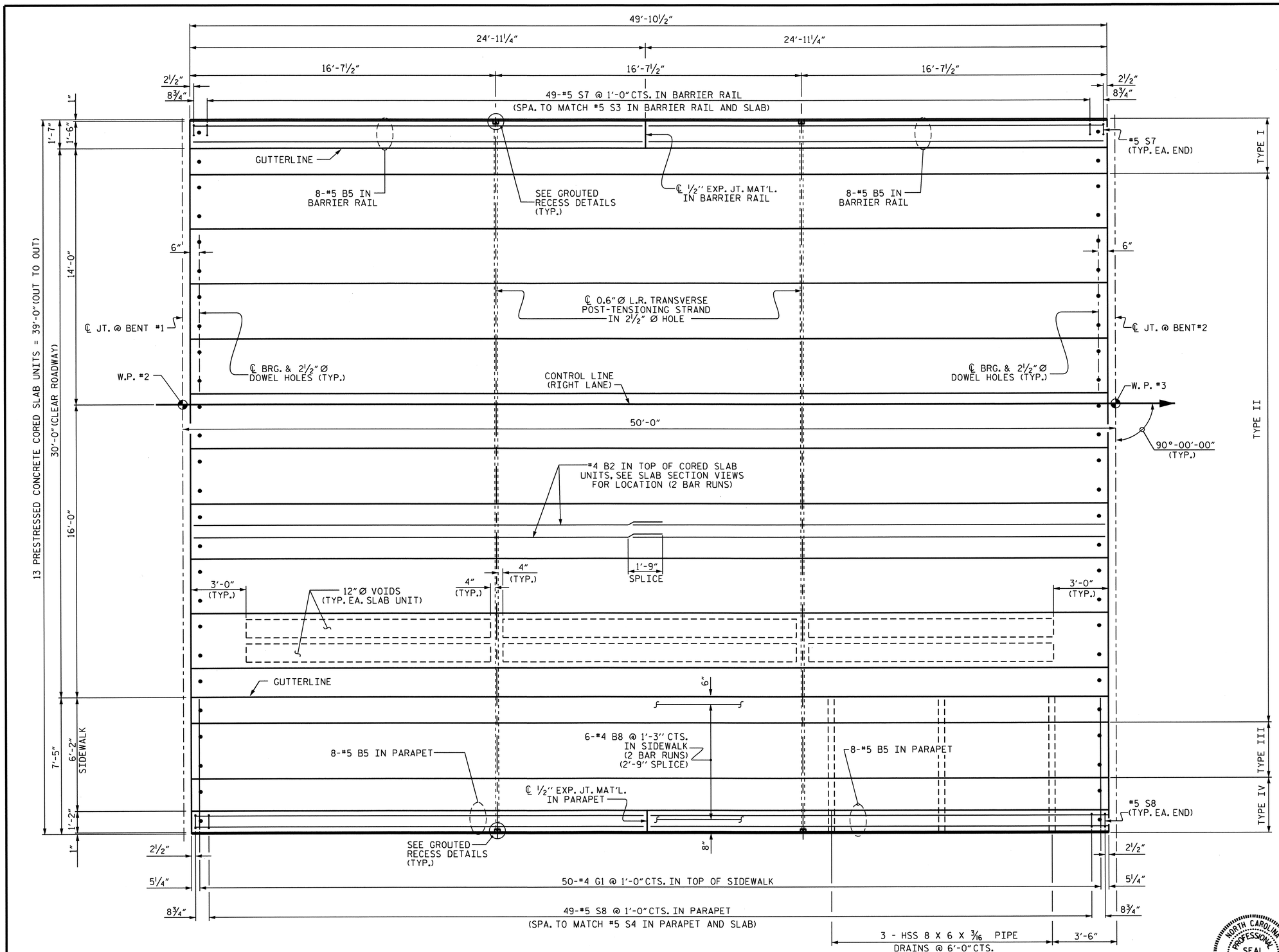

SPAN "B"

SHOWING REINFORCING STEEL IN BARRIER RAIL, PARAPET AND SIDEWALK.
SEE SHEET 5 OF 8 FOR REINFORCING STEEL DETAILS IN CORED SLAB UNITS.

DRAWN BY : M.D.PISO DATE : 02-10-12
CHECKED BY : P.A.PARISI DATE : 05-01-12

02-AUG-2012 16:47
R:\TIPProjects-U\U3810\structures\Plans\FinalPlans\Bridges\Str. #1\u3810_sd_cs_01.dgn
tcoggins

NORTH CAROLINA PROFESSIONAL SEAL 14045 ENGINEER TIMOTHY L. COGGINS
08/02/12

PROJECT NO. U-3810
ONSLOW COUNTY
STATION: 84+77.50 -L-

SHEET 4 OF 8

STATE OF NORTH CAROLINA
DEPARTMENT OF TRANSPORTATION
RALEIGH

SUPERSTRUCTURE

PLAN OF SPAN "B"

REVISIONS						SHEET NO.
NO.	BY:	DATE:	NO.	BY:	DATE:	S-9
1			3			TOTAL SHEETS
2			4			62

STR. #1

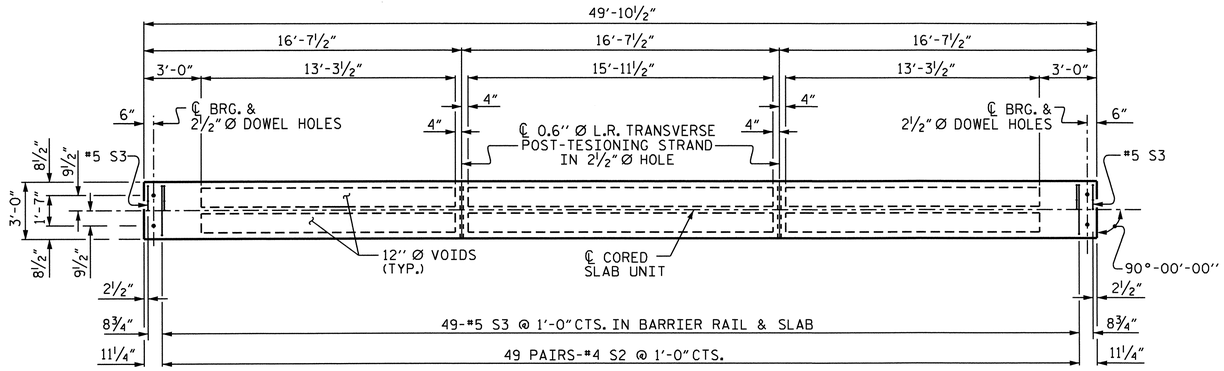

PLAN OF TYPE I CORED SLAB UNIT

FOR LOCATION OF S1 BARS AT ENDS OF SLAB, SEE "PART PLAN - EXTERIOR SECTIONS"

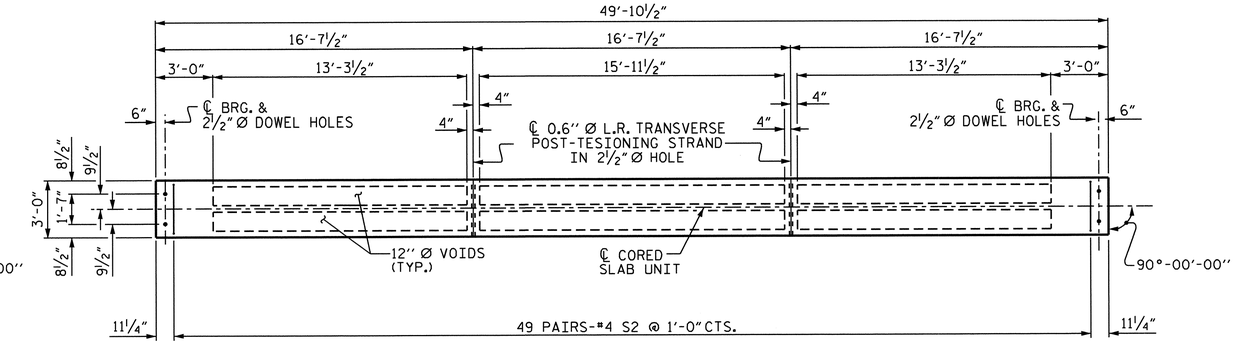

PLAN OF TYPE II CORED SLAB UNIT

FOR LOCATION OF S1 BARS AT ENDS OF SLAB, SEE "PART PLAN - EXTERIOR SECTIONS"

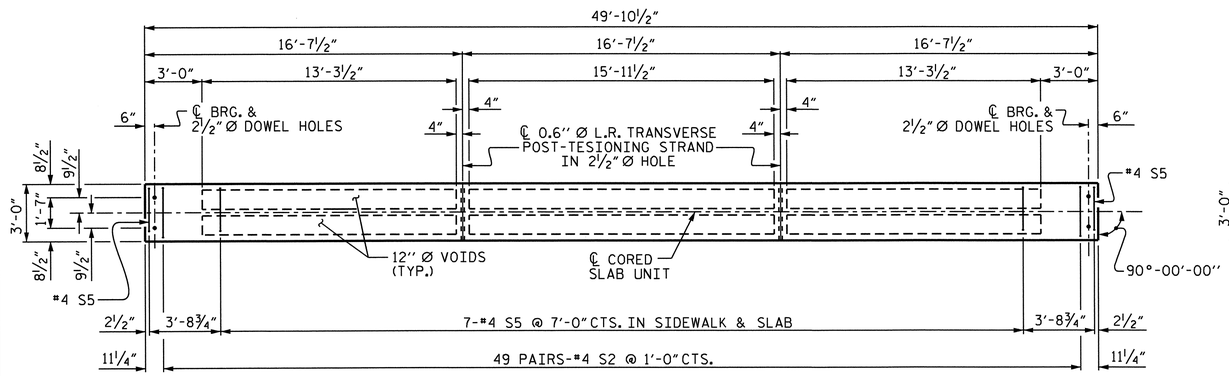

PLAN OF TYPE III CORED SLAB UNIT

FOR LOCATION OF S1 BARS AT ENDS OF SLAB, SEE "PART PLAN - EXTERIOR SECTIONS"

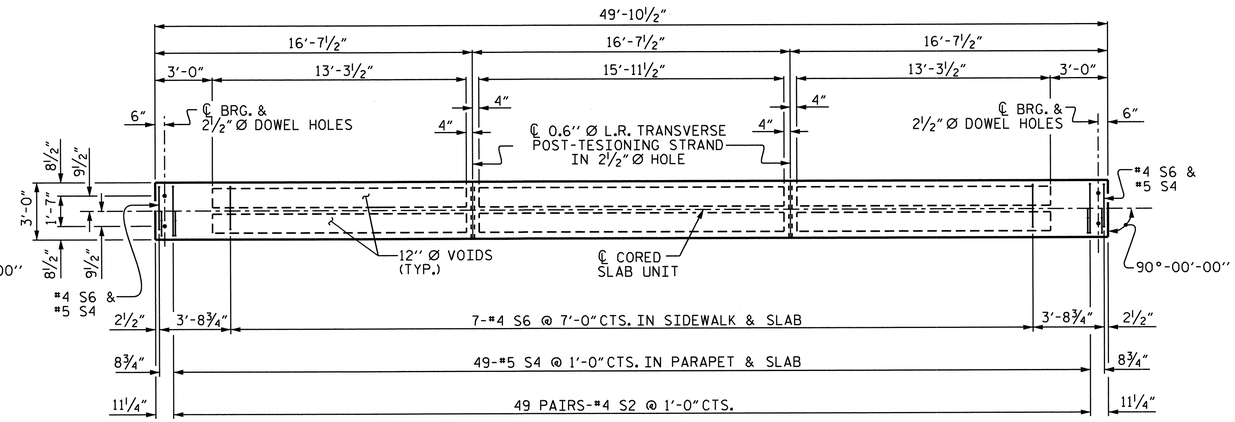

PLAN OF TYPE IV CORED SLAB UNIT

FOR LOCATION OF S1 BARS AT ENDS OF SLAB, SEE "PART PLAN - EXTERIOR SECTIONS"

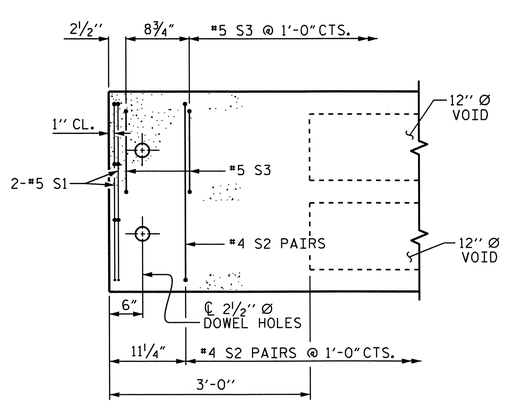

TYPE I EXTERIOR SECTION

TYPE II SIMILAR EXCEPT OMIT S3 BARS

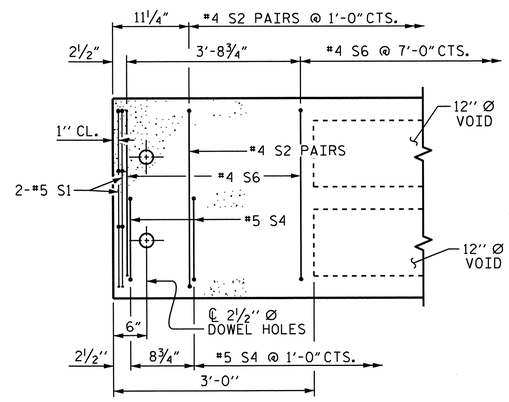

TYPE IV EXTERIOR SECTION

TYPE III SIMILAR EXCEPT OMIT S4 BARS AND SUBSTITUTE #4 S5 BARS FOR #4 S6 BARS

PART PLAN - EXTERIOR SECTIONS

PROJECT NO. U-3810

ONSLOW COUNTY

STATION: 84+77.50 -L-

SHEET 5 OF 8

STATE OF NORTH CAROLINA
DEPARTMENT OF TRANSPORTATION
RALEIGH

SUPERSTRUCTURE

PLAN OF SPAN "B" DETAILS

NORTH CAROLINA PROFESSIONAL SEAL 14045 ENGINEER TIMOTHY A. COGGINS

07/27/12

REVISIONS						SHEET NO.
NO.	BY:	DATE:	NO.	BY:	DATE:	S-10
1			3			TOTAL SHEETS
2			4			62

STR. #1

DRAWN BY : M.D.PISO DATE : 02-10-12
CHECKED BY : P.A.PARISI DATE : 05-01-12

12-JUN-2012 08:46
R:\Structures\Final Plans\Bridges\Str. #1\u3810_sd_cs_01.dgn
nruffin

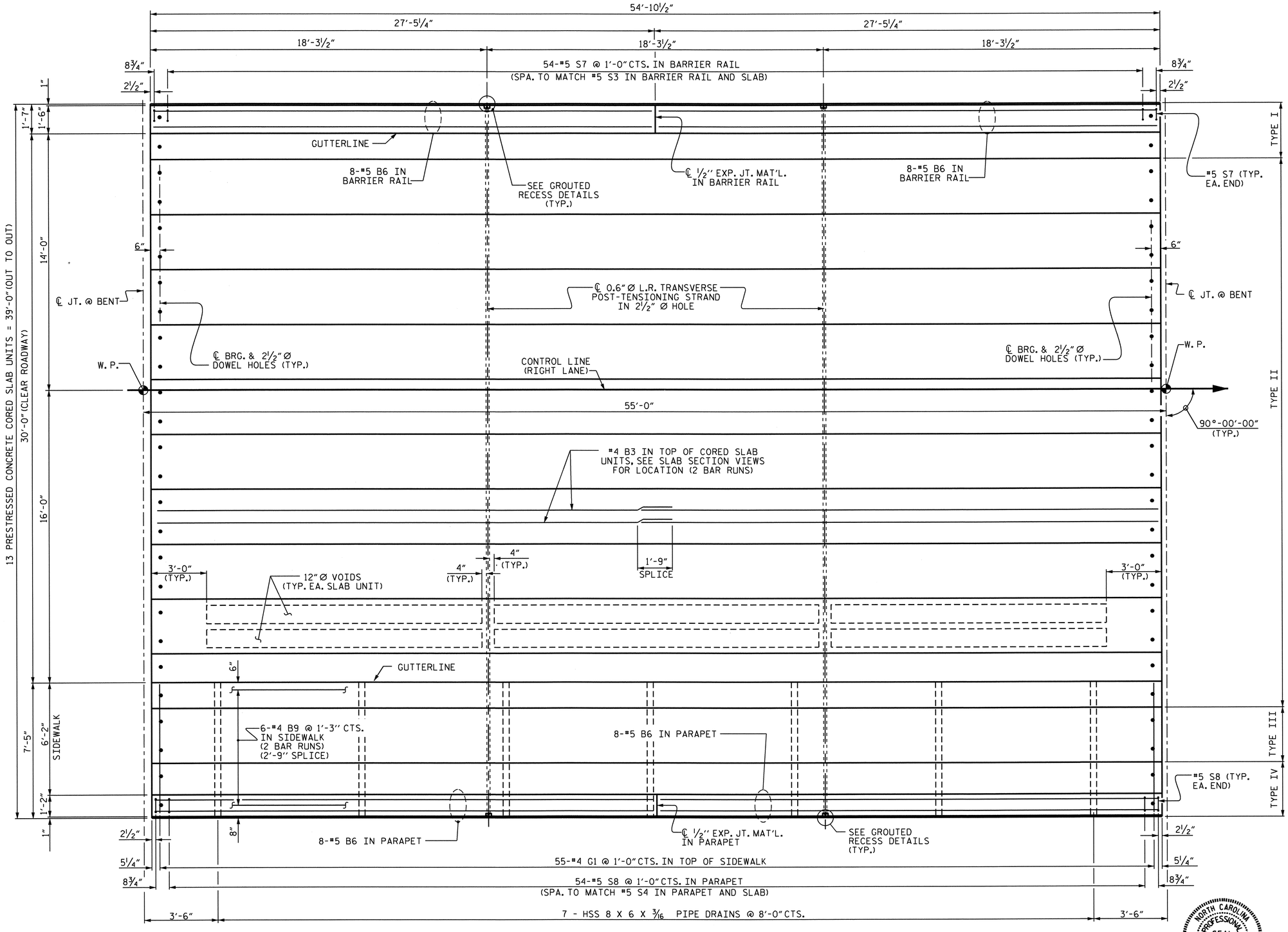

SPAN "C" OR "D"

SHOWING REINFORCING STEEL IN BARRIER RAIL, PARAPET AND SIDEWALK.
SEE SHEET 8 OF 8 FOR REINFORCING STEEL DETAILS IN CORED SLAB UNITS.

PROJECT NO. U-3810
ONSLOW COUNTY
STATION: 84+77.50 -L-

SHEET 6 OF 8

STATE OF NORTH CAROLINA
DEPARTMENT OF TRANSPORTATION
RALEIGH

SUPERSTRUCTURE

PLAN OF SPANS "C" & "D"

NORTH CAROLINA PROFESSIONAL SEAL 14045 ENGINEER TIMOTHY J. COGGINS
08/02/12

REVISIONS						SHEET NO.
NO.	BY:	DATE:	NO.	BY:	DATE:	S-11
1			3			TOTAL SHEETS
2			4			62

STR. #1

DRAWN BY : M.D.PISO DATE : 02-10-12
CHECKED BY : P.A.PARISI DATE : 05-01-12

02-AUG-2012 16:46
R:\TIPProjects-U\U3810\structures\Plans\FinalPlans\Bridges\Str. #1\u3810_sd_cs_01.dgn
tcoggins

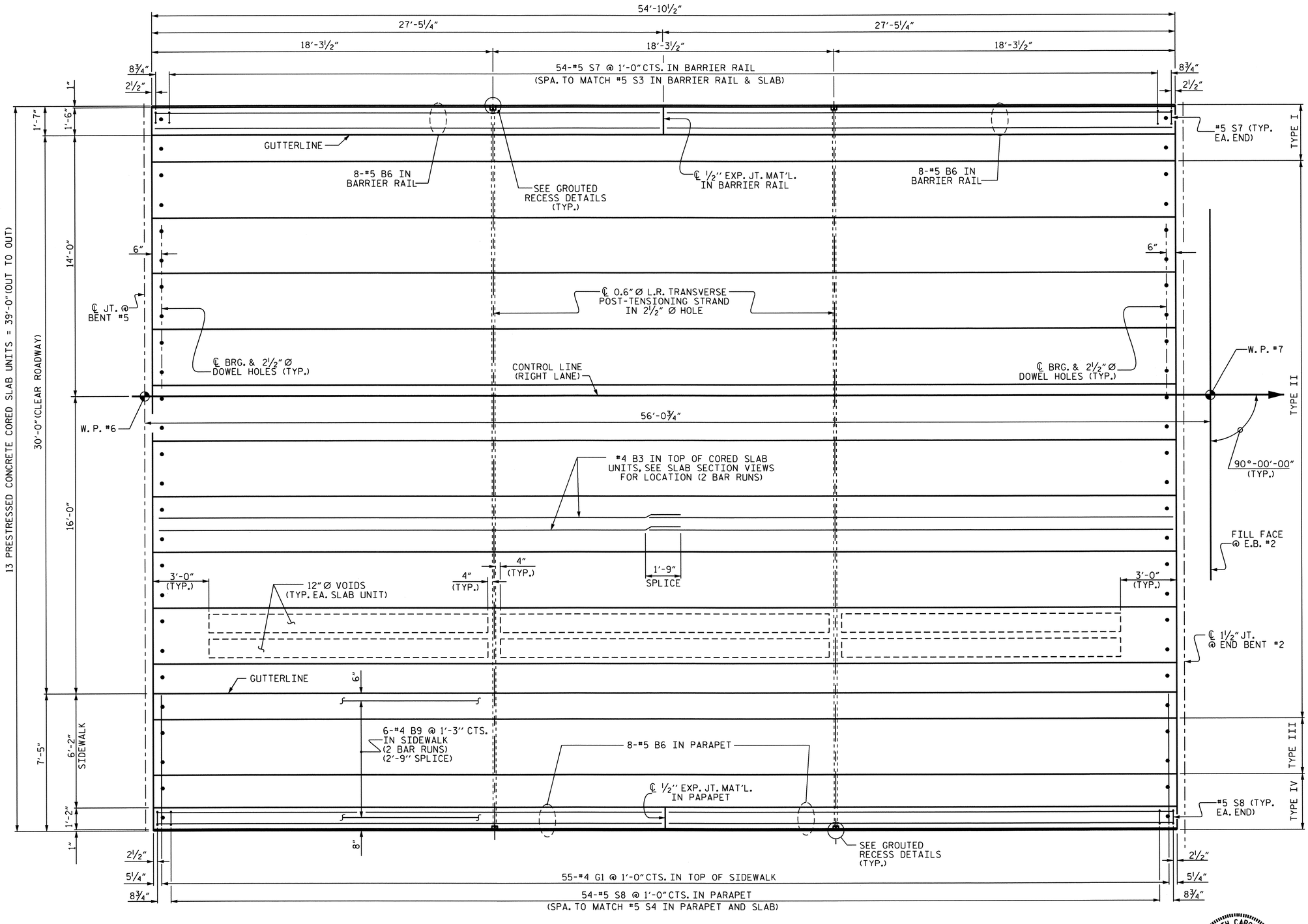

SPAN "F"

SHOWING REINFORCING STEEL IN BARRIER RAIL, PARAPET AND SIDEWALK.
SEE SHEET 8 OF 8 FOR REINFORCING STEEL DETAILS IN CORED SLAB UNITS.

NORTH CAROLINA PROFESSIONAL SEAL 14045 ENGINEER TIMOTHY W. COGGINS
07/27/12

PROJECT NO. U-3810
ONSLOW COUNTY
STATION: 84+77.50 -L-

SHEET 7 OF 8

STATE OF NORTH CAROLINA
DEPARTMENT OF TRANSPORTATION
RALEIGH

SUPERSTRUCTURE

PLAN OF SPAN "F"

REVISIONS						SHEET NO.
NO.	BY:	DATE:	NO.	BY:	DATE:	S-12
1			3			TOTAL SHEETS
2			4			62

DRAWN BY : M.D.PISO DATE : 02-10-12
CHECKED BY : P.A.PARISI DATE : 05-01-12

27-JUL-2012 15:20
R:\TIPProjects-U\U3810\structures\Plans\FinalPlans\Bridges\Str. #1\u3810_sd_cs_01.dgn
tcoggins

STR. #1

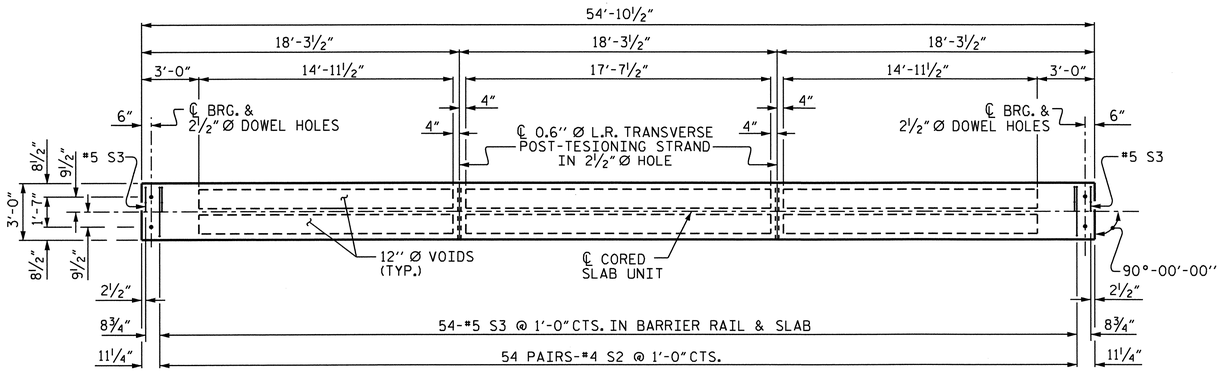

PLAN OF TYPE I CORED SLAB UNIT

FOR LOCATION OF S1 BARS AT ENDS OF SLAB, SEE "PART PLAN - EXTERIOR SECTIONS"

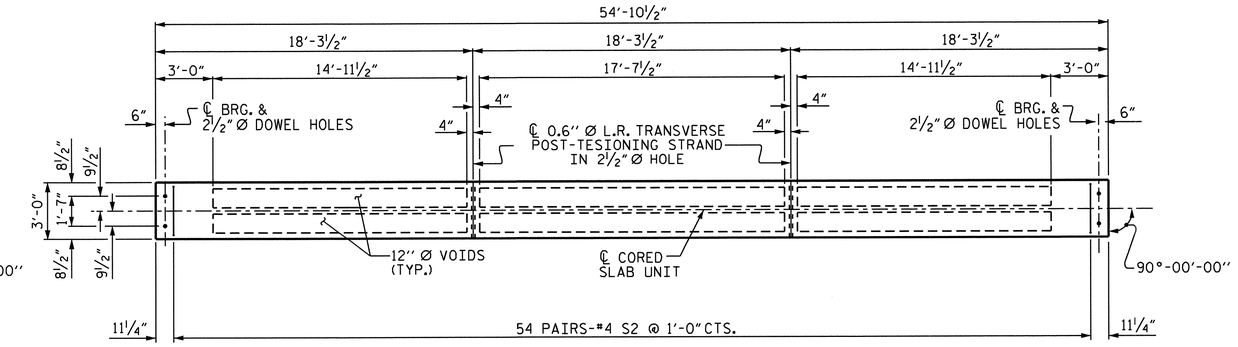

PLAN OF TYPE II CORED SLAB UNIT

FOR LOCATION OF S1 BARS AT ENDS OF SLAB, SEE "PART PLAN - EXTERIOR SECTIONS"

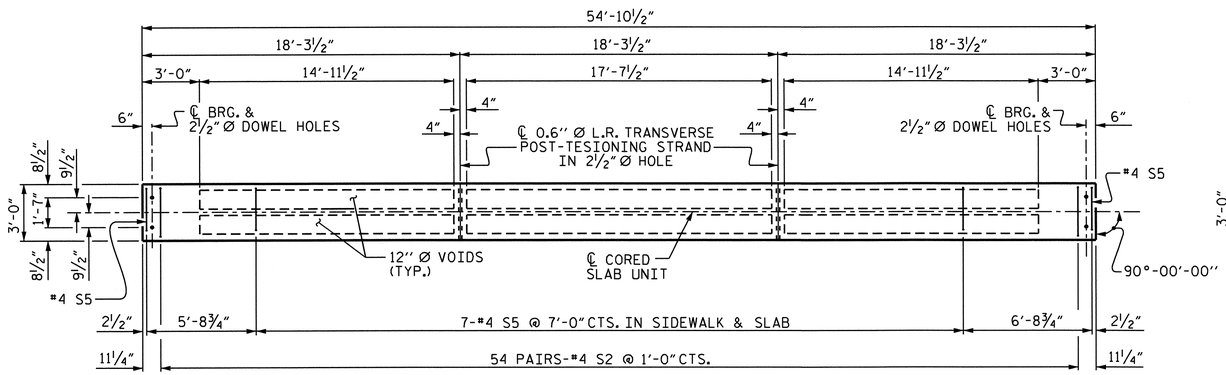

PLAN OF TYPE III CORED SLAB UNIT

FOR LOCATION OF S1 BARS AT ENDS OF SLAB, SEE "PART PLAN - EXTERIOR SECTIONS"

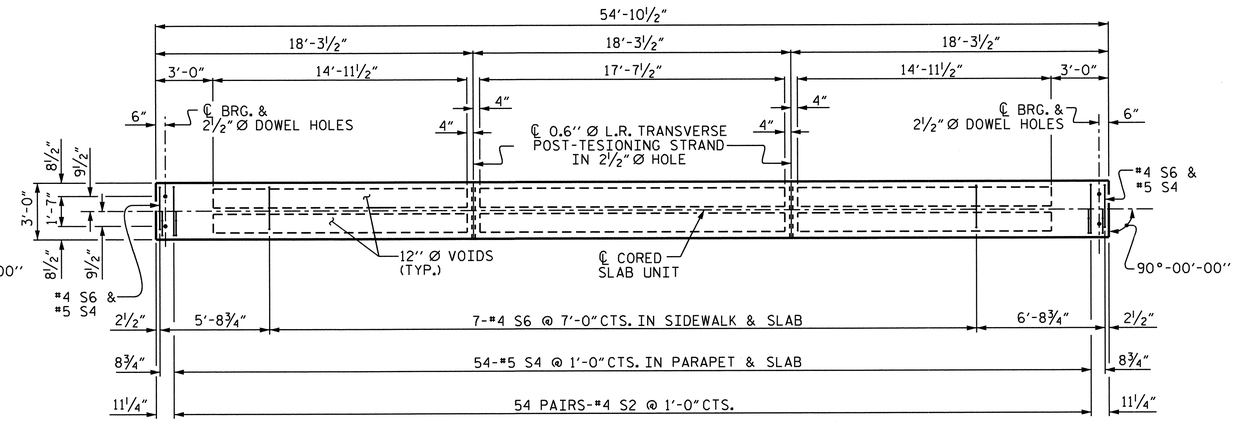

PLAN OF TYPE IV CORED SLAB UNIT

FOR LOCATION OF S1 BARS AT ENDS OF SLAB, SEE "PART PLAN - EXTERIOR SECTIONS"

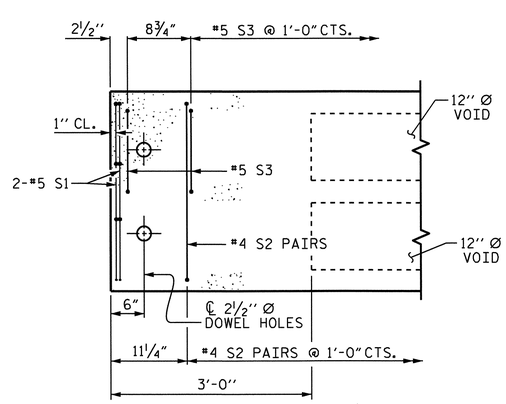

TYPE I EXTERIOR SECTION

TYPE II SIMILAR EXCEPT OMIT S3 BARS

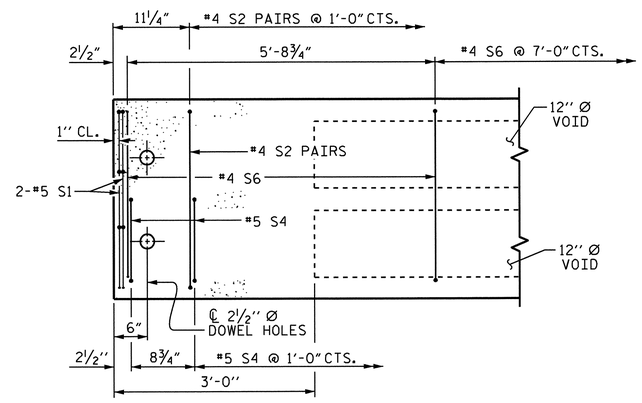

TYPE IV EXTERIOR SECTION

TYPE III SIMILAR EXCEPT OMIT S4 BARS AND SUBSTITUTE #4 S5 BARS FOR #4 S6 BARS

PART PLAN - EXTERIOR SECTIONS

NORTH CAROLINA PROFESSIONAL SEAL 14045 ENGINEER TIMOTHY W. COGGINS
07/27/12

PROJECT NO. U-3810
ONSLOW COUNTY
STATION: 84+77.50 -L-

SHEET 8 OF 8

STATE OF NORTH CAROLINA
DEPARTMENT OF TRANSPORTATION
RALEIGH

SUPERSTRUCTURE
PLAN OF SPANS "C", "D" AND "F" DETAILS

REVISIONS						SHEET NO.
NO.	BY:	DATE:	NO.	BY:	DATE:	S-13
1			3			TOTAL SHEETS
2			4			62

DRAWN BY : M.D.PISO DATE : 02-10-12
CHECKED BY : P.A.PARISI DATE : 05-01-12

12-JUN-2012 08:46
R:\Structures\Final Plans\Bridges\Str. #1\u3810_sd_cs_01.dgn
nruffin

STR. #1

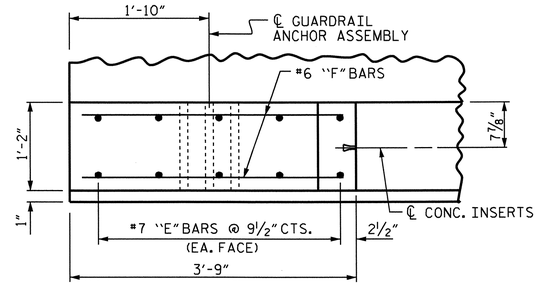

PLAN OF END POST

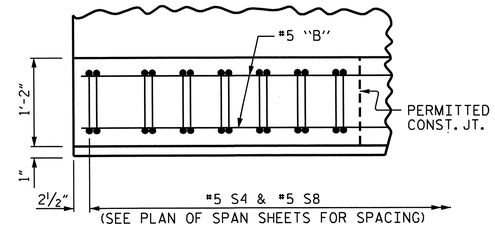

PLAN OF PARAPET

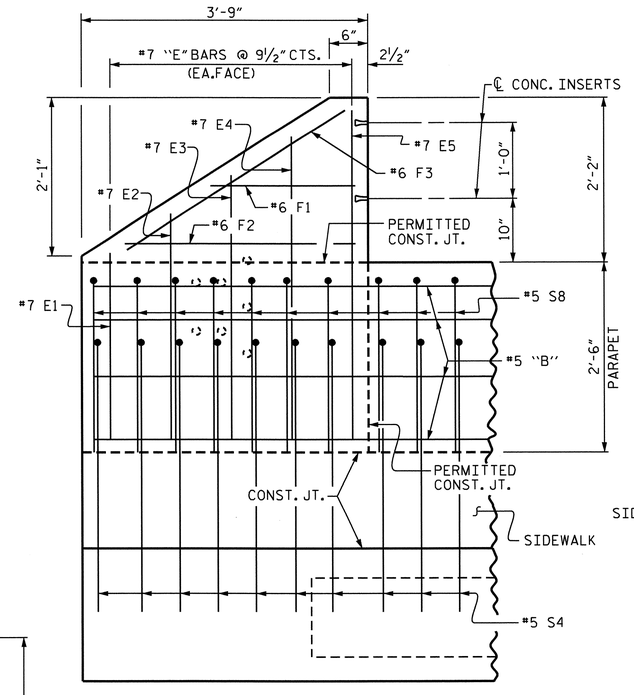

ELEVATION

REINFORCING STEEL IN SIDEWALK NOT SHOWN FOR CLARITY

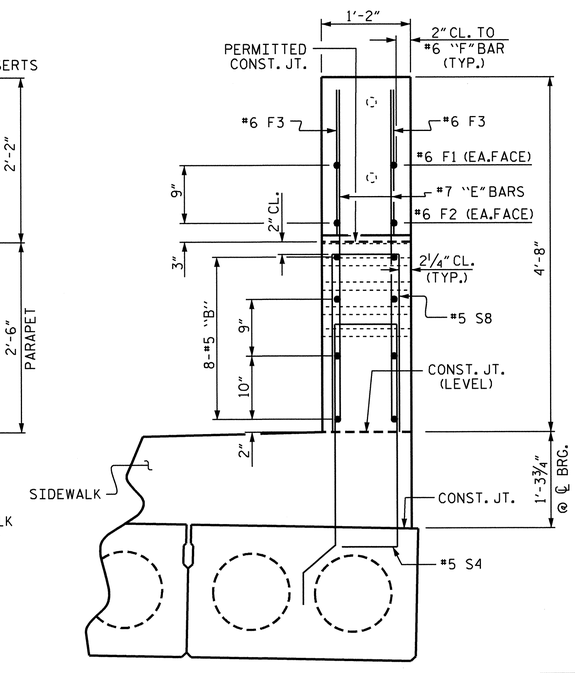

END VIEW

REINFORCING STEEL IN SIDEWALK NOT SHOWN FOR CLARITY

PARAPET AND END POST FOR TWO BAR RAIL

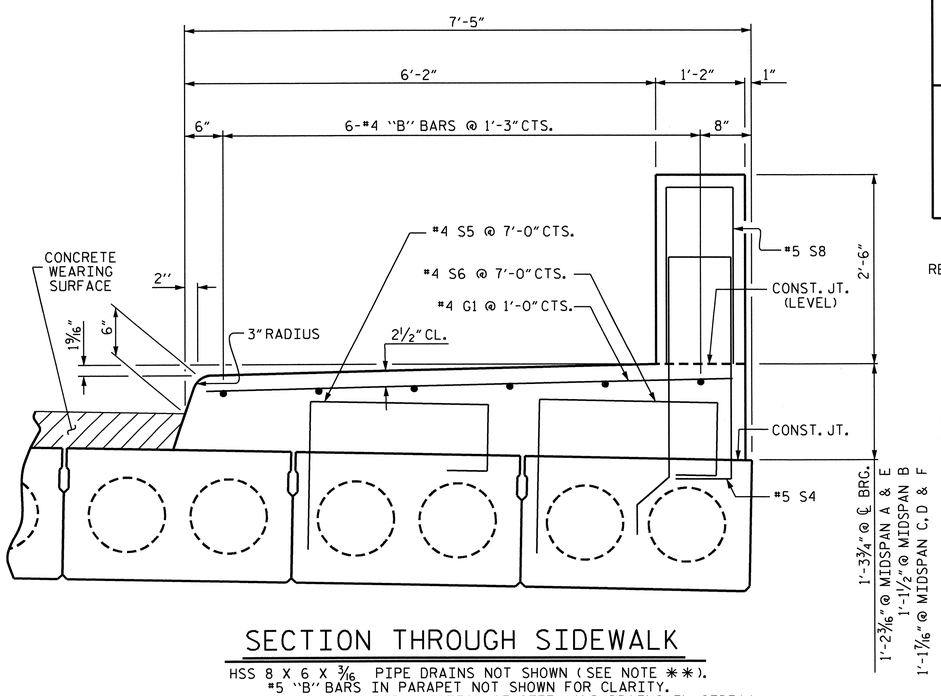

SECTION THROUGH SIDEWALK

HSS 8 X 6 X 3/16 PIPE DRAINS NOT SHOWN (SEE NOTE **).
#5 "B" BARS IN PARAPET NOT SHOWN FOR CLARITY.
SEE PLAN OF SPAN SHEETS FOR LOCATION OF STEEL AND DRAINS IN SIDEWALK.

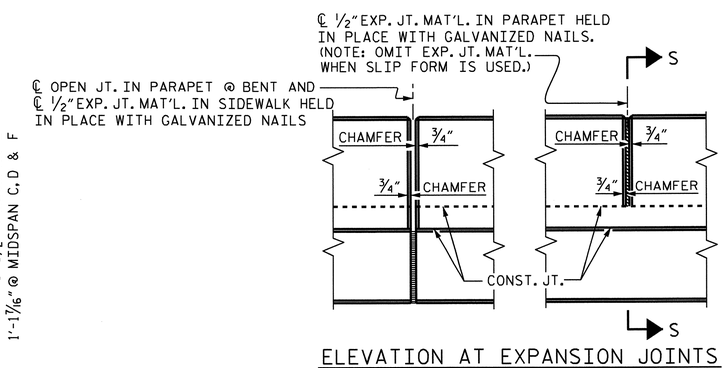

ELEVATION AT EXPANSION JOINTS

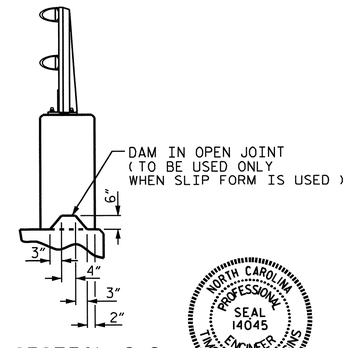

SECTION S-S

PARAPET DETAILS

BAR TYPE

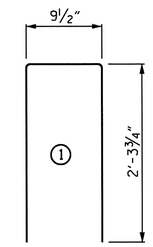

ALL BAR DIMENSIONS ARE OUT TO OUT

BILL OF MATERIAL

PARAPET AND END POSTS

BAR	NO.	SIZE	TYPE	LENGTH	WEIGHT
* B4	32	#5	STR.	22'-1"	737
* B5	16	#5	STR.	24'-7"	410
* B6	48	#5	STR.	27'-1"	1356
* E1	4	#7	STR.	2'-5"	20
* E2	4	#7	STR.	2'-11"	24
* E3	4	#7	STR.	3'-5"	28
* E4	4	#7	STR.	3'-11"	32
* E5	4	#7	STR.	4'-4"	35
* F1	4	#6	STR.	1'-10"	11
* F2	4	#6	STR.	3'-0"	18
* F3	4	#6	STR.	3'-4"	20
* S8	331	#5	1	5'-5"	1896

* EPOXY COATED REINFORCING STEEL 4,561 LBS.

CLASS AA CONCRETE (PARAPET & END POSTS) 33.3 CU. YDS.

1'-2" X 2'-6" CONCRETE PARAPET 304.88 LIN. FT.

SIDEWALK

BAR	NO.	SIZE	TYPE	LENGTH	WEIGHT
* B7	24	#4	STR.	23'-8"	379
* B8	12	#4	STR.	26'-2"	210
* B9	36	#4	STR.	28'-8"	689
* G1	305	#4	STR.	6'-10"	1392

* EPOXY COATED REINFORCING STEEL 2,670 LBS.

CLASS AA CONCRETE (SIDEWALK) 88.7 CU. YDS.

** NOTE: THE DRAIN PIPES SHALL BE HSS 8 X 6 X 3/16, ASTM A500 GRADE A STEEL AND SHALL BE GALVANIZED. THE COST FOR THE PIPES SHALL BE INCIDENTAL TO THE COST OF THE SIDEWALK.

PROJECT NO. U-3810
ONSLOW COUNTY
STATION: 84+77.50 -L-

SHEET 1 OF 5

STATE OF NORTH CAROLINA
DEPARTMENT OF TRANSPORTATION
RALEIGH

CONCRETE PARAPET, END POST & SIDEWALK DETAILS

NORTH CAROLINA PROFESSIONAL SEAL 14045 ENGINEER TIMOTHY L. COGGINS
08/02/12

REVISIONS						SHEET NO.
NO.	BY:	DATE:	NO.	BY:	DATE:	S-14
1			3			TOTAL SHEETS
2			4			62

STR. #1

DRAWN BY : M.D.PISO DATE : 02-10-12
CHECKED BY : P.A.PARISI DATE : 05-01-12

02-AUG-2012 16:45
R:\TIPProjects-U\U3810\structures\Plans\FinalPlans\Bridges\Str. #1\u3810_sd_cs_01.dgn
tcoggins

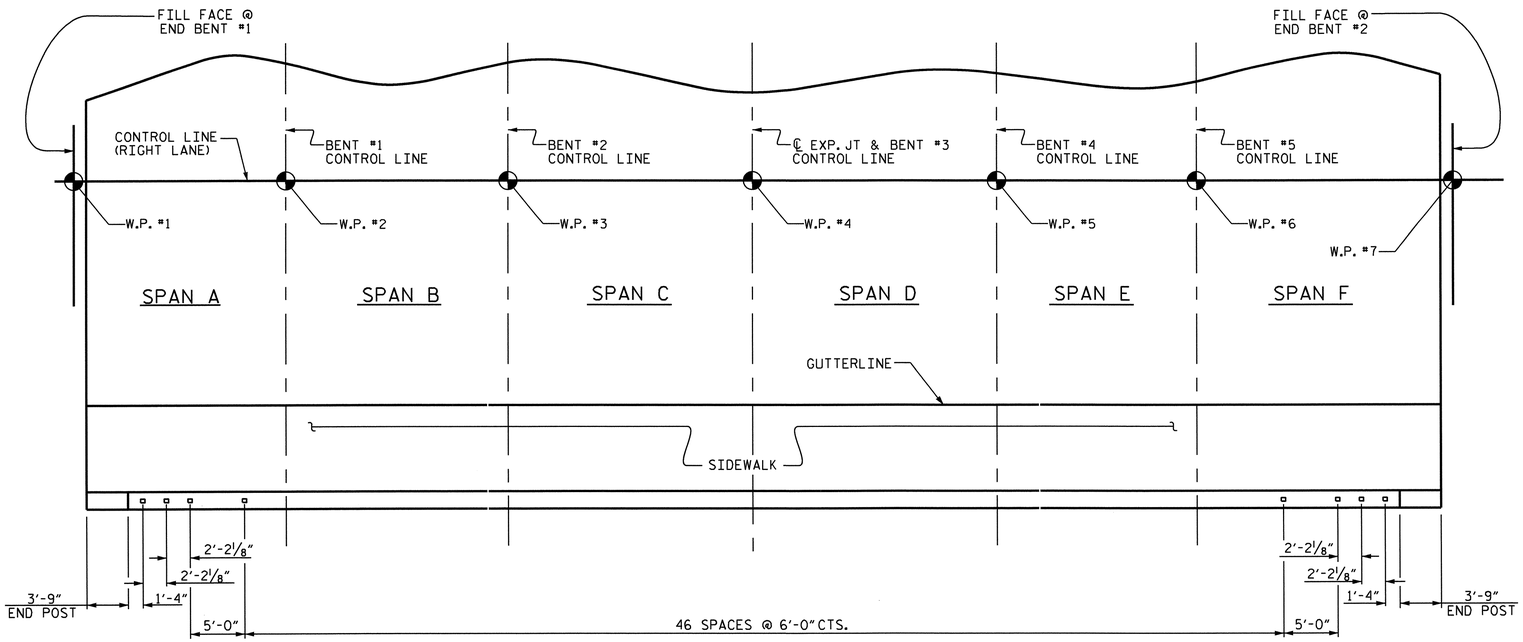

PLAN OF RAIL POST SPACINGS

NOTES

STRUCTURAL CONCRETE INSERT

THE STRUCTURAL CONCRETE INSERT ASSEMBLY SHALL CONSIST OF THE FOLLOWING COMPONENTS:

A. FERRULES SHALL BE MADE FROM STEEL MEETING THE REQUIREMENTS OF AASHTO M169, GRADE 12L14 AND SHALL HAVE A MINIMUM LENGTH OF THREADS OF 1 1/2".

B. 1 - 3/4" Ø X 1 5/8" BOLT WITH WASHER. BOLT SHALL CONFORM TO THE REQUIREMENTS OF ASTM A307. BOLT AND WASHER SHALL BE GALVANIZED. (AT THE CONTRACTOR'S OPTION, STAINLESS STEEL BOLT AND WASHER MAY BE USED AS AN ALTERNATE FOR THE 3/4" Ø X 1 5/8" GALVANIZED BOLT AND WASHER. THEY SHALL CONFORM TO OR EXCEED THE MECHANICAL REQUIREMENTS OF ASTM A307. THE USE OF THIS ALTERNATE SHALL BE APPROVED BY THE ENGINEER.)

C. WIRE STRUT SHOWN IN THE CONCRETE INSERT ASSEMBLY DETAIL IS THE MINIMUM ALLOWABLE SIZE AND SHALL HAVE A MINIMUM TENSILE STRENGTH OF 100,000 PSI. AS AN OPTION, A 7/16" Ø WIRE STRUT WITH A MINIMUM TENSILE STRENGTH OF 90,000 PSI IS ACCEPTABLE.

NOTES

METAL RAIL TO END POST CONNECTION

THE METAL RAIL TO END POST CONNECTION SHALL CONSIST OF THE FOLLOWING COMPONENTS:

A. 1/2" PLATES SHALL CONFORM TO AASHTO M270 GRADE 36 AND SHALL BE GALVANIZED AFTER FABRICATION.

B. 3/4" STRUCTURAL CONCRETE INSERT SHALL HAVE A WORKING LOAD SHEAR CAPACITY OF 4800 LBS. THE FERRULES SHALL ENGAGE A 3/4"Ø X 1 5/8" BOLT WITH 2" O.D. WASHER IN PLACE. THE 3/4"Ø X 1 5/8" BOLT SHALL HAVE N. C. THREADS.

C. CAP SCREWS FOR RAIL ATTACHMENT TO ANGLE SHALL CONFORM TO THE REQUIREMENTS OF ASTM F593 ALLOY 305 STAINLESS STEEL. CAP SCREWS TO BE CENTERED IN SLOTS AT 60°F.

D. STANDARD CLAMP BARS (SEE METAL RAIL SHEET).

E. 1/2" Ø PIPE SLEEVES (IF REQUIRED) TO BE GALVANIZED.

THE COST OF THE STANDARD CLAMP BARS AND CAP SCREWS USED IN THE METAL RAIL TO END POST CONNECTION SHALL BE INCLUDED IN THE UNIT CONTRACT PRICE BID FOR LINEAR FEET OF 2 BAR METAL RAILS.

THE 3/4" STRUCTURAL CONCRETE INSERT WITH BOLT SHALL BE ASSEMBLED IN THE SHOP.

THE COST OF THE 3/4" STRUCTURAL CONCRETE INSERT ASSEMBLY, AND THE 1/2" PLATES COMPLETE IN PLACE SHALL BE INCLUDED IN THE VARIOUS PAY ITEMS.

THE CONTRACTOR, AT HIS OPTION, MAY USE AN ADHESIVE BONDING SYSTEM IN LIEU OF THE STRUCTURAL CONCRETE INSERT EMBEDDED IN THE END POST. IF THE ADHESIVE BONDING SYSTEM IS USED, THE 3/4" Ø X 1 5/8" BOLT WITH WASHER SHALL BE REPLACED WITH A 3/4"Ø X 6 1/2" BOLT AND 2" O.D. WASHER. ALL SPECIFICATIONS THAT APPLY TO THE 3/4" Ø X 1 5/8" BOLT SHALL APPLY TO THE 3/4"Ø X 6 1/2" BOLT. FIELD TESTING OF THE ADHESIVE BONDING SYSTEM IS NOT REQUIRED.

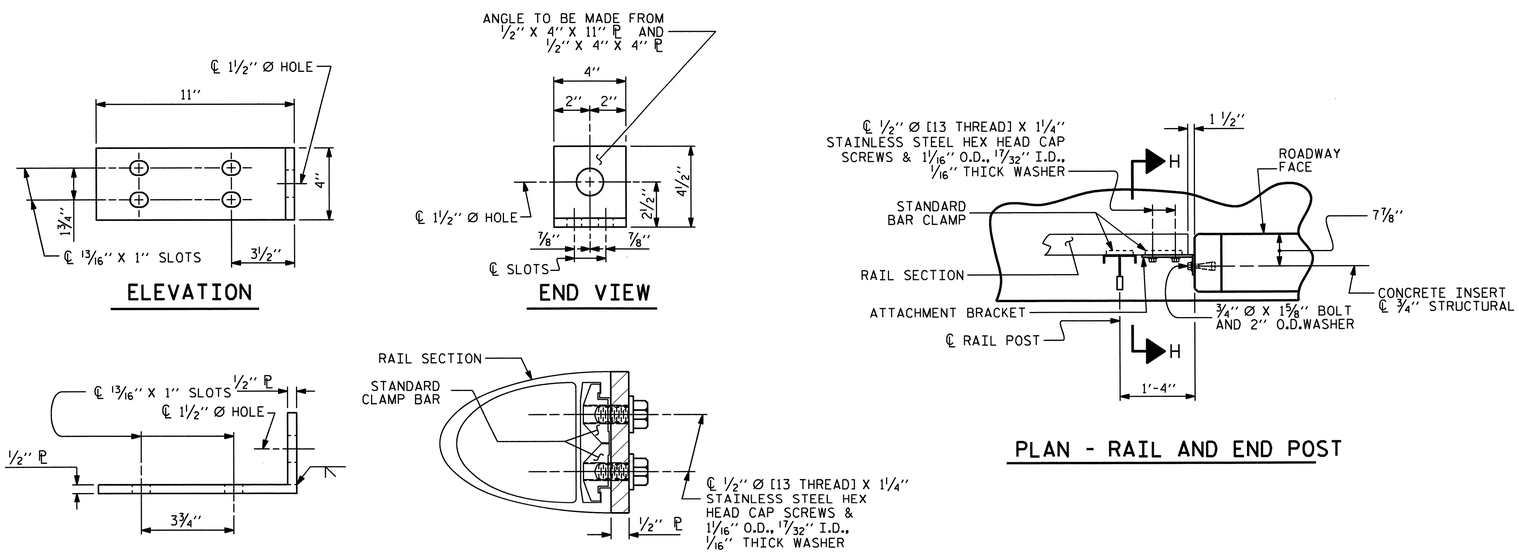

DETAILS FOR ATTACHING METAL RAIL TO END POST

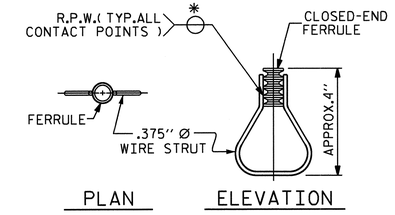

STRUCTURAL CONCRETE INSERT

* EACH WELDED ATTACHMENT OF WIRE TO FERRULE SHALL DEVELOP THE TENSILE STRENGTH OF THE WIRE.

PROJECT NO. U-3810

ONSLOW COUNTY

STATION: 84+77.50 -L-

SHEET 2 OF 5

STATE OF NORTH CAROLINA
DEPARTMENT OF TRANSPORTATION
RALEIGH

STANDARD

RAIL POST SPACINGS AND END OF RAIL DETAILS

FOR TWO BAR METAL RAILS

NORTH CAROLINA PROFESSIONAL SEAL 14045 ENGINEER TIMOTHY W. COLGRAVE

07/27/12

ASSEMBLED BY : M.D.PISO	DATE : 02-10-12
CHECKED BY : P.A.PARISI	DATE : 05-01-12

DRAWN BY : FCJ 1/88	REV. 5/7/03 RWW/JTE
CHECKED BY : CRK 3/89	REV. 5/1/06 TLA/GM
	REV. 10/1/11 MAA/GM

REVISIONS						SHEET NO.
NO.	BY:	DATE:	NO.	BY:	DATE:	S-15
1			3			TOTAL SHEETS
2			4			62

STR. #1

STD. NO. BMR2

12-JUN-2012 14:38
R:\TIPProjects-U\U3810\Structures\FinalPlans\Bridges\Str. #1\u3810_sd_cs_01.dgn
taverette

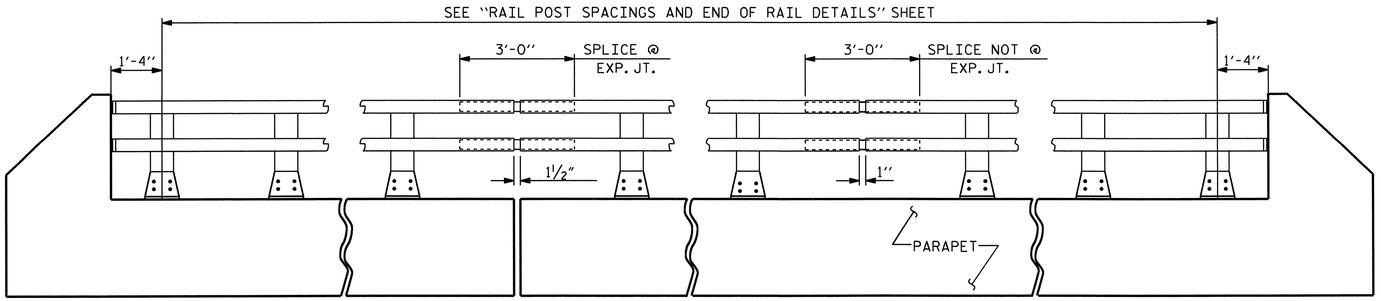

ELEVATION

NOTE : FOR ATTACHMENT OF METAL RAIL TO END POST, SEE STANDARD NO. BMR2.

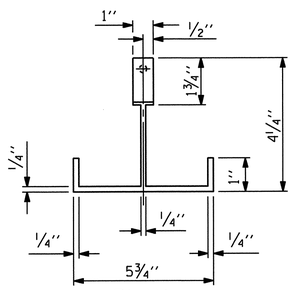

PLAN

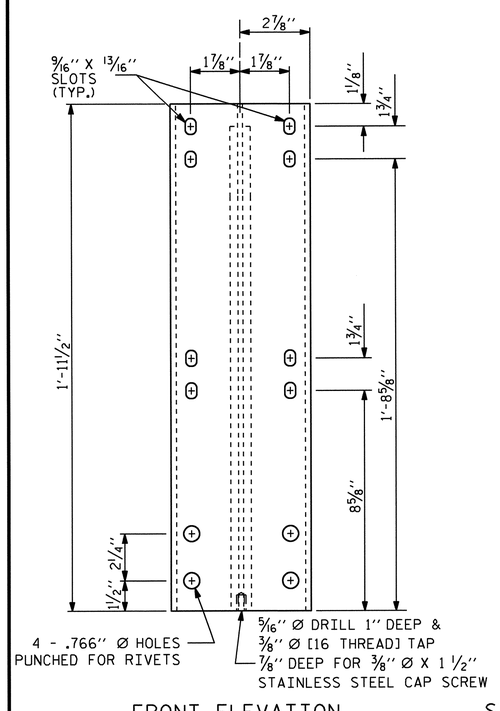

FRONT ELEVATION

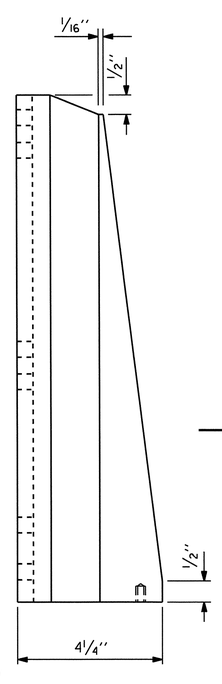

SIDE ELEVATION

DETAILS OF POST

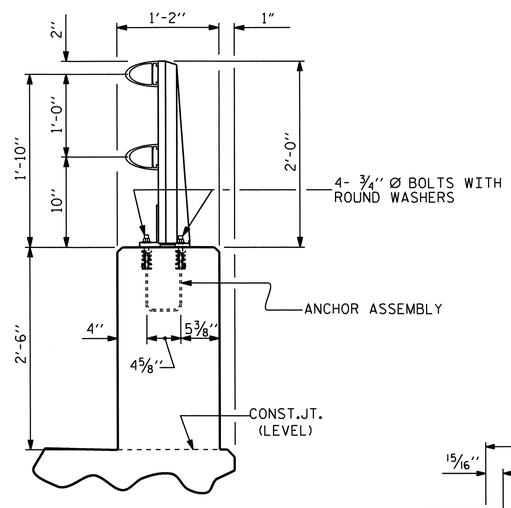

SECTION THRU PARAPET AND RAIL

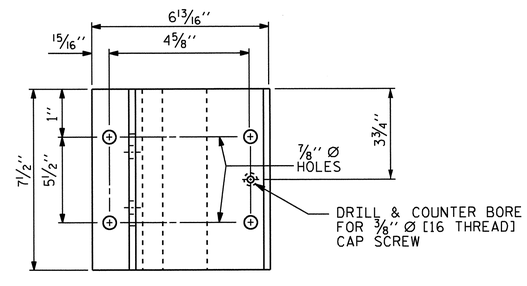

PLAN

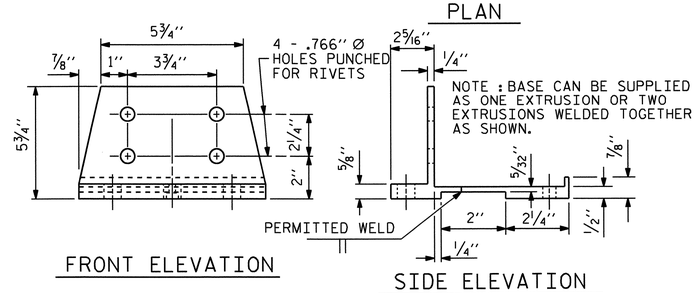

FRONT ELEVATION

SIDE ELEVATION

POST BASE DETAILS

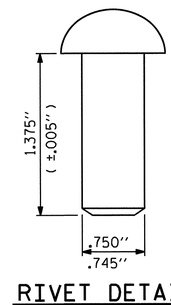

RIVET DETAIL

NOTES

THE METAL RAIL SHALL BE ALUMINUM AND IN ACCORDANCE WITH THE REQUIREMENTS OF THE GENERAL NOTES AND THE FOLLOWING SPECIFICATIONS.

ALUMINUM RAILS

MATERIAL FOR POSTS, BASES AND RAILS, EXPANSION BARS AND CLAMP BARS SHALL BE ASTM B-221 ALLOY 6061-T6.

MATERIAL FOR RIVETS SHALL BE ASTM B316 ALLOY 6061-T6. RIVETS SHALL BE STANDARD BUTTON HEAD AND CONE POINT COLD DRIVEN AS PER DRAWING.

THE BASE OF RAIL POSTS, OR ANY OTHER ALUMINUM SURFACE IN CONTACT WITH CONCRETE SHALL BE THOROUGHLY COATED WITH AN ALUMINUM IMPREGNATED CAULKING COMPOUND OF APPROVED QUALITY.

MATERIAL FOR SHIMS TO BE ASTM B209 ALLOY 6061-T6.

GENERAL NOTES

RAILING SHALL BE CONTINUOUS FROM END POST TO END POST OF BRIDGE. EACH JOINT IN RAIL LENGTH SHALL BE SPLICED AS DETAILED. PANEL LENGTHS OF RAIL SHALL BE ATTACHED TO A MINIMUM OF THREE POSTS.

FOR END OF RAIL TO CLEAR FACE OF CONCRETE END POST DIMENSION, SEE STANDARD NO. BMR2.

CAP SCREWS SHALL BE ASTM F593 ALLOY 305 STAINLESS STEEL. WASHERS SHALL MEET THE REQUIREMENTS OF ASTM F844 EXCEPT THEY SHALL BE MADE FROM ALLOY 304 STAINLESS STEEL.

CERTIFIED MILL REPORTS ARE REQUIRED FOR RAILS AND POSTS. SHOP INSPECTION IS NOT REQUIRED.

METAL RAIL POSTS SHALL BE SET NORMAL TO CURB GRADE.

METHOD OF MEASUREMENT FOR METAL RAILS: FOR LENGTH OF METAL RAILS TO BE PAID FOR, SEE THE STANDARD SPECIFICATIONS.

CURVED RAIL USAGE: WHERE RAILS ARE TO BE USED ON BRIDGES ON HORIZONTAL AND/OR VERTICAL CURVATURE THE CONTRACTOR MAY, AT HIS OPTION, HAVE THE REQUIRED CURVATURE IN THE RAIL FORMED IN THE SHOP OR IN THE FIELD. IN EITHER EVENT, THE RAIL SHALL CONFORM WITHOUT BUCKLING OR KINKING TO THE REQUIRED CURVATURE IN A UNIFORM MANNER ACCEPTABLE TO THE ENGINEER.

TO INSURE FUTURE IDENTIFICATION OF THE FABRICATOR, A PERMANENT IDENTIFYING MARK SHALL BE PLACED ON EACH POST. THE METHOD OF MARKING AND LOCATION SHALL BE SUCH THAT IT DOES NOT DETRACT FROM THE APPEARANCE OF THE POST, BUT REMAINS VISIBLE AFTER RAIL PLACEMENT.

SHIMS SHALL BE USED AS NECESSARY FOR POST ALIGNMENT.

ALLOY 6351-T5 MAY BE SUBSTITUTED FOR ALLOY 6061-T6 WHERE APPLICABLE.

MINOR VARIATIONS IN DETAILS OF METAL RAIL WILL BE CONSIDERED. DETAILS OF SUCH VARIATIONS, IF DESIRED, SHALL BE SUBMITTED FOR APPROVAL.

PAY LENGTH = 297.38 LIN. FT.

PROJECT NO. U-3810
ONSLOW COUNTY
STATION: 84+77.50 -L-

SHEET 3 OF 5

STATE OF NORTH CAROLINA
DEPARTMENT OF TRANSPORTATION
RALEIGH

STANDARD

2 BAR METAL RAIL

NORTH CAROLINA PROFESSIONAL SEAL 14045 ENGINEER TIMOTHY L. COGGINS
07/27/12

ASSEMBLED BY :	M.D.PISO	DATE : 02-10-12
CHECKED BY :	P.A.PARISI	DATE : 05-01-12

DRAWN BY :	EEM	6/94	REV. 5/7/03R RWW/JTE
CHECKED BY :	RGW	6/94	REV. 5/1/06 TLA/GM
			REV. 10/1/11 MAA/GM

REVISIONS								SHEET NO.
NO.	BY:	DATE:	NO.	BY:	DATE:			S-16
1			3					TOTAL SHEETS
2			4					62

STR. #1

STD. NO. BMR3

12-JUN-2012 08:45
R:\Structures\Final Plans\Bridges\Str. #1\u3810_sd_cs_01.dgn
nruffin

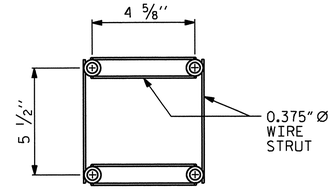

PLAN

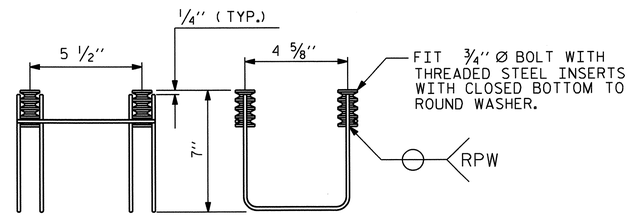

SIDE VIEW ELEVATION

4-BOLT METAL RAIL ANCHOR ASSEMBLY

(53 ASSEMBLIES REQUIRED)

NOTES

STRUCTURAL CONCRETE ANCHOR ASSEMBLY

THE STRUCTURAL CONCRETE ANCHOR ASSEMBLY SHALL CONSIST OF THE FOLLOWING COMPONENTS :

A. FERRULES SHALL BE MADE FROM STEEL MEETING THE REQUIREMENTS OF AASHTO M169, GRADE 12L14 AND SHALL HAVE A MINIMUM LENGTH OF THREADS OF 2" FOR 3/4" FERRULES.

B. 4 - 3/4" Ø X 2 1/2" BOLTS WITH WASHERS. BOLTS SHALL CONFORM TO THE REQUIREMENTS OF ASTM A307. BOLTS AND WASHERS SHALL BE GALVANIZED. AT THE CONTRACTOR'S OPTION, STAINLESS STEEL BOLTS AND WASHERS MAY BE USED AS AN ALTERNATE FOR THE 3/4" Ø X 2 1/2" GALVANIZED BOLTS AND WASHERS. THEY SHALL CONFORM TO OR EXCEED THE MECHANICAL REQUIREMENTS OF ASTM A307. THE USE OF THIS ALTERNATE SHALL BE APPROVED BY THE ENGINEER.

C. WIRE STRUT SHOWN IN THE CONCRETE ANCHOR ASSEMBLY DETAIL IS THE MINIMUM ALLOWABLE SIZE AND SHALL HAVE A MINIMUM TENSILE STRENGTH OF 100,000 PSI. AS AN OPTION, A 7/16" Ø WIRE STRUT WITH A MINIMUM TENSILE STRENGTH OF 90,000 PSI IS ACCEPTABLE.

D. THE METAL RAIL ANCHOR ASSEMBLIES TO BE HOT DIPPED GALVANIZED TO CONFORM TO REQUIREMENTS OF AASHTO M111.

E. THE COST OF THE METAL RAIL ANCHOR ASSEMBLY WITH BOLTS AND WASHERS COMPLETE IN PLACE SHALL BE INCLUDED IN THE PRICE BID FOR LINEAR FEET OF METAL RAIL.

F. BOLTS TO BE TIGHTENED ONE-HALF TURN WITH A WRENCH FROM A FINGER-TIGHT POSITION.

THE CONTRACTOR MAY USE ADHESIVELY ANCHORED ANCHOR BOLTS IN PLACE OF THE METAL RAIL ANCHOR ASSEMBLY. LEVEL ONE FIELD TESTING IS REQUIRED, AND THE YIELD LOAD OF THE 3/4" Ø BOLT IS 10 KIPS. FOR ADHESIVELY ANCHORED ANCHOR BOLTS OR DOWELS, SEE THE STANDARD SPECIFICATIONS.

WHEN ADHESIVELY ANCHORED ANCHOR BOLTS ARE USED, BOLTS SHALL MEET THE REQUIREMENTS OF ASTM F593 ALLOY 304 STAINLESS STEEL WITH MINIMUM 75,000 PSI ULTIMATE STRENGTH. NUTS SHALL MEET THE REQUIREMENTS OF ASTM F594 ALLOY 304 STAINLESS STEEL AND WASHERS SHALL MEET THE REQUIREMENTS OF ASTM F844 EXCEPT THEY SHALL BE MADE FROM ALLOY 304 STAINLESS STEEL.

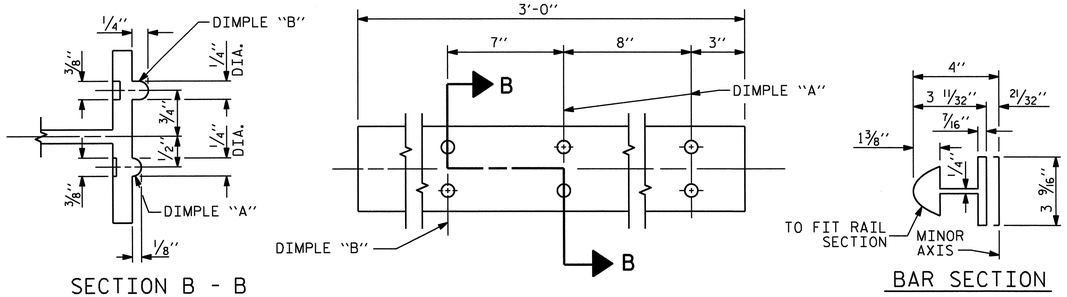

SECTION B - B

EXPANSION BAR DETAILS

BAR SECTION

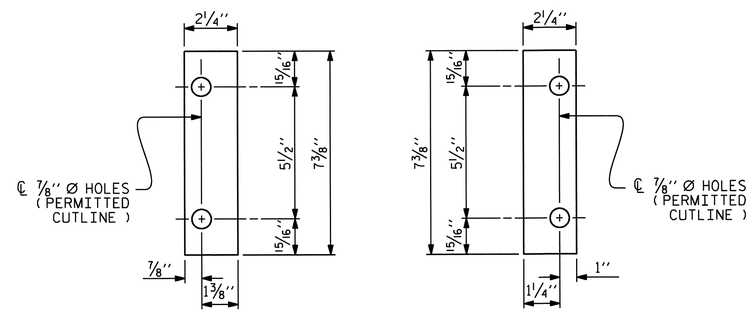

FRONT PLATE REAR PLATE

SHIM DETAILS

NOTE :
SHIMS MAY BE CUT ALONG PERMITTED CUTLINE OR SLOTTED TO EDGE OF PLATE TO FACILITATE PLACEMENT.

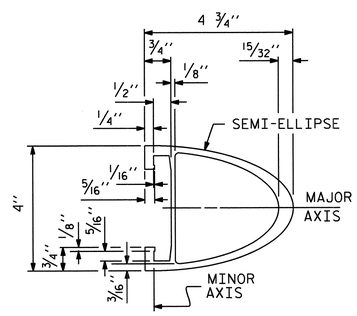

RAIL SECTION

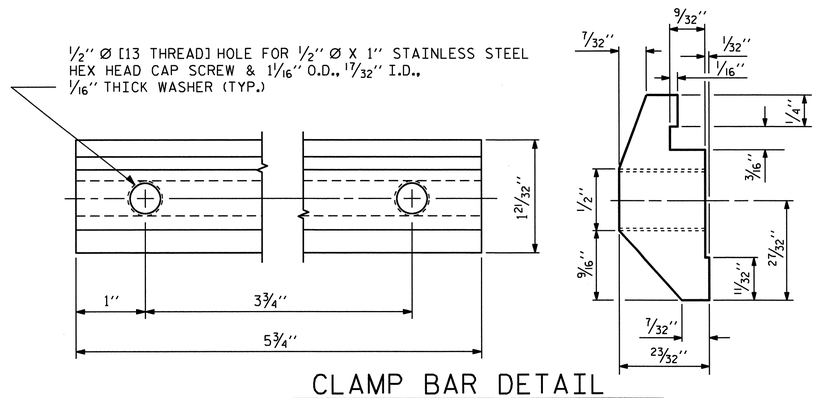

CLAMP BAR DETAIL

(4 REQUIRED PER POST)

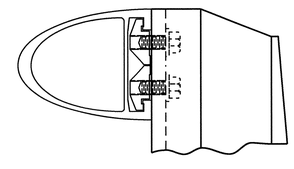

CLAMP ASSEMBLY

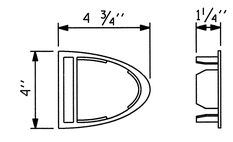

RAIL CAP

PROJECT NO. U-3810
ONSLOW COUNTY
STATION: 84+77.50 -L-

SHEET 4 OF 5

STATE OF NORTH CAROLINA
DEPARTMENT OF TRANSPORTATION
RALEIGH

STANDARD

2 BAR METAL RAIL

NORTH CAROLINA PROFESSIONAL SEAL 14045 ENGINEER TIMOTHY L. COGGINS
07/27/12

ASSEMBLED BY : M.D.PISO	DATE : 02-10-12		
CHECKED BY : P.A.PARISI	DATE : 05-01-12		
DRAWN BY : EEM 6/94	REV. 8/16/99	MAB/LES	
CHECKED BY : RGW 6/94	REV. 5/1/06R	KMM/GM	
	REV. 10/1/11	MAA/GM	

REVISIONS								SHEET NO.
NO.	BY:	DATE:	NO.	BY:	DATE:			S-17
1			3					TOTAL SHEETS
2			4					62

STR. #1

STD. NO. BMR4

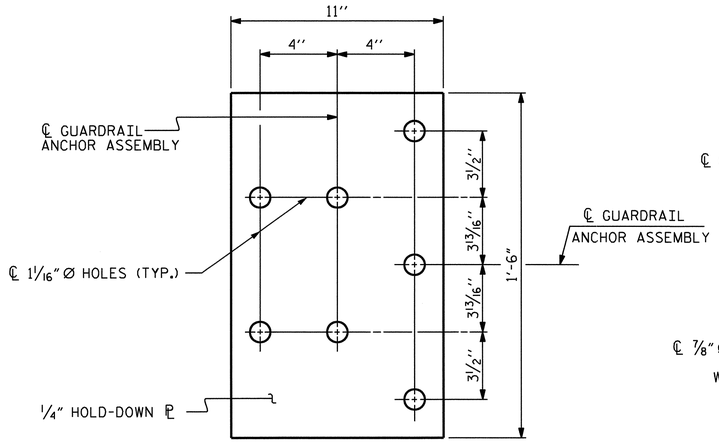

PLAN

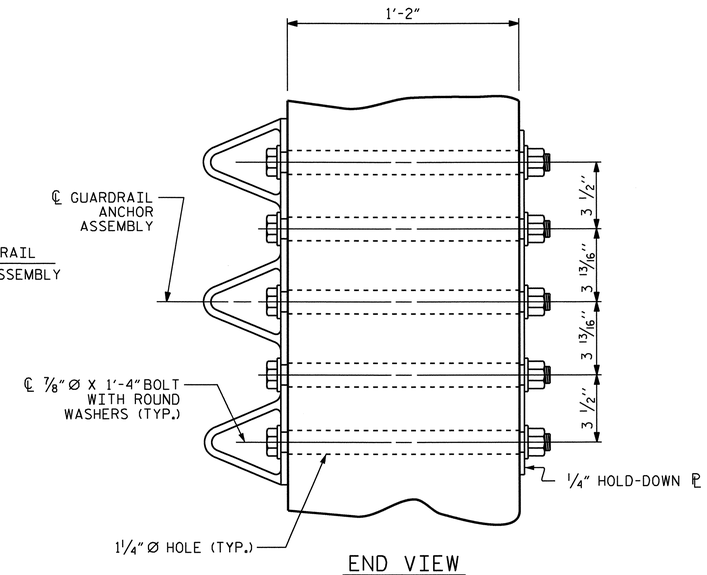

END VIEW

GUARDRAIL ANCHOR ASSEMBLY DETAILS

NOTES

THE GUARDRAIL ANCHOR ASSEMBLY SHALL CONSIST OF A 1/4" HOLD DOWN PLATE AND 7 - 7/8" Ø BOLTS WITH NUTS AND WASHERS.

THE HOLD-DOWN PLATE SHALL CONFORM TO AASHTO M270 GRADE 36. AFTER FABRICATION, THE HOLD-DOWN PLATE SHALL BE HOT-DIP GALVANIZED IN ACCORDANCE WITH AASHTO M111.

BOLTS SHALL CONFORM TO THE REQUIREMENTS OF ASTM A307 AND NUTS SHALL CONFORM TO THE REQUIREMENTS OF AASHTO M291. BOLTS, NUTS AND WASHERS SHALL BE GALVANIZED. AT THE CONTRACTOR'S OPTION, STAINLESS STEEL BOLTS, NUTS AND WASHERS MAY BE USED AS AN ALTERNATE FOR THE 7/8" Ø GALVANIZED BOLTS, NUTS AND WASHERS. THEY SHALL CONFORM TO OR EXCEED THE MECHANICAL REQUIREMENTS OF ASTM A307. THE USE OF THIS ALTERNATE SHALL BE APPROVED BY THE ENGINEER.

THE GUARDRAIL ANCHOR ASSEMBLY IS REQUIRED AT ALL POINTS WHERE APPROACH GUARDRAIL IS TO BE ATTACHED TO THE END OF THE PARAPET. FOR POINTS OF ATTACHMENT, SEE SKETCH.

AFTER INSTALLATION, THE EXPOSED THREAD OF THE BOLT SHALL BE BURRED WITH A SHARP POINTED TOOL.

THE COST OF THE GUARDRAIL ANCHOR ASSEMBLIES WITH BOLTS, NUTS AND WASHERS COMPLETE IN PLACE, SHALL BE INCLUDED IN THE VARIOUS PAY ITEMS.

THE VERTICAL REINFORCING BARS MAY BE SHIFTED SLIGHTLY IN THE END POST TO CLEAR ASSEMBLY BOLTS.

THE 1 1/4" Ø HOLES SHALL BE FORMED OR DRILLED WITH A CORE BIT. IMPACT TOOLS WILL NOT BE PERMITTED. ANY CONCRETE DAMAGED BY THIS WORK SHALL BE REPAIRED TO THE SATISFACTION OF THE ENGINEER.

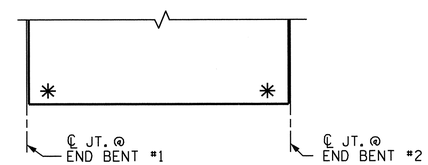

SKETCH SHOWING POINTS OF ATTACHMENT

* LOCATION OF GUARDRAIL ATTACHMENT FOR METAL RAIL

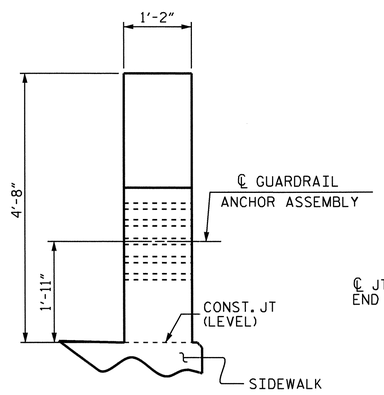

END VIEW

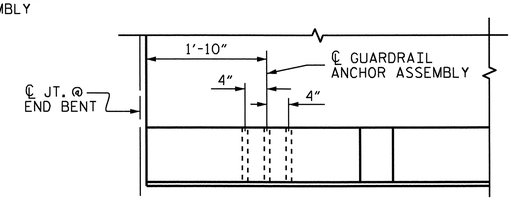

PLAN

LOCATION OF GUARDRAIL ANCHOR AT END POST

(END BENT #1 SHOWN, END BENT #2 SIMILAR)

PROJECT NO. U-3810
ONSLOW COUNTY
STATION: 84+77.50 -L-

SHEET 5 OF 5

STATE OF NORTH CAROLINA
DEPARTMENT OF TRANSPORTATION
RALEIGH

STANDARD
GUARDRAIL ANCHORAGE DETAILS FOR METAL RAILS

NORTH CAROLINA PROFESSIONAL SEAL 14045 ENGINEER TIMOTHY L. COGGINS
07/27/12

REVISIONS						SHEET NO.
NO.	BY:	DATE:	NO.	BY:	DATE:	S-18
1			3			TOTAL SHEETS
2			4			62

ASSEMBLED BY : M.D.PISO	DATE : 02-10-12
CHECKED BY : P.A.PARISI	DATE : 05-01-12
DRAWN BY : MAA 5/10	ADDED 5/6/10
CHECKED BY : GM 5/10	REV. 10/1/11 MAA/GM REV. 12/5/11 MAA/GM

12-JUN-2012 08:45
R:\Structures\Final Plans\Bridges\Str. #1\u3810_sd_cs_01.dgn
nruffin

STR. #1 (SHT 4) STD. NO. GRA3

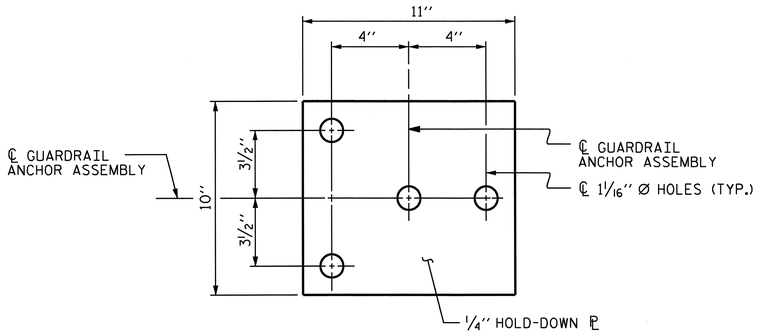

PLAN

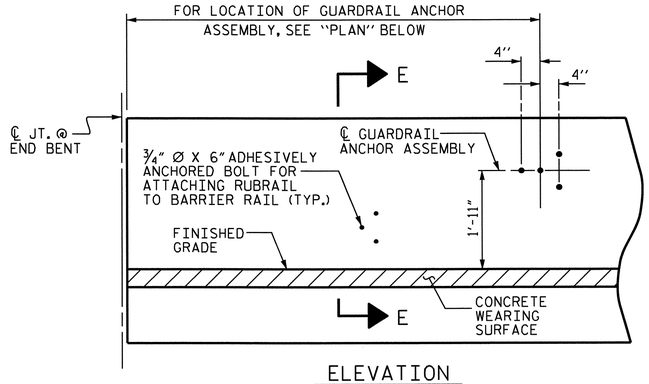

ELEVATION

FOR LOCATION OF RUBRAIL, SEE ROADWAY STD. 862.03

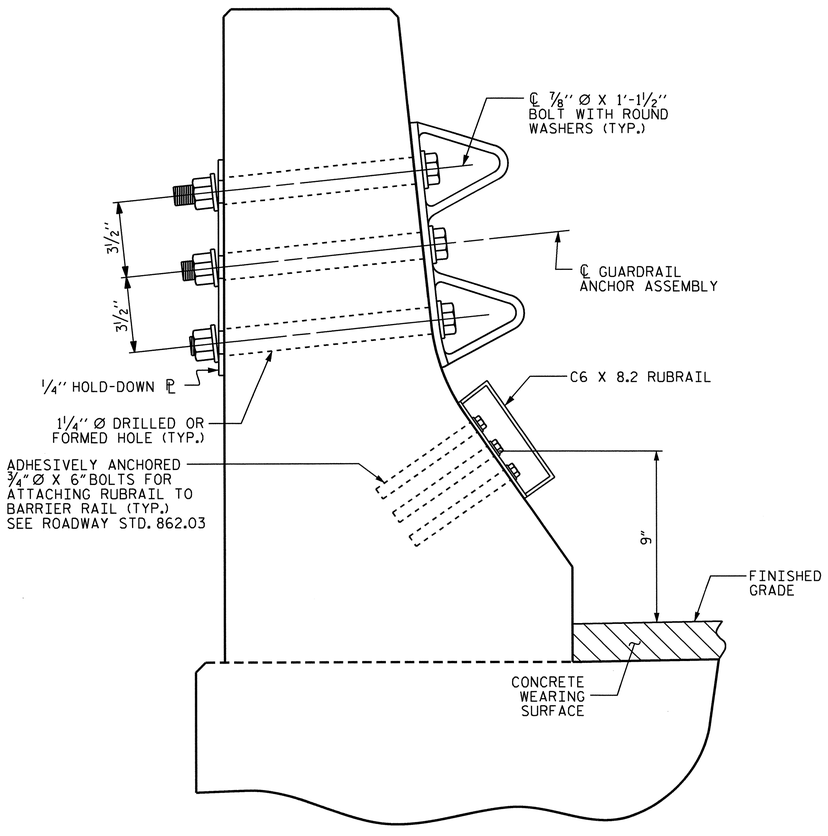

SECTION E-E

GUARDRAIL ANCHOR ASSEMBLY DETAILS

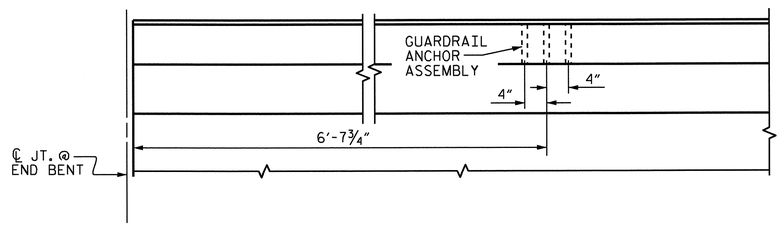

PLAN

LOCATION OF ANCHORS FOR GUARDRAIL

END BENT #1 SHOWN, END BENT #2 SIMILAR.

NOTES

THE GUARDRAIL ANCHOR ASSEMBLY SHALL CONSIST OF A 1/4'' HOLD DOWN PLATE AND 4 - 7/8'' Ø BOLTS WITH NUTS AND WASHERS, RUBRAIL, AND ADHESIVELY ANCHORED BOLTS.

THE HOLD-DOWN PLATE SHALL CONFORM TO AASHTO M270 GRADE 36. AFTER FABRICATION, THE HOLD-DOWN PLATE SHALL BE HOT-DIP GALVANIZED IN ACCORDANCE WITH AASHTO M111.

BOLTS SHALL CONFORM TO THE REQUIREMENTS OF ASTM A307 AND NUTS SHALL CONFORM TO THE REQUIREMENTS OF AASHTO M291. BOLTS, NUTS AND WASHERS SHALL BE GALVANIZED. (AT THE CONTRACTOR'S OPTION, STAINLESS STEEL BOLTS, NUTS AND WASHERS MAY BE USED AS AN ALTERNATE FOR THE 7/8'' Ø GALVANIZED BOLTS, NUTS AND WASHERS. THEY SHALL CONFORM TO OR EXCEED THE MECHANICAL REQUIREMENTS OF ASTM A307. THE USE OF THIS ALTERNATE SHALL BE APPROVED BY THE ENGINEER.)

THE GUARDRAIL ANCHOR ASSEMBLY IS REQUIRED AT ALL POINTS WHERE APPROACH GUARDRAIL IS TO BE ATTACHED TO THE END OF BARRIER RAIL. FOR POINTS OF ATTACHMENT, SEE SKETCH.

AFTER INSTALLATION, THE EXPOSED THREAD OF THE BOLT SHALL BE BURRED WITH A SHARP POINTED TOOL.

THE COST OF THE GUARDRAIL ANCHOR ASSEMBLY SHALL BE INCLUDED IN THE UNIT CONTRACT PRICE BID FOR CONCRETE BARRIER RAIL.

THE 1 1/4'' Ø HOLES SHALL BE FORMED OR DRILLED WITH A CORE BIT. IMPACT TOOLS WILL NOT BE PERMITTED. ANY CONCRETE DAMAGED BY THIS WORK SHALL BE REPAIRED TO THE SATISFACTION OF THE ENGINEER.

THE C6 X 8.2 RUBRAIL IS TO BE ADHESIVELY ANCHORED TO THE RAIL USING THREE 3/4" Ø X 6" BOLTS WITH WASHERS. LEVEL ONE FIELD TESTING IS REQUIRED, AND THE YIELD LOAD OF THE 3/4" Ø BOLT IS 12 KIPS. FOR ADHESIVELY ANCHORED ANCHOR BOLTS OR DOWELS, SEE STANDARD SPECIFICATIONS. SEE ROADWAY STANDARD 862.03 FOR DETAILS AND LOCATION OF THE RUBRAIL.

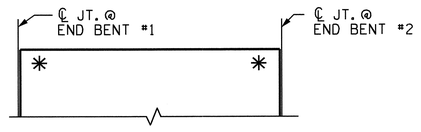

SKETCH SHOWING POINTS OF ATTACHMENTS

✳ DENOTES GUARDRAIL ANCHOR ASSEMBLY FOR BARRIER RAIL

PROJECT NO. U-3810

ONSLOW COUNTY

STATION: 84+77.50 -L-

STATE OF NORTH CAROLINA
DEPARTMENT OF TRANSPORTATION
RALEIGH

STANDARD

GUARDRAIL ANCHORAGE FOR BARRIER RAIL

NORTH CAROLINA PROFESSIONAL SEAL 14045 ENGINEER TIMOTHY W. COLGROVE

07/27/12

REVISIONS						SHEET NO.
NO.	BY:	DATE:	NO.	BY:	DATE:	S-19
1			3			TOTAL SHEETS
2			4			62

ASSEMBLED BY : M.D.PISO	DATE : 02-10-12
CHECKED BY : P.A.PARISI	DATE : 05-01-12
DRAWN BY : TLA 5/06	ADDED 5/1/06RR KMM/GM
CHECKED BY : GM 5/06	REV. 10/1/11 MAA/GM

12-JUN-2012 08:45
R:\Structures\Final Plans\Bridges\Str. #1\u3810_sd_cs_01.dgn
nruffin

STR. #1

(SHT 2) STD. NO. GRA2

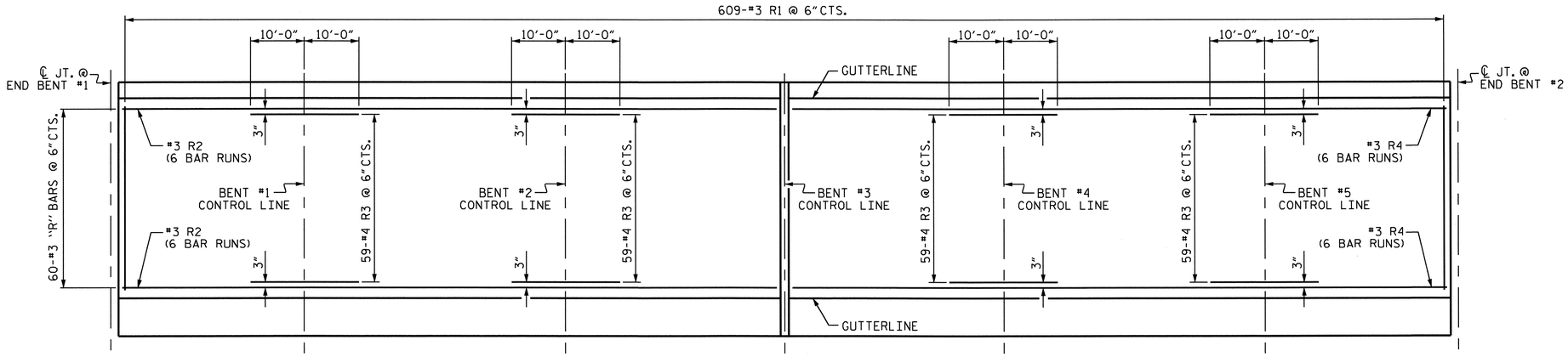

PLAN SHOWING CONCRETE WEARING SURFACE REINFORCING STEEL

BILL OF MATERIAL FOR CONCRETE WEARING SURFACE					
BAR	NO.	SIZE	TYPE	LENGTH	WEIGHT
✱R1	609	#3	STR	29'-7"	6774
✱R2	360	#3	STR	26'-7"	3598
✱R3	236	#4	STR	20'-0"	3153
✱R4	360	#3	STR	27'-5"	3711
✱ EPOXY COATED REINFORCING STEEL				LBS.	17236
CONCRETE WEARING SURFACE				SQ. FT.	9146

SPLICE LENGTH CHART	
BAR SIZE	EPOXY COATED
#3 "R"	2'-0"

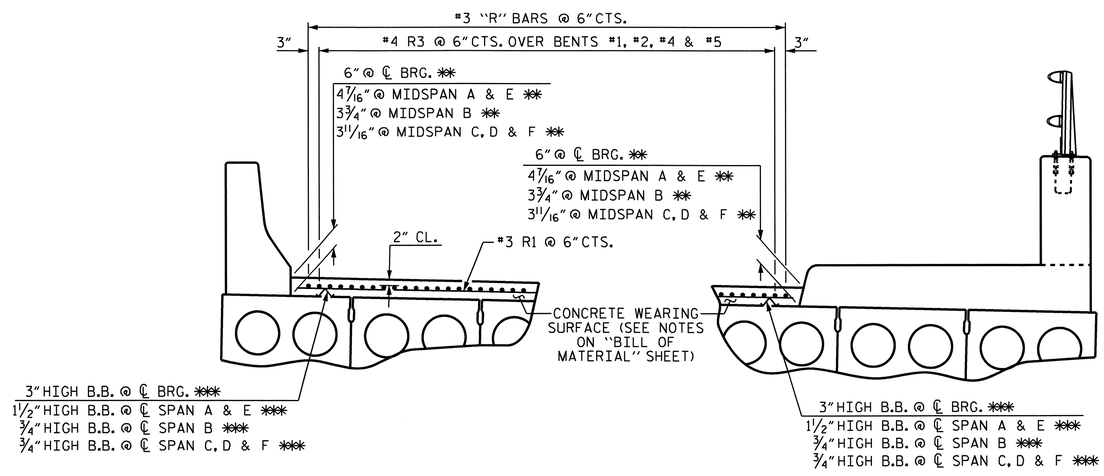

REINFORCING STEEL FOR CONCRETE WEARING SURFACE

✱✱ BASED ON PREDICTED FINAL CAMBER AND THEORETICAL GRADE LINE ELEVATIONS
✱✱✱ BEAM BOLSTERS (B.B.) SHALL BE SPACED AT 2'-0" CENTERS SET 1'-0" FROM GUTTERLINE.

PROJECT NO. U-3810
ONSLOW COUNTY
STATION: 84+77.50 -L-

STATE OF NORTH CAROLINA
DEPARTMENT OF TRANSPORTATION
RALEIGH

CONCRETE WEARING SURFACE DETAILS

NORTH CAROLINA PROFESSIONAL SEAL 14045 ENGINEER TIMOTHY W. COGGINS
07/27/12

REVISIONS						SHEET NO.
NO.	BY:	DATE:	NO.	BY:	DATE:	S-20
1			3			TOTAL SHEETS
2			4			62

DRAWN BY : M.D.PISO DATE : 02-10-12
CHECKED BY : P.A.PARISI DATE : 05-01-12

12-JUN-2012 08:45
R:\Structures\Final Plans\Bridges\Str. #1\u3810_sd_cs_01.dgn
nruffin

STR. #1

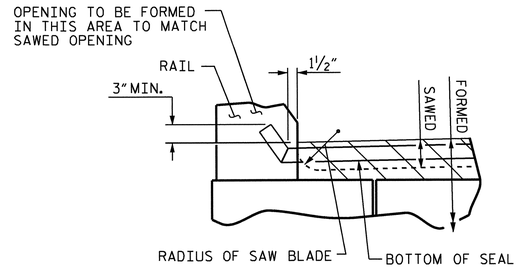

SECTION A-A

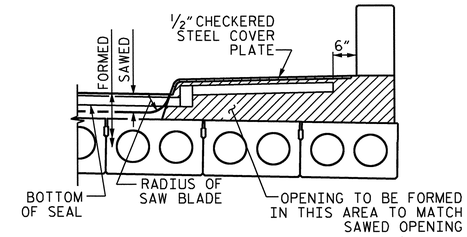

SECTION H-H

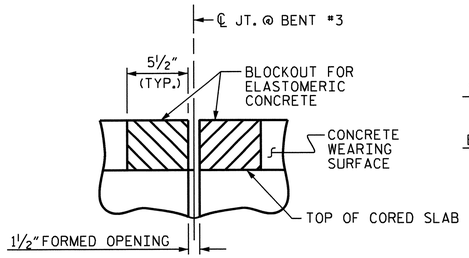

SECTION C-C
FOAM JOINT SEAL
(PRE-SAWED ELASTOMERIC CONCRETE DIMENSIONS)

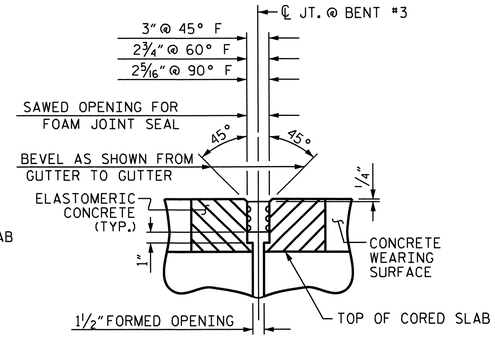

SECTION C-C
FOAM JOINT SEAL

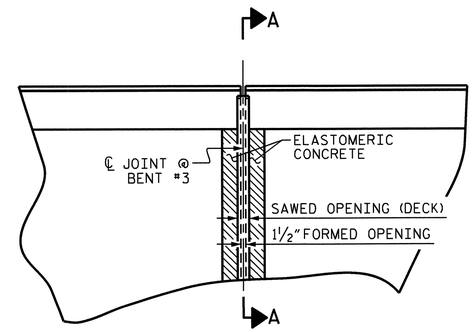

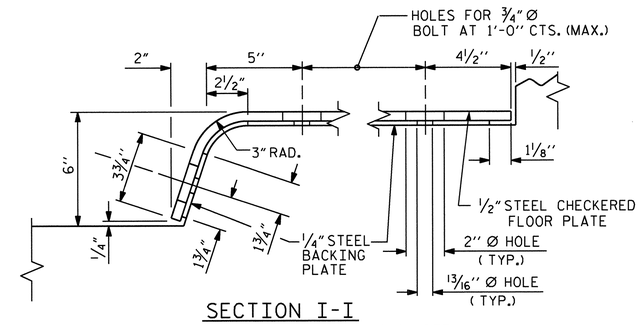

SECTION I-I
INSERTS & BOLTS NOT SHOWN FOR CLARITY

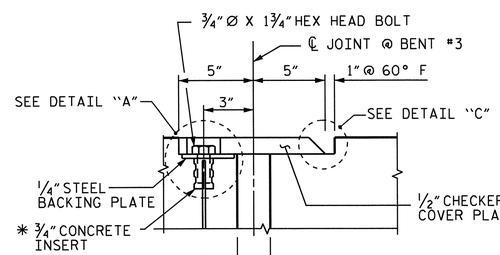

SECTION K-K

*THE ¾" CONCRETE INSERTS SHALL BE CLOSED-END FERRULES WITH LOOPED WIRE STRUTS ATTACHED TO THEM. THE INSERTS SHALL CONFORM TO AASHTO M169, GRADE 12L14 AND SHALL HAVE A TENSILE WORKING LOAD CAPACITY OF 3000 LBS.

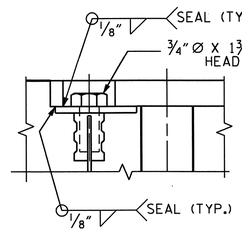

DETAIL "A"

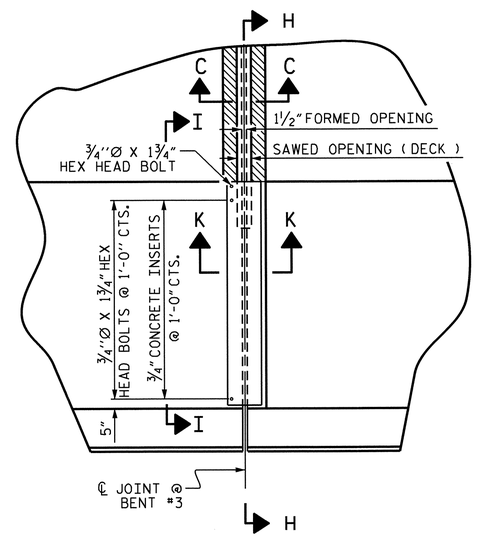

PLAN

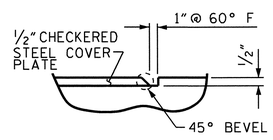

DETAIL "C"

ELASTOMERIC CONCRETE	
BENT NO.	ELASTOMERIC CONCRETE ** (CU. FT)
3	13.8
TOTAL	13.8

** BASED ON THE MINIMUM BLOCKOUT SHOWN

PROJECT NO. U-3810
ONSLOW COUNTY
STATION: 84+77.50 -L-

JOINT SEAL DETAILS @ BENT #3

THE STEEL PLATES SHALL CONFORM TO AASHTO M270 GRADE 36 OR APPROVED EQUAL. AFTER FABRICATION, THE PLATES SHALL BE COMMERCIALLY BLAST CLEANED AND EITHER COATED WITH A MINIMUM THICKNESS OF 4 MILS (DRY) OF ZINC-RICH PAINT, GALVANIZED OR METALLIZED TO A MINIMUM THICKNESS OF 6 MILS IN ACCORDANCE WITH THE STANDARD SPECIFICATIONS. FOR THERMAL SPRAYED COATINGS (METALLIZATION), SEE SPECIAL PROVISIONS.

THE ¾" DIAMETER HEX HEAD BOLTS SHALL CONFORM TO ASTM F593 ALLOY 304 STAINLESS STEEL.

NO SEPARATE PAYMENT WILL BE MADE FOR FURNISHING AND INSTALLING THE COVER PLATE. THE ENTIRE COST OF THIS WORK SHALL BE INCLUDED IN THE LUMP SUM PRICE FOR "FOAM JOINT SEALS".

THE NOMINAL UNCOMPRESSED SEAL WIDTH OF THE FOAM JOINT SEAL SHALL BE 3⁷⁄₁₆" AT BENT No. 3.

FOR FOAM JOINT SEALS, SEE SPECIAL PROVISIONS.

FOR ELASTOMERIC CONCRETE, SEE SPECIAL PROVISIONS.

NORTH CAROLINA PROFESSIONAL SEAL 14045 ENGINEER TIMOTHY L. COGGINS
07/27/12

STATE OF NORTH CAROLINA
DEPARTMENT OF TRANSPORTATION
RALEIGH

FOAM JOINT DETAILS @ BENT #3

ASSEMBLED BY : M.D.PISO	DATE : 02-10-12
CHECKED BY : P.A.PARISI	DATE : 05-01-12

DRAWN BY : FCJ 11/88	REV. 10/17/00 RWW/LES
CHECKED BY : ARB 11/88	REV. 5/7/03 RWW/JTE
	REV. 5/1/06 TLA/GM

REVISIONS						SHEET NO.
NO.	BY:	DATE:	NO.	BY:	DATE:	S-21
1			3			TOTAL SHEETS
2			4			62

STR. #1

12-JUN-2012 08:53
R:\Structures\Final Plans\Bridges\Str. #1\u3810_sd_cs_01.dgn
nruffin

BAR TYPES

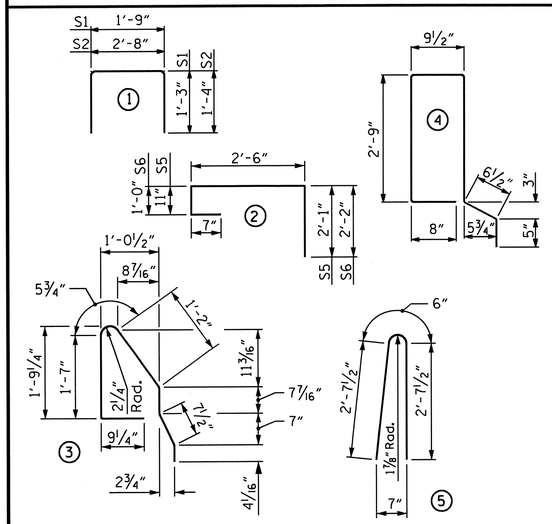

ALL BAR DIMENSIONS ARE OUT TO OUT

CORED SLABS REQUIRED

		NUMBER	LENGTH	TOTAL LENGTH
SPAN A	TYPE I	1	44'-10½"	44'-10½"
	TYPE II	10	44'-10½"	448'-9"
	TYPE III	1	44'-10½"	44'-10½"
	TYPE IV	1	44'-10½"	44'-10½"
SPAN B	TYPE I	1	49'-10½"	49'-10½"
	TYPE II	10	49'-10½"	498'-9"
	TYPE III	1	49'-10½"	49'-10½"
	TYPE IV	1	49'-10½"	49'-10½"
SPAN C	TYPE I	1	54'-10½"	54'-10½"
	TYPE II	10	54'-10½"	548'-9"
	TYPE III	1	54'-10½"	54'-10½"
	TYPE IV	1	54'-10½"	54'-10½"
SPAN D	TYPE I	1	54'-10½"	54'-10½"
	TYPE II	10	54'-10½"	548'-9"
	TYPE III	1	54'-10½"	54'-10½"
	TYPE IV	1	54'-10½"	54'-10½"
SPAN E	TYPE I	1	44'-10½"	44'-10½"
	TYPE II	10	44'-10½"	448'-9"
	TYPE III	1	44'-10½"	44'-10½"
	TYPE IV	1	44'-10½"	44'-10½"
SPAN F	TYPE I	1	54'-10½"	54'-10½"
	TYPE II	10	54'-10½"	548'-9"
	TYPE III	1	54'-10½"	54'-10½"
	TYPE IV	1	54'-10½"	54'-10½"
TOTAL	———	78	———	3955'-3"

BILL OF MATERIAL FOR ONE CORED SLAB SECTION - SPANS A & E

				TYPE I UNIT		TYPE II UNIT		TYPE III UNIT		TYPE IV UNIT	
BAR	NUMBER	SIZE	TYPE	LENGTH	WEIGHT	LENGTH	WEIGHT	LENGTH	WEIGHT	LENGTH	WEIGHT
B1	4	#4	STR	23'-2"	62	23'-2"	62	23'-2"	62	23'-2"	62
S1	8	#5	1	4'-3"	35	4'-3"	35	4'-3"	35	4'-3"	35
S2	108	#4	1	5'-4"	385	5'-4"	385	5'-4"	385	5'-4"	385
✱ S3	56	#5	3	5'-7"	326	——	——	——	——	——	——
✱ S4	56	#5	4	——	——	——	——	——	——	7'-11"	462
✱ S5	8	#4	2	——	——	——	——	6'-1"	33	——	——
✱ S6	8	#4	2	——	——	——	——	——	——	6'-3"	33
REINFORCING STEEL					482 LBS.		482 LBS.		482 LBS.		482 LBS.
✱ EPOXY COATED REINFORCING STEEL					326 LBS.		——		33 LBS.		495 LBS.
5,000 P.S.I. CONCRETE					6.5 CU. YDS.		6.5 CU. YDS.		6.5 CU. YDS.		6.5 CU. YDS.
0.6" Ø L.R. STRANDS		No.			16		16		16		16

BILL OF MATERIAL FOR ONE CORED SLAB SECTION - SPAN B

				TYPE I UNIT		TYPE II UNIT		TYPE III UNIT		TYPE IV UNIT	
BAR	NUMBER	SIZE	TYPE	LENGTH	WEIGHT	LENGTH	WEIGHT	LENGTH	WEIGHT	LENGTH	WEIGHT
B2	4	#4	STR	25'-8"	69	25"-8"	69	25'-8"	69	25'-8"	69
S1	8	#5	1	4'-3"	35	4'-3"	35	4'-3"	35	4'-3"	35
S2	98	#4	1	5'-4"	349	5'-4"	349	5'-4"	349	5'-4"	349
✱ S3	51	#5	3	5'-7"	297	——	——	——	——	——	——
✱ S4	51	#5	4	——	——	——	——	——	——	7'-11"	421
✱ S5	9	#4	2	——	——	——	——	6'-1"	37	——	——
✱ S6	9	#4	2	——	——	——	——	——	——	6'-3"	38
REINFORCING STEEL					453 LBS.		453 LBS.		453 LBS.		453 LBS.
✱ EPOXY COATED REINFORCING STEEL					297 LBS.		——		37 LBS.		459 LBS.
7,000 P.S.I. CONCRETE					7.2 CU. YDS.		7.2 CU. YDS.		7.2 CU. YDS.		7.2 CU. YDS.
0.6" Ø L.R. STRANDS		No.			21		21		21		21

BILL OF MATERIAL FOR ONE CORED SLAB SECTION - SPANS C, D & F

				TYPE I UNIT		TYPE II UNIT		TYPE III UNIT		TYPE IV UNIT	
BAR	NUMBER	SIZE	TYPE	LENGTH	WEIGHT	LENGTH	WEIGHT	LENGTH	WEIGHT	LENGTH	WEIGHT
B3	4	#4	STR	28'-2"	75	28'-2"	75	28'-2"	75	28'-2"	75
S1	8	#5	1	4'-3"	35	4'-3"	35	4'-3"	35	4'-3"	35
S2	108	#4	1	5'-4"	385	5'-4"	385	5'-4"	385	5'-4"	385
✱ S3	56	#5	3	5'-7"	326	——	——	——	——	——	——
✱ S4	56	#5	4	——	——	——	——	——	——	7'-11"	462
✱ S5	9	#4	2	——	——	——	——	6'-1"	37	——	——
✱ S6	9	#4	2	——	——	——	——	——	——	6'-3"	38
REINFORCING STEEL					495 LBS.		495 LBS.		495 LBS.		495 LBS.
✱ EPOXY COATED REINFORCING STEEL					326 LBS.		——		37 LBS.		500 LBS.
7.000 P.S.I. CONCRETE					7.9 CU. YDS.		7.9 CU. YDS.		7.9 CU. YDS.		7.9 CU. YDS.
0.6" Ø L.R. STRANDS		No.			21		21		21		21

DEAD LOAD DEFLECTION AND CAMBER

3'-0" x 1'-9" 0.6" Ø L.R. STRAND	SPANS A & E	SPAN B	SPANS C, D & F
CAMBER (SLAB ALONE IN PLACE) ↑	1⅞"	2⅝"	2⅞"
DEFLECTION DUE TO SUPERIMPOSED DEAD LOAD✱✱ ↓	5⁄16"	⅜"	9⁄16"
FINAL CAMBER ↑	1⁹⁄₁₆"	2¼"	2⁵⁄₁₆"

✱✱ INCLUDES FUTURE WEARING SURFACE

GRADE 270 STRANDS

	0.6" Ø L.R.
AREA (SQUARE INCHES)	0.217
ULTIMATE STRENGTH (LBS. PER STRAND)	58,600
APPLIED PRESTRESS (LBS. PER STRAND)	43,950

GROOVING BRIDGE FLOORS

APPROACH SLABS	1281	SQ.FT.
BRIDGE DECK	8162	SQ.FT.
TOTAL	9443	SQ.FT.

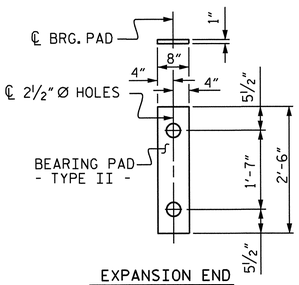

EXPANSION END
(TYPE II - 52 REQ'D)

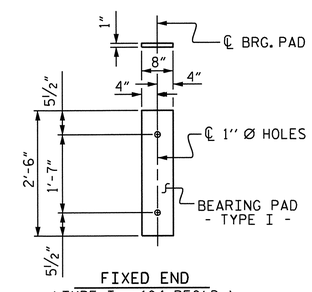

FIXED END
(TYPE I - 104 REQ'D)

ELASTOMERIC BEARING DETAILS

ELASTOMER IN BEARINGS SHALL BE 50 DUROMETER HARDNESS.

NOTES:

ALL PRESTRESSING STRANDS SHALL BE 7-WIRE LOW RELAXATION GRADE 270 STRANDS AND SHALL CONFORM TO AASHTO M203 EXCEPT FOR SAMPLING REQUIREMENTS WHICH SHALL BE IN ACCORDANCE WITH THE STANDARD SPECIFICATIONS.

ALL REINFORCING STEEL CAST WITH THE CORED SLAB SECTIONS SHALL BE GRADE 60 AND SHALL BE INCLUDED IN THE UNIT PRICE BID FOR PRESTRESSED CONCRETE CORED SLABS.

RECESSES FOR TRANSVERSE STRANDS SHALL BE GROUTED AFTER THE TENSIONING OF THE STRANDS.

THE 2½" Ø DOWEL HOLES AT FIXED ENDS OF SLAB SECTIONS SHALL BE FILLED WITH GROUT. THE 2½" Ø DOWEL HOLES AT EXPANSION ENDS OF SLAB SECTIONS SHALL BE FILLED WITH JOINT SEALER MATERIAL TO 1½" ABOVE THE TOP OF DOWELS AND THEN FILLED WITH GROUT.

THE JOINT SEALER MATERIAL SHALL CONFORM TO THE REQUIREMENTS OF TYPE SL LOW MODULUS SILICONE SEALANT. THE 2" Ø BACKER ROD SHALL CONFORM TO THE REQUIREMENTS OF TYPE M BOND BREAKER. SEE SECTION 1028 OF THE STANDARD SPECIFICATIONS.

WHEN CORED SLABS ARE CAST, AN INTERNAL HOLD-DOWN SYSTEM SHALL BE EMPLOYED TO PREVENT VOIDS FROM RISING OR MOVING SIDEWAYS. AT LEAST SIX WEEKS PRIOR TO CASTING CORED SLABS, THE CONTRACTOR SHALL SUBMIT TO THE ENGINEER FOR REVIEW AND COMMENT, DETAILED DRAWINGS OF THE PROPOSED HOLD DOWN SYSTEM. IN ADDITION TO STRUCTURAL DETAILS, LOCATION AND SPACING OF THE HOLD-DOWNS SHALL BE INDICATED.

WHEN A CONCRETE WEARING SURFACE IS DETAILED ON THE CORED SLAB BRIDGE TYPICAL SECTION, THE TOP SURFACE OF THE CORED SLAB UNITS SHALL HAVE A ⅜" RAKED FINISH.

THE TRANSFER OF LOAD FROM THE ANCHORAGES TO THE CORED SLAB UNIT SHALL BE DONE WHEN THE CONCRETE HAS REACHED A COMPRESSIVE STRENGTH OF NOT LESS THAN 4500 PSI. AT SPANS A & E, AND 5200 PSI AT SPANS B, C, D, & F.

ALL REINFORCING STEEL IN BARRIER RAIL, PARAPETS, END POSTS, SIDEWALK AND CONCRETE WEARING SURFACE SHALL BE EPOXY COATED.

PRESTRESSING STRANDS SHALL BE CUT FLUSH WITH THE CORED SLAB UNIT ENDS.

APPLY EPOXY PROTECTIVE COATING TO CORED SLAB UNIT ENDS.

FOR FOAM JOINT SEALS, SEE SPECIAL PROVISIONS.

PLACEMENT OF THE CONCRETE WEARING SURFACE SHALL OCCUR AFTER CASTING THE CONCRETE BARRIER RAIL, PARAPET AND SIDEWALK. THE COST OF THE REINFORCING STEEL CAST WITH THE CONCRETE WEARING SURFACE SHALL BE INCLUDED IN THE UNIT PRICE BID FOR CONCRETE WEARING SURFACE. FOR CONCRETE WEARING SURFACE, SEE SPECIAL PROVISIONS.

GROOVED CONTRACTION JOINTS ½" IN DEPTH, SHALL BE TOOLED IN ALL EXPOSED FACES OF THE BARRIER RAIL, PARAPET AND SIDEWALK IN ACCORDANCE WITH ARTICLE 825-10(B) OF THE STANDARD SPECIFICATIONS. A CONTRACTION JOINT SHALL BE LOCATED AT EACH THIRD POINT BETWEEN EXPANSION JOINTS. ONLY ONE CONTRACTION JOINT IS REQUIRED AT MIDPOINT OF SEGMENTS LESS THAN 20 FEET IN LENGTH AND NO CONTRACTION JOINTS ARE REQUIRED FOR THOSE SEGMENTS LESS THAN 10 FEET IN LENGTH.

FOR GROUT FOR STRUCTURES, SEE SPECIAL PROVISIONS.

PAYMENT FOR SIDEWALK SHALL BE INCLUDED IN THE PAY ITEMS FOR CLASS AA CONCRETE AND EPOXY COATED REINFORCING STEEL.

TRANSVERSE POST TENSIONING OF THE CORED SLAB UNITS SHALL BE DONE IN ACCORDANCE WITH THE STANDARD SPECIFICATIONS.

THE #4 S2 STIRRUPS MAY BE SHIFTED AS NECESSARY TO MAINTAIN 1" CLEAR TO THE GROUTED RECESS.

PROJECT NO. U-3810
ONSLOW COUNTY
STATION: 84+77.50 -L-

BILL OF MATERIAL FOR CONCRETE BARRIER RAIL

BAR	BARS PER SPAN						TOTAL NO.	SIZE	TYPE	LENGTH	WEIGHT
	SPAN A	SPAN B	SPAN C	SPAN D	SPAN E	SPAN F					
✱ B4	16				16		32	#5	STR	22'-1"	737
✱ B5		16					16	#5	STR	24'-7"	410
✱ B6			16	16		16	48	#5	STR	27'-1"	1356
✱ S7	56	51	56	56	56	56	331	#5	5	5'-9"	1985
✱ EPOXY COATED REINFORCING STEEL											4488 LBS.
CLASS AA CONCRETE											37.5 CU.YDS.
TOTAL LIN. FT. OF CONCRETE BARRIER RAIL											304.88

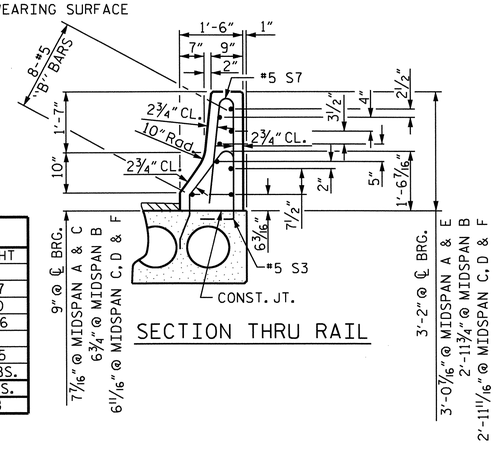

SECTION THRU RAIL

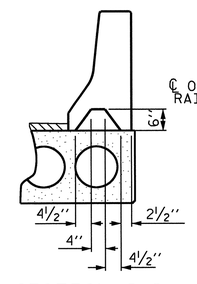

SECTION S-S
AT DAM IN OPEN JOINT
(THIS IS TO BE USED ONLY WHEN SLIP FORM IS USED)

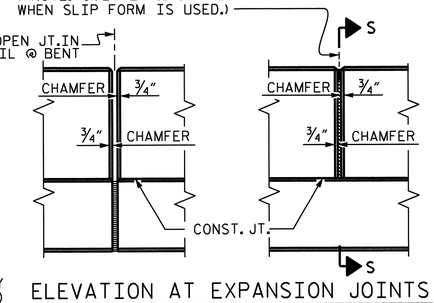

ELEVATION AT EXPANSION JOINTS

NORTH CAROLINA PROFESSIONAL SEAL 14045 ENGINEER TIMOTHY L. HOGGINS
07/27/12

BARRIER RAIL DETAILS

STATE OF NORTH CAROLINA
DEPARTMENT OF TRANSPORTATION
RALEIGH

SUPERSTRUCTURE

BILL OF MATERIAL

REVISIONS						SHEET NO.
NO.	BY:	DATE:	NO.	BY:	DATE:	S-22
1			3			TOTAL SHEETS
2			4			62

STR. #1

DRAWN BY : M.D.PISO DATE : 02-10-12
CHECKED BY : P.A.PARISI DATE : 05-01-12

24-JUL-2012 09:43
W:\structures\Plans\Final Plans\Bridges\Str. #1\u3810_sd_cs_01.dgn
bbarodawala

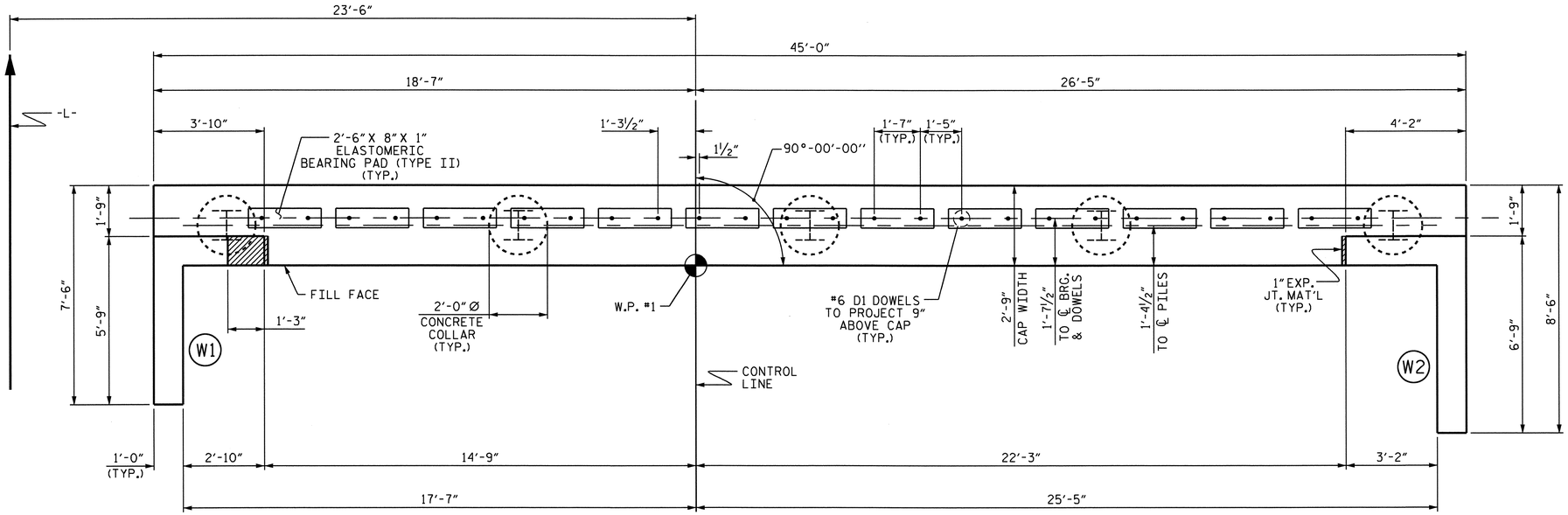

PLAN

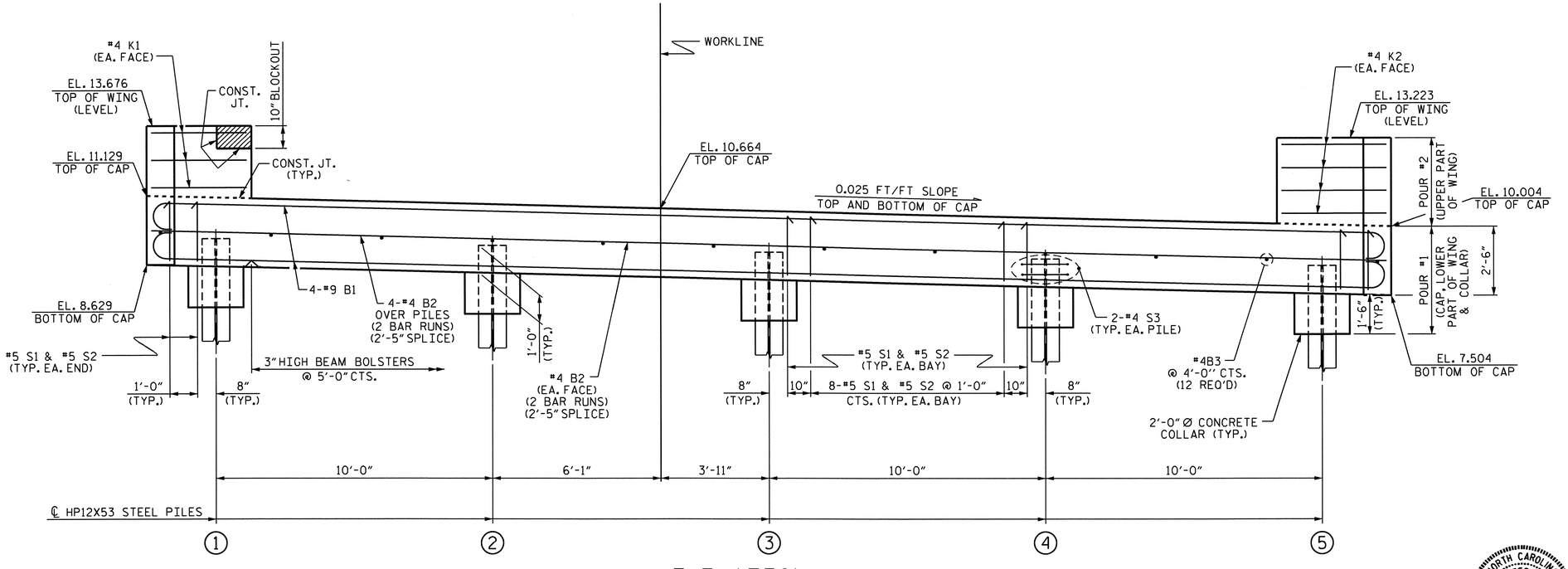

ELEVATION

NOTES:

STIRRUPS IN CAP MAY BE SHIFTED AS NECESSARY TO CLEAR DOWELS.

THE CONCRETE IN THE SHADED AREA OF THE WING SHALL BE POURED AFTER THE JOINT BETWEEN THE DECK AND APPROACH SLAB HAS BEEN SAWED AND THE BARRIER RAIL IS CAST IF SLIP FORMING IS USED.

FOR PILE SPLICE DETAILS, SEE SHEET 3 OF 3.

INSTALL THE 4" DIA. DRAIN PIPE THROUGH THE WING WALL AS REQUIRED FOR REINFORCED BRIDGE APPROACH FILLS. SEE THE ROADWAY PLANS. REINFORCING STEEL IN THE WING WALL MAY BE SHIFTED AS NECESSARY TO CLEAR THE DRAIN PIPE.

TOP OF PILE ELEVATIONS	
1	9.579
2	9.329
3	9.079
4	8.829
5	8.579

PROJECT NO. U-3810

ONSLOW COUNTY

STATION: 84+77.50 -L-

SHEET 1 OF 3

STATE OF NORTH CAROLINA
DEPARTMENT OF TRANSPORTATION
RALEIGH

SUBSTRUCTURE

END BENT #1

NORTH CAROLINA PROFESSIONAL SEAL 14045 ENGINEER TIMOTHY L. COGGINS

Timothy L. Coggins 07/27/12

REVISIONS						SHEET NO.
NO.	BY:	DATE:	NO.	BY:	DATE:	S-23
1			3			TOTAL SHEETS
2			4			62

DRAWN BY : B. L. GREEN DATE : 3/8/12
CHECKED BY : T. L. COGGINS DATE : 3/20/12

24-JUL-2012 09:44
W:\structures\Plans\Final Plans\Bridges\Str. #1\u3810_sd_eb#_01.dgn
bbarodawala

STR. #1

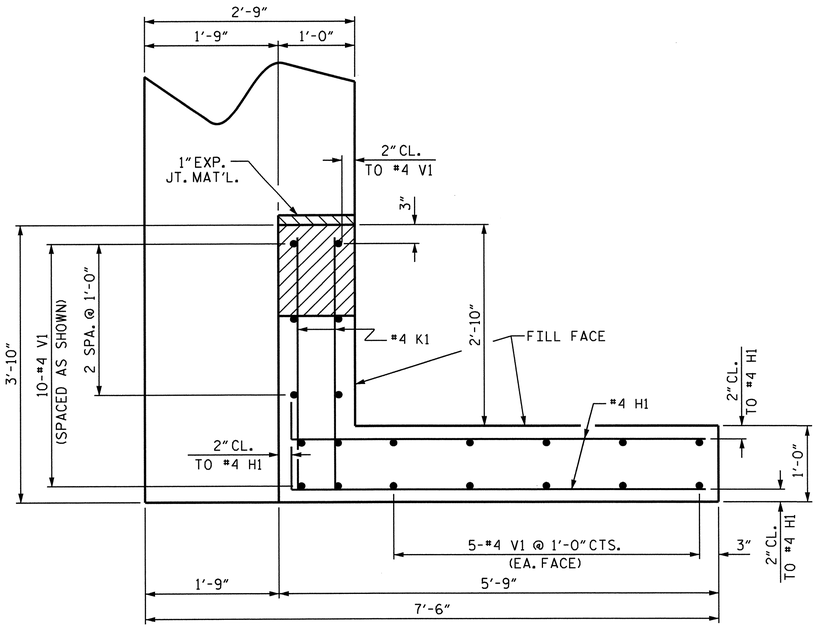

PLAN OF WING W1

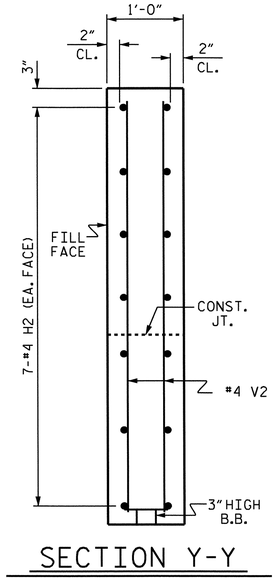

SECTION Y-Y

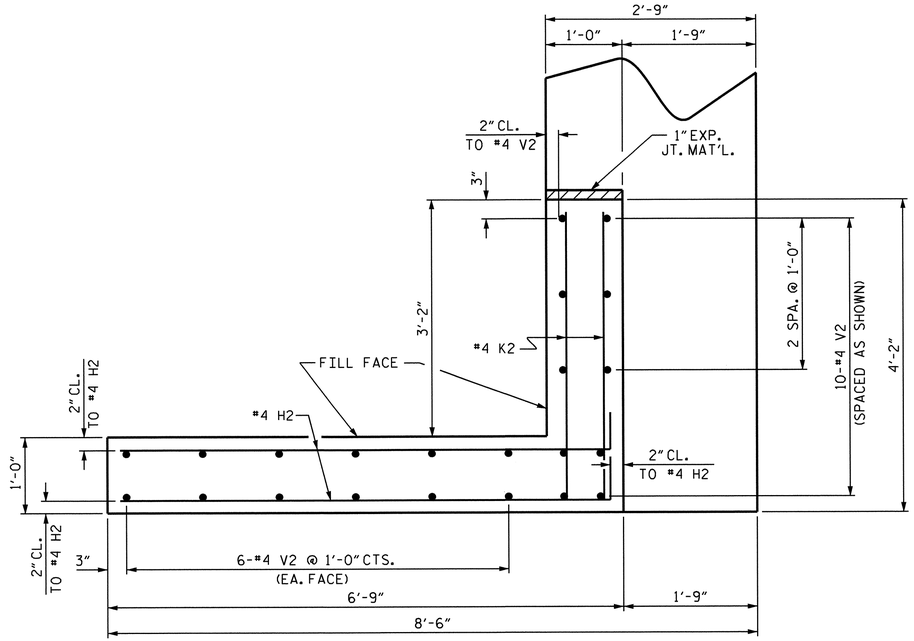

PLAN OF WING W2

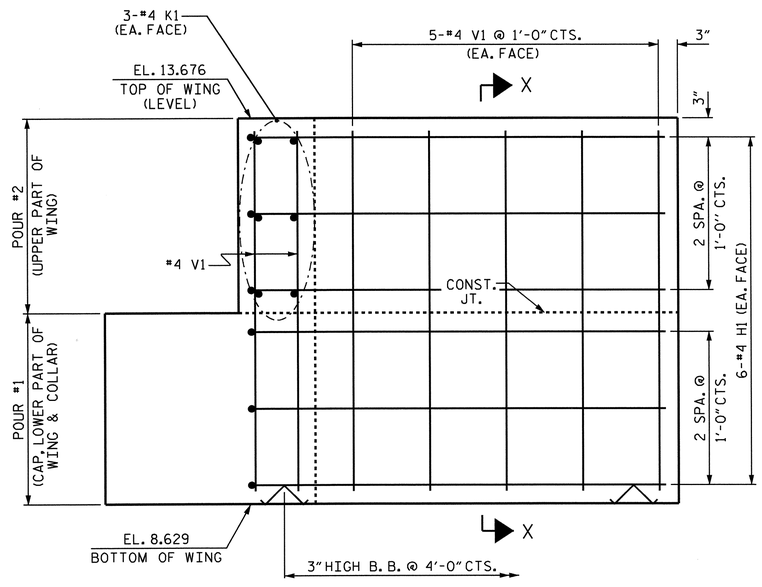

ELEVATION OF WING W1

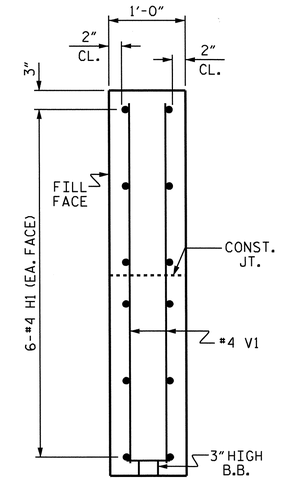

SECTION X-X

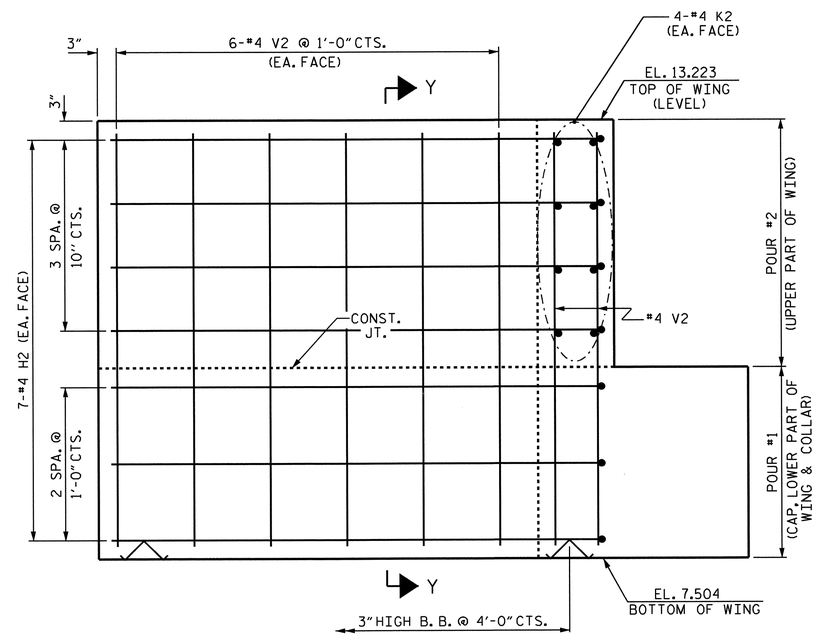

ELEVATION OF WING W2

PROJECT NO. U-3810

ONSLOW COUNTY

STATION: 84+77.50 -L-

SHEET 2 OF 3

STATE OF NORTH CAROLINA
DEPARTMENT OF TRANSPORTATION
RALEIGH

SUBSTRUCTURE

END BENT #1

NORTH CAROLINA PROFESSIONAL SEAL 14045 ENGINEER TIMOTHY L. COGGINS

07/27/12

REVISIONS						SHEET NO.
NO.	BY:	DATE:	NO.	BY:	DATE:	S-24
1			3			TOTAL SHEETS
2			4			62

DRAWN BY : B. L. GREEN DATE : 3/8/12
CHECKED BY : T. L. COGGINS DATE : 3/20/12

11-JUN-2012 13:08
R:\Structures\Final Plans\Bridges\Str. #1\u3810_sd_eb*_01.dgn
nruffin

STR. #1

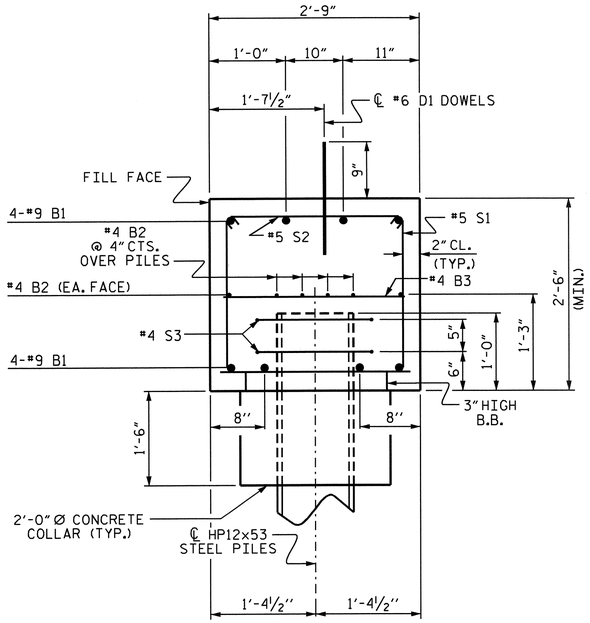

SECTION THRU CAP

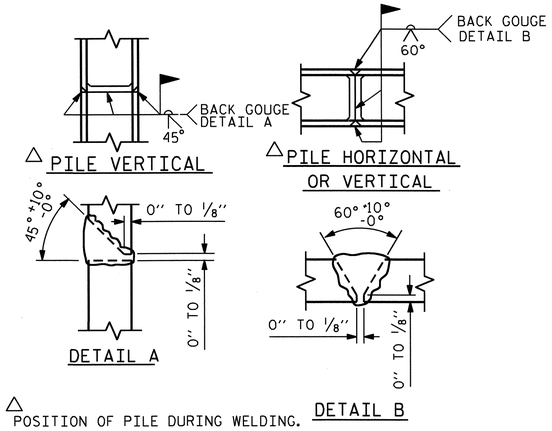

△ POSITION OF PILE DURING WELDING.

PILE SPLICE DETAILS

BAR TYPES

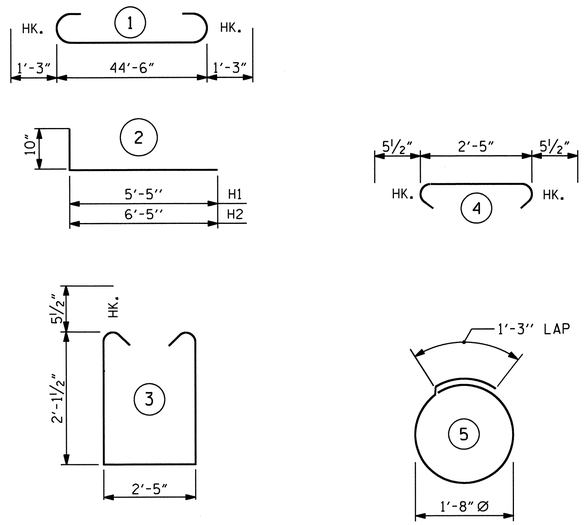

ALL BAR DIMENSIONS ARE OUT TO OUT.

BILL OF MATERIAL
END BENT #1

BAR	NO.	SIZE	TYPE	LENGTH	WEIGHT
B1	8	#9	1	47'-0"	1278
B2	12	#4	STR.	23'-7"	189
B3	12	#4	STR.	2'-5"	19
D1	26	#6	STR.	1'-6"	59
H1	12	#4	2	6'-3"	50
H2	14	#4	2	7'-3"	68
K1	6	#4	STR.	3'-6"	14
K2	8	#4	STR.	3'-10"	20
S1	44	#5	3	7'-7"	348
S2	44	#5	4	3'-4"	153
S3	10	#4	5	6'-6"	43
V1	20	#4	STR.	4'-9"	63
V2	22	#4	STR.	5'-5"	80
REINFORCING STEEL				LBS.	2384

CLASS "A" CONCRETE BREAKDOWN

POUR #1 CAP, LOWER WINGS & COLLARS	13.3 C.Y.
POUR #2 UPPER WINGS	2.0 C.Y.
CLASS "A" CONCRETE TOTAL	15.3 C.Y.
HP 12X53 STEEL PILES No. 5	350 LIN. FT.
STEEL PILE POINTS No.	5 EACH
PILE REDRIVES No.	5 EACH

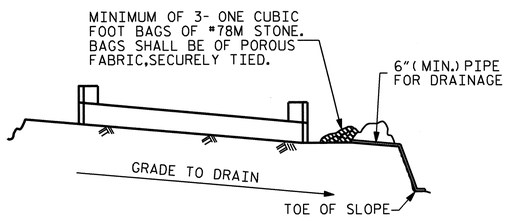

BAGGED STONE AND PIPE SHALL BE PLACED IMMEDIATELY AFTER COMPLETION OF END BENT EXCAVATION. PIPE MAY BE EITHER CONCRETE, CORRUGATED STEEL, CORRUGATED ALUMINUM ALLOY, OR CORRUGATED PLASTIC. PERFORATED PIPE WILL NOT BE ALLOWED.

BAGGED STONE SHALL REMAIN IN PLACE UNTIL THE ENGINEER DIRECTS THAT IT BE REMOVED. THE CONTRACTOR SHALL REMOVE AND DISPOSE OF SILT ACCUMULATIONS AT BAGGED STONE WHEN SO DIRECTED BY THE ENGINEER. BAGS SHALL BE REMOVED AND REPLACED WHENEVER THE ENGINEER DETERMINES THAT THEY HAVE DETERIORATED AND LOST THEIR EFFECTIVENESS.

NO SEPARATE PAYMENT WILL BE MADE FOR THIS WORK AND THE ENTIRE COST OF THIS WORK SHALL BE INCLUDED IN THE UNIT CONTRACT PRICE BID FOR THE SEVERAL PAY ITEMS.

TEMPORARY DRAINAGE AT END BENT

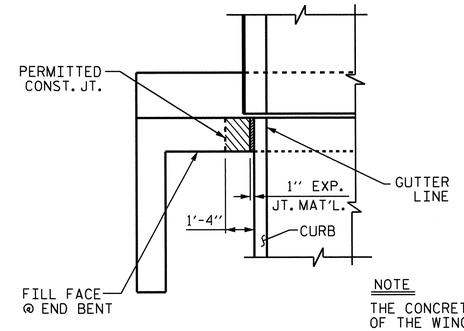

PLAN

NOTE

THE CONCRETE IN THE SHADED AREA OF THE WING SHALL BE POURED AFTER THE JOINT BETWEEN THE DECK AND APPROACH SLAB HAS BEEN SAWED AND THE BARRIER RAIL IS CAST IF SLIP FORMING IS USED.

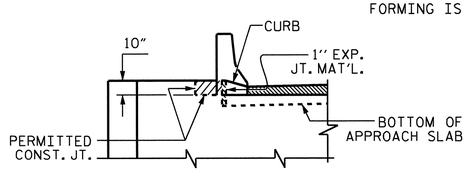

ELEVATION

BLOCKOUT IN WING WALL

PROJECT NO. U-3810
ONSLOW COUNTY
STATION: 84+77.50 -L-

SHEET 3 OF 3

STATE OF NORTH CAROLINA
DEPARTMENT OF TRANSPORTATION
RALEIGH

SUBSTRUCTURE

END BENT #1

NORTH CAROLINA PROFESSIONAL SEAL 14045 ENGINEER TIMOTHY L. COGGINS
07/27/12

REVISIONS						SHEET NO.
NO.	BY:	DATE:	NO.	BY:	DATE:	S-25
1			3			TOTAL SHEETS
2			4			62

DRAWN BY : B. L. GREEN DATE : 3/8/12
CHECKED BY : T. L. COGGINS DATE : 3/20/12

26-JUL-2012 16:36
R:\TIPProjects-U\U3810\structures\Plans\FinalPlans\Bridges\Str. #1\u3810_sd_eb*_01.dgn
tcoggins

STR. #1

NOTES

STIRRUPS IN CAP MAY BE SHIFTED AS NECESSARY TO CLEAR DOWELS.

★ INVERT ALTERNATE STIRRUPS.

GALVANIZE THE TOP OF EACH INTERIOR BENT PILE A MINIMUM OF 31 FEET FOR BENT #1 AND #5 AND 23 FEET FOR BENT #2, #3 AND #4. GALVANIZE IN ACCORDANCE WITH SECTION 1076 OF THE STANDARD SPECIFICATIONS.

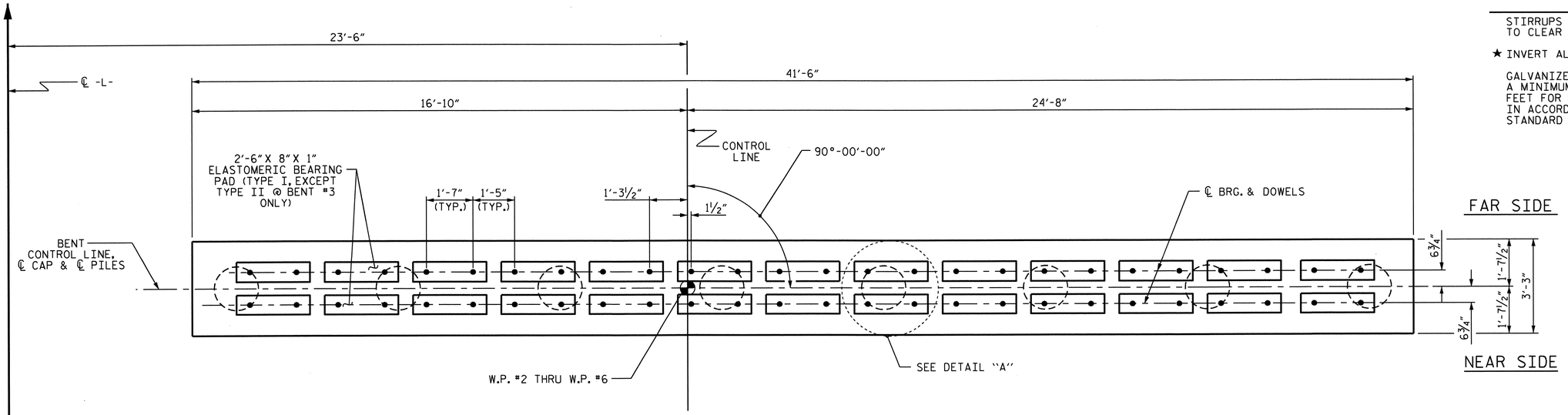

PLAN

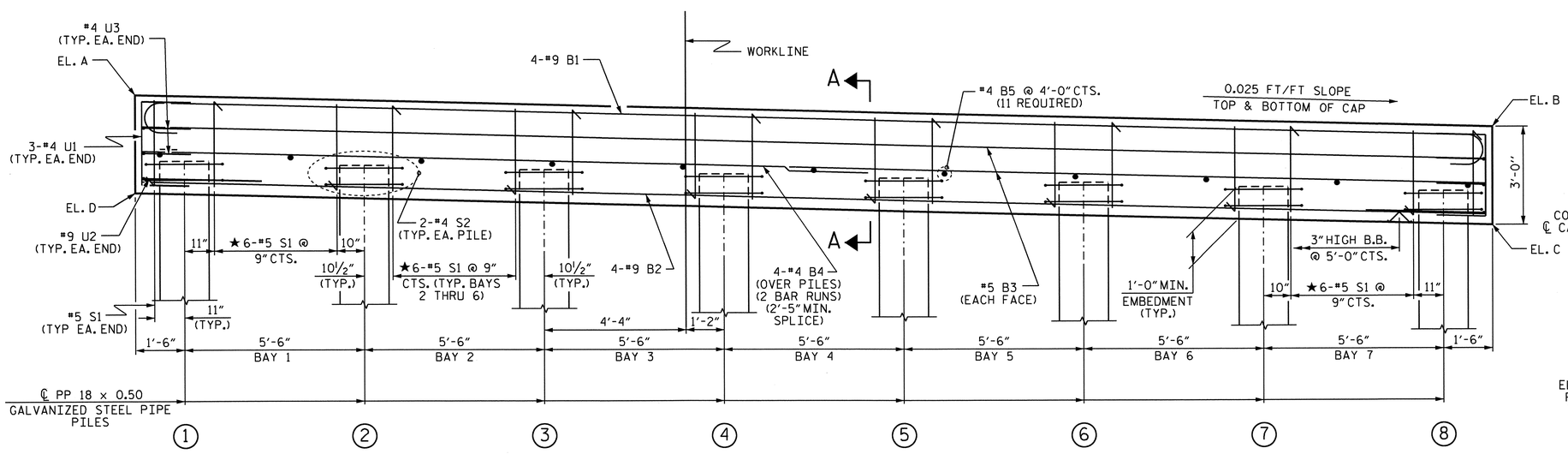

ELEVATION

FOR SECTION A-A, SEE SHEET 2 OF 2

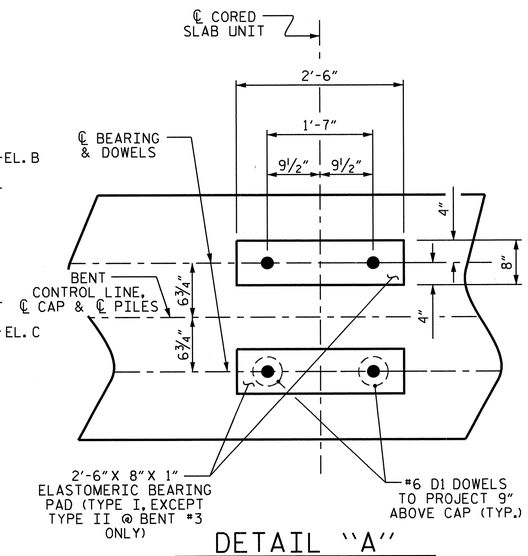

DETAIL "A"

(DIMENSIONS ARE TYPICAL EACH BEARING)

TOP AND BOTTOM OF CAP ELEVATIONS					
	BENT #1	BENT #2	BENT #3	BENT #4	BENT #5
EL. A	11.216	11.366	11.531	11.696	11.831
EL. B	10.178	10.328	10.493	10.658	10.793
EL. C	7.178	7.328	7.493	7.658	7.793
EL. D	8.216	8.366	8.531	8.696	8.831

TOP OF PILE ELEVATIONS					
PILE	BENT #1	BENT #2	BENT #3	BENT #4	BENT #5
1	9.160	9.310	9.475	9.640	9.775
2	9.060	9.210	9.375	9.540	9.675
3	8.922	9.072	9.237	9.402	9.537
4	8.785	8.935	9.100	9.265	9.400
5	8.647	8.797	8.962	9.127	9.262
6	8.510	8.660	8.825	8.990	9.125
7	8.372	8.522	8.687	8.852	8.987
8	8.235	8.385	8.550	8.715	8.850

PROJECT NO. U-3810

ONSLOW COUNTY

STATION: 84+77.50 -L-

SHEET 1 OF 2

STATE OF NORTH CAROLINA
DEPARTMENT OF TRANSPORTATION
RALEIGH

SUBSTRUCTURE

BENTS #1-#5

NORTH CAROLINA PROFESSIONAL SEAL ENGINEER OMAR R. AZIZI 8-7-12

REVISIONS						SHEET NO.
NO.	BY:	DATE:	NO.	BY:	DATE:	S-26
1			3			TOTAL SHEETS
2			4			62

ASSEMBLED BY : B. L. GREEN DATE : 3/12/12
CHECKED BY : O. R. AZIZI DATE : 3/19/12

DRAWN BY : DGE 05/10
CHECKED BY : MKT 05/10

07-AUG-2012 15:56
Z:\TIPProjects-U\U3810\structures\Plans\FinalPlans\Bridges\Str. #1\u3810_sd_b#_01.dgn
padkins

STR. #1

BAR TYPES

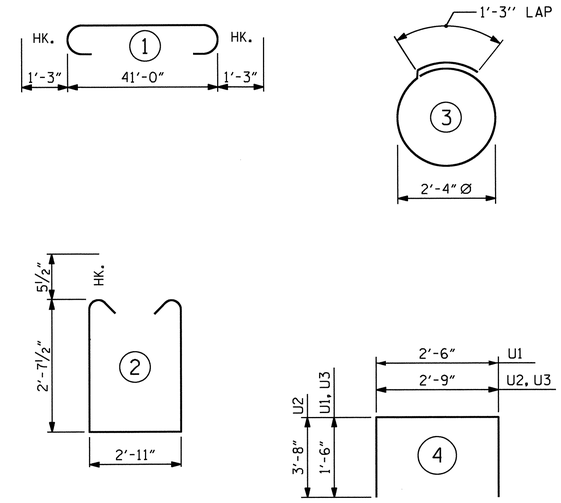

ALL BAR DIMENSIONS ARE OUT TO OUT.

BILL OF MATERIAL

BAR	NO.	SIZE	TYPE	LENGTH	WEIGHT
B1	4	#9	1	43'-6"	592
B2	4	#9	STR	41'-2"	560
B3	4	#5	STR	41'-2"	172
B4	8	#4	STR	21'-10"	117
B5	11	#4	STR	2'-11"	21
D1	52	#6	STR	1'-6"	117
S1	44	#5	2	9'-1"	417
S2	16	#4	3	8'-7"	92
U1	6	#4	4	5'-6"	22
U2	2	#9	4	10'-1"	69
U3	4	#4	4	5'-9"	15

REINFORCING STEEL (FOR ONE BENT) 2194 LBS

CLASS "A" CONCRETE BREAKDOWN (FOR ONE BENT)

* POUR #1 (CAP) 14.5 C.Y.

TOTAL CLASS "A" CONCRETE (FOR ONE BENT) 14.5 C.Y.

PP 18 X 0.50 GALVANIZED STEEL PIPE PILES

	No.	LIN. FT.
BENT #1	8	680
BENT #2	8	680
BENT #3	8	760
BENT #4	8	760
BENT #5	8	760

STEEL PILE POINTS (FOR ONE BENT) EA. 8

PILE REDRIVES (FOR ONE BENT) EA. 8

PDA TESTING (FOR ONE BENT) 1

* CONCRETE DISPLACED BY THE FILLED 18" STEEL PIPE PILES HAS BEEN DEDUCTED FROM THE QUANTITY OF CLASS "A" CONCRETE FOR THE BENT CAP.

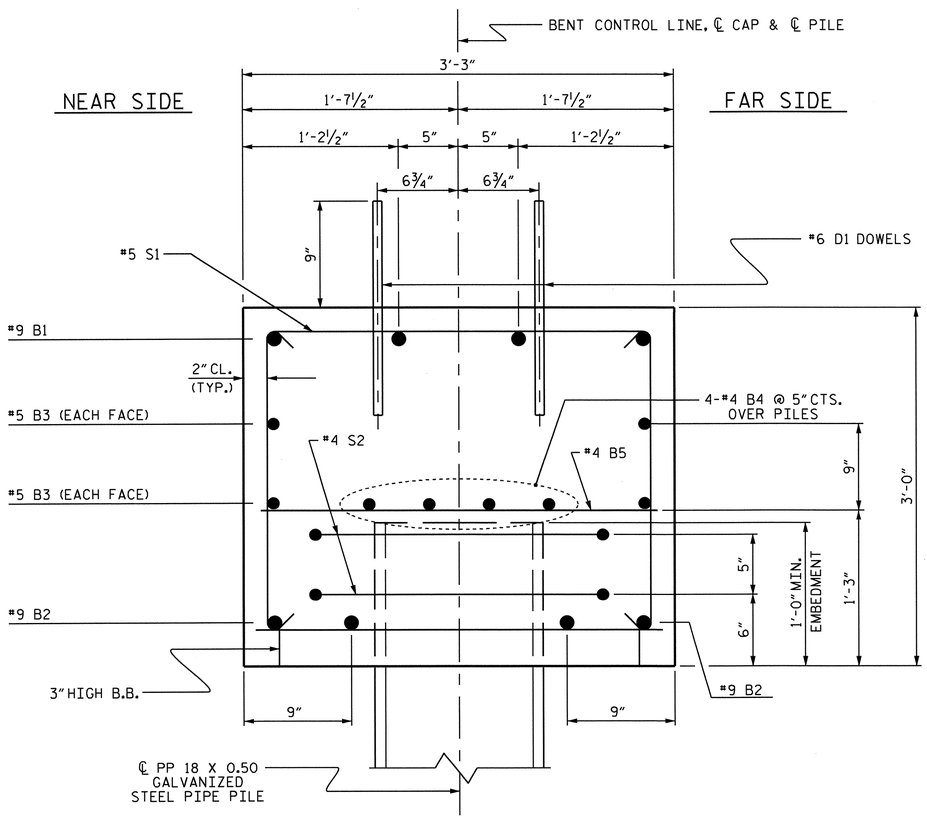

SECTION A-A

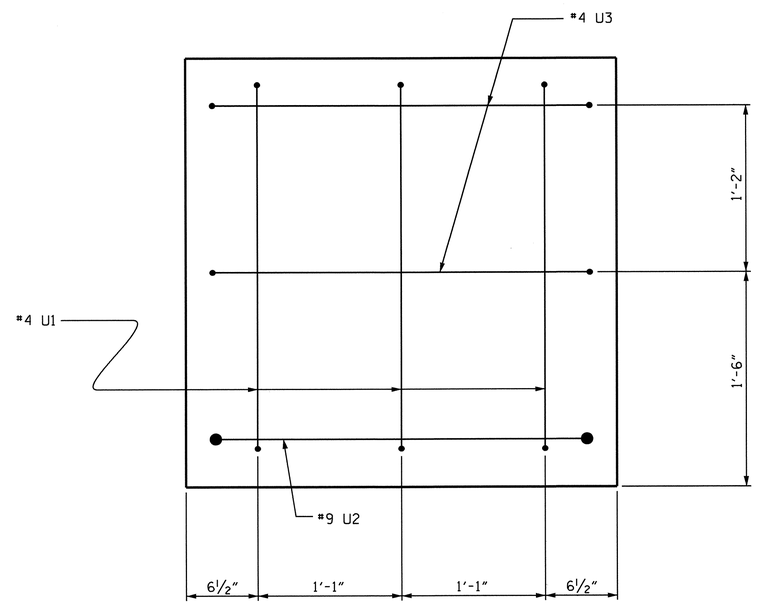

END OF CAP VIEW
(TYPICAL BOTH ENDS)

PROJECT NO. U-3810
ONSLOW COUNTY
STATION: 84+77.50 -L-

SHEET 2 OF 2

STATE OF NORTH CAROLINA
DEPARTMENT OF TRANSPORTATION
RALEIGH

SUBSTRUCTURE

BENTS #1-#5

NORTH CAROLINA PROFESSIONAL SEAL 022174 ENGINEER OMAR R. AZIZI
7/30/12

REVISIONS						SHEET NO.
NO.	BY:	DATE:	NO.	BY:	DATE:	S-27
1			3			TOTAL SHEETS
2			4			62

DRAWN BY : B. L. GREEN DATE : 3/12/12
CHECKED BY : O. R. AZIZI DATE : 3/19/12

DRAWN BY : DGE 05/10
CHECKED BY : MKT 05/10

11-JUN-2012 13:08
R:\Structures\Final Plans\Bridges\Str. #1\u3810_sd_b*_01.dgn
nruffin

STR. #1

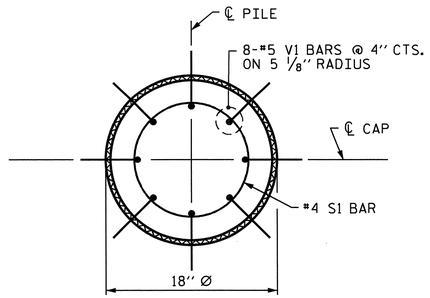

PLAN

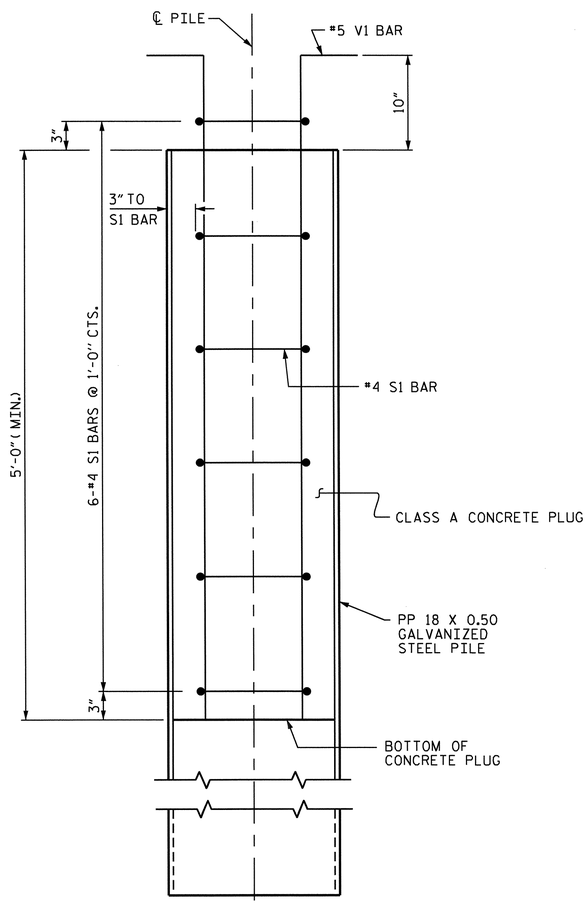

ELEVATION

PP 18 X 0.50 GALVANIZED STEEL PILE

(OPEN END)

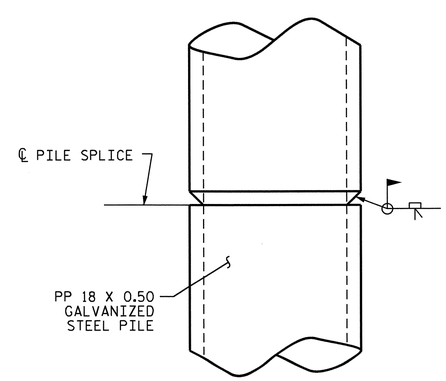

PIPE PILE SPLICE DETAIL

NOTES

PIPE PILES SHALL BE IN ACCORDANCE WITH SECTION 1084 OF THE STANDARD SPECIFICATIONS.

GALVANIZE STEEL PIPE PILES IN ACCORDANCE WITH SECTION 1076 OF THE STANDARD SPECIFICATIONS UNLESS METALLIZING IS REQUIRED.

REMOVE AND REPLACE OR REPAIR TO THE SATISFACTION OF THE ENGINEER PILES THAT ARE DAMAGED, DEFORMED OR COLLAPSED DURING INSTALLATION OR DRIVING.

PILE SPLICES SHALL BE IN ACCORDANCE WITH THE STANDARD SPECIFICATIONS AND AWS D1.1.

FOR OPEN END PIPE PILES, REMOVE ENOUGH SOIL AND WATER FROM INSIDE THE PILES TO CONSTRUCT THE CONCRETE PLUG WITHOUT FOULING THE CONCRETE.

FORM THE CONCRETE PLUG SUCH THAT THE REINFORCING STEEL OR CONCRETE DOES NOT MOVE AND THE CLEARANCE FROM THE REINFORCING STEEL TO THE INSIDE OF THE PILE IS MAINTAINED AFTER CONCRETE PLACEMENT. DO NOT PLACE CONCRETE IN THE BENT CAP UNTIL THE CONCRETE PLUG HAS ATTAINED A MINIMUM COMPRESSIVE STRENGTH OF 1500 PSI.

THE REINFORCING STEEL, CLASS A CONCRETE, AND GALVANIZING ARE CONSIDERED INCIDENTAL TO THE CONTRACT UNIT PRICE BID PER LINEAR FOOT FOR PP 18 X 0.50 GALVANIZED STEEL PILES.

BILL OF MATERIAL FOR ONE PP 18 X 0.50 GALVANIZED STEEL PILE

BAR	NO.	SIZE	TYPE	LENGTH	WEIGHT
S1	6	#4	1	4'-5"	18
V1	8	#5	2	6'-8"	56
REINFORCING STEEL =					74 lbs
CLASS A CONCRETE					
5'-0" MINIMUM PLUG					0.3 CY

BAR TYPES

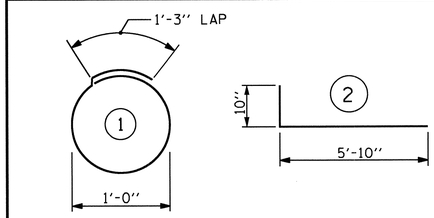

ALL BAR DIMENSIONS ARE OUT TO OUT.

PROJECT NO. U-3810

ONSLOW COUNTY

STATION: 84+77.50 -L-

STATE OF NORTH CAROLINA
DEPARTMENT OF TRANSPORTATION
RALEIGH

STANDARD

18" STEEL PIPE PILE

NORTH CAROLINA PROFESSIONAL SEAL 22274 ENGINEER OMAR R. AZIZI

7/30/12

REVISIONS						SHEET NO.
NO.	BY:	DATE:	NO.	BY:	DATE:	S-28
1			3			TOTAL SHEETS
2			4			62

ASSEMBLED BY : B. L. GREEN		DATE : 3/12/12	
CHECKED BY : O. R. AZIZI		DATE : 3/19/12	
DRAWN BY : RWW	1/01	REV. 10/1/05	LBG/TLA
CHECKED BY : LES	1/01	REV. 5/1/06R	MAA/KMM
		REV. 10/1/11	MAA/GM

11-JUN-2012 13:08
R:\Structures\FinalPlans\Bridges\Str. #1\u3810_sd_b*_01.dgn
nruffin

STR. #1

STD. NO. SPP3

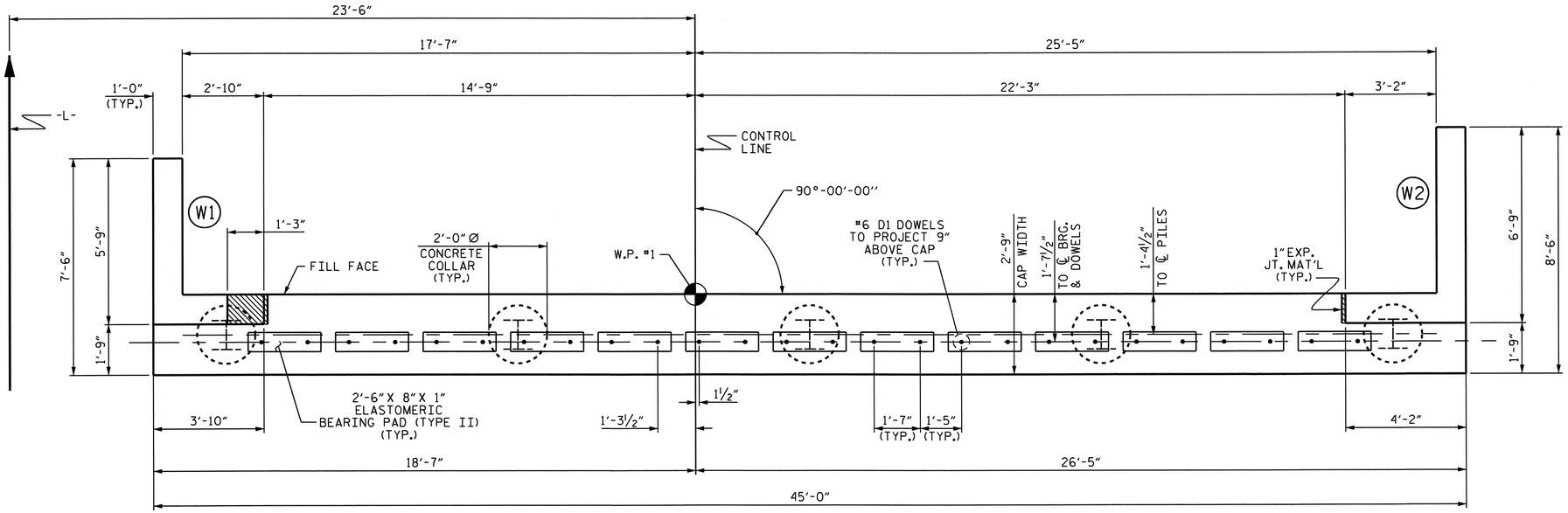

PLAN

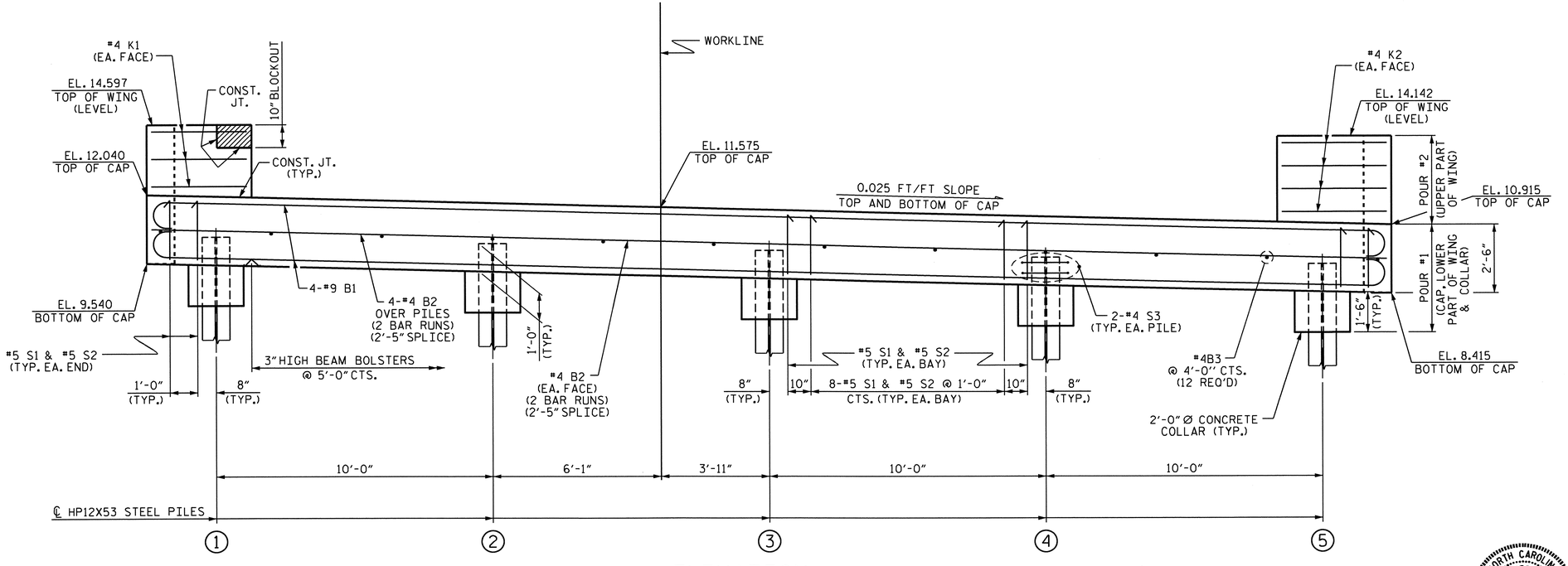

ELEVATION

NOTES:

STIRRUPS IN CAP MAY BE SHIFTED AS NECESSARY TO CLEAR DOWELS.

THE CONCRETE IN THE SHADED AREA OF THE WING SHALL BE POURED AFTER THE JOINT BETWEEN THE DECK AND APPROACH SLAB HAS BEEN SAWED AND THE BARRIER RAIL IS CAST IF SLIP FORMING IS USED.

FOR PILE SPLICE DETAILS, SEE SHEET 3 OF 3.

INSTALL THE 4" DIA. DRAIN PIPE THROUGH THE WING WALL AS REQUIRED FOR REINFORCED BRIDGE APPROACH FILLS. SEE THE ROADWAY PLANS. REINFORCING STEEL IN THE WING WALL MAY BE SHIFTED AS NECESSARY TO CLEAR THE DRAIN PIPE.

TOP OF PILE ELEVATIONS	
1	10.490
2	10.240
3	9.990
4	9.740
5	9.490

PROJECT NO. U-3810

ONSLOW COUNTY

STATION: 84+77.50 -L-

SHEET 1 OF 3

STATE OF NORTH CAROLINA
DEPARTMENT OF TRANSPORTATION
RALEIGH

SUBSTRUCTURE

END BENT #2

NORTH CAROLINA PROFESSIONAL SEAL 14045 ENGINEER TIMOTHY L. COGGINS
07/27/12

REVISIONS						SHEET NO.
NO.	BY:	DATE:	NO.	BY:	DATE:	S-29
1			3			TOTAL SHEETS
2			4			62

DRAWN BY : B. L. GREEN DATE : 3/8/12
CHECKED BY : T. L. COGGINS DATE : 3/30/12

24-JUL-2012 09:45
W:\structures\Plans\FinalPlans\Bridges\Str. #1\u3810_sd_eb*_01.dgn
bbarodawala

STR. #1

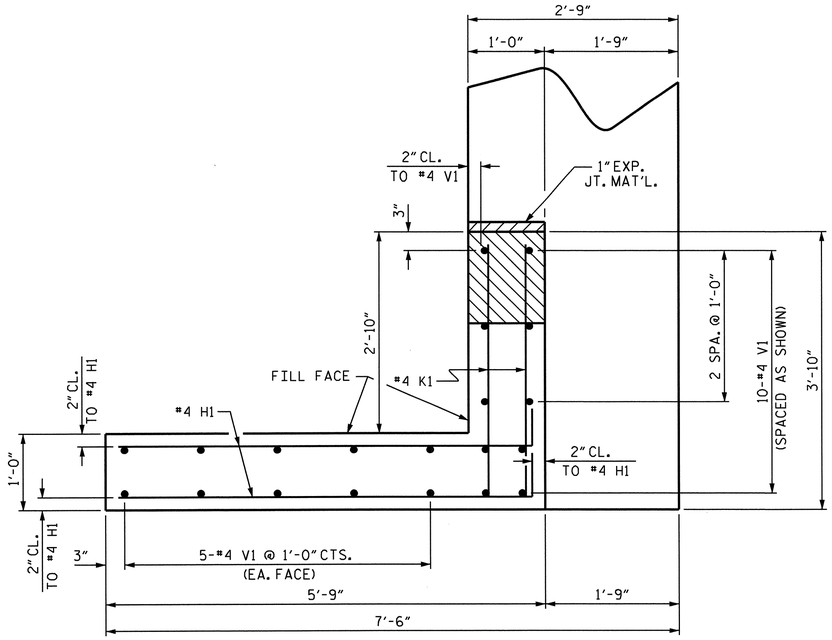

PLAN OF WING W1

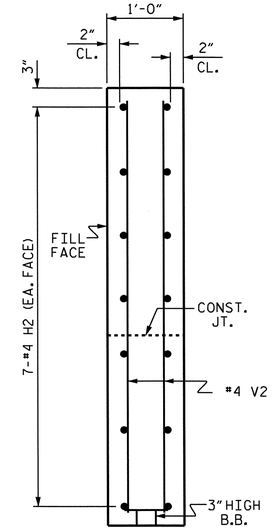

SECTION Y-Y

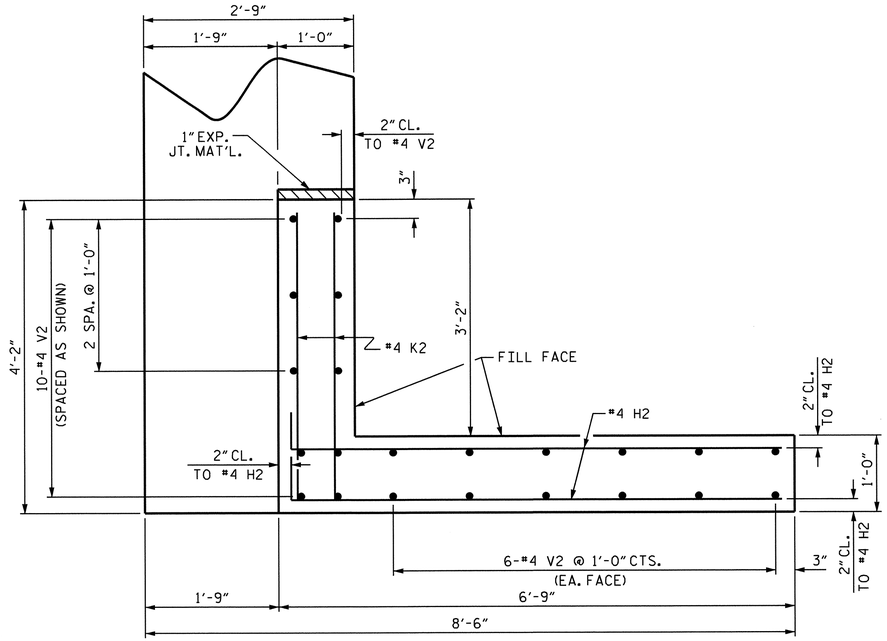

PLAN OF WING W2

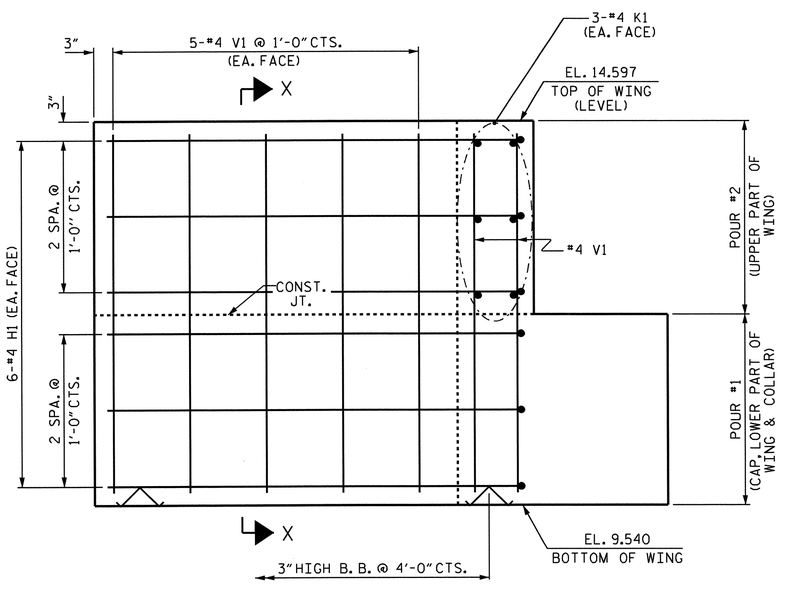

ELEVATION OF WING W1

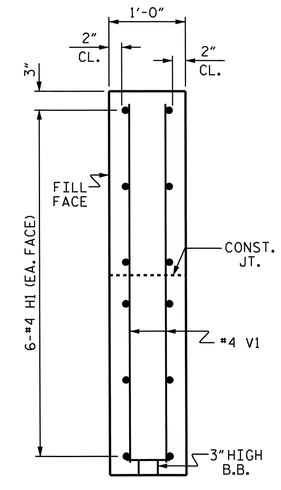

SECTION X-X

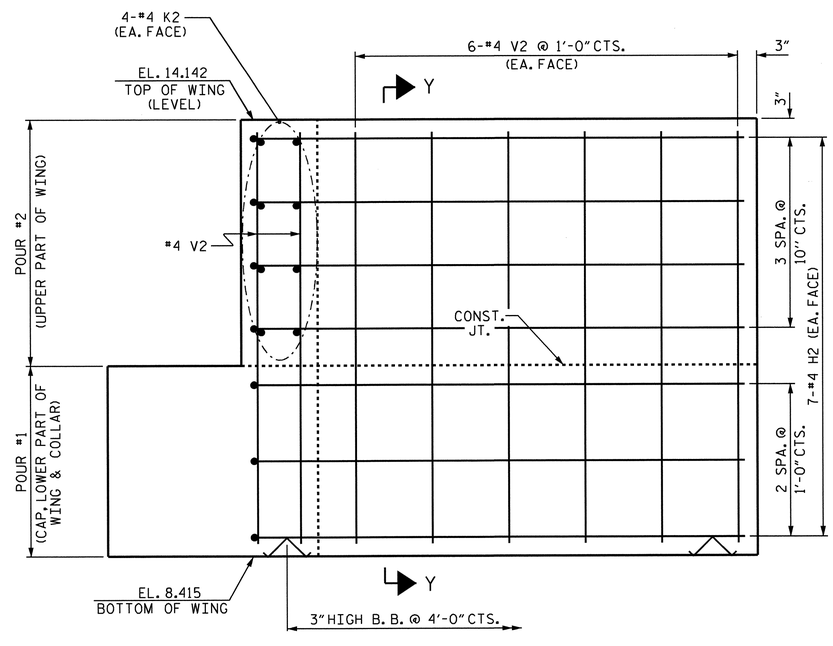

ELEVATION OF WING W2

NORTH CAROLINA PROFESSIONAL SEAL 14045 ENGINEER TIMOTHY L. COGGINS
07/27/12

PROJECT NO. U-3810
ONSLOW COUNTY
STATION: 84+77.50 -L-

SHEET 2 OF 3

STATE OF NORTH CAROLINA
DEPARTMENT OF TRANSPORTATION
RALEIGH

SUBSTRUCTURE

END BENT #2

REVISIONS						SHEET NO.
NO.	BY:	DATE:	NO.	BY:	DATE:	S-30
1			3			TOTAL SHEETS
2			4			62

DRAWN BY : B. L. GREEN DATE : 3/8/12
CHECKED BY : T. L. COGGINS DATE : 3/30/12

11-JUN-2012 13:08
R:\Structures\Final Plans\Bridges\Str. #1\u3810_sd_eb*_01.dgn
nruffin

STR. #1

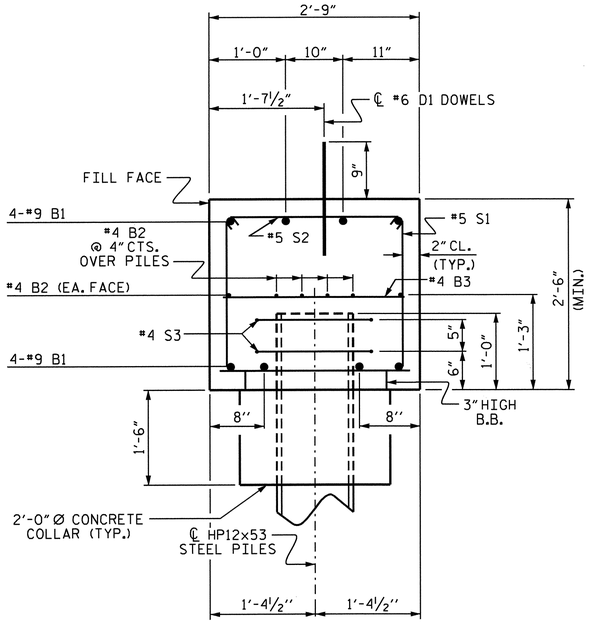

SECTION THRU CAP

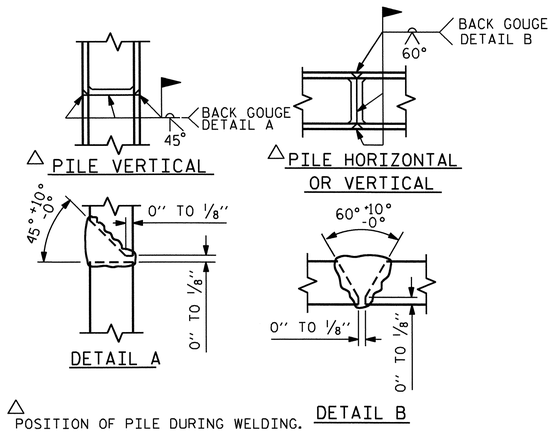

△ POSITION OF PILE DURING WELDING.

PILE SPLICE DETAILS

BAR TYPES

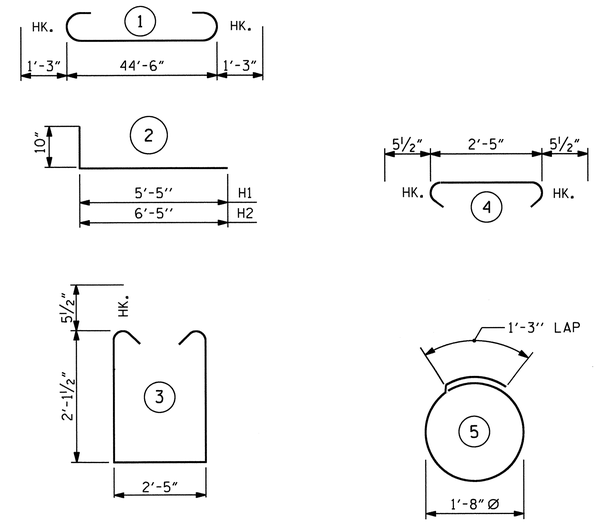

ALL BAR DIMENSIONS ARE OUT TO OUT.

BILL OF MATERIAL
END BENT #2

BAR	NO.	SIZE	TYPE	LENGTH	WEIGHT
B1	8	#9	1	47'-0"	1278
B2	12	#4	STR.	23'-7"	189
B3	12	#4	STR.	2'-5"	19
D1	26	#6	STR.	1'-6"	59
H1	12	#4	2	6'-3"	50
H2	14	#4	2	7'-3"	68
K1	6	#4	STR.	3'-6"	14
K2	8	#4	STR.	3'-10"	20
S1	44	#5	3	7'-7"	348
S2	44	#5	4	3'-4"	153
S3	10	#4	5	6'-6"	43
V1	20	#4	STR.	4'-9"	63
V2	22	#4	STR.	5'-5"	80
REINFORCING STEEL				LBS.	2384

CLASS "A" CONCRETE BREAKDOWN

POUR #1 CAP, LOWER WINGS & COLLARS	13.3 C.Y.
POUR #2 UPPER WINGS	2.0 C.Y.
CLASS "A" CONCRETE TOTAL	15.3 C.Y.
HP 12X53 STEEL PILES No. 5	375 LIN. FT.
STEEL PILE POINTS No.	5 EACH
PILE REDRIVES No.	5 EACH

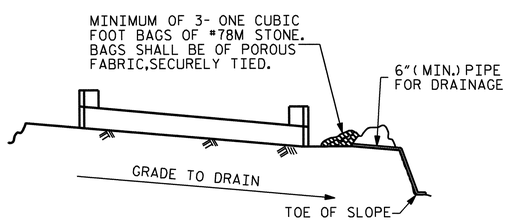

BAGGED STONE AND PIPE SHALL BE PLACED IMMEDIATELY AFTER COMPLETION OF END BENT EXCAVATION. PIPE MAY BE EITHER CONCRETE, CORRUGATED STEEL, CORRUGATED ALUMINUM ALLOY, OR CORRUGATED PLASTIC. PERFORATED PIPE WILL NOT BE ALLOWED.

BAGGED STONE SHALL REMAIN IN PLACE UNTIL THE ENGINEER DIRECTS THAT IT BE REMOVED. THE CONTRACTOR SHALL REMOVE AND DISPOSE OF SILT ACCUMULATIONS AT BAGGED STONE WHEN SO DIRECTED BY THE ENGINEER. BAGS SHALL BE REMOVED AND REPLACED WHENEVER THE ENGINEER DETERMINES THAT THEY HAVE DETERIORATED AND LOST THEIR EFFECTIVENESS.

NO SEPARATE PAYMENT WILL BE MADE FOR THIS WORK AND THE ENTIRE COST OF THIS WORK SHALL BE INCLUDED IN THE UNIT CONTRACT PRICE BID FOR THE SEVERAL PAY ITEMS.

TEMPORARY DRAINAGE AT END BENT

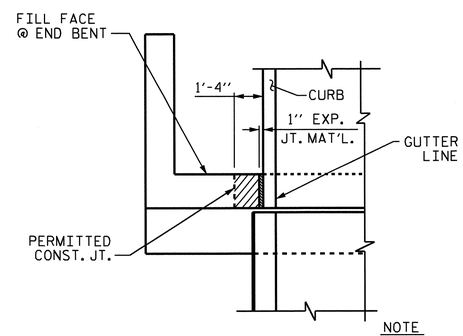

NOTE

THE CONCRETE IN THE SHADED AREA OF THE WING SHALL BE POURED AFTER THE JOINT BETWEEN THE DECK AND APPROACH SLAB HAS BEEN SAWED AND THE BARRIER RAIL IS CAST IF SLIP FORMING IS USED.

PLAN

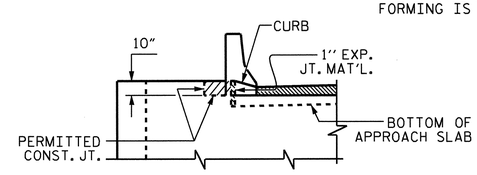

ELEVATION

BLOCKOUT IN WING WALL

PROJECT NO. U-3810
ONSLOW COUNTY
STATION: 84+77.50 -L-

SHEET 3 OF 3

STATE OF NORTH CAROLINA
DEPARTMENT OF TRANSPORTATION
RALEIGH

SUBSTRUCTURE

END BENT #2

NORTH CAROLINA PROFESSIONAL SEAL 14045 ENGINEER TIMOTHY L. COGGINS
07/27/12

REVISIONS						SHEET NO.
NO.	BY:	DATE:	NO.	BY:	DATE:	S-31
1			3			TOTAL SHEETS
2			4			62

DRAWN BY : B. L. GREEN DATE : 3/8/12
CHECKED BY : T. L. COGGINS DATE : 3/30/12

26-JUL-2012 16:36
R:\TIPProjects-U\U3810\structures\Plans\FinalPlans\Bridges\Str. #1\u3810_sd_eb#_01.dgn
tcoggins

STR. #1

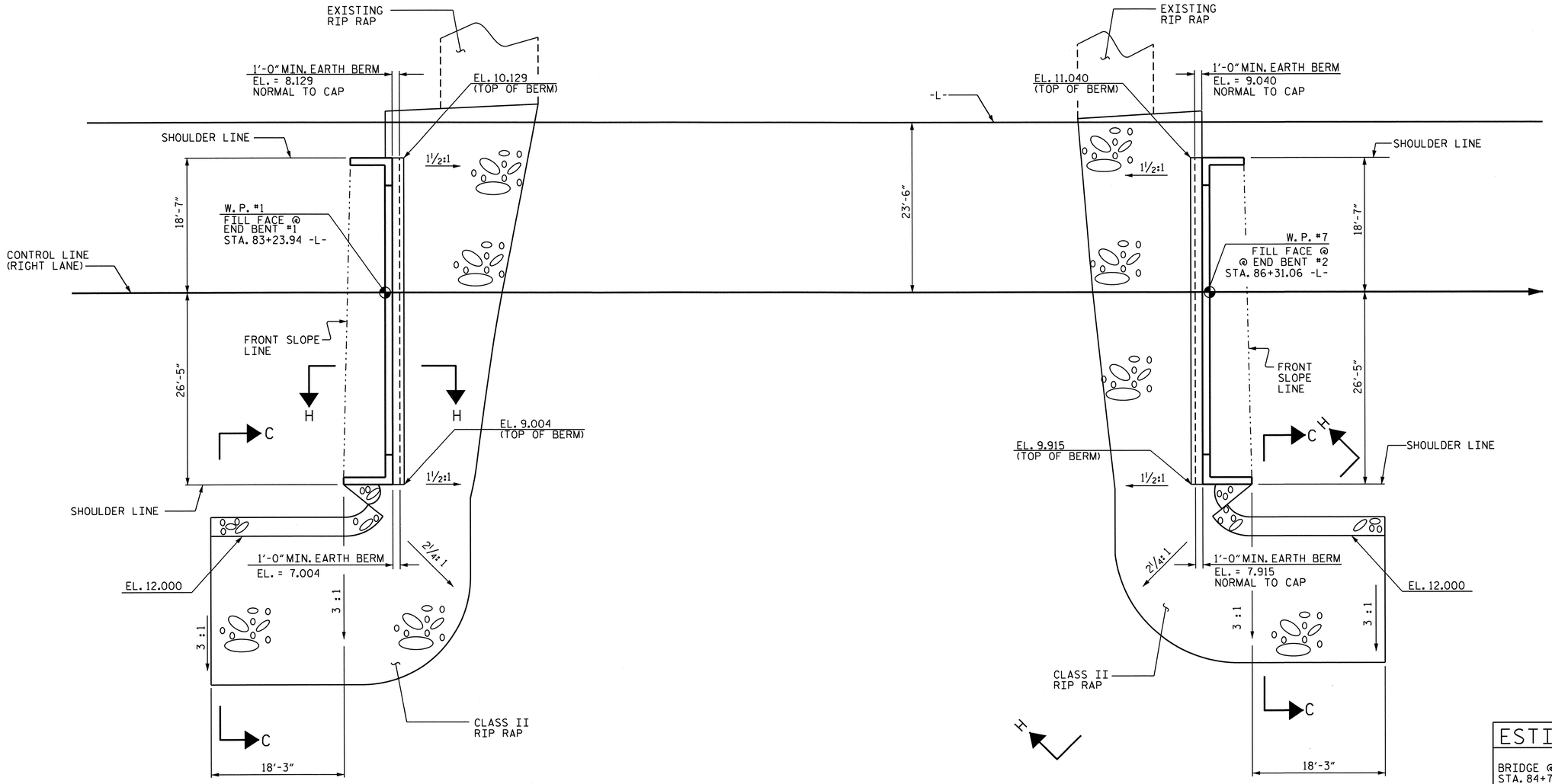

END BENT #1

END BENT #2

PLAN

ESTIMATED QUANTITIES		
BRIDGE @ STA. 84+77.50 -L-	RIP RAP CLASS II (2'-0" THICK)	GEOTEXTILE FOR DRAINAGE
	TONS	SQUARE YARDS
END BENT #1	261	290
END BENT #2	265	295

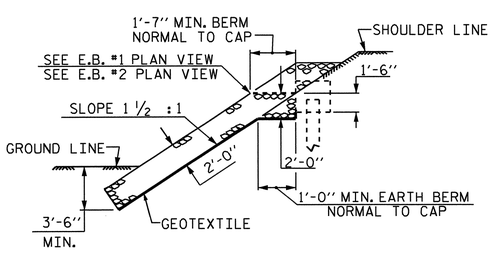

SECTION H-H

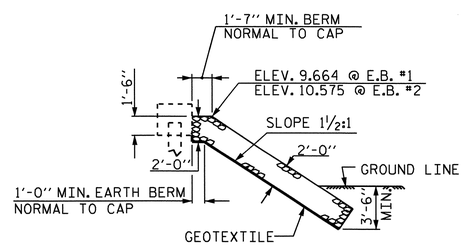

℄ SECTION @ CONTROL LINE

BERM RIP RAPPED

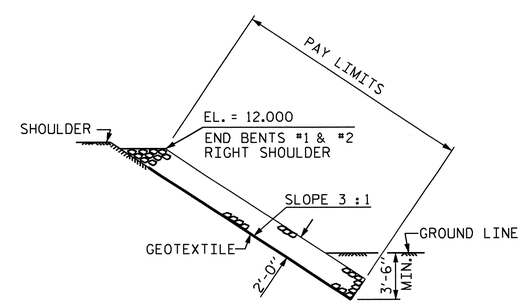

SECTION C-C

PROJECT NO. U-3810

ONSLOW COUNTY

STATION: 84+77.50 -L-

STATE OF NORTH CAROLINA
DEPARTMENT OF TRANSPORTATION
RALEIGH

RIP RAP DETAILS

NORTH CAROLINA PROFESSIONAL SEAL 14045 ENGINEER TIMOTHY A. COGGINS
07/27/12

REVISIONS							SHEET NO.
NO.	BY:	DATE:	NO.	BY:	DATE:		S-32
1			3				TOTAL SHEETS
2			4				62

DRAWN BY : M.D.PISO DATE : 03-19-2012
CHECKED BY : K.P.SEDAI DATE : 03-23-2012

27-JUL-2012 11:06
R:\TIPProjects-U\U3810\structures\Plans\FinalPlans\Bridges\Str. #1\u3810_sd_rr_01.dgn
tcoggins

STR. #1

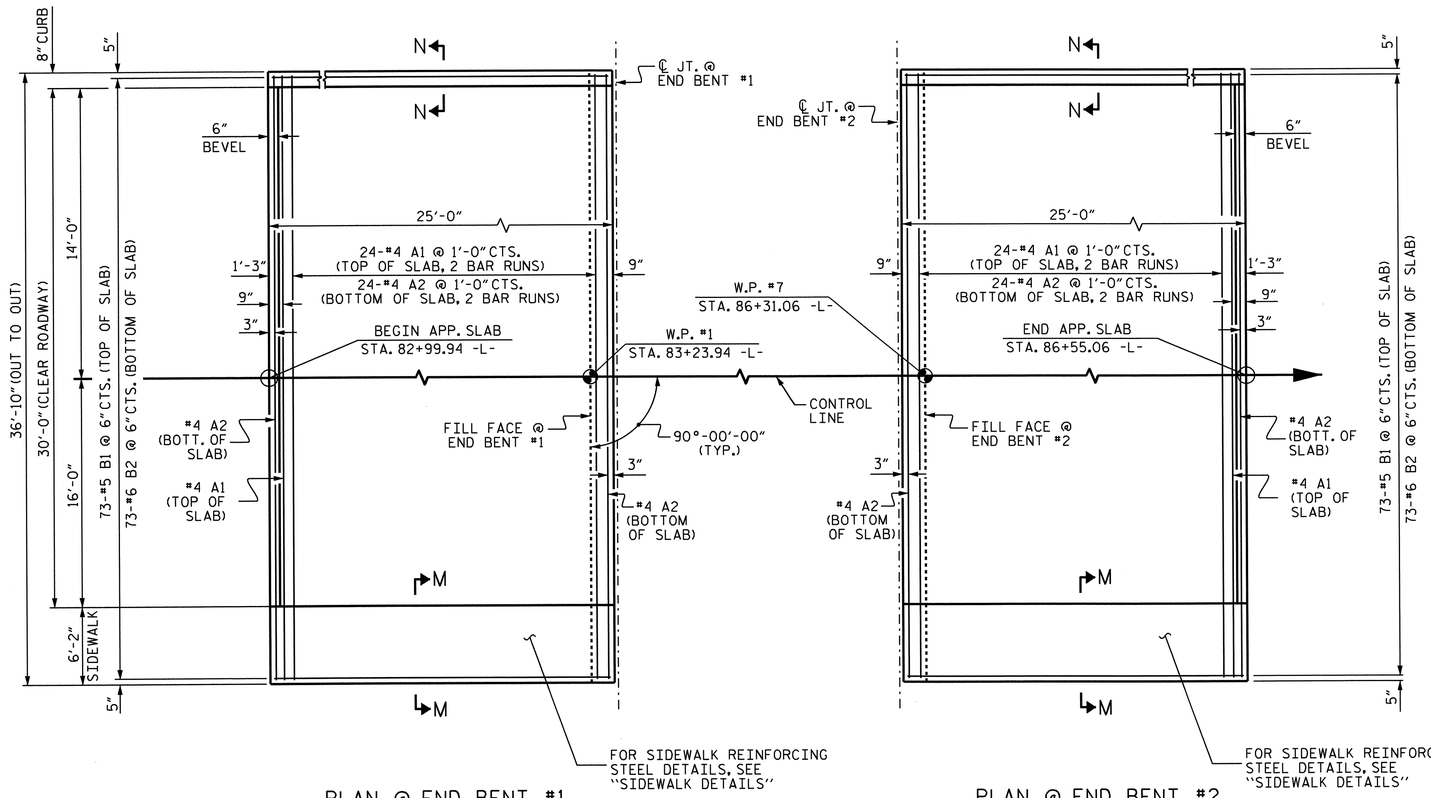

PLAN @ END BENT #1

PLAN @ END BENT #2

DIMENSIONS SHOWN ARE TYPICAL FOR BOTH APPROACH SLABS

NOTES

APPROACH SLABS SHALL BE POURED AFTER CONCRETE OVERLAY IS POURED.

FOR REINFORCED BRIDGE APPROACH FILL INCLUDING GEOTEXTILE, IMPERMEABLE GEOMEMBRANE, 4" Ø DRAINAGE PIPE, #78M STONE, AND SELECT MATERIAL, SEE ROADWAY PLANS.

AREA BETWEEN THE WINGWALL AND APPROACH SLAB SHALL BE GRADED TO DRAIN THE WATER AWAY FROM THE FILL FACE OF THE BRIDGE AND SHALL BE PAVED. SEE ROADWAY PLANS.

THE JOINT SHALL BE SAWED PRIOR TO THE CASTING OF THE BARRIER RAIL.

THE JOINT AT END BENTS SHALL BE GROUTED AS SOON AS PRACTICAL AFTER THE CONSTRUCTION OF THE APPROACH SLAB.

U1 BARS MAY BE PUSHED INTO GREEN CONCRETE AFTER THE SLAB HAS BEEN SCREEDED AND FLOAT FINISHED.

WITH FOAM JOINT SEAL

FOR FOAM JOINT SEALS, SEE SPECIAL PROVISIONS.

THE NOMINAL UNCOMPRESSED SEAL WIDTH OF THE FOAM JOINT SEAL SHALL BE 3 7/16".

FOR ELASTOMERIC CONCRETE, SEE SPECIAL PROVISIONS.

THE JOINT SHALL BE SAWED AFTER THE CASTING OF THE SIDEWALK.

SPLICE CHART	
BAR	LENGTH
#4 A1	2'-0"
#4 A2	1'-9"

BILL OF MATERIAL

FOR ONE APPROACH SLAB (2 REQ'D)

BAR	NO.	SIZE	TYPE	LENGTH	WEIGHT
* A1	50	#4	STR	19'-3"	643
A2	52	#4	STR	19'-2"	666
* B1	73	#5	STR	23'-10"	1815
B2	73	#6	STR	24'-8"	2705
* B3	4	#4	STR	24'-8"	66
* G1	25	#4	STR	5'-10"	97
* U1	8	#4	1	3'-0"	16
REINFORCING STEEL				LBS.	3371
* EPOXY COATED REINFORCING STEEL				LBS.	2637
CLASS AA CONCRETE BREAKDOWN					
POUR #1		SLAB & CURB			43.2 C. Y.
POUR #2		SIDEWALK			3.6 C. Y.
TOTAL CLASS AA CONCRETE					46.8 C. Y.

BAR TYPE

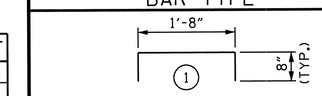

BAR DIMENSION IS OUT TO OUT.

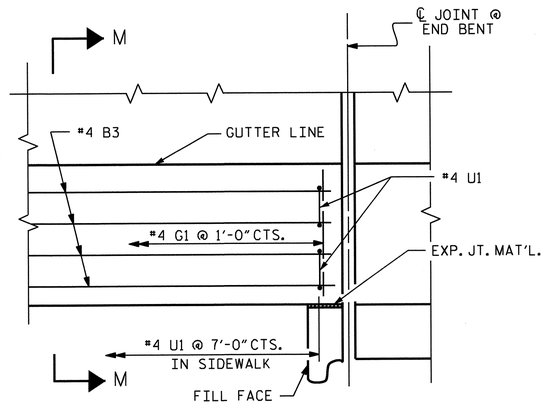

PLAN

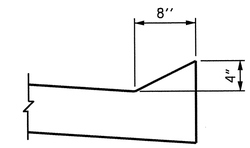

SECTION N-N

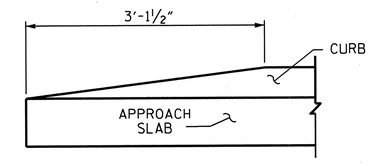

END OF CURB WITHOUT SHOULDER BERM GUTTER

CURB DETAILS

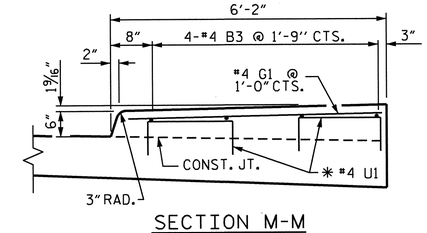

SECTION M-M

SIDEWALK DETAILS

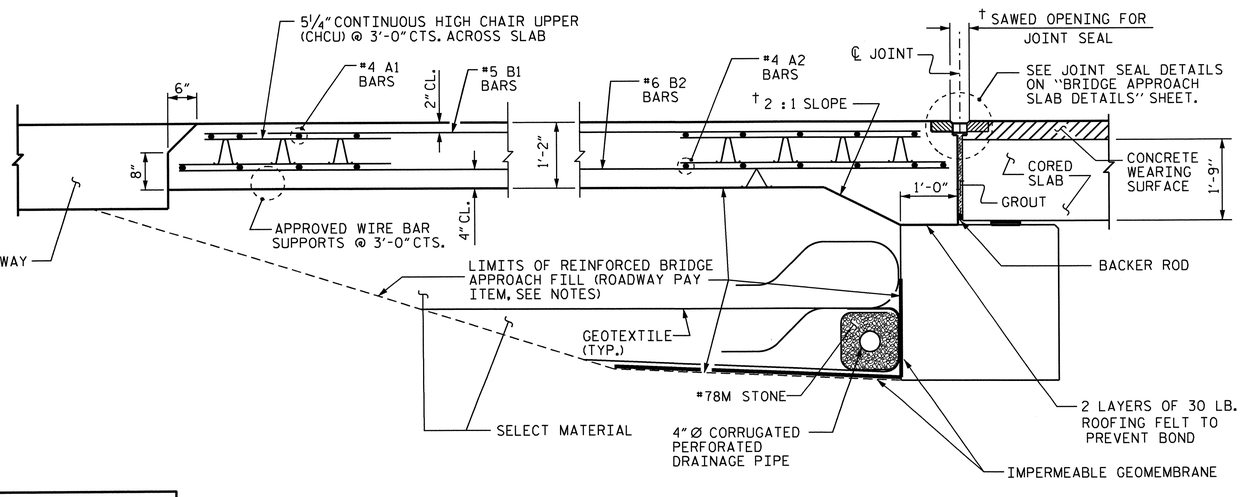

† NORMAL TO END BENT

SECTION THRU SLAB

PROJECT NO. U-3810

ONSLOW COUNTY

STATION: 84+77.50 -L-

SHEET 1 OF 2

STATE OF NORTH CAROLINA
DEPARTMENT OF TRANSPORTATION
RALEIGH

STANDARD

BRIDGE APPROACH SLAB FOR PRESTRESSED CONCRETE CORED SLAB

NORTH CAROLINA PROFESSIONAL SEAL 14045 ENGINEER TIMOTHY L. COGGINS

07/31/12

REVISIONS						SHEET NO.
NO.	BY:	DATE:	NO.	BY:	DATE:	S-33
1			3			TOTAL SHEETS
2			4			62

ASSEMBLED BY : PEGGY PARISI	DATE : 5-11-12		
CHECKED BY : T.L. COGGINS	DATE : 5-11-12		
DRAWN BY : RH 5/99	REV. 5/1/06RR	KMM/GM	
CHECKED BY : RDR 5/99	REV. 10/1/11	MAA/GM	
	REV. 12/21/11	MAA/GM	

31-JUL-2012 12:12
R:\TIPProjects-U\U3810\structures\Plans\FinalPlans\Bridges\Str. #1\u3810_sd_as_01.dgn
tcoggins

STR #1

STD. NO. BAS3 (SHT 2)

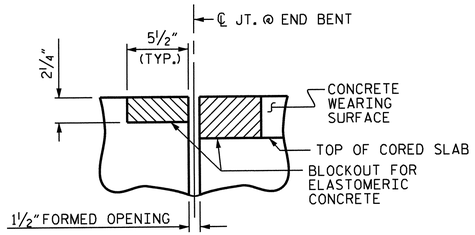

SECTION C-C
FOAM JOINT SEAL
(PRE-SAWED ELASTOMERIC CONCRETE DIMENSIONS)

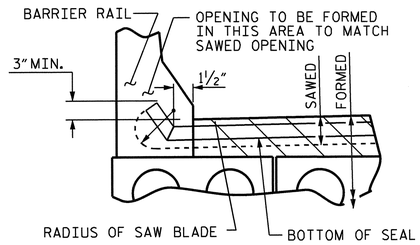

SECTION A-A

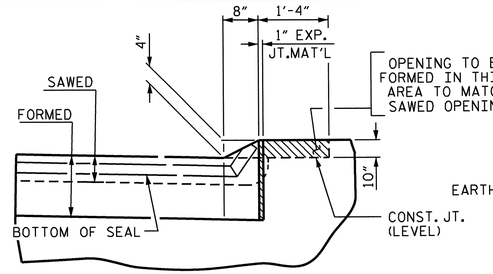

SECTION B-B

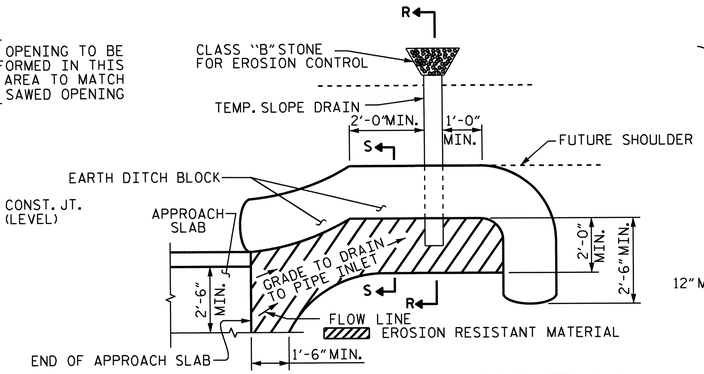

NOTE: IMMEDIATELY AFTER THE CONSTRUCTION OF THE APPROACH SLAB, THE CONTRACTOR SHALL PROVIDE TEMPORARY BERM AND SLOPE DRAIN. CONTRACTOR SHALL GRADE TO PIPE INLET AND PROVIDE EROSION RESISTANT MATERIAL AS SHOWN. THE EROSION RESISTANT MATERIAL SHALL BE EITHER 1) ASPHALT PLANT MIX, TYPE 1 OR TYPE 2, MIN. 2" DEPTH, 2) EROSION CONTROL MAT, OR 3) CONCRETE, AS DIRECTED BY THE ENGINEER. THE SLOPE DRAIN SHALL CONSIST OF A NON-PERFORATED TEMPORARY DRAINAGE PIPE, 12 INCHES IN DIAMETER.

PLAN VIEW

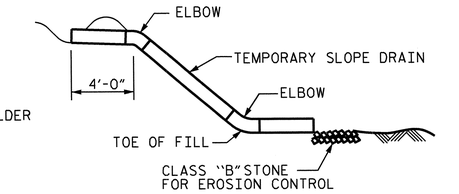

SECTION R-R

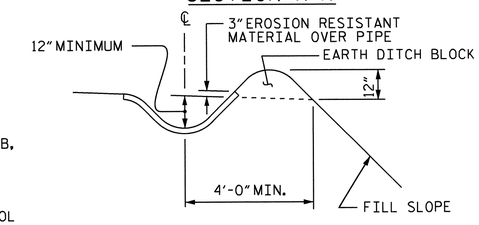

SECTION S-S

TEMPORARY BERM AND SLOPE DRAIN DETAILS

(TO BE USED WHEN SHOULDER BERM GUTTER IS REQUIRED)

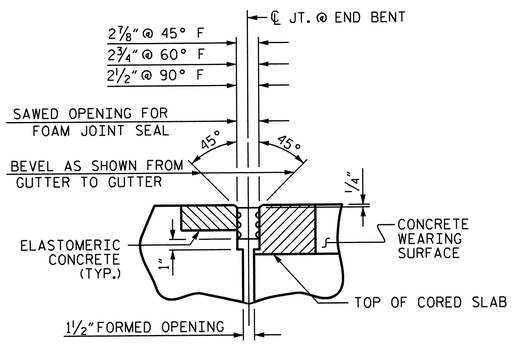

SECTION C-C
FOAM JOINT SEAL
(EXPANSION)

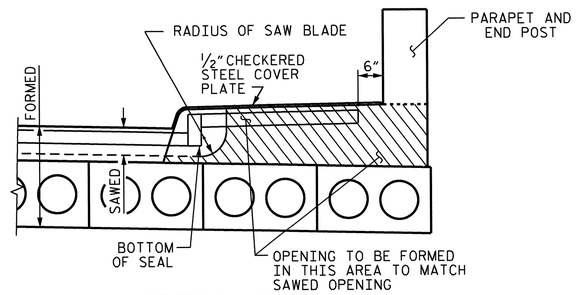

SECTION H-H

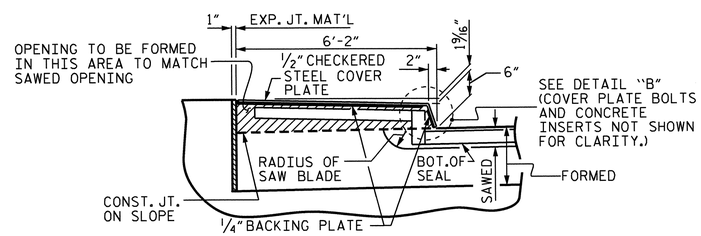

SECTION I-I

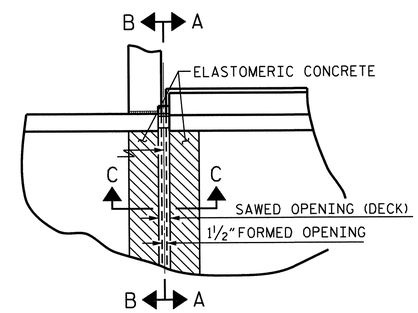

PLAN VIEW AT BARRIER RAIL

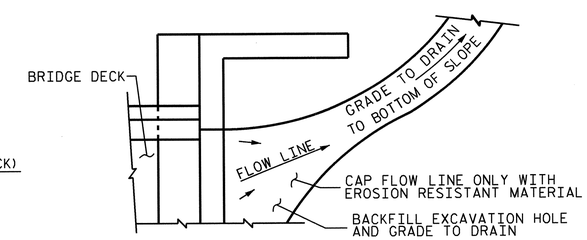

NOTE: IF THE APPROACH SLAB IS NOT CONSTRUCTED IMMEDIATELY AFTER THE BACKFILLING OF THE END BENT EXCAVATION, GRADE TO DRAIN TO THE BOTTOM OF THE SLOPE AND PROVIDE EROSION RESISTANT MATERIAL, SUCH AS FIBERGLASS ROVING OR AS DIRECTED BY THE ENGINEER TO PREVENT SOIL EROSION AND TO PROTECT THE AREA ADJACENT TO THE STRUCTURE. THE CONTRACTOR WILL BE REQUIRED TO REMOVE THESE MATERIALS PRIOR TO CONSTRUCTION OF THE APPROACH SLAB.

TEMPORARY DRAINAGE DETAIL

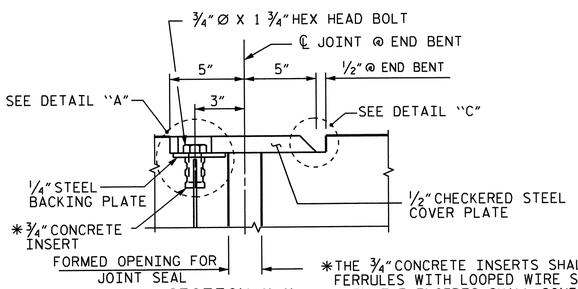

SECTION K-K

*THE ¾" CONCRETE INSERTS SHALL BE CLOSED-END FERRULES WITH LOOPED WIRE STRUTS ATTACHED TO THEM. THE INSERTS SHALL CONFORM TO AASHTO M169, GRADE 12L14 AND SHALL HAVE A TENSILE WORKING LOAD CAPACITY OF 3000 LBS.

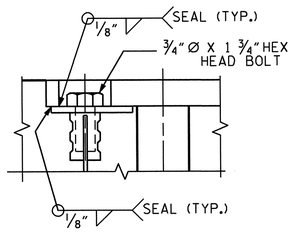

DETAIL "A"

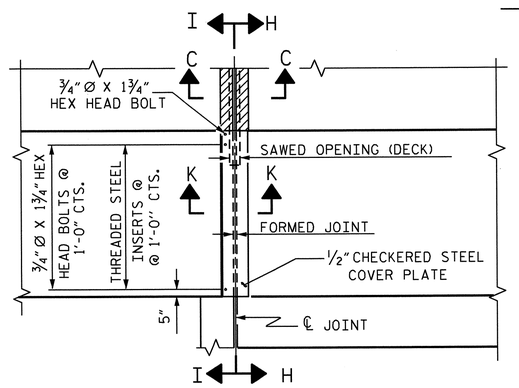

PLAN VIEW AT SIDEWALK

THE STEEL PLATES SHALL CONFORM TO AASHTO M270 GRADE 36 OR APPROVED EQUAL. AFTER FABRICATION, THE PLATES SHALL BE COMMERCIALLY BLAST CLEANED AND EITHER COATED WITH A MINIMUM THICKNESS OF 4 MILS (DRY) OF ZINC-RICH PAINT, GALVANIZED OR METALLIZED TO A MINIMUM THICKNESS OF 6 MILS IN ACCORDANCE WITH THE STANDARD SPECIFICATIONS. FOR THERMAL SPRAYED COATINGS (METALLIZATION), SEE SPECIAL PROVISIONS.

THE ¾" DIAMETER HEX HEAD BOLTS SHALL CONFORM TO ASTM F593 ALLOY 304 STAINLESS STEEL.

NO SEPARATE PAYMENT WILL BE MADE FOR FURNISHING AND INSTALLING THE COVER PLATE. THE ENTIRE COST OF THIS WORK SHALL BE INCLUDED IN THE LUMP SUM PRICE FOR "FOAM JOINT SEALS".

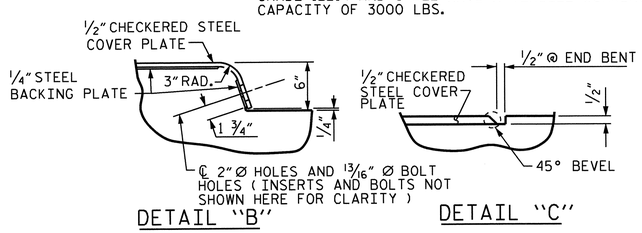

DETAIL "B"

DETAIL "C"

JOINT SEAL DETAILS @ END BENT

FOAM JOINT SEAL TO BE CUT, HEAT WELDED AND TURNED UP PARALLEL TO SLOPED FACE OF THE BARRIER RAIL.

THE JOINT SHALL BE SAWED PRIOR TO THE CASTING OF THE BARRIER RAIL.

ELASTOMERIC CONCRETE	
END BENT NO.	ELASTOMERIC CONCRETE * (CU. FT.)
1	9.5
2	9.5
TOTAL	19.0

* BASED ON THE MINIMUM BLOCKOUT SHOWN.

NORTH CAROLINA PROFESSIONAL SEAL 14045 ENGINEER TIMOTHY L. COGGINS
07/31/12

PROJECT NO. U-3810
ONSLOW COUNTY
STATION: 84+77.50 -L-

SHEET 2 OF 2

STATE OF NORTH CAROLINA
DEPARTMENT OF TRANSPORTATION
RALEIGH

STANDARD

BRIDGE APPROACH SLAB DETAILS

REVISIONS						SHEET NO.
NO.	BY:	DATE:	NO.	BY:	DATE:	S-34
1			3			TOTAL SHEETS
2			4			62

STR. #1

STD. NO. BAS4 (SHT 1)

ASSEMBLED BY : PEGGY PARISI	DATE : 5-11-12		
CHECKED BY : T.L. COGGINS	DATE : 5-11-12		
DRAWN BY : FCJ	11/88	REV. 5/7/03	RWW/JTE
CHECKED BY : ARB	11/88	REV. 5/1/06RRR	MAA/KMM
		REV. 10/1/11	MAA/GM

31-JUL-2012 12:11
R:\TIPProjects-U\U3810\structures\Plans\FinalPlans\Bridges\Str. #1\u3810_sd_as_01.dgn
tcoggins

F. A. PROJECT NO. STP-1406(7)

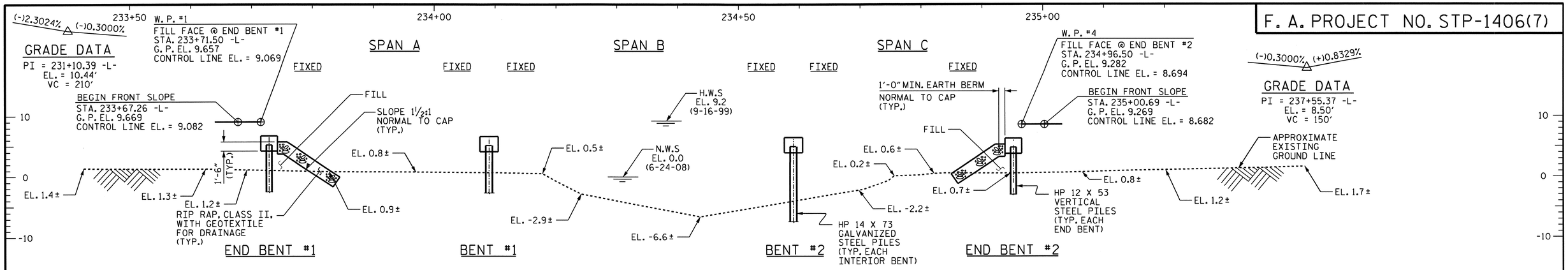

SECTION ALONG CONTROL LINE

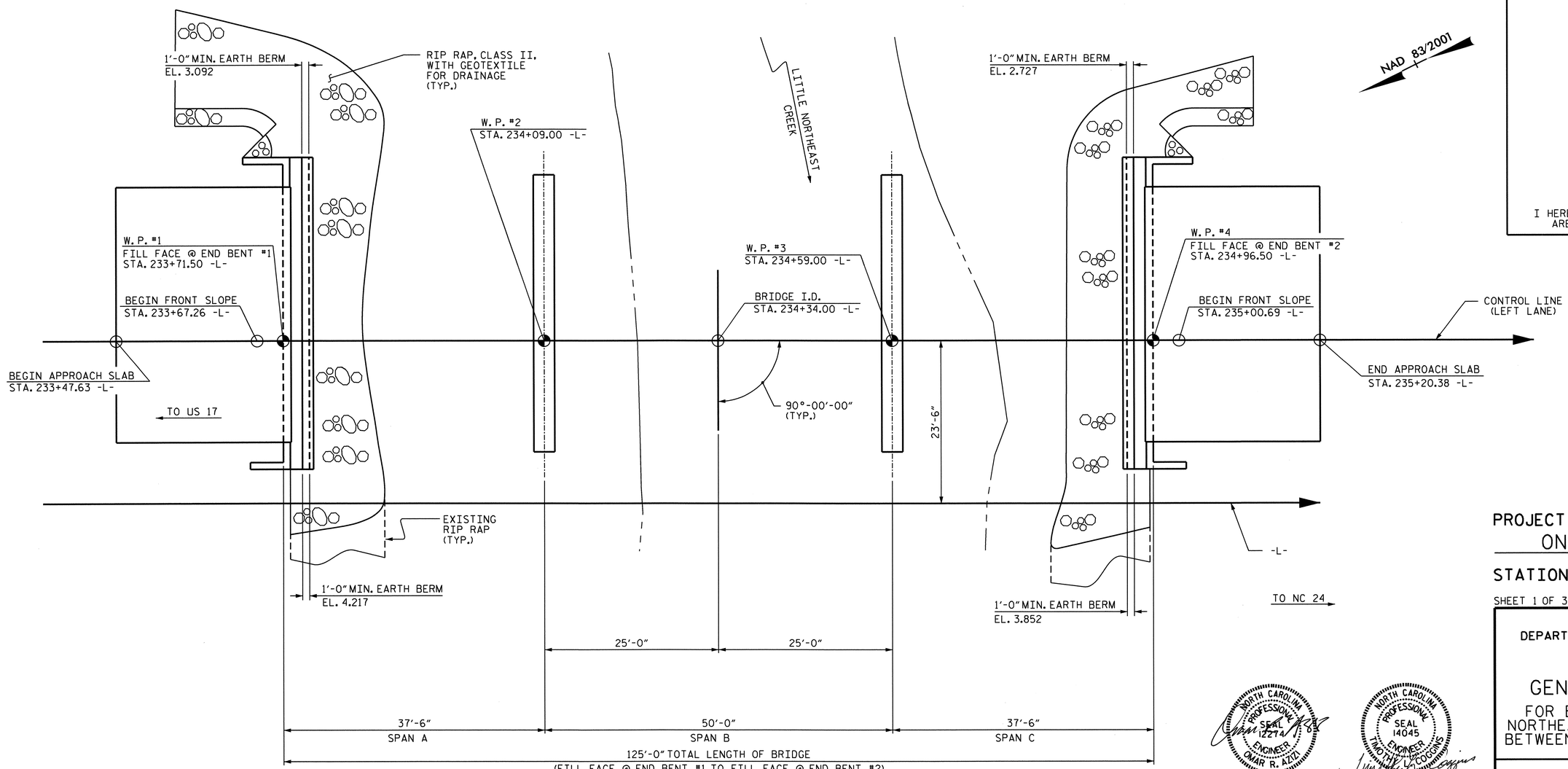

PLAN

(PILES ARE NOT SHOWN FOR CLARITY)

I HEREBY CERTIFY THESE PLANS ARE THE AS-BUILT PLANS.

NORTH CAROLINA PROFESSIONAL SEAL 12274 ENGINEER OMAR R. AZIZI 7/31/12

NORTH CAROLINA PROFESSIONAL SEAL 14045 ENGINEER TIMOTHY L. COGGINS 07/31/2012

PROJECT NO. U-3810

ONSLOW COUNTY

STATION: 234+34.00 -L-

SHEET 1 OF 3

BRIDGE NO. 311

STATE OF NORTH CAROLINA
DEPARTMENT OF TRANSPORTATION
RALEIGH

GENERAL DRAWING

FOR BRIDGE OVER LITTLE NORTHEAST CREEK ON SR 1406 BETWEEN SR 1465 AND SR 1453

REVISIONS						SHEET NO.
NO.	BY:	DATE:	NO.	BY:	DATE:	S-35
1			3			TOTAL SHEETS
2			4			62

DRAWN BY : PEGGY PARISI DATE : 4-20-12
CHECKED BY : T. L. COGGINS DATE : 05-03-12

31-JUL-2012 10:20
R:\structures\Plans\Final Plans\Bridges\Str. #2\u3810_sd_gd_02.dgn
nruffin

STR. #2

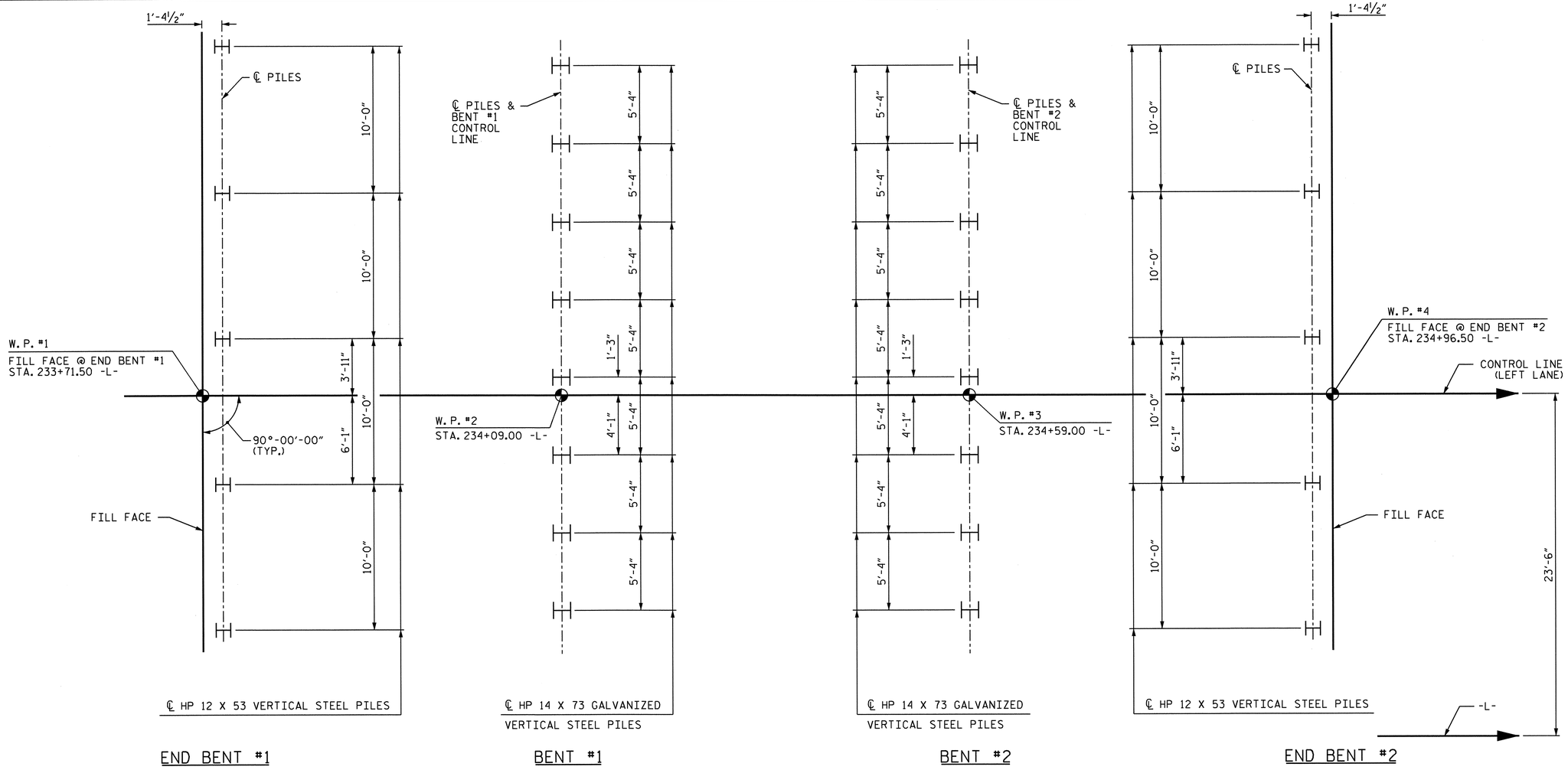

FOUNDATION LAYOUT

DIMENSIONS LOCATING PILS ARE SHOWN TO PILE CENTERLINE.

FOUNDATION NOTES:

FOR PILES, SEE SECTION 450 OF THE STANDARD SPECIFICATIONS.

PILES AT END BENT NO. 1 AND END BENT NO. 2 ARE DESIGNED FOR A FACTORED RESISTANCE OF 77 TONS PER PILE.

PILES AT BENT NO. 1 AND BENT NO. 2 ARE DESIGNED FOR A FACTORED RESISTANCE OF 109 TONS PER PILE.

DRIVE PILES AT END BENT NO. 1 AND END BENT NO. 2 TO A REQUIRED DRIVING RESISTANCE OF 129 TONS PER PILE.

DRIVE PILES AT BENT NO. 1 AND BENT NO. 2 TO A REQUIRED DRIVING RESISTANCE OF 183 TONS PER PILE. THIS REQUIRED DRIVING RESISTANCE INCLUDES ADDITIONAL RESISTANCE FOR SCOUR.

INSTALL PILES AT BENT NO. 1 AND BENT NO. 2 TO A TIP ELEVATION NO HIGHER THAN -36 FT.

TESTING THE FIRST PRODUCTION PILES WITH THE PDA DURING DRIVING, RESTRIKING OR REDRIVING IS REQUIRED AT END BENT NO. 1 AND BENT NO. 2. FOR PDA TESTING, SEE SECTION 450 OF THE STANDARD SPECIFICATIONS.

IT HAS BEEN ESTIMATED THAT A HAMMER WITH AN EQUIVALENT RATED ENERGY OF 30,000 TO 45,000 FT-LBS PER BLOW WILL BE REQUIRED TO DRIVE PILES AT END BENT NO. 1, BENT NO. 1, BENT NO. 2 AND END BENT NO. 2. THE ESTIMATED ENERGY RANGE DOES NOT RELEASE THE CONTRACTOR FROM PROVIDING EQUIPMENT IN ACCORDANCE WITH SUBARTICLE 450-3 (D) (2) OF THE STANDARD SPECIFICATIONS.

UNDERCUT SOFT ALLUVIAL CLAYS AT END BENT NO. 1 TO APPROXIMATELY 20 FEET BEYOND THE CREST OF THE END SLOPE TO 5 FEET BEYOND THE TOE OF THE END SLOPE. (APPROXIMATE STATIONS 233+50 TO 233+90). GEOTEXTILE SHOULD BE PLACED IN THE BOTTOM OF THE EXCAVATION AND BACKFILLED WITH CLASS III MATERIAL. UNDERCUT DEPTHS OF APPROXIMATELY 3.5 FEET ARE ANTICIPATED.

UNDERCUT SOFT ALLUVIAL CLAYS AT END BENT NO. 2 TO APPROXIMATELY 20 FEET BEYOND THE CREST OF THE END SLOPE TO 5 FEET BEYOND THE TOE OF THE END SLOPE. (APPROXIMATE STATIONS 234+80 TO 235+20). GEOTEXTILE SHOULD BE PLACED IN THE BOTTOM OF THE EXCAVATION AND BACKFILLED WITH CLASS III MATERIAL. UNDERCUT DEPTHS OF APPROXIMATELY 3.5 FEET ARE ANTICIPATED.

NORTH CAROLINA PROFESSIONAL SEAL 14045 ENGINEER TIMOTHY L. COGGINS
8/8/12

PROJECT NO. U-3810
ONSLOW COUNTY
STATION: 234+34.00 -L-

SHEET 2 OF 3

STATE OF NORTH CAROLINA
DEPARTMENT OF TRANSPORTATION
RALEIGH

GENERAL DRAWING
FOR BRIDGE OVER LITTLE NORTHEAST CREEK ON SR 1406 BETWEEN SR 1465 AND SR 1453

REVISIONS						SHEET NO.
NO.	BY:	DATE:	NO.	BY:	DATE:	S-36
1			3			TOTAL SHEETS
2			4			62

STR. #2

ASSEMBLED BY : PEGGY PARISI	DATE : 4-20-12	
CHECKED BY : T. L. COGGINS	DATE : 05-03-12	
DRAWN BY : DGE	02/10	
CHECKED BY : MKT	02/10	

07-AUG-2012 15:56
Z:\TIPProjects-U\U3810\structures\Plans\FinalPlans\Bridges\Str. #2\u3810_sd_gd_02.dgn
podkins

BM = BL-41: REBAR WITH CAP, STA. 235+14.12 -L-; 52.20' RT; ELEV. 7.03.

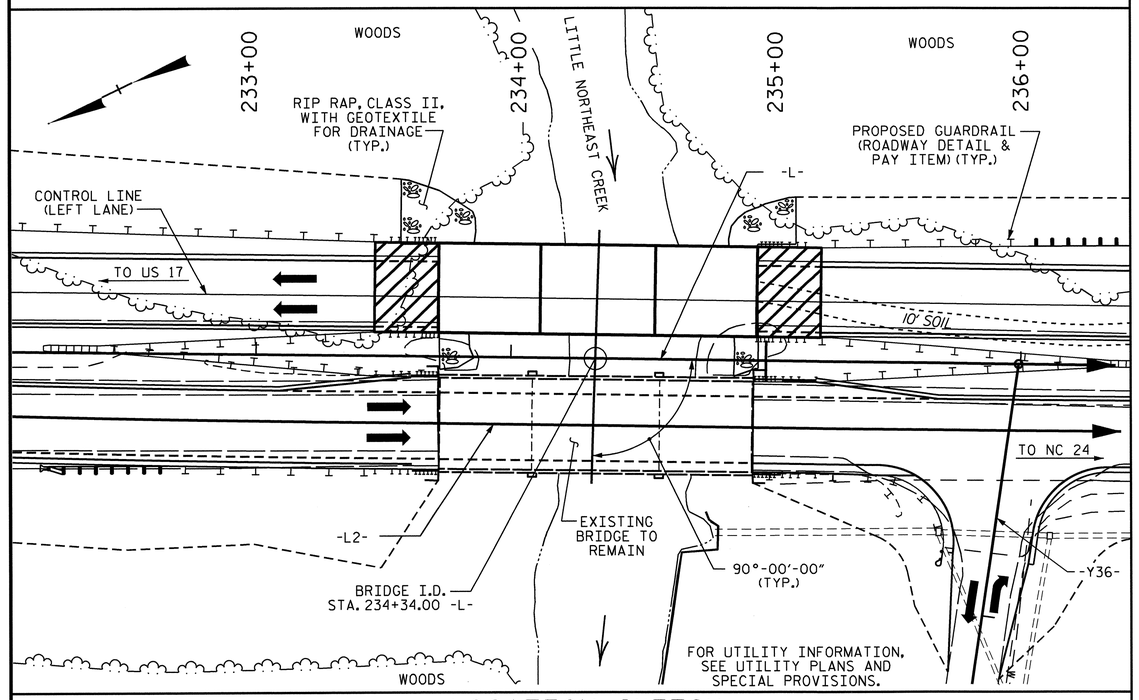

LOCATION SKETCH

NOTES:

ASSUMED LIVE LOAD = HL-93 OR ALTERNATE LOADING.

FOR OTHER DESIGN DATA AND GENERAL NOTES, SEE SHEET SN.

FOR EROSION CONTROL MEASURES, SEE EROSION CONTROL PLANS.

THIS BRIDGE HAS BEEN DESIGNED IN ACCORDANCE WITH THE AASHTO LRFD BRIDGE DESIGN SPECIFICATIONS.

ALL PAVEMENT MARKING WILL BE IN ACCORDANCE WITH THE PAVEMENT MARKING PLANS AND SHALL PROVIDE FOR BICYCLES.

THIS STRUCTURE HAS BEEN DESIGNED IN ACCORDANCE WITH HEC 18, "EVALUATING SCOUR AT BRIDGES", MAY, 2001.

THE CONTRACTOR SHALL PROVIDE INDEPENDENT ASSURANCE SAMPLES OF REINFORCING STEEL AS FOLLOWS: FOR PROJECTS REQUIRING UP TO 400 TONS OF REINFORCING STEEL, ONE 30 INCH SAMPLE OF EACH SIZE BAR USED, AND FOR PROJECTS REQUIRING OVER 400 TONS OF REINFORCING STEEL, TWO 30 INCH SAMPLES OF EACH SIZE BAR USED. THE BARS FROM WHICH THE SAMPLES ARE TAKEN MUST THEN BE SPLICED WITH REPLACEMENT BARS OF THE SIZE AND LENGTH OF THE SAMPLE, PLUS A MINIMUM LAP SPLICE OF THIRTY BAR DIAMETERS. PAYMENT FOR THE SAMPLES OF REINFORCING STEEL SHALL BE CONSIDERED INCIDENTAL TO VARIOUS PAY ITEMS.

FOR SUBMITTAL OF WORKING DRAWINGS, SEE SPECIAL PROVISIONS.

FOR FALSEWORK AND FORMWORK, SEE SPECIAL PROVISIONS.

THIS BRIDGE SHALL BE CONSTRUCTED USING TOP-DOWN CONSTRUCTION METHODS. THE USE OF A TEMPORARY CAUSEWAY OR WORK BRIDGE IS NOT PERMITTED.

FOR CRANE SAFETY, SEE SPECIAL PROVISIONS.

FOR GROUT FOR STRUCTURES, SEE SPECIAL PROVISIONS.

THIS BRIDGE IS LOCATED IN SEISMIC ZONE 1.

FOR INTERIOR BENTS #1 AND #2, ONLY PARTIAL GALVANIZING OF THE PILES IS REQUIRED. SEE INTERIOR BENT SHEETS FOR REQUIRED GALVANIZED LENGTHS. PAYMENT FOR PARTIALLY GALVANIZED PILES WILL BE MADE UNDER THE CONTRACT UNIT PRICE FOR GALVANIZED STEEL PILES.

TOTAL BILL OF MATERIAL

	PDA TESTING	CONCRETE WEARING SURFACE	GROOVING BRIDGE FLOORS	CLASS AA CONCRETE	CLASS A CONCRETE	BRIDGE APPROACH SLABS	REINFORCING STEEL	EPOXY COATED REINFORCING STEEL	HP 12 X 53 STEEL PILES		HP 14 X 73 GALVANIZED STEEL PILES		PILE REDRIVES	2 BAR METAL RAIL	CONCRETE BARRIER RAIL	1'-2" X 2'-6" CONCRETE PARAPET	RIP RAP CLASS II (2'-0" THICK)	GEOTEXTILE FOR DRAINAGE	ELASTOMERIC BEARINGS	3'-0" X 1'-9" PRESTRESSED CONCRETE CORED SLABS	
	EACH	SF	SF	CU. YDS.	CU. YDS.	LUMP SUM	LBS.	LBS.	NO.	LIN.FT.	NO.	LIN.FT.	EACH	LIN.FT.	LIN.FT.	LIN.FT.	TONS	SQ.YDS.	LUMP SUM	NO.	LIN.FT.
SUPERSTRUCTURE		3,683	4,628	37.8		LUMP SUM		1,078						115.25	122.75	122.75			LUMP SUM	39	1,592.50
END BENT NO. 1	1				15.3		2,174		5	350			5				202	225			
BENT NO. 1					11.1		2,125				8	600	8								
BENT NO. 2	1				11.1		2,125				8	600	8								
END BENT NO. 2					15.3		2,174		5	375			5				184	204			
TOTAL	2	3,683	4,628	37.8	52.8	LUMP SUM	8,598	1,078	10	725	16	1,200	26	115.25	122.75	122.75	386	429	LUMP SUM	39	1,592.50

HYDRAULIC DATA

DESIGN DISCHARGE	=	4,300 c.f.s.
FREQUENCY OF DESIGN FLOOD	=	50 YR.
DESIGN HIGH WATER ELEVATION	=	7.8'
DRAINAGE AREA	=	19.4 MI^2
BASE DISCHARGE (Q100)	=	4,800 c.f.s.
BASE HIGH WATER ELEVATION	=	8.4'

OVERTOPPING FLOOD DATA

OVERTOPPING DISCHARGE	=	6,000 c.f.s.
FREQUENCY OF OVERTOPPING FLOOD	=	100 YR.+
OVERTOPPING FLOOD ELEVATION	=	9.6'

NORTH CAROLINA PROFESSIONAL SEAL 14045 ENGINEER TIMOTHY L. COGGINS

07/27/12

PROJECT NO. U-3810

ONSLOW COUNTY

STATION: 234+34.00 -L-

SHEET 3 OF 3

STATE OF NORTH CAROLINA
DEPARTMENT OF TRANSPORTATION
RALEIGH

GENERAL DRAWING
FOR BRIDGE OVER LITTLE NORTHEAST CREEK ON SR 1406 BETWEEN SR 1465 AND SR 1453

REVISIONS						SHEET NO.
NO.	BY:	DATE:	NO.	BY:	DATE:	S-37
1			3			TOTAL SHEETS
2			4			62

DRAWN BY : PEGGY PARISI DATE : 4-20-12
CHECKED BY : T. L. COGGINS DATE : 05-03-12

24-JUL-2012 13:41
W:\structures\Plans\FinalPlans\Bridges\Str. #2\u3810_sd_gd_02.dgn
bbarodawala

STR. #2

LOAD AND RESISTANCE FACTOR RATING (LRFR) SUMMARY FOR PRESTRESSED CONCRETE GIRDERS

LEVEL		VEHICLE	WEIGHT (W) (TONS)	CONTROLLING LOAD RATING (#)	MINIMUM RATING FACTORS (RF)	TONS = W × RF	STRENGTH I LIMIT STATE											SERVICE III LIMIT STATE						COMMENT NUMBER
							LIVE-LOAD FACTORS (γ_{LL})	MOMENT					SHEAR					LIVE-LOAD FACTORS (γ_{LL})	MOMENT					
								DISTRIBUTION FACTORS (DF)	RATING FACTOR	SPAN	GIRDER LOCATION	DISTANCE FROM LEFT END OF SPAN (ft)	DISTRIBUTION FACTORS (DF)	RATING FACTOR	SPAN	GIRDER LOCATION	DISTANCE FROM LEFT END OF SPAN (ft)		DISTRIBUTION FACTORS (DF)	RATING FACTOR	SPAN	GIRDER LOCATION	DISTANCE FROM LEFT END OF SPAN (ft)	
DESIGN LOAD RATING		HL-93 (INVENTORY)	N/A	1	1.06	--	1.75	0.279	1.16	B	EL	24.438	0.554	1.06	A	EL	1.766	0.80	0.279	1.22	B	EL	24.438	
		HL-93 (OPERATING)	N/A	--	1.37	--	1.35	0.279	1.51	B	EL	24.438	0.554	1.37	A	EL	1.766	N/A	---	---	---	---	---	
		HS-20 (INVENTORY)	36.000	2	1.26	45.184	1.75	0.279	1.56	B	EL	24.438	0.554	1.26	A	EL	1.766	0.80	0.279	1.64	B	EL	24.438	
		HS-20 (OPERATING)	36.000		1.63	58.572	1.35	0.279	2.02	B	EL	24.438	0.554	1.63	A	EL	1.766	N/A	---	---	---	---	---	
LEGAL LOAD RATING	SINGLE VEHICLE (SV)	SNSH	13.500		3.27	44.180	1.40	0.279	3.97	B	EL	24.438	0.554	3.27	A	EL	1.766	0.80	0.279	3.33	B	EL	24.438	
		SNGARBS2	20.000		2.46	49.243	1.40	0.279	3.14	B	EL	24.438	0.554	2.46	A	EL	1.766	0.80	0.279	2.63	B	EL	24.438	
		SNAGRIS2	22.000		2.34	51.516	1.40	0.279	3.05	B	EL	29.325	0.554	2.34	A	EL	1.766	0.80	0.279	2.56	B	EL	24.438	
		SNCOTTS3	27.250		1.65	44.877	1.40	0.279	1.98	B	EL	24.438	0.554	1.65	A	EL	1.766	0.80	0.279	1.66	B	EL	24.438	
		SNAGGRS4	34.925		1.44	50.431	1.40	0.279	1.72	B	EL	24.438	0.554	1.46	A	EL	1.766	0.80	0.279	1.44	B	EL	24.438	
		SNS5A	35.550		1.41	50.058	1.40	0.279	1.68	B	EL	24.438	0.554	1.54	A	EL	1.766	0.80	0.279	1.41	B	EL	24.438	
		SNS6A	39.950		1.32	52.606	1.40	0.279	1.57	B	EL	24.438	0.554	1.45	A	EL	1.766	0.80	0.279	1.32	B	EL	24.438	
		SNS7B	42.000		1.25	52.708	1.40	0.279	1.50	B	EL	24.438	0.554	1.48	A	EL	1.766	0.80	0.279	1.25	B	EL	24.438	
	TRUCK TRACTOR SEMI-TRAILER (TTST)	TNAGRIT3	33.000		1.61	53.239	1.40	0.279	1.92	B	EL	24.438	0.554	1.69	A	EL	1.766	0.80	0.279	1.61	B	EL	24.438	
		TNT4A	33.075		1.60	52.833	1.40	0.279	1.94	B	EL	24.438	0.554	1.60	A	EL	1.766	0.80	0.279	1.63	B	EL	24.438	
		TNT6A	41.600		1.36	56.400	1.40	0.279	1.62	B	EL	24.438	0.554	1.57	A	EL	1.766	0.80	0.279	1.36	B	EL	24.438	
		TNT7A	42.000		1.38	57.807	1.40	0.279	1.64	B	EL	24.438	0.554	1.45	A	EL	1.766	0.80	0.279	1.38	B	EL	24.438	
		TNT7B	42.000		1.40	58.999	1.40	0.279	1.71	B	EL	24.438	0.554	1.40	A	EL	1.766	0.80	0.279	1.43	B	EL	24.438	
		TNAGRIT4	43.000		1.35	57.907	1.40	0.279	1.62	B	EL	24.438	0.554	1.35	A	EL	1.766	0.80	0.279	1.36	B	EL	24.438	
		TNAGT5A	45.000		1.27	57.240	1.40	0.279	1.52	B	EL	24.438	0.554	1.41	A	EL	1.766	0.80	0.279	1.27	B	EL	24.438	
		TNAGT5B	45.000	3	1.25	56.077	1.40	0.279	1.49	B	EL	24.438	0.554	1.27	A	EL	1.766	0.80	0.279	1.25	B	EL	24.438	

LOAD FACTORS:

DESIGN LOAD RATING FACTORS	LIMIT STATE	γ_{DC}	γ_{DW}
	STRENGTH I	1.25	1.50
	SERVICE III	1.00	1.00

NOTES:

MINIMUM RATING FACTORS ARE BASED ON THE STRENGTH I AND SERVICE III LIMIT STATES.

ALLOWABLE STRESSES FOR SERVICE III LIMIT STATE ARE AS REQUIRED FOR DESIGN.

COMMENTS:

1.
2.
3.
4.

(#) CONTROLLING LOAD RATING

(1) DESIGN LOAD RATING (HL-93)
(2) DESIGN LOAD RATING (HS-20)
(3) LEGAL LOAD RATING **
** SEE CHART FOR VEHICLE TYPE

GIRDER LOCATION

I - INTERIOR GIRDER
EL - EXTERIOR LEFT GIRDER
ER - EXTERIOR RIGHT GIRDER

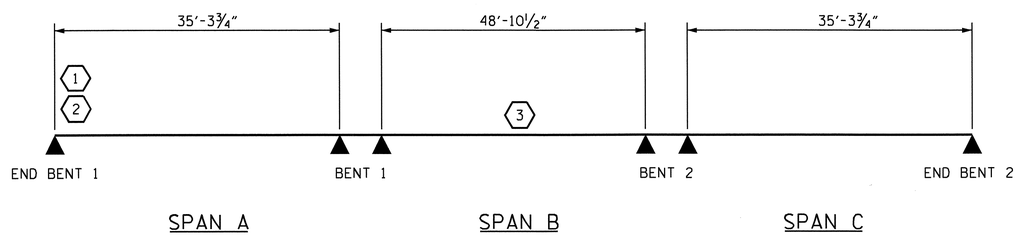

LRFR SUMMARY

PROJECT NO. U-3810
ONSLOW COUNTY
STATION: 234+34.00 -L-

STATE OF NORTH CAROLINA
DEPARTMENT OF TRANSPORTATION
RALEIGH

STANDARD
LRFR SUMMARY FOR PRESTRESSED CONCRETE GIRDERS
(NON-INTERSTATE TRAFFIC)

NORTH CAROLINA PROFESSIONAL SEAL 14045 ENGINEER TIMOTHY L. COGGINS
07/27/12

REVISIONS						SHEET NO.
NO.	BY:	DATE:	NO.	BY:	DATE:	S-38
1			3			TOTAL SHEETS
2			4			68

ASSEMBLED BY : PEGGY PARISI DATE : 5-29-12
CHECKED BY : T.L. COGGINS DATE : 6-4-12
DRAWN BY : MAA 1/08
CHECKED BY : GM/DI 2/08
REV. 11/12/08RR MAA/GM
REV. 10/1/11 MAA/GM

12-JUN-2012 09:31
R:\Structures\Final Plans\Bridges\Str. #2\u3810_sd_gd_02.dgn
nruffin

STR. #2

STD. NO. LRFR1

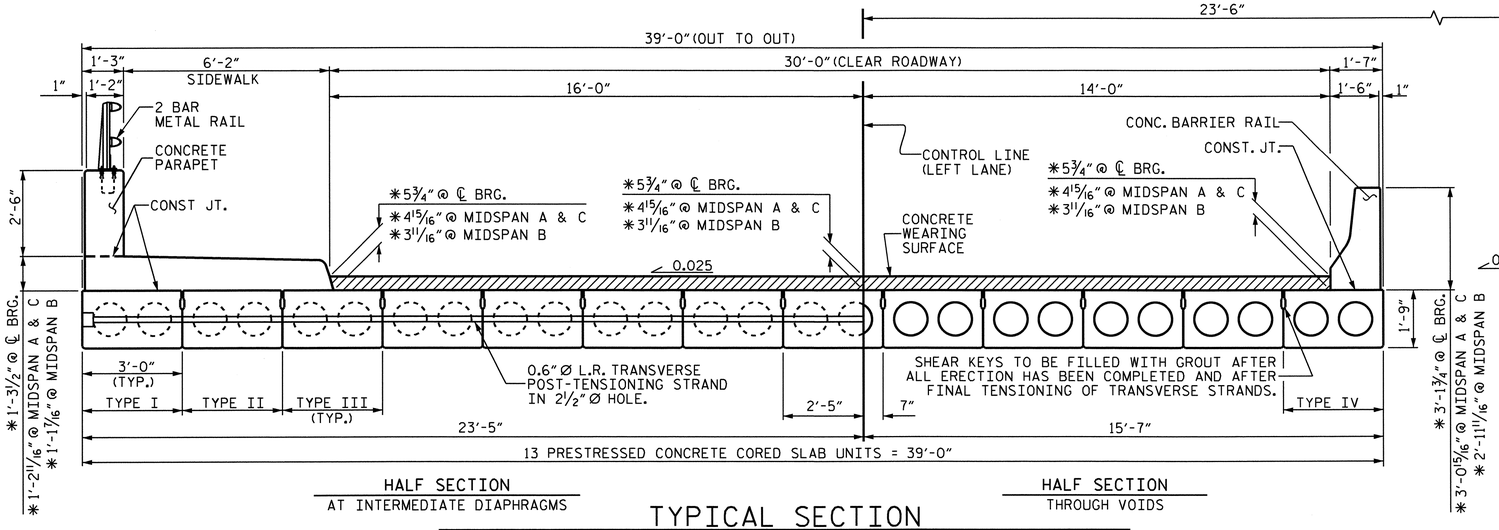

TYPICAL SECTION

✱ - THE MINIMUM AND MAXIMUM BARRIER RAIL HEIGHTS, SIDEWALK HEIGHTS AND CONCRETE WEARING SURFACE THICKNESSES ARE SHOWN. THE HEIGHT OF THE SIDEWALK, BARRIER RAIL AND CONCRETE WEARING SURFACE THICKNESS VARIES WHILE THE TOP OF THE BARRIER RAIL AND PARAPET FOLLOW THE PROFILE OF THE GUTTERLINE.

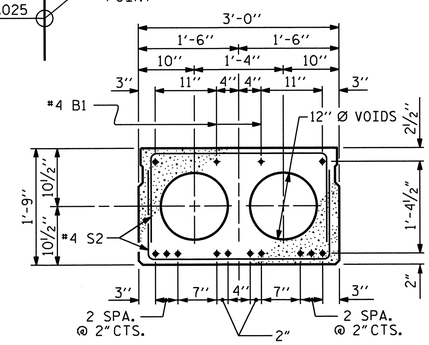

TYPE III - INTERIOR SLAB SECTION SPANS A & C

(12 STRANDS REQUIRED)

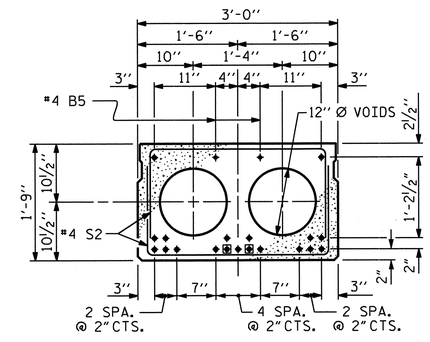

TYPE III - INTERIOR SLAB SECTION SPAN B

(19 STRANDS REQUIRED, 2 SHEATHED)

0.6" Ø LOW RELAXATION STRAND LAYOUT

● BOND SHALL BE BROKEN ON THESE STRANDS FOR A DISTANCE OF 4'-0" FROM END OF CORED SLAB UNIT. SEE STANDARD SPECIFICATIONS, ARTICLE 1078-7.

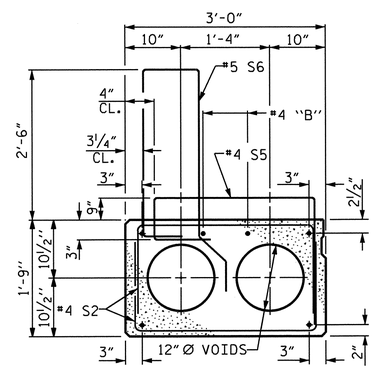

TYPE I - EXTERIOR SLAB SIDEWALK SECTION (LEFT)

(FOR PRESTRESSED STRAND LAYOUT, SEE TYPE III - INTERIOR SLAB SECTION)

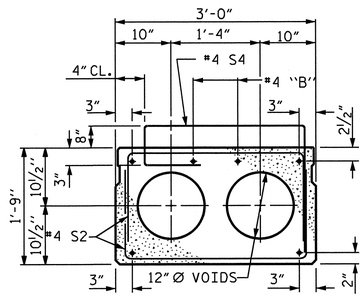

TYPE II - INTERIOR SLAB SIDEWALK SECTION

(FOR PRESTRESSED STRAND LAYOUT, SEE TYPE III - INTERIOR SLAB SECTION)

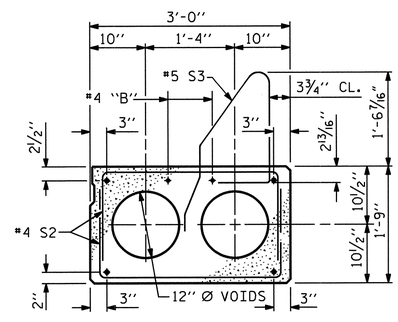

TYPE IV - EXTERIOR SLAB SECTION (RIGHT)

(FOR PRESTRESSED STRAND LAYOUT, SEE TYPE III - INTERIOR SLAB SECTION)

PROJECT NO. U-3810

ONSLOW COUNTY

STATION: 234+34.00 -L-

FIXED END

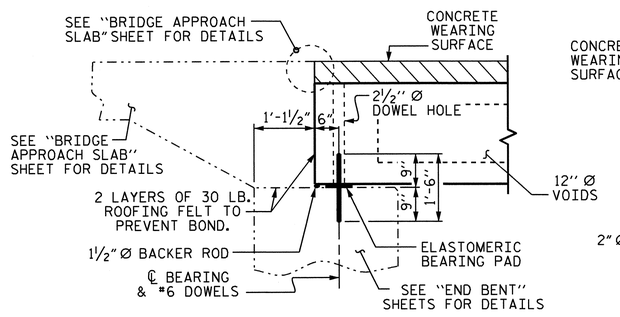

SECTION AT END BENT

FIXED END FIXED END

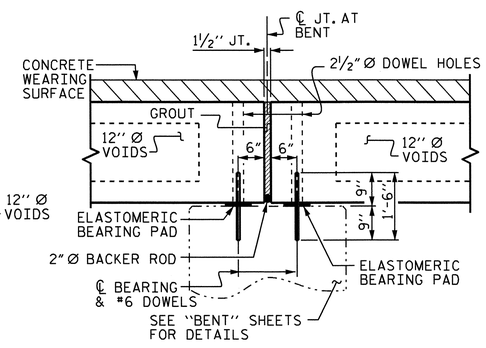

SECTION AT BENT

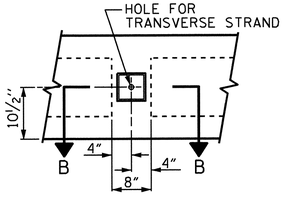

ELEVATION VIEW

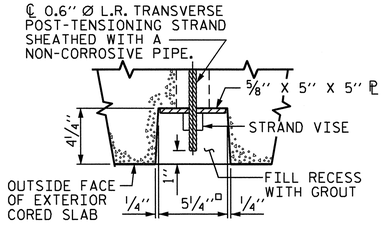

SECTION B-B

GROUTED RECESS AT END OF POST-TENSIONED STRAND OF CORED SLABS

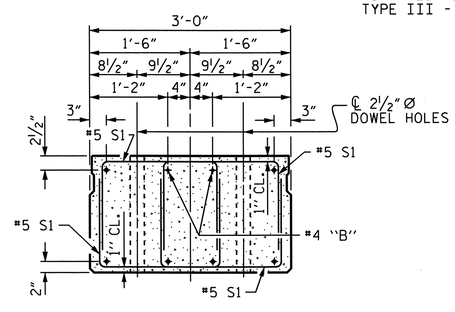

END ELEVATION

SHOWING PLACEMENT OF DOUBLE STIRRUPS AND LOCATION OF DOWEL HOLES. (STRAND LAYOUT NOT SHOWN.) INTERIOR SLAB UNIT SHOWN-EXTERIOR SLAB UNIT SIMILAR EXCEPT SHEAR KEY LOCATION.

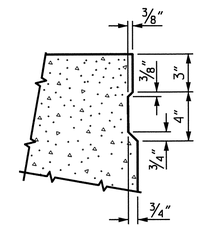

SHEAR KEY DETAIL

NOTE: OMIT SHEAR KEY ON OUTSIDE FACE OF EXTERIOR CORED SLABS.

NORTH CAROLINA PROFESSIONAL SEAL 14045 ENGINEER TIMOTHY W. COGGINS

07/18/12

STATE OF NORTH CAROLINA
DEPARTMENT OF TRANSPORTATION
RALEIGH

STANDARD 3'-0" X 1'-9" PRESTRESSED CONCRETE CORED SLAB UNIT

REVISIONS								SHEET NO.
NO.	BY:	DATE:	NO.	BY:	DATE:			S-39
1			3					TOTAL SHEETS
2			4					62

ASSEMBLED BY :	M.D. PISO	DATE :	07-15-11
CHECKED BY :	P.A.PARISI	DATE :	04-18-12
DRAWN BY : WJH	4/89	REV. 7/10/01RR	RWW/LES
CHECKED BY : FCJ	5/89	REV. 5/1/06R	TLA/GM
		REV. 10/1/11	MAA/GM

08-JUN-2012 11:21
R:\Structures\Final Plans\Bridges\Str. #2\u3810_sd_cs_02.dgn
nruffin

STR. #2

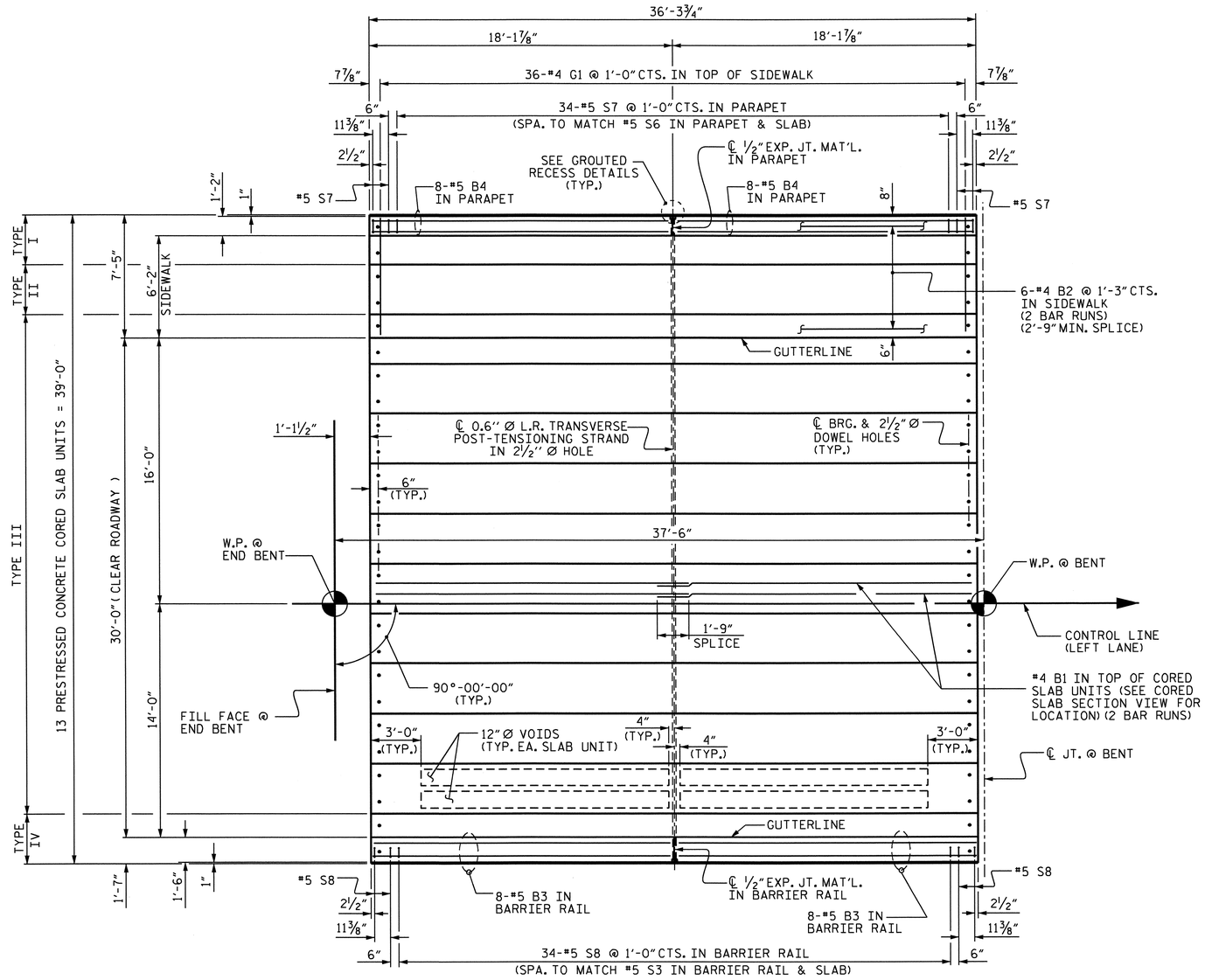

SPAN "A" OR SPAN "C"

(SPAN A SHOWN, SPAN C SIMILAR)
SHOWING REINFORCING STEEL IN PARAPETS, SIDEWALK, AND BARRIER RAIL.
SEE SHEET 2 OF 4 FOR REINFORCING STEEL DETAILS IN CORED SLAB UNITS.

PROJECT NO. U-3810
ONSLOW COUNTY
STATION: 234+34.00 -L-

SHEET 1 OF 4

STATE OF NORTH CAROLINA
DEPARTMENT OF TRANSPORTATION
RALEIGH

SUPERSTRUCTURE

PLAN OF SPANS "A" & "C"

NORTH CAROLINA PROFESSIONAL SEAL 14045 ENGINEER TIMOTHY E. COGGINS
07/27/12

REVISIONS						SHEET NO.
NO.	BY:	DATE:	NO.	BY:	DATE:	S-40
1			3			TOTAL SHEETS
2			4			62

DRAWN BY : M.D.PISO DATE : 7-15-11
CHECKED BY : P.A.PARISI DATE : 4-18-12

08-JUN-2012 11:21
R:\Structures\Final Plans\Bridges\Str. #2\u3810_sd_cs_02.dgn
nruffin

STR. #2

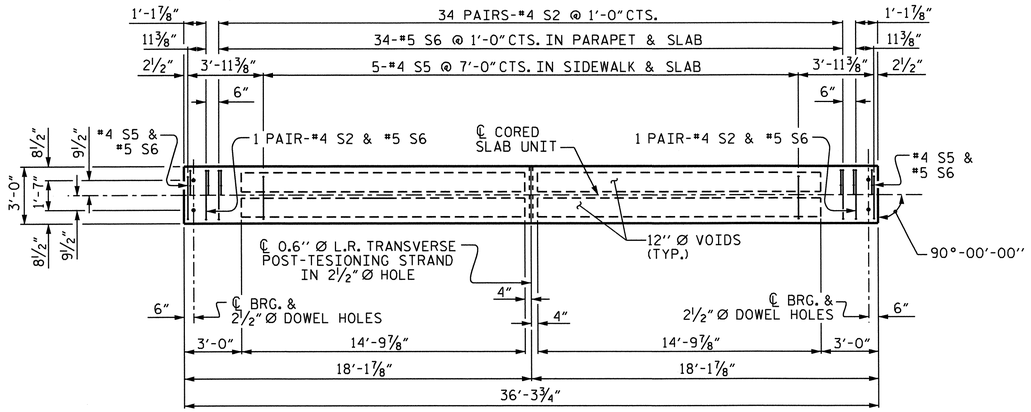

PLAN OF TYPE I CORED SLAB UNIT

FOR LOCATION OF S1 BARS AT ENDS OF SLAB, SEE "PART PLAN - EXTERIOR SECTIONS"

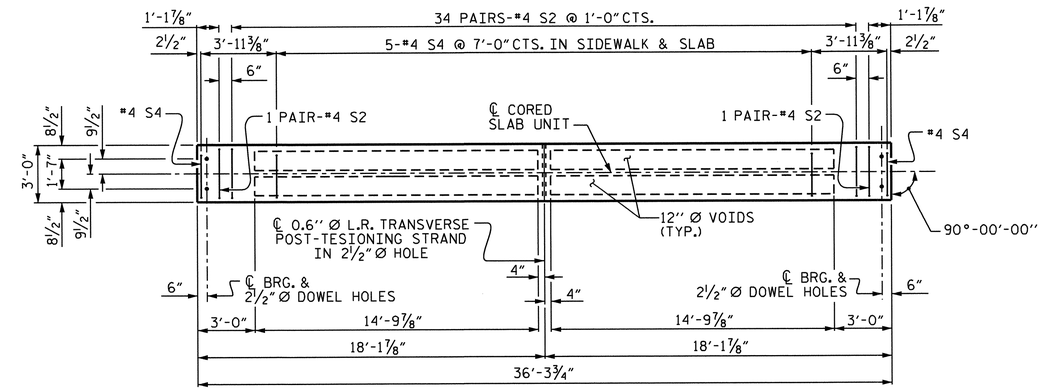

PLAN OF TYPE II CORED SLAB UNIT

FOR LOCATION OF S1 BARS AT ENDS OF SLAB, SEE "PART PLAN - EXTERIOR SECTIONS"

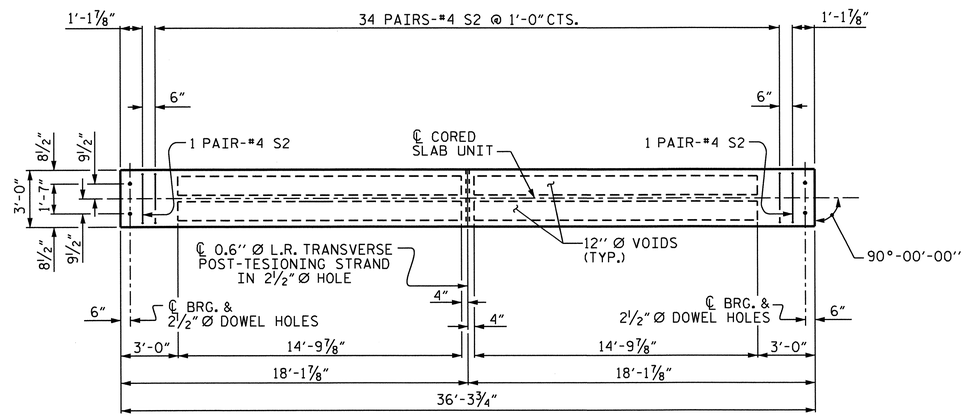

PLAN OF TYPE III CORED SLAB UNIT

FOR LOCATION OF S1 BARS AT ENDS OF SLAB, SEE "PART PLAN - EXTERIOR SECTIONS"

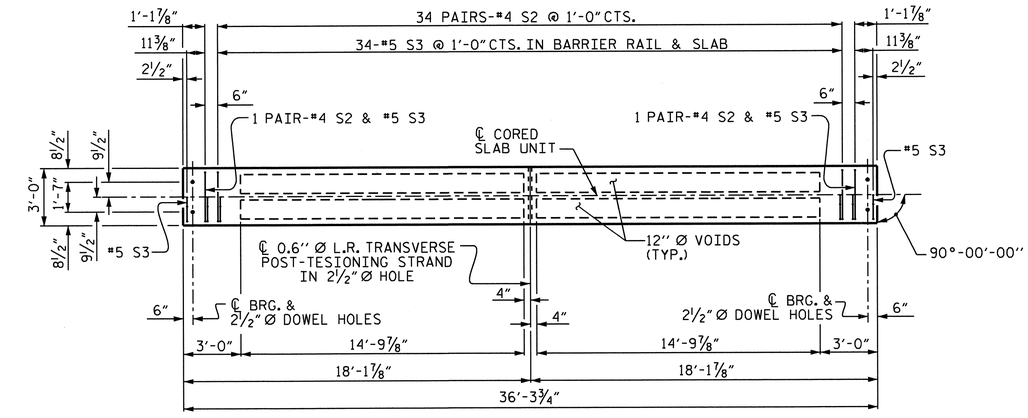

PLAN OF TYPE IV CORED SLAB UNIT

FOR LOCATION OF S1 BARS AT ENDS OF SLAB, SEE "PART PLAN - EXTERIOR SECTIONS"

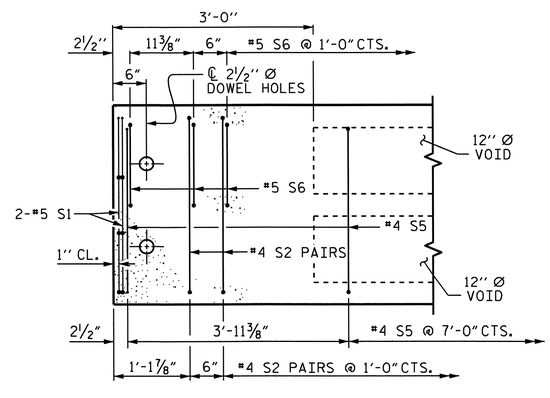

TYPE I EXTERIOR SECTION

TYPE II SIMILAR EXCEPT OMIT S6 BARS AND SUBSTITUTE #4 S4 BARS FOR #4 S5 BARS

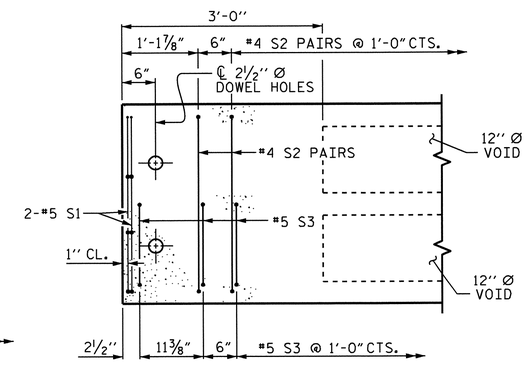

TYPE IV EXTERIOR SECTION

TYPE III SIMILAR EXCEPT OMIT S3 BARS

PART PLAN - EXTERIOR SECTIONS

PROJECT NO. U-3810
ONSLOW COUNTY
STATION: 234+34.00 -L-

SHEET 2 OF 4

STATE OF NORTH CAROLINA
DEPARTMENT OF TRANSPORTATION
RALEIGH

SUPERSTRUCTURE
PLAN OF SPANS "A" & "C" DETAILS

NORTH CAROLINA PROFESSIONAL SEAL 14045 ENGINEER TIMOTHY L. COGGINS
07/27/12

REVISIONS						SHEET NO.
NO.	BY:	DATE:	NO.	BY:	DATE:	S-41
1			3			TOTAL SHEETS
2			4			62

DRAWN BY : M.D.PISO DATE : 7-15-11
CHECKED BY : P.A.PARISI DATE : 4-19-12

08-JUN-2012 11:21
R:\Structures\FinalPlans\Bridges\Str. #2\u3810_sd_cs_02.dgn
nrutfin

STR. #2

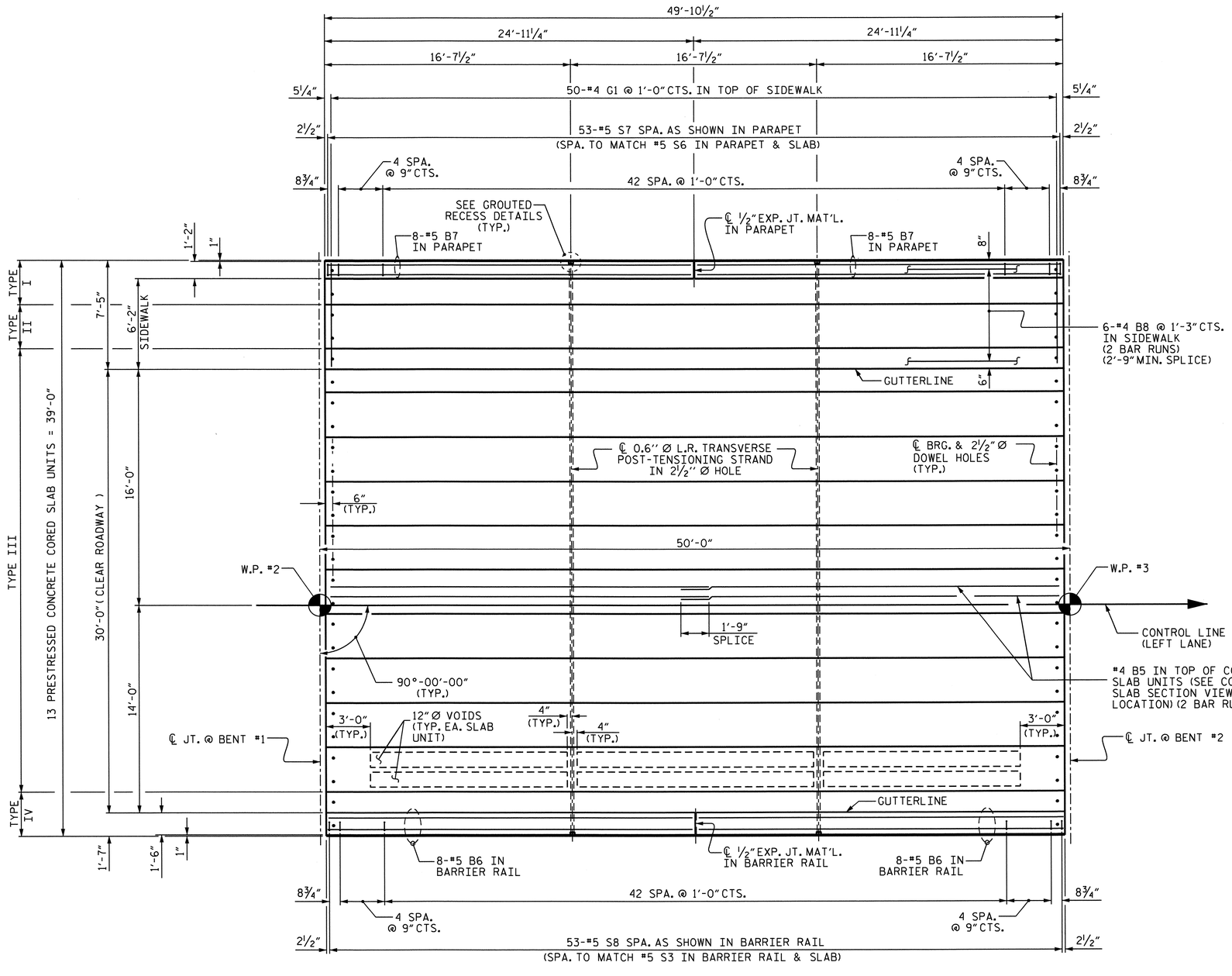

SPAN "B"

SHOWING REINFORCING STEEL IN PARAPETS, SIDEWALK, AND BARRIER RAIL.
SEE SHEET 4 OF 4 FOR REINFORCING STEEL DETAILS IN CORED SLAB UNITS.

NORTH CAROLINA PROFESSIONAL SEAL 14045 ENGINEER TIMOTHY L. COGGINS
07/27/12

PROJECT NO. U-3810
ONSLOW COUNTY
STATION: 234+34.00 -L-

SHEET 3 OF 4

STATE OF NORTH CAROLINA
DEPARTMENT OF TRANSPORTATION
RALEIGH

SUPERSTRUCTURE

PLAN OF SPAN "B"

REVISIONS						SHEET NO.
NO.	BY:	DATE:	NO.	BY:	DATE:	S-42
1			3			TOTAL SHEETS
2			4			62

DRAWN BY : M.D.PISO DATE : 7-15-11
CHECKED BY : P.A.PARISI DATE : 4-18-12

08-JUN-2012 11:21
R:\Structures\FinalPlans\Bridges\Str. #2\u3810_sd_cs_02.dgn
nruffin

STR. #2

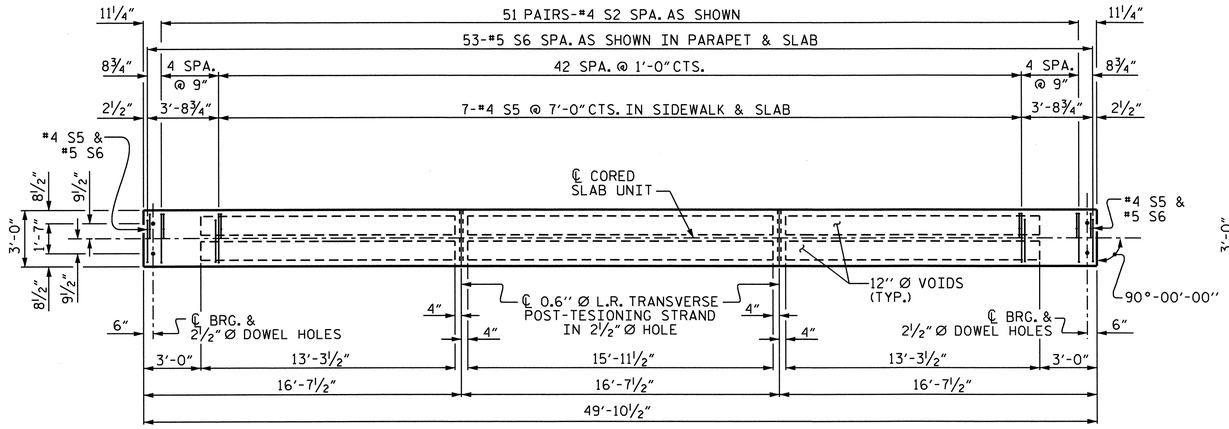

PLAN OF TYPE I CORED SLAB UNIT

FOR LOCATION OF S1 BARS AT ENDS OF SLAB, SEE "PART PLAN - EXTERIOR SECTIONS"

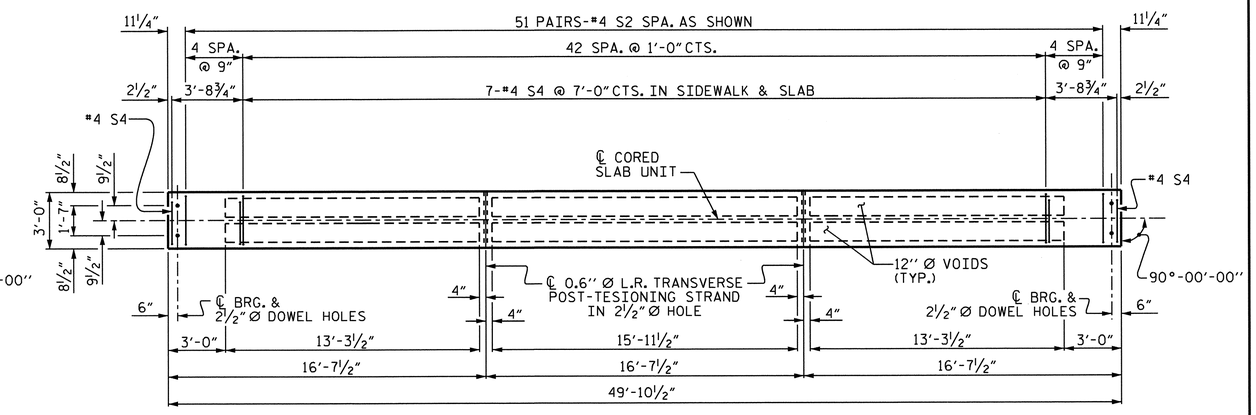

PLAN OF TYPE II CORED SLAB UNIT

FOR LOCATION OF S1 BARS AT ENDS OF SLAB, SEE "PART PLAN - EXTERIOR SECTIONS"

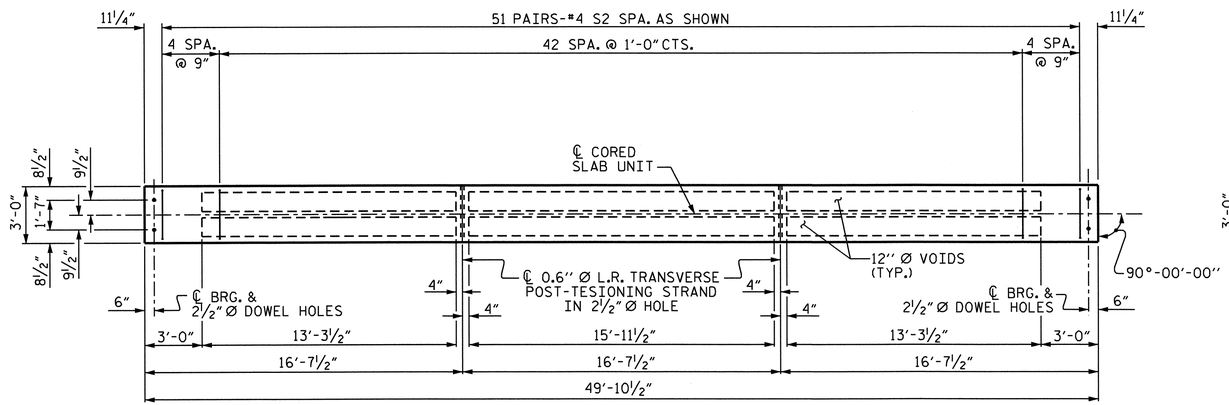

PLAN OF TYPE III CORED SLAB UNIT

FOR LOCATION OF S1 BARS AT ENDS OF SLAB, SEE "PART PLAN - EXTERIOR SECTIONS"

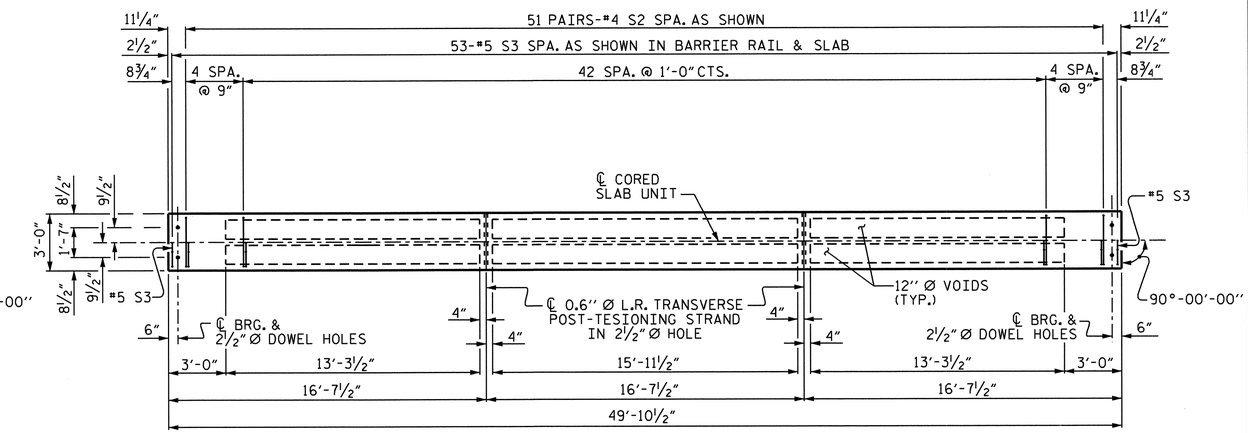

PLAN OF TYPE IV CORED SLAB UNIT

FOR LOCATION OF S1 BARS AT ENDS OF SLAB, SEE "PART PLAN - EXTERIOR SECTIONS"

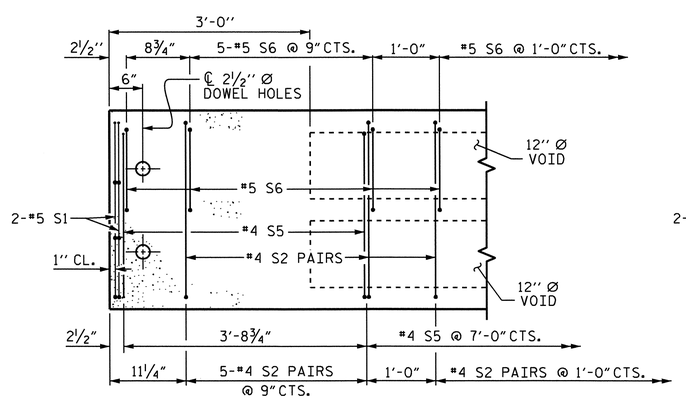

TYPE I EXTERIOR SECTION

TYPE II SIMILAR EXCEPT OMIT S6 BARS AND SUBSTITUTE #4 S4 BARS FOR #4 S5 BARS

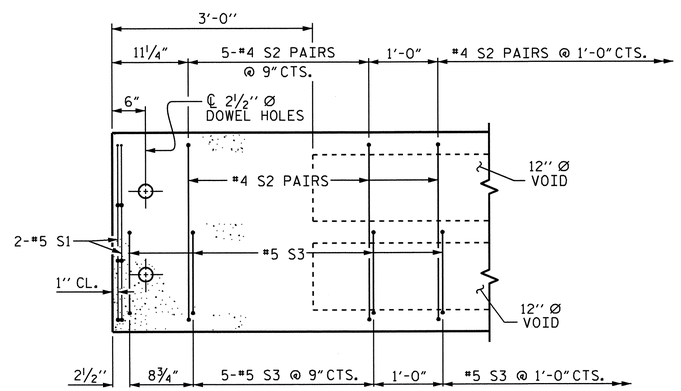

TYPE IV EXTERIOR SECTION

TYPE III SIMILAR EXCEPT OMIT S3 BARS

PART PLAN - EXTERIOR SECTIONS

PROJECT NO. U-3810

ONSLOW COUNTY

STATION: 234+34.00 -L-

SHEET 4 OF 4

STATE OF NORTH CAROLINA
DEPARTMENT OF TRANSPORTATION
RALEIGH

SUPERSTRUCTURE

PLAN OF SPAN "B" DETAILS

NORTH CAROLINA PROFESSIONAL SEAL 14045 ENGINEER TIMOTHY L. COGGINS
Timothy L. Coggins 07/27/12

REVISIONS								SHEET NO.
NO.	BY:	DATE:	NO.	BY:	DATE:			S-43
1			3					TOTAL SHEETS
2			4					62

DRAWN BY : M.D.PISO DATE : 7-15-11
CHECKED BY : P.A.PARISI DATE : 4-19-12

08-JUN-2012 11:21
R:\Structures\Final Plans\Bridges\Str. #2\u3810_sd_cs_02.dgn
nruffin

STR. #2

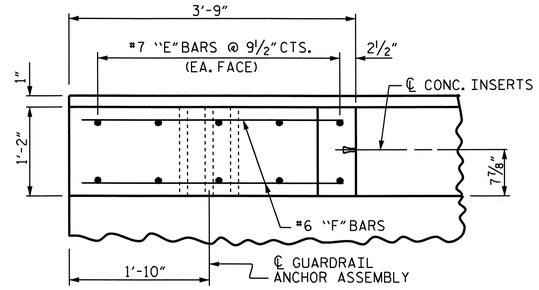

PLAN OF END POST

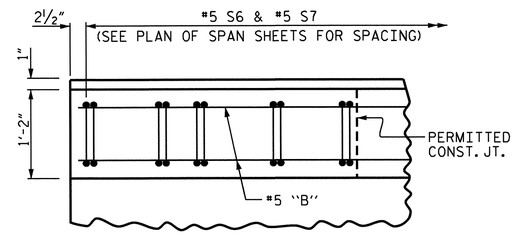

PLAN OF PARAPET

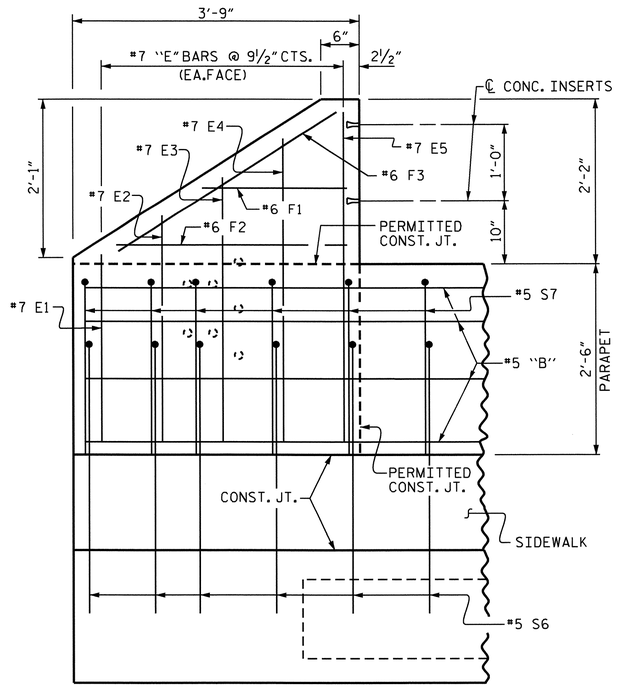

ELEVATION

REINFORCING STEEL IN SIDEWALK NOT SHOWN FOR CLARITY

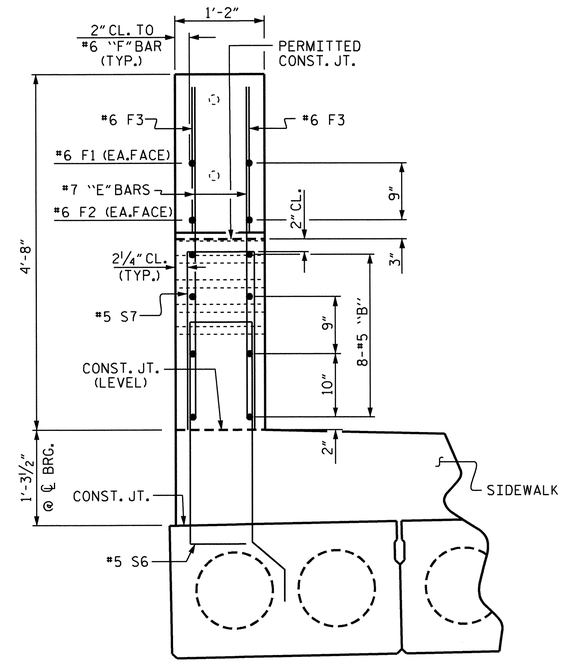

END VIEW

REINFORCING STEEL IN SIDEWALK NOT SHOWN FOR CLARITY

PARAPET AND END POST FOR TWO BAR RAIL

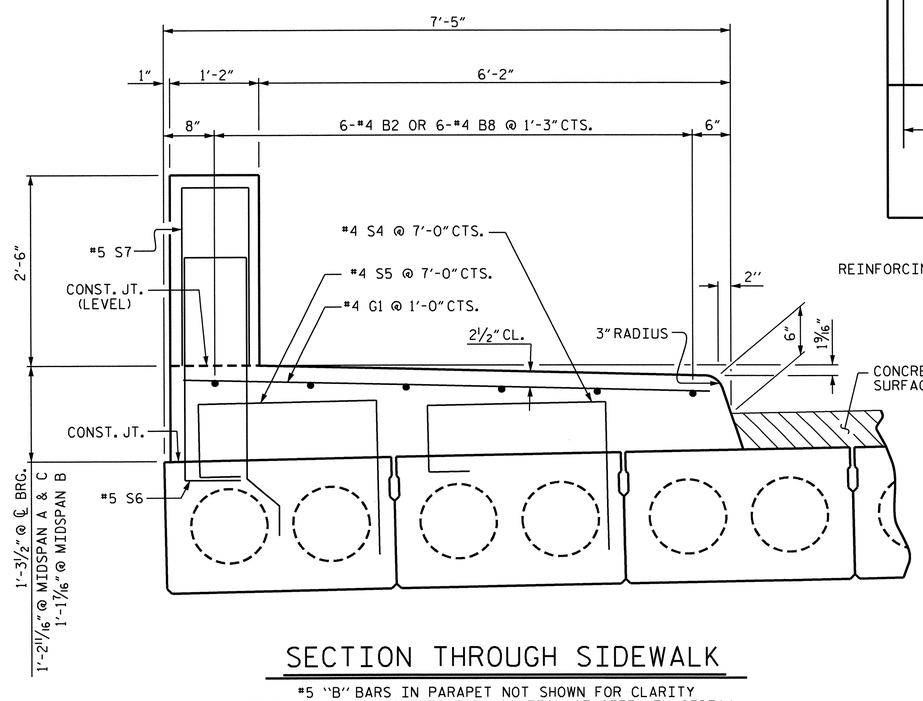

SECTION THROUGH SIDEWALK

#5 "B" BARS IN PARAPET NOT SHOWN FOR CLARITY
SEE PLAN OF SPAN SHEETS FOR LOCATION OF STEEL IN SIDEWALK

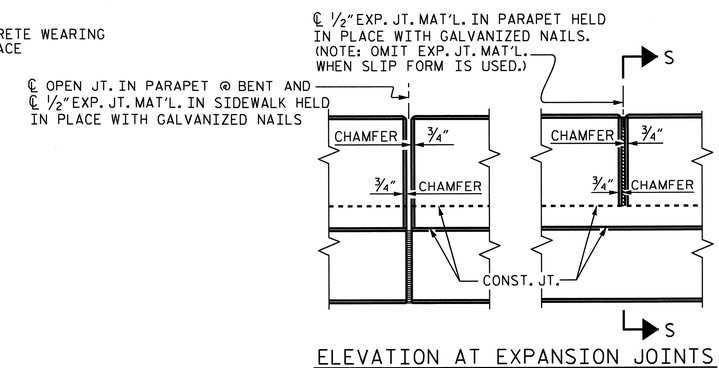

ELEVATION AT EXPANSION JOINTS

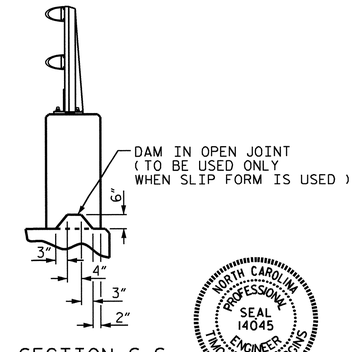

SECTION S-S

PARAPET DETAILS

BAR TYPE

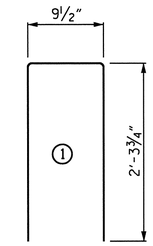

ALL BAR DIMENSIONS ARE OUT TO OUT

BILL OF MATERIAL

PARAPET AND END POSTS

BAR	NO.	SIZE	TYPE	LENGTH	WEIGHT
* B4	32	#5	STR.	17'-9"	592
* B7	16	#5	STR.	24'-7"	410
* E1	4	#7	STR.	2'-5"	20
* E2	4	#7	STR.	2'-11"	24
* E3	4	#7	STR.	3'-5"	28
* E4	4	#7	STR.	3'-11"	32
* E5	4	#7	STR.	4'-4"	35
* F1	4	#6	STR.	1'-10"	11
* F2	4	#6	STR.	3'-0"	18
* F3	4	#6	STR.	3'-4"	20
* S7	129	#5	1	5'-5"	729

* EPOXY COATED REINFORCING STEEL 1,919 LBS.

CLASS AA CONCRETE (PARAPET & END POSTS) 13.7 CU. YDS.

1'-2" X 2'-6" CONCRETE PARAPET 122.75 LIN. FT.

SIDEWALK

BAR	NO.	SIZE	TYPE	LENGTH	WEIGHT
* B2	24	#4	STR.	19'-5"	311
* B8	12	#4	STR.	26'-2"	210
* G1	122	#4	STR.	6'-10"	557

* EPOXY COATED REINFORCING STEEL 1,078 LBS.

CLASS AA CONCRETE (SIDEWALK) 37.8 CU. YDS.

PROJECT NO. U-3810
ONSLOW COUNTY
STATION: 234+34.00 -L-

SHEET 1 OF 5

STATE OF NORTH CAROLINA
DEPARTMENT OF TRANSPORTATION
RALEIGH

CONCRETE PARAPET, END POST & SIDEWALK DETAILS

NORTH CAROLINA PROFESSIONAL SEAL 14045 ENGINEER TIMOTHY C. COGGIN
07/27/12

REVISIONS						SHEET NO.
NO.	BY:	DATE:	NO.	BY:	DATE:	S-44
1			3			TOTAL SHEETS
2			4			62

STR. #2

DRAWN BY : M.D.PISO DATE : 7-15-11
CHECKED BY : P.A.PARISI DATE : 4-19-12

11-JUN-2012 12:07
R:\TIPProjects-U\U3810\Structures\FinalPlans\Bridges\Str. #2\u3810_sd_cs_02.dgn
taverette

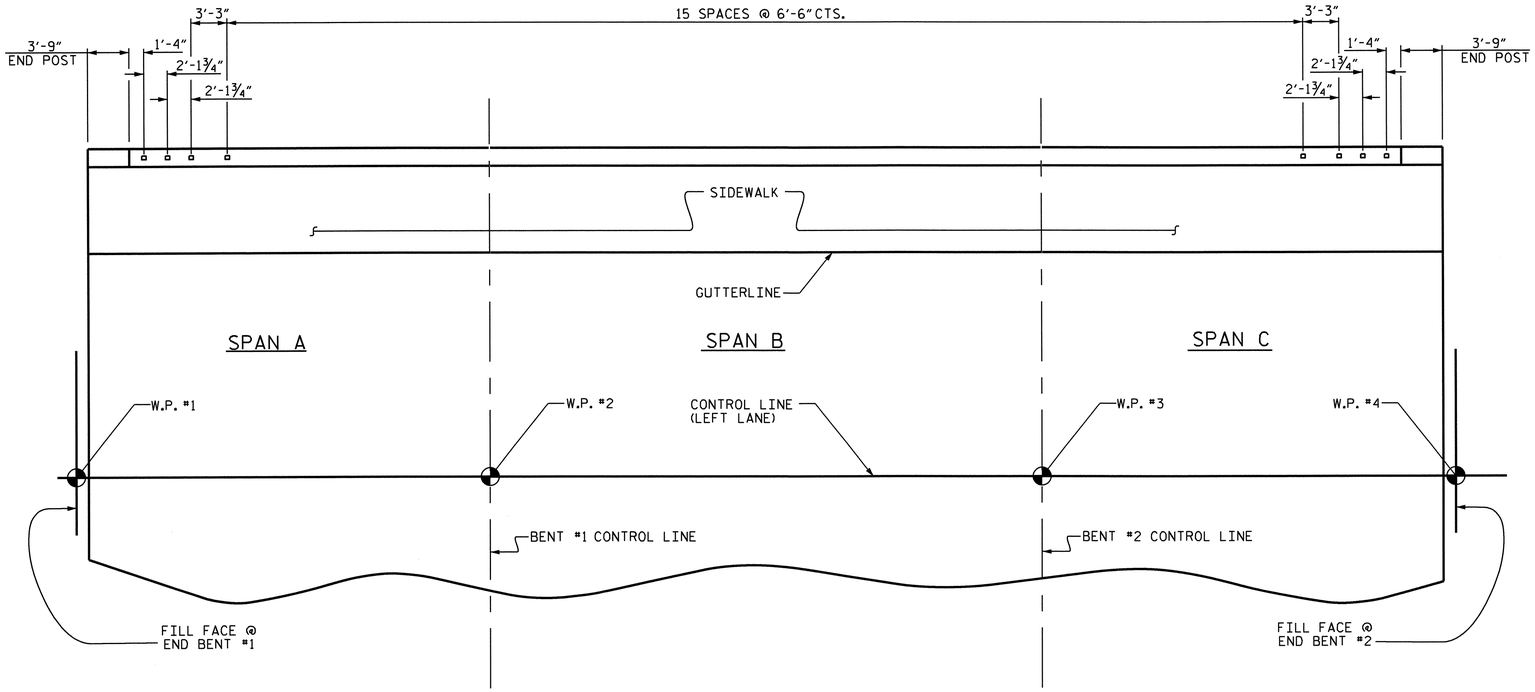

PLAN OF RAIL POST SPACINGS

NOTES

STRUCTURAL CONCRETE INSERT

THE STRUCTURAL CONCRETE INSERT ASSEMBLY SHALL CONSIST OF THE FOLLOWING COMPONENTS:

A. FERRULES SHALL BE MADE FROM STEEL MEETING THE REQUIREMENTS OF AASHTO M169, GRADE 12L14 AND SHALL HAVE A MINIMUM LENGTH OF THREADS OF 1½".

B. 1 - ¾" Ø X 1⅝" BOLT WITH WASHER. BOLT SHALL CONFORM TO THE REQUIREMENTS OF ASTM A307. BOLT AND WASHER SHALL BE GALVANIZED. (AT THE CONTRACTOR'S OPTION, STAINLESS STEEL BOLT AND WASHER MAY BE USED AS AN ALTERNATE FOR THE ¾" Ø X 1⅝" GALVANIZED BOLT AND WASHER. THEY SHALL CONFORM TO OR EXCEED THE MECHANICAL REQUIREMENTS OF ASTM A307. THE USE OF THIS ALTERNATE SHALL BE APPROVED BY THE ENGINEER.)

C. WIRE STRUT SHOWN IN THE CONCRETE INSERT ASSEMBLY DETAIL IS THE MINIMUM ALLOWABLE SIZE AND SHALL HAVE A MINIMUM TENSILE STRENGTH OF 100,000 PSI. AS AN OPTION, A 7/16" Ø WIRE STRUT WITH A MINIMUM TENSILE STRENGTH OF 90,000 PSI IS ACCEPTABLE.

NOTES

METAL RAIL TO END POST CONNECTION

THE METAL RAIL TO END POST CONNECTION SHALL CONSIST OF THE FOLLOWING COMPONENTS:

A. ½" PLATES SHALL CONFORM TO AASHTO M270 GRADE 36 AND SHALL BE GALVANIZED AFTER FABRICATION.

B. ¾" STRUCTURAL CONCRETE INSERT SHALL HAVE A WORKING LOAD SHEAR CAPACITY OF 4800 LBS. THE FERRULES SHALL ENGAGE A ¾"Ø X 1⅝" BOLT WITH 2" O.D. WASHER IN PLACE. THE ¾"Ø X 1⅝" BOLT SHALL HAVE N. C. THREADS.

C. CAP SCREWS FOR RAIL ATTACHMENT TO ANGLE SHALL CONFORM TO THE REQUIREMENTS OF ASTM F593 ALLOY 305 STAINLESS STEEL. CAP SCREWS TO BE CENTERED IN SLOTS AT 60°F.

D. STANDARD CLAMP BARS (SEE METAL RAIL SHEET).

E. ½" Ø PIPE SLEEVES (IF REQUIRED) TO BE GALVANIZED.

THE COST OF THE STANDARD CLAMP BARS AND CAP SCREWS USED IN THE METAL RAIL TO END POST CONNECTION SHALL BE INCLUDED IN THE UNIT CONTRACT PRICE BID FOR LINEAR FEET OF 2 BAR METAL RAILS.

THE ¾" STRUCTURAL CONCRETE INSERT WITH BOLT SHALL BE ASSEMBLED IN THE SHOP.

THE COST OF THE ¾" STRUCTURAL CONCRETE INSERT ASSEMBLY, AND THE ½" PLATES COMPLETE IN PLACE SHALL BE INCLUDED IN THE VARIOUS PAY ITEMS.

THE CONTRACTOR, AT HIS OPTION, MAY USE AN ADHESIVE BONDING SYSTEM IN LIEU OF THE STRUCTURAL CONCRETE INSERT EMBEDDED IN THE END POST. IF THE ADHESIVE BONDING SYSTEM IS USED, THE ¾" Ø X 1⅝" BOLT WITH WASHER SHALL BE REPLACED WITH A ¾"Ø X 6½" BOLT AND 2" O.D. WASHER. ALL SPECIFICATIONS THAT APPLY TO THE ¾" Ø X 1⅝" BOLT SHALL APPLY TO THE ¾"Ø X 6 ½" BOLT. FIELD TESTING OF THE ADHESIVE BONDING SYSTEM IS NOT REQUIRED.

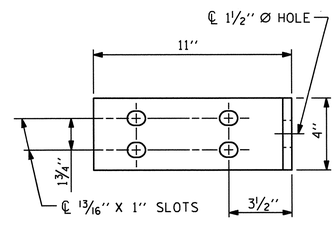

ELEVATION

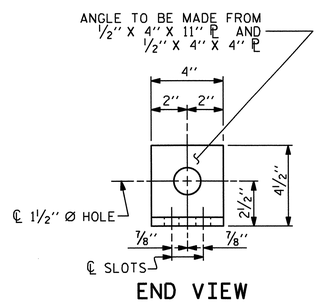

END VIEW

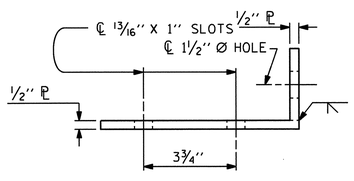

TOP VIEW

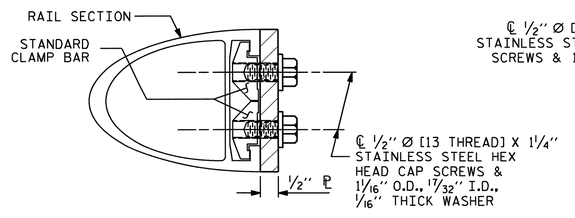

SECTION H-H

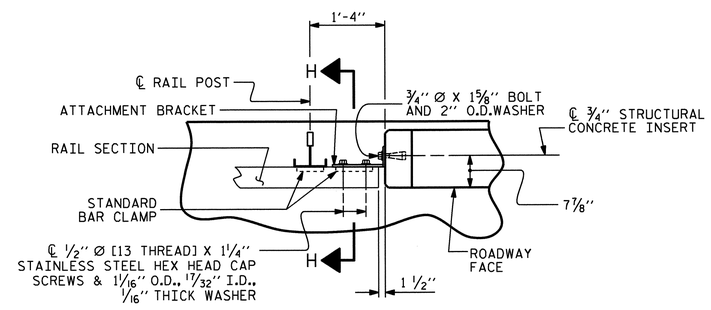

PLAN - RAIL AND END POST

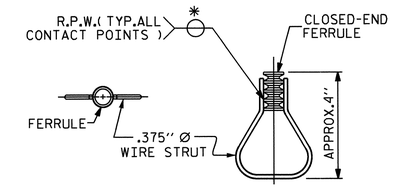

PLAN ELEVATION

STRUCTURAL CONCRETE INSERT

* EACH WELDED ATTACHMENT OF WIRE TO FERRULE SHALL DEVELOP THE TENSILE STRENGTH OF THE WIRE.

PROJECT NO. U-3810

ONSLOW COUNTY

STATION: 234+34.00 -L-

SHEET 2 OF 5

STATE OF NORTH CAROLINA
DEPARTMENT OF TRANSPORTATION
RALEIGH

STANDARD

RAIL POST SPACINGS
AND
END OF RAIL DETAILS
FOR TWO BAR METAL RAILS

DETAILS FOR ATTACHING METAL RAIL TO END POST

NORTH CAROLINA PROFESSIONAL SEAL 14045 ENGINEER TIMOTHY L. COGGINS

Timothy L. Coggins 07/27/12

REVISIONS							SHEET NO.
NO.	BY:	DATE:	NO.	BY:	DATE:		S-45
1			3				TOTAL SHEETS
2			4				62

ASSEMBLED BY :	M.D.PISO	DATE : 7-15-11	
CHECKED BY :	P.A.PARISI	DATE : 4-19-12	
DRAWN BY : FCJ 1/88	REV. 5/7/03	RWW/JTE	
CHECKED BY : CRK 3/89	REV. 5/1/06	TLA/GM	
	REV. 10/1/11	MAA/GM	

STR.#2

STD. NO. BMR2

12-JUN-2012 14:49
R:\TIPProjects-U\U3810\Structures\FinalPlans\Bridges\Str. #2\u3810_sd_cs_02.dgn
taverette

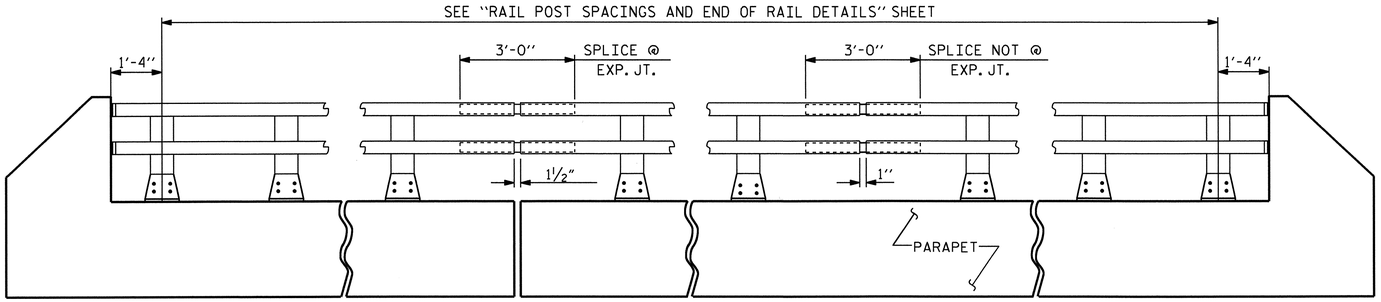

ELEVATION

NOTE : FOR ATTACHMENT OF METAL RAIL TO END POST, SEE STANDARD NO. BMR2.

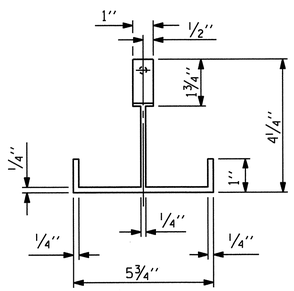

PLAN

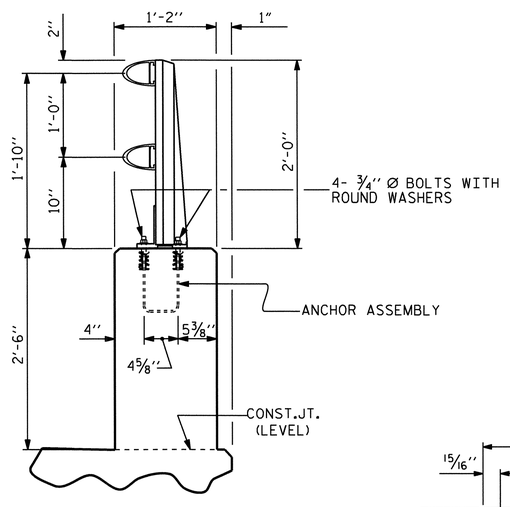

SECTION THRU PARAPET AND RAIL

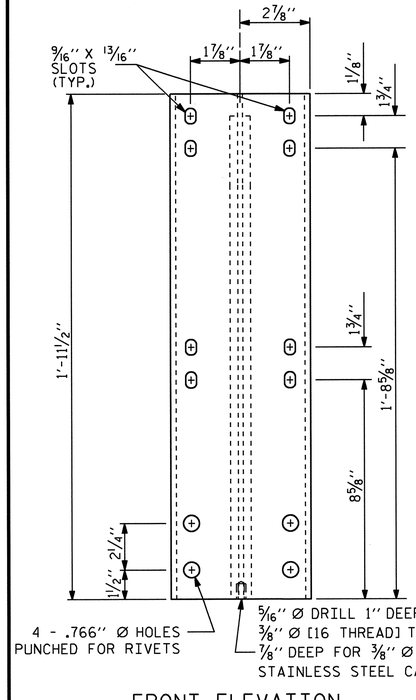

FRONT ELEVATION

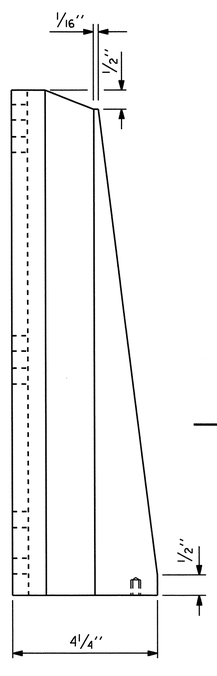

SIDE ELEVATION

DETAILS OF POST

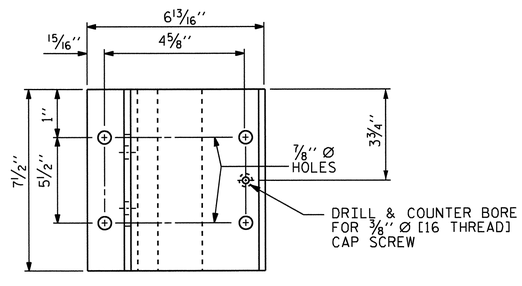

PLAN

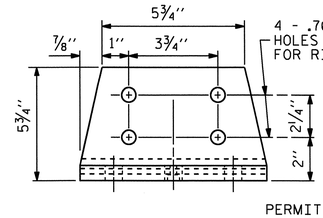

FRONT ELEVATION

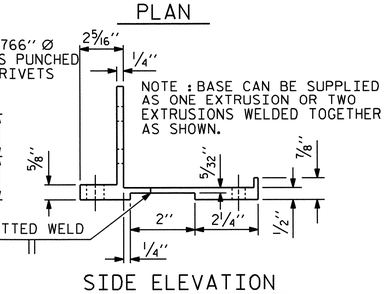

SIDE ELEVATION

POST BASE DETAILS

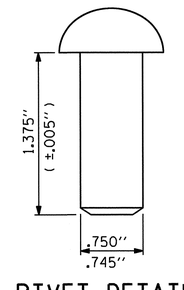

RIVET DETAIL

NOTES

THE METAL RAIL SHALL BE ALUMINUM AND IN ACCORDANCE WITH THE REQUIREMENTS OF THE GENERAL NOTES AND THE FOLLOWING SPECIFICATIONS.

ALUMINUM RAILS

MATERIAL FOR POSTS, BASES AND RAILS, EXPANSION BARS AND CLAMP BARS SHALL BE ASTM B-221 ALLOY 6061-T6.

MATERIAL FOR RIVETS SHALL BE ASTM B316 ALLOY 6061-T6. RIVETS SHALL BE STANDARD BUTTON HEAD AND CONE POINT COLD DRIVEN AS PER DRAWING.

THE BASE OF RAIL POSTS, OR ANY OTHER ALUMINUM SURFACE IN CONTACT WITH CONCRETE SHALL BE THOROUGHLY COATED WITH AN ALUMINUM IMPREGNATED CAULKING COMPOUND OF APPROVED QUALITY.

MATERIAL FOR SHIMS TO BE ASTM B209 ALLOY 6061-T6.

GENERAL NOTES

RAILING SHALL BE CONTINUOUS FROM END POST TO END POST OF BRIDGE. EACH JOINT IN RAIL LENGTH SHALL BE SPLICED AS DETAILED. PANEL LENGTHS OF RAIL SHALL BE ATTACHED TO A MINIMUM OF THREE POSTS.

FOR END OF RAIL TO CLEAR FACE OF CONCRETE END POST DIMENSION, SEE STANDARD NO. BMR2.

CAP SCREWS SHALL BE ASTM F593 ALLOY 305 STAINLESS STEEL. WASHERS SHALL MEET THE REQUIREMENTS OF ASTM F844 EXCEPT THEY SHALL BE MADE FROM ALLOY 304 STAINLESS STEEL.

CERTIFIED MILL REPORTS ARE REQUIRED FOR RAILS AND POSTS. SHOP INSPECTION IS NOT REQUIRED.

METAL RAIL POSTS SHALL BE SET NORMAL TO CURB GRADE.

METHOD OF MEASUREMENT FOR METAL RAILS: FOR LENGTH OF METAL RAILS TO BE PAID FOR, SEE THE STANDARD SPECIFICATIONS.

CURVED RAIL USAGE: WHERE RAILS ARE TO BE USED ON BRIDGES ON HORIZONTAL AND/OR VERTICAL CURVATURE THE CONTRACTOR MAY, AT HIS OPTION, HAVE THE REQUIRED CURVATURE IN THE RAIL FORMED IN THE SHOP OR IN THE FIELD. IN EITHER EVENT, THE RAIL SHALL CONFORM WITHOUT BUCKLING OR KINKING TO THE REQUIRED CURVATURE IN A UNIFORM MANNER ACCEPTABLE TO THE ENGINEER.

TO INSURE FUTURE IDENTIFICATION OF THE FABRICATOR, A PERMANENT IDENTIFYING MARK SHALL BE PLACED ON EACH POST. THE METHOD OF MARKING AND LOCATION SHALL BE SUCH THAT IT DOES NOT DETRACT FROM THE APPEARANCE OF THE POST, BUT REMAINS VISIBLE AFTER RAIL PLACEMENT.

SHIMS SHALL BE USED AS NECESSARY FOR POST ALIGNMENT.

ALLOY 6351-T5 MAY BE SUBSTITUTED FOR ALLOY 6061-T6 WHERE APPLICABLE.

MINOR VARIATIONS IN DETAILS OF METAL RAIL WILL BE CONSIDERED. DETAILS OF SUCH VARIATIONS, IF DESIRED, SHALL BE SUBMITTED FOR APPROVAL.

PAY LENGTH = 115.25 LIN. FT.

PROJECT NO. U-3810
ONSLOW COUNTY
STATION: 234+34.00 -L-

SHEET 3 OF 5

STATE OF NORTH CAROLINA
DEPARTMENT OF TRANSPORTATION
RALEIGH

STANDARD

2 BAR METAL RAIL

NORTH CAROLINA PROFESSIONAL SEAL 14045 ENGINEER TIMOTHY L. GOGGINS
07/27/12

ASSEMBLED BY : M.D.PISO	DATE : 7-15-11
CHECKED BY : P.A.PARISI	DATE : 4-19-12

DRAWN BY : EEM 6/94	REV. 5/7/03R RWW/JTE
CHECKED BY : RGW 6/94	REV. 5/1/06 TLA/GM
	REV. 10/1/11 MAA/GM

REVISIONS							SHEET NO.
NO.	BY:	DATE:	NO.	BY:	DATE:		S-46
1			3				TOTAL SHEETS
2			4				62

STR. #2

STD. NO. BMR3

08-JUN-2012 11:21
R:\Structures\Final Plans\Bridges\Str. #2\u3810_sd_cs_02.dgn
nruffin

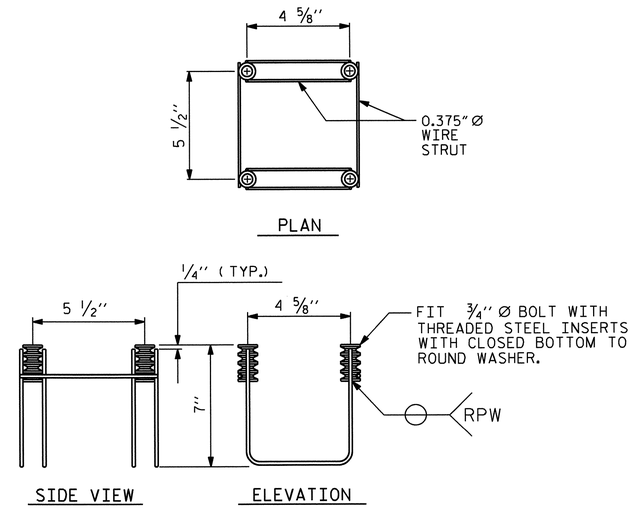

4-BOLT METAL RAIL ANCHOR ASSEMBLY

(22 ASSEMBLIES REQUIRED)

NOTES

STRUCTURAL CONCRETE ANCHOR ASSEMBLY

THE STRUCTURAL CONCRETE ANCHOR ASSEMBLY SHALL CONSIST OF THE FOLLOWING COMPONENTS :

A. FERRULES SHALL BE MADE FROM STEEL MEETING THE REQUIREMENTS OF AASHTO M169, GRADE 12L14 AND SHALL HAVE A MINIMUM LENGTH OF THREADS OF 2'' FOR 3/4'' FERRULES.

B. 4 - 3/4'' Ø X 2 1/2'' BOLTS WITH WASHERS. BOLTS SHALL CONFORM TO THE REQUIREMENTS OF ASTM A307. BOLTS AND WASHERS SHALL BE GALVANIZED. AT THE CONTRACTOR'S OPTION, STAINLESS STEEL BOLTS AND WASHERS MAY BE USED AS AN ALTERNATE FOR THE 3/4'' Ø X 2 1/2'' GALVANIZED BOLTS AND WASHERS. THEY SHALL CONFORM TO OR EXCEED THE MECHANICAL REQUIREMENTS OF ASTM A307. THE USE OF THIS ALTERNATE SHALL BE APPROVED BY THE ENGINEER.

C. WIRE STRUT SHOWN IN THE CONCRETE ANCHOR ASSEMBLY DETAIL IS THE MINIMUM ALLOWABLE SIZE AND SHALL HAVE A MINIMUM TENSILE STRENGTH OF 100,000 PSI. AS AN OPTION, A 7/16'' Ø WIRE STRUT WITH A MINIMUM TENSILE STRENGTH OF 90,000 PSI IS ACCEPTABLE.

D. THE METAL RAIL ANCHOR ASSEMBLIES TO BE HOT DIPPED GALVANIZED TO CONFORM TO REQUIREMENTS OF AASHTO M111.

E. THE COST OF THE METAL RAIL ANCHOR ASSEMBLY WITH BOLTS AND WASHERS COMPLETE IN PLACE SHALL BE INCLUDED IN THE PRICE BID FOR LINEAR FEET OF METAL RAIL.

F. BOLTS TO BE TIGHTENED ONE-HALF TURN WITH A WRENCH FROM A FINGER-TIGHT POSITION.

THE CONTRACTOR MAY USE ADHESIVELY ANCHORED ANCHOR BOLTS IN PLACE OF THE METAL RAIL ANCHOR ASSEMBLY. LEVEL ONE FIELD TESTING IS REQUIRED, AND THE YIELD LOAD OF THE 3/4'' Ø BOLT IS 10 KIPS. FOR ADHESIVELY ANCHORED ANCHOR BOLTS OR DOWELS, SEE THE STANDARD SPECIFICATIONS.

WHEN ADHESIVELY ANCHORED ANCHOR BOLTS ARE USED, BOLTS SHALL MEET THE REQUIREMENTS OF ASTM F593 ALLOY 304 STAINLESS STEEL WITH MINIMUM 75,000 PSI ULTIMATE STRENGTH. NUTS SHALL MEET THE REQUIREMENTS OF ASTM F594 ALLOY 304 STAINLESS STEEL AND WASHERS SHALL MEET THE REQUIREMENTS OF ASTM F844 EXCEPT THEY SHALL BE MADE FROM ALLOY 304 STAINLESS STEEL.

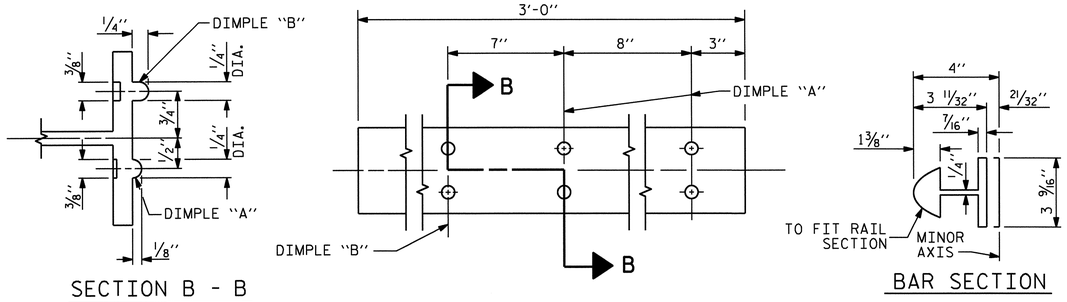

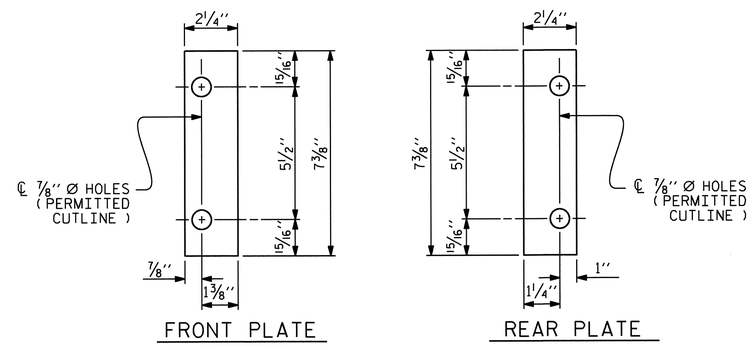

SHIM DETAILS

NOTE :
SHIMS MAY BE CUT ALONG PERMITTED CUTLINE OR SLOTTED TO EDGE OF PLATE TO FACILITATE PLACEMENT.

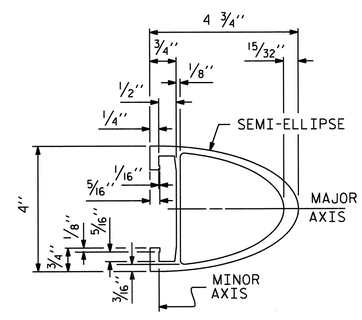

RAIL SECTION

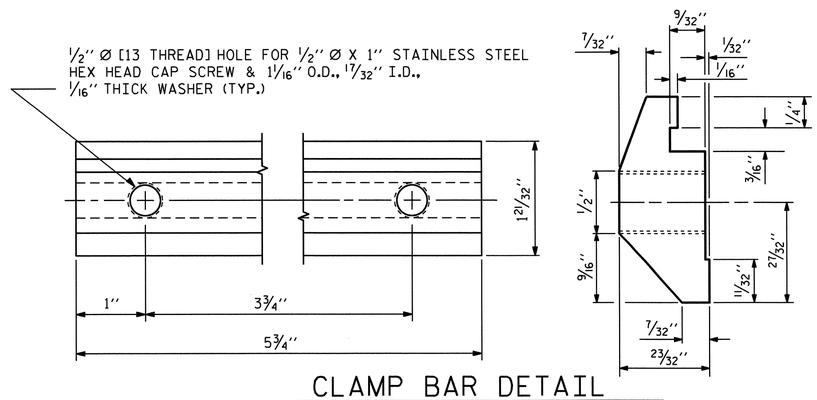

CLAMP BAR DETAIL

(4 REQUIRED PER POST)

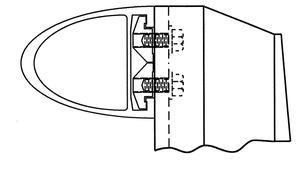

CLAMP ASSEMBLY

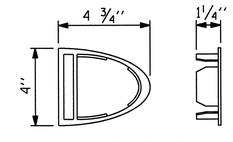

RAIL CAP

PROJECT NO. U-3810
ONSLOW COUNTY
STATION: 234+34.00 -L-

SHEET 4 OF 5

STATE OF NORTH CAROLINA
DEPARTMENT OF TRANSPORTATION
RALEIGH

STANDARD

2 BAR METAL RAIL

NORTH CAROLINA PROFESSIONAL SEAL 14045 ENGINEER TIMOTHY W. COGGINS
07/27/12

REVISIONS						SHEET NO.
NO.	BY:	DATE:	NO.	BY:	DATE:	S-47
1			3			TOTAL SHEETS
2			4			62

STR. #2

STD. NO. BMR4

ASSEMBLED BY :	M.D.PISO	DATE : 7-15-11	
CHECKED BY :	P.A.PARISI	DATE : 4-19-12	
DRAWN BY : EEM 6/94	REV. 8/16/99	MAB/LES	
CHECKED BY : RGW 6/94	REV. 5/1/06R	KMM/GM	
	REV. 10/1/11	MAA/GM	

12-JUN-2012 14:50
R:\TIPProjects-U\U3810\Structures\FinalPlans\Bridges\Str. #2\u3810_sd_cs_02.dgn
taverette

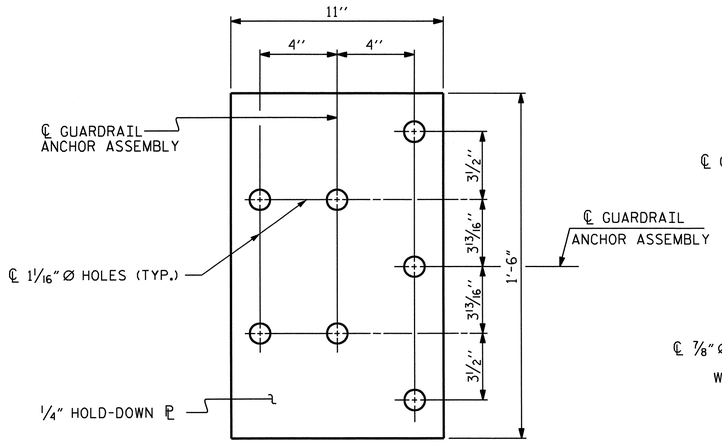

PLAN

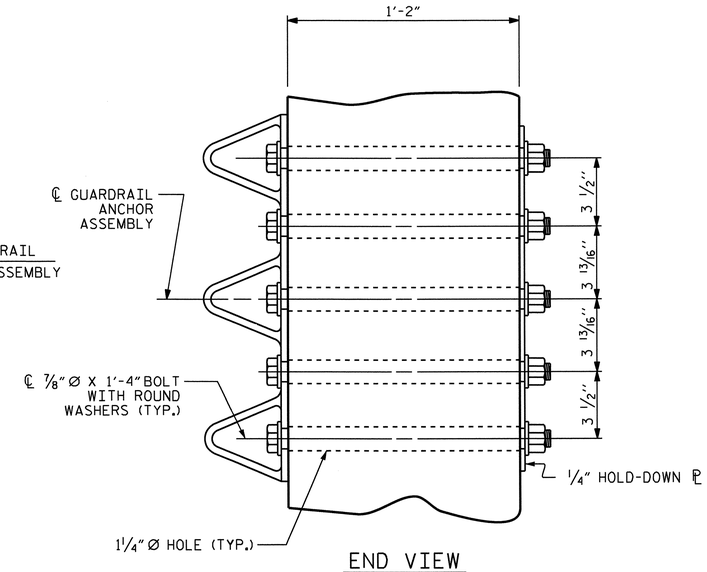

END VIEW

GUARDRAIL ANCHOR ASSEMBLY DETAILS

NOTES

THE GUARDRAIL ANCHOR ASSEMBLY SHALL CONSIST OF A 1/4" HOLD DOWN PLATE AND 7 - 7/8" Ø BOLTS WITH NUTS AND WASHERS.

THE HOLD-DOWN PLATE SHALL CONFORM TO AASHTO M270 GRADE 36. AFTER FABRICATION, THE HOLD-DOWN PLATE SHALL BE HOT-DIP GALVANIZED IN ACCORDANCE WITH AASHTO M111.

BOLTS SHALL CONFORM TO THE REQUIREMENTS OF ASTM A307 AND NUTS SHALL CONFORM TO THE REQUIREMENTS OF AASHTO M291. BOLTS, NUTS AND WASHERS SHALL BE GALVANIZED. AT THE CONTRACTOR'S OPTION, STAINLESS STEEL BOLTS, NUTS AND WASHERS MAY BE USED AS AN ALTERNATE FOR THE 7/8" Ø GALVANIZED BOLTS, NUTS AND WASHERS. THEY SHALL CONFORM TO OR EXCEED THE MECHANICAL REQUIREMENTS OF ASTM A307. THE USE OF THIS ALTERNATE SHALL BE APPROVED BY THE ENGINEER.

THE GUARDRAIL ANCHOR ASSEMBLY IS REQUIRED AT ALL POINTS WHERE APPROACH GUARDRAIL IS TO BE ATTACHED TO THE END OF THE PARAPET. FOR POINTS OF ATTACHMENT, SEE SKETCH.

AFTER INSTALLATION, THE EXPOSED THREAD OF THE BOLT SHALL BE BURRED WITH A SHARP POINTED TOOL.

THE COST OF THE GUARDRAIL ANCHOR ASSEMBLIES WITH BOLTS, NUTS AND WASHERS COMPLETE IN PLACE, SHALL BE INCLUDED IN THE VARIOUS PAY ITEMS.

THE VERTICAL REINFORCING BARS MAY BE SHIFTED SLIGHTLY IN THE END POST TO CLEAR ASSEMBLY BOLTS.

THE 1 1/4" Ø HOLES SHALL BE FORMED OR DRILLED WITH A CORE BIT. IMPACT TOOLS WILL NOT BE PERMITTED. ANY CONCRETE DAMAGED BY THIS WORK SHALL BE REPAIRED TO THE SATISFACTION OF THE ENGINEER.

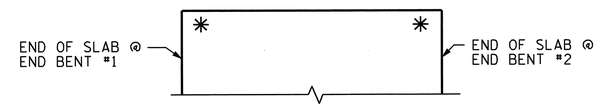

SKETCH SHOWING POINTS OF ATTACHMENT

* LOCATION OF GUARDRAIL ATTACHMENT FOR METAL RAIL

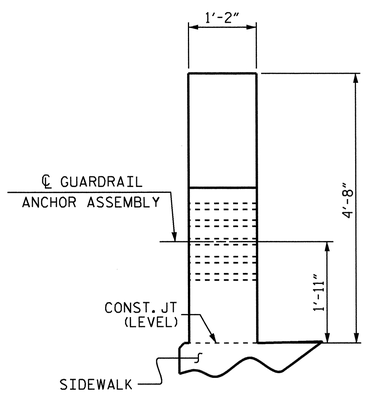

END VIEW

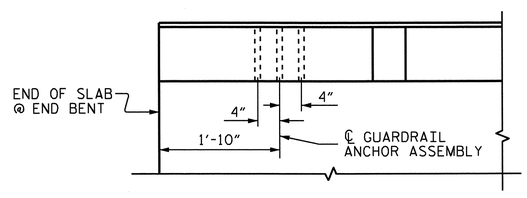

PLAN

LOCATION OF GUARDRAIL ANCHOR AT END POST

(END BENT #1 SHOWN, END BENT #2 SIMILAR)

PROJECT NO. U-3810

ONSLOW COUNTY

STATION: 234+34.00 -L-

SHEET 5 OF 5

STATE OF NORTH CAROLINA
DEPARTMENT OF TRANSPORTATION
RALEIGH

STANDARD

GUARDRAIL ANCHORAGE DETAILS FOR METAL RAILS

NORTH CAROLINA PROFESSIONAL SEAL 14045 ENGINEER TIMOTHY V. COGGINS

07/27/12

REVISIONS						SHEET NO.
NO.	BY:	DATE:	NO.	BY:	DATE:	S-48
1			3			TOTAL SHEETS
2			4			62

ASSEMBLED BY :	M.D.PISO	DATE :	7-15-11
CHECKED BY :	P.A.PARISI	DATE :	4-19-12
DRAWN BY : MAA	5/10	ADDED 5/6/10	
CHECKED BY : GM	5/10	REV. 10/1/11	MAA/GM
		REV. 12/5/11	MAA/GM

08-JUN-2012 11:21
R:\Structures\Final Plans\Bridges\Str. #2\u3810_sd_cs_02.dgn
nruffin

STR. #2 (SHT 4) STD. NO. GRA3

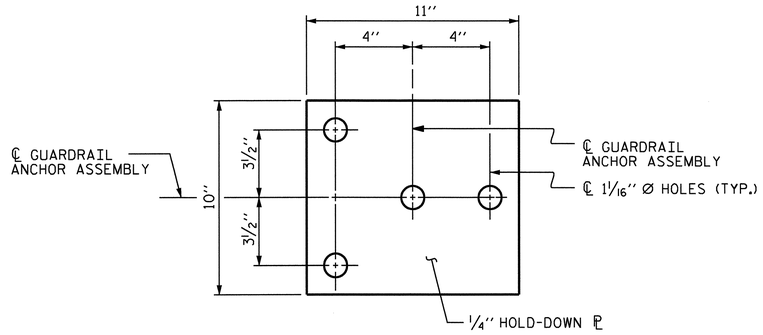

PLAN

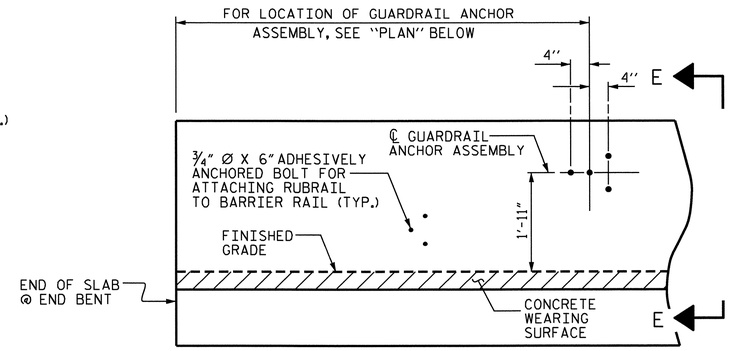

ELEVATION

FOR LOCATION OF RUBRAIL, SEE ROADWAY STD. 862.03

NOTES

THE GUARDRAIL ANCHOR ASSEMBLY SHALL CONSIST OF A 1/4'' HOLD DOWN PLATE AND 4 - 7/8'' Ø BOLTS WITH NUTS AND WASHERS, RUBRAIL, AND ADHESIVELY ANCHORED BOLTS.

THE HOLD-DOWN PLATE SHALL CONFORM TO AASHTO M270 GRADE 36. AFTER FABRICATION, THE HOLD-DOWN PLATE SHALL BE HOT-DIP GALVANIZED IN ACCORDANCE WITH AASHTO M111.

BOLTS SHALL CONFORM TO THE REQUIREMENTS OF ASTM A307 AND NUTS SHALL CONFORM TO THE REQUIREMENTS OF AASHTO M291. BOLTS, NUTS AND WASHERS SHALL BE GALVANIZED. (AT THE CONTRACTOR'S OPTION, STAINLESS STEEL BOLTS, NUTS AND WASHERS MAY BE USED AS AN ALTERNATE FOR THE 7/8'' Ø GALVANIZED BOLTS, NUTS AND WASHERS. THEY SHALL CONFORM TO OR EXCEED THE MECHANICAL REQUIREMENTS OF ASTM A307. THE USE OF THIS ALTERNATE SHALL BE APPROVED BY THE ENGINEER.)

THE GUARDRAIL ANCHOR ASSEMBLY IS REQUIRED AT ALL POINTS WHERE APPROACH GUARDRAIL IS TO BE ATTACHED TO THE END OF BARRIER RAIL. FOR POINTS OF ATTACHMENT, SEE SKETCH.

AFTER INSTALLATION, THE EXPOSED THREAD OF THE BOLT SHALL BE BURRED WITH A SHARP POINTED TOOL.

THE COST OF THE GUARDRAIL ANCHOR ASSEMBLY SHALL BE INCLUDED IN THE UNIT CONTRACT PRICE BID FOR CONCRETE BARRIER RAIL.

THE 1 1/4'' Ø HOLES SHALL BE FORMED OR DRILLED WITH A CORE BIT. IMPACT TOOLS WILL NOT BE PERMITTED. ANY CONCRETE DAMAGED BY THIS WORK SHALL BE REPAIRED TO THE SATISFACTION OF THE ENGINEER.

THE C6 X 8.2 RUBRAIL IS TO BE ADHESIVELY ANCHORED TO THE RAIL USING THREE 3/4''Ø X 6''BOLTS WITH WASHERS. LEVEL ONE FIELD TESTING IS REQUIRED, AND THE YIELD LOAD OF THE 3/4''Ø BOLT IS 12 KIPS. FOR ADHESIVELY ANCHORED ANCHOR BOLTS OR DOWELS, SEE STANDARD SPECIFICATIONS. SEE ROADWAY STANDARD 862.03 FOR DETAILS AND LOCATION OF THE RUBRAIL.

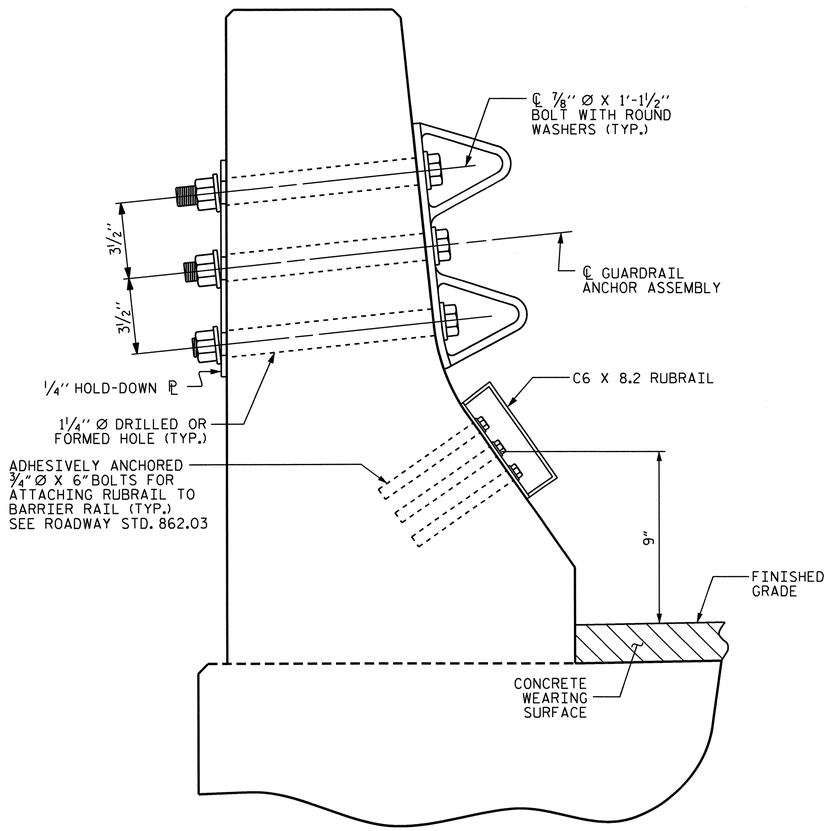

SECTION E-E

GUARDRAIL ANCHOR ASSEMBLY DETAILS

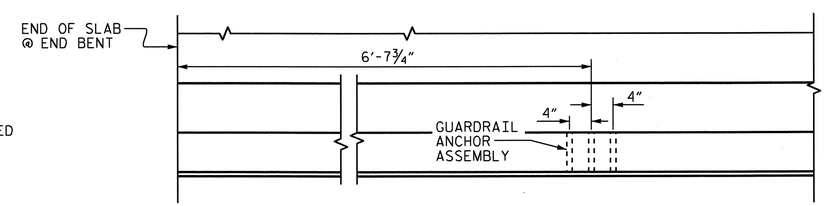

PLAN

LOCATION OF ANCHORS FOR GUARDRAIL

END BENT #1 SHOWN, END BENT #2 SIMILAR.

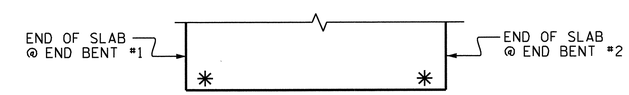

SKETCH SHOWING POINTS OF ATTACHMENTS

✳ DENOTES GUARDRAIL ANCHOR ASSEMBLY FOR BARRIER RAIL

PROJECT NO. U-3810

ONSLOW COUNTY

STATION: 234+34.00 -L-

STATE OF NORTH CAROLINA
DEPARTMENT OF TRANSPORTATION
RALEIGH

STANDARD

GUARDRAIL ANCHORAGE FOR BARRIER RAIL

NORTH CAROLINA PROFESSIONAL SEAL 14045 ENGINEER TIMOTHY L. COGGINS
07/27/12

REVISIONS								SHEET NO.
NO.	BY:	DATE:	NO.	BY:	DATE:			S-49
1			3					TOTAL SHEETS
2			4					62

ASSEMBLED BY :	M.D.PISO	DATE :	7-15-11
CHECKED BY :	P.A.PARISI	DATE :	4-19-12
DRAWN BY : TLA	5/06	ADDED 5/1/06RR	KMM/GM
CHECKED BY : GM	5/06	REV. 10/1/11	MAA/GM

08-JUN-2012 11:21
R:\Structures\FinalPlans\Bridges\Str. #2\u3810_sd_cs_02.dgn
nruffin

STR. #2 (SHT 2) STD. NO. GRA2

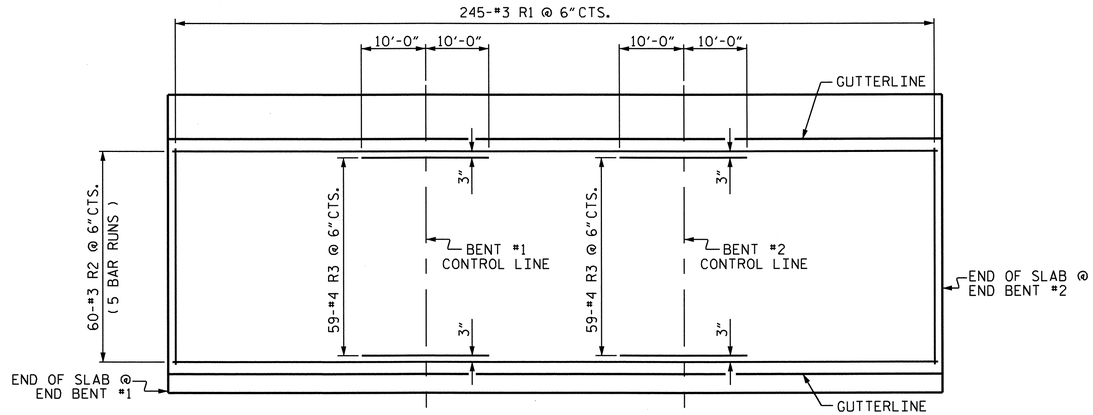

PLAN SHOWING CONCRETE WEARING SURFACE REINFORCING STEEL

BILL OF MATERIAL FOR CONCRETE WEARING SURFACE					
BAR	NO.	SIZE	TYPE	LENGTH	WEIGHT
✳R1	245	#3	STR	29'-7"	2725
✳R2	300	#3	STR	26'-1"	2942
✳R3	118	#4	STR	20'-0"	1576
✳ EPOXY COATED REINFORCING STEEL				LBS.	7243
CONCRETE WEARING SURFACE				SQ. FT.	3683

SPLICE LENGTH CHART	
BAR SIZE	EPOXY COATED
#3 "R"	2'-0"

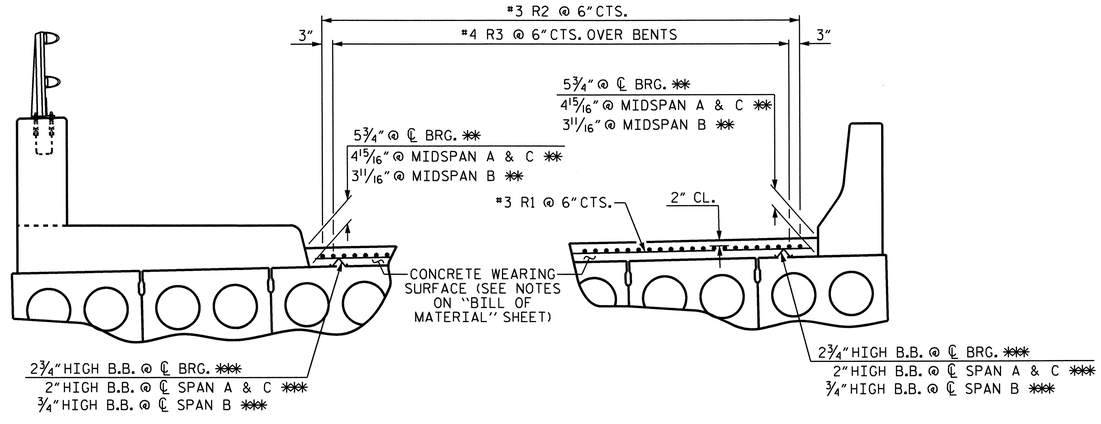

REINFORCING STEEL FOR CONCRETE WEARING SURFACE

✳✳ BASED ON PREDICTED FINAL CAMBER AND THEORETICAL GRADE LINE ELEVATIONS
✳✳✳ BEAM BOLSTERS (B.B.) SHALL BE SPACED AT 2'-0" CENTERS SET 1'-0" FROM GUTTERLINE.

PROJECT NO. U-3810
ONSLOW COUNTY
STATION: 234+34.00 -L-

STATE OF NORTH CAROLINA
DEPARTMENT OF TRANSPORTATION
RALEIGH

CONCRETE WEARING SURFACE DETAILS

NORTH CAROLINA PROFESSIONAL SEAL 14045 ENGINEER TIMOTHY L. COGGINS
07/27/12

REVISIONS							SHEET NO.
NO.	BY:	DATE:	NO.	BY:	DATE:		S-50
1			3				TOTAL SHEETS
2			4				62

DRAWN BY : M.D.PISO DATE : 7-15-11
CHECKED BY : P.A.PARISI DATE : 4-19-12

08-JUN-2012 11:21
R:\Structures\Final Plans\Bridges\Str. #2\u3810_sd_cs_02.dgn
nruffin

STR. #2

BAR TYPES

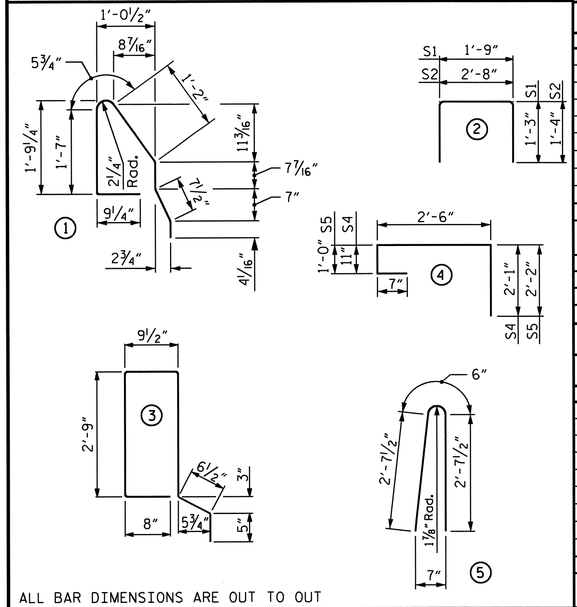

ALL BAR DIMENSIONS ARE OUT TO OUT

CORED SLABS REQUIRED

		NUMBER	LENGTH	TOTAL LENGTH
SPAN A	TYPE I	1	36'-3¾"	36'-3¾"
	TYPE II	1	36'-3¾"	36'-3¾"
	TYPE III	10	36'-3¾"	363'-1½"
	TYPE IV	1	36'-3¾"	36'-3¾"
SPAN B	TYPE I	1	49'-10½"	49'-10½"
	TYPE II	1	49'-10½"	49'-10½"
	TYPE III	10	49'-10½"	498'-9"
	TYPE IV	1	49'-10½"	49'-10½"
SPAN C	TYPE I	1	36'-3¾"	36'-3¾"
	TYPE II	1	36'-3¾"	36'-3¾"
	TYPE III	10	36'-3¾"	363'-1½"
	TYPE IV	1	36'-3¾"	36'-3¾"
TOTAL		39		1592'-6"

BILL OF MATERIAL FOR ONE CORED SLAB SECTION

SPAN A

				TYPE I		TYPE II		TYPE III		TYPE IV	
BAR	NUMBER	SIZE	TYPE	LENGTH	WEIGHT	LENGTH	WEIGHT	LENGTH	WEIGHT	LENGTH	WEIGHT
B1	4	#4	STR	18'-11"	51	18'-11"	51	18'-11"	51	18'-11"	51
S1	8	#5	2	4'-3"	35	4'-3"	35	4'-3"	35	4'-3"	35
S2	72	#4	2	5'-4"	257	5'-4"	257	5'-4"	257	5'-4"	257
✱ S3	38	#5	1	—	—	—	—	—	—	5'-7"	221
✱ S4	7	#4	4	—	—	6'-1"	28	—	—	—	—
✱ S5	7	#4	4	6'-3"	29	—	—	—	—	—	—
✱ S6	38	#5	3	7'-11"	314	—	—	—	—	—	—
REINFORCING STEEL					343 LBS.		343 LBS.		343 LBS.		343 LBS.
✱ EPOXY COATED REINFORCING STEEL					343 LBS.		28 LBS.		—		221 LBS.
5000 P.S.I. CONCRETE					5.3 CU. YDS.		5.3 CU. YDS.		5.3 CU. YDS.		5.3 CU. YDS.
0.6"Ø L.R. STRANDS No.				12		12		12		12	

SPAN B

				TYPE I		TYPE II		TYPE III		TYPE IV	
BAR	NUMBER	SIZE	TYPE	LENGTH	WEIGHT	LENGTH	WEIGHT	LENGTH	WEIGHT	LENGTH	WEIGHT
B5	4	#4	STR	25'-8"	69	25'-8"	69	25'-8"	69	25'-8"	69
S1	8	#5	2	4'-3"	35	4'-3"	35	4'-3"	35	4'-3"	35
S2	102	#4	2	5'-4"	363	5'-4"	363	5'-4"	363	5'-4"	363
✱ S3	53	#5	1	—	—	—	—	—	—	5'-7"	309
✱ S4	9	#4	4	—	—	6'-1"	37	—	—	—	—
✱ S5	9	#4	4	6'-3"	38	—	—	—	—	—	—
✱ S6	53	#5	3	7'-11"	438	—	—	—	—	—	—
REINFORCING STEEL					467 LBS.		467 LBS.		467 LBS.		467 LBS.
✱ EPOXY COATED REINFORCING STEEL					476 LBS.		37 LBS.		—		309 LBS.
6000 P.S.I. CONCRETE					7.2 CU. YDS.		7.2 CU. YDS.		7.2 CU. YDS.		7.2 CU. YDS.
0.6"Ø L.R. STRANDS No.				19		19		19		19	

SPAN C

				TYPE I		TYPE II		TYPE III		TYPE IV	
BAR	NUMBER	SIZE	TYPE	LENGTH	WEIGHT	LENGTH	WEIGHT	LENGTH	WEIGHT	LENGTH	WEIGHT
B1	4	#4	STR	18'-11"	51	18'-11"	51	18'-11"	51	18'-11"	51
S1	8	#5	2	4'-3"	35	4'-3"	35	4'-3"	35	4'-3"	35
S2	72	#4	2	5'-4"	257	5'-4"	257	5'-4"	257	5'-4"	257
✱ S3	38	#5	1	—	—	—	—	—	—	5'-7"	221
✱ S4	7	#4	4	—	—	6'-1"	28	—	—	—	—
✱ S5	7	#4	4	6'-3"	29	—	—	—	—	—	—
✱ S6	38	#5	3	7'-11"	314	—	—	—	—	—	—
REINFORCING STEEL					343 LBS.		343 LBS.		343 LBS.		343 LBS.
✱ EPOXY COATED REINFORCING STEEL					343 LBS.		28 LBS.		—		221 LBS.
5000 P.S.I. CONCRETE					5.3 CU. YDS.		5.3 CU. YDS.		5.3 CU. YDS.		5.3 CU. YDS.
0.6"Ø L.R. STRANDS No.				12		12		12		12	

GRADE 270 STRANDS

	0.6"Ø L.R.
AREA (SQUARE INCHES)	0.217
ULTIMATE STRENGTH (LBS. PER STRAND)	58,600
APPLIED PRESTRESS (LBS. PER STRAND)	43,950

GROOVING BRIDGE FLOORS

BRIDGE DECK	3,314 SQ. FT.
APPROACH SLABS	1,314 SQ. FT.
TOTAL	4,628 SQ. FT.

NOTES

ALL PRESTRESSING STRANDS SHALL BE 7-WIRE LOW RELAXATION GRADE 270 STRANDS AND SHALL CONFORM TO AASHTO M203 EXCEPT FOR SAMPLING REQUIREMENTS WHICH SHALL BE IN ACCORDANCE WITH THE STANDARD SPECIFICATIONS.

ALL REINFORCING STEEL CAST WITH THE CORED SLAB SECTIONS SHALL BE GRADE 60 AND SHALL BE INCLUDED IN THE UNIT PRICE BID FOR PRESTRESSED CONCRETE CORED SLABS.

RECESSES FOR TRANSVERSE STRANDS SHALL BE GROUTED AFTER THE TENSIONING OF THE STRANDS.

THE 2½"Ø DOWEL HOLES AT FIXED ENDS OF SLAB SECTIONS SHALL BE FILLED WITH GROUT.

THE BACKER RODS SHALL CONFORM TO THE REQUIREMENTS OF TYPE M BOND BREAKER. SEE SECTION 1028 OF THE STANDARD SPECIFICATIONS.

WHEN CORED SLABS ARE CAST, AN INTERNAL HOLD-DOWN SYSTEM SHALL BE EMPLOYED TO PREVENT VOIDS FROM RISING OR MOVING SIDEWAYS. AT LEAST SIX WEEKS PRIOR TO CASTING CORED SLABS, THE CONTRACTOR SHALL SUBMIT TO THE ENGINEER FOR REVIEW AND COMMENT, DETAILED DRAWINGS OF THE PROPOSED HOLD-DOWN SYSTEM. IN ADDITION TO STRUCTURAL DETAILS, LOCATION AND SPACING OF THE HOLD-DOWNS SHALL BE INDICATED.

PLACEMENT OF THE CONCRETE WEARING SURFACE SHALL OCCUR AFTER CASTING THE CONCRETE BARRIER RAIL, PARAPET AND SIDEWALK. THE COST OF THE REINFORCING STEEL CAST WITH THE CONCRETE WEARING SURFACE SHALL BE INCLUDED IN THE UNIT PRICE BID FOR THE CONCRETE WEARING SURFACE. FOR CONCRETE WEARING SURFACE, SEE SPECIAL PROVISIONS.

WHEN A CONCRETE WEARING SURFACE IS DETAILED ON THE CORED SLAB BRIDGE TYPICAL SECTION, THE TOP SURFACE OF THE CORED SLAB UNITS SHALL HAVE A ⅜" RAKED FINISH.

THE TRANSFER OF LOAD FROM THE ANCHORAGES TO THE CORED SLAB UNIT SHALL BE DONE WHEN THE CONCRETE HAS REACHED A COMPRESSIVE STRENGTH OF NOT LESS THAN 4000 PSI FOR SPANS A & C, AND 5000 PSI FOR SPAN B.

ALL REINFORCING STEEL IN BARRIER RAILS, PARAPET, END POSTS, SIDEWALK AND CONCRETE WEARING SURFACE SHALL BE EPOXY COATED.

PRESTRESSING STRANDS SHALL BE CUT FLUSH WITH THE CORED SLAB UNIT ENDS.

APPLY EPOXY PROTECTIVE COATING TO CORED SLAB UNIT ENDS.

GROOVED CONTRACTION JOINTS, ½" IN DEPTH, SHALL BE TOOLED IN ALL EXPOSED FACES OF THE BARRIER RAIL, PARAPET AND SIDEWALK IN ACCORDANCE WITH ARTICLE 825-10(B) OF THE STANDARD SPECIFICATIONS. A CONTRACTION JOINT SHALL BE LOCATED AT EACH THIRD POINT BETWEEN EXPANSION JOINTS. ONLY ONE CONTRACTION JOINT IS REQUIRED AT MIDPOINT OF SEGMENTS LESS THAN 20 FEET IN LENGTH AND NO CONTRACTION JOINTS ARE REQUIRED FOR THOSE SEGMENTS LESS THAN 10 FEET IN LENGTH.

TRANSVERSE POST TENSIONING OF THE CORED SLAB UNITS SHALL BE DONE IN ACCORDANCE WITH THE STANDARD SPECIFICATIONS.

FOR GROUT FOR STRUCTURES, SEE SPECIAL PROVISIONS.

PAYMENT FOR SIDEWALK SHALL BE INCLUDED IN THE PAY ITEMS FOR CLASS AA CONCRETE AND EPOXY COATED REINFORCING STEEL.

THE #4 S2 STIRRUPS MAY BE SHIFTED AS NECESSARY TO MAINTAIN 1" CLEAR TO THE GROUTED RECESS.

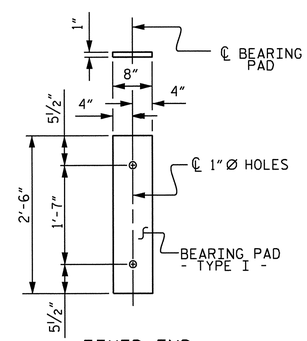

FIXED END
(TYPE I - 78 REQ'D.)

ELASTOMERIC BEARING DETAIL

ELASTOMER IN BEARINGS SHALL BE 50 DUROMETER HARDNESS.

BILL OF MATERIAL FOR CONCRETE BARRIER RAIL

BAR	BARS PER SPAN SPAN A	SPAN B	SPAN C	TOTAL NO.	SIZE	TYPE	LENGTH	WEIGHT
✱ B3	16		16	32	#5	STR	17'-9"	592
✱ B6		16		16	#5	STR	24'-7"	410
✱ S8	38	53	38	129	#5	5	5'-9"	774
✱ EPOXY COATED REINFORCING STEEL								1776 LBS.
CLASS AA CONCRETE								15.1 CU.YDS.
TOTAL LIN. FT. OF CONCRETE BARRIER RAIL								122.75

DEAD LOAD DEFLECTION AND CAMBER

3'-0" x 1'-9" 0.6"Ø L.R. STRAND	SPAN A	SPAN B	SPAN C
CAMBER (SLAB ALONE IN PLACE) ↑	15⁄16"	2½"	15⁄16"
DEFLECTION DUE TO SUPERIMPOSED DEAD LOAD✱✱ ↓	⅛"	7⁄16"	⅛"
FINAL CAMBER ↑	13⁄16"	2⁄16"	13⁄16"

✱✱ INCLUDES FUTURE WEARING SURFACE

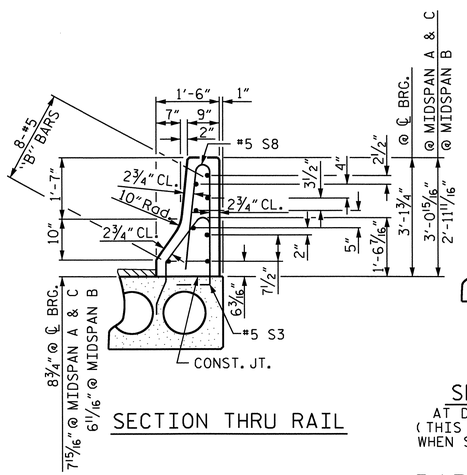

SECTION THRU RAIL

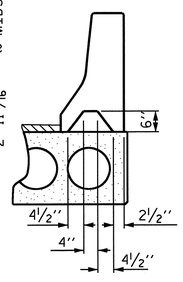

SECTION S-S
AT DAM IN OPEN JOINT
(THIS IS TO BE USED ONLY WHEN SLIP FORM IS USED)

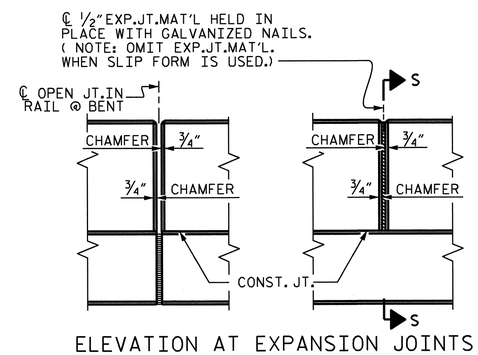

ELEVATION AT EXPANSION JOINTS

BARRIER RAIL DETAILS

PROJECT NO. U-3810
ONSLOW COUNTY
STATION: 234+34.00 -L-

STATE OF NORTH CAROLINA
DEPARTMENT OF TRANSPORTATION
RALEIGH

SUPERSTRUCTURE

BILL OF MATERIAL

NORTH CAROLINA PROFESSIONAL SEAL 14045 ENGINEER TIMOTHY W. COGGINS
07/27/12

REVISIONS						SHEET NO.
NO.	BY:	DATE:	NO.	BY:	DATE:	S-51
1			3			TOTAL SHEETS
2			4			62

STR. #2

ASSEMBLED BY : M.D.PISO	DATE : 7-15-11		
CHECKED BY : P.A.PARISI	DATE : 4-19-12		
DRAWN BY : WJH 4/89	REV. 5/7/03RRR	RWW/JTE	
CHECKED BY : FCJ 5/89	REV. 5/1/06R	TLA/GM	
	REV. 10/1/11	MAA/GM	

11-JUN-2012 11:15
R:\TIPProjects-U\U3810\Structures\FinalPlans\Bridges\Str. #2\u3810_sd_cs_02.dgn
tcoggins

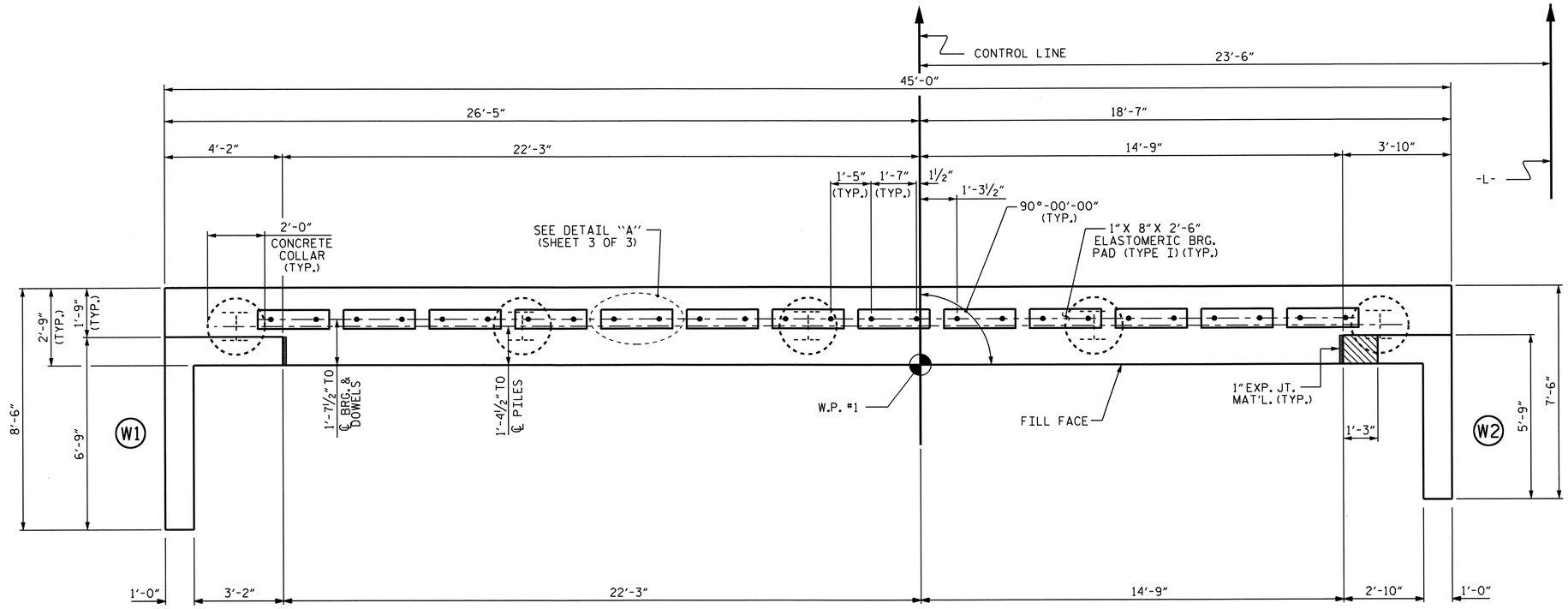

PLAN

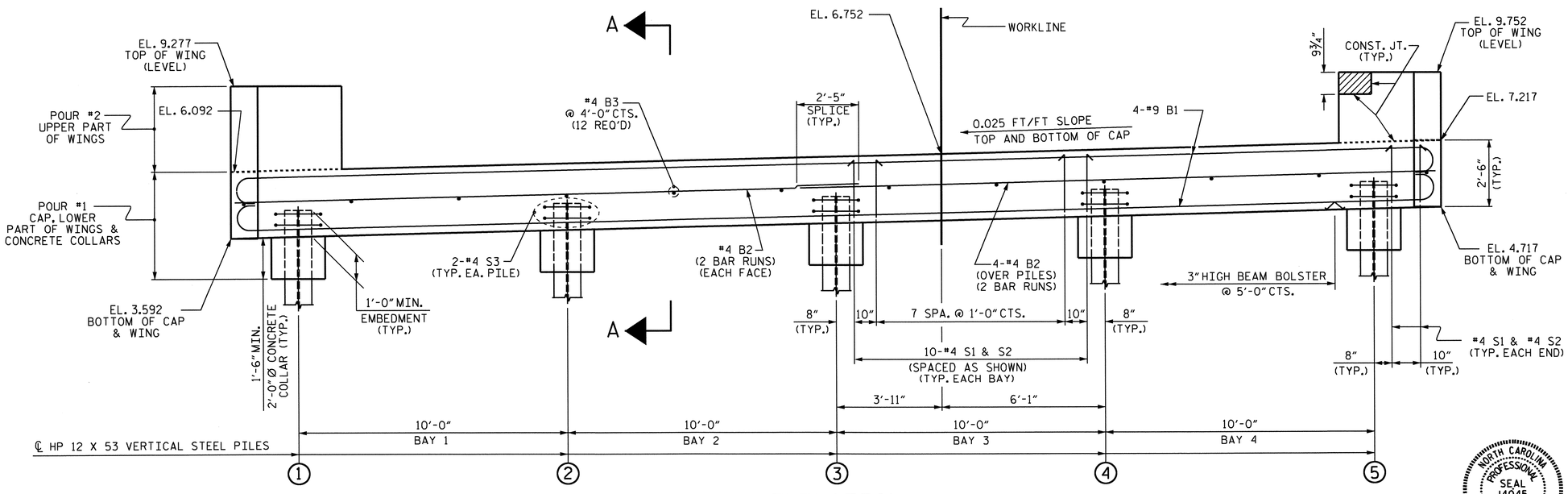

ELEVATION

NOTES

STIRRUPS IN CAP MAY BE SHIFTED AS NECESSARY TO CLEAR DOWELS.

THE CONCRETE IN THE SHADED AREA OF THE WING SHALL BE POURED AFTER THE JOINT BETWEEN THE DECK AND APPROACH SLAB HAS BEEN SAWED AND THE BARRIER RAIL IS CAST IF SLIP FORMING IS USED.

FOR PILE SPLICE DETAILS, SEE SHEET 3 OF 3.

INSTALL THE 4" DIA. DRAIN PIPE THROUGH THE WING WALL AS REQUIRED FOR REINFORCED BRIDGE APPROACH FILLS. SEE THE ROADWAY PLANS. REINFORCING STEEL IN THE WING WALL MAY BE SHIFTED AS NECESSARY TO CLEAR THE DRAIN PIPE.

TOP OF PILE ELEVATIONS	
1	4.667
2	4.917
3	5.167
4	5.417
5	5.667

PROJECT NO. U-3810
ONSLOW COUNTY
STATION: 234+34.00 -L-
SHEET 1 OF 3

STATE OF NORTH CAROLINA
DEPARTMENT OF TRANSPORTATION
RALEIGH

SUBSTRUCTURE

END BENT #1

NORTH CAROLINA PROFESSIONAL SEAL 14045 ENGINEER TIMOTHY L. COGGINS
07/27/12

REVISIONS						SHEET NO.
NO.	BY:	DATE:	NO.	BY:	DATE:	S-52
1			3			TOTAL SHEETS
2			4			62

ASSEMBLED BY : PEGGY PARISI DATE : 9-28-11
CHECKED BY : G. KOUCHEKI DATE : 3-20-12
DRAWN BY : DGE 02/10
CHECKED BY : MKT 02/10

24-JUL-2012 13:42
W:\structures\Plans\FinalPlans\Bridges\Str. #2\u3810_sd_eb#_02.dgn
bbarodawala

STR. #2

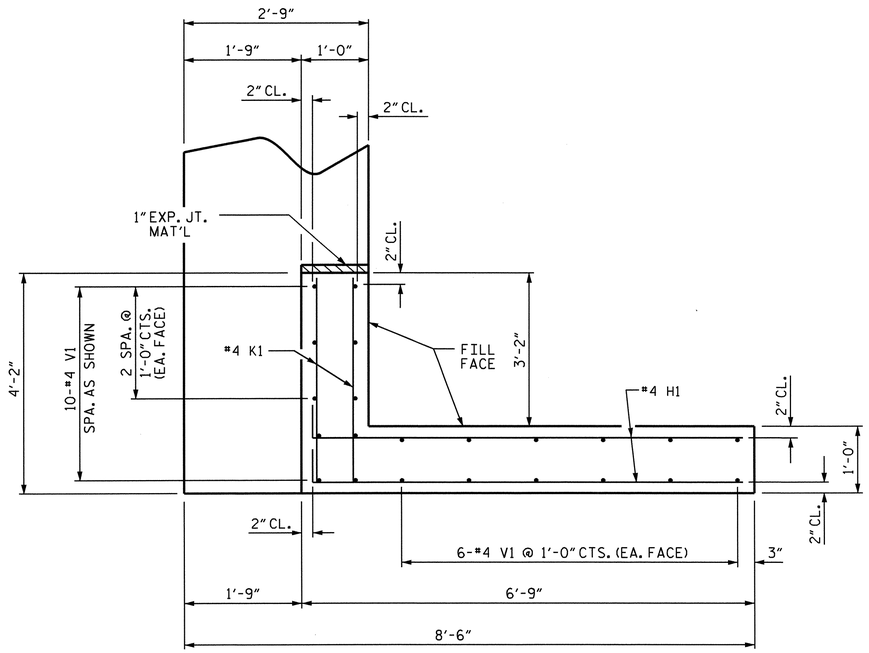

PLAN OF WING (W1)

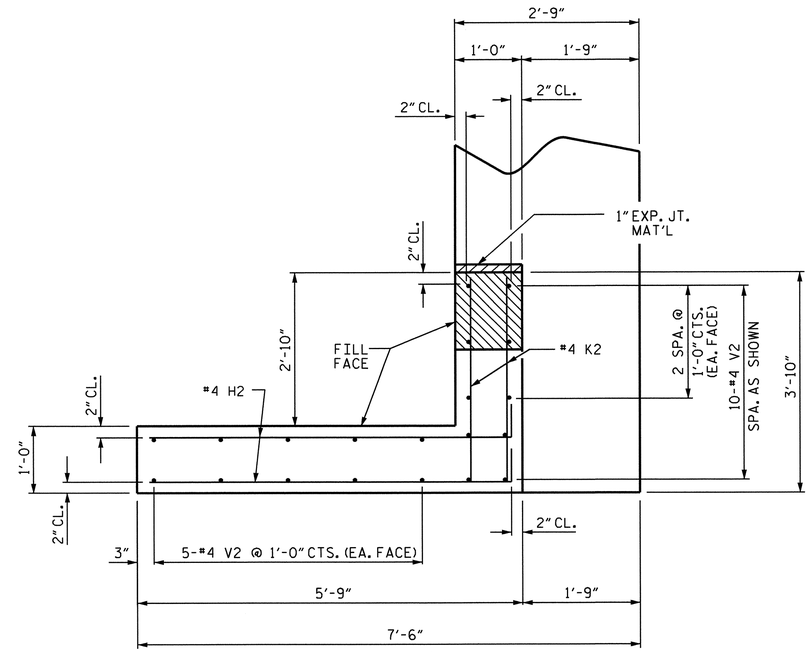

PLAN OF WING (W2)

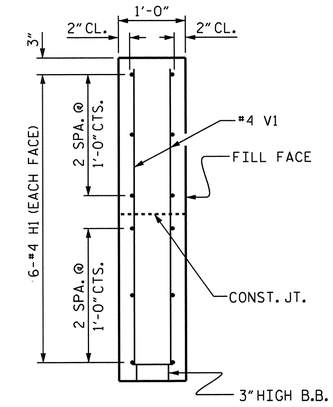

SECTION X-X

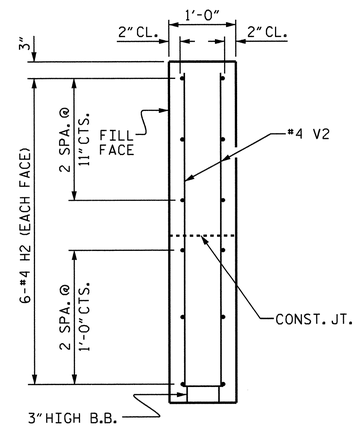

SECTION Y-Y

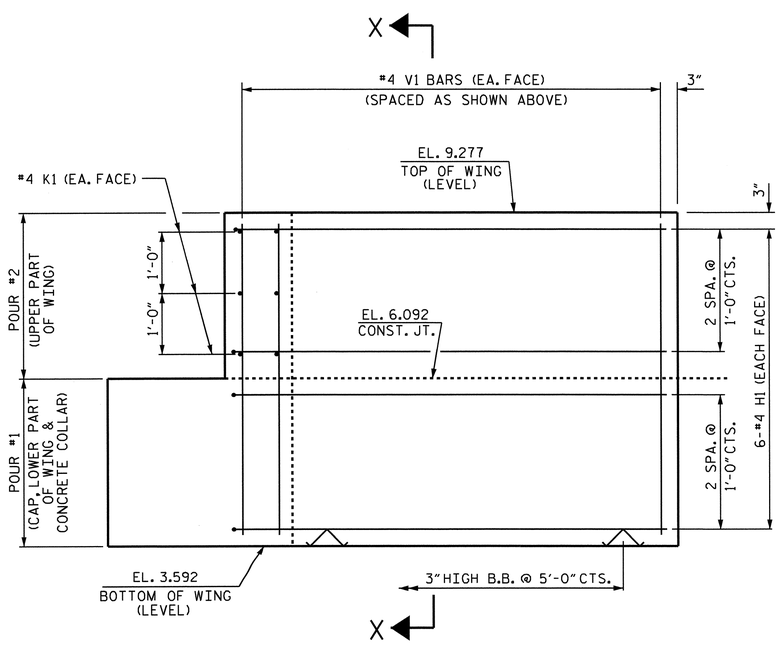

ELEVATION OF WING (W1)

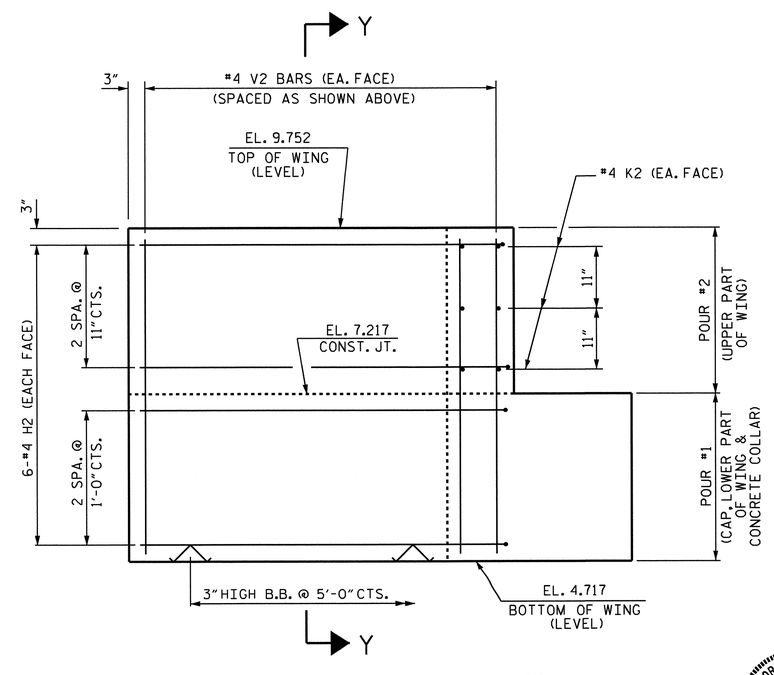

ELEVATION OF WING (W2)

WING DETAILS

NORTH CAROLINA PROFESSIONAL SEAL 14045 ENGINEER TIMOTHY W. COGGINS
07/27/12

PROJECT NO. U-3810
ONSLOW COUNTY
STATION: 234+34.00 -L-

SHEET 2 OF 3

STATE OF NORTH CAROLINA
DEPARTMENT OF TRANSPORTATION
RALEIGH

SUBSTRUCTURE
END BENT #1
WING DETAILS

REVISIONS						SHEET NO.
NO.	BY:	DATE:	NO.	BY:	DATE:	S-53
1			3			TOTAL SHEETS
2			4			62

ASSEMBLED BY : PEGGY PARISI DATE : 9-30-11
CHECKED BY : G. KOUCHEKI DATE : 3-20-12
DRAWN BY : DGE 02/10
CHECKED BY : MKT 02/10

08-JUN-2012 11:21
R:\Structures\Final Plans\Bridges\Str. #2\u3810_sd_eb#_02.dgn
nruffin

STR. #2

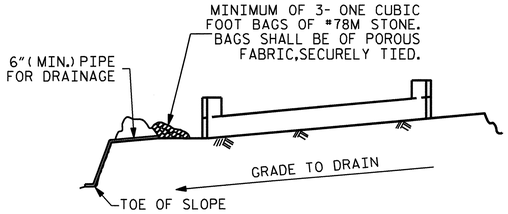

BAGGED STONE AND PIPE SHALL BE PLACED IMMEDIATELY AFTER COMPLETION OF END BENT EXCAVATION. PIPE MAY BE EITHER CONCRETE, CORRUGATED STEEL, CORRUGATED ALUMINUM ALLOY, OR CORRUGATED PLASTIC. PERFORATED PIPE WILL NOT BE ALLOWED.

BAGGED STONE SHALL REMAIN IN PLACE UNTIL THE ENGINEER DIRECTS THAT IT BE REMOVED. THE CONTRACTOR SHALL REMOVE AND DISPOSE OF SILT ACCUMULATIONS AT BAGGED STONE WHEN SO DIRECTED BY THE ENGINEER. BAGS SHALL BE REMOVED AND REPLACED WHENEVER THE ENGINEER DETERMINES THAT THEY HAVE DETERIORATED AND LOST THEIR EFFECTIVENESS.

NO SEPARATE PAYMENT WILL BE MADE FOR THIS WORK AND THE ENTIRE COST OF THIS WORK SHALL BE INCLUDED IN THE UNIT CONTRACT PRICE BID FOR THE SEVERAL PAY ITEMS.

TEMPORARY DRAINAGE AT END BENT

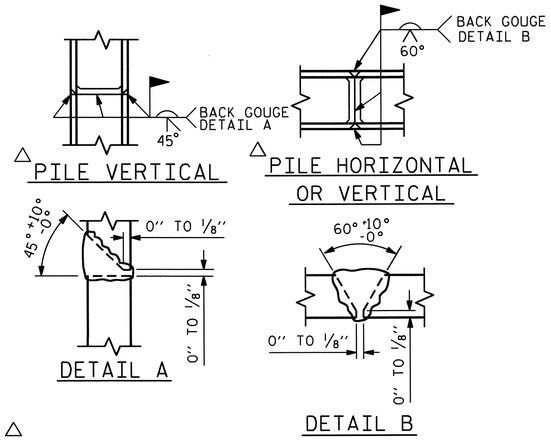

△ POSITION OF PILE DURING WELDING.

PILE SPLICE DETAILS

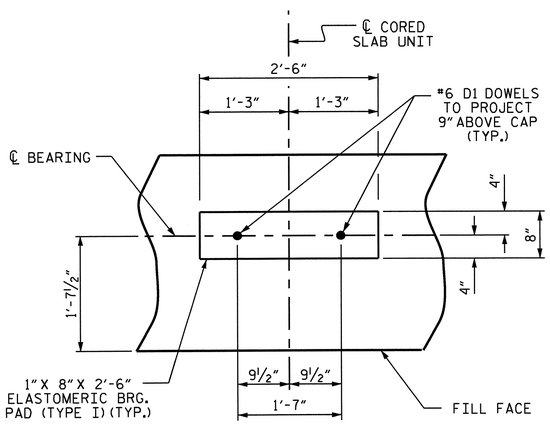

DETAIL "A"

(DIMENSIONS ARE TYPICAL FOR EACH BEARING)

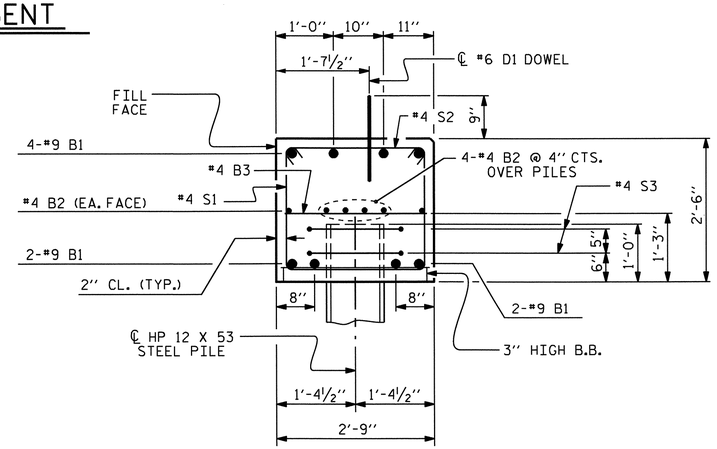

SECTION A-A

(CONCRETE COLLAR NOT SHOWN FOR CLARITY. SEE "CORROSION PROTECTION FOR STEEL PILES DETAIL.")

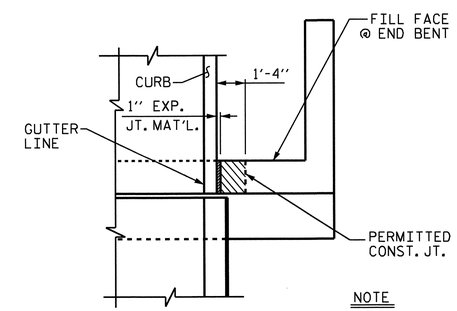

PLAN

NOTE

THE CONCRETE IN THE SHADED AREA OF THE WING SHALL BE POURED AFTER THE JOINT BETWEEN THE DECK AND APPROACH SLAB HAS BEEN SAWED AND THE BARRIER RAIL IS CAST IF SLIP FORMING IS USED.

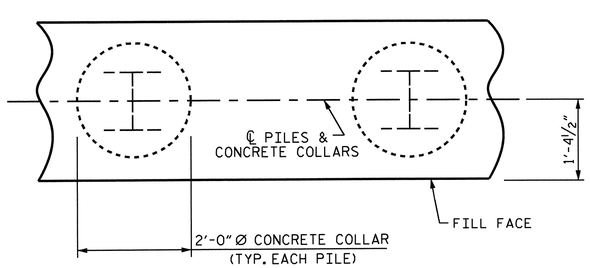

PLAN

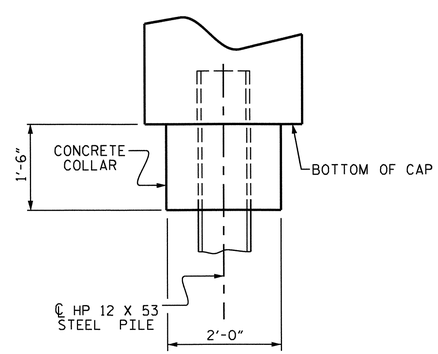

ELEVATION

CORROSION PROTECTION FOR STEEL PILES DETAIL

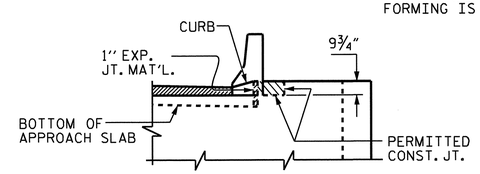

ELEVATION

BLOCKOUT IN WING WALL

BAR TYPES

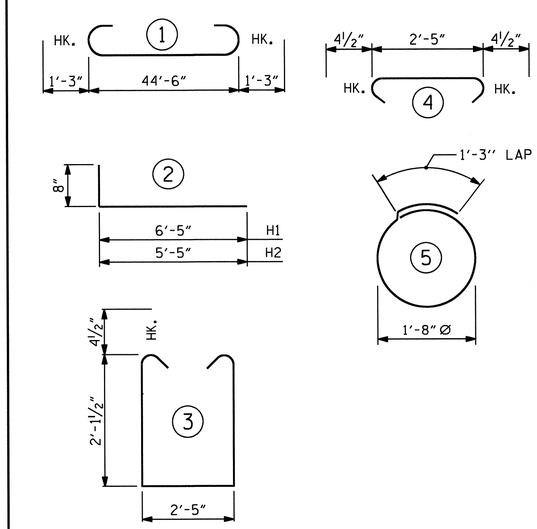

ALL BAR DIMENSIONS ARE OUT TO OUT.

BILL OF MATERIAL

END BENT #1

BAR	NO.	SIZE	TYPE	LENGTH	WEIGHT
B1	8	#9	1	47'-0"	1278
B2	12	#4	STR	23'-7"	189
B3	12	#4	STR	2'-5"	19
D1	26	#6	STR	1'-6"	59
H1	12	#4	2	7'-1"	57
H2	12	#4	2	6'-1"	49
K1	6	#4	STR	3'-10"	15
K2	6	#4	STR	3'-6"	14
S1	44	#4	3	7'-5"	218
S2	44	#4	4	3'-2"	93
S3	10	#4	5	6'-6"	43
V1	22	#4	STR	5'-4"	78
V2	20	#4	STR	4'-8"	62
REINFORCING STEEL					2174 LBS.

CLASS A CONCRETE BREAKDOWN

POUR #1	CAP, LOWER PART OF WINGS & COLLARS	13.3 C.Y.
POUR #2	UPPER PART OF WINGS	2.0 C.Y.
TOTAL CLASS A CONCRETE		15.3 C.Y.

HP 12 X 53 STEEL PILES
NO: 5 LIN. FT.= 350

PILE REDRIVES NO. 5 EACH

PDA TESTING NO. 1 EACH

PROJECT NO. U-3810
ONSLOW COUNTY
STATION: 234+34.00 -L-

SHEET 3 OF 3

STATE OF NORTH CAROLINA
DEPARTMENT OF TRANSPORTATION
RALEIGH

SUBSTRUCTURE

END BENT #1 DETAILS

NORTH CAROLINA PROFESSIONAL SEAL 14045 ENGINEER TIMOTHY W. COGGINS
Timothy W. Coggins 07/27/12

REVISIONS						SHEET NO.
NO.	BY:	DATE:	NO.	BY:	DATE:	S-54
1			3			TOTAL SHEETS
2			4			62

ASSEMBLED BY : PEGGY PARISI DATE : 9-30-11
CHECKED BY : G. KOUCHEKI DATE : 3-20-12
DRAWN BY : DGE 02/10
CHECKED BY : MKT 02/10

27-JUL-2012 09:30
R:\TIPProjects-U\U3810\structures\Plans\FinalPlans\Bridges\Str. #2\u3810_sd_eb#_02.dgn
tcoggins

STR. #2

NOTES

STIRRUPS IN CAP MAY BE SHIFTED AS NECESSARY TO CLEAR DOWELS.

★ INVERT ALTERNATE STIRRUPS.

GALVANIZE THE TOP OF EACH INTERIOR BENT PILE A MINIMUM OF 25 FEET FOR BENT #1 AND 30 FEET FOR BENT #2. GALVANIZE IN ACCORDANCE WITH SECTION 1076 OF THE STANDARD SPECIFICATIONS.

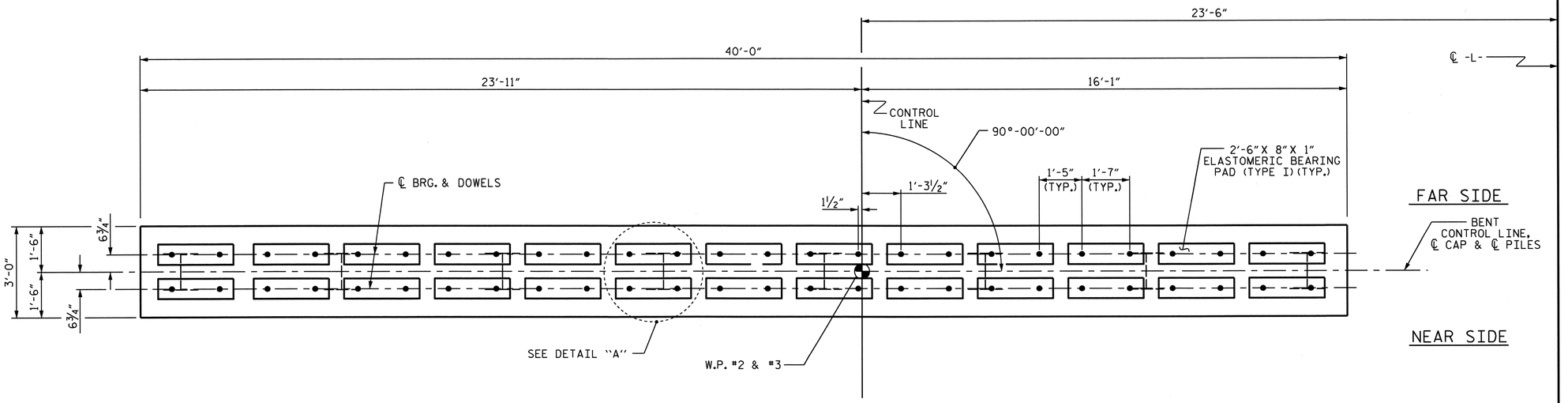

PLAN

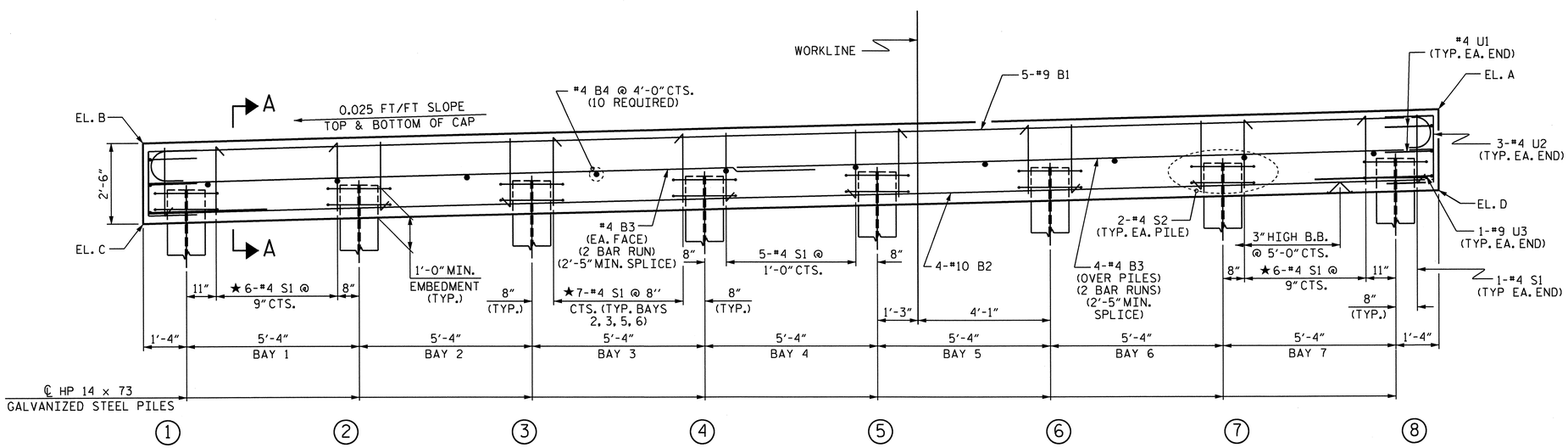

ELEVATION

FOR SECTION A-A, SEE SHEET 2 OF 2

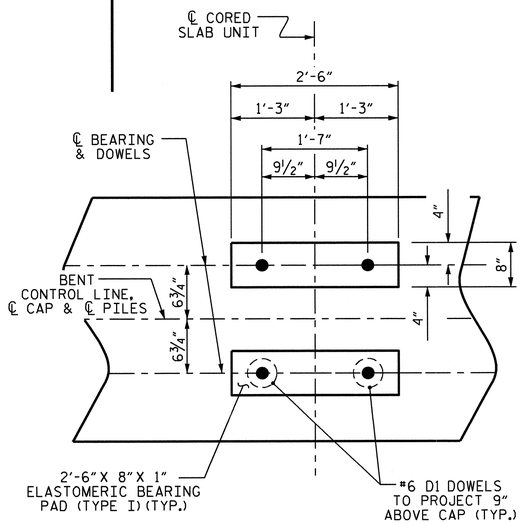

DETAIL "A"

(DIMENSIONS ARE TYPICAL EACH BEARING)

TOP AND BOTTOM OF CAP ELEVATIONS		
	BENT #1	BENT #2
EL. A	7.045	6.895
EL. B	6.045	5.895
EL. C	3.545	3.395
EL. D	4.545	4.395

TOP OF PILE ELEVATIONS		
PILE	BENT #1	BENT #2
1	4.593	4.443
2	4.726	4.576
3	4.860	4.710
4	4.993	4.843
5	5.126	4.976
6	5.260	5.110
7	5.393	5.243
8	5.497	5.347

PROJECT NO. U-3810

ONSLOW COUNTY

STATION: 234+34.00 -L-

SHEET 1 OF 2

STATE OF NORTH CAROLINA
DEPARTMENT OF TRANSPORTATION
RALEIGH

SUBSTRUCTURE

BENTS #1 & #2

NORTH CAROLINA PROFESSIONAL SEAL 12774 ENGINEER OMAR R. AZIZI 8-7-12

ASSEMBLED BY : B. L. GREEN DATE : 3/12/12
CHECKED BY : O. R. AZIZI DATE : 3/19/12

DRAWN BY : DGE 05/10
CHECKED BY : MKT 05/10

REVISIONS						SHEET NO.
NO.	BY:	DATE:	NO.	BY:	DATE:	S-55
1			3			TOTAL SHEETS
2			4			62

07-AUG-2012 15:56
Z:\TIPProjects-U\U3810\structures\Plans\FinalPlans\Bridges\Str. #2\u3810_sd_b#_02.dgn
padkins

STR. #2

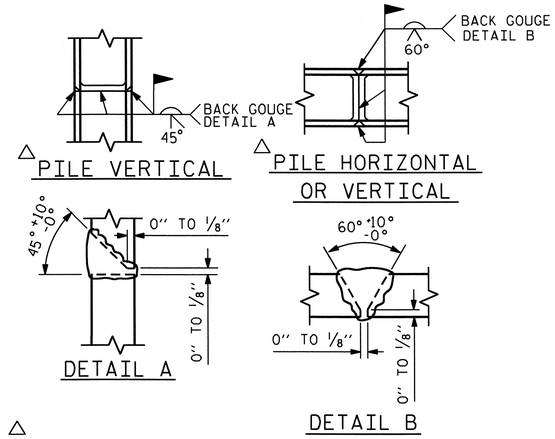

△ POSITION OF PILE DURING WELDING.

PILE SPLICE DETAILS

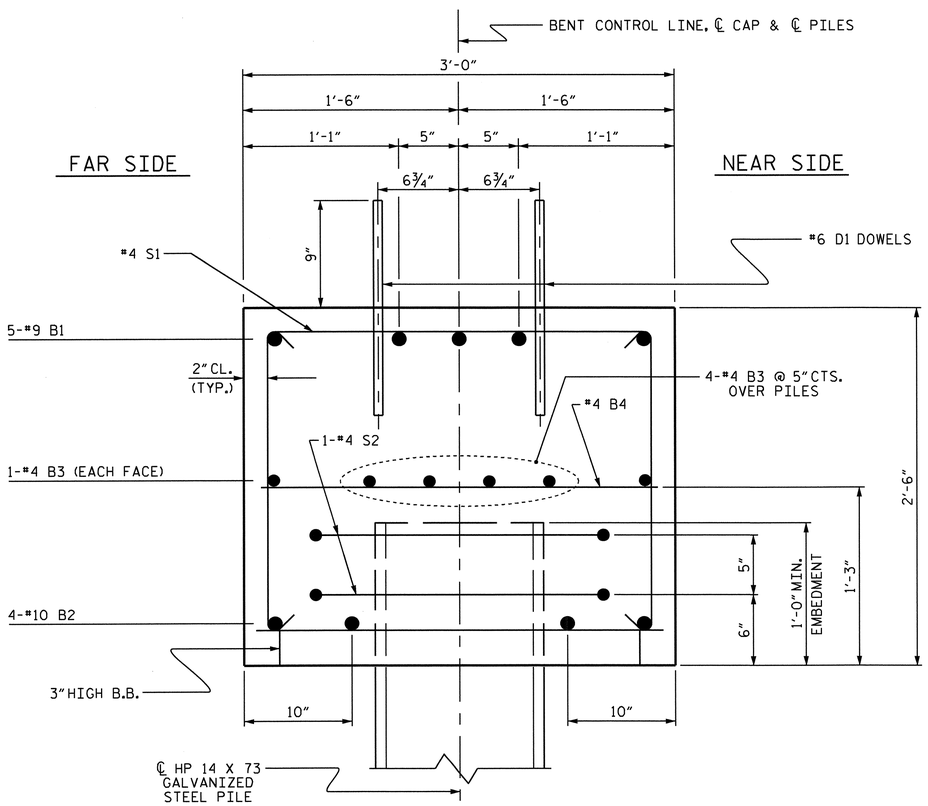

SECTION A-A

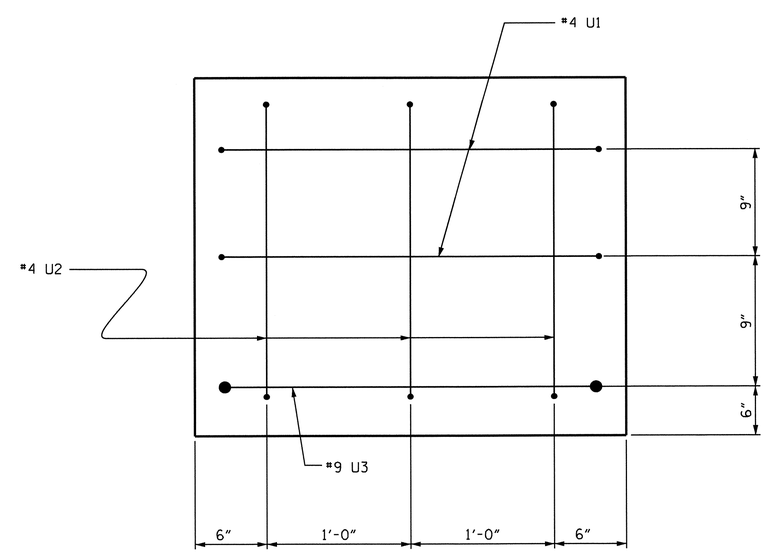

END OF CAP VIEW

(TYPICAL BOTH ENDS)

BAR TYPES

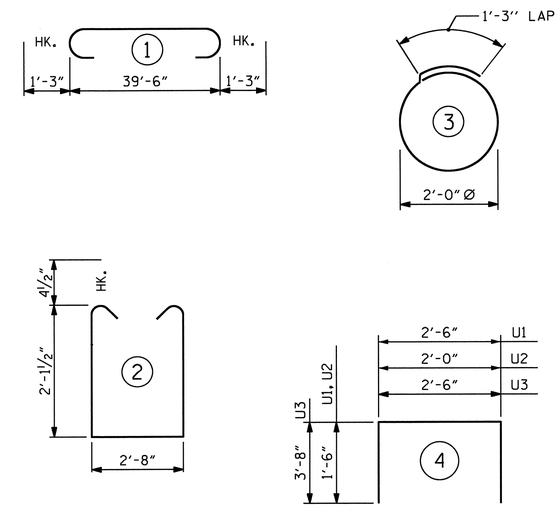

ALL BAR DIMENSIONS ARE OUT TO OUT.

BILL OF MATERIAL
FOR ONE BENT

BAR	NO.	SIZE	TYPE	LENGTH	WEIGHT
B1	5	#9	1	42'-0"	714
B2	4	#10	STR	39'-8"	683
B3	12	#4	STR	21'-1"	169
B4	10	#4	STR	2'-8"	18
D1	52	#6	STR	1'-6"	117
S1	47	#4	2	7'-8"	241
S2	16	#4	3	7'-7"	81
U1	4	#4	4	5'-6"	15
U2	6	#4	4	5'-0"	20
U3	2	#9	4	9'-10"	67

REINFORCING STEEL (FOR ONE BENT) 2125 LBS

CLASS A CONCRETE BREAKDOWN (FOR ONE BENT)

POUR #1 (CAP) 11.1 C.Y.

TOTAL CLASS A CONCRETE 11.1 C.Y.

HP 14 X 73 GALVANIZED STEEL PILES (FOR ONE BENT)

No. 8 LIN. FT. 600

PILE REDRIVES EA. 8

PDA TESTING (BENT #2 ONLY) EA. 1

PROJECT NO. U-3810

ONSLOW COUNTY

STATION: 234+34.00 -L-

SHEET 2 OF 2

STATE OF NORTH CAROLINA
DEPARTMENT OF TRANSPORTATION
RALEIGH

SUBSTRUCTURE

BENTS #1 & #2

NORTH CAROLINA PROFESSIONAL SEAL ENGINEER OMAR R. AZIZI 7/30/12

REVISIONS						SHEET NO.
NO.	BY:	DATE:	NO.	BY:	DATE:	S-56
1			3			TOTAL SHEETS
2			4			62

DRAWN BY : B. L. GREEN DATE : 3/12/12
CHECKED BY : O. R. AZIZI DATE : 3/19/12

DRAWN BY : DGE 05/10
CHECKED BY : MKT 05/10

08-JUN-2012 11:21
R:\Structures\Final Plans\Bridges\Str. #2\u3810_sd_b#_02.dgn
nruffin

STR. #2

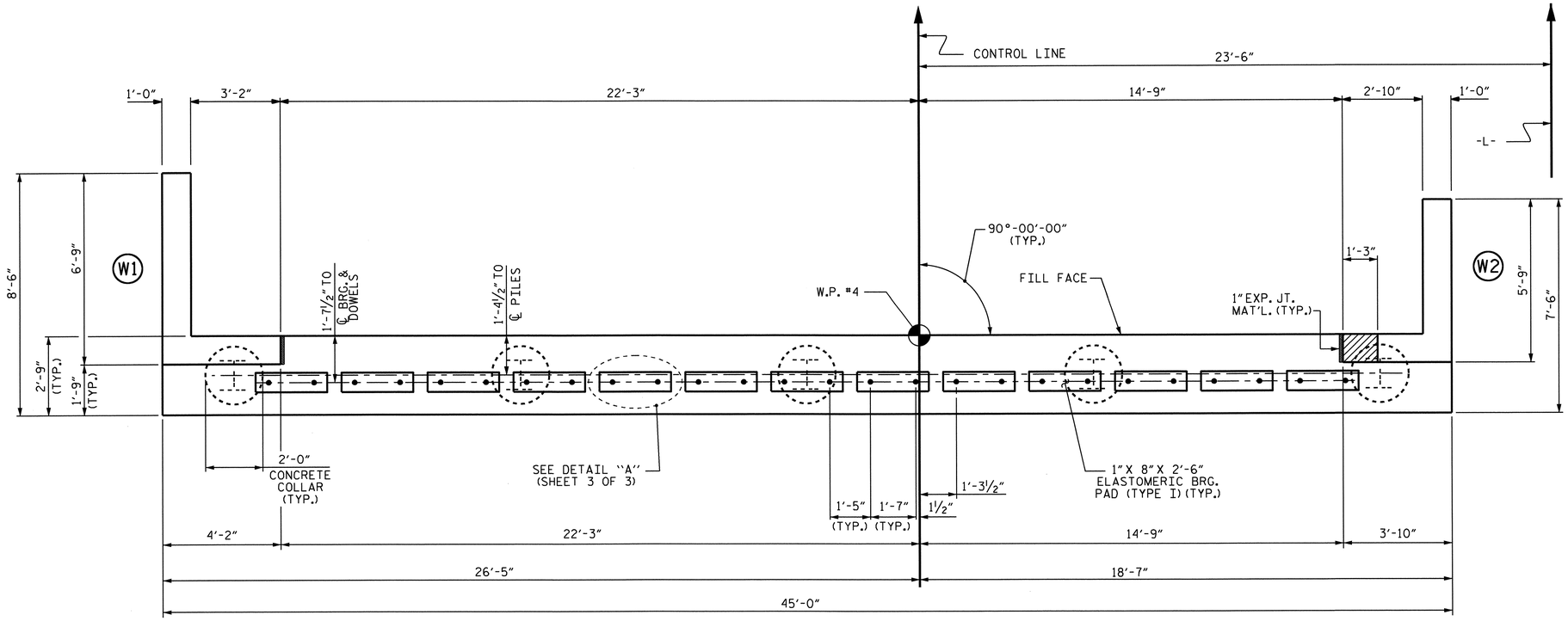

PLAN

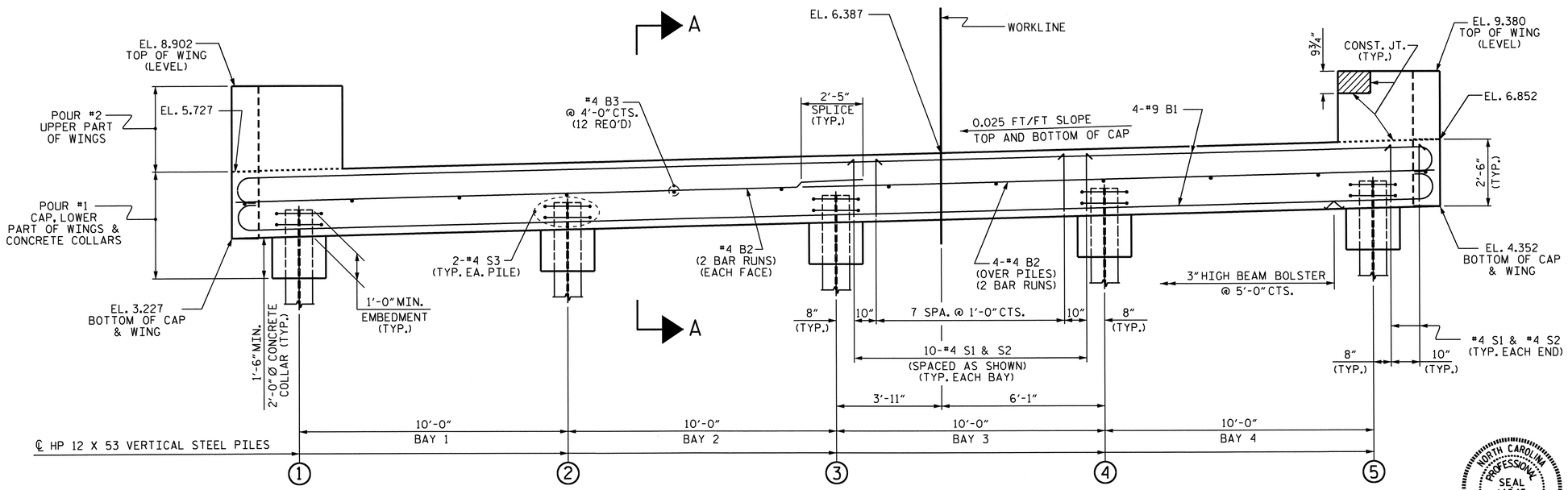

ELEVATION

NOTES:

STIRRUPS IN CAP MAY BE SHIFTED AS NECESSARY TO CLEAR DOWELS.

THE CONCRETE IN THE SHADED AREA OF THE WING SHALL BE POURED AFTER THE JOINT BETWEEN THE DECK AND APPROACH SLAB HAS BEEN SAWED AND THE BARRIER RAIL IS CAST IF SLIP FORMING IS USED.

FOR PILE SPLICE DETAILS, SEE SHEET 3 OF 3.

INSTALL THE 4" DIA. DRAIN PIPE THROUGH THE WING WALL AS REQUIRED FOR REINFORCED BRIDGE APPROACH FILLS, SEE THE ROADWAY PLANS. REINFORCING STEEL IN THE WING WALL MAY BE SHIFTED AS NECESSARY TO CLEAR THE DRAIN PIPE.

TOP OF PILE ELEVATIONS	
1	4.302
2	4.552
3	4.802
4	5.052
5	5.302

PROJECT NO. U-3810
ONSLOW COUNTY
STATION: 234+34.00 -L-

SHEET 1 OF 3

STATE OF NORTH CAROLINA
DEPARTMENT OF TRANSPORTATION
RALEIGH

SUBSTRUCTURE

END BENT #2

NORTH CAROLINA PROFESSIONAL SEAL 14045 ENGINEER TIMOTHY V. COGGINS
07/27/12

REVISIONS						SHEET NO.
NO.	BY:	DATE:	NO.	BY:	DATE:	S-57
1			3			TOTAL SHEETS
2			4			62

STR. #2

ASSEMBLED BY : PEGGY PARISI DATE : 9-28-11
CHECKED BY : G. KOUCHEKI DATE : 3-20-12
DRAWN BY : DGE 02/10
CHECKED BY : MKT 02/10

27-JUL-2012 16:56
R:\TIPProjects-U\U3810\structures\Plans\FinalPlans\Bridges\Str. #2\u3810_sd_eb#_02.dgn
tcoggins

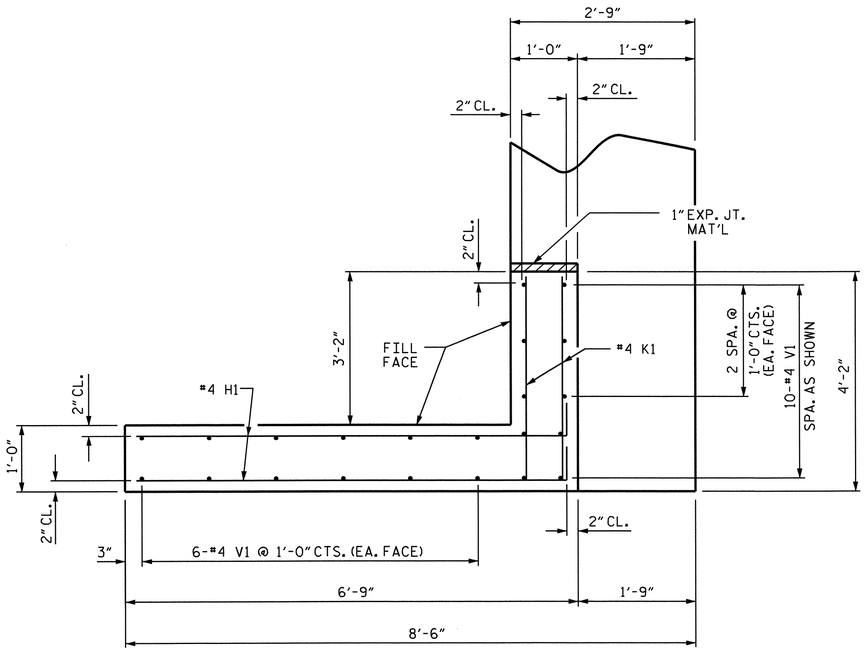

PLAN OF WING (W1)

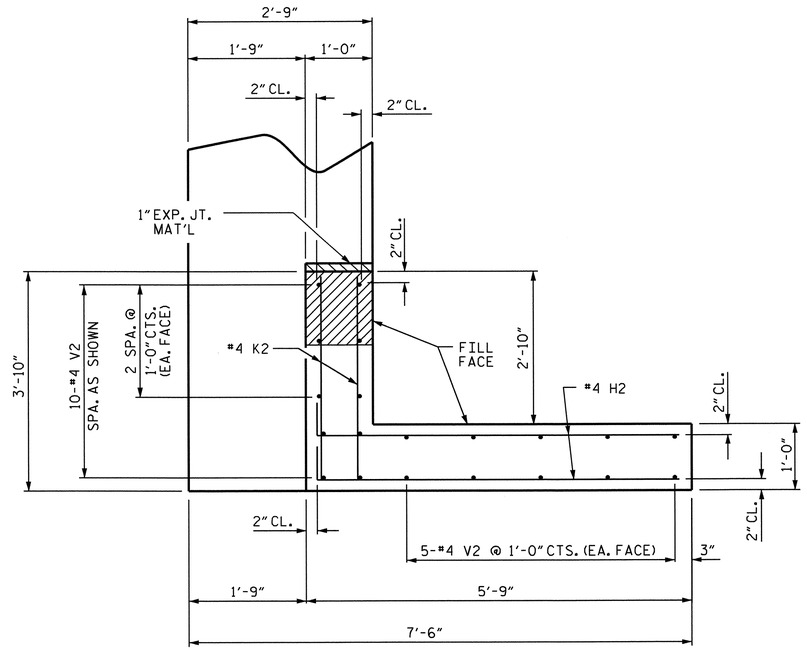

PLAN OF WING (W2)

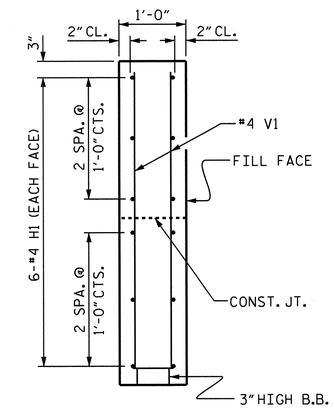

SECTION X-X

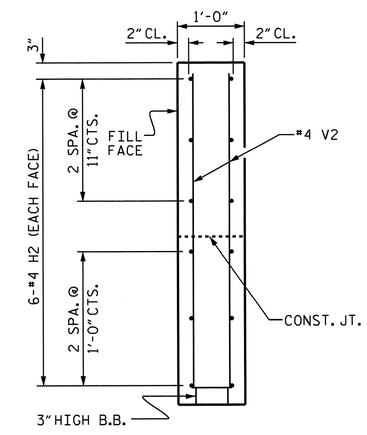

SECTION Y-Y

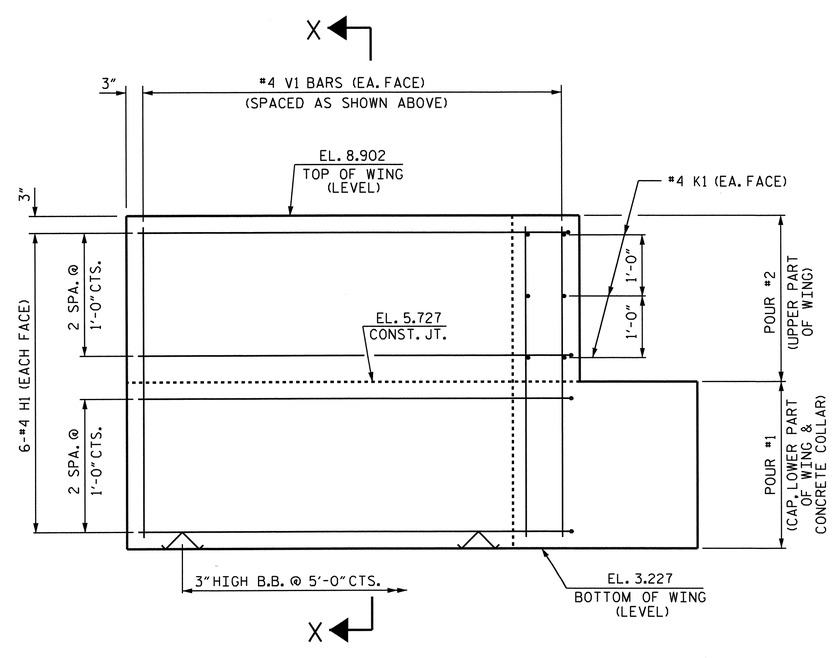

ELEVATION OF WING (W1)

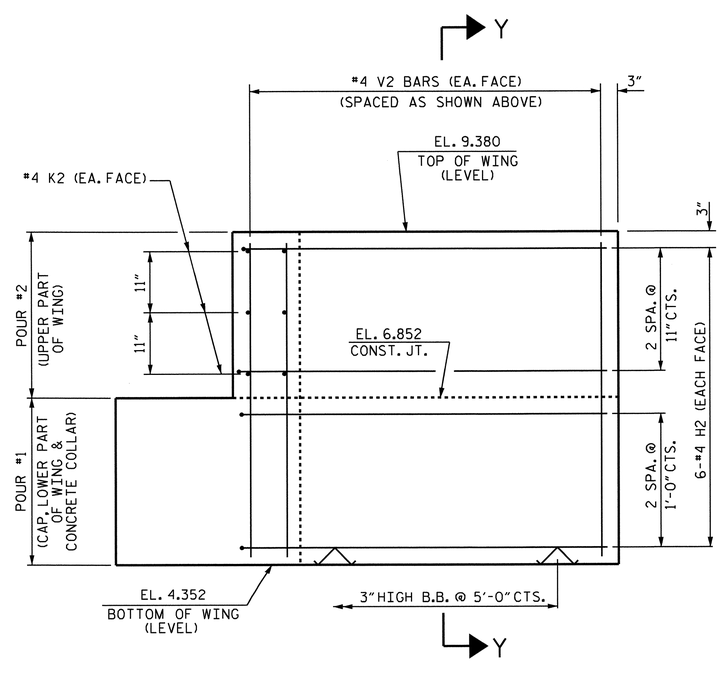

ELEVATION OF WING (W2)

WING DETAILS

PROJECT NO. U-3810

ONSLOW COUNTY

STATION: 234+34.00 -L-

SHEET 2 OF 3

STATE OF NORTH CAROLINA
DEPARTMENT OF TRANSPORTATION
RALEIGH

SUBSTRUCTURE

END BENT #2
WING DETAILS

NORTH CAROLINA PROFESSIONAL SEAL 14045 ENGINEER TIMOTHY L. COGGINS
07/27/12

REVISIONS						SHEET NO.
NO.	BY:	DATE:	NO.	BY:	DATE:	S-58
1			3			TOTAL SHEETS
2			4			62

STR. #2

ASSEMBLED BY : PEGGY PARISI DATE : 9-30-11
CHECKED BY : G. KOUCHEKI DATE : 3-20-12

DRAWN BY : DGE 02/10
CHECKED BY : MKT 02/10

08-JUN-2012 11:21
R:\Structures\Final Plans\Bridges\Str. #2\u3810_sd_eb#_02.dgn
nruffin

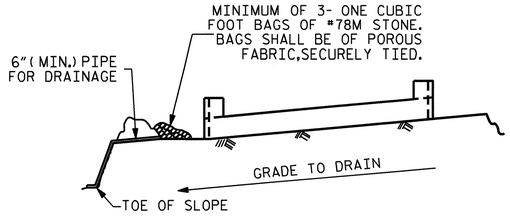

BAGGED STONE AND PIPE SHALL BE PLACED IMMEDIATELY AFTER COMPLETION OF END BENT EXCAVATION. PIPE MAY BE EITHER CONCRETE, CORRUGATED STEEL, CORRUGATED ALUMINUM ALLOY, OR CORRUGATED PLASTIC. PERFORATED PIPE WILL NOT BE ALLOWED.

BAGGED STONE SHALL REMAIN IN PLACE UNTIL THE ENGINEER DIRECTS THAT IT BE REMOVED. THE CONTRACTOR SHALL REMOVE AND DISPOSE OF SILT ACCUMULATIONS AT BAGGED STONE WHEN SO DIRECTED BY THE ENGINEER. BAGS SHALL BE REMOVED AND REPLACED WHENEVER THE ENGINEER DETERMINES THAT THEY HAVE DETERIORATED AND LOST THEIR EFFECTIVENESS.

NO SEPARATE PAYMENT WILL BE MADE FOR THIS WORK AND THE ENTIRE COST OF THIS WORK SHALL BE INCLUDED IN THE UNIT CONTRACT PRICE BID FOR THE SEVERAL PAY ITEMS.

TEMPORARY DRAINAGE AT END BENT

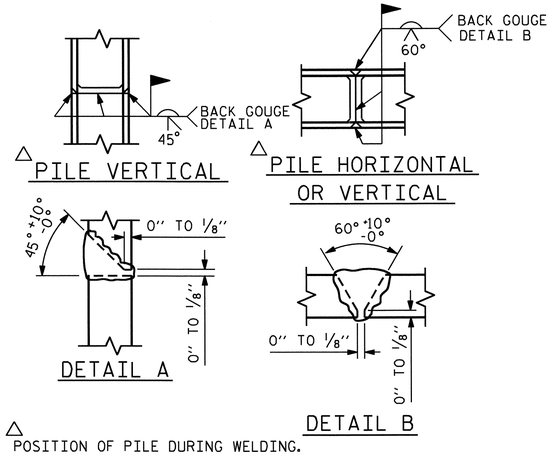

PILE SPLICE DETAILS

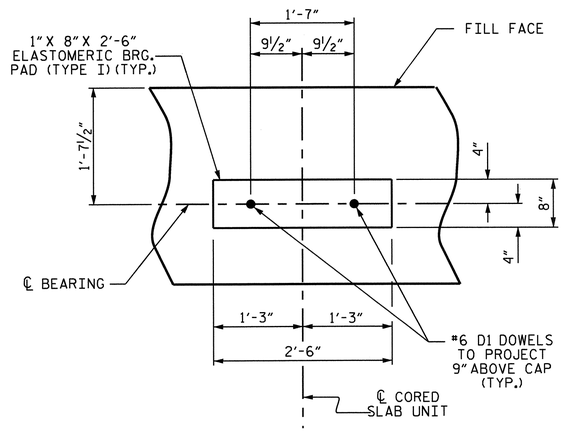

DETAIL "A"

(DIMENSIONS ARE TYPICAL FOR EACH BEARING)

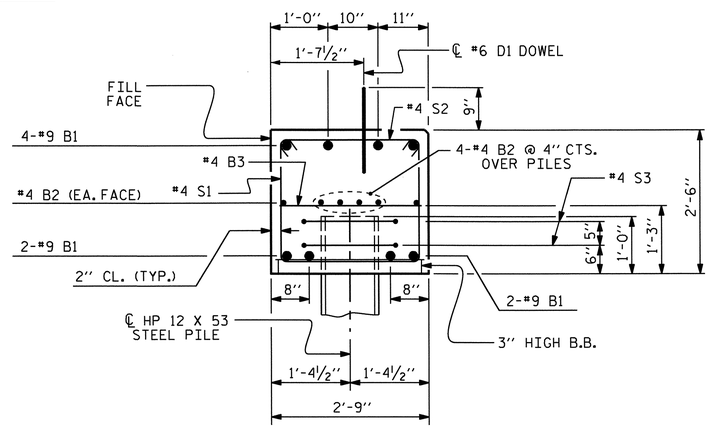

SECTION A-A

(CONCRETE COLLAR NOT SHOWN FOR CLARITY. SEE "CORROSION PROTECTION FOR STEEL PILES DETAIL.")

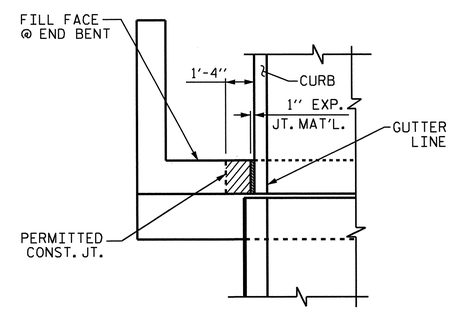

NOTE

THE CONCRETE IN THE SHADED AREA OF THE WING SHALL BE POURED AFTER THE JOINT BETWEEN THE DECK AND APPROACH SLAB HAS BEEN SAWED AND THE BARRIER RAIL IS CAST IF SLIP FORMING IS USED.

PLAN

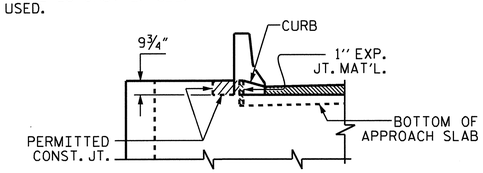

ELEVATION

BLOCKOUT IN WING WALL

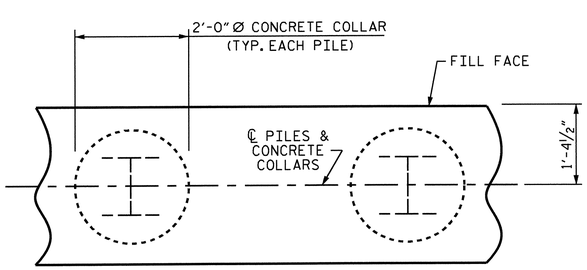

PLAN

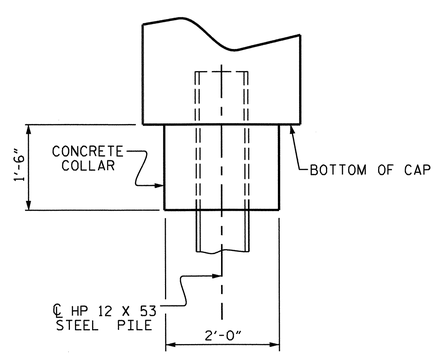

ELEVATION

CORROSION PROTECTION FOR STEEL PILES DETAIL

BAR TYPES

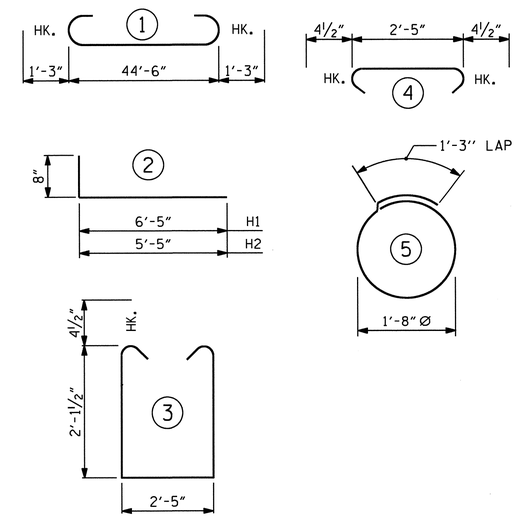

ALL BAR DIMENSIONS ARE OUT TO OUT.

BILL OF MATERIAL
END BENT #2

BAR	NO.	SIZE	TYPE	LENGTH	WEIGHT
B1	8	#9	1	47'-0"	1,278
B2	12	#4	STR	23'-7"	189
B3	12	#4	STR	2'-5"	19
D1	26	#6	STR	1'-6"	59
H1	12	#4	2	7'-1"	57
H2	12	#4	2	6'-1"	49
K1	6	#4	STR	3'-10"	15
K2	6	#4	STR	3'-6"	14
S1	44	#4	3	7'-5"	218
S2	44	#4	4	3'-2"	93
S3	10	#4	5	6'-6"	43
V1	22	#4	STR	5'-4"	78
V2	20	#4	STR	4'-8"	62
REINFORCING STEEL					2,174 LBS.

CLASS A CONCRETE BREAKDOWN

POUR #1	CAP, LOWER PART OF WINGS & COLLARS	13.3 C.Y.
POUR #2	UPPER PART OF WINGS	2.0 C.Y.
TOTAL CLASS A CONCRETE		15.3 C.Y.

HP 12 X 53 STEEL PILES
NO: 5 LIN. FT.= 375

PILE REDRIVES NO. 5 EACH

PROJECT NO. U-3810
ONSLOW COUNTY
STATION: 234+34.00 -L-

SHEET 3 OF 3

STATE OF NORTH CAROLINA
DEPARTMENT OF TRANSPORTATION
RALEIGH

SUBSTRUCTURE

END BENT #2
DETAILS

NORTH CAROLINA PROFESSIONAL SEAL 14045 ENGINEER TIMOTHY M. COGGINS
07/27/12

REVISIONS						SHEET NO.
NO.	BY:	DATE:	NO.	BY:	DATE:	S-59
1			3			TOTAL SHEETS
2			4			62

ASSEMBLED BY : PEGGY PARISI DATE : 9-30-11
CHECKED BY : G. KOUCHEKI DATE : 3-20-12
DRAWN BY : DGE 02/10
CHECKED BY : MKT 02/10

27-JUL-2012 09:30
R:\TIPProjects-U\U3810\structures\Plans\FinalPlans\Bridges\Str. #2\u3810_sd_eb#_02.dgn
tcoggins

STR. #2

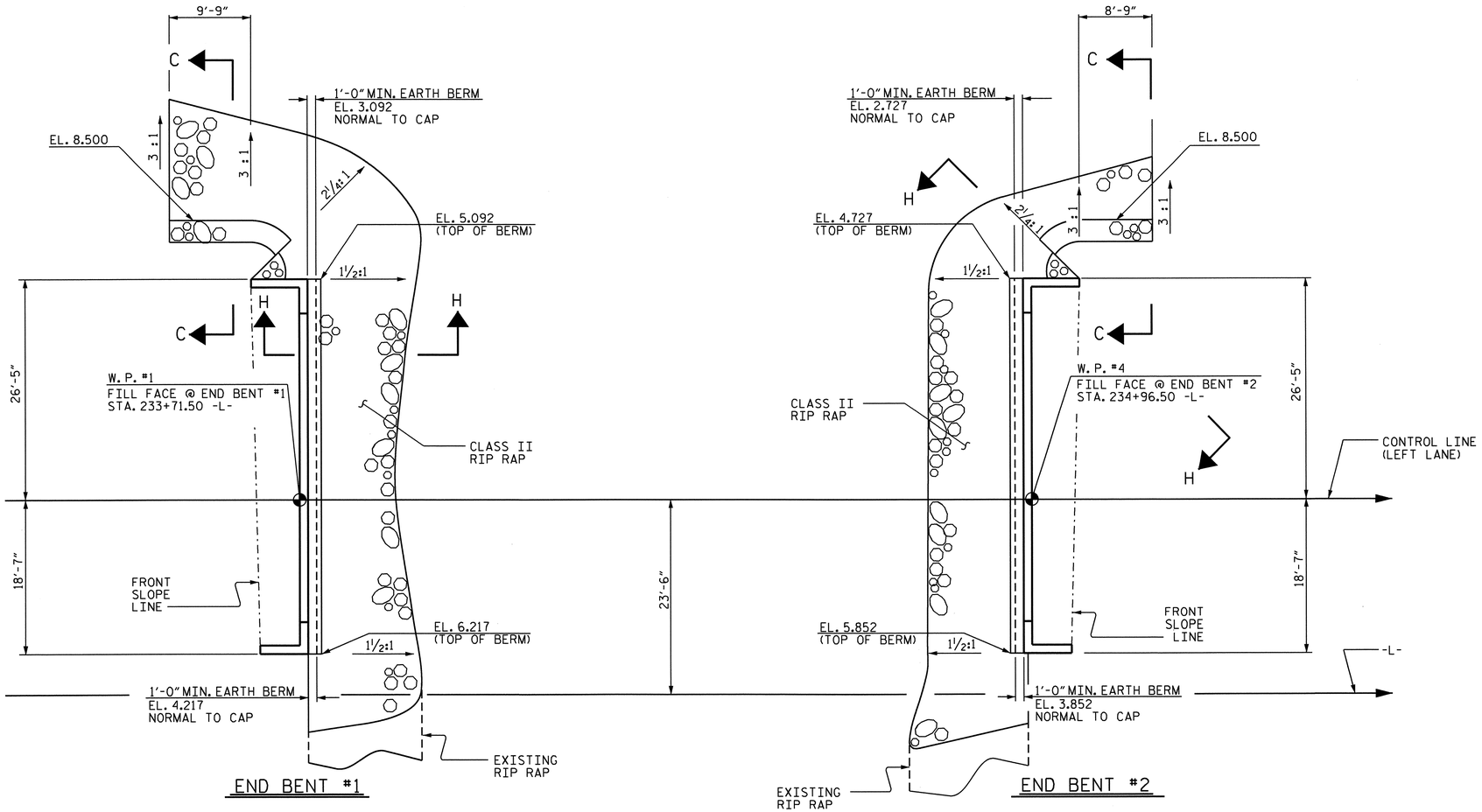

PLAN

ESTIMATED QUANTITIES		
BRIDGE @ STA. 234+34.00 -L-	RIP RAP CLASS II (2'-0" THICK)	GEOTEXTILE FOR DRAINAGE
	TONS	SQUARE YARDS
END BENT 1	202	225
END BENT 2	184	204

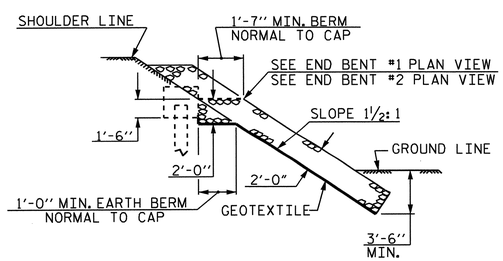

SECTION H-H

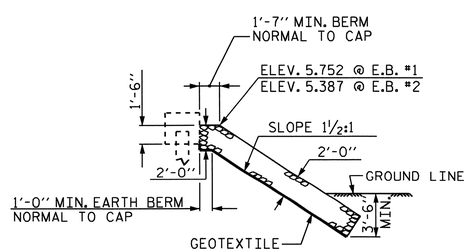

℄ SECTION @ CONTROL LINE
BERM RIP RAPPED

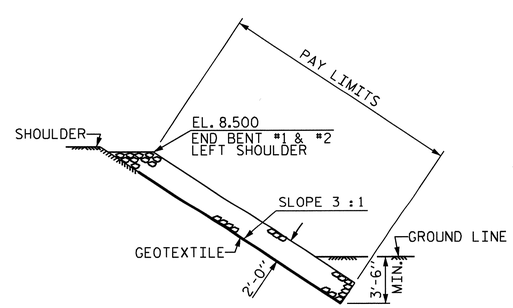

SECTION C-C

PROJECT NO. U-3810
ONSLOW COUNTY
STATION: 234+34.00 -L-

STATE OF NORTH CAROLINA
DEPARTMENT OF TRANSPORTATION
RALEIGH

RIP RAP DETAILS

NORTH CAROLINA PROFESSIONAL SEAL 14045 ENGINEER TIMOTHY W. COGGINS
07/27/12

REVISIONS						SHEET NO.
NO.	BY:	DATE:	NO.	BY:	DATE:	S-60
1			3			TOTAL SHEETS
2			4			62

STR. #2

DRAWN BY : M.D.PISO DATE : 03-19-2012
CHECKED BY : K.P.SEDAI DATE : 03-23-2012

27-JUL-2012 11:05
R:\TIPProjects-U\U3810\structures\Plans\FinalPlans\Bridges\Str. #2\u3810_sd_rr_02.dgn
tcoggins

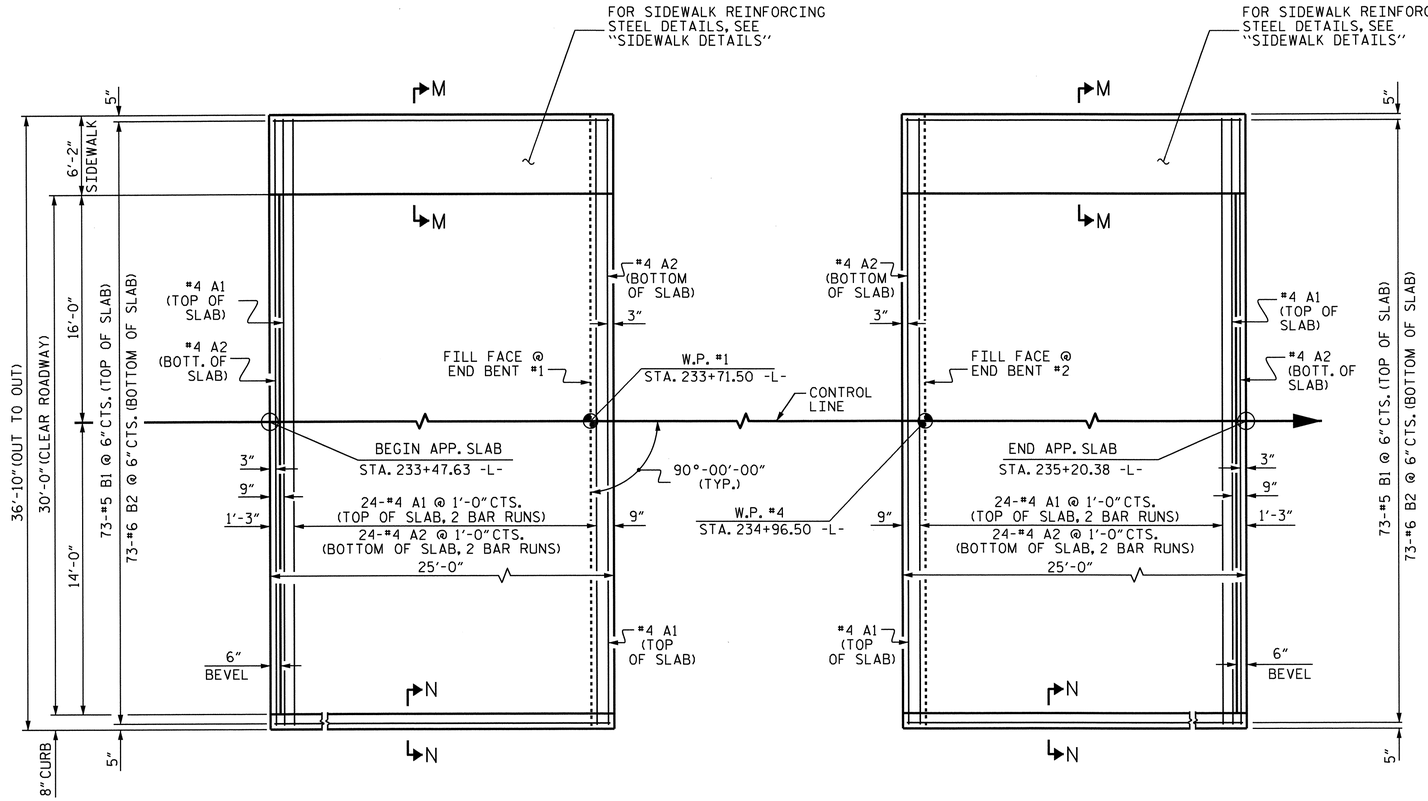

PLAN @ END BENT #1

PLAN @ END BENT #2

DIMENSIONS SHOWN ARE TYPICAL FOR BOTH APPROACH SLABS

NOTES

APPROACH SLABS SHALL BE POURED AFTER CONCRETE OVERLAY IS POURED.

FOR REINFORCED BRIDGE APPROACH FILL INCLUDING GEOTEXTILE, IMPERMEABLE GEOMEMBRANE, 4" Ø DRAINAGE PIPE, #78M STONE, AND SELECT MATERIAL, SEE ROADWAY PLANS.

AREA BETWEEN THE WINGWALL AND APPROACH SLAB SHALL BE GRADED TO DRAIN THE WATER AWAY FROM THE FILL FACE OF THE BRIDGE AND SHALL BE PAVED. SEE ROADWAY PLANS.

U1 BARS MAY BE PUSHED INTO GREEN CONCRETE AFTER THE SLAB HAS BEEN SCREEDED AND FLOAT FINISHED.

BILL OF MATERIAL

FOR ONE APPROACH SLAB (2 REQ'D)

BAR	NO.	SIZE	TYPE	LENGTH	WEIGHT
* A1	52	#4	STR	19'-3"	669
A2	52	#4	STR	19'-2"	666
* B1	73	#5	STR	24'-3"	1846
B2	73	#6	STR	24'-8"	2705
* B3	4	#4	STR	24'-8"	66
* G1	25	#4	STR	5'-10"	97
* U1	8	#4	1	3'-0"	16
REINFORCING STEEL				LBS.	3371
* EPOXY COATED REINFORCING STEEL				LBS.	2694
CLASS AA CONCRETE BREAKDOWN					
POUR #1		SLAB & CURB			43.3 C.Y.
POUR #2		SIDEWALK			3.6 C.Y.
TOTAL CLASS AA CONCRETE					46.9 C.Y.

BAR TYPE

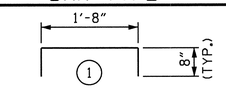

BAR DIMENSION IS OUT TO OUT.

SPLICE CHART

BAR	LENGTH
#4 A1	2'-0"
#4 A2	1'-9"

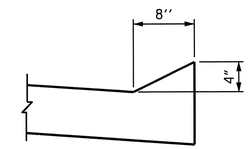

SECTION N-N

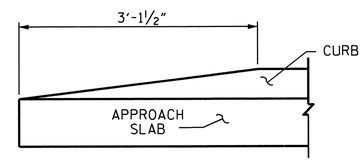

END OF CURB WITHOUT SHOULDER BERM GUTTER

CURB DETAILS

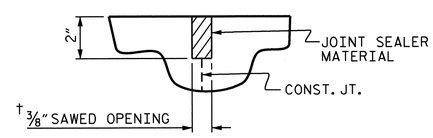

DETAIL A

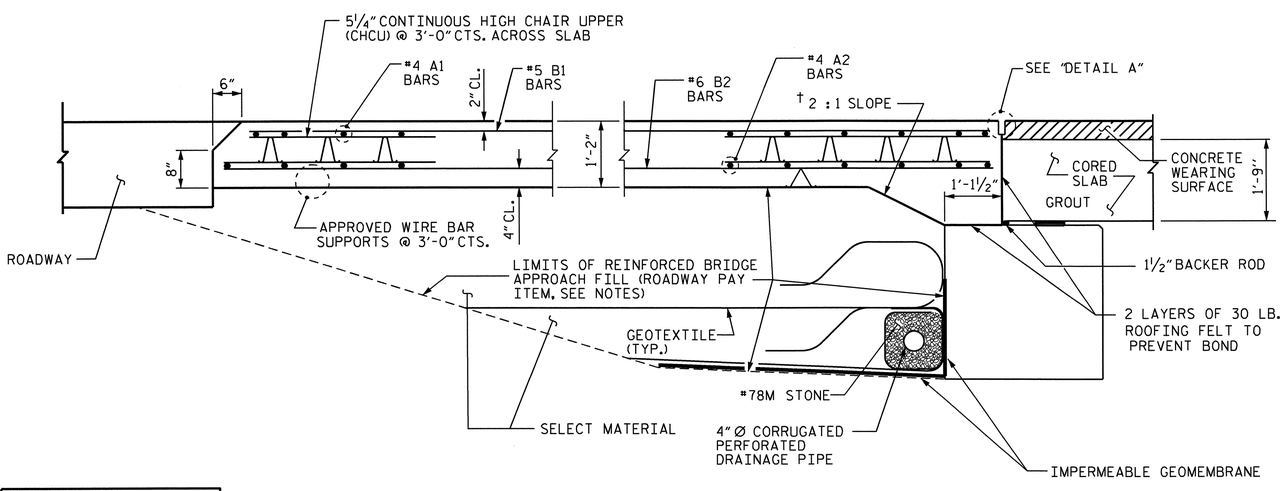

† NORMAL TO END BENT

SECTION THRU SLAB

PROJECT NO. U-3810

ONSLOW COUNTY

STATION: 234+34.00 L-

SHEET 1 OF 2

STATE OF NORTH CAROLINA
DEPARTMENT OF TRANSPORTATION
RALEIGH

STANDARD

BRIDGE APPROACH SLAB FOR PRESTRESSED CONCRETE CORED SLAB

NORTH CAROLINA PROFESSIONAL SEAL 14045 ENGINEER TIMOTHY L. COGGINS
07/24/12

REVISIONS							SHEET NO.
NO.	BY:	DATE:	NO.	BY:	DATE:		S-61
1			3				TOTAL SHEETS
2			4				62

ASSEMBLED BY : PEGGY PARISI DATE : 5-11-12
CHECKED BY : T.L. COGGINS DATE : 5-11-12

DRAWN BY : RH 5/99
CHECKED BY : RDR 5/99

REV. 5/1/06 RR KMM/GM
REV. 10/1/11 MAA/GM
REV. 12/21/11 MAA/GM

30-JUL-2012 09:47
E:\TIPProjects-U\U3810\structures\Plans\FinalPlans\Bridges\Str. #2\u3810_sd_as_02.dgn
nruffin

STR #2

STD. NO. BAS3 (SHT 2)

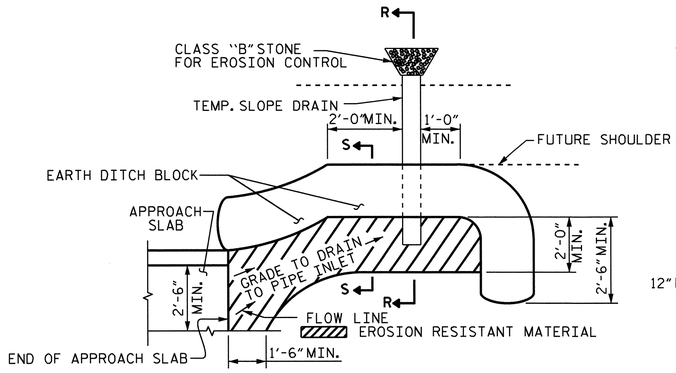

NOTE: IMMEDIATELY AFTER THE CONSTRUCTION OF THE APPROACH SLAB, THE CONTRACTOR SHALL PROVIDE TEMPORARY BERM AND SLOPE DRAIN. CONTRACTOR SHALL GRADE TO PIPE INLET AND PROVIDE EROSION RESISTANT MATERIAL AS SHOWN. THE EROSION RESISTANT MATERIAL SHALL BE EITHER 1) ASPHALT PLANT MIX, TYPE 1 OR TYPE 2, MIN. 2" DEPTH, 2) EROSION CONTROL MAT, OR 3) CONCRETE, AS DIRECTED BY THE ENGINEER. THE SLOPE DRAIN SHALL CONSIST OF A NON-PERFORATED TEMPORARY DRAINAGE PIPE, 12 INCHES IN DIAMETER.

PLAN VIEW

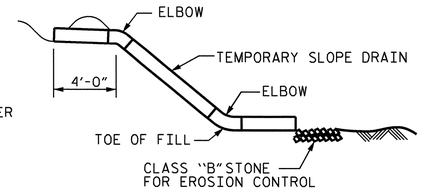

SECTION R-R

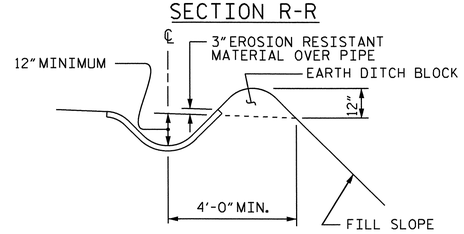

SECTION S-S

TEMPORARY BERM AND SLOPE DRAIN DETAILS

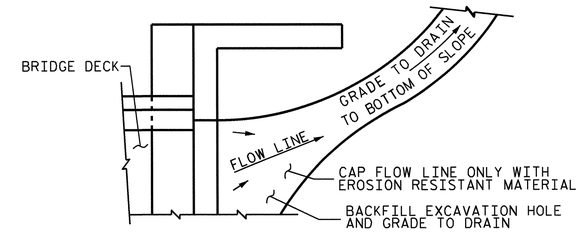

NOTE: IF THE APPROACH SLAB IS NOT CONSTRUCTED IMMEDIATELY AFTER THE BACKFILLING OF THE END BENT EXCAVATION, GRADE TO DRAIN TO THE BOTTOM OF THE SLOPE AND PROVIDE EROSION RESISTANT MATERIAL, SUCH AS FIBERGLASS ROVING OR AS DIRECTED BY THE ENGINEER TO PREVENT SOIL EROSION AND TO PROTECT THE AREA ADJACENT TO THE STRUCTURE. THE CONTRACTOR WILL BE REQUIRED TO REMOVE THESE MATERIALS PRIOR TO CONSTRUCTION OF THE APPROACH SLAB.

TEMPORARY DRAINAGE DETAIL

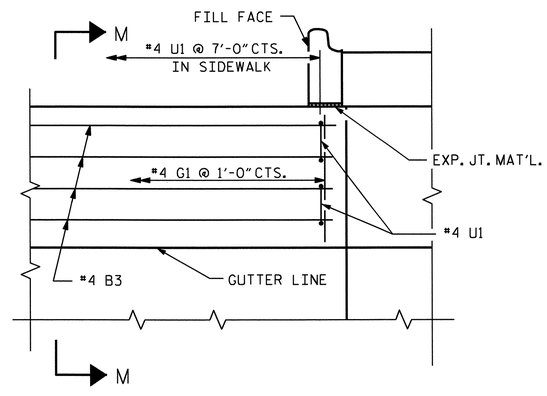

PLAN

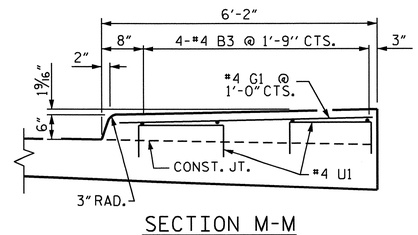

SECTION M-M

SIDEWALK DETAILS

PROJECT NO. U-3810

ONSLOW COUNTY

STATION: 234+34.00 -L-

SHEET 2 OF 2

STATE OF NORTH CAROLINA
DEPARTMENT OF TRANSPORTATION
RALEIGH

STANDARD

BRIDGE APPROACH
SLAB DETAILS

NORTH CAROLINA PROFESSIONAL SEAL 14045 ENGINEER TIMOTHY L. COGGINS
07/31/12

REVISIONS						SHEET NO.
NO.	BY:	DATE:	NO.	BY:	DATE:	S-62
1			3			TOTAL SHEETS
2			4			62

ASSEMBLED BY : PEGGY PARISI		DATE : 5-11-12	
CHECKED BY : T.L. COGGINS		DATE : 5-11-12	
DRAWN BY : FCJ	11/88	REV. 5/7/03	RWW/JTE
CHECKED BY : ARB	11/88	REV. 5/1/06RRR	MAA/KMM
		REV. 10/1/11	MAA/GM

30-JUL-2012 09:47
E:\TIPProjects-U\U3810\structures\Plans\FinalPlans\Bridges\Str. #2\u3810_sd_as_02.dgn
nruffin

STR. #2

STD. NO. BAS4 (SHT 2)

F. A. PROJECT NO. STP-1406 (7)

BM BL-9: 30"-#5 REBAR W/ ALUMINUM CAP; STA. 50+31.29 -L-, 0.68' RIGHT, EL. 24.78

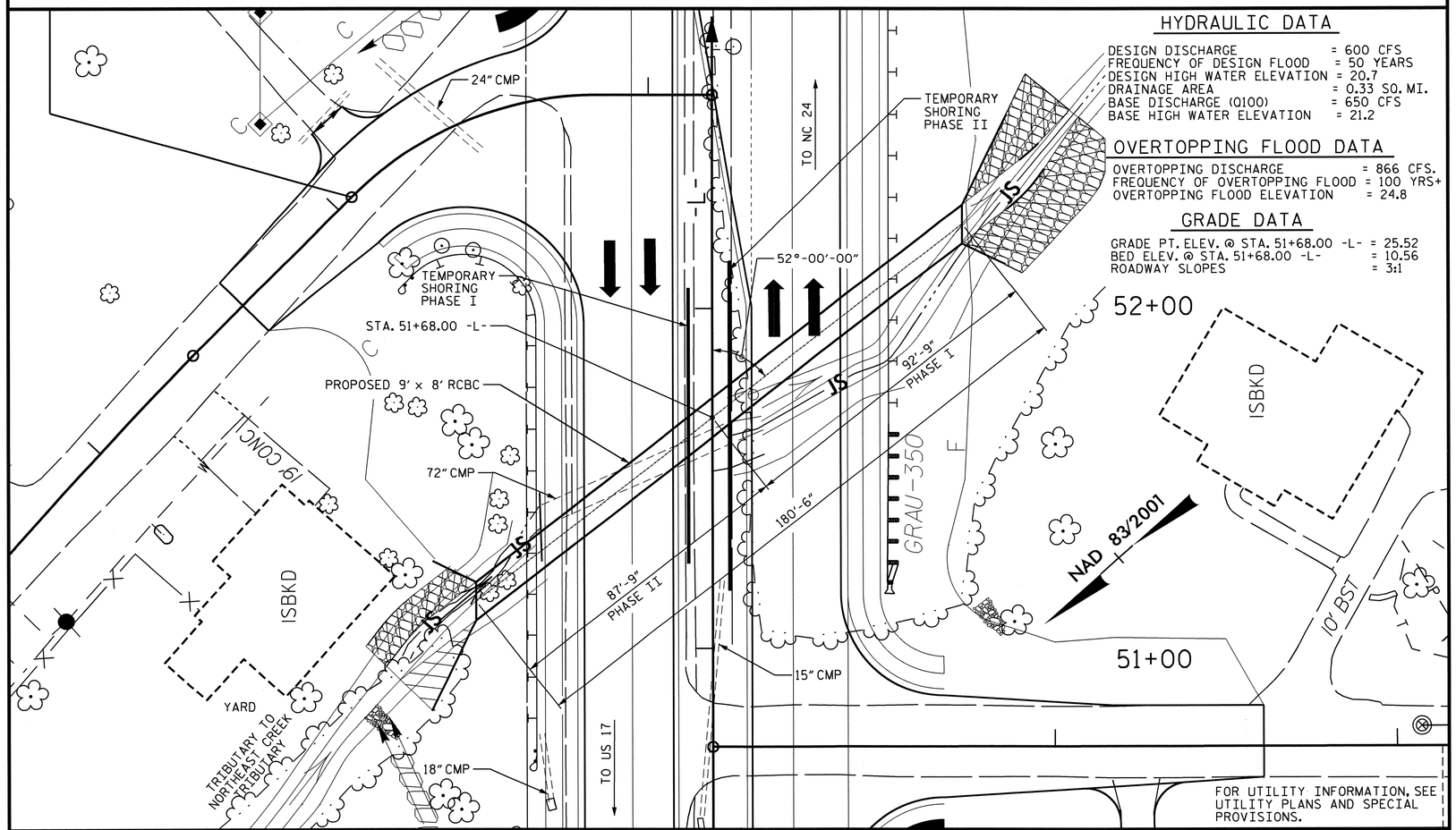

HYDRAULIC DATA

DESIGN DISCHARGE	= 600 CFS
FREQUENCY OF DESIGN FLOOD	= 50 YEARS
DESIGN HIGH WATER ELEVATION	= 20.7
DRAINAGE AREA	= 0.33 SQ. MI.
BASE DISCHARGE (Q100)	= 650 CFS
BASE HIGH WATER ELEVATION	= 21.2

OVERTOPPING FLOOD DATA

OVERTOPPING DISCHARGE	= 866 CFS.
FREQUENCY OF OVERTOPPING FLOOD	= 100 YRS+
OVERTOPPING FLOOD ELEVATION	= 24.8

GRADE DATA

GRADE PT. ELEV. @ STA. 51+68.00 -L-	= 25.52
BED ELEV. @ STA. 51+68.00 -L-	= 10.56
ROADWAY SLOPES	= 3:1

LOCATION SKETCH

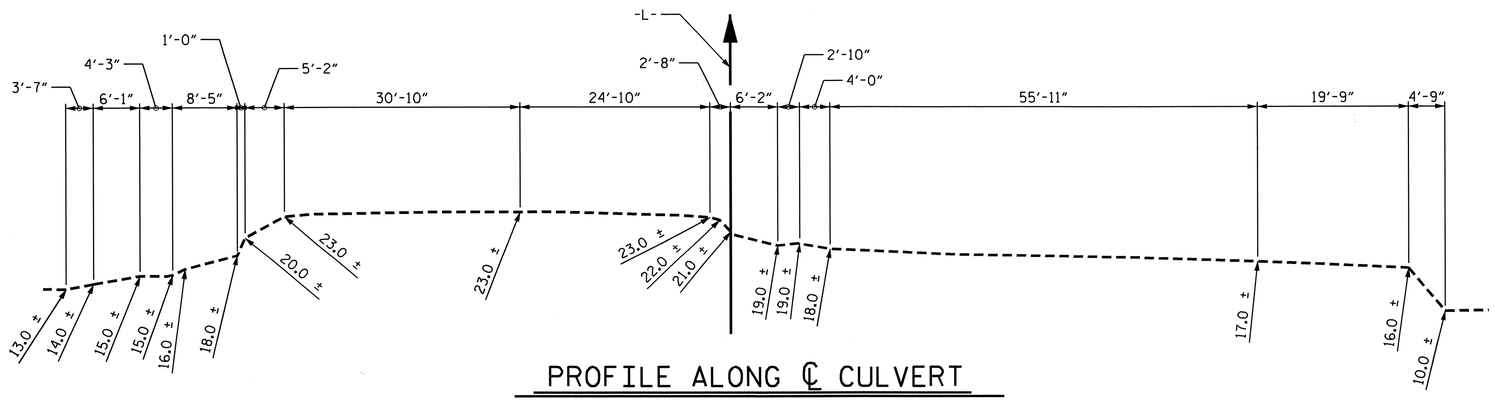

PROFILE ALONG ℄ CULVERT

NOTES

ASSUMED LIVE LOAD ----------HL93 OR ALTERNATE LOADING.

DESIGN FILL----------6.97'

FOR OTHER DESIGN DATA AND NOTES, SEE STANDARD NOTE SHEET.

3" Ø WEEP HOLES INDICATED TO BE IN ACCORDANCE WITH THE SPECIFICATIONS.

CONCRETE IN CULVERTS TO BE POURED IN THE FOLLOWING ORDER:

PHASE I
1. WING FOOTINGS AND FLOOR SLAB INCLUDING 4" OF ALL VERTICAL WALLS, EXCEPT THE MOST SOUTHWESTERLY WING W2 SHALL BE CONSTRUCTED UP TO THE CONSTRUCTION JOINT.

2. THE REMAINING PORTIONS OF THE WALLS AND WINGS FULL HEIGHT FOLLOWED BY ROOF SLAB AND HEADWALLS.

3. ONCE THE WATER IS DIVERTED INTO THE COMPLETED BARREL, THE REMAINING PORTION OF THE MOST SOUTHWESTERLY FOOTING AND WING W2 SHALL BE CONSTRUCTED.

PHASE II
1. WING FOOTINGS AND FLOOR SLAB INCLUDING 4" OF ALL VERTICAL WALLS.

2. THE REMAINING PORTIONS OF THE WALLS AND WINGS FULL HEIGHT FOLLOWED BY ROOF SLAB AND HEADWALLS.

THE RESIDENT ENGINEER SHALL CHECK THE LENGTH OF CULVERT BEFORE STAKING IT OUT TO MAKE CERTAIN THAT IT WILL PROPERLY TAKE CARE OF THE FILL.

DIMENSIONS FOR WING LAYOUT AS WELL AS ADDITIONAL REINFORCING STEEL EMBEDDED IN BARREL ARE SHOWN ON WING SHEET.

TRANSVERSE CONSTRUCTION JOINTS SHALL BE USED IN THE BARREL, SPACED TO LIMIT THE POURS TO A MAXIMUM OF 70 FT. LOCATION OF JOINTS SHALL BE SUBJECT TO APPROVAL OF THE ENGINEER.

AT THE CONTRACTOR'S OPTION, HE MAY SPLICE THE VERTICAL REINFORCING STEEL IN THE INTERIOR FACE OF EXTERIOR WALL ABOVE LOWER WALL CONSTRUCTION JOINT. THE SPLICE LENGTH SHALL BE AS PROVIDED IN THE SPLICE LENGTH CHART SHOWN ON THE PLANS. EXTRA WEIGHT OF STEEL DUE TO THE SPLICES SHALL BE PAID FOR BY THE CONTRACTOR.

NO PRECAST REINFORCED BOX CULVERT OPTION WILL BE ALLOWED.

THE CONTRACTOR SHALL PROVIDE INDEPENDENT ASSURANCE SAMPLES OF REINFORCING STEEL AS FOLLOWS: FOR PROJECTS REQUIRING UP TO 400 TONS OF REINFORCING STEEL, ONE 30 INCH SAMPLE OF EACH SIZE BAR USED, AND FOR PROJECTS REQUIRING OVER 400 TONS OF REINFORCING STEEL, TWO 30 INCH SAMPLES OF EACH SIZE BAR USED. THE BARS FROM WHICH THE SAMPLES ARE TAKEN MUST THEN BE SPLICED WITH REPLACEMENT BARS OF THE SIZE AND LENGTH OF THE SAMPLE, PLUS A MINIMUM LAP SPLICE OF THIRTY BAR DIAMETERS. PAYMENT FOR THE SAMPLES OF REINFORCING STEEL SHALL BE CONSIDERED INCIDENTAL TO VARIOUS PAY ITEMS.

FOR CULVERT DIVERSION DETAILS AND PAY ITEM, SEE EROSION CONTROL PLANS.

A 3 FOOT STRIP OF FILTER FABRIC SHALL BE ATTACHED TO THE FILL FACE OF THE WING COVERING THE ENTIRE LENGTH OF THE EXPANSION JOINT.

FOR SUBMITTAL OF WORKING DRAWINGS, SEE SPECIAL PROVISIONS.

FOR FALSEWORK AND FORMWORK, SEE SPECIAL PROVISIONS.

FOR CRANE SAFETY, SEE SPECIAL PROVISIONS.

FOR GROUT FOR STRUCTURES, SEE SPECIAL PROVISIONS.

FOR MAINTENANCE OF TRAFFIC, SEE TRAFFIC CONTROL PLANS.

TOTAL STRUCTURE QUANTITIES

CLASS A CONCRETE				
BARREL @	0.925	CY/FT	167.0	C.Y.
WING ETC.			45.2	C.Y.
TOTAL			212.2	C.Y.
REINFORCING STEEL				
BARREL			28,629	LBS.
WINGS ETC.			3,021	LBS.
TOTAL			31,650	LBS.
FOUNDATION COND. MAT'L.			183	TONS
CULVERT EXCAVATION ----------			LUMP	SUM

NORTH CAROLINA PROFESSIONAL SEAL 22274 ENGINEER OMAR R. AZIZI 7/30/12

NORTH CAROLINA PROFESSIONAL SEAL 14045 ENGINEER TIMOTHY L. COGGINS 07/27/12

PROJECT NO. U-3810
ONSLOW COUNTY
STATION: 51+68.00 -L-

SHEET 1 OF 7

STATE OF NORTH CAROLINA
DEPARTMENT OF TRANSPORTATION
RALEIGH

SINGLE 9 FT. X 8 FT. CONCRETE BOX CULVERT 52° SKEW

REVISIONS								SHEET NO.
NO.	BY:	DATE:	NO.	BY:	DATE:			C-1
1			3					TOTAL SHEETS
2			4					28

STR. #3

ASSEMBLED BY : Neil M Ruffin	DATE : 4/12/12	SPECIAL
CHECKED BY : B. GREEN	DATE : 4/20/12	
DRAWN BY : R. WRIGHT	DATE : AUG. 1989	STANDARD
CHECKED BY : C.R.K.	DATE : AUG. 1989	

REVISED 11-13-91 BY E.L.R. CHECKED BY G.R.P.
ADDED 8-22-89

LOAD AND RESISTANCE FACTOR RATING (LRFR) SUMMARY FOR REINFORCED CONCRETE BOX CULVERTS

LEVEL		VEHICLE	WEIGHT (W) (TONS)	CONTROLLING LOAD RATING (#)	MINIMUM RATING FACTORS (RF)	TONS = W × RF	STRENGTH I LIMIT STATE									COMMENT NUMBER
							LIVE-LOAD FACTORS (γ_{LL})	MOMENT				SHEAR				
								RATING FACTOR	BOX NO.	ELEMENT TYPE	DISTANCE FROM LEFT END OF ELEMENT (ft)	RATING FACTOR	BOX NO.	ELEMENT TYPE	DISTANCE FROM LEFT END OF ELEMENT (ft)	
DESIGN LOAD RATING		HL-93 (INVENTORY)	N/A	1	1.16	--	1.75	1.61	1	EXTERIOR WALL	1.09	1.16	1	BOTTOM SLAB	0.84	
		HL-93 (OPERATING)	N/A		1.50	--	1.35	2.09	1	EXTERIOR WALL	1.09	1.50	1	BOTTOM SLAB	0.84	
		HS-20 (INVENTORY)	36.000	2	1.66	59.82	1.75	2.02	1	EXTERIOR WALL	1.09	1.66	1	BOTTOM SLAB	0.84	
		HS-20 (OPERATING)	36.000		2.15	77.55	1.35	2.62	1	EXTERIOR WALL	1.09	2.15	1	BOTTOM SLAB	0.84	
LEGAL LOAD RATING	SINGLE VEHICLE (SV)	SNSH	13.500		3.00	40.54	1.40	3.84	1	TOP SLAB	4.83	3.00	1	BOTTOM SLAB	0.84	
		SNGARBS2	20.000		2.82	56.38	1.40	3.60	1	TOP SLAB	4.83	2.82	1	BOTTOM SLAB	0.84	
		SNAGRIS2	22.000		3.00	66.06	1.40	3.84	1	TOP SLAB	4.83	3.00	1	BOTTOM SLAB	0.84	
		SNCOTTS3	27.250	3	1.45	39.41	1.40	2.03	1	TOP SLAB	4.83	1.45	1	BOTTOM SLAB	0.84	
		SNAGGRS4	34.925		1.63	56.76	1.40	2.51	1	TOP SLAB	4.83	1.63	1	BOTTOM SLAB	0.84	
		SNS5A	35.550		1.63	58.11	1.40	2.42	1	TOP SLAB	4.83	1.63	1	BOTTOM SLAB	0.84	
		SNS6A	39.950		1.63	65.31	1.40	2.42	1	TOP SLAB	4.83	1.63	1	BOTTOM SLAB	0.84	
		SNS7B	42.000		1.63	68.66	1.40	2.42	1	TOP SLAB	4.83	1.63	1	BOTTOM SLAB	0.84	
	TRUCK TRACTOR SEMI-TRAILER (TTST)	TNAGRIT3	33.000		2.76	91.17	1.40	3.84	1	TOP SLAB	4.83	2.76	1	BOTTOM SLAB	0.84	
		TNT4A	33.075		1.72	56.75	1.40	2.42	1	TOP SLAB	4.83	1.72	1	BOTTOM SLAB	8.82	
		TNT6A	41.600		1.60	66.43	1.40	2.38	1	TOP SLAB	5.08	1.60	1	BOTTOM SLAB	8.82	
		TNT7A	42.000		1.73	72.52	1.40	2.42	1	TOP SLAB	4.83	1.73	1	BOTTOM SLAB	0.84	
		TNT7B	42.000		1.63	68.66	1.40	2.42	1	TOP SLAB	4.83	1.63	1	BOTTOM SLAB	8.82	
		TNAGRIT4	43.000		1.64	70.71	1.40	2.31	1	TOP SLAB	4.83	1.64	1	BOTTOM SLAB	0.84	
		TNAGT5A	45.000		1.68	75.80	1.40	2.36	1	TOP SLAB	4.83	1.68	1	BOTTOM SLAB	0.84	
		TNAGT5B	45.000		1.72	77.22	1.40	2.42	1	TOP SLAB	4.83	1.72	1	BOTTOM SLAB	8.82	

LOAD FACTORS:

DESIGN LOAD RATING FACTORS

LOAD TYPE	MAX FACTOR	MIN FACTOR
DC	1.25	0.90
DW	1.50	0.65
EV	1.30	0.90
EH	1.35	0.90
ES	1.35	0.90
LS	1.75	--
WA	1.00	--

NOTE:

RATING FACTORS ARE BASED ON THE STRENGTH I LIMIT STATE.

COMMENTS:

1.
2.
3.
4.

(#) CONTROLLING LOAD RATING

(1) DESIGN LOAD RATING (HL-93)

(2) DESIGN LOAD RATING (HS-20)

(3) LEGAL LOAD RATING **

** SEE CHART FOR VEHICLE TYPE

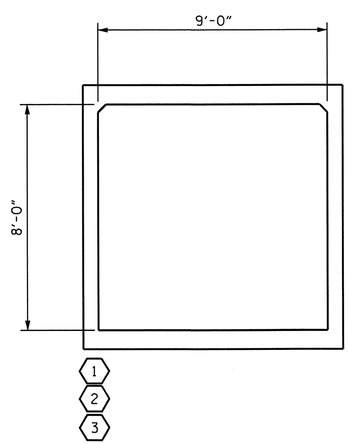

LRFR SUMMARY

(LOOKING DOWNSTREAM)

PROJECT NO. U-3810

ONSLOW COUNTY

STATION: 51+68.00 -L-

SHEET 2 OF 7

STATE OF NORTH CAROLINA
DEPARTMENT OF TRANSPORTATION
RALEIGH

STANDARD

LRFR SUMMARY FOR REINFORCED CONCRETE BOX CULVERTS (NON-INTERSTATE TRAFFIC)

NORTH CAROLINA PROFESSIONAL SEAL 14045 ENGINEER TIMOTHY X. COGGINS

07/27/12

REVISIONS						SHEET NO.
NO.	BY:	DATE:	NO.	BY:	DATE:	C-2
1			3			TOTAL SHEETS
2			4			28

STR. #3 STD. NO. LRFR5

ASSEMBLED BY : Neal Ruffin DATE : 4/12/12
CHECKED BY : B. GREEN DATE : 4/20/12
DRAWN BY : WMC 7/11
CHECKED BY : GM 7/11
REV. 10/1/11 MAA/GM

27-JUL-2012 10:50
R:\TIPProjects-U\U3810\structures\Plans\FinalPlans\Culverts\Str. #3\U3810_sd_Culvert_03.dgn
tcoggins

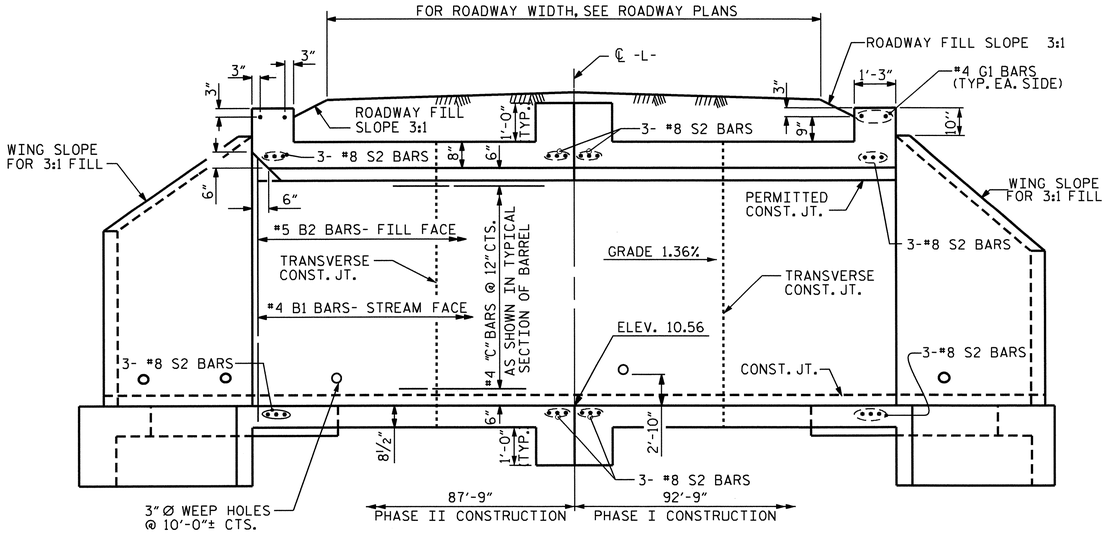

CULVERT SECTION NORMAL TO ROADWAY

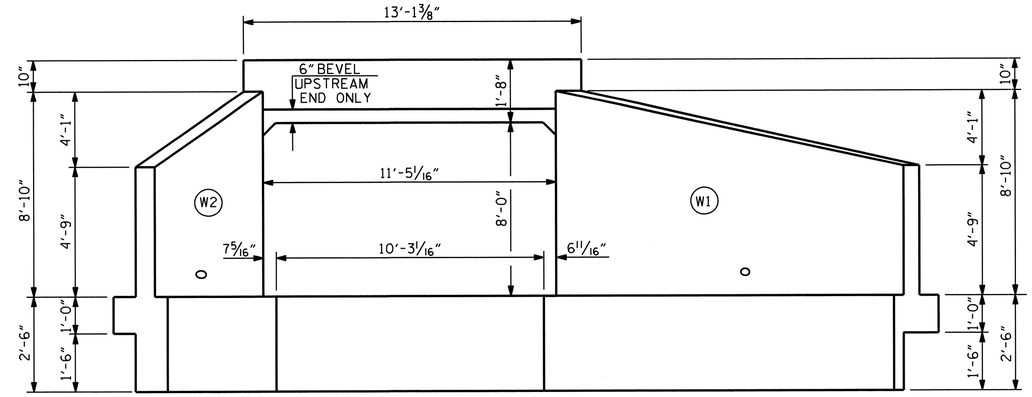

END ELEVATION NORMAL TO SKEW

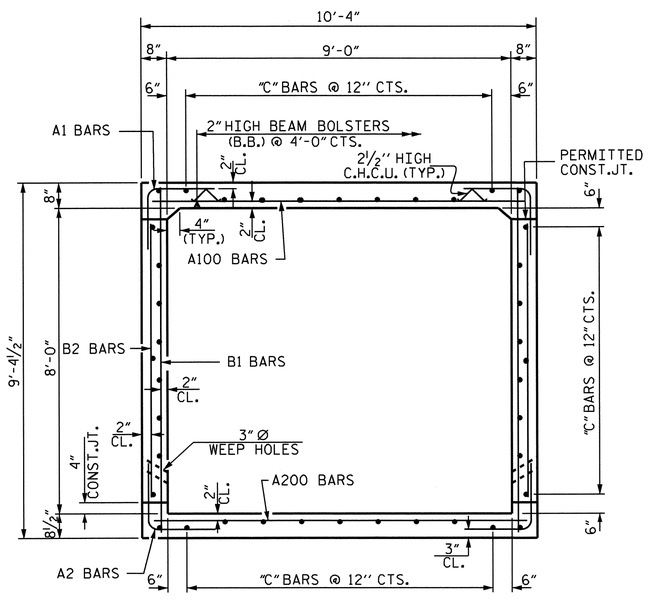

RIGHT ANGLE SECTION OF BARREL

THERE ARE 40 "C" BARS IN SECTION OF BARREL

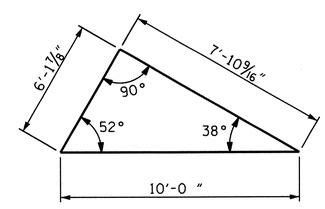

SKEW TRIANGLE

PROJECT NO. U-3810

ONSLOW COUNTY

STATION: 51+68.00 -L-

SHEET 3 OF 7

STATE OF NORTH CAROLINA
DEPARTMENT OF TRANSPORTATION
RALEIGH

SINGLE 9 FT. X 8 FT. CONCRETE BOX CULVERT 52° SKEW

NORTH CAROLINA PROFESSIONAL SEAL 14045 ENGINEER TIMOTHY A. COGGINS
07/27/12

REVISIONS						SHEET NO.
NO.	BY:	DATE:	NO.	BY:	DATE:	C-3
1			3			TOTAL SHEETS
2			4			28

STR. #3

ASSEMBLED BY : Neal M Ruffin DATE : 4/12/12
CHECKED BY : B. GREEN DATE : 4/20/12

REVISED 8-28-92 BY E.L.R. CHECKED BY C.R.P.
REVISED 8-22-89 BY A.R.B. CHECKED BY C.R.K.
REDRAWN 8-22-89
REVISED 11-19-99 BY M.M. CHECKED BY R.W.W.

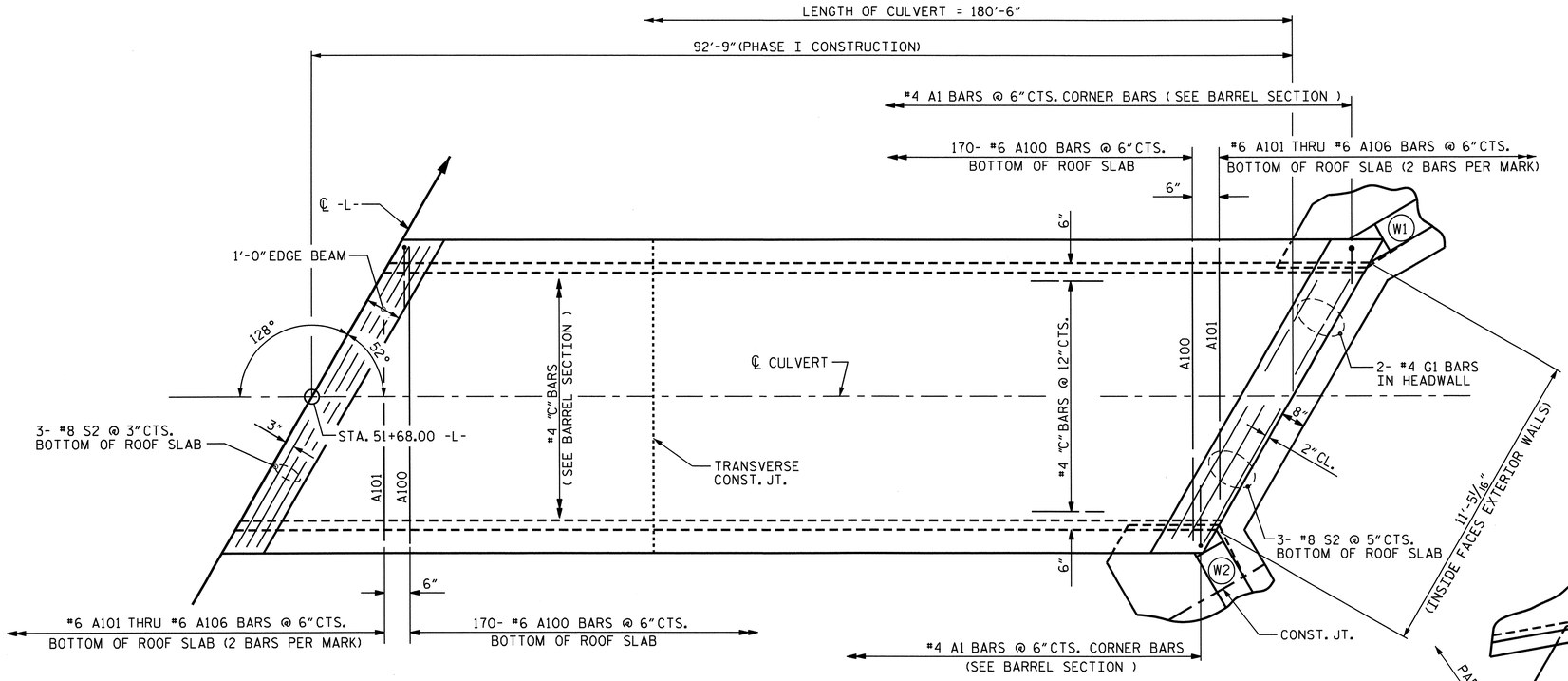

PLAN - ROOF SLAB

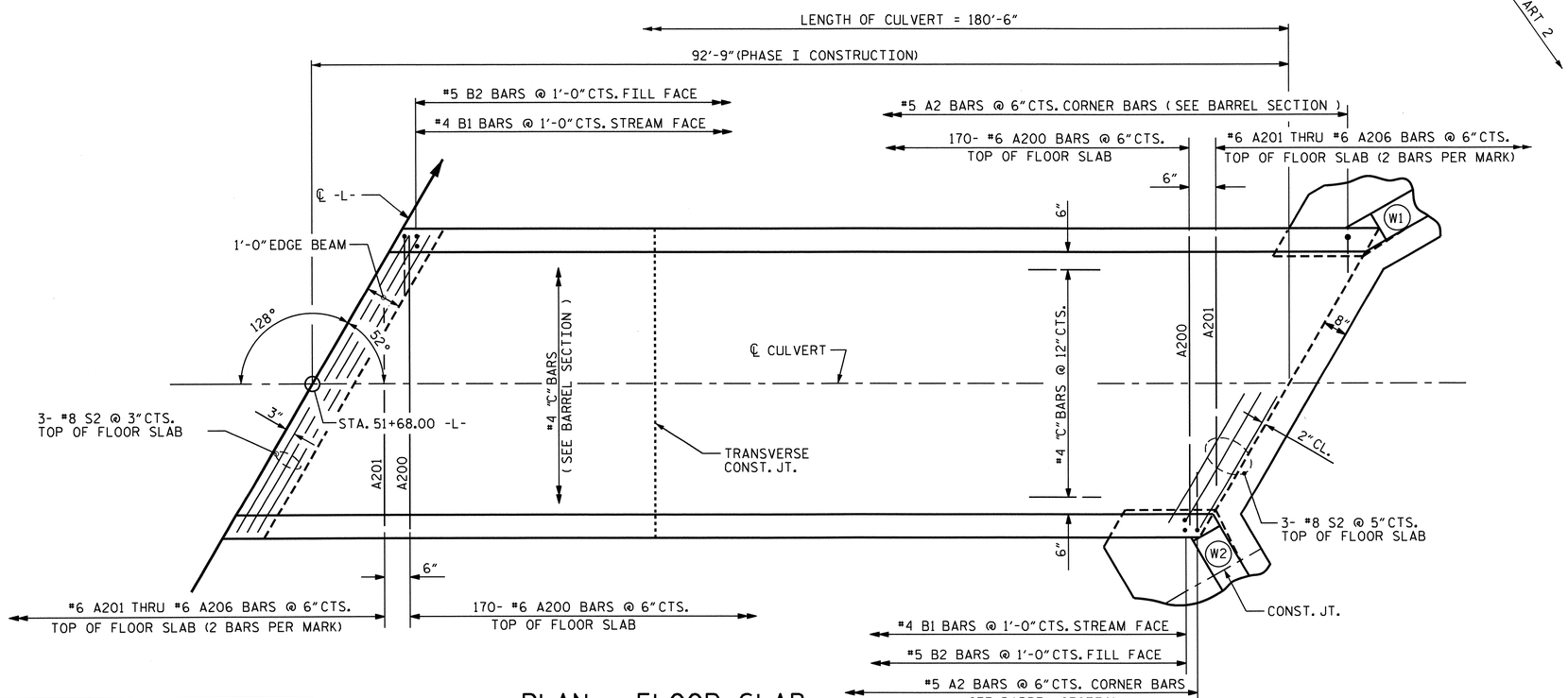

PLAN - FLOOR SLAB

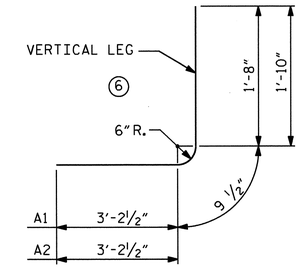

BAR TYPE

DIMENSIONS ARE OUT TO OUT

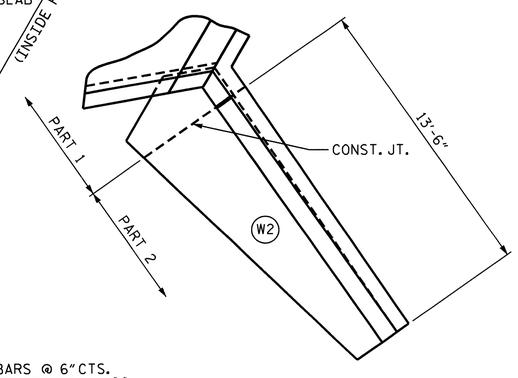

WING DETAIL

BILL OF MATERIAL PHASE I

BAR	No.	SIZE	TYPE	LENGTH	WEIGHT
A1	370	4	6	5'-8"	1401
A2	370	5	6	5'-10"	2251
A100	170	6	STR	9'-11"	2532
A101	4	6	STR	8'-8"	52
A102	4	6	STR	7'-5"	45
A103	4	6	STR	6'-2"	37
A104	4	6	STR	4'-10"	29
A105	4	6	STR	3'-7"	22
A106	4	6	STR	2'-3"	14
A200	170	6	STR	9'-11"	2532
A201	4	6	STR	8'-8"	52
A202	4	6	STR	7'-5"	45
A203	4	6	STR	6'-2"	37
A204	4	6	STR	4'-10"	29
A205	4	6	STR	3'-7"	22
A206	4	6	STR	2'-3"	14
B1	186	4	STR	8'-10"	1098
B2	186	5	STR	7'-4"	1423
C1	160	4	STR	25'-1"	2681
G1	2	4	STR	12'-8"	17
S2	12	8	STR	12'-8"	406
REINFORCING STEEL LBS.					14,739

STRUCTURE QUANTITIES FOR PHASE I CONSTRUCTION

CLASS A CONCRETE
BARREL @ 0.925 CY/FT 85.8 C.Y.
WING ETC. 22.6 C.Y.
TOTAL 108.4 C.Y.

REINFORCING STEEL
BARREL 14,739 LBS.
WINGS ETC. 1,514 LBS.
TOTAL 16,253 LBS.

FOUNDATION COND. MAT'L. 94 TONS
CULVERT EXCAVATION ---------- LUMP SUM

SPLICE CHART

BAR	SIZE	SPLICE LENGTH
B1	4	1'-9"
C1	4	1'-11"

PROJECT NO. U-3810
ONSLOW COUNTY
STATION: 51+68.00 -L-

SHEET 4 OF 7

STATE OF NORTH CAROLINA
DEPARTMENT OF TRANSPORTATION
RALEIGH

SINGLE 9 FT. X 8 FT. CONCRETE BOX CULVERT PHASE I CONSTRUCTION

NORTH CAROLINA PROFESSIONAL SEAL 14045 ENGINEER TIMOTHY W. COGGINS
07/27/12

REVISIONS						SHEET NO.
NO.	BY:	DATE:	NO.	BY:	DATE:	C-4
1			3			TOTAL SHEETS
2			4			28

STR. #3

DRAWN BY : Neil M. Ruffin DATE : 4/13/12
CHECKED BY : B. GREEN DATE : 4/20/12

08-JUN-2012 11:21
R:\Structures\FinalPlans\Culverts\Str. #3\U3810_sd_Culvert_03.dgn
nruffin

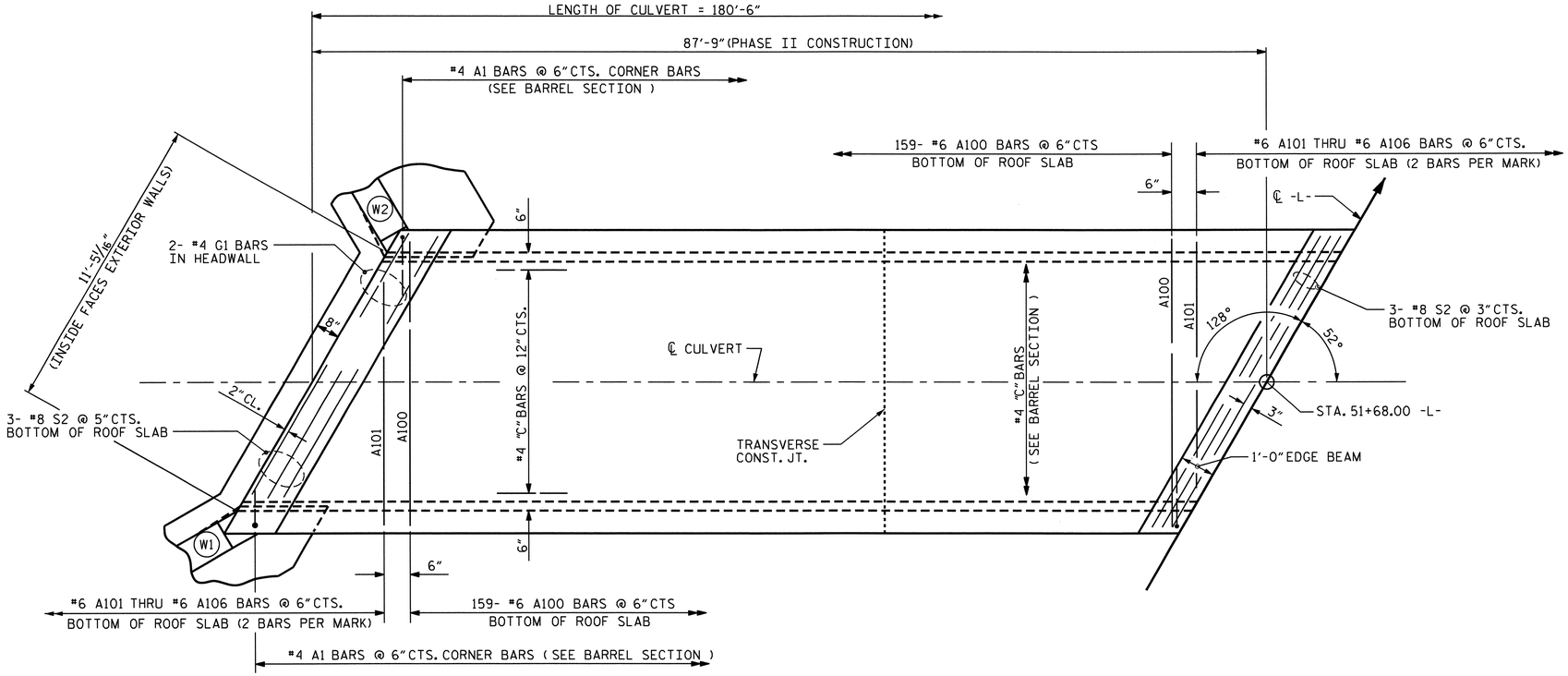

PLAN - ROOF SLAB

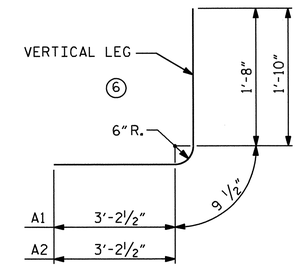

BAR TYPE

DIMENSIONS ARE OUT TO OUT

BILL OF MATERIAL PHASE II

BAR	No.	SIZE	TYPE	LENGTH	WEIGHT
A1	350	4	6	5'-8"	1325
A2	350	5	6	5'-10"	2129
A100	159	6	STR	9'-11"	2368
A101	4	6	STR	8'-8"	52
A102	4	6	STR	7'-5"	45
A103	4	6	STR	6'-2"	37
A104	4	6	STR	4'-10"	29
A105	4	6	STR	3'-7"	22
A106	4	6	STR	2'-3"	14
A200	159	6	STR	9'-11"	2368
A201	4	6	STR	8'-8"	52
A202	4	6	STR	7'-5"	45
A203	4	6	STR	6'-2"	37
A204	4	6	STR	4'-10"	29
A205	4	6	STR	3'-7"	22
A206	4	6	STR	2'-3"	14
B1	176	4	STR	8'-10"	1039
B2	176	5	STR	7'-4"	1346
C2	160	4	STR	23'-4"	2494
G1	2	4	STR	12'-8"	17
S2	12	8	STR	12'-8"	406
REINFORCING STEEL LBS.					13,890

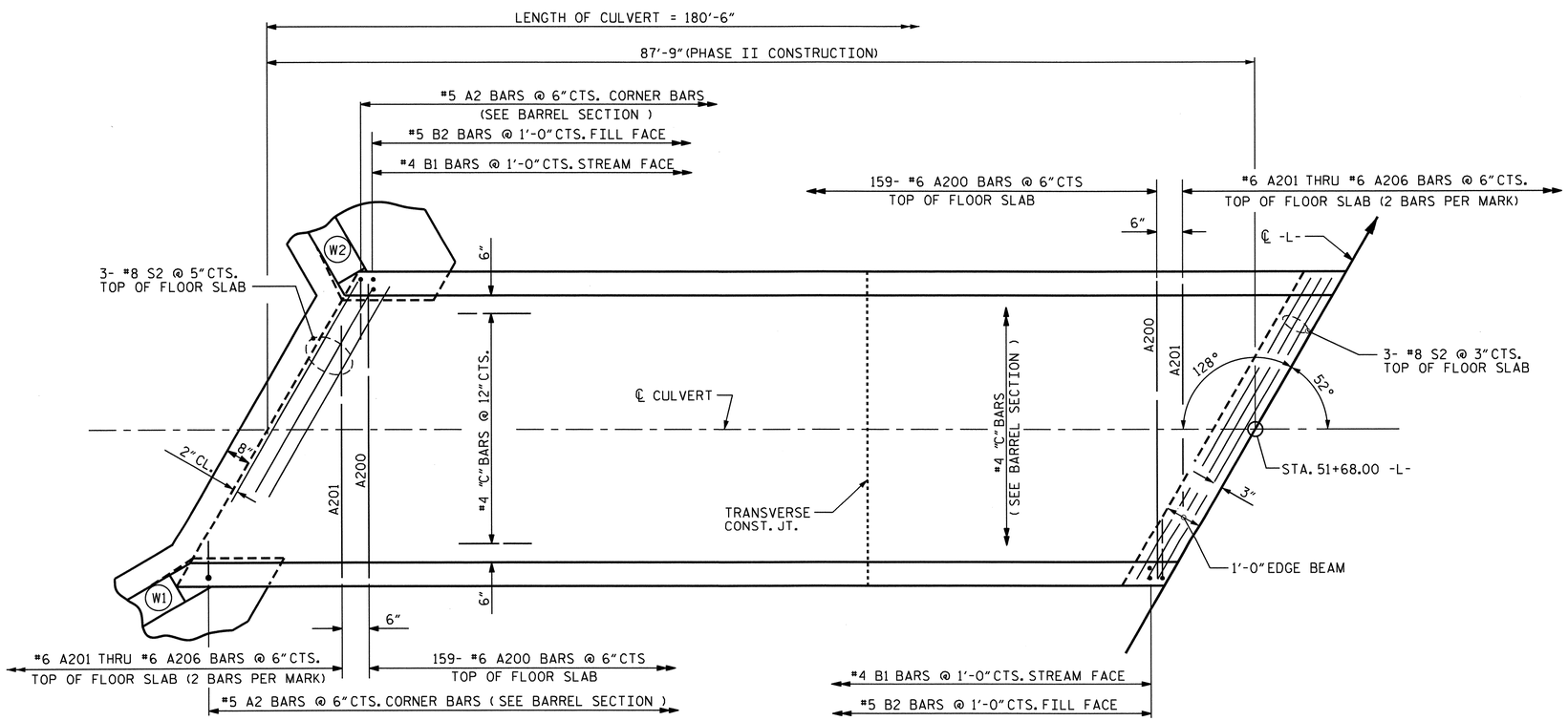

PLAN - FLOOR SLAB

STRUCTURE QUANTITIES FOR PHASE II CONSTRUCTION

CLASS A CONCRETE			
BARREL @	0.925 CY/FT	81.2	C.Y.
WING ETC.		22.6	C.Y.
TOTAL		103.8	C.Y.
REINFORCING STEEL			
BARREL		13890	LBS.
WINGS ETC.		1507	LBS.
TOTAL		15397	LBS.
FOUNDATION COND. MAT'L.		89	TONS
CULVERT EXCAVATION		LUMP SUM	

SPLICE CHART

BAR	SIZE	SPLICE LENGTH
B1	4	1'-9"
C2	4	1'-11"

PROJECT NO. U-3810

ONSLOW COUNTY

STATION: 51+68.00 -L-

SHEET 5 OF 7

STATE OF NORTH CAROLINA
DEPARTMENT OF TRANSPORTATION
RALEIGH

SINGLE 9 FT. X 8 FT. CONCRETE BOX CULVERT PHASE II CONSTRUCTION

NORTH CAROLINA PROFESSIONAL SEAL 14045 ENGINEER TIMOTHY V. COLLINS

07/27/12

REVISIONS						SHEET NO.
NO.	BY:	DATE:	NO.	BY:	DATE:	C-5
1			3			TOTAL SHEETS
2			4			28

STR. #3

DRAWN BY : Neil M Ruffin DATE : 4/13/12
CHECKED BY : B. GREEN DATE : 4/20/12

08-JUN-2012 11:21
R:\Structures\Final Plans\Culverts\Str. #3\U3810_sd_Culvert_03.dgn
nruffin

BAR TYPES

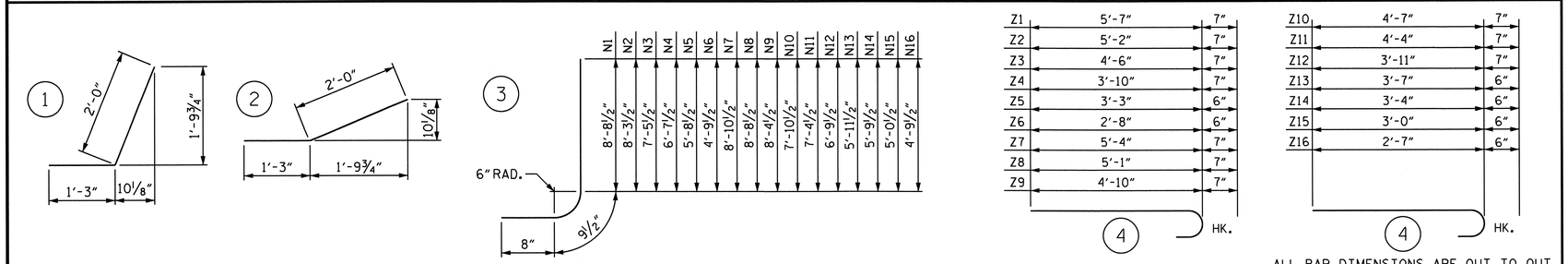

ALL BAR DIMENSIONS ARE OUT TO OUT.

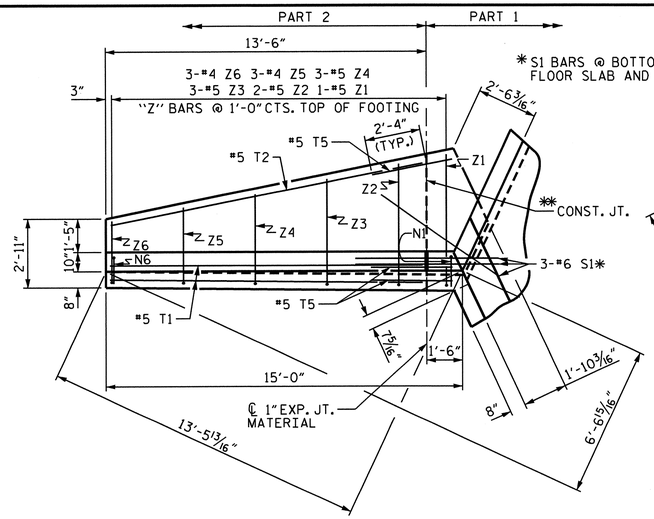

PLAN W2

** CONSTRUCTION JOINT REQUIRED IN THE MOST SOUTHWESTERLY WING W2 OF PHASE I CONSTRUCTION

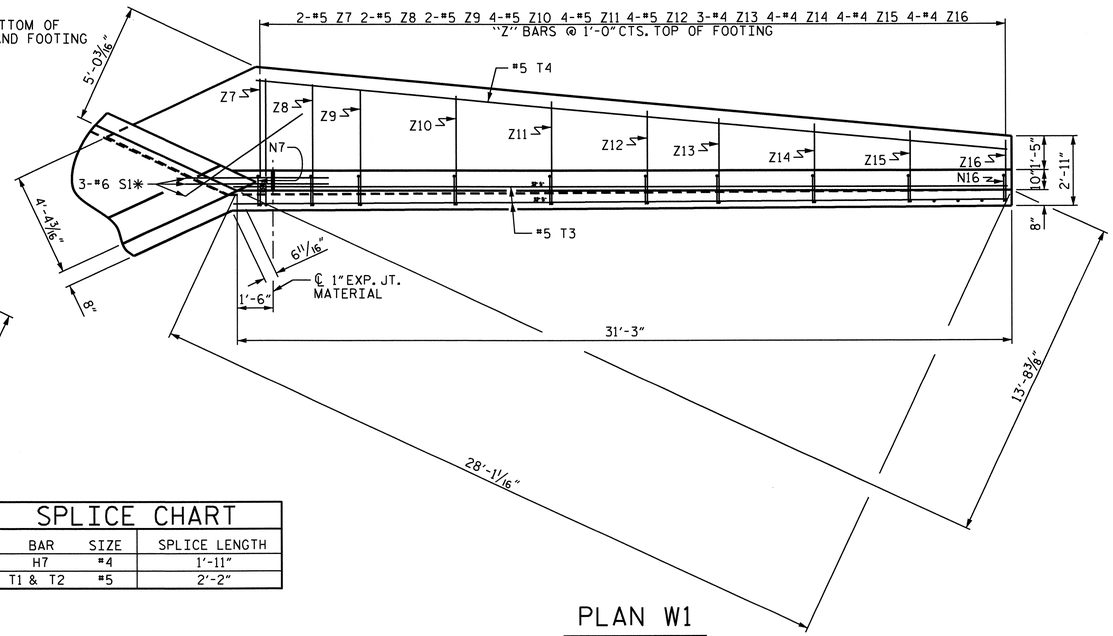

PLAN W1

SPLICE CHART		
BAR	SIZE	SPLICE LENGTH
H7	#4	1'-11"
T1 & T2	#5	2'-2"

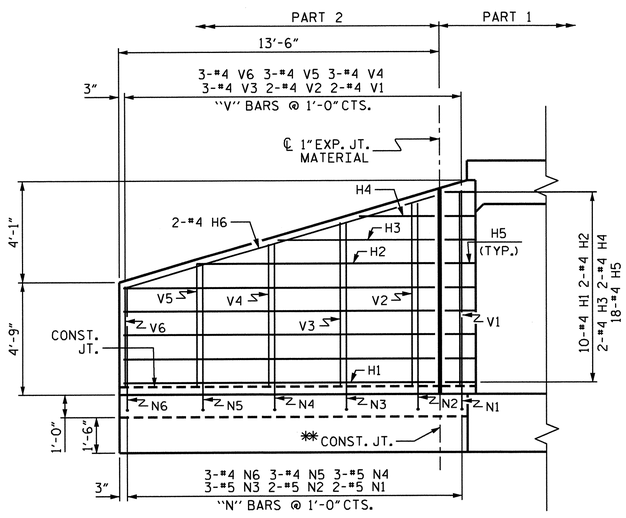

ELEVATION W2

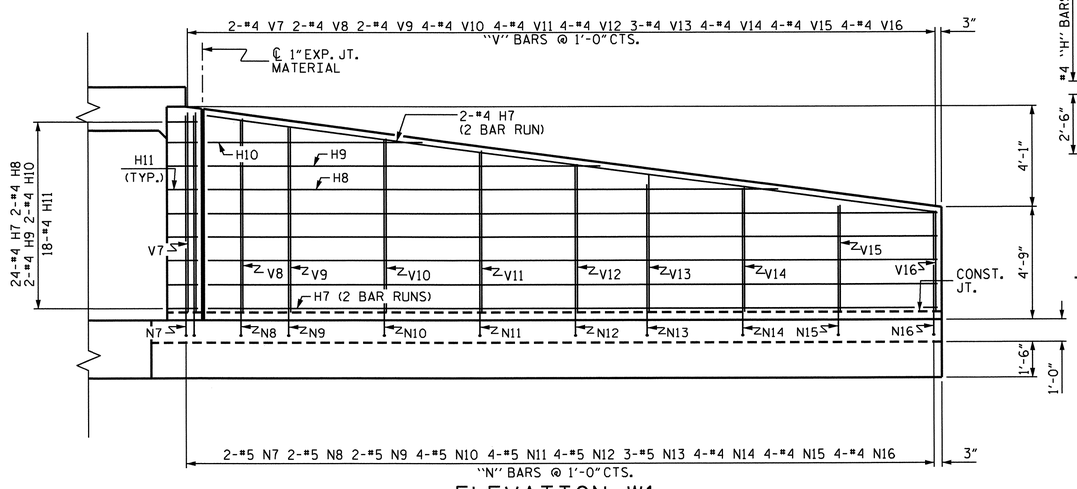

ELEVATION W1

BILL OF MATERIAL

PHASE I PART 2

BAR	NO.	SIZE	TYPE	LENGTH	WEIGHT
H1	10	4	STR	12'-11"	86
H2	2	4	STR	9'-10"	13
H3	2	4	STR	6'-4"	8
H4	2	4	STR	2'-11"	4
H6	2	4	STR	13'-5"	18
N2	2	5	3	9'-9"	20
N3	3	5	3	8'-11"	28
N4	3	5	3	8'-1"	25
N5	3	4	3	7'-2"	14
N6	3	4	3	6'-4"	13
T1	2	5	STR	13'-4"	28
T2	1	5	STR	13'-1"	14
V2	2	4	STR	7'-9"	10
V3	3	4	STR	6'-11"	14
V4	3	4	STR	6'-0"	12
V5	3	4	STR	5'-2"	10
V6	3	4	STR	4'-3"	9
Z2	2	5	4	5'-9"	12
Z3	3	5	4	5'-1"	16
Z4	3	5	4	4'-5"	14
Z5	3	4	4	3'-9"	8
Z6	3	4	4	3'-2"	6

REINFORCING STEEL LBS. 382
FOR 1 PART WING

CLASS A CONCRETE
1 PART WING 5.4 CY
TOTAL 5.4 CY

PHASE I PART 1

BAR	NO.	SIZE	TYPE	LENGTH	WEIGHT
H5	18	4	1	3'-3"	39
H7	24	4	STR	16'-5"	263
H8	2	4	STR	23'-10"	32
H9	2	4	STR	16'-5"	22
H10	2	4	STR	8'-11"	12
H11	18	4	2	3'-3"	39
N1	2	5	3	10'-2"	21
N7	2	5	3	10'-4"	22
N8	2	5	3	10'-2"	21
N9	2	5	3	9'-10"	21
N10	4	5	3	9'-4"	39
N11	4	5	3	8'-10"	37
N12	4	5	3	8'-3"	34
N13	3	5	3	8'-5"	26
N14	4	4	3	7'-3"	19
N15	4	4	3	6'-6"	17
N16	4	4	3	6'-3"	17
S1	6	6	STR	6'-0"	54
T3	2	5	STR	32'-5"	68
T4	1	5	STR	31'-7"	33
T5	3	5	STR	3'-5"	11
V1	2	4	STR	8'-2"	11
V7	2	4	STR	8'-5"	11
V8	2	4	STR	8'-2"	11
V9	2	4	STR	7'-10"	10
V10	4	4	STR	7'-4"	20
V11	4	4	STR	6'-10"	18
V12	4	4	STR	6'-3"	17
V13	3	4	STR	5'-10"	12
V14	4	4	STR	5'-3"	14
V15	4	4	STR	4'-6"	12
V16	4	4	STR	4'-3"	11
Z1	1	5	4	6'-2"	6
Z7	2	5	4	5'-11"	12
Z8	2	5	4	5'-8"	12
Z9	2	5	4	5'-5"	11
Z10	4	5	4	5'-2"	22
Z11	4	5	4	4'-11"	21
Z12	4	5	4	4'-6"	19
Z13	3	4	4	4'-1"	8
Z14	4	4	4	3'-10"	10
Z15	4	4	4	3'-6"	9
Z16	4	4	4	3'-1"	8

REINFORCING STEEL LBS. 1,132
FOR 1 WING & PART WING

CLASS A CONCRETE
1 WING & PART WING 15.0 CY
1 HEADWALL 0.6 CY
1 END CURTAIN WALL 0.6 CY
2 EDGE BEAMS 1.0 CY
TOTAL 17.2 CY

TOTAL QUANTITIES PHASE I

PHASE I PART 1 REINF. STEEL	1,132 LBS.
PHASE I PART 2 REINF. STEEL	382 LBS.
TOTAL	1,514 LBS.
PHASE I PART 1 CLASS A CONCRETE	17.2 CY
PHASE I PART 2 CLASS A CONCRETE	5.4 CY
TOTAL	22.6 CY

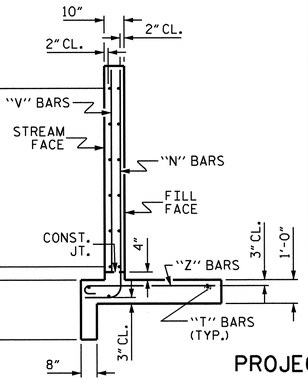

TYPICAL WING SECTION

PROJECT NO. U-3810

ONSLOW COUNTY

STATION: 51+68.00 -L-

SHEET 6 OF 7

STATE OF NORTH CAROLINA
DEPARTMENT OF TRANSPORTATION
RALEIGH

PHASE I WINGS FOR CONCRETE BOX CULVERT

H = 8'-0" SLOPE = 3:1

52° SKEW

NORTH CAROLINA PROFESSIONAL SEAL 14045 ENGINEER TIMOTHY V. COGGINS
07/27/12

REVISIONS						
NO.	BY:	DATE:	NO.	BY:	DATE:	
1			3			
2			4			

SHEET NO. C-6
TOTAL SHEETS 28

STR. #3

ASSEMBLED BY :	Neil M. Ruffin	DATE : 4/16/12
CHECKED BY :	B. GREEN	DATE : 4/20/12
DRAWN BY :	NMR 03/12	
CHECKED BY :		

08-JUN-2012 11:21
R:\Structures\FinalPlans\Culverts\Str. #3\U3810_sd_Culvert_03.dgn
nruffin

BAR TYPES

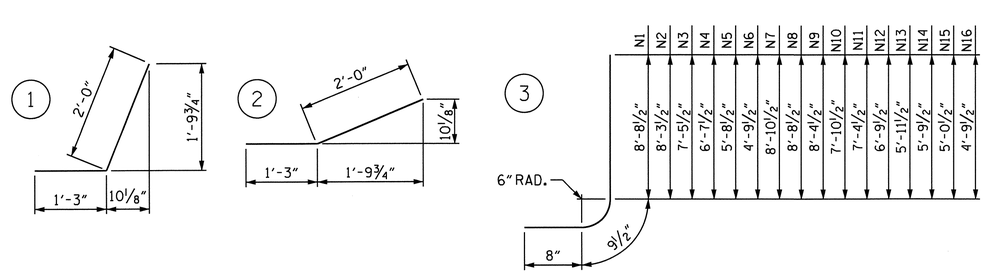

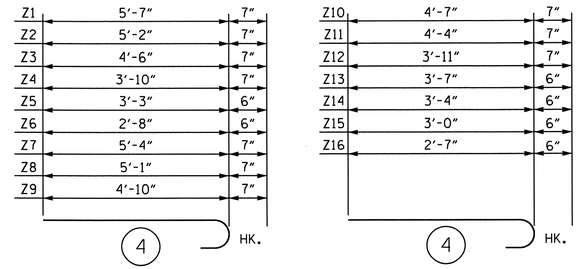

ALL BAR DIMENSIONS ARE OUT TO OUT.

BILL OF MATERIAL PHASE II

BAR	NO.	SIZE	TYPE	LENGTH	WEIGHT	BAR	NO.	SIZE	TYPE	LENGTH	WEIGHT
H1	10	4	STR	12'-11"	86	V1	2	4	STR	8'-2"	11
H2	2	4	STR	9'-10"	13	V2	2	4	STR	7'-9"	10
H3	2	4	STR	6'-4"	8	V3	3	4	STR	6'-11"	14
H4	2	4	STR	2'-11"	4	V4	3	4	STR	6'-0"	12
H5	18	4	1	3'-3"	39	V5	3	4	STR	5'-2"	10
H6	2	4	STR	13'-5"	18	V6	3	4	STR	4'-3"	9
H7	24	4	STR	16'-5"	263	V7	2	4	STR	8'-5"	11
H8	2	4	STR	23'-10"	32	V8	2	4	STR	8'-2"	11
H9	2	4	STR	16'-5"	22	V9	2	4	STR	7'-10"	10
H10	2	4	STR	8'-11"	12	V10	4	4	STR	7'-4"	20
H11	18	4	2	3'-3"	39	V11	4	4	STR	6'-10"	18
						V12	4	4	STR	6'-3"	17
N1	2	5	3	10'-2"	21	V13	3	4	STR	5'-10"	12
N2	2	5	3	9'-9"	20	V14	4	4	STR	5'-3"	14
N3	3	5	3	8'-11"	28	V15	4	4	STR	4'-6"	12
N4	3	5	3	8'-1"	25	V16	4	4	STR	4'-3"	11
N5	3	4	3	7'-2"	14						
N6	3	4	3	6'-4"	13	Z1	1	5	4	6'-2"	6
N7	2	5	3	10'-4"	22	Z2	2	5	4	5'-9"	12
N8	2	5	3	10'-2"	21	Z3	3	5	4	5'-1"	16
N9	2	5	3	9'-10"	21	Z4	3	5	4	4'-5"	14
N10	4	5	3	9'-4"	39	Z5	3	4	4	3'-9"	8
N11	4	5	3	8'-10"	37	Z6	3	4	4	3'-2"	6
N12	4	5	3	8'-3"	34	Z7	2	5	4	5'-11"	12
N13	3	5	3	8'-5"	26	Z8	2	5	4	5'-8"	12
N14	4	4	3	7'-3"	19	Z9	2	5	4	5'-5"	11
N15	4	4	3	6'-6"	17	Z10	4	5	4	5'-2"	22
N16	4	4	3	6'-3"	17	Z11	4	5	4	4'-11"	21
						Z12	4	5	4	4'-6"	19
S1	6	6	STR	6'-0"	54	Z13	3	4	4	4'-1"	8
						Z14	4	4	4	3'-10"	10
T1	2	5	STR	14'-9"	31	Z15	4	4	4	3'-6"	9
T2	1	5	STR	14'-6"	15	Z16	4	4	4	3'-1"	8
T3	2	5	STR	32'-5"	68						
T4	1	5	STR	31'-7"	33						

REINFORCING STEEL LBS. 1,507
FOR 2 WINGS

CLASS A CONCRETE	
2 WINGS	20.4 CY
1 HEADWALL	0.6 CY
1 END CURTAIN WALL	0.6 CY
2 EDGE BEAMS	1.0 CY
TOTAL	22.6 CY

SPLICE CHART

BAR	SIZE	SPLICE LENGTH
H7	#4	1'-11"

TOTAL QUANTITIES PHASE II

PHASE II REINF. STEEL	1,507 LBS.
TOTAL	1,507 LBS.
PHASE II CLASS A CONCRETE	22.6 CY
TOTAL	22.6 CY

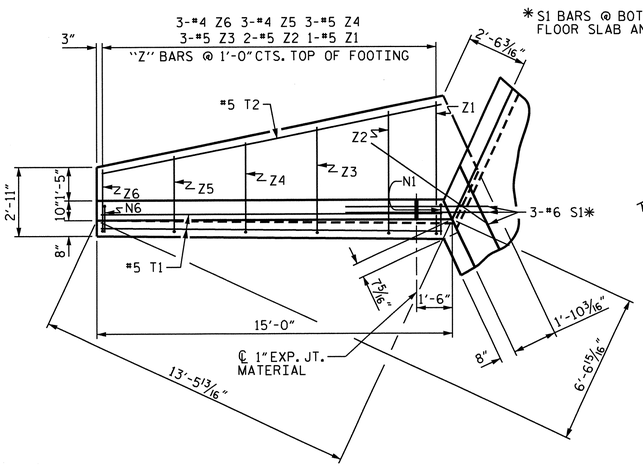

PLAN W2

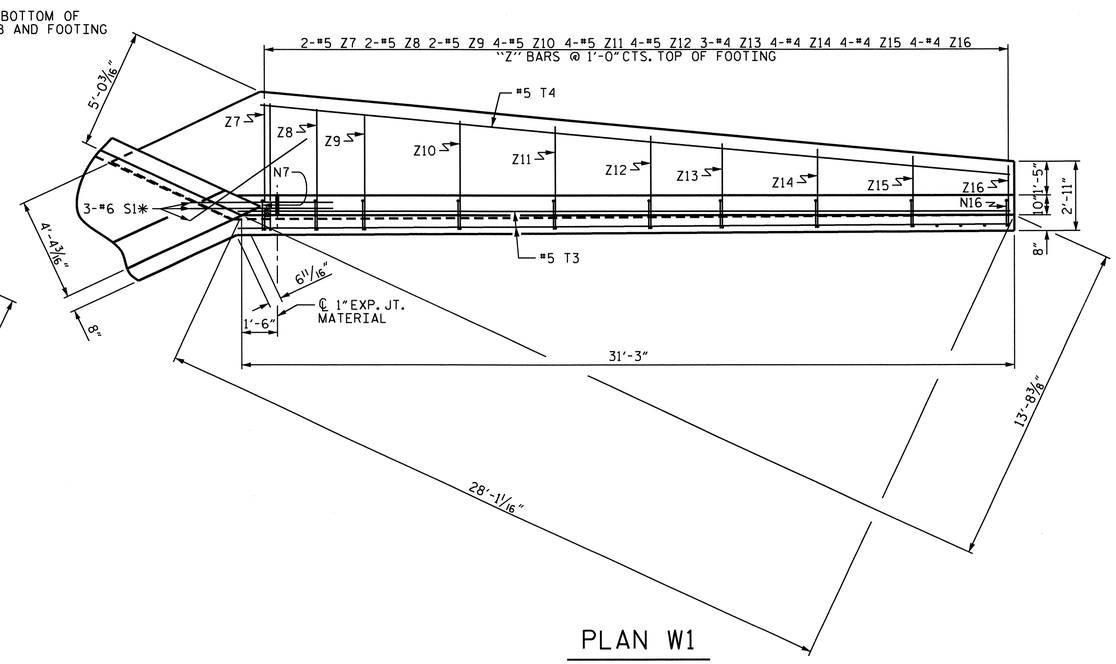

PLAN W1

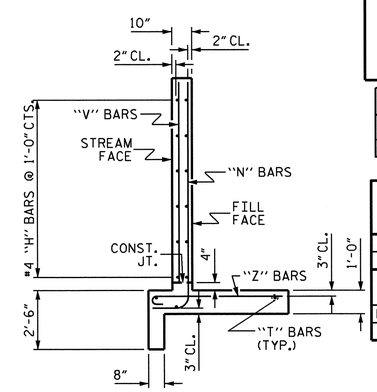

TYPICAL WING SECTION

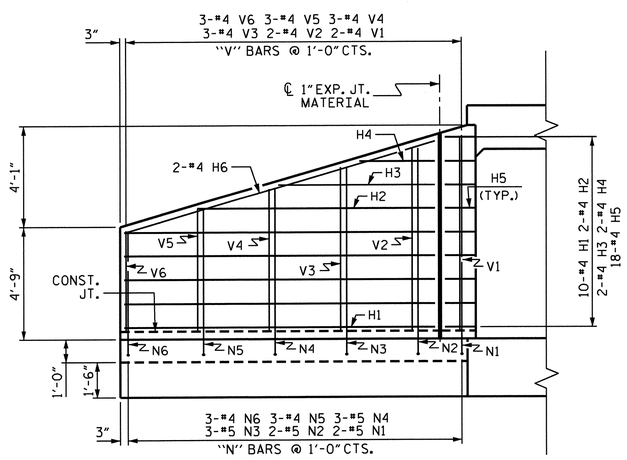

ELEVATION W2

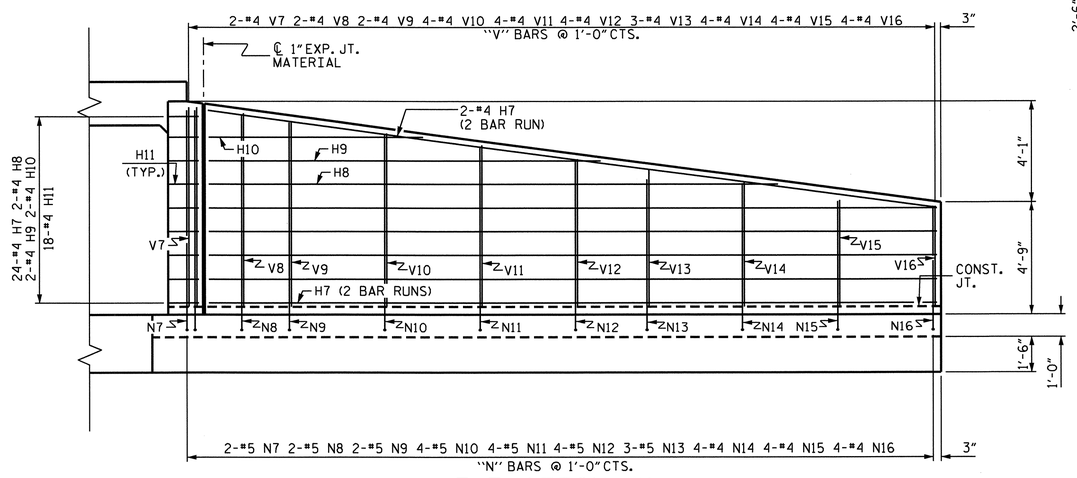

ELEVATION W1

PROJECT NO. U-3810
ONSLOW COUNTY
STATION: 51+68.00 -L-

SHEET 7 OF 7

STATE OF NORTH CAROLINA
DEPARTMENT OF TRANSPORTATION
RALEIGH

PHASE II WINGS FOR CONCRETE BOX CULVERT

H = 8'-0" SLOPE = 3:1
52° SKEW

NORTH CAROLINA PROFESSIONAL SEAL 14045 ENGINEER TIMOTHY W. COGGINS
07/27/12

REVISIONS						SHEET NO.
NO.	BY:	DATE:	NO.	BY:	DATE:	C-7
1			3			TOTAL SHEETS
2			4			28

STR. #3

ASSEMBLED BY : Neil M. Ruffin DATE : 4/16/12
CHECKED BY : B. GREEN DATE : 4/20/12
DRAWN BY : NMR 03/12
CHECKED BY :

25-JUL-2012 07:22
W:\structures\Plans\FinalPlans\Culverts\Str. #3\U3810_sd_Culvert_03.dgn
bbarodawala

F. A. PROJECT NO. STP-1406 (7)

BM: NCDOT GPS STA. "U3810-4" STA. 116+13.34 -L- 19.90' RIGHT EL. 32.33

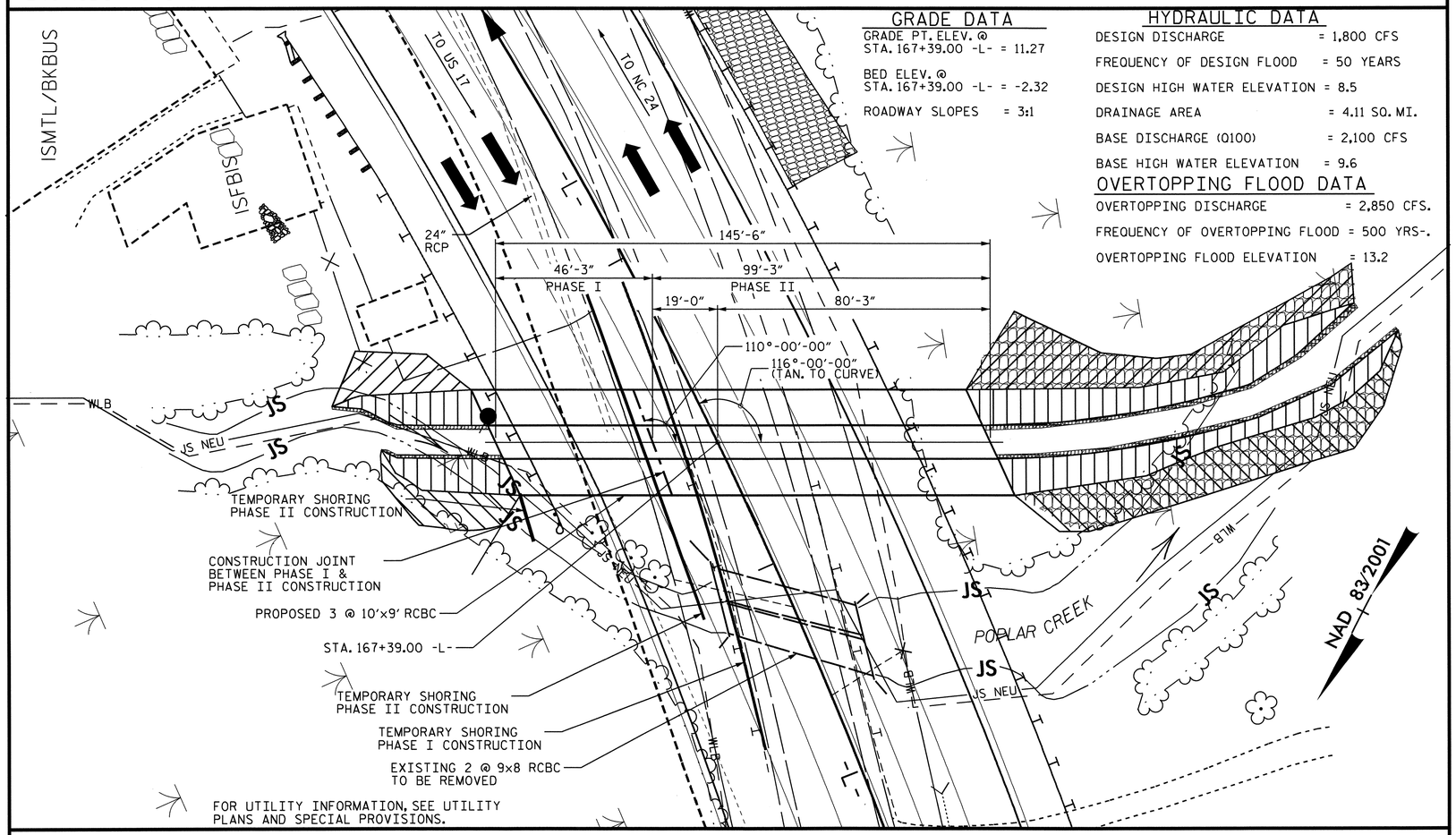

GRADE DATA

GRADE PT. ELEV. @ STA. 167+39.00 -L- = 11.27

BED ELEV. @ STA. 167+39.00 -L- = -2.32

ROADWAY SLOPES = 3:1

HYDRAULIC DATA

DESIGN DISCHARGE	= 1,800 CFS
FREQUENCY OF DESIGN FLOOD	= 50 YEARS
DESIGN HIGH WATER ELEVATION	= 8.5
DRAINAGE AREA	= 4.11 SQ. MI.
BASE DISCHARGE (Q100)	= 2,100 CFS
BASE HIGH WATER ELEVATION	= 9.6

OVERTOPPING FLOOD DATA

OVERTOPPING DISCHARGE	= 2,850 CFS.
FREQUENCY OF OVERTOPPING FLOOD	= 500 YRS-.
OVERTOPPING FLOOD ELEVATION	= 13.2

LOCATION SKETCH

THE EXISTING STRUCTURE CONSISTING OF A DOUBLE 9 x 8 RCBC APPROXIMATELY 43'-0" IN LENGTH AND LOCATED APPROXIMATELY 56'-6" DOWNSTATION FROM PROPOSED STRUCTURE SHALL BE REMOVED. THE EXISTING STRUCTURE IS PRESENTLY NOT POSTED BELOW THE LEGAL LOAD LIMIT. SHOULD THE STRUCTURAL INTEGRITY OF THE STRUCTURE FURTHER DETERIORATE, THIS LOAD LIMITATION MAY BE REDUCED AS FOUND NECESSARY DURING THE LIFE OF THE PROJECT.

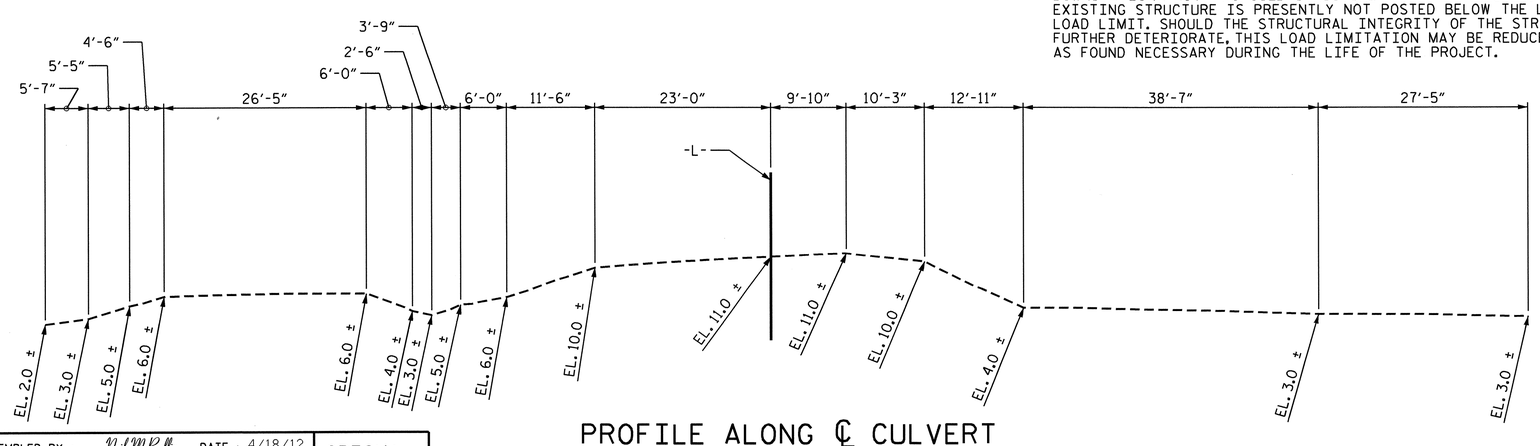

PROFILE ALONG ℄ CULVERT

NOTES

ASSUMED LIVE LOAD ----------HL93 OR ALTERNATE LOADING.

DESIGN FILL----------7.31'

FOR OTHER DESIGN DATA AND NOTES, SEE STANDARD NOTE SHEET.

3" Ø WEEP HOLES INDICATED TO BE IN ACCORDANCE WITH THE SPECIFICATIONS.

CONCRETE IN CULVERTS TO BE POURED IN THE FOLLOWING ORDER:

PHASE I
1. WING FOOTINGS AND FLOOR SLAB INCLUDING 4" OF ALL VERTICAL WALLS, EXCEPT THE MOST NORTHWESTERLY WING W2 SHALL BE CONSTRUCTED UP TO THE CONSTRUCTION JOINT.
2. THE REMAINING PORTIONS OF THE WALLS AND WINGS FULL HEIGHT FOLLOWED BY ROOF SLAB AND HEADWALLS.

PHASE II
1. WING FOOTINGS AND FLOOR SLAB INCLUDING 4" OF ALL VERTICAL WALLS.
2. THE REMAINING PORTIONS OF THE WALLS AND WINGS FULL HEIGHT FOLLOWED BY ROOF SLAB AND HEADWALLS.

PHASE III
1. THE REMAINING WING FOOTING INCLUDING 4" OF THE VERTICAL WALL OF THE MOST NORTHWESTERLY WING W2 SHALL BE CONSTRUCTED UP TO THE CONSTRUCTION JOINT.
2. THE REMAINING PORTION OF THE MOST NORTHWESTERLY WING W2 SHALL BE CONSTRUCTED TO FULL HEIGHT.

THE RESIDENT ENGINEER SHALL CHECK THE LENGTH OF CULVERT BEFORE STAKING IT OUT TO MAKE CERTAIN THAT IT WILL PROPERLY TAKE CARE OF THE FILL.

DIMENSIONS FOR WING LAYOUT AS WELL AS ADDITIONAL REINFORCING STEEL EMBEDDED IN BARREL ARE SHOWN ON WING SHEET.

STEEL IN THE BOTTOM SLAB MAY BE SPLICED AT THE PERMITTED CONSTRUCTION JOINT AT THE CONTRACTOR'S OPTION. EXTRA WEIGHT OF STEEL DUE TO THE SPLICES WILL BE PAID FOR BY THE CONTRACTOR.

TRANSVERSE CONSTRUCTION JOINTS SHALL BE USED IN THE BARREL, SPACED TO LIMIT THE POURS TO A MAXIMUM OF 70 FT. LOCATION OF JOINTS SHALL BE SUBJECT TO APPROVAL OF THE ENGINEER.

AT THE CONTRACTOR'S OPTION, HE MAY SPLICE THE VERTICAL REINFORCING STEEL IN THE INTERIOR FACE OF EXTERIOR WALL ABOVE LOWER WALL CONSTRUCTION JOINT. THE SPLICE LENGTH SHALL BE AS PROVIDED IN THE SPLICE LENGTH CHART SHOWN ON THE PLANS. EXTRA WEIGHT OF STEEL DUE TO THE SPLICES SHALL BE PAID FOR BY THE CONTRACTOR.

NO PRECAST REINFORCED BOX CULVERT OPTION WILL BE ALLOWED.

THE CONTRACTOR SHALL PROVIDE INDEPENDENT ASSURANCE SAMPLES OF REINFORCING STEEL AS FOLLOWS: FOR PROJECTS REQUIRING UP TO 400 TONS OF REINFORCING STEEL, ONE 30 INCH SAMPLE OF EACH SIZE BAR USED, AND FOR PROJECTS REQUIRING OVER 400 TONS OF REINFORCING STEEL, TWO 30 INCH SAMPLES OF EACH SIZE BAR USED. THE BARS FROM WHICH THE SAMPLES ARE TAKEN MUST THEN BE SPLICED WITH REPLACEMENT BARS OF THE SIZE AND LENGTH OF THE SAMPLE, PLUS A MINIMUM LAP SPLICE OF THIRTY BAR DIAMETERS. PAYMENT FOR THE SAMPLES OF REINFORCING STEEL SHALL BE CONSIDERED INCIDENTAL TO VARIOUS PAY ITEMS.

FOR CULVERT DIVERSION DETAILS AND PAY ITEM, SEE EROSION CONTROL PLANS.

A 3 FOOT STRIP OF FILTER FABRIC SHALL BE ATTACHED TO THE FILL FACE OF THE WING COVERING THE ENTIRE LENGTH OF THE EXPANSION JOINT.

FOR SUBMITTAL OF WORKING DRAWINGS, SEE SPECIAL PROVISIONS.

FOR FALSEWORK AND FORMWORK, SEE SPECIAL PROVISIONS.

FOR CRANE SAFETY, SEE SPECIAL PROVISIONS.

FOR GROUT FOR STRUCTURES, SEE SPECIAL PROVISIONS.

FOR MAINTENANCE OF TRAFFIC, SEE TRAFFIC CONTROL PLANS.

TOTAL STRUCTURE QUANTITIES

CLASS A CONCRETE			
BARREL @ 3.371 CY/FT	490.5	C.Y.	
WING ETC.	58.2	C.Y.	
TOTAL	548.7	C.Y.	
REINFORCING STEEL			
BARREL	65,638	LBS.	
WINGS ETC.	3,404	LBS.	
TOTAL	69,042	LBS.	
FOUNDATION COND. MAT'L.	377	TONS	
CULVERT EXCAVATION ----------	LUMP SUM		
REMOVAL OF EXISTING STRUCTURE -	LUMP SUM		

NORTH CAROLINA PROFESSIONAL SEAL 12224 ENGINEER OMAR R. AZIZI 7/30/12

NORTH CAROLINA PROFESSIONAL SEAL 14045 ENGINEER TIMOTHY W. COGGINS 07/27/12

PROJECT NO. U-3810

ONSLOW COUNTY

STATION: 167+39.00 -L-

SHEET 1 OF 9

CULVERT NO. 312

STATE OF NORTH CAROLINA
DEPARTMENT OF TRANSPORTATION
RALEIGH

BARREL STANDARD

TRIPLE 10 FT. X 9 FT. CONCRETE BOX CULVERT 116° SKEW

REVISIONS								SHEET NO.
NO.	BY:	DATE:	NO.	BY:	DATE:			C-8
1			3					TOTAL SHEETS
2			4					28

STR. #4

ASSEMBLED BY : Neil M Ruffin	DATE : 4/18/12	SPECIAL	
CHECKED BY : B. GREEN	DATE : 5/1/12		
DRAWN BY : R. WRIGHT	DATE : AUG. 1989	STANDARD	
CHECKED BY : C.R.K.	DATE : AUG. 1989		

REVISED 11-13-91 BY E.L.R. CHECKED BY G.R.P.
ADDED 8-22-89

LOAD AND RESISTANCE FACTOR RATING (LRFR) SUMMARY FOR REINFORCED CONCRETE BOX CULVERTS

LEVEL		VEHICLE	WEIGHT (W) (TONS)	CONTROLLING LOAD RATING (#)	MINIMUM RATING FACTORS (RF)	TONS = W × RF	STRENGTH I LIMIT STATE									COMMENT NUMBER
							LIVE-LOAD FACTORS (γ_{LL})	MOMENT				SHEAR				
								RATING FACTOR	BOX NO.	ELEMENT TYPE	DISTANCE FROM LEFT END OF ELEMENT (ft)	RATING FACTOR	BOX NO.	ELEMENT TYPE	DISTANCE FROM LEFT END OF ELEMENT (ft)	
DESIGN LOAD RATING		HL-93 (INVENTORY)	N/A	1	1.02	--	1.75	1.44	1	Top Slab	4.27	1.02	1	Top Slab	9.45	
		HL-93 (OPERATING)	N/A		1.32	--	1.35	1.87	1	Top Slab	4.27	1.32	1	Top Slab	9.45	
		HS-20 (INVENTORY)	36.000	2	1.24	44.48	1.75	1.53	1	Top Slab	4.53	1.24	1	Top Slab	9.45	
		HS-20 (OPERATING)	36.000		1.60	57.66	1.35	1.98	1	Top Slab	4.53	1.60	1	Top Slab	9.45	
LEGAL LOAD RATING	SINGLE VEHICLE (SV)	SNSH	13.500		2.25	30.42	1.40	2.77	1	Top Slab	4.53	2.25	1	Top Slab	9.45	
		SNGARBS2	20.000		2.10	42.03	1.40	2.59	1	Top Slab	4.53	2.10	1	Top Slab	9.45	
		SNAGRIS2	22.000		2.25	49.41	1.40	2.77	1	Top Slab	4.53	2.25	1	Top Slab	9.45	
		SNCOTTS3	27.250	3	1.28	34.81	1.40	1.81	1	Top Slab	4.27	1.28	1	Top Slab	9.45	
		SNAGGRS4	34.925		1.62	56.48	1.40	2.26	1	Top Slab	4.80	1.62	1	Top Slab	9.45	
		SNS5A	35.550		1.45	51.65	1.40	2.16	1	Top Slab	4.53	1.45	1	Top Slab	9.45	
		SNS6A	39.950		1.45	58.05	1.40	2.16	1	Top Slab	4.53	1.45	1	Top Slab	9.45	
		SNS7B	42.000		1.43	60.13	1.40	2.25	1	Top Slab	4.53	1.43	1	Top Slab	9.45	
	TRUCK TRACTOR SEMI-TRAILER (TTST)	TNAGRIT3	33.000		2.10	69.14	1.40	2.77	1	Top Slab	4.53	2.10	1	Top Slab	9.45	
		TNT4A	33.075		1.52	50.18	1.40	2.15	1	Top Slab	4.27	1.52	1	Top Slab	9.45	
		TNT6A	41.600		1.46	60.57	1.40	2.17	1	Top Slab	4.53	1.46	1	Top Slab	9.45	
		TNT7A	42.000		1.47	61.94	1.40	2.20	1	Top Slab	4.53	1.47	1	Top Slab	9.45	
		TNT7B	42.000		1.49	62.61	1.40	2.11	1	Top Slab	4.53	1.49	1	Top Slab	9.45	
		TNAGRIT4	43.000		1.45	62.35	1.40	2.05	1	Top Slab	4.27	1.45	1	Top Slab	9.45	
		TNAGT5A	45.000		1.47	66.22	1.40	2.10	1	Top Slab	4.27	1.47	1	Top Slab	9.45	
		TNAGT5B	45.000		1.44	64.97	1.40	2.04	2	Top Slab	0.53	1.44	1	Top Slab	9.45	

LOAD FACTORS:

DESIGN LOAD RATING FACTORS

LOAD TYPE	MAX FACTOR	MIN FACTOR
DC	1.25	0.90
DW	1.50	0.65
EV	1.30	0.90
EH	1.35	0.90
ES	1.35	0.90
LS	1.75	--
WA	1.00	--

NOTE:

RATING FACTORS ARE BASED ON THE STRENGTH I LIMIT STATE.

COMMENTS:

1.
2.
3.
4.

(#) CONTROLLING LOAD RATING

(1) DESIGN LOAD RATING (HL-93)

(2) DESIGN LOAD RATING (HS-20)

(3) LEGAL LOAD RATING **

** SEE CHART FOR VEHICLE TYPE

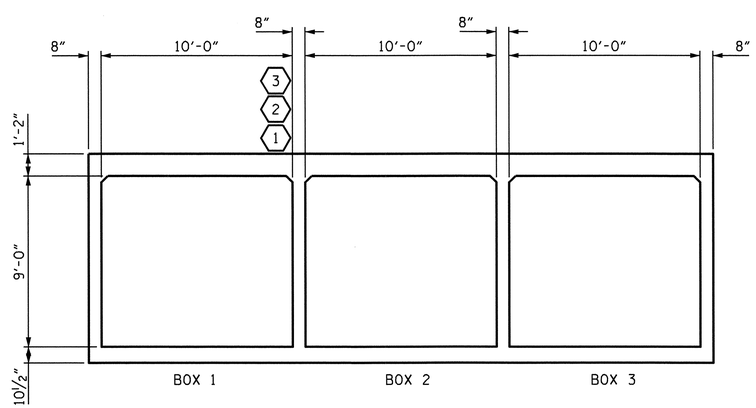

LRFR SUMMARY

(LOOKING DOWNSTREAM)

PROJECT NO. U-3810

ONSLOW COUNTY

STATION: 167+39.00 -L-

SHEET 2 OF 9

STATE OF NORTH CAROLINA
DEPARTMENT OF TRANSPORTATION
RALEIGH

STANDARD

LRFR SUMMARY FOR REINFORCED CONCRETE BOX CULVERTS
(NON-INTERSTATE TRAFFIC)

NORTH CAROLINA PROFESSIONAL SEAL 14045 ENGINEER TIMOTHY W. COGGINS
07/27/12

REVISIONS						SHEET NO.
NO.	BY:	DATE:	NO.	BY:	DATE:	C-9
1			3			TOTAL SHEETS
2			4			28

STR. #4 STD. NO. LRFR5

ASSEMBLED BY : Neil Ruffin		DATE : 4/19/12	
CHECKED BY : B. GREEN		DATE : 5/1/12	
DRAWN BY : WMC	7/11	REV. 10/1/11	MAA/GM
CHECKED BY : GM	7/11		

08-JUN-2012 11:21
R:\Structures\FinalPlans\Culverts\Str. #4\u3810_sd_cu_04.dgn
nruffin

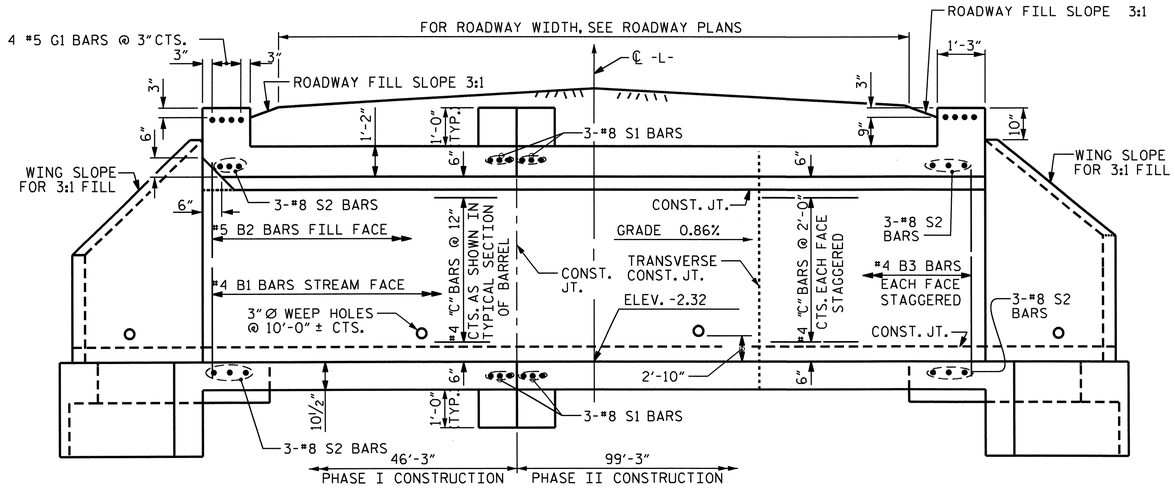

EXTERIOR WALL INTERIOR WALL

CULVERT SECTION NORMAL TO ROADWAY

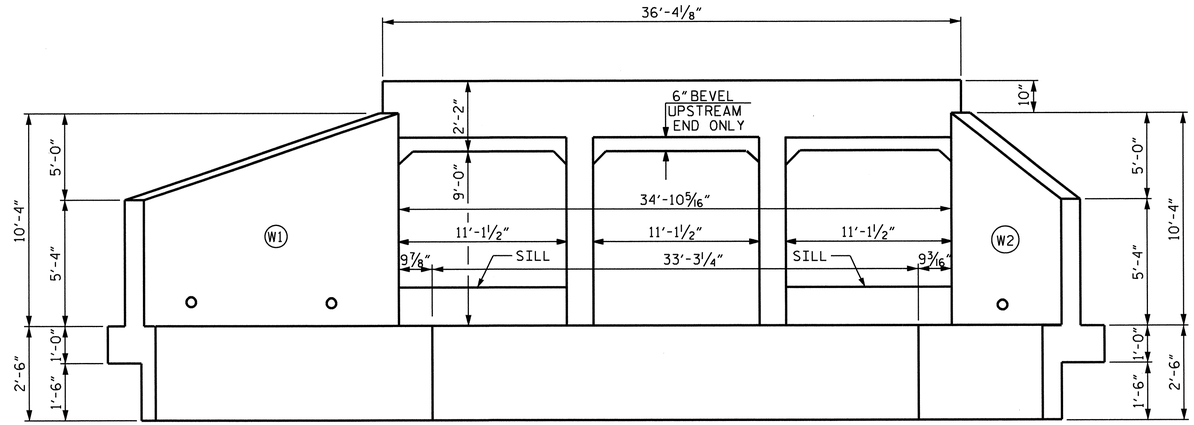

END ELEVATION NORMAL TO SKEW

SILLS AT INLET END ONLY

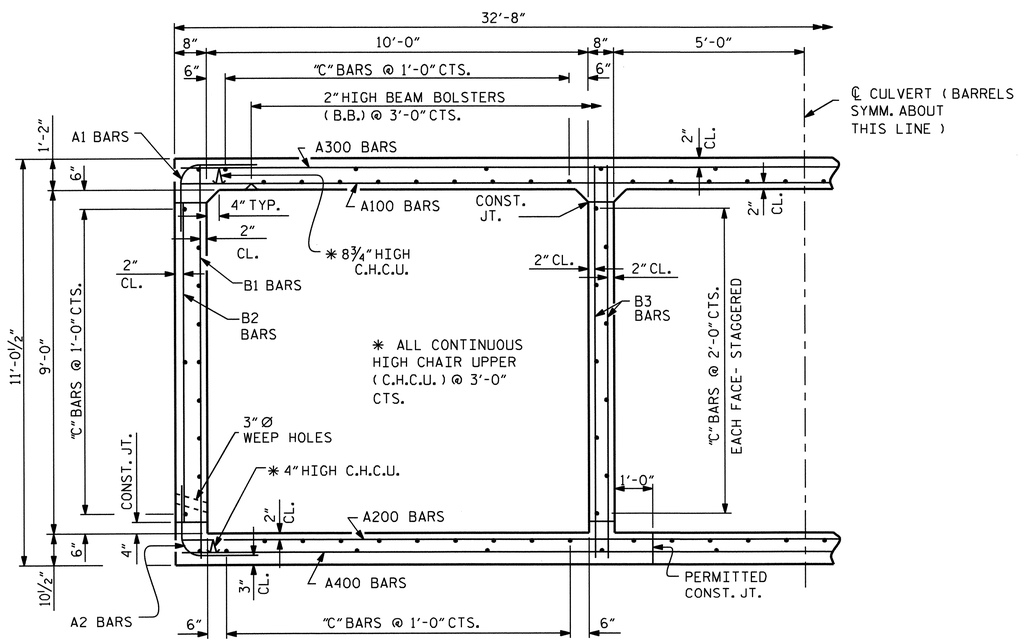

RIGHT ANGLE SECTION OF BARREL

THERE ARE 118 "C" BARS IN SECTION OF BARREL.

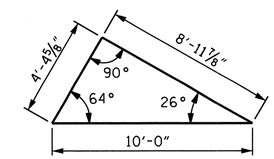

SKEW TRIANGLE

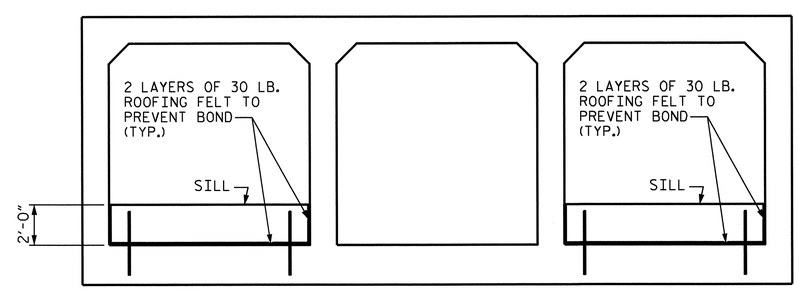

ELEVATION

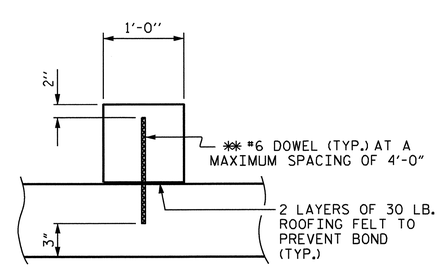

SECTION THROUGH SILL

** DOWELS MAY BE PUSHED INTO GREEN CONCRETE AFTER SLAB HAS BEEN FLOAT FINISHED.

NORTH CAROLINA PROFESSIONAL SEAL 14045 ENGINEER TIMOTHY W. COGGINS
07/27/12

PROJECT NO. U-3810
ONSLOW COUNTY
STATION: 167+39.00 -L-

SHEET 3 OF 9

STATE OF NORTH CAROLINA
DEPARTMENT OF TRANSPORTATION
RALEIGH

TRIPLE 10 FT. X 9 FT. CONCRETE BOX CULVERT 116° SKEW

REVISIONS						SHEET NO.
NO.	BY:	DATE:	NO.	BY:	DATE:	C-10
1			3			TOTAL SHEETS
2			4			28

STR. #4

REVISED 8-28-92 BY E.L.R. CHECKED BY G.R.P.
REVISED 8-22-99 BY A.R.B. CHECKED BY C.R.K.
REDRAWN 8-22-99
REVISED 11-19-99 BY M.M. CHECKED BY R.W.W.

ASSEMBLED BY : Neil M Ruffin DATE : 4/12/12
CHECKED BY : B. GREEN DATE : 5/1/12

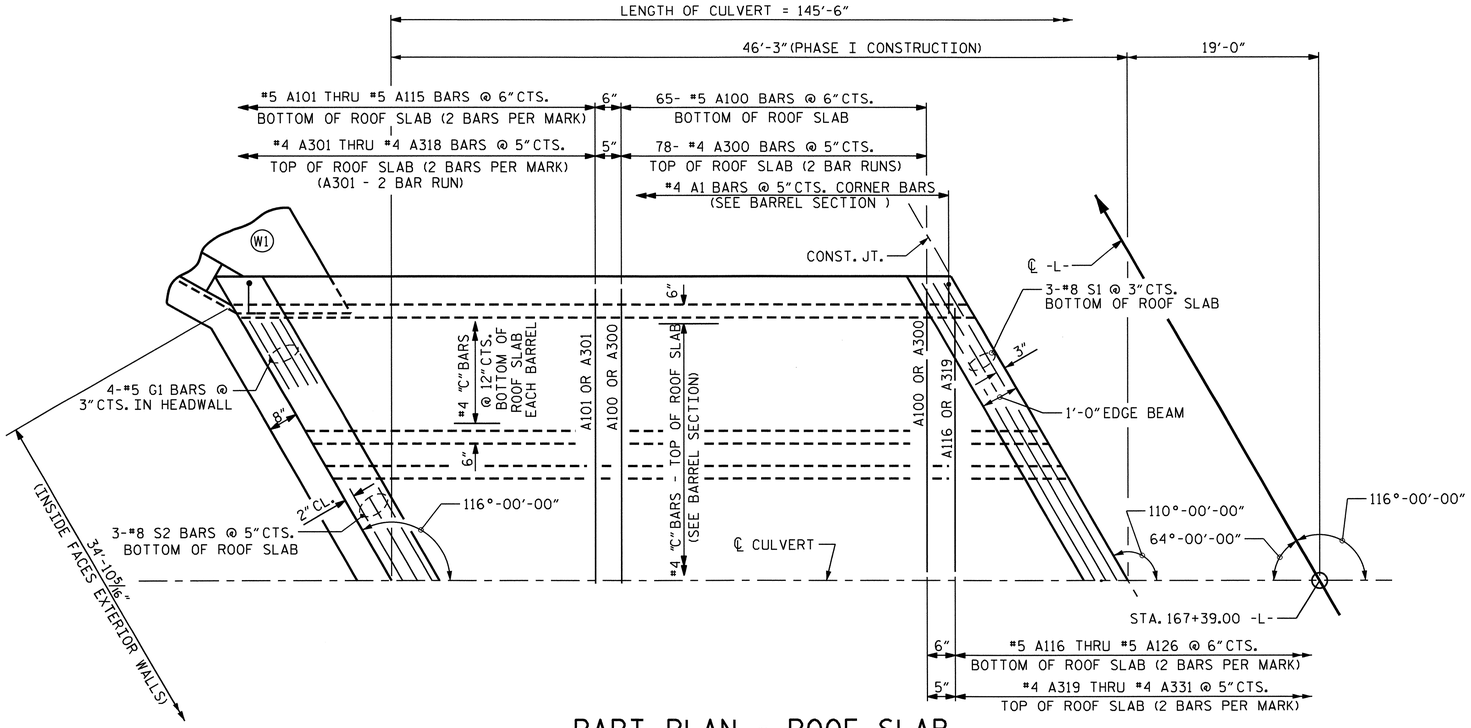

PART PLAN - ROOF SLAB

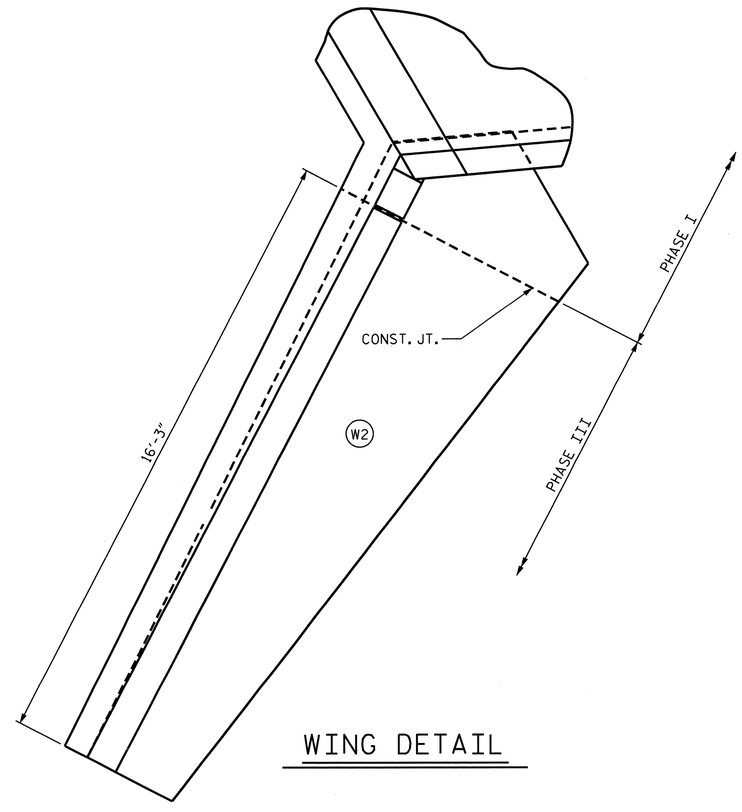

WING DETAIL

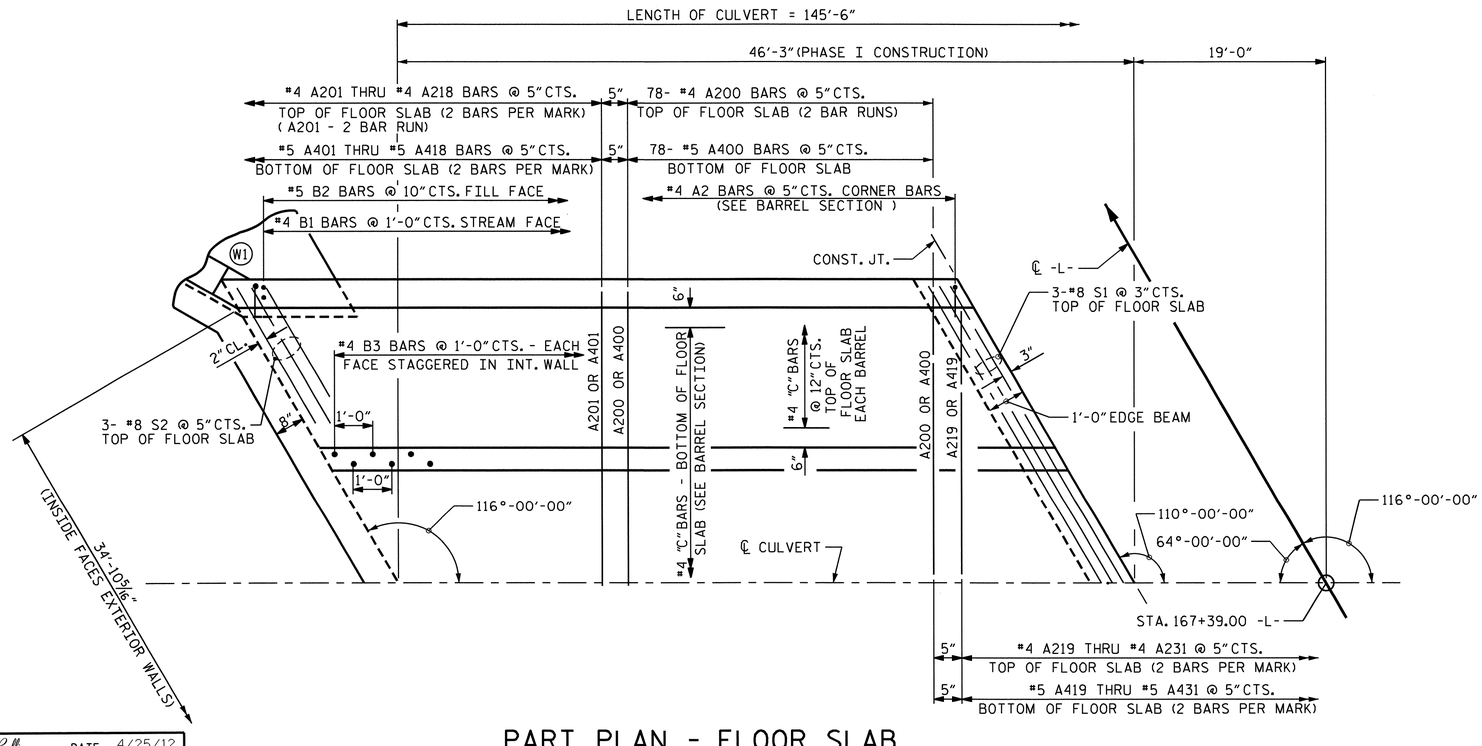

PART PLAN - FLOOR SLAB

PROJECT NO. U-3810

ONSLOW COUNTY

STATION: 167+39.00 -L-

SHEET 4 OF 9

STATE OF NORTH CAROLINA
DEPARTMENT OF TRANSPORTATION
RALEIGH

TRIPLE 10 FT. X 9 FT. CONCRETE BOX CULVERT 116° SKEW

PHASE I CONSTRUCTION

NORTH CAROLINA PROFESSIONAL SEAL 14045 ENGINEER TIMOTHY L. COGGINS

07/30/12

REVISIONS						SHEET NO.
NO.	BY:	DATE:	NO.	BY:	DATE:	C-11
1			3			TOTAL SHEETS
2			4			28

STR. #4

DRAWN BY : Neil M. Ruffin DATE : 4/25/12

CHECKED BY : B. GREEN DATE : 5/1/12

30-JUL-2012 08:14
E:\TIPProjects-U\U3810\structures\Plans\FinalPlans\Culverts\Str. #4\u3810_sd_cu_04.dgn
nruffin

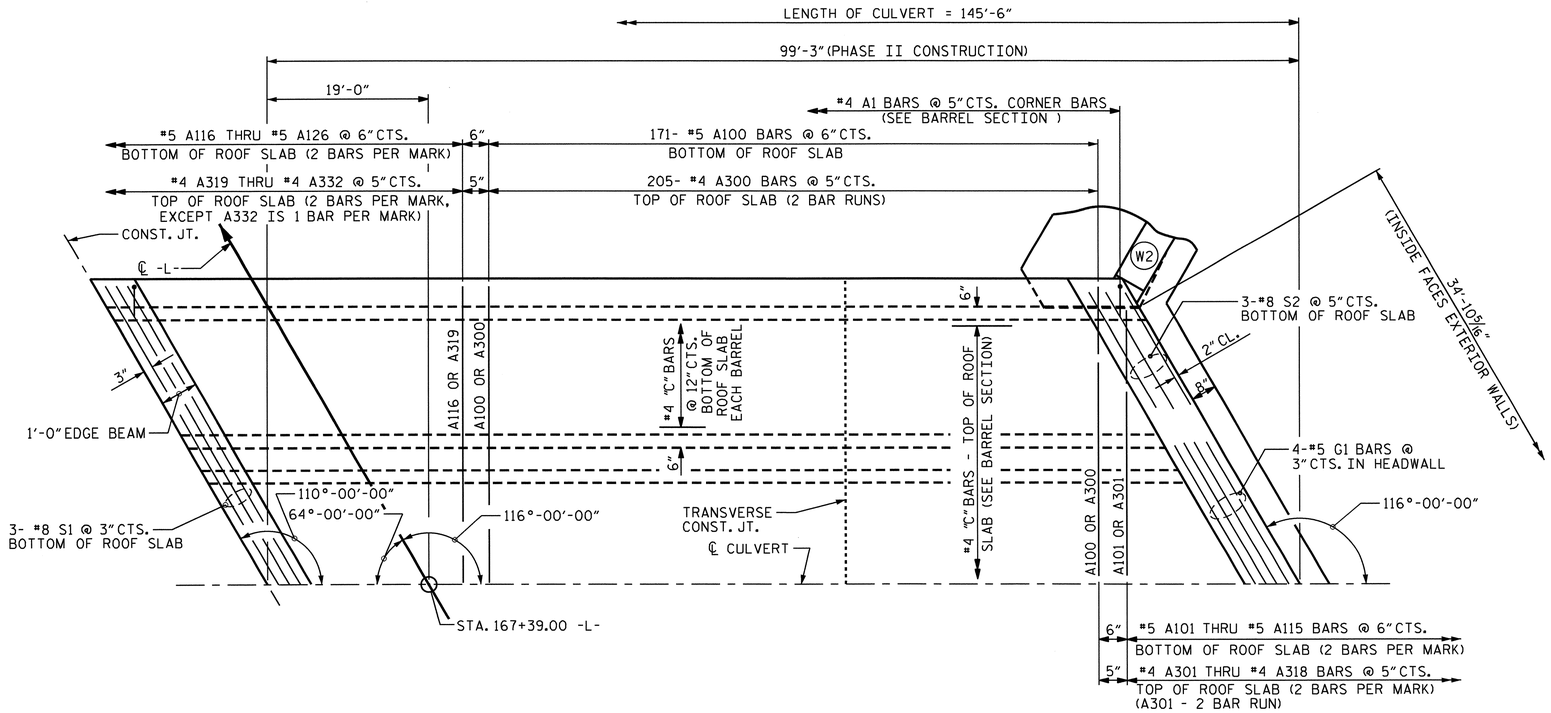

PART PLAN - ROOF SLAB

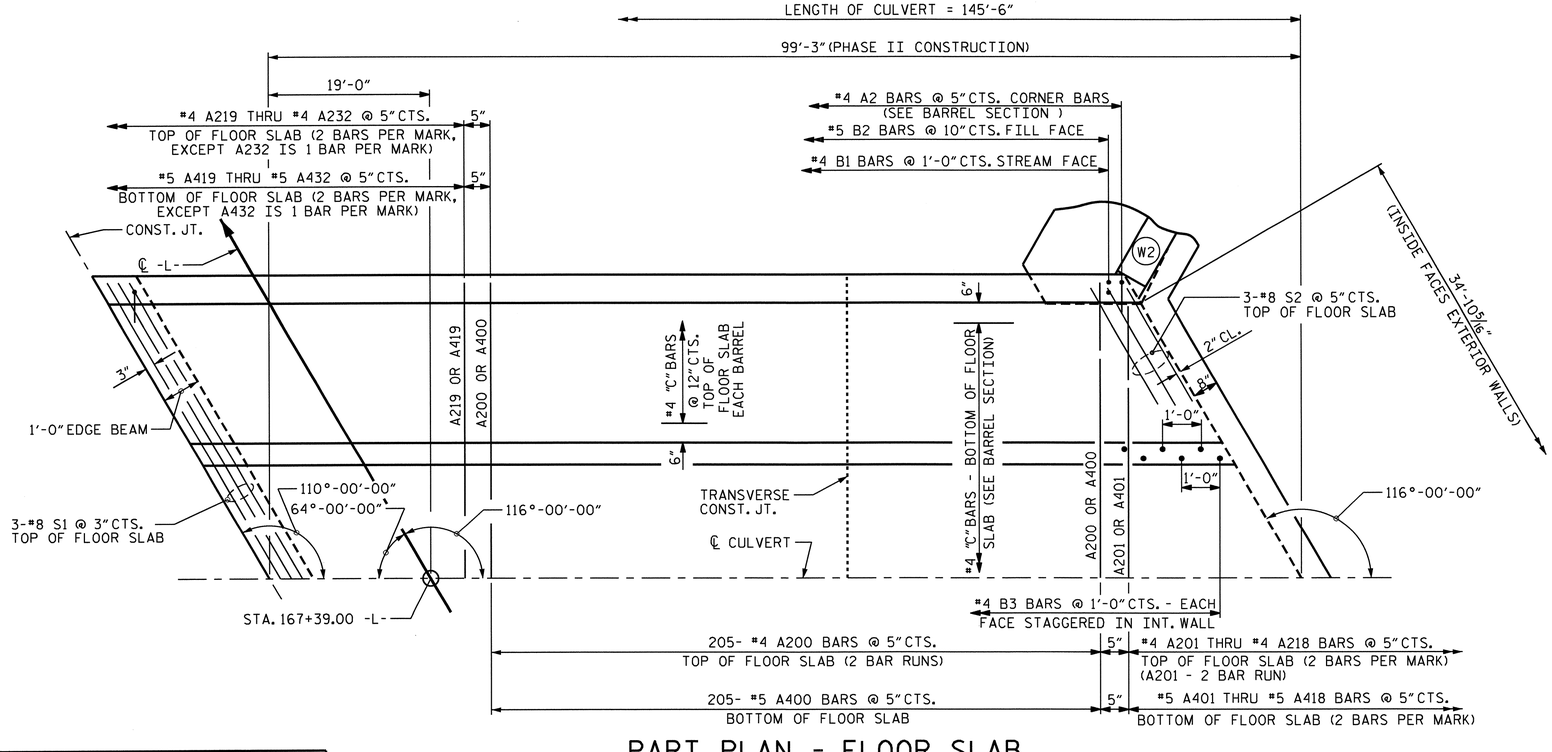

PART PLAN - FLOOR SLAB

DRAWN BY : Neil M Ruffin DATE : 4/25/12
CHECKED BY : B. GREEN DATE : 5/1/12

30-JUL-2012 08:14
E:\TIPProjects-U\U3810\structures\Plans\FinalPlans\Culverts\Str. #4\u3810_sd_cu_04.dgn
nruffin

PROJECT NO. U-3810
ONSLOW COUNTY
STATION: 167+39.00 -L-

SHEET 5 OF 9

STATE OF NORTH CAROLINA
DEPARTMENT OF TRANSPORTATION
RALEIGH

TRIPLE 10 FT. X 9 FT. CONCRETE BOX CULVERT 116° SKEW

PHASE II CONSTRUCTION

NORTH CAROLINA PROFESSIONAL SEAL 14045 ENGINEER TIMOTHY W. COGGINS
07/30/12

REVISIONS						SHEET NO.
NO.	BY:	DATE:	NO.	BY:	DATE:	C-12
1			3			TOTAL SHEETS
2			4			28

STR. #4

PHASE I CONSTRUCTION BILL OF MATERIAL

BAR	No.	SIZE	TYPE	LENGTH	WEIGHT
A1	221	4	6	5'-1"	750
A2	221	4	6	4'-8"	689
A100	65	5	STR	32'-3"	2186
A101	2	5	STR	30'-4"	63
A102	2	5	STR	28'-3"	59
A103	2	5	STR	26'-3"	55
A104	2	5	STR	24'-2"	50
A105	2	5	STR	22'-1"	46
A106	2	5	STR	20'-1"	42
A107	2	5	STR	18'-0"	38
A108	2	5	STR	16'-0"	33
A109	2	5	STR	13'-11"	29
A110	2	5	STR	11'-10"	25
A111	2	5	STR	9'-10"	21
A112	2	5	STR	7'-9"	16
A113	2	5	STR	5'-9"	12
A114	2	5	STR	3'-8"	8
A115	2	5	STR	1'-7"	3
A116	2	5	STR	29'-8"	62
A117	2	5	STR	26'-11"	56
A118	2	5	STR	24'-2"	50
A119	2	5	STR	21'-5"	45
A120	2	5	STR	18'-8"	39
A121	2	5	STR	15'-11"	33
A122	2	5	STR	13'-2"	27
A123	2	5	STR	10'-5"	22
A124	2	5	STR	7'-8"	16
A125	2	5	STR	4'-11"	10
A126	2	5	STR	2'-2"	5
A200	156	4	STR	17'-0"	1772
A201	4	4	STR	16'-2"	43
A202	2	4	STR	28'-10"	39
A203	2	4	STR	27'-2"	36
A204	2	4	STR	25'-5"	34
A205	2	4	STR	23'-9"	32
A206	2	4	STR	22'-0"	29
A207	2	4	STR	20'-4"	27
A208	2	4	STR	18'-7"	25
A209	2	4	STR	16'-11"	23
A210	2	4	STR	15'-2"	20
A211	2	4	STR	13'-6"	18
A212	2	4	STR	11'-9"	16
A213	2	4	STR	10'-1"	13
A214	2	4	STR	8'-4"	11
A215	2	4	STR	6'-8"	9
A216	2	4	STR	4'-11"	7
A217	2	4	STR	3'-3"	4
A218	2	4	STR	1'-6"	2
A219	2	4	STR	30'-0"	40
A220	2	4	STR	27'-9"	37
A221	2	4	STR	25'-5"	34
A222	2	4	STR	23'-2"	31
A223	2	4	STR	20'-10"	28
A224	2	4	STR	18'-7"	25
A225	2	4	STR	16'-3"	22
A226	2	4	STR	14'-0"	19
A227	2	4	STR	11'-8"	16
A228	2	4	STR	9'-5"	13
A229	2	4	STR	7'-1"	9
A230	2	4	STR	4'-10"	6
A231	2	4	STR	2'-6"	3
A300	156	4	STR	17'-0"	1772
A301	4	4	STR	16'-2"	43
A302	2	4	STR	28'-10"	39
A303	2	4	STR	27'-2"	36
A304	2	4	STR	25'-5"	34

PHASE I CONSTRUCTION BILL OF MATERIAL

BAR	No.	SIZE	TYPE	LENGTH	WEIGHT
A305	2	4	STR	23'-9"	32
A306	2	4	STR	22'-0"	29
A307	2	4	STR	20'-4"	27
A308	2	4	STR	18'-7"	25
A309	2	4	STR	16'-11"	23
A310	2	4	STR	15'-2"	20
A311	2	4	STR	13'-6"	18
A312	2	4	STR	11'-9"	16
A313	2	4	STR	10'-1"	13
A314	2	4	STR	8'-4"	11
A315	2	4	STR	6'-8"	9
A316	2	4	STR	4'-11"	7
A317	2	4	STR	3'-3"	4
A318	2	4	STR	1'-6"	2
A319	2	4	STR	30'-0"	40
A320	2	4	STR	27'-9"	37
A321	2	4	STR	25'-5"	34
A322	2	4	STR	23'-2"	31
A323	2	4	STR	20'-10"	28
A324	2	4	STR	18'-7"	25
A325	2	4	STR	16'-3"	22
A326	2	4	STR	14'-0"	19
A327	2	4	STR	11'-8"	16
A328	2	4	STR	9'-5"	13
A329	2	4	STR	7'-1"	9
A330	2	4	STR	4'-10"	6
A331	2	4	STR	2'-6"	3
A400	78	5	STR	32'-3"	2624
A401	2	5	STR	30'-7"	64
A402	2	5	STR	28'-10"	60
A403	2	5	STR	27'-2"	57
A404	2	5	STR	25'-5"	53
A405	2	5	STR	23'-9"	50
A406	2	5	STR	22'-0"	46
A407	2	5	STR	20'-4"	42
A408	2	5	STR	18'-7"	39
A409	2	5	STR	16'-11"	35
A410	2	5	STR	15'-2"	32
A411	2	5	STR	13'-6"	28
A412	2	5	STR	11'-9"	25
A413	2	5	STR	10'-1"	21
A414	2	5	STR	8'-4"	17
A415	2	5	STR	6'-8"	14
A416	2	5	STR	4'-11"	10
A417	2	5	STR	3'-3"	7
A418	2	5	STR	1'-6"	3
A419	2	5	STR	30'-0"	63
A420	2	5	STR	27'-9"	58
A421	2	5	STR	25'-5"	53
A422	2	5	STR	23'-2"	48
A423	2	5	STR	20'-10"	43
A424	2	5	STR	18'-7"	39
A425	2	5	STR	16'-3"	34
A426	2	5	STR	14'-0"	29
A427	2	5	STR	11'-8"	24
A428	2	5	STR	9'-5"	20
A429	2	5	STR	7'-1"	15
A430	2	5	STR	4'-10"	10
A431	2	5	STR	2'-6"	5
B1	94	4	STR	10'-6"	659
B2	111	5	STR	8'-4"	965
B3	184	4	STR	10'-6"	1291
C1	236	4	STR	26'-1"	4112
D1	6	6	STR	2'-5"	22
G1	4	5	STR	35'-11"	150
S1	6	8	STR	34'-4"	550
S2	6	8	STR	35'-11"	575
REINFORCING STEEL LBS.					21,368

PHASE II CONSTRUCTION BILL OF MATERIAL

BAR	No.	SIZE	TYPE	LENGTH	WEIGHT
A1	476	4	6	5'-1"	1616
A2	476	4	6	4'-8"	1484
A100	171	5	STR	32'-3"	5752
A101	2	5	STR	30'-4"	63
A102	2	5	STR	28'-3"	59
A103	2	5	STR	26'-3"	55
A104	2	5	STR	24'-2"	50
A105	2	5	STR	22'-1"	46
A106	2	5	STR	20'-1"	42
A107	2	5	STR	18'-0"	38
A108	2	5	STR	16'-0"	33
A109	2	5	STR	13'-11"	29
A110	2	5	STR	11'-10"	25
A111	2	5	STR	9'-10"	21
A112	2	5	STR	7'-9"	16
A113	2	5	STR	5'-9"	12
A114	2	5	STR	3'-8"	8
A115	2	5	STR	1'-7"	3
A116	2	5	STR	29'-8"	62
A117	2	5	STR	26'-11"	56
A118	2	5	STR	24'-2"	50
A119	2	5	STR	21'-5"	45
A120	2	5	STR	18'-8"	39
A121	2	5	STR	15'-11"	33
A122	2	5	STR	13'-2"	27
A123	2	5	STR	10'-5"	22
A124	2	5	STR	7'-8"	16
A125	2	5	STR	4'-11"	10
A126	2	5	STR	2'-2"	5
A200	410	4	STR	17'-0"	4656
A201	4	4	STR	16'-2"	43
A202	2	4	STR	28'-10"	39
A203	2	4	STR	27'-2"	36
A204	2	4	STR	25'-5"	34
A205	2	4	STR	23'-9"	32
A206	2	4	STR	22'-0"	29
A207	2	4	STR	20'-4"	27
A208	2	4	STR	18'-7"	25
A209	2	4	STR	16'-11"	23
A210	2	4	STR	15'-2"	20
A211	2	4	STR	13'-6"	18
A212	2	4	STR	11'-9"	16
A213	2	4	STR	10'-1"	13
A214	2	4	STR	8'-4"	11
A215	2	4	STR	6'-8"	9
A216	2	4	STR	4'-11"	7
A217	2	4	STR	3'-3"	4
A218	2	4	STR	1'-6"	2
A219	2	4	STR	30'-0"	40
A220	2	4	STR	27'-9"	37
A221	2	4	STR	25'-5"	34
A222	2	4	STR	23'-2"	31
A223	2	4	STR	20'-10"	28
A224	2	4	STR	18'-7"	25
A225	2	4	STR	16'-3"	22
A226	2	4	STR	14'-0"	19
A227	2	4	STR	11'-8"	16
A228	2	4	STR	9'-5"	13
A229	2	4	STR	7'-1"	9
A230	2	4	STR	4'-10"	6
A231	2	4	STR	2'-6"	3
A232	1	4	STR	1'-6"	1
A300	410	4	STR	17'-0"	4656
A301	4	4	STR	16'-2"	43
A302	2	4	STR	28'-10"	39
A303	2	4	STR	27'-2"	36
A304	2	4	STR	25'-5"	34

PHASE II CONSTRUCTION BILL OF MATERIAL

BAR	No.	SIZE	TYPE	LENGTH	WEIGHT
A305	2	4	STR	23'-9"	32
A306	2	4	STR	22'-0"	29
A307	2	4	STR	20'-4"	27
A308	2	4	STR	18'-7"	25
A309	2	4	STR	16'-11"	23
A310	2	4	STR	15'-2"	20
A311	2	4	STR	13'-6"	18
A312	2	4	STR	11'-9"	16
A313	2	4	STR	10'-1"	13
A314	2	4	STR	8'-4"	11
A315	2	4	STR	6'-8"	9
A316	2	4	STR	4'-11"	7
A317	2	4	STR	3'-3"	4
A318	2	4	STR	1'-6"	2
A319	2	4	STR	30'-0"	40
A320	2	4	STR	27'-9"	37
A321	2	4	STR	25'-5"	34
A322	2	4	STR	23'-2"	31
A323	2	4	STR	20'-10"	28
A324	2	4	STR	18'-7"	25
A325	2	4	STR	16'-3"	22
A326	2	4	STR	14'-0"	19
A327	2	4	STR	11'-8"	16
A328	2	4	STR	9'-5"	13
A329	2	4	STR	7'-1"	9
A330	2	4	STR	4'-10"	6
A331	2	4	STR	2'-6"	3
A332	1	4	STR	1'-6"	1
A400	205	5	STR	32'-3"	6896
A401	2	5	STR	30'-7"	64
A402	2	5	STR	28'-10"	60
A403	2	5	STR	27'-2"	57
A404	2	5	STR	25'-5"	53
A405	2	5	STR	23'-9"	50
A406	2	5	STR	22'-0"	46
A407	2	5	STR	20'-4"	42
A408	2	5	STR	18'-7"	39
A409	2	5	STR	16'-11"	35
A410	2	5	STR	15'-2"	32
A411	2	5	STR	13'-6"	28
A412	2	5	STR	11'-9"	25
A413	2	5	STR	10'-1"	21
A414	2	5	STR	8'-4"	17
A415	2	5	STR	6'-8"	14
A416	2	5	STR	4'-11"	10
A417	2	5	STR	3'-3"	7
A418	2	5	STR	1'-6"	3
A419	2	5	STR	30'-0"	63
A420	2	5	STR	27'-9"	58
A421	2	5	STR	25'-5"	53
A422	2	5	STR	23'-2"	48
A423	2	5	STR	20'-10"	43
A424	2	5	STR	18'-7"	39
A425	2	5	STR	16'-3"	34
A426	2	5	STR	14'-0"	29
A427	2	5	STR	11'-8"	24
A428	2	5	STR	9'-5"	20
A429	2	5	STR	7'-1"	15
A430	2	5	STR	4'-10"	10
A431	2	5	STR	2'-6"	5
A432	1	5	STR	1'-6"	2
B1	200	4	STR	10'-6"	1403
B2	239	5	STR	8'-4"	2077
B3	398	4	STR	10'-6"	2792
C2	472	4	STR	26'-8"	8408
G1	4	5	STR	35'-11"	150
S1	6	8	STR	34'-4"	550
S2	6	8	STR	35'-11"	575
REINFORCING STEEL LBS.					44,270

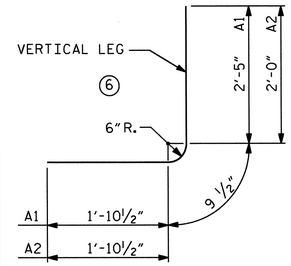

BAR TYPE

DIMENSIONS ARE OUT TO OUT

SPLICE CHART

BAR	SIZE	SPLICE LENGTH
A200	4	1'-9"
A300	4	1'-9"
B1	4	1'-9"
C1	4	1'-11"

STRUCTURE QUANTITIES FOR PHASE I CONSTRUCTION

CLASS A CONCRETE
BARREL @ 3.371 CY/FT 155.9 C.Y.
WING ETC. 22.6 C.Y.
TOTAL 178.5 C.Y.

REINFORCING STEEL
BARREL 21,368 LBS.
WINGS ETC. 1,164 LBS.
TOTAL 22,532 LBS.

FOUNDATION COND. MAT'L. 120 TONS
CULVERT EXCAVATION ---------- LUMP SUM

STRUCTURE QUANTITIES FOR PHASE II CONSTRUCTION

CLASS A CONCRETE
BARREL @ 3.371 CY/FT 334.6 C.Y.
WING ETC. 28.3 C.Y.
TOTAL 362.9 C.Y.

REINFORCING STEEL
BARREL 44270 LBS.
WINGS ETC. 1698 LBS.
TOTAL 45968 LBS.

FOUNDATION COND. MAT'L. 257 TONS
CULVERT EXCAVATION ---------- LUMP SUM

STRUCTURE QUANTITIES FOR PHASE III CONSTRUCTION

CLASS A CONCRETE

WING ETC. 7.3 C.Y.
TOTAL 7.3 C.Y.

REINFORCING STEEL

WINGS ETC. 542 LBS.
TOTAL 542 LBS.

CULVERT EXCAVATION ---------- LUMP SUM

PROJECT NO. U-3810
ONSLOW COUNTY
STATION: 167+39.00 -L-

SHEET 6 OF 9

STATE OF NORTH CAROLINA
DEPARTMENT OF TRANSPORTATION
RALEIGH

TRIPLE 10 FT. X 9 FT. CONCRETE BOX CULVERT 116° SKEW

NORTH CAROLINA PROFESSIONAL SEAL 14045 ENGINEER TIMOTHY L. COGGINS
Timothy L. Coggins 07/27/12

REVISIONS						SHEET NO.
NO.	BY:	DATE:	NO.	BY:	DATE:	C-13
1			3			TOTAL SHEETS
2			4			28

STR. #4

DRAWN BY : Neil M. Raffin DATE : 5/1/12
CHECKED BY : B. GREEN DATE : 5/1/12

25-JUL-2012 07:27
W:\structures\Plans\Final Plans\Culverts\Str. #4\u3810_sd_cu_04.dgn
bbarodawala

BAR TYPES

ALL BAR DIMENSIONS ARE OUT TO OUT.

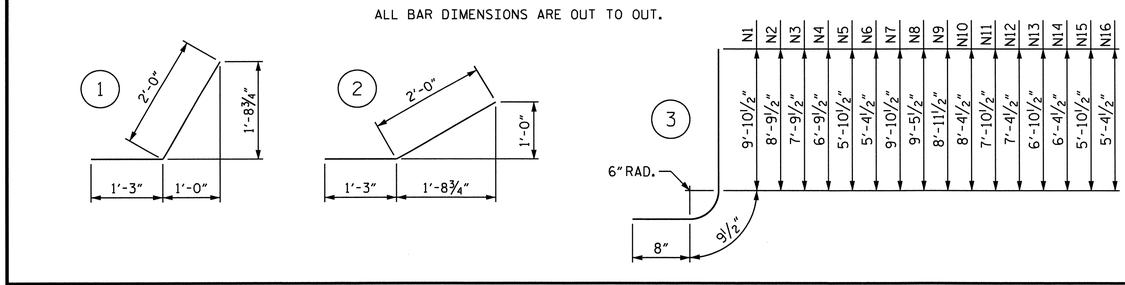

Z1	6'-0"	7"
Z2	5'-4"	7"
Z3	4'-8"	7"
Z4	3'-10"	6"
Z5	3'-3"	6"
Z6	2'-10"	6"
Z7	6'-1"	7"
Z8	5'-9"	7"

HK.

4

Z9	5'-5"	7"
Z10	5'-1"	7"
Z11	4'-8"	7"
Z12	4'-4"	7"
Z13	3'-11"	7"
Z14	3'-7"	6"
Z15	3'-2"	6"
Z16	2'-10"	6"

HK.

4

BILL OF MATERIAL

PHASE III

BAR	NO.	SIZE	TYPE	LENGTH	WEIGHT
H1	10	4	STR	15'-11"	106
H2	2	4	STR	14'-10"	20
H3	2	4	STR	11'-2"	15
H4	2	4	STR	7'-5"	10
H5	2	4	STR	3'-9"	5
H7	2	4	STR	16'-7"	22
N2	4	6	3	10'-3"	62
N3	4	5	3	9'-3"	39
N4	4	5	3	8'-3"	34
N5	3	5	3	7'-4"	23
N6	2	4	3	6'-10"	9
T4	3	5	STR	16'-2"	51
V2	4	4	STR	8'-3"	22
V3	4	4	STR	7'-3"	19
V4	4	4	STR	6'-3"	17
V5	3	4	STR	5'-4"	11
V6	2	4	STR	4'-10"	6
Z2	4	5	4	5'-11"	25
Z3	4	5	4	5'-3"	22
Z4	4	4	4	4'-4"	12
Z5	3	4	4	3'-9"	8
Z6	2	4	4	3'-4"	4

REINFORCING STEEL LBS. 542
FOR 1 WING PART

CLASS A CONCRETE
1 WING PART 7.3 CY
TOTAL 7.3 CY

PHASE I

BAR	NO.	SIZE	TYPE	LENGTH	WEIGHT
H6	20	4	1	3'-3"	43
H8	10	4	STR	26'-4"	176
H9	2	4	STR	24'-6"	33
H10	2	4	STR	18'-7"	25
H11	2	4	STR	12'-8"	17
H12	2	4	STR	6'-9"	9
H13	20	4	2	3'-3"	43
H14	2	4	STR	26'-9"	36
N1	2	6	3	11'-4"	34
N7	2	6	3	11'-4"	34
N8	3	6	3	10'-11"	49
N9	3	6	3	10'-5"	47
N10	3	6	3	9'-10"	44
N11	3	5	3	9'-4"	29
N12	3	5	3	8'-10"	28
N13	3	4	3	8'-4"	17
N14	3	4	3	7'-10"	16
N15	3	4	3	7'-4"	15
N16	3	4	3	6'-10"	14
S1	6	6	STR	6'-0"	54
T2	3	5	STR	28'-1"	88
T3	3	5	STR	3'-5"	11
V1	2	4	STR	9'-4"	12
V7	2	4	STR	9'-4"	12
V8	3	4	STR	8'-11"	18
V9	3	4	STR	8'-5"	17
V10	3	4	STR	7'-10"	16
V11	3	4	STR	7'-4"	15
V12	3	4	STR	6'-10"	14
V13	3	4	STR	6'-4"	13
V14	3	4	STR	5'-10"	12
V15	3	4	STR	5'-4"	11
V16	3	4	STR	4'-10"	10
Z1	2	5	4	6'-7"	14
Z7	2	5	4	6'-8"	14
Z8	3	5	4	6'-4"	20
Z9	3	5	4	6'-0"	19
Z10	3	5	4	5'-8"	18
Z11	3	5	4	5'-3"	16
Z12	3	5	4	4'-11"	15
Z13	3	5	4	4'-6"	14
Z14	3	4	4	4'-1"	8
Z15	3	4	4	3'-8"	7
Z16	3	4	4	3'-4"	7

REINFORCING STEEL LBS. 1,164
FOR 1 WING AND 1 WING PART

CLASS A CONCRETE
1 WING & 1 WING PART 14.6 CY
1 HEADWALL 1.7 CY
1 END CURTAIN WALL 2.1 CY
2 EDGE BEAMS 2.6 CY
2 SILLS 1.6 CY
TOTAL 22.6 CY

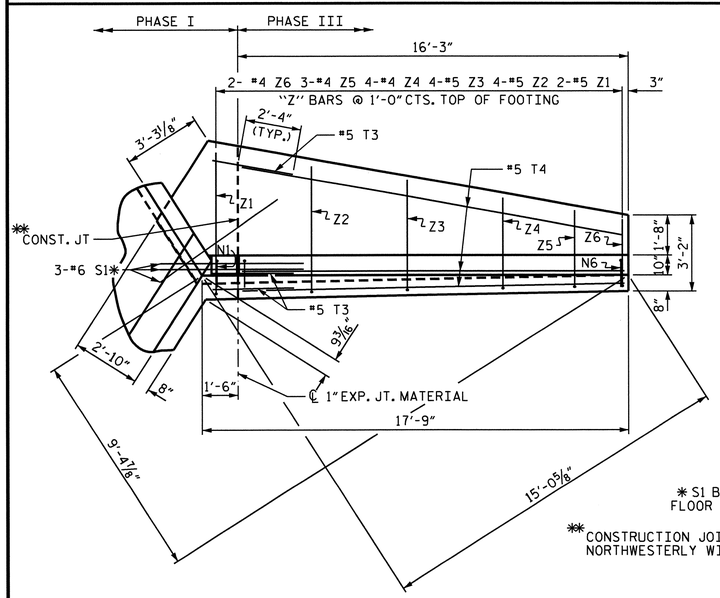

* S1 BARS @ BOTTOM OF FLOOR SLAB AND FOOTING

** CONSTRUCTION JOINT REQUIRED IN THE MOST NORTHWESTERLY WING W2 OF PHASE I CONSTRUCTION

PLAN W2

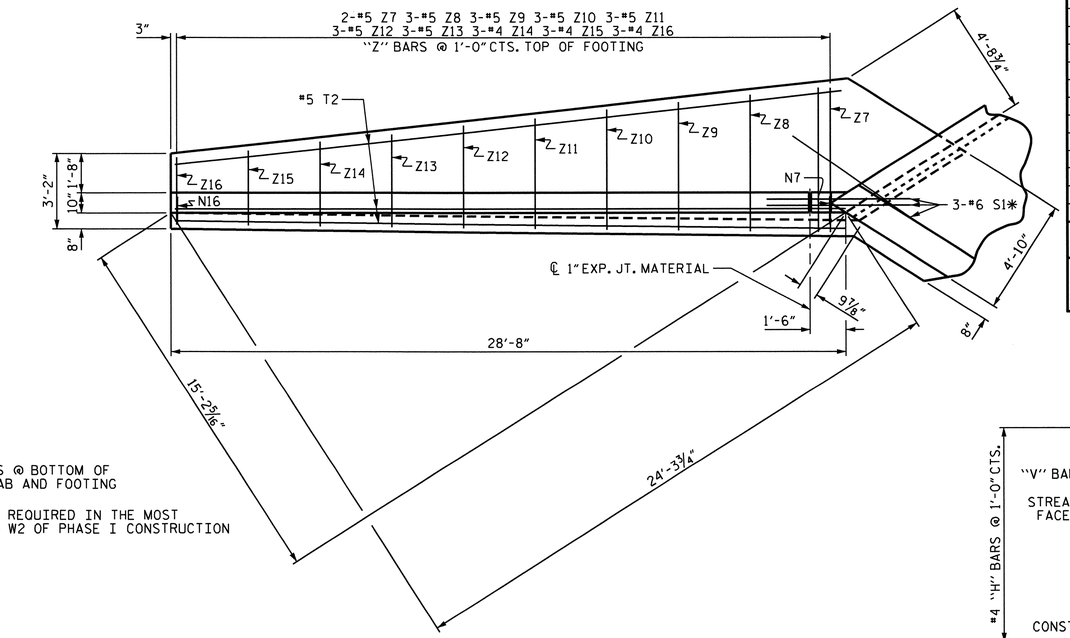

PLAN W1

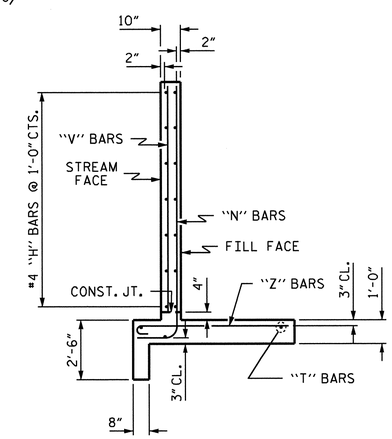

TYPICAL WING SECTION

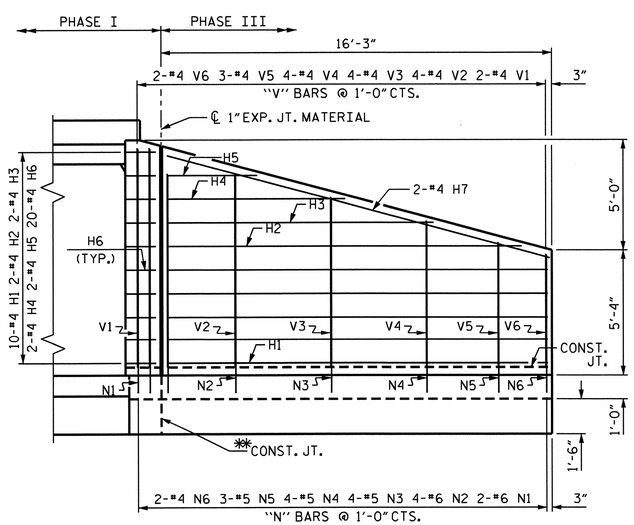

ELEVATION W2

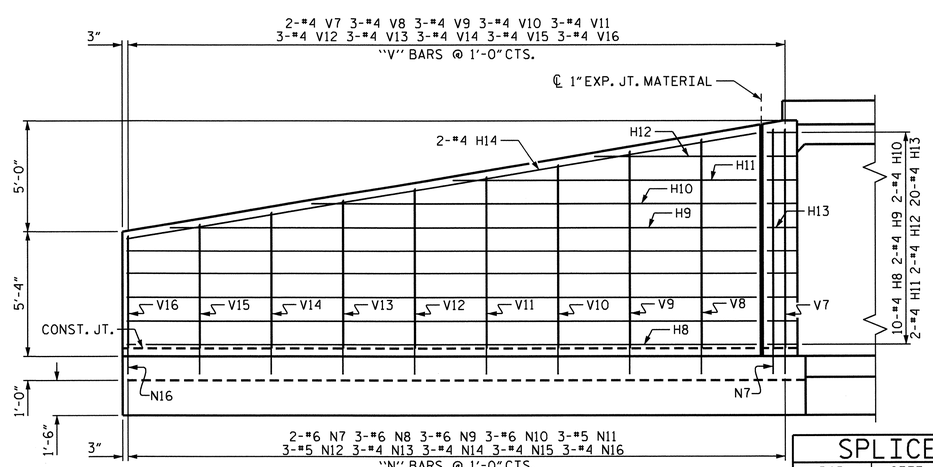

ELEVATION W1

TOTAL QUANTITIES

PHASE I REINFORCING STEEL	1,164 LBS.
PHASE III REINFORCING STEEL	542 LBS.
TOTAL	1,706 LBS.
PHASE I CLASS A CONCRETE	22.6 CY
PHASE III CLASS A CONCRETE	7.3 CY
TOTAL	29.9 CY

SPLICE CHART

BAR	SIZE	SPLICE LENGTH
T1	#5	2'-2"

NORTH CAROLINA PROFESSIONAL SEAL 14045 ENGINEER TIMOTHY W. COGGINS

07/27/12

PROJECT NO. U-3810
ONSLOW COUNTY
STATION: 167+39.00 -L-

SHEET 7 OF 9

STATE OF NORTH CAROLINA
DEPARTMENT OF TRANSPORTATION
RALEIGH

PHASE I & III WINGS FOR CONCRETE BOX CULVERT

H = 9'-0" SLOPE = 3:1

REVISIONS						SHEET NO.
NO.	BY:	DATE:	NO.	BY:	DATE:	C-14
1			3			TOTAL SHEETS
2			4			28

DRAWN BY : Neil M. Ruffin DATE : 5/1/12
CHECKED BY : B. GREEN DATE : 5/1/12

STR. #4 STD. NO. CW6509

BAR TYPES

ALL BAR DIMENSIONS ARE OUT TO OUT.

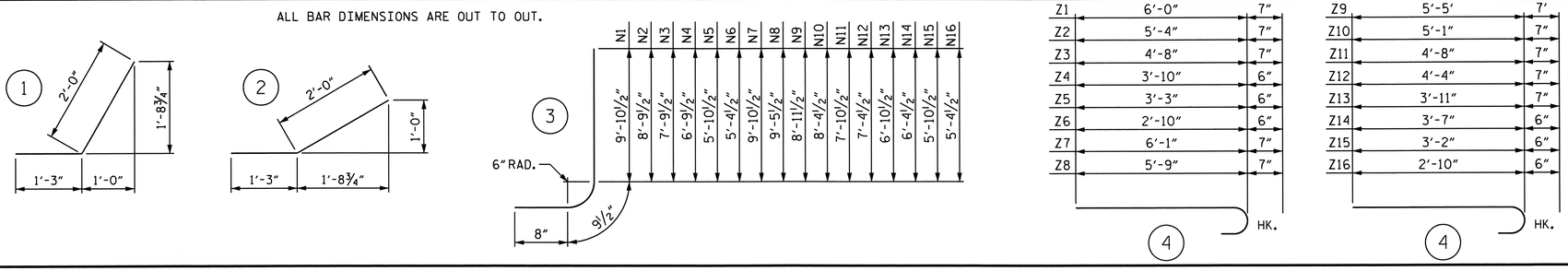

BILL OF MATERIAL PHASE II

BAR	NO.	SIZE	TYPE	LENGTH	WEIGHT	BAR	NO.	SIZE	TYPE	LENGTH	WEIGHT
H1	10	4	STR	15'-11"	106	S1	6	6	STR	6'-0"	54
H2	2	4	STR	14'-10"	20						
H3	2	4	STR	11'-2"	15	T1	3	5	STR	17'-3"	54
H4	2	4	STR	7'-5"	10	T2	3	5	STR	28'-1"	88
H5	2	4	STR	3'-9"	5						
H6	20	4	1	3'-3"	43	V1	2	4	STR	9'-4"	12
H7	2	4	STR	16'-7"	22	V2	4	4	STR	8'-3"	22
H8	10	4	STR	26'-4"	176	V3	4	4	STR	7'-3"	19
H9	2	4	STR	24'-6"	33	V4	4	4	STR	6'-3"	17
H10	2	4	STR	18'-7"	25	V5	3	4	STR	5'-4"	11
H11	2	4	STR	12'-8"	17	V6	2	4	STR	4'-10"	6
H12	2	4	STR	6'-9"	9	V7	2	4	STR	9'-4"	12
H13	20	4	2	3'-3"	43	V8	3	4	STR	8'-11"	18
H14	2	4	STR	26'-9"	36	V9	3	4	STR	8'-5"	17
						V10	3	4	STR	7'-10"	16
N1	2	6	3	11'-4"	34	V11	3	4	STR	7'-4"	15
N2	4	6	3	10'-3"	62	V12	3	4	STR	6'-10"	14
N3	4	5	3	9'-3"	39	V13	3	4	STR	6'-4"	13
N4	4	5	3	8'-3"	34	V14	3	4	STR	5'-10"	12
N5	3	5	3	7'-4"	23	V15	3	4	STR	5'-4"	11
N6	2	4	3	6'-10"	9	V16	3	4	STR	4'-10"	10
N7	2	6	3	11'-4"	34						
N8	3	6	3	10'-11"	49	Z1	2	5	4	6'-7"	14
N9	3	6	3	10'-5"	47	Z2	4	5	4	5'-11"	25
N10	3	6	3	9'-10"	44	Z3	4	5	4	5'-3"	22
N11	3	5	3	9'-4"	29	Z4	4	4	4	4'-4"	12
N12	3	5	3	8'-10"	28	Z5	3	4	4	3'-9"	8
N13	3	4	3	8'-4"	17	Z6	2	4	4	3'-4"	4
N14	3	4	3	7'-10"	16	Z7	2	5	4	6'-8"	14
N15	3	4	3	7'-4"	15	Z8	3	5	4	6'-4"	20
N16	3	4	3	6'-10"	14	Z9	3	5	4	6'-0"	19
						Z10	3	5	4	5'-8"	18
						Z11	3	5	4	5'-3"	16
						Z12	3	5	4	4'-11"	15
						Z13	3	5	4	4'-6"	14
						Z14	3	4	4	4'-1"	8
						Z15	3	4	4	3'-8"	7
						Z16	3	4	4	3'-4"	7

REINFORCING STEEL FOR 2 WINGS LBS. 1,698

CLASS A CONCRETE

2 WINGS	21.9 CY
1 HEADWALL	1.7 CY
1 END CURTAIN WALL	2.1 CY
2 EDGE BEAMS	2.6 CY
TOTAL	28.3 CY

TOTAL QUANTITIES PHASE II

PHASE II REINFORCING STEEL	1,698 LBS.
TOTAL	1,698 LBS.
PHASE II CLASS A CONCRETE	28.3 CY
TOTAL	28.3 CY

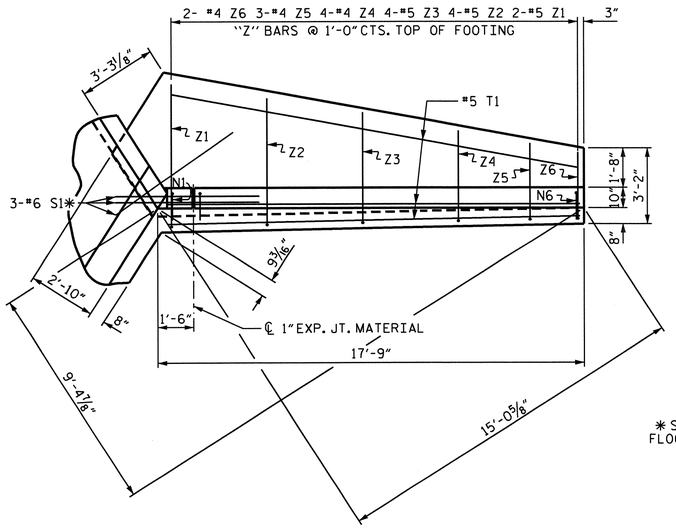

PLAN W2

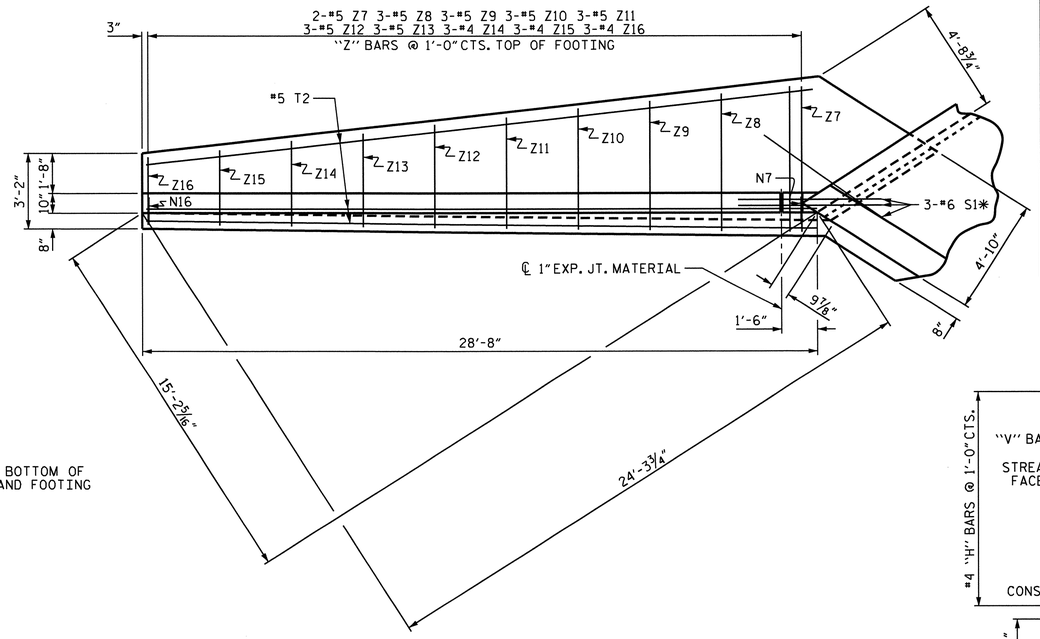

PLAN W1

✱ S1 BARS @ BOTTOM OF FLOOR SLAB AND FOOTING

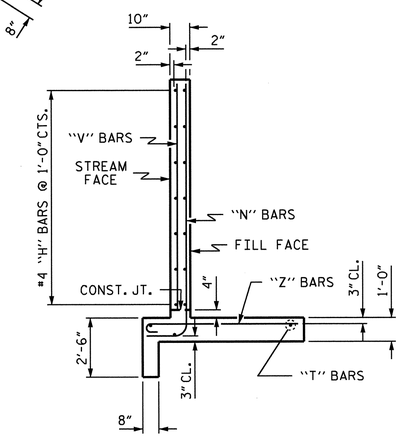

TYPICAL WING SECTION

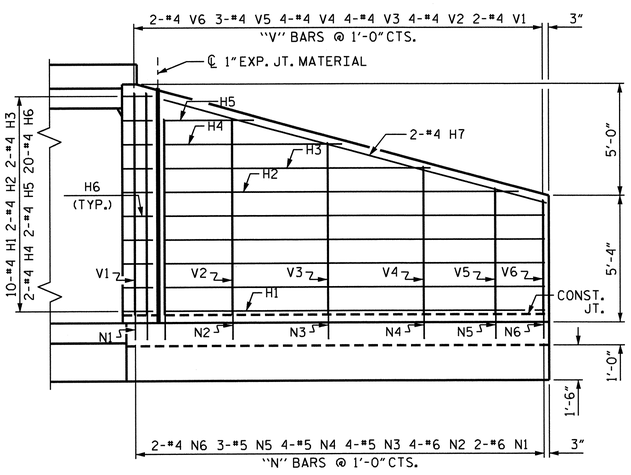

ELEVATION W2

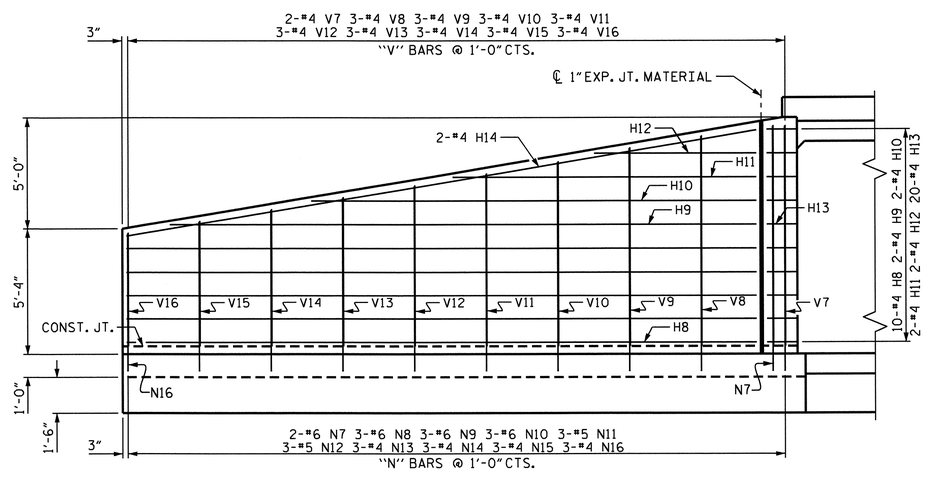

ELEVATION W1

PROJECT NO. U-3810

ONSLOW COUNTY

STATION: 167+39.00 -L-

SHEET 8 OF 9

STATE OF NORTH CAROLINA
DEPARTMENT OF TRANSPORTATION
RALEIGH

PHASE II WINGS FOR CONCRETE BOX CULVERT

H = 9'-0" SLOPE = 3:1

NORTH CAROLINA PROFESSIONAL SEAL 14045 ENGINEER TIMOTHY W. COGGINS
07/27/12

REVISIONS						SHEET NO.
NO.	BY:	DATE:	NO.	BY:	DATE:	C-15
1			3			TOTAL SHEETS
2			4			28

DRAWN BY : Neil M. Ruffin DATE : 5/1/12
CHECKED BY : B. GREEN DATE : 5/1/12

STR. #4 STD. NO. CW6509

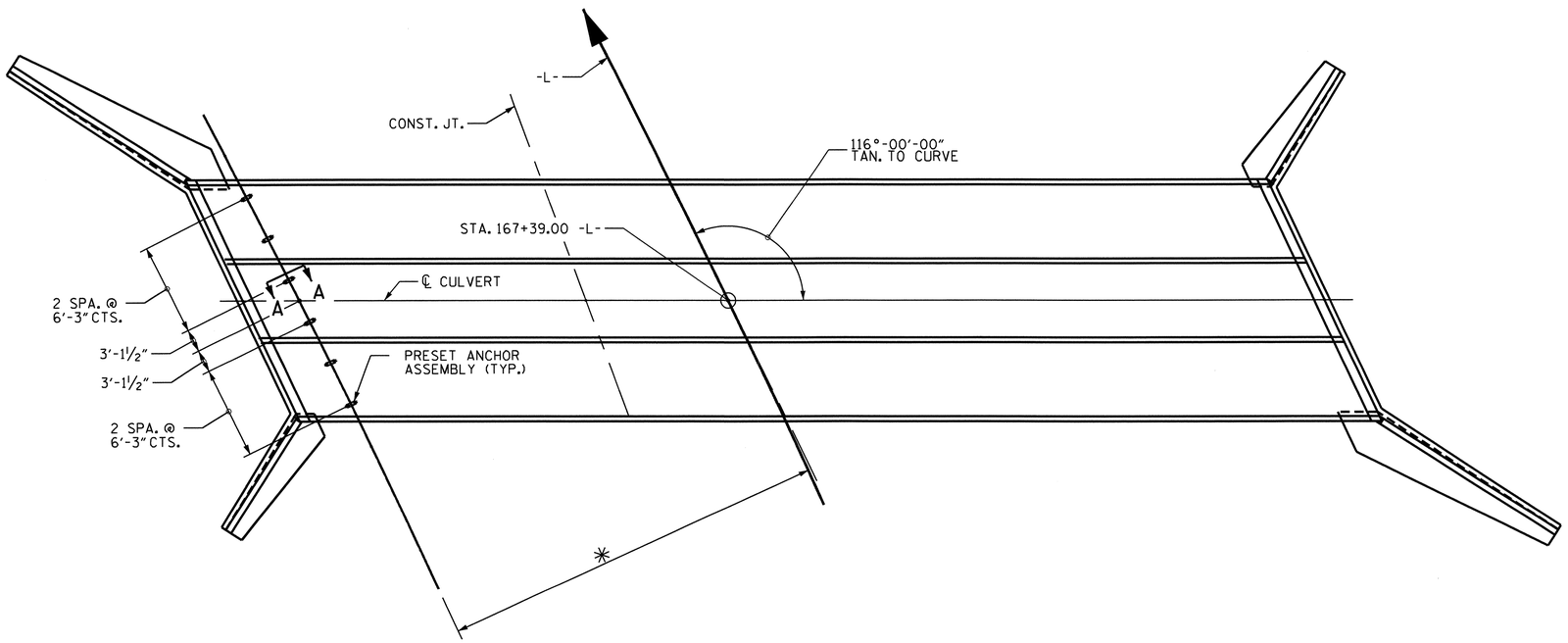

PLAN

SHOWING : GUARDRAIL ANCHOR ASSEMBLY SPACING.

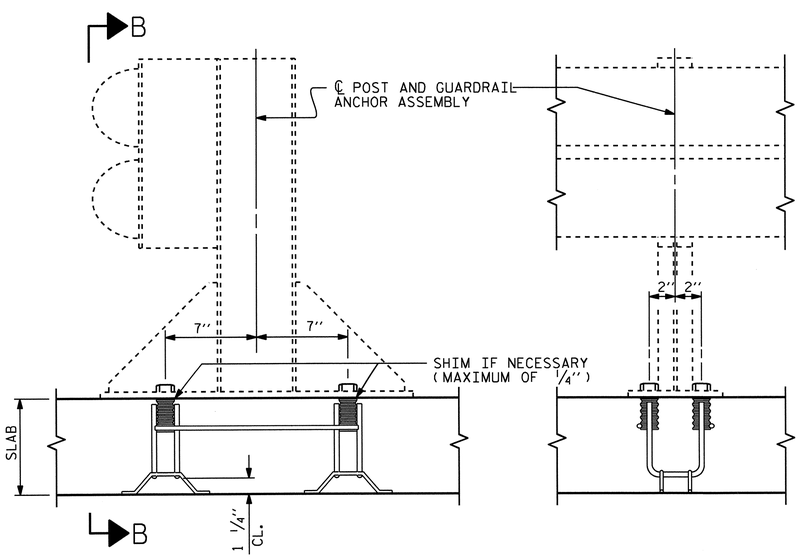

SECTION A-A

SECTION B-B

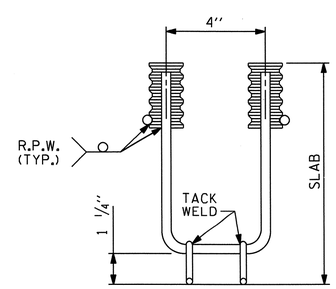

ELEVATION

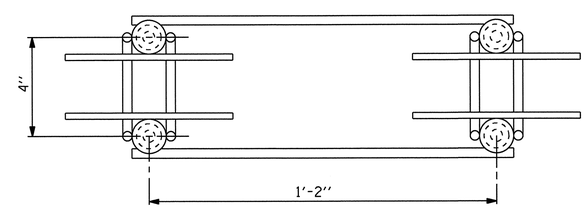

PLAN

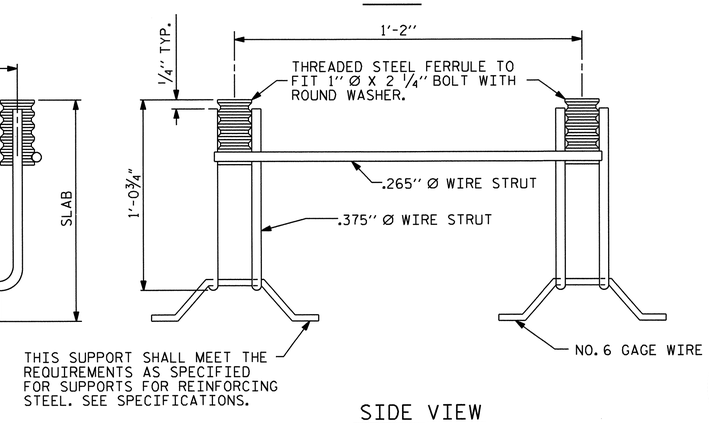

SIDE VIEW

GUARDRAIL ANCHOR ASSEMBLY FOR CULVERTS

NOTES

THE GUARDRAIL ANCHOR ASSEMBLY FOR CULVERTS SHALL CONSIST OF THE FOLLOWING COMPONENTS :

A. FERRULES SHALL BE MADE FROM STEEL MEETING THE REQUIREMENTS OF AASHTO M169, GRADE 12L14 AND SHALL HAVE A MINIMUM LENGTH OF THREADS OF 2½".

B. 4 - 1" Ø X 2¼" BOLTS WITH WASHERS, BOLTS SHALL CONFORM TO THE REQUIREMENTS OF ASTM A307. BOLTS AND WASHERS SHALL BE GALVANIZED. (AT THE CONTRACTOR'S OPTION, STAINLESS STEEL BOLTS AND WASHERS MAY BE USED AS AN ALTERNATE FOR THE 1" Ø X 2¼" GALVANIZED BOLTS AND WASHERS. THEY SHALL CONFORM TO OR EXCEED THE MECHANICAL REQUIREMENTS OF ASTM A307. THE USE OF THIS ALTERNATE SHALL BE APPROVED BY THE ENGINEER.)

C. WIRE STRUTS SHOWN IN THE GUARDRAIL ANCHOR ASSEMBLY FOR CULVERTS DETAIL ARE MINIMUM ALLOWABLE SIZE AND SHALL HAVE A MINIMUM TENSILE STRENGTH OF 100,000 P.S.I. AS AN OPTION, A 7/16" Ø WIRE STRUT WITH A MINIMUM TENSILE STRENGTH OF 90,000 PSI IS ACCEPTABLE.

GUARDRAIL ANCHOR ASSEMBLY WITH BOLTS SHALL BE ASSEMBLED IN THE SHOP. BOLT THREADS MAY BE RECUT AS NECESSARY TO INSURE FIT.

THE COST OF THE GUARDRAIL ANCHOR ASSEMBLY FOR CULVERTS COMPLETE IN PLACE, SHALL BE INCLUDED IN THE UNIT CONTRACT PRICE BID FOR CLASS "A" CONCRETE.

FERRULES TO BE PLUGGED DURING POURING OF SLAB AS RECOMMENDED BY THE MANUFACTURER.

AT THE CONTRACTOR'S OPTION, FERRULES WITH OPEN OR CLOSED ENDS MAY BE USED.

PAYMENT FOR GUARDRAIL, POSTS, AND POST BASE PLATES IS INCLUDED IN ROADWAY PAY ITEMS.

SLAB REINFORCING STEEL MAY BE SHIFTED AS NECESSARY TO CLEAR GUARDRAIL ANCHOR ASSEMBLY. CARE SHOULD BE TAKEN TO KEEP THE SHIFTING OF REINFORCING STEEL TO A MINIMUM.

THE CONTRACTOR MAY USE ADHESIVELY ANCHORED ANCHOR BOLTS IN PLACE OF GUARDRAIL ANCHOR ASSEMBLY. LEVEL TWO FIELD TESTING IS REQUIRED, AND THE YIELD LOAD OF THE 1"Ø BOLT IS 21.8 KIPS. FOR ADHESIVELY ANCHORED ANCHOR BOLTS OR DOWELS, SEE STANDARD SPECIFICATIONS.

NORTH CAROLINA PROFESSIONAL SEAL 14045 ENGINEER TIMOTHY L. COGGINS
07/27/12

PROJECT NO. U-3810
ONSLOW COUNTY
STATION: 167+39.00 -L-

SHEET 9 OF 9

STATE OF NORTH CAROLINA
DEPARTMENT OF TRANSPORTATION
RALEIGH

STANDARD

ANCHORAGE DETAILS FOR GUARDRAIL ANCHOR ASSEMBLY FOR CULVERTS

REVISIONS								SHEET NO.
NO.	BY:	DATE:	NO.	BY:	DATE:			C-16
1			3					TOTAL SHEETS
2			4					28

STR. #4 STD. NO. GRA1

ASSEMBLED BY : Neil M. Ruffin	DATE : 5/1/12		
CHECKED BY : B. GREEN	DATE : 5/1/12		
DRAWN BY : FCJ 6/88	REV. 5/7/03	RWW/JTE	
CHECKED BY : ARB 6/88	REV. 5/1/06R	KMM/GM	
	REV. 10/1/11	MAA/GM	

25-JUL-2012 07:30
W:\structures\Plans\Final Plans\Culverts\Str. #4\u3810_sd_cu_04.dgn
bbarodawala

F. A. PROJECT NO. STP-1406 (7)

BM BL-48: 30"-#5 REBAR W/ ALUMINUM CAP; STA. 271+12.06 -L-, 56.86' RIGHT, EL. 24.30

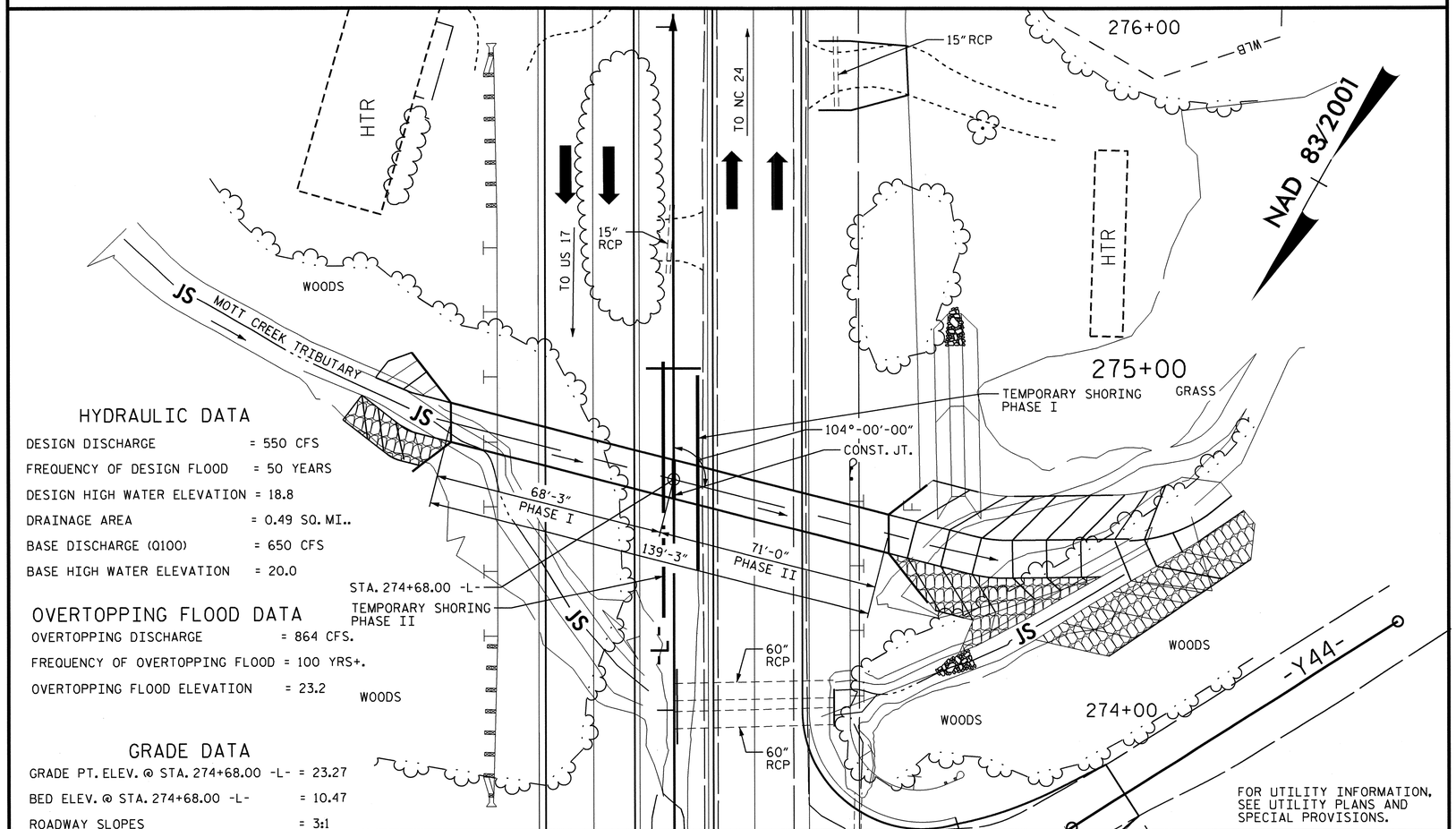

HYDRAULIC DATA

DESIGN DISCHARGE	= 550 CFS
FREQUENCY OF DESIGN FLOOD	= 50 YEARS
DESIGN HIGH WATER ELEVATION	= 18.8
DRAINAGE AREA	= 0.49 SQ. MI..
BASE DISCHARGE (Q100)	= 650 CFS
BASE HIGH WATER ELEVATION	= 20.0

OVERTOPPING FLOOD DATA

OVERTOPPING DISCHARGE	= 864 CFS.
FREQUENCY OF OVERTOPPING FLOOD	= 100 YRS+.
OVERTOPPING FLOOD ELEVATION	= 23.2

GRADE DATA

GRADE PT. ELEV. @ STA. 274+68.00 -L-	= 23.27
BED ELEV. @ STA. 274+68.00 -L-	= 10.47
ROADWAY SLOPES	= 3:1

LOCATION SKETCH

NOTES

ASSUMED LIVE LOAD ----------HL93 OR ALTERNATE LOADING.

DESIGN FILL----------5.82'

FOR OTHER DESIGN DATA AND NOTES, SEE STANDARD NOTE SHEET.

3" Ø WEEP HOLES INDICATED TO BE IN ACCORDANCE WITH THE SPECIFICATIONS.

CONCRETE IN CULVERTS TO BE POURED IN THE FOLLOWING ORDER:

1. WING FOOTINGS AND FLOOR SLAB INCLUDING 4" OF ALL VERTICAL WALLS.
2. THE REMAINING PORTIONS OF THE WALLS AND WINGS FULL HEIGHT FOLLOWED BY ROOF SLAB AND HEADWALLS.

THE RESIDENT ENGINEER SHALL CHECK THE LENGTH OF CULVERT BEFORE STAKING IT OUT TO MAKE CERTAIN THAT IT WILL PROPERLY TAKE CARE OF THE FILL.

DIMENSIONS FOR WING LAYOUT AS WELL AS ADDITIONAL REINFORCING STEEL EMBEDDED IN BARREL ARE SHOWN ON WING SHEET.

TRANSVERSE CONSTRUCTION JOINTS SHALL BE USED IN THE BARREL, SPACED TO LIMIT THE POURS TO A MAXIMUM OF 70 FT. LOCATION OF JOINTS SHALL BE SUBJECT TO APPROVAL OF THE ENGINEER.

AT THE CONTRACTOR'S OPTION, HE MAY SPLICE THE VERTICAL REINFORCING STEEL IN THE INTERIOR FACE OF EXTERIOR WALL ABOVE LOWER WALL CONSTRUCTION JOINT. THE SPLICE LENGTH SHALL BE AS PROVIDED IN THE SPLICE LENGTH CHART SHOWN ON THE PLANS. EXTRA WEIGHT OF STEEL DUE TO THE SPLICES SHALL BE PAID FOR BY THE CONTRACTOR.

NO PRECAST REINFORCED BOX CULVERT OPTION WILL BE ALLOWED.

THE CONTRACTOR SHALL PROVIDE INDEPENDENT ASSURANCE SAMPLES OF REINFORCING STEEL AS FOLLOWS: FOR PROJECTS REQUIRING UP TO 400 TONS OF REINFORCING STEEL, ONE 30 INCH SAMPLE OF EACH SIZE BAR USED, AND FOR PROJECTS REQUIRING OVER 400 TONS OF REINFORCING STEEL, TWO 30 INCH SAMPLES OF EACH SIZE BAR USED. THE BARS FROM WHICH THE SAMPLES ARE TAKEN MUST THEN BE SPLICED WITH REPLACEMENT BARS OF THE SIZE AND LENGTH OF THE SAMPLE, PLUS A MINIMUM LAP SPLICE OF THIRTY BAR DIAMETERS. PAYMENT FOR THE SAMPLES OF REINFORCING STEEL SHALL BE CONSIDERED INCIDENTAL TO VARIOUS PAY ITEMS.

FOR CULVERT DIVERSION DETAILS AND PAY ITEM, SEE EROSION CONTROL PLANS.

A 3 FOOT STRIP OF FILTER FABRIC SHALL BE ATTACHED TO THE FILL FACE OF THE WING COVERING THE ENTIRE LENGTH OF THE EXPANSION JOINT.

FOR SUBMITTAL OF WORKING DRAWINGS, SEE SPECIAL PROVISIONS.

FOR FALSEWORK AND FORMWORK, SEE SPECIAL PROVISIONS.

FOR CRANE SAFETY, SEE SPECIAL PROVISIONS.

FOR GROUT FOR STRUCTURES, SEE SPECIAL PROVISIONS.

FOR MAINTENANCE OF TRAFFIC, SEE TRAFFIC CONTROL PLANS.

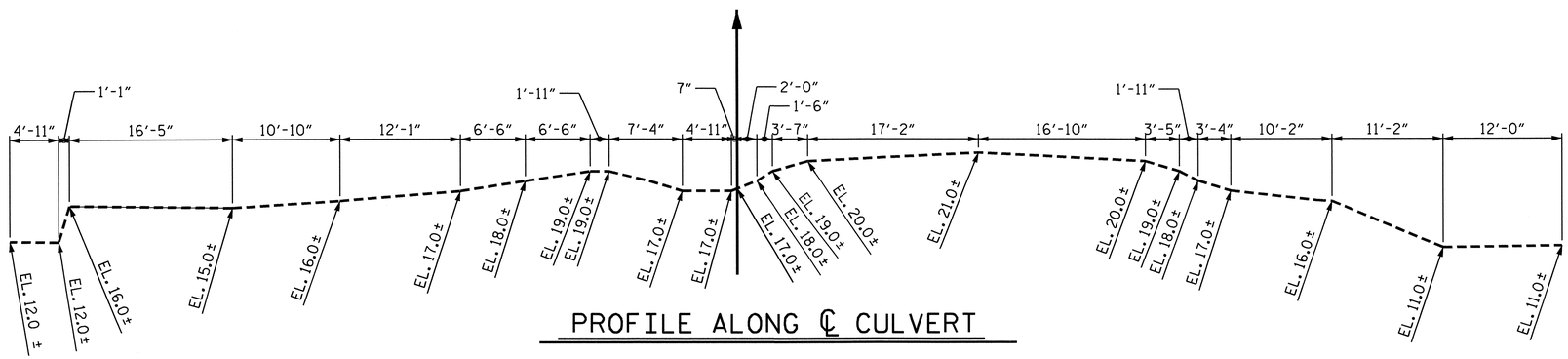

PROFILE ALONG ℄ CULVERT

TOTAL STRUCTURE QUANTITIES

CLASS A CONCRETE			
BARREL @ 0.997 CY/FT		138.8	C.Y.
WING ETC.		32.2	C.Y.
TOTAL		171.0	C.Y.
REINFORCING STEEL			
BARREL		27,754	LBS.
WINGS ETC.		1,828	LBS.
TOTAL		29,582	LBS.
FOUNDATION COND. MAT'L.		161	TONS
CULVERT EXCAVATION	----------	LUMP SUM	

NORTH CAROLINA PROFESSIONAL SEAL 22714 ENGINEER OMAR R. AZIZI
7/30/12

NORTH CAROLINA PROFESSIONAL SEAL 14045 ENGINEER TIMOTHY L. COGGINS
07/27/12

PROJECT NO. U-3810
ONSLOW COUNTY
STATION: 274+68.00 -L-

SHEET 1 OF 6

STATE OF NORTH CAROLINA
DEPARTMENT OF TRANSPORTATION
RALEIGH

BARREL STANDARD

SINGLE 11 FT. X 7 FT.
CONCRETE BOX CULVERT
104° SKEW

AUGUST 1989

REVISIONS						SHEET NO.
NO.	BY:	DATE:	NO.	BY:	DATE:	C-17
1			3			TOTAL SHEETS
2			4			28

STR. #5 STD. NO. CB221A

ASSEMBLED BY : Neil M. Ruffin	DATE : 3/23/12	SPECIAL
CHECKED BY : B. GREEN	DATE : 4/16/12	
DRAWN BY : R. WRIGHT	DATE : AUG. 1989	STANDARD
CHECKED BY : C.R.K.	DATE : AUG. 1989	

REVISED 11-13-91 BY E.L.R. CHECKED BY G.R.P.
ADDED 8-22-89

LOAD AND RESISTANCE FACTOR RATING (LRFR) SUMMARY FOR REINFORCED CONCRETE BOX CULVERTS

LEVEL		VEHICLE	WEIGHT (W) (TONS)	CONTROLLING LOAD RATING (#)	MINIMUM RATING FACTORS (RF)	TONS = W × RF	STRENGTH I LIMIT STATE									COMMENT NUMBER
							LIVE-LOAD FACTORS (γ_{LL})	MOMENT				SHEAR				
								RATING FACTOR	BOX NO.	ELEMENT TYPE	DISTANCE FROM LEFT END OF ELEMENT (ft)	RATING FACTOR	BOX NO.	ELEMENT TYPE	DISTANCE FROM LEFT END OF ELEMENT (ft)	
DESIGN LOAD RATING		HL-93 (INVENTORY)	N/A	1	1.03	--	1.75	1.09	1	TOP SLAB	5.83	1.03	1	BOTTOM SLAB	10.79	
		HL-93 (OPERATING)	N/A		1.34	--	1.35	1.42	1	TOP SLAB	5.83	1.34	1	BOTTOM SLAB	10.79	
		HS-20 (INVENTORY)	36.000	2	1.24	44.48	1.75	1.40	1	TOP SLAB	5.83	1.24	1	TOP SLAB	0.81	
		HS-20 (OPERATING)	36.000		1.60	57.66	1.35	1.81	1	TOP SLAB	5.83	1.60	1	TOP SLAB	0.81	
LEGAL LOAD RATING	SINGLE VEHICLE (SV)	SNSH	13.500		2.25	30.33	1.40	2.54	1	TOP SLAB	5.83	2.25	1	TOP SLAB	0.81	
		SNGARBS2	20.000		2.10	42.06	1.40	2.38	1	TOP SLAB	5.83	2.10	1	TOP SLAB	0.81	
		SNAGRIS2	22.000		2.25	49.42	1.40	2.54	1	TOP SLAB	5.83	2.25	1	TOP SLAB	0.81	
		SNCOTTS3	27.250	3	1.29	35.19	1.40	1.37	1	TOP SLAB	5.83	1.29	1	BOTTOM SLAB	0.87	
		SNAGGRS4	34.925		1.38	48.33	1.40	1.68	1	TOP SLAB	5.83	1.38	1	BOTTOM SLAB	0.87	
		SNS5A	35.550		1.39	49.45	1.40	1.58	1	TOP SLAB	5.83	1.39	1	BOTTOM SLAB	0.87	
		SNS6A	39.950		1.39	55.57	1.40	1.58	1	TOP SLAB	5.83	1.39	1	BOTTOM SLAB	0.87	
		SNS7B	42.000		1.39	58.42	1.40	1.58	1	TOP SLAB	5.83	1.39	1	BOTTOM SLAB	0.87	
	TRUCK TRACTOR SEMI-TRAILER (TTST)	TNAGRIT3	33.000		2.1	69.38	1.40	2.38	1	TOP CORNER WALL	7.52	2.10	1	BOTTOM SLAB	0.87	
		TNT4A	33.075		1.54	50.97	1.40	1.63	1	TOP SLAB	5.83	1.54	1	BOTTOM SLAB	0.87	
		TNT6A	41.600		1.36	56.70	1.40	1.57	1	TOP SLAB	5.83	1.36	1	BOTTOM SLAB	0.87	
		TNT7A	42.000		1.47	61.57	1.40	1.60	1	TOP SLAB	5.83	1.47	1	BOTTOM SLAB	0.87	
		TNT7B	42.000		1.39	58.42	1.40	1.58	1	TOP SLAB	5.83	1.39	1	BOTTOM SLAB	0.87	
		TNAGRIT4	43.000		1.47	63.04	1.40	1.55	1	TOP SLAB	5.83	1.47	1	BOTTOM SLAB	0.87	
		TNAGT5A	45.000		1.50	67.43	1.40	1.59	1	TOP SLAB	5.83	1.50	1	BOTTOM SLAB	10.79	
		TNAGT5B	45.000		1.54	69.35	1.40	1.63	1	TOP SLAB	5.83	1.54	1	BOTTOM SLAB	0.87	

LOAD FACTORS:

DESIGN LOAD RATING FACTORS

LOAD TYPE	MAX FACTOR	MIN FACTOR
DC	1.25	0.90
DW	1.50	0.65
EV	1.30	0.90
EH	1.35	0.90
ES	1.35	0.90
LS	1.75	--
WA	1.00	--

NOTE:

RATING FACTORS ARE BASED ON THE STRENGTH I LIMIT STATE.

COMMENTS:

1.
2.
3.
4.

(#) CONTROLLING LOAD RATING

(1) DESIGN LOAD RATING (HL-93)

(2) DESIGN LOAD RATING (HS-20)

(3) LEGAL LOAD RATING **

** SEE CHART FOR VEHICLE TYPE

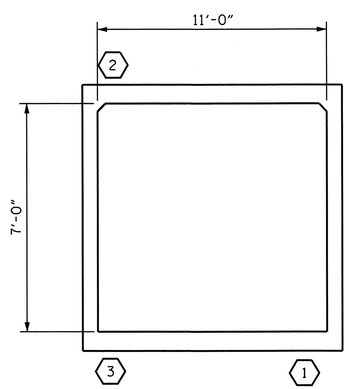

LRFR SUMMARY

(LOOKING DOWNSTREAM)

PROJECT NO. U-3810

ONSLOW COUNTY

STATION: 274+68.00 -L-

SHEET 2 OF 6

STATE OF NORTH CAROLINA
DEPARTMENT OF TRANSPORTATION
RALEIGH

STANDARD

LRFR SUMMARY FOR REINFORCED CONCRETE BOX CULVERTS
(NON-INTERSTATE TRAFFIC)

NORTH CAROLINA PROFESSIONAL SEAL 14045 ENGINEER TIMOTHY W. COGGINS
07/27/12

REVISIONS						SHEET NO.
NO.	BY:	DATE:	NO.	BY:	DATE:	C-18
1			3			TOTAL SHEETS
2			4			28

STR. #5 STD. NO. LRFR5

ASSEMBLED BY : Neil Ruffin DATE : 3/15/12
CHECKED BY : B. GREEN DATE : 4/16/12
DRAWN BY : WMC 7/11
CHECKED BY : GM 7/11
REV. 10/1/11 MAA/GM

27-JUL-2012 10:48
R:\TIPProjects-U\U3810\structures\Plans\FinalPlans\Culverts\Str. #5\U-3810_sd_Culvert_05.dgn
tcoggins

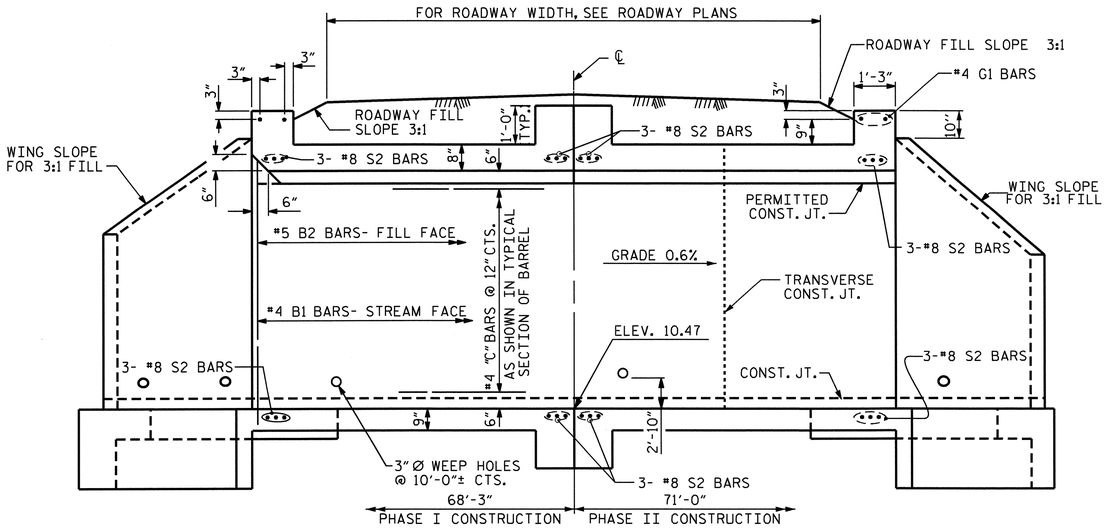

CULVERT SECTION NORMAL TO ROADWAY

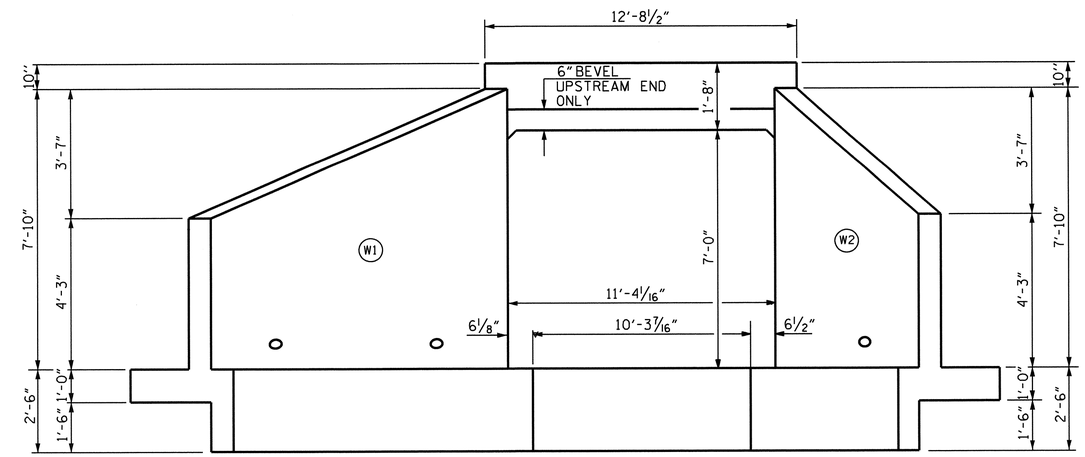

END ELEVATION NORMAL TO SKEW

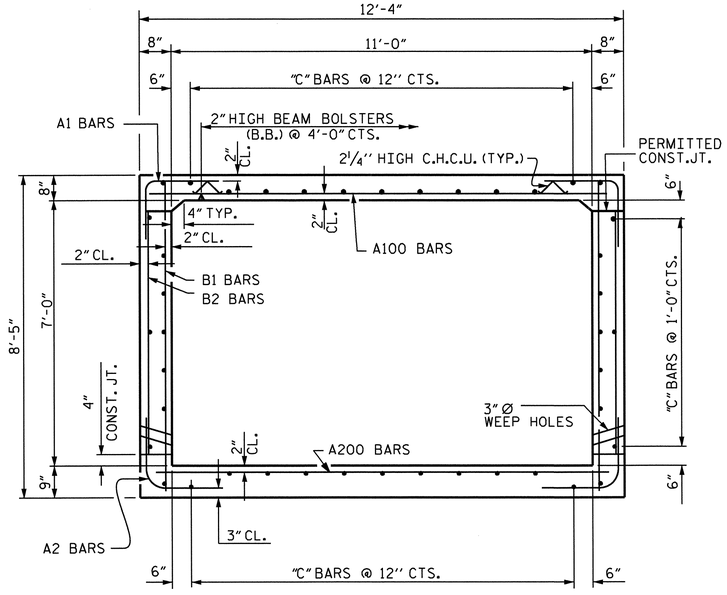

RIGHT ANGLE SECTION OF BARREL

THERE ARE 42 "C" BARS IN SECTION OF BARREL.

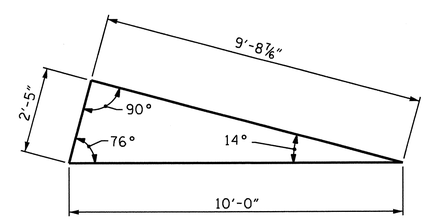

SKEW TRIANGLE

PROJECT NO. U-3810
ONSLOW COUNTY
STATION: 274+68.00 -L-

SHEET 3 OF 6

STATE OF NORTH CAROLINA
DEPARTMENT OF TRANSPORTATION
RALEIGH

SINGLE 11 FT. X 7 FT. CONCRETE BOX CULVERT 104° SKEW

1971

REVISIONS								SHEET NO.
NO.	BY:	DATE:		NO.	BY:	DATE:		C-19
1				3				TOTAL SHEETS
2				4				28

STR. #5 STD. NO. CB221

NORTH CAROLINA PROFESSIONAL SEAL 14045 ENGINEER TIMOTHY L. COGGINS
07/27/12

ASSEMBLED BY : Neil M Ruffin DATE : 3/23/12 CHECKED BY : B. GREEN DATE : 4/16/12	SPECIAL	
DRAWN BY : R.W. WRIGHT DATE : AUG. 1989 CHECKED BY : A.R. BISSETTE DATE : AUG. 1989	STANDARD	

REVISED 8-28-92 BY E.L.R. CHECKED BY C.R.P.
REVISED 8-22-89 BY A.R.B. CHECKED BY C.R.K.
REDRAWN 8-22-89
REVISED 11-19-99 BY M.M. CHECKED BY R.W.W.

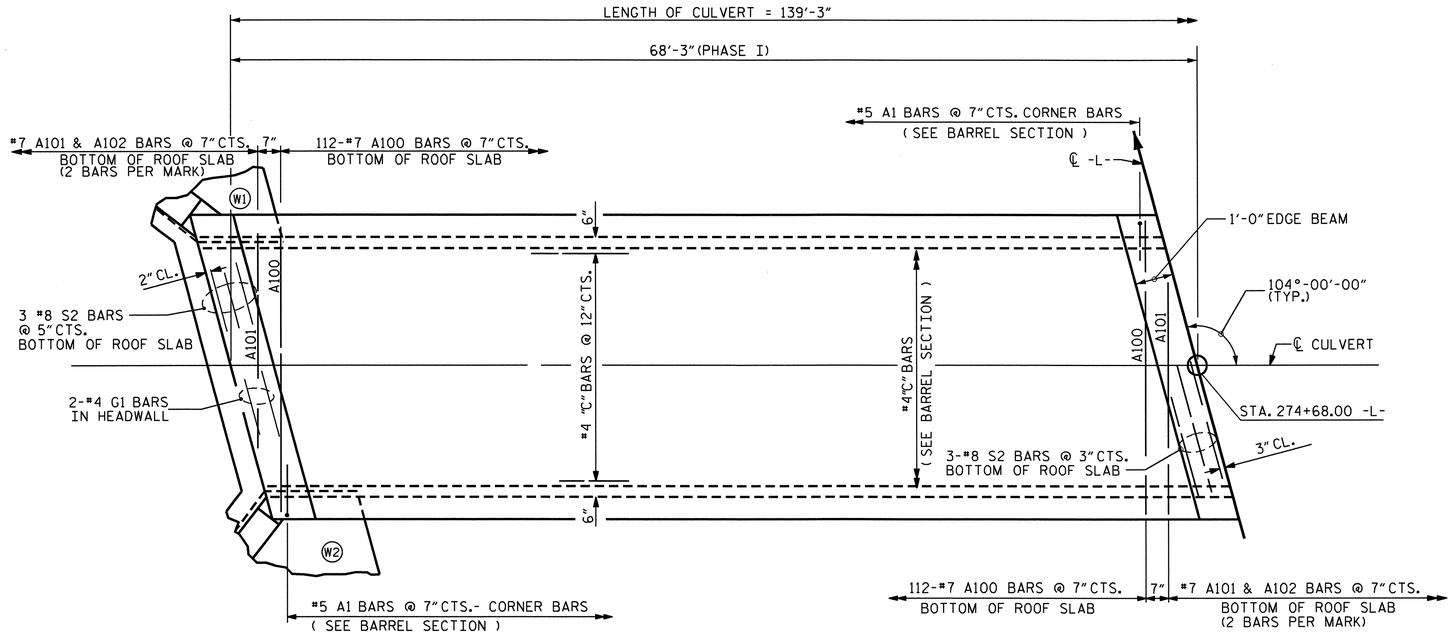

PLAN - ROOF SLAB

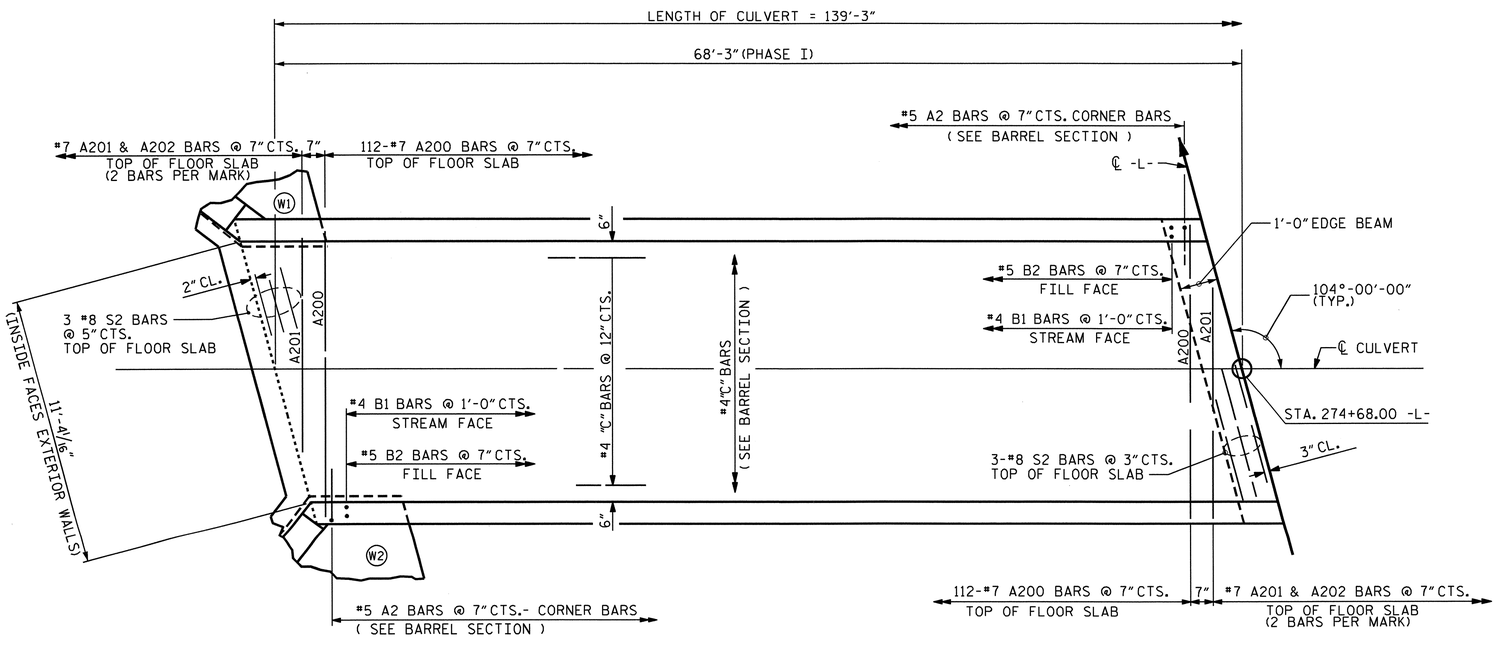

PLAN - FLOOR SLAB

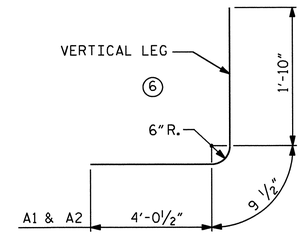

BAR TYPE

DIMENSIONS ARE OUT TO OUT

BILL OF MATERIAL PHASE I

BAR	No.	SIZE	TYPE	LENGTH	WEIGHT
A1	234	5	6	6'-8"	1627
A2	234	5	6	6'-8"	1627
A100	112	7	STR	11'-11"	2728
A101	4	7	STR	7'-3"	59
A102	4	7	STR	2'-7"	21
A200	112	7	STR	11'-11"	2728
A201	4	7	STR	7'-3"	59
A202	4	7	STR	2'-7"	21
B1	136	4	STR	7'-11"	719
B2	234	5	STR	6'-4"	1546
C1	126	4	STR	24'-10"	2090
G1	2	4	STR	12'-4"	16
S1	12	8	STR	12'-4"	395
REINFORCING STEEL LBS.					13,636

SPLICE CHART

BAR	SIZE	SPLICE LENGTH
B1	4	1'-9"
C1	4	1'-11"

STRUCTURE QUANTITIES FOR PHASE I CONSTRUCTION

CLASS A CONCRETE			
BARREL @ 0.997 CY/FT	68.0	C.Y.	
WING ETC.	16.1	C.Y.	
TOTAL	84.1	C.Y.	
REINFORCING STEEL			
BARREL	13,636	LBS.	
WINGS ETC.	914	LBS.	
TOTAL	14,550	LBS.	
FOUNDATION COND. MAT'L.	79	TONS	
CULVERT EXCAVATION ----------	LUMP SUM		

PROJECT NO. U-3810

ONSLOW COUNTY

STATION: 274+68.00 -L-

SHEET 4 OF 6

STATE OF NORTH CAROLINA
DEPARTMENT OF TRANSPORTATION
RALEIGH

SINGLE 11 FT. X 7 FT. CONCRETE BOX CULVERT PHASE I CONSTRUCTION

NORTH CAROLINA PROFESSIONAL SEAL 14045 ENGINEER TIMOTHY W. COGGINS

07/27/12

REVISIONS						SHEET NO.
NO.	BY:	DATE:	NO.	BY:	DATE:	C-20
1			3			TOTAL SHEETS
2			4			28

STR. #5

DRAWN BY : Neil M. Ruffin DATE : 3/23/12
CHECKED BY : B. GREEN DATE : 4/16/12

08-JUN-2012 11:20
R:\Structures\Final Plans\Culverts\Str. #5\U-3810_sd_Culvert_05.dgn
nruffin

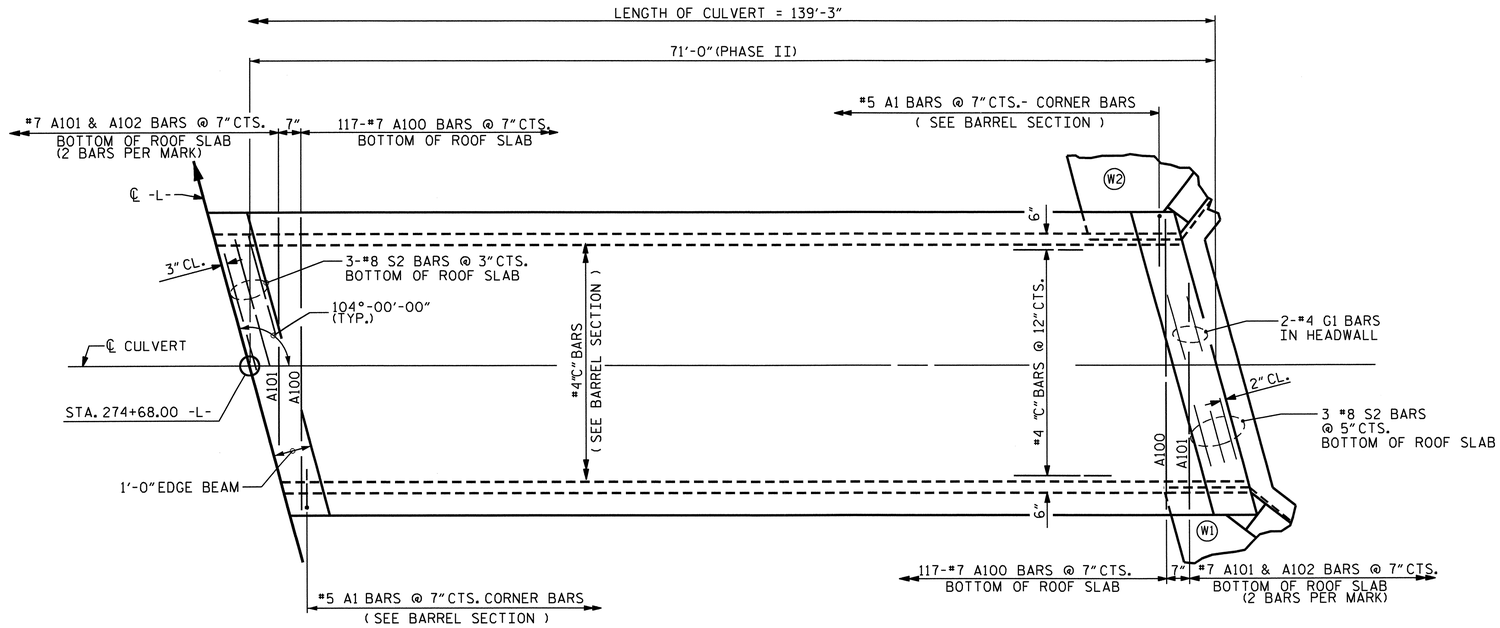

PLAN - ROOF SLAB

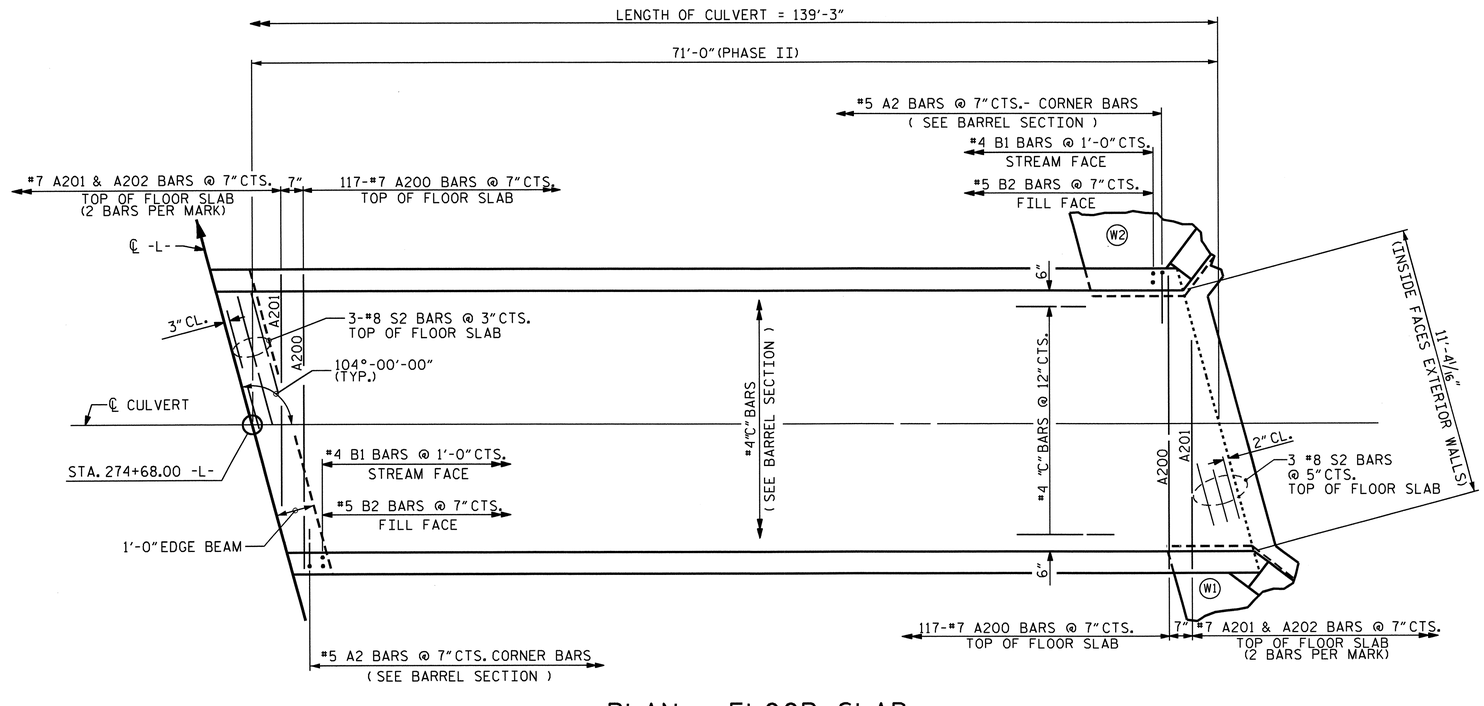

PLAN - FLOOR SLAB

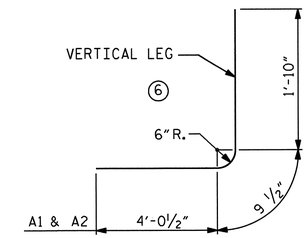

BAR TYPE

DIMENSIONS ARE OUT TO OUT

BILL OF MATERIAL PHASE II

BAR	No.	SIZE	TYPE	LENGTH	WEIGHT
A1	244	5	6	6'-8"	1697
A2	244	5	6	6'-8"	1697
A100	117	7	STR	11'-11"	2850
A101	4	7	STR	7'-3"	59
A102	4	7	STR	2'-7"	21
A200	117	7	STR	11'-11"	2850
A201	4	7	STR	7'-3"	59
A202	4	7	STR	2'-7"	21
B1	142	4	STR	7'-11"	751
B2	244	5	STR	6'-4"	1612
C1	126	4	STR	24'-10"	2090
G1	2	4	STR	12'-4"	16
S1	12	8	STR	12'-4"	395
REINFORCING STEEL LBS.					14,118

SPLICE CHART

BAR	SIZE	SPLICE LENGTH
B1	4	1'-9"
C1	4	1'-11"

STRUCTURE QUANTITIES FOR PHASE II CONSTRUCTION

CLASS A CONCRETE			
BARREL @	0.997	CY/FT	70.8 C.Y.
WING ETC.			16.1 C.Y.
TOTAL			86.9 C.Y.
REINFORCING STEEL			
BARREL			14,118 LBS.
WINGS ETC.			914 LBS.
TOTAL			15,032 LBS.
FOUNDATION COND. MAT'L.			82 TONS
CULVERT EXCAVATION ----------			LUMP SUM

PROJECT NO. U-3810

ONSLOW COUNTY

STATION: 274+68.00 -L-

SHEET 5 OF 6

STATE OF NORTH CAROLINA
DEPARTMENT OF TRANSPORTATION
RALEIGH

SINGLE 11 FT. X 7 FT. CONCRETE BOX CULVERT PHASE II CONSTRUCTION

NORTH CAROLINA PROFESSIONAL SEAL 14045 ENGINEER TIMOTHY L. COGGINS
Timothy L. Coggins 07/27/12

REVISIONS						SHEET NO.
NO.	BY:	DATE:	NO.	BY:	DATE:	C-21
1			3			TOTAL SHEETS
2			4			28

STR. #5

DRAWN BY : Neil M Ruffin DATE : 3/23/12
CHECKED BY : B. GREEN DATE : 4/16/12

08-JUN-2012 11:20
R:\Structures\FinalPlans\Culverts\Str. #5\U-3810_sd_Culvert_05.dgn
nruffin

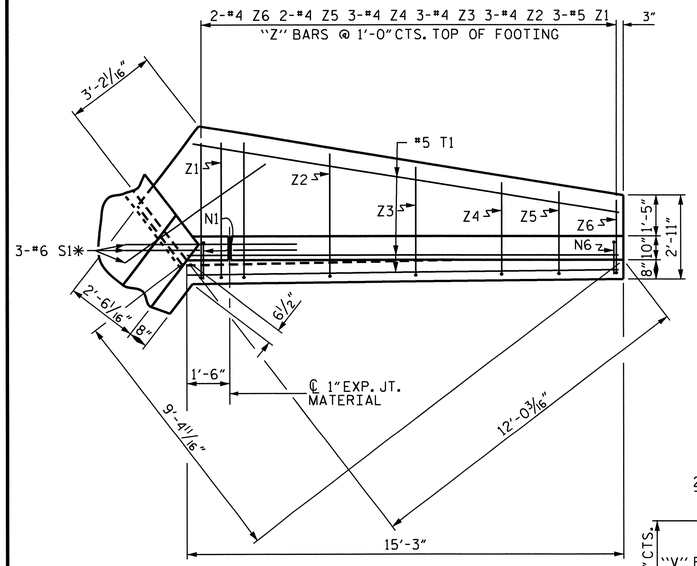

PLAN W2

*S1 @ BOTTOM OF FLOOR SLAB & FOOTING

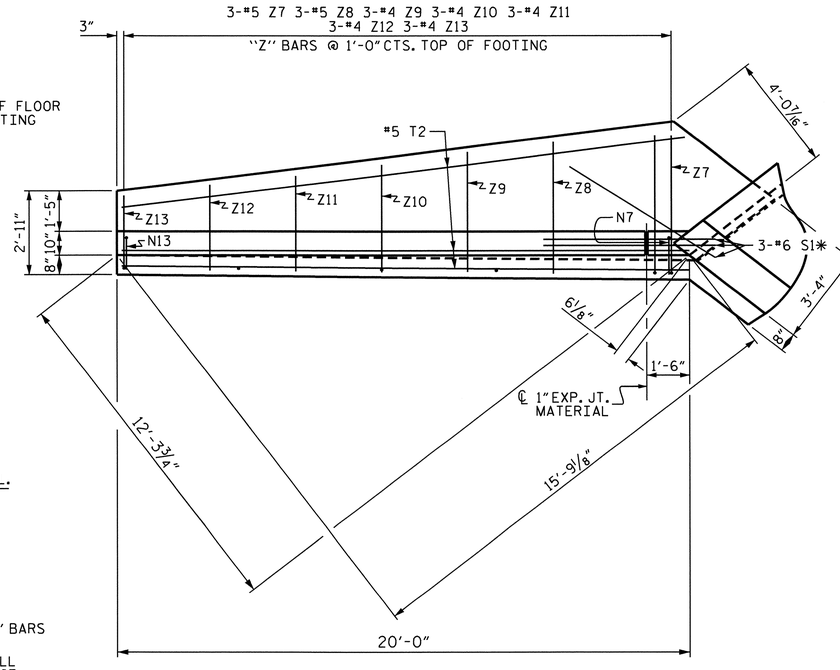

PLAN W1

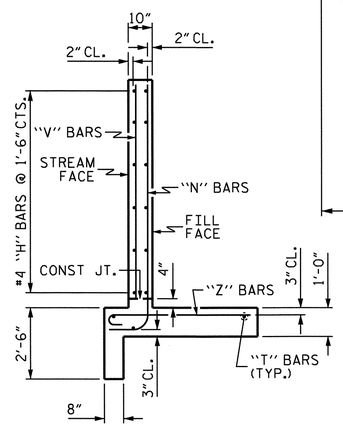

TYPICAL WING SECTION

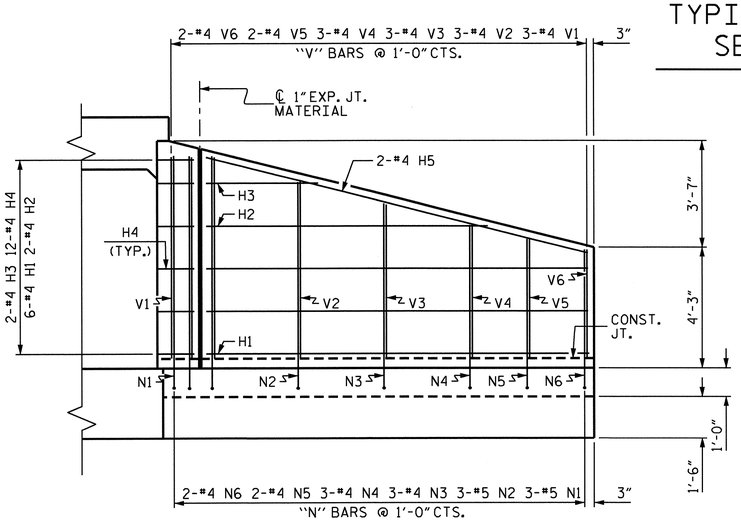

ELEVATION W2

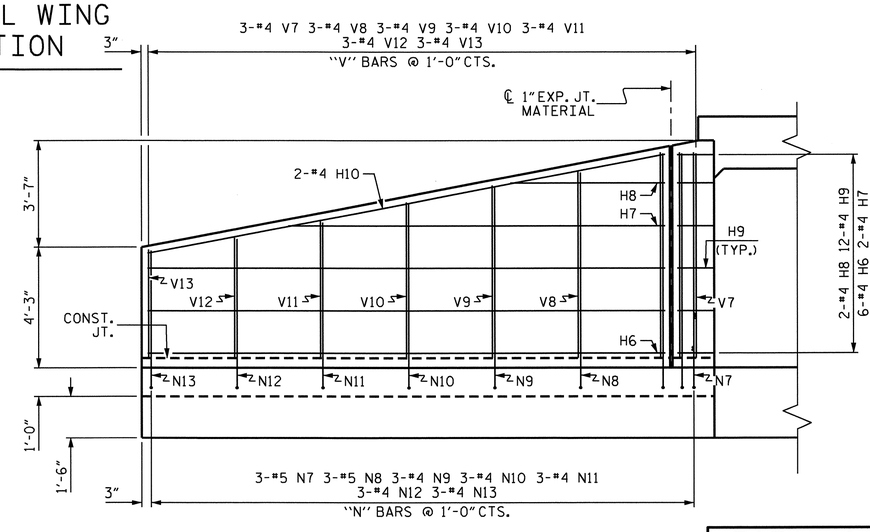

ELEVATION W1

BILL OF MATERIAL FOR TWO WINGS

BAR	NO.	SIZE	TYPE	LENGTH	WEIGHT
H1	6	4	STR	13'-4"	53
H2	2	4	STR	9'-10"	13
H3	2	4	STR	3'-11"	5
H4	12	4	1	3'-3"	26
H5	2	4	STR	13'-9"	18
H6	6	4	STR	18'-1"	72
H7	2	4	STR	13'-2"	18
H8	2	4	STR	5'-5"	7
H9	12	4	2	3'-3"	26
H10	2	4	STR	18'-5"	25
N1	3	5	3	9'-2"	29
N2	3	5	3	8'-3"	26
N3	3	4	3	7'-6"	15
N4	3	4	3	6'-9"	14
N5	2	4	3	6'-3"	8
N6	2	4	3	5'-10"	8
N7	3	5	3	9'-3"	29
N8	3	5	3	8'-7"	27
N9	3	4	3	8'-1"	16
N10	3	4	3	7'-6"	15
N11	3	4	3	6'-10"	14
N12	3	4	3	6'-3"	13
N13	3	4	3	5'-10"	12
S1	6	6	STR	6'-0"	54
T1	3	5	STR	15'-1"	47
T2	3	5	STR	19'-10"	62
V1	3	4	STR	7'-1"	14
V2	3	4	STR	6'-3"	13
V3	3	4	STR	5'-5"	11
V4	3	4	STR	4'-9"	10
V5	2	4	STR	4'-3"	6
V6	2	4	STR	3'-10"	5
V7	3	4	STR	7'-3"	15
V8	3	4	STR	6'-7"	13
V9	3	4	STR	6'-1"	12
V10	3	4	STR	5'-6"	11
V11	3	4	STR	4'-10"	10
V12	3	4	STR	4'-3"	9
V13	3	4	STR	3'-10"	8
Z1	3	5	4	5'-4"	17
Z2	3	4	4	4'-10"	10
Z3	3	4	4	4'-4"	9
Z4	3	4	4	3'-9"	8
Z5	2	4	4	3'-5"	5
Z6	2	4	4	3'-1"	4
Z7	3	5	4	5'-5"	17
Z8	3	5	4	5'-2"	16
Z9	3	4	4	4'-8"	9
Z10	3	4	4	4'-3"	9
Z11	3	4	4	3'-10"	8
Z12	3	4	4	3'-6"	7
Z13	3	4	4	3'-1"	6

REINFORCING STEEL LBS. FOR 2 WINGS	914
CLASS A CONCRETE	
2 WINGS	14.0 CY
1 HEADWALL	0.6 CY
1 END CURTAIN WALL	0.6 CY
2 EDGE BEAMS	0.9 CY
TOTAL	16.1 CY

BAR TYPES

ALL BAR DIMENSIONS ARE OUT TO OUT.

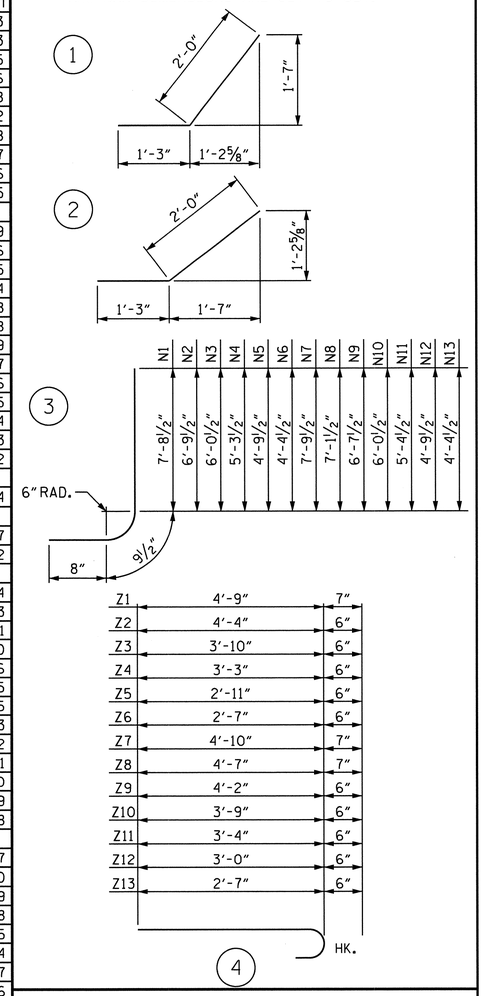

PROJECT NO. U-3810

ONSLOW COUNTY

STATION: 274+68.00 -L-

SHEET 6 OF 6

TOTAL QUANTITIES

PHASE I	REINFORCING STEEL	914 LBS.
PHASE II	REINFORCING STEEL	914 LBS.
	TOTAL	1828 LBS.
PHASE I	CLASS A CONCRETE	16.1 CY
PHASE II	CLASS A CONCRETE	16.1 CY
	TOTAL	32.2 CY

NORTH CAROLINA PROFESSIONAL SEAL 14045 ENGINEER TIMOTHY L. GOODWIN

07/27/12

STATE OF NORTH CAROLINA
DEPARTMENT OF TRANSPORTATION
RALEIGH

WINGS FOR CONCRETE BOX CULVERT

H = 7'-0" SLOPE = 3:1

REVISIONS						SHEET NO.
NO.	BY:	DATE:	NO.	BY:	DATE:	C-22
1			3			TOTAL SHEETS
2			4			28

STR. #5

DRAWN BY : Neil M Ruffin DATE : 3/22/12
CHECKED BY : B. GREEN DATE : 4/16/12

F. A. PROJECT NO. STP-1406 (7)

BM BL-56: 30"-#5 REBAR W/ ALUMINUM CAP; STA. 332+04.90 -L-, 29.77' LEFT, EL. 34.09

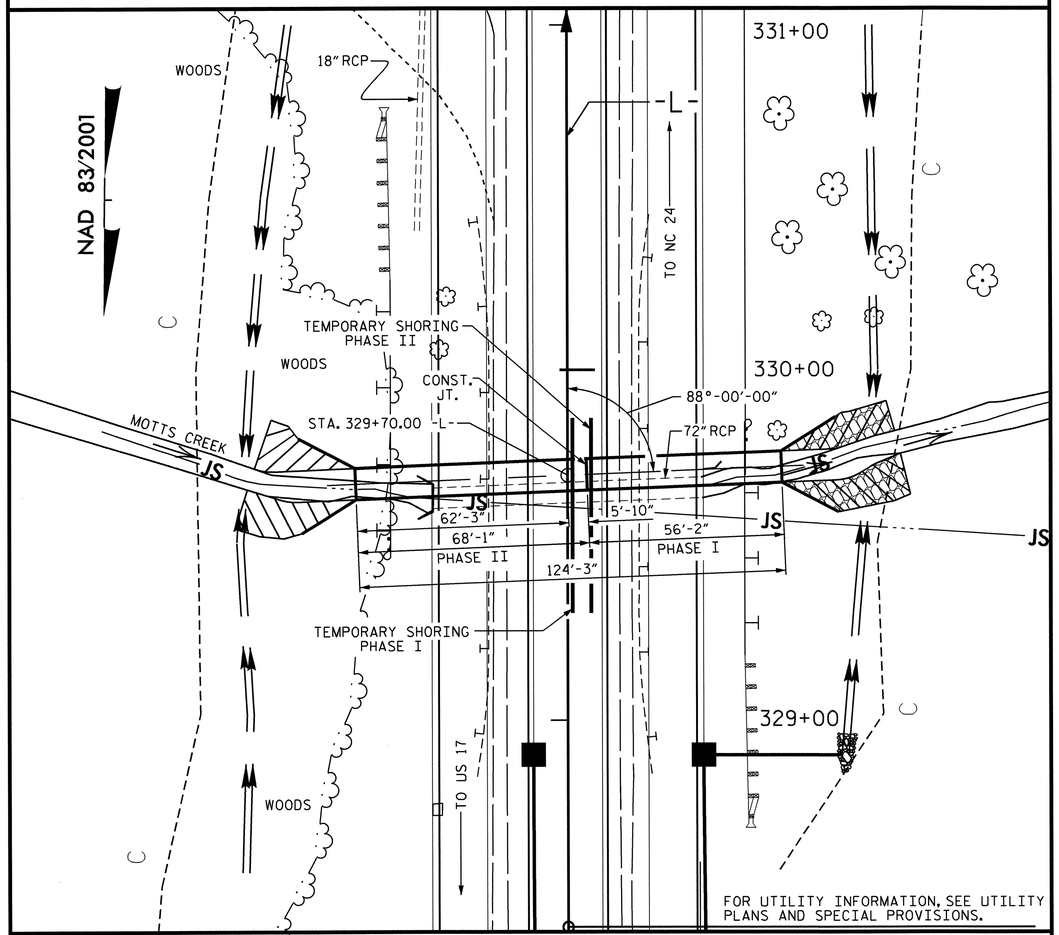

LOCATION SKETCH

HYDRAULIC DATA

DESIGN DISCHARGE	= 490 CFS
FREQUENCY OF DESIGN FLOOD	= 50 YEARS
DESIGN HIGH WATER ELEVATION	= 33.3
DRAINAGE AREA	= 0.33 SQ. MI.
BASE DISCHARGE (Q100)	= 600 CFS
BASE HIGH WATER ELEVATION	= 34.7

OVERTOPPING FLOOD DATA

OVERTOPPING DISCHARGE	= 646 CFS.
FREQUENCY OF OVERTOPPING FLOOD	= 100 YRS+.
OVERTOPPING FLOOD ELEVATION	= 35.3

GRADE DATA

GRADE PT. ELEV. @ STA. 329+70.00 -L-	= 35.57
BED ELEV. @ STA. 329+70.00 -L-	= 23.78
ROADWAY SLOPES	= 3:1

NOTES

ASSUMED LIVE LOAD ----------HL 93 OR ALTERNATE LOADING.

DESIGN FILL---------- 3.80 FT

FOR OTHER DESIGN DATA AND NOTES, SEE STANDARD NOTE SHEET.

3"Ø WEEP HOLES INDICATED TO BE IN ACCORDANCE WITH THE SPECIFICATIONS.

CONCRETE IN CULVERTS TO BE POURED IN THE FOLLOWING ORDER:

1. WING FOOTINGS AND FLOOR SLAB INCLUDING 4" OF ALL VERTICAL WALLS.
2. THE REMAINING PORTIONS OF THE WALLS AND WINGS FULL HEIGHT FOLLOWED BY ROOF SLAB AND HEADWALLS.

THE RESIDENT ENGINEER SHALL CHECK THE LENGTH OF CULVERT BEFORE STAKING IT OUT TO MAKE CERTAIN THAT IT WILL PROPERLY TAKE CARE OF THE FILL.

DIMENSIONS FOR WING LAYOUT AS WELL AS ADDITIONAL REINFORCING STEEL EMBEDDED IN BARREL ARE SHOWN ON WING SHEET.

AT THE CONTRACTORS OPTION, HE MAY SPLICE THE VERTICAL REINFORCING STEEL IN THE INTERIOR FACE OF EXTERIOR WALL ABOVE LOWER WALL CONSTRUCTION JOINT. THE SPLICE LENGTH SHALL BE AS PROVIDED IN THE SPLICE LENGTH CHART SHOWN ON THE PLANS. EXTRA WEIGHT OF STEEL DUE TO THE SPLICES SHALL BE PAID FOR BY THE CONTRACTOR.

NO PRECAST REINFORCED BOX CULVERT OPTION WILL BE ALLOWED.

THE CONTRACTOR SHALL PROVIDE INDEPENDENT ASSURANCE SAMPLES OF REINFORCING STEEL AS FOLLOWS: FOR PROJECTS REQUIRING UP TO 400 TONS OF REINFORCING STEEL, ONE 30 INCH SAMPLE OF EACH SIZE BAR USED, AND FOR PROJECTS REQUIRING OVER 400 TONS OF REINFORCING STEEL, TWO 30 INCH SAMPLES OF EACH SIZE BAR USED. THE BARS FROM WHICH THE SAMPLES ARE TAKEN MUST THEN BE SPLICED WITH REPLACEMENT BARS OF THE SIZE AND LENGTH OF THE SAMPLE, PLUS A MINIMUM LAP SPLICE OF THIRTY BAR DIAMETERS. PAYMENT FOR THE SAMPLES OF REINFORCING STEEL SHALL BE CONSIDERED INCIDENTAL TO VARIOUS PAY ITEMS.

FOR CULVERT DIVERSION DETAILS AND PAY ITEM, SEE EROSION CONTROL PLANS.

A 3 FOOT STRIP OF FILTER FABRIC SHALL BE ATTACHED TO THE FILL FACE OF THE WING COVERING THE ENTIRE LENGTH OF THE EXPANSION JOINT.

FOR SUBMITTAL OF WORKING DRAWINGS, SEE SPECIAL PROVISIONS.

FOR FALSEWORK AND FORMWORK, SEE SPECIAL PROVISIONS.

FOR CRANE SAFETY, SEE SPECIAL PROVISIONS.

FOR GROUT FOR STRUCTURES, SEE SPECIAL PROVISIONS.

FOR MAINTENANCE OF TRAFFIC, SEE TRAFFIC CONTROL PLANS.

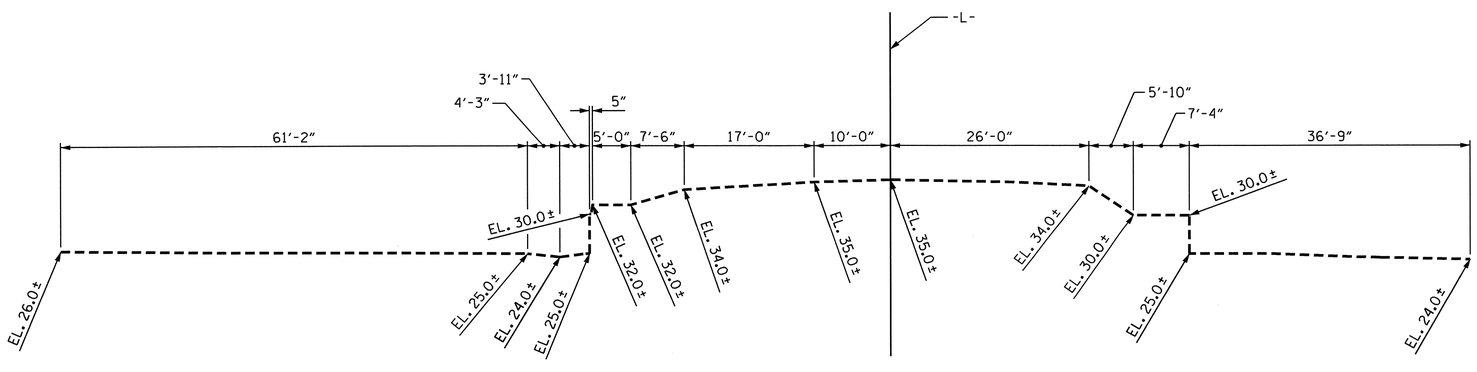

PROFILE ALONG ℄ CULVERT

TOTAL STRUCTURE QUANTITIES

CLASS A CONCRETE			
BARREL @ 0.973 CY/FT	120.9	C.Y.	
WING ETC.	36.4	C.Y.	
TOTAL	157.3	C.Y.	
REINFORCING STEEL			
BARREL	17,342	LBS.	
WINGS ETC.	2,304	LBS.	
TOTAL	19,646	LBS.	
FOUNDATION COND. MAT'L.	126	TONS	
CULVERT EXCAVATION	LUMP SUM		

NORTH CAROLINA PROFESSIONAL SEAL 12274 ENGINEER OMAR R. AZIZ
7/30/12

NORTH CAROLINA PROFESSIONAL SEAL 14045 ENGINEER TIMOTHY A. BOCCONS
07/30/12

PROJECT NO. U-3810
ONSLOW COUNTY
STATION: 329+70.00 -L-

SHEET 1 OF 6

STATE OF NORTH CAROLINA
DEPARTMENT OF TRANSPORTATION
RALEIGH

SINGLE 9 FT. X 8 FT.
CONCRETE BOX CULVERT
88° SKEW

AUGUST 1989

REVISIONS						SHEET NO.
NO.	BY:	DATE:	NO.	BY:	DATE:	C-23
1			3			TOTAL SHEETS
2			4			28

ASSEMBLED BY : B. L. GREEN	DATE : 4/6/12	SPECIAL	
CHECKED BY : N. M. RUFFIN	DATE : 5/9/12		
DRAWN BY : R.W. WRIGHT	DATE : AUG. 1989	STANDARD	
CHECKED BY : A.R. BISSETTE	DATE : AUG. 1989		

REVISED 11-13-91 BY E.L.R. CHECKED BY G.R.P.
ADDED 8-22-89

STR. #6 STD. NO. CB11A

LOAD AND RESISTANCE FACTOR RATING (LRFR) SUMMARY FOR REINFORCED CONCRETE BOX CULVERTS

LEVEL		VEHICLE	WEIGHT (W) (TONS)	CONTROLLING LOAD RATING (#)	MINIMUM RATING FACTORS (RF)	TONS = W x RF	STRENGTH I LIMIT STATE									COMMENT NUMBER
							LIVE-LOAD FACTORS (γ_{LL})	MOMENT				SHEAR				
								RATING FACTOR	BOX NO.	ELEMENT TYPE	DISTANCE FROM LEFT END OF ELEMENT (ft)	RATING FACTOR	BOX NO.	ELEMENT TYPE	DISTANCE FROM LEFT END OF ELEMENT (ft)	
DESIGN LOAD RATING		HL-93 (INVENTORY)	N/A	1	1.12	--	1.75	1.12	1	BOTTOM SLAB	4.83	1.16	1	BOTTOM SLAB	0.87	
		HL-93 (OPERATING)	N/A		1.45	--	1.35	1.45	1	BOTTOM SLAB	4.83	1.50	1	BOTTOM SLAB	0.87	
		HS-20 (INVENTORY)	36.000	2	1.28	45.93	1.75	1.28	1	TOP SLAB	4.83	1.32	1	TOP SLAB	0.87	
		HS-20 (OPERATING)	36.000		1.65	59.54	1.35	1.65	1	TOP SLAB	4.83	1.71	1	TOP SLAB	0.87	
LEGAL LOAD RATING	SINGLE VEHICLE (SV)	SNSH	13.500		2.32	31.33	1.40	2.32	1	TOP SLAB	4.83	2.49	1	TOP SLAB	0.87	
		SNGARBS2	20.000		2.17	43.42	1.40	2.17	1	TOP SLAB	4.83	2.25	1	TOP SLAB	0.87	
		SNAGRIS2	22.000		2.32	51.05	1.40	2.32	1	TOP SLAB	4.83	2.49	1	TOP SLAB	0.87	
		SNCOTTS3	27.250	3	1.40	38.03	1.40	1.40	1	BOTTOM SLAB	4.83	1.45	1	BOTTOM SLAB	0.87	
		SNAGGRS4	34.925		1.56	54.51	1.40	1.56	1	BOTTOM SLAB	4.83	1.58	1	BOTTOM SLAB	8.79	
		SNS5A	35.550		1.55	54.98	1.40	1.55	1	BOTTOM SLAB	4.83	1.57	1	BOTTOM SLAB	0.87	
		SNS6A	39.950		1.54	61.69	1.40	1.54	1	BOTTOM SLAB	4.83	1.57	1	BOTTOM SLAB	0.87	
		SNS7B	42.000		1.54	64.85	1.40	1.54	1	BOTTOM SLAB	4.83	1.57	1	BOTTOM SLAB	0.87	
	TRUCK TRACTOR SEMI-TRAILER (TTST)	TNAGRIT3	33.000		2.32	76.58	1.40	2.32	1	TOP SLAB	4.83	2.49	1	TOP SLAB	0.87	
		TNT4A	33.075		1.66	54.97	1.40	1.66	1	BOTTOM SLAB	4.83	1.72	1	BOTTOM SLAB	0.87	
		TNT6A	41.600		1.51	62.97	1.40	1.51	1	BOTTOM SLAB	4.83	1.54	1	BOTTOM SLAB	8.79	
		TNT7A	42.000		1.62	68.21	1.40	1.62	1	BOTTOM SLAB	4.83	1.66	1	BOTTOM SLAB	8.79	
		TNT7B	42.000		1.55	65.15	1.40	1.55	1	BOTTOM SLAB	4.83	1.58	1	BOTTOM SLAB	0.87	
		TNAGRIT4	43.000		1.59	68.18	1.40	1.59	1	BOTTOM SLAB	4.83	1.64	1	BOTTOM SLAB	0.87	
		TNAGT5A	45.000		1.62	72.97	1.40	1.62	1	BOTTOM SLAB	4.83	1.68	1	BOTTOM SLAB	0.87	
		TNAGT5B	45.000		1.66	74.78	1.40	1.66	1	BOTTOM SLAB	4.83	1.72	1	BOTTOM SLAB	0.87	

LOAD FACTORS:

DESIGN LOAD RATING FACTORS

LOAD TYPE	MAX FACTOR	MIN FACTOR
DC	1.25	0.90
DW	1.50	0.65
EV	1.30	0.90
EH	1.35	0.90
ES	1.35	0.90
LS	1.75	--
WA	1.00	--

NOTE:

RATING FACTORS ARE BASED ON THE STRENGTH I LIMIT STATE.

COMMENTS:

1.
2.
3.
4.

(#) CONTROLLING LOAD RATING

(1) DESIGN LOAD RATING (HL-93)

(2) DESIGN LOAD RATING (HS-20)

(3) LEGAL LOAD RATING **

** SEE CHART FOR VEHICLE TYPE

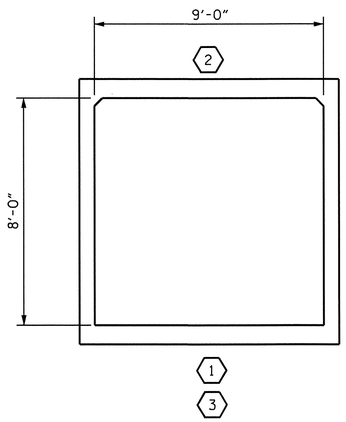

LRFR SUMMARY

(LOOKING DOWNSTREAM)

PROJECT NO. U-3810

ONSLOW COUNTY

STATION: 329+70.00 -L-

SHEET 2 OF 6

STATE OF NORTH CAROLINA
DEPARTMENT OF TRANSPORTATION
RALEIGH

STANDARD

LRFR SUMMARY FOR REINFORCED CONCRETE BOX CULVERTS
(NON-INTERSTATE TRAFFIC)

NORTH CAROLINA PROFESSIONAL SEAL 14045 ENGINEER TIMOTHY C. COGGINS

07/27/12

REVISIONS						SHEET NO.
NO.	BY:	DATE:	NO.	BY:	DATE:	C-24
1			3			TOTAL SHEETS
2			4			28

STR. #6 STD. NO. LRFR5

ASSEMBLED BY : B. L. GREEN DATE : 4/6/12
CHECKED BY : N. M. RUFFIN DATE : 5/9/12
DRAWN BY : WMC 7/11
CHECKED BY : GM 7/11
REV. 10/1/11 MAA/GM

27-JUL-2012 10:46
R:\TIPProjects-U\U3810\structures\Plans\FinalPlans\Culverts\Str. #6\U3810_sd_Culvert_06.dgn
tcoggins

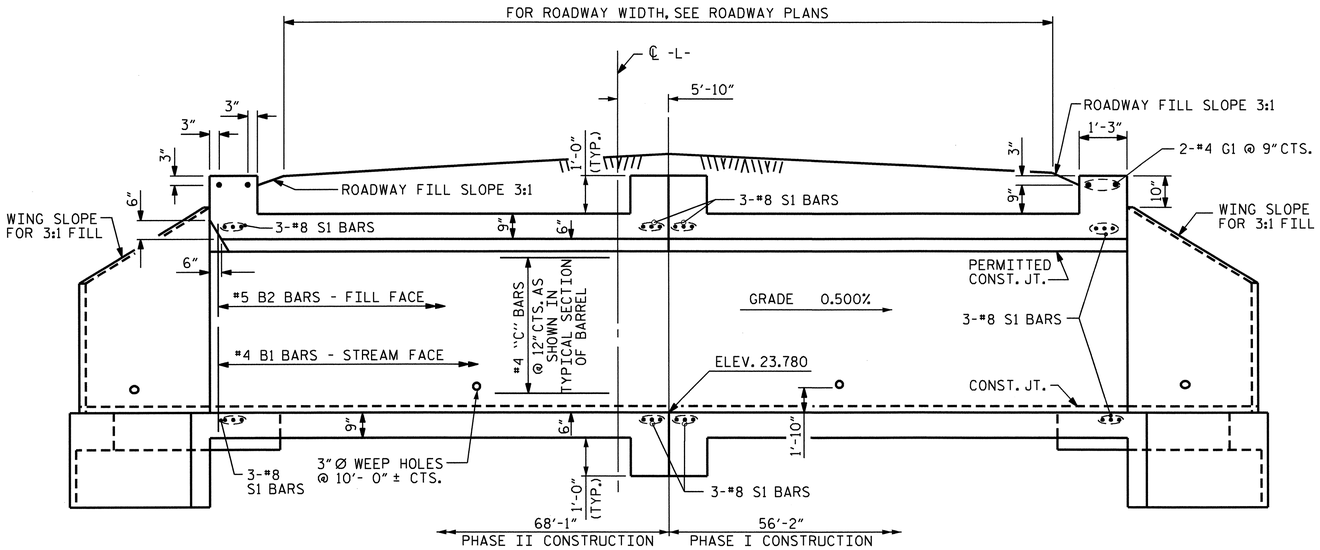

CULVERT SECTION NORMAL TO ROADWAY

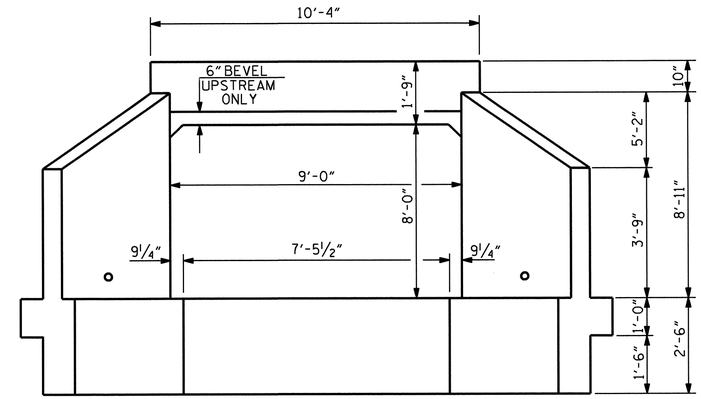

END ELEVATION

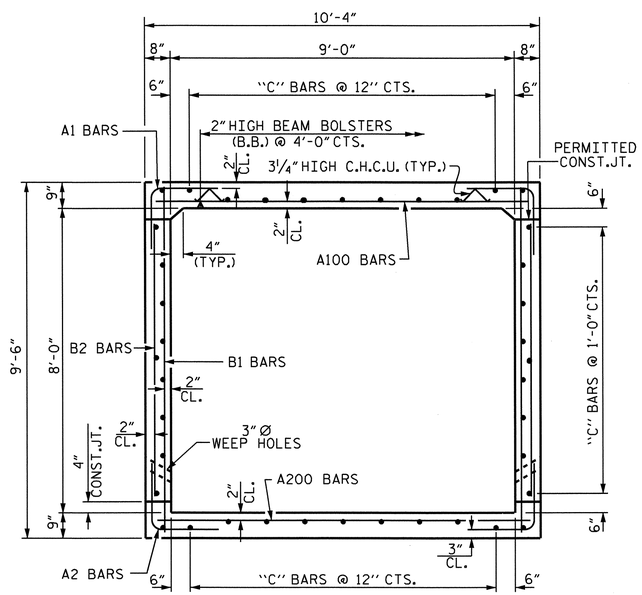

RIGHT ANGLE SECTION OF BARREL

THERE ARE 40 "C" BARS IN SECTION OF BARREL

PROJECT NO. U-3810

ONSLOW COUNTY

STATION: 329+70.00 -L-

SHEET 3 OF 6

STATE OF NORTH CAROLINA
DEPARTMENT OF TRANSPORTATION
RALEIGH

SINGLE 9 FT. X 8 FT. CONCRETE BOX CULVERT 88° SKEW

1971

NORTH CAROLINA PROFESSIONAL SEAL 14045 ENGINEER TIMOTHY L. COGGINS
07/27/12

REVISIONS							
NO.	BY:	DATE:	NO.	BY:	DATE:		SHEET NO. C-25
1			3				TOTAL SHEETS 28
2			4				

STR. #6 STD. NO. CB11

ASSEMBLED BY : B. L. GREEN DATE : 4/6/12 CHECKED BY : N. M. RUFFIN DATE : 5/11/12	SPECIAL	
DRAWN BY : R. WRIGHT DATE : AUG. 1989 CHECKED BY : A.R. BISSETTE DATE : AUG. 1989	STANDARD	

REVISED 8-28-92 BY E.L.R. CHECKED BY C.R.P.
REVISED 8-22-89 BY A.R.B. CHECKED BY C.R.K.
REDRAWN 8-22-1989
REVISED 11-19-99 BY M.M. CHECKED BY R.W.W.

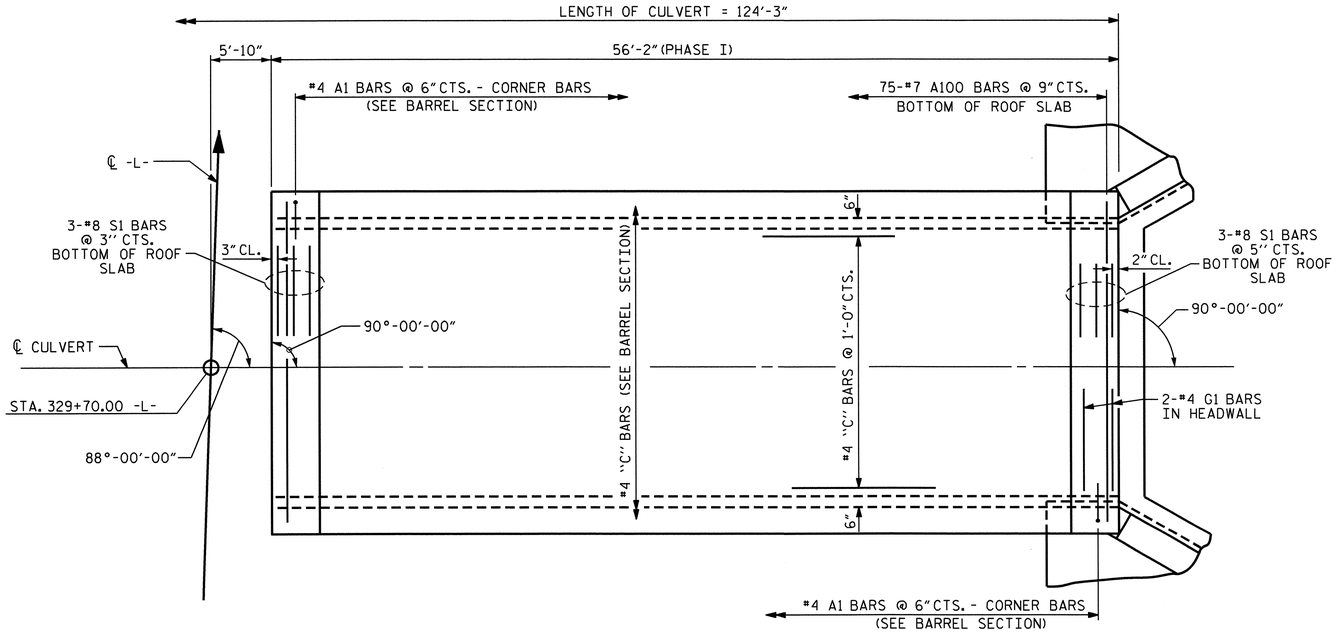

PLAN - ROOF SLAB

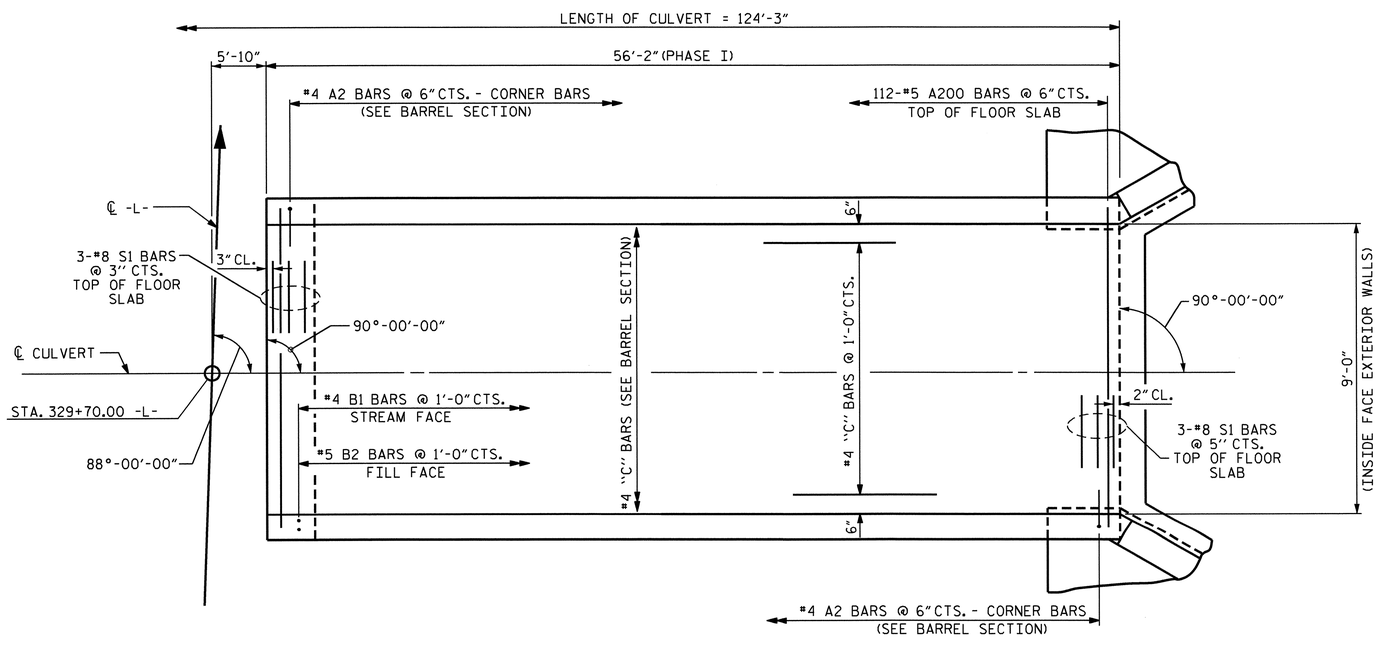

PLAN - FLOOR SLAB

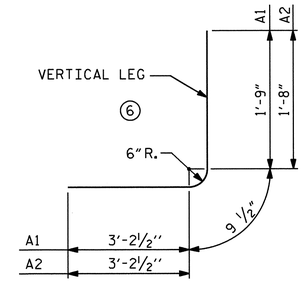

BAR TYPE

DIMENSIONS ARE OUT TO OUT

BILL OF MATERIAL PHASE I

BAR	No.	SIZE	TYPE	LENGTH	WEIGHT
A1	224	4	6	5'-9"	860
A2	224	4	6	5'-8"	848
A100	75	7	STR	9'-11"	1520
A200	112	5	STR	9'-11"	1158
B1	114	4	STR	9'-0"	685
B2	114	5	STR	7'-4"	872
C1	80	4	STR	30'-0"	1603
G1	2	4	STR	10'-0"	13
S1	12	8	STR	10'-0"	320
REINFORCING STEEL LBS.					7879

SPLICE CHART

BAR	SIZE	SPLICE LENGTH
B1	#4	1'-9"
C1	#4	1'-11"

STRUCTURE QUANTITIES FOR PHASE I CONSTRUCTION

CLASS A CONCRETE
BARREL @ 0.973 CY/FT 54.7 C.Y.
WING ETC. 18.2 C.Y.
TOTAL 72.9 C.Y.

REINFORCING STEEL
BARREL 7,879 LBS.
WINGS ETC. 1,152 LBS.
TOTAL 9,031 LBS.

FOUNDATION COND. MAT'L. 57 TONS
CULVERT EXCAVATION ---------- LUMP SUM

PROJECT NO. U-3810
ONSLOW COUNTY
STATION: 329+70.00 -L-

SHEET 4 OF 6

STATE OF NORTH CAROLINA
DEPARTMENT OF TRANSPORTATION
RALEIGH

SINGLE 9 FT. X 8 FT. CONCRETE BOX CULVERT PHASE I CONSTRUCTION

NORTH CAROLINA PROFESSIONAL SEAL 14045 ENGINEER TIMOTHY L. COGGINS
07/27/12

REVISIONS						SHEET NO.
NO.	BY:	DATE:	NO.	BY:	DATE:	C-26
1			3			TOTAL SHEETS
2			4			28

DRAWN BY : B. L. GREEN DATE : 4/6/12
CHECKED BY : N. M. RUFFIN DATE : 5/15/12

08-JUN-2012 11:20
R:\Structures\FinalPlans\Culverts\Str. #6\U3810_sd_Culvert_06.dgn
nruffin

STR. #6

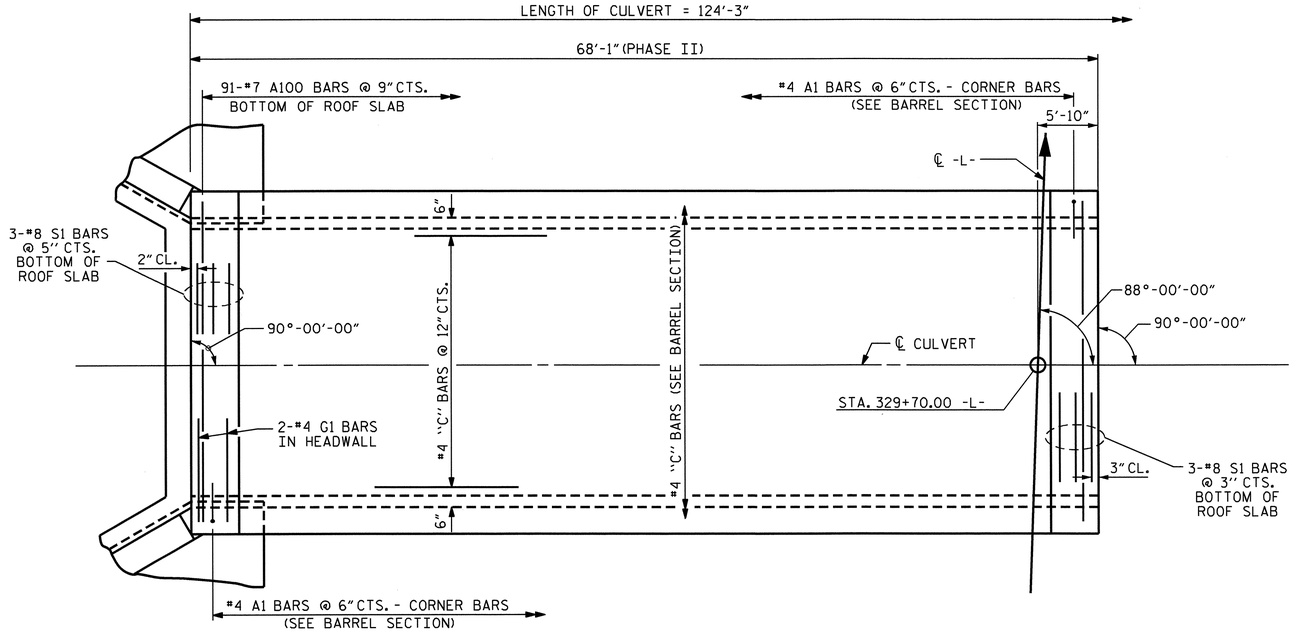

PLAN - ROOF SLAB

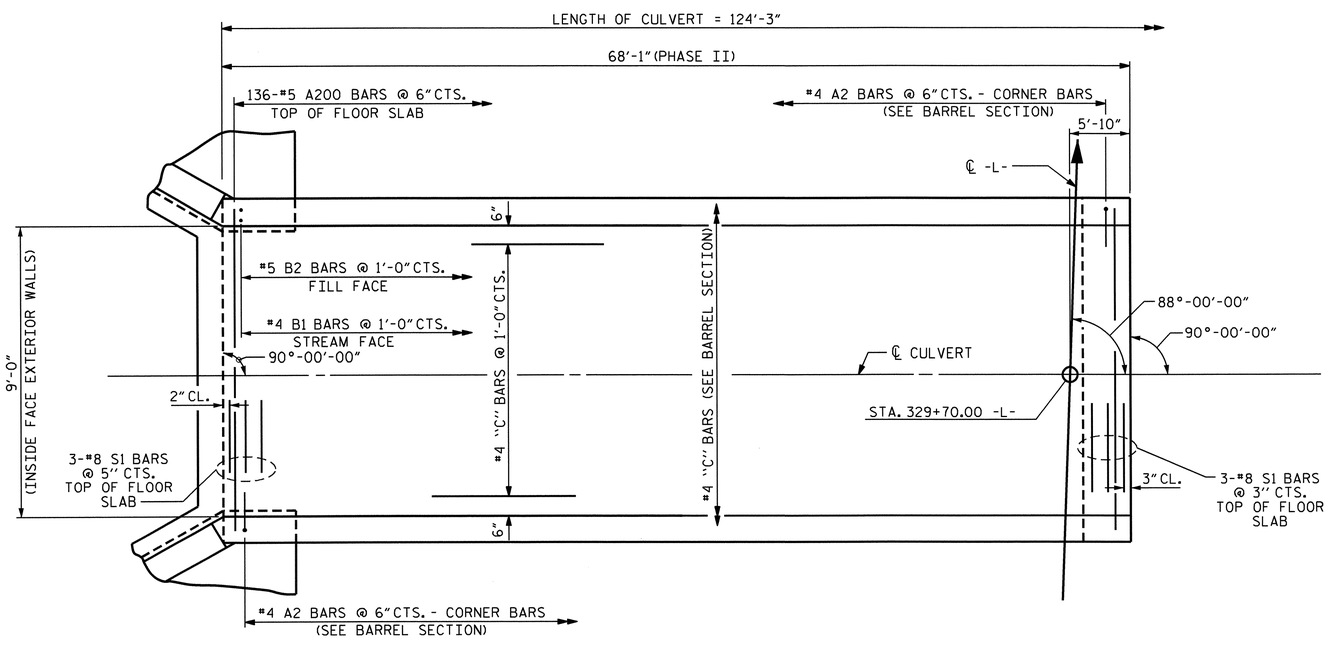

PLAN - FLOOR SLAB

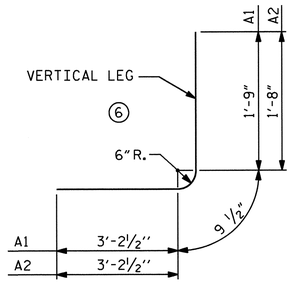

BAR TYPE

DIMENSIONS ARE OUT TO OUT

BILL OF MATERIAL PHASE II

BAR	No.	SIZE	TYPE	LENGTH	WEIGHT
A1	272	4	6	5'-9"	1045
A2	272	4	6	5'-8"	1030
A100	91	7	STR	9'-11"	1845
A200	136	5	STR	9'-11"	1407
B1	138	4	STR	9'-0"	830
B2	138	5	STR	7'-4"	1056
C2	120	4	STR	23'-11"	1917
G1	2	4	STR	10'-0"	13
S1	12	8	STR	10'-0"	320
REINFORCING STEEL LBS.					9463

SPLICE CHART

BAR	SIZE	SPLICE LENGTH
B1	#4	1'-9"
C2	#4	1'-11"

STRUCTURE QUANTITIES FOR PHASE II CONSTRUCTION

CLASS A CONCRETE			
BARREL @	0.973 CY/FT	66.2	C.Y.
WING ETC.		18.2	C.Y.
TOTAL		84.4	C.Y.
REINFORCING STEEL			
BARREL		9,463	LBS.
WINGS ETC.		1,152	LBS.
TOTAL		10,615	LBS.
FOUNDATION COND. MAT'L.		69	TONS
CULVERT EXCAVATION		LUMP SUM	

PROJECT NO. U-3810

ONSLOW COUNTY

STATION: 329+70.00 -L-

SHEET 5 OF 6

STATE OF NORTH CAROLINA
DEPARTMENT OF TRANSPORTATION
RALEIGH

SINGLE 9 FT. X 8 FT. CONCRETE BOX CULVERT PHASE II CONSTRUCTION

NORTH CAROLINA PROFESSIONAL SEAL 14045 ENGINEER TIMOTHY L. COGGINS

Timothy L. Coggins 07/27/12

REVISIONS						SHEET NO.
NO.	BY:	DATE:	NO.	BY:	DATE:	C-27
1			3			TOTAL SHEETS
2			4			28

DRAWN BY : B. L. GREEN DATE : 4/6/12
CHECKED BY : N. M. RUFFIN DATE : 5/15/12

08-JUN-2012 11:20
R:\Structures\Final Plans\Culverts\Str. #6\U3810_sd_Culvert_06.dgn
nruffin

STR. #6

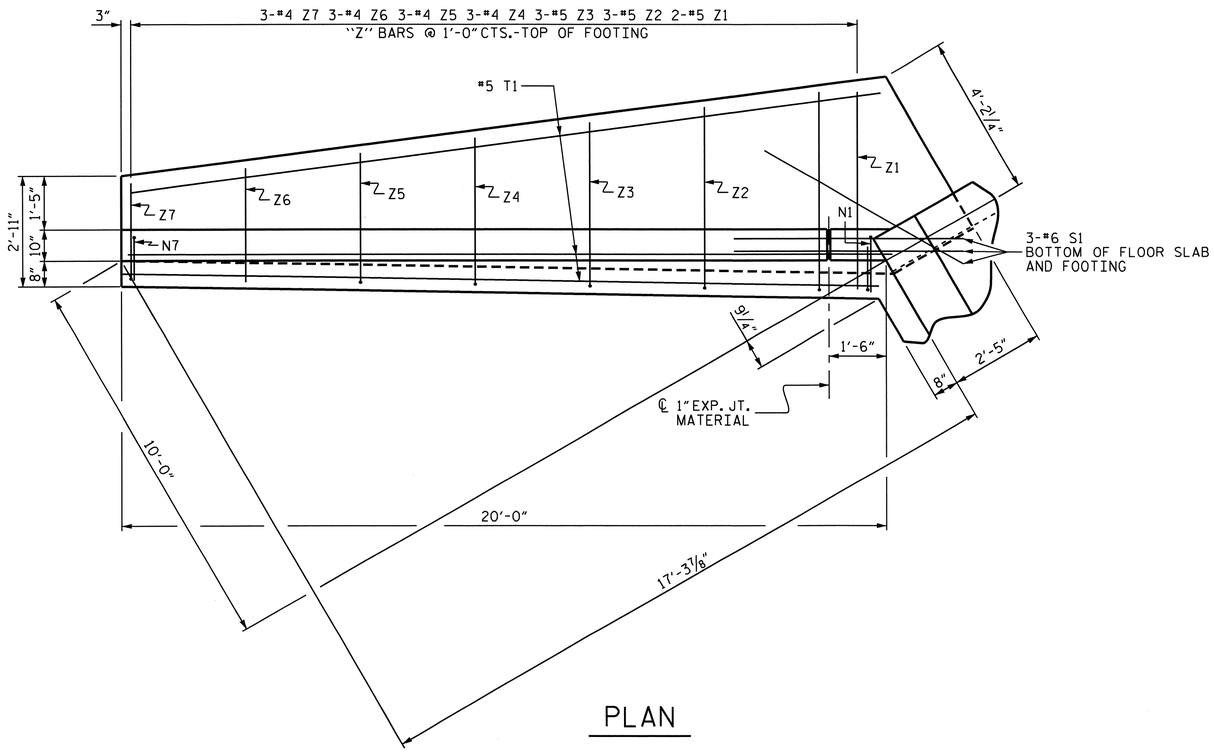

PLAN

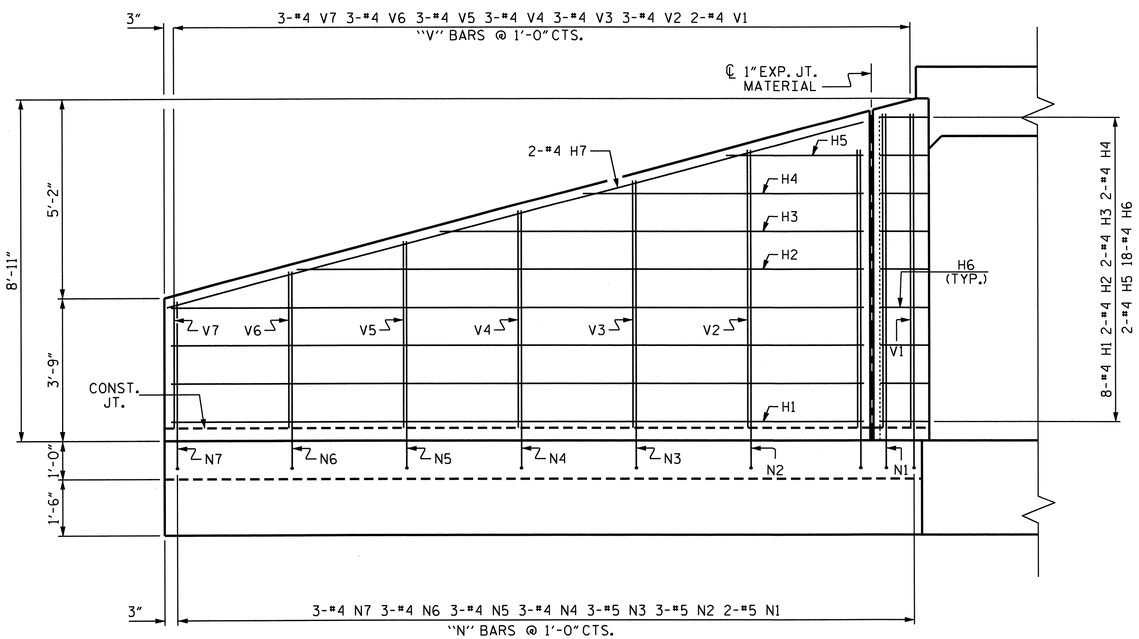

ELEVATION

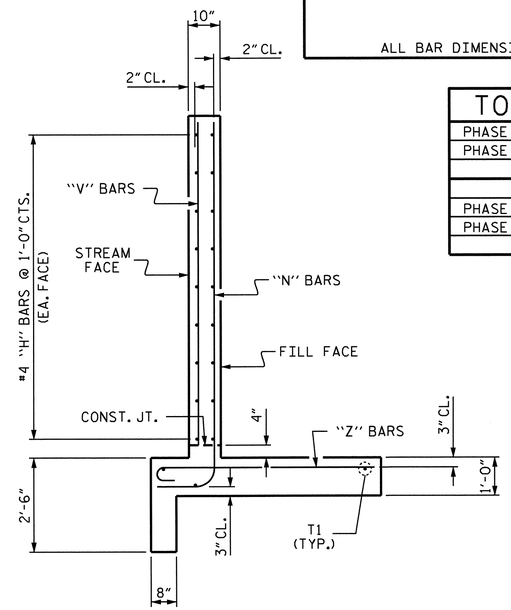

TYPICAL WING SECTION

BAR TYPES

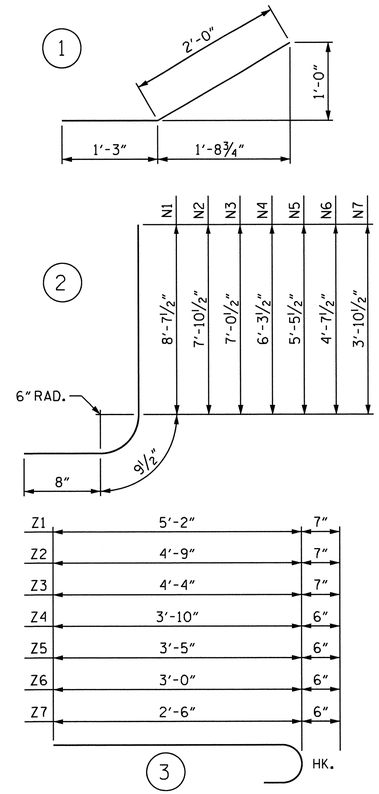

ALL BAR DIMENSIONS ARE OUT TO OUT.

BILL OF MATERIAL FOR TWO WINGS

BAR	NO.	SIZE	TYPE	LENGTH	WEIGHT
H1	16	#4	STR	18'-1"	193
H2	4	#4	STR	14'-10"	40
H3	4	#4	STR	11'-1"	30
H4	4	#4	STR	7'-4"	20
H5	4	#4	STR	3'-7"	10
H6	36	#4	1	3'-3"	78
H7	4	#4	STR	18'-10"	50
N1	4	#5	2	10'-1"	42
N2	6	#5	2	9'-4"	58
N3	6	#5	2	8'-6"	53
N4	6	#4	2	7'-9"	31
N5	6	#4	2	6-11"	28
N6	6	#4	2	6'-1"	24
N7	6	#4	2	5'-4"	21
S1	6	#6	STR	6'-0"	54
T1	6	#5	STR	19'-9"	124
V1	4	#4	STR	8'-3"	22
V2	6	#4	STR	7'-3"	29
V3	6	#4	STR	6'-6"	26
V4	6	#4	STR	5'-8"	23
V5	6	#4	STR	4'-11"	20
V6	6	#4	STR	4'-1"	16
V7	6	#4	STR	3'-4"	13
Z1	4	#5	3	5'-9"	24
Z2	6	#5	3	5'-4"	33
Z3	6	#5	3	4'-11"	31
Z4	6	#4	3	4'-4"	17
Z5	6	#4	3	3'-11"	16
Z6	6	#4	3	3'-6"	14
Z7	6	#4	3	3'-0"	12

REINFORCING STEEL FOR 2 WINGS 1152 LBS

CLASS A CONCRETE

2 WINGS	16.4	CY
1 HEADWALL	0.5	CY
1 END CURTAIN WALL	0.5	CY
2 EDGE BEAMS	0.8	CY
TOTAL	18.2	CY

TOTAL QUANTITIES

PHASE I	REINFORCING STEEL	1152 LBS.
PHASE II	REINFORCING STEEL	1152 LBS.
	TOTAL	2304 LBS.
PHASE I	CLASS A CONCRETE	18.2 CY
PHASE II	CLASS A CONCRETE	18.2 CY
	TOTAL	36.4 CY

PROJECT NO. U-3810

ONSLOW COUNTY

STATION: 329+70.00 -L-

SHEET 6 OF 6

STATE OF NORTH CAROLINA
DEPARTMENT OF TRANSPORTATION
RALEIGH

WINGS FOR CONCRETE BOX CULVERT

H = 8'-0" SLOPE = 3:1

90° SKEW

NORTH CAROLINA PROFESSIONAL SEAL 14045 ENGINEER TIMOTHY L. COGGINS

07/27/12

REVISIONS							SHEET NO.
NO.	BY:	DATE:	NO.	BY:	DATE:		C-28
1			3				TOTAL SHEETS
2			4				28

ASSEMBLED BY :	B. L. GREEN	DATE :	4/6/12
CHECKED BY :	N. M. RUFFIN	DATE :	5/16/12
DRAWN BY :	CCJ	10/99	
CHECKED BY :	RWW	03/00	

GEOTECHNICAL ENGINEER	ENGINEER
NORTH CAROLINA PROFESSIONAL SEAL 30943 ENGINEER THEIN TUN ZAN — SIGNATURE — DATE 3/19/2012	SIGNATURE — DATE

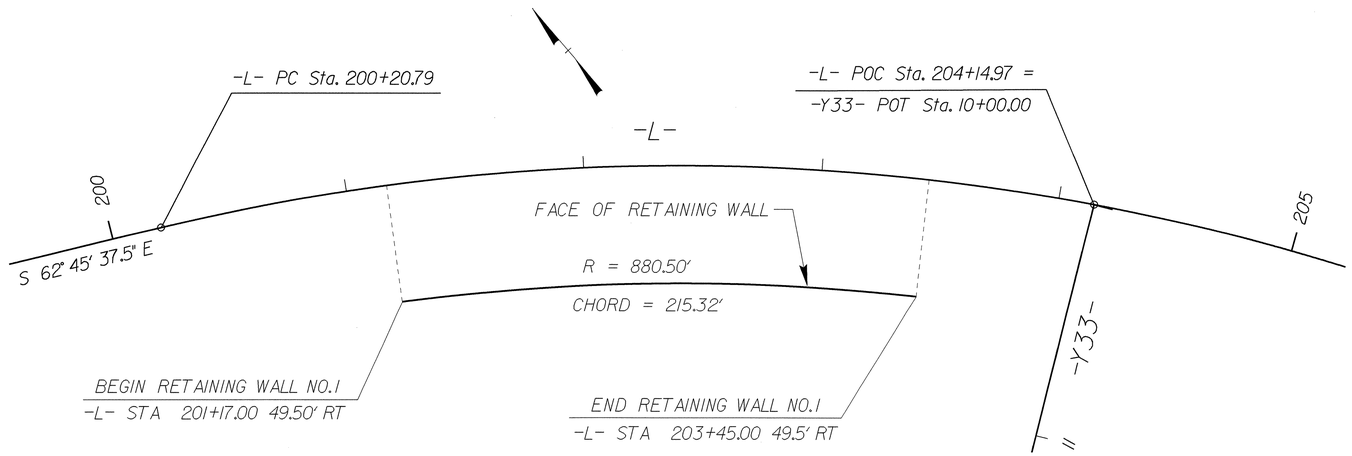

RETAINING WALL NO. 1 PLAN

NOT TO SCALE

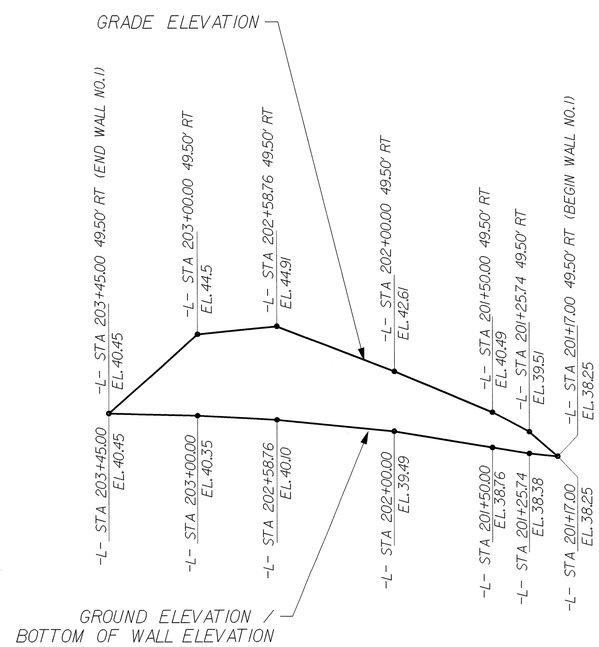

RETAINING WALL NO. 1 ELEVATION

NOT TO SCALE

BILL OF MATERIALS	
SEGMENTAL GRAVITY RETAINING WALLS	850 SQ.FT.

PROJECT NO.: 35801.1.1 (U-3810)

ONSLOW **COUNTY**

STATION: 201+50.00 -L-

SHEET 1 OF 2

GEOTECHNICAL ENGINEERING UNIT

☒ EASTERN REGIONAL OFFICE
☐ WESTERN REGIONAL OFFICE
☐ CONTRACT OFFICE

STATE OF NORTH CAROLINA
DEPARTMENT OF TRANSPORTATION
RALEIGH

SEGMENTAL GRAVITY RETAINING WALL NO. 1 PLAN AND ELEVATION

REVISIONS						SHEET NO.
NO.	BY	DATE	NO.	BY	DATE	W-1
1			3			TOTAL SHEETS
2			4			2

PREPARED BY: THEIN T. ZAN	DATE: 8/2011
REVIEWED BY: JINYOUNG PARK	DATE: 8/2011

GEOTECHNICAL ENGINEER	ENGINEER
NORTH CAROLINA PROFESSIONAL SEAL 30943 ENGINEER THEIN TUN ZAN	
SIGNATURE 3/19/2012 DATE	SIGNATURE DATE

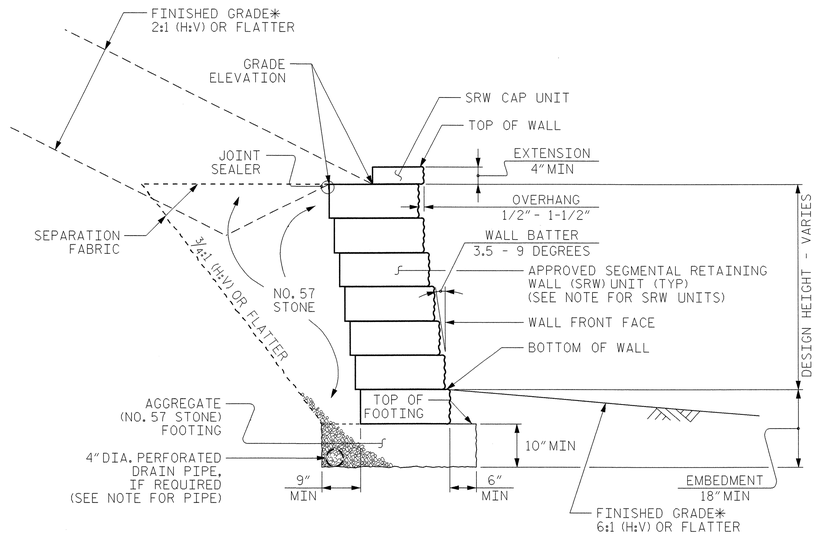

SEGMENTAL GRAVITY WALL WITH BACK SLOPE

*SEE ROADWAY PLANS FOR FINISHED GRADE AND DITCH DETAILS.

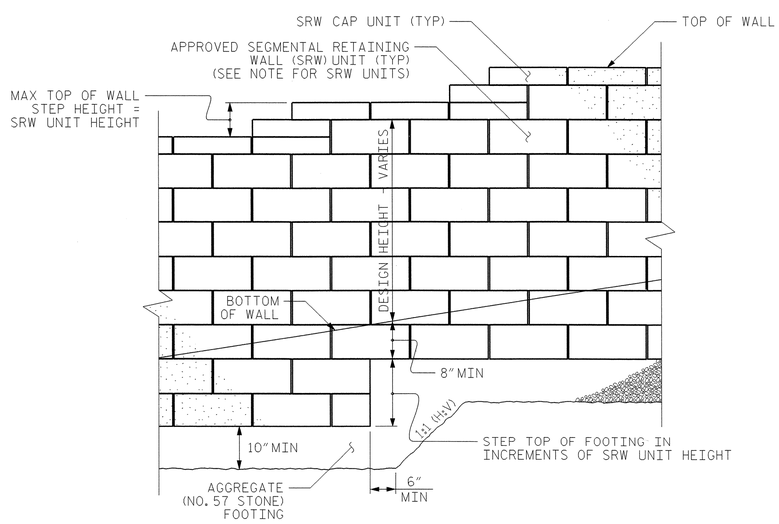

SEGMENTAL GRAVITY WALL PARTIAL ELEVATION

NOTES:

FOR SEGMENTAL GRAVITY RETAINING WALLS, SEE SEGMENTAL GRAVITY RETAINING WALLS PROVISION.

A DRAIN PIPE IS REQUIRED FOR RETAINING WALL NO. 1.

BEFORE BEGINNING SEGMENTAL GRAVITY WALL DESIGN FOR RETAINING WALL NO. 1, SURVEY WALL LOCATION AND SUBMIT A REVISED WALL PROFILE VIEW (WALL ENVELOPE) FOR REVIEW. DO NOT START WALL DESIGN OR CONSTRUCTION UNTIL THE REVISED WALL ENVELOPE IS ACCEPTED.

DESIGN RETAINING WALL NO. 1 FOR WALL HEIGHTS EQUAL TO THE DESIGN HEIGHT PLUS DEPTH TO TOP OF FOOTING (DIFFERENCE BETWEEN GRADE ELEVATION AND TOP OF FOOTING ELEVATION).

DESIGN RETAINING WALL NO. _FOR THE FOLLOWING:
1) IN-SITU ASSUMED MATERIAL PARAMETERS:

MATERIAL TYPE	UNIT WEIGHT (γ) PCF	FRICTION ANGLE (ϕ) DEGREES	COHESION (c) PSF
BACKFILL	120	30	0
FOUNDATION	120	30	0

DO NOT PLACE NO. 57 STONE FOR FOOTINGS FOR RETAINING WALL NO. 1 UNTIL EXCAVATION DIMENSIONS AND FOUNDATION MATERIAL ARE APPROVED.

PROJECT NO.: 35801.1.1 (U-3810)
ONSLOW ***COUNTY***
STATION: 201+50.00 -L-
SHEET 2 OF 2

PREPARED BY: THEIN T. ZAN	DATE: 8/2011
REVIEWED BY: JINYOUNG PARK	DATE: 8/2011

GEOTECHNICAL ENGINEERING UNIT

[X] ***EASTERN REGIONAL OFFICE***
[ ] ***WESTERN REGIONAL OFFICE***
[ ] ***CONTRACT OFFICE***

STATE OF NORTH CAROLINA
DEPARTMENT OF TRANSPORTATION
RALEIGH

SEGMENTAL GRAVITY RETAINING WALL NO. 1 NOTES AND DETAILS

REVISIONS							SHEET NO.
NO.	BY	DATE	NO.	BY	DATE		W-2
1			3				TOTAL SHEETS
2			4				2

STANDARD NOTES

DESIGN DATA:

SPECIFICATIONS	A.A.S.H.T.O. (CURRENT)
LIVE LOAD	SEE PLANS
IMPACT ALLOWANCE	SEE A.A.S.H.T.O.
STRESS IN EXTREME FIBER OF	
STRUCTURAL STEEL - AASHTO M270 GRADE 36	20,000 LBS. PER SQ. IN.
- AASHTO M270 GRADE 50W	27,000 LBS. PER SQ. IN.
- AASHTO M270 GRADE 50	27,000 LBS. PER SQ. IN.
REINFORCING STEEL IN TENSION	
GRADE 60	24,000 LBS. PER SQ. IN.
CONCRETE IN COMPRESSION	1,200 LBS. PER SQ. IN.
CONCRETE IN SHEAR	SEE A.A.S.H.T.O.
STRUCTURAL TIMBER - TREATED OR	
UNTREATED - EXTREME FIBER STRESS	1,800 LBS. PER SQ. IN.
COMPRESSION PERPENDICULAR TO GRAIN OF TIMBER	375 LBS. PER SQ. IN.
EQUIVALENT FLUID PRESSURE OF EARTH	30 LBS. PER CU. FT. (MINIMUM)

MATERIAL AND WORKMANSHIP:

EXCEPT AS MAY OTHERWISE BE SPECIFIED ON PLANS OR IN THE SPECIAL PROVISIONS, ALL MATERIAL AND WORKMANSHIP SHALL BE IN ACCORDANCE WITH THE 2006 "STANDARD SPECIFICATIONS FOR ROADS AND STRUCTURES" OF THE N. C. DEPARTMENT OF TRANSPORTATION.

STEEL SHEET PILING FOR PERMANENT OR TEMPORARY APPLICATIONS SHALL BE HOT ROLLED.

CONCRETE:

UNLESS OTHERWISE REQUIRED ON PLANS, CLASS A CONCRETE SHALL BE USED FOR ALL PORTIONS OF ALL STRUCTURES WITH THE EXCEPTION THAT: CLASS AA CONCRETE SHALL BE USED IN BRIDGE SUPERSTRUCTURES, ABUTMENT BACKWALLS, AND APPROACH SLABS; AND CLASS B CONCRETE SHALL BE USED FOR SLOPE PROTECTION AND RIP RAP.

CONCRETE CHAMFERS:

UNLESS OTHERWISE NOTED ON THE PLANS, ALL EXPOSED CORNERS ON STRUCTURES SHALL BE CHAMFERED 3/4" WITH THE FOLLOWING EXCEPTIONS: TOP CORNERS OF CURBS MAY BE ROUNDED TO 1-1/2" RADIUS WHICH IS BUILT INTO CURB FORMS; CORNERS OF TRANSVERSE FLOOR EXPANSION JOINTS SHALL BE ROUNDED WITH A 1/4" FINISHING TOOL UNLESS OTHERWISE REQUIRED ON PLANS; AND CORNERS OF EXPANSION JOINTS IN THE ROADWAY FACES AND TOPS OF CURBS AND SIDEWALKS SHALL BE ROUNDED TO A 1/4" RADIUS WITH A FINISHING STONE OR TOOL UNLESS OTHERWISE REQUIRED ON PLANS.

DOWELS:

DOWELS WHEN INDICATED ON PLANS AS FOR CULVERT EXTENSIONS, SHALL BE EMBEDDED AT LEAST 12" INTO THE OLD CONCRETE AND GROUTED INTO PLACE WITH 1:2 CEMENT MORTAR.

ALLOWANCE FOR DEAD LOAD DEFLECTION, SETTLEMENT, ETC. IN CASTING SUPERSTRUCTURES:

BRIDGES SHALL BE BUILT ON THE GRADE OR VERTICAL CURVE SHOWN ON PLANS. SLABS, CURBS AND PARAPETS SHALL CONFORM TO THE GRADE OR CURVE.

ALL DIMENSIONS WHICH ARE GIVEN IN SECTION AND ARE AFFECTED BY DEAD LOAD DEFLECTIONS ARE DIMENSIONS AT CENTER LINE OF BEARING UNLESS OTHERWISE NOTED ON PLANS. IN SETTING FORMS FOR STEEL BEAM BRIDGES AND PRESTRESSED CONCRETE GIRDER BRIDGES, ADJUSTMENTS SHALL BE MADE DUE TO THE DEAD LOAD DEFLECTIONS FOR THE ELEVATIONS SHOWN. WHERE BLOCKS ARE SHOWN OVER BEAMS FOR BUILDING UP TO THE SLAB, THE VERTICAL DIMENSIONS OF THE BLOCKS SHALL BE ADJUSTED BETWEEN BEARINGS TO COMPENSATE FOR DEAD LOAD DEFLECTIONS, VERTICAL CURVE ORDINATE, AND ACTUAL BEAM CAMBER. WHERE BOTTOM OF SLAB IS IN LINE WITH BOTTOM OF TOP FLANGES, DEPTH OF SLAB BETWEEN BEARINGS SHALL BE ADJUSTED TO COMPENSATE FOR DEAD LOAD DEFLECTION, VERTICAL CURVE ORDINATE, AND ACTUAL BEAM CAMBER.

IN SETTING FALSEWORK AND FORMS FOR REINFORCED CONCRETE SPANS, AN ALLOWANCE SHALL BE MADE FOR DEAD LOAD DEFLECTIONS, SETTLEMENT OF FALSEWORK, AND PERMANENT CAMBER WHICH SHALL BE PROVIDED FOR IN ADDITION TO THE ELEVATIONS SHOWN. AFTER REMOVAL OF THE FALSEWORK, THE FINISHED STRUCTURES SHALL CONFORM TO THE PROFILE AND ELEVATIONS SHOWN ON THE PLANS AND CONSTRUCTION ELEVATIONS FURNISHED BY THE ENGINEER.

DETAILED DRAWINGS FOR FALSEWORK OR FORMS FOR BRIDGE SUPERSTRUCTURE AND ANY STRUCTURE OR PARTS OF A STRUCTURE AS NOTED ON THE PLANS SHALL BE SUBMITTED TO THE ENGINEER FOR APPROVAL BEFORE CONSTRUCTION OF THE FALSEWORK OR FORMS IS STARTED.

REINFORCING STEEL:

ALL REINFORCING STEEL SHALL BE DEFORMED. DIMENSIONS RELATIVE TO PLACEMENT OF REINFORCING ARE TO CENTERS OF BARS UNLESS OTHERWISE INDICATED IN THE PLANS. DIMENSIONS ON BAR DETAILS ARE TO CENTERS OF BARS OR ARE OUT TO OUT AS INDICATED ON PLANS.

WIRE BAR SUPPORTS SHALL BE PROVIDED FOR REINFORCING STEEL WHERE INDICATED ON THE PLANS. WHEN BAR SUPPORT PIECES ARE PLACED IN CONTINUOUS LINES, THEY SHALL BE SO PLACED THAT THE ENDS OF THE SUPPORTING WIRES SHALL BE LAPPED TO LOCK LEGS ON ADJOINING PIECES.

STRUCTURAL STEEL:

AT THE CONTRACTOR'S OPTION, HE MAY SUBSTITUTE 7/8" Ø SHEAR STUDS FOR THE 3/4" Ø STUDS SPECIFIED ON THE PLANS. THIS SUBSTITUTION SHALL BE MADE AT THE RATE OF 3 - 7/8" Ø STUDS FOR 4 - 3/4" Ø STUDS, AND STUD SPACING CHANGES SHALL BE MADE AS NECESSARY TO PROVIDE THE SAME EQUIVALENT NUMBER OF 7/8" Ø STUDS ALONG THE BEAM AS SHOWN FOR 3/4" Ø STUDS BASED ON THE RATIO OF 3 - 7/8" Ø STUDS FOR 4 - 3/4" Ø STUDS. STUDS OF THE LENGTH SPECIFIED ON THE PLANS MUST BE PROVIDED. THE MAXIMUM SPACING SHALL BE 2'-0".

EXCEPT AT THE INTERIOR SUPPORTS OF CONTINUOUS BEAMS WHERE THE COVER PLATE IS IN CONTACT WITH BEARING PLATE, THE CONTRACTOR MAY, AT HIS OPTION, SUBSTITUTE FOR THE COVER PLATES DESIGNATED ON THE PLANS COVER PLATES OF THE EQUIVALENT AREA PROVIDED THESE PLATES ARE AT LEAST 5/16" IN THICKNESS AND DO NOT EXCEED A WIDTH EQUAL TO THE FLANGE WIDTH LESS 2" OR A THICKNESS EQUAL TO 2 TIMES THE FLANGE THICKNESS. THE SIZE OF FILLET WELDS SHALL CONFORM TO THE REQUIREMENTS OF THE CURRENT ANSI/AASHTO/AWS "BRIDGE WELDING CODE". ELECTROSLAG WELDING WILL NOT BE PERMITTED.

WITH THE SOLE EXCEPTION OF EDGES AT SURFACES WHICH BEAR ON OTHER SURFACES, ALL SHARP EDGES AND ENDS OF SHAPES AND PLATES SHALL BE SLIGHTLY ROUNDED BY SUITABLE MEANS TO A RADIUS OF APPROXIMATELY 1/16 INCH OR EQUIVALENT FLAT SURFACE AT A SUITABLE ANGLE PRIOR TO PAINTING, GALVANIZING, OR METALLIZING.

HANDRAILS AND POSTS:

METAL STANDARDS AND FACES OF THE CONCRETE END POSTS FOR THE METAL RAIL SHALL BE SET NORMAL TO THE GRADE OF THE CURB, UNLESS OTHERWISE SHOWN ON PLANS. THE METAL RAIL AND TOPS OF CONCRETE POSTS USED WITH THE ALUMINUM RAIL SHALL BE BUILT PARALLEL TO THE GRADE OF THE CURB.

METAL HANDRAILS SHALL BE IN ACCORDANCE WITH THE PLANS. RAILS SHALL BE AS MANUFACTURED FOR BRIDGE RAILING. CASTINGS SHALL BE OF A UNIFORM APPEARANCE. FINS AND OTHER DEFORMATIONS RESULTING FROM CASTING OR OTHERWISE SHALL BE REMOVED IN A MANNER SO THAT A UNIFORM COLORING OF THE COMPLETED CASTING SHALL BE OBTAINED. CASTINGS WITH DISCOLORATIONS OR OF NON-UNIFORM COLORING WILL NOT BE ACCEPTED. CERTIFIED MILL REPORTS ARE REQUIRED FOR METAL RAILS AND POSTS.

SPECIAL NOTES:

GENERALLY, IN CASE OF DISCREPANCY, THIS STANDARD SHEET OF NOTES SHALL GOVERN OVER THE SPECIFICATIONS, BUT THE REMAINDER OF THE PLANS SHALL GOVERN OVER NOTES HEREON, AND SPECIAL PROVISIONS SHALL GOVERN OVER ALL. SEE SPECIFICATIONS ARTICLE 105-4.

ENGLISH

JANUARY, 1990

STD. NO. SN