09/08/99

TIP PROJECT: U-2809B

CONTRACT: C202885

See Sheet 1-A For Index of Sheets

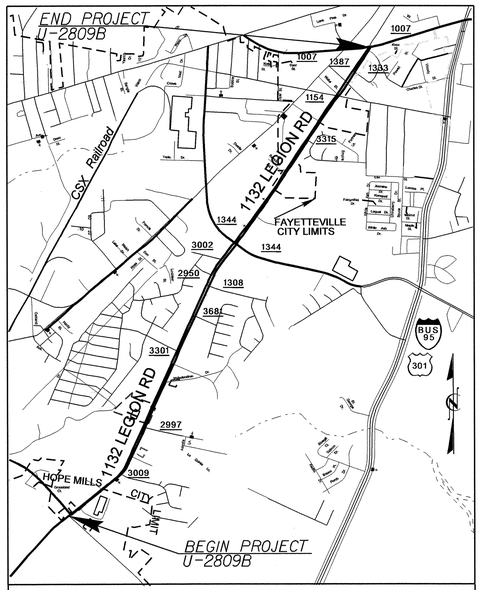

VICINITY MAP

STATE OF NORTH CAROLINA
DIVISION OF HIGHWAYS

CUMBERLAND COUNTY

LOCATION: SR 1132 (LEGION RD) FROM SR 1363 (ELK RD) TO SR 1007 (OWEN DR) IN FAYETTEVILLE

TYPE OF WORK: WIDENING, GRADING, PAVING, DRAINAGE, SIGNING, SIGNALS AND RETAINING WALL.

STATE	STATE PROJECT REFERENCE NO.	SHEET NO.	TOTAL SHEETS
N.C.	U-2809B	1	

STATE PROJ. NO.	F.A. PROJ. NO.	DESCRIPTION
34865.2.1	MA-STP-1132(7)	P.E.
34865.2.3	STP-1132(7)	R/W & UTIL
34865.3.3	STP-1132(7)	CONST.

NAD 83/2001

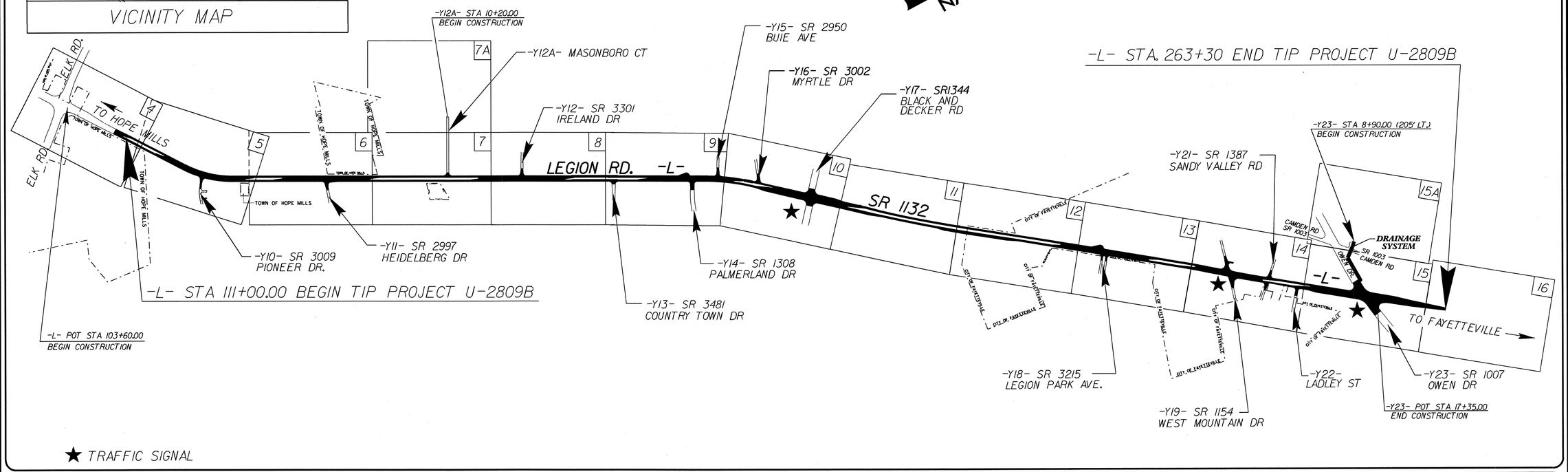

★ TRAFFIC SIGNAL

GRAPHIC SCALES

50 25 0 50 100
PLANS

50 25 0 50 100
PROFILE (HORIZONTAL)

10 5 0 10 20
PROFILE (VERTICAL)

DESIGN DATA

ADT 2012 = 23,900
ADT 2030 = 35,000
DHV = 10 %
D = 60 %
T = 4 % *
V = 50 MPH
* TTST 1% DUAL 3%

FUNC. CLASS = URBAN COLLECTOR

PROJECT LENGTH

LENGTH OF ROADWAY TIP PROJECT U-2809B = 2.884 MILES
TOTAL LENGTH OF TIP PROJECT U-2809B = 2.884 MILES

Prepared In the Office of:
DIVISION OF HIGHWAYS
1000 Birch Ridge Dr., Raleigh NC, 27610

2012 STANDARD SPECIFICATIONS

RIGHT OF WAY DATE:
SEPTEMBER 30, 2010

LETTING DATE:
SEPTEMBER 18, 2012

G.E. BREW, P.E.
PROJECT ENGINEER

I. T. YOUNIS
PROJECT DESIGN ENGINEER

HYDRAULICS ENGINEER
7-23-12
SIGNATURE:

ROADWAY DESIGN ENGINEER
7-23-12
SIGNATURE:

DIVISION OF HIGHWAYS
STATE OF NORTH CAROLINA

23-JUL-2012 08:42
R:\Roadway\Proj\u2809b_rdy_tsh.dgn
$$$$USERNAME$$$$

PROJECT REFERENCE NO.	SHEET NO.
U-2809B	1-A

ROADWAY DESIGN ENGINEER
NORTH CAROLINA PROFESSIONAL SEAL 18903 ENGINEER GREGORY E. BREW
7-3-12

STATE OF NORTH CAROLINA
DIVISION OF HIGHWAYS

INDEX OF SHEETS

INDEX OF SHEETS

SHEET NUMBER	SHEET
1	TITLE SHEET
1-A	INDEX OF SHEETS, GENERAL NOTES, AND LIST OF STANDARD DRAWINGS
1-B	CONVENTIONAL SYMBOLS
1-C THRU 1-E	SURVEY CONTROL SHEETS
2 THRU 2-E	PAVEMENT SCHEDULE, TYPICAL SECTIONS, AND WEDGING DETAILS
2-F THRU 2-N	INTERSECTION & CHANNELIZATION DETAILS
2-O THRU 2-P	RETAINING WALL PLANS
2-Q	DETAIL FOR 2'-9" CONCRETE CURB & GUTTER
2-R	OPEN THROAT CATCH BASIN
2-S	DETAIL OF BICYCLE SAFE STEEL GRATE & FRAME
2-T	DETAIL OF SPECIAL CB
2-U	DETAIL OF CONVERT EXISTING CB TO TBJB W/MANHOLE
2-V	DETAIL OF CONVERTING EXISTING CB TO JB W/MANHOLE
2-W	DETAIL OF CONVERTING EXISTING DI/JB TO CB
2-X	DETAIL OF SPECIAL CB
2-Y	DETAIL OF SPECIAL DI
2-Z	DETAIL OF SPECIAL JB
2-AA	DETAIL OF SPECIAL JB
2-BB	DETAIL OF SPECIAL CB
2-CC	DETAIL OF CONCRETE TRANSITIONAL SECTION FOR 2'-9" C&G
2-DD THRU 2-FF	DETAILS OF CURP RAMPS
3	SUMMARY OF QUANTITIES
3-A THRU 3-N	SUMMARY OF DRAINAGE QUANTITIES
3-O	SUMMARY OF GUARDRAIL, EARTHWORK SUMMARY, AND ASPHALT PAVEMENT REMOVAL SUMMARY
3-P THRU 3-Q	PARCEL INDEX SHEETS
4 THRU 16	PLAN SHEETS
17 THRU 26	PROFILE SHEETS
TCP-1 THRU TCP-45	TRAFFIC CONTROL PLANS
PM-1 THRU PM-15	PAVEMENT MARKING PLANS
EC-1 THRU EC-33	EROSION CONTROL PLANS
SIGN-1 THRU SIGN-16	SIGNING PLANS
SIG-1 THRU SIG-43	SIGNAL PLANS
UC-1 THRU UC-23	UTILITIES CONSTRUCTION PLANS
UO-1 THRU UO-14	UTILITIES BY OTHERS PLANS
X-1A THRU X-1D	CROSS-SECTIONS SUMMARY SHEETS
X-1 THRU X-69	CROSS-SECTIONS

GENERAL NOTES

GENERAL NOTES:

2012 SPECIFICATIONS
EFFECTIVE: 01-17-12
REVISED: 11/01/11

GRADING AND SURFACING OR RESURFACING AND WIDENING:
THE GRADE LINES SHOWN DENOTE THE FINISHED ELEVATION OF THE PROPOSED SURFACING AT GRADE POINTS SHOWN ON THE TYPICAL SECTIONS. WHERE NO GRADE LINES ARE SHOWN, THE PROFILES SHOWN DENOTE THE TOP ELEVATION OF THE EXISTING PAVEMENT ALONG THE CENTER LINE OF SURVEY ON WHICH THE PROPOSED RESURFACING WILL BE PLACED. GRADE LINES MAY BE ADJUSTED BY THE ENGINEER IN ORDER TO SECURE A PROPER TIE-IN.

CLEARING:
CLEARING ON THIS PROJECT SHALL BE PERFORMED TO THE LIMITS ESTABLISHED BY METHOD III.

SUPERELEVATION:
ALL CURVES ON THIS PROJECT SHALL BE SUPERELEVATED IN ACCORDANCE WITH STD. NO. 225.04 USING THE RATE OF SUPERELEVATION AND RUNOFF SHOWN ON THE PLANS. SUPERELEVATION IS TO BE REVOLVED ABOUT THE GRADE POINTS SHOWN ON THE TYPICAL SECTIONS.

SHOULDER CONSTRUCTION:
ASPHALT, EARTH, AND CONCRETE SHOULDER CONSTRUCTION ON THE HIGH SIDE OF SUPERELEVATED CURVES SHALL BE IN ACCORDANCE WITH STD. NO. 560.01.

SIDE ROADS:
THE CONTRACTOR WILL BE REQUIRED TO DO ALL NECESSARY WORK TO PROVIDE SUITABLE CONNECTIONS WITH ALL ROADS, STREETS, AND DRIVES ENTERING THIS PROJECT. THIS WORK WILL BE PAID FOR AT THE CONTRACT UNIT PRICE FOR THE PARTICULAR ITEMS INVOLVED.

UNDERDRAINS:
UNDERDRAINS SHALL BE CONSTRUCTED IN ACCORDANCE WITH STD. NO. 815.03 AT LOCATIONS DIRECTED BY THE ENGINEER.

DRIVEWAYS:
DRIVEWAYS SHALL BE CONSTRUCTED IN ACCORDANCE WITH STD. 848.03 AT LOCATIONS SHOWN ON PLANS OR AS DIRECTED BY THE ENGINEER.

STREET TURNOUT:
STREET RETURNS SHALL BE CONSTRUCTED IN ACCORDANCE WITH STD. NO. 848.04 USING THE RADII NOTED ON PLANS.

GUARDRAIL:
THE GUARDRAIL LOCATIONS SHOWN ON THE PLANS MAY BE ADJUSTED DURING CONSTRUCTION AS DIRECTED BY THE ENGINEER. THE CONTRACTOR SHOULD CONSULT WITH THE ENGINEER PRIOR TO ORDERING GUARDRAIL MATERIAL.

TEMPORARY SHORING:
SHORING REQUIRED FOR THE MAINTENANCE OF TRAFFIC WILL BE PAID FOR AS "EXTRA WORK" IN ACCORDANCE WITH SECTION 104-7.

UTILITIES:
UTILITY OWNERS ON THIS PROJECT ARE
FAYETTEVILLE PWC (POWER, WATER AND SEWER) PROGRESS ENERGY CAROLINAS
CENTURYLINK. AT&T, TIME WARNER CABLE, PIEDMONT NATURAL GAS COMPANY.
ANY RELOCATION OF EXISTING UTILITIES WILL BE ACCOMPLISHED BY OTHERS, EXCEPT AS SHOWN ON THE PLANS.

RIGHT-OF-WAY MARKERS:
ALL RIGHT-OF-WAY MARKERS ON THIS PROJECT SHALL BE PLACED BY OTHERS.

CURB RAMPS
CURB RAMPS ARE SHOWN ON THE PLANS AT APPROXIMATE LOCATIONS.
CONSTRUCT ALL CURB RAMPS ACCORDANCE WITH STD 848.05

LIST OF STANDARD DRAWINGS

2012 ROADWAY ENGLISH STANDARD DRAWINGS
The following Roadway Standards as appear in "Roadway Standard Drawings" Highway Design Branch - N. C. Department of Transportation - Raleigh, N. C., Dated January, 2012 are applicable to this project and by reference hereby are considered a part of these plans:

STD.NO.	TITLE
200.03	Method of Clearing - Method III
225.04	Method of Obtaining Superelevation - Two Lane Pavement
225.06	Method of Grading Sight Distance at Intersections
300.01	Method of Pipe Installation
310.10	Driveway Pipe Construction
560.01	Method of Shoulder Construction - High Side of Superelevated Curve - Method 1
654.01	Pavement Repairs
815.03	Pipe Underdrain and Blind Drain
838.01	Concrete Endwall for Single and Double Pipe Culverts - 15" thru 48" Pipe 90 Skew
838.11	Brick Endwall for Single and Double Pipe Culverts - 15" thru 48" Pipe 90 Skew
838.80	Precast Endwalls - 12" thru 72" Pipe 90 Skew
840.00	Concrete Base Pad for Drainage Structures
840.01	Brick Catch Basin - 12" thru 54" Pipe
840.02	Concrete Catch Basin - 12" thru 54" Pipe
840.03	Frame, Grates and Hood - for Use on Standard Catch Basin
840.14	Concrete Drop Inlet - 12" thru 30" Pipe
840.15	Brick Drop Inlet - 12" thru 30" Pipe
840.16	Drop Inlet Frame and Grates - for use with Std. Dwg 840.14 and 840.15
840.18	Concrete Grated Drop Inlet Type 'B' - 12" thru 36" Pipe
840.20	Frames and Wide Slot Flat Grates
840.24	Frames and Narrow Slot Sag Grates
840.25	Anchorage for Frames - Brick or Concrete or Precast
840.27	Brick Grated Drop Inlet Type 'B' - 12" thru 36" Pipe
840.29	Frames and Narrow Slot Flat Grates
840.31	Concrete Junction Box - 12" thru 66" Pipe
840.32	Brick Junction Box - 12" thru 66" Pipe
840.34	Traffic Bearing Junction Box - for Use with Pipes 42" and Under
840.35	Traffic Bearing Grated Drop Inlet - for Cast Iron Double Frame and Grates
840.45	Precast Drainage Structure
840.46	Traffic Bearing Precast Drainage Structure
840.54	Manhole Frame and Cover
840.66	Drainage Structure Steps
840.71	Concrete and Brick Pipe Plug
840.72	Pipe Collar
846.01	Concrete Curb, Gutter and Curb & Gutter
848.01	Concrete Sidewalk
848.03	Driveway Turnout - Drop Curb Type
848.04	Street Turnout
848.05	Curb Ramp - Proposed Curb & Gutter
852.01	Concrete Islands
852.06	Method for Placement of Drop Inlets in Concrete Islands
862.01	Guardrail Placement
862.02	Guardrail Installation
876.02	Guide for Rip Rap at Pipe Outlets

8/17/99
29-JUN-2012 08:27
R:\Roadway\Proj\2809b_rdy_tsh.dgn
$$$$USERNAME$$$$

PROJECT REFERENCE NO.	SHEET NO.
U-2809B	1-B

04/16/11

Note: Not to Scale

****S.U.E. = Subsurface Utility Engineering***

STATE OF NORTH CAROLINA
DIVISION OF HIGHWAYS

CONVENTIONAL PLAN SHEET SYMBOLS

BOUNDARIES AND PROPERTY:

- State Line
- County Line
- Township Line
- City Line
- Reservation Line
- Property Line
- Existing Iron Pin — EIP
- Property Corner
- Property Monument — ECM
- Parcel/Sequence Number — 123
- Existing Fence Line
- Proposed Woven Wire Fence
- Proposed Chain Link Fence
- Proposed Barbed Wire Fence
- Existing Wetland Boundary — WLB
- Proposed Wetland Boundary — WLB
- Existing Endangered Animal Boundary — EAB
- Existing Endangered Plant Boundary — EPB
- Known Soil Contamination: Area or Site
- Potential Soil Contamination: Area or Site

BUILDINGS AND OTHER CULTURE:

- Gas Pump Vent or U/G Tank Cap
- Sign — S
- Well — W
- Small Mine
- Foundation
- Area Outline
- Cemetery
- Building
- School
- Church
- Dam

HYDROLOGY:

- Stream or Body of Water
- Hydro, Pool or Reservoir
- Jurisdictional Stream — JS
- Buffer Zone 1 — BZ 1
- Buffer Zone 2 — BZ 2
- Flow Arrow
- Disappearing Stream
- Spring
- Wetland
- Proposed Lateral, Tail, Head Ditch — FLOW
- False Sump

RAILROADS:

- Standard Gauge — CSX TRANSPORTATION
- RR Signal Milepost — MILEPOST 35
- Switch — SWITCH
- RR Abandoned
- RR Dismantled

RIGHT OF WAY:

- Baseline Control Point
- Existing Right of Way Marker
- Existing Right of Way Line
- Proposed Right of Way Line — RW
- Proposed Right of Way Line with Iron Pin and Cap Marker — RW
- Proposed Right of Way Line with Concrete or Granite R/W Marker — RW
- Proposed Control of Access Line with Concrete C/A Marker — CA
- Existing Control of Access — CA
- Proposed Control of Access — CA
- Existing Easement Line — E
- Proposed Temporary Construction Easement — E
- Proposed Temporary Drainage Easement — TDE
- Proposed Permanent Drainage Easement — PDE
- Proposed Permanent Drainage / Utility Easement — DUE
- Proposed Permanent Utility Easement — PUE
- Proposed Temporary Utility Easement — TUE
- Proposed Aerial Utility Easement — AUE
- Proposed Permanent Easement with Iron Pin and Cap Marker

ROADS AND RELATED FEATURES:

- Existing Edge of Pavement
- Existing Curb
- Proposed Slope Stakes Cut — C
- Proposed Slope Stakes Fill — F
- Proposed Curb Ramp — CR
- Existing Metal Guardrail
- Proposed Guardrail
- Existing Cable Guiderail
- Proposed Cable Guiderail
- Equality Symbol
- Pavement Removal

VEGETATION:

- Single Tree
- Single Shrub
- Hedge
- Woods Line
- Orchard
- Vineyard — Vineyard

EXISTING STRUCTURES:

MAJOR:

- Bridge, Tunnel or Box Culvert — CONC
- Bridge Wing Wall, Head Wall and End Wall — CONC WW

MINOR:

- Head and End Wall — CONC HW
- Pipe Culvert
- Footbridge
- Drainage Box: Catch Basin, DI or JB — CB
- Paved Ditch Gutter
- Storm Sewer Manhole — S
- Storm Sewer — S

UTILITIES:

POWER:

- Existing Power Pole
- Proposed Power Pole
- Existing Joint Use Pole
- Proposed Joint Use Pole
- Power Manhole — P
- Power Line Tower
- Power Transformer
- U/G Power Cable Hand Hole
- H-Frame Pole
- Recorded U/G Power Line — P
- Designated U/G Power Line (S.U.E.*) — P

TELEPHONE:

- Existing Telephone Pole
- Proposed Telephone Pole
- Telephone Manhole — T
- Telephone Booth
- Telephone Pedestal — T
- Telephone Cell Tower
- U/G Telephone Cable Hand Hole — HH
- Recorded U/G Telephone Cable — T
- Designated U/G Telephone Cable (S.U.E.*) — T
- Recorded U/G Telephone Conduit — TC
- Designated U/G Telephone Conduit (S.U.E.*) — TC
- Recorded U/G Fiber Optics Cable — T FO
- Designated U/G Fiber Optics Cable (S.U.E.*) — T FO

WATER:

- Water Manhole — W
- Water Meter
- Water Valve
- Water Hydrant
- Recorded U/G Water Line — W
- Designated U/G Water Line (S.U.E.*) — W
- Above Ground Water Line — A/G Water

TV:

- TV Satellite Dish
- TV Pedestal — C
- TV Tower
- U/G TV Cable Hand Hole — HH
- Recorded U/G TV Cable — TV
- Designated U/G TV Cable (S.U.E.*) — TV
- Recorded U/G Fiber Optic Cable — TV FO
- Designated U/G Fiber Optic Cable (S.U.E.*) — TV FO

GAS:

- Gas Valve
- Gas Meter
- Recorded U/G Gas Line — G
- Designated U/G Gas Line (S.U.E.*) — G
- Above Ground Gas Line — A/G Gas

SANITARY SEWER:

- Sanitary Sewer Manhole
- Sanitary Sewer Cleanout
- U/G Sanitary Sewer Line — SS
- Above Ground Sanitary Sewer — A/G Sanitary Sewer
- Recorded SS Forced Main Line — FSS
- Designated SS Forced Main Line (S.U.E.*) — FSS

MISCELLANEOUS:

- Utility Pole
- Utility Pole with Base
- Utility Located Object
- Utility Traffic Signal Box — S
- Utility Unknown U/G Line — ?UTL
- U/G Tank; Water, Gas, Oil
- Underground Storage Tank, Approx. Loc. — UST
- A/G Tank; Water, Gas, Oil
- Geoenvironmental Boring
- U/G Test Hole (S.U.E.*)
- Abandoned According to Utility Records — AATUR
- End of Information — E.O.I.

PROJECT REFERENCE NO.	SHEET NO.
U-2809B	1-C
Location and Surveys	

SURVEY CONTROL SHEET U-2809-B

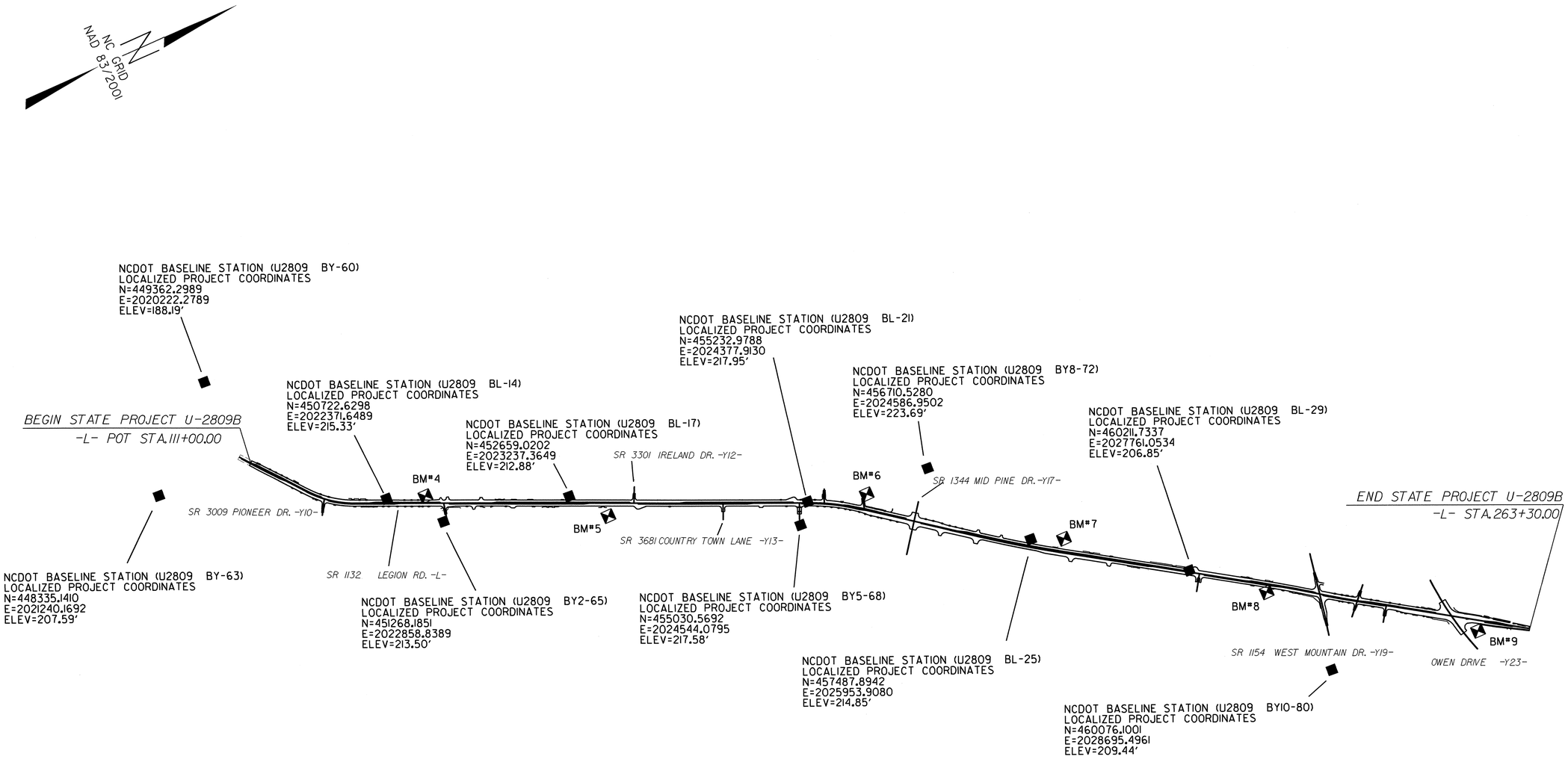

DATUM DESCRIPTION

THE LOCALIZED COORDINATE SYSTEM DEVELOPED FOR THIS PROJECT IS BASED ON THE STATE PLANE COORDINATES ESTABLISHED BY NCGS FOR MONUMENT ""ACACIA""
WITH NAD 1983/2001 STATE PLANE GRID COORDINATES OF
NORTHING: 466066.2496(ft) EASTING: 1984258.8464(ft)
THE AVERAGE COMBINED GRID FACTOR USED ON THIS PROJECT (GROUND TO GRID) IS: .999881374
THE N.C. LAMBERT GRID BEARING AND LOCALIZED HORIZONTAL GROUND DISTANCE FROM ""ACACIA"" TO -L- STATION 111+00.00 IS
S 65°51'13.8" E 40,607.4320'
ALL LINEAR DIMENSIONS ARE LOCALIZED HORIZONTAL DISTANCES
VERTICAL DATUM USED IS NAVD 88

NOTE: DRAWING NOT TO SCALE

NOTES:

1. THE SITE CALIBRATION SHOWN IS BASED UPON A NETWORK TIED TO THE HARN (HIGH ACCURACY REFERENCE NETWORK) NAD 8395 ADJUSTMENT. THIS CALIBRATION WILL ALLOW THE END USER TO WORKWITHIN THE SAME COORDINATE SYSTEM WHEN USING RTK (REAL TIME KINEMATIC) GPS AND A LOCAL BASE STATION. IF ANOTHER SYSTEM SUCH AS VRS (VIRTUAL REFERENCE STATION) IS USED, ADDITIONAL FIELD TIES MAY BE NEEDED TO REDUCE POSSIBLE ERRORS, OR BIASES.

2. THE CONTROL DATA FOR THIS PROJECT CAN BE FOUND ELECTRONICALLY BY SELECTING PROJECT CONTROL DATA AT:
HTTP://WWW.NCDOT.ORG/DOH/PRECONSTRUCT/HIGHWAY/LOCATION/PROJECT/

THE FILE TO BE FOUND ARE AS FOLLOWS:
U2809B_LS_CONTROL_090326.TXT

THE WGS84 AND LOCAL FILES ARE COMMA DELIMITED AND CAN BE USED TO REPRODUCE THE SITE CALIBRATION FOR THE END USER'S GPS EQUIPMENT. IF FURTHER INFORMATION IS NEEDED, PLEASE CONTACT THE LOCATION AND SURVEYS UNIT.

◎ INDICATES GEODETIC CONTROL MONUMENTS USED OR SET FOR HORIZONTAL PROJECT CONTROL BY THE NCDOT LOCATION AND SURVEYS UNIT.
PROJECT CONTROL ESTABLISHED USING GLOBAL POSITIONING SYSTEM.
NETWORK ESTABLISHED FROM EXISTING HARN MONUMENTATION
SEE GPS CALIBRATION SHEET FOR HORIZONTAL AND VERTICAL COORDINATE VALUES.

6/2/99
15-MAY-2012 14:00
R:\Roadway\Proj\u2809b_ls_1c.dgn
$$$$USERNAME$$$$

SURVEY CONTROL SHEET U-2809B

B_BL

POINT	DESC.	NORTH	EAST	ELEVATION	L STATION	OFFSET
10	U2809B -BL10-	448934.9610	2020555.7210	206.72	101+83.51	67.81 LT
11	U2809B -BL11-	449416.0712	2021194.6311	202.14	109+82.94	43.74 LT
12	U2809B -BL12-	449742.7903	2021642.8384	210.51	115+37.01	18.43 LT
13	U2809B -BL13-	450103.5439	2022101.9128	220.34	121+18.65	20.57 RT
14	U2809B -BL14-	450722.6298	2022371.6489	215.33	127+91.89	20.78 LT
15	U2809B -BL15-	451415.4540	2022675.5711	213.93	135+48.44	24.29 LT
16	U2809B -BL16-	452050.3346	2022952.2227	211.46	142+40.96	29.20 LT
17	U2809B -BL17-	452659.0202	2023237.3649	212.88	149+12.99	15.72 LT
18	U2809B -BL18-	453359.7422	2023531.6225	214.68	156+72.83	31.26 LT
19	U2809B -BL19-	453887.4647	2023776.9204	216.31	162+54.69	21.32 LT
20	U2809B -BL20-	454420.2273	2024020.8967	218.03	168+40.62	14.64 LT
21	U2809B -BL21-	455232.9788	2024377.9130	217.95	177+28.32	18.31 LT
22	U2809B -BL22-	455789.9145	2024700.6534	216.33	183+69.13	23.95 LT
23	U2809B -BL23-	456267.8694	2025018.5161	215.67	189+42.11	58.14 LT
24	U2809B -BL24-	456862.2982	2025502.7528	214.34	197+08.28	29.68 LT
25	U2809B -BL25-	457487.8942	2025953.9080	214.85	204+81.16	29.65 LT
26	U2809B -BL26-	458280.8809	2026479.3932	214.57	214+33.00	25.19 LT
27	U2809B -BL27-	458992.8772	2026953.8921	214.85	222+88.58	16.84 LT
28	U2809B -BL28-	459639.3951	2027374.8321	211.75	230+59.96	17.87 LT
29	U2809B -BL29-	460211.7337	2027761.0534	206.85	237+49.92	20.60 LT
30	U2809B -BL30-	460636.3970	2028048.0842	201.40	242+63.19	21.96 LT
31	U2809B -BL31-	460942.1549	2028257.6211	197.75	246+33.78	14.50 LT
32	U2809B -BL32-	461189.4220	2028410.8304	194.23	249+24.57	22.04 LT
33	U2809B -BL33-	461528.3235	2028708.6737	193.79	253+71.32	41.08 RT
34	U2809B -BL34-	461967.1422	2028976.2252	189.21	258+84.99	24.06 RT
35	U2809B -BL35-	462472.8451	2029305.1027	189.49	264+88.22	21.62 RT

BY1

POINT	DESC.	NORTH	EAST	ELEVATION	Y10 STATION	OFFSET
213	U2809B -BL-13-	450103.5439	2022101.9128	220.34	10+26.07	54.19 LT
64	U2809B -BY1-64-	449931.9844	2022297.3835	218.47	OUTSIDE PROJECT LIMITS	

BY2

POINT	DESC.	NORTH	EAST	ELEVATION	Y11 STATION	OFFSET
215	U2809B -BL-15-	451415.4540	2022675.5711	213.93	OUTSIDE PROJECT LIMITS	
65	U2809B -BY2-65-	451268.1851	2022858.8389	213.50	OUTSIDE PROJECT LIMITS	

BY3

POINT	DESC.	NORTH	EAST	ELEVATION	Y12 STATION	OFFSET
66	U2809B -BY3-66-	453484.5866	2023291.4992	212.74	OUTSIDE PROJECT LIMITS	
218	U2809B -BL-18-	453359.7422	2023531.6225	214.68	11+63.07	25.54 RT

BY4

POINT	DESC.	NORTH	EAST	ELEVATION	Y13 STATION	OFFSET
220	U2809B -BL-20-	454420.2273	2024020.8967	218.03	OUTSIDE PROJECT LIMITS	
67	U2809B -BY4-67-	454244.2629	2024222.7294	217.40	OUTSIDE PROJECT LIMITS	

BY5

POINT	DESC.	NORTH	EAST	ELEVATION	Y14 STATION	OFFSET
221	U2809B -BL-21-	455232.9788	2024377.9130	217.95	OUTSIDE PROJECT LIMITS	
68	U2809B -BY5-68-	455030.5692	2024544.0795	217.58	OUTSIDE PROJECT LIMITS	

BY6

POINT	DESC.	NORTH	EAST	ELEVATION	Y15 STATION	OFFSET
69	U2809B -BY6-69-	455556.9261	2024159.6032	219.16	OUTSIDE PROJECT LIMITS	
70	U2809B -BY6-70-	455418.1865	2024411.8198	218.19	11+01.41	16.24 RT
211	POINT NOT SET	455387.5618	2024467.4928	UNKNOWN	11+64.74	21.36 RT

BY7

POINT	DESC.	NORTH	EAST	ELEVATION	Y16 STATION	OFFSET
71	U2809B -BY7-71-	455906.4490	2024423.7502	218.65	OUTSIDE PROJECT LIMITS	
222	U2809B -BL-22-	455789.9145	2024700.6534	216.33	11+58.45	27.11 RT

BY8

POINT	DESC.	NORTH	EAST	ELEVATION	Y17 STATION	OFFSET
72	U2809B -BY8-72-	456710.5280	2024586.9502	223.69	78+27.14	37.01 RT
73	U2809B -BY8-73-	456485.2098	2024758.1185	223.68	81+01.54	50.56 RT
223	U2809B -BL-23-	456267.8694	2025018.5161	215.67	84+33.87	59.54 RT
74	U2809B -BY8-74-	456051.3756	2025343.6777	218.23	88+24.02	40.00 RT
75	U2809B -BY8-75-	455866.0073	2025669.9304	219.11	91+89.31	39.46 RT

BY9

POINT	DESC.	NORTH	EAST	ELEVATION	Y18 STATION	OFFSET
227	U2809B -BL-27-	458992.8772	2026953.8921	214.85	OUTSIDE PROJECT LIMITS	
76	U2809B -BY9-76-	458972.7082	2027192.9916	213.07	11+94.41	3.53 RT

BY10

POINT	DESC.	NORTH	EAST	ELEVATION	Y19 STATION	OFFSET
77	U2809B -BY10-77	460384.7201	2027058.6502	209.06	OUTSIDE PROJECT LIMITS	
78	U2809B -BY10-78	460295.0580	2027604.7517	207.41	12+68.94	15.03 RT
229	U2809B -BL-29-	460211.7337	2027761.0534	206.85	14+37.87	68.30 RT
79	U2809B -BY10-79	460190.0775	2028154.3334	206.42	18+28.97	15.23 RT
80	U2809B -BY10-80	460076.1001	2028695.4961	209.44	OUTSIDE PROJECT LIMITS	

BY11

POINT	DESC.	NORTH	EAST	ELEVATION	Y21 STATION	OFFSET
81	U2809B -BY11-81	460875.2613	2027853.6215	196.75	OUTSIDE PROJECT LIMITS	
230	U2809B -BL-30-	460636.3970	2028048.0842	201.40	11+81.22	22.80 RT
82	U2809B -BY11-82	460416.2073	2028350.1990	203.29	OUTSIDE PROJECT LIMITS	

BY12

POINT	DESC.	NORTH	EAST	ELEVATION	Y22 STATION	OFFSET
231	U2809B -BL-31-	460942.1549	2028257.6211	197.75	OUTSIDE PROJECT LIMITS	
83	U2809B -BY12-83	460756.5694	2028481.8273	198.65	OUTSIDE PROJECT LIMITS	

BY13

POINT	DESC.	NORTH	EAST	ELEVATION	Y23 STATION	OFFSET
84	U2809B -BY13-84	461450.5894	2028021.4875	194.15	OUTSIDE PROJECT LIMITS	
233	U2809B -BL-33-	461528.3235	2028708.6737	193.79	14+99.29	49.70 RT
85	U2809B -BY13-85	461620.7664	2029126.4072	193.28	19+21.26	58.85 RT
86	U2809B -BY13-86	461778.6809	2029629.2150	192.41	OUTSIDE PROJECT LIMITS	

BM3 ELEVATION = 209.11
N 448775 E 2020623
L STATION 101+36 99 RIGHT

BM4 ELEVATION = 215.33
N 451193 E 2022533
L STATION 132+87 64 LEFT

BM5 ELEVATION = 215.56
N 453115 E 2023554
L STATION 154+58 89 RIGHT

BM6 ELEVATION = 220.23
N 455906 E 2024595
L STATION 183+98 178 LEFT

BM7 ELEVATION = 216.93
N 457737 E 2026071
L STATION 207+55 70 LEFT

BM8 ELEVATION = 212.50
N 459736 E 2027545
L STATION 232+35 71 RIGHT

BM9 ELEVATION = 191.11
N 461808 E 2028973
L STATION 257+50 109 RIGHT

6/2/99
16-MAY-2012 14:00
R:\Roadway\Proj\u2809b_ls_ld.dgn
$$$$USERNAME$$$$

SURVEY CONTROL SHEET U-2809B

ROW MARKER IRON PIN AND CAP-E

ALIGN	STATION	OFFSET	NORTH	EAST
L	184·05.66	50.48	455774.2387	2024782.0726
L	184·68.00	59.00	455818.8653	2024826.4235
L	190·77.71	-62.50	456378.7335	2025096.7125
L	192·84.00	-63.00	456543.6985	2025220.5767
L	193·79.00	-51.06	456612.3395	2025287.3290
L	214·26.36	49.19	458234.6774	2026538.0601
L	214·26.36	58.00	458229.8616	2026545.4374
L	205·00.00	58.00	457454.2976	2026037.0345
L	175·58.02	48.86	455050.0694	2024370.1621
L	176·95.00	50.00	455174.7908	2024426.8124
L	192·66.00	62.00	456454.0341	2025309.5110
L	192·66.00	79.00	456443.7938	2025323.0806
L	193·95.00	80.00	456546.1612	2025401.5848
L	193·95.00	61.00	456557.6063	2025386.4187
L	236·86.00	-51.28	460176.9958	2027699.2461
L	120·19.02	49.63	450006.5768	2022057.8025
L	121·33.23	50.73	450097.0414	2022134.9611
L	179·77.47	-48.77	455473.2618	2024460.3109
L	134·17.74	49.77	451265.9335	2022690.1995
L	135·44.90	50.22	451381.9666	2022742.2314
L	191·46.94	59.05	456360.7755	2025235.4440
L	207·32.55	58.00	457648.7882	2026166.3232
L	222·13.85	-62.77	458955.3801	2026874.5931
L	223·75.00	-62.02	459089.9388	2026963.2771
L	223·75.00	-52.32	459084.6387	2026971.4007
L	121·25.36	-60.00	450158.1034	2022042.2635
L	121·21.38	-49.23	450148.5116	2022048.4586
L	119·08.59	-51.42	450000.5755	2021908.3997
L	119·12.98	-60.00	450009.7348	2021905.7269
L	134·90.50	-60.00	451376.9962	2022619.4170
·L	134·92.00	-51.86	451375.0619	2022627.4609
L	133·30.00	-60.00	451230.3171	2022554.2602
L	133·30.00	-51.99	451227.0648	2022561.5816
L	155·50.00	-60.00	453259.1527	2023455.4959
L	155·50.00	-49.67	453254.9585	2023464.9378
L	196·77.92	61.00	456783.4390	2025556.8430
L	148·75.00	52.55	452596.5855	2023284.3310
L	148·75.00	60.00	452593.5616	2023291.1383
L	150·05.00	60.00	452712.3673	2023343.9134
L	150·05.00	52.77	452715.3027	2023337.3052
L	204·00.00	49.99	457375.8900	2025973.8185
L	172·74.00	-49.77	454830.5462	2024164.7231
L	173·49.00	-77.00	454910.1421	2024170.2855
L	173·49.00	-49.89	454899.1373	2024195.0592
L	134·51.69	78.74	451285.2071	2022730.4512
L	156·57.20	-74.91	453363.1760	2023485.3916

ROW MARKER IRON PIN AND CAP-E

ALIGN	STATION	OFFSET	NORTH	EAST
Y10	10·87.50	29.37	450000.3087	2022108.5294
Y10	10·92.97	-31.10	450049.2097	2022144.5209

ROW MARKER IRON PIN AND CAP-E

ALIGN	STATION	OFFSET	NORTH	EAST
Y11	11·17.60	-29.74	451333.0647	2022785.8895

ROW MARKER IRON PIN AND CAP-E

ALIGN	STATION	OFFSET	NORTH	EAST
Y14	11·31.00	30.55	455060.4367	2024464.7388
Y14	11·32.00	-37.00	455121.8421	2024492.9057
Y14	11·32.00	-29.74	455115.1992	2024489.9768

ROW MARKER IRON PIN AND CAP-E

ALIGN	STATION	OFFSET	NORTH	EAST
Y15	10·54.30	-38.00	455486.9738	2024391.0786
Y15	10·54.30	-29.31	455479.0488	2024387.5179

ROW MARKER IRON PIN AND CAP-E

ALIGN	STATION	OFFSET	NORTH	EAST
Y19	12·99.00	30.93	460273.9135	2027631.3854

ROW MARKER IRON PIN AND CAP-E

ALIGN	STATION	OFFSET	NORTH	EAST
Y22	10·71.76	-26.96	460909.6104	2028340.0073

ROW MARKER PERMANENT EASEMENT-E

ALIGN	STATION	OFFSET	NORTH	EAST
L	142·21.50	65.00	451994.3047	2023030.4116
L	142·38.50	65.00	452009.8408	2023037.3129
L	142·38.50	51.81	452015.1942	2023025.2615
L	142·21.50	51.79	451999.6671	2023018.3398
L	143·41.59	51.95	452109.3554	2023067.2369
L	143·41.00	70.00	452101.4843	2023083.4945
L	143·68.00	70.00	452126.1593	2023094.4554
L	143·68.00	52.00	452133.4666	2023078.0054
L	147·87.00	-67.00	452564.6960	2023139.3506
L	147·87.00	-47.00	452556.5768	2023157.6284
L	149·36.50	-47.70	452693.4888	2023217.6770
L	149·36.50	-66.00	452700.9166	2023200.9558
L	149·63.50	-66.00	452725.5916	2023211.9168
L	149·63.50	-48.00	452718.2843	2023228.3668
L	160·11.00	-48.49	453675.7819	2023653.1576
L	159·94.00	-48.46	453660.2336	2023646.2925
L	162·38.00	-64.00	453889.5324	2023731.1432
L	162·38.00	-48.79	453883.3580	2023745.0430
L	162·55.00	-64.00	453905.0685	2023738.0446
L	162·55.00	-48.77	453898.8871	2023751.9600
L	166·10.00	-69.00	454231.5297	2023877.5907
L	166·10.00	-48.76	454223.3131	2023896.0877
L	166·27.00	-48.56	454238.7694	2023903.1688
L	166·27.00	-69.00	454247.0658	2023884.4920
L	158·54.00	51.00	453491.9126	2023680.3521
L	158·71.00	51.00	453507.4492	2023687.2525
L	158·71.00	68.00	453500.5478	2023702.7886
L	158·54.00	68.00	453485.0117	2023695.8873
L	161·29.00	50.82	453743.3059	2023791.8260
L	161·29.00	73.50	453734.0991	2023812.5522

L	161·46.00	73.50	453749.6348	2023819.4546
L	161·46.00	50.81	453758.8475	2023798.7150
L	168·67.00	-59.02	454462.3478	2023991.0438
L	168·67.00	-49.08	454458.3113	2024000.1306
L	168·84.00	-59.00	454477.8755	2023997.9641
L	168·84.00	-49.14	454473.8734	2024006.9736
L	177·93.00	-54.00	455306.6929	2024371.6149
L	177·93.00	-74.00	455314.8584	2024353.3570
L	178·09.00	-74.00	455329.9210	2024360.1579
L	178·08.95	-53.96	455321.5633	2024378.3678
L	178·10.00	48.00	455280.2113	2024471.5777
L	178·10.00	72.00	455270.2480	2024493.4108
L	177·92.22	71.87	455254.6187	2024486.2051
L	177·92.00	47.93	455264.1851	2024464.2646
L	185·61.00	59.00	455893.0987	2024882.4449
L	185·61.00	72.00	455885.2679	2024892.8217
L	185·78.00	73.00	455898.2352	2024903.8603
L	185·78.00	59.00	455906.6690	2024892.6844
L	183·97.00	50.50	455767.3122	2024776.8702
L	184·14.00	51.62	455780.2067	2024788.0052
L	184·14.00	69.00	455769.7373	2024801.8784
L	183·97.00	69.00	455756.1677	2024791.6381
L	182·95.00	64.00	455677.8881	2024726.3081
L	183·12.00	64.00	455691.3312	2024736.4454
L	183·12.00	51.00	455699.1620	2024726.0686
L	182·95.00	51.00	455685.6918	2024715.9122
L	181·51.00	48.47	455571.8972	2024632.9742
L	181·69.01	48.82	455586.4079	2024642.9744
L	181·69.00	60.00	455580.1989	2024652.2745
L	181·51.00	60.00	455565.5823	2024642.6162
L	192·70.00	-80.00	456542.7632	2025198.5747
L	193·10.00	-80.00	456574.6918	2025222.6696
L	193·10.00	-59.73	456562.4839	2025238.8466
L	195·94.00	-65.00	456792.3494	2025405.7165
L	196·11.00	-50.92	456797.4404	2025427.1922
L	196·11.00	-65.00	456805.9191	2025415.9568
L	198·26.00	-64.00	456976.8696	2025546.2007
L	198·44.00	-64.00	456991.1918	2025556.9626
L	198·44.00	-49.95	456982.7618	2025568.1969
L	198·26.00	-49.99	456968.4469	2025557.3942
L	206·13.00	-65.00	457616.6435	2025997.8607
L	206·32.00	-65.00	457632.3952	2026008.3213
L	206·32.00	-49.40	457623.7724	2026021.3254
L	206·13.00	-49.33	457607.9641	2026010.9104
L	207·07.00	-67.36	457696.0082	2026047.4244
L	209·85.00	-69.00	457929.6139	2026197.9048
L	209·85.00	-49.60	457919.0108	2026214.1552
L	210·03.00	-49.62	457934.0974	2026223.9733
L	210·03.00	-69.00	457944.6887	2026207.7410
L	195·10.00	61.00	456649.4011	2025455.6915
L	195·31.00	61.00	456666.1636	2025468.3413
L	195·31.00	85.00	456651.7067	2025487.4985
L	195·10.00	85.00	456634.9440	2025474.8490
L	200·69.00	-63.00	457170.8303	2025690.6821
L	200·88.00	-63.00	457186.1512	2025701.7688
L	200·88.00	-48.18	457177.4722	2025713.7801
L	200·69.00	-48.29	457162.2003	2025702.5902
L	211·92.00	-49.84	458092.5070	2026327.0632
L	218·22.00	-73.00	458632.7947	2026651.9112
L	218·42.00	-73.00	458649.5449	2026662.8396
L	218·42.00	-50.99	458637.5170	2026681.2737
L	218·22.00	-50.87	458620.7023	2026670.4453
L	209·86.00	58.00	457861.0563	2026304.8162
L	210·00.00	58.00	457872.7815	2026312.4661
L	210·00.00	99.00	457850.3771	2026346.8034
L	209·86.00	99.00	457838.6520	2026339.1534
L	216·05.84	68.81	458374.2756	2026652.5627
L	220·61.00	-66.00	458829.1345	2026788.3688
L	221·45.00	-66.00	458899.4853	2026834.2683
L	225·95.00	-66.00	459276.3646	2027080.1585
L	226·16.00	-66.00	459293.9523	2027091.6333
L	226·16.00	-51.01	459285.7596	2027104.1905
L	225·95.00	-51.12	459268.2345	2027092.6197
L	228·92.00	-67.00	459525.6514	2027241.6085
L	228·71.00	-49.61	459498.5645	2027244.6932
L	228·71.00	-67.00	459508.0637	2027230.1336
L	228·92.00	-49.52	459516.1014	2027256.2458
L	223·27.00	49.93	458988.5647	2027030.8106
L	224·85.00	50.02	459120.8431	2027117.2190
L	230·71.00	49.60	459611.4252	2027437.2185
L	230·71.00	75.00	459597.4270	2027458.4141
L	230·02.00	75.00	459539.9818	2027420.5993
L	230·02.00	49.73	459553.8458	2027399.4690
L	239·62.52	-69.50	460413.8867	2027843.0524
L	239·83.00	-69.50	460430.3869	2027854.5565
L	239·83.00	-46.00	460416.9977	2027873.8693
L	249·29.00	63.00	461146.4708	2028484.3623
L	249·29.00	84.00	461134.9508	2028501.9205
L	249·48.00	62.50	461162.6306	2028494.3678
L	249·48.00	84.00	461150.8368	2028512.3433
L	250·97.00	63.00	461286.9371	2028576.5210
L	251·18.00	63.00	461304.4953	2028588.0410
L	251·18.00	84.00	461292.9747	2028605.6000
L	250·97.00	84.00	461275.4165	2028594.0801
L	254·94.23	-60.00	461686.5387	2028691.5904
L	254·94.23	-74.29	461694.3796	2028679.6397
L	254·72.23	-61.29	461668.8528	2028678.4423
L	254·72.23	-74.31	461675.9930	2028667.5595
L	116·56.00	50.00	449763.7933	2021778.4785
L	116·73.00	50.00	449774.4243	2021791.7441
L	116·73.00	60.00	449766.6206	2021797.9972
L	116·56.00	60.00	449755.9902	2021784.7309
L	166·64.00	74.00	454222.8268	2024030.1998
L	166·47.00	74.00	454207.2906	2024023.2985
L	166·64.00	50.86	454232.2220	2024009.0496
L	166·47.00	50.80	454216.7078	2024002.0988
L	169·52.00	70.00	454487.6513	2024143.4604
L	169·52.00	49.94	454495.7950	2024125.1276
L	169·69.00	70.00	454503.1870	2024150.3627
L	169·69.00	49.93	454511.3359	2024132.0183
L	116·81.00	-60.00	449865.2677	2021729.2021

L	116·81.00	-50.42	449857.7916	2021735.1931
L	116·98.00	-60.00	449875.8975	2021742.4693
L	116·98.01	-50.43	449868.4345	2021748.4576
L	184·43.11	-49.92	455864.6135	2024724.4882
L	195·94.00	-51.05	456783.9451	2025416.8532
L	212·11.00	-63.00	458115.6121	2026326.4220
L	212·11.00	-49.86	458108.4311	2026337.4277
L	211·92.00	-64.00	458100.2462	2026315.2019
L	215·88.00	49.11	458370.0933	2026626.3184
L	216·06.00	49.10	458385.1732	2026636.1467
L	215·88.00	69.00	458359.2260	2026642.9737
L	220·61.00	-52.29	458821.6433	2026799.8499
L	220·80.00	-66.00	458845.0472	2026798.7508
L	220·80.00	-52.40	458837.6177	2026810.1373
L	221·45.00	-52.79	458892.2670	2026845.3311
L	221·64.00	-66.00	458915.3980	2026844.6503
L	221·64.00	-52.90	458908.2414	2026855.6186
L	192·70.00	-62.97	456532.5024	2025212.1715
L	123·23.00	68.00	450254.9396	2022257.0430
L	138·01.00	78.00	451604.7360	2022871.5861
L	138·52.15	72.82	451653.5856	2022887.6178
L	178·73.32	70.00	455326.5244	2024517.8434
L	179·55.04	69.00	455397.4192	2024553.1310
L	187·97.00	77.00	456070.6351	2025038.9727
L	189·01.00	85.00	456148.8305	2025108.0051
L	207·00.00	89.00	457604.4309	2026174.3516
L	208·45.00	92.00	457724.3883	2026256.2454
L	239·57.97	63.00	460334.0995	2027948.9356
L	240·50.00	73.00	460405.6088	2028010.0667
L	247·46.19	71.00	460989.2344	2028390.7663
L	248·46.60	82.50	461066.8768	2028455.4618
L	253·08.36	82.50	461452.9602	2028708.7713
L	263·38.98	-68.50	462397.5033	2029147.8872
L	258·73.00	-74.00	462010.9083	2028887.6651
L	257·30.00	-65.00	461886.4081	2028816.7447
L	254·94.23	-70.00	461692.0246	2028683.2295
L	193·52.81	-71.15	456603.5331	2025255.5205
L	176·69.10	-76.00	455202.2723	2024301.1478
L	172·00.00	-71.00	454771.5363	2024115.2815
L	171·82.38	-70.00	454755.0276	2024109.0423
L	160·52.32	-68.00	453721.4652	2023652.1086
L	207·00.00	58.00	457621.4324	2026148.4296
L	240·83.59	-69.50	460512.3082	2027909.8150
L	122·37.34	70.00	450175.7862	2022213.0981
L	208·45.00	58.00	457742.9671	2026227.7691
L	207·48.00	-49.32	457720.3703	2026084.8841
L	207·48.00	-68.00	457730.5773	2026069.2407
L	259·64.81	65.00	462011.4202	2029054.2480
L	259·83.06	65.00	462026.6787	2029064.2592
L	259·83.06	51.28	462034.2051	2029052.7878
L	138·47.39	50.88	451658.1427	2022865.6313
L	193·52.82	-54.36	456593.4213	2025268.9290
L	207·07.00	-49.41	457686.1726	2026062.4375
L	183·00.73	69.00	455679.3231	2024733.6461
L	193·10.00	-71.15	456569.3615	2025229.7329
L	140·07.00	-48.97	451844.5423	2022839.1778
L	140·27.00	-48.86	451862.7745	2022847.3997
L	140·27.00	-70.85	451871.7025	2022827.3011
L	140·07.00	-71.10	451853.5251	2022818.9558
L	194·59.00	-68.69	456686.8159	2025321.4475
L	194·59.00	-51.01	456676.1616	2025335.5658
L	194·39.00	-51.01	456660.1973	2025323.5183
L	194·39.00	-69.83	456671.5382	2025308.4902
L	231·22.00	-50.12	459708.9944	2027382.2169
L	231·38.00	-65.50	459730.8281	2027378.2488
L	231·23.00	-80.00	459726.3449	2027357.8736
L	230·98.00	-55.00	459691.6446	2027364.8651
L	229·88.00	78.00	459526.6683	2027415.4572
L	229·74.00	64.00	459522.6616	2027396.0992
L	229·89.00	49.73	459542.9973	2027392.3575
L	230·18.00	49.72	459567.1977	2027408.2225
L	117·28.09	-50.45	449887.2638	2021771.9247
L	117·28.00	-66.50	449899.7271	2021761.8173
L	117·18.00	-66.28	449893.3070	2021754.1474
L	117·18.00	-50.44	449880.9467	2021764.0517
L	146·07.00	52.26	452351.7831	2023175.2628
L	145·97.00	52.26	452342.6442	2023171.2032
L	145·97.00	64.35	452337.7352	2023182.2542
L	146·07.00	64.32	452346.8856	2023186.2877
L	147·43.00	52.44	452475.9965	2023230.6438
L	147·33.00	52.44	452466.8576	2023226.5842
L	147·33.00	63.96	452462.1817	2023237.1104
L	147·43.00	63.93	452471.3322	2023241.1440
L	205·46.00	-48.87	457552.2171	2025974.1822
L	205·46.00	-64.00	457560.6576	2025961.6269
L	205·65.00	-64.00	457576.3585	2025972.1662
L	205·65.00	-49.03	457568.0264	2025984.5979
L	196·56.00	76.00	456756.9044	2025555.6119
L	196·76.00	76.00	456772.8687	2025567.6594
L	196·56.00	61.00	456765.9399	2025543.6387
L	252·88.00	55.00	461451.0211	2028674.6097
L	252·88.00	46.50	461455.6840	2028667.5028
L	252·11.00	55.00	461386.6410	2028632.3699
L	252·11.00	46.50	461391.3039	2028625.2630
L	191·18.07	-79.00	456420.8888	2025107.8552
L	191·18.09	-62.60	456411.0210	2025120.9570
L	190·91.00	-62.53	456389.3605	2025104.6932
L	191·03.00	-79.00	456408.8588	2025098.7768
L	212·66.99	-49.92	458155.3634	2026367.9703
L	212·80.99	-49.94	458167.0974	2026375.6066
L	212·66.99	-62.72	458162.3582	2026357.2492
L	215·12.00	-51.08	458361.1896	2026500.8827
L	215·26.00	-51.07	458372.9106	2026508.5389
L	215·12.00	-64.08	458368.2977	2026489.9880
L	215·26.00	-64.08	458380.0228	2026497.6380
L	139·99.00	65.00	451790.9637	2022940.0860
L	140·24.00	65.00	451813.8110	2022950.2350
L	139·82.00	51.21	451781.0259	2022920.5820
L	140·07.00	51.27	451803.8480	2022930.7876
L	138·96.50	51.00	451702.9742	2022885.6789
L	138·82.00	50.96	451689.7384	2022879.7602
L	138·90.00	70.00	451689.3199	2022900.4056

L	139·02.00	67.00	451701.5045	2022902.5355
L	131·22.00	-119.00	451064.1793	2022415.9015
L	131·29.31	-52.14	451043.7176	2022479.9677
L	130·90.06	-52.18	451007.8621	2022463.9962
L	131·06.00	-119.00	451049.5570	2022409.4061
L	127·31.00	-61.44	450683.4828	2022309.7700
L	127·43.00	-61.33	450694.4045	2022314.7427
L	127·31.00	-52.92	450680.0227	2022317.5592
L	127·43.00	-52.89	450690.9771	2022322.4585
L	128·40.00	-60.44	450782.6887	2022354.9387
L	128·52.00	-60.33	450793.6104	2022359.9114
L	128·40.00	-52.64	450779.5249	2022362.0609
L	128·52.00	-52.61	450790.4792	2022366.9602
L	258·44.00	-52.09	461974.6419	2028890.0756
L	258·59.00	-51.04	461986.6075	2028899.1821
L	258·59.00	-64.00	461993.7169	2028888.3461
L	258·44.00	-64.00	461981.1754	2028880.1176
L	121·16.59	70.78	450070.9599	2022140.1738
L	134·41.37	69.93	451279.3481	2022718.2169
L	135·35.88	70.21	451365.6100	2022756.8347
L	157·39.65	-68.00	453435.7153	2023525.1747
L	148·14.00	-67.00	452589.3710	2023150.3116
L	148·14.00	-48.00	452581.6577	2023167.6755
L	148·55.96	-478.60	452794.8112	2022791.1920
L	148·76.09	-475.23	452811.8374	2022802.4364
L	148·47.98	-715.22	452883.5729	2022571.7053
L	148·68.15	-710.45	452900.0723	2022584.2526
L	176·89.75	69.94	455161.8995	2024442.9045
L	178·92.76	-74.13	455408.0166	2024397.3798
L	189·36.77	75.44	456183.1377	2025121.9213
L	223·27.00	83.00	458970.4956	2027058.5052
L	224·85.00	81.00	459103.9150	2027143.1650
L	238·68.84	-69.50	460337.1785	2027789.2750
L	242·30.11	59.50	460564.0469	2028098.0470
L	242·47.31	-69.50	460649.1948	2027999.6264

ROW MARKER PERMANENT EASEMENT-E

ALIGN	STATION	OFFSET	NORTH	EAST
Y16	10·98.00	-30.52	455861.0642	2024656.9209
Y16	10·98.00	-37.00	455867.3320	2024658.5759

ROW MARKER PERMANENT EASEMENT-E

ALIGN	STATION	OFFSET	NORTH	EAST
Y18	10·82.74	50.18	458994.0431	2027073.8677
Y18	10·81.26	-49.99	459079.0203	2027126.9241

ROW MARKER PERMANENT EASEMENT-E

ALIGN	STATION	OFFSET	NORTH	EAST
Y19	13·20.00	-30.09	460330.0572	2027663.2118
Y19	13·20.00	-47.00	460346.6784	2027666.3096
Y19	13·40.00	-47.00	460343.0140	2027685.9710

ROW MARKER PERMANENT EASEMENT-E

ALIGN	STATION	OFFSET	NORTH	EAST
Y21	13·23.58	55.74	460537.7478	2028145.2704
Y21	[illegible]	[illegible]	460539.6528	2028135.2504
Y21	[illegible]	[illegible]	460537.8581	2028150.4500
Y21	13·23.58	26.12	460537.3981	2028150.4400

L

TYPE	STATION	NORTH	EAST
POT	32·80.83	442815.9993	2018059.2296
PC	33·13.06	442848.0679	2018055.9991
PT	34·40.00	442974.8393	2018053.9338
PC	60·63.54	445592.3474	2018231.7267
PT	68·23.99	446308.2154	2018464.5175
PC	76·29.03	446989.8714	2018892.8138
PT	82·16.59	447459.3768	2019244.9490
PC	95·61.78	448465.3308	2020138.0422
PT	100·05.93	448770.9965	2020459.5471
PC	118·35.42	449915.0100	2021887.2299
PT	124·14.73	450369.5077	2022237.5307
PC	177·87.34	455279.4807	2024418.6059
PT	183·00.73	455720.8868	2024678.5692
PC	198·07.10	456923.2941	2025585.9640
PT	207·32.55	457680.4807	2026117.7477
PC	229·42.85	459531.6259	2027325.5043
PT	231·18.94	459678.7383	2027422.2932
PC	232·81.95	459814.5698	2027512.4094
PT	235·76.35	460057.7782	2027678.2924
PC	239·62.52	460373.9925	2027899.9619
PT	240·83.59	460474.1833	2027967.9235
POT	265·05.00	462498.7334	2029296.2318

Y10

TYPE	STATION	NORTH	EAST
POT	10·00.00	450072.7939	2022050.2368
PC	10·28.58	450056.9954	2022074.0552
PT	11·69.84	449984.5825	2022195.2777
POT	11·97.19	449971.6751	2022219.3959

Y11

TYPE	STATION	NORTH	EAST
POT	10·00.00	451330.9265	2022664.6052
POT	11·95.60	451286.3231	2022855.0541

Y12A

TYPE	STATION	NORTH	EAST
POT	10·00.00	452898.9546	2022571.7187
POT	17·21.46	452602.2138	2023229.3284

Y12

TYPE	STATION	NORTH	EAST
POT	10·00.00	453452.0799	2023394.8053
POT	11·93.82	453369.8212	2023570.3086

Y13

TYPE	STATION	NORTH	EAST
POT	10·00.00	454323.3538	2023993.8816
POT	11·97.05	454245.2862	2024174.8062

Y14

TYPE	STATION	NORTH	EAST
POT	10·00.00	455141.2401	2024357.1975
POT	11·97.22	455061.6748	2024537.6557

Y15

TYPE	STATION	NORTH	EAST
POT	10·00.00	455474.5652	2024325.9747
POT	11·68.22	455405.6257	2024479.4152

Y16

TYPE	STATION	NORTH	EAST
POT	10·00.00	455856.5781	2024554.3765
POT	11·95.42	455806.6880	2024743.3190

Y17

TYPE	STATION	NORTH	EAST
POT	28·83.85	461616.5362	2024393.1515
POT	32·80.83	461220.1894	2024370.7236
PC	49·67.57	459536.1469	2024275.4296
PT	56·55.00	458849.1268	2024277.7239
PC	70·47.87	457459.0456	2024365.7019
PT	79·93.53	456600.2122	2024719.4830
PC	80·08.15	456589.2025	2024729.1061
PT	82·55.11	456422.1040	2024910.2924
PC	88·95.00	456041.2761	2025424.5255
PT	92·54.67	455883.1900	2025745.4354
PC	94·14.07	455839.4450	2025898.7121
PT	98·63.61	455733.1130	2026335.3786
PC	109·65.19	455514.5750	2027415.0632
PT	124·31.34	454728.4943	2028610.5363
PC	133·36.54	453985.0862	2029127.0055
PT	137·33.59	453756.3546	2029442.4021
POT	139·79.77	453685.6526	2029678.2196

Y18

TYPE	STATION	NORTH	EAST
POT	10·00.00	459081.0633	2027031.5404
POT	12·15.21	458964.3995	2027212.3885

Y21

TYPE	STATION	NORTH	EAST
POT	10·00.00	460776.0712	2027930.3901
POT	13·99.82	460504.8775	2028224.1756

Y19

TYPE	STATION	NORTH	EAST
POT	10·00.00	460359.1051	2027343.1143
PC	17·31.99	460224.9890	2028062.7166
PT	17·79.18	460215.6143	2028108.9653
POT	17·79.19	460215.6143	2028108.9653
POT	19·85.93	460171.3595	2028310.9208

Y22

TYPE	STATION	NORTH	EAST
POT	10·00.00	460927.8031	2028265.5438
POT	12·01.88	460813.9845	2028432.2739

Y23

TYPE	STATION	NORTH	EAST
POT	7·00.00	461495.1381	2027905.0370
PC	10·00.00	461518.1350	2028204.1543
PT	19·87.26	461696.7763	2029172.3315

6/2/99
29-JUN-2012 07:47
R:\Roadway\Proj\u2809b_ls_1e.dgn
$$$$USERNAME$$$$

PROJECT REFERENCE NO.	SHEET NO.
U-2809B	2
ROADWAY DESIGN ENGINEER	PAVEMENT DESIGN ENGINEER

NORTH CAROLINA PROFESSIONAL SEAL 18903 ENGINEER GREGORY E. BREW 7-2-12

NORTH CAROLINA PROFESSIONAL SEAL 22896 ENGINEER CLARK S. MORRISON 7/24/12

FINAL PAVEMENT SCHEDULE

C1	PROP. APPROX. 1.5" ASPHALT CONC. SURFACE COURSE, TYPE S9.5B, AT AN AVERAGE RATE OF 168 LBS. PER SQ. YD.	R3	5" MONOLITHIC CONCRETE ISLAND (KEYED IN).
C2	PROP. APPROX. 3" ASPHALT CONC. SURFACE COURSE, TYPE S9.5B, AT AN AVERAGE RATE OF 168 LBS. PER SQ. YD. IN EACH OF TWO LAYERS.	R4	1'-6" CONCRETE CURB AND GUTTER.
C3	PROP. VAR. DEPTH ASPHALT CONC. SURFACE COURSE, TYPE S9.5B, AT AN AVERAGE RATE OF 112 LBS. PER SQ. YD. PER 1" DEPTH, TO BE PLACED IN LAYERS NOT TO EXCEED 2" IN DEPTH.	R5	8"X18" CONCRETE CURB.
D1	PROP. APPROX. 4" ASPHALT CONC. INTERMEDIATE COURSE, TYPE I19.0B, AT AN AVERAGE RATE OF 456 LBS. PER SQ. YD.	R6	6" CONCRETE DRIVEWAY.
D2	PROP. VAR. DEPTH ASPHALT CONC. INTERMEDIATE COURSE, TYPE I19.0B, AT AN AVERAGE RATE OF 114 LBS. PER SQ. YD. PER 1" DEPTH, TO BE PLACED IN LAYERS NOT LESS THAN 2.5" IN DEPTH OR GREATER THAN 4" IN DEPTH.	S	PROPOSED 4" CONCRETE SIDEWALK.
E1	PROP. APPROX 4" ASPHALT CONCRETE BASE COURSE, TYPE B25.0B, AT AN AVERAGE RATE OF 456 LBS. PER SQ. YD.	T	EARTH MATERIAL.
E2	PROP. VAR. DEPTH ASPHALT CONCRETE BASE COURSE, TYPE B25.0B, AT AT AN AVERAGE RATE OF 114 LBS. PER SQ. YD. PER 1" DEPTH, TO BE PLACED IN LAYERS NOT LESS THAN 3" IN DEPTH OR GREATER THAN 5.5" IN DEPTH.	U	EXISTING PAVEMENT.
R1	2'-6" CONCRETE CURB AND GUTTER.	W	VARIABLE DEPTH ASPHALT PAVEMENT. (SEE WEDGING DETAIL)
R2	2'-9" CONCRETE CURB AND GUTTER.		

NOTE: PAVEMENT EDGE SLOPES ARE 1:1 UNLESS SHOWN OTHERWISE

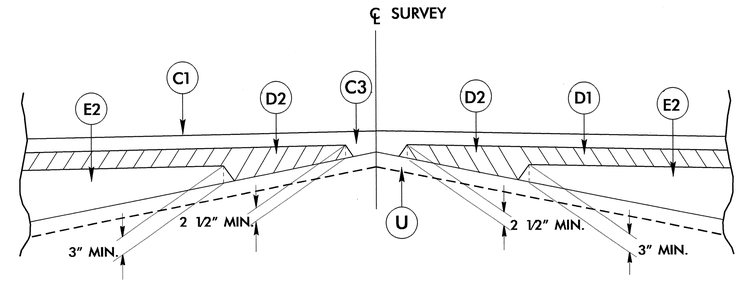

Detail Showing Method of Wedging

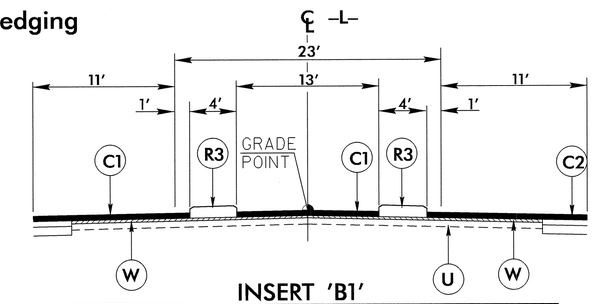

INSERT 'B1'

USE IN CONJUNCTION WITH TYPICAL SECTION NO. 2
SEE PLANS FOR LOCATIONS

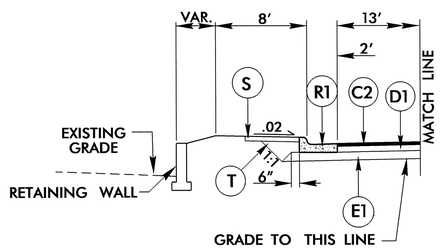

INSERT 'A'

USE WITH TYPICAL SECTION NO. 2

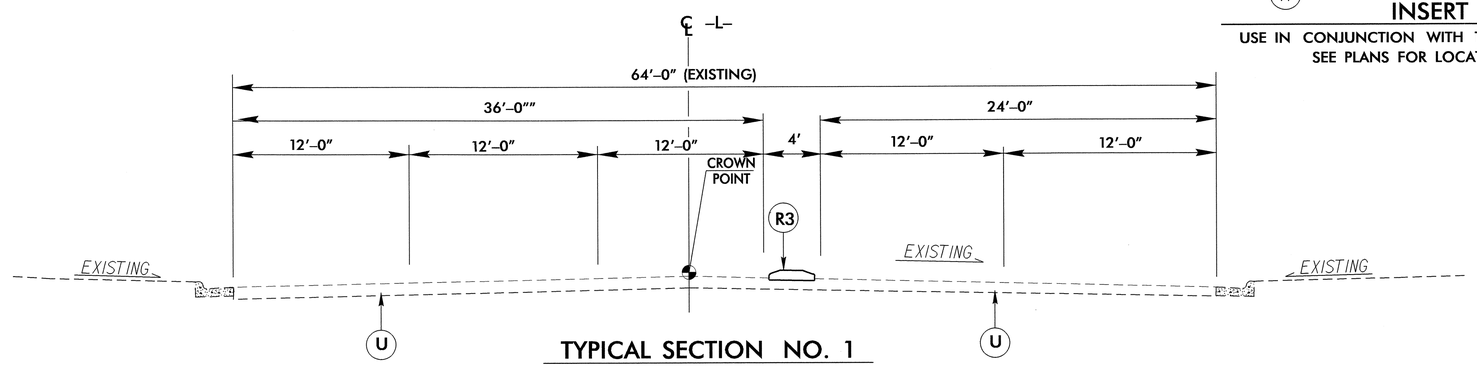

TYPICAL SECTION NO. 1

-L- STA. 109+50.00 TO -L- STA. 111+00.00

TRANSITION FROM TS NO.1 TO TS NO. 3
-L- STA. 111+00.00 TO 112+00.00

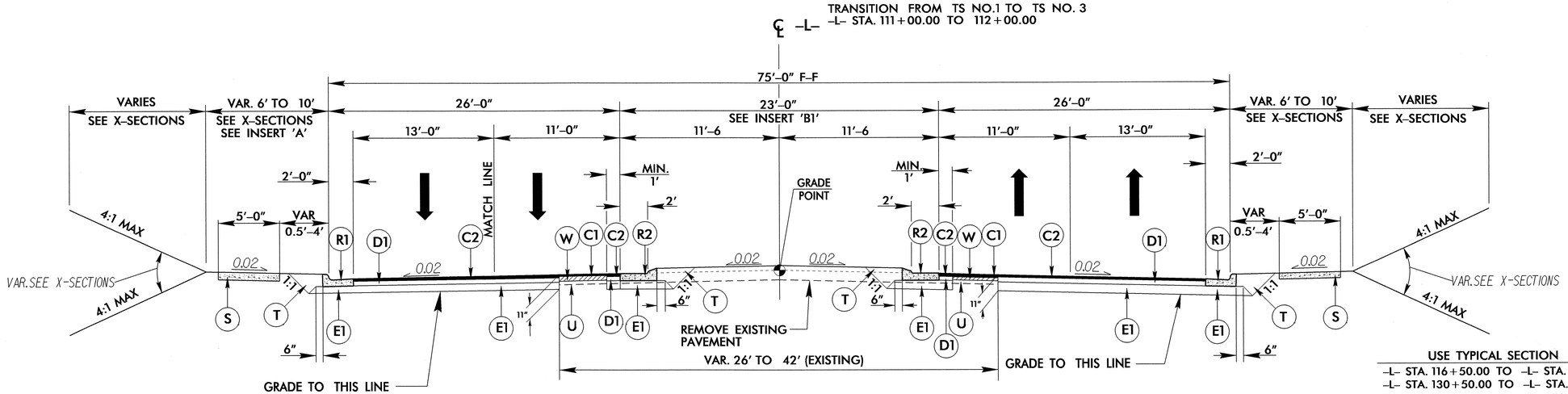

TYPICAL SECTION NO. 2

USE TYPICAL SECTION NO. 2

-L- STA. 116+50.00 TO -L- STA. 124+50.00
-L- STA. 130+50.00 TO -L- STA. 138+50.00
-L- STA. 139+50.00 TO -L- STA. 179+50.00
-L- STA. 183+50.00 TO -L- STA. 227+50.00
-L- STA. 233+50.00 TO -L- STA. 243+00.00
-L- STA. 245+50.00 TO -L- STA. 254+70.00

6/2/99
26-JUN-2012 13:35
R:\Roadway\Proj\u2809b_rdy_typ.dgn
$$$$USERNAME$$$$

PROJECT REFERENCE NO.	SHEET NO.
U-2809B	2-A

ROADWAY DESIGN ENGINEER
NORTH CAROLINA PROFESSIONAL SEAL 18903 ENGINEER GREGORY E. BREW
7-3-12

PAVEMENT DESIGN ENGINEER
NORTH CAROLINA PROFESSIONAL SEAL 22886 ENGINEER CLARK S. MORRISON
6/24/12

PAVEMENT SCHEDULE

C1	1.5" S9.5B
C2	3" DEPTH S9.5B
D1	4.0" I19.0B
D2	VAR. DEPTH I19.0B
E1	4.0" B25.0B
E2	VAR. B25.0B
R1	2'-6" C&G
R2	2'-9" C&G
R3	MONOLITHIC ISLAND
R4	1'-6" C&G
R5	8"X18" CURB
R6	6" CONC. DRIVEWAY
S	PROPOSED SIDEWALK
T	EARTH MATERIAL
U	EXISTING PAVEMENT
W	WEDGING

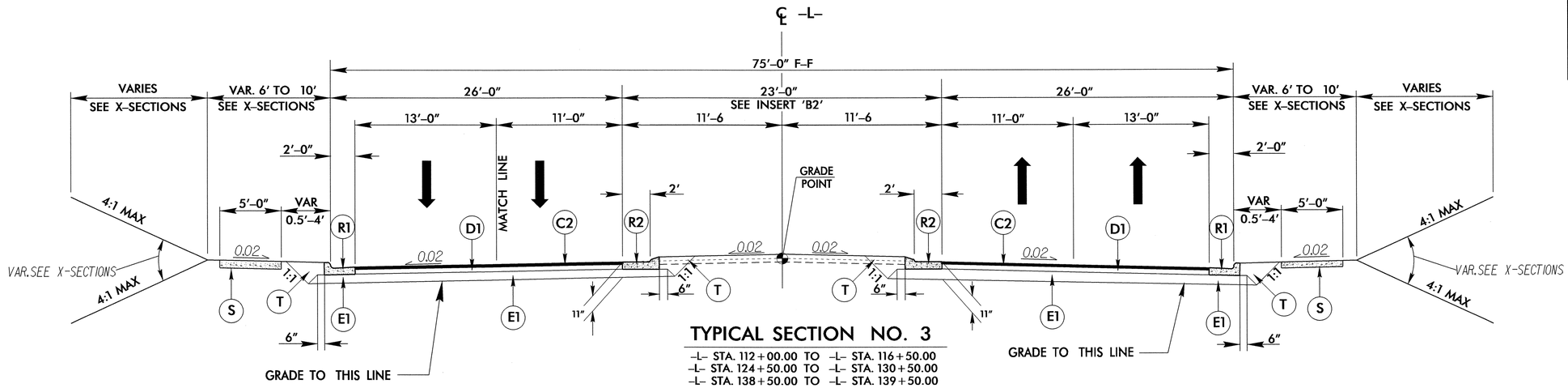

TYPICAL SECTION NO. 3

-L- STA. 112+00.00 TO -L- STA. 116+50.00
-L- STA. 124+50.00 TO -L- STA. 130+50.00
-L- STA. 138+50.00 TO -L- STA. 139+50.00
-L- STA. 179+50.00 TO -L- STA. 183+50.00
-L- STA. 227+50.00 TO -L- STA. 233+50.00
-L- STA. 243+00.00 TO -L- STA. 245+50.00

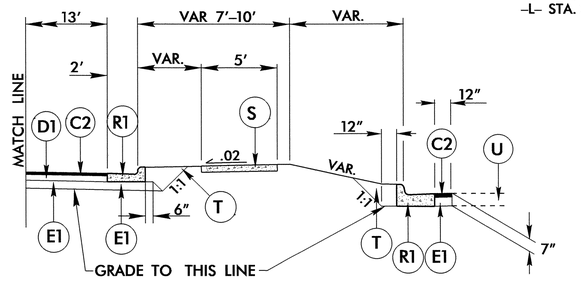

INSERT 'C'

CHANNELIZATION DETAIL

USE IN CONJUNCTION WITH TYPICAL SECTION NO. 2 & 3
SEE PLANS FOR LOCATIONS

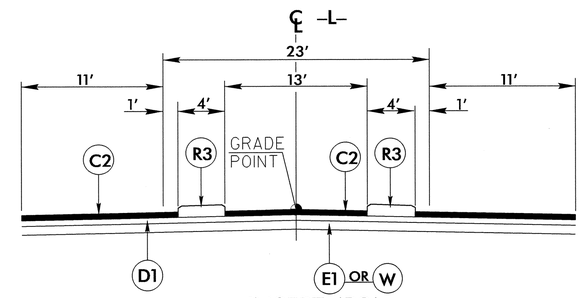

INSERT 'B2'

USE IN CONJUNCTION WITH TYPICAL SECTION NO. 3
SEE PLANS FOR LOCATIONS

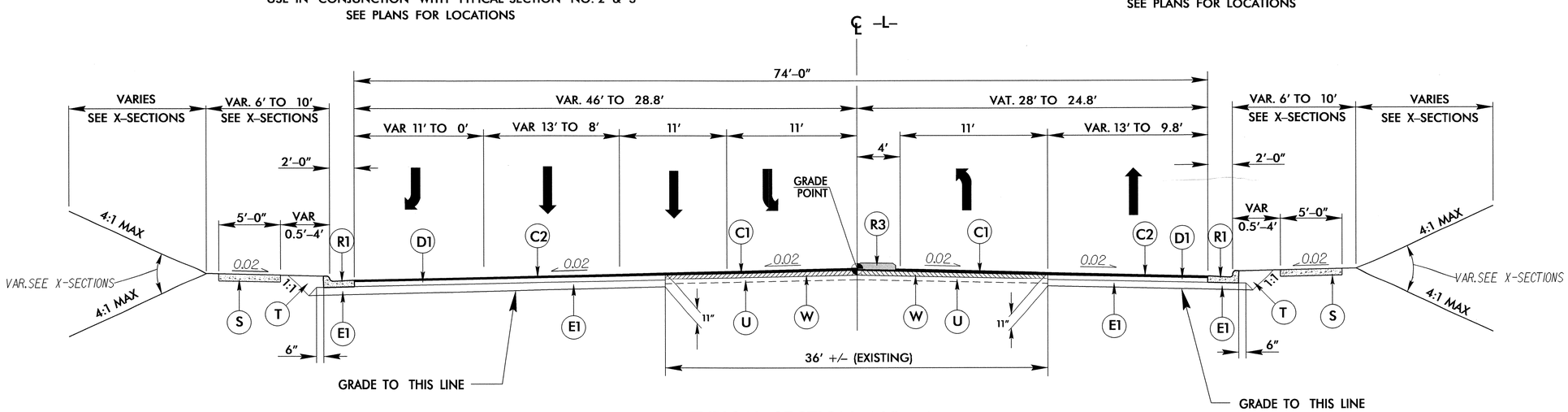

TYPICAL SECTION NO. 4

-L- STA. 254+70.00 TO 260+87.10

26-JUN-2012 3:35
R:\Roadway\Proj\u2809b_rdy_typ.dgn
$$$$USERNAME$$$$

PROJECT REFERENCE NO.	SHEET NO.
U-2809B	2-B

ROADWAY DESIGN ENGINEER

NORTH CAROLINA PROFESSIONAL SEAL 18803 ENGINEER GREGORY E. BREW

9-3-12

PAVEMENT DESIGN ENGINEER

NORTH CAROLINA PROFESSIONAL SEAL 22896 ENGINEER CLARK S. MORRISON

6/26/12

PAVEMENT SCHEDULE

C1	1.5" S9.5B
C2	3" DEPTH S9.5B
D1	4.0" I19.0B
D2	VAR. DEPTH I19.0B
E1	4.0" B25.0B
E2	VAR. B25.0B
R1	2'-6" C&G
R2	2'-9" C&G
R3	MONOLITHIC ISLAND
R4	1'-6" C&G
R5	8"X18" CURB
R6	6" CONC. DRIVEWAY
T	EARTH MATERIAL
U	EXISTING PAVEMENT
W	WEDGING

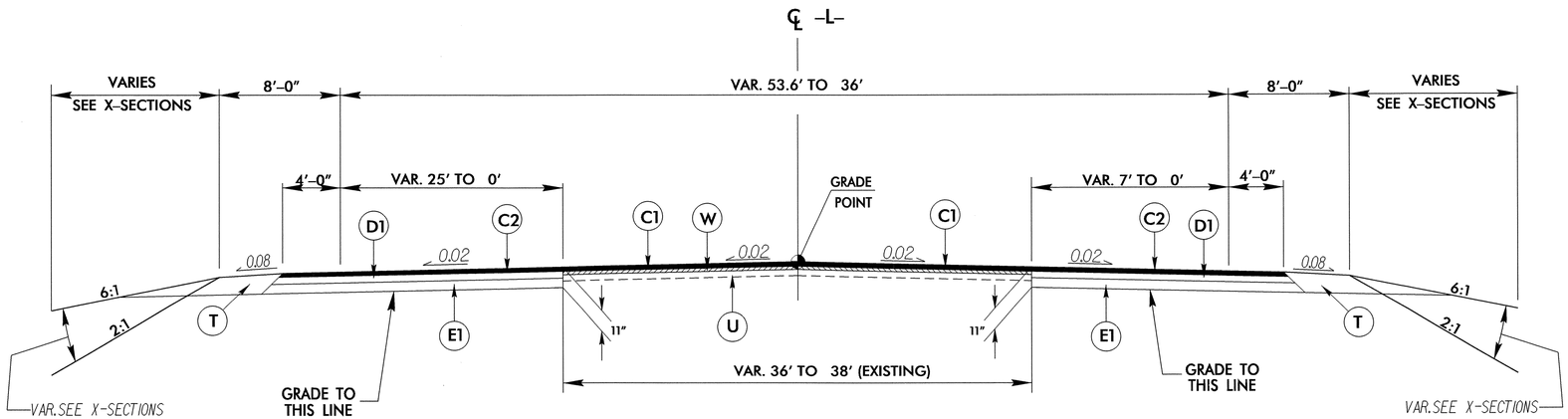

TYPICAL SECTION NO. 5

-L- STA. 260+87.10 TO 263+00.00

-L- STA. 263+00.00 TO 263+30.00 TRANSITION FROM T.S. 5 TO EXISTING

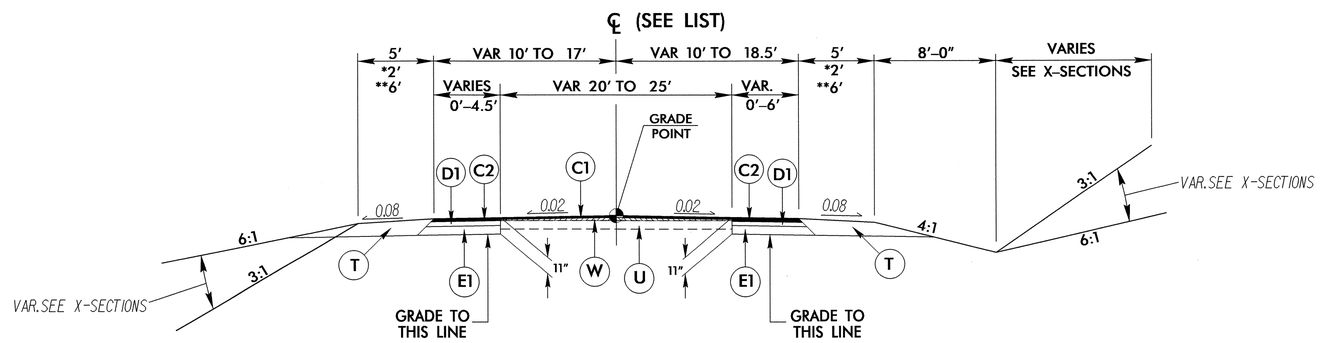

TYPICAL SECTION NO. 6

USE TYPICAL SECTION NO. 6

-Y11- STA. 10+82.87 TO 11+34.00

-Y15- STA. 10+50.00 TO 11+00.51

*-Y16- STA. 10+53.00 TO 11+03.87

*-Y21- STA. 10+75.00 TO 11+25.81

**-Y21- STA. 12+73.58 TO 13+20.00

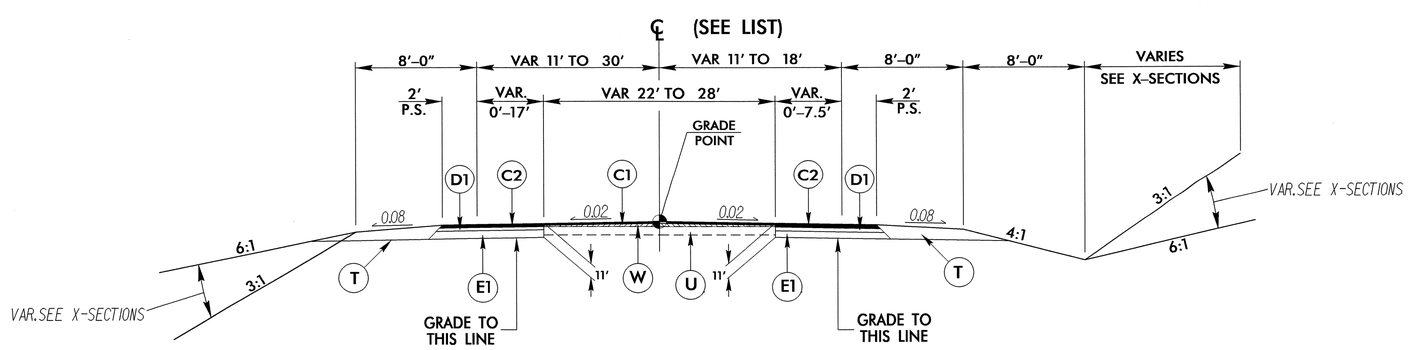

TYPICAL SECTION NO. 7

USE TYPICAL SECTION NO. 7

-Y10- STA. 10+84.25 TO 11+64.00

-Y12- STA. 10+78.00 TO 11+27.40

-Y19- STA. 12+25.00 TO 13+35.32

-Y19- STA. 16+59.00 TO 18+22.00

6/2/99

26-JUN-2012 13:35
R:\Roadway\Proj\u2809b_rdy_typ.dgn
$$$$USERNAME$$$$

PROJECT REFERENCE NO.	SHEET NO.
U-2809B	2-C

ROADWAY DESIGN ENGINEER

NORTH CAROLINA PROFESSIONAL SEAL 18903 ENGINEER GREGORY E. BREWER

7-3-12

PAVEMENT DESIGN ENGINEER

NORTH CAROLINA PROFESSIONAL SEAL 22896 ENGINEER CLARK S. MORRISON

6/24/12

PAVEMENT SCHEDULE

C1	1.5" S9.5B
C2	3" DEPTH S9.5B
D1	4.0" I19.0B
D2	VAR. DEPTH I19.0B
E1	4.0" B25.0B
E2	VAR. B25.0B
R1	2'-6" C&G
R2	2'-9" C&G
R3	MONOLITHIC ISLAND
R4	1'-6" C&G
R5	8"X18" CURB
R6	6" CONC. DRIVEWAY
T	EARTH MATERIAL
U	EXISTING PAVEMENT
W	WEDGING

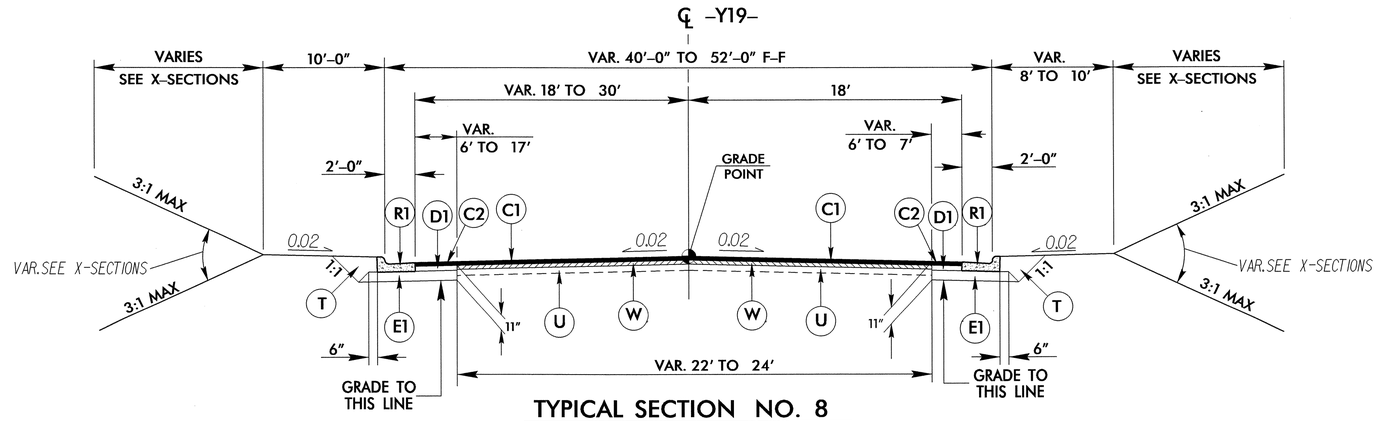

TYPICAL SECTION NO. 8

-Y19- STA. 13+35.32 TO 13+55.82

-Y19- STA. 16+21.95 TO 16+59.00

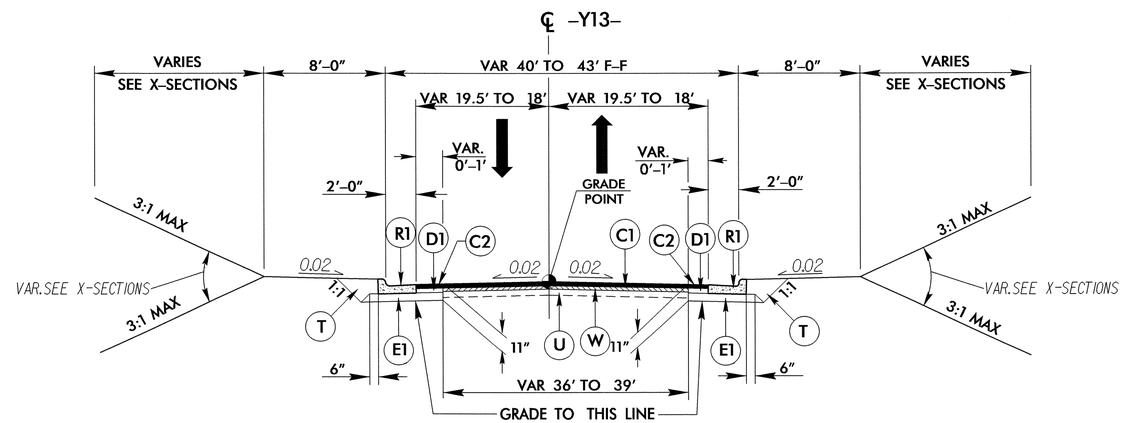

TYPICAL SECTION NO. 9

-Y13- STA. 10+67.10 TO 11+00.00

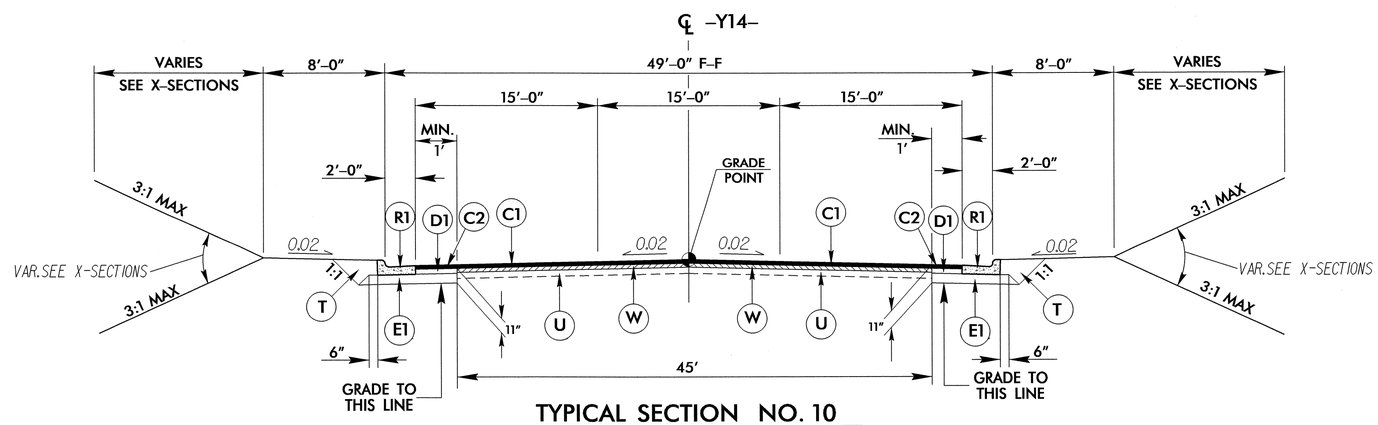

TYPICAL SECTION NO. 10

-Y14- STA. 10+65.36 TO 11+00.00

-Y14- STA. 11+00.00 TO 11+25.00, TRANSITION FROM T.S. 10 TO EXSITING

26-JUN-2012 13:35
R:\Roadway\Proj\u2809b_rdy_typ.dgn
$$$$USERNAME$$$$

PROJECT REFERENCE NO.	SHEET NO.
U-2809B	2-D

ROADWAY DESIGN ENGINEER
NORTH CAROLINA PROFESSIONAL SEAL 19903 ENGINEER GREGORY E. BREWER
7-3-12

PAVEMENT DESIGN ENGINEER
NORTH CAROLINA PROFESSIONAL SEAL 22896 ENGINEER CLARK S. MORRISON
6/29/12

PAVEMENT SCHEDULE

C1	1.5" S9.5B
C2	3" DEPTH S9.5B
D1	4.0" I19.0B
D2	VAR. DEPTH I19.0B
E1	4.0" B25.0B
E2	VAR. B25.0B
R1	2'-6" C&G
R2	2'-9" C&G
R3	MONOLITHIC ISLAND
R4	1'-6" C&G
R5	8"X18" CURB
R6	6" CONC. DRIVEWAY
T	EARTH MATERIAL
U	EXISTING PAVEMENT
W	WEDGING

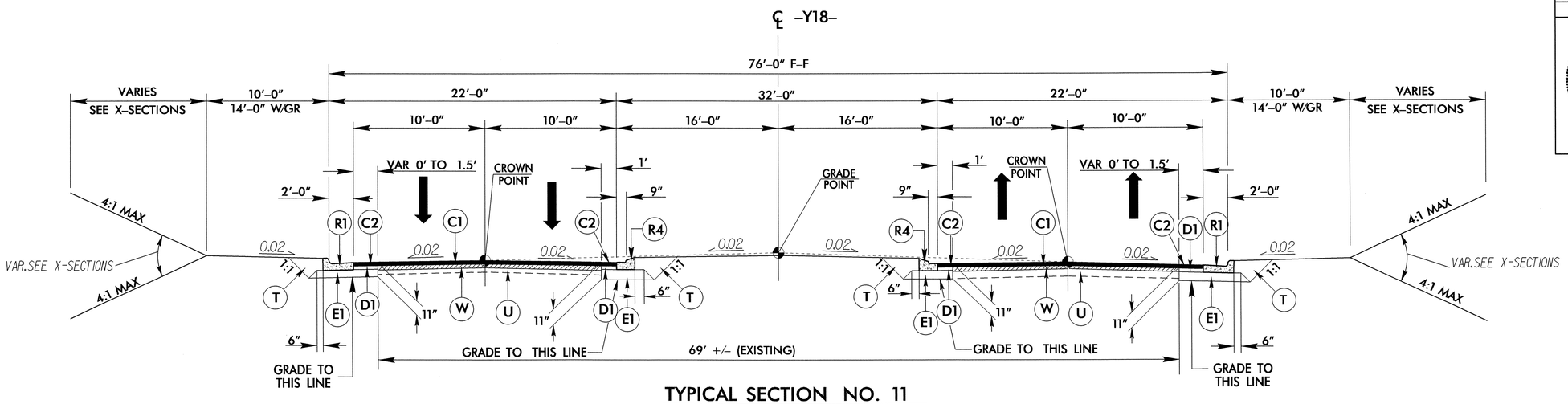

TYPICAL SECTION NO. 11

-Y18- STA. 10+65.84 TO 11+00.00

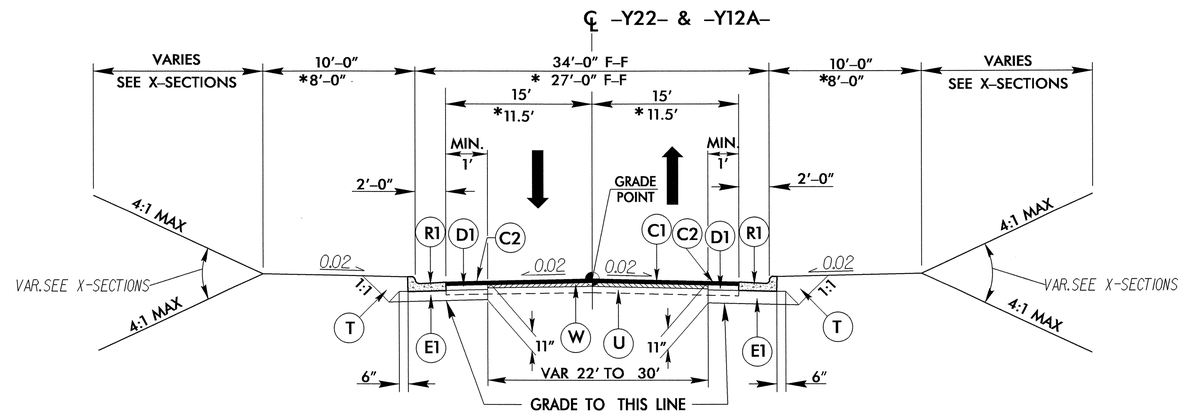

TYPICAL SECTION NO. 12

-Y22- STA. 10+67.42 TO 11+00.00
* -Y12A- STA. 16+30.00 TO 16+55.79

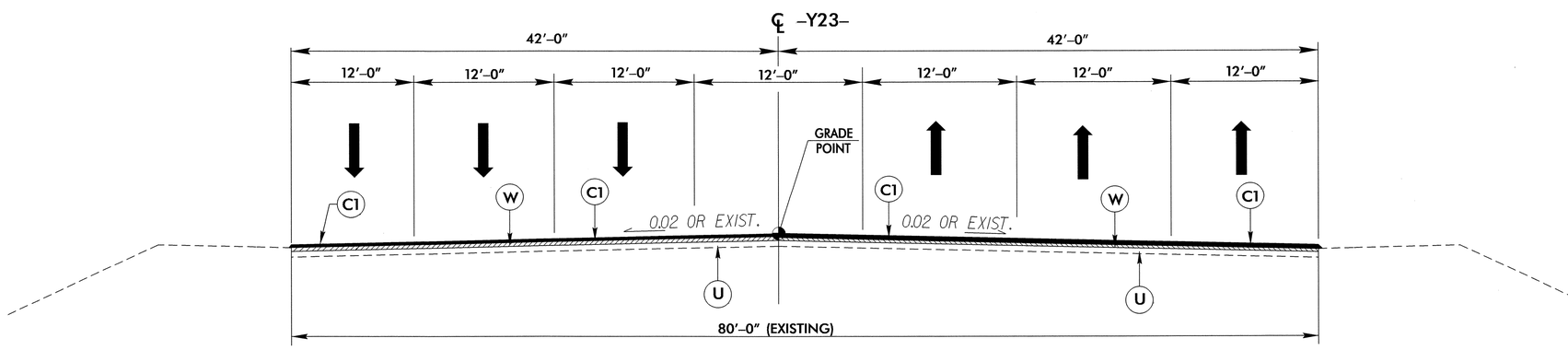

TYPICAL SECTION NO. 13

-Y23- STA. 12+88.00 TO -L- STA. 13+36.89
-Y23- STA. 16+89.36 TO -L- STA. 17+35.00

6/2/99

26-JUN-2012 13:35
R:\Roadway\Proj\2809b_rdy_typ.dgn
$$$$USERNAME$$$$

PROJECT REFERENCE NO.	SHEET NO.
U-2809B	2-E

ROADWAY DESIGN ENGINEER

NORTH CAROLINA PROFESSIONAL SEAL 18903 ENGINEER GREGORY E. BREW

7-3-12

PAVEMENT DESIGN ENGINEER

NORTH CAROLINA PROFESSIONAL SEAL 22896 ENGINEER CLARK S. MORRISON

6/28/12

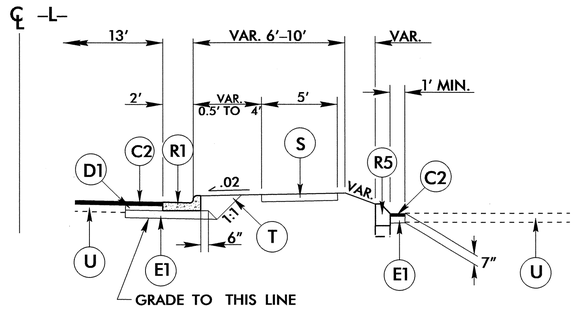

CHANNELIZATION DETAIL "A"

TO BE USED IN CONJUNCTION WITH TYPICAL SECTION NO. 2, 3, 4, 5
(SEE PLANS FOR LOCATIONS)

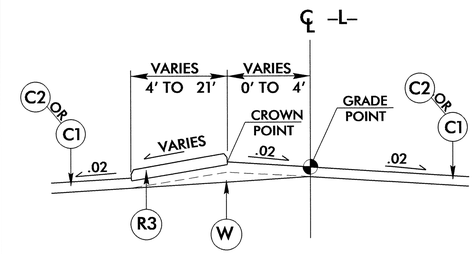

SUPERELEVATION TREATMENT ADJACENT
TO PROPOSED CHANNELIZATION DETAIL 'B'

TO BE USED IN CONJUNCTION WITH TYPICAL SECTION 2, 3, 4 7 5
(SEE PLANS FOR LOCATIONS)

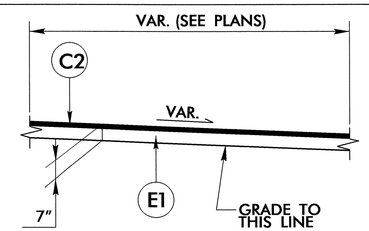

ROADWAY

MISC. PAVED PRIVATE DRIVES

REMARKS

SEE PLANS FOR LOCATIONS

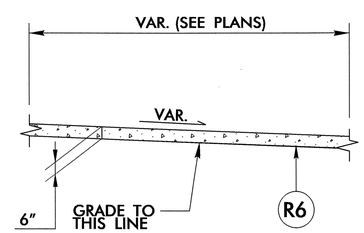

ROADWAY

MISC. CONC PRIVATE DRIVES

REMARKS

SEE PLANS FOR LOCATIONS

PAVEMENT SCHEDULE

C1	1.5" S9.5B
C2	3" DEPTH S9.5B
D1	4.0" I19.0B
D2	VAR. DEPTH I19.0B
E1	4.0" B25.0B
E2	VAR. B25.0B
R1	2'-6" C&G
R2	2'-9" C&G
R3	MONOLITHIC ISLAND
R4	1'-6" C&G
R5	8"X18" CURB
R6	6" CONC. DRIVEWAY
T	EARTH MATERIAL
U	EXISTING PAVEMENT
W	WEDGING

6/2/99

26-JUN-2012 13:34
R:\Roadway\Proj\u2809b_rdy_typ.dgn
$$$$USERNAME$$$$

PROJECT REFERENCE NO.	SHEET NO.
U-2809B	2-F

25 0 50

ROADWAY DESIGN ENGINEER
NORTH CAROLINA PROFESSIONAL ENGINEER SEAL 18993 GREGORY E. BREY
7-3-12

-Y10-
INTERSECTION DETAIL

NAD 83/2001

5" MONOLITHIC CONC. ISLAND

4" CONC. SIDEWALK

FOR PLANS SEE SHEET 5

-L-
PI Sta 121+30.71
Δ = 27° 20' 35.1" (LT)
D = 4° 43' 11.8"
L = 579.31'
T = 295.28'
R = 1,213.91'
e = SEE PLANS

POC Sta 120+62.62 -L-
POT Sta. 10+00.00 -Y10-

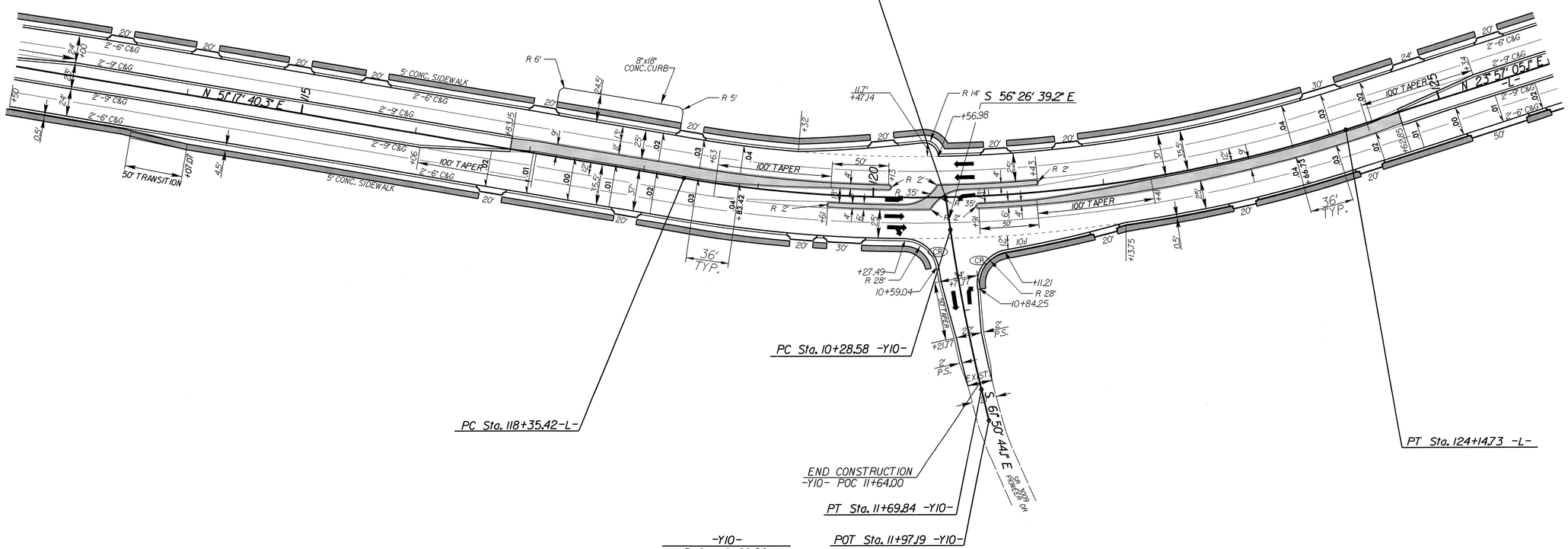

-Y10-
PI Sta 10+99.26
Δ = 5° 23' 44.1" (LT)
D = 3° 49' 11.0"
L = 141.26'
T = 70.68'
R = 1,500.00'

REVISIONS

8/17/99

26-JUN-2012 13:34
R:\Roadway\Proj\10_Intersection_rdy_dsn.dgn
$$$$USERNAME$$$$

25 0 50	PROJECT REFERENCE NO.	SHEET NO.
	U-2809B	2-G

ROADWAY DESIGN ENGINEER

NORTH CAROLINA PROFESSIONAL SEAL 18990 ENGINEER GREGORY E. BREW

7-3-12

-Y11-
INTERSECTION & CHANNELIZATION DETAIL

5" MONOLITHIC CONC. ISLAND

4" CONC. SIDEWALK

FOR PLANS SEE SHEET 6

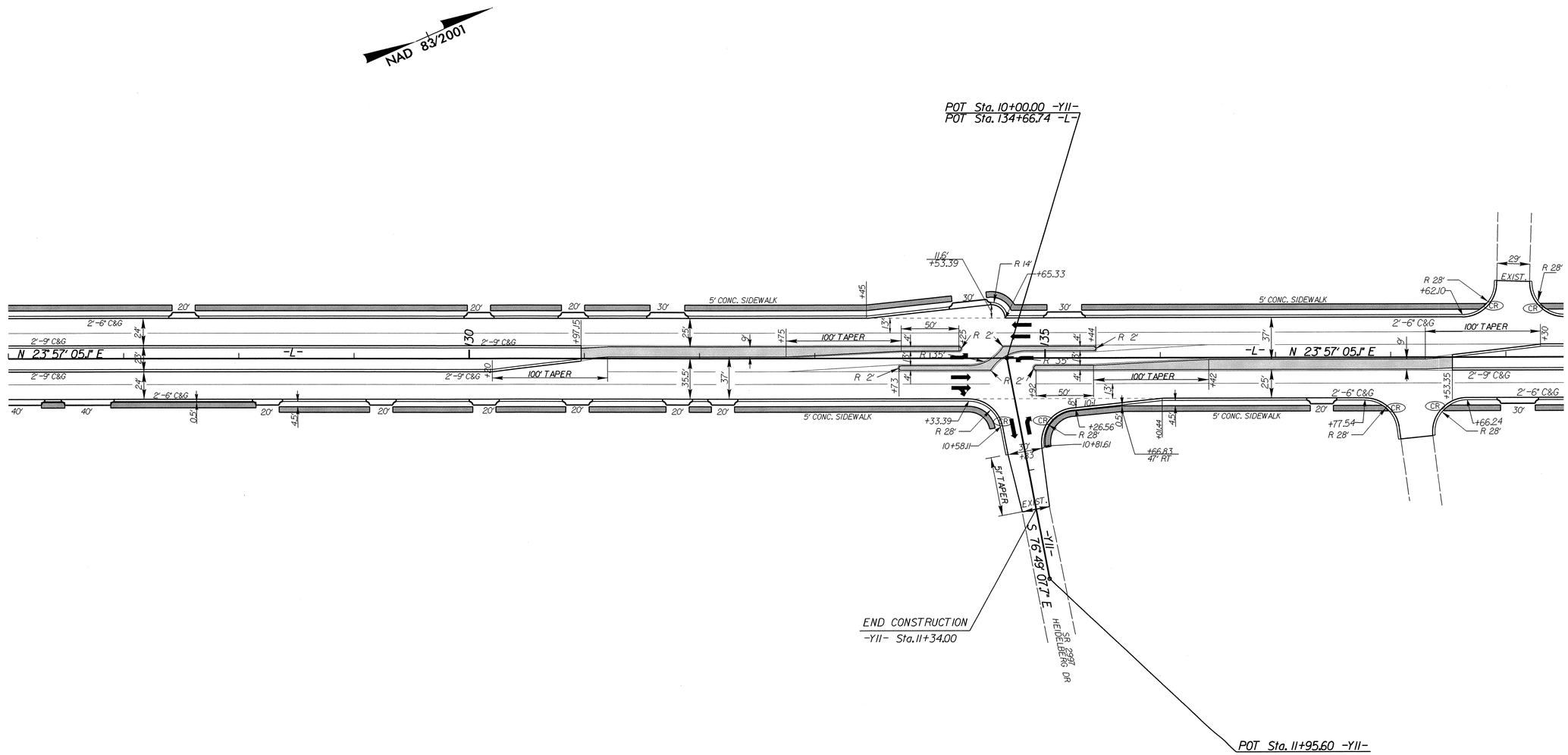

REVISIONS

8/17/99

26-JUN-2012 13:34
R:\Roadway\Proj\u2809_Intersection_rdy_dsn.dgn
$$$$USER$$$$

25 0 50	PROJECT REFERENCE NO.	SHEET NO.
	U-2809B	2-H

ROADWAY DESIGN ENGINEER

NORTH CAROLINA PROFESSIONAL SEAL 49903 ENGINEER GREGORY E. BREW

7-3-12

-Y12- & -Y12A-
INTERSECTION DETAIL
CHANNELIZATION DETAIL

5" MONOLITHIC CONC. ISLAND

4" CONC. SIDEWALK

FOR PLANS SEE SHEETS 7 & 8

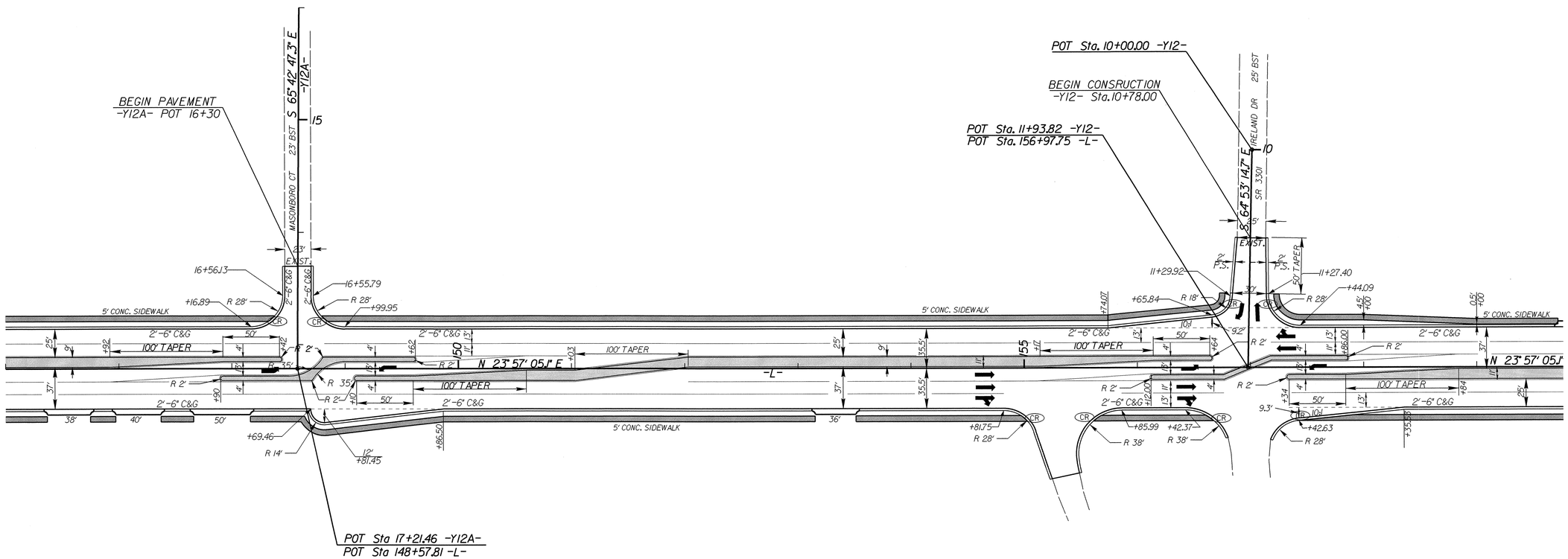

REVISIONS

8/17/99

26-JUN-2012 13:34
R:\Roadway\Proj\u2809b_Intersection_rdy_dsn.dgn
$$$$USERNAME$$$$

PROJECT REFERENCE NO.	SHEET NO.
U-2809B	2-1

ROADWAY DESIGN ENGINEER

NORTH CAROLINA PROFESSIONAL SEAL 18903 ENGINEER GREGORY E. BREWER

7-3-12

-Y13-
INTERSECTION & CHANNELIZATION DETAILS

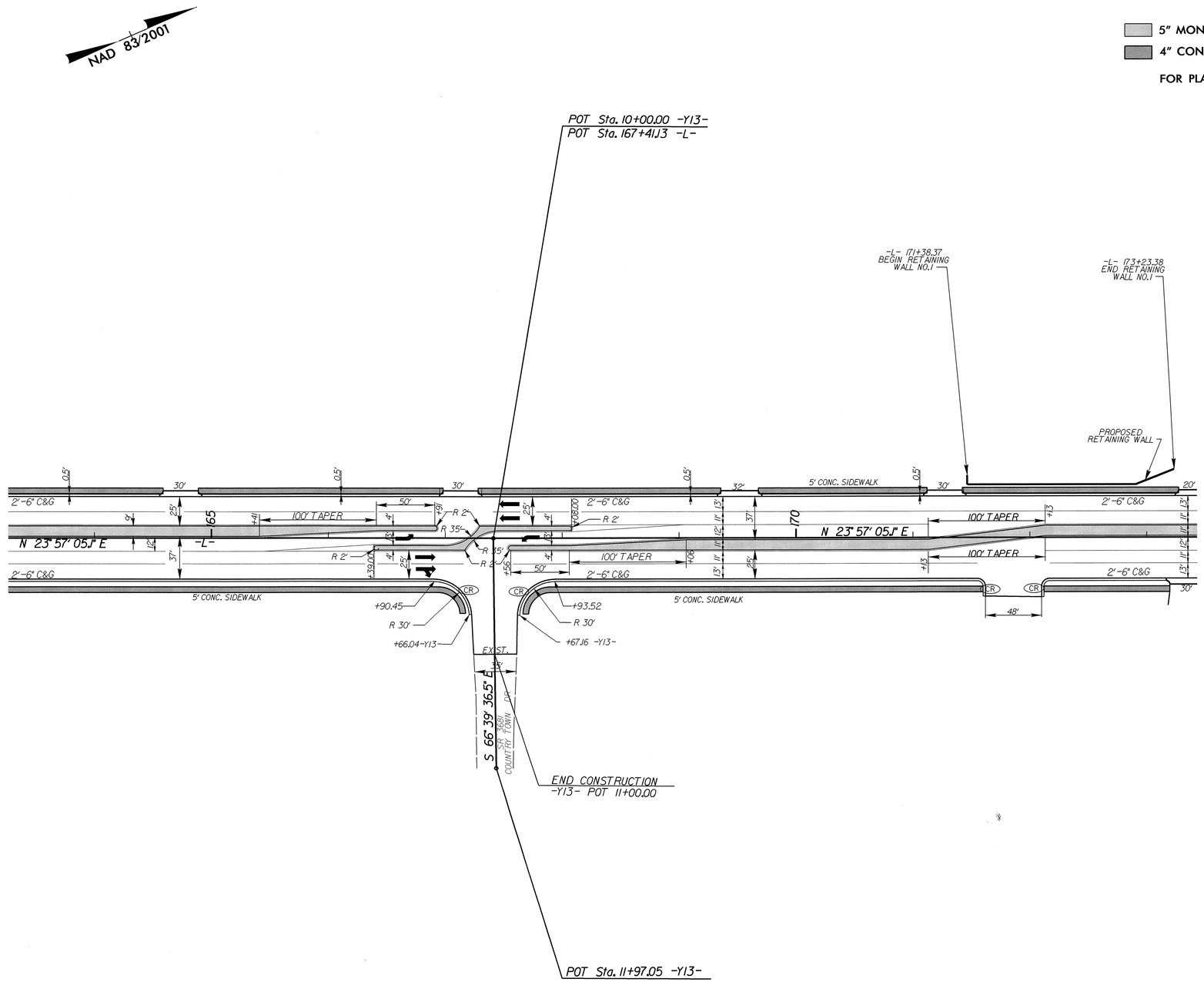

REVISIONS

8/17/99

26-JUN-2012 13:34
R:\Roadway\Proj\u13_intersection_rdy_dsn.dgn
$$$$USERNAME$$$$

PROJECT REFERENCE NO.	SHEET NO.
U-2809B	2-J

ROADWAY DESIGN ENGINEER

NORTH CAROLINA PROFESSIONAL SEAL 18902 ENGINEER GREGORY E. BREW

7-3-12

-Y14- -Y15- & -Y16-
INTERSECTION & CHANNELIZATION DETAILS

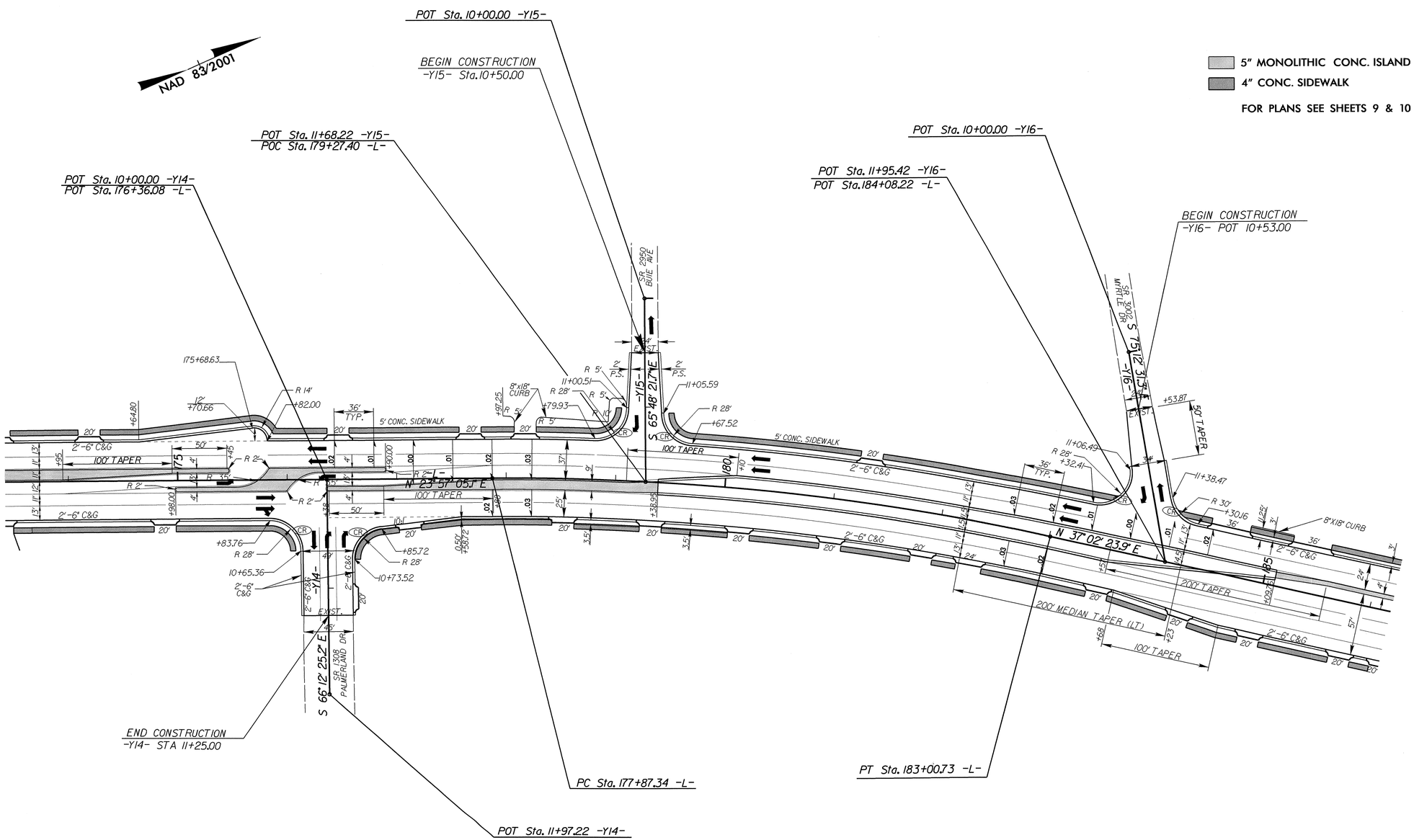

5" MONOLITHIC CONC. ISLAND

4" CONC. SIDEWALK

FOR PLANS SEE SHEETS 9 & 10

-L-

PI Sta 180+45.16
Δ = 13° 05' 18.8" (RT)
D = 2° 32' 58.0"
L = 513.39'
T = 257.81'
R = 2,247.37'
e = SEE PLANS

-L-

PI Sta 180+45.16
Δ = 13° 05' 18.8" (RT)
D = 2° 32' 58.0"
L = 513.39'
T = 257.81'
R = 2,247.37'
e = SEE PLANS

REVISIONS

8/17/99

26-JUN-2012 13:34
R:\Roadway\Proj\u14_Intersection_rdy_dsn.dgn
$$$$USERNAME$$$$

25 0 50	PROJECT REFERENCE NO.	SHEET NO.
	U-2809B	2-K

ROADWAY DESIGN ENGINEER

NORTH CAROLINA PROFESSIONAL SEAL 18903 ENGINEER GREGORY E. BREW

12-12

-Y17-
INTERSECTION & CHANNELIZATION DETAILS

5" MONOLITHIC CONC. ISLAND

4" CONC. SIDEWALK

FOR PLANS SEE SHEETS 10 & 11

* SPECIAL CURB RAMP SEE SHEET 2-DD THRU 2-FF

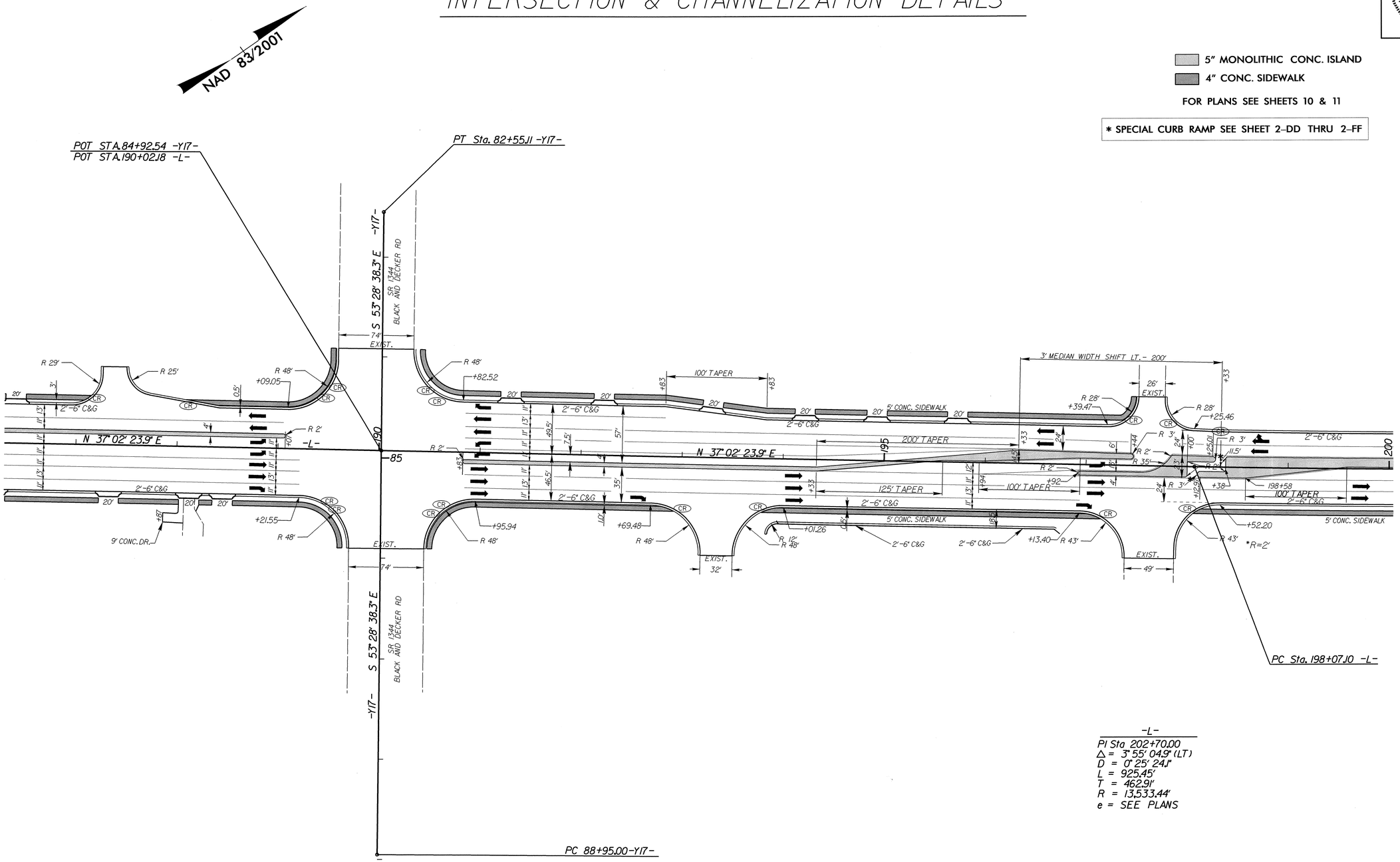

-L-

PI Sta 202+70.00
Δ = 3° 55' 04.9" (LT)
D = 0° 25' 24.1"
L = 925.45'
T = 462.91'
R = 13,533.44'
e = SEE PLANS

REVISIONS

8/17/99

26-JUN-2012 13:34
R:\Roadway\Proj\u17_intersection_rdy_dsn.dgn
$$$$USERNAME$$$$

25 0 50	PROJECT REFERENCE NO.	SHEET NO.
	U-2809B	2-L

ROADWAY DESIGN ENGINEER

NORTH CAROLINA PROFESSIONAL SEAL 18903 ENGINEER GREGORY E. BREW

7-3-12

-Y18-
INTERSECTION & CHANNELIZATION DETAIL

NAD 83/2001

5" MONOLITHIC CONC. ISLAND

4" CONC. SIDEWALK

FOR PLANS SEE SHEETS 12 & 13

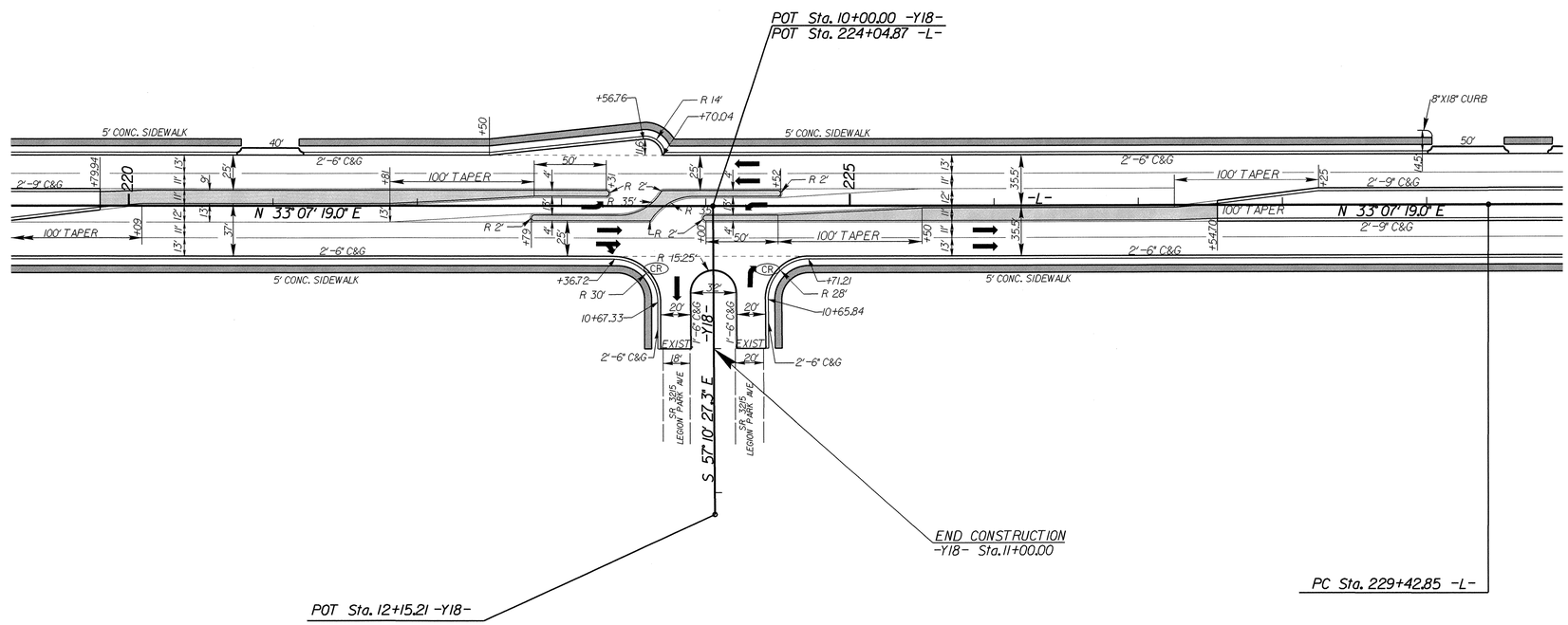

REVISIONS

8/17/99

26-JUN-2012 13:34
R:\Roadway\Proj\u18_Intersection_rdy_dsn.dgn
$$$$USERNAME$$$$

PROJECT REFERENCE NO.	SHEET NO.
U-2809B	2-M

ROADWAY DESIGN ENGINEER

NORTH CAROLINA PROFESSIONAL SEAL ENGINEER 18902 GREGORY E. BREEK 7-3-12

-Y19- -Y21- & -Y22- INTERSECTION DETAILS

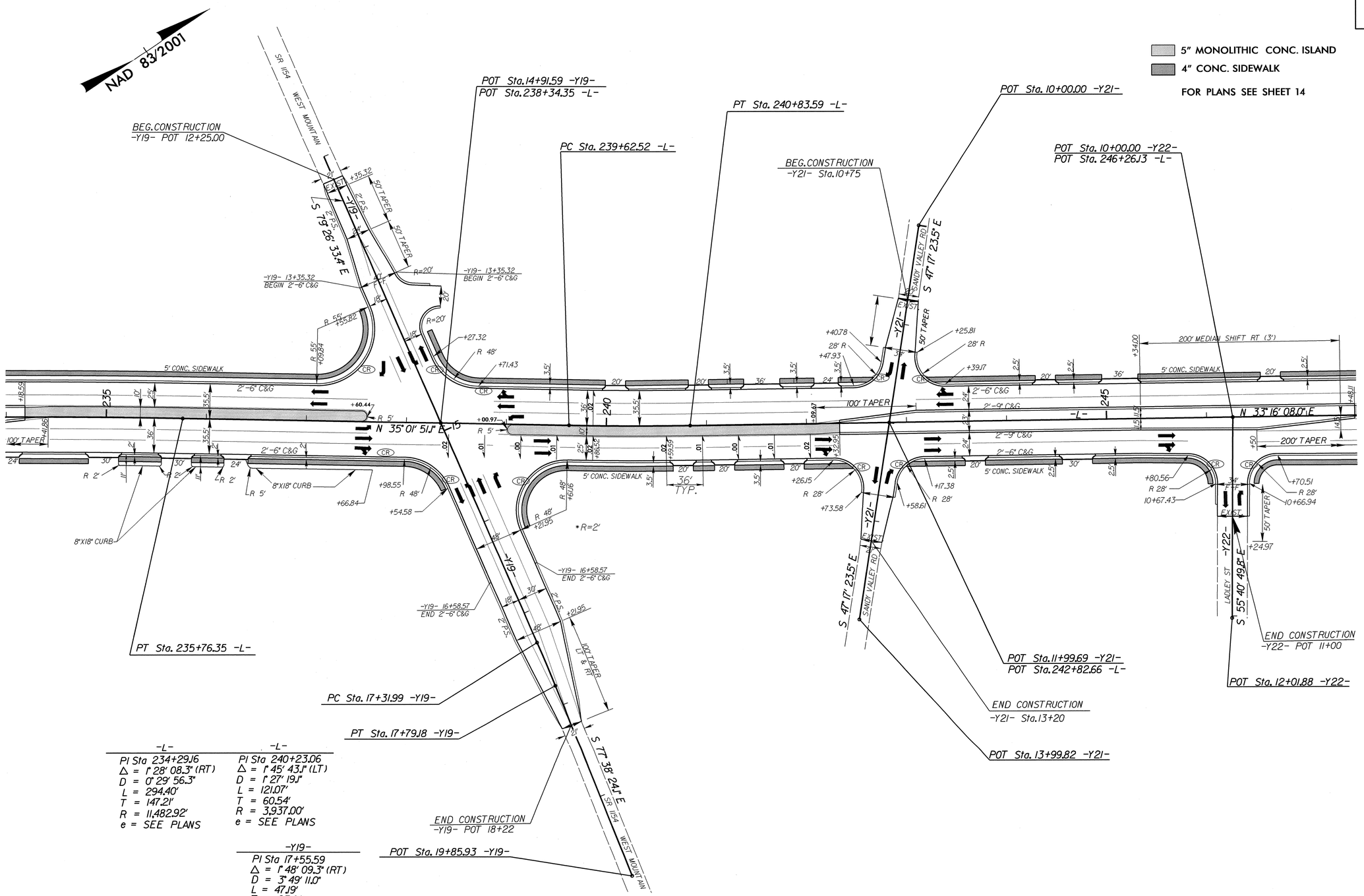

-L-	-L-
PI Sta 234+29.16	PI Sta 240+23.06
Δ = 1° 28' 08.3" (RT)	Δ = 1° 45' 43.1" (LT)
D = 0° 29' 56.3"	D = 1° 27' 19.1"
L = 294.40'	L = 121.07'
T = 147.21'	T = 60.54'
R = 11,482.92'	R = 3,937.00'
e = SEE PLANS	e = SEE PLANS

-Y19-
PI Sta 17+55.59
Δ = 1° 48' 09.3" (RT)
D = 3° 49' 11.0"
L = 47.19'
T = 23.60'
R = 1,500.00'

REVISIONS

8/17/99

27-JUN-2012 08:31
R:\Roadway\Proj\2809_19_Intersection_rdy_dsn.dgn
$$$$USERNAME$$$$

PROJECT REFERENCE NO.	SHEET NO.
U-2809B	2-N

ROADWAY DESIGN ENGINEER

NORTH CAROLINA PROFESSIONAL SEAL 19903 ENGINEER GREGORY E. BREW

7-3-12

-Y23- INTERSECTION AND CHANNELIZATION DETAIL

NAD 83/2001

5" MONOLITHIC CONC. ISLAND

4" CONC. SIDEWALK

FOR PLANS SEE SHEET 15

* SPECIAL CURB RAMP SEE SHEET 2-DD THRU 2-FF

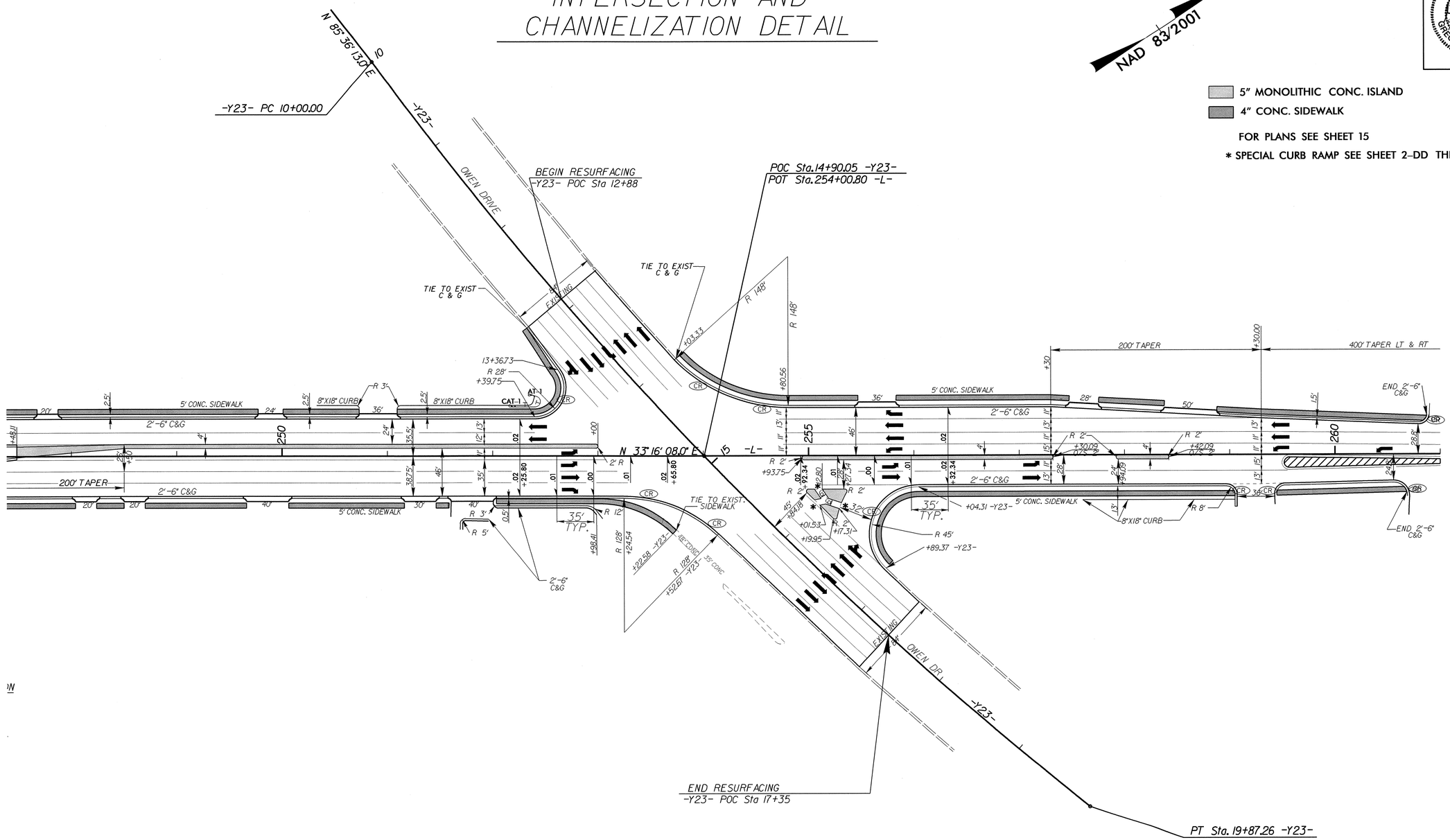

-Y23-
PI Sta 14+96.39
Δ = 14° 48' 00.4" (LT)
D = 1° 29' 56.8"
L = 987.26'
T = 496.39'
R = 3,822.00'

REVISIONS

8/17/99

26-JUN-2012 13:34
R:\Roadway\Proj\u2809b_y23_Intersection_rdy_dsn.dgn
$$$$USERNAME$$$$

PROJECT REFERENCE NO.	SHEET
U-2809B (34865.1.1)	2-0

GEOTECHNICAL ENGINEER

NORTH CAROLINA PROFESSIONAL SEAL 038176 ENGINEER SHUAI ZHANG

5-16-2012

SIGNATURE DATE

ENGINEER

SIGNATURE DATE

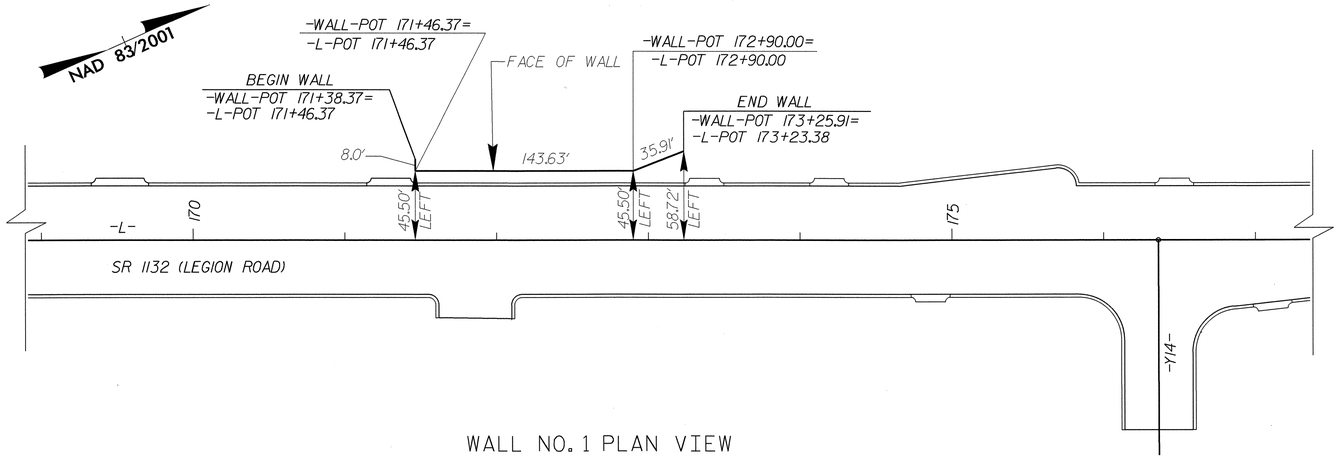

WALL NO. 1 PLAN VIEW

NOT TO SCALE

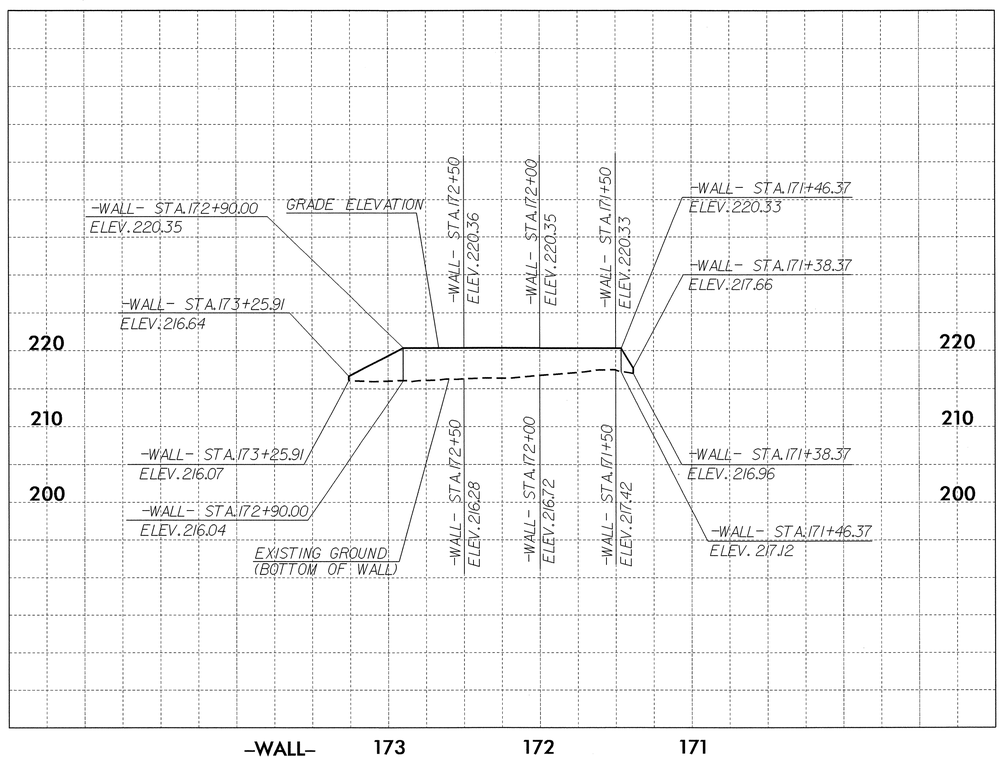

WALL NO. 1 ENVELOPE

EXPOSED WALL FACE (NOT TO SCALE)

ESTIMATED QUANTITY

RETAINING WALL NO.	SEGMENTAL GRAVITY RETAINING WALLS (SQUARE FEET)
1	705

RETAINING WALL TYPICAL SECTIONS

-L- STA. AND OFFSET	-WALL- STA.	GRADE EL.	BOTTOM OF WALL EL.	DESIGN HEIGHT
171+46.37 53.50' LT.	171+38.37	217.66'	216.96'	0.70'
171+46.37 45.50' LT.	171+46.37	220.33'	217.12'	3.21'
171+50.00 45.50' LT.	171+50.00	220.33'	217.42'	2.91'
172+00.00 45.50' LT.	172+00.00	220.35'	216.72'	3.63'
172+50.00 45.50' LT.	172+50.00	220.36'	216.28'	4.08'
172+90.00 45.50' LT.	172+90.00	220.35'	216.04'	4.31'
173+23.38 58.72' LT.	173+25.91	216.64'	216.07'	0.57'

SEE SHEET 9

PREPARED BY: S. ZHANG	DATE: 03/2012
REVIEWED BY: J. BATTS	DATE: 03/2012

GEOTECHNICAL ENGINEERING UNIT

STATE OF NORTH CAROLINA DEPARTMENT OF TRANSPORTATION

- [X] EASTERN REGIONAL OFFICE
- [ ] WESTERN REGIONAL OFFICE
- [ ] CONTRACT OFFICE

STATE OF NORTH CAROLINA DEPARTMENT OF TRANSPORTATION RALEIGH

RETAINING WALL NO. 1

REVISIONS

NO.	BY	DATE	NO.	BY	DATE
1			3		
2			4		

PROJECT REFERENCE NO.	SHEET
U-2809B (34865.1.1)	2-P

GEOTECHNICAL ENGINEER

NORTH CAROLINA PROFESSIONAL SEAL 038176 ENGINEER MINHAI ZHANG

5-14-2012

SIGNATURE DATE

ENGINEER

SIGNATURE DATE

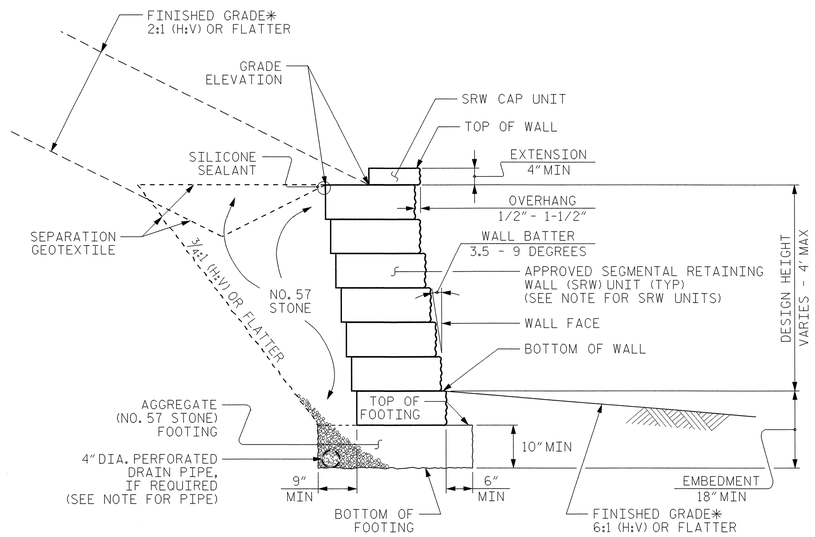

STANDARD SEGMENTAL GRAVITY WALL WITH SLOPE

*SEE ROADWAY PLANS FOR FINISHED GRADE AND DITCH DETAILS.

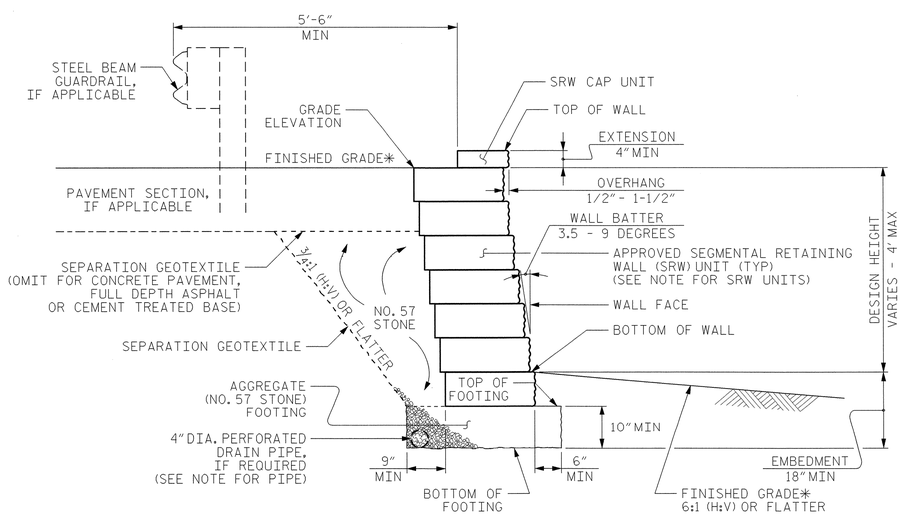

STANDARD SEGMENTAL GRAVITY WALL WITHOUT SLOPE

*SEE ROADWAY PLANS FOR FINISHED GRADE DETAILS.

NOTES:

FOR STANDARD SEGMENTAL GRAVITY RETAINING WALLS, SEE SEGMENTAL GRAVITY RETAINING WALLS PROVISION.

FOR STEEL BEAM GUARDRAIL, SEE ROADWAY PLANS AND SECTION 862 OF THE STANDARD SPECIFICATIONS.

DO NOT ATTACH FENCES OR HANDRAILS TO STANDARD SEGMENTAL GRAVITY WALLS.

DO NOT USE STANDARD SEGMENTAL GRAVITY WALLS FOR INTERSTATE HIGHWAY OR RAILROAD PROJECTS.

DO NOT USE STANDARD SEGMENTAL GRAVITY WALLS WHEN SURCHARGE LOADS WILL BE WITHIN 5'-6" OF THE BACK OF SRW CAP UNITS.

DO NOT USE STANDARD SEGMENTAL GRAVITY WALLS WHEN VERY LOOSE OR SOFT SOIL OR MUCK IS BELOW WALLS.

SEGMENTAL RETAINING WALL (SRW) UNITS ARE APPROVED FOR EITHER 2' OR 4' MAXIMUM DESIGN HEIGHTS. FOR DETAILS AND DIMENSIONS OF APPROVED SRW UNITS AND MAXIMUM DESIGN HEIGHTS, SEE www.ncdot.org/doh/preconstruct/highway/geotech/seggravwalls

DO NOT MIX APPROVED SRW UNITS FROM DIFFERENT VENDORS ON THE SAME STANDARD SEGMENTAL GRAVITY WALL. USE THE SAME SIZE APPROVED SRW UNITS FOR EACH WALL SECTION.

BEFORE BEGINNING STANDARD SEGMENTAL GRAVITY WALL CONSTRUCTION, SURVEY WALL LOCATIONS AND SUBMIT WALL PROFILE VIEWS (WALL ENVELOPES) FOR REVIEW. FOR WALL ENVELOPES, INCLUDE BOTTOM OF WALL, EXISTING GROUND AND GRADE ELEVATIONS AND OTHER ELEVATIONS AS NEEDED AT INTERVALS OF 25' OR LESS ALONG WALLS. DO NOT START WALL CONSTRUCTION UNTIL WALL ENVELOPES ARE ACCEPTED.

A DRAIN PIPE IS REQUIRED IF GROUNDWATER IS ABOVE BOTTOM OF FOOTINGS.

DO NOT PLACE NO. 57 STONE FOR FOOTINGS UNTIL EXCAVATION DIMENSIONS AND FOUNDATION MATERIAL ARE APPROVED.

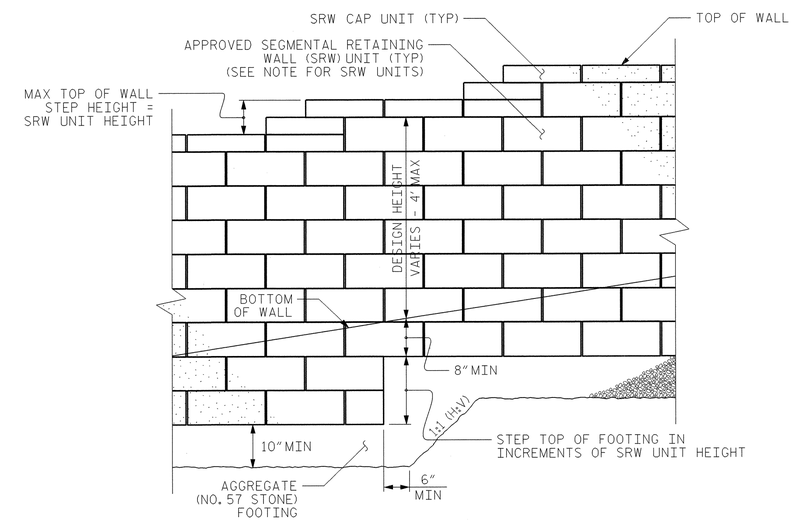

STANDARD SEGMENTAL GRAVITY WALL - PARTIAL ELEVATION

SEE SHEET 9

GEOTECHNICAL ENGINEERING UNIT

STATE OF NORTH CAROLINA DEPARTMENT OF TRANSPORTATION RALEIGH

STANDARD DRAWING NO. 453.02

STANDARD SEGMENTAL GRAVITY RETAINING WALL

DATE: 1-17-12

PROJECT REFERENCE NO.	SHEET NO.
U-2809B	2-Q

STATE OF
NORTH CAROLINA
DEPT. OF TRANSPORTATION
DIVISION OF HIGHWAYS
RALEIGH, N.C.

ENGLISH DETAIL DRAWING FOR

2'-9" CONCRETE CURB & GUTTER

SHEET 1 OF 1

846D01

GENERAL NOTES:
- PLACE CONTRACTION JOINTS AT 10' INTERVALS, EXCEPT THAT A 15' SPACING MAY BE USED WHEN A MACHINE IS USED OR WHEN SATISFACTORY SUPPORT FOR THE FACE FORM CAN BE OBTAINED WITHOUT THE USE OF TEMPLATES AT 10' INTERVALS.
- JOINT SPACING MAY BE ALTERED IF REQUIRED BY THE ENGINEER.
- CONTRACTION JOINTS MAY BE INSTALLED WITH THE USE OF TEMPLATES OR FORMED BY OTHER APPROVED METHODS. MAKE NON-TEMPLATE FORMED JOINTS A MIN. OF 1½" DEEP.
- FILL ALL CONSTRUCTION JOINTS WITH JOINT FILLER AND SEALER.
- SPACE EXPANSION JOINTS AT 90' INTERVALS AND ADJACENT TO ALL RIGID OBJECTS.

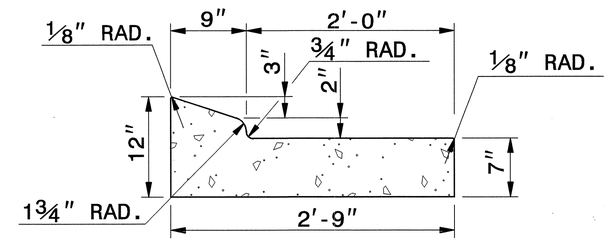

2'-9" CURB AND GUTTER

SECTION VIEW OF CURB AND GUTTER

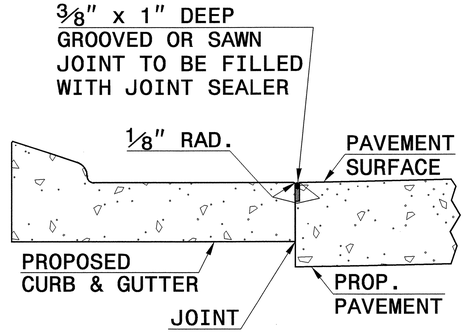

LONGITUDINAL JOINT

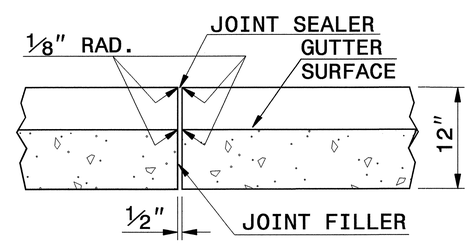

TRANSVERSE EXPANSION JOINT IN CURB AND GUTTER

SECTION VIEW OF JOINTS

STATE OF
NORTH CAROLINA
DEPT. OF TRANSPORTATION
DIVISION OF HIGHWAYS
RALEIGH, N.C.

ENGLISH DETAIL DRAWING FOR

2'-9" CONCRETE CURB & GUTTER

SHEET 1 OF 1

846D01

NORTH CAROLINA PROFESSIONAL SEAL 022966 ENGINEER R. HOWERTON
7/5/12

PROJECT SERVICES UNIT
STANDARDS AND SPECIAL DESIGN
Office 919-250-4128 FAX 919-250-4119

SEE PLATE FOR TITLE

ORIGINAL BY: STD. 846.01 DATE:
MODIFIED BY: E.E. WARD DATE: 8-15-00
CHECKED BY: DATE: 6/17/09
FILE SPEC.: /usr/details/stand/c&g2'-9".dgn

15-JUN-2009 10:00
s:\contracts\contracts\special details\ericward\usr\details\stand\c&g2'-9.dgn
jhowerton AT PS237501

PROJECT REFERENCE NO.	SHEET NO.
U-2809B	2-R

GENERAL NOTES:
ALL CATCH BASINS OVER 3'-6" IN DEPTH TO BE PROVIDED WITH STEPS 12" ON CENTERS. STEPS SHALL BE IN ACCORDANCE WITH STD. 840.66.
ALL EXPOSED CORNERS TO BE CHAMFERED 1".
CLASS "B" CONCRETE TO BE USED THROUGHOUT.
2" PIPE WEEPHOLES TO BE PLACED AS DIRECTED BY ENGINEER.
THE 6" OPENING SHOWN MAY BE INCREASED TO 8" MAXIMUM IF DEEMED TO BE NECESSARY BY THE ENGINEER.
OPTIONAL CONSTRUCTION - MONOLITHIC POUR, 2" KEYWAY, OR #5 BAR DOWELS AT 12" CENTERS AS DIRECTED BY THE ENGINEER.
FORMS ARE TO BE USED FOR THE CONSTRUCTION OF THE BOTTOM SLAB.
IF REINFORCED CONCRETE PIPE IS SET IN BASE SLAB OF BOX, ADD TO BASE AS SHOWN ON STD. DWG. 840.00.
A STONE DRAIN CONSISTING OF 1 CUBIC FOOT OF NO. 78M STONE CONTAINED IN A BAG OF POROUS FABRIC SHALL BE PLACED AT EACH WEEP HOLE.
FOR 8' IN HEIGHT OR LESS USE 6" WALLS AND BOTTOM SLAB.
OVER 8' IN HEIGHT USE 8" WALLS AND BOTTOM SLAB. QUANTITIES TO BE ADJUSTED ACCORDINGLY.

BILL OF MATERIALS

REINFORCING STEEL				MASONRY	
CODE	SIZE	QTY.	LENGTH	REINF. STEEL LBS.	CONCRETE CLASS "B" FT^3
X	#4	13	5'-2"	44.87	TOTAL 2.66
Y	#4	9	6'-8"	40.08	NO DEDUCTIONS HAVE BEEN MADE FOR PIPES OR MANHOLES
Z1	#4	4	6'-8"	17.81	
Z2	#4	4	5'-2"	13.81	
			TOTAL	116.57	

STATE OF NORTH CAROLINA DEPT. OF TRANSPORTATION DIVISION OF HIGHWAYS RALEIGH, N.C.

ENGLISH DETAIL DRAWING FOR
CONCRETE CATCH BASIN (3 OR 4 SIDE OPEN THROAT)

SHEET 1 OF 2
840D04

STATE OF NORTH CAROLINA DEPT. OF TRANSPORTATION DIVISION OF HIGHWAYS RALEIGH, N.C.

ENGLISH DETAIL DRAWING FOR
CONCRETE CATCH BASIN (3 OR 4 SIDE OPEN THROAT)

SHEET 1 OF 2
840D04

STATE OF NORTH CAROLINA DEPT. OF TRANSPORTATION DIVISION OF HIGHWAYS RALEIGH, N.C.

ENGLISH DETAIL DRAWING FOR
CONCRETE CATCH BASIN (3 OR 4 SIDE OPEN THROAT)

SHEET 2 OF 2
840D04

SEE SHEET 12. STR. NO. 1235

NORTH CAROLINA PROFESSIONAL SEAL 022966 ENGINEER
7/9/12

CONTRACT STANDARDS AND DEVELOPMENT UNIT
Office 919-707-6950 FAX 919-250-4119

SEE PLATE FOR TITLE

ORIGINAL BY: _____ DATE: _____
MODIFIED BY: E.E.WARD DATE: 8-21-03
CHECKED BY: _____ DATE: 4/10/12
FILE SPEC.: w:eward:detail/metric/stand/840d04.dgn

5/14/99
10-APR-2012 13:34
S:\Contracts\Contracts\Special Details\nbritt\english\hydro\840d04 3 or 4 side OTCB.dgn
jhowerton AT CSD237501

PROJECT REFERENCE NO.	SHEET NO.
U-2809B	2-S

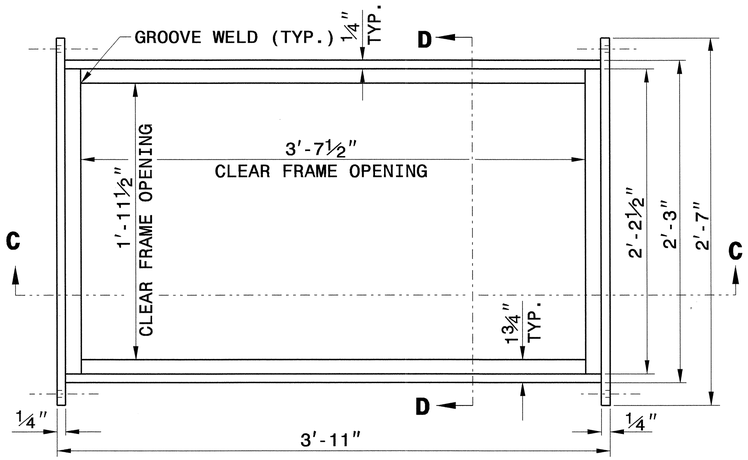

PLAN VIEW

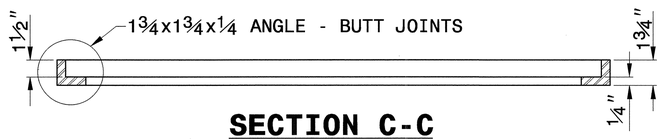

SECTION C-C
FRAME

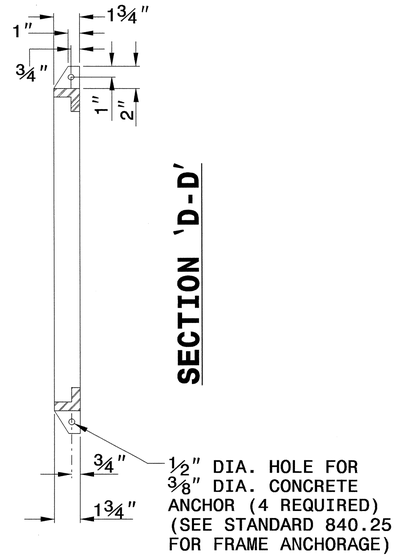

SECTION 'D-D'

NOTES:

1. HOT DIP GALVANIZE FRAME AND GRATE IN ACCORDANCE WITH ASTM DESIGNATION A-123 AND AASHTO M-111.
2. GRATE SHOULD MEET HS-20 LOADING.
3. PROVIDE STEEL CONFORMING TO THE REQUIREMENTS OF A.S.T.M. DESIGNATION A-36.
4. WELD IN ACCORDANCE WITH THE ANSI/AASHTO/AWS D1.5 WELDING CODE. SEAL WELD ALL CONNECTIONS ALONG TOP AND BOTTOM HORIZONTAL SEAMS OF CONNECTIONS IN ADDITION TO ANY REQUIRED STRUCTURAL WELDS.
5. SEE STD. DRAWING 840.25 FOR FRAME ANCHORAGE.

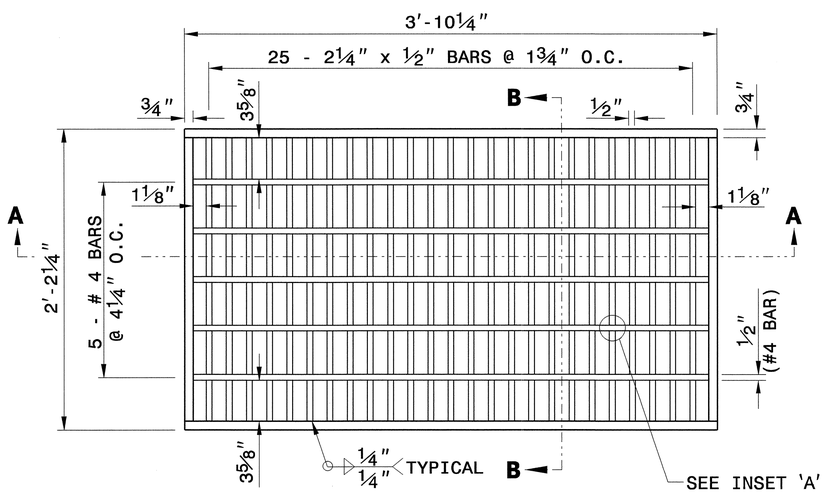

PLAN VIEW

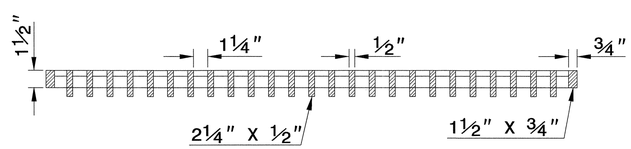

SECTION A-A
GRATE

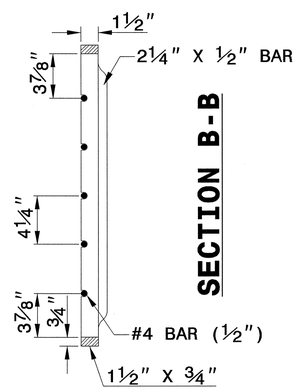

SECTION B-B

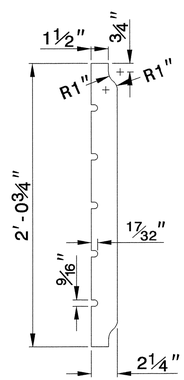

DETAIL OF BEARING BAR

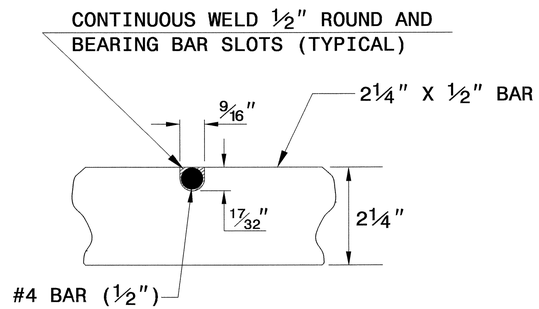

INSET 'A'

(17/32" X 9/16" NOTCH IN 2 1/4" X 1/2" BAR)

SEE SHEET 15, STR. 1551

REVISED 10-10-02
FOR HS-20 LOADING

NORTH CAROLINA PROFESSIONAL SEAL 022966 ENGINEER JOEL R. HOMEYER
7/5/12

CONTRACT STANDARDS
AND DEVELOPMENT UNIT
Office 919-707-6950 FAX 919-250-4119

BICYCLE SAFE STEEL GRATE AND FRAME

ORIGINAL BY: E.E. WARD DATE: 11-12-98
MODIFIED BY: E.E. WARD DATE: 10-10-02
CHECKED BY: DATE:
FILE SPEC.: /usr/stand/details/bicyclesafe.dgn

$$$$$SYSTIME$$$$$
$$$$$$$$$$$$$$DGN$$$$$$$$$$$$$$$$$$$$
$$$$USERNAME$$$$

PROJECT REFERENCE NO.	SHEET NO.
U-2809B	2-T

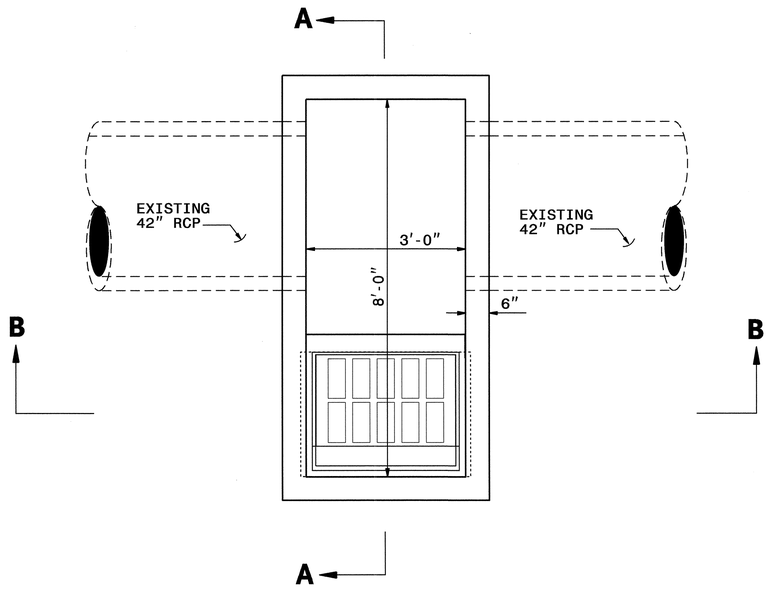

PLAN

GENERAL NOTES:

1. USE CLASS "B" CONCRETE THROUGHOUT.
2. CONSTRUCT CONCRETE BOX IN ACCORDANCE WITH SECTION 825 OF THE STANDARD SPECIFICATIONS.
3. USE FORMS TOR CONSTRUCT THE BOTTOM SLAB.
4. ADJUST LENGTH OF STEEL BARS AS NEEDED TO COMPENSATE FOR PIPES AND FRAME AND GRATE OPENINGS.
5. REINFORCING STEEL SHALL CONFORM TO ASTM A 615, GRADE 400.
6. CUT OR BEND STEEL BARS AS NEEDED TO PROVIDE 2" CLEARANCE.
7. LOCATE FRAME AND GRATE AS FIELD CONDITIONS DICTATE AND AS DIRECTED BY THE ENGINEER.
8. DIMENSIONS OF CATCH BASIN MAY BE ADSUSTED AS DIRECTED BY THE ENGINEER.

BILL OF MATERIALS

BAR	QTY	SIZE	LENGTH	WEIGHT
A	29	#5	3'-8"	111
B	8	#5	8'-8"	72
C	8	#5	5'-6"	46
TOTAL REINF. STEEL (lbs.)				230
TOTAL CONC. CU. YDS.				4.8
DEDUCTIONS FOR ONE PIPE				
42" RC PIPE				0.28

NO DEDUCTIONS HAVE BEEN MADE TO ACCOMMODATE PIPES OR CATCH BASIN OPENING.

SEE SHEET 11, STR. 1124

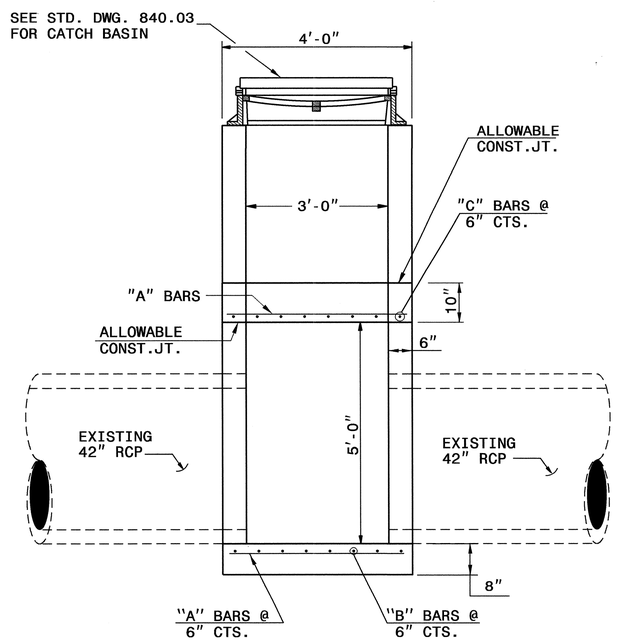

SECTION B-B

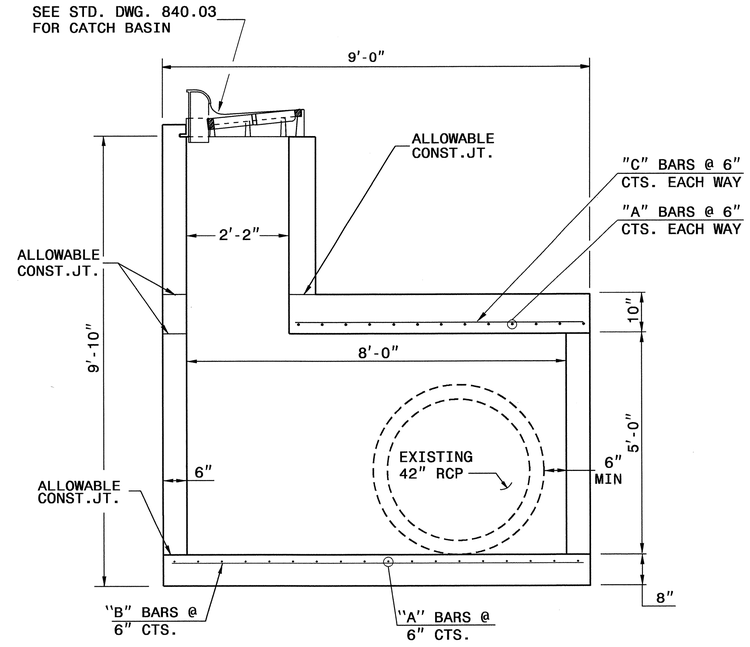

SECTION A-A

NORTH CAROLINA PROFESSIONAL SEAL 022966 ENGINEER JOHN H. HOWARD 7/6/12

CONTRACTS STANDARDS AND DEVELOPMENT UNIT
Office 919-707-6950 FAX 919-250-4119

DETAIL OF SPECIAL CATCH BASIN

ORIGINAL BY: T.S.SPELL DATE: MAY 22,2008
MODIFIED BY: K.A.KEMPE DATE: MAR 06,2012
CHECKED BY: [signature] DATE: 3/13/12
FILE SPEC.: g:\details\kkempf\english\cb36rcpoffset.dgn

09-MAR-2012 12:25
S:\Contracts\Contracts\Special Details\kkempf\english\cb36rcpoffset.dgn
$$$$USERNAME$$$$

PROJECT REFERENCE NO.	SHEET NO.
U-2809B	2-U

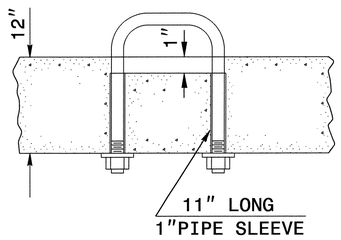

PARTIAL SECTION

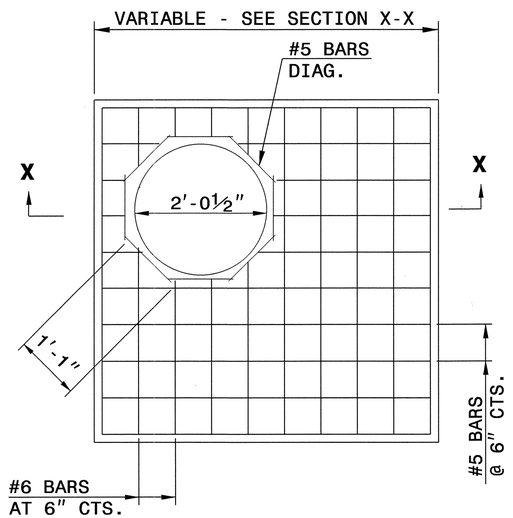

PLAN

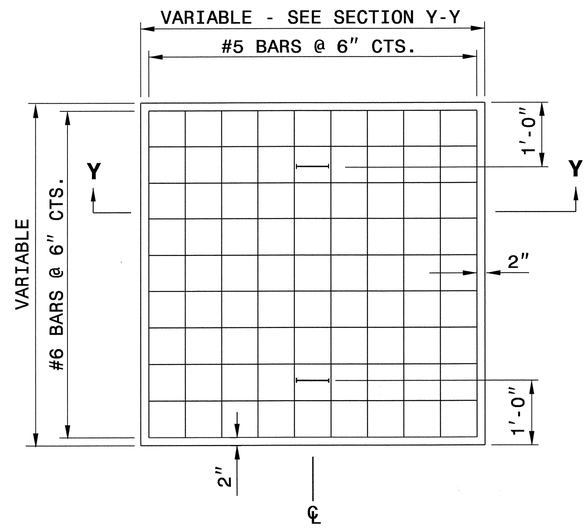

PLAN

GENERAL NOTES:

CONSTRUCT IN ACCORDANCE WITH SECTION 859 OF THE STANDARD SPECIFICATIONS.

FIELD VERIFY THE DIMENSIONS FOR THE EXISTING BOXES.

BILL OF MATERIALS

MASONRY	
TOP SLAB CONCRETE CLASS "A"	.037YDS^3 PER FT^2
BRICK MASONRY	.025YDS^3 PER FT^2
REINFORCING STEEL	7.64LBS PER FT^2

MANHOLE OPTION QUANTITIES			
SIZE	QTY.	LENGTH	REINF. STEEL LBS.
#5 DIAG.	8	1'-1"	9.04

NOTE:
CONCRETE AND REINFORCING STEEL QUANTITIES BASED ON SQUARE FOOT AREA OF THE PROPOSED TOP SLAB FOR THE EXISTING DRAINAGE STRUCTURE.

BRICK MASONRY QUANTITY IS BASED ON THE TOTAL SQUARE FOOTAGE OF EXTERIOR WALL SURFACE AREA TO BE CONSTRUCTED.

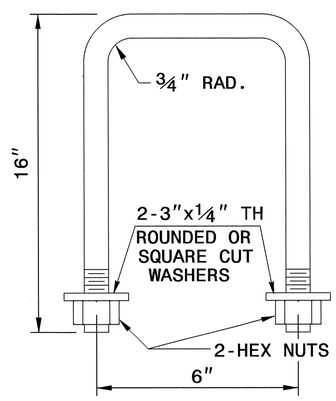

DETAIL OF HANDLE

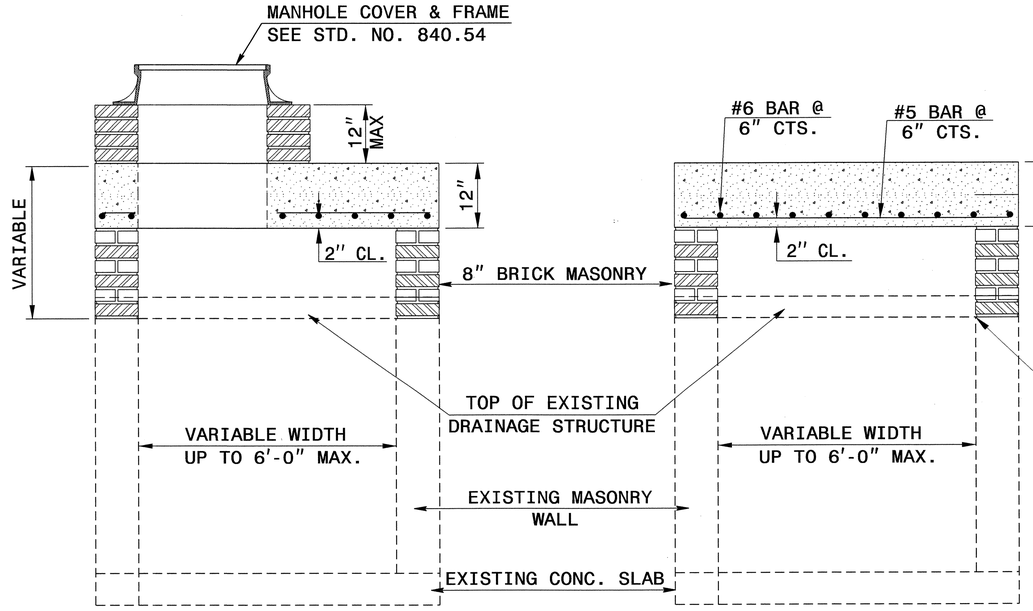

SECTION X-X

SECTION Y-Y

SEE SHEET 10. STR. NO. 1024A, 1008, 1048A,
SEE SHEET 11. STR. NO. 1133A

NORTH CAROLINA PROFESSIONAL SEAL 022966 ENGINEER
DOT STRUCTURE MANAGEMENT UNIT
7/5/12

CONTRACT STANDARDS AND DEVELOPMENT UNIT
Office 919-707-6950 FAX 919-250-4119

DETAIL TO CONVERT EXISTING DROP INLET OR CATCH BASIN TO TRAFFIC BEARING JUNCTION BOX (MANHOLE OPTIONAL)

ORIGINAL BY: T.S.S. DATE: FEB.2000
MODIFIED BY: E.E.W. DATE: NOV.2001
CHECKED BY: [signature] DATE: 3/1/12
FILE SPEC.: $$$$ericward/usr/details/stand/boxtotbjbe.dgn

01-MAR-2012 08:11
S:\Contracts\Contracts\Special Details\ericward\usr\details\stand\boxtotb_jbe.dgn
$$$$USERNAME$$$$

PROJECT REFERENCE NO.	SHEET NO.
U-2809B	2-V

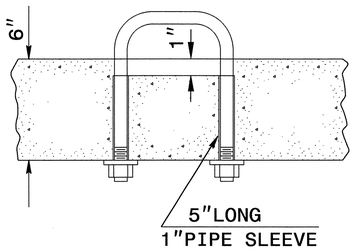

PARTIAL SECTION

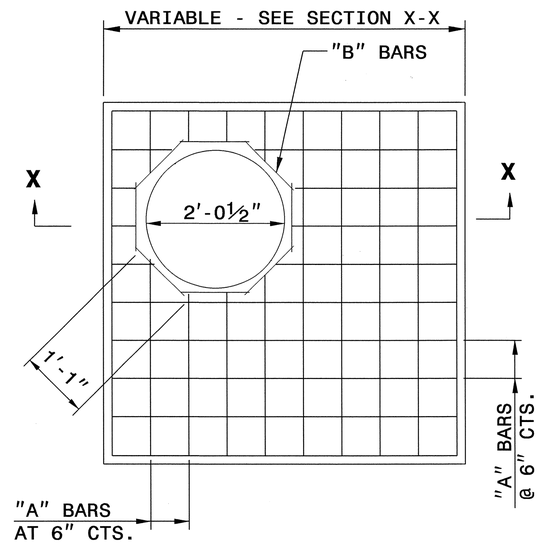

PLAN

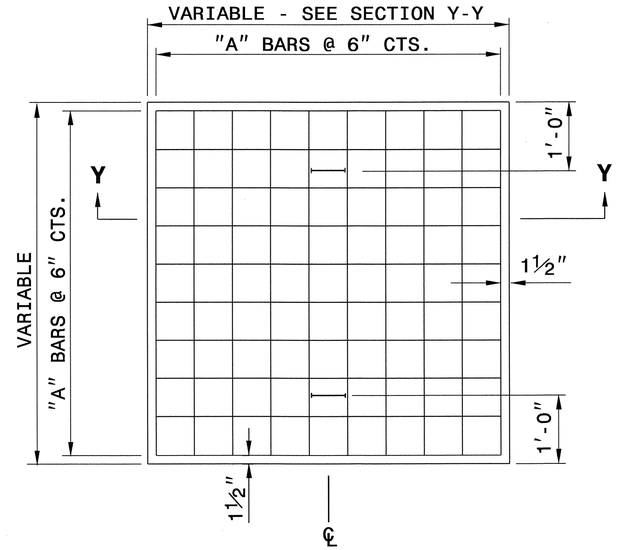

PLAN

GENERAL NOTES:

CONSTRUCT IN ACCORDANCE WITH SECTION 859 OF THE STANDARD SPECIFICATIONS.

THE DIMENSIONS FOR THE EXISTING BOXES ARE APPROXIMATE AND MAY VARY SLIGHTLY.

DETAIL INTENDED FOR NON-TRAFFIC BEARING DRAINAGE STRUCTURES.

BILL OF MATERIALS

REINFORCING STEEL				
CODE	SIZE	QTY.	LENGTH	REINF. STEEL LBS.
A	#4	20	4'-6"	60.12
B	#4	8	1'-1"	5.79
TOTAL				65.91 *
MASONRY				CU YDS
TOP SLAB CONCRETE CLASS "B"				.4326 *
BRICK MASONRY PER FT HT (MIN)				.4111

★ NOTE:
QUANTITIES BASED ON 3'-6" X 3'-6" DRAINAGE STRUCTURE. ADJUST QUANTITIES FOR LARGER STRUCTURES AND MANHOLE CONSTRUCTION.

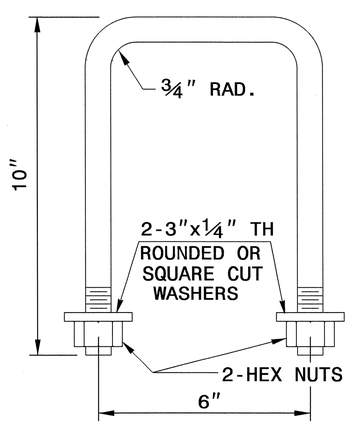

DETAIL OF HANDLE

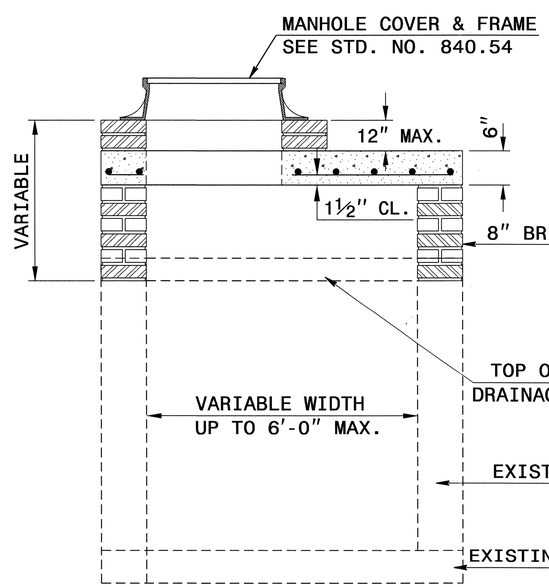

SECTION X-X

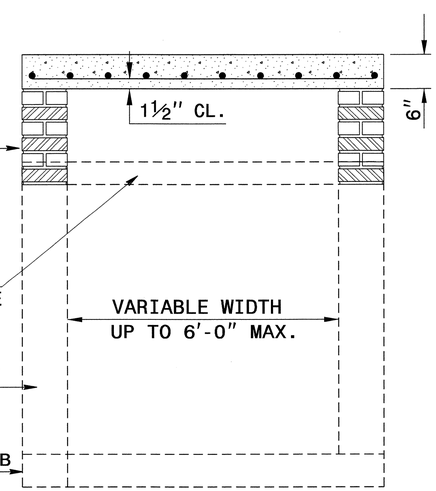

SECTION Y-Y

SEE SHEET 10, STR. 1049A

SEE SHEET 11, STR. 1125A, 1128B

NORTH CAROLINA PROFESSIONAL SEAL 022966 ENGINEER JOEL S. HOWESTON
7/5/12

CONTRACT STANDARDS AND DEVELOPMENT UNIT
Office 919-707-6950 FAX 919-250-4119

DETAIL TO CONVERT EXISTING DROP INLET OR CATCH BASIN TO JUNCTION BOX (MANHOLE OPTIONAL)

ORIGINAL BY:	T.S.S.	DATE:	NOV. 1997
MODIFIED BY:	T.S.S.	DATE:	FEB. 2000
CHECKED BY:	[signature]	DATE:	4/9/12
FILE SPEC.:	ds174:/usr/details/stand/boxtojbe.dgn		

09-APR-2012 11:54
S:\Contracts\Contracts\Special Details\ericward\usr\details\stand\boxtojbe.dgn
$$$$USERNAME$$$$

PROJECT REFERENCE NO.	SHEET NO.
U-2809B	2-W

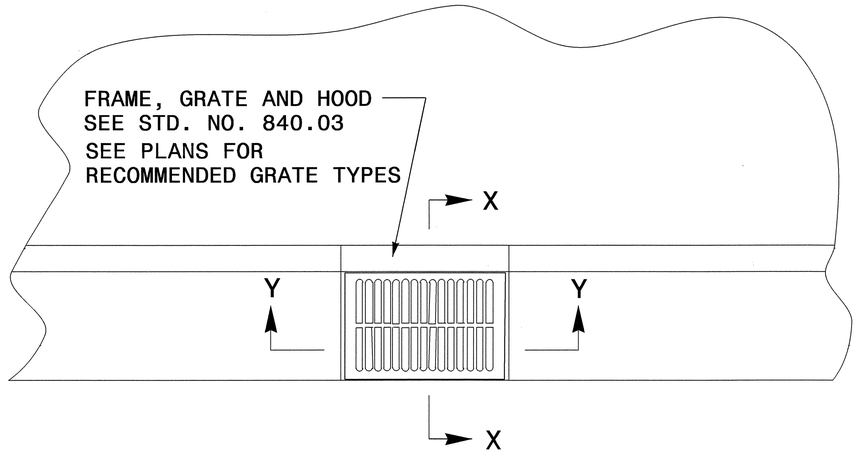

PLAN

GENERAL NOTES:

- THE ROADWAY PLANS INDICATE STRUCTURES TO BE CONVERTED.
- AFTER REMOVAL, STORE GRATES AND FRAMES AS DIRECTED BY THE ENGINEER.
- 4" SOLID CLAY BRICK, JUMBO BRICK, CONCRETE, OR 4" SOLID CONCRETE BLOCK MAY BE USED FOR VERTICAL ADJUSTMENT OF THE STRUCTURE.
- CONVERT IN ACCORDANCE WITH SECTION 859 OF THE STANDARD SPECIFICATIONS.

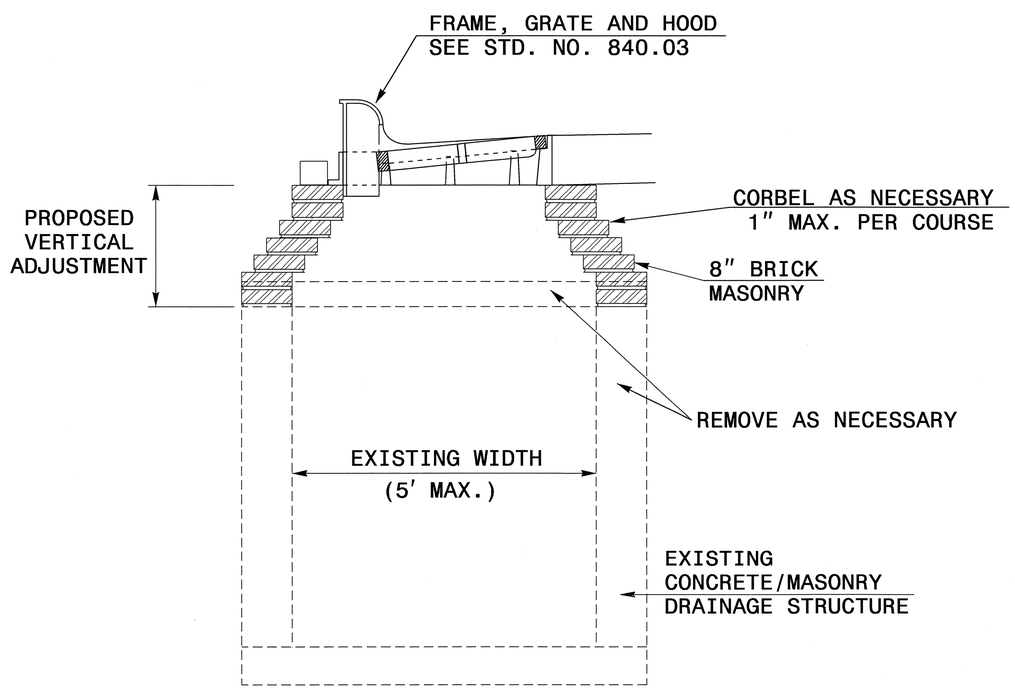

SECTION X-X

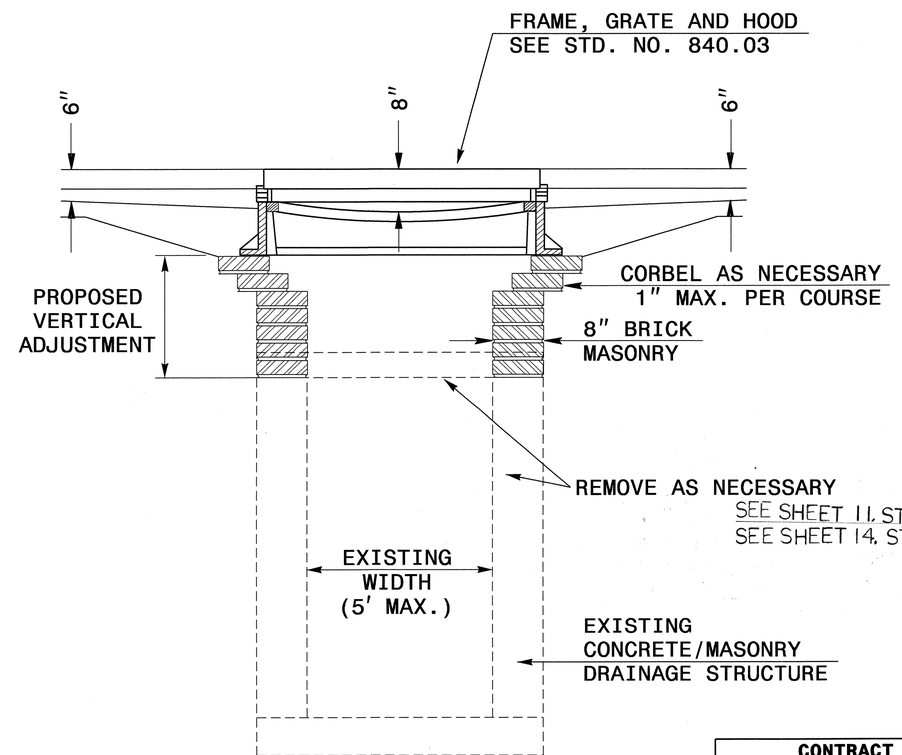

SECTION Y-Y

NORTH CAROLINA PROFESSIONAL SEAL 022986 ENGINEER JOHN S. HOWERTON
7/5/12

CONTRACT STANDARDS AND DEVELOPMENT UNIT
Office 919-707-6950 FAX 919-250-4119

CONVERSION OF DROP INLET OR JUNCTION BOX TO CATCH BASIN

ORIGINAL BY: E.E. WARD DATE: 11-97
MODIFIED BY: DATE:
CHECKED BY: DATE: 3/6/12
FILE SPEC.: p337:usr\details\stand\jbtocb.dgn

5/14/99

06-MAR-2012 08:15
S:\Contracts\Contracts\Special Details\ericward\usr\details\stand\ditocb_eng.dgn
jhowerton AT CSD237501

PROJECT REFERENCE NO.	SHEET NO.
U-2809B	2-X

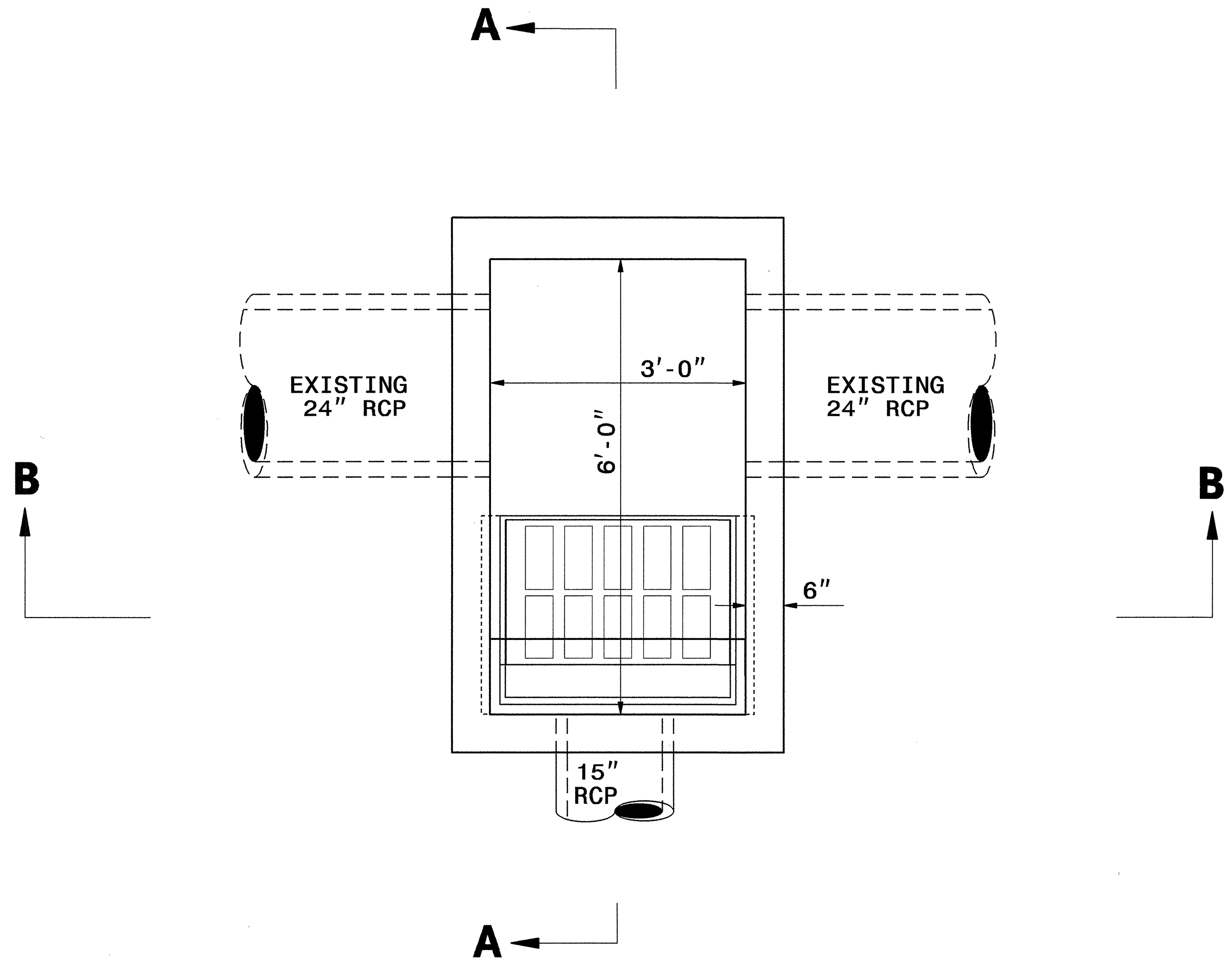

PLAN

GENERAL NOTES:

1. USE CLASS "B" CONCRETE THROUGHOUT.
2. CONSTRUCT CONCRETE BOX IN ACCORDANCE WITH SECTION 825 OF THE STANDARD SPECIFICATIONS.
3. USE FORMS TOR CONSTRUCT THE BOTTOM SLAB.
4. ADJUST LENGTH OF STEEL BARS AS NEEDED TO COMPENSATE FOR PIPES AND FRAME AND GRATE OPENINGS.
5. REINFORCING STEEL SHALL CONFORM TO ASTM A 615, GRADE 400.
6. CUT OR BEND STEEL BARS AS NEEDED TO PROVIDE 2″ CLEARANCE.
7. LOCATE FRAME AND GRATE AS FIELD CONDITIONS DICTATE AND AS DIRECTED BY THE ENGINEER.
8. DIMENSIONS OF CATCH BASIN MAY BE ADSUSTED AS DIRECTED BY THE ENGINEER.

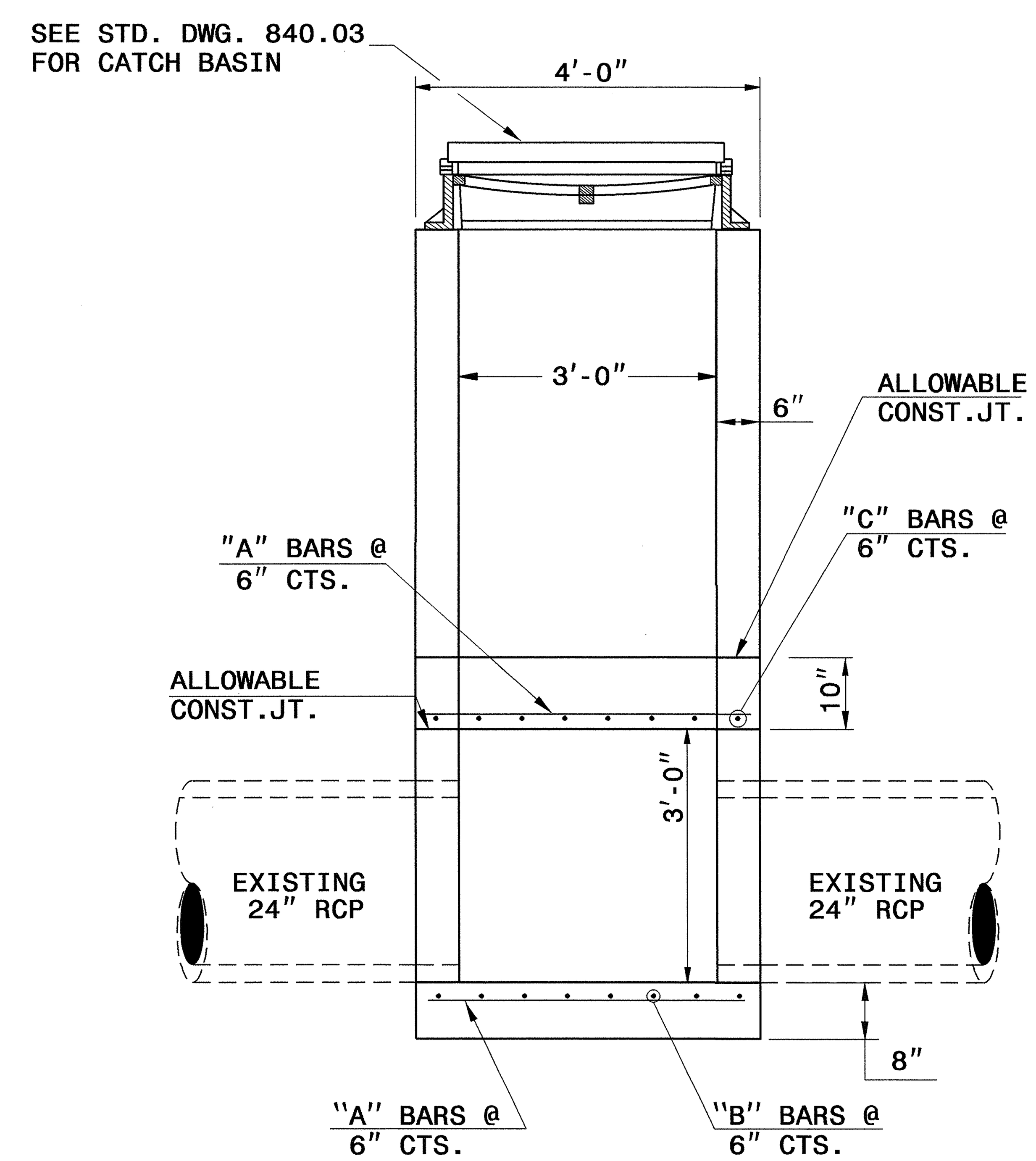

SECTION B-B

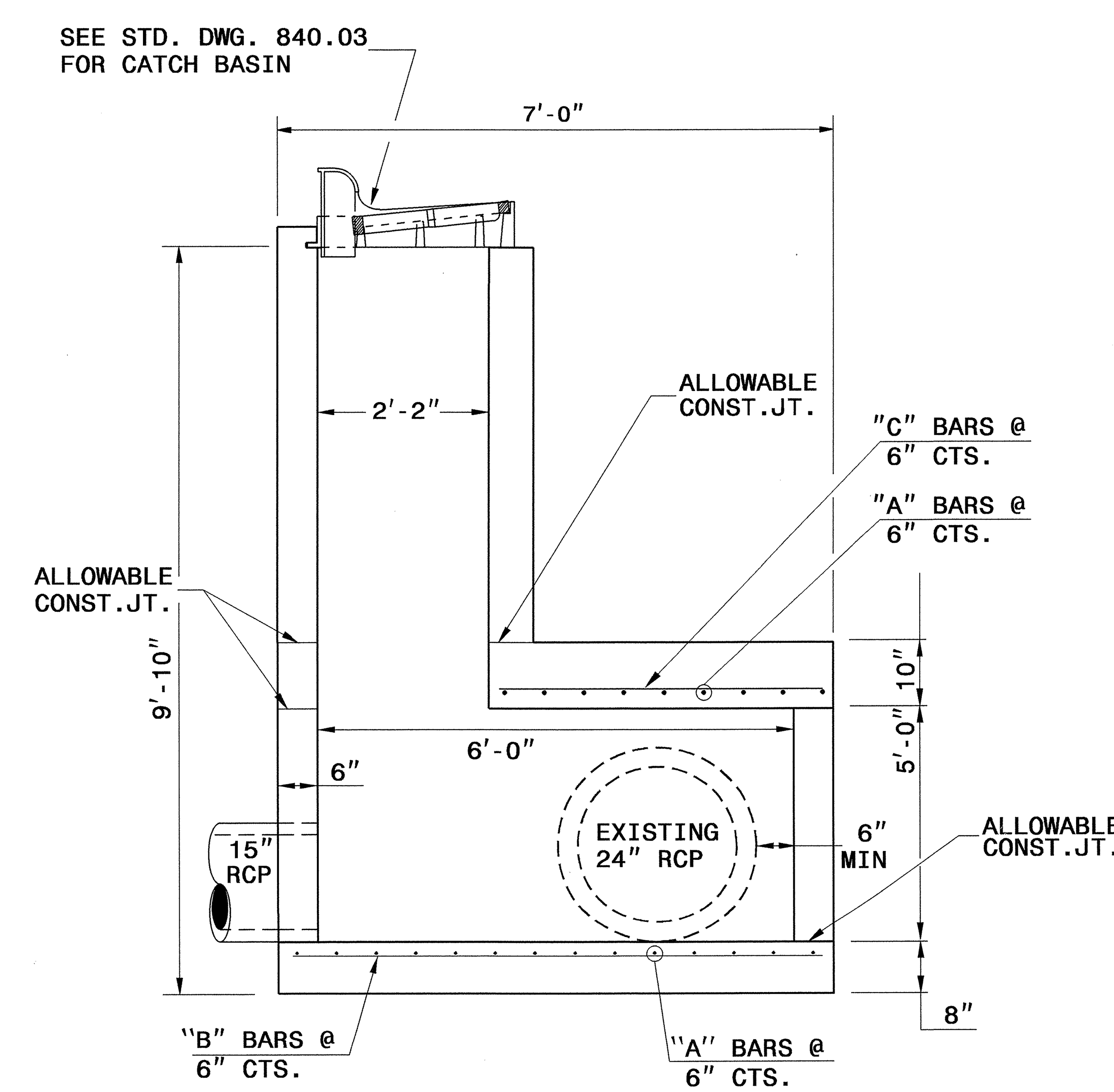

SECTION A-A

BILL OF MATERIALS

BAR	QTY	SIZE	LENGTH	WEIGHT
A	29	#5	3′-8″	111
B	8	#5	8′-8″	72
C	8	#5	5′-6″	46
TOTAL REINF. STEEL (lbs.)				230
TOTAL CONC. CU. YDS.				4.8
DEDUCTIONS FOR ONE PIPE				
42″ RC PIPE				0.28

NO DEDUCTIONS HAVE BEEN MADE TO ACCOMMODATE PIPES OR CATCH BASIN OPENING.

SEE SHEET 15, STR. 1510A

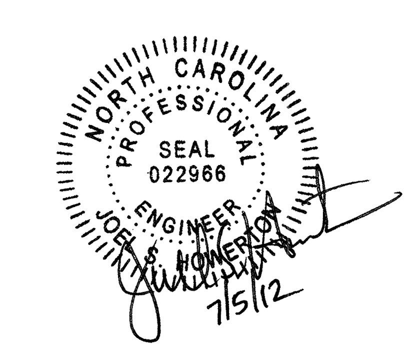

CONTRACTS STANDARDS AND DEVELOPMENT UNIT
Office 919-707-6950 FAX 919-250-4119

DETAIL OF SPECIAL CATCH BASIN

ORIGINAL BY: T.S.SPELL DATE: MAY 22,2008
MODIFIED BY: K.A.KEMPF DATE: MAY 15,2012
CHECKED BY: DATE:
FILE SPEC.: s:details/kkempf/english/cb36rcpoffset.dgn

$$$$$$SYSTIME$$$$$
$$$$$$$$$DGN$$$$$$$$$$$$$$
$$$$USERNAME$$$$

PROJECT REFERENCE NO.	SHEET NO.
U-2809B	2-Y

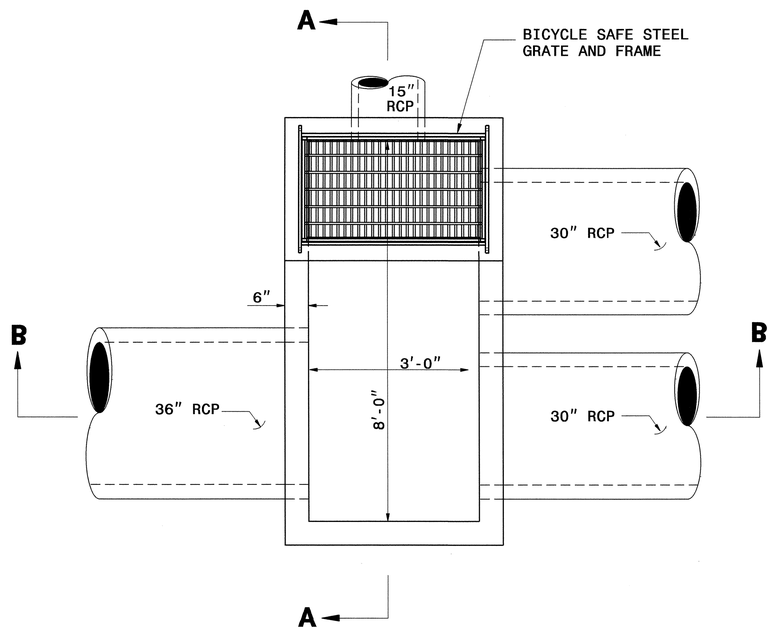

PLAN

GENERAL NOTES:

1. USE CLASS "B" CONCRETE THROUGHOUT.
2. CONSTRUCT CONCRETE BOX IN ACCORDANCE WITH SECTION 825 OF THE STANDARD SPECIFICATIONS.
3. USE FORMS TOR CONSTRUCT THE BOTTOM SLAB.
4. ADJUST LENGTH OF STEEL BARS AS NEEDED TO COMPENSATE FOR PIPES AND FRAME AND GRATE OPENINGS.
5. REINFORCING STEEL SHALL CONFORM TO ASTM A 615, GRADE 400.
6. CUT OR BEND STEEL BARS AS NEEDED TO PROVIDE 2" CLEARANCE.
7. LOCATE FRAME AND GRATE AS FIELD CONDITIONS DICTATE AND AS DIRECTED BY THE ENGINEER.
8. DIMENSIONS OF CATCH BASIN MAY BE ADSUSTED AS DIRECTED BY THE ENGINEER.
9. INSTALL STEPS FOR ALL STRUCTURES OVER 3' IN HEIGHT. SEE STANDARD. 840.66

BILL OF MATERIALS

BAR	QTY	SIZE	LENGTH	WEIGHT
A	29	#5	3'-8"	111
B	8	#5	8'-8"	72
C	8	#5	6'-0"	46
TOTAL REINF. STEEL (lbs.)				230
TOTAL CONC. CU. YDS.				3.5

NO DEDUCTIONS HAVE BEEN MADE TO ACCOMMODATE PIPES OR CATCH BASIN OPENING.

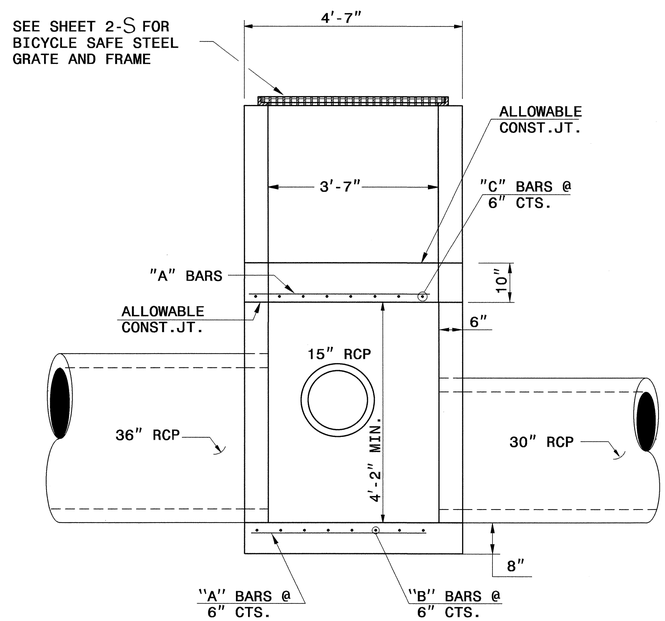

SECTION B-B

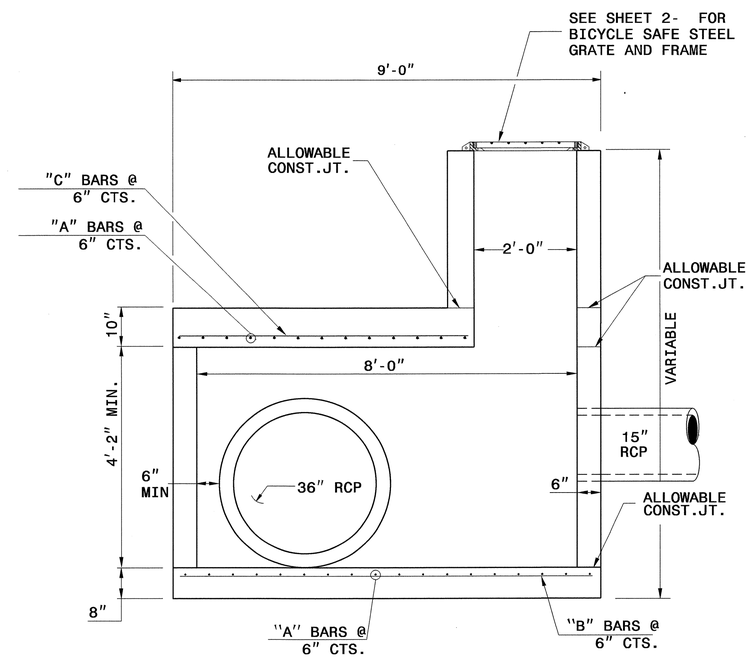

SECTION A-A

SEE SHEET 15. STR. 1551

NORTH CAROLINA PROFESSIONAL SEAL 022966 ENGINEER LOUIS HOWARD KEMPF 7/5/12

CONTRACTS STANDARDS AND DEVELOPMENT UNIT
Office 919-707-6950 FAX 919-250-4119

DETAIL OF SPECIAL DROP INLET

ORIGINAL BY: T.S.SPELL DATE: MAY 22,2008
MODIFIED BY: K.A.KEMPF DATE: MAY 15,2012
CHECKED BY: DATE:
FILE SPEC.: s:details/kkempf/english/cb36rcpoffset.dgn

$$$$SYSTIME$$$$
$$$$DGN$$$$
$$$$USERNAME$$$$

PROJECT REFERENCE NO.	SHEET NO.
U-2809B	2-Z

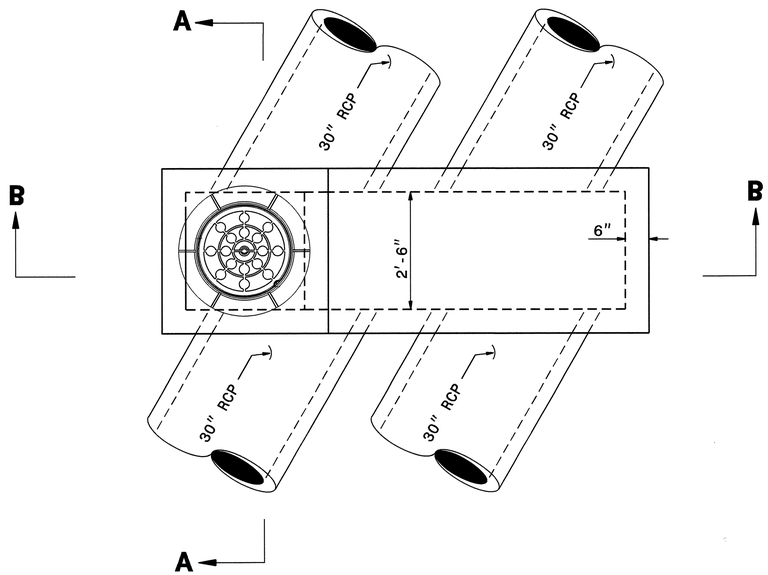

PLAN

GENERAL NOTES:

1. USE CLASS "B" CONCRETE THROUGHOUT.
2. CONSTRUCT CONCRETE BOX IN ACCORDANCE WITH SECTION 825 OF THE STANDARD SPECIFICATIONS.
3. USE FORMS TOR CONSTRUCT THE BOTTOM SLAB.
4. ADJUST LENGTH OF STEEL BARS AS NEEDED TO COMPENSATE FOR PIPES AND FRAME AND GRATE OPENINGS.
5. REINFORCING STEEL SHALL CONFORM TO ASTM A 615, GRADE 400.
6. CUT OR BEND STEEL BARS AS NEEDED TO PROVIDE 2" CLEARANCE.
7. LOCATE MANHOLE RING AND COVER AS FIELD CONDITIONS DICTATE AND AS DIRECTED BY THE ENGINEER.
8. DIMENSIONS OF JUNCTION BOX MAY BE ADSUSTED AS DIRECTED BY THE ENGINEER.
9. INSTALL STEPS FOR ALL STRUCTURES OVER 3' IN HEIGHT. SEE STANDARD. 840.66

BILL OF MATERIALS

BAR	QTY	SIZE	LENGTH	WEIGHT
A	39	#5	3'-2"	129
B	6	#5	10'-0"	63
C	6	#5	7'-2"	45
TOTAL REINF. STEEL (lbs.)				237
TOTAL CONC. CU. YDS.				3.1

NO DEDUCTIONS HAVE BEEN MADE TO ACCOMMODATE PIPES OR MANHOLE OPENING.

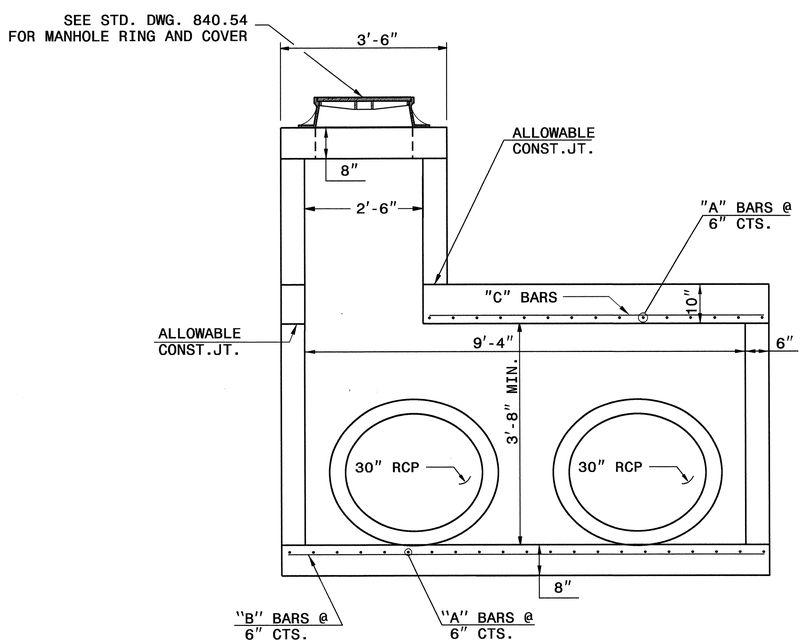

SECTION B-B

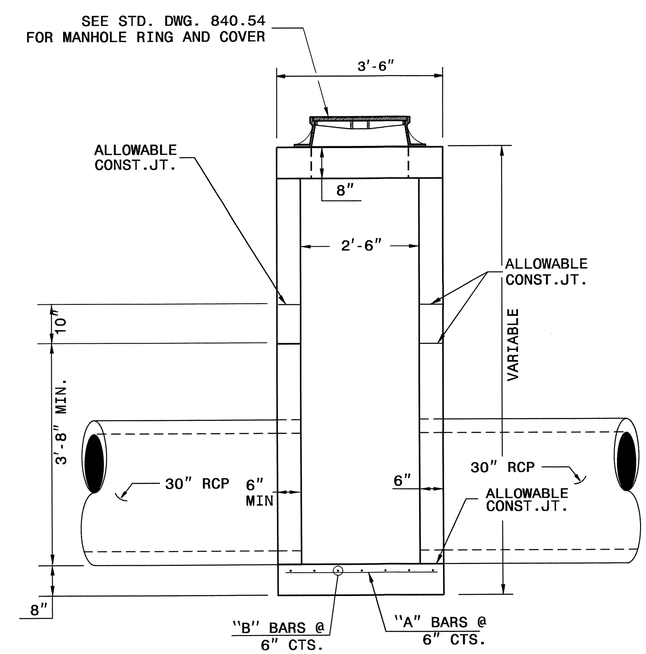

SECTION A-A

STR. 1521
SEE SHEE 15

NORTH CAROLINA PROFESSIONAL SEAL 022966 ENGINEER JOEL S. HOWELL
7/5/12

CONTRACTS STANDARDS AND DEVELOPMENT UNIT
Office 919-707-6950 FAX 919-250-4119

DETAIL OF SPECIAL JUNCTION BOX

ORIGINAL BY: T.S.SPELL DATE: MAY 22,2008
MODIFIED BY: K.A.KEMPF DATE: MAR 30,2012
CHECKED BY: DATE:
FILE SPEC.: s:details/kkempf/english/cb36rcpoffset.dgn

30-APR-2012 16:02
S:\Contracts\Contracts\Special Details\kkempf\english\cb36rcpoffset.dgn
$$$$USERNAME$$$$

PROJECT REFERENCE NO.	SHEET NO.
U-2809B	2-AA

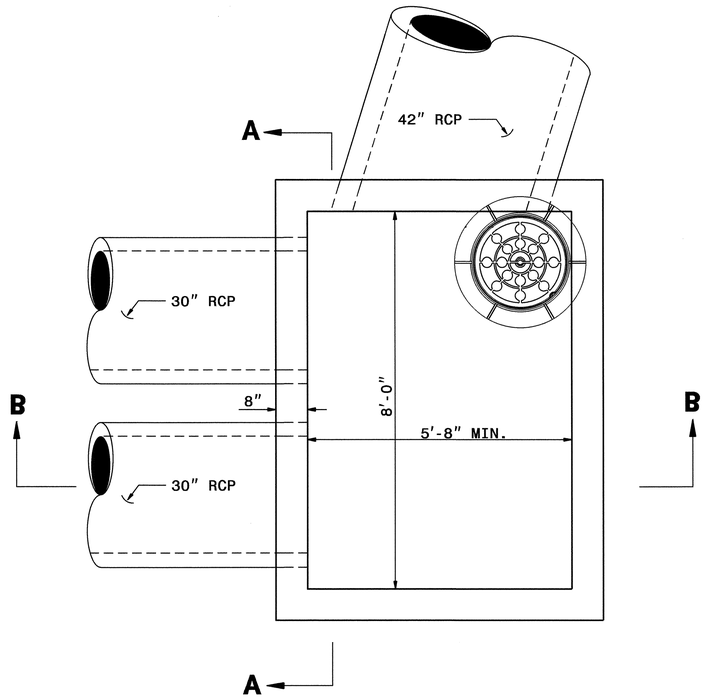

PLAN

GENERAL NOTES:

1. USE CLASS "B" CONCRETE THROUGHOUT.
2. CONSTRUCT CONCRETE BOX IN ACCORDANCE WITH SECTION 825 OF THE STANDARD SPECIFICATIONS.
3. USE FORMS TOR CONSTRUCT THE BOTTOM SLAB.
4. ADJUST LENGTH OF STEEL BARS AS NEEDED TO COMPENSATE FOR PIPES AND FRAME AND GRATE OPENINGS.
5. REINFORCING STEEL SHALL CONFORM TO ASTM A 615, GRADE 400.
6. CUT OR BEND STEEL BARS AS NEEDED TO PROVIDE 2" CLEARANCE.
7. LOCATE FRAME AND GRATE AS FIELD CONDITIONS DICTATE AND AS DIRECTED BY THE ENGINEER.
8. DIMENSIONS OF CATCH BASIN MAY BE ADSUSTED AS DIRECTED BY THE ENGINEER.
9. INSTALL STEPS FOR ALL STRUCTURES OVER 3' IN HEIGHT. SEE STANDARD. 840.66
10. SEE STD. 840.54 FOR MANHOLE RING AND COVER.

BILL OF MATERIALS

BAR	QTY	SIZE	LENGTH	WEIGHT
A	36	#5	6'-4"	238
B	26	#5	8'-8"	235
C	12	#5	7'-8"	96
D	32	#5	4'-8"	156
E	12	#5	5'-4"	67
TOTAL REINF. STEEL (lbs.)				792
TOTAL CONC. CU. YDS.				7.7

NO DEDUCTIONS HAVE BEEN MADE TO ACCOMMODATE PIPES OR MAN HOLE OPENING.

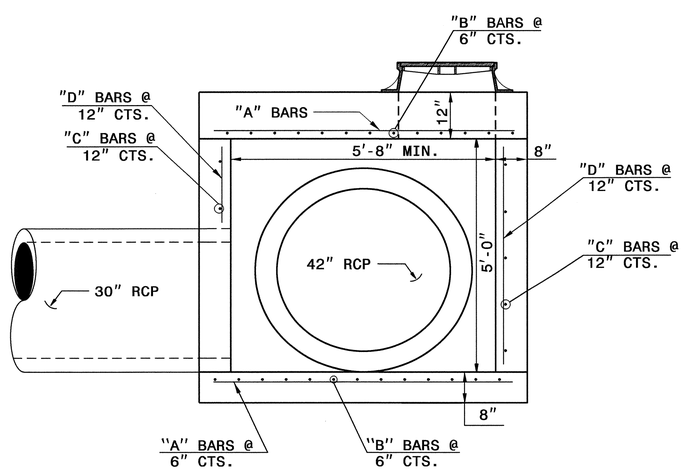

SECTION B-B

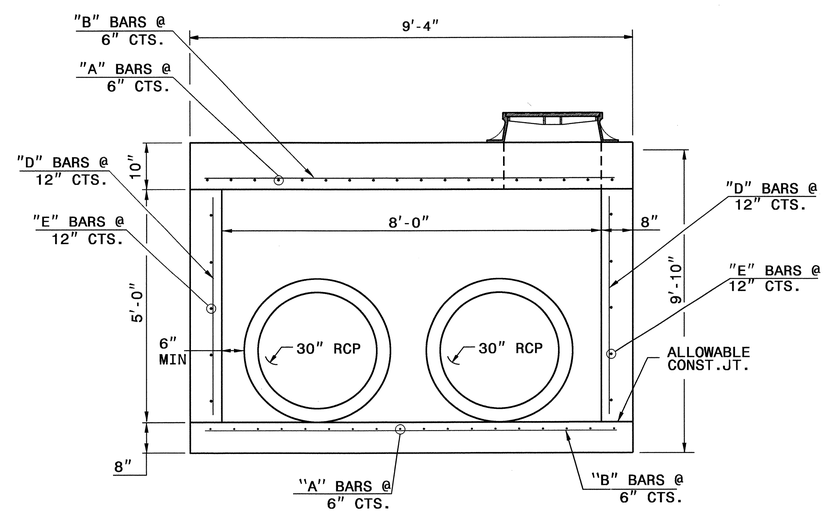

SECTION A-A

SEE SHEET 15
STR. NO. 1513

NORTH CAROLINA PROFESSIONAL SEAL 022966 ENGINEER JOEL S. HOWARTH
7/5/12

CONTRACTS STANDARDS AND DEVELOPMENT UNIT
Office 919-707-6950 FAX 919-250-4119

DETAIL OF SPECIAL JUNCTION BOX

ORIGINAL BY: T.S.SPELL DATE: MAY 22,2008
MODIFIED BY: K.A.KEMPF DATE: MAR 30,2012
CHECKED BY: DATE: 4/9/12
FILE SPEC.: g:details/kkempf/english/cb36rcpoffset.dgn

05-APR-2012 13:29
S:\Contracts\Contracts\Special Details\kkempf\english\cb36rcpoffset.dgn
$$$$USERNAME$$$$

PROJECT REFERENCE NO.	SHEET NO.
U-2809B	2-BB

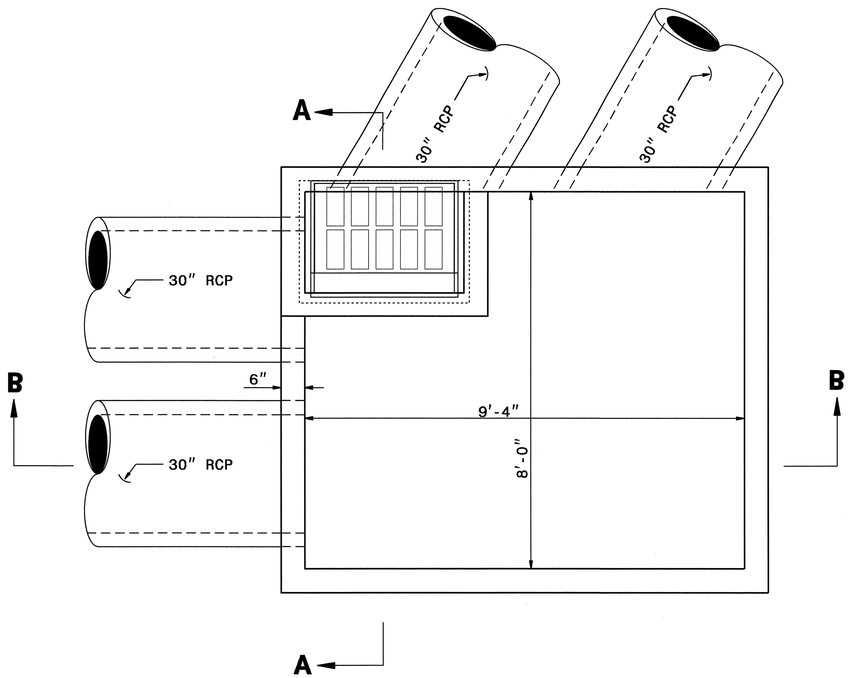

PLAN

GENERAL NOTES:

1. USE CLASS "B" CONCRETE THROUGHOUT.
2. CONSTRUCT CONCRETE BOX IN ACCORDANCE WITH SECTION 825 OF THE STANDARD SPECIFICATIONS.
3. USE FORMS TOR CONSTRUCT THE BOTTOM SLAB.
4. ADJUST LENGTH OF STEEL BARS AS NEEDED TO COMPENSATE FOR PIPES AND FRAME AND GRATE OPENINGS.
5. REINFORCING STEEL SHALL CONFORM TO ASTM A 615, GRADE 400.
6. CUT OR BEND STEEL BARS AS NEEDED TO PROVIDE 2" CLEARANCE.
7. LOCATE FRAME AND GRATE AS FIELD CONDITIONS DICTATE AND AS DIRECTED BY THE ENGINEER.
8. DIMENSIONS OF CATCH BASIN MAY BE ADSUSTED AS DIRECTED BY THE ENGINEER.
9. INSTALL STEPS FOR ALL STRUCTURES OVER 3' IN HEIGHT. SEE STANDARD. 840.66

BILL OF MATERIALS

BAR	QTY	SIZE	LENGTH	WEIGHT
A	5	#5	6'-8"	35
B	6	#5	6'-0"	38
C	29	#5	10'-0"	302
D	33	#5	8'-8"	298
TOTAL REINF. STEEL (lbs.)				673
TOTAL CONC. CU. YDS.				7.7

NO DEDUCTIONS HAVE BEEN MADE TO ACCOMMODATE PIPES OR CATCH BASIN OPENING.

SEE SHEET 15

STR. NO. 1522

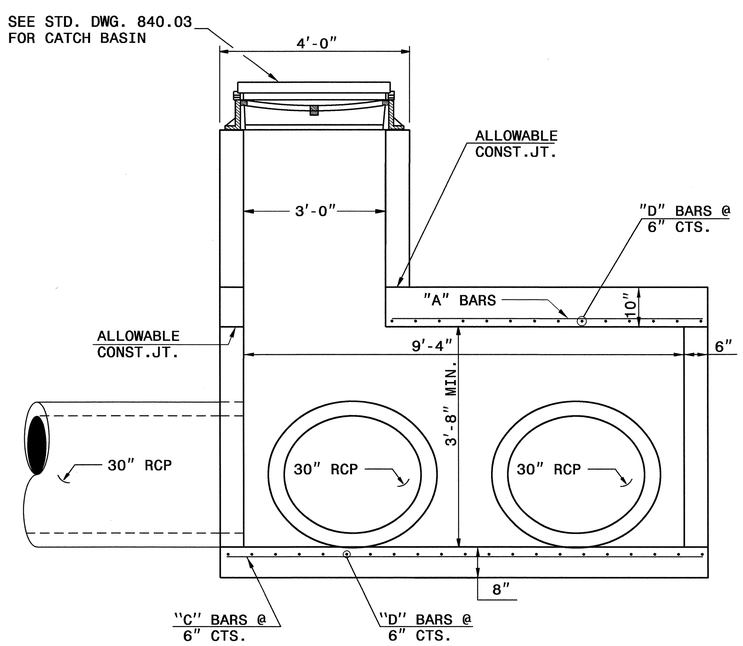

SECTION B-B

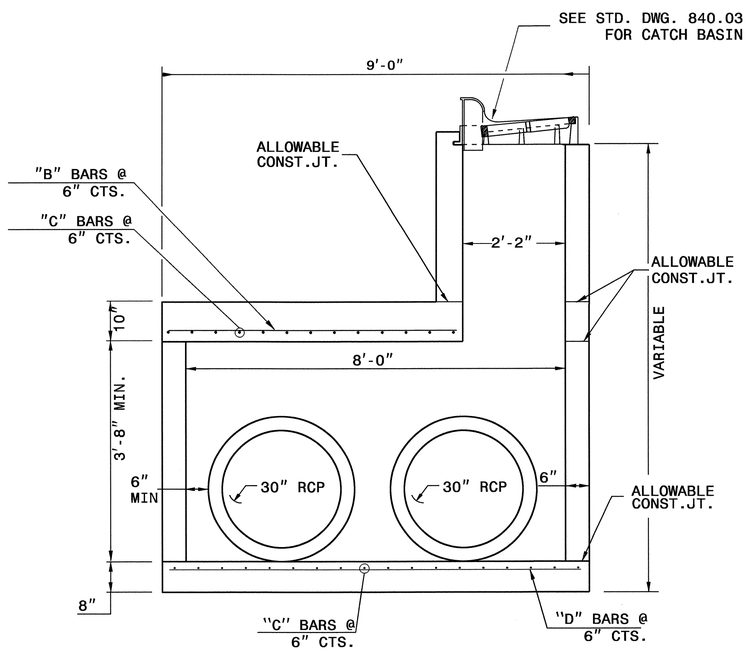

SECTION A-A

NORTH CAROLINA PROFESSIONAL SEAL 022986 ENGINEER
7/5/12

CONTRACTS STANDARDS AND DEVELOPMENT UNIT
Office 919-707-6950 FAX 919-250-4119

DETAIL OF SPECIAL CATCH BASIN

ORIGINAL BY: T.S.SPELL DATE: MAY 22,2008
MODIFIED BY: K.A.KEMPF DATE: MAR 30,2012
CHECKED BY: DATE: 4/9/12
FILE SPEC.: s/details/kkempf/english/cb36rcpoffset.dgn

05-APR-2012 13:28
S:\Contracts\Contracts\Special Details\kkempf\english\cb36rcpoffset.dgn
$$$$USERNAME$$$$

PROJECT REFERENCE NO.	SHEET NO.
U-2809 B	2-CC

*NOTE: SEE STD.DWG. 846.01 FOR 2′-6″ CURB AND GUTTER INFORMATION.

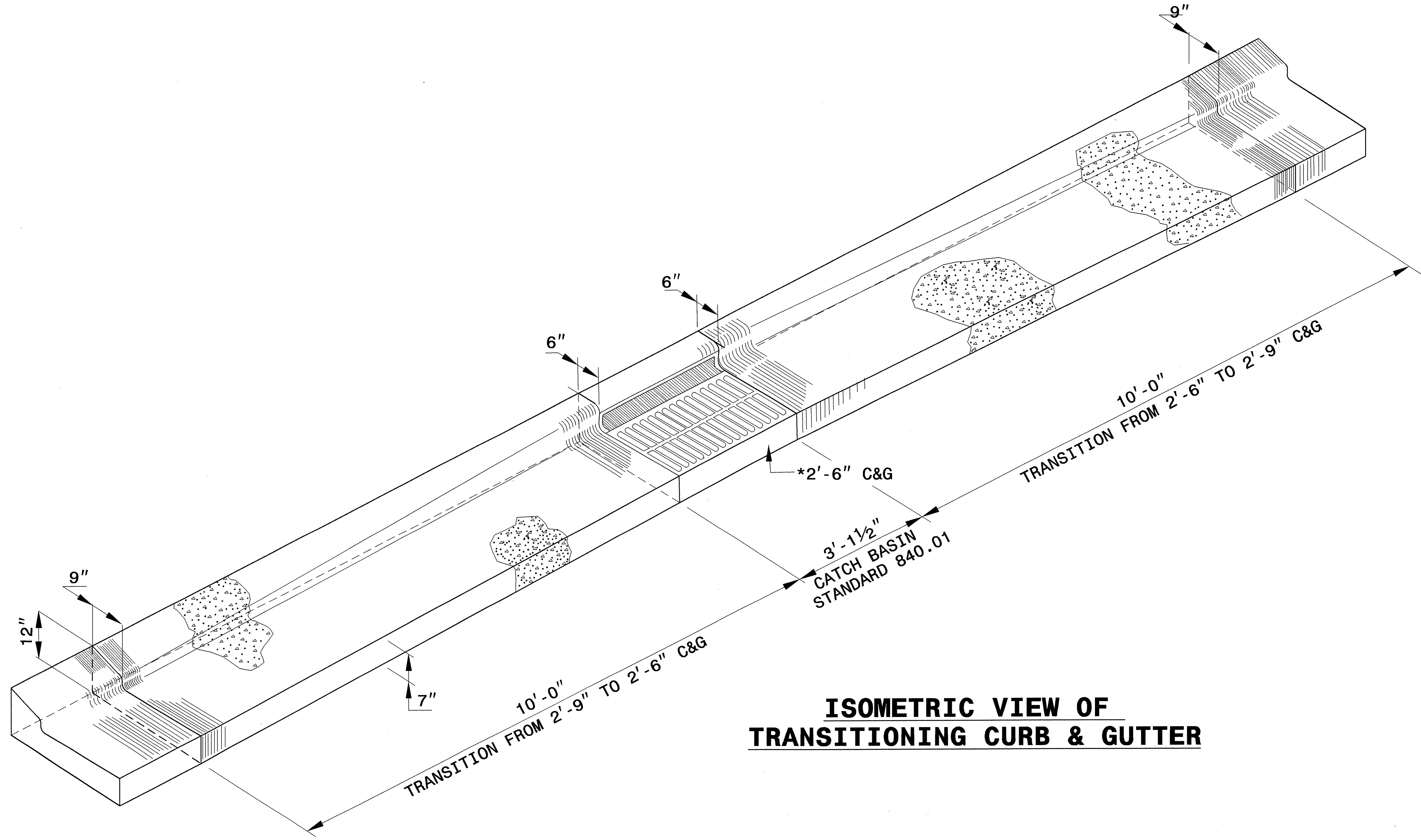

ISOMETRIC VIEW OF TRANSITIONING CURB & GUTTER

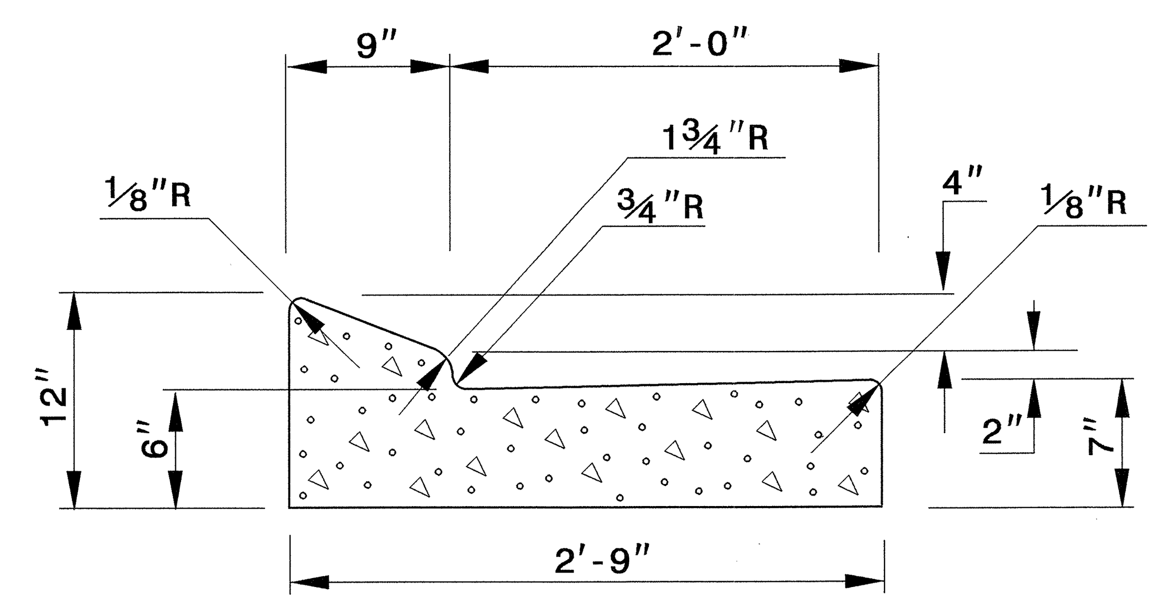

PROPOSED 2′-9″ CURB & GUTTER

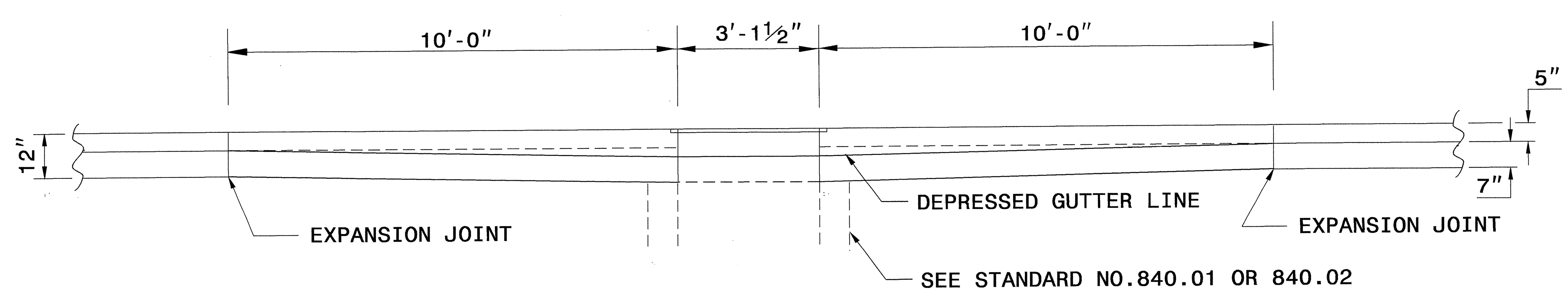

ELEVATION

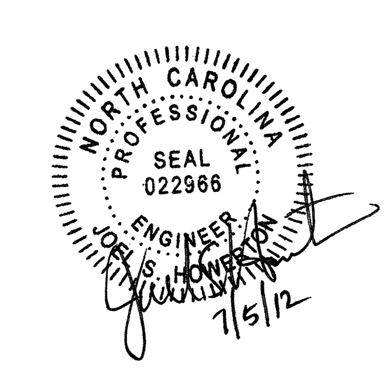

CONTRACT STANDARDS AND DEVELOPMENT UNIT
Office 919-707-6950 FAX 919-250-4119

DETAIL OF 2′-9″ TO 2′-6″ CURB & GUTTER TRANSITION SECTION

ORIGINAL BY: DATE:
MODIFIED BY: tspell DATE: july 14,2009
CHECKED BY: DATE: 6/25/12
FILE SPEC.: s:eric/usr/details/stand/cgtranst.dgn

$$$$$SYSTIME$$$$$
$$$$$$$$$$DGN$$$$$$$$$$$$$$$$
$$$$USERNAME$$$$

PROJECT REFERENCE NO.	SHEET NO.
U-2809B	2-DD

PAY LIMITS FOR 1 CURB RAMP

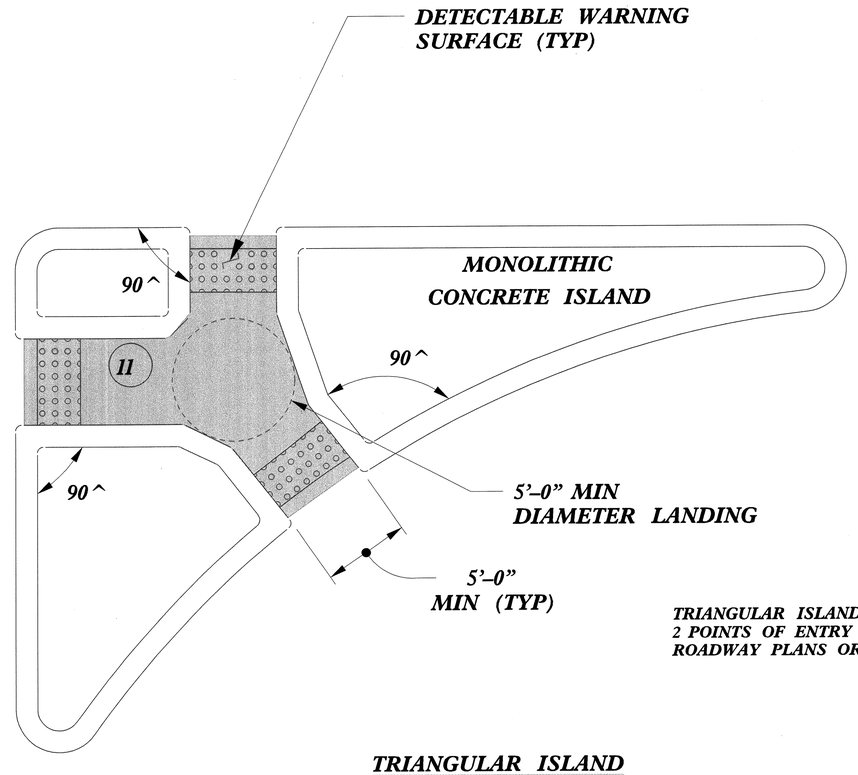

TRIANGULAR ISLANDS MAY BE CONSTRUCTED WITH ONLY 2 POINTS OF ENTRY AND EXIT AS SHOWN IN THE ROADWAY PLANS OR AS DIRECTED BY THE ENGINEER.

TRIANGULAR ISLAND WITH CUT THROUGH

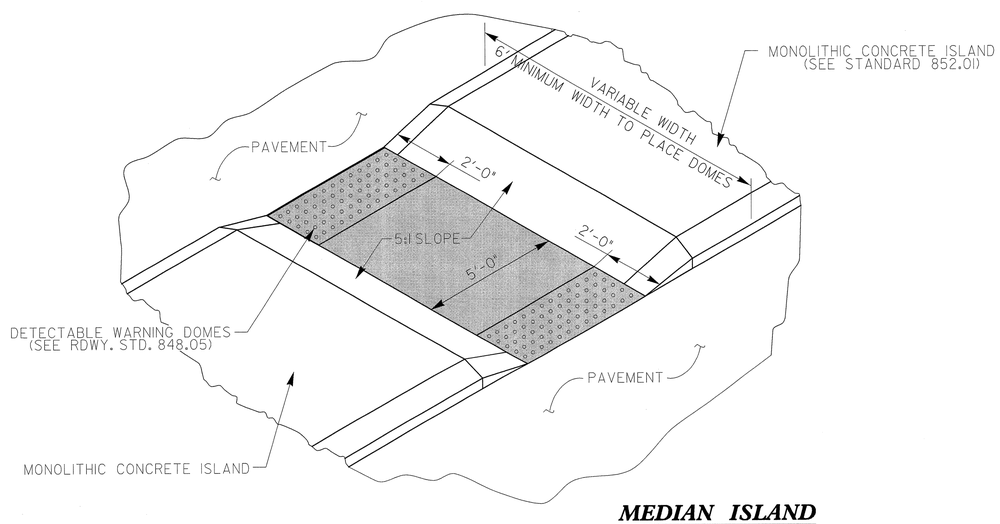

MEDIAN ISLAND WITH CUT THROUGH

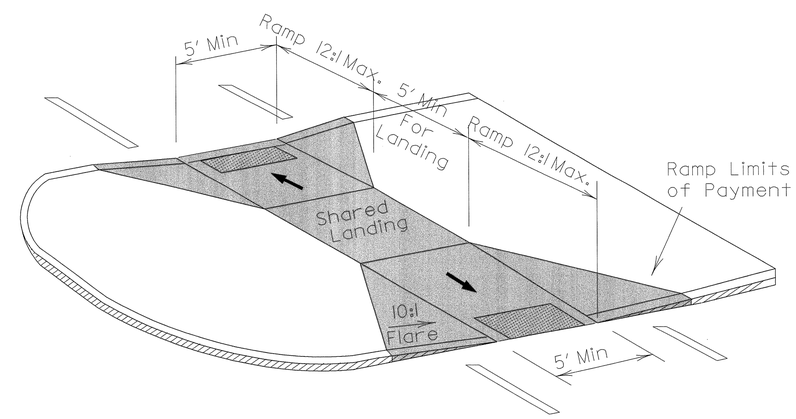

MEDIAN ISLAND CURB RAMPS

NORTH CAROLINA PROFESSIONAL SEAL 022966 ENGINEER JOEL S. HOWERTON
7/5/12

CONTRACT STANDARDS AND DEVELOPMENT UNIT
Office 919-707-6950 FAX 919-250-4119

CURB RAMPS

Median or Turn Lane Islands

ORIGINAL BY: J.S. HOWERTON DATE: 7/7/11
MODIFIED BY: DATE:
CHECKED BY: DATE: 6/25/12
FILE SPEC.: sds/2012CurbRamp/CurbRampDetails.dgn

5/14/99

$$$$SYSTIME$$$$
$$$$SELENIMEON$$$$

5/14/99

PAY LIMITS FOR 1 CURB RAMP

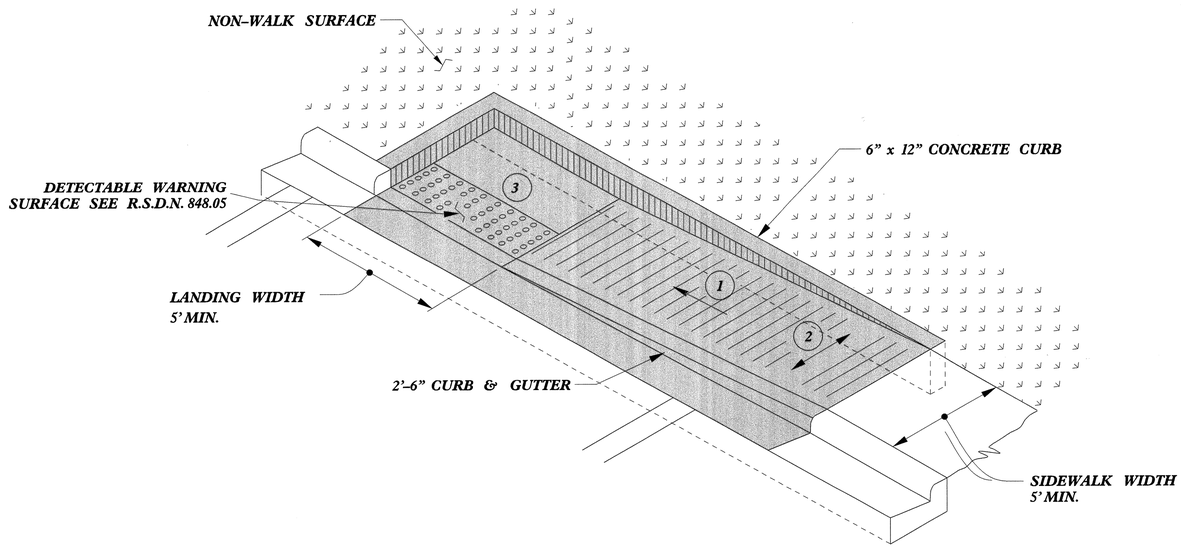

TYPE 1A

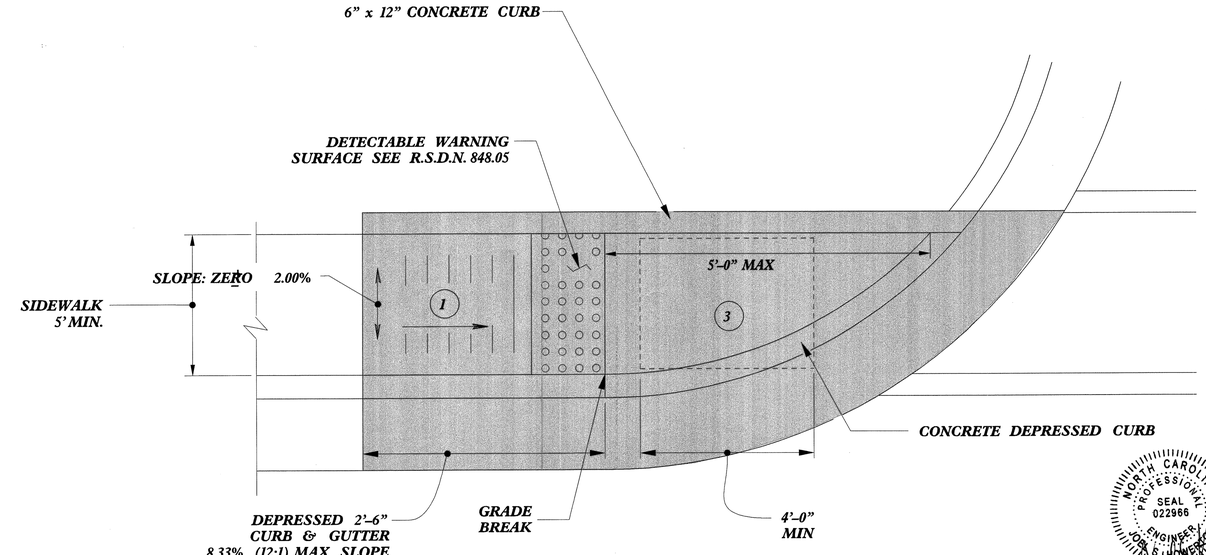

TYPE 1

1. 8.33% (12:1) MAX RAMP SLOPE
2. CROSS SLOPE: 2.00%
3. CURB RAMPS REQUIRE A (4'-0") MINIMUM LANDING WITH A MAXIMUM CROSS SLOPE AND LONGITUDINAL SLOPE OF 2.00% WHERE PEDESTRIANS PERFORM TURNING MANEUVERS. SLOPE TO DRAIN TO CURB.

REFER TO ROADWAY STANDARD DRAWING NUMBER 848.05 SHEET 3 OF 3 FOR ALL RAMP NOTES

NORTH CAROLINA PROFESSIONAL SEAL 022966 ENGINEER JOSEPH S. HOWERTON
7/5/12

CONTRACT STANDARDS AND DEVELOPMENT UNIT
Office 919-707-6950 FAX 919-250-4119

CURB RAMPS

Directional Ramps

ORIGINAL BY: J.S. HOWERTON DATE: 7/7/11
MODIFIED BY: DATE:
CHECKED BY: Paul S. Hart DATE: 6/25/12
FILE SPEC. sdis/2012CurbRamp/CurbRampDetails.dgn

>>>>SYSTIME$$$$
>>>>DGN$$$$
>>>>DELENAME$$$$

PROJECT REFERENCE NO.	SHEET NO.
U-2809B	2-FF

5/14/99

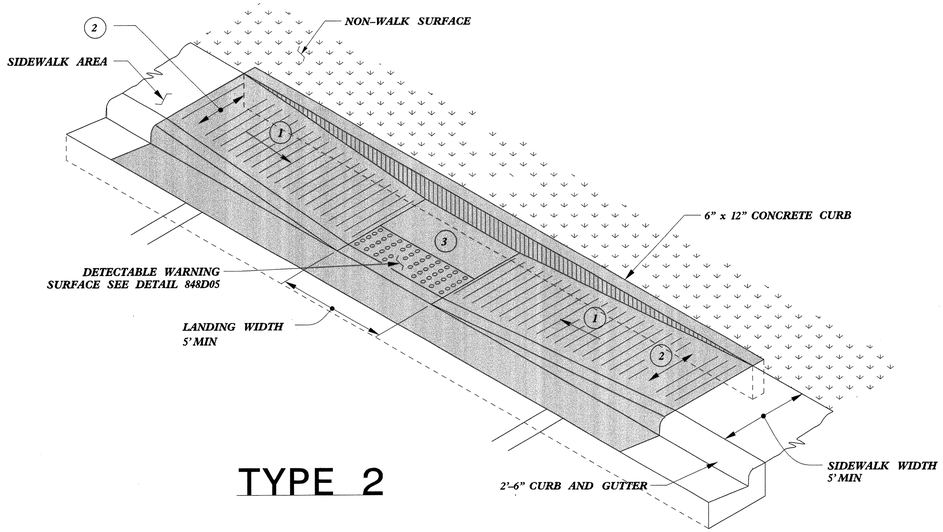

TYPE 2

PAY LIMITS FOR 1 CURB RAMP

1. 8.33% (12:1) MAX RAMP SLOPE
2. CROSS SLOPE: 2.00%
3. CURB RAMPS REQUIRE A (4'-0") MINIMUM LANDING WITH A MAXIMUM CROSS SLOPE AND LONGITUDINAL SLOPE OF 2.00% WHERE PEDESTRIANS PERFORM TURNING MANEUVERS. SLOPE TO DRAIN TO CURB.

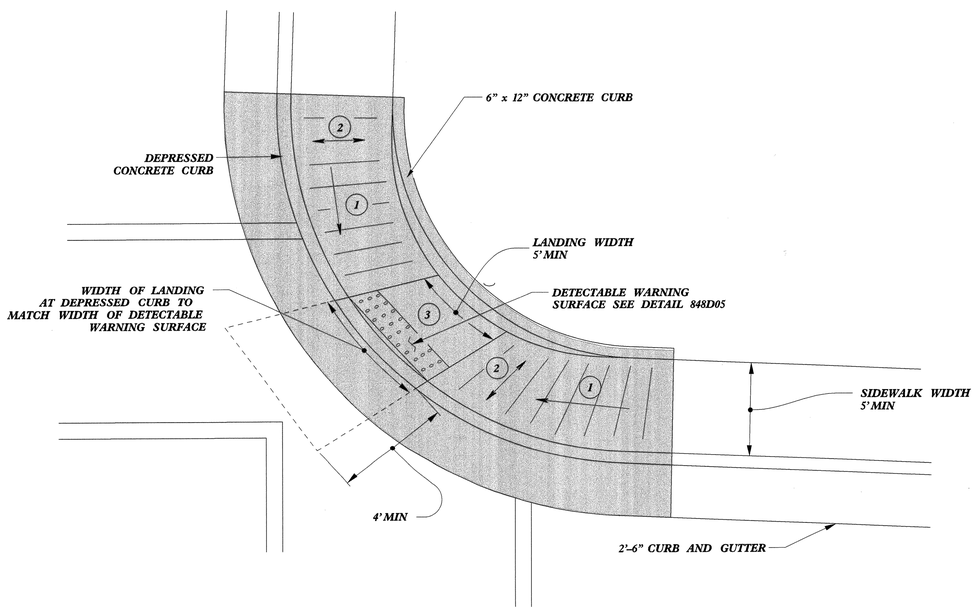

TYPE 2A

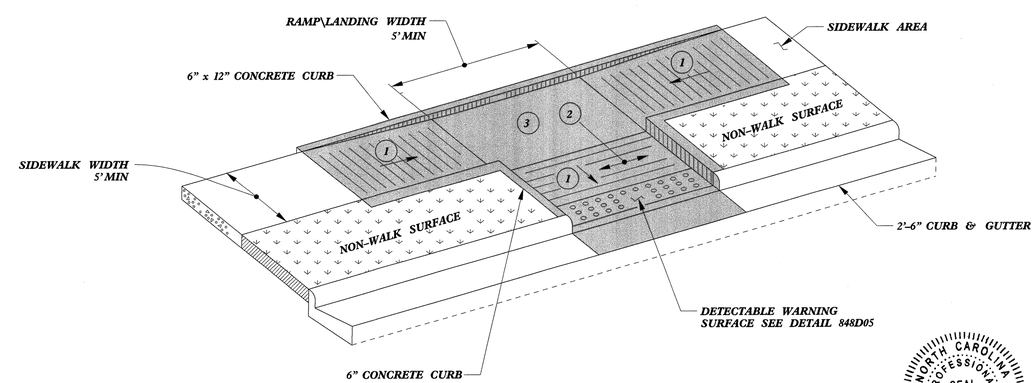

TYPE 3

NORTH CAROLINA PROFESSIONAL SEAL 022966 ENGINEER JOHN S. HOWERTON 7/5/12

REFER TO ROADWAY STANDARD DRAWING NUMBER 848.05 SHEET 3 OF 3 FOR ALL RAMP NOTES

CONTRACT STANDARDS AND DEVELOPMENT UNIT
Office 919-707-6950 FAX 919-250-4119

CURB RAMPS

Parallel Ramps

ORIGINAL BY: J.S. HOWERTON DATE: 7/7/11
MODIFIED BY: DATE:
CHECKED BY: DATE: 6/25/12
FILE SPEC. sids/2012CurbRamp/CurbRampDetails.dgn

$$$$SYSTIME$$$$
$$$$SYSTIME$$$$
$$$$SCLENAME$$$$
$$$$SCLENAME$$$$

STATE OF NORTH CAROLINA
DIVISION OF HIGHWAYS
ROADWAY SUMMARY OF QUANTITIES FOR CONTRACT - C202885

Summary of Quantities - U-2809B

ItemNumber	Sec #	Quantity	Unit	Description
0000100000-N	800	Lump Sum		MOBILIZATION
0000400000-N	801	Lump Sum		CONSTRUCTION SURVEYING
0001000000-E	200	Lump Sum		CLEARING & GRUBBING .. ACRE(S)
0008000000-E	200	1	ACR	SUPPLEMENTARY CLEARING & GRUBBING
0022000000-E	225	6,500	CY	UNCLASSIFIED EXCAVATION
0036000000-E	225	200	CY	UNDERCUT EXCAVATION
0106000000-E	230	48,000	CY	BORROW EXCAVATION
0134000000-E	240	22	CY	DRAINAGE DITCH EXCAVATION
0156000000-E	250	11,420	SY	REMOVAL OF EXISTING ASPHALT PAVEMENT
0195000000-E	265	200	CY	SELECT GRANULAR MATERIAL
0196000000-E	270	1,800	SY	GEOTEXTILE FOR SOIL STABILIZATION
0255000000-E	SP	10	TON	GENERIC GRADING ITEM EXCAVATION, HAULING, AND DISPOSAL OF CONTAMINATED SOIL
0318000000-E	300	5,814	TON	FOUNDATION CONDITIONING MATERIAL, MINOR STRUCTURES
0320000000-E	300	18,265	SY	FOUNDATION CONDITIONING GEOTEXTILE
0366000000-E	310	9,608	LF	15" RC PIPE CULVERTS, CLASS III
0372000000-E	310	3,980	LF	18" RC PIPE CULVERTS, CLASS III
0378000000-E	310	4,508	LF	24" RC PIPE CULVERTS, CLASS III
0384000000-E	310	3,156	LF	30" RC PIPE CULVERTS, CLASS III
0390000000-E	310	1,424	LF	36" RC PIPE CULVERTS, CLASS III
0396000000-E	310	1,228	LF	42" RC PIPE CULVERTS, CLASS III
0995000000-E	340	1,667	LF	PIPE REMOVAL
0996000000-N	350	1	EA	PIPE CLEAN-OUT
1011000000-N	500	Lump Sum		FINE GRADING
1099500000-E	505	500	CY	SHALLOW UNDERCUT
1099700000-E	505	950	TON	CLASS IV SUBGRADE STABILIZATION
1110000000-E	510	5,000	TON	STABILIZER AGGREGATE
1220000000-E	545	1,000	TON	INCIDENTAL STONE BASE
1489000000-E	610	29,050	TON	ASPHALT CONC BASE COURSE, TYPE B25.0B
1498000000-E	610	26,150	TON	ASPHALT CONC INTERMEDIATE COURSE, TYPE I19.0B
1519000000-E	610	17,050	TON	ASPHALT CONC SURFACE COURSE, TYPE S9.5B
1575000000-E	620	3,560	TON	ASPHALT BINDER FOR PLANT MIX
1693000000-E	654	1,555	TON	ASPHALT PLANT MIX, PAVEMENT REPAIR
2022000000-E	815	115	CY	SUBDRAIN EXCAVATION
2033000000-E	815	85	CY	SUBDRAIN FINE AGGREGATE
2044000000-E	815	500	LF	6" PERFORATED SUBDRAIN PIPE
2070000000-N	815	1	EA	SUBDRAIN PIPE OUTLET
2077000000-E	815	6	LF	6" OUTLET PIPE
2209000000-E	838	5	CY	ENDWALLS
2253000000-E	840	2	CY	PIPE COLLARS
2264000000-E	840	2	CY	PIPE PLUGS
2275000000-E	SP	115	CY	FLOWABLE FILL
2286000000-N	840	266	EA	MASONRY DRAINAGE STRUCTURES
2308000000-E	840	102	LF	MASONRY DRAINAGE STRUCTURES
2364000000-N	840	75	EA	FRAME WITH TWO GRATES, STD 840.16
2364200000-N	840	1	EA	FRAME WITH TWO GRATES, STD 840.20
2366000000-N	840	2	EA	FRAME WITH TWO GRATES, STD 840.24
2367000000-N	840	14	EA	FRAME WITH TWO GRATES, STD 840.29
2374000000-N	840	20	EA	FRAME WITH GRATE & HOOD, STD 840.03, TYPE ** (E)
2374000000-N	840	71	EA	FRAME WITH GRATE & HOOD, STD 840.03, TYPE ** (F)
2374000000-N	840	72	EA	FRAME WITH GRATE & HOOD, STD 840.03, TYPE ** (G)
2396000000-N	840	18	EA	FRAME WITH COVER, STD 840.54
2440000000-N	852	5	EA	CONCRETE TRANSITIONAL SECTION FOR CATCH BASIN
2451000000-N	852	29	EA	CONCRETE TRANSITIONAL SECTION FOR DROP INLET
2473000000-N	SP	1	EA	GENERIC DRAINAGE ITEM BICYCLE SAFE STEEL FRAME AND GRATE
2535000000-E	846	1,020	LF	**"X **" CONCRETE CURB (8" X 18")
2538000000-E	846	8,630	LF	**'-**" CONCRETE CURB & GUTTER (2'-9")
2542000000-E	846	130	LF	1'-6" CONCRETE CURB & GUTTER
2549000000-E	846	27,300	LF	2'-6" CONCRETE CURB & GUTTER
2591000000-E	848	13,760	SY	4" CONCRETE SIDEWALK
2605000000-N	848	85	EA	CONCRETE CURB RAMP
2612000000-E	848	5,180	SY	6" CONCRETE DRIVEWAY
2655000000-E	852	8,520	SY	5" MONOLITHIC CONCRETE ISLANDS (KEYED IN)
2800000000-N	858	9	EA	ADJUSTMENT OF CATCH BASINS
2830000000-N	858	6	EA	ADJUSTMENT OF MANHOLES
2845000000-N	858	370	EA	ADJUSTMENT OF METER BOXES OR VALVE BOXES
2893000000-N	859	3	EA	CONVERT EXISTING CATCH BASIN TO JUNCTION BOX WITH MANHOLE
2965000000-N	859	2	EA	CONVERT EXISTING JUNCTION BOX TO CATCH BASIN
2995000000-N	SP	4	EA	GENERIC DRAINAGE ITEM CONVERT EXT CATCH BASIN TO SPECIAL TRAFFIC BEARING JUNCTION BOX W/MANHOLE
3045000000-E	862	25	LF	STEEL BM GUARDRAIL, SHOP CURVED
3195000000-N	862	1	EA	GUARDRAIL ANCHOR UNITS, TYPE AT-1
3210000000-N	862	1	EA	GUARDRAIL ANCHOR UNITS, TYPE CAT-1
3628000000-E	876	26	TON	RIP RAP, CLASS I
3649000000-E	876	10	TON	RIP RAP, CLASS B
3656000000-E	876	1,415	SY	GEOTEXTILE FOR DRAINAGE
4072000000-E	903	2,349	LF	SUPPORTS, 3-LB STEEL U-CHANNEL
4096000000-N	904	5	EA	SIGN ERECTION, TYPE D
4102000000-N	904	134	EA	SIGN ERECTION, TYPE E
4116100000-N	904	7	EA	SIGN ERECTION, RELOCATE, TYPE **** (GROUND MOUNTED) (E)
4155000000-N	907	88	EA	DISPOSAL OF SIGN SYSTEM, U-CHANNEL
4158000000-N	907	4	EA	DISPOSAL OF SIGN SYSTEM, WOOD
4192000000-N	907	6	EA	DISPOSAL OF SUPPORT, U-CHANNEL
4400000000-E	1110	748	SF	WORK ZONE SIGNS (STATIONARY)
4405000000-E	1110	944	SF	WORK ZONE SIGNS (PORTABLE)
4410000000-E	1110	369	SF	WORK ZONE SIGNS (BARRICADE MOUNTED)
4415000000-N	1115	4	EA	FLASHING ARROW BOARD
4420000000-N	1120	2	EA	PORTABLE CHANGEABLE MESSAGE SIGN
4430000000-N	1130	700	EA	DRUMS
4435000000-N	1135	75	EA	CONES
4445000000-E	1145	1,030	LF	BARRICADES (TYPE III)
4455000000-N	1150	2,160	DAY	FLAGGER
4480000000-N	1165	4	EA	TMA
4510000000-N	SP	240	HR	LAW ENFORCEMENT
4516000000-N	1180	100	EA	SKINNY DRUM
4650000000-N	1251	952	EA	TEMPORARY RAISED PAVEMENT MARKERS
4685000000-E	1205	24,219	LF	THERMOPLASTIC PAVEMENT MARKING LINES (4", 90 MILS)
4686000000-E	1205	29,114	LF	THERMOPLASTIC PAVEMENT MARKING LINES (4", 120 MILS)
4695000000-E	1205	9,472	LF	THERMOPLASTIC PAVEMENT MARKING LINES (8", 90 MILS)
4697000000-E	1205	1,152	LF	THERMOPLASTIC PAVEMENT MARKING LINES (8", 120 MILS)
4710000000-E	1205	1,152	LF	THERMOPLASTIC PAVEMENT MARKING LINES (24", 120 MILS)
4721000000-E	1205	38	EA	THERMOPLASTIC PAVEMENT MARKING CHARACTER (120 MILS)
4725000000-E	1205	278	EA	THERMOPLASTIC PAVEMENT MARKING SYMBOL (90 MILS)
4810000000-E	1205	213,764	LF	PAINT PAVEMENT MARKING LINES (4")
4820000000-E	1205	5,632	LF	PAINT PAVEMENT MARKING LINES (8")
4835000000-E	1205	2,646	LF	PAINT PAVEMENT MARKING LINES (24")
4840000000-N	1205	120	EA	PAINT PAVEMENT MARKING CHARACTER
4845000000-N	1205	388	EA	PAINT PAVEMENT MARKING SYMBOL
4850000000-E	1205	11,446	LF	REMOVAL OF PAVEMENT MARKING LINES (4")
4860000000-E	1205	285	LF	REMOVAL OF PAVEMENT MARKING LINES (8")
4865000000-E	1205	164	LF	REMOVAL OF PAVEMENT MARKING LINES (12")
4870000000-E	1205	326	LF	REMOVAL OF PAVEMENT MARKING LINES (24")
4875000000-N	1205	23	EA	REMOVAL OF PAVEMENT MARKING SYMBOLS & CHARACTERS
4900000000-N	1251	1,451	EA	PERMANENT RAISED PAVEMENT MARKERS
5255000000-N	1413	Lump Sum		PORTABLE LIGHTING
5325200000-E	1510	804	LF	2" WATER LINE
5325600000-E	1510	139	LF	6" WATER LINE
5325800000-E	1510	11,959	LF	8" WATER LINE
5326200000-E	1510	264	LF	12" WATER LINE
5327400000-E	1510	5,399	LF	24" WATER LINE
5536000000-E	1515	6	EA	2" VALVE
5538000000-E	1515	1	EA	4" VALVE
5540000000-E	1515	8	EA	6" VALVE
5546000000-E	1515	56	EA	8" VALVE
5558000000-E	1515	4	EA	12" VALVE
5559400000-E	1515	24	EA	24" VALVE
5571600000-E	1515	1	EA	6" TAPPING VALVE
5571800000-E	1515	15	EA	8" TAPPING VALVE
5572200000-E	1515	2	EA	12" TAPPING VALVE
5572600000-E	1515	2	EA	16" TAPPING VALVE
5589200000-E	1515	1	EA	2" AIR RELEASE VALVE
5606000000-E	1515	10	EA	2" BLOW OFF
5648000000-N	1515	124	EA	RELOCATE WATER METER
5649000000-N	1515	27	EA	RECONNECT WATER METER
5666000000-E	1515	19	EA	FIRE HYDRANT
5672000000-N	1515	11	EA	RELOCATE FIRE HYDRANT
5691300000-E	1520	2,365	LF	8" SANITARY GRAVITY SEWER
5709400000-E	1520	680	LF	8" FORCE MAIN SEWER
5768000000-N	1520	32	EA	SANITARY SEWER CLEAN-OUT
5775000000-E	1525	7	EA	4' DIA UTILITY MANHOLE
5801000000-E	1530	2,523	LF	ABANDON 8" UTILITY PIPE
5810000000-E	1530	11,875	LF	ABANDON 16" UTILITY PIPE
5816000000-N	1530	8	EA	ABANDON UTILITY MANHOLE
5835000000-E	1540	182	LF	**" ENCASEMENT PIPE (42")
5835700000-E	1540	783	LF	16" ENCASEMENT PIPE
5835900000-E	1540	190	LF	20" ENCASEMENT PIPE

Summary of Quantities - U-2809B

ItemNumber	Sec #	Quantity	Unit	Description
5882000000-N	SP	1	EA	GENERIC UTILITY ITEM RELOCATE 4" WATER METER AND VAULT
5888000000-E	SP	480	LF	GENERIC UTILITY ITEM 12" DI RESTRAINED JOINT WATER LINE
5888000000-E	SP	7,588	LF	GENERIC UTILITY ITEM 24" DI RESTRAINED JOINT WATER LINE
5888000000-E	SP	3,795	LF	GENERIC UTILITY ITEM 8" DI RESTRAINED JOINT WATER LINE
6000000000-E	1605	40,000	LF	TEMPORARY SILT FENCE
6006000000-E	1610	1,105	TON	STONE FOR EROSION CONTROL, CLASS A
6009000000-E	1610	805	TON	STONE FOR EROSION CONTROL, CLASS B
6012000000-E	1610	2,600	TON	SEDIMENT CONTROL STONE
6015000000-E	1615	25.5	ACR	TEMPORARY MULCHING
6018000000-E	1620	700	LB	SEED FOR TEMPORARY SEEDING
6021000000-E	1620	3.75	TON	FERTILIZER FOR TEMPORARY SEED-ING
6024000000-E	1622	300	LF	TEMPORARY SLOPE DRAINS
6029000000-E	SP	500	LF	SAFETY FENCE
6030000000-E	1630	1,260	CY	SILT EXCAVATION
6036000000-E	1631	27,000	SY	MATTING FOR EROSION CONTROL
6037000000-E	SP	70	SY	COIR FIBER MAT
6038000000-E	SP	120	SY	PERMANENT SOIL REINFORCEMENT MAT
6042000000-E	1632	10,500	LF	1/4" HARDWARE CLOTH
6071010000-E	SP	950	LF	WATTLE
6071012000-E	SP	550	LF	COIR FIBER WATTLE
6071020000-E	SP	450	LB	POLYACRYLAMIDE (PAM)
6071030000-E	1640	300	LF	COIR FIBER BAFFLE
6071050000-E	SP	3	EA	**" SKIMMER (1-1/2")
6084000000-E	1660	24	ACR	SEEDING & MULCHING
6087000000-E	1660	12	ACR	MOWING
6090000000-E	1661	300	LB	SEED FOR REPAIR SEEDING
6093000000-E	1661	0.75	TON	FERTILIZER FOR REPAIR SEEDING
6096000000-E	1662	550	LB	SEED FOR SUPPLEMENTAL SEEDING
6108000000-E	1665	16	TON	FERTILIZER TOPDRESSING
6114500000-N	1667	50	MHR	SPECIALIZED HAND MOWING
6117000000-N	SP	100	EA	RESPONSE FOR EROSION CONTROL
6132000000-N	SP	25	EA	GENERIC EROSION CONTROL ITEM FABRIC INSERT INLET PROTECTION DEVICE
7048500000-E	1705	14	EA	PEDESTRIAN SIGNAL HEAD (16", 1 SECTION W/COUNTDOWN)
7060000000-E	1705	8,370	LF	SIGNAL CABLE
7120000000-E	1705	44	EA	VEHICLE SIGNAL HEAD (12", 3 SECTION)
7132000000-E	1705	1	EA	VEHICLE SIGNAL HEAD (12", 4 SECTION)
7144000000-E	1705	3	EA	VEHICLE SIGNAL HEAD (12", 5 SECTION)
7252000000-E	1710	410	LF	MESSENGER CABLE (1/4")
7264000000-E	1710	2,020	LF	MESSENGER CABLE (3/8")
7279000000-E	1715	60	LF	TRACER WIRE
7300000000-E	1715	655	LF	UNPAVED TRENCHING (**********) (1, 2")
7300100000-E	1715	1,630	LF	UNPAVED TRENCHING FOR TEMP-ORARY LEAD-IN
7301000000-E	1715	860	LF	DIRECTIONAL DRILL (**********) (1, 2")
7324000000-N	1716	23	EA	JUNCTION BOX (STANDARD SIZE)
7348000000-N	1716	2	EA	JUNCTION BOX (OVER-SIZED, HEA-VY DUTY)
7360000000-N	1720	5	EA	WOOD POLE
7372000000-N	1721	11	EA	GUY ASSEMBLY
7408000000-E	1722	2	EA	1" RISER WITH WEATHERHEAD
7420000000-E	1722	7	EA	2" RISER WITH WEATHERHEAD
7444000000-E	1725	9,720	LF	INDUCTIVE LOOP SAWCUT
7456000000-E	1726	26,810	LF	LEAD-IN CABLE (**********) (14-2)
7516000000-E	1730	610	LF	COMMUNICATIONS CABLE (**FIBER) (12)
7528000000-E	1730	450	LF	DROP CABLE
7540000000-N	1731	1	EA	SPLICE ENCLOSURE
7541000000-N	1731	2	EA	MODIFY SPLICE ENCLOSURE
7552000000-N	1731	2	EA	INTERCONNECT CENTER
7564100000-N	1732	2	EA	FIBER-OPTIC TRANSCEIVER, SELF-HEALING RING
7575160000-E	1734	60	LF	REMOVE EXISTING COMMUNICATIONS CABLE
7576000000-N	SP	8	EA	METAL STRAIN SIGNAL POLE
7588000000-N	SP	1	EA	METAL POLE WITH SINGLE MAST ARM
7613000000-N	SP	9	EA	SOIL TEST
7614100000-E	SP	63	CY	DRILLED PIER FOUNDATION
7631000000-N	SP	1	EA	MAST ARM WITH METAL POLE DE-SIGN
7642100000-N	1743	8	EA	TYPE I POST WITH FOUNDATION
7642200000-N	1743	7	EA	TYPE II PEDESTAL WITH FOUND-ATION
7684000000-N	1750	1	EA	SIGNAL CABINET FOUNDATION
7756000000-N	1751	1	EA	CONTROLLER WITH CABINET (TYPE 2070L, BASE MOUNTED)
7780000000-N	1751	11	EA	DETECTOR CARD (TYPE 2070L)
7901000000-N	1753	1	EA	CABINET BASE EXTENDER
8802030000-E	SP	705	SF	SEGMENTAL GRAVITY RETAINING WALLS

COMPUTED BY: JBT DATE: 30/4/2012

CHECKED BY: KDA/IY DATE: 5/30/2012

RD261636

NORTH CAROLINA DEPARTMENT OF TRANSPORTATION
DIVISION OF HIGHWAYS

PROJECT NO.	SHEET NO.
U-2809B	3-A

Note: Invert Elevations indicated are for Bid Purposes only and shall not be used for project construction stakeout. See "Standard Specifications For Roads and Structures, Section 300-5".

LIST OF PIPES, ENDWALLS, ETC. (FOR PIPES 48 INCHES & UNDER)

Station	Location (LT, RT, or CL)	Structure No. From	Structure No. To	Top Elevation	Invert Elevation	Invert Elevation	Slope Critical	Drainage Pipe (RCP, CSP, CAAP, HDPE, or PVC) 12"	15"	18"	24"	30"	36"	42"	48"	Do Not Use RCP	Do Not Use CSP	Do Not Use CAAP	Do Not Use HDPE	C.S. Pipe 12" .064	C.S. 15" .064	C.S. 18" .064	C.S. 24" .064	C.S. 30" .079	C.S. 36" .079	C.S. 42" .109	C.S. 48" .109	R.C. Pipe Class III 12"	R.C. III 15"	R.C. III 18"	R.C. III 24"	R.C. III 30"	R.C. III 36"	R.C. III 42"	R.C. III 48"	R.C. Pipe Class IV 12"	R.C. IV 15"	R.C. IV 18"	R.C. IV 24"	R.C. IV 30"	R.C. IV 36"	R.C. IV 42"	R.C. IV 48"
-L-																																											
111+58.04	RT	413		204.36																																							
		413	414		200.21	198.96																							68'														
111+59.60	LT	414		204.22																																							
114+24.50	LT	501		209.32																																							
		501	414		205.9	198.96																								264'													
116+82.50	LT	504		214.31																																							
		504	501		211.09	206.15																							256'														
117+23.00	LT	505		214.4																																							
117+23.00	LT	511		215.4																																							
		505	511		212.15	211.98																							24'														
		511	504		211.98	211.09																							36'														
116+81.15	CL	503		215.04																																							
		503	504		211.58	211.16																							36'														
116+64.78	RT	502		215.09																																							
		502	503		211.84	211.68																							52'														
117+94.43	LT	506		217.61																																							
		506	503		214.26	211.89																							112'														
118+62.52	LT	507		218.79																																							
		507	506		215.61	214.36																							64'														
121+36.82	LT	550		220.65																																							
		550	508		217.12	216.76																							80'														
122+17.34	RT	508		220.45																																							
		508	513		216.77	216.5																							84'														
122+99.68	RT	513		219.91																																							
		513	514		216.4	216.05																							72'														
123+72.75	RT	514		219.22																																							
		514	509		215.95	215.35																							84'														
124+56.73	RT	509		218.52																																							
		509	510		214.15	214																							44'														
124+56.95	LT	510		219.15																																							
		510	600		214	212.43																							204'														
126+62.93	LT	600		215.68																																							
		600	618		212.33	212.1																							68'														
127+36.21	LT	618		215.41																																							
127+36.52	LT	617		213.96																																							
		617	618		211.71	211.66																							16'														
		618	602		211.6	211.27																							112'														
128+52.95	LT	602		215.27																																							
128+45.79	LT	601		215.33																																							
		601	602		212.08	211.3																							16'														
		602	604		209.15	208.98																									48'												
129+00.57	LT	604		215.22																																							
		604	606		208.88	208.25																									208'												
131+08.62	LT	606		215.87																																							
		606	607		208.15	208.1																									16'												
127+23.50	RT	619		215.38																																							
SHEET TOTALS																													1428'	264'	272'												

Station	Structure No. From	Structure No. To	** " R.C. PIPE (CLASS V)	***" RC PIPE CULVERTS, CONTRACTOR DESIGN	***" RC PIPE CULVERTS, CONTRACTOR DESIGN	15" SIDE DRAIN PIPE	18" SIDE DRAIN PIPE	ENDWALLS STD. 838.01 838.11 OR STD. 838.80 (UNLESS NOTED OTHERWISE) CU. YARDS R.C.P.	ENDWALLS C.S.P.	QUANTITIES FOR DRAINAGE STRUCTURES PER EACH (0' THRU 5.0')	*TOTAL L.F. FOR PAY QUANTITY SHALL BE COL. 'A' + (1.3 X COL.'B') LIN. FT. A 5.0' THRU 10.0'	LIN. FT. B 10.0' AND ABOVE	C.B. STD. 840.01 OR STD. 840.02	FRAME, GRATES, AND HOOD STANDARD 840.03 TYPE OF GRATE E	F	G	CONCRETE TRANSITIONAL SECTION DROP INLET	CATCH BASIN (SEE DETAIL SHEET 2-CC)	OPEN THROAT CATCH BASIN (SEE DETAIL SHEET 2-R)	D.I. STD. 840.14 OR STD. 840.15	D.I. FRAME AND TWO GRATE STD. 840.16	G.D.I. TYPE "B" STD. 840.18 OR 840.27	G.D.I. FRAME WITH TWO GRATES STD. 840.20	G.D.I. FRAME WITH TWO GRATES STD. 840.24	FRAME & TWO N. S. FLAT GRATES STD. 840.29	J.B. STD. 840.31 OR 840.32	T.B.J.B. STD. 840.34	T.B.G.D.I. STD. 840.35	M.H. FRAME AND COVER STD. 840.54	ADJUST EXIST. MH COVER	ADJUST EXIST. CB	BICYCLE SAFE STEEL FRAME & GRATE (SEE DETAIL SHEET 2-S)	SPECIAL D.I. (SEE DETAIL SHEET 2-Y)	SPECIAL C.B. (SEE DETAIL SHEET 2-BB)	CONVERT EXIST. J.B. TO C.B. (SEE DETAIL SHEET 2-W)	SPECIAL J.B. (SEE DETAIL SHEET 2-Z)	CONVERT EXIST. C.B. TO J.B. w/MH COVER(SEE DETAIL SHEET 2-V)	CONVERT EXIST. CB TO T.B.J.B. W/MH COVER (SEE DETAIL SHEET 2-U)	SPECIAL J.B. (SEE DETAIL SHEET 2-AA)	SPECIAL C.B. (SEE DETAIL SHEET 2-X)	SPECIAL C.B. (SEE DETAIL SHEET 2-T)	CONC. & BRICK PIPE PLUG, C.Y. STD. 840.71	CONC. COLLARS CL. "B" C.Y. STD. 840.72	PIPE REMOVAL LIN. FT.	REMARKS
111+58.04	413									1			1			1																													
	413	414																																											
111+59.60	414																													1															RETAIN CB AND ADJUST GRATE
114+24.50	501									1			1		1																														
	501	414																																											
116+82.50	504									1			1		1																														
	504	501																																											
117+23.00	505									1																1			1																
117+23.00	511									1			1		1																														
	505	511																																											
	511	504																																											
116+81.15	503									1			1			1		1																											
	503	504																																											
116+64.78	502									1										1	1																								
	502	503																																											
117+94.43	506									1							1			1	1																								
	506	503																																											
118+62.52	507									1							1			1	1																								
	507	506																																											
121+36.82	550									1							1			1	1																								
	550	508																																											
122+17.34	508									1							1			1	1																								
	508	513																																											
122+99.68	513									1							1			1	1																								
	513	514																																											
123+72.75	514									1							1			1	1																								
	514	509																																											
124+56.73	509									1							1			1	1																								
	509	510																																											
124+56.95	510									1	0.15		1			1																													
	510	600																																											
126+62.93	600									1			1			1																													
	600	618																																											
127+36.21	618									1			1			1																													
127+36.52	617									1										1	1																								
	617	618																																											
	618	602																																											
128+52.95	602									1	1.12		1	1																															
128+45.79	601									1										1	1																								
	601	602																																											
	602	604																																											
129+00.57	604									1	1.34		1		1																														
	604	606																																											
131+08.62	606									1	2.72		1		1																														
	606	607																																											
127+23.50	619									1			1		1																														
SHEET TOTALS										23	5.33		12	1	6	5	7	1		10	10				1			1			1														

ABBREVIATIONS

C.B.	CATCH BASIN
N.D.I.	NARROW DROP INLET
D.I.	DROP INLET
G.D.I.	GRATED DROP INLET
G.D.I.(N.S.)	(NARROW SLOT)
J.B.	JUNCTION BOX
M.H.	MANHOLE
T.B.D.I.	TRAFFIC BEARING DROP INLET
T.B.J.B.	TRAFFIC BEARING JUNCTION BOX

COMPUTED BY: JBT DATE: 30/4/2012

CHECKED BY: KDA/IY DATE: 5/30/2012

PROJECT NO.	SHEET NO.
U-2809B	3-B

RD261636

NORTH CAROLINA DEPARTMENT OF TRANSPORTATION
DIVISION OF HIGHWAYS

Note: Invert Elevations indicated are for Bid Purposes only and shall not be used for project construction stakeout. See "Standard Specifications For Roads and Structures, Section 300-5".

LIST OF PIPES, ENDWALLS, ETC. (FOR PIPES 48 INCHES & UNDER)

STATION / SIZE / THICKNESS OR GAUGE	LOCATION (LT, RT, OR CL')	STRUCTURE NO. FROM	STRUCTURE NO. TO	TOP ELEVATION	INVERT ELEVATION	INVERT ELEVATION	SLOPE CRITICAL	DRAINAGE PIPE (RCP, CSP, CAAP, HDPE, or PVC) 12"	15"	18"	24"	30"	36"	42"	48"	DO NOT USE RCP	DO NOT USE CSP	DO NOT USE CAAP	DO NOT USE HDPE
		619	603		212.13	211.74													
128+26.68	RT																		
128+52.42	RT	603		215.15															
		603	602		210.13	209.92													
129+01.04	RT	605		215.22															
		605	603		211.97	211.8													
129+24.71	RT																		
130+14.72	RT																		
130+94.10	RT																		
131+10.83	CL																		
134+58.34	LT	608		214.96															
		608	650		210.92	210.68													
134+40.92	RT	650		215.85															
		650	609		210.68	210.56													
134+14.83	RT	609		215.25															
		609	652		210.56	210.2													
135+40.00	LT	651		215.6															
		651	652		211	210.25													
135+38.39	RT	652		214.8															
		652	611		210.2	209.8													
136+85.84	LT	610		214.43															
		610	611		210.12	209.8													
136+87.90	RT	611		214.43															
138+84.00	RT	620		213.9															
		621	620		209.42	209.26													
138+95.40	RT	621		211.67															
139+11.52	RT																		
		611	620		209.8	209.26													
		620	728		209.26	209													
139+78.50	RT	728		214.43															
		728	730		209	208.12													
139+75.49	LT	700		213.57															
		700	729		209.99	208.85													
140+09.00	RT	732		211.74															
		732	728		209.49	209													
140+31.94	RT																		
140+89.72	LT																		
141+53.30	LT																		
141+98.95	RT																		
142+28.50	LT	729		212.87															
		729	730		208.85	208.62													
142+29.66	RT	731		211.74															
		731	730		208.54	208.47													
142+27.06	RT	730		212.87															
		730	702		208.12	207.74													
142+90.26	LT																		
143+55.36	RT	701		211.32															
		701	702		208.16	208.08													
143+54.00	RT	702		212.45															
SHEET TOTALS																			

STATION	FROM	TO	C.S. PIPE 12" .064	15" .064	18" .064	24" .064	30" .079	36" .079	42" .109	48" .109	R.C. PIPE CLASS III 12"	15"	18"	24"	30"	36"	42"	48"	R.C. PIPE CLASS IV 12"	15"	18"	24"	30"	36"	42"	48"
	619	603										128'														
128+26.68																										
128+52.42	603																									
	603	602										72'														
129+01.04	605																									
	605	603										48'														
129+24.71																										
130+14.72																										
130+94.10																										
131+10.83																										
134+58.34	608																									
	608	650										56'														
134+40.92	650																									
	650	609										40'														
134+14.83	609																									
	609	652											124'													
135+40.00	651																									
	651	652										48'														
135+38.39	652																									
	652	611											144'													
136+85.84	610																									
	610	611											72'													
136+87.90	611																									
138+84.00	620																									
	621	620										24'														
138+95.40	621																									
139+11.52																										
	611	620											196'													
	620	728											88'													
139+78.50	728																									
	728	730											248'													
139+75.49	700																									
	700	729											256'													
140+09.00	732																									
	732	728										36'														
140+31.94																										
140+89.72																										
141+53.30																										
141+98.95																										
142+28.50	729																									
	729	730											72'													
142+29.66	731																									
	731	730										24'														
142+27.06	730																									
	730	702												124'												
142+90.26																										
143+55.36	701																									
	701	702										24'														
143+54.00	702																									
SHEET TOTALS												500'	1200'	124'												

STATION	FROM	TO	** " R.C. PIPE (CLASS V)	***" RC PIPE CULVERTS, CONTRACTOR DESIGN	***" RC PIPE CULVERTS, CONTRACTOR DESIGN	15" SIDE DRAIN PIPE	18" SIDE DRAIN PIPE	ENDWALLS STD. 838.01 838.11 OR STD. 838.80 (UNLESS NOTED OTHERWISE) CU. YARDS R.C.P.	C.S.P.	QUANTITIES FOR DRAINAGE STRUCTURES PER EACH (0' THRU 5.0')	*TOTAL L.F. FOR PAY QUANTITY SHALL BE COL. 'A' + (1.3 X COL.'B') LIN. FT. A 5.0' THRU 10.0'	B 10.0' AND ABOVE	C.B. STD. 840.01 OR STD. 840.02	FRAME, GRATES, AND HOOD STANDARD 840.03 TYPE OF GRATE E	F	G	CONCRETE TRANSITIONAL SECTION DROP INLET	CATCH BASIN (SEE DETAIL SHEET 2-CC)
	619	603																
128+26.68																		
128+52.42	603									1	0.02		1	1				
	603	602																
129+01.04	605									1			1			1		
	605	603																
129+24.71																		
130+14.72																		
130+94.10																		
131+10.83																		
134+58.34	608									1			1			1		
	608	650																
134+40.92	650									1	0.17						1	
	650	609																
134+14.83	609									1			1		1			
	609	652																
135+40.00	651									1							1	
	651	652																
135+38.39	652									1			1		1			
	652	611																
136+85.84	610									1			1			1		
	610	611																
136+87.90	611									1			1		1			
138+84.00	620									1			1		1			
	621	620																
138+95.40	621									1								
139+11.52																		
	611	620																
	620	728																
139+78.50	728									1	0.43		1		1			
	728	730																
139+75.49	700									1			1			1		
	700	729																
140+09.00	732									1								
	732	728																
140+31.94																		
140+89.72																		
141+53.30																		
141+98.95																		
142+28.50	729									1			1			1		
	729	730																
142+29.66	731									1								
	731	730																
142+27.06	730									1			1		1			
	730	702																
142+90.26																		
143+55.36	701									1								
	701	702																
143+54.00	702									1			1		1			
SHEET TOTALS										19	0.62		13	1	7	5	2	

STATION	FROM	TO	OPEN THROAT CATCH BASIN (SEE DETAIL SHEET 2-R)	D.I. STD. 840.14 OR STD. 840.15	D.I. FRAME AND TWO GRATE STD. 840.16	G.D.I. TYPE "B" STD. 840.18 OR 840.27	G.D.I. FRAME WITH TWO GRATES STD. 840.20	G.D.I. FRAME WITH TWO GRATES STD. 840.24	FRAME & TWO N. S. FLAT GRATES STD. 840.29	J.B. STD. 840.31 OR 840.32	T.B.J.B. STD. 840.34	T.B.G.D.I. STD. 840.35	M.H. FRAME AND COVER STD. 840.54	ADJUST EXIST. MH COVER	ADJUST EXIST. CB	BICYCLE SAFE STEEL FRAME & GRATE (SEE DETAIL SHEET 2-S)	SPECIAL D.I. (SEE DETAIL SHEET 2-Y)	SPECIAL C.B. (SEE DETAIL SHEET 2-BB)	CONVERT EXIST. J.B. TO C.B. (SEE DETAIL SHEET 2-W)	SPECIAL J.B. (SEE DETAIL SHEET 2-Z)	CONVERT EXIST. C.B. TO J.B. w/MH COVER(SEE DETAIL SHEET 2-V)	CONVERT EXIST. CB TO T.B.J.B. W/MH COVER (SEE DETAIL SHEET 2-U)	SPECIAL J.B. (SEE DETAIL SHEET 2-AA)	SPECIAL C.B. (SEE DETAIL SHEET 2-X)	SPECIAL C.B. (SEE DETAIL SHEET 2-T)	CONC. & BRICK PIPE PLUG, C.Y. STD. 840.71	CONC. COLLARS CL. "B" C.Y. STD. 840.72	PIPE REMOVAL LIN. FT.	REMARKS
	619	603																											
128+26.68																												19	REMOVE EXIST. PIPE TYPE & SIZE UNK.
128+52.42	603																												
	603	602																											
129+01.04	605																												
	605	603																											
129+24.71																												21	REMOVE EXIST. PIPE TYPE & SIZE UNK.
130+14.72																												20	REMOVE EXIST. PIPE TYPE & SIZE UNK.
130+94.10																												18	REMOVE EXIST. PIPE TYPE & SIZE UNK.
131+10.83																										0.09			PLUG & FILL EXIST. 15" RCP
134+58.34	608																												
	608	650																											
134+40.92	650			1	1																								
	650	609																											
134+14.83	609																												
	609	652																											
135+40.00	651			1	1																								
	651	652																											
135+38.39	652																												
	652	611																											
136+85.84	610																												
	610	611																											
136+87.90	611																												
138+84.00	620																												
	621	620																											
138+95.40	621			1	1																								
139+11.52																												37	REMOVE EXIST. PIPE TYPE & SIZE UNK.
	611	620																											
	620	728																											
139+78.50	728																												
	728	730																											
139+75.49	700																												
	700	729																											
140+09.00	732			1	1																								
	732	728																											
140+31.94																												20	REMOVE EXIST. PIPE TYPE & SIZE UNK.
140+89.72																												49	REMOVE EXIST. PIPE TYPE & SIZE UNK.
141+53.30																												49	REMOVE EXIST. PIPE TYPE & SIZE UNK.
141+98.95																												20	REMOVE EXIST. PIPE TYPE & SIZE UNK.
142+28.50	729																												
	729	730																											
142+29.66	731			1	1																								
	731	730																											
142+27.06	730																												
	730	702																											
142+90.26																												88	REMOVE EXIST. PIPE TYPE & SIZE UNK.
143+55.36	701			1	1																								
	701	702																											
143+54.00	702																												
SHEET TOTALS				6	6																					0.09		341	

ABBREVIATIONS

C.B.	CATCH BASIN
N.D.I.	NARROW DROP INLET
D.I.	DROP INLET
G.D.I.	GRATED DROP INLET
G.D.I.(N.S.)	(NARROW SLOT)
J.B.	JUNCTION BOX
M.H.	MANHOLE
T.B.D.I.	TRAFFIC BEARING DROP INLET
T.B.J.B.	TRAFFIC BEARING JUNCTION BOX

COMPUTED BY:	JBT	DATE:	30/4/2012
CHECKED BY:	KDA/IY	DATE:	5/30/2012

RD261636

PROJECT NO.	SHEET NO.
U-2809B	3-C

NORTH CAROLINA DEPARTMENT OF TRANSPORTATION
DIVISION OF HIGHWAYS

**Note: Invert Elevations indicated are for Bid Purposes only and shall not be used for project construction stakeout.
See "Standard Specifications For Roads and Structures, Section 300-5".**

LIST OF PIPES, ENDWALLS, ETC. (FOR PIPES 48 INCHES & UNDER)

ABBREVIATIONS

C.B.	CATCH BASIN
N.D.I.	NARROW DROP INLET
D.I.	DROP INLET
G.D.I.	GRATED DROP INLET
G.D.I.(N.S.)	(NARROW SLOT)
J.B.	JUNCTION BOX
M.H.	MANHOLE
T.B.D.I.	TRAFFIC BEARING DROP INLET
T.B.J.B.	TRAFFIC BEARING JUNCTION BOX

STATION (SIZE; THICKNESS OR GAUGE; -L-)	LOCATION (LT, RT, OR CL)'	STRUCTURE NO. FROM	STRUCTURE NO. TO	TOP ELEVATION	INVERT ELEVATION	INVERT ELEVATION	SLOPE CRITICAL	DRAINAGE PIPE (RCP, CSP, CAAP, HDPE, or PVC) 12"	15"	18"	24"	30"	36"	42"	48"	DO NOT USE RCP	DO NOT USE CSP	DO NOT USE CAAP	DO NOT USE HDPE	C.S. PIPE 12" .064	15" .064	18" .064	24" .064	30" .079	36" .079	42" .109	48" .109	R.C. PIPE CLASS III 12"	15"	18"	24"	30"	36"	42"	48"	R.C. PIPE CLASS IV 12"	15"	18"	24"	30"	36"	42"	48"	** " R.C. PIPE (CLASS V)	***" RC PIPE CULVERTS, CONTRACTOR DESIGN	***" RC PIPE CULVERTS, CONTRACTOR DESIGN	15" SIDE DRAIN PIPE	18" SIDE DRAIN PIPE	ENDWALLS STD. 838.01 838.11 OR STD. 838.80 (UNLESS NOTED OTHERWISE) CU. YARDS R.C.P.	C.S.P.	QUANTITIES FOR DRAINAGE STRUCTURES PER EACH (0' THRU 5.0')	*TOTAL L.F. FOR PAY QUANTITY SHALL BE COL. 'A' + (1.3 X COL.'B') LIN. FT. A 5.0' THRU 10.0'	B 10.0' AND ABOVE	C.B. STD. 840.01 OR STD. 840.02	FRAME, GRATES, AND HOOD STANDARD 840.03 TYPE OF GRATE E	F	G	CONCRETE TRANSITIONAL SECTION DROP INLET	CATCH BASIN (SEE DETAIL SHEET 2-CC)	OPEN THROAT CATCH BASIN (SEE DETAIL SHEET 2-R)	D.I. STD. 840.14 OR STD. 840.15	D.I. FRAME AND TWO GRATE STD. 840.16	G.D.I. TYPE "B" STD. 840.18 OR 840.27	G.D.I. FRAME WITH TWO GRATES STD. 840.20	G.D.I. FRAME WITH TWO GRATES STD. 840.24	FRAME & TWO N. S. FLAT GRATES STD. 840.29	J.B. STD. 840.31 OR 840.32	T.B.J.B. STD. 840.34	T.B.G.D.I. STD. 840.35	M.H. FRAME AND COVER STD. 840.54	ADJUST EXIST. MH COVER	ADJUST EXIST. CB	BICYCLE SAFE STEEL FRAME & GRATE (SEE DETAIL SHEET 2-S)	SPECIAL D.I. (SEE DETAIL SHEET 2-Y)	SPECIAL C.B. (SEE DETAIL SHEET 2-BB)	CONVERT EXIST. J.B. TO C.B. (SEE DETAIL SHEET 2-W)	SPECIAL .J.B. (SEE DETAIL SHEET 2-Z)	CONVERT EXIST. C.B. TO J.B. w/MH COVER(SEE DETAIL SHEET 2-V)	CONVERT EXIST. CB TO T.B.J.B. W/MH COVER (SEE DETAIL SHEET 2-U)	SPECIAL .J.B. (SEE DETAIL SHEET 2-AA)	SPECIAL C.B. (SEE DETAIL SHEET 2-X)	SPECIAL C.B. (SEE DETAIL SHEET 2-T)	CONC. & BRICK PIPE PLUG, C.Y. STD. 840.71	CONC. COLLARS CL. "B" C.Y. STD. 840.72	PIPE REMOVAL LIN. FT.	REMARKS
		702	704		207.74	207.32																									36'																																																									
143+91.82	RT	704		212.44																																															1	0.12		1	1																																
		704	703		207.32	207																									72'																																																									
143+91.82	LT	703		212.44																																															1	0.45		1	1																																
		703	706		206.99	206.33																									208'																																																									
144+80.43	LT																																																																																						106	REMOVE EXIST. PIPE TYPE & SIZE UNK.
145+26.03	RT																																																																																							36	REMOVE EXIST. PIPE TYPE & SIZE UNK.
146+02.31	RT	707		212.42																																															1										1	1																								
		707	708		209.17	209.11																						20'																																																														
146+01.01	RT	708		213																																															1			1			1																													
		708	706		209.01	208.78																						72'																																																														
146+02.97	LT	706		213																																															1	1.67		1		1																														
		706	709		206.33	206.01																										80'																																																								
146+80.50	LT	709		213.27																																															1	2.26		1		1																														
		709	713		206.01	205.57																										148'																																																								
148+01.82	LT	712		211.5																																															1										1	1																								
		712	713		208.25	208.13																						36'																																																														
148+31.51	LT	713		213.98																																															1	3.41		1		1																														
		713	715		205.57	205.44																										48'																																																								
148+00.00	RT	751		214.4																																															1	3.00						1			1	1																								
		751	713		206.4	205.57																						56'																																																															
148+55.29	LT																																																																																							65	REMOVE EXIST. PIPE TYPE & SIZE UNK.
147+38.35	RT	710		213.02																																															1															1			1																	
		710	711		209.77	209.71																						20'																																																															
147+39.50	RT	711		213.47																																															1			1			1																													
		711	714		209	208																						128'																																																														
148+90.37	LT	750		214.75																																															1	1.75						1			1	1																								
		750	714		208	206.68																							48'																																																													
148+69.08	RT	714		214.03																																															1	2.35		1			1																													
		714	715		206.68	205.44																								92'																																																												
150+41.51	RT	718		214.6																																															1	2.37		1			1																													
		718	714		207.23	206.68																							172'																																																													
152+09.50	RT	720		215.16																																															1	2.40		1			1																													
		720	718		207.76	207.25																							168'																																																													
154+37.61	RT	827		215.63																																															1	1.94		1			1																													
		827	720		208.69	208.01																						228'																																																															
156+40.00	RT	802		215.42																																															1	0.85		1			1																													
		802	827		209.57	208.79																						200'																																																															
156+67.87	RT	850		216.25																																															1	0.39						1			1	1																								
		850	802		210.86	209.69																						36'																																																															
158+54.52	RT	805		215.12																																															1			1	1																															
		805	802		210.18	209.62																						212'																																																															
158+62.68	RT	804		213.6																																															1										1	1																								
		804	805		210.35	210.28																						24'																																																														
SHEET TOTALS																													1032'	388'	408'	276'																					20	22.96		13	3	3	7	3			6	6				1			1																207	

COMPUTED BY:	JBT	DATE:	30/4/2012
CHECKED BY:	KDA/IY	DATE:	5/30/2012

NORTH CAROLINA DEPARTMENT OF TRANSPORTATION
DIVISION OF HIGHWAYS

PROJECT NO.	SHEET NO.
U-2809B	3-D

RD261636

Note: Invert Elevations indicated are for Bid Purposes only and shall not be used for project construction stakeout. See "Standard Specifications For Roads and Structures, Section 300-5".

LIST OF PIPES, ENDWALLS, ETC. (FOR PIPES 48 INCHES & UNDER)

STATION	LOCATION (LT, RT, OR CL)	STRUCTURE NO. FROM	STRUCTURE NO. TO	TOP ELEVATION	INVERT ELEVATION	INVERT ELEVATION	SLOPE CRITICAL
149+48.25	LT	717		214.26			
		717	715		206.66	206.41	
149+50.30	LT	716		210.87			
		716	717		207.62	207.54	
152+03.50	LT	719		215.16			
		719	717		207.53	206.76	
154+36.10	LT	800		215.63			
		800	719		208.33	207.63	
156+55.63	LT	801		215.36			
		801	800		209.1	208.43	
158+54.52		803		215.12			
157+84.00	LT	830		215.18			
		803	830		209.68	209.48	
		830	801		209.48	209.1	
157+84.52	LT	851		216.03			
		851	830		210	209.48	
160+01.50	LT	807		215.43			
		807	803		210.34	209.68	
159+93.08	LT						
156+74.91	RT						
157+25.50	RT						
160+02.65	LT	808		213.8			
		808	807		212.55	212.27	
160+03.89	RT	806		215.44			
		806	807		211.87	211.65	
160+54.16	RT						
161+36.50	RT	810		216.19			
		810	806		212.46	211.97	
161+37.75	RT	809		214.95			
		809	810		213.28	212.71	
162+46.16	LT	811		216.72			
		811	807		211.58	210.84	
162+46.36	LT	812		215.9			
		812	811		213.11	213.05	
162+30.41	LT						
163+85.50	LT	813		217.4			
		813	811		212.11	211.68	
163+86.99	RT	814		217.4			
		814	813		213.26	212.61	
164+75.36	LT						
166+17.51	LT	818		218.55			
		818	813		213	212.3	
166+18.83	LT	819		216.25			
		819	818		214.13	213.34	
166+49.93	RT	852		219.27			
		852	817		214.69	214.46	
166+55.61	RT	816		216.04			
		816	817		214.71	214.56	
SHEET TOTALS							

Row (Station / Str. From-To)	DRAINAGE PIPE (RCP, CSP, CAAP, HDPE, or PVC) 12"	15"	18"	24"	30"	36"	42"	48"	DO NOT USE RCP	DO NOT USE CSP	DO NOT USE CAAP	DO NOT USE HDPE	C.S. PIPE 12" .064	15" .064	18" .064	24" .064	30" .079	36" .079	42" .109	48" .109
149+48.25																				
717-715																				
149+50.30																				
716-717																				
152+03.50																				
719-717																				
154+36.10																				
800-719																				
156+55.63																				
801-800																				
158+54.52																				
157+84.00																				
803-830																				
830-801																				
157+84.52																				
851-830																				
160+01.50																				
807-803																				
159+93.08																				
156+74.91																				
157+25.50																				
160+02.65																				
808-807																				
160+03.89																				
806-807																				
160+54.16																				
161+36.50																				
810-806																				
161+37.75																				
809-810																				
162+46.16																				
811-807																				
162+46.36																				
812-811																				
162+30.41																				
163+85.50																				
813-811																				
163+86.99																				
814-813																				
164+75.36																				
166+17.51																				
818-813																				
166+18.83																				
819-818																				
166+49.93																				
852-817																				
166+55.61																				
816-817																				
SHEET TOTALS																				

Row (Station / Str. From-To)	R.C. PIPE CLASS III 12"	15"	18"	24"	30"	36"	42"	48"	R.C. PIPE CLASS IV 12"	15"	18"	24"	30"	36"	42"	48"	** " R.C. PIPE (CLASS V)	***" RC PIPE CULVERTS, CONTRACTOR DESIGN	***" RC PIPE CULVERTS, CONTRACTOR DESIGN	15" SIDE DRAIN PIPE	18" SIDE DRAIN PIPE
149+48.25																					
717-715					72'																
149+50.30																					
716-717		24'																			
152+03.50																					
719-717					252'																
154+36.10																					
800-719					232'																
156+55.63																					
801-800					216'																
158+54.52																					
157+84.00																					
803-830					68'																
830-801					124'																
157+84.52																					
851-830		28'																			
160+01.50																					
807-803					148'																
159+93.08																					
156+74.91																					
157+25.50																					
160+02.65																					
808-807		20'																			
160+03.89																					
806-807			72'																		
160+54.16																					
161+36.50																					
810-806			132'																		
161+37.75																					
809-810		28'																			
162+46.16																					
811-807				244'																	
162+46.36																					
812-811		20'																			
162+30.41																					
163+85.50																					
813-811				140'																	
163+86.99																					
814-813			72'																		
164+75.36																					
166+17.51																					
818-813			232'																		
166+18.83																					
819-818		24'																			
166+49.93																					
852-817			28'																		
166+55.61																					
816-817			28'																		
SHEET TOTALS		144'	564'	384'	1112'																

Row (Station / Str. From-To)	ENDWALLS STD. 838.01 838.11 OR STD. 838.80 (UNLESS NOTED OTHERWISE) CU. YARDS R.C.P.	C.S.P.	QUANTITIES FOR DRAINAGE STRUCTURES PER EACH (0' THRU 5.0')	*TOTAL L.F. FOR PAY QUANTITY SHALL BE COL. 'A' + (1.3 X COL.'B') LIN. FT. A 5.0' THRU 10.0'	B 10.0' AND ABOVE	C.B. STD. 840.01 OR STD. 840.02	FRAME, GRATES, AND HOOD STANDARD 840.03 TYPE OF GRATE E	F	G	CONCRETE TRANSITIONAL SECTION DROP INLET	CATCH BASIN (SEE DETAIL SHEET 2-CC)
149+48.25			1	2.60		1		1			
717-715											
149+50.30			1								
716-717											
152+03.50			1	2.63		1		1			
719-717											
154+36.10			1	2.30		1		1			
800-719											
156+55.63			1	1.26		1			1		
801-800											
158+54.52			1	0.44		1	1				
157+84.00			1	0.70		1			1		
803-830											
830-801											
157+84.52			1	1.03						1	
851-830											
160+01.50			1	0.09		1		1			
807-803											
159+93.08											
156+74.91											
157+25.50											
160+02.65			1								
808-807											
160+03.89			1			1			1		
806-807											
160+54.16											
161+36.50			1			1			1		
810-806											
161+37.75			1								
809-810											
162+46.16			1			1		1			
811-807											
162+46.36			1								
812-811											
162+30.41											
163+85.50			1	0.29		1		1			
813-811											
163+86.99			1			1			1		
814-813											
164+75.36											
166+17.51			1	0.55		1		1			
818-813											
166+18.83			1								
819-818											
166+49.93			1							1	
852-817											
166+55.61			1								
816-817											
SHEET TOTALS			21	11.89		13	1	7	5	2	

Row (Station / Str. From-To)	OPEN THROAT CATCH BASIN (SEE DETAIL SHEET 2-R)	D.I. STD. 840.14 OR STD. 840.15	D.I. FRAME AND TWO GRATE STD. 840.16	G.D.I. TYPE "B" STD. 840.18 OR 840.27	G.D.I. FRAME WITH TWO GRATES STD. 840.20	G.D.I. FRAME WITH TWO GRATES STD. 840.24	FRAME & TWO N. S. FLAT GRATES STD. 840.29	J.B. STD. 840.31 OR 840.32	T.B.J.B. STD. 840.34	T.B.G.D.I. STD. 840.35	M.H. FRAME AND COVER STD. 840.54	ADJUST EXIST. MH COVER	ADJUST EXIST. CB
149+48.25													
717-715													
149+50.30		1	1										
716-717													
152+03.50													
719-717													
154+36.10													
800-719													
156+55.63													
801-800													
158+54.52													
157+84.00													
803-830													
830-801													
157+84.52		1	1										
851-830													
160+01.50													
807-803													
159+93.08													
156+74.91													1
157+25.50													1
160+02.65							1			1			
808-807													
160+03.89													
806-807													
160+54.16													
161+36.50													
810-806													
161+37.75		1	1										
809-810													
162+46.16													
811-807													
162+46.36							1			1			
812-811													
162+30.41													
163+85.50													
813-811													
163+86.99													
814-813													
164+75.36													
166+17.51													
818-813													
166+18.83							1			1			
819-818													
166+49.93		1	1										
852-817													
166+55.61		1	1										
816-817													
SHEET TOTALS		5	5				3			3			2

Row (Station / Str. From-To)	BICYCLE SAFE STEEL FRAME & GRATE (SEE DETAIL SHEET 2-S)	SPECIAL D.I. (SEE DETAIL SHEET 2-Y)	SPECIAL C.B. (SEE DETAIL SHEET 2-BB)	CONVERT EXIST. J.B. TO C.B. (SEE DETAIL SHEET 2-W)	SPECIAL J.B. (SEE DETAIL SHEET 2-Z)	CONVERT EXIST. C.B. TO J.B. w/MH COVER(SEE DETAIL SHEET 2-V)	CONVERT EXIST. CB TO T.B.J.B. W/MH COVER (SEE DETAIL SHEET 2-U)	SPECIAL J.B. (SEE DETAIL SHEET 2-AA)	SPECIAL C.B. (SEE DETAIL SHEET 2-X)	SPECIAL C.B. (SEE DETAIL SHEET 2-T)	CONC. & BRICK PIPE PLUG, C.Y. STD. 840.71	CONC. COLLARS CL. "B" C.Y. STD. 840.72	PIPE REMOVAL LIN. FT.	REMARKS
149+48.25														
717-715														
149+50.30														
716-717														
152+03.50														
719-717														
154+36.10														
800-719														
156+55.63														
801-800														
158+54.52														
157+84.00														
803-830														
830-801														
157+84.52														
851-830														
160+01.50														
807-803														
159+93.08													40	REMOVE EXIST. PIPE TYPE & SIZE UNK.
156+74.91														ADJUST EXISTING CB
157+25.50														ADJUST EXISTING CB
160+02.65														
808-807														
160+03.89														
806-807														
160+54.16													118	REMOVE EXIST. 15" RCP
161+36.50														
810-806														
161+37.75														
809-810														
162+46.16														
811-807														
162+46.36														
812-811														
162+30.41													40	REMOVE EXIST. PIPE TYPE & SIZE UNK.
163+85.50														
813-811														
163+86.99														
814-813														
164+75.36													32	REMOVE EXIST. PIPE TYPE & SIZE UNK.
166+17.51														
818-813														
166+18.83														
819-818														
166+49.93														
852-817														
166+55.61														
816-817														
SHEET TOTALS													230	

ABBREVIATIONS

C.B.	CATCH BASIN
N.D.I.	NARROW DROP INLET
D.I.	DROP INLET
G.D.I.	GRATED DROP INLET
G.D.I.(N.S.)	(NARROW SLOT)
J.B.	JUNCTION BOX
M.H.	MANHOLE
T.B.D.I.	TRAFFIC BEARING DROP INLET
T.B.J.B.	TRAFFIC BEARING JUNCTION BOX

COMPUTED BY:	JBT	DATE:	30/4/2012
CHECKED BY:	KDA/IY	DATE:	5/30/2012

RD261636

NORTH CAROLINA DEPARTMENT OF TRANSPORTATION
DIVISION OF HIGHWAYS

PROJECT NO.	SHEET NO.
U-2809B	3-E

Note: Invert Elevations indicated are for Bid Purposes only and shall not be used for project construction stakeout. See "Standard Specifications For Roads and Structures, Section 300-5".

LIST OF PIPES, ENDWALLS, ETC. (FOR PIPES 48 INCHES & UNDER)

STATION / SIZE / THICKNESS OR GAUGE	LOCATION (LT, RT, OR CL)	STRUCTURE NO. FROM	STRUCTURE NO. TO	TOP ELEVATION	INVERT ELEVATION	INVERT ELEVATION	SLOPE CRITICAL	DRAINAGE PIPE (RCP, CSP, CAAP, HDPE, or PVC) 12"	15"	18"	24"	30"	36"	42"	48"	DO NOT USE RCP	DO NOT USE CSP	DO NOT USE CAAP	DO NOT USE HDPE	C.S. PIPE 12" .064	15" .064	18" .064	24" .064	30" .079	36" .079	42" .109	48" .109
166+56.00	RT	817		218.59																							
		817	814		214.46	213.36																					
167+32.82	LT	951		218.98																							
		951	818		213.5	213																					
167+12.59	LT																										
167+32.62	LT	950		219.8																							
		950	951		214	213.6																					
168+74.50	LT	910		219.27																							
		910	951		214	213.6																					
168+75.61	LT	900		219.05																							
		900	910		215.8	214.75																					
168+75.97	RT	934		219.27																							
		934	910		214.3	214																					
169+59.51	RT	935		219.45																							
		935	934		214.56	214.3																					
169+60.16	RT	936		215.95																							
		936	935		214.79	214.56																					
169+52.42	LT																										
170+48.70	LT	920		219.58																							
		920	910		215	214.35																					
171+33.17	LT																										
173+39.83	LT																										
173+75.00	LT	901		219.66																							
		901	902		215.55	215.33																					
173+75.00	RT	902		219.66																							
		902	904		215.33	214.71																					
174+19.38	LT																										
175+70.50	RT	904		219.26																							
		904	908		214.7	214.34																					
175+65.67	RT	952		220.02																							
		952	904		214.98	214.7																					
175+71.58	LT	903		218.96																							
		903	952		215.17	214.98																					
176+31.76	LT	931		219.16																							
		931	903		215.36	215.17																					
176+51.92	LT																										
176+68.38	RT	953		219.79																							
		953	908		214.74	214.34																					
176+90.86	RT	908		219.17																							
		908	912		214.33	213.98																					
177+67.16	LT																										
178+01.00	RT	911		215.14																							
		911	912		213.98	213.48																					
178+00.00	LT	913		217.35																							
		913	909		214.54	214.35																					
SHEET TOTALS																											

STATION	STRUCTURE NO. FROM	TO	R.C. PIPE CLASS III 12"	15"	18"	24"	30"	36"	42"	48"	R.C. PIPE CLASS IV 12"	15"	18"	24"	30"	36"	42"	48"	** " R.C. PIPE (CLASS V)	***" RC PIPE CULVERTS, CONTRACTOR DESIGN	****" RC PIPE CULVERTS, CONTRACTOR DESIGN	15" SIDE DRAIN PIPE	18" SIDE DRAIN PIPE	ENDWALLS STD. 838.01 838.11 OR STD. 838.80 (UNLESS NOTED OTHERWISE) CU. YARDS R.C.P.	C.S.P.
	817	814			268'																				
	951	818			112'																				
	950	951			32'																				
	910	951			140'																				
	900	910		16'																					
	934	910		72'																					
	935	934		84'																					
	936	935		24'																					
	920	910		172'																					
	901	902		72'																					
	902	904		196'																					
	904	908		116'																					
	952	904		28'																					
	903	952		52'																					
	931	903		60'																					
	953	908		40'																					
	908	912			112'																				
	911	912		28'																					
	913	909		68'																					
SHEET TOTALS				1028'	664'																				

STATION	STRUCTURE NO. FROM	TO	QUANTITIES FOR DRAINAGE STRUCTURES PER EACH (0' THRU 5.0')	*TOTAL L.F. FOR PAY QUANTITY SHALL BE COL. 'A' + (1.3 X COL.'B') LIN. FT. A 5.0' THRU 10.0'	B 10.0' AND ABOVE	C.B. STD. 840.01 OR STD. 840.02	FRAME, GRATES, AND HOOD STANDARD 840.03 TYPE OF GRATE E	F	G	CONCRETE TRANSITIONAL SECTION DROP INLET	CATCH BASIN (SEE DETAIL SHEET 2-CC)	OPEN THROAT CATCH BASIN (SEE DETAIL SHEET 2-R)	D.I. STD. 840.14 OR STD. 840.15	D.I. FRAME AND TWO GRATE STD. 840.16	G.D.I. TYPE "B" STD. 840.18 OR 840.27	G.D.I. FRAME WITH TWO GRATES STD. 840.20	G.D.I. FRAME WITH TWO GRATES STD. 840.24	FRAME & TWO N. S. FLAT GRATES STD. 840.29	J.B. STD. 840.31 OR 840.32	T.B.J.B. STD. 840.34	T.B.G.D.I. STD. 840.35	M.H. FRAME AND COVER STD. 840.54	ADJUST EXIST. MH COVER	ADJUST EXIST. CB	BICYCLE SAFE STEEL FRAME & GRATE (SEE DETAIL SHEET 2-S)	SPECIAL D.I. (SEE DETAIL SHEET 2-Y)	SPECIAL C.B. (SEE DETAIL SHEET 2-BB)	CONVERT EXIST. J.B. TO C.B. (SEE DETAIL SHEET 2-W)	SPECIAL J.B. (SEE DETAIL SHEET 2-Z)	CONVERT EXIST. C.B. TO J.B. w/MH COVER(SEE DETAIL SHEET 2-V)	CONVERT EXIST. CB TO T.B.J.B. W/MH COVER (SEE DETAIL SHEET 2-U)	SPECIAL J.B. (SEE DETAIL SHEET 2-AA)	SPECIAL C.B. (SEE DETAIL SHEET 2-X)	SPECIAL C.B. (SEE DETAIL SHEET 2-T)
166+56.00	817		1			1			1																									
167+32.82	951		1	0.48		1		1																										
167+32.62	950		1	0.80						1			1	1																				
168+74.50	910		1	0.27		1		1																										
168+75.61	900		1															1			1													
168+75.97	934		1			1			1																									
169+59.51	935		1			1			1																									
169+60.16	936		1															1			1													
170+48.70	920		1			1		1																										
173+75.00	901		1			1			1																									
173+75.00	902		1			1		1																										
175+70.50	904		1			1		1																										
175+65.67	952		1	0.04						1			1	1																				
175+71.58	903		1			1			1																									
176+31.76	931		1			1			1																									
176+68.38	953		1	0.05						1			1	1																				
176+90.86	908		1			1		1																										
178+01.00	911		1										1	1																				
178+00.00	913		1															1			1													
SHEET TOTALS			19	1.64		12		6	6	3			4	4				3			3													

STATION	LOCATION	CONC. & BRICK PIPE PLUG, C.Y. STD. 840.71	CONC. COLLARS CL. "B" C.Y. STD. 840.72	PIPE REMOVAL LIN. FT.	REMARKS
167+12.59	LT			32	REMOVE EXIST. PIPE TYPE & SIZE UNK.
169+52.42	LT			32	REMOVE EXIST. PIPE TYPE & SIZE UNK.
171+33.17	LT			33	REMOVE EXIST. PIPE TYPE & SIZE UNK.
173+39.83	LT			33	REMOVE EXIST. PIPE TYPE & SIZE UNK.
174+19.38	LT			22	REMOVE EXIST. PIPE TYPE & SIZE UNK.
176+51.92	LT			28	REMOVE EXIST. PIPE TYPE & SIZE UNK.
177+67.16	LT			21	REMOVE EXIST. PIPE TYPE & SIZE UNK.
SHEET TOTALS				201	

ABBREVIATIONS

C.B.	CATCH BASIN
N.D.I.	NARROW DROP INLET
D.I.	DROP INLET
G.D.I.	GRATED DROP INLET
G.D.I.(N.S.)	(NARROW SLOT)
J.B.	JUNCTION BOX
M.H.	MANHOLE
T.B.D.I.	TRAFFIC BEARING DROP INLET
T.B.J.B.	TRAFFIC BEARING JUNCTION BOX

COMPUTED BY: JBT DATE: 30/4/2012

CHECKED BY: KDA/IY DATE: 5/30/2012

RD261636

NORTH CAROLINA DEPARTMENT OF TRANSPORTATION
DIVISION OF HIGHWAYS

PROJECT NO.	SHEET NO.
U-2809B	3-F

Note: Invert Elevations indicated are for Bid Purposes only and shall not be used for project construction stakeout. See "Standard Specifications For Roads and Structures, Section 300-5".

LIST OF PIPES, ENDWALLS, ETC. (FOR PIPES 48 INCHES & UNDER)

STATION	LOCATION (LT, RT, OR CL)	STRUCTURE NO. FROM	STRUCTURE NO. TO	TOP ELEVATION	INVERT ELEVATION	INVERT ELEVATION	SLOPE CRITICAL	R.C. PIPE CLASS III 12"	15"	18"	24"	30"	36"	42"	48"
178+02.54	LT	909		219.45											
		909	912		214.35	214.23			32'						
178+03.51	RT	912		218.6											
		912	917		213.48	213.03					148'				
178+16.79	LT														
179+53.09	LT	916		219.18											
		916	917		214.53	213.78			40'						
179+53.00	RT	917		217.91											
		917	1053		213.03	212.42					200'				
181+59.46	LT	1000		218.8											
		1000	1053		214.99	213.63			44'						
181+60.29	RT	1054		216.85											
		1054	1053		213.74	213.34			20'						
181+61.51	RT	1053		217.3											
		1053	1056		212.68	212.41					96'				
182+61.00	LT	1055		218.55											
		1055	1056		214.78	213.37			48'						
182+61.00	RT	1056		217.08											
183+15.28	LT	1057		218.03											
		1057	1055		215.09	214.78			52'						
		1056	1058		212.41	212.25					40'				
183+03.76	RT	1059		216.27											
		1059	1058		213.24	213.18			16'						
183+05.85	RT	1058		217.25											
		1058	1064		212.25	211.95					96'				
184+04.94	RT	1065		216.31											
		1065	1064		213	212.94			20'						
184+02.79	RT	1064		216.9											
		1064	1001		211.45	211.24						64'			
184+66.63	RT	1001		216.59											
		1001	1003		211.24	210.93						100'			
185+69.13	RT	1002		216.95											
		1002	1003		212.98	212.4			12'						
185+67.64	RT	1003		216.25											
		1003	1005		210.93	210.23						228'			
187+98.53	RT	1005		215.58											
188+76.02	RT	1005A		214.41											
189+14.72	RT	1005B		214.37											
189+42.88	RT	1005C		214.63											
189+56.21	RT	1005D		215.13											
190+60.87	RT	1005E		214.11											
190+66.51	RT	1005F		214.03											
191+03.16	RT	1005G		214.03											
184+30.42	LT	1062		214.81											
		1062	1063		213.52	213.32			8'						
SHEET TOTALS									292'	0'	580'	392'			

SIZE / THICKNESS OR GAUGE	DRAINAGE PIPE (RCP, CSP, CAAP, HDPE, or PVC) 12"	15"	18"	24"	30"	36"	42"	48"	DO NOT USE RCP	DO NOT USE CSP	DO NOT USE CAAP	DO NOT USE HDPE	C.S. PIPE 12" .064	15" .064	18" .064	24" .064	30" .079	36" .079	42" .109	48" .109	R.C. PIPE CLASS IV 12"	15"	18"	24"	30"	36"	42"	48"	** " R.C. PIPE (CLASS V)	***" RC PIPE CULVERTS, CONTRACTOR DESIGN	***" RC PIPE CULVERTS, CONTRACTOR DESIGN	15" SIDE DRAIN PIPE	18" SIDE DRAIN PIPE	ENDWALLS STD. 838.01, 838.11 OR STD. 838.80 (UNLESS NOTED OTHERWISE) CU. YARDS R.C.P.	C.S.P.
SHEET TOTALS																																			

STATION	FROM	TO	QUANTITIES FOR DRAINAGE STRUCTURES PER EACH (0' THRU 5.0')	*TOTAL L.F. FOR PAY QUANTITY SHALL BE COL. 'A' + (1.3 X COL.'B') LIN. FT. A 5.0' THRU 10.0'	B 10.0' AND ABOVE	C.B. STD. 840.01 OR STD. 840.02	FRAME, GRATES, AND HOOD STANDARD 840.03 TYPE OF GRATE E	F	G	CONCRETE TRANSITIONAL SECTION DROP INLET	CATCH BASIN (SEE DETAIL SHEET 2-CC)	OPEN THROAT CATCH BASIN (SEE DETAIL SHEET 2-R)	D.I. STD. 840.14 OR STD. 840.15	D.I. FRAME AND TWO GRATE STD. 840.16
178+02.54	909		1	0.10						1			1	1
	909	912												
178+03.51	912		1	0.12		1		1						
	912	917												
178+16.79														
179+53.09	916		1			1			1		1			
	916	917												
179+53.00	917		1			1		1						
	917	1053												
181+59.46	1000		1			1			1		1			
	1000	1053												
181+60.29	1054		1										1	1
	1054	1053												
181+61.51	1053		1			1		1						
	1053	1056												
182+61.00	1055		1			1			1		1			
	1055	1056												
182+61.00	1056		1			1		1						
183+15.28	1057		1			1			1		1			
	1057	1055												
	1056	1058												
183+03.76	1059		1										1	1
	1059	1058												
183+05.85	1058		1			1		1						
	1058	1064												
184+04.94	1065		1										1	1
	1065	1064												
184+02.79	1064		1	0.45		1		1						
	1064	1001												
184+66.63	1001		1	0.35		1		1						
	1001	1003												
185+69.13	1002		1										1	1
	1002	1003												
185+67.64	1003		1	0.32		1		1						
	1003	1005												
187+98.53	1005		1			1		1						
188+76.02	1005A													
189+14.72	1005B													
189+42.88	1005C													
189+56.21	1005D													
190+60.87	1005E													
190+66.51	1005F													
191+03.16	1005G													
184+30.42	1062		1											
	1062	1063												
SHEET TOTALS			19	1.34		13		9	4	1	4		5	5

STATION	FROM	TO	G.D.I. TYPE "B" STD. 840.18 OR 840.27	G.D.I. FRAME WITH TWO GRATES STD. 840.20	G.D.I. FRAME WITH TWO GRATES STD. 840.24	FRAME & TWO N. S. FLAT GRATES STD. 840.29	J.B. STD. 840.31 OR 840.32	T.B.J.B. STD. 840.34	T.B.G.D.I. STD. 840.35	M.H. FRAME AND COVER STD. 840.54	ADJUST EXIST. MH COVER	ADJUST EXIST. CB	BICYCLE SAFE STEEL FRAME & GRATE (SEE DETAIL SHEET 2-S)	SPECIAL D.I. (SEE DETAIL SHEET 2-Y)	SPECIAL C.B. (SEE DETAIL SHEET 2-BB)	CONVERT EXIST. J.B. TO C.B. (SEE DETAIL SHEET 2-W)	SPECIAL J.B. (SEE DETAIL SHEET 2-Z)	CONVERT EXIST. C.B. TO J.B. w/MH COVER(SEE DETAIL SHEET 2-V)	CONVERT EXIST. CB TO T.B.J.B. W/MH COVER (SEE DETAIL SHEET 2-U)	SPECIAL J.B. (SEE DETAIL SHEET 2-AA)	SPECIAL C.B. (SEE DETAIL SHEET 2-X)	SPECIAL C.B. (SEE DETAIL SHEET 2-T)	CONC. & BRICK PIPE PLUG, C.Y. STD. 840.71	CONC. COLLARS CL. "B" C.Y. STD. 840.72	PIPE REMOVAL LIN. FT.	REMARKS
178+02.54	909																									
	909	912																								
178+03.51	912																									
	912	917																								
178+16.79																									20	REMOVE EXIST. PIPE TYPE & SIZE UNK.
179+53.09	916																									
	916	917																								
179+53.00	917																									
	917	1053																								
181+59.46	1000																									
	1000	1053																								
181+60.29	1054																									
	1054	1053																								
181+61.51	1053																									
	1053	1056																								
182+61.00	1055																									
	1055	1056																								
182+61.00	1056																									
183+15.28	1057																									
	1057	1055																								
	1056	1058																								
183+03.76	1059																									
	1059	1058																								
183+05.85	1058																									
	1058	1064																								
184+04.94	1065																									
	1065	1064																								
184+02.79	1064																									
	1064	1001																								
184+66.63	1001																									
	1001	1003																								
185+69.13	1002																									
	1002	1003																								
185+67.64	1003																									
	1003	1005																								
187+98.53	1005																									REMOVE EXIST. DI & RETAIN EXIST. 30" RCP
188+76.02	1005A											1														
189+14.72	1005B											1														
189+42.88	1005C										1															
189+56.21	1005D											1														
190+60.87	1005E											1														
190+66.51	1005F										1															
191+03.16	1005G											1														
184+30.42	1062					1			1																	
	1062	1063																								
SHEET TOTALS						1			1		2	5													20	

ABBREVIATIONS

C.B.	CATCH BASIN
N.D.I.	NARROW DROP INLET
D.I.	DROP INLET
G.D.I.	GRATED DROP INLET
G.D.I.(N.S.)	(NARROW SLOT)
J.B.	JUNCTION BOX
M.H.	MANHOLE
T.B.D.I.	TRAFFIC BEARING DROP INLET
T.B.J.B.	TRAFFIC BEARING JUNCTION BOX

RD261636

COMPUTED BY:	JBT	DATE:	30/4/2012
CHECKED BY:	KDA/IY	DATE:	5/30/2012

PROJECT NO.	SHEET NO.
U-2809B	3-G

NORTH CAROLINA DEPARTMENT OF TRANSPORTATION
DIVISION OF HIGHWAYS

Note: Invert Elevations indicated are for Bid Purposes only and shall not be used for project construction stakeout. See "Standard Specifications For Roads and Structures, Section 300-5".

LIST OF PIPES, ENDWALLS, ETC. (FOR PIPES 48 INCHES & UNDER)

STATION	LOCATION (LT, RT, OR CL)	STRUCTURE NO. FROM	STRUCTURE NO. TO	TOP ELEVATION	INVERT ELEVATION	INVERT ELEVATION	SLOPE CRITICAL	R.C. PIPE CLASS III 12"	15"	18"	24"	30"	36"	42"	48"
184+30.41	LT	1063		217.01											
		1063	1004		213.22	212.39			196'						
186+25.34	LT	1004		216.22											
		1004	1006		212.29	211.29			196'						
188+75.13	LT	1008		215.65											
		1008	1007		210.25	210.23			4'						
188+75.00	LT	1007		215.65											
190+88.61	LT	1024A		215.65											
191+01.17	LT	1024B		210.93											
		1024B	1024C		210.93	210.89			12'						
192+38.49	LT	1024		214.24											
		1024	1026		210.15	209.55			52'						
192+92.47	LT	1025		214.5											
		1025	1026		209.14	209.19					12'				
193+41.67	LT	1027		213.99											
		1027	1026		210.55	210.39			48'						
192+91.78	LT	1026		214.11											
		1026	1023		209.49	209.56					24'				
193+99.18	LT	1100		214.08											
		1100	1027		211.09	210.65			56'						
192+67.22	RT	1031		214.21											
192+71.55	RT	1049		212.56											
		1049	1049A		210.31	208.85			20'						
192+88.95	RT	1049A		211.36											
193+10.28	RT	1048		212.3											
		1048	1048A		209.3	208.79			12'						
193+12.72	RT	1048A		212.41											
193+60.35	RT	1133		213.96											
		1133	1133A		210.96	208.77			12'						
193+56.97	RT	1133A		212.45											
193+88.08	RT	1125		212.26											
		1125	1125A		209.26	208.52			12'						
193+89.30	RT	1125A		211.71											
194+06.97	RT	1124		212.26											
194+94.84	RT	1126		213.99											
		1126	1128		210.74	210.45			92'						
195+19.01	RT														
195+19.03	RT														
165+21.57	RT	1128D		206.14											
195+88.14	RT	1128		214.16											
		1128	1128A		210.35	210.33			4'						
SHEET TOTALS									716'	0'	36'				

SIZE	DRAINAGE PIPE (RCP, CSP, CAAP, HDPE, or PVC) 12"	15"	18"	24"	30"	36"	42"	48"	DO NOT USE RCP	DO NOT USE CSP	DO NOT USE CAAP	DO NOT USE HDPE

SIZE	C.S. PIPE 12"	15"	18"	24"	30"	36"	42"	48"
THICKNESS OR GAUGE	.064	.064	.064	.064	.079	.079	.109	.109

SIZE	R.C. PIPE CLASS IV 12"	15"	18"	24"	30"	36"	42"	48"	** " R.C. PIPE (CLASS V)	***" RC PIPE CULVERTS, CONTRACTOR DESIGN	***" RC PIPE CULVERTS, CONTRACTOR DESIGN	15" SIDE DRAIN PIPE	18" SIDE DRAIN PIPE	ENDWALLS STD. 838.01 838.11 OR STD. 838.80 (UNLESS NOTED OTHERWISE) CU. YARDS R.C.P.	C.S.P.

STATION	STRUCTURE NO.	QUANTITIES FOR DRAINAGE STRUCTURES PER EACH (0' THRU 5.0')	*TOTAL L.F. FOR PAY QUANTITY SHALL BE COL. 'A' + (1.3 X COL.'B') LIN. FT. A 5.0' THRU 10.0'	B 10.0' AND ABOVE	C.B. STD. 840.01 OR STD. 840.02	FRAME, GRATES, AND HOOD STANDARD 840.03 TYPE OF GRATE E	F	G	CONCRETE TRANSITIONAL SECTION DROP INLET	CATCH BASIN (SEE DETAIL SHEET 2-CC)	OPEN THROAT CATCH BASIN (SEE DETAIL SHEET 2-R)	D.I. STD. 840.14 OR STD. 840.15	D.I. FRAME AND TWO GRATE STD. 840.16	G.D.I. TYPE "B" STD. 840.18 OR 840.27	G.D.I. FRAME WITH TWO GRATES STD. 840.20	G.D.I. FRAME WITH TWO GRATES STD. 840.24	FRAME & TWO N. S. FLAT GRATES STD. 840.29	J.B. STD. 840.31 OR 840.32	T.B.J.B. STD. 840.34	T.B.G.D.I. STD. 840.35	M.H. FRAME AND COVER STD. 840.54	ADJUST EXIST. MH COVER	ADJUST EXIST. CB	BICYCLE SAFE STEEL FRAME & GRATE (SEE DETAIL SHEET 2-S)	SPECIAL D.I. (SEE DETAIL SHEET 2-Y)	SPECIAL C.B. (SEE DETAIL SHEET 2-BB)	CONVERT EXIST. J.B. TO C.B. (SEE DETAIL SHEET 2-W)	SPECIAL J.B. (SEE DETAIL SHEET 2-Z)	CONVERT EXIST. C.B. TO J.B. w/MH COVER(SEE DETAIL SHEET 2-V)	CONVERT EXIST. CB TO T.B.J.B. W/MH COVER (SEE DETAIL SHEET 2-U)	SPECIAL J.B. (SEE DETAIL SHEET 2-AA)	SPECIAL C.B. (SEE DETAIL SHEET 2-X)	SPECIAL C.B. (SEE DETAIL SHEET 2-T)	CONC. & BRICK PIPE PLUG, C.Y. STD. 840.71	CONC. COLLARS CL. "B" C.Y. STD. 840.72	PIPE REMOVAL LIN. FT.	REMARKS
184+30.41	1063	1			1			1																													
186+25.34	1004	1			1			1																													
188+75.13	1008																				1									1							
188+75.00	1007	1	0.40		1			1																													
190+88.61	1024A																				1									1							
191+01.17	1024B																																		0.399		COLLAR AND EXTEND EXIST. 15" RCP
192+38.49	1024	1			1			1																													
192+92.47	1025	1	0.36																1		1																
193+41.67	1027	1			1			1																													
192+91.78	1026	1			1			1																													
193+99.18	1100	1			1	1																															
192+67.22	1031	1			1		1																														
192+71.55	1049	1										1	1																								
192+88.95	1049A																				1								1								REMOVE EXIST. FLUME. CONVERT DI TO JB
193+10.28	1048	1			1		1																														
193+12.72	1048A																				1									1							
193+60.35	1133	1			1		1																														
193+56.97	1133A																				1									1							
193+88.08	1125	1										1	1																								
193+89.30	1125A																				1								1								CONVERT EXIST. CB TO TBJB
194+06.97	1124	1				1																											1				REMOVE JB AND INSTALL SPECIAL CB
194+94.84	1126	1			1			1																													
195+19.01																																				7	REMOVE EXIST CB & 15" RCP
195+19.03																																		0.09			PLUG BOTH SIDES OF 15" RCP
165+21.57	1128D							1																			1										
195+88.14	1128	1			1			1																													
SHEET TOTALS		16	0.76		12	2	3	9	0			2	2						1		7						1		2	4			1	0.09	0.399	7	

ABBREVIATIONS

C.B.	CATCH BASIN
N.D.I.	NARROW DROP INLET
D.I.	DROP INLET
G.D.I.	GRATED DROP INLET
G.D.I.(N.S.)	(NARROW SLOT)
J.B.	JUNCTION BOX
M.H.	MANHOLE
T.B.D.I.	TRAFFIC BEARING DROP INLET
T.B.J.B.	TRAFFIC BEARING JUNCTION BOX

COMPUTED BY:	JBT	DATE:	30/4/2012
CHECKED BY:	KDA/IY	DATE:	5/30/2012

NORTH CAROLINA DEPARTMENT OF TRANSPORTATION
DIVISION OF HIGHWAYS

PROJECT NO.	SHEET NO.
U-2809B	3-H

RD261636

Note: Invert Elevations indicated are for Bid Purposes only and shall not be used for project construction stakeout. See "Standard Specifications For Roads and Structures, Section 300-5".

LIST OF PIPES, ENDWALLS, ETC. (FOR PIPES 48 INCHES & UNDER)

STATION / SIZE / THICKNESS OR GAUGE	LOCATION (LT, RT, OR CL)	STRUCTURE NO. FROM	STRUCTURE NO. TO	TOP ELEVATION	INVERT ELEVATION	INVERT ELEVATION	SLOPE CRITICAL	R.C. PIPE CLASS III 12"	15"	18"	24"	30"	36"	42"	48"
195+87.90	RT	1128A		212.49											
195+96.86	LT	1153		215.3											
		1153	1128A		207.69	206.69			44'						
196+02.00	LT	1129		214.58											
		1129	1153		208.21	207.69			36'						
196+02.85	LT	1130		214.9											
		1130	1129		211.63	211.06			16'						
196+67.27	RT	1128B		211.93											
196+98.25	RT	1150		215.64											
		1150	1153		209.2	207.79			100'						
198+35.90	LT	1131		215.29											
198+43.00	RT	1132		215.34											
		1131	1136		212.15	211.85			16'						
198+35.90	LT	1136		215.34											
		1136	1132		209.23	209.02			72'						
		1132	1132A		208.48	207.5			12'						
198+31.09	RT	1132A		212											
200+73.50	RT	1103		215.93											
		1103	1132		211.41	210.68					232'				
200+76.94	LT	1102		215.9											
		1102	1103		211.73	211.51					72'				
200+76.65	LT	1101		215.8											
		1101	1102		212.3	212.23				20'					
204+17.69	RT	1170		216.99											
		1170	1171		212.85	212.01			92'						
205+10.09	LT	1171		216.72											
		1171	1172		212.01	211.01			112'						
205+54.00	LT	1104		214.41											
		1104	1171		211.22				64'						
206+22.02	LT	1105		215.46											
		1105	1172		211.15	211.01			40'						
206+20.62	LT	1172		216.63											
		1172	1106		211.01	210.74			40'						
206+23.24	RT	1106		215.26											
206+78.36	LT														
		1106	1234		210.64	210.06			188'						
208+14.04	RT	1234		214.58											
		1234	1239		209.81	209.27				180'					
209+91.92	RT	1238		214.66											
		1238	1239		207.57	207.52					20'				
209+94.49	RT	1239		214.32											
		1239	1240		206.92	205.55						32'			
207+13.59	LT	1231		212.95											
SHEET TOTALS									832'	200'	324'	32'			

STATION	STRUCTURE NO.	QUANTITIES FOR DRAINAGE STRUCTURES: PER EACH (0' THRU 5.0')	*TOTAL L.F. FOR PAY QUANTITY SHALL BE COL. 'A' + (1.3 X COL.'B') LIN. FT. A: 5.0' THRU 10.0'	B: 10.0' AND ABOVE	C.B. STD. 840.01 OR STD. 840.02	FRAME, GRATES, AND HOOD STANDARD 840.03 TYPE OF GRATE E	F	G	CONCRETE TRANSITIONAL SECTION: DROP INLET	CATCH BASIN (SEE DETAIL SHEET 2-CC)	OPEN THROAT CATCH BASIN (SEE DETAIL SHEET 2-R)	D.I. STD. 840.14 OR STD. 840.15	D.I. FRAME AND TWO GRATE STD. 840.16
195+87.90	1128A												
195+96.86	1153	1	2.61						1			1	1
196+02.00	1129	1	1.37		1		1						
196+02.85	1130	1										1	1
196+67.27	1128B												
196+98.25	1150	1	1.44						1			1	1
198+35.90	1131	1										1	1
198+43.00	1132	1	1.86		1			1					
198+35.90	1136	1	1.11		1		1						
198+31.09	1132A												
200+73.50	1103	1			1			1					
200+76.94	1102	1			1		1						
200+76.65	1101	1										1	1
204+17.69	1170	1							1			1	1
205+10.09	1171	1							1			1	1
205+54.00	1104	1										1	1
206+22.02	1105	1			1			1					
206+20.62	1172	1	0.62										
206+23.24	1106	1			1		1						
208+14.04	1234	1			1		1						
209+91.92	1238												
209+94.49	1239	1	2.40		1		1						
207+13.59	1231	1											
SHEET TOTALS		19	11.41		9		6	3	4			8	8

STATION	STRUCTURE NO.	G.D.I. TYPE "B" STD. 840.18 OR 840.27	G.D.I. FRAME WITH TWO GRATES STD. 840.20	G.D.I. FRAME WITH TWO GRATES STD. 840.24	FRAME & TWO N. S. FLAT GRATES STD. 840.29	J.B. STD. 840.31 OR 840.32	T.B.J.B. STD. 840.34	T.B.G.D.I. STD. 840.35	M.H. FRAME AND COVER STD. 840.54	ADJUST EXIST. MH COVER	ADJUST EXIST. CB	BICYCLE SAFE STEEL FRAME & GRATE (SEE DETAIL SHEET 2-S)	SPECIAL D.I. (SEE DETAIL SHEET 2-Y)	SPECIAL C.B. (SEE DETAIL SHEET 2-BB)	CONVERT EXIST. J.B. TO C.B. (SEE DETAIL SHEET 2-W)	SPECIAL .J.B. (SEE DETAIL SHEET 2-Z)	CONVERT EXIST. C.B. TO J.B. w/MH COVER(SEE DETAIL SHEET 2-V)	CONVERT EXIST. CB TO T.B.J.B. W/MH COVER (SEE DETAIL SHEET 2-U)	SPECIAL .J.B. (SEE DETAIL SHEET 2-AA)	SPECIAL C.B. (SEE DETAIL SHEET 2-X)	SPECIAL C.B. (SEE DETAIL SHEET 2-T)	CONC. & BRICK PIPE PLUG, C.Y. STD. 840.71	CONC. COLLARS CL. "B" C.Y. STD. 840.72	PIPE REMOVAL LIN. FT.	REMARKS
195+87.90	1128A									1															
196+67.27	1128B								1								1								
198+31.09	1132A									1															
206+20.62	1172					1			1																
206+78.36																								60	REMOVE EXIST. PIPE TYPE & SIZE UNK.
209+91.92	1238																						0.553		PIPE COLLAR FOR 24' RCP
207+13.59	1231				1			1																	
SHEET TOTALS					1	1		1	2	2							1						0.553	60	

Columns without entries on this sheet:

DRAINAGE PIPE (RCP, CSP, CAAP, HDPE, or PVC) 12"	15"	18"	24"	30"	36"	42"	48"	DO NOT USE RCP	DO NOT USE CSP	DO NOT USE CAAP	DO NOT USE HDPE

C.S. PIPE 12" (.064)	15" (.064)	18" (.064)	24" (.064)	30" (.079)	36" (.079)	42" (.109)	48" (.109)

R.C. PIPE CLASS IV 12"	15"	18"	24"	30"	36"	42"	48"	** " R.C. PIPE (CLASS V)	***" RC PIPE CULVERTS, CONTRACTOR DESIGN	***" RC PIPE CULVERTS, CONTRACTOR DESIGN	15" SIDE DRAIN PIPE	18" SIDE DRAIN PIPE	ENDWALLS STD. 838.01 838.11 OR STD. 838.80 (UNLESS NOTED OTHERWISE) CU. YARDS R.C.P.	C.S.P.

ABBREVIATIONS

C.B.	CATCH BASIN
N.D.I.	NARROW DROP INLET
D.I.	DROP INLET
G.D.I.	GRATED DROP INLET
G.D.I.(N.S.)	(NARROW SLOT)
J.B.	JUNCTION BOX
M.H.	MANHOLE
T.B.D.I.	TRAFFIC BEARING DROP INLET
T.B.J.B.	TRAFFIC BEARING JUNCTION BOX

COMPUTED BY:	JBT	DATE:	30/4/2012
CHECKED BY:	KDA/IY	DATE:	5/30/2012

RD261636

NORTH CAROLINA DEPARTMENT OF TRANSPORTATION
DIVISION OF HIGHWAYS

PROJECT NO.	SHEET NO.
U-2809B	3-I

Note: Invert Elevations indicated are for Bid Purposes only and shall not be used for project construction stakeout. See "Standard Specifications For Roads and Structures, Section 300-5".

LIST OF PIPES, ENDWALLS, ETC. (FOR PIPES 48 INCHES & UNDER)

STATION	LOCATION (LT, RT, OR CL)	STRUCTURE NO. FROM	STRUCTURE NO. TO	TOP ELEVATION	INVERT ELEVATION	INVERT ELEVATION	SLOPE CRITICAL	R.C. PIPE CLASS III 12"	15"	18"	24"	30"	36"	42"	48"
		1231	1232		210.45	210.35			28'						
207+43.04	LT	1232		216.18											
		1232	1233		210.35	210.25			20'						
207+39.49	LT	1233		214.89											
		1233	1236		210.25	209.48			252'						
209+92.83	LT	1235		213.14											
		1235	1236		209.89	209.75			24'						
209+94.49	LT	1236		214.54											
		1236	1237		209.43	209.34					8'				
209+92.91	LT	1237		214.65											
210+91.58	LT	1241		214.45											
		1241	1236		210.21	209.8			96'						
212+73.16	LT	1246		214.44											
		1246	1241		210.7	210.22			180'						
212+73.94	LT	1245		213											
		1245	1246		210.75	210.7			16'						
213+36.97	LT	1250		215.5											
		1250	1246		212	210.7			68'						
210+91.58	RT	1242		214.23											
		1242	1239		208.54	208.15						96'			
211+90.64	RT	1243		214.19											
		1243	1242		209	208.55					100'				
215+18.38	RT	1202		215.33											
		1202	1243		210	209					328'				
215+19.77	LT	1200		213.18											
		1200	1201		210.74	210.68				20'					
215+21.49	LT	1201		215											
		1201	1202		210.68	210.46				72'					
215+96.51	RT	1204		215.55											
		1204	1202		211.88	211.39			76'						
215+97.50	RT	1205		214.48											
		1205	1204		212.5	211.98			20'						
217+30.51	RT	1206		215.92											
		1206	1204		212.67	211.98			132'						
216+00.50	LT	1203		215.56											
		1203	1201		211.32	210.81				80'					
218+30.50	LT	1207		216.01											
		1207	1203		212.26	211.57			228'						
218+31.94	LT	1208		215.64											
		1208	1207		212.62	212.36			16'						
220+71.02	LT	1209		216.01											
		1209	1210		212.76	212.71			16'						
220+97.77	LT														
SHEET TOTALS									1172'	172'	436'	96'			

STATION	FROM	QUANTITIES FOR DRAINAGE STRUCTURES PER EACH (0' THRU 5.0')	*TOTAL L.F. FOR PAY QUANTITY SHALL BE COL. 'A' + (1.3 X COL.'B') LIN. FT. A 5.0' THRU 10.0'	B 10.0' AND ABOVE	C.B. STD. 840.01 OR STD. 840.02	FRAME, GRATES, AND HOOD STANDARD 840.03 TYPE OF GRATE E	F	G	CONCRETE TRANSITIONAL SECTION DROP INLET	CATCH BASIN (SEE DETAIL SHEET 2-CC)	OPEN THROAT CATCH BASIN (SEE DETAIL SHEET 2-R)	D.I. STD. 840.14 OR STD. 840.15	D.I. FRAME AND TWO GRATE STD. 840.16	G.D.I. TYPE "B" STD. 840.18 OR 840.27	G.D.I. FRAME WITH TWO GRATES STD. 840.20	G.D.I. FRAME WITH TWO GRATES STD. 840.24	FRAME & TWO N. S. FLAT GRATES STD. 840.29	J.B. STD. 840.31 OR 840.32	T.B.J.B. STD. 840.34	T.B.G.D.I. STD. 840.35	M.H. FRAME AND COVER STD. 840.54	ADJUST EXIST. MH COVER	ADJUST EXIST. CB	BICYCLE SAFE STEEL FRAME & GRATE (SEE DETAIL SHEET 2-S)	SPECIAL D.I. (SEE DETAIL SHEET 2-Y)	SPECIAL C.B. (SEE DETAIL SHEET 2-BB)	CONVERT EXIST. J.B. TO C.B. (SEE DETAIL SHEET 2-W)	SPECIAL .J.B. (SEE DETAIL SHEET 2-Z)	CONVERT EXIST. C.B. TO J.B. w/MH COVER(SEE DETAIL SHEET 2-V)	CONVERT EXIST. CB TO T.B.J.B. W/MH COVER (SEE DETAIL SHEET 2-U)	SPECIAL .J.B. (SEE DETAIL SHEET 2-AA)	SPECIAL C.B. (SEE DETAIL SHEET 2-X)	SPECIAL C.B. (SEE DETAIL SHEET 2-T)	CONC. & BRICK PIPE PLUG, C.Y. STD. 840.71	CONC. COLLARS CL. "B" C.Y. STD. 840.72	PIPE REMOVAL LIN. FT.	REMARKS
207+43.04	1232	1	0.83									1	1																										
207+39.49	1233	1			1			1																															
209+92.83	1235	1									1																												3 SIDED OTCB
209+94.49	1236	1	0.11		1			1																															
209+92.91	1237																																				0.553		PIPE COLLAR FOR 24" RCP
210+91.58	1241	1			1	1																																	
212+73.16	1246	1			1		1																																
212+73.94	1245	1										1	1																										
213+36.97	1250	1							1			1	1																										
210+91.58	1242	1	0.69		1	1																																	
211+90.64	1243	1	0.19		1			1																															
215+18.38	1202	1	0.33		1			1																															
215+19.77	1200	1										1	1																										
215+21.49	1201	1			1		1																																
215+96.51	1204	1			1			1																															
215+97.50	1205	1										1	1																										
217+30.51	1206	1			1			1																															
216+00.50	1203	1			1		1																																
218+30.50	1207	1			1		1																																
218+31.94	1208	1												1	1																								
220+71.02	1209	1															1			1																			
220+97.77																																						44	REMOVE EXIST. PIPE TYPE & SIZE UNK.
SHEET TOTALS		20	2.15		12	2	4	6	1		1	5	5	1	1		1			1																	0.553	44	

Other columns on the sheet (no entries on this sheet):

DRAINAGE PIPE (RCP, CSP, CAAP, HDPE, or PVC) 12"	15"	18"	24"	30"	36"	42"	48"	DO NOT USE RCP	DO NOT USE CSP	DO NOT USE CAAP	DO NOT USE HDPE

C.S. PIPE 12" .064	15" .064	18" .064	24" .064	30" .079	36" .079	42" .109	48" .109

R.C. PIPE CLASS IV 12"	15"	18"	24"	30"	36"	42"	48"

** " R.C. PIPE (CLASS V)	***" RC PIPE CULVERTS, CONTRACTOR DESIGN	***" RC PIPE CULVERTS, CONTRACTOR DESIGN	15" SIDE DRAIN PIPE	18" SIDE DRAIN PIPE	ENDWALLS STD. 838.01 838.11 OR STD. 838.80 (UNLESS NOTED OTHERWISE) CU. YARDS R.C.P.	C.S.P.

Other column headings printed on the sheet: SIZE; THICKNESS OR GAUGE.

ABBREVIATIONS

C.B.	CATCH BASIN
N.D.I.	NARROW DROP INLET
D.I.	DROP INLET
G.D.I.	GRATED DROP INLET
G.D.I.(N.S.)	(NARROW SLOT)
J.B.	JUNCTION BOX
M.H.	MANHOLE
T.B.D.I.	TRAFFIC BEARING DROP INLET
T.B.J.B.	TRAFFIC BEARING JUNCTION BOX

COMPUTED BY: JBT DATE: 30/4/2012

CHECKED BY: KDA/IY DATE: 5/30/2012

RD261636

NORTH CAROLINA DEPARTMENT OF TRANSPORTATION
DIVISION OF HIGHWAYS

PROJECT NO.	SHEET NO.
U-2809B	3-J

Note: Invert Elevations indicated are for Bid Purposes only and shall not be used for project construction stakeout. See "Standard Specifications For Roads and Structures, Section 300-5".

LIST OF PIPES, ENDWALLS, ETC. (FOR PIPES 48 INCHES & UNDER)

STATION / SIZE / THICKNESS OR GAUGE	LOCATION (LT, RT, OR CL)'	STRUCTURE NO. FROM	STRUCTURE NO. TO	TOP ELEVATION	INVERT ELEVATION	INVERT ELEVATION	SLOPE CRITICAL
220+72.49	LT	1210		216.14			
		1210	1212		212.46	212.2	
221+55.01	LT	1211		216.27			
		1211	1212		213.02	212.79	
221+56.49	LT	1212		216.04			
		1212	1213		211.7	211.44	
222+40.86	LT	1213		215.82			
		1213	1214		211.44	211.13	
223+40.28	LT	1214		215.38			
		1214	1217		211.13	210.94	
223+45.67	RT	1350		216.34			
		1350	1214		212.2	211.13	
223+99.50	LT	1217		215.33			
226+03.50	LT	1219		214.34			
		1217	1219		210.94	210.32	
226+04.77	LT	1220		215.98			
		1220	1219		212.73	211.13	
228+79.20	LT	1303		213.07			
		1219	1303		210.32	209.07	
228+80.78	LT	1302		212.43			
		1302	1303		209.18	209.12	
230+28.00	LT	1306		212.31			
		1303	1306		207.87	207.42	
230+18.50	RT	1304		212.35			
		1306	1304		208.25	208	
223+36.07	RT	1215		211.28			
		1215	1216		209.64	209.29	
223+36.49	RT	1216		215.58			
		1216	1218		209.27	208.88	
224+47.05	LT	1351		215.81			
		1351	1218		210.2	209	
224+74.57	RT	1221		213.61			
		1221	1218		210.36	210.25	
224+62.82	RT	1218		215.33			
		1218	1301		208.38	207.61	
227+18.00	RT	1301		213.86			
		1301	1304		207.61	206.7	
230+39.03	RT						
230+13.00	RT	1305		210.74			
		1305	1304		208.49	208	
230+59.34	RT	1327		212.71			
		1327	1305		209.46	207.49	
		1304	1307		208	206.58	
SHEET TOTALS							

STATION	FROM	TO	DRAINAGE PIPE (RCP, CSP, CAAP, HDPE, or PVC) 12"	15"	18"	24"	30"	36"	42"	48"	DO NOT USE RCP	DO NOT USE CSP	DO NOT USE CAAP	DO NOT USE HDPE	C.S. PIPE 12" .064	15" .064	18" .064	24" .064	30" .079	36" .079	42" .109	48" .109	R.C. PIPE CLASS IV 12"	15"	18"	24"	30"	36"	42"	48"
SHEET TOTALS																														

STATION	FROM	TO	R.C. PIPE CLASS III 12"	15"	18"	24"	30"	36"	42"	48"
220+72.49	1210									
	1210	1212			84'					
221+55.01	1211									
	1211	1212		16'						
221+56.49	1212									
	1212	1213				84'				
222+40.86	1213									
	1213	1214				100'				
223+40.28	1214									
	1214	1217				60'				
223+45.67	1350									
	1350	1214		52'						
223+99.50	1217									
226+03.50	1219									
	1217	1219				204'				
226+04.77	1220									
	1220	1219		20'						
228+79.20	1303									
	1219	1303				272'				
228+80.78	1302									
	1302	1303		20'						
230+28.00	1306									
	1303	1306					144'			
230+18.50	1304									
	1306	1304					72'			
223+36.07	1215									
	1215	1216			36'					
223+36.49	1216									
	1216	1218			124'					
224+47.05	1351									
	1351	1218		48'						
224+74.57	1221									
	1221	1218		32'						
224+62.82	1218									
	1218	1301				256'				
227+18.00	1301									
	1301	1304				300'				
230+39.03										
230+13.00	1305									
	1305	1304		28'						
230+59.34	1327									
	1327	1305		44'						
	1304	1307					228'			
SHEET TOTALS				260'	244'	1276'	444'			

STATION	FROM	TO	** " R.C. PIPE (CLASS V)	***" RC PIPE CULVERTS, CONTRACTOR DESIGN	***" RC PIPE CULVERTS, CONTRACTOR DESIGN	15" SIDE DRAIN PIPE	18" SIDE DRAIN PIPE	ENDWALLS STD. 838.01 838.11 OR STD. 838.80 (UNLESS NOTED OTHERWISE) CU. YARDS R.C.P.	C.S.P.
SHEET TOTALS									

STATION	FROM	TO	QUANTITIES FOR DRAINAGE STRUCTURES PER EACH (0' THRU 5.0')	*TOTAL L.F. FOR PAY QUANTITY SHALL BE COL. 'A' + (1.3 X COL.'B') LIN. FT. A 5.0' THRU 10.0'	B 10.0' AND ABOVE	C.B. STD. 840.01 OR STD. 840.02	FRAME, GRATES, AND HOOD STANDARD 840.03 TYPE OF GRATE E	F	G	CONCRETE TRANSITIONAL SECTION DROP INLET	CATCH BASIN (SEE DETAIL SHEET 2-CC)	OPEN THROAT CATCH BASIN (SEE DETAIL SHEET 2-R)	D.I. STD. 840.14 OR STD. 840.15	D.I. FRAME AND TWO GRATE STD. 840.16
220+72.49	1210		1			1			1					
	1210	1212												
221+55.01	1211		1										1	1
	1211	1212												
221+56.49	1212		1			1			1					
	1212	1213												
222+40.86	1213		1			1			1					
	1213	1214												
223+40.28	1214		1			1			1					
	1214	1217												
223+45.67	1350		1							1			1	1
	1350	1214												
223+99.50	1217		1			1			1					
226+03.50	1219		1			1			1					
	1217	1219												
226+04.77	1220		1										1	1
	1220	1219												
228+79.20	1303		1			1			1					
	1219	1303												
228+80.78	1302		1										1	1
	1302	1303												
230+28.00	1306		1			1			1					
	1303	1306												
230+18.50	1304		1			1		1						
	1306	1304												
223+36.07	1215		1										1	1
	1215	1216												
223+36.49	1216		1	1.31		1		1						
	1216	1218												
224+47.05	1351		1	0.61						1			1	1
	1351	1218												
224+74.57	1221		1										1	1
	1221	1218												
224+62.82	1218		1	1.95		1		1						
	1218	1301												
227+18.00	1301		1	1.25		1		1						
	1301	1304												
230+39.03														
230+13.00	1305		1										1	1
	1305	1304												
230+59.34	1327		1										1	1
	1327	1305												
	1304	1307												
SHEET TOTALS			21	5.12		12		4	8	2			9	9

STATION	FROM	TO	G.D.I. TYPE "B" STD. 840.18 OR 840.27	G.D.I. FRAME WITH TWO GRATES STD. 840.20	G.D.I. FRAME WITH TWO GRATES STD. 840.24	FRAME & TWO N. S. FLAT GRATES STD. 840.29	J.B. STD. 840.31 OR 840.32	T.B.J.B. STD. 840.34	T.B.G.D.I. STD. 840.35	M.H. FRAME AND COVER STD. 840.54	ADJUST EXIST. MH COVER	ADJUST EXIST. CB	BICYCLE SAFE STEEL FRAME & GRATE (SEE DETAIL SHEET 2-S)	SPECIAL D.I. (SEE DETAIL SHEET 2-Y)	SPECIAL C.B. (SEE DETAIL SHEET 2-BB)	CONVERT EXIST. J.B. TO C.B. (SEE DETAIL SHEET 2-W)	SPECIAL .J.B. (SEE DETAIL SHEET 2-Z)	CONVERT EXIST. C.B. TO J.B. w/MH COVER(SEE DETAIL SHEET 2-V)	CONVERT EXIST. CB TO T.B.J.B. W/MH COVER (SEE DETAIL SHEET 2-U)	SPECIAL .J.B. (SEE DETAIL SHEET 2-AA)	SPECIAL C.B. (SEE DETAIL SHEET 2-X)	SPECIAL C.B. (SEE DETAIL SHEET 2-T)	CONC. & BRICK PIPE PLUG, C.Y. STD. 840.71	CONC. COLLARS CL. "B" C.Y. STD. 840.72	PIPE REMOVAL LIN. FT.	REMARKS
230+39.03																									41	REMOVE EXIST. 15" RCP
SHEET TOTALS																									41	

ABBREVIATIONS

C.B.	CATCH BASIN
N.D.I.	NARROW DROP INLET
D.I.	DROP INLET
G.D.I.	GRATED DROP INLET
G.D.I.(N.S.)	(NARROW SLOT)
J.B.	JUNCTION BOX
M.H.	MANHOLE
T.B.D.I.	TRAFFIC BEARING DROP INLET
T.B.J.B.	TRAFFIC BEARING JUNCTION BOX

COMPUTED BY: JBT DATE: 30/4/2012

CHECKED BY: KDA/IY DATE: 5/30/2012

PROJECT NO.	SHEET NO.
U-2809B	3-K

NORTH CAROLINA DEPARTMENT OF TRANSPORTATION
DIVISION OF HIGHWAYS

RD261636

Note: Invert Elevations indicated are for Bid Purposes only and shall not be used for project construction stakeout. See "Standard Specifications For Roads and Structures, Section 300-5".

LIST OF PIPES, ENDWALLS, ETC. (FOR PIPES 48 INCHES & UNDER)

STATION	LOCATION (LT, RT, OR CL)	STRUCTURE NO. FROM	TO	TOP ELEVATION	INVERT ELEVATION	INVERT ELEVATION	SLOPE CRITICAL
232+49.50	RT	1307		211.5			
		1307	1421		206.58	204.9	
233+37.48	LT	1308		211.01			
		1308	1420		207.52	206.46	
232+45.25	LT						
234+81.48	LT	1420		209.96			
		1420	1423		206.71	202.31	
237+19.01	LT	1422		206.59			
		1422	1423		204.9	204.43	
237+55.56	LT	1427		206.61			
		1427	1423		202.36	202.21	
237+20.35	LT	1423		207.68			
		1423	1424		202.21	201.99	
234+80.49	RT	1421		209.97			
		1421	1424		204.26	202.68	
237+21.31	RT	1424		207.68			
		1424	1428		201.99	201.75	
237+98.37	RT	1428		206.94			
		1428	1433		201.75	201.51	
238+43.87	RT	1429		206.14			
238+77.68	RT	1433		206.5			
		1433	1436		201.51	201.28	
239+02.02	RT						
239+17.52	RT	1434		206.42			
		1434	1435		203.17	202.9	
239+50.52	RT	1435		206.15			
		1435	1436		202.9	202.82	
239+52.11	RT	1436		206.36			
		1436	1403		201.28	199.83	
240+37.44	RT	1401		205.34			
		1401	1402		202.09	201.21	
241+02.97	RT	1402		204.46			
		1402	1403		201.51	199.83	
240+96.17	RT	1403		204.54			
		1403	1405		199.83	196.44	
243+12.19	RT	1405		201.61			
		1405	1412		196.44	193.7	
239+73.06	LT	1437		202.7			
		1437	1438		200.4	199.33	
239+72.63	LT	1438		205.01			
		1438	1404		199.23	198.38	
242+55.64	LT	1404		202.07			
		1404	1411		198.28	195.14	
243+83.75	RT						
SHEET TOTALS							

Pipes (SIZE / THICKNESS OR GAUGE):

STATION	FROM	TO	DRAINAGE PIPE (RCP, CSP, CAAP, HDPE, or PVC) 12"	15"	18"	24"	30"	36"	42"	48"	DO NOT USE RCP	DO NOT USE CSP	DO NOT USE CAAP	DO NOT USE HDPE	C.S. PIPE 12" .064	15" .064	18" .064	24" .064	30" .079	36" .079	42" .109	48" .109	R.C. PIPE CLASS III 12"	15"	18"	24"	30"	36"	42"	48"	R.C. PIPE CLASS IV 12"	15"	18"	24"	30"	36"	42"	48"
	1307	1421																									224'											
	1308	1420																						144'														
	1420	1423																						240'														
	1422	1423																						20'														
	1427	1423																							44'													
	1423	1424																								72'												
	1421	1424																									240'											
	1424	1428																										76'										
	1428	1433																										76'										
	1433	1436																										72'										
	1434	1435																						32'														
	1435	1436																						28'														
	1436	1403																										148'										
	1401	1402																						64'														
	1402	1403																						24'														
	1403	1405																										204'										
	1405	1412																										252'										
	1437	1438																						28'														
	1438	1404																						280'														
	1404	1411																						308'														
SHEET TOTALS																								1168'	44'	72'	464'	828'										

Structures, endwalls and remarks:

STATION	FROM	TO	** " R.C. PIPE (CLASS V)	***" RC PIPE CULVERTS, CONTRACTOR DESIGN	***" RC PIPE CULVERTS, CONTRACTOR DESIGN	15" SIDE DRAIN PIPE	18" SIDE DRAIN PIPE	ENDWALLS STD. 838.01 838.11 OR STD. 838.80 (UNLESS NOTED OTHERWISE) CU. YARDS R.C.P.	C.S.P.	QUANTITIES FOR DRAINAGE STRUCTURES PER EACH (0' THRU 5.0')	*TOTAL L.F. FOR PAY QUANTITY SHALL BE COL. 'A' + (1.3 X COL.'B') LIN. FT. A 5.0' THRU 10.0'	B 10.0' AND ABOVE	C.B. STD. 840.01 OR STD. 840.02	FRAME, GRATES, AND HOOD STANDARD 840.03 TYPE OF GRATE E	F	G	CONCRETE TRANSITIONAL SECTION DROP INLET	CATCH BASIN (SEE DETAIL SHEET 2-CC)	OPEN THROAT CATCH BASIN (SEE DETAIL SHEET 2-R)	D.I. STD. 840.14 OR STD. 840.15	D.I. FRAME AND TWO GRATE STD. 840.16	G.D.I. TYPE "B" STD. 840.18 OR 840.27	G.D.I. FRAME WITH TWO GRATES STD. 840.20	G.D.I. FRAME WITH TWO GRATES STD. 840.24	FRAME & TWO N. S. FLAT GRATES STD. 840.29	J.B. STD. 840.31 OR 840.32	T.B.J.B. STD. 840.34	T.B.G.D.I. STD. 840.35	M.H. FRAME AND COVER STD. 840.54	ADJUST EXIST. MH COVER	ADJUST EXIST. CB	BICYCLE SAFE STEEL FRAME & GRATE (SEE DETAIL SHEET 2-S)	SPECIAL D.I. (SEE DETAIL SHEET 2-Y)	SPECIAL C.B. (SEE DETAIL SHEET 2-BB)	CONVERT EXIST. J.B. TO C.B. (SEE DETAIL SHEET 2-W)	SPECIAL .J.B. (SEE DETAIL SHEET 2-Z)	CONVERT EXIST. C.B. TO J.B. w/MH COVER(SEE DETAIL SHEET 2-V)	CONVERT EXIST. CB TO T.B.J.B. W/MH COVER (SEE DETAIL SHEET 2-U)	SPECIAL .J.B. (SEE DETAIL SHEET 2-AA)	SPECIAL C.B. (SEE DETAIL SHEET 2-X)	SPECIAL C.B. (SEE DETAIL SHEET 2-T)	CONC. & BRICK PIPE PLUG, C.Y. STD. 840.71	CONC. COLLARS CL. "B" C.Y. STD. 840.72	PIPE REMOVAL LIN. FT.	REMARKS
232+49.50	1307									1			1		1																														
233+37.48	1308									1			1			1																													
232+45.25																																												33	REMOVE 15" RCP
234+81.48	1420									1			1			1																													
237+19.01	1422									1										1	1																								
237+55.56	1427									1			1			1																													
237+20.35	1423									1	0.47		1			1																													
234+80.49	1421									1	0.71		1		1																														
237+21.31	1424									1	0.69		1		1																														
237+98.37	1428									1	0.19		1		1																														
238+43.87	1429														1																				1										
238+77.68	1433									1																	1		1																
239+02.02																																										0.27			6 PLUGS & FILL EXIST. 15" RCP PIPES
239+17.52	1434									1							1			1	1																								
239+50.52	1435									1							1			1	1																								
239+52.11	1436									1	0.08		1		1																														
240+37.44	1401									1							1			1	1																								
241+02.97	1402									1							1			1	1																								
240+96.17	1403									1			1		1																														
243+12.19	1405									1	0.17		1		1																														
	1405	1412																																								0.09			2 PLUGS & FILL EXIST. 15" RCP PIPES
239+73.06	1437									1										1	1																								
239+72.63	1438									1	0.78		1			1																													
242+55.64	1404									1			1			1																													
243+83.75																																										0.09			2 PLUGS & FILL EXIST. 15" RCP
SHEET TOTALS										20	3.09		13		8	6	4			6	6						1		1						1							0.45		33	

ABBREVIATIONS

C.B.	CATCH BASIN
N.D.I.	NARROW DROP INLET
D.I.	DROP INLET
G.D.I.	GRATED DROP INLET
G.D.I.(N.S.)	(NARROW SLOT)
J.B.	JUNCTION BOX
M.H.	MANHOLE
T.B.D.I.	TRAFFIC BEARING DROP INLET
T.B.J.B.	TRAFFIC BEARING JUNCTION BOX

COMPUTED BY: JBT DATE: 30/4/2012

CHECKED BY: KDA/IY DATE: 5/30/2012

RD261636

NORTH CAROLINA DEPARTMENT OF TRANSPORTATION
DIVISION OF HIGHWAYS

PROJECT NO.	SHEET NO.
U-2809B	3-L

Note: Invert Elevations indicated are for Bid Purposes only and shall not be used for project construction stakeout. See "Standard Specifications For Roads and Structures, Section 300-5".

LIST OF PIPES, ENDWALLS, ETC. (FOR PIPES 48 INCHES & UNDER)

STATION	LOCATION (LT, RT, OR CL)	STRUCTURE NO. FROM	STRUCTURE NO. TO	TOP ELEVATION	INVERT ELEVATION	INVERT ELEVATION	SLOPE CRITICAL
245+65.95	LT	1411		198.39			
		1411	1412		194.89	194.67	
245+67.49	RT	1412		198.61			
		1412	1413		193.7	192.76	
246+43.62	RT	1413		197.51			
		1413	1532		192.76	189.15	
249+33.69	RT						
249+38.38	RT	1528		193.47			
		1528	1532		191.22	189.15	
249+39.00	RT	1532		193.9			
		1532	1525		189.15	187.6	
251+06.71	RT	1524		192.5			
		1524	1525		190.25	188.9	
251+07.60	RT						
251+09.49	RT	1525		192.4			
		1525	1551		187.6	187.42	
251+49.87	RT						
249+72.49	LT	1527		193.62			
		1527	1526		190.47	189.27	
251+11.49	LT	1526		192.41			
		1526	1550		189.27	189.05	
251+68.68	LT	1550		192.3			
		1550	1551		189.05	188.82	
251+68.68	RT	1551		192.25			
		1551	1522		187.42	187.19	
251+80.63	RT						
252+01.33	LT						
252+16.69	RT	1522		191.49			
		1522	1521		187.19	187.04	
252+79.00		1570		192.87			
252+17.00		1571		192.8			
		1570	1571		187.5	187.29	
		1571	1522		187.29	187.19	
252+48.66	LT	1521		193.55			
		1521	1513		187.04	186.82	
252+83.56	LT	1513		192.57			
253+54.55	RT	1522A		192.52			
254+57.16	LT	1502A		191.88			
254+82.25	LT	1502		190.59			
		1502	1502A		181.89	181.75	
254+66.84	LT						
254+83.90	LT	1503		189.7			
		1503	1502		186.33	186.28	
256+46.55	LT						
257+22.99	LT	1504		189.42			
		1504	1502		182.62	181.89	
258+28.85	LT	1556		189.34			
		1556	1504		182.97	182.62	
SHEET TOTALS							

STATION	FROM	TO	DRAINAGE PIPE (RCP, CSP, CAAP, HDPE, or PVC) 12"	15"	18"	24"	30"	36"	42"	48"	DO NOT USE RCP	DO NOT USE CSP	DO NOT USE CAAP	DO NOT USE HDPE	C.S. PIPE 12" (.064)	15" (.064)	18" (.064)	24" (.064)	30" (.079)	36" (.079)	42" (.109)	48" (.109)
245+65.95	1411																					
	1411	1412																				
245+67.49	1412																					
	1412	1413																				
246+43.62	1413																					
	1413	1532																				
249+33.69																						
249+38.38	1528																					
	1528	1532																				
249+39.00	1532																					
	1532	1525																				
251+06.71	1524																					
	1524	1525																				
251+07.60																						
251+09.49	1525																					
	1525	1551																				
251+49.87																						
249+72.49	1527																					
	1527	1526																				
251+11.49	1526																					
	1526	1550																				
251+68.68	1550																					
	1550	1551																				
251+68.68	1551																					
	1551	1522																				
251+80.63																						
252+01.33																						
252+16.69	1522																					
	1522	1521																				
252+79.00	1570																					
252+17.00	1571																					
	1570	1571																				
	1571	1522																				
252+48.66	1521																					
	1521	1513																				
252+83.56	1513																					
253+54.55	1522A																					
254+57.16	1502A																					
254+82.25	1502																					
	1502	1502A																				
254+66.84																						
254+83.90	1503																					
	1503	1502																				
256+46.55																						
257+22.99	1504																					
	1504	1502																				
258+28.85	1556																					
	1556	1504																				
SHEET TOTALS																						

STATION	FROM	TO	R.C. PIPE CLASS III 12"	15"	18"	24"	30"	36"	42"	48"	R.C. PIPE CLASS IV 12"	15"	18"	24"	30"	36"	42"	48"	** " R.C. PIPE (CLASS V)	***" RC PIPE CULVERTS, CONTRACTOR DESIGN	***" RC PIPE CULVERTS, CONTRACTOR DESIGN	15" SIDE DRAIN PIPE	18" SIDE DRAIN PIPE
245+65.95	1411																						
	1411	1412			72'																		
245+67.49	1412																						
	1412	1413						76'															
246+43.62	1413																						
	1413	1532						296'															
249+33.69																							
249+38.38	1528																						
	1528	1532		32'																			
249+39.00	1532																						
	1532	1525						168'															
251+06.71	1524																						
	1524	1525		28'																			
251+07.60																							
251+09.49	1525																						
	1525	1551						56'															
251+49.87																							
249+72.49	1527																						
	1527	1526		136'																			
251+11.49	1526																						
	1526	1550		56'																			
251+68.68	1550																						
	1550	1551		76'																			
251+68.68	1551																						
	1551	1522					100'																
251+80.63																							
252+01.33																							
252+16.69	1522																						
	1522	1521					112'																
252+79.00	1570																						
252+17.00	1571																						
	1570	1571		60'																			
	1571	1522		8'																			
252+48.66	1521																						
	1521	1513					128'																
252+83.56	1513																						
253+54.55	1522A																						
254+57.16	1502A																						
254+82.25	1502																						
	1502	1502A				44'																	
254+66.84																							
254+83.90	1503																						
	1503	1502		16'																			
256+46.55																							
257+22.99	1504																						
	1504	1502				240'																	
258+28.85	1556																						
	1556	1504				104'																	
SHEET TOTALS				412'	72'	388'	340'	596'															

STATION	FROM	TO	ENDWALLS STD. 838.01, 838.11 OR STD. 838.80 (UNLESS NOTED OTHERWISE) CU. YARDS R.C.P.	C.S.P.	QUANTITIES FOR DRAINAGE STRUCTURES PER EACH (0' THRU 5.0')	*TOTAL L.F. FOR PAY QUANTITY SHALL BE COL. 'A' + (1.3 X COL.'B') LIN. FT. A 5.0' THRU 10.0'	B 10.0' AND ABOVE	C.B. STD. 840.01 OR STD. 840.02	FRAME, GRATES, AND HOOD STANDARD 840.03 TYPE OF GRATE E	F	G	CONCRETE TRANSITIONAL SECTION DROP INLET	CATCH BASIN (SEE DETAIL SHEET 2-CC)
245+65.95	1411				1			1			1		
	1411	1412											
245+67.49	1412				1			1		1			
	1412	1413											
246+43.62	1413				1								
	1413	1532											
249+33.69													
249+38.38	1528				1								
	1528	1532											
249+39.00	1532				1			1		1			
	1532	1525											
251+06.71	1524				1								
	1524	1525											
251+07.60													
251+09.49	1525				1			1		1			
	1525	1551											
251+49.87													
249+72.49	1527				1			1			1		
	1527	1526											
251+11.49	1526				1			1			1		
	1526	1550											
251+68.68	1550				1			1	1				
	1550	1551											
251+68.68	1551				1								
	1551	1522											
251+80.63													
252+01.33													
252+16.69	1522				1						1		
	1522	1521											
252+79.00	1570				1	0.37		1		1			
252+17.00	1571				1	0.51		1		1			
	1570	1571											
	1571	1522											
252+48.66	1521				1	1.51							
	1521	1513											
252+83.56	1513				1	0.53							
253+54.55	1522A												
254+57.16	1502A												
254+82.25	1502				1	3.70		1			1		
	1502	1502A											
254+66.84													
254+83.90	1503				1								
	1503	1502											
256+46.55													
257+22.99	1504				1	1.80		1			1		
	1504	1502											
258+28.85	1556				1	1.37		1	1				
	1556	1504											
SHEET TOTALS					20	9.79		12	2	5	6		

STATION	FROM	TO	OPEN THROAT CATCH BASIN (SEE DETAIL SHEET 2-R)	D.I. STD. 840.14 OR STD. 840.15	D.I. FRAME AND TWO GRATE STD. 840.16	G.D.I. TYPE "B" STD. 840.18 OR 840.27	G.D.I. FRAME WITH TWO GRATES STD. 840.20	G.D.I. FRAME WITH TWO GRATES STD. 840.24	FRAME & TWO N. S. FLAT GRATES STD. 840.29	J.B. STD. 840.31 OR 840.32	T.B.J.B. STD. 840.34	T.B.G.D.I. STD. 840.35	M.H. FRAME AND COVER STD. 840.54	ADJUST EXIST. MH COVER	ADJUST EXIST. CB	BICYCLE SAFE STEEL FRAME & GRATE (SEE DETAIL SHEET 2-S)	SPECIAL D.I. (SEE DETAIL SHEET 2-Y)	SPECIAL C.B. (SEE DETAIL SHEET 2-BB)	CONVERT EXIST. J.B. TO C.B. (SEE DETAIL SHEET 2-W)	SPECIAL J.B. (SEE DETAIL SHEET 2-Z)	CONVERT EXIST. C.B. TO J.B. w/MH COVER(SEE DETAIL SHEET 2-V)	CONVERT EXIST. CB TO T.B.J.B. W/MH COVER (SEE DETAIL SHEET 2-U)	SPECIAL J.B. (SEE DETAIL SHEET 2-AA)	SPECIAL C.B. (SEE DETAIL SHEET 2-X)	SPECIAL C.B. (SEE DETAIL SHEET 2-T)
245+65.95	1411																								
	1411	1412																							
245+67.49	1412																								
	1412	1413																							
246+43.62	1413										1		1												
	1413	1532																							
249+33.69																									
249+38.38	1528			1	1																				
	1528	1532																							
249+39.00	1532																								
	1532	1525																							
251+06.71	1524			1	1																				
	1524	1525																							
251+07.60																									
251+09.49	1525																								
	1525	1551																							
251+49.87																									
249+72.49	1527																								
	1527	1526																							
251+11.49	1526																								
	1526	1550																							
251+68.68	1550																								
	1550	1551																							
251+68.68	1551																1	1								
	1551	1522																							
251+80.63																									
252+01.33																									
252+16.69	1522																		1							
	1522	1521																							
252+79.00	1570																								
252+17.00	1571																								
	1570	1571																							
	1571	1522																							
252+48.66	1521												1								1					
	1521	1513																							
252+83.56	1513												1											1		
253+54.55	1522A													1												
254+57.16	1502A													1												
254+82.25	1502																								
	1502	1502A																							
254+66.84																									
254+83.90	1503			1	1																				
	1503	1502																							
256+46.55																									
257+22.99	1504																								
	1504	1502																							
258+28.85	1556																								
	1556	1504																							
SHEET TOTALS				3	3						1		3	2		1	1	1		1			1		

STATION	FROM	TO	CONC. & BRICK PIPE PLUG, C.Y. STD. 840.71	CONC. COLLARS CL. "B" C.Y. STD. 840.72	PIPE REMOVAL LIN. FT.	REMARKS
245+65.95	1411					
	1411	1412				
245+67.49	1412					
	1412	1413	0.09			2 PLUGS & FILL EXIST. 15" RCP
246+43.62	1413					
	1413	1532				
249+33.69			0.09			2 PLUGS & FILL EXIST. 15" RCP
249+38.38	1528					
	1528	1532				
249+39.00	1532					
	1532	1525				
251+06.71	1524					
	1524	1525				
251+07.60					21	REMOVE EXIST.15" RCP & EXIST. DI.
251+09.49	1525					
	1525	1551				
251+49.87			0.09			2 PLUGS & FILL EXIST. 15" RCP
249+72.49	1527					
	1527	1526				
251+11.49	1526					
	1526	1550				
251+68.68	1550					
	1550	1551				
251+68.68	1551					
	1551	1522				2 @ 30" PIPES
251+80.63			0.09			2 PLUGS & FILL EXIST. 15" RCP & REMOVE EXIST. DI
252+01.33			0.09			2 PLUGS & FILL EXIST. 15" RCP
252+16.69	1522					
	1522	1521				2 @ 30" PIPES
252+79.00	1570					
252+17.00	1571					
	1570	1571				
	1571	1522				
252+48.66	1521					
	1521	1513				2 @ 30"
252+83.56	1513					
253+54.55	1522A					
254+57.16	1502A					
254+82.25	1502					
	1502	1502A				
254+66.84					52	REMOVE EXIST. 15" RCP & EXIST. DI
254+83.90	1503					
	1503	1502				
256+46.55			0.09			2 PLUGS & FILL EXIST. 15" RCP
257+22.99	1504					
	1504	1502				
258+28.85	1556					
	1556	1504				
SHEET TOTALS			0.54		73	

ABBREVIATIONS

C.B.	CATCH BASIN
N.D.I.	NARROW DROP INLET
D.I.	DROP INLET
G.D.I.	GRATED DROP INLET
G.D.I.(N.S.)	(NARROW SLOT)
J.B.	JUNCTION BOX
M.H.	MANHOLE
T.B.D.I.	TRAFFIC BEARING DROP INLET
T.B.J.B.	TRAFFIC BEARING JUNCTION BOX

COMPUTED BY:	JBT	DATE:	30/4/2012
CHECKED BY:	KDA/IY	DATE:	5/30/2012

NORTH CAROLINA DEPARTMENT OF TRANSPORTATION
DIVISION OF HIGHWAYS

PROJECT NO.	SHEET NO.
U-2809B	3-M

RD261636

Note: Invert Elevations indicated are for Bid Purposes only and shall not be used for project construction stakeout. See "Standard Specifications For Roads and Structures, Section 300-5".

LIST OF PIPES, ENDWALLS, ETC. (FOR PIPES 48 INCHES & UNDER)

STATION	LOCATION (LT, RT, OR CL)	STRUCTURE NO. FROM	STRUCTURE NO. TO	TOP ELEVATION	INVERT ELEVATION	INVERT ELEVATION	SLOPE CRITICAL
258+51.95	LT	1507		187.16			
		1507	1556		184.46	182.97	
258+64.92	LT						
258+96.85	LT	1508		189.57			
		1508	1556		183.14	182.98	
258+41.23	RT	1555		189.65			
		1555	1516		184.99	184.81	
258+99.63	RT	1506		187.27			
		1506	1516		184.96	184.81	
259+00.27	RT	1516		189.72			
		1516	1508		183.34	183.14	
259+16.51	RT						
259+60.77	RT	1509		189.88			
		1509	1516		183.52	183.24	
259+13.37	RT						
259+64.61	LT						
259+72.51	RT	1505		186.6			
		1505	1509		183.6	183.52	
259+64.60	RT						
-Y12A-							
16+63.60	LT	715		214			
		715	705		204.44	203.48	
13+67.70	LT	724		211.16			
		724	705		205.76	205.73	
13+66.48	LT	705		211.16			
		705	1700		203.48	202.67	
12+33.33	LT						
10+98.35	CL	1700		212.72			
		1700	1701		202.67	202.5	
-Y14-							
10+81.85	RT	906		217.45			
		906	907		214.6	214.45	
10+81.34	LT	907		217.45			
		907	908		214.45	213.85	
-Y15-							
10+60.62	RT	914		216.57			
		914	915		215.12	214.96	
10+62.82	LT	915		216.57			
SHEET TOTALS							

STATION (SIZE / THICKNESS OR GAUGE)	DRAINAGE PIPE (RCP, CSP, CAAP, HDPE, or PVC) 12"	15"	18"	24"	30"	36"	42"	48"	DO NOT USE RCP	DO NOT USE CSP	DO NOT USE CAAP	DO NOT USE HDPE	C.S. PIPE 12" .064	15" .064	18" .064	24" .064	30" .079	36" .079	42" .109	48" .109
258+51.95																				
258+64.92																				
258+96.85																				
258+41.23																				
258+99.63																				
259+00.27																				
259+16.51																				
259+60.77																				
259+13.37																				
259+64.61																				
259+72.51																				
259+64.60																				
-Y12A-																				
16+63.60																				
13+67.70																				
13+66.48																				
12+33.33																				
10+98.35																				
-Y14-																				
10+81.85																				
10+81.34																				
-Y15-																				
10+60.62																				
10+62.82																				
SHEET TOTALS																				

STATION	R.C. PIPE CLASS III 12"	15"	18"	24"	30"	36"	42"	48"	R.C. PIPE CLASS IV 12"	15"	18"	24"	30"	36"	42"	48"	** " R.C. PIPE (CLASS V)	***" RC PIPE CULVERTS, CONTRACTOR DESIGN	***" RC PIPE CULVERTS, CONTRACTOR DESIGN	15" SIDE DRAIN PIPE	18" SIDE DRAIN PIPE	ENDWALLS STD. 838.01 838.11 OR STD. 838.80 (UNLESS NOTED OTHERWISE) CU. YARDS R.C.P.	C.S.P.
258+51.95																							
		24'																					
258+64.92																							
258+96.85																							
				64'																			
258+41.23																							
		56'																					
258+99.63																							
				16'																			
259+00.27																							
				68'																			
259+16.51																							
259+60.77																							
				60'																			
259+13.37																							
259+64.61																							
259+72.51																							
			24'																				
259+64.60																							
-Y12A-																							
16+63.60																							
							296'																
13+67.70																							
		8'																					
13+66.48																							
							268'																
12+33.33																							
10+98.35																							
							56'																
-Y14-																							
10+81.85																							
		44'																					
10+81.34																							
		48'																					
-Y15-																							
10+60.62																							
		48'																					
10+62.82																							
SHEET TOTALS		228'	24'	208'			620'																

STATION	QUANTITIES FOR DRAINAGE STRUCTURES PER EACH (0' THRU 5.0')	*TOTAL L.F. FOR PAY QUANTITY SHALL BE COL. 'A' + (1.3 X COL.'B') LIN. FT. A 5.0' THRU 10.0'	B 10.0' AND ABOVE	C.B. STD. 840.01 OR STD. 840.02	FRAME, GRATES, AND HOOD STANDARD 840.03 TYPE OF GRATE E	F	G	CONCRETE TRANSITIONAL SECTION DROP INLET	CATCH BASIN (SEE DETAIL SHEET 2-CC)
258+51.95	1								
258+64.92									
258+96.85	1	1.43		1		1			
258+41.23	1			1	1				
258+99.63	1								
259+00.27	1	1.38		1			1		
259+16.51									
259+60.77	1	1.36		1			1		
259+13.37									
259+64.61									
259+72.51	1								
259+64.60									
-Y12A-									
16+63.60	1	4.56							
13+67.70	1	0.40		1	1				
13+66.48	1	2.68							
12+33.33									
10+98.35	1	5.00	0.05						
-Y14-									
10+81.85	1			1	1				
10+81.34	1			1	1				
-Y15-									
10+60.62	1								
10+62.82	1								
SHEET TOTALS	15	16.81	0.05	7	4	1	2		

STATION	OPEN THROAT CATCH BASIN (SEE DETAIL SHEET 2-R)	D.I. STD. 840.14 OR STD. 840.15	D.I. FRAME AND TWO GRATE STD. 840.16	G.D.I. TYPE "B" STD. 840.18 OR 840.27	G.D.I. FRAME WITH TWO GRATES STD. 840.20	G.D.I. FRAME WITH TWO GRATES STD. 840.24	FRAME & TWO N. S. FLAT GRATES STD. 840.29	J.B. STD. 840.31 OR 840.32	T.B.J.B. STD. 840.34	T.B.G.D.I. STD. 840.35	M.H. FRAME AND COVER STD. 840.54	ADJUST EXIST. MH COVER	ADJUST EXIST. CB	BICYCLE SAFE STEEL FRAME & GRATE (SEE DETAIL SHEET 2-S)	SPECIAL D.I. (SEE DETAIL SHEET 2-Y)	SPECIAL C.B. (SEE DETAIL SHEET 2-BB)	CONVERT EXIST. J.B. TO C.B. (SEE DETAIL SHEET 2-W)	SPECIAL J.B. (SEE DETAIL SHEET 2-Z)	CONVERT EXIST. C.B. TO J.B. w/MH COVER(SEE DETAIL SHEET 2-V)	CONVERT EXIST. CB TO T.B.J.B. W/MH COVER (SEE DETAIL SHEET 2-U)	SPECIAL J.B. (SEE DETAIL SHEET 2-AA)	SPECIAL C.B. (SEE DETAIL SHEET 2-X)	SPECIAL C.B. (SEE DETAIL SHEET 2-T)
258+51.95							1			1													
258+64.92																							
258+96.85																							
258+41.23																							
258+99.63		1	1																				
259+00.27																							
259+16.51																							
259+60.77																							
259+13.37																							
259+64.61																							
259+72.51		1	1																				
259+64.60																							
-Y12A-																							
16+63.60								1			1												
13+67.70																							
13+66.48								1			1												
12+33.33																							
10+98.35		1	1																				
-Y14-																							
10+81.85																							
10+81.34																							
-Y15-																							
10+60.62		1	1																				
10+62.82							1			1													
SHEET TOTALS		4	4				2	2		2	2												

STATION	CONC. & BRICK PIPE PLUG, C.Y. STD. 840.71	CONC. COLLARS CL. "B" C.Y. STD. 840.72	PIPE REMOVAL LIN. FT.	REMARKS
258+51.95				
258+64.92			37	REMOVE EXIST DI & JB/MH & 15" RCP
258+96.85				
258+41.23				
258+99.63				
259+00.27				
259+16.51			71	REMOVE EXIST. 12" RCP
259+60.77				
259+13.37	0.09			2 PLUGS & FILL EXIST. 15" RCP
259+64.61				REMOVE EXIST. JB/MH
259+72.51				
259+64.60	0.09			2 PLUGS & FILL EXIST. 15" RCP
-Y12A-				
16+63.60				
13+67.70				REMOVE EXIST. CB
13+66.48				
12+33.33			269	REMOVE EXIST. 18" RCP
10+98.35				REMOVE EXIST. DI
				REMOVE EXIST. 18" RCP
-Y14-				
10+81.85				
10+81.34				
-Y15-				
10+60.62				
10+62.82				
SHEET TOTALS	0.18		377	

ABBREVIATIONS

C.B.	CATCH BASIN
N.D.I.	NARROW DROP INLET
D.I.	DROP INLET
G.D.I.	GRATED DROP INLET
G.D.I.(N.S.)	(NARROW SLOT)
J.B.	JUNCTION BOX
M.H.	MANHOLE
T.B.D.I.	TRAFFIC BEARING DROP INLET
T.B.J.B.	TRAFFIC BEARING JUNCTION BOX

COMPUTED BY: JBT DATE: 30/4/2012

CHECKED BY: KDA/IY DATE: 5/30/2012

RD248629

PROJECT NO.	SHEET NO.
U-2809B	3-N

NORTH CAROLINA DEPARTMENT OF TRANSPORTATION
DIVISION OF HIGHWAYS

Note: Invert Elevations indicated are for Bid Purposes only and shall not be used for project construction stakeout. See "Standard Specifications For Roads and Structures, Section 300-5".

LIST OF PIPES, ENDWALLS, ETC. (FOR PIPES 48 INCHES & UNDER)

STATION	LOCATION (LT, RT, OR CL)	STRUCTURE NO. FROM	STRUCTURE NO. TO	TOP ELEVATION	INVERT ELEVATION	INVERT ELEVATION	SLOPE CRITICAL	DRAINAGE PIPE (RCP, CSP, CAAP, HDPE, or PVC) 12"	15"	18"	24"	30"	36"	42"	48"	DO NOT USE RCP	DO NOT USE CSP	DO NOT USE CAAP	DO NOT USE HDPE
		915	916		214.95	214.63													
-Y16-																			
11+08.50	RT	1060		214.98															
		1060	1061		213.9	213.75													
11+08.66	LT	1061		215.12															
		1061	1062		213.75	213.54													
-Y19-																			
13+29.80	LT	1425		204.77															
		1425	1426		203.27	203.04													
13+33.24	RT	1426		204.77															
		1426	1427		202.6	202.36													
16+58.26	RT	1431		205.68															
		1431	1432		202.43	202.19													
16+55.19	LT	1432		205.44															
		1432	1433		202.29	201.91													
-Y23-																			
		1513	1500		186.86	186.59													
13+10.82	RT	1500		192.92															
		1500	1523		186.59	186													
13+05.57	LT	1523		191.51															
		1523	1800		186	184.9													
10+11.75	LT	1800		193.15															
		1800	1807		184.9	180.81													
09+31.32	LT	1807		189															
		1807	1804		180.81	177.95													
08+91.13	LT	1804		177.95															
16+72.52	LT																		
16+75.17	LT	1510A		191.39															
16+80.74	LT	1510		190															
		1510	1510A		186.83	182.1													
16+82.63	LT	1510B		191.42															
17+22.50	LT	1511		190.73															
17+34.21	LT	1512		190.73															
SHEET TOTALS																			
PROJ. TOTALS																			
SAY																			

STATION	C.S. PIPE 12" (.064)	15" (.064)	18" (.064)	24" (.064)	30" (.079)	36" (.079)	42" (.109)	48" (.109)	R.C. PIPE CLASS III 12"	15"	18"	24"	30"	36"	42"	48"	R.C. PIPE CLASS IV 12"	15"	18"	24"	30"	36"	42"	48"
										104'														
-Y16-																								
11+08.50																								
										52'														
11+08.66																								
										48'														
-Y19-																								
13+29.80																								
											76'													
13+33.24																								
											68'													
16+58.26																								
										48'														
16+55.19																								
										112'														
-Y23-																								
															52'									
13+10.82																								
															96'									
13+05.57																								
															272'									
10+11.75																								
															132'									
09+31.32																								
															56'									
08+91.13																								
16+72.52																								
16+75.17																								
16+80.74																								
										32'														
16+82.63																								
17+22.50																								
17+34.21																								
SHEET TOTALS										396'	144'				608'									
PROJ. TOTALS										9608'	3980'	4508'	3156'	1424'	1228'									
SAY																								

STATION	** " R.C. PIPE (CLASS V)	***" RC PIPE CULVERTS, CONTRACTOR DESIGN	***" RC PIPE CULVERTS, CONTRACTOR DESIGN	15" SIDE DRAIN PIPE	18" SIDE DRAIN PIPE	ENDWALLS STD. 838.01 838.11 OR STD. 838.80 (UNLESS NOTED OTHERWISE) CU. YARDS R.C.P.	C.S.P.	QUANTITIES FOR DRAINAGE STRUCTURES PER EACH (0' THRU 5.0')	*TOTAL L.F. FOR PAY QUANTITY SHALL BE COL. 'A' + (1.3 X COL.'B') LIN. FT. A 5.0' THRU 10.0'	B 10.0' AND ABOVE	C.B. STD. 840.01 OR STD. 840.02	FRAME, GRATES, AND HOOD STANDARD 840.03 TYPE OF GRATE E	F	G	CONCRETE TRANSITIONAL SECTION DROP INLET	CATCH BASIN (SEE DETAIL SHEET 2-CC)
-Y16-																
11+08.50								1								
11+08.66								1								
-Y19-																
13+29.80								1								
13+33.24								1								
16+58.26								1			1	1				
16+55.19								1			1	1				
-Y23-																
13+10.82								1	1.33		1	1				
13+05.57								1	0.51							
10+11.75								1	3.25							
09+31.32								1	3.19							
08+91.13						4.5										
16+72.52																
16+75.17								1				1				
16+80.74								1								
16+82.63																
17+22.50								1			1		1			
17+34.21								1			1		1			
SHEET TOTALS						4.5		14	8.28		5	4	2			
PROJ. TOTALS						4.5		266	101.19	0.05	158	20	71	72	29	5
SAY						5			102							

STATION	OPEN THROAT CATCH BASIN (SEE DETAIL SHEET 2-R)	D.I. STD. 840.14 OR STD. 840.15	D.I. FRAME AND TWO GRATE STD. 840.16	G.D.I. TYPE "B" STD. 840.18 OR 840.27	G.D.I. FRAME WITH TWO GRATES STD. 840.20	G.D.I. FRAME WITH TWO GRATES STD. 840.24	FRAME & TWO N. S. FLAT GRATES STD. 840.29	J.B. STD. 840.31 OR 840.32	T.B.J.B. STD. 840.34	T.B.G.D.I. STD. 840.35	M.H. FRAME AND COVER STD. 840.54	ADJUST EXIST. MH COVER	ADJUST EXIST. CB	BICYCLE SAFE STEEL FRAME & GRATE (SEE DETAIL SHEET 2-S)	SPECIAL D.I. (SEE DETAIL SHEET 2-Y)	SPECIAL C.B. (SEE DETAIL SHEET 2-BB)	CONVERT EXIST. J.B. TO C.B. (SEE DETAIL SHEET 2-W)	SPECIAL J.B. (SEE DETAIL SHEET 2-Z)	CONVERT EXIST. C.B. TO J.B. w/MH COVER(SEE DETAIL SHEET 2-V)	CONVERT EXIST. CB TO T.B.J.B. W/MH COVER (SEE DETAIL SHEET 2-U)	SPECIAL J.B. (SEE DETAIL SHEET 2-AA)	SPECIAL C.B. (SEE DETAIL SHEET 2-X)	SPECIAL C.B. (SEE DETAIL SHEET 2-T)	CONC. & BRICK PIPE PLUG, C.Y. STD. 840.71	CONC. COLLARS CL. "B" C.Y. STD. 840.72	PIPE REMOVAL LIN. FT.	REMARKS
-Y16-																											
11+08.50		1	1																								
11+08.66							1			1																	
-Y19-																											
13+29.80				1		1																					
13+33.24				1		1																					
16+58.26																											
16+55.19																											
-Y23-																											
13+10.82																											
13+05.57								1			1																
10+11.75								1			1																
09+31.32								1			1																
08+91.13																											CONCRETE ENDWALL (42" RC PIPE)
16+72.52																										33	REMOVE EXIST DI & 15" RCP
16+75.17																						1					
16+80.74		1	1																								
16+82.63													1														
17+22.50																											
17+34.21																											
SHEET TOTALS		2	2	2		2	1	3		1	3		1									1				33	
PROJ. TOTALS	1	75	75	3	1	2	14	6	3	14	18	6	9	1	1	1	2	1	3	4	1	1	1	1.35	1.504	1667	PROJ. TOTALS
SAY																								2	2		SAY

ABBREVIATIONS

C.B.	CATCH BASIN
N.D.I.	NARROW DROP INLET
D.I.	DROP INLET
G.D.I.	GRATED DROP INLET
G.D.I.(N.S.)	(NARROW SLOT)
J.B.	JUNCTION BOX
M.H.	MANHOLE
T.B.D.I.	TRAFFIC BEARING DROP INLET
T.B.J.B.	TRAFFIC BEARING JUNCTION BOX

COMPUTED BY: JBT DATE: 1-10-2012	PROJECT NO.	SHEET NO.
CHECKED BY: IY/KDA DATE: 5/15/2012	U-2809B	3-O

STATE OF NORTH CAROLINA
DIVISION OF HIGHWAYS

SUMMARY OF EARTHWORK

CUBIC YARDS

Station to Station	Uncl. Exc. C.Y.	Embank. +% C.Y.	Borrow C.Y.	Waste C.Y.
SUMMARY NO. 1				
RIGHT SIDE				
-L- 111+00 TO 136+00	830	4,529	3,699	
-Y10- 10+75 TO 11+64	47	26		21
-Y11- 10+75 TO 11+34	82	8		75
LEFT SIDE				
-L- 111+00 TO 136+00	593	4,290	3,697	
SUMMARY NO. 1 TOTALS	1,552	8,853	7,396	95
SUMMARY NO. 2				
RIGHT SIDE				
-L- 136+00 TO 161+00	138	3,548	3,410	
LEFT SIDE				
-L- 136+00 TO 161+00	131	6,021	5,890	
-Y12- 10+78 TO 11+25	30	1		29
SUMMARY NO. 2 TOTALS	299	9,570	9,300	29
SUMMARY NO. 3				
RIGHT SIDE				
-L- 161+00 TO 191+00	289	6,810	6,521	
-Y13- 10+75 TO 11+00	8	6		2
-Y14- 10+75 TO 11+25	7	33	26	
LEFT SIDE				
-L- 161+00 TO 191+00	406	6,365	5,959	
-Y15- 10+50 TO 11+00	45			45
-Y16- 10+53 TO 11+00	58			58
SUMMARY NO. 3 TOTALS	813	13,214	12,506	105
SUMMARY NO. 4				
RIGHT SIDE				
-L- 191+00 TO 221+00	279	7,528	7,249	
LEFT SIDE				
-L- 191+00 TO 221+00	376	3,499	3,123	
SUMMARY NO. 4 TOTALS	655	11,027	10,372	

Station to Station	Uncl. Exc. C.Y.	Embank. +% C.Y.	Borrow C.Y.	Waste C.Y.
SUMMARY NO. 5				
RIGHT SIDE				
-L- 221+00 TO 248+00	803	4,461	3,658	
-Y18- 10+50 TO 11+00	16	158	142	
-Y19- 15+75 TO 18+22	343	74		269
-Y21- 12+50 TO 13+20	208			208
-Y22- 10+50 TO 11+00	36			36
LEFT SIDE				
-L- 221+00 TO 248+00	970	2,238	1,268	
-Y19- 12+25 TO 14+00	180	71		109
-Y21- 10+75 TO 11+50	97	13		85
SUMMARY NO. 5 TOTALS	2,653	7,015	5,068	707
SUMMARY NO. 6				
RIGHT SIDE				
-L- 248+00 TO 263+30	444	651	207	
LEFT SIDE				
-L- 248+00 TO 263+30	418	1,035	617	
SUMMARY NO. 6 TOTALS	862	1,686	824	
PROJECT SUB TOTAL	6,834	51,365	45,464	935
Waste In Lieu of Borrow			-935	-935
Estimated Shoulder Material			175	
due to Clearing&Grubbing	-650		650	
Est 5% To Replace Topsoil at Borrow Pit			2,266	
GRAND TOTALS	6,184		47,620	
SAY	6,500		48,000	

ESTIMATED DDE = 22 CY
ESTIMATED UNDERCUT = 200 CY
ESTIMATED SHALLOW UNDERCUT = 500 CY
Select Granular Material = 200 CY

Quantities are approximate only. The Resident Engineer will recross-section the work accurately when the project is staked out. These cross-section notes will be used in computing the final quantities for which the contractor will be paid.

Note: Earthwork quantities are calculated by the Roadway Design Unit. These earthwork quantities are based in part on subsurface data provided by the Geotechnical Engineering Unit.

SUMMARY OF ASPHALT PAVEMENT REMOVAL

LINE	Station to Station	LOC LT/RT/CL	Ashalt Removal SQ. YDS.
-L-	111+58.33 TO 116+83.15	CL	1,279.70
-L-	124+62.85 TO 130+97.15	CL	1,658.89
-L-	138+53.35 TO 144+94.28	CL	1,864.08
-L-	179+38.72 TO 185+09.76	CL	1,448.80
-L-	208+12.36 TO 213+06.00	CL	1,333.96
-L-	217+09.36 TO 219+79.94	CL	836.81
-L-	227+54.70 TO 234+18.59	CL	1,695.50
-L-	242+32.95 TO 247+48.11	CL	1,294.16
	PROJECT TOTAL		11,411.90
		SAY	11,420.00

GUARDRAIL SUMMARY

"N" = DISTANCE FROM EDGE OF LANE TO FACE OF GUARDRAIL
TOTAL SHOULDER WIDTH = DISTANCE FROM EDGE OF TRAVEL LANE TO SHOULDER BREAK POINT.
FLARE LENGTH = DISTANCE FROM LAST SECTION OF PARALLEL GUARDRAIL TO END OF GUARDRAIL.
W = TOTAL WIDTH OF FLARE FROM BEGINNING OF TAPER TO END OF GUARDRAIL
G = GATING IMPACT ATTENUATOR TYPE 350
NG = NON-GATING IMPACT ATTENUATOR TYPE 350

LINE	BEG. STA.	END STA.	LOC.	LENGTH (FT.) STRAIGHT	LENGTH (FT.) SHOP CURVED	LENGTH (FT.) DOUBLE FACED	WARRANT POINT APPR. END	WARRANT POINT TRAIL. END	"N" DIST. FROM E.O.L.	TOTAL SHLDR WIDTH	FLARE LENGTH APPR. END	FLARE LENGTH TRAIL. END	W APPR. END	W TRAIL. END	ANCHORS CAT-1	ANCHORS AT-1	ANCHORS	ANCHORS	ANCHORS	ANCHORS	ANCHORS	IMP. ATTEN. TYPE 350 EA	IMP. ATTEN. TYPE 350 G	IMP. ATTEN. TYPE 350 NG	REMOVE EXISTING GUARDRAIL	REMARKS
L	252+17.79	252+36.58	RT		25										1	1										
		PROJ. TOTALS			25										1	1										PROJECT TOTAL

PROJ. REFERENCE NO.	SHEET NO.
U-2809B	3-P

STATE OF NORTH CAROLINA
DIVISION OF HIGHWAYS

PARCEL INDEX SHEET

PARCEL No.	SHEET No.	PROPERTY OWNER NAME
1	4	CAPE FEAR LANDSCAPING & LAWNCARE OF FAYETTEVILLE,INC
1A	4	ERICA LAYHER
2	4, 5	WILLIAM CAULDER
4	4,5	LILLE SLADE
5	5	JAMES BRITT
6	5	DACHIA PONE
7	5	ROCK SPRINGS CHURCH
8	5	JAMES BRYANT
9	5	BARBARA TAYLOR
10	5	DIDIEL GOMEZ
11	5	GILBERT CRIBB
12	5	CHARLES T. GARDNER
13	5	JOHN TYSON
14	5,6	HUBERT CLODFELTER
15	5	JOSEPH SAUNDERS
16	5	JAMES REAVES
17	5	CRIBB INVESTMENTS
18	5	RANG VAN LU
19	5,6	HELEN D. RATLEY
20	5,6	THEODORE MELVIN
21	6	EDGAR EDGE
22	6	MELISSA D. HAMMOND
23	6	JAMES MELVIN
24	6	ALBERT WELLING
25	6	STEVEN HATLEY
26	6	AMERICAN LEGION
27	6	D & D CONSTRUCTION AND REALITY
28	6	D. CAREY EDGE
29	6	HILLSIDE BAPTISH CHURCH
30	6,7	CEDAR CREEK CROSSING WEST LLC
31	6	PATRICIA HEYLER
32	6	MARITA CLAYTON
33	6,7	GEORGE GILMORE
34	7	CHARLES GARDNER
35	7	EPHESUS CHRISTIAN CENTER
36	7	RAYMOND SMITH, JR.
37	7,7A	ABET ACQUISITIONS LLC
38	7	OLD DOMINION TOBACCO CO., INC.
39	7	LESTER PHILLIPS
40	7	LY KIM ALEXANDER
41	7	VANCE NEAL
42	7	ROBERT MATTOCKS
43	7	KAS DEVELOPERS LLC
44	7,7A	RAYMOND NICHOLSON
45	7,8,7A	LARRY F HERRINGDINE JR.
46	7	SCHWAN'S SALES ENTERPRISES
47	7	TOM KEITH
48	7,8	RAYMOND NICHOLSON, JR
49	7,8	CLAUDETTE R. KLEWICKI
50	8	LEGION MANOR ASSOCIATES
51	8	LEGION CROSSING ASSOCIATES
52	8	JON SORENSEN
53	8	OSCAR HALL
54	8	RICHARD WHEELER
55	8	DENISE DAY
56	8	DOUGLAS JONES
57	8	MICHAEL ROBINSON
58	8	WYANE J. BLAKE
59	8	CROSSWINDS GREEN II ASSOCIATES LIMITED PARTNERSHIP
60	8	CROSSWINDS GREEN ASSOCIATES

PARCEL No.	SHEET No.	PROPERTY OWNER NAME
61	8	MAURICE LANE
62	8	RITA A. ADAMS
63	8	TATIANA DINS
64	8	GERALD SHEETS
65	8	TIMOTHY THOMAS
66	8	TAMMY WILLIAMS
67	8,9	HAYWOOD DAVIS, JR.
68	8,9	COUNTRYTOWN TOWNHOMES INC
69	8,9	BURTON SUITE
70	9	LEE WASHINGTON
71	9	JAMES NORDAN
72	9	TONIA L. REINSMA
73	9	CHRISTOPHER ORTEGA
74	9	CHURCH OF GOD PROPHECY
75	9	LINDSEY WARREN
76	9	LARRY EDWARDS
77	9	DIONISIO JONES
78	9	ERIC JOHNSON
79	9	DAVID MATTHEWS
80	9	CAROLINA TELEPHONE & TELEGRAPH CO.
81	9	DONALD HAWLEY
82	9	CARY ENGLISH
83	9	EARL MCLEAN
84	9	W.H. CARTER
85	9	JOYCE SELLERS
86	9,10	CHURCH OF GOD OF PROPHESY
87	9	JOSEPH DECARLO
88	9,10	JOHN JOHNSON
89	10	SHELLEY A. CANAS
90	10	MARSHALL TEW
91	10	HAROLD JANSON
92	10	RAYMOND EATON
93	10	STANLEY JOHNSON
94 & 94A	10	ALFONZIE WILLIAMSON
95	10	LUTHER N. PACKER
96	10	KENNETH A. BYRD
97	10	DAVIS MCCOY, JR
98	10	BETTY B. SMITH
99	10	ELLEN J. WILLIS
100	10	SHIRLEY WILLIAMS
101	10	JPR DEVELOPMENT LLC
102	10	JAMES EMANUEL
103	10	FIVE RIDDLES 11 INC
104	10	GLADYS R. BEASLEY
105	10,11	WILLIAM CARROLL
106	10,11	LEGION CROSSING, INC
107	11	ETHEL MORGAN
108 & 108Z	11	WILLIE ROUSE
109	11	DOUGLAS NEW
110	11	MARCH RIDDLE
111	11	CUMBERLAND COUNTY BOARD OF EDUCATION
112	11,12	JOSEPH RIDDLE 111
113	11,12	FAITH WESLEYAN CHURCH
114	12	MARCH RIDDLE
115	12	MILA S. MORGAN
116 & 116Z	12	DONALD HORNE
117	12	CUMBERLAND COUNTY
118	12	JOHN S. RORIE, JR.
119, 119A, 119B	12,13	RORIE INVESTMENTS LLC
120	12,13	MINI MAXI FAY LLC

PROJ. REFERENCE NO.	SHEET NO.
U-2809B	3-Q

STATE OF NORTH CAROLINA
DIVISION OF HIGHWAYS

PARCEL INDEX SHEET

PARCEL No.	SHEET No.	PROPERTY OWNER NAME
121	12	SHAWN HARRELSON
122	12	LAYMON HORSEY
123	12,13	CRISTIE HINTON
124	13	DAVID HOLMES
125	13	JOHN M. HALL, JR.
126	13	LEVONE VIGIL
127	13	LILLY L. TURNER
128	13	JAMES LEWIS
129	13	CYNTHIA MCMILLIAN
130	13	ANGELA HARRIS
131	13	NATHAN DAVIS
132	13	CORNERSTONE PROPANE
133	13	JCR RENTALS, INC.
135	13,14	JEANETTE C. REID
136	13,14	CARROLTON OF FAYETTEVILLE, INC.
137	13,14	COMMUNITY REAL ESTATE HOLDING
138	14	DONALD STRICKLAND
139	14	F & B INVESTMENTS, INC
140	14	JAMES BLUE
141	14	CHERYL H. PERRY
142	14	TERRI C. BYROM
143	14	OSCAR PHILLIPS, JR.
144	14	CHARLES D. JONES
145	14	BOBBY HAIRR
146	14	CHARLES T. HUGGINS
147, 147A,147B,	14	JOHN WILLIAMS
147C	14	JOHN WILLIAMS
147D,147E	14,15	JOHN WILLIAMS
148	14	PATRICIA H. ROGITZ
149	14	CONFLICT
150	14	DEBBIE BARR
151	14	WESTMINISTER PRESBYTERIAN
152	14	DALE ANN TRIPP
153	14	ALFRED YOUNG
154	14	RICHARD BRAUN
155	14	PAUL HAMMAKER
156	14	ELBERT CALHOUN JR.
157	15	WILLIAM DEAN
158	15	BOBBY TAYLOR OIL CO.
159	15	C&N INVESTMNTS LLC
160	15	U.S. POSTAL SERVICE
161	15	JIMMY R. FANN
162	15	EASTAIR, LLC
163	15	701 SQUARE LLC
164 & 164Z	15,16	BOBBY HAIR
165	15,16	BILL AGAPION
166	15	PARIS PARTNERSHIP
167	16	ROSALIE P. CROWE

PARCEL No.	SHEET No.	PROPERTY OWNER NAME

PROJECT REFERENCE NO.	SHEET NO.
U-2809B	4
R/W SHEET NO.	
ROADWAY DESIGN ENGINEER	HYDRAULICS ENGINEER

NORTH CAROLINA PROFESSIONAL SEAL 19993 ENGINEER GREGORY E. BREW 7-3-12

NORTH CAROLINA PROFESSIONAL SEAL 12786 ENGINEER STEVEN M. BONDUR 7-6-12

FOR PROFILE OF -L- LINE SEE SHEET 17

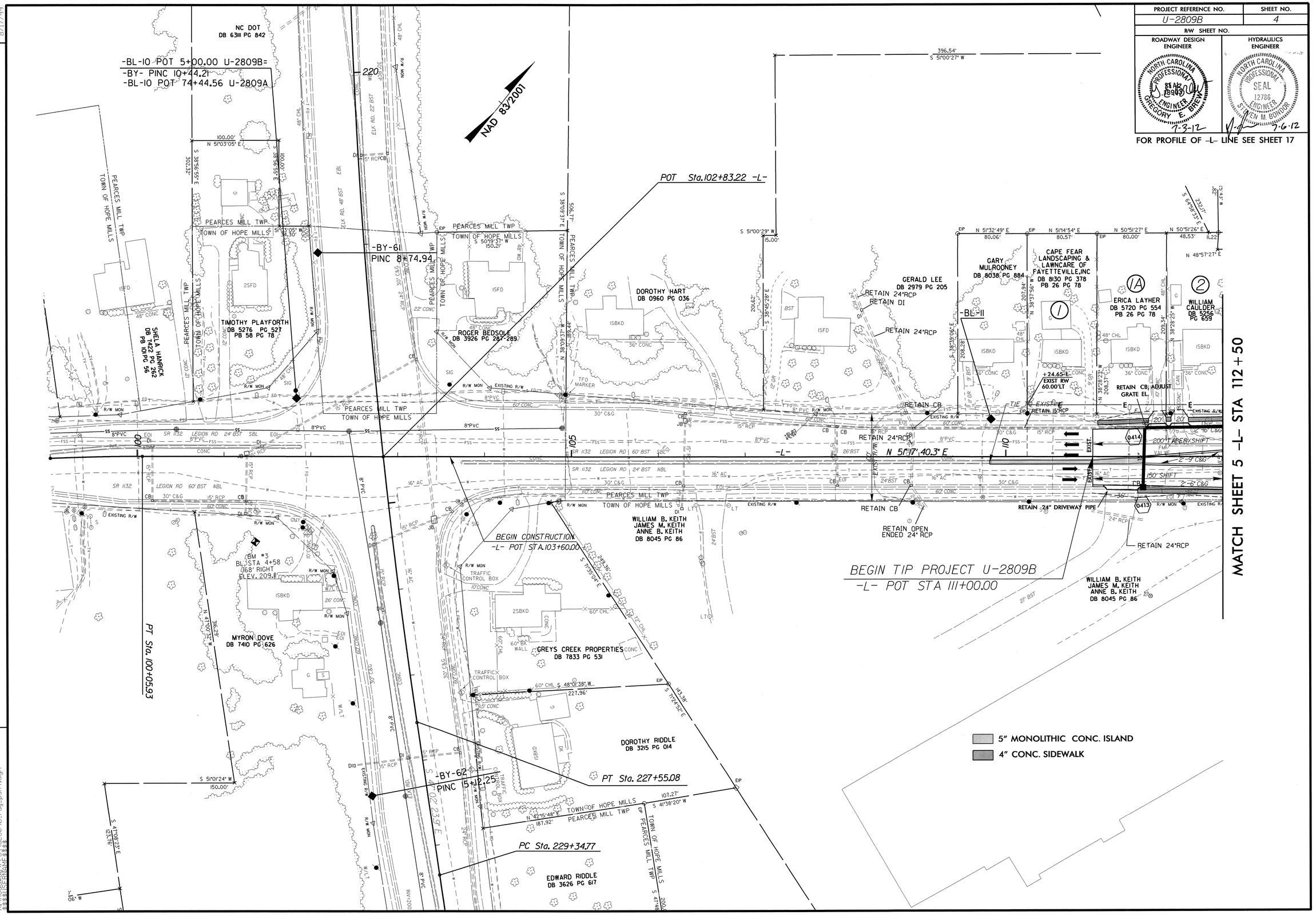

REVISIONS

8/17/99

27-JUN-2012 14:14
R:\Roadway\Proj\u2809b_rdy_psh4.dgn

PROJECT REFERENCE NO.	SHEET NO.
U-2809B	5
R/W SHEET NO.	
ROADWAY DESIGN ENGINEER	HYDRAULICS ENGINEER
NORTH CAROLINA PROFESSIONAL SEAL 16903 ENGINEER GREGORY E. BREWER — 7-23-12	NORTH CAROLINA PROFESSIONAL SEAL 12786 ENGINEER STEVEN M. BONDUR — 7-23-12

SEE SHEET 2-F FOR INTERSECTION DETAIL

FOR PROFILE OF -L- LINE SEE SHEET 17
FOR PROFILE OF -Y10- LINE SEE SHEET 23

5" MONOLITHIC CONC. ISLAND
4" CONC. SIDEWALK

NAD 83/2001

-L-
PI Sta 121+30.71
Δ = 27° 20' 35.1" (LT)
D = 4° 43' 11.8"
L = 579.31'
T = 295.28'
R = 1,213.91'
e = SEE PLANS

MATCH SHEET 4 -L- STA 112+50

MATCH SHEET 6 -L- STA 126+00

POC Sta 120+62.62 -L-
POT Sta. 10+00.00 -Y10-

PC Sta. 118+35.42-L-

PC Sta. 10+28.58 -Y10-

END CONSTRUCTION
-Y10- POC 11+64.00

PT Sta. 11+69.84 -Y10-

POT Sta. 11+97.19 -Y10-

PT Sta. 124+14.73 -L-

-BL-12

-BL- 13
-BYI-

-Y10-
PI Sta 10+99.26
Δ = 5° 23' 44.1" (LT)
D = 3° 49' 11.0"
L = 141.26'
T = 70.68'
R = 1,500.00'

-BYI-64
POT 7+60.08

-L- SR 1132 (LEGION RD)
-Y10- SR 3009 (PIONEER DR)

-L-	-Y10-
23087 / 34200	22487 / 33600
23687 / 34800	600 / 600
1200 / 1200	1800 / 1800
2012 ADT / 2030 ADT	

MARRIANN EASON
DB 5793 PG 822

BETTY F. BLACKWELL
DB 2416 PG 367

ROCK SPRINGS CHURCH
DB 8044 PG 524

4 LILLE SLADE
DB 2775 PG 635

5 JAMES BRITT
DB 2789 PG 351

6 DACHIA PONE
DB 7000 PG 352

7 ROCK SPRINGS CHURCH
DB 8044 PG 524

8 JAMES BRYANT
DB 4411 PG 471

9 BARBARA TAYLOR
DB 2691 PG 372

10 DIDIEL GOMEZ
DB 4883 PG 790

11 GILBERT CRIBB
DB 4884 PG 41

12 CHARLES T. GARDNER
DB 8045 PG 827

13 JOHN TYSON
DB 5866 PG 699
PB 98 PG 46

14 HUBERT CLODFELTER
DB 3299 PG 433
DB 3299 PG 436
DB 3299 PG 468

15 JOSEPH SAUNDERS
DB 8016 PG 695

16 JAMES REAVES
DB 6402 PG 188
PB 98 PG 46

17 HGCB,LLC
DB 8306 PG 454

18 RANG VAN LU
DB 3912 PG 209

19 TOWN OF HOPE MILLS
DB 6357 PG 814

REVISIONS

8/17/99

20-JUL-2012 11:58
R:\Roadway\Proj\2809b_rdy_psh5.dgn
$$$$USERNAME$$$$

PROJECT REFERENCE NO.	SHEET NO.
U-2809B	6
R/W SHEET NO.	
ROADWAY DESIGN ENGINEER	HYDRAULICS ENGINEER

NORTH CAROLINA PROFESSIONAL SEAL 16903 ENGINEER GREGORY E. BREW — 2-23-12

NORTH CAROLINA PROFESSIONAL SEAL 12786 ENGINEER STEVEN M. BONDUR — 2-23-12

SEE SHEET 2-G FOR INTERSECTION DETAIL

-L- SR 1132 (LEGION RD)
-Y11- SR 2997 (HEIDELBURG DR.)

23687 / 34800	-L-	23887 / 35000
23487 / 34600		
200 / 200	400 / 400	
-Y11-		
600 / 600	2012 ADT / 2030 ADT	

FOR PROFILE OF -L- LINE SEE SHEET 17 & 18
FOR PROFILE OF -Y11- LINE SEE SHEET 23

5" MONOLITHIC CONC. ISLAND
4" CONC. SIDEWALK

STANDARD BASE TAIL DITCH (Not to Scale)
Natural Ground — 3:1 — D — 3:1 — Natural Ground; d; B
*When B is < 6.0'
Type of Liner= PSRM
Min. D= 1.0 Ft.
Max. d= 1.0 Ft.
B= 3.0 Ft.
STA. 131+10 LT.

NAD 83/2001

MATCH SHEET 5 -L- STA 126+00

MATCH SHEET 7 -L- STA 139+50

POT Sta. 10+00.00 -Y11-
POT Sta. 134+66.74 -L-

19 NEIL J. RATLEY, et al DB 2580 PG 403
21 EDGAR EDGE DB 1032 PG 601
23 JAMES MELVIN DB 1113 PG 265
26 AMERICAN LEGION DB 0801 PG 461
30 CEDAR CREEK CROSSING WEST LLC DB 7282 PG 350
20 THEODORE MELVIN DB 5870 PG 785
22 MELISSA D. HAMMOND DB 8200 PG 317
24 ALBERT WELLING DB 6545 PG 198 PB 88 PG 132
25 STEVEN HATLEY DB 5654 PG 112 PB 88 PG 132
27 D & D CONSTRUCTION AND REALITY DB 5813 PG 128
28 D. CAREY EDGE DB 2749 PG 817
29 HILLSIDE BAPTISH CHURCH DB 3960 PG 662
31 PATRICIA HEYLER DB 4309 PG 859
32 MARITA CLAYTON DB 7328 PG 406
33 GEORGE GILMORE DB 7401 PG 415
GEORGE GILMORE DB 5329 PG 477
J.C. SATTERFIELD DB 4604 PG 251
14

PLUG ENDS WITH CONCRETE AND FILL WITH FLOWABLE MATERIAL

END CONSTRUCTION -Y11- Sta. 11+34.00

POT Sta. 11+95.60 -Y11-

-BL-14
-BL-15
-BY2-
-BY2-65
POT 7+35.11

TOWN OF HOPE MILLS
PEARCES MILL

DON'T DISTURB CURBS

100' TAPER/TRANSITION

N 23°57'05.1" E
S 79°07'17" E

REVISIONS

8/17/99

20-JUL-2012 11:58
R:\Roadway\Proj\u2809b_rdy_psh6.dgn

PROJECT REFERENCE NO.	SHEET NO.
U-2809B	7
R/W SHEET NO.	
ROADWAY DESIGN ENGINEER	HYDRAULICS ENGINEER

NORTH CAROLINA PROFESSIONAL SEAL 18903 ENGINEER GREGORY E. BREEN 7-23-12

NORTH CAROLINA PROFESSIONAL SEAL 12786 ENGINEER STEVEN M BONDO 7-23-12

FOR PROFILE OF -L- LINE SEE SHEET 18
FOR PROFILE OF -Y12A- LINE SEE SHEET 23

SEE SHEET 2-H FOR INTERSECTION DETAILS

5" MONOLITHIC CONC. ISLAND

4" CONC. SIDEWALK

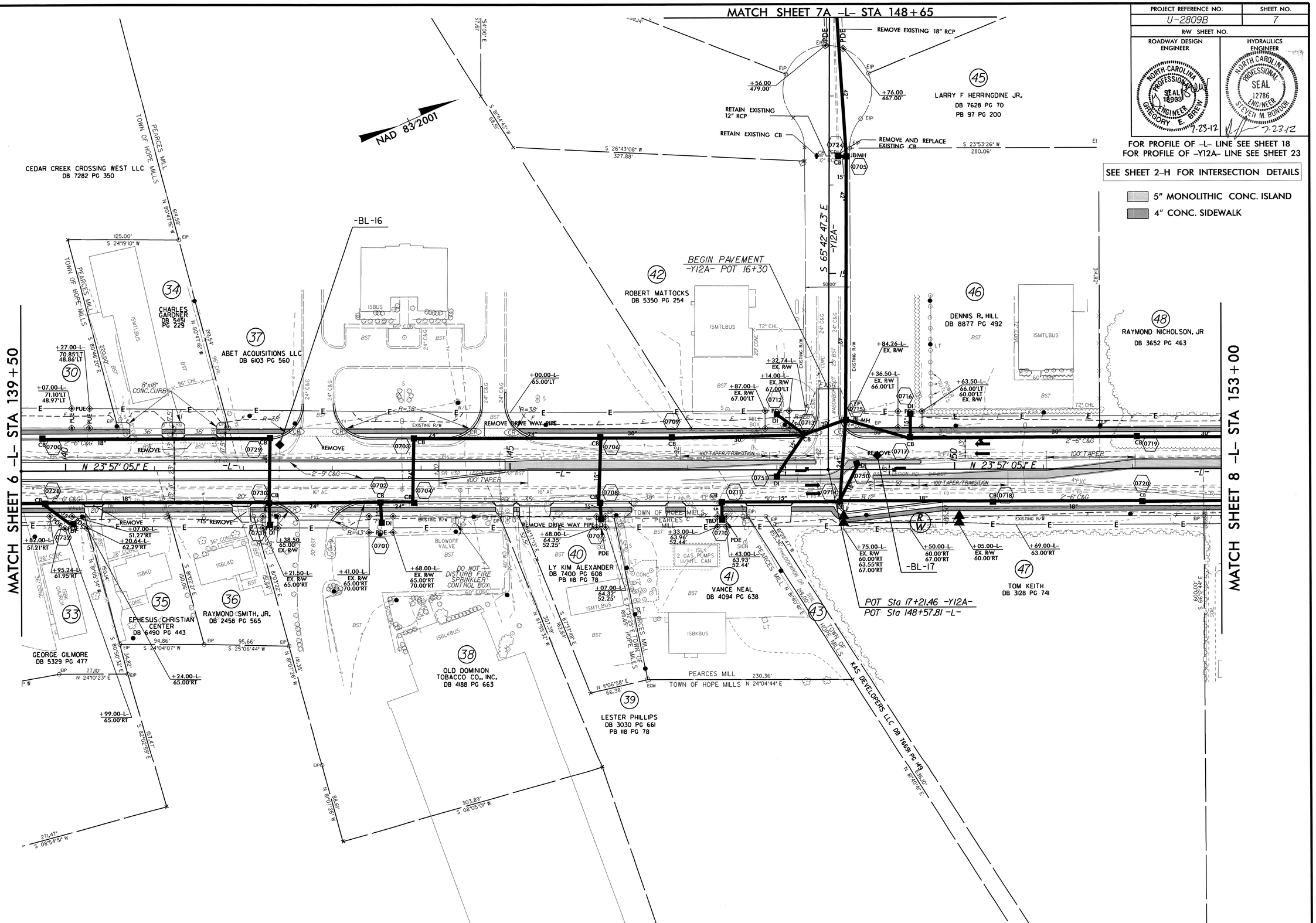

REVISIONS

8/17/99

20-JUL-2012 11:57
R:\Roadway\Proj\u2809b_rdy_psh7.dgn

PROJECT REFERENCE NO.	SHEET NO.
U-2809B	7A
R/W SHEET NO.	
ROADWAY DESIGN ENGINEER	HYDRAULICS ENGINEER

NORTH CAROLINA PROFESSIONAL SEAL 18903 ENGINEER GREGORY E. BREWER 7-3-12

NORTH CAROLINA PROFESSIONAL SEAL 12786 ENGINEER STEVEN M. BONDUR 7-6-12

FOR PROFILE OF -Y12A- LINE SEE SHEET 23

REVISIONS

8/17/99

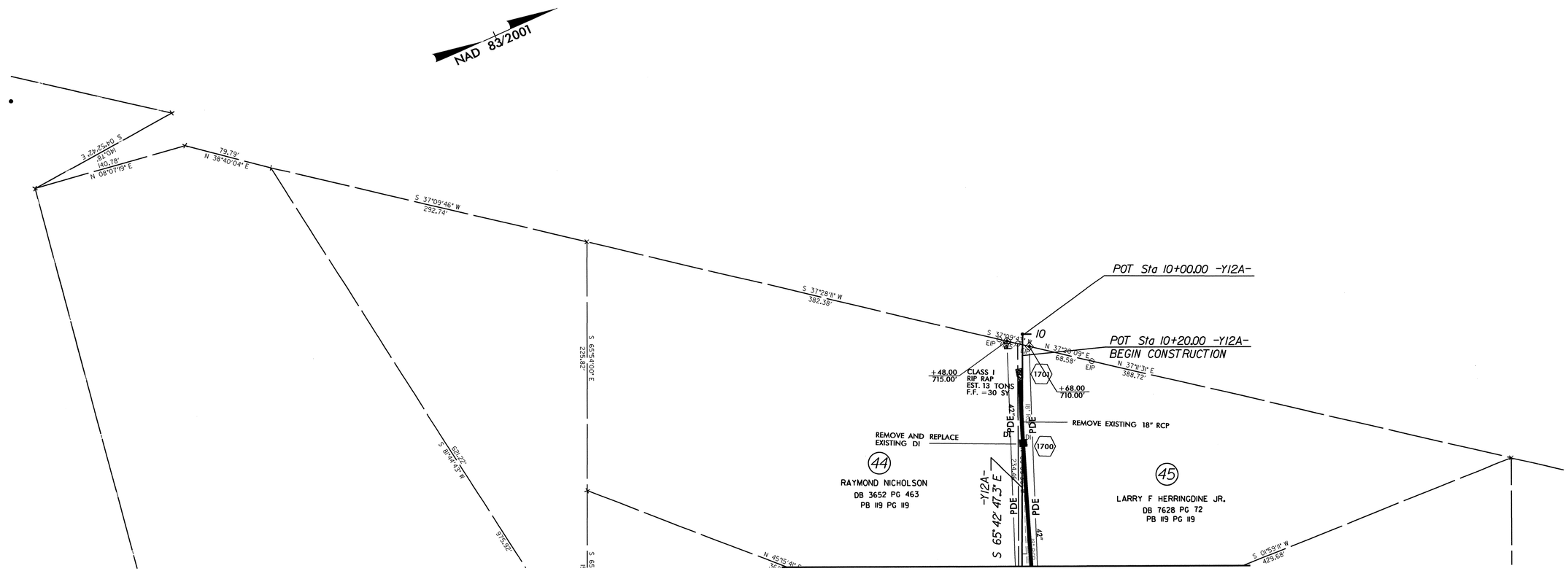

MATCH SHEET 7 -L- STA 148+65

27-JUN-2012 14:13
R:\Roadway\Proj\u2809b_rdy_psh7A.dgn
$$$$USERNAME$$$$

PROJECT REFERENCE NO.	SHEET NO.
U-2809B	8
R/W SHEET NO.	
ROADWAY DESIGN ENGINEER	HYDRAULICS ENGINEER

NORTH CAROLINA PROFESSIONAL SEAL 18203 ENGINEER GREGORY E. BRIEN 7-3-12

NORTH CAROLINA PROFESSIONAL SEAL 12786 ENGINEER STEVEN M. BUNDOR 7.6.12

FOR PROFILE OF -L- LINE SEE SHEET 18 & 19
FOR PROFILE OF -Y12- LINE SEE SHEET 23

SEE SHEETS 2-H & 2-I FOR INTERSECTION DETAILS

5" MONOLITHIC CONC. ISLAND

4" CONC. SIDEWALK

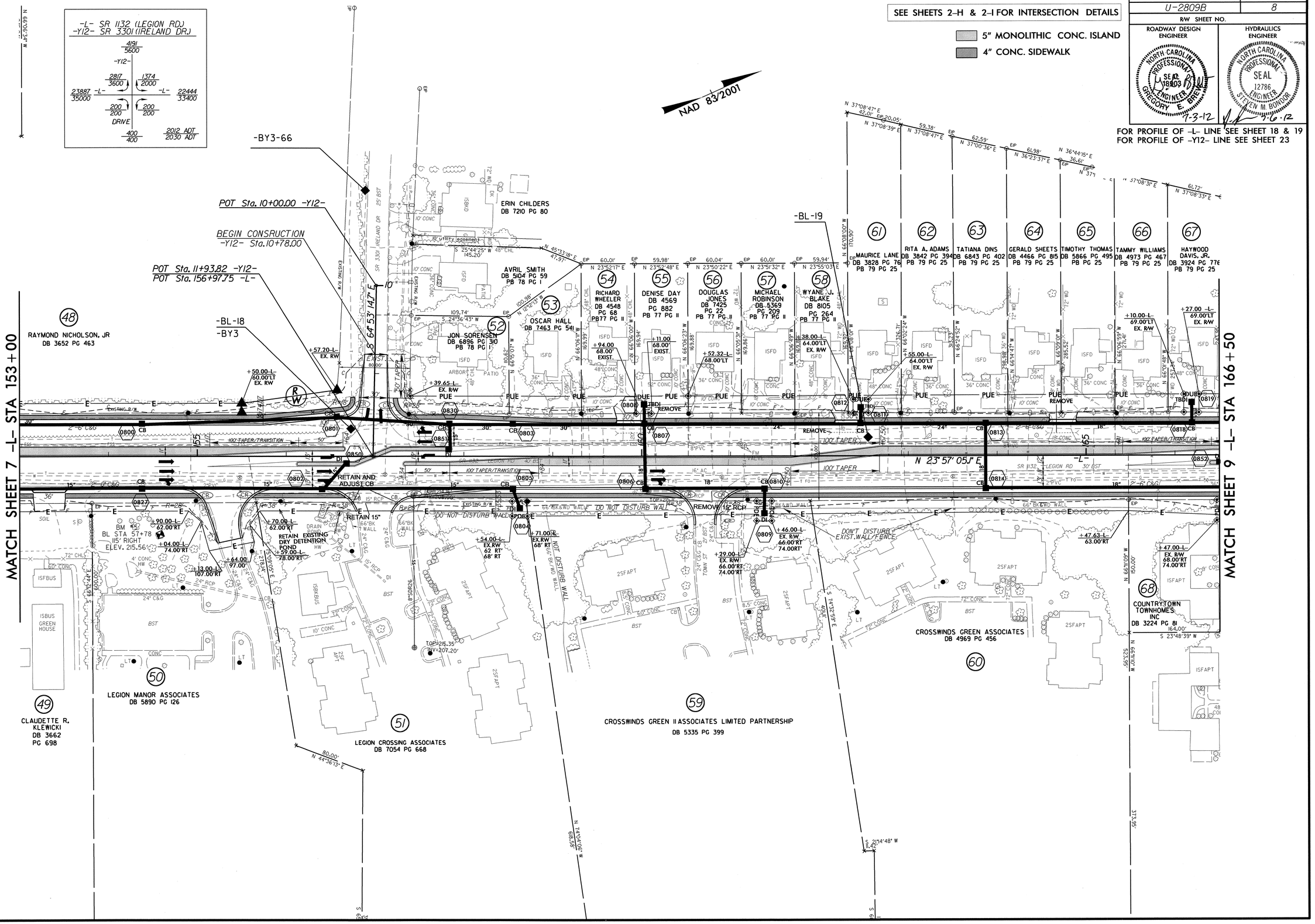

REVISIONS

8/17/99

27-JUN-2012 14:13
R:\Roadway\Proj\u2809b_rdy_psh8.dgn
$$$$USERNAME$$$$

PROJECT REFERENCE NO.	SHEET NO.
U-2809B	9
R/W SHEET NO.	
ROADWAY DESIGN ENGINEER	HYDRAULICS ENGINEER

NORTH CAROLINA PROFESSIONAL SEAL 18904 ENGINEER GREGORY E. BREWER 7-3-12

NORTH CAROLINA PROFESSIONAL SEAL 12786 ENGINEER STEVEN M. BONDUR 7-6-12

SEE SHEETS 2-I & 2-J FOR INTERSECTION DETAILS

FOR RETAINING WALL NO. 1 PLANS SEE SHEETS 2-O THRU 2-P

5" MONOLITHIC CONC. ISLAND

4" CONC. SIDEWALK

FOR PROFILE OF -L- LINE SEE SHEET 19
FOR PROFILE OF -Y13- LINE SEE SHEET 24
FOR PROFILE OF -Y14- LINE SEE SHEET 24
FOR PROFILE OF -Y15- LINE SEE SHEET 24

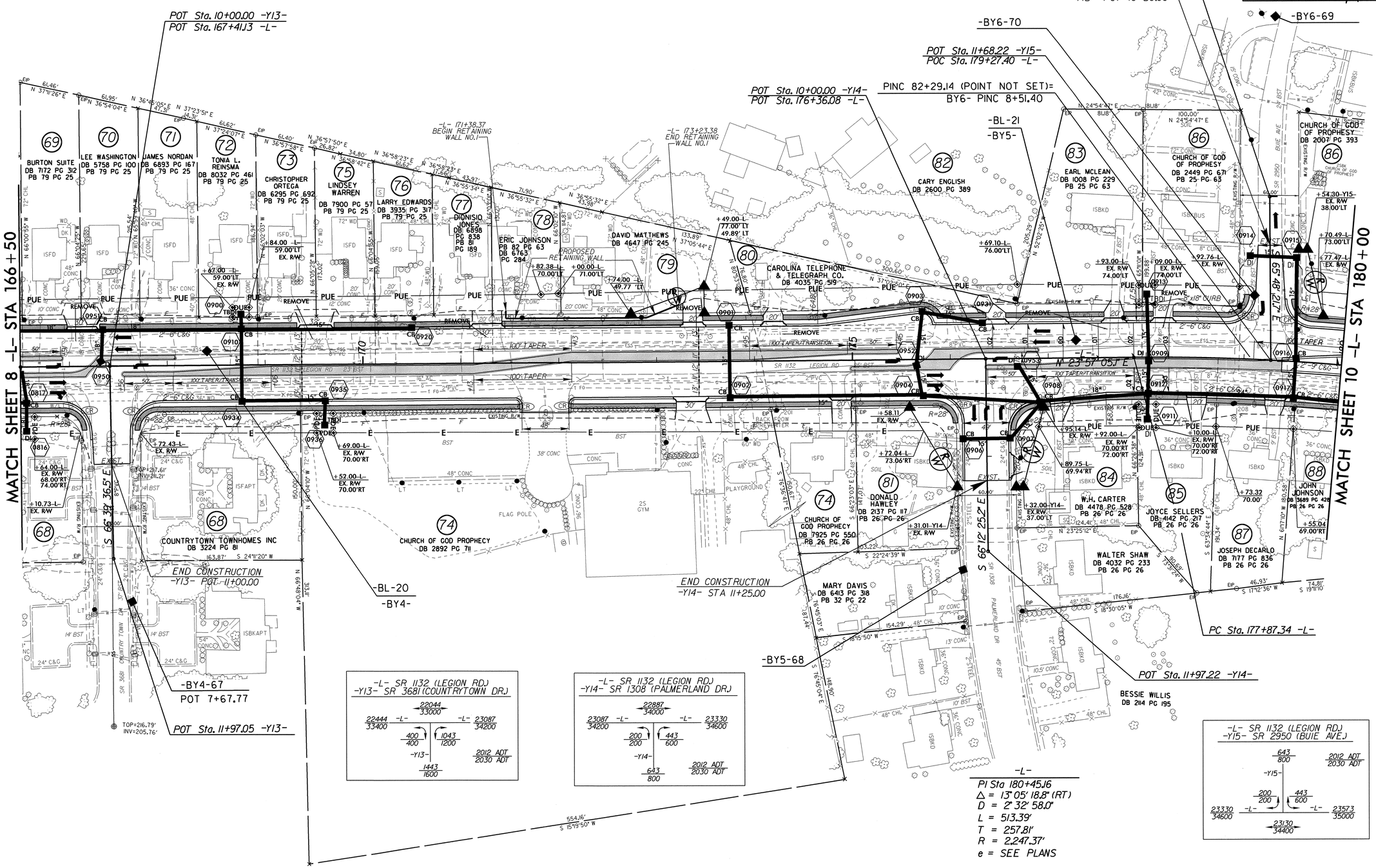

REVISIONS

8/17/99

27-JUN-2012 14:13
R:\Roadway\Proj\u2809b_rdy_psh9.dgn
$$$$USERNAME$$$$

PROJECT REFERENCE NO.	SHEET NO.
U-2809B	10
R/W SHEET NO.	
ROADWAY DESIGN ENGINEER	HYDRAULICS ENGINEER

NORTH CAROLINA PROFESSIONAL SEAL 18903 ENGINEER GREGORY E. BRELAND — 7-3-12

NORTH CAROLINA PROFESSIONAL SEAL 12786 ENGINEER STEPHEN M. BONDUR — 7-6-12

FOR PROFILE OF -L- LINE SEE SHEET 19 & 20
FOR PROFILE OF -Y16- LINE SEE SHEET 24

SEE SHEETS 2-J AND 2-K FOR INTERSECTION DETAILS

5" MONOLITHIC CONC. ISLAND
4" CONC. SIDEWALK

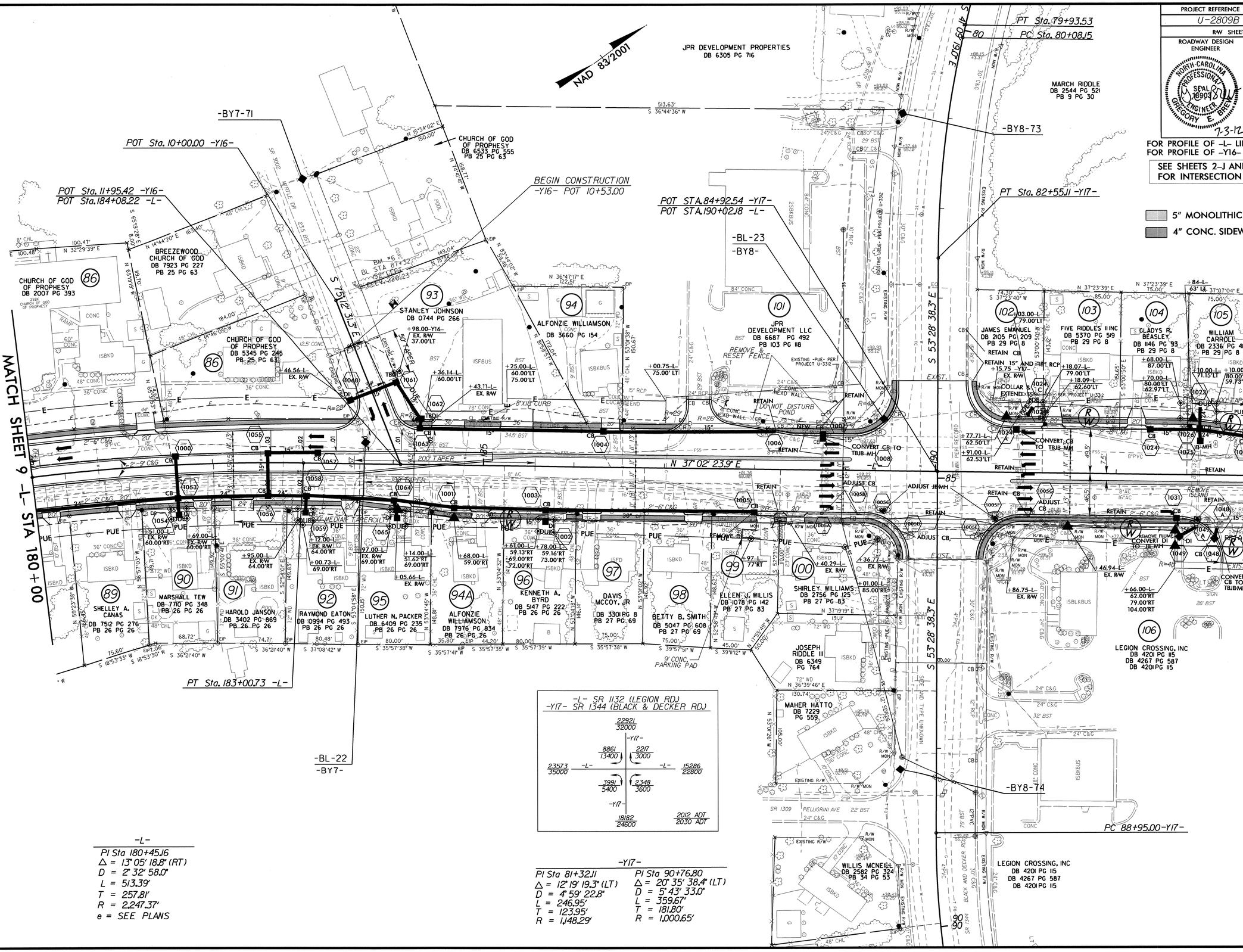

-L-

PI Sta 180+45.16
Δ = 13° 05' 18.8" (RT)
D = 2° 32' 58.0"
L = 513.39'
T = 257.81'
R = 2,247.37'
e = SEE PLANS

-Y17-

PI Sta 81+32.11
Δ = 12° 19' 19.3" (LT)
D = 4° 59' 22.8"
L = 246.95'
T = 123.95'
R = 1,148.29'

PI Sta 90+76.80
Δ = 20° 35' 38.4" (LT)
D = 5° 43' 33.0"
L = 359.67'
T = 181.80'
R = 1,000.65'

REVISIONS

8/17/99

29-JUN-2012 10:37
R:\Hydraulics\Brandon\u2809b_r_dg_psh10.dgn
$$$$USERNAME$$$$

PROJECT REFERENCE NO.	SHEET NO.
U-2809B	11
R/W SHEET NO.	
ROADWAY DESIGN ENGINEER	HYDRAULICS ENGINEER

NORTH CAROLINA PROFESSIONAL SEAL 18903 ENGINEER GREGORY E. BREW 7-3-12

NORTH CAROLINA PROFESSIONAL SEAL 12786 ENGINEER STEVEN M. BONDOR 7-6-12

FOR PROFILE OF -L- LINE SEE SHEET 20

SEE SHEETS 2-K & 2-L FOR INTERSECTION AND CHANNELIZATION DETAILS

5" MONOLITHIC CONC. ISLAND

4" CONC. SIDEWALK

* SPECIAL CURB RAMP SEE SHEET 2-DD THRU 2-FF

-L-
PI Sta 202+70.00
Δ = 3° 55' 04.9" (LT)
D = 0° 25' 24.1"
L = 925.45'
T = 462.91'
R = 13,533.44'
e = SEE PLANS

NAD 83/2001

MATCH SHEET 10 -L- STA 193+50

MATCH SHEET 12 -L- STA 207+00

-BL-24

-BL-25

107 ETHEL MORGAN PB 29 PG 8 DB 7230 PG 555

108 WILLIE ROUSE DB 1180 PG 377 PB 29 PG 8

108Z

109 DOUGLAS NEW DB 7198 PG 633 PB 29 PG 8

110 MARCH RIDDLE DB 2544 PG 521 PB 9 PG 30

111 CUMBERLAND COUNTY BOARD OF EDUCATION DB 2689 PG 419

113 FAITH WESLEYAN CHURCH DB 2471 PG 577 DB 3304 PG 351

106 LEGION CROSSING, INC DB 4201 PG 115 DB 4267 PG 587 DB 4201 PG 115

112 JOSEPH RIDDLE III DB 6781 PG 110 PB9 PG 30

112 J.P. RIDDLE DB 2544 PG 521

JOSEPH RIDDLE III DB 6781 PG 110 PB 9 PG 30

3' MEDIAN SHIFT

RETAIN EXIST. SIDEWALK

REMOVE EXIST. SIDEWALK

200' TAPER

100' TAPER

125' TAPER

100' TAPER/TRANSITION

CONVERT CB TO JB/MH

RETAIN JB

CONVERT TO JB/MH

RETAIN 24"RCP

CONVERT CB TO JB-MH

REMOVE EXIST CB & PLUG 15" PIPE

CONVERT JB TO CB

REMOVE JB/MH INSTALL CB, SPECIAL DETAIL EXTEND CB FROM GUTTER TO EXISTING 42" RCP

RETAIN EXIST. MH/JB

DON'T DISTURB SIGN

PC Sta. 198+07.10 -L-

REMOVE

N 37°02' 23.9" E

N 36°45'21" E 305.48'

S 36°45'55" W 163.00'

REVISIONS

8/17/99

29-JUN-2012 10:38
r:\roadway\proj\u2809b_rdy_pshi1.dgn

PROJECT REFERENCE NO.	SHEET NO.
U-2809B	12
R/W SHEET NO.	
ROADWAY DESIGN ENGINEER	HYDRAULICS ENGINEER

NORTH CAROLINA PROFESSIONAL SEAL 18903 ENGINEER GREGORY E. BRECKENRIDGE 7-3-12

NORTH CAROLINA PROFESSIONAL SEAL 12786 ENGINEER STEVEN M. BONDOR 7-6-12

FOR PROFILE OF -L- LINE SEE SHEETS 20 & 21

SEE SHEET 2-L FOR CHANNELIZATION DETAIL

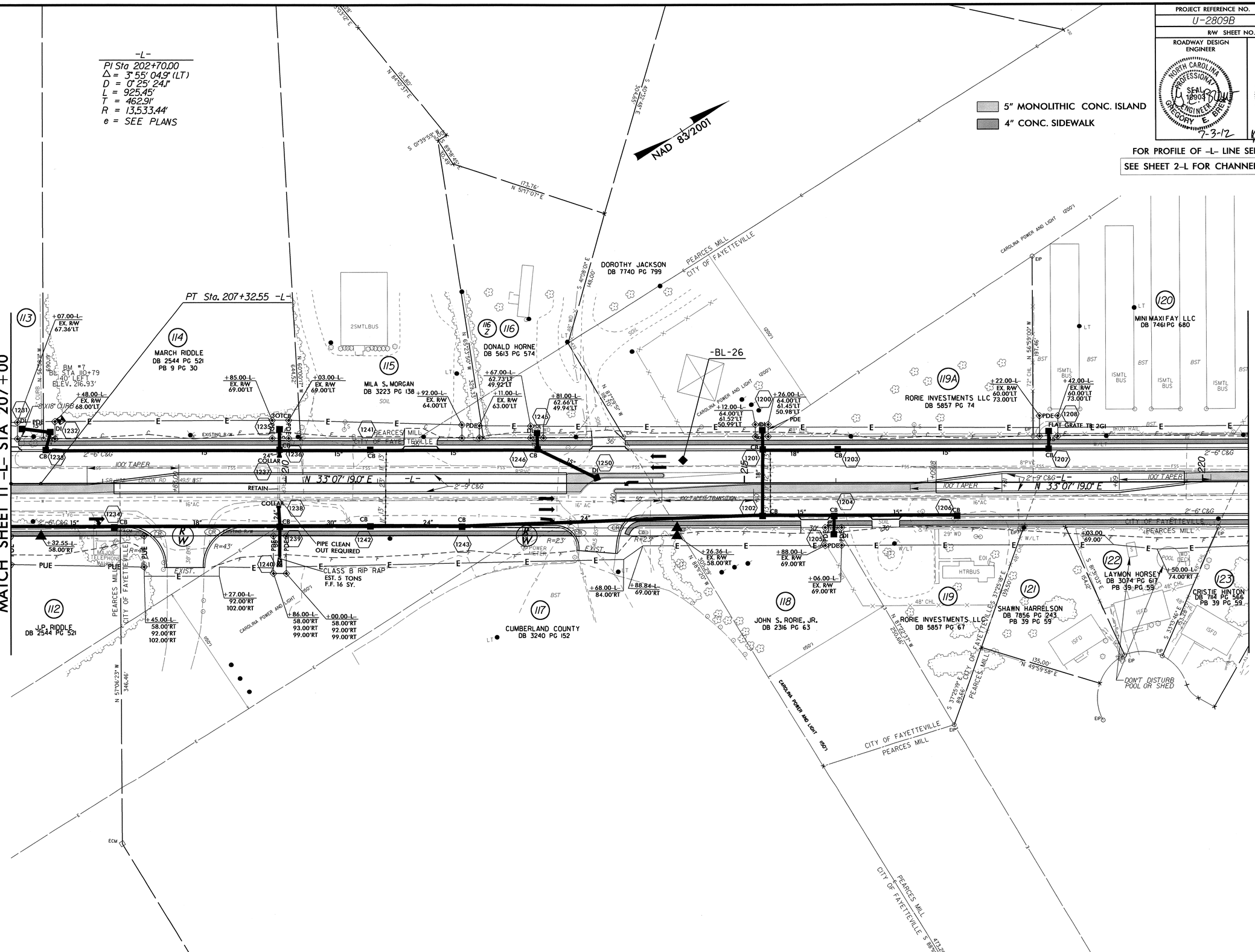

REVISIONS

8/17/99

27-JUN-2012 14:13
R:\Roadway\Proj\u2809b_rdy_psh12.dgn
$$$$USERNAME$$$$

PROJECT REFERENCE NO.	SHEET NO.
U-2809B	13
R/W SHEET NO.	
ROADWAY DESIGN ENGINEER	HYDRAULICS ENGINEER

NORTH CAROLINA PROFESSIONAL SEAL 16903 ENGINEER GREGORY E. BREWER 7-3-12

NORTH CAROLINA PROFESSIONAL SEAL 12786 ENGINEER STEVEN M. BUNDER 7-6-12

FOR PROFILE OF -L- LINE SEE SHEET 21
FOR PROFILE OF -Y18- LINE SEE SHEET 25

SEE SHEET 2-L FOR INTERSECTION DETAIL

5" MONOLITHIC CONC. ISLAND
4" CONC. SIDEWALK

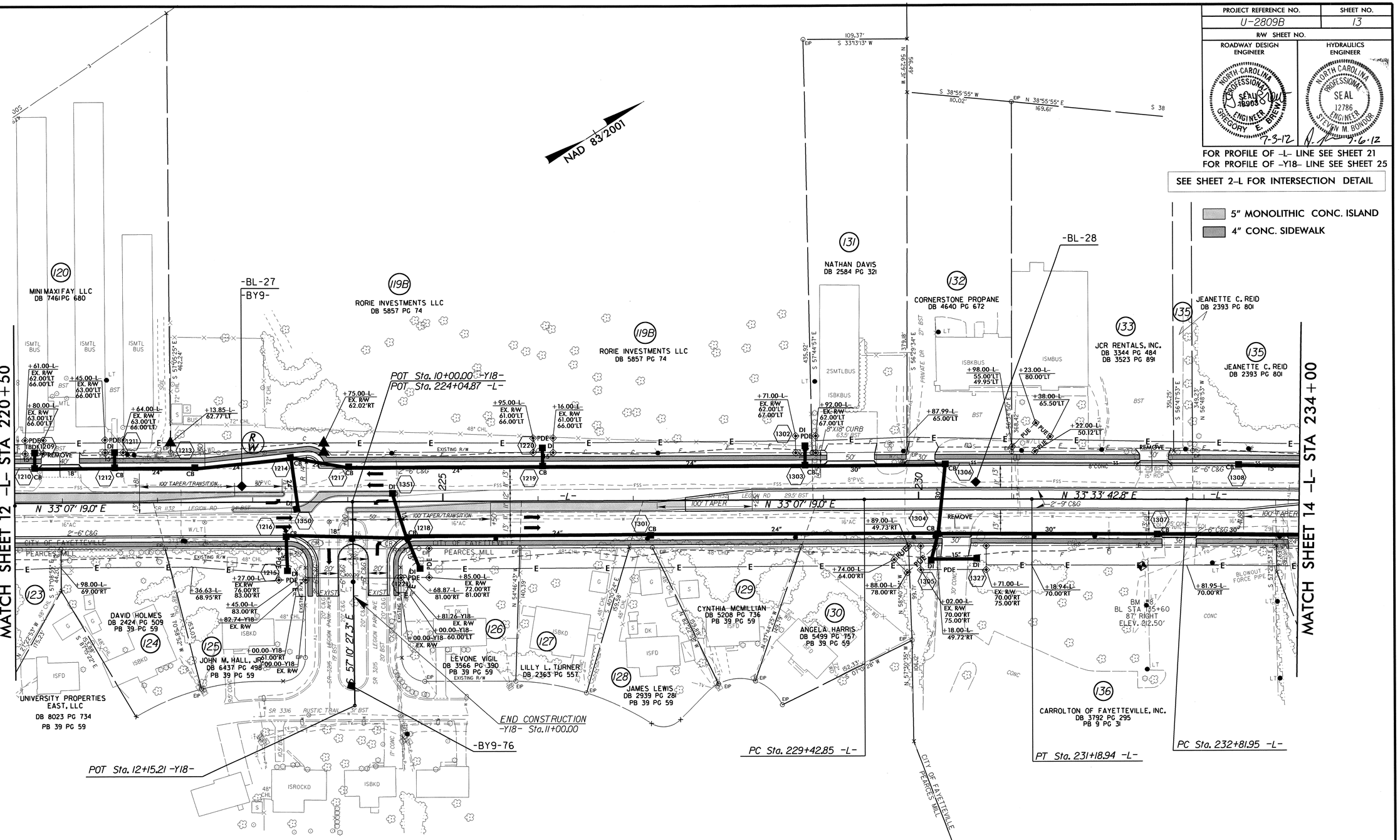

-L-	
PI Sta 230+30.90	PI Sta 234+29.16
Δ = 0° 26' 23.9" (RT)	Δ = 1° 28' 08.3" (RT)
D = 0° 14' 59.4"	D = 0° 29' 56.3"
L = 176.10'	L = 294.40'
T = 88.05'	T = 147.21'
R = 22,933.03'	R = 11,482.92'
e = SEE PLANS	e = SEE PLANS

REVISIONS

8/17/99

29-JUN-2012 11:16
R:\Roadway\Proj\u2809b_rdy_psh13.dgn
$$$$USER$$$$

PROJECT REFERENCE NO.	SHEET NO.
U-2809B	14
RW SHEET NO.	
ROADWAY DESIGN ENGINEER	HYDRAULICS ENGINEER

NORTH CAROLINA PROFESSIONAL SEAL 16903 ENGINEER GREGORY E. BREWER 3-12

NORTH CAROLINA PROFESSIONAL SEAL 12786 ENGINEER STEVEN M. BONDER 3-6-12

SEE SHEET 2-M FOR INTERSECTION DETAILS

5" MONOLITHIC CONC. ISLAND

4" CONC. SIDEWALK

FOR PROFILE OF -L- LINE SEE SHEET 21 & 22
FOR PROFILE OF -Y19- LINE SEE SHEET 25
FOR PROFILE OF -Y21- LINE SEE SHEET 25
FOR PROFILE OF -Y22- LINE SEE SHEET 25

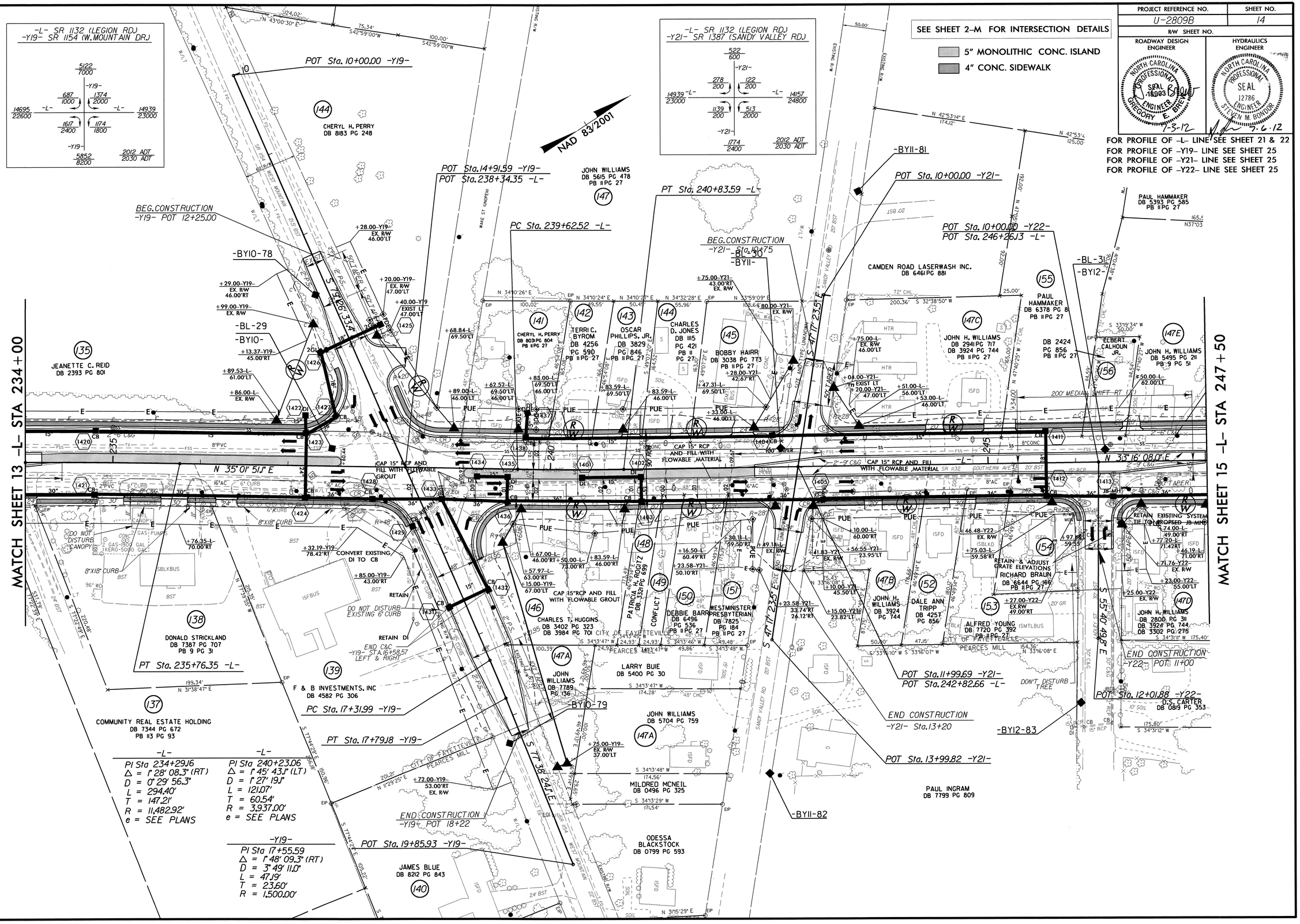

REVISIONS

8/17/99

29-JUN-2012 10:38
R:\Roadway\Proj\u2809b_rdy_psh14.dgn
$$$$USERNAME$$$$

PROJECT REFERENCE NO.	SHEET NO.
U-2809B	15
R/W SHEET NO.	
ROADWAY DESIGN ENGINEER	HYDRAULICS ENGINEER

NORTH CAROLINA PROFESSIONAL SEAL 16903 ENGINEER GREGORY E. BREWER 7-3-12

NORTH CAROLINA PROFESSIONAL SEAL 12786 ENGINEER STEVEN M. BONDOR 7-6-12

SEE SHEET 2-N FOR INTERSECTION DETAIL

* SPECIAL CURB RAMP SEE SHEET 2-DD THRU 2-FF

FOR PROFILE OF -L- LINE SEE SHEET 22
FOR PROFILE OF -Y23- LINE SEE SHEET 26

5" MONOLITHIC CONC. ISLAND

4" CONC. SIDEWALK

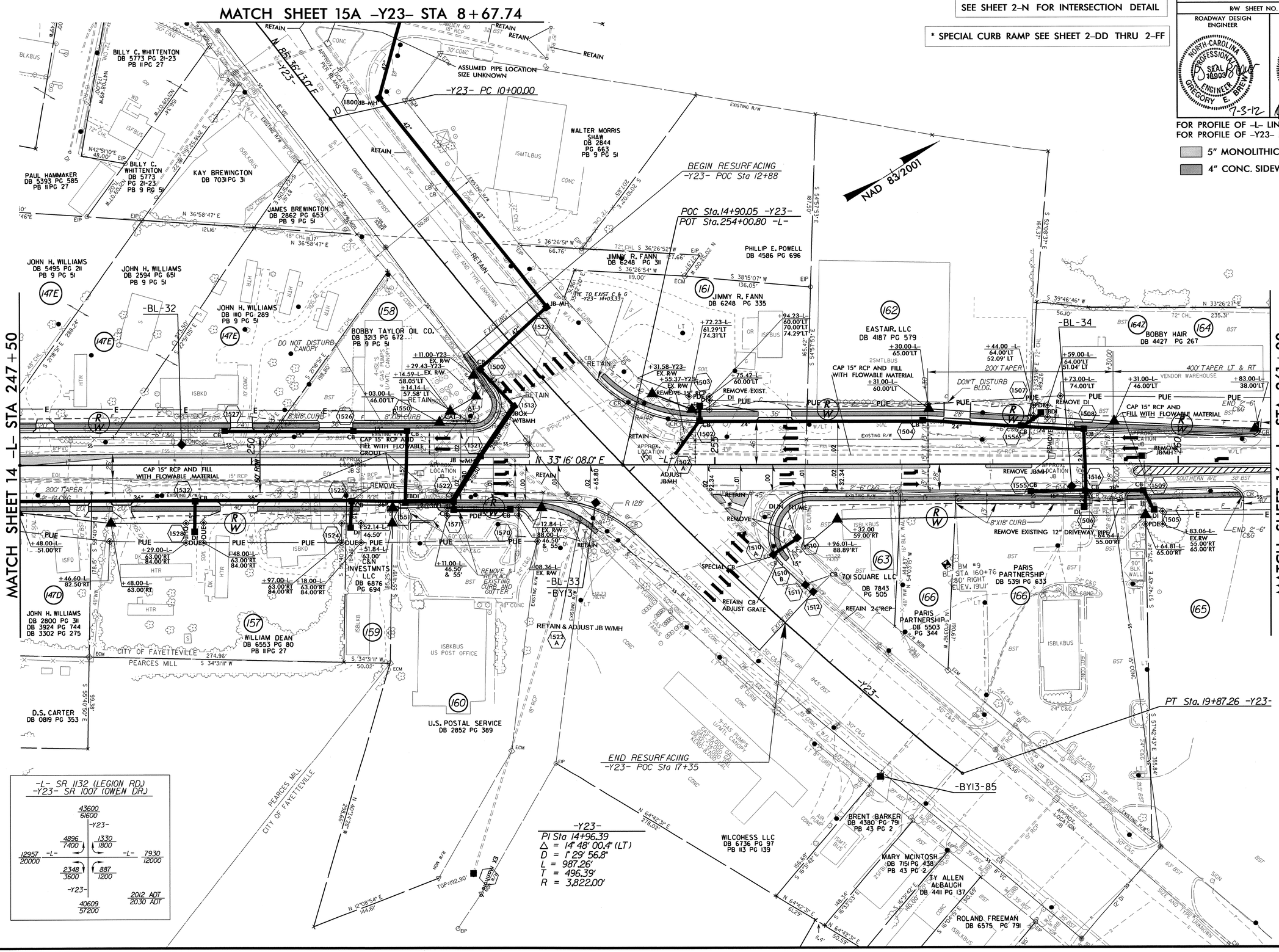

REVISIONS

8/17/99

29-JUN-2012 10:38
H:\Roadway\U2809b_rdy_psh15.dgn
H:\SUP\MUNNIS\U2809B

PROJECT REFERENCE NO.	SHEET NO.
U-2809B	15A
R/W SHEET NO.	
ROADWAY DESIGN ENGINEER	HYDRAULICS ENGINEER

NORTH CAROLINA PROFESSIONAL SEAL 18903 ENGINEER GREGORY E. BREWER 9-3-12

NORTH CAROLINA PROFESSIONAL SEAL 12786 ENGINEER STEVEN M. BONDOR 9-6-12

REVISIONS

8/17/99

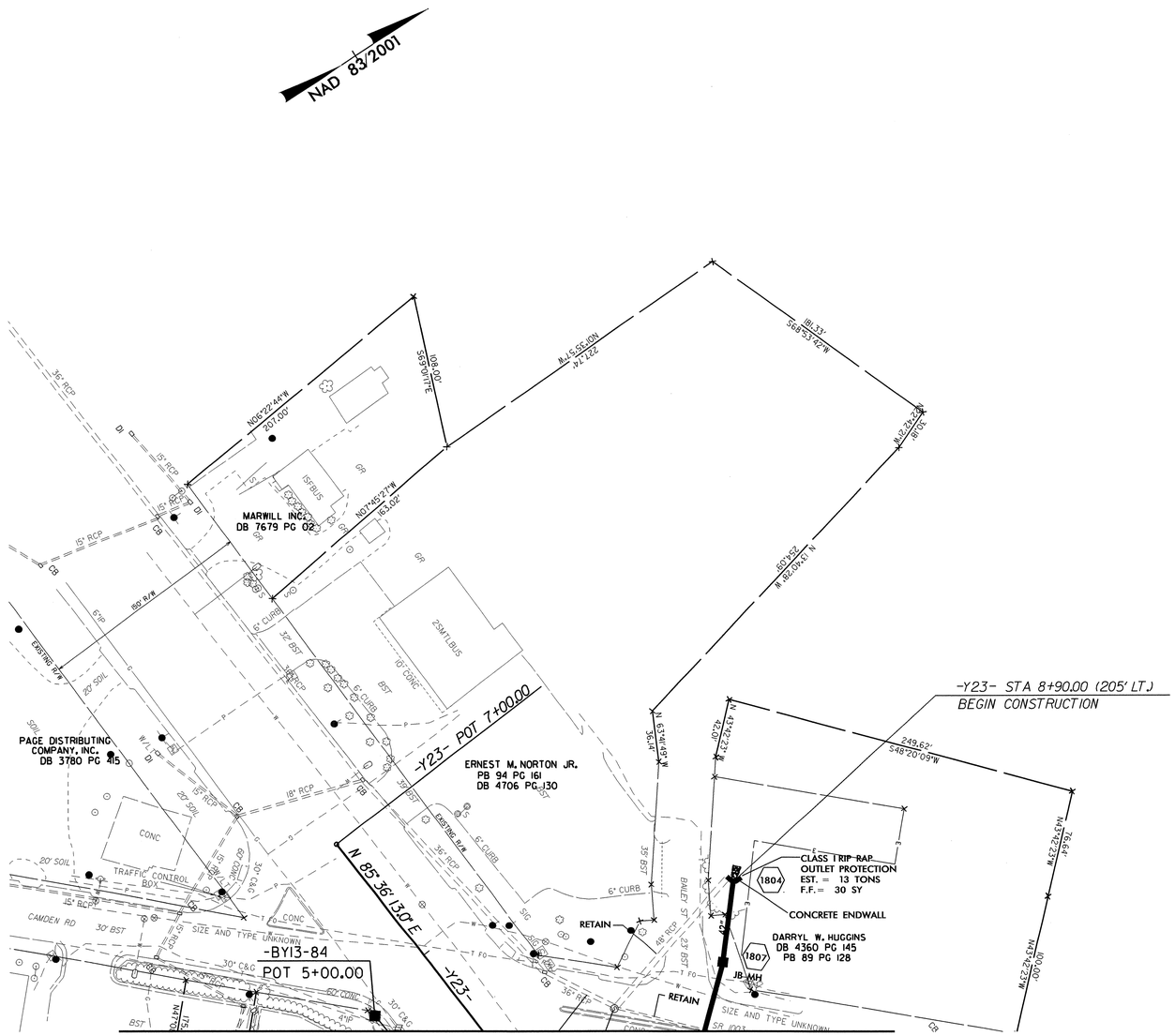

27-JUN-2012 14:12
R:\Roadway\Proj\u2809b_rdy_psh15A.dgn
$$$$USERNAME$$$$

PROJECT REFERENCE NO.	SHEET NO.
U-2809B	16
R/W SHEET NO.	
ROADWAY DESIGN ENGINEER	HYDRAULICS ENGINEER

NORTH CAROLINA PROFESSIONAL SEAL 18903 ENGINEER GREGORY E. BREWER 7-3-12

NORTH CAROLINA PROFESSIONAL SEAL 12786 ENGINEER STEVEN M. BONDUR 7-6-12

FOR PROFILE OF -L- LINE SEE SHEET 22

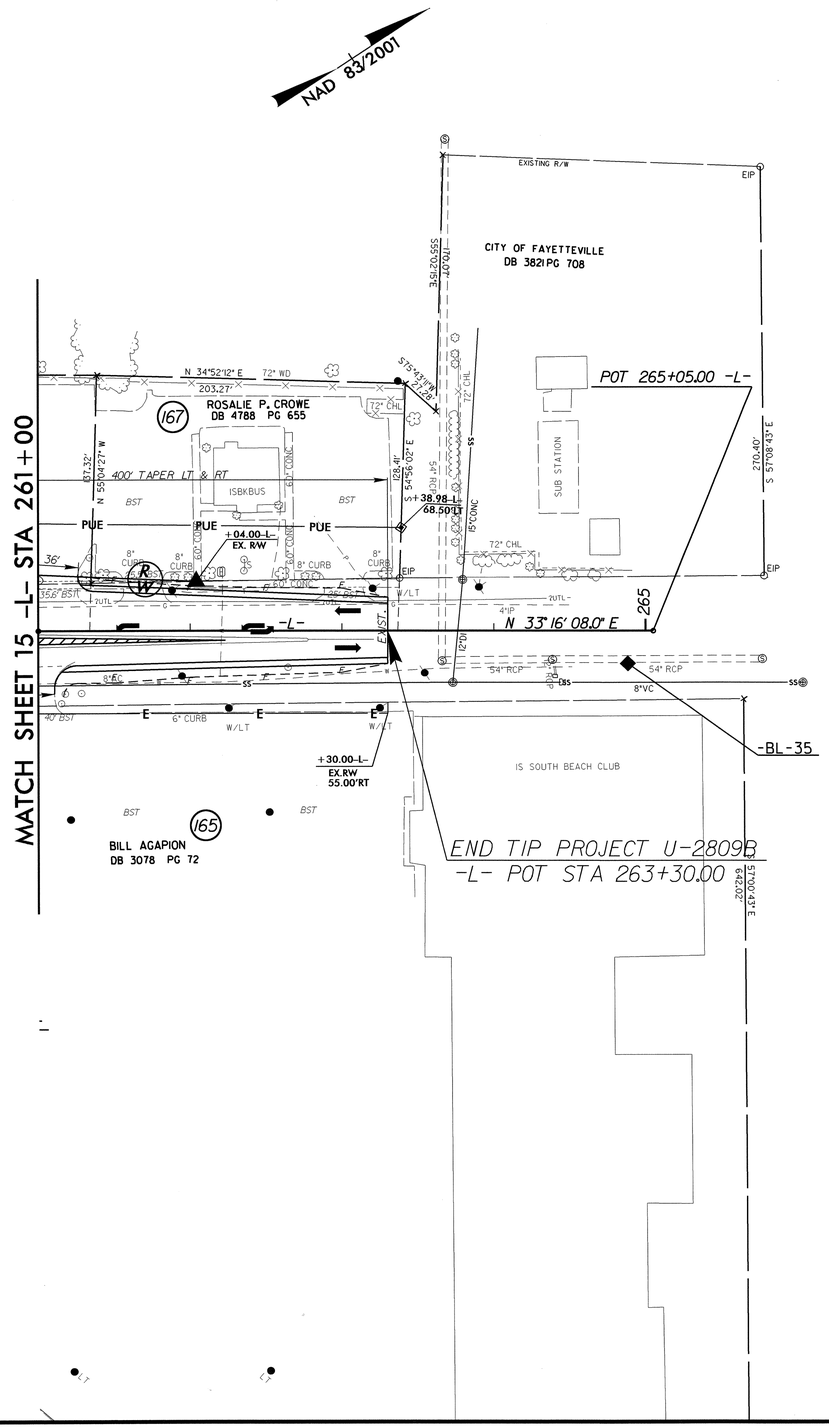

REVISIONS

8/17/99

27-JUN-2012 14:12
R:\Roadway\Proj\u2809b_rdy_psh16.dgn
$$$$USERNAME$$$$

PROJECT REFERENCE NO.	SHEET NO.
U-2809B	17

ROADWAY DESIGN ENGINEER

NORTH CAROLINA PROFESSIONAL SEAL 18903 ENGINEER GREGORY E. BREWER

7-3-12

HYDRAULICS ENGINEER

NORTH CAROLINA PROFESSIONAL SEAL 12786 ENGINEER STEVEN M. BONDOR

7-6-12

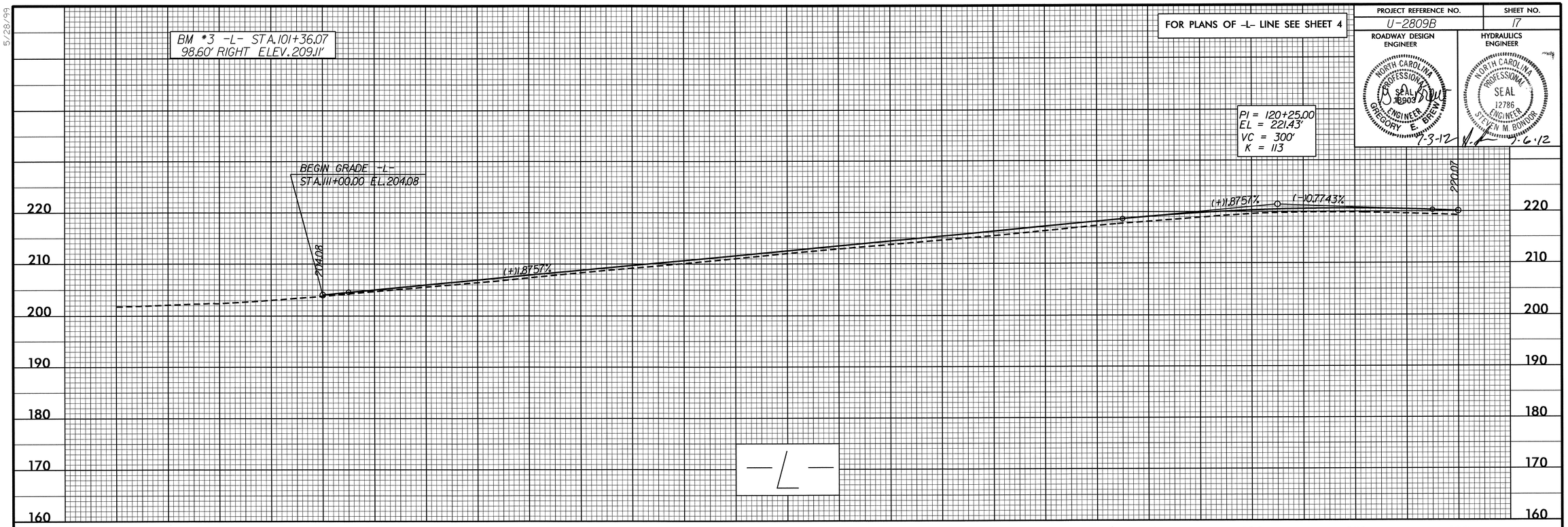

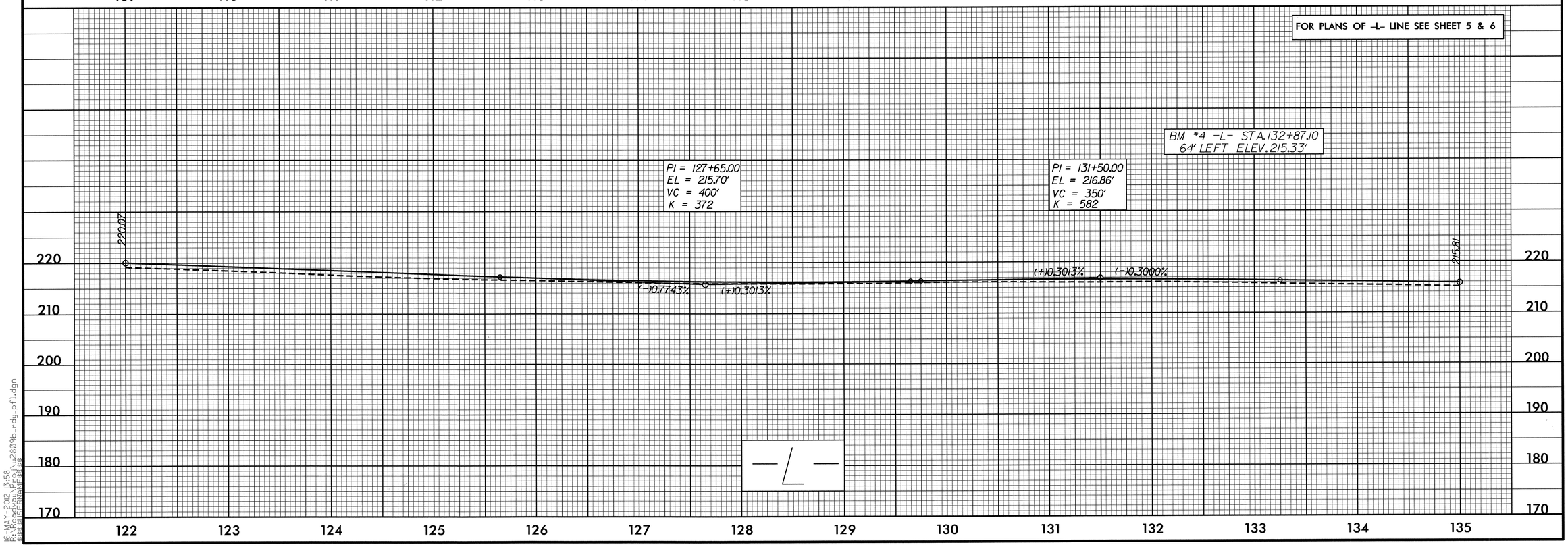

5/28/99

15-MAY-2012 13:58
R:\Roadway\Proj\u2809b_rdy_pfl.dgn
$$$$USERNAME$$$$

PROJECT REFERENCE NO.	SHEET NO.
U-2809B	18

ROADWAY DESIGN ENGINEER

NORTH CAROLINA PROFESSIONAL SEAL 18903 ENGINEER GREGORY E. BREWER

7-3-12

HYDRAULICS ENGINEER

NORTH CAROLINA PROFESSIONAL SEAL 12786 ENGINEER STEVEN M. BONDOR

7-6-12

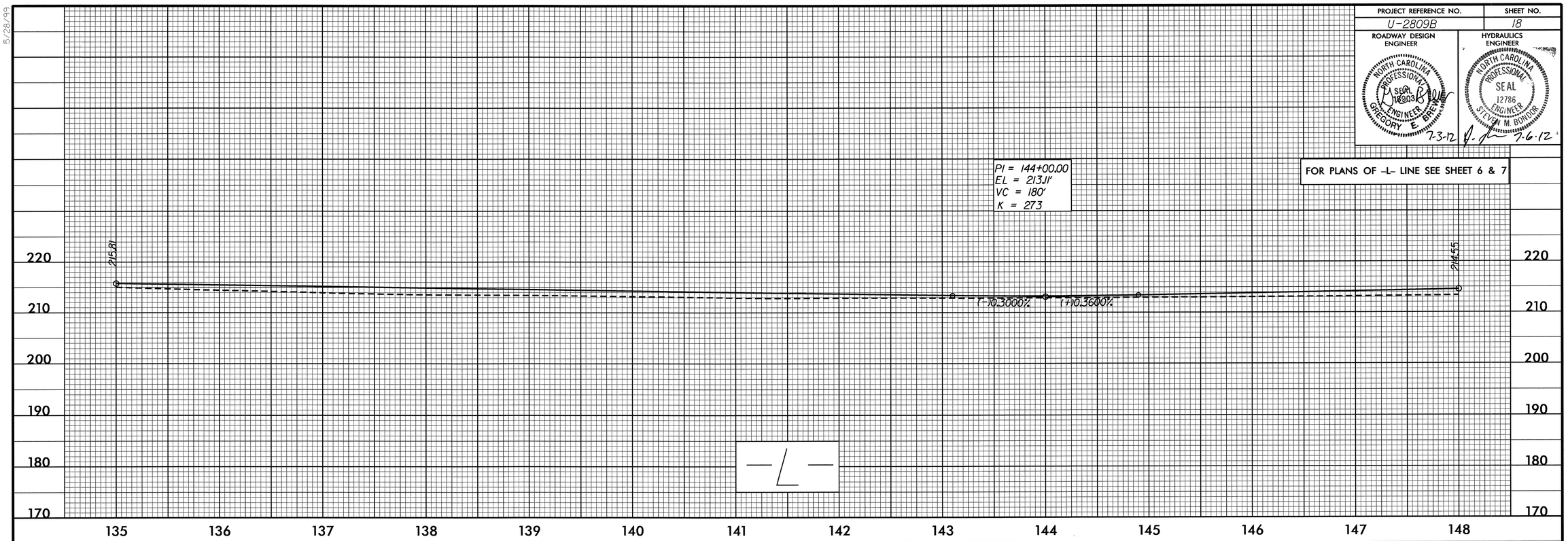

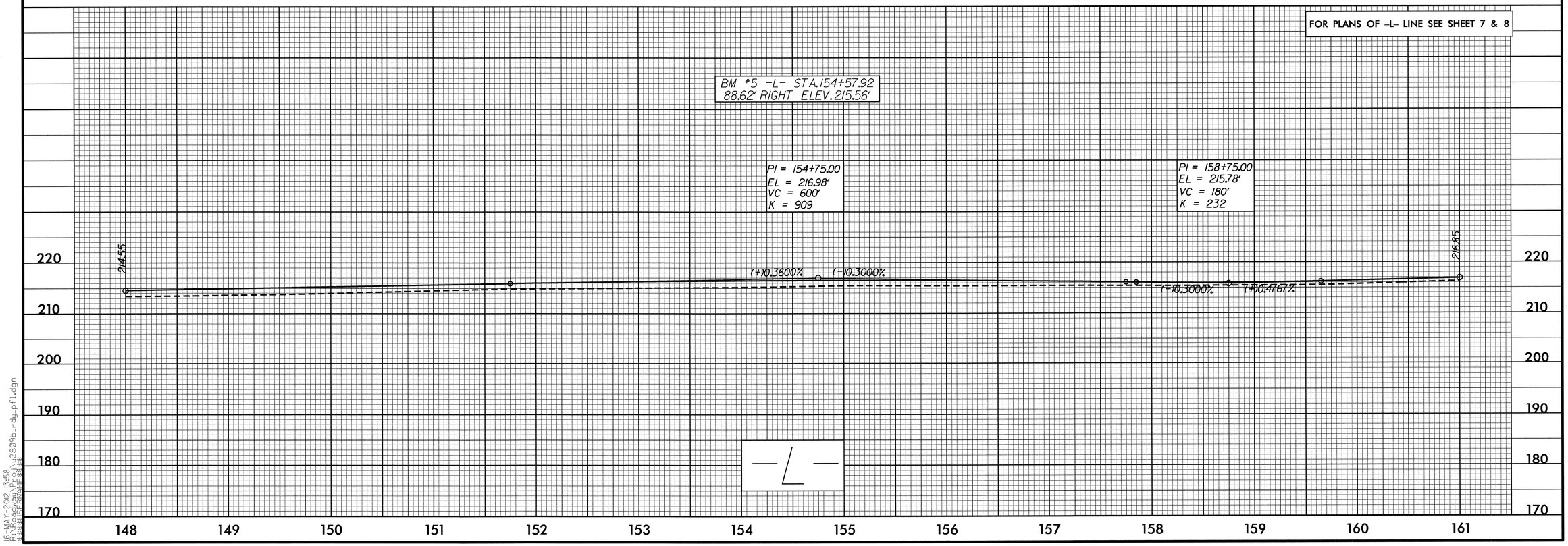

5/28/99

16-MAY-2012 13:58
R:\Roadway\Proj\u2809b_rdy_pfl.dgn
$$$$USER NAME$$$$

PROJECT REFERENCE NO.	SHEET NO.
U-2809B	19

ROADWAY DESIGN ENGINEER

NORTH CAROLINA PROFESSIONAL SEAL 18903 ENGINEER GREGORY E. BREWER 7-3-12

HYDRAULICS ENGINEER

NORTH CAROLINA PROFESSIONAL SEAL 12786 ENGINEER STEVEN M. BONDOR 7-3-12

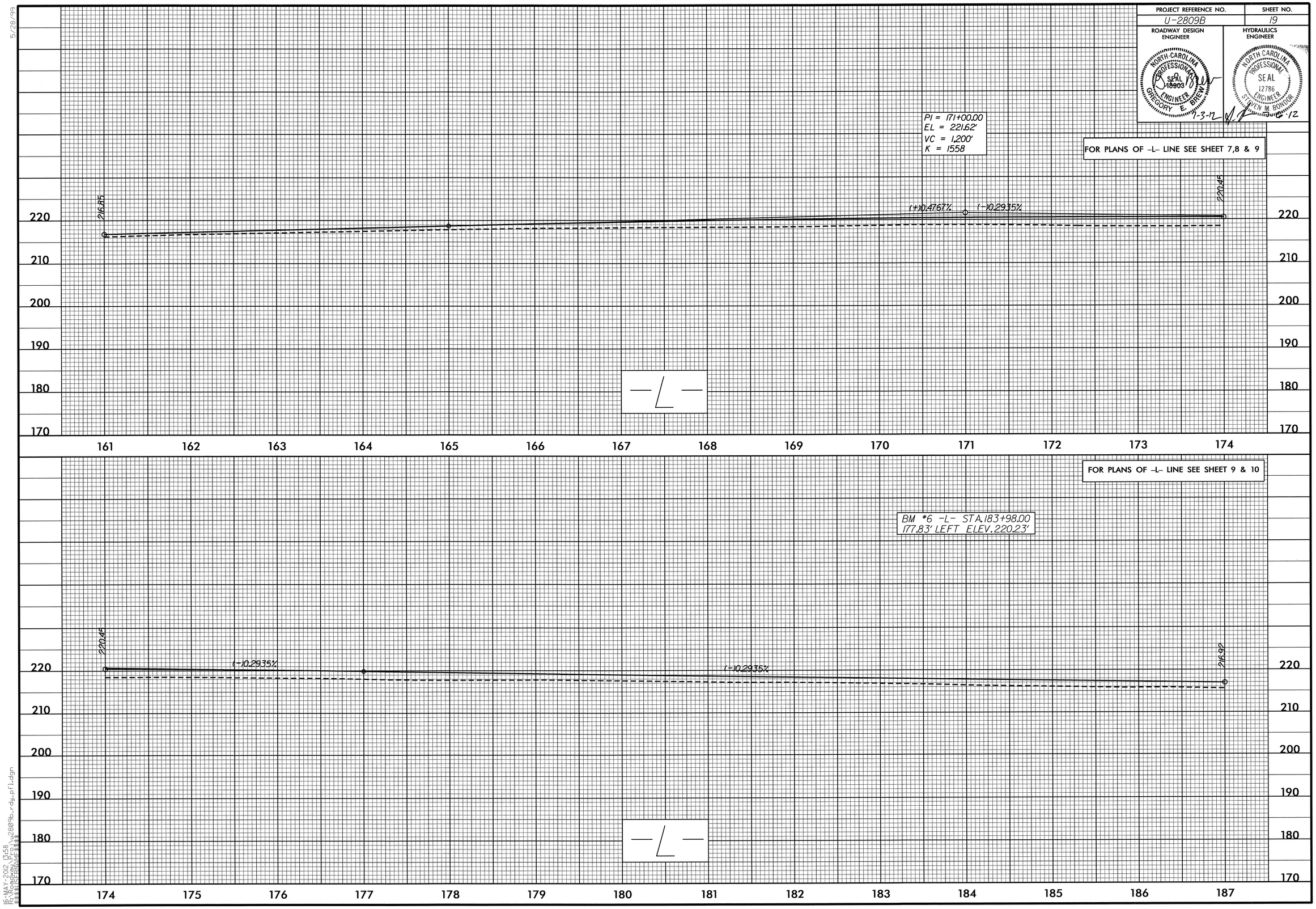

5/28/99

16-MAY-2012 13:58
R:\Roadway\Proj\u2809b_rdy_pfl.dgn
$$$$USERNAME$$$$

PROJECT REFERENCE NO.	SHEET NO.
U-2809B	20

ROADWAY DESIGN ENGINEER

NORTH CAROLINA PROFESSIONAL SEAL 13803 ENGINEER GREGORY E. BREW

7-3-12

HYDRAULICS ENGINEER

NORTH CAROLINA PROFESSIONAL SEAL 12786 ENGINEER STEVEN M. BONDUR

7-6-12

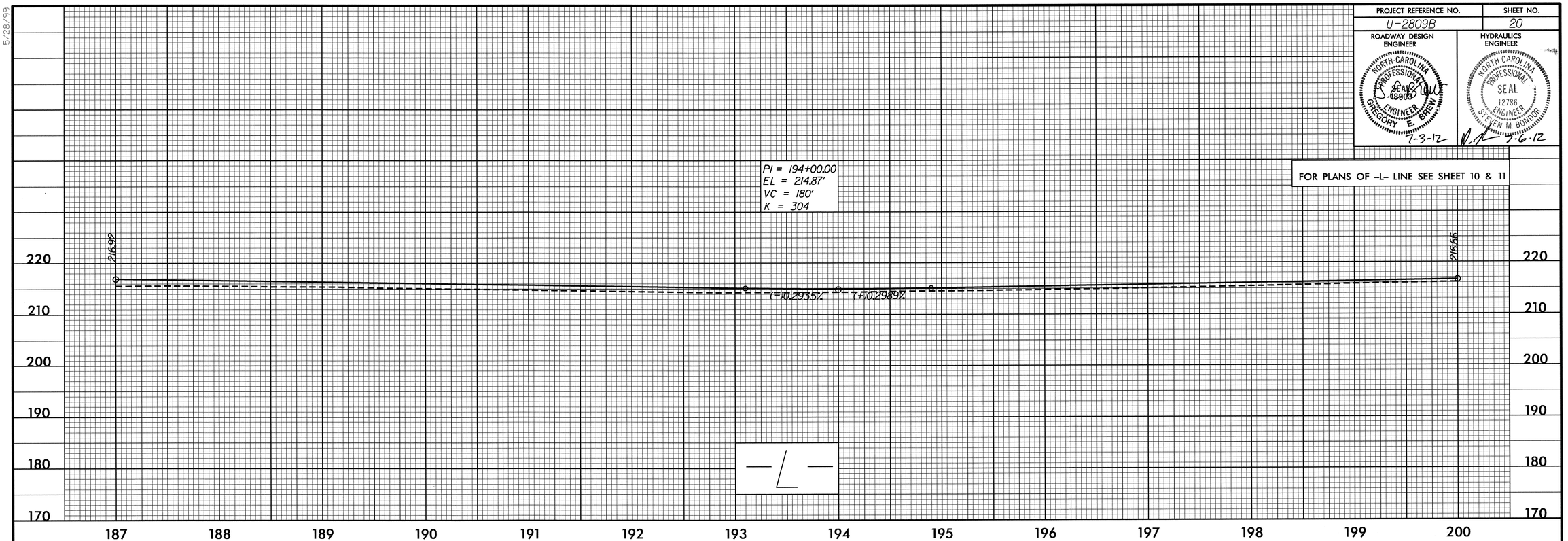

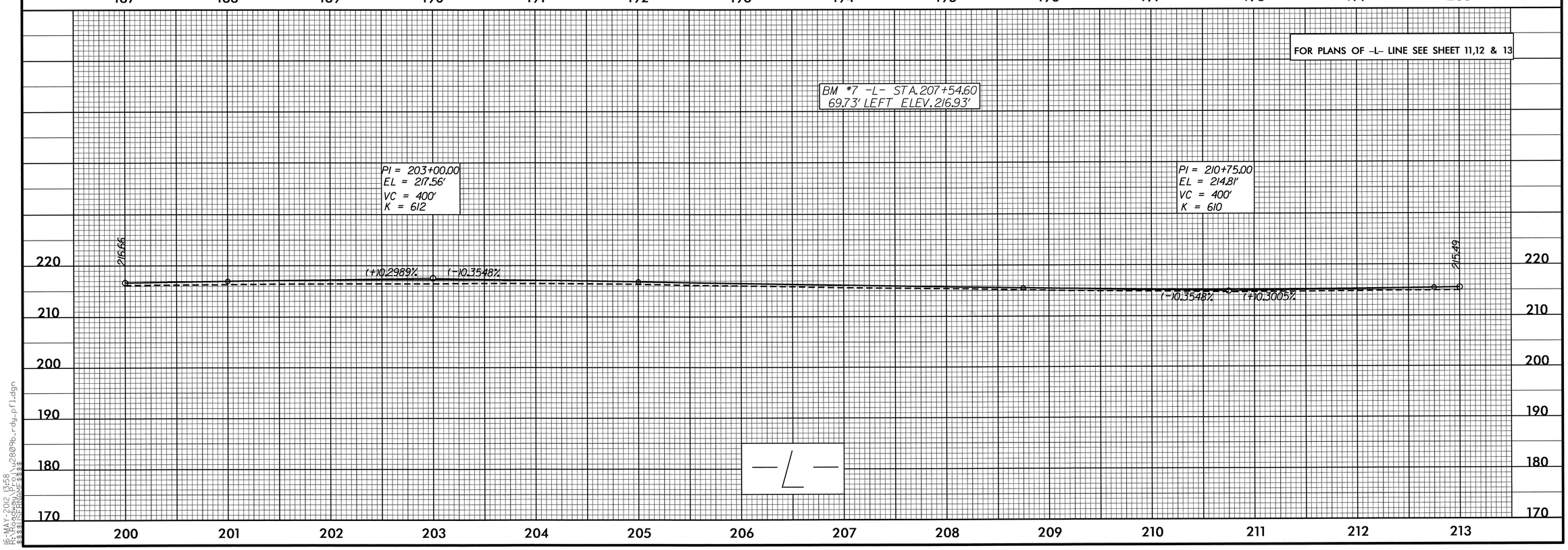

5/28/99

15-MAY-2012 13:58
R:\Roadway\Proj\u2809b_rdy_pfl.dgn
$$$$USERNAME$$$$

5/28/99

PROJECT REFERENCE NO.	SHEET NO.
U-2809B	21

ROADWAY DESIGN ENGINEER

NORTH CAROLINA PROFESSIONAL SEAL 18903 ENGINEER GREGORY E. BRENT

7-3-12

HYDRAULICS ENGINEER

NORTH CAROLINA PROFESSIONAL SEAL 12786 ENGINEER STEVEN M. BONDUR

7-6-12

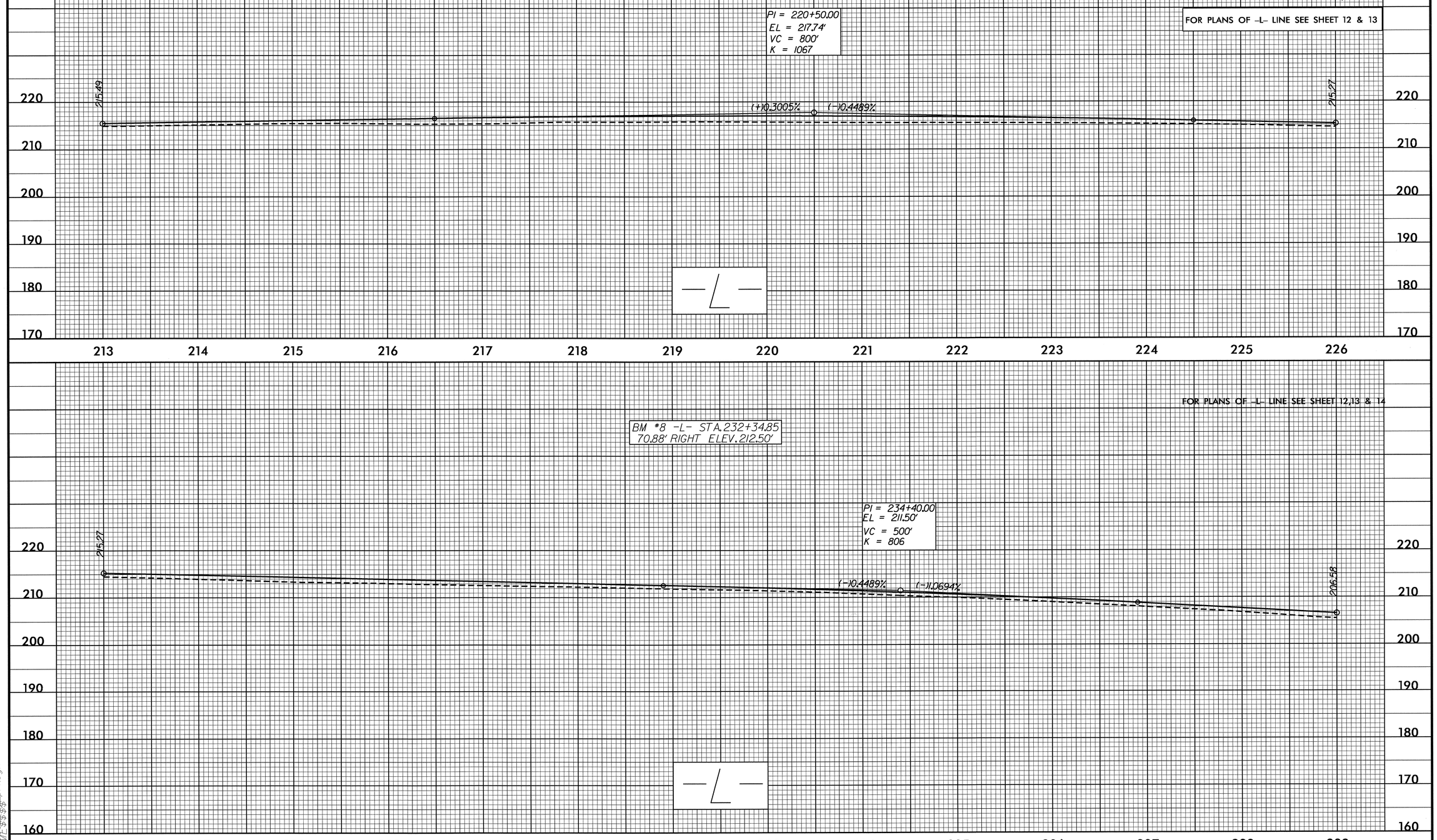

AX-2980 08:17
SERVICE$$$$_pf1.dgn

PROJECT REFERENCE NO.	SHEET NO.
U-2809B	22

ROADWAY DESIGN ENGINEER

NORTH CAROLINA PROFESSIONAL SEAL 18903 ENGINEER GREGORY E. BREWER

7-3-12

HYDRAULICS ENGINEER

NORTH CAROLINA PROFESSIONAL SEAL 12786 ENGINEER STEVEN M. BONDOR

7-6-12

FOR PLANS OF -L- LINE SEE SHEET 14 & 15

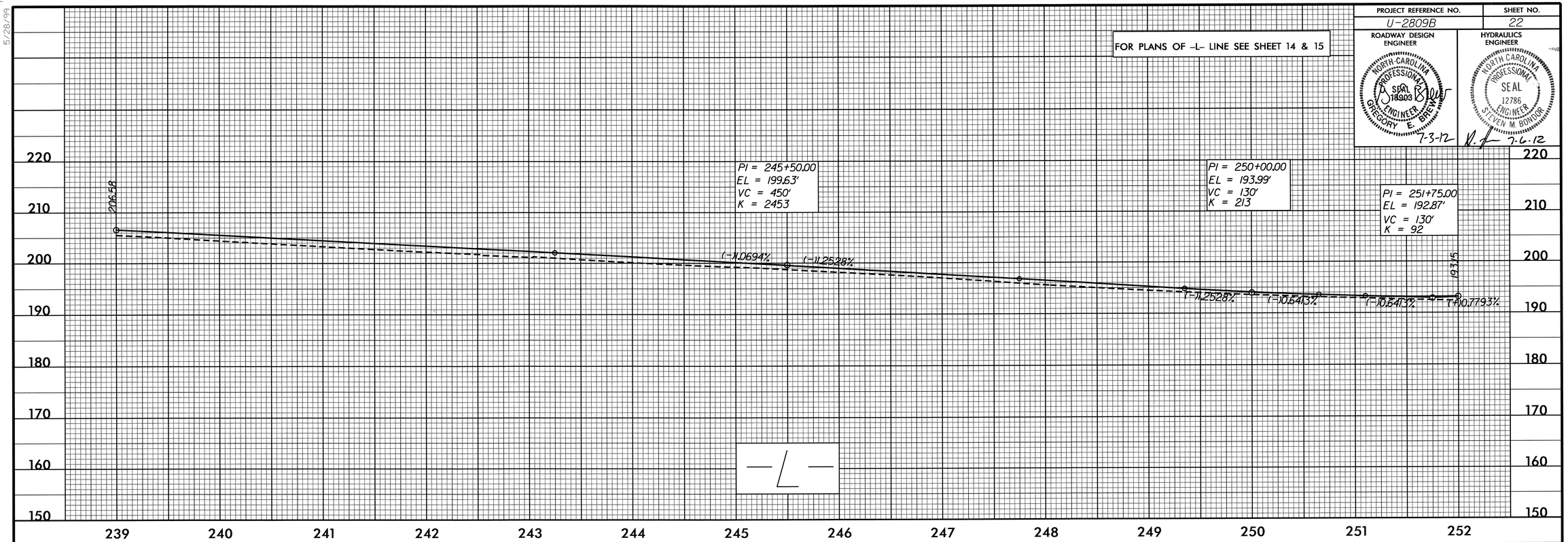

FOR PLANS OF -L- LINE SEE SHEET 14 & 15

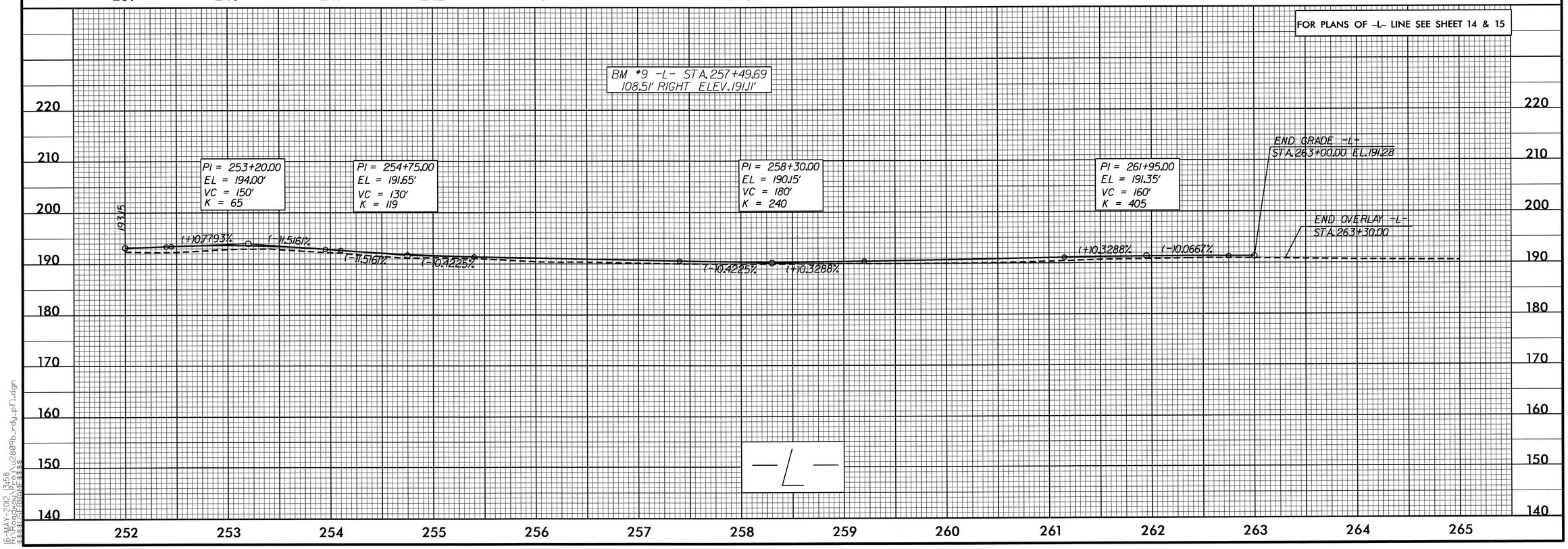

16-MAY-2012 13:58
R:\Roadway\Proj\u2809b_rdy_pfl.dgn
$$$$USERNAME$$$$

PROJECT REFERENCE NO.	SHEET NO.
U-2809B	23

ROADWAY DESIGN ENGINEER

NORTH CAROLINA PROFESSIONAL SEAL 18903 ENGINEER GREGORY E. BREWER
7-3-12

HYDRAULICS ENGINEER

NORTH CAROLINA PROFESSIONAL SEAL 12786 ENGINEER STEVEN M. BONDOR
7.2.12

FOR PLANS OF -Y10- LINE SEE SHEET 5

BM #4 -L- STA.132+87.10
64' LEFT ELEV.215.33'

PI = 10+65.00
EL = 222.06'
VC = 50'
K = 16

PI = 11+25.00
EL = 220.25'
VC = 50'
K = 21

(+)0.1840%
(-)3.0192%
(-)5.0192%
(-)0.8212%

BEGIN GRADE -Y10-
STA.10+35.76 EL.222.01

END GRADE -Y10-
STA.11+64.00 EL.220.01

-Y10-

FOR PLANS OF -Y11- LINE SEE SHEET 6

PI = 10+75.00
EL = 214.66'
VC = 75'
K = 104

(-)1.3463%
(-)0.6217%

BEGIN GRADE -Y11-
STA.10+36.14 EL.215.18

END GRADE -Y11-
STA.11+34.00 EL.214.29

-Y11-

FOR PLANS OF -Y12- LINE SEE SHEET 8

BM #5 -L- STA.154+57.92
88.62' RIGHT ELEV.215.56'

BEGIN GRADE -Y12-
STA.10+78.00 EL.214.55

PI = 11+25.00
EL = 214.90'
VC = 65'
K = 51

(+)0.7406%
(+)2.0108%

END GRADE -Y12-
STA.11+58.32 EL.215.57

-Y12-

FOR PLANS OF -Y12A- LINE SEE SHEET 7

BM #5 -L- STA.154+57.92
88.62' RIGHT ELEV.215.56'

PI = 16+50.00
EL = 213.00'
VC = 40'
K = 17

(+)0.6000%
(+)2.9199%

BEGIN GRADE -Y12A-
STA.16+30.00 EL.212.88

END GRADE -Y12A-
STA.16+85.96 EL.214.05

-Y12A-

5/28/99
JC-MAY-2012 13:58
R:\Hydraulics\Bridge\u2809b_rdp_pfl.dgn
$$$$USERNAME$$$$

PROJECT REFERENCE NO.	SHEET NO.
U-2809B	24

ROADWAY DESIGN ENGINEER

NORTH CAROLINA PROFESSIONAL SEAL 019007 ENGINEER GREGORY E. BRIEN

7-5-12

HYDRAULICS ENGINEER

NORTH CAROLINA PROFESSIONAL SEAL 12786 ENGINEER STEVEN M. BONDUR

7-6-12

FOR PLANS OF –Y13– LINE SEE SHEET 9

BM #5 –L– STA.154+57.92
88.62' RIGHT ELEV.215.56'

PI = 10+70.00
EL = 218.11'
VC = 60'
K = 34

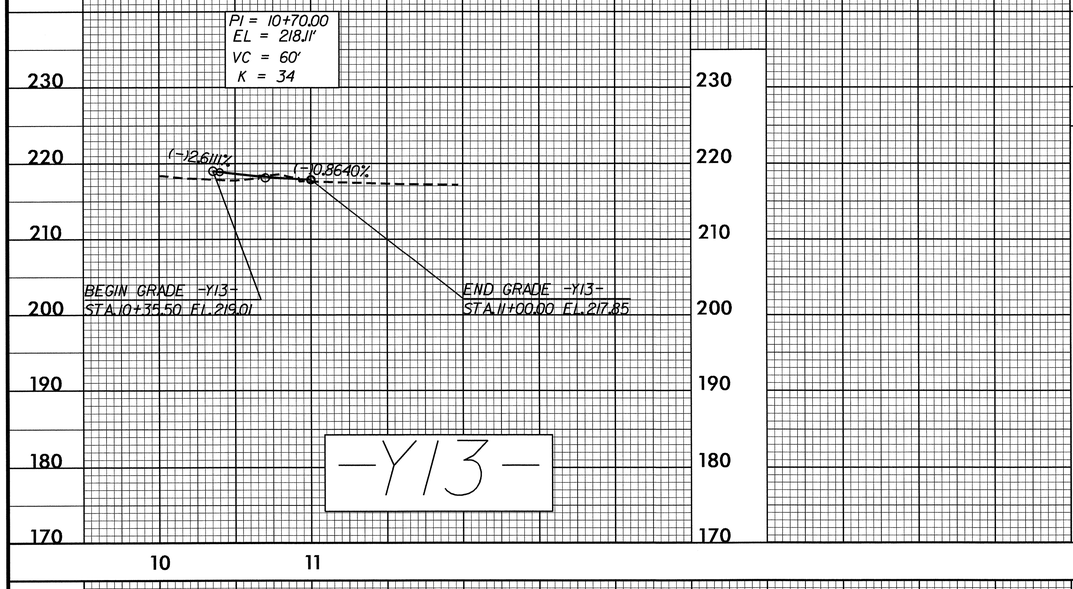

FOR PLANS OF –Y14– LINE SEE SHEET 9

BM #6 –L– STA.183+98.00
177.83' LEFT ELEV.220.23'

PI = 10+83.00
EL = 217.50'
VC = 80'
K = 18

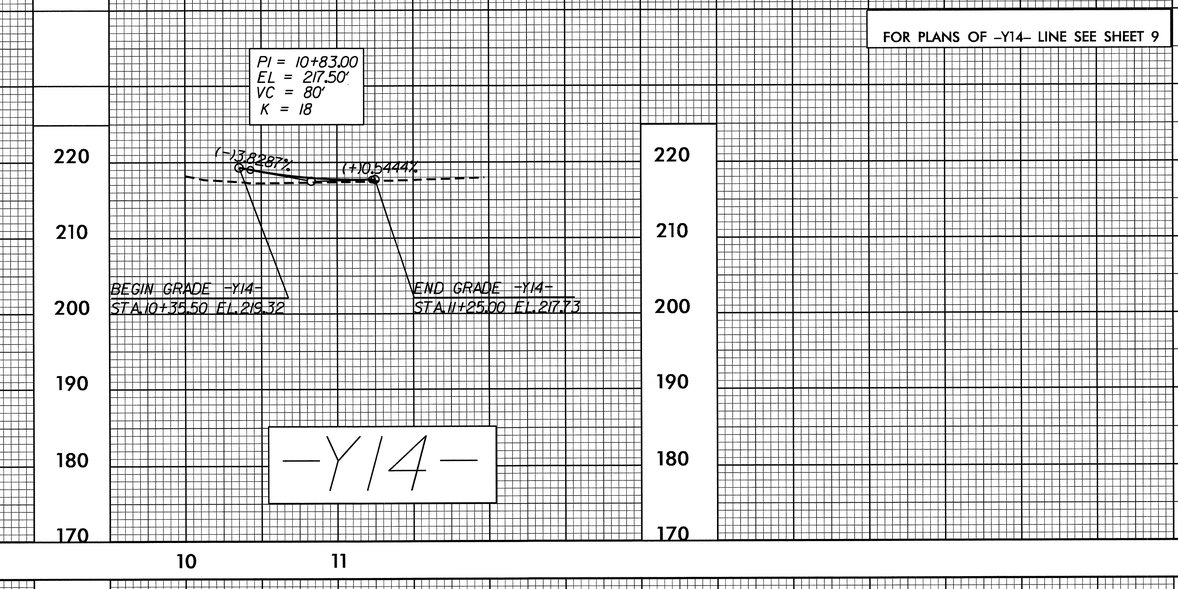

FOR PLANS OF –Y15– LINE SEE SHEET 9

BM #6 –L– STA.183+98.00
177.83' LEFT ELEV.220.23'

PI = 10+83.00
EL = 219.29'
VC = 50'
K = 29

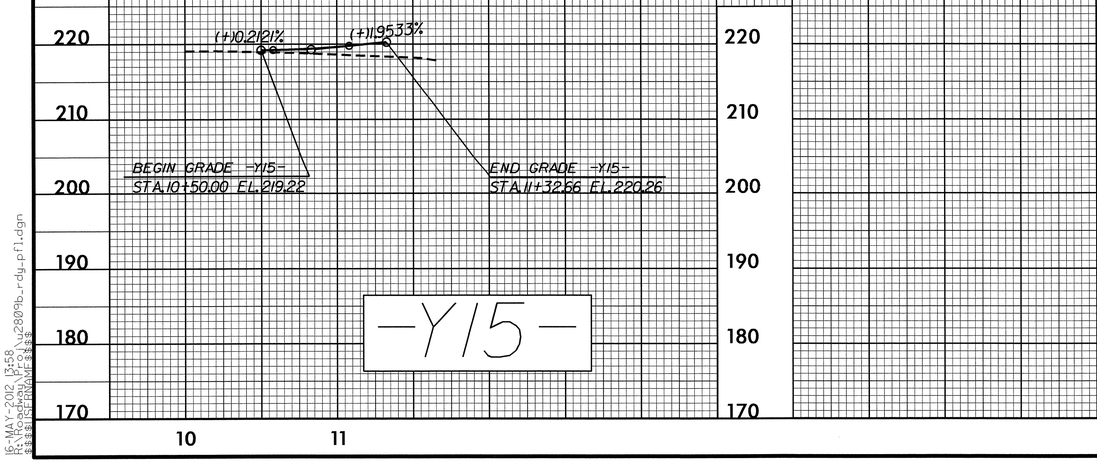

FOR PLANS OF –Y16– LINE SEE SHEET 10

BM #6 –L– STA.183+98.00
177.83' LEFT ELEV.220.23'

PI = 11+00.00
EL = 217.46'
VC = 75'
K = 78

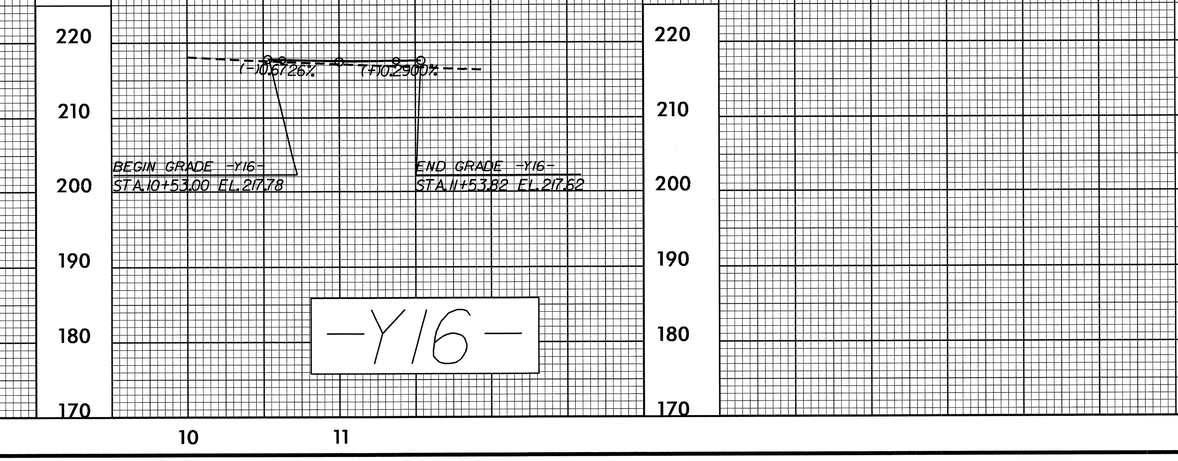

5/28/99

16-MAY-2012 13:58
R:\Roadway\Proj\u2809b_rdy_pfl.dgn
$$$$USERNAME$$$$

PROJECT REFERENCE NO.	SHEET NO.
U-2809B	25

ROADWAY DESIGN ENGINEER

NORTH CAROLINA PROFESSIONAL SEAL 18903 ENGINEER GREGORY E. BREE

7-3-12

HYDRAULICS ENGINEER

NORTH CAROLINA PROFESSIONAL SEAL 12786 ENGINEER STEVEN M. BONDOR

7-2-12

FOR PLANS OF –Y18– LINE SEE SHEET 13

BM #8 –L– STA. 232+34.85
70.88' RIGHT ELEV. 212.50'

PI = 10+70.00
EL = 214.60'
VC = 40'
K = 29

(–)2.4058%

(–)1.0000%

BEGIN GRADE –Y18–
STA. 10+35.50 EL. 215.43

END GRADE –Y18–
STA. 11+00.00 EL. 214.30

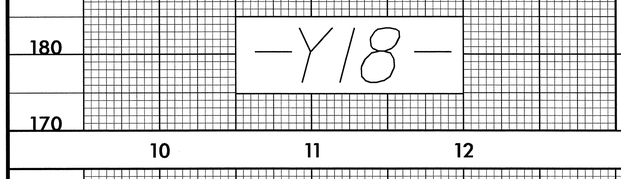

BM #8 –L– STA. 232+34.85
70.88' RIGHT ELEV. 212.50'

FOR PLANS OF –Y19– LINE SEE SHEET 14

BEGIN Y19LT GRADE
STA. 12+25.00 EL. 208.92

END Y19LT GRADE
STA. 14+52.59 EL. 206.75

BEGIN Y19RT GRADE
STA. 15+30.60 EL. 206.48

END Y19RT GRADE
STA. 18+22.00 EL. 206.84

PI = 13+50.00
EL = 207.10'
VC = 200'
K = 179

PI = 16+65.00
EL = 206.09'
VC = 75'
K = 104

PI = 17+90.00
EL = 206.63'
VC = 60'
K = 263

(–)7.4560%

(–)0.3412%

(–)0.2902%

(+)0.4316%

(+)0.6591%

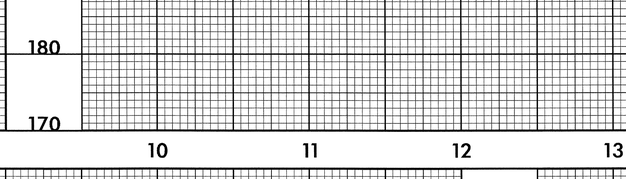

BM #8 –L– STA. 232+34.85
70.88' RIGHT ELEV. 212.50'

FOR PLANS OF –Y21– LINE SEE SHEET 14

END –Y21LT– GRADE
STA. 11+63.71 EL. 201.72

BEGIN –Y21RT– GRADE
STA. 12+35.68 EL. 201.84

END –Y21RT– GRADE
STA. 13+20 EL. 202.29

PI = 11+10.00
EL = 199.88'
VC = 60'
K = 43

PI = 12+82.95
EL = 202.18'
VC = 40'
K = 95

(+)2.0286%

(+)3.4256%

(+)0.7193%

(+)0.2969%

BEGIN GRADE –Y21LT–
STA. 10+75.00 EL. 199.17

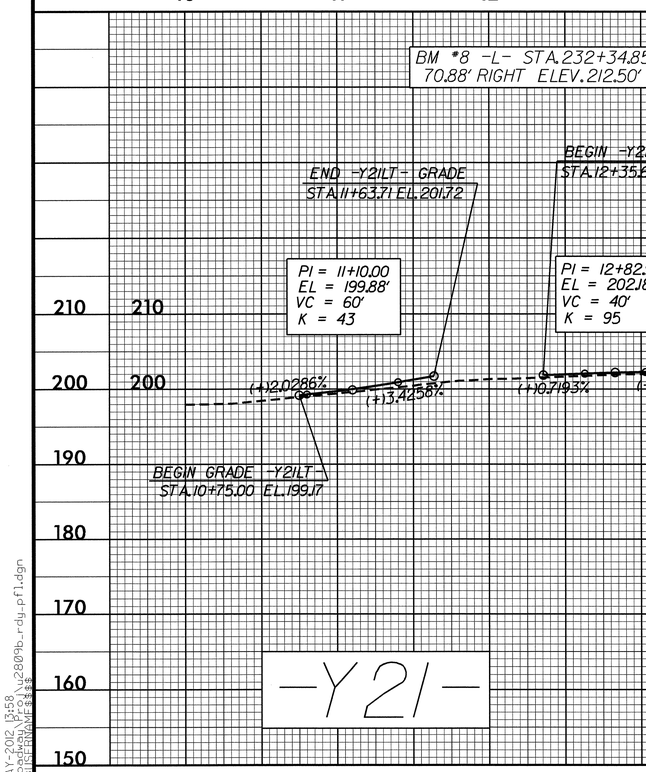

FOR PLANS OF –Y22– LINE SEE SHEET 14

END GRADE –Y22–
STA. 11+00.00 EL. 198.12

(+)0.3663%

BEGIN GRADE –Y22–
STA. 10+37.65 EL. 197.89

BM #9 –L– STA. 257+49.69
108.51' RIGHT ELEV. 191.11'

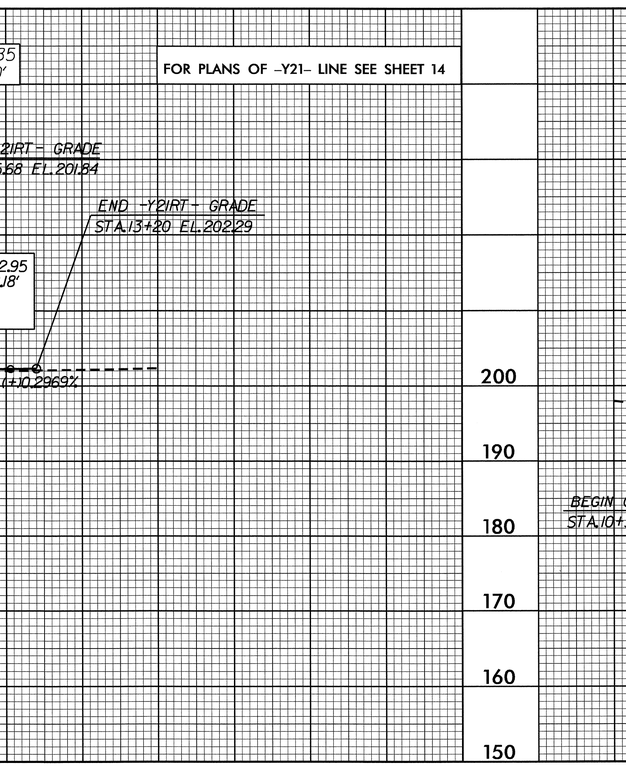

5/28/99

IC-MAY-2012 13:58
R:\Hydraulics\Bridge\U2809b_rdy_pfl.dgn
$$$$USERNAME$$$$

PROJECT REFERENCE NO.	SHEET NO.
U-2809B	26

ROADWAY DESIGN ENGINEER

NORTH CAROLINA PROFESSIONAL SEAL 18908 ENGINEER GREGORY E. BREWER

7-3-12

HYDRAULICS ENGINEER

NORTH CAROLINA PROFESSIONAL SEAL 12786 ENGINEER STEPHEN M. BONDUR

7-6-12

FOR PLANS OF -Y23- LINE SEE SHEET 15

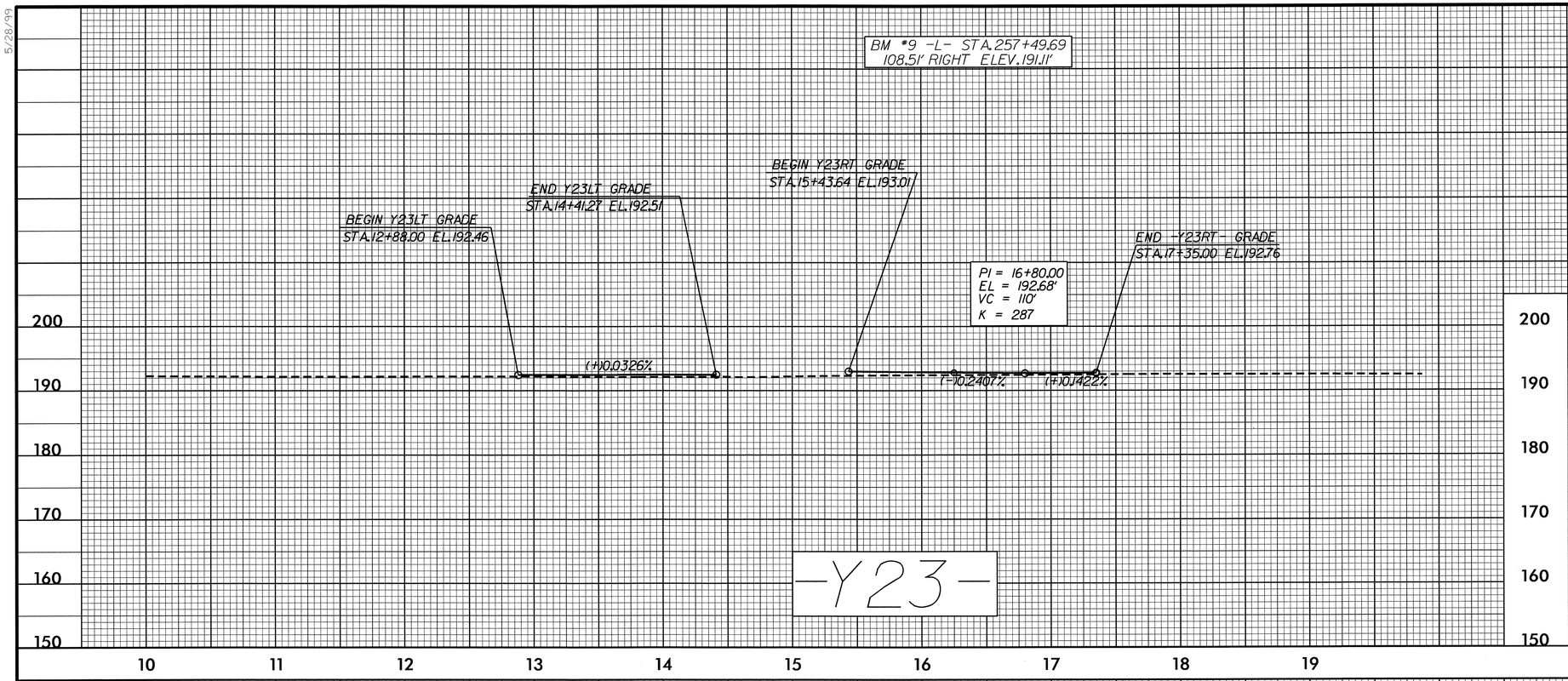

5/28/99

16-MAY-2012 13:58
R:\Roadway\Proj\u2809b_rdy_pfl.dgn
$$$$USERNAME$$$$