CONTRACT: C202879 TIP PROJECT: B-4949/B-4091

STRUCTURES

STATE OF NORTH CAROLINA
DIVISION OF HIGHWAYS

CUMBERLAND COUNTY

STATE	STATE PROJECT REFERENCE NO.	SHEET NO.	TOTAL SHEETS
N.C.	B-4949/B-4091		

STATE PROJ. NO.	F. A. PROJ. NO.	DESCRIPTION
40107.1.1	BRNHS-095-2(103)40	(B-4949) P.E.
40107.2.1	BRNHS-095-2(103)40	(B-4949) ROW, UTIL.
40107.3.1	BRNHS-095-2(103)40	(B-4949) CONST.
33449.1.1	BRSTP-301(12)	(B-4091) P.E.
33449.3.1	BRSTP-301(12)	(B-4091) ROW, UTIL.
33449.2.2	BRSTP-301(12)	(B-4091) CONST.

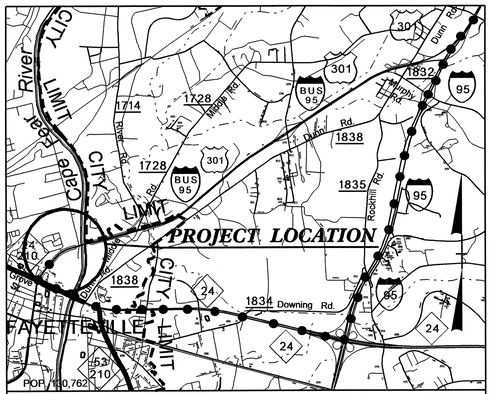

VICINITY MAP

OFF-SITE DETOUR

LOCATION: I-95 BUSINESS & US 301 – REPLACE BRIDGE NO. 61 OVER CROSS CREEK AND REPLACE BRIDGE NO. 85 OVER CAPE FEAR RIVER, SR 1738 & SR 1741 IN FAYETTEVILLE

TYPE OF WORK: GRADING, PAVING, DRAINAGE, STRUCTURES AND RETAINING WALLS

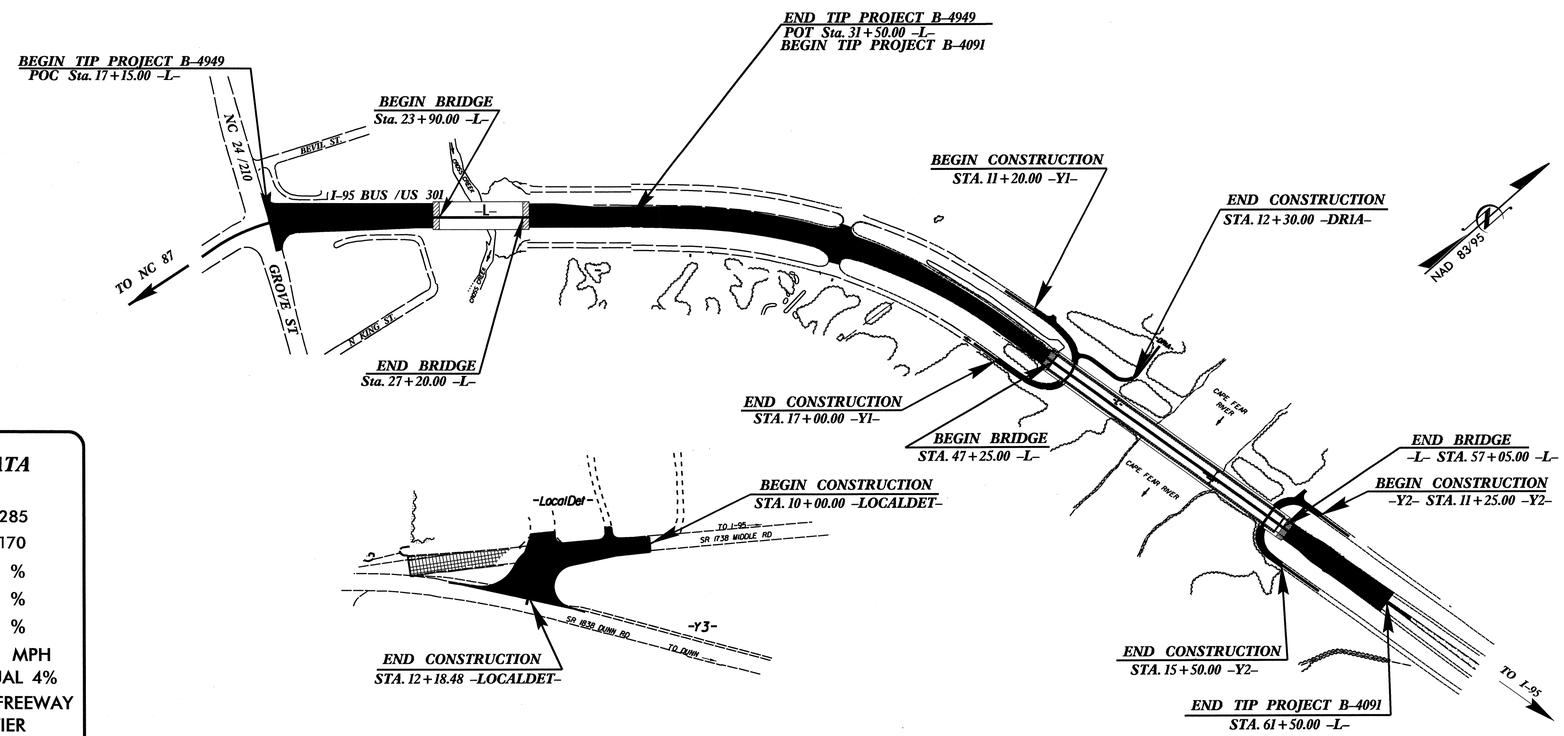

DESIGN DATA
(B-4949)

ADT 2012 = 24,200
ADT 2035 = 38,000
DHV = 10 %
D = 60 %
*T = 8 %
V = 50 MPH
* TTST 5 % DUAL 3 %
FUNC. CLASS. = ARTERIAL
STATEWIDE TIER

DESIGN DATA
(B-4091)

ADT 2012 = 25,285
ADT 2035 = 37,170
DHV = 10 %
D = 55 %
*T = 7 %
V = 50 MPH
* TTST 3% DUAL 4%
FUNC. CLASS. = FREEWAY
STATEWIDE TIER

STATE OF NORTH CAROLINA DEPARTMENT OF TRANSPORTATION

PROJECT LENGTH

LENGTH ROADWAY TIP PROJECT B-4949 /B-4091 = 0.591 MI
LENGTH OF STRUCTURE TIP PROJECT B-4949 /B-4091 = 0.249 MI
TOTAL LENGTH TIP PROJECT B-4949/B-4091 = 0.840 MI

Prepared in the Office of:
DIVISION OF HIGHWAYS
1000 Birch Ridge Dr., Raleigh NC, 27610

2012 STANDARD SPECIFICATIONS

LETTING DATE:
AUGUST 21, 2012

B-4091

Prepared by
URS
URS Corporation – North Carolina
1600 Perimeter Park Drive, Suite 400
Morrisville, NC 27560
TELEPHONE (919) 461-1100
FAX (919) 461-1415

B-4949

Q.H. NGUYEN, P.E.
PROJECT ENGINEER

MARC G. CHEEK, P.E.
PROJECT DESIGN ENGINEER

STRUCTURES MANAGEMENT UNIT
1000 BIRCH RIDGE DR.
RALEIGH, N.C. 27610

DIVISION OF HIGHWAYS
STATE OF NORTH CAROLINA

P.E.
STATE DESIGN ENGINEER

DEPARTMENT OF TRANSPORTATION
FEDERAL HIGHWAY ADMINISTRATION

APPROVED
DIVISION ADMINISTRATOR DATE

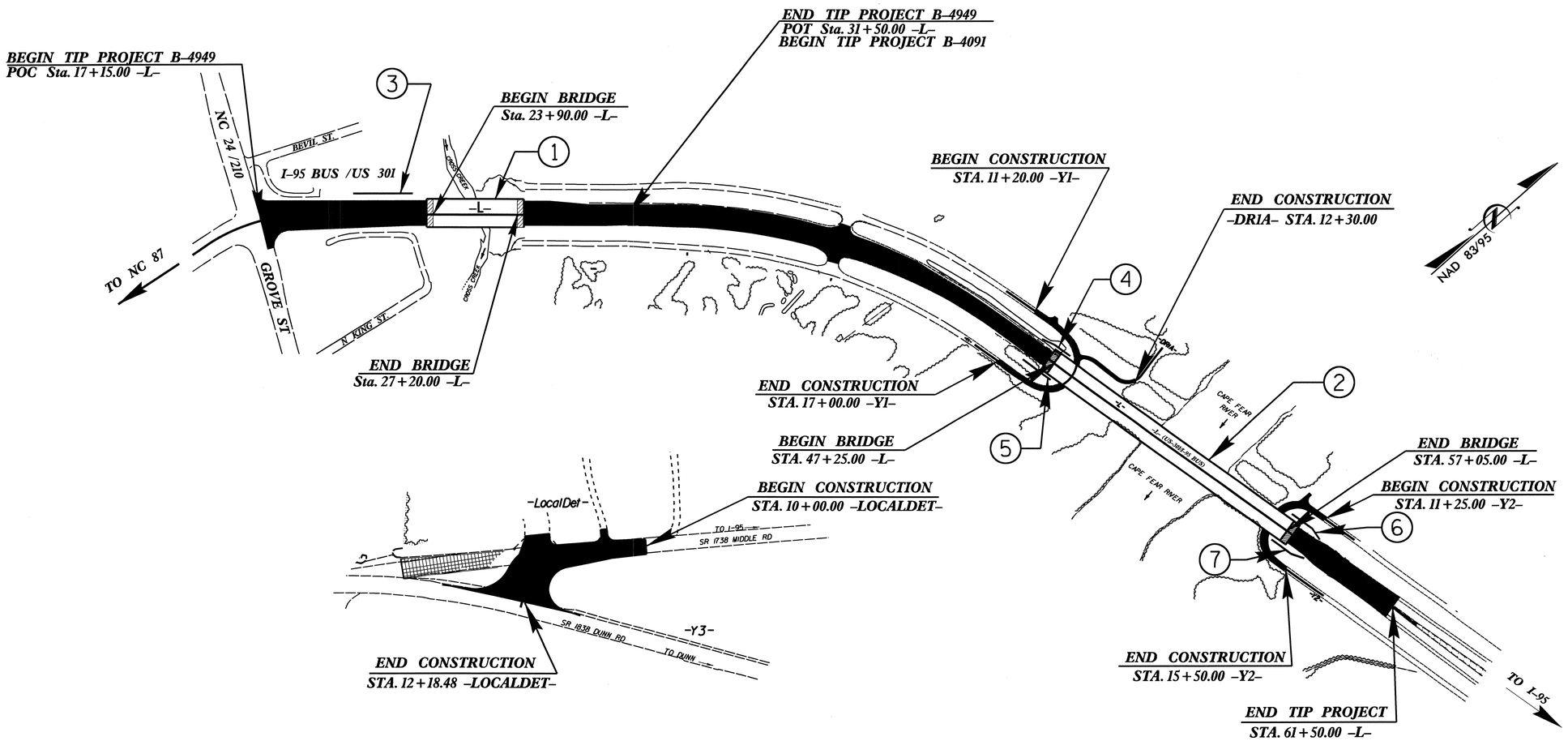

INDEX

STR. No.	STATION	DESCRIPTION	SHEETS
1	25+55.00 -L-	BRIDGE OVER CROSS CREEK ON I-95 BUS. LOOP	S-1 THRU S-53
2	52+15.00 -L-	BRIDGE OVER CAPE FEAR RIVER ON I-95 BUS. LOOP	S-54 THRU S-131
3	20+00.00 -L-	SEGMENTAL GRAVITY RETAINING WALL	W-1 THRU W-2
4, 5, 6, & 7	VARIES	MSE RETAINING WALLS 1, 2, 3, & 4	W-3 THRU W-5

PROJECT NO. B-4949/B-4091

CUMBERLAND COUNTY

STATION:

STATE OF NORTH CAROLINA
DEPARTMENT OF TRANSPORTATION
RALEIGH

STRUCTURE INDEX

REVISIONS					
NO.	BY:	DATE:	NO.	BY:	DATE:
1			3		
2			4		

DRAWN BY : D. HODGE DATE : 5/12
CHECKED BY : M.G. CHEEK DATE : 5/12

05-JUN-2012 12:32
R:\Structures\FinalPlans\B4949_SD_IS.dgn

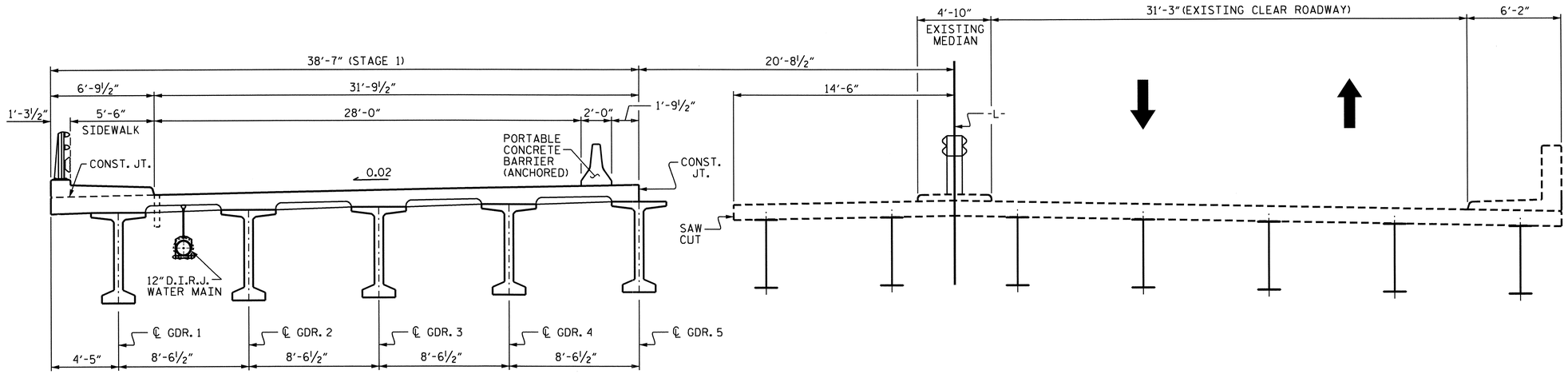

STAGE 1

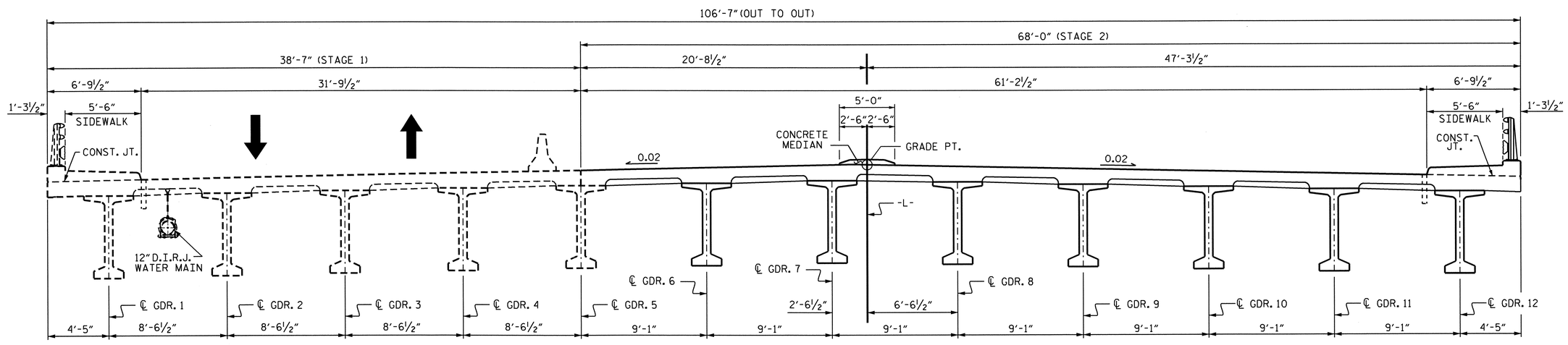

STAGE 2

PROJECT NO. B-4949

CUMBERLAND COUNTY

STATION: 25+55.00 -L-

NOTES

FOR TRAFFIC PHASING, SEE TRAFFIC CONTROL PLANS.

THE PORTABLE CONCRETE BARRIER IS A TRAFFIC CONTROL PAY ITEM.

SEE TRAFFIC CONTROL PLANS FOR LOCATION AND PAY LIMITS OF PORTABLE CONCRETE BARRIER.

NORTH CAROLINA PROFESSIONAL SEAL 20125 ENGINEER
MARK G. CHEEK
6-12-12

STATE OF NORTH CAROLINA
DEPARTMENT OF TRANSPORTATION
RALEIGH

CONSTRUCTION STAGING SEQUENCE

REVISIONS						SHEET NO.
NO.	BY:	DATE:	NO.	BY:	DATE:	S-1
1			3			TOTAL SHEETS
2			4			131

DRAWN BY : K. P. SEDAI/DAH DATE : 1/24/11
CHECKED BY : M.G. CHEEK DATE : 4/12

12-JUN-2012 10:53
R:\Structures\Final Plans\B4949_SD_ConstSeq.dgn
dahodge

F.A. PROJECT No. : BRNHS-095-2(103)40

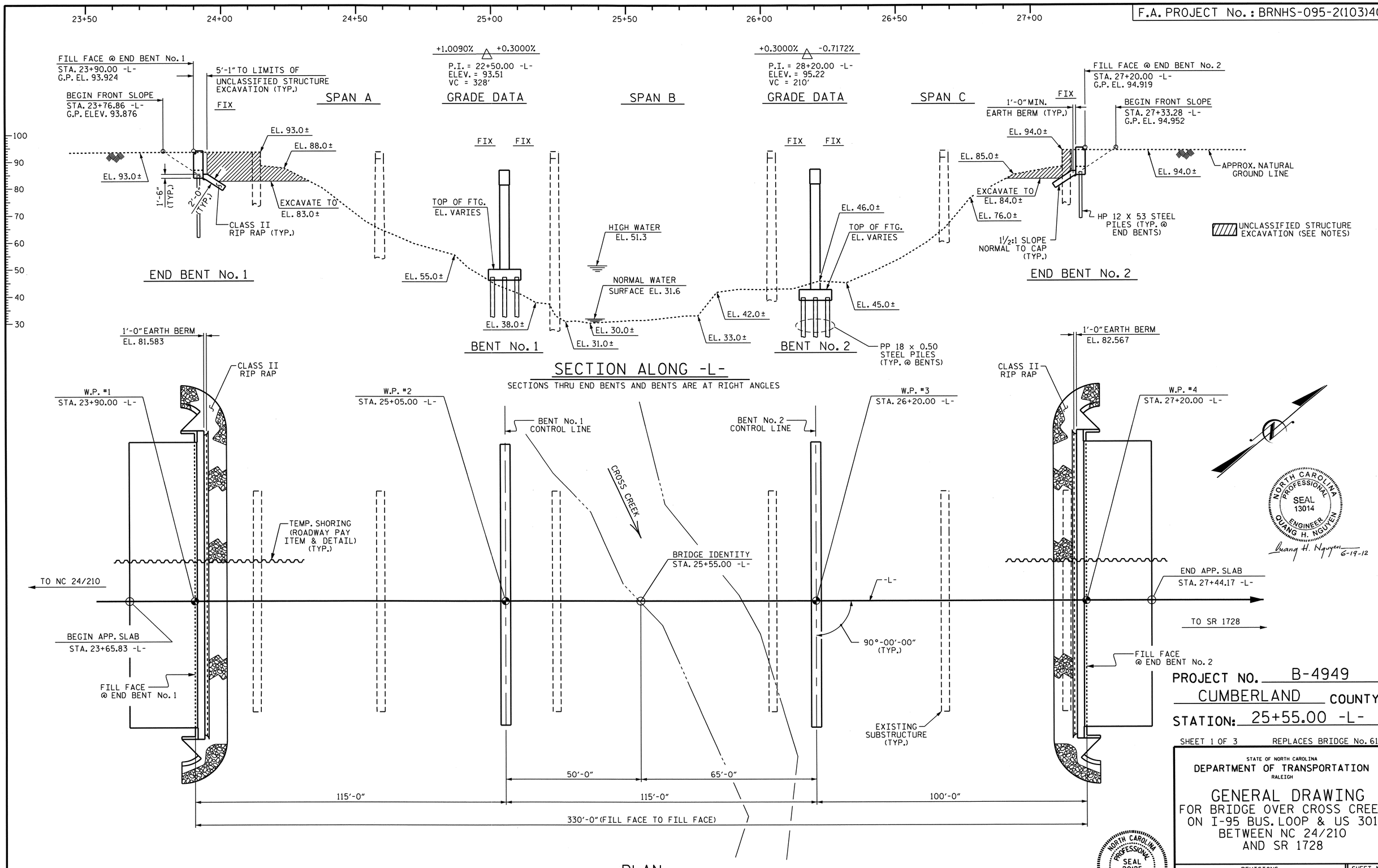

PROJECT NO. B-4949

CUMBERLAND COUNTY

STATION: 25+55.00 -L-

SHEET 1 OF 3 REPLACES BRIDGE No. 61

STATE OF NORTH CAROLINA
DEPARTMENT OF TRANSPORTATION
RALEIGH

GENERAL DRAWING
FOR BRIDGE OVER CROSS CREEK
ON I-95 BUS. LOOP & US 301
BETWEEN NC 24/210
AND SR 1728

REVISIONS							SHEET NO.
NO.	BY:	DATE:	NO.	BY:	DATE:		S-2
1			3				TOTAL SHEETS
2			4				131

DRAWN BY : B.N. GRADY/DAH DATE : 12/11
CHECKED BY : M.G. CHEEK DATE : 03/12

26-JUN-2012 14:47
R:\Structures\Final Plans\B4949_sd_GD.dgn
dahodge

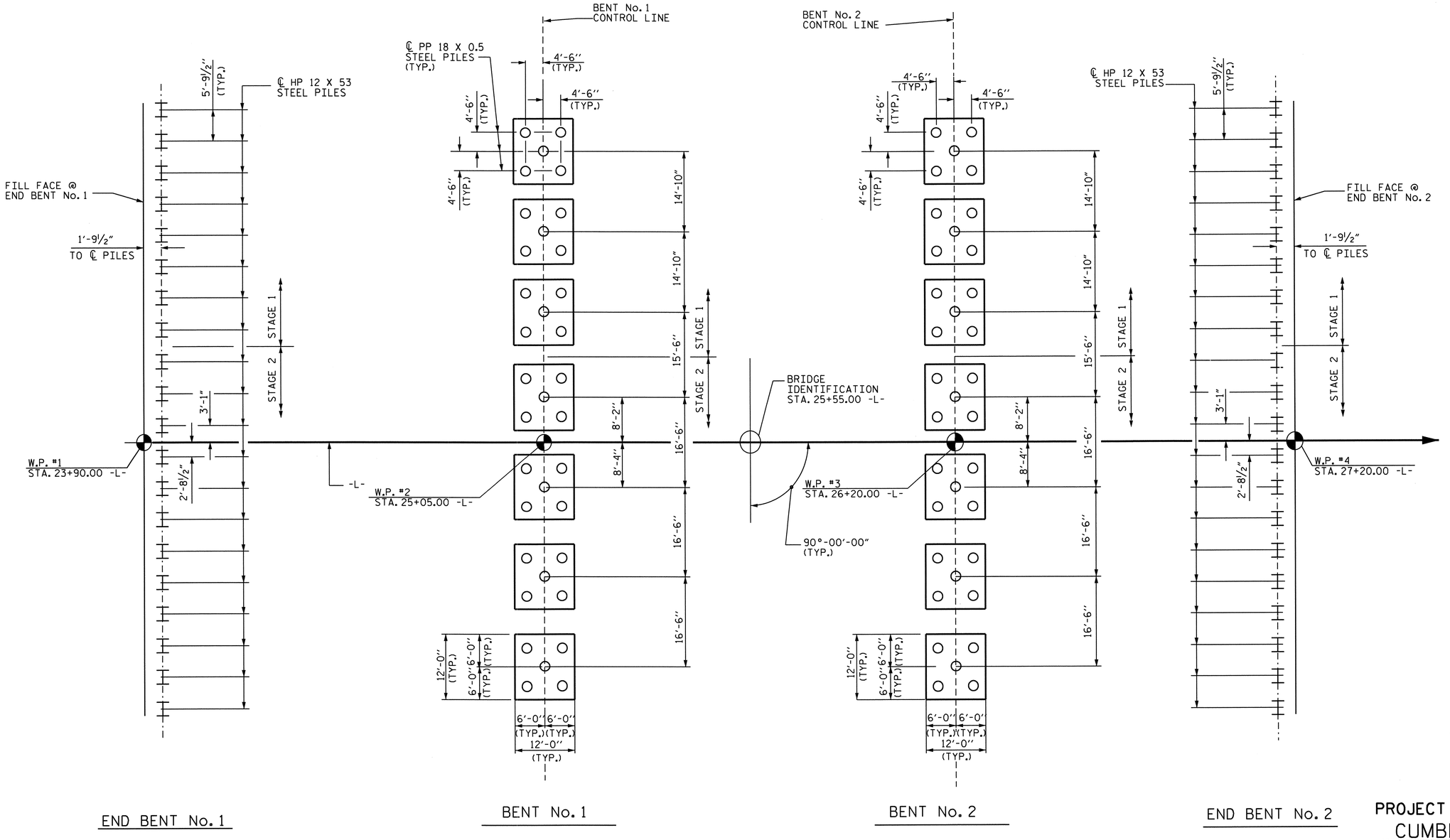

FOUNDATION LAYOUT

FOR PILES, SEE SECTION 450 OF THE STANDARD SPECIFICATIONS.

PILES AT END BENT No. 1 AND END BENT No. 2 ARE DESIGNED FOR A FACTORED RESISTANCE OF 120 AND 110 TONS PER PILE, RESPECTIVELY.

PILES AT BENT No. 1 AND BENT No. 2 ARE DESIGNED FOR A FACTORED RESISTANCE OF 150 AND 145 TONS PER PILE, RESPECTIVELY.

DRIVE PILES AT END BENT No. 1 AND END BENT No. 2 TO A REQUIRED DRIVING RESISTANCE OF 200 AND 185 TONS PER PILE, RESPECTIVELY.

DRIVE PILES AT BENT No. 1 AND BENT No. 2 TO A REQUIRED DRIVING RESISTANCE OF 280 AND 250 TONS PER PILE RESPECTIVELY. THIS REQUIRED DRIVING RESISTANCE INCLUDES ADDITIONAL RESISTANCE FOR DOWNDRAG OR SCOUR.

ALL END BENT PILES ARE HP 12 X 53 STEEL PILES.

ALL BENT PILES ARE PP 18 X 0.5 STEEL PILES.

INSTALL PILES AT BENT No. 1 AND BENT No. 2 TO A TIP ELEVATION NO HIGHER THAN 5.0 FT.

THE SCOUR CRITICAL ELEVATION FOR BENT No. 1 AND BENT No. 2 IS ELEVATION 28.0 FT. SCOUR CRITICAL ELEVATIONS ARE USED TO MONITOR POSSIBLE SCOUR PROBLEMS DURING THE LIFE OF THE STRUCTURE.

TESTING PILES WITH THE PILE DRIVING ANALYZER (PDA) DURING DRIVING, RESTRIKING OR REDRIVING MAY BE REQUIRED. THE ENGINEER WILL DETERMINE THE NEED FOR PDA TESTING. FOR PDA TESTING, SEE SECTION 450 OF THE STANDARD SPECIFICATIONS.

IT HAS BEEN ESTIMATED THAT A HAMMER WITH AN EQUIVALENT RATED ENERGY IN THE RANGE OF 55 - 110 FT- KIPS PER BLOW WILL BE REQUIRED TO DRIVE PILES AT BENT No. 1 AND BENT No. 2. THIS ESTIMATED ENERGY RANGE DOES NOT RELEASE THE CONTRACTOR FROM PROVIDING DRIVING EQUIPMENT IN ACCORDANCE WITH SUBARTICLE 450-3(D)(2) OF THE STANDARD SPECIFICATIONS.

NORTH CAROLINA PROFESSIONAL SEAL 20125 ENGINEER MARSHALL G. CHEEK, JR.
6-19-12

PROJECT NO. B-4949
CUMBERLAND COUNTY
STATION: 25+55.00 -L-

SHEET 2 OF 3

STATE OF NORTH CAROLINA
DEPARTMENT OF TRANSPORTATION
RALEIGH

GENERAL DRAWING
FOR BRIDGE OVER CROSS CREEK
ON I-95 BUS. LOOP & US 301
BETWEEN NC 24/210
AND SR 1728

REVISIONS						SHEET NO.
NO.	BY:	DATE:	NO.	BY:	DATE:	S-3
1			3			TOTAL SHEETS
2			4			131

DRAWN BY : M. POOLE DATE : 12/11
CHECKED BY : M. G. CHEEK DATE : 4/12

19-JUN-2012 11:34
R:\Structures\Final Plans\B-4949_SD_FL.dgn
dahodge

BENCHMARK #1 : RR SPIKE IN BASE OF 36" OAK, 111.58' RT. OF STA. 18+28.71 -L-, ELEV. 87.65

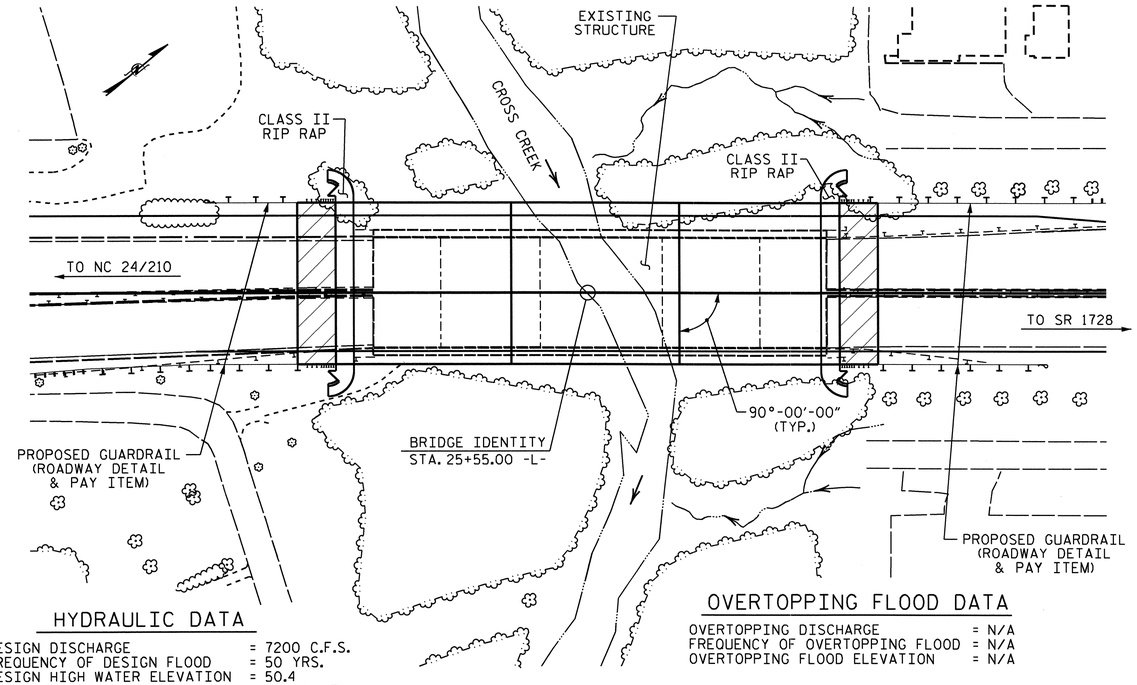

HYDRAULIC DATA

DESIGN DISCHARGE	= 7200 C.F.S.
FREQUENCY OF DESIGN FLOOD	= 50 YRS.
DESIGN HIGH WATER ELEVATION	= 50.4
DRAINAGE AREA	= 40 SQ. MI.
BASE DISCHARGE (Q100)	= 8000 C.F.S.
BASE HIGH WATER ELEVATION	= 51.3

OVERTOPPING FLOOD DATA

OVERTOPPING DISCHARGE	= N/A
FREQUENCY OF OVERTOPPING FLOOD	= N/A
OVERTOPPING FLOOD ELEVATION	= N/A

LOCATION SKETCH

FOR UTILITY INFORMATION, SEE UTILITY PLANS AND SPECIAL PROVISIONS.

TOTAL BILL OF MATERIAL

	CONSTRUCTION, MAINTENANCE AND REMOVAL OF TEMPORARY ACCESS	REMOVAL OF EXISTING STRUCTURE	FOUNDATION EXCAVATION	UNCLASSIFIED STRUCTURE EXCAVATION	REINFORCED CONCRETE DECK SLAB	GROOVING BRIDGE FLOORS	CLASS A CONCRETE	BRIDGE APPROACH SLABS	REINFORCING STEEL
	LUMP SUM	LUMP SUM	CU.YDS.	LUMP SUM	SQ.FT.	SQ.FT.	CU.YDS.	LUMP SUM	LBS.
SUPERSTRUCTURE	LUMP SUM	LUMP SUM			35,173	33,841		LUMP SUM	
END BENT No. 1				LUMP SUM			65.3		8,877
BENT No. 1			275				304.6		56,490
BENT No. 2			265				318.6		59,222
END BENT No. 2				LUMP SUM			65.3		8,877
TOTAL	LUMP SUM	LUMP SUM	540	LUMP SUM	35,173	33,841	753.8	LUMP SUM	133,466

TOTAL BILL OF MATERIAL

	SPIRAL COLUMN REINFORCING STEEL	MODIFIED 72" PRESTRESSED CONCRETE GIRDERS		HP 12 X 53 STEEL PILES		PP 18 X 0.50 STEEL PILES		PILE REDRIVES	THREE BAR METAL RAIL	RIP RAP CLASS II (2'-0" THICK)	GEOTEXTILE FOR DRAINAGE	ELASTOMERIC BEARINGS	12" WATER LINE
	LBS.	NO.	LIN.FT.	NO.	LIN.FT.	NO.	LIN.FT.	EACH	LIN.FT.	TONS	SQ.YDS.	LUMP SUM	LUMP SUM
SUPERSTRUCTURE		36	3,914.00						645.00			LUMP SUM	LUMP SUM
END BENT No. 1				20	1,100			5		232	258		
BENT No. 1	6,316					35	1,750	9					
BENT No. 2	7,354					35	1,575	9					
END BENT No. 2				20	900			5		244	271		
TOTAL	13,670	36	3,914.00	40	2,000	70	3,325	28	645.00	476	529	LUMP SUM	LUMP SUM

NOTES

ASSUMED LIVE LOAD = HL-93 OR ALTERNATE LOADING.

FOR OTHER DESIGN DATA AND GENERAL NOTES, SEE SHEET SN.

FOR EROSION CONTROL MEASURES, SEE EROSION CONTROL PLANS.

THIS BRIDGE HAS BEEN DESIGNED IN ACCORDANCE WITH THE AASHTO LRFD BRIDGE DESIGN SPECIFICATIONS.

REMOVABLE FORMS MAY BE USED IN LIEU OF METAL STAY-IN-PLACE FORMS IN ACCORDANCE WITH ARTICLE 420-3 OF THE STANDARD SPECIFICATIONS.

AFTER SERVING AS A TEMPORARY STRUCTURE, THE EXISTING BRIDGE, CONSISTING OF 5 SPANS (1 @ 45'-0", 1 @ 64'-7", 1 @ 80'-0", 1 @ 64'-5", 1 @ 43'-3") WITH A REINFORCED CONCRETE FLOOR ON 10 LINES OF 36" STEEL I-BEAMS, WITH A SUBSTRUCTURE CONSISTING OF REINFORCED CONCRETE CAPS/TIMBER PILES AT THE END BENTS AND REINFORCED CONCRETE POST AND BEAM INTERIOR BENTS, LOCATED AT THE SITE OF THE PROPOSED STRUCTURE, SHALL BE REMOVED. THE EXISTING BRIDGE IS PRESENTLY NOT POSTED FOR LOAD LIMIT. SHOULD THE STRUCTURAL INTEGRITY OF THE BRIDGE DETERIORATE, A LOAD LIMIT MAY BE POSTED AND MAY BE REDUCED AS FOUND NECESSARY DURING THE LIFE OF THE PROJECT.

REMOVAL OF THE EXISTING BRIDGE SHALL BE PERFORMED SO AS NOT TO ALLOW DEBRIS TO FALL INTO THE WATER. THE CONTRACTOR SHALL REMOVE THE BRIDGE AND SUBMIT PLANS FOR DEMOLITION IN ACCORDANCE WITH ARTICLE 402-2 OF THE STANDARD SPECIFICATIONS.

THE MATERIAL SHOWN IN THE CROSS-HATCHED AREA SHALL BE EXCAVATED FOR A DISTANCE OF 65 FT. LEFT OF -L-, AND 55 FT. RIGHT OF -L- AS DIRECTED BY THE ENGINEER. THIS WORK WILL BE PAID FOR AT THE CONTRACT LUMP SUM PRICE FOR UNCLASSIFIED STRUCTURE EXCAVATION. SEE SECTION 412 OF THE STANDARD SPECIFICATIONS.

THE SUBSTRUCTURE OF THE EXISTING BRIDGE INDICATED ON THE PLANS IS FROM THE BEST INFORMATION AVAILABLE. SINCE THIS INFORMATION IS SHOWN FOR THE CONVENIENCE OF THE CONTRACTOR, THE CONTRACTOR SHALL HAVE NO CLAIM WHATSOEVER AGAINST THE DEPARTMENT OF TRANSPORTATION FOR ANY DELAYS OR ADDITIONAL COST INCURRED BASED ON DIFFERENCES BETWEEN THE EXISTING BRIDGE SUBSTRUCTURE SHOWN ON THE PLANS AND THE ACTUAL CONDITIONS AT THE PROJECT SITE.

THIS STRUCTURE HAS BEEN DESIGNED IN ACCORDANCE WITH HEC 18, "EVALUATING SCOUR AT BRIDGES", MAY, 2001.

FOR LIMITS OF TEMPORARY SHORING FOR MAINTENANCE OF TRAFFIC, SEE TRAFFIC CONTROL PLANS. FOR PAY ITEM FOR TEMPORARY SHORING FOR MAINTENANCE OF TRAFFIC, SEE ROADWAY PLANS.

THE CONTRACTOR SHALL PROVIDE INDEPENDENT ASSURANCE SAMPLES OF REINFORCING STEEL AS FOLLOWS: FOR PROJECTS REQUIRING UP TO 400 TONS OF REINFORCING STEEL, ONE 30 INCH SAMPLE OF EACH SIZE BAR USED, AND FOR PROJECTS REQUIRING OVER 400 TONS OF REINFORCING STEEL, TWO 30 INCH SAMPLES OF EACH SIZE BAR USED. THE BARS FROM WHICH THE SAMPLES ARE TAKEN MUST THEN BE SPLICED WITH REPLACEMENT BARS OF THE SIZE AND LENGTH OF THE SAMPLE, PLUS A MINIMUM LAP SPLICE OF THIRTY BAR DIAMETERS. PAYMENT FOR THE SAMPLES OF REINFORCING STEEL SHALL BE CONSIDERED INCIDENTAL TO VARIOUS PAY ITEMS.

STEEL SHEET PILING REQUIRED FOR SHORING SHALL BE HOT ROLLED.

FOR INSTALLATION AND ATTACHMENT OF THE 12" D.I.R.J. WATER MAIN, SEE SPECIAL PROVISIONS.

INASMUCH AS THE PAINT SYSTEM ON THE EXISTING STRUCTURAL STEEL CONTAINS LEAD, THE CONTRACTOR'S ATTENTION IS DIRECTED TO ARTICLE 107-1 OF THE STANDARD SPECIFICATIONS. ANY COSTS RESULTING FROM COMPLIANCE WITH APPLICABLE STATE OR FEDERAL REGULATIONS PERTAINING TO HANDLING OF MATERIALS CONTAINING LEAD BASED PAINT SHALL BE INCLUDED IN THE BID PRICE FOR "REMOVAL OF EXISTING STRUCTURE AT STATION."

NEEDLE BEAMS WILL NOT BE ALLOWED UNLESS OTHERWISE CALLED FOR ON THE PLANS OR APPROVED BY THE ENGINEER.

FOR SUBMITTAL OF WORKING DRAWINGS, SEE SPECIAL PROVISIONS.

FOR FALSEWORK AND FORMWORK, SEE SPECIAL PROVISIONS.

FOR CRANE SAFETY, SEE SPECIAL PROVISIONS.

FOR GROUT FOR STRUCTURES, SEE SPECIAL PROVISIONS.

THIS BRIDGE IS LOCATED IN SEISMIC ZONE 1.

NORTH CAROLINA PROFESSIONAL SEAL 20125 ENGINEER MARSHALL G. CHEEK, JR.
6-11-12

PROJECT NO. B-4949
CUMBERLAND COUNTY
STATION: 25+55.00 -L-

SHEET 3 OF 3

STATE OF NORTH CAROLINA
DEPARTMENT OF TRANSPORTATION
RALEIGH

GENERAL DRAWING
FOR BRIDGE OVER CROSS CREEK
ON I-95 BUS. LOOP & US 301
BETWEEN NC 24/210
AND SR 1728

REVISIONS						SHEET NO.
NO.	BY:	DATE:	NO.	BY:	DATE:	S-4
1			3			TOTAL SHEETS
2			4			131

DRAWN BY : B.N. GRADY/DAH DATE : 12/11
CHECKED BY : M.G. CHEEK DATE : 04/12

19-JUN-2012 13:14
R:\Structures\Final Plans\B4949_sd_GD.dgn
dahodge

NOTES:

THE CONTRACTOR WILL BE REQUIRED TO CONSTRUCT, MAINTAIN AND AFTERWARDS REMOVE A TEMPORARY ACCESS FOR USE DURING CONSTRUCTION OF THE PROPOSED STRUCTURE. FOR CONSTRUCTION, MAINTENANCE AND REMOVAL OF TEMPORARY ACCESS, SEE SPECIAL PROVISIONS.

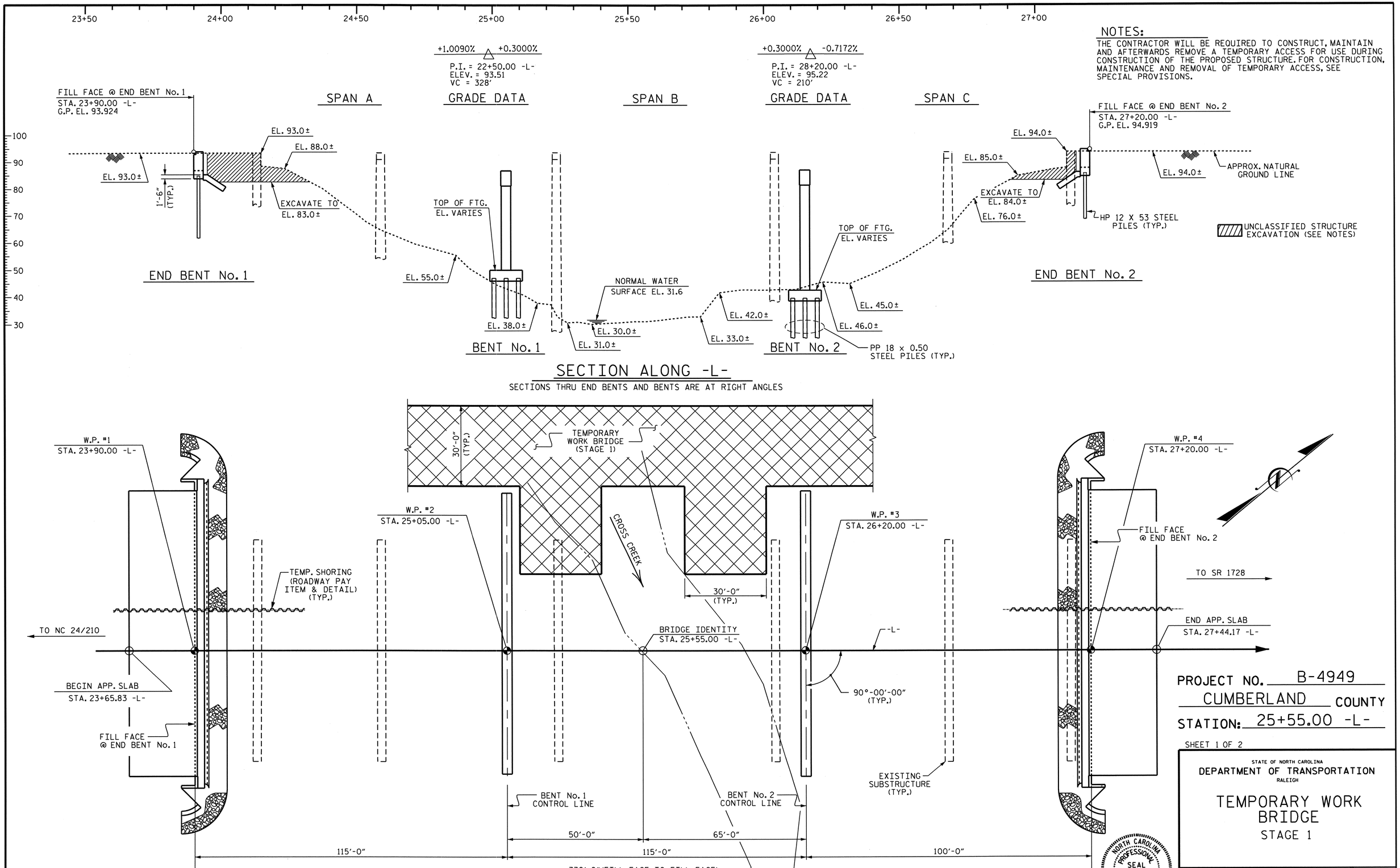

PROJECT NO. B-4949

CUMBERLAND COUNTY

STATION: 25+55.00 -L-

SHEET 1 OF 2

STATE OF NORTH CAROLINA
DEPARTMENT OF TRANSPORTATION
RALEIGH

TEMPORARY WORK BRIDGE

STAGE 1

REVISIONS							SHEET NO.
NO.	BY:	DATE:	NO.	BY:	DATE:		S-5
1			3				TOTAL SHEETS
2			4				131

DRAWN BY : B.N. GRADY/DAH DATE : 12/11
CHECKED BY : M.G. CHEEK DATE : 05/12

10-MAY-2012 11:45
R:\Structures\Final Plans\B4949_SD_Workbridges.dgn
dahodge

NOTES:

THE CONTRACTOR WILL BE REQUIRED TO CONSTRUCT, MAINTAIN AND AFTERWARDS REMOVE A TEMPORARY ACCESS FOR USE DURING CONSTRUCTION OF THE PROPOSED STRUCTURE. FOR CONSTRUCTION, MAINTENANCE AND REMOVAL OF TEMPORARY ACCESS, SEE SPECIAL PROVISIONS.

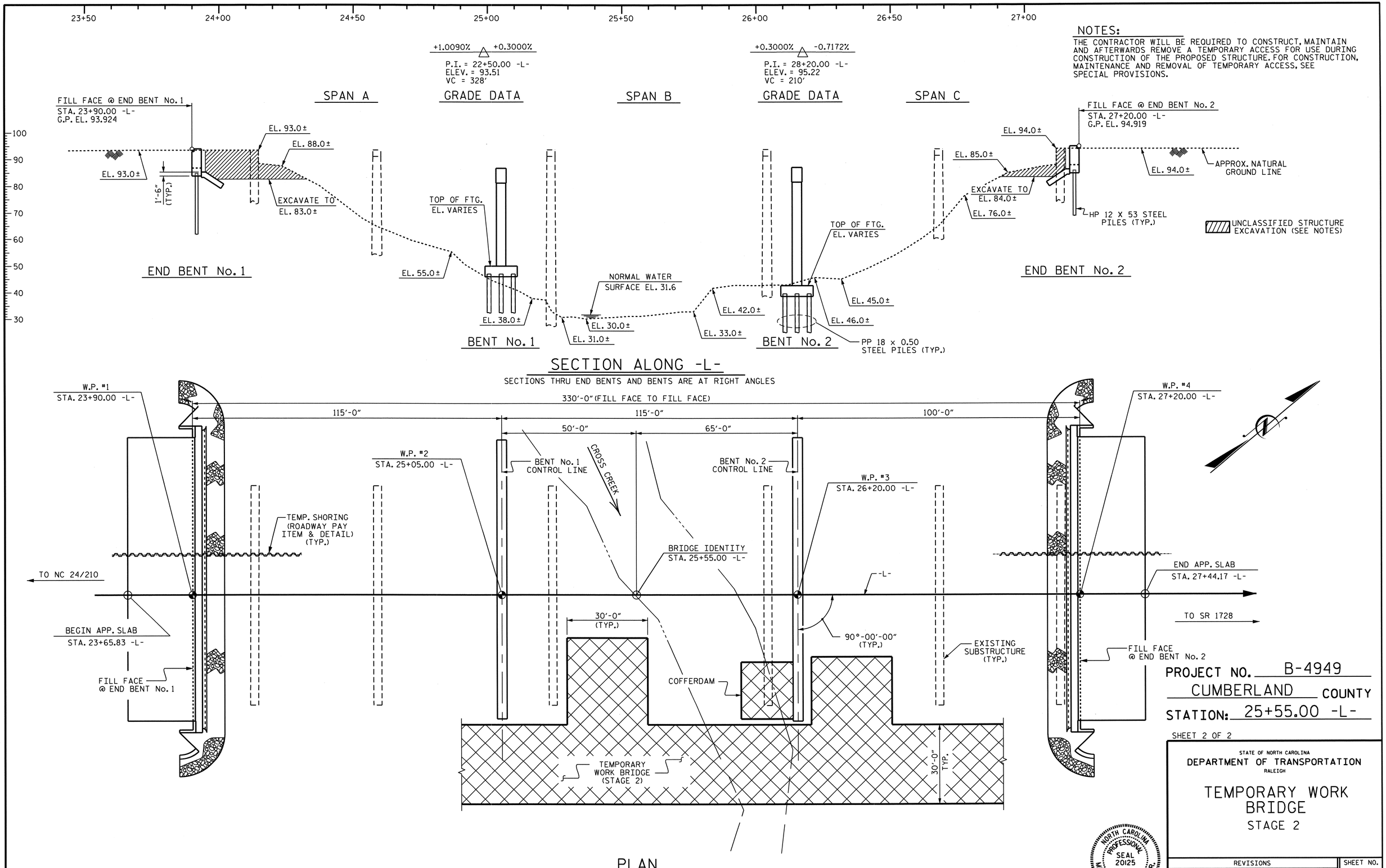

PROJECT NO. B-4949

CUMBERLAND COUNTY

STATION: 25+55.00 -L-

SHEET 2 OF 2

STATE OF NORTH CAROLINA
DEPARTMENT OF TRANSPORTATION
RALEIGH

TEMPORARY WORK BRIDGE

STAGE 2

NORTH CAROLINA PROFESSIONAL SEAL 20125 ENGINEER WARREN L. G. CHEEK, JR.

REVISIONS						SHEET NO.
NO.	BY:	DATE:	NO.	BY:	DATE:	S-6
1			3			TOTAL SHEETS
2			4			131

DRAWN BY : B.N. GRADY/DAH DATE : 12/11
CHECKED BY : M.G. CHEEK DATE : 05/12

10-MAY-2012 11:45
R:\Structures\Final Plans\B4949_SD_Workbridges.dgn
dahodge

LOAD AND RESISTANCE FACTOR RATING (LRFR) SUMMARY FOR PRESTRESSED CONCRETE GIRDERS

LEVEL		VEHICLE	WEIGHT (W) (TONS)	CONTROLLING LOAD RATING	MINIMUM RATING FACTORS (RF)	TONS = W X RF	STRENGTH I LIMIT STATE											SERVICE III LIMIT STATE						COMMENT NUMBER
								MOMENT					SHEAR						MOMENT					
							# LIVELOAD FACTORS	DISTRIBUTION FACTORS (DF)	RATING FACTOR	SPAN	GIRDER LOCATION	DISTANCE FROM LEFT END OF SPAN (ft)	DISTRIBUTION FACTORS (DF)	RATING FACTOR	SPAN	GIRDER LOCATION	DISTANCE FROM LEFT END OF SPAN (ft)	LIVELOAD FACTORS	DISTRIBUTION FACTORS (DF)	RATING FACTOR	SPAN	GIRDER LOCATION	DISTANCE FROM LEFT END OF SPAN (ft)	
DESIGN LOAD RATING		HL-93(Inv)	N/A	1	1.040	--	1.75	0.755	1.62	B	I	56.375	0.890	1.48	B	I	78.925	0.80	0.890	1.04	B	I	56.375	
		HL-93(Opr)	N/A	--	1.906	--	1.35	0.786	2.12	C	I	48.542	0.890	1.91	C	I	29.125	N/A	--	--	--	--	--	
		HS-20(Inv)	36.000	2	1.625	58.514	1.75	0.755	2.53	B	I	56.375	0.890	2.02	B	I	78.925	0.80	0.755	1.63	B	I	56.375	
		HS-20(Opr)	36.000	--	2.500	89.993	1.35	0.786	3.17	C	I	48.542	0.890	2.50	C	I	29.125	N/A	--	--	--	--	--	
LEGAL LOAD RATING	SV	SH	12.500	--	4.246	53.078	1.4	0.755	8.25	B	I	56.375	0.890	6.64	B	I	78.925	0.80	0.755	4.25	B	I	56.375	
		S3C	21.500	--	2.480	53.323	1.4	0.755	4.82	B	I	56.375	0.890	3.90	B	I	78.925	0.80	0.755	2.48	B	I	56.375	
		S3A	22.750	--	2.349	53.431	1.4	0.755	4.57	B	I	56.375	0.890	3.70	B	I	78.925	0.80	0.755	2.35	B	I	56.375	
		S4A	26.750	--	2.050	54.832	1.4	0.755	3.98	B	I	56.375	0.890	3.23	B	I	78.925	0.80	0.755	2.05	B	I	56.375	
		S5A	30.500	--	1.807	55.104	1.4	0.755	3.51	B	I	56.375	0.890	2.95	B	I	78.925	0.80	0.755	1.81	B	I	56.375	
		S6A	34.500	--	1.628	56.164	1.4	0.755	3.16	B	I	56.375	0.890	2.66	B	I	78.925	0.80	0.755	1.63	B	I	56.375	
		S7B	38.500	--	1.476	56.816	1.4	0.755	2.87	B	I	56.375	0.890	2.48	B	I	78.925	0.80	0.755	1.48	B	I	56.375	
		S7A	40.000	3	1.448	57.935	1.4	0.755	2.82	B	I	56.375	0.890	2.53	B	I	78.925	0.80	0.755	1.45	B	I	56.375	
	TTST	T4A	28.250	--	2.000	56.499	1.4	0.755	3.89	B	I	56.375	0.890	3.13	B	I	78.925	0.80	0.755	2.00	B	I	56.375	
		T5B	32.000	--	1.759	56.292	1.4	0.755	3.42	B	I	56.375	0.890	2.96	B	I	78.925	0.80	0.755	1.76	B	I	56.375	
		T6A	36.000	--	1.600	57.593	1.4	0.755	3.11	B	I	56.375	0.890	2.71	B	I	78.925	0.80	0.755	1.60	B	I	56.375	
		T7A	40.000	--	1.472	58.875	1.4	0.755	2.86	B	I	56.375	0.890	2.52	B	I	78.925	0.80	0.755	1.47	B	I	56.375	
		T7B	40.000	--	1.543	61.701	1.4	0.755	3.00	B	I	56.375	0.890	2.38	B	I	78.925	0.80	0.755	1.54	B	I	56.375	

LOAD FACTORS:

DESIGN LOAD RATING FACTORS	LIMIT STATE	γ_{DC}	γ_{DW}
	STRENGTH I	1.25	1.50
	SERVICE III	1.00	1.00

NOTES:

MINIMUM RATING FACTORS ARE BASED ON THE STRENGTH I AND SERVICE III LIMIT STATES.

ALLOWABLE STRESSES FOR SERVICE III LIMIT STATE ARE AS REQUIRED FOR DESIGN.

COMMENTS:

1.
2.
3.
4.

 # CONTROLLING LOAD RATING

1. DESIGN LOAD RATING (HL-93)
2. DESIGN LOAD RATING (HS-20)
3. LEGAL LOAD RATING **

** SEE CHART FOR VEHICLE TYPE

GIRDER LOCATION

I - INTERIOR GIRDER
EL - EXTERIOR LEFT GIRDER
ER - EXTERIOR RIGHTGIRDER

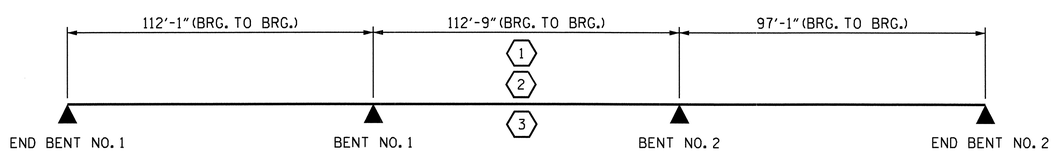

LRFR SUMMARY

PROJECT NO. B-4949
CUMBERLAND COUNTY
STATION: 25+55.00 -L-

STATE OF NORTH CAROLINA
DEPARTMENT OF TRANSPORTATION
RALEIGH

LRFR SUMMARY FOR PRESTRESSED CONCRETE GIRDERS
(INTERSTATE TRAFFIC)

NORTH CAROLINA PROFESSIONAL SEAL 20125 ENGINEER MARSHALL G. CHEEK, JR.
6-4-12

REVISIONS						
NO.	BY:	DATE:	NO.	BY:	DATE:	
1			3			
2			4			

SHEET NO. S-7
TOTAL SHEETS 131

STD. NO. LRFR2

ASSEMBLED BY : J.R. MCROY DATE : 5/9/12
CHECKED BY : M.G. CHEEK DATE : 5/9/12
DRAWN BY : MAA 1/08
CHECKED BY : GM/DI 2/08

10-MAY-2012 11:46
R:\Structures\FinalPlans\B-4949_Rating.dgn
dahodge

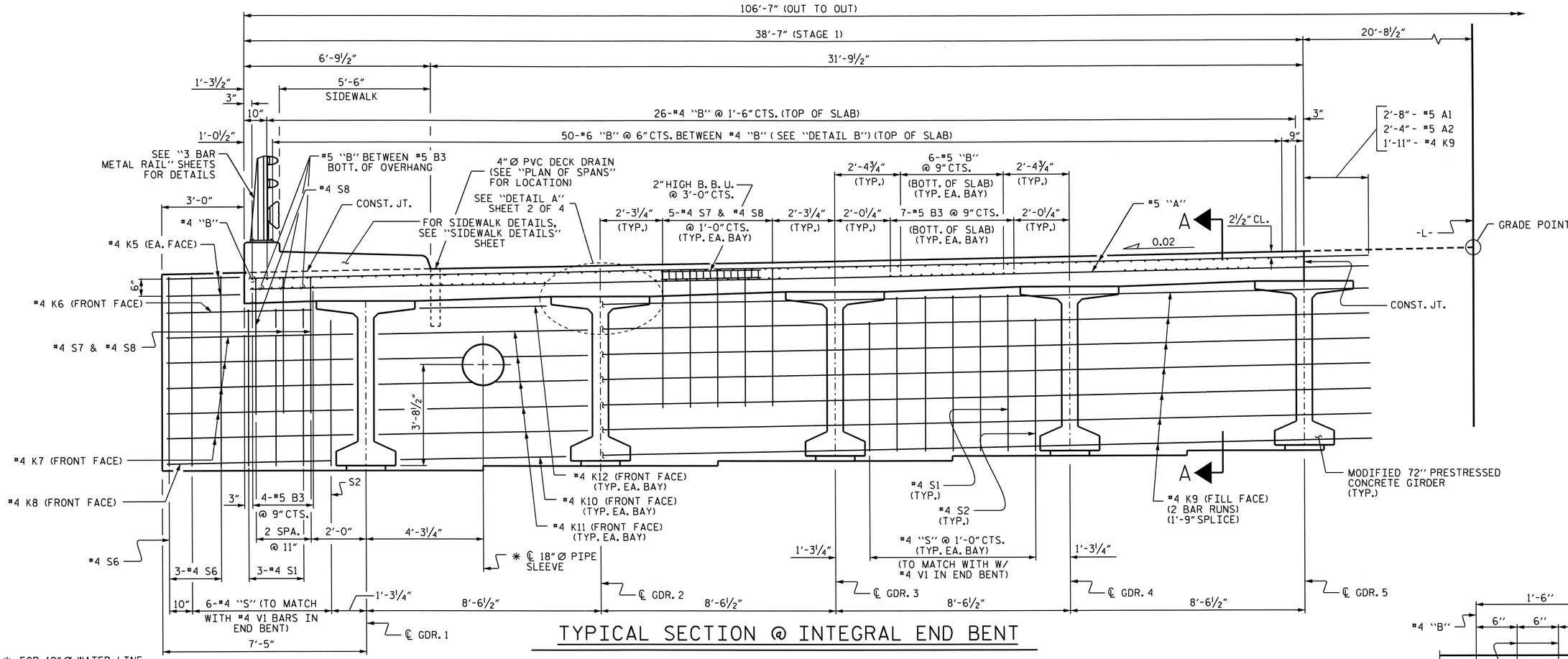

TYPICAL SECTION @ INTEGRAL END BENT

✱ FOR 12" Ø WATER LINE, SEE "12" Ø D.I.R.J. WATER LINE" SHEET.

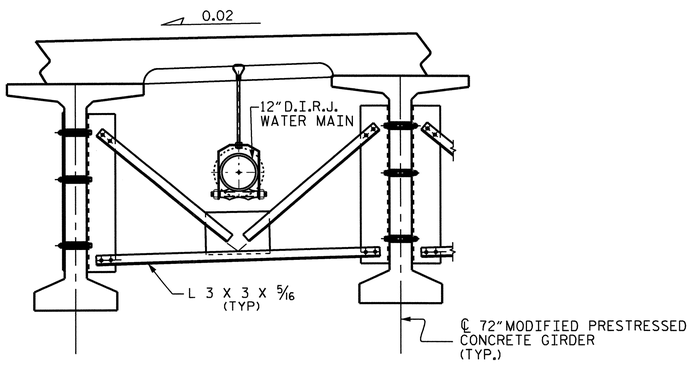

PART SECTION AT INTERMEDIATE DIAPHRAGM

SHOWING INTERMEDIATE DIAPHRAGMS
(FOR INTERMEDIATE STEEL DIAPHRAGMS DETAILS, SEE "INTERMEDIATE STEEL DIAPHRAGMS FOR 72" BULB TEE PRESTRESSED CONCRETE GIRDERS" SHEET 5 OF 5.)

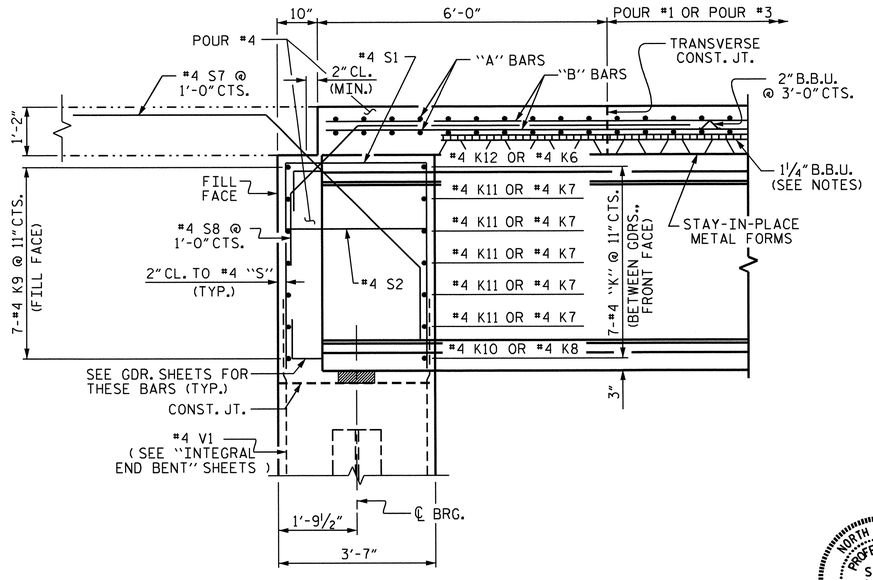

SECTION A-A

(AT INTEGRAL END BENT)

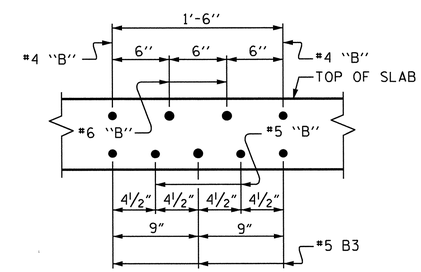

DETAIL B

PROJECT NO. B-4949
CUMBERLAND COUNTY
STATION: 25+55.00 -L-

SHEET 1 OF 4

STATE OF NORTH CAROLINA
DEPARTMENT OF TRANSPORTATION
RALEIGH

SUPERSTRUCTURE
TYPICAL SECTION
(STAGE 1)

NORTH CAROLINA PROFESSIONAL SEAL 20125 ENGINEER MARSHAL D. ELKEL, JR. 6-14-12

REVISIONS						SHEET NO.
NO.	BY:	DATE:	NO.	BY:	DATE:	S-8
1			3			TOTAL SHEETS
2			4			131

DRAWN BY : J.L. WALTON/DAH DATE : 5/15/11
CHECKED BY : B.N. GRADY/MGC DATE : 3/12

19-JUN-2012 11:41
R:\Structures\Final Plans\B-4949_SD_TS_1.dgn
dahodge

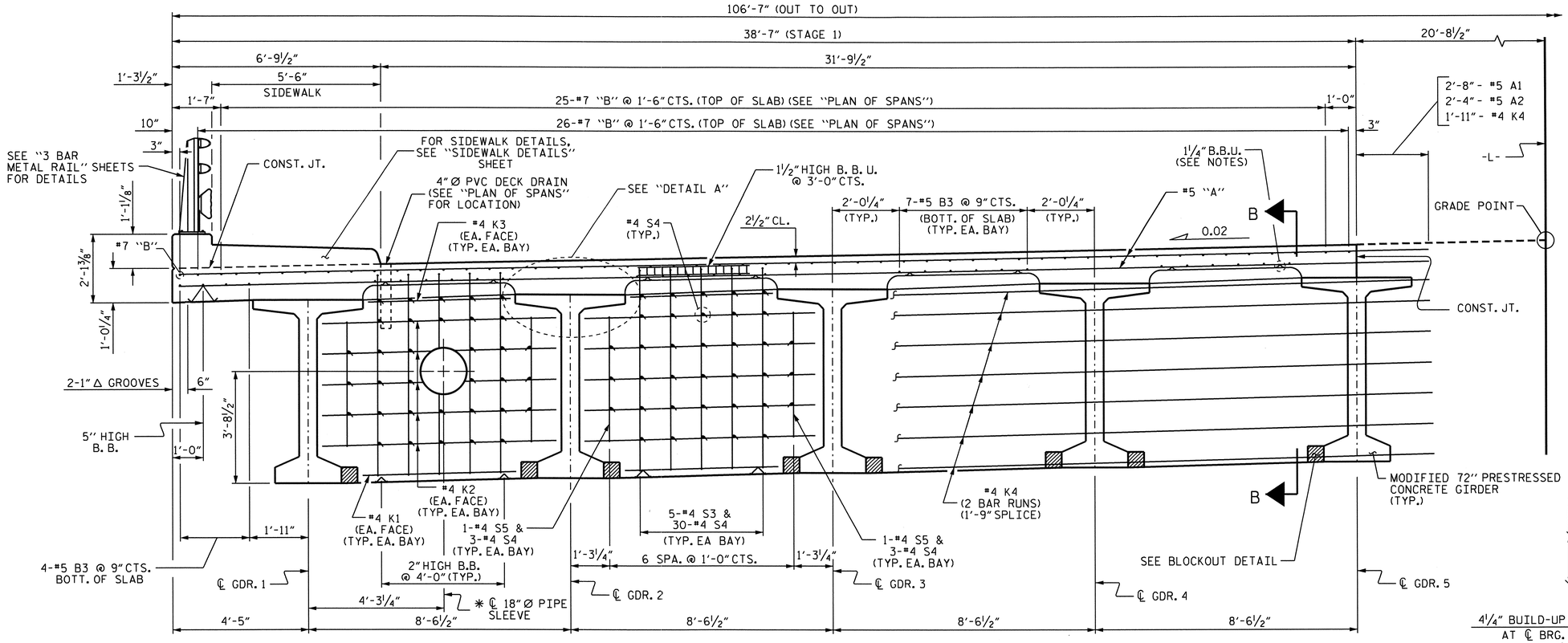

TYPICAL SECTION @ BENT DIAPHRAGM

✱ FOR 12" Ø WATER LINE, SEE "12" Ø D.I.R.J. WATER LINE" SHEET.

NOTES

PROVIDE 1¼" HIGH BEAM BOLSTERS UPPER AT 4'-0" CTS. ATOP THE METAL STAY-IN-PLACE FORMS TO SUPPORT THE BOTTOM MAT OF 'A' BARS. WHEN USING REMOVABLE FORMS, PROVIDE CONTINUOUS HIGH CHAIRS FOR METAL DECK (C.H.C.M.) @ 4'-0" CTS. WITH A HEIGHT TO SUPPORT THE BOTTOM MAT OF 'A' BARS A CLEAR DISTANCE OF 2½" ABOVE THE TOP OF THE REMOVABLE FORM.

LONGITUDINAL STEEL MAY BE SHIFTED SLIGHTLY, AS NECESSARY, TO AVOID INTERFERENCE WITH STIRRUPS IN PRESTRESSED CONCRETE GIRDERS.

PREVIOUSLY CAST CONCRETE IN A CONTINUOUS UNIT SHALL HAVE ATTAINED A MINIMUM COMPRESSIVE STRENGTH OF 3,000 PSI BEFORE ADDITIONAL CONCRETE IS CAST IN THE UNIT.

FOR TYPICAL SECTION OF INTERMEDIATE DIAPHRAGMS, SEE "PRESTRESSED CONCRETE GIRDER" SHEET 5 OF 5.

THE CONTRACTOR SHALL PROVIDE FOR INSTALLATION OF THE UTILITY BLOCKOUTS IN THE BENT DIAPHRAGM AND INTEGRAL END BENTS. REINFORCING STEEL IN THE BENT DIAPHRAGMS AND INTEGRAL END BENTS MAY BE SHIFTED OR FIELD BENT AS NECESSARY TO PROVIDE FOR THE UTILITY BLOCKOUTS. SEE UTILITY SHEETS FOR DETAILS.

THE 18" DIA. STEEL PIPE SLEEVE IS TO BE FLUSH WITH BOTH SIDES OF THE BENT DIAPHRAGMS OR INTEGRAL END BENTS. THE SLEEVE SHALL BE PLACED PARALLEL TO THE GIRDERS.

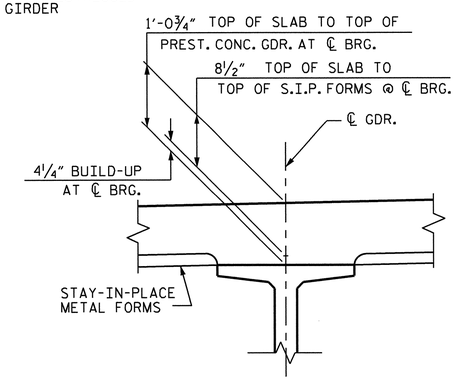

DETAIL A

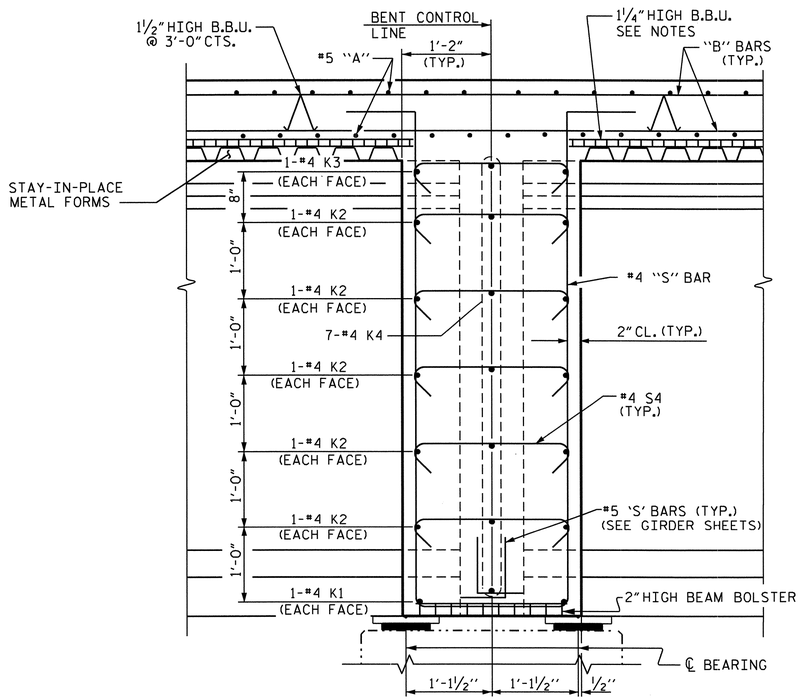

SECTION B-B

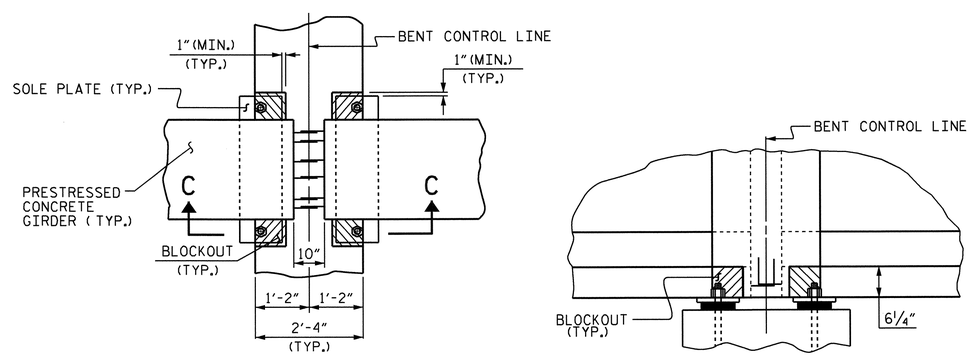

PLAN VIEW

SECTION C-C

BENT DIAPHRAGM BLOCKOUT DETAIL

PROJECT NO. B-4949
CUMBERLAND COUNTY
STATION: 25+55.00 -L-

SHEET 2 OF 4

STATE OF NORTH CAROLINA
DEPARTMENT OF TRANSPORTATION
RALEIGH

SUPERSTRUCTURE
TYPICAL SECTION
(STAGE 1)

REVISIONS						SHEET NO.
NO.	BY:	DATE:	NO.	BY:	DATE:	S-9
1			3			TOTAL SHEETS
2			4			131

NORTH CAROLINA PROFESSIONAL SEAL 20125 ENGINEER MARSHALL C. HOOK, JR.
6-19-12

DRAWN BY : J.L. WALTON/DAH DATE : 5/15/11
CHECKED BY : B.N. GRADY/MGC DATE : 3/12

19-JUN-2012 11:41
R:\Structures\Final Plans\B-4949_SD_TS_1.dgn
dahodge

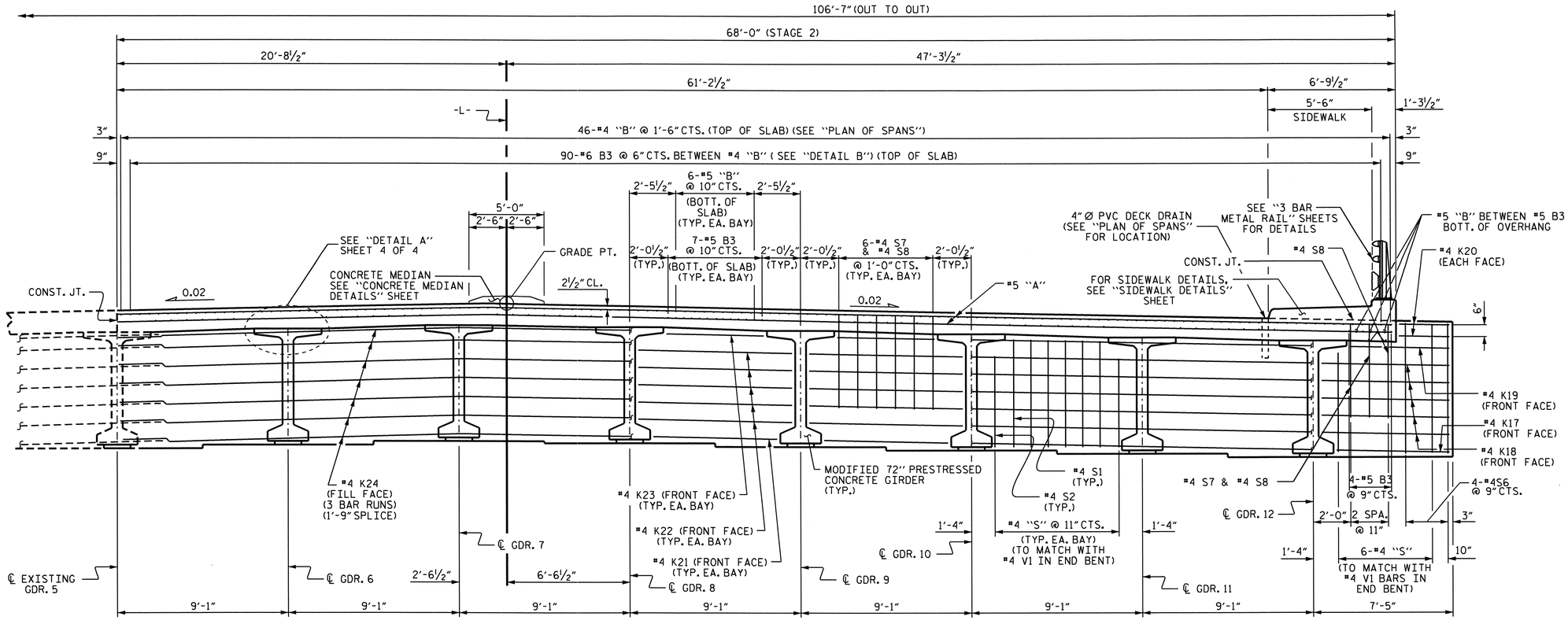

TYPICAL SECTION @ INTEGRAL END BENT

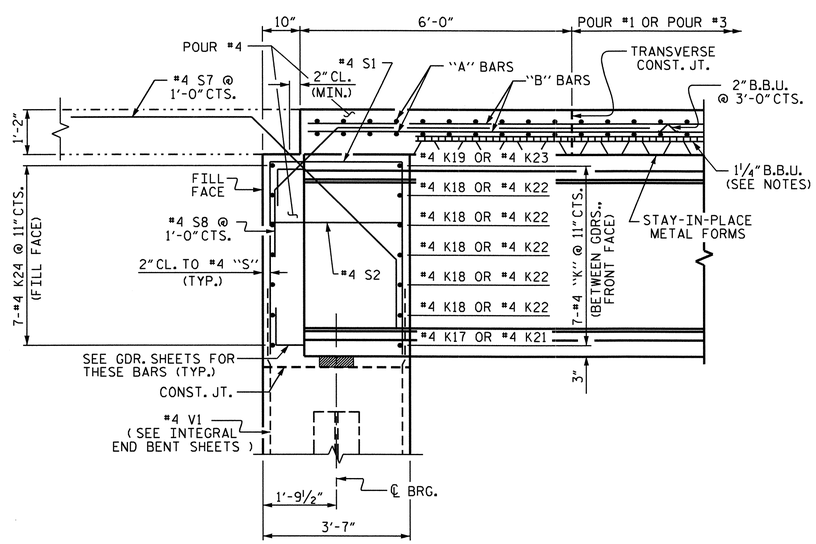

SECTION A-A

(AT INTEGRAL END BENT)

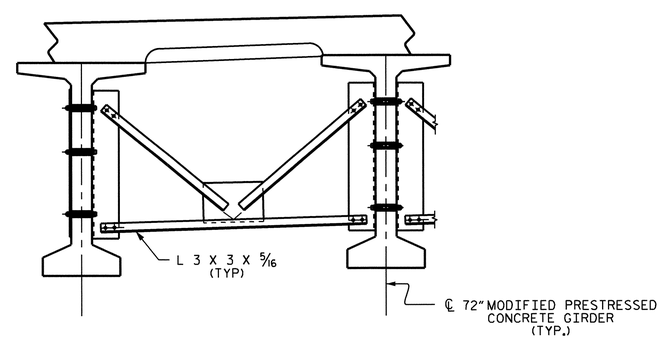

PART SECTION AT INTERMEDIATE DIAPHRAGM

SHOWING INTERMEDIATE DIAPHRAGMS
(FOR INTERMEDIATE STEEL DIAPHRAGMS DETAILS, SEE "INTERMEDIATE STEEL DIAPHRAGMS FOR 72" BULB TEE PRESTRESSED CONCRETE GIRDERS" SHEET 5 OF 5.)

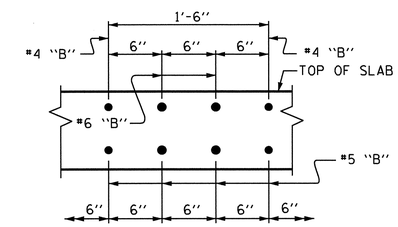

DETAIL B

PROJECT NO. B-4949
CUMBERLAND COUNTY
STATION: 25+55.00 -L-

SHEET 3 OF 4

STATE OF NORTH CAROLINA
DEPARTMENT OF TRANSPORTATION
RALEIGH

SUPERSTRUCTURE
TYPICAL SECTION
(STAGE 2)

REVISIONS						SHEET NO.
NO.	BY:	DATE:	NO.	BY:	DATE:	S-10
1			3			TOTAL SHEETS
2			4			131

NORTH CAROLINA PROFESSIONAL SEAL 20125 ENGINEER MARSHALL BACHELER, JR.

DRAWN BY : J.L. WALTON/DAH DATE : 7-1-11
CHECKED BY : B.N. GRADY/MGC DATE : 3/12

19-JUN-2012 11:40
R:\Structures\Final Plans\B-4949_SD_TS_1.dgn
dahodge

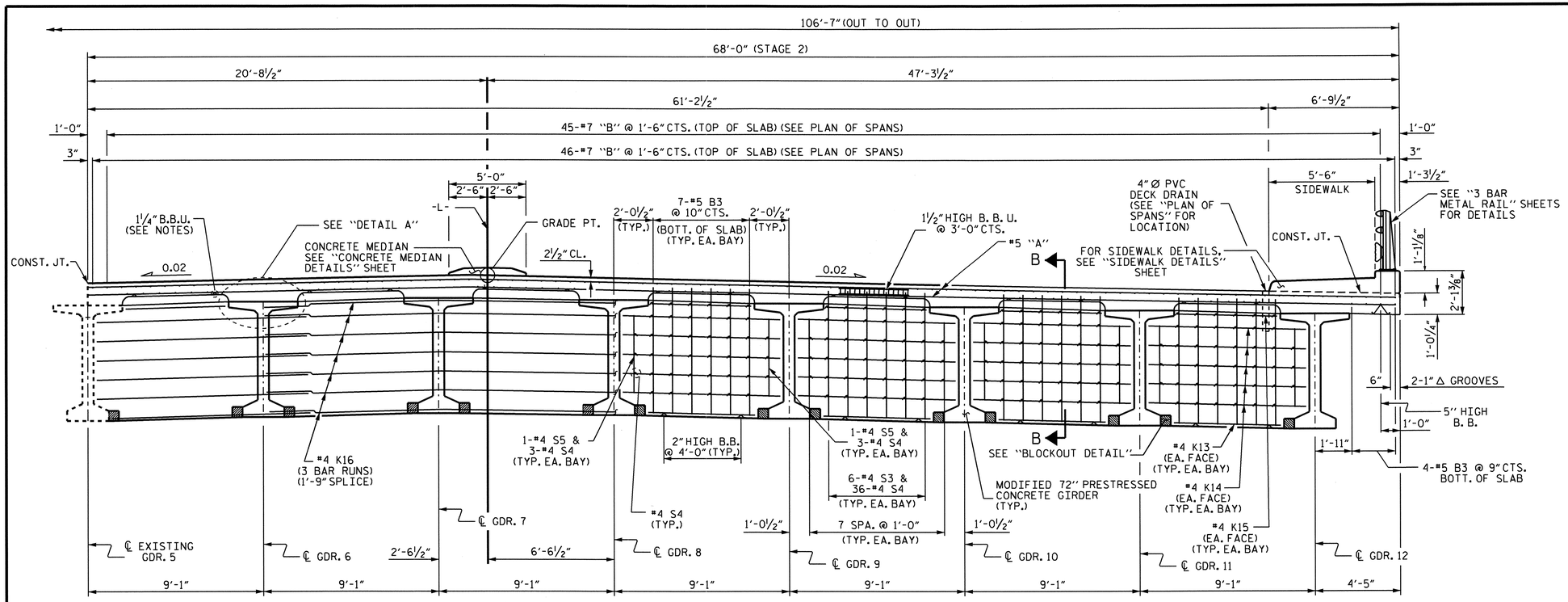

TYPICAL SECTION @ BENT DIAPHRAGM

NOTES

PROVIDE 1¼" HIGH BEAM BOLSTERS UPPER AT 4'-0" CTS. ATOP THE METAL STAY-IN-PLACE FORMS TO SUPPORT THE BOTTOM MAT OF 'A' BARS. WHEN USING REMOVABLE FORMS, PROVIDE CONTINUOUS HIGH CHAIRS FOR METAL DECK (C.H.C.M.) @ 4'-0" CTS. WITH A HEIGHT TO SUPPORT THE BOTTOM MAT OF 'A' BARS A CLEAR DISTANCE OF 2½" ABOVE THE TOP OF THE REMOVABLE FORM.

LONGITUDINAL STEEL MAY BE SHIFTED SLIGHTLY, AS NECESSARY, TO AVOID INTERFERENCE WITH STIRRUPS IN PRESTRESSED CONCRETE GIRDERS.

PREVIOUSLY CAST CONCRETE IN A CONTINUOUS UNIT SHALL HAVE ATTAINED A MINIMUM COMPRESSIVE STRENGTH OF 3,000 PSI BEFORE ADDITIONAL CONCRETE IS CAST IN THE UNIT.

FOR TYPICAL SECTION OF INTERMEDIATE DIAPHRAGMS, SEE "PRESTRESSED CONCRETE GIRDER" SHEET 5 OF 5.

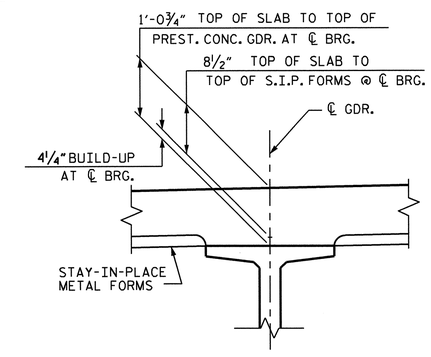

DETAIL A

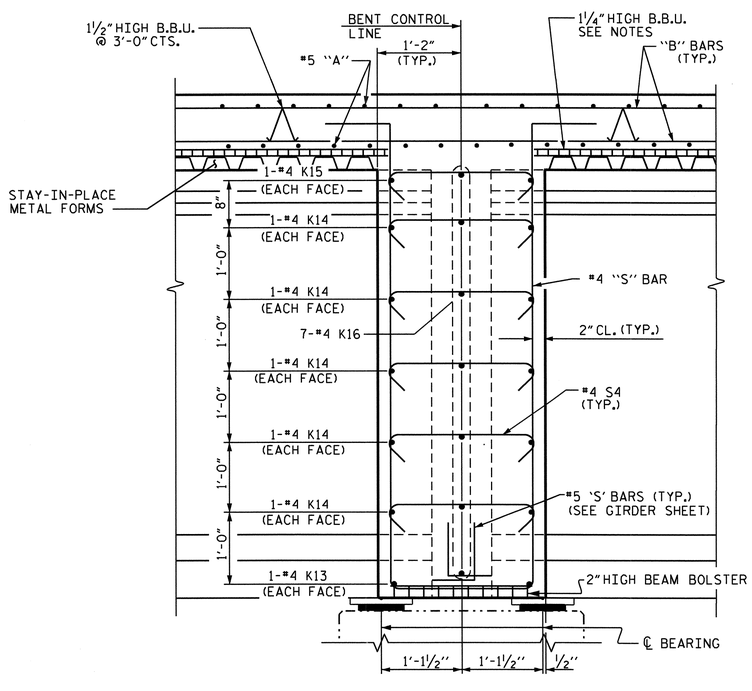

SECTION B-B

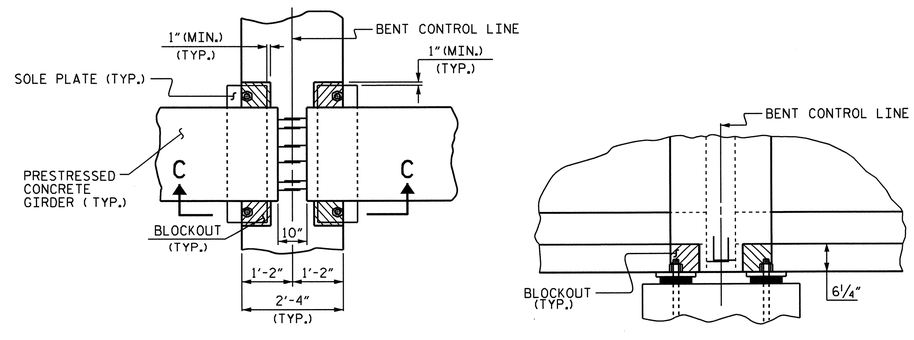

PLAN VIEW

SECTION C-C

BENT DIAPHRAGM BLOCKOUT DETAIL

PROJECT NO. B-4949

CUMBERLAND COUNTY

STATION: 25+55.00 -L-

SHEET 4 OF 4

STATE OF NORTH CAROLINA
DEPARTMENT OF TRANSPORTATION
RALEIGH

SUPERSTRUCTURE
TYPICAL SECTION
(STAGE 2)

NORTH CAROLINA PROFESSIONAL SEAL 20125 ENGINEER MARSHALL B. CLEX, JR.
6-4-12

REVISIONS						SHEET NO.
NO.	BY:	DATE:	NO.	BY:	DATE:	S-11
1			3			TOTAL SHEETS
2			4			131

DRAWN BY : J.L. WALTON/DAH DATE : 7-1-11
CHECKED BY : B.N. GRADY/MGC DATE : 3/12

10-MAY-2012 11:43
R:\Structures\Final Plans\B-4949_SD_TS_1.dgn
dahodge

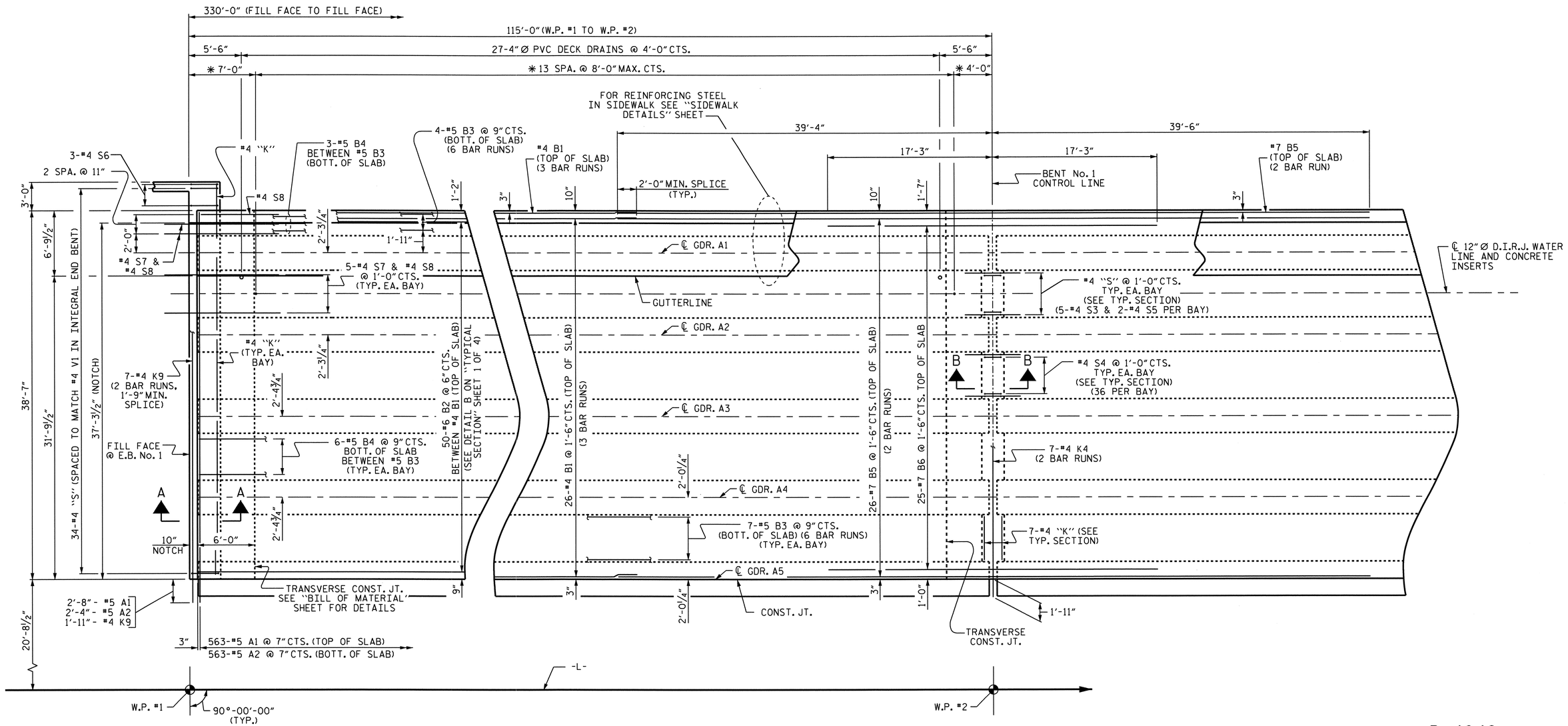

PLAN OF SPAN A

FOR SECTION VIEWS, SEE "TYPICAL SECTION" SHEETS.

FOR DETAILS OF INTERMEDIATE DIAPHRAGMS, SEE "PRESTRESSED CONCRETE GIRDER" SHEET 5 OF 5.

* SPACING MAY VARY SLIGHTLY TO INSURE THAT INSERTS ARE LOCATED ON PEAKS OF STAY-IN-PLACE FORMS.

FOR WING DETAILS, SEE SHEET 7 OF 7.

PROJECT NO. B-4949
CUMBERLAND COUNTY
STATION: 25+55.00 -L-

SHEET 1 OF 7

STATE OF NORTH CAROLINA
DEPARTMENT OF TRANSPORTATION
RALEIGH

SUPERSTRUCTURE
PLAN OF SPAN
SPAN A
(STAGE 1)

NORTH CAROLINA PROFESSIONAL SEAL 20125 ENGINEER
MARSHALL G. CHEEK, JR.
6-14-12

REVISIONS						SHEET NO.
NO.	BY:	DATE:	NO.	BY:	DATE:	S-12
1			3			TOTAL SHEETS
2			4			131

DRAWN BY : J.L. WALTON/DAH DATE : 7-5-11
CHECKED BY : B.N. GRADY/MGC DATE : 3/12

14-JUN-2012 09:27
R:\Structures\Final Plans\B-4949_SD_S*_1.dgn
dahodge

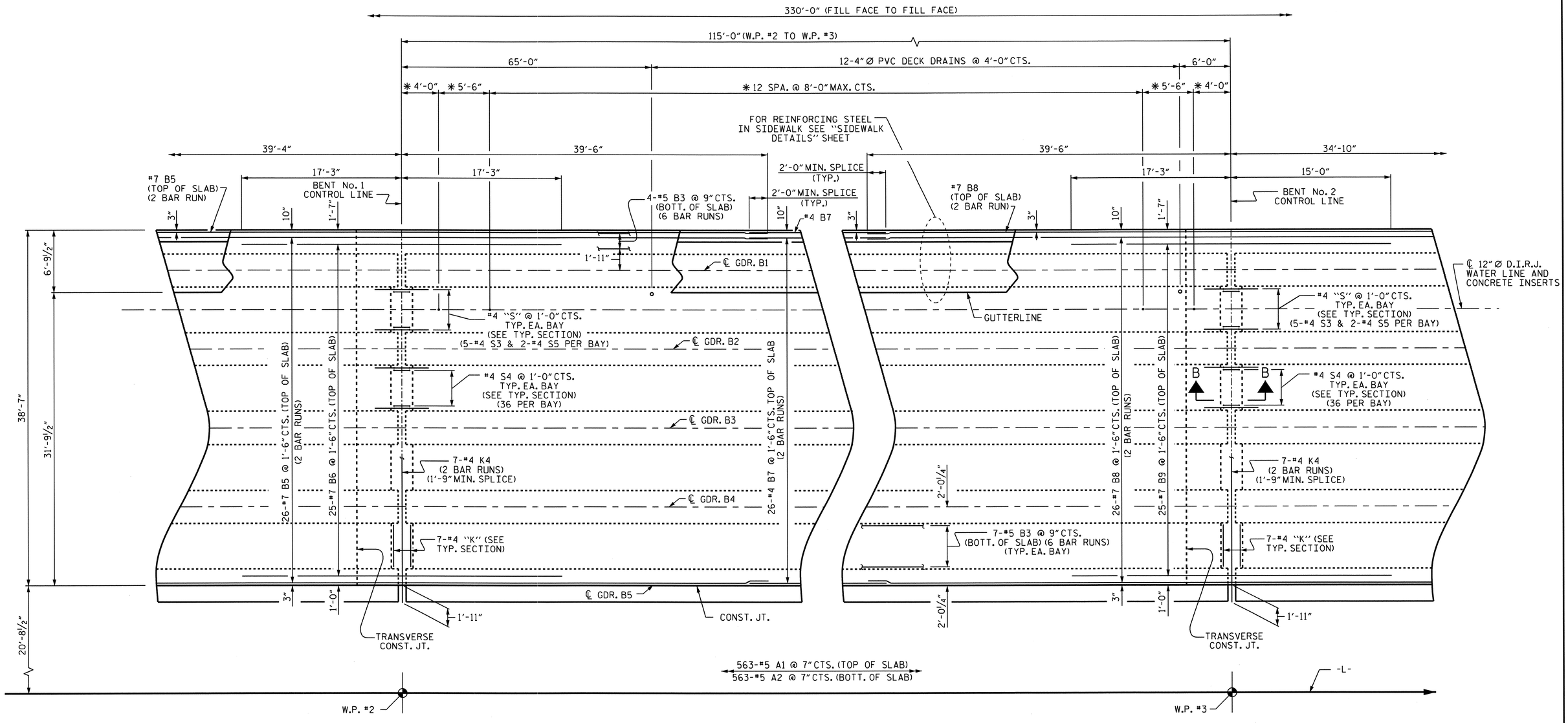

PLAN OF SPAN B

FOR SECTION VIEWS, SEE "TYPICAL SECTION" SHEETS.

FOR DETAILS OF INTERMEDIATE DIAPHRAGMS, SEE "PRESTRESSED CONCRETE GIRDER" SHEET 5 OF 5.

* SPACING MAY VARY SLIGHTLY TO INSURE THAT INSERTS ARE LOCATED ON PEAKS OF STAY-IN-PLACE FORMS.

PROJECT NO. B-4949
CUMBERLAND COUNTY
STATION: 25+55.00 -L-

SHEET 2 OF 7

STATE OF NORTH CAROLINA
DEPARTMENT OF TRANSPORTATION
RALEIGH

SUPERSTRUCTURE
PLAN OF SPAN
SPAN B
(STAGE 1)

NORTH CAROLINA PROFESSIONAL SEAL 20125 ENGINEER MATTHEW G. CHECK, JR.
6-14-12

REVISIONS						SHEET NO.
NO.	BY:	DATE:	NO.	BY:	DATE:	S-13
1			3			TOTAL SHEETS
2			4			131

DRAWN BY : J.L. WALTON/DAH DATE : 7-5-11
CHECKED BY : B.N. GRADY/MGC DATE : 3/12

14-JUN-2012 07:28
R:\Structures\Final Plans\B-4949_SD_S*_1.dgn
dahodge

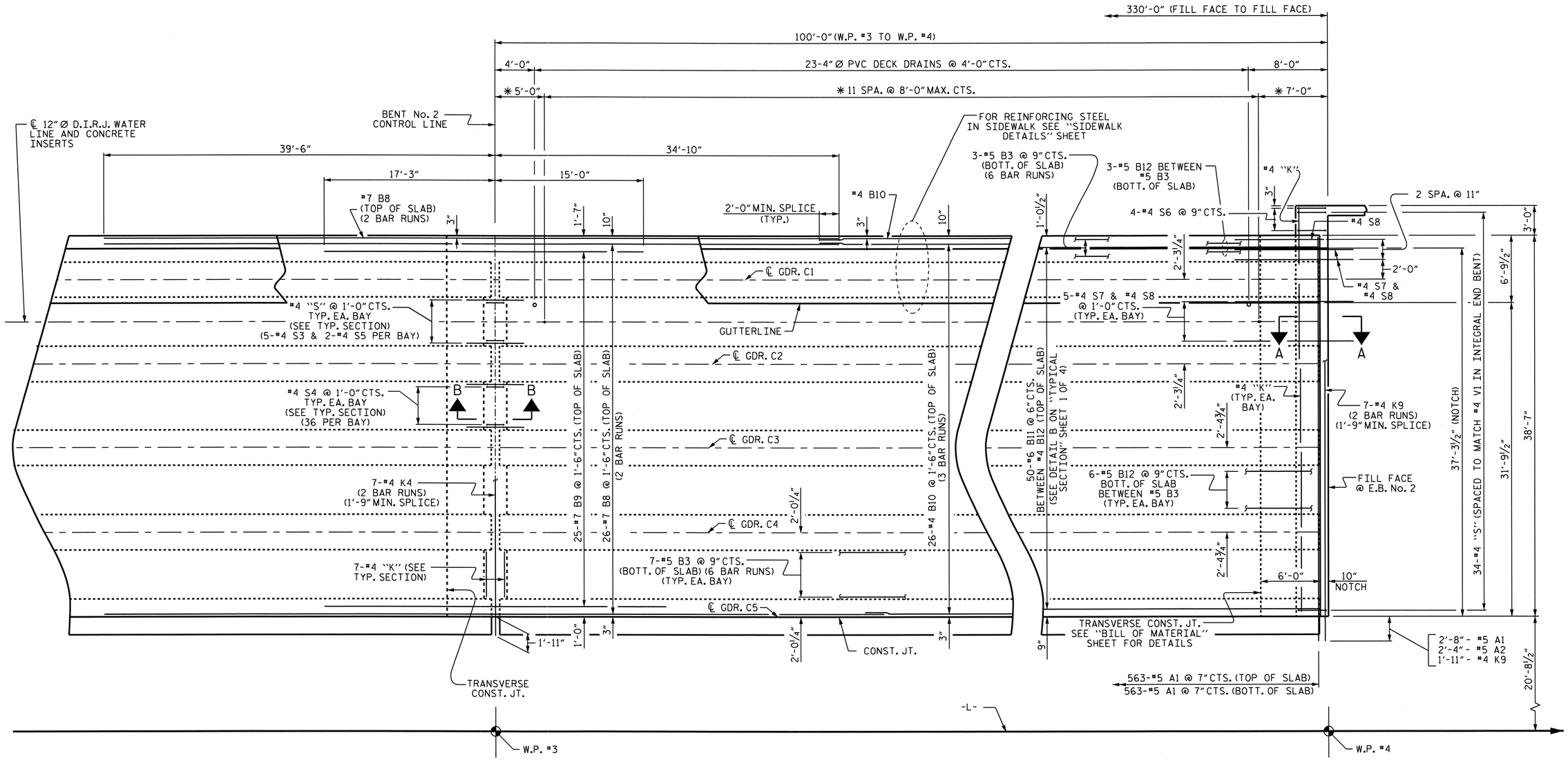

PLAN OF SPAN C

FOR SECTION VIEWS, SEE "TYPICAL SECTION" SHEETS.

FOR DETAILS OF INTERMEDIATE DIAPHRAGMS, SEE "PRESTRESSED CONCRETE GIRDER" SHEET 5 OF 5.

* SPACING MAY VARY SLIGHTLY TO INSURE THAT INSERTS ARE LOCATED ON PEAKS OF STAY-IN-PLACE FORMS.

FOR WING DETAILS, SEE SHEET 7 OF 7.

PROJECT NO. B-4949

CUMBERLAND COUNTY

STATION: 25+55.00 -L-

SHEET 3 OF 7

STATE OF NORTH CAROLINA
DEPARTMENT OF TRANSPORTATION
RALEIGH

SUPERSTRUCTURE

PLAN OF SPAN
SPAN C
(STAGE 1)

NORTH CAROLINA PROFESSIONAL SEAL 20125 ENGINEER MARSHALL G. CHEEK, JR.
6-14-12

REVISIONS						SHEET NO.
NO.	BY:	DATE:	NO.	BY:	DATE:	S-14
1			3			TOTAL SHEETS
2			4			131

DRAWN BY : J.L. WALTON/DAH DATE : 7-5-11
CHECKED BY : B.N. GRADY/MGC DATE : 3/12

14-JUN-2012 09:27
R:\Structures\Final Plans\B-4949_SD_S*_1.dgn
dahodge

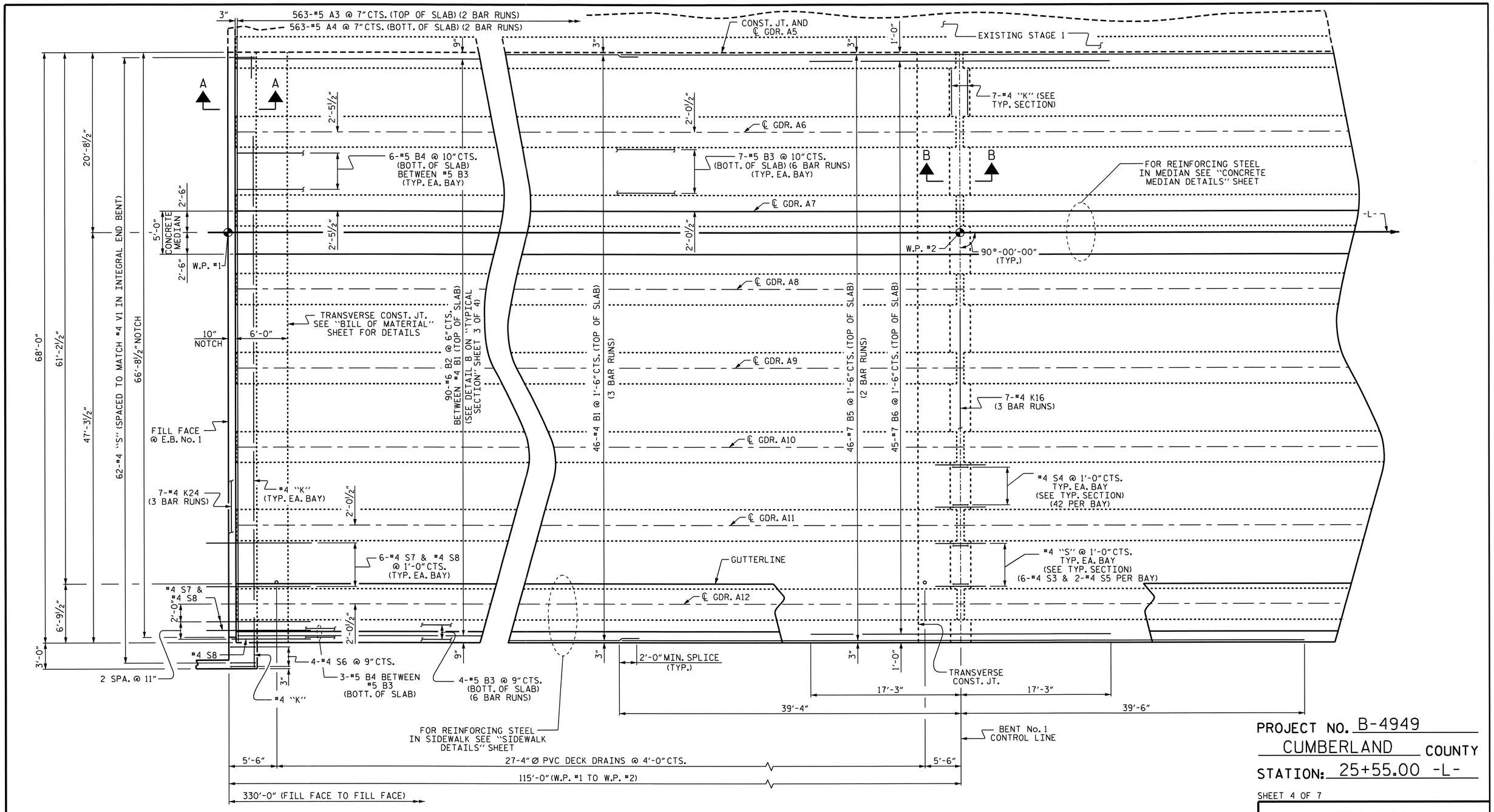

PLAN OF SPAN A

FOR SECTION VIEWS, SEE "TYPICAL SECTION" SHEETS.

FOR DETAILS OF INTERMEDIATE DIAPHRAGMS, SEE "PRESTRESSED CONCRETE GIRDER", SHEET 5 OF 5.

FOR WING DETAILS, SEE SHEET 7 OF 7.

PROJECT NO. B-4949

CUMBERLAND COUNTY

STATION: 25+55.00 -L-

SHEET 4 OF 7

STATE OF NORTH CAROLINA
DEPARTMENT OF TRANSPORTATION
RALEIGH

SUPERSTRUCTURE
PLAN OF SPAN
SPAN A
(STAGE 2)

NORTH CAROLINA PROFESSIONAL SEAL 20125 ENGINEER MARSHALL G. CHECK, JR.
6-14-12

REVISIONS								SHEET NO.
NO.	BY:	DATE:	NO.	BY:	DATE:			S-15
1			3					TOTAL SHEETS
2			4					131

DRAWN BY : J.L. WALTON/DAH DATE : 7-5-11
CHECKED BY : B.N. GRADY/MGC DATE : 3/12

14-JUN-2012 09:27
R:\Structures\Final Plans\B-4949_SD_S*_1.dgn
dahodge

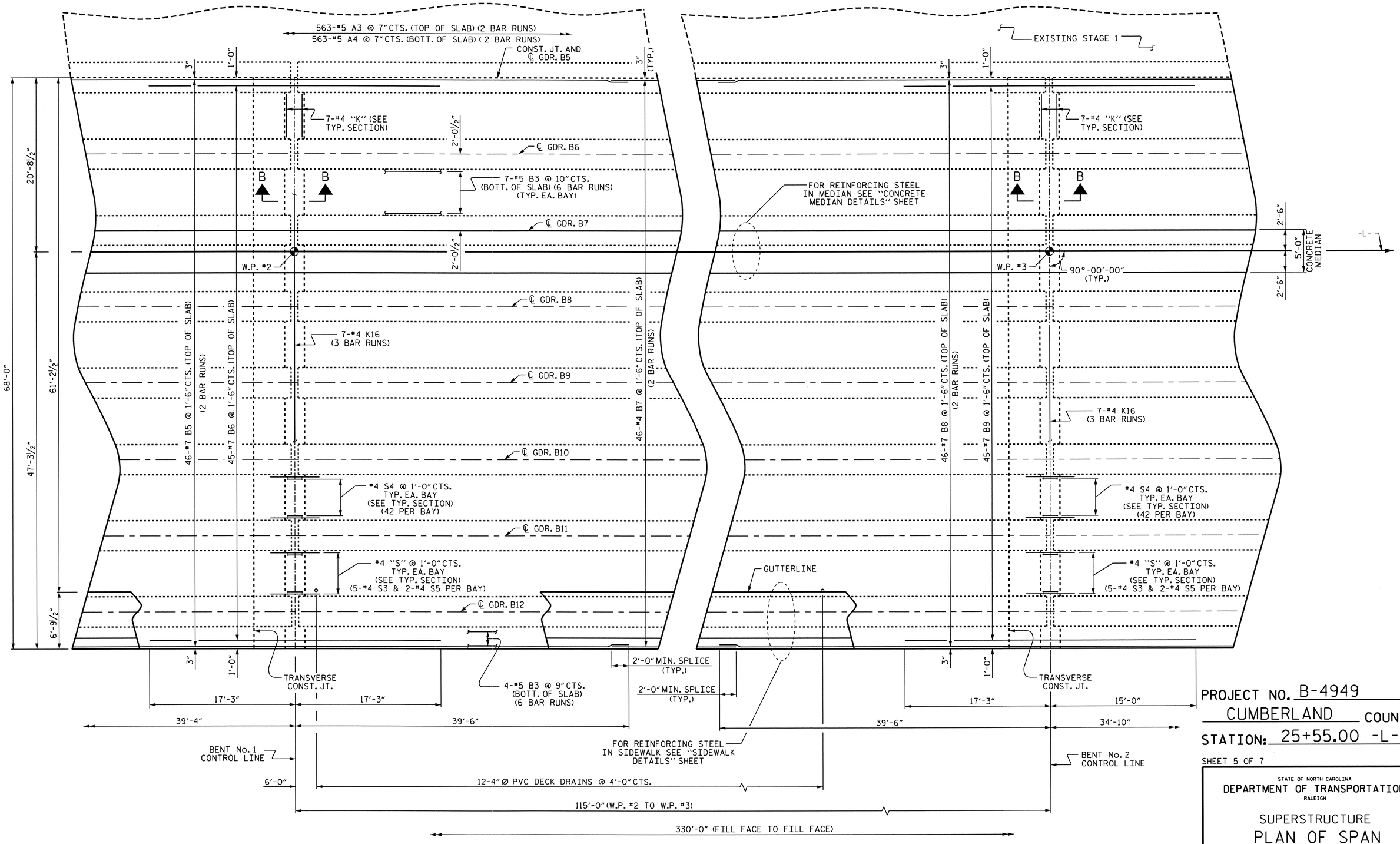

PLAN OF SPAN B

FOR SECTION VIEWS, SEE "TYPICAL SECTION" SHEETS.

FOR DETAILS OF INTERMEDIATE DIAPHRAGMS, SEE "PRESTRESSED CONCRETE GIRDER", SHEET 5 OF 5.

PROJECT NO. B-4949
CUMBERLAND COUNTY
STATION: 25+55.00 -L-

SHEET 5 OF 7

STATE OF NORTH CAROLINA
DEPARTMENT OF TRANSPORTATION
RALEIGH

SUPERSTRUCTURE
PLAN OF SPAN
SPAN B
(STAGE 2)

NORTH CAROLINA PROFESSIONAL SEAL 20125 ENGINEER MARSHALL G. BREEK, JR.
6-14-12

REVISIONS						SHEET NO.
NO.	BY:	DATE:	NO.	BY:	DATE:	S-16
1			3			TOTAL SHEETS
2			4			131

DRAWN BY : J.L. WALTON/DAH DATE : 7-5-11
CHECKED BY : B.N. GRADY/MGC DATE : 3/12

14-JUN-2012 09:26
R:\Structures\Final Plans\B-4949_SD_S*_1.dgn
dahodge

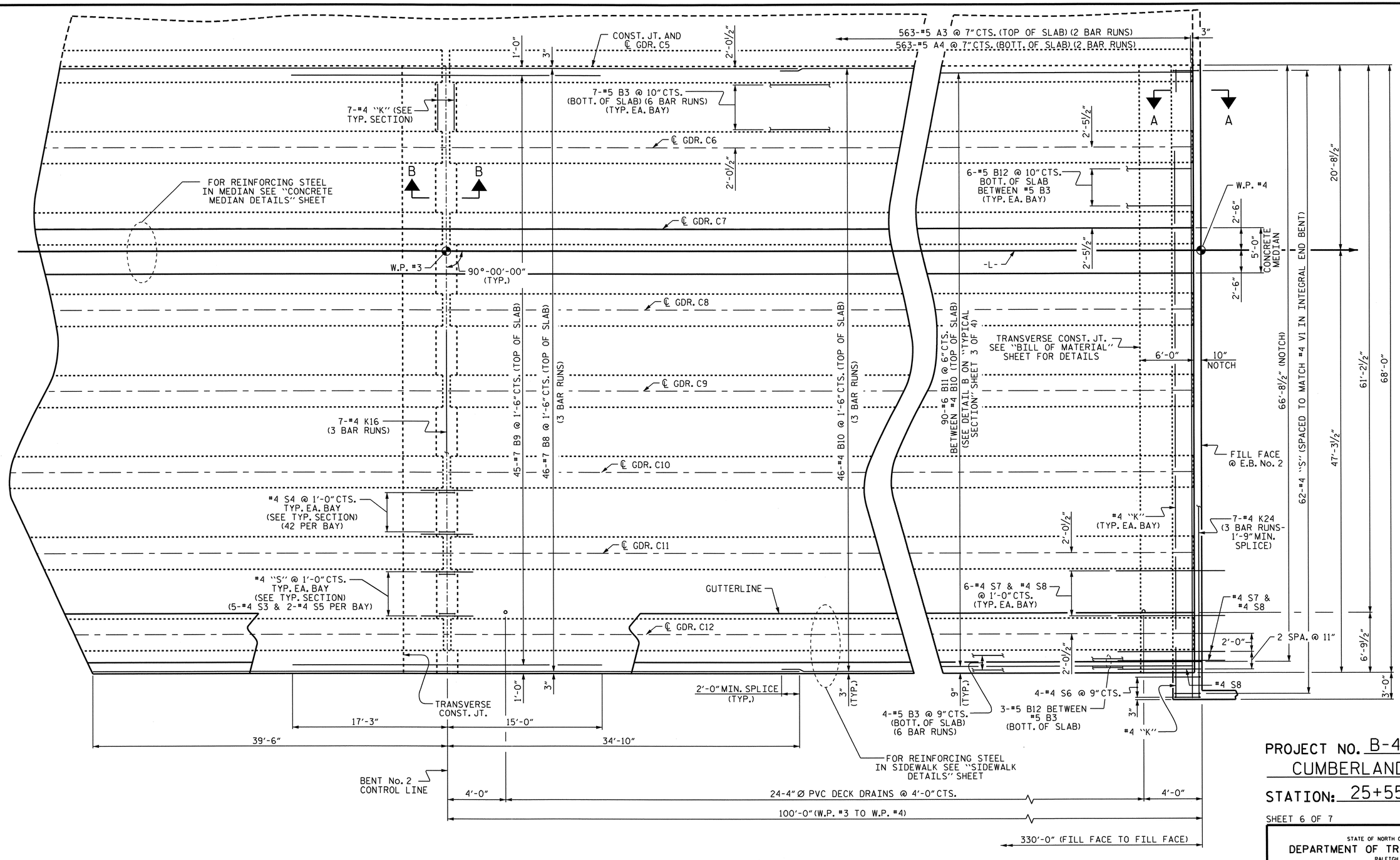

PLAN OF SPAN C

FOR SECTION VIEWS, SEE "TYPICAL SECTION" SHEETS.

FOR DETAILS OF INTERMEDIATE DIAPHRAGMS, SEE "PRESTRESSED CONCRETE GIRDER", SHEET 5 OF 5.

FOR WING DETAILS, SEE SHEET 7 OF 7.

PROJECT NO. B-4949
CUMBERLAND COUNTY
STATION: 25+55.00 -L-

SHEET 6 OF 7

STATE OF NORTH CAROLINA
DEPARTMENT OF TRANSPORTATION
RALEIGH

SUPERSTRUCTURE
PLAN OF SPAN
SPAN C
(STAGE 2)

NORTH CAROLINA PROFESSIONAL SEAL 20125 ENGINEER MARSHAL B. CHECK, JR.
6-10-12

REVISIONS						SHEET NO.
NO.	BY:	DATE:	NO.	BY:	DATE:	S-17
1			3			TOTAL SHEETS
2			4			131

DRAWN BY : J.L. WALTON/DAH DATE : 7-5-11
CHECKED BY : B.N. GRADY/MGC DATE : 3/12

14-JUN-2012 09:26
R:\Structures\Final Plans\B-4949_SD_S*_1.dgn
dahodge

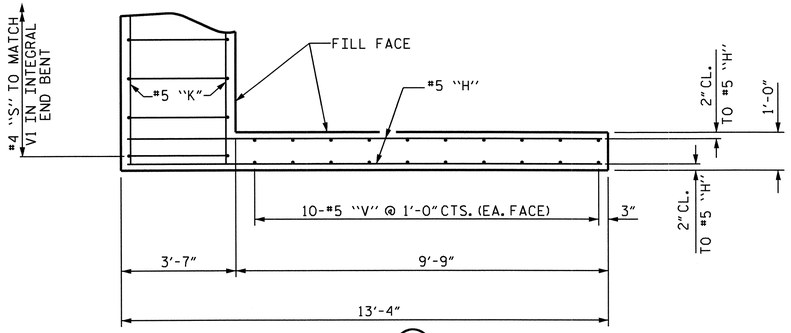

PLAN (W1)

STAGE 1

WING AT END BENT No. 1 SHOWN, WING AT END BENT No. 2 SIMILAR

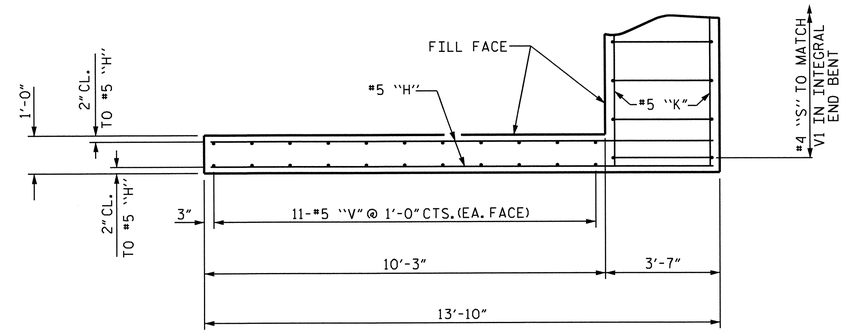

PLAN (W2)

STAGE 2

WING AT END BENT No. 1 SHOWN, WING AT END BENT No. 2 SIMILAR

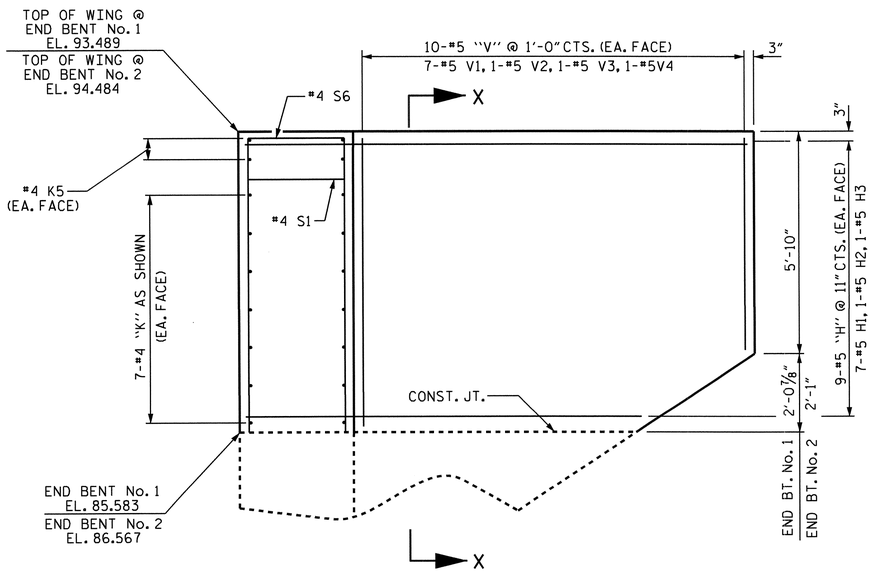

ELEVATION (W1)

STAGE 1

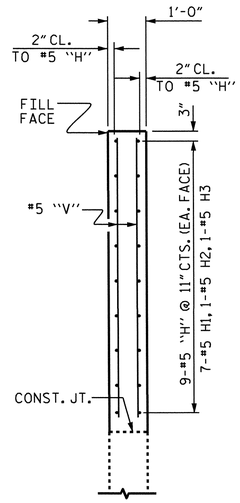

SECTION X-X

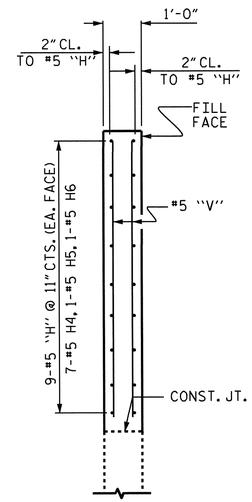

SECTION Y-Y

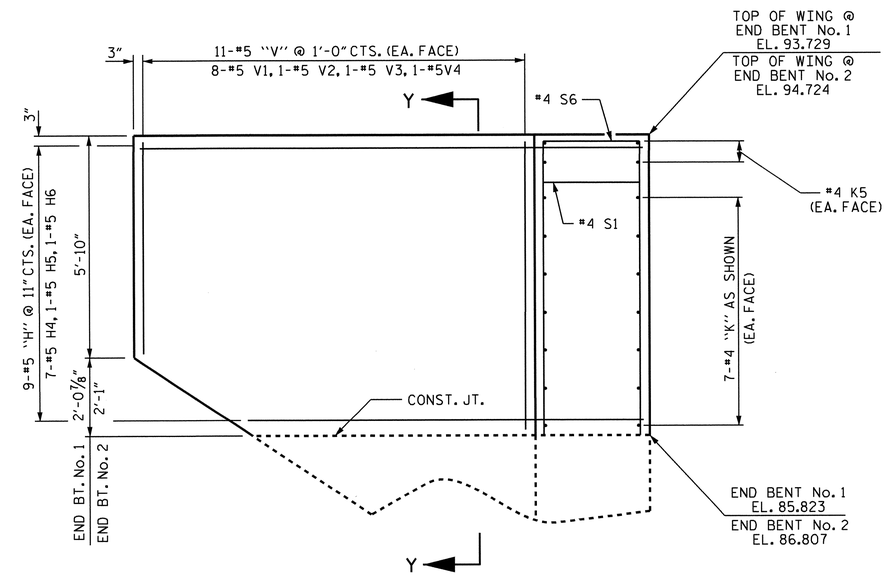

ELEVATION (W2)

STAGE 2

UPPER WINGS AT INTEGRAL END BENTS

FOR LOWER WING REINFORCING STEEL AND DETAILS, SEE "INTEGRAL END BENT" SHEETS.

PROJECT NO. B-4949

CUMBERLAND COUNTY

STATION: 25+55.00 -L-

SHEET 7 OF 7

STATE OF NORTH CAROLINA
DEPARTMENT OF TRANSPORTATION
RALEIGH

SUPERSTRUCTURE

PLAN OF SPAN DETAILS

NORTH CAROLINA PROFESSIONAL SEAL 20125 ENGINEER MARSHALL G. CHECK, JR.
6-14-12

REVISIONS						SHEET NO.
NO.	BY:	DATE:	NO.	BY:	DATE:	S-18
1			3			TOTAL SHEETS
2			4			131

DRAWN BY : J.L. WALTON/DAH DATE : 7-5-11
CHECKED BY : B.N. GRADY/MGC DATE : 4/12

14-JUN-2012 13:01
W:\Structures\Final Plans\B-4949_SD_S*_1.dgn
wjharris

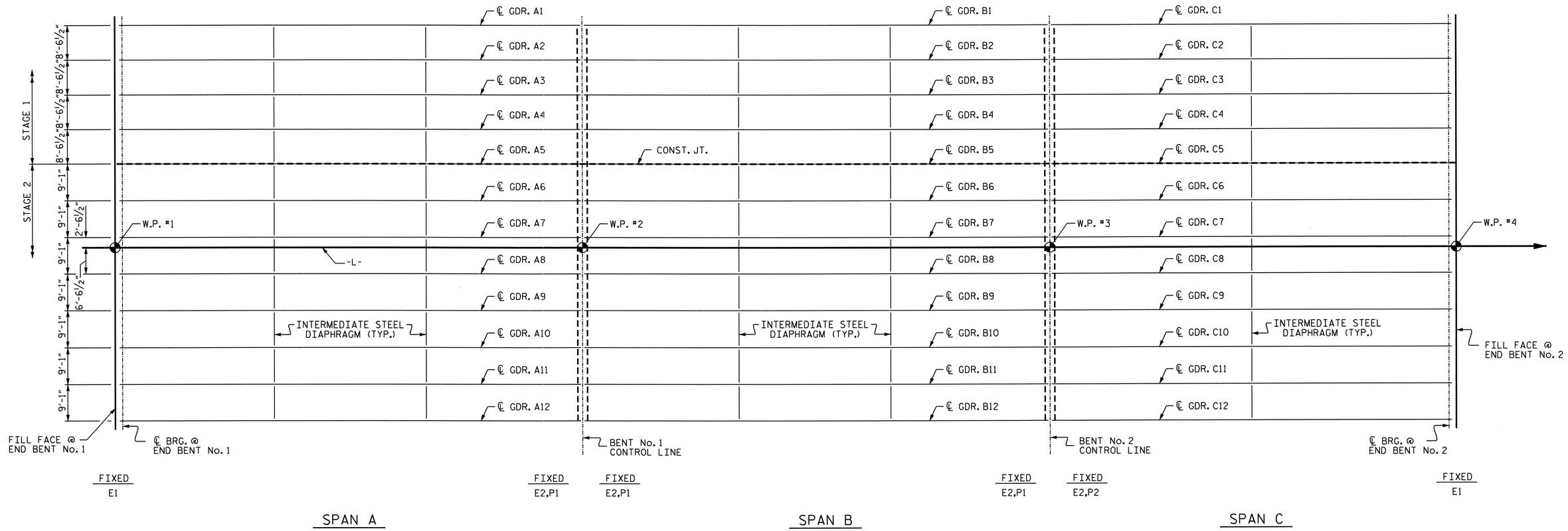

PLAN OF GIRDER LAYOUT

PROJECT NO. B-4949

CUMBERLAND COUNTY

STATION: 25+55.00 -L-

STATE OF NORTH CAROLINA
DEPARTMENT OF TRANSPORTATION
RALEIGH

SUPERSTRUCTURE

GIRDER LAYOUT
SPANS A, B, & C
STAGE 1 & 2

NORTH CAROLINA PROFESSIONAL SEAL 20125 ENGINEER MARSHALL G. CHEEK, JR.
6-4-12

REVISIONS						SHEET NO.
NO.	BY:	DATE:	NO.	BY:	DATE:	S-19
1			3			TOTAL SHEETS
2			4			131

DRAWN BY : D. HODGE DATE : 2/12
CHECKED BY : M.G. CHEEK DATE : 3/12

10-MAY-2012 11:36
R:\Structures\Final Plans\B4949_SD_FP.dgn
dahodge

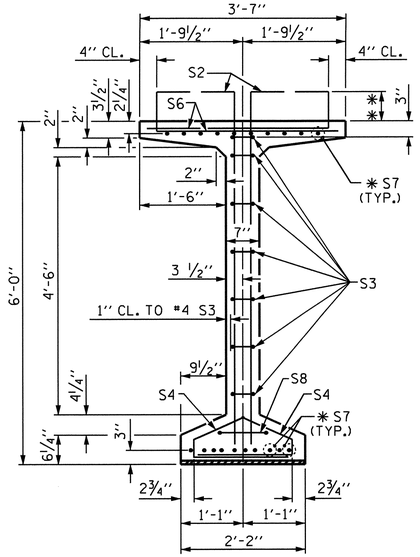

SECTION A-A

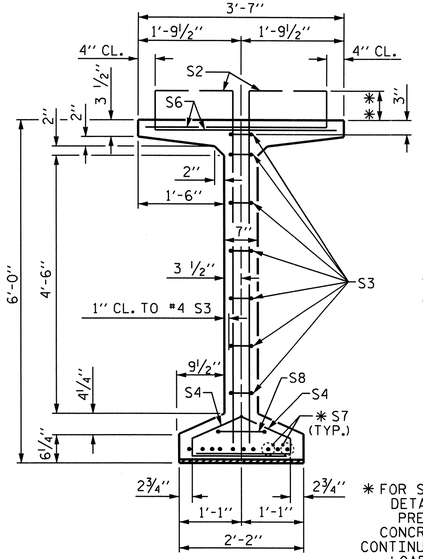

SECTION B-B

✱ FOR S7 BARS. SEE DETAIL "C" OF PRESTRESSED CONCRETE GIRDER CONTINUOUS FOR LIVE LOAD DETAILS, SHEET 4 OF 5.

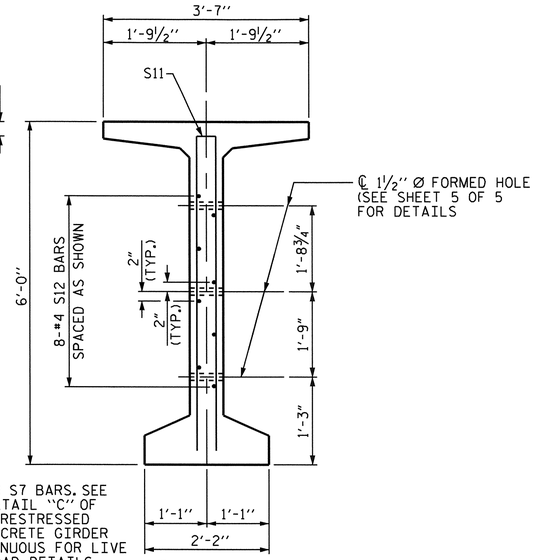

SECTION C-C

(S1, S6 AND S9 BARS NOT SHOWN)

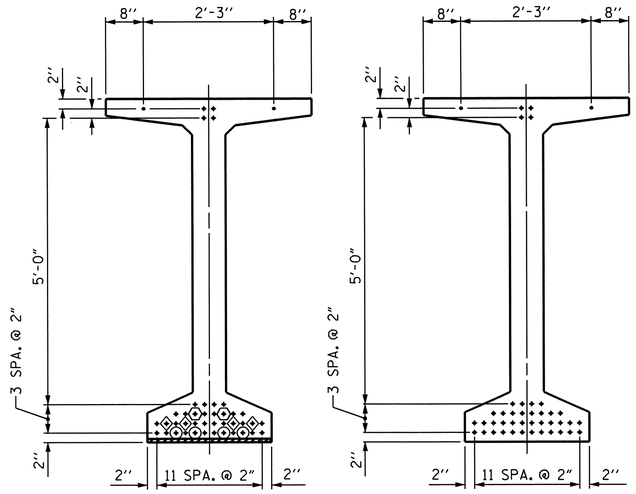

AT END OF GIRDER

AT ℄ OF GIRDER

0.6" Ø LOW RELAXATION STRAND LAYOUT

0.6" Ø L. R. GRADE 270 STRANDS		
AREA (SQUARE INCHES)	ULTIMATE STRENGTH (LBS. PER STRAND)	APPLIED PRESTRESS (LBS. PER STRAND)
0.217	58,600	43,950

REINFORCING STEEL FOR ONE GDR

BAR	NUMBER	SIZE	TYPE	LENGTH	WEIGHT
S1	184	#4	1	6'-10"	840
S2	36	#6	1	6'-10"	369
S3	14	#4	2	8'-5"	79
S4	116	#4	3	3'-0"	232
S6	220	#5	4	4'-4"	994
✱ S7	30	#5	STR	3'-8"	115
S8	2	#5	2	9'-0"	19
S9	31	#5	STR	3'-3"	105
S10	2	#3	STR	1'-10"	1
S11	8	#5	2	11'-8"	97
S12	16	#4	STR	8'-0"	86

✱ NOTE: S7 BARS SHALL BE BENT BEFORE SHIPMENT. HEAT BENDING SHALL NOT BE ALLOWED.

BAR TYPES

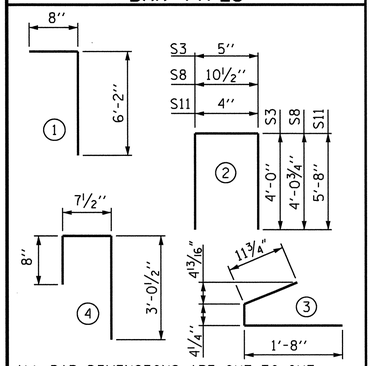

ALL BAR DIMENSIONS ARE OUT-TO-OUT

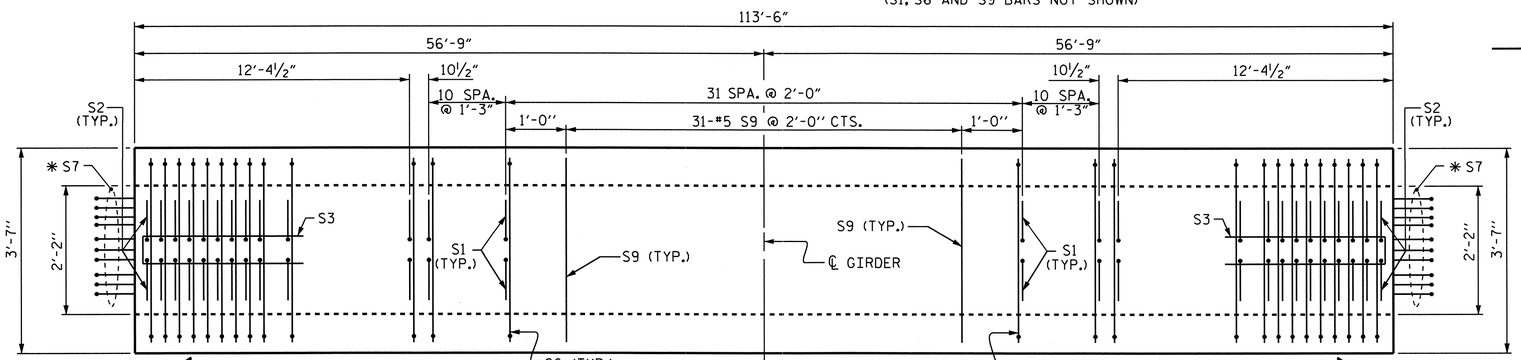

PLAN OF GIRDER

DEBONDING LEGEND

- ● FULLY BONDED STRANDS
- STRANDS DEBONDED FOR 4'-0" FROM END OF GIRDER
- STRANDS DEBONDED FOR 6'-0" FROM END OF GIRDER
- STRANDS DEBONDED FOR 8'-0" FROM END OF GIRDER

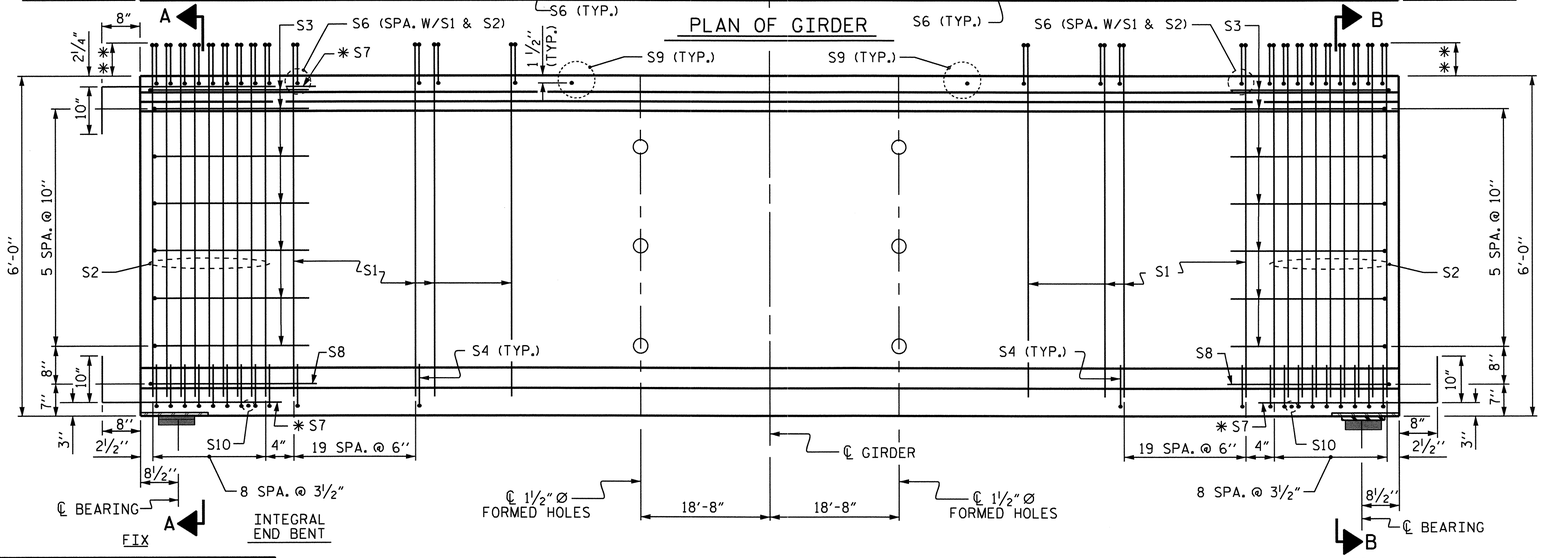

ELEVATION OF GIRDER

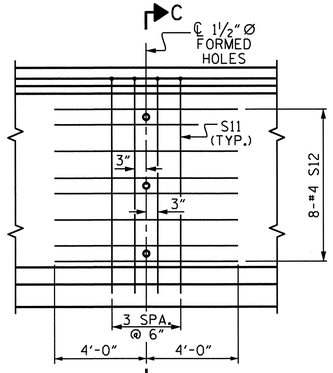

PARTIAL ELEVATION

SHOWING INTERMEDIATE STEEL DIAPHRAGM REINFORCING STEEL

✱✱ THE PROJECTION OF THE S1 AND S2 BARS VARIES LINEARLY FROM 7¾" AT THE ENDS OF THE GIRDER TO 5" AT THE CENTERLINE OF THE GIRDER.

QUANTITIES FOR ONE GIRDER		
REINFORCING STEEL	9100 PSI CONCRETE	0.6" Ø L.R. STRANDS
LB.	C.Y.	No.
2,937	24.3	42

GIRDERS REQUIRED			
STAGE	NUMBER	LENGTH	TOTAL LENGTH
1	5	113'-6"	567'-6"
2	7	113'-6"	794'-6"
TOTAL	12	113'-6"	1362'-0"

PROJECT NO. B-4949

CUMBERLAND COUNTY

STATION: 25+55.00 -L-

SHEET 1 OF 5

STATE OF NORTH CAROLINA
DEPARTMENT OF TRANSPORTATION
RALEIGH

STANDARD
72" PRESTRESSED CONCRETE MODIFIED BULB TEE CONTINUOUS FOR LIVE LOAD
(SPAN A)

NORTH CAROLINA PROFESSIONAL SEAL 20125 ENGINEER MARSHALL GLOVER, JR.
6-14-12

ASSEMBLED BY : J.L. WALTON/DAH	DATE : 6/13/11
CHECKED BY : M.G. CHEEK	DATE : 5/12

DRAWN BY : EEM 2/6/97	REV. 10/17/00	RWW/LES
CHECKED BY : VAP 2/6/97	REV. 5/1/06R	TLA/GM
	REV. 10/1/11	MAA/GM

REVISIONS

NO.	BY:	DATE:	NO.	BY:	DATE:
1			3		
2			4		

SHEET NO. S-20

TOTAL SHEETS 131

STD. NO. PCG8

14-JUN-2012 07:27
R:\Structures\Final Plans\B-4949_SD_G*_1.dgn
dahodge

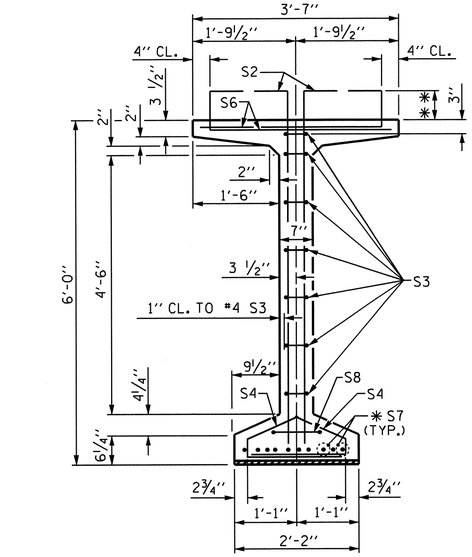

SECTION A-A

* FOR S7 BARS. SEE DETAIL "C" OF PRESTRESSED CONCRETE GIRDER CONTINUOUS FOR LIVE LOAD DETAILS, SHEET 4 OF 5.

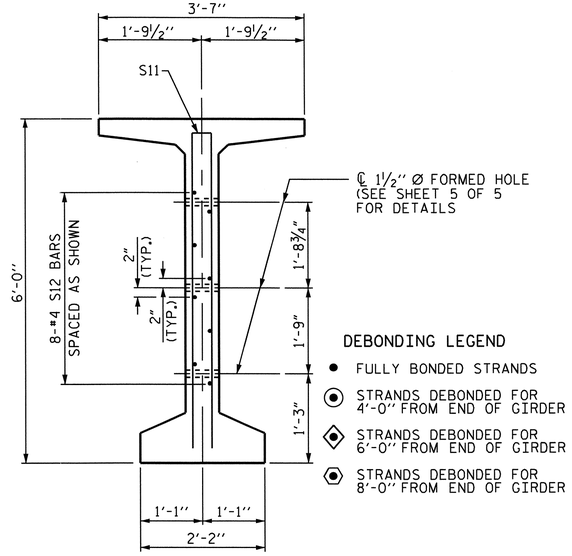

SECTION C-C

(S1, S6 AND S9 BARS NOT SHOWN)

DEBONDING LEGEND

- FULLY BONDED STRANDS
- STRANDS DEBONDED FOR 4'-0" FROM END OF GIRDER
- STRANDS DEBONDED FOR 6'-0" FROM END OF GIRDER
- STRANDS DEBONDED FOR 8'-0" FROM END OF GIRDER

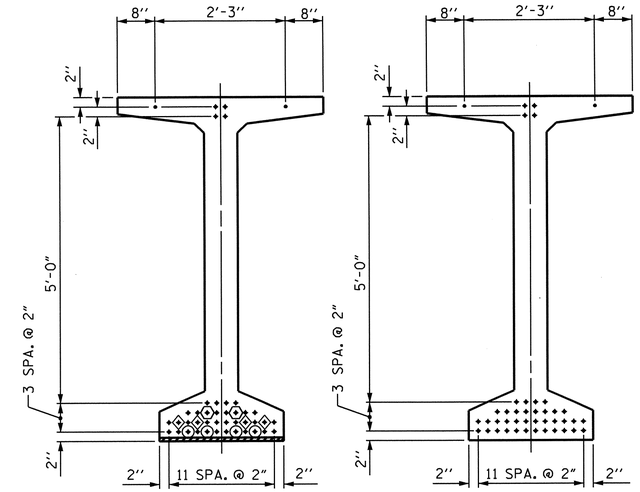

AT END OF GIRDER

AT ℄ OF GIRDER

0.6" Ø LOW RELAXATION STRAND LAYOUT

0.6" Ø L. R. GRADE 270 STRANDS		
AREA (SQUARE INCHES)	ULTIMATE STRENGTH (LBS. PER STRAND)	APPLIED PRESTRESS (LBS. PER STRAND)
0.217	58,600	43,950

REINFORCING STEEL FOR ONE GDR

BAR	NUMBER	SIZE	TYPE	LENGTH	WEIGHT
S1	188	#4	1	6'-10"	858
S2	36	#6	1	6'-10"	369
S3	14	#4	2	8'-5"	79
S4	124	#4	3	3'-0"	248
S6	224	#5	4	4'-4"	1012
* S7	20	#5	STR	3'-8"	76
S8	2	#5	2	9'-0"	19
S9	33	#5	STR	3'-3"	112
S10	2	#3	STR	1'-10"	1
S11	8	#5	2	11'-8"	97
S12	16	#4	STR	8'-0"	86

* NOTE: S7 BARS SHALL BE BENT BEFORE SHIPMENT. HEAT BENDING SHALL NOT BE ALLOWED.

BAR TYPES

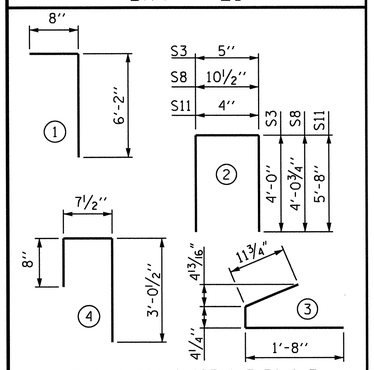

ALL BAR DIMENSIONS ARE OUT-TO-OUT

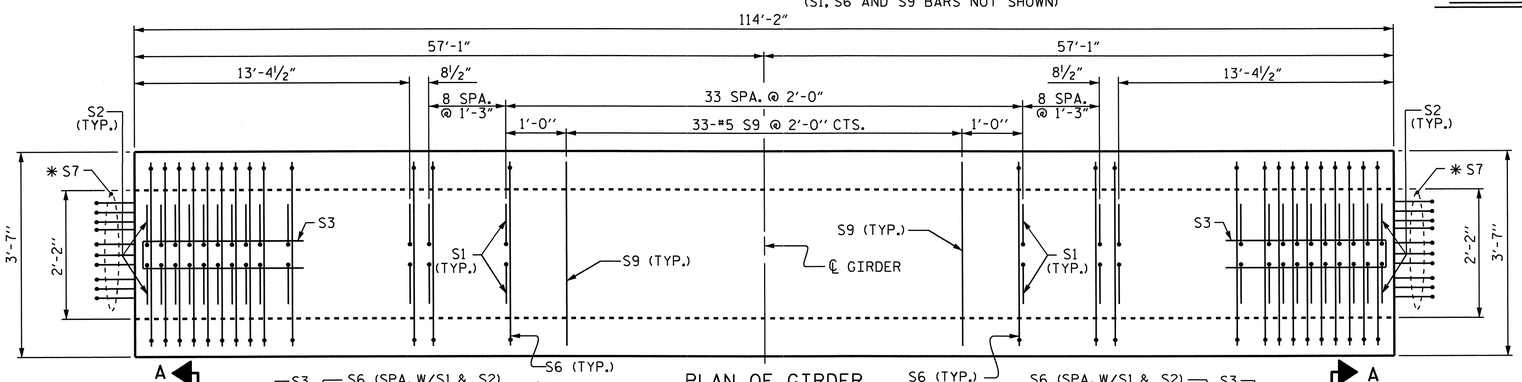

PLAN OF GIRDER

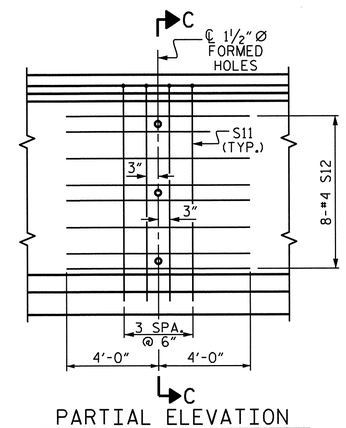

PARTIAL ELEVATION

SHOWING INTERMEDIATE STEEL DIAPHRAGM REINFORCING STEEL

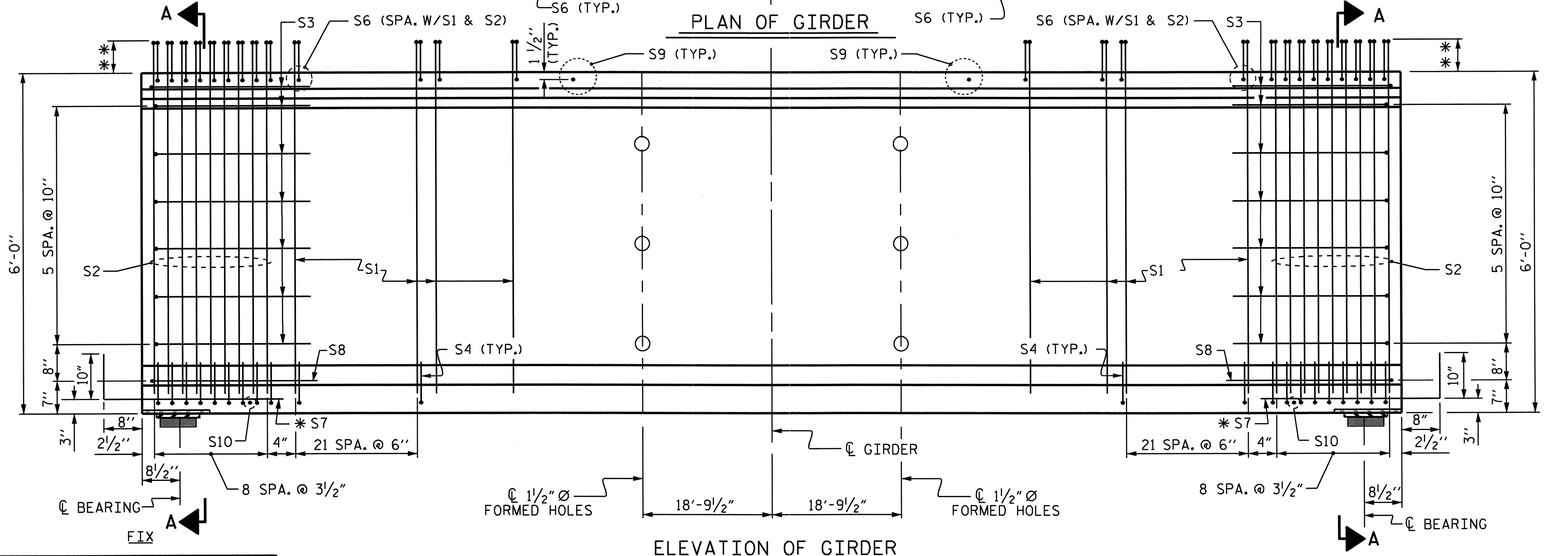

ELEVATION OF GIRDER

QUANTITIES FOR ONE GIRDER		
REINFORCING STEEL	9100 PSI CONCRETE	0.6" Ø L.R. STRANDS
LB.	C.Y.	No.
2,957	24.5	42

GIRDERS REQUIRED			
STAGE	NUMBER	LENGTH	TOTAL LENGTH
1	5	114'-2"	570'-10"
2	7	114'-2"	799'-2"
TOTAL	12	114'-2"	1370'-0"

** THE PROJECTION OF THE S1 AND S2 BARS VARIES LINEARLY FROM 7¾" AT THE ENDS OF THE GIRDER TO 5" AT THE CENTERLINE OF THE GIRDER.

NORTH CAROLINA PROFESSIONAL SEAL 20125 ENGINEER WARREN G. CHEEK, JR.

6-14-12

PROJECT NO. B-4949

CUMBERLAND COUNTY

STATION: 25+55.00 -L-

SHEET 2 OF 5

STATE OF NORTH CAROLINA
DEPARTMENT OF TRANSPORTATION
RALEIGH

STANDARD
72" PRESTRESSED CONCRETE MODIFIED BULB TEE CONTINUOUS FOR LIVE LOAD (SPAN B)

ASSEMBLED BY : J.L. WALTON/DAH	DATE : 6/13/11		
CHECKED BY : M.G. CHEEK	DATE : 5/12		
DRAWN BY : EEM 2/6/97	REV. 10/17/00	RWW/LES	
CHECKED BY : VAP 2/6/97	REV. 5/1/06R	TLA/GM	
	REV. 10/1/11	MAA/GM	

REVISIONS								SHEET NO.
NO.	BY:	DATE:	NO.	BY:	DATE:			S-21
1			3					TOTAL SHEETS
2			4					131

STD. NO. PCG8

14-JUN-2012 10:41
R:\Structures\Final Plans\B-4949_SD_G*_1.dgn
dahodge

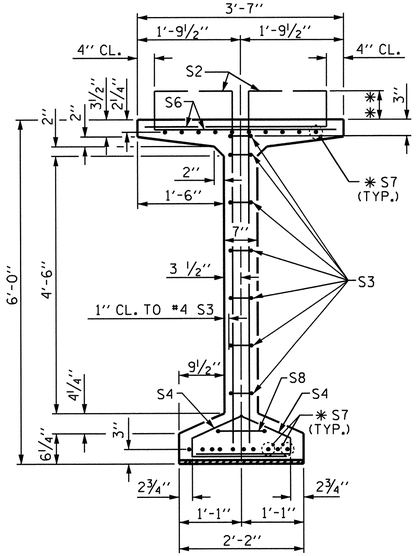

SECTION A-A

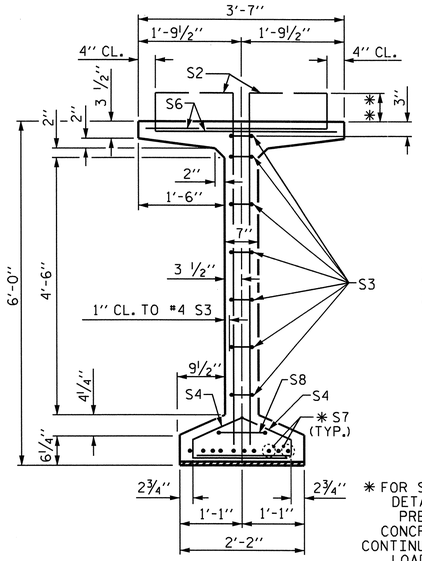

SECTION B-B

✱ FOR S7 BARS, SEE DETAIL "C" OF PRESTRESSED CONCRETE GIRDER CONTINUOUS FOR LIVE LOAD DETAILS, SHEET 4 OF 5.

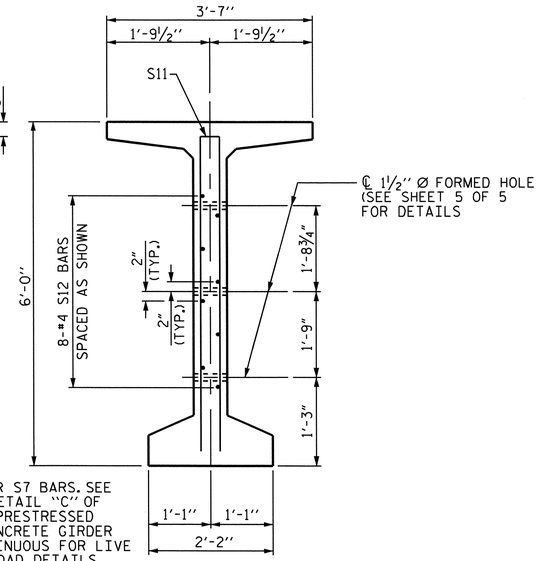

SECTION C-C

(S1, S6 AND S9 BARS NOT SHOWN)

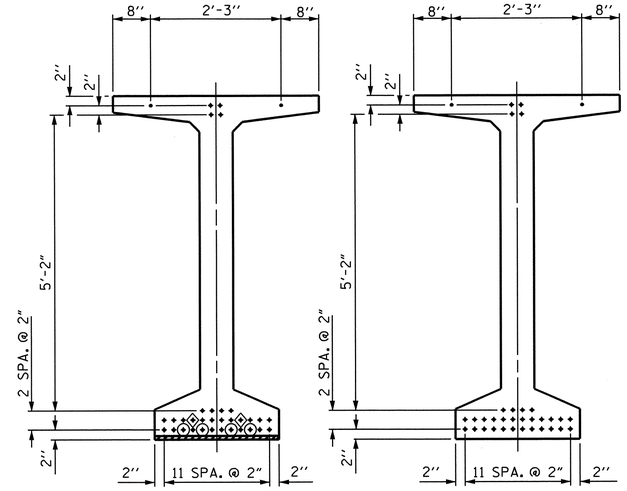

0.6" Ø LOW RELAXATION STRAND LAYOUT

DEBONDING LEGEND

- ● FULLY BONDED STRANDS
- ◉ STRANDS DEBONDED FOR 4'-0" FROM END OF GIRDER
- ◈ STRANDS DEBONDED FOR 6'-0" FROM END OF GIRDER

0.6" Ø L. R. GRADE 270 STRANDS		
AREA (SQUARE INCHES)	ULTIMATE STRENGTH (LBS. PER STRAND)	APPLIED PRESTRESS (LBS. PER STRAND)
0.217	58,600	43,950

REINFORCING STEEL FOR ONE GDR

BAR	NUMBER	SIZE	TYPE	LENGTH	WEIGHT
S1	160	#4	1	6'-10"	730
S2	36	#6	1	6'-10"	369
S3	14	#4	2	8'-5"	79
S4	108	#4	3	3'-0"	216
S6	196	#5	4	4'-4"	886
✱ S7	30	#5	STR	3'-8"	115
S8	2	#5	2	9'-0"	19
S9	27	#5	STR	3'-3"	92
S10	2	#3	STR	1'-10"	1
S11	4	#5	2	11'-8"	49
S12	8	#4	STR	8'-0"	43

✱ NOTE: S7 BARS SHALL BE BENT BEFORE SHIPMENT. HEAT BENDING SHALL NOT BE ALLOWED.

BAR TYPES

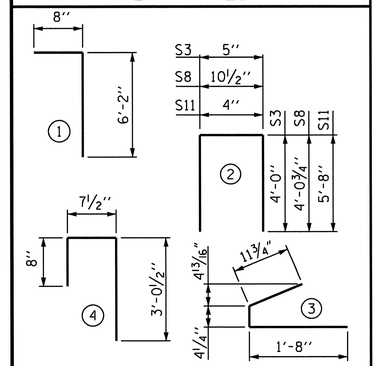

ALL BAR DIMENSIONS ARE OUT-TO-OUT

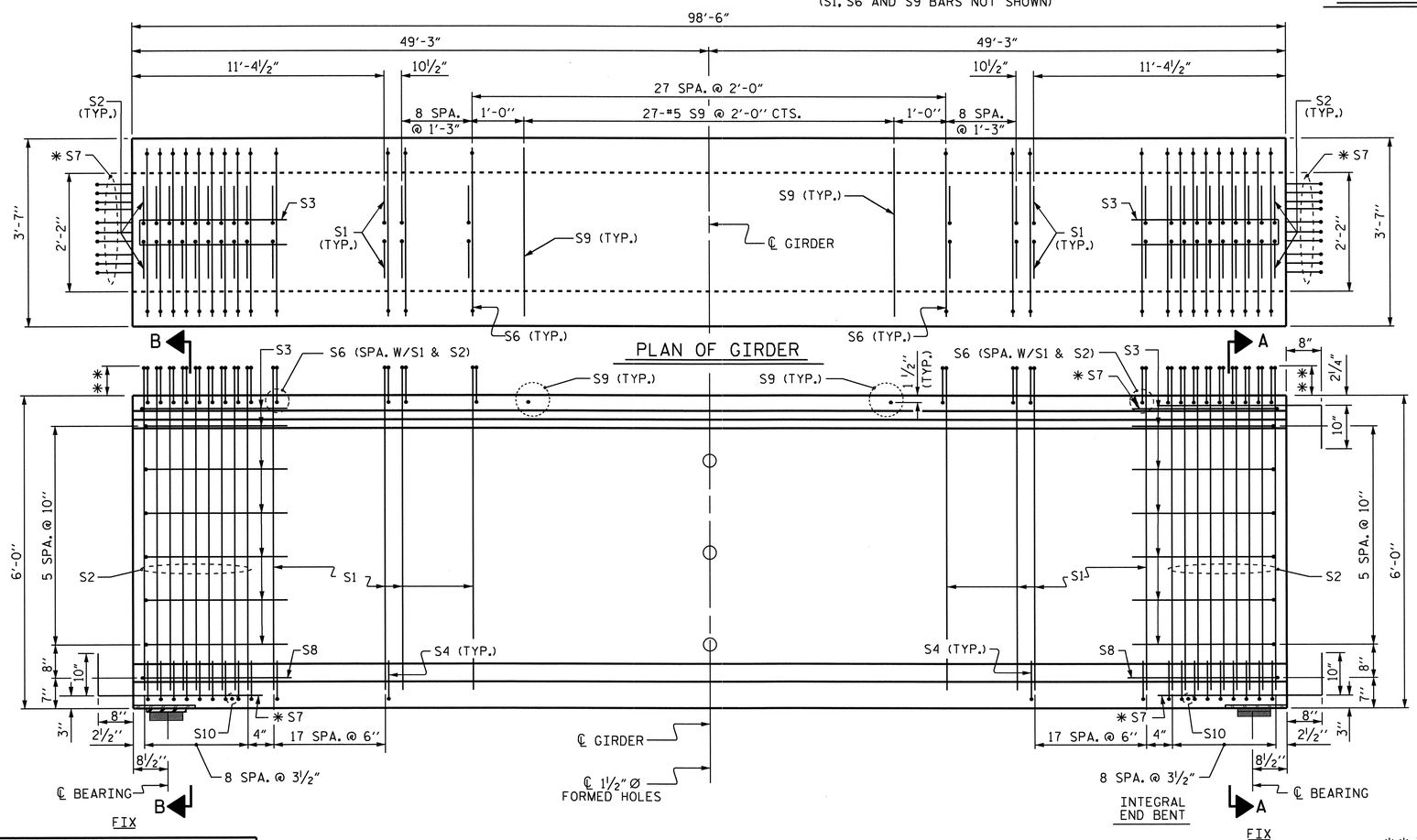

PLAN OF GIRDER

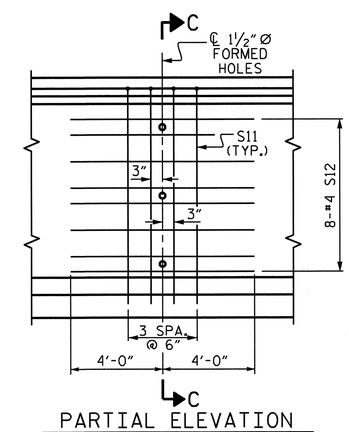

PARTIAL ELEVATION

SHOWING INTERMEDIATE STEEL DIAPHRAGM REINFORCING STEEL

✱✱ THE PROJECTION OF THE S1 AND S2 BARS VARIES LINEARLY FROM 7¾" AT THE ENDS OF THE GIRDER TO 6" AT THE CENTERLINE OF THE GIRDER.

QUANTITIES FOR ONE GIRDER		
REINFORCING STEEL	7000 PSI CONCRETE	0.6" Ø L.R. STRANDS
LB.	C.Y.	No.
2,599	21.1	34

GIRDERS REQUIRED			
STAGE	NUMBER	LENGTH	TOTAL LENGTH
1	5	98'-6"	492'-6"
2	7	98'-6"	689'-6"
TOTAL	12	98'-6"	1182'-0"

PROJECT NO. B-4949

CUMBERLAND COUNTY

STATION: 25+55.00 -L-

SHEET 3 OF 5

STATE OF NORTH CAROLINA
DEPARTMENT OF TRANSPORTATION
RALEIGH

STANDARD
72" PRESTRESSED CONCRETE MODIFIED BULB TEE CONTINUOUS FOR LIVE LOAD (SPAN C)

NORTH CAROLINA PROFESSIONAL SEAL 20125 ENGINEER MARSHALL G. CHEEK, JR.
6-14-12

ASSEMBLED BY : J.L. WALTON/DAH	DATE : 6/13/11	
CHECKED BY : M.G. CHEEK	DATE : 5/12	
DRAWN BY : EEM 2/6/97	REV. 10/17/00	RWW/LES
CHECKED BY : VAP 2/6/97	REV. 5/1/06R	TLA/GM
	REV. 10/1/11	MAA/GM

REVISIONS							SHEET NO.
NO.	BY:	DATE:	NO.	BY:	DATE:		S-22
1			3				TOTAL SHEETS
2			4				130

STD. NO. PCG8

14-JUN-2012 10:45
R:\Structures\Final Plans\B-4949_SD_G*_1.dgn
dahodge

DEAD LOAD DEFLECTION TABLE FOR SPAN A

0.6"Ø LOW RELAXATION	STAGE 1 - GIRDER 1											STAGE 1 - GIRDERS 2, 3 & 4											STAGE 1 - GIRDER 5										
TENTH POINTS	℄ BRG.	.1	.2	.3	.4	.5	.6	.7	.8	.9	℄ BRG.	℄ BRG.	.1	.2	.3	.4	.5	.6	.7	.8	.9	℄ BRG.	℄ BRG.	.1	.2	.3	.4	.5	.6	.7	.8	.9	℄ BRG.
CAMBER (GIRDER ALONE IN PLACE) ↑	0.000	0.106	0.201	0.275	0.322	0.338	0.322	0.275	0.201	0.106	0.000	0.000	0.106	0.201	0.275	0.322	0.338	0.322	0.275	0.201	0.106	0.000	0.000	0.106	0.201	0.275	0.322	0.338	0.322	0.275	0.201	0.106	0.000
✱ DEFLECTION DUE TO SUPERIMPOSED D.L. ↓	0.000	0.043	0.082	0.112	0.131	0.137	0.131	0.112	0.082	0.043	0.000	0.000	0.041	0.077	0.105	0.123	0.129	0.123	0.105	0.077	0.041	0.000	0.000	0.029	0.055	0.075	0.088	0.093	0.088	0.075	0.055	0.029	0.000
FINAL CAMBER ↑	0	3/4"	1 7/16"	1 15/16"	2 5/16"	2 7/16"	2 5/16"	1 15/16"	1 7/16"	3/4"	0	0	13/16"	1 1/2"	2 1/16"	2 3/8"	2 1/2"	2 3/8"	2 1/16"	1 1/2"	13/16"	0	0	15/16"	1 3/4"	2 3/8"	2 13/16"	2 15/16"	2 13/16"	2 3/8"	1 3/4"	15/16"	0

0.6"Ø LOW RELAXATION	STAGE 2 - GIRDERS 6 & 9											STAGE 2 - GIRDERS 7, 8, 10 & 11											STAGE 2 - GIRDER 12										
TENTH POINTS	℄ BRG.	.1	.2	.3	.4	.5	.6	.7	.8	.9	℄ BRG.	℄ BRG.	.1	.2	.3	.4	.5	.6	.7	.8	.9	℄ BRG.	℄ BRG.	.1	.2	.3	.4	.5	.6	.7	.8	.9	℄ BRG.
CAMBER (GIRDER ALONE IN PLACE) ↑	0.000	0.106	0.201	0.275	0.322	0.338	0.322	0.275	0.201	0.106	0.000	0.000	0.106	0.201	0.275	0.322	0.338	0.322	0.275	0.201	0.106	0.000	0.000	0.106	0.201	0.275	0.322	0.338	0.322	0.275	0.201	0.106	0.000
✱ DEFLECTION DUE TO SUPERIMPOSED D.L. ↓	0.000	0.040	0.075	0.102	0.120	0.126	0.120	0.102	0.075	0.040	0.000	0.000	0.043	0.081	0.111	0.130	0.136	0.130	0.111	0.081	0.043	0.000	0.000	0.044	0.084	0.115	0.135	0.142	0.135	0.115	0.084	0.044	0.000
FINAL CAMBER ↑	0	13/16"	1 1/2"	2 1/16"	2 7/16"	2 9/16"	2 7/16"	2 1/16"	1 1/2"	13/16"	0	0	3/4"	1 7/16"	2"	2 5/16"	2 7/16"	2 5/16"	2"	1 7/16"	3/4"	0	0	3/4"	1 3/8"	1 15/16"	2 1/4"	2 3/8"	2 1/4"	1 15/16"	1 3/8"	3/4"	0

DEAD LOAD DEFLECTION TABLE FOR SPAN B

0.6"Ø LOW RELAXATION	STAGE 1 - GIRDER 1											STAGE 1 - GIRDERS 2, 3 & 4											STAGE 1 - GIRDER 5										
TENTH POINTS	℄ BRG.	.1	.2	.3	.4	.5	.6	.7	.8	.9	℄ BRG.	℄ BRG.	.1	.2	.3	.4	.5	.6	.7	.8	.9	℄ BRG.	℄ BRG.	.1	.2	.3	.4	.5	.6	.7	.8	.9	℄ BRG.
CAMBER (GIRDER ALONE IN PLACE) ↑	0.000	0.107	0.202	0.277	0.324	0.340	0.324	0.277	0.202	0.107	0.000	0.000	0.107	0.202	0.277	0.324	0.340	0.324	0.277	0.202	0.107	0.000	0.000	0.107	0.202	0.277	0.324	0.340	0.324	0.277	0.202	0.107	0.000
✱ DEFLECTION DUE TO SUPERIMPOSED D.L. ↓	0.000	0.047	0.084	0.114	0.134	0.141	0.134	0.114	0.084	0.047	0.000	0.000	0.042	0.079	0.108	0.126	0.133	0.126	0.108	0.079	0.042	0.000	0.000	0.030	0.056	0.077	0.090	0.095	0.090	0.077	0.056	0.030	0.000
FINAL CAMBER ↑	0	3/4"	1 7/16"	1 15/16"	2 1/4"	2 3/8"	2 1/4"	1 15/16"	1 7/16"	3/4"	0	0	13/16"	1 1/2"	2"	2 3/8"	2 1/2"	2 3/8"	2"	1 1/2"	13/16"	0	0	15/16"	1 3/4"	2 3/8"	2 13/16"	2 15/16"	2 13/16"	2 3/8"	1 3/4"	15/16"	0

0.6"Ø LOW RELAXATION	STAGE 2 - GIRDERS 6 & 9											STAGE 2 - GIRDERS 7, 8 10 & 11											STAGE 2 - GIRDER 12										
TENTH POINTS	℄ BRG.	.1	.2	.3	.4	.5	.6	.7	.8	.9	℄ BRG.	℄ BRG.	.1	.2	.3	.4	.5	.6	.7	.8	.9	℄ BRG.	℄ BRG.	.1	.2	.3	.4	.5	.6	.7	.8	.9	℄ BRG.
CAMBER (GIRDER ALONE IN PLACE) ↑	0.000	0.107	0.202	0.277	0.324	0.340	0.324	0.277	0.202	0.107	0.000	0.000	0.107	0.202	0.277	0.324	0.340	0.324	0.277	0.202	0.107	0.000	0.000	0.107	0.202	0.277	0.324	0.340	0.324	0.277	0.202	0.107	0.000
✱ DEFLECTION DUE TO SUPERIMPOSED D.L. ↓	0.000	0.041	0.077	0.105	0.123	0.129	0.123	0.105	0.077	0.041	0.000	0.000	0.044	0.083	0.114	0.133	0.140	0.133	0.114	0.083	0.044	0.000	0.000	0.046	0.086	0.118	0.138	0.145	0.138	0.118	0.086	0.046	0.000
FINAL CAMBER ↑	0	13/16"	1 1/2"	2 1/16"	2 7/16"	2 9/16"	2 7/16"	2 1/16"	1 1/2"	13/16"	0	0	3/4"	1 7/16"	1 15/16"	2 5/16"	2 3/8"	2 5/16"	1 15/16"	1 7/16"	3/4"	0	0	3/4"	1 3/8"	1 7/8"	2 1/4"	2 5/16"	2 1/4"	1 7/8"	1 3/8"	3/4"	0

DEAD LOAD DEFLECTION TABLE FOR SPAN C

0.6"Ø LOW RELAXATION	STAGE 1 - GIRDER 1											STAGE 1 - GIRDERS 2, 3 & 4											STAGE 1 - GIRDER 5										
TENTH POINTS	℄ BRG.	.1	.2	.3	.4	.5	.6	.7	.8	.9	℄ BRG.	℄ BRG.	.1	.2	.3	.4	.5	.6	.7	.8	.9	℄ BRG.	℄ BRG.	.1	.2	.3	.4	.5	.6	.7	.8	.9	℄ BRG.
CAMBER (GIRDER ALONE IN PLACE) ↑	0.000	0.071	0.134	0.184	0.215	0.226	0.215	0.184	0.134	0.071	0.000	0.000	0.071	0.134	0.184	0.215	0.226	0.215	0.184	0.134	0.071	0.000	0.000	0.071	0.134	0.184	0.215	0.226	0.215	0.184	0.134	0.071	0.000
✱ DEFLECTION DUE TO SUPERIMPOSED D.L. ↓	0.000	0.028	0.053	0.072	0.085	0.089	0.085	0.072	0.053	0.028	0.000	0.000	0.026	0.050	0.068	0.080	0.084	0.080	0.068	0.050	0.025	0.000	0.000	0.019	0.035	0.048	0.057	0.059	0.057	0.048	0.035	0.019	0.000
FINAL CAMBER ↑	0	1/2"	1"	1 5/16"	1 9/16"	1 5/8"	1 9/16"	1 5/16"	1"	1/2"	0	0	9/16"	1"	1 3/8"	1 5/8"	1 11/16"	1 5/8"	1 3/8"	1"	9/16"	0	0	5/8"	1 3/16"	1 5/8"	1 7/8"	2"	1 7/8"	1 5/8"	1 3/16"	5/8"	0

0.6"Ø LOW RELAXATION	STAGE 2 - GIRDERS 6 & 9											STAGE 2 - GIRDERS 7, 8, 10 & 11											STAGE 2 - GIRDER 12										
TENTH POINTS	℄ BRG.	.1	.2	.3	.4	.5	.6	.7	.8	.9	℄ BRG.	℄ BRG.	.1	.2	.3	.4	.5	.6	.7	.8	.9	℄ BRG.	℄ BRG.	.1	.2	.3	.4	.5	.6	.7	.8	.9	℄ BRG.
CAMBER (GIRDER ALONE IN PLACE) ↑	0.000	0.071	0.134	0.184	0.215	0.226	0.215	0.184	0.134	0.071	0.000	0.000	0.071	0.134	0.184	0.215	0.226	0.215	0.184	0.134	0.071	0.000	0.000	0.071	0.134	0.184	0.215	0.226	0.215	0.184	0.134	0.071	0.000
✱ DEFLECTION DUE TO SUPERIMPOSED D.L. ↓	0.000	0.026	0.049	0.066	0.078	0.082	0.078	0.066	0.049	0.026	0.000	0.000	0.029	0.054	0.074	0.084	0.088	0.084	0.074	0.054	0.029	0.000	0.000	0.029	0.054	0.074	0.087	0.092	0.087	0.074	0.054	0.029	0.000
FINAL CAMBER ↑	0	9/16"	1"	1 7/16"	1 5/8"	1 3/4"	1 5/8"	1 7/16"	1"	9/16"	0	0	1/2"	1"	1 3/8"	1 9/16"	1 5/8"	1 9/16"	1 3/8"	1"	1/2"	0	0	1/2"	15/16"	1 5/16"	1 9/16"	1 5/8"	1 9/16"	1 5/16"	15/16"	1/2"	0

✱ INCLUDES FUTURE WEARING SURFACE
ALL VALUES ARE SHOWN IN FEET (DECIMAL FORM), EXCEPT "FINAL CAMBER", WHICH IS GIVEN IN INCHES (FRACTION FORM).

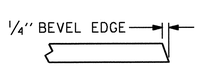

SECTION "G"

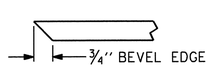

SECTION "F"

(SEE NOTES)

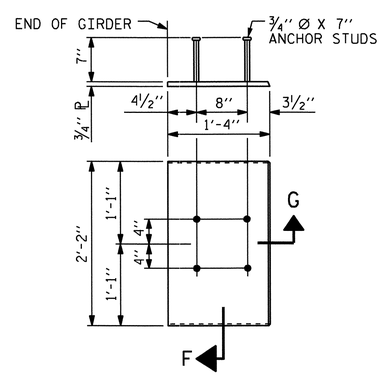

EMBEDDED PLATE "B-1" DETAILS FOR AASHTO 72" MODIFIED BULB TEES

(2 REQ'D PER GIRDER)

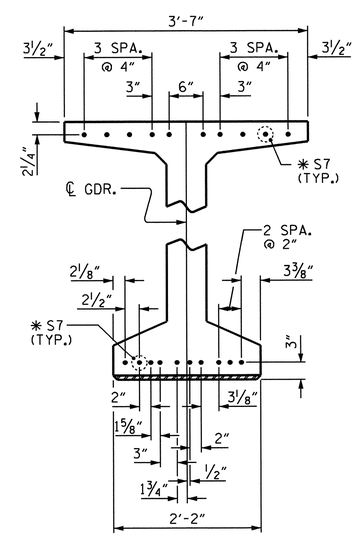

DETAIL "C"

NOTES:

ALL PRESTRESSING STRANDS SHALL BE 7-WIRE LOW- RELAXATION GRADE 270 STRANDS AND SHALL CONFORM TO AASHTO M203 EXCEPT FOR SAMPLING REQUIREMENTS WHICH SHALL BE IN ACCORDANCE WITH THE STANDARD SPECIFICATIONS.

ALL REINFORCING STEEL SHALL BE GRADE 60.

EMBEDDED PLATE "B-1" SHALL BE GALVANIZED IN ACCORDANCE WITH THE STANDARD SPECIFICATIONS. BEVEL EDGES OF PLATE "B- 1" TO GIVE CLOSE FIT BUT NOT TIGHT FIT TO STEEL CASTING FORM.

ANCHOR STUDS SHALL CONFORM TO AASHTO M169 GRADES 1010 THROUGH 1020 OR APPROVED EQUAL, AND SHALL MEET THE TYPE "B" REQUIREMENTS OF SUBSECTION 7.3 OF THE ANSI/AASHTO/AWS D1.5 BRIDGE WELDING CODE.

AT ENDS OF GIRDERS TO BE EMBEDDED IN CONCRETE DIAPHRAGMS OR END WALLS, PRESTRESSING STRANDS MAY EXTEND A MAXIMUM OF 2" BEYOND THE GIRDER ENDS. OTHERWISE, PRESTRESSING STRANDS SHALL BE CUT FLUSH WITH THE GIRDER ENDS.

THE TRANSFER OF LOAD FROM THE ANCHORAGES TO THE GIRDER SHALL BE DONE WHEN CONCRETE HAS REACHED A COMPRESSIVE STRENGTH OF NOT LESS THAN 7,000 PSI FOR SPANS A & B AND 5,500 PSI FOR SPAN C.

DEPENDING ON THE TYPE OF SYSTEM USED TO SUPPORT THE DECK SLAB FORMS, PRESET ANCHORS MAY BE NECESSARY IN THE PRESTRESSED CONCRETE GIRDER.

THE TOP SURFACE OF THE GIRDER, EXCLUDING THE OUTSIDE 4", SHALL BE RAKED TO A DEPTH OF 1/4".

WHEN DRAPED STRANDS ARE DETAILED, THE LONGITUDINAL LOCATION OF THE HOLD DOWN DEVICES SHALL BE WITHIN 6" OF THE LOCATION SHOWN AND THE CENTER OF GRAVITY OF THE GROUP OF DRAPED STRANDS SHALL BE LOCATED WITHIN 1/2" OF THE THEORETICAL LOCATION SHOWN.

A 2" x 2" CHAMFER IS ALLOWED AT THE INTERSECTION OF THE WEB AND THE BOTTOM FLANGE OF THE 63" AND 72" MODIFIED BULB TEES ONLY.

THE CONTRACTOR HAS THE OPTION TO PROVIDE, AT NO ADDITIONAL COST TO THE DEPARTMENT, 2 ADDITIONAL STRANDS AT THE TOP OF THE GIRDER TO FACILITATE TYING OF THE REINFORCING STEEL. THESE STRANDS SHALL BE PULLED TO A LOAD OF 4500 lbs.

PROJECT NO. B-4949
CUMBERLAND COUNTY
STATION: 25+55.00 -L-

SHEET 4 OF 5

STATE OF NORTH CAROLINA
DEPARTMENT OF TRANSPORTATION
RALEIGH

STANDARD
PRESTRESSED CONCRETE GIRDER CONTINUOUS FOR LIVE LOAD DETAILS AND DEAD LOAD DEFLECTION TABLES

NORTH CAROLINA PROFESSIONAL SEAL 20125 ENGINEER MARSHALL G. CHEEK, JR. 6-14-12

REVISIONS								SHEET NO.
NO.	BY:	DATE:	NO.	BY:	DATE:			S-23
1			3					TOTAL SHEETS
2			4					131

DRAWN BY : J.L. WALTON/DAH DATE : 5/12
CHECKED BY : M.G. CHEEK DATE : 5/12

14-JUN-2012 10:45
R:\Structures\Final Plans\B-4949_SD_G*_1.dgn
dahodge

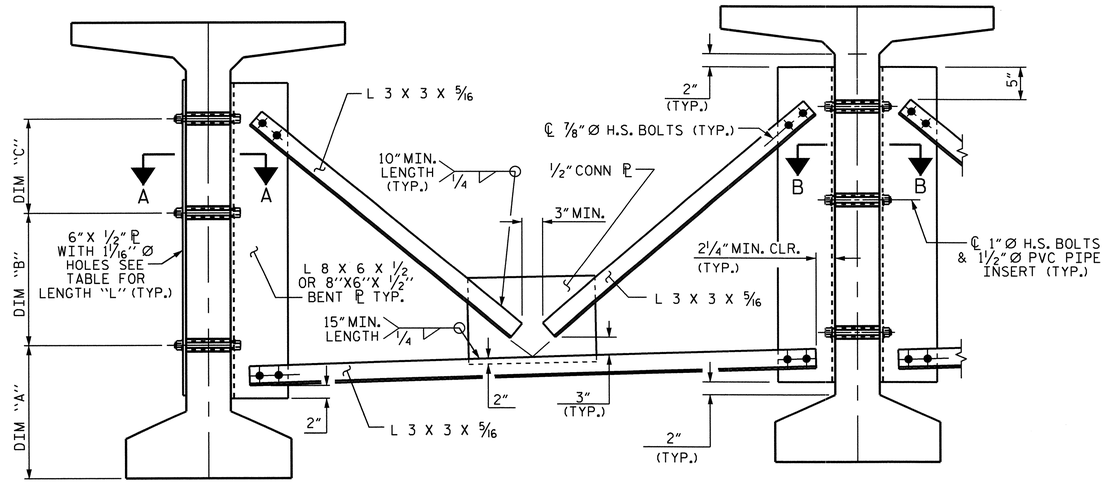

EXTERIOR GIRDER

INTERIOR GIRDER

PART SECTION AT INTERMEDIATE DIAPHRAGM

(72" BULB TEE GIRDER SHOWN)

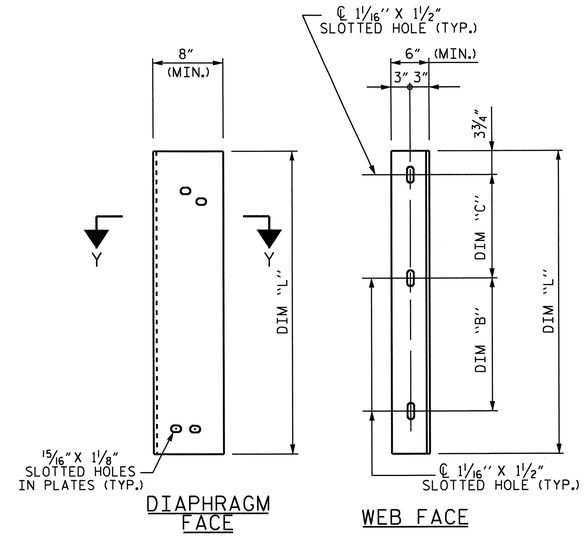

DIAPHRAGM FACE

WEB FACE

STRUCTURAL STEEL NOTES

ALL INTERMEDIATE DIAPHRAGM STEEL AND CONNECTOR PLATES SHALL BE AASHTO M270 GRADE 50 OR APPROVED EQUAL.

TENSION ON THE ASTM A325 BOLTS THROUGH THE ANGLE MEMBER SHALL BE CALIBRATED USING DIRECT TENSION INDICATOR WASHERS IN ACCORDANCE WITH THE STANDARD SPECIFICATIONS.

TENSION ON THE ASTM A449 BOLTS THROUGH THE GIRDER WEB SHALL BE SNUG TIGHTENED FOLLOWED BY AN ADDITIONAL 1/4 TURN.

THE PLATES, BENT PLATES, AND ANGLES SHALL BE GALVANIZED OR METALLIZED IN ACCORDANCE WITH THE STANDARD SPECIFICATIONS. FOR THERMAL SPRAYED COATINGS (METALLIZATION), SEE SPECIAL PROVISIONS.

FOR METALLIZATION, APPLY AN 8 MIL THICK 99.99 PERCENT ZINC (W-Zn-1) THERMAL SPRAYED COATING WITH A 0.5 MIL THICK SEAL COAT TO ALL STEEL DIAPHRAGM SURFACES IN ACCORDANCE WITH THE THERMAL SPRAYED COATINGS SPECIAL PROVISION AND SECTION 442 OF THE STANDARD SPECIFICATIONS.

GALVANIZE THE HIGH STRENGTH BOLTS, NUTS, WASHERS AND DIRECT TENSION INDICATORS IN ACCORDANCE WITH THE STANDARD SPECIFICATIONS.

USE AN ASTM F436 HARDENED WASHER WITH STANDARD AND SLOTTED HOLES UNDER EACH BOLT HEAD AND NUT.

FOR BOLTS THROUGH THE GIRDER WEB, PROVIDE SUFFICIENT LENGTH OF THREADS ON ALL BOLTS TO ACCOMMODATE WASHERS AND THE THICKNESS OF CONNECTING MEMBER PLUS AT LEAST 1/4" PROJECTION BEYOND THE NUT.

INTERMEDIATE DIAPHRAGM ASSEMBLY SHALL COMPLY WITH SECTION 1072 OF THE STANDARD SPECIFICATIONS.

SUBMIT TWO SETS OF WORKING DRAWINGS FOR THE INTERMEDIATE DIAPHRAGM ASSEMBLY FOR REVIEW, COMMENTS AND ACCEPTANCE. AFTER REVIEW, COMMENTS, AND ACCEPTANCE, SUBMIT SEVEN SETS FOR DISTRIBUTION.

IN THE EXTERIOR BAYS, PLACE TEMPORARY STRUTS BETWEEN PRESTRESSED GIRDERS ADJACENT TO THE STEEL DIAPHRAGMS. STRUTS SHALL REMAIN IN PLACE 3 DAYS AFTER CONCRETE IS PLACED.

THE COST OF THE STEEL DIAPHRAGMS AND ASSEMBLIES SHALL BE INCLUDED IN THE UNIT PRICE BID FOR PRESTRESSED CONCRETE GIRDERS.

TABLE

GIRDER TYPE	DIM "A"	DIM "B"	DIM "C"	DIM "L"
72" BULB TEE	1'-3"	1'-9"	1'-8 3/4"	4'-2"

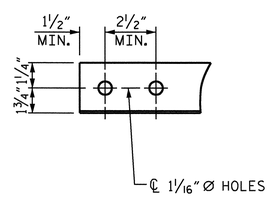

ANGLE END

(L 3 X 3 X 5/16)

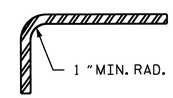

SECTION Y-Y

CONNECTOR PLATE DETAIL

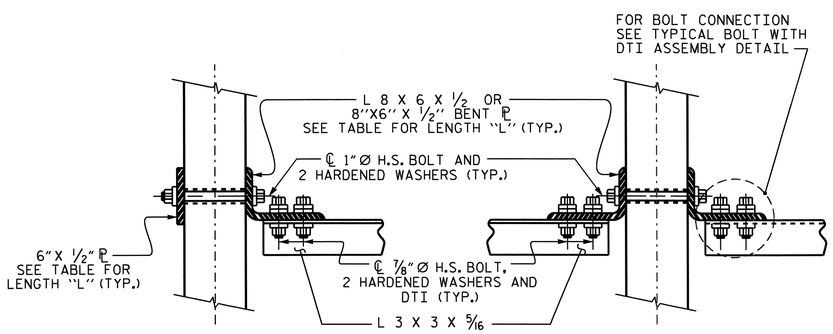

SECTION A-A

SECTION B-B

CONNECTION DETAILS

(FOR SKEW = 90°)

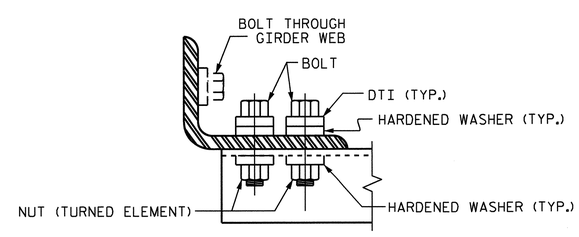

BOLT WITH DTI ASSEMBLY DETAIL

PROJECT NO. B-4949

CUMBERLAND COUNTY

STATION: 25+55.00 -L-

SHEET 5 OF 5

STATE OF NORTH CAROLINA
DEPARTMENT OF TRANSPORTATION
RALEIGH

STANDARD
INTERMEDIATE
STEEL DIAPHRAGMS
FOR 72"
MODIFIED BULB TEE
PRESTRESSED CONCRETE
GIRDERS

REVISIONS								SHEET NO.
NO.	BY:	DATE:	NO.	BY:	DATE:			S-24
1			3					TOTAL SHEETS
2			4					131

NORTH CAROLINA PROFESSIONAL SEAL 20125 ENGINEER MARSHALL G. CHECK, JR.
6-14-12

STD. NO. PCG11

ASSEMBLED BY : J.L. WALTON/DAH DATE : 5-26-11 CHECKED BY : M.G. CHEEK DATE : 3/12	
DRAWN BY : RWW 11/09 CHECKED BY : GM 11/09	ADDED 11/23/09R REV. 10/1/11 MAA/GM

14-JUN-2012 07:25
R:\Structures\Final Plans\B-4949_SD_G*_1.dgn
dahodge

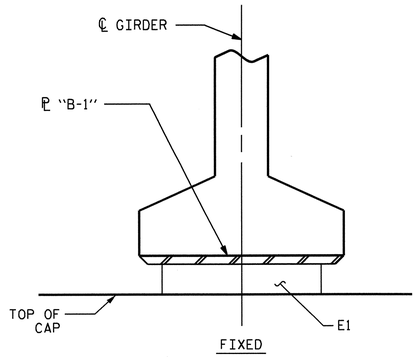

SECTION D-D

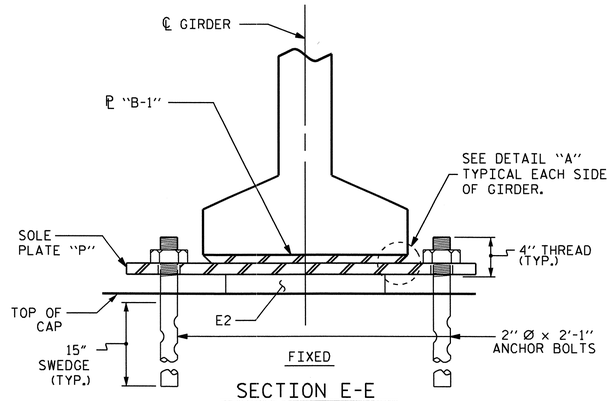

SECTION E-E

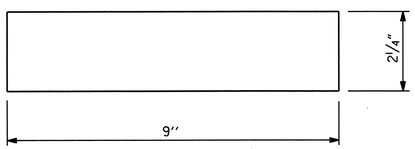

TYPICAL SECTION OF ELASTOMERIC BEARING

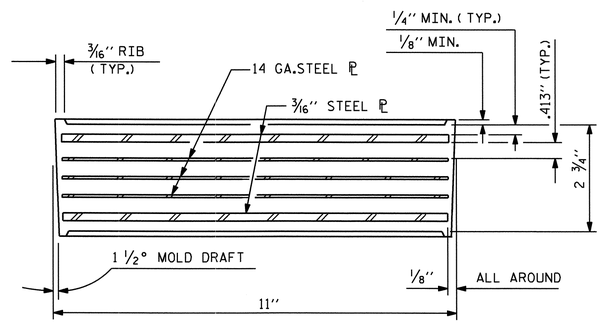

TYPICAL SECTION OF ELASTOMERIC BEARING

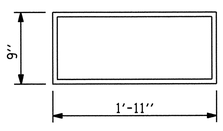

E1 (24 REQ'D)

PLAN VIEW OF ELASTOMERIC BEARING

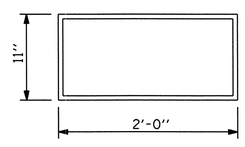

E2 (48 REQ'D)

PLAN VIEW OF ELASTOMERIC BEARING

TYPE VII

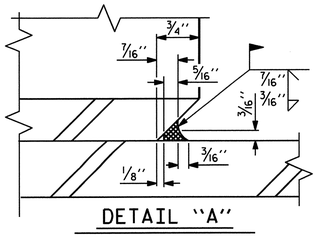

DETAIL "A"

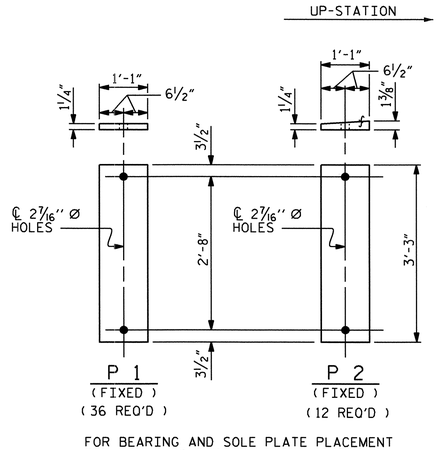

FOR BEARING AND SOLE PLATE PLACEMENT SEE "PLAN OF GIRDER LAYOUT" SHEET.

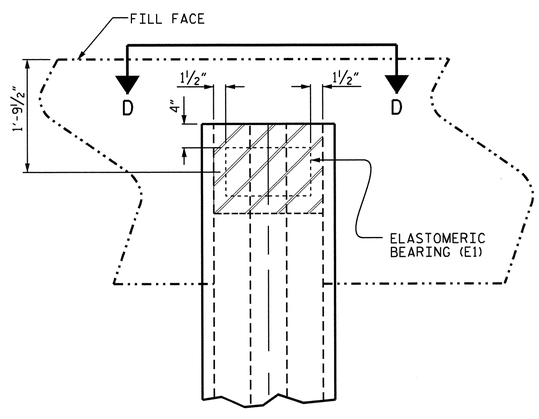

PLAN VIEW AT INTEGRAL END BENTS

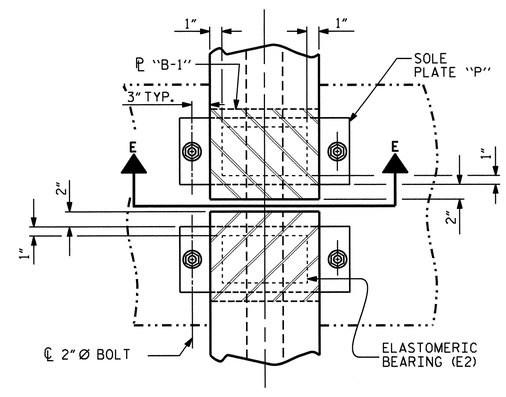

PLAN VIEW AT BENTS

(SHOWING CONTINUOUS BENT)

NOTES

AT ALL FIXED POINTS OF SUPPORT, NUTS FOR ANCHOR BOLTS ARE TO BE TIGHTENED FINGER TIGHT AND THEN BACKED OFF ½ TURN. THE THREAD OF THE NUT AND BOLT SHALL THEN BE BURRED WITH A SHARP POINTED TOOL.

THE 2" Ø PIPE SLEEVE SHALL BE CUT FROM SCHEDULE 40 PVC PLASTIC PIPE. THE PVC PLASTIC PIPE SHALL MEET THE REQUIREMENTS OF ASTM D1785.

STEEL SOLE PLATES, ANCHOR BOLTS, NUTS, AND WASHERS SHALL BE GALVANIZED IN ACCORDANCE WITH THE STANDARD SPECIFICATIONS.

PRIOR TO WELDING, GRIND THE GALVANIZED SURFACE OF THE PORTION OF THE EMBEDDED PLATE AND SOLE PLATE THAT ARE TO BE WELDED. AFTER WELDING, DAMAGED GALVANIZED SURFACES SHALL BE REPAIRED IN ACCORDANCE WITH THE STANDARD SPECIFICATIONS.

WHEN WELDING THE SOLE PLATE TO THE EMBEDDED PLATE IN THE GIRDER, USE TEMPERATURE INDICATING WAX PENS, OR OTHER SUITABLE MEANS, TO ENSURE THAT THE TEMPERATURE OF THE SOLE PLATE DOES NOT EXCEED 300°F. TEMPERATURES ABOVE THIS MAY DAMAGE THE ELASTOMER.

SOLE PLATE "P", BOLTS, NUTS, WASHERS, AND PIPE SLEEVE SHALL BE INCLUDED IN THE PAY ITEM FOR PRESTRESSED CONCRETE GIRDERS.

ANCHOR BOLTS SHALL MEET THE REQUIREMENTS OF ASTM A449. NUTS SHALL MEET THE REQUIREMENTS OF AASHTO M291-DH OR AASHTO M292-2H. WASHERS SHALL MEET THE REQUIREMENTS OF AASHTO M293. NO SHOP DRAWINGS ARE REQUIRED FOR ANCHOR BOLTS, NUTS AND WASHERS. SHOP INSPECTION IS REQUIRED.

ALL SURFACES OF BEARING PLATES SHALL BE SMOOTH AND STRAIGHT.

— LOAD RATINGS —	
	MAX.D.L.+ L.L.
TYPE VII	264 K

PROJECT NO. B-4949

CUMBERLAND COUNTY

STATION: 25+55.00 -L-

STATE OF NORTH CAROLINA
DEPARTMENT OF TRANSPORTATION
RALEIGH

ELASTOMERIC BEARING DETAILS

PRESTRESSED CONCRETE GIRDER SUPERSTRUCTURE

NORTH CAROLINA PROFESSIONAL SEAL 20125 ENGINEER MARSHALL B. CHEEK, JR.

REVISIONS								SHEET NO.
NO.	BY:	DATE:	NO.	BY:	DATE:			S-25
1			3					TOTAL SHEETS
2			4					131

ASSEMBLED BY : J.L. WALTON/DAH	DATE : 6/9/11		
CHECKED BY : M.G. CHEEK	DATE : 3/12		
DRAWN BY : EEM 2/97	REV. 10/17/00	RWW/LES	
CHECKED BY : VAP 2/97	REV. 5/1/06	TLA/GM	
	REV. 10/1/11	MAA/GM	

12-JUN-2012 10:49
R:\Structures\Final Plans\B-4949_SD_BG_1.dgn
dahodge

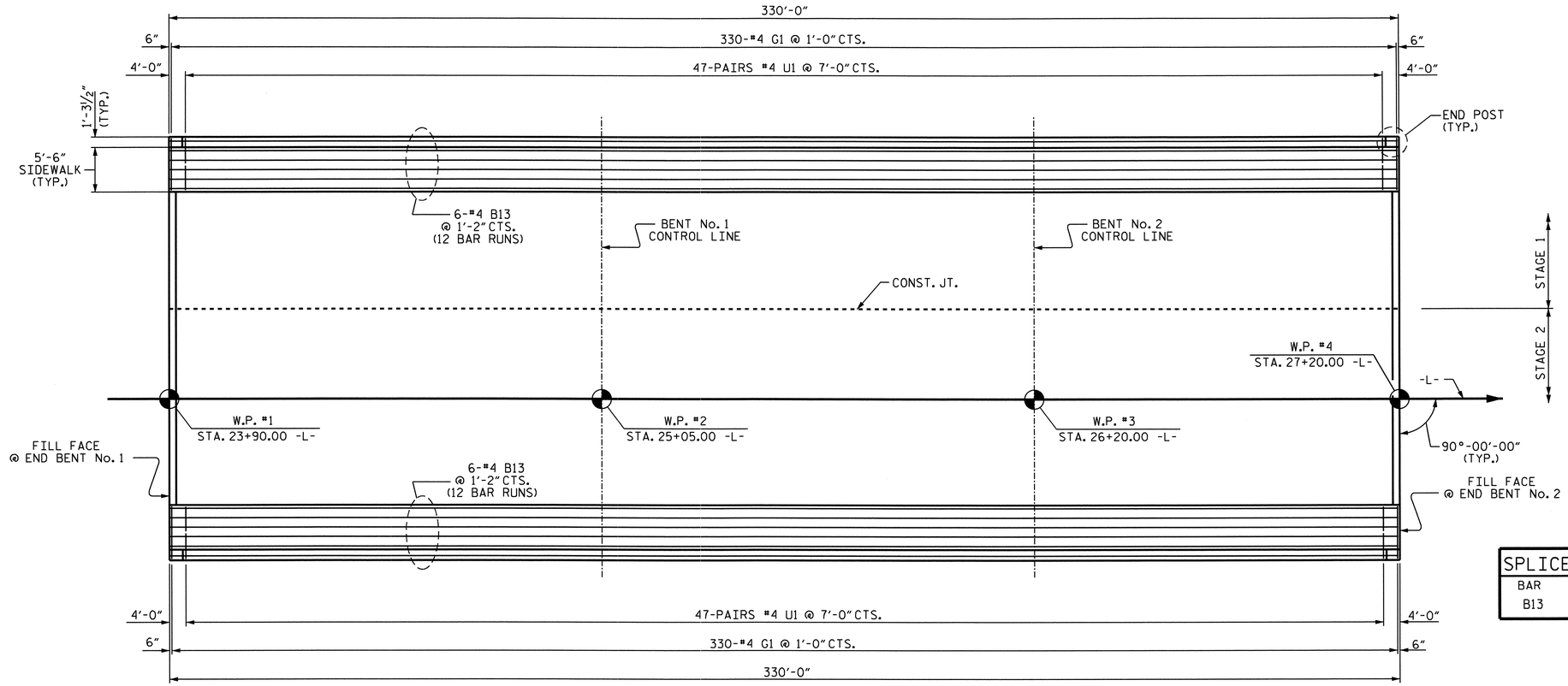

PLAN OF SIDEWALK

SPLICE LENGTH CHART		
BAR	SIZE	LENGTH
B13	4	2'-0"

BILL OF MATERIAL FOR 2 END POSTS AND SIDEWALK (STAGE 1)

BAR	NO.	SIZE	TYPE	LENGTH	WEIGHT
✳B13	72	4	STR	29'-4"	1411
✳E1	4	7	1	3'-5"	28
✳E2	4	7	1	4'-0"	33
✳E3	4	7	1	4'-7"	37
✳E4	4	7	1	5'-1"	42
✳F1	4	6	STR	2'-4"	14
✳F2	8	6	STR	3'-5"	41
✳F3	4	6	STR	3'-7"	22
✳G1	330	4	STR	6'-4"	1396
✳U1	94	4	2	3'-4"	209

✳EPOXY COATED REINFORCING STEEL 3,233 LBS.

CLASS AA CONCRETE 58.6 CU.YDS.

BILL OF MATERIAL FOR 2 END POSTS AND SIDEWALK (STAGE 2)

BAR	NO.	SIZE	TYPE	LENGTH	WEIGHT
✳B13	72	4	STR	29'-4"	1411
✳E1	4	7	1	3'-5"	28
✳E2	4	7	1	4'-0"	33
✳E3	4	7	1	4'-7"	37
✳E4	4	7	1	5'-1"	42
✳F1	4	6	STR	2'-4"	14
✳F2	8	6	STR	3'-5"	41
✳F3	4	6	STR	3'-7"	22
✳G1	330	4	STR	6'-4"	1396
✳U1	94	4	2	3'-4"	209

✳EPOXY COATED REINFORCING STEEL 3,233 LBS.

CLASS AA CONCRETE 58.6 CU.YDS.

BAR TYPE

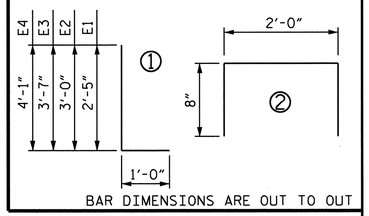

BAR DIMENSIONS ARE OUT TO OUT

NOTES

NO SEPARATE MEASUREMENT OR PAYMENT WILL BE MADE FOR MATERIALS OR LABOR REQUIRED TO CONSTRUCT THE SIDEWALK AND END POSTS. THE ENTIRE COST OF THIS WORK SHALL BE INCLUDED IN THE UNIT BID PRICE FOR REINFORCED CONCRETE DECK SLAB.

GROOVED CONTRACTION JOINTS 1/2" IN DEPTH, SHALL BE TOOLED IN ALL EXPOSED FACES OF SIDEWALK IN ACCORDANCE WITH ARTICLE 825-10(B) OF THE STANDARD SPECIFICATIONS. THE CONTRACTION JOINTS SHALL BE LOCATED AT A SPACING OF 8 FEET TO 10 FEET BETWEEN EXPANSION JOINTS. NO CONTRACTION JOINTS WILL BE REQUIRED FOR SEGMENTS LESS THAN 10 FEET IN LENGTH.

ALL REINFORCING STEEL IN SIDEWALK SHALL BE EPOXY COATED.

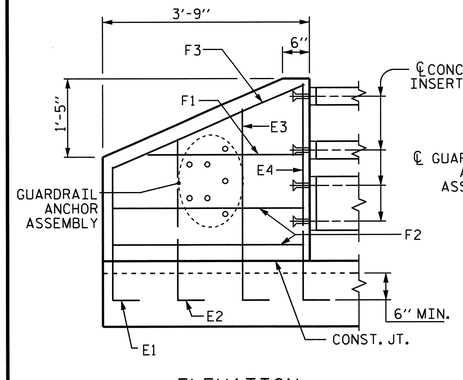

ELEVATION

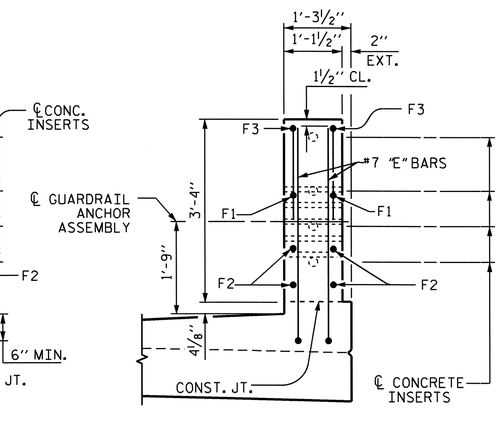

END VIEW

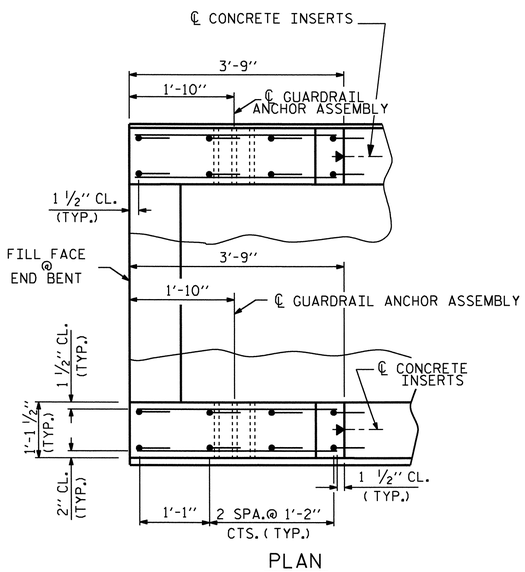

PLAN

END POST DETAILS

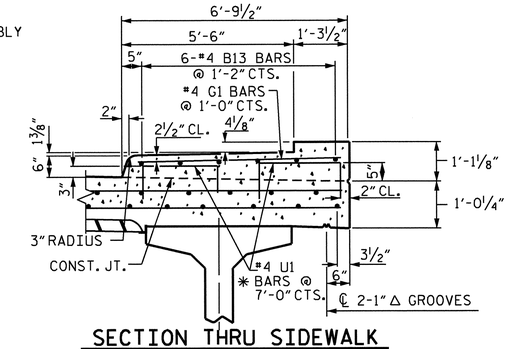

SECTION THRU SIDEWALK

✳ U1 BARS MAY BE PUSHED INTO GREEN CONCRETE AFTER SPAN HAS BEEN SCREEDED OFF.

PROJECT NO. B-4949

CUMBERLAND COUNTY

STATION: 25+55.00 -L-

STATE OF NORTH CAROLINA
DEPARTMENT OF TRANSPORTATION
RALEIGH

SUPERSTRUCTURE
SIDEWALK DETAILS

NORTH CAROLINA PROFESSIONAL SEAL 20125 ENGINEER MARSHALL FLOWERS, JR.

REVISIONS							SHEET NO.
NO.	BY:	DATE:	NO.	BY:	DATE:		S-26
1			3				TOTAL SHEETS
2			4				131

DRAWN BY : J.L. WALTON/DAH DATE : 5-25-11
CHECKED BY : M.G. CHEEK DATE : 3/12

12-JUN-2012 10:49
R:\Structures\Final Plans\B-4949_SD_3MR_1.dgn
dahodge

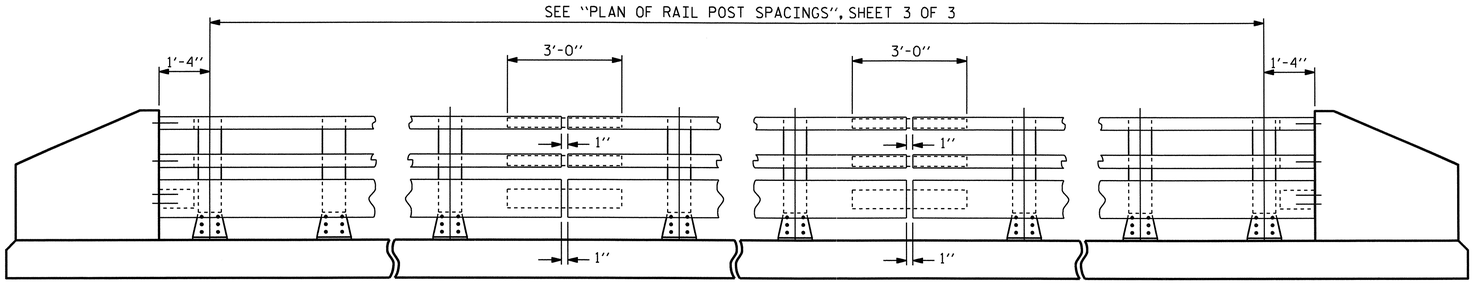

NOTE:
FOR ATTACHMENT OF METAL RAIL TO END POST, SEE SHEET 3 OF 3.

ELEVATION

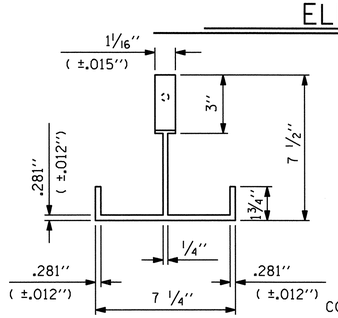

PLAN

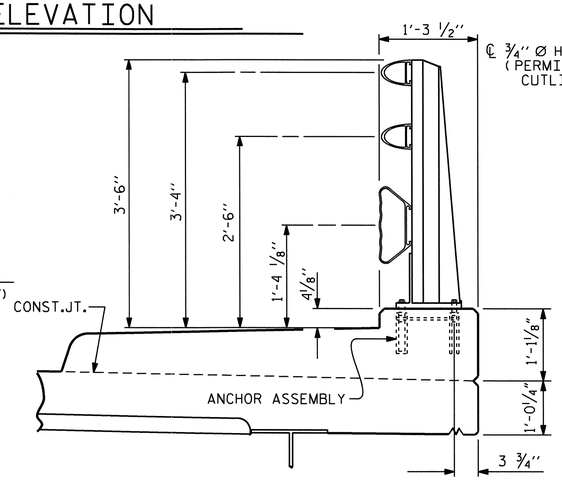

SECTION THRU RAIL

FOR ANCHOR ASSEMBLY, SEE "3 BAR METAL RAIL", SHEET 2 OF 3.

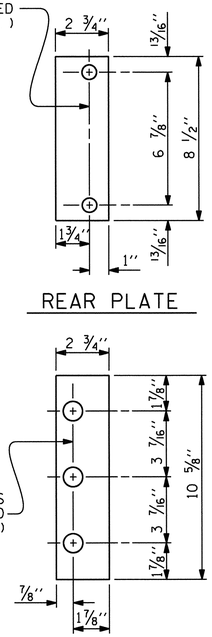

REAR PLATE

FRONT PLATE

SHIM DETAILS

NOTE :
SHIMS MAY BE CUT ALONG PERMITTED CUTLINE OR SLOTTED TO EDGE OF PLATE TO FACILITATE PLACEMENT.

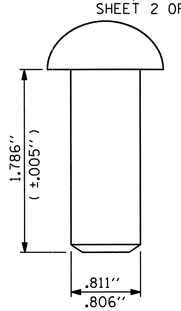

RIVET DETAIL

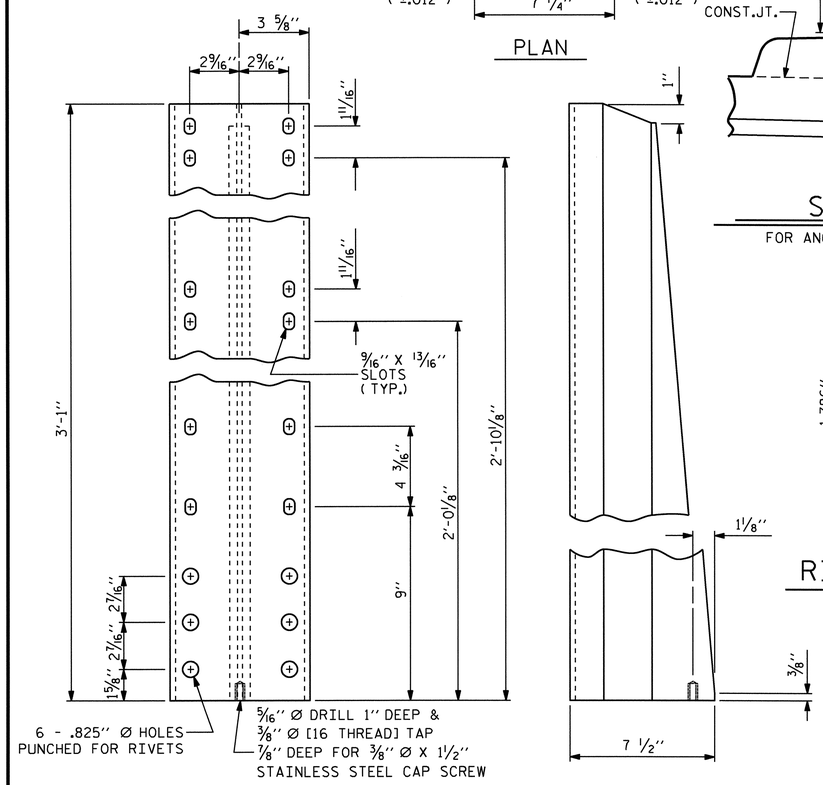

FRONT ELEVATION

SIDE ELEVATION

DETAILS OF POST

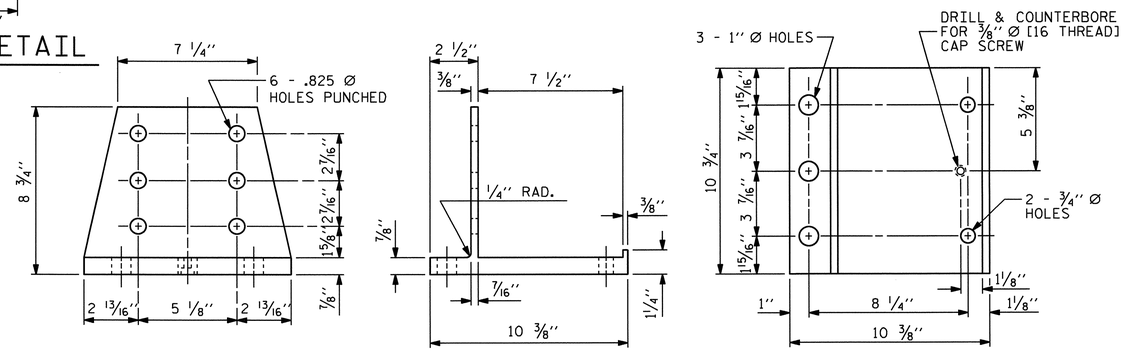

FRONT ELEVATION

SIDE ELEVATION

PLAN

POST BASE DETAILS

NOTES

AT THE CONTRACTOR'S OPTION, METAL RAIL MAY BE EITHER ALUMINUM OR GALVANIZED STEEL IN ACCORDANCE WITH THE REQUIREMENTS OF THE GENERAL NOTES AND THE FOLLOWING SPECIFICATIONS FOR THE ALTERNATE MATERIALS; HOWEVER, THE CONTRACTOR WILL BE REQUIRED TO USE THE SAME RAIL MATERIAL ON ALL STRUCTURES ON THE PROJECT FOR WHICH METAL RAIL IS DESIGNATED.

ALUMINUM RAILS

MATERIAL FOR POSTS, BASES AND RAILS, EXPANSION BARS AND CLAMP BARS SHALL BE ASTM B221 ALLOY 6061-T6.

MATERIAL FOR RIVETS SHALL BE ASTM B316 ALLOY 6061-T6. RIVETS SHALL BE STANDARD BUTTON HEAD AND CONE POINT COLD DRIVEN AS PER DRAWING.

THE BASE OF RAIL POSTS, OR ANY OTHER ALUMINUM SURFACE IN CONTACT WITH CONCRETE SHALL BE THOROUGHLY COATED WITH AN ALUMINUM IMPREGNATED CAULKING COMPOUND OF APPROVED QUALITY.

MATERIAL FOR SHIMS TO BE ASTM B209 ALLOY 6061-T6.

GALVANIZED STEEL RAILS

MATERIAL AND GALVANIZING ARE TO CONFORM TO THE FOLLOWING SPECIFICATIONS:

POST, POST BASES, RAILS, EXPANSION BARS AND CLAMP BARS : AASHTO M270 GRADE 36 STRUCTURAL STEEL - GALVANIZED TO AASHTO M111.

RIVETS: RIVETS SHALL MEET THE REQUIREMENTS OF ASTM A502 FOR GRADE 1 RIVETS.

THE CUT ENDS OF GALVANIZED STEEL RAILING, AFTER GRINDING SMOOTH SHALL BE GIVEN TWO COATS OF ZINC RICH PAINT MEETING THE REQUIREMENTS OF FEDERAL SPECIFICATION MIL-P-26915 USAF TYPE 1, OR OF FEDERAL SPECIFICATIONS TT-P-641.

SHIMS: SHIMS SHALL MEET THE REQUIREMENTS OF ASTM A570 FOR GRADE 33 OR A611 FOR GRADE C AND SHALL BE GALVANIZED IN ACCORDANCE WITH AASHTO M111.

RAIL CAPS: RAIL CAPS SHALL MEET THE REQUIREMENTS OF ASTM A570 FOR GRADE 33 OR A611 FOR GRADE C AND SHALL BE GALVANIZED IN ACCORDANCE WITH AASHTO M111.

GENERAL NOTES

RAILING SHALL BE CONTINUOUS FROM END POST TO END POST OF BRIDGE. EACH JOINT IN RAIL LENGTH SHALL BE SPLICED AS DETAILED. PANEL LENGTHS OF RAIL SHALL BE ATTACHED TO A MINIMUM OF THREE POSTS. PLACE ONE JOINT SPLICE JUST BEYOND THE 3RD RAIL POST FROM EACH END, TYPICALLY 14' FROM THE END. PLACE OTHER JOINTS AS NEEDED.

FOR END OF RAIL TO CLEAR FACE OF CONCRETE END POST DIMENSION, SEE SHEET 3 OF 3.

CAP SCREWS SHALL BE ASTM F593 ALLOY 305 STAINLESS STEEL. WASHERS FOR RAIL ATTACHMENT SHALL MEET THE REQUIREMENTS OF ASTM F844 EXCEPT THEY SHALL BE MADE FROM ALLOY 304 STAINLESS STEEL.

CERTIFIED MILL REPORTS ARE REQUIRED FOR RAILS AND POSTS. SHOP INSPECTION IS NOT REQUIRED.

METAL RAIL POSTS SHALL BE SET NORMAL TO CURB GRADE.

METHOD OF MEASUREMENT FOR METAL RAILS: FOR LENGTH OF METAL RAILS TO BE PAID FOR, SEE THE STANDARD SPECIFICATIONS.

CURVED RAIL USAGE: WHERE RAILS ARE TO BE USED ON BRIDGES ON HORIZONTAL AND/OR VERTICAL CURVATURE THE CONTRACTOR MAY, AT HIS OPTION, HAVE THE REQUIRED CURVATURE IN THE RAIL FORMED IN THE SHOP OR IN THE FIELD. IN EITHER EVENT, THE RAIL SHALL CONFORM WITHOUT BUCKLING OR KINKING TO THE REQUIRED CURVATURE IN A UNIFORM MANNER ACCEPTABLE TO THE ENGINEER.

TO INSURE FUTURE IDENTIFICATION OF THE FABRICATOR, A PERMANENT IDENTIFYING MARK SHALL BE PLACED ON EACH POST. THE METHOD OF MARKING AND LOCATION SHALL BE SUCH THAT IT DOES NOT DETRACT FROM THE APPEARANCE OF THE POST, BUT REMAIN VISIBLE AFTER RAIL PLACEMENT.

SHIMS SHALL BE USED AS NECESSARY FOR POST ALIGNMENT.

ALLOY 6351-T5 MAY BE SUBSTITUTED FOR ALLOY 6061-T6 WHERE APPLICABLE.

MINOR VARIATIONS IN DETAILS OF METAL RAIL WILL BE CONSIDERED. DETAILS OF SUCH VARIATIONS, IF DESIRED, SHALL BE SUBMITTED FOR APPROVAL.

PAY LENGTH = 645.00 LIN.FT.

NORTH CAROLINA PROFESSIONAL SEAL 20125 ENGINEER MARSHALL G. CHEEK, JR. 6-12-12

PROJECT NO. B-4949
CUMBERLAND COUNTY
STATION: 25+55.00 -L-

SHEET 1 OF 3

STATE OF NORTH CAROLINA
DEPARTMENT OF TRANSPORTATION
RALEIGH

STANDARD

3 BAR METAL RAIL

ASSEMBLED BY : J.L. WALTON/DAH	DATE : 2/12				
CHECKED BY : M.G. CHEEK	DATE : 2/12				
DRAWN BY : JMB 1/88	REV. 5/7/03	RWW/JTE			
CHECKED BY : GGH 1/88	REV. 5/1/06	TLA/GM			
	REV. 10/1/11	MAA/GM			

REVISIONS						SHEET NO.
NO.	BY:	DATE:	NO.	BY:	DATE:	S-27
1			3			TOTAL SHEETS
2			4			131

STD. NO. BMR5

12-JUN-2012 10:48
R:\Structures\Final Plans\B-4949_SD_3MR_1.dgn
dahodge

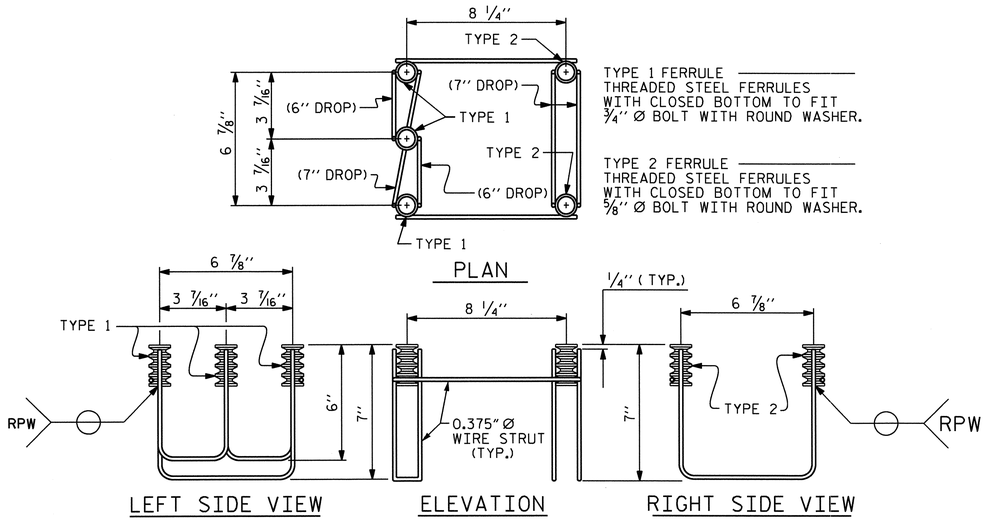

5-BOLT METAL RAIL ANCHOR ASSEMBLY

(106 ASSEMBLIES REQUIRED)

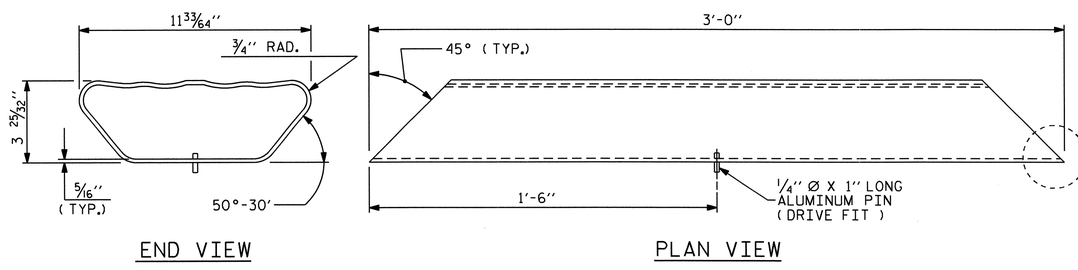

BOTTOM RAIL EXPANSION BAR

NOTES

STRUCTURAL CONCRETE ANCHOR ASSEMBLY

THE STRUCTURAL CONCRETE ANCHOR ASSEMBLY SHALL CONSIST OF THE FOLLOWING COMPONENTS:

A. FERRULES SHALL BE MADE FROM STEEL MEETING THE REQUIREMENTS OF AASHTO M169, GRADE 12L14 AND SHALL HAVE A MINIMUM LENGTH OF THREADS OF 2'' FOR 3/4'' FERRULES AND 1 3/4'' FOR 5/8'' FERRULES.

B. 3 - 3/4'' Ø X 2 1/2'' BOLTS WITH WASHERS. BOLTS SHALL CONFORM TO THE REQUIREMENTS OF ASTM A307. BOLTS AND WASHERS SHALL BE GALVANIZED. AT THE CONTRACTOR'S OPTION, STAINLESS STEEL BOLTS AND WASHERS MAY BE USED AS AN ALTERNATE FOR THE 3/4'' Ø X 2 1/2'' GALVANIZED BOLTS AND WASHERS. THEY SHALL CONFORM TO OR EXCEED THE MECHANICAL REQUIREMENTS OF ASTM A307. THE USE OF THIS ALTERNATE SHALL BE APPROVED BY THE ENGINEER.

C. 2 - 5/8'' Ø X 2 1/4'' BOLTS WITH WASHERS. BOLTS SHALL CONFORM TO THE REQUIREMENTS OF ASTM A307. BOLTS AND WASHERS SHALL BE GALVANIZED. AT THE CONTRACTOR'S OPTION, STAINLESS STEEL BOLTS AND WASHERS MAY BE USED AS AN ALTERNATE FOR THE 5/8'' Ø X 2 1/4'' GALVANIZED BOLTS AND WASHERS. THEY SHALL CONFORM TO OR EXCEED THE MECHANICAL REQUIREMENTS OF ASTM A307. THE USE OF THIS ALTERNATE SHALL BE APPROVED BY THE ENGINEER.

D. WIRE STRUT SHOWN IN THE CONCRETE ANCHOR ASSEMBLY DETAIL IS THE MINIMUM ALLOWABLE SIZE AND SHALL HAVE A MINIMUM TENSILE STRENGTH OF 100,000 PSI. AS AN OPTION, A 7/16'' Ø WIRE STRUT WITH A MINIMUM TENSILE STRENGTH OF 90,000 PSI IS ACCEPTABLE.

E. THE METAL RAIL ANCHOR ASSEMBLIES TO BE HOT DIPPED GALVANIZED TO CONFORM TO REQUIREMENTS OF AASHTO M111.

F. THE COST OF THE METAL RAIL ANCHOR ASSEMBLY WITH BOLTS AND WASHERS COMPLETE IN PLACE SHALL BE INCLUDED IN THE PRICE BID FOR LINEAR FEET OF METAL RAIL.

G. BOLTS TO BE TIGHTENED ONE-HALF TURN WITH A WRENCH FROM A FINGER-TIGHT POSITION.

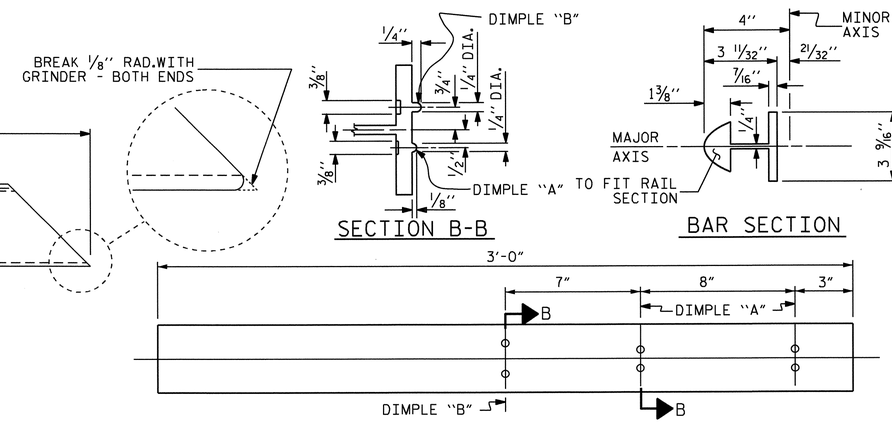

TOP & MIDDLE RAIL EXPANSION BAR

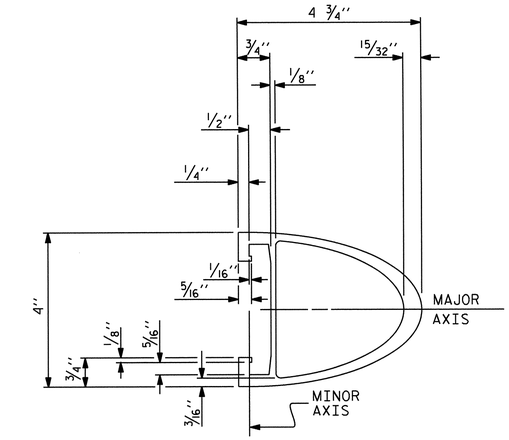

TOP & MIDDLE RAIL SECTION

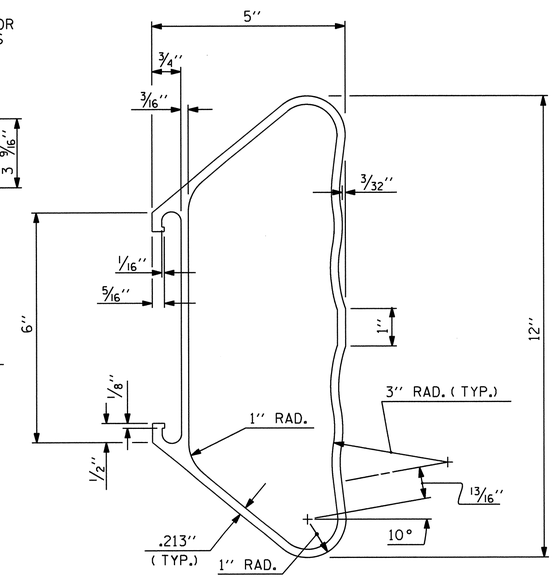

BOTTOM RAIL SECTION

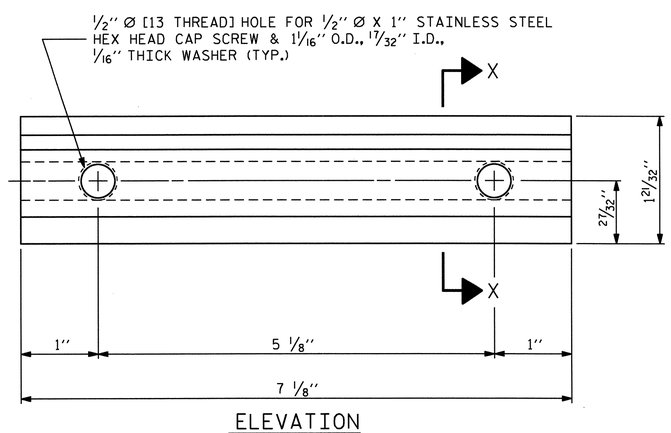

ELEVATION

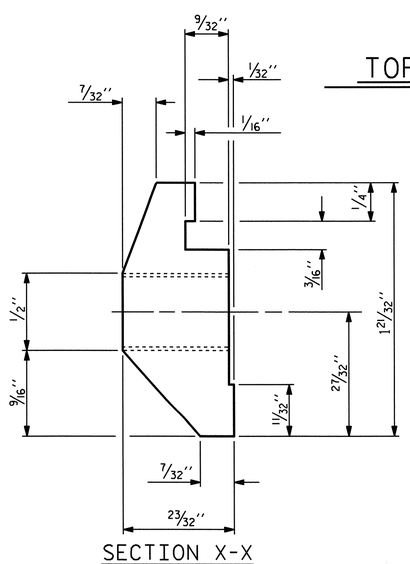

SECTION X-X

CLAMP BAR DETAIL

(6 REQUIRED PER POST)

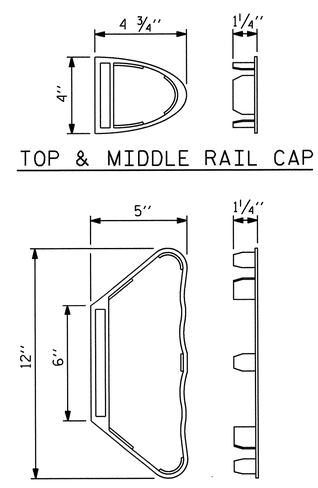

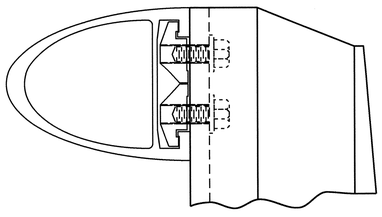

CLAMP ASSEMBLY

TOP RAIL SHOWN
(MIDDLE & BOTTOM RAIL ARE SIMILAR)

NORTH CAROLINA PROFESSIONAL SEAL 20125 ENGINEER MARSHALL G. CHEEK, JR.
6-4-12

PROJECT NO. B-4949
CUMBERLAND COUNTY
STATION: 25+55.00 -L-

SHEET 2 OF 3

STATE OF NORTH CAROLINA
DEPARTMENT OF TRANSPORTATION
RALEIGH

STANDARD

3 BAR METAL RAIL

ASSEMBLED BY : J.L. WALTON/DAH	DATE : 2/12		
CHECKED BY : M.G. CHEEK	DATE : 3/12		
DRAWN BY : JMB 1/88	REV. 5/7/03	RWW/JTE	
CHECKED BY : GGH 1/88	REV. 5/1/06	TLA/GM	
	REV. 10/1/11	MAA/GM	

REVISIONS								SHEET NO.
NO.	BY:	DATE:	NO.	BY:	DATE:			S-28
1			3					TOTAL SHEETS
2			4					131

STD. NO. BMR6

10-MAY-2012 11:25
R:\Structures\Final Plans\B-4949_SD_3MR_1.dgn
dahodge

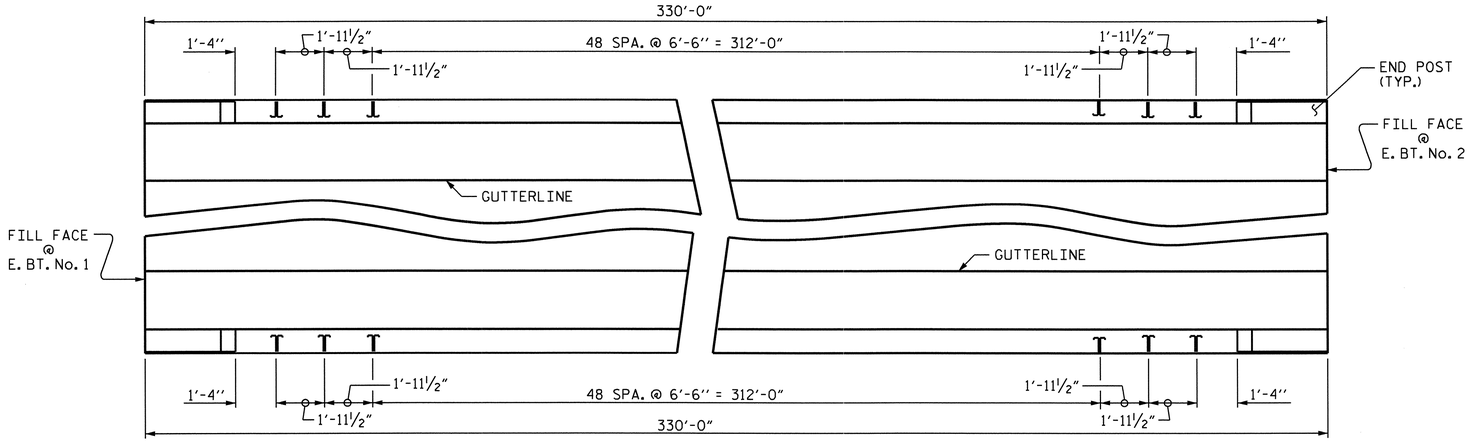

PLAN OF RAIL POST SPACING

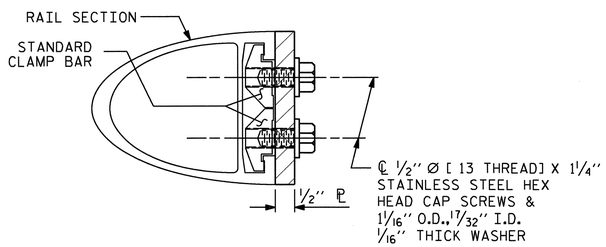

SECTION H-H

(FOR TOP & MIDDLE RAIL)

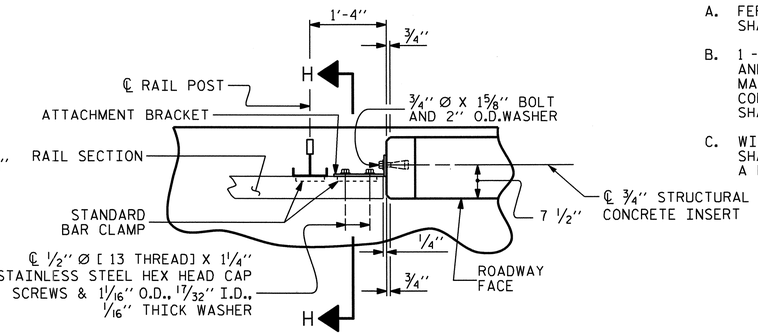

PLAN OF RAIL AND END POST

(STIFFENER ON ½" ℙ NOT SHOWN FOR CLARITY)

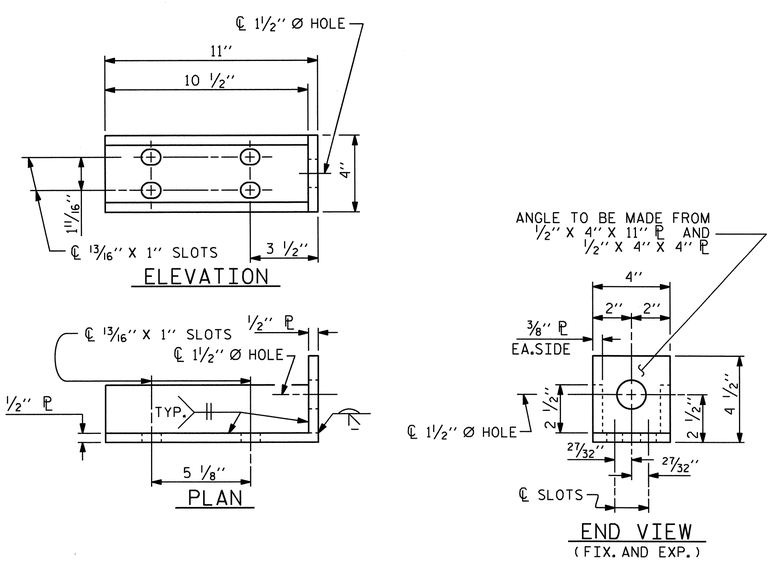

DETAILS FOR ATTACHMENT BRACKET

(TOP & MIDDLE RAIL ONLY)

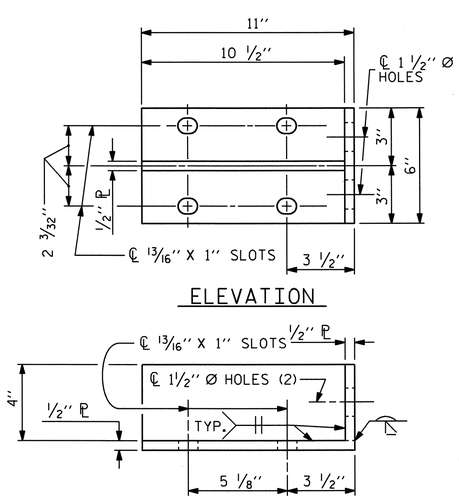

DETAILS FOR ATTACHMENT BRACKET

(BOTTOM RAIL ONLY)

NOTES

METAL RAIL TO END POST CONNECTION

THE METAL RAIL TO END POST CONNECTION SHALL CONSIST OF THE FOLLOWING COMPONENTS:

A. ½" PLATES SHALL CONFORM TO AASHTO M270 GRADE 36 AND SHALL BE GALVANIZED AFTER FABRICATION.

B. ¾" STRUCTURAL CONCRETE INSERT SHALL HAVE A WORKING LOAD SHEAR CAPACITY OF 4800 LBS. THE FERRULES SHALL ENGAGE A ¾" Ø X 1⅝" BOLT WITH 2" O.D. WASHER IN PLACE. THE ¾" Ø X 1⅝" BOLT SHALL HAVE N. C. THREADS.

C. CAP SCREWS FOR RAIL ATTACHMENT TO ANGLE SHALL CONFORM TO THE REQUIREMENTS OF ASTM F593 ALLOY 305 STAINLESS STEEL. CAP SCREWS TO BE CENTERED IN SLOTS AT 60°F. WASHERS FOR RAIL ATTACHMENT SHALL MEET THE REQUIREMENTS OF ASTM F844 EXCEPT THEY SHALL BE MADE FROM ALLOY 304 STAINLESS STEEL.

D. STANDARD CLAMP BARS (STD. No. BMR6).

THE COST OF THE STANDARD CLAMP BARS AND CAP SCREWS USED IN THE METAL RAIL TO END POST CONNECTION SHALL BE INCLUDED IN THE UNIT CONTRACT PRICE BID FOR LINEAR FEET OF 3 BAR METAL RAIL.

THE ¾" STRUCTURAL CONCRETE INSERT WITH BOLT SHALL BE ASSEMBLED IN THE SHOP.

THE COST OF THE ¾" STRUCTURAL CONCRETE INSERT ASSEMBLY, AND THE ½" PLATES COMPLETE IN PLACE SHALL BE INCLUDED IN THE VARIOUS PAY ITEMS.

THE CONTRACTOR, AT HIS OPTION, MAY USE AN ADHESIVE BONDING SYSTEM IN LIEU OF THE STRUCTURAL CONCRETE INSERT EMBEDDED IN THE END POST. IF THE ADHESIVE BONDING SYSTEM IS USED, THE ¾" Ø X 1⅝" BOLT WITH WASHER SHALL BE REPLACED WITH A ¾" Ø X 6 ½" BOLT AND 2" O.D. WASHER. ALL SPECIFICATIONS THAT APPLY TO THE ¾" Ø X 1⅝" BOLT SHALL APPLY TO THE ¾" Ø X 6 ½" BOLT. FIELD TESTING OF THE ADHESIVE BONDING SYSTEM IS NOT REQUIRED.

NOTES

STRUCTURAL CONCRETE INSERT

THE STRUCTURAL CONCRETE INSERT ASSEMBLY SHALL CONSIST OF THE FOLLOWING COMPONENTS:

A. FERRULES SHALL BE MADE FROM STEEL MEETING THE REQUIREMENTS OF AASHTO M169, GRADE 12L14 AND SHALL HAVE A MINIMUM LENGTH OF THREADS OF 1½".

B. 1 - ¾" Ø X 1⅝" BOLT WITH WASHER. BOLT SHALL CONFORM TO THE REQUIREMENTS OF ASTM A307. BOLT AND WASHER SHALL BE GALVANIZED. AT THE CONTRACTORS OPTION, STAINLESS STEEL BOLT AND WASHER MAY BE USED AS AN ALTERNATE FOR THE ¾" Ø X 1⅝" GALVANIZED BOLT AND WASHER. THEY SHALL CONFORM TO OR EXCEED THE MECHANICAL REQUIREMENTS OF ASTM A307. THE USE OF THIS ALTERNATE SHALL BE APPROVED BY THE ENGINEER.

C. WIRE STRUT SHOWN IN THE CONCRETE INSERT ASSEMBLY DETAIL IS THE MINIMUM ALLOWABLE SIZE AND SHALL HAVE A MINIMUM TENSILE STRENGTH OF 100,000 PSI. AS AN OPTION, A 7/16" Ø WIRE STRUT WITH A MINIMUM TENSILE STRENGTH OF 90,000 PSI IS ACCEPTABLE.

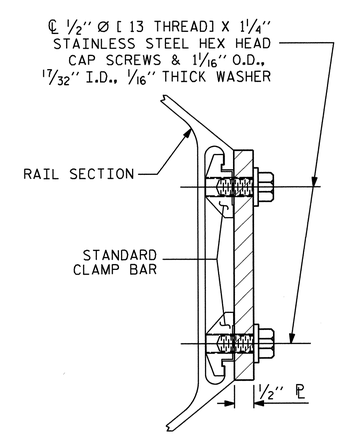

SECTION H-H

(FOR BOTTOM RAIL)

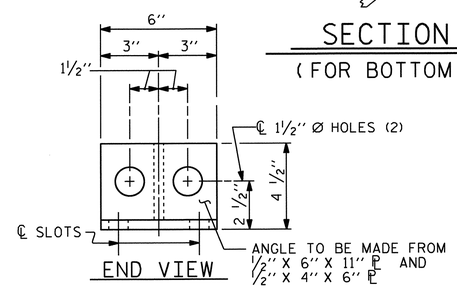

END VIEW

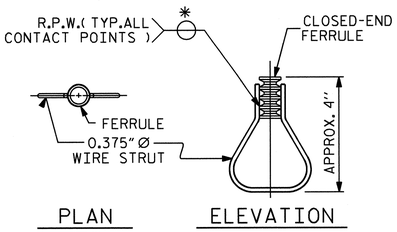

STRUCTURAL CONCRETE INSERT

* EACH WELDED ATTACHMENT OF WIRE TO FERRULE SHALL DEVELOP THE TENSILE STRENGTH OF THE WIRE.

PROJECT NO. B-4949

CUMBERLAND COUNTY

STATION: 25+55.00 -L-

SHEET 3 OF 3

STATE OF NORTH CAROLINA
DEPARTMENT OF TRANSPORTATION
RALEIGH

STANDARD

3 BAR METAL RAIL

NORTH CAROLINA PROFESSIONAL SEAL 20125 ENGINEER MARSHALL L. CREEK, JR.
6-4-12

REVISIONS							SHEET NO.
NO.	BY:	DATE:	NO.	BY:	DATE:		S-29
1			3				TOTAL SHEETS
2			4				131

ASSEMBLED BY : J.L. WALTON/DAH		DATE :	2/12
CHECKED BY : M.G. CHEEK		DATE :	3/12
DRAWN BY : JMB	1/88	REV. 5/7/03	RWW/JTE
CHECKED BY : GGH	1/88	REV. 5/1/06	TLA/GM
		REV. 10/1/11	MAA/GM

10-MAY-2012 11:24
R:\Structures\Final Plans\B-4949_SD_3MR_1.dgn
dahodge

STD. NO. BMR7

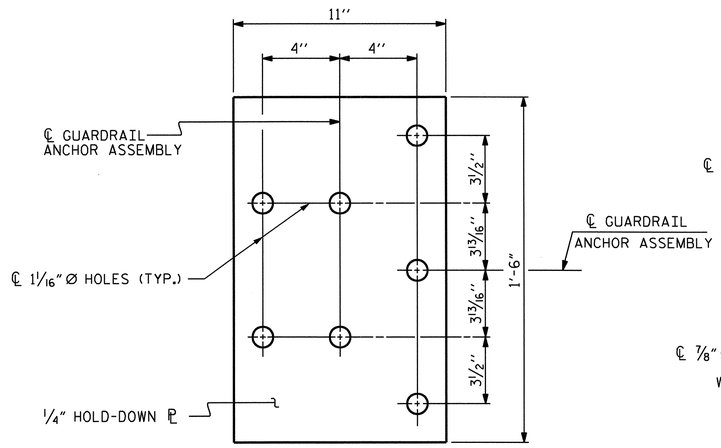

PLAN

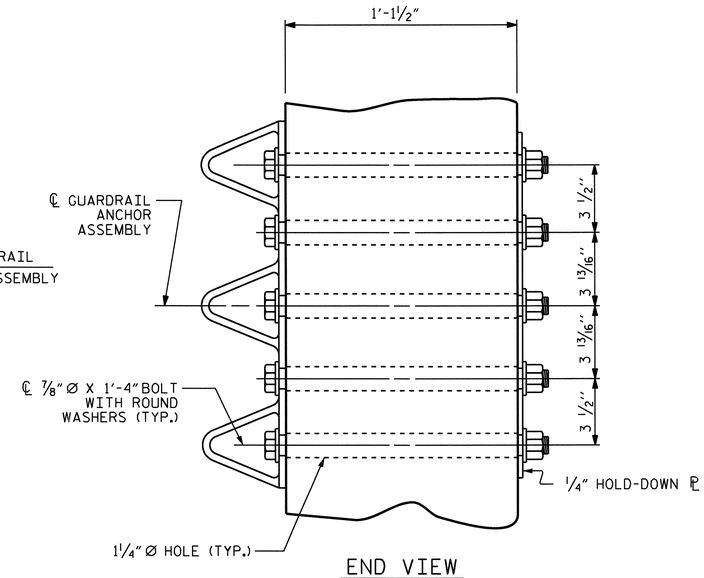

END VIEW

GUARDRAIL ANCHOR ASSEMBLY DETAILS

NOTES

THE GUARDRAIL ANCHOR ASSEMBLY SHALL CONSIST OF A 1/4'' HOLD DOWN PLATE AND 7 - 7/8'' Ø BOLTS WITH NUTS AND WASHERS.

THE HOLD-DOWN PLATE SHALL CONFORM TO AASHTO M270 GRADE 36. AFTER FABRICATION, THE HOLD-DOWN PLATE SHALL BE HOT-DIP GALVANIZED IN ACCORDANCE WITH AASHTO M111.

BOLTS SHALL CONFORM TO THE REQUIREMENTS OF ASTM A307 AND NUTS SHALL CONFORM TO THE REQUIREMENTS OF AASHTO M291. BOLTS, NUTS AND WASHERS SHALL BE GALVANIZED. AT THE CONTRACTOR'S OPTION, STAINLESS STEEL BOLTS, NUTS AND WASHERS MAY BE USED AS AN ALTERNATE FOR THE 7/8'' Ø GALVANIZED BOLTS, NUTS AND WASHERS. THEY SHALL CONFORM TO OR EXCEED THE MECHANICAL REQUIREMENTS OF ASTM A307. THE USE OF THIS ALTERNATE SHALL BE APPROVED BY THE ENGINEER.

THE GUARDRAIL ANCHOR ASSEMBLY IS REQUIRED AT ALL POINTS WHERE APPROACH GUARDRAIL IS TO BE ATTACHED TO THE END OF THE PARAPET. FOR POINTS OF ATTACHMENT, SEE SKETCH.

AFTER INSTALLATION, THE EXPOSED THREAD OF THE BOLT SHALL BE BURRED WITH A SHARP POINTED TOOL.

THE COST OF THE GUARDRAIL ANCHOR ASSEMBLIES WITH BOLTS, NUTS AND WASHERS COMPLETE IN PLACE, SHALL BE INCLUDED IN THE VARIOUS PAY ITEMS.

THE VERTICAL REINFORCING BARS MAY BE SHIFTED SLIGHTLY IN THE END POST TO CLEAR ASSEMBLY BOLTS.

THE 1 1/4'' Ø HOLES SHALL BE FORMED OR DRILLED WITH A CORE BIT. IMPACT TOOLS WILL NOT BE PERMITTED. ANY CONCRETE DAMAGED BY THIS WORK SHALL BE REPAIRED TO THE SATISFACTION OF THE ENGINEER.

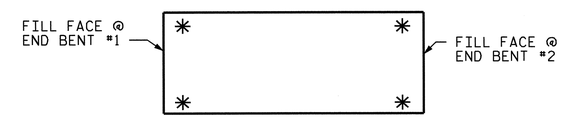

SKETCH SHOWING POINTS OF ATTACHMENT

✳ LOCATION OF GUARDRAIL ATTACHMENT

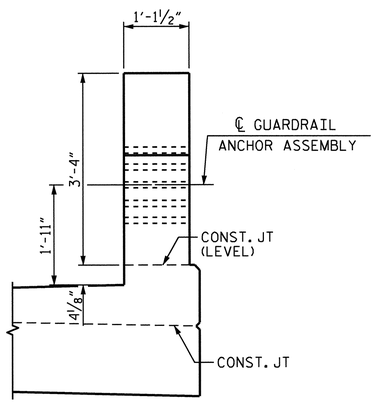

END VIEW
(THREE BAR METAL RAIL)

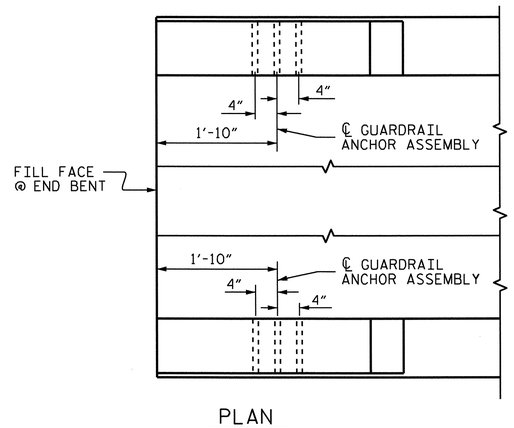

PLAN

LOCATION OF GUARDRAIL ANCHOR AT END POST

PROJECT NO. B-4949
CUMBERLAND COUNTY
STATION: 25+55.00 -L-

STATE OF NORTH CAROLINA
DEPARTMENT OF TRANSPORTATION
RALEIGH

STANDARD
GUARDRAIL ANCHORAGE DETAILS FOR METAL RAILS

NORTH CAROLINA PROFESSIONAL SEAL 20125 ENGINEER MARSHALL G. CHEEK, JR.
6-4-12

REVISIONS						SHEET NO.
NO.	BY:	DATE:	NO.	BY:	DATE:	S-30
1			3			TOTAL SHEETS
2			4			131

STD. NO. GRA3

ASSEMBLED BY : D. HODGE		DATE : 2/12	
CHECKED BY : M.G. CHEEK		DATE : 3/12	
DRAWN BY : MAA 5/10	ADDED 5/6/10		
CHECKED BY : GM 5/10	REV. 10/1/11	MAA/GM	
	REV. 12/5/11	MAA/GM	

10-MAY-2012 11:24
R:\Structures\Final Plans\B-4949_SD_3MR_1.dgn
dohodge

NOTES

GROOVED CONTRACTION JOINTS 1/2" IN DEPTH, SHALL BE TOOLED IN ALL EXPOSED FACES OF CONCRETE MEDIAN IN ACCORDANCE WITH ARTICLE 825-10(B) OF THE STANDARD SPECIFICATIONS. THE CONTRACTION JOINTS SHALL BE LOCATED AT A SPACING OF 8 FEET TO 10 FEET BETWEEN EXPANSION JOINTS. NO CONTRACTION JOINTS WILL BE REQUIRED FOR SEGMENTS LESS THAN 10 FEET IN LENGTH.

NO SEPARATE MEASUREMENT OR PAYMENT WILL BE MADE FOR MATERIALS OR LABOR REQUIRED TO CONSTRUCT THE CONCRETE MEDIAN. THE ENTIRE COST OF THIS WORK SHALL BE INCLUDED IN THE UNIT BID PRICE FOR REINFORCED CONCRETE DECK SLAB.

ALL STEEL IN CONCRETE MEDIAN SHALL BE EPOXY COATED.

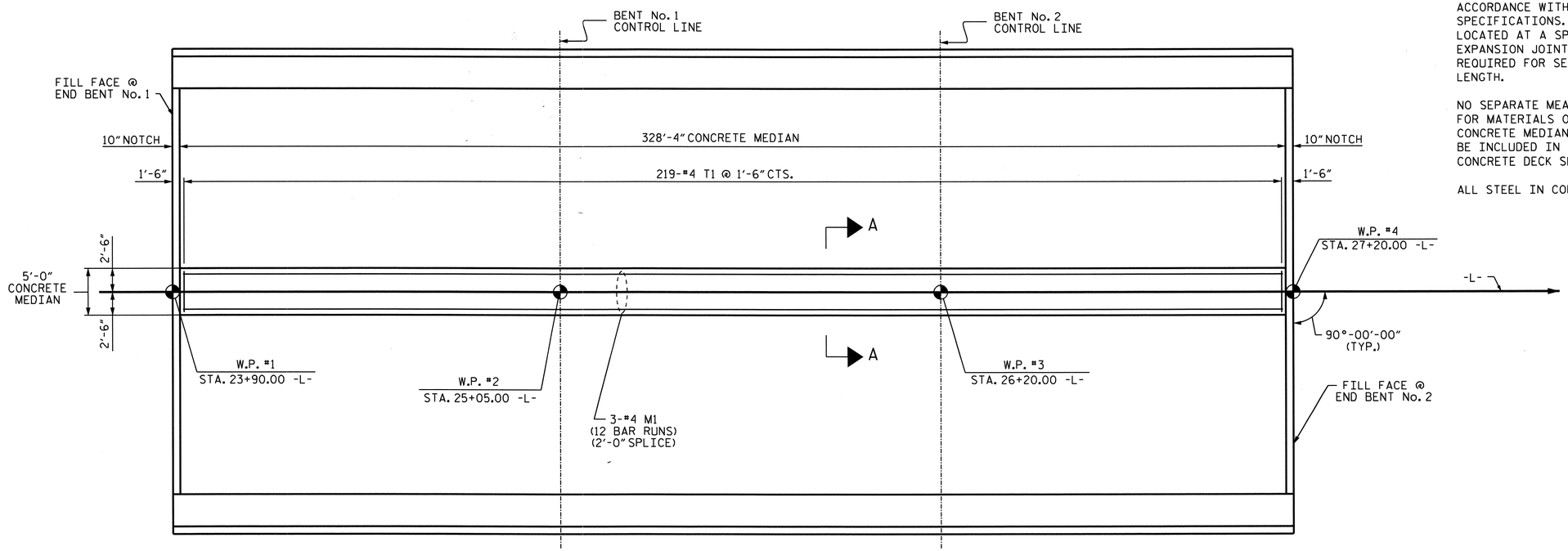

PLAN OF CONCRETE MEDIAN

BILL OF MATERIAL FOR CONCRETE MEDIAN					
BAR	NO.	SIZE	TYPE	LENGTH	WEIGHT
* M1	36	#4	STR	29'-2"	701
* T1	219	#4	STR	3'-0"	439
* EPOXY COATED REINFORCING STEEL				LBS.	1,140
CLASS AA CONCRETE				C. Y.	22.8

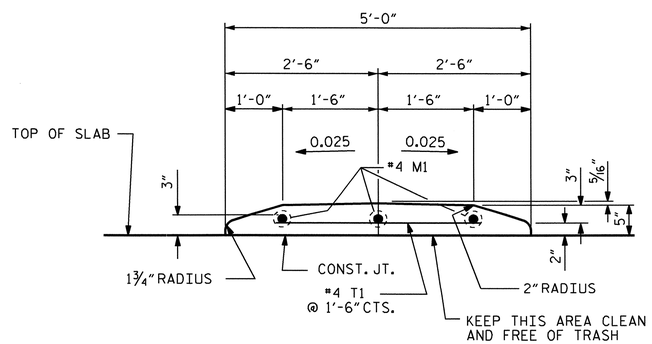

SECTION A-A

PROJECT NO. B-4949

CUMBERLAND COUNTY

STATION: 25+55.00 -L-

STATE OF NORTH CAROLINA
DEPARTMENT OF TRANSPORTATION
RALEIGH

SUPERSTRUCTURE
CONCRETE MEDIAN
DETAILS

NORTH CAROLINA PROFESSIONAL SEAL 20125 ENGINEER MARSHALL G. CHEEK, JR.
6-12-12

REVISIONS						SHEET NO.
NO.	BY:	DATE:	NO.	BY:	DATE:	S-31
1			3			TOTAL SHEETS
2			4			131

DRAWN BY : J.L. WALTON/DAH DATE : 6-17-11
CHECKED BY : M.G. CHEEK DATE : 3/12

12-JUN-2012 10:48
R:\Structures\Final Plans\B-4949_SD_3MR_1.dgn
dohodge

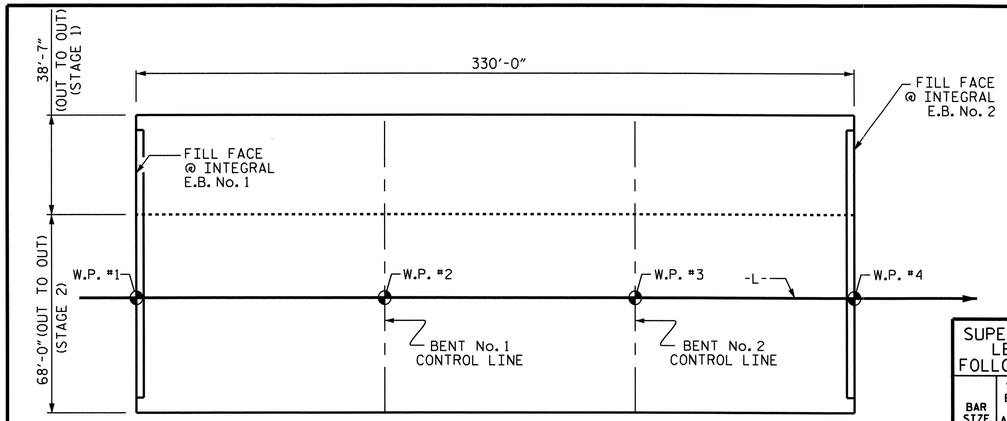

LAYOUT FOR COMPUTING AREA REINFORCED CONCRETE DECK SLAB (SQ. FT. = 35,173)

SUPERSTRUCTURE REINFORCING STEEL LENGTHS ARE BASED ON THE FOLLOWING MINIMUM SPLICE LENGTHS					
BAR SIZE	SUPERSTRUCTURE EXCEPT APPROACH SLABS, PARAPET, AND BARRIER RAIL		APPROACH SLABS		PARAPET AND BARRIER RAIL
	EPOXY COATED	UNCOATED	EPOXY COATED	UNCOATED	
#4	2'-0"	1'-9"	2'-0"	1'-9"	2'-9"
#5	2'-6"	2'-2"	2'-6"	2'-2"	3'-5"
#6	3'-0"	2'-7"	3'-10"	2'-7"	4'-4"
#7	5'-3"	3'-6"			
#8	6'-10"	4'-7"			

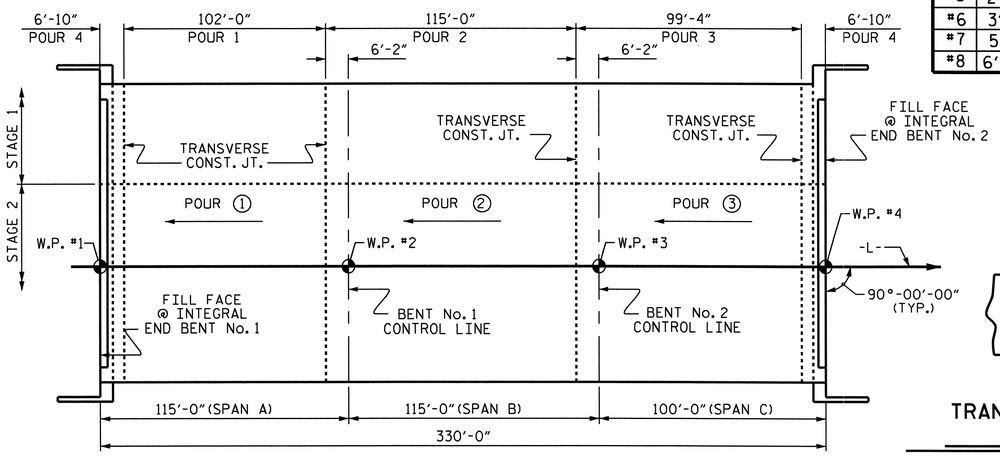

POURING SEQUENCE

STAGE 1 AND STAGE 2 POURING SEQUENCE IS THE SAME

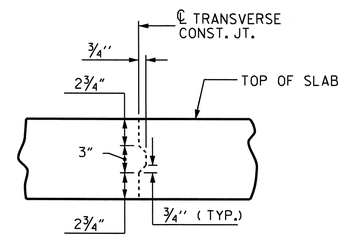

TRANSVERSE CONSTRUCTION JOINT DETAIL

NOTE: REINFORCING STEEL IN SLAB NOT SHOWN. LONGITUDINAL REINFORCING STEEL SHALL BE CONTINUOUS THRU JOINT

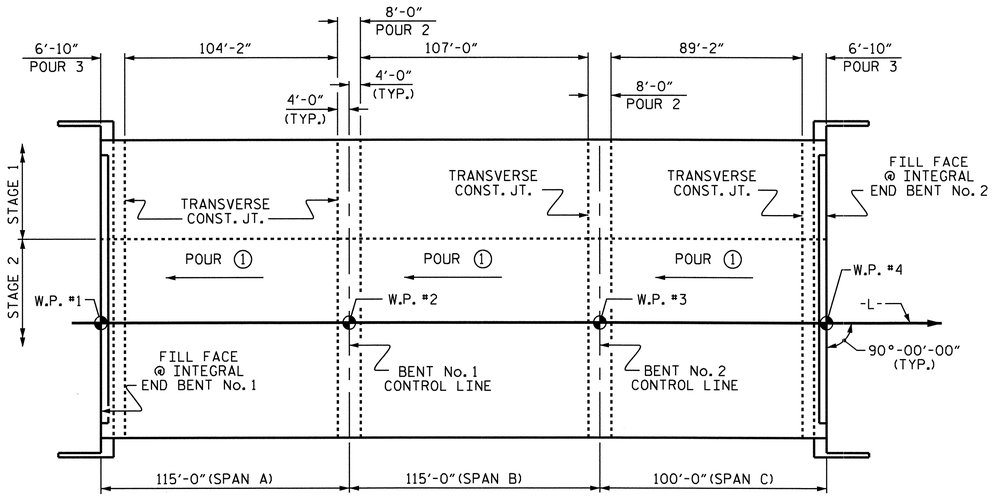

OPTIONAL POURING SEQUENCE

STAGE 1 AND STAGE 2 POURING SEQUENCE IS THE SAME

REINFORCING BAR SCHEDULE STAGE 1						REINFORCING BAR SCHEDULE STAGE 2					
BAR	NO.	SIZE	TYPE	LENGTH	WEIGHT	BAR	NO.	SIZE	TYPE	LENGTH	WEIGHT
✳ A1	563	#5	STR	41'-1"	24124	✳ A3	1126	#5	STR	35'-1"	41202
A2	563	#5	STR	40'-9"	23929	A4	1126	#5	STR	34'-11"	41007
✳ B1	81	#4	STR	26'-11"	1456	✳ B1	138	#4	STR	26'-11"	2481
✳ B2	50	#6	STR	23'-0"	1727	✳ B2	90	#6	STR	23'-0"	3109
B3	192	#5	STR	56'-6"	11314	B3	318	#5	STR	56'-6"	18740
B4	27	#5	STR	23'-0"	648	B4	45	#5	STR	23'-0"	1080
✳ B5	54	#7	STR	42'-2"	4654	✳ B5	92	#7	STR	42'-2"	7929
✳ B6	25	#7	STR	34'-6"	1763	✳ B6	45	#7	STR	34'-6"	3173
✳ B7	54	#4	STR	21'-0"	758	✳ B7	92	#4	STR	21'-0"	1291
✳ B8	54	#7	STR	39'-10"	4397	✳ B8	92	#7	STR	39'-10"	7491
✳ B9	25	#7	STR	32'-3"	1648	✳ B9	45	#7	STR	32'-3"	2966
✳ B10	81	#4	STR	23'-6"	1272	✳ B10	138	#4	STR	23'-6"	2166
✳ B11	50	#6	STR	20'-0"	1502	✳ B11	90	#6	STR	20'-0"	2734
B12	27	#5	STR	20'-0"	563	B12	45	#5	STR	20'-0"	939
H1	28	#5	STR	13'-0"	380	H4	28	#5	STR	13'-6"	394
H2	4	#5	STR	11'-7"	48	H5	4	#5	STR	12'-1"	50
H3	4	#5	STR	10'-3"	43	H6	4	#5	STR	10'-8"	45
K1	16	#4	STR	5'-0"	53	K13	28	#4	STR	5'-6"	103
K2	80	#4	STR	7'-7"	405	K14	140	#4	STR	8'-2"	764
K3	16	#4	STR	4'-7"	49	K15	28	#4	STR	5'-2"	97
K4	28	#4	STR	19'-0"	355	K16	42	#4	STR	22'-4"	627
K5	8	#4	STR	2'-8"	14	K17	2	#4	STR	6'-0"	8
K6	2	#4	STR	5'-3"	7	K18	10	#4	STR	6'-9"	45
K7	10	#4	STR	6'-9"	45	K19	2	#4	STR	5'-3"	7
K8	2	#4	STR	6'-0"	8	K20	8	#4	STR	2'-8"	14
K9	28	#4	STR	22'-8"	424	K21	14	#4	STR	6'-7"	62
K10	8	#4	STR	6'-0"	32	K22	70	#4	STR	8'-2"	382
K11	40	#4	STR	7'-7"	203	K23	14	#4	STR	5'-2"	48
K12	8	#4	STR	4'-7"	24	K24	42	#4	STR	24'-9"	694
S1	46	#4	1	13'-5"	412	S1	90	#4	1	13'-5"	807
S2	18	#4	1	11'-5"	137	S2	30	#4	1	11'-5"	229
S3	40	#4	2	18'-10"	503	S3	84	#4	2	18'-10"	1057
S4	288	#4	3	2'-9"	529	S4	588	#4	3	2'-9"	1080
S5	16	#4	4	12'-10"	137	S5	28	#4	4	12'-10"	240
S6	6	#4	1	16'-11"	68	S6	8	#4	1	16'-11"	90
✳ S7	44	#4	5	11'-0"	323	✳ S7	88	#4	5	11'-0"	647
✳ S8	46	#4	5	11'-11"	366	✳ S8	90	#4	5	11'-11"	716
V1	28	#5	STR	7'-6"	219	V1	32	#5	STR	7'-6"	250
V2	4	#5	STR	6'-11"	29	V2	4	#5	STR	6'-11"	29
V3	4	#5	STR	6'-3"	26	V3	4	#5	STR	6'-3"	26
V4	4	#5	STR	5'-7"	23	V4	4	#5	STR	5'-7"	23
REINFORCING STEEL = 40,627 LBS						REINFORCING STEEL = 68,937 LBS					
✳ EPOXY COATED REINF. STEEL = 43,990 LBS						✳ EPOXY COATED REINF. STEEL = 75,905 LBS					

BAR TYPES

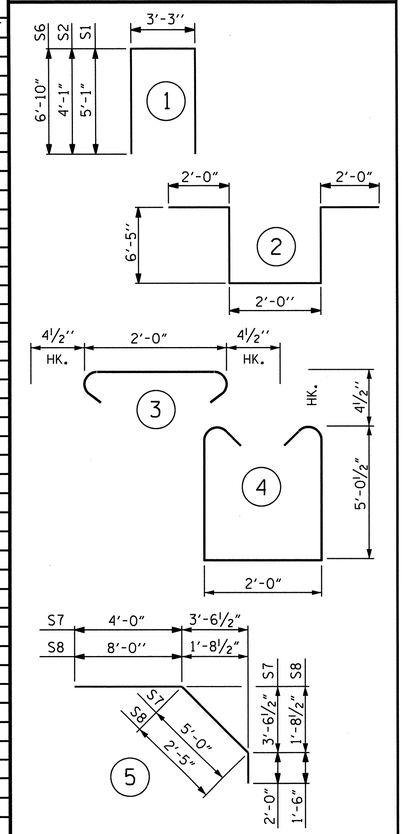

ALL BAR DIMENSIONS ARE OUT TO OUT

GROOVING BRIDGE FLOORS		
APPROACH SLABS - STAGE 1	1,460	SQ.FT.
APPROACH SLABS - STAGE 2	2,876	SQ.FT.
APPROACH SLAB TOTAL	4,336	SQ.FT.
BRIDGE DECK - STAGE 1	9,931	SQ.FT.
BRIDGE DECK - STAGE 2	19,574	SQ.FT.
BRIDGE DECK TOTAL	29,505	SQ.FT.
TOTAL	33,841	SQ.FT.

SUPERSTRUCTURE BILL OF MATERIAL

STAGE 1	CLASS AA CONCRETE	REINFORCING STEEL	EPOXY COATED REINFORCING STEEL
	(CU. YDS.)	(LBS.)	(LBS.)
SPANS A, B & C		40,627	43,990
POUR #1	142.2		
POUR #2	177.0		
POUR #3	155.1		
POUR #4	85.3		
TOTALS✳✳	559.6	40,627	43,990

STAGE 2	CLASS AA CONCRETE	REINFORCING STEEL	EPOXY COATED REINFORCING STEEL
	(CU. YDS.)	(LBS.)	(LBS.)
SPANS A, B & C		68,937	75,905
POUR #1	251.1		
POUR #2	314.2		
POUR #3	275.6		
POUR #4	142.1		
TOTALS✳✳	983.0	68,937	75,905

✳✳ QUANTITIES FOR SIDEWALK & CONCRETE MEDIAN ARE NOT INCLUDED. SEE "SIDEWALK DETAILS" SHEET AND "CONCRETE MEDIAN DETAILS" SHEET.

PROJECT NO. B-4949
CUMBERLAND COUNTY
STATION: 25+55.00 -L-

STATE OF NORTH CAROLINA
DEPARTMENT OF TRANSPORTATION
RALEIGH

STANDARD
SUPERSTRUCTURE BILL OF MATERIAL

NORTH CAROLINA PROFESSIONAL SEAL 20125 ENGINEER MARSHALL L. HICKERSON, JR.
6-12-12

ASSEMBLED BY : J.L. WALTON/DAH	DATE : 7/20/11
CHECKED BY : M.G. CHEEK	DATE : 3/12
DRAWN BY : JMB 5/87	REV. 6/1/94 EEM/GRP
CHECKED BY : SJD 9/87	REV. 8/16/99 RWW/LES
	REV. 5/1/06 TLA/GM

REVISIONS								SHEET NO.
NO.	BY:	DATE:	NO.	BY:	DATE:			S-32
1			3					TOTAL SHEETS
2			4					131

STD. NO. BOM1

12-JUN-2012 10:40
R:\Structures\Final Plans\B-4949_SD_BM.dgn
dahodge

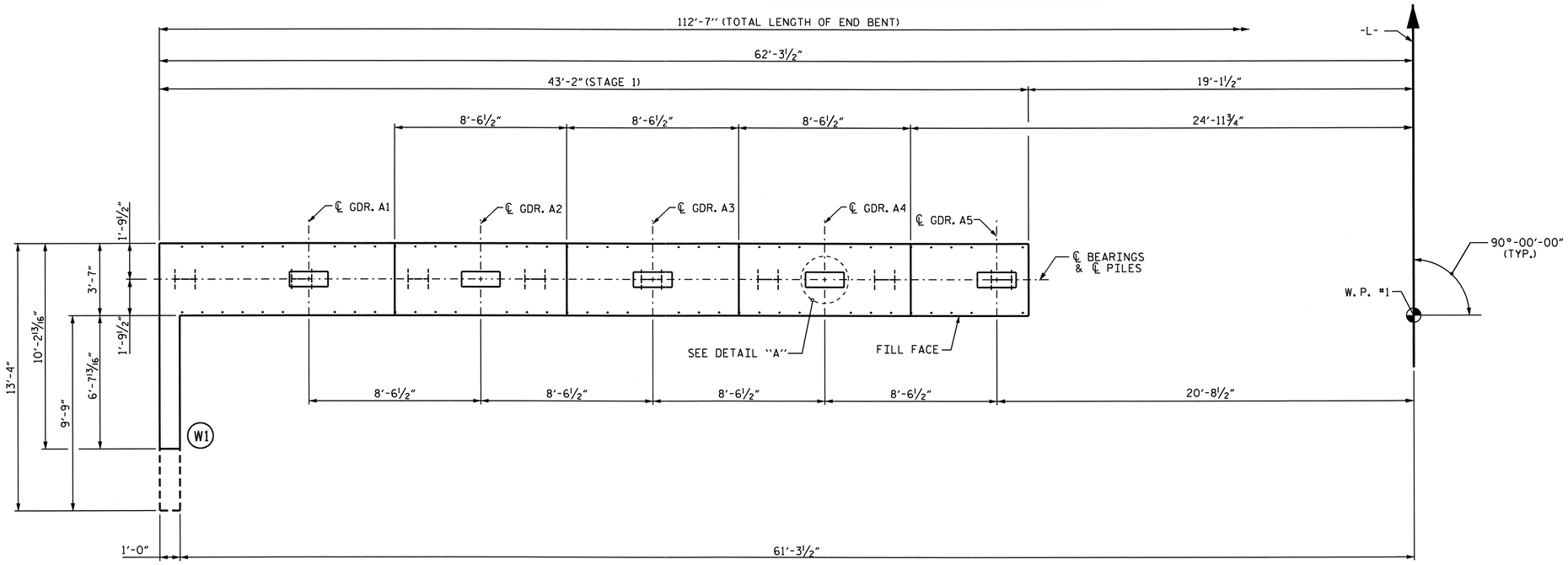

PLAN

NOTES

FOR MECHANICAL BUTT SPLICING FOR REINFORCING STEEL, SEE SECTION 425-5 OF THE STANDARD SPECIFICATIONS.

THE CONTRACTOR SHALL PROVIDE FOR INSTALLATION OF THE 4" DIAMETER DRAIN PIPE THROUGH THE WING WALL AS REQUIRED FOR REINFORCED BRIDGE APPROACH FILLS. SEE THE ROADWAY PLANS. REINFORCING STEEL IN THE WING WALL MAY BE SHIFTED AS NECESSARY TO CLEAR THE DRAIN PIPE.

UPPER PORTION OF INTEGRAL END BENT CAP & UPPER PORTION OF WINGS SHALL BE POURED WITH THE SUPERSTRUCTURE. SEE SUPERSTRUCTURE PLANS.

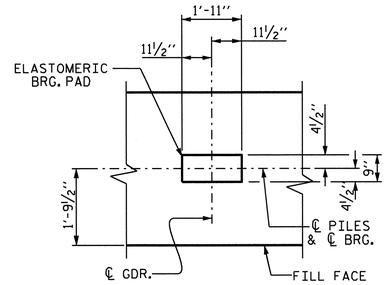

DETAIL "A"
(TYP. EACH BEARING)

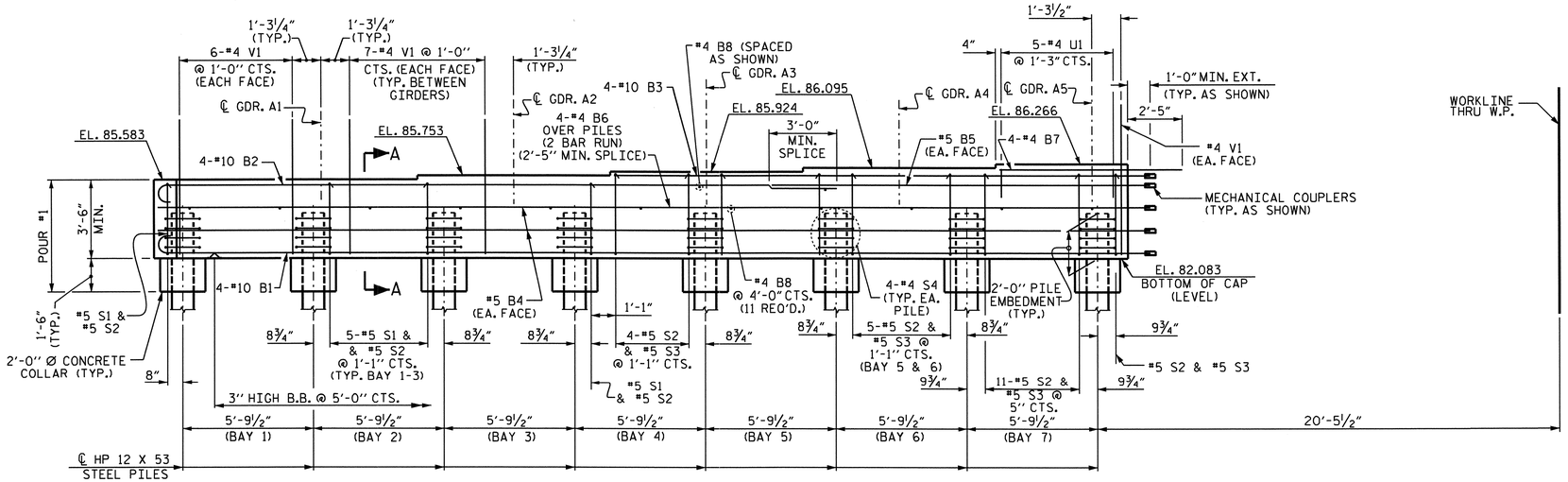

ELEVATION

PROJECT NO. B-4949
CUMBERLAND COUNTY
STATION: 25+55.00 -L-

SHEET 1 OF 4

STATE OF NORTH CAROLINA
DEPARTMENT OF TRANSPORTATION
RALEIGH

SUBSTRUCTURE
INTEGRAL END BENT NO. 1
(STAGE 1)

NORTH CAROLINA PROFESSIONAL SEAL 20125 ENGINEER MARSHALL G. CHEEK, JR.
6-14-12

REVISIONS								SHEET NO.
NO.	BY:	DATE:	NO.	BY:	DATE:			S-33
1			3					TOTAL SHEETS
2			4					131

DRAWN BY : J. MYA/J.R. MCROY DATE : 3/12
CHECKED BY : M.G. CHEEK DATE : 3/12

14-JUN-2012 10:23
R:\Structures\Final Plans\B4949_SD_E*.dgn
dahodge

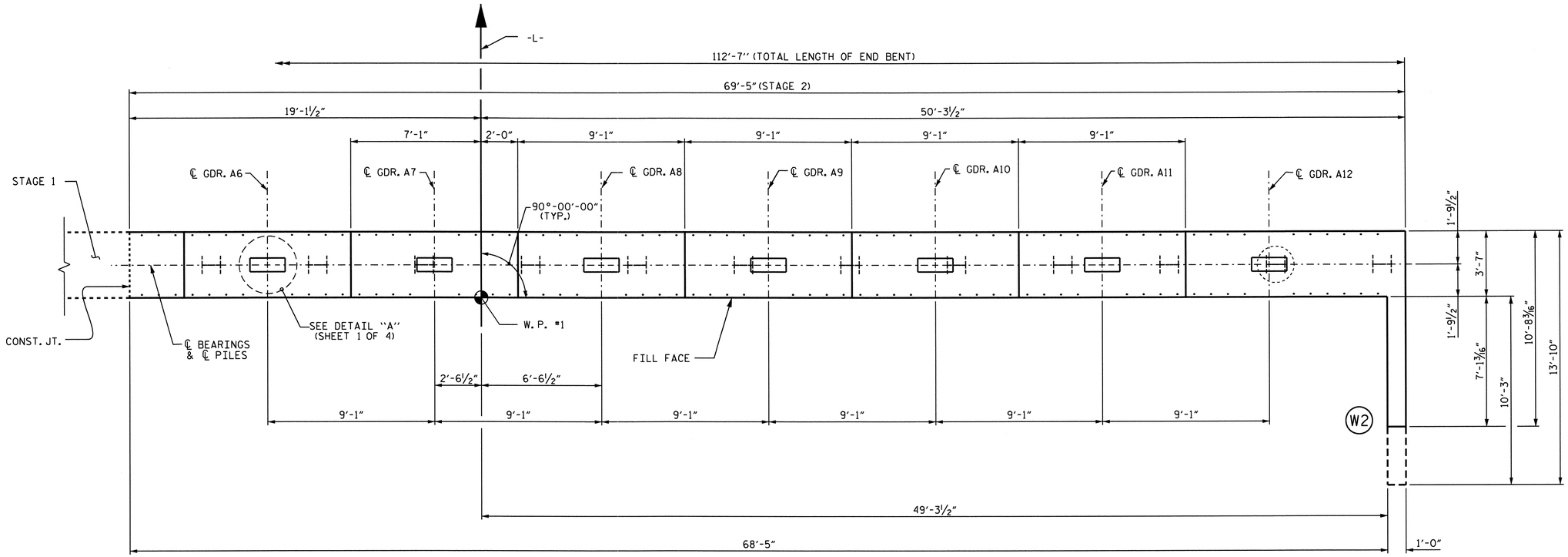

PLAN

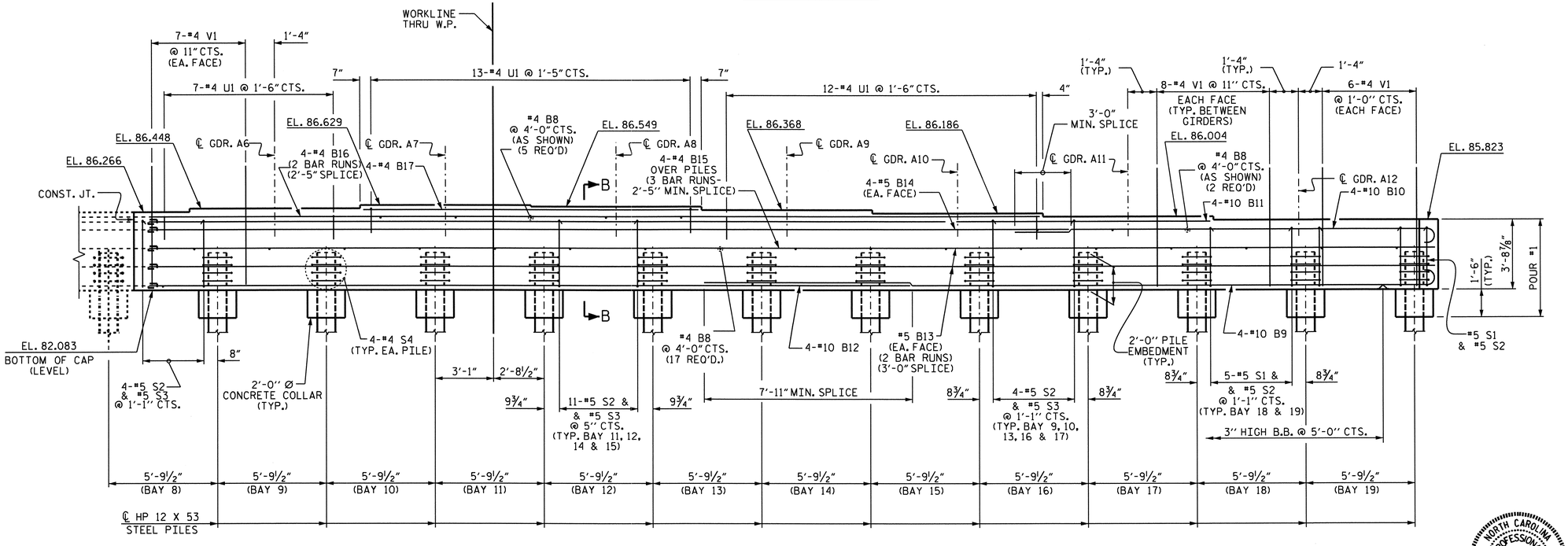

ELEVATION

PROJECT NO. B-4949

CUMBERLAND COUNTY

STATION: 25+55.00 -L-

SHEET 2 OF 4

STATE OF NORTH CAROLINA
DEPARTMENT OF TRANSPORTATION
RALEIGH

SUBSTRUCTURE
INTEGRAL
END BENT NO. 1
(STAGE 2)

NORTH CAROLINA PROFESSIONAL SEAL 20125 ENGINEER MARSHALL G. CHEEK, JR.

REVISIONS						SHEET NO.
NO.	BY:	DATE:	NO.	BY:	DATE:	S-34
1			3			TOTAL SHEETS
2			4			131

DRAWN BY : J. MYA/J.R. MCROY DATE : 3/12
CHECKED BY : M.G. CHEEK DATE : 3/12

14-JUN-2012 10:23
R:\Structures\Final Plans\B4949_SD_E*.dgn
dahodge

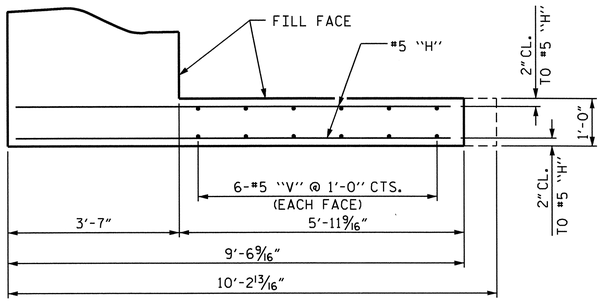

PLAN (W1)
(STAGE 1)

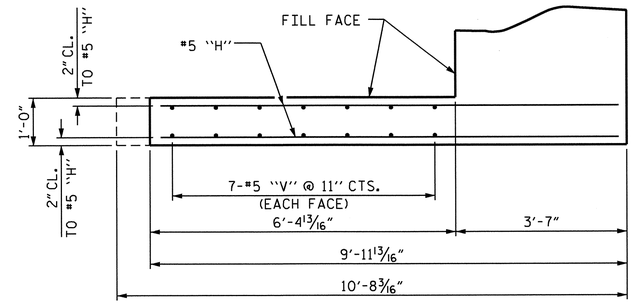

PLAN (W2)
(STAGE 2)

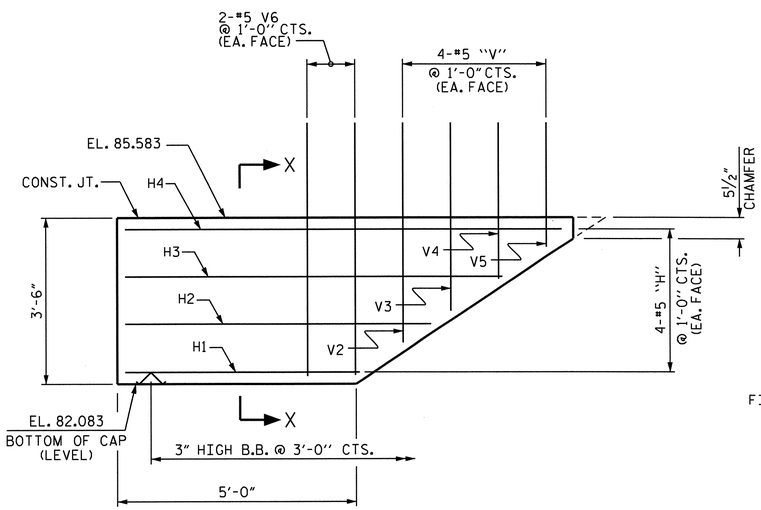

ELEVATION (W1)
(STAGE 1)

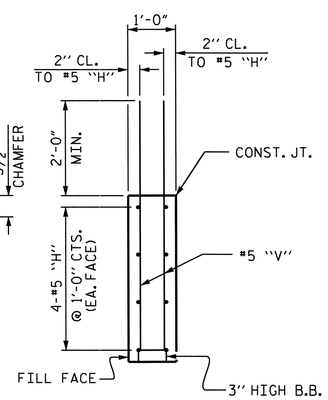

SECTION X-X
(STAGE 1)

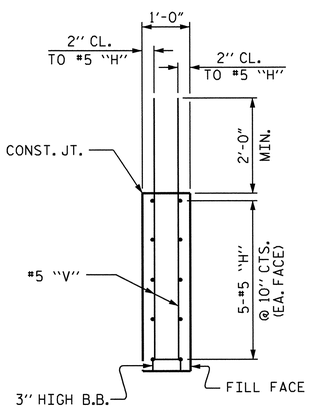

SECTION Y-Y
(STAGE 2)

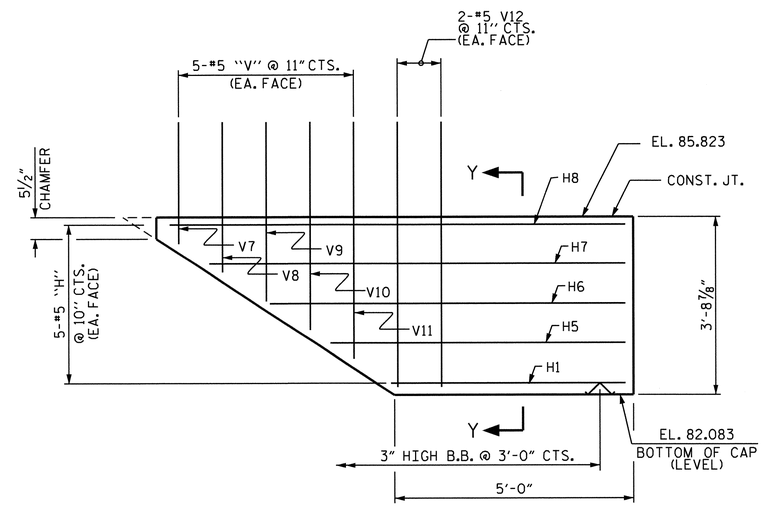

ELEVATION (W2)
(STAGE 2)

PROJECT NO. B-4949
CUMBERLAND COUNTY
STATION: 25+55.00 -L-

SHEET 3 OF 4

STATE OF NORTH CAROLINA
DEPARTMENT OF TRANSPORTATION
RALEIGH

SUBSTRUCTURE

INTEGRAL
END BENT NO. 1

NORTH CAROLINA PROFESSIONAL SEAL 20125 ENGINEER MARSHALL G. CHEEK JR.

REVISIONS						SHEET NO.
NO.	BY:	DATE:	NO.	BY:	DATE:	S-35
1			3			TOTAL SHEETS
2			4			131

DRAWN BY : J. MYA/J.R. MCROY DATE : 3/12
CHECKED BY : M.G. CHEEK DATE : 3/12

14-JUN-2012 10:23
R:\Structures\Final Plans\B4949_SD_E*.dgn
dahodge

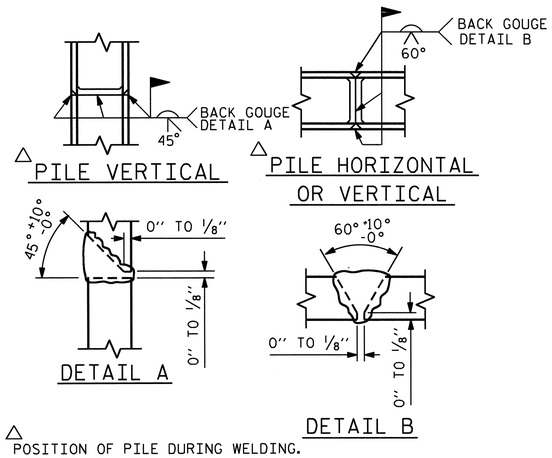

△ POSITION OF PILE DURING WELDING.

PILE SPLICE DETAILS

TOTAL QUANTITIES	
CLASS A CONCRETE	65.3 C.Y.
REINFORCING STEEL	8,877 LBS.
HP 12 X 53 STEEL PILES	1,100 LIN. FT.
PILE REDRIVES	5 EA.

BAR TYPES

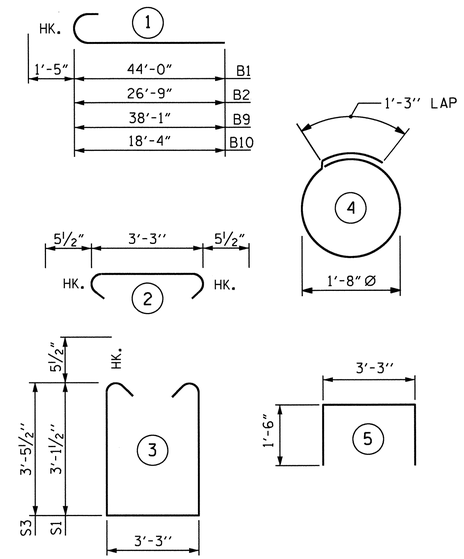

ALL BAR DIMENSIONS ARE OUT TO OUT.

▲ UPPER PORTION OF WINGS TO BE POURED WITH SUPERSTRUCTURE.

BILL OF MATERIAL

INTEGRAL END BENT NO. 1 (STAGE 1)

BAR	NO.	SIZE	TYPE	LENGTH	WEIGHT
B1	4	#10	1	45'-5"	782
B2	4	#10	1	28'-2"	485
B3	4	#10	STR	23'-10"	410
B4	4	#5	STR	44'-0"	184
B5	2	#5	STR	20'-7"	43
B6	8	#4	STR	23'-3"	124
B7	4	#4	STR	8'-2"	22
B8	13	#4	STR	3'-3"	28
H1	2	#5	STR	4'-10"	10
H2	2	#5	STR	6'-6"	14
H3	2	#5	STR	8'-0"	17
H4	2	#5	STR	9'-2"	19
S1	17	#5	3	10'-5"	185
S2	43	#5	2	4'-2"	187
S3	26	#5	3	11'-1"	301
S4	32	#4	4	6'-6"	139
U1	5	#4	5	6'-3"	21
V1	70	#4	STR	5'-0"	234
V2	2	#5	STR	4'-9"	10
V3	2	#5	STR	4'-0"	8
V4	2	#5	STR	3'-4"	7
V5	2	#5	STR	2'-9"	6
V6	4	#5	STR	5'-4"	22

REINFORCING STEEL 3258 LBS.

CLASS A CONCRETE

▲ (CAP, CONCRETE COLLARS & LOWER PORTION OF WING) C.Y. 23.7

TOTAL C.Y. 23.7

HP 12 X 53 STEEL PILES

No. 8 LIN. FT.: 440

INTEGRAL END BENT NO. 1 (STAGE 2)

BAR	NO.	SIZE	TYPE	LENGTH	WEIGHT
B8	24	#4	STR	3'-3"	52
B9	4	#10	1	39'-6"	680
B10	4	#10	1	19'-9"	340
B11	4	#10	STR	56'-3"	968
B12	4	#10	STR	38'-1"	655
B13	8	#5	STR	35'-8"	298
B14	2	#5	STR	52'-10"	110
B15	12	#4	STR	24'-5"	196
B16	8	#4	STR	25'-3"	135
B17	4	#4	STR	17'-10"	48
H1	2	#5	STR	4'-10"	10
H5	2	#5	STR	6'-3"	13
H6	2	#5	STR	7'-6"	16
H7	2	#5	STR	8'-9"	18
H8	2	#5	STR	9'-7"	20
S1	11	#5	3	10'-5"	120
S2	79	#5	2	4'-2"	343
S3	68	#5	3	11'-1"	786
S4	48	#4	4	6'-6"	208
U1	32	#4	5	6'-3"	134
V1	122	#4	STR	5'-0"	407
V7	2	#5	STR	2'-7"	5
V8	2	#5	STR	3'-2"	7
V9	2	#5	STR	3'-10"	8
V10	2	#5	STR	4'-5"	9
V11	2	#5	STR	5'-0"	10
V12	4	#5	STR	5'-7"	23

REINFORCING STEEL 5619 LBS.

CLASS A CONCRETE

▲ (CAP, CONCRETE COLLARS & LOWER PORTION OF WING) C.Y. 41.6

TOTAL C.Y. 41.6

HP 12 X 53 STEEL PILES

No. 12 LIN. FT.: 660

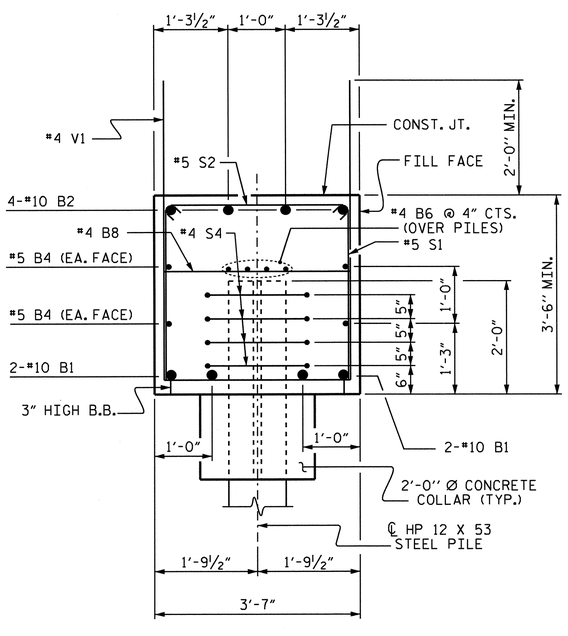

SECTION A-A

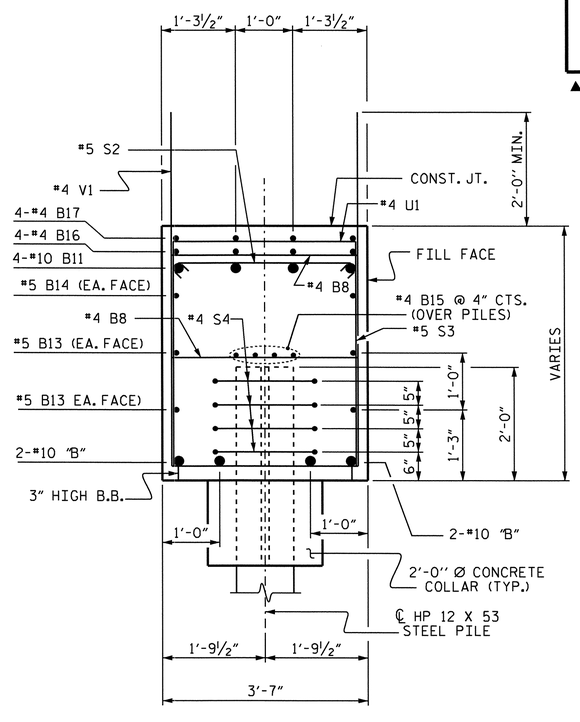

SECTION B-B

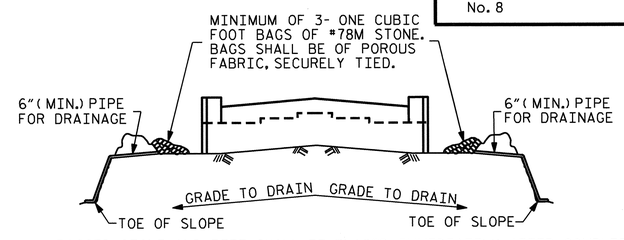

BAGGED STONE AND PIPE SHALL BE PLACED IMMEDIATELY AFTER COMPLETION OF END BENT EXCAVATION. PIPE MAY BE EITHER CONCRETE, CORRUGATED STEEL, CORRUGATED ALUMINUM ALLOY, OR CORRUGATED PLASTIC. PERFORATED PIPE WILL NOT BE ALLOWED.

BAGGED STONE SHALL REMAIN IN PLACE UNTIL THE ENGINEER DIRECTS THAT IT BE REMOVED. THE CONTRACTOR SHALL REMOVE AND DISPOSE OF SILT ACCUMULATIONS AT BAGGED STONE WHEN SO DIRECTED BY THE ENGINEER. BAGS SHALL BE REMOVED AND REPLACED WHENEVER THE ENGINEER DETERMINES THAT THEY HAVE DETERIORATED AND LOST THEIR EFFECTIVENESS.

NO SEPARATE PAYMENT WILL BE MADE FOR THIS WORK AND THE ENTIRE COST OF THIS WORK SHALL BE INCLUDED IN THE UNIT CONTRACT PRICE BID FOR THE SEVERAL PAY ITEMS.

TEMPORARY DRAINAGE AT END BENT

PROJECT NO. B-4949
CUMBERLAND COUNTY
STATION: 25+55.00 -L-

SHEET 4 OF 4

STATE OF NORTH CAROLINA
DEPARTMENT OF TRANSPORTATION
RALEIGH

SUBSTRUCTURE
INTEGRAL
END BENT NO. 1

NORTH CAROLINA PROFESSIONAL SEAL 20125 ENGINEER MARSHALL G. CHEEK, JR.

REVISIONS								SHEET NO.
NO.	BY:	DATE:	NO.	BY:	DATE:			S-36
1			3					TOTAL SHEETS
2			4					131

DRAWN BY : J. MYA DATE : 8--11
CHECKED BY : M.G. CHEEK DATE : 3/12

12-JUN-2012 10:35
R:\Structures\Final Plans\B4949_SD_E*.dgn
dahodge

NOTES

STIRRUPS IN CAP MY BE SHIFTED AS NECESSARY TO CLEAR ANCHOR BOLTS.

HOOKS ON "V" BARS MAY BE TURNED AS NECESSARY FOR PLACING REINFORCING STEEL.

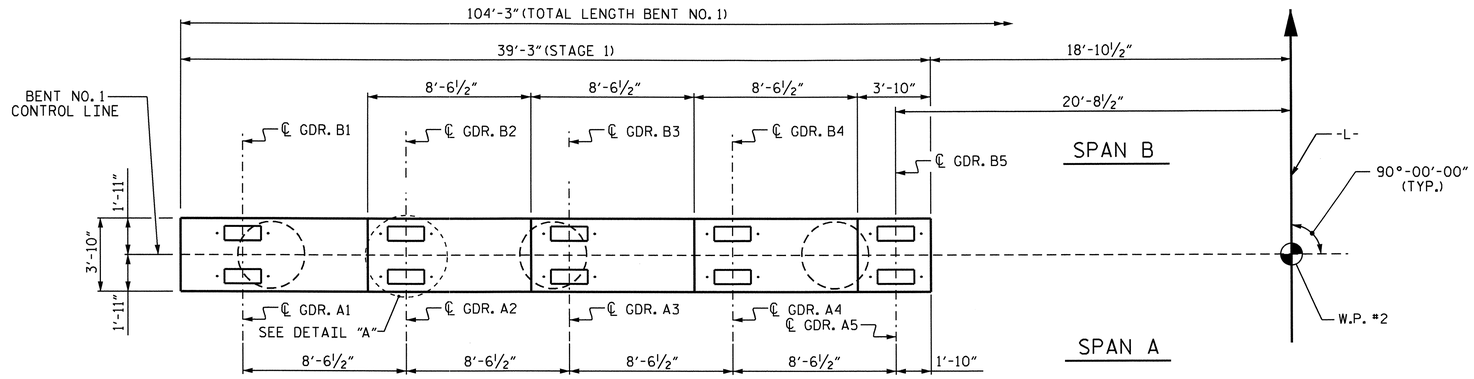

PLAN

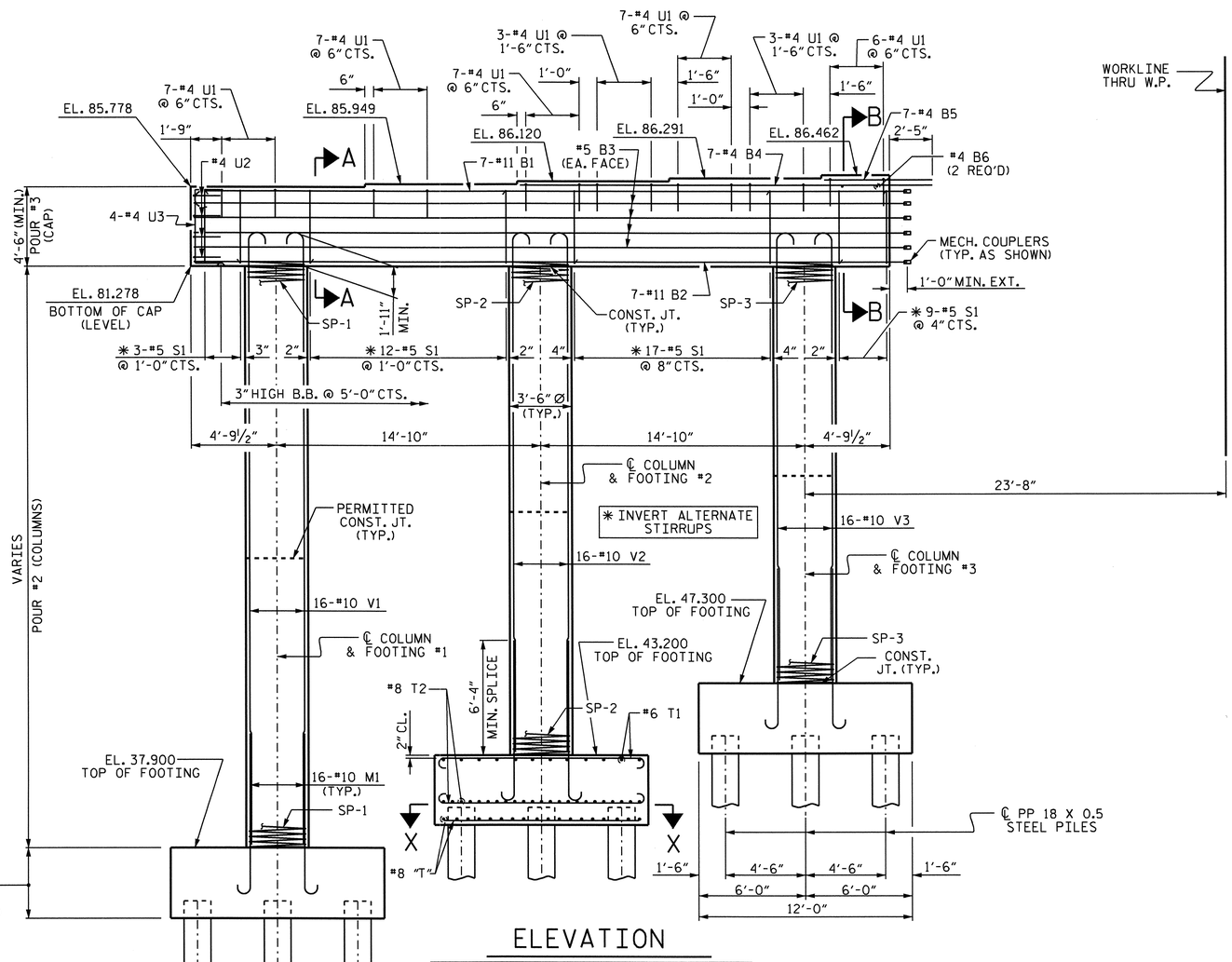

ELEVATION

REINFORCING STEEL & DIMENSIONS TYPICAL FOR ALL COLUMNS & FOOTINGS UNLESS OTHERWISE NOTED.
FOR SECTION A-A & B-B, SEE SHEET 4 OF 4.
FOR SECTION X-X, SEE SHEET 3 OF 4.

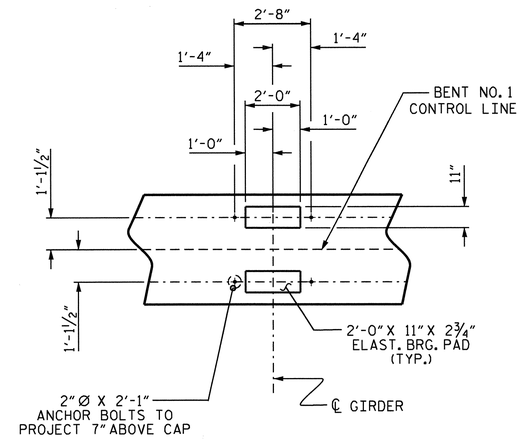

DETAIL "A"

PROJECT NO. B-4949
CUMBERLAND COUNTY
STATION: 25+55.00 -L-

SHEET 1 OF 4

STATE OF NORTH CAROLINA
DEPARTMENT OF TRANSPORTATION
RALEIGH

SUBSTRUCTURE
BENT NO. 1
STAGE 1

NORTH CAROLINA PROFESSIONAL SEAL 20125 ENGINEER MARSHALL G. CHEEK, JR.
6-19-12

REVISIONS						SHEET NO.
NO.	BY:	DATE:	NO.	BY:	DATE:	S-37
1			3			TOTAL SHEETS
2			4			131

DRAWN BY : J.R. MCROY DATE : 02/10/12
CHECKED BY : M.G. CHEEK DATE : 02/12

19-JUN-2012 11:29
R:\Structures\Final Plans\B-4949_SD_B*_1.dgn
dahodge

NOTES

STIRRUPS IN CAP MY BE SHIFTED AS NECESSARY TO CLEAR ANCHOR BOLTS.

HOOKS ON "V" BARS MAY BE TURNED AS NECESSARY FOR PLACING REINFORCING STEEL.

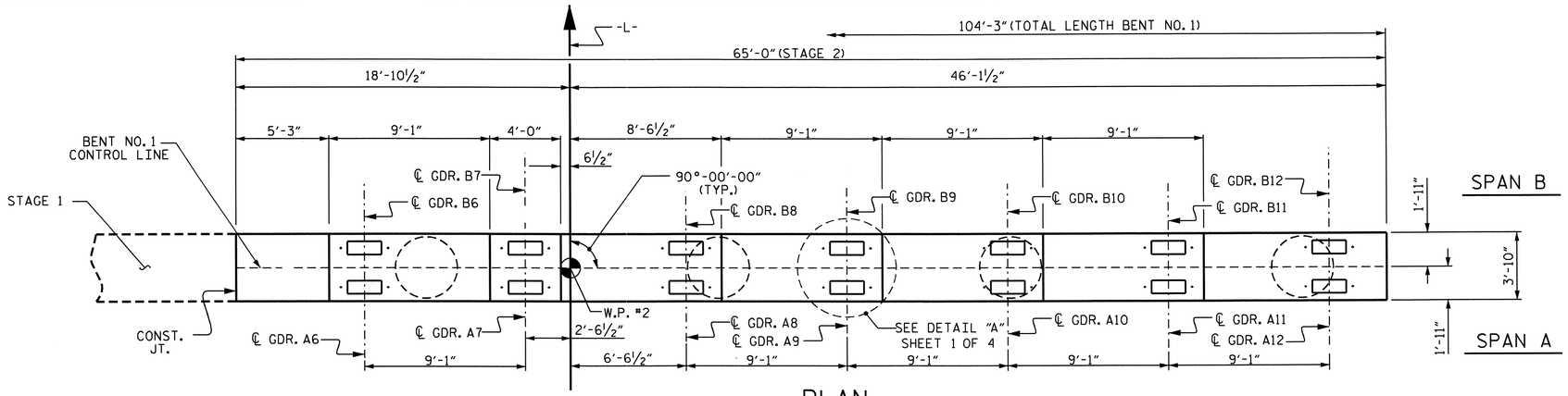

PLAN

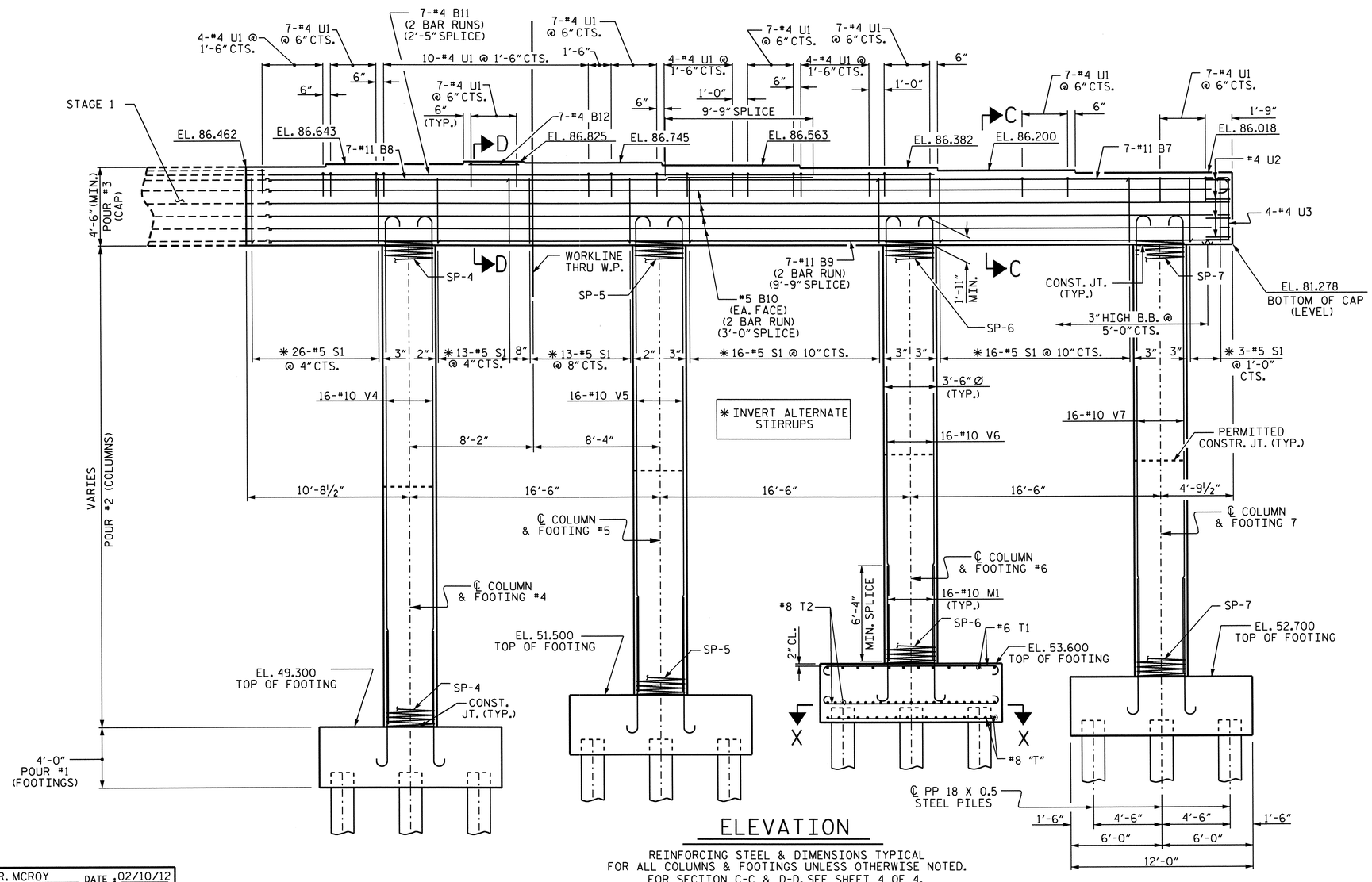

ELEVATION

REINFORCING STEEL & DIMENSIONS TYPICAL FOR ALL COLUMNS & FOOTINGS UNLESS OTHERWISE NOTED.
FOR SECTION C-C & D-D, SEE SHEET 4 OF 4.
FOR SECTION X-X, SEE SHEET 3 OF 4.

PROJECT NO. B-4949
CUMBERLAND COUNTY
STATION: 25+55.00 -L-

SHEET 2 OF 4

STATE OF NORTH CAROLINA
DEPARTMENT OF TRANSPORTATION
RALEIGH

SUBSTRUCTURE
BENT NO. 1
STAGE 2

REVISIONS								SHEET NO.
NO.	BY:	DATE:	NO.	BY:	DATE:			S-38
1			3					TOTAL SHEETS
2			4					131

NORTH CAROLINA PROFESSIONAL SEAL 20125 ENGINEER MARSHALL G. CHEEK, JR.
6-19-12

DRAWN BY : J.R. MCROY DATE : 02/10/12
CHECKED BY : M.G. CHEEK DATE : 02/12

19-JUN-2012 11:29
R:\Structures\Final Plans\B-4949_SD_B*_1.dgn
dahodge

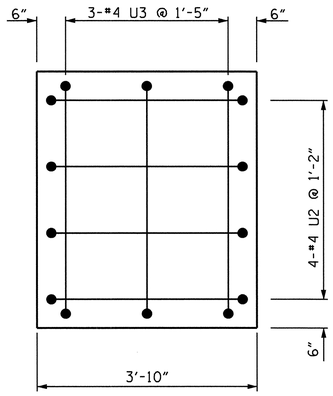

END OF CAP VIEW

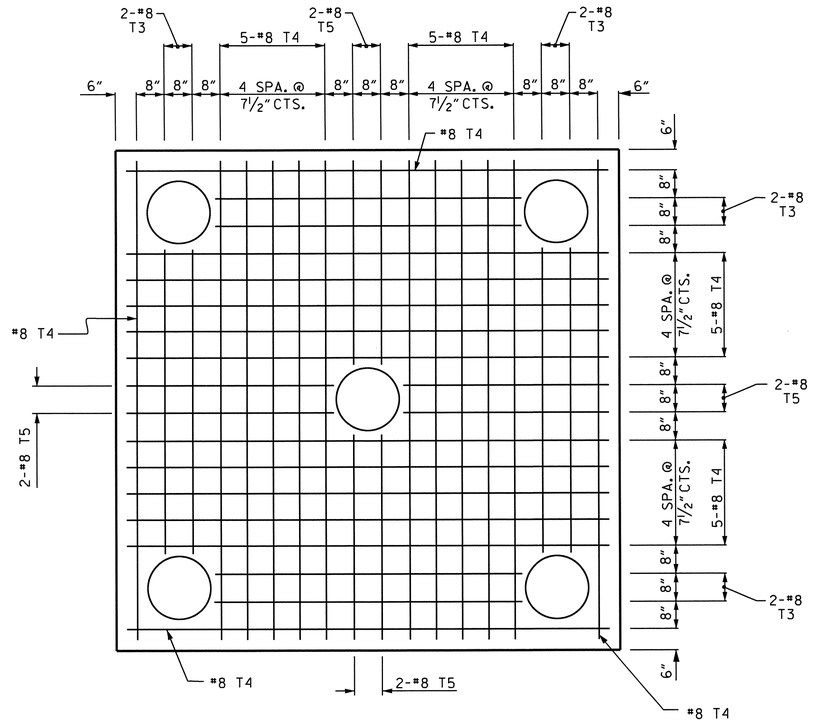

SECTION X-X

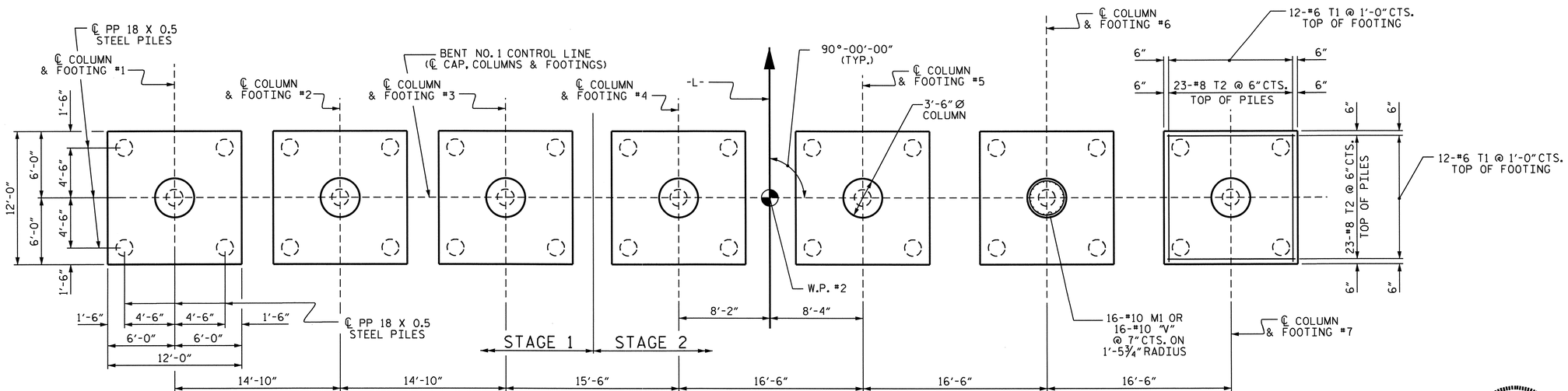

PLAN OF COLUMNS & FOOTINGS

REINFORCING STEEL & DIMENSIONS TYPICAL FOR ALL COLUMNS & FOOTINGS
FOR ADDITIONAL REINFORCING STEEL IN BOTTOM OF FOOTING, SEE "SECTION X-X".

PROJECT NO. B-4949
CUMBERLAND COUNTY
STATION: 25+55.00 -L-

SHEET 3 OF 4

STATE OF NORTH CAROLINA
DEPARTMENT OF TRANSPORTATION
RALEIGH

SUBSTRUCTURE

BENT NO. 1

NORTH CAROLINA PROFESSIONAL SEAL 20125 ENGINEER MARSHALL G. CHEEK, JR.
6-19-12

REVISIONS						SHEET NO.
NO.	BY:	DATE:	NO.	BY:	DATE:	S-39
1			3			TOTAL SHEETS
2			4			131

DRAWN BY : J.R. MCROY DATE : 02/10/12
CHECKED BY : M.G. CHEEK DATE : 02/12

19-JUN-2012 11:29
R:\Structures\Final Plans\B-4949_SD_B*_1.dgn
dahodge

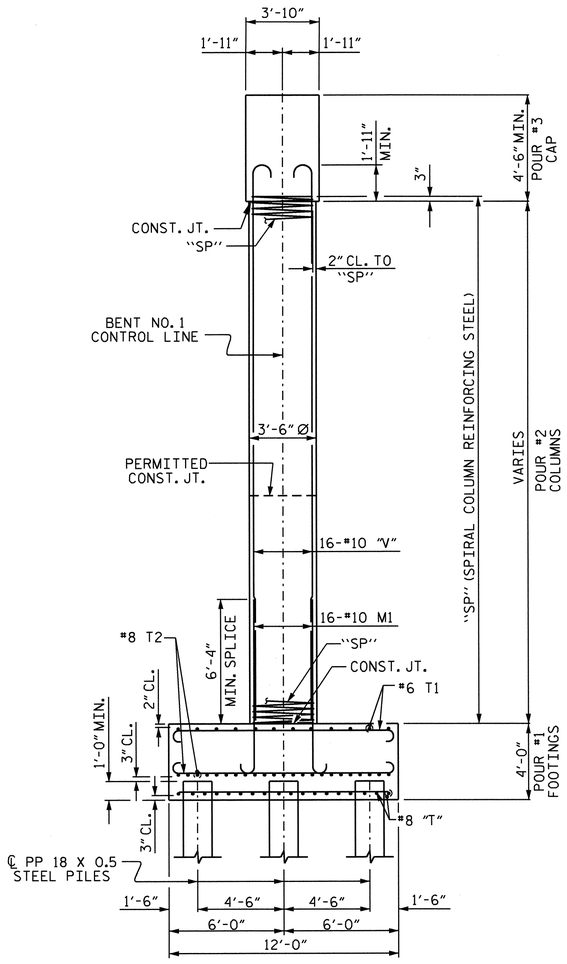

END ELEVATION

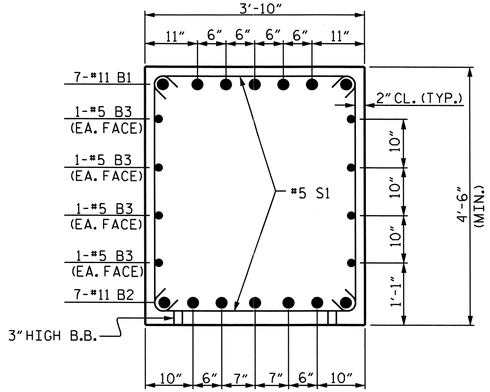

SECTION A-A

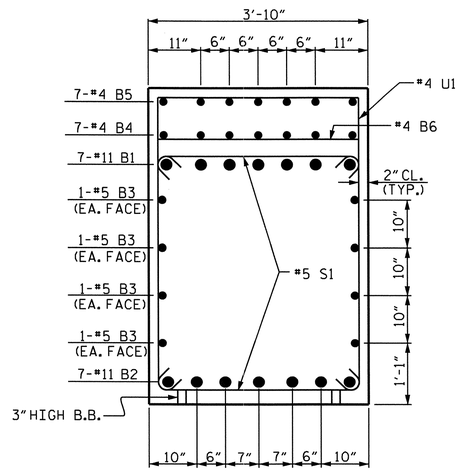

SECTION B-B

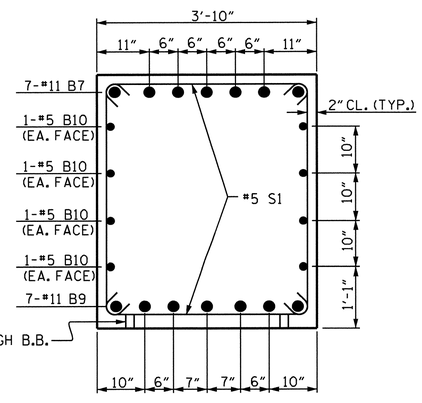

SECTION C-C

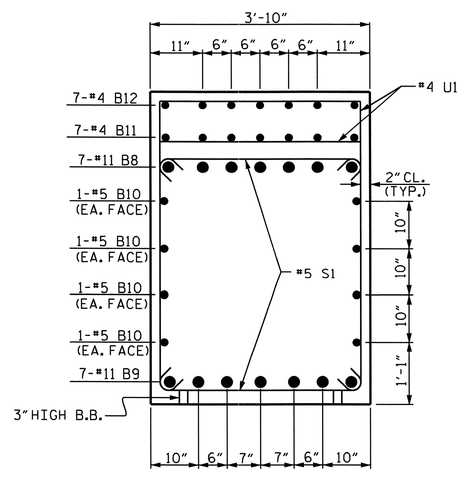

SECTION D-D

BAR TYPES

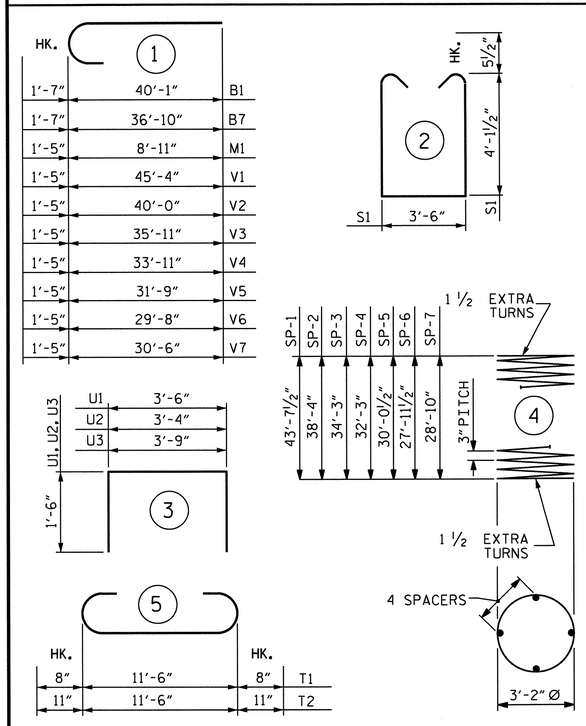

ALL BAR DIMENSIONS ARE OUT TO OUT.

** THE "SP" SPIRAL REINFORCING STEEL SHALL BE W20 OR D-20 COLD DRAWN WIRE OR #4 PLAIN OR DEFORMED BAR.

TOTAL BENT NO. 1 QUANTITIES

CLASS A CONCRETE	304.6 CU. YD.
REINFORCING STEEL	56,490 LBS.
SPIRAL COL. REINFORCING STEEL	6,316 LBS.
PP 18 x 0.5 STEEL PILES	1,750 LIN. FT.
PILE REDRIVES	9 EA.
FOUNDATION EXCAVATION	275 CU. YD.

BILL OF MATERIAL

BENT NO. 1 - STAGE 1

BAR	NO.	SIZE	TYPE	LENGTH	WEIGHT
B1	7	#11	1	41'-8"	1550
B2	7	#11	STR	40'-1"	1491
B3	8	#5	STR	40'-1"	334
B4	7	#4	STR	23'-2"	108
B5	7	#4	STR	6'-1"	28
B6	2	#4	STR	3'-6"	5
M1	48	#10	1	10'-4"	2134
S1	41	#5	2	12'-8"	542
T1	72	#6	5	12'-10"	1388
T2	138	#8	5	13'-4"	4913
T3	24	#8	STR	7'-2"	459
T4	72	#8	STR	11'-8"	2243
T5	24	#8	STR	4'-10"	310
U1	40	#4	3	6'-6"	174
U2	4	#4	3	6'-4"	17
U3	3	#4	3	6'-9"	14
V1	16	#10	1	46'-9"	3219
V2	16	#10	1	41'-5"	2851
V3	16	#10	1	37'-4"	2570
REINFORCING STEEL					24,350 LBS.
SP-1	1	**	4	1745'-8"	1166
SP-2	1	**	4	1537'-0"	1027
SP-3	1	**	4	1374'-11"	918
SPIRAL COLUMN REINFORCING STEEL					3,111 LBS.

CLASS A CONCRETE BREAKDOWN

†POUR #1 (FOOTINGS)	63.0	CU.YD.
POUR #2 (COLUMNS)	41.1	CU.YD.
POUR #3 (CAP)	26.7	CU.YD.
TOTAL	130.8	CU.YD.

PP 18 X 0.5 STEEL PILES NO. 15 — 750 LIN.FT.

BENT NO. 1 - STAGE 2

BAR	NO.	SIZE	TYPE	LENGTH	WEIGHT
B7	7	#11	1	38'-5"	1429
B8	7	#11	STR	36'-10"	1370
B9	14	#11	STR	36'-10"	2740
B10	16	#5	STR	33'-5"	558
B11	14	#4	STR	24'-0"	224
B12	7	#4	STR	3'-8"	17
M1	64	#10	1	10'-4"	2846
S1	87	#5	2	12'-8"	1149
T1	96	#6	5	12'-10"	1850
T2	184	#8	5	13'-4"	6550
T3	32	#8	STR	7'-2"	612
T4	96	#8	STR	11'-8"	2990
T5	32	#8	STR	4'-10"	413
U1	71	#4	3	6'-6"	308
U2	4	#4	3	6'-4"	17
U3	3	#4	3	6'-9"	14
V4	16	#10	1	35'-4"	2433
V5	16	#10	1	33'-2"	2283
V6	16	#10	1	31'-1"	2140
V7	16	#10	1	31'-11"	2197
REINFORCING STEEL					32,140 LBS.
SP-4	1	**	4	1296'-4"	866
SP-5	1	**	4	1210'-5"	809
SP-6	1	**	4	1127'-0"	753
SP-7	1	**	4	1163'-9"	777
SPIRAL COLUMN REINFORCING STEEL					3,205 LBS.

CLASS A CONCRETE BREAKDOWN

†POUR #1 (FOOTINGS)	84.0	CU.YD.
POUR #2 (COLUMNS)	42.1	CU.YD.
POUR #3 (CAP)	47.7	CU.YD.
TOTAL	173.8	CU.YD.

PP 18 X 0.5 STEEL PILES NO. 20 — 1,000 LIN.FT.

† CONCRETE DISPLACED BY THE FILLED 18" PIPE PILES HAS BEEN DEDUCTED.

PROJECT NO. B-4949
CUMBERLAND COUNTY
STATION: 25+55.00 -L-

SHEET 4 OF 4

STATE OF NORTH CAROLINA
DEPARTMENT OF TRANSPORTATION
RALEIGH

SUBSTRUCTURE
BENT NO. 1

NORTH CAROLINA PROFESSIONAL SEAL 20125 ENGINEER MARSHALL G. CHEEK, JR.
6-19-12

REVISIONS								SHEET NO.
NO.	BY:	DATE:	NO.	BY:	DATE:			S-40
1			3					TOTAL SHEETS
2			4					131

DRAWN BY : J.R. MCROY DATE : 02/10/12
CHECKED BY : M.G. CHEEK DATE : 02/12

19-JUN-2012 11:28
R:\Structures\Final Plans\B-4949_SD_B*_1.dgn
dahodge

NOTES

STIRRUPS IN CAP MY BE SHIFTED AS NECESSARY TO CLEAR ANCHOR BOLTS.

HOOKS ON "V" BARS MAY BE TURNED AS NECESSARY FOR PLACING REINFORCING STEEL.

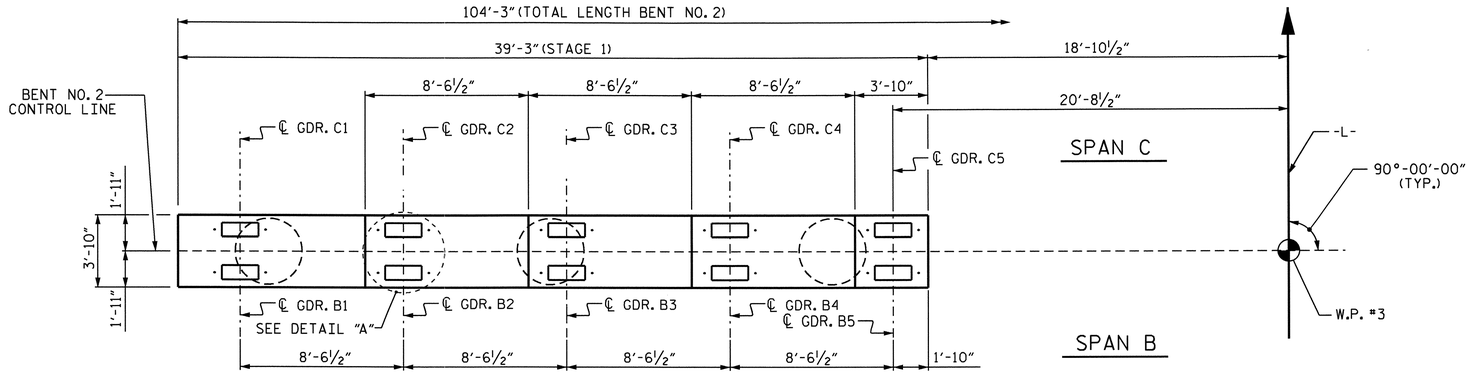

PLAN

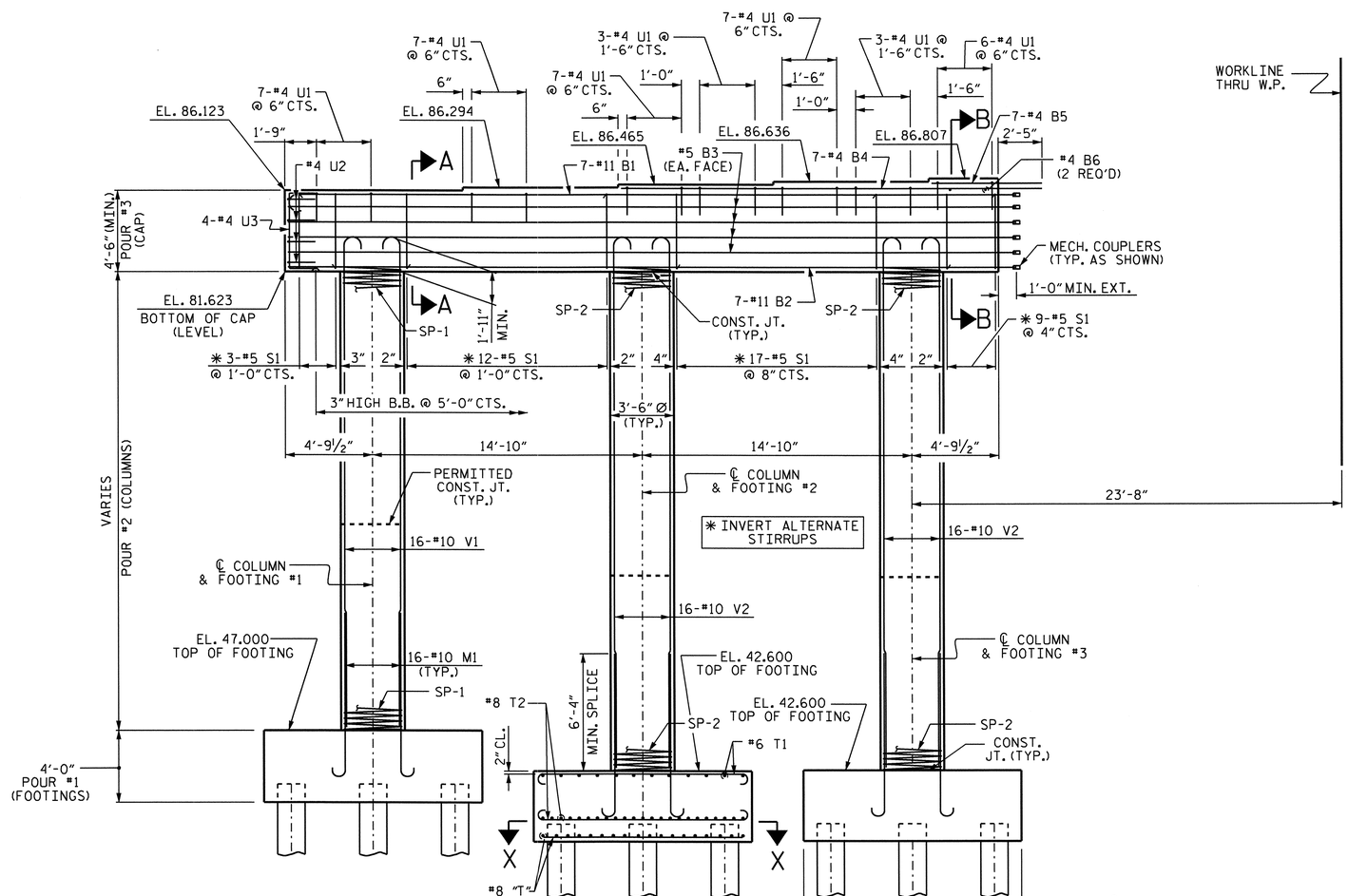

ELEVATION

REINFORCING STEEL & DIMENSIONS TYPICAL FOR ALL COLUMNS & FOOTINGS UNLESS OTHERWISE NOTED.
FOR SECTION A-A & B-B, SEE SHEET 4 OF 4.
FOR SECTION X-X, SEE SHEET 3 OF 4.

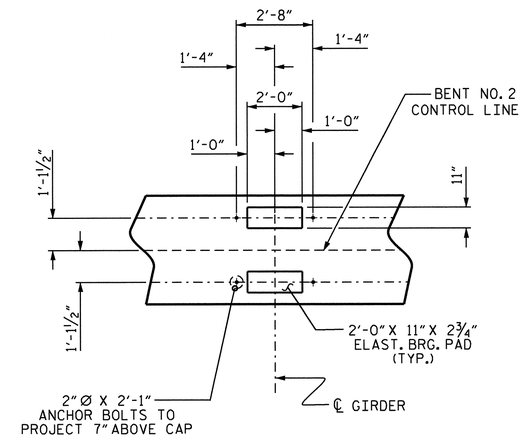

DETAIL "A"

PROJECT NO. B-4949
CUMBERLAND COUNTY
STATION: 25+55.00 -L-

SHEET 1 OF 4

STATE OF NORTH CAROLINA
DEPARTMENT OF TRANSPORTATION
RALEIGH

SUBSTRUCTURE
BENT NO. 2
STAGE 1

REVISIONS						SHEET NO.
NO.	BY:	DATE:	NO.	BY:	DATE:	S-41
1			3			TOTAL SHEETS
2			4			131

NORTH CAROLINA PROFESSIONAL SEAL 20125 ENGINEER MARSHALL G. CHEEK, JR.
6-19-12

DRAWN BY : J.R. MCROY DATE : 02/09/12
CHECKED BY : M.G. CHEEK DATE : 02/12

19-JUN-2012 11:28
R:\Structures\Final Plans\B-4949_SD_B*_1.dgn
dahodge

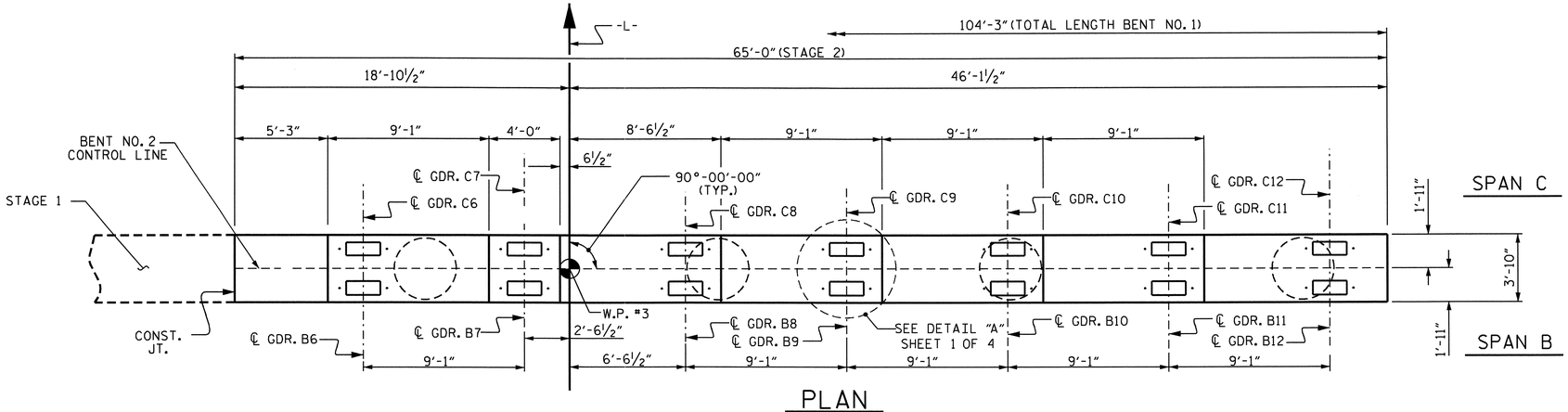

PLAN

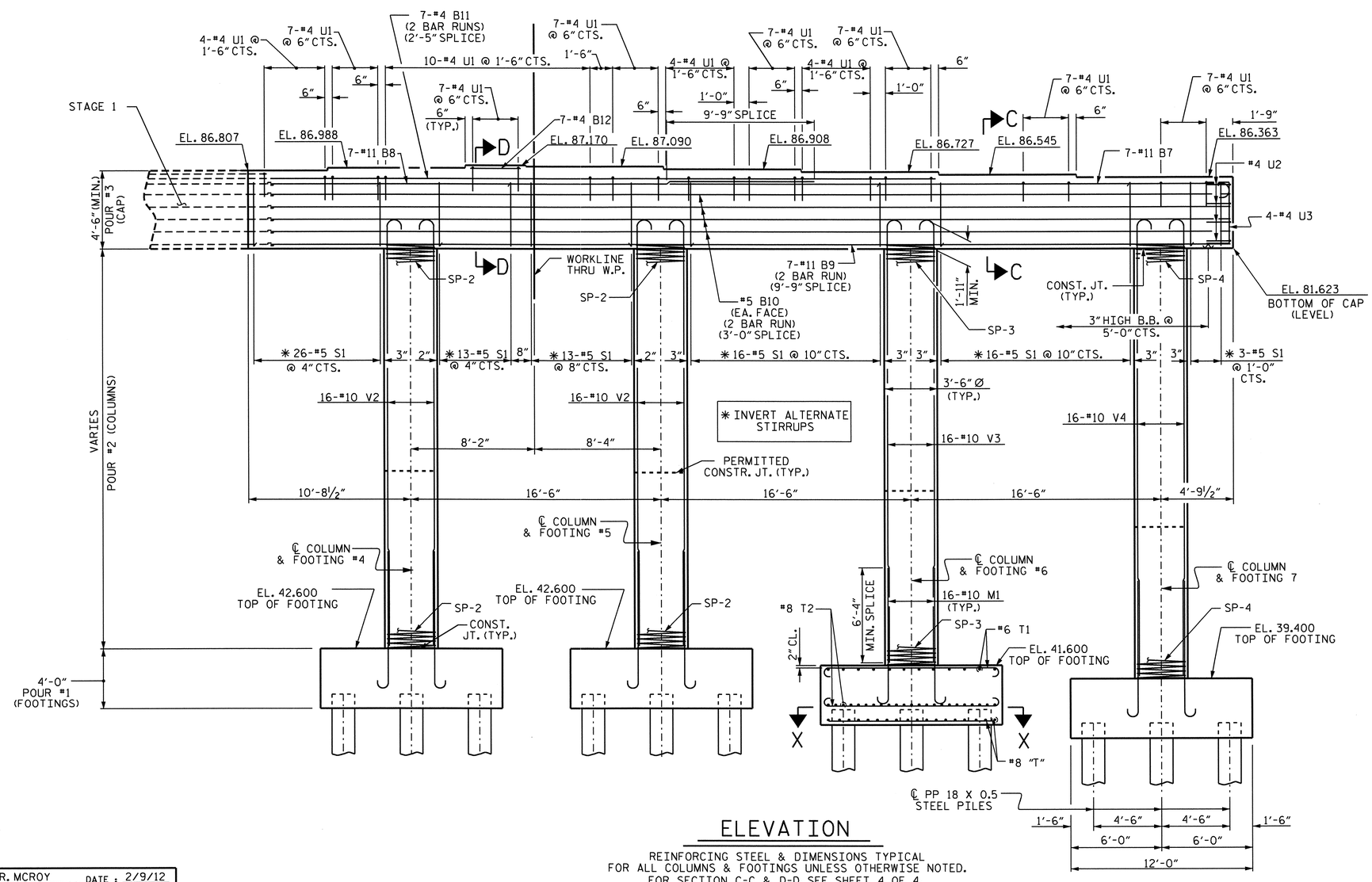

ELEVATION

REINFORCING STEEL & DIMENSIONS TYPICAL
FOR ALL COLUMNS & FOOTINGS UNLESS OTHERWISE NOTED.
FOR SECTION C-C & D-D, SEE SHEET 4 OF 4.
FOR SECTION X-X, SEE SHEET 3 OF 4.

NOTES

STIRRUPS IN CAP MY BE SHIFTED AS NECESSARY TO CLEAR ANCHOR BOLTS.

HOOKS ON "V" BARS MAY BE TURNED AS NECESSARY FOR PLACING REINFORCING STEEL.

PROJECT NO. B-4949
CUMBERLAND COUNTY
STATION: 25+55.00 -L-

SHEET 2 OF 4

STATE OF NORTH CAROLINA
DEPARTMENT OF TRANSPORTATION
RALEIGH

SUBSTRUCTURE
BENT NO. 2
STAGE 2

NORTH CAROLINA PROFESSIONAL SEAL 20125 ENGINEER MARSHALL G. CHEEK, JR.
6-19-12

REVISIONS						SHEET NO.
NO.	BY:	DATE:	NO.	BY:	DATE:	S-42
1			3			TOTAL SHEETS
2			4			131

DRAWN BY : J.R. MCROY DATE : 2/9/12
CHECKED BY : M.G. CHEEK DATE : 2/12

19-JUN-2012 11:28
R:\Structures\FinalPlans\B-4949_SD_B*_1.dgn
ddhodge

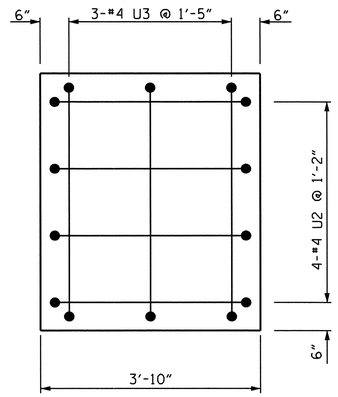

END OF CAP VIEW

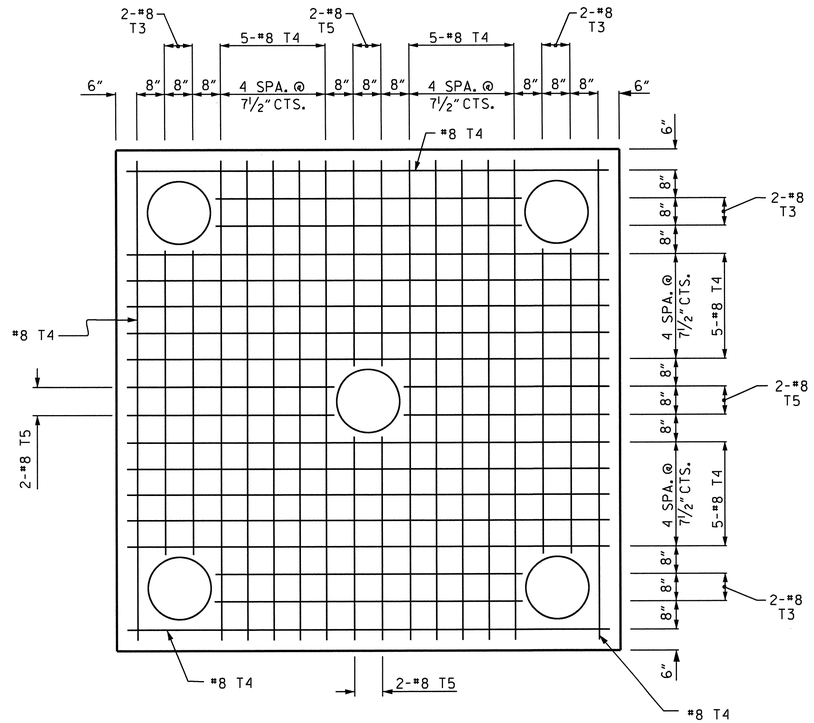

SECTION X-X

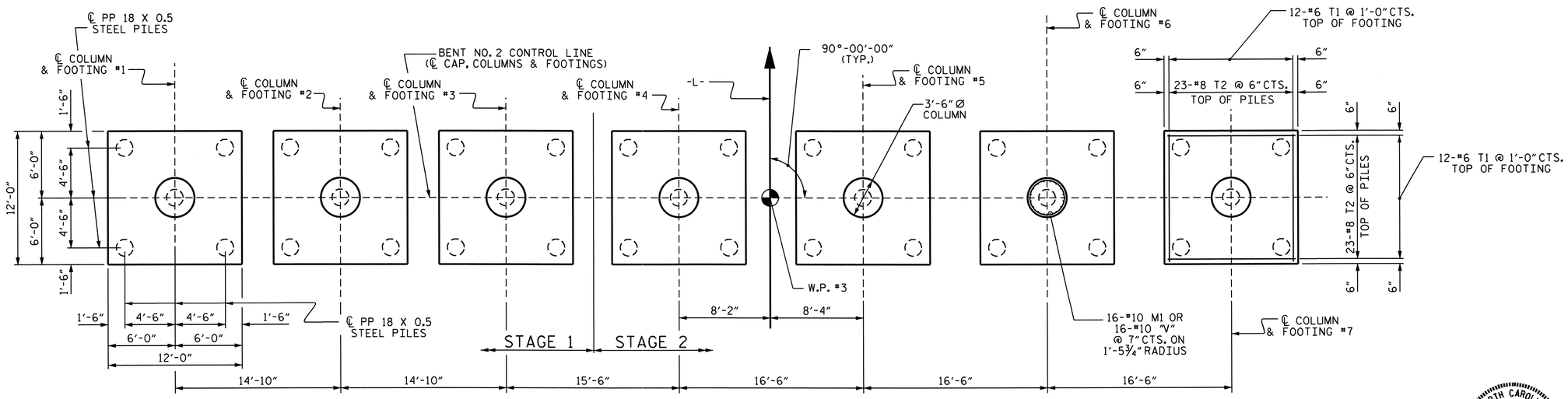

PLAN OF COLUMNS & FOOTINGS

REINFORCING STEEL & DIMENSIONS TYPICAL FOR ALL COLUMNS & FOOTINGS
FOR ADDITIONAL REINFORCING STEEL IN BOTTOM OF FOOTING, SEE "SECTION X-X".

PROJECT NO. B-4949
CUMBERLAND COUNTY
STATION: 25+55.00 -L-

SHEET 3 OF 4

STATE OF NORTH CAROLINA
DEPARTMENT OF TRANSPORTATION
RALEIGH

SUBSTRUCTURE

BENT NO. 2

NORTH CAROLINA PROFESSIONAL SEAL 20125 ENGINEER MARSHALL G. CHEEK, JR.
6-19-12

REVISIONS						SHEET NO.
NO.	BY:	DATE:	NO.	BY:	DATE:	S-43
1			3			TOTAL SHEETS
2			4			131

DRAWN BY : J.R. MCROY DATE : 02/09/12
CHECKED BY : M.G. CHEEK DATE : 02/12

19-JUN-2012 11:27
R:\Structures\Final Plans\B-4949_SD_B*_1.dgn
dahodge

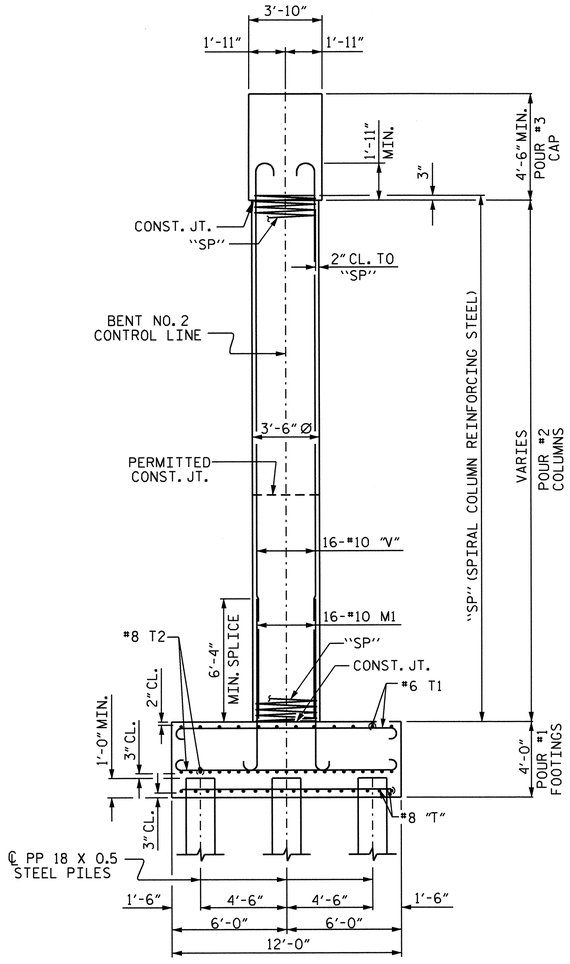

END ELEVATION

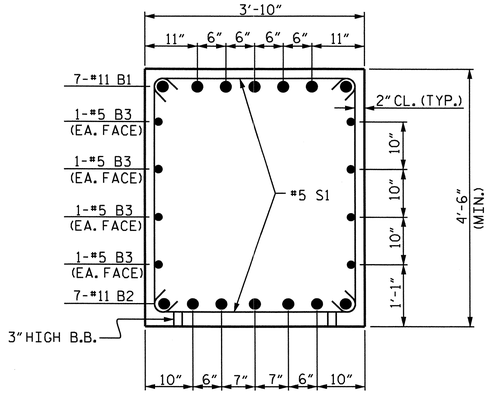

SECTION A-A

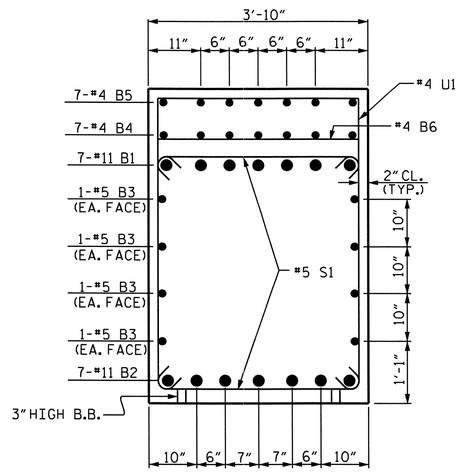

SECTION B-B

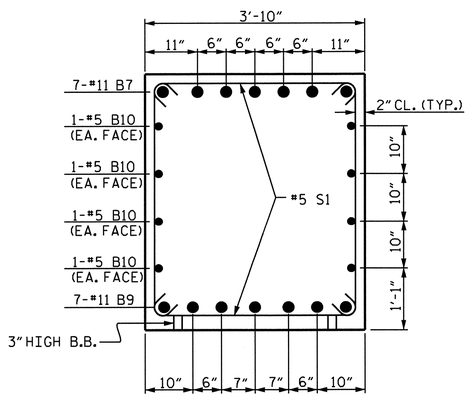

SECTION C-C

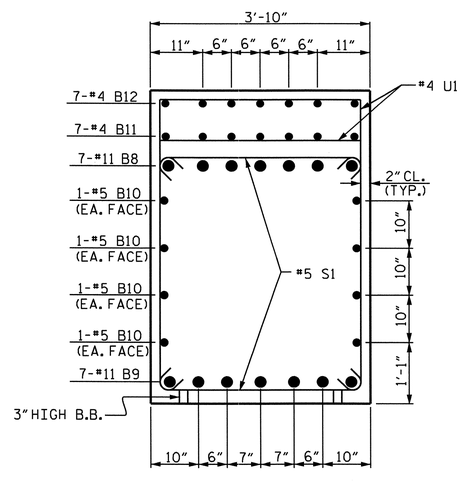

SECTION D-D

BAR TYPES

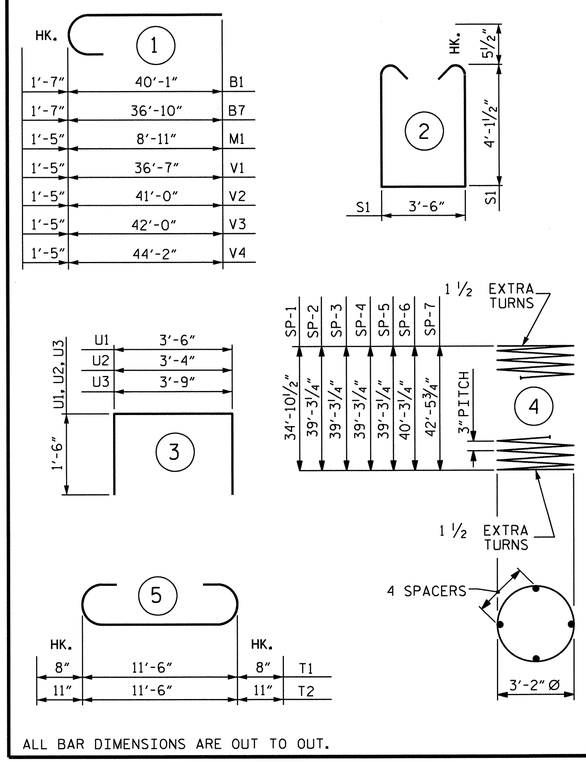

ALL BAR DIMENSIONS ARE OUT TO OUT.

** THE "SP" SPIRAL REINFORCING STEEL SHALL BE W20 OR D-20 COLD DRAWN WIRE OR #4 PLAIN OR DEFORMED BAR.

TOTAL BENT NO. 2 QUANTITIES

CLASS A CONCRETE	318.6 CU. YD.
REINFORCING STEEL	59,222 LBS.
SPIRAL COL. REINFORCING STEEL	7,354 LBS.
PP 18 x 0.5 STEEL PILES	1,575 LIN. FT.
PILE REDRIVES	9 EA.
FOUNDATION EXCAVATION	265 CU. YD.

BILL OF MATERIAL

BENT NO. 2 - STAGE 1

BAR	NO.	SIZE	TYPE	LENGTH	WEIGHT
B1	7	#11	1	41'-8"	1550
B2	7	#11	STR	40'-1"	1491
B3	8	#5	STR	40'-1"	334
B4	7	#4	STR	23'-2"	108
B5	7	#4	STR	6'-1"	28
B6	2	#4	STR	3'-6"	5
M1	48	#10	1	10'-4"	2134
S1	41	#5	2	12'-8"	542
T1	72	#6	5	12'-10"	1388
T2	138	#8	5	13'-4"	4913
T3	24	#8	STR	7'-2"	459
T4	72	#8	STR	11'-8"	2243
T5	24	#8	STR	4'-10"	310
U1	40	#4	3	6'-6"	174
U2	4	#4	3	6'-4"	17
U3	3	#4	3	6'-9"	14
V1	16	#10	1	38'-0"	2616
V2	32	#10	1	42'-5"	5841
REINFORCING STEEL					24,167 LBS.
SP-1	1	**	4	1399'-6"	935
SP-2	2	**	4	1573'-10"	2103
SPIRAL COLUMN REINFORCING STEEL					3,038 LBS.

CLASS A CONCRETE BREAKDOWN

†POUR #1 (FOOTINGS)	63.0	CU.YD.
POUR #2 (COLUMNS)	40.1	CU.YD.
POUR #3 (CAP)	26.7	CU.YD.
TOTAL	129.8	CU.YD.

PP 18 X 0.5 STEEL PILES NO. 15 — 675 LIN.FT.

BENT NO. 2 - STAGE 2

BAR	NO.	SIZE	TYPE	LENGTH	WEIGHT
B7	7	#11	1	38'-5"	1429
B8	7	#11	STR	36'-10"	1370
B9	14	#11	STR	36'-10"	2740
B10	16	#5	STR	33'-5"	558
B11	14	#4	STR	24'-0"	224
B12	7	#4	STR	3'-8"	17
M1	64	#10	1	10'-4"	2846
S1	87	#5	2	12'-8"	1149
T1	96	#6	5	12'-10"	1850
T2	184	#8	5	13'-4"	6550
T3	32	#8	STR	7'-2"	612
T4	96	#8	STR	11'-8"	2990
T5	32	#8	STR	4'-10"	413
U1	71	#4	3	6'-6"	308
U2	4	#4	3	6'-4"	17
U3	3	#4	3	6'-9"	14
V2	32	#10	1	42'-5"	5841
V3	16	#10	1	43'-5"	2989
V4	16	#10	1	45'-7"	3138
REINFORCING STEEL					35,055 LBS.
SP-2	2	**	4	1573'-10"	2103
SP-3	1	**	4	1613'-1"	1078
SP-4	1	**	4	1699'-0"	1135
SPIRAL COLUMN REINFORCING STEEL					4,316 LBS.

CLASS A CONCRETE BREAKDOWN

†POUR #1 (FOOTINGS)	84.0	CU.YD.
POUR #2 (COLUMNS)	57.1	CU.YD.
POUR #3 (CAP)	47.7	CU.YD.
TOTAL	188.8	CU.YD.

PP 18 X 0.5 STEEL PILES NO. 20 — 900 LIN.FT.

† CONCRETE DISPLACED BY THE FILLED 18" PIPE PILES HAS BEEN DEDUCTED.

PROJECT NO. B-4949
CUMBERLAND COUNTY
STATION: 25+55.00 -L-

SHEET 4 OF 4

STATE OF NORTH CAROLINA
DEPARTMENT OF TRANSPORTATION
RALEIGH

SUBSTRUCTURE
BENT NO. 2

NORTH CAROLINA PROFESSIONAL SEAL 20125 ENGINEER MARSHALL G. CHEEK, JR.
6-19-12

REVISIONS								SHEET NO.
NO.	BY:	DATE:	NO.	BY:	DATE:			S-44
1			3					TOTAL SHEETS
2			4					131

DRAWN BY : J.R. MCROY DATE : 02/10/12
CHECKED BY : M.G. CHEEK DATE : 02/12

19-JUN-2012 11:27
R:\Structures\Final Plans\B-4949_SD_B*_1.dgn
dahodge

NOTES

FOR MECHANICAL BUTT SPLICING FOR REINFORCING STEEL, SEE SECTION 425-5 OF THE STANDARD SPECIFICATIONS.

THE CONTRACTOR SHALL PROVIDE FOR INSTALLATION OF THE 4"DIAMETER DRAIN PIPE THROUGH THE WING WALL AS REQUIRED FOR REINFORCED BRIDGE APPROACH FILLS. SEE THE ROADWAY PLANS. REINFORCING STEEL IN THE WING WALL MAY BE SHIFTED AS NECESSARY TO CLEAR THE DRAIN PIPE.

UPPER PORTION OF INTEGRAL END BENT CAP & UPPER PORTION OF WINGS SHALL BE POURED WITH THE SUPERSTRUCTURE. SEE SUPERSTRUCTURE PLANS.

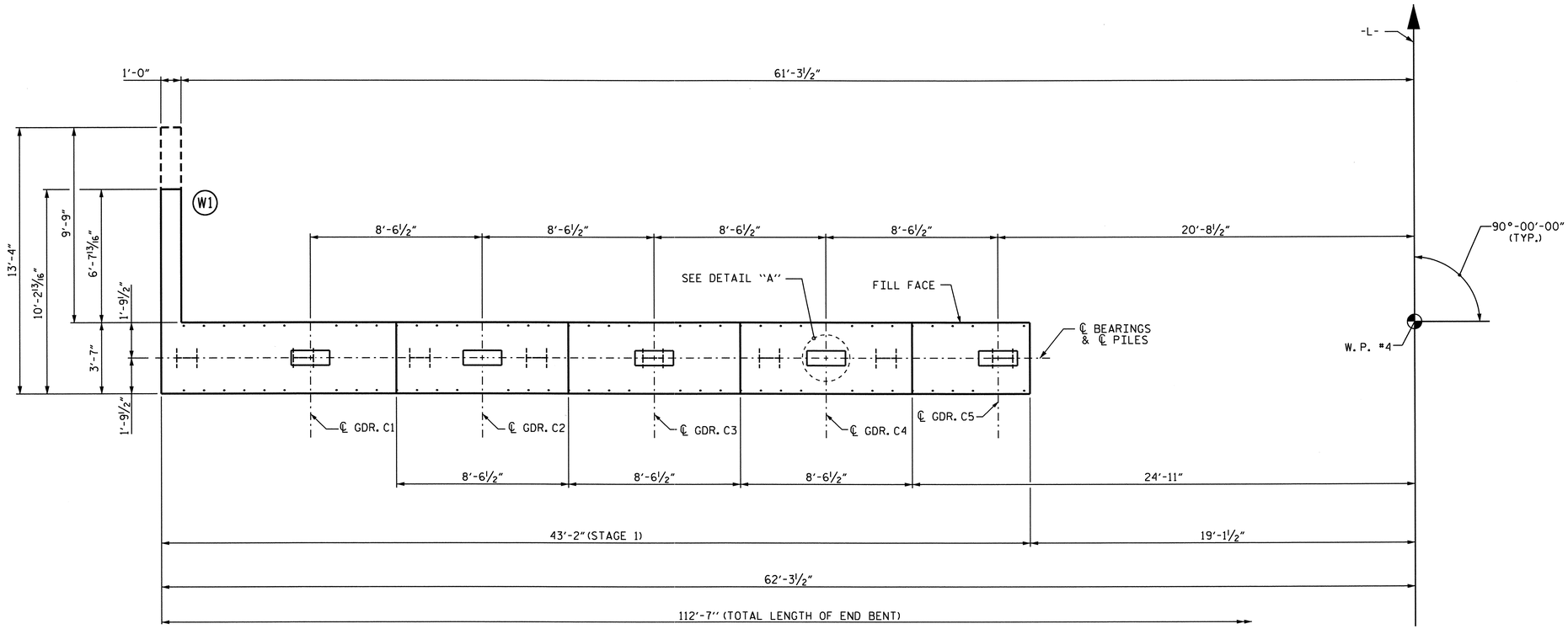

PLAN

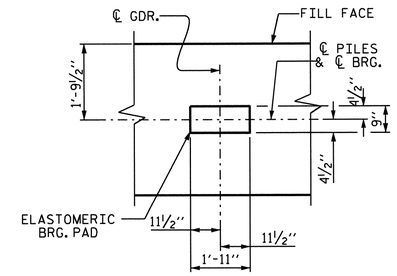

DETAIL "A"

(TYP. EACH BEARING)

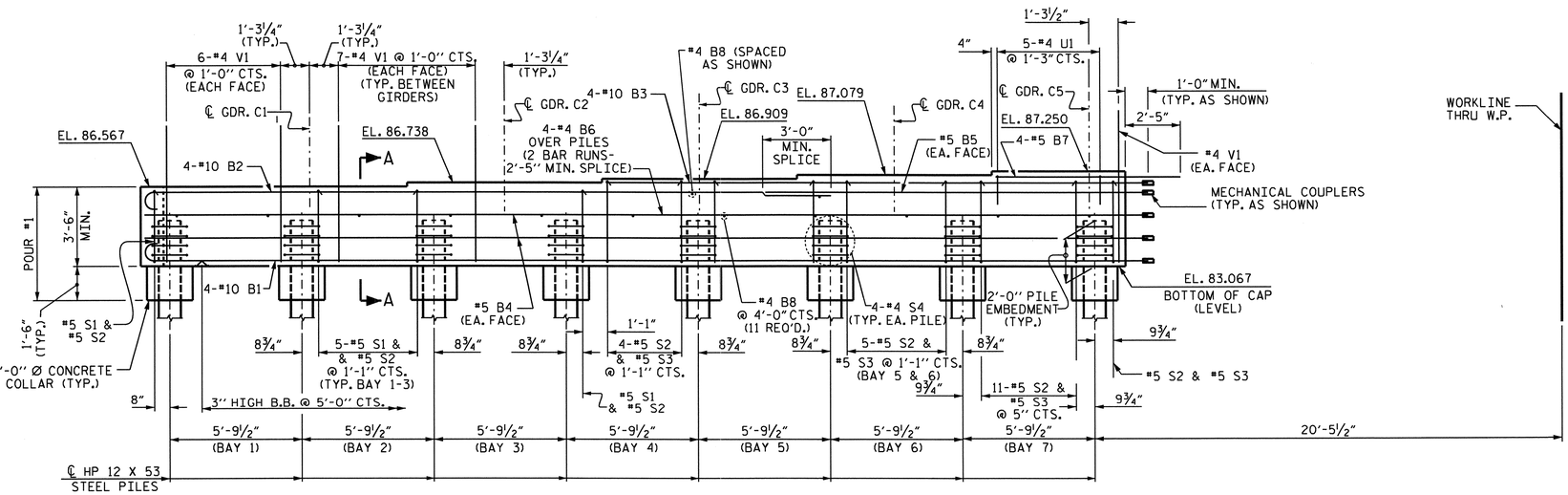

ELEVATION

PROJECT NO. B-4949

CUMBERLAND COUNTY

STATION: 25+55.00 -L-

SHEET 1 OF 4

STATE OF NORTH CAROLINA
DEPARTMENT OF TRANSPORTATION
RALEIGH

SUBSTRUCTURE
INTEGRAL
END BENT NO. 2
(STAGE 1)

NORTH CAROLINA PROFESSIONAL SEAL 20125 ENGINEER MARSHAL G. CHEEK, JR.
6-12-12

REVISIONS								SHEET NO.
NO.	BY:	DATE:	NO.	BY:	DATE:			S-45
1			3					TOTAL SHEETS
2			4					131

DRAWN BY : J. MYA/J.R. MCROY DATE : 3/12
CHECKED BY : M.G. CHEEK DATE : 4/12

12-JUN-2012 10:24
R:\Structures\Final Plans\B4949_SD_E*.dgn
dahodge

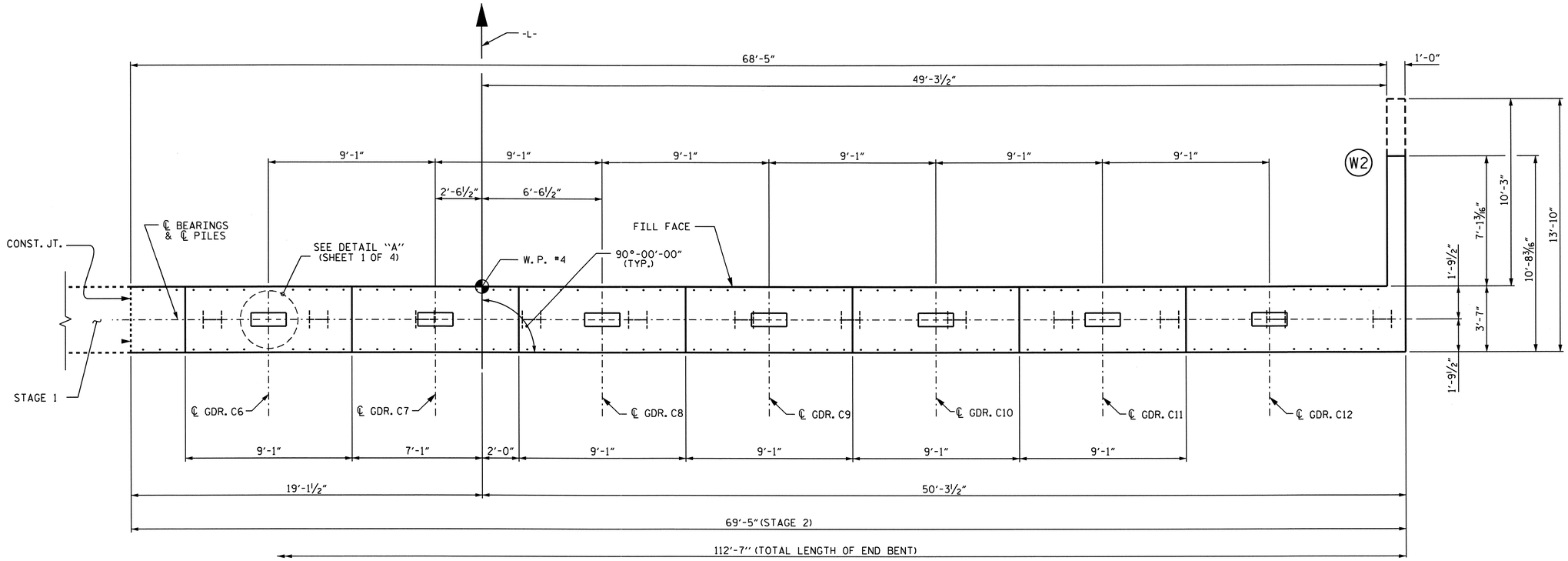

PLAN

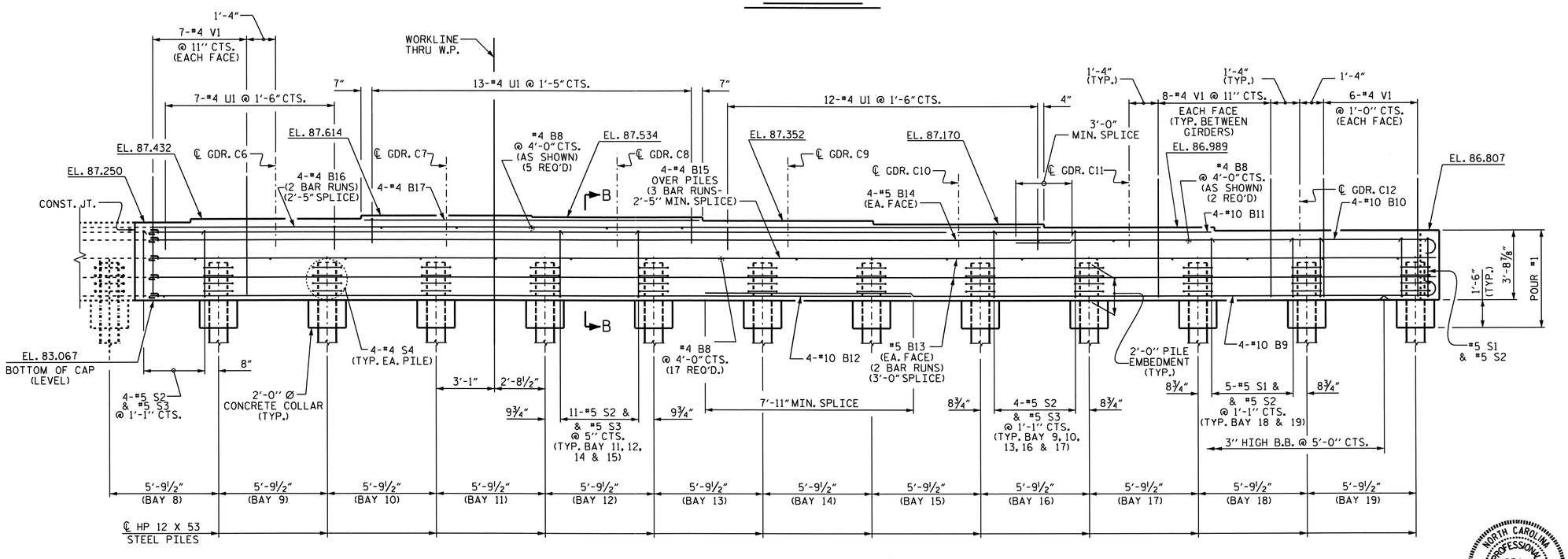

ELEVATION

PROJECT NO. B-4949

CUMBERLAND COUNTY

STATION: 25+55.00 -L-

SHEET 2 OF 4

STATE OF NORTH CAROLINA
DEPARTMENT OF TRANSPORTATION
RALEIGH

SUBSTRUCTURE
INTEGRAL
END BENT NO. 2
(STAGE 2)

REVISIONS							SHEET NO.
NO.	BY:	DATE:	NO.	BY:	DATE:		S-46
1			3				TOTAL SHEETS
2			4				131

NORTH CAROLINA PROFESSIONAL SEAL 20125 ENGINEER MARSHALL G. CHEEK, JR.
6-12-12

DRAWN BY : J. MYA/J.R. MCROY DATE : 3/12
CHECKED BY : M.G. CHEEK DATE : 4/12

12-JUN-2012 10:24
R:\Structures\Final Plans\B4949_SD_E*.dgn
dahodge

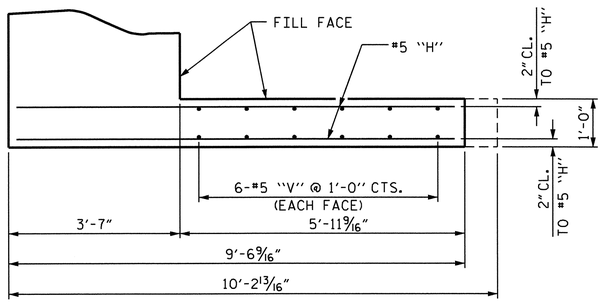

PLAN (W1)
(STAGE 1)

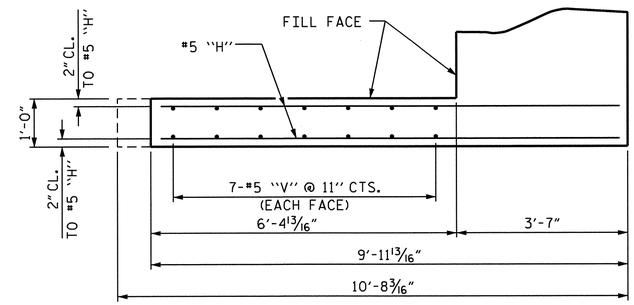

PLAN (W2)
(STAGE 2)

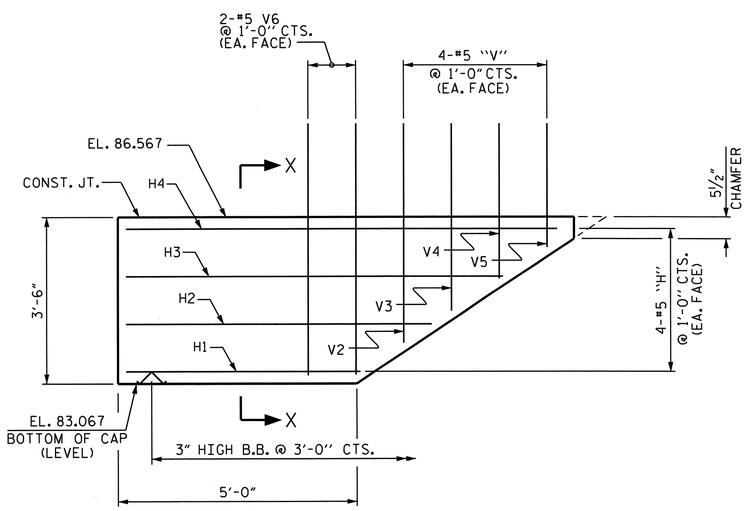

ELEVATION (W1)
(STAGE 1)

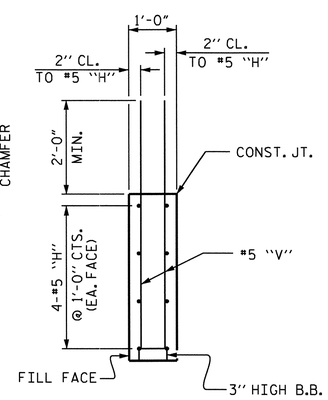

SECTION X-X
(STAGE 1)

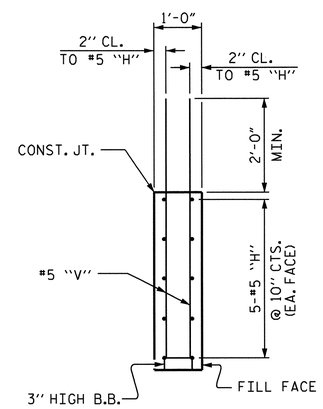

SECTION Y-Y
(STAGE 2)

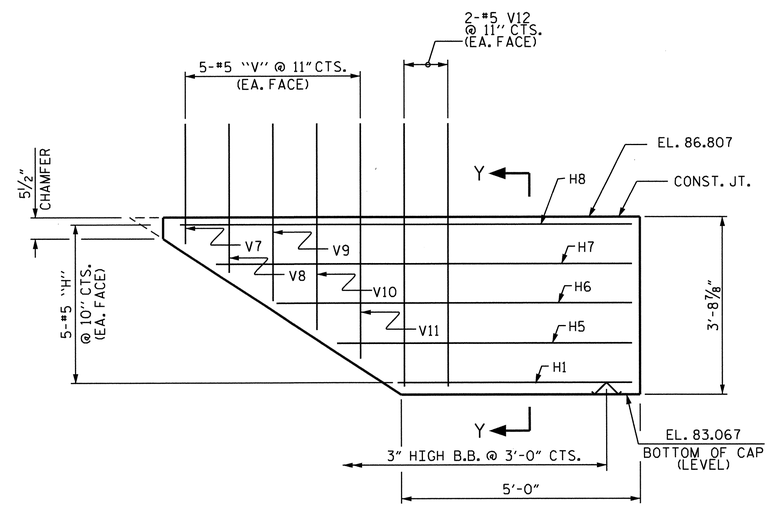

ELEVATION (W2)
(STAGE 2)

PROJECT NO. B-4949
CUMBERLAND COUNTY
STATION: 25+55.00 -L-

SHEET 3 OF 4

STATE OF NORTH CAROLINA
DEPARTMENT OF TRANSPORTATION
RALEIGH

SUBSTRUCTURE

INTEGRAL
END BENT NO. 2

NORTH CAROLINA PROFESSIONAL SEAL 20125 ENGINEER MARSHALL G. CHEEK, JR.
6-14-12

REVISIONS						SHEET NO.
NO.	BY:	DATE:	NO.	BY:	DATE:	S-47
1			3			TOTAL SHEETS
2			4			131

DRAWN BY : J. MYA/J.R. MCROY DATE : 3/12
CHECKED BY : M.G. CHEEK DATE : 4/12

14-JUN-2012 10:22
R:\Structures\Final Plans\B4949_SD_E*.dgn
dahodge

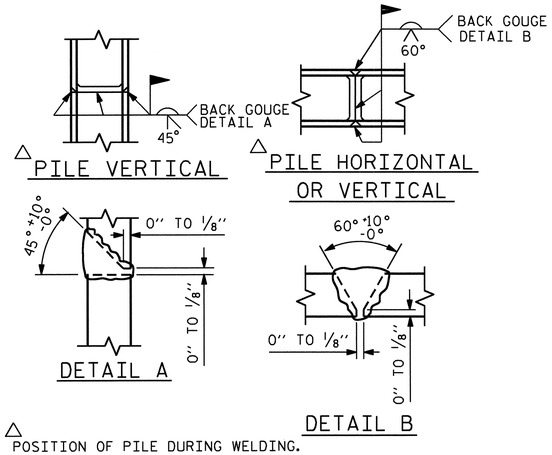

△ POSITION OF PILE DURING WELDING.

PILE SPLICE DETAILS

TOTAL QUANTITIES	
CLASS A CONCRETE	65.3 C.Y.
REINFORCING STEEL	8,877 LBS.
HP 12 X 53 STEEL PILES	900 LIN. FT.
PILE REDRIVES	5 EA.

BAR TYPES

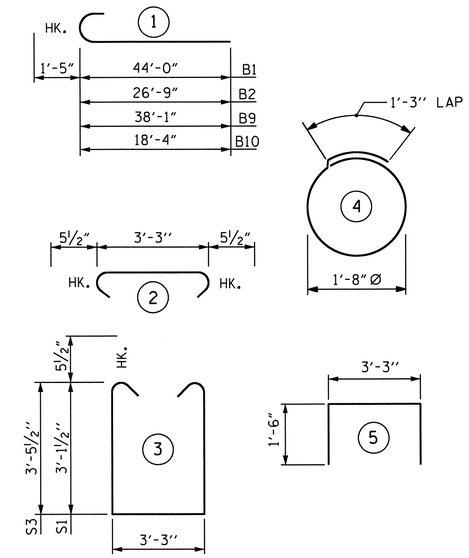

ALL BAR DIMENSIONS ARE OUT TO OUT.

▲ UPPER PORTION OF WINGS TO BE POURED WITH SUPERSTRUCTURE.

BILL OF MATERIAL

INTEGRAL END BENT NO. 2 (STAGE 1)

BAR	NO.	SIZE	TYPE	LENGTH	WEIGHT
B1	4	#10	1	45'-5"	782
B2	4	#10	1	28'-2"	485
B3	4	#10	STR	23'-10"	410
B4	4	#5	STR	44'-0"	184
B5	2	#5	STR	20'-7"	43
B6	8	#4	STR	23'-3"	124
B7	4	#4	STR	8'-2"	22
B8	13	#4	STR	3'-3"	28
H1	2	#5	STR	4'-10"	10
H2	2	#5	STR	6'-6"	14
H3	2	#5	STR	8'-0"	17
H4	2	#5	STR	9'-2"	19
S1	17	#5	3	10'-5"	185
S2	43	#5	2	4'-2"	187
S3	26	#5	3	11'-1"	301
S4	32	#4	4	6'-6"	139
U1	5	#4	5	6'-3"	21
V1	70	#4	STR	5'-0"	234
V2	2	#5	STR	4'-9"	10
V3	2	#5	STR	4'-0"	8
V4	2	#5	STR	3'-4"	7
V5	2	#5	STR	2'-9"	6
V6	4	#5	STR	5'-4"	22

REINFORCING STEEL 3258 LBS.

CLASS A CONCRETE

▲ (CAP, CONCRETE COLLARS & LOWER PART OF WING) C.Y. 23.7

TOTAL C.Y. 23.7

HP 12 X 53 STEEL PILES

No. 8 LIN. FT.: 360

INTEGRAL END BENT NO. 2 (STAGE 2)

BAR	NO.	SIZE	TYPE	LENGTH	WEIGHT
B8	24	#4	STR	3'-3"	52
B9	4	#10	1	39'-6"	680
B10	4	#10	1	19'-9"	340
B11	4	#10	STR	56'-3"	968
B12	4	#10	STR	38'-1"	655
B13	8	#5	STR	35'-8"	298
B14	2	#5	STR	52'-10"	110
B15	12	#4	STR	24'-5"	196
B16	8	#4	STR	25'-3"	135
B17	4	#4	STR	17'-10"	48
H1	2	#5	STR	4'-10"	10
H5	2	#5	STR	6'-3"	13
H6	2	#5	STR	7'-6"	16
H7	2	#5	STR	8'-9"	18
H8	2	#5	STR	9'-7"	20
S1	11	#5	3	10'-5"	120
S2	79	#5	2	4'-2"	343
S3	68	#5	3	11'-1"	786
S4	48	#4	4	6'-6"	208
U1	32	#4	5	6'-3"	134
V1	122	#4	STR	5'-0"	407
V7	2	#5	STR	2'-7"	5
V8	2	#5	STR	3'-2"	7
V9	2	#5	STR	3'-10"	8
V10	2	#5	STR	4'-5"	9
V11	2	#5	STR	5'-0"	10
V12	4	#5	STR	5'-7"	23

REINFORCING STEEL 5619 LBS.

CLASS A CONCRETE

▲ (CAP, CONCRETE COLLARS & LOWER PART OF WING) C.Y. 41.6

TOTAL C.Y. 41.6

HP 12 X 53 STEEL PILES

No. 12 LIN. FT.: 540

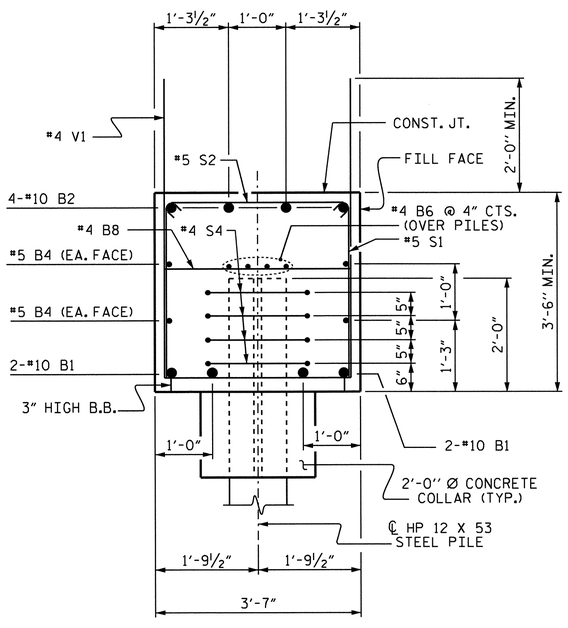

SECTION A-A

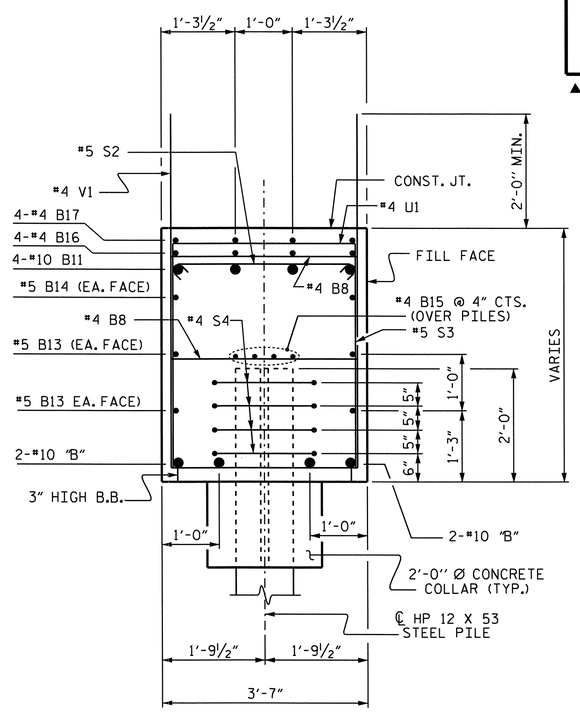

SECTION B-B

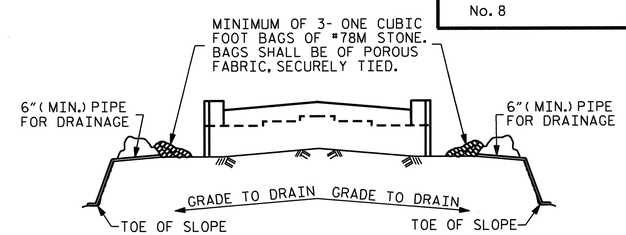

BAGGED STONE AND PIPE SHALL BE PLACED IMMEDIATELY AFTER COMPLETION OF END BENT EXCAVATION. PIPE MAY BE EITHER CONCRETE, CORRUGATED STEEL, CORRUGATED ALUMINUM ALLOY, OR CORRUGATED PLASTIC. PERFORATED PIPE WILL NOT BE ALLOWED.

BAGGED STONE SHALL REMAIN IN PLACE UNTIL THE ENGINEER DIRECTS THAT IT BE REMOVED. THE CONTRACTOR SHALL REMOVE AND DISPOSE OF SILT ACCUMULATIONS AT BAGGED STONE WHEN SO DIRECTED BY THE ENGINEER. BAGS SHALL BE REMOVED AND REPLACED WHENEVER THE ENGINEER DETERMINES THAT THEY HAVE DETERIORATED AND LOST THEIR EFFECTIVENESS.

NO SEPARATE PAYMENT WILL BE MADE FOR THIS WORK AND THE ENTIRE COST OF THIS WORK SHALL BE INCLUDED IN THE UNIT CONTRACT PRICE BID FOR THE SEVERAL PAY ITEMS.

TEMPORARY DRAINAGE AT END BENT

PROJECT NO. B-4949

CUMBERLAND COUNTY

STATION: 25+55.00 -L-

SHEET 4 OF 4

STATE OF NORTH CAROLINA
DEPARTMENT OF TRANSPORTATION
RALEIGH

SUBSTRUCTURE

INTEGRAL END BENT NO. 2

NORTH CAROLINA PROFESSIONAL SEAL 20125 ENGINEER MARSHALL G. CHEEK, JR.

REVISIONS								SHEET NO.
NO.	BY:	DATE:	NO.	BY:	DATE:			S-48
1			3					TOTAL SHEETS
2			4					131

DRAWN BY : J. MYA/J.R. MCROY DATE : 3/12
CHECKED BY : M.G. CHEEK DATE : 4/12

12-JUN-2012 10:23
R:\Structures\Final Plans\B4949_SD_E*.dgn
dahodge

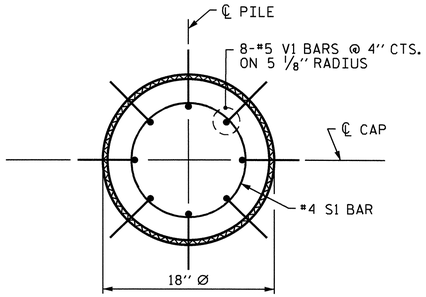

PLAN

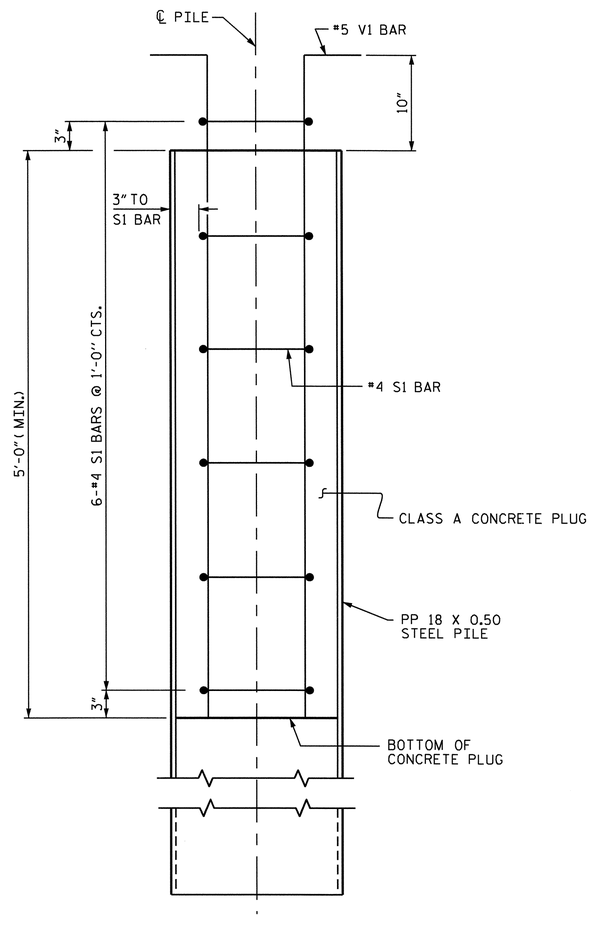

ELEVATION

PP 18 X 0.50 STEEL PILE

(OPEN END)

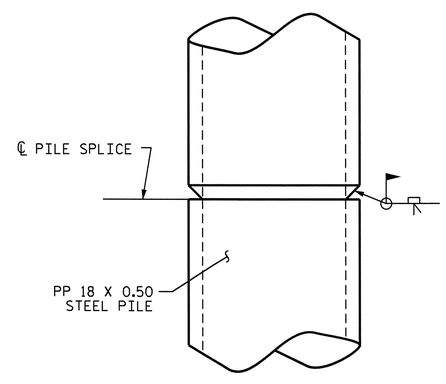

PIPE PILE SPLICE DETAIL

NOTES

PIPE PILES SHALL BE IN ACCORDANCE WITH SECTION 1084 OF THE STANDARD SPECIFICATIONS.

PIPE PILE PLATES, IF REQUIRED, SHALL BE IN ACCORDANCE WITH SECTION 450 OF THE STANDARD SPECIFICATIONS.

REMOVE AND REPLACE OR REPAIR TO THE SATISFACTION OF THE ENGINEER PILES THAT ARE DAMAGED, DEFORMED OR COLLAPSED DURING INSTALLATION OR DRIVING.

PILE SPLICES SHALL BE IN ACCORDANCE WITH THE STANDARD SPECIFICATIONS AND AWS D1.1.

FOR OPEN END PIPE PILES, REMOVE ENOUGH SOIL AND WATER FROM INSIDE THE PILES TO CONSTRUCT THE CONCRETE PLUG WITHOUT FOULING THE CONCRETE.

FORM THE CONCRETE PLUG SUCH THAT THE REINFORCING STEEL OR CONCRETE DOES NOT MOVE AND THE CLEARANCE FROM THE REINFORCING STEEL TO THE INSIDE OF THE PILE IS MAINTAINED AFTER CONCRETE PLACEMENT. DO NOT PLACE CONCRETE IN THE BENT CAP UNTIL THE CONCRETE PLUG HAS ATTAINED A MINIMUM COMPRESSIVE STRENGTH OF 1500 PSI.

THE REINFORCING STEEL AND CLASS A CONCRETE ARE CONSIDERED INCIDENTAL TO THE CONTRACT UNIT PRICE BID PER LINEAR FOOT FOR PP 18 X 0.50 STEEL PILES.

BILL OF MATERIAL FOR ONE PP 18 X 0.50 STEEL PILE

BAR	NO.	SIZE	TYPE	LENGTH	WEIGHT
S1	6	#4	1	4'-5"	18
V1	8	#5	2	6'-8"	56
REINFORCING STEEL =				74	lbs

CLASS A CONCRETE

5'-0" MINIMUM PLUG 0.3 CY

BAR TYPES

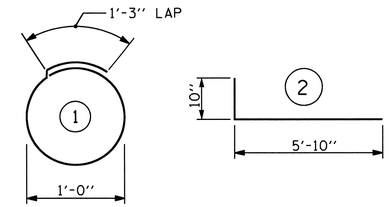

ALL BAR DIMENSIONS ARE OUT TO OUT.

PROJECT NO. B-4949

CUMBERLAND COUNTY

STATION: 25+55.00 -L-

STATE OF NORTH CAROLINA
DEPARTMENT OF TRANSPORTATION
RALEIGH

STANDARD

18" STEEL PIPE PILE

NORTH CAROLINA PROFESSIONAL SEAL 20125 ENGINEER MARSHALL G. CHEEK, JR.
6-19-12

REVISIONS								SHEET NO.
NO.	BY:	DATE:	NO.	BY:	DATE:			S-49
1			3					TOTAL SHEETS
2			4					131

STD. NO. SPP3

ASSEMBLED BY : J.R. MCROY		DATE : 5/12	
CHECKED BY : M.G. CHEEK		DATE : 5/12	
DRAWN BY : RWW 1/01	REV. 10/1/05	LBG/TLA	
CHECKED BY : LES 1/01	REV. 5/1/06R	MAA/KMM	
	REV. 10/1/11	MAA/GM	

19-JUN-2012 11:26
R:\Structures\Final Plans\B-4949_SD_B*_1.dgn
dahodge

8/17/99

PROJECT REFERENCE NO.	
B-4949	

NORTH CAROLINA PROFESSIONAL SEAL 32831 ENGINEER BRYAN M BADER 6/13/12

UTILITY CONSTRUCTION

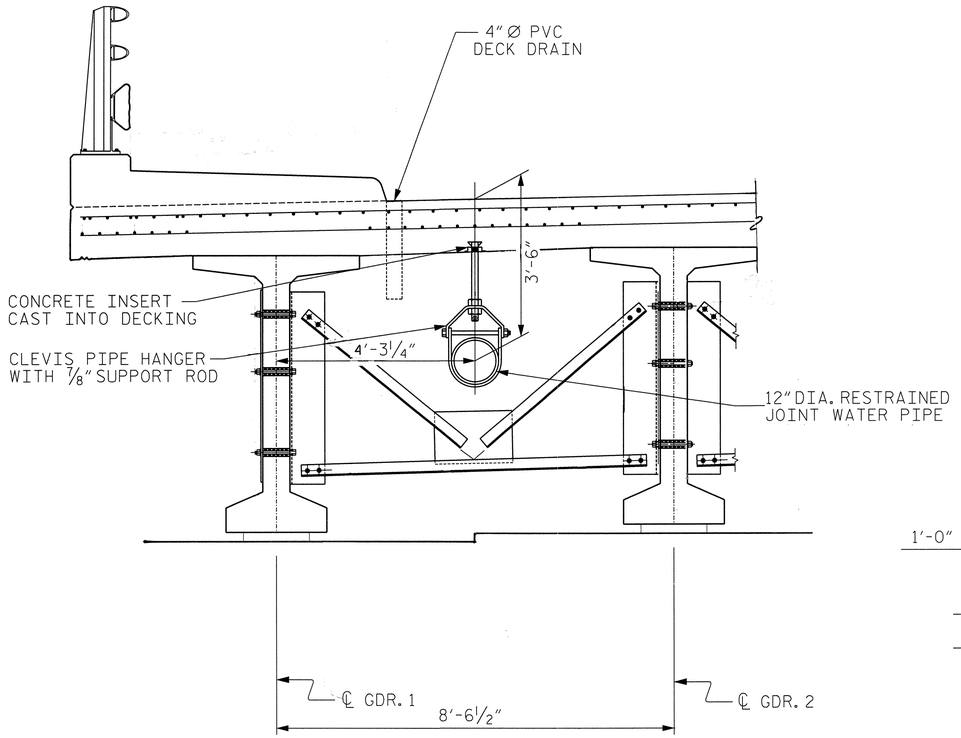

PIPE HANGING DETAIL

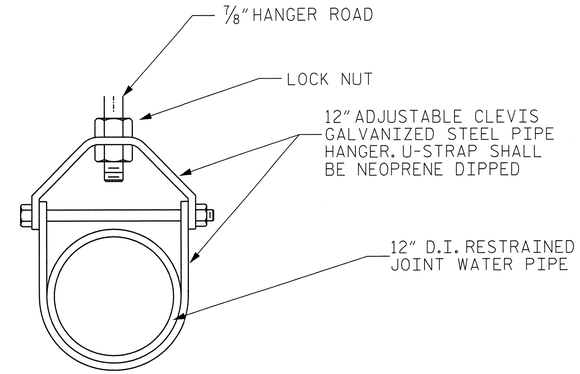

PIPE HANGER DETAIL

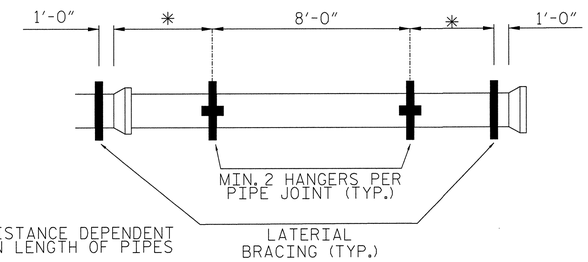

PIPE HANGER SPACING DETAIL

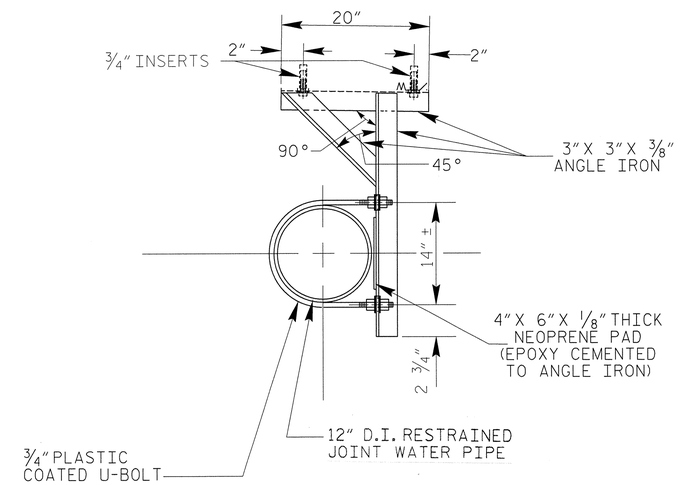

LATERAL BRACE DETAIL

NOTES:

1. ANGLE IRONS SHALL BE CONNECTED BY ARC WELDING.
2. HOLES IN ANGLE IRON SHALL BE DRILLED LARGER THAN U-BOLTS AND INSERTS. NO BURNING OF HOLES WILL BE ALLOWED.
3. LATERAL BRACES SHALL BE INSTALLED ONE PER JOINT OF PIPE.

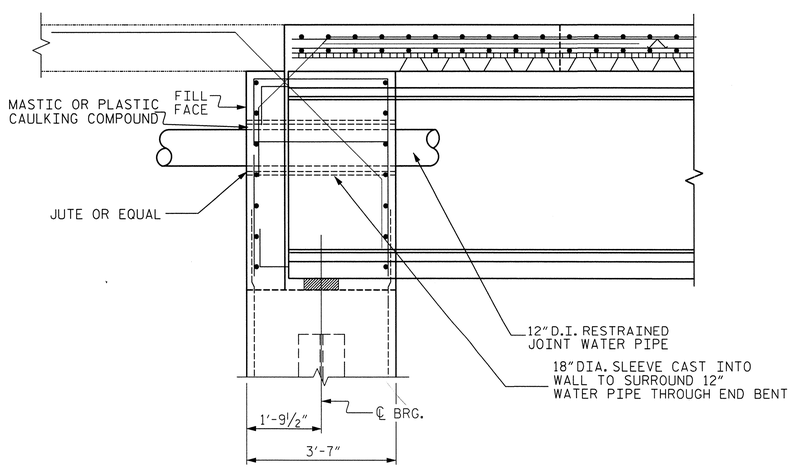

SECTION THRU INTEGRAL END BENT

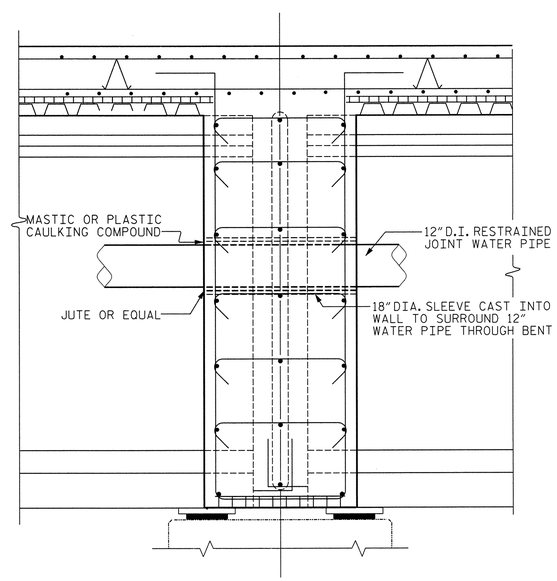

SECTION THRU BENT DIAPHRAGM

STATE OF NORTH CAROLINA
DEPARTMENT OF TRANSPORTATION
RALEIGH

12" D.I.R.J.
WATER LINE

REVISIONS						SHEET NO.
NO.	BY:	DATE:	NO.	BY:	DATE:	S-50
1			3			TOTAL SHEETS
2			4			131

6/12/2012
R:\Proj\B-4949_UC-8_psh.dgn
bbader

NOTES :

FOR BERM WIDTH DIMENSIONS, SEE GENERAL DRAWING.

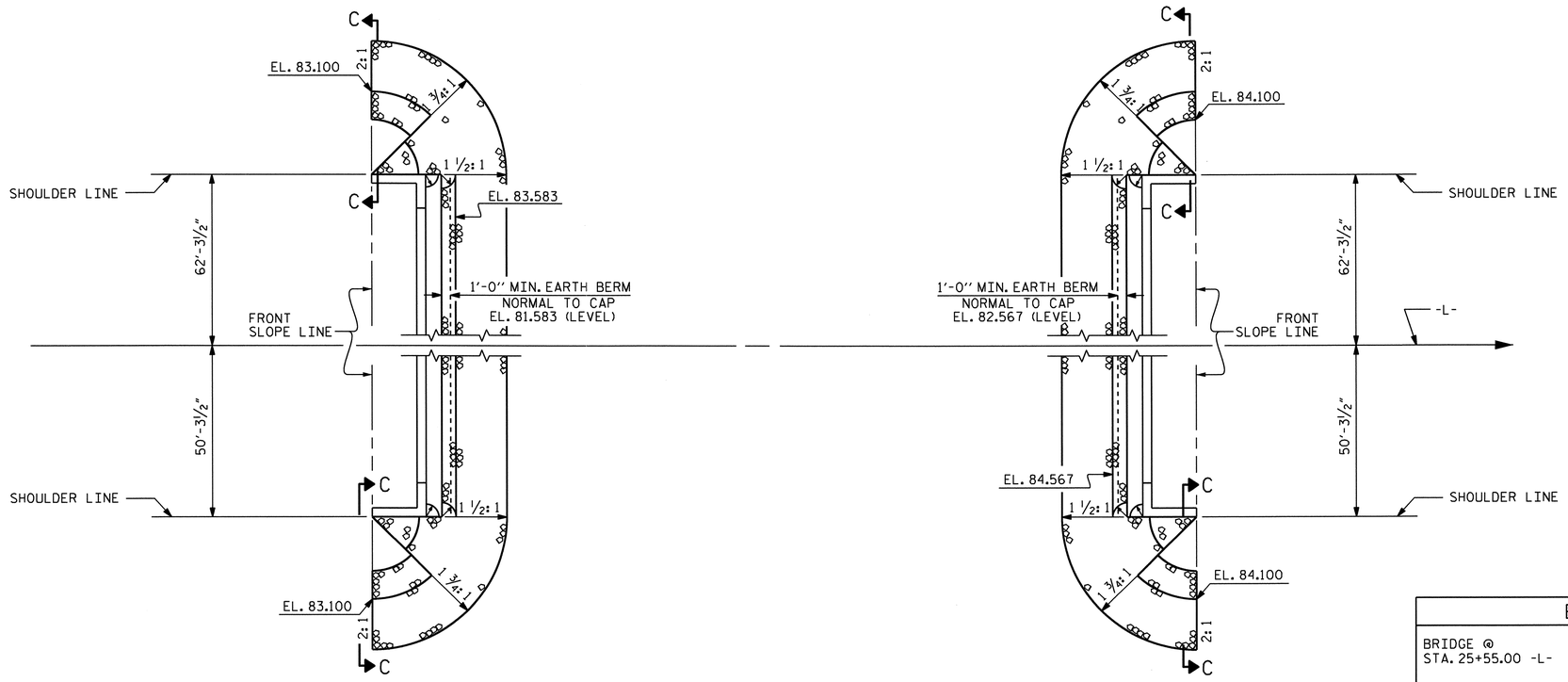

END BENT No. 1

END BENT No. 2

PLAN

ESTIMATED QUANTITIES		
BRIDGE @ STA. 25+55.00 -L-	RIP RAP CLASS II (2'-0" THICK)	GEOTEXTILE FOR DRAINAGE
	TONS	SQUARE YARDS
END BENT No. 1	232	258
END BENT No. 2	244	271

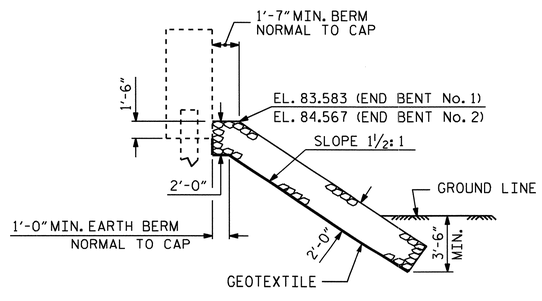

℄ SECTION

BERM RIP RAPPED

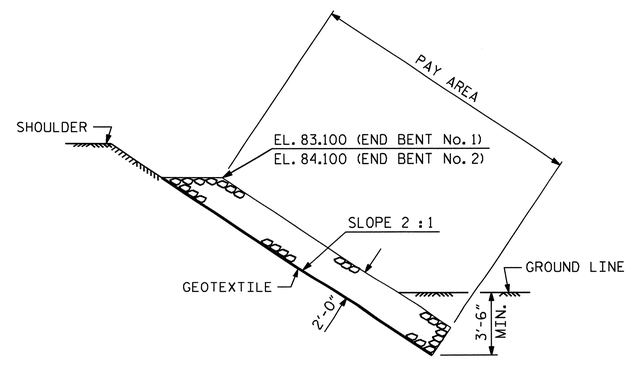

SECTION C-C

PROJECT NO. B-4949

CUMBERLAND COUNTY

STATION: 25+55.00 -L-

STATE OF NORTH CAROLINA
DEPARTMENT OF TRANSPORTATION
RALEIGH

STANDARD

RIP RAP DETAILS

NORTH CAROLINA PROFESSIONAL SEAL 20125 ENGINEER MARSHALL C. CHEEK, JR.

REVISIONS							SHEET NO.
NO.	BY:	DATE:	NO.	BY:	DATE:		S-51
1			3				TOTAL SHEETS
2			4				131

ASSEMBLED BY : D. HODGE	DATE : 4/12	
CHECKED BY : M.G. CHEEK	DATE : 4/12	
DRAWN BY : REK 1/84	REV. 5/1/06R	TLA/GM
CHECKED BY : RDU 1/84	REV. 10/1/11	MAA/GM
	REV. 12/21/11	MAA/GM

12-JUN-2012 10:23
R:\Structures\Final Plans\B4949_SD_RR.dgn
dahodge

STD. NO. RR1

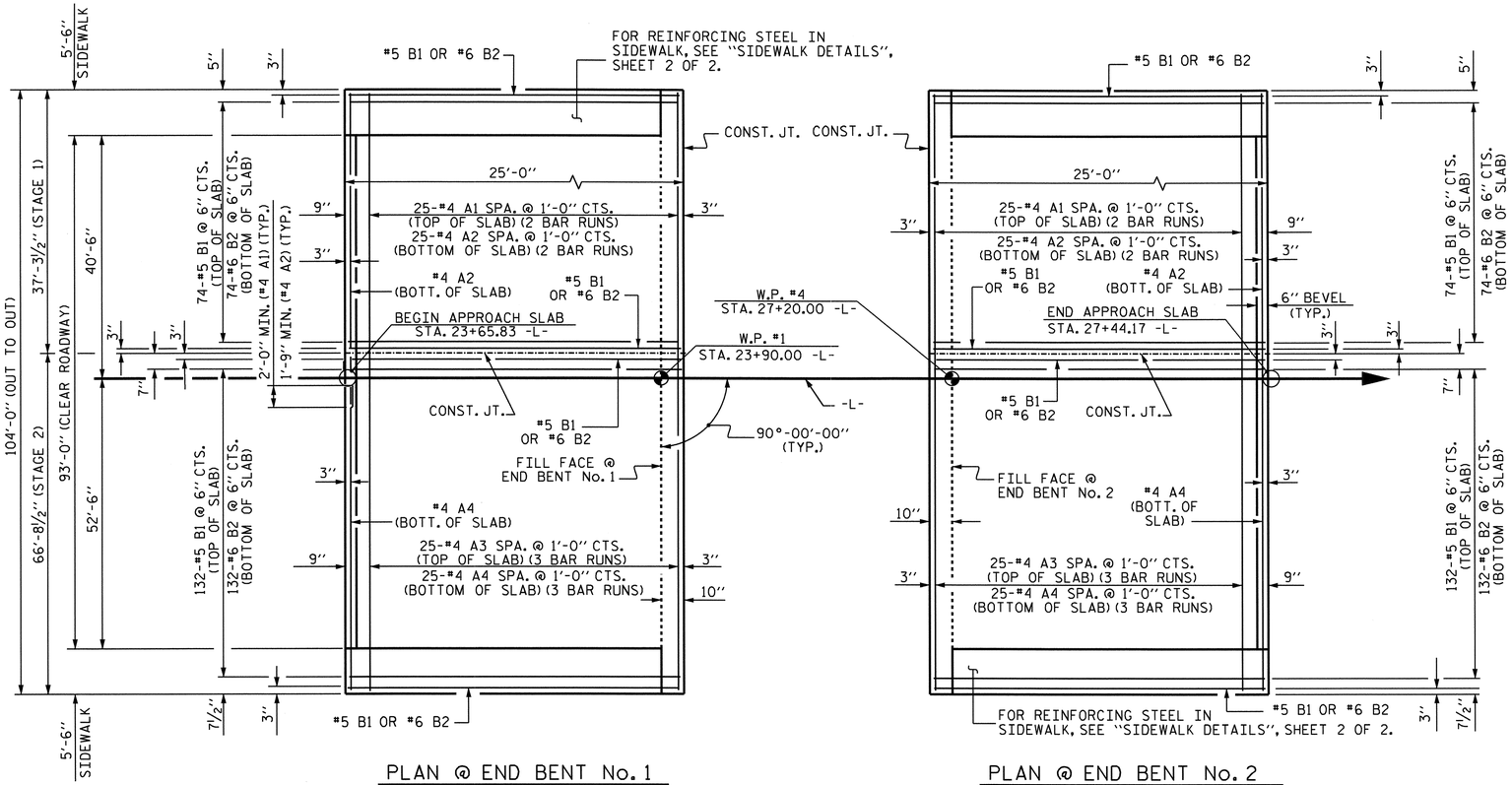

PLAN @ END BENT No. 1

PLAN @ END BENT No. 2

DIMENSIONS ARE TYPICAL FOR BOTH APPROACH SLABS

FOR CONCRETE MEDIAN, SEE "CONCRETE MEDIAN DETAILS", SHEET 2 OF 2.

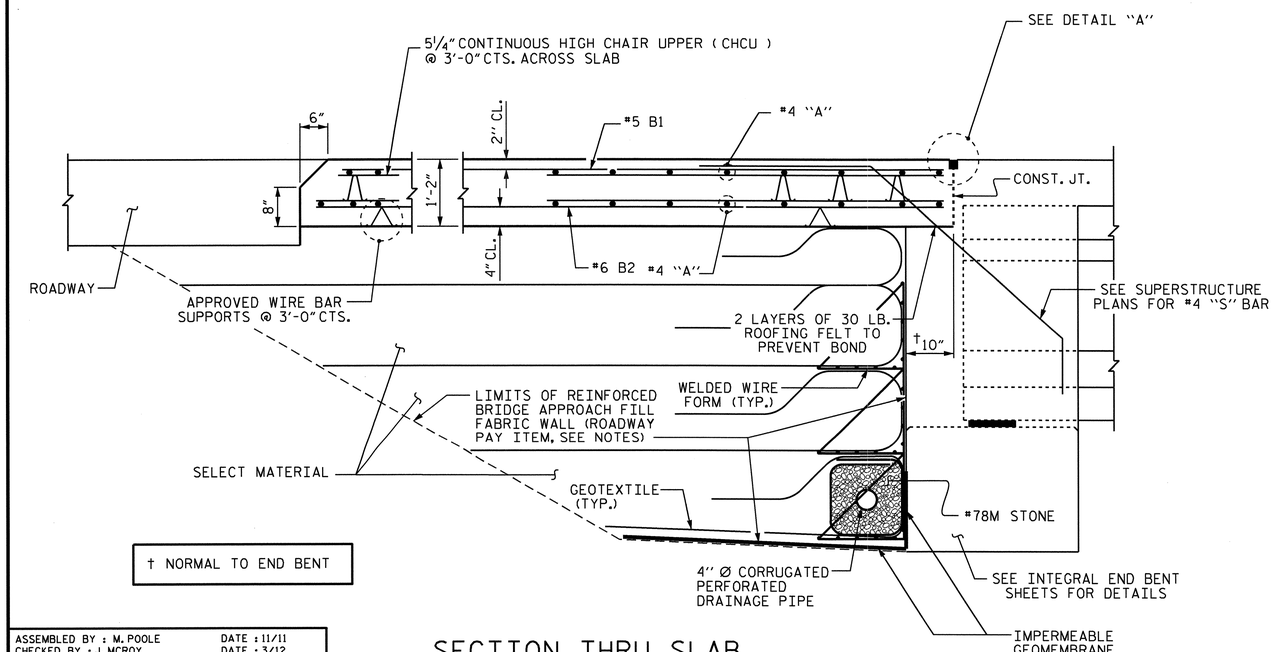

SECTION THRU SLAB

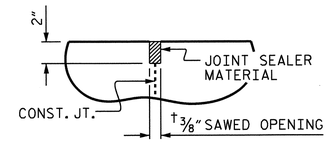

DETAIL "A"

NOTES

APPROACH SLAB SHALL NOT BE CONSTRUCTED PRIOR TO COMPLETION OF THE BRIDGE DECK.

FOR REINFORCED BRIDGE APPROACH FILL FABRIC WALL INCLUDING GEOTEXTILE, IMPERMEABLE GEOMEMBRANE, 4" Ø DRAINAGE PIPE, #78M STONE, WELDED WIRE FORM, AND SELECT MATERIAL, SEE ROADWAY PLANS.

AREA BETWEEN THE WINGWALL AND APPROACH SLAB SHALL BE GRADED TO DRAIN THE WATER AWAY FROM THE FILL FACE OF THE BRIDGE AND SHALL BE PAVED. SEE ROADWAY PLANS.

THE JOINT OPENING AT THE APPROACH SLAB/DECK INTERFACE SHALL BE SAWED NO MORE THAN 12 HOURS AFTER THE APPROACH SLAB IS CAST. THE JOINT SHALL BE CLEANED OF ALL DEBRIS BEFORE THE SEALANT IS APPLIED. THE JOINT SEALER MATERIAL SHALL CONFORM TO THE REQUIREMENTS OF SECTION 1028-3 OF THE STANDARD SPECIFICATIONS.

GROOVED CONTRACTION JOINTS ½" IN DEPTH, SHALL BE TOOLED IN ALL EXPOSED FACES OF CONCRETE MEDIAN IN ACCORDANCE WITH ARTICLE 825-10(B) OF THE STANDARD SPECIFICATIONS. THE CONTRACTION JOINTS SHALL BE LOCATED AT A SPACING OF 8 FEET TO 10 FEET IN BETWEEN EXPANSION JOINTS. NO CONTRACTION JOINTS WILL BE REQUIRED FOR SEGMENTS LESS THAN 10 FEET IN LENGTH.

NO SEPARATE MEASUREMENT OR PAYMENT WILL BE MADE FOR MATERIALS OR LABOR REQUIRED TO CONSTRUCT THE CONCRETE MEDIAN OR SIDEWALK. THE ENTIRE COST OF THIS WORK SHALL BE INCLUDED IN THE LUMP SUM PRICE BID FOR BRIDGE APPROACH SLABS.

BILL OF MATERIAL FOR ONE APPROACH SLAB (2 REQ'D)

STAGE 1 (2 REQ'D)

BAR	NO.	SIZE	TYPE	LENGTH	WEIGHT
* A1	50	#4	STR	20'-9"	693
A2	52	#4	STR	20'-6"	712
* B1	76	#5	STR	24'-2"	1916
B2	76	#6	STR	24'-8"	2816
* B3	5	#4	STR	23'-10"	80
* G1	24	#4	STR	5'-0"	80
* U1	8	#4	1	3'-7"	19

REINFORCING STEEL LBS. 3528

* EPOXY COATED REINFORCING STEEL LBS. 2788

CLASS AA CONCRETE 40.0 C.Y.

STAGE 2 (2 REQ'D)

BAR	NO.	SIZE	TYPE	LENGTH	WEIGHT
* A3	75	#4	STR	23'-6"	1177
A4	78	#4	STR	23'-4"	1216
* B1	134	#5	STR	24'-2"	3378
B2	134	#6	STR	24'-8"	4965
* B3	5	#4	STR	23'-10"	80
* G1	24	#4	STR	5'-0"	80
* M1	3	#4	STR	24'-8"	49
* T1	16	#4	STR	3'-0"	32
* U1	8	#4	1	3'-7"	19

REINFORCING STEEL LBS. 6181

* EPOXY COATED REINFORCING STEEL LBS. 4815

CLASS AA CONCRETE 71.7 C.Y.

BAR TYPE

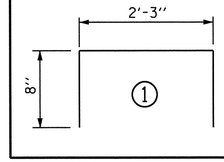

PROJECT NO. B-4949

CUMBERLAND COUNTY

STATION: 25+55.00 -L-

SHEET 1 OF 2

STATE OF NORTH CAROLINA
DEPARTMENT OF TRANSPORTATION
RALEIGH

STANDARD
BRIDGE APPROACH SLAB FOR INTEGRAL ABUTMENT

REVISIONS						SHEET NO.
NO.	BY:	DATE:	NO.	BY:	DATE:	S-52
1			3			TOTAL SHEETS
2			4			131

STD. NO. BAS5

ASSEMBLED BY : M. POOLE DATE : 11/11
CHECKED BY : J. MCROY DATE : 3/12
DRAWN BY : TLA 10/05
CHECKED BY : GM 5/06
ADDED 5/1/06RR KMM/GM
REV. 10/1/11 MAA/GM

18-JUN-2012 11:37
R:\Structures\Final Plans\B-4949_SD_AS.dgn
dahodge

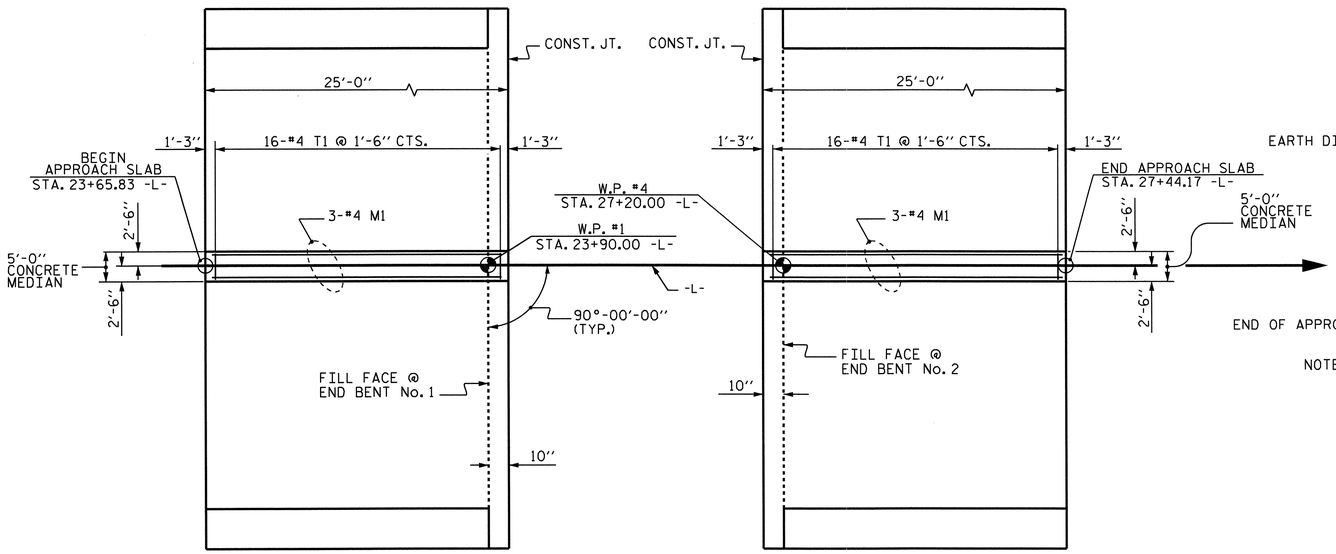

PLAN OF CONCRETE MEDIAN

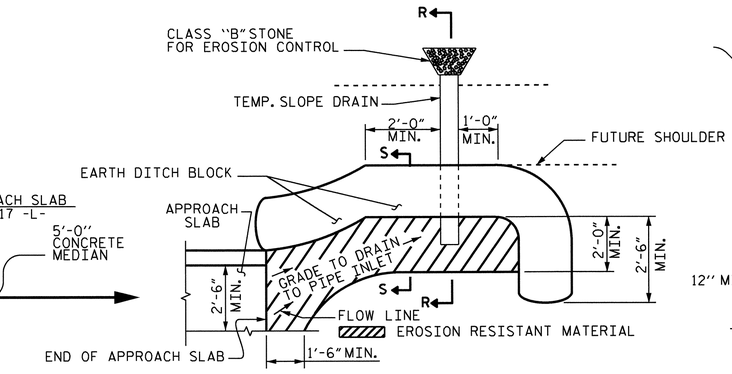

NOTE: IMMEDIATELY AFTER THE CONSTRUCTION OF THE APPROACH SLAB, THE CONTRACTOR SHALL PROVIDE TEMPORARY BERM AND SLOPE DRAIN. CONTRACTOR SHALL GRADE TO PIPE INLET AND PROVIDE EROSION RESISTANT MATERIAL AS SHOWN. THE EROSION RESISTANT MATERIAL SHALL BE EITHER 1) ASPHALT PLANT MIX, TYPE 1 OR TYPE 2, MIN. 2" DEPTH, 2) EROSION CONTROL MAT, OR 3) CONCRETE, AS DIRECTED BY THE ENGINEER. THE SLOPE DRAIN SHALL CONSIST OF A NON-PERFORATED TEMPORARY DRAINAGE PIPE, 12 INCHES IN DIAMETER.

PLAN VIEW

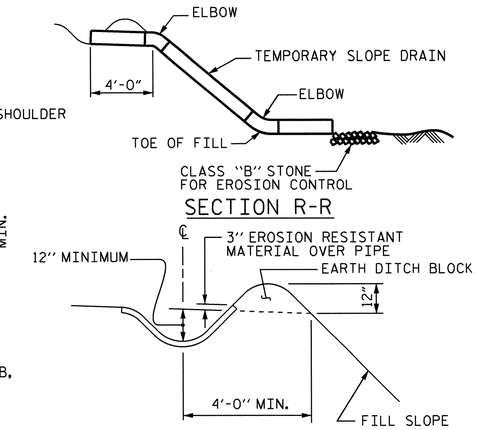

TEMPORARY BERM AND SLOPE DRAIN DETAILS

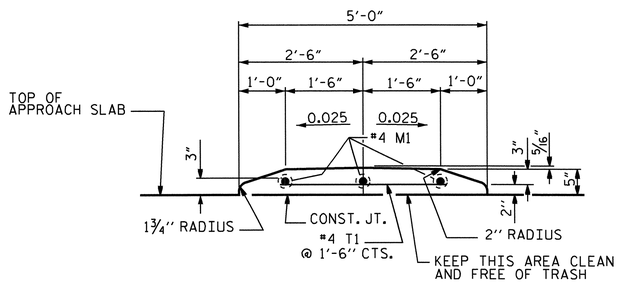

SECTION THRU CONCRETE ISLAND

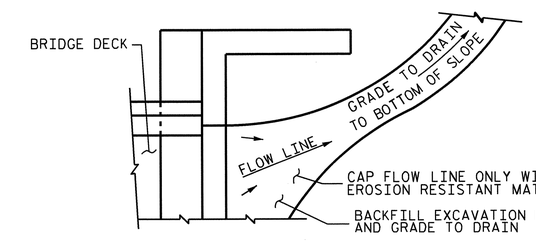

NOTE: IF THE APPROACH SLAB IS NOT CONSTRUCTED IMMEDIATELY AFTER THE BACKFILLING OF THE END BENT EXCAVATION, GRADE TO DRAIN TO THE BOTTOM OF THE SLOPE AND PROVIDE EROSION RESISTANT MATERIAL, SUCH AS FIBERGLASS ROVING OR AS DIRECTED BY THE ENGINEER TO PREVENT SOIL EROSION AND TO PROTECT THE AREA ADJACENT TO THE STRUCTURE. THE CONTRACTOR WILL BE REQUIRED TO REMOVE THESE MATERIALS PRIOR TO CONSTRUCTION OF THE APPROACH SLAB.

TEMPORARY DRAINAGE DETAIL

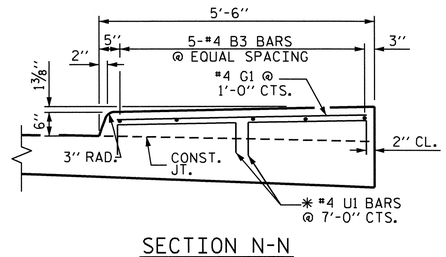

SECTION N-N

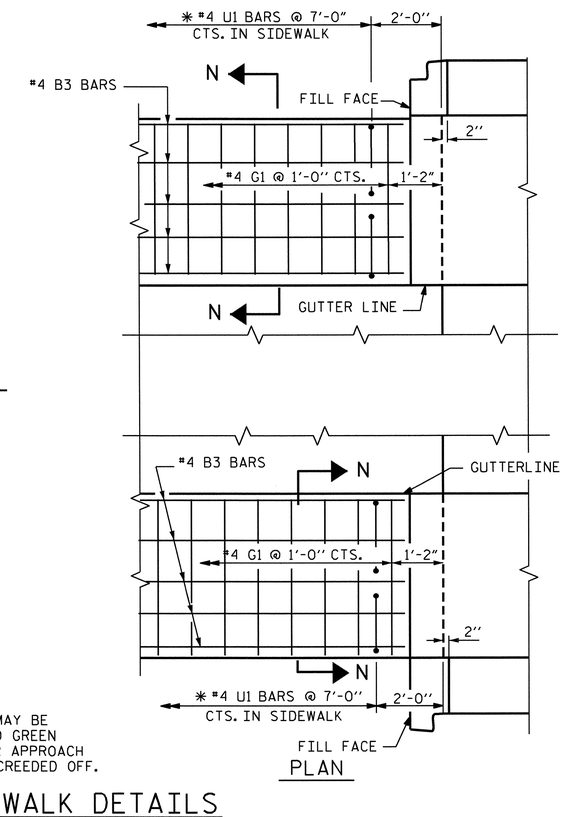

PLAN

✱ U1 BARS MAY BE PUSHED INTO GREEN CONCRETE AFTER APPROACH SLAB HAS BEEN SCREEDED OFF.

SIDEWALK DETAILS

APPROACH SLAB @ END BENT No. 1 SHOWN, APPROACH SLAB @ END BENT No. 2 SIMILAR

PROJECT NO. B-4949
CUMBERLAND COUNTY
STATION: 25+55.00 -L-

SHEET 2 OF 2

STATE OF NORTH CAROLINA
DEPARTMENT OF TRANSPORTATION
RALEIGH

STANDARD
BRIDGE APPROACH SLAB DETAILS

NORTH CAROLINA PROFESSIONAL SEAL 20125 ENGINEER MICHAEL R. CHECK, JR.
6-18-12

REVISIONS								SHEET NO.
NO.	BY:	DATE:	NO.	BY:	DATE:			S-53
1			3					TOTAL SHEETS
2			4					131

STD. NO. BAS4

ASSEMBLED BY : M. POOLE		DATE : 8/12/11	
CHECKED BY : J. MCROY		DATE : 3/12	
DRAWN BY : FCJ	11/88	REV. 5/7/03	RWW/JTE
CHECKED BY : ARB	11/88	REV. 5/1/06RRR	MAA/KMM
		REV. 10/1/11	MAA/GM

18-JUN-2012 11:36
R:\Structures\Final Plans\B-4949_SD_AS.dgn
dahodge

F.A. PROJECT NO.: BRSTP-0301 (12)

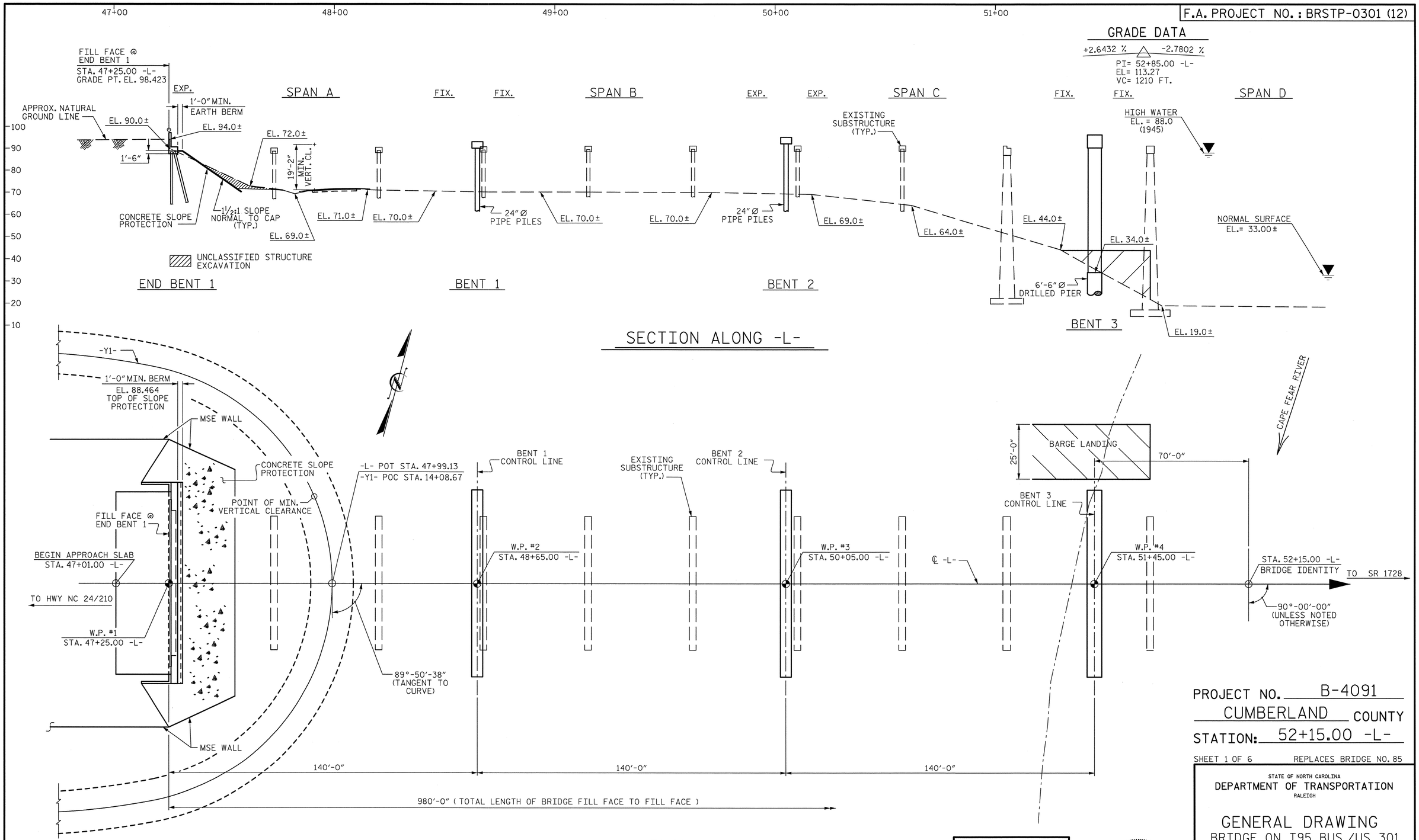

PROJECT NO. B-4091

CUMBERLAND COUNTY

STATION: 52+15.00 -L-

SHEET 1 OF 6 REPLACES BRIDGE NO. 85

STATE OF NORTH CAROLINA
DEPARTMENT OF TRANSPORTATION
RALEIGH

GENERAL DRAWING

BRIDGE ON I95 BUS./US 301
OVER CAPE FEAR RIVER
BETWEEN NC 24/210
AND SR 1728

Prepared by
URS
URS Corporation - North Carolina
1600 Perimeter Park Drive, Suite 400
Morrisville, NC 27560
TELEPHONE (919) 461-1100
FAX (919) 461-1415

NORTH CAROLINA PROFESSIONAL SEAL 038447 ENGINEER ANDREW J. MILLER
6/6/12

REVISIONS						SHEET NO.
NO.	BY:	DATE:	NO.	BY:	DATE:	S-54
1			3			TOTAL SHEETS
2			4			131

DRAWN BY : M. K. TOM DATE : 1/23/12
CHECKED BY : J. C. HALL DATE : 3/29/12

6/6/2012
P:\Jobs\B4091\Structures\Submittals\2012_0524 Final Plans and Calcs\Revision 1\Revised Drawings with Seal\B4091_SD_GD1.dgn
ross_whitcher

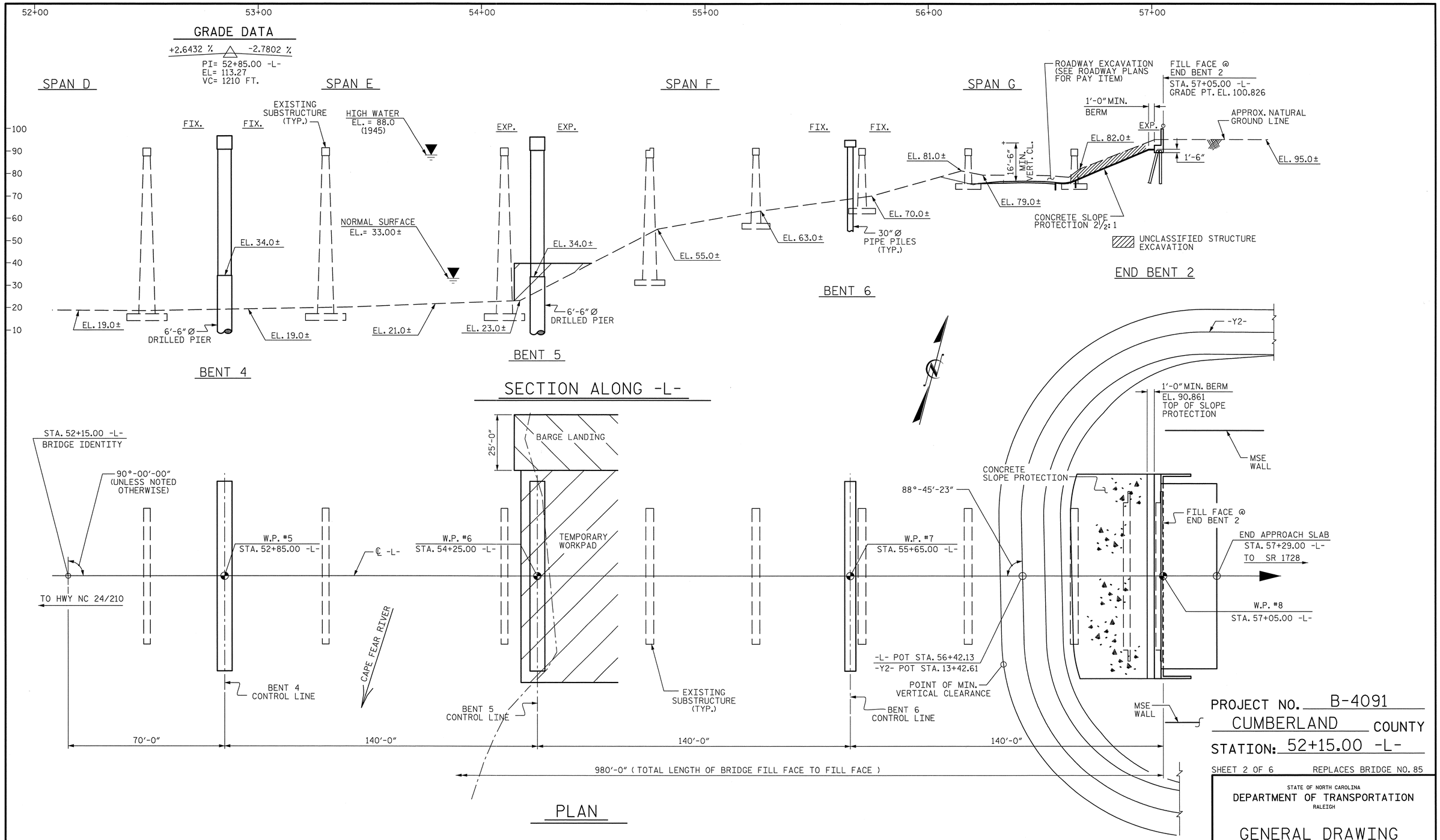

PROJECT NO. B-4091

CUMBERLAND COUNTY

STATION: 52+15.00 -L-

SHEET 2 OF 6 REPLACES BRIDGE NO. 85

STATE OF NORTH CAROLINA
DEPARTMENT OF TRANSPORTATION
RALEIGH

GENERAL DRAWING
BRIDGE ON I95 BUS./US 301
OVER CAPE FEAR RIVER
BETWEEN NC 24/210
AND SR 1728

Prepared by
URS
URS Corporation – North Carolina
1600 Perimeter Park Drive, Suite 400
Morrisville, NC 27560
TELEPHONE (919) 461-1100
FAX (919) 461-1415

NORTH CAROLINA PROFESSIONAL SEAL 038447 ENGINEER ANDREW S. MILLER
6/6/12

REVISIONS						SHEET NO.
NO.	BY:	DATE:	NO.	BY:	DATE:	S-55
1			3			TOTAL SHEETS
2			4			131

DRAWN BY : M. K. TOM DATE : 1/23/12
CHECKED BY : J. C. HALL DATE : 3/29/12

6/6/2012
P:\Jobs\B4091\Structures\Submittals\2012_0524 Final Plans and Calcs\Revision 1\Revised Drawings with Seal\B4091_SD_GD2.dgn
ross_whitcher

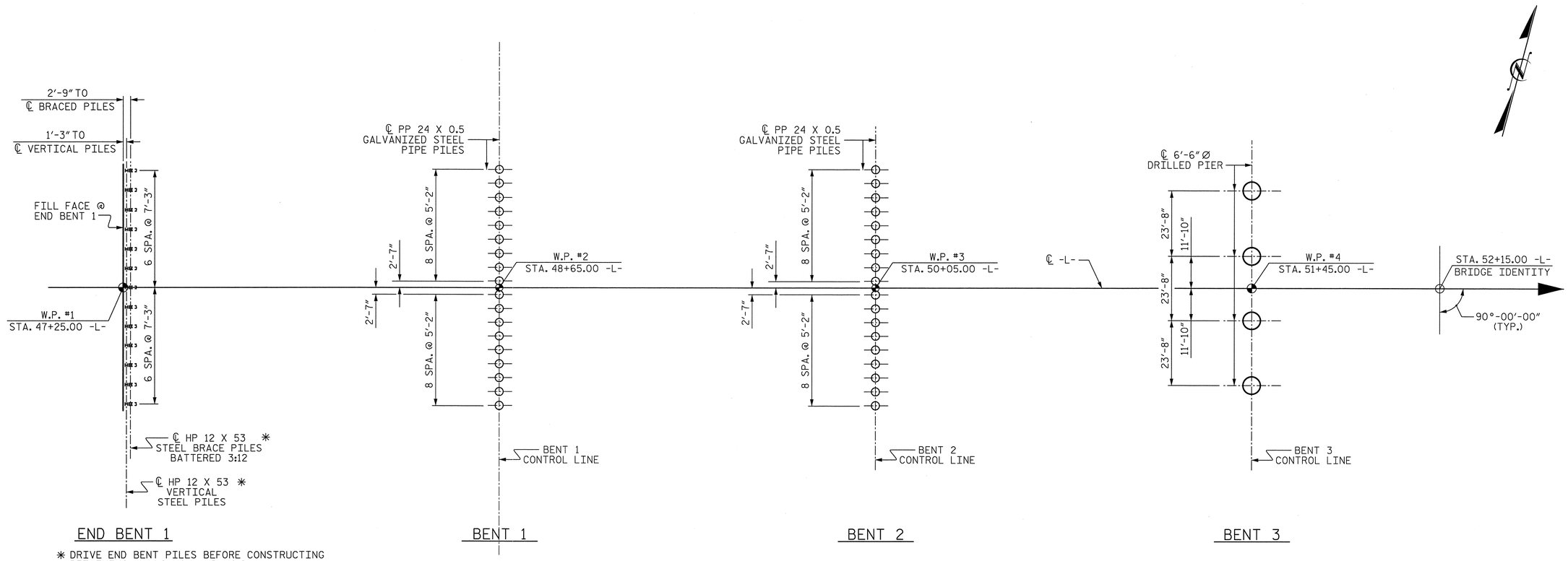

* DRIVE END BENT PILES BEFORE CONSTRUCTING RETAINING WALLS NO.1 AND NO.2

FOUNDATION LAYOUT PLAN

NOTES:

FOR PILES, SEE SECTION 450 OF THE STANDARD SPECIFICATIONS.

PILES AT END BENTS 1 AND 2 ARE DESIGNED FOR A FACTORED RESISTANCE OF 115 TONS PER PILE.

PILES AT BENT 1 AND BENT 2 ARE DESIGNED FOR A FACTORED RESISTANCE OF 240 TONS PER PILE.

PILES AT BENT 6 ARE DESIGNED FOR A FACTORED RESISTANCE OF 300 TONS PER PILE.

DRIVE PILES AT END BENT 1 AND 2 TO A REQUIRED DRIVING RESISTANCE OF 195 TONS PER PILE.

DRIVE PILES AT BENT 1 AND BENT 2 TO A REQUIRED DRIVING RESISTANCE OF 415 TONS PER PILE. THIS REQUIRED DRIVING RESISTANCE INCLUDES ADDITIONAL RESISTANCE FOR DOWNDRAG OR SCOUR.

DRIVE PILES AT BENT 6 TO A REQUIRED DRIVING RESISTANCE OF 530 TONS PER PILE. THIS REQUIRED DRIVING RESISTANCE INCLUDES ADDITIONAL RESISTANCE FOR DOWNDRAG OR SCOUR.

DRIVE END BENT PILES BEFORE CONSTRUCTING RETAINING WALLS NO. 1 AND NO. 2.

INSTALL PILES AT BENT 1, BENT 2, AND BENT 6 TO TIP ELEVATIONS NO HIGHER THAN 44.0 FT, 37.0 FT, AND 26.0 FT, RESPECTIVELY.

SCOUR CRITICAL ELEVATIONS FOR BENT 1, BENT 2, BENT 3, BENT 4, BENT 5, AND BENT 6 ARE ELEVATIONS 64.0 FT, 63.0 FT, 20.0 FT, 10.0 FT, 9.0 FT, AND 56.0 FT, RESPECTIVELY. SCOUR CRITICAL ELEVATIONS ARE USED TO MONITOR POSSIBLE SCOUR PROBLEMS DURING THE LIFE OF THE STRUCTURE.

TESTING THE FIRST PRODUCTION PILES WITH THE PDA DURING DRIVING, RESTRIKING OR REDRIVING IS REQUIRED AT BENT 1, BENT 2, AND BENT 6. FOR PDA TESTING, SEE SECTION 450 OF THE STANDARD SPECIFICATIONS.

IT HAS BEEN ESTIMATED THAT A HAMMER WITH AN EQUIVALENT RATED ENERGY IN THE RANGE OF 95-160 FT-KIPS PER BLOW WILL BE REQUIRED TO DRIVE PILES AT BENT 1, BENT 2, AND BENT 6. THIS ESTIMATED ENERGY RANGE DOES NOT RELEASE THE CONTRACTOR FROM PROVIDING DRIVING EQUIPMENT IN ACCORDANCE WITH SUBARTICLE 450-3(D)(2) OF THE STANDARD SPECIFICATIONS.

PIPE PILE PLATES ARE NOT REQUIRED FOR STEEL PIPE PILES AT BENT 1, BENT 2, AND BENT 6.

FOR DRILLED PIERS, SEE SECTION 411 OF THE STANDARD SPECIFICATIONS.

DRILLED PIERS AT BENT 3, BENT 4, AND BENT 5 ARE DESIGNED FOR A FACTORED RESISTANCE OF 1291 TONS PER PIER. CHECK FIELD CONDITIONS FOR THE REQUIRED TIP RESISTANCE OF 25 TSF.

PERMANENT STEEL CASINGS ARE REQUIRED FOR DRILLED PIERS AT BENT 3, BENT 4, AND BENT 5. DO NOT EXTEND PERMANENT CASINGS BELOW ELEVATIONS 5 FT, 5 FT, AND 2 FT, RESPECTIVELY, WITHOUT PRIOR APPROVAL FROM THE ENGINEER.

INSTALL PERMANENT STEEL CASINGS AT BENT 3, BENT 4, AND BENT 5 BY VIBRATING, SCREWING OR DRIVING PERMANENT CASINGS BEFORE EXCAVATING OR DISTURBING ANY MATERIAL BELOW ELEVATION 22.1 FT, 12.2 FT, AND 11.9 FT, RESPECTIVELY.

INSTALL DRILLED PIERS AT BENT 3, BENT 4, AND BENT 5 THAT EXTEND TO AN ELEVATION NO HIGHER THAN -73 FT AND SATISFY THE REQUIRED TIP RESISTANCE.

SPT IS REQUIRED FOR DRILLED PIERS AT BENT 3, BENT 4, AND BENT 5. FOR SPT TESTING, SEE SECTION 411 OF THE STANDARD SPECIFICATIONS.

DO NOT DEWATER DRILLED PIER EXCAVATIONS AT BENT 3, BENT 4, AND BENT 5. CLEAN THE BOTTOM OF EXCAVATIONS WITH A SUBMERSIBLE PUMP OR AN AIRLIFT. WET PLACEMENT OF CONCRETE IS REQUIRED.

POLYMER SLURRY IS REQUIRED FOR DRILLED PIERS AT BENT 3, BENT 4, AND BENT 5.

SID INSPECTIONS ARE REQUIRED FOR DRILLED PIERS AT BENT 3, BENT 4, AND BENT 5. FOR SID INSPECTIONS, SEE SECTION 411 OF THE STANDARD SPECIFICATIONS.

CSL TUBES AND TESTING ARE REQUIRED FOR DRILLED PIERS AT BENT 3, BENT 4, AND BENT 5. FOR CSL TESTING, SEE SECTION 411 OF THE STANDARD SPECIFICATIONS.

AFTER REMOVAL OF EXISTING PILES IMMEDIATELY ADJACENT TO BENTS 1 AND 2, THE REMAINING VOIDS SHALL BE FILLED WITH EXCAVATABLE FLOWABLE FILL. THIS WORK SHALL BE PERFORMED PRIOR TO INSTALLATION OF PIPE PILES. FOR EXCAVATABLE FLOWABLE FILL, SEE SPECIAL PROVISIONS.

Prepared by
URS
URS Corporation - North Carolina
1600 Perimeter Park Drive, Suite 400
Morrisville, NC 27560
TELEPHONE (919) 461-1100
FAX (919) 461-1415

NORTH CAROLINA PROFESSIONAL SEAL 038447 ENGINEER ANDREW S. MILLER
5/23/12

PROJECT NO. B-4091
CUMBERLAND COUNTY
STATION: 52+15.00 -L-

SHEET 3 OF 6

STATE OF NORTH CAROLINA
DEPARTMENT OF TRANSPORTATION
RALEIGH

GENERAL DRAWING
BRIDGE ON I95 BUS./US 301
OVER CAPE FEAR RIVER
BETWEEN NC 24/210
AND SR 1728

REVISIONS						SHEET NO.
NO.	BY:	DATE:	NO.	BY:	DATE:	S-56
1			3			TOTAL SHEETS
2			4			131

DRAWN BY : M. K. TOM DATE : 1/23/12
CHECKED BY : A.S. MILLER DATE : 3/29/12

5/23/2012
P:\Jobs1\B4091\Structures\Final Drawings\B4091_SD_FL1.dgn
ross_whitcher

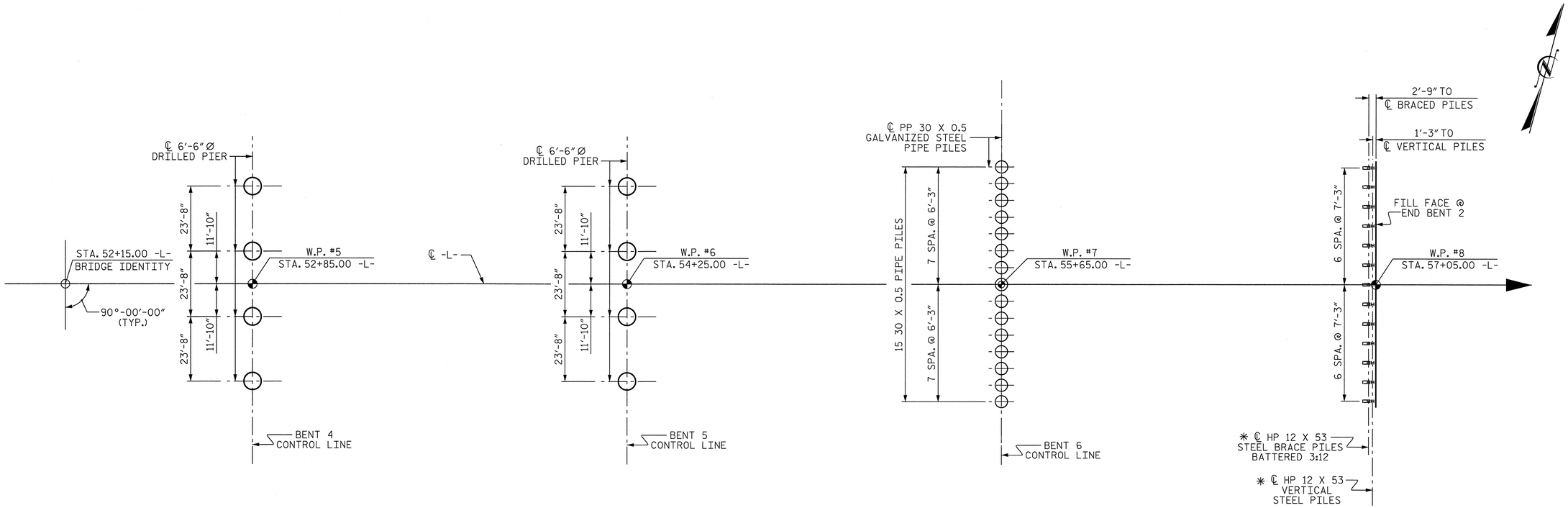

BENT 4 BENT 5 BENT 6 END BENT 2

* DRIVE END BENT PILES BEFORE CONSTRUCTING RETAINING WALLS NO.3 AND NO.4

FOUNDATION LAYOUT PLAN

PROJECT NO. B-4091

CUMBERLAND COUNTY

STATION: 52+15.00 -L-

SHEET 4 OF 6

STATE OF NORTH CAROLINA
DEPARTMENT OF TRANSPORTATION
RALEIGH

GENERAL DRAWING
BRIDGE ON I95 BUS./US 301
OVER CAPE FEAR RIVER
BETWEEN NC 24/210
AND SR 1728

REVISIONS						SHEET NO.
NO.	BY:	DATE:	NO.	BY:	DATE:	S-57
1			3			TOTAL SHEETS
2			4			131

Prepared by
URS
URS Corporation - North Carolina
1600 Perimeter Park Drive, Suite 400
Morrisville, NC 27560
TELEPHONE (919) 461-1100
FAX (919) 461-1415

NORTH CAROLINA PROFESSIONAL SEAL 038447 ENGINEER ANDREW S. MILLER
6/6/12

DRAWN BY : M. K. TOM DATE : 1/23/12
CHECKED BY : A.S. MILLER DATE : 3/29/12

6/6/2012
P:\Jobs1\B4091\Structures\Submittals\2012_0524 Final Plans and Calcs\Revision 1\Revised Drawings with Seal\B4091_SD_FL2.dgn
ross_whitcher

B.M. #82 : R. R. SPIKE IN BASE OF 10" SYCAMORE TREE 60.00' RT. STA. 61+97.30 -L- EL. 89.94

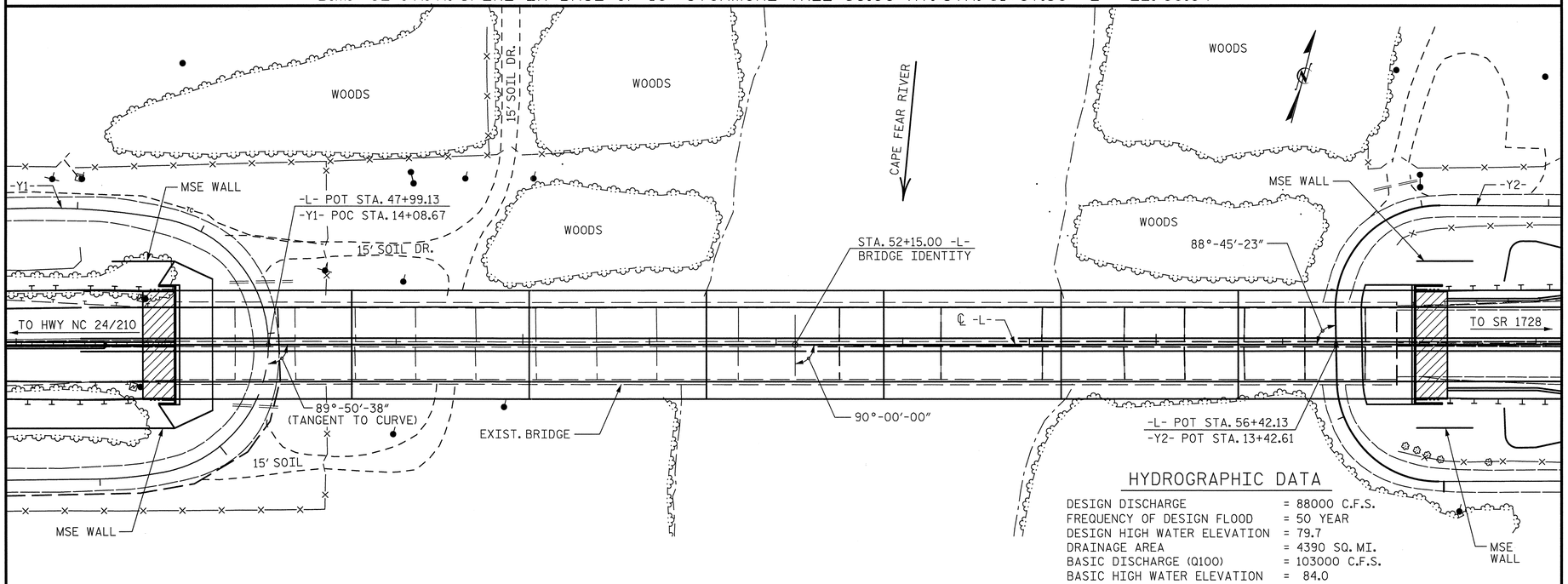

FOR UTILITY INFORMATION, SEE UTILITY PLANS AND SPECIAL PROVISIONS.

LOCATION SKETCH

HYDROGRAPHIC DATA

DESIGN DISCHARGE	= 88000 C.F.S.
FREQUENCY OF DESIGN FLOOD	= 50 YEAR
DESIGN HIGH WATER ELEVATION	= 79.7
DRAINAGE AREA	= 4390 SQ. MI.
BASIC DISCHARGE (Q100)	= 103000 C.F.S.
BASIC HIGH WATER ELEVATION	= 84.0

OVERTOPPING FLOOD DATA

OVERTOPPING DISCHARGE	< 150,000 C.F.S.
FREQUENCY OF OVERTOPPING FLOOD	< 500 YEAR
OVERTOPPING FLOOD ELEVATION	= 89.9

NOTES :

ASSUMED LIVE LOAD = HL-93 OR ALTERNATE LOADING

THIS BRIDGE HAS BEEN DESIGNED IN ACCORDANCE WITH THE AASHTO LRFD BRIDGE DESIGN SPECIFICATIONS.

THIS BRIDGE IS LOCATED IN SEISMIC ZONE 1.

FOR OTHER DESIGN DATA AND GENERAL NOTES, SEE SHEET SN.

FOR EROSION CONTROL MEASURES, SEE EROSION CONTROL PLANS.

REMOVABLE FORMS MAY BE USED IN LIEU OF METAL STAY-IN-PLACE FORMS IN ACCORDANCE WITH ARTICLE 420-3 OF THE STANDARD SPECIFICATIONS.

THE CONTRACTOR SHALL PROVIDE INDEPENDENT ASSURANCE SAMPLES OF REINFORCING STEEL AS FOLLOWS: FOR PROJECTS REQUIRING UP TO 400 TONS OF REINFORCING STEEL, ONE 30 INCH SAMPLE OF EACH SIZE BAR USED, AND FOR PROJECTS REQUIRING OVER 400 TONS OF REINFORCING STEEL, TWO 30 INCH SAMPLES OF EACH SIZE BAR USED. THE BARS FROM WHICH THE SAMPLES ARE TAKEN MUST THEN BE SPLICED WITH REPLACEMENT BARS OF THE SIZE AND LENGTH OF THE SAMPLE, PLUS A MINIMUM LAP SPLICE OF THIRTY BAR DIAMETERS. PAYMENT FOR THE SAMPLES OF REINFORCING STEEL SHALL BE CONSIDERED INCIDENTAL TO VARIOUS PAY ITEMS.

FOR SECURING OF VESSELS, SEE SPECIAL PROVISIONS

FOR FALSEWORK AND FORMWORK, SEE SPECIAL PROVISIONS.

FOR MASS CONCRETE, SEE SPECIAL PROVISIONS.

FOR CRANE SAFETY, SEE SPECIAL PROVISIONS.

FOR GROUT FOR STRUCTURES, SEE SPECIAL PROVISIONS.

FOR SUBMITTAL OF WORKING DRAWINGS, SEE SPECIAL PROVISIONS.

FOR MODIFIED 74" PRESTRESSED CONCRETE GIRDERS, SEE SPECIAL PROVISIONS.

THE EXISTING BRIDGE IS PRESENTLY NOT POSTED FOR LOAD LIMIT. SHOULD THE STRUCTURAL INTEGRITY OF THE BRIDGE DETERIORATE A LOAD LIMIT MAY BE POSTED AND MAY BE REDUCED AS FOUND NECESSARY DURING THE LIFE OF THE PROJECT.

THE SUBSTRUCTURE OF THE EXISTING BRIDGE INDICATED ON THE PLANS IS FROM THE BEST INFORMATION AVAILABLE. SINCE THIS INFORMATION IS SHOWN FOR THE CONVENIENCE OF THE CONTRACTOR, THE CONTRACTOR SHALL HAVE NO CLAIM WHATSOEVER AGAINST THE DEPARTMENT OF TRANSPORTATION FOR ANY DELAYS OR ADDITIONAL COST INCURRED BASED ON DIFFERENCES BETWEEN THE EXISTING BRIDGE SUBSTRUCTURE SHOWN ON THE PLANS AND ACTUAL CONDITIONS AT THE PROJECT SITE.

REMOVAL OF THE EXISTING BRIDGE SHALL BE PERFORMED SO AS NOT TO ALLOW DEBRIS TO FALL INTO THE WATER. THE CONTRACTOR SHALL REMOVE THE BRIDGE AND SUBMIT PLANS FOR DEMOLITION IN ACCORDANCE WITH ARTICLE 402-2 OF THE STANDARD SPECIFICATIONS.

THE EXISTING STRUCTURE LOCATED AT THE SITE OF THE PROPOSED STRUCTURE AND CONSISTING OF EIGHTEEN (18) SPANS TOTALING 965'-0" SHALL BE REMOVED. (THIRTEEN (13) CAST-IN-PLACE CONCRETE GIRDER SPANS, 12 @ 47'-6", 1 @ 25'-0"; FIVE (5) CONSTINUOUSLY SUPPORTED STRUCTURAL STEEL GIRDER SPANS, 1 @ 65'-0", 3 @ 80'-0", 1 @ 65'-0"; 56'-0" CLEAR ROADWAY WIDTH, REINFORCED CONCRETE DECK SLAB, CONCRETE END BENTS ON PRESTRESSED CONCRETE PILES; SEVEN (7) INTERIOR PILE BENTS CONSISTING OF CONCRETE CAPS ON PRESTRESSED CONCRETE PILES; TEN (10) INTERIOR CONCRETE POST AND BEAM BENTS SUPPORTED ON SPREAD FOOTINGS).

INASMUCH AS THE PAINT SYSTEM ON THE EXISTING STRUCTURAL STEEL CONTAINS LEAD; THE CONTRACTOR'S ATTENTION IS DIRECTED TO ARTICLE 107-1 OF THE STANDARD SPECIFICATIONS. ANY COSTS RESULTING FROM COMPLIANCE WITH APPLICABLE STATE OR FEDERAL REGULATIONS PERTAINING TO HANDLING OF MATERIALS CONTAINING LEAD BASED PAINT SHALL BE INCLUDED IN THE BID PRICE FOR "REMOVAL OF EXISTING STRUCTURE AT STA. 52+15.00 -L-".

NEEDLE BEAMS WILL NOT BE ALLOWED UNLESS OTHERWISE CALLED FOR ON THE PLANS OR APPROVED BY THE ENGINEER.

FOR INTERIOR BENTS 1, 2, AND 6, ONLY PARTIAL GALVANIZING OF THE PILES IS REQUIRED. SEE INTERIOR BENT SHEETS FOR REQUIRED GALVANIZED LENGTHS. PAYMENT FOR PARTIALLY GALVANIZED PILES WILL BE MADE UNDER THE CONTRACT UNIT PRICE FOR GALVANIZED STEEL PILES.

THE MATERIAL SHOWN IN THE CROSS-HATCHED AREA SHALL BE EXCAVATED FOR A DISTANCE OF 50 FT EACH SIDE OF CENTERLINE ROADWAY AS DIRECTED BY THE ENGINEER. THIS WORK WILL BE PAID FOR AT THE CONTRACT LUMP SUM PRICE FOR UNCLASSIFIED STRUCTURE EXCAVATION. SEE SECTION 412 OF THE STANDARD SPECIFICATIONS.

NORTH CAROLINA PROFESSIONAL SEAL 038447 ENGINEER ANDREW S. MILLER

6/6/12

Prepared by
URS
URS Corporation - North Carolina
1600 Perimeter Park Drive, Suite 400
Morrisville, NC 27560
TELEPHONE (919) 461-1100
FAX (919) 461-1415

PROJECT NO. B-4091

CUMBERLAND COUNTY

STATION: 52+15.00 -L-

SHEET 5 OF 6

STATE OF NORTH CAROLINA
DEPARTMENT OF TRANSPORTATION
RALEIGH

GENERAL DRAWING
BRIDGE ON I95 BUS./US 301
OVER CAPE FEAR RIVER
BETWEEN NC 24/210
AND SR 1728

REVISIONS						SHEET NO.
NO.	BY:	DATE:	NO.	BY:	DATE:	S-58
1			3			TOTAL SHEETS
2			4			131

DRAWN BY : M. K. TOM DATE : 1/24/12
CHECKED BY : A. S. MILLER DATE : 3/17/12

TOTAL BILL OF MATERIAL

	CONSTRUCTION, MAINTENANCE, & REMOVAL OF TEMP ACCESS AT STA 52+15.00 -L-	REMOVAL OF EXISTING STRUCTURE AT STA 52+15.00 -L-	6'-6" DIA. DRILLED PIERS	PERMANENT STEEL CASING FOR 6'-6" DIA. DRILLED PIER	PDA TESTING	SID INSPECTIONS	SPT TESTING	CSL TESTING	UNCLASSIFIED STRUCTURE EXCAVATION	REINFORCED CONCRETE DECK SLAB	GROOVING BRIDGE FLOORS	CLASS A CONCRETE	BRIDGE APPROACH SLABS	REINFORCING STEEL	SPIRAL COLUMN REINFORCING STEEL	HP 12 X 53 STEEL PILES		PP 24 x 0.50 GALV. STEEL PILES		PP 30 x 0.50 GALV. STEEL PILES	
	LUMP SUM	LUMP SUM	LIN. FT.	LIN. FT.	EACH	EACH	EACH	EACH	LUMP SUM	SQ. FT.	SQ. FT.	CU. YDS.	LUMP SUM	LBS.	LBS.	No.	LIN. FT.	No.	LIN. FT.	No.	LIN. FT.
SUPERSTRUCTURE										83,689.8	65,435										
END BENT No. 1												78.8		12,259		26	1,300				
BENT No. 1					1							54.3		11,253				18	1,350		
BENT No. 2					1							54.3		11,253				18	1,350		
BENT No. 3			428.0	116.0		4	4	4				366.7		152.355	29,788						
BENT No. 4			428.0	116.0		4	4	4				368.1		152.355	29,788						
BENT No. 5			428.0	128.0		4	4	4				366.0		152.355	29,788						
BENT No. 6					2							53.6		11,164						15	1,125
END BENT No. 2												78.8		12,259		26	1,430				
TOTAL	LUMP SUM	LUMP SUM	1,284.0	360.0	4	12	12	12	LUMP SUM	83,689.8	65,435	1,420.6	LUMP SUM	515,253	89,364	52	2,730	36	2,700	15	1,125

TOTAL BILL OF MATERIAL

	PILE REDRIVES	THREE BAR METAL RAIL	CONCRETE MEDIAN BARRIER	4" SLOPE PROTECTION	ELASTOMERIC BEARINGS	EXPANSION JOINT SEALS	EXCAVATABLE FLOWABLE FILL	MODIFIED 74" PRESTRESSED CONCRETE GIRDERS	
	EA.	LIN. FT.	LIN. FT.	SQ. YDS.	LUMP SUM	LUMP SUM	CU. YDS.	No.	LIN. FT.
SUPERSTRUCTURE		1,940.5	1,028		LUMP SUM	LUMP SUM		84	11681.00
END BENT No. 1	6			495					
BENT No. 1	5						20		
BENT No. 2	5						20		
BENT No. 3									
BENT No. 4									
BENT No. 5									
BENT No. 6	5								
END BENT No. 2	6			434					
TOTAL	27	1,940.5	1,028	929	LUMP SUM	LUMP SUM	40	84	11681.00

PROJECT NO. B-4091

CUMBERLAND COUNTY

STATION: 52+15.00 -L-

SHEET 6 OF 6

STATE OF NORTH CAROLINA
DEPARTMENT OF TRANSPORTATION
RALEIGH

GENERAL DRAWING
BRIDGE ON I95 BUS./US 301
OVER CAPE FEAR RIVER
BETWEEN NC 24/210
AND SR 1728

Prepared by
URS
URS Corporation - North Carolina
1600 Perimeter Park Drive, Suite 400
Morrisville, NC 27560
TELEPHONE (919) 461-1100
FAX (919) 461-1415

NORTH CAROLINA PROFESSIONAL SEAL 038447 ENGINEER ANDREW S. MILLER
5/23/12

REVISIONS						SHEET NO.
NO.	BY:	DATE:	NO.	BY:	DATE:	S-59
1			3			TOTAL SHEETS
2			4			131

DRAWN BY : M. K. TOM DATE : 1/24/12
CHECKED BY : A. S. MILLER DATE : 3/30/12

5/23/2012
P:\Jobs1\B4091\Structures\FinalDrawings\B4091_SD_GD4.dgn
ross_whitcher

LOAD AND RESISTANCE FACTOR RATING (LRFR) SUMMARY FOR PRESTRESSED CONCRETE GIRDERS

LEVEL		VEHICLE	WEIGHT (W) (TONS)	CONTROLING LOAD RATING (#)	MINIMUM RATING FACTORS (RF)	TONS = W x RF	STRENGTH I LIMIT STATE											SERVICE III LIMIT STATE						COMMENT NUMBER
								MOMENT					SHEAR						MOMENT					
							LIVE-LOAD FACTORS (γ_{LL})	DISTRIBUTION FACTORS (DF)	RATING FACTOR	SPAN	GIRDER LOCATION	DISTANCE FROM LEFT END OF SPAN (ft)	DISTRIBUTION FACTORS (DF)	RATING FACTOR	SPAN	GIRDER LOCATION	DISTANCE FROM LEFT END OF SPAN (ft)	LIVE-LOAD FACTORS (γ_{LL})	DISTRIBUTION FACTORS (DF)	RATING FACTOR	SPAN	GIRDER LOCATION	DISTANCE FROM LEFT END OF SPAN (ft)	
DESIGN LOAD RATING		HL-93 (INVENTORY)	N/A	1	1.21	--	1.75	0.61	1.65	B	I	70.000	0.77	1.37	B	I	125.895	0.80	0.61	1.21	B	I	70.000	
		HL-93 (OPERATING)	N/A	--	1.83	--	1.35	0.61	2.14	B	I	70.000	0.77	1.83	B	I	14.455	N/A	--	--	--	--	--	
		HS-20 (INVENTORY)	36.000	2	1.85	66.600	1.75	0.61	2.52	B	I	70.000	0.77	2.13	B	I	125.895	0.80	0.61	1.85	B	I	70.000	
		HS-20 (OPERATING)	36.000	--	2.80	100.800	1.35	0.61	3.27	B	I	70.000	0.77	2.80	B	I	14.455	N/A	--	--	--	--	--	
LEGAL LOAD RATING	SINGLE VEHICLE (SV)	SNSH	13.500	--	4.56	61.560	1.40	0.61	7.76	B	I	70.000	0.77	7.38	B	I	125.895	0.80	0.61	4.56	B	I	70.000	
		SNGARBS2	20.000	--	3.23	64.600	1.40	0.61	5.49	B	I	70.000	0.77	5.08	B	I	14.455	0.80	0.61	3.23	B	I	70.000	
		SNAGRIS2	22.000	--	2.99	65.780	1.40	0.61	5.09	B	I	70.000	0.77	4.66	B	I	14.455	0.80	0.61	2.99	B	I	70.000	
		SNCOTTS3	27.250	--	2.26	61.585	1.40	0.61	3.85	B	I	70.000	0.77	3.45	B	I	14.455	0.80	0.61	2.26	B	I	70.000	
		SNAGGRS4	34.925	--	1.82	63.564	1.40	0.61	3.11	B	I	70.000	0.77	2.61	B	I	14.455	0.80	0.61	1.82	B	I	70.000	
		SNS5A	35.550	--	1.79	63.635	1.40	0.61	3.04	B	I	70.000	0.77	2.55	B	I	14.455	0.80	0.61	1.79	B	I	70.000	
		SNS6A	39.950	--	1.61	64.320	1.40	0.61	2.75	B	I	70.000	0.77	2.28	B	I	14.455	0.80	0.61	1.61	B	I	70.000	
		SNS7B	42.000	--	1.54	64.680	1.40	0.61	2.62	B	I	70.000	0.77	2.20	B	I	14.455	0.80	0.61	1.54	B	I	70.000	
	TRUCK TRACTOR SEMI-TRAILER (TTST)	TNAGRIT3	33.000	--	1.96	64.680	1.40	0.61	3.34	B	I	70.000	0.77	2.85	B	I	14.455	0.80	0.61	1.96	B	I	70.000	
		TNT4A	33.075	--	1.96	64.827	1.40	0.61	3.34	B	I	70.000	0.77	2.70	B	I	14.455	0.80	0.61	1.96	B	I	70.000	
		TNT6A	41.600	--	1.58	65.728	1.40	0.61	2.69	B	I	70.000	0.77	2.26	B	I	14.455	0.80	0.61	1.58	B	I	70.000	
		TNT7A	42.000	--	1.58	66.360	1.40	0.61	2.69	B	I	70.000	0.77	2.27	B	I	14.455	0.80	0.61	1.58	B	I	70.000	
		TNT7B	42.000	--	1.60	67.200	1.40	0.61	2.73	B	I	70.000	0.77	2.17	B	I	14.455	0.80	0.61	1.60	B	I	70.000	
		TNAGRIT4	43.000	--	1.55	66.650	1.40	0.61	2.63	B	I	70.000	0.77	2.08	B	I	14.455	0.80	0.61	1.55	B	I	70.000	
		TNAGT5A	45.000	--	1.47	66.150	1.40	0.61	2.50	B	I	70.000	0.77	2.03	B	I	14.455	0.80	0.61	1.47	B	I	70.000	
		TNAGT5B	45.000	3	1.46	65.700	1.40	0.61	2.48	B	I	70.000	0.77	1.98	B	I	14.455	0.80	0.61	1.46	B	I	70.000	

LOAD FACTORS:

DESIGN LOAD RATING FACTORS	LIMIT STATE	γ_{DC}	γ_{DW}
	STRENGTH I	1.25	1.50
	SERVICE III	1.00	1.00

	YEAR	ADTT
CURRENT	2012	1,770
FUTURE	2035	2,602

NOTES:

MINIMUM RATING FACTORS ARE BASED ON THE STRENGTH I AND SERVICE III LIMIT STATES.

ALLOWABLE STRESSES FOR SERVICE III LIMIT STATE ARE AS REQUIRED FOR DESIGN.

COMMENTS:

1.
2.
3.
4.

(#) CONTROLLING LOAD RATING

(1) DESIGN LOAD RATING (HL-93)

(2) DESIGN LOAD RATING (HS-20)

(3) LEGAL LOAD RATING **

** SEE CHART FOR VEHICLE TYPE

GIRDER LOCATION

I - INTERIOR GIRDER
EL - EXTERIOR LEFT GIRDER
ER - EXTERIOR RIGHT GIRDER

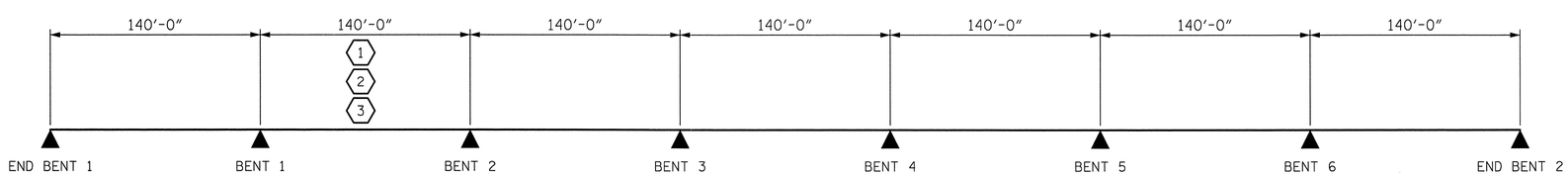

LRFR SUMMARY

PROJECT NO. B-4091
CUMBERLAND COUNTY
STATION: 52+15.00 -L-

STATE OF NORTH CAROLINA
DEPARTMENT OF TRANSPORTATION
RALEIGH

STANDARD
LRFR SUMMARY FOR PRESTRESSED CONCRETE GIRDERS
(NON-INTERSTATE TRAFFIC)

Prepared by
URS
URS Corporation - North Carolina
1600 Perimeter Park Drive, Suite 400
Morrisville, NC 27560
TELEPHONE (919) 461-1100
FAX (919) 461-1415

NORTH CAROLINA PROFESSIONAL SEAL 038447 ENGINEER ANDREW S. MILLER
5/23/12

REVISIONS						SHEET NO.
NO.	BY:	DATE:	NO.	BY:	DATE:	S-60
1			3			TOTAL SHEETS
2			4			131

ASSEMBLED BY : M. K. TOM DATE : 3/17/12
CHECKED BY : A. S. MILLER DATE : 3/21/12
DRAWN BY : MAA 1/08
CHECKED BY : GM/DI 2/08
REV. 11/12/08RR MAA/GM
REV. 10/1/11 MAA/GM

5/23/2012
R:\Structures\FinalDrawings\B4091_SD_LRFR.dgn
ross_whitcher

STD. NO. LRFR1

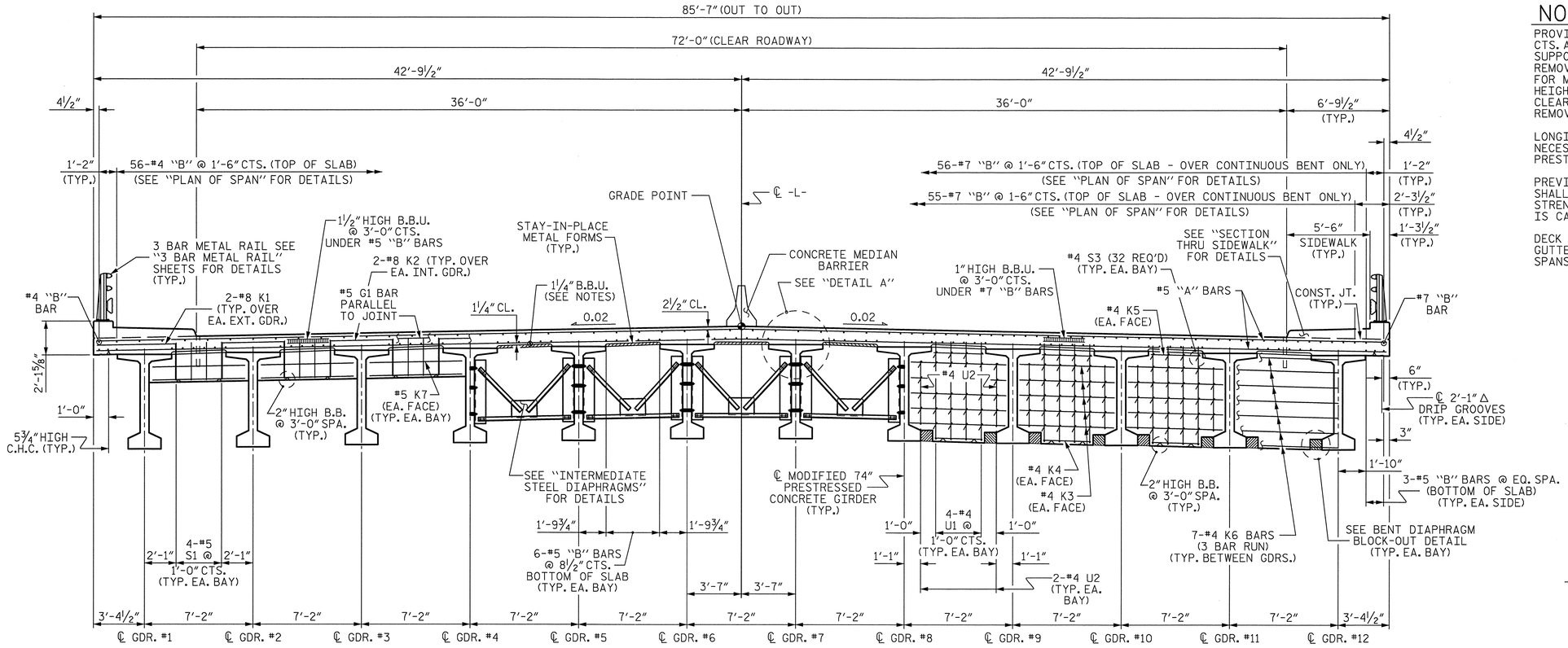

SECTION AT END BENTS & EXPANSION BENTS

SHOWING DIAPHRAGMS @ END BENTS #1 & #2 & BENTS #2 & #5

SECTION AT INTERMEDIATE DIAPHRAGM

SECTION AT FIXED BENTS

SHOWING DIAPHRAGMS @ BENTS #1, #3, #4, & #6

TYPICAL SECTION

NOTES :

PROVIDE 1¼" HIGH BEAM BOLSTERS UPPER AT 4'-0" CTS. ATOP THE METAL STAY-IN-PLACE FORMS TO SUPPORT THE BOTTOM MAT OF "A" BARS. WHEN USING REMOVABLE FORMS, PROVIDE CONTINUOUS HIGH CHAIRS FOR METAL DECK (C.H.C.M.) @ 4'-0" CTS. WITH A HEIGHT TO SUPPORT THE BOTTOM MAT OF "A" BARS A CLEAR DISTANCE OF 2½" ABOVE THE TOP OF THE REMOVABLE FORM.

LONGITUDINAL STEEL MAY BE SHIFTED SLIGHTLY, AS NECESSARY, TO AVOID INTERFERENCE WITH STIRRUPS IN PRESTRESSED CONCRETE GIRDERS.

PREVIOUSLY CAST CONCRETE IN A CONTINUOUS UNIT SHALL HAVE ATTAINED A MINIMUM COMPRESSIVE STRENGTH OF 3,000 PSI BEFORE ADDITIONAL CONCRETE IS CAST IN THE UNIT.

DECK DRAINS ARE REQUIRED ALONG LEFT AND RIGHT GUTTERLINE. SEE "DRAIN DETAILS", SEE PLAN OF SPANS FOR LOCATION.

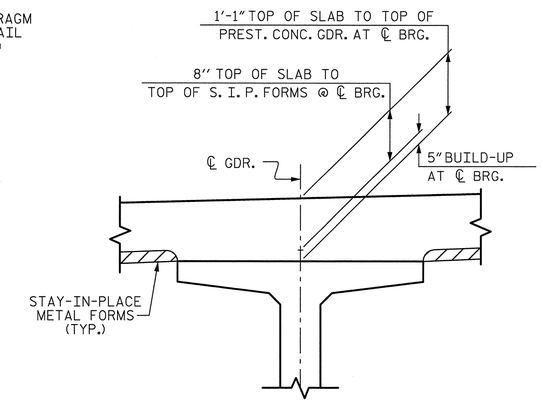

DETAIL A

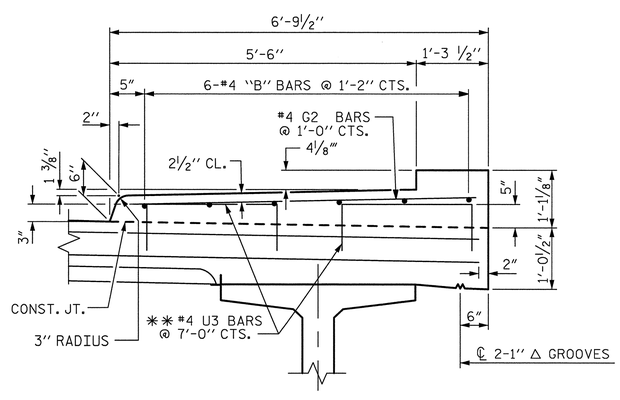

SECTION THRU SIDEWALK

** U3 BARS MAY BE PUSHED INTO GREEN CONCRETE AFTER SPAN HAS BEEN SCREEDED OFF.

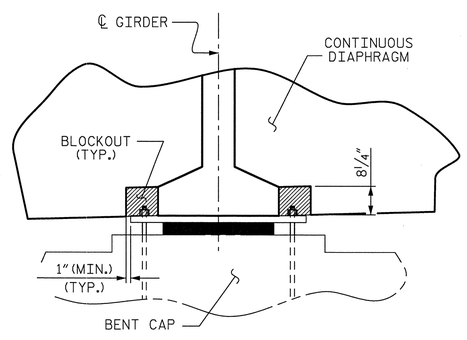

SECTION

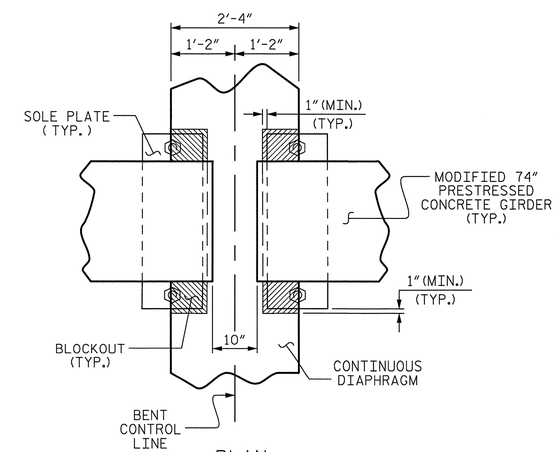

PLAN

FIXED BENT DIAPHRAGM BLOCKOUT DETAIL

PROJECT NO. B-4091

CUMBERLAND COUNTY

STATION: 52+15.00 -L-

SHEET 1 OF 2

STATE OF NORTH CAROLINA
DEPARTMENT OF TRANSPORTATION
RALEIGH

SUPERSTRUCTURE

TYPICAL SECTION

Prepared by
URS
URS Corporation - North Carolina
1600 Perimeter Park Drive, Suite 400
Morrisville, NC 27560
TELEPHONE (919) 461-1100
FAX (919) 461-1415

NORTH CAROLINA PROFESSIONAL SEAL 038447 ENGINEER ANDREW S. MILLER

6/6/12

REVISIONS						SHEET NO.
NO.	BY:	DATE:	NO.	BY:	DATE:	S-61
1			3			TOTAL SHEETS
2			4			131

DRAWN BY : M. K. TOM DATE : 3/6/12
CHECKED BY : A. S. MILLER DATE : 3/6/12

6/6/2012
P:\Jobs1\B4091\Structures\Submittals\2012_0524 Final Plans and Calcs\Revision 1\Revised Drawings with Seal\B4091_SD_TS1.dgn
ross_whitcher

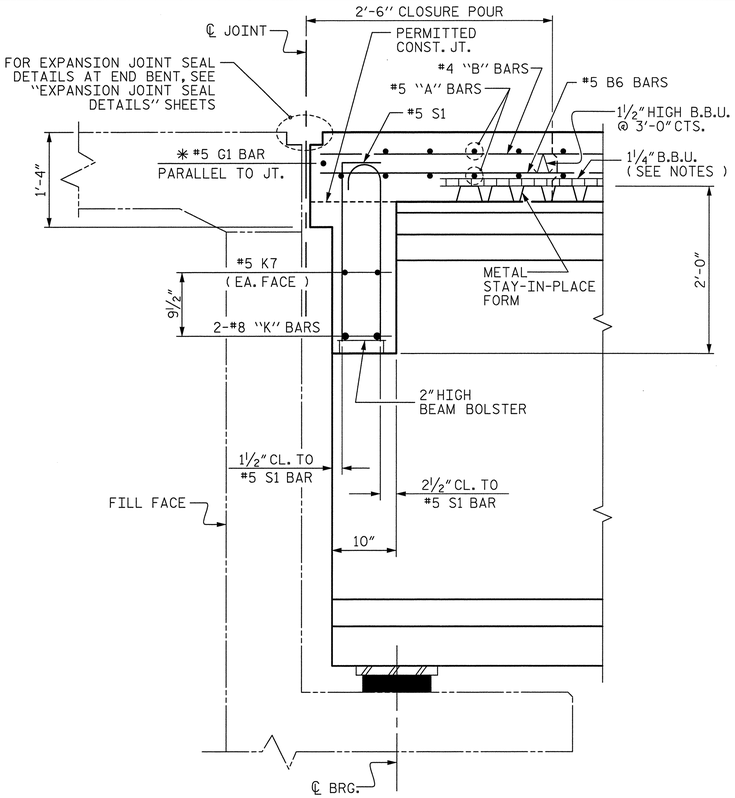

SECTION THRU END BENT DIAPHRAGM

✳ #5 G1 BAR MAY BE SHIFTED SLIGHTLY, AS NECESSARY, TO CLEAR REINFORCING STEEL AND STIRRUPS.

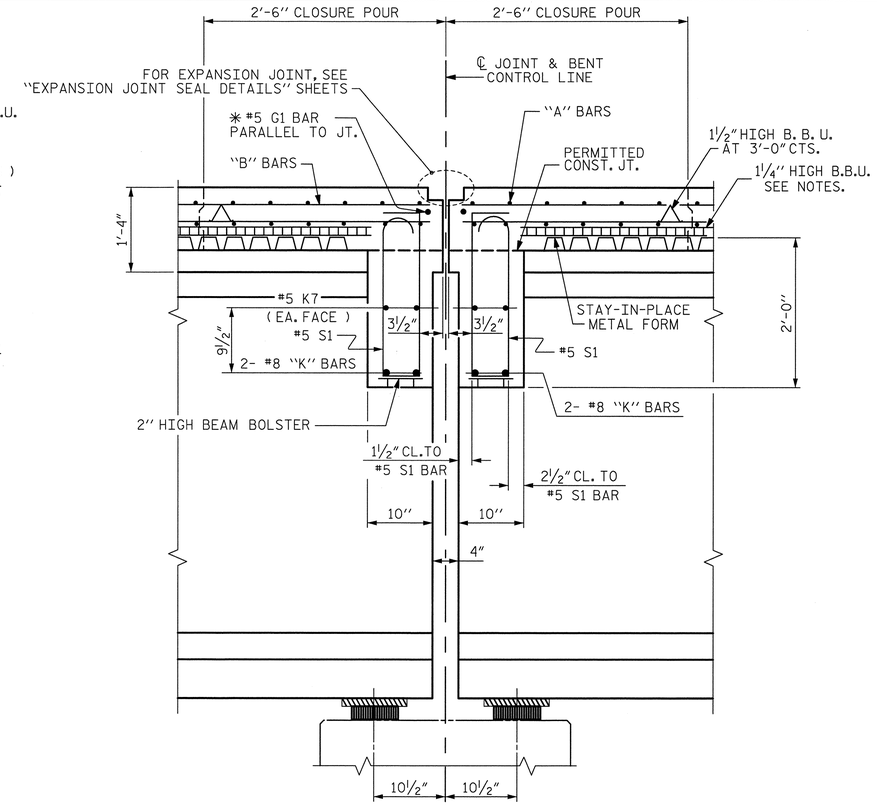

SECTION THRU EXPANSION BENT DIAPHRAGM

✳ #5 G1 BAR MAY BE SHIFTED SLIGHTLY, AS NECESSARY, TO CLEAR REINFORCING STEEL AND STIRRUPS.

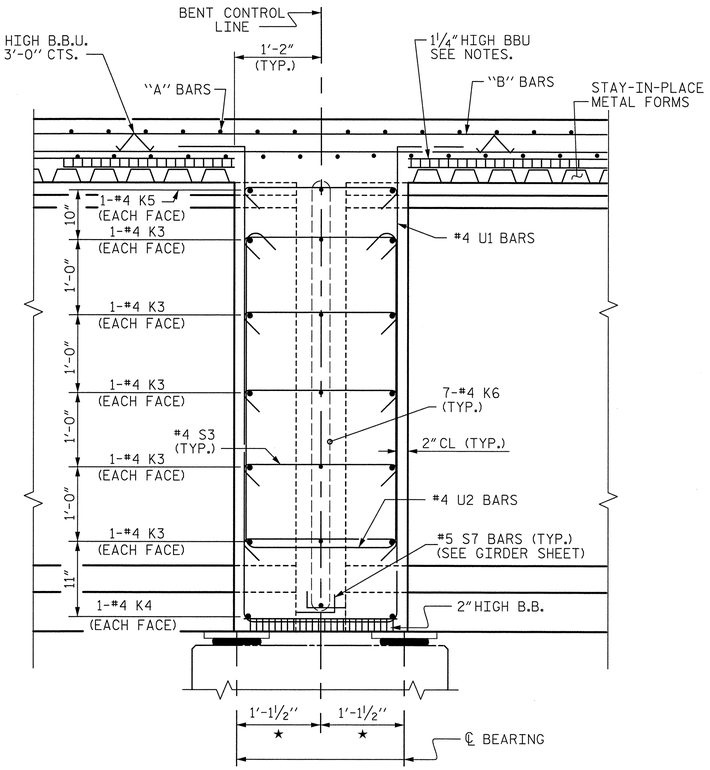

SECTION THRU CONTINUOUS BENT DIAPHRAGM

★ MEASURED ALONG ℄ GIRDER

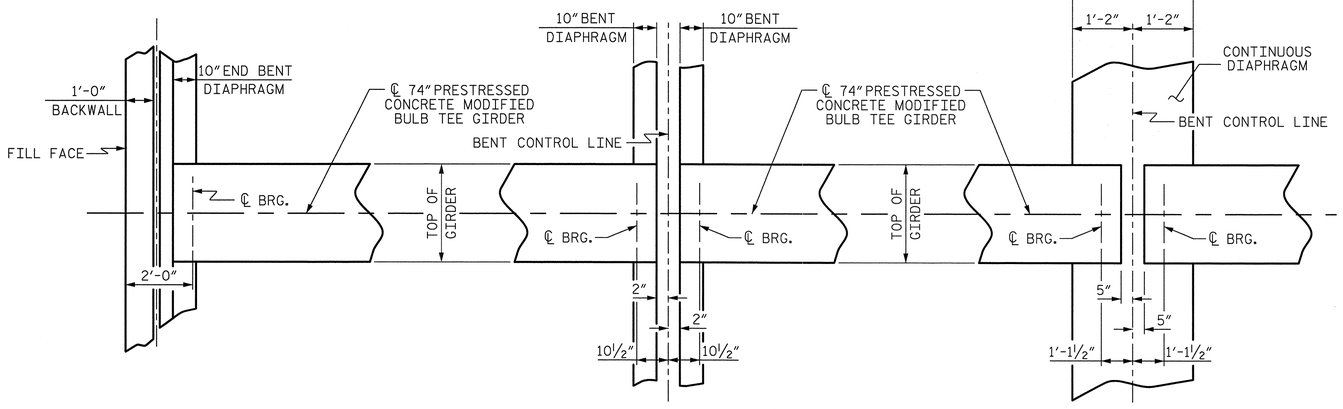

END BENT

EXPANSION BENT
@ BENTS #2 & #5

FIXED BENT
@ BENTS #1, #3, #4, & #5

PLAN OF DIAPHRAGMS

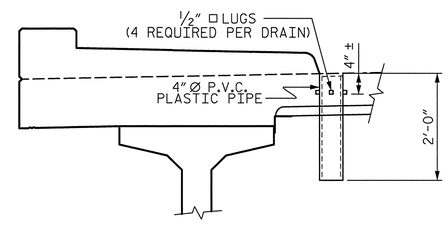

ELEVATION

TOP OF FLOOR DRAINS TO BE SET ⅜" BELOW SURFACE OF SLAB.

4 - ½" □ LUGS TO BE GLUED TO THE P.V.C. PLASTIC PIPE AT EQUAL SPACES AROUND THE PIPE DRAIN APPROXIMATELY 4" FROM THE TOP OF PIPE.

THE 4" Ø PVC PLASTIC PIPE AND FITTINGS SHALL BE SCHEDULE 40 AND CONFORM TO ASTM D1785.

DRAIN DETAILS

SEE "PLAN OF SPAN" SHEETS FOR DRAIN LOCATIONS (154 DRAINS REQUIRED)

PROJECT NO. B-4091
CUMBERLAND COUNTY
STATION: 52+15.00 -L-

SHEET 2 OF 2

STATE OF NORTH CAROLINA
DEPARTMENT OF TRANSPORTATION
RALEIGH

SUPERSTRUCTURE

TYPICAL SECTION DETAILS

Prepared by
URS
URS Corporation - North Carolina
1600 Perimeter Park Drive, Suite 400
Morrisville, NC 27560
TELEPHONE (919) 461-1100
FAX (919) 461-1415

NORTH CAROLINA PROFESSIONAL SEAL 038447 ENGINEER ANDREW S. MILLER
5/23/12

REVISIONS						SHEET NO.
NO.	BY:	DATE:	NO.	BY:	DATE:	S-62
1			3			TOTAL SHEETS
2			4			131

DRAWN BY : M. K. TOM DATE : 3/12/12
CHECKED BY : A. D. MILLER DATE : 3/12/12

5/23/2012
P:\Jobs1\B4091\Structures\FinalDrawings\B4091_SD_TS2.dgn
ross_whitcher

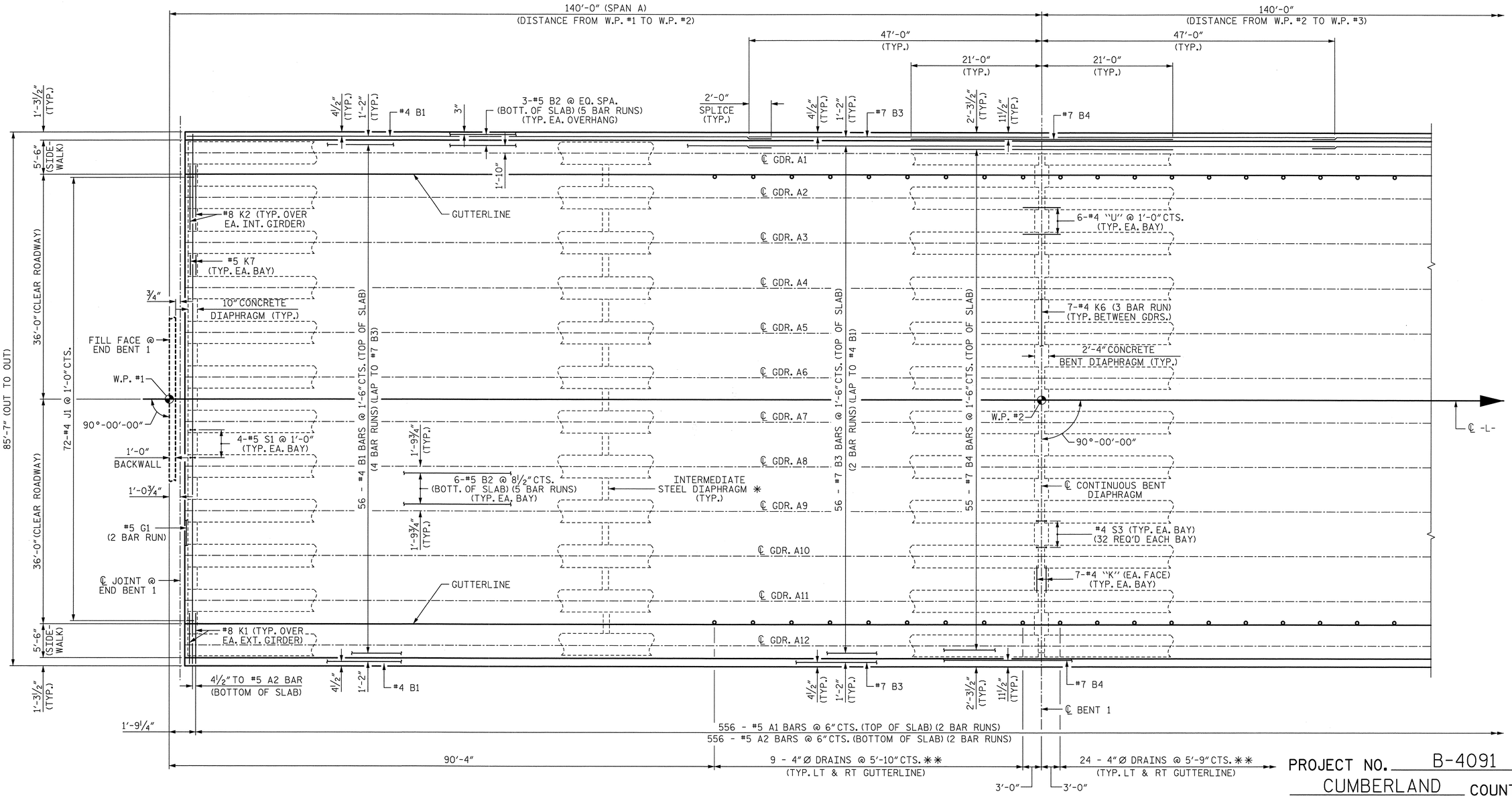

PLAN OF SPAN A

FOR POUR SEQUENCE AND LOCATION OF CONSTRUCTION JOINTS, SEE SUPERSTRUCTURE "CONCRETE DECK POUR DETAILS" SHEET.

✱ OTHER STEEL DIAPHRAGMS NOT SHOWN FOR CLARITY SEE FRAMING PLAN FOR NUMBER AND LOCATION OF INTERMEDIATE STEEL DIAPHRAGMS.

✱✱ SEE DRAIN DETAILS ON "TYPICAL SECTION" SHEET

PROJECT NO. B-4091

CUMBERLAND COUNTY

STATION: 52+15.00 -L-

SHEET 1 OF 7

STATE OF NORTH CAROLINA
DEPARTMENT OF TRANSPORTATION
RALEIGH

PLAN OF SPAN
SPAN A

Prepared by
URS
URS Corporation - North Carolina
1600 Perimeter Park Drive, Suite 400
Morrisville, NC 27560
TELEPHONE (919) 461-1100
FAX (919) 461-1415

NORTH CAROLINA PROFESSIONAL SEAL 038447 ENGINEER ANDREW S. MILLER
5/23/12

REVISIONS						SHEET NO.
NO.	BY:	DATE:	NO.	BY:	DATE:	S-63
1			3			TOTAL SHEETS
2			4			131

DRAWN BY : R. L. WHITCHER DATE : 3/11/12
CHECKED BY : A. S. MILLER DATE : 3/11/12

5/23/2012
P:\Jobs1\B4091\Structures\Final Drawings\B4091_SD_S1.dgn
ross_whitcher

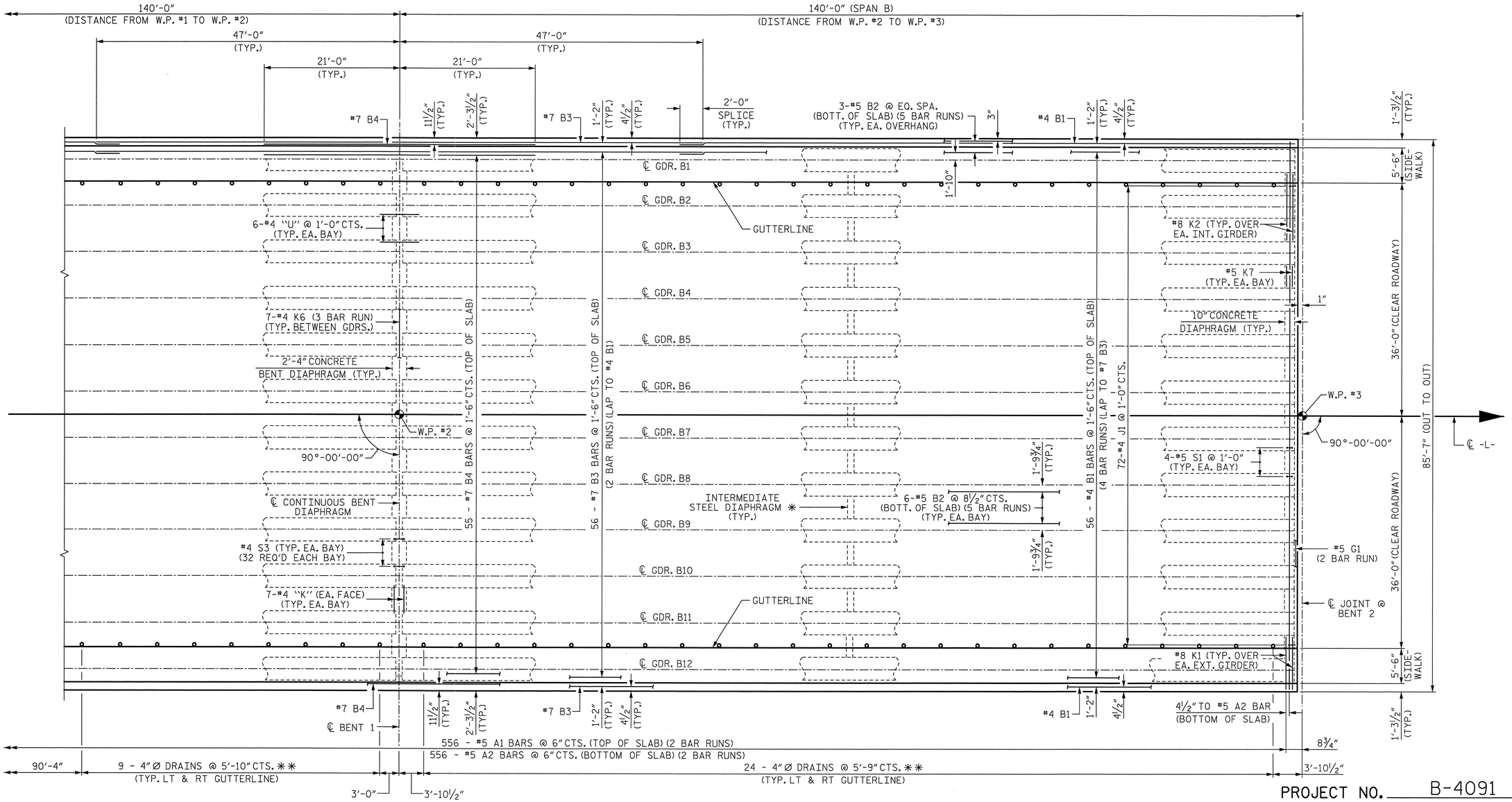

PROJECT NO. B-4091

CUMBERLAND COUNTY

STATION: 52+15.00 -L-

SHEET 2 OF 7

PLAN OF SPAN B

FOR POUR SEQUENCE AND LOCATION OF CONSTRUCTION JOINTS, SEE SUPERSTRUCTURE "CONCRETE DECK POUR DETAILS" SHEET.

✱ OTHER STEEL DIAPHRAGMS NOT SHOWN FOR CLARITY SEE FRAMING PLAN FOR NUMBER AND LOCATION OF INTERMEDIATE STEEL DIAPHRAGMS.

✱✱ SEE DRAIN DETAILS ON "TYPICAL SECTION" SHEET

Prepared by
URS
URS Corporation - North Carolina
1600 Perimeter Park Drive, Suite 400
Morrisville, NC 27560
TELEPHONE (919) 461-1100
FAX (919) 461-1415

NORTH CAROLINA PROFESSIONAL SEAL 038447 ENGINEER ANDREW S. MILLER

5/23/12

STATE OF NORTH CAROLINA
DEPARTMENT OF TRANSPORTATION
RALEIGH

PLAN OF SPAN
SPAN B

REVISIONS							SHEET NO.
NO.	BY:	DATE:	NO.	BY:	DATE:		S-64
1			3				TOTAL SHEETS
2			4				131

DRAWN BY : L. H. MCARTHUR DATE : 03/12/12
CHECKED BY : R. L. WHITCHER DATE : 03/15/12

5/23/2012
P:\Jobs1\B4091\Structures\FinalDrawings\B4091_SD_S2.dgn
ross_whitcher

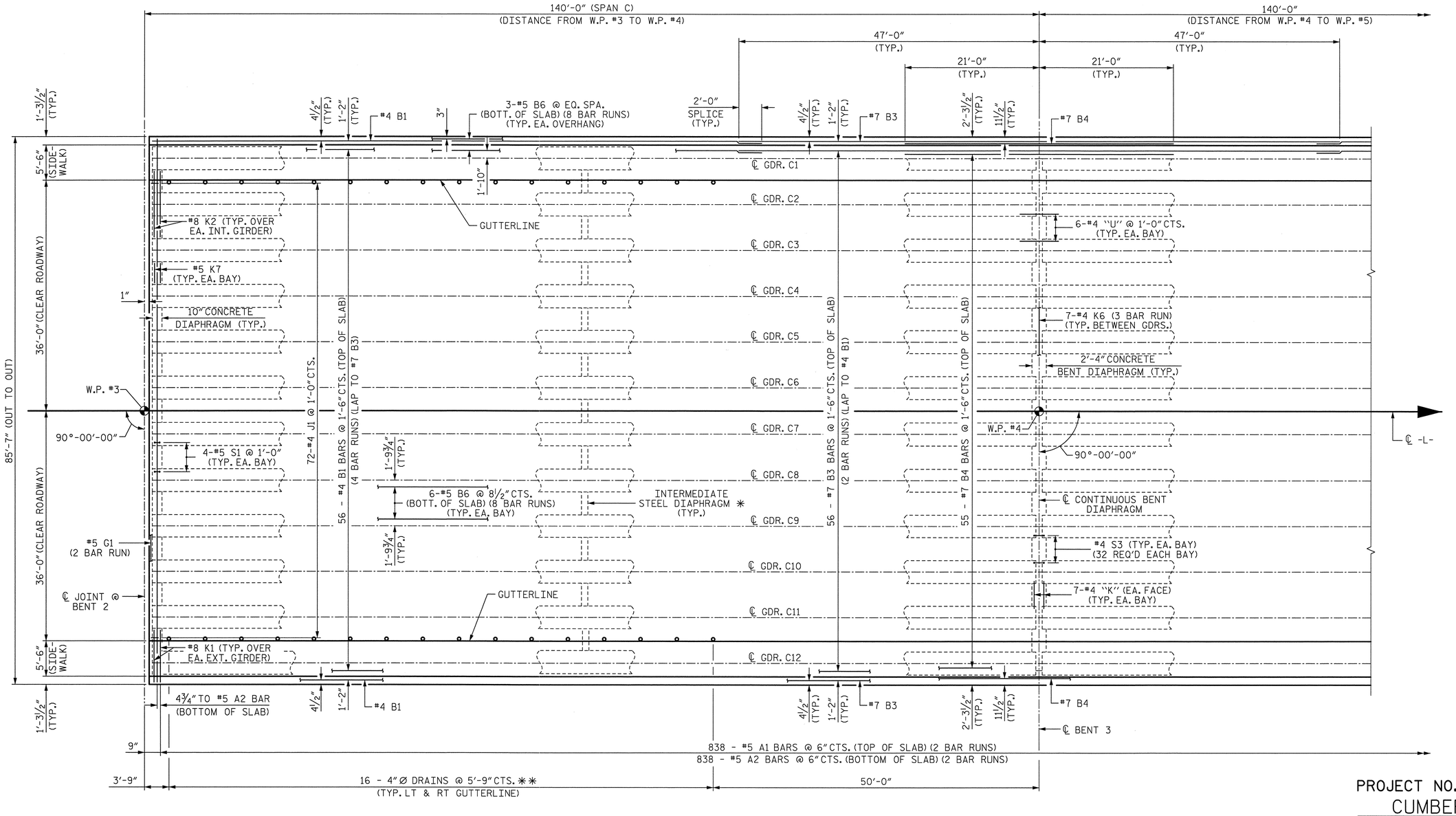

PLAN OF SPAN C

FOR POUR SEQUENCE AND LOCATION OF CONSTRUCTION JOINTS, SEE SUPERSTRUCTURE "CONCRETE DECK POUR DETAILS" SHEET.

✱ OTHER STEEL DIAPHRAGMS NOT SHOWN FOR CLARITY SEE FRAMING PLAN FOR NUMBER AND LOCATION OF INTERMEDIATE STEEL DIAPHRAGMS.

✱✱ SEE DRAIN DETAILS ON "TYPICAL SECTION" SHEET

PROJECT NO. B-4091
CUMBERLAND COUNTY
STATION: 52+15.00 -L-

SHEET 3 OF 7

STATE OF NORTH CAROLINA
DEPARTMENT OF TRANSPORTATION
RALEIGH

PLAN OF SPAN
SPAN C

Prepared by
URS
URS Corporation – North Carolina
1600 Perimeter Park Drive, Suite 400
Morrisville, NC 27560
TELEPHONE (919) 461-1100
FAX (919) 461-1415

NORTH CAROLINA PROFESSIONAL SEAL 038447 ENGINEER ANDREW S. MILLER
5/23/12

REVISIONS						SHEET NO.
NO.	BY:	DATE:	NO.	BY:	DATE:	S-65
1			3			TOTAL SHEETS
2			4			131

DRAWN BY : L. H. MCARTHUR DATE : 03/12/12
CHECKED BY : R. L. WHITCHER DATE : 03/15/12

5/23/2012
P:\Jobs1\B4091\Structures\Final Drawings\B4091_SD_S3.dgn
ross_whitcher

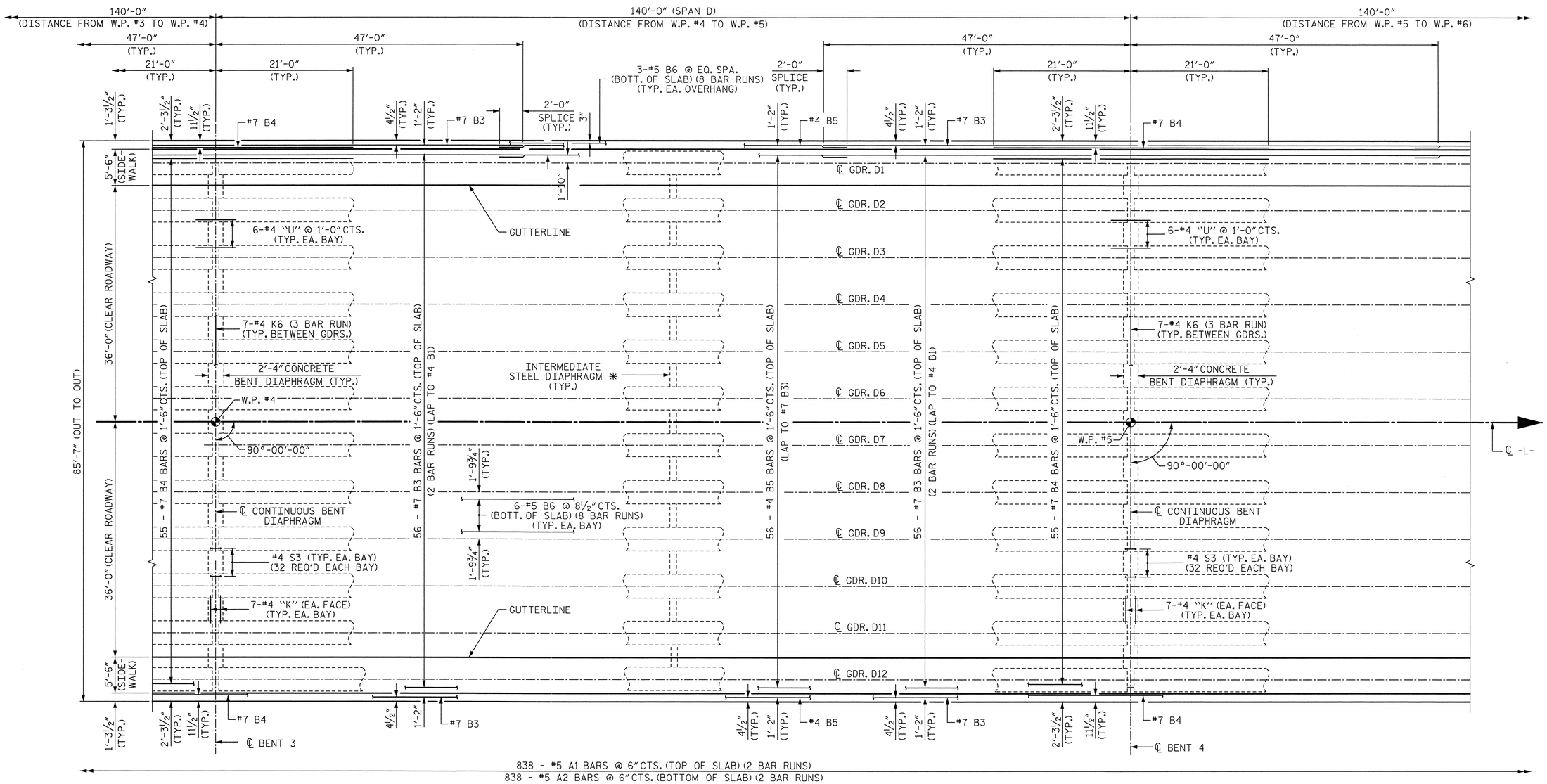

PLAN OF SPAN D

FOR POUR SEQUENCE AND LOCATION OF CONSTRUCTION JOINTS, SEE SUPERSTRUCTURE "CONCRETE DECK POUR DETAILS" SHEET.

✳ OTHER STEEL DIAPHRAGMS NOT SHOWN FOR CLARITY SEE FRAMING PLAN FOR NUMBER AND LOCATION OF INTERMEDIATE STEEL DIAPHRAGMS.

PROJECT NO. B-4091
CUMBERLAND COUNTY
STATION: 52+15.00 -L-

SHEET 4 OF 7

STATE OF NORTH CAROLINA
DEPARTMENT OF TRANSPORTATION
RALEIGH

PLAN OF SPAN
SPAN D

Prepared by
URS
URS Corporation – North Carolina
1600 Perimeter Park Drive, Suite 400
Morrisville, NC 27560
TELEPHONE (919) 461-1100
FAX (919) 461-1415

NORTH CAROLINA PROFESSIONAL SEAL 038447 ENGINEER ANDREW S. WALTER
5/23/12

REVISIONS						SHEET NO.
NO.	BY:	DATE:	NO.	BY:	DATE:	S-66
1			3			TOTAL SHEETS
2			4			131

DRAWN BY : L. H. MCARTHUR DATE : 03/12/12
CHECKED BY : R. L. WHITCHER DATE : 03/14/12

5/23/2012
P:\Jobs1\B4091\Structures\Final Drawings\B4091_SD_S4.dgn
ross_whitcher

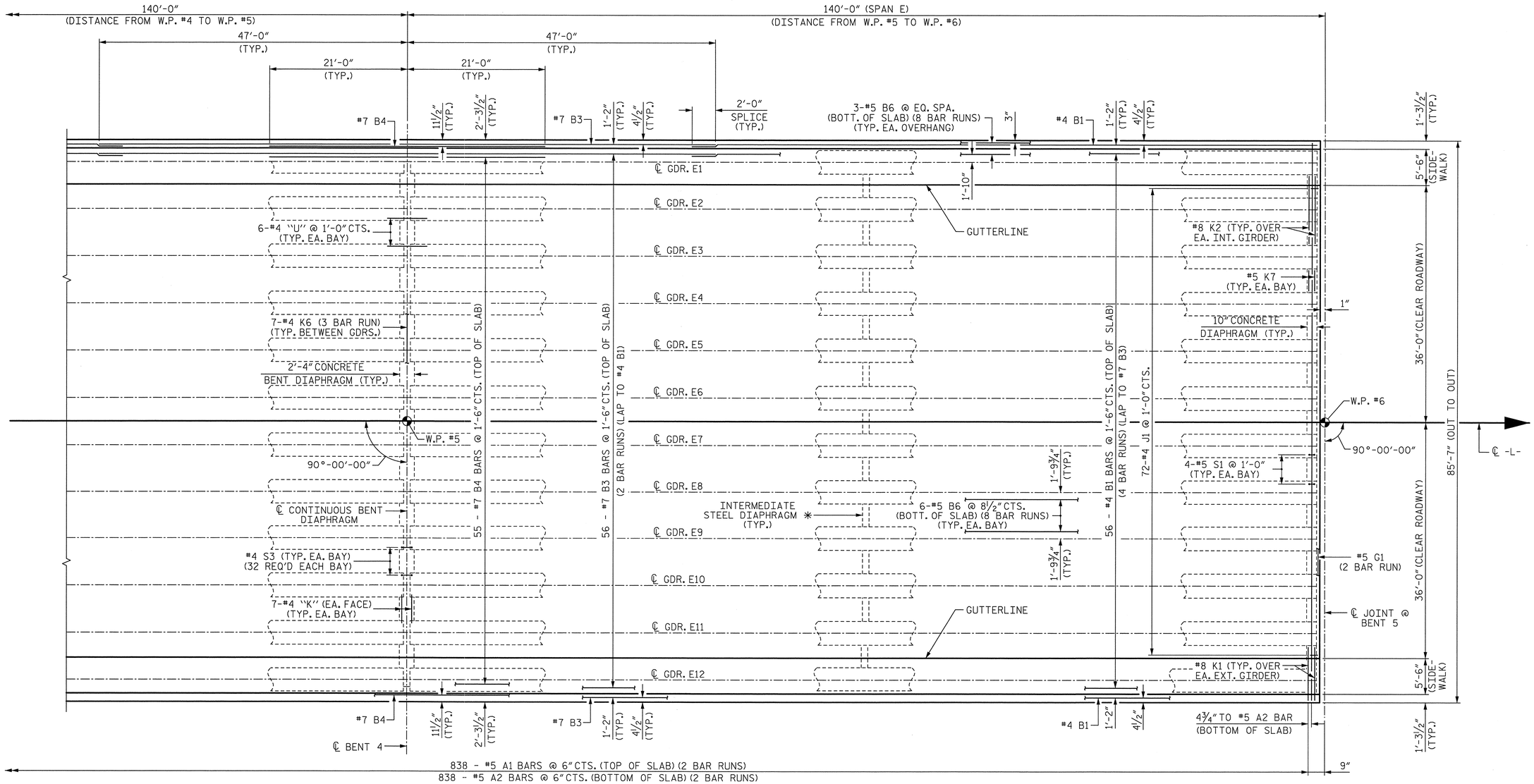

PLAN OF SPAN E

FOR POUR SEQUENCE AND LOCATION OF CONSTRUCTION JOINTS, SEE SUPERSTRUCTURE "CONCRETE DECK POUR DETAILS" SHEET.

* OTHER STEEL DIAPHRAGMS NOT SHOWN FOR CLARITY SEE FRAMING PLAN FOR NUMBER AND LOCATION OF INTERMEDIATE STEEL DIAPHRAGMS.

PROJECT NO. B-4091
CUMBERLAND COUNTY
STATION: 52+15.00 -L-

SHEET 5 OF 7

STATE OF NORTH CAROLINA
DEPARTMENT OF TRANSPORTATION
RALEIGH

PLAN OF SPAN
SPAN E

Prepared by
URS
URS Corporation – North Carolina
1600 Perimeter Park Drive, Suite 400
Morrisville, NC 27560
TELEPHONE (919) 461-1100
FAX (919) 461-1415

NORTH CAROLINA PROFESSIONAL SEAL 038447 ENGINEER ANDREW S. MILLER
5/23/12

REVISIONS						SHEET NO.
NO.	BY:	DATE:	NO.	BY:	DATE:	S-67
1			3			TOTAL SHEETS
2			4			131

DRAWN BY : L. H. MCARTHUR DATE : 03/12/12
CHECKED BY : R. L. WHITCHER DATE : 03/14/12

5/23/2012
P:\Jobs1\B4091\Structures\Final Drawings\B4091_SD_S5.dgn
ross_whitcher

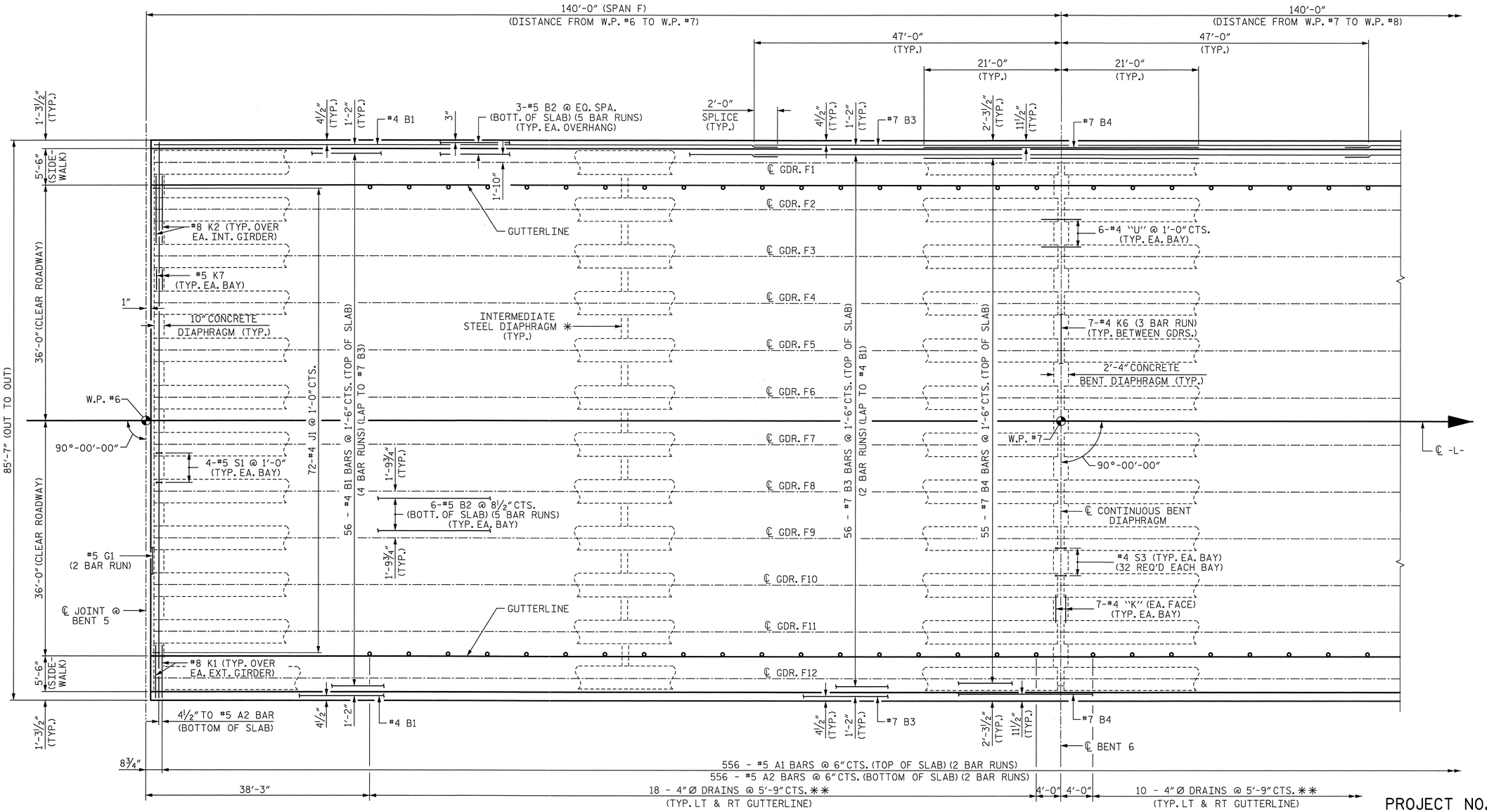

PROJECT NO. B-4091

CUMBERLAND COUNTY

STATION: 52+15.00 -L-

SHEET 6 OF 7

PLAN OF SPAN F

FOR POUR SEQUENCE AND LOCATION OF CONSTRUCTION JOINTS, SEE SUPERSTRUCTURE "CONCRETE DECK POUR DETAILS" SHEET.

✱ OTHER STEEL DIAPHRAGMS NOT SHOWN FOR CLARITY SEE FRAMING PLAN FOR NUMBER AND LOCATION OF INTERMEDIATE STEEL DIAPHRAGMS.

✱✱ SEE DRAIN DETAILS ON "TYPICAL SECTION" SHEET

Prepared by
URS
URS Corporation – North Carolina
1600 Perimeter Park Drive, Suite 400
Morrisville, NC 27560
TELEPHONE (919) 461-1100
FAX (919) 461-1415

NORTH CAROLINA PROFESSIONAL SEAL 038447 ENGINEER ANDREW S. MILLER
5/23/12

STATE OF NORTH CAROLINA
DEPARTMENT OF TRANSPORTATION
RALEIGH

PLAN OF SPAN
SPAN F

REVISIONS						SHEET NO.
NO.	BY:	DATE:	NO.	BY:	DATE:	S-68
1			3			TOTAL SHEETS
2			4			131

DRAWN BY : L. H. MCARTHUR DATE : 03/12/12
CHECKED BY : R. L. WHITCHER DATE : 03/14/12

5/23/2012
P:\Jobs1\B4091\Structures\Final Drawings\B4091_SD_S6.dgn
ross_whitcher

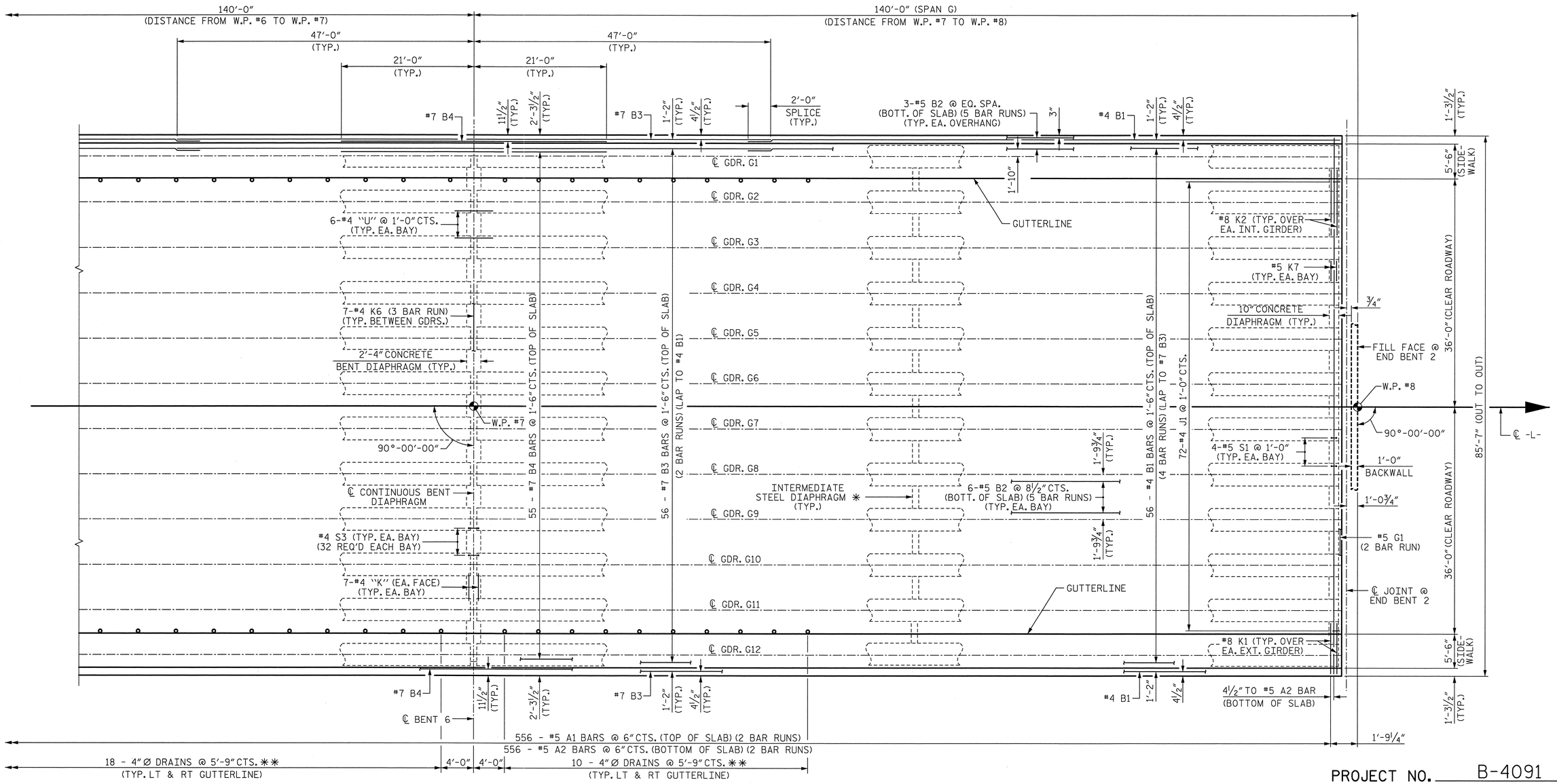

PROJECT NO. B-4091

CUMBERLAND COUNTY

STATION: 52+15.00 -L-

SHEET 7 OF 7

PLAN OF SPAN G

FOR POUR SEQUENCE AND LOCATION OF CONSTRUCTION JOINTS, SEE SUPERSTRUCTURE "CONCRETE DECK POUR DETAILS" SHEET.

✱ OTHER STEEL DIAPHRAGMS NOT SHOWN FOR CLARITY SEE FRAMING PLAN FOR NUMBER AND LOCATION OF INTERMEDIATE STEEL DIAPHRAGMS.

✱✱ SEE DRAIN DETAILS ON "TYPICAL SECTION" SHEET

Prepared by
URS
URS Corporation – North Carolina
1600 Perimeter Park Drive, Suite 400
Morrisville, NC 27560
TELEPHONE (919) 461-1100
FAX (919) 461-1415

NORTH CAROLINA PROFESSIONAL SEAL 038447 ENGINEER ANDREW J. MILLER
5/23/12

STATE OF NORTH CAROLINA
DEPARTMENT OF TRANSPORTATION
RALEIGH

PLAN OF SPAN
SPAN G

REVISIONS						SHEET NO.
NO.	BY:	DATE:	NO.	BY:	DATE:	S-69
1			3			TOTAL SHEETS
2			4			131

DRAWN BY : L. H. MCARTHUR DATE : 03/13/12
CHECKED BY : R. L. WHITCHER DATE : 03/14/12

5/23/2012
P:\Jobs1\B4091\Structures\Final Drawings\B4091_SD_S7.dgn
ross_whitcher

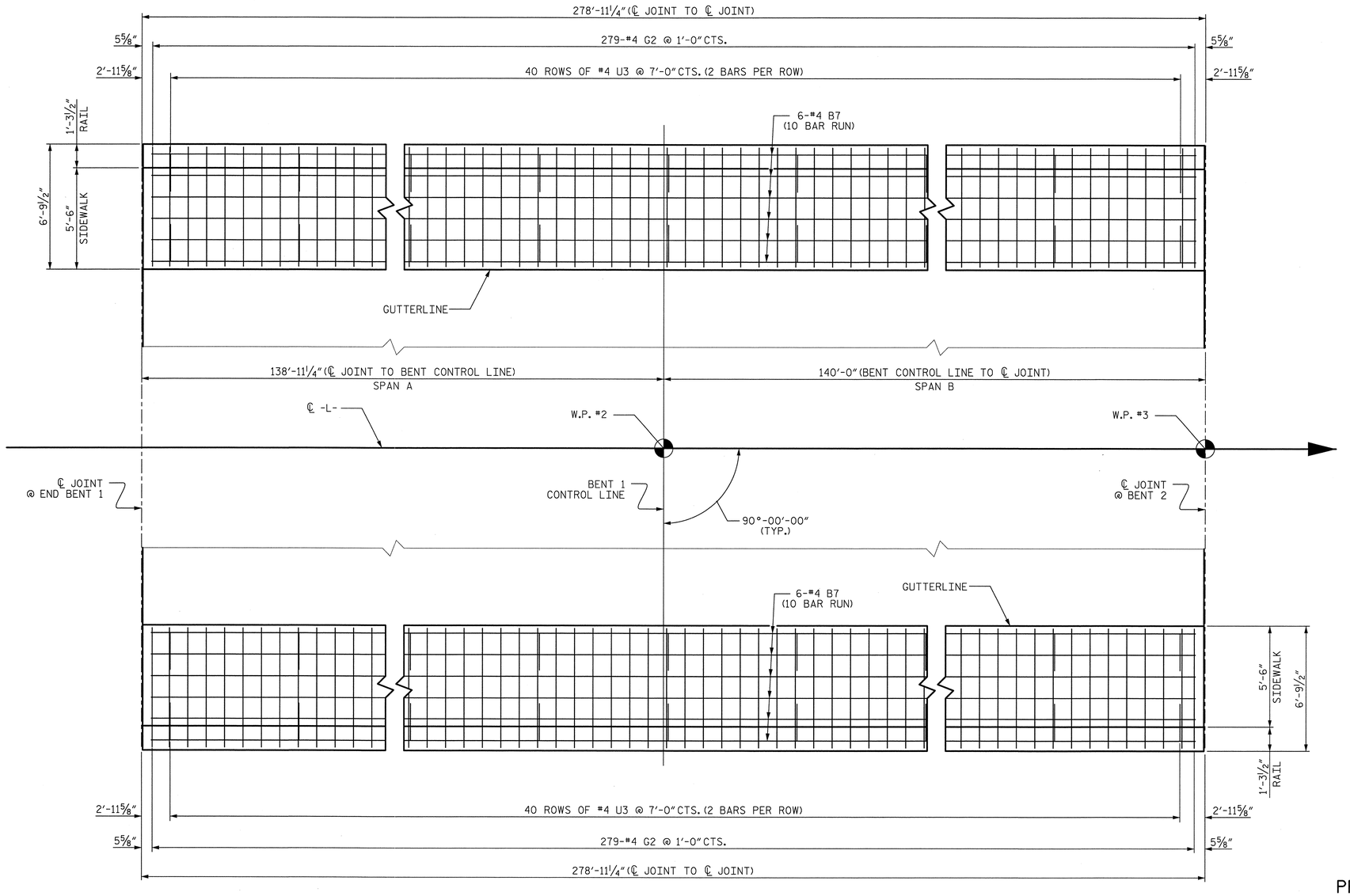

PLAN OF SPAN A-B

PROJECT NO. B-4091

CUMBERLAND COUNTY

STATION: 52+15.00 -L-

SHEET 1 OF 3

NOTES:

GROOVED CONTRACTION JOINTS, ½" IN DEPTH, SHALL BE TOOLED IN ALL EXPOSED FACES OF THE SIDEWALK IN ACCORDANCE WITH ARTICLE 825-10(B) OF THE STANDARD SPECIFICATIONS. THE CONTRACTION JOINTS SHALL BE LOCATED AT A SPACING OF 8 FEET TO 10 FEET BETWEEN EXPANSION JOINTS. NO CONTRACTION JOINT WILL BE REQUIRED FOR SEGMENTS LESS THAN 10 FEET IN LENGTH.

FOR SIDEWALK COVER PLATE DETAILS AT EXPANSION JOINTS, SEE "EXPANSION JOINT SEAL DETAILS FOR SIDEWALK" SHEETS.

FOR SECTION THRU SIDEWALK ON DECK, SEE "TYPICAL SECTION" SHEET.

THE #4 U3 BARS MAY BE PUSHED INTO GREEN CONCRETE AFTER DECK HAS BEEN SCREEDED OFF.

THE SIDEWALK ON A CONTINUOUS UNIT SHALL NOT BE CAST UNTIL ALL SLAB CONCRETE IN THE UNIT HAS BEEN CAST AND HAS REACHED A MINIMUM COMPRESSIVE STRENGTH OF 3,000 PSI.

ALL REINFORCING STEEL IN THE SIDEWALK AND END POSTS SHALL BE EPOXY COATED.

FOR SIDEWALK QUANTITIES SEE "SUPERSTRUCTURE BILL OF MATERIALS" SHEET.

MINIMUM SPLICE LENGTH FOR ALL #4 "B" BARS ON THIS SHEET IS 2'-0".

Prepared by
URS
URS Corporation - North Carolina
1600 Perimeter Park Drive, Suite 400
Morrisville, NC 27560
TELEPHONE (919) 461-1100
FAX (919) 461-1415

NORTH CAROLINA PROFESSIONAL SEAL 038447 ENGINEER ANDREW S. MILLER
5/23/12

STATE OF NORTH CAROLINA
DEPARTMENT OF TRANSPORTATION
RALEIGH

PLAN OF SIDEWALK
SPAN A-B

REVISIONS						SHEET NO.
NO.	BY:	DATE:	NO.	BY:	DATE:	S-70
1			3			TOTAL SHEETS
2			4			131

DRAWN BY : K.H. COMPTON DATE : 3/20/12
CHECKED BY : M.K. TOM DATE : 3/23/12

5/23/2012
P:\Jobs1\B4091\Structures\Final Drawings\B4091_SD_SW1.dgn
ross_whitcher

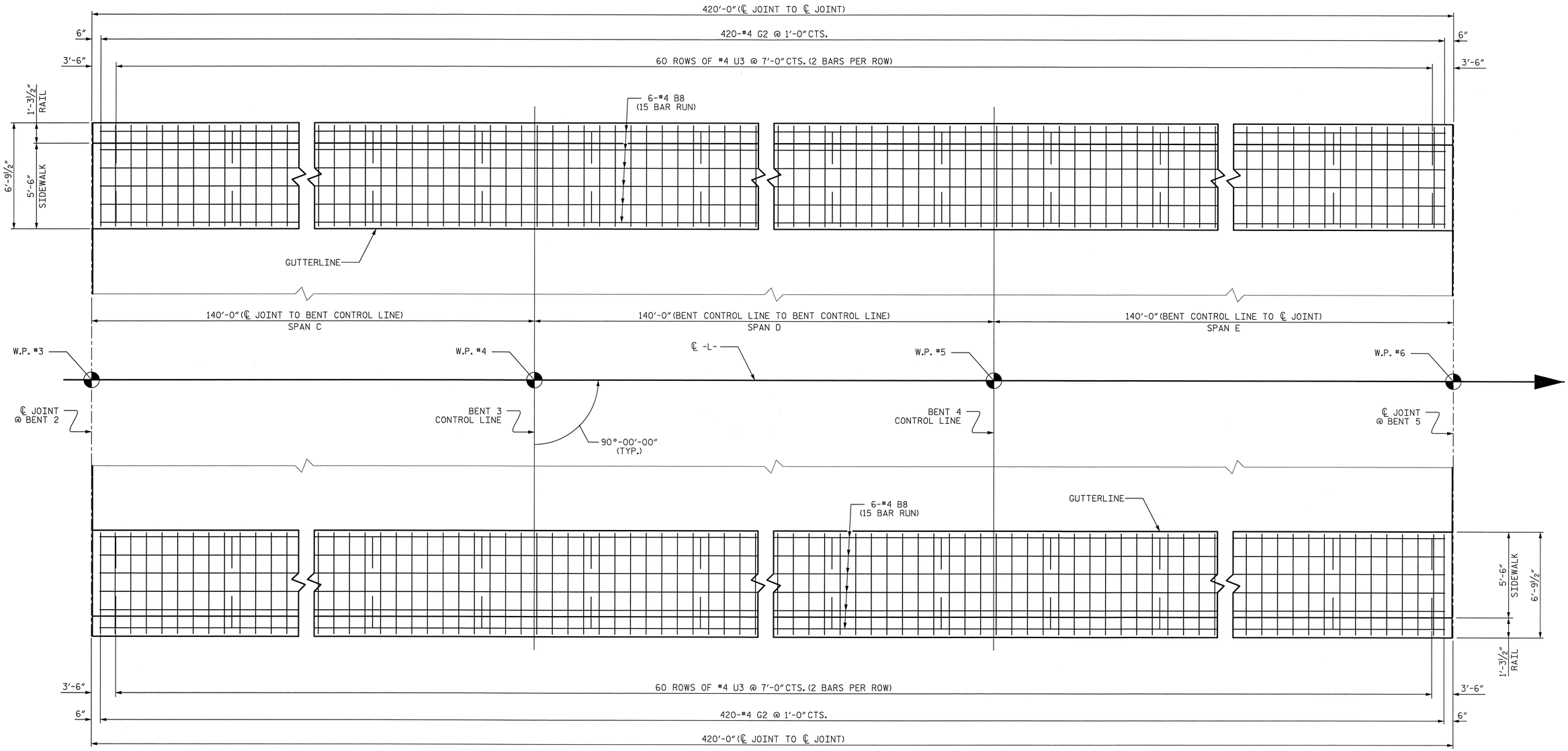

PLAN OF SPAN C-D-E

PROJECT NO. B-4091

CUMBERLAND COUNTY

STATION: 52+15.00 -L-

SHEET 2 OF 3

NOTES:

GROOVED CONTRACTION JOINTS, ½" IN DEPTH, SHALL BE TOOLED IN ALL EXPOSED FACES OF THE SIDEWALK IN ACCORDANCE WITH ARTICLE 825-10(B) OF THE STANDARD SPECIFICATIONS. THE CONTRACTION JOINTS SHALL BE LOCATED AT A SPACING OF 8 FEET TO 10 FEET BETWEEN EXPANSION JOINTS. NO CONTRACTION JOINT WILL BE REQUIRED FOR SEGMENTS LESS THAN 10 FEET IN LENGTH.

FOR SIDEWALK COVER PLATE DETAILS AT EXPANSION JOINTS, SEE "EXPANSION JOINT SEAL DETAILS FOR SIDEWALK" SHEETS.

FOR SECTION THRU SIDEWALK ON DECK, SEE "TYPICAL SECTION" SHEET.

THE #4 U3 BARS MAY BE PUSHED INTO GREEN CONCRETE AFTER DECK HAS BEEN SCREEDED OFF.

THE SIDEWALK ON A CONTINUOUS UNIT SHALL NOT BE CAST UNTIL ALL SLAB CONCRETE IN THE UNIT HAS BEEN CAST AND HAS REACHED A MINIMUM COMPRESSIVE STRENGTH OF 3,000 PSI.

ALL REINFORCING STEEL IN THE SIDEWALK AND END POSTS SHALL BE EPOXY COATED.

FOR SIDEWALK QUANTITIES SEE "SUPERSTRUCTURE BILL OF MATERIALS" SHEET.

MINIMUM SPLICE LENGTH FOR ALL #4 "B" BARS ON THIS SHEET IS 2'-0".

Prepared by
URS
URS Corporation - North Carolina
1600 Perimeter Park Drive, Suite 400
Morrisville, NC 27560
TELEPHONE (919) 461-1100
FAX (919) 461-1415

NORTH CAROLINA PROFESSIONAL SEAL 038447 ENGINEER ANDREW S. MILLER
5/23/12

STATE OF NORTH CAROLINA
DEPARTMENT OF TRANSPORTATION
RALEIGH

PLAN OF SIDEWALK
SPAN C-D-E

REVISIONS						SHEET NO.
NO.	BY:	DATE:	NO.	BY:	DATE:	S-71
1			3			TOTAL SHEETS
2			4			131

DRAWN BY : K.H. COMPTON DATE : 3/20/12
CHECKED BY : M.K. TOM DATE : 3/23/12

5/23/2012
P:\Jobs\B4091\Structures\FinalDrawings\B4091_SD_SW2.dgn
ross_whitcher

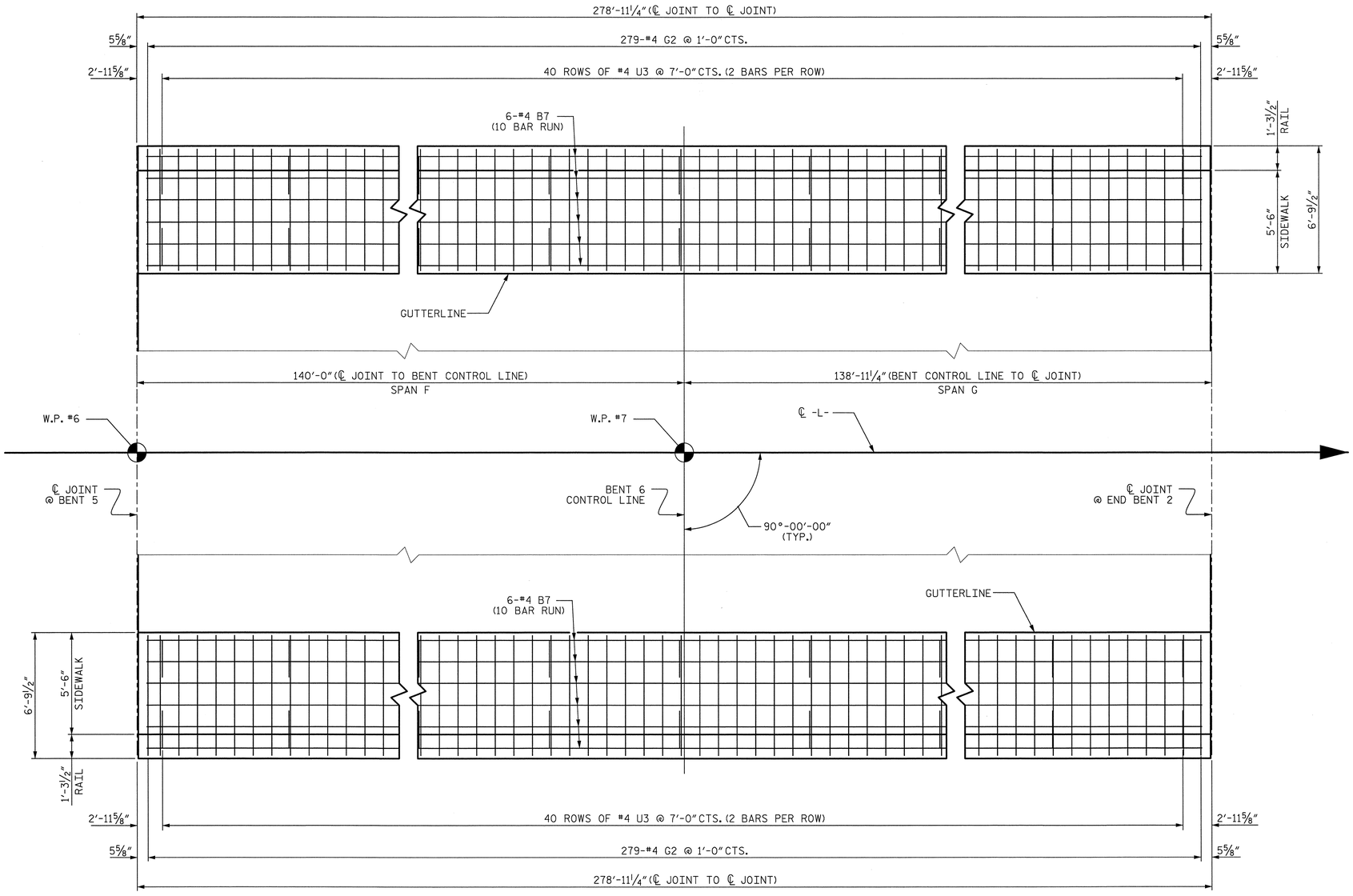

PLAN OF SPAN F-G

PROJECT NO. B-4091

CUMBERLAND COUNTY

STATION: 52+15.00 -L-

SHEET 3 OF 3

NOTES:

GROOVED CONTRACTION JOINTS, ½" IN DEPTH, SHALL BE TOOLED IN ALL EXPOSED FACES OF THE SIDEWALK IN ACCORDANCE WITH ARTICLE 825-10(B) OF THE STANDARD SPECIFICATIONS. THE CONTRACTION JOINTS SHALL BE LOCATED AT A SPACING OF 8 FEET TO 10 FEET BETWEEN EXPANSION JOINTS. NO CONTRACTION JOINT WILL BE REQUIRED FOR SEGMENTS LESS THAN 10 FEET IN LENGTH.

FOR SIDEWALK COVER PLATE DETAILS AT EXPANSION JOINTS, SEE "EXPANSION JOINT SEAL DETAILS FOR SIDEWALK" SHEETS.

FOR SECTION THRU SIDEWALK ON DECK, SEE "TYPICAL SECTION" SHEET.

THE #4 U3 BARS MAY BE PUSHED INTO GREEN CONCRETE AFTER DECK HAS BEEN SCREEDED OFF.

THE SIDEWALK ON A CONTINUOUS UNIT SHALL NOT BE CAST UNTIL ALL SLAB CONCRETE IN THE UNIT HAS BEEN CAST AND HAS REACHED A MINIMUM COMPRESSIVE STRENGTH OF 3,000 PSI.

ALL REINFORCING STEEL IN THE SIDEWALK AND END POSTS SHALL BE EPOXY COATED.

FOR SIDEWALK QUANTITIES SEE "SUPERSTRUCTURE BILL OF MATERIALS" SHEET.

MINIMUM SPLICE LENGTH FOR ALL #4 "B" BARS ON THIS SHEET IS 2'-0".

Prepared by
URS
URS Corporation - North Carolina
1600 Perimeter Park Drive, Suite 400
Morrisville, NC 27560
TELEPHONE (919) 461-1100
FAX (919) 461-1415

NORTH CAROLINA PROFESSIONAL SEAL 038447 ENGINEER ANDREW S. MILLER
5/23/12

STATE OF NORTH CAROLINA
DEPARTMENT OF TRANSPORTATION
RALEIGH

PLAN OF SIDEWALK
SPAN F-G

REVISIONS						SHEET NO.
NO.	BY:	DATE:	NO.	BY:	DATE:	S-72
1			3			TOTAL SHEETS
2			4			131

DRAWN BY : K.H. COMPTON DATE : 3/20/12
CHECKED BY : M.K. TOM DATE : 3/23/12

5/23/2012
P:\Jobs1\B4091\Structures\Final Drawings\B4091_SD_SW3.dgn
ross_whitcher

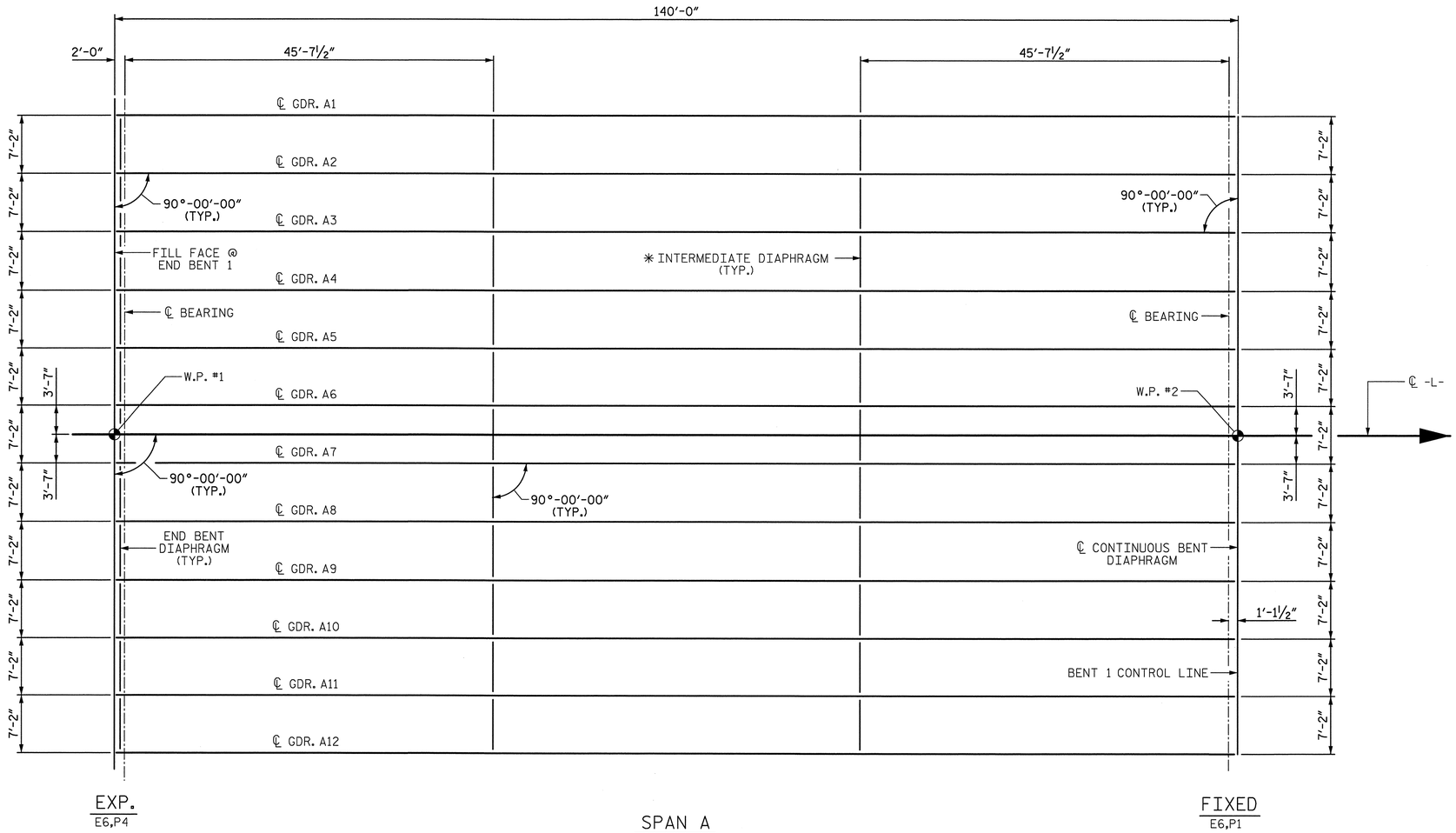

FRAMING PLAN

✳ SEE "INTERMEDIATE STEEL DIAPHRAGMS FOR 74"MODIFIED BULB TEE PRESTRESSED CONCRETE GIRDER"

PROJECT NO. B-4091
CUMBERLAND COUNTY
STATION: 52+15.00 -L-

SHEET 1 OF 7

STATE OF NORTH CAROLINA
DEPARTMENT OF TRANSPORTATION
RALEIGH

FRAMING PLAN
SPAN A

Prepared by
URS
URS Corporation - North Carolina
1600 Perimeter Park Drive, Suite 400
Morrisville, NC 27560
TELEPHONE (919) 461-1100
FAX (919) 461-1415

NORTH CAROLINA PROFESSIONAL SEAL 038447 ENGINEER ANDREW S. MILLER
5/23/12

REVISIONS						SHEET NO.
NO.	BY:	DATE:	NO.	BY:	DATE:	S-73
1			3			TOTAL SHEETS
2			4			131

DRAWN BY : R. L. WHITCHER DATE : 2/9/12
CHECKED BY : A. S. MILLER DATE : 2/17/12

5/23/2012
P:\Jobs1\B4091\Structures\Final Drawings\B4091_SD_FP1.dgn
ross_whitcher

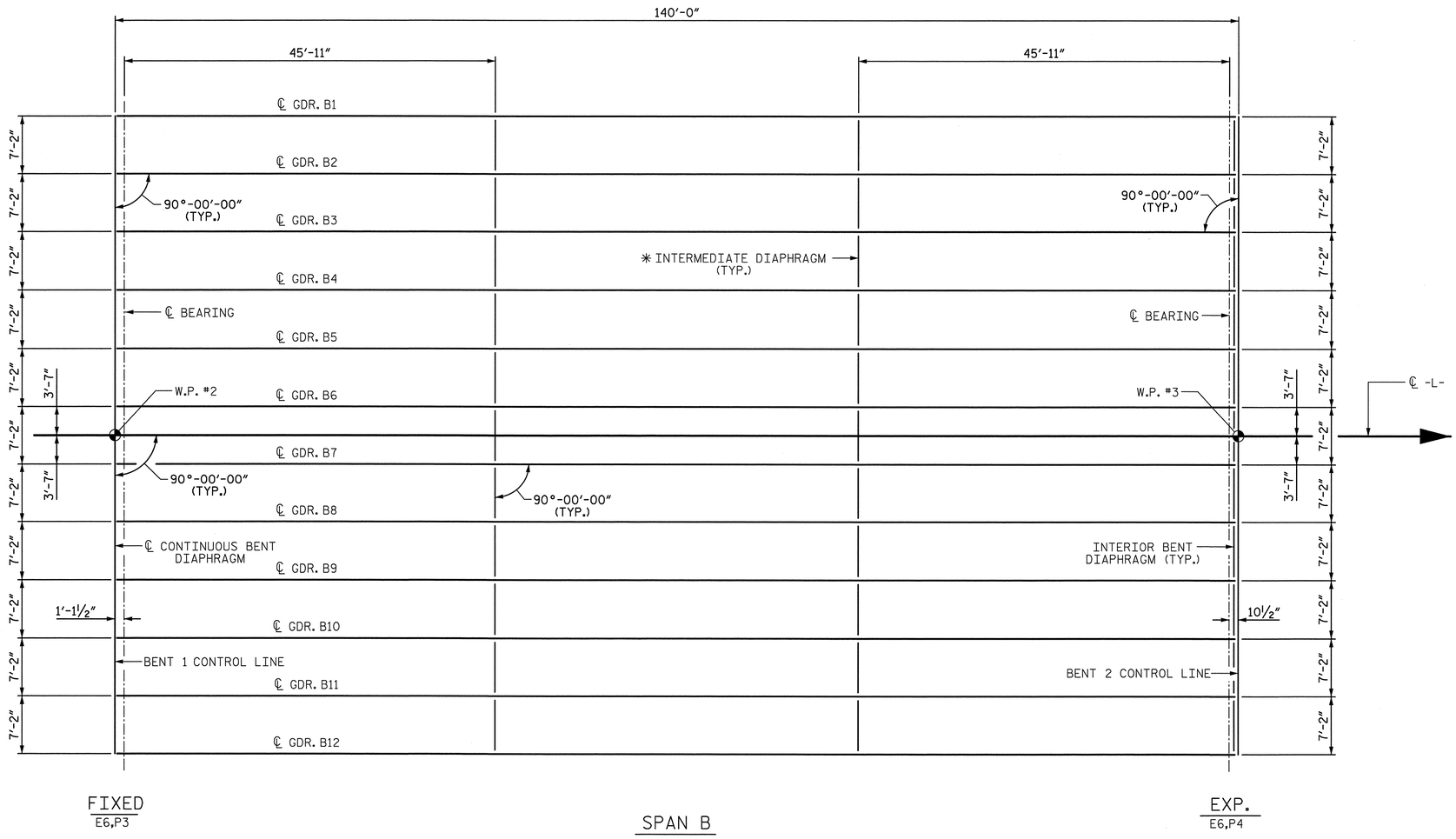

FRAMING PLAN

✳ SEE "INTERMEDIATE STEEL DIAPHRAGMS FOR 74" MODIFIED BULB TEE PRESTRESSED CONCRETE GIRDER"

PROJECT NO. B-4091
CUMBERLAND COUNTY
STATION: 52+15.00 -L-

SHEET 2 OF 7

STATE OF NORTH CAROLINA
DEPARTMENT OF TRANSPORTATION
RALEIGH

FRAMING PLAN
SPAN B

Prepared by
URS
URS Corporation - North Carolina
1600 Perimeter Park Drive, Suite 400
Morrisville, NC 27560
TELEPHONE (919) 461-1100
FAX (919) 461-1415

NORTH CAROLINA PROFESSIONAL SEAL 038447 ENGINEER ANDREW S. MILLER
5/23/12

REVISIONS						SHEET NO.
NO.	BY:	DATE:	NO.	BY:	DATE:	S-74
1			3			TOTAL SHEETS
2			4			131

DRAWN BY : L. H. MCARTHUR DATE : 2/22/12
CHECKED BY : R. L. WHITCHER DATE : 2/27/12

5/23/2012
P:\Jobs1\B4091\Structures\Final Drawings\B4091_SD_FP2.dgn
ross_whitcher

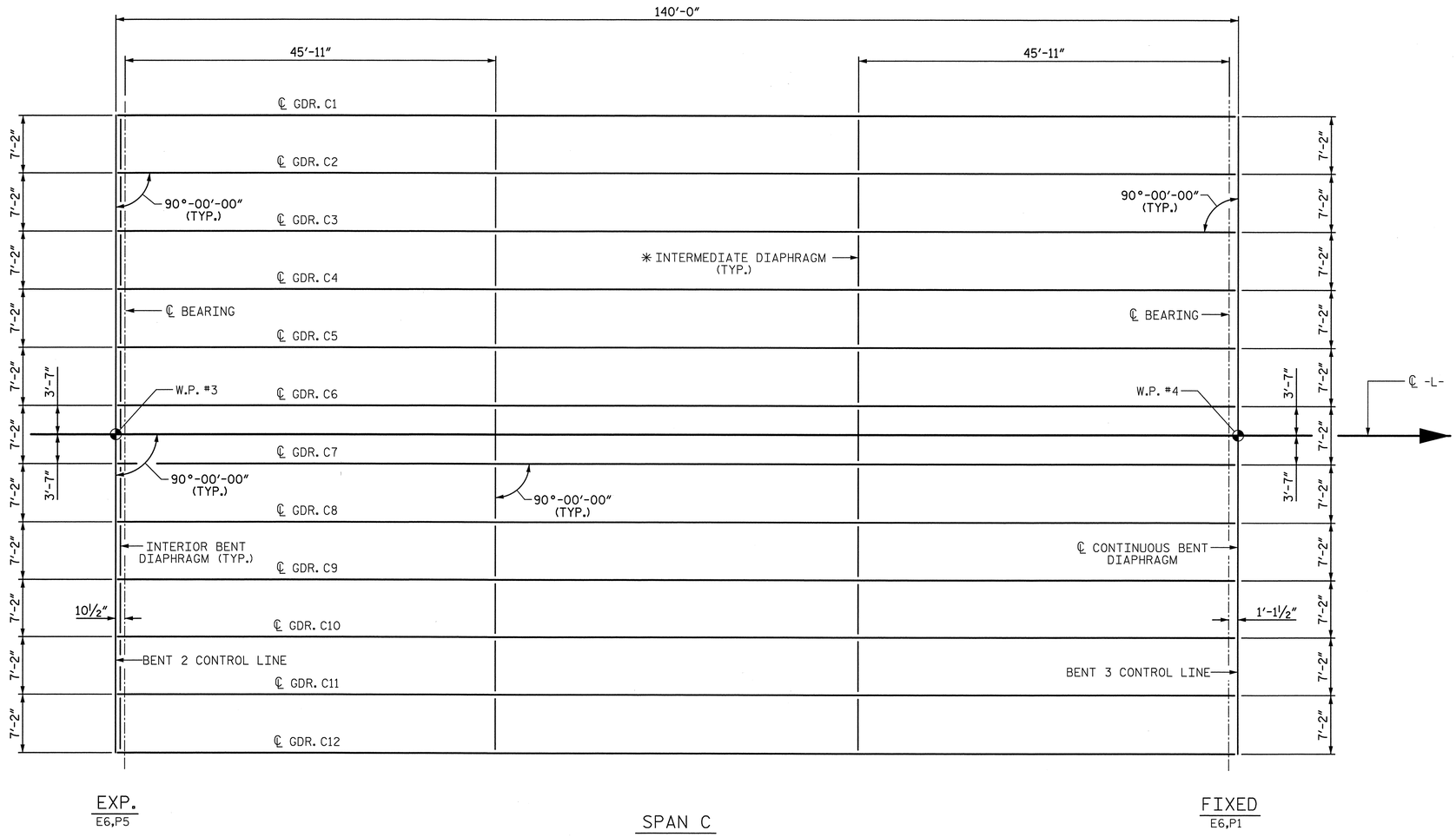

FRAMING PLAN

✳ SEE "INTERMEDIATE STEEL DIAPHRAGMS FOR 74" MODIFIED BULB TEE PRESTRESSED CONCRETE GIRDER"

PROJECT NO. B-4091
CUMBERLAND COUNTY
STATION: 52+15.00 -L-

SHEET 3 OF 7

STATE OF NORTH CAROLINA
DEPARTMENT OF TRANSPORTATION
RALEIGH

FRAMING PLAN
SPAN C

Prepared by
URS
URS Corporation - North Carolina
1600 Perimeter Park Drive, Suite 400
Morrisville, NC 27560
TELEPHONE: (919) 461-1100
FAX: (919) 461-1415

NORTH CAROLINA PROFESSIONAL SEAL 038447 ENGINEER ANDREW R. WILLER
5/23/12

REVISIONS								SHEET NO.
NO.	BY:	DATE:	NO.	BY:	DATE:			S-75
1			3					TOTAL SHEETS
2			4					131

DRAWN BY : L. H. MCARTHUR DATE : 2/22/12
CHECKED BY : R. L. WHITCHER DATE : 2/27/12

5/23/2012
P:\Jobs1\B4091\Structures\FinalDrawings\B4091_SD_FP3.dgn
ross_whitcher

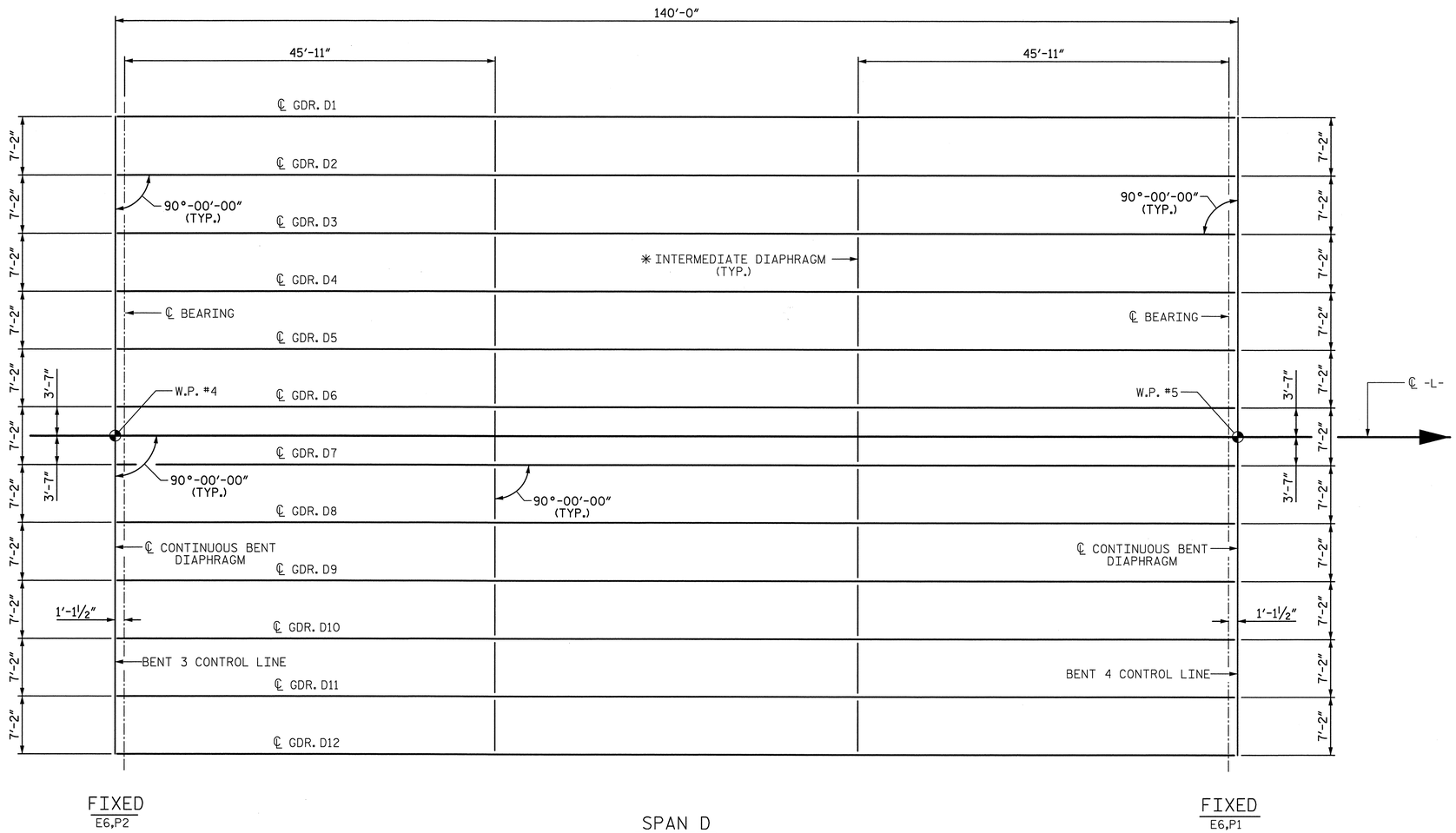

SPAN D

FRAMING PLAN

✳ SEE "INTERMEDIATE STEEL DIAPHRAGMS FOR 74"MODIFIED BULB TEE PRESTRESSED CONCRETE GIRDER"

PROJECT NO. B-4091
CUMBERLAND COUNTY
STATION: 52+15.00 -L-

SHEET 4 OF 7

STATE OF NORTH CAROLINA
DEPARTMENT OF TRANSPORTATION
RALEIGH

FRAMING PLAN
SPAN D

Prepared by
URS
URS Corporation – North Carolina
1600 Perimeter Park Drive, Suite 400
Morrisville, NC 27560
TELEPHONE (919) 461-1100
FAX (919) 461-1415

NORTH CAROLINA PROFESSIONAL SEAL 038447 ENGINEER ANDREW B. MILLER
5/23/12

REVISIONS						SHEET NO.
NO.	BY:	DATE:	NO.	BY:	DATE:	S-76
1			3			TOTAL SHEETS
2			4			131

DRAWN BY : L. H. MCARTHUR DATE : 2/22/12
CHECKED BY : R. L. WHITCHER DATE : 2/27/12

5/23/2012
P:\Jobs1\B4091\Structures\FinalDrawings\B4091_SD_FP4.dgn
ross_whitcher

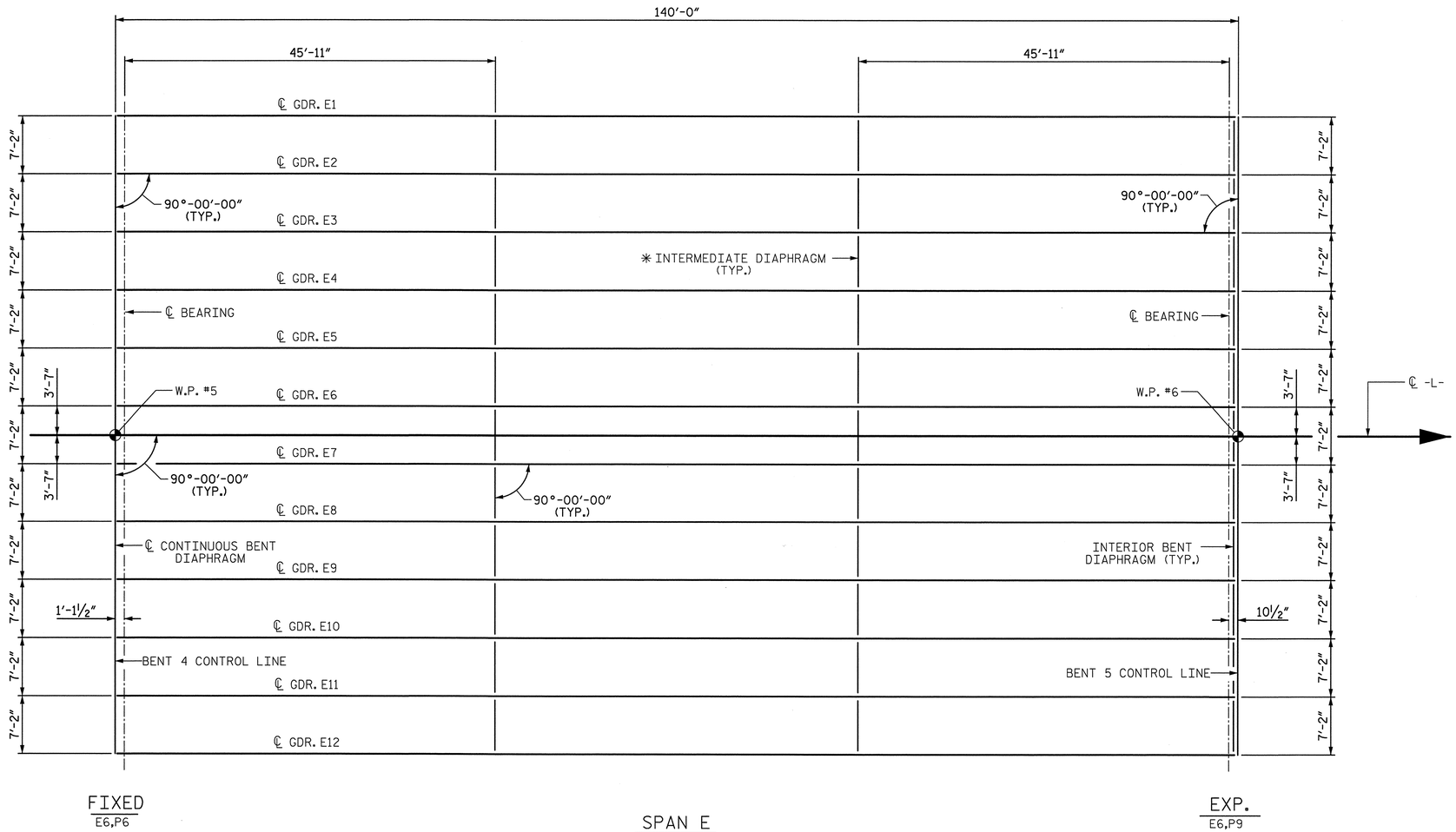

FRAMING PLAN

✳ SEE "INTERMEDIATE STEEL DIAPHRAGMS FOR 74"MODIFIED BULB TEE PRESTRESSED CONCRETE GIRDER"

PROJECT NO. B-4091
CUMBERLAND COUNTY
STATION: 52+15.00 -L-

SHEET 5 OF 7

STATE OF NORTH CAROLINA
DEPARTMENT OF TRANSPORTATION
RALEIGH

FRAMING PLAN
SPAN E

Prepared by
URS
URS Corporation – North Carolina
1600 Perimeter Park Drive, Suite 400
Morrisville, NC 27560
TELEPHONE (919) 461-1100
FAX (919) 461-1415

NORTH CAROLINA PROFESSIONAL SEAL 038447 ENGINEER ANDREW S. MILLER
5/23/12

REVISIONS						SHEET NO.
NO.	BY:	DATE:	NO.	BY:	DATE:	S-77
1			3			TOTAL SHEETS
2			4			131

DRAWN BY : L. H. MCARTHUR DATE : 2/22/12
CHECKED BY : R. L. WHITCHER DATE : 2/27/12

5/23/2012
P:\Jobs\B4091\Structures\FinalDrawings\B4091_SD_FP5.dgn
ross_whitcher

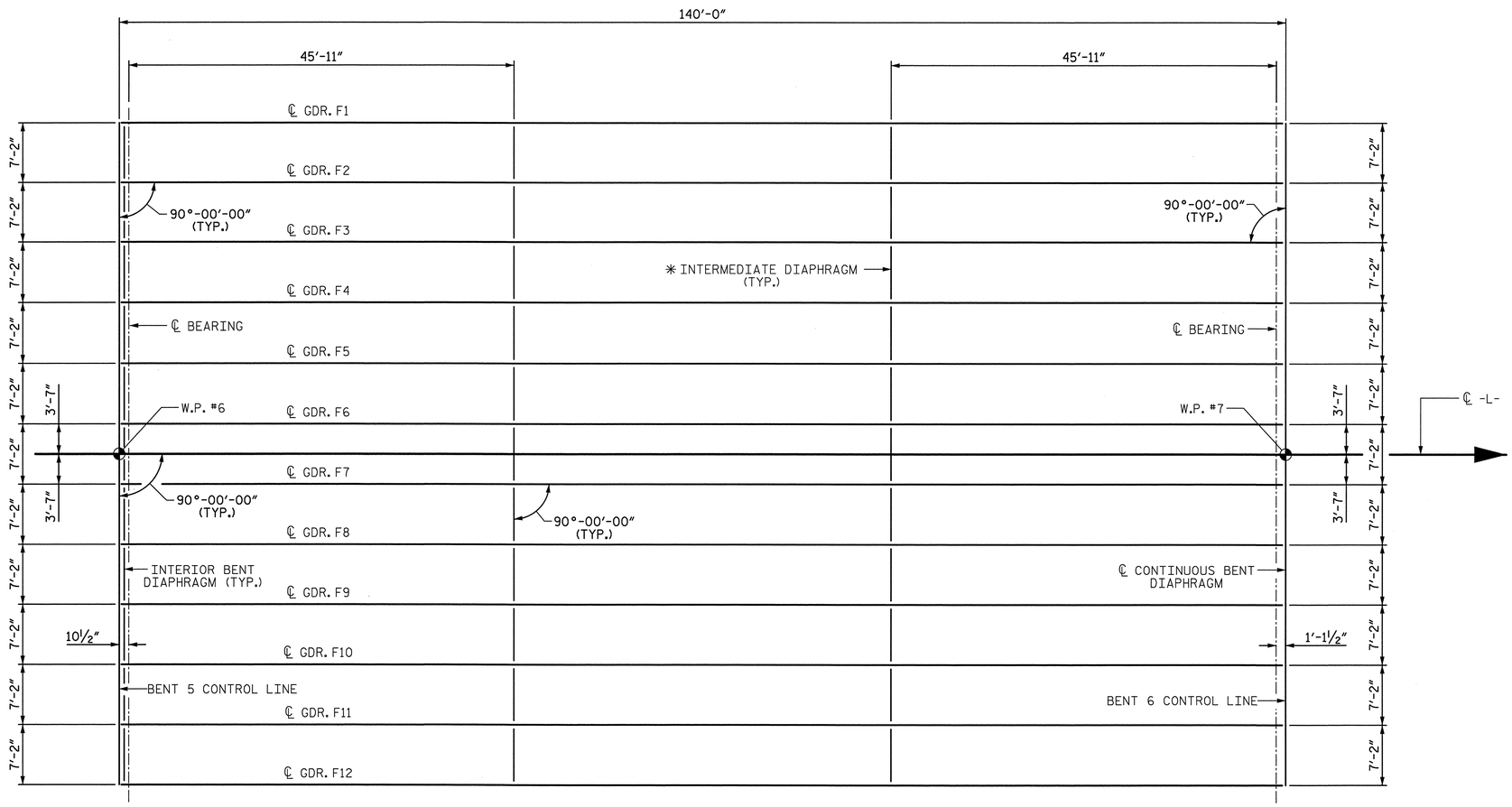

FRAMING PLAN

✳ SEE "INTERMEDIATE STEEL DIAPHRAGMS FOR 74" MODIFIED BULB TEE PRESTRESSED CONCRETE GIRDER"

PROJECT NO. B-4091
CUMBERLAND COUNTY
STATION: 52+15.00 -L-

SHEET 6 OF 7

STATE OF NORTH CAROLINA
DEPARTMENT OF TRANSPORTATION
RALEIGH

FRAMING PLAN
SPAN F

Prepared by
URS
URS Corporation - North Carolina
1600 Perimeter Park Drive, Suite 400
Morrisville, NC 27560
TELEPHONE (919) 461-1100
FAX (919) 461-1415

NORTH CAROLINA PROFESSIONAL SEAL 038447 ENGINEER ANDREW J. WILLER
5/23/12

REVISIONS						SHEET NO.
NO.	BY:	DATE:	NO.	BY:	DATE:	S-78
1			3			TOTAL SHEETS
2			4			131

DRAWN BY : L. H. MCARTHUR DATE : 2/22/12
CHECKED BY : R. L. WHITCHER DATE : 2/27/12

5/23/2012
P:\Jobs1\B4091\Structures\Final Drawings\B4091_SD_FP6.dgn
ross_whitcher

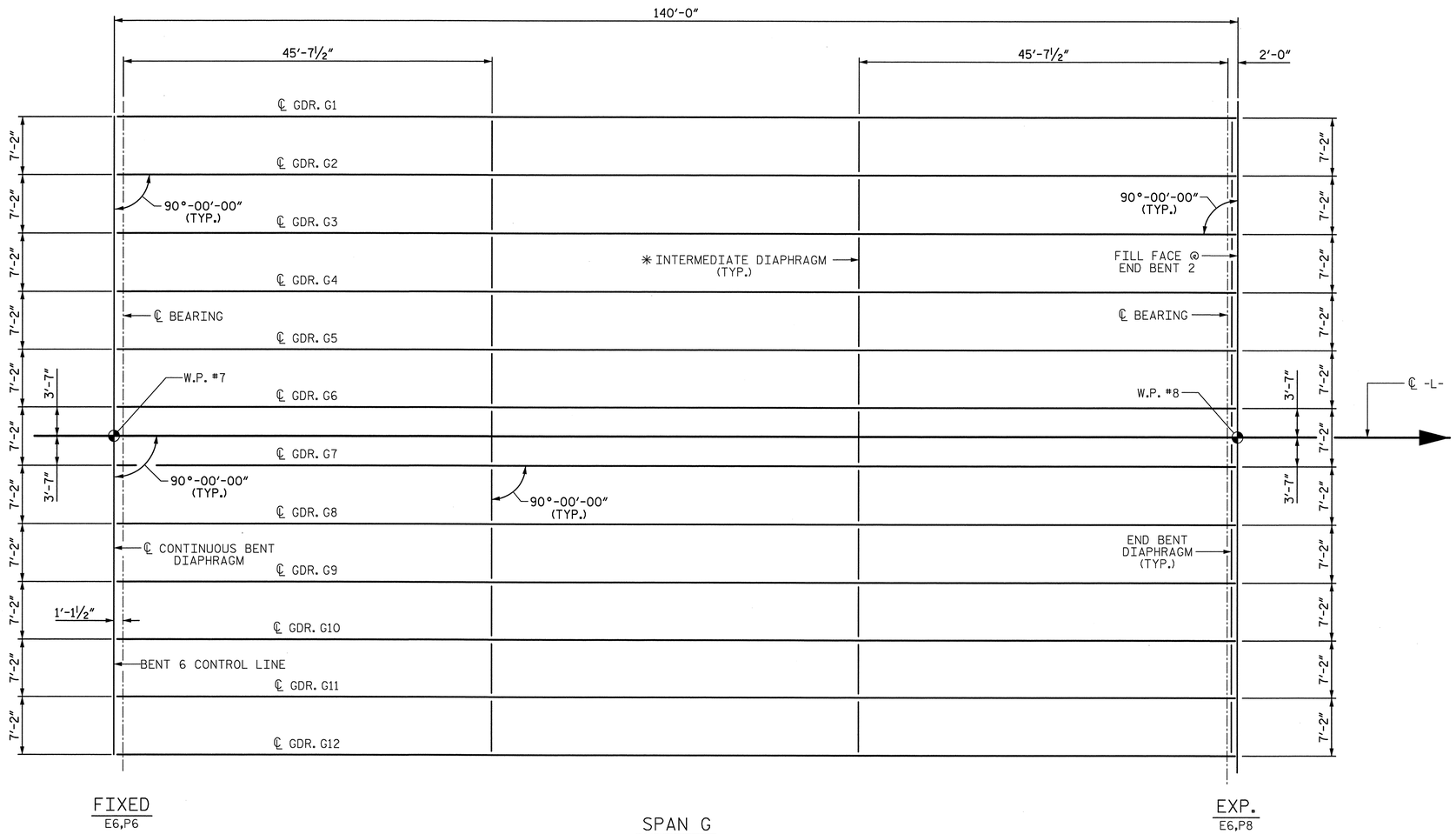

FRAMING PLAN

✳ SEE "INTERMEDIATE STEEL DIAPHRAGMS FOR 74" MODIFIED BULB TEE PRESTRESSED CONCRETE GIRDER"

PROJECT NO. B-4091

CUMBERLAND COUNTY

STATION: 52+15.00 -L-

SHEET 7 OF 7

STATE OF NORTH CAROLINA
DEPARTMENT OF TRANSPORTATION
RALEIGH

FRAMING PLAN
SPAN G

Prepared by
URS
URS Corporation – North Carolina
1600 Perimeter Park Drive, Suite 400
Morrisville, NC 27560
TELEPHONE (919) 461-1100
FAX (919) 461-1415

NORTH CAROLINA PROFESSIONAL ENGINEER SEAL 038447 ANDREW S. WILLIS
5/23/12

REVISIONS						SHEET NO.
NO.	BY:	DATE:	NO.	BY:	DATE:	S-79
1			3			TOTAL SHEETS
2			4			131

DRAWN BY : L. H. MCARTHUR DATE : 2/9/12
CHECKED BY : R. L. WHITCHER DATE : 2/27/12

5/23/2012
P:\Jobs1\B4091\Structures\FinalDrawings\B4091_SD_FP7.dgn
ross_whitcher

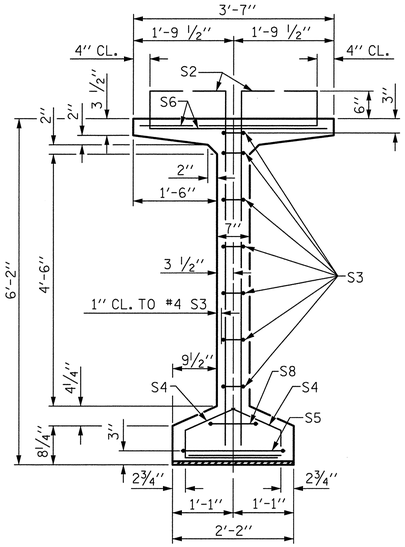

SECTION A-A

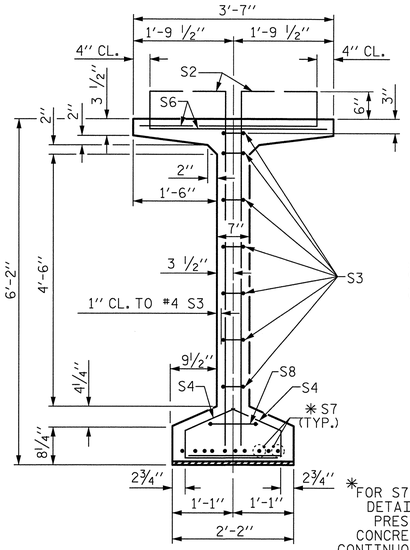

SECTION B-B

✱FOR S7 BARS, SEE DETAIL "C" OF PRESTRESSED CONCRETE GIRDER CONTINUOUS FOR LIVE LOAD DETAILS SHEET

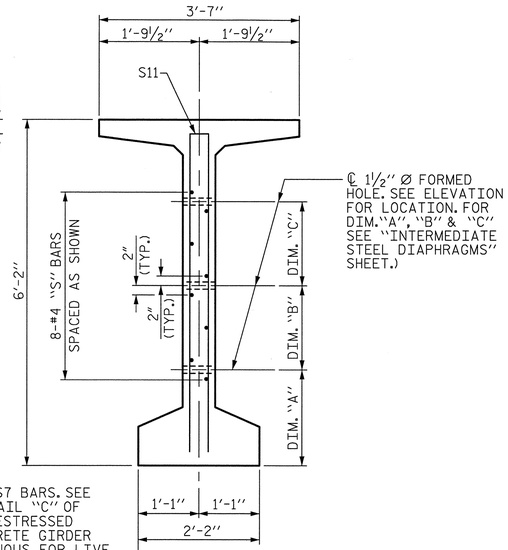

SECTION C-C

(S1, S6 AND S9 BARS NOT SHOWN)

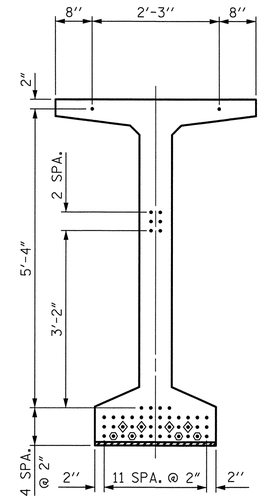

AT END OF GIRDER

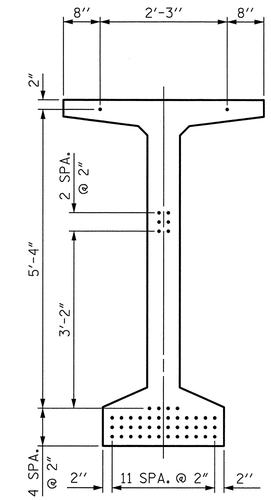

AT ℄ OF GIRDER

0.6" Ø LOW RELAXATION STRAND LAYOUT

- ● FULLY BONDED STRANDS
- ◇ STRANDS DEBONDED FOR 10'-0" FROM END OF GIRDER
- ⬡ STRANDS DEBONDED FOR 12'-0" FROM END OF GIRDER

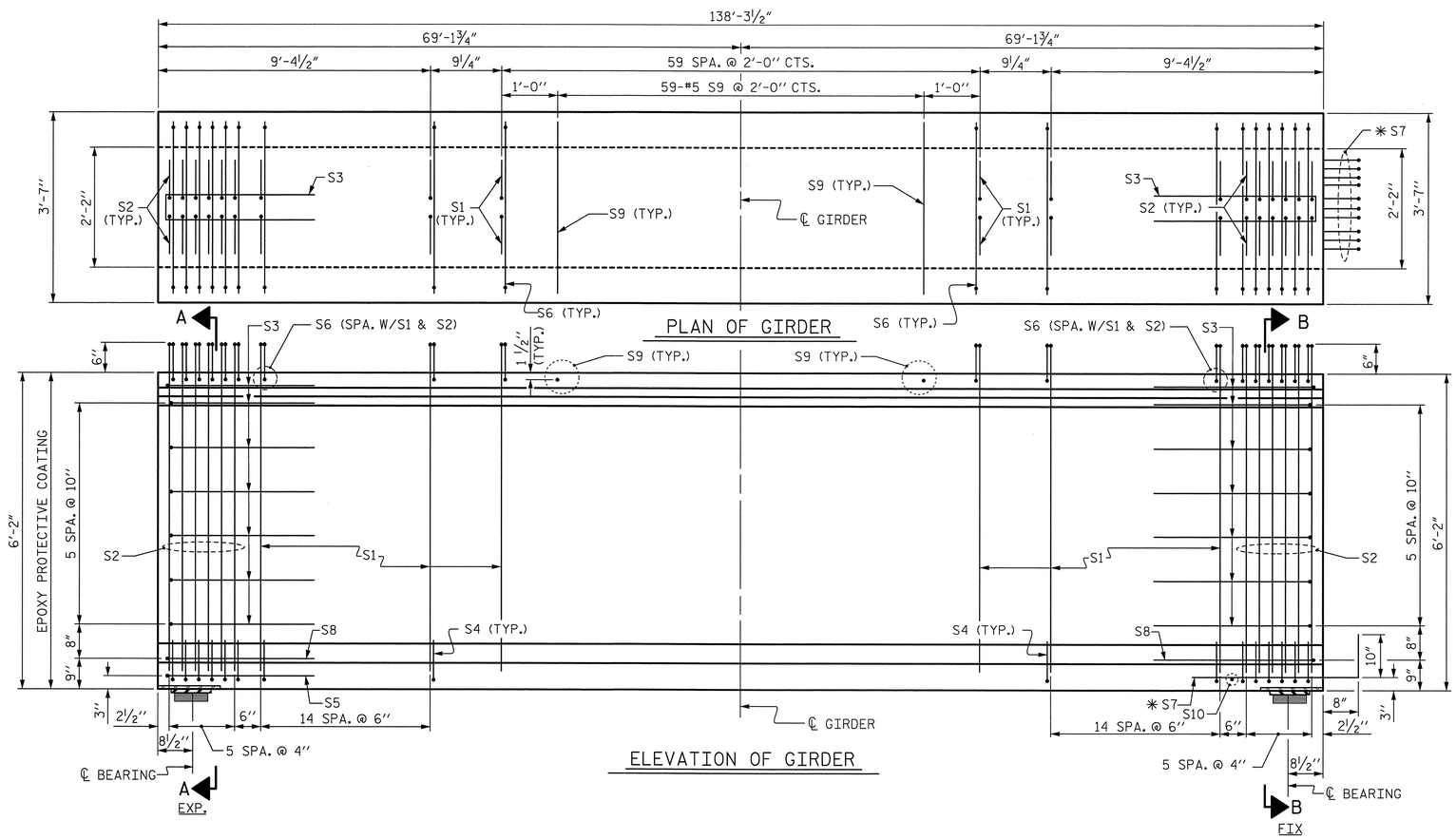

ELEVATION OF GIRDER

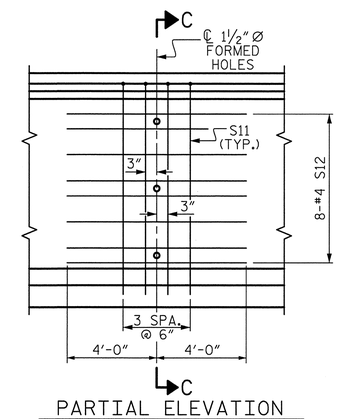

PARTIAL ELEVATION

SHOWING INTERMEDIATE STEEL DIAPHRAGM REINFORCING STEEL FOR GIRDER Nos. 1-12 (FOR ALL EXTERIOR GIRDERS AND INTERIOR GIRDERS WITH 70° ≤ SKEW ≤ 110°)

0.6" Ø L. R. GRADE 270 STRANDS

AREA (SQUARE INCHES)	ULTIMATE STRENGTH (LBS. PER STRAND)	APPLIED PRESTRESS (LBS. PER STRAND)
0.217	58,600	43,950

REINFORCING STEEL FOR ONE GDR

BAR	NUMBER	SIZE	TYPE	LENGTH	WEIGHT
S1	180	#4	1	7'-0"	842
S2	24	#5	1	7'-0"	175
S3	14	#4	2	8'-5"	79
S4	84	#4	3	3'-2"	178
S5	1	#5	2	9'-10"	10
S6	204	#5	4	4'-4"	922
✱ S7	10	#5	STR	3'-8"	38
S8	2	#5	2	9'-0"	19
S9	59	#5	STR	3'-3"	200
S10	1	#3	STR	1'-10"	1
S11	8	#5	2	12'-0"	100
S12	16	#4	STR	8'-0"	86

✱ NOTE: S7 BARS SHALL BE BENT BEFORE SHIPMENT. HEAT BENDING SHALL NOT BE ALLOWED.

BAR TYPES

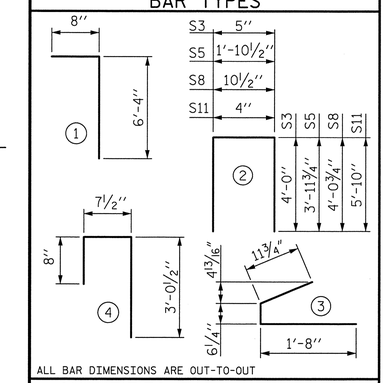

ALL BAR DIMENSIONS ARE OUT-TO-OUT

QUANTITIES FOR ONE GIRDER

SPAN A	REINFORCING STEEL	9500 PSI CONCRETE	0.6" Ø L.R. STRANDS
	LB.	C.Y.	No.
INT. & EXT. GIRDER	2650	31.48	48

GIRDERS REQUIRED

NUMBER	LENGTH	TOTAL LENGTH
12	138'-3 1/2"	1659.50'

PROJECT NO. B-4091

CUMBERLAND COUNTY

STATION: 52+15.00 -L-

SHEET 1 OF 6

STATE OF NORTH CAROLINA
DEPARTMENT OF TRANSPORTATION
RALEIGH

74" PRESTRESSED CONCRETE MODIFIED BULB TEE CONTINUOUS FOR LIVE LOAD SPAN A

Prepared by URS
URS Corporation - North Carolina
1600 Perimeter Park Drive, Suite 400
Morrisville, NC 27560
TELEPHONE (919) 461-1100
FAX (919) 461-1415

NORTH CAROLINA PROFESSIONAL SEAL 038447 ENGINEER ANDREW S. MILLER
5/23/12

REVISIONS						SHEET NO.
NO.	BY:	DATE:	NO.	BY:	DATE:	S-80
1			3			TOTAL SHEETS
2			4			131

DRAWN BY : MKT DATE : 2/27/12
CHECKED BY : ASM DATE : 3/15/12

5/23/2012
P:\Jobs\B4091\Structures\FinalDrawings\B4091_SD_G1.dgn
ross_whitcher

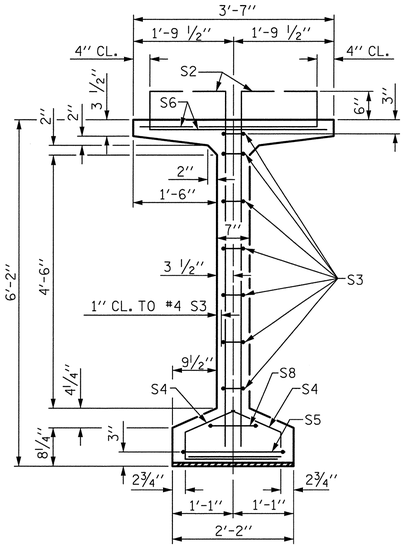

SECTION A-A

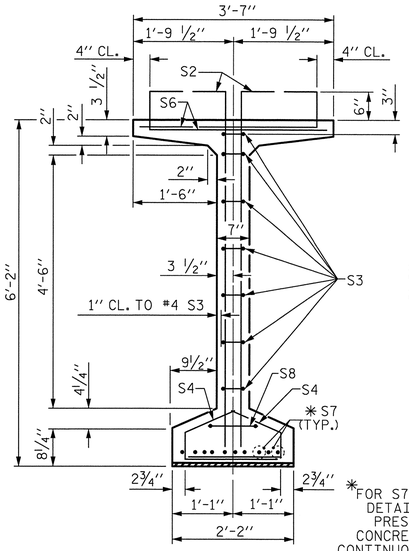

SECTION B-B

✱FOR S7 BARS. SEE DETAIL "C" OF PRESTRESSED CONCRETE GIRDER CONTINUOUS FOR LIVE LOAD DETAILS SHEET

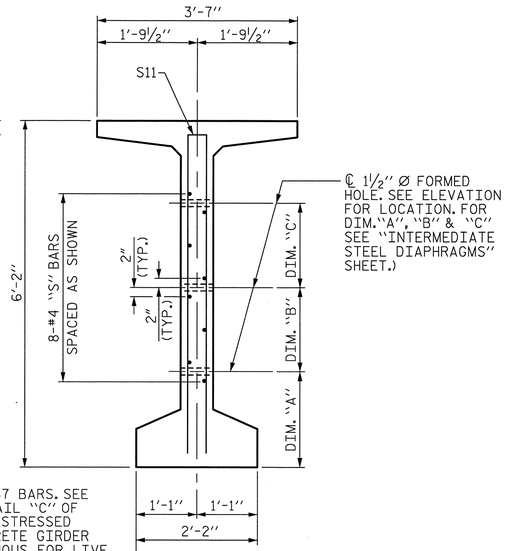

SECTION C-C

(S1, S6 AND S9 BARS NOT SHOWN)

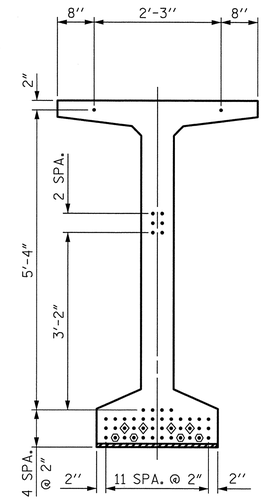

AT END OF GIRDER

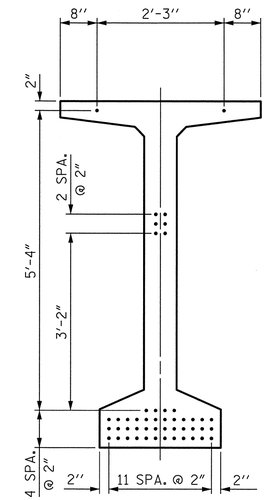

AT ℄ OF GIRDER

0.6" Ø LOW RELAXATION STRAND LAYOUT

- ● FULLY BONDED STRANDS
- ◇ STRANDS DEBONDED FOR 10'-0" FROM END OF GIRDER
- ⬡ STRANDS DEBONDED FOR 12'-0" FROM END OF GIRDER

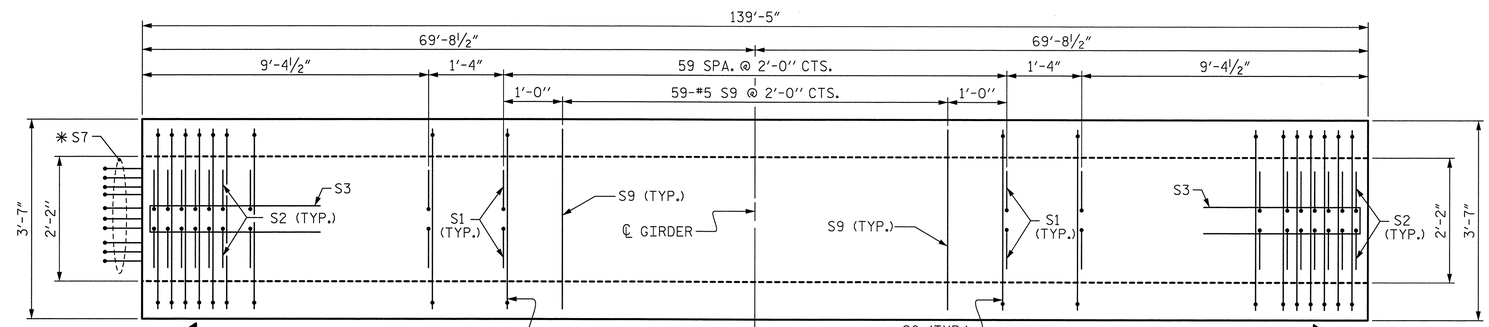

PLAN OF GIRDER

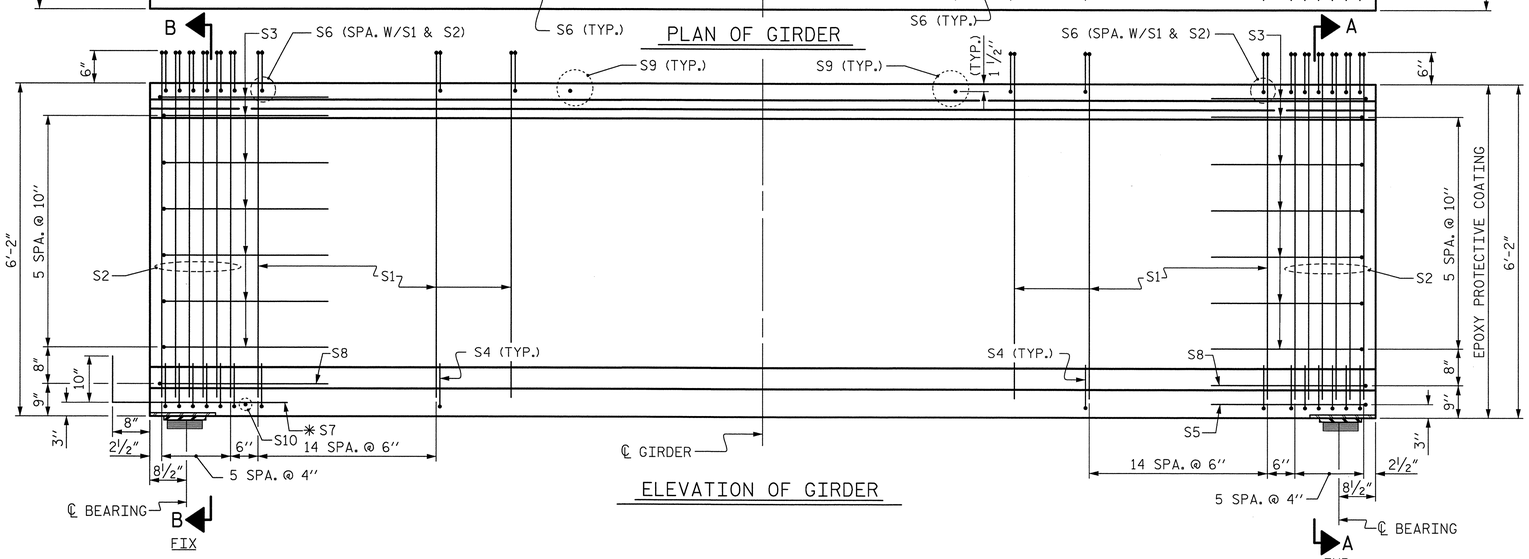

ELEVATION OF GIRDER

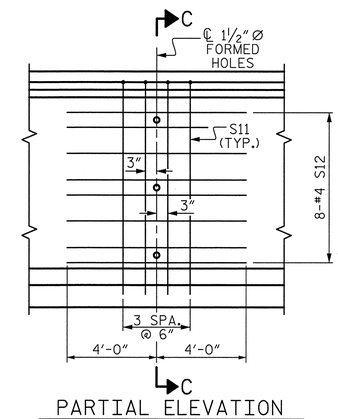

PARTIAL ELEVATION

SHOWING INTERMEDIATE STEEL DIAPHRAGM REINFORCING STEEL FOR GIRDER Nos. 1-12 (FOR ALL EXTERIOR GIRDERS AND INTERIOR GIRDERS WITH 70° ≤ SKEW ≤ 110°)

0.6" Ø L. R. GRADE 270 STRANDS

AREA (SQUARE INCHES)	ULTIMATE STRENGTH (LBS. PER STRAND)	APPLIED PRESTRESS (LBS. PER STRAND)
0.217	58,600	43,950

REINFORCING STEEL FOR ONE GDR

BAR	NUMBER	SIZE	TYPE	LENGTH	WEIGHT
S1	180	#4	1	7'-0"	842
S2	24	#5	1	7'-0"	175
S3	14	#4	2	8'-5"	79
S4	84	#4	3	3'-2"	178
S5	1	#5	2	9'-10"	10
S6	204	#5	4	4'-4"	922
✱S7	10	#5	STR	3'-8"	38
S8	2	#5	2	9'-0"	19
S9	59	#5	STR	3'-3"	200
S10	1	#3	STR	1'-10"	1
S11	8	#5	2	12'-0"	100
S12	16	#4	STR	8'-0"	86

✱NOTE: S7 BARS SHALL BE BENT BEFORE SHIPMENT. HEAT BENDING SHALL NOT BE ALLOWED.

BAR TYPES

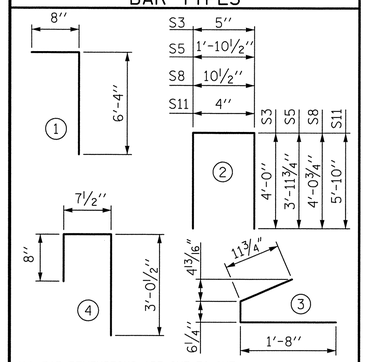

ALL BAR DIMENSIONS ARE OUT-TO-OUT

QUANTITIES FOR ONE GIRDER

SPAN B & E	REINFORCING STEEL	9500 PSI CONCRETE	0.6" Ø L.R. STRANDS
	LB.	C.Y.	No.
INT. & EXT. GIRDER	2650	31.74	48

GIRDERS REQUIRED

NUMBER	LENGTH	TOTAL LENGTH
24	139'-5"	3346.00'

PROJECT NO. B-4091

CUMBERLAND COUNTY

STATION: 52+15.00 -L-

SHEET 2 OF 6

STATE OF NORTH CAROLINA
DEPARTMENT OF TRANSPORTATION
RALEIGH

74" PRESTRESSED CONCRETE MODIFIED BULB TEE CONTINUOUS FOR LIVE LOAD SPAN B & E

Prepared by
URS
URS Corporation – North Carolina
1600 Perimeter Park Drive, Suite 400
Morrisville, NC 27560
TELEPHONE (919) 461-1100
FAX (919) 461-1415

NORTH CAROLINA PROFESSIONAL SEAL 038447 ENGINEER ANDREW S. MILLER
5/23/12

REVISIONS						SHEET NO.
NO.	BY:	DATE:	NO.	BY:	DATE:	S-81
1			3			TOTAL SHEETS
2			4			131

DRAWN BY : MKT DATE : 2/27/12
CHECKED BY : ASM DATE : 3/15/12

5/23/2012
P:\Jobs\B4091\Structures\Final Drawings\B4091_SD_02.dgn
ross_whitcher

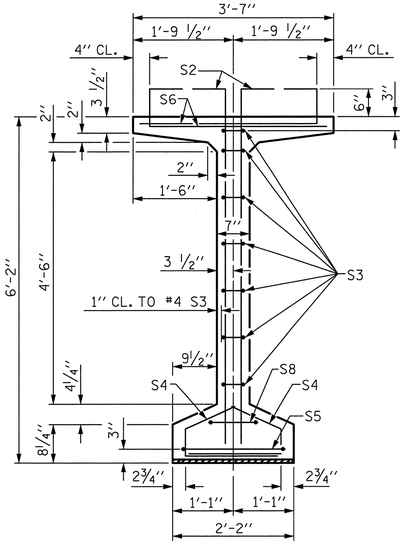

SECTION A-A

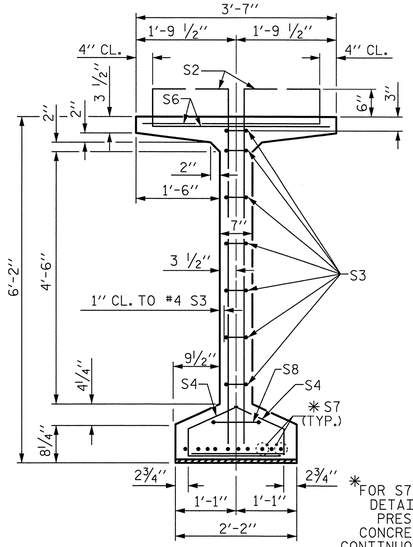

SECTION B-B

✱FOR S7 BARS, SEE DETAIL "C" OF PRESTRESSED CONCRETE GIRDER CONTINUOUS FOR LIVE LOAD DETAILS SHEET

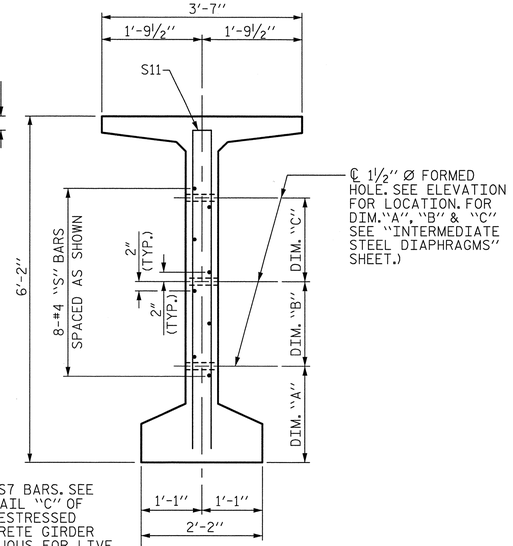

SECTION C-C

(S1, S6 AND S9 BARS NOT SHOWN)

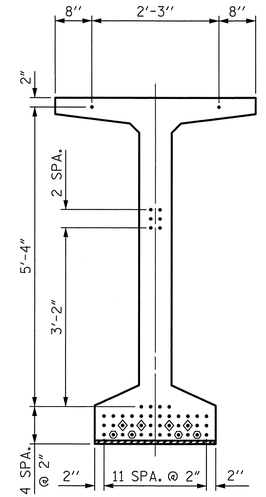

AT END OF GIRDER

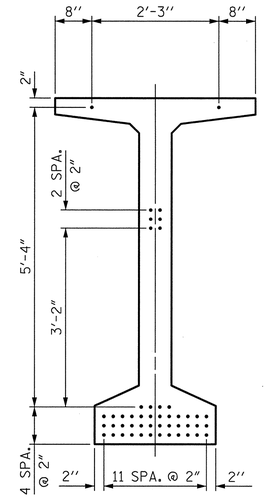

AT ℄ OF GIRDER

0.6" Ø LOW RELAXATION STRAND LAYOUT

- ● FULLY BONDED STRANDS
- ◇ STRANDS DEBONDED FOR 10'-0" FROM END OF GIRDER
- ⬡ STRANDS DEBONDED FOR 12'-0" FROM END OF GIRDER

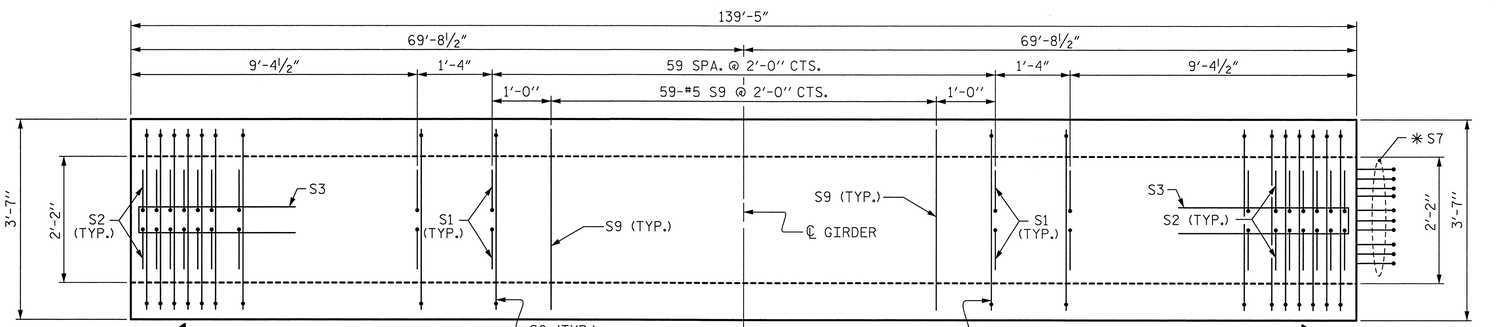

PLAN OF GIRDER

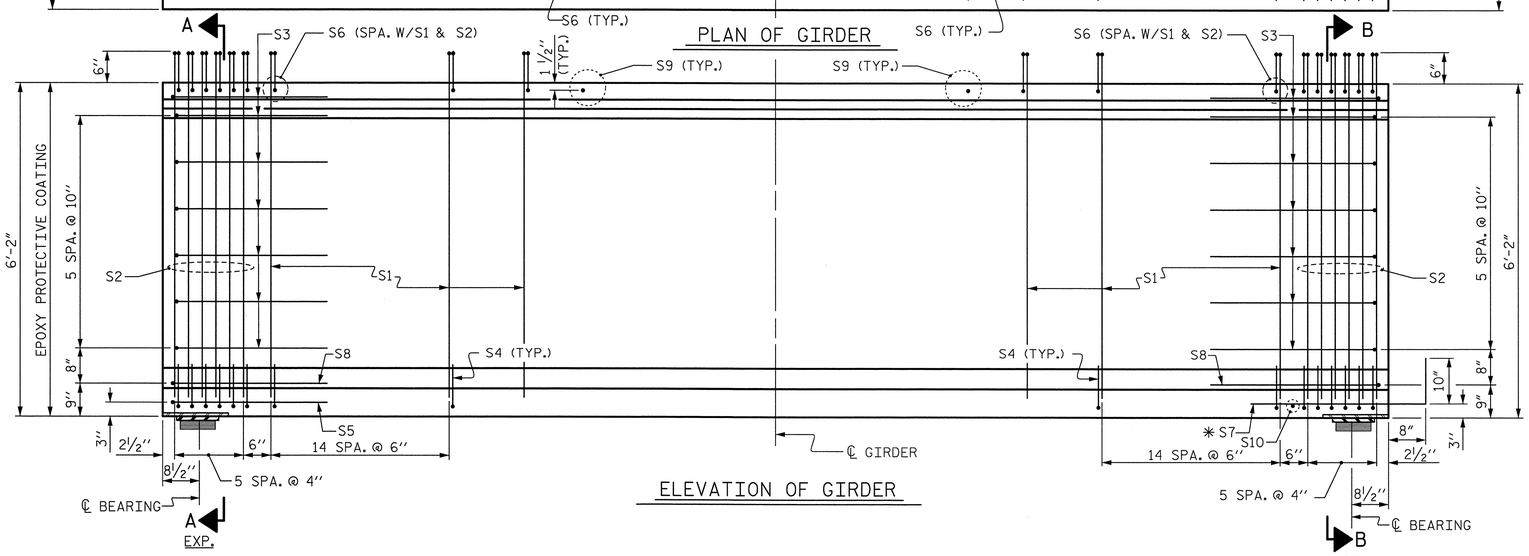

ELEVATION OF GIRDER

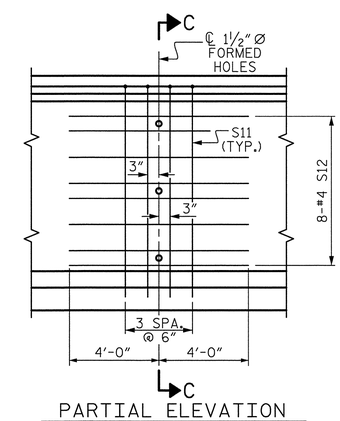

PARTIAL ELEVATION

SHOWING INTERMEDIATE STEEL DIAPHRAGM REINFORCING STEEL FOR GIRDER Nos. 1-12 (FOR ALL EXTERIOR GIRDERS AND INTERIOR GIRDERS WITH 70° ≤ SKEW ≤ 110°)

0.6" Ø L. R. GRADE 270 STRANDS

AREA (SQUARE INCHES)	ULTIMATE STRENGTH (LBS. PER STRAND)	APPLIED PRESTRESS (LBS. PER STRAND)
0.217	58,600	43,950

REINFORCING STEEL FOR ONE GDR

BAR	NUMBER	SIZE	TYPE	LENGTH	WEIGHT
S1	180	#4	1	7'-0"	842
S2	24	#5	1	7'-0"	175
S3	14	#4	2	8'-5"	79
S4	84	#4	3	3'-2"	178
S5	1	#5	2	9'-10"	10
S6	204	#5	4	4'-4"	922
✱S7	10	#5	STR	3'-8"	38
S8	2	#5	2	9'-0"	19
S9	59	#5	STR	3'-3"	200
S10	1	#3	STR	1'-10"	1
S11	8	#5	2	12'-0"	100
S12	16	#4	STR	8'-0"	86

✱NOTE: S7 BARS SHALL BE BENT BEFORE SHIPMENT. HEAT BENDING SHALL NOT BE ALLOWED.

BAR TYPES

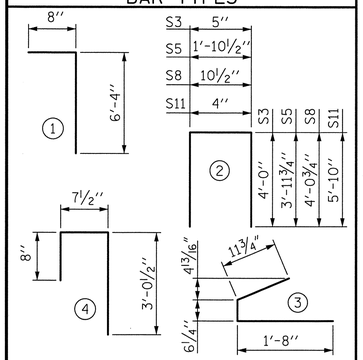

ALL BAR DIMENSIONS ARE OUT-TO-OUT

QUANTITIES FOR ONE GIRDER

SPAN C & F	REINFORCING STEEL	9500 PSI CONCRETE	0.6" Ø L.R. STRANDS
	LB.	C.Y.	No.
INT. & EXT. GIRDER	2650	31.74	48

GIRDERS REQUIRED

NUMBER	LENGTH	TOTAL LENGTH
24	139'-5"	3346.00'

PROJECT NO. B-4091

CUMBERLAND COUNTY

STATION: 52+15.00 -L-

SHEET 3 OF 6

STATE OF NORTH CAROLINA
DEPARTMENT OF TRANSPORTATION
RALEIGH

74" PRESTRESSED CONCRETE MODIFIED BULB TEE CONTINUOUS FOR LIVE LOAD SPAN C & F

Prepared by
URS
URS Corporation - North Carolina
1600 Perimeter Park Drive, Suite 400
Morrisville, NC 27560
TELEPHONE (919) 461-1100
FAX (919) 461-1415

NORTH CAROLINA PROFESSIONAL SEAL 038447 ENGINEER ANDREW S. MILLER
5/23/12

REVISIONS							SHEET NO.
NO.	BY:	DATE:	NO.	BY:	DATE:		S-82
1			3				TOTAL SHEETS
2			4				131

DRAWN BY : MKT DATE : 2/27/12
CHECKED BY : ASM DATE : 3/15/12

5/23/2012
P:\Jobs\B4091\Structures\FinalDrawings\B4091_SD_G3.dgn
ross_whitcher

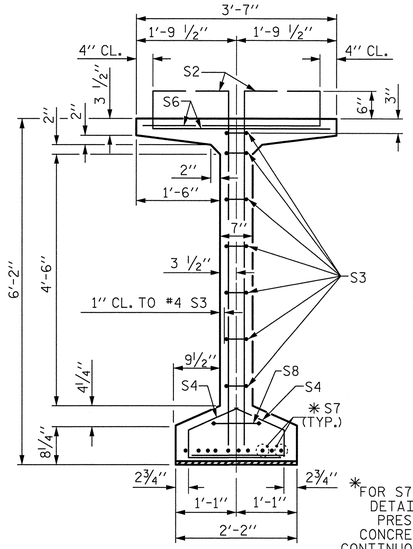

SECTION B-B

*FOR S7 BARS, SEE DETAIL "C" OF PRESTRESSED CONCRETE GIRDER CONTINUOUS FOR LIVE LOAD DETAILS SHEET

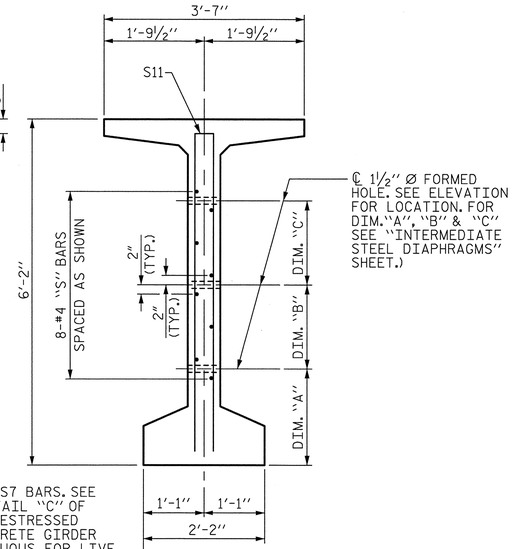

SECTION C-C

(S1, S6 AND S9 BARS NOT SHOWN)

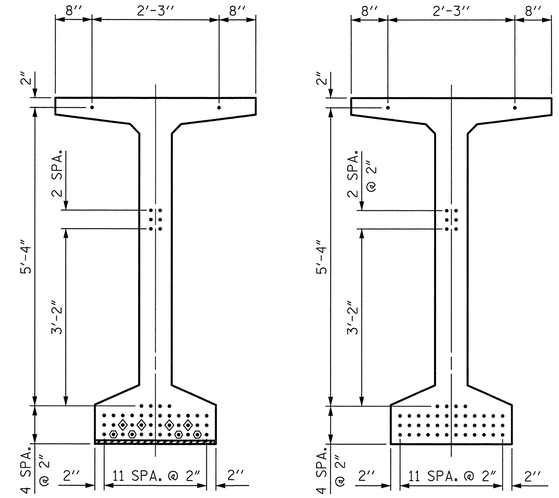

AT END OF GIRDER

AT ℄ OF GIRDER

0.6" Ø LOW RELAXATION STRAND LAYOUT

- ● FULLY BONDED STRANDS
- ◇ STRANDS DEBONDED FOR 10'-0" FROM END OF GIRDER
- ⬡ STRANDS DEBONDED FOR 12'-0" FROM END OF GIRDER

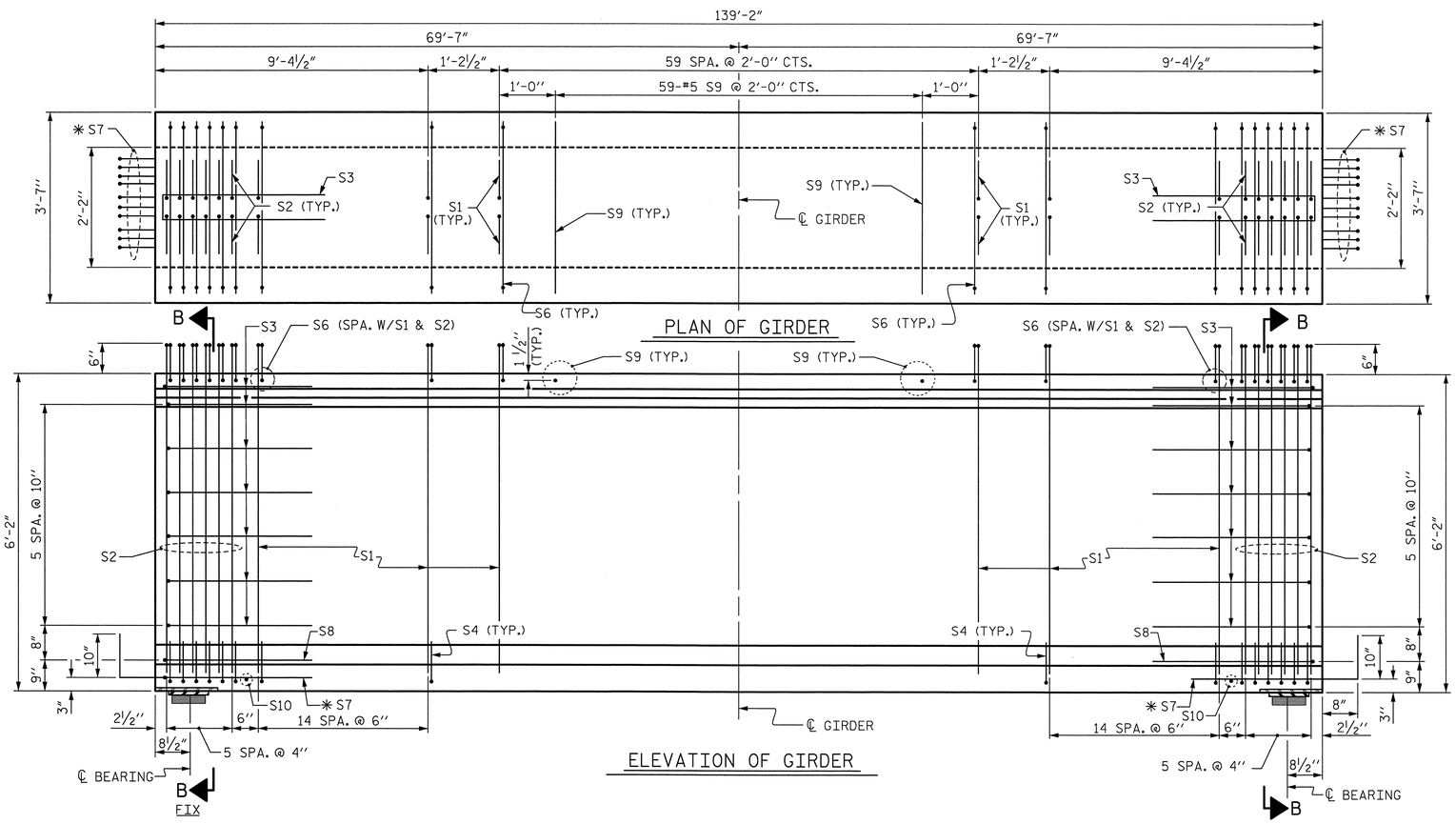

PLAN OF GIRDER

ELEVATION OF GIRDER

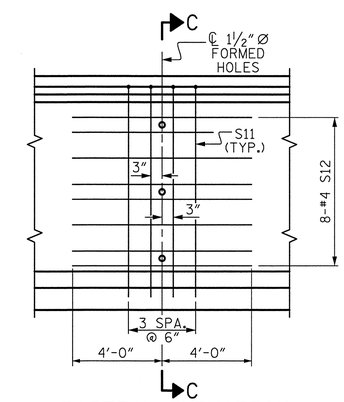

PARTIAL ELEVATION

SHOWING INTERMEDIATE STEEL DIAPHRAGM REINFORCING STEEL FOR GIRDER Nos. 1-12 (FOR ALL EXTERIOR GIRDERS AND INTERIOR GIRDERS WITH 70° ≤ SKEW ≤ 110°)

0.6" Ø L. R. GRADE 270 STRANDS

AREA (SQUARE INCHES)	ULTIMATE STRENGTH (LBS. PER STRAND)	APPLIED PRESTRESS (LBS. PER STRAND)
0.217	58,600	43,950

REINFORCING STEEL FOR ONE GDR

BAR	NUMBER	SIZE	TYPE	LENGTH	WEIGHT
S1	180	#4	1	7'-0"	842
S2	24	#5	1	7'-0"	175
S3	14	#4	2	8'-5"	79
S4	84	#4	3	3'-2"	178
S6	204	#5	4	4'-4"	922
*S7	20	#5	STR	3'-8"	76
S8	2	#5	2	9'-0"	19
S9	59	#5	STR	3'-3"	200
S10	2	#3	STR	1'-10"	1
S11	8	#5	2	12'-0"	100
S12	16	#4	STR	8'-0"	86

*NOTE: S7 BARS SHALL BE BENT BEFORE SHIPMENT. HEAT BENDING SHALL NOT BE ALLOWED.

BAR TYPES

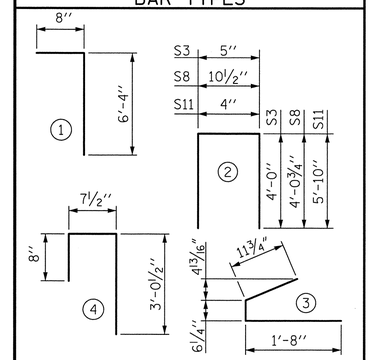

ALL BAR DIMENSIONS ARE OUT-TO-OUT

QUANTITIES FOR ONE GIRDER

SPAN D	REINFORCING STEEL	9500 PSI CONCRETE	0.6" Ø L.R. STRANDS
	LB.	C.Y.	No.
INT. & EXT. GIRDER	2678	31.68	48

GIRDERS REQUIRED

NUMBER	LENGTH	TOTAL LENGTH
12	139'-2"	1670.00'

PROJECT NO. B-4091

CUMBERLAND COUNTY

STATION: 52+15.00 -L-

SHEET 4 OF 6

STATE OF NORTH CAROLINA
DEPARTMENT OF TRANSPORTATION
RALEIGH

74" PRESTRESSED CONCRETE MODIFIED BULB TEE CONTINUOUS FOR LIVE LOAD SPAN D

REVISIONS						SHEET NO.
NO.	BY:	DATE:	NO.	BY:	DATE:	S-83
1			3			TOTAL SHEETS
2			4			131

Prepared by
URS
URS Corporation - North Carolina
1600 Perimeter Park Drive, Suite 400
Morrisville, NC 27560
TELEPHONE (919) 461-1100
FAX (919) 461-1415

NORTH CAROLINA PROFESSIONAL SEAL 038447 ENGINEER ANDREW S. MILLER
5/23/12

DRAWN BY : MKT DATE : 2/27/12
CHECKED BY : ASM DATE : 3/15/12

5/23/2012
P:\Jobs1\B4091\Structures\FinalDrawings\B4091_SD_04.dgn
ross_whitcher

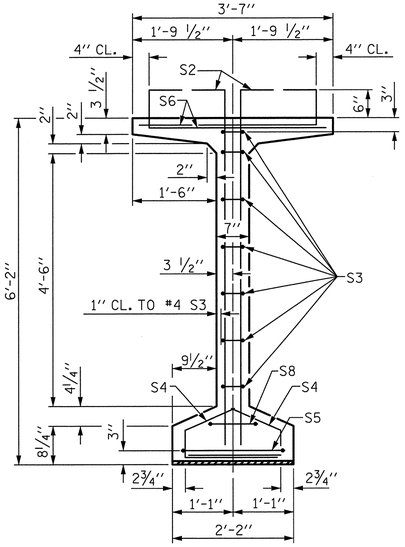

SECTION A-A

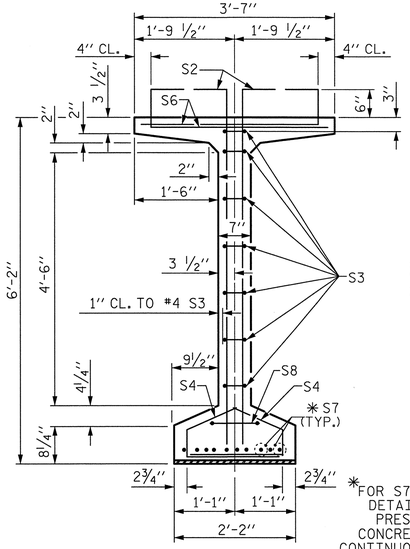

SECTION B-B

*FOR S7 BARS, SEE DETAIL "C" OF PRESTRESSED CONCRETE GIRDER CONTINUOUS FOR LIVE LOAD DETAILS SHEET

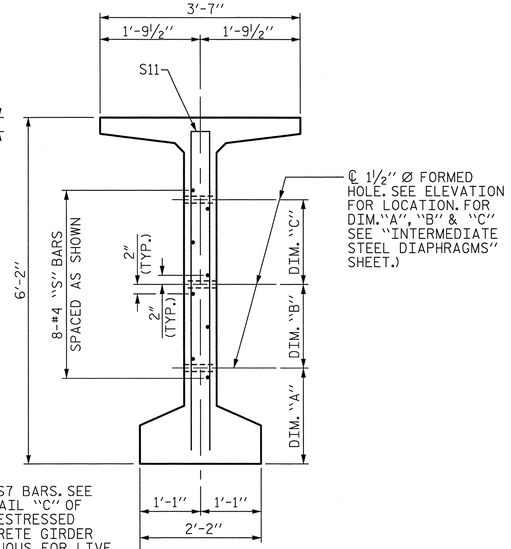

SECTION C-C

(S1, S6 AND S9 BARS NOT SHOWN)

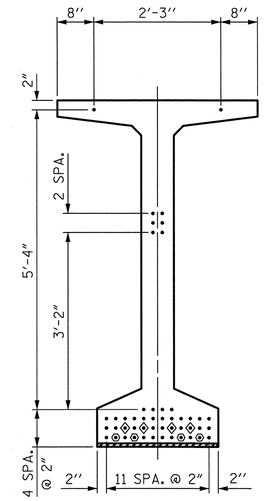

AT END OF GIRDER

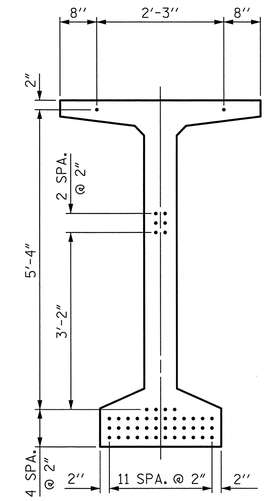

AT ℄ OF GIRDER

0.6" Ø LOW RELAXATION STRAND LAYOUT

- ● FULLY BONDED STRANDS
- ◇ STRANDS DEBONDED FOR 10'-0" FROM END OF GIRDER
- ⬡ STRANDS DEBONDED FOR 12'-0" FROM END OF GIRDER

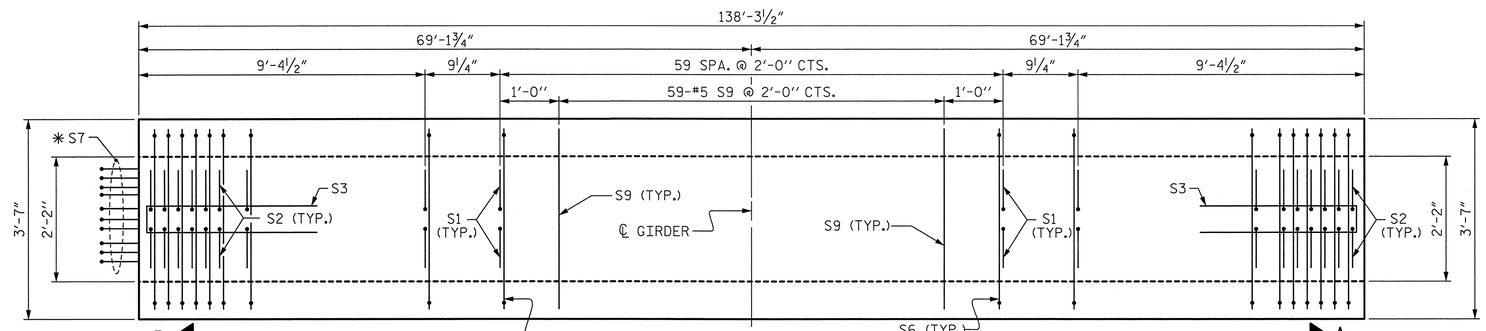

PLAN OF GIRDER

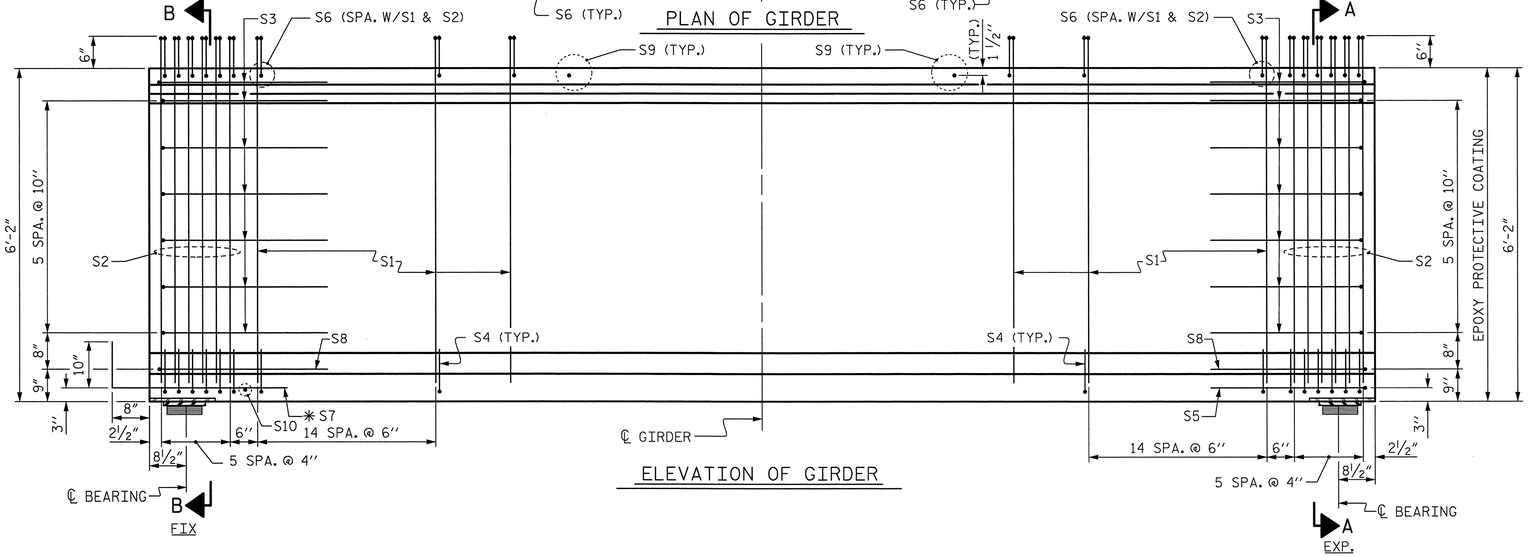

ELEVATION OF GIRDER

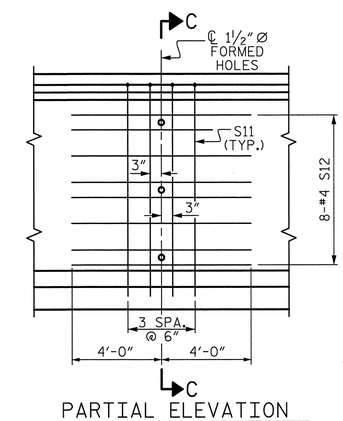

PARTIAL ELEVATION

SHOWING INTERMEDIATE STEEL DIAPHRAGM REINFORCING STEEL FOR GIRDER Nos. 1-12 (FOR ALL EXTERIOR GIRDERS AND INTERIOR GIRDERS WITH 70° ≤ SKEW ≤ 110°)

0.6" Ø L. R. GRADE 270 STRANDS		
AREA (SQUARE INCHES)	ULTIMATE STRENGTH (LBS. PER STRAND)	APPLIED PRESTRESS (LBS. PER STRAND)
0.217	58,600	43,950

REINFORCING STEEL FOR ONE GDR

BAR	NUMBER	SIZE	TYPE	LENGTH	WEIGHT
S1	180	#4	1	7'-0"	842
S2	24	#5	1	7'-0"	175
S3	14	#4	2	8'-5"	79
S4	84	#4	3	3'-2"	178
S5	1	#5	2	9'-10"	10
S6	204	#5	4	4'-4"	922
*S7	10	#5	STR	3'-8"	38
S8	2	#5	2	9'-0"	19
S9	59	#5	STR	3'-3"	200
S10	1	#3	STR	1'-10"	1
S11	8	#5	2	12'-0"	100
S12	16	#4	STR	8'-0"	86

*NOTE: S7 BARS SHALL BE BENT BEFORE SHIPMENT. HEAT BENDING SHALL NOT BE ALLOWED.

BAR TYPES

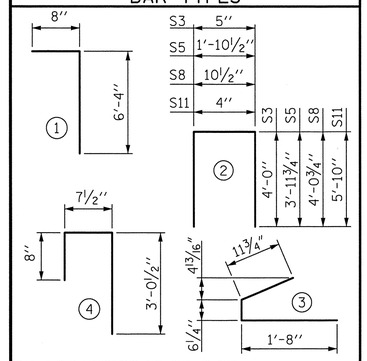

ALL BAR DIMENSIONS ARE OUT-TO-OUT

QUANTITIES FOR ONE GIRDER

SPAN G	REINFORCING STEEL	9500 PSI CONCRETE	0.6" Ø L.R. STRANDS
	LB.	C.Y.	No.
INT. & EXT. GIRDER	2650	31.48	48

GIRDERS REQUIRED

NUMBER	LENGTH	TOTAL LENGTH
12	138'-3 1/2"	1659.50'

PROJECT NO. B-4091

CUMBERLAND COUNTY

STATION: 52+15.00 -L-

SHEET 5 OF 6

STATE OF NORTH CAROLINA
DEPARTMENT OF TRANSPORTATION
RALEIGH

74" PRESTRESSED CONCRETE MODIFIED BULB TEE CONTINUOUS FOR LIVE LOAD SPAN G

Prepared by
URS
URS Corporation - North Carolina
1600 Perimeter Park Drive, Suite 400
Morrisville, NC 27560
TELEPHONE (919) 461-1100
FAX (919) 461-1415

NORTH CAROLINA PROFESSIONAL SEAL 038447 ENGINEER ANDREW S. MILLER
5/23/12

REVISIONS						SHEET NO.
NO.	BY:	DATE:	NO.	BY:	DATE:	S-84
1			3			TOTAL SHEETS
2			4			131

DRAWN BY : MKT DATE : 2/27/12
CHECKED BY : ASM DATE : 3/15/12

5/23/2012
P:\Jobs\B4091\Structures\FinalDrawings\B4091_S0_05.dgn
ross_whitcher

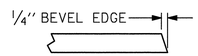

SECTION "G"

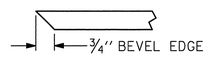

SECTION "F"

(SEE NOTES)

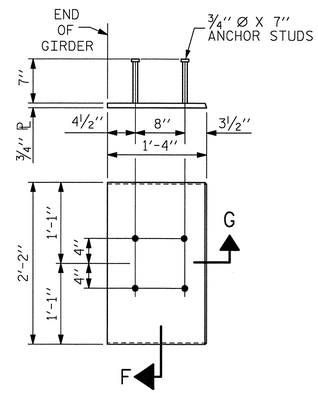

EMBEDDED PLATE "B-1" DETAILS

(2 REQ'D PER GIRDER)

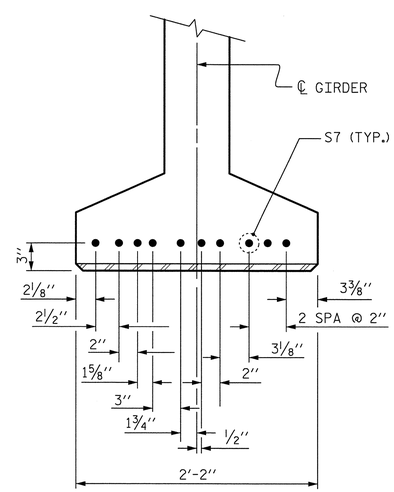

DETAIL "C"

NOTES:

ALL PRESTRESSING STRANDS SHALL BE 7-WIRE LOW-RELAXATION GRADE 270 STRANDS AND SHALL CONFORM TO AASHTO M203 EXCEPT FOR SAMPLING REQUIREMENTS WHICH SHALL BE IN ACCORDANCE WITH THE STANDARD SPECIFICATIONS.

ALL REINFORCING STEEL SHALL BE GRADE 60.

APPLY EPOXY PROTECTIVE COATING TO END OF GIRDER SURFACES INDICATED IN ELEVATION VIEW.

EMBEDDED PLATE "B-1" SHALL BE GALVANIZED IN ACCORDANCE WITH THE STANDARD SPECIFICATIONS. BEVEL EDGES OF PLATE "B-1" TO GIVE CLOSE FIT BUT NOT TIGHT FIT TO STEEL CASTING FORM.

ANCHOR STUDS SHALL CONFORM TO AASHTO M169 GRADES 1010 THROUGH 1020 OR APPROVED EQUAL, AND SHALL MEET THE TYPE "B" REQUIREMENTS OF SUBSECTION 7.3 OF THE ANSI/AASHTO/AWS D1.5 BRIDGE WELDING CODE.

AT ENDS OF GIRDERS TO BE EMBEDDED IN CONCRETE DIAPHRAGMS OR END WALLS, PRESTRESSING STRANDS MAY EXTEND A MAXIMUM OF 2" BEYOND THE GIRDER ENDS. OTHERWISE, PRESTRESSING STRANDS SHALL BE CUT FLUSH WITH THE GIRDER ENDS.

THE TRANSFER OF LOAD FROM THE ANCHORAGES TO THE GIRDER SHALL BE DONE WHEN CONCRETE HAS REACHED A COMPRESSIVE STRENGTH OF NOT LESS THAN 7000 PSI.

DEPENDING ON THE TYPE OF SYSTEM USED TO SUPPORT THE DECK SLAB FORMS, PRESET ANCHORS MAY BE NECESSARY IN THE PRESTRESSED CONCRETE GIRDER.

THE TOP SURFACE OF THE GIRDER, EXCLUDING THE OUTSIDE 4", SHALL BE RAKED TO A DEPTH OF 1/4".

A 2" x 2" CHAMFER IS ALLOWED AT THE INTERSECTION OF THE WEB AND THE BOTTOM FLANGE OF THE 74" MODIFIED BULB TEES ONLY.

THE CONTRACTOR HAS THE OPTION TO PROVIDE, AT NO ADDITIONAL COST TO THE DEPARTMENT, 2 ADDITIONAL STRANDS AT THE TOP OF THE GIRDER TO FACILITATE TYING OF THE REINFORCING STEEL. THESE STRANDS SHALL BE PULLED TO A LOAD OF 4500 lbs.

PROJECT NO. B-4091

CUMBERLAND COUNTY

STATION: 52+15.00 -L-

SHEET 6 OF 6

STATE OF NORTH CAROLINA
DEPARTMENT OF TRANSPORTATION
RALEIGH

STANDARD

PRESTRESSED CONCRETE GIRDER CONTINUOUS FOR LIVE LOAD DETAILS

ASSEMBLED BY : RLW/MKT	DATE : 2/27/12
CHECKED BY : A. S. MILLER	DATE : 3/15/12
DRAWN BY : ELR 11/91	REV. 7/10/01 RR LES/RDR
CHECKED BY : GRP 11/91	REV. 5/1/06 TLA/GM
	REV. 10/1/11 MAA/GM

Prepared by
URS
URS Corporation - North Carolina
1600 Perimeter Park Drive, Suite 400
Morrisville, NC 27560
TELEPHONE (919) 461-1100
FAX (919) 461-1415

NORTH CAROLINA PROFESSIONAL SEAL 038447 ENGINEER ANDREW S. MILLER
5/23/12

REVISIONS						SHEET NO.
NO.	BY:	DATE:	NO.	BY:	DATE:	S-85
1			3			TOTAL SHEETS
2			4			131

STD. NO. PCG9

5/23/2012
P:\Jobs\B4091\Structures\FinalDrawings\B4091_SD_G6.dgn
ross_whitcher

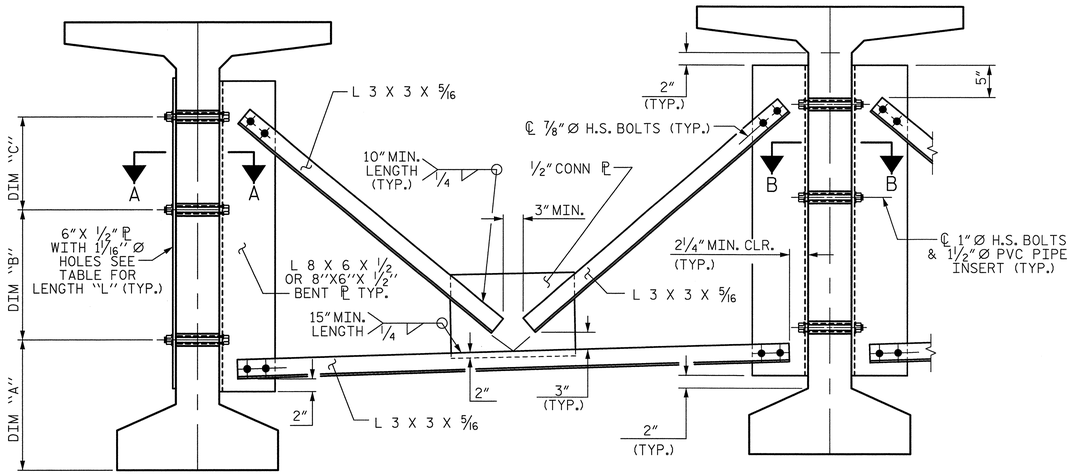

EXTERIOR GIRDER

INTERIOR GIRDER

PART SECTION AT INTERMEDIATE DIAPHRAGM

(74" BULB TEE GIRDER SHOWN)

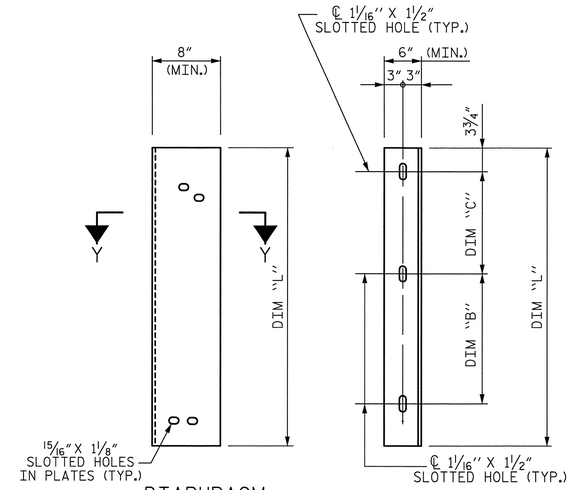

DIAPHRAGM FACE

WEB FACE

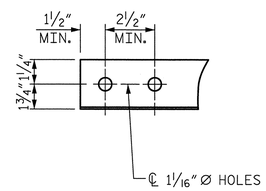

ANGLE END

(L 3 X 3 X 5/16)

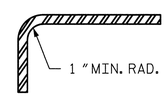

SECTION Y-Y

CONNECTOR PLATE DETAIL

STRUCTURAL STEEL NOTES

ALL INTERMEDIATE DIAPHRAGM STEEL AND CONNECTOR PLATES SHALL BE AASHTO M270 GRADE 50 OR APPROVED EQUAL.

TENSION ON THE ASTM A325 BOLTS THROUGH THE ANGLE MEMBER SHALL BE CALIBRATED USING DIRECT TENSION INDICATOR WASHERS IN ACCORDANCE WITH THE STANDARD SPECIFICATIONS.

TENSION ON THE ASTM A449 BOLTS THROUGH THE GIRDER WEB SHALL BE SNUG TIGHTENED FOLLOWED BY AN ADDITIONAL 1/4 TURN.

THE PLATES, BENT PLATES, AND ANGLES SHALL BE GALVANIZED OR METALLIZED IN ACCORDANCE WITH THE STANDARD SPECIFICATIONS. FOR THERMAL SPRAYED COATINGS (METALLIZATION), SEE SPECIAL PROVISIONS.

FOR METALLIZATION, APPLY AN 8 MIL THICK 99.99 PERCENT ZINC (W-Zn-1) THERMAL SPRAYED COATING WITH A 0.5 MIL THICK SEAL COAT TO ALL STEEL DIAPHRAGM SURFACES IN ACCORDANCE WITH THE THERMAL SPRAYED COATINGS SPECIAL PROVISION AND SECTION 442 OF THE STANDARD SPECIFICATIONS.

GALVANIZE THE HIGH STRENGTH BOLTS, NUTS, WASHERS AND DIRECT TENSION INDICATORS IN ACCORDANCE WITH THE STANDARD SPECIFICATIONS.

USE AN ASTM F436 HARDENED WASHER WITH STANDARD AND SLOTTED HOLES UNDER EACH BOLT HEAD AND NUT.

FOR BOLTS THROUGH THE GIRDER WEB, PROVIDE SUFFICIENT LENGTH OF THREADS ON ALL BOLTS TO ACCOMMODATE WASHERS AND THE THICKNESS OF CONNECTING MEMBER PLUS AT LEAST 1/4" PROJECTION BEYOND THE NUT.

INTERMEDIATE DIAPHRAGM ASSEMBLY SHALL COMPLY WITH SECTION 1072 OF THE STANDARD SPECIFICATIONS.

SUBMIT TWO SETS OF WORKING DRAWINGS FOR THE INTERMEDIATE DIAPHRAGM ASSEMBLY FOR REVIEW, COMMENTS AND ACCEPTANCE. AFTER REVIEW, COMMENTS, AND ACCEPTANCE, SUBMIT SEVEN SETS FOR DISTRIBUTION.

IN THE EXTERIOR BAYS, PLACE TEMPORARY STRUTS BETWEEN PRESTRESSED GIRDERS ADJACENT TO THE STEEL DIAPHRAGMS. STRUTS SHALL REMAIN IN PLACE 3 DAYS AFTER CONCRETE IS PLACED.

THE COST OF THE STEEL DIAPHRAGMS AND ASSEMBLIES SHALL BE INCLUDED IN THE UNIT PRICE BID FOR PRESTRESSED CONCRETE GIRDERS.

TABLE

GIRDER TYPE	DIM "A"	DIM "B"	DIM "C"	DIM "L"
74" BULB TEE	1'-8 1/4"	1'-8 1/4"	1'-8 1/4"	4'-2"

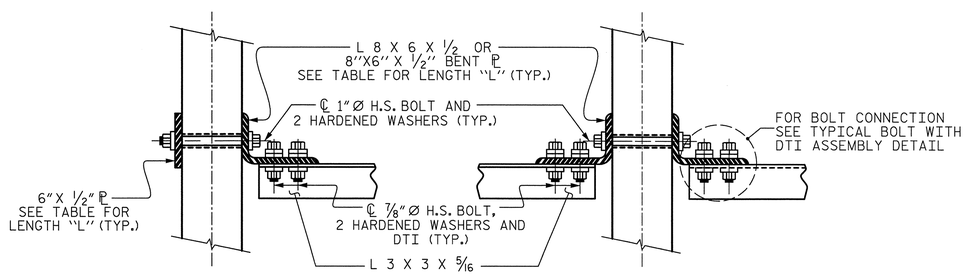

SECTION A-A

SECTION B-B

CONNECTION DETAILS

(FOR SKEW = 90°)

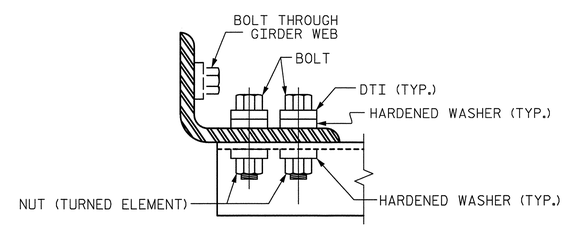

BOLT WITH DTI ASSEMBLY DETAIL

PROJECT NO. B-4091

CUMBERLAND COUNTY

STATION: 52+15.00 -L-

STATE OF NORTH CAROLINA
DEPARTMENT OF TRANSPORTATION
RALEIGH

STANDARD
INTERMEDIATE
STEEL DIAPHRAGMS
FOR 74"
MODIFIED BULB TEE
PRESTRESSED CONCRETE
GIRDERS

Prepared by
URS
URS Corporation - North Carolina
1600 Perimeter Park Drive, Suite 400
Morrisville, NC 27560
TELEPHONE (919) 461-1100
FAX (919) 461-1415

NORTH CAROLINA PROFESSIONAL SEAL 038447 ENGINEER ANDREW S. MILLER
5/23/12

REVISIONS								SHEET NO.
NO.	BY:	DATE:	NO.	BY:	DATE:			S-86
1			3					TOTAL SHEETS
2			4					131

STD. NO. PCG11

ASSEMBLED BY : K. H. COMPTON DATE : 3/16/12	
CHECKED BY : A. S. MILLER DATE : 3/16/12	
DRAWN BY : RWW 11/09	ADDED 11/23/09R
CHECKED BY : GM 11/09	REV. 10/1/11 MAA/GM

5/23/2012
P:\Jobs1\B4091\Structures\Final Drawings\B4091_SD_G7.dgn
ross_whitcher

DEAD LOAD DEFLECTION TABLE FOR GIRDERS

0.6" Ø LOW RELAXATION	GIRDERS 1 & 12																				
TWENTIETH POINTS	0	.05	.10	.15	.20	.25	.30	.35	.40	.45	.50	.55	.60	.65	.70	.75	.80	.85	.90	.95	0
CAMBER (GIRDER ALONE IN PLACE) ↑	0.000	0.091	0.167	0.230	0.281	0.324	0.357	0.383	0.400	0.411	0.415	0.411	0.400	0.383	0.357	0.324	0.281	0.230	0.167	0.091	0.000
✱ DEFLECTION DUE TO SUPERIMPOSED D.L. ↓	0.000	0.036	0.073	0.106	0.138	0.167	0.191	0.210	0.224	0.232	0.235	0.232	0.224	0.210	0.191	0.167	0.138	0.106	0.072	0.036	0.000
FINAL CAMBER ↑	0	5/8"	1 1/8"	1 1/2"	1 11/16"	1 7/8"	2"	2 1/16"	2 1/8"	2 1/8"	2 1/8"	2 1/8"	2 1/8"	2 1/16"	2"	1 7/8"	1 3/4"	1 1/2"	1 1/8"	11/16"	0

✱ INCLUDES FUTURE WEARING SURFACE
ALL VALUES ARE SHOWN IN FEET (DECIMAL FORM), EXCEPT "FINAL CAMBER", WHICH IS GIVEN IN INCHES (FRACTION FORM).

DEAD LOAD DEFLECTION TABLE FOR GIRDERS

0.6" Ø LOW RELAXATION	GIRDERS 2, 3, 10, & 11																				
TWENTIETH POINTS	0	.05	.10	.15	.20	.25	.30	.35	.40	.45	.50	.55	.60	.65	.70	.75	.80	.85	.90	.95	0
CAMBER (GIRDER ALONE IN PLACE) ↑	0.000	0.091	0.167	0.230	0.281	0.324	0.357	0.383	0.400	0.411	0.415	0.411	0.400	0.383	0.357	0.324	0.281	0.230	0.167	0.091	0.000
✱ DEFLECTION DUE TO SUPERIMPOSED D.L. ↓	0.000	0.035	0.069	0.102	0.132	0.159	0.182	0.200	0.213	0.221	0.224	0.221	0.213	0.200	0.181	0.158	0.131	0.101	0.068	0.034	0.000
FINAL CAMBER ↑	0	11/16"	1 3/16"	1 1/2"	1 13/16"	2"	2 1/8"	2 3/16"	2 1/4"	2 1/4"	2 5/16"	2 1/4"	2 1/4"	2 3/16"	2 1/8"	2"	1 13/16"	1 9/16"	1 3/16"	11/16"	0

✱ INCLUDES FUTURE WEARING SURFACE
ALL VALUES ARE SHOWN IN FEET (DECIMAL FORM), EXCEPT "FINAL CAMBER", WHICH IS GIVEN IN INCHES (FRACTION FORM).

DEAD LOAD DEFLECTION TABLE FOR GIRDERS

0.6" Ø LOW RELAXATION	GIRDERS 4 THRU 9																				
TWENTIETH POINTS	0	.05	.10	.15	.20	.25	.30	.35	.40	.45	.50	.55	.60	.65	.70	.75	.80	.85	.90	.95	0
CAMBER (GIRDER ALONE IN PLACE) ↑	0.000	0.091	0.167	0.230	0.281	0.324	0.357	0.383	0.400	0.411	0.415	0.411	0.400	0.383	0.357	0.324	0.281	0.230	0.167	0.091	0.000
✱ DEFLECTION DUE TO SUPERIMPOSED D.L. ↓	0.000	0.032	0.064	0.095	0.123	0.148	0.169	0.186	0.198	0.206	0.208	0.206	0.198	0.186	0.169	0.147	0.122	0.094	0.063	0.032	0.000
FINAL CAMBER ↑	0	11/16"	1 1/4"	1 5/8"	1 7/8"	2 1/8"	2 1/4"	2 3/8"	2 7/16"	2 7/16"	2 1/2"	2 7/16"	2 7/16"	2 3/8"	2 1/4"	2 1/8"	1 15/16"	1 5/8"	1 1/4"	11/16"	0

✱ INCLUDES FUTURE WEARING SURFACE
ALL VALUES ARE SHOWN IN FEET (DECIMAL FORM), EXCEPT "FINAL CAMBER", WHICH IS GIVEN IN INCHES (FRACTION FORM).

PROJECT NO. B-4091
CUMBERLAND COUNTY
STATION: 52+10 -L-

SHEET 1 OF 3

STATE OF NORTH CAROLINA
DEPARTMENT OF TRANSPORTATION
RALEIGH

SUPERSTRUCTURE

DEAD LOAD DEFLECTIONS
SPANS A & G

Prepared by
URS
URS Corporation - North Carolina
1600 Perimeter Park Drive, Suite 400
Morrisville, NC 27560
TELEPHONE (919) 461-1100
FAX (919) 461-1415

NORTH CAROLINA PROFESSIONAL SEAL 038447 ENGINEER ANDREW S. MILLER
5/23/12

REVISIONS						SHEET NO.
NO.	BY:	DATE:	NO.	BY:	DATE:	S-87
1			3			TOTAL SHEETS
2			4			131

DRAWN BY : M. K. TOM DATE : 3/19/12
CHECKED BY : A. S. MILLER DATE : 3/20/12

5/23/2012
P:\Jobs1\B4091\Structures\FinalDrawings\B4091_SD_DL1.dgn
ross_whitcher

DEAD LOAD DEFLECTION TABLE FOR GIRDERS

0.6"Ø LOW RELAXATION	GIRDERS 1 & 12																				
TWENTIETH POINTS	0	.05	.10	.15	.20	.25	.30	.35	.40	.45	.50	.55	.60	.65	.70	.75	.80	.85	.90	.95	0
CAMBER (GIRDER ALONE IN PLACE) ↑	0.000	0.092	0.168	0.231	0.283	0.325	0.358	0.384	0.402	0.412	0.416	0.412	0.402	0.384	0.358	0.325	0.283	0.231	0.168	0.092	0.000
* DEFLECTION DUE TO SUPERIMPOSED D.L. ↓	0.000	0.037	0.074	0.109	0.141	0.171	0.196	0.216	0.230	0.239	0.242	0.239	0.230	0.216	0.196	0.171	0.142	0.109	0.074	0.037	0.000
FINAL CAMBER ↑	0	11/16"	1 1/8"	1 7/16"	1 11/16"	1 7/8"	1 15/16"	2"	2 1/16"	2 1/16"	2 1/16"	2 1/16"	2 1/16"	2"	1 15/16"	1 7/8"	1 11/16"	1 7/16"	1 1/8"	11/16"	0

* INCLUDES FUTURE WEARING SURFACE
ALL VALUES ARE SHOWN IN FEET (DECIMAL FORM), EXCEPT "FINAL CAMBER", WHICH IS GIVEN IN INCHES (FRACTION FORM).

DEAD LOAD DEFLECTION TABLE FOR GIRDERS

0.6"Ø LOW RELAXATION	GIRDERS 2, 3, 10, & 11																				
TWENTIETH POINTS	0	.05	.10	.15	.20	.25	.30	.35	.40	.45	.50	.55	.60	.65	.70	.75	.80	.85	.90	.95	0
CAMBER (GIRDER ALONE IN PLACE) ↑	0.000	0.092	0.168	0.231	0.283	0.325	0.358	0.384	0.402	0.412	0.416	0.412	0.402	0.384	0.358	0.325	0.283	0.231	0.168	0.092	0.000
* DEFLECTION DUE TO SUPERIMPOSED D.L. ↓	0.000	0.035	0.070	0.104	0.135	0.163	0.186	0.205	0.219	0.227	0.230	0.227	0.219	0.205	0.186	0.163	0.135	0.104	0.070	0.035	0.000
FINAL CAMBER ↑	0	11/16"	1 3/16"	1 1/2"	1 3/4"	1 15/16"	2 1/16"	2 1/8"	2 3/16"	2 1/4"	2 1/4"	2 1/4"	2 3/16"	2 1/8"	2 1/16"	1 15/16"	1 3/4"	1 1/2"	1 3/16"	11/16"	0

* INCLUDES FUTURE WEARING SURFACE
ALL VALUES ARE SHOWN IN FEET (DECIMAL FORM), EXCEPT "FINAL CAMBER", WHICH IS GIVEN IN INCHES (FRACTION FORM).

DEAD LOAD DEFLECTION TABLE FOR GIRDERS

0.6"Ø LOW RELAXATION	GIRDERS 4 THRU 9																				
TWENTIETH POINTS	0	.05	.10	.15	.20	.25	.30	.35	.40	.45	.50	.55	.60	.65	.70	.75	.80	.85	.90	.95	0
CAMBER (GIRDER ALONE IN PLACE) ↑	0.000	0.092	0.168	0.231	0.283	0.325	0.358	0.384	0.402	0.412	0.416	0.412	0.402	0.384	0.358	0.325	0.283	0.231	0.168	0.092	0.000
* DEFLECTION DUE TO SUPERIMPOSED D.L. ↓	0.000	0.035	0.065	0.097	0.126	0.152	0.174	0.191	0.204	0.212	0.214	0.212	0.204	0.191	0.174	0.152	0.126	0.097	0.065	0.032	0.000
FINAL CAMBER ↑	0	11/16"	1 1/4"	1 5/8"	1 7/8"	2 1/16"	2 3/16"	2 5/16"	2 3/8"	2 3/8"	2 7/16"	2 3/8"	2 3/8"	2 5/16"	2 3/16"	2 1/16"	1 7/8"	1 5/8"	1 1/4"	11/16"	0

* INCLUDES FUTURE WEARING SURFACE
ALL VALUES ARE SHOWN IN FEET (DECIMAL FORM), EXCEPT "FINAL CAMBER", WHICH IS GIVEN IN INCHES (FRACTION FORM).

PROJECT NO. B-4091
CUMBERLAND COUNTY
STATION: 52+10 -L-

SHEET 2 OF 3

STATE OF NORTH CAROLINA
DEPARTMENT OF TRANSPORTATION
RALEIGH

SUPERSTRUCTURE

DEAD LOAD DEFLECTIONS
SPANS B, C, E, & F

Prepared by
URS
URS Corporation - North Carolina
1600 Perimeter Park Drive, Suite 400
Morrisville, NC 27560
TELEPHONE (919) 461-1100
FAX (919) 461-1415

NORTH CAROLINA PROFESSIONAL SEAL 038447 ENGINEER ANDREW S. MILLER
5/23/12

REVISIONS								SHEET NO.
NO.	BY:	DATE:	NO.	BY:	DATE:			S-88
1			3					TOTAL SHEETS
2			4					131

DRAWN BY : M. K. TOM DATE : 3/19/12
CHECKED BY : A. S. MILLER DATE : 3/20/12

5/23/2012
P:\Jobs1\B4091\Structures\FinalDrawings\B4091_SD_DL2.dgn
roas_whitcher

DEAD LOAD DEFLECTION TABLE FOR GIRDERS

0.6" Ø LOW RELAXATION	GIRDERS 1 & 12																				
TWENTIETH POINTS	0	.05	.10	.15	.20	.25	.30	.35	.40	.45	.50	.55	.60	.65	.70	.75	.80	.85	.90	.95	0
CAMBER (GIRDER ALONE IN PLACE) ↑	0.000	0.092	0.168	0.231	0.283	0.325	0.358	0.384	0.401	0.412	0.415	0.412	0.401	0.384	0.358	0.325	0.283	0.231	0.168	0.092	0.000
✱ DEFLECTION DUE TO SUPERIMPOSED D.L. ↓	0.000	0.037	0.073	0.109	0.141	0.170	0.195	0.214	0.229	0.237	0.240	0.237	0.229	0.214	0.195	0.170	0.141	0.109	0.073	0.037	0.000
FINAL CAMBER ↑	0	11/16"	1 1/8"	1 7/16"	1 11/16"	1 7/8"	1 15/16"	2"	2 1/16"	2 1/8"	2 1/8"	2 1/8"	2 1/16"	2"	1 15/16"	1 7/8"	1 11/16"	1 7/16"	1 1/8"	11/16"	0

✱ INCLUDES FUTURE WEARING SURFACE
ALL VALUES ARE SHOWN IN FEET (DECIMAL FORM), EXCEPT "FINAL CAMBER", WHICH IS GIVEN IN INCHES (FRACTION FORM).

DEAD LOAD DEFLECTION TABLE FOR GIRDERS

0.6" Ø LOW RELAXATION	GIRDERS 2, 3, 10, & 11																				
TWENTIETH POINTS	0	.05	.10	.15	.20	.25	.30	.35	.40	.45	.50	.55	.60	.65	.70	.75	.80	.85	.90	.95	0
CAMBER (GIRDER ALONE IN PLACE) ↑	0.000	0.092	0.168	0.231	0.283	0.325	0.358	0.384	0.401	0.412	0.415	0.412	0.401	0.384	0.358	0.325	0.283	0.231	0.168	0.092	0.000
✱ DEFLECTION DUE TO SUPERIMPOSED D.L. ↓	0.000	0.035	0.070	0.103	0.134	0.162	0.185	0.204	0.217	0.226	0.228	0.226	0.217	0.204	0.185	0.162	0.134	0.103	0.070	0.035	0.000
FINAL CAMBER ↑	0	11/16"	1 3/16"	1 1/2"	1 3/4"	1 15/16"	2 1/16"	2 3/16"	2 3/16"	2 1/4"	2 1/4"	2 1/4"	2 3/16"	2 3/16"	2 1/16"	1 15/16"	1 3/4"	1 1/2"	1 3/16"	11/16"	0

✱ INCLUDES FUTURE WEARING SURFACE
ALL VALUES ARE SHOWN IN FEET (DECIMAL FORM), EXCEPT "FINAL CAMBER", WHICH IS GIVEN IN INCHES (FRACTION FORM).

DEAD LOAD DEFLECTION TABLE FOR GIRDERS

0.6" Ø LOW RELAXATION	GIRDERS 4 THRU 9																				
TWENTIETH POINTS	0	.05	.10	.15	.20	.25	.30	.35	.40	.45	.50	.55	.60	.65	.70	.75	.80	.85	.90	.95	0
CAMBER (GIRDER ALONE IN PLACE) ↑	0.000	0.092	0.168	0.231	0.283	0.325	0.358	0.384	0.401	0.412	0.415	0.412	0.401	0.384	0.358	0.325	0.283	0.231	0.168	0.092	0.000
✱ DEFLECTION DUE TO SUPERIMPOSED D.L. ↓	0.000	0.032	0.065	0.096	0.125	0.150	0.172	0.189	0.202	0.210	0.212	0.210	0.202	0.190	0.172	0.150	0.125	0.096	0.065	0.032	0.000
FINAL CAMBER ↑	0	11/16"	1 1/4"	1 5/8"	1 7/8"	2 1/16"	2 1/4"	2 5/16"	2 3/8"	2 7/16"	2 7/16"	2 7/16"	2 3/8"	2 5/16"	2 1/4"	2 1/16"	1 7/8"	1 5/8"	1 1/4"	11/16"	0

✱ INCLUDES FUTURE WEARING SURFACE
ALL VALUES ARE SHOWN IN FEET (DECIMAL FORM), EXCEPT "FINAL CAMBER", WHICH IS GIVEN IN INCHES (FRACTION FORM).

PROJECT NO. B-4091
CUMBERLAND COUNTY
STATION: 52+10 -L-

SHEET 3 OF 3

STATE OF NORTH CAROLINA
DEPARTMENT OF TRANSPORTATION
RALEIGH

SUPERSTRUCTURE

DEAD LOAD DEFLECTIONS
SPAN D

Prepared by
URS
URS Corporation – North Carolina
1600 Perimeter Park Drive, Suite 400
Morrisville, NC 27560
TELEPHONE (919) 461-1100
FAX (919) 461-1415

NORTH CAROLINA PROFESSIONAL SEAL 038447 ENGINEER ANDREW S. MILLER
5/23/12

REVISIONS						SHEET NO.
NO.	BY:	DATE:	NO.	BY:	DATE:	S-89
1			3			TOTAL SHEETS
2			4			131

DRAWN BY : M. K. TOM DATE : 3/19/12
CHECKED BY : A. S. MILLER DATE : 3/20/12

5/23/2012
P:\Jobs1\B4091\Structures\Final Drawings\B4091_SD_DL3.dgn
ross_whitcher

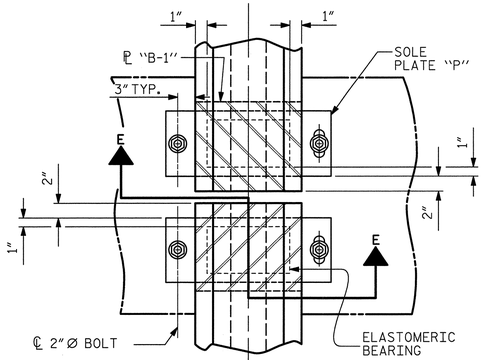

TYPICAL HALF-PLAN (SHOWING CONTINUOUS BENT)

TYPICAL HALF-PLAN (SHOWING SIMPLE SPAN BENT)

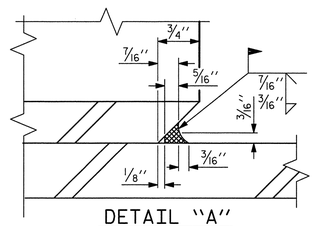

DETAIL "A"

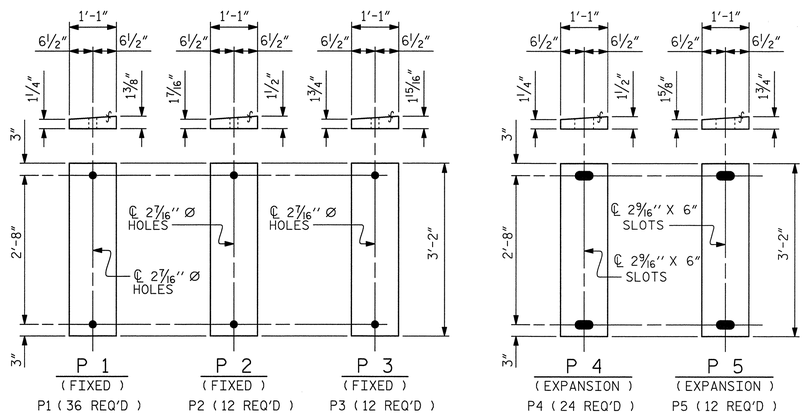

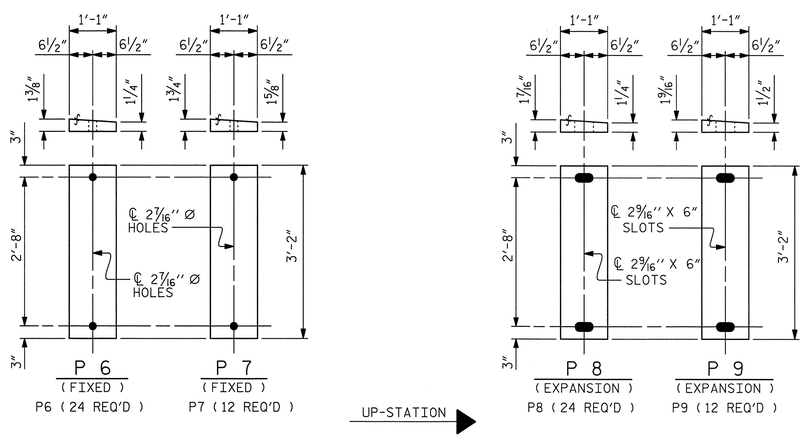

SOLE PLATE DETAILS ("P")

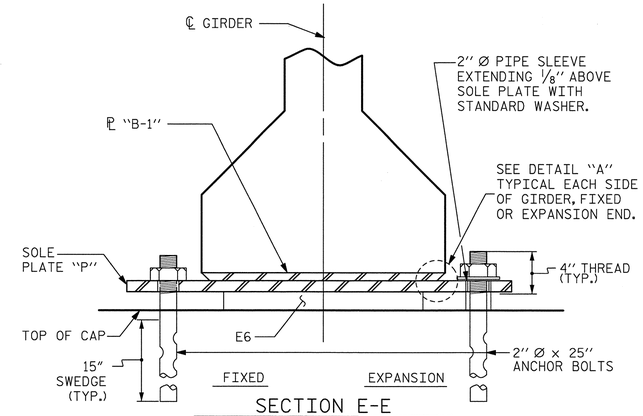

SECTION E-E

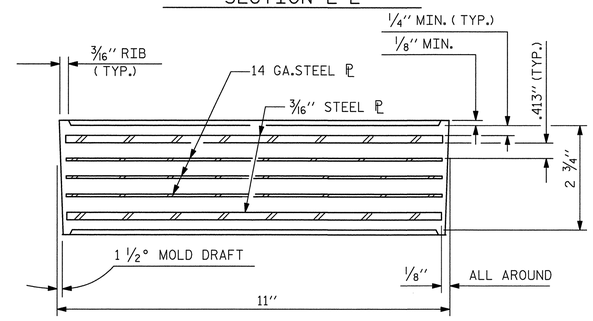

TYPICAL SECTION OF ELASTOMERIC BEARINGS

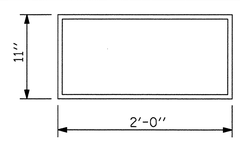

E6 (168 REQ'D)

PLAN VIEW OF ELASTOMERIC BEARING

TYPE VII

NOTES

AT ALL FIXED POINTS OF SUPPORT, NUTS FOR ANCHOR BOLTS ARE TO BE TIGHTENED FINGER TIGHT AND THEN BACKED OFF 1/2 TURN. THE THREAD OF THE NUT AND BOLT SHALL THEN BE BURRED WITH A SHARP POINTED TOOL.

THE 2" Ø PIPE SLEEVE SHALL BE CUT FROM SCHEDULE 40 PVC PLASTIC PIPE. THE PVC PLASTIC PIPE SHALL MEET THE REQUIREMENTS OF ASTM D1785.

STEEL SOLE PLATES, ANCHOR BOLTS, NUTS, AND WASHERS SHALL BE GALVANIZED IN ACCORDANCE WITH THE STANDARD SPECIFICATIONS.

PRIOR TO WELDING, GRIND THE GALVANIZED SURFACE OF THE PORTION OF THE EMBEDDED PLATE AND SOLE PLATE THAT ARE TO BE WELDED. AFTER WELDING, DAMAGED GALVANIZED SURFACES SHALL BE REPAIRED IN ACCORDANCE WITH THE STANDARD SPECIFICATIONS.

WHEN WELDING THE SOLE PLATE TO THE EMBEDDED PLATE IN THE GIRDER, USE TEMPERATURE INDICATING WAX PENS, OR OTHER SUITABLE MEANS, TO ENSURE THAT THE TEMPERATURE OF THE SOLE PLATE DOES NOT EXCEED 300°F. TEMPERATURES ABOVE THIS MAY DAMAGE THE ELASTOMER.

SOLE PLATE "P", BOLTS, NUTS, WASHERS, AND PIPE SLEEVE SHALL BE INCLUDED IN THE PAY ITEM FOR PRESTRESSED CONCRETE GIRDERS.

ANCHOR BOLTS SHALL MEET THE REQUIREMENTS OF ASTM A449. NUTS SHALL MEET THE REQUIREMENTS OF AASHTO M291-DH OR AASHTO M292-2H. WASHERS SHALL MEET THE REQUIREMENTS OF AASHTO M293. NO SHOP DRAWINGS ARE REQUIRED FOR ANCHOR BOLTS, NUTS AND WASHERS. SHOP INSPECTION IS REQUIRED.

ALL SURFACES OF BEARING PLATES SHALL BE SMOOTH AND STRAIGHT.

— LOAD RATINGS —	
	MAX.D.L.+ L.L.
TYPE VII	264 K

PROJECT NO. B-4091
CUMBERLAND COUNTY
STATION: 52+15.00 -L-

STATE OF NORTH CAROLINA
DEPARTMENT OF TRANSPORTATION
RALEIGH

STANDARD

ELASTOMERIC BEARING DETAILS

PRESTRESSED CONCRETE GIRDER SUPERSTRUCTURE

REVISIONS								SHEET NO.
NO.	BY:	DATE:	NO.	BY:	DATE:			S-90
1			3					TOTAL SHEETS
2			4					131

Prepared by
URS
URS Corporation - North Carolina
1600 Perimeter Park Drive, Suite 400
Morrisville, NC 27560
TELEPHONE (919) 461-1100
FAX (919) 461-1415

NORTH CAROLINA PROFESSIONAL SEAL 038447 ENGINEER ANDREW S. MILLER
5/23/12

ASSEMBLED BY : R. L. WHITCHER		DATE : 2/13/12	
CHECKED BY : J. E. SLOAN		DATE : 3/21/12	
DRAWN BY : WJH 8/89	REV. 7/10/01	RWW/LES	
CHECKED BY : CRK 8/89	REV. 5/1/06	TLA/GM	
	REV. 10/1/11	MAA/GM	

5/23/2012
P:\Jobs1\B4091\Structures\Final Drawings\B4091_SD_BG.dgn
ross_whitcher

STD. NO. EB3

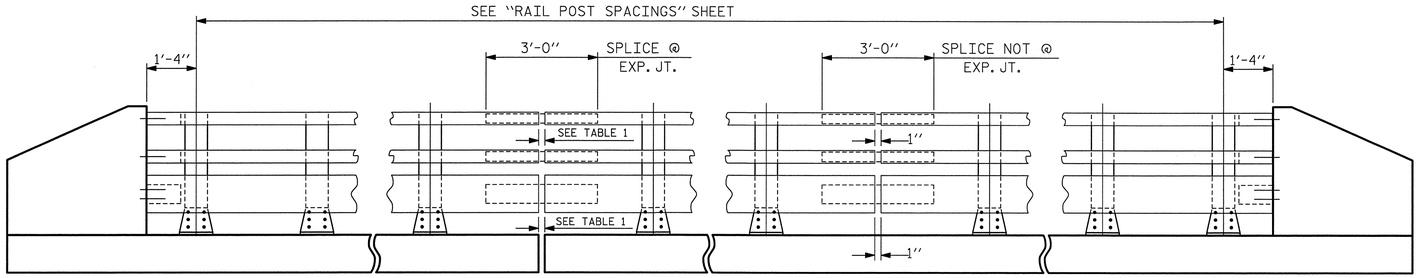

ELEVATION

NOTE:
FOR ATTACHMENT OF METAL RAIL TO END POST, SEE STANDARD NO. BMR7.

TABLE 1	
℄ EXP.JT. @ BENT	RAIL OPENING
BENT No. 2	2"
BENT No. 5	2"

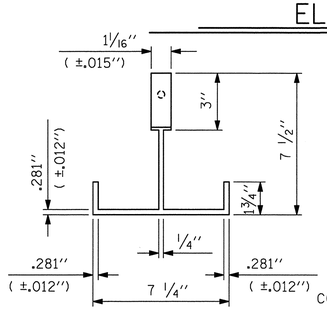

PLAN

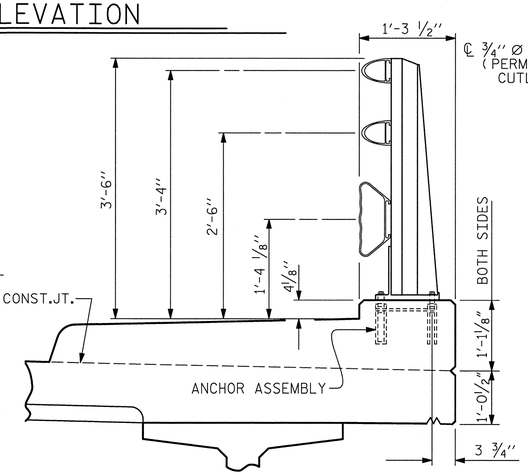

SECTION THRU RAIL

FOR ANCHOR ASSEMBLY, SEE "3 BAR METAL RAIL" STD.No.BMR6

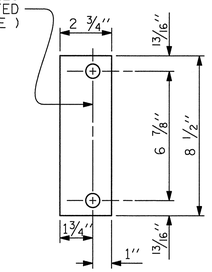

REAR PLATE

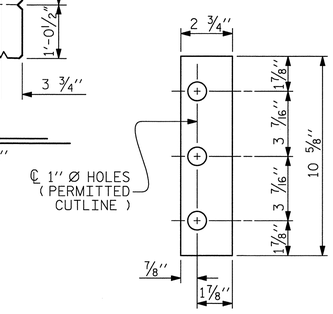

FRONT PLATE

SHIM DETAILS

NOTE :
SHIMS MAY BE CUT ALONG PERMITTED CUTLINE OR SLOTTED TO EDGE OF PLATE TO FACILITATE PLACEMENT.

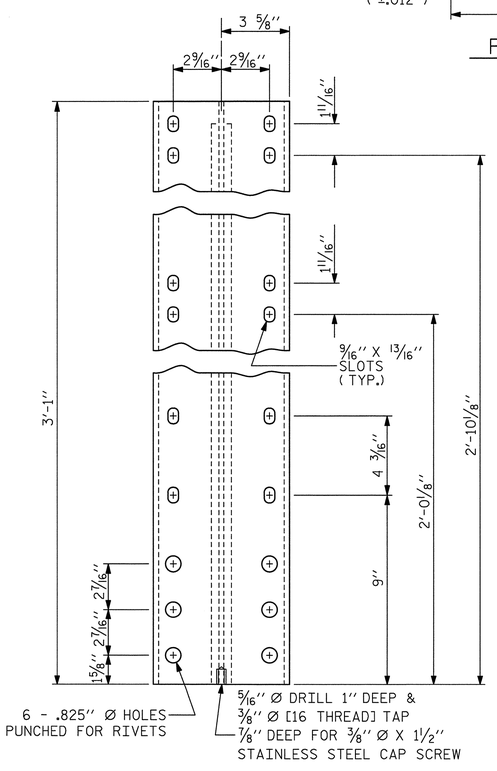

FRONT ELEVATION

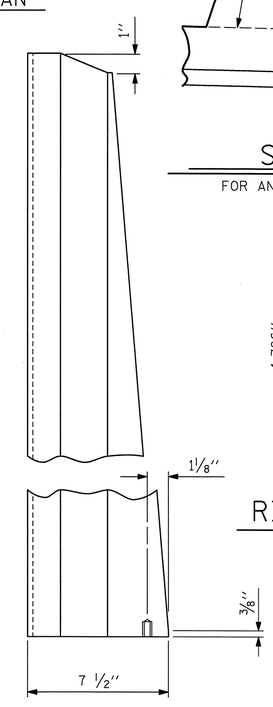

SIDE ELEVATION

DETAILS OF POST

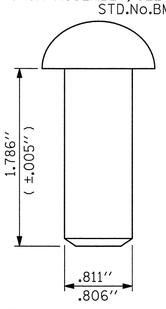

RIVET DETAIL

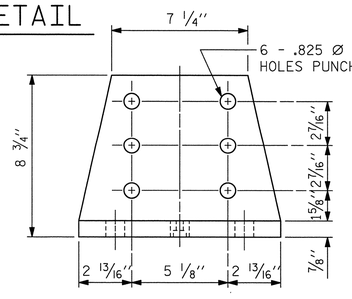

FRONT ELEVATION

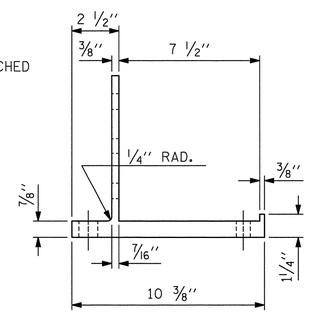

SIDE ELEVATION

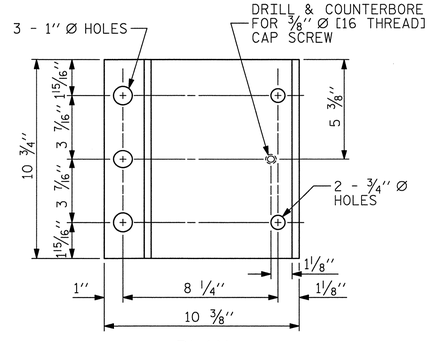

PLAN

POST BASE DETAILS

NOTES

AT THE CONTRACTOR'S OPTION, METAL RAIL MAY BE EITHER ALUMINUM OR GALVANIZED STEEL IN ACCORDANCE WITH THE REQUIREMENTS OF THE GENERAL NOTES AND THE FOLLOWING SPECIFICATIONS FOR THE ALTERNATE MATERIALS; HOWEVER, THE CONTRACTOR WILL BE REQUIRED TO USE THE SAME RAIL MATERIAL ON ALL STRUCTURES ON THE PROJECT FOR WHICH METAL RAIL IS DESIGNATED.

ALUMINUM RAILS

MATERIAL FOR POSTS, BASES AND RAILS, EXPANSION BARS AND CLAMP BARS SHALL BE ASTM B221 ALLOY 6061-T6.

MATERIAL FOR RIVETS SHALL BE ASTM B316 ALLOY 6061-T6. RIVETS SHALL BE STANDARD BUTTON HEAD AND CONE POINT COLD DRIVEN AS PER DRAWING.

THE BASE OF RAIL POSTS, OR ANY OTHER ALUMINUM SURFACE IN CONTACT WITH CONCRETE SHALL BE THOROUGHLY COATED WITH AN ALUMINUM IMPREGNATED CAULKING COMPOUND OF APPROVED QUALITY.

MATERIAL FOR SHIMS TO BE ASTM B209 ALLOY 6061-T6.

GALVANIZED STEEL RAILS

MATERIAL AND GALVANIZING ARE TO CONFORM TO THE FOLLOWING SPECIFICATIONS:

POST, POST BASES, RAILS, EXPANSION BARS AND CLAMP BARS : AASHTO M270 GRADE 36 STRUCTURAL STEEL - GALVANIZED TO AASHTO M111.

RIVETS: RIVETS SHALL MEET THE REQUIREMENTS OF ASTM A502 FOR GRADE 1 RIVETS.

THE CUT ENDS OF GALVANIZED STEEL RAILING, AFTER GRINDING SMOOTH SHALL BE GIVEN TWO COATS OF ZINC RICH PAINT MEETING THE REQUIREMENTS OF FEDERAL SPECIFICATION MIL-P-26915 USAF TYPE 1, OR OF FEDERAL SPECIFICATIONS TT-P-641.

SHIMS: SHIMS SHALL MEET THE REQUIREMENTS OF ASTM A570 FOR GRADE 33 OR A611 FOR GRADE C AND SHALL BE GALVANIZED IN ACCORDANCE WITH AASHTO M111.

RAIL CAPS: RAIL CAPS SHALL MEET THE REQUIREMENTS OF ASTM A570 FOR GRADE 33 OR A611 FOR GRADE C AND SHALL BE GALVANIZED IN ACCORDANCE WITH AASHTO M111.

GENERAL NOTES

RAILING SHALL BE CONTINUOUS FROM END POST TO END POST OF BRIDGE. EACH JOINT IN RAIL LENGTH SHALL BE SPLICED AS DETAILED. PANEL LENGTHS OF RAIL SHALL BE ATTACHED TO A MINIMUM OF THREE POSTS. PLACE ONE JOINT SPLICE JUST BEYOND THE 3RD RAIL POST FROM EACH END, TYPICALLY 14' FROM THE END. PLACE OTHER JOINTS AS NEEDED.

FOR END OF RAIL TO CLEAR FACE OF CONCRETE END POST DIMENSION, SEE STANDARD NO. BMR7.

CAP SCREWS SHALL BE ASTM F593 ALLOY 305 STAINLESS STEEL. WASHERS FOR RAIL ATTACHMENT SHALL MEET THE REQUIREMENTS OF ASTM F844 EXCEPT THEY SHALL BE MADE FROM ALLOY 304 STAINLESS STEEL.

CERTIFIED MILL REPORTS ARE REQUIRED FOR RAILS AND POSTS. SHOP INSPECTION IS NOT REQUIRED.

METAL RAIL POSTS SHALL BE SET NORMAL TO CURB GRADE.

METHOD OF MEASUREMENT FOR METAL RAILS: FOR LENGTH OF METAL RAILS TO BE PAID FOR, SEE THE STANDARD SPECIFICATIONS.

CURVED RAIL USAGE: WHERE RAILS ARE TO BE USED ON BRIDGES ON HORIZONTAL AND/OR VERTICAL CURVATURE THE CONTRACTOR MAY, AT HIS OPTION, HAVE THE REQUIRED CURVATURE IN THE RAIL FORMED IN THE SHOP OR IN THE FIELD. IN EITHER EVENT, THE RAIL SHALL CONFORM WITHOUT BUCKLING OR KINKING TO THE REQUIRED CURVATURE IN A UNIFORM MANNER ACCEPTABLE TO THE ENGINEER.

TO INSURE FUTURE IDENTIFICATION OF THE FABRICATOR, A PERMANENT IDENTIFYING MARK SHALL BE PLACED ON EACH POST. THE METHOD OF MARKING AND LOCATION SHALL BE SUCH THAT IT DOES NOT DETRACT FROM THE APPEARANCE OF THE POST, BUT REMAIN VISIBLE AFTER RAIL PLACEMENT.

SHIMS SHALL BE USED AS NECESSARY FOR POST ALIGNMENT.

ALLOY 6351-T5 MAY BE SUBSTITUTED FOR ALLOY 6061-T6 WHERE APPLICABLE.

MINOR VARIATIONS IN DETAILS OF METAL RAIL WILL BE CONSIDERED. DETAILS OF SUCH VARIATIONS, IF DESIRED, SHALL BE SUBMITTED FOR APPROVAL.

PAY LENGTH = 1940.5 LIN.FT.

NORTH CAROLINA PROFESSIONAL SEAL 038447 ENGINEER ANDREW S. MILLER
5/23/12

Prepared by
URS
URS Corporation - North Carolina
1600 Perimeter Park Drive, Suite 400
Morrisville, NC 27560
TELEPHONE (919) 461-1100
FAX (919) 461-1415

PROJECT NO. B-4091
CUMBERLAND COUNTY
STATION: 52+15.00 -L-

SHEET 1 OF 5

STATE OF NORTH CAROLINA
DEPARTMENT OF TRANSPORTATION
RALEIGH

STANDARD

3 BAR METAL RAIL

ASSEMBLED BY : R. L WHITCHER	DATE : 2/14/12
CHECKED BY : M. K. TOM	DATE : 2/22/12

DRAWN BY : JMB	1/88	REV. 5/7/03	RWW/JTE
CHECKED BY : GGH	1/88	REV. 5/1/06	TLA/GM
		REV. 10/1/11	MAA/GM

REVISIONS						SHEET NO.
NO.	BY:	DATE:	NO.	BY:	DATE:	S-91
1			3			TOTAL SHEETS
2			4			131

STD. NO. BMR5

5/23/2012
P:\Jobs\B4091\Structures\FinalDrawings\B4091_SD_3MR1.dgn
ross_whitcher

NOTES

STRUCTURAL CONCRETE ANCHOR ASSEMBLY

THE STRUCTURAL CONCRETE ANCHOR ASSEMBLY SHALL CONSIST OF THE FOLLOWING COMPONENTS:

A. FERRULES SHALL BE MADE FROM STEEL MEETING THE REQUIREMENTS OF AASHTO M169, GRADE 12L14 AND SHALL HAVE A MINIMUM LENGTH OF THREADS OF 2" FOR 3/4" FERRULES AND 1 3/4" FOR 5/8" FERRULES.

B. 3 - 3/4" Ø X 2 1/2" BOLTS WITH WASHERS. BOLTS SHALL CONFORM TO THE REQUIREMENTS OF ASTM A307. BOLTS AND WASHERS SHALL BE GALVANIZED. AT THE CONTRACTOR'S OPTION, STAINLESS STEEL BOLTS AND WASHERS MAY BE USED AS AN ALTERNATE FOR THE 3/4" Ø X 2 1/2" GALVANIZED BOLTS AND WASHERS. THEY SHALL CONFORM TO OR EXCEED THE MECHANICAL REQUIREMENTS OF ASTM A307. THE USE OF THIS ALTERNATE SHALL BE APPROVED BY THE ENGINEER.

C. 2 - 5/8" Ø X 2 1/4" BOLTS WITH WASHERS. BOLTS SHALL CONFORM TO THE REQUIREMENTS OF ASTM A307. BOLTS AND WASHERS SHALL BE GALVANIZED. AT THE CONTRACTOR'S OPTION, STAINLESS STEEL BOLTS AND WASHERS MAY BE USED AS AN ALTERNATE FOR THE 5/8" Ø X 2 1/4" GALVANIZED BOLTS AND WASHERS. THEY SHALL CONFORM TO OR EXCEED THE MECHANICAL REQUIREMENTS OF ASTM A307. THE USE OF THIS ALTERNATE SHALL BE APPROVED BY THE ENGINEER.

D. WIRE STRUT SHOWN IN THE CONCRETE ANCHOR ASSEMBLY DETAIL IS THE MINIMUM ALLOWABLE SIZE AND SHALL HAVE A MINIMUM TENSILE STRENGTH OF 100,000 PSI. AS AN OPTION, A 7/16" Ø WIRE STRUT WITH A MINIMUM TENSILE STRENGTH OF 90,000 PSI IS ACCEPTABLE.

E. THE METAL RAIL ANCHOR ASSEMBLIES TO BE HOT DIPPED GALVANIZED TO CONFORM TO REQUIREMENTS OF AASHTO M111.

F. THE COST OF THE METAL RAIL ANCHOR ASSEMBLY WITH BOLTS AND WASHERS COMPLETE IN PLACE SHALL BE INCLUDED IN THE PRICE BID FOR LINEAR FEET OF METAL RAIL.

G. BOLTS TO BE TIGHTENED ONE-HALF TURN WITH A WRENCH FROM A FINGER-TIGHT POSITION.

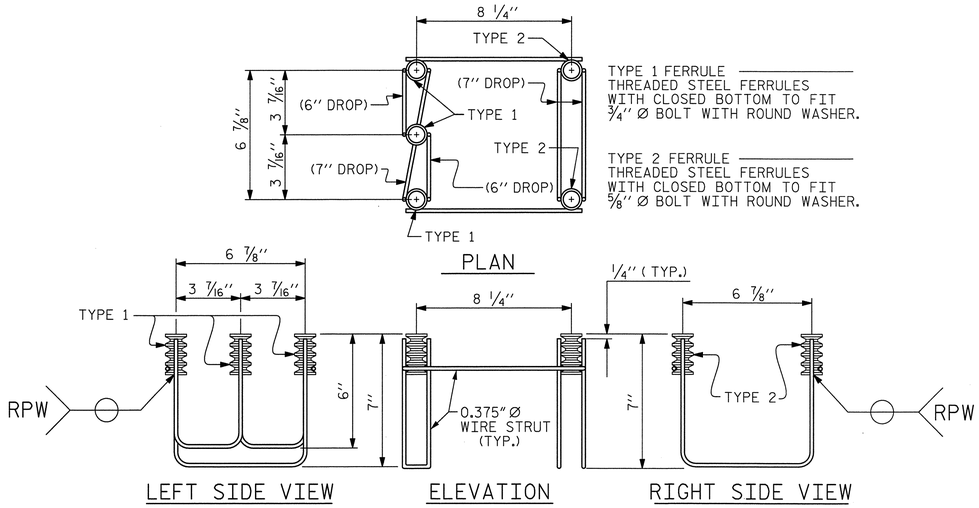

5-BOLT METAL RAIL ANCHOR ASSEMBLY

(306 ASSEMBLIES REQUIRED)

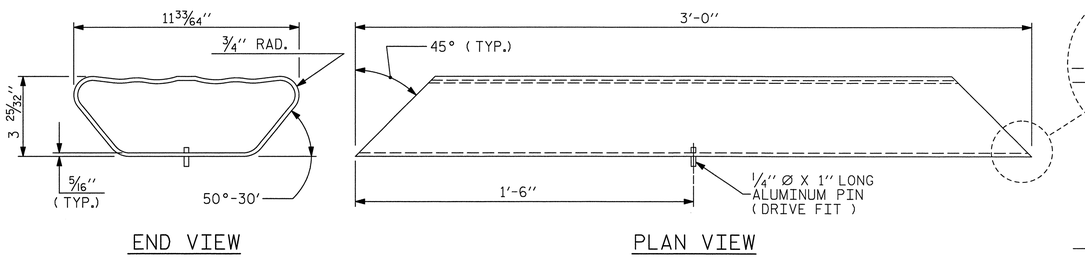

BOTTOM RAIL EXPANSION BAR

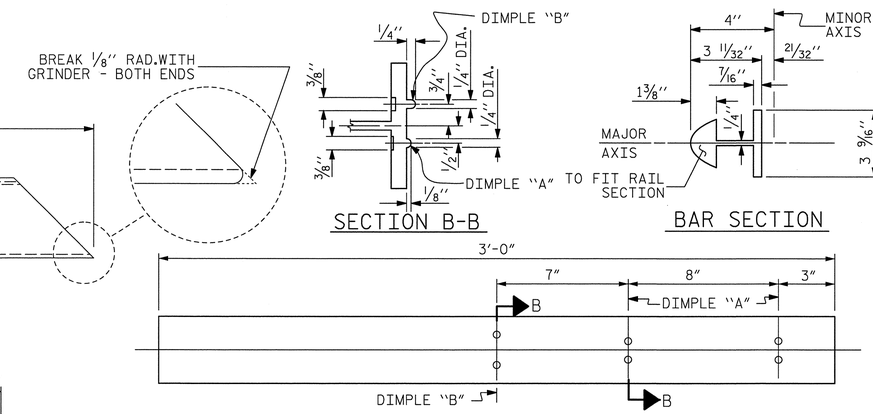

TOP & MIDDLE RAIL EXPANSION BAR

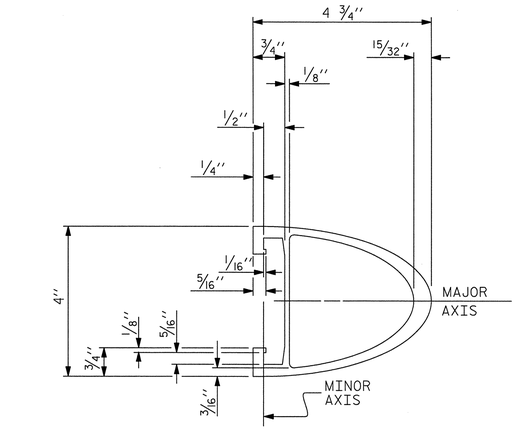

TOP & MIDDLE RAIL SECTION

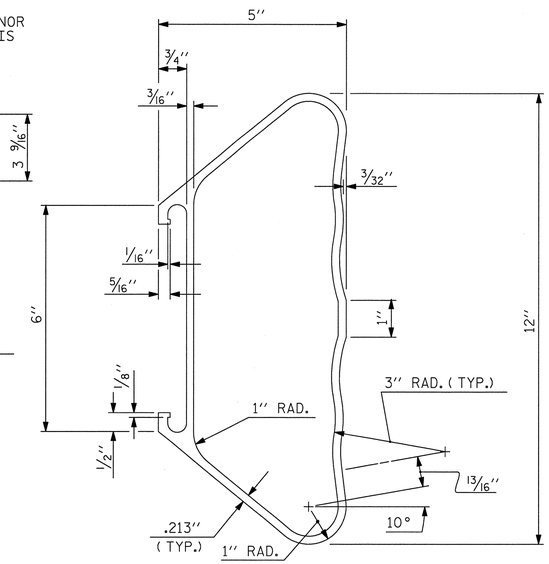

BOTTOM RAIL SECTION

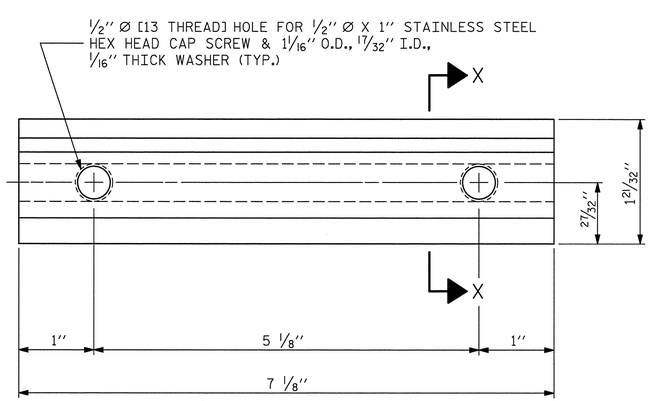

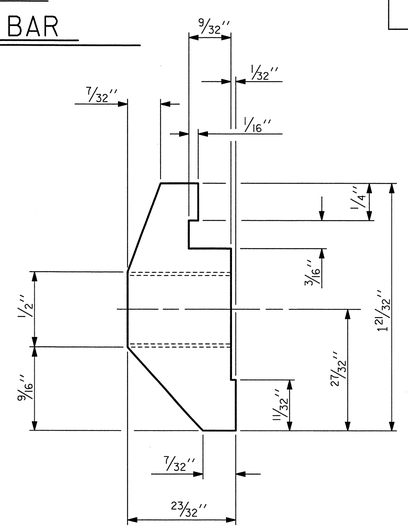

CLAMP BAR DETAIL

(6 REQUIRED PER POST)

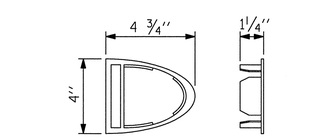

TOP & MIDDLE RAIL CAP

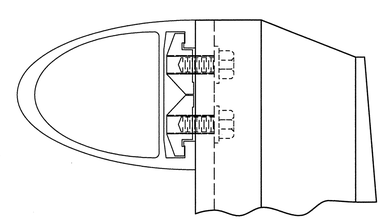

CLAMP ASSEMBLY

TOP RAIL SHOWN
(MIDDLE & BOTTOM RAIL ARE SIMILAR)

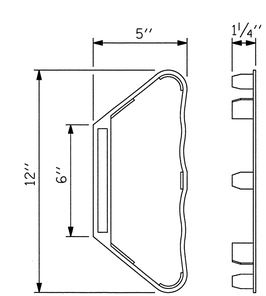

BOTTOM RAIL CAP

PROJECT NO. B-4091

CUMBERLAND COUNTY

STATION: 52+15.00 -L-

SHEET 2 OF 5

STATE OF NORTH CAROLINA
DEPARTMENT OF TRANSPORTATION
RALEIGH

STANDARD

3 BAR METAL RAIL

ASSEMBLED BY : R. L WHITCHER	DATE : 2/14/12				
M. K. TOM	M. K. TOM	DATE : 2/22/12			
DRAWN BY : JMB 1/88	REV. 5/7/03	RWW/JTE			
CHECKED BY : GGH 1/88	REV. 5/1/06	TLA/GM			
	REV. 10/1/11	MAA/GM			

REVISIONS						SHEET NO.
NO.	BY:	DATE:	NO.	BY:	DATE:	S-92
1			3			TOTAL SHEETS
2			4			131

Prepared by
URS
URS Corporation - North Carolina
1600 Perimeter Park Drive, Suite 400
Morrisville, NC 27560
TELEPHONE (919) 461-1100
FAX (919) 461-1415

NORTH CAROLINA PROFESSIONAL SEAL 038447 ENGINEER ANDREW S. MILLER 5/23/12

STD. NO. BMR6

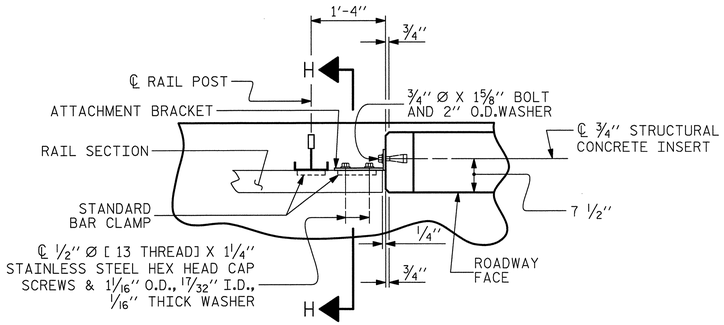

PLAN OF RAIL AND END POST

(STIFFENER ON 1/2" ℙ NOT SHOWN FOR CLARITY)

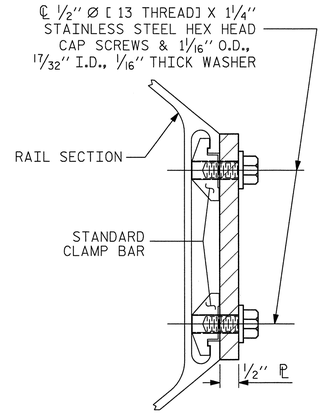

SECTION H-H

(FOR BOTTOM RAIL)

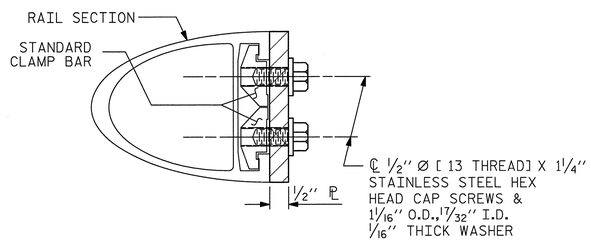

SECTION H-H

(FOR TOP & MIDDLE RAIL)

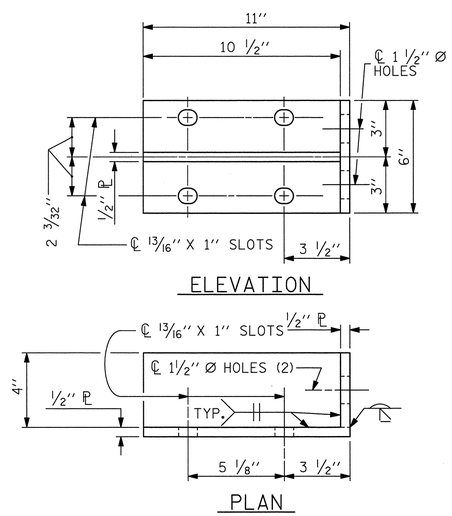

DETAILS FOR ATTACHMENT BRACKET

(BOTTOM RAIL ONLY)

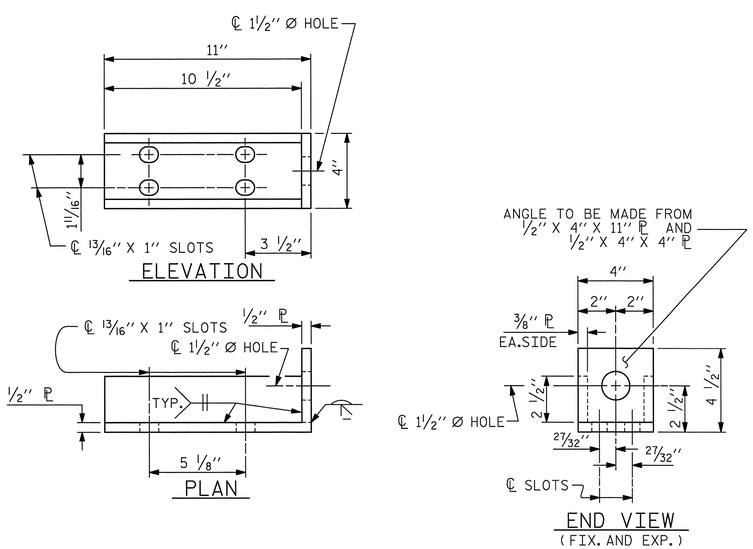

DETAILS FOR ATTACHMENT BRACKET

(TOP & MIDDLE RAIL ONLY)

NOTES

METAL RAIL TO END POST CONNECTION

THE METAL RAIL TO END POST CONNECTION SHALL CONSIST OF THE FOLLOWING COMPONENTS:

A. 1/2" PLATES SHALL CONFORM TO AASHTO M270 GRADE 36 AND SHALL BE GALVANIZED AFTER FABRICATION.

B. 3/4" STRUCTURAL CONCRETE INSERT SHALL HAVE A WORKING LOAD SHEAR CAPACITY OF 4800 LBS. THE FERRULES SHALL ENGAGE A 3/4" Ø X 1 5/8" BOLT WITH 2" O.D. WASHER IN PLACE. THE 3/4" Ø X 1 5/8" BOLT SHALL HAVE N. C. THREADS.

C. CAP SCREWS FOR RAIL ATTACHMENT TO ANGLE SHALL CONFORM TO THE REQUIREMENTS OF ASTM F593 ALLOY 305 STAINLESS STEEL. CAP SCREWS TO BE CENTERED IN SLOTS AT 60°F. WASHERS FOR RAIL ATTACHMENT SHALL MEET THE REQUIREMENTS OF ASTM F844 EXCEPT THEY SHALL BE MADE FROM ALLOY 304 STAINLESS STEEL.

D. STANDARD CLAMP BARS (STD. No. BMR6).

THE COST OF THE STANDARD CLAMP BARS AND CAP SCREWS USED IN THE METAL RAIL TO END POST CONNECTION SHALL BE INCLUDED IN THE UNIT CONTRACT PRICE BID FOR LINEAR FEET OF 3 BAR METAL RAIL.

THE 3/4" STRUCTURAL CONCRETE INSERT WITH BOLT SHALL BE ASSEMBLED IN THE SHOP.

THE COST OF THE 3/4" STRUCTURAL CONCRETE INSERT ASSEMBLY, AND THE 1/2" PLATES COMPLETE IN PLACE SHALL BE INCLUDED IN THE VARIOUS PAY ITEMS.

THE CONTRACTOR, AT HIS OPTION, MAY USE AN ADHESIVE BONDING SYSTEM IN LIEU OF THE STRUCTURAL CONCRETE INSERT EMBEDDED IN THE END POST. IF THE ADHESIVE BONDING SYSTEM IS USED, THE 3/4" Ø X 1 5/8" BOLT WITH WASHER SHALL BE REPLACED WITH A 3/4" Ø X 6 1/2" BOLT AND 2" O.D.WASHER. ALL SPECIFICATIONS THAT APPLY TO THE 3/4" Ø X 1 5/8" BOLT SHALL APPLY TO THE 3/4" Ø X 6 1/2" BOLT. FIELD TESTING OF THE ADHESIVE BONDING SYSTEM IS NOT REQUIRED.

NOTES

STRUCTURAL CONCRETE INSERT

THE STRUCTURAL CONCRETE INSERT ASSEMBLY SHALL CONSIST OF THE FOLLOWING COMPONENTS:

A. FERRULES SHALL BE MADE FROM STEEL MEETING THE REQUIREMENTS OF AASHTO M169, GRADE 12L14 AND SHALL HAVE A MINIMUM LENGTH OF THREADS OF 1 1/2".

B. 1 - 3/4" Ø X 1 5/8" BOLT WITH WASHER. BOLT SHALL CONFORM TO THE REQUIREMENTS OF ASTM A307. BOLT AND WASHER SHALL BE GALVANIZED. AT THE CONTRACTORS OPTION, STAINLESS STEEL BOLT AND WASHER MAY BE USED AS AN ALTERNATE FOR THE 3/4" Ø X 1 5/8" GALVANIZED BOLT AND WASHER. THEY SHALL CONFORM TO OR EXCEED THE MECHANICAL REQUIREMENTS OF ASTM A307. THE USE OF THIS ALTERNATE SHALL BE APPROVED BY THE ENGINEER.

C. WIRE STRUT SHOWN IN THE CONCRETE INSERT ASSEMBLY DETAIL IS THE MINIMUM ALLOWABLE SIZE AND SHALL HAVE A MINIMUM TENSILE STRENGTH OF 100,000 PSI. AS AN OPTION, A 7/16" Ø WIRE STRUT WITH A MINIMUM TENSILE STRENGTH OF 90,000 PSI IS ACCEPTABLE.

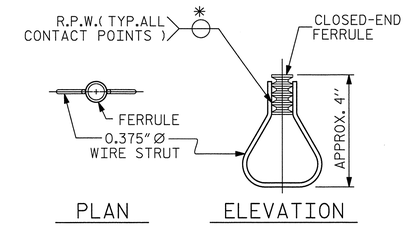

STRUCTURAL CONCRETE INSERT

* EACH WELDED ATTACHMENT OF WIRE TO FERRULE SHALL DEVELOP THE TENSILE STRENGTH OF THE WIRE.

PROJECT NO. B-4091

CUMBERLAND COUNTY

STATION: 52+15.00 -L-

SHEET 3 OF 5

STATE OF NORTH CAROLINA
DEPARTMENT OF TRANSPORTATION
RALEIGH

STANDARD

3 BAR METAL RAIL

ASSEMBLED BY :	R. L WHITCHER	DATE : 2/14/12			
CHECKED BY :	M. K. TOM	DATE : 2/22/12			
DRAWN BY : JMB	1/88	REV. 5/7/03	RWW/JTE		
CHECKED BY : GGH	1/88	REV. 5/1/06	TLA/GM		
		REV. 10/1/11	MAA/GM		

REVISIONS

NO.	BY:	DATE:	NO.	BY:	DATE:
1			3		
2			4		

SHEET NO. S-93

TOTAL SHEETS 131

Prepared by
URS
URS Corporation - North Carolina
1600 Perimeter Park Drive, Suite 400
Morrisville, NC 27560
TELEPHONE (919) 461-1100
FAX (919) 461-1415

NORTH CAROLINA PROFESSIONAL SEAL 038447 ENGINEER ANDREW M. WHELER
5/23/12

STD. NO. BMR7

5/23/2012
P:\Jobs1\B4091\Structures\FinalDrawings\B4091_SD_3MR3.dgn
ross_whitcher

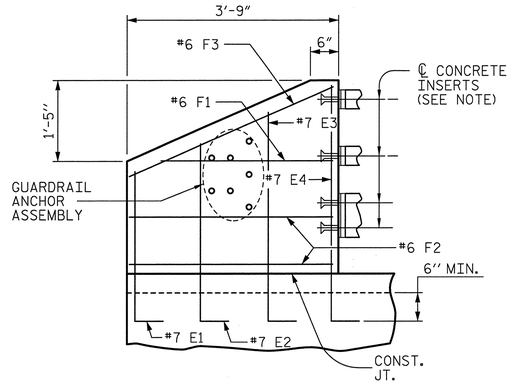

ELEVATION

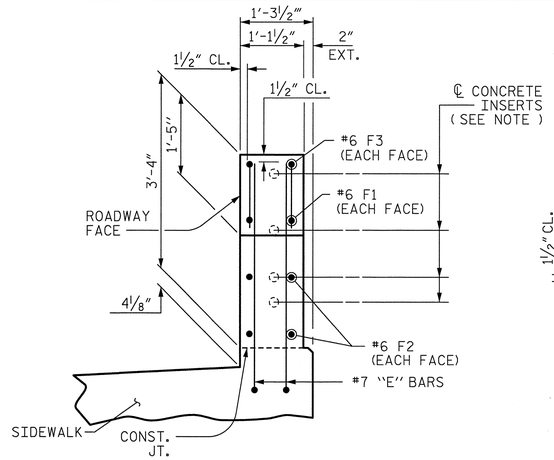

END VIEW

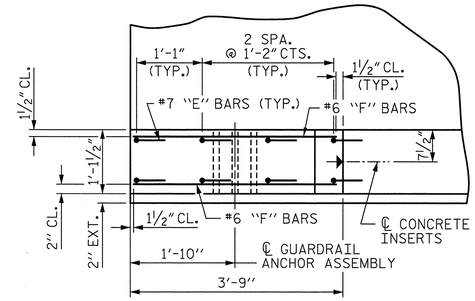

PLAN

BEGIN BRIDGE SHOWN, END BRIDGE SIMILAR

END POST DETAILS

NOTES

THE GUARDRAIL ANCHOR ASSEMBLY SHALL CONSIST OF A ¼" HOLD DOWN PLATE AND 7 - ⅞" Ø BOLTS WITH NUTS AND WASHERS.

THE HOLD-DOWN PLATE SHALL CONFORM TO AASHTO M270 GRADE 36. AFTER FABRICATION, THE HOLD-DOWN PLATE SHALL BE HOT-DIP GALVANIZED IN ACCORDANCE WITH AASHTO M111.

BOLTS SHALL CONFORM TO THE REQUIREMENTS OF ASTM A307 AND NUTS SHALL CONFORM TO THE REQUIREMENTS OF AASHTO M291. BOLTS, NUTS AND WASHERS SHALL BE GALVANIZED. AT THE CONTRACTOR'S OPTION, STAINLESS STEEL BOLTS, NUTS AND WASHERS MAY BE USED AS AN ALTERNATE FOR THE ⅞" Ø GALVANIZED BOLTS, NUTS AND WASHERS. THEY SHALL CONFORM TO OR EXCEED THE MECHANICAL REQUIREMENTS OF ASTM A307. THE USE OF THIS ALTERNATE SHALL BE APPROVED BY THE ENGINEER.

THE GUARDRAIL ANCHOR ASSEMBLY IS REQUIRED AT ALL POINTS WHERE APPROACH GUARDRAIL IS TO BE ATTACHED TO THE END OF THE PARAPET. FOR POINTS OF ATTACHMENT, SEE SKETCH.

AFTER INSTALLATION, THE EXPOSED THREAD OF THE BOLT SHALL BE BURRED WITH A SHARP POINTED TOOL.

THE COST OF THE GUARDRAIL ANCHOR ASSEMBLIES WITH BOLTS, NUTS AND WASHERS COMPLETE IN PLACE, SHALL BE INCLUDED IN THE VARIOUS PAY ITEMS.

THE VERTICAL REINFORCING BARS MAY BE SHIFTED SLIGHTLY IN THE END POST TO CLEAR ASSEMBLY BOLTS.

THE 1 ¼" Ø HOLES SHALL BE FORMED OR DRILLED WITH A CORE BIT. IMPACT TOOLS WILL NOT BE PERMITTED. ANY CONCRETE DAMAGED BY THIS WORK SHALL BE REPAIRED TO THE SATISFACTION OF THE ENGINEER.

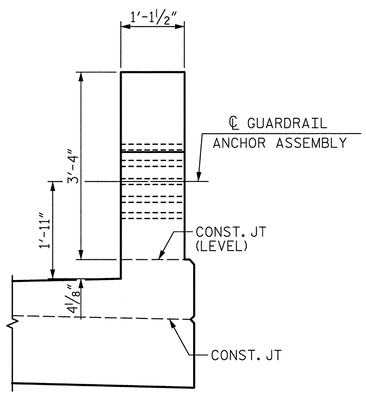

END VIEW

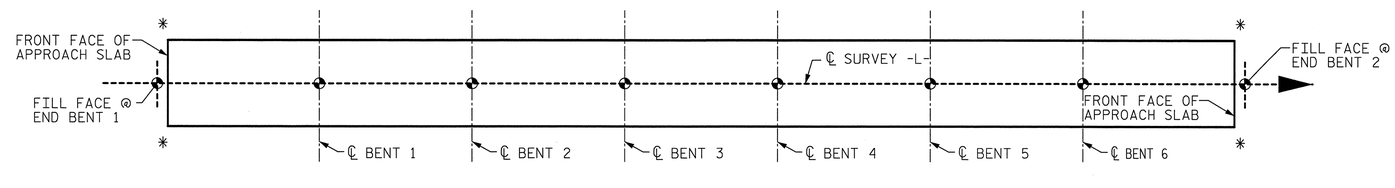

SKETCH SHOWING POINTS OF ATTACHMENT

✱ LOCATION OF GUARDRAIL ATTACHMENT

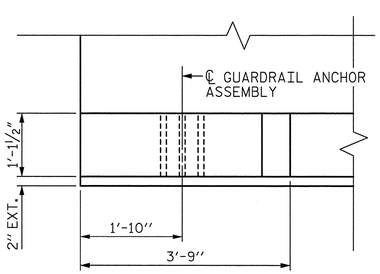

PLAN

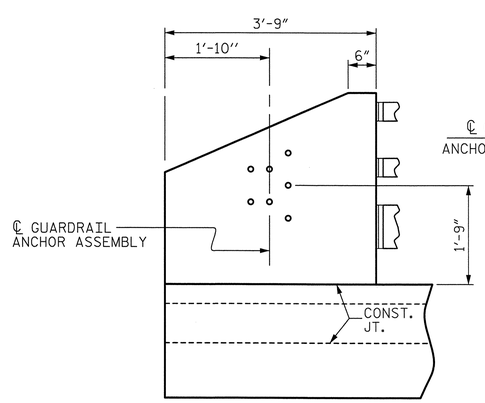

ELEVATION

LOCATION OF GUARDRAIL ANCHOR AT END POST

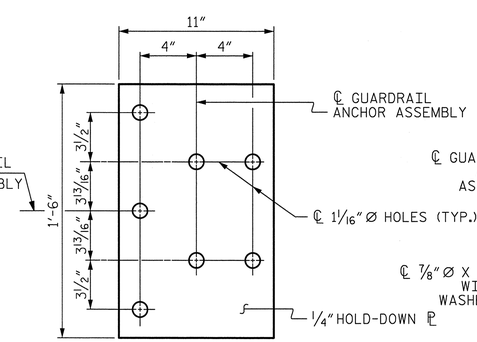

PLAN

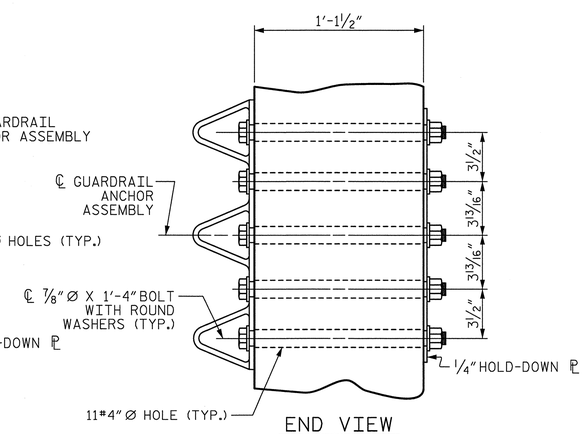

END VIEW

GUARDRAIL ANCHOR ASSEMBLY DETAILS

PROJECT NO. B-4091

CUMBERLAND COUNTY

STATION: 52+15.00 -L-

SHEET 4 OF 5

STATE OF NORTH CAROLINA
DEPARTMENT OF TRANSPORTATION
RALEIGH

STANDARD
END POST & GUARDRAIL ANCHORAGE DETAILS

ASSEMBLED BY : R. L WHITCHER	DATE : 2/14/12
CHECKED BY : M. K. TOM	DATE : 2/22/12
DRAWN BY : MAA 5/10	ADDED 5/6/10
CHECKED BY : GM 5/10	REV. 10/1/11 MAA/GM
	REV. 12/5/11 MAA/GM

Prepared by
URS
URS Corporation - North Carolina
1600 Perimeter Park Drive, Suite 400
Morrisville, NC 27560
TELEPHONE (919) 461-1100
FAX (919) 461-1415

NORTH CAROLINA PROFESSIONAL SEAL 038447 ENGINEER ANDREW S. MILLER
5/23/12

REVISIONS						SHEET NO.
NO.	BY:	DATE:	NO.	BY:	DATE:	S-94
1			3			TOTAL SHEETS
2			4			131

STD. NO. GRA3

5/23/2012
P:\Jobs1\B4091\Structures\FinalDrawings\B4091_SD_3MR4.dgn
ross_whitcher

NOTES

FOR TABLE 1 SEE "3 BAR METAIL RAIL" SHEET 2 OF 5

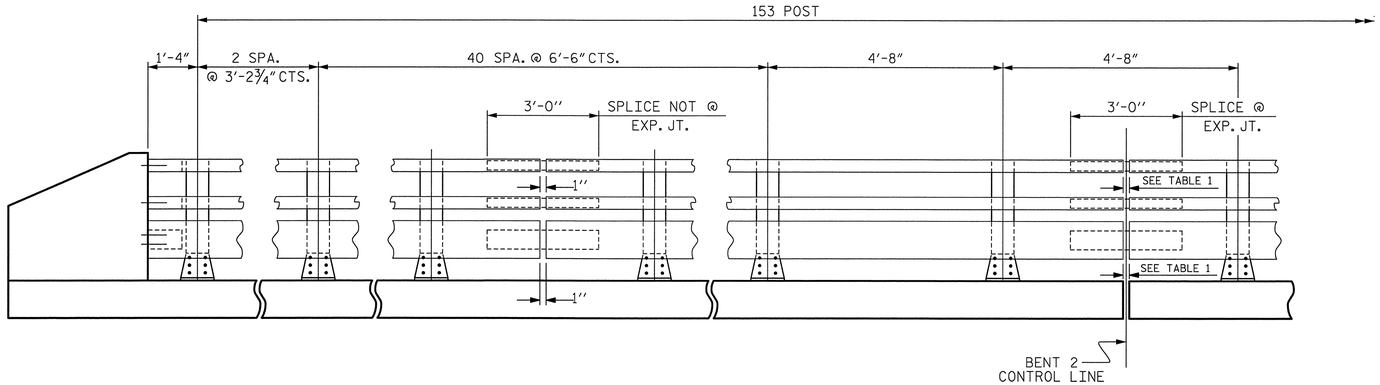

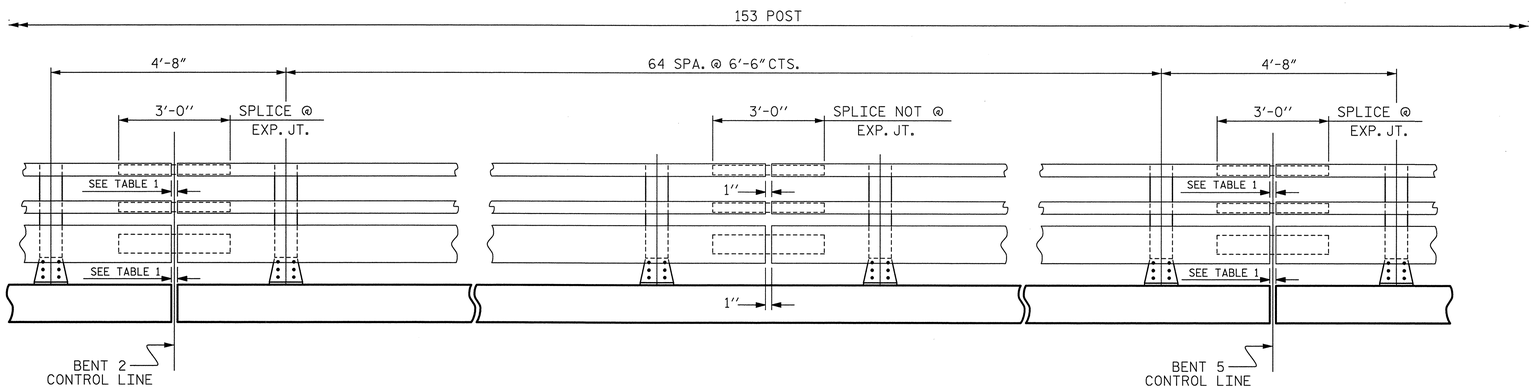

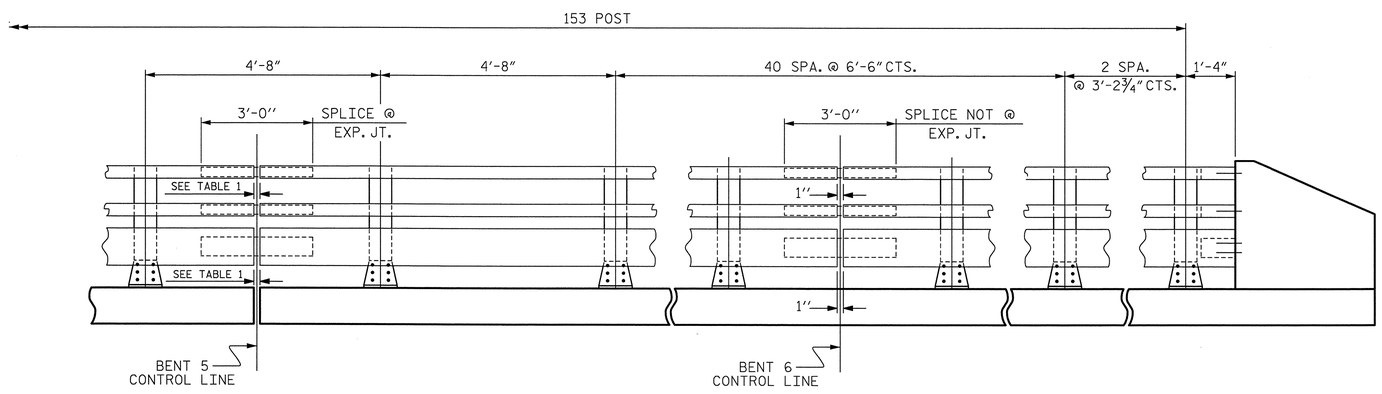

ELEVATION 3 BAR METAL RAIL

PROJECT NO. B-4091

CUMBERLAND COUNTY

STATION: 52+15.00 -L-

SHEET 5 OF 5

STATE OF NORTH CAROLINA
DEPARTMENT OF TRANSPORTATION
RALEIGH

SUPERSTRUCTURE

3 BAR METAL RAIL
POST SPACING

Prepared by
URS
URS Corporation - North Carolina
1600 Perimeter Park Drive, Suite 400
Morrisville, NC 27560
TELEPHONE (919) 461-1100
FAX (919) 461-1415

NORTH CAROLINA PROFESSIONAL SEAL 038447 ENGINEER ANDREW S. MILLER
5/23/12

REVISIONS								SHEET NO.
NO.	BY:	DATE:	NO.	BY:	DATE:			S-95
1			3					TOTAL SHEETS
2			4					131

DRAWN BY : M. K. TOM DATE : 3/21/12
CHECKED BY : J. C. HALL DATE : 3/29/12

5/23/2012
P:\Jobs\B4091\Structures\Final Drawings\B4091_SD_3MR5.dgn
ross_whitcher

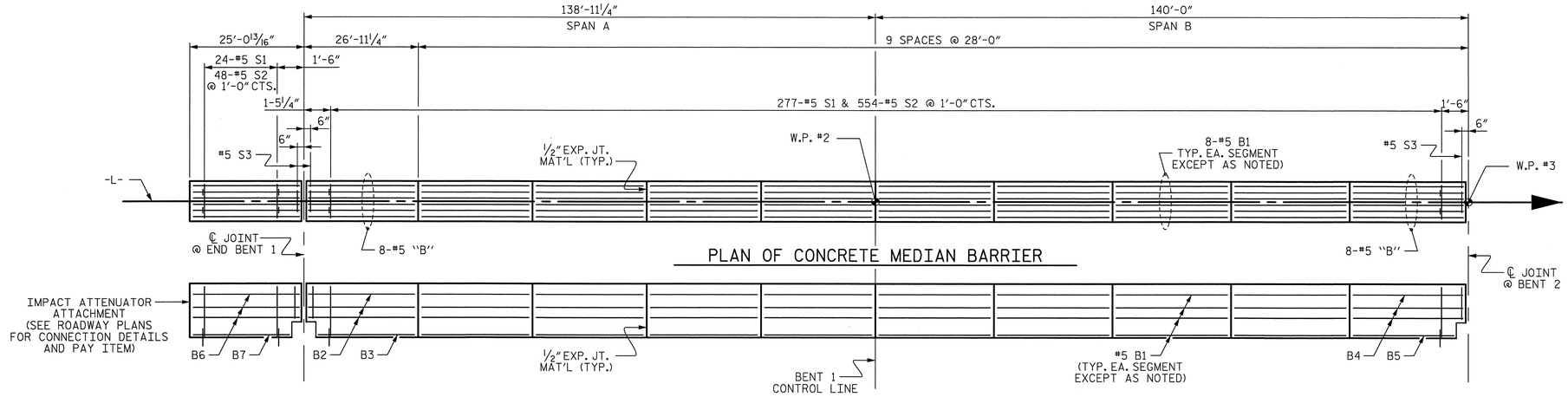

PLAN OF CONCRETE MEDIAN BARRIER

ELEVATION OF CONCRETE MEDIAN BARRIER

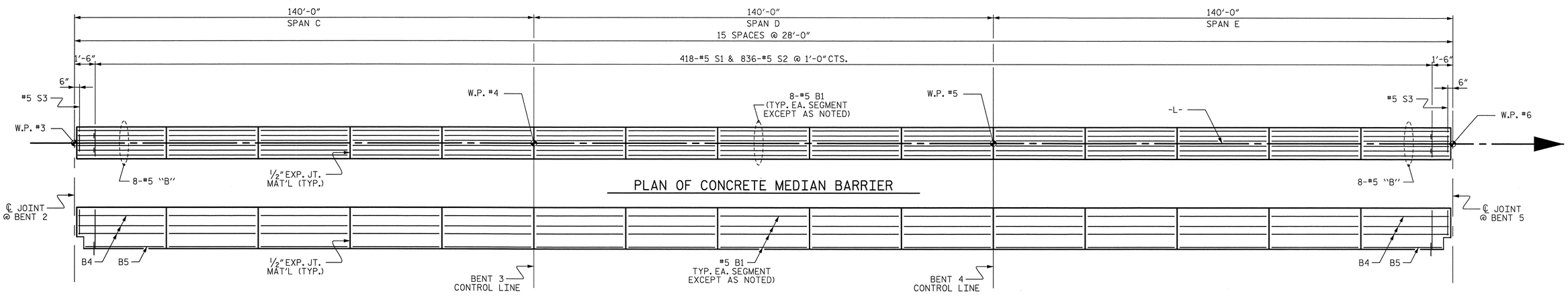

PLAN OF CONCRETE MEDIAN BARRIER

ELEVATION OF CONCRETE MEDIAN BARRIER

PROJECT NO. B-4091

CUMBERLAND COUNTY

STATION: 52+15.00 -L-

SHEET 1 OF 3

STATE OF NORTH CAROLINA
DEPARTMENT OF TRANSPORTATION
RALEIGH

SUPERSTRUCTURE

CONCRETE MEDIAN BARRIER

Prepared by
URS
URS Corporation – North Carolina
1600 Perimeter Park Drive, Suite 400
Morrisville, NC 27560
TELEPHONE (919) 461-1100
FAX (919) 461-1415

NORTH CAROLINA PROFESSIONAL SEAL 038447 ENGINEER ANDREW S. MILLER
5/23/12

REVISIONS						SHEET NO.
NO.	BY:	DATE:	NO.	BY:	DATE:	S-96
1			3			TOTAL SHEETS
2			4			131

DRAWN BY : M. K. TOM DATE : 3/21/12
CHECKED BY : K. H. COMPTON DATE : 3/23/12

5/23/2012
P:\Jobs1\B4091\Structures\Final Drawings\B4091_SD_MD1.dgn
ross_whitcher

BAR TYPE

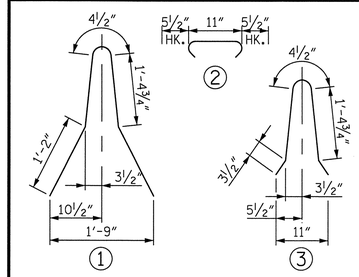

BILL OF MATERIAL

CONCRETE MEDIAN BARRIER

BAR	NO.	SIZE	TYPE	LENGTH	WEIGHT
✳B1	232	#5	STR.	27'-7"	6675
✳B2	12	#5	STR.	26'-6"	332
✳B3	4	#5	STR.	25'-7"	107
✳B4	24	#5	STR.	27'-6"	688
✳B5	8	#5	STR.	26'-8"	223
✳B6	12	#5	STR.	24'-7"	308
✳B7	4	#5	STR.	23'-9"	99
✳S1	1020	#5	1	5'-6"	5851
✳S2	2040	#5	2	1'-10"	3901
✳S3	8	#5	3	3'-9"	31
✳EPOXY COATED REINF. STEEL					18,215 LBS.
CLASS AA CONCRETE					106.9 CU. YDS.
CONCRETE MEDIAN BARRIER					1,028 LIN. FT.

NOTES:

THE CONCRETE MEDIAN BARRIER IN EACH CONTINUOUS UNIT SHALL NOT BE CAST UNTIL ALL SLAB CONCRETE IN THAT UNIT HAS BEEN CAST AND HAS REACHED A MINIMUM COMPRESSIVE STRENGTH OF 3,000 PSI.

GROOVED CONTRACTION JOINTS, ½" IN DEPTH, SHALL BE TOOLED IN ALL EXPOSED FACES OF THE CONCRETE MEDIAN BARRIER AND IN ACCORDANCE WITH ARTICLE 825-10(B) OF THE STANDARD SPECIFICATIONS. THE CONTRACTION JOINT SHALL BE LOCATED AT EACH THRID POINT BETWEEN CONCRETE MEDIAN BARRIER EXPANSION JOINTS. ONLY ONE CONTRACTION JOINT IS REQUIRED AT MIDPOINT OF CONCRETE BARRIER SEGMENTS LESS THAN 20 FEET IN LENGTH AND NO CONTRACTION JOINTS ARE REQUIRED FOR THOSE SEGMENTS LESS THAN 10 FEET IN LENGTH.

ALL REINFORCING STEEL IN THE CONCRETE MEDIAN BARRIER SHALL BE EPOXY COATED.

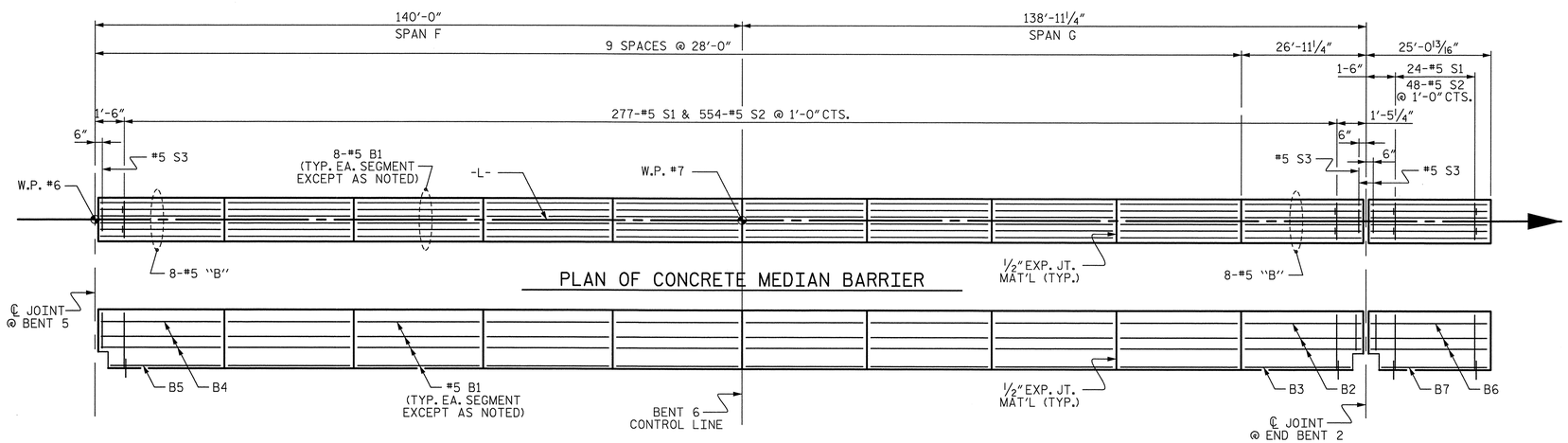

PROJECT NO. B-4091

CUMBERLAND COUNTY

STATION: 52+15.00 -L-

SHEET 2 OF 3

STATE OF NORTH CAROLINA
DEPARTMENT OF TRANSPORTATION
RALEIGH

SUPERSTRUCTURE

CONCRETE MEDIAN BARRIER

Prepared by
URS
URS Corporation – North Carolina
1600 Perimeter Park Drive, Suite 400
Morrisville, NC 27560
TELEPHONE (919) 461-1100
FAX (919) 461-1415

NORTH CAROLINA PROFESSIONAL SEAL 038447 ENGINEER ANDREW S. MILLER
5/23/12

REVISIONS						SHEET NO.
NO.	BY:	DATE:	NO.	BY:	DATE:	S-97
1			3			TOTAL SHEETS
2			4			131

DRAWN BY : M. K. TOM DATE : 3/21/12
CHECKED BY : K. H. COMPTON DATE : 3/23/12

5/23/2012
R:\Jobs\B4091\Structures\Final Drawings\B4091_SD_MD2.dgn
ross_whitcher

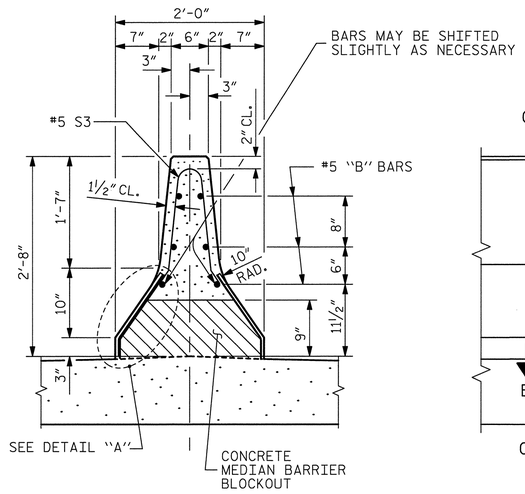

SECTION A-A

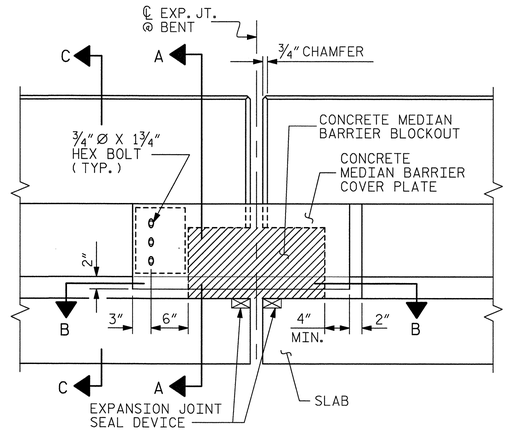

ELEVATION @ EXP. JT.

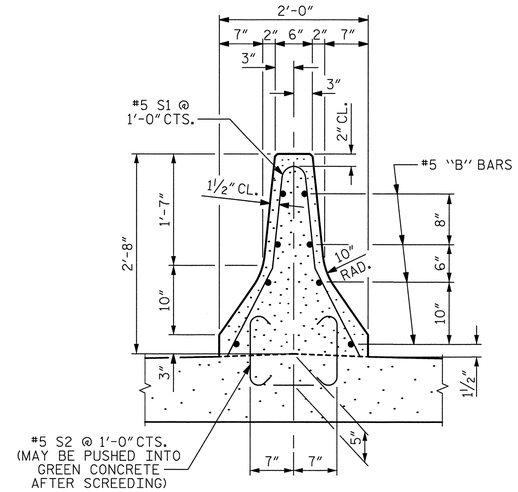

SECTION C-C

CONCRETE MEDIAN BARRIER

(FOR RIGID PAVEMENT)

NOTES:

NO SEPARATE PAYMENT WILL BE MADE FOR FURNISHING AND INSTALLING THE COVER PLATES. THE ENTIRE COST OF THIS WORK SHALL BE INCLUDED IN THE LUMP SUM PRICE FOR EXPANSION JOINT SEALS.

THE STEEL PLATES CONFORM TO AASHTO M270 GRADE 36 OR APPROVED EQUAL. AFTER FABRICATION, THE PLATES SHALL BE COMMERCIALLY BLAST CLEANED AND COATED WITH A MINIMUM THICKNESS OF 4 MILS (DRY) OF ZINC RICH PAINT, GALVANIZED OR METALLIZED TO A MINIMUM THICKNESS OF 6 MILS IN ACCORDANCE WITH THE STANDARD SPECIFICATIONS. FOR THERMAL SPRAYED COATINGS (METALLIZATION), SEE SPECIAL PROVISIONS.

THE ¾" DIAMETER HEX HEAD BOLTS SHALL CONFORM TO ASTM F593 ALLOY 304 STAINLESS STEEL.

THE ¾" CONCRETE INSERTS SHALL BE CLOSED-END FERRULES WITH LOOPED WIRE STRUTS ATTACHED TO THEM. THE INSERTS SHALL CONFORM TO AASHTO M169, GRADE 12L14 AND SHALL HAVE A TENSILE WORKING LOAD CAPACITY OF 3000 LBS.

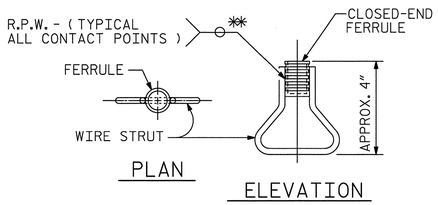

CONCRETE INSERT

** EACH WELDED ATTACHMENT OF WIRE TO FERRULE SHALL DEVELOP THE TENSILE STRENGTH OF THE WIRE.

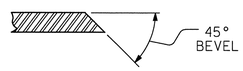

SECTION E- E

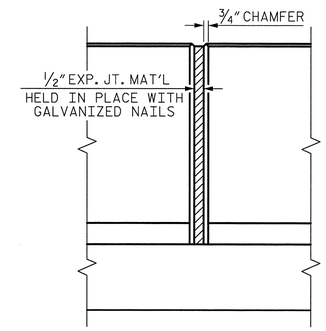

ELEVATION @ BARRIER EXP. JT.

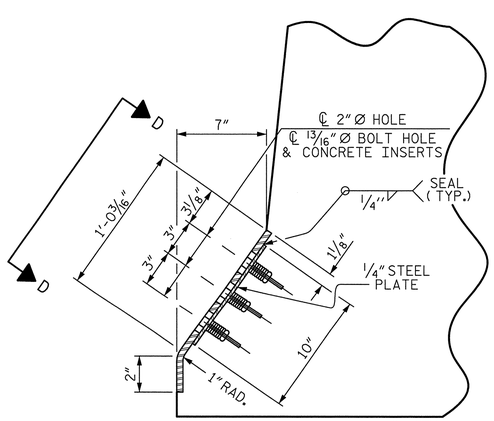

DETAIL "A"

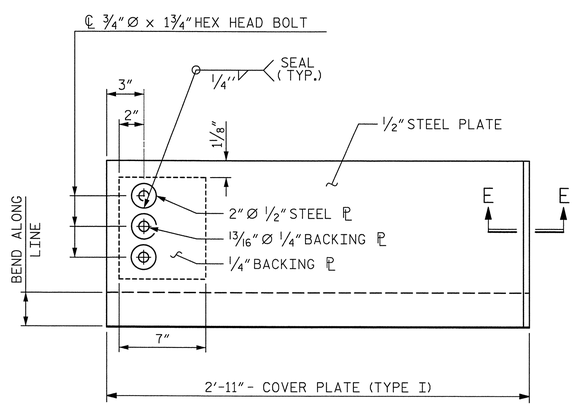

VIEW D-D

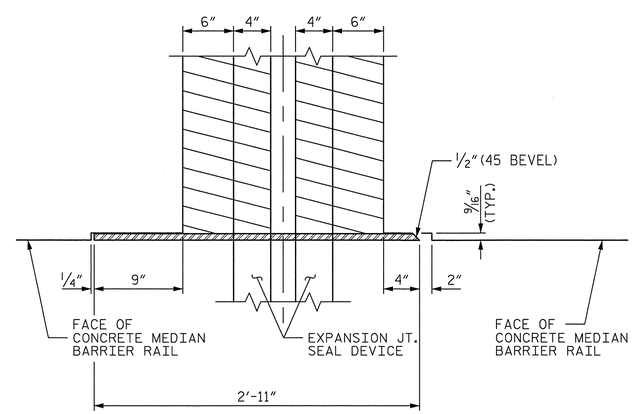

SECTION B-B

CONCRETE MEDIAN BARRIER COVER PLATE DETAIL

PROJECT NO. B-4091
CUMBERLAND COUNTY
STATION: 52+15.00 -L-

SHEET 3 OF 3

STATE OF NORTH CAROLINA
DEPARTMENT OF TRANSPORTATION
RALEIGH

SUPERSTRUCTURE

CONCRETE MEDIAN BARRIER DETAILS

Prepared by
URS
URS Corporation - North Carolina
1600 Perimeter Park Drive, Suite 400
Morrisville, NC 27560
TELEPHONE (919) 461-1100
FAX (919) 461-1415

NORTH CAROLINA PROFESSIONAL SEAL 038447 ENGINEER ANDREW S. WALLER
5/23/12

REVISIONS						SHEET NO.
NO.	BY:	DATE:	NO.	BY:	DATE:	S-98
1			3			TOTAL SHEETS
2			4			131

DRAWN BY : M. K. TOM DATE : 3/21/12
CHECKED BY : K. H. COMPTON DATE : 3/23/12

5/23/2012
P:\Jobs1\B4091\Structures\Final Drawings\B4091_SD_MD3.dgn
ross_whitcher

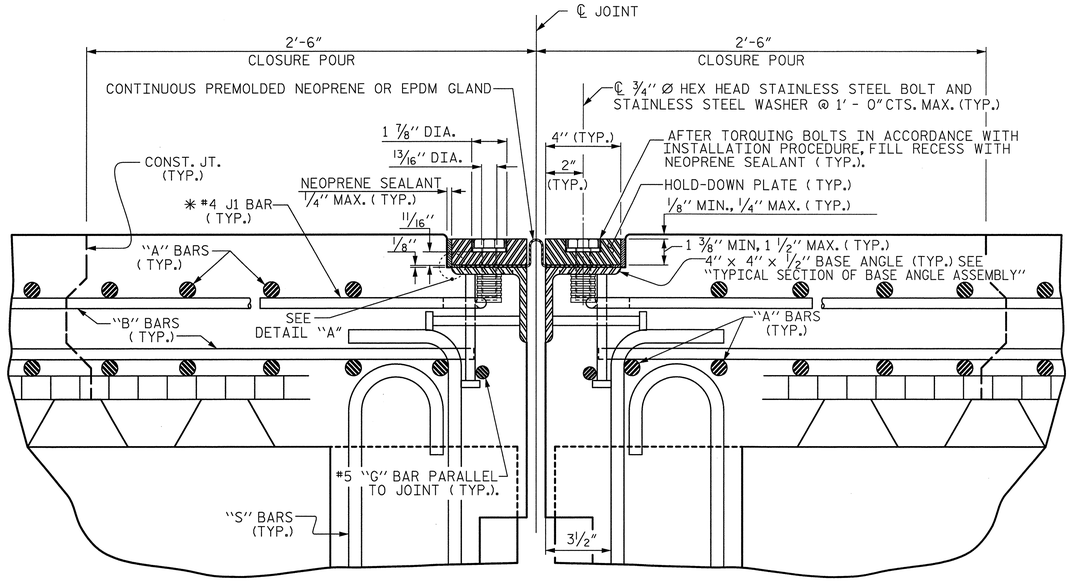

EXPANSION JOINT DETAILS

SECTION NORMAL TO JOINT -- PRESTRESSED GIRDER SUPERSTRUCTURE

✳ THE QUANTITY OF #4 J1 BARS ON THE BILL OF MATERIAL IS BASED ON 1'-0" CENTERS. J1 BARS SHALL BE PLACED AT EACH VERTICAL STUD ANCHOR BOLT. IN THE EVENT THAT THE NUMBER OF VERTICAL STUD ANCHORS EXCEEDS THE NUMBER OF J1 BARS SPECIFIED, ADDITIONAL J1 BARS WILL NOT BE REQUIRED.

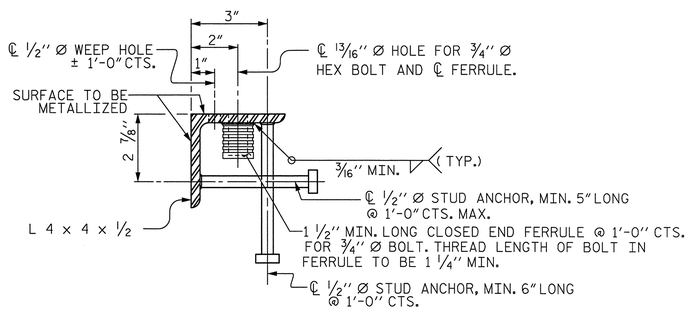

TYPICAL SECTION OF BASE ANGLE ASSEMBLY

INSTALLATION PROCEDURE

1. A TEMPLATE OR OTHER SUITABLE DEVICE SHALL BE USED TO FORM THE TOP OF THE EXPANSION JOINT SEAL BLOCKOUT TO THE PROPER DEPTH AND WIDTH. THE TEMPLATE SHALL BE 4 1/8" TO 4 1/4" WIDE AND OF SUCH THICKNESS AS TO PROVIDE FOR CORRECT FINAL ELEVATION OF TOP OF HOLD-DOWN PLATES. THE TEMPLATE SHALL BE ATTACHED TO THE BASE ANGLE ASSEMBLY WITH THE ¾" Ø HEX HEAD BOLTS PROVIDED FOR THE HOLD-DOWN PLATES. A 1" Ø HOLE SHALL BE PROVIDED IN THE TEMPLATE CENTERED OVER EACH WEEP HOLE IN THE 4" X 4" X 1/2" BASE ANGLE. OTHER METHODS OF INSURING DRAINAGE THROUGH WEEP HOLES MAY BE EMPLOYED SUBJECT TO ENGINEER'S APPROVAL.
2. AFTER THE CONCRETE HAS BEEN CAST ON BOTH SIDES OF THE JOINT, REMOVE THE TEMPLATE. THOROUGHLY CLEAN THE BOLT HOLES AND THE ANGLE PLATE. REMOVE ANY EXCESS CONCRETE THAT COMES OUT OF THE WEEP HOLES. ANY DAMAGED STEEL SHALL BE COATED WITH A MINIMUM THICKNESS OF 4 DRY MILS OF ZINC-RICH PAINT IN ACCORDANCE WITH THE STANDARD SPECIFICATIONS.
3. LAY THE GLAND ON THE BASE ANGLE AND FIELD MARK THE GLAND FOR THE BOLT HOLES. HOLES IN THE GLAND SHALL BE PUNCHED 7/8" IN DIAMETER WITH A HAND PUNCH.
4. IN ORDER TO CHECK FOR PROPER ALIGNMENT, PLACE THE GLAND AND HOLD-DOWN PLATES ON THE BASE ANGLE. DO NOT APPLY NEOPRENE SEALANT. BOLT THE HOLD-DOWN PLATES TO THE BASE ANGLE BUT DO NOT TIGHTEN. THE ENGINEER SHALL INSPECT THE JOINT SEAL DEVICE FOR PROPER ALIGNMENT.
5. AFTER INSPECTION, REMOVE THE HOLD-DOWN PLATES AND GLAND. APPLY NEOPRENE SEALANT TO THE BASE ANGLE IN ACCORDANCE WITH THE "INSTALLATION SKETCH". PLACE GLAND AND HOLD-DOWN PLATES ON THE BASE ANGLE. BOLT THE HOLD-DOWN PLATES TO THE BASE ANGLE ASSEMBLY AND TORQUE THE BOLTS TO 88 FT-LBS WITH A TORQUE WRENCH. CHECK THE TORQUE AFTER THREE (3) HOURS AND, IF NECESSARY, RETIGHTEN TO 88 FT-LBS. A FINAL CHECK SHALL BE MADE AT SEVEN (7) DAYS. TORQUE SHALL NOT BE LESS THAN 80 FT-LBS AFTER SEVEN (7) DAYS.
6. AFTER PROPER TORQUING, CLEAN THE BOLT HOLE RECESSES AND THE RECESS BETWEEN THE JOINT SEAL DEVICE AND CONCRETE, COMPLETELY FILL THESE RECESSES WITH NEOPRENE SEALANT.

GENERAL NOTES

1. FOR EXPANSION JOINT SEALS, SEE SPECIAL PROVISIONS.
2. ALL PLATES AND ANGLES SHALL CONFORM TO AASHTO M270 GRADE 36 STEEL OR APPROVED EQUAL. ALL HOLD-DOWN BOLTS SHALL CONFORM TO ASTM F593 ALLOY 304 STAINLESS STEEL AND WASHERS SHALL CONFORM TO ASTM F844 EXCEPT THEY SHALL BE MADE FROM ALLOY 304 STAINLESS STEEL. ALL STUD ANCHORS SHALL CONFORM TO AASHTO M169, GRADES 1010 THRU 1020 OR APPROVED EQUAL. ALL CONCRETE INSERTS SHALL BE CLOSED END AND SHALL CONFORM TO AASHTO M169, GRADE 12L14. TENSILE CAPACITY SHALL BE 3000 LBS. MIN.
3. A PREMOLDED CORRUGATED OR NON-CORRUGATED GLAND SHALL BE USED FOR JOINTS SKEWED BETWEEN 50° THRU 130°. FOR JOINTS SKEWED LESS THAN 50° OR MORE THAN 130°, ONLY A CORRUGATED GLAND SHALL BE USED.
4. CLOSED END FERRULES AND STUD ANCHORS SHALL BE SHOP WELDED AND ALL HOLES SHALL BE SHOP DRILLED AS SHOWN ON PLANS. STUD ANCHORS SHALL BE ELECTRIC ARC END WELDED WITH COMPLETE FUSION.
5. SURFACES COMING IN CONTACT WITH NEOPRENE SHALL BE GROUND SMOOTH PRIOR TO METALLIZING.
6. UPON COMPLETION OF SHOP FABRICATION, THE HOLD DOWN PLATE AND BASE ANGLE ASSEMBLY, AS SHOWN IN THE "TYPICAL SECTION OF BASE ANGLE ASSEMBLY", SHALL BE METALLIZED. SEE SPECIAL PROVISION FOR THERMAL SPRAYED COATINGS (METALLIZATION).
7. BASE ANGLE ASSEMBLY SHALL BE CONTINUOUS FOR THE LENGTH OF THE JOINT. AT CROWN BREAKS, THE ENDS OF THE BASE ANGLE ASSEMBLY SHALL BE CUT PARALLEL TO THE BRIDGE CENTERLINE FOR SKEWS LESS THAN 80° AND GREATER THAN 100°. FINISHED WELD SHALL BE GROUND SMOOTH AND COATED WITH A MINIMUM THICKNESS OF 4 DRY MILS OF ZINC-RICH PAINT IN ACCORDANCE WITH THE STANDARD SPECIFICATIONS.
8. FIELD SPLICES OF HOLD-DOWN PLATES SHALL BE KEPT TO A MINIMUM. CONTRACTOR SHALL FURNISH DETAILED PLANS SHOWING PROPOSED SPLICE LOCATIONS FOR APPROVAL. HOLD-DOWN PLATES SHALL NOT EXCEED 20' LENGTHS UNLESS APPROVED BY THE ENGINEER.
9. NO ALTERNATE JOINT DETAILS SHALL BE PERMITTED IN LIEU OF THOSE SHOWN ON THESE PLANS.
10. THE CONTRACTOR MAY, AT HIS OPTION, USE ADHESIVELY ANCHORED ANCHOR BOLTS IN PLACE OF CONCRETE INSERTS FOR COVER PLATES. THE YIELD LOAD OF THE ¾" Ø BOLT IS 10 KIPS. FIELD TESTING OF THE ADHESIVE BONDING SYSTEM IS NOT REQUIRED.

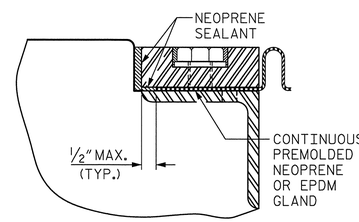

DETAIL "A"

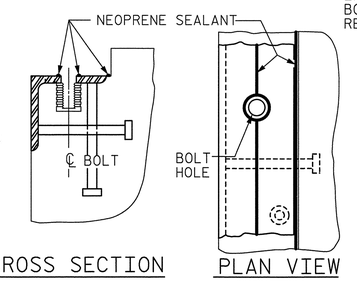

INSTALLATION SKETCH

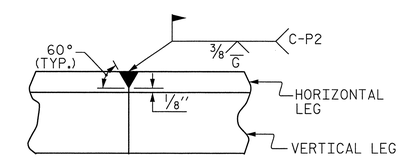

DETAIL- FIELD WELD SPLICE OF BASE ANGLE

MOVEMENT AND SETTING AT JOINT					
BENT NO.	SKEW ANGLE	TOTAL MOVEMENT (ALONG ℄ RDWY)	PERPENDICULAR JOINT OPENING AT 45° F	PERPENDICULAR JOINT OPENING AT 60° F	PERPENDICULAR JOINT OPENING AT 90° F
E1, E2	90°	1 3/16"	1 13/16"	1 5/8"	1 3/16"
B2, B5	90°	2 1/8"	2 1/2"	2 1/8"	1 3/8"

PROJECT NO. B-4091

CUMBERLAND COUNTY

STATION: 52+15.00 -L-

SHEET 1 OF 3

STATE OF NORTH CAROLINA
DEPARTMENT OF TRANSPORTATION
RALEIGH

STANDARD

EXPANSION JOINT SEAL DETAILS

Prepared by
URS
URS Corporation - North Carolina
1600 Perimeter Park Drive, Suite 400
Morrisville, NC 27560
TELEPHONE (919) 461-1100
FAX (919) 461-1415

NORTH CAROLINA PROFESSIONAL SEAL 038447 ENGINEER ANDREW J. MILLER
5/23/12

REVISIONS								SHEET NO.
NO.	BY:	DATE:	NO.	BY:	DATE:			S-99
1			3					TOTAL SHEETS
2			4					131

STD. NO. EJS1

ASSEMBLED BY : R. L. WHITCHER	DATE : 2/24/12		
CHECKED BY : J. C. HALL	DATE : 3/27/12		
DRAWN BY : REK 9/87	REV. 5/7/03R	RWW/JTE	
CHECKED BY : CRK 10/87	REV. 5/1/06R	TLA/GM	
	REV. 10/1/11	MAA/GM	

5/23/2012
P:\Jobs1\B4091\Structures\Final Drawings\B4091_SD_JS1.dgn
ross_whitcher

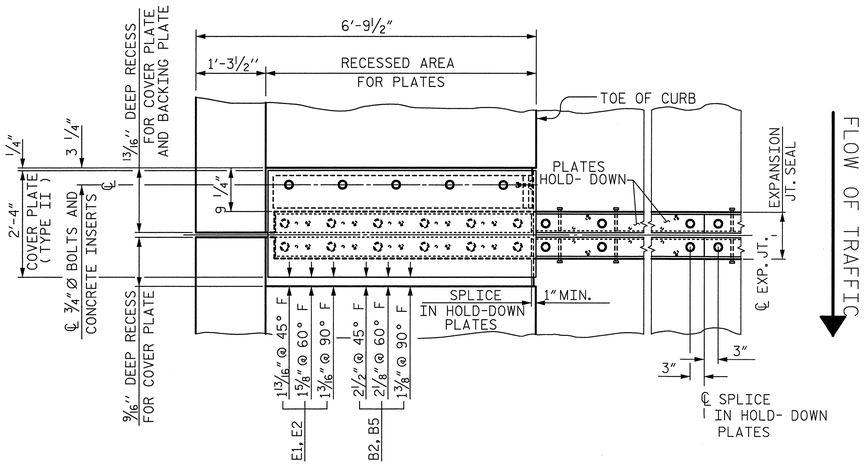

PLAN OF EXPANSION JOINT SEAL - LEFT SIDE

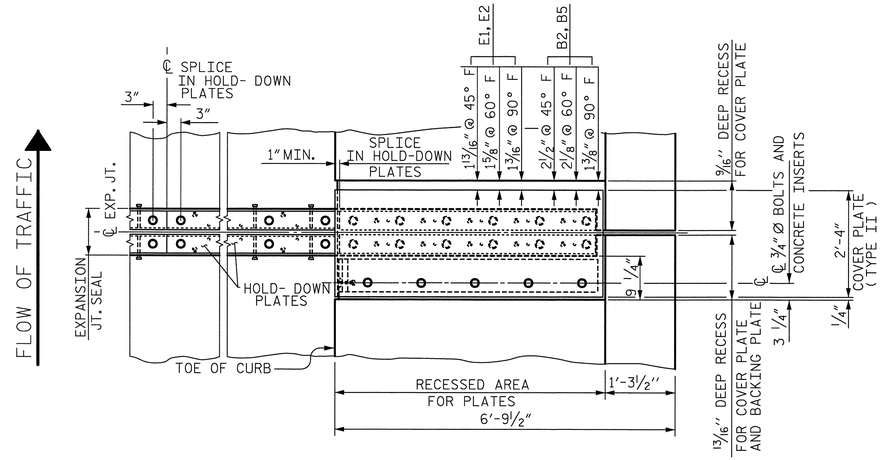

PLAN OF EXPANSION JOINT SEAL - RIGHT SIDE

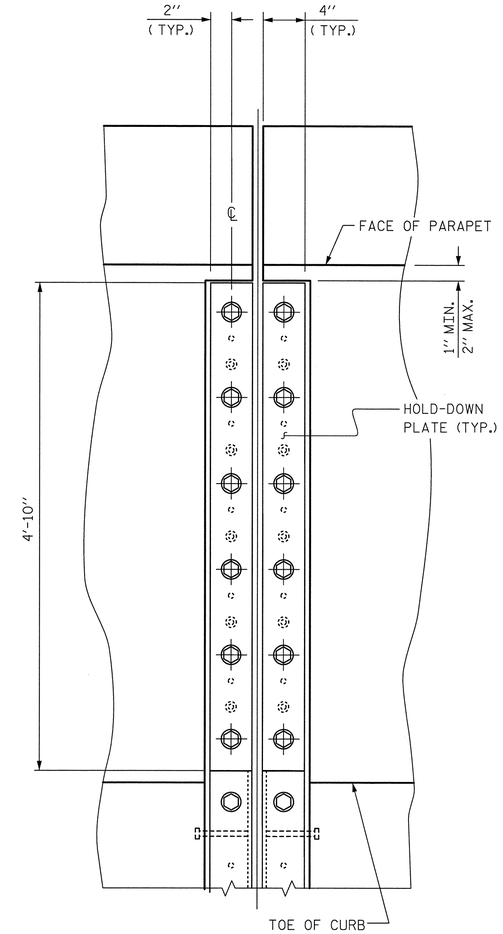

SECTION A - A

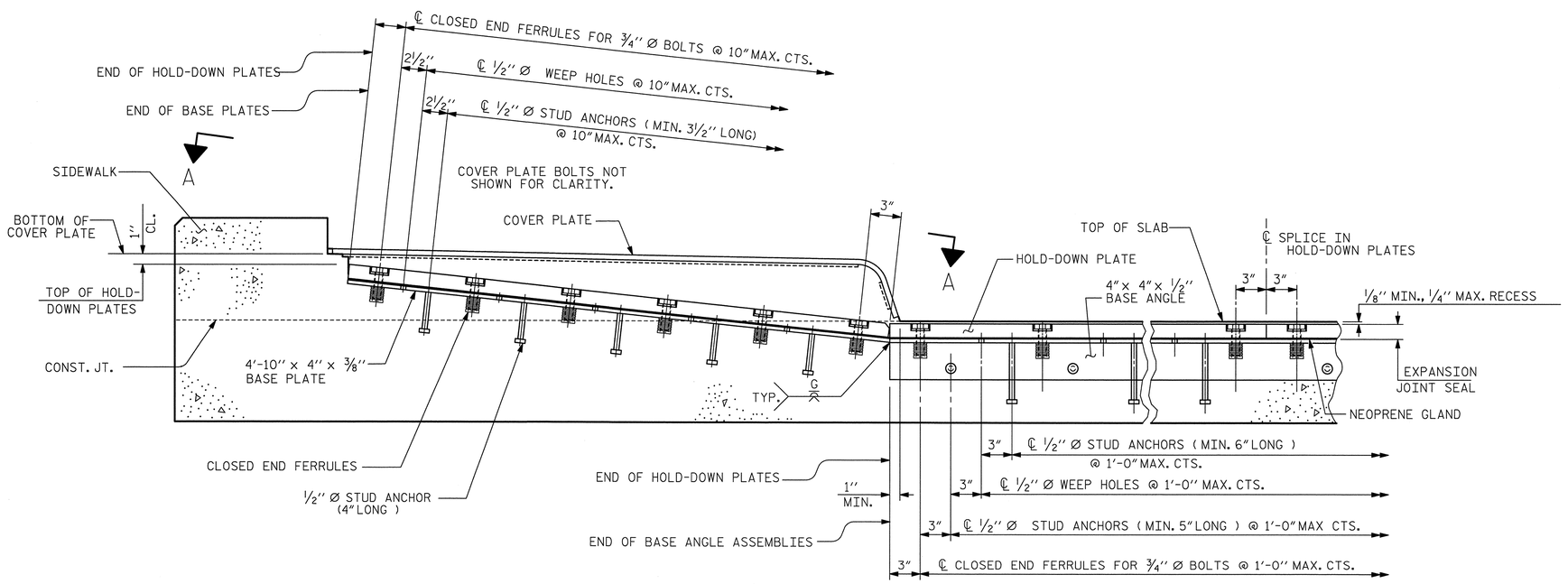

SECTION THRU SIDEWALK NORMAL TO JOINT

PROJECT NO. B-4091

CUMBERLAND COUNTY

STATION: 52+15.00 -L-

SHEET 2 OF 3

STATE OF NORTH CAROLINA
DEPARTMENT OF TRANSPORTATION
RALEIGH

EXPANSION JOINT SEAL DETAILS FOR SIDEWALK

REVISIONS						SHEET NO.
NO.	BY:	DATE:	NO.	BY:	DATE:	S-100
1			3			TOTAL SHEETS
2			4			131

Prepared by
URS
URS Corporation - North Carolina
1600 Perimeter Park Drive, Suite 400
Morrisville, NC 27560
TELEPHONE (919) 461-1100
FAX (919) 461-1415

NORTH CAROLINA PROFESSIONAL SEAL 038447 ENGINEER ANDREW SY MILLER
5/23/12

ASSEMBLED BY : R. L. WHITCHER		DATE : 2/24/12	
CHECKED BY : J. C. HALL		DATE : 3/27/12	
DRAWN BY : REK 10/87	REV. 2/6/97	EEM/RGW	
CHECKED BY : CRK 1/88	REV. 5/1/06	TLA/GM	
	REV. 10/1/11	MAA/GM	

5/23/2012
P:\Jobs1\B4091\Structures\FinalDrawings\B4091_SD_JS2.dgn
ross_whitcher

STD. NO. EJS3

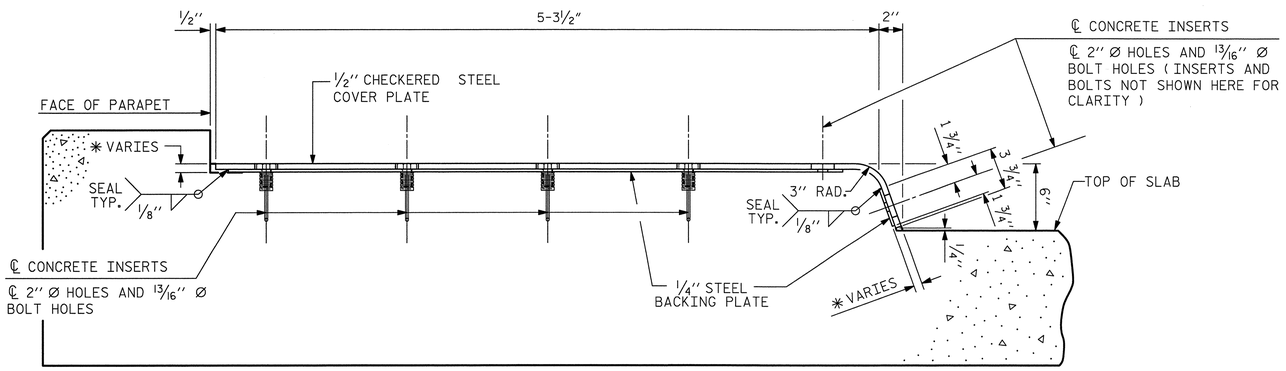

END VIEW

(NORMAL TO SIDEWALK)

✱ CONCRETE RECESS DIMENSIONS:

13/16" FOR THE SIDE OF THE JOINT HAVING THE 1/2" COVER PLATE WITH A 1/4" BACKING PLATE.

9/16" FOR THE SIDE OF THE JOINT HAVING ONLY THE 1/2" COVER PLATE.

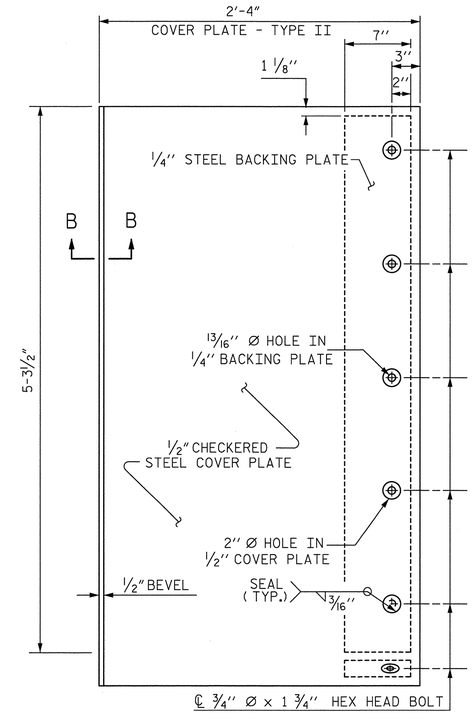

TYPE II - PLAN VIEW

NOTES:

THE STEEL PLATES CONFORM TO AASHTO M270 GRADE 36 OR APPROVED EQUAL. AFTER FABRICATION, THE PLATE SHALL BE COMMERCIALLY BLAST CLEANED AND COATED WITH A MINIMUM THICKNESS OF 4 MILS (DRY) OF ZINC RICH PAINT, GALVANIZED OR METALLIZED TO A MINIMUM THICKNESS OF 6 MILS IN ACCORDANCE WITH THE STANDARD SPECIFICATIONS. FOR THERMAL SPRAYED COATINGS (METALLIZATION), SEE SPECIAL PROVISIONS.

THE 3/4" DIAMETER HEX HEAD BOLTS SHALL CONFORM TO ASTM F593 ALLOY 304 STAINLESS STEEL.

THE 3/4" CONCRETE INSERTS SHALL BE CLOSED-END FERRULES WITH LOOPED WIRE STRUTS ATTACHED TO THEM. THE INSERTS SHALL CONFORM TO AASHTO M169, GRADE 12L14 AND SHALL HAVE A TENSILE WORKING LOAD CAPACITY OF 3000 LBS.

NO SEPARATE PAYMENT WILL BE MADE FOR FURNISHING AND INSTALLING THE COVER PLATES. THE ENTIRE COST OF THIS WORK SHALL BE INCLUDED IN THE LUMP SUM PRICE FOR EXPANSION JOINT SEALS.

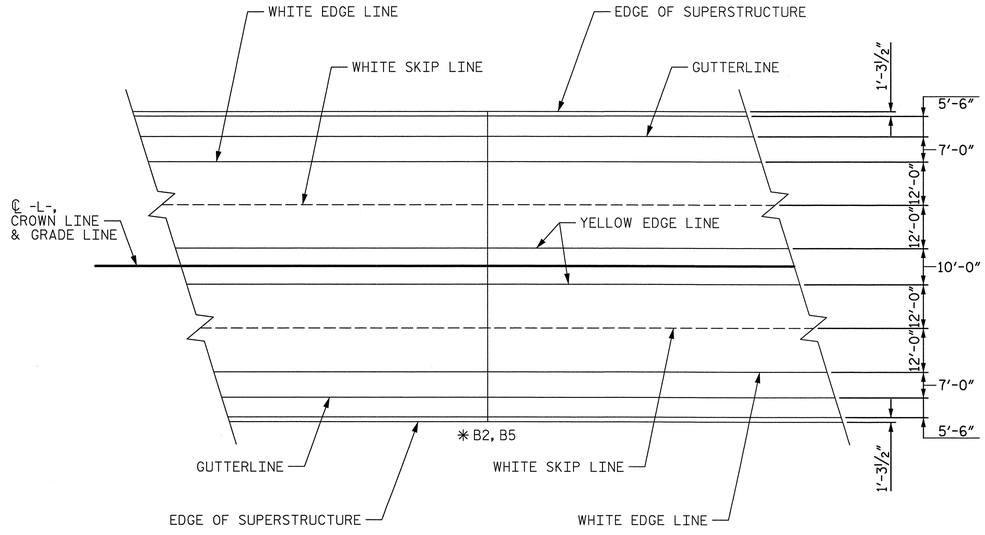

PAVEMENT MARKING ALIGNMENT

✱ PAVEMENT MARKING AT END BENTS SIMILAR

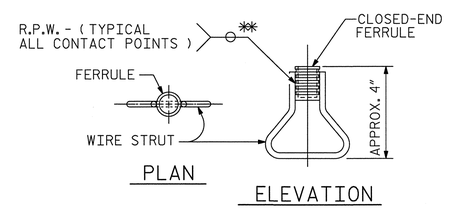

CONCRETE INSERT

✱✱ EACH WELDED ATTACHMENT OF WIRE TO FERRULE SHALL DEVELOP THE TENSILE STRENGTH OF THE WIRE.

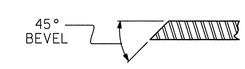

SECTION B - B

COVER PLATE DETAILS

PROJECT NO. B-4091

CUMBERLAND COUNTY

STATION: 52+15.00 -L-

SHEET 3 OF 3

STATE OF NORTH CAROLINA
DEPARTMENT OF TRANSPORTATION
RALEIGH

EXPANSION JOINT SEAL DETAILS FOR SIDEWALK

REVISIONS						SHEET NO.
NO.	BY:	DATE:	NO.	BY:	DATE:	S-101
1			3			TOTAL SHEETS
2			4			131

Prepared by
URS
URS Corporation - North Carolina
1600 Perimeter Park Drive, Suite 400
Morrisville, NC 27560
TELEPHONE (919) 461-1100
FAX (919) 461-1415

NORTH CAROLINA PROFESSIONAL SEAL 038447 ENGINEER ANDREW J. MILLER
5/23/12

ASSEMBLED BY : R. L. WHITCHER		DATE : 2/24/12	
CHECKED BY : J. C. HALL		DATE : 3/27/12	
DRAWN BY : REK 10/87	REV. 10/17/00	RWW/LES	
CHECKED BY : CRK 1/88	REV. 5/1/06	TLA/GM	
	REV. 10/1/11	MAA/GM	

5/23/2012
P:\Jobs1\B4091\Structures\FinalDrawings\B4091_SD_JS3.dgn
ross_whitcher

STD. NO. EJS4

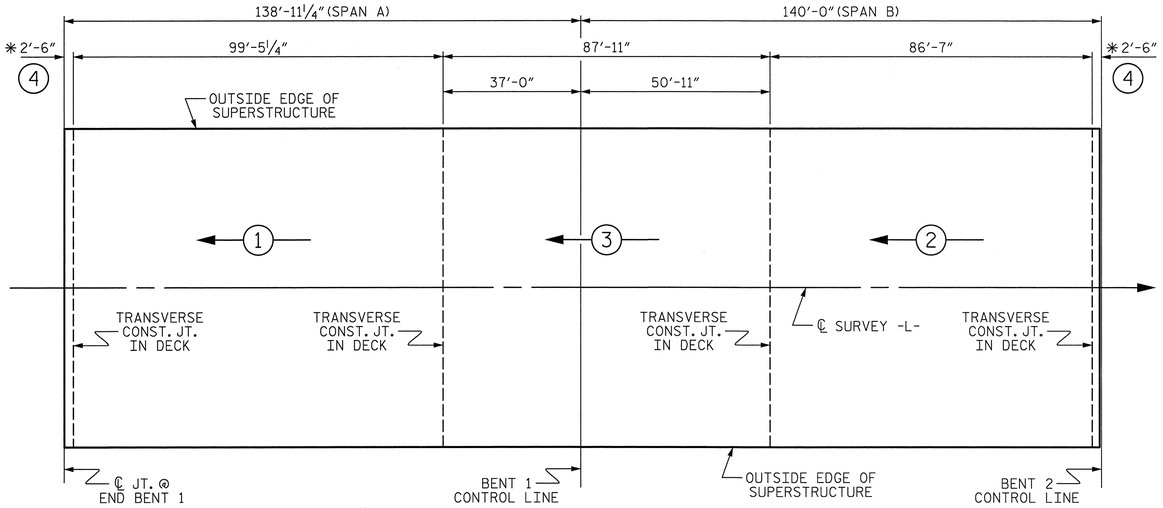

SPAN A-B

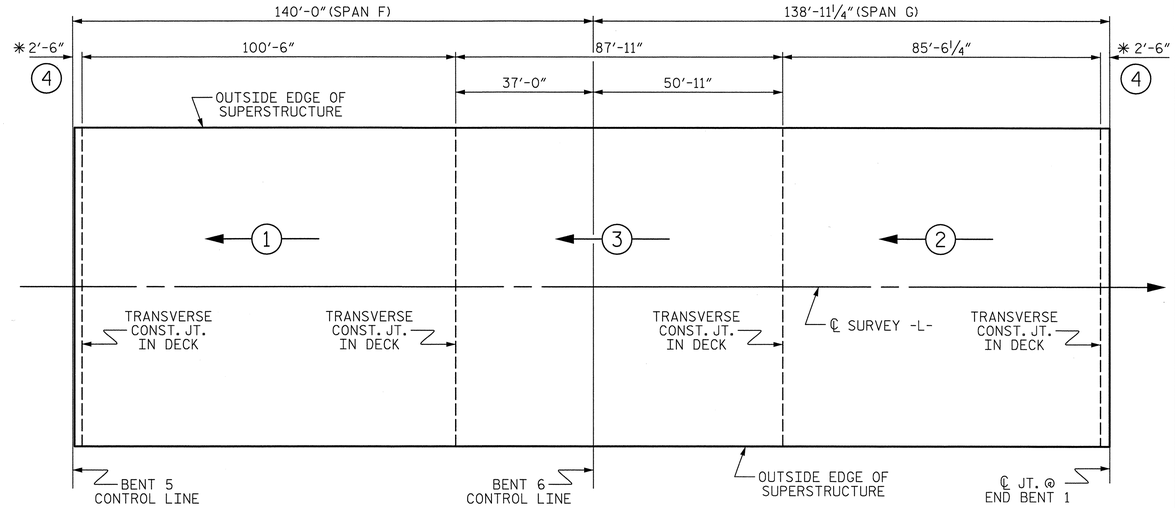

SPAN F-G

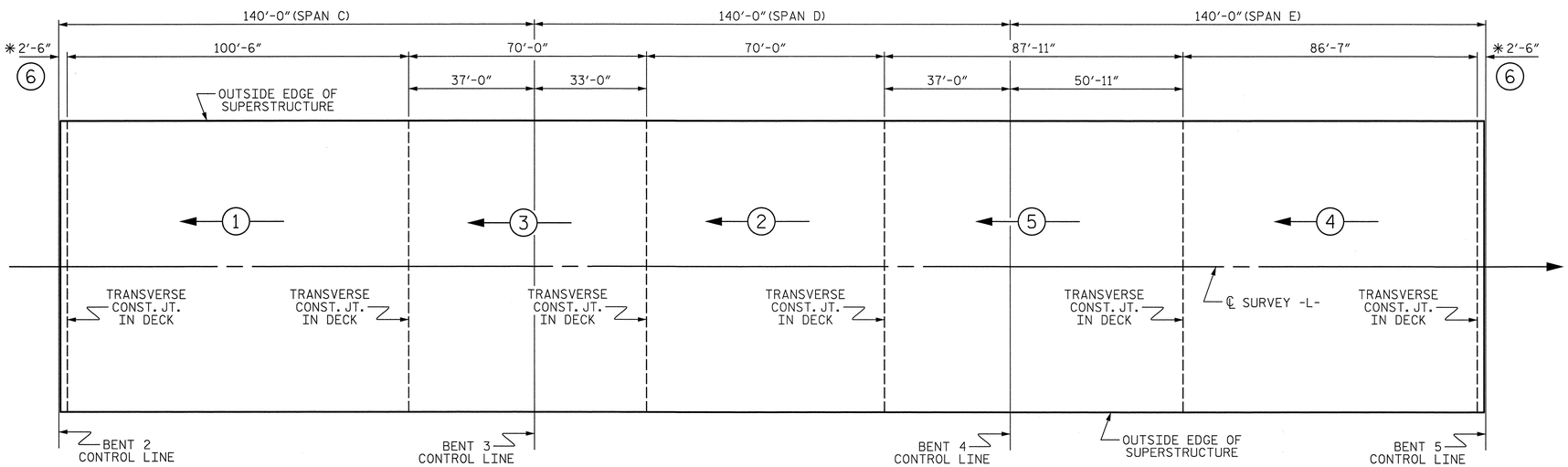

SPAN C-D-E

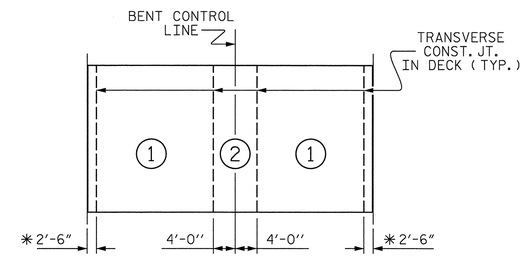

OPTIONAL DECK POUR DETAIL

NOTE : TYPICAL FOR EACH 2 SPAN CONTINUOUS UNIT POUR (2) SHALL NOT BE STARTED UNTIL BOTH ADJACENT (1) POURS REACH A MINIMUM OF 3000 PSI

POUR SEQUENCE

(#) INDICATES POUR NUMBER AND DIRECTION OF POUR

* CLOSURE POUR, SEE "STANDARD EXPANSION JOINT SEAL DETAILS" SHEET

NOTE :
FOR QUANTITY BREAKDOWN, SEE "BILL OF MATERIAL" SHEET

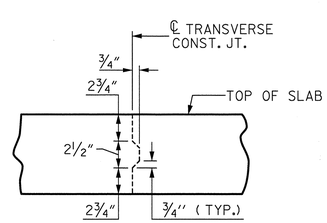

TRANSVERSE CONSTRUCTION JOINT DETAIL

NOTE: REINFORCING STEEL IN SLAB NOT SHOWN. LONGITUDINAL REINFORCING STEEL SHALL BE CONTINUOUS THRU JOINT.

PROJECT NO. B-4091

CUMBERLAND COUNTY

STATION: 52+15.00 -L-

STATE OF NORTH CAROLINA
DEPARTMENT OF TRANSPORTATION
RALEIGH

SUPERSTRUCTURE

CONCRETE DECK POUR DETAILS

Prepared by
URS
URS Corporation – North Carolina
1600 Perimeter Park Drive, Suite 400
Morrisville, NC 27560
TELEPHONE: (919) 461-1100
FAX: (919) 461-1415

NORTH CAROLINA PROFESSIONAL SEAL 038447 ENGINEER ANDREW S. MILLER
5/23/12

REVISIONS						SHEET NO.
NO.	BY:	DATE:	NO.	BY:	DATE:	S-102
1			3			TOTAL SHEETS
2			4			131

DRAWN BY : M. K. TOM DATE : 3/13/12
CHECKED BY : K. H. COMPTON DATE : 3/14/12

5/23/2012
P:\Jobs\B4091\Structures\Final Drawings\B4091_SD_BOM1.dgn
ross_whitcher

SUPERSTRUCTURE REINFORCING STEEL LENGTHS ARE BASED ON THE FOLLOWING MINIMUM SPLICE LENGTHS

BAR SIZE	SUPERSTRUCTURE EXCEPT APPROACH SLABS, PARAPET, AND BARRIER RAIL		APPROACH SLABS		PARAPET AND BARRIER RAIL
	EPOXY COATED	UNCOATED	EPOXY COATED	UNCOATED	
#4	2′-0″	1′-9″	2′-0″	1′-9″	2′-9″
#5	2′-6″	2′-2″	2′-6″	2′-2″	3′-5″
#6	3′-0″	2′-7″	3′-10″	2′-7″	4′-4″
#7	5′-3″	3′-6″			
#8	6′-10″	4′-7″			

CLASS AA CONCRETE BREAKDOWN

POUR #1 (SPAN A-B)	294.6 CU. YDS.
POUR #2 (SPAN A-B)	256.5 CU. YDS.
POUR #3 (SPAN A-B)	298.7 CU. YDS.
POUR #4 (SPAN A-B)	23.9 CU. YDS.
SIDEWALK (SPAN A-B)	93.9 CU. YDS.
TOTAL	967.6 CU. YDS.
POUR #1 (SPAN C-D-E)	297.7 CU. YDS.
POUR #2 (SPAN C-D-E)	207.4 CU. YDS.
POUR #3 (SPAN C-D-E)	245.6 CU. YDS.
POUR #4 (SPAN C-D-E)	256.5 CU. YDS.
POUR #5 (SPAN C-D-E)	298.7 CU. YDS.
POUR #6 (SPAN C-D-E)	23.9 CU. YDS.
SIDEWALK (SPAN C-D-E)	141.4 CU. YDS.
TOTAL	1,471.2 CU. YDS.
POUR #1 (SPAN F-G)	297.7 CU. YDS.
POUR #2 (SPAN F-G)	253.4 CU. YDS.
POUR #3 (SPAN F-G)	298.7 CU. YDS.
POUR #4 (SPAN F-G)	23.9 CU. YDS.
SIDEWALK (SPAN F-G)	93.9 CU. YDS.
TOTAL	967.6 CU. YDS.

BAR TYPES

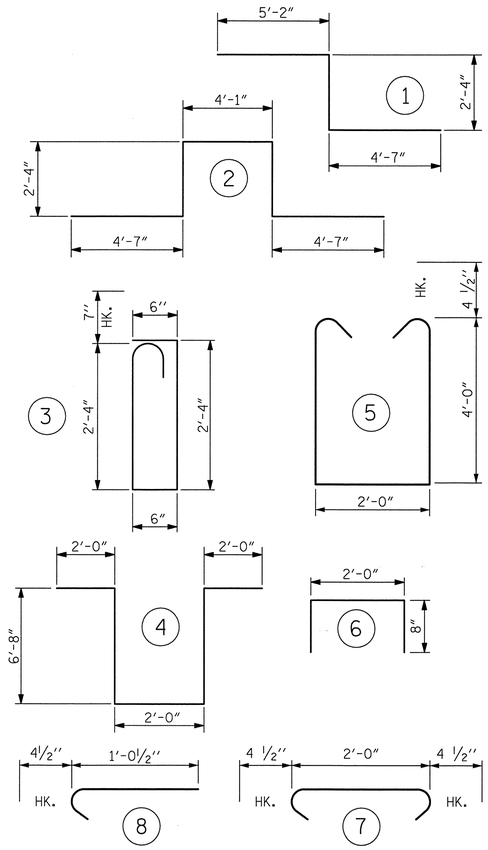

ALL BAR DIMENSIONS ARE OUT TO OUT

SUPERSTRUCTURE BILL OF MATERIAL

	CLASS AA CONCRETE	REINFORCING STEEL	EPOXY COATED REINFORCING STEEL
	(CU. YDS.)	(LBS.)	(LBS.)
SPAN A-B	967.6	77,131	80,999
SPAN C-D-E	1,471.2	115,565	128,722
SPAN F-G	967.6	77,131	80,999
TOTALS**	3,406.4	269,827	290,720

** QUANTITIES FOR CONCRETE MEDIAN BARRIER ARE NOT INCLUDED

BILL OF MATERIAL

SPAN A-B

BAR	NO.	SIZE	TYPE	LENGTH	WEIGHT
* A1	1112	#5	STR	43′-11″	50935
A2	1116	#5	STR	43′-9″	50925
* B1	464	#4	STR	24′-8″	7645
B2	360	#5	STR	57′-5″	21559
* B3	116	#7	STR	49′-8″	11776
* B4	57	#7	STR	42′-0″	4893
* B7	120	#4	STR	29′-8″	2378
G1	4	#5	STR	43′-11″	183
* G2	558	#4	STR	6′-3″	2330
* J1	144	#4	8	1′-5″	136
K1	8	#8	1	12′-1″	258
K2	40	#8	2	17′-11″	1914
K3	110	#4	STR	6′-3″	459
K4	22	#4	STR	3′-1″	45
K5	22	#4	STR	3′-3″	48
K6	21	#4	STR	29′-7″	415
K7	44	#5	STR	6′-3″	287
S1	88	#5	3	6′-3″	574
S3	352	#4	7	2′-9″	647
* U1	44	#4	4	19′-4″	568
* U2	22	#4	5	10′-11″	160
* U3	160	#4	6	3′-4″	356
REINFORCING STEEL					77,314
* EPOXY COATED REINF. STEEL					81,177

SPAN C-D-E

BAR	NO.	SIZE	TYPE	LENGTH	WEIGHT
* A1	1676	#5	STR	43′-11″	76769
A2	1680	#5	STR	43′-9″	76661
* B1	464	#4	STR	24′-8″	7645
* B3	232	#7	STR	49′-8″	23552
* B4	114	#7	STR	42′-0″	9787
* B5	116	#4	STR	26′-0″	2015
B6	576	#5	STR	54′-4″	32642
* B8	180	#4	STR	29′-10″	3587
G1	4	#5	STR	43′-11″	183
* G2	840	#4	STR	6′-3″	3507
* J1	144	#4	8	1′-5″	136
K1	8	#8	1	12′-1″	258
K2	40	#8	2	17′-11″	1914
K3	220	#4	STR	6′-3″	919
K4	44	#4	STR	3′-1″	91
K5	44	#4	STR	3′-3″	96
K6	42	#4	STR	29′-7″	830
K7	44	#5	STR	6′-3″	287
S1	88	#5	3	6′-3″	574
S3	704	#4	7	2′-9″	1293
* U1	88	#4	4	19′-4″	1136
* U2	44	#4	5	10′-11″	321
* U3	240	#4	6	3′-4″	534
REINFORCING STEEL					115,748
* EPOXY COATED REINF. STEEL					128,989

SPAN F-G

BAR	NO.	SIZE	TYPE	LENGTH	WEIGHT
* A1	1112	#5	STR	43′-11″	50935
A2	1116	#5	STR	43′-9″	50925
* B1	464	#4	STR	24′-8″	7645
B2	360	#5	STR	57′-5″	21559
* B3	116	#7	STR	49′-8″	11776
* B4	57	#7	STR	42′-0″	4893
* B7	120	#4	STR	29′-8″	2378
G1	4	#5	STR	43′-11″	183
* G2	558	#4	STR	6′-3″	2330
* J1	144	#4	8	1′-5″	136
K1	8	#8	1	12′-1″	258
K2	40	#8	2	17′-11″	1914
K3	110	#4	STR	6′-3″	459
K4	22	#4	STR	3′-1″	45
K5	22	#4	STR	3′-3″	48
K6	21	#4	STR	29′-7″	415
K7	44	#5	STR	6′-3″	287
S1	88	#5	3	6′-3″	574
S3	352	#4	7	2′-9″	647
* U1	44	#4	4	19′-4″	568
* U2	22	#4	5	10′-11″	160
* U3	160	#4	6	3′-4″	356
REINFORCING STEEL					77,314
* EPOXY COATED REINF. STEEL					81,177

GROOVING BRIDGE FLOORS

APPROACH SLABS	3,072	SQ.FT.
DECK SPAN A-B	17,779	SQ.FT.
DECK SPAN C-D-E	26,805	SQ.FT.
DECK SPAN F-G	17,779	SQ.FT.
TOTAL	65,435	SQ.FT.

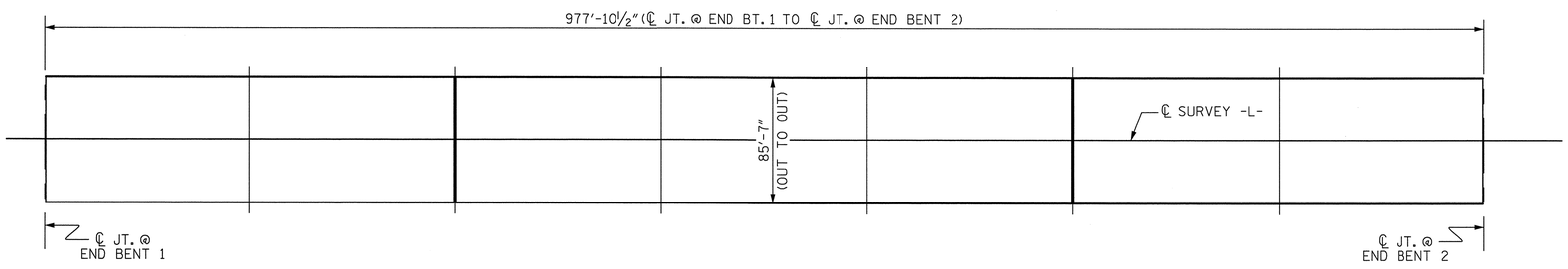

LAYOUT FOR COMPUTING AREA OF REINFORCED CONCRETE DECK SLAB

(SQ. FT. = 83,689.802)

PROJECT NO. B-4091
CUMBERLAND COUNTY
STATION: 52+15.00 -L-

STATE OF NORTH CAROLINA
DEPARTMENT OF TRANSPORTATION
RALEIGH

STANDARD
SUPERSTRUCTURE BILL OF MATERIAL

Prepared by
URS
URS Corporation - North Carolina
1600 Perimeter Park Drive, Suite 400
Morrisville, NC 27560
TELEPHONE (919) 461-1100
FAX (919) 461-1415

NORTH CAROLINA PROFESSIONAL SEAL 038447 ENGINEER ANDREW S. MILLER
5/23/12

ASSEMBLED BY : K.H. COMPTON	DATE : 3/17/12
CHECKED BY : M.K. TOM	DATE : 3/26/12
DRAWN BY : JMB 5/87	REV. 8/16/99 RWW/LES
CHECKED BY : SJD 9/87	REV. 5/1/06 TLA/GM
	REV. 10/1/11 MAA/GM

REVISIONS							SHEET NO.
NO.	BY:	DATE:	NO.	BY:	DATE:		S-103
1			3				TOTAL SHEETS
2			4				131

STD. NO. BOM2

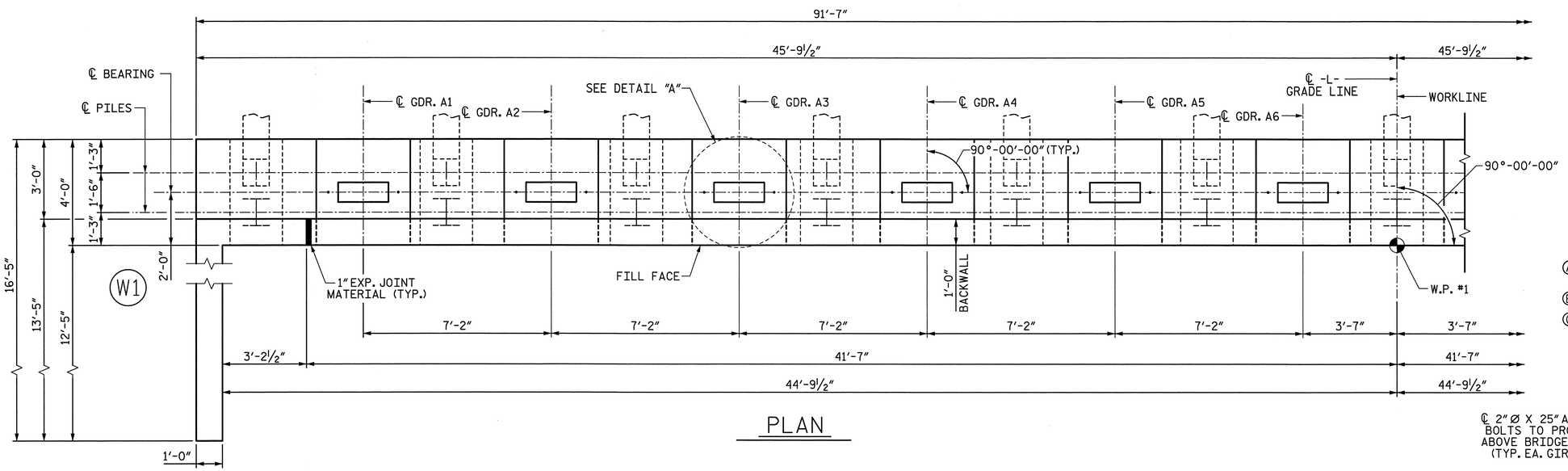

PLAN

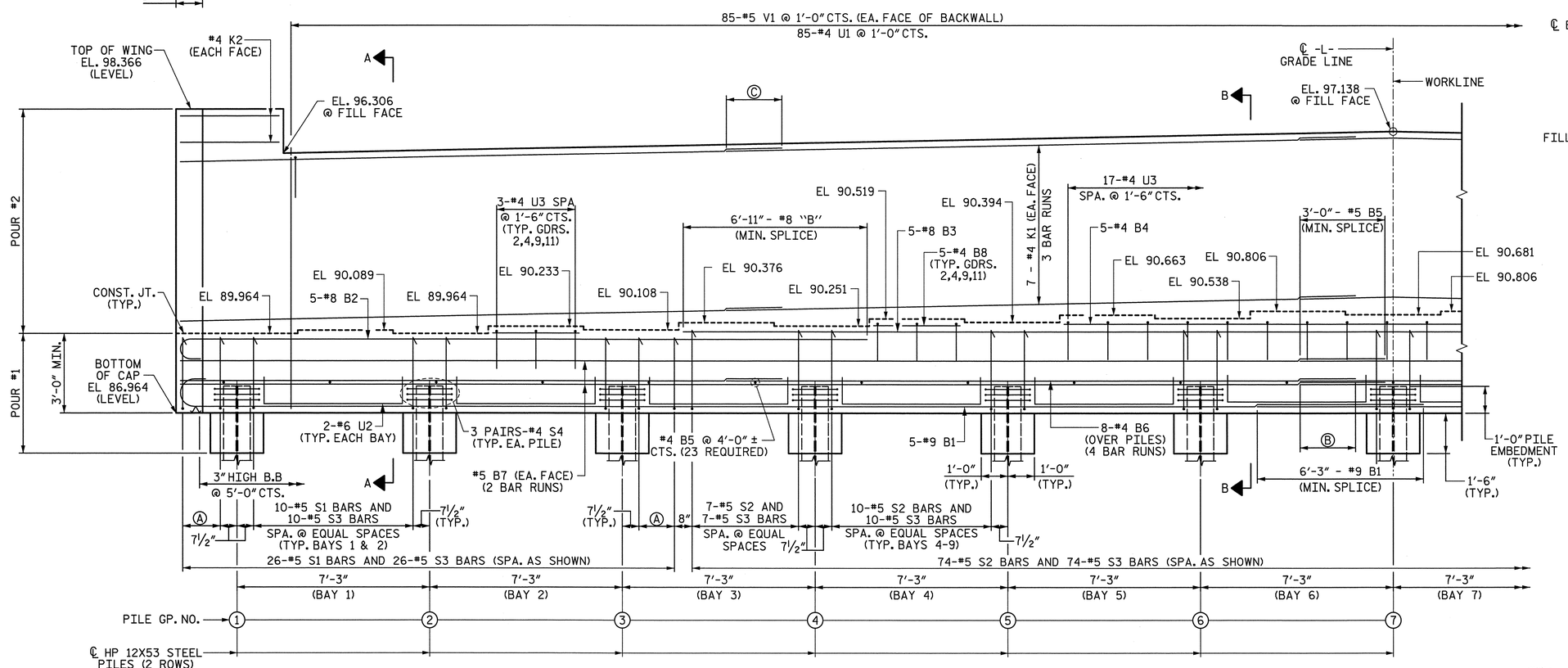

ELEVATION

**FOR LOCATION OF ELEVATION BETWEEN BRIDGE SEATS, SEE "SECTION A-A", SHEET 4 OF 4.

NOTES:

STIRRUPS IN CAP MAY BE SHIFTED AS NECESSARY TO CLEAR ANCHOR BOLTS.

THE TOP SURFACE OF THE CAP EXCEPT THE BRIDGE SEAT BUILDUPS SHALL BE SLOPED TRANSVERSELY FROM THE FILL FACE TO THE BACK FACE AT THE RATE OF 2%.

THE TOP SURFACE AREAS OF THE END BENT CAPS SHALL BE CURED IN ACCORDANCE WITH THE STANDARD SPECIFICATIONS EXCEPT THE MEMBRANE CURING COMPOUND METHOD SHALL NOT BE USED.

BACKWALL SHALL BE PLACED BEFORE APPLYING THE EPOXY PROTECTIVE COATING.

INSTALL THE 4" DIA. DRAIN THROUGH THE WING WALL AS REQUIRED FOR REINFORCED BRIDGE APPROACH FILLS, SEE THE ROADWAY PLANS. REINFORCING STEEL IN THE WING WALL MAY BE SHIFTED AS NECESSARY TO CLEAR THE DRAIN PIPE.

Ⓐ 3-#5 S1 BARS AND 3-#5 S3 BARS SPA. @ EQUAL SPACES

Ⓑ 2'-5" - #4 B6 (MIN. SPLICE) (TYP.)

Ⓒ 2'-5" - #4 K1 (MIN. SPLICE) (TYP.)

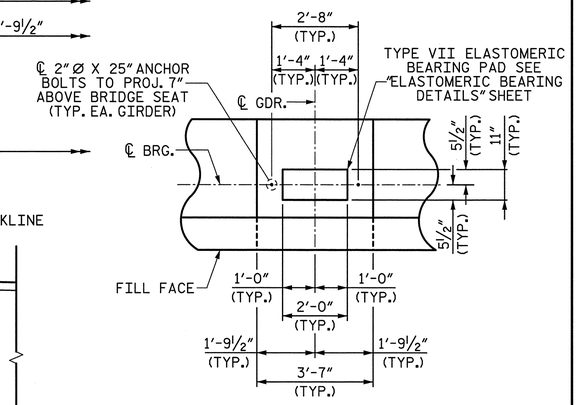

DETAIL "A"

(TYP. EA. GIRDER)

Prepared by
URS
URS Corporation – North Carolina
1600 Perimeter Park Drive, Suite 400
Morrisville, NC 27560
TELEPHONE (919) 461-1100
FAX (919) 461-1415

PROJECT NO. B-4091

CUMBERLAND COUNTY

STATION: 52+15.00 -L-

SHEET 1 OF 4

STATE OF NORTH CAROLINA
DEPARTMENT OF TRANSPORTATION
RALEIGH

SUBSTRUCTURE END BENT 1

NORTH CAROLINA PROFESSIONAL SEAL 038447 ENGINEER ANDREW J. MILLER
5/23/12

REVISIONS						SHEET NO.
NO.	BY:	DATE:	NO.	BY:	DATE:	S-104
1			3			TOTAL SHEETS
2			4			131

DRAWN BY : R. L. WHITCHER DATE : 2/20/12
CHECKED BY : J. C. HALL DATE : 3/15/12

5/23/2012
P:\Jobs1\B4091\Structures\FinalDrawings\B4091_SD_E1_1.dgn
ross_whitcher

NOTES:

Ⓐ 3-#5 S1 BARS AND 3-#5 S3 BARS SPA. @ EQUAL SPACES

Ⓑ 2'-5" - #4 B6 (MIN. SPLICE) (TYP.)

Ⓒ 2'-5" - #4 K1 (MIN. SPLICE) (TYP.)

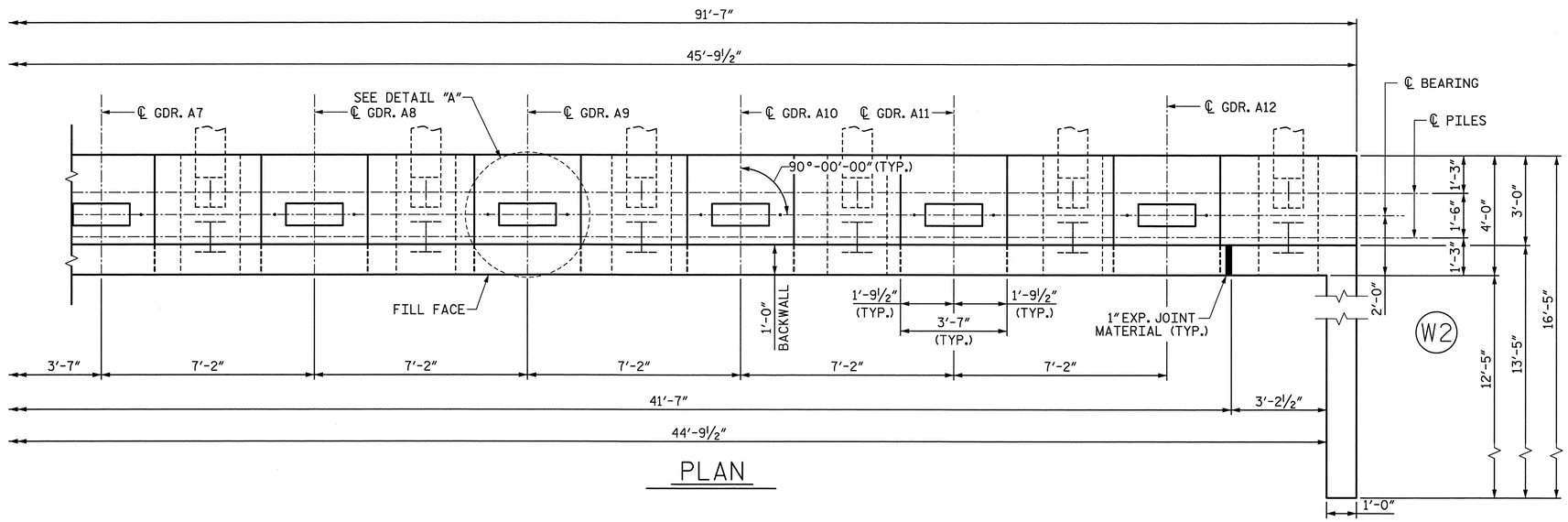

PLAN

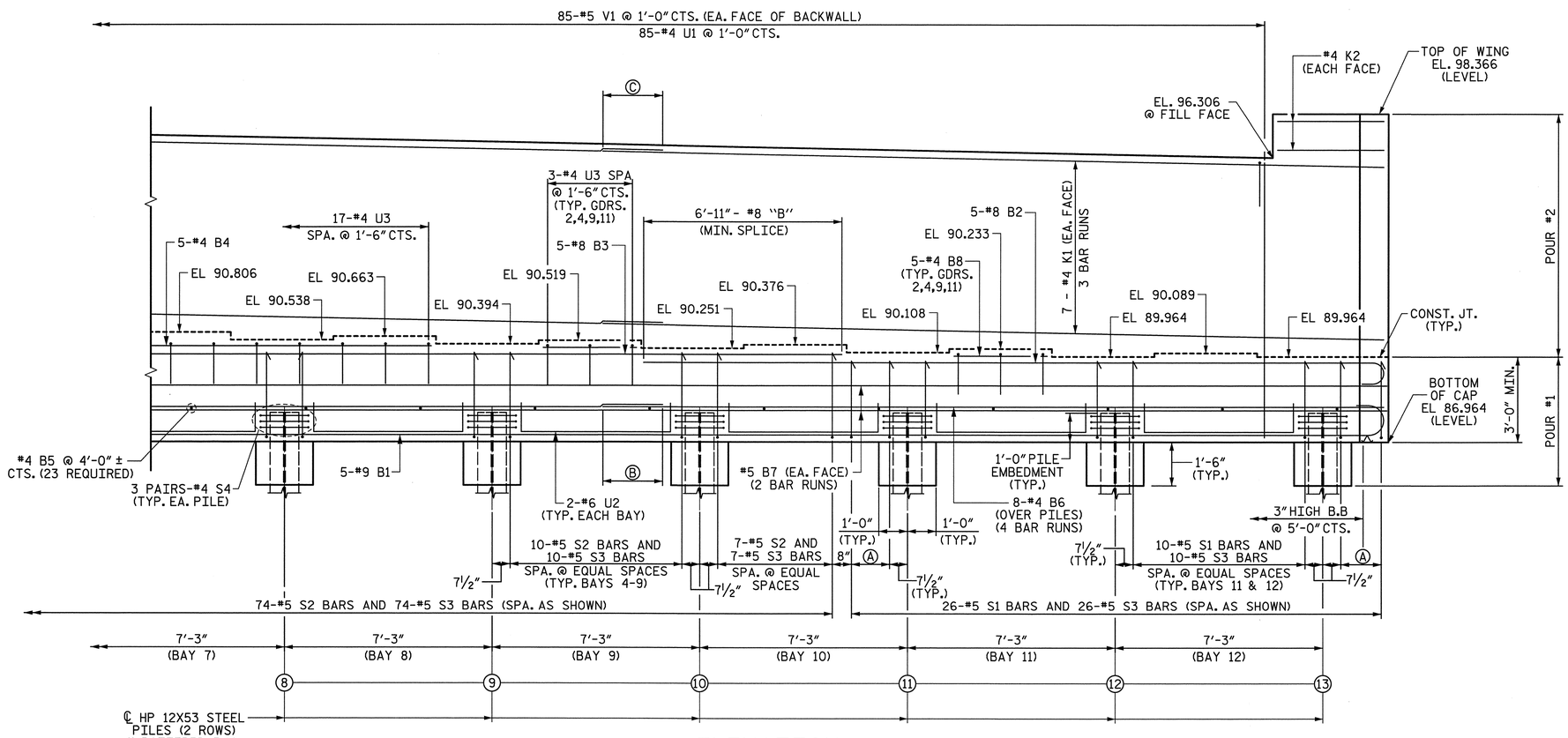

ELEVATION

** FOR LOCATION OF ELEVATION BETWEEN BRIDGE SEATS, SEE "SECTION A-A", SHEET 4 OF 4.

DRAWN BY : R. L. WHITCHER DATE : 2/20/12
CHECKED BY : J. C. HALL DATE : 3/15/12

5/23/2012
P:\Jobs1\B4091\Structures\FinalDrawings\B4091_SD_E1_2.dgn
ross_whitcher

Prepared by
URS
URS Corporation - North Carolina
1600 Perimeter Park Drive, Suite 400
Morrisville, NC 27560
TELEPHONE (919) 461-1100
FAX (919) 461-1415

PROJECT NO. B-4091
CUMBERLAND COUNTY
STATION: 52+15.00 -L-

SHEET 2 OF 4

STATE OF NORTH CAROLINA
DEPARTMENT OF TRANSPORTATION
RALEIGH

SUBSTRUCTURE END BENT 1

NORTH CAROLINA PROFESSIONAL SEAL 038447 ENGINEER ANDREW S. MILLER
5/23/12

REVISIONS						SHEET NO.
NO.	BY:	DATE:	NO.	BY:	DATE:	S-105
1			3			TOTAL SHEETS
2			4			131

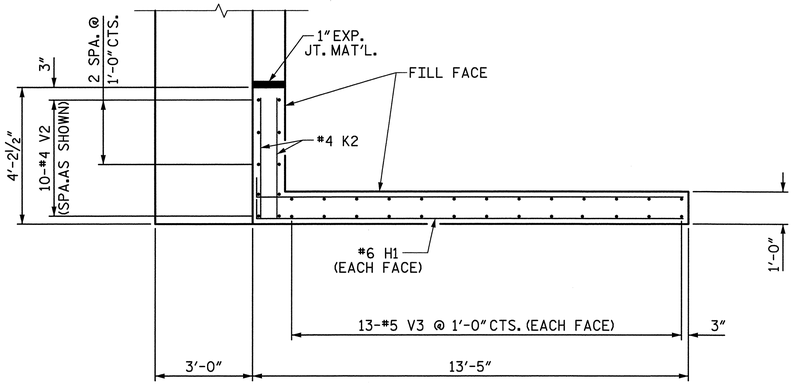

PLAN OF WING (W1)

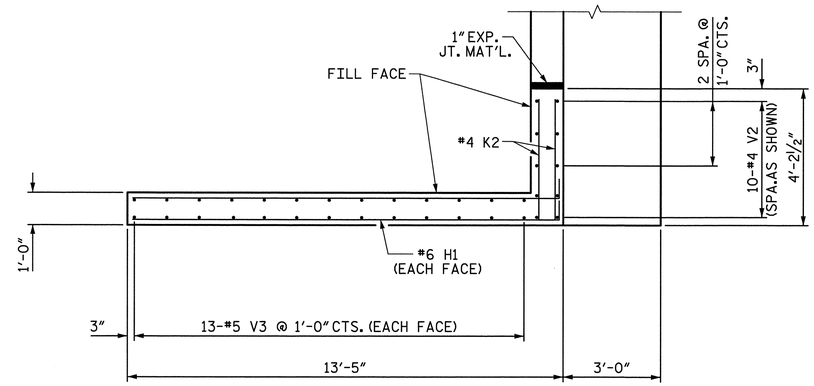

PLAN OF WING (W2)

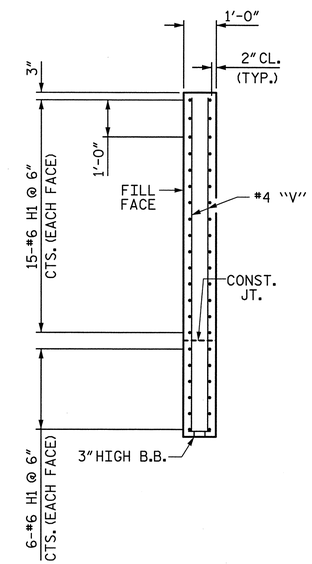

SECTION X-X

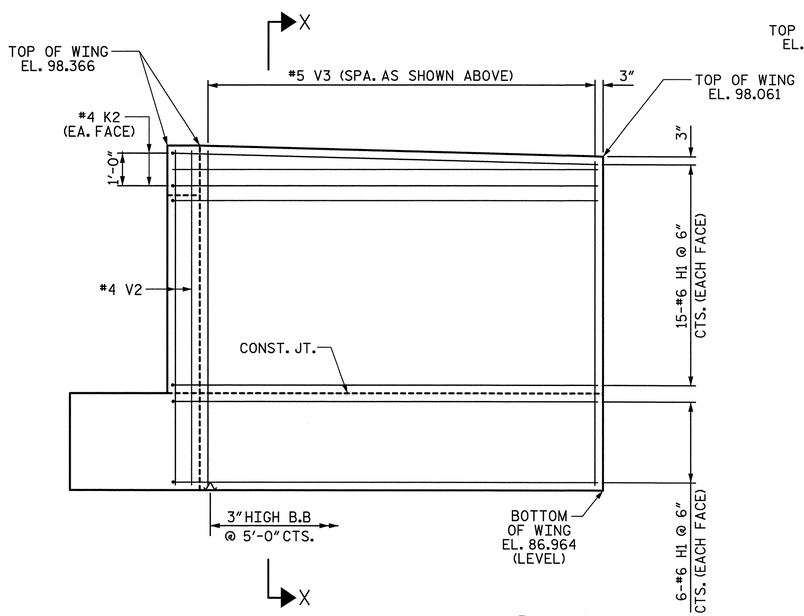

ELEVATION OF WING (W1)

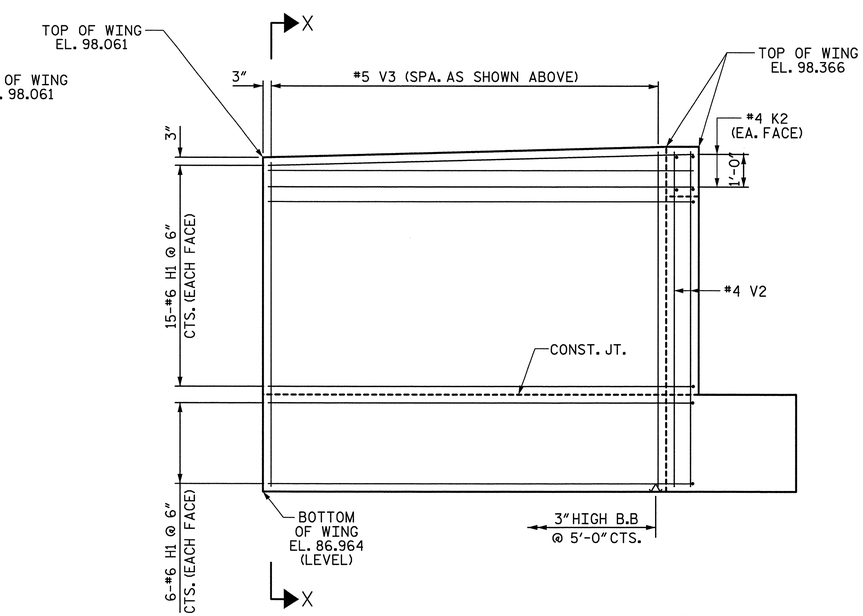

ELEVATION OF WING (W2)

PROJECT NO. B-4091
CUMBERLAND COUNTY
STATION: 52+15.00 -L-

SHEET 3 OF 4

STATE OF NORTH CAROLINA
DEPARTMENT OF TRANSPORTATION
RALEIGH

SUBSTRUCTURE
END BENT 1

Prepared by
URS
URS Corporation – North Carolina
1600 Perimeter Park Drive, Suite 400
Morrisville, NC 27560
TELEPHONE (919) 461-1100
FAX (919) 461-1415

NORTH CAROLINA PROFESSIONAL SEAL 038447 ENGINEER ANDREW S. MILLER
5/23/12

REVISIONS						SHEET NO.
NO.	BY:	DATE:	NO.	BY:	DATE:	S-106
1			3			TOTAL SHEETS
2			4			131

DRAWN BY : R. L. WHITCHER DATE : 2/20/12
CHECKED BY : J. C. HALL DATE : 3/15/12

5/23/2012
P:\Jobs1\B4091\Structures\FinalDrawings\B4091_SD_E1_3.dgn
ross_whitcher

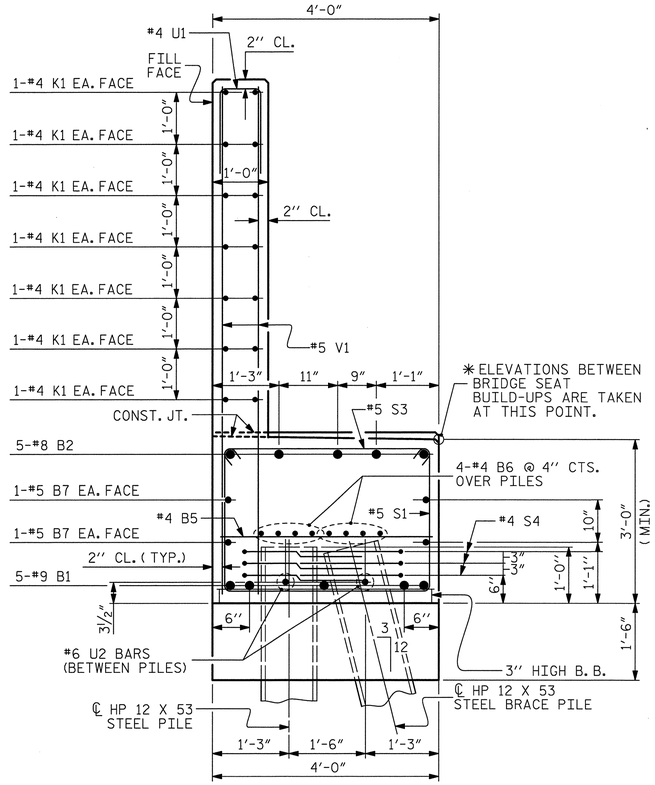

SECTION A-A

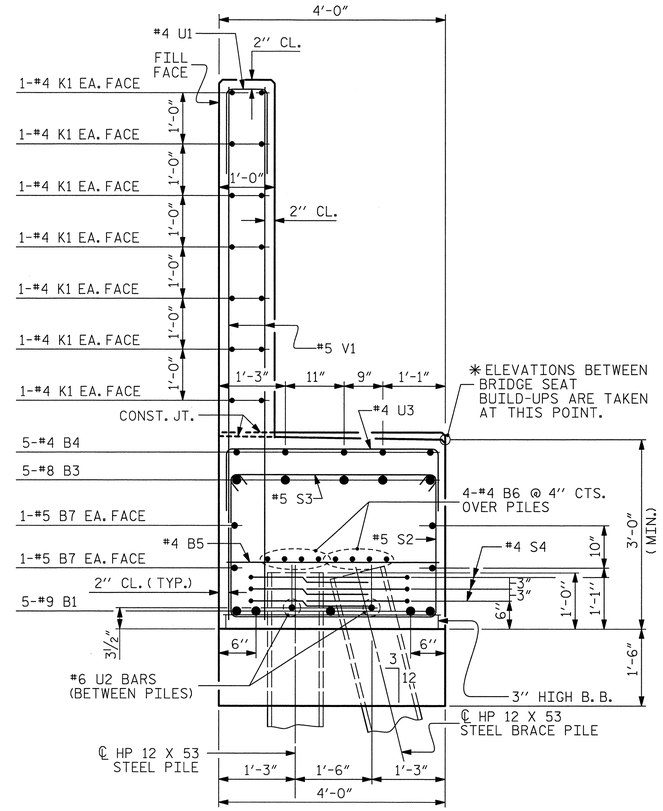

SECTION B-B

BAR TYPES

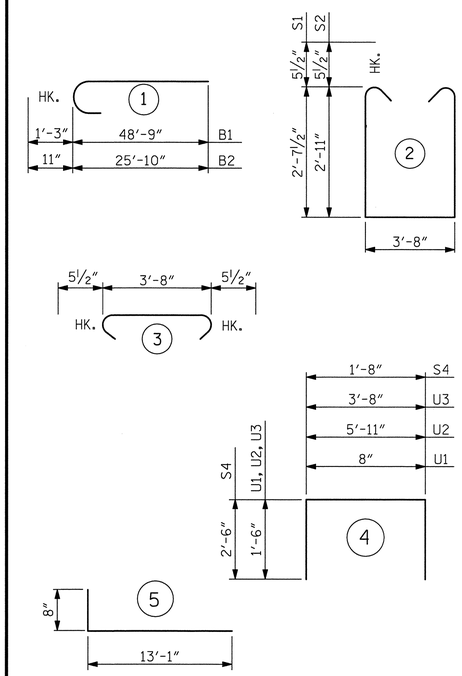

ALL BAR DIMENSIONS ARE OUT TO OUT.

BILL OF MATERIAL

END BENT 1

BAR	NO.	SIZE	TYPE	LENGTH	WEIGHT
B1	10	#9	1	50'-0"	1700
B2	10	#8	1	26'-9"	714
B3	5	#8	STR	53'-5"	713
B4	5	#4	STR	24'-9"	83
B5	30	#4	STR	3'-8"	73
B6	32	#4	STR	24'-8"	527
B7	8	#5	STR	47'-2"	394
B8	20	#4	STR	3'-3"	43
H1	84	#6	5	13'-9"	1735
K1	56	#4	STR	24'-8"	923
K2	8	#4	STR	3'-10"	20
S1	52	#5	2	9'-10"	533
S2	74	#5	2	10'-4"	798
S3	126	#5	3	4'-7"	602
S4	78	#4	4	6'-8"	347
U1	85	#4	4	3'-8"	208
U2	24	#6	4	8'-11"	321
U3	29	#4	4	6'-8"	129
V1	170	#5	STR	8'-11"	1581
V2	20	#5	STR	11'-0"	229
V3	52	#5	STR	10'-9"	583
REINFORCING STEEL				LBS.	12259

CLASS A CONCRETE BREAKDOWN

POUR #1 - CAP, LOWER WINGS & WING BRACE PILE CAP & COLLARS	CY	52.8
POUR #2 - BACKWALL & UPPER WINGS	CY	26.0
TOTAL	CY	78.8

HP 12 x 53 STEEL PILES NO. 26	LF	1300
PILE REDRIVES	EA	6

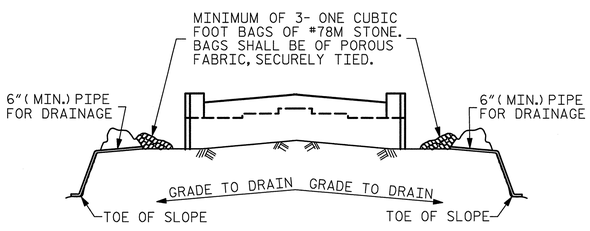

BAGGED STONE AND PIPE SHALL BE PLACED IMMEDIATELY AFTER COMPLETION OF END BENT EXCAVATION. PIPE MAY BE EITHER CONCRETE, CORRUGATED STEEL, CORRUGATED ALUMINUM ALLOY, OR CORRUGATED PLASTIC. PERFORATED PIPE WILL NOT BE ALLOWED.

BAGGED STONE SHALL REMAIN IN PLACE UNTIL THE ENGINEER DIRECTS THAT IT BE REMOVED. THE CONTRACTOR SHALL REMOVE AND DISPOSE OF SILT ACCUMULATIONS AT BAGGED STONE WHEN SO DIRECTED BY THE ENGINEER. BAGS SHALL BE REMOVED AND REPLACED WHENEVER THE ENGINEER DETERMINES THAT THEY HAVE DETERIORATED AND LOST THEIR EFFECTIVENESS.

NO SEPARATE PAYMENT WILL BE MADE FOR THIS WORK AND THE ENTIRE COST OF THIS WORK SHALL BE INCLUDED IN THE UNIT CONTRACT PRICE BID FOR THE SEVERAL PAY ITEMS.

TEMPORARY DRAINAGE AT END BENT

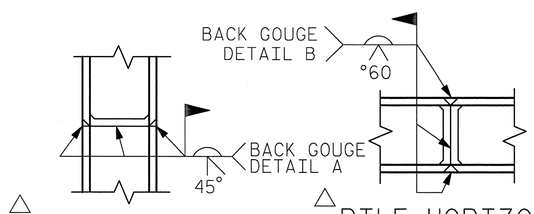

△ PILE VERTICAL

△ PILE HORIZONTAL OR VERTICAL

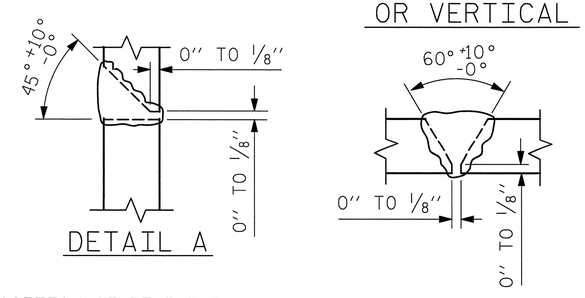

DETAIL A

DETAIL B

△ POSITION OF PILE DURING WELDING.

PILE SPLICE DETAILS

PROJECT NO. B-4091

CUMBERLAND COUNTY

STATION: 52+15.00 -L-

SHEET 4 OF 4

STATE OF NORTH CAROLINA
DEPARTMENT OF TRANSPORTATION
RALEIGH

SUBSTRUCTURE
END BENT 1

Prepared by
URS
URS Corporation - North Carolina
1600 Perimeter Park Drive, Suite 400
Morrisville, NC 27560
TELEPHONE (919) 461-1100
FAX (919) 461-1415

NORTH CAROLINA PROFESSIONAL SEAL 038447 ENGINEER ANDREW S. MILLER
5/23/12

REVISIONS						SHEET NO.
NO.	BY:	DATE:	NO.	BY:	DATE:	S-107
1			3			TOTAL SHEETS
2			4			131

DRAWN BY : R. L. WHITCHER DATE : 2/20/12
CHECKED BY : J. C. HALL DATE : 3/15/12

5/23/2012
P:\Jobs1\B4091\Structures\Final Drawings\B4091_SD_E1_4.dgn
ross_whitcher

NOTES:

FOR "SECTION A-A" & "SECTION B-B", SEE SHEET 2 OF 2.

FOR REINFORCING BILL OF MATERIAL, SEE SHEET 2 OF 2.

FOR "END VIEW", SEE SHEET 2 OF 2.

STIRRUPS IN CAP MAY BE SHIFTED AS NECESSARY TO CLEAR ANCHOR BOLTS AND COLUMN STEEL.

GALVANIZE THE TOP OF EACH INTERIOR BENT PILE A MINIMUM OF 42 FEET. GALVANIZE IN ACCORDANCE WITH SECTION 1076 OF THE STANDARD SPECIFICATIONS.

FOR PIPE PILE DETAILS, SEE SHEET "24" STEEL PIPE PILE"

FOR ADDITIONAL NOTES, SEE "GENERAL DRAWING", SHEET 3 OF 6.

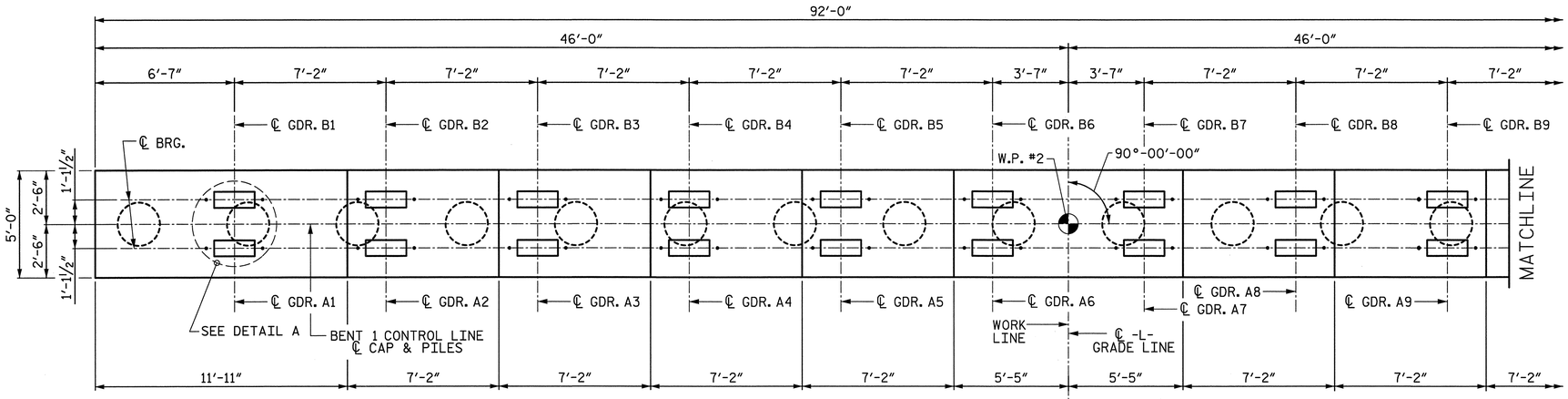

PLAN

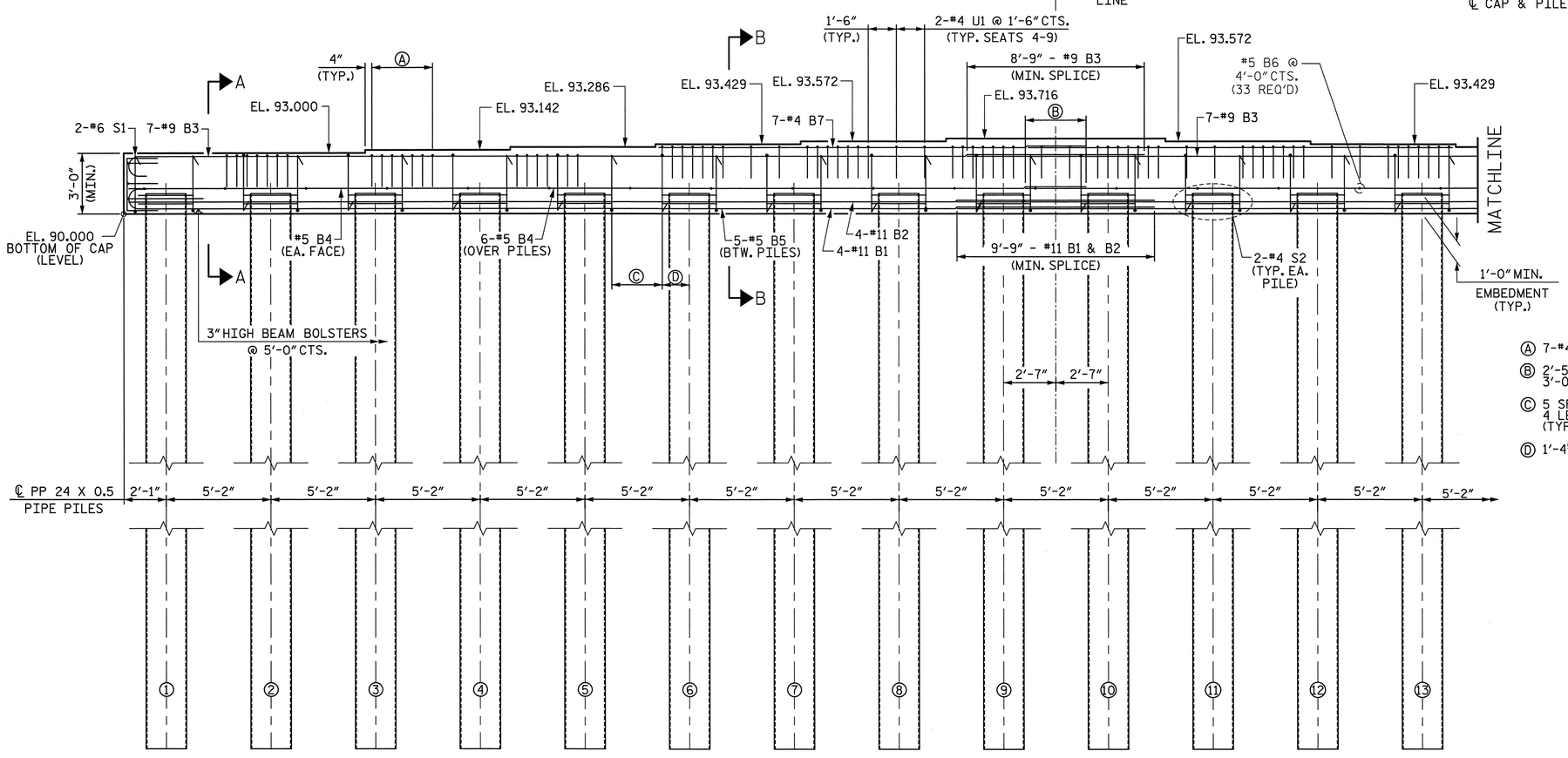

ELEVATION

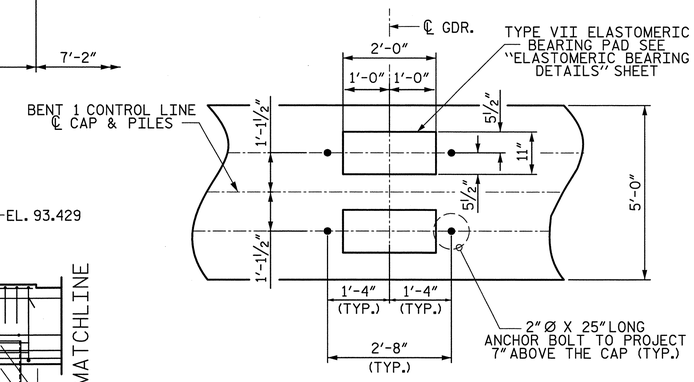

DETAIL A
(TYP. EACH GIRDER)

Ⓐ 7-#4 U1 @ 6" CTS. (TYP. ALL SEATS)

Ⓑ 2'-5" - #4 B7 MIN. SPLICE (TYP.)
3'-0" - #5 B4 MIN. SPLICE (TYP.)

Ⓒ 5 SPA. @ 5¾" CTS. S1
4 LEGS PER SPA. INVERTED ALTERNATELY
(TYP. BTW. PILES)

Ⓓ 1'-4⅝" (TYP.)

Prepared by
URS
URS Corporation - North Carolina
1600 Perimeter Park Drive, Suite 400
Morrisville, NC 27560
TELEPHONE (919) 461-1100
FAX (919) 461-1415

PROJECT NO. B-4091

CUMBERLAND COUNTY

STATION: 52+15.00 -L-

SHEET 1 OF 2

STATE OF NORTH CAROLINA
DEPARTMENT OF TRANSPORTATION
RALEIGH

SUBSTRUCTURE
BENT 1

NORTH CAROLINA PROFESSIONAL SEAL 038447 ENGINEER ANDREW J. MILLER
5/23/12

REVISIONS						SHEET NO.
NO.	BY:	DATE:	NO.	BY:	DATE:	S-108
1			3			TOTAL SHEETS
2			4			131

DRAWN BY : K.H. COMPTON DATE : 3/12/12
CHECKED BY : J. SLOAN DATE : 3/19/12

5/23/2012
R:\Structures\Final Drawings\B4091_SD_B1_1.dgn
ross_whitcher

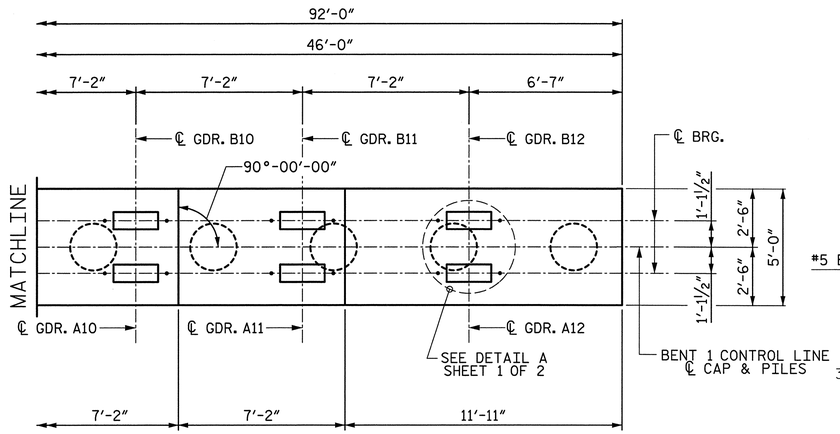

PLAN

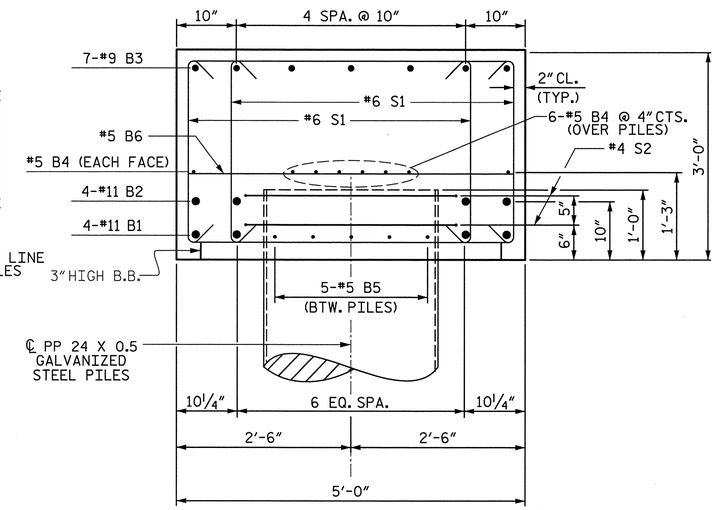

SECTION A-A

BAR TYPES

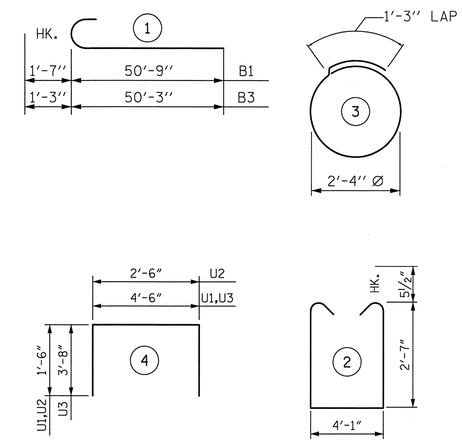

ALL BAR DIMENSIONS ARE OUT TO OUT

BILL OF MATERIAL

BENT No. 1

BAR	NO.	SIZE	TYPE	LENGTH	WEIGHT
B1	8	#11	1	52'-4"	2224
B2	8	#11	STR	50'-9"	2157
B3	14	#9	1	51'-6"	2451
B4	16	#5	STR	47'-0"	784
B5	85	#5	STR	2'-10"	251
B6	33	#5	STR	4'-8"	161
B7	14	#4	STR	20'-9"	194
S1	208	#6	2	10'-2"	2225
S2	36	#4	3	8'-7"	206
U1	98	#4	4	7'-6"	491
U2	8	#4	4	5'-6"	29
U3	2	#9	4	11'-10"	80
REINFORCING STEEL					11253

CLASS A CONCRETE BREAKDOWN

POUR #1 (CAP)	54.3 C.Y.
TOTAL CLASS A CONCRETE	54.3 C.Y.

PP 24 x 0.5 GALVANIZED STEEL PILES NO. = 18	LIN. FT.	1350
PILE REDRIVES	EA.	5
PDA TESTING	EA.	1

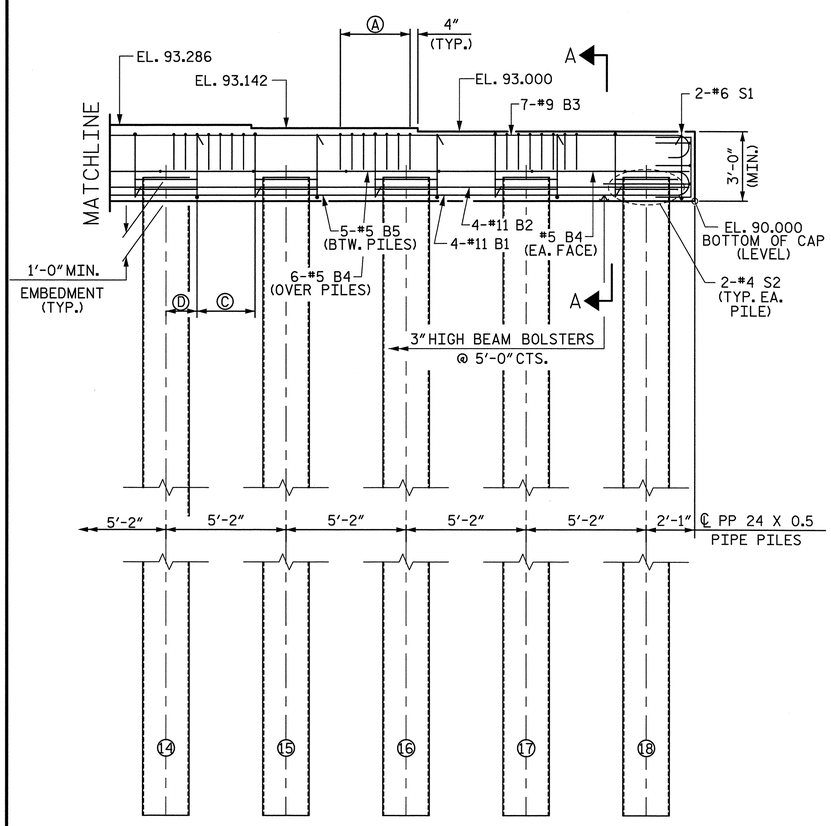

ELEVATION

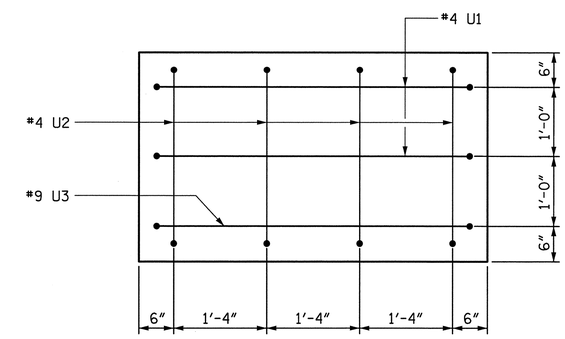

END VIEW

TYP. BOTH ENDS

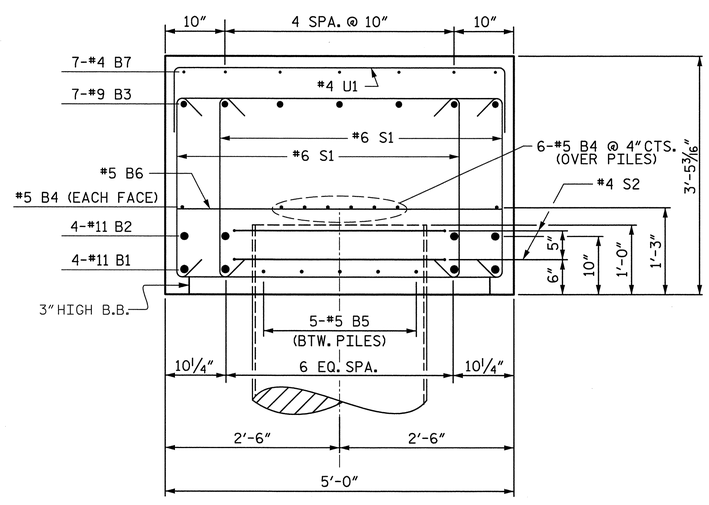

SECTION B-B

PROJECT NO. B-4091

CUMBERLAND COUNTY

STATION: 52+15.00 -L-

SHEET 2 OF 2

STATE OF NORTH CAROLINA
DEPARTMENT OF TRANSPORTATION
RALEIGH

SUBSTRUCTURE
BENT 1

Prepared by
URS
URS Corporation – North Carolina
1600 Perimeter Park Drive, Suite 400
Morrisville, NC 27560
TELEPHONE (919) 461-1100
FAX (919) 461-1415

NORTH CAROLINA PROFESSIONAL SEAL 038447 ENGINEER ANDREW S. MILLER
5/23/12

REVISIONS								SHEET NO.
NO.	BY:	DATE:	NO.	BY:	DATE:			S-109
1			3					TOTAL SHEETS
2			4					131

DRAWN BY : K.H. COMPTON DATE : 3/12/12
CHECKED BY : J. SLOAN DATE : 3/19/12

5/23/2012
R:\Structures\Final Drawings\B4091_SD_B1_2.dgn
ross_whitcher

NOTES:

FOR "SECTION A-A" & "SECTION B-B", SEE SHEET 2 OF 2.

FOR REINFORCING BILL OF MATERIAL, SEE SHEET 2 OF 2.

FOR "END VIEW", SEE SHEET 2 OF 2.

STIRRUPS IN CAP MAY BE SHIFTED AS NECESSARY TO CLEAR ANCHOR BOLTS AND COLUMN STEEL.

GALVANIZE THE TOP OF EACH INTERIOR BENT PILE A MINIMUM OF 45 FEET. GALVANIZE IN ACCORDANCE WITH SECTION 1076 OF THE STANDARD SPECIFICATIONS.

FOR PIPE PILE DETAILS SEE SHEET "24" STEEL PIPE PILE"

THE TOP SURFACE AREAS OF THE BENT CAP SHALL BE CURED IN ACCORDANCE WITH THE STANDARD SPECIFICATIONS EXCEPT THE MEMBRANE CURING COMPOUND METHOD SHALL NOT BE USED.

FOR ADDITIONAL NOTES, SEE "GENERAL DRAWING", SHEET 3 OF 6.

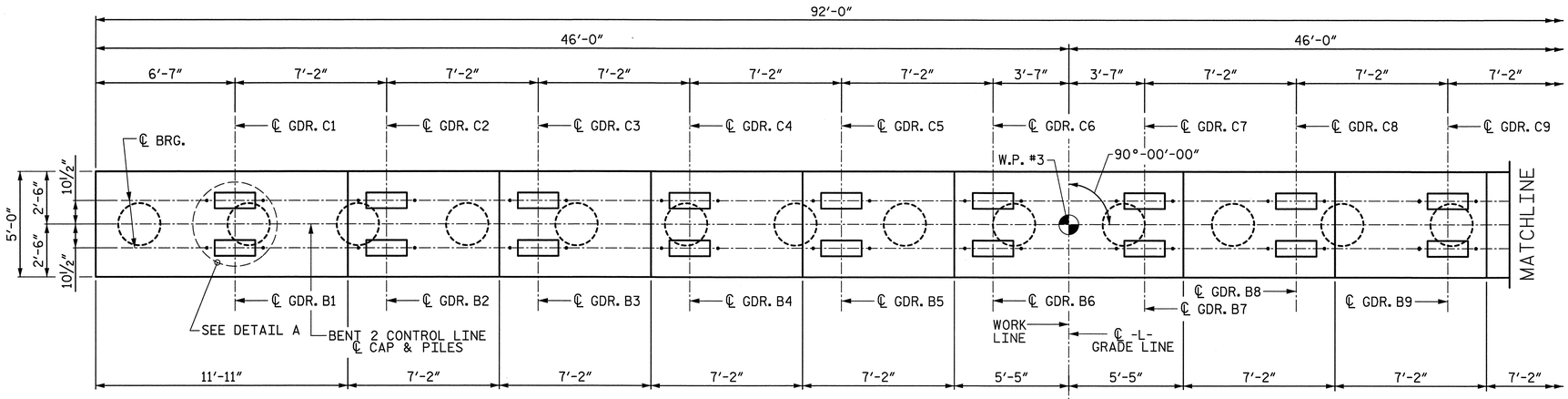

PLAN

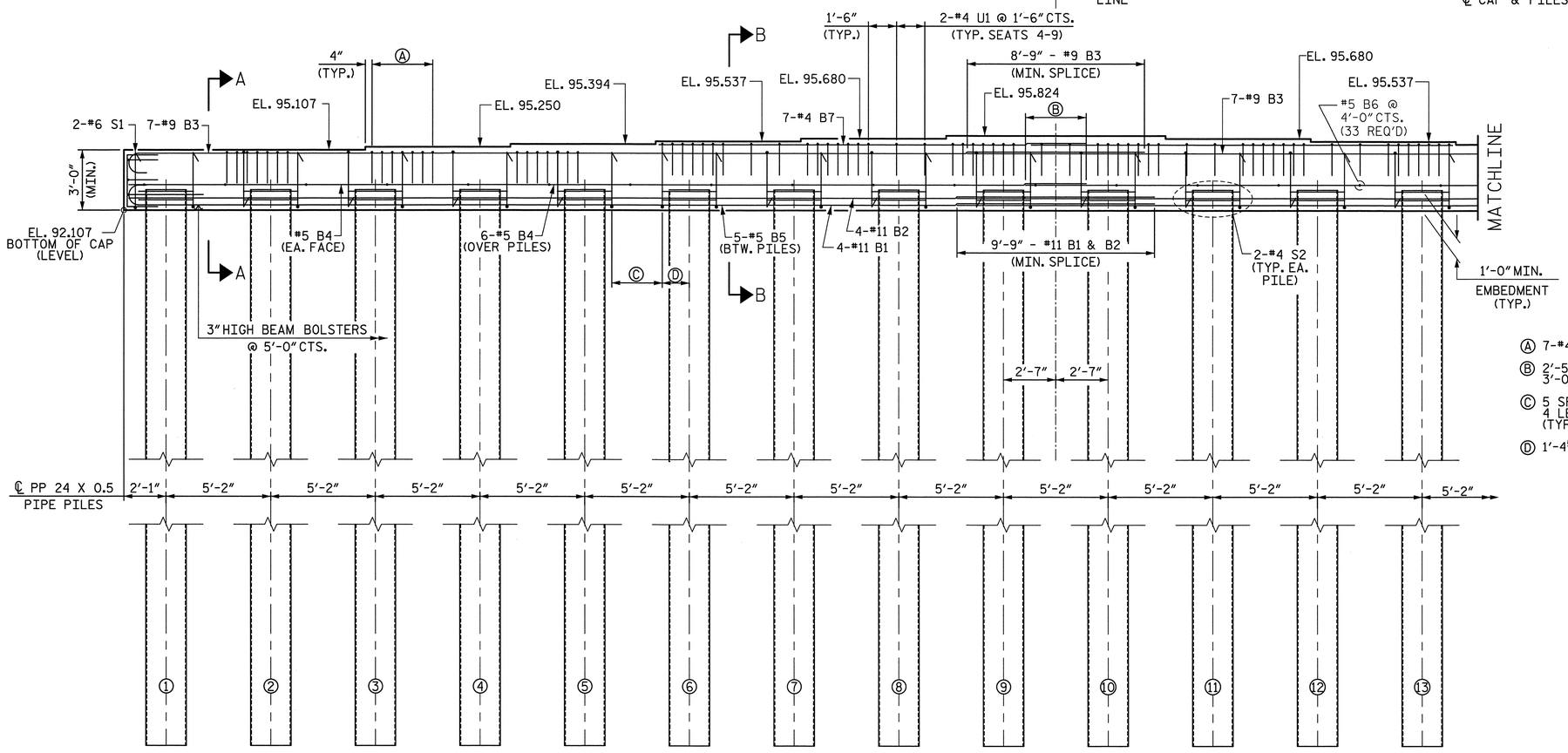

ELEVATION

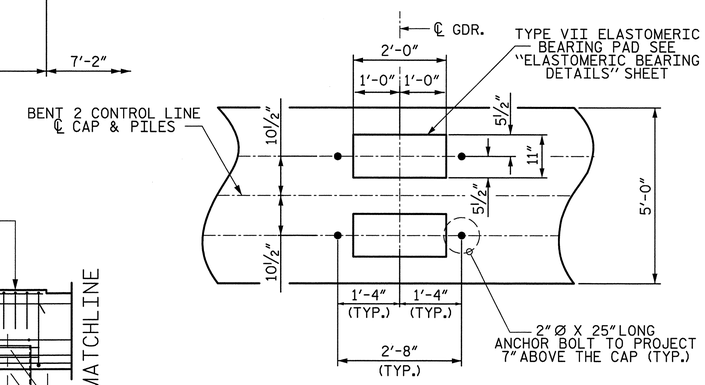

DETAIL A
(TYP. EACH GIRDER)

Ⓐ 7-#4 U1 @ 6" CTS. (TYP. ALL SEATS)

Ⓑ 2'-5" - #4 B7 MIN. SPLICE (TYP.)
3'-0" - #5 B4 MIN. SPLICE (TYP.)

Ⓒ 5 SPA. @ 5¾" CTS. S1
4 LEGS PER SPA. INVERTED ALTERNATELY (TYP. BTW. PILES)

Ⓓ 1'-4⅝" (TYP.)

Prepared by
URS
URS Corporation - North Carolina
1600 Perimeter Park Drive, Suite 400
Morrisville, NC 27560
TELEPHONE (919) 461-1100
FAX (919) 461-1415

PROJECT NO. B-4091

CUMBERLAND COUNTY

STATION: 52+15.00 -L-

SHEET 1 OF 2

STATE OF NORTH CAROLINA
DEPARTMENT OF TRANSPORTATION
RALEIGH

SUBSTRUCTURE BENT 2

NORTH CAROLINA PROFESSIONAL SEAL 038447 ENGINEER ANDREW S. MILLER
5/23/12

REVISIONS						SHEET NO.
NO.	BY:	DATE:	NO.	BY:	DATE:	S-110
1			3			TOTAL SHEETS
2			4			131

DRAWN BY : K.H. COMPTON DATE : 3/12/12
CHECKED BY : J. SLOAN DATE : 3/21/12

5/23/2012
R:\Structures\Final Drawings\B4091_SD_B2_1.dgn
ross_whitcher

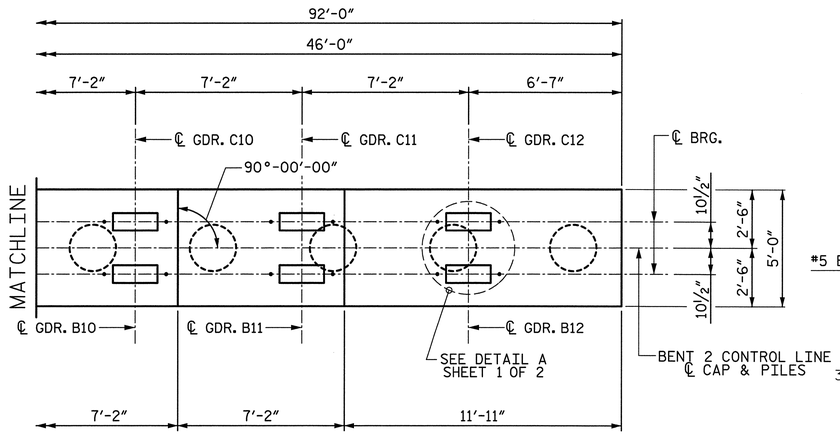

PLAN

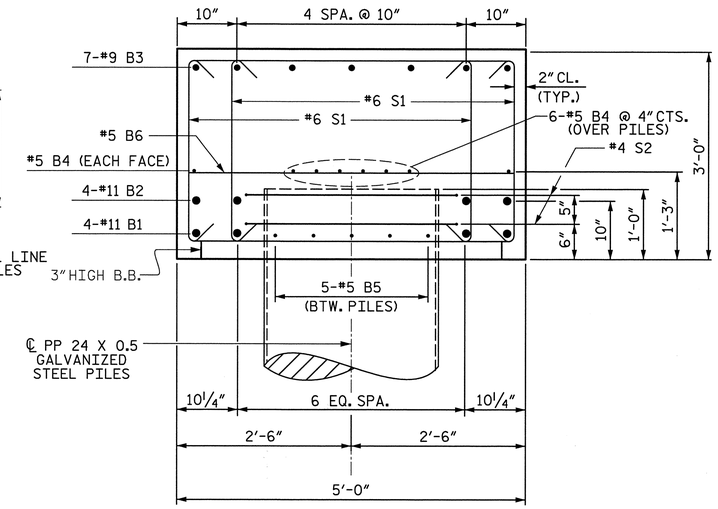

SECTION A-A

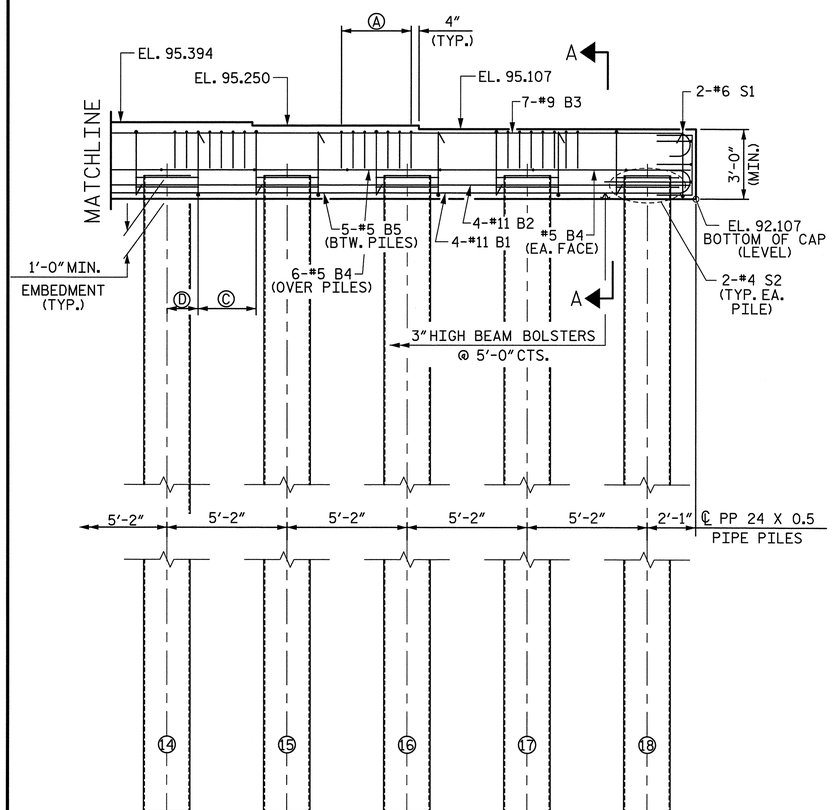

ELEVATION

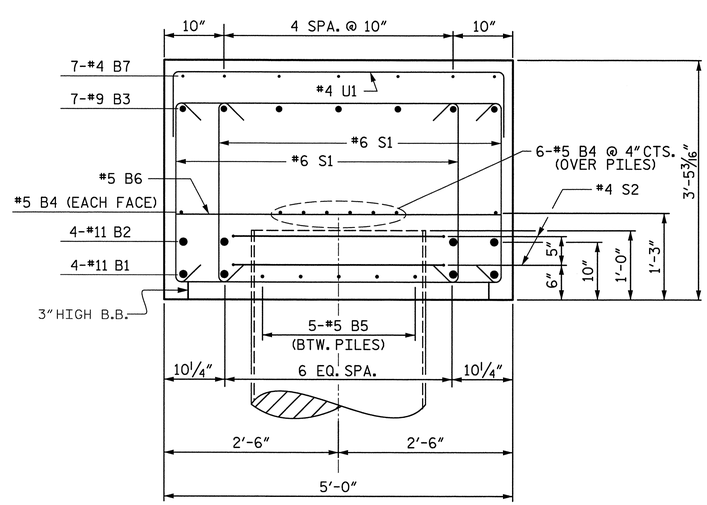

SECTION B-B

BAR TYPES

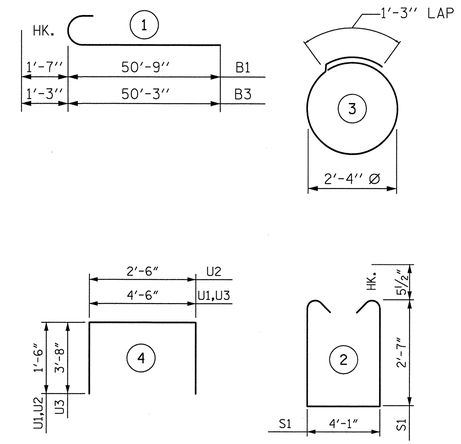

ALL BAR DIMENSIONS ARE OUT TO OUT

BILL OF MATERIAL

BENT No. 2

BAR	NO.	SIZE	TYPE	LENGTH	WEIGHT
B1	8	#11	1	52'-4"	2224
B2	8	#11	STR	50'-9"	2157
B3	14	#9	1	51'-6"	2451
B4	16	#5	STR	47'-0"	784
B5	85	#5	STR	2'-10"	251
B6	33	#5	STR	4'-8"	161
B7	14	#4	STR	20'-9"	194
S1	208	#6	2	10'-2"	2225
S2	36	#4	3	8'-7"	206
U1	98	#4	4	7'-6"	491
U2	8	#4	4	5'-6"	29
U3	2	#9	4	11'-10"	80
REINFORCING STEEL					11253

CLASS A CONCRETE BREAKDOWN	
POUR #1 (CAP)	54.3 C.Y.
TOTAL CLASS A CONCRETE	54.3 C.Y.

PP 24 x 0.5 GALVANIZED STEEL PILES NO. = 18	LIN. FT.	1350
PILE REDRIVES	EA.	5
PDA TESTING	EA.	1

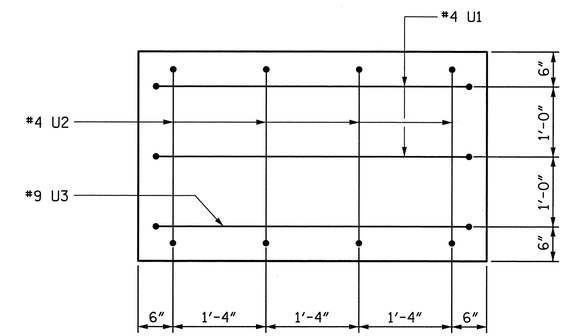

END VIEW

TYP. BOTH ENDS

PROJECT NO. B-4091

CUMBERLAND COUNTY

STATION: 52+15.00 -L-

SHEET 2 OF 2

STATE OF NORTH CAROLINA
DEPARTMENT OF TRANSPORTATION
RALEIGH

SUBSTRUCTURE
BENT 2

REVISIONS						SHEET NO.
NO.	BY:	DATE:	NO.	BY:	DATE:	S-111
1			3			TOTAL SHEETS
2			4			131

Prepared by
URS
URS Corporation - North Carolina
1600 Perimeter Park Drive, Suite 400
Morrisville, NC 27560
TELEPHONE (919) 461-1100
FAX (919) 461-1415

NORTH CAROLINA PROFESSIONAL SEAL 038447 ENGINEER ANDREW S. MILLER
5/23/12

DRAWN BY : K.H. COMPTON DATE : 3/12/12
CHECKED BY : J. SLOAN DATE : 3/21/12

5/23/2012
R:\Structures\Final Drawings\B4091_SD_B2_2.dgn
ross_whitcher

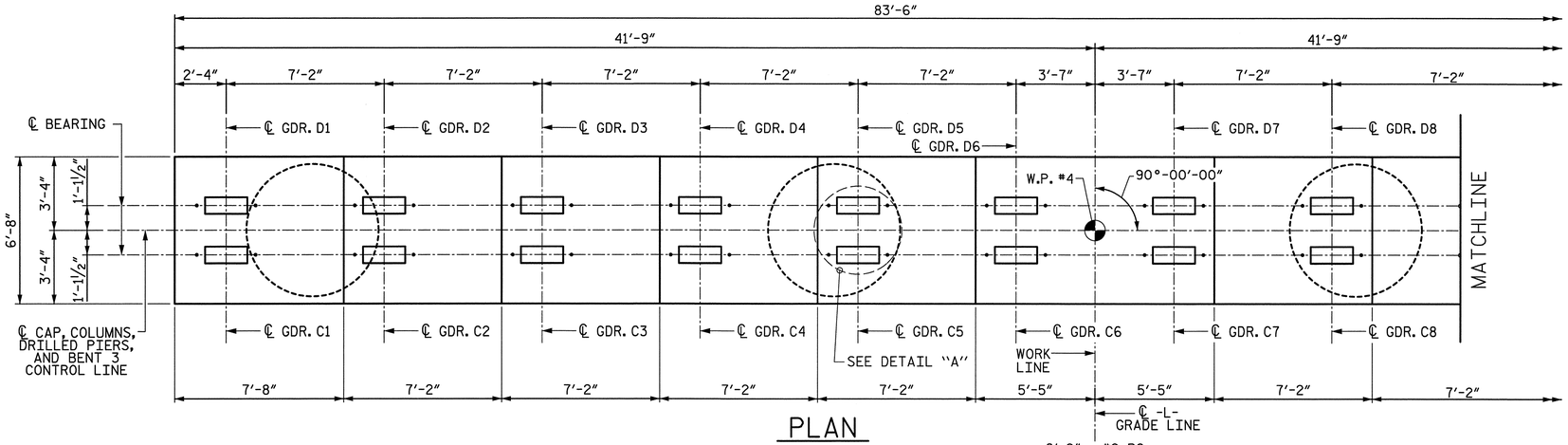

PLAN

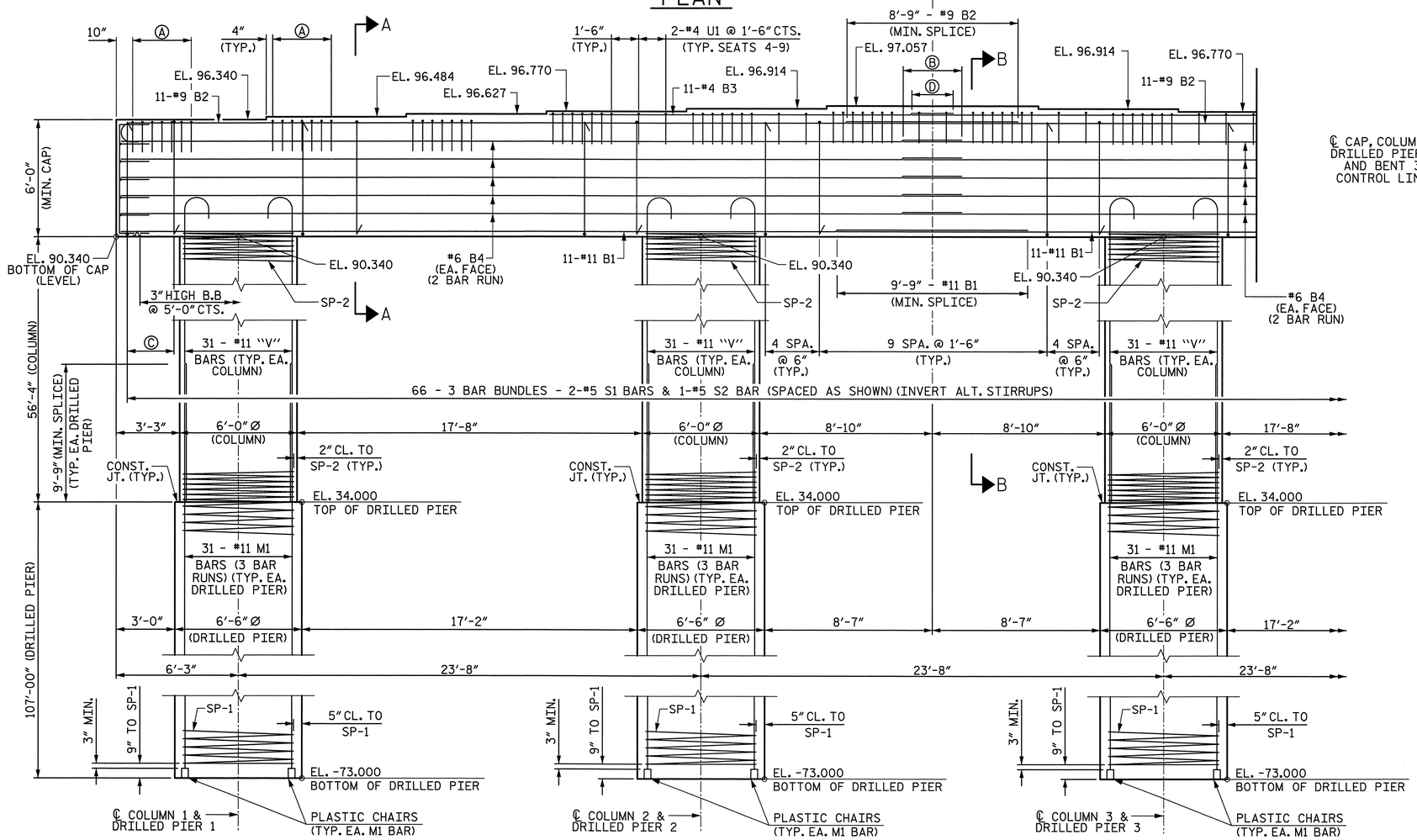

ELEVATION

NOTES:

FOR "SECTION A-A" AND "SECTION B-B", SEE SHEET 3 OF 3.

FOR REINFORCING BILL OF MATERIAL, SEE SHEET 3 OF 3.

FOR "END ELEVATION", SEE SHEET 2 OF 3.

FOR "END VIEW", SEE SHEET 3 OF 3.

STIRRUPS IN CAP MAY BE SHIFTED AS NECESSARY TO CLEAR ANCHOR BOLTS AND COLUMN STEEL.

HOOKS ON "V" BARS MAY BE TURNED AS NECESSARY FOR PLACING REINFORCING STEEL.

ALL STEEL IN THE DRILLED PIERS IS INCLUDED IN THE PAY ITEMS FOR "REINFORCING STEEL" AND "SPIRAL COLUMN REINFORCING STEEL".

THE CONTRACTOR'S ATTENTION IS CALLED TO THE FACT THAT THE LONGITUDINAL REINFORCEMENT FOR THE DRILLED PIERS IS DETAILED WITH 3 FEET OF EXTRA LENGTH.

FOR ADDITIONAL NOTES, SEE "GENERAL DRAWING", SHEET 3 OF 6.

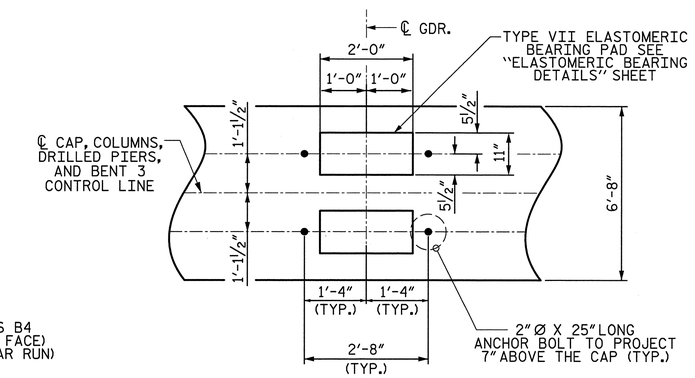

DETAIL A
(TYP. EACH GIRDER)

Ⓐ 7-#4 U1 @ 6" CTS. (TYP. ALL SEATS)
Ⓑ 3'-10" - #6 B4 (MIN. SPLICE) (TYP.)
Ⓒ 5 SPA. @ 6"
Ⓓ 2'-5" - #4 B3 (MIN. SPLICE)

Prepared by
URS
URS Corporation - North Carolina
1600 Perimeter Park Drive, Suite 400
Morrisville, NC 27560
TELEPHONE (919) 461-1100
FAX (919) 461-1415

PROJECT NO. B-4091
CUMBERLAND COUNTY
STATION: 52+15.00 -L-

SHEET 1 OF 3

STATE OF NORTH CAROLINA
DEPARTMENT OF TRANSPORTATION
RALEIGH

SUBSTRUCTURE
BENT 3

NORTH CAROLINA PROFESSIONAL SEAL 038447 ENGINEER ANDREW S. MILLER
5/23/12

REVISIONS						SHEET NO.
NO.	BY:	DATE:	NO.	BY:	DATE:	S-112
1			3			TOTAL SHEETS
2			4			131

DRAWN BY : R. L. WHITCHER DATE : 2/9/12
CHECKED BY : K. H. COMPTON DATE : 3/26/12

5/23/2012
R:\Structures\Final Drawings\B4091_SD_B3_1.dgn
ross_whitcher

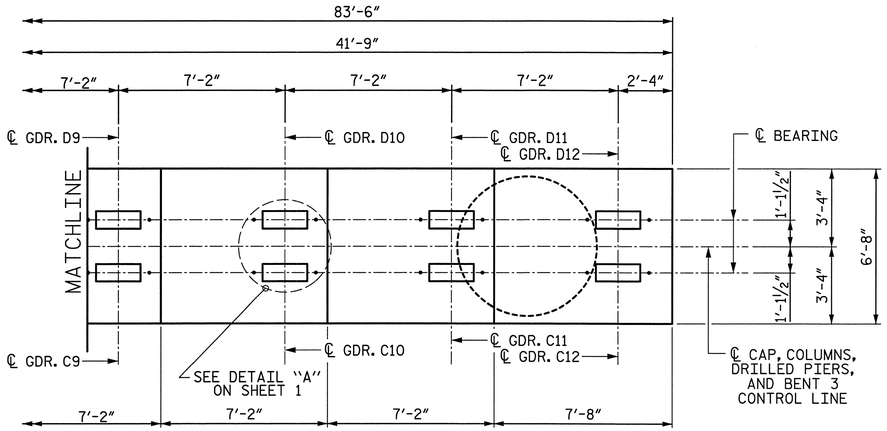

PLAN

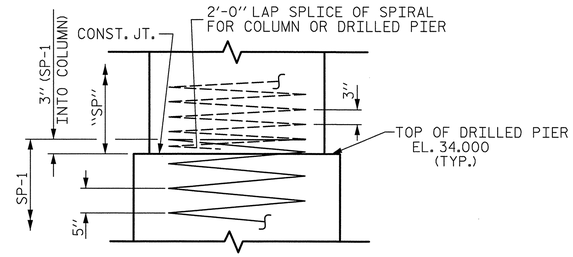

CONSTRUCTION JOINT DETAIL

Ⓐ 7-#4 U1 @ 6" CTS. (TYP. ALL SEATS)
Ⓒ 5 SPA. @ 6"

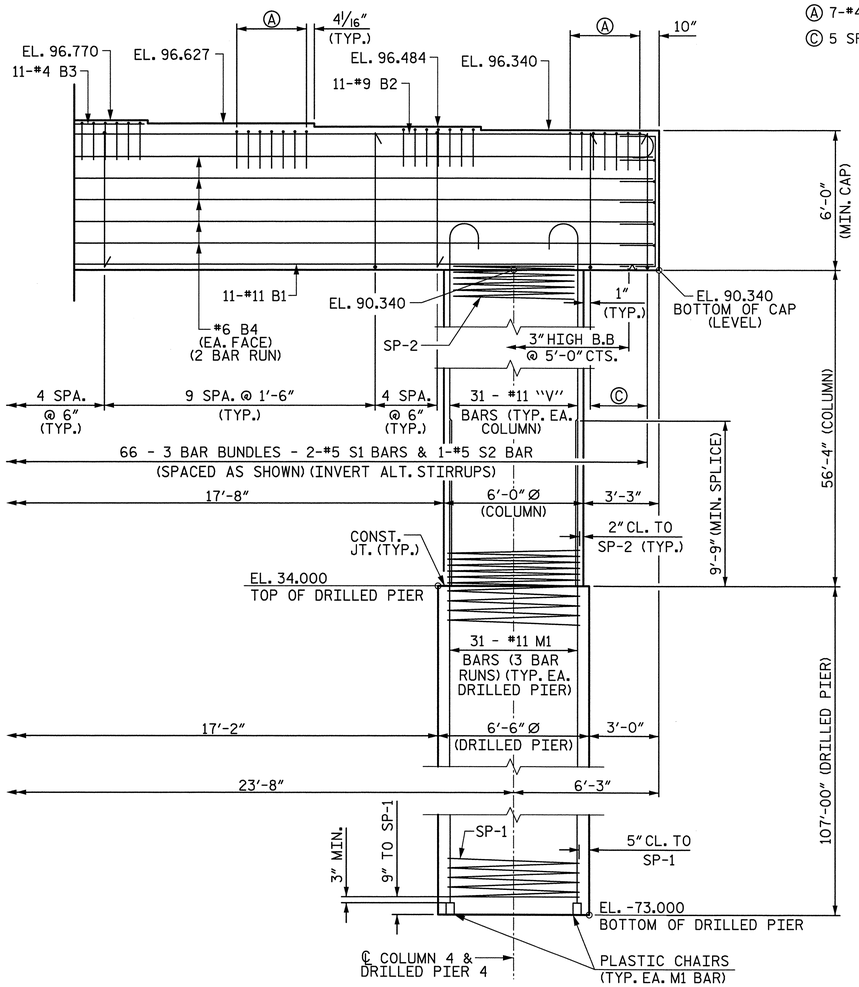

ELEVATION

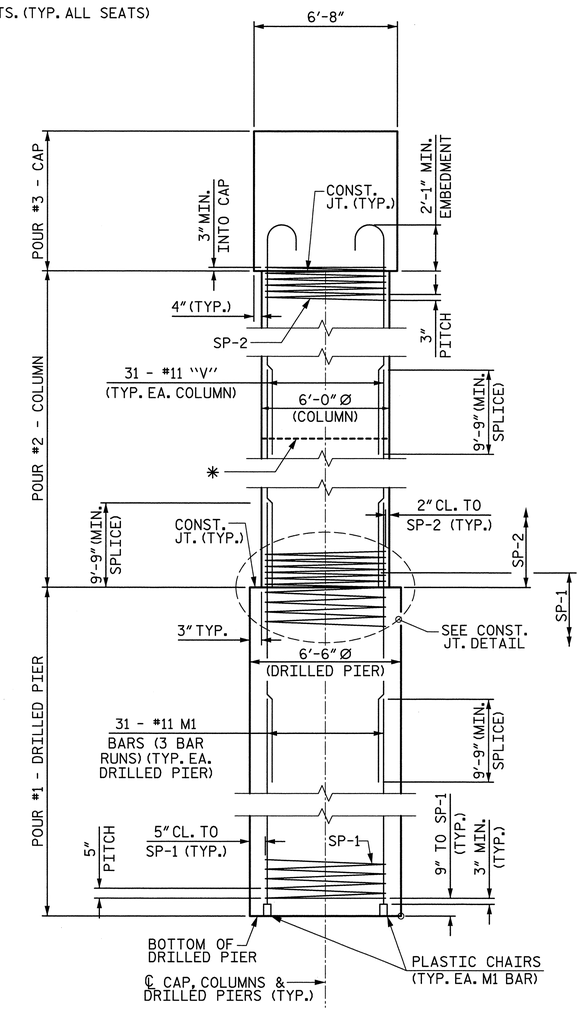

END ELEVATION

* PERMITTED CONST. JT. AT APPROXIMATELY MID-HEIGHT

Prepared by
URS
URS Corporation – North Carolina
1600 Perimeter Park Drive, Suite 400
Morrisville, NC 27560
TELEPHONE (919) 461-1100
FAX (919) 461-1415

NORTH CAROLINA PROFESSIONAL SEAL 038447 ENGINEER ANDREW R. SCHMITZ
5/23/12

PROJECT NO. B-4091
CUMBERLAND COUNTY
STATION: 52+15.00 -L-

SHEET 2 OF 3

STATE OF NORTH CAROLINA
DEPARTMENT OF TRANSPORTATION
RALEIGH

SUBSTRUCTURE
BENT 3

REVISIONS						SHEET NO.
NO.	BY:	DATE:	NO.	BY:	DATE:	S-113
1			3			TOTAL SHEETS
2			4			131

DRAWN BY : R. L. WHITCHER DATE : 2/9/12
CHECKED BY : K. H. COMPTON DATE : 3/26/12

5/23/2012
R:\Structures\FinalDrawings\B4091_SD_B3_2.dgn
ross_whitcher

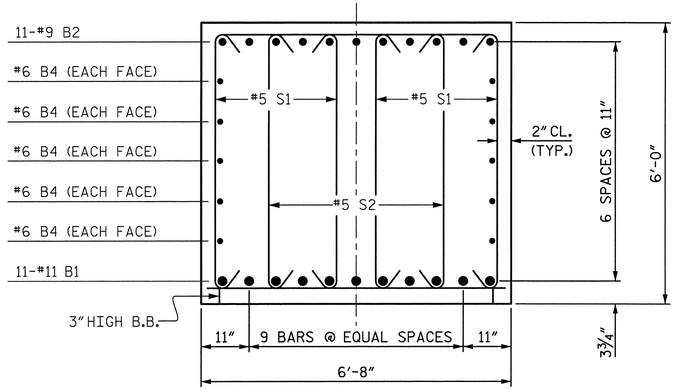

SECTION A-A

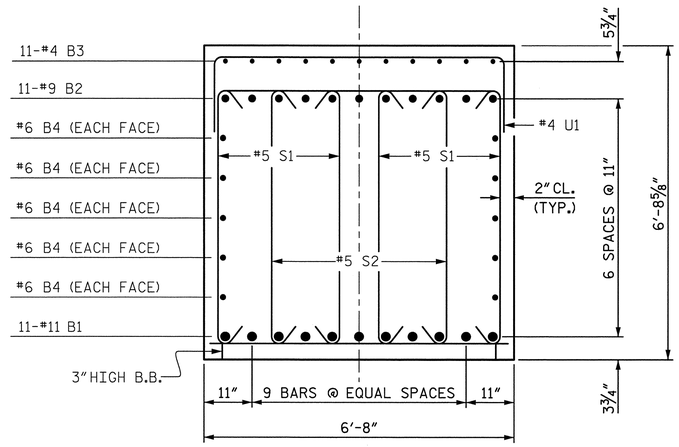

SECTION B-B

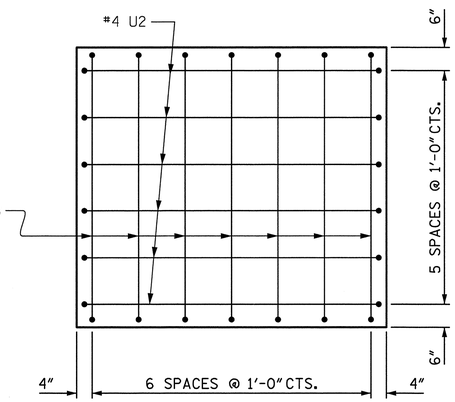

END VIEW

(TYP. BOTH ENDS OF CAP)

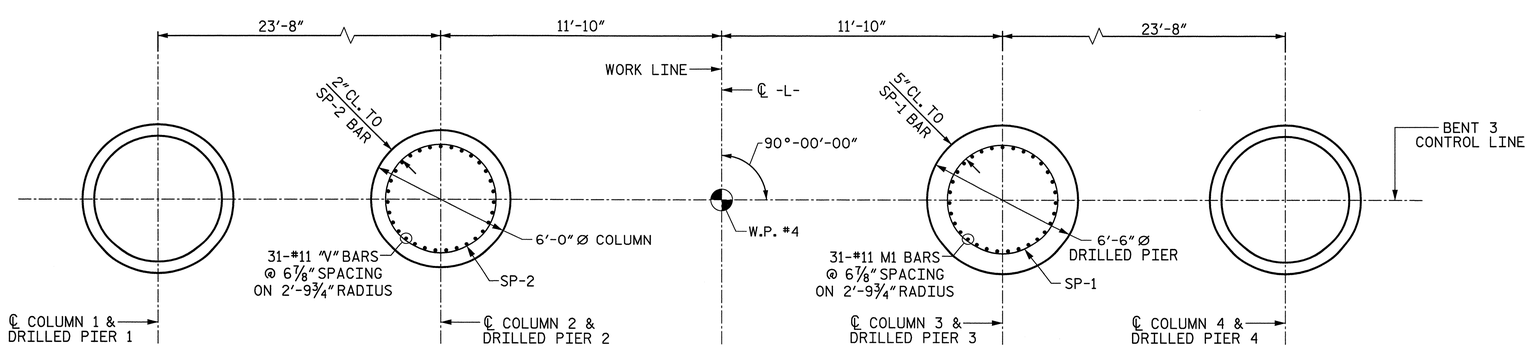

TYP. COLUMN REINFORCEMENT

TYP. DRILLED PIER REINFORCEMENT

PLAN OF DRILLED PIERS & COLUMNS

BAR TYPES

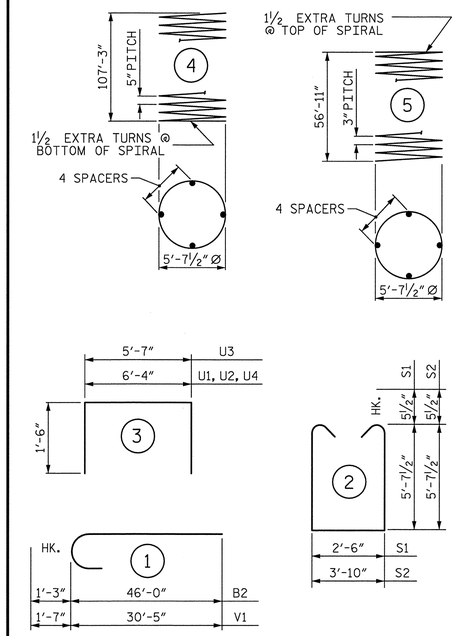

ALL BAR DIMENSIONS ARE OUT TO OUT

BILL OF MATERIAL

BENT No. 3

BAR	NO.	SIZE	TYPE	LENGTH	WEIGHT
B1	22	11	STR	46'-6"	5435
B2	22	9	1	47'-3"	3534
B3	22	4	STR	20'-10"	306
B4	20	6	STR	43'-6"	1307
M1	372	11	STR	46'-5"	91740
S1	132	5	2	14'-8"	2019
S2	66	5	2	16'-0"	1101
U1	94	4	3	9'-4"	586
U2	12	4	3	9'-4"	75
U3	14	4	3	8'-7"	80
V1	124	11	1	32'-0"	21082
V2	124	11	STR	38'-1"	25090
REINFORCING STEEL					152355
SP-1	4	*	4	4544'-8"	18960
SP-2	4	**	5	4052'-3"	10828

SPIRAL COLUMN REINFORCING STEEL 29788 LBS.

* THE SP-1 SPIRAL REINFORCING STEEL SHALL BE W31 OR D-31 COLD DRAWN WIRE OR #5 PLAIN OR DEFORMED BAR

** THE SP-2 SPIRAL REINFORCING STEEL SHALL BE W20 OR D-20 COLD DRAWN WIRE OR #4 PLAIN OR DEFORMED BAR

CLASS A CONCRETE BREAKDOWN	
POUR #2 (COLUMNS)	236.0 C.Y.
POUR #3 (CAP)	130.7 C.Y.
TOTAL CLASS A CONCRETE	366.7 C.Y.

DRILLED PIERS:

DRILLED PIER CONCRETE

POUR #1 (DRILLED PIERS) 526.0 C.Y.

6'-6" Ø DRILLED PIERS 428.0 LIN. FT.

PERMANENT STEEL CASING FOR 6'-6" Ø DRILLED PIER 116.0 LIN. FT.

CSL TUBES 2604 LIN. FT.

Prepared by
URS
URS Corporation - North Carolina
1600 Perimeter Park Drive, Suite 400
Morrisville, NC 27560
TELEPHONE (919) 461-1100
FAX (919) 461-1415

PROJECT NO. B-4091

CUMBERLAND COUNTY

STATION: 52+15.00 -L-

SHEET 3 OF 3

STATE OF NORTH CAROLINA
DEPARTMENT OF TRANSPORTATION
RALEIGH

SUBSTRUCTURE
BENT 3
DETAILS

NORTH CAROLINA PROFESSIONAL SEAL 038447 ENGINEER ANDREW R. MILLER
5/23/12

REVISIONS						SHEET NO.
NO.	BY:	DATE:	NO.	BY:	DATE:	S-114
1			3			TOTAL SHEETS
2			4			131

DRAWN BY : R. L. WHITCHER DATE : 2/9/12
CHECKED BY : K. H. COMPTON DATE : 3/26/12

5/23/2012
R:\Structures\Final Drawings\B4091_SD_B3_3.dgn
ross_whitcher

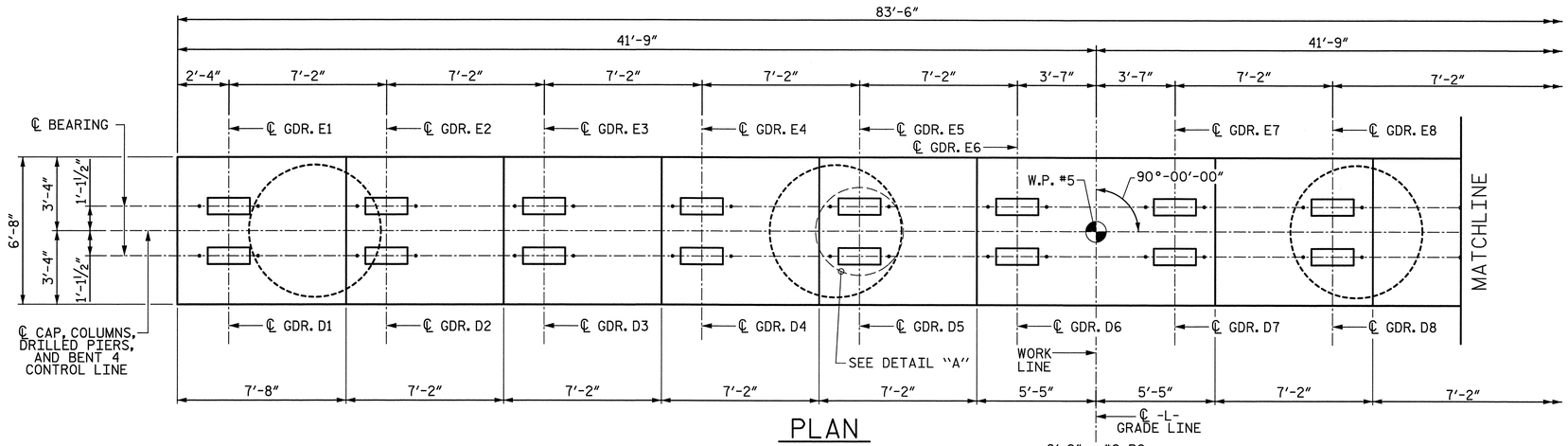

PLAN

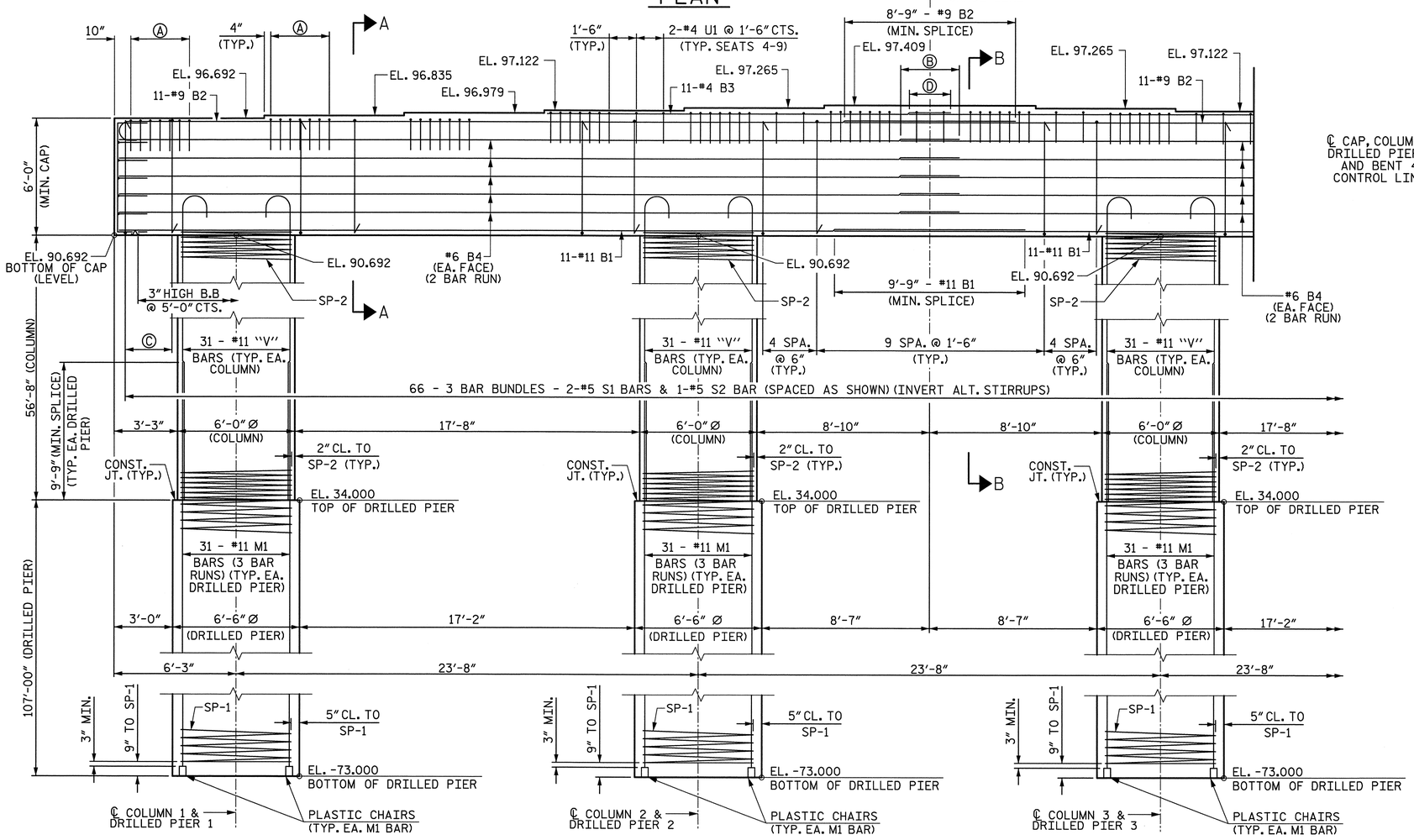

ELEVATION

NOTES:

FOR "SECTION A-A" AND "SECTION B-B", SEE SHEET 3 OF 3.

FOR REINFORCING BILL OF MATERIAL, SEE SHEET 3 OF 3.

FOR "END ELEVATION", SEE SHEET 2 OF 3.

FOR "END VIEW", SEE SHEET 3 OF 3.

STIRRUPS IN CAP MAY BE SHIFTED AS NECESSARY TO CLEAR ANCHOR BOLTS AND COLUMN STEEL.

HOOKS ON "V" BARS MAY BE TURNED AS NECESSARY FOR PLACING REINFORCING STEEL.

ALL STEEL IN THE DRILLED PIERS IS INCLUDED IN THE PAY ITEMS FOR "REINFORCING STEEL" AND "SPIRAL COLUMN REINFORCING STEEL".

THE CONTRACTOR'S ATTENTION IS CALLED TO THE FACT THAT THE LONGITUDINAL REINFORCEMENT FOR THE DRILLED PIERS IS DETAILED WITH 3 FEET OF EXTRA LENGTH.

FOR ADDITIONAL NOTES, SEE "GENERAL DRAWING", SHEET 3 OF 6.

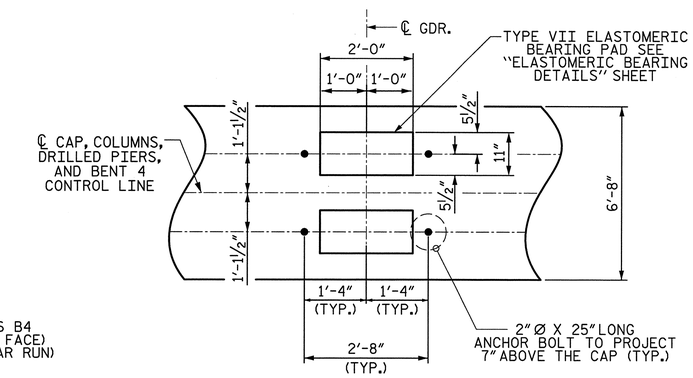

DETAIL A
(TYP. EACH GIRDER)

Ⓐ 7-#4 U1 @ 6" CTS. (TYP. ALL SEATS)
Ⓑ 3'-10" - #6 B4 (MIN. SPLICE) (TYP.)
Ⓒ 5 SPA. @ 6"
Ⓓ 2'-5" - #4 B3 (MIN. SPLICE)

Prepared by
URS
URS Corporation - North Carolina
1600 Perimeter Park Drive, Suite 400
Morrisville, NC 27560
TELEPHONE (919) 461-1100
FAX (919) 461-1415

PROJECT NO. B-4091
CUMBERLAND COUNTY
STATION: 52+15.00 -L-

SHEET 1 OF 3

STATE OF NORTH CAROLINA
DEPARTMENT OF TRANSPORTATION
RALEIGH

SUBSTRUCTURE
BENT 4

NORTH CAROLINA PROFESSIONAL SEAL 038447 ENGINEER ANDREW R. MILLER
5/23/12

REVISIONS						SHEET NO.
NO.	BY:	DATE:	NO.	BY:	DATE:	S-115
1			3			TOTAL SHEETS
2			4			131

DRAWN BY : R. L. WHITCHER DATE : 2/9/12
CHECKED BY : K. H. COMPTON DATE : 3/14/12

5/23/2012
R:\Structures\Final Drawings\B4091_SD_B4_1.dgn
ross_whitcher

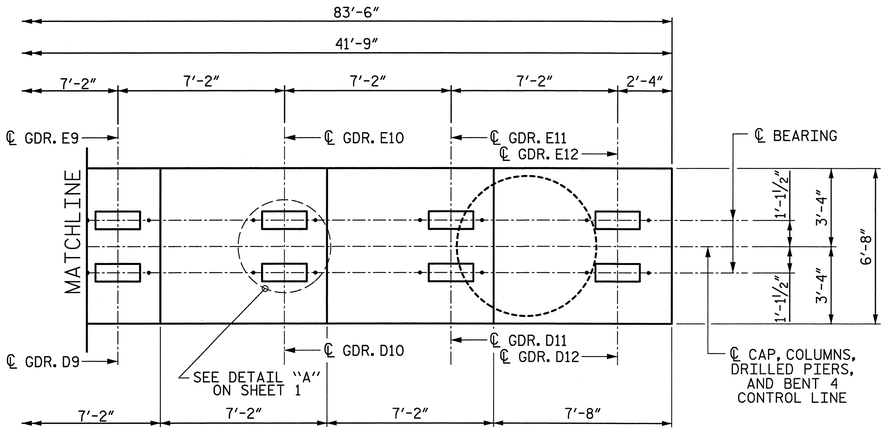

PLAN

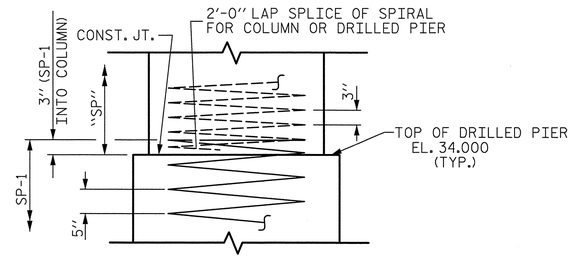

CONSTRUCTION JOINT DETAIL

Ⓐ 7-#4 U1 @ 6" CTS. (TYP. ALL SEATS)

Ⓒ 5 SPA. @ 6"

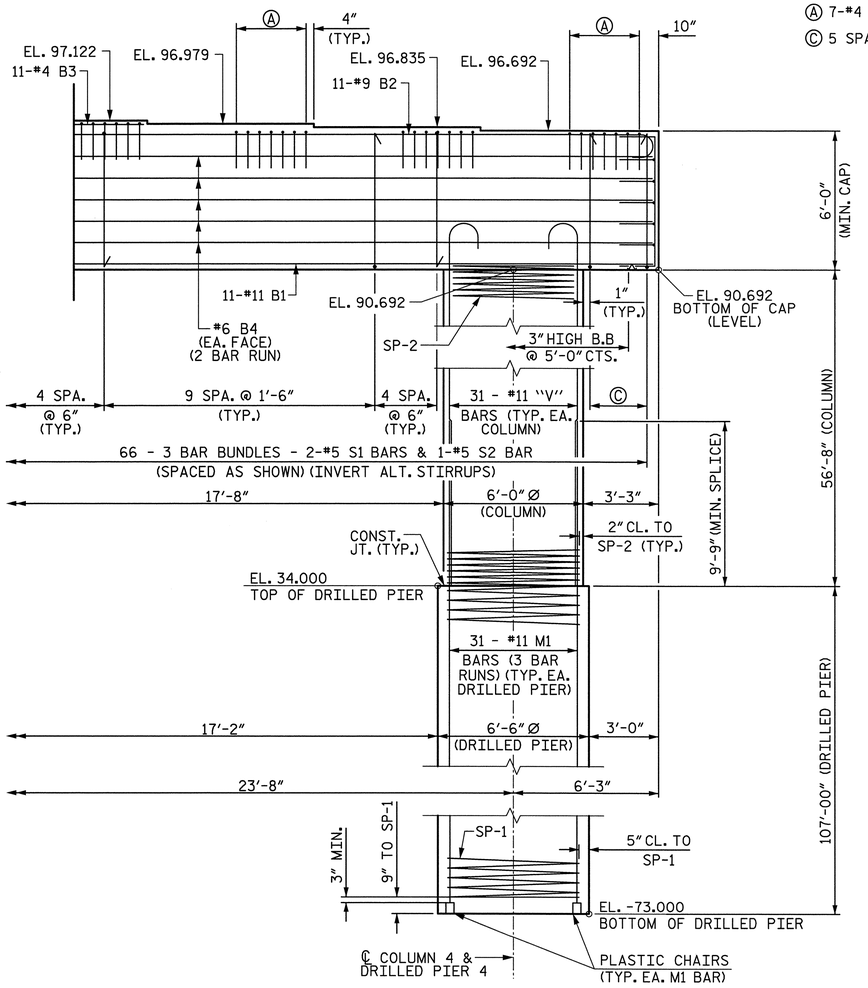

ELEVATION

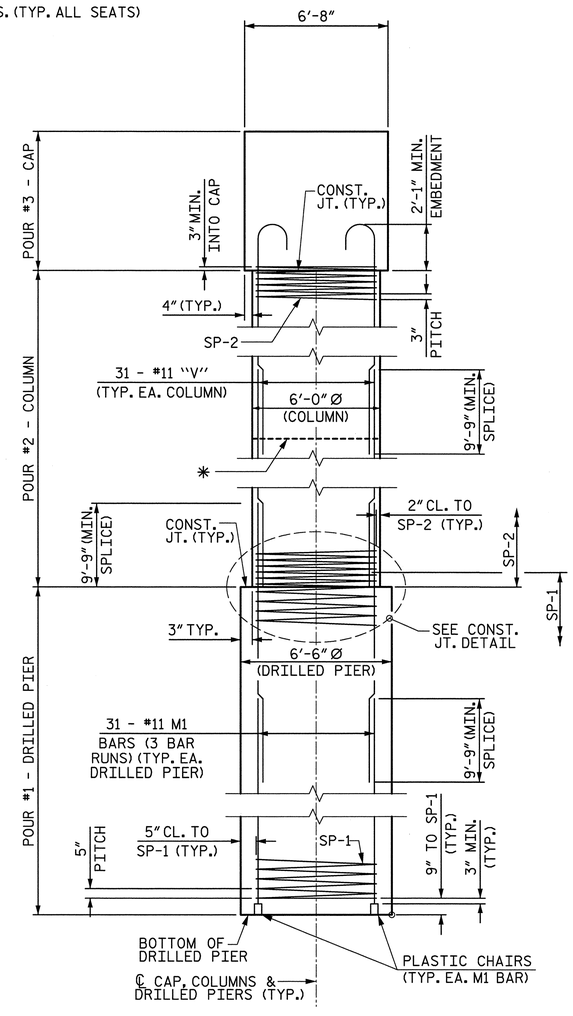

END ELEVATION

* PERMITTED CONST. JT. AT APPROXIMATELY MID-HEIGHT

PROJECT NO. B-4091

CUMBERLAND COUNTY

STATION: 52+15.00 -L-

SHEET 2 OF 3

Prepared by

URS

URS Corporation - North Carolina
1600 Perimeter Park Drive, Suite 400
Morrisville, NC 27560
TELEPHONE (919) 461-1100
FAX (919) 461-1415

NORTH CAROLINA PROFESSIONAL SEAL 038447 ENGINEER ANDREW S. MILLER

5/23/12

STATE OF NORTH CAROLINA
DEPARTMENT OF TRANSPORTATION
RALEIGH

SUBSTRUCTURE
BENT 4

REVISIONS						SHEET NO.
NO.	BY:	DATE:	NO.	BY:	DATE:	S-116
1			3			TOTAL SHEETS
2			4			131

DRAWN BY : R. L. WHITCHER DATE : 2/9/12
CHECKED BY : K. H. COMPTON DATE : 3/14/12

5/23/2012
R:\Structures\FinalDrawings\B4091_SD_B4_2.dgn
ross_whitcher

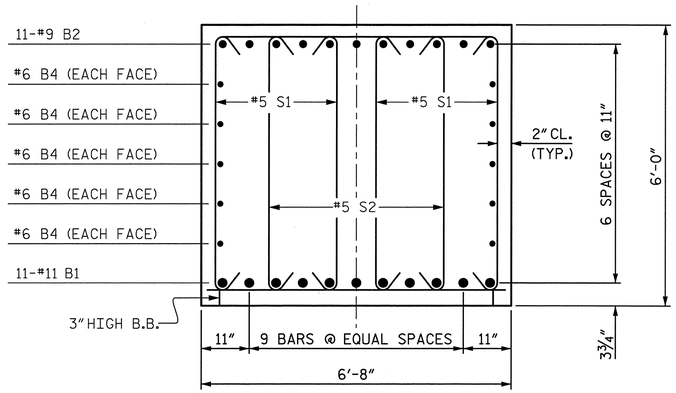

SECTION A-A

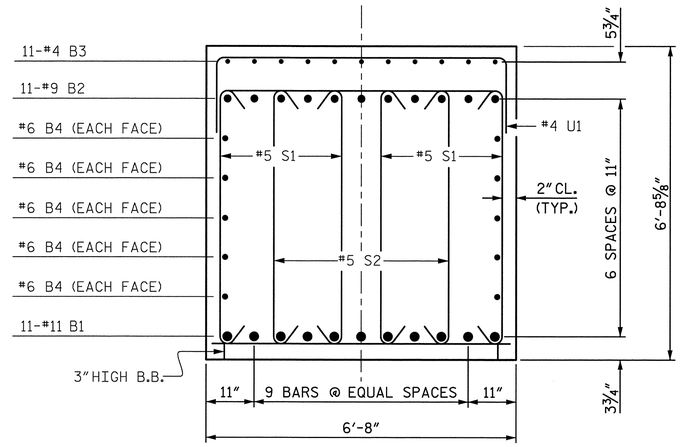

SECTION B-B

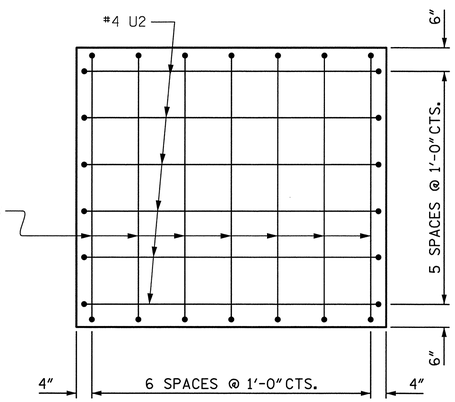

END VIEW

(TYP. BOTH ENDS OF CAP)

BAR TYPES

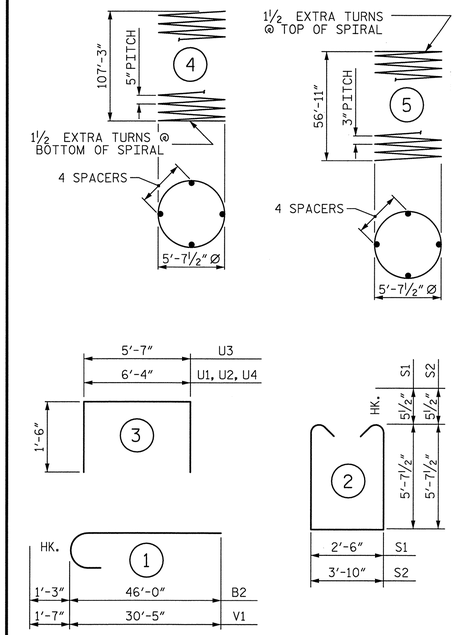

ALL BAR DIMENSIONS ARE OUT TO OUT

BILL OF MATERIAL

BENT No. 4

BAR	NO.	SIZE	TYPE	LENGTH	WEIGHT
B1	22	11	STR	46'-6"	5435
B2	22	9	1	47'-3"	3534
B3	22	4	STR	20'-10"	306
B4	20	6	STR	43'-6"	1307
M1	372	11	STR	46'-5"	91740
S1	132	5	2	14'-8"	2019
S2	66	5	2	16'-0"	1101
U1	94	4	3	9'-4"	586
U2	12	4	3	9'-4"	75
U3	14	4	3	8'-7"	80
V1	124	11	1	32'-0"	21082
V2	124	11	STR	38'-1"	25090
REINFORCING STEEL					152355
SP-1	4	✳	4	4544'-8"	18960
SP-2	4	✳✳	5	4052'-3"	10828

SPIRAL COLUMN REINFORCING STEEL 29788 LBS.

✳ THE SP-1 SPIRAL REINFORCING STEEL SHALL BE W31 OR D-31 COLD DRAWN WIRE OR #5 PLAIN OR DEFORMED BAR

✳✳ THE SP-2 SPIRAL REINFORCING STEEL SHALL BE W20 OR D-20 COLD DRAWN WIRE OR #4 PLAIN OR DEFORMED BAR

CLASS A CONCRETE BREAKDOWN	
POUR #2 (COLUMNS)	237.4 C.Y.
POUR #3 (CAP)	130.7 C.Y.
TOTAL CLASS A CONCRETE	368.1 C.Y.

DRILLED PIERS:

DRILLED PIER CONCRETE
POUR #1 (DRILLED PIERS) 526.0 C.Y.

6'-6" Ø DRILLED PIERS 428.0 LIN. FT.

PERMANENT STEEL CASING FOR 6'-6" Ø DRILLED PIER 116.0 LIN. FT.

CSL TUBES 2604 LIN. FT.

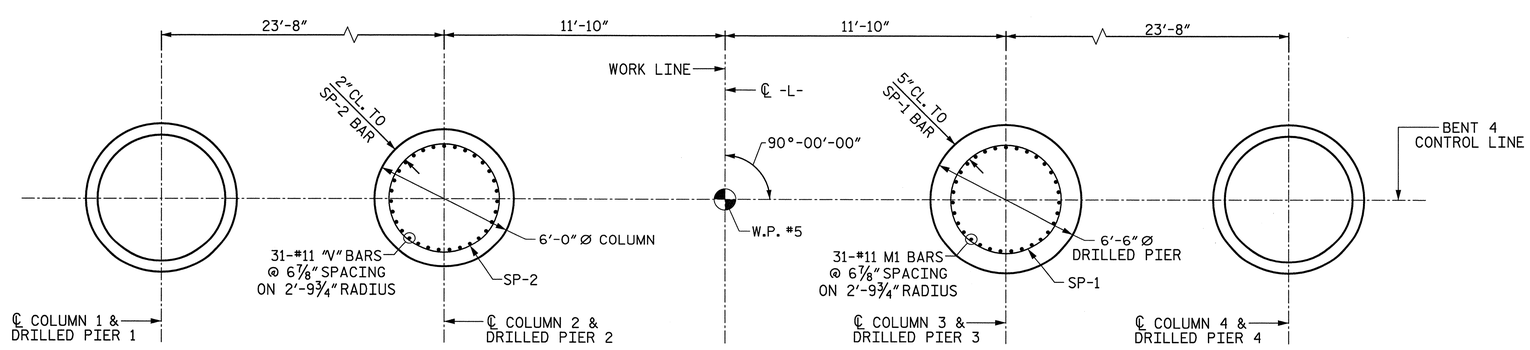

TYP. COLUMN REINFORCEMENT

TYP. DRILLED PIER REINFORCEMENT

PLAN OF DRILLED PIERS & COLUMNS

Prepared by
URS
URS Corporation – North Carolina
1600 Perimeter Park Drive, Suite 400
Morrisville, NC 27560
TELEPHONE (919) 461-1100
FAX (919) 461-1415

PROJECT NO. B-4091

CUMBERLAND COUNTY

STATION: 52+15.00 -L-

SHEET 3 OF 3

STATE OF NORTH CAROLINA
DEPARTMENT OF TRANSPORTATION
RALEIGH

SUBSTRUCTURE
BENT 4
DETAILS

NORTH CAROLINA PROFESSIONAL SEAL 038447 ENGINEER ANDREW S. MILLER
5/23/12

REVISIONS						SHEET NO.
NO.	BY:	DATE:	NO.	BY:	DATE:	S-117
1			3			TOTAL SHEETS
2			4			131

DRAWN BY : R. L. WHITCHER DATE : 2/9/12
CHECKED BY : K. H. COMPTON DATE : 3/14/12

5/23/2012
R:\Structures\Final Drawings\B4091_SD_B4_3.dgn
ross_whitcher

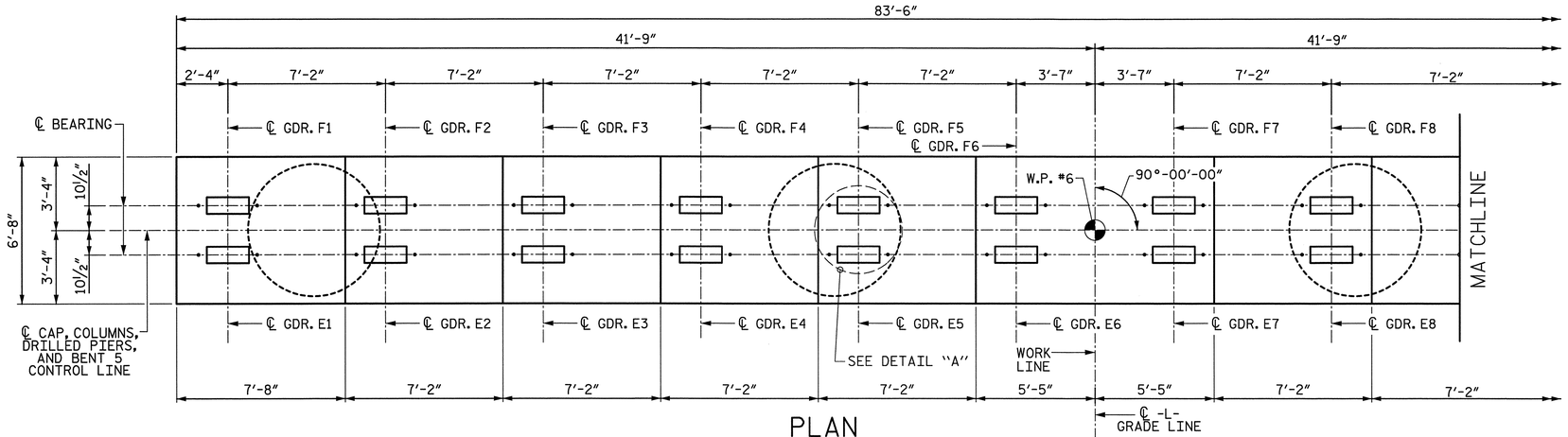

PLAN

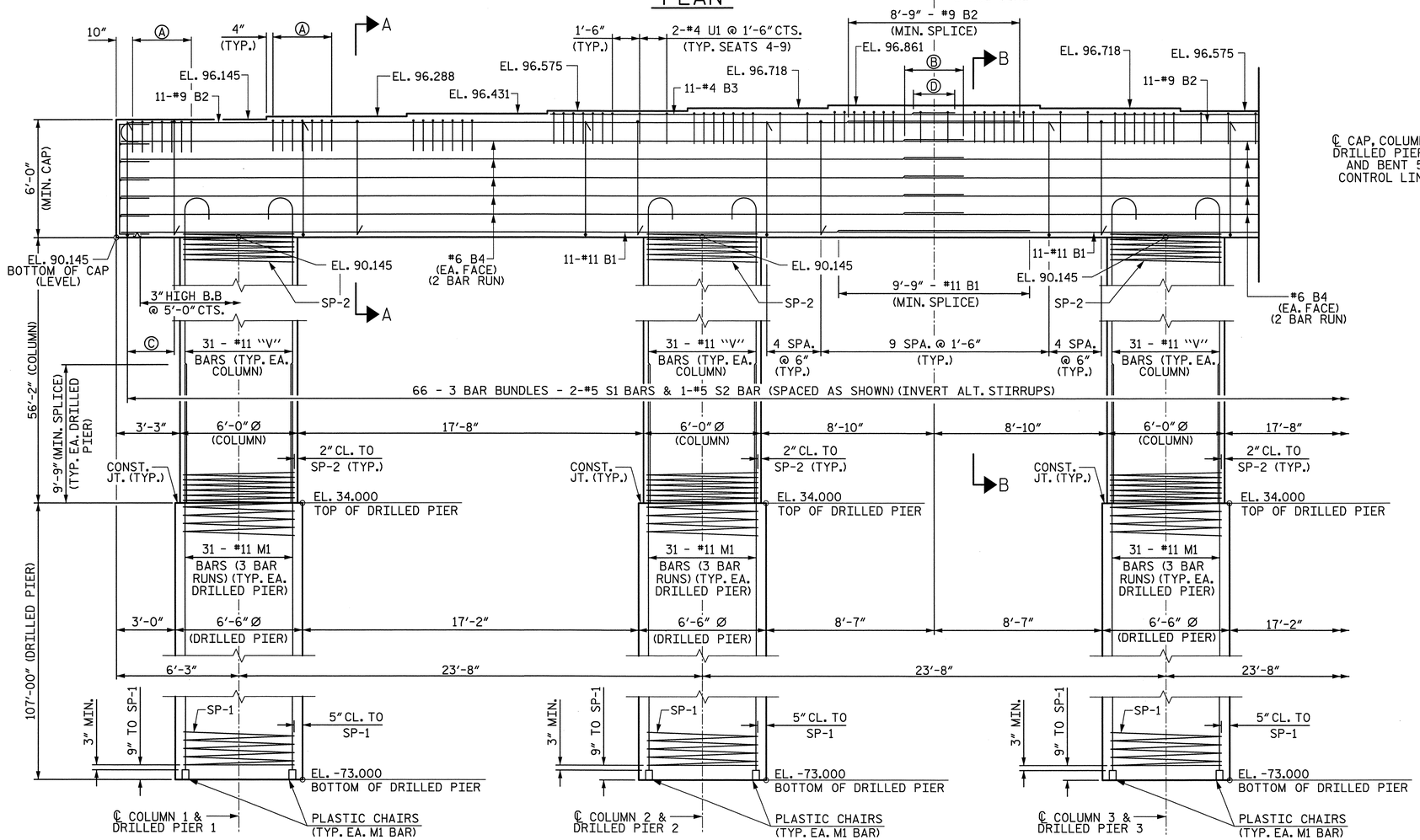

ELEVATION

NOTES:

FOR "SECTION A-A" AND "SECTION B-B", SEE SHEET 3 OF 3.

FOR REINFORCING BILL OF MATERIAL, SEE SHEET 3 OF 3.

FOR "END ELEVATION", SEE SHEET 2 OF 3.

FOR "END VIEW", SEE SHEET 3 OF 3.

STIRRUPS IN CAP MAY BE SHIFTED AS NECESSARY TO CLEAR ANCHOR BOLTS AND COLUMN STEEL.

THE TOP SURFACE AREAS OF THE BENT CAP SHALL BE CURED IN ACCORDANCE WITH THE STANDARD SPECIFICATIONS EXCEPT THE MEMBRANE CURING COMPOUND METHOD SHALL NOT BE USED.

HOOKS ON "V" BARS MAY BE TURNED AS NECESSARY FOR PLACING REINFORCING STEEL.

ALL STEEL IN THE DRILLED PIERS IS INCLUDED IN THE PAY ITEMS FOR "REINFORCING STEEL" AND "SPIRAL COLUMN REINFORCING STEEL".

THE CONTRACTOR'S ATTENTION IS CALLED TO THE FACT THAT THE LONGITUDINAL REINFORCEMENT FOR THE DRILLED PIERS IS DETAILED WITH 3 FEET OF EXTRA LENGTH.

FOR ADDITIONAL NOTES, SEE "GENERAL DRAWING", SHEET 3 OF 6.

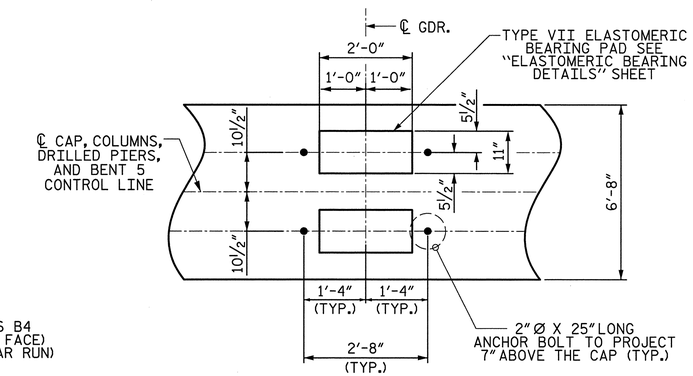

DETAIL A

(TYP. EACH GIRDER)

Ⓐ 7-#4 U1 @ 6" CTS. (TYP. ALL SEATS)
Ⓑ 3'-10" - #6 B4 (MIN. SPLICE) (TYP.)
Ⓒ 5 SPA. @ 6"
Ⓓ 2'-5" - #4 B3 (MIN. SPLICE)

Prepared by
URS
URS Corporation - North Carolina
1600 Perimeter Park Drive, Suite 400
Morrisville, NC 27560
TELEPHONE (919) 461-1100
FAX (919) 461-1415

PROJECT NO. B-4091
CUMBERLAND COUNTY
STATION: 52+15.00 -L-

SHEET 1 OF 3

STATE OF NORTH CAROLINA
DEPARTMENT OF TRANSPORTATION
RALEIGH

SUBSTRUCTURE BENT 5

NORTH CAROLINA PROFESSIONAL SEAL 038447 ENGINEER ANDREW C. SCHULLER
5/23/12

REVISIONS						SHEET NO.
NO.	BY:	DATE:	NO.	BY:	DATE:	S-118
1			3			TOTAL SHEETS
2			4			131

DRAWN BY : R. L. WHITCHER DATE : 2/9/12
CHECKED BY : K. H. COMPTON DATE : 3/26/12

5/23/2012
R:\Structures\Final Drawings\B4091_SD_B5_1.dgn
ross_whitcher

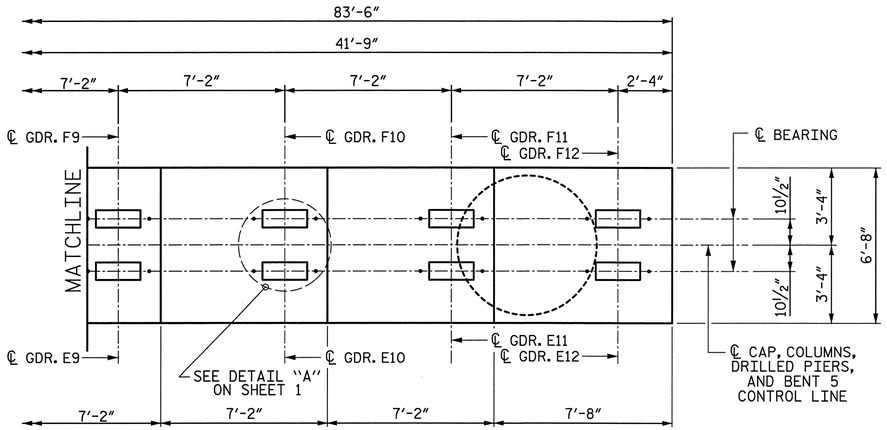

PLAN

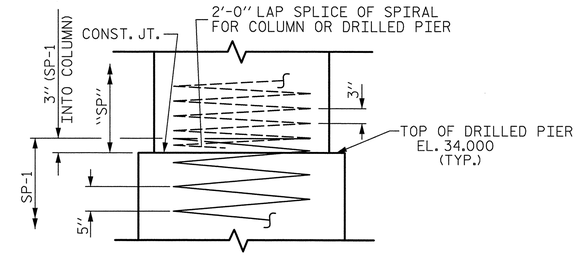

CONSTRUCTION JOINT DETAIL

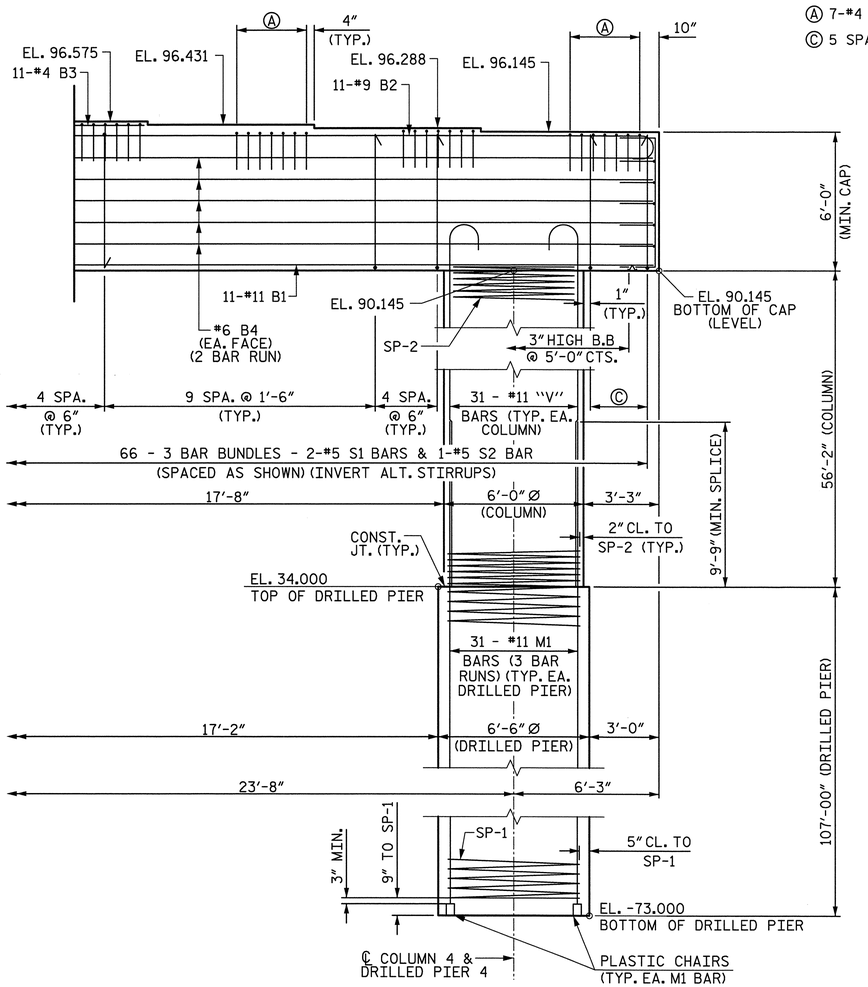

ELEVATION

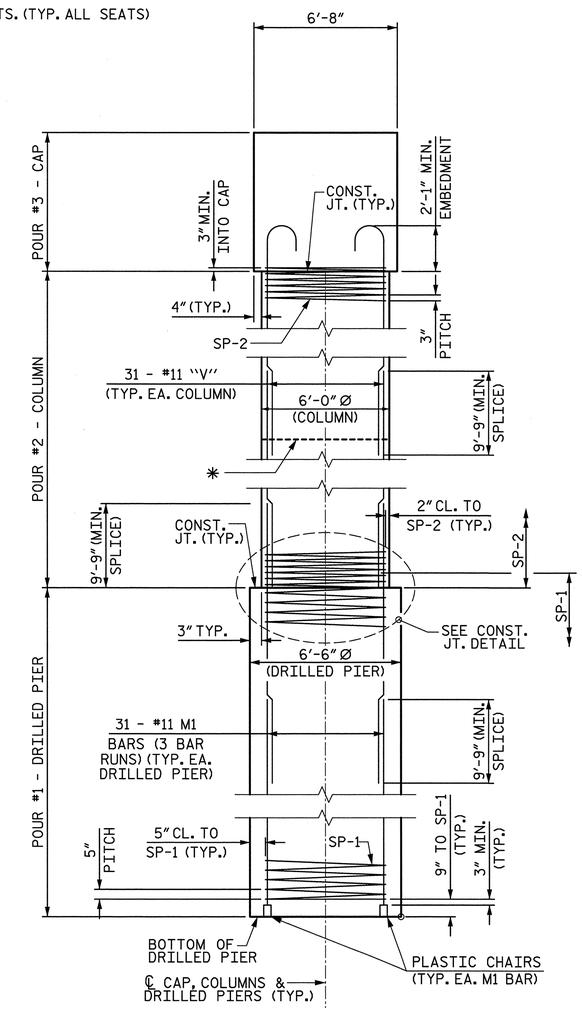

END ELEVATION

* PERMITTED CONST. JT. AT APPROXIMATELY MID-HEIGHT

Prepared by
URS
URS Corporation - North Carolina
1600 Perimeter Park Drive, Suite 400
Morrisville, NC 27560
TELEPHONE (919) 461-1100
FAX (919) 461-1415

NORTH CAROLINA PROFESSIONAL SEAL 038447 ENGINEER ANDREW S. MILLER
5/23/12

PROJECT NO. B-4091
CUMBERLAND COUNTY
STATION: 52+15.00 -L-

SHEET 2 OF 3

STATE OF NORTH CAROLINA
DEPARTMENT OF TRANSPORTATION
RALEIGH

SUBSTRUCTURE
BENT 5

REVISIONS						SHEET NO.
NO.	BY:	DATE:	NO.	BY:	DATE:	S-119
1			3			TOTAL SHEETS
2			4			131

DRAWN BY : R. L. WHITCHER DATE : 2/9/12
CHECKED BY : K. H. COMPTON DATE : 3/26/12

5/23/2012
R:\Structures\FinalDrawings\B4091_SD_B5_2.dgn
ross_whitcher

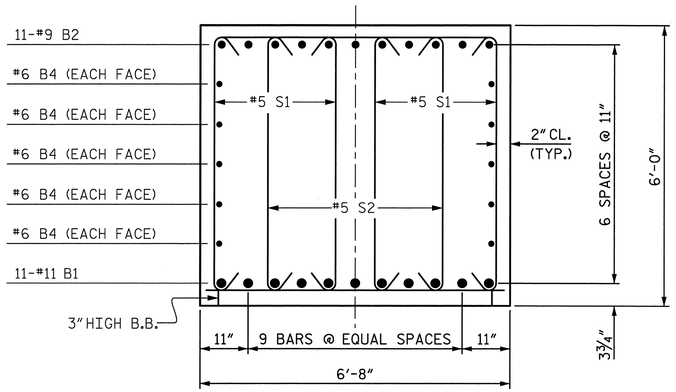

SECTION A-A

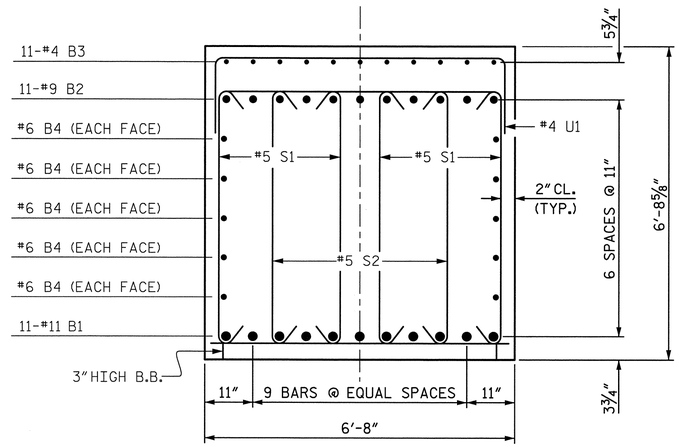

SECTION B-B

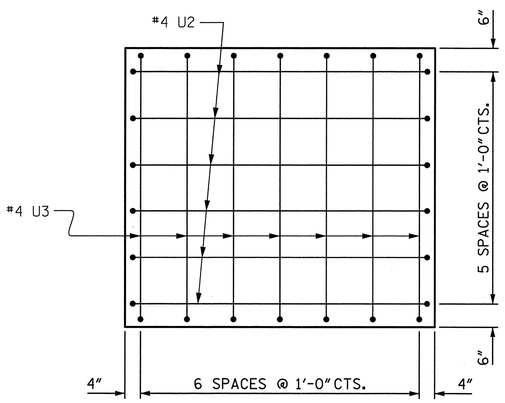

END VIEW

(TYP. BOTH ENDS OF CAP)

BAR TYPES

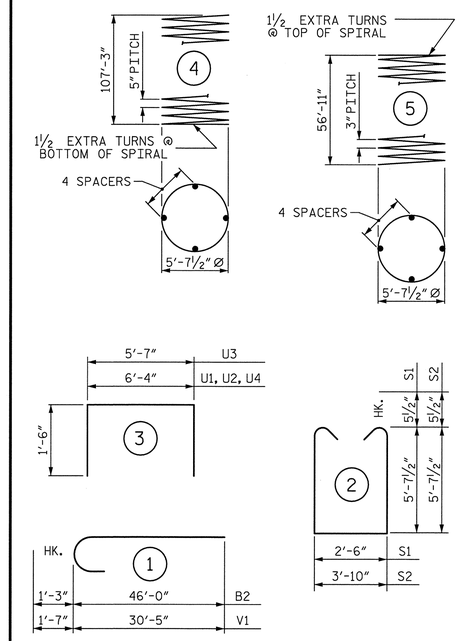

ALL BAR DIMENSIONS ARE OUT TO OUT

BILL OF MATERIAL

BENT No. 5

BAR	NO.	SIZE	TYPE	LENGTH	WEIGHT
B1	22	11	STR	46'-6"	5435
B2	22	9	1	47'-3"	3534
B3	22	4	STR	20'-10"	306
B4	20	6	STR	43'-6"	1307
M1	372	11	STR	46'-5"	91740
S1	132	5	2	14'-8"	2019
S2	66	5	2	16'-0"	1101
U1	94	4	3	9'-4"	586
U2	12	4	3	9'-4"	75
U3	14	4	3	8'-7"	80
V1	124	11	1	32'-0"	21082
V2	124	11	STR	38'-1"	25090
REINFORCING STEEL					152355
SP-1	4	*	4	4544'-8"	18960
SP-2	4	**	5	4052'-3"	10828

SPIRAL COLUMN REINFORCING STEEL 29788 LBS.

* THE SP-1 SPIRAL REINFORCING STEEL SHALL BE W31 OR D-31 COLD DRAWN WIRE OR #5 PLAIN OR DEFORMED BAR

** THE SP-2 SPIRAL REINFORCING STEEL SHALL BE W20 OR D-20 COLD DRAWN WIRE OR #4 PLAIN OR DEFORMED BAR

CLASS A CONCRETE BREAKDOWN

POUR #2 (COLUMNS)	235.3 C.Y.
POUR #3 (CAP)	130.7 C.Y.
TOTAL CLASS A CONCRETE	366.0 C.Y.

DRILLED PIERS:

DRILLED PIER CONCRETE
POUR #1 (DRILLED PIERS) 526.0 C.Y.

6'-6" Ø DRILLED PIERS 428.0 LIN. FT.

PERMANENT STEEL CASING FOR 6'-6" Ø DRILLED PIER 128.0 LIN. FT.

CSL TUBES 2604 LIN. FT.

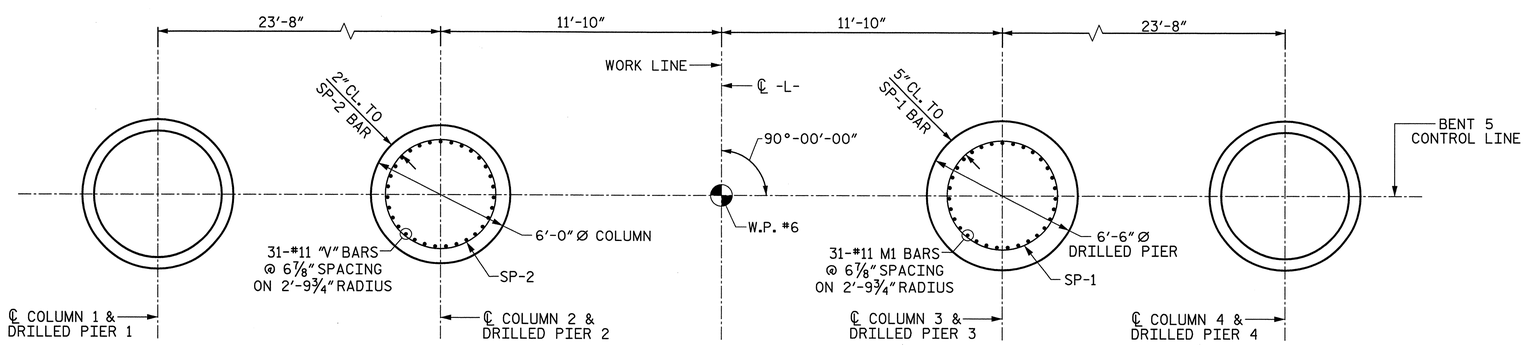

TYP. COLUMN REINFORCEMENT

TYP. DRILLED PIER REINFORCEMENT

PLAN OF DRILLED PIERS & COLUMNS

Prepared by
URS
URS Corporation - North Carolina
1600 Perimeter Park Drive, Suite 400
Morrisville, NC 27560
TELEPHONE (919) 461-1100
FAX (919) 461-1415

PROJECT NO. B-4091
CUMBERLAND COUNTY
STATION: 52+15.00 -L-

SHEET 3 OF 3

STATE OF NORTH CAROLINA
DEPARTMENT OF TRANSPORTATION
RALEIGH

SUBSTRUCTURE
BENT 5
DETAILS

NORTH CAROLINA PROFESSIONAL SEAL 038447 ENGINEER ANDREW S. MILLER
5/23/12

REVISIONS						SHEET NO.
NO.	BY:	DATE:	NO.	BY:	DATE:	S-120
1			3			TOTAL SHEETS
2			4			131

DRAWN BY : R. L. WHITCHER DATE : 2/9/12
CHECKED BY : K. H. COMPTON DATE : 3/14/12

5/23/2012
R:\Structures\Final Drawings\B4091_SD_B5_3.dgn
ross_whitcher

NOTES:

FOR "SECTION A-A" & "SECTION B-B", SEE SHEET 2 OF 2.

FOR REINFORCING BILL OF MATERIAL, SEE SHEET 2 OF 2.

FOR "END VIEW", SEE SHEET 2 OF 2.

STIRRUPS IN CAP MAY BE SHIFTED AS NECESSARY TO CLEAR ANCHOR BOLTS AND COLUMN STEEL.

GALVANIZE THE TOP OF EACH INTERIOR BENT PILE A MINIMUM OF 53 FEET. GALVANIZE IN ACCORDANCE WITH SECTION 1076 OF THE STANDARD SPECIFICATIONS.

FOR PIPE PILE DETAILS SEE SHEET "30" STEEL PIPE PILE"

FOR ADDITIONAL NOTES, SEE "GENERAL DRAWING", SHEET 3 OF 6.

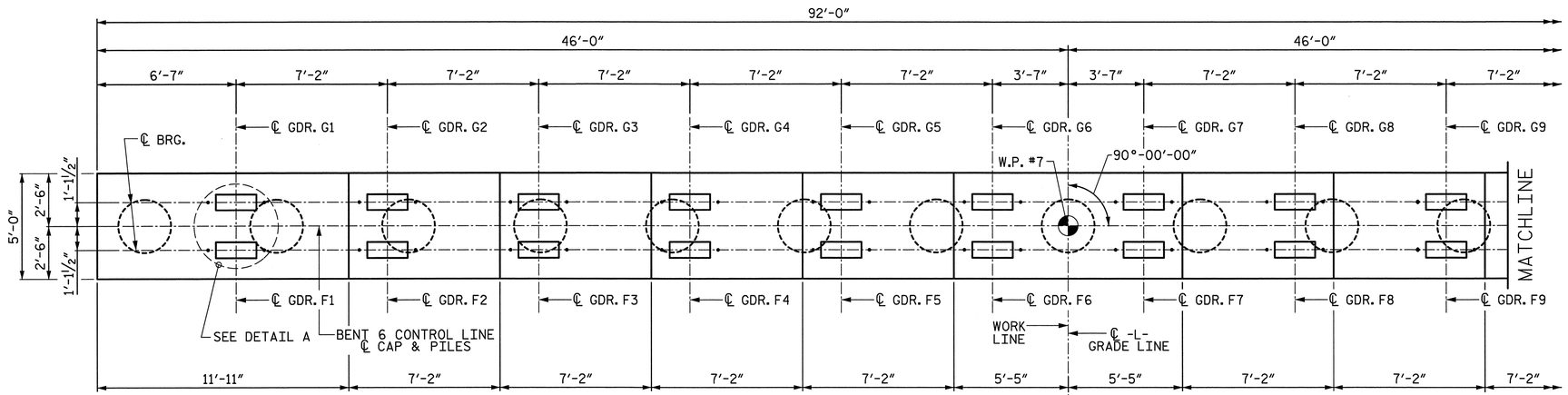

PLAN

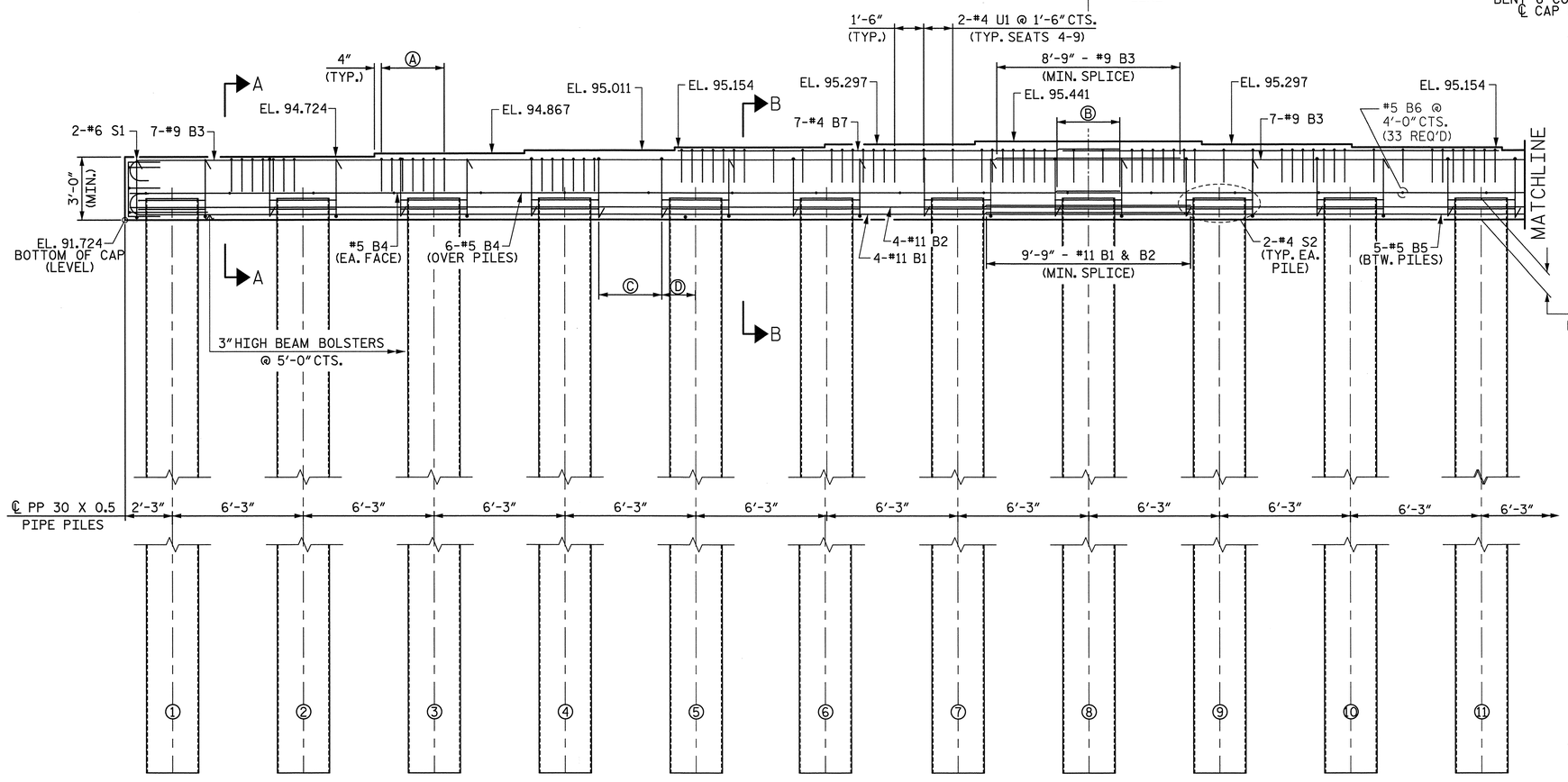

ELEVATION

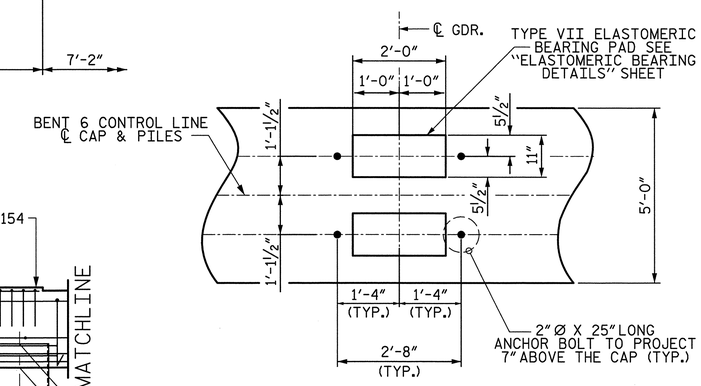

DETAIL A
(TYP. EACH GIRDER)

Ⓐ 7-#4 U1 @ 6" CTS. (TYP. ALL SEATS)

Ⓑ 2'-5" - #4 B7 MIN. SPLICE (TYP.)
3'-0" - #5 B4 MIN. SPLICE (TYP.)

Ⓒ 6 SPA. @ 5¾" CTS. S1
4 LEGS PER SPA. INVERTED ALTERNATELY
(TYP. BTW. PILES)

Ⓓ 1'-8¼" (TYP.)

Prepared by
URS
URS Corporation - North Carolina
1600 Perimeter Park Drive, Suite 400
Morrisville, NC 27560
TELEPHONE (919) 461-1100
FAX (919) 461-1415

PROJECT NO. B-4091

CUMBERLAND COUNTY

STATION: 52+15.00 -L-

SHEET 1 OF 2

STATE OF NORTH CAROLINA
DEPARTMENT OF TRANSPORTATION
RALEIGH

SUBSTRUCTURE
BENT 6

NORTH CAROLINA PROFESSIONAL SEAL 038447 ENGINEER ANDREW S. MILLER
5/23/12

REVISIONS						SHEET NO.
NO.	BY:	DATE:	NO.	BY:	DATE:	S-121
1			3			TOTAL SHEETS
2			4			131

DRAWN BY : K.H. COMPTON DATE : 3/12/12
CHECKED BY : J. SLOAN DATE : 3/21/12

5/23/2012
R:\Structures\FinalDrawings\B4091_SD_B6_1.dgn
ross_whitcher

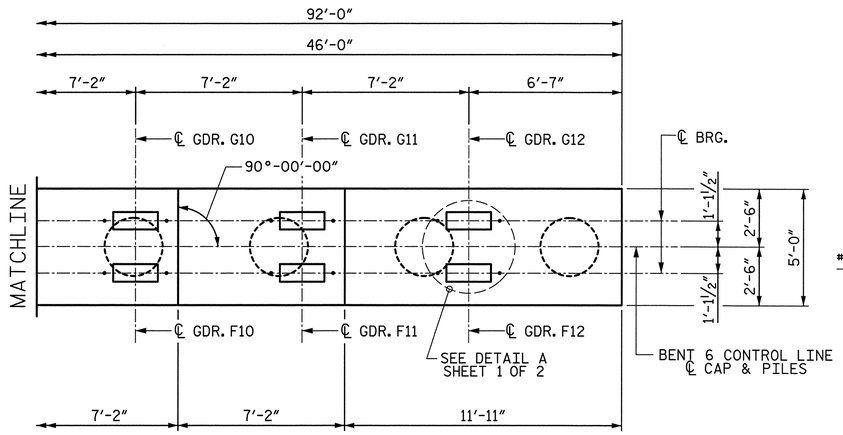

PLAN

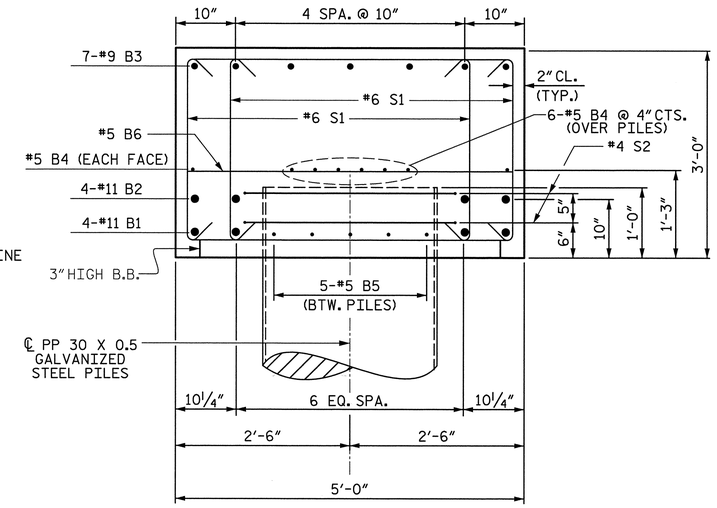

SECTION A-A

BAR TYPES

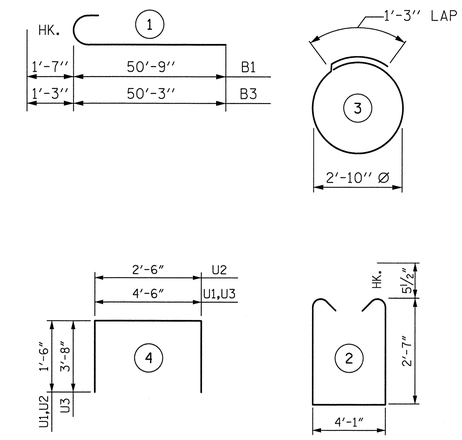

ALL BAR DIMENSIONS ARE OUT TO OUT

BILL OF MATERIAL

BENT No. 6

BAR	NO.	SIZE	TYPE	LENGTH	WEIGHT
B1	8	#11	1	52'-4"	2224
B2	8	#11	STR	50'-9"	2157
B3	14	#9	1	51'-6"	2451
B4	16	#5	STR	47'-0"	784
B5	70	#5	STR	3'-5"	249
B6	33	#5	STR	4'-8"	161
B7	14	#4	STR	20'-9"	194
S1	200	#6	2	10'-2"	2139
S2	30	#4	3	10'-3"	205
U1	98	#4	4	7'-6"	491
U2	8	#4	4	5'-6"	29
U3	2	#9	4	11'-10"	80
REINFORCING STEEL					11164

CLASS A CONCRETE BREAKDOWN

POUR #1 (CAP)	53.6 C.Y.
TOTAL CLASS A CONCRETE	53.6 C.Y.

PP 30 x 0.5 GALVANIZED STEEL PILES NO. = 15	LIN. FT.	1125
PILE REDRIVES	EA.	5
PDA TESTING	EA.	2

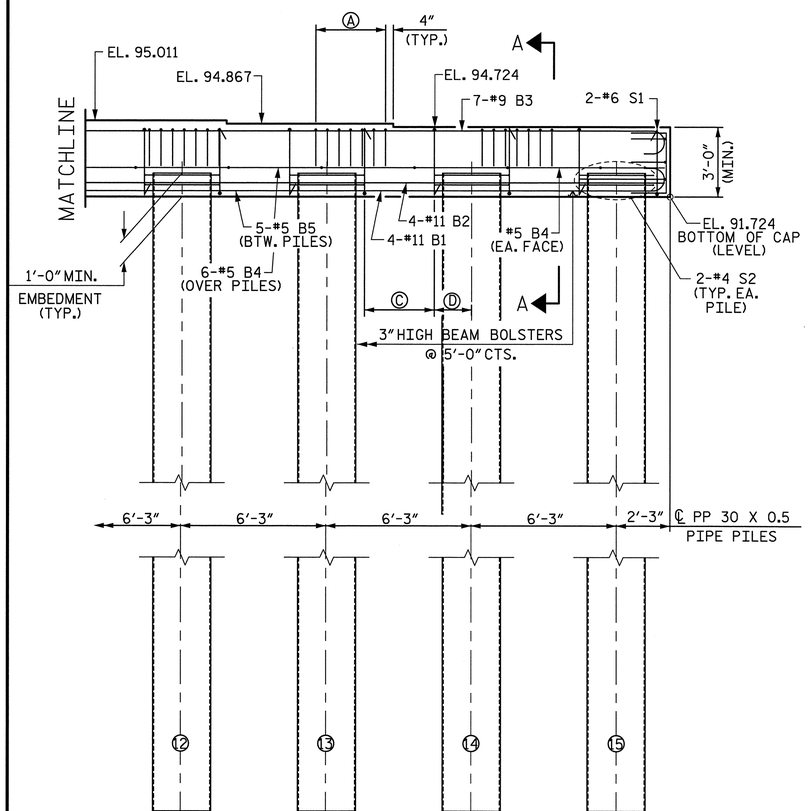

ELEVATION

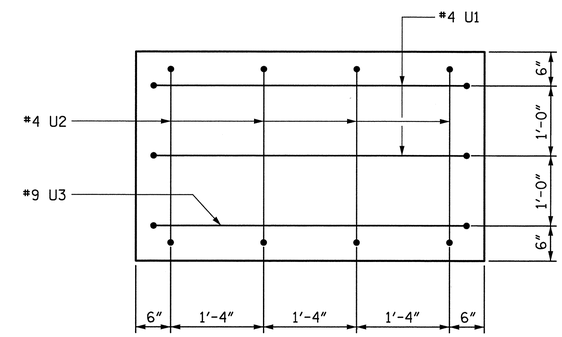

END VIEW

TYP. BOTH ENDS

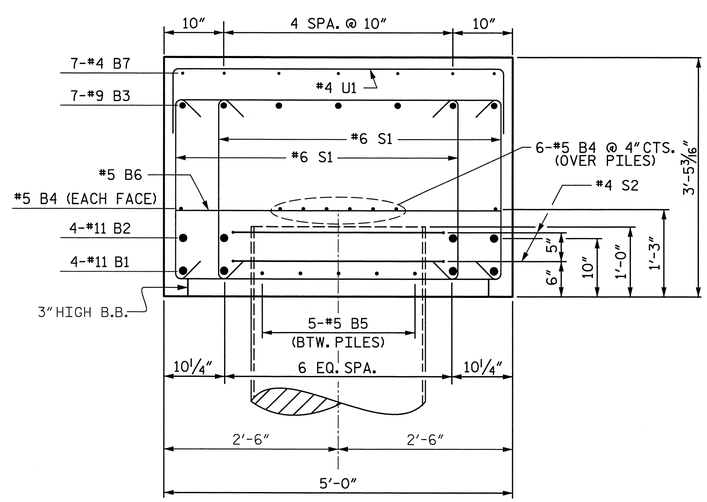

SECTION B-B

PROJECT NO. B-4091

CUMBERLAND COUNTY

STATION: 52+15.00 -L-

SHEET 2 OF 2

STATE OF NORTH CAROLINA
DEPARTMENT OF TRANSPORTATION
RALEIGH

SUBSTRUCTURE BENT 6

Prepared by
URS
URS Corporation - North Carolina
1600 Perimeter Park Drive, Suite 400
Morrisville, NC 27560
TELEPHONE (919) 461-1100
FAX (919) 461-1415

NORTH CAROLINA PROFESSIONAL ENGINEER SEAL 038447 ANDREW S. MILLER
5/23/12

REVISIONS							SHEET NO.
NO.	BY:	DATE:	NO.	BY:	DATE:		S-122
1			3				TOTAL SHEETS
2			4				131

DRAWN BY : K.H. COMPTON DATE : 3/12/12
CHECKED BY : J. SLOAN DATE : 3/21/12

5/23/2012
R:\Structures\Final Drawings\B4091_SD_B6_2.dgn
ross_whitcher

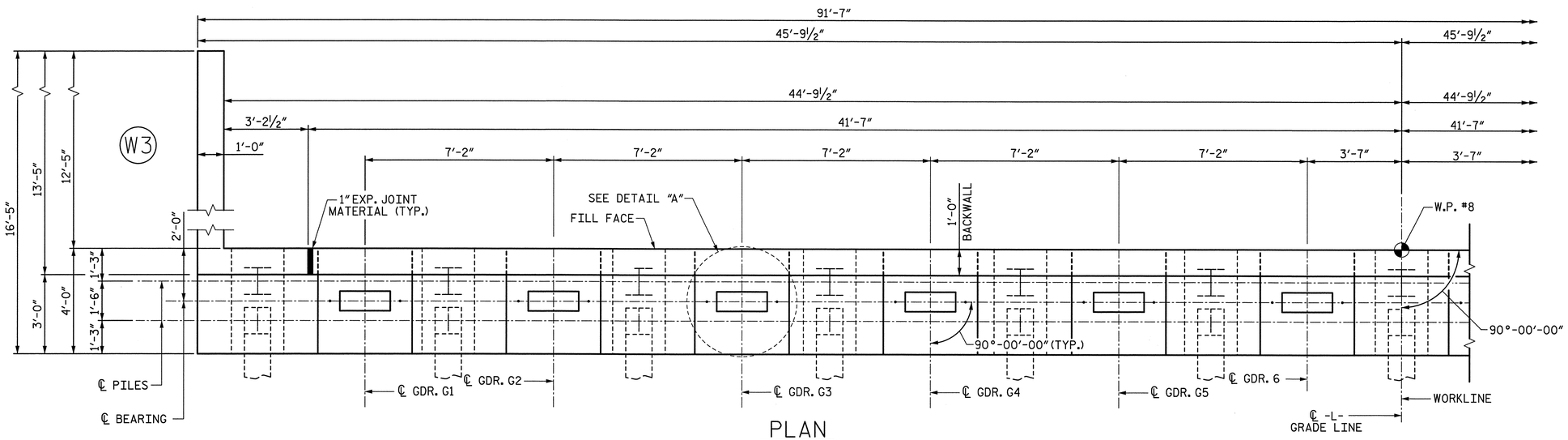

PLAN

NOTES:

STIRRUPS IN CAP MAY BE SHIFTED AS NECESSARY TO CLEAR ANCHOR BOLTS.

THE TOP SURFACE OF THE CAP EXCEPT THE BRIDGE SEAT BUILDUPS SHALL BE SLOPED TRANSVERSELY FROM THE FILL FACE TO THE BACK FACE AT THE RATE OF 2%.

THE TOP SURFACE AREAS OF THE END BENT CAPS SHALL BE CURED IN ACCORDANCE WITH THE STANDARD SPECIFICATIONS EXCEPT THE MEMBRANE CURING COMPOUND METHOD SHALL NOT BE USED.

BACKWALL SHALL BE PLACED BEFORE APPLYING THE EPOXY PROTECTIVE COATING.

INSTALL THE 4" DIA. DRAIN THROUGH THE WING WALL AS REQUIRED FOR REINFORCED BRIDGE APPROACH FILLS, SEE THE ROADWAY PLANS. REINFORCING STEEL IN THE WING WALL MAY BE SHIFTED AS NECESSARY TO CLEAR THE DRAIN PIPE.

Ⓐ 3-#5 S1 BARS AND 3-#5 S3 BARS SPA. @ EQUAL SPACES

Ⓑ 2'-5" - #4 B6 (MIN. SPLICE) (TYP.)

Ⓒ 2'-5" - #4 K1 (MIN. SPLICE) (TYP.)

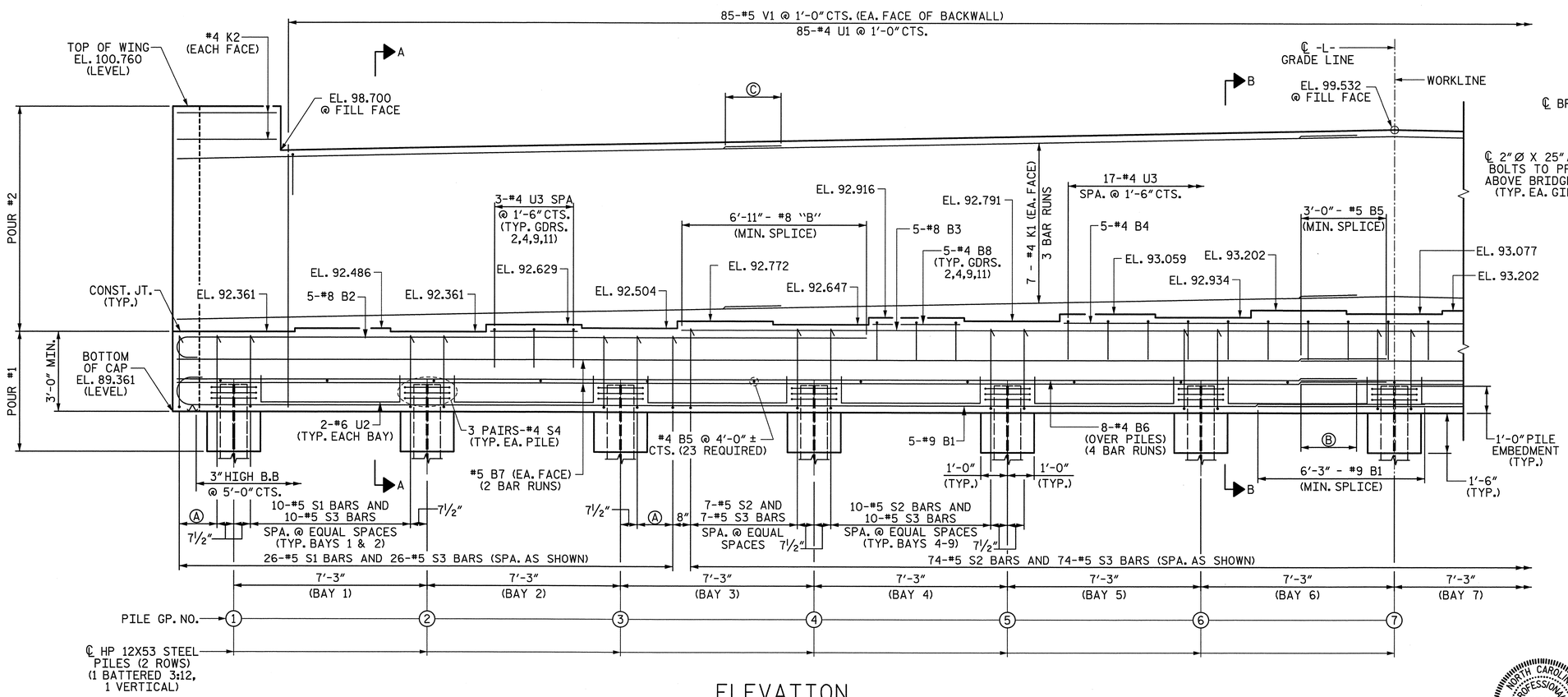

ELEVATION

**FOR LOCATION OF ELEVATION BETWEEN BRIDGE SEATS, SEE "SECTION A-A", SHEET 4 OF 4.

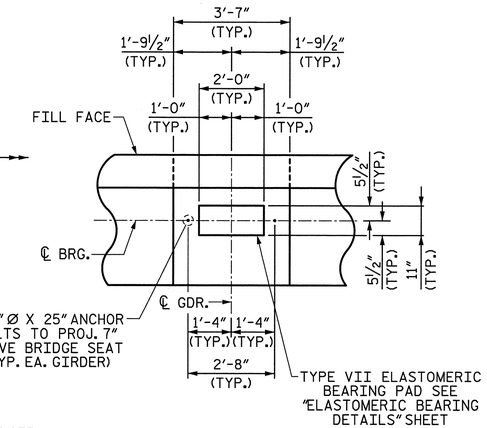

DETAIL "A"

(TYP. EA. GIRDER)

Prepared by
URS
URS Corporation – North Carolina
1600 Perimeter Park Drive, Suite 400
Morrisville, NC 27560
TELEPHONE (919) 461-1100
FAX (919) 461-1415

PROJECT NO. B-4091

CUMBERLAND COUNTY

STATION: 52+15.00 -L-

SHEET 1 OF 4

STATE OF NORTH CAROLINA
DEPARTMENT OF TRANSPORTATION
RALEIGH

SUBSTRUCTURE END BENT 2

NORTH CAROLINA PROFESSIONAL SEAL 038447 ENGINEER ANDREW R. WHITCHER
5/23/12

REVISIONS						SHEET NO.
NO.	BY:	DATE:	NO.	BY:	DATE:	S-123
1			3			TOTAL SHEETS
2			4			131

DRAWN BY : R. L. WHITCHER DATE : 3/12/12
CHECKED BY : J. C. HALL DATE : 3/20/12

5/23/2012
P:\Jobs1\B4091\Structures\Final Drawings\B4091_SD_E2_1.dgn
ross_whitcher

NOTES:

Ⓐ 3-#5 S1 BARS AND 3-#5 S3 BARS SPA. @ EQUAL SPACES

Ⓑ 2'-5" - #4 B6 (MIN. SPLICE) (TYP.)

Ⓒ 2'-5" - #4 K1 (MIN. SPLICE) (TYP.)

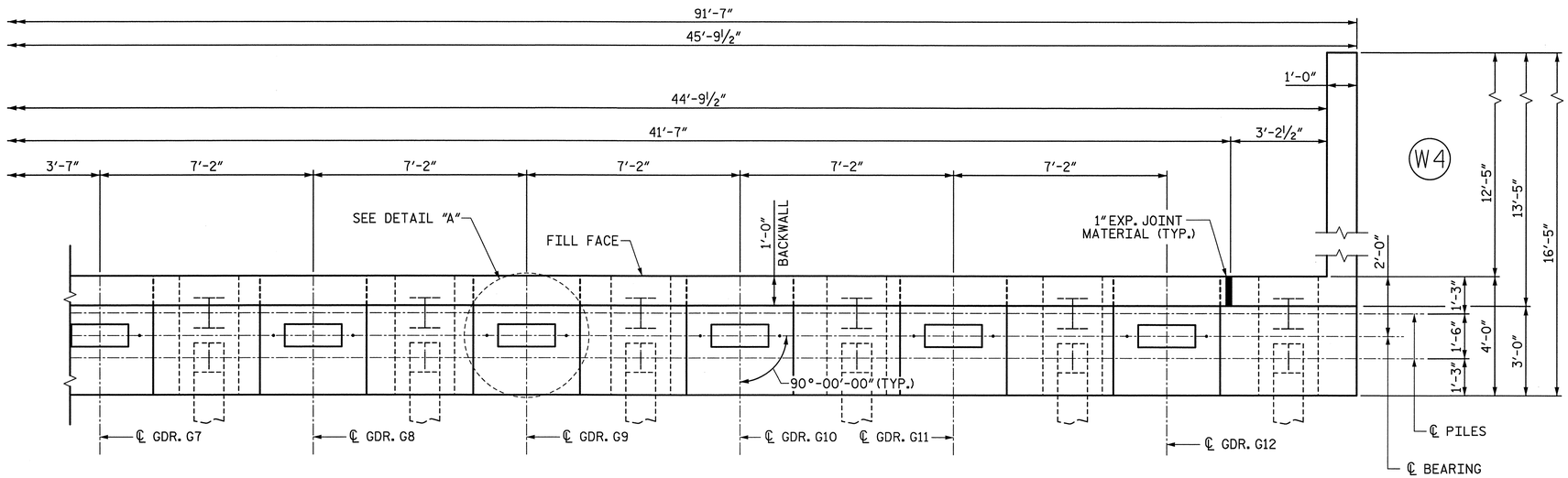

PLAN

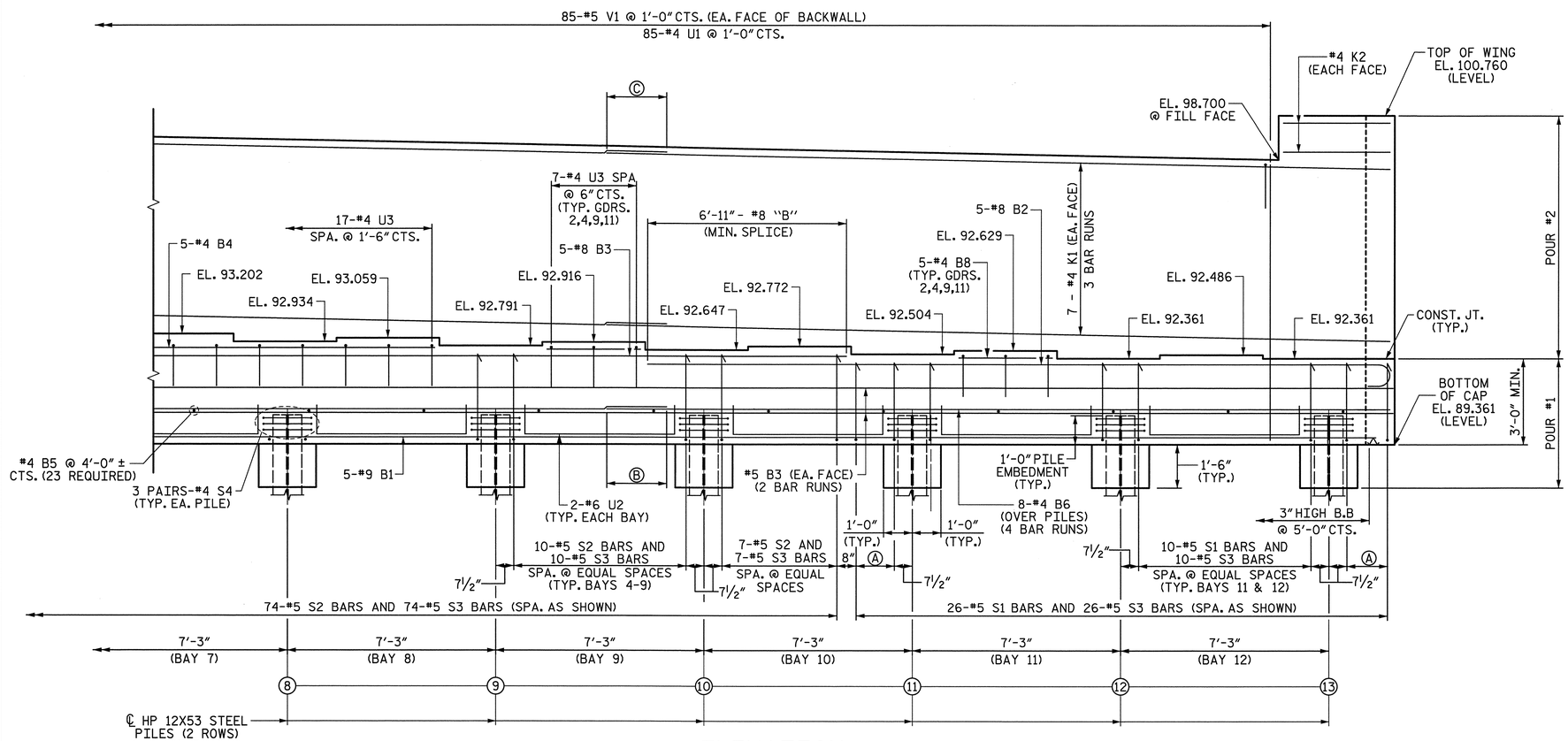

ELEVATION

** FOR LOCATION OF ELEVATION BETWEEN BRIDGE SEATS, SEE "SECTION A-A", SHEET 4 OF 4.

Prepared by
URS
URS Corporation - North Carolina
1600 Perimeter Park Drive, Suite 400
Morrisville, NC 27560
TELEPHONE (919) 461-1100
FAX (919) 461-1415

PROJECT NO. B-4091

CUMBERLAND COUNTY

STATION: 52+15.00 -L-

SHEET 2 OF 4

STATE OF NORTH CAROLINA
DEPARTMENT OF TRANSPORTATION
RALEIGH

SUBSTRUCTURE
END BENT 2

NORTH CAROLINA PROFESSIONAL SEAL 038447 ENGINEER ANDREW S. MILLER
5/23/12

REVISIONS						SHEET NO.
NO.	BY:	DATE:	NO.	BY:	DATE:	S-124
1			3			TOTAL SHEETS
2			4			131

DRAWN BY : R. L. WHITCHER DATE : 3/12/12
CHECKED BY : J. C. HALL DATE : 3/20/12

5/23/2012
P:\Jobs1\B4091\Structures\Final Drawings\B4091_SD_E2_2.dgn
ross_whitcher

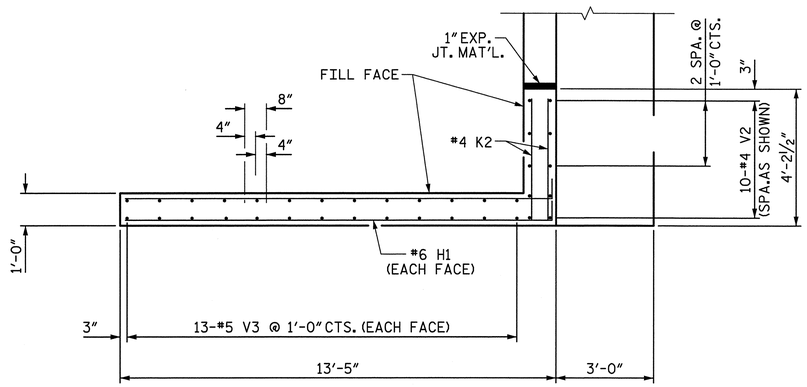

PLAN OF WING (W3)

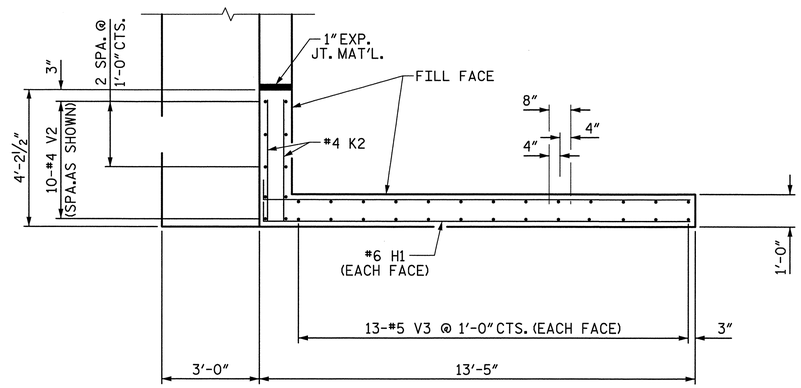

PLAN OF WING (W4)

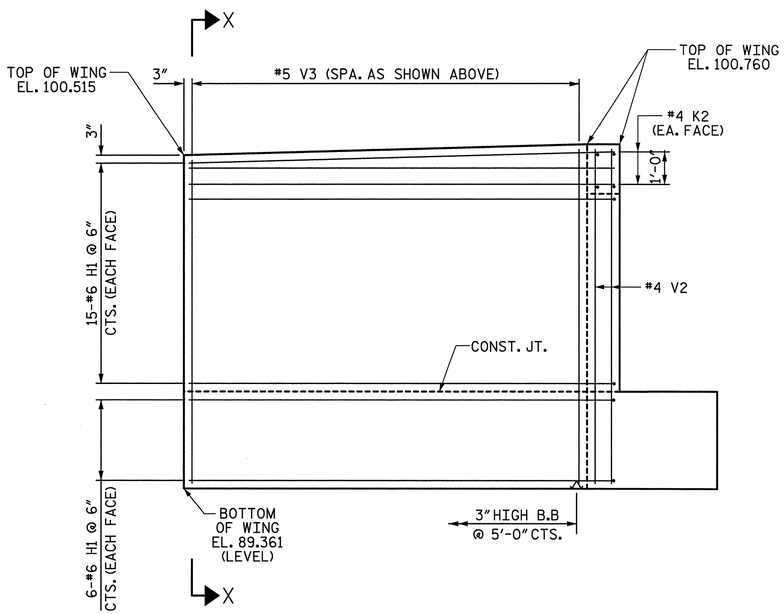

ELEVATION OF WING (W3)

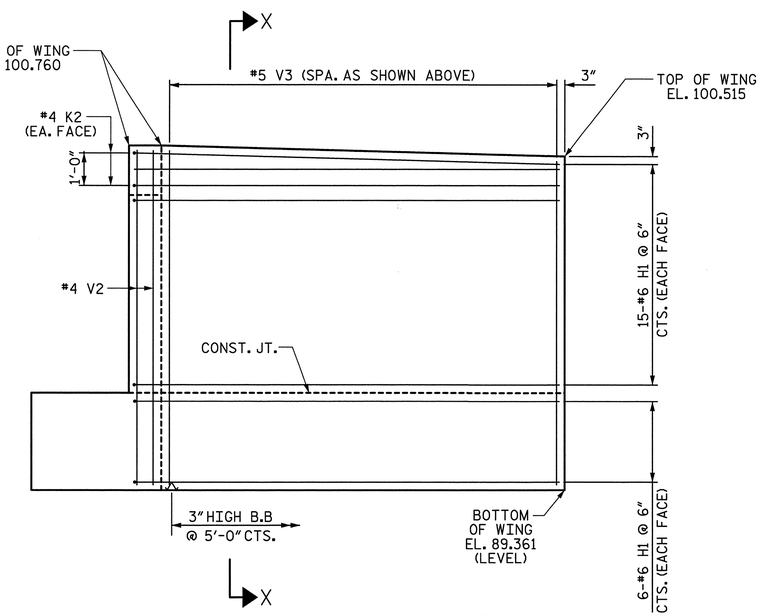

ELEVATION OF WING (W4)

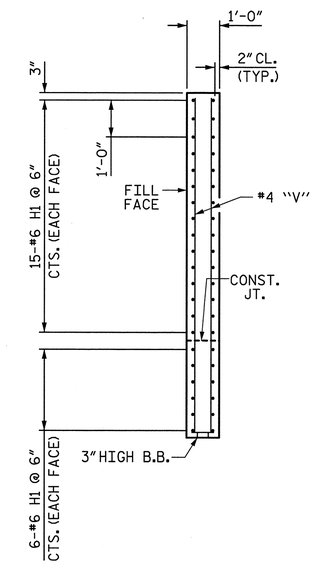

SECTION X-X

PROJECT NO. B-4091

CUMBERLAND COUNTY

STATION: 52+15.00 -L-

SHEET 3 OF 4

STATE OF NORTH CAROLINA
DEPARTMENT OF TRANSPORTATION
RALEIGH

SUBSTRUCTURE
END BENT 2

Prepared by
URS
URS Corporation – North Carolina
1600 Perimeter Park Drive, Suite 400
Morrisville, NC 27560
TELEPHONE (919) 461-1100
FAX (919) 461-1415

NORTH CAROLINA PROFESSIONAL SEAL 038447 ENGINEER ANDREW S. MILLER
5/23/12

REVISIONS						SHEET NO.
NO.	BY:	DATE:	NO.	BY:	DATE:	S-125
1			3			TOTAL SHEETS
2			4			131

DRAWN BY : R. L. WHITCHER DATE : 2/20/12
CHECKED BY : J. C. HALL DATE : 3/20/12

5/23/2012
P:\Jobs1\B4091\Structures\Final Drawings\B4091_SD_E2_3.dgn
ross_whitcher

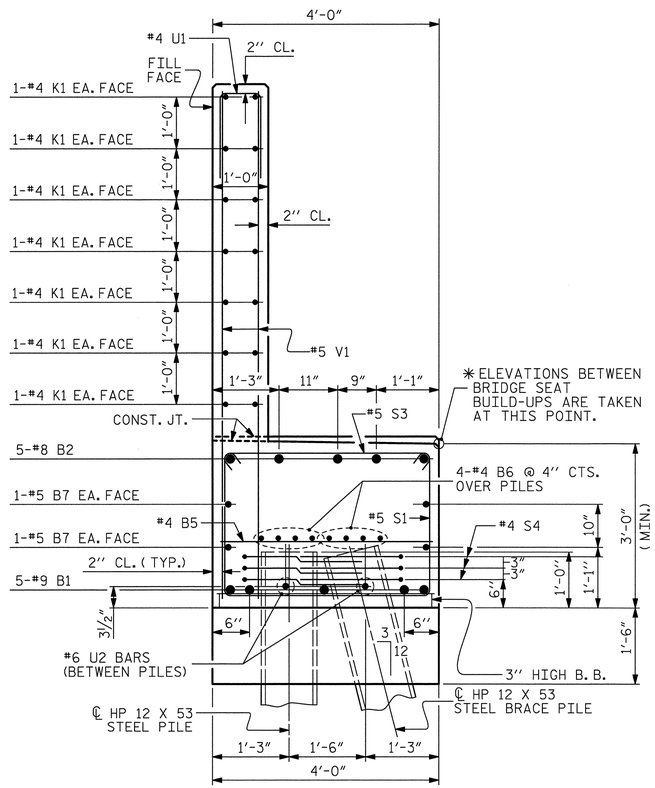

SECTION A-A

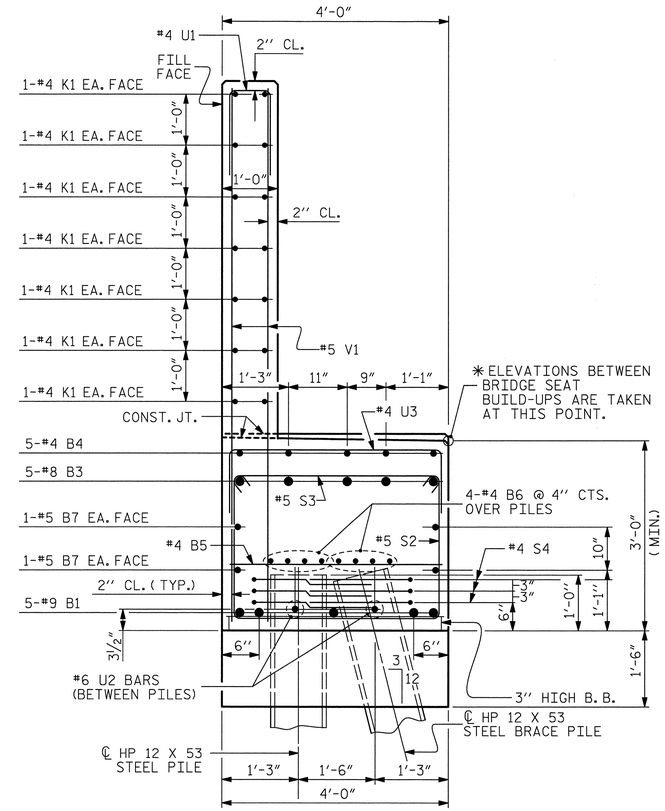

SECTION B-B

BAR TYPES

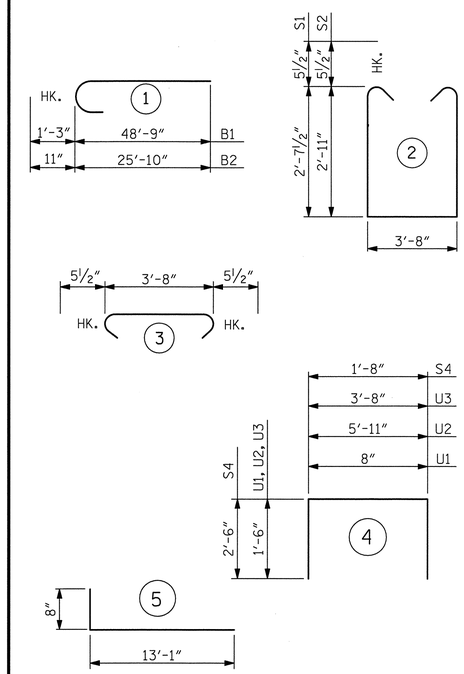

ALL BAR DIMENSIONS ARE OUT TO OUT.

BILL OF MATERIAL
END BENT 2

BAR	NO.	SIZE	TYPE	LENGTH	WEIGHT
B1	10	#9	1	50'-0"	1700
B2	10	#8	1	26'-9"	714
B3	5	#8	STR	53'-5"	713
B4	5	#4	STR	24'-9"	83
B5	30	#4	STR	3'-8"	73
B6	32	#4	STR	24'-8"	527
B7	8	#5	STR	47'-2"	394
B8	20	#4	STR	3'-3"	43
H1	84	#6	5	13'-9"	1735
K1	56	#4	STR	24'-8"	923
K2	8	#4	STR	3'-10"	20
S1	52	#5	2	9'-10"	533
S2	74	#5	2	10'-4"	798
S3	126	#5	3	4'-7"	602
S4	78	#4	4	6'-8"	347
U1	85	#4	4	3'-8"	208
U2	24	#6	4	8'-11"	321
U3	29	#4	4	6'-8"	129
V1	170	#5	STR	8'-11"	1581
V2	20	#5	STR	11'-0"	229
V3	52	#5	STR	10'-9"	583
REINFORCING STEEL				LBS.	12259

CLASS A CONCRETE BREAKDOWN

POUR #1 - CAP, LOWER WINGS & WING BRACE PILE CAP & COLLARS	CY	52.8
POUR #2 - BACKWALL & UPPER WINGS	CY	26.0
TOTAL	CY	78.8

HP 12 x 53 STEEL PILES NO. 26	LF	1430
PILE REDRIVES	EA	6

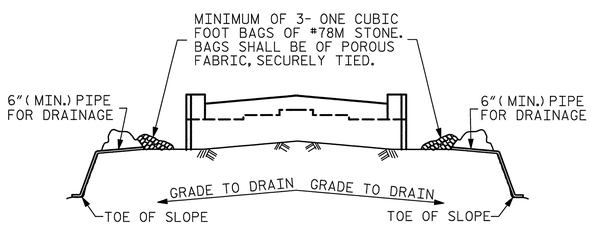

BAGGED STONE AND PIPE SHALL BE PLACED IMMEDIATELY AFTER COMPLETION OF END BENT EXCAVATION. PIPE MAY BE EITHER CONCRETE, CORRUGATED STEEL, CORRUGATED ALUMINUM ALLOY, OR CORRUGATED PLASTIC. PERFORATED PIPE WILL NOT BE ALLOWED.

BAGGED STONE SHALL REMAIN IN PLACE UNTIL THE ENGINEER DIRECTS THAT IT BE REMOVED. THE CONTRACTOR SHALL REMOVE AND DISPOSE OF SILT ACCUMULATIONS AT BAGGED STONE WHEN SO DIRECTED BY THE ENGINEER. BAGS SHALL BE REMOVED AND REPLACED WHENEVER THE ENGINEER DETERMINES THAT THEY HAVE DETERIORATED AND LOST THEIR EFFECTIVENESS.

NO SEPARATE PAYMENT WILL BE MADE FOR THIS WORK AND THE ENTIRE COST OF THIS WORK SHALL BE INCLUDED IN THE UNIT CONTRACT PRICE BID FOR THE SEVERAL PAY ITEMS.

TEMPORARY DRAINAGE AT END BENT

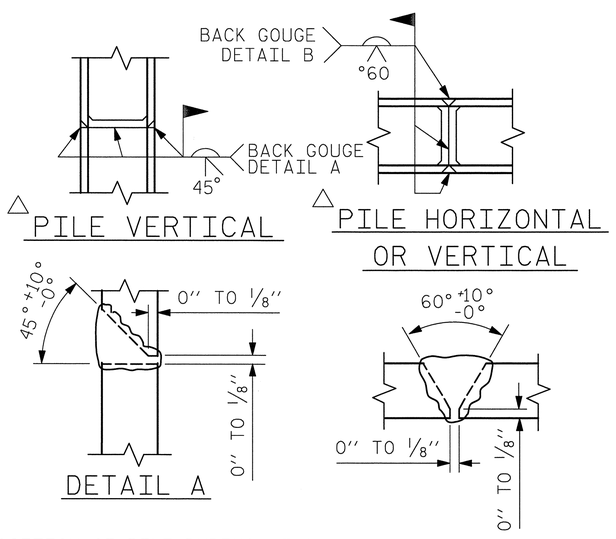

△ POSITION OF PILE DURING WELDING.

PILE SPLICE DETAILS

PROJECT NO. B-4091

CUMBERLAND COUNTY

STATION: 52+15.00 -L-

SHEET 4 OF 4

STATE OF NORTH CAROLINA
DEPARTMENT OF TRANSPORTATION
RALEIGH

SUBSTRUCTURE
END BENT 2

Prepared by
URS
URS Corporation – North Carolina
1600 Perimeter Park Drive, Suite 400
Morrisville, NC 27560
TELEPHONE (919) 461-1100
FAX (919) 461-1415

NORTH CAROLINA PROFESSIONAL SEAL 038447 ENGINEER ANDREW S. MILLER
5/23/12

REVISIONS						SHEET NO.
NO.	BY:	DATE:	NO.	BY:	DATE:	S-126
1			3			TOTAL SHEETS
2			4			131

DRAWN BY : R. L. WHITCHER DATE : 2/20/12
CHECKED BY : J. C. HALL DATE : 3/20/12

5/23/2012
P:\Jobs1\B4091\Structures\Final Drawings\B4091_SD_E2_4.dgn
ross_whitcher

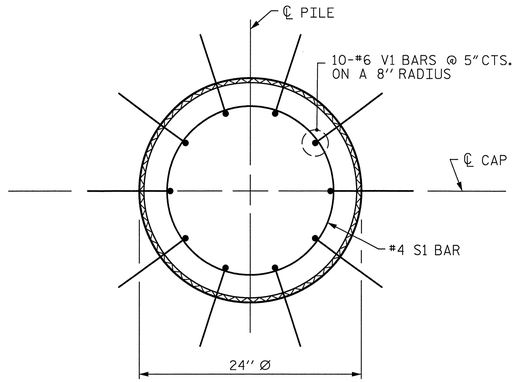

PLAN

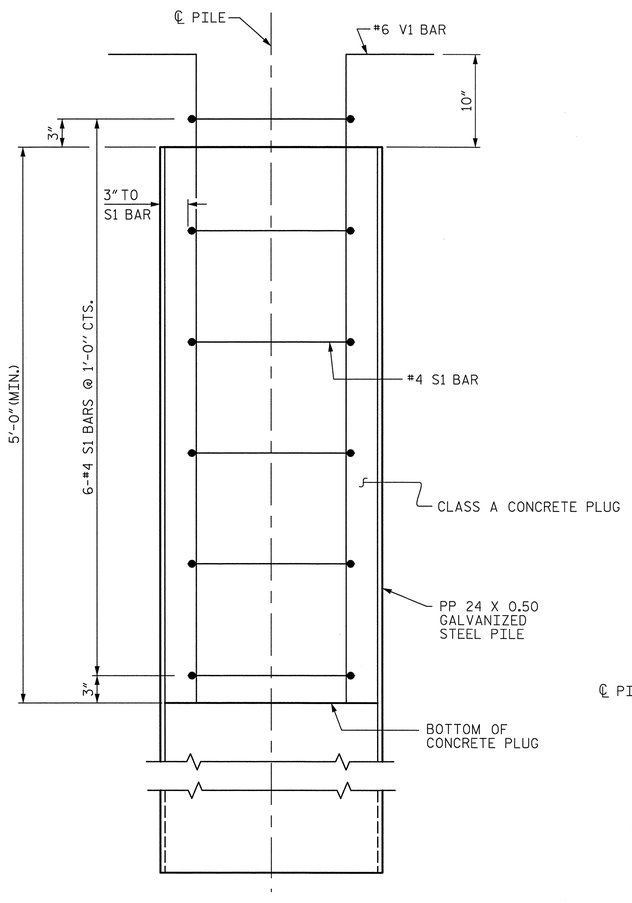

ELEVATION

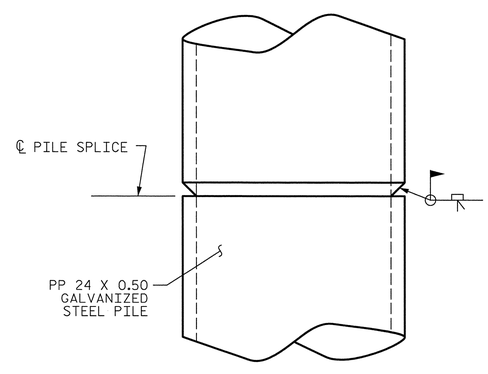

PIPE PILE SPLICE DETAIL

PP 24 X 0.50 GALVANIZED STEEL PILE

(OPEN OR CLOSED END)

NOTES

PIPE PILES SHALL BE IN ACCORDANCE WITH SECTION 1084 OF THE STANDARD SPECIFICATIONS.

GALVANIZE STEEL PIPE PILES IN ACCORDANCE WITH SECTION 1076 OF THE STANDARD SPECIFICATIONS UNLESS METALLIZING IS REQUIRED. GALVANIZING OR METALLIZING PIPE PILE PLATES IS NOT REQUIRED.

PIPE PILE PLATES, IF REQUIRED, SHALL BE IN ACCORDANCE WITH SECTION 450 OF THE STANDARD SPECIFICATIONS.

REMOVE AND REPLACE OR REPAIR TO THE SATISFACTION OF THE ENGINEER PILES THAT ARE DAMAGED, DEFORMED OR COLLAPSED DURING INSTALLATION OR DRIVING.

PILE SPLICES SHALL BE IN ACCORDANCE WITH THE STANDARD SPECIFICATIONS AND AWS D1.1.

FOR CLOSED END PIPE PILES, REMOVE ALL SOIL AND WATER FROM INSIDE THE PILES JUST PRIOR TO PLACING REINFORCING STEEL AND CONCRETE FOR THE CONCRETE PLUG.

FOR OPEN END PIPE PILES, REMOVE ENOUGH SOIL AND WATER FROM INSIDE THE PILES TO CONSTRUCT THE CONCRETE PLUG WITHOUT FOULING THE CONCRETE.

FORM THE CONCRETE PLUG SUCH THAT THE REINFORCING STEEL OR CONCRETE DOES NOT MOVE AND THE CLEARANCE FROM THE REINFORCING STEEL TO THE INSIDE OF THE PILE IS MAINTAINED AFTER CONCRETE PLACEMENT. DO NOT PLACE CONCRETE IN THE BENT CAP UNTIL THE CONCRETE PLUG HAS ATTAINED A MINIMUM COMPRESSIVE STRENGTH OF 1500 PSI.

THE REINFORCING STEEL, CLASS A CONCRETE, AND GALVANIZING ARE CONSIDERED INCIDENTAL TO THE CONTRACT UNIT PRICE BID PER LINEAR FOOT FOR PP 24 X 0.50 GALVANIZED STEEL PILES.

BILL OF MATERIAL FOR ONE PP 24 X 0.50 GALVANIZED STEEL PILE

BAR	NO.	SIZE	TYPE	LENGTH	WEIGHT
S1	6	#4	1	6'-0"	24
V1	10	#6	2	6'-8"	100
REINFORCING STEEL =				124	lbs
CLASS A CONCRETE					
5'-0" MINIMUM PLUG					0.5 CY

BAR TYPES

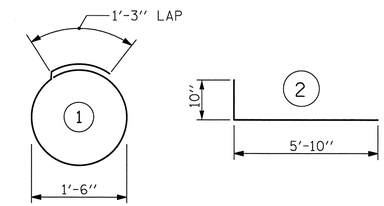

ALL BAR DIMENSIONS ARE OUT TO OUT.

PROJECT NO. B-4091

CUMBERLAND COUNTY

STATION: 52+15.00 -L-

REPLACES BRIDGE NO. 85

STATE OF NORTH CAROLINA
DEPARTMENT OF TRANSPORTATION
RALEIGH

STANDARD

24" STEEL PIPE PILE

ASSEMBLED BY : KHC	DATE : 3/12
CHECKED BY : JES	DATE : 3/12
DRAWN BY : TLA 8/05	ADDED 10/1/05
CHECKED BY : GM 9/05	REV. 5/1/06R MAA/KMM
	REV. 10/1/11 MAA/GM

5/23/2012
P:\Jobs1\B4091\Structures\Final Drawings\B4091_SD_PP1.dgn
ross_whitcher

Prepared by
URS
URS Corporation - North Carolina
1600 Perimeter Park Drive, Suite 400
Morrisville, NC 27560
TELEPHONE (919) 461-1100
FAX (919) 461-1415

NORTH CAROLINA PROFESSIONAL SEAL 038447 ENGINEER ANDREW A. MILLER
5/23/12

REVISIONS						SHEET NO.
NO.	BY:	DATE:	NO.	BY:	DATE:	S-127
1			3			TOTAL SHEETS
2			4			131

STD. NO. SPP4

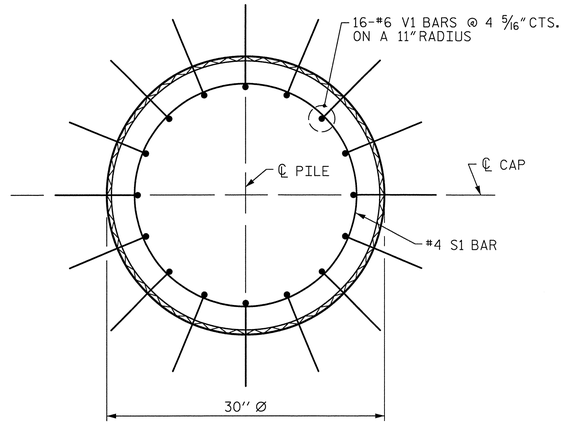

PLAN

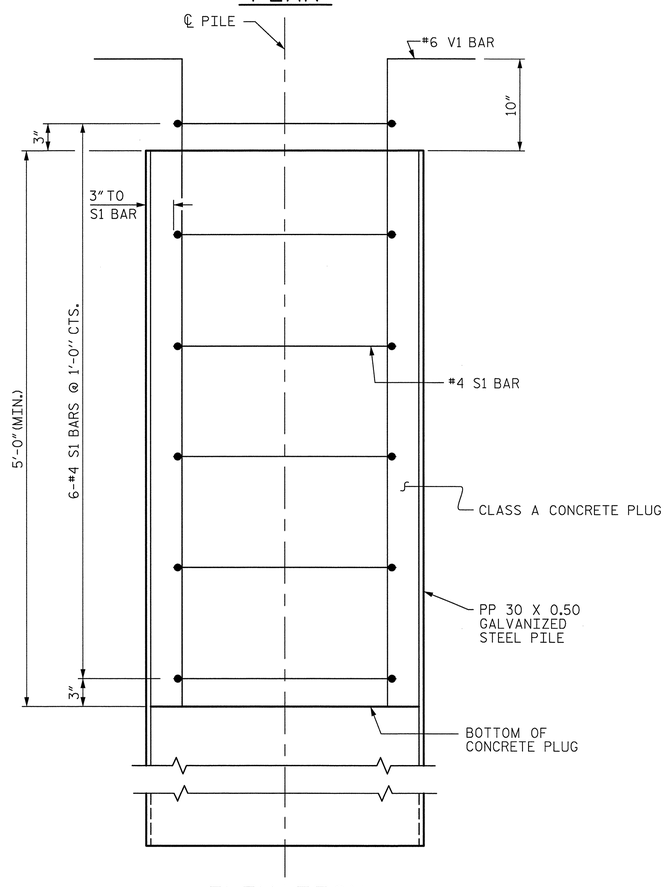

ELEVATION

PP 30 X 0.50 GALVANIZED STEEL PILE

(OPEN OR CLOSED END)

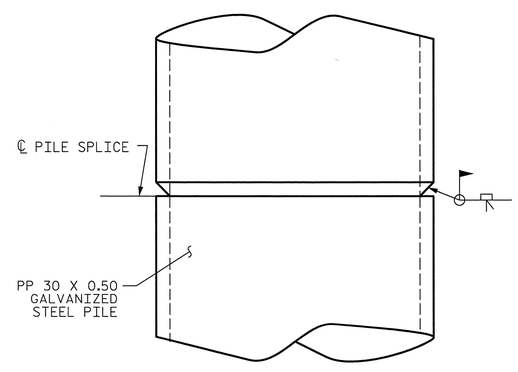

PIPE PILE SPLICE DETAIL

NOTES

PIPE PILES SHALL BE IN ACCORDANCE WITH SECTION 1084 OF THE STANDARD SPECIFICATIONS.

GALVANIZE STEEL PIPE PILES IN ACCORDANCE WITH SECTION 1076 OF THE STANDARD SPECIFICATIONS UNLESS METALLIZING IS REQUIRED. GALVANIZING OR METALLIZING PIPE PILE PLATES IS NOT REQUIRED.

PIPE PILE PLATES, IF REQUIRED, SHALL BE IN ACCORDANCE WITH SECTION 450 OF THE STANDARD SPECIFICATIONS.

REMOVE AND REPLACE OR REPAIR TO THE SATISFACTION OF THE ENGINEER PILES THAT ARE DAMAGED, DEFORMED OR COLLAPSED DURING INSTALLATION OR DRIVING.

PILE SPLICES SHALL BE IN ACCORDANCE WITH THE STANDARD SPECIFICATIONS AND AWS D1.1.

FOR CLOSED END PIPE PILES, REMOVE ALL SOIL AND WATER FROM INSIDE THE PILES JUST PRIOR TO PLACING REINFORCING STEEL AND CONCRETE FOR THE CONCRETE PLUG.

FOR OPEN END PIPE PILES, REMOVE ENOUGH SOIL AND WATER FROM INSIDE THE PILES TO CONSTRUCT THE CONCRETE PLUG WITHOUT FOULING THE CONCRETE.

FORM THE CONCRETE PLUG SUCH THAT THE REINFORCING STEEL OR CONCRETE DOES NOT MOVE AND THE CLEARANCE FROM THE REINFORCING STEEL TO THE INSIDE OF THE PILE IS MAINTAINED AFTER CONCRETE PLACEMENT. DO NOT PLACE CONCRETE IN THE BENT CAP UNTIL THE CONCRETE PLUG HAS ATTAINED A MINIMUM COMPRESSIVE STRENGTH OF 1500 PSI.

THE REINFORCING STEEL, CLASS A CONCRETE, AND GALVANIZING ARE CONSIDERED INCIDENTAL TO THE CONTRACT UNIT PRICE BID PER LINEAR FOOT FOR PP 30 X 0.50 GALVANIZED STEEL PILES.

BILL OF MATERIAL FOR ONE PP 30 X 0.50 GALVANIZED STEEL PILE

BAR	NO.	SIZE	TYPE	LENGTH	WEIGHT
S1	6	#4	1	7'-7"	30
V1	16	#6	2	6'-10"	164
REINFORCING STEEL =					194 lbs
CLASS A CONCRETE					
5'-0" MINIMUM PLUG					0.8 CY

BAR TYPES

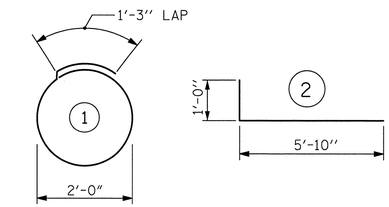

ALL BAR DIMENSIONS ARE OUT TO OUT.

PROJECT NO. B-4091

CUMBERLAND COUNTY

STATION: 52+15.00 -L-

REPLACES BRIDGE NO. 85

STATE OF NORTH CAROLINA
DEPARTMENT OF TRANSPORTATION
RALEIGH

STANDARD

30" STEEL PIPE PILE

ASSEMBLED BY : KHC	DATE : 3/12
CHECKED BY : JES	DATE : 3/12
DRAWN BY : TLA 8/05	ADDED 10/1/05
CHECKED BY : GM 9/05	REV. 5/1/06R MAA/KMM
	REV. 10/1/11 MAA/GM

Prepared by
URS
URS Corporation - North Carolina
1600 Perimeter Park Drive, Suite 400
Morrisville, NC 27560
TELEPHONE (919) 461-1100
FAX (919) 461-1415

NORTH CAROLINA PROFESSIONAL SEAL 038447 ENGINEER ANDREW A. MILLER
5/23/12

REVISIONS						SHEET NO.
NO.	BY:	DATE:	NO.	BY:	DATE:	S-128
1			3			TOTAL SHEETS
2			4			131

STD. NO. SPP5

5/23/2012
P:\Jobs1\B4091\Structures\Final Drawings\B4091_SD_PP2.dgn
ross_whitcher

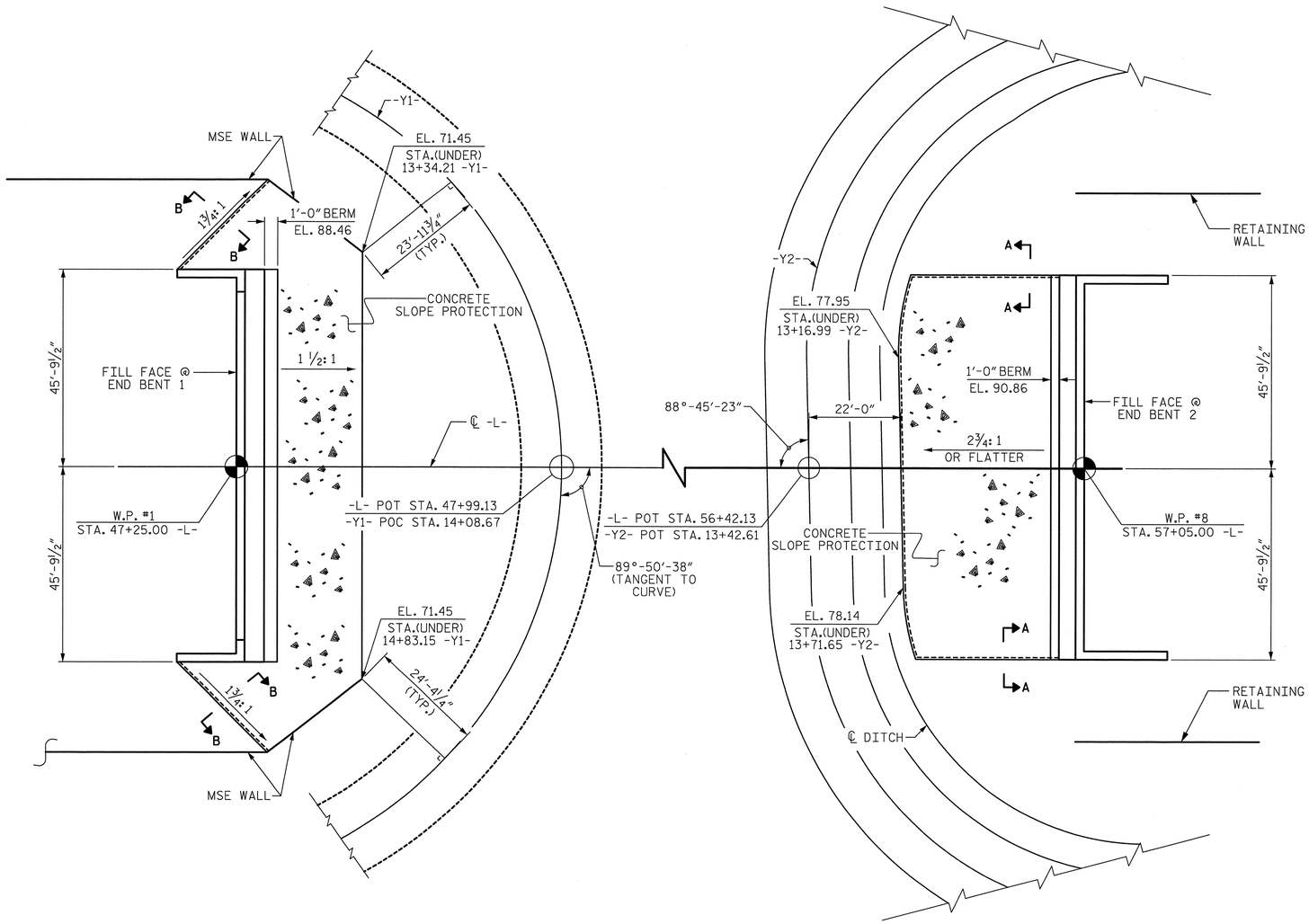

GENERAL NOTES

SLOPE PROTECTION SHALL BE PLACED UNDER THE ENDS OF THE BRIDGE AS SHOWN IN THE DETAILS. STRAIGHT EDGING WILL NOT BE REQUIRED UNLESS, IN THE OPINION OF THE ENGINEER, VISUAL INSPECTION INDICATES A NEED FOR IT. MEASUREMENT AND PAYMENT SHALL BE AS PRESCRIBED IN SECTION 462 OF THE STANDARD SPECIFICATIONS. FOR BERM WIDTH, SEE GENERAL DRAWING.

CONCRETE SLOPE PROTECTION SHALL CONSIST OF 4" POURED-IN-PLACE CONCRETE PAVING AS SHOWN IN THE DETAILS ON THIS SHEET. CONCRETE SHALL BE CLASS "B". THE CONCRETE SURFACE SHALL BE FLOATED WITH A WOODEN FLOAT AND FINISHED. WELDED WIRE FABRIC REINFORCING SHALL BE 6 X 6 - W1.4 X W1.4, 60" WIDE. SLOPE PROTECTION SHALL BE POURED IN 5' STRIPS AS SHOWN IN THE "POURING DETAIL" WITH 2'-0" LONG #4 BARS PLACED ALONG THE SLOPE BETWEEN STRIPS AT 1'-6" MAXIMUM SPACING. SLOPE PROTECTION MAY BE POURED IN ALTERNATE 4' AND 5' STRIPS AS SHOWN IN THE "OPTIONAL POURING DETAIL" WITH ADJACENT RUNS OF WELDED WIRE FABRIC LAPPING AT LEAST 6". THE COST OF THE WELDED WIRE FABRIC AND #4 BARS, IF USED, SHALL BE INCLUDED IN THE CONTRACT UNIT PRICE BID PER SQUARE YARD FOR SLOPE PROTECTION.

BRIDGE @ STA. 52+15.00 -L-	4 INCH SLOPE PROTECTION	* WELDED WIRE FABRIC 60 INCHES WIDE
	SQUARE YARDS	APPROX. L.F.
END BENT 1	495	924
END BENT 2	434	842

* QUANTITY SHOWN IS BASED ON 5' POURS.

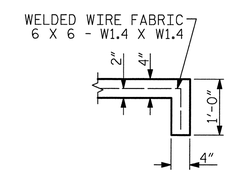

SECTION A-A

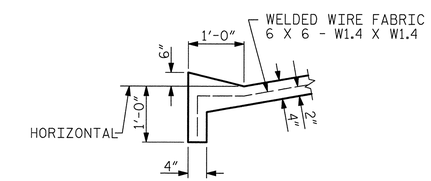

SECTION B-B

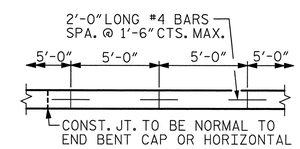

STRIP WIDTHS MAY VARY IN CURVED PORTION.

POURING DETAIL

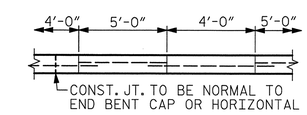

POUR A 4'-0" STRIP FIRST. STRIP WIDTHS MAY VARY IN CURVED PORTION.

OPTIONAL POURING DETAIL

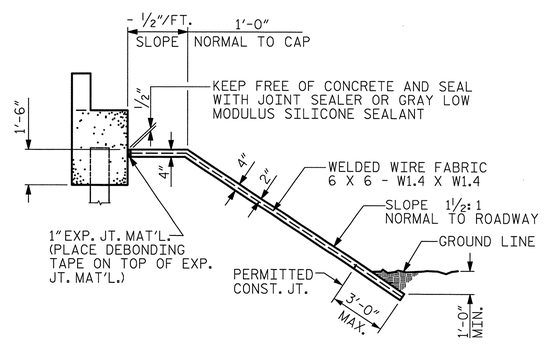

SECTION ALONG ℄ ROADWAY WHEN DITCH IS NOT PROVIDED

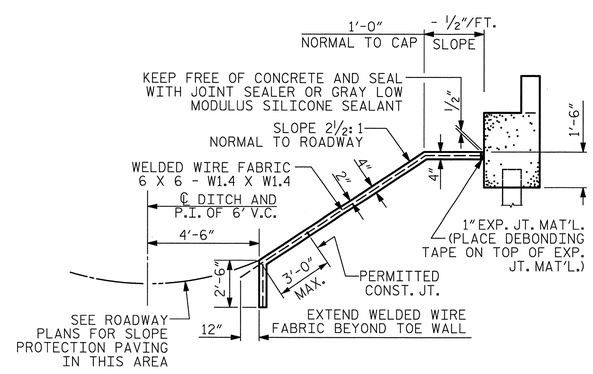

SECTION ALONG ℄ ROADWAY WHEN FILL CATCHES IN DITCH

PROJECT NO. B-4091

CUMBERLAND COUNTY

STATION: 52+15.00 -L-

SHEET OF

STATE OF NORTH CAROLINA
DEPARTMENT OF TRANSPORTATION
RALEIGH

STANDARD

CONCRETE SLOPE PROTECTION DETAILS

REVISIONS								SHEET NO.
NO.	BY:	DATE:	NO.	BY:	DATE:			S-129
1			3					TOTAL SHEETS
2			4					131

STD. NO. SP1

Prepared by
URS
URS Corporation - North Carolina
1600 Perimeter Park Drive, Suite 400
Morrisville, NC 27560
TELEPHONE (919) 461-1100
FAX (919) 461-1415

NORTH CAROLINA PROFESSIONAL SEAL 038447 ENGINEER ANDREW J. MILLER
5/23/12

ASSEMBLED BY : R. L. WHITCHER		DATE : 2/27/12	
CHECKED BY : J. C. HALL		DATE : 3/26/12	
DRAWN BY : ELR 5/92	REV. 5/1/06	TLA/GM	
CHECKED BY : GRP 6/92	REV. 10/1/11	MAA/GM	
	REV. 12/21/11	MAA/GM	

5/23/2012
P:\Jobs\B4091\Structures\Final Drawings\B4091_SD_SP1.dgn
ross_whitcher

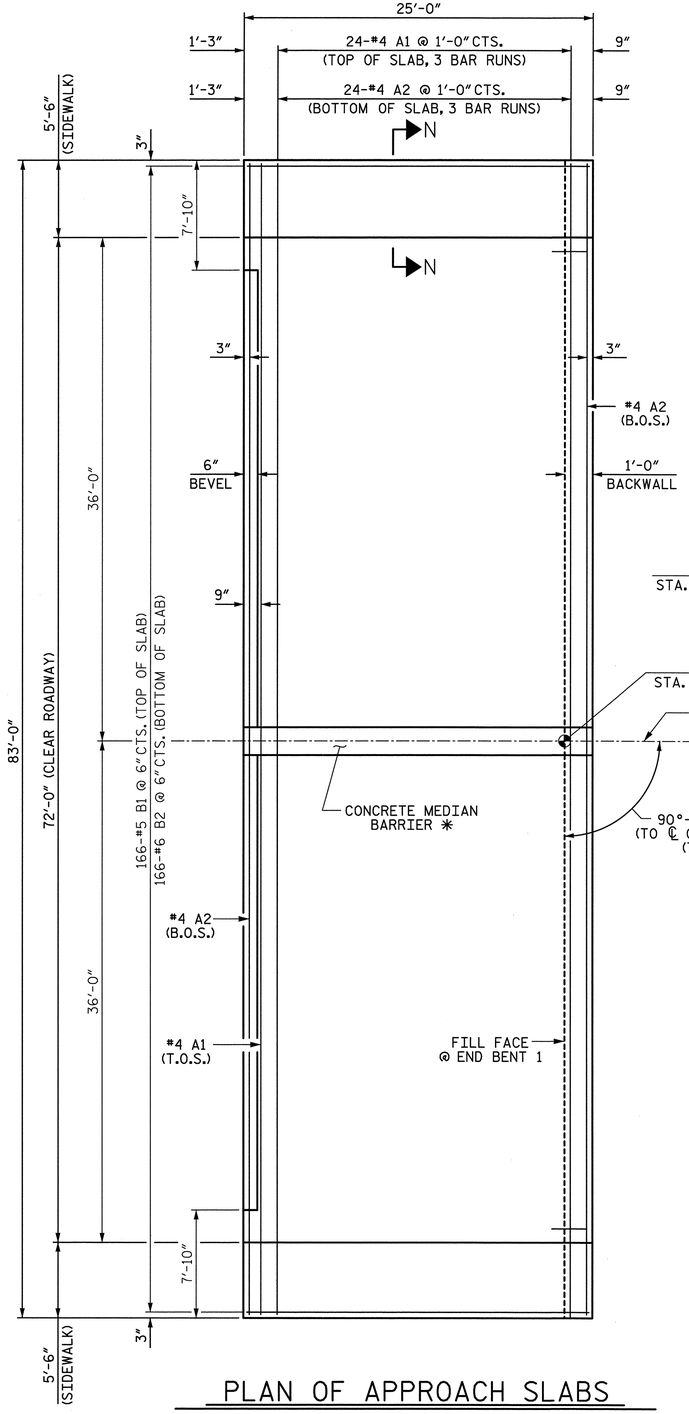

PLAN OF APPROACH SLABS

BOTH APPROACH SLABS ARE SIMILAR

T.O.S. - DENOTES TOP OF SLAB

B.O.S. - DENOTES BOTTOM OF SLAB

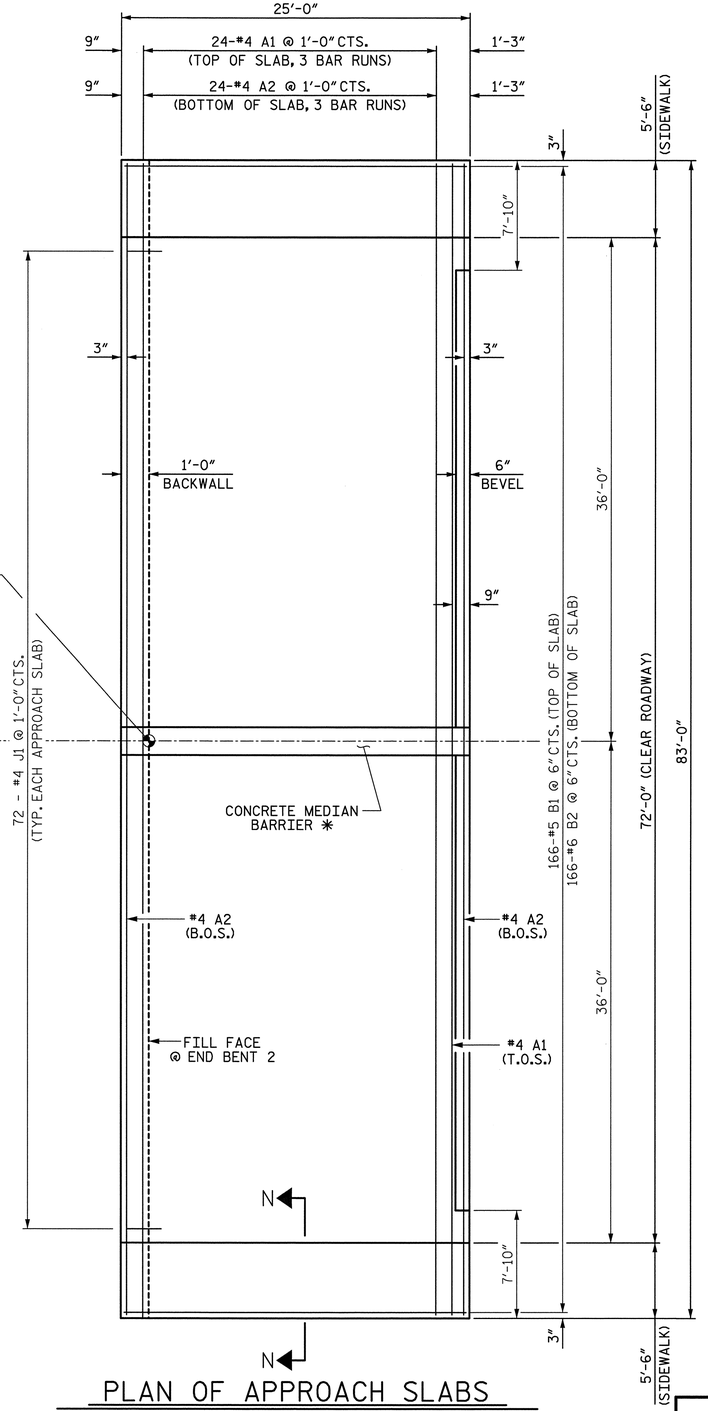

PLAN OF APPROACH SLABS

BOTH APPROACH SLABS ARE SIMILAR

T.O.S. - DENOTES TOP OF SLAB

B.O.S. - DENOTES BOTTOM OF SLAB

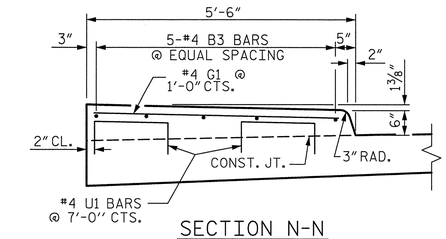

SECTION N-N

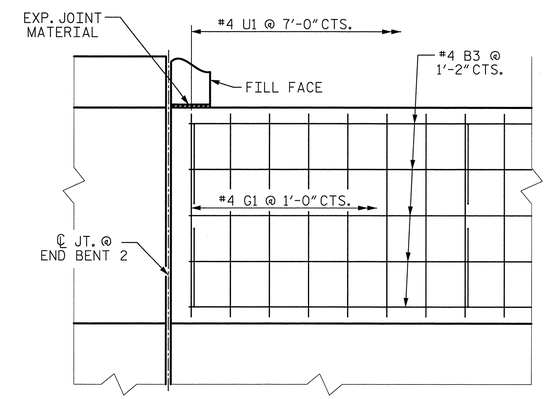

PLAN

LEFT SIDE END BENT 2 SHOWN, OTHER CORNERS ARE SIMILAR.

DETAILS OF SIDEWALK ON APPROACH SLAB

✳ SEE "CONCRETE MEDIAN BARRIER" AND "CONCRETE MEDIAN BARRIER DETAILS"

PROJECT NO. B-4091

CUMBERLAND COUNTY

STATION: 52+15.00 -L-

SHEET 1 OF 2

STATE OF NORTH CAROLINA
DEPARTMENT OF TRANSPORTATION
RALEIGH

BRIDGE APPROACH SLAB FOR FLEXIBLE PAVEMENT

Prepared by
URS
URS Corporation - North Carolina
1600 Perimeter Park Drive, Suite 400
Morrisville, NC 27560
TELEPHONE: (919) 461-1100
FAX: (919) 461-1415

NORTH CAROLINA PROFESSIONAL SEAL 038447 ENGINEER ANDREW S. MILLER
5/23/12

REVISIONS						SHEET NO.
NO.	BY:	DATE:	NO.	BY:	DATE:	S-130
1			3			TOTAL SHEETS
2			4			131

DRAWN BY : K.H. COMPTON DATE : 3/14/12
CHECKED BY : M.K. TOM DATE : 3/27/12

5/23/2012
P:\Jobs1\B4091\Structures\FinalDrawings\B4091_SD_AS1.dgn
ross_whitcher

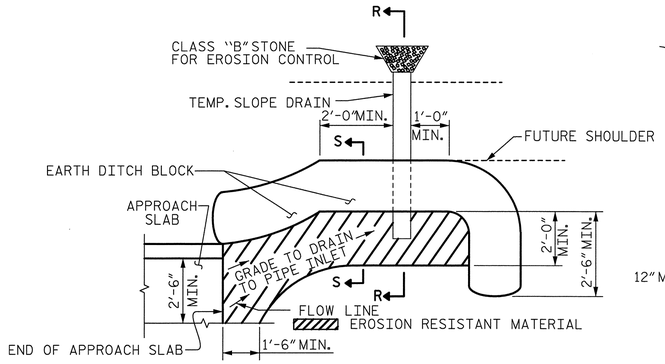

NOTE: IMMEDIATELY AFTER THE CONSTRUCTION OF THE APPROACH SLAB, THE CONTRACTOR SHALL PROVIDE TEMPORARY BERM AND SLOPE DRAIN. CONTRACTOR SHALL GRADE TO PIPE INLET AND PROVIDE EROSION RESISTANT MATERIAL AS SHOWN. THE EROSION RESISTANT MATERIAL SHALL BE EITHER 1) ASPHALT PLANT MIX, TYPE 1 OR TYPE 2, MIN. 2" DEPTH, 2) EROSION CONTROL MAT, OR 3) CONCRETE, AS DIRECTED BY THE ENGINEER. THE SLOPE DRAIN SHALL CONSIST OF A NON-PERFORATED TEMPORARY DRAINAGE PIPE, 12 INCHES IN DIAMETER.

PLAN VIEW

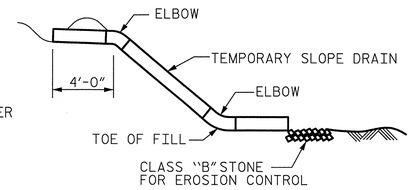

SECTION R-R

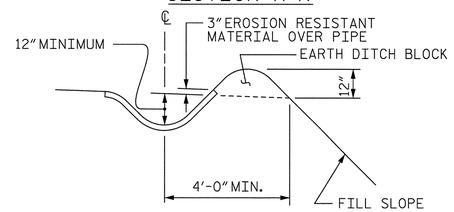

SECTION S-S

TEMPORARY BERM AND SLOPE DRAIN DETAILS

(TO BE USED WHEN SHOULDER BERM GUTTER IS REQUIRED)

NOTES

APPROACH SLAB SHALL NOT BE CONSTRUCTED PRIOR TO COMPLETION OF THE BRIDGE DECK.

FOR REINFORCED BRIDGE APPROACH FILL INCLUDING GEOTEXTILE, IMPERMEABLE GEOMEMBRANE, 4" Ø DRAINAGE PIPE, #78M STONE, AND SELECT MATERIAL, SEE ROADWAY PLANS.

TEMPORARY DRAINAGE AND TEMPORARY BERM AND SLOPE DRAINS WILL BE PAID FOR UNDER THE LUMP SUM PRICE FOR BRIDGE APPROACH SLAB.

AREA BETWEEN THE WINGWALL AND APPROACH SLAB SHALL BE GRADED TO DRAIN THE WATER AWAY FROM THE FILL FACE OF THE BRIDGE AND SHALL BE PAVED. SEE ROADWAY PLANS.

THE JOINT SHALL BE SAWED PRIOR TO THE CASTING OF THE BARRIER RAIL OR PARAPET AND END POST.

FOR CONCRETE MEDIAN, SEE "CONCRETE MEDIAN BARRIER DETAILS" SHEET.

BILL OF MATERIAL
FOR ONE APPROACH SLAB (2 REQ'D)

BAR	NO.	SIZE	TYPE	LENGTH	WEIGHT
✳ A1	75	#4	STR	28'-10"	1445
A2	78	#4	STR	28'-8"	1494
✳ B1	166	#5	STR	24'-2"	4184
B2	166	#6	STR	24'-8"	6150
✳ B3	10	#4	STR	24'-6"	164
✳ G1	50	#4	STR	4'-10"	161
✳ J1	72	#4	5	1'-5"	68
✳ U1	16	#4	1	3'-4"	36

REINFORCING STEEL	LBS.	7644
✳ EPOXY COATED REINFORCING STEEL	LBS.	6058
CLASS AA CONCRETE		
SLAB	C. Y.	89.9
SIDEWALK	C. Y.	6.2
TOTAL	C. Y.	96.1

BAR TYPES

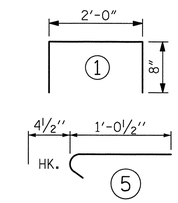

ALL BAR DIMENSIONS ARE OUT TO OUT

SPLICE LENGTHS

BAR SIZE	EPOXY COATED	UNCOATED
#4	2'-0"	1'-9"
#5	2'-6"	2'-2"
#6	3'-10"	2'-7"

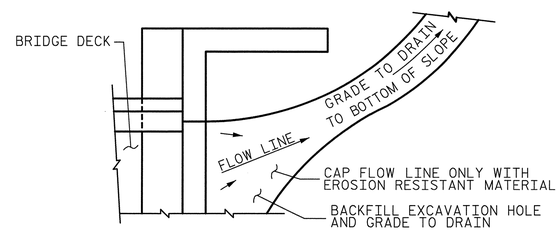

NOTE: IF THE APPROACH SLAB IS NOT CONSTRUCTED IMMEDIATELY AFTER THE BACKFILLING OF THE END BENT EXCAVATION, GRADE TO DRAIN TO THE BOTTOM OF THE SLOPE AND PROVIDE EROSION RESISTANT MATERIAL, SUCH AS FIBERGLASS ROVING OR AS DIRECTED BY THE ENGINEER TO PREVENT SOIL EROSION AND TO PROTECT THE AREA ADJACENT TO THE STRUCTURE. THE CONTRACTOR WILL BE REQUIRED TO REMOVE THESE MATERIALS PRIOR TO CONSTRUCTION OF THE APPROACH SLAB.

TEMPORARY DRAINAGE DETAIL

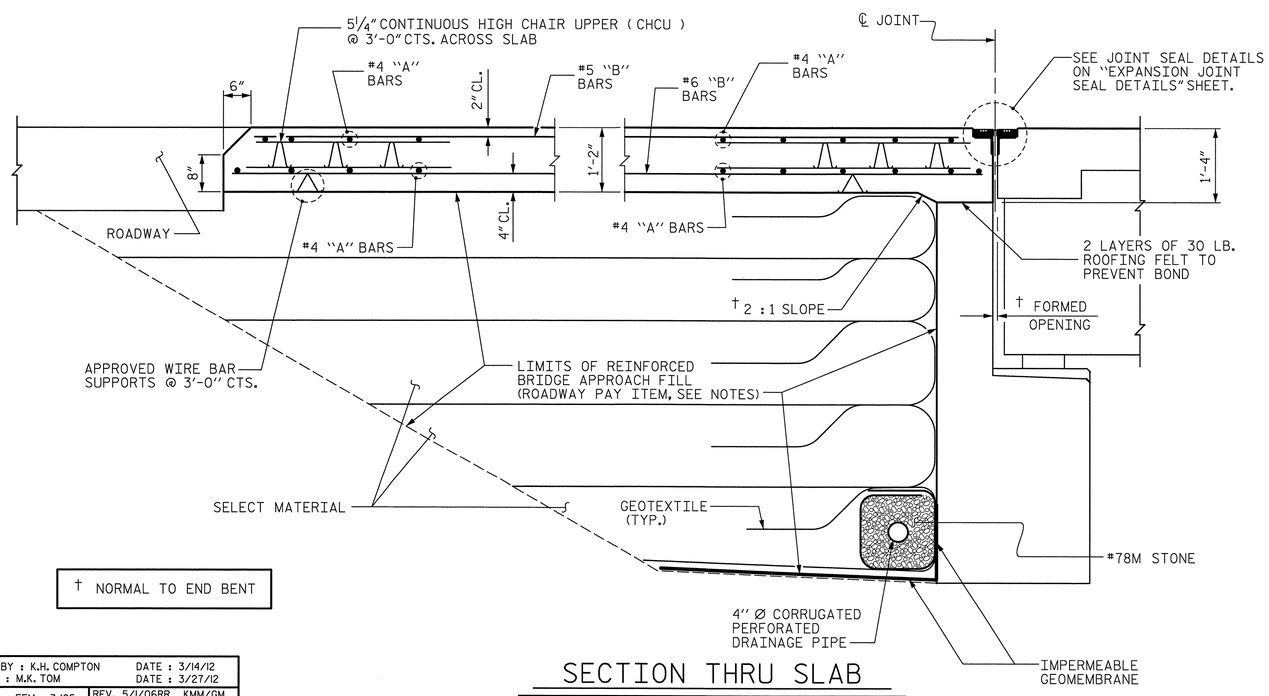

† NORMAL TO END BENT

SECTION THRU SLAB

PROJECT NO. B-4091
CUMBERLAND COUNTY
STATION: 52+15.00 -L-

SHEET 2 OF 2

STATE OF NORTH CAROLINA
DEPARTMENT OF TRANSPORTATION
RALEIGH

STANDARD

BRIDGE APPROACH SLAB FOR FLEXIBLE PAVEMENT

Prepared by
URS
URS Corporation - North Carolina
1600 Perimeter Park Drive, Suite 400
Morrisville, NC 27560
TELEPHONE (919) 461-1100
FAX (919) 461-1415

NORTH CAROLINA PROFESSIONAL SEAL 038447 ENGINEER ANDREW V. MILLER
5/23/12

REVISIONS								SHEET NO.
NO.	BY:	DATE:	NO.	BY:	DATE:			S-131
1			3					TOTAL SHEETS
2			4					131

STD. NO. BAS2

ASSEMBLED BY : K.H. COMPTON		DATE : 3/14/12	
CHECKED BY : M.K. TOM		DATE : 3/27/12	
DRAWN BY : EEM 3/95	REV. 5/1/06RR	KMM/GM	
CHECKED BY : VAP 3/95	REV. 10/1/11	MAA/GM	
	REV. 12/21/11	MAA/GM	

5/23/2012
P:\Jobs\B4091\Structures\FinalDrawings\B4091_SD_AS2.dgn
ross_whitcher

GEOTECHNICAL ENGINEER	ENGINEER
NORTH CAROLINA PROFESSIONAL SEAL 038176 ENGINEER SHIHAI ZHANG 5/9/2012	
SIGNATURE DATE	SIGNATURE DATE

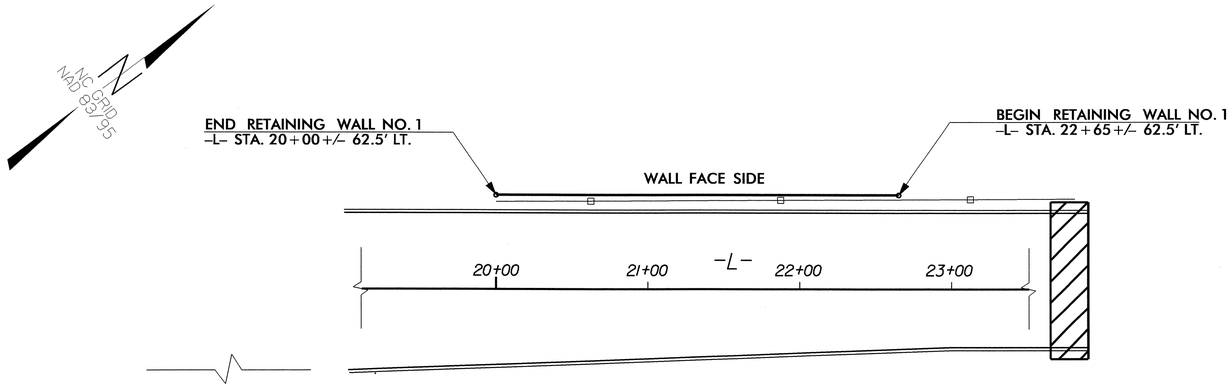

WALL NO. 1 PLAN VIEW

NOT TO SCALE

TOTAL BILL OF MATERIAL	
SEGMENTAL GRAVITY RETAINING WALLS	750 SQUARE FEET

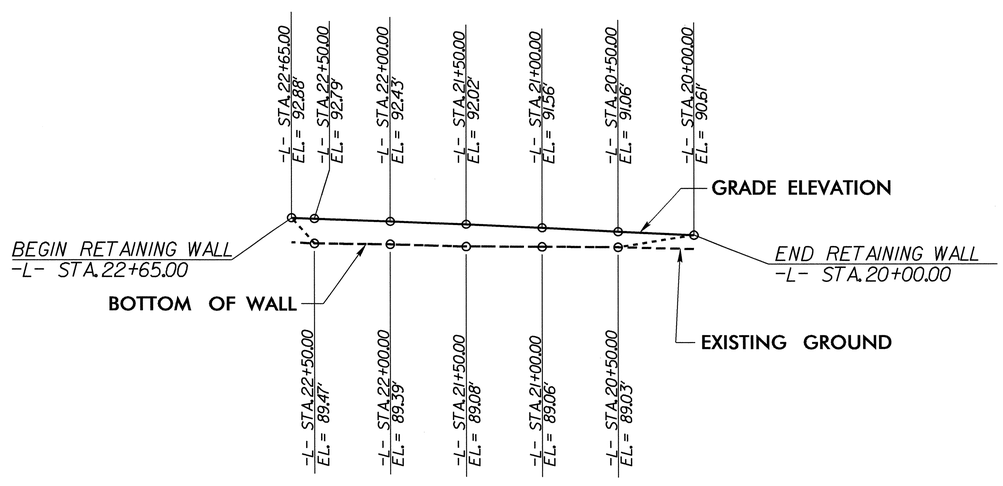

WALL NO. 1 ENVELOPE

EXPOSED WALL FACE (NOT TO SCALE)

RETAINING WALL TYPICAL SECTIONS			
STATION AND OFFSET	BOTTOM OF WALL EL.	GRADE EL.	DESIGN HEIGHT
-L- 22+65.00 62.5' LT.	92.88'	92.88'	0.00'
-L- 22+50.00 62.5' LT.	89.47'	92.79'	3.32'
-L- 22+00.00 62.5' LT.	89.39'	92.43'	3.04'
-L- 21+50.00 62.5' LT.	89.08'	92.02'	2.94'
-L- 21+00.00 62.5' LT.	89.06'	91.56'	2.50'
-L- 20+50.00 62.5' LT.	89.03'	91.06'	2.03'
-L- 20+00.00 62.5' LT.	90.61'	90.61'	0.00'

PROJECT NO.: B-4949 (40107.1.1)

CUMBERLAND ***COUNTY***

STATION: 22+65.00 -L- to 20+00.00 -L-

SHEET 1 OF 2

GEOTECHNICAL ENGINEERING UNIT

☒ ***EASTERN REGIONAL OFFICE***

☐ ***WESTERN REGIONAL OFFICE***

☐ ***CONTRACT OFFICE***

STATE OF NORTH CAROLINA
DEPARTMENT OF TRANSPORTATION
RALEIGH

RETAINING WALL NO. 1
PLANS

REVISIONS						SHEET NO.
NO.	BY	DATE	NO.	BY	DATE	W-1
1			3			TOTAL SHEETS
2			4			5

PREPARED BY:	OLIVIA PILKINGTON / SHIHAI ZHANG	DATE: 01/2012
REVIEWED BY:	JAMEY BATTS	DATE: 01/2012

GEJ248323 5/8/2012 B-4949_Geo_des_Rwall No. 1 szhang2 RD-Oce860-34

GEOTECHNICAL ENGINEER	ENGINEER
NORTH CAROLINA PROFESSIONAL SEAL 038176 ENGINEER WEIHAI ZHANG 5/9/2012	
SIGNATURE DATE	SIGNATURE DATE

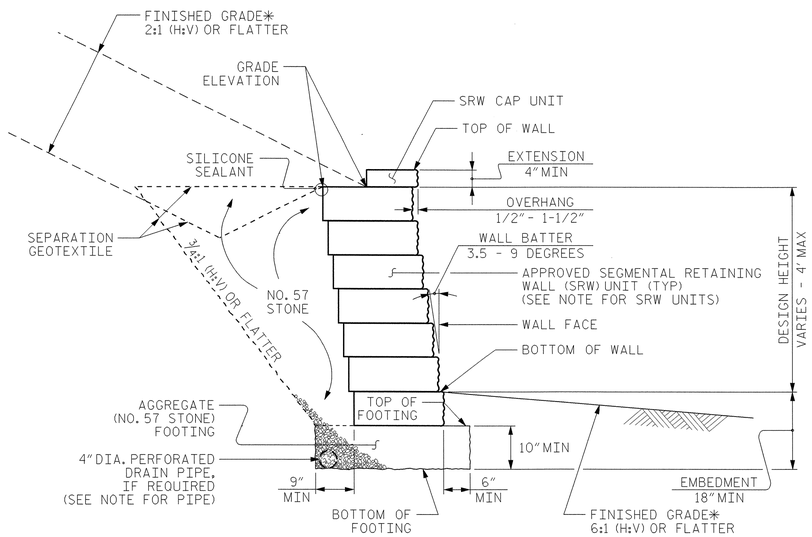

STANDARD SEGMENTAL GRAVITY WALL WITH SLOPE

*SEE ROADWAY PLANS FOR FINISHED GRADE AND DITCH DETAILS.

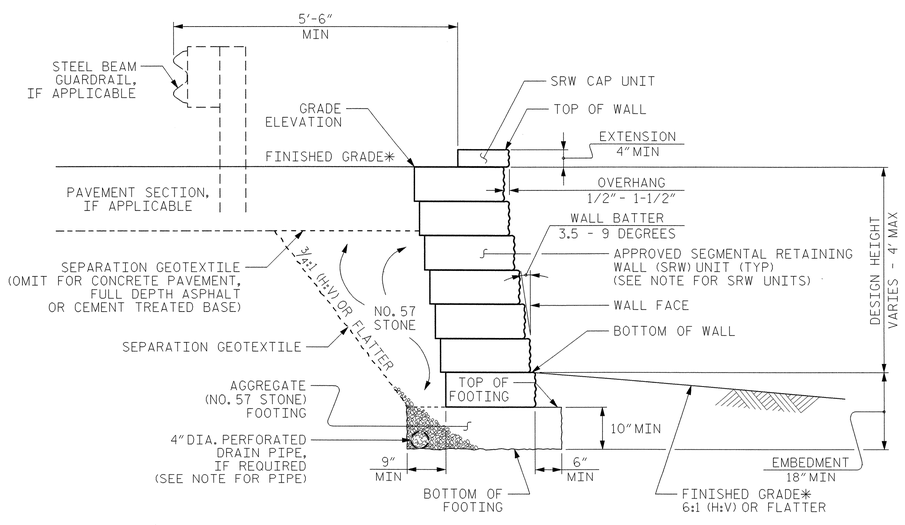

STANDARD SEGMENTAL GRAVITY WALL WITHOUT SLOPE

*SEE ROADWAY PLANS FOR FINISHED GRADE DETAILS.

NOTES:

FOR STANDARD SEGMENTAL GRAVITY RETAINING WALLS, SEE SEGMENTAL GRAVITY RETAINING WALLS PROVISION.

FOR STEEL BEAM GUARDRAIL, SEE ROADWAY PLANS AND SECTION 862 OF THE STANDARD SPECIFICATIONS.

DO NOT ATTACH FENCES OR HANDRAILS TO STANDARD SEGMENTAL GRAVITY WALLS.

DO NOT USE STANDARD SEGMENTAL GRAVITY WALLS FOR INTERSTATE HIGHWAY OR RAILROAD PROJECTS.

DO NOT USE STANDARD SEGMENTAL GRAVITY WALLS WHEN SURCHARGE LOADS WILL BE WITHIN 5'-6" OF THE BACK OF SRW CAP UNITS.

DO NOT USE STANDARD SEGMENTAL GRAVITY WALLS WHEN VERY LOOSE OR SOFT SOIL OR MUCK IS BELOW WALLS.

SEGMENTAL RETAINING WALL (SRW) UNITS ARE APPROVED FOR EITHER 2' OR 4' MAXIMUM DESIGN HEIGHTS. FOR DETAILS AND DIMENSIONS OF APPROVED SRW UNITS AND MAXIMUM DESIGN HEIGHTS, SEE www.ncdot.org/doh/preconstruct/highway/geotech/seggravwalls

DO NOT MIX APPROVED SRW UNITS FROM DIFFERENT VENDORS ON THE SAME STANDARD SEGMENTAL GRAVITY WALL. USE THE SAME SIZE APPROVED SRW UNITS FOR EACH WALL SECTION.

BEFORE BEGINNING STANDARD SEGMENTAL GRAVITY WALL CONSTRUCTION, SURVEY WALL LOCATIONS AND SUBMIT WALL PROFILE VIEWS (WALL ENVELOPES) FOR REVIEW. FOR WALL ENVELOPES, INCLUDE BOTTOM OF WALL, EXISTING GROUND AND GRADE ELEVATIONS AND OTHER ELEVATIONS AS NEEDED AT INTERVALS OF 25' OR LESS ALONG WALLS. DO NOT START WALL CONSTRUCTION UNTIL WALL ENVELOPES ARE ACCEPTED.

A DRAIN PIPE IS REQUIRED IF GROUNDWATER IS ABOVE BOTTOM OF FOOTINGS.

DO NOT PLACE NO. 57 STONE FOR FOOTINGS UNTIL EXCAVATION DIMENSIONS AND FOUNDATION MATERIAL ARE APPROVED.

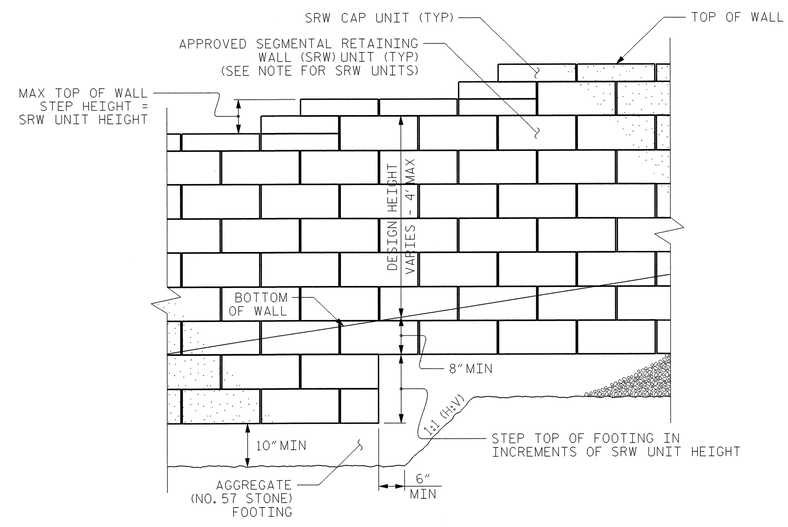

STANDARD SEGMENTAL GRAVITY WALL - PARTIAL ELEVATION

PROJECT NO.: B-4949 (40107.1.1)

CUMBERLAND ***COUNTY***

STATION: 22+65.00 -L- to 20+00.00 -L-

SHEET 2 OF 2

GEOTECHNICAL ENGINEERING UNIT

STATE OF NORTH CAROLINA DEPARTMENT OF TRANSPORTATION RALEIGH

STANDARD DRAWING NO. 453.02

STANDARD SEGMENTAL GRAVITY RETAINING WALL

DATE: 1-17-12

SHEET NO. W-2

TOTAL SHEETS 5

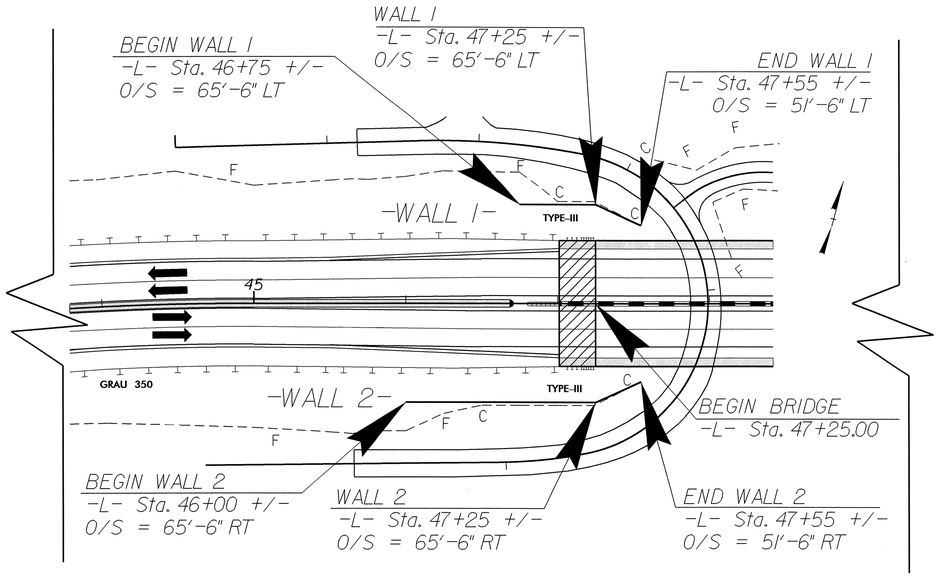

MSE WALL NO. 1 AND NO. 2 - PLAN VIEW (NTS)

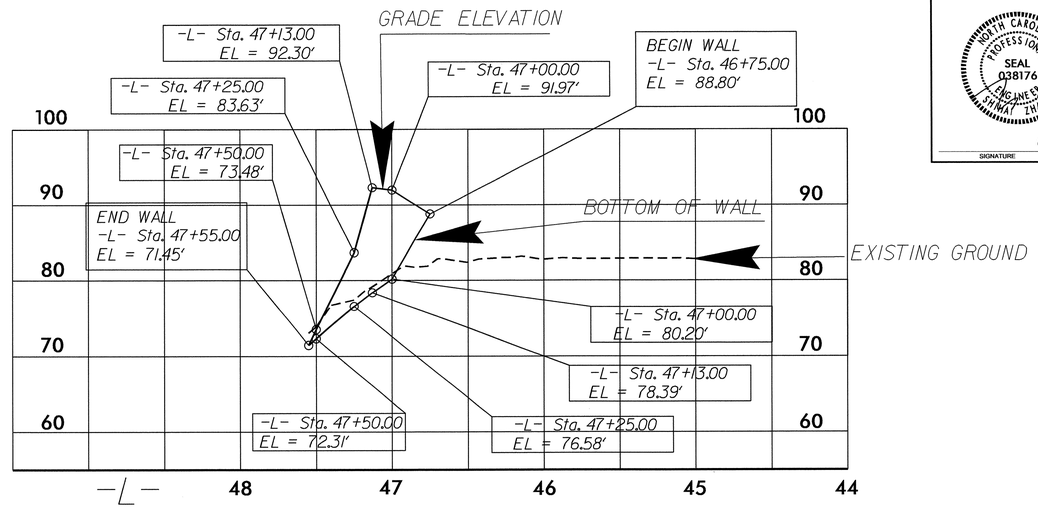

MSE WALL NO. 1 - ENVELOPE (NTS)

- EXPOSED WALL FACE -

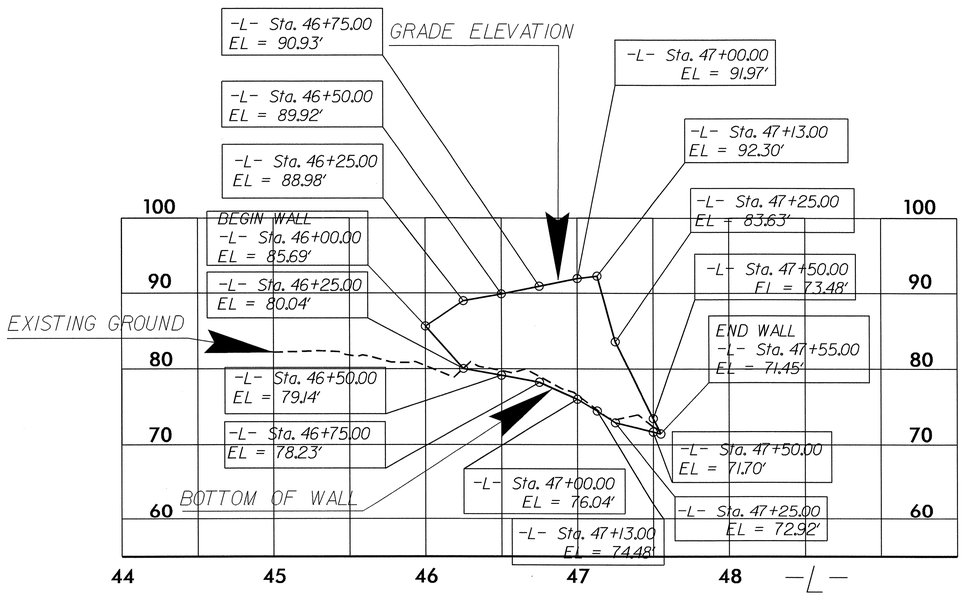

MSE WALL NO. 2 - ENVELOPE (NTS)

- EXPOSED WALL FACE -

GEOTECHNICAL ENGINEER	ENGINEER
NORTH CAROLINA PROFESSIONAL SEAL 038176 ENGINEER SHIHAI ZHANG	
6-5-2012	
SIGNATURE DATE	SIGNATURE DATE

NOTES:

FOR MECHANICALLY STABILIZED EARTH (MSE) RETAINING WALLS, SEE MECHANICALLY STABILIZED EARTH RETAINING WALLS PROVISION.

FOR STEEL BEAM GUARDRAIL, SEE ROADWAY PLANS AND SECTION 862 OF THE STANDARD SPECIFICATIONS.

USE AN MSE WALL SYSTEM WITH PRECAST CONCRETE PANELS THAT MEET SECTION 1077 OF THE STANDARD SPECIFICATIONS FOR RETAINING WALL NO. 1 AND NO. 2.

CAST-IN-PLACE REINFORCED CONCRETE COPING IS REQUIRED FOR RETAINING WALL NO. 1 AND NO. 2.

A DRAIN IS REQUIRED FOR RETAINING WALL NO. 1 AND NO. 2.

BEFORE BEGINNING MSE WALL DESIGN FOR RETAINING WALL NO. 1 AND NO. 2, SURVEY WALL LOCATION AND SUBMIT A REVISED WALL PROFILE VIEW (WALL ENVELOPE) FOR REVIEW. DO NOT START WALL DESIGN OR CONSTRUCTION UNTIL THE REVISED WALL ENVELOPE IS ACCEPTED.

DESIGN RETAINING WALL NO. FOR THE FOLLOWING:
1) H = DESIGN HEIGHT + EMBEDMENT
2) DESIGN LIFE = 100 YEARS
3) MAXIMUM FACTORED VERTICAL STRESS ON FOUNDATION MATERIAL = 5000 LB/SF
4) MINIMUM REINFORCEMENT LENGTH (L) TO WALL HEIGHT (H) RATIO = 1.2
5) MINIMUM EMBEDMENT = 3 FT
6) AGGREGATE PARAMETERS:

AGGREGATE TYPE*	UNIT WEIGHT (γ) LB/CF	FRICTION ANGLE (ϕ) DEGREES	COHESION (c) LB/SF
COARSE	110	38	0
FINE	125	34	0
*SEE MSE RETAINING WALLS PROVISION FOR COARSE AND FINE AGGREGATE MATERIAL REQUIREMENTS.			

7) IN-SITU ASSUMED MATERIAL PARAMETERS:

MATERIAL TYPE	UNIT WEIGHT (γ) LB/CF	FRICTION ANGLE (ϕ) DEGREES	COHESION (c) LB/SF
BACKFILL	120	30	0
FOUNDATION	120	12	750

NOTES (CONTINUED):

DESIGN RETAINING WALL NO. 1 AND NO. 2 FOR A LIVE LOAD (TRAFFIC) SURCHARGE.

DO NOT PLACE LEVELING PAD CONCRETE, AGGREGATE OR REINFORCEMENT FOR RETAINING WALL NO. 1 AND NO. 2 UNTIL EXCAVATION DIMENSIONS AND FOUNDATION MATERIAL ARE APPROVED.

AT THE CONTRACTOR'S OPTION, "TEMPORARY SHORING FOR WALL CONSTRUCTION" MAY BE USED TO CONSTRUCT RETAINING WALL NO. 1 AND NO. 2. SEE MSE RETAINING WALLS PROVISION FOR TEMPORARY SHORING FOR WALL CONSTRUCTION.

BRIDGE WINGS FOR END BENT NO. 1 LOCATED AT STATION 47+25.00 -L- MAY INTERFERE WITH REINFORCEMENT FOR RETAINING WALL NO. 1 AND NO. 2. SEE "GENERAL DRAWING" AND "SUBSTRUCTURE END BENT 1" SHEETS FOR BRIDGE WING LOCATIONS.

MSE WALL QUANTITIES (SQUARE FEET)	
MSE RETAINING WALL NO. 1	600 SF
MSE RETAINING WALL NO. 2	1660 SF

PROJECT NO.: 33449.1.1(B-4091)
CUMBERLAND **COUNTY**
STATION: 46+00.00 -L- TO 47+55.00 -L-
SHEET 1 OF 3

PREPARED BY: SHIHAI ZHANG	DATE: 05/2012
REVIEWED BY: JAMES R. BATTS	DATE: 05/2012

GEOTECHNICAL ENGINEERING UNIT

[X] EASTERN REGIONAL OFFICE
[ ] WESTERN REGIONAL OFFICE
[ ] CONTRACT OFFICE

STATE OF NORTH CAROLINA
DEPARTMENT OF TRANSPORTATION
RALEIGH

MSE RETAINING WALL
NO. 1 AND NO. 2
WALL ENVELOPE AND NOTES

REVISIONS						SHEET NO.
NO.	BY	DATE	NO.	BY	DATE	W-3
1			3			TOTAL SHEETS
2			4			5

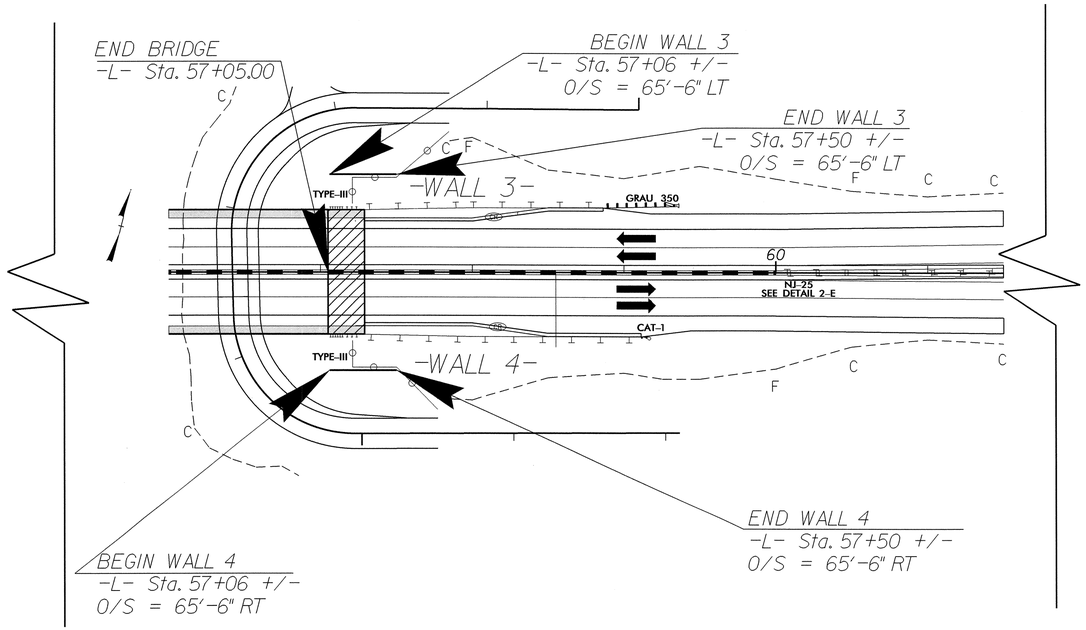

MSE WALL NO. 3 AND NO. 4 - PLAN VIEW (NTS)

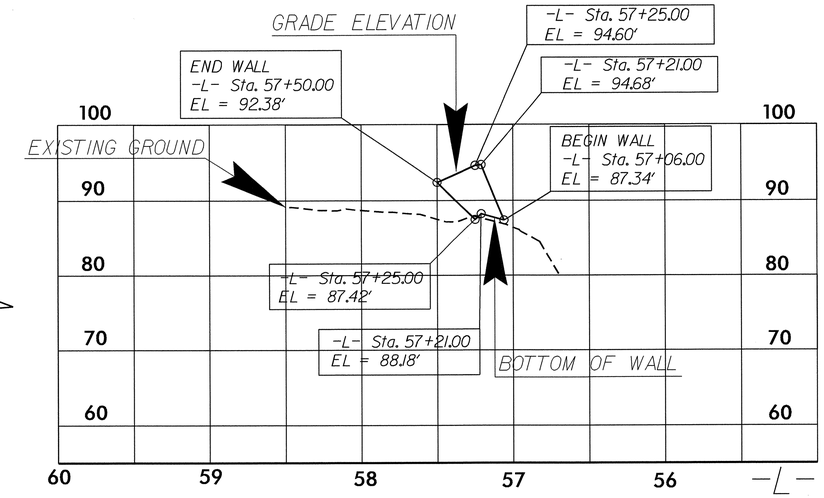

MSE WALL NO. 3 - ENVELOPE (NTS)

- EXPOSED WALL FACE -

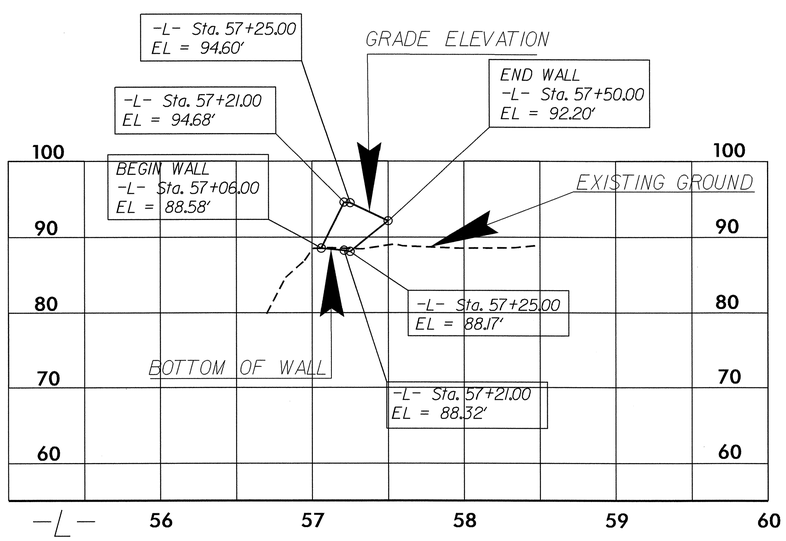

MSE WALL NO. 4 - ENVELOPE (NTS)

- EXPOSED WALL FACE -

NOTES:

FOR MECHANICALLY STABILIZED EARTH (MSE) RETAINING WALLS, SEE MECHANICALLY STABILIZED EARTH RETAINING WALLS PROVISION.

FOR STEEL BEAM GUARDRAIL, SEE ROADWAY PLANS AND SECTION 862 OF THE STANDARD SPECIFICATIONS.

USE AN MSE WALL SYSTEM WITH PRECAST CONCRETE PANELS THAT MEET SECTION 1077 OF THE STANDARD SPECIFICATIONS FOR RETAINING WALL NO. 3 AND NO. 4.

CAST-IN-PLACE REINFORCED CONCRETE COPING IS REQUIRED FOR RETAINING WALL NO. 3 AND NO. 4.

A DRAIN IS REQUIRED FOR RETAINING WALL NO. 3 AND NO. 4.

BEFORE BEGINNING MSE WALL DESIGN FOR RETAINING WALL NO. 3 AND NO. 4, SURVEY WALL LOCATION AND SUBMIT A REVISED WALL PROFILE VIEW (WALL ENVELOPE) FOR REVIEW. DO NOT START WALL DESIGN OR CONSTRUCTION UNTIL THE REVISED WALL ENVELOPE IS ACCEPTED.

DESIGN RETAINING WALL NO. FOR THE FOLLOWING:
1) H = DESIGN HEIGHT + EMBEDMENT
2) DESIGN LIFE = 100 YEARS
3) MAXIMUM FACTORED VERTICAL STRESS ON FOUNDATION MATERIAL = 3200 LB/SF
4) MINIMUM REINFORCEMENT LENGTH (L) TO WALL HEIGHT (H) RATIO = 1.2
5) MINIMUM EMBEDMENT = 2 FT
6) AGGREGATE PARAMETERS:

AGGREGATE TYPE*	UNIT WEIGHT (γ) LB/CF	FRICTION ANGLE (ϕ) DEGREES	COHESION (c) LB/SF
COARSE	110	38	0
FINE	125	34	0
*SEE MSE RETAINING WALLS PROVISION FOR COARSE AND FINE AGGREGATE MATERIAL REQUIREMENTS.			

7) IN-SITU ASSUMED MATERIAL PARAMETERS:

MATERIAL TYPE	UNIT WEIGHT (γ) LB/CF	FRICTION ANGLE (ϕ) DEGREES	COHESION (c) LB/SF
BACKFILL	120	30	0
FOUNDATION	120	30	0

NOTES (CONTINUED):

DESIGN RETAINING WALL NO. 3 AND NO. 4 FOR A LIVE LOAD (TRAFFIC) SURCHARGE.

DO NOT PLACE LEVELING PAD CONCRETE, AGGREGATE OR REINFORCEMENT FOR RETAINING WALL NO. 3 AND NO. 4 UNTIL EXCAVATION DIMENSIONS AND FOUNDATION MATERIAL ARE APPROVED.

AT THE CONTRACTOR'S OPTION, "TEMPORARY SHORING FOR WALL CONSTRUCTION" MAY BE USED TO CONSTRUCT RETAINING WALL NO. 3 AND NO. 4. SEE MSE RETAINING WALLS PROVISION FOR TEMPORARY SHORING FOR WALL CONSTRUCTION.

MSE WALL QUANTITIES (SQUARE FEET)	
MSE RETAINING WALL NO. 3	190 SF
MSE RETAINING WALL NO. 4	180 SF

GEOTECHNICAL ENGINEER

NORTH CAROLINA PROFESSIONAL SEAL 038176 ENGINEER SHIHAI ZHANG

6-5-2012

SIGNATURE DATE

ENGINEER

SIGNATURE DATE

PROJECT NO.: 33449.1.1(B-4091)

CUMBERLAND ***COUNTY***

STATION: 57+06.00 -L- TO 57+50.00 -L-

SHEET 2 OF 3

GEOTECHNICAL ENGINEERING UNIT

☒ *EASTERN REGIONAL OFFICE*

☐ *WESTERN REGIONAL OFFICE*

☐ *CONTRACT OFFICE*

STATE OF NORTH CAROLINA
DEPARTMENT OF TRANSPORTATION
RALEIGH

MSE RETAINING WALL
NO. 3 AND NO. 4
WALL ENVELOPE AND NOTES

REVISIONS						SHEET NO.
NO.	BY	DATE	NO.	BY	DATE	W-4
1			3			TOTAL SHEETS
2			4			5

PREPARED BY: SHIHAI ZHANG	DATE: 05/2012
REVIEWED BY: JAMES R. BATTS	DATE: 05/2012

GEOTECHNICAL ENGINEER	ENGINEER
NORTH CAROLINA PROFESSIONAL SEAL 038176 ENGINEER SHIHAI ZHANG 6-5-2012	
SIGNATURE DATE	SIGNATURE DATE

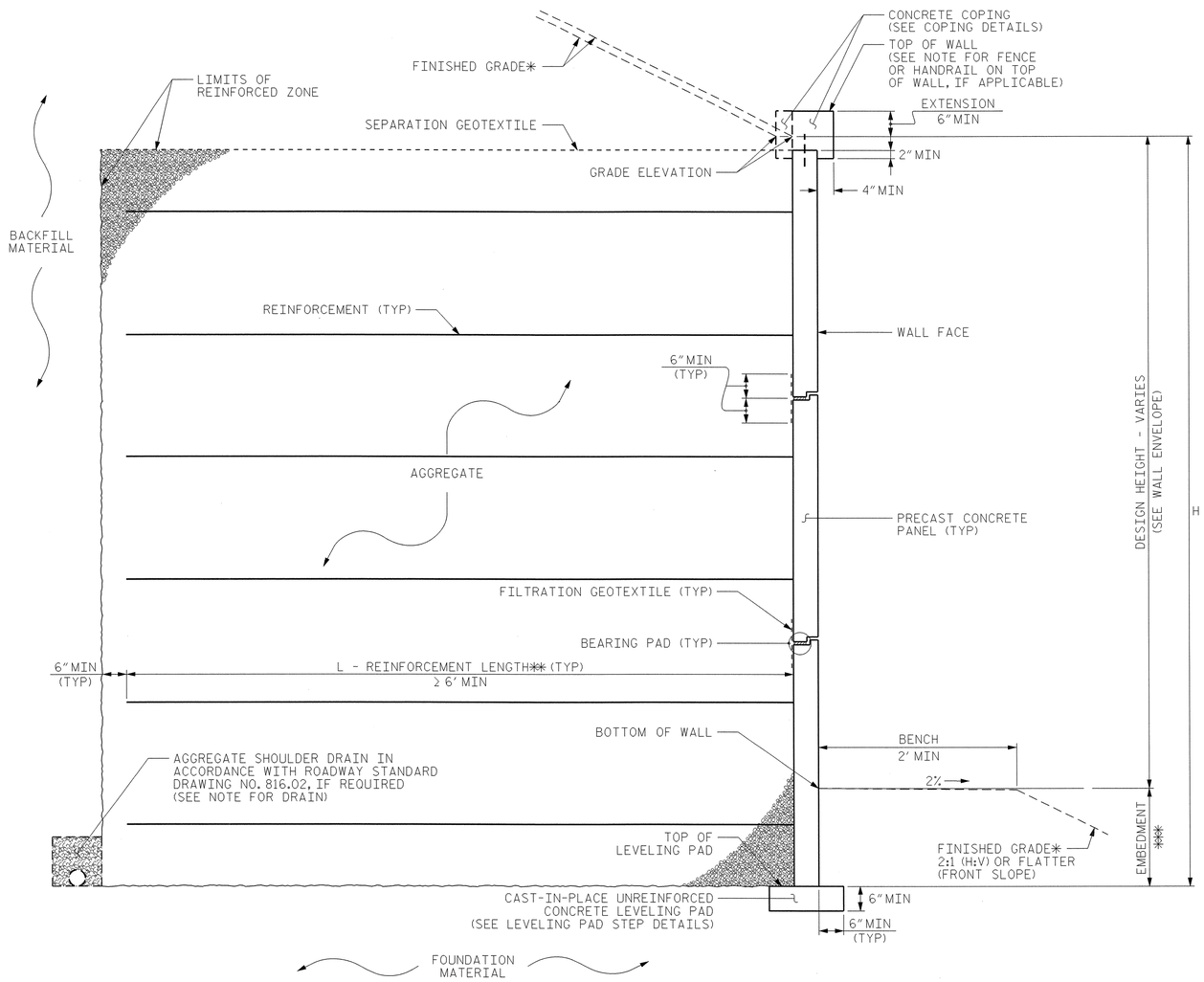

MSE WALL WITH PRECAST PANELS - TYPICAL SECTION

*SEE ROADWAY PLANS FOR FINISHED GRADE AND DITCH DETAILS.
**SEE MSE RETAINING WALLS PROVISION FOR REINFORCEMENT LENGTH REQUIREMENTS.
*** WALL EMBEDMENT: 3' MIN FOR WALL NO. 1 AND NO. 2; 2' MIN FOR WALL NO. 3 AND NO. 4

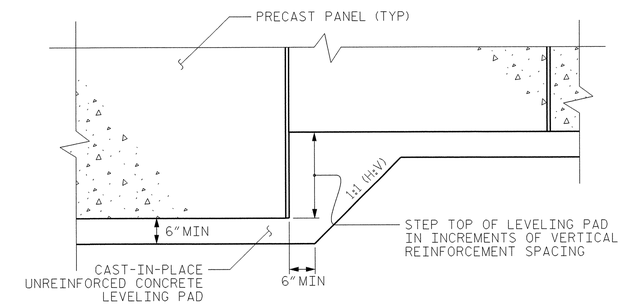

PRECAST CONCRETE PANELS

LEVELING PAD STEP DETAILS

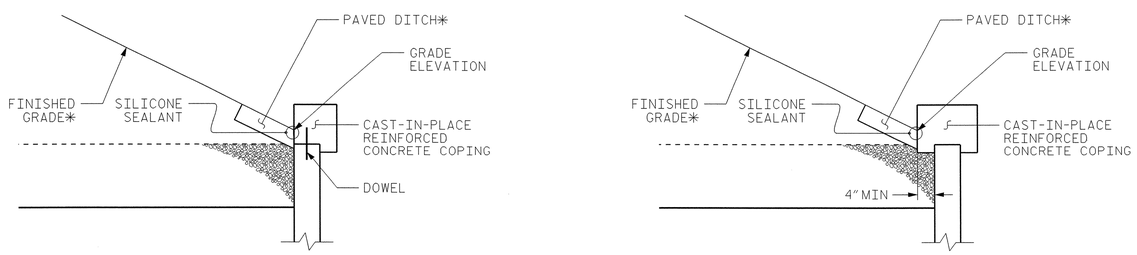

COPING DETAILS

AT THE CONTRACTOR'S OPTION, CONNECT COPING TO PANELS WITH DOWELS OR EXTEND COPING DOWN BACK OF PANELS.
*SEE ROADWAY PLANS FOR FINISHED GRADE AND DITCH DETAILS.

PREPARED BY: SHIHAI ZHANG	DATE: 05/2012
REVIEWED BY: JAMES R. BATTS	DATE: 05/2012

PROJECT NO.: 33449.1.1(B-4091)
CUMBERLAND ***COUNTY***
STATION: VARIES
SHEET 3 OF 3

GEOTECHNICAL ENGINEERING UNIT

- [X] ***EASTERN REGIONAL OFFICE***
- [ ] ***WESTERN REGIONAL OFFICE***
- [ ] ***CONTRACT OFFICE***

STATE OF NORTH CAROLINA
DEPARTMENT OF TRANSPORTATION
RALEIGH

MSE RETAINING WALL
NO. 1, NO. 2, NO. 3 AND NO. 4
TYPICAL DETAILS

REVISIONS						SHEET NO.
NO.	BY	DATE	NO.	BY	DATE	W-5
1			3			TOTAL SHEETS
2			4			5

STANDARD NOTES

DESIGN DATA:

SPECIFICATIONS	A.A.S.H.T.O. (CURRENT)
LIVE LOAD	SEE PLANS
IMPACT ALLOWANCE	SEE A.A.S.H.T.O.
STRESS IN EXTREME FIBER OF	
STRUCTURAL STEEL - AASHTO M270 GRADE 36	20,000 LBS. PER SQ. IN.
- AASHTO M270 GRADE 50W	27,000 LBS. PER SQ. IN.
- AASHTO M270 GRADE 50	27,000 LBS. PER SQ. IN.
REINFORCING STEEL IN TENSION	
GRADE 60	24,000 LBS. PER SQ. IN.
CONCRETE IN COMPRESSION	1,200 LBS. PER SQ. IN.
CONCRETE IN SHEAR	SEE A.A.S.H.T.O.
STRUCTURAL TIMBER - TREATED OR	
UNTREATED - EXTREME FIBER STRESS	1,800 LBS. PER SQ. IN.
COMPRESSION PERPENDICULAR TO GRAIN OF TIMBER	375 LBS. PER SQ. IN.
EQUIVALENT FLUID PRESSURE OF EARTH	30 LBS. PER CU. FT. (MINIMUM)

MATERIAL AND WORKMANSHIP:

EXCEPT AS MAY OTHERWISE BE SPECIFIED ON PLANS OR IN THE SPECIAL PROVISIONS, ALL MATERIAL AND WORKMANSHIP SHALL BE IN ACCORDANCE WITH THE 2006 "STANDARD SPECIFICATIONS FOR ROADS AND STRUCTURES" OF THE N. C. DEPARTMENT OF TRANSPORTATION.

STEEL SHEET PILING FOR PERMANENT OR TEMPORARY APPLICATIONS SHALL BE HOT ROLLED.

CONCRETE:

UNLESS OTHERWISE REQUIRED ON PLANS, CLASS A CONCRETE SHALL BE USED FOR ALL PORTIONS OF ALL STRUCTURES WITH THE EXCEPTION THAT: CLASS AA CONCRETE SHALL BE USED IN BRIDGE SUPERSTRUCTURES, ABUTMENT BACKWALLS, AND APPROACH SLABS; AND CLASS B CONCRETE SHALL BE USED FOR SLOPE PROTECTION AND RIP RAP.

CONCRETE CHAMFERS:

UNLESS OTHERWISE NOTED ON THE PLANS, ALL EXPOSED CORNERS ON STRUCTURES SHALL BE CHAMFERED 3/4" WITH THE FOLLOWING EXCEPTIONS: TOP CORNERS OF CURBS MAY BE ROUNDED TO 1-1/2" RADIUS WHICH IS BUILT INTO CURB FORMS; CORNERS OF TRANSVERSE FLOOR EXPANSION JOINTS SHALL BE ROUNDED WITH A 1/4" FINISHING TOOL UNLESS OTHERWISE REQUIRED ON PLANS; AND CORNERS OF EXPANSION JOINTS IN THE ROADWAY FACES AND TOPS OF CURBS AND SIDEWALKS SHALL BE ROUNDED TO A 1/4" RADIUS WITH A FINISHING STONE OR TOOL UNLESS OTHERWISE REQUIRED ON PLANS.

DOWELS:

DOWELS WHEN INDICATED ON PLANS AS FOR CULVERT EXTENSIONS, SHALL BE EMBEDDED AT LEAST 12" INTO THE OLD CONCRETE AND GROUTED INTO PLACE WITH 1:2 CEMENT MORTAR.

ALLOWANCE FOR DEAD LOAD DEFLECTION, SETTLEMENT, ETC. IN CASTING SUPERSTRUCTURES:

BRIDGES SHALL BE BUILT ON THE GRADE OR VERTICAL CURVE SHOWN ON PLANS. SLABS, CURBS AND PARAPETS SHALL CONFORM TO THE GRADE OR CURVE.

ALL DIMENSIONS WHICH ARE GIVEN IN SECTION AND ARE AFFECTED BY DEAD LOAD DEFLECTIONS ARE DIMENSIONS AT CENTER LINE OF BEARING UNLESS OTHERWISE NOTED ON PLANS. IN SETTING FORMS FOR STEEL BEAM BRIDGES AND PRESTRESSED CONCRETE GIRDER BRIDGES, ADJUSTMENTS SHALL BE MADE DUE TO THE DEAD LOAD DEFLECTIONS FOR THE ELEVATIONS SHOWN. WHERE BLOCKS ARE SHOWN OVER BEAMS FOR BUILDING UP TO THE SLAB, THE VERTICAL DIMENSIONS OF THE BLOCKS SHALL BE ADJUSTED BETWEEN BEARINGS TO COMPENSATE FOR DEAD LOAD DEFLECTIONS, VERTICAL CURVE ORDINATE, AND ACTUAL BEAM CAMBER. WHERE BOTTOM OF SLAB IS IN LINE WITH BOTTOM OF TOP FLANGES, DEPTH OF SLAB BETWEEN BEARINGS SHALL BE ADJUSTED TO COMPENSATE FOR DEAD LOAD DEFLECTION, VERTICAL CURVE ORDINATE, AND ACTUAL BEAM CAMBER.

IN SETTING FALSEWORK AND FORMS FOR REINFORCED CONCRETE SPANS, AN ALLOWANCE SHALL BE MADE FOR DEAD LOAD DEFLECTIONS, SETTLEMENT OF FALSEWORK, AND PERMANENT CAMBER WHICH SHALL BE PROVIDED FOR IN ADDITION TO THE ELEVATIONS SHOWN. AFTER REMOVAL OF THE FALSEWORK, THE FINISHED STRUCTURES SHALL CONFORM TO THE PROFILE AND ELEVATIONS SHOWN ON THE PLANS AND CONSTRUCTION ELEVATIONS FURNISHED BY THE ENGINEER.

DETAILED DRAWINGS FOR FALSEWORK OR FORMS FOR BRIDGE SUPERSTRUCTURE AND ANY STRUCTURE OR PARTS OF A STRUCTURE AS NOTED ON THE PLANS SHALL BE SUBMITTED TO THE ENGINEER FOR APPROVAL BEFORE CONSTRUCTION OF THE FALSEWORK OR FORMS IS STARTED.

REINFORCING STEEL:

ALL REINFORCING STEEL SHALL BE DEFORMED. DIMENSIONS RELATIVE TO PLACEMENT OF REINFORCING ARE TO CENTERS OF BARS UNLESS OTHERWISE INDICATED IN THE PLANS. DIMENSIONS ON BAR DETAILS ARE TO CENTERS OF BARS OR ARE OUT TO OUT AS INDICATED ON PLANS.

WIRE BAR SUPPORTS SHALL BE PROVIDED FOR REINFORCING STEEL WHERE INDICATED ON THE PLANS. WHEN BAR SUPPORT PIECES ARE PLACED IN CONTINUOUS LINES, THEY SHALL BE SO PLACED THAT THE ENDS OF THE SUPPORTING WIRES SHALL BE LAPPED TO LOCK LEGS ON ADJOINING PIECES.

STRUCTURAL STEEL:

AT THE CONTRACTOR'S OPTION, HE MAY SUBSTITUTE 7/8" Ø SHEAR STUDS FOR THE 3/4" Ø STUDS SPECIFIED ON THE PLANS. THIS SUBSTITUTION SHALL BE MADE AT THE RATE OF 3 - 7/8" Ø STUDS FOR 4 - 3/4" Ø STUDS, AND STUD SPACING CHANGES SHALL BE MADE AS NECESSARY TO PROVIDE THE SAME EQUIVALENT NUMBER OF 7/8" Ø STUDS ALONG THE BEAM AS SHOWN FOR 3/4" Ø STUDS BASED ON THE RATIO OF 3 - 7/8" Ø STUDS FOR 4 - 3/4" Ø STUDS. STUDS OF THE LENGTH SPECIFIED ON THE PLANS MUST BE PROVIDED. THE MAXIMUM SPACING SHALL BE 2'-0".

EXCEPT AT THE INTERIOR SUPPORTS OF CONTINUOUS BEAMS WHERE THE COVER PLATE IS IN CONTACT WITH BEARING PLATE, THE CONTRACTOR MAY, AT HIS OPTION, SUBSTITUTE FOR THE COVER PLATES DESIGNATED ON THE PLANS COVER PLATES OF THE EQUIVALENT AREA PROVIDED THESE PLATES ARE AT LEAST 5/16" IN THICKNESS AND DO NOT EXCEED A WIDTH EQUAL TO THE FLANGE WIDTH LESS 2" OR A THICKNESS EQUAL TO 2 TIMES THE FLANGE THICKNESS. THE SIZE OF FILLET WELDS SHALL CONFORM TO THE REQUIREMENTS OF THE CURRENT ANSI/AASHTO/AWS "BRIDGE WELDING CODE". ELECTROSLAG WELDING WILL NOT BE PERMITTED.

WITH THE SOLE EXCEPTION OF EDGES AT SURFACES WHICH BEAR ON OTHER SURFACES, ALL SHARP EDGES AND ENDS OF SHAPES AND PLATES SHALL BE SLIGHTLY ROUNDED BY SUITABLE MEANS TO A RADIUS OF APPROXIMATELY 1/16 INCH OR EQUIVALENT FLAT SURFACE AT A SUITABLE ANGLE PRIOR TO PAINTING, GALVANIZING, OR METALLIZING.

HANDRAILS AND POSTS:

METAL STANDARDS AND FACES OF THE CONCRETE END POSTS FOR THE METAL RAIL SHALL BE SET NORMAL TO THE GRADE OF THE CURB, UNLESS OTHERWISE SHOWN ON PLANS. THE METAL RAIL AND TOPS OF CONCRETE POSTS USED WITH THE ALUMINUM RAIL SHALL BE BUILT PARALLEL TO THE GRADE OF THE CURB.

METAL HANDRAILS SHALL BE IN ACCORDANCE WITH THE PLANS. RAILS SHALL BE AS MANUFACTURED FOR BRIDGE RAILING. CASTINGS SHALL BE OF A UNIFORM APPEARANCE. FINS AND OTHER DEFORMATIONS RESULTING FROM CASTING OR OTHERWISE SHALL BE REMOVED IN A MANNER SO THAT A UNIFORM COLORING OF THE COMPLETED CASTING SHALL BE OBTAINED. CASTINGS WITH DISCOLORATIONS OR OF NON-UNIFORM COLORING WILL NOT BE ACCEPTED. CERTIFIED MILL REPORTS ARE REQUIRED FOR METAL RAILS AND POSTS.

SPECIAL NOTES:

GENERALLY, IN CASE OF DISCREPANCY, THIS STANDARD SHEET OF NOTES SHALL GOVERN OVER THE SPECIFICATIONS, BUT THE REMAINDER OF THE PLANS SHALL GOVERN OVER NOTES HEREON, AND SPECIAL PROVISIONS SHALL GOVERN OVER ALL. SEE SPECIFICATIONS ARTICLE 105-4.

ENGLISH

JANUARY, 1990

STD. NO. SN