TIP PROJECT: B-4028

CONTRACT: C202878

STRUCTURES

STATE OF NORTH CAROLINA
DIVISION OF HIGHWAYS

BLADEN COUNTY

STATE	STATE PROJECT REFERENCE NO.	SHEET NO.	TOTAL SHEETS
N.C.	B-4028		

STATE PROJ. NO.	F.A. PROJ. NO.	DESCRIPTION
33395.1.1	BRSTP-0011(9)	P.E.
33395.3.1	BRSTP-0011(9)	R/W & UTIL.
33395.2.2	BRSTP-0011(9)	CONST.

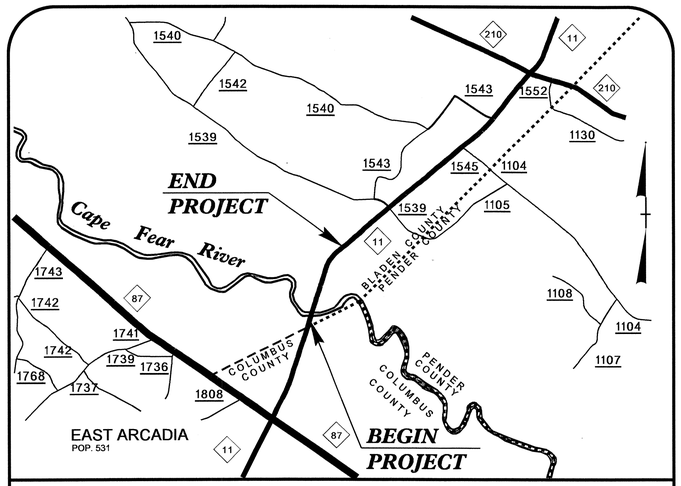

VICINITY MAP

LOCATION: BRIDGE NOS. 12, 18 AND 42 OVER CAPE FEAR RIVER AND OVERFLOW ON NC 11

TYPE OF WORK: GRADING, DRAINAGE, PAVING, AND STRUCTURES

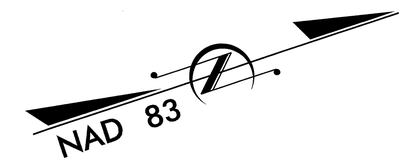

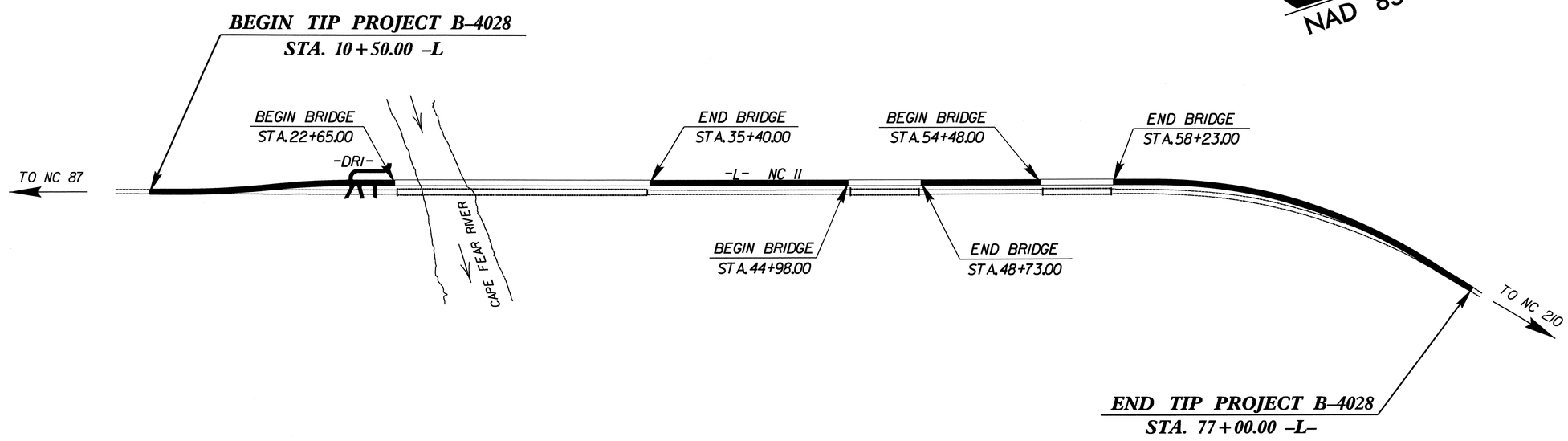

STATE OF NORTH CAROLINA DEPARTMENT OF TRANSPORTATION

DESIGN DATA

ADT 2012 = 3700
ADT 2032 = 6500
DHV = 11 %
D ≐ 55 %
T = 34 % *
V = 60 MPH
* TTST 28% DUAL 6%
FUNC. CLASS = MAJOR COLLECTOR
REGIONAL TIER

PROJECT LENGTH

LENGTH ROADWAY TIP PROJECT B-4028	=	0.875 MILES
LENGTH STRUCTURES TIP PROJECT B-4028	=	0.384 MILES
TOTAL LENGTH TIP PROJECT B-4028	=	1.259 MILES

Prepared In the Office of:
DIVISION OF HIGHWAYS
1000 Birch Ridge Dr., Raleigh NC, 27610

2012 STANDARD SPECIFICATIONS

LETTING DATE:
AUGUST 21, 2012

J. M. BAILEY, P.E.
PROJECT ENGINEER

D. R. CALHOUN, P.E.
PROJECT DESIGN ENGINEER

STRUCTURES MANAGEMENT UNIT

DIVISION OF HIGHWAYS
STATE OF NORTH CAROLINA

P.E.
STATE DESIGN ENGINEER

DEPARTMENT OF TRANSPORTATION
FEDERAL HIGHWAY ADMINISTRATION

APPROVED
DIVISION ADMINISTRATOR DATE

26-JUN-2012 15:31
$$$$$$$$$$$$$$$$DGN$$$$$$$$$$$$$$$$$$$$
dely
09/08/08

F.A. PROJECT No. BRSTP-0011(9)

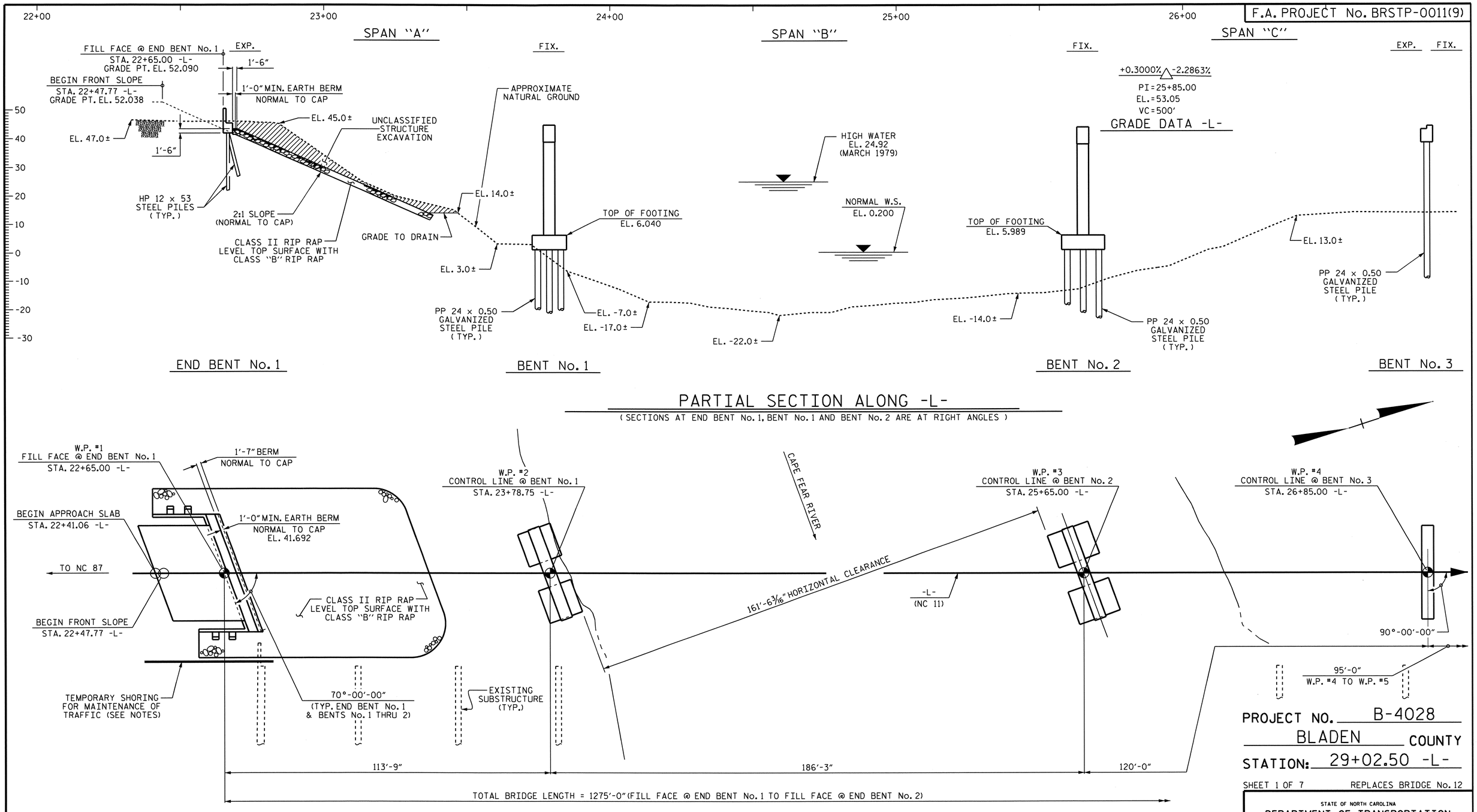

PARTIAL SECTION ALONG -L-

(SECTIONS AT END BENT No. 1, BENT No. 1 AND BENT No. 2 ARE AT RIGHT ANGLES)

PARTIAL PLAN

(COLUMNS & PILES NOT SHOWN IN PLAN VIEW FOR CLARITY)

I HEREBY CERTIFY THESE PLANS ARE THE AS-BUILT PLANS

NORTH CAROLINA PROFESSIONAL SEAL 14855 ENGINEER DOUGLAS R. CALHOUN
6/26/12

PROJECT NO. B-4028

BLADEN COUNTY

STATION: 29+02.50 -L-

SHEET 1 OF 7 REPLACES BRIDGE No. 12

STATE OF NORTH CAROLINA
DEPARTMENT OF TRANSPORTATION
RALEIGH

GENERAL DRAWING

BRIDGE ON NC 11
OVER CAPE FEAR
RIVER BETWEEN NC 87
AND SR 1539

REVISIONS							SHEET NO.
NO.	BY:	DATE:	NO.	BY:	DATE:		S-1
1			3				TOTAL SHEETS
2			4				147

DRAWN BY : S.B.W./T.J.B. DATE : 8-2011
CHECKED BY : T. N. CARROLL DATE : 9-2011

26-JUN-2012 14:15
R:\Structures\STRI\GeneralDrawings\B-4028_SD_GD.dgn
dely

STR. #1

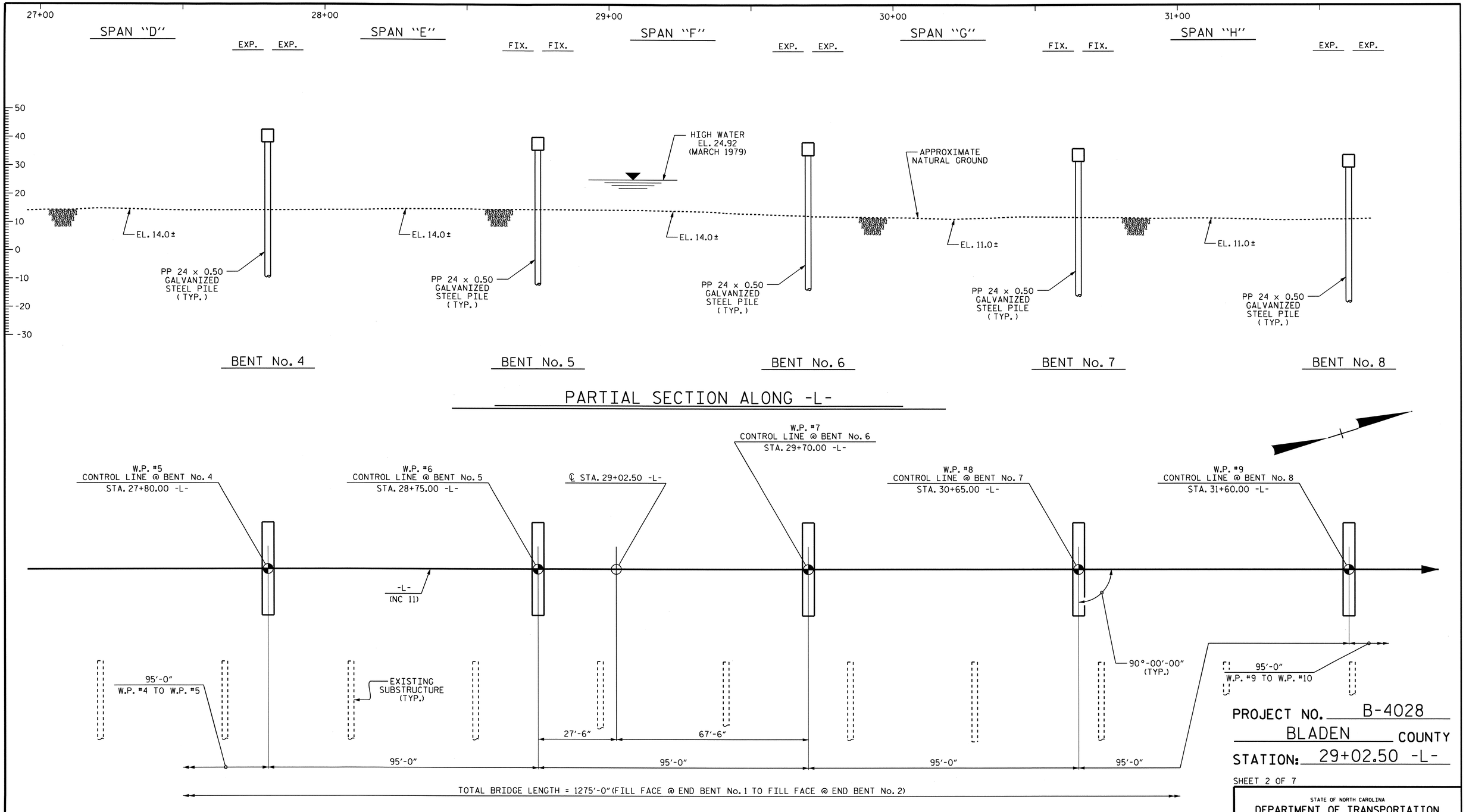

PARTIAL SECTION ALONG -L-

PARTIAL PLAN

(PILES NOT SHOWN IN PLAN VIEW FOR CLARITY)

PROJECT NO. B-4028

BLADEN COUNTY

STATION: 29+02.50 -L-

SHEET 2 OF 7

STATE OF NORTH CAROLINA
DEPARTMENT OF TRANSPORTATION
RALEIGH

GENERAL DRAWING
BRIDGE ON NC 11
OVER CAPE FEAR
RIVER BETWEEN NC 87
AND SR 1539

NORTH CAROLINA PROFESSIONAL SEAL 14855 ENGINEER DOUGLAS R. CALHOUN
6/26/12

REVISIONS						SHEET NO.
NO.	BY:	DATE:	NO.	BY:	DATE:	S-2
1			3			TOTAL SHEETS
2			4			147

DRAWN BY : S.B.W./T.J.B. DATE : 8-2011
CHECKED BY : T. N. CARROLL DATE : 9-2011

26-JUN-2012 14:15
R:\Structures\STR1\GeneralDrawings\B-4028_SD_GD.dgn
dely

STR. #1

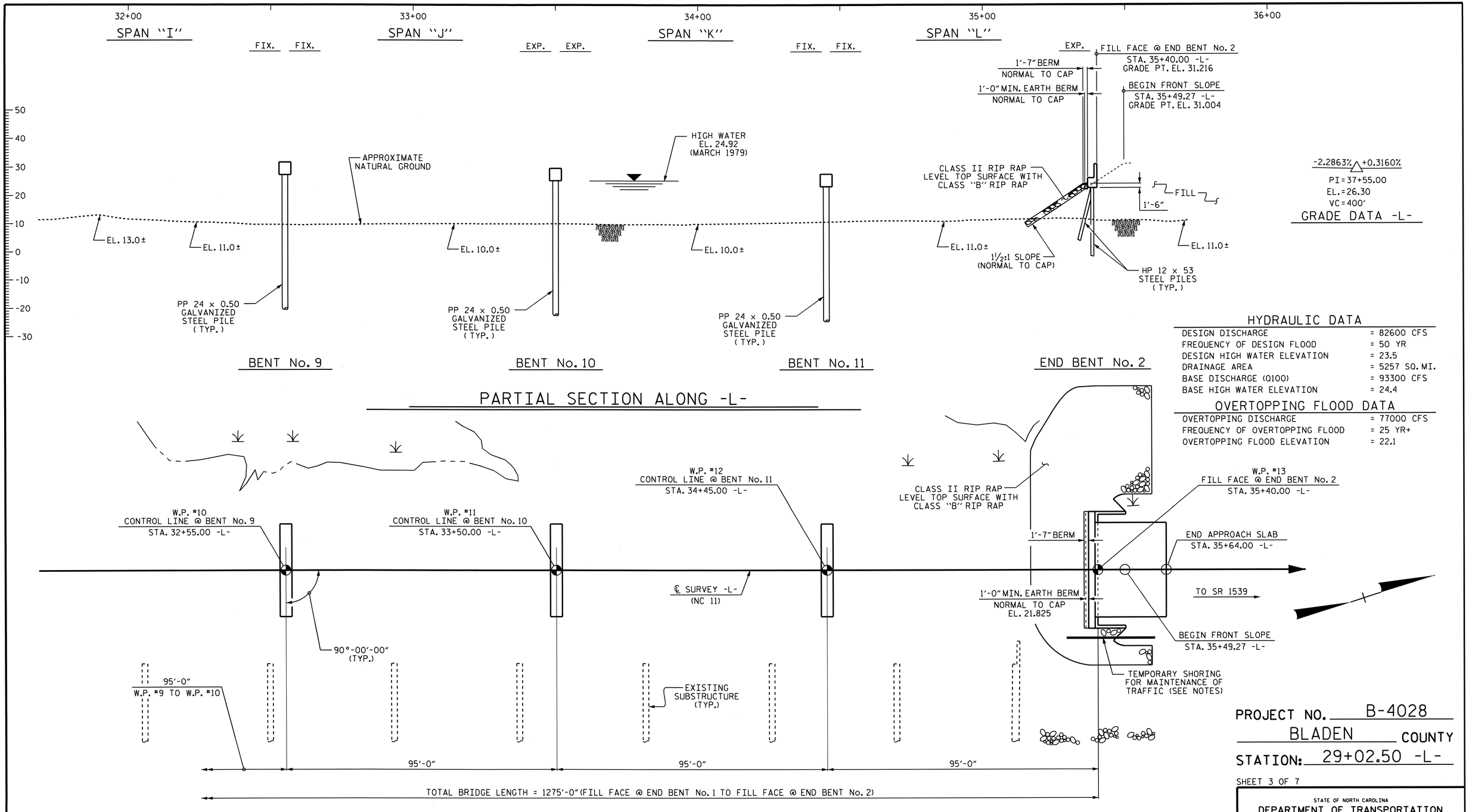

HYDRAULIC DATA

DESIGN DISCHARGE	= 82600 CFS
FREQUENCY OF DESIGN FLOOD	= 50 YR
DESIGN HIGH WATER ELEVATION	= 23.5
DRAINAGE AREA	= 5257 SQ. MI.
BASE DISCHARGE (Q100)	= 93300 CFS
BASE HIGH WATER ELEVATION	= 24.4

OVERTOPPING FLOOD DATA

OVERTOPPING DISCHARGE	= 77000 CFS
FREQUENCY OF OVERTOPPING FLOOD	= 25 YR+
OVERTOPPING FLOOD ELEVATION	= 22.1

PROJECT NO. B-4028

BLADEN COUNTY

STATION: 29+02.50 -L-

SHEET 3 OF 7

STATE OF NORTH CAROLINA
DEPARTMENT OF TRANSPORTATION
RALEIGH

GENERAL DRAWING

BRIDGE ON NC 11
OVER CAPE FEAR
RIVER BETWEEN NC 87
AND SR 1539

NORTH CAROLINA PROFESSIONAL SEAL 14855 ENGINEER THOMAS R. CALHOUN
6/26/12

REVISIONS						SHEET NO.
NO.	BY:	DATE:	NO.	BY:	DATE:	S-3
1			3			TOTAL SHEETS
2			4			147

DRAWN BY : S.B.W./T.J.B. DATE : 8-2011
CHECKED BY : T. N. CARROLL DATE : 9-2011

26-JUN-2012 14:14
R:\Structures\STRI\GeneralDrawings\B-4028_SD_GD.dgn
dely

STR. #1

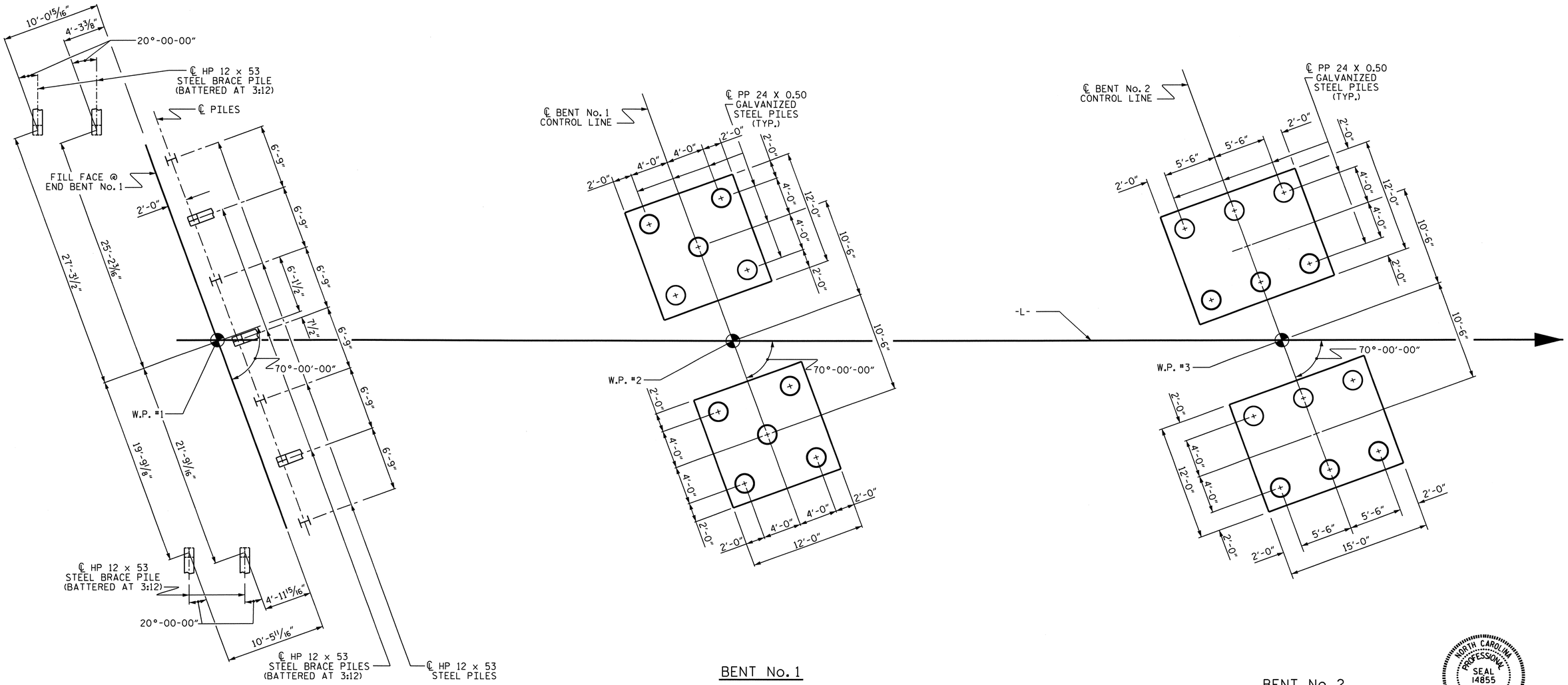

FOUNDATION LAYOUT

(DIMENSIONS LOCATING PILES ARE TO PILE CENTERLINE AT THE BOTTOM OF THE CAP & FOOTING)

FOUNDATION NOTES

DRIVE PILES AT BENT No. 2 TO A REQUIRED DRIVING RESISTANCE OF 315 TONS PER PILE. THIS REQUIRED DRIVING RESISTANCE INCLUDES ADDITIONAL RESISTANCE FOR DOWNDRAG OR SCOUR.

DRIVE PILES AT BENT No. 3 TO A REQUIRED DRIVING RESISTANCE OF 275 TONS PER PILE. THIS REQUIRED DRIVING RESISTANCE INCLUDES ADDITIONAL RESISTANCE FOR DOWNDRAG OR SCOUR.

INSTALL PILES AT BENT No. 1 TO A TIP ELEVATION NO HIGHER THAN -60 FT.

INSTALL PILES AT BENT No. 2 TO A TIP ELEVATION NO HIGHER THAN-65 FT.

INSTALL PILES AT BENT No. 3 THROUGH BENT No. 8 TO A TIP ELEVATION NO HIGHER THAN -24 FT.

INSTALL PILES AT BENT No. 9 TO A TIP ELEVATION NO HIGHER THAN -22 FT.

INSTALL PILES AT BENT No. 10 AND BENT No. 11 TO A TIP ELEVATION NO HIGHER THAN -27 FT.

PILES AT BENTS No. 4, No. 6, No. 8 AND No. 10 ARE DESIGNED FOR A FACTORED RESISTANCE OF 210 TONS PER PILE.

DRIVES PILES AT BENTS No. 4, No. 6, No. 8 AND No. 10 TO A REQUIRED DRIVING RESISTANCE OF 290 TONS PER PILE. THIS REQUIRED DRIVING RESISTANCE INCLUDES ADDITIONAL RESISTANCE FOR DOWNDRAG OR SCOUR.

PILES AT BENTS No. 5, No. 7, No. 9 AND No. 11 ARE DESIGNED FOR A FACTORED RESISTANCE OF 230 TONS PER PILE.

DRIVE PILES AT BENTS No. 5, No. 7, No. 9 AND No. 11 TO A REQUIRED DRIVING REISISANCE OF 315 TONS PER PILE. THIS REQUIRED DRIVING RESISTANCE INCLUDES ADDITIONAL RESISTANCE FOR DOWNDRAG OR SCOUR.

FOR SETTLEMENT GUAGES, SEE EMBANKMENT MONITORING DETAIL AND SPECIAL PROVISION IN THE ROADWAY PLANS.

IT HAS BEEN ESTIMATED THAT A HAMMER WITH AN EQUIVALENT RATED ENERGY IN THE RANGE OF 70 TO 130 FT-KIPS PER BLOW WILL BE REQUIRED TO DRIVE PILES AT BENT No. 1 THROUGH BENT No. 11. THIS ESTIMATED ENERGY RANGE DOES NOT RELEASE THE CONTRACTOR FROM PROVIDING DRIVING EQUIPMENT IN ACCORDANCE WITH SUBARTICLE 450-3(D)(2) OF THE STANDARD SPECIFICATIONS.

THE SCOUR CRITICAL ELEVATION FOR BENT NO. 1 THROUGH BENT No. 11 IS ELEVATION -21, -29, 7, 7, 7, 5, 5, 4, 3, 3 AND 3 FT. RESPECTIVELY. SCOUR CRITICAL ELEVATIONS ARE USED TO MONITOR POSSIBLE SCOUR PROBLEMS DURING THE LIFE OF THE STRUCTURE.

TESTING THE FIRST PRODUCTION PILES WITH THE PILE DRIVING ANALYZER DURING DRIVING, RESTRIKING OR REDRIVING IS REQUIRED AT BENT No. 1, BENT No. 2, BENT No. 4 AND BENT No. 9. FOR PDA TESTING, SEE SECTION 450 OF THE STANDARD SPECIFICATIONS.

PIPE PILE PLATES ARE NOT REQUIRED FOR STEEL PIPE PILES AT BENT No. 1 THROUGH BENT No. 11.

STEEL PIPE PILE CUTTING SHOES ARE REQUIRED FOR STEEL PIPE PILES AT BENT No. 1 THROUGH BENT No. 11. FOR STEEL PILE POINTS, SEE SECTION 450 OF THE STANDARD SPECIFICATIONS.

OBSERVE A 3 MONTH WAITING PERIOD AFTER CONSTRUCTING THE EMBANKMENT TO FINISHED GRADE BEFORE BEGINNING END BENT CONSTRUCTION AT END BENT No. 2.

STEEL H-PILE POINTS ARE REQUIRED FOR STEEL H-PILES AT END BENT No. 1 AND END BENT No. 2. FOR STEEL PILE POINTS, SEE SECTION 450 OF THE STANDARD SPECIFICATIONS.

SPUDDING WILL BE REQUIRED AT BENT No. 1 AND BENT No. 2 IF PILES CANNOT BE DRIVEN TO ELEVATION -60 FEET AT BENT No. 1 AND ELEVATION -65 FEET AT BENT No. 2 WITHOUT DAMAGE. DO NOT SPUD BELOW THESE ELEVATIONS. NO ADDITIONAL PAYMENT WILL BE MADE FOR SPUDDING.

FOR ADDITIONAL FOUNDATION NOTES, SEE SHEET 5 OF 7.

NORTH CAROLINA PROFESSIONAL SEAL 14855 ENGINEER DOUGLAS R. CALHOUN
6/26/12

PROJECT NO. B-4028
BLADEN COUNTY
STATION: 29+02.50 -L-

SHEET 4 OF 7

STATE OF NORTH CAROLINA
DEPARTMENT OF TRANSPORTATION
RALEIGH

GENERAL DRAWING
BRIDGE ON NC 11
OVER CAPE FEAR
RIVER BETWEEN NC 87
AND SR 1539

REVISIONS						SHEET NO.
NO.	BY:	DATE:	NO.	BY:	DATE:	S-4
1			3			TOTAL SHEETS
2			4			197

DRAWN BY : S.B. WILLIAMS DATE : 9-11
CHECKED BY : T. N. CARROLL DATE : 9-11

26-JUN-2012 14:14
R:\Structures\STRI\GeneralDrawings\B-4028_SD_GD.dgn
dely

STR. #1

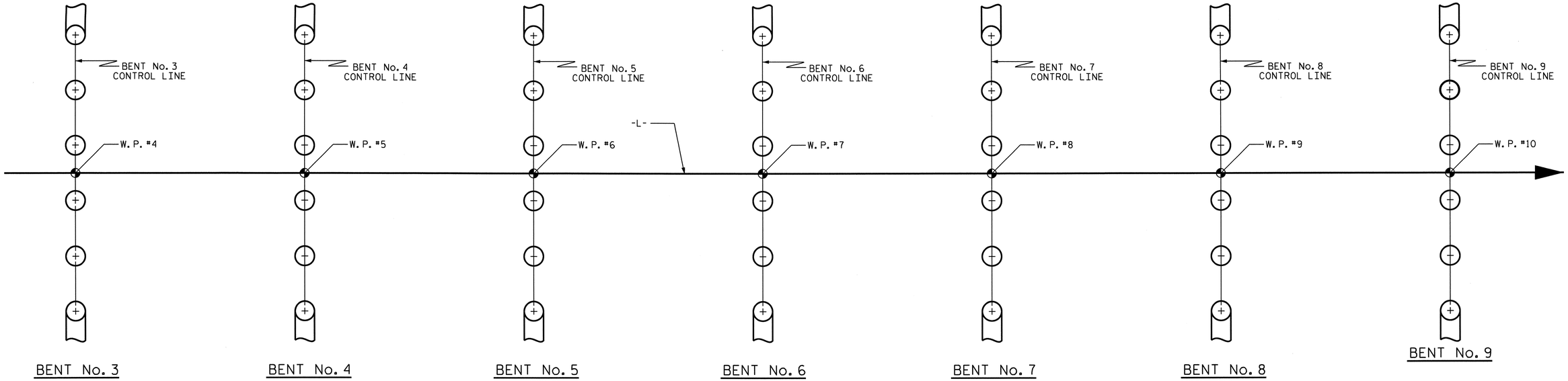

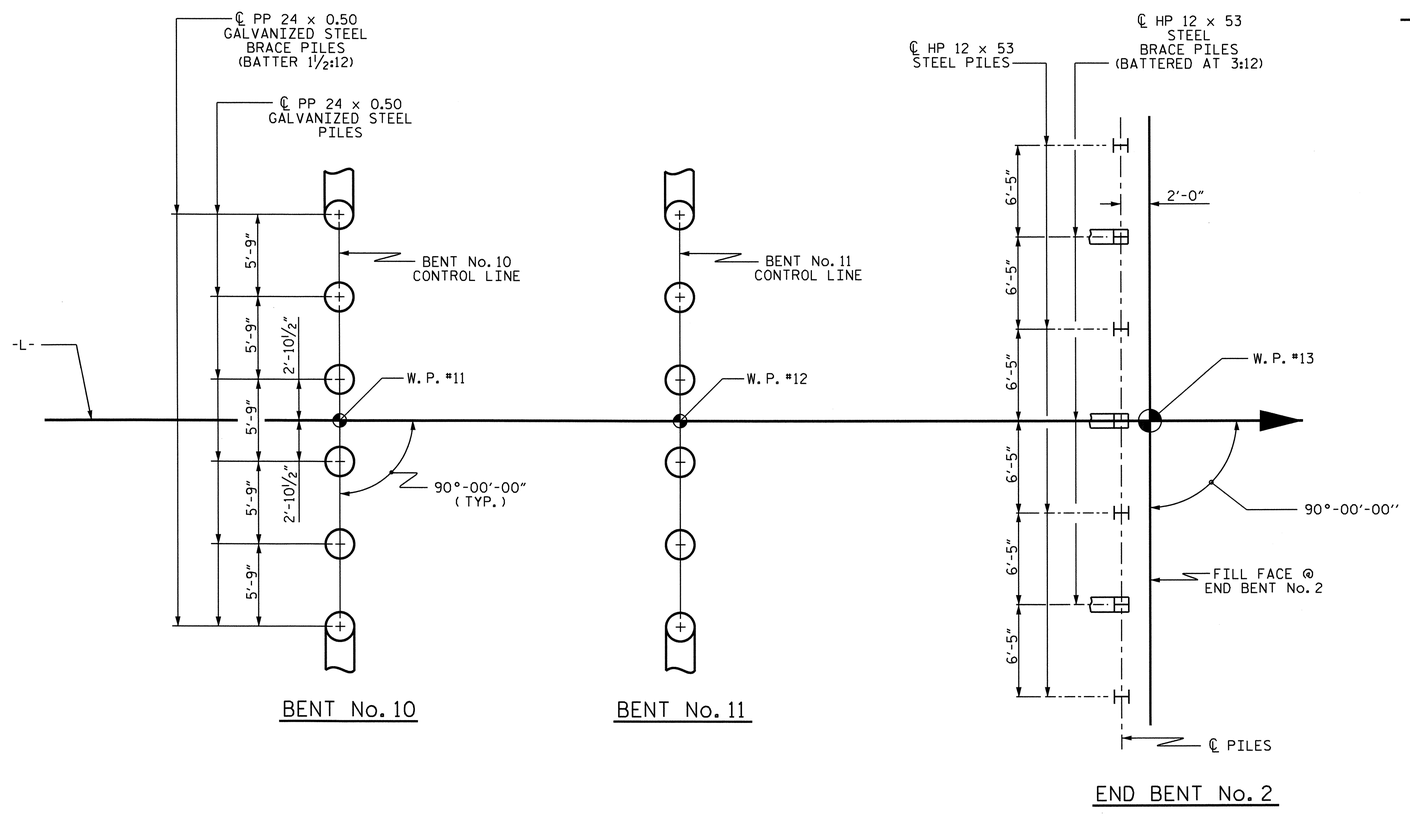

FOUNDATION NOTES

FOR PILES, SEE SECTION 450 OF THE STANDARD SPECIFICATIONS.

PILES AT END BENT No. 1 ARE DESIGNED FOR A FACTORED RESISTANCE OF 85 TONS PER PILE.

PILES AT END BENT No. 2 ARE DESIGNED FOR A FACTORED RESISTANCE OF 100 TONS PER PILE.

DRIVE PILES AT END BENT No. 1 TO A REQUIRED DRIVING RESISTANCE OF 145 TONS PER PILE.

DRIVE PILES AT END BENT No. 2 TO A REQUIRED DRIVING RESISTANCE OF 170 TONS PER PILE.

PILES AT BENT No. 1 ARE DESIGNED FOR A FACTORED RESISTANCE OF 230 TONS PER PILE.

PILES AT BENT No. 2 ARE DESIGNED FOR A FACTORED RESISTANCE OF 195 TONS PER PILE.

PILES AT BENT No. 3 ARE DESIGNED FOR A FACTORED RESISTANCE OF 205 TONS PER PILE.

DRIVE PILES AT BENT No. 1 TO A REQUIRED DRIVING RESISTANCE OF 350 TONS PER PILE. THIS REQUIRED DRIVING RESISTANCE INCLUDES ADDITIONAL RESISTANCE FOR DOWNDRAG OR SCOUR.

FOR ADDITIONAL FOUNDATION NOTES, SEE SHEET 4 OF 7.

FOUNDATION LAYOUT

(DIMENSIONS LOCATING PILES ARE TO PILE CENTERLINE AT THE BOTTOM OF THE END BENT CAP.)
(DIMENSIONS LOCATING END BENT WING BRACE PILES ARE SHOWN TO THE PILE CENTERLINE AT THE BOTTOM OF WING ELEVATION.)
(DIMENSIONS SHOWN FOR INTERIOR BENT No. 10 ARE TYPICAL FOR BENTS No. 3 THRU No. 11.)

PROJECT NO. B-4028
BLADEN COUNTY
STATION: 29+02.50 -L-

SHEET 5 OF 7

STATE OF NORTH CAROLINA
DEPARTMENT OF TRANSPORTATION
RALEIGH

GENERAL DRAWING
BRIDGE ON NC 11
OVER CAPE FEAR
RIVER BETWEEN NC 87
AND SR 1539

NORTH CAROLINA PROFESSIONAL SEAL 14855 ENGINEER DOUGLAS R. CALHOUN
6/26/12

REVISIONS							SHEET NO.
NO.	BY:	DATE:	NO.	BY:	DATE:		S-5
1			3				TOTAL SHEETS
2			4				147

DRAWN BY : DGE/S.B. WILLIAMS DATE : 4-12/9-11
CHECKED BY : T. N. CARROLL DATE : 9-11

26-JUN-2012 14:14
R:\Structures\STRI\GeneralDrawings\B-4028_SD_GD.dgn
dely

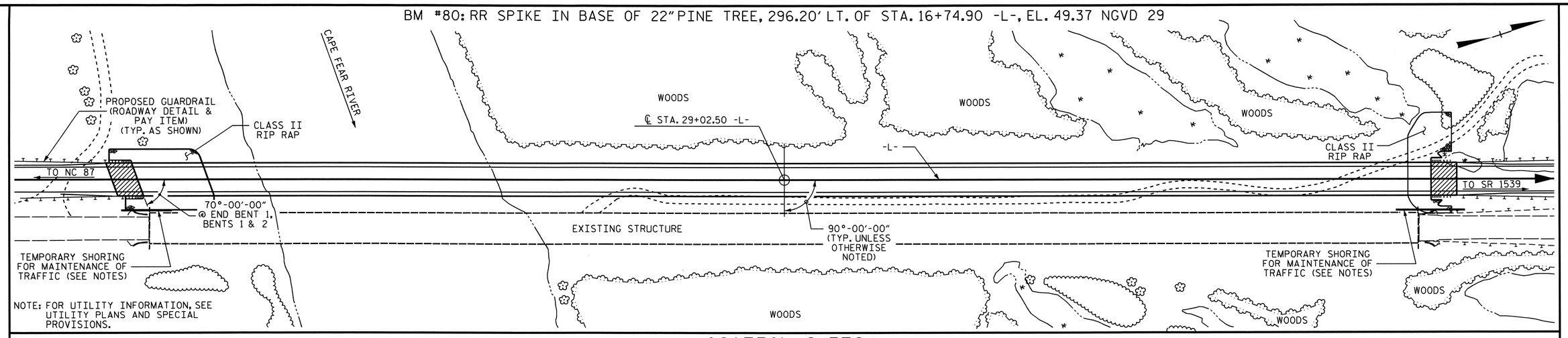

LOCATION SKETCH

NOTES:

ASSUMED LIVE LOAD = HL 93 OR ALTERNATE LOADING.

FOR OTHER DESIGN DATA AND GENERAL NOTES, SEE SHEET SN.

FOR EROSION CONTROL MEASURES SEE EROSION CONTROL PLANS.

THIS BRIDGE HAS BEEN DESIGNED IN ACCORDANCE WITH THE AASHTO LRFD BRIDGE DESIGN SPECIFICATIONS.

THIS BRIDGE IS LOCATED IN SEISMIC ZONE 1.

THIS STRUCTURE HAS BEEN DESIGNED IN ACCORDANCE WITH HEC 18, "EVALUATING SCOUR AT BRIDGES", MAY, 2001.

ALL STRUCTURAL STEEL SHALL BE AASHTO M270 GRADE 50W AND PAINTED IN ACCORDANCE WITH SYSTEM 4 OF ARTICLE 442-8 OF THE STANDARD SPECIFICATIONS UNLESS OTHERWISE NOTED ON THE PLANS.

REMOVABLE FORMS MAY BE USED IN LIEU OF METAL STAY-IN-PLACE FORMS IN ACCORDANCE WITH ARTICLE 420-3 OF THE STANDARD SPECIFICATIONS.

AFTER SERVING AS A TEMPORARY STRUCTURE, THE EXISTING STRUCTURE CONSISTING OF 24 SPANS (34'-6", 35'-0", 34'-10", 251'-4", 43'-6", 44'-1", 44'-5", 3 @ 44'-0", 2 @ 43'-10", 44'-2", 43'-10", 44'-3", 44'-2", 43'-11", 2 @ 44'-0", 44'-4", 3 @ 44'-0", 43'-6"; REINFORCED CONCRETE DECK GIRDER & THRU TRUSS WITH 6.5" RC/NO AWS; CLEAR ROADWAY WIDTH OF 26'-0" WITH 1'-7" SIDEWALKS, LEFT & RIGHT; SUBSTRUCTURE: END BENTS & BENTS 1, 2 & 5 THRU 23 OF REINFORCED CAPS ON REINFORCED CONCRETE PILES, BENTS 3 & 4 REINFORCED CONCRETE POST & BEAM, STEEL CRUTCH AND LOCATED APPROXIMATELY 46 FEET DOWNSTREAM FROM PROPOSED STRUCTURE) SHALL BE REMOVED. THE EXISTING BRIDGE IS PRESENTLY NOT POSTED FOR LOAD LIMIT. SHOULD THE STRUCTURAL INTEGRITY OF THE BRIDGE DETERIORATE A LOAD LIMIT MAY BE POSTED AND MAY BE REDUCED AS FOUND NECESSARY DURING THE LIFE OF THE PROJECT.

REMOVAL OF THE EXISTING BRIDGE SHALL BE PERFORMED SO AS NOT TO ALLOW DEBRIS TO FALL INTO THE WATER. THE CONTRACTOR SHALL REMOVE THE BRIDGE AND SUBMIT PLANS FOR DEMOLITION IN ACCORDANCE WITH ARTICLE 402-2 OF THE STANDARD SPECIFICATIONS.

THE MATERIAL SHOWN IN THE CROSS-HATCHED AREA SHALL BE EXCAVATED FOR A DISTANCE OF 26 FT. @ END BENT No. 1 EACH SIDE OF CENTERLINE ROADWAY AS DIRECTED BY THE ENGINEER. THIS WORK WILL BE PAID FOR AT THE CONTRACT LUMP SUM PRICE FOR UNCLASSIFIED STRUCTURE EXCAVATION. SEE SECTION 412 OF THE STANDARD SPECIFICATIONS.

THE SUBSTRUCTURE OF THE EXISTING BRIDGE INDICATED ON THE PLANS IS FROM THE BEST INFORMATION AVAILABLE. SINCE THIS INFORMATION IS SHOWN FOR THE CONVENIENCE OF THE CONTRACTOR, THE CONTRACTOR SHALL HAVE NO CLAIM WHATSOEVER AGAINST THE DEPARTMENT OF TRANSPORTATION FOR ANY DELAYS OR ADDITIONAL COST INCURRED BASED ON DIFFERENCES BETWEEN THE EXISTING BRIDGE SUBSTRUCTURE SHOWN ON THE PLANS AND THE ACTUAL CONDITIONS AT THE PROJECT SITE.

FOR SECURING OF VESSELS, SEE SPECIAL PROVISIONS.

FOR LIMITS OF TEMPORARY SHORING FOR MAINTENANCE OF TRAFFIC, SEE TRAFFIC CONTROL PLANS. FOR PAY ITEM FOR TEMPORARY SHORING FOR MAINTENANCE OF TRAFFIC, SEE ROADWAY PLANS.

THE CONTRACTOR IS REQUIRED TO MAINTAIN A MINIMUM OF 60 FEET HORIZONTAL CLEARANCE IN THE CHANNEL AT ALL TIMES FOR NAVIGATIONAL PURPOSES.

THE ARMY CORPS OF ENGINEERS SHALL BE NOTIFIED PRIOR TO CONSTRUCTION OF TEMPORARY BENTS IN THE WATER.

THE CONTRACTOR SHALL PROVIDE INDEPENDENT ASSURANCE SAMPLES OF REINFORCING STEEL AS FOLLOWS: FOR PROJECTS REQUIRING UP TO 400 TONS OF REINFORCING STEEL, ONE 30 INCH SAMPLE OF EACH SIZE BAR USED, AND FOR PROJECTS REQUIRING OVER 400 TONS OF REINFORCING STEEL, TWO 30 INCH SAMPLES OF EACH SIZE BAR USED. THE BARS FROM WHICH THE SAMPLES ARE TAKEN MUST THEN BE SPLICED WITH REPLACEMENT BARS OF THE SIZE AND LENGTH OF THE SAMPLE, PLUS A MINIMUM LAP SPLICE OF THIRTY BAR DIAMETERS. PAYMENT FOR THE SAMPLES OF REINFORCING STEEL SHALL BE CONSIDERED INCIDENTAL TO VARIOUS PAY ITEMS.

INASMUCH AS THE PAINT SYSTEM ON THE EXISTING STRUCTURAL STEEL CONTAINS LEAD, THE CONTRACTOR'S ATTENTION IS DIRECTED TO ARTICLE 107-1 OF THE STANDARD SPECIFICATIONS. ANY COSTS RESULTING FROM COMPLIANCE WITH APPLICABLE STATE OR FEDERAL REGULATIONS PERTAINING TO HANDLING OF MATERIALS CONTAINING LEAD BASED PAINT SHALL BE INCLUDED IN THE BID PRICE FOR "REMOVAL OF EXISTING STRUCTURE AT STATION 29+02.50 -L-."

NEEDLE BEAMS WILL NOT BE ALLOWED UNLESS OTHERWISE CALLED FOR ON THE PLANS OR APPROVED BY THE ENGINEER.

FOR SUBMITTAL OF WORKING DRAWINGS, SEE SPECIAL PROVISIONS.

FOR FALSEWORK AND FORMWORK, SEE SPECIAL PROVISIONS.

FOR GROUT FOR STRUCTURES, SEE SPECIAL PROVISIONS.

FOR INTERIOR BENT No. 1 THRU BENT No. 11, ONLY PARTIAL GALVANIZING OF PILES IS REQUIRED. SEE INTERIOR BENT SHEET FOR REQUIRED GALVANIZED LENGTHS. PAYMENT FOR PARTIALLY GALVANIZED PILES WILL BE MADE UNDER THE CONTRACT UNIT PRICE FOR GALVANIZED STEEL PILES.

FOR CRANE SAFETY, SEE SPECIAL PROVISIONS.

FOR SOLAR ARRAY SUPPORT PLATFORM, SEE SPECIAL PROVISIONS.

FOR NAVIGATIONAL LIGHTING SYSTEM, SEE SPECIAL PROVISIONS.

FOR CONSTRUCTION, MAINTENANCE, AND REMOVAL OF TEMPORARY ACCESS, SEE SPECIAL PROVISIONS.

FOR MAINTENANCE OF WATER TRAFFIC, SEE SPECIAL PROVISIONS.

FOR WORKING IN, OVER OR ADJACENT TO NAVIGABLE WATERS, SEE SPECIAL PROVISIONS.

FOR TEMPORARY BENTS, SEE SPECIAL PROVISIONS.

NORTH CAROLINA PROFESSIONAL SEAL 14855 ENGINEER DOUGLAS R. CALHOUN
6/26/12

PROJECT NO. B-4028
BLADEN COUNTY
STATION: 29+02.50 -L-

SHEET 6 OF 7

STATE OF NORTH CAROLINA
DEPARTMENT OF TRANSPORTATION
RALEIGH

GENERAL DRAWING
BRIDGE ON NC 11
OVER CAPE FEAR
RIVER BETWEEN NC 87
AND SR 1539

REVISIONS						SHEET NO.
NO.	BY:	DATE:	NO.	BY:	DATE:	S-6
1			3			TOTAL SHEETS
2			4			147

DRAWN BY : S.B.W./T.J.B. DATE : 8-2011
CHECKED BY : T. N. CARROLL DATE : 9-2011

26-JUN-2012 14:13
R:\Structures\STRI\GeneralDrawings\B-4028_SD_GD.dgn
dely

STR. #1

TOTAL BILL OF MATERIAL

	CONSTRUCTION, MAINTENANCE & REMOVAL OF TEMP. ACCESS	REMOVAL OF EXISTING STRUCTURE	PDA TESTING	UNCLASSIFIED STUCTURE EXCAVATION	REINFORCED CONCRETE DECK SLAB	GROOVING BRIDGE FLOORS	CLASS A CONCRETE	BRIDGE APPROACH SLABS	REINFORCING STEEL	SPIRAL COLUMN REINFORCING STEEL	54" PRESTRESSED CONCRETE GIRDERS		STRUCTURAL STEEL	HP 12 x 53 STEEL PILES		PP 24 x 0.50 GALVANIZED STEEL PILES		STEEL PILE POINTS	PILE REDRIVES
	LUMP SUM	LUMP SUM	EACH	LUMP SUM	SQ.FT.	SQ.FT.	CU.YDS.	LUMP SUM	LBS.	LBS.	No.	LIN.FT.	APPROX. LBS.	No.	LIN.FT.	No.	LIN.FT.	EACH	EACH
SUPERSTRUCTURE					44,867	38,095		LUMP SUM			36	3395.17	764,100						
END BENT No. 1				LUMP SUM			39.5		6,089					11	715			11	4
BENT No. 1			1				114.8		16,610	2055						10	900	10	5
BENT No. 2			1				126.7		17,839	2009						12	1200	12	6
BENT No. 3							25.4		3,293							6	540	6	3
BENT No. 4			1				22.4		2,545							6	540	6	3
BENT No. 5							22.4		2,545							6	540	6	3
BENT No. 6							22.4		2,545							6	510	6	3
BENT No. 7							22.4		2,545							6	510	6	3
BENT No. 8							22.4		2,545							6	510	6	3
BENT No. 9			1				22.4		2,545							6	570	6	3
BENT No. 10							22.4		2,545							6	600	6	3
BENT No. 11							22.4		2,545							6	600	6	3
END BENT No. 2							29.7		4,618					7	630			7	3
TOTAL	LUMP SUM	LUMP SUM	* 7	LUMP SUM	44,867	38,095	515.3	LUMP SUM	68,809	4064	36	3395.17	764,100	18	1345	76	7020	94	45

	CONCRETE BARRIER RAIL	RIP RAP CLASS B	RIP RAP CLASS II (2'-0" THICK)	GEOTEXTILE FOR DRAINAGE	POT BEARINGS	ELASTOMERIC BEARINGS	EXPANSION JOINT SEALS	SOLAR ARRAY SUPPORT PLATFORM
	LIN.FT.	TONS	TONS	SQ. YDS.	LUMP SUM	LUMP SUM	LUMP SUM	LUMP SUM
SUPERSTRUCTURE	2591.59				LUMP SUM	LUMP SUM	LUMP SUM	LUMP SUM
END BENT No. 1		315	1200	1335				
BENT No. 1								
BENT No. 2								
BENT No. 3								
BENT No. 4								
BENT No. 5								
BENT No. 6								
BENT No. 7								
BENT No. 8								
BENT No. 9								
BENT No. 10								
BENT No. 11								
END BENT No. 2		115	465	520				
TOTAL	2591.59	430	1665	1855	LUMP SUM	LUMP SUM	LUMP SUM	LUMP SUM

* A QUANTITY OF 4 (FOUR) PDA TESTING IS REQUIRED IN THE PROJECT CONTRACT AND A QUANTITY OF 3 (THREE) PDA TESTING IS ADDED AS A CONTINGENCY ITEM TO BE USED AT THE DISCRETION OF THE ENGINEER.

PROJECT NO. B-4028
BLADEN COUNTY
STATION: 29+02.50 -L-

SHEET 7 OF 7

NORTH CAROLINA PROFESSIONAL SEAL 14855 ENGINEER DOUGLAS R. CALHOUN
6/26/12

STATE OF NORTH CAROLINA
DEPARTMENT OF TRANSPORTATION
RALEIGH

GENERAL DRAWING
BRIDGE ON NC 11
OVER CAPE FEAR
RIVER BETWEEN NC 87
AND SR 1539

REVISIONS						SHEET NO.
NO.	BY:	DATE:	NO.	BY:	DATE:	S-7
1			3			TOTAL SHEETS
2			4			147

DRAWN BY : DGE/SBW/TJB DATE : 5-12/8-11
CHECKED BY : T. N. CARROLL DATE : 9-2011

26-JUN-2012 14:13
R:\Structures\STRI\GeneralDrawings\B-4028_SD_GD.dgn
dely

STR. #1

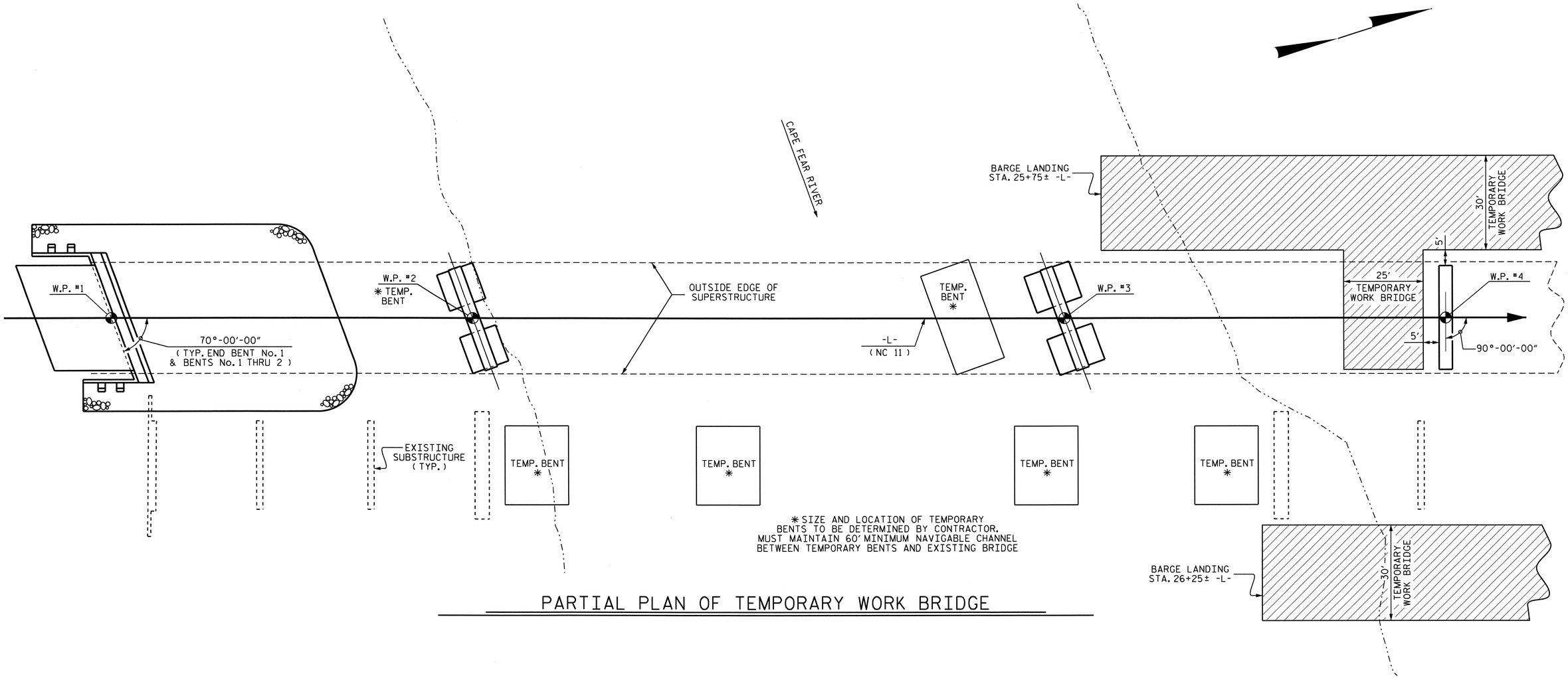

PARTIAL PLAN OF TEMPORARY WORK BRIDGE

PROJECT NO. B-4028

BLADEN COUNTY

STATION: 29+02.50 -L-

SHEET 1 OF 3

STATE OF NORTH CAROLINA
DEPARTMENT OF TRANSPORTATION
RALEIGH

TEMPORARY ACCESS DETAILS

NORTH CAROLINA PROFESSIONAL SEAL 14855 ENGINEER DOUGLAS G. ELY
8/22/12

REVISIONS						SHEET NO.
NO.	BY:	DATE:	NO.	BY:	DATE:	S-8
1			3			TOTAL SHEETS
2			4			147

DRAWN BY : MIKE BRITT DATE : 8-30-11
CHECKED BY : D. G. ELY DATE : 4-24-12

26-JUN-2012 14:12
R:\Structures\STRI\GeneralDrawings\B4028_str1_TempAccess.dgn
dely

STR. #1

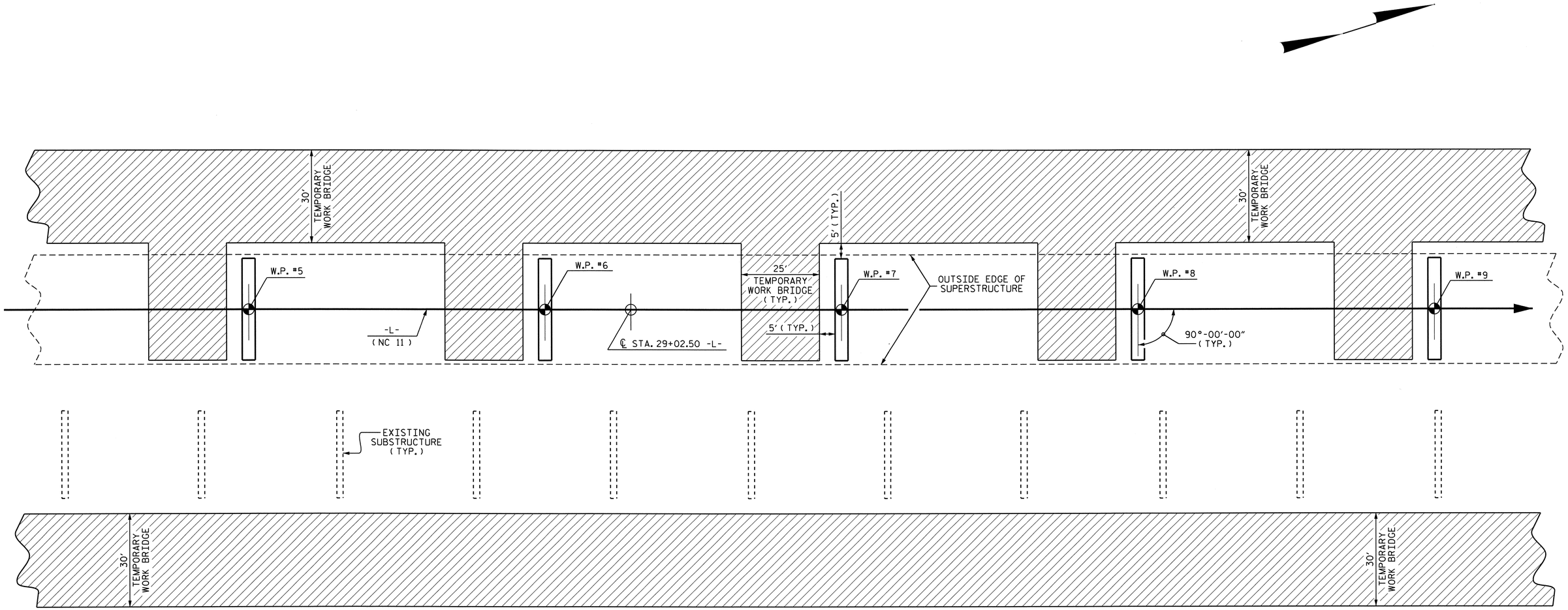

PARTIAL PLAN OF TEMPORARY WORK BRIDGE

PROJECT NO. B-4028

BLADEN COUNTY

STATION: 29+02.50 -L-

SHEET 2 OF 3

STATE OF NORTH CAROLINA
DEPARTMENT OF TRANSPORTATION
RALEIGH

TEMPORARY ACCESS DETAILS

NORTH CAROLINA PROFESSIONAL SEAL 14855 ENGINEER DOUGLAS G. ELY
6/26/12

REVISIONS						SHEET NO.
NO.	BY:	DATE:	NO.	BY:	DATE:	S-9
1			3			TOTAL SHEETS
2			4			147

DRAWN BY : MIKE BRITT DATE : 8-30-11
CHECKED BY : D. G. ELY DATE : 4-24-12

26-JUN-2012 14:12
R:\Structures\STR1\GeneralDrawings\B4028_str1_TempAccess.dgn
dely

STR. #1

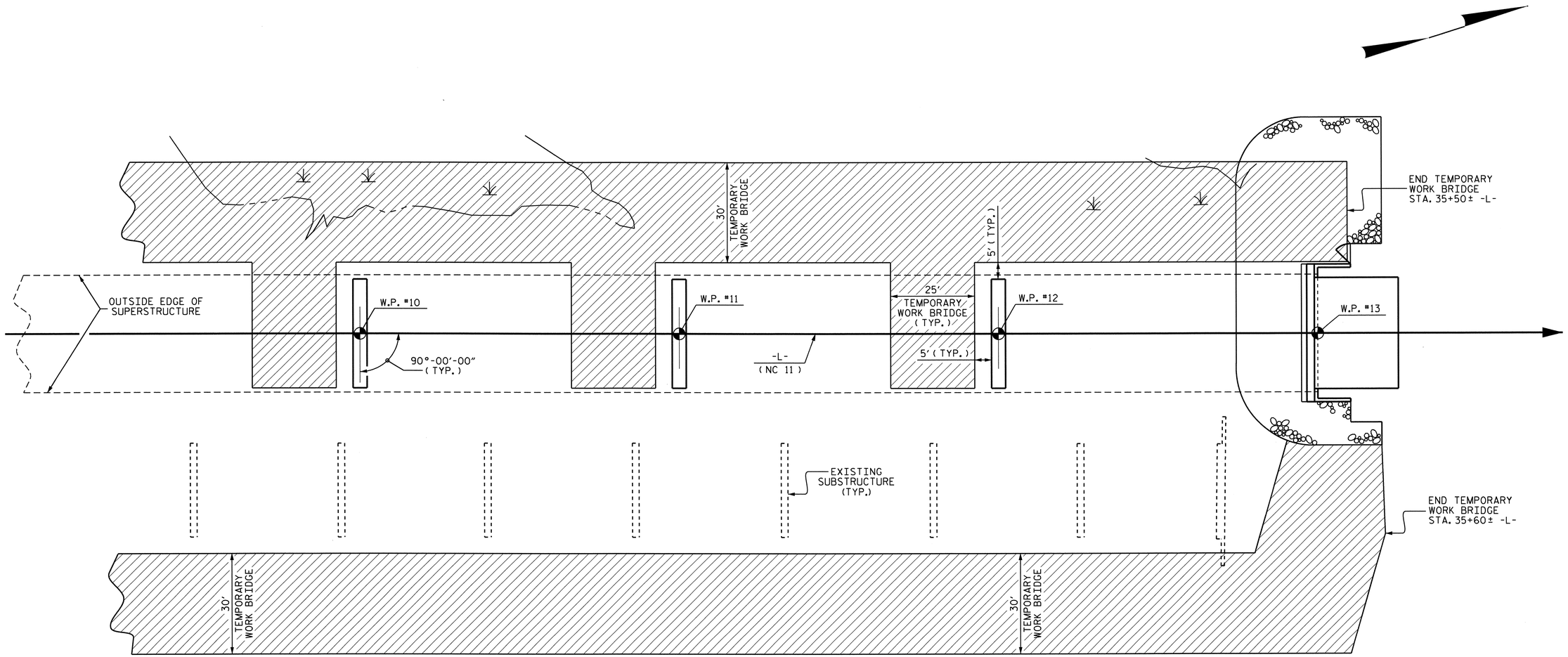

PARTIAL PLAN OF TEMPORARY WORK BRIDGE

PROJECT NO. B-4028

BLADEN COUNTY

STATION: 29+02.50 -L-

SHEET 3 OF 3

STATE OF NORTH CAROLINA
DEPARTMENT OF TRANSPORTATION
RALEIGH

TEMPORARY ACCESS DETAILS

NORTH CAROLINA PROFESSIONAL SEAL 14855 ENGINEER DOUGLAS G. ELY
6/26/12

REVISIONS						SHEET NO.
NO.	BY:	DATE:	NO.	BY:	DATE:	S-10
1			3			TOTAL SHEETS
2			4			147

DRAWN BY : MIKE BRITT DATE : 8-30-11
CHECKED BY : D.G.ELY DATE : 4-24-12

26-JUN-2012 14:12
R:\Structures\STR1\GeneralDrawings\B4028_str1_TempAccess.dgn
dely

STR. #1

LOAD AND RESISTANCE FACTOR RATING (LRFR) SUMMARY FOR STEEL GIRDERS

LEVEL		VEHICLE	WEIGHT (W) (TONS)	CONTROLLING LOAD RATING (#)	MINIMUM RATING FACTORS (RF)	TONS = W × RF	STRENGTH I LIMIT STATE											SERVICE II LIMIT STATE						COMMENT NUMBER
							LIVE-LOAD FACTORS (γ_{LL})	MOMENT					SHEAR					LIVE-LOAD FACTORS (γ_{LL})	MOMENT					
								DISTRIBUTION FACTORS (DF)	RATING FACTOR	SPAN	GIRDER LOCATION	DISTANCE FROM LEFT END OF SPAN (ft)	DISTRIBUTION FACTORS (DF)	RATING FACTOR	SPAN	GIRDER LOCATION	DISTANCE FROM LEFT END OF SPAN (ft)		DISTRIBUTION FACTORS (DF)	RATING FACTOR	SPAN	GIRDER LOCATION	DISTANCE FROM LEFT END OF SPAN (ft)	
DESIGN LOAD RATING		HL-93 (INVENTORY)	N/A	1	1.06	--	1.75	0.821	1.51	B	EL	186.25	0.907	1.06	C	I	24.18	1.30	0.821	1.62	B	EL	186.25	
		HL-93 (OPERATING)	N/A		1.37	--	1.35	0.821	1.95	B	EL	186.25	0.907	1.37	C	I	24.18	1.00	0.821	2.11	B	EL	186.25	
		HS-20 (INVENTORY)	36.00	2	1.61	57.96	1.75	0.821	3.50	B	ER	186.25	0.907	1.61	C	I	24.18	1.30	0.651	3.46	B	I	93.12	
		HS-20 (OPERATING)	36.00		2.09	75.24	1.35	0.821	4.54	B	ER	186.25	0.907	2.09	C	I	24.18	1.00	0.651	4.50	B	I	93.12	
LEGAL LOAD RATING	SINGLE VEHICLE (SV)	SNSH	13.500		5.07	68.45	1.40	0.821	10.80	B	EL	93.12	0.907	5.07	C	I	24.18	1.30	0.821	8.81	B	EL	93.12	
		SNGARBS2	20.000		3.52	70.40	1.40	0.821	7.71	B	EL	93.12	0.907	3.52	C	I	24.18	1.30	0.821	6.29	B	EL	93.12	
		SNAGRIS2	22.000		3.24	71.28	1.40	0.821	7.16	B	EL	93.12	0.907	3.24	C	I	24.18	1.30	0.821	5.84	B	EL	93.12	
		SNCOTTS3	27.250		2.53	68.94	1.40	0.821	5.37	B	EL	93.12	0.907	2.53	C	I	24.18	1.30	0.821	4.38	B	EL	93.12	
		SNAGGRS4	34.925		2.03	70.90	1.40	0.821	4.35	B	ER	186.25	0.907	2.03	C	I	24.18	1.30	0.821	3.56	B	EL	93.12	
		SNS5A	35.550		2.03	72.17	1.40	0.821	4.27	B	EL	93.12	0.907	2.03	C	I	24.18	1.30	0.821	3.48	B	ER	93.12	
		SNS6A	39.950		1.83	73.11	1.40	0.821	3.82	B	ER	186.25	0.907	1.83	C	I	24.18	1.30	0.821	3.15	B	EL	93.12	
		SNS7B	42.000		1.77	74.34	1.40	0.821	3.63	B	ER	186.25	0.907	1.77	C	I	24.18	1.30	0.821	3.00	B	EL	93.12	
	TRUCK TRACTOR SEMI-TRAILER (TTST)	TNAGRIT3	33.000		2.19	72.27	1.40	0.821	4.71	B	EL	93.12	0.907	2.19	C	I	24.18	1.30	0.821	3.84	B	EL	93.12	
		TNT4A	33.075		2.16	71.44	1.40	0.821	4.61	B	ER	186.25	0.907	2.16	C	I	24.18	1.30	0.821	3.83	B	EL	93.12	
		TNT6A	41.600		1.83	76.13	1.40	0.821	3.68	B	ER	186.25	0.907	1.83	C	I	24.18	1.30	0.821	3.10	B	EL	93.12	
		TNT7A	42.000		1.80	75.60	1.40	0.821	3.65	B	ER	186.25	0.907	1.80	C	I	24.18	1.30	0.821	3.09	B	EL	93.12	
		TNT7B	42.000		1.74	73.08	1.40	0.821	3.66	B	ER	186.25	0.907	1.74	C	I	24.18	1.30	0.821	3.13	B	EL	93.12	
		TNAGRIT4	43.000		1.70	73.10	1.40	0.821	3.56	B	ER	186.25	0.907	1.70	C	I	24.18	1.30	0.821	3.03	B	EL	93.12	
		TNAGT5A	45.000		1.66	74.70	1.40	0.821	3.40	B	ER	186.25	0.907	1.66	C	I	24.18	1.30	0.821	2.88	B	EL	93.12	
		TNAGT5B	45.000	3	1.61	72.45	1.40	0.821	3.39	B	ER	186.25	0.907	1.61	C	I	24.18	1.30	0.821	2.86	B	EL	93.12	

LOAD FACTORS:

DESIGN LOAD RATING FACTORS	LIMIT STATE	γ_{DC}	γ_{DW}
	STRENGTH I	1.25	1.50
	SERVICE II	1.00	1.00

NOTES:

MINIMUM RATING FACTORS ARE BASED ON THE STRENGTH I AND SERVICE II LIMIT STATES.

ALLOWABLE STRESS FOR SERVICE II LIMIT STATE ARE AS REQUIRED FOR DESIGN.

COMMENTS:

1.
2.
3.
4.

(#) CONTROLLING LOAD RATING

1. DESIGN LOAD RATING (HL-93) **
2. DESIGN LOAD RATING (HS-20) **
3. LEGAL LOAD RATING **

** SEE CHART FOR VEHICLE TYPE

GIRDER LOCATION

I - INTERIOR GIRDER
EL - EXTERIOR LEFT GIRDER
ER - EXTERIOR RIGHT GIRDER

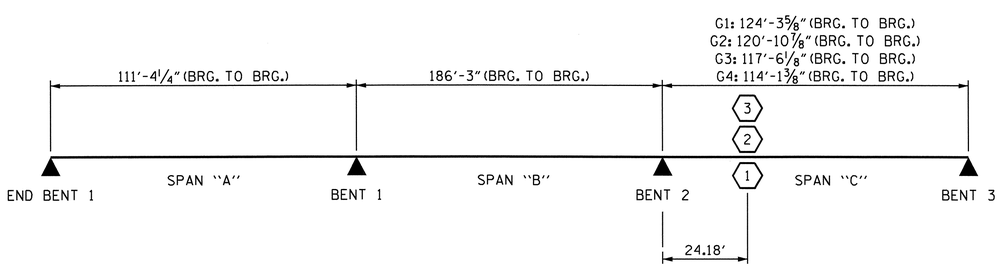

LRFR SUMMARY

PROJECT NO. B-4028
BLADEN COUNTY
STATION: 29+02.50 -L-

SHEET 1 OF 2

STATE OF NORTH CAROLINA
DEPARTMENT OF TRANSPORTATION
RALEIGH

STANDARD

LRFR SUMMARY FOR STEEL GIRDERS
(NON-INTERSTATE TRAFFIC)
SPANS "A-C"

NORTH CAROLINA PROFESSIONAL SEAL 14855 ENGINEER DOUGLAS R. CALHOUN
6/26/12

REVISIONS						
NO.	BY:	DATE:	NO.	BY:	DATE:	
1			3			
2			4			

SHEET NO. 5-11
TOTAL SHEETS 147

STD. NO. LRFR3

ASSEMBLED BY : W. S. ARAFAT	DATE : 5/12		
CHECKED BY : D. G. ELY	DATE : 5/12		
DRAWN BY : MAA 1/08	REV. 11/12/08RR	MAA/GM	
CHECKED BY : GM/DI 2/08	REV. 10/1/11	MAA/GM	

26-JUN-2012 14:11
R:\Structures\STR1\MiscDrawings\RATINGSA-C.dgn
dely

LOAD AND RESISTANCE FACTOR RATING (LRFR) SUMMARY FOR PRESTRESSED CONCRETE GIRDERS

LEVEL		VEHICLE	WEIGHT (W) (TONS)	CONTROLLING LOAD RATING (#)	MINIMUM RATING FACTORS (RF)	TONS = W × RF	STRENGTH I LIMIT STATE											SERVICE III LIMIT STATE						COMMENT NUMBER
							LIVE-LOAD FACTORS (γ_{LL})	MOMENT					SHEAR					LIVE-LOAD FACTORS (γ_{LL})	MOMENT					
								DISTRIBUTION FACTORS (DF)	RATING FACTOR	SPAN	GIRDER LOCATION	DISTANCE FROM LEFT END OF SPAN (ft)	DISTRIBUTION FACTORS (DF)	RATING FACTOR	SPAN	GIRDER LOCATION	DISTANCE FROM LEFT END OF SPAN (ft)		DISTRIBUTION FACTORS (DF)	RATING FACTOR	SPAN	GIRDER LOCATION	DISTANCE FROM LEFT END OF SPAN (ft)	
DESIGN LOAD RATING		HL-93 (INVENTORY)	N/A	1	1.008	---	1.75	0.821	1.61	D	EL	46.625	0.907	2.69	D	I	55.95	0.80	0.907	1.01	D	I	46.625	
		HL-93 (OPERATING)	N/A		2.09	---	1.35	0.821	2.09	D	EL	46.625	0.907	3.49	D	I	55.95	N/A	--	--	----	--	--	
		HS-20 (INVENTORY)	36.000	2	1.386	49.898	1.75	0.821	2.22	D	EL	46.625	0.907	3.31	D	I	55.95	0.80	0.768	1.39	D	I	46.625	
		HS-20 (OPERATING)	36.000		2.873	103.431	1.35	0.821	2.87	D	EL	46.625	0.907	4.29	D	I	55.95	N/A	--	--	----	--	--	
LEGAL LOAD RATING	SINGLE VEHICLE (SV)	SNSH	13.500		3.261	44.022	1.40	0.821	6.52	D	EL	46.625	0.907	9.36	D	I	46.625	0.80	0.768	3.26	D	I	46.625	
		SNGARBS2	20.000		2.373	47.451	1.40	0.821	4.74	D	EL	46.625	0.907	6.81	D	I	46.625	0.80	0.768	2.37	D	I	46.625	
		SNAGRIS2	22.000		2.224	48.918	1.40	0.821	4.44	D	EL	46.625	0.907	6.38	D	I	46.625	0.80	0.768	2.22	D	I	46.625	
		SNCOTTS3	27.250		1.621	44.173	1.40	0.821	3.24	D	EL	46.625	0.907	4.69	D	I	46.625	0.80	0.768	1.62	D	I	46.625	
		SNAGGRS4	34.925		1.333	46.538	1.40	0.821	2.66	D	EL	46.625	0.907	4	D	I	46.625	0.80	0.768	1.33	D	I	46.625	
		SNS5A	35.550		1.305	46.377	1.40	0.821	2.61	D	EL	46.625	0.907	4.11	D	I	46.625	0.80	0.768	1.30	D	I	46.625	
		SNS6A	39.950		1.188	47.455	1.40	0.821	2.37	D	EL	46.625	0.907	3.78	D	I	55.95	0.80	0.768	1.19	D	I	46.625	
		SNS7B	42.000		1.131	47.497	1.40	0.821	2.26	D	EL	46.625	0.907	3.74	D	I	55.95	0.80	0.768	1.13	D	I	46.625	
	TRUCK TRACTOR SEMI-TRAILER (TTST)	TNAGRIT3	33.000		1.446	47.714	1.40	0.821	2.89	D	EL	46.625	0.907	4.48	D	I	46.625	0.80	0.768	1.45	D	I	46.625	
		TNT4A	33.075		1.45	47.952	1.40	0.821	2.9	D	EL	46.625	0.907	4.32	D	I	46.625	0.80	0.768	1.45	D	I	46.625	
		TNT6A	41.600		1.177	48.96	1.40	0.821	2.35	D	EL	46.625	0.907	4.03	D	I	55.95	0.80	0.768	1.18	D	I	46.625	
		TNT7A	42.000		1.178	49.489	1.40	0.821	2.36	D	EL	46.625	0.907	3.94	D	I	55.95	0.80	0.768	1.18	D	I	46.625	
		TNT7B	42.000		1.208	50.738	1.40	0.821	2.41	D	EL	46.625	0.907	3.63	D	I	55.95	0.80	0.768	1.21	D	I	46.625	
		TNAGRIT4	43.000		1.157	49.765	1.40	0.821	2.31	D	EL	46.625	0.907	3.51	D	I	55.95	0.80	0.768	1.16	D	I	46.625	
		TNAGT5A	45.000		1.095	49.277	1.40	0.821	2.19	D	EL	46.625	0.907	3.51	D	I	55.95	0.80	0.768	1.10	D	I	46.625	
		TNAGT5B	45.000	3	1.085	48.836	1.40	0.821	2.17	D	EL	46.625	0.907	3.33	D	I	55.95	0.80	0.768	1.09	D	I	46.625	

LOAD FACTORS:

DESIGN LOAD RATING FACTORS	LIMIT STATE	γ_{DC}	γ_{DW}
	STRENGTH I	1.25	1.50
	SERVICE III	1.00	1.00

NOTES:

MINIMUM RATING FACTORS ARE BASED ON THE STRENGTH I AND SERVICE III LIMIT STATES.

ALLOWABLE STRESSES FOR SERVICE III LIMIT STATE ARE AS REQUIRED FOR DESIGN.

COMMENTS:

1.
2.
3.
4.

(#) CONTROLLING LOAD RATING

(1) DESIGN LOAD RATING (HL-93)
(2) DESIGN LOAD RATING (HS-20)
(3) LEGAL LOAD RATING **
** SEE CHART FOR VEHICLE TYPE

GIRDER LOCATION

I - INTERIOR GIRDER
EL - EXTERIOR LEFT GIRDER
ER - EXTERIOR RIGHT GIRDER

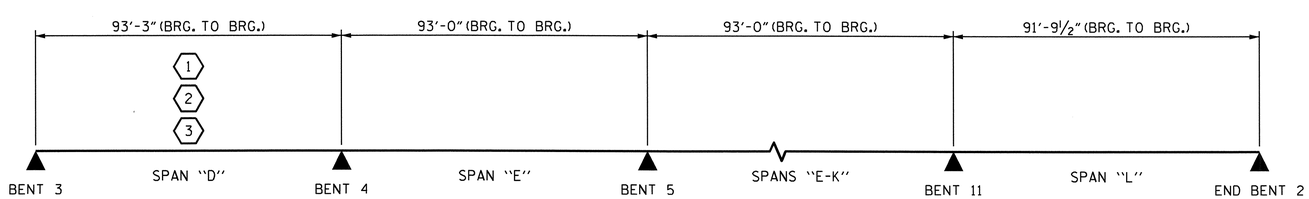

LRFR SUMMARY

PROJECT NO. B-4028
BLADEN COUNTY
STATION: 29+02.50 -L-

SHEET 2 OF 2

STATE OF NORTH CAROLINA
DEPARTMENT OF TRANSPORTATION
RALEIGH

STANDARD
LRFR SUMMARY FOR PRESTRESSED CONCRETE GIRDERS
(NON-INTERSTATE TRAFFIC)
SPANS "D-L"

NORTH CAROLINA PROFESSIONAL SEAL 14855 ENGINEER DOUGLAS R. CALHOUN
6/26/12

REVISIONS						SHEET NO.
NO.	BY:	DATE:	NO.	BY:	DATE:	S-12
1			3			TOTAL SHEETS
2			4			147

STD. NO. LRFR1

ASSEMBLED BY : W. S. ARAFAT DATE : 5/12
CHECKED BY : D. G. ELY DATE : 5/12
DRAWN BY : MAA 1/08
CHECKED BY : GM/DI 2/08
REV. 11/12/08RR MAA/GM
REV. 10/1/11 MAA/GM

26-JUN-2012 14:10
R:\Structures\STRI\MiscDrawings\RATINGSD-L.dgn
dely

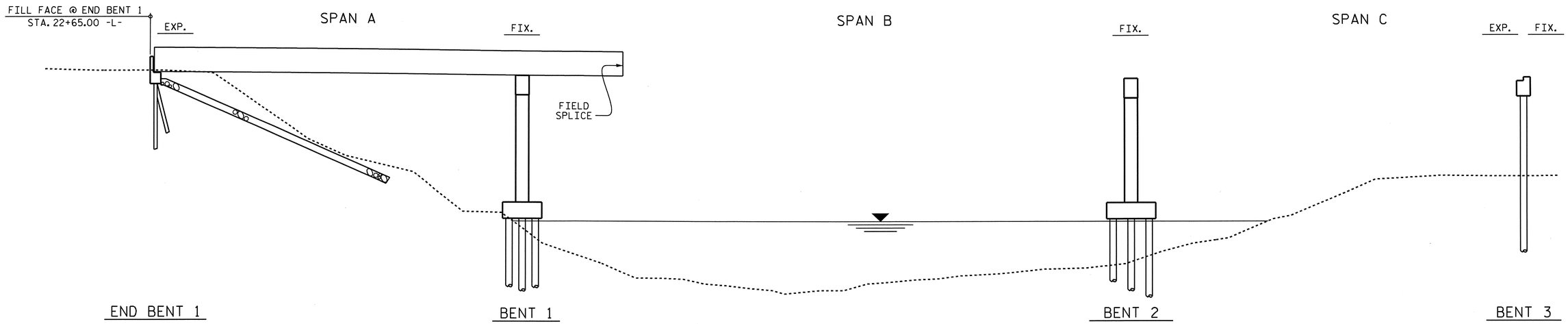

STAGE I GIRDER ERECTION

(SECTIONS AT BENTS & END BENT ARE AT RIGHT ANGLES)

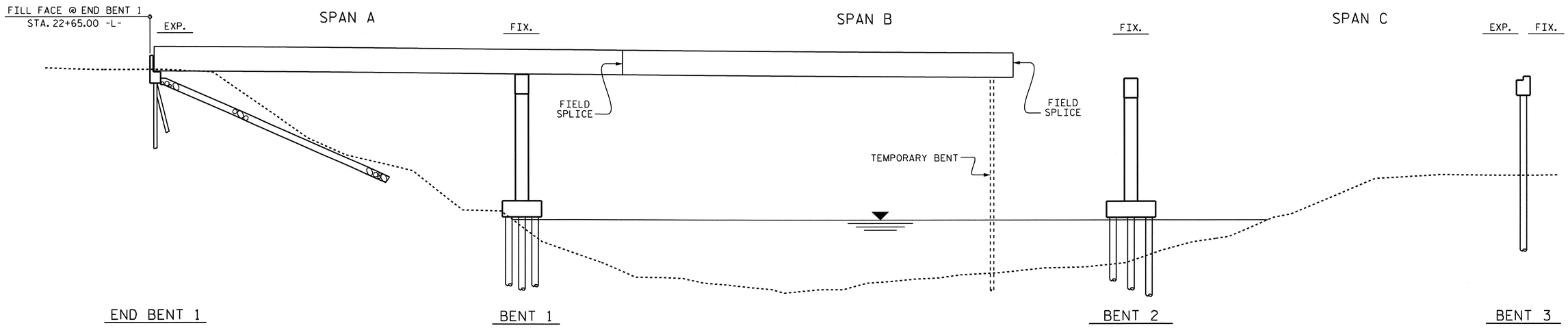

STAGE II GIRDER ERECTION

(SECTIONS AT BENTS & END BENT ARE AT RIGHT ANGLES)

ERECTION NOTES

ERECT A MINIMUM OF TWO GIRDERS WITH ALL DIAPHRAGMS/CROSSFRAMES BETWEEN THE GIRDERS IN PLACE AND THE BOLTS TIGHTENED PRIOR TO RELEASING THE GIRDERS.

ERECT EACH SUBSEQUENT GIRDER OR PAIR OF GIRDERS WITH DIAPHRAGMS/CROSSFRAMES CONNECTING TO THE ADJACENT PREVIOUSLY ERECTED GIRDER AND TIGHTEN ALL BOLTS BEFORE RELEASING THE GIRDER(S).

THE STRUCTURAL STEEL SHALL BE SUPPORTED DURING ERECTION IN ITS CAMBERED POSITION. A MINIMUM OF ONE TEMPORARY BENT SHALL BE USED IN SPAN "B".

TEMPORARY BENT(S) SHALL REMAIN IN PLACE UNTIL ALL DIAPHRAGMS/CROSSFRAMES ARE IN PLACE AND ALL HIGH STRENGTH BOLTS ARE TIGHTENED.

TEMPORARY BENT(S) SHALL PROVIDE BEARING AT CONNECTOR PLATE LOCATIONS. WHEN CONNECTOR PLATES ARE USED AS TEMPORARY BEARING STIFFENERS, DIAPHRAGMS MUST BE ATTACHED.

THE CONTRACTOR'S ERECTION PLANS SHALL INCLUDE A METHOD OF TEMPORARY BENT REMOVAL THAT WILL UNIFORMLY TRANSFER THE STRUCTURAL WEIGHT TO THE DIAPHRAGMS/CROSSFRAMES AND THE GIRDERS WILL REMAIN IN THE CAMBERED POSITIONS.

PLANS FOR TEMPORARY BENT ERECTION AND REMOVAL SHALL BE SUBMITTED TO THE ENGINEER FOR REVIEW.

THE CONTRACTOR IS RESPONSIBLE FOR DESIGNING THE TEMPORARY BENTS. THE DESIGNS SHALL BE COMPLETED BY A PROFESSIONAL ENGINEER REGISTERED IN THE STATE OF NORTH CAROLINA. THE CONTRACTOR SHALL SUBMIT SIGNED AND SEALED WORKING DRAWINGS AND CALCULATIONS FOR APPROVAL BY THE ENGINEER.

DURING THE GIRDER ERECTION PROCEDURE, THE CONTRACTOR IS RESPONSIBLE FOR PROVIDING TEMPORARY LATERAL BRACING AND OTHER MEANS OF SUPPORT, AS REQUIRED, TO ENSURE STABILITY OF THE GIRDERS, AVOID UPLIFT OF THE GIRDERS AT THE TEMPORARY BENTS AND TO ENSURE PLUMBNESS OF THE GIRDERS IN THE FINAL CONDITION.

NO SEPARATE MEASUREMENT OR PAYMENT WILL BE MADE FOR PROVIDING THE TEMPORARY BENT. THE COST FOR ALL MATERIALS, EQUIPMENT, TOOLS, LABOR AND ANY INCIDENTALS NECESSARY TO PROVIDE THE TEMPORARY BENT SHALL BE CONSIDERED INCIDENTAL TO THE LUMP SUM BID PRICE FOR STRUCTURAL STEEL.

THE CONTRACTOR MAY SUBMIT AN ALTERNATE ERECTION METHOD TO THE ENGINEER FOR REVIEW AND APPROVAL.

PROJECT NO. B-4028
BLADEN COUNTY
STATION: 29+02.50 -L-

NORTH CAROLINA PROFESSIONAL SEAL 14855 ENGINEER DOUGLAS R. CALHOUN
6/26/12

STATE OF NORTH CAROLINA
DEPARTMENT OF TRANSPORTATION
RALEIGH

GIRDER ERECTION DETAILS

REVISIONS						SHEET NO.
NO.	BY:	DATE:	NO.	BY:	DATE:	S-13
1			3			TOTAL SHEETS
2			4			147

DRAWN BY : A. SORSENGINH DATE : 5/2012
CHECKED BY : D.G. ELY DATE : 5/2012

26-JUN-2012 14:09
R:\Structures\STR1\MiscDrawings\B-4028_SD_ER.dgn
dely

STR. #1

NOTES :

PROVIDE 1¼"HIGH BEAM BOLSTERS UPPER AT 4'-0"CTS. ATOP THE METAL STAY-IN-PLACE FORMS TO SUPPORT THE BOTTOM MAT OF "A" BARS. WHEN USING REMOVABLE FORMS, PROVIDE CONTINUOUS HIGH CHAIRS FOR METAL DECK (C.H.C.M.) @ 4'-0"CTS. WITH A HEIGHT TO SUPPORT THE BOTTOM MAT OF "A" BARS A CLEAR DISTANCE OF 2½" ABOVE THE TOP OF THE REMOVABLE FORM.

METAL STAY-IN-PLACE FORMS SHALL NOT BE WELDED TO GIRDER FLANGES IN THE ZONES REQUIRING CHARPY V-NOTCH TEST. SEE STRUCTURAL STEEL DETAIL SHEETS.

PREVIOUSLY CAST CONCRETE IN A CONTINUOUS UNIT SHALL HAVE ATTAINED A MINIMUM COMPRESSIVE STRENGTH OF 3,000 PSI BEFORE ADDITIONAL CONCRETE IS CAST IN THE UNIT.

STRUCTURAL STEEL ERECTION IN A CONTINUOUS UNIT SHALL BE COMPLETE BEFORE FALSEWORK OR FORMS ARE PLACED ON THE UNIT.

#5 "G" BARS MAY BE SHIFTED SLIGHTLY, AS NECESSARY, TO CLEAR REINFORCING STEEL AND STIRRUPS.

THE CONTRACTOR MAY, WHEN NECESSARY, PROPOSE A SCHEME FOR AVOIDING INTERFERENCE BETWEEN METAL STAY-IN-PLACE FORM SUPPORTS OR FORMS AND GIRDER STIFFENERS OR CONNECTOR PLATES. THE PROPOSAL SHALL BE INDICATED, AS APPROPRIATE, ON EITHER THE STEEL WORKING DRAWINGS OR THE METAL STAY-IN-PLACE FORM WORKING DRAWINGS.

THE CONTRACTOR SHALL ADJUST THE GIRDER BUILDUPS AS NECESSARY TO INCORPORATE A MAXIMUM PERMISSIBLE VARIATION IN POT BEARING DEPTH OF ½". SEE SPECIAL PROVISION FOR POT BEARINGS.

LONGITUDINAL STEEL MAY BE SHIFTED SLIGHTLY, AS NECESSARY, TO AVOID INTERFERENCE WITH DECK DRAINS AND STIRRUPS IN PRESTRESSED CONCRETE GIRDERS.

6" Ø PVC PLASTIC PIPE DRAINS ARE REQUIRED IN SPANS "A" AND "C" & "D" THRU "L". SEE PLAN OF SPAN SHEETS FOR LOCATION. SEE "TYPICAL SECTIONS", SHEET 5 OF 5 FOR DETAILS.

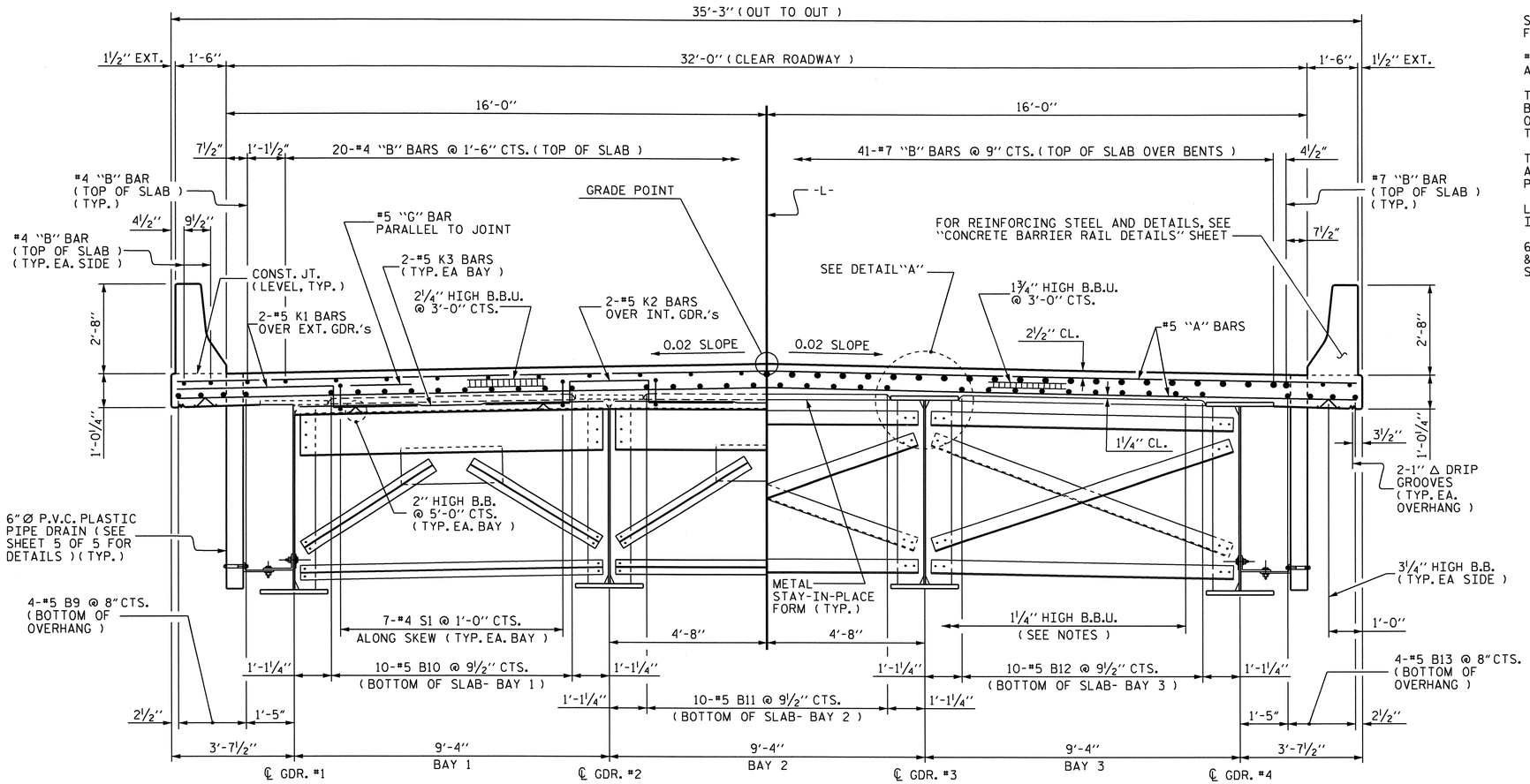

HALF-SECTION @
END BENT No. 1 & BENT No. 3 DIAPHRAGM

HALF-SECTION @
BENT No.'s 1 & 2
& INTERMEDIATE DIAPHRAGMS

TYPICAL SECTION

(SPANS "A" THRU "C")

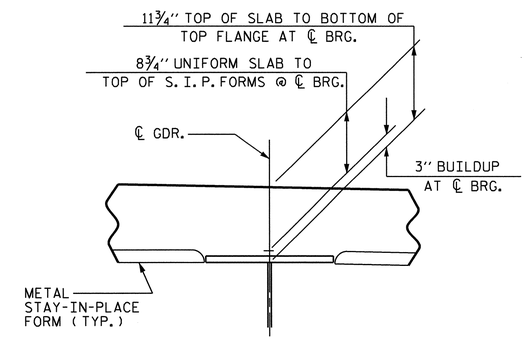

DETAIL "A"

(TYPICAL SPANS "A" THRU "C")

PROJECT NO. B-4028

BLADEN COUNTY

STATION: 29+02.50 -L-

SHEET 1 OF 5

STATE OF NORTH CAROLINA
DEPARTMENT OF TRANSPORTATION
RALEIGH

SUPERSTRUCTURE

TYPICAL SECTIONS

SPANS "A" THRU "C"

NORTH CAROLINA PROFESSIONAL SEAL 14855 ENGINEER DOUGLAS R. CALHOUN

REVISIONS						SHEET NO.
NO.	BY:	DATE:	NO.	BY:	DATE:	S-14
1			3			TOTAL SHEETS
2			4			147

DRAWN BY : MIKE BRITT DATE : 11-18-10
CHECKED BY : S.B. WILLIAMS DATE : 1-2011

26-JUN-2012 14:08
R:\Structures\STR1\SuperDrawings\b4028_str1_TSsteel.dgn
dely

STR.#1

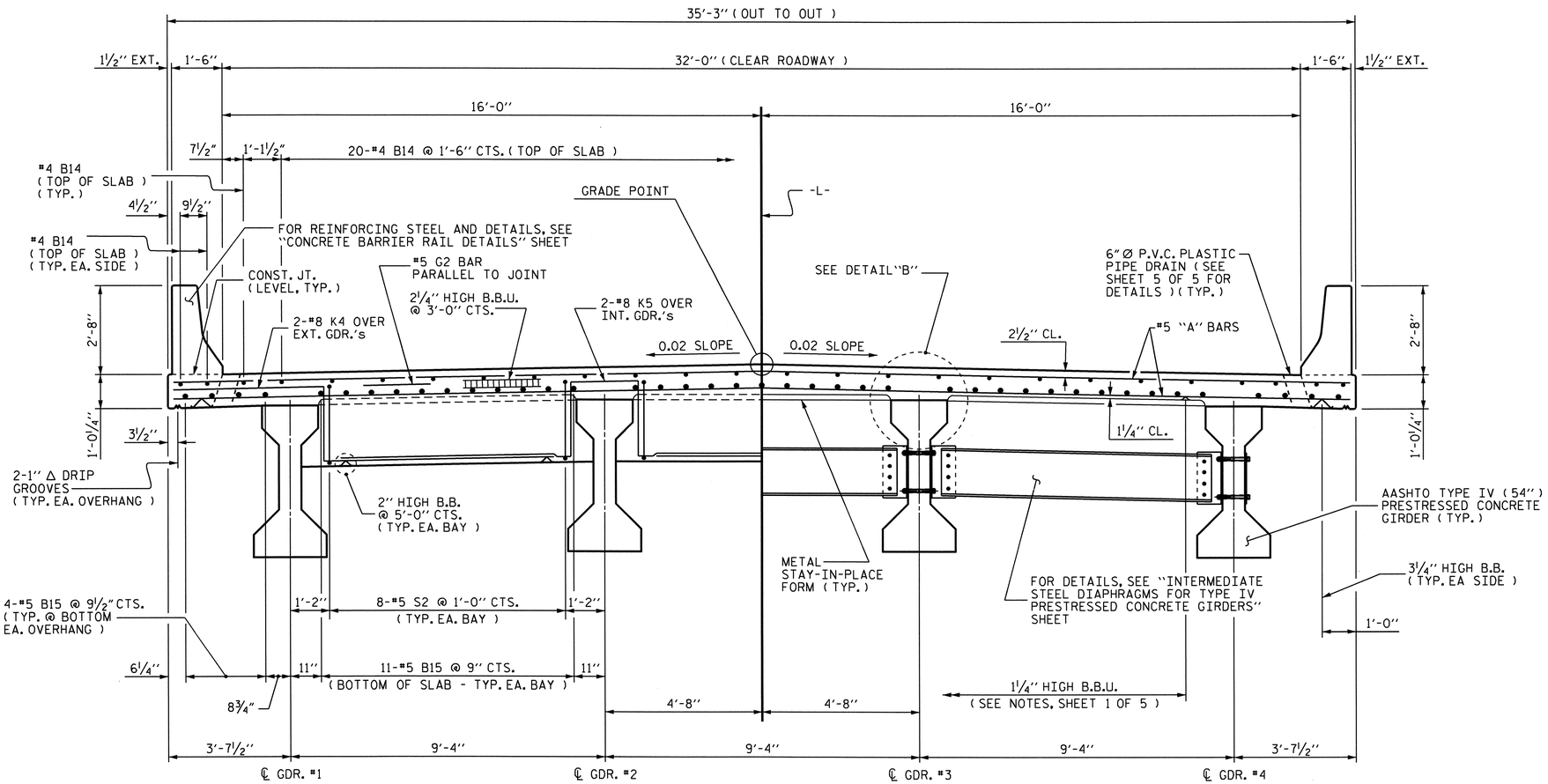

HALF-SECTION @ BENT DIAPHRAGM

HALF-SECTION @ INTERMEDIATE DIAPHRAGM
(TYPICAL SPANS "D" THRU "L")

TYPICAL SECTION
(SPAN "D")

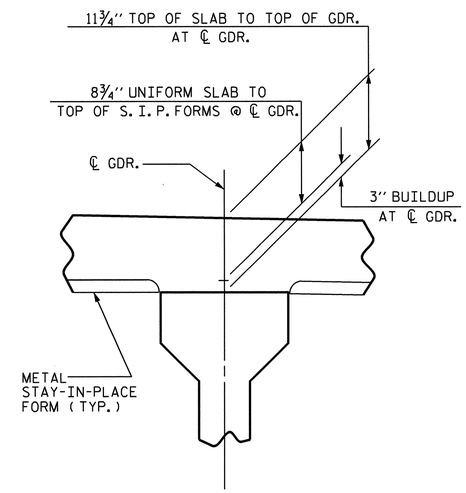

DETAIL "B"
(TYPICAL SPANS "D" THRU "L")

PROJECT NO. B-4028
BLADEN COUNTY
STATION: 29+02.50 -L-

SHEET 2 OF 5

STATE OF NORTH CAROLINA
DEPARTMENT OF TRANSPORTATION
RALEIGH

SUPERSTRUCTURE

TYPICAL SECTIONS

SPAN "D"

NORTH CAROLINA PROFESSIONAL SEAL 14855 ENGINEER DOUGLAS R. CALHOUN
6/26/12

REVISIONS						SHEET NO.
NO.	BY:	DATE:	NO.	BY:	DATE:	S-15
1			3			TOTAL SHEETS
2			4			147

DRAWN BY : MIKE BRITT DATE : 11-17-10
CHECKED BY : S.B. WILLIAMS DATE : 1-2011

26-JUN-2012 14:08
R:\Structures\STR1\SuperDrawings\b4028_str1_TSpcg.dgn
dely

STR.#1

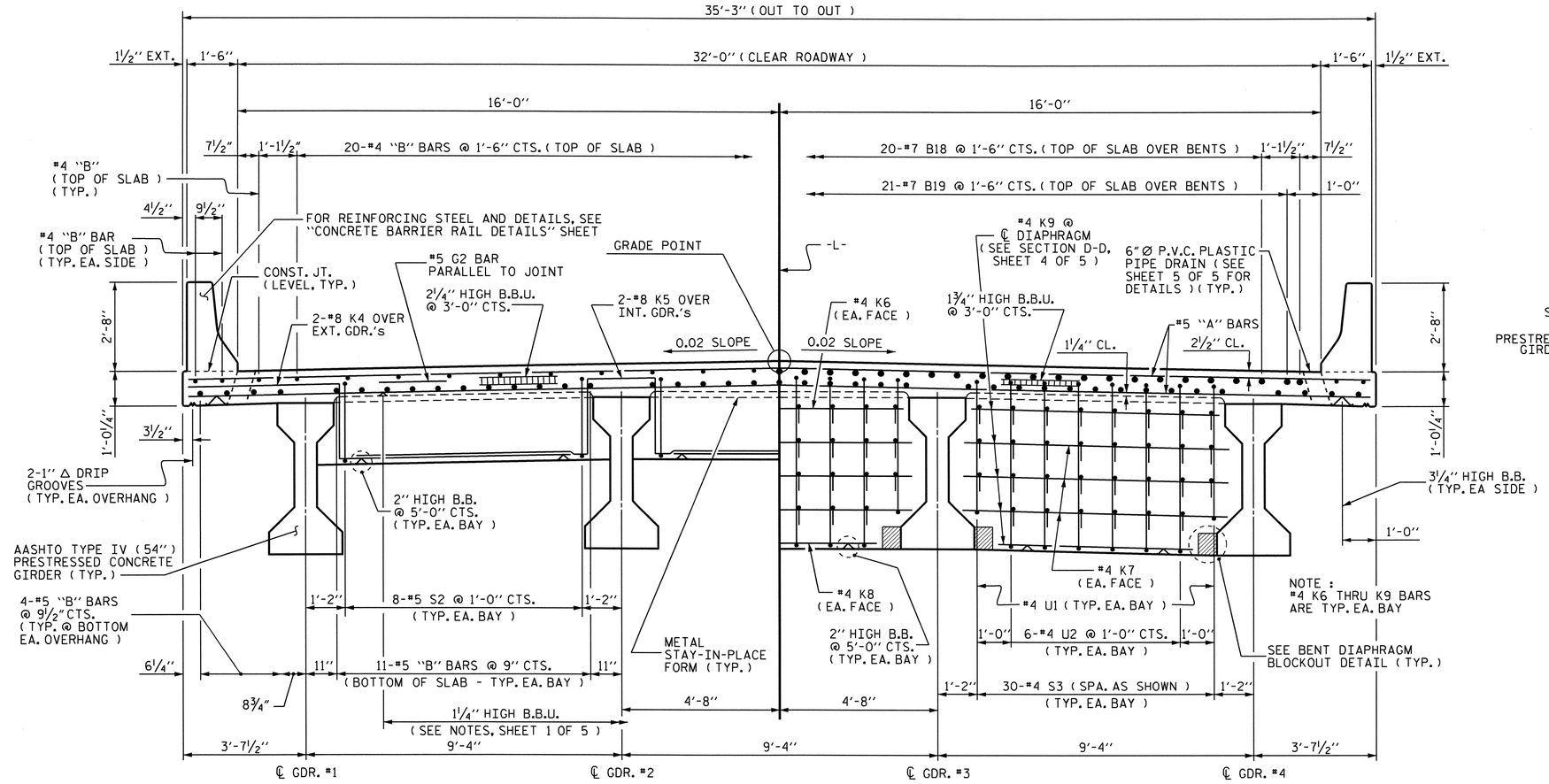

HALF-SECTION @ BENT DIAPHRAGM

HALF-SECTION @ CONTINUOUS BENT DIAPHRAGM

TYPICAL SECTION

(SPANS "E" THRU "L")

(FOR INTERMEDIATE DIAPHRAGMS, SEE "TYPICAL SECTION - SPAN D")

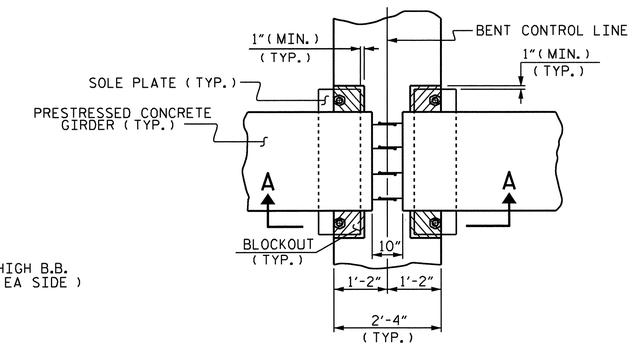

PLAN VIEW

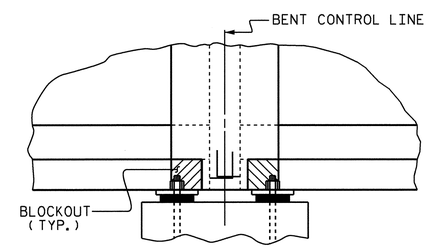

SECTION A-A

BENT DIAPHRAGM BLOCKOUT DETAIL

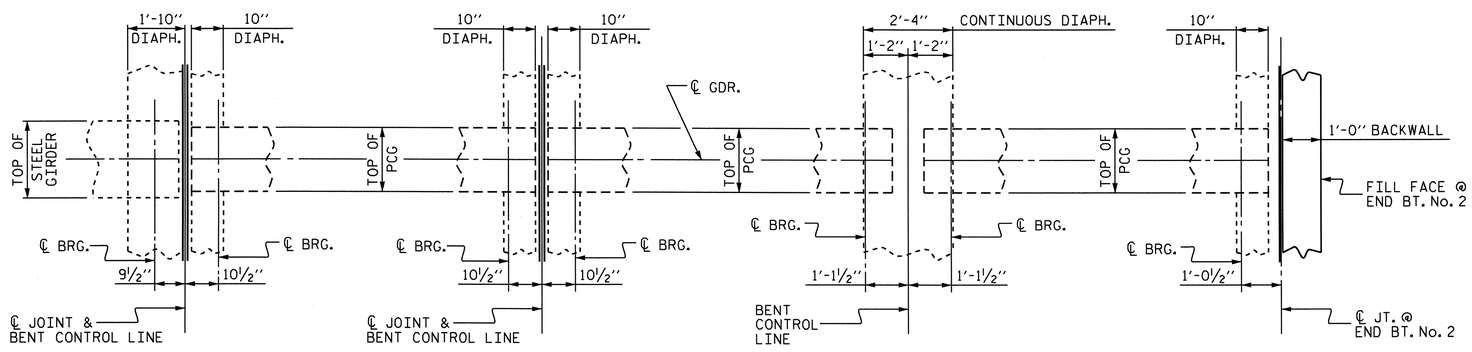

@ BENT No. 3

@ BENT No.'s 4, 6, 8 & 10

@ BENT No.'s 5, 7, 9 & 11

@ END BENT No. 2

PLAN OF DIAPHRAGMS

(BENT No. 3 THRU END BENT No. 2)

PROJECT NO. B-4028

BLADEN COUNTY

STATION: 29+02.50 -L-

SHEET 3 OF 5

STATE OF NORTH CAROLINA
DEPARTMENT OF TRANSPORTATION
RALEIGH

SUPERSTRUCTURE

TYPICAL SECTIONS

SPANS "E" THRU "L"

NORTH CAROLINA PROFESSIONAL SEAL 14855 ENGINEER DOUGLAS R. CALHOUN
6/26/12

REVISIONS						SHEET NO.
NO.	BY:	DATE:	NO.	BY:	DATE:	5-16
1			3			TOTAL SHEETS
2			4			147

DRAWN BY : MIKE BRITT DATE : 11-17-10
CHECKED BY : S.B. WILLIAMS DATE : 1-2011

26-JUN-2012 14:07
R:\Structures\STRI\SuperDrawings\b4028_stri_TSpcg.dgn
dely

STR.#1

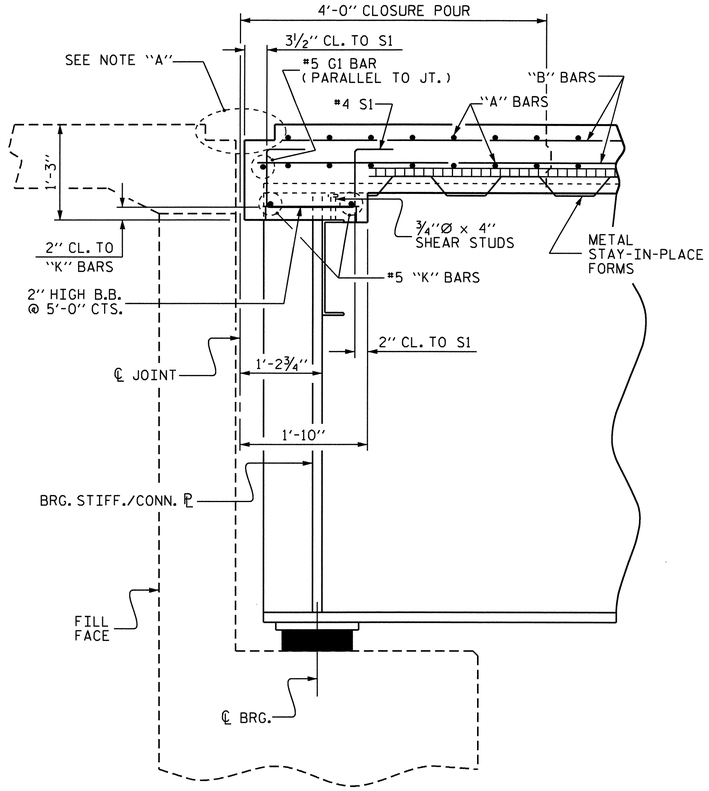

SECTION A-A

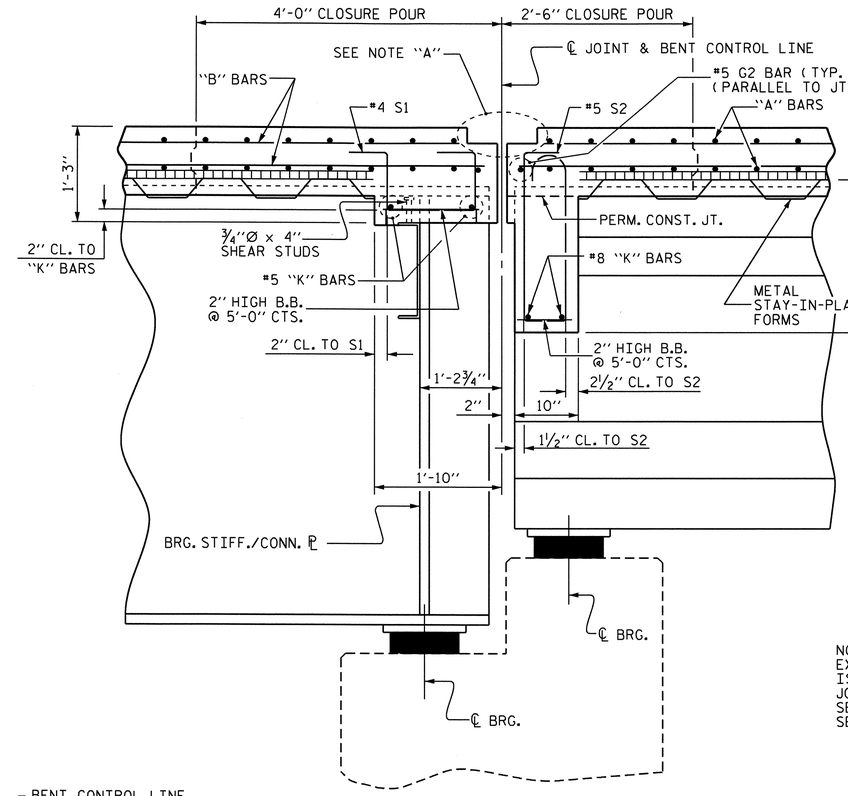

SECTION B-B

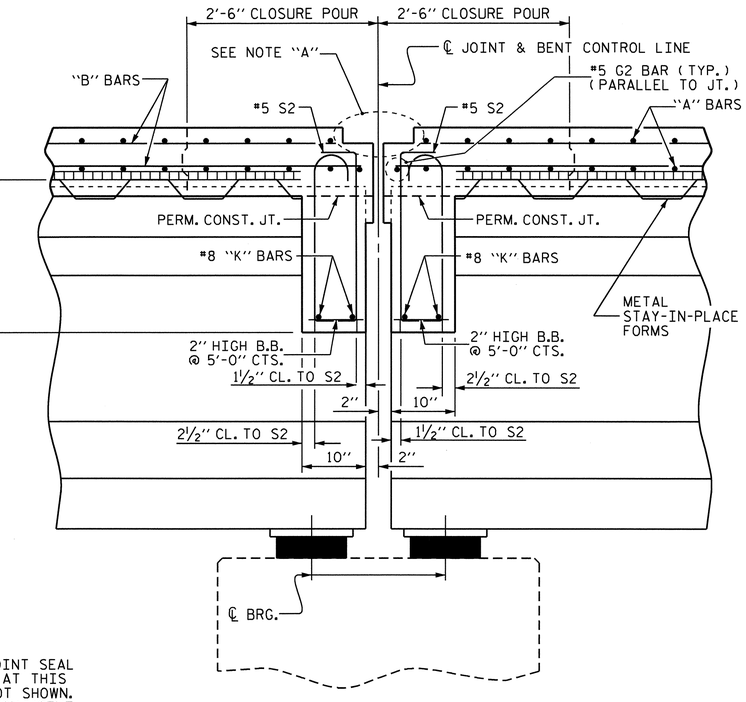

SECTION C-C

NOTE "A":
EXPANSION JOINT SEAL IS REQUIRED AT THIS JOINT BUT NOT SHOWN. SEE "EXPANSION JOINT SEAL DETAILS" SHEETS

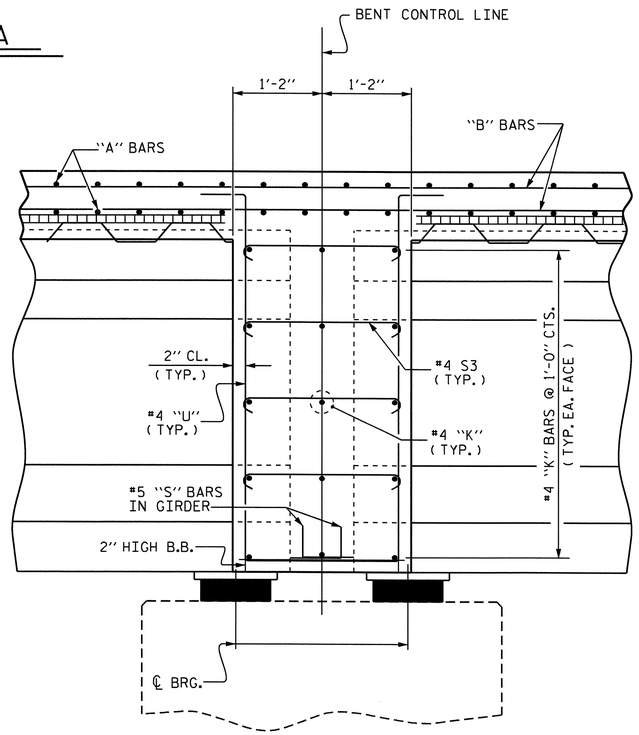

SECTION D-D

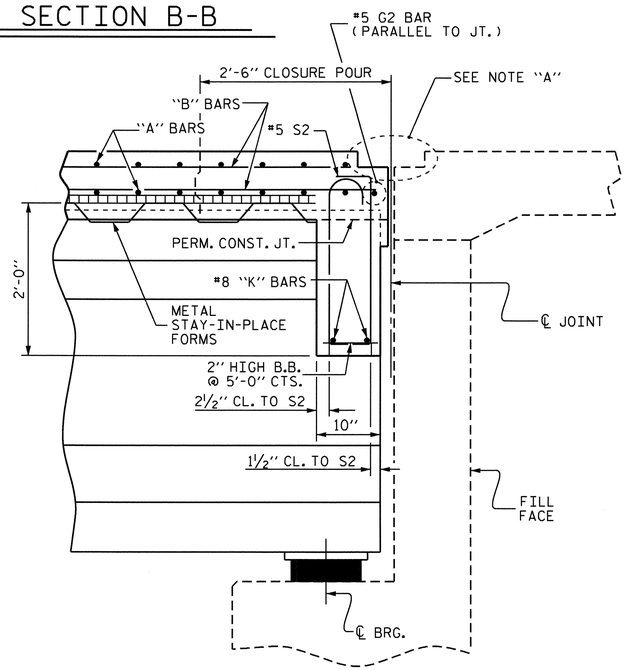

SECTION E-E

PROJECT NO. B-4028
BLADEN COUNTY
STATION: 29+02.50 -L-

SHEET 4 OF 5

STATE OF NORTH CAROLINA
DEPARTMENT OF TRANSPORTATION
RALEIGH

SUPERSTRUCTURE

TYPICAL SECTIONS

NORTH CAROLINA PROFESSIONAL SEAL 14855 ENGINEER DOUGLAS B. CALHOUN
06/26/12

REVISIONS						SHEET NO.
NO.	BY:	DATE:	NO.	BY:	DATE:	S-17
1			3			TOTAL SHEETS
2			4			147

DRAWN BY : MIKE BRITT DATE : 11-18-10
CHECKED BY : S.B. WILLIAMS DATE : 1-2011

26-JUN-2012 14:07
R:\Structures\STRI\SuperDrawings\b4028_str1_TSsteel.dgn
dely

STR.#1

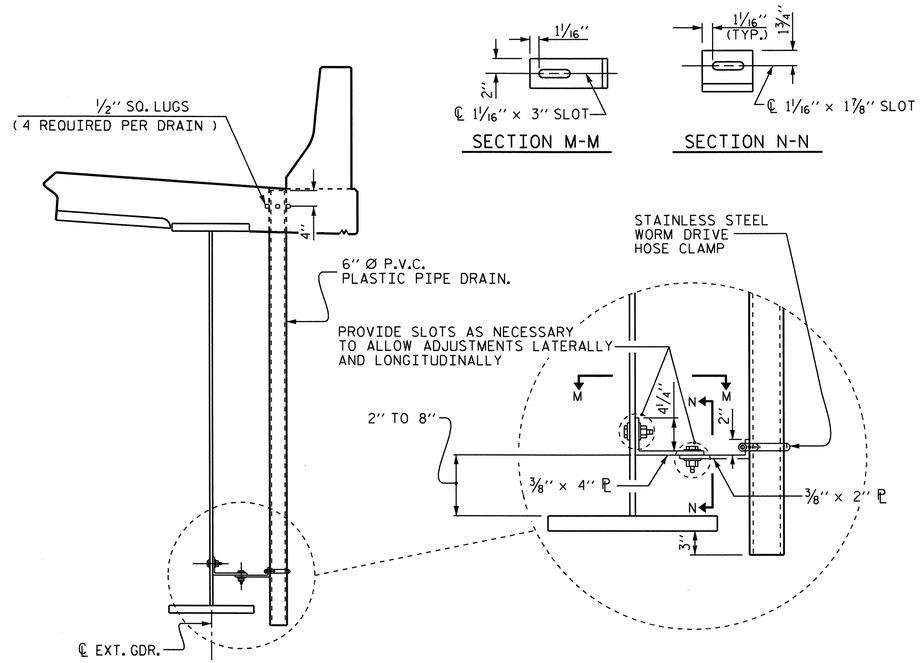

DRAIN CONNECTOR DETAIL (SPANS "A" & "C")

(21 PIPE DRAINS REQUIRED IN SPANS "A" & "C")

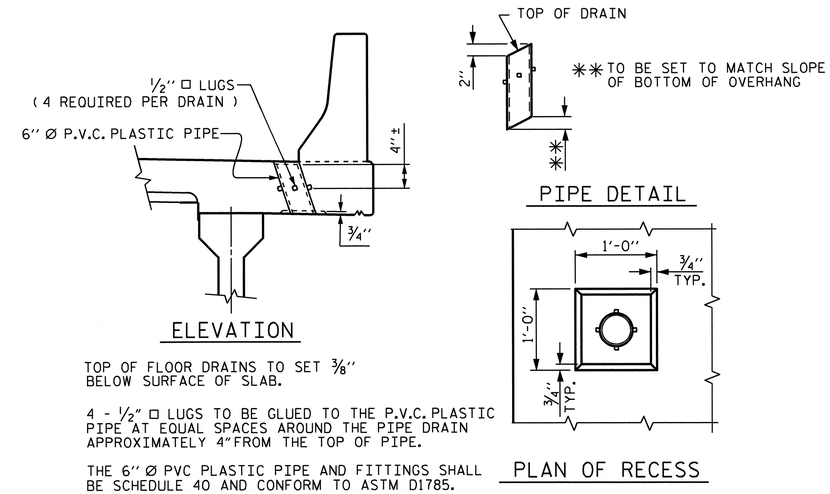

TOP OF FLOOR DRAINS TO SET 3/8" BELOW SURFACE OF SLAB.

4 - 1/2" □ LUGS TO BE GLUED TO THE P.V.C. PLASTIC PIPE AT EQUAL SPACES AROUND THE PIPE DRAIN APPROXIMATELY 4" FROM THE TOP OF PIPE.

THE 6" Ø PVC PLASTIC PIPE AND FITTINGS SHALL BE SCHEDULE 40 AND CONFORM TO ASTM D1785.

DRAIN DETAILS (SPANS "D" THRU "L")

(144 PIPE DRAINS REQUIRED IN SPANS "D" THRU "L")

DRAIN NOTES : (FOR SPANS "A" & "C")

COUPLING IN DRAIN PIPE WILL BE PERMITTED AS APPROVED BY THE ENGINEER.

4- 1/2" SQ. LUGS TO BE GLUED TO THE PVC PLASTIC PIPE AT EQUAL SPACES AROUND THE PIPE DRAIN AT APPROXIMATELY 4" FROM THE TOP OF THE PIPE.

BOLT SIZE TO BE THE SAME AS DIAPHRAGM AND CROSS FRAME CONNECTIONS. STAINLESS STEEL WORM DRIVE HOSE CLAMP SHALL BE COMMERCIAL QUALITY.

TOP OF FLOOR DRAINS TO BE SET 3/8" BELOW SURFACE OF SLAB.

PVC DECK DRAINS SHALL BE PAINTED WITH TWO COATS OF BROWN PRIMER MEETING THE REQUIREMENTS OF ARTICLE 1080-12 OF THE STANDARD SPECIFICATIONS. EACH COAT SHALL BE 2 DRY MILS THICK. DECK DRAINS SHALL BE ROUGHENED PRIOR TO PAINTING. NO SEPARATE PAYMENT SHALL BE MADE FOR PAINTING PVC DECK DRAINS AS THIS IS CONSIDERED INCIDENTAL TO PAY ITEM FOR REINFORCED CONCRETE DECK SLAB.

THE 6" Ø PVC PLASTIC PIPE AND FITTINGS SHALL BE SCHEDULE 40 AND CONFORM TO ASTM D1785.

PLATES FOR PIPE DRAIN BRACKETS SHALL CONFORM TO AASHTO M270 GRADE 36 STEEL OR APPROVED EQUAL.

PROJECT NO. B-4028
BLADEN COUNTY
STATION: 29+02.50 -L-

SHEET 5 OF 5

STATE OF NORTH CAROLINA
DEPARTMENT OF TRANSPORTATION
RALEIGH

SUPERSTRUCTURE

TYPICAL SECTIONS

NORTH CAROLINA PROFESSIONAL SEAL 14855 ENGINEER DOUGLAS R. CALHOUN
06-26-12

REVISIONS						SHEET NO.
NO.	BY:	DATE:	NO.	BY:	DATE:	S-13
1			3			TOTAL SHEETS
2			4			147

DRAWN BY : MIKE BRITT DATE : 11-18-10
CHECKED BY : S.B. WILLIAMS DATE : 1-2011

26-JUN-2012 14:06
R:\Structures\STRI\SuperDrawings\b4028_stri_TSsteel.dgn
dely

STR.#1

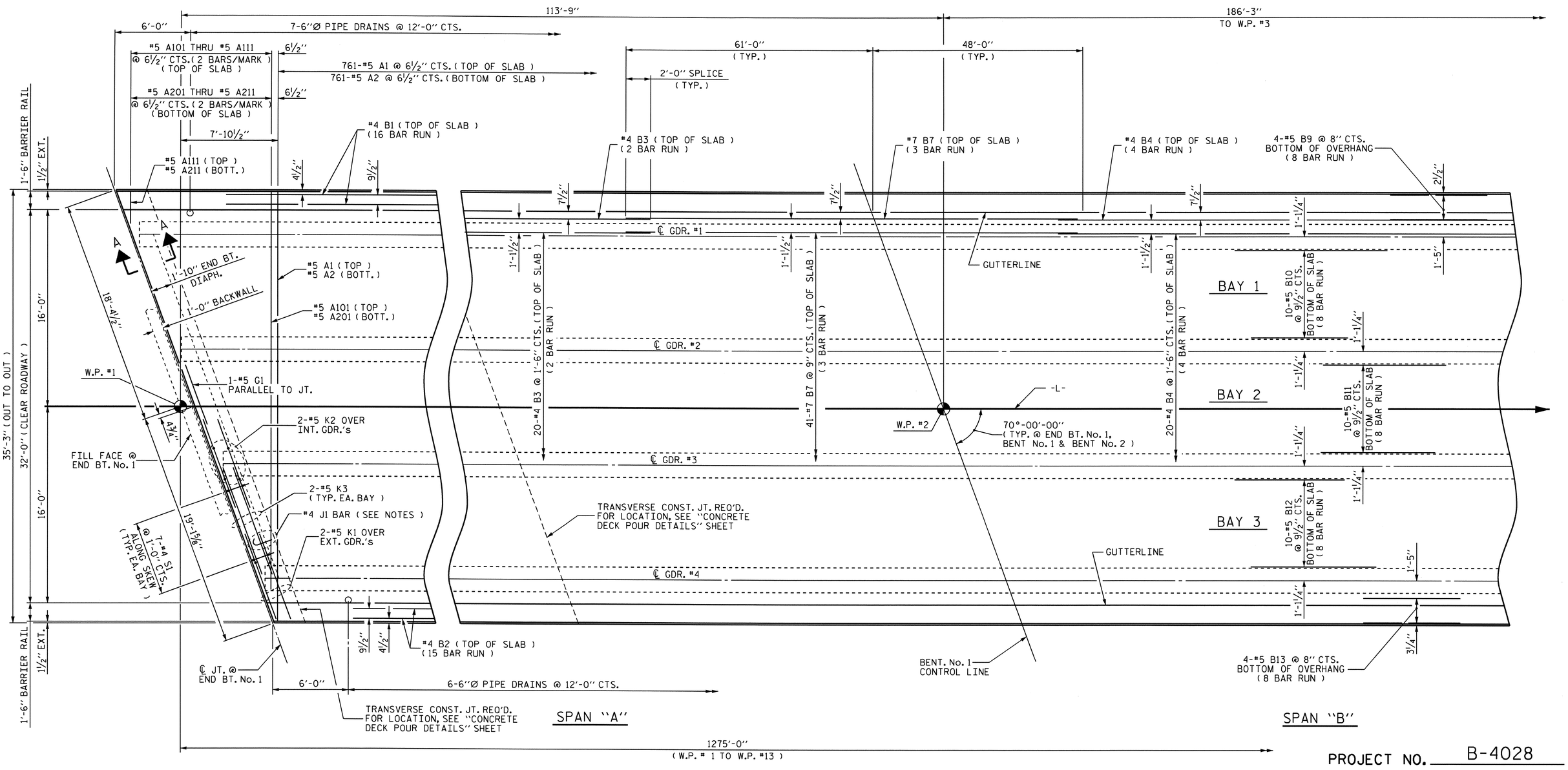

PARTIAL PLAN OF SPAN "A-B-C"

PROJECT NO. B-4028

BLADEN COUNTY

STATION: 29+02.50 -L-

SHEET 1 OF 7

NOTES :

FOR SECTION A-A, SEE "TYPICAL SECTIONS", SHEET 4 OF 5.

FOR BARRIER RAIL DETAILS AND REINFORCING STEEL, SEE "CONCRETE BARRIER RAIL" SHEETS.

FOR PLACEMENT OF #4 J1 BAR, SEE "EXPANSION JOINT SEAL DETAILS" SHEETS.

NORTH CAROLINA PROFESSIONAL SEAL 14855 ENGINEER DOUGLAS R. CALHOUN
6/12/12

STATE OF NORTH CAROLINA
DEPARTMENT OF TRANSPORTATION
RALEIGH

SUPERSTRUCTURE

PARTIAL
PLAN OF SPAN "A-B-C"

REVISIONS						SHEET NO.
NO.	BY:	DATE:	NO.	BY:	DATE:	S-19
1			3			TOTAL SHEETS
2			4			147

DRAWN BY : MIKE BRITT DATE : 10-27-10
CHECKED BY : S.B. WILLIAMS DATE : 1-2011

26-JUN-2012 14:05
R:\Structures\STRI\SuperDrawings\b4028_str1_PSsteel.dgn
dely

STR. #1

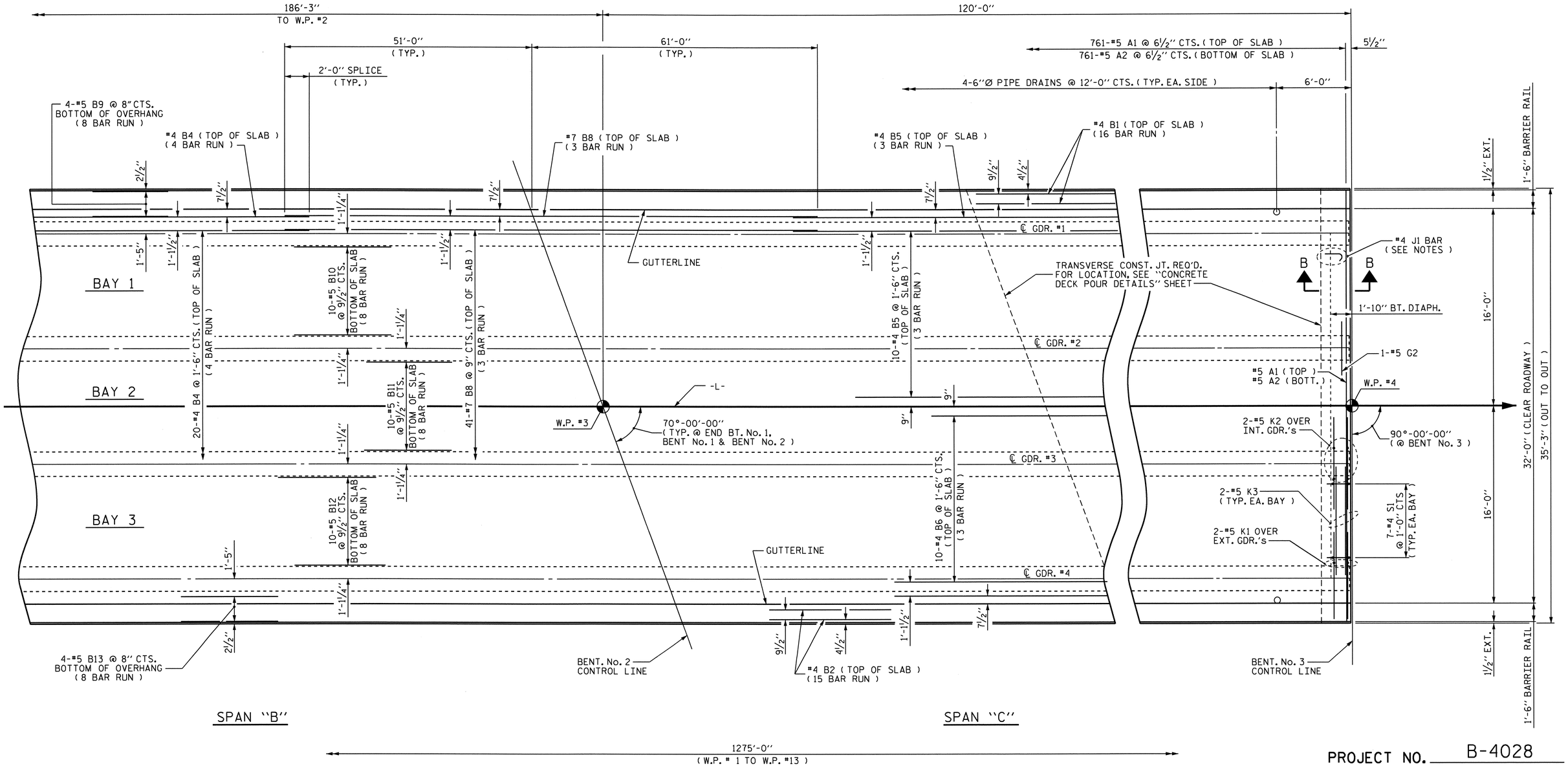

PROJECT NO. B-4028

BLADEN COUNTY

STATION: 29+02.50 -L-

SHEET 2 OF 7

PARTIAL PLAN OF SPAN "A-B-C"

NOTES :

FOR SECTION B-B, SEE "TYPICAL SECTIONS", SHEET 4 OF 5.

FOR BARRIER RAIL DETAILS AND REINFORCING STEEL, SEE "CONCRETE BARRIER RAIL" SHEETS.

FOR PLACEMENT OF #4 J1 BAR, SEE "EXPANSION JOINT SEAL DETAILS" SHEETS.

NORTH CAROLINA PROFESSIONAL SEAL 14855 ENGINEER DOUGLAS R. CALDWELL
6/26/12

STATE OF NORTH CAROLINA
DEPARTMENT OF TRANSPORTATION
RALEIGH

SUPERSTRUCTURE

PARTIAL
PLAN OF SPAN "A-B-C"

REVISIONS						SHEET NO.
NO.	BY:	DATE:	NO.	BY:	DATE:	S-20
1			3			TOTAL SHEETS
2			4			147

DRAWN BY : MIKE BRITT DATE : 10-27-10
CHECKED BY : S.B. WILLIAMS DATE : 1-2011

26-JUN-2012 14:05
R:\Structures\STR1\SuperDrawings\b4028_str1_PSsteel.dgn
dely

STR. #1

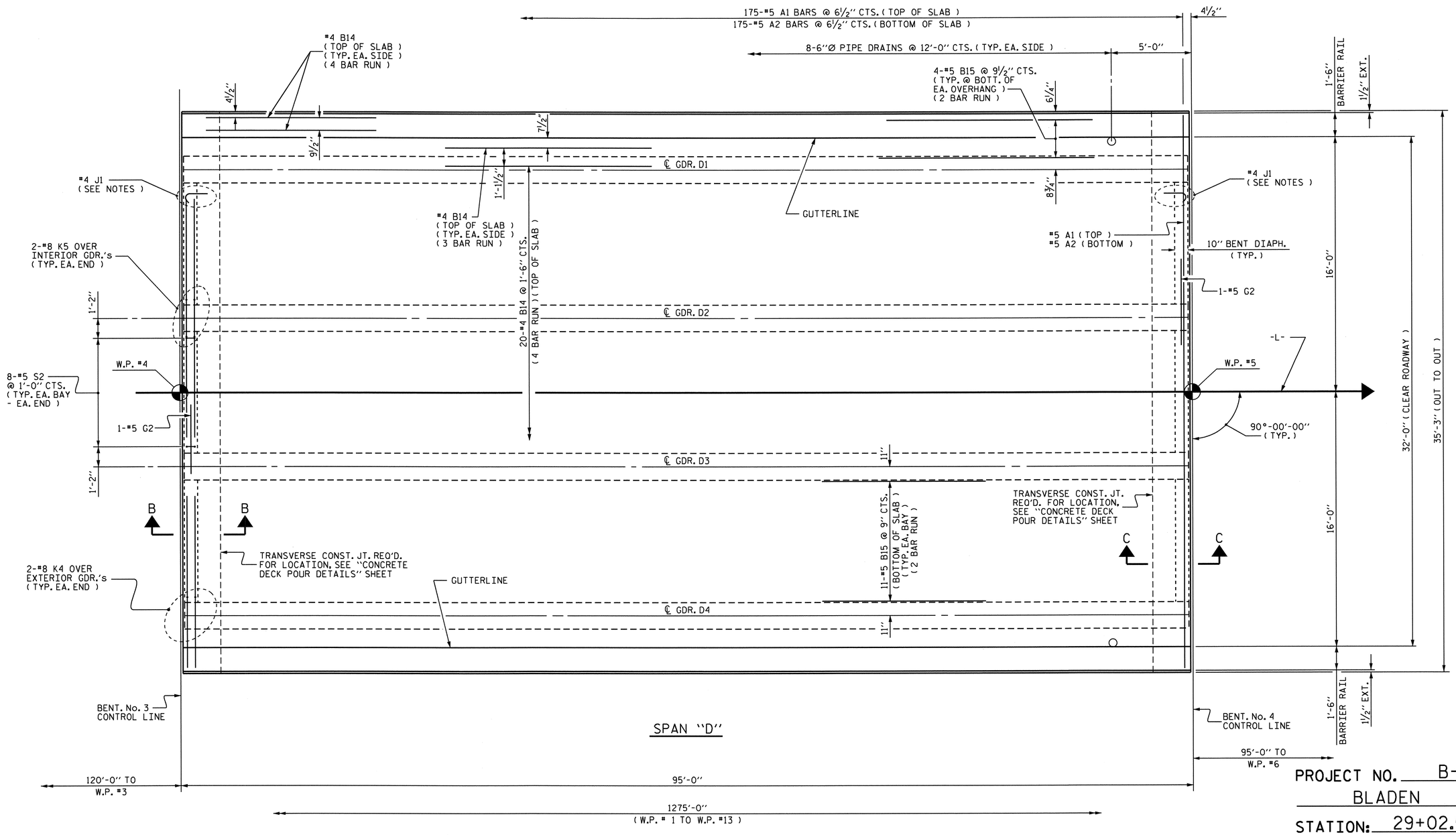

PLAN OF SPAN "D"

PROJECT NO. B-4028

BLADEN COUNTY

STATION: 29+02.50 -L-

SHEET 3 OF 7

NOTES :

FOR LOCATION OF INTERMEDIATE DIAPHRAGMS, SEE "GIRDER LAYOUT" SHEETS. FOR DETAILS, SEE "INTERMEDIATE STEEL DIAPHRAGMS FOR TYPE IV PRESTRESSED CONCRETE GIRDERS" SHEET.

FOR SECTIONS, SEE "TYPICAL SECTIONS", SHEET 4 OF 5.

FOR BARRIER RAIL DETAILS AND REINFORCING STEEL, SEE "CONCRETE BARRIER RAIL" SHEETS.

FOR PLACEMENT OF #4 J1 BAR, SEE "EXPANSION JOINT SEAL DETAILS" SHEETS.

NORTH CAROLINA PROFESSIONAL SEAL 14855 ENGINEER DOUGLAS R. CALHOUN
6/26/12

STATE OF NORTH CAROLINA
DEPARTMENT OF TRANSPORTATION
RALEIGH

SUPERSTRUCTURE

PLAN OF SPAN "D"

REVISIONS						SHEET NO.
NO.	BY:	DATE:	NO.	BY:	DATE:	S-21
1			3			TOTAL SHEETS
2			4			147

DRAWN BY : MIKE BRITT DATE : 9-29-10
CHECKED BY : S.B. WILLIAMS DATE : 2-2011

26-JUN-2012 14:03
R:\Structures\STRI\SuperDrawings\b4028_stri_PSpcg.dgn
dely

STR. #1

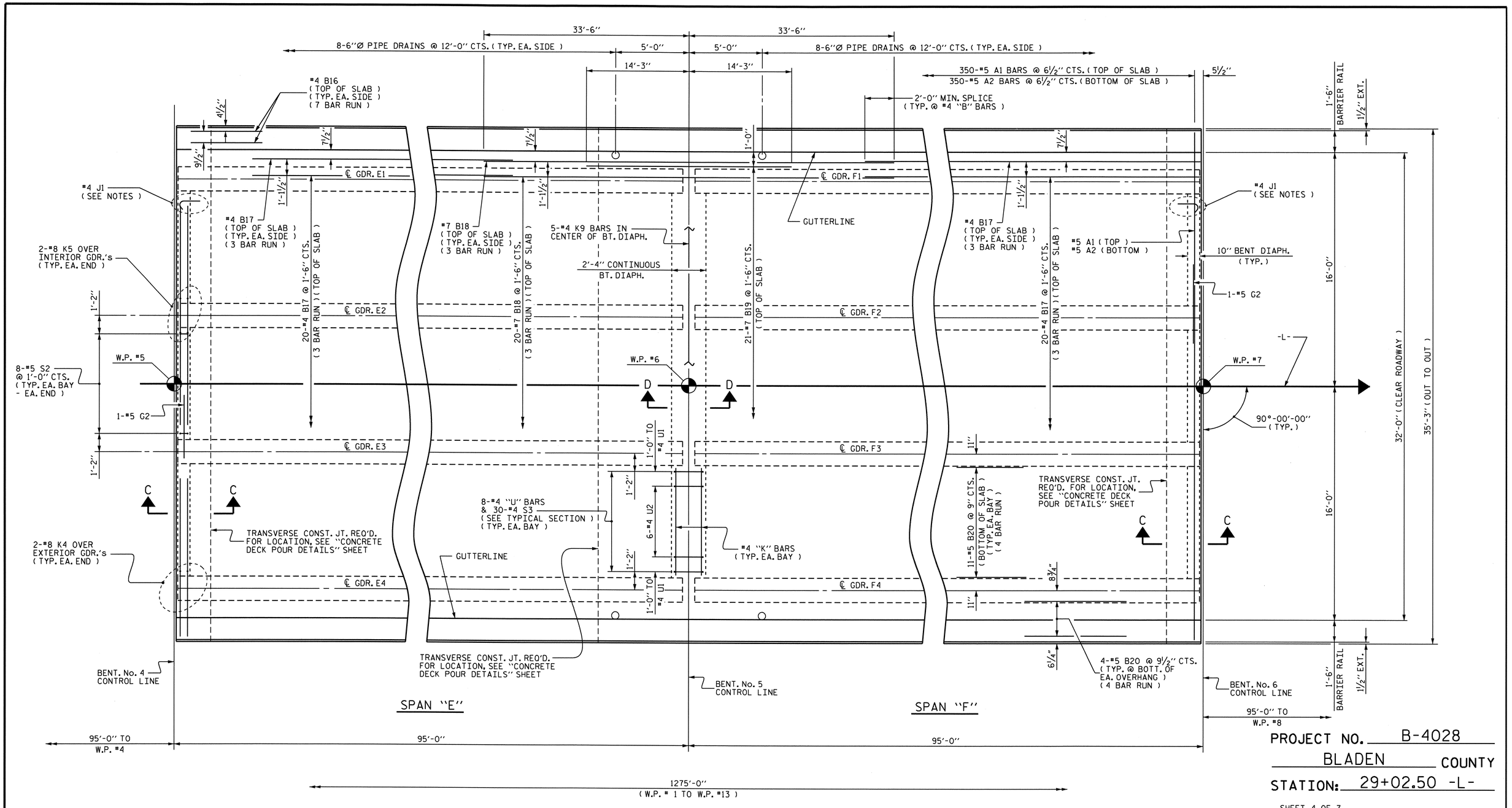

PROJECT NO. B-4028

BLADEN COUNTY

STATION: 29+02.50 -L-

SHEET 4 OF 7

PLAN OF SPAN "E-F"

NOTES :

FOR LOCATION OF INTERMEDIATE DIAPHRAGMS, SEE "GIRDER LAYOUT" SHEETS. FOR DETAILS, SEE "INTERMEDIATE STEEL DIAPHRAGMS FOR TYPE IV PRESTRESSED CONCRETE GIRDERS" SHEET.

FOR SECTIONS, SEE "TYPICAL SECTIONS", SHEET 4 OF 5.

FOR BARRIER RAIL DETAILS AND REINFORCING STEEL, SEE "CONCRETE BARRIER RAIL" SHEETS.

FOR PLACEMENT OF #4 J1 BAR, SEE "EXPANSION JOINT SEAL DETAILS" SHEETS.

NORTH CAROLINA PROFESSIONAL SEAL 14855 ENGINEER DOUGLAS R. CALHOUN
6/26/12

STATE OF NORTH CAROLINA
DEPARTMENT OF TRANSPORTATION
RALEIGH

SUPERSTRUCTURE

PLAN OF SPAN "E-F"

REVISIONS						SHEET NO.
NO.	BY:	DATE:	NO.	BY:	DATE:	S-22
1			3			TOTAL SHEETS
2			4			147

DRAWN BY : MIKE BRITT DATE : 9-29-10
CHECKED BY : S.B. WILLIAMS DATE : 2-2011

26-JUN-2012 14:03
R:\Structures\STR1\SuperDrawings\b4028_str1_PSpcg.dgn
dely

STR. #1

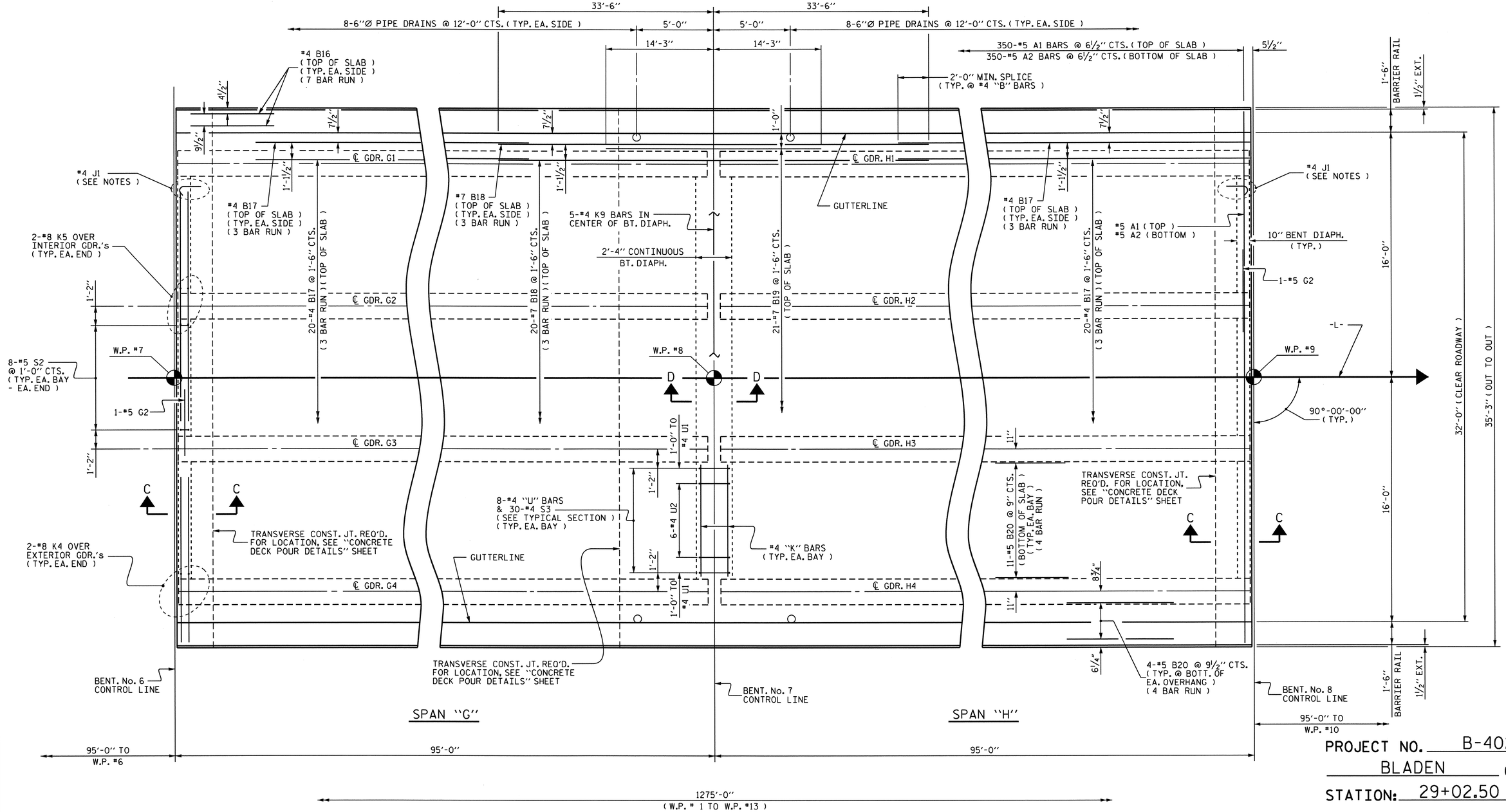

PROJECT NO. B-4028

BLADEN COUNTY

STATION: 29+02.50 -L-

SHEET 5 OF 7

PLAN OF SPAN "G-H"

NOTES :

FOR LOCATION OF INTERMEDIATE DIAPHRAGMS, SEE "GIRDER LAYOUT" SHEETS. FOR DETAILS, SEE "INTERMEDIATE STEEL DIAPHRAGMS FOR TYPE IV PRESTRESSED CONCRETE GIRDERS" SHEET.

FOR SECTIONS, SEE "TYPICAL SECTIONS", SHEET 4 OF 5.

FOR BARRIER RAIL DETAILS AND REINFORCING STEEL, SEE "CONCRETE BARRIER RAIL" SHEETS.

FOR PLACEMENT OF #4 J1 BAR, SEE "EXPANSION JOINT SEAL DETAILS" SHEETS.

NORTH CAROLINA PROFESSIONAL SEAL 14855 ENGINEER DOUGLAS R. CALHOUN
6-26-12

STATE OF NORTH CAROLINA
DEPARTMENT OF TRANSPORTATION
RALEIGH

SUPERSTRUCTURE

PLAN OF SPAN "G-H"

REVISIONS						SHEET NO.
NO.	BY:	DATE:	NO.	BY:	DATE:	S-23
1			3			TOTAL SHEETS
2			4			147

DRAWN BY : MIKE BRITT DATE : 9-29-10
CHECKED BY : S.B. WILLIAMS DATE : 2-2011

26-JUN-2012 14:03
R:\Structures\STRI\SuperDrawings\b4028_stri_PSpcg.dgn
dely

STR. #1

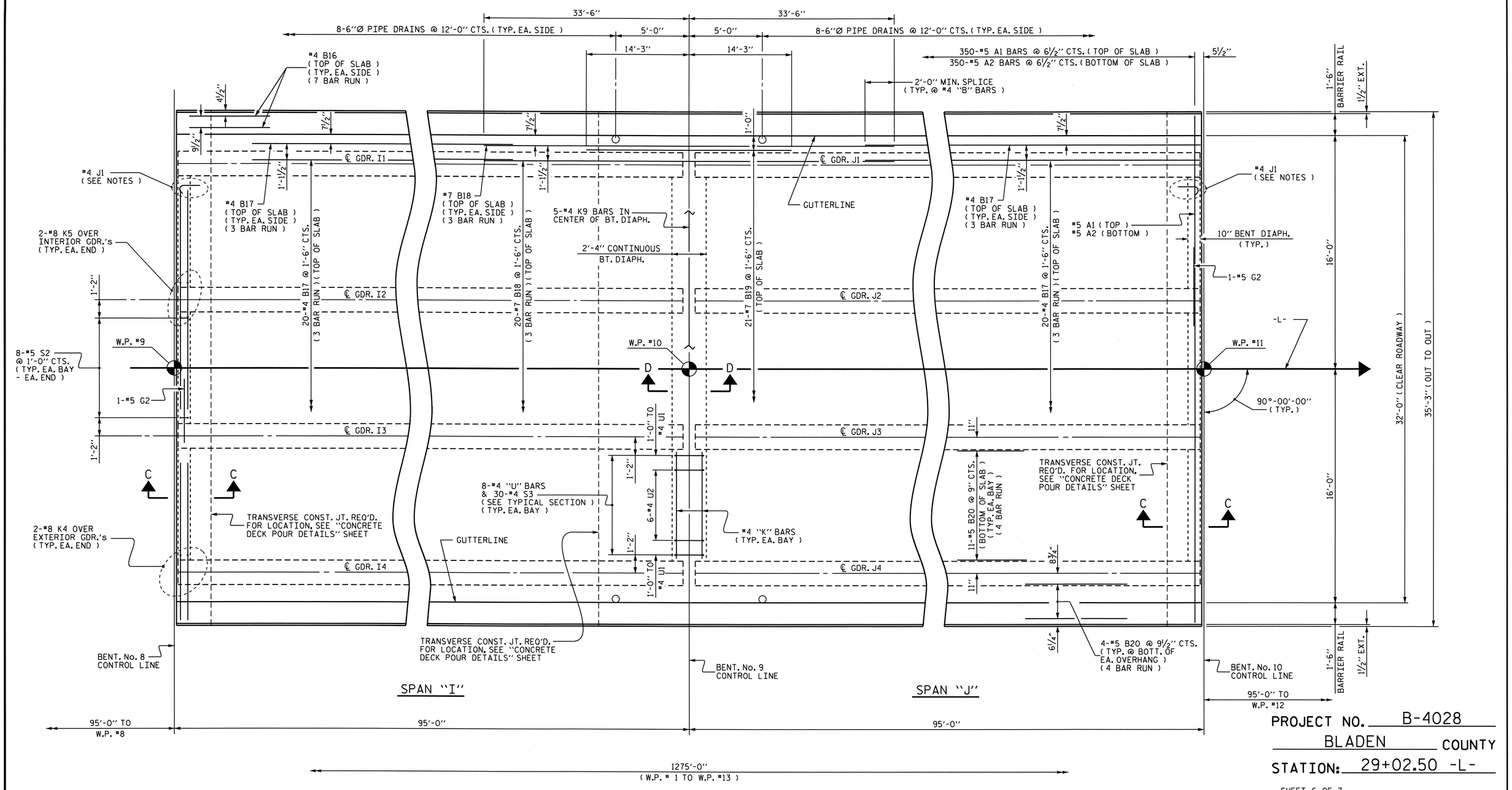

PROJECT NO. B-4028

BLADEN COUNTY

STATION: 29+02.50 -L-

SHEET 6 OF 7

PLAN OF SPAN "I-J"

NOTES :

FOR LOCATION OF INTERMEDIATE DIAPHRAGMS, SEE "GIRDER LAYOUT" SHEETS. FOR DETAILS, SEE "INTERMEDIATE STEEL DIAPHRAGMS FOR TYPE IV PRESTRESSED CONCRETE GIRDERS" SHEET.

FOR SECTIONS, SEE "TYPICAL SECTIONS", SHEET 4 OF 5.

FOR BARRIER RAIL DETAILS AND REINFORCING STEEL, SEE "CONCRETE BARRIER RAIL" SHEETS.

FOR PLACEMENT OF #4 J1 BAR, SEE "EXPANSION JOINT SEAL DETAILS" SHEETS.

NORTH CAROLINA PROFESSIONAL SEAL 14855 ENGINEER DOUGLAS R. CALHOUN

6/22/12

STATE OF NORTH CAROLINA
DEPARTMENT OF TRANSPORTATION
RALEIGH

SUPERSTRUCTURE

PLAN OF SPAN "I-J"

REVISIONS						SHEET NO.
NO.	BY:	DATE:	NO.	BY:	DATE:	S-24
1			3			TOTAL SHEETS
2			4			147

DRAWN BY : MIKE BRITT DATE : 9-29-10
CHECKED BY : S.B. WILLIAMS DATE : 2-2011

26-JUN-2012 14:02
R:\Structures\STRI\SuperDrawings\b4028_stri_PSpcg.dgn
dely

STR. #1

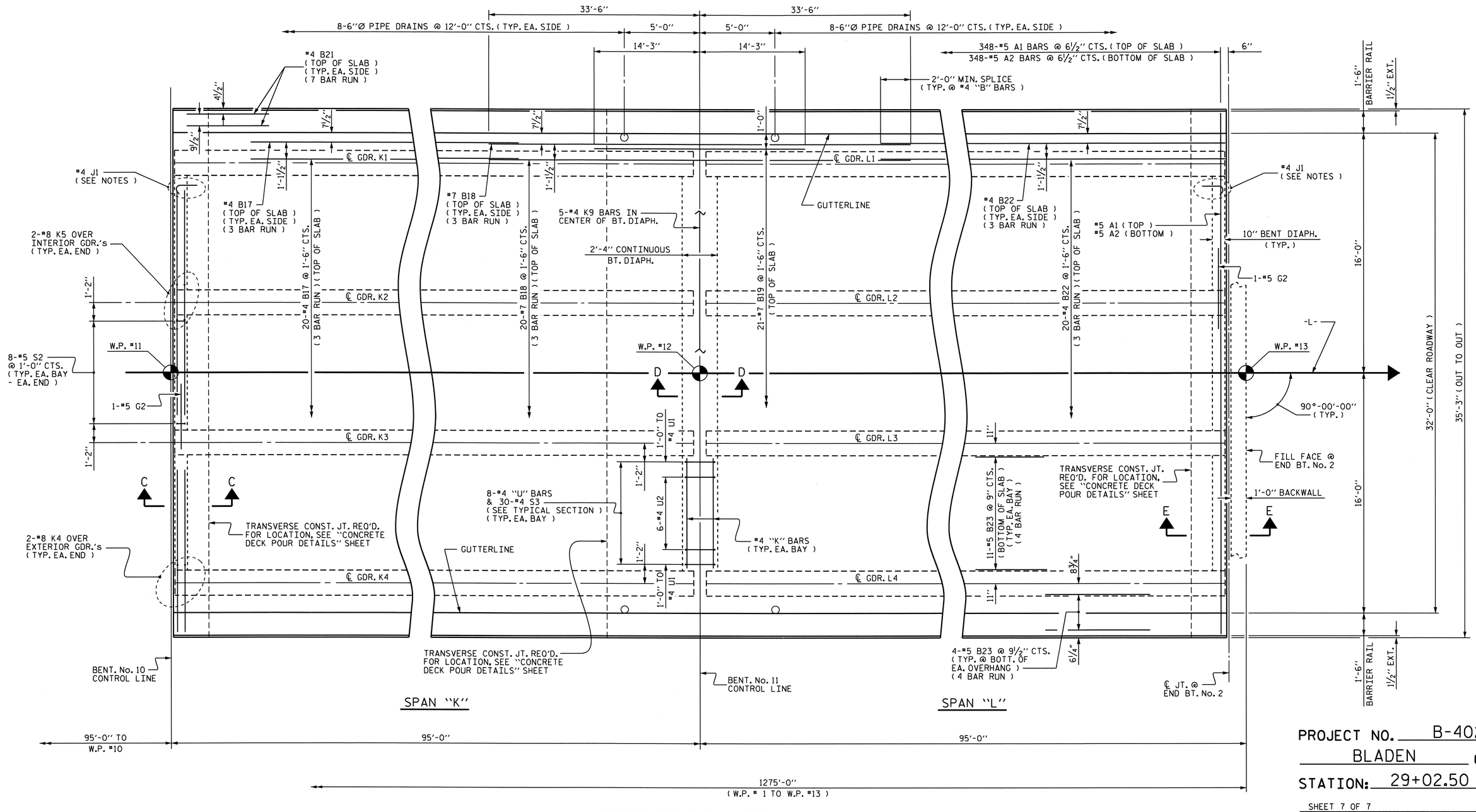

PLAN OF SPAN "K-L"

NOTES :

FOR LOCATION OF INTERMEDIATE DIAPHRAGMS, SEE "GIRDER LAYOUT" SHEETS. FOR DETAILS, SEE "INTERMEDIATE STEEL DIAPHRAGMS FOR TYPE IV PRESTRESSED CONCRETE GIRDERS" SHEET.

FOR SECTIONS, SEE "TYPICAL SECTIONS", SHEET 4 OF 5.

FOR BARRIER RAIL DETAILS AND REINFORCING STEEL, SEE "CONCRETE BARRIER RAIL" SHEETS.

FOR PLACEMENT OF #4 J1 BAR, SEE "EXPANSION JOINT SEAL DETAILS" SHEETS.

NORTH CAROLINA PROFESSIONAL SEAL 14855 ENGINEER DOUGLAS R. CALHOUN
6-26-12

PROJECT NO. B-4028
BLADEN COUNTY
STATION: 29+02.50 -L-

SHEET 7 OF 7

STATE OF NORTH CAROLINA
DEPARTMENT OF TRANSPORTATION
RALEIGH

SUPERSTRUCTURE

PLAN OF SPAN "K-L"

REVISIONS						SHEET NO.
NO.	BY:	DATE:	NO.	BY:	DATE:	S-25
1			3			TOTAL SHEETS
2			4			147

DRAWN BY : MIKE BRITT DATE : 9-29-10
CHECKED BY : S.B. WILLIAMS DATE : 2-2011

26-JUN-2012 14:02
R:\Structures\STR1\SuperDrawings\b4028_str1_PSpcg.dgn
dely

STR. #1

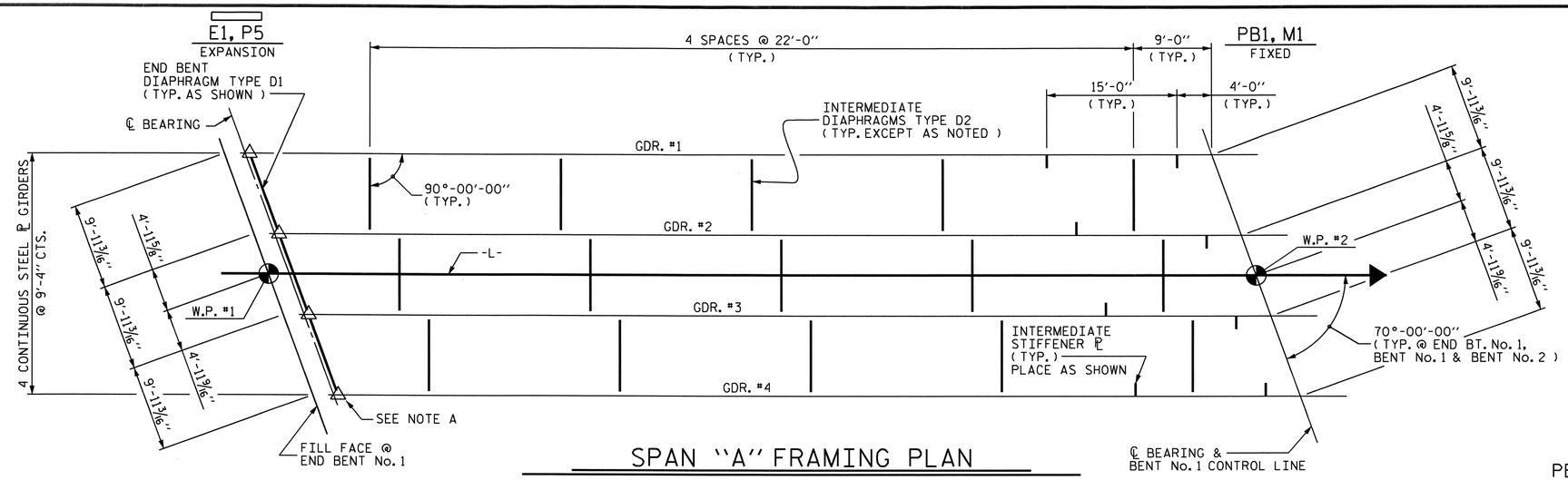

SPAN "A" FRAMING PLAN

△ NOTE A :
BEARING STIFFENERS TO BE USED AS CONNECTOR PLATES IN THIS AREA.

◯ NOTE B :
INTERMEDIATE STIFFENERS TO BE USED AS CONNECTOR PLATES IN THIS AREA.

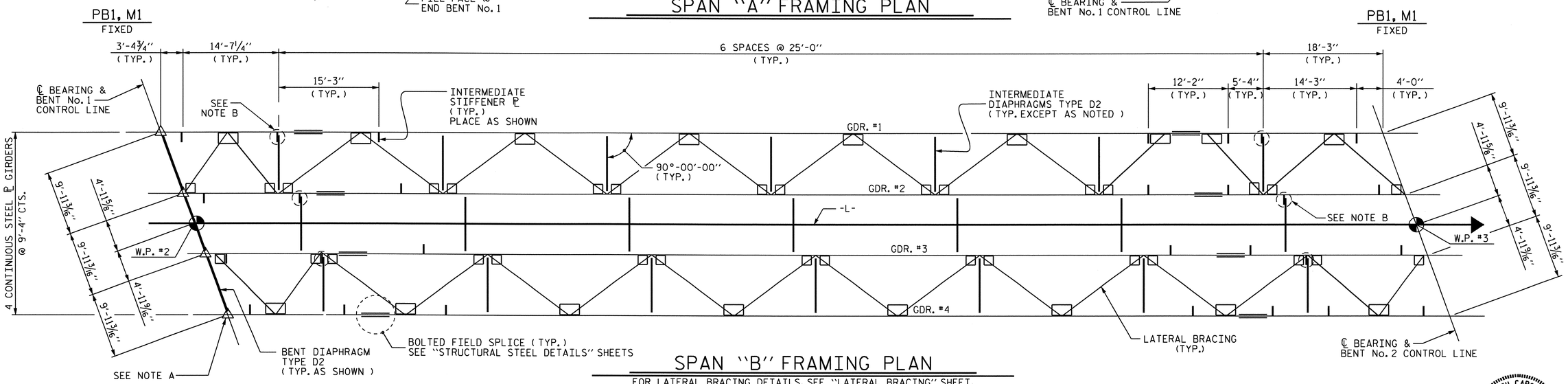

SPAN "B" FRAMING PLAN

FOR LATERAL BRACING DETAILS, SEE "LATERAL BRACING" SHEET.

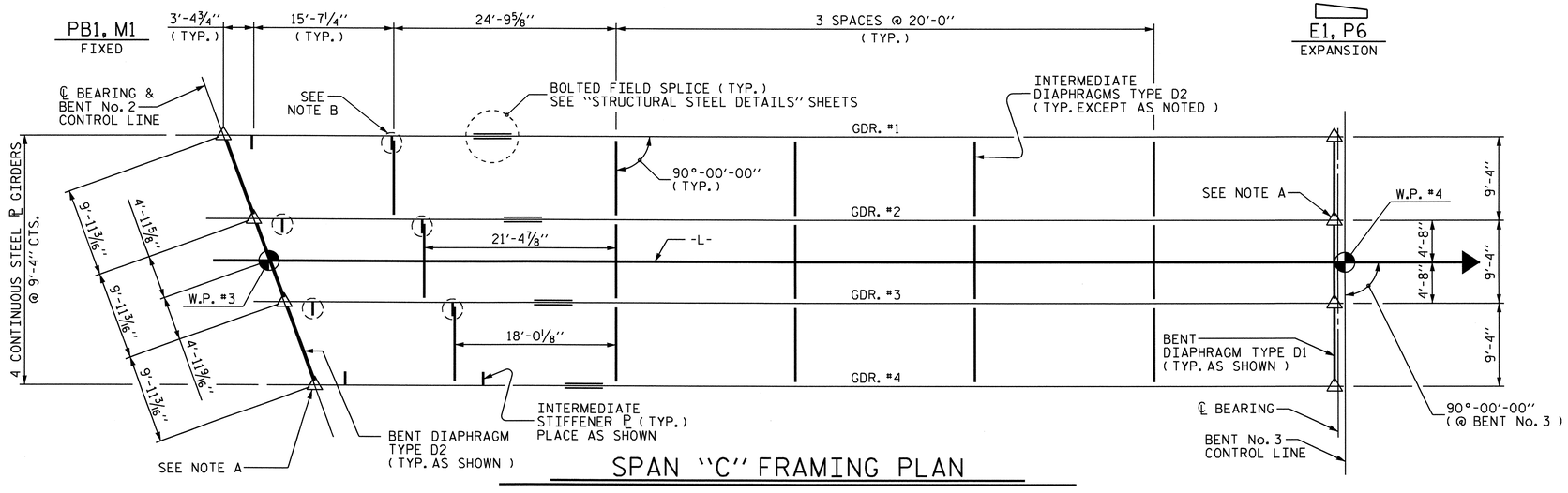

SPAN "C" FRAMING PLAN

NORTH CAROLINA PROFESSIONAL SEAL 14855 ENGINEER DALE A. R. CALHOUN
6/20/12

PROJECT NO. B-4028

BLADEN COUNTY

STATION: 29+02.50 -L-

STATE OF NORTH CAROLINA
DEPARTMENT OF TRANSPORTATION
RALEIGH

SUPERSTRUCTURE

SPAN "A-B-C"
FRAMING PLAN

REVISIONS						SHEET NO.
NO.	BY:	DATE:	NO.	BY:	DATE:	S-26
1			3			TOTAL SHEETS
2			4			197

DRAWN BY : DGE/MIKE BRITT DATE : 4-12/11-10
CHECKED BY : S.B. WILLIAMS DATE : 2-2011

26-JUN-2012 14:01
R:\Structures\STRI\SuperDrawings\b4028_str1_FP.dgn
dely

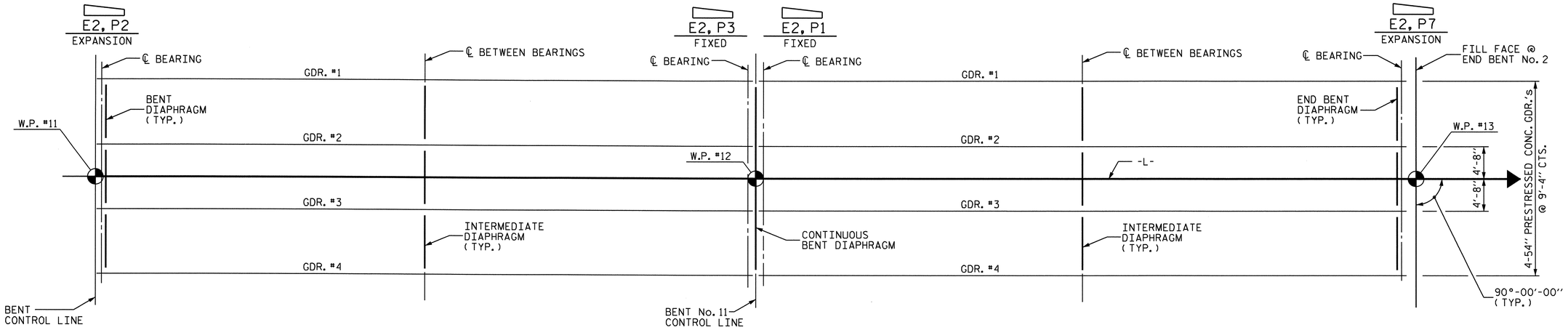

SPAN "K-L" GIRDER LAYOUT

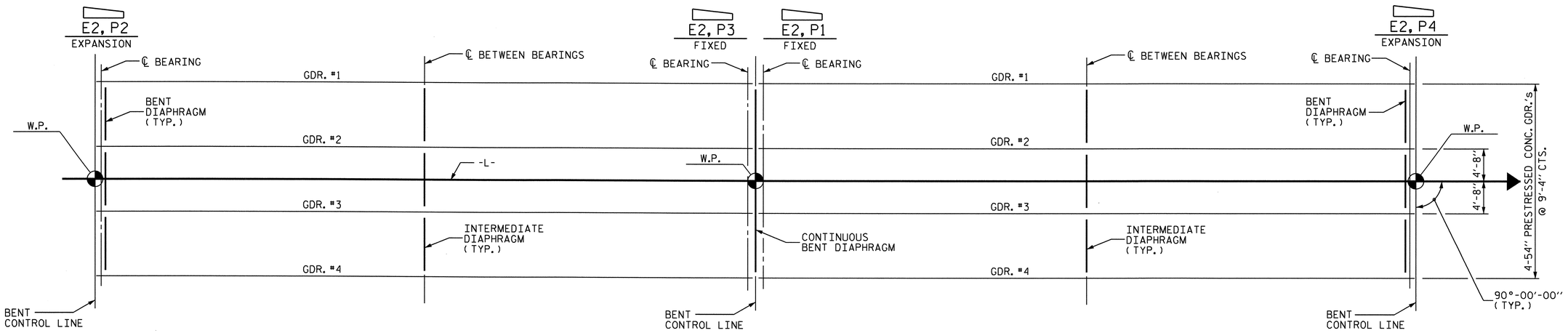

SPAN "E-F", "G-H" OR "I-J" GIRDER LAYOUT

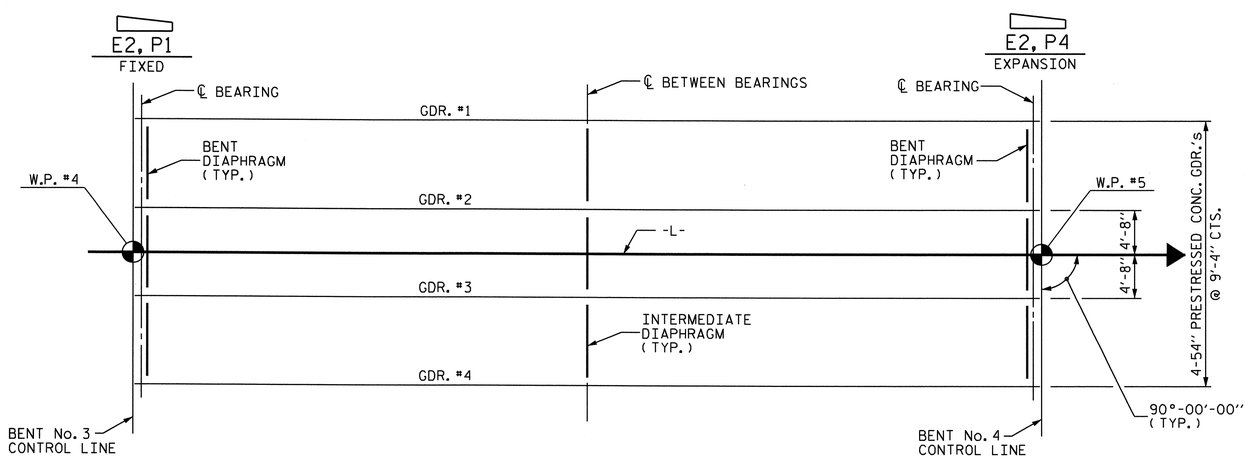

SPAN "D" GIRDER LAYOUT

PROJECT NO. B-4028

BLADEN COUNTY

STATION: 29+02.50 -L-

STATE OF NORTH CAROLINA
DEPARTMENT OF TRANSPORTATION
RALEIGH

SUPERSTRUCTURE

SPANS "D" THRU "L"
GIRDER LAYOUT

NORTH CAROLINA PROFESSIONAL SEAL 14855 ENGINEER DOUGLAS R. CALHOUN
6/26/12

REVISIONS						SHEET NO.
NO.	BY:	DATE:	NO.	BY:	DATE:	S-27
1			3			TOTAL SHEETS
2			4			147

DRAWN BY : MIKE BRITT DATE : 11-4-10
CHECKED BY : S.B. WILLIAMS DATE : 2-2011

26-JUN-2012 14:01
R:\Structures\STRI\SuperDrawings\b4028_stri_FP.dgn
dely

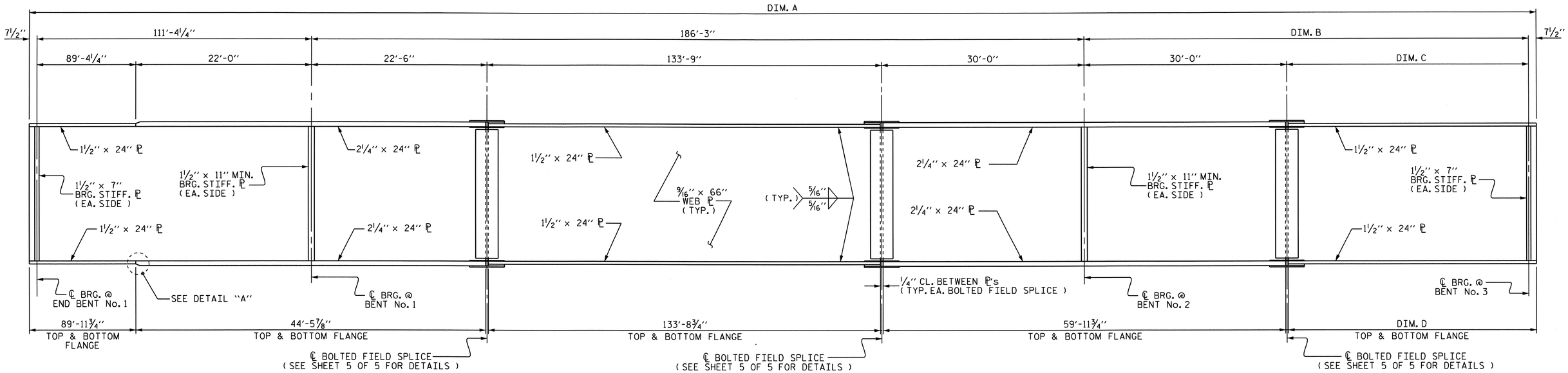

PLATE GIRDER ELEVATION

SEE GIRDER TABLE FOR DIM.'s A THRU D
INTERMEDIATE STIFFENER AND CONNECTOR PL's NOT SHOWN, SEE "FRAMING PLAN" SHEETS.
SHEAR STUDS NOT SHOWN, SEE SHEET 2 OF 5 FOR SHEAR STUD LOCATIONS

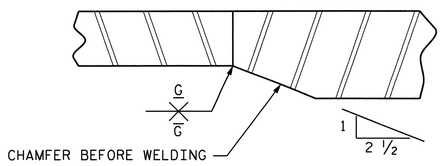

DETAIL "A"

(TYP. TOP & BOTT. FLANGE)

GIRDER TABLE					
GIRDER	DIM. A	DIM. B	DIM. C	DIM. D	DIM. E
#1	423'-1⅞"	124'-3⅝"	94'-3⅝"	94'-11"	101'-7½"
#2	419'-9⅛"	120'-10⅞"	90'-10⅞"	91'-6¼"	98'-7½"
#3	416'-4⅜"	117'-6⅛"	87'-6⅛"	88'-1½"	94'-7½"
#4	412'-11⅝"	114'-1⅜"	84'-1⅜"	84'-8¾"	91'-7½"

NOTE : ALL LENGTHS ARE HORIZONTAL DISTANCES.

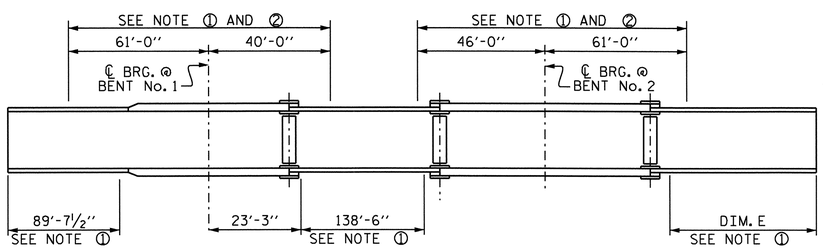

GIRDER MAKE UP

NOTE ① : CHARPY V-NOTCH TESTS ARE REQUIRED FOR ALL TOP OR BOTTOM FLANGE PLATES WHICH FALL WITHIN THESE LIMITS, ALL WEB PLATES, AND ALL SPLICE PLATES. IF A PERMITTED SHOP FLANGE SPLICE IS NOT USED, CHARPY V-NOTCH TESTS WILL BE REQUIRED FOR THE ENTIRE FLANGE PLATE. FOR CHARPY V-NOTCH TESTS, SEE ARTICLE 1072-7 OF THE STANDARD SPECIFICATIONS.

NOTE ② : NO WELDING OF FORMS OR FALSEWORK TO THE TOP FLANGE WILL BE PERMITTED IN THIS REGION

CHARPY V-NOTCH TESTS FOR CONTINUOUS PLATE GIRDERS

NOTE : ALL GIRDER DIMENSIONS IN THE ABOVE DETAIL ARE HORIZONTAL DIMENSIONS.
SEE GIRDER TABLE FOR DIM. E

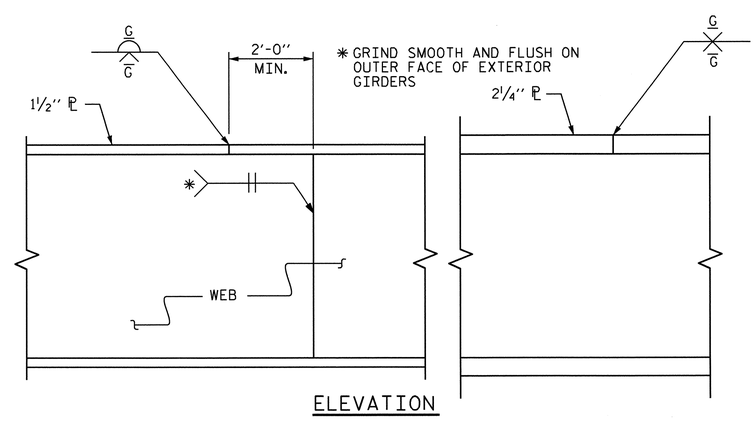

ELEVATION

TYPICAL FLANGE AND WEB BUTT JOINT

NORTH CAROLINA PROFESSIONAL SEAL 14855 ENGINEER DOUGLAS R. CALHOUN
6/26/12

PROJECT NO. B-4028
BLADEN COUNTY
STATION: 29+02.50 -L-

SHEET 1 OF 5

STATE OF NORTH CAROLINA
DEPARTMENT OF TRANSPORTATION
RALEIGH

SUPERSTRUCTURE

STRUCTURAL STEEL DETAILS

REVISIONS						SHEET NO.
NO.	BY:	DATE:	NO.	BY:	DATE:	S-23
1			3			TOTAL SHEETS
2			4			147

DRAWN BY : MIKE BRITT DATE : 11-10-10
CHECKED BY : S.B. WILLIAMS DATE : 2-2011

26-JUN-2012 14:00
R:\Structures\STRI\SuperDrawings\b4028_strl_SS.dgn
dely

STR. #1

SHEAR STUD SPACING TABLE

GIRDER	"A"	"B"	"C"
#1	73 SPACES @ 1'-0" CTS.	6⅝"	6"
#2	70 SPACES @ 1'-0" CTS.	NO SPA. REQ'D	7⅞"
#3	66 SPACES @ 1'-0" CTS.	8⅛"	7"
#4	62 SPACES @ 1'-0" CTS.	11⅜"	11"

TO BE USED FOR SPAN "C" STUD PLACEMENT

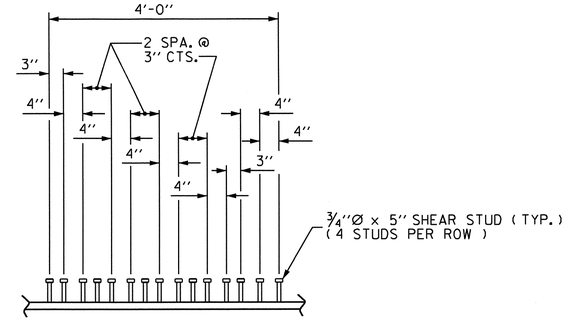

DETAIL "B"

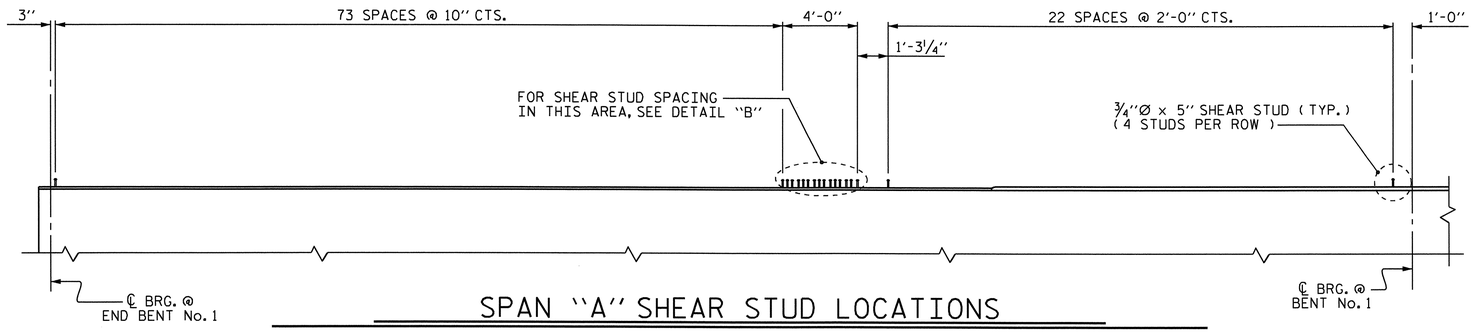

SPAN "A" SHEAR STUD LOCATIONS

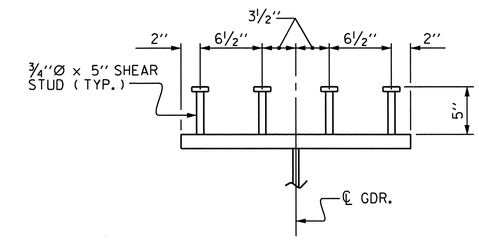

SHEAR STUD DETAIL

TYPICAL EXCEPT @ BOLTED FIELD SPLICE

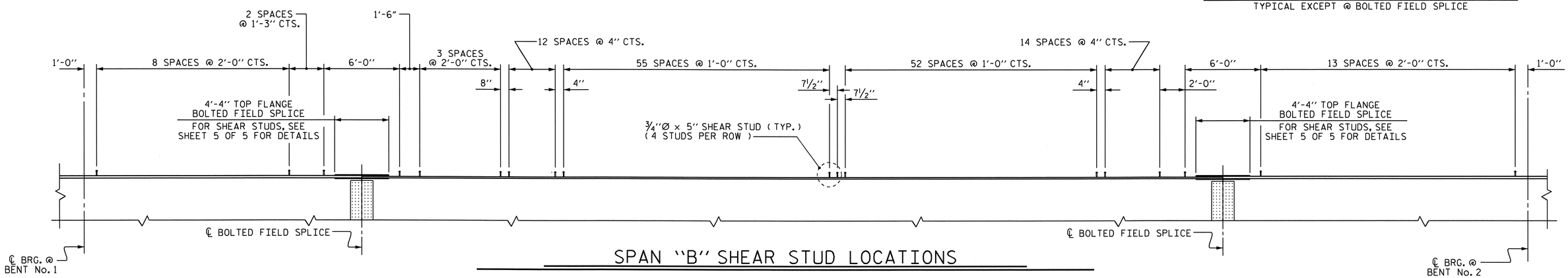

SPAN "B" SHEAR STUD LOCATIONS

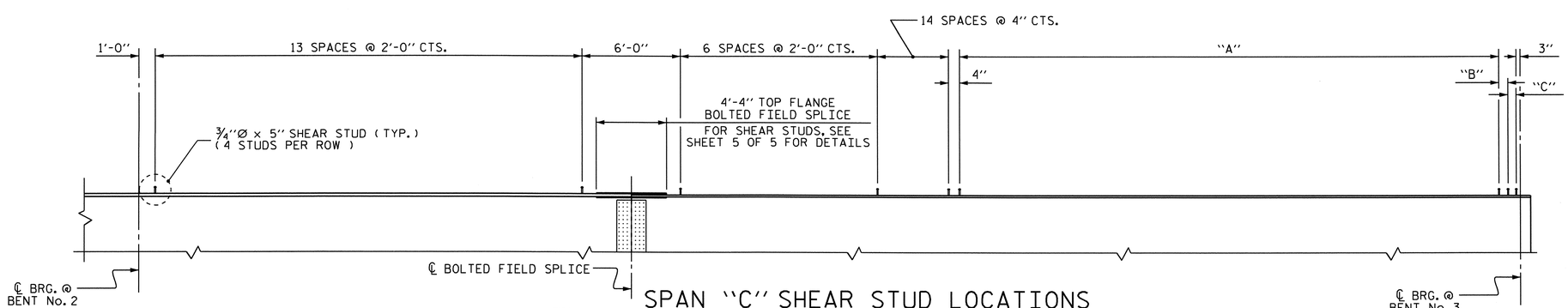

SPAN "C" SHEAR STUD LOCATIONS

SEE TABLE ABOVE

NORTH CAROLINA PROFESSIONAL SEAL 14855 ENGINEER DOUGLAS R. CALHOUN
6/26/12

PROJECT NO. B-4028
BLADEN COUNTY
STATION: 29+02.50 -L-

SHEET 2 OF 5

STATE OF NORTH CAROLINA
DEPARTMENT OF TRANSPORTATION
RALEIGH

SUPERSTRUCTURE

STRUCTURAL STEEL DETAILS

REVISIONS						SHEET NO.
NO.	BY:	DATE:	NO.	BY:	DATE:	S-29
1			3			TOTAL SHEETS
2			4			147

DRAWN BY : MIKE BRITT DATE : 11-16-10
CHECKED BY : S.B. WILLIAMS DATE : 2-2011

26-JUN-2012 14:00
R:\Structures\STR1\SuperDrawings\b4028_str1_SS.dgn
dely

STR. #1

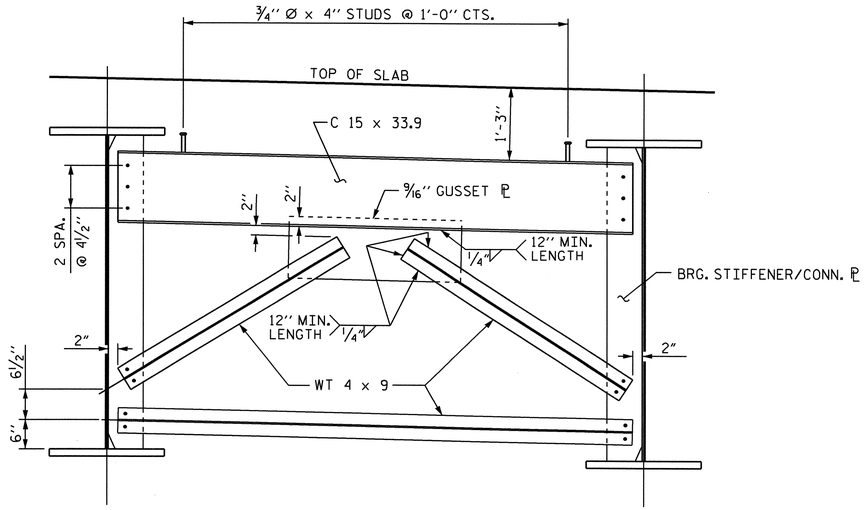

TYPICAL BENT DIAPHRAGM (TYPE D1)

TO BE USED AT END BENT No. 1 & BENT No. 3

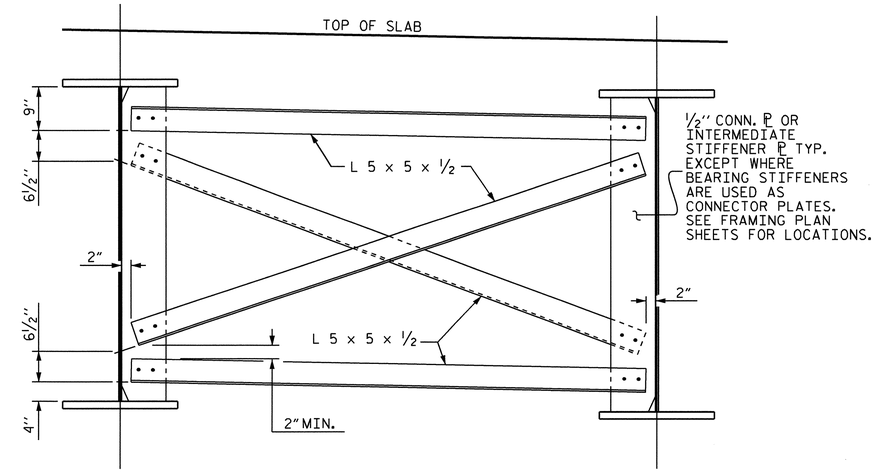

TYPICAL BENT & INTERMEDIATE DIAPHRAGM (TYPE D2)

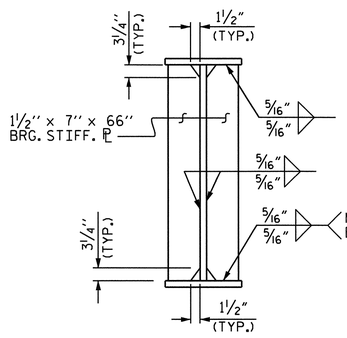

BEARING STIFFENER

(AT END BENT No. 1 & BENT No. 3)

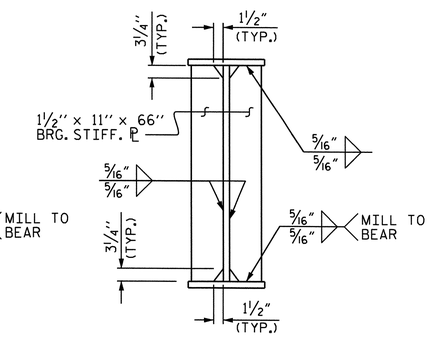

BEARING STIFFENER

(AT BENT No. 1 & BENT No. 2)

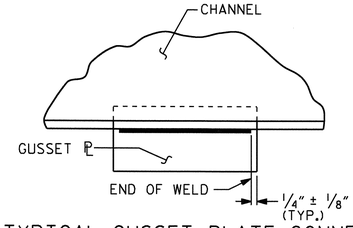

TYPICAL GUSSET PLATE CONNECTION

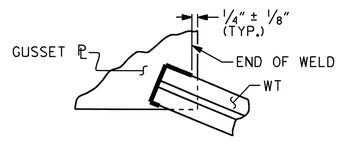

TYPICAL "TEE" TO GUSSET PLATE CONNECTION

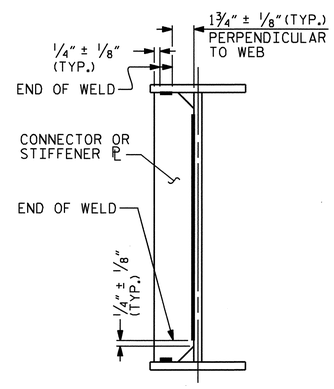

TYPICAL STIFFENER OR CONNECTOR PLATE CONNECTIONS

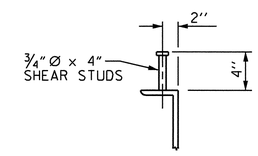

SHEAR STUD DETAILS

(TYP. END BENT No. 1 & BENT No. 3)

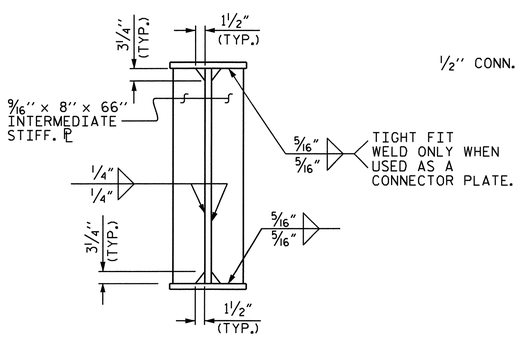

INTERMEDIATE STIFFENER

(SEE FRAMING PLAN FOR LOCATION)

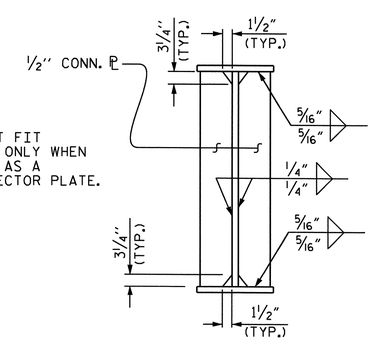

CONNECTOR PL

WELD TERMINATION DETAILS

PROJECT NO. B-4028

BLADEN COUNTY

STATION: 29+02.50 -L-

SHEET 3 OF 5

STATE OF NORTH CAROLINA
DEPARTMENT OF TRANSPORTATION
RALEIGH

SUPERSTRUCTURE

STRUCTURAL STEEL DETAILS

NORTH CAROLINA PROFESSIONAL SEAL 14855 ENGINEER DOUGLAS R. CALHOUN
6/26/12

REVISIONS						SHEET NO.
NO.	BY:	DATE:	NO.	BY:	DATE:	S-30
1			3			TOTAL SHEETS
2			4			197

DRAWN BY : MIKE BRITT DATE : 1-27-10
CHECKED BY : S.B. WILLIAMS DATE : 2-2011

26-JUN-2012 13:59
R:\Structures\STRI\SuperDrawings\b4028_str1_SS.dgn
dbly

STR. #1

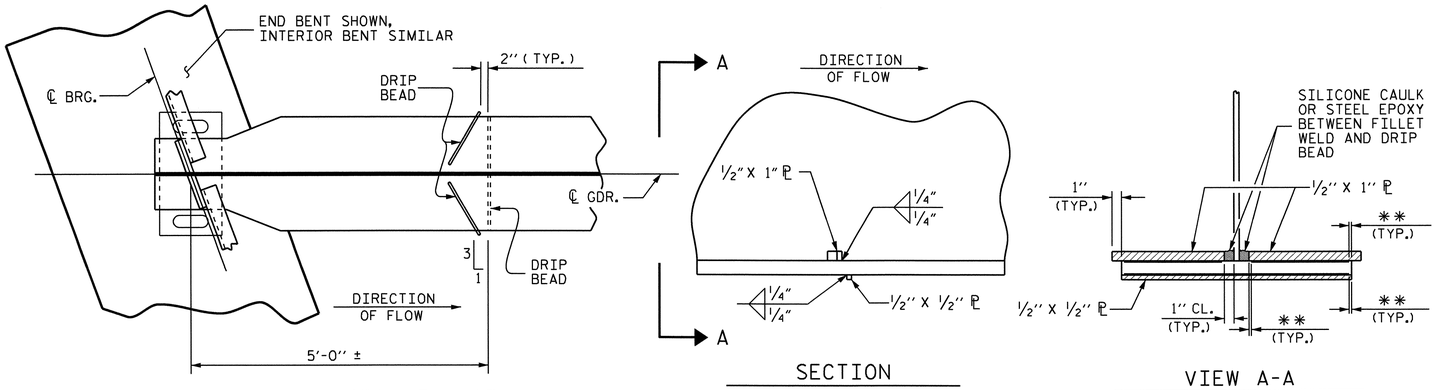

PART PLAN - BOTTOM FLANGE

SECTION

VIEW A-A

** SEE "WELD TERMINATION DETAILS" SHEET 3 OF 5

DRIP BEAD DETAILS

STRUCTURAL STEEL NOTES :

ALL STRUCTURAL STEEL SHALL BE AASHTO M270 GRADE 50W AND PAINTED IN ACCORDANCE WITH SYSTEM 4 OF ARTICLE 442-8 OF THE STANDARD SPECIFICATIONS UNLESS OTHERWISE NOTED ON THE PLANS.

ALL DIMENSIONS SHOWN ARE HORIZONTAL OR VERTICAL, UNLESS OTHERWISE NOTED.

ALL FIELD CONNECTIONS TO BE 7/8" DIA. HIGH STRENGTH BOLTS UNLESS OTHERWISE NOTED.

BEARING STIFFENERS AT END BENT No. 1 AND BENTS No. 1 & 2 ARE TO BE PLACED ALONG THE SKEW AND SHALL BE PLUMB. ALL OTHER BEARING STIFFENERS ARE TO BE PLACED NORMAL TO THE WEB OF THE GIRDER AND SHALL BE PLUMB.

PERMITTED FLANGE AND WEB SHOP SPLICES SHALL NOT BE LOCATED WITHIN 15 FEET OF MAXIMUM DEAD LOAD DEFLECTION (NOR WITHIN 15 FEET OF INTERMEDIATE BEARINGS OF CONTINUOUS UNITS). KEEP 2 FEET MINIMUM BETWEEN WEB AND FLANGE SHOP SPLICES. KEEP 6" MINIMUM BETWEEN CONNECTOR PLATE OR TRANSVERSE STIFFENER WELDS AND WEB OR FLANGE SHOP SPLICES.

STUDS ON GIRDERS MAY BE SHIFTED UP TO 1" IF NECESSARY TO CLEAR FLANGE SPLICE WELD.

TENSION ON THE AASHTO M164 BOLTS SHALL BE CALIBRATED USING DIRECT TENSION INDICATOR WASHERS IN ACCORDANCE WITH ARTICLE 440-8 OF THE STANDARD SPECIFICATIONS.

END OF GIRDERS SHALL BE PLUMB.

BEARING STIFFENER PLATE WIDTH SHOWN IS A MINIMUM WIDTH. THE BEARING STIFFENER PLATE WIDTH, WHEN USED AS A CONNECTOR PLATE, MAY BE INCREASED AS NECESSARY IN ORDER TO CONNECT THE DIAPHRAGM MEMBERS WHEN REQUIRED.

INTERMEDIATE STIFFENER PLATE WIDTH SHOWN IS A MINIMUM WIDTH. THE INTERMEDIATE STIFFENER PLATE WIDTH, WHEN USED AS A CONNECTOR PLATE, MAY BE INCREASED AS NECESSARY IN ORDER TO CONNECT THE DIAPHRAGM MEMBERS.

BEARING STIFFENER MAY REQUIRE COPING IF WIDER THAN BOTTOM FLANGE.

FABRICATORS SHALL DETAIL DIAPHRAGM MEMBERS AND CONNECTIONS FOR FULL DEAD LOAD FIT UP. GIRDERS SHALL BE PLUMB AFTER THE FULL AMOUNT OF DEAD LOAD IS APPLIED.

STRUCTURAL STEEL ERECTION IN A CONTINUOUS UNIT SHALL BE COMPLETE BEFORE FALSEWORK OR FORMS ARE PLACED ON THE UNIT.

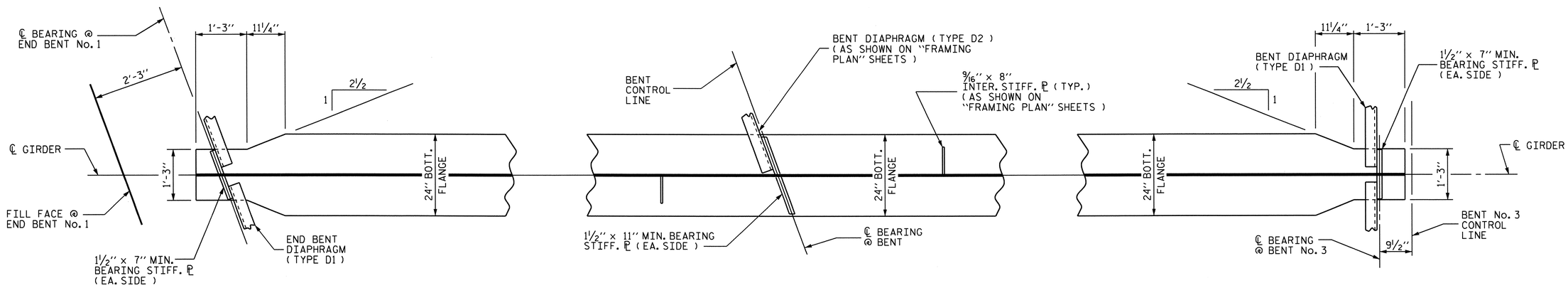

@ END BENT No. 1

@ BENT No. 1 & No. 2

@ BENT No. 3

SPAN "A-B-C" BOTTOM FLANGE DETAIL

SEE FRAMING PLAN SHEETS FOR DIAPHRAGM LOCATIONS

PROJECT NO. B-4028

BLADEN COUNTY

STATION: 29+02.50 -L-

SHEET 4 OF 5

NORTH CAROLINA PROFESSIONAL SEAL 14855 ENGINEER DOUGLAS R. CALHOUN

6/26/12

STATE OF NORTH CAROLINA
DEPARTMENT OF TRANSPORTATION
RALEIGH

SUPERSTRUCTURE

STRUCTURAL STEEL DETAILS

REVISIONS						SHEET NO.
NO.	BY:	DATE:	NO.	BY:	DATE:	S-31
1			3			TOTAL SHEETS
2			4			147

DRAWN BY : MIKE BRITT DATE : 11-18-10
CHECKED BY : S.B. WILLIAMS DATE : 2-2011

26-JUN-2012 13:59
R:\Structures\STRI\SuperDrawings\b4028_str1_SS.dgn
dely

STR. #1

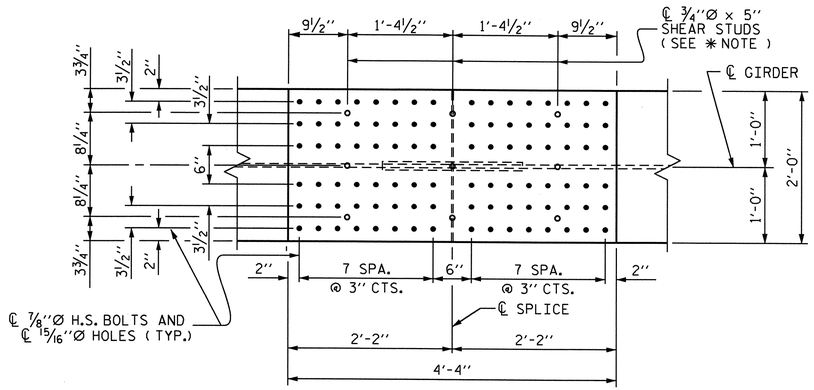

PLAN (TOP OF TOP FLANGE)

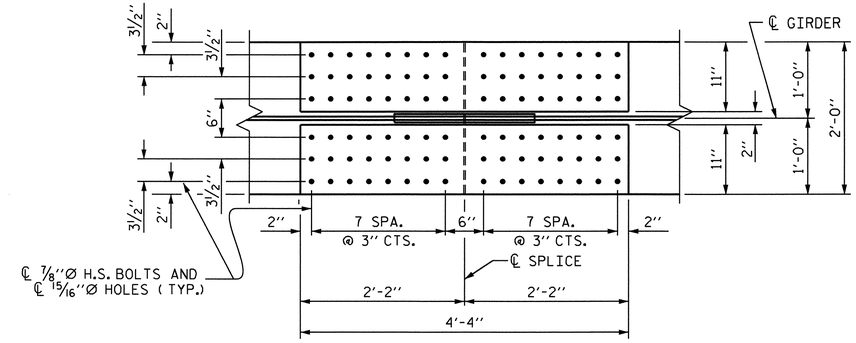

PLAN (TOP OF BOTTOM FLANGE)

✱ NOTE :
SHEAR STUDS ARE TO BE SHOP WELDED ON TOP OF PLATE BEFORE FIELD ASSEMBLY.

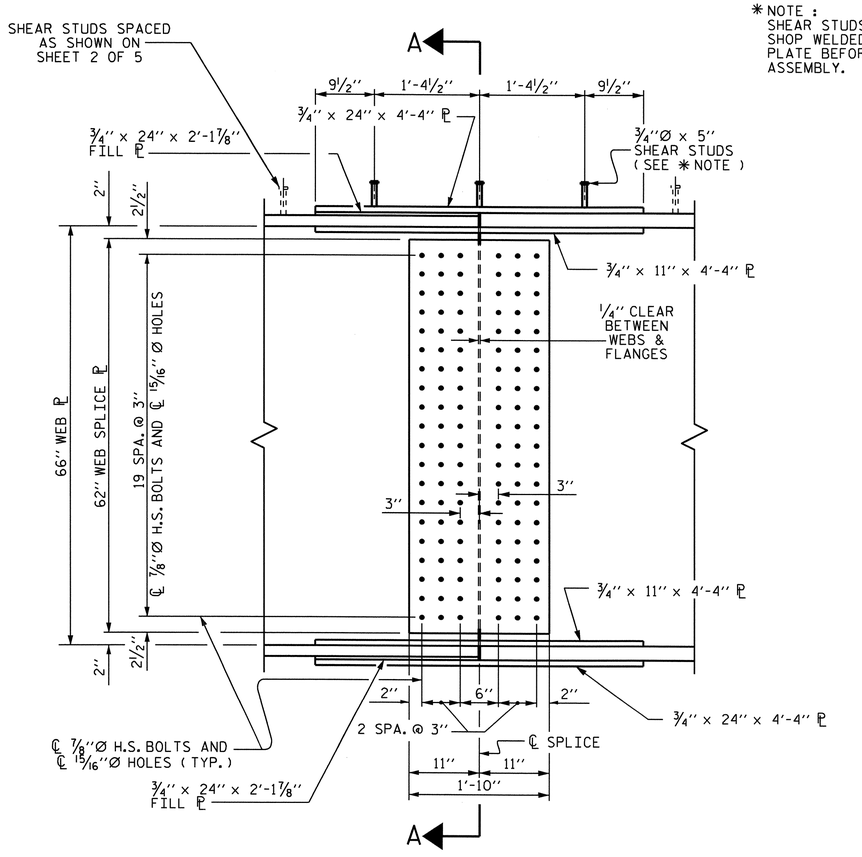

ELEVATION

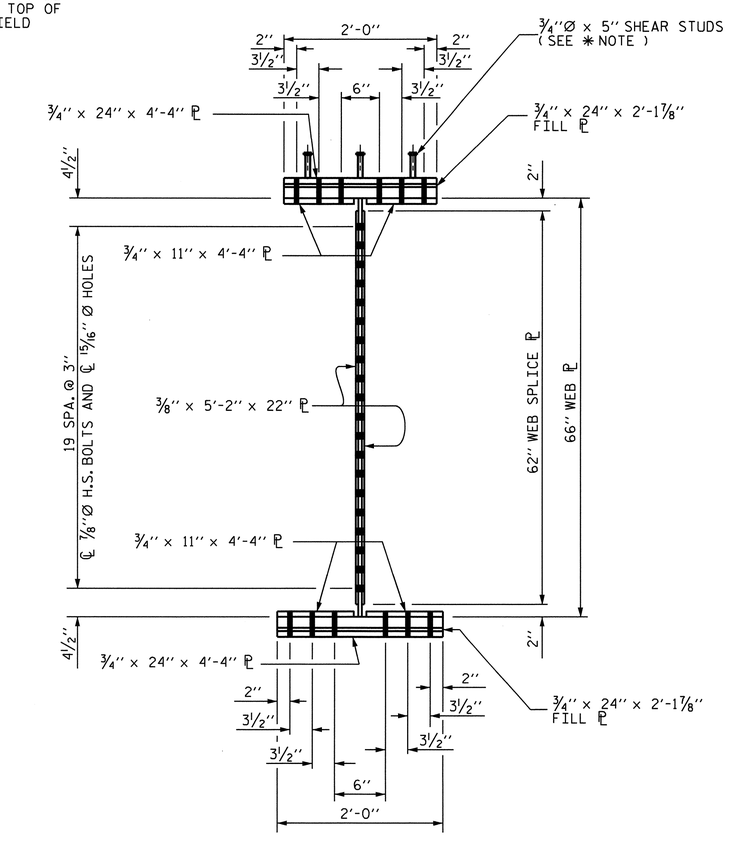

SECTION A-A

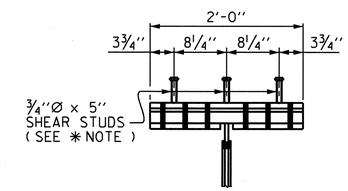

SHEAR STUD DETAIL FOR TOP FLANGE SPLICE PLATE

BOLTED FIELD SPLICE DETAILS

(TYPICAL EACH FIELD SPLICE)

PROJECT NO. B-4028
BLADEN COUNTY
STATION: 29+02.50 -L-

SHEET 5 OF 5

STATE OF NORTH CAROLINA
DEPARTMENT OF TRANSPORTATION
RALEIGH

SUPERSTRUCTURE
STRUCTURAL STEEL DETAILS

NORTH CAROLINA PROFESSIONAL SEAL 14855 ENGINEER DOUGLAS R. CALDWELL
6/26/12

REVISIONS						SHEET NO.
NO.	BY:	DATE:	NO.	BY:	DATE:	S-32
1			3			TOTAL SHEETS
2			4			147

DRAWN BY : MIKE BRITT DATE : 11-19-10
CHECKED BY : S.B. WILLIAMS DATE : 2-2011

26-JUN-2012 13:58
R:\Structures\STRI\SuperDrawings\b4028_str1_SS.dgn
dely

STR. #1

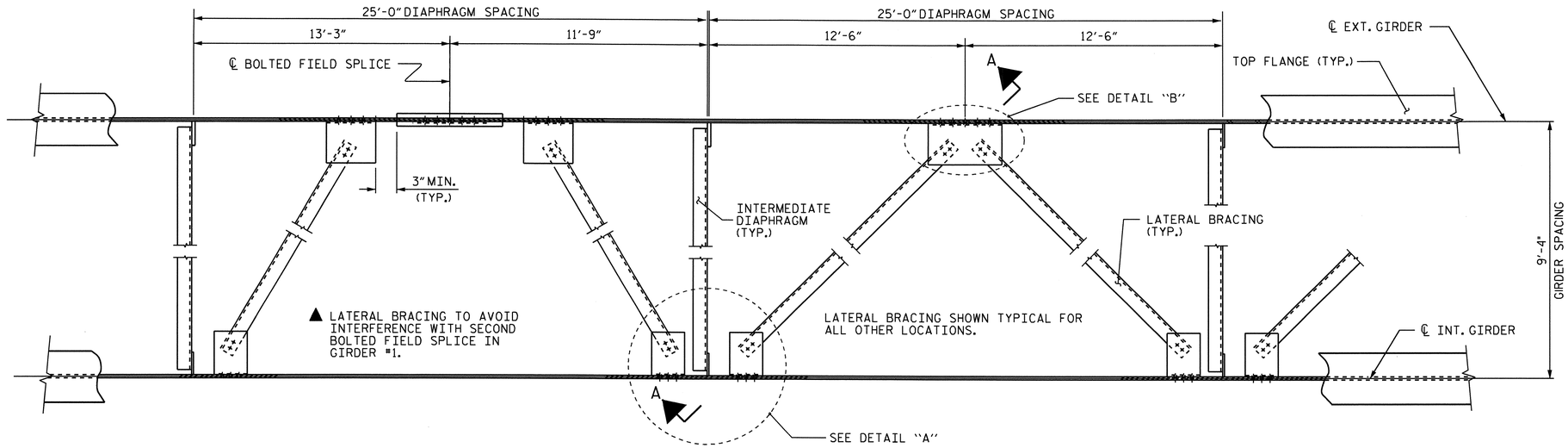

PART PLAN - TOP FLANGE LATERAL BRACING

(THROUGHOUT EXTERIOR BAYS ONLY)

NOTES

LATERAL BRACING ASSEMBLY SHALL COMPLY WITH SECTION 1072 OF THE STANDARD SPECIFICATIONS.

ALL STRUCTURAL STEEL SHALL BE AASHTO M270 GRADE 50W OR APPROVED EQUAL.

TENSION ON THE ASTM A325 BOLTS SHALL BE CALIBRATED USING DIRECT TENSION INDICATOR WASHERS IN ACCORDANCE WITH THE STANDARD SPECIFICATIONS.

ALL BOLTED CONNECTIONS SHALL BE 7/8" Ø HIGH STRENGTH BOLTS UNLESS OTHERWISE SPECIFIED.

THE CONTRACTOR HAS THE OPTION TO CLIP THE PROTRUDING CORNERS OF THE GUSSET PLATES, AT NO ADDITIONAL COST TO THE DEPARTMENT.

BENT GUSSET PLATES OR ROLLED ANGLE SHAPES MAY BE SUBSTITUTED FOR THE WELDED GUSSET PLATES DETAILED IF APPROVED BY THE ENGINEER, AT NO ADDITIONAL COST TO THE DEPARTMENT.

INSTALL THE LATERAL BRACING AFTER ERECTING THE EXTERIOR GIRDER AND THE ADJACENT INTERIOR GIRDER AND INSTALLING THE INTERMEDIATE DIAPHRAGMS.

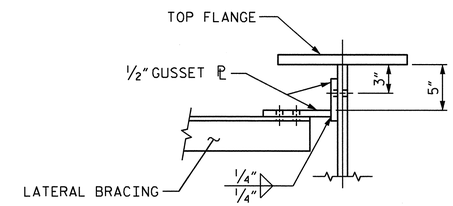

SECTION THRU CONNECTION

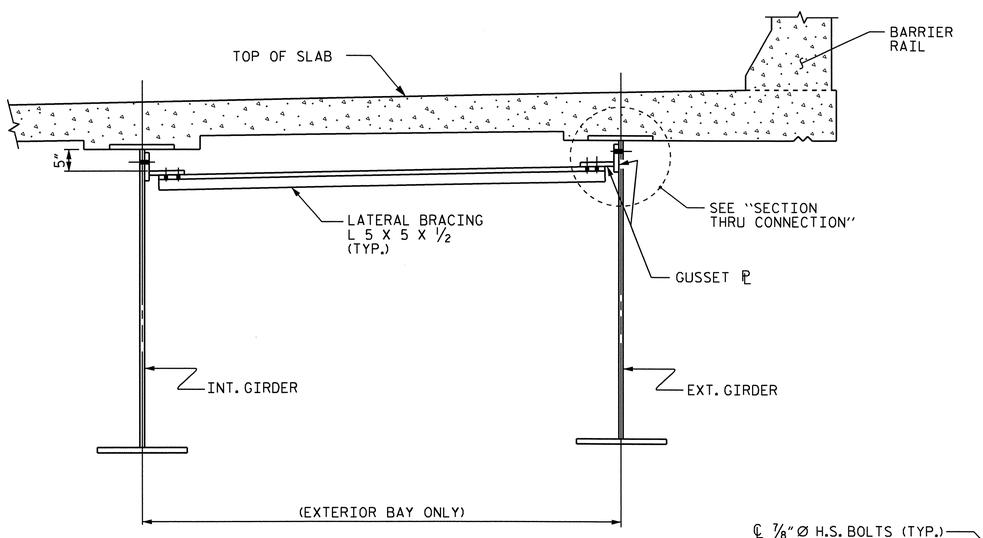

SECTION A-A

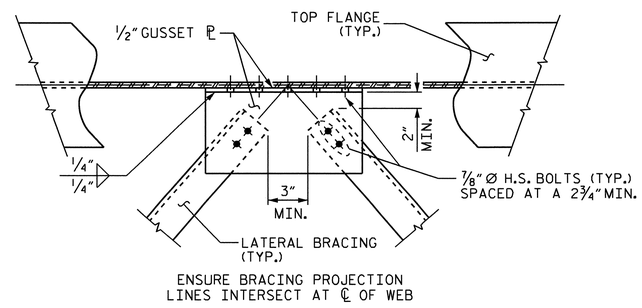

DETAIL "B"

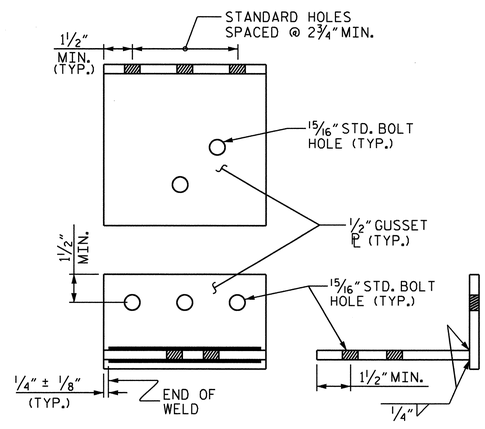

CONNECTION DETAIL

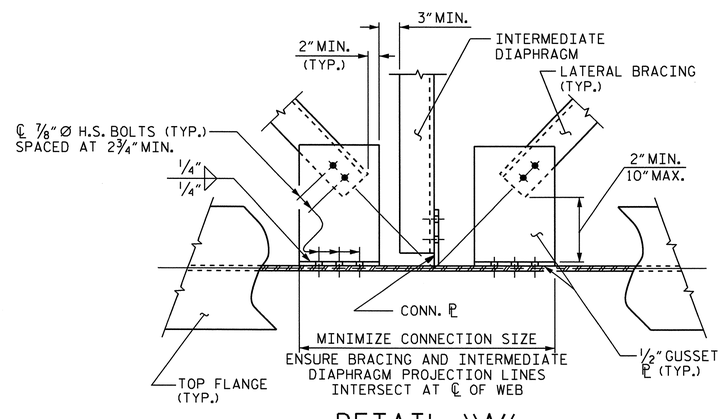

DETAIL "A"

PROJECT NO. B-4028

BLADEN COUNTY

STATION: 29+02.50 -L-

STATE OF NORTH CAROLINA
DEPARTMENT OF TRANSPORTATION
RALEIGH

STANDARD

LATERAL BRACING

NORTH CAROLINA PROFESSIONAL SEAL 14855 ENGINEER DOUGLAS R. CALHOUN
06/26/12

REVISIONS						SHEET NO.
NO.	BY:	DATE:	NO.	BY:	DATE:	S-33
1			3			TOTAL SHEETS
2			4			147

ASSEMBLED BY:	D. G. ELY	DATE:	4/12
CHECKED BY :	D. R. CALHOUN	DATE:	4/12
DRAWN BY :	WMC 6/11	ADDED: 10/31/11	
CHECKED BY :	GM 6/11		

26-JUN-2012 13:58
R:\Structures\STRI\SuperDrawings\b4028_str1_SS.dgn
dely

STD. NO. LB1

DEAD LOAD DEFLECTION TABLE FOR GIRDERS

SPAN "A"	GIRDER #1																				
TWENTIETH POINTS	0	.05	.10	.15	.20	.25	.30	.35	.40	.45	.50	.55	.60	.65	.70	.75	.80	.85	.90	.95	0
DEFLECTION DUE TO WEIGHT OF GIRDER ↓	0	.001	.002	.003	.003	.004	.003	.003	.002	.001	.000	-.002	-.003	-.005	-.006	-.007	-.007	-.007	-.005	-.003	0
DEFLECTION DUE TO WEIGHT OF SLAB * ↓	0	.004	.006	.008	.011	.011	.011	.010	.007	.004	.001	-.003	-.007	-.011	-.014	-.016	-.017	-.015	-.013	-.008	0
DEFLECTION DUE TO WEIGHT OF BARRIER RAIL ↓	0	.000	.001	.001	.001	.001	.001	.001	.001	.001	.000	.000	-.001	-.001	-.002	-.002	-.002	-.002	-.002	-.001	0
TOTAL DEAD LOAD DEFLECTION ↓	0	.005	.009	.012	.015	.016	.015	.014	.010	.006	.001	-.005	-.011	-.017	-.022	-.025	-.026	-.024	-.020	-.012	0
VERTICAL CURVE ORDINATE ↑	0	.002	.004	.006	.008	.010	.012	.014	.016	.017	.019	.021	.023	.025	.026	.026	.024	.020	.015	.008	0
REQUIRED CAMBER ↑	0	1/16"	1/8"	3/16"	1/4"	5/16"	5/16"	5/16"	5/16"	5/16"	1/4"	3/16"	1/8"	1/8"	1/16"	0	0	- 1/16"	- 1/16"	- 1/16"	0

DEAD LOAD DEFLECTION TABLE FOR GIRDERS

SPAN "A"	GIRDER #2																				
TWENTIETH POINTS	0	.05	.10	.15	.20	.25	.30	.35	.40	.45	.50	.55	.60	.65	.70	.75	.80	.85	.90	.95	0
DEFLECTION DUE TO WEIGHT OF GIRDER ↓	0	.001	.002	.003	.003	.003	.003	.003	.002	.001	-.001	-.002	-.004	-.005	-.006	-.007	-.007	-.007	-.005	-.003	0
DEFLECTION DUE TO WEIGHT OF SLAB * ↓	0	.004	.006	.008	.010	.010	.011	.009	.007	.003	.001	-.004	-.007	-.012	-.014	-.017	-.018	-.016	-.013	-.008	0
DEFLECTION DUE TO WEIGHT OF BARRIER RAIL ↓	0	.000	.001	.001	.001	.001	.001	.001	.001	.001	.000	.000	-.001	-.001	-.002	-.002	-.002	-.002	-.002	-.001	0
TOTAL DEAD LOAD DEFLECTION ↓	0	.005	.009	.012	.014	.014	.015	.013	.010	.005	.000	-.006	-.012	-.018	-.022	-.026	-.027	-.025	-.020	-.012	0
VERTICAL CURVE ORDINATE ↑	0	.002	.005	.007	.009	.011	.014	.016	.018	.021	.023	.025	.027	.030	.030	.029	.027	.022	.016	.009	0
REQUIRED CAMBER ↑	0	1/16"	3/16"	1/4"	1/4"	5/16"	5/16"	3/8"	5/16"	5/16"	1/4"	1/4"	3/16"	1/8"	1/16"	1/16"	0	- 1/16"	- 1/16"	- 1/16"	0

DEAD LOAD DEFLECTION TABLE FOR GIRDERS

SPAN "A"	GIRDER #3																				
TWENTIETH POINTS	0	.05	.10	.15	.20	.25	.30	.35	.40	.45	.50	.55	.60	.65	.70	.75	.80	.85	.90	.95	0
DEFLECTION DUE TO WEIGHT OF GIRDER ↓	0	.001	.002	.003	.003	.003	.003	.003	.002	.001	-.001	-.002	-.004	-.005	-.007	-.007	-.007	-.007	-.006	-.003	0
DEFLECTION DUE TO WEIGHT OF SLAB * ↓	0	.003	.005	.008	.010	.011	.010	.008	.006	.003	.000	-.005	-.008	-.012	-.014	-.017	-.018	-.016	-.013	-.008	0
DEFLECTION DUE TO WEIGHT OF BARRIER RAIL ↓	0	.000	.001	.001	.001	.001	.001	.001	.001	.001	.000	.000	-.001	-.001	-.002	-.002	-.002	-.002	-.002	-.001	0
TOTAL DEAD LOAD DEFLECTION ↓	0	.004	.008	.012	.014	.015	.014	.012	.009	.005	-.001	-.007	-.013	-.018	-.022	-.026	-.027	-.025	-.021	-.012	0
VERTICAL CURVE ORDINATE ↑	0	.003	.005	.008	.011	.013	.016	.019	.021	.024	.027	.029	.032	.034	.034	.032	.029	.024	.018	.010	0
REQUIRED CAMBER ↑	0	1/16"	3/16"	1/4"	5/16"	5/16"	3/8"	3/8"	3/8"	3/8"	5/16"	1/4"	1/4"	3/16"	1/8"	1/16"	0	0	- 1/16"	0	0

DEAD LOAD DEFLECTION TABLE FOR GIRDERS

SPAN "A"	GIRDER #4																				
TWENTIETH POINTS	0	.05	.10	.15	.20	.25	.30	.35	.40	.45	.50	.55	.60	.65	.70	.75	.80	.85	.90	.95	0
DEFLECTION DUE TO WEIGHT OF GIRDER ↓	0	.001	.002	.003	.003	.003	.003	.002	.002	.000	-.001	-.003	-.004	-.006	-.007	-.007	-.008	-.007	-.006	-.003	0
DEFLECTION DUE TO WEIGHT OF SLAB * ↓	0	.003	.005	.007	.009	.010	.010	.009	.005	.003	.000	-.004	-.009	-.012	-.015	-.018	-.018	-.017	-.013	-.009	0
DEFLECTION DUE TO WEIGHT OF BARRIER RAIL ↓	0	.000	.001	.001	.001	.001	.001	.001	.001	.001	.000	.000	-.001	-.001	-.002	-.002	-.002	-.002	-.002	-.001	0
TOTAL DEAD LOAD DEFLECTION ↓	0	.004	.008	.011	.013	.014	.014	.012	.008	.004	-.001	-.007	-.014	-.019	-.024	-.027	-.028	-.026	-.021	-.013	0
VERTICAL CURVE ORDINATE ↑	0	.003	.006	.009	.012	.015	.019	.022	.025	.028	.031	.034	.037	.038	.037	.035	.031	.026	.019	.010	0
REQUIRED CAMBER ↑	0	1/16"	3/16"	1/4"	5/16"	3/8"	3/8"	3/8"	3/8"	3/8"	3/8"	5/16"	1/4"	1/4"	3/16"	1/16"	1/16"	0	0	0	0

* INCLUDES SLAB, BUILDUPS & STAY-IN-PLACE FORMS.
ALL VALUES ARE SHOWN IN FEET (DECIMAL FORM), EXCEPT "REQUIRED CAMBER", WHICH IS GIVEN IN INCHES (FRACTION FORM).
DEFLECTIONS ARE TAKEN AT TWENTIETH POINTS BETWEEN BEARINGS.

NORTH CAROLINA PROFESSIONAL SEAL 14855 ENGINEER DOUGLAS R. CALHOUN
6/26/12

PROJECT NO. B-4028
BLADEN COUNTY
STATION: 29+02.50 -L-

SHEET 1 OF 4

STATE OF NORTH CAROLINA
DEPARTMENT OF TRANSPORTATION
RALEIGH

SUPERSTRUCTURE
DEAD LOAD DEFLECTIONS
SPAN "A"

REVISIONS						SHEET NO.
NO.	BY:	DATE:	NO.	BY:	DATE:	S-34
1			3			TOTAL SHEETS
2			4			147

DRAWN BY : MIKE BRITT DATE : 12-17-10
CHECKED BY : S.B. WILLIAMS DATE : 2-2011

26-JUN-2012 13:57
R:\Structures\STR1\SuperDrawings\b4028_str1_DL.dgn
dely

DEAD LOAD DEFLECTION TABLE FOR GIRDERS

SPAN "B"	GIRDER #1																				
TWENTIETH POINTS	0	.05	.10	.15	.20	.25	.30	.35	.40	.45	.50	.55	.60	.65	.70	.75	.80	.85	.90	.95	0
DEFLECTION DUE TO WEIGHT OF GIRDER ↓	0	.008	.019	.031	.044	.056	.068	.078	.085	.090	.091	.089	.084	.076	.066	.054	.041	.029	.017	.007	0
DEFLECTION DUE TO WEIGHT OF SLAB * ↓	0	.020	.047	.078	.111	.144	.174	.198	.218	.228	.232	.228	.214	.195	.168	.138	.106	.072	.043	.018	0
DEFLECTION DUE TO WEIGHT OF BARRIER RAIL ↓	0	.003	.006	.010	.014	.019	.022	.026	.028	.030	.030	.029	.028	.025	.022	.018	.014	.010	.006	.002	0
TOTAL DEAD LOAD DEFLECTION ↓	0	.031	.072	.119	.169	.219	.264	.302	.331	.348	.353	.346	.326	.296	.256	.210	.161	.111	.066	.027	0
VERTICAL CURVE ORDINATE ↑	0	.043	.081	.114	.144	.168	.188	.204	.215	.222	.224	.222	.215	.204	.188	.168	.144	.114	.081	.043	0
REQUIRED CAMBER ↑	0	7/8"	1 13/16"	2 13/16"	3 3/4"	4 5/8"	5 7/16"	6 1/16"	6 9/16"	6 13/16"	6 15/16"	6 13/16"	6 1/2"	6"	5 5/16"	4 9/16"	3 5/8"	2 11/16"	1 3/4"	13/16"	0

DEAD LOAD DEFLECTION TABLE FOR GIRDERS

SPAN "B"	GIRDER #2																				
TWENTIETH POINTS	0	.05	.10	.15	.20	.25	.30	.35	.40	.45	.50	.55	.60	.65	.70	.75	.80	.85	.90	.95	0
DEFLECTION DUE TO WEIGHT OF GIRDER ↓	0	.008	.019	.031	.044	.057	.069	.079	.086	.091	.092	.090	.085	.077	.067	.055	.042	.030	.018	.007	0
DEFLECTION DUE TO WEIGHT OF SLAB * ↓	0	.020	.047	.079	.112	.146	.176	.201	.220	.231	.235	.231	.218	.198	.172	.141	.108	.075	.044	.020	0
DEFLECTION DUE TO WEIGHT OF BARRIER RAIL ↓	0	.003	.006	.010	.014	.018	.022	.025	.028	.029	.030	.029	.027	.025	.022	.018	.014	.010	.006	.002	0
TOTAL DEAD LOAD DEFLECTION ↓	0	.031	.072	.120	.170	.221	.267	.305	.334	.351	.357	.350	.330	.300	.261	.214	.164	.115	.068	.029	0
VERTICAL CURVE ORDINATE ↑	0	.043	.081	.114	.144	.168	.188	.204	.215	.222	.224	.222	.215	.204	.188	.168	.144	.114	.081	.043	0
REQUIRED CAMBER ↑	0	7/8"	1 13/16"	2 13/16"	3 3/4"	4 11/16"	5 7/16"	6 1/8"	6 9/16"	6 7/8"	7"	6 7/8"	6 9/16"	6 1/16"	5 3/8"	4 9/16"	3 11/16"	2 3/4"	1 13/16"	7/8"	0

DEAD LOAD DEFLECTION TABLE FOR GIRDERS

SPAN "B"	GIRDER #3																				
TWENTIETH POINTS	0	.05	.10	.15	.20	.25	.30	.35	.40	.45	.50	.55	.60	.65	.70	.75	.80	.85	.90	.95	0
DEFLECTION DUE TO WEIGHT OF GIRDER ↓	0	.008	.019	.031	.045	.058	.069	.079	.087	.092	.093	.091	.086	.079	.068	.056	.043	.030	.018	.008	0
DEFLECTION DUE TO WEIGHT OF SLAB * ↓	0	.021	.048	.080	.113	.146	.178	.203	.223	.234	.238	.234	.221	.201	.175	.145	.111	.078	.046	.019	0
DEFLECTION DUE TO WEIGHT OF BARRIER RAIL ↓	0	.003	.006	.010	.014	.019	.022	.026	.028	.029	.030	.029	.028	.025	.022	.018	.014	.010	.006	.003	0
TOTAL DEAD LOAD DEFLECTION ↓	0	.032	.073	.121	.172	.223	.269	.308	.338	.355	.361	.354	.335	.305	.265	.219	.168	.118	.070	.030	0
VERTICAL CURVE ORDINATE ↑	0	.043	.081	.114	.144	.168	.188	.204	.215	.222	.224	.222	.215	.204	.188	.168	.144	.114	.081	.043	0
REQUIRED CAMBER ↑	0	7/8"	1 7/8"	2 13/16"	3 13/16"	4 11/16"	5 1/2"	6 1/8"	6 5/8"	6 15/16"	7"	6 15/16"	6 5/8"	6 1/8"	5 7/16"	4 5/8"	3 3/4"	2 13/16"	1 13/16"	7/8"	0

DEAD LOAD DEFLECTION TABLE FOR GIRDERS

SPAN "B"	GIRDER #4																				
TWENTIETH POINTS	0	.05	.10	.15	.20	.25	.30	.35	.40	.45	.50	.55	.60	.65	.70	.75	.80	.85	.90	.95	0
DEFLECTION DUE TO WEIGHT OF GIRDER ↓	0	.008	.019	.032	.045	.058	.070	.080	.088	.093	.094	.092	.087	.080	.069	.057	.044	.031	.019	.008	0
DEFLECTION DUE TO WEIGHT OF SLAB * ↓	0	.021	.049	.080	.114	.149	.179	.206	.225	.236	.241	.238	.224	.204	.178	.147	.113	.080	.048	.020	0
DEFLECTION DUE TO WEIGHT OF BARRIER RAIL ↓	0	.003	.006	.010	.015	.019	.023	.026	.029	.031	.031	.030	.029	.026	.023	.019	.015	.010	.006	.003	0
TOTAL DEAD LOAD DEFLECTION ↓	0	.032	.074	.122	.174	.226	.272	.312	.342	.360	.366	.360	.340	.310	.270	.223	.172	.121	.073	.031	0
VERTICAL CURVE ORDINATE ↑	0	.043	.081	.114	.144	.168	.188	.204	.215	.222	.224	.222	.215	.204	.188	.168	.144	.114	.081	.043	0
REQUIRED CAMBER ↑	0	7/8"	1 7/8"	2 13/16"	3 13/16"	4 3/4"	5 1/2"	6 3/16"	6 11/16"	7"	7 1/16"	7"	6 11/16"	6 3/16"	5 1/2"	4 11/16"	3 13/16"	2 13/16"	1 13/16"	7/8"	0

* INCLUDES SLAB, BUILDUPS & STAY-IN-PLACE FORMS.
ALL VALUES ARE SHOWN IN FEET (DECIMAL FORM), EXCEPT "REQUIRED CAMBER", WHICH IS GIVEN IN INCHES (FRACTION FORM).
DEFLECTIONS ARE TAKEN AT TWENTIETH POINTS BETWEEN BEARINGS.

NORTH CAROLINA PROFESSIONAL SEAL 14855 ENGINEER DOUGLAS R. CALHOUN
06/26/12

PROJECT NO. B-4028
BLADEN COUNTY
STATION: 29+02.50 -L-

SHEET 2 OF 4

STATE OF NORTH CAROLINA
DEPARTMENT OF TRANSPORTATION
RALEIGH

SUPERSTRUCTURE
DEAD LOAD DEFLECTIONS
SPAN "B"

REVISIONS						SHEET NO.
NO.	BY:	DATE:	NO.	BY:	DATE:	S-35
1			3			TOTAL SHEETS
2			4			147

DRAWN BY : MIKE BRITT DATE : 12-17-10
CHECKED BY : S.B. WILLIAMS DATE : 2-2011

26-JUN-2012 13:57
R:\Structures\STRI\SuperDrawings\b4028_stri_DL.dgn
dely

STR. #1

DEAD LOAD DEFLECTION TABLE FOR GIRDERS

SPAN "C"	GIRDER #1																				
TWENTIETH POINTS	0	.05	.10	.15	.20	.25	.30	.35	.40	.45	.50	.55	.60	.65	.70	.75	.80	.85	.90	.95	0
DEFLECTION DUE TO WEIGHT OF GIRDER ↓	0	-.003	-.004	-.004	-.003	-.002	.000	.003	.005	.007	.009	.011	.012	.013	.013	.012	.010	.008	.006	.003	0
DEFLECTION DUE TO WEIGHT OF SLAB ✱ ↓	0	-.006	-.010	-.010	-.008	-.004	.002	.008	.014	.021	.026	.031	.034	.034	.034	.032	.028	.023	.016	.008	0
DEFLECTION DUE TO WEIGHT OF BARRIER RAIL ↓	0	-.001	-.001	-.001	-.001	.000	.000	.001	.002	.003	.004	.004	.004	.005	.004	.004	.004	.003	.002	.001	0
TOTAL DEAD LOAD DEFLECTION ↓	0	-.010	-.015	-.015	-.012	-.006	.002	.012	.021	.031	.039	.046	.050	.052	.051	.048	.042	.034	.024	.012	0
VERTICAL CURVE ORDINATE ↑	0	.019	.036	.051	.064	.075	.084	.091	.096	.099	.100	.099	.096	.091	.084	.075	.064	.051	.036	.019	0
REQUIRED CAMBER ↑	0	1/8"	1/4"	7/16"	5/8"	13/16"	1"	1 1/4"	1 7/16"	1 9/16"	1 11/16"	1 3/4"	1 3/4"	1 11/16"	1 5/8"	1 1/2"	1 1/4"	1"	11/16"	3/8"	0

DEAD LOAD DEFLECTION TABLE FOR GIRDERS

SPAN "C"	GIRDER #2																				
TWENTIETH POINTS	0	.05	.10	.15	.20	.25	.30	.35	.40	.45	.50	.55	.60	.65	.70	.75	.80	.85	.90	.95	0
DEFLECTION DUE TO WEIGHT OF GIRDER ↓	0	-.003	-.005	-.005	-.005	-.004	-.002	.000	.002	.004	.006	.008	.009	.010	.010	.009	.008	.007	.005	.002	0
DEFLECTION DUE TO WEIGHT OF SLAB ✱ ↓	0	-.007	-.011	-.011	-.010	-.007	-.003	.003	.008	.014	.019	.022	.026	.027	.027	.026	.023	.018	.012	.007	0
DEFLECTION DUE TO WEIGHT OF BARRIER RAIL ↓	0	-.001	-.001	-.002	-.001	-.001	.000	.000	.001	.002	.002	.003	.003	.003	.003	.003	.003	.002	.002	.001	0
TOTAL DEAD LOAD DEFLECTION ↓	0	-.011	-.017	-.018	-.016	-.012	-.005	.003	.011	.020	.027	.033	.038	.040	.040	.038	.034	.027	.019	.010	0
VERTICAL CURVE ORDINATE ↑	0	.018	.034	.048	.061	.071	.079	.086	.091	.094	.095	.094	.091	.086	.079	.071	.061	.048	.034	.018	0
REQUIRED CAMBER ↑	0	1/16"	3/16"	3/8"	1/2"	11/16"	7/8"	1 1/16"	1 1/4"	1 3/8"	1 7/16"	1 1/2"	1 9/16"	1 1/2"	1 7/16"	1 5/16"	1 1/8"	7/8"	5/8"	5/16"	0

DEAD LOAD DEFLECTION TABLE FOR GIRDERS

SPAN "C"	GIRDER #3																				
TWENTIETH POINTS	0	.05	.10	.15	.20	.25	.30	.35	.40	.45	.50	.55	.60	.65	.70	.75	.80	.85	.90	.95	0
DEFLECTION DUE TO WEIGHT OF GIRDER ↓	0	-.003	-.005	-.006	-.006	-.005	-.004	-.002	.000	.002	.004	.005	.006	.007	.007	.007	.006	.005	.004	.002	0
DEFLECTION DUE TO WEIGHT OF SLAB ✱ ↓	0	-.008	-.011	-.013	-.012	-.011	-.007	-.004	.002	.006	.011	.015	.018	.020	.020	.020	.018	.014	.010	.005	0
DEFLECTION DUE TO WEIGHT OF BARRIER RAIL ↓	0	-.001	-.002	-.002	-.002	-.001	-.001	.000	.000	.001	.001	.002	.002	.002	.003	.002	.002	.002	.001	.001	0
TOTAL DEAD LOAD DEFLECTION ↓	0	-.012	-.018	-.021	-.020	-.017	-.012	-.006	.002	.009	.016	.022	.026	.029	.030	.029	.026	.021	.015	.008	0
VERTICAL CURVE ORDINATE ↑	0	.017	.032	.046	.057	.067	.075	.081	.086	.088	.089	.088	.086	.081	.075	.067	.057	.046	.032	.017	0
REQUIRED CAMBER ↑	0	1/16"	3/16"	5/16"	7/16"	5/8"	3/4"	7/8"	1 1/16"	1 3/16"	1 1/4"	1 5/16"	1 5/16"	1 5/16"	1 1/4"	1 1/8"	1"	13/16"	9/16"	5/16"	0

DEAD LOAD DEFLECTION TABLE FOR GIRDERS

SPAN "C"	GIRDER #4																				
TWENTIETH POINTS	0	.05	.10	.15	.20	.25	.30	.35	.40	.45	.50	.55	.60	.65	.70	.75	.80	.85	.90	.95	0
DEFLECTION DUE TO WEIGHT OF GIRDER ↓	0	-.003	-.005	-.006	-.006	-.006	-.005	-.004	-.002	-.001	.001	.003	.004	.004	.005	.005	.005	.004	.003	.001	0
DEFLECTION DUE TO WEIGHT OF SLAB ✱ ↓	0	-.008	-.013	-.016	-.016	-.015	-.012	-.009	-.005	.000	.003	.006	.010	.012	.013	.012	.011	.010	.007	.004	0
DEFLECTION DUE TO WEIGHT OF BARRIER RAIL ↓	0	-.001	-.002	-.002	-.002	-.002	-.002	-.001	-.001	.000	.001	.001	.001	.002	.002	.002	.002	.001	.001	.001	0
TOTAL DEAD LOAD DEFLECTION ↓	0	-.012	-.020	-.024	-.024	-.023	-.019	-.014	-.008	-.001	.005	.010	.015	.018	.020	.019	.018	.015	.011	.006	0
VERTICAL CURVE ORDINATE ↑	0	.016	.030	.043	.054	.063	.071	.077	.081	.083	.084	.083	.081	.077	.071	.063	.054	.043	.030	.016	0
REQUIRED CAMBER ↑	0	1/16"	1/8"	1/4"	3/8"	1/2"	5/8"	3/4"	7/8"	1"	1 1/16"	1 1/8"	1 1/8"	1 1/8"	1 1/16"	1"	7/8"	11/16"	1/2"	1/4"	0

✱ INCLUDES SLAB, BUILDUPS & STAY-IN-PLACE FORMS.
ALL VALUES ARE SHOWN IN FEET (DECIMAL FORM), EXCEPT "REQUIRED CAMBER", WHICH IS GIVEN IN INCHES (FRACTION FORM).
DEFLECTIONS ARE TAKEN AT TWENTIETH POINTS BETWEEN BEARINGS.

NORTH CAROLINA PROFESSIONAL SEAL 14855 ENGINEER DOUGLAS R. CALHOUN
6/26/12

PROJECT NO. B-4028
BLADEN COUNTY
STATION: 29+02.50 -L-

SHEET 3 OF 4

STATE OF NORTH CAROLINA
DEPARTMENT OF TRANSPORTATION
RALEIGH

SUPERSTRUCTURE
DEAD LOAD DEFLECTIONS
SPAN "C"

REVISIONS						SHEET NO.
NO.	BY:	DATE:	NO.	BY:	DATE:	S-36
1			3			TOTAL SHEETS
2			4			147

DRAWN BY : MIKE BRITT DATE : 12-17-10
CHECKED BY : S.B. WILLIAMS DATE : 2-2011

26-JUN-2012 13:57
R:\Structures\STR1\SuperDrawings\b4028_str1_DL.dgn
dely

STR. #1

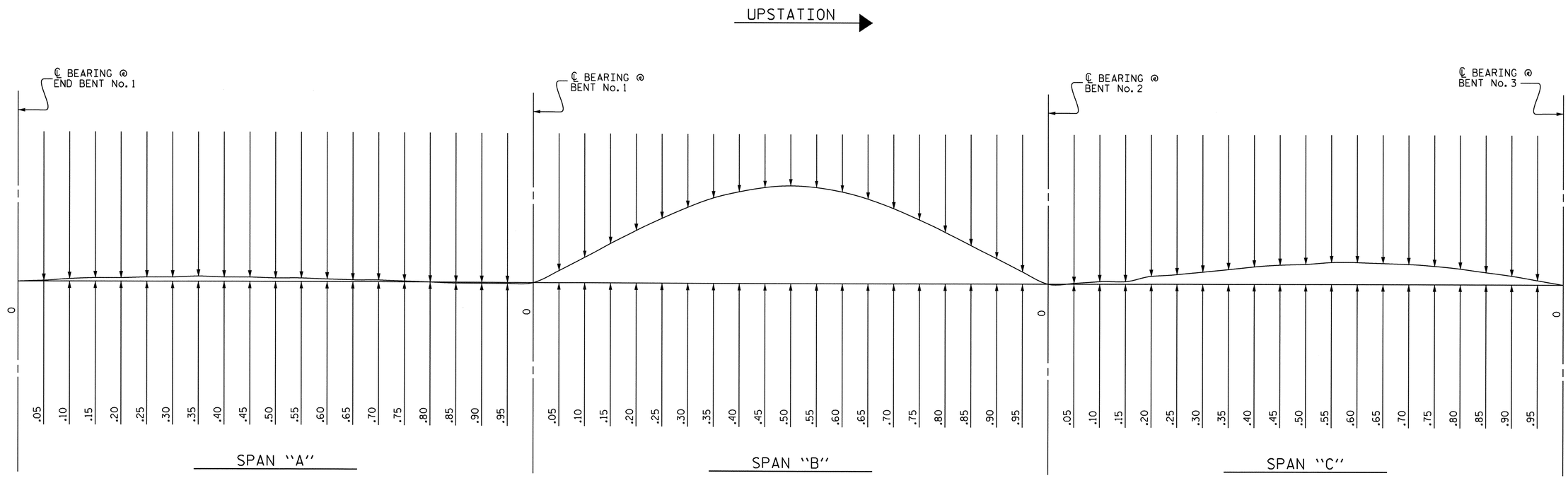

SCHEMATIC CAMBER ORDINATE

FOR CAMBER AT TWENTIETH POINTS, SEE TABLES
SLOPE FOR THE ZERO CAMBER BASE LINE VARIES

PROJECT NO. B-4028
BLADEN COUNTY
STATION: 29+02.50 -L-

SHEET 4 OF 4

STATE OF NORTH CAROLINA
DEPARTMENT OF TRANSPORTATION
RALEIGH

SUPERSTRUCTURE

DEAD LOAD DEFLECTIONS

NORTH CAROLINA PROFESSIONAL SEAL 14855 ENGINEER DOUGLAS R. CALHOUN
6/26/12

REVISIONS						SHEET NO.
NO.	BY:	DATE:	NO.	BY:	DATE:	S-37
1			3			TOTAL SHEETS
2			4			147

DRAWN BY : MIKE BRITT DATE : 12-17-10
CHECKED BY : S.B. WILLIAMS DATE : 2-2011

26-JUN-2012 13:56
R:\Structures\STR1\SuperDrawings\b4028_str1_DL.dgn
dely

STR. #1

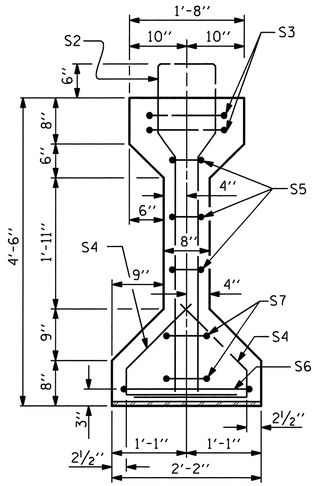

SECTION A-A

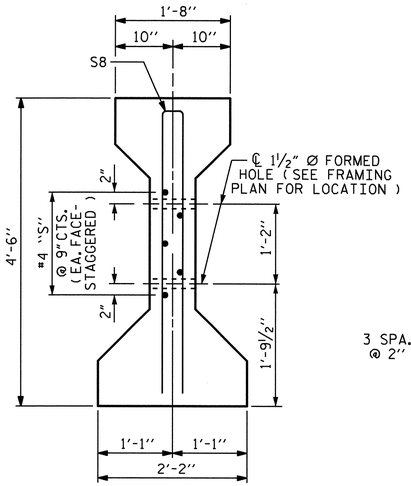

SECTION C-C

(S1 BARS NOT SHOWN)

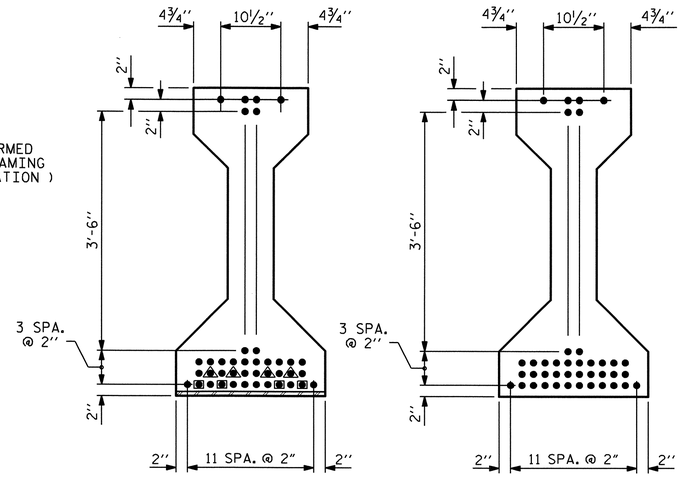

AT END OF GIRDER

AT ℄ OF GIRDER

0.6" Ø LOW RELAXATION STRAND LAYOUT

DEBONDING LENGTH = 4'-0"

DEBONDING LENGTH = 8'-0"

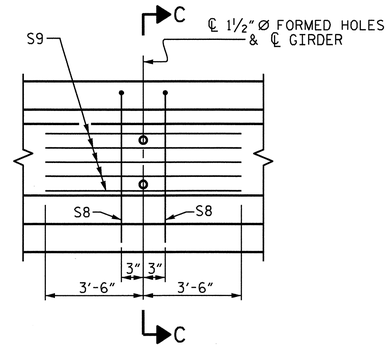

PARTIAL ELEVATION

SHOWING INTERMEDIATE DIAPHRAGM REINFORCING STEEL FOR GIRDERS IN SPAN "D"

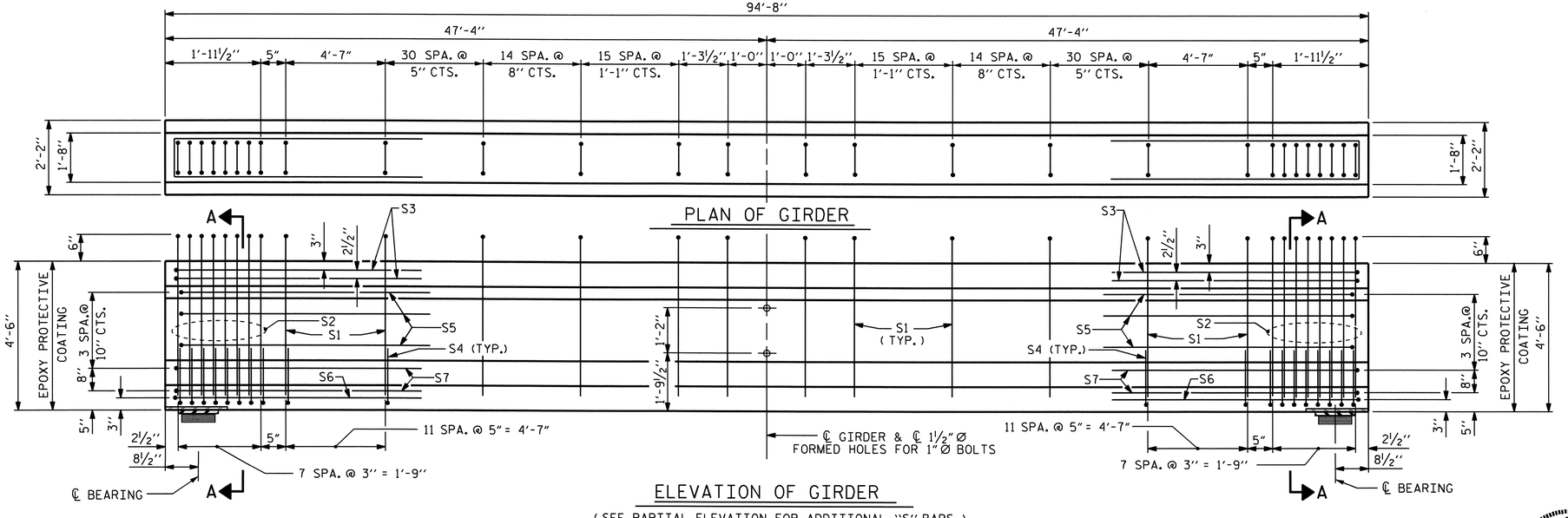

ELEVATION OF GIRDER

(SEE PARTIAL ELEVATION FOR ADDITIONAL "S" BARS)

FIX

EXP.

0.6" Ø L. R. GRADE 270 STRANDS

AREA (SQUARE INCHES)	ULTIMATE STRENGTH (LBS. PER STRAND)	APPLIED PRESTRESS (LBS. PER STRAND)
0.217	58,600	43,950

REINFORCING STEEL FOR ONE GIRDER

BAR	NUMBER	SIZE	TYPE	LENGTH	WEIGHT
S1	144	#4	1	10'-8"	1026
S2	16	#6	1	10'-8"	256
S3	4	#4	2	9'-1"	24
S4	80	#4	3	3'-5"	183
S5	6	#4	2	8'-5"	34
S6	2	#4	2	9'-11"	13
S7	4	#4	2	8'-7"	23
S8	2	#5	2	8'-8"	18
S9	5	#4	STR	7'-0"	23

BAR TYPES

ALL BAR DIMENSIONS ARE OUT-TO-OUT

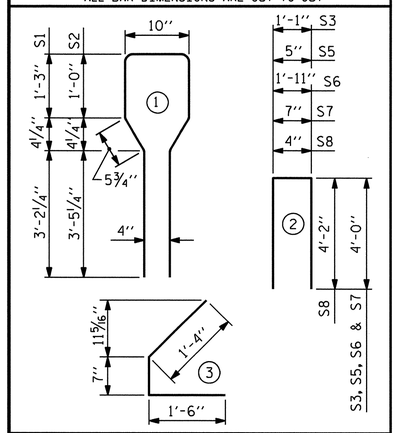

QUANTITIES FOR ONE GIRDER

	REINFORCING STEEL	10,000 PSI CONCRETE	0.6" Ø L. R. STRANDS
	LB.	C.Y.	No.
SPAN "D"	1,600	19.2	40

GIRDERS REQUIRED

NUMBER	LENGTH	TOTAL LENGTH
4	94'-8"	378.67'

PROJECT NO. B-4028

BLADEN COUNTY

STATION: 29+02.50 -L-

STATE OF NORTH CAROLINA
DEPARTMENT OF TRANSPORTATION
RALEIGH

STANDARD

AASHTO TYPE IV
PRESTRESSED CONCRETE GIRDER

SPAN "D"

NORTH CAROLINA PROFESSIONAL SEAL 14855 ENGINEER DOUGLAS R. CALHOUN
8/26/12

ASSEMBLED BY : MIKE BRITT	DATE : 8-3-10
CHECKED BY : S.B. WILLIAMS	DATE : 1-2011

DRAWN BY : JMB 12/87	REV. 8/16/99	RWW/LES	
CHECKED BY : ARB 12/87	REV. 5/1/06	TLA/GM	
	REV. 10/1/11	MAA/GM	

REVISIONS

NO.	BY:	DATE:	NO.	BY:	DATE:
1			3		
2			4		

SHEET NO. S-33

TOTAL SHEETS 197

26-JUN-2012 13:56
R:\Structures\STRI\SuperDrawings\b4028_str1_PCG.dgn
dely

STD. NO. PCG3 STR. #1

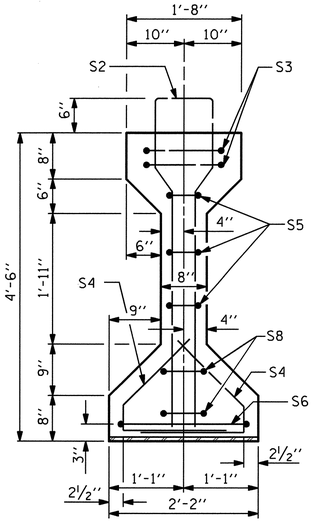

SECTION A-A

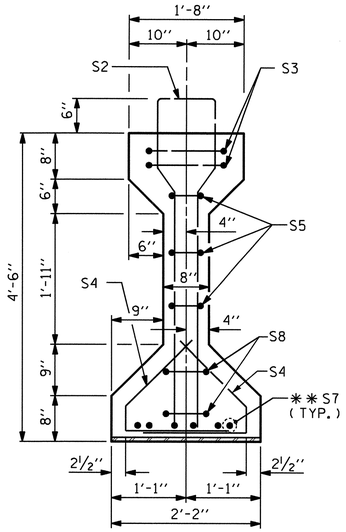

SECTION B-B

** FOR S7 BARS, SEE DETAIL "A" OF PRESTRESSED CONCRETE GIRDER CONTINUOUS FOR LIVE LOAD DETAILS SHEET

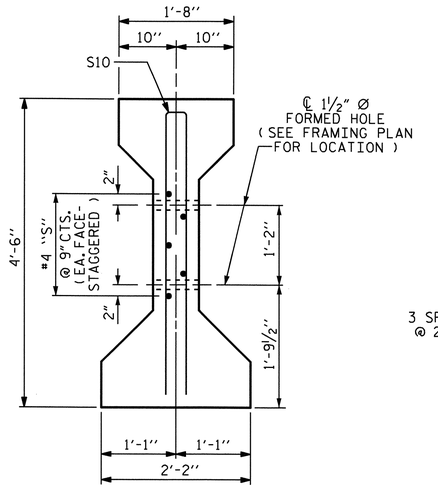

SECTION C-C

(S1 BARS NOT SHOWN)

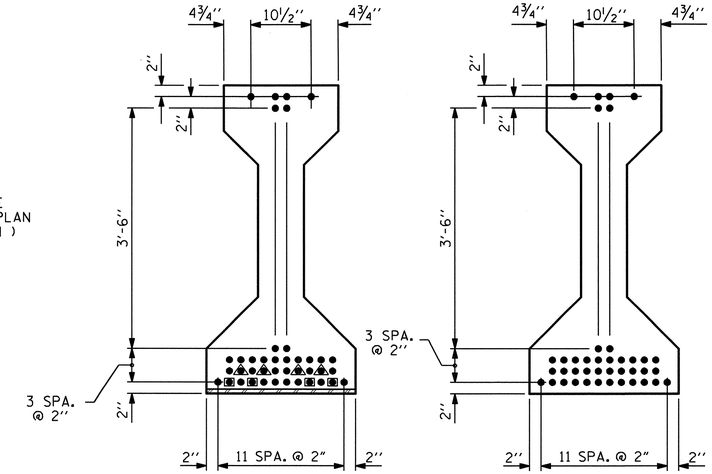

0.6" Ø LOW RELAXATION STRAND LAYOUT

DEBONDING LENGTH = 4'-0"

DEBONDING LENGTH = 8'-0"

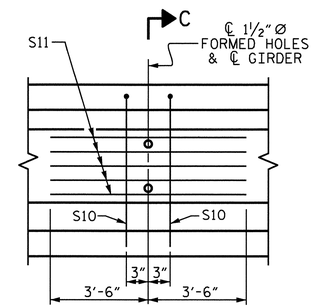

PARTIAL ELEVATION

SHOWING INTERMEDIATE DIAPHRAGM REINFORCING STEEL FOR GIRDERS IN SPANS "E" THRU "K"

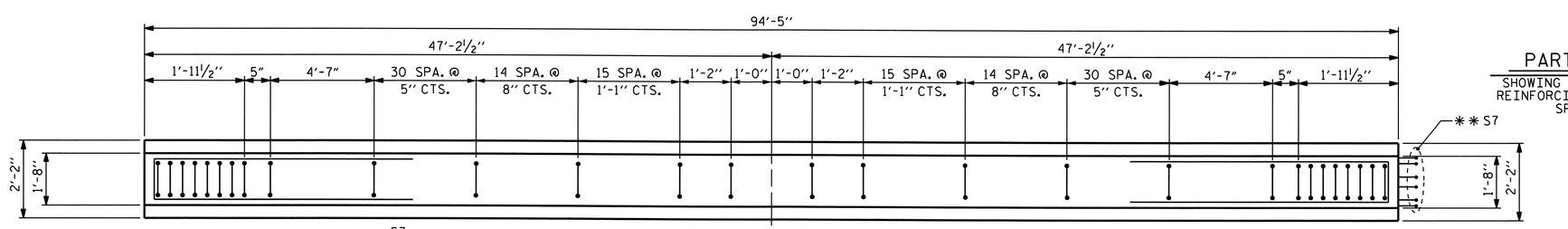

PLAN OF GIRDER

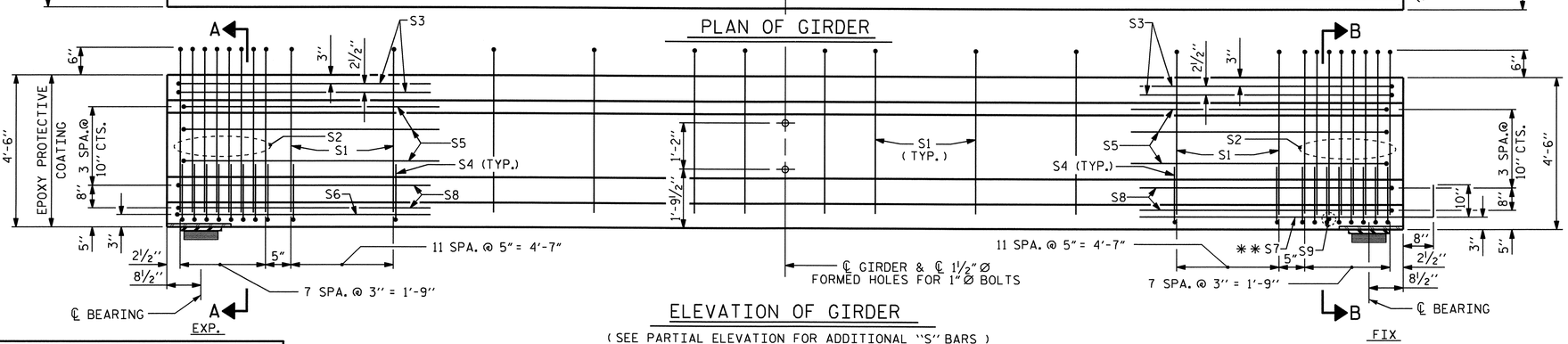

ELEVATION OF GIRDER

(SEE PARTIAL ELEVATION FOR ADDITIONAL "S" BARS)

0.6" Ø L. R. GRADE 270 STRANDS

AREA (SQUARE INCHES)	ULTIMATE STRENGTH (LBS. PER STRAND)	APPLIED PRESTRESS (LBS. PER STRAND)
0.217	58,600	43,950

REINFORCING STEEL FOR ONE GIRDER

BAR	NUMBER	SIZE	TYPE	LENGTH	WEIGHT
S1	144	#4	1	10'-8"	1026
S2	16	#6	1	10'-8"	256
S3	4	#4	2	9'-1"	24
S4	80	#4	3	3'-5"	183
S5	6	#4	2	8'-5"	34
S6	1	#4	2	9'-11"	7
* S7	6	#5	STR	3'-8"	23
S8	4	#4	2	8'-7"	23
S9	1	#3	STR	1'-10"	1
S10	2	#5	2	8'-8"	18
S11	5	#4	STR	7'-0"	23

* NOTE: S7 BARS SHALL BE BENT BEFORE SHIPMENT. HEAT BENDING SHALL NOT BE ALLOWED.

BAR TYPES

ALL BAR DIMENSIONS ARE OUT-TO-OUT

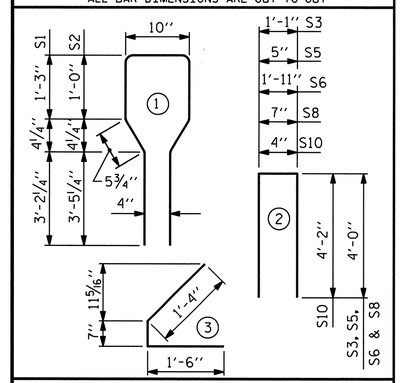

QUANTITIES FOR ONE GIRDER

SPANS "E" THRU "K"	REINFORCING STEEL	10,000 PSI CONCRETE	0.6" Ø L. R. STRANDS
	LB.	C.Y.	No.
	1,618	19.2	40

GIRDERS REQUIRED

NUMBER	LENGTH	TOTAL LENGTH
28	94'-5"	2,643.67'

PROJECT NO. B-4028

BLADEN COUNTY

STATION: 29+02.50 -L-

STATE OF NORTH CAROLINA
DEPARTMENT OF TRANSPORTATION
RALEIGH

STANDARD

AASHTO TYPE IV
PRESTRESSED CONCRETE GIRDER
CONTINUOUS FOR LIVE LOAD
SPANS "E" THRU "K"

NORTH CAROLINA PROFESSIONAL SEAL 14855 ENGINEER DOUGLAS R. CALHOUN
6/26/12

REVISIONS								SHEET NO.
NO.	BY:	DATE:	NO.	BY:	DATE:			S-39
1			3					TOTAL SHEETS
2			4					147

ASSEMBLED BY : MIKE BRITT	DATE : 8-3-10		
CHECKED BY : S.B. WILLIAMS	DATE : 1-2011		
DRAWN BY : JMB 12/87	REV. 10/17/00R	RWW/LES	
CHECKED BY : ARB 12/87	REV. 5/1/06R	TLA/GM	
	REV. 10/1/11	MAA/GM	

26-JUN-2012 13:55
R:\Structures\STRI\SuperDrawings\b4028_stri_PCG.dgn
dely

STD. NO. PCG6 STR. #1

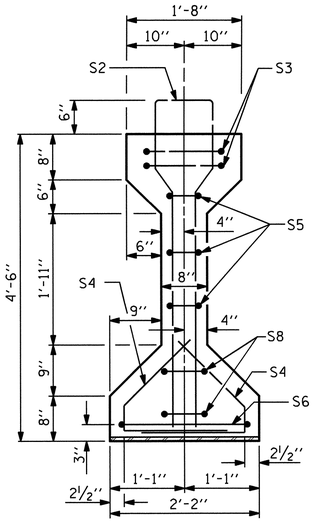

SECTION A-A

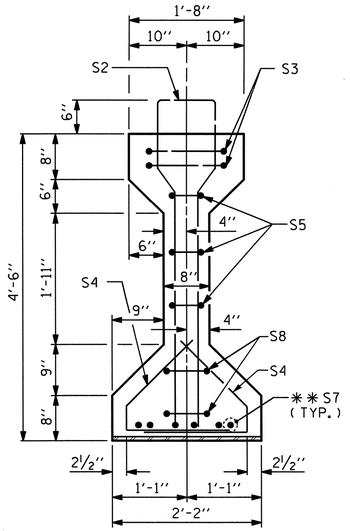

SECTION B-B

** FOR S7 BARS, SEE DETAIL "A" OF PRESTRESSED CONCRETE GIRDER CONTINUOUS FOR LIVE LOAD DETAILS SHEET

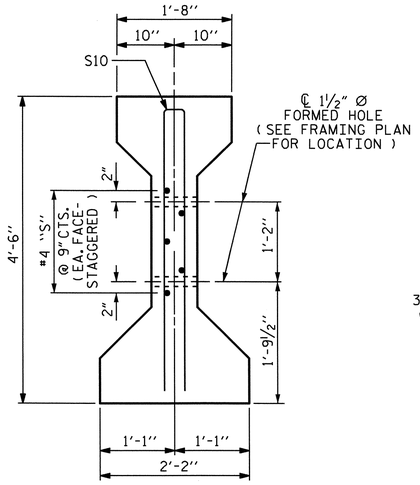

SECTION C-C

(S1 BARS NOT SHOWN)

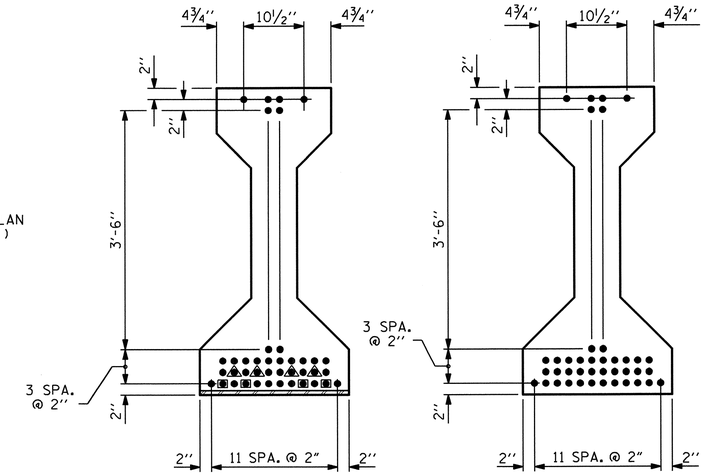

0.6" Ø LOW RELAXATION STRAND LAYOUT

▲ DEBONDING LENGTH = 4'-0"

● DEBONDING LENGTH = 8'-0"

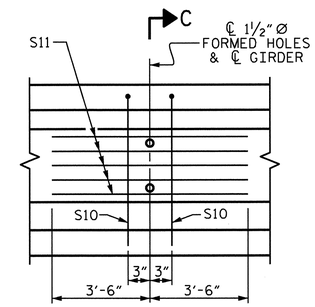

PARTIAL ELEVATION

SHOWING INTERMEDIATE DIAPHRAGM REINFORCING STEEL FOR GIRDERS IN SPANS "E" THRU "K"

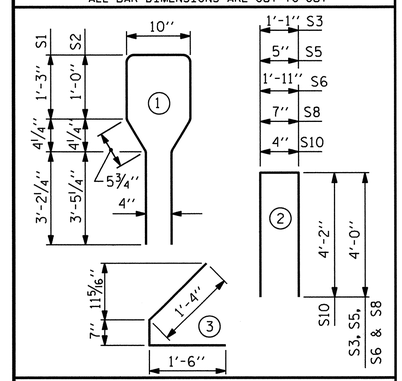

0.6" Ø L. R. GRADE 270 STRANDS

AREA (SQUARE INCHES)	ULTIMATE STRENGTH (LBS. PER STRAND)	APPLIED PRESTRESS (LBS. PER STRAND)
0.217	58,600	43,950

REINFORCING STEEL FOR ONE GIRDER

BAR	NUMBER	SIZE	TYPE	LENGTH	WEIGHT
S1	144	#4	1	10'-8"	1026
S2	16	#6	1	10'-8"	256
S3	4	#4	2	9'-1"	24
S4	80	#4	3	3'-5"	183
S5	6	#4	2	8'-5"	34
S6	1	#4	2	9'-11"	7
* S7	6	#5	STR	3'-8"	23
S8	4	#4	2	8'-7"	23
S9	1	#3	STR	1'-10"	1
S10	2	#5	2	8'-8"	18
S11	5	#4	STR	7'-0"	23

* NOTE: S7 BARS SHALL BE BENT BEFORE SHIPMENT. HEAT BENDING SHALL NOT BE ALLOWED.

BAR TYPES

ALL BAR DIMENSIONS ARE OUT-TO-OUT

QUANTITIES FOR ONE GIRDER

SPAN "L"	REINFORCING STEEL	10,000 PSI CONCRETE	0.6" Ø L. R. STRANDS
	LB.	C.Y.	No.
	1,618	18.9	40

GIRDERS REQUIRED

NUMBER	LENGTH	TOTAL LENGTH
4	93'-2½"	372.83'

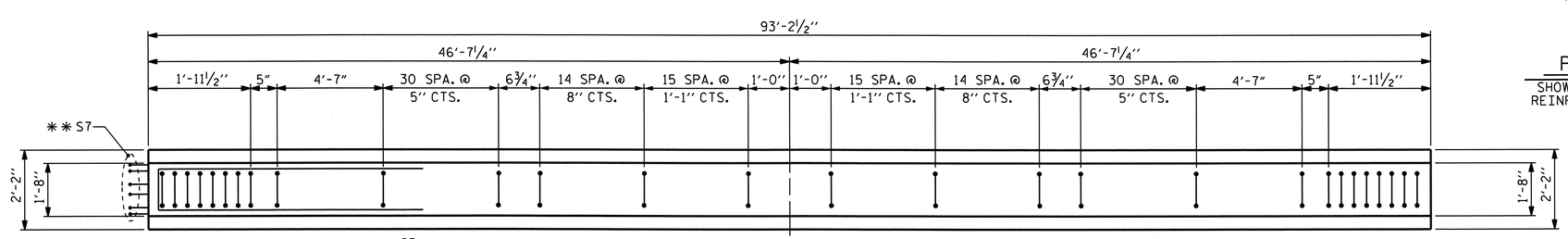

PLAN OF GIRDER

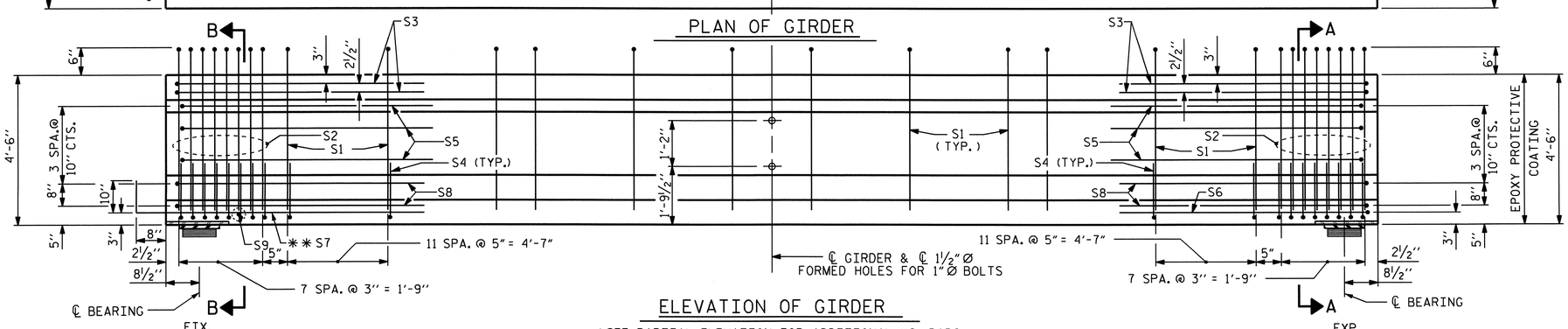

ELEVATION OF GIRDER

(SEE PARTIAL ELEVATION FOR ADDITIONAL "S" BARS)

PROJECT NO. B-4028

BLADEN COUNTY

STATION: 29+02.50 -L-

STATE OF NORTH CAROLINA
DEPARTMENT OF TRANSPORTATION
RALEIGH

STANDARD

AASHTO TYPE IV
PRESTRESSED CONCRETE GIRDER
CONTINUOUS FOR LIVE LOAD

SPAN "L"

NORTH CAROLINA PROFESSIONAL SEAL 14855 ENGINEER DOUGLAS R. CALHOUN
6/26/12

REVISIONS							
NO.	BY:	DATE:	NO.	BY:	DATE:	SHEET NO.	S-90
1			3			TOTAL SHEETS	147
2			4				

STD. NO. PCG6 STR. #1

ASSEMBLED BY : MIKE BRITT	DATE : 8-3-10		
CHECKED BY : S.B. WILLIAMS	DATE : 1-2011		
DRAWN BY : JMB 12/87	REV. 10/17/00R	RWW/LES	
CHECKED BY : ARB 12/87	REV. 5/1/06R	TLA/GM	
	REV. 10/1/11	MAA/GM	

26-JUN-2012 13:55
R:\Structures\STRI\SuperDrawings\b4028_str1_PCG.dgn
dely

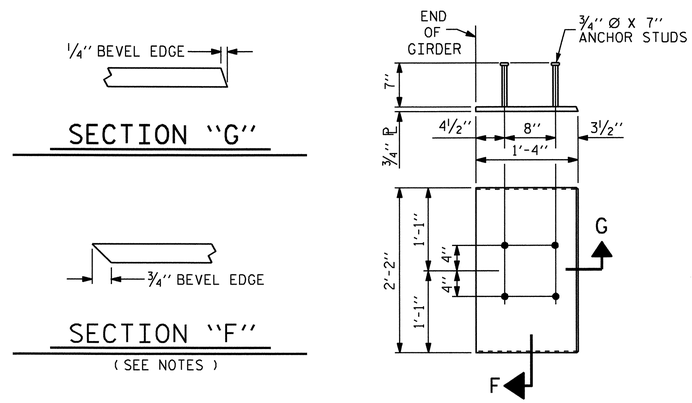

EMBEDDED PLATE "B-1" DETAILS

(2 REQ'D PER GIRDER)
TYPICAL FOR SPANS "D" THRU "L"

NOTES

ALL PRESTRESSING STRANDS SHALL BE 7-WIRE LOW-RELAXATION GRADE 270 STRANDS AND SHALL CONFORM TO AASHTO M203 EXCEPT FOR SAMPLING REQUIREMENTS WHICH SHALL BE IN ACCORDANCE WITH THE STANDARD SPECIFICATIONS.

ALL REINFORCING STEEL SHALL BE GRADE 60.

APPLY EPOXY PROTECTIVE COATING TO END OF GIRDER SURFACES INDICATED IN ELEVATION VIEW.

EMBEDDED PLATE "B-1" SHALL BE GALVANIZED IN ACCORDANCE WITH THE STANDARD SPECIFICATIONS. BEVEL EDGES OF PLATE "B-1" TO GIVE CLOSE FIT BUT NOT TIGHT FIT TO STEEL CASTING FORM.

ANCHOR STUDS SHALL CONFORM TO AASHTO M169 GRADES 1010 THROUGH 1020 OR APPROVED EQUAL, AND SHALL MEET THE TYPE "B" REQUIREMENTS OF SUBSECTION 7.3 OF THE ANSI/AASHTO/AWS D1.5 BRIDGE WELDING CODE.

AT ENDS OF GIRDERS TO BE EMBEDDED IN CONCRETE DIAPHRAGMS OR END WALLS, PRESTRESSING STRANDS MAY EXTEND A MAXIMUM OF 2" BEYOND THE GIRDER ENDS. OTHERWISE, PRESTRESSING STRANDS SHALL BE CUT FLUSH WITH THE GIRDER ENDS.

THE TRANSFER OF LOAD FROM THE ANCHORAGES TO THE GIRDER SHALL BE DONE WHEN CONCRETE HAS REACHED A COMPRESSIVE STRENGTH OF NOT LESS THAN 6,400 PSI.

DEPENDING ON THE TYPE OF SYSTEM USED TO SUPPORT THE DECK SLAB FORMS, PRESET ANCHORS MAY BE NECESSARY IN THE PRESTRESSED CONCRETE GIRDER.

THE TOP SURFACE OF THE GIRDER, EXCLUDING THE OUTSIDE 4", SHALL BE RAKED TO A DEPTH OF 1/4".

DEAD LOAD DEFLECTION TABLE FOR GIRDERS

1/2" Ø LOW RELAXATION	SPAN "D"																					
	GIRDERS 1 & 4											GIRDERS 2 & 3										
TENTH POINTS	0	.1	.2	.3	.4	.5	.6	.7	.8	.9	0	0	.1	.2	.3	.4	.5	.6	.7	.8	.9	0
CAMBER (GIRDER ALONE IN PLACE) ↑	0	0.078	0.147	0.201	0.236	0.247	0.236	0.201	0.147	0.078	0	0	0.078	0.147	0.201	0.236	0.247	0.236	0.201	0.147	0.078	0
* DEFLECTION DUE TO SUPERIMPOSED D.L. ↓	0	0.038	0.071	0.097	0.114	0.119	0.114	0.097	0.071	0.038	0	0	0.041	0.077	0.105	0.123	0.129	0.123	0.105	0.077	0.041	0
FINAL CAMBER ↑	0	1/2"	15/16"	1 1/4"	1 7/16"	1 9/16"	1 7/16"	1 1/4"	15/16"	1/2"	0	0	7/16"	13/16"	1 1/8"	1 3/8"	1 7/16"	1 3/8"	1 1/8"	13/16"	7/16"	0

DEAD LOAD DEFLECTION TABLE FOR GIRDERS

1/2" Ø LOW RELAXATION	SPANS "E" THRU "K"																					
	GIRDERS 1 & 4											GIRDERS 2 & 3										
TENTH POINTS	0	.1	.2	.3	.4	.5	.6	.7	.8	.9	0	0	.1	.2	.3	.4	.5	.6	.7	.8	.9	0
CAMBER (GIRDER ALONE IN PLACE) ↑	0	0.078	0.147	0.201	0.235	0.247	0.235	0.201	0.147	0.078	0	0	0.078	0.147	0.201	0.235	0.247	0.235	0.201	0.147	0.078	0
* DEFLECTION DUE TO SUPERIMPOSED D.L. ↓	0	0.037	0.070	0.096	0.113	0.118	0.113	0.096	0.070	0.037	0	0	0.040	0.076	0.104	0.122	0.128	0.122	0.104	0.076	0.040	0
FINAL CAMBER ↑	0	1/2"	15/16"	1 1/4"	1 1/2"	1 9/16"	1 1/2"	1 1/4"	15/16"	1/2"	0	0	7/16"	7/8"	1 3/16"	1 3/8"	1 7/16"	1 3/8"	1 3/16"	7/8"	7/16"	0

DEAD LOAD DEFLECTION TABLE FOR GIRDERS

1/2" Ø LOW RELAXATION	SPAN "L"																					
	GIRDERS 1 & 4											GIRDERS 2 & 3										
TENTH POINTS	0	.1	.2	.3	.4	.5	.6	.7	.8	.9	0	0	.1	.2	.3	.4	.5	.6	.7	.8	.9	0
CAMBER (GIRDER ALONE IN PLACE) ↑	0	0.077	0.145	0.199	0.233	0.245	0.233	0.199	0.145	0.077	0	0	0.077	0.145	0.199	0.233	0.245	0.233	0.199	0.145	0.077	0
* DEFLECTION DUE TO SUPERIMPOSED D.L. ↓	0	0.035	0.067	0.091	0.107	0.112	0.107	0.091	0.067	0.035	0	0	0.038	0.072	0.099	0.116	0.121	0.116	0.099	0.072	0.038	0
FINAL CAMBER ↑	0	1/2"	15/16"	15/16"	1 1/2"	1 9/16"	1 1/2"	1 5/16"	15/16"	1/2"	0	0	7/16"	7/8"	1 3/16"	1 7/16"	1 1/2"	1 7/16"	1 3/16"	7/8"	7/16"	0

* INCLUDES FUTURE WEARING SURFACE
ALL VALUES ARE SHOWN IN FEET (DECIMAL FORM), EXCEPT " FINAL CAMBER ", WHICH IS GIVEN IN INCHES (FRACTION FORM).

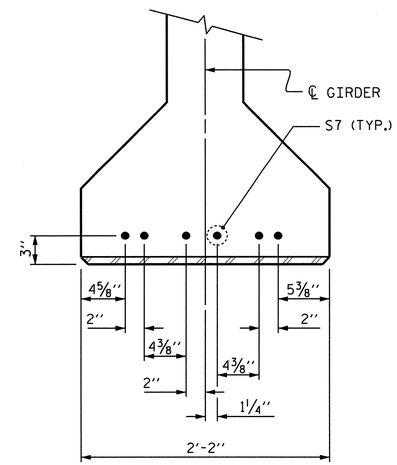

DETAIL "A"

(FOR SPANS "E" THRU "L")

PROJECT NO. B-4028
BLADEN COUNTY
STATION: 29+02.50 -L-

STATE OF NORTH CAROLINA
DEPARTMENT OF TRANSPORTATION
RALEIGH

STANDARD

PRESTRESSED CONCRETE GIRDER CONTINUOUS FOR LIVE LOAD DETAILS

NORTH CAROLINA PROFESSIONAL SEAL 14855 ENGINEER DOUGLAS R. CALHOUN
6/26/12

REVISIONS						SHEET NO.
NO.	BY:	DATE:	NO.	BY:	DATE:	S-91
1			3			TOTAL SHEETS
2			4			147

ASSEMBLED BY : DGE/MIKE BRITT DATE : 5-12/7-10
CHECKED BY : S.B. WILLIAMS DATE : 1-2011

DRAWN BY : ELR 11/91
CHECKED BY : GRP 11/91

REV. 7/10/01RR LES/RDR
REV. 5/1/06 TLA/GM
REV. 10/1/11 MAA/GM

26-JUN-2012 13:55
R:\Structures\STR1\SuperDrawings\b4028_str1_PCG.dgn
dely

STD. NO. PCG9 STR. #1

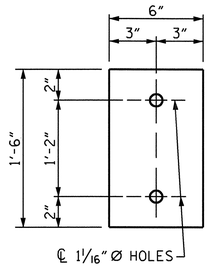

PLATE DETAILS

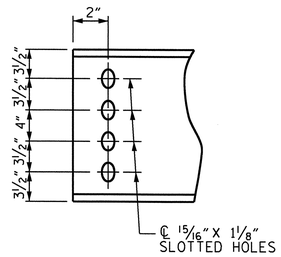

CHANNEL END

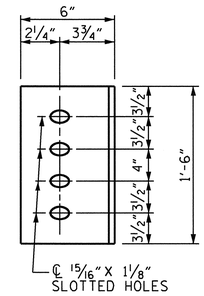

DIAPHRAGM FACE

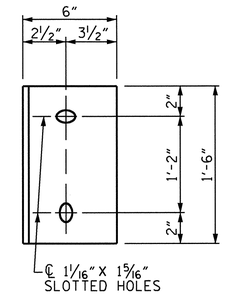

WEB FACE

CONNECTOR PLATE DETAILS

STRUCTURAL STEEL NOTES

ALL INTERMEDIATE DIAPHRAGM STEEL AND CONNECTOR PLATES SHALL BE AASHTO M270 GRADE 50 OR APPROVED EQUAL.

TENSION ON THE ASTM A325 BOLTS THROUGH THE CHANNEL MEMBER SHALL BE CALIBRATED USING DIRECT TENSION INDICATOR WASHERS IN ACCORDANCE WITH THE STANDARD SPECIFICATIONS.

TENSION ON THE ASTM A449 BOLTS THROUGH THE GIRDER WEB SHALL BE SNUG TIGHTENED FOLLOWED BY AN ADDITIONAL 1/4 TURN.

THE PLATES, BENT PLATES, CHANNELS, AND ANGLES SHALL BE GALVANIZED OR METALLIZED IN ACCORDANCE WITH THE STANDARD SPECIFICATIONS. FOR THERMAL SPRAYED COATINGS (METALLIZATION), SEE SPECIAL PROVISIONS.

FOR METALLIZATION, APPLY AN 8 MIL THICK 99.99 PERCENT ZINC (W-Zn-1) THERMAL SPRAYED COATING WITH A 0.5 MIL THICK SEAL COAT TO ALL STEEL DIAPHRAGM SURFACES IN ACCORDANCE WITH THE THERMAL SPRAYED COATINGS SPECIAL PROVISION AND SECTION 442 OF THE STANDARD SPECIFICATIONS.

GALVANIZE THE HIGH STRENGTH BOLTS, NUTS, WASHERS AND DIRECT TENSION INDICATORS IN ACCORDANCE WITH THE STANDARD SPECIFICATIONS.

USE AN ASTM F436 HARDENED WASHER WITH STANDARD AND SLOTTED HOLES UNDER EACH BOLT HEAD AND NUT.

FOR BOLTS THROUGH THE GIRDER WEB, PROVIDE SUFFICIENT LENGTH OF THREADS ON ALL BOLTS TO ACCOMMODATE WASHERS AND THE THICKNESS OF CONNECTING MEMBER PLUS AT LEAST 1/4" PROJECTION BEYOND THE NUT.

INTERMEDIATE DIAPHRAGM ASSEMBLY SHALL COMPLY WITH SECTION 1072 OF THE STANDARD SPECIFICATIONS.

SUBMIT TWO SETS OF WORKING DRAWINGS FOR THE INTERMEDIATE DIAPHRAGM ASSEMBLY FOR REVIEW, COMMENTS AND ACCEPTANCE. AFTER REVIEW, COMMENTS, AND ACCEPTANCE, SUBMIT SEVEN SETS FOR DISTRIBUTION.

IN THE EXTERIOR BAYS, PLACE TEMPORARY STRUTS BETWEEN PRESTRESSED GIRDERS ADJACENT TO THE STEEL DIAPHRAGMS. STRUTS SHALL REMAIN IN PLACE 3 DAYS AFTER CONCRETE IS PLACED.

THE COST OF THE STEEL DIAPHRAGMS AND ASSEMBLIES SHALL BE INCLUDED IN THE UNIT PRICE BID FOR PRESTRESSED CONCRETE GIRDERS.

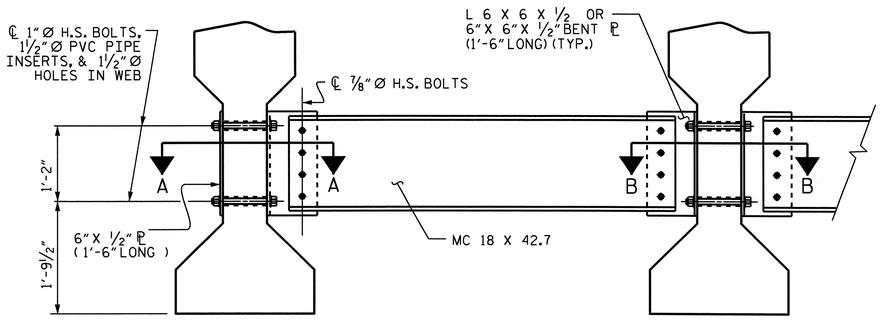

EXTERIOR GIRDER

INTERIOR GIRDER

PART SECTION AT INTERMEDIATE DIAPHRAGM

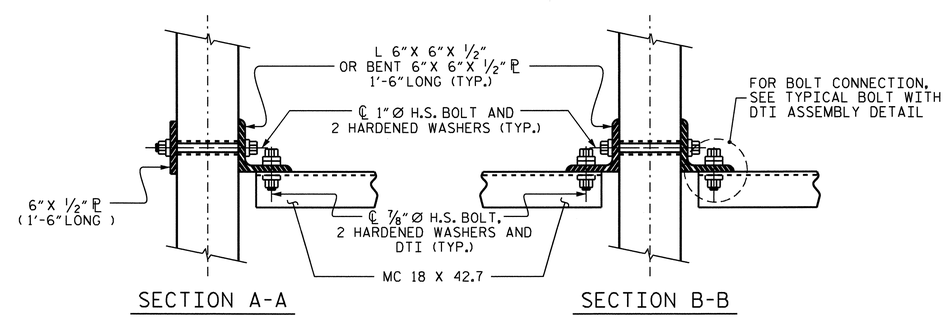

SECTION A-A

SECTION B-B

CONNECTION DETAILS

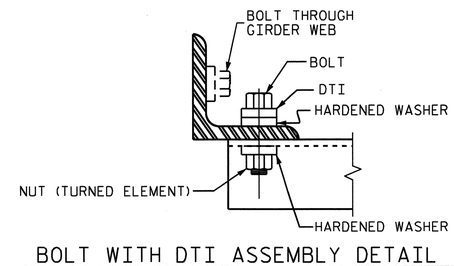

BOLT WITH DTI ASSEMBLY DETAIL

PROJECT NO. B-4028

BLADEN COUNTY

STATION: 29+02.50 -L-

STATE OF NORTH CAROLINA
DEPARTMENT OF TRANSPORTATION
RALEIGH

STANDARD

INTERMEDIATE STEEL DIAPHRAGMS FOR TYPE IV PRESTRESSED CONCRETE GIRDERS (SPANS "D" THRU "L")

NORTH CAROLINA PROFESSIONAL SEAL 14855 ENGINEER DOUGLAS R. CALHOUN
6/26/12

REVISIONS						SHEET NO.
NO.	BY:	DATE:	NO.	BY:	DATE:	S-42
1			3			TOTAL SHEETS
2			4			147

ASSEMBLED BY : MIKE BRITT	DATE : 7-16-10
CHECKED BY : S.B. WILLIAMS	DATE : 2-2011
DRAWN BY : TLA 6/05	ADDED 10/21/05
CHECKED BY : VC 6/05	REV. 5/1/06RRR KMM/GM
	REV. 10/1/11 MAA/GM

26-JUN-2012 13:54
R:\Structures\STR1\SuperDrawings\b4028_str1_TSpcg.dgn
dely

STD. NO. PCG10

STR. #1

NOTES

FOR POT BEARINGS, SEE SPECIAL PROVISIONS.

AT ALL POINTS OF SUPPORT AT BENT No. 1 & BENT No. 2, NUTS FOR ANCHOR BOLTS SHALL BE TIGHTENED FINGER TIGHT AND GIVEN AN ADDITIONAL 1/4 TURN. THE THREAD OF THE NUT AND BOLT SHALL THEN BE BURRED WITH A SHARP POINTED TOOL.

WHEN WELDING THE SOLE PLATE TO THE GIRDER, USE TEMPERATURE INDICATING WAX PENS, OR OTHER SUITABLE MEANS, TO ENSURE THAT THE TEMPERATURE OF THE BEARING DOES NOT EXCEED 250°F TEMPERATURES ABOVE THIS MAY DAMAGE THE TFE OR ELASTOMER.

SOLE PLATES SHOULD BE WELDED TO GIRDER FLANGES BEFORE FALSEWORK IS PLACED.

ALL SURFACES OF BEARING PLATES SHALL BE SMOOTH AND STRAIGHT.

FOR THERMAL SPRAYED COATINGS (METALLIZATION), SEE SPECIAL PROVISIONS.

THE CONTRACTOR MAY SUBSTITUTE DISC BEARINGS FOR THE POT BEARINGS SHOWN. FOR OPTIONAL DISC BEARINGS, SEE SPECIAL PROVISIONS.

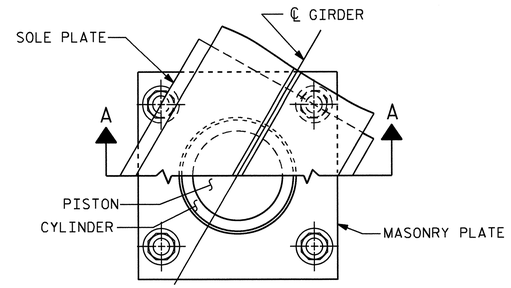

CUT-AWAY PLAN

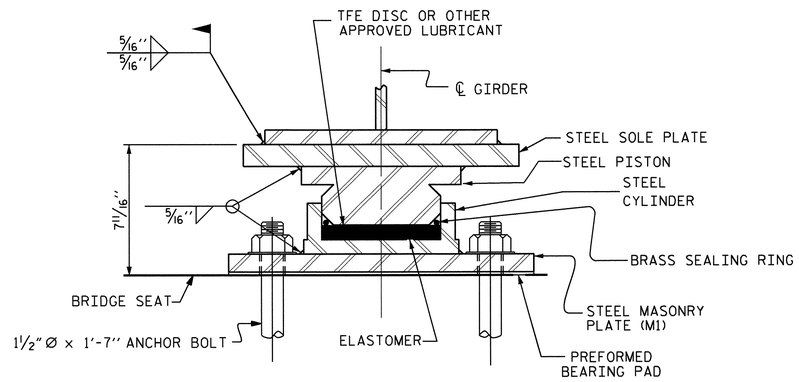

SECTION A-A

PB1, FIXED
(8 REQ'D.)

POT BEARING DETAILS

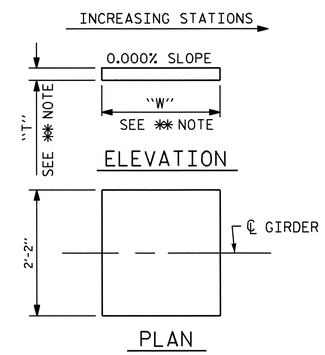

✱✱ NOTE:
DIMENSIONS "W" AND "T" ARE TO BE DETERMINED BY THE MANUFACTURER.

SOLE PLATE DETAILS

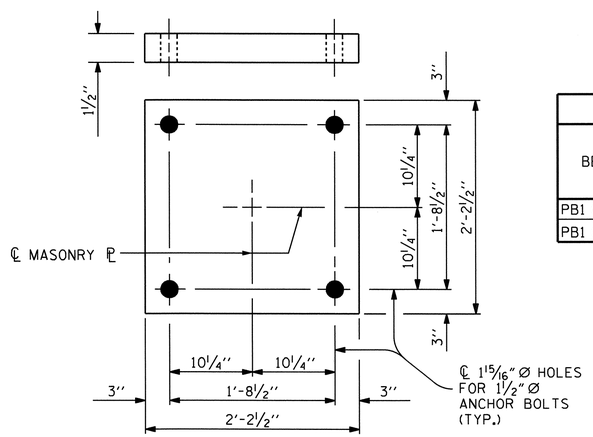

PLAN
M1 (8 REQ'D.)

MASONRY PLATE DETAILS

TABLE FOR LOADS AND MOVEMENT

BEARING	LOCATION	UNFACTORED VERTICAL LOAD (KIPS) DEAD DC	DEAD DW	LIVE LL+IM	TOTAL	FACTORED LATERAL LOAD (KIPS)	TOTAL MOVEMENT (INCHES)
PB1 (FIXED)	BENT No. 1	340K	43K	228K	611K	125K	0
PB1 (FIXED)	BENT No. 2	340K	43K	228K	611K	125K	0

PROJECT NO. B-4028
BLADEN COUNTY
STATION: 29+02.50 -L-

STATE OF NORTH CAROLINA
DEPARTMENT OF TRANSPORTATION
RALEIGH

STANDARD

POT BEARING DETAILS

(SPAN "A-B-C")

NORTH CAROLINA PROFESSIONAL SEAL 14855 ENGINEER DOUGLAS R. CALHOUN
6/26/12

REVISIONS						SHEET NO.
NO.	BY:	DATE:	NO.	BY:	DATE:	S-43
1			3			TOTAL SHEETS
2			4			147

ASSEMBLED BY : MIKE BRITT DATE : 11-4-10
CHECKED BY : S.B. WILLIAMS DATE : 2-2011

DRAWN BY : RWW 8/99
CHECKED BY : LES 8/99

REV. 5/7/03 RWW/JTE
REV. 5/1/06R TLA/GM
REV. 10/1/11 MAA/GM

26-JUN-2012 13:53
R:\Structures\STR1\SuperDrawings\b4028_str1_POT.dgn
dely

STD. NO. PB1 STR. #1

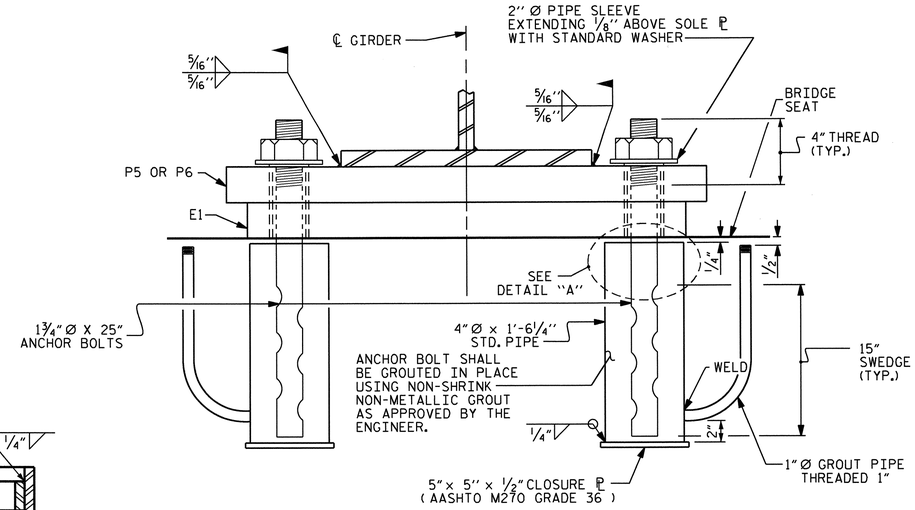

EXPANSION

END VIEW

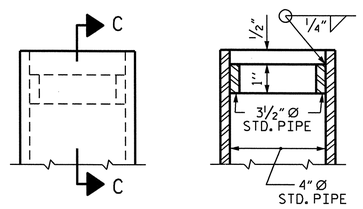

SECTION C-C

DETAIL "A"

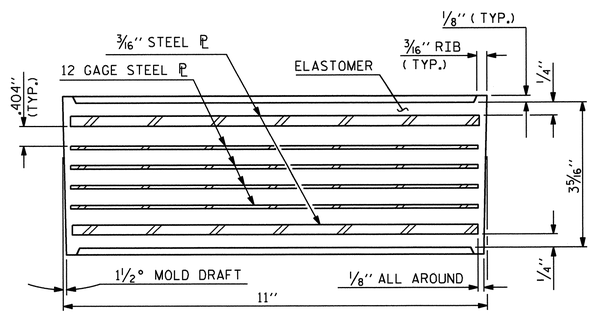

TYPICAL SECTION OF ELASTOMERIC BEARING

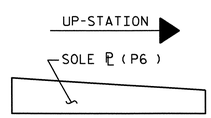

SOLE PL PLACEMENT DETAIL

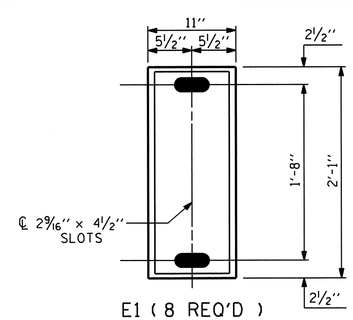

E1 (8 REQ'D)

PLAN VIEW OF ELASTOMERIC BEARING

TYPE IV

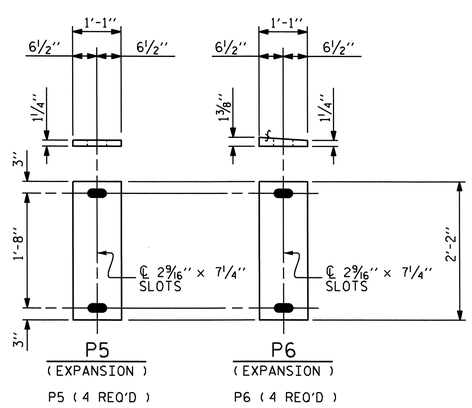

SOLE PLATE DETAIL ("P")

NOTES

AT ALL FIXED POINTS OF SUPPORT, NUTS FOR ANCHOR BOLTS ARE TO BE TIGHTENED FINGER TIGHT AND THEN BACKED OFF 1/2 TURN. THE THREAD OF THE NUT AND BOLT SHALL THEN BE BURRED WITH A SHARP POINTED TOOL.

THE 2" Ø PIPE SLEEVE SHALL BE CUT FROM SCHEDULE 40 PVC PLASTIC PIPE. THE PVC PLASTIC PIPE SHALL MEET THE REQUIREMENTS OF ASTM D1785.

THE PAYMENT FOR THE PIPE SLEEVES AND 4"Ø x 1'-6 1/4" STANDARD PIPE ASSEMBLY SHALL BE INCLUDED IN THE SEVERAL PAY ITEMS.

FOR AASHTO M270 GRADE 50W STRUCTURAL STEEL, SOLE PLATE SHALL BE AASHTO M270 GRADE 50W AND SHALL NOT BE GALVANIZED. ANCHOR BOLTS, NUTS AND WASHERS SHALL BE GALVANIZED IN ACCORDANCE WITH THE STANDARD SPECIFICATIONS.

ANCHOR BOLTS SHALL MEET THE REQUIREMENTS OF ASTM A449. NUTS SHALL MEET THE REQUIREMENTS OF AASHTO M291-DH OR AASHTO M292-2H. WASHERS SHALL MEET THE REQUIREMENTS OF AASHTO M293. SHOP DRAWINGS ARE NOT REQUIRED FOR ANCHOR BOLTS, NUTS AND WASHERS. SHOP INSPECTION IS REQUIRED.

WHEN FIELD WELDING THE SOLE PLATE TO THE GIRDER FLANGE, USE TEMPERATURE INDICATING WAX PENS, OR OTHER SUITABLE MEANS, TO ENSURE THAT THE TEMPERATURE OF THE SOLE PLATE DOES NOT EXCEED 300°F. TEMPERATURES ABOVE THIS MAY DAMAGE THE ELASTOMER.

ALL SURFACES OF BEARING PLATES SHALL BE SMOOTH AND STRAIGHT.

THE CLOSURE PLATE, GROUT PIPE AND STANDARD PIPE FOR THE EXPANSION ASSEMBLY NEED NOT BE GALVANIZED.

THE CONTRACTOR'S ATTENTION IS CALLED TO THE FOLLOWING PROCEDURES, WHICH MAY BE REQUIRED BY THE ENGINEER, TO RESET ELASTOMERIC BEARINGS DUE TO GIRDER TRANSLATION AND END ROTATION :

1. ONCE THE DECK HAS CURED, THE GIRDERS SHALL BE JACKED THEN THE ANCHOR BOLTS AND ELASTOMERIC BEARING SLOTS SHALL BE CENTERED AS NEARLY AS PRACTICAL ABOUT THE BEARING STIFFENER. THIS OPERATION SHALL BE PERFORMED AT APPROXIMATELY 60° F.
2. AFTER CENTERING THE ELASTOMERIC BEARING SLOTS AND ANCHOR BOLTS, THE ANCHOR BOLTS SHALL BE GROUTED.

THE CONTRACTOR MAY PROPOSE ALTERNATE METHODS, PROVIDED DETAILS ARE SUBMITTED TO THE ENGINEER FOR REVIEW AND APPROVAL.

—LOAD RATINGS—	
	MAX.D.L.+ L.L.
TYPE IV	184 K

PROJECT NO. B-4028

BLADEN COUNTY

STATION: 29+02.50 -L-

STATE OF NORTH CAROLINA
DEPARTMENT OF TRANSPORTATION
RALEIGH

STANDARD

ELASTOMERIC BEARING DETAILS

(SPAN "A-B-C")

NORTH CAROLINA PROFESSIONAL SEAL 14855 ENGINEER DOUGLAS R. CALHOUN
6/26/12

REVISIONS						SHEET NO.
NO.	BY:	DATE:	NO.	BY:	DATE:	S-44
1			3			TOTAL SHEETS
2			4			147

ASSEMBLED BY : MIKE BRITT	DATE : 11-4-10
CHECKED BY : S.B. WILLIAMS	DATE : 2-2011
DRAWN BY : EEM 10/95	REV. 7/10/01 LES/RDR
CHECKED BY : PEK 10/95	REV. 5/1/06 TLA/GM
	REV. 10/1/11 MAA/GM

26-JUN-2012 13:52
R:\Structures\STR1\SuperDrawings\b4028_str1_EB.dgn
dely

STD. NO. EB2

STR. #1

NOTES

AT ALL FIXED POINTS OF SUPPORT, NUTS FOR ANCHOR BOLTS ARE TO BE TIGHTENED FINGER TIGHT AND THEN BACKED OFF 1/2 TURN. THE THREAD OF THE NUT AND BOLT SHALL THEN BE BURRED WITH A SHARP POINTED TOOL.

THE 2" Ø PIPE SLEEVE SHALL BE CUT FROM SCHEDULE 40 PVC PLASTIC PIPE. THE PVC PLASTIC PIPE SHALL MEET THE REQUIREMENTS OF ASTM D1785.

STEEL SOLE PLATES, ANCHOR BOLTS, NUTS, AND WASHERS SHALL BE GALVANIZED IN ACCORDANCE WITH THE STANDARD SPECIFICATIONS.

PRIOR TO WELDING, GRIND THE GALVANIZED SURFACE OF THE PORTION OF THE EMBEDDED PLATE AND SOLE PLATE THAT ARE TO BE WELDED. AFTER WELDING, DAMAGED GALVANIZED SURFACES SHALL BE REPAIRED IN ACCORDANCE WITH THE STANDARD SPECIFICATIONS.

WHEN WELDING THE SOLE PLATE TO THE EMBEDDED PLATE IN THE GIRDER, USE TEMPERATURE INDICATING WAX PENS, OR OTHER SUITABLE MEANS, TO ENSURE THAT THE TEMPERATURE OF THE SOLE PLATE DOES NOT EXCEED 300°F. TEMPERATURES ABOVE THIS MAY DAMAGE THE ELASTOMER.

SOLE PLATE "P", BOLTS, NUTS, WASHERS, AND PIPE SLEEVE SHALL BE INCLUDED IN THE PAY ITEM FOR PRESTRESSED CONCRETE GIRDERS.

ANCHOR BOLTS SHALL MEET THE REQUIREMENTS OF ASTM A449. NUTS SHALL MEET THE REQUIREMENTS OF AASHTO M291-DH OR AASHTO M292-2H. WASHERS SHALL MEET THE REQUIREMENTS OF AASHTO M293. SHOP DRAWINGS ARE NOT REQUIRED FOR ANCHOR BOLT, NUTS AND WASHERS. SHOP INSPECTION IS REQUIRED.

ALL SURFACES OF BEARING PLATES SHALL BE SMOOTH AND STRAIGHT.

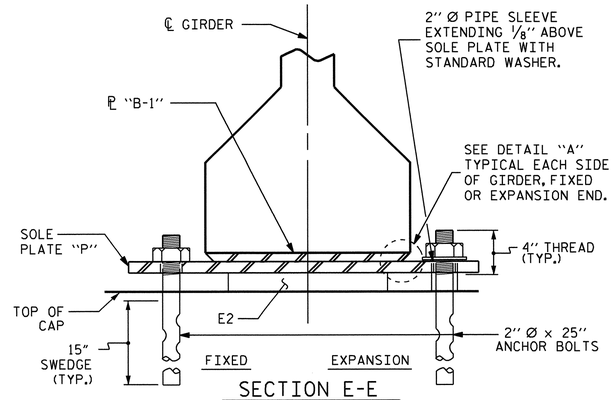

SECTION E-E

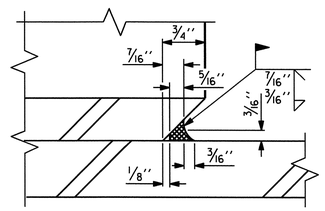

DETAIL "A"

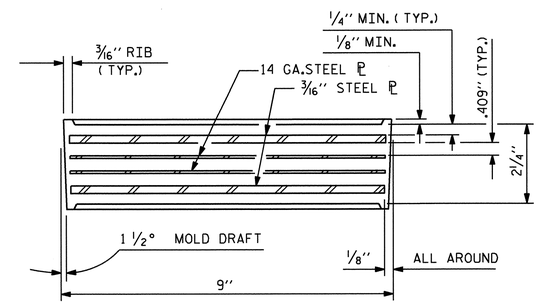

TYPICAL SECTION OF ELASTOMERIC BEARINGS

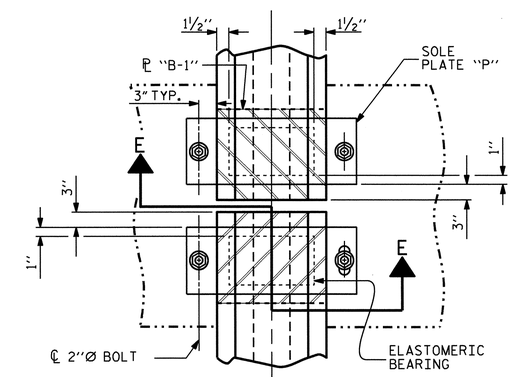

TYPICAL HALF-PLAN (SHOWING CONTINUOUS BENT)

TYPICAL HALF-PLAN (SHOWING SIMPLE SPAN BENT)

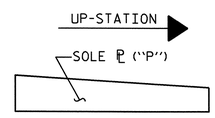

SOLE ℗ PLACEMENT DETAIL

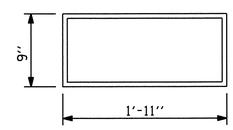

E2 (72 REQ'D)

PLAN VIEW OF ELASTOMERIC BEARING

TYPE V

60 DUROMETER HARDNESS

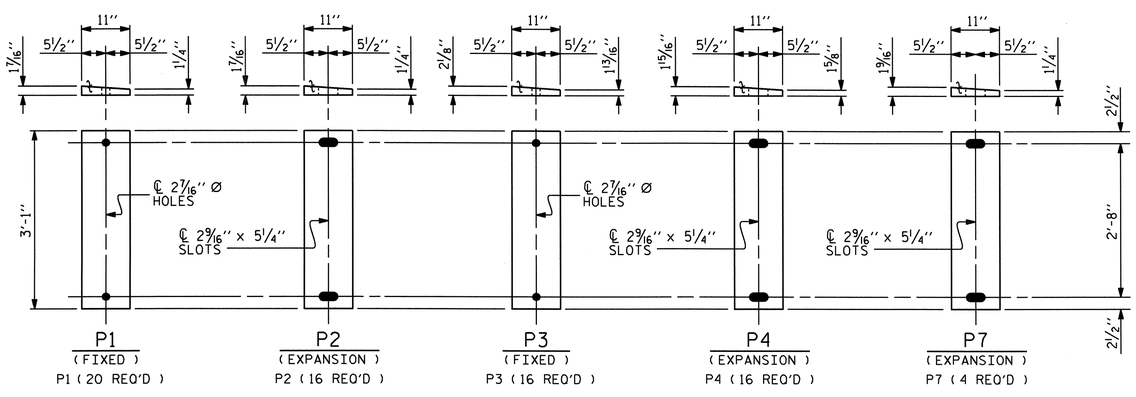

SOLE PLATE DETAILS ("P")

LOAD RATINGS	
	MAX. D.L. + L.L.
54"PCG -TYPE V	260 K

PROJECT NO. B-4028

BLADEN COUNTY

STATION: 29+02.50 -L-

STATE OF NORTH CAROLINA
DEPARTMENT OF TRANSPORTATION
RALEIGH

STANDARD

ELASTOMERIC BEARING DETAILS

(SPANS "D" THRU "L")

NORTH CAROLINA PROFESSIONAL SEAL 14855 ENGINEER DOUGLAS R. CALHOUN
6/26/12

REVISIONS							
NO.	BY:	DATE:	NO.	BY:	DATE:	SHEET NO.	
1			3			S-45	
2			4			TOTAL SHEETS	
						147	

ASSEMBLED BY : MIKE BRITT		DATE : 11-5-10	
CHECKED BY : S.B. WILLIAMS		DATE : 2-2011	
DRAWN BY : WJH 8/89	REV. 10/17/00	RWW/LES	
CHECKED BY : CRK 8/89	REV. 5/1/06	TLA/GM	
	REV. 10/1/11	MAA/GM	

26-JUN-2012 13:51
R:\Structures\STRI\SuperDrawings\b4028_str1_EB.dgn
dely

STD. NO. EB4

STR. #1

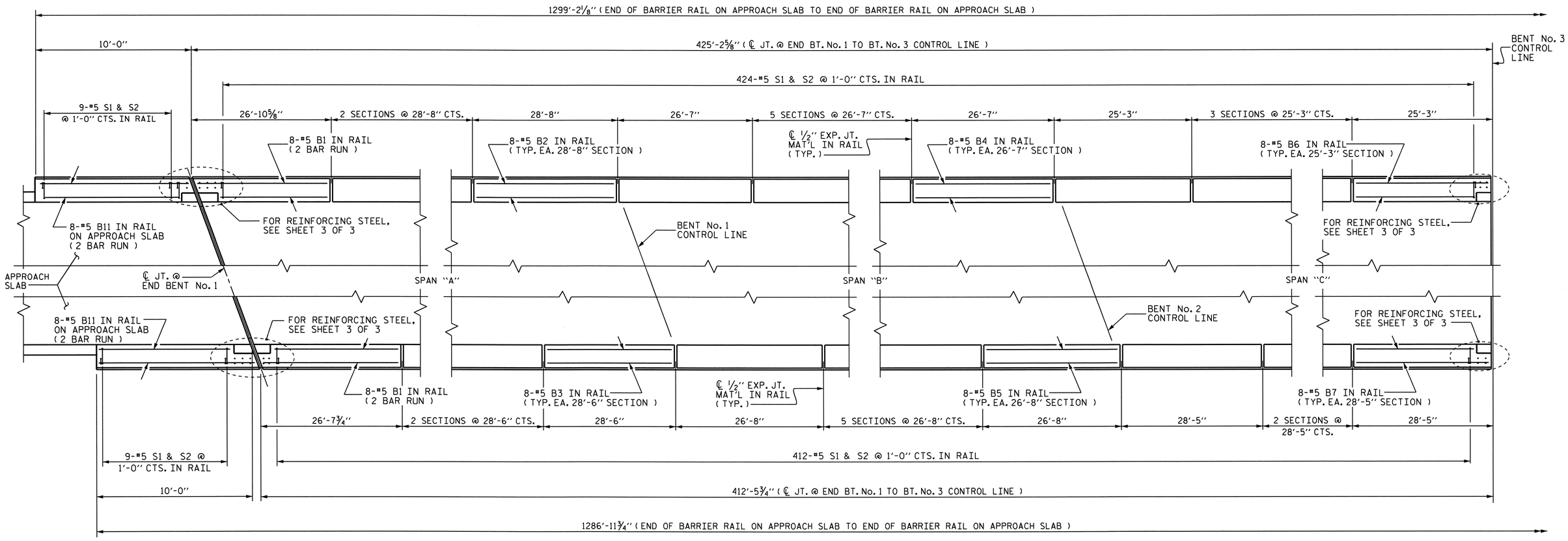

PLAN OF SPAN "A-B-C"

(DIMENSIONS TAKEN ALONG BACK FACE OF BARRIER RAIL)

PROJECT NO. B-4028

BLADEN COUNTY

STATION: 29+02.50 -L-

SHEET 1 OF 3

STATE OF NORTH CAROLINA
DEPARTMENT OF TRANSPORTATION
RALEIGH

SUPERSTRUCTURE

CONCRETE BARRIER RAIL

NORTH CAROLINA PROFESSIONAL SEAL 14855 ENGINEER DOUGLAS R. CALHOUN
6/26/12

REVISIONS						SHEET NO.
NO.	BY:	DATE:	NO.	BY:	DATE:	S-46
1			3			TOTAL SHEETS
2			4			147

DRAWN BY : DGE/MIKE BRITT DATE : 3-12/8-10
CHECKED BY : S.B. WILLIAMS DATE : 3-2011

26-JUN-2012 13:50
R:\Structures\STRI\SuperDrawings\b4028_stri_BR.dgn
dely

STR. #1

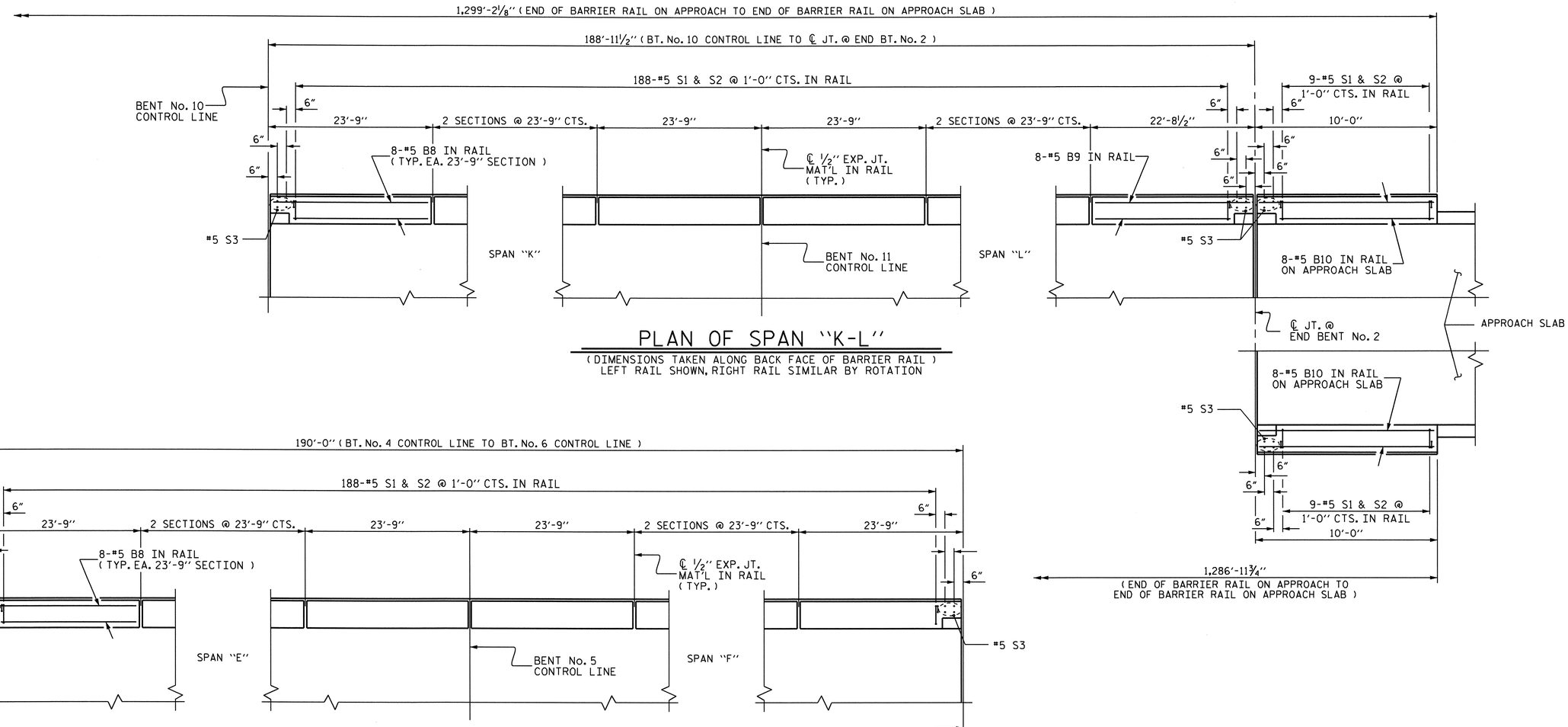

PLAN OF SPAN "K-L"

(DIMENSIONS TAKEN ALONG BACK FACE OF BARRIER RAIL)
LEFT RAIL SHOWN, RIGHT RAIL SIMILAR BY ROTATION

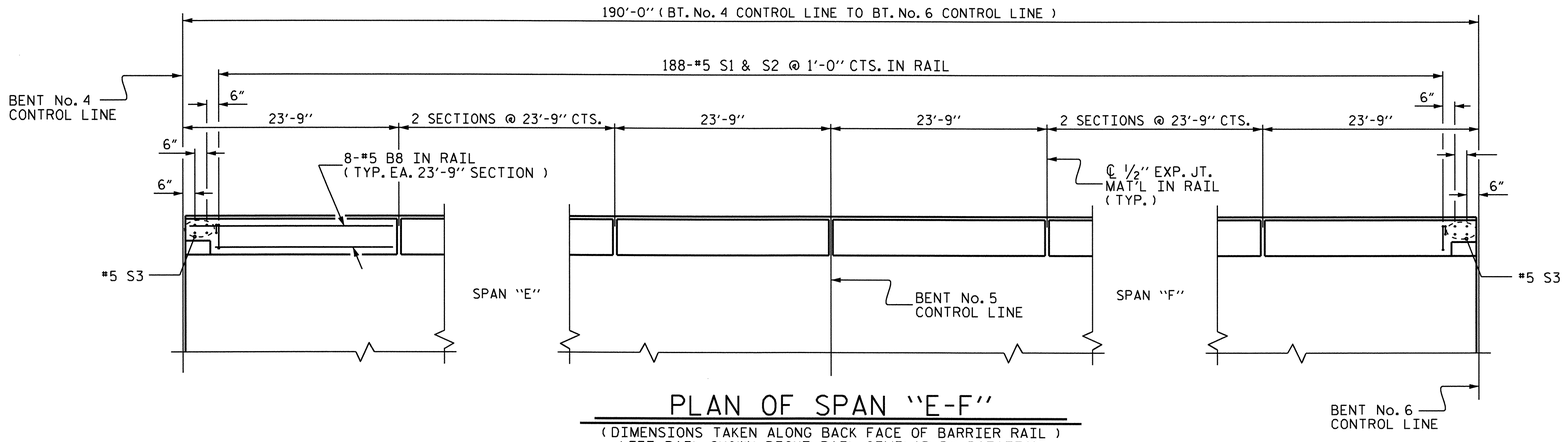

PLAN OF SPAN "E-F"

(DIMENSIONS TAKEN ALONG BACK FACE OF BARRIER RAIL)
LEFT RAIL SHOWN, RIGHT RAIL SIMILAR BY ROTATION
(TYPICAL FOR SPANS "G-H" & "I-J")

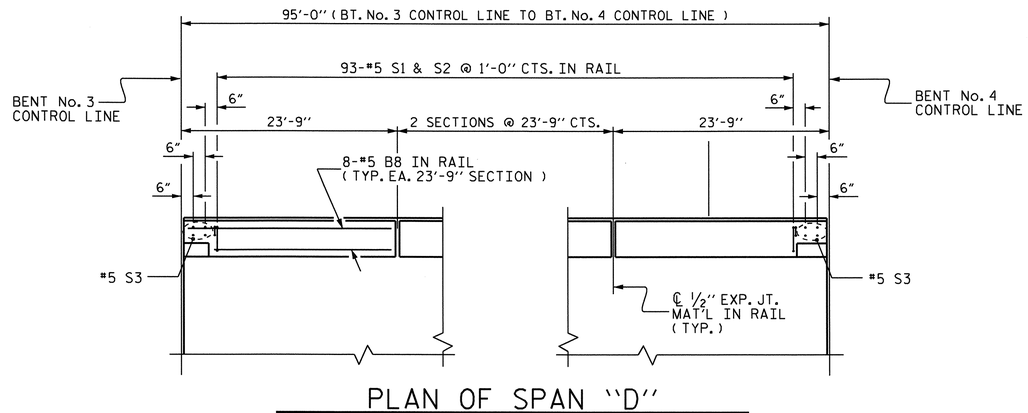

PLAN OF SPAN "D"

(DIMENSIONS TAKEN ALONG BACK FACE OF BARRIER RAIL)
LEFT RAIL SHOWN, RIGHT RAIL SIMILAR BY ROTATION

PROJECT NO. B-4028
BLADEN COUNTY
STATION: 29+02.50 -L-

SHEET 2 OF 3

STATE OF NORTH CAROLINA
DEPARTMENT OF TRANSPORTATION
RALEIGH

SUPERSTRUCTURE

CONCRETE BARRIER RAIL

NORTH CAROLINA PROFESSIONAL SEAL 14855 ENGINEER DOUGLAS R. CALHOUN
6/26/12

REVISIONS						SHEET NO.
NO.	BY:	DATE:	NO.	BY:	DATE:	S-47
1			3			TOTAL SHEETS
2			4			147

DRAWN BY : DGE/MIKE BRITT DATE : 3-12/8-10
CHECKED BY : S.B. WILLIAMS DATE : 3-2011

26-JUN-2012 13:50
R:\Structures\STRI\SuperDrawings\b4028_stri_BR.dgn
dely

STR. #1

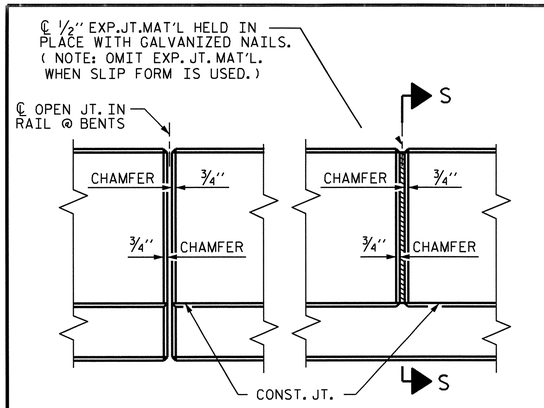

ELEVATION AT EXPANSION JOINTS

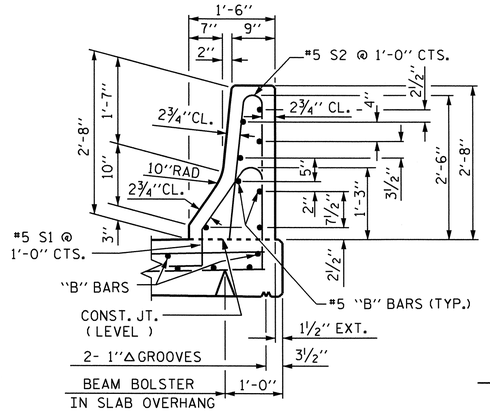

SECTION THRU RAIL

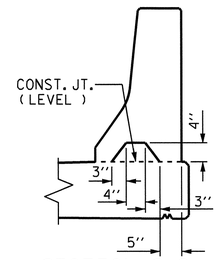

SECTION S-S

AT DAM IN OPEN JOINT
(THIS IS TO BE USED ONLY WHEN SLIP FORM IS USED)

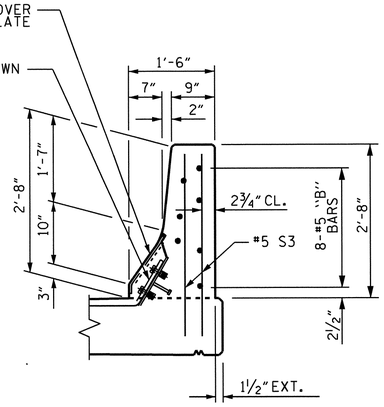

END VIEW

BARRIER RAIL DETAILS

NOTES

THE BARRIER RAIL IN SPAN "D" SHALL NOT BE CAST UNTIL ALL SLAB CONCRETE IN SPAN "D" HAS BEEN CAST AND HAS REACHED A MINIMUM COMPRESSIVE STRENGTH OF 3,000 PSI.

THE BARRIER RAIL IN EACH CONTINUOUS UNIT AND ON APPROACH SLABS SHALL NOT BE CAST UNTIL ALL SLAB CONCRETE IN THAT CONTINUOUS UNIT AND APPROACH SLAB HAS BEEN CAST AND HAS REACHED A MINIMUM COMPRESSIVE STRENGTH OF 3,000 PSI.

ALL REINFORCING STEEL IN BARRIER RAILS SHALL BE EPOXY COATED.

THE #5 S3 BARS SHALL BE INSTALLED, USING AN ADHESIVE ANCHORING SYSTEM, AFTER SAWING THE JOINT. THE YIELD LOAD FOR THE #5 S3 BARS IS 18.6 KIPS. FIELD TESTING FOR THE ADHESIVE BONDING SYSTEM IS NOT REQUIRED.

GROOVED CONTRACTION JOINTS, 1/2" IN DEPTH, SHALL BE TOOLED IN ALL EXPOSED FACES OF THE BARRIER RAIL AND IN ACCORDANCE WITH ARTICLE 825-10(B) OF THE STANDARD SPECIFICATIONS. THE CONTRACTION JOINT SHALL BE LOCATED AT EACH THIRD POINT BETWEEN BARRIER RAIL EXPANSION JOINTS. ONLY ONE CONTRACTION JOINT IS REQUIRED AT MIDPOINT OF BARRIER RAIL SEGMENTS LESS THAN 20 FEET IN LENGTH AND NO CONTRACTION JOINTS ARE REQUIRED FOR THOSE SEGMENTS LESS THAN 10 FEET IN LENGTH.

THE #5 S1 & S2 BARS MAY BE SHIFTED SLIGHTLY IN ORDER TO MAINTAIN A 2" MINIMUM CLEARANCE TO THE 1/2" EXPANSION JOINT MATERIAL IN RAIL.

QUANTITIES FOR BARRIER RAIL ON THE APPROACH SLAB ARE INCLUDED IN THE SUPERSTRUCTURE CONCRETE BARRIER RAIL BILL OF MATERIAL.

BAR TYPES

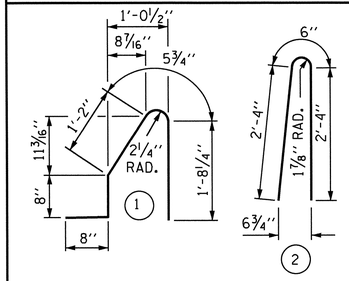

ALL BAR DIMENSIONS ARE OUT TO OUT

BILL OF MATERIAL

FOR CONCRETE BARRIER RAIL ONLY

BAR	NO.	SIZE	TYPE	LENGTH	WEIGHT
✱ S1	2562	#5	1	4'-8"	12470
✱ S2	2562	#5	2	5'-2"	13806
✱ S3	114	#5	STR	3'-4"	396
✱ B1	32	#5	STR	15'-0"	501
✱ B2	24	#5	STR	28'-3"	707
✱ B3	24	#5	STR	28'-1"	703
✱ B4	56	#5	STR	26'-2"	1528
✱ B5	56	#5	STR	26'-3"	1533
✱ B6	40	#5	STR	24'-10"	1036
✱ B7	32	#5	STR	28'-0"	935
✱ B8	560	#5	STR	23'-4"	13629
✱ B9	16	#5	STR	22'-4"	373
✱ B10	16	#5	STR	9'-6"	159
✱ B11	32	#5	STR	6'-9"	225
✱ EPOXY COATED REINFORCING STEEL					48,001 LBS.
CLASS AA CONCRETE					259.62 CU. YDS.
▲ CONCRETE BARRIER RAIL					2,591.59 LIN. FT.

▲ INCLUDES BARRIER RAIL ON APPROACH SLABS.

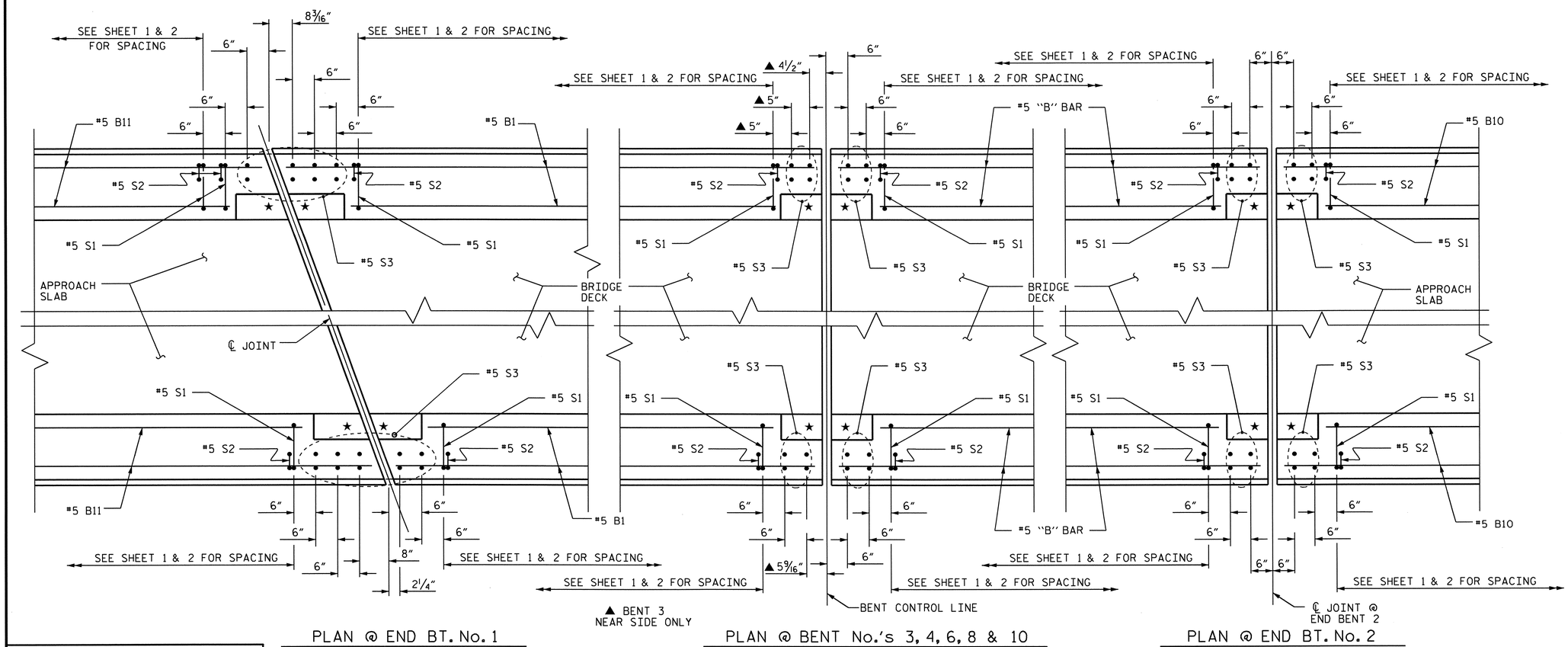

PLAN @ END BT. No. 1

PLAN @ BENT No.'s 3, 4, 6, 8 & 10

PLAN @ END BT. No. 2

END OF RAIL DETAILS

★ FOR RECESS DETAILS SEE "EXPANSION JOINT SEAL DETAILS" SHEETS 2 & 3 OF 3.

NORTH CAROLINA PROFESSIONAL SEAL 14855 ENGINEER DOUGLAS R. CALHOUN
6/26/12

PROJECT NO. B-4028

BLADEN COUNTY

STATION: 29+02.50 -L-

SHEET 3 OF 3

STATE OF NORTH CAROLINA
DEPARTMENT OF TRANSPORTATION
RALEIGH

STANDARD

CONCRETE BARRIER RAIL

ASSEMBLED BY : DGE/MIKE BRITT	DATE : 3-12/8-10
CHECKED BY : S.B. WILLIAMS	DATE : 3-2011
DRAWN BY : ARB 5/87	REV. 5/7/03R RWW/JTE
CHECKED BY : SJD 9/87	REV. 5/1/06R TLA/GM
	REV. 10/1/11 MAA/GM

REVISIONS						SHEET NO.
NO.	BY:	DATE:	NO.	BY:	DATE:	S-48
1			3			TOTAL SHEETS
2			4			147

26-JUN-2012 13:50
R:\Structures\STRI\SuperDrawings\b4028_stri_BR.dgn
dely

STD. NO. CBR1 STR. #1

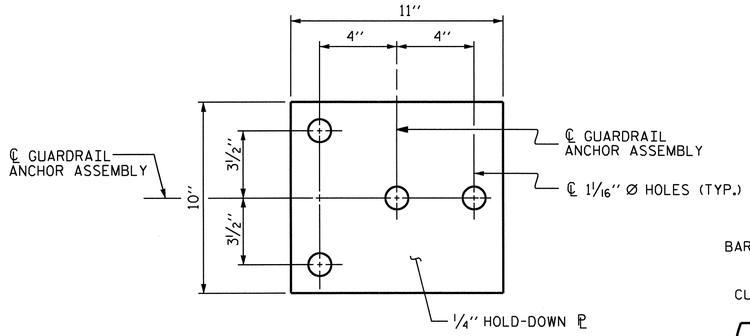

PLAN

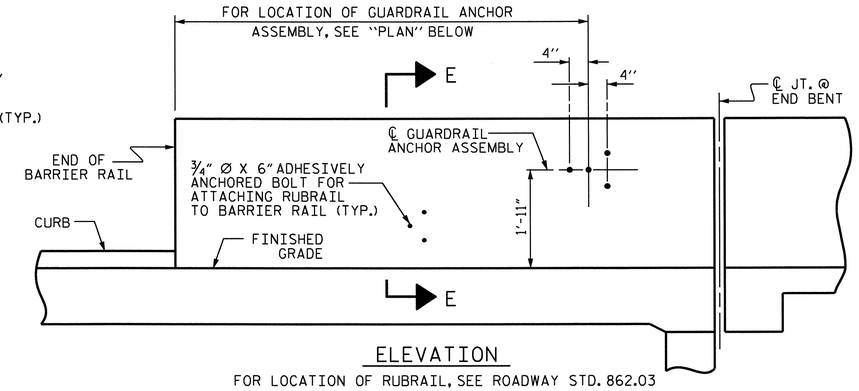

ELEVATION

FOR LOCATION OF RUBRAIL, SEE ROADWAY STD. 862.03

NOTES

THE GUARDRAIL ANCHOR ASSEMBLY SHALL CONSIST OF A 1/4'' HOLD DOWN PLATE AND 4 - 7/8'' Ø BOLTS WITH NUTS AND WASHERS, RUBRAIL, AND ADHESIVELY ANCHORED BOLTS.

THE HOLD-DOWN PLATE SHALL CONFORM TO AASHTO M270 GRADE 36. AFTER FABRICATION, THE HOLD-DOWN PLATE SHALL BE HOT-DIP GALVANIZED IN ACCORDANCE WITH AASHTO M111.

BOLTS SHALL CONFORM TO THE REQUIREMENTS OF ASTM A307 AND NUTS SHALL CONFORM TO THE REQUIREMENTS OF AASHTO M291. BOLTS, NUTS AND WASHERS SHALL BE GALVANIZED. (AT THE CONTRACTOR'S OPTION, STAINLESS STEEL BOLTS, NUTS AND WASHERS MAY BE USED AS AN ALTERNATE FOR THE 7/8'' Ø GALVANIZED BOLTS, NUTS AND WASHERS. THEY SHALL CONFORM TO OR EXCEED THE MECHANICAL REQUIREMENTS OF ASTM A307. THE USE OF THIS ALTERNATE SHALL BE APPROVED BY THE ENGINEER.)

THE GUARDRAIL ANCHOR ASSEMBLY IS REQUIRED AT ALL POINTS WHERE APPROACH GUARDRAIL IS TO BE ATTACHED TO THE END OF BARRIER RAIL. FOR POINTS OF ATTACHMENT, SEE SKETCH.

AFTER INSTALLATION, THE EXPOSED THREAD OF THE BOLT SHALL BE BURRED WITH A SHARP POINTED TOOL.

THE COST OF THE GUARDRAIL ANCHOR ASSEMBLY SHALL BE INCLUDED IN THE UNIT CONTRACT PRICE BID FOR CONCRETE BARRIER RAIL.

THE 1 1/4'' Ø HOLES SHALL BE FORMED OR DRILLED WITH A CORE BIT. IMPACT TOOLS WILL NOT BE PERMITTED. ANY CONCRETE DAMAGED BY THIS WORK SHALL BE REPAIRED TO THE SATISFACTION OF THE ENGINEER.

THE C6 X 8.2 RUBRAIL IS TO BE ADHESIVELY ANCHORED TO THE RAIL USING THREE 3/4" Ø X 6" BOLTS WITH WASHERS. LEVEL ONE FIELD TESTING IS REQUIRED, AND THE YIELD LOAD OF THE 3/4" Ø BOLT IS 12 KIPS. FOR ADHESIVELY ANCHORED ANCHOR BOLTS OR DOWELS, SEE STANDARD SPECIFICATIONS. SEE ROADWAY STANDARD 862.03 FOR DETAILS AND LOCATION OF THE RUBRAIL.

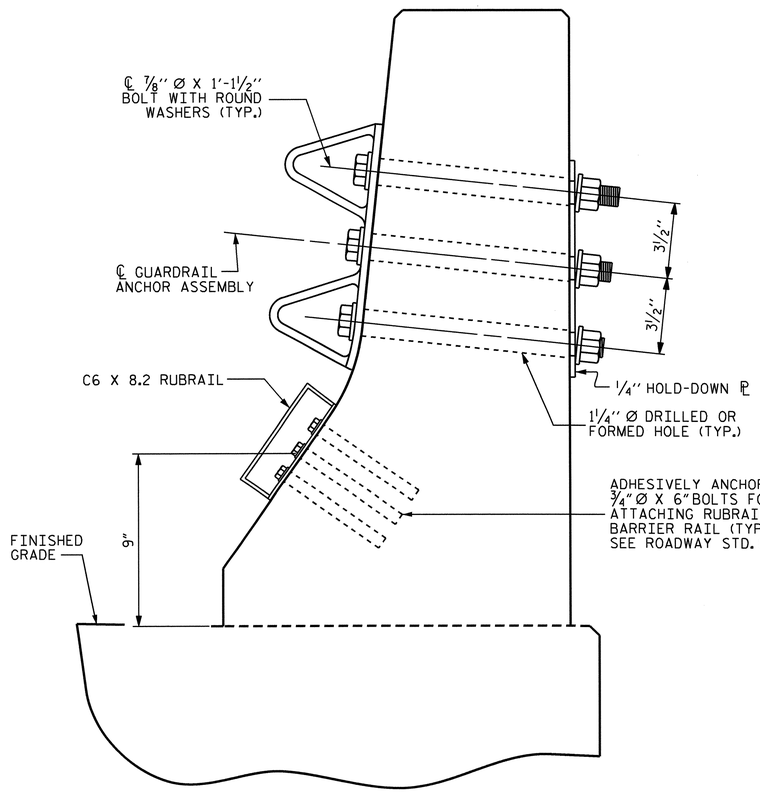

SECTION E-E

GUARDRAIL ANCHOR ASSEMBLY DETAILS

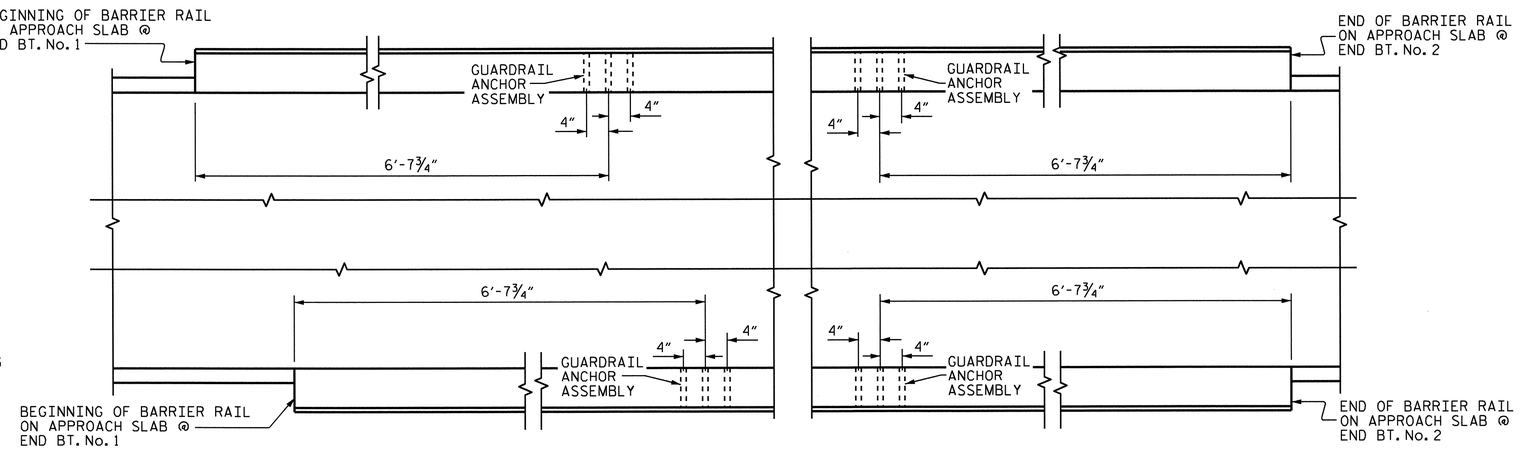

PLAN

LOCATION OF ANCHORS FOR GUARDRAIL

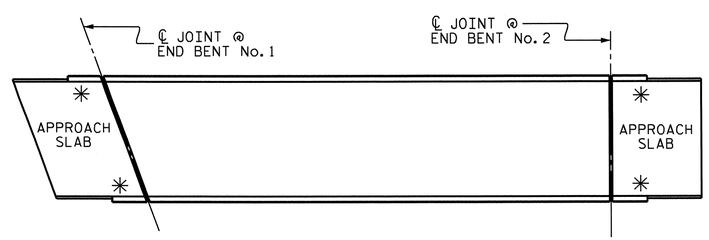

SKETCH SHOWING POINTS OF ATTACHMENTS

✳ DENOTES GUARDRAIL ANCHOR ASSEMBLY

PROJECT NO. B-4028

BLADEN COUNTY

STATION: 29+02.50 -L-

STATE OF NORTH CAROLINA
DEPARTMENT OF TRANSPORTATION
RALEIGH

STANDARD

GUARDRAIL ANCHORAGE FOR BARRIER RAIL

NORTH CAROLINA PROFESSIONAL SEAL 14855 ENGINEER DOUGLAS R. CALHOUN
6/26/12

REVISIONS						SHEET NO.
NO.	BY:	DATE:	NO.	BY:	DATE:	S-49
1			3			TOTAL SHEETS
2			4			147

ASSEMBLED BY : DGE/MIKE BRITT	DATE : 3-12/12-10
CHECKED BY : S.B. WILLIAMS	DATE : 3-2011
DRAWN BY : TLA 5/06	ADDED 5/1/06R KMM/GM
CHECKED BY : GM 5/06	REV. 10/1/11 MAA/GM

26-JUN-2012 15:49
R:\Structures\STR1\SuperDrawings\b4028_str1_BR.dgn
dely

STD. NO. GRA2 STR. #1

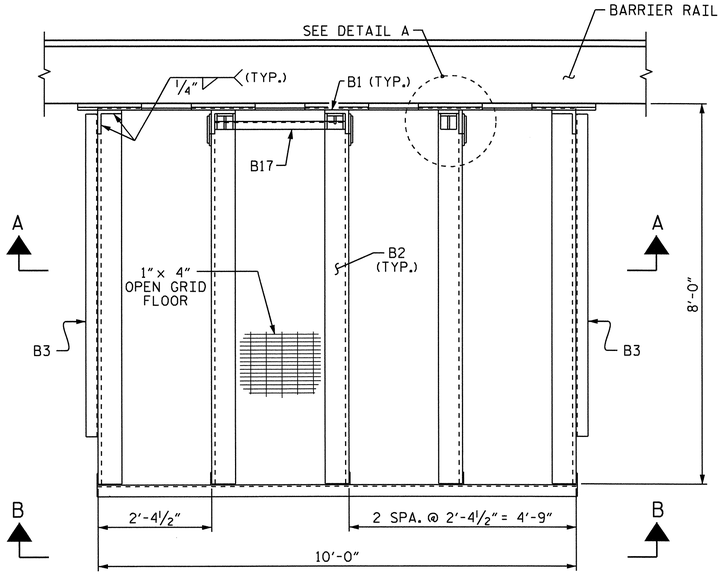

PLAN

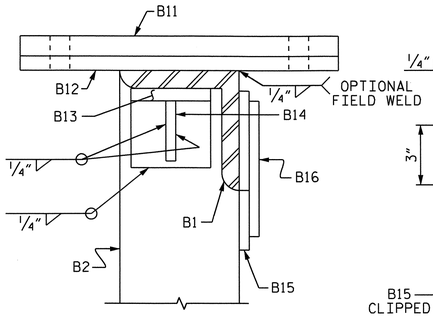

DETAIL A

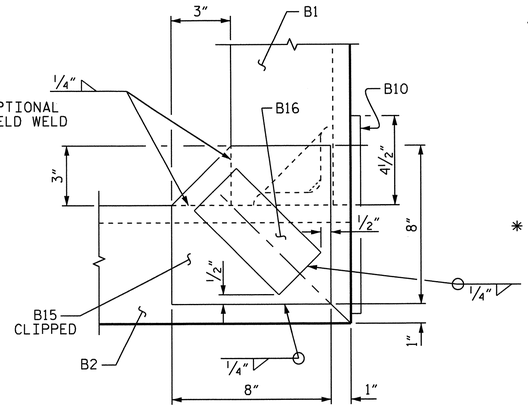

DETAIL B

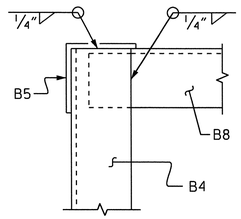

DETAIL C

NOTES:

ALL STRUCTURAL STEEL SHALL BE AASHTO M270 GRADE 50.

ALL FIELD CONNECTIONS TO BE 7/8" DIAMETER HIGH STRENGTH BOLTS UNLESS OTHERWISE NOTED.

FOR SOLAR ARRAY PLATFORM, SEE SPECIAL PROVISIONS.

ALL STRUCTURAL MEMBERS, OPEN GRID FLOOR, BOLTS, NUTS, AND WASHERS SHALL BE GALVANIZED IN ACCORDANCE WITH THE STANDARD SPECIFICATIONS.

* THE CONTRACTOR SHALL PROVIDE ANCHOR BOLTS OF SUFFICIENT LENGTH TO INCLUDE ALL PLATE THICKNESSES PLUS MEET THE MINIMUM EMBEDMENT DEPTH REQUIRED BY THE MANUFACTURER.

LEVEL 1 FIELD TESTING IS REQUIRED FOR THE ADHESIVELY ANCHORED ANCHOR BOLTS. THE YIELD LOAD OF THE ANCHOR BOLT IS 42 KIPS. FOR ADHESIVELY ANCHORED ANCHOR BOLTS, SEE THE STANDARD SPECIFICATIONS.

THE ENTIRE COST FOR THE LABOR AND MATERIALS NECESSARY TO FABRICATE AND INSTALL SOLAR ARRAY SUPPORT PLATFORM SHALL BE INCLUDED IN THE LUMP SUM PRICE BID FOR THE "SOLAR ARRAY SUPPORT PLATFORM".

OPEN GRID FLOOR SHALL BE WELDED SECURELY TO EACH HORIZONTAL FLOOR MEMBER.

COMPLETELY SEAL ALL EDGES OF TIGHTLY CONTACTING SURFACES BY WELDING BEFORE GALVANIZING.

BILL OF MATERIAL

ITEM	NUMBER	DESCRIPTION
B1	5	L6 x 6 x 3/4
B2	5	L6 x 6 x 3/4
B3	2	L3 x 3 x 1/4
B4	5	L3 x 3 x 1/4
B5	1	L3 1/2 x 3 1/2 x 1/4
B6	1	L3 x 3 x 1/4
B7	1	PL 3/8 x 4 1/2 x 120
B8	4	L3 x 3 x 1/4
B9	2	PL 3/8 x 4 1/2 x 93
B10	1	PL 1/2 x 10 x 120
B11	5	PL 1 1/2 x 16 x 29
B12	5	PL 3/4 x 16 x 41
B13	3	L4 x 4 x 5/8
B14	3	PL 2 x 1/2 x 2
B15	3	PL 8 x 1/2 x 8
B16	3	PL 3 x 1/2 x 6
B17	4	L2 x 2 x 1/4
1"x4" OPEN GRID FLOOR W/ 3/16"x3/4" BRG. BARS		

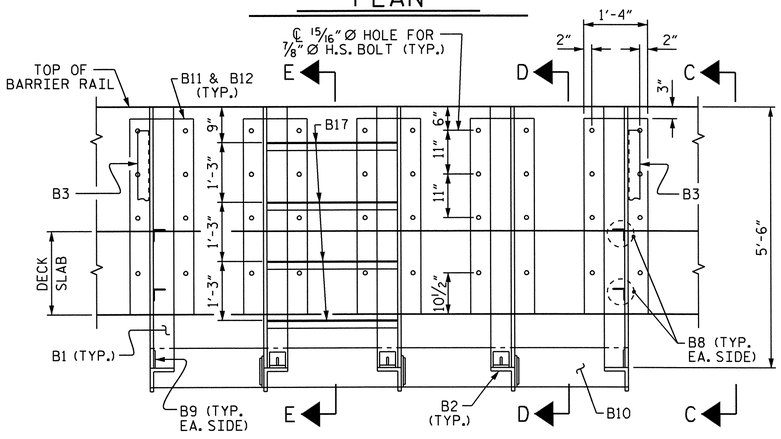

SECTION A-A

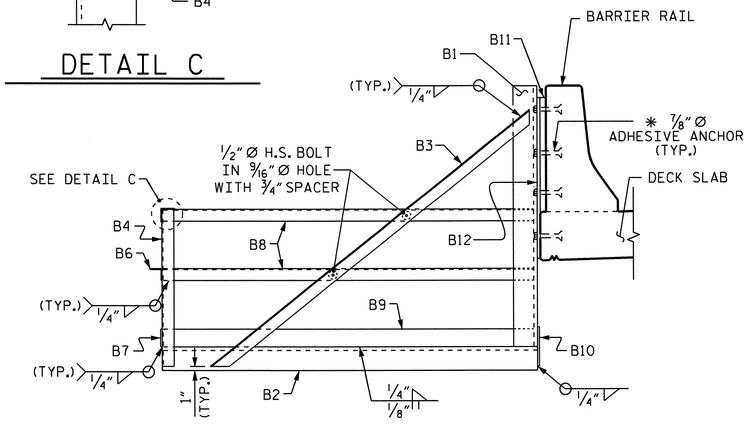

VIEW C-C

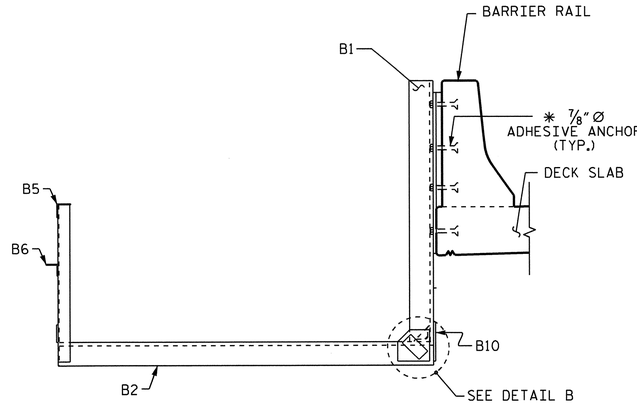

SECTION D-D

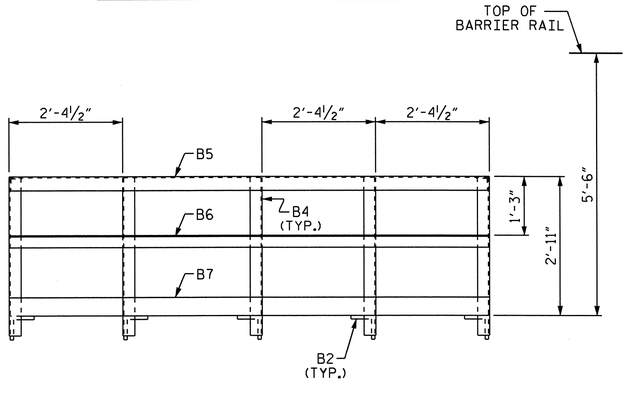

VIEW B-B

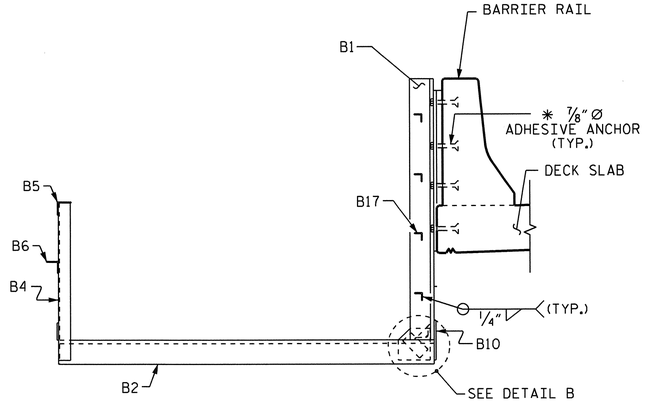

SECTION E-E

PROJECT NO. B-4028

BLADEN COUNTY

STATION: 29+02.50 -L-

STATE OF NORTH CAROLINA
DEPARTMENT OF TRANSPORTATION
RALEIGH

SOLAR ARRAY PLATFORM

NORTH CAROLINA PROFESSIONAL SEAL 14855 ENGINEER DOUGLAS B. CALHOUN
6/26/12

REVISIONS						SHEET NO.
NO.	BY:	DATE:	NO.	BY:	DATE:	S-50
1			3			TOTAL SHEETS
2			4			147

DRAWN BY : D. G. ELY DATE : 03/2012
CHECKED BY : W. F. PARKER DATE : 03/2012

26-JUN-2012 13:48
R:\Structures\STRI\MiscDrawings\B-4028_sd_NAV_LTG_str_1.dgn
dely

NOTES:

FOR NAVIGATIONAL LIGHTING SYSTEM, SEE SPECIAL PROVISIONS.

SEE "SOLAR ARRAY PLATFORM" SHEET FOR ADDITIONAL DETAILS.

1" PVC CONDUIT TO BE PLACED DURING BRIDGE DECK CONSTRUCTION.

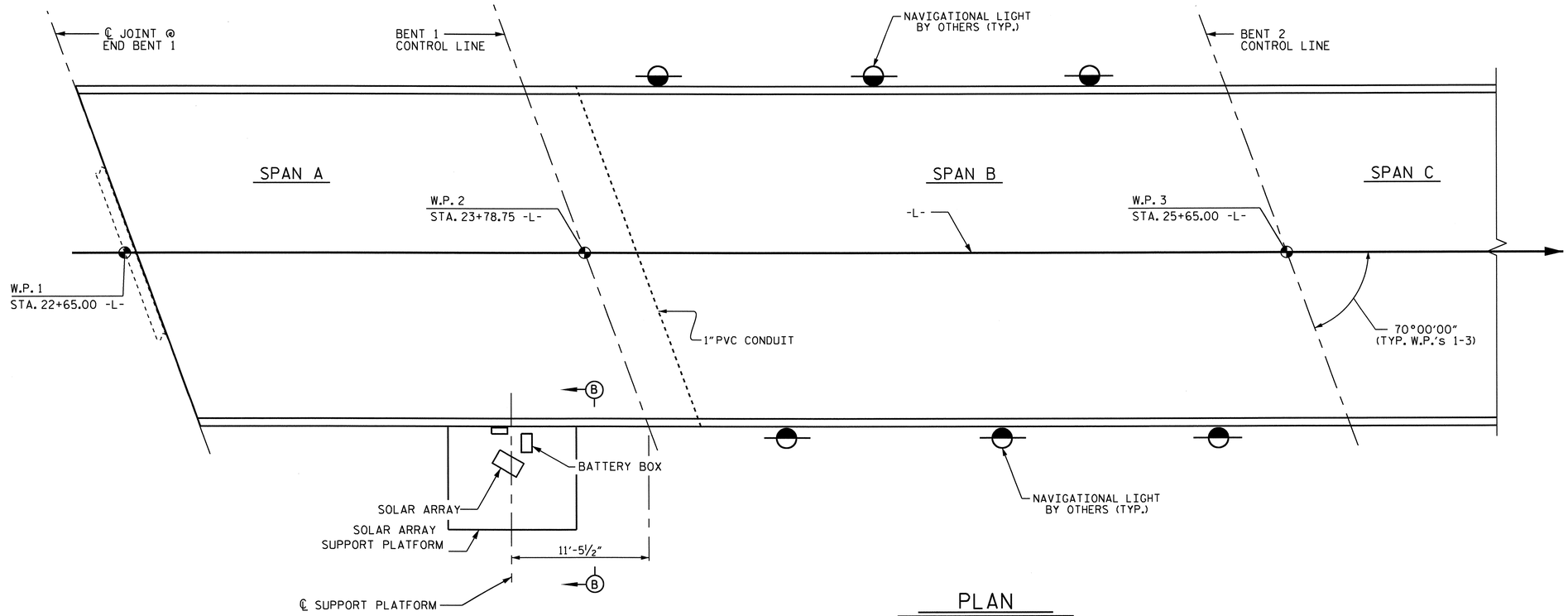

PLAN

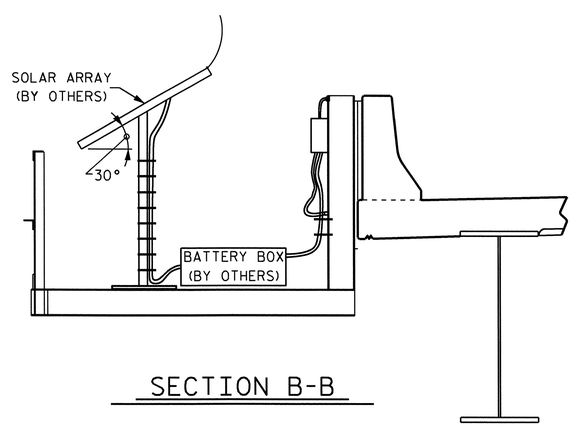

SECTION B-B

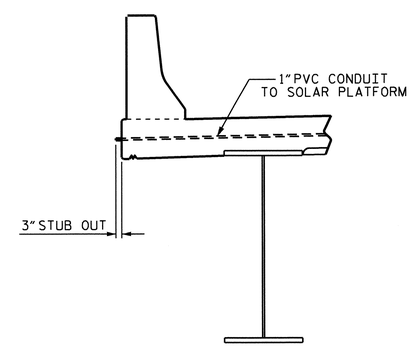

CONDUIT DETAIL

PROJECT NO. B-4028

BLADEN COUNTY

STATION: 29+02.50 -L-

STATE OF NORTH CAROLINA
DEPARTMENT OF TRANSPORTATION
RALEIGH

NAVIGATIONAL LIGHTING AND CONDUIT SYSTEM

NORTH CAROLINA PROFESSIONAL SEAL 14855 ENGINEER DOUGLAS R. CALHOUN
6/26/12

REVISIONS						SHEET NO.
NO.	BY:	DATE:	NO.	BY:	DATE:	S-51
1			3			TOTAL SHEETS
2			4			147

DRAWN BY : D. G. ELY DATE : 03/2012
CHECKED BY : W. F. PARKER DATE : 03/2012

26-JUN-2012 13:48
R:\Structures\STRI\MiscDrawings\B-4028_sd_NAV_LTG_str_*1.dgn
dely

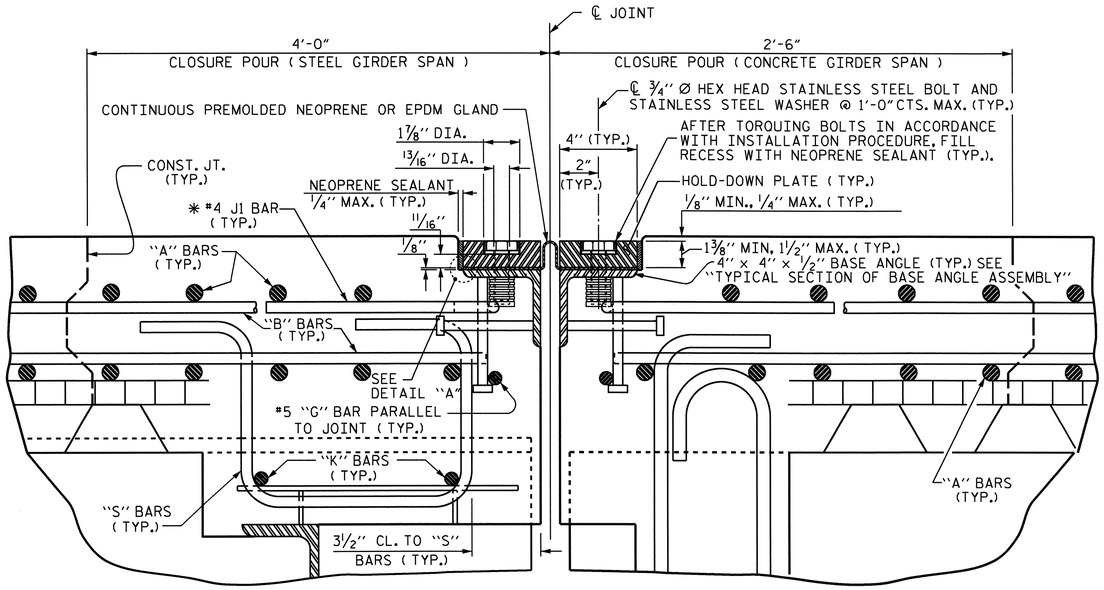

EXPANSION JOINT DETAILS

SECTION NORMAL TO JOINT
(JOINT @ BENT No. 3 SHOWN, ALL OTHERS SIMILAR)

* THE QUANTITY OF #4 J1 BARS ON THE BILL OF MATERIAL IS BASED ON 1'-0" CENTERS. J1 BARS SHALL BE PLACED AT EACH VERTICAL STUD ANCHOR BOLT. IN THE EVENT THAT THE NUMBER OF VERTICAL STUD ANCHORS EXCEEDS THE NUMBER OF J1 BARS SPECIFIED, ADDITIONAL J1 BARS WILL NOT BE REQUIRED.

INSTALLATION PROCEDURE

1. A TEMPLATE OR OTHER SUITABLE DEVICE SHALL BE USED TO FORM THE TOP OF THE EXPANSION JOINT SEAL BLOCKOUT TO THE PROPER DEPTH AND WIDTH. THE TEMPLATE SHALL BE 4⅛" TO 4¼" WIDE AND OF SUCH THICKNESS AS TO PROVIDE FOR CORRECT FINAL ELEVATION OF TOP OF HOLD-DOWN PLATES. THE TEMPLATE SHALL BE ATTACHED TO THE BASE ANGLE ASSEMBLY WITH THE ¾" Ø HEX HEAD BOLTS PROVIDED FOR THE HOLD-DOWN PLATES. A 1" Ø HOLE SHALL BE PROVIDED IN THE TEMPLATE CENTERED OVER EACH WEEP HOLE IN THE 4" X 4" X ½" BASE ANGLE. OTHER METHODS OF INSURING DRAINAGE THROUGH WEEP HOLES MAY BE EMPLOYED SUBJECT TO ENGINEER'S APPROVAL.
2. AFTER THE CONCRETE HAS BEEN CAST ON BOTH SIDES OF THE JOINT, REMOVE THE TEMPLATE. THOROUGHLY CLEAN THE BOLT HOLES AND THE ANGLE PLATE. REMOVE ANY EXCESS CONCRETE THAT COMES OUT OF THE WEEP HOLES. ANY DAMAGED STEEL SHALL BE COATED WITH A MINIMUM THICKNESS OF 4 DRY MILS OF ZINC-RICH PAINT IN ACCORDANCE WITH THE STANDARD SPECIFICATIONS.
3. LAY THE GLAND ON THE BASE ANGLE AND FIELD MARK THE GLAND FOR THE BOLT HOLES. HOLES IN THE GLAND SHALL BE PUNCHED ⅞" IN DIAMETER WITH A HAND PUNCH.
4. IN ORDER TO CHECK FOR PROPER ALIGNMENT, PLACE THE GLAND AND HOLD-DOWN PLATES ON THE BASE ANGLE. DO NOT APPLY NEOPRENE SEALANT. BOLT THE HOLD-DOWN PLATES TO THE BASE ANGLE BUT DO NOT TIGHTEN. THE ENGINEER SHALL INSPECT THE JOINT SEAL DEVICE FOR PROPER ALIGNMENT.
5. AFTER INSPECTION, REMOVE THE HOLD-DOWN PLATES AND GLAND. APPLY NEOPRENE SEALANT TO THE BASE ANGLE IN ACCORDANCE WITH THE "INSTALLATION SKETCH". PLACE GLAND AND HOLD-DOWN PLATES ON THE BASE ANGLE. BOLT THE HOLD-DOWN PLATES TO THE BASE ANGLE ASSEMBLY AND TOROUE THE BOLTS TO 88 FT-LBS WITH A TOROUE WRENCH. CHECK THE TOROUE AFTER THREE (3) HOURS AND, IF NECESSARY, RETIGHTEN TO 88 FT-LBS. A FINAL CHECK SHALL BE MADE AT SEVEN (7) DAYS. TOROUE SHALL NOT BE LESS THAN 80 FT-LBS AFTER SEVEN (7) DAYS.
6. AFTER PROPER TOROUING, CLEAN THE BOLT HOLE RECESSES AND THE RECESS BETWEEN THE JOINT SEAL DEVICE AND CONCRETE, COMPLETELY FILL THESE RECESSES WITH NEOPRENE SEALANT.

GENERAL NOTES

1. FOR EXPANSION JOINT SEALS, SEE SPECIAL PROVISIONS.
2. ALL PLATES AND ANGLES SHALL CONFORM TO AASHTO M270 GRADE 36 STEEL OR APPROVED EQUAL. ALL HOLD-DOWN BOLTS SHALL CONFORM TO ASTM F593 ALLOY 304 STAINLESS STEEL AND WASHERS SHALL CONFORM TO ASTM F844 EXCEPT THEY SHALL BE MADE FROM ALLOY 304 STAINLESS STEEL. ALL STUD ANCHORS SHALL CONFORM TO AASHTO M169, GRADES 1010 THRU 1020 OR APPROVED EQUAL. ALL CONCRETE INSERTS SHALL BE CLOSED END AND SHALL CONFORM TO AASHTO M169, GRADE 12L14. TENSILE CAPACITY SHALL BE 3000 LBS. MIN.
3. A PREMOLDED CORRUGATED OR NON-CORRUGATED GLAND SHALL BE USED FOR JOINTS SKEWED BETWEEN 50° THRU 130°. FOR JOINTS SKEWED LESS THAN 50° OR MORE THAN 130°, ONLY A CORRUGATED GLAND SHALL BE USED.
4. CLOSED END FERRULES AND STUD ANCHORS SHALL BE SHOP WELDED AND ALL HOLES SHALL BE SHOP DRILLED AS SHOWN ON PLANS. STUD ANCHORS SHALL BE ELECTRIC ARC END WELDED WITH COMPLETE FUSION.
5. SURFACES COMING IN CONTACT WITH NEOPRENE SHALL BE GROUND SMOOTH PRIOR TO METALLIZING.
6. UPON COMPLETION OF SHOP FABRICATION, THE HOLD DOWN PLATE AND BASE ANGLE ASSEMBLY, AS SHOWN IN THE "TYPICAL SECTION OF BASE ANGLE ASSEMBLY", SHALL BE METALLIZED. SEE SPECIAL PROVISION FOR THERMAL SPRAYED COATINGS (METALLIZATION).
7. BASE ANGLE ASSEMBLY SHALL BE CONTINUOUS FOR THE LENGTH OF THE JOINT. AT CROWN BREAKS, THE ENDS OF THE BASE ANGLE ASSEMBLY SHALL BE CUT PARALLEL TO THE BRIDGE CENTERLINE FOR SKEWS LESS THAN 80° AND GREATER THAN 100°. FINISHED WELD SHALL BE GROUND SMOOTH AND COATED WITH A MINIMUM THICKNESS OF 4 DRY MILS OF ZINC-RICH PAINT IN ACCORDANCE WITH THE STANDARD SPECIFICATIONS.
8. FIELD SPLICES OF HOLD-DOWN PLATES SHALL BE KEPT TO A MINIMUM. CONTRACTOR SHALL FURNISH DETAILED PLANS SHOWING PROPOSED SPLICE LOCATIONS FOR APPROVAL. HOLD-DOWN PLATES SHALL NOT EXCEED 20' LENGTHS UNLESS APPROVED BY THE ENGINEER.
9. NO ALTERNATE JOINT DETAILS SHALL BE PERMITTED IN LIEU OF THOSE SHOWN ON THESE PLANS.
10. THE CONTRACTOR MAY, AT HIS OPTION, USE ADHESIVELY ANCHORED ANCHOR BOLTS IN PLACE OF CONCRETE INSERTS FOR COVER PLATES. THE YIELD LOAD OF THE ¾" Ø BOLT IS 10 KIPS. FIELD TESTING OF THE ADHESIVE BONDING SYSTEM IS NOT REQUIRED.

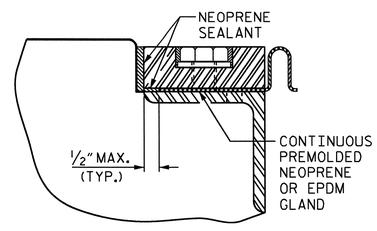

DETAIL "A"

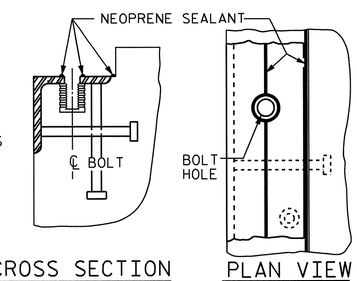

CROSS SECTION PLAN VIEW

INSTALLATION SKETCH

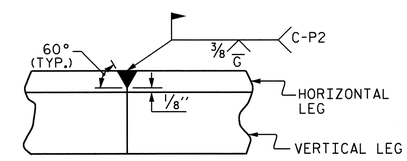

DETAIL- FIELD WELD SPLICE OF BASE ANGLE

MOVEMENT AND SETTING AT JOINT					
LOCATION	SKEW ANGLE	TOTAL MOVEMENT (ALONG ℄ RDWY)	PERPENDICULAR JOINT OPENING AT 45° F	PERPENDICULAR JOINT OPENING AT 60° F	PERPENDICULAR JOINT OPENING AT 90° F
END BENT No. 1	70°-00'-00"	2⅛"	2¼"	2"	1⅜"
BENT No. 3	90°-00'-00"	2³⁄₁₆"	2⅜"	2¹⁄₁₆"	1⁷⁄₁₆"
BENT No. 4	90°-00'-00"	1⁹⁄₁₆"	2⅛"	1¹³⁄₁₆"	1¼"
BENT No. 6	90°-00'-00"	1⁹⁄₁₆"	2⅛"	1¹³⁄₁₆"	1¼"
BENT No. 8	90°-00'-00"	1⁹⁄₁₆"	2⅛"	1¹³⁄₁₆"	1¼"
BENT No. 10	90°-00'-00"	1⁹⁄₁₆"	2⅛"	1¹³⁄₁₆"	1¼"
END BENT No. 2	90°-00'-00"	¹³⁄₁₆"	1⁹⁄₁₆"	1⁷⁄₁₆"	1⅛"

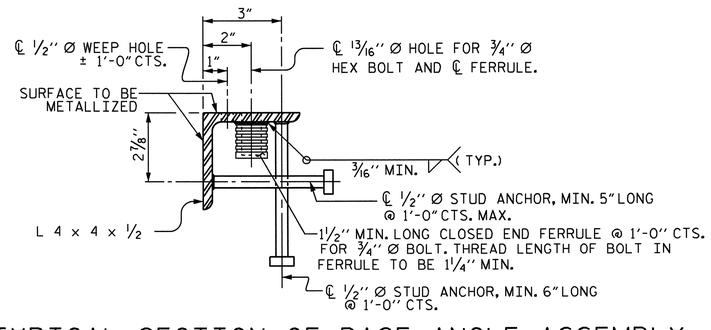

TYPICAL SECTION OF BASE ANGLE ASSEMBLY

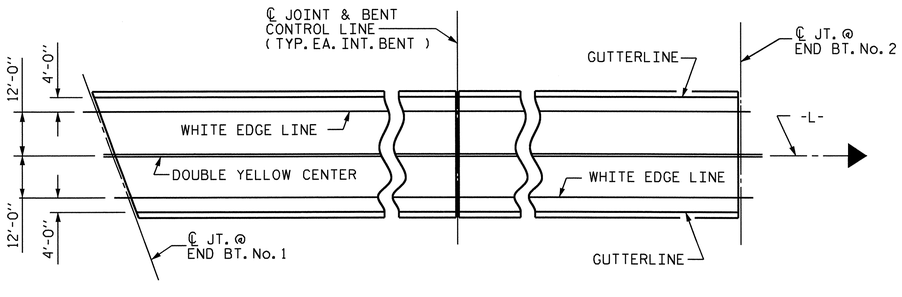

PAVEMENT MARKING ALIGNMENT SKETCH

PROJECT NO. B-4028
BLADEN COUNTY
STATION: 29+02.50 -L-

SHEET 1 OF 3

STATE OF NORTH CAROLINA
DEPARTMENT OF TRANSPORTATION
RALEIGH

SUPERSTRUCTURE

EXPANSION JOINT SEAL DETAILS

NORTH CAROLINA PROFESSIONAL SEAL 14855 ENGINEER DOUGLAS R. CALHOUN
6/26/12

REVISIONS								SHEET NO.
NO.	BY:	DATE:	NO.	BY:	DATE:			S-52
1			3					TOTAL SHEETS
2			4					147

DRAWN BY : MIKE BRITT		DATE : 12-15-10	
CHECKED BY : S.B. WILLIAMS		DATE : 2-2011	
DRAWN BY : REK 9/87	REV. 5/17/03R	RWW/JTE	
CHECKED BY : CRK 10/87	REV. 5/1/06R	TLA/GM	
	REV. 10/1/11	MAA/GM	

26-JUN-2012 13:47
R:\Structures\STR1\SuperDrawings\b4028_str1_EJS.dgn
dely

STR. #1

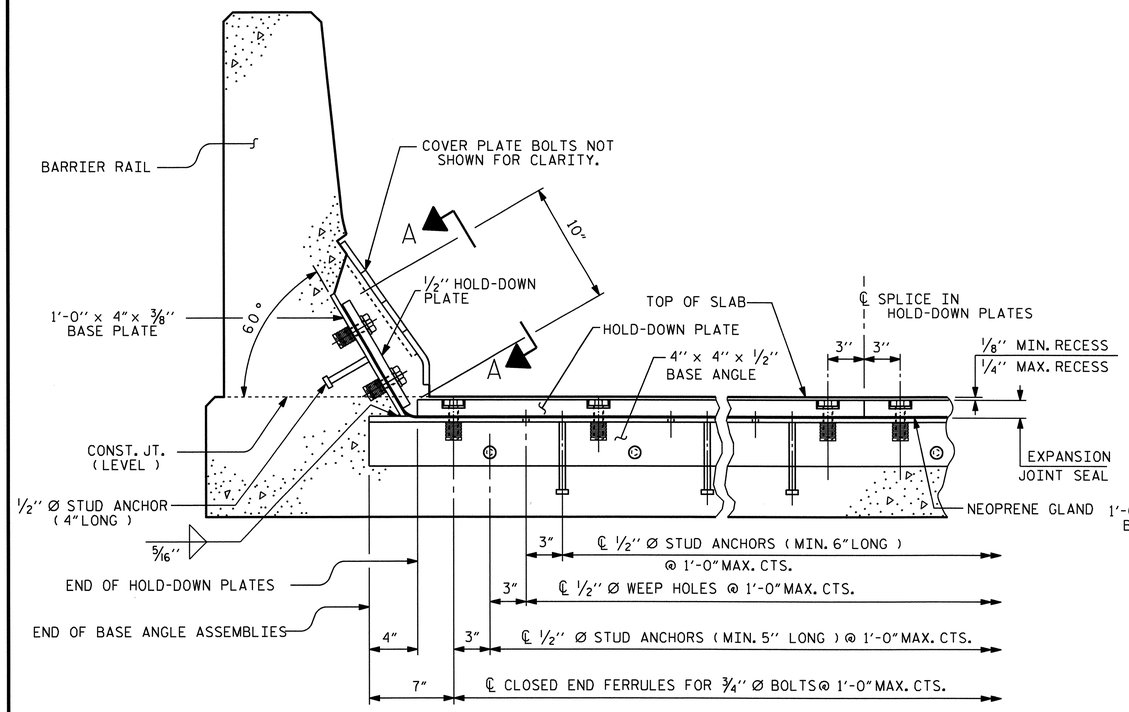

SECTION THRU RAIL NORMAL TO JOINT

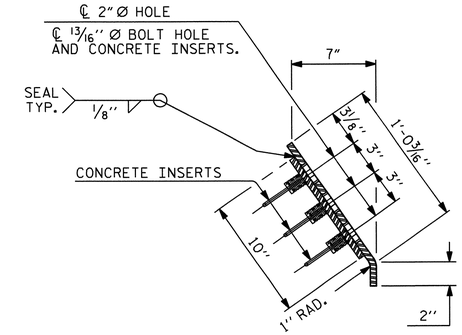

END VIEW

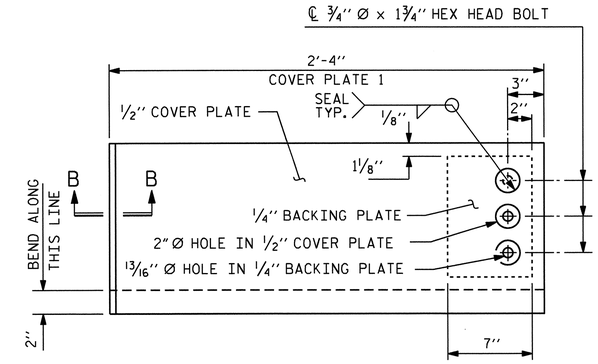

ELEVATION VIEW

COVER PLATE 1 DETAILS

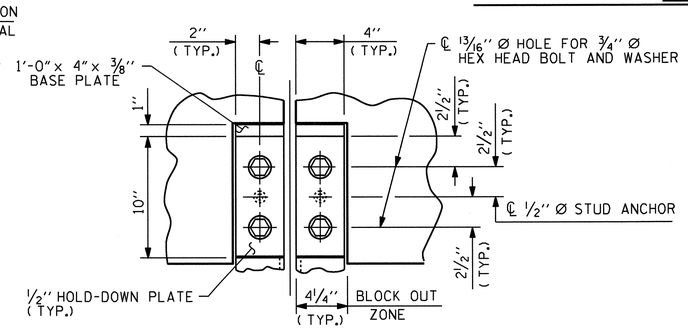

SECTION A-A

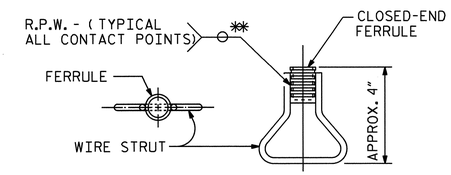

PLAN ELEVATION

CONCRETE INSERT

** EACH WELDED ATTACHMENT OF WIRE TO FERRULE SHALL DEVELOP THE TENSILE STRENGTH OF THE WIRE.

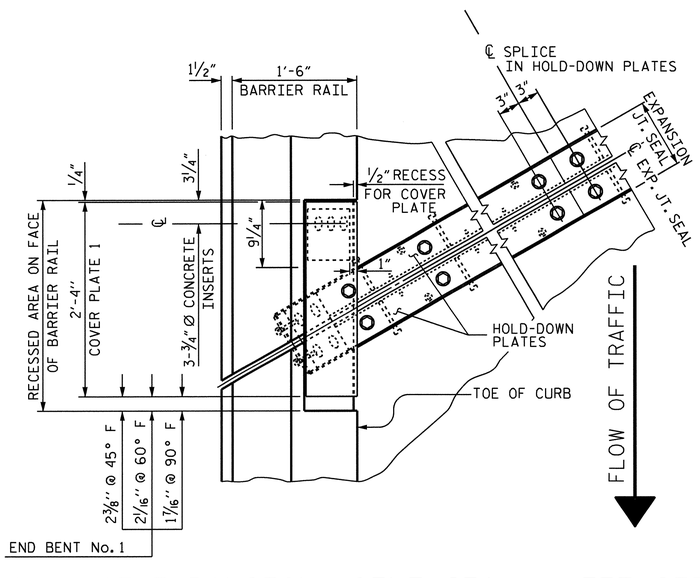

PLAN OF EXPANSION JOINT SEAL - LEFT SIDE

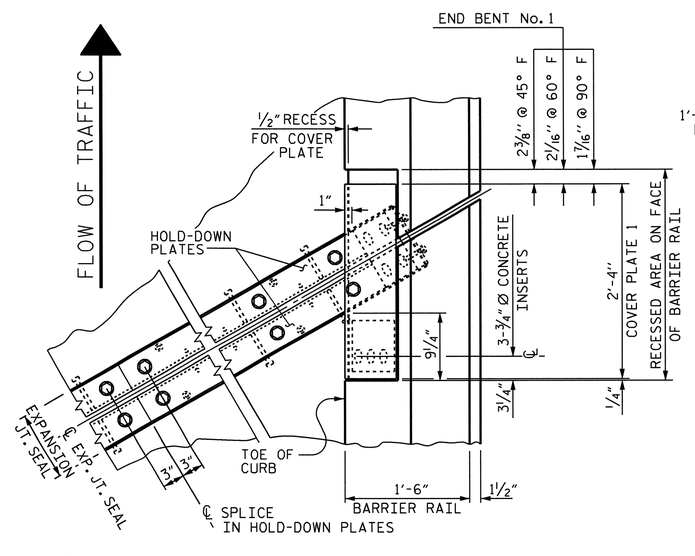

PLAN OF EXPANSION JOINT SEAL - RIGHT SIDE

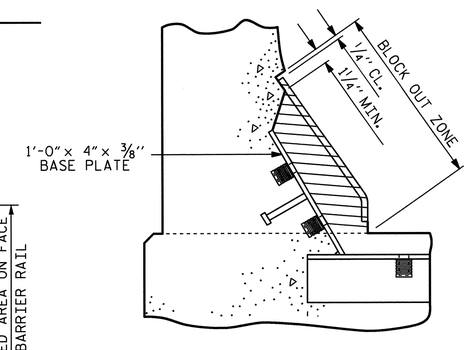

BLOCK OUT DETAIL

SEE "SECTION A-A" FOR OTHER DETAILS.

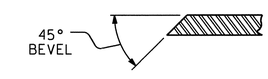

SECTION B-B

PROJECT NO. B-4028

BLADEN COUNTY

STATION: 29+02.50 -L-

SHEET 2 OF 3

STATE OF NORTH CAROLINA
DEPARTMENT OF TRANSPORTATION
RALEIGH

STANDARD

EXPANSION JOINT SEAL DETAILS FOR BARRIER RAIL

NORTH CAROLINA PROFESSIONAL SEAL 14855 ENGINEER DOUGLAS R. CALHOUN
6/26/12

REVISIONS						SHEET NO.
NO.	BY:	DATE:	NO.	BY:	DATE:	S-53
1			3			TOTAL SHEETS
2			4			147

ASSEMBLED BY : MIKE BRITT	DATE : 12-15-10
CHECKED BY : S.B. WILLIAMS	DATE : 2-2011
DRAWN BY : REK 9/87	REV. 10/17/00 RWW/LES
CHECKED BY : CRK 10/87	REV. 5/1/06 TLA/GM
	REV. 10/1/11 MAA/GM

26-JUN-2012 13:47
R:\Structures\STRI\SuperDrawings\b4028_str1_EJS.dgn
dely

STD. NO. EJS2 STR. #1

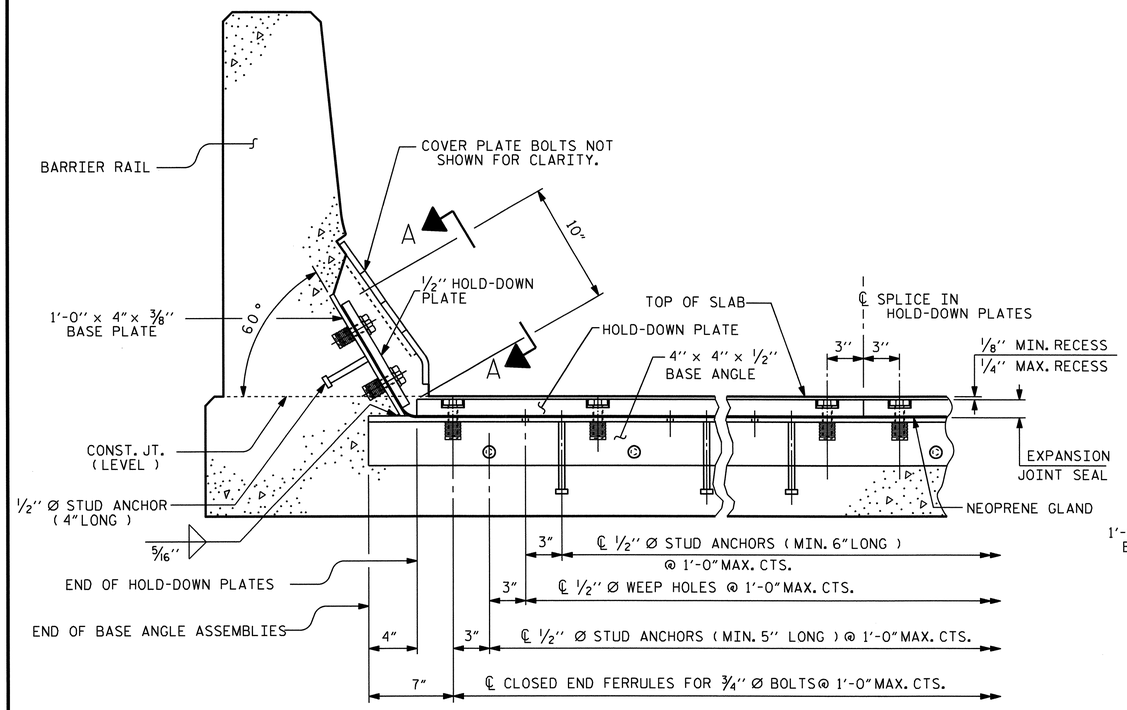

SECTION THRU RAIL NORMAL TO JOINT

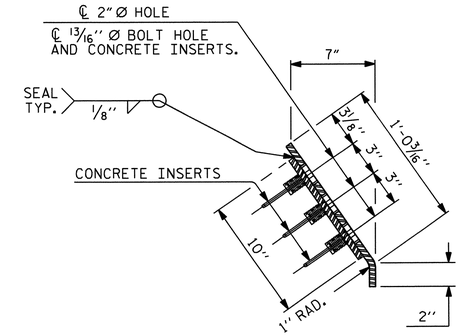

END VIEW

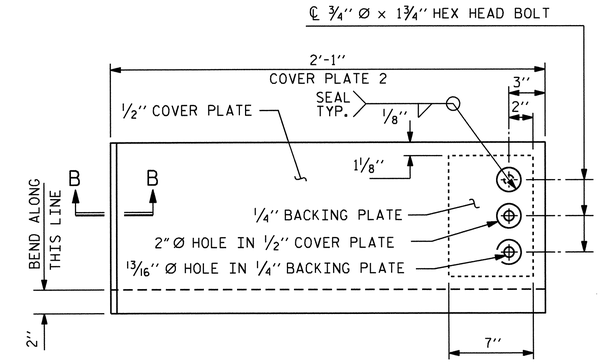

ELEVATION VIEW

COVER PLATE 2 DETAILS

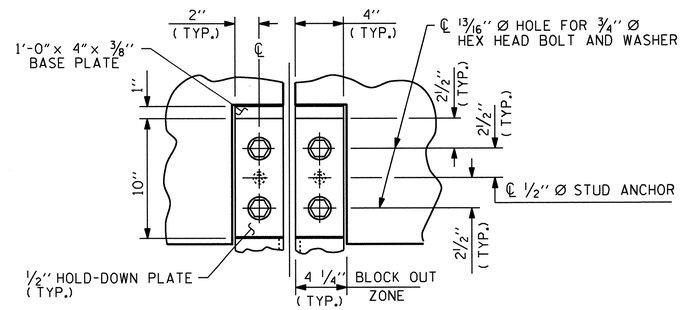

SECTION A-A

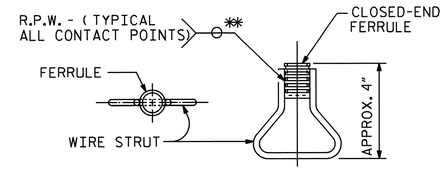

PLAN ELEVATION

CONCRETE INSERT

** EACH WELDED ATTACHMENT OF WIRE TO FERRULE SHALL DEVELOP THE TENSILE STRENGTH OF THE WIRE.

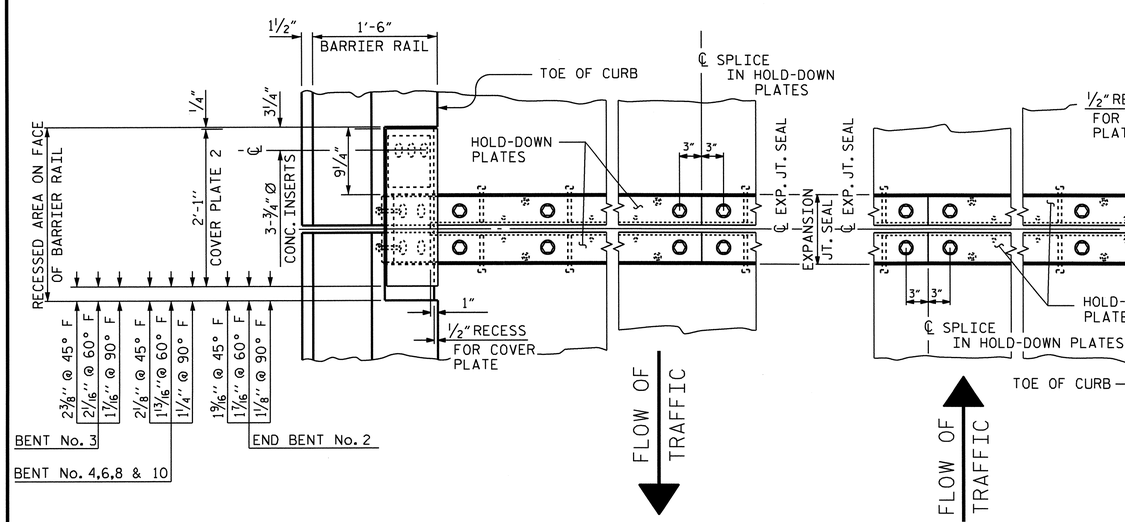

PLAN OF EXPANSION JOINT SEAL-LEFT SIDE

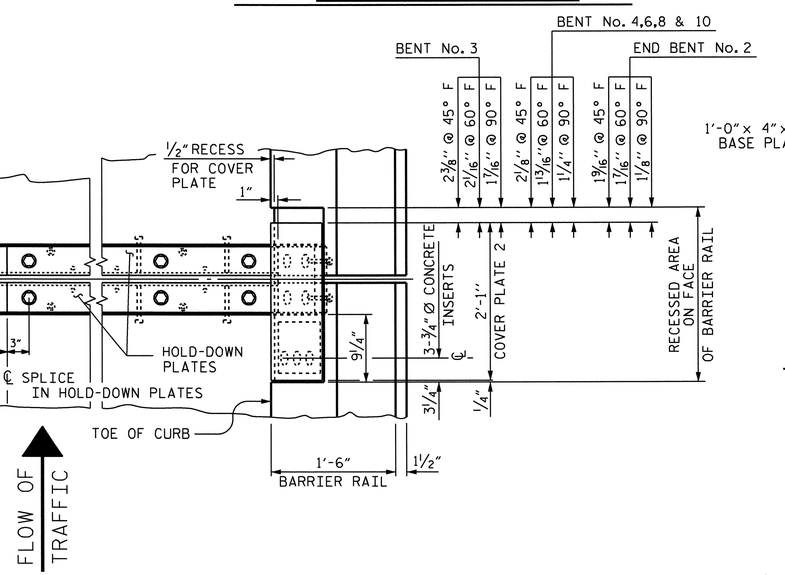

PLAN OF EXPANSION JOINT SEAL-RIGHT SIDE

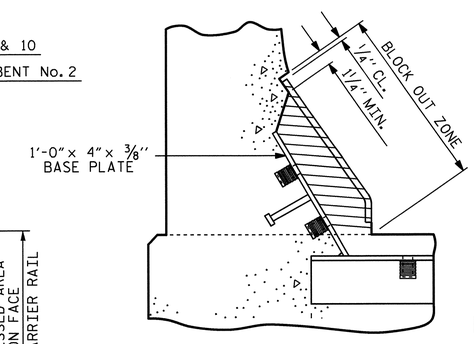

BLOCK OUT DETAIL

SEE "SECTION A-A" FOR OTHER DETAILS.

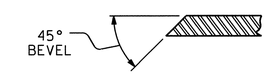

SECTION B-B

PROJECT NO. B-4028

BLADEN COUNTY

STATION: 29+02.50 -L-

SHEET 3 OF 3

STATE OF NORTH CAROLINA
DEPARTMENT OF TRANSPORTATION
RALEIGH

STANDARD

EXPANSION JOINT SEAL DETAILS FOR BARRIER RAIL

NORTH CAROLINA PROFESSIONAL SEAL 14855 ENGINEER DOUGLAS R. CALHOUN
6/26/12

REVISIONS						SHEET NO.
NO.	BY:	DATE:	NO.	BY:	DATE:	S-59
1			3			TOTAL SHEETS
2			4			147

STD. NO. EJS2 STR. #1

ASSEMBLED BY : MIKE BRITT		DATE : 12-15-10	
CHECKED BY : S.B. WILLIAMS		DATE : 2-2011	
DRAWN BY : REK 9/87	REV. 10/17/00 RWW/LES		
CHECKED BY : CRK 10/87	REV. 5/1/06 TLA/GM		
	REV. 10/1/11 MAA/GM		

26-JUN-2012 13:46
R:\Structures\STRI\SuperDrawings\b4028_strl_EJS.dgn
dely

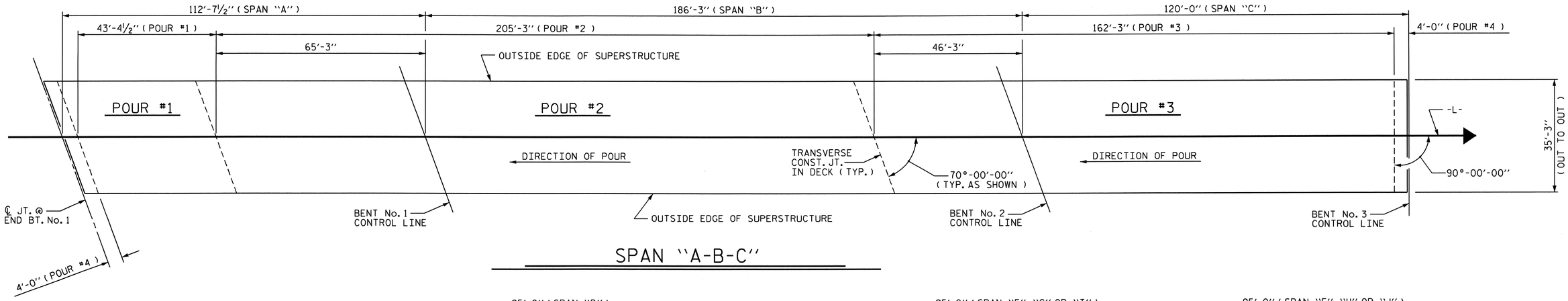

SPAN "A-B-C"

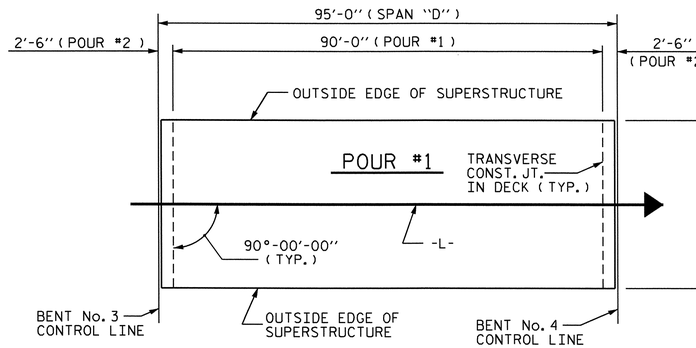

SPAN "D"

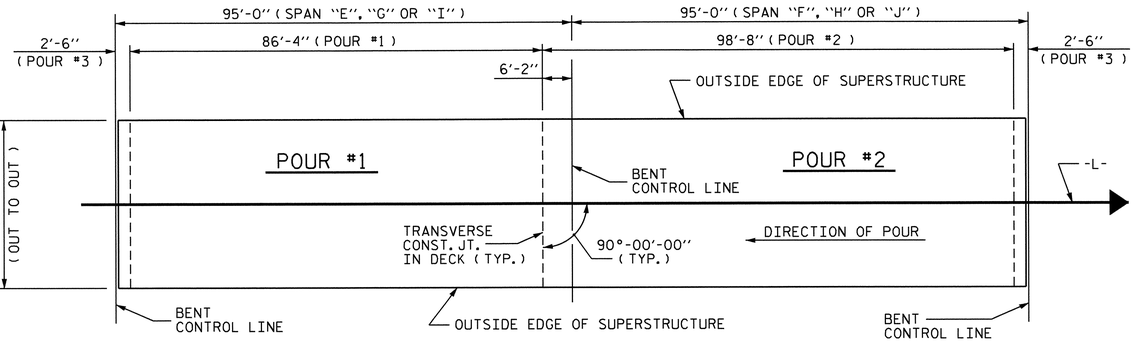

SPAN "E-F", "G-H" OR "I-J"

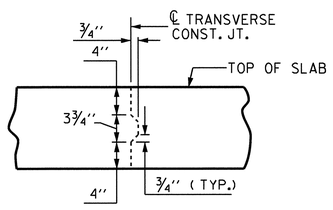

TRANSVERSE CONSTRUCTION JOINT DETAIL

NOTE: REINFORCING STEEL IN SLAB NOT SHOWN. LONGITUDINAL REINFORCING STEEL SHALL BE CONTINUOUS THRU JOINT.

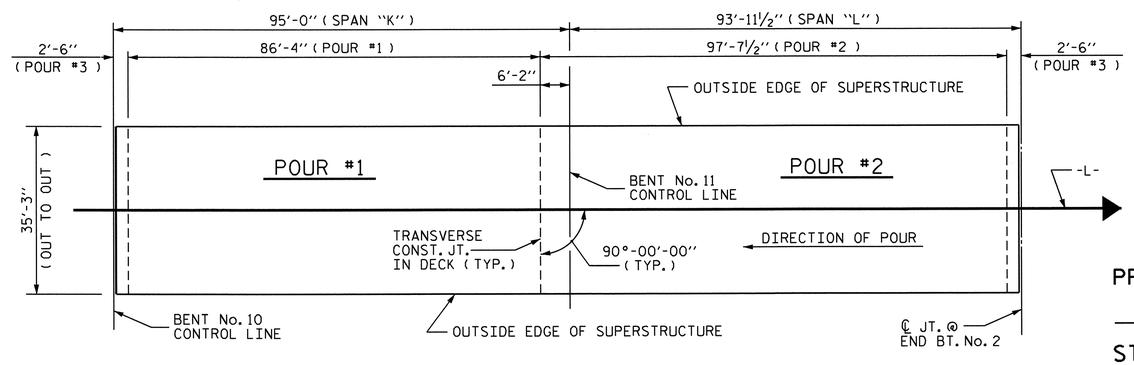

SPAN "K-L"

NOTE :
FOR QUANTITY BREAKDOWN, SEE " BILL OF MATERIAL" SHEET

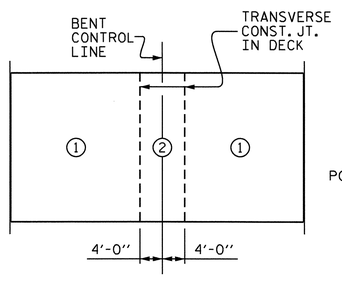

OPTIONAL DECK POUR DETAIL

POUR (2) SHALL NOT BE STARTED UNTIL BOTH ADJACENT (1) POURS REACH A MINIMUM OF 3000 PSI

NOTE :
TYPICAL FOR EACH PRESTRESSED CONCRETE GIRDER 2 SPAN CONTINUOUS UNIT

PROJECT NO. B-4028
BLADEN COUNTY
STATION: 29+02.50 -L-

STATE OF NORTH CAROLINA
DEPARTMENT OF TRANSPORTATION
RALEIGH

SUPERSTRUCTURE

CONCRETE DECK POUR DETAILS

NORTH CAROLINA PROFESSIONAL SEAL 14855 ENGINEER DOUGLAS R. CALHOUN
6/26/12

REVISIONS								SHEET NO.
NO.	BY:	DATE:	NO.	BY:	DATE:			S-55
1			3					TOTAL SHEETS
2			4					147

DRAWN BY : MIKE BRITT DATE : 12-1-10
CHECKED BY : S.B. WILLIAMS DATE : 2-2011

26-JUN-2012 13:46
R:\Structures\STR1\SuperDrawings\b4028_str1_POUR.dgn
dely

STR. #1

SUPERSTRUCTURE REINFORCING STEEL LENGTHS ARE BASED ON THE FOLLOWING MINIMUM SPLICE LENGTHS

BAR SIZE	SUPERSTRUCTURE EXCEPT APPROACH SLABS, PARAPET, AND BARRIER RAIL		APPROACH SLABS		PARAPET AND BARRIER RAIL
	EPOXY COATED	UNCOATED	EPOXY COATED	UNCOATED	
#4	2'-0"	1'-9"	2'-0"	1'-9"	2'-9"
#5	2'-6"	2'-2"	2'-6"	2'-2"	3'-5"
#6	3'-0"	2'-7"	3'-10"	2'-7"	4'-4"
#7	5'-3"	3'-6"			
#8	6'-10"	4'-7"			

CLASS AA CONCRETE BREAKDOWN

POUR #1 (SPAN "A-B-C")	48.1 CU. YDS.
POUR #2 (SPAN "A-B-C")	227.7 CU. YDS.
POUR #3 (SPAN "A-B-C")	180.0 CU. YDS.
POUR #4 (SPAN "A-B-C")	10.6 CU. YDS.
TOTAL	466.4 CU. YDS.
POUR #1 (SPAN "D")	101.5 CU. YDS.
POUR #2 (SPAN "D")	9.2 CU. YDS.
TOTAL	110.7 CU. YDS.
POUR #1 (SPAN "E-F")	98.5 CU. YDS.
POUR #2 (SPAN "E-F")	122.9 CU. YDS.
POUR #3 (SPAN "E-F")	7.7 CU. YDS.
TOTAL	229.1 CU. YDS.
POUR #1 (SPAN "G-H")	98.5 CU. YDS.
POUR #2 (SPAN "G-H")	122.9 CU. YDS.
POUR #3 (SPAN "G-H")	7.7 CU. YDS.
TOTAL	229.1 CU. YDS.
POUR #1 (SPAN "I-J")	98.5 CU. YDS.
POUR #2 (SPAN "I-J")	122.9 CU. YDS.
POUR #3 (SPAN "I-J")	7.7 CU. YDS.
TOTAL	229.1 CU. YDS.
POUR #1 (SPAN "K-L")	98.5 CU. YDS.
POUR #2 (SPAN "K-L")	121.7 CU. YDS.
POUR #3 (SPAN "K-L")	7.7 CU. YDS.
TOTAL	227.9 CU. YDS.

FOR LOCATION OF POURS, SEE "CONCRETE DECK POUR DETAILS" SHEET

BILL OF MATERIAL

SPAN "A-B-C"

BAR	No.	SIZE	TYPE	LENGTH	WEIGHT
* A1	761	#5	STR.	34'-11"	27714
A2	761	#5	STR.	34'-11"	27714
* A101	2	#5	STR.	32'-4"	67
* A102	2	#5	STR.	29'-4"	61
* A103	2	#5	STR.	26'-5"	55
* A104	2	#5	STR.	23'-5"	49
* A105	2	#5	STR.	20'-5"	43
* A106	2	#5	STR.	17'-5"	36
* A107	2	#5	STR.	14'-6"	30
* A108	2	#5	STR.	11'-6"	24
* A109	2	#5	STR.	8'-6"	18
* A110	2	#5	STR.	5'-7"	12
* A111	2	#5	STR.	2'-7"	5
A201	2	#5	STR.	32'-4"	67
A202	2	#5	STR.	29'-4"	61
A203	2	#5	STR.	26'-5"	55
A204	2	#5	STR.	23'-5"	49
A205	2	#5	STR.	20'-5"	43
A206	2	#5	STR.	17'-5"	36
A207	2	#5	STR.	14'-6"	30
A208	2	#5	STR.	11'-6"	24
A209	2	#5	STR.	8'-6"	18
A210	2	#5	STR.	5'-7"	12
A211	2	#5	STR.	2'-7"	5
* B1	32	#4	STR.	28'-5"	607
* B2	30	#4	STR.	29'-5"	590
* B3	44	#4	STR.	27'-9"	816
* B4	88	#4	STR.	24'-4"	1430
* B5	33	#4	STR.	23'-6"	518
* B6	33	#4	STR.	21'-6"	474
* B7	129	#7	STR.	39'-10"	10503
* B8	129	#7	STR.	40'-10"	10767
B9	32	#5	STR.	55'-0"	1836
B10	80	#5	STR.	54'-10"	4575
B11	80	#5	STR.	54'-5"	4541
B12	80	#5	STR.	54'-0"	4506
B13	32	#5	STR.	53'-7"	1788
* G1	1	#5	STR.	37'-1"	39
* G2	1	#5	STR.	34'-11"	36
* J1	66	#4	6	1'-5"	62
* K1	8	#5	1	7'-9"	65
* K2	8	#5	2	8'-10"	74
* K3	12	#5	STR.	8'-6"	106
* S1	42	#4	3	3'-8"	103

REINFORCING STEEL 45,360 LBS.

* EPOXY COATED REINFORCING STEEL 54,304 LBS.

SPAN "D"

BAR	No.	SIZE	TYPE	LENGTH	WEIGHT
* A1	175	#5	STR.	34'-11"	6373
A2	175	#5	STR.	34'-11"	6373
* B14	104	#4	STR.	25'-2"	1748
B15	82	#5	STR.	48'-4"	4134
* J1	64	#4	6	1'-5"	61
* G2	2	#5	STR.	34'-11"	73
* K4	8	#8	1	13'-5"	287
* K5	8	#8	2	20'-0"	427
* S2	48	#5	5	5'-11"	296

REINFORCING STEEL 10,507 LBS.

* EPOXY COATED REINFORCING STEEL 9,265 LBS.

SPAN "E-F"

BAR	No.	SIZE	TYPE	LENGTH	WEIGHT
* A1	350	#5	STR.	34'-11"	12746
A2	350	#5	STR.	34'-11"	12746
* B16	28	#4	STR.	28'-10"	539
* B17	132	#4	STR.	22'-5"	1977
* B18	66	#7	STR.	25'-10"	3485
* B19	21	#7	STR.	28'-6"	1223
B20	164	#5	STR.	49'-0"	8382
* J1	64	#4	6	1'-5"	61
* G2	2	#5	STR.	34'-11"	73
* K4	8	#8	1	13'-5"	287
* K5	8	#8	2	20'-0"	427
K6	6	#4	STR.	7'-4"	29
K7	18	#4	STR.	7'-10"	94
K8	6	#4	STR.	5'-9"	23
K9	5	#4	STR.	27'-8"	92
* S2	48	#5	5	5'-11"	296
S3	90	#4	4	2'-9"	165
* U1	6	#4	2	13'-2"	53
* U2	18	#4	2	15'-2"	182

REINFORCING STEEL 21,531 LBS.

* EPOXY COATED REINFORCING STEEL 21,349 LBS.

SPAN "G-H"

BAR	No.	SIZE	TYPE	LENGTH	WEIGHT
* A1	350	#5	STR.	34'-11"	12746
A2	350	#5	STR.	34'-11"	12746
* B16	28	#4	STR.	28'-10"	539
* B17	132	#4	STR.	22'-5"	1977
* B18	66	#7	STR.	25'-10"	3485
* B19	21	#7	STR.	28'-6"	1223
B20	164	#5	STR.	49'-0"	8382
* J1	64	#4	6	1'-5"	61
* G2	2	#5	STR.	34'-11"	73
* K4	8	#8	1	13'-5"	287
* K5	8	#8	2	20'-0"	427
K6	6	#4	STR.	7'-4"	29
K7	18	#4	STR.	7'-10"	94
K8	6	#4	STR.	5'-9"	23
K9	5	#4	STR.	27'-8"	92
* S2	48	#5	5	5'-11"	296
S3	90	#4	4	2'-9"	165
* U1	6	#4	2	13'-2"	53
* U2	18	#4	2	15'-2"	182

REINFORCING STEEL 21,531 LBS.

* EPOXY COATED REINFORCING STEEL 21,349 LBS.

SPAN "I-J"

BAR	No.	SIZE	TYPE	LENGTH	WEIGHT
* A1	350	#5	STR.	34'-11"	12746
A2	350	#5	STR.	34'-11"	12746
* B16	28	#4	STR.	28'-10"	539
* B17	132	#4	STR.	22'-5"	1977
* B18	66	#7	STR.	25'-10"	3485
* B19	21	#7	STR.	28'-6"	1223
B20	164	#5	STR.	49'-0"	8382
* J1	64	#4	6	1'-5"	61
* G2	2	#5	STR.	34'-11"	73
* K4	8	#8	1	13'-5"	287
* K5	8	#8	2	20'-0"	427
K6	6	#4	STR.	7'-4"	29
K7	18	#4	STR.	7'-10"	94
K8	6	#4	STR.	5'-9"	23
K9	5	#4	STR.	27'-8"	92
* S2	48	#5	5	5'-11"	296
S3	90	#4	4	2'-9"	165
* U1	6	#4	2	13'-2"	53
* U2	18	#4	2	15'-2"	182

REINFORCING STEEL 21,531 LBS.

* EPOXY COATED REINFORCING STEEL 21,349 LBS.

SPAN "K-L"

BAR	No.	SIZE	TYPE	LENGTH	WEIGHT
* A1	348	#5	STR.	34'-11"	12674
A2	348	#5	STR.	34'-11"	12674
* B17	66	#4	STR.	22'-5"	988
* B18	66	#7	STR.	25'-10"	3485
* B19	21	#7	STR.	28'-6"	1223
* B21	28	#4	STR.	28'-8"	536
* B22	66	#4	STR.	22'-1"	974
B23	164	#5	STR.	48'-9"	8339
* J1	64	#4	6	1'-5"	61
* G2	2	#5	STR.	34'-11"	73
* K4	8	#8	1	13'-5"	287
* K5	8	#8	2	20'-0"	427
K6	6	#4	STR.	7'-4"	29
K7	18	#4	STR.	7'-10"	94
K8	6	#4	STR.	5'-9"	23
K9	5	#4	STR.	27'-8"	92
* S2	48	#5	5	5'-11"	296
S3	90	#4	4	2'-9"	165
* U1	6	#4	2	13'-2"	53
* U2	18	#4	2	15'-2"	182

REINFORCING STEEL 21,416 LBS.

* EPOXY COATED REINFORCING STEEL 21,259 LBS.

BAR TYPES

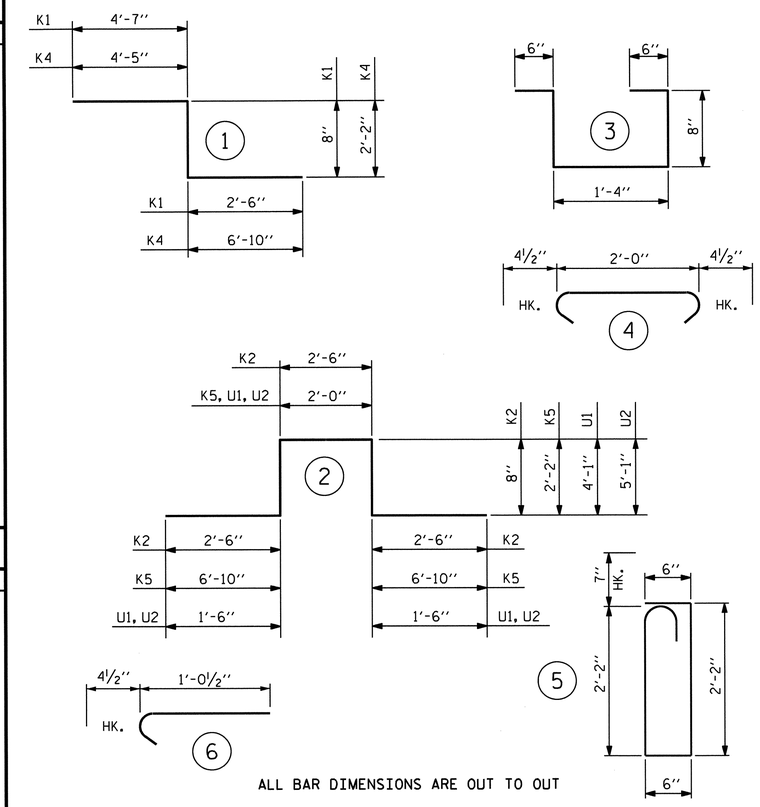

ALL BAR DIMENSIONS ARE OUT TO OUT

SUPERSTRUCTURE BILL OF MATERIAL

	CLASS AA CONCRETE (CU.YDS.)	REINFORCING STEEL (LBS.)	EPOXY COATED REINFORCING STEEL (LBS.)
SPAN "A-B-C"	466.4	45,360	54,304
SPAN "D"	110.7	10,507	9,265
SPAN "E-F"	229.1	21,531	21,349
SPAN "G-H"	229.1	21,531	21,349
SPAN "I-J"	229.1	21,531	21,349
SPAN "K-L"	227.9	21,416	21,259
TOTALS**	1,492.3	141,876	148,875

** QUANTITIES FOR BARRIER RAIL ARE NOT INCLUDED

GROOVING BRIDGE FLOORS

APPROACH SLABS	1,380 SQ.FT.
BRIDGE DECK	36,715 SQ.FT.
TOTAL	38,095 SQ.FT.

PROJECT NO. B-4028

BLADEN COUNTY

STATION: 29+02.50 -L-

NORTH CAROLINA PROFESSIONAL SEAL 14855 ENGINEER DOUGLAS R. CALLIDON

6/26/12

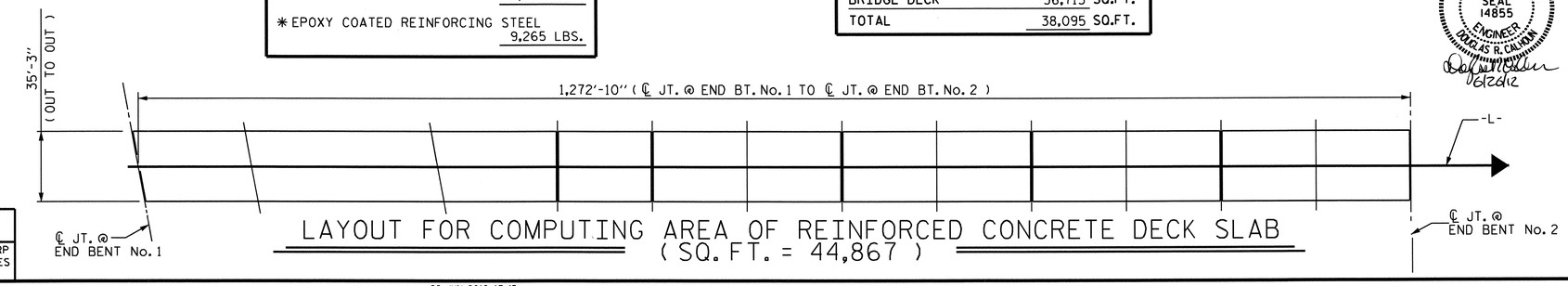

LAYOUT FOR COMPUTING AREA OF REINFORCED CONCRETE DECK SLAB
(SQ. FT. = 44,867)

STATE OF NORTH CAROLINA
DEPARTMENT OF TRANSPORTATION
RALEIGH

STANDARD

SUPERSTRUCTURE BILL OF MATERIAL

ASSEMBLED BY : MIKE BRITT	DATE : 12-15-10
CHECKED BY : S.B. WILLIAMS	DATE : 3-2011

DRAWN BY : JMB 5/87	REV. 6/1/94 EEM/GRP
CHECKED BY : SJD 9/87	REV. 8/16/99 RWW/LES
	REV. 5/1/06 TLA/GM

REVISIONS								SHEET NO.
NO.	BY:	DATE:	NO.	BY:	DATE:			S-56
1			3					TOTAL SHEETS
2			4					147

26-JUN-2012 13:45
R:\Structures\STR1\SuperDrawings\b4028_str1_BOM.dgn
dely

STD. NO. BOM1 STR. #1

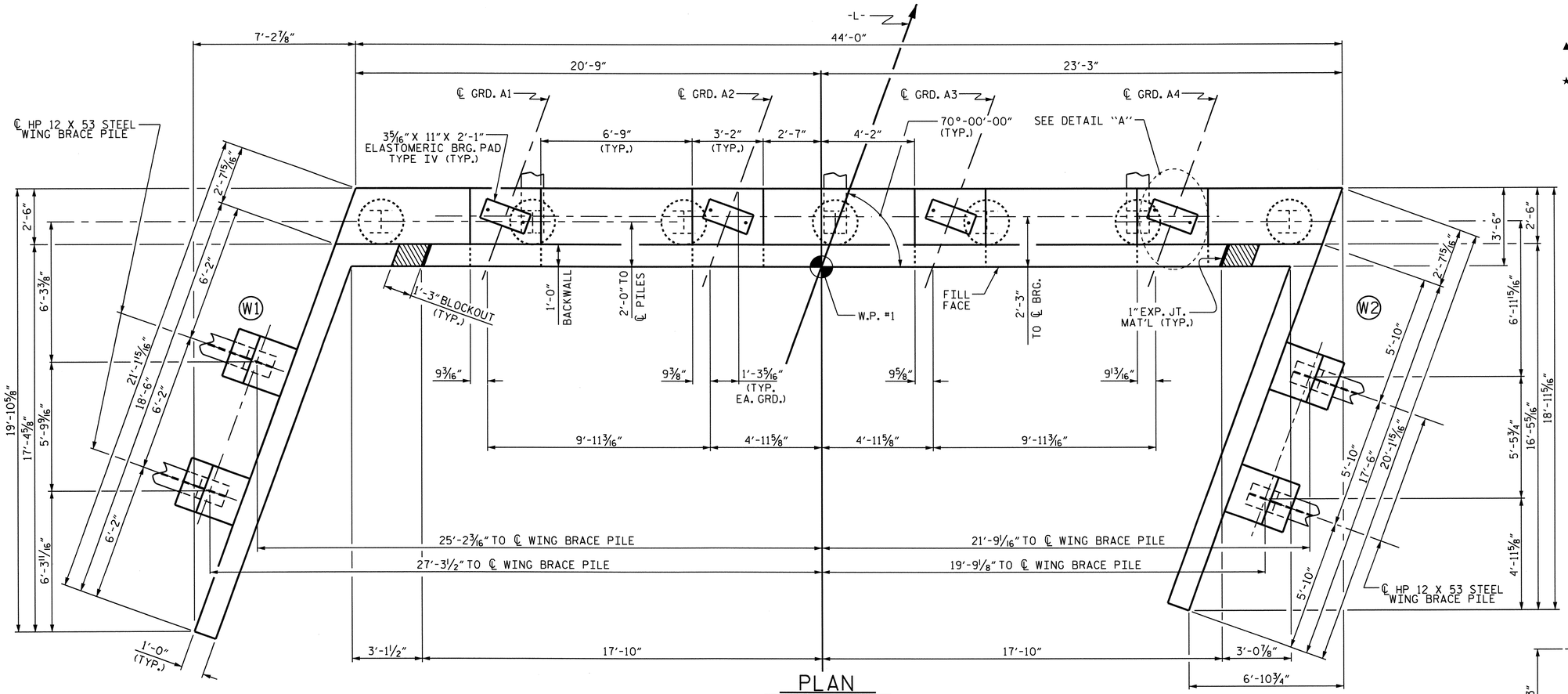

PLAN

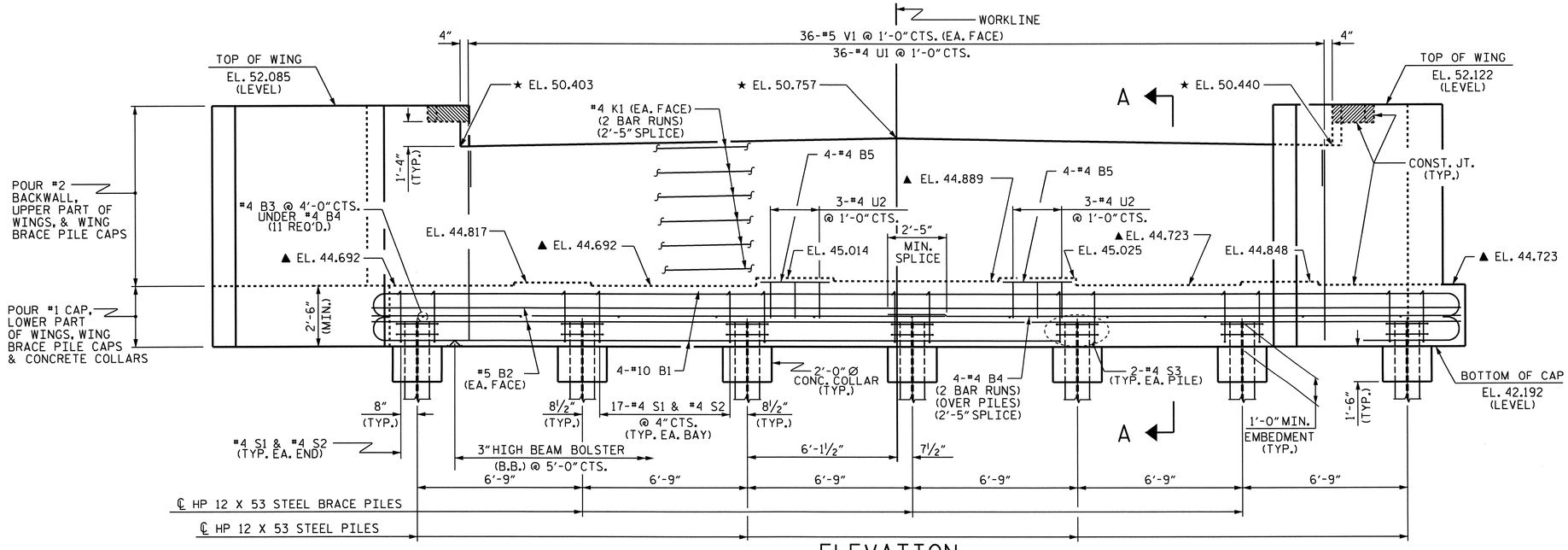

ELEVATION

(WING BRACE PILES NOT SHOWN FOR CLARITY)

NOTES:

▲ FOR LOCATION OF ELEVATIONS BETWEEN BUILDUPS, SEE SECTION A-A ON SHEET 3 OF 3.

★ THIS ELEVATION TAKEN ON FILL FACE OF BACKWALL.

STIRRUPS AND U2 BARS IN CAP MAY BE SHIFTED AS NECESSARY TO CLEAR ANCHOR BOLTS.

THE TOP SURFACE OF THE CAP EXCEPT THE BRIDGE SEAT BUILDUPS SHALL BE SLOPED TRANSVERSELY FROM THE FILL FACE TO THE BACK FACE AT THE RATE OF 2%.

BACKWALL SHALL BE PLACED BEFORE APPLYING THE EPOXY PROTECTIVE COATING.

THE CONTRACTOR SHALL PROVIDE FOR INSTALLATION OF THE 4" DIAMETER DRAIN PIPE THROUGH THE WING WALL AS REQUIRED FOR REINFORCED BRIDGE APPROACH FILLS, SEE THE ROADWAY PLANS. REINFORCING STEEL IN THE WING WALL MAY BE SHIFTED AS NECESSARY TO CLEAR THE DRAIN PIPE.

THE CONCRETE IN THE SHADED AREA OF THE WING WALL SHALL BE POURED AFTER THE BARRIER RAIL IS CAST IF SLIP FORMING IS USED.

FOR PIPE INSERT DETAILS, SEE BEARINGS SHEET.

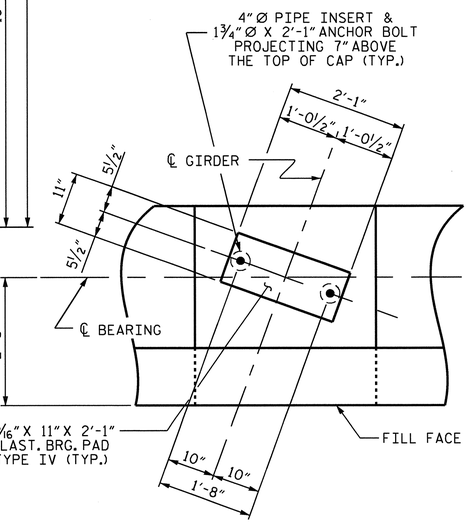

DETAIL "A"

(TYP. EA. GIRDER)

PROJECT NO. B-4028

BLADEN COUNTY

STATION: 29+02.50 -L-

SHEET 1 OF 3

STATE OF NORTH CAROLINA
DEPARTMENT OF TRANSPORTATION
RALEIGH

SUBSTRUCTURE

END BENT No. 1

NORTH CAROLINA PROFESSIONAL SEAL 14855 ENGINEER DOUGLAS R. CALHOUN
6/26/12

REVISIONS						SHEET NO.
NO.	BY:	DATE:	NO.	BY:	DATE:	S-57
1			3			TOTAL SHEETS
2			4			147

STR. #1

DRAWN BY : DGE/M.L. BROWN DATE : 4-12/3-11
CHECKED BY : T.L. CLELLAND DATE : 4/11

26-JUN-2012 13:44
R:\Structures\STR1\SubDrawings\B-4028_str1_sd_EB1.dgn
dely

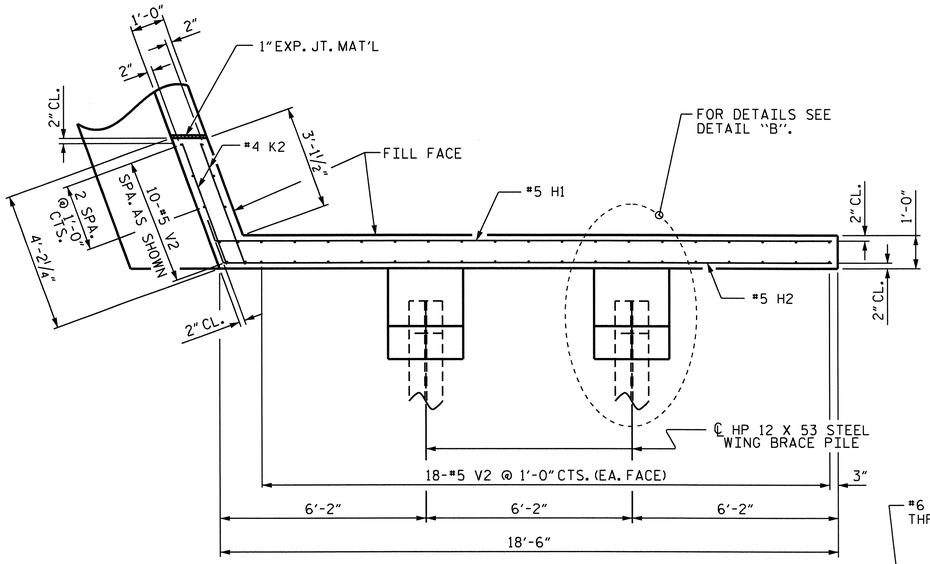

PLAN OF WING (W1)

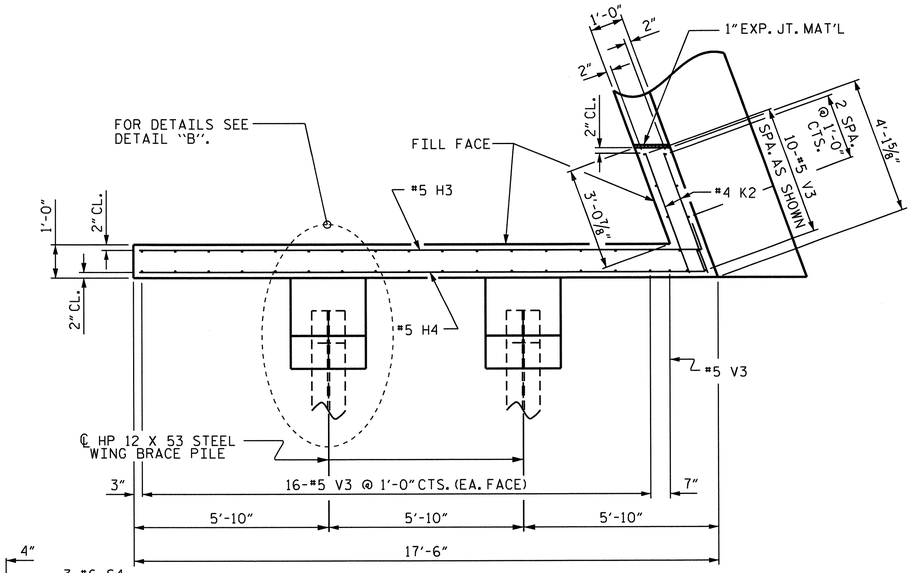

PLAN OF WING (W2)

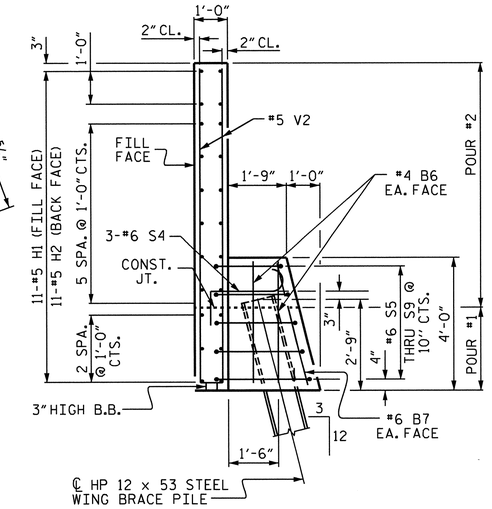

SECTION X-X

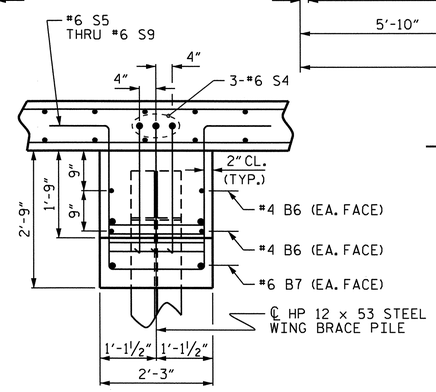

DETAIL "B"

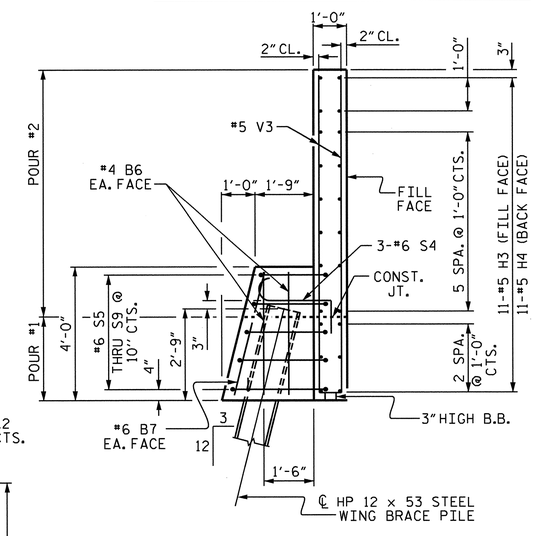

SECTION Y-Y

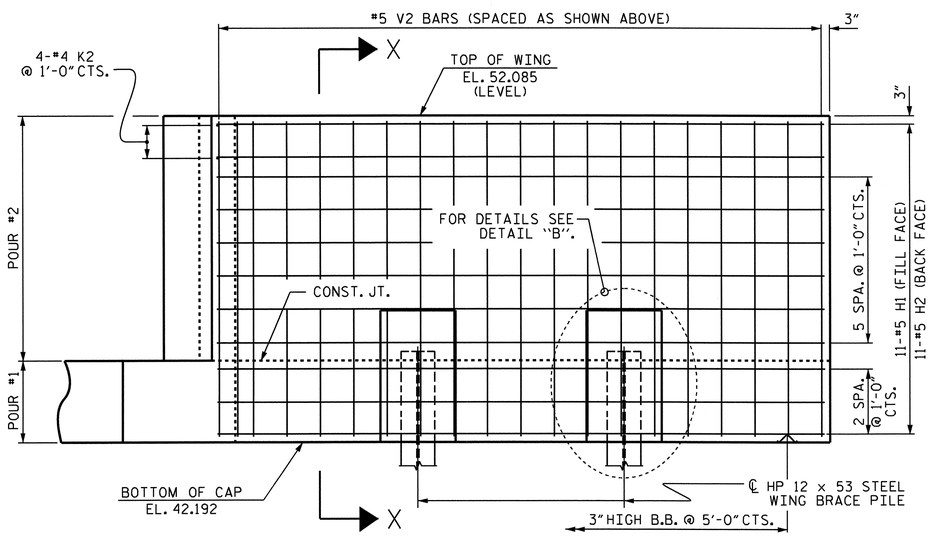

ELEVATION OF WING (W1)

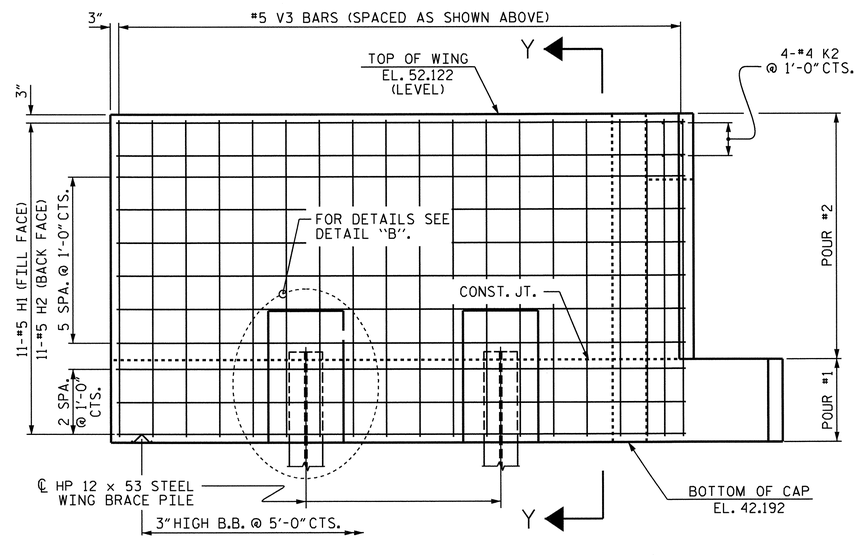

ELEVATION OF WING (W2)

NORTH CAROLINA PROFESSIONAL SEAL 14855 ENGINEER DOUGLAS R. CALHOUN
6/26/12

PROJECT NO. B-4028
BLADEN COUNTY
STATION: 29+02.50 -L-

SHEET 2 OF 3

STATE OF NORTH CAROLINA
DEPARTMENT OF TRANSPORTATION
RALEIGH

SUBSTRUCTURE

END BENT No. 1

REVISIONS						SHEET NO.
NO.	BY:	DATE:	NO.	BY:	DATE:	S-53
1			3			TOTAL SHEETS
2			4			147

DRAWN BY : M.L. BROWN DATE : 3/11
CHECKED BY : T.L. CLELLAND DATE : 4/11

26-JUN-2012 13:44
R:\Structures\STRI\SubDrawings\B-4028_str1_sd_EB1.dgn
daly

STR. #1

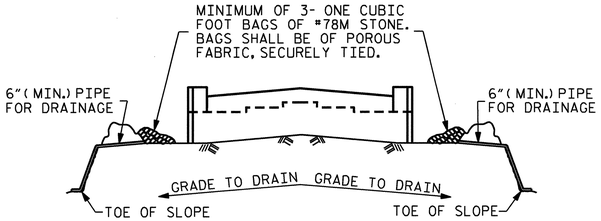

BAGGED STONE AND PIPE SHALL BE PLACED IMMEDIATELY AFTER COMPLETION OF END BENT EXCAVATION. PIPE MAY BE EITHER CONCRETE, CORRUGATED STEEL, CORRUGATED ALUMINUM ALLOY, OR CORRUGATED PLASTIC. PERFORATED PIPE WILL NOT BE ALLOWED.

BAGGED STONE SHALL REMAIN IN PLACE UNTIL THE ENGINEER DIRECTS THAT IT BE REMOVED. THE CONTRACTOR SHALL REMOVE AND DISPOSE OF SILT ACCUMULATIONS AT BAGGED STONE WHEN SO DIRECTED BY THE ENGINEER. BAGS SHALL BE REMOVED AND REPLACED WHENEVER THE ENGINEER DETERMINES THAT THEY HAVE DETERIORATED AND LOST THEIR EFFECTIVENESS.

NO SEPARATE PAYMENT WILL BE MADE FOR THIS WORK AND THE ENTIRE COST OF THIS WORK SHALL BE INCLUDED IN THE UNIT CONTRACT PRICE BID FOR THE SEVERAL PAY ITEMS.

TEMPORARY DRAINAGE AT END BENT

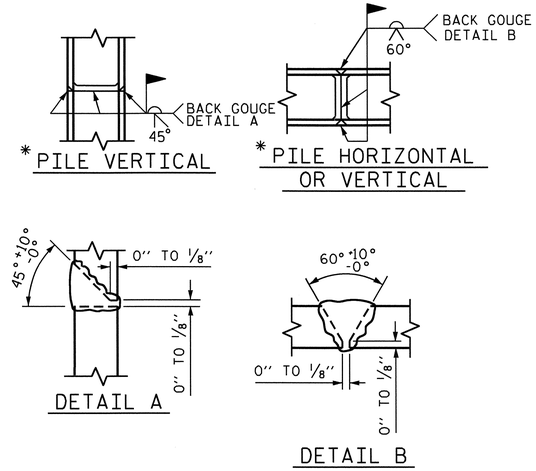

* POSITION OF PILE DURING WELDING.

PILE SPLICE DETAILS

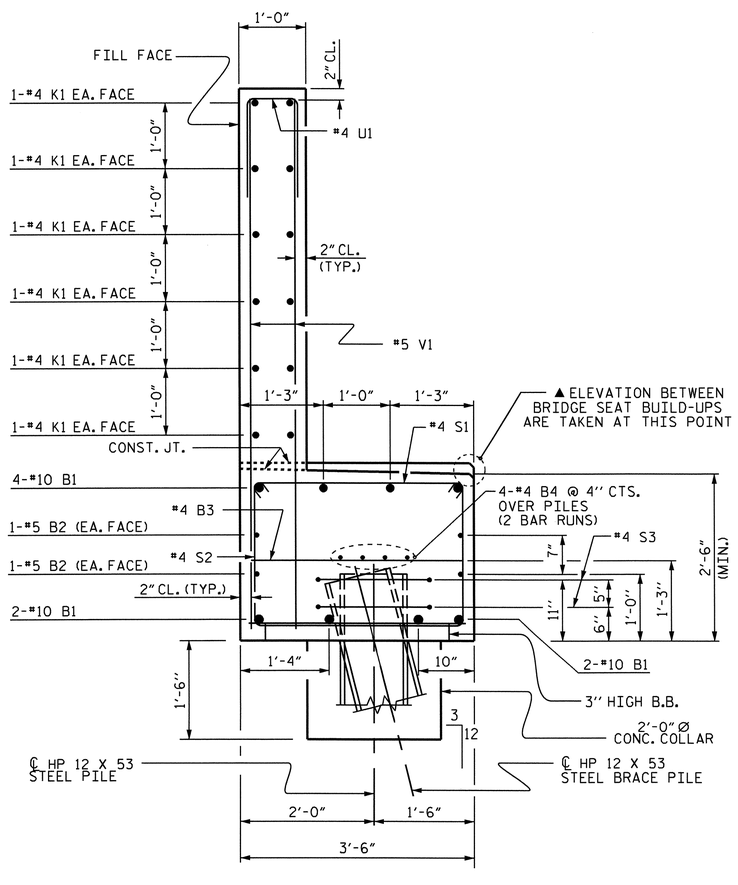

SECTION A-A

BAR TYPES

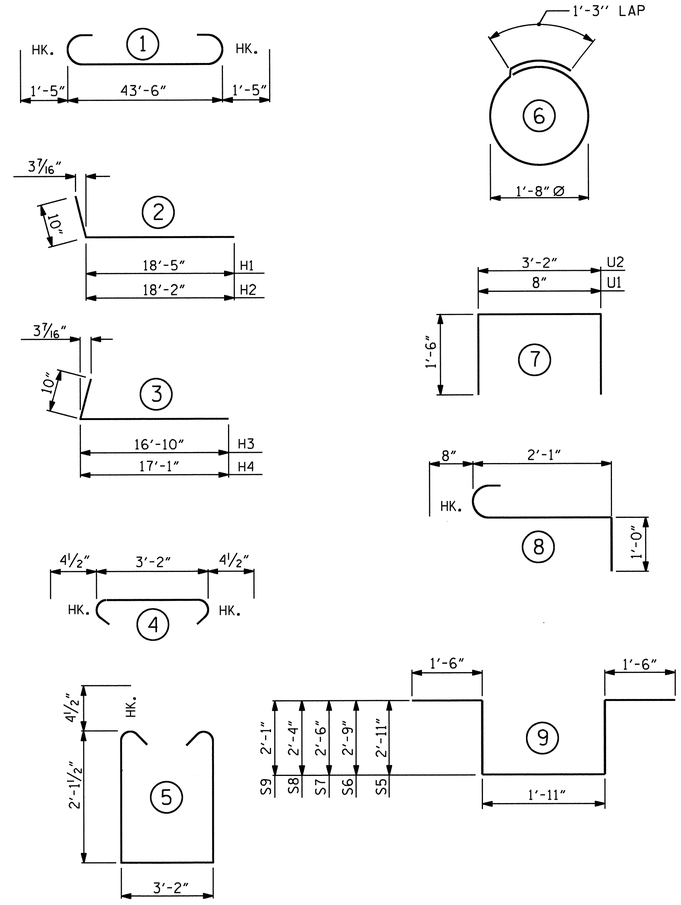

ALL BAR DIMENSIONS ARE OUT TO OUT.

BILL OF MATERIAL
END BENT No. 1

BAR	NO.	SIZE	TYPE	LENGTH	WEIGHT
B1	8	#10	1	46'-4"	1595
B2	4	#5	STR	43'-8"	182
B3	11	#4	STR	3'-2"	23
B4	8	#4	STR	23'-1"	123
B5	8	#4	STR	2'-10"	15
B6	16	#4	STR	3'-8"	39
B7	8	#4	STR	3'-9"	20
H1	11	#5	2	19'-3"	221
H2	11	#5	2	19'-0"	218
H3	11	#5	3	17'-8"	203
H4	11	#5	3	17'-9"	204
K1	24	#4	STR	23'-1"	370
K2	4	#4	STR	3'-10"	10
K3	4	#4	STR	3'-9"	10
S1	104	#4	4	3'-11"	272
S2	104	#4	5	8'-2"	567
S3	14	#4	6	6'-6"	61
S4	12	#6	8	3'-9"	68
S5	4	#6	9	10'-9"	65
S6	4	#6	9	10'-5"	63
S7	4	#6	9	9'-11"	60
S8	4	#6	9	9'-7"	58
S9	4	#6	9	9'-1"	55
U1	36	#4	7	3'-8"	88
U2	6	#4	7	6'-2"	25
V1	72	#5	STR	7'-10"	588
V2	46	#5	STR	9'-6"	456
V3	43	#5	STR	9'-7"	430

REINFORCING STEEL 6089 LBS.

CLASS A CONCRETE

POUR #1 (CAP, COLLARS, LOWER PART OF WINGS & WING BRACE PILE CAP) 21.3 C.Y.

POUR #2 (BACKWALL & UPPER PART OF WINGS & WING BRACE PILE CAP) 18.2 C.Y.

TOTAL CLASS A CONCRETE 39.5 C.Y.

HP 12 X 53 STEEL PILES
NO. = 11 LIN. FT. = 715

STEEL PILE POINTS No. 11
PILE REDRIVES EA. 4

PROJECT NO. B-4028
BLADEN COUNTY
STATION: 29+02.50 -L-

SHEET 3 OF 3

STATE OF NORTH CAROLINA
DEPARTMENT OF TRANSPORTATION
RALEIGH

SUBSTRUCTURE
END BENT No. 1

NORTH CAROLINA PROFESSIONAL SEAL 14855 ENGINEER DOUGLAS R. CALHOUN
6/12/12

REVISIONS						SHEET NO.
NO.	BY:	DATE:	NO.	BY:	DATE:	S-99
1			3			TOTAL SHEETS
2			4			147

DRAWN BY : M.L. BROWN DATE : 3/11
CHECKED BY : T.L. CLELLAND DATE : 4/11

NOTES:

STIRRUPS AND "U" BARS IN CAP MAY BE SHIFTED AS NECESSARY TO CLEAR ANCHOR BOLTS.

HOOKS ON "V" BARS MAY BE TURNED AS NECESSARY FOR PLACING REINFORCING STEEL.

FOR PILE SPLICE DETAILS, SEE 24" STEEL PIPE PILE STANDARD.

FOR ADDITIONAL REINFORCING STEEL IN PP 24 X 0.50 GALVANIZED STEEL PIPE PILES, SEE 24" STEEL PIPE PILE STANDARD.

GALVANIZE THE TOP OF EACH INTERIOR BENT PILE A MINIMUM OF 39 FEET. GALVANIZE IN ACCORDANCE WITH SECTION 1076 OF THE STANDARD SPECIFICATIONS.

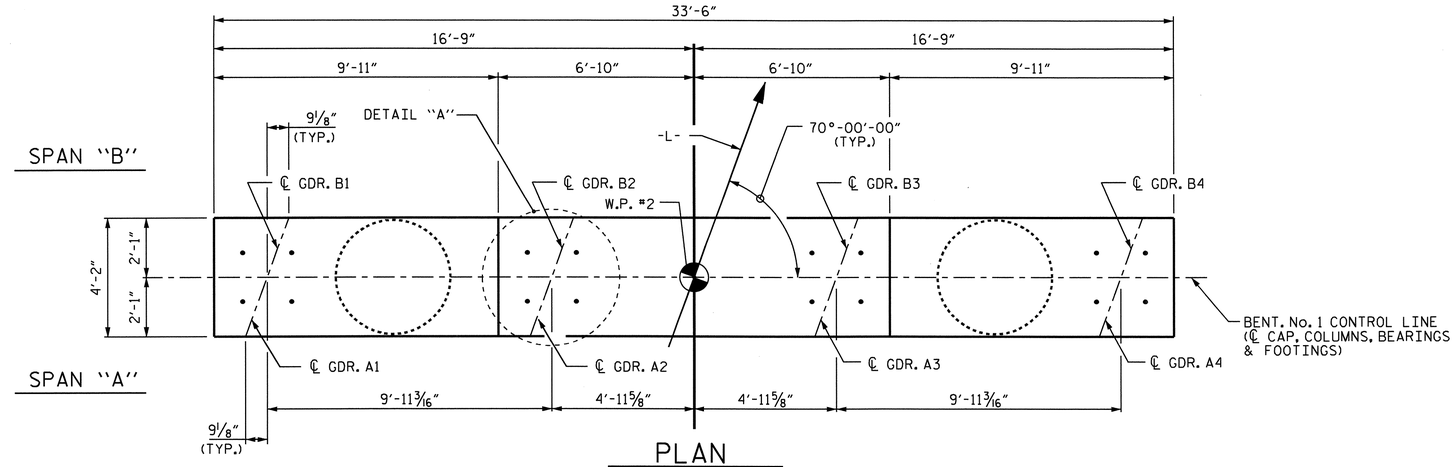

PLAN

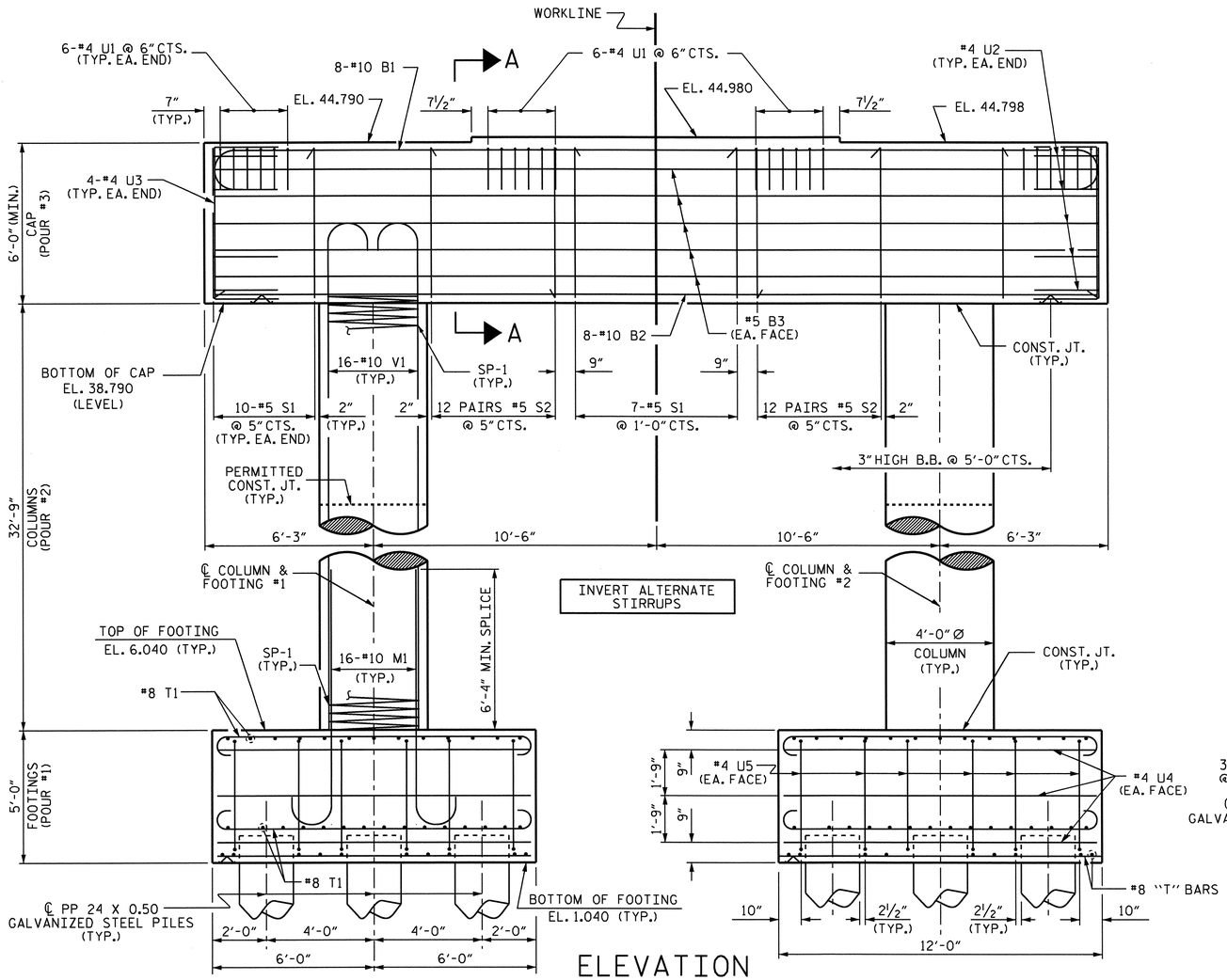

ELEVATION

DIMENSIONS & REINFORCING STEEL ARE TYPICAL FOR EACH COLUMN & FOOTING

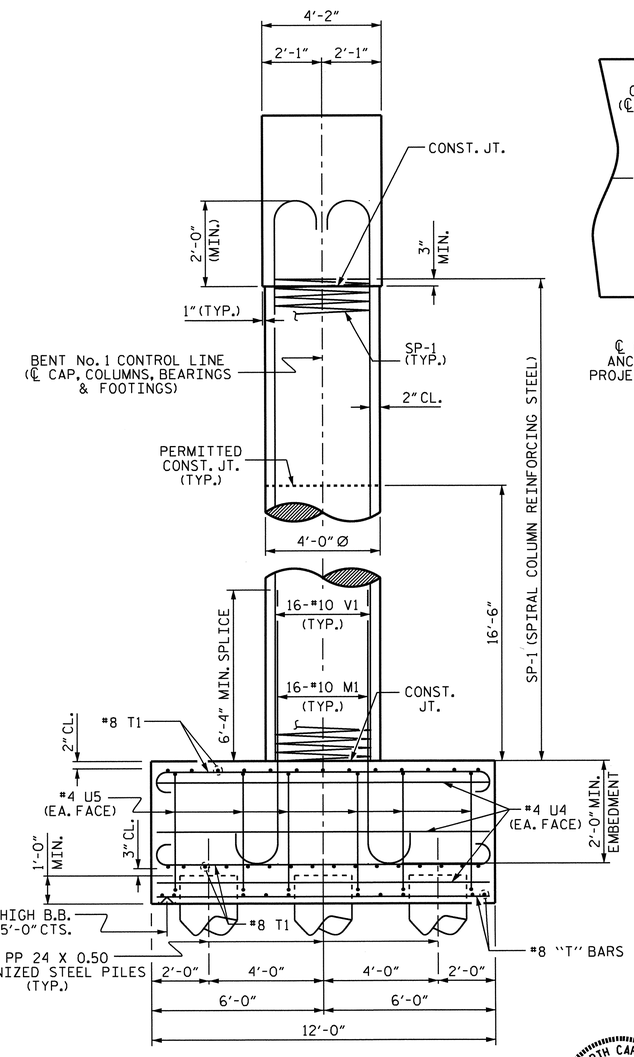

END ELEVATION

REINFORCING STEEL, DIMENSIONS AND DETAILS ARE TYPICAL FOR EACH COLUMN & FOOTING UNLESS OTHERWISE NOTED.

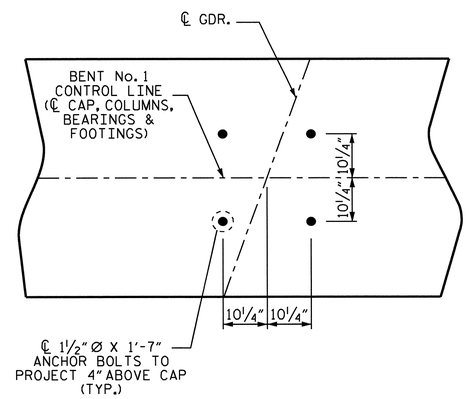

DETAIL "A"

(TYP. EA. BRG.)

PROJECT NO. B-4028

BLADEN COUNTY

STATION: 29+02.50-L-

SHEET 1 OF 2

STATE OF NORTH CAROLINA
DEPARTMENT OF TRANSPORTATION
RALEIGH

SUBSTRUCTURE

BENT No. 1

NORTH CAROLINA PROFESSIONAL SEAL 14855 ENGINEER DOUGLAS R. CALHOUN
6/26/12

REVISIONS						SHEET NO.
NO.	BY:	DATE:	NO.	BY:	DATE:	S-60
1			3			TOTAL SHEETS
2			4			147

DRAWN BY : DGE/T.L.CLELLAND DATE : 4-12/3-11
CHECKED BY : T.N.CARROLL DATE : 4-2011

26-JUN-2012 13:42
R:\Structures\STRI\SubDrawings\B-4028_SD_Bts1&2.dgn
dely

STR. #1

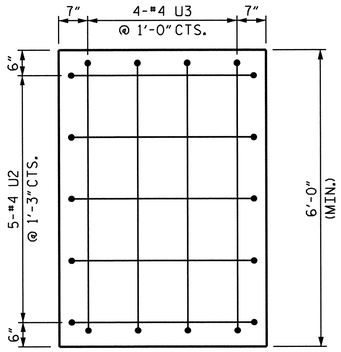

END OF CAP VIEW

(TYP. EACH END)

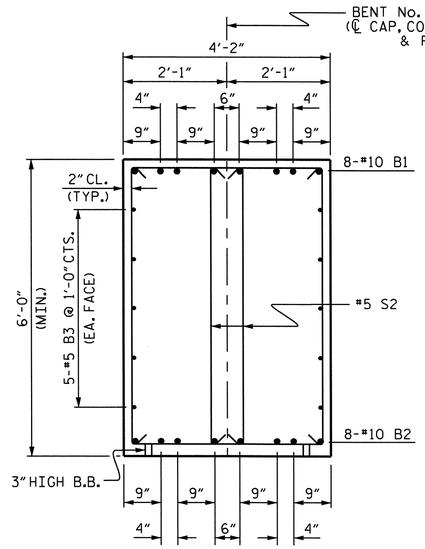

SECTION A-A

(SHOWING DOUBLE STIRRUPS (S2)
SEE ELEVATION FOR LOCATION
OF S1 & S2.)

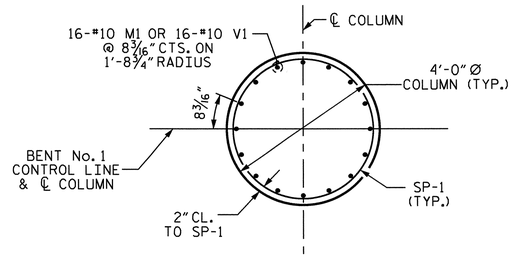

PLAN OF COLUMN

(REINFORCING STEEL AND
DIMENSIONS ARE TYPICAL
FOR EACH COLUMN)

BAR TYPES

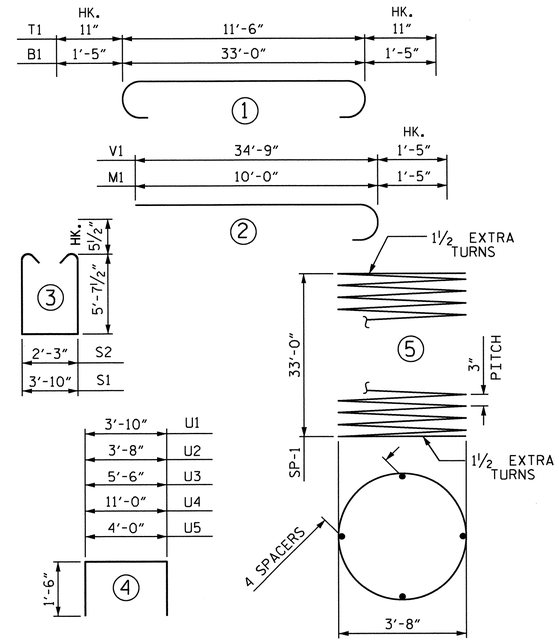

ALL BAR DIMENSIONS ARE OUT TO OUT

BILL OF MATERIAL

BAR	NO.	SIZE	TYPE	LENGTH	WEIGHT
B1	8	#10	1	35'-10"	1234
B2	8	#10	STR	33'-2"	1142
B3	10	#5	STR	33'-2"	346
M1	32	#10	2	11'-5"	1572
S1	27	#5	3	16'-0"	451
S2	48	#5	3	14'-5"	722
T1	116	#8	1	13'-4"	4130
T2	40	#8	STR	11'-6"	1228
T3	8	#8	STR	5'-7"	119
T4	8	#5	STR	4'-7"	38
U1	24	#4	4	6'-10"	110
U2	10	#4	4	6'-8"	45
U3	8	#4	4	8'-6"	45
U4	24	#4	4	14'-0"	224
U5	48	#4	4	7'-0"	224
V1	32	#10	2	36'-2"	4980
REINFORCING STEEL				=	16610 LBS
SP-1	2	*	5	1537'-10"	2055
SPIRAL COLUMN REINFORCING STEEL					2055 LBS.

* THE SP-1 SPIRAL REINFORCING STEEL SHALL BE W20 OR D-20 COLD DRAWN WIRE OR #4 PLAIN OR DEFORMED BAR.

CLASS A CONCRETE BREAKDOWN	
POUR #1 (FOOTINGS)	52.9 C.Y.
POUR #2 (COLUMNS)	30.5 C.Y.
POUR #3 (CAP)	31.4 C.Y.
TOTAL CLASS A CONCRETE	114.8 C.Y.

PP 24 X 0.50 GALVANIZED STEEL PILES		
No. = 10	LIN. FT.	900
STEEL PILE POINTS	NO.	10
PILE REDRIVES	EA.	5
PDA TESTING	EA.	1

THE CONCRETE DISPLACED BY THE FILLED PP 24 X 0.50 GALVANIZED STEEL PILES HAS BEEN DEDUCTED FROM THE QUANTITY OF CLASS A CONCRETE FOR THE FOOTINGS.

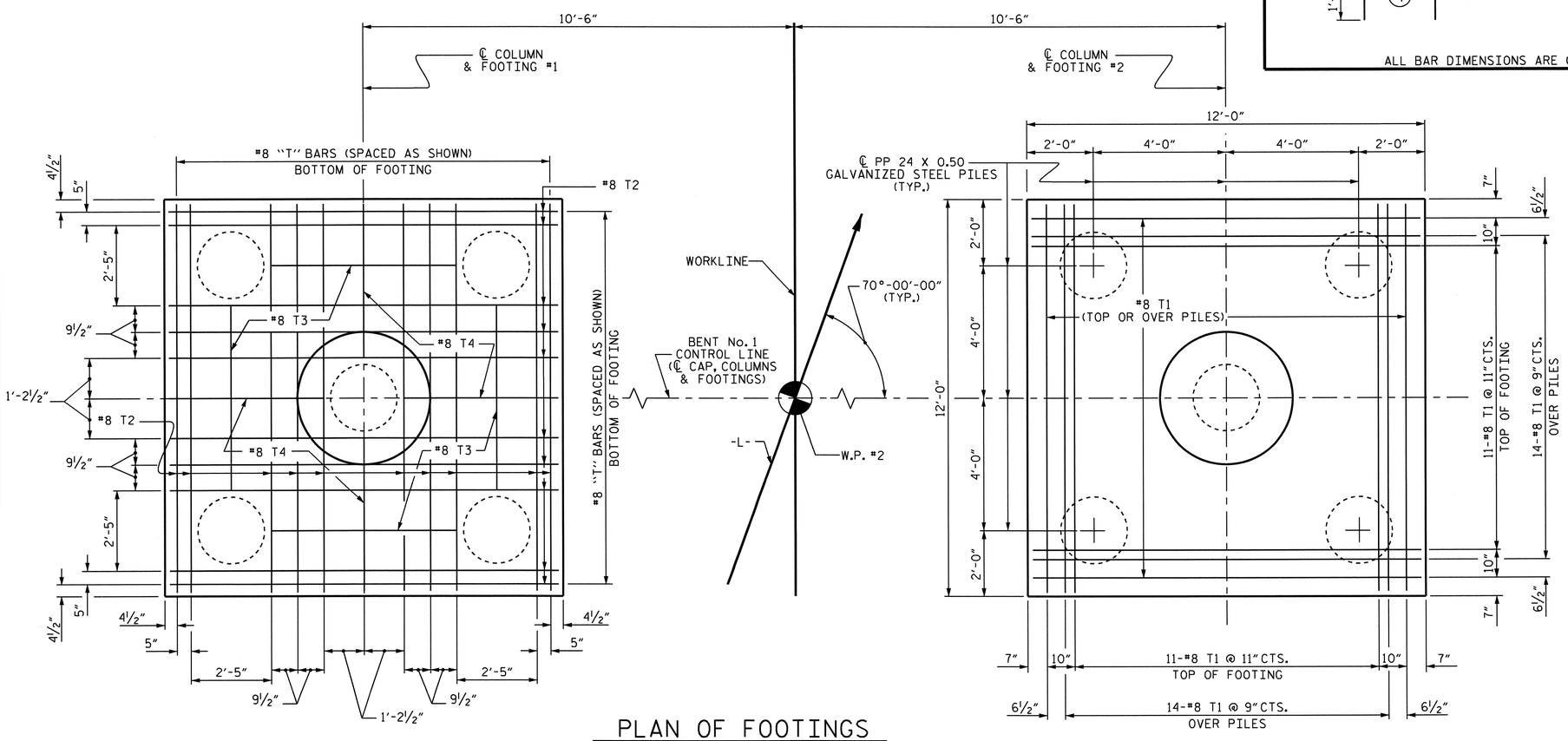

PLAN OF FOOTINGS

PILE PLACEMENT, DIMENSIONS & REINFORCING STEEL
ARE TYPICAL FOR EACH FOOTING

PROJECT NO. B-4028
BLADEN COUNTY
STATION: 29+02.50-L-

SHEET 2 OF 2

STATE OF NORTH CAROLINA
DEPARTMENT OF TRANSPORTATION
RALEIGH

SUBSTRUCTURE

BENT No. 1

NORTH CAROLINA PROFESSIONAL SEAL 14855 ENGINEER DOUGLAS R. CALHOUN
6/26/12

REVISIONS						SHEET NO.
NO.	BY:	DATE:	NO.	BY:	DATE:	S-61
1			3			TOTAL SHEETS
2			4			147

DRAWN BY : DGE/T.L.CLELLAND DATE : 4-12/3-11
CHECKED BY : T.N.CARROLL DATE : 4-2011

26-JUN-2012 13:42
R:\Structures\STRI\SubDrawings\B-4028_SD_Bts1&2.dgn
dely

STR. #1

NOTES:

STIRRUPS AND "U" BARS IN CAP MAY BE SHIFTED AS NECESSARY TO CLEAR ANCHOR BOLTS.

HOOKS ON "V" BARS MAY BE TURNED AS NECESSARY FOR PLACING REINFORCING STEEL.

FOR PILE SPLICE DETAILS, SEE 24" STEEL PIPE PILE STANDARD.

FOR ADDITIONAL REINFORCING STEEL IN PP 24 X 0.50 GALVANIZED STEEL PILES, SEE 24" STEEL PIPE PILE STANDARD.

GALVANIZE THE TOP OF EACH INTERIOR BENT PILE A MINIMUM OF 46 FEET. GALVANIZE IN ACCORDANCE WITH SECTION 1076 OF THE STANDARD SPECIFICATIONS.

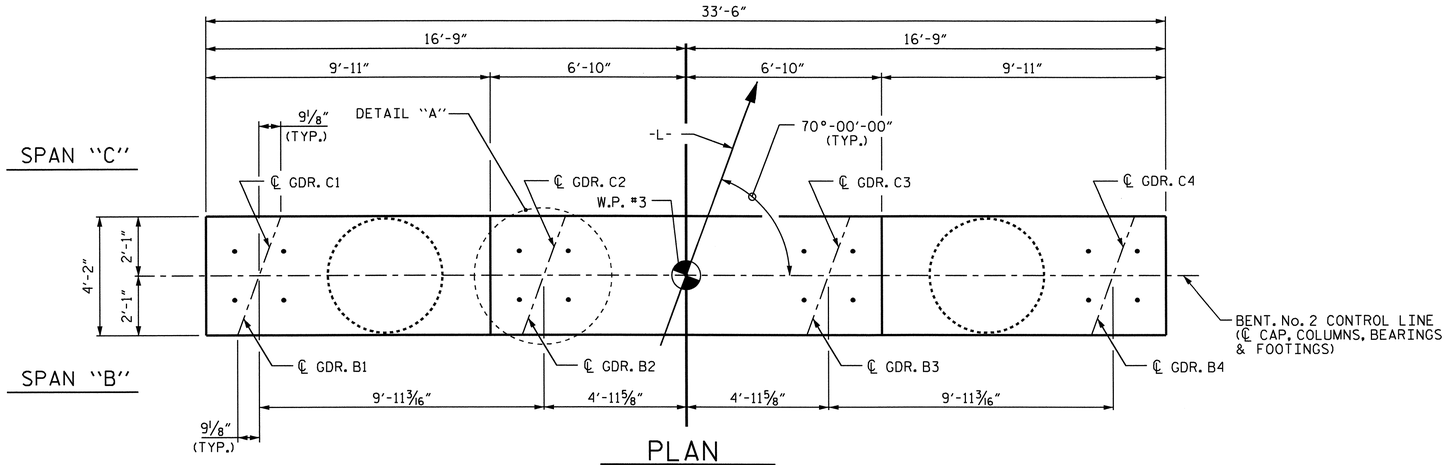

PLAN

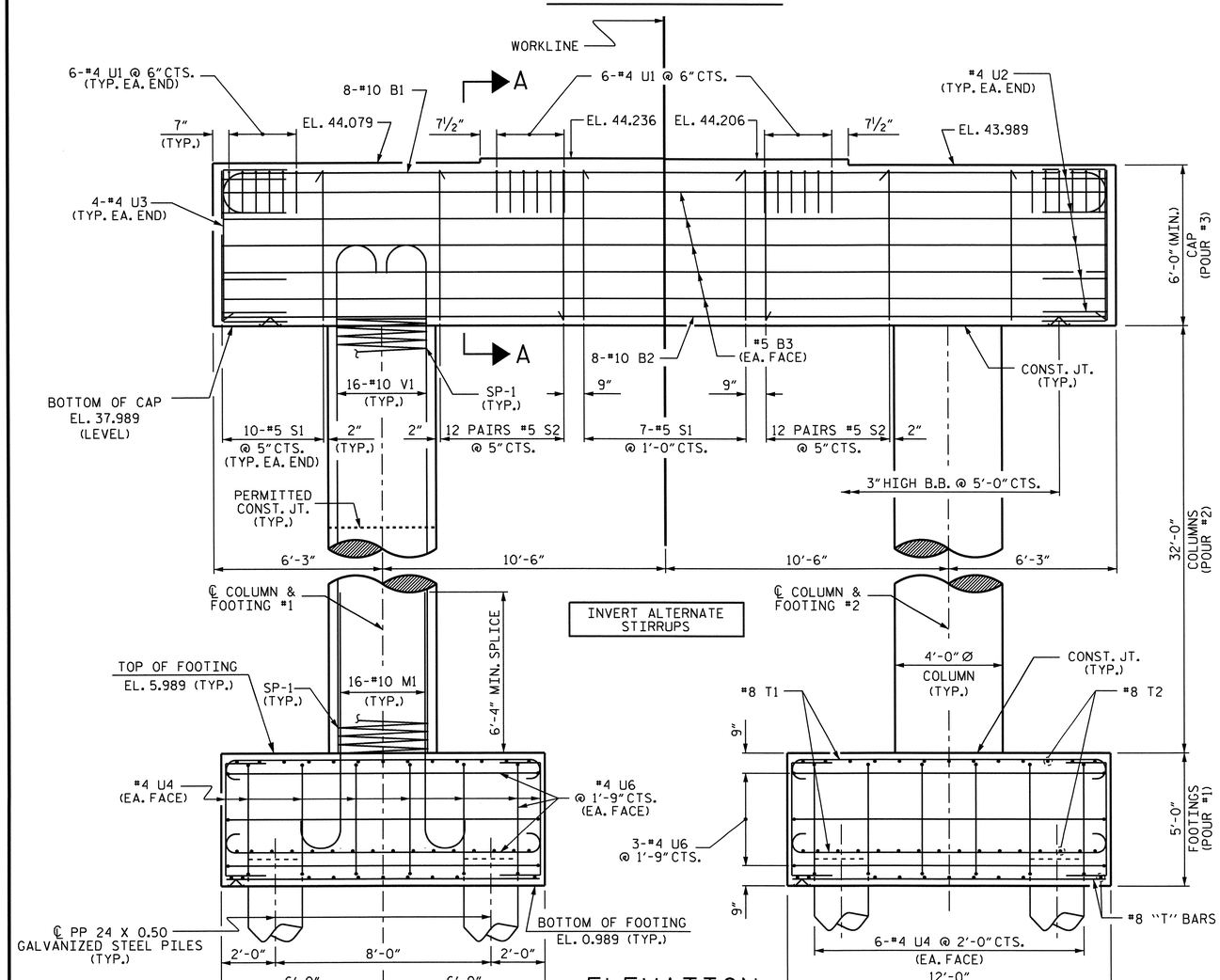

ELEVATION

DIMENSIONS & REINFORCING STEEL ARE TYPICAL FOR EACH COLUMN & FOOTING

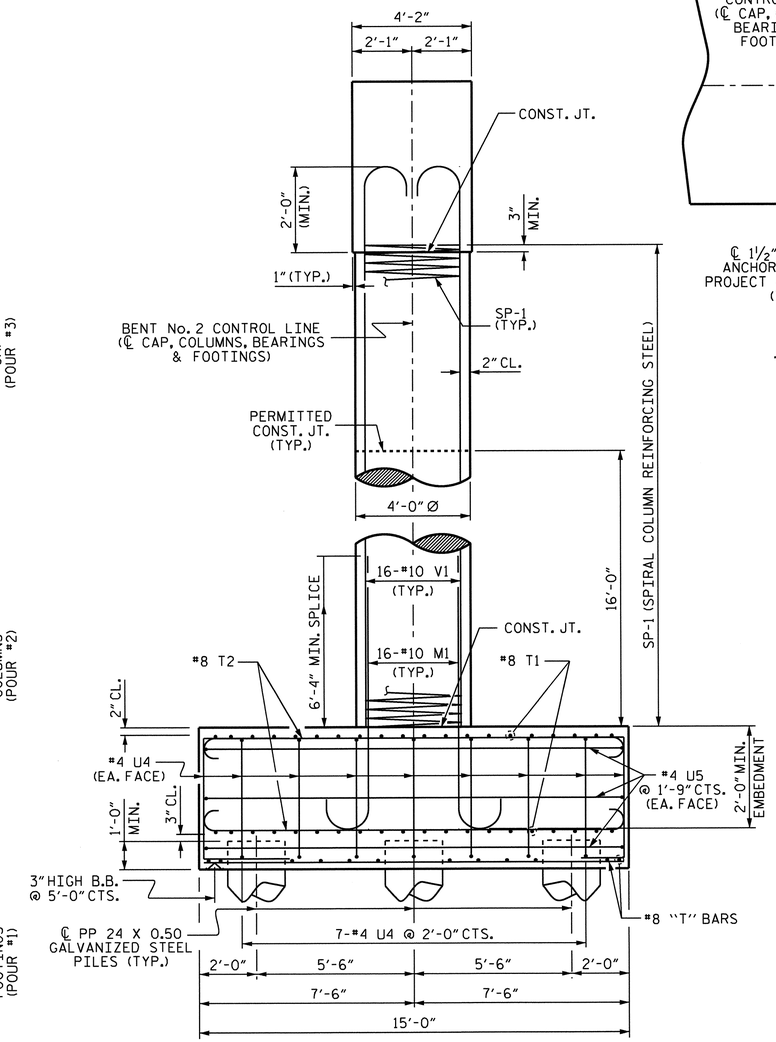

END ELEVATION

REINFORCING STEEL, DIMENSIONS AND DETAILS ARE TYPICAL FOR EACH COLUMN & FOOTING UNLESS OTHERWISE NOTED.

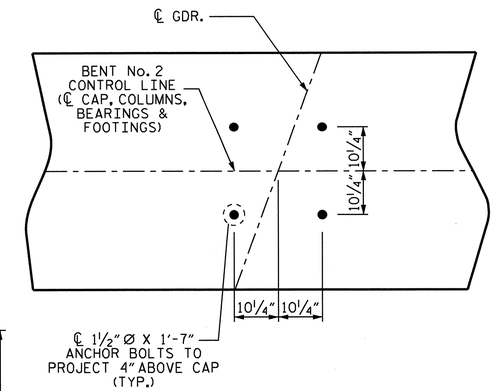

DETAIL "A"

(TYP. EA. BRG.)

NORTH CAROLINA PROFESSIONAL SEAL 14855 ENGINEER DOUGLAS R. CALHOUN
6/26/12

PROJECT NO. B-4028

BLADEN COUNTY

STATION: 29+02.50-L-

SHEET 1 OF 2

STATE OF NORTH CAROLINA
DEPARTMENT OF TRANSPORTATION
RALEIGH

SUBSTRUCTURE

BENT No. 2

REVISIONS						SHEET NO.
NO.	BY:	DATE:	NO.	BY:	DATE:	S-62
1			3			TOTAL SHEETS
2			4			147

STR. #1

DRAWN BY : DGE/T.L.CLELLAND DATE : 4-12/3-11
CHECKED BY : T.N.CARROLL DATE : 4-2011

26-JUN-2012 13:42
R:\Structures\STRI\SubDrawings\B-4028_SD_Bts1&2.dgn
dely

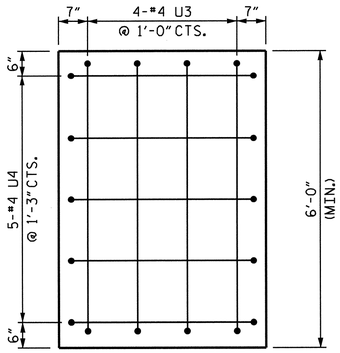

END OF CAP VIEW

(TYP. EACH END)

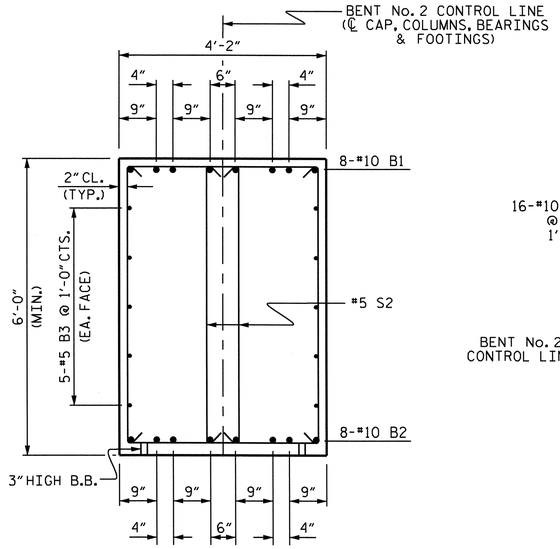

SECTION A-A

(SHOWING DOUBLE STIRRUPS (S2)
SEE ELEVATION FOR LOCATION
OF S1 & S2.)

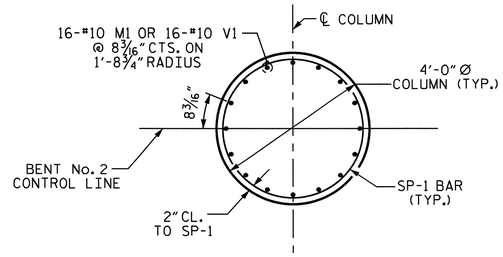

PLAN OF COLUMN

(REINFORCING STEEL AND
DIMENSIONS ARE TYPICAL
FOR EACH COLUMN)

BAR TYPES

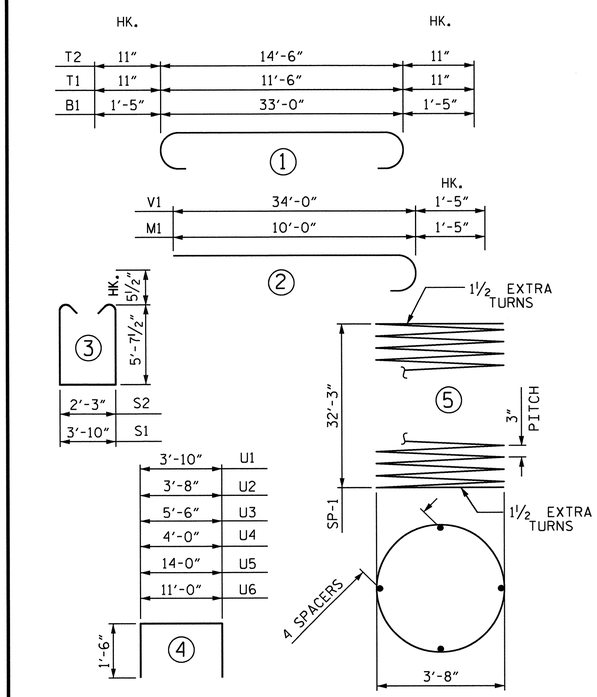

ALL BAR DIMENSIONS ARE OUT TO OUT

BILL OF MATERIAL

BAR	NO.	SIZE	TYPE	LENGTH	WEIGHT
B1	8	#10	1	35'-10"	1234
B2	8	#10	STR	33'-2"	1142
B3	10	#5	STR	33'-2"	346
M1	32	#10	2	11'-5"	1572
S1	27	#5	3	16'-0"	451
S2	48	#5	3	14'-5"	722
T1	72	#8	1	13'-4"	2563
T2	58	#8	1	16'-4"	2529
T3	24	#8	STR	11'-6"	737
T4	22	#8	STR	14'-6"	852
T5	4	#8	STR	5'-6"	59
T6	8	#8	STR	3'-0"	64
U1	24	#4	4	6'-10"	110
U2	10	#4	4	6'-8"	45
U3	8	#4	4	8'-6"	45
U4	52	#4	4	7'-0"	243
U5	12	#4	4	17'-0"	136
U6	12	#4	4	14'-0"	112
V1	32	#10	2	35'-5"	4877
REINFORCING STEEL				=	17839 LBS
SP-1	2	*	5	1503'-8"	2009

SPIRAL COLUMN
REINFORCING STEEL 2009 LBS.

* THE SP-1 SPIRAL REINFORCING STEEL SHALL BE W20 OR D-20 COLD DRAWN WIRE OR #4 PLAIN OR DEFORMED BAR.

CLASS A CONCRETE BREAKDOWN	
POUR #1 (FOOTINGS)	65.3 C.Y.
POUR #2 (COLUMNS)	29.8 C.Y.
POUR #3 (CAP)	31.6 C.Y.
TOTAL CLASS A CONCRETE	126.7 C.Y.

PP 24 X 0.50 GALVANIZED STEEL PILES		
No. = 12	LIN. FT.	1200
STEEL PILE POINTS	NO.	12
PILE REDRIVES	EA.	6
PDA TESTING	EA.	1

THE CONCRETE DISPLACED BY THE FILLED PP 24 X 0.50 GALVANIZED STEEL PILES HAS BEEN DEDUCTED FROM THE QUANTITY OF CLASS A CONCRETE FOR THE FOOTINGS.

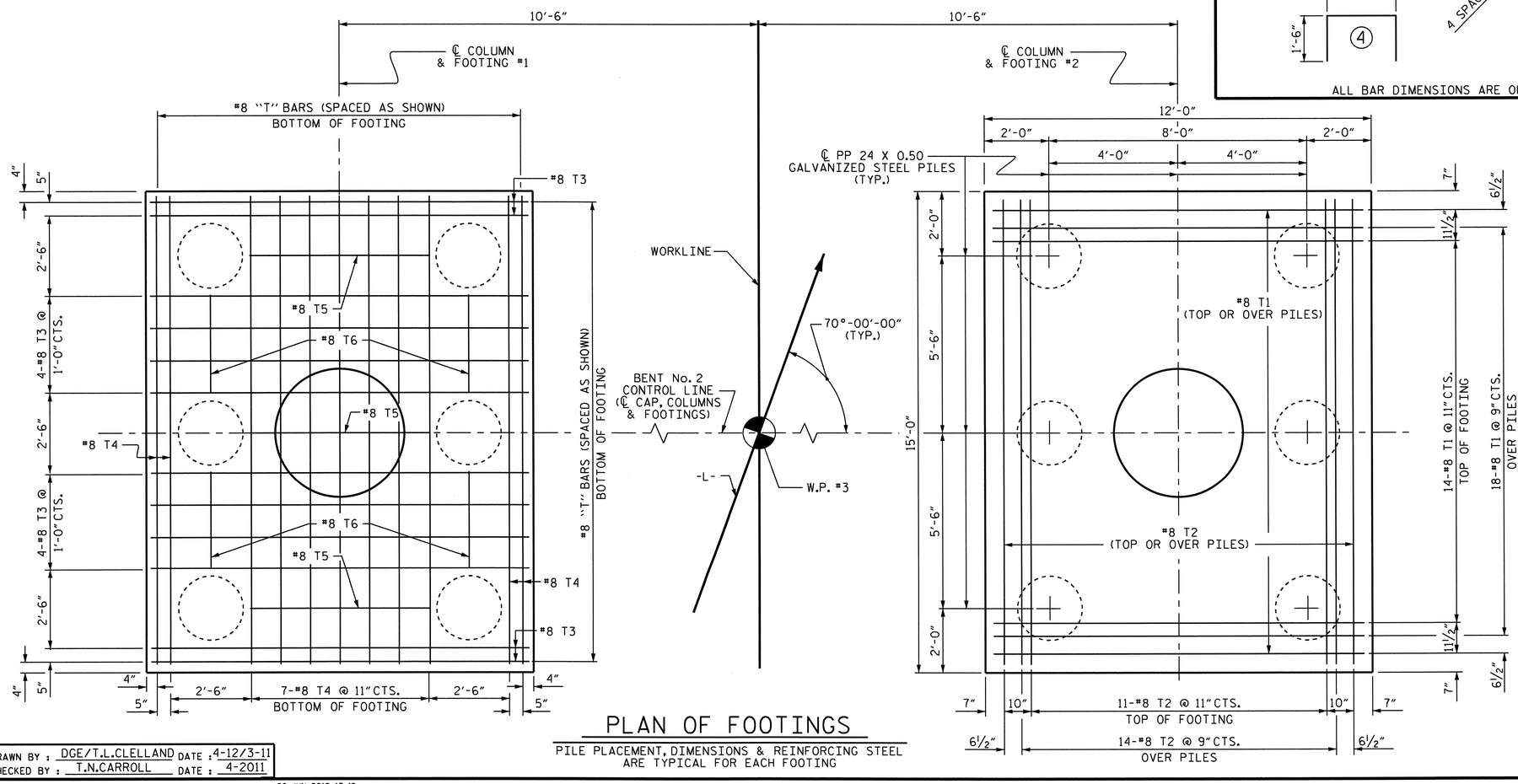

PLAN OF FOOTINGS

PILE PLACEMENT, DIMENSIONS & REINFORCING STEEL
ARE TYPICAL FOR EACH FOOTING

PROJECT NO. B-4028
BLADEN COUNTY
STATION: 29+02.50-L-

SHEET 2 OF 2

STATE OF NORTH CAROLINA
DEPARTMENT OF TRANSPORTATION
RALEIGH

SUBSTRUCTURE

BENT No. 2

NORTH CAROLINA PROFESSIONAL SEAL 14855 ENGINEER DOUGLAS R. CALHOUN
6/26/12

REVISIONS							SHEET NO.
NO.	BY:	DATE:	NO.	BY:	DATE:		S-63
1			3				TOTAL SHEETS
2			4				147

DRAWN BY : DGE/T.L.CLELLAND DATE : 4-12/3-11
CHECKED BY : T.N.CARROLL DATE : 4-2011

26-JUN-2012 13:42
R:\Structures\STRI\SubDrawings\B-4028_SD_Btsl&2.dgn
dely

STR. #1

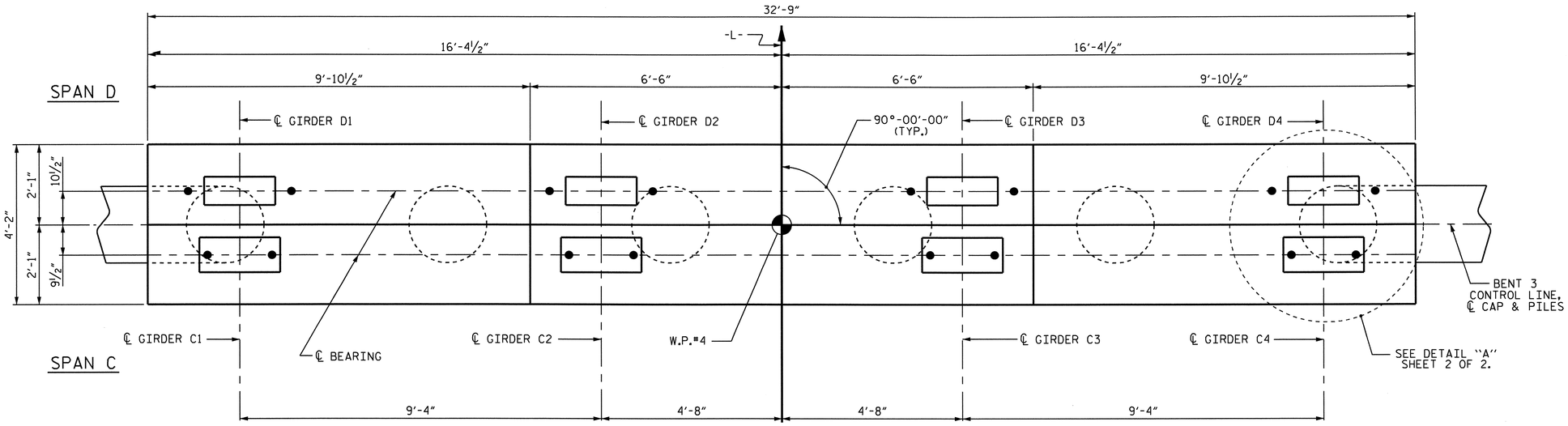

PLAN

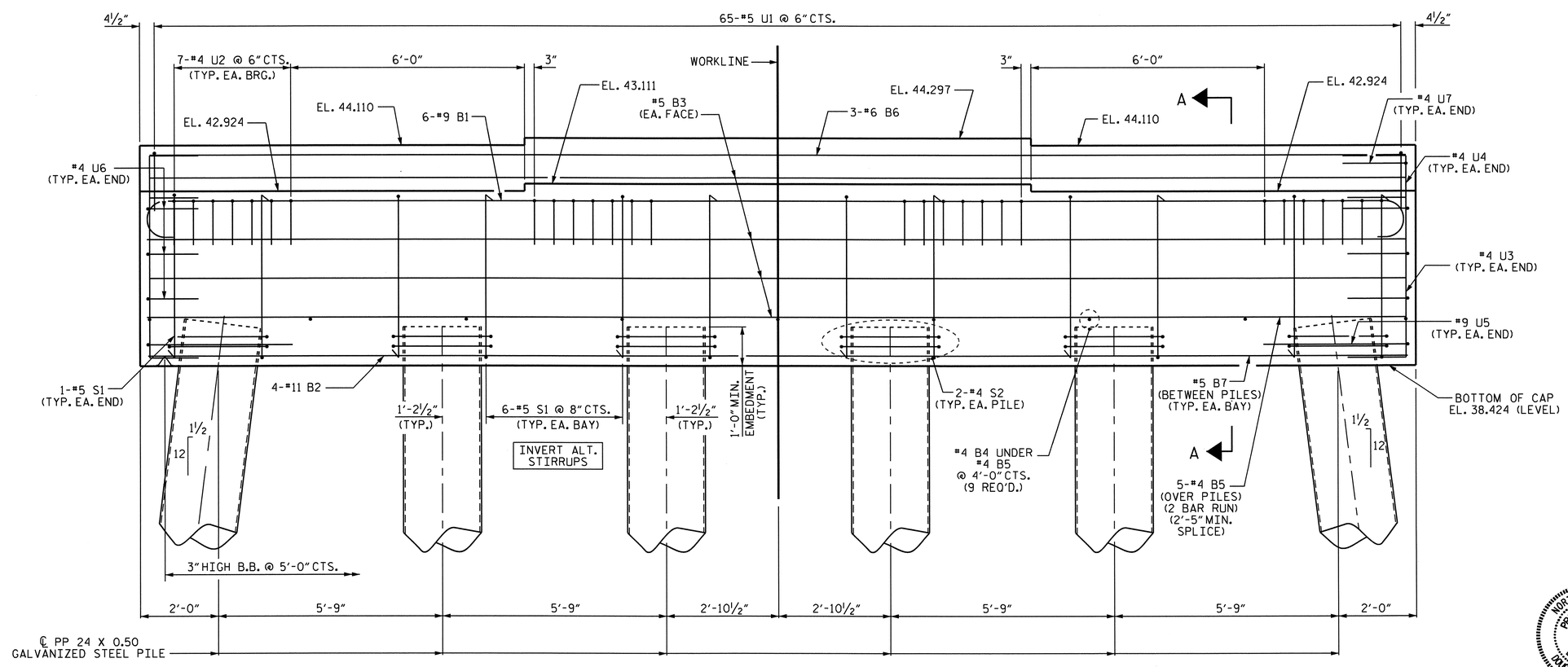

ELEVATION

(FOR SECTION A-A SEE SHEET 2 OF 2)

NOTES

STIRRUPS AND "U" BARS IN CAP MAY BE SHIFTED AS NECESSARY TO CLEAR ANCHOR BOLTS.

FOR ADDITIONAL REINFORCING STEEL IN PP 24 X 0.50 GALVANIZED STEEL PIPE PILES, SEE 24" STEEL PIPE PILE STANDARD.

FOR PILE SPLICE DETAILS, SEE 24" STEEL PIPE PILE STANDARD.

GALVANIZE THE TOP OF EACH INTERIOR BENT PILE A MINIMUM OF 46 FEET. GALVANIZE IN ACCORDANCE WITH SECTION 1076 OF THE STANDARD SPECIFICATIONS.

FOR PIPE INSERT DETAILS, SEE BEARINGS SHEET.

PROJECT NO. B-4028

BLADEN COUNTY

STATION: 29+02.50 -L-

SHEET 1 OF 2

STATE OF NORTH CAROLINA
DEPARTMENT OF TRANSPORTATION
RALEIGH

SUBSTRUCTURE

BENT No. 3

NORTH CAROLINA PROFESSIONAL SEAL 14855 ENGINEER DOUGLAS R. CALHOUN
6/26/12

REVISIONS						SHEET NO.
NO.	BY:	DATE:	NO.	BY:	DATE:	S-64
1			3			TOTAL SHEETS
2			4			147

DRAWN BY : T.L.CLELLAND DATE : 3-2011
CHECKED BY : T.N.CARROLL DATE : 5-2011

26-JUN-2012 13:41
R:\Structures\STRI\SubDrawings\B-4028_SD_Bt3.dgn
dely

STR. #1

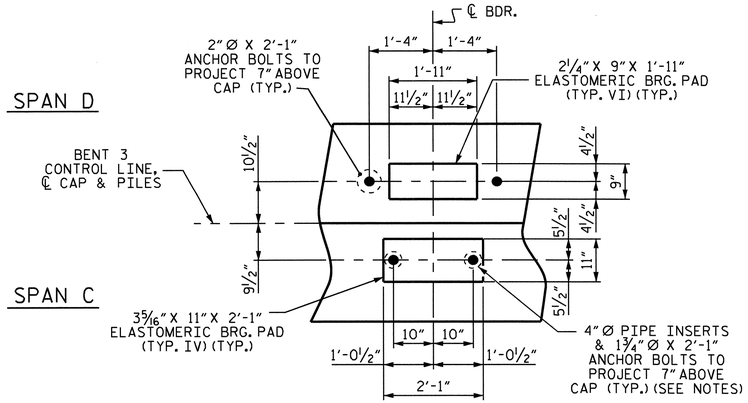

DETAIL "A"

(DIMENSIONS ARE TYPICAL EACH BEARING)

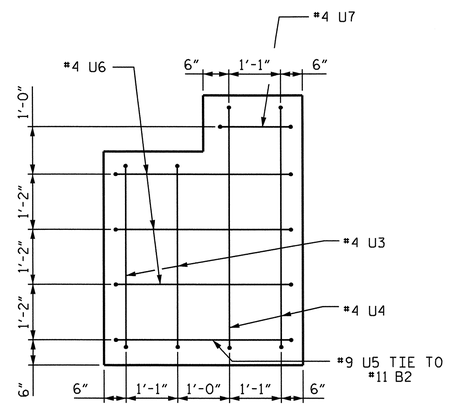

END OF CAP VIEW

(TYPICAL EACH END)

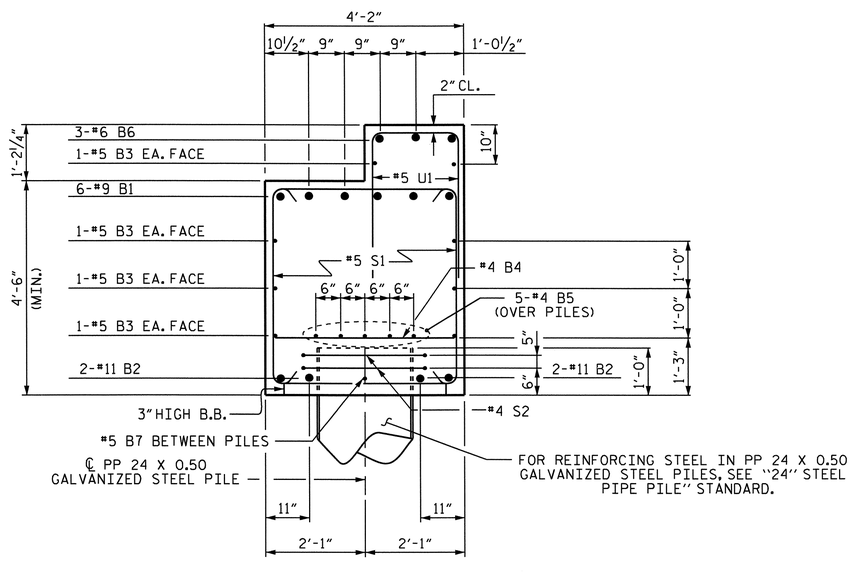

SECTION A-A

BAR TYPES

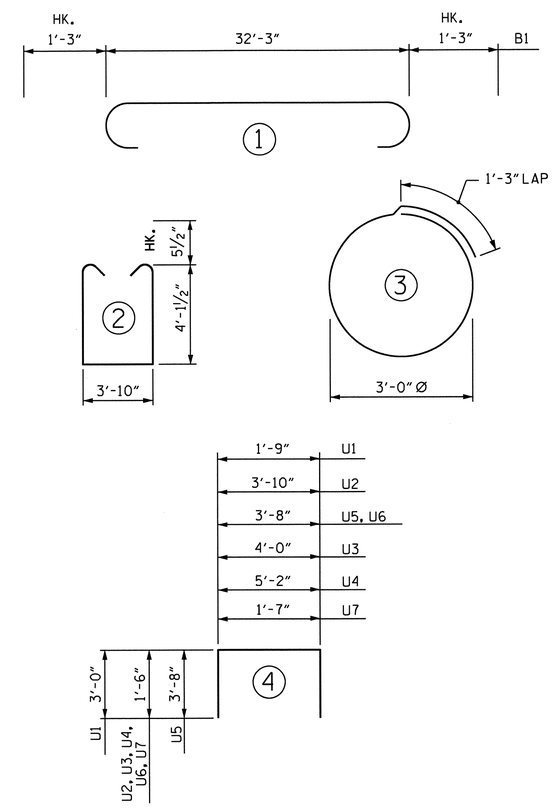

ALL BAR DIMENSIONS ARE OUT TO OUT

BILL OF MATERIAL

BAR	NO.	SIZE	TYPE	LENGTH	WEIGHT
B1	6	#9	1	34'-9"	709
B2	4	#11	STR	32'-5"	689
B3	8	#5	STR	32'-5"	270
B4	9	#4	STR	3'-10"	23
B5	10	#4	STR	17'-5"	116
B6	3	#6	STR	32'-5"	146
B7	5	#5	STR	3'-5"	18
S1	32	#5	2	13'-0"	434
S2	12	#4	3	10'-8"	86
U1	65	#5	4	7'-9"	525
U2	28	#4	4	6'-10"	128
U3	4	#4	4	7'-0"	19
U4	4	#4	4	8'-2"	22
U5	2	#9	4	11'-0"	75
U6	6	#4	4	6'-8"	27
U7	2	#4	4	4'-7"	6

REINFORCING STEEL = 3293 LBS

CLASS A CONCRETE BREAKDOWN

* POUR #1 (CAP) 25.4 C.Y.

* TOTAL CLASS A CONCRETE 25.4 C.Y.

PP 24 X 0.50 GALVANIZED STEEL PILES
No. = 6 LIN. FT. 540
STEEL PILE POINTS NO. 6
PILE REDRIVES EA. 3

* CONCRETE DISPLACED BY THE FILLED PP 24 X 0.50 GALVANIZED STEEL PILES HAS BEEN DEDUCTED FROM THE QUANTITY OF CLASS A CONCRETE FOR BENT CAP.

PROJECT NO. B-4028
BLADEN COUNTY
STATION: 29+02.50-L-

SHEET 2 OF 2

STATE OF NORTH CAROLINA
DEPARTMENT OF TRANSPORTATION
RALEIGH

SUBSTRUCTURE

BENT No. 3

NORTH CAROLINA PROFESSIONAL SEAL 14855 ENGINEER DOUGLAS R. CALHOUN
6/26/12

REVISIONS						SHEET NO.
NO.	BY:	DATE:	NO.	BY:	DATE:	S-65
1			3			TOTAL SHEETS
2			4			147

DRAWN BY : T.L.CLELLAND DATE : 3-2011
CHECKED BY : T.N.CARROLL DATE : 5-2011

26-JUN-2012 13:41
R:\Structures\STRI\SubDrawings\B-4028_SD_Bt3.dgn
dely

STR. #1

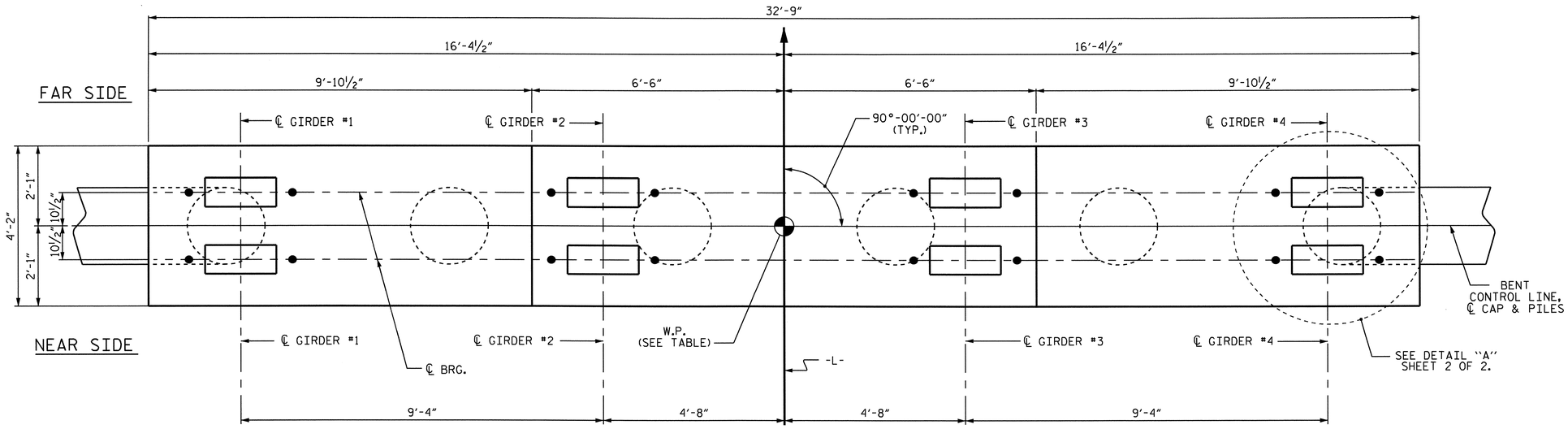

PLAN

NOTES

STIRRUPS AND "U" BARS IN CAP MAY BE SHIFTED AS NECESSARY TO CLEAR ANCHOR BOLTS.

FOR ADDITIONAL REINFORCING STEEL IN PP 24 X 0.50 GALVANIZED STEEL PIPE PILES, SEE 24" STEEL PIPE PILE STANDARD.

FOR PILE SPLICE DETAILS, SEE 24" STEEL PIPE PILE STANDARD.

GALVANIZE THE TOP OF EACH INTERIOR BENT PILE A MINIMUM LENGTH AS SHOWN IN TABLE BELOW. GALVANIZE IN ACCORDANCE WITH SECTION 1076 OF THE STANDARD SPECIFICATIONS.

GALVANIZE TOP OF PILES				
BENT	4	6	8	10
LENGTH	45'	42'	39'	36'

CAP ELEVATIONS				
BENT	4	6	8	10
WORK POINT	#5	#7	#9	#11
ELEV. A	42.436	38.169	33.825	29.481
ELEV. B	42.623	38.356	34.012	29.668
BOTT. OF CAP ELEV.C	37.936	33.669	29.325	24.981

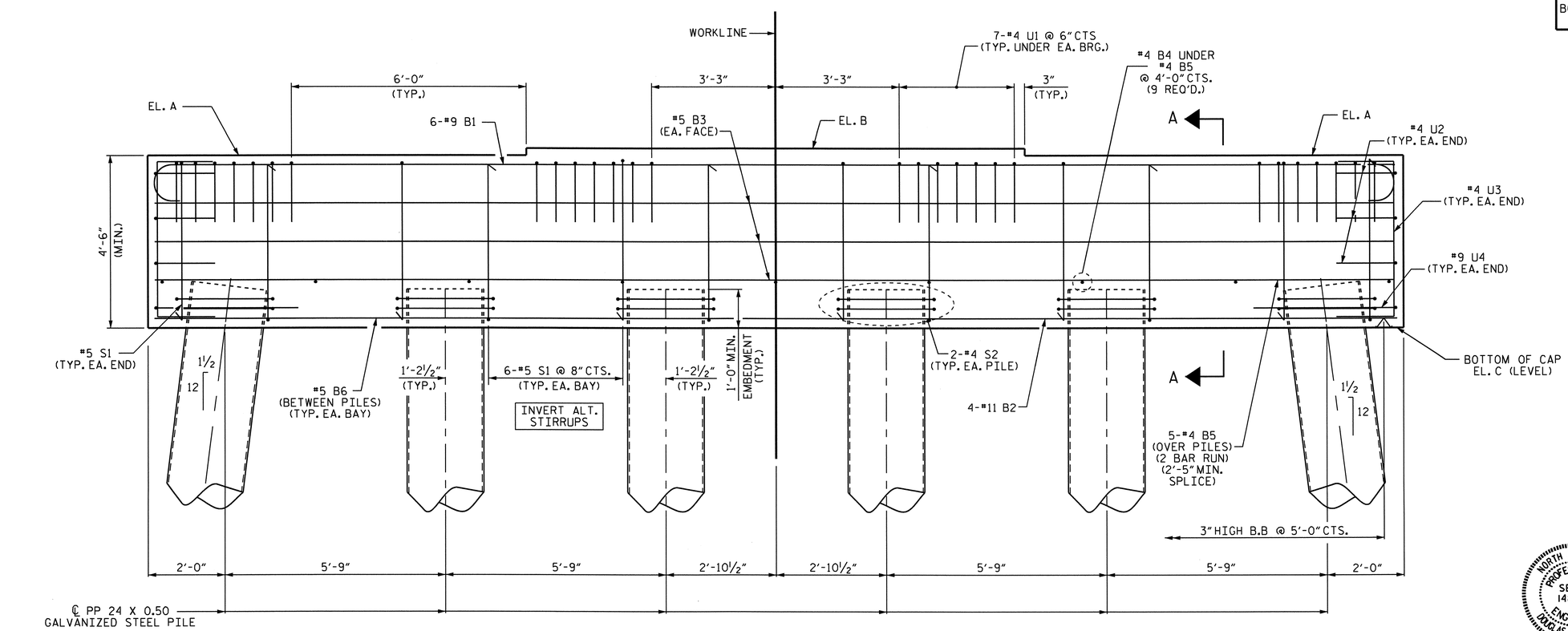

ELEVATION

(FOR SECTION A-A SEE SHEET 2 OF 2)

PROJECT NO. B-4028

BLADEN COUNTY

STATION: 29+02.50-L-

SHEET 1 OF 2

STATE OF NORTH CAROLINA
DEPARTMENT OF TRANSPORTATION
RALEIGH

SUBSTRUCTURE

BENTS No. 4, 6, 8, 10

NORTH CAROLINA PROFESSIONAL SEAL 14855 ENGINEER DOUGLAS R. CALHOUN
6/26/12

REVISIONS						SHEET NO.
NO.	BY:	DATE:	NO.	BY:	DATE:	5-66
1			3			TOTAL SHEETS
2			4			147

DRAWN BY : T.L.CLELLAND DATE : 3-2011
CHECKED BY : T.N.CARROLL DATE : 5-2011

26-JUN-2012 13:40
R:\Structures\STRI\SubDrawings\B-4028_SD_Bts46810.dgn
dely

STR. #1

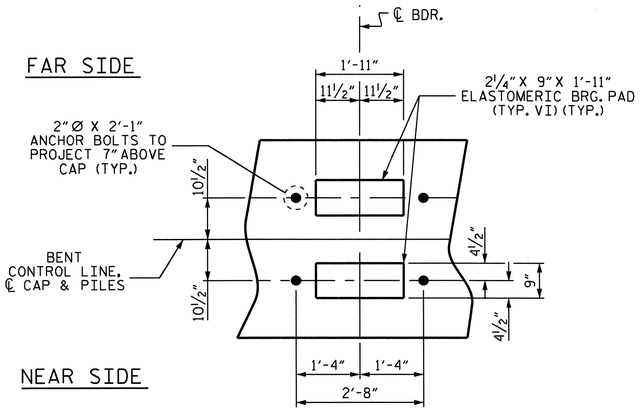

DETAIL "A"

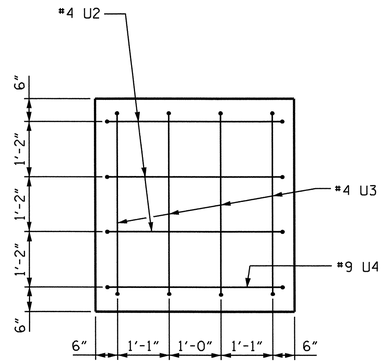

END OF CAP VIEW
(TYPICAL EACH END)

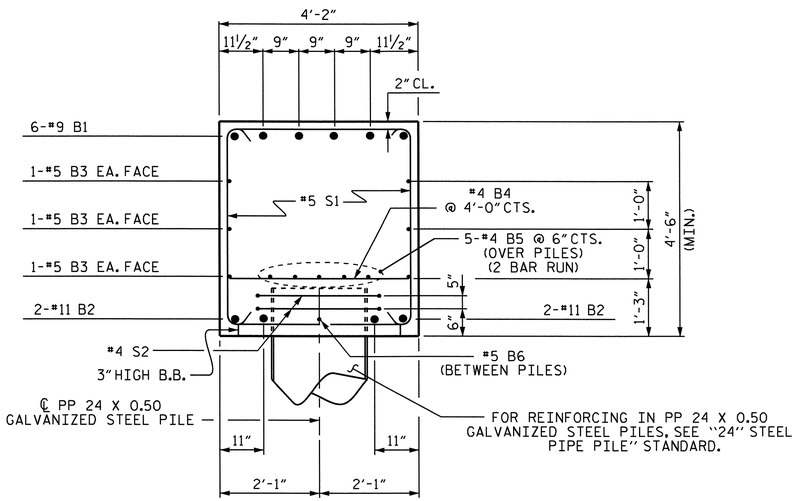

SECTION A-A

BAR TYPES

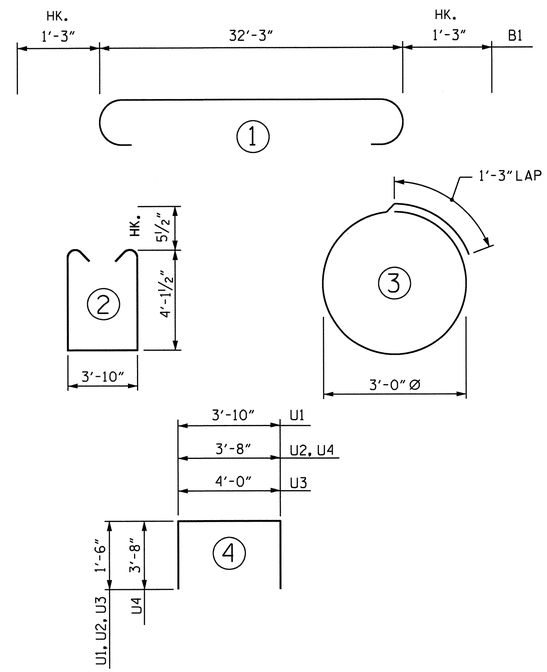

ALL BAR DIMENSIONS ARE OUT TO OUT

* CONCRETE DISPLACED BY THE FILLED PP 24 X 0.50 GALVANIZED STEEL PILES HAS BEEN DEDUCTED FROM THE QUANTITY OF CLASS A CONCRETE FOR BENT CAP.

BILL OF MATERIAL

FOR ONE BENT (4 REQ'D.)

BAR	NO.	SIZE	TYPE	LENGTH	WEIGHT
B1	6	#9	1	34'-9"	709
B2	4	#11	STR	32'-5"	689
B3	6	#5	STR	32'-5"	203
B4	9	#4	STR	3'-10"	23
B5	10	#4	STR	17'-5"	116
B6	5	#5	STR	3'-5"	18
S1	32	#5	2	13'-0"	434
S2	12	#4	3	10'-8"	86
U1	28	#4	4	6'-10"	128
U2	6	#4	4	6'-8"	27
U3	8	#4	4	7'-0"	37
U4	2	#9	4	11'-0"	75

REINFORCING STEEL = 2545 LBS

CLASS A CONCRETE BREAKDOWN

* POUR #1 22.4 C.Y.
* TOTAL CLASS A CONCRETE 22.4 C.Y.

PP 24 X 0.50 GALVANIZED STEEL PILES

BENT	No.	LIN. FT.
4	6	540
6	6	510
8	6	510
10	6	600

STEEL PILE POINTS

BENT		
4	NO.	6
6	NO.	6
8	NO.	6
10	NO.	6

PILES REDRIVES

BENT		
4	EA.	3
6	EA.	3
8	EA.	3
10	EA.	3

PDA TESTING

BENT		
4	EA.	1

PROJECT NO. B-4028
BLADEN COUNTY
STATION: 29+02.50-L-

SHEET 2 OF 2

STATE OF NORTH CAROLINA
DEPARTMENT OF TRANSPORTATION
RALEIGH

SUBSTRUCTURE

BENTS No. 4, 6, 8, 10

NORTH CAROLINA PROFESSIONAL SEAL 14855 ENGINEER DOUGLAS R. CALHOUN
8/26/12

REVISIONS						SHEET NO.
NO.	BY:	DATE:	NO.	BY:	DATE:	S-67
1			3			TOTAL SHEETS
2			4			147

DRAWN BY : T.L.CLELLAND DATE : 3-2011
CHECKED BY : T.N.CARROLL DATE : 5-2011

26-JUN-2012 13:40
R:\Structures\STRI\SubDrawings\B-4028_SD_Bts46810.dgn
dely

STR. #1

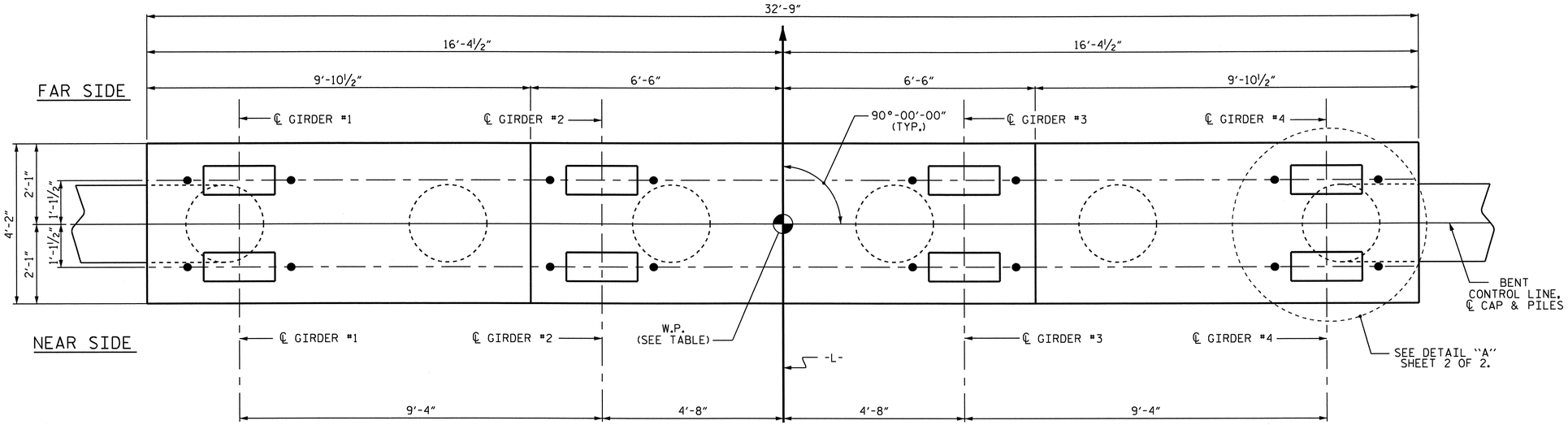

PLAN

NOTES

STIRRUPS AND "U" BARS IN CAP MAY BE SHIFTED AS NECESSARY TO CLEAR ANCHOR BOLTS.

FOR ADDITIONAL REINFORCING STEEL IN PP 24 X 0.50 GALVANIZED STEEL PIPE PILES, SEE 24" STEEL PIPE PILE STANDARD.

FOR PILE SPLICE DETAILS, SEE 24" STEEL PIPE PILE STANDARD.

GALVANIZE THE TOP OF EACH INTERIOR BENT PILE A MINIMUM LENGTH AS SHOWN IN TABLE BELOW. GALVANIZE IN ACCORDANCE WITH SECTION 1076 OF THE STANDARD SPECIFICATIONS.

GALVANIZE TOP OF PILES				
BENT	5	7	9	11
LENGTH	43'	41'	37'	34'

CAP ELEVATIONS				
BENT	5	7	9	11
WORK POINT	#6	#8	#10	#12
ELEV. A	40.335	35.991	31.647	27.303
ELEV. B	40.521	36.177	31.833	27.490
BOTT. OF CAP ELEV.C	35.835	31.491	27.147	22.803

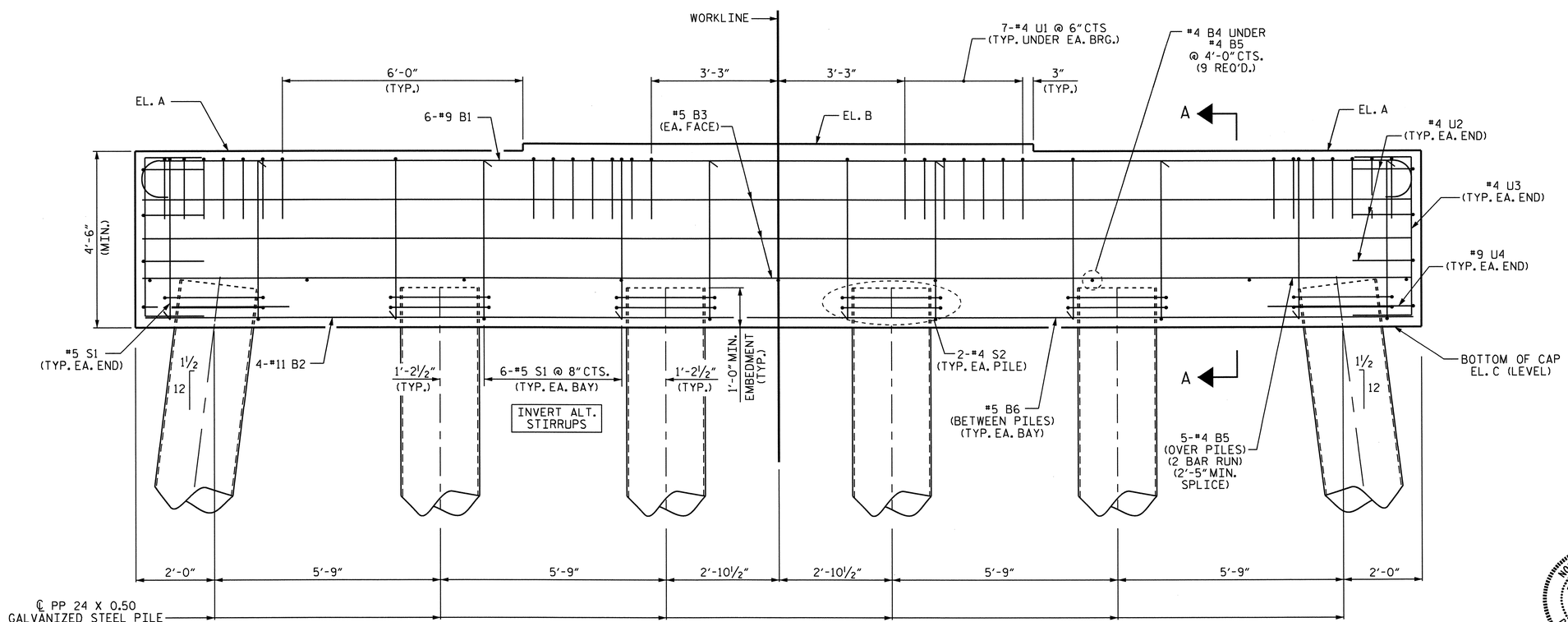

ELEVATION

(FOR SECTION A-A SEE SHEET 2 OF 2)

PROJECT NO. B-4028

BLADEN COUNTY

STATION: 29+02.50-L-

SHEET 1 OF 2

STATE OF NORTH CAROLINA
DEPARTMENT OF TRANSPORTATION
RALEIGH

SUBSTRUCTURE

BENTS No. 5, 7, 9, 11

NORTH CAROLINA PROFESSIONAL SEAL 14855 ENGINEER DOUGLAS R. CALHOUN
8/26/12

REVISIONS								SHEET NO.
NO.	BY:	DATE:	NO.	BY:	DATE:			S-63
1			3					TOTAL SHEETS
2			4					197

DRAWN BY : T.L.CLELLAND DATE : 3-2011
CHECKED BY : T.N.CARROLL DATE : 5-2011

26-JUN-2012 13:39
R:\Structures\STRI\SubDrawings\B-4028_SD_Bts57911.dgn
daly

STR. #1

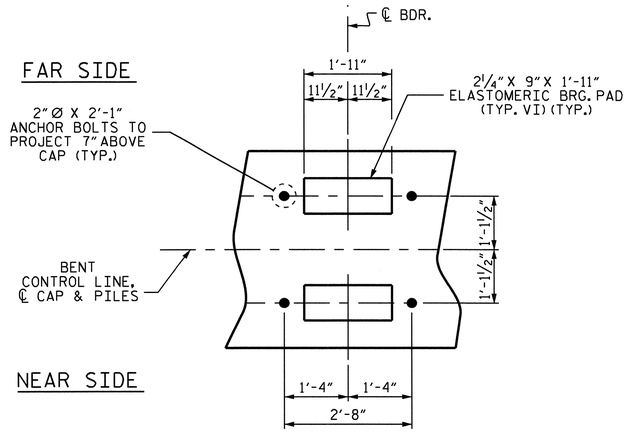

DETAIL "A"

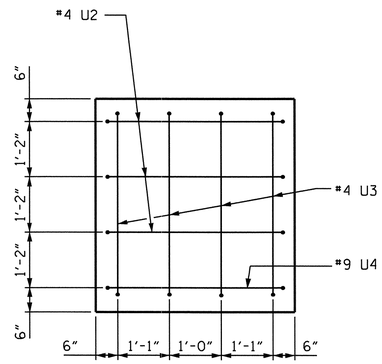

END OF CAP VIEW

(TYPICAL EACH END)

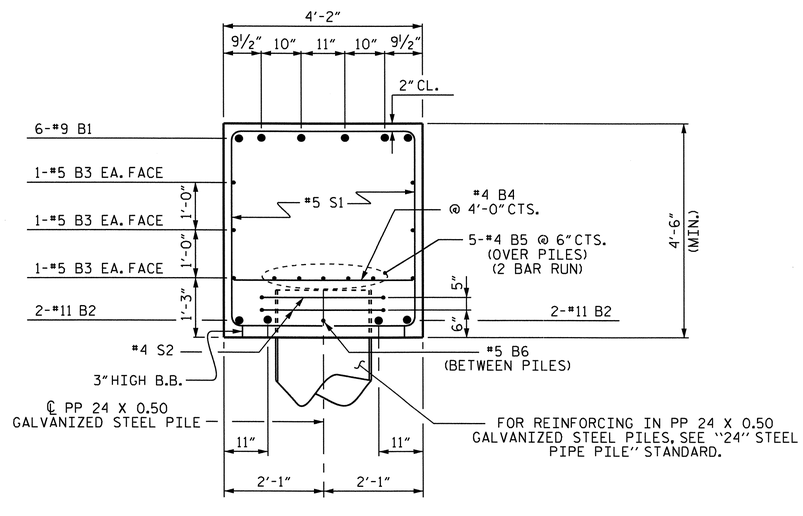

BAR TYPES

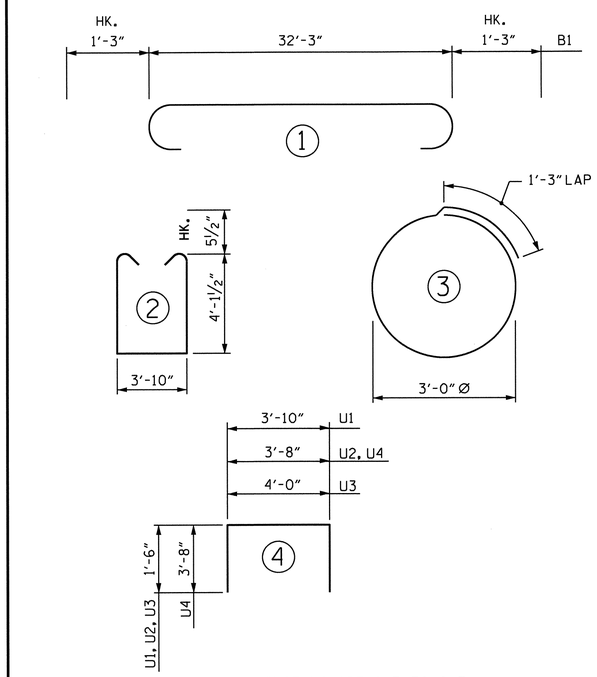

ALL BAR DIMENSIONS ARE OUT TO OUT

* CONCRETE DISPLACED BY THE FILLED PP 24 X 0.50 GALVANIZED STEEL PILES HAS BEEN DEDUCTED FROM THE QUANTITY OF CLASS A CONCRETE FOR BENT CAP.

BILL OF MATERIAL

FOR ONE BENT (4 REQ'D.)

BAR	NO.	SIZE	TYPE	LENGTH	WEIGHT
B1	6	#9	1	34'-9"	709
B2	4	#11	STR	32'-5"	689
B3	6	#5	STR	32'-5"	203
B4	9	#4	STR	3'-10"	23
B5	10	#4	STR	17'-5"	116
B6	5	#5	STR	3'-5"	18
S1	32	#5	2	13'-0"	434
S2	12	#4	3	10'-8"	86
U1	28	#4	4	6'-10"	128
U2	6	#4	4	6'-8"	27
U3	8	#4	4	7'-0"	37
U4	2	#9	4	11'-0"	75

REINFORCING STEEL = 2545 LBS

CLASS A CONCRETE BREAKDOWN

* POUR #1 22.4 C.Y.

* TOTAL CLASS A CONCRETE 22.4 C.Y.

PP 24 X 0.50 GALVANIZED STEEL PILES

BENT	No.	LIN. FT.
5	6	540
7	6	510
9	6	570
11	6	600

STEEL PILE POINTS

BENT		
5	NO.	6
7	NO.	6
9	NO.	6
11	NO.	6

PILES REDRIVES

BENT		
5	EA.	3
7	EA.	3
9	EA.	3
11	EA.	3

PDA TESTING

BENT		
9	EA.	1

PROJECT NO. B-4028

BLADEN COUNTY

STATION: 29+02.50-L-

SHEET 2 OF 2

STATE OF NORTH CAROLINA
DEPARTMENT OF TRANSPORTATION
RALEIGH

SUBSTRUCTURE

BENTS No. 5, 7, 9, 11

NORTH CAROLINA PROFESSIONAL SEAL 14855 ENGINEER DOUGLAS R. CALHOUN
6-26-12

REVISIONS						SHEET NO.
NO.	BY:	DATE:	NO.	BY:	DATE:	S-69
1			3			TOTAL SHEETS
2			4			147

DRAWN BY : T.L.CLELLAND DATE : 3-2011
CHECKED BY : T.N.CARROLL DATE : 5-2011

26-JUN-2012 13:39
R:\Structures\STRI\SubDrawings\B-4028_SD_Bts57911.dgn
dely

STR. #1

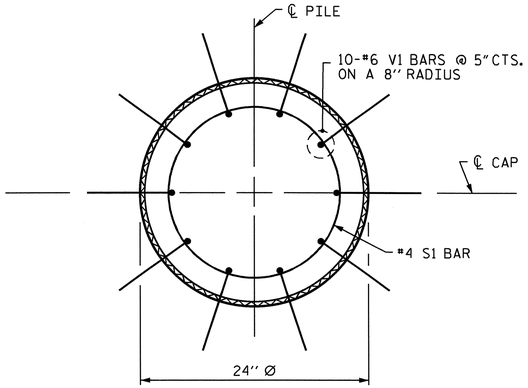

PLAN

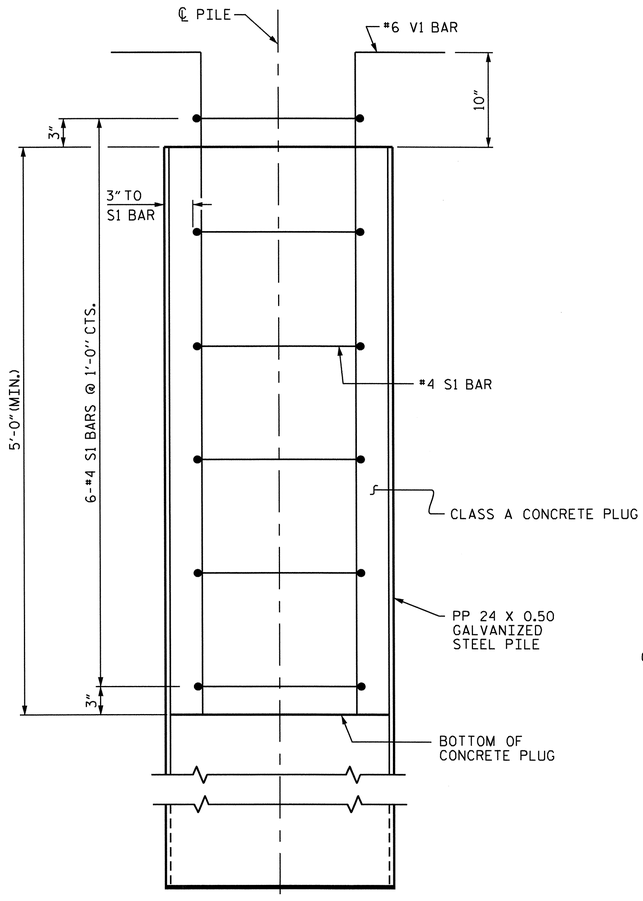

ELEVATION

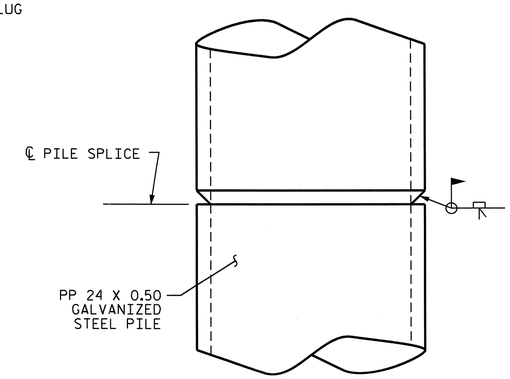

PIPE PILE SPLICE DETAIL

NOTES

PIPE PILES SHALL BE IN ACCORDANCE WITH SECTION 1084 OF THE STANDARD SPECIFICATIONS.

GALVANIZE STEEL PIPE PILES IN ACCORDANCE WITH SECTION 1076 OF THE STANDARD SPECIFICATIONS UNLESS METALLIZING IS REQUIRED. GALVANIZING OR METALLIZING PIPE PILE PLATES IS NOT REQUIRED.

PIPE PILE PLATES, IF REQUIRED, SHALL BE IN ACCORDANCE WITH SECTION 450 OF THE STANDARD SPECIFICATIONS.

REMOVE AND REPLACE OR REPAIR TO THE SATISFACTION OF THE ENGINEER PILES THAT ARE DAMAGED, DEFORMED OR COLLAPSED DURING INSTALLATION OR DRIVING.

PILE SPLICES SHALL BE IN ACCORDANCE WITH THE STANDARD SPECIFICATIONS AND AWS D1.1.

FOR OPEN END PIPE PILES, REMOVE ENOUGH SOIL AND WATER FROM INSIDE THE PILES TO CONSTRUCT THE CONCRETE PLUG WITHOUT FOULING THE CONCRETE.

FORM THE CONCRETE PLUG SUCH THAT THE REINFORCING STEEL OR CONCRETE DOES NOT MOVE AND THE CLEARANCE FROM THE REINFORCING STEEL TO THE INSIDE OF THE PILE IS MAINTAINED AFTER CONCRETE PLACEMENT. DO NOT PLACE CONCRETE IN THE BENT CAP UNTIL THE CONCRETE PLUG HAS ATTAINED A MINIMUM COMPRESSIVE STRENGTH OF 1500 PSI.

THE REINFORCING STEEL, CLASS A CONCRETE, AND GALVANIZING ARE CONSIDERED INCIDENTAL TO THE CONTRACT UNIT PRICE BID PER LINEAR FOOT FOR PP 24 X 0.50 GALVANIZED STEEL PILES.

THE CONTRACTOR MAY PROPOSE AN ALTERNATE METHOD FOR PLUGGING THE STEEL PIPE PILE, SUBJECT TO APPROVAL BY THE ENGINEER.

BILL OF MATERIAL FOR ONE PP 24 X 0.50 GALVANIZED STEEL PILE

BAR	NO.	SIZE	TYPE	LENGTH	WEIGHT
S1	6	#4	1	6'-0"	24
V1	10	#6	2	6'-8"	100
REINFORCING STEEL =					124 lbs
CLASS A CONCRETE					
5'-0" MINIMUM PLUG					0.5 CY

BAR TYPES

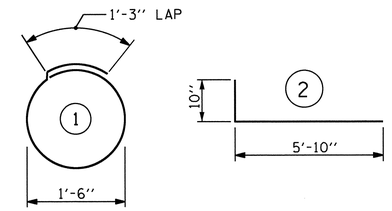

ALL BAR DIMENSIONS ARE OUT TO OUT.

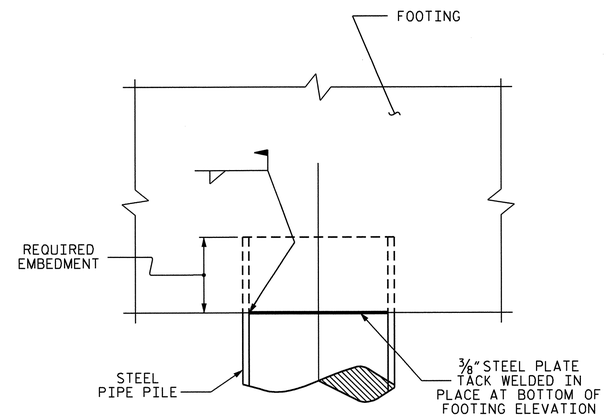

FOOTING DETAIL

PP 24 X 0.50 GALVANIZED STEEL PILE

(OPEN END)

PROJECT NO. B-4028

BLADEN COUNTY

STATION: 29+02.50-L-

STATE OF NORTH CAROLINA
DEPARTMENT OF TRANSPORTATION
RALEIGH

STANDARD

24" STEEL PIPE PILE

NORTH CAROLINA PROFESSIONAL SEAL 14855 ENGINEER DOUGLAS R. CALHOUN
6/26/12

REVISIONS						SHEET NO.
NO.	BY:	DATE:	NO.	BY:	DATE:	S-70
1			3			TOTAL SHEETS
2			4			147

STD. NO. SPP4 STR. #1

ASSEMBLED BY : T.L.CLELLAND	DATE : 3-2011		
CHECKED BY : T.N.CARROLL	DATE : 4-2011		
DRAWN BY : TLA 8/05	ADDED 10/1/05		
CHECKED BY : GM 9/05	REV. 5/1/06R	MAA/KMM	
	REV. 10/1/11	MAA/GM	

26-JUN-2012 13:38
R:\Structures\STR1\SubDrawings\B-4028_SD_Bts1&2.dgn
dely

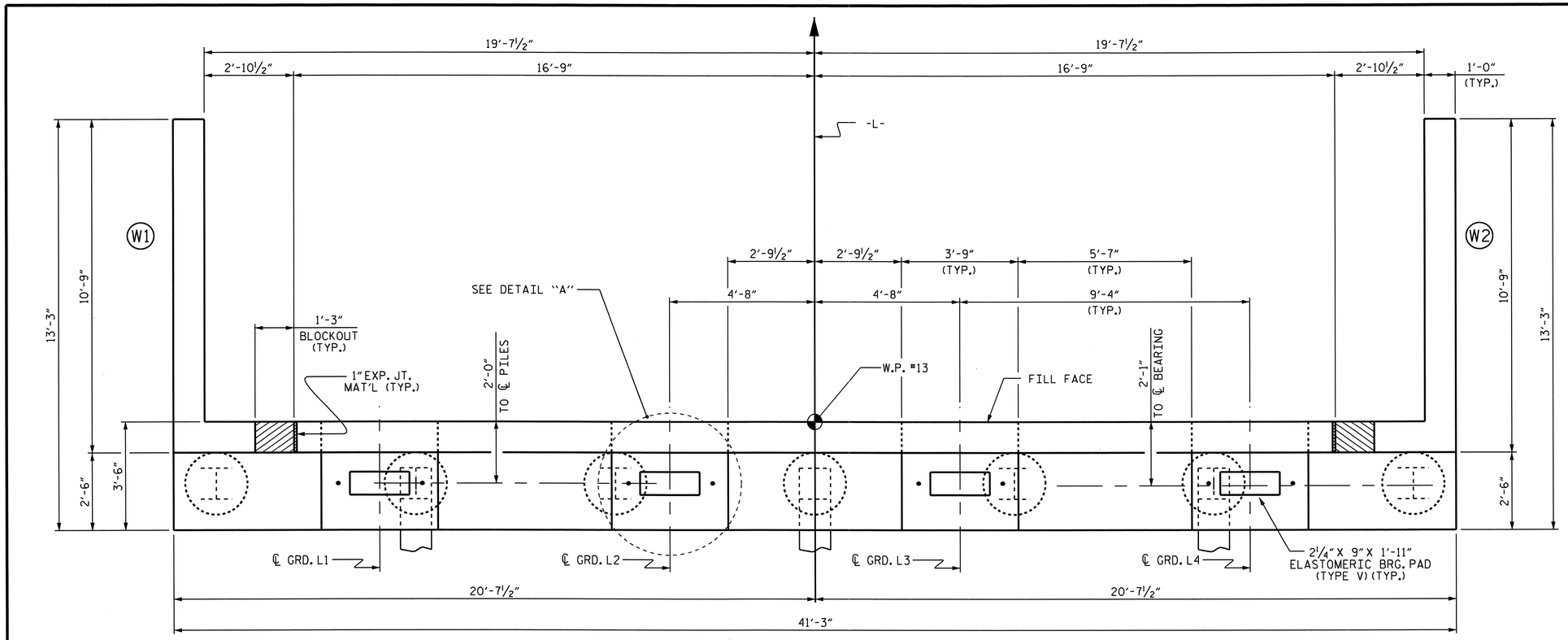

PLAN

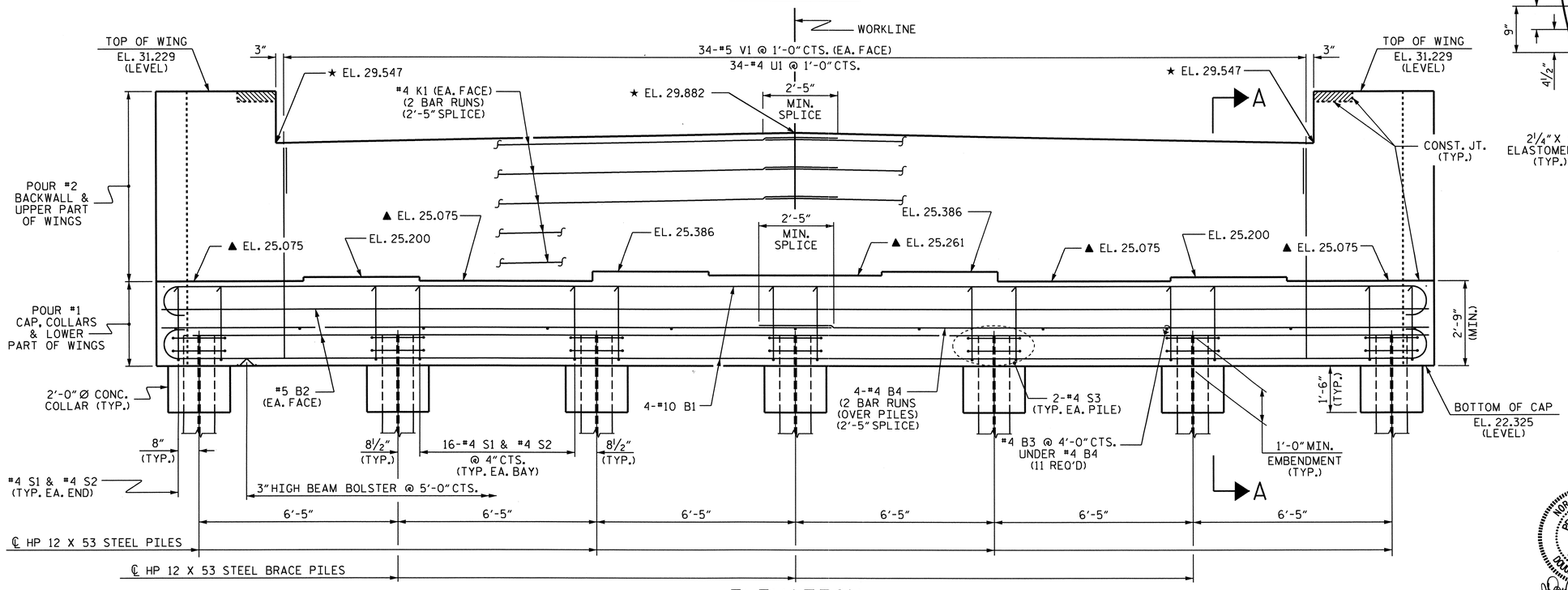

ELEVATION

NOTES:

▲ FOR LOCATION OF ELEVATIONS BETWEEN BUILDUPS, SEE SECTION A-A ON SHEET 3 OF 3.

★ THIS ELEVATION TAKEN ON FILL FACE OF BACKWALL.

STIRRUPS AND U1 BARS IN CAP MAY BE SHIFTED AS NECESSARY TO CLEAR ANCHOR BOLTS.

THE TOP SURFACE OF THE CAP EXCEPT THE BRIDGE SEAT BUILDUPS SHALL BE SLOPED TRANSVERSELY FROM THE FILL FACE TO THE BACK FACE AT THE RATE OF 2%.

BACKWALL SHALL BE PLACED BEFORE APPLYING THE EPOXY PROTECTIVE COATING.

THE CONTRACTOR SHALL PROVIDE FOR INSTALLATION OF THE 4" DIAMETER DRAIN PIPE THROUGH THE WING WALL AS REQUIRED FOR REINFORCED BRIDGE APPROACH FILLS, SEE THE ROADWAY PLANS. REINFORCING STEEL IN THE WING WALL MAY BE SHIFTED AS NECESSARY TO CLEAR THE DRAIN PIPE.

THE CONCRETE IN THE SHADED AREA OF THE WING WALL SHALL BE POURED AFTER THE BARRIER RAIL IS CAST IF SLIP FORMING IS USED.

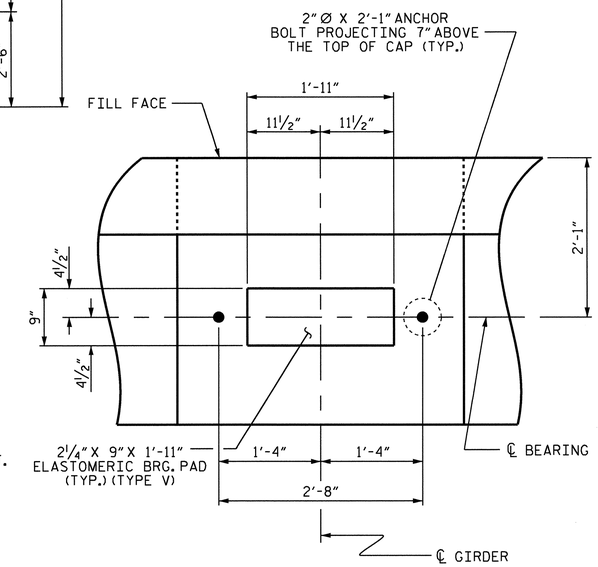

DETAIL "A"

(TYP. EA. GIRDER)

PROJECT NO. B-4028

BLADEN COUNTY

STATION: 29+02.50 -L-

SHEET 1 OF 3

STATE OF NORTH CAROLINA
DEPARTMENT OF TRANSPORTATION
RALEIGH

SUBSTRUCTURE

END BENT No. 2

NORTH CAROLINA PROFESSIONAL SEAL 14855 ENGINEER DOUGLAS R. CALHOUN
6-26-12

REVISIONS								SHEET NO.
NO.	BY:	DATE:	NO.	BY:	DATE:			S-71
1			3					TOTAL SHEETS
2			4					147

DRAWN BY : M.L. BROWN DATE : 3/11
CHECKED BY : T.L. CLELLAND DATE : 4/11

26-JUN-2012 13:38
R:\Structures\STRI\SubDrawings\B-4028_str1_sd_EB2.dgn
dely

STR. #1

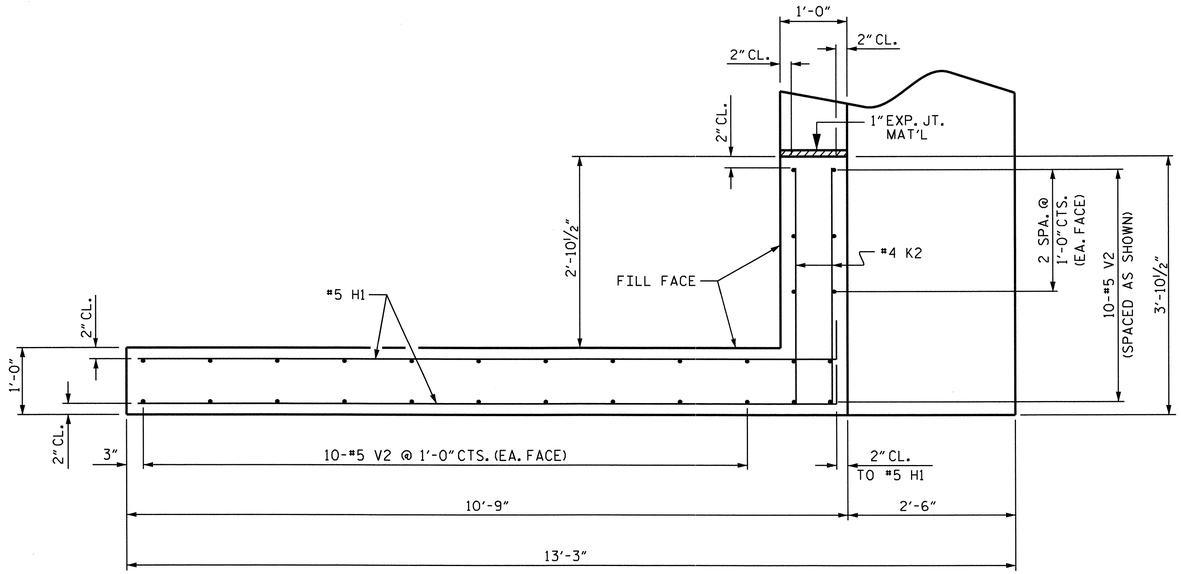

PLAN OF WING

(LEFT WING SHOWN, RIGHT WING SIMILAR)

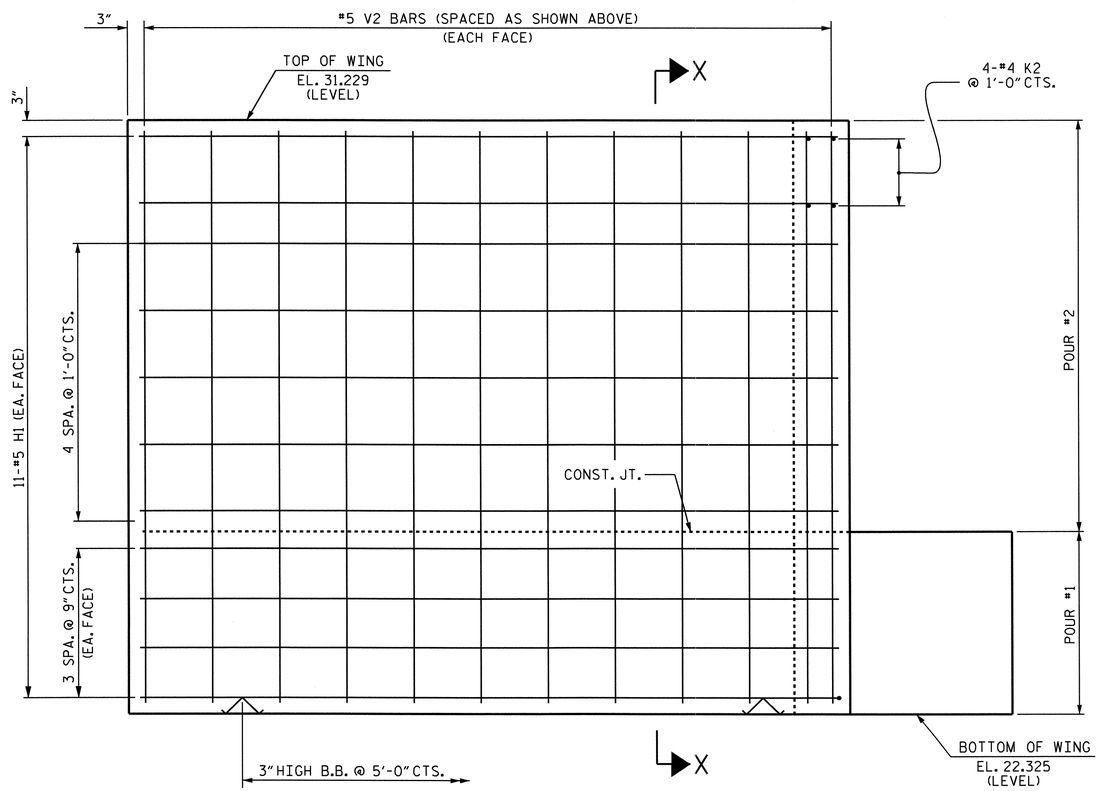

ELEVATION OF WING

(LEFT WING SHOWN, RIGHT WING SIMILAR)

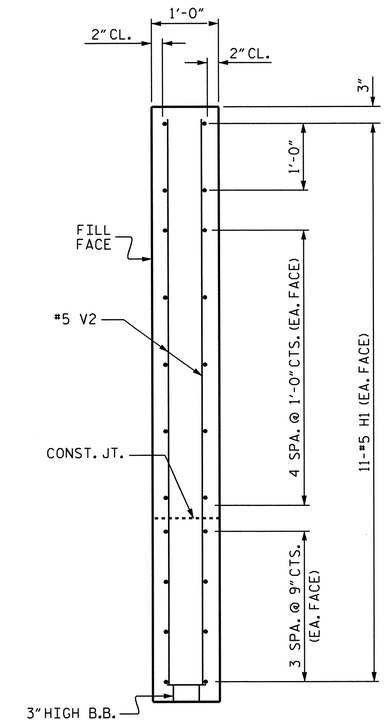

SECTION X-X

PROJECT NO. B-4028

BLADEN COUNTY

STATION: 29+02.50 -L-

SHEET 2 OF 3

STATE OF NORTH CAROLINA
DEPARTMENT OF TRANSPORTATION
RALEIGH

SUBSTRUCTURE

END BENT No. 2

NORTH CAROLINA PROFESSIONAL SEAL 14855 ENGINEER DOUGLAS R. CALHOUN
6/26/12

REVISIONS						SHEET NO.
NO.	BY:	DATE:	NO.	BY:	DATE:	S-72
1			3			TOTAL SHEETS
2			4			147

DRAWN BY : M.L. BROWN DATE : 3/11
CHECKED BY : T.L. CLELLAND DATE : 4/11

26-JUN-2012 13:37
R:\Structures\STRI\SubDrawings\B-4028_stri_sd_EB2.dgn
dely

STR. #1

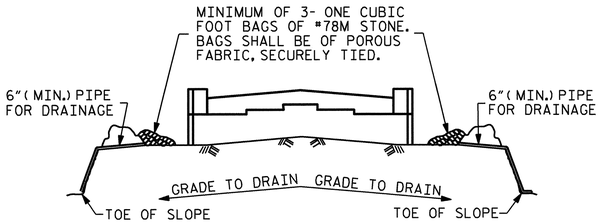

BAGGED STONE AND PIPE SHALL BE PLACED IMMEDIATELY AFTER COMPLETION OF END BENT EXCAVATION. PIPE MAY BE EITHER CONCRETE, CORRUGATED STEEL, CORRUGATED ALUMINUM ALLOY, OR CORRUGATED PLASTIC. PERFORATED PIPE WILL NOT BE ALLOWED.

BAGGED STONE SHALL REMAIN IN PLACE UNTIL THE ENGINEER DIRECTS THAT IT BE REMOVED. THE CONTRACTOR SHALL REMOVE AND DISPOSE OF SILT ACCUMULATIONS AT BAGGED STONE WHEN SO DIRECTED BY THE ENGINEER. BAGS SHALL BE REMOVED AND REPLACED WHENEVER THE ENGINEER DETERMINES THAT THEY HAVE DETERIORATED AND LOST THEIR EFFECTIVENESS.

NO SEPARATE PAYMENT WILL BE MADE FOR THIS WORK AND THE ENTIRE COST OF THIS WORK SHALL BE INCLUDED IN THE UNIT CONTRACT PRICE BID FOR THE SEVERAL PAY ITEMS.

TEMPORARY DRAINAGE AT END BENT

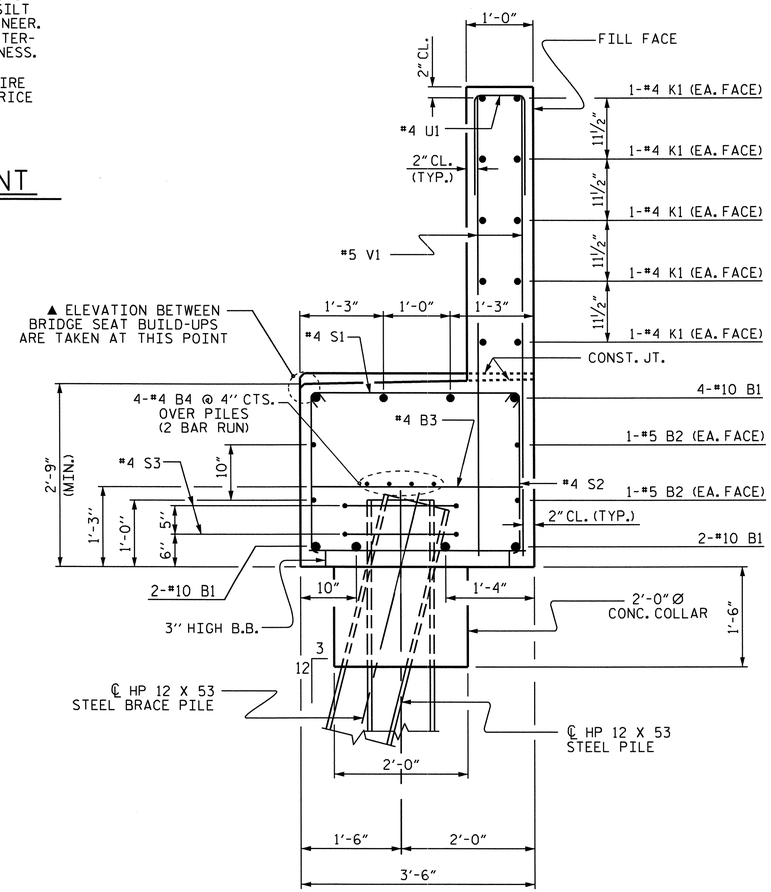

SECTION A-A

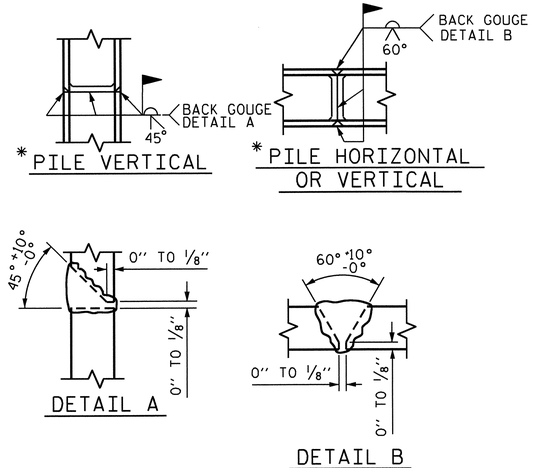

* POSITION OF PILE DURING WELDING.

PILE SPLICE DETAILS

BAR TYPES

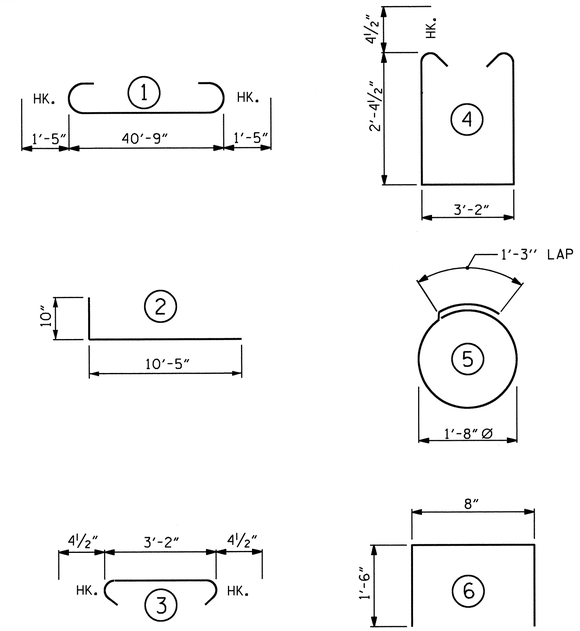

ALL BAR DIMENSIONS ARE OUT TO OUT.

BILL OF MATERIAL
END BENT No. 2

BAR	NO.	SIZE	TYPE	LENGTH	WEIGHT
B1	8	#10	1	43'-7"	1500
B2	4	#5	STR	40'-11"	171
B3	11	#4	STR	3'-2"	23
B4	8	#4	STR	21'-8"	116
H1	44	#5	2	11'-3"	516
K1	20	#4	STR	21'-8"	289
K2	8	#4	STR	3'-6"	19
S1	98	#4	3	3'-11"	256
S2	98	#4	4	8'-8"	567
S3	14	#4	5	6'-6"	61
U1	34	#4	6	3'-8"	83
V1	68	#5	STR	6'-10"	485
V2	60	#5	STR	8'-6"	532

REINFORCING STEEL 4618 LBS.

CLASS A CONCRETE

POUR #1 (CAP, COLLARS & LOWER PART OF WINGS) 17.9 C.Y.

POUR #2 (BACKWALL & UPPER PART OF WINGS) 11.8 C.Y.

TOTAL CLASS A CONCRETE 29.7 C.Y.

HP 12 X 53 STEEL PILES
NO. = 7 LIN. FT. = 630

STEEL PILE POINTS No. 7
PILE REDRIVES EA. 3

PROJECT NO. B-4028
BLADEN COUNTY
STATION: 29+02.50 -L-

SHEET 3 OF 3

STATE OF NORTH CAROLINA
DEPARTMENT OF TRANSPORTATION
RALEIGH

SUBSTRUCTURE

END BENT No. 2

NORTH CAROLINA PROFESSIONAL SEAL 14855 ENGINEER DOUGLAS R. CALHOUN
06/26/12

REVISIONS						SHEET NO.
NO.	BY:	DATE:	NO.	BY:	DATE:	S-73
1			3			TOTAL SHEETS
2			4			147

DRAWN BY : M.L. BROWN DATE : 3/11
CHECKED BY : T.L. CLELLAND DATE : 4/11

ESTIMATED QUANTITIES			
BRIDGE @ STA. 29+02.50 -L-	CLASS B RIP RAP	RIP RAP CLASS II (2'-0" THICK)	GEOTEXTILE FOR DRAINAGE
	TONS	TONS	SQUARE YARDS
END BENT 1	315	1200	1335
END BENT 2	115	465	520

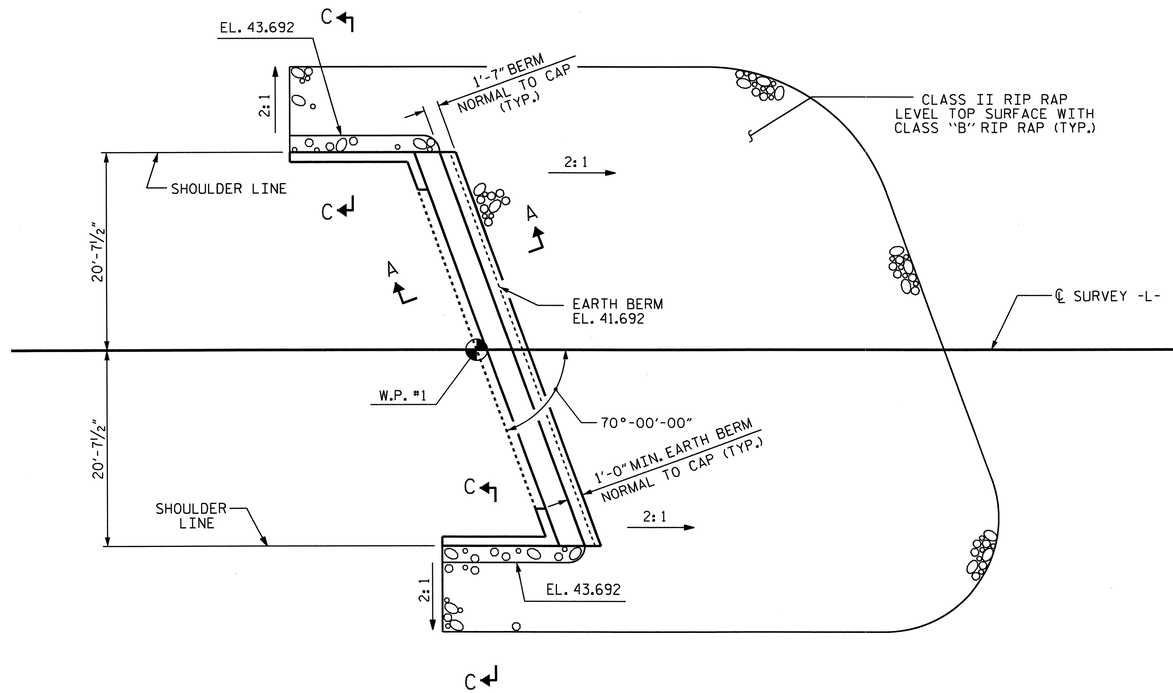

END BENT No. 1

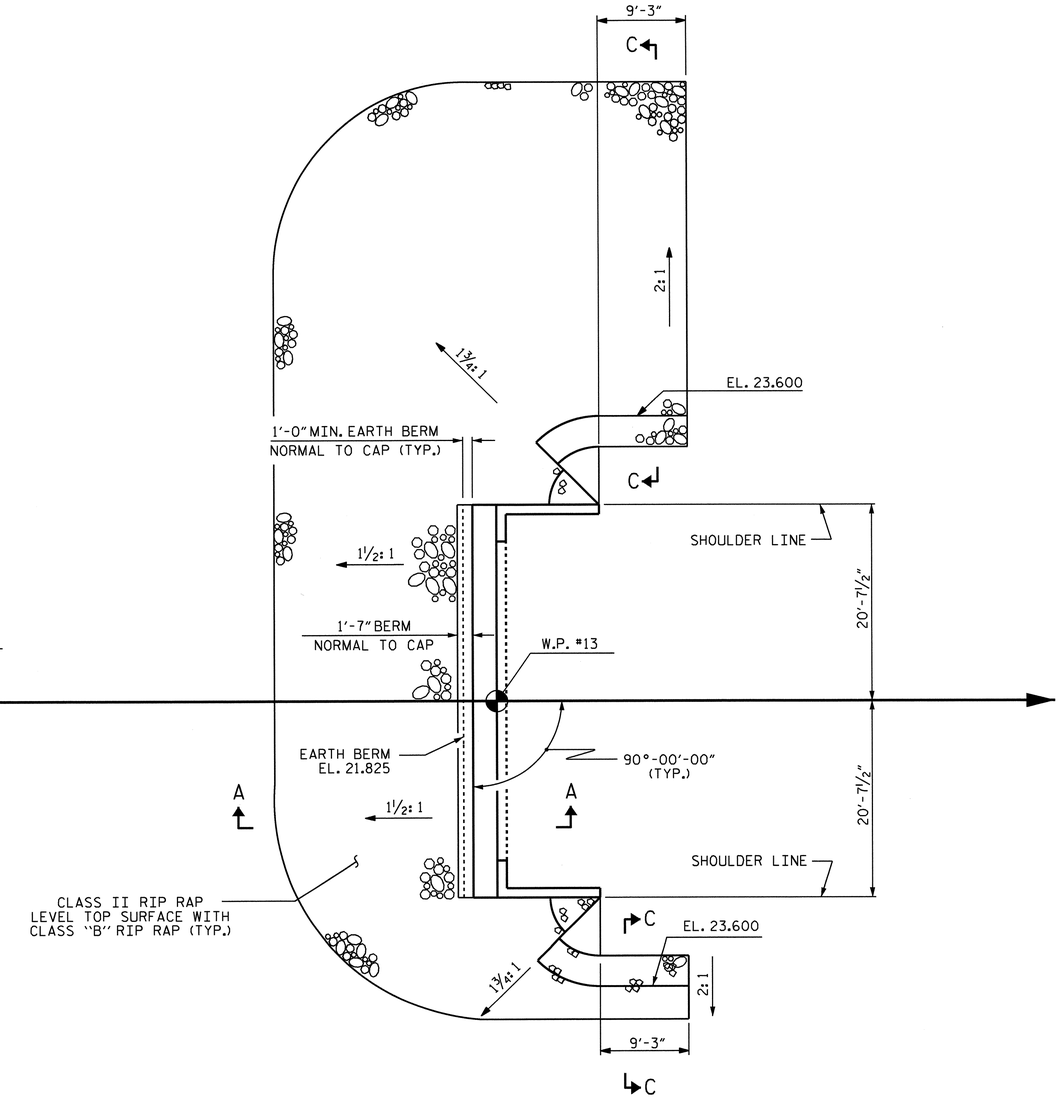

END BENT No. 2

PLAN OF RIP RAP

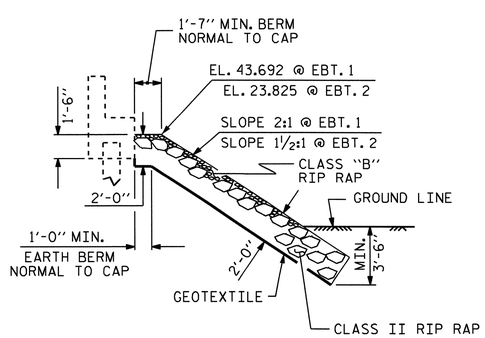

SECTION A-A

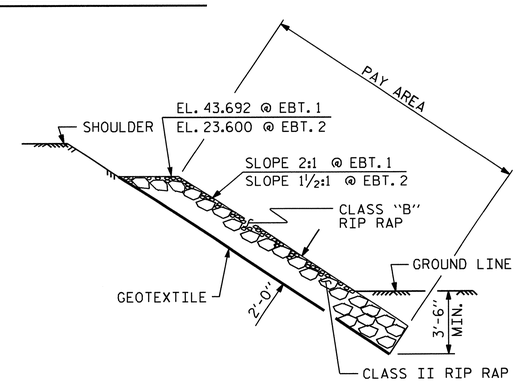

SECTION C-C

PROJECT NO. B-4028
BLADEN COUNTY
STATION: 29+02.50 -L-

STATE OF NORTH CAROLINA
DEPARTMENT OF TRANSPORTATION
RALEIGH

STANDARD
RIP RAP DETAILS

NORTH CAROLINA PROFESSIONAL SEAL 14855 ENGINEER DOUGLAS R. GALHOUN
6/26/12

REVISIONS						SHEET NO.
NO.	BY:	DATE:	NO.	BY:	DATE:	S-74
1			3			TOTAL SHEETS
2			4			147

DRAWN BY : DGE/M. L. BROWN DATE : 4-12/4/11
CHECKED BY : S.B. WILLIAMS DATE : 6/11

26-JUN-2012 13:36
R:\Structures\STR1\MiscDrawings\B-4028_sd_RR.dgn
dely

STR. #1

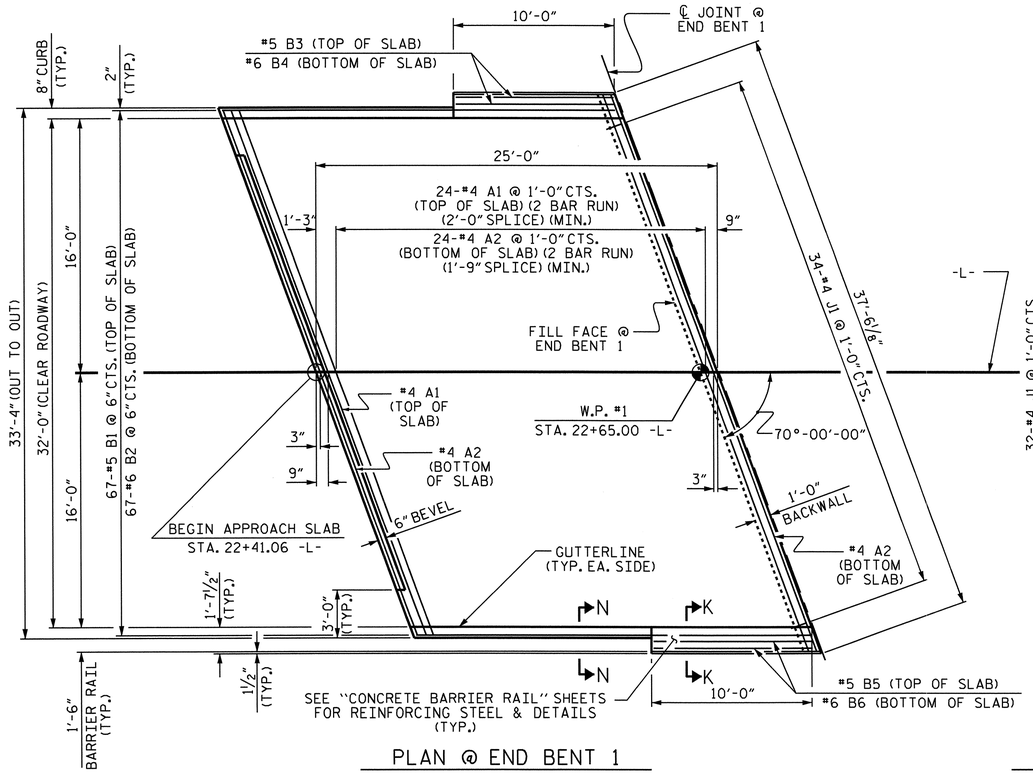

PLAN @ END BENT 1

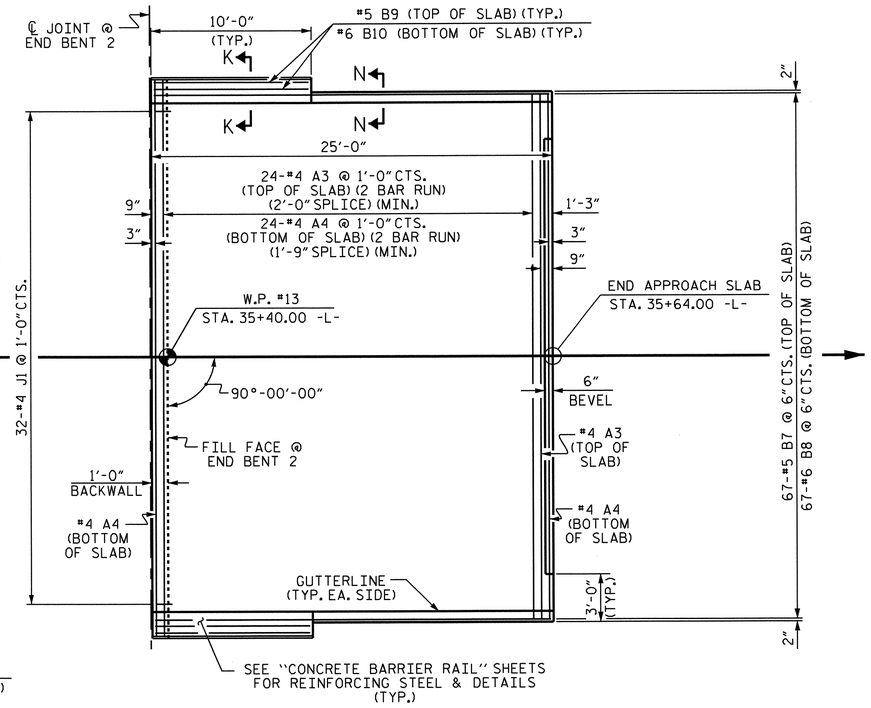

PLAN @ END BENT 2

BILL OF MATERIAL

APPROACH SLAB AT E.B. 1

BAR	NO.	SIZE	TYPE	LENGTH	WEIGHT
* A1	50	#4	STR	19'-8"	657
A2	52	#4	STR	19'-5"	674
* B1	67	#5	STR	23'-9"	1660
B2	67	#6	STR	24'-7"	2474
* B3	2	#5	STR	9'-3"	19
B4	2	#6	STR	9'-9"	29
* B5	2	#5	STR	9'-7"	20
B6	2	#6	STR	10'-1"	30
* J1	34	#4	1	1'-5"	32
REINFORCING STEEL **				LBS.	3207
* EPOXY COATED REINFORCING STEEL				** LBS.	2388
CLASS AA CONCRETE **				C. Y.	36.4

APPROACH SLAB AT E.B. 2

BAR	NO.	SIZE	TYPE	LENGTH	WEIGHT
* A3	50	#4	STR	17'-5"	582
A4	52	#4	STR	17'-4"	602
* B7	67	#5	STR	23'-9"	1660
B8	67	#6	STR	24'-7"	2474
* B9	4	#5	STR	9'-1"	38
B10	4	#6	STR	9'-7"	58
* J1	32	#4	1	1'-5"	30
REINFORCING STEEL **				LBS.	3134
* EPOXY COATED REINFORCING STEEL				** LBS.	2310
CLASS AA CONCRETE **				C. Y.	36.4

BAR TYPE

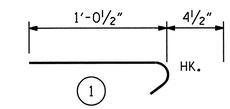

ALL BAR DIMENSIONS ARE OUT TO OUT

** QUANTITIES FOR BARRIER RAIL ARE NOT INCLUDED.

THE QUANTITY OF #4 J1 BARS ON THE BILL OF MATERIAL IS BASED ON 1'-0" CENTERS. J1 BARS SHALL BE PLACED AT EACH VERTICAL STUD ANCHOR BOLT. IN THE EVENT THAT THE NUMBER OF VERTICAL STUD ANCHORS EXCEEDS THE NUMBER OF J1 BARS SPECIFIED, ADDITIONAL J1 BARS WILL NOT BE REQUIRED.

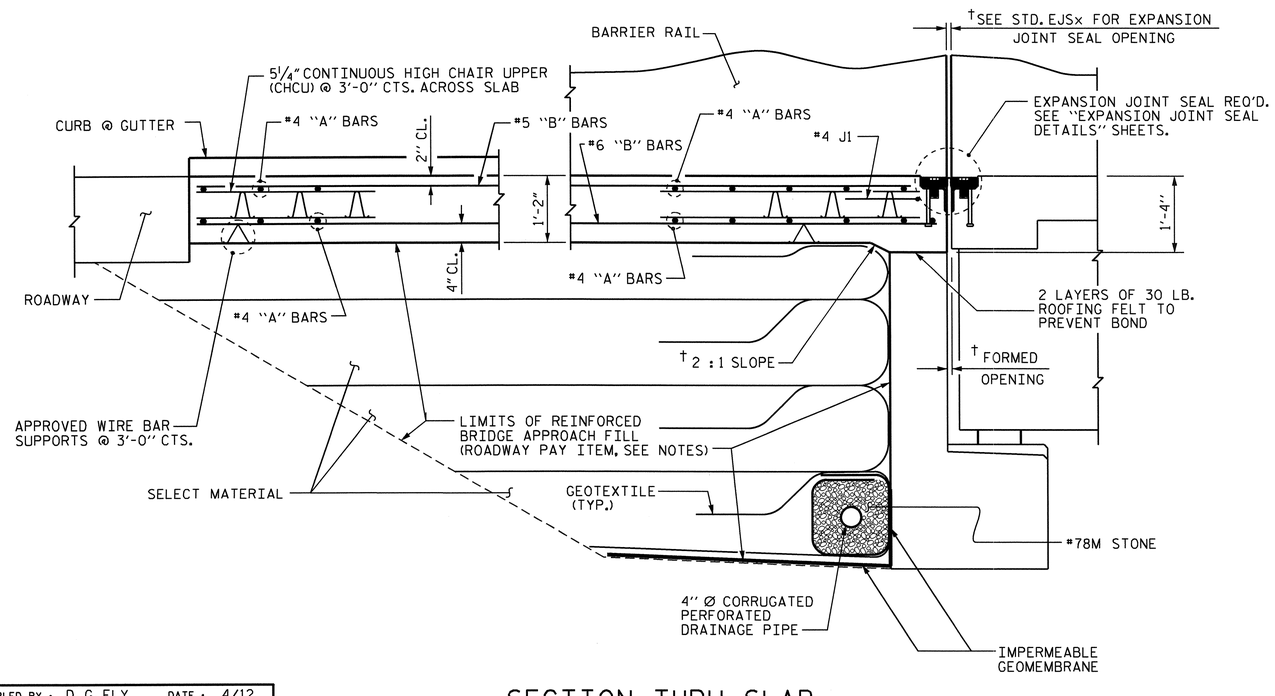

SECTION THRU SLAB

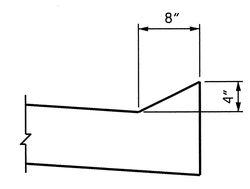

SECTION N-N

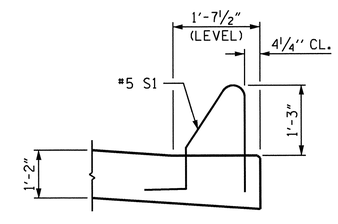

SECTION K-K

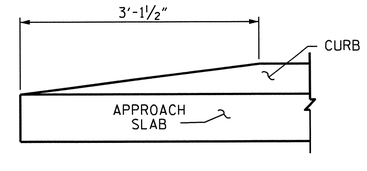

END OF CURB WITHOUT SHOULDER BERM GUTTER

CURB DETAILS

SPLICE LENGTHS		
BAR SIZE	EPOXY COATED	UNCOATED
#4	2'-0"	1'-9"
#5	2'-6"	2'-2"
#6	3'-10"	2'-7"

NORTH CAROLINA PROFESSIONAL SEAL 14855 ENGINEER DOUGLAS B. ROBERTSON 10/26/12

PROJECT NO. B-4028

BLADEN COUNTY

STATION: 29+02.50 -L-

SHEET 1 OF 2

STATE OF NORTH CAROLINA
DEPARTMENT OF TRANSPORTATION
RALEIGH

STANDARD

BRIDGE APPROACH SLAB FOR FLEXIBLE PAVEMENT

REVISIONS						SHEET NO.
NO.	BY:	DATE:	NO.	BY:	DATE:	S-75
1			3			TOTAL SHEETS
2			4			147

ASSEMBLED BY : D. G. ELY	DATE : 4/12		
CHECKED BY : W. F. PARKER	DATE : 5/12		
DRAWN BY : EEM 3/95	REV. 5/7/03R	RWW/JTE	
CHECKED BY : VAP 3/95	REV. 5/1/06RR	KMM/GM	
	REV. 10/1/11	MAA/GM	

26-JUN-2012 13:32
R:\Structures\STRI\MiscDrawings\B-4028_sd_AS_str_#1.dgn
dely

STR. #1

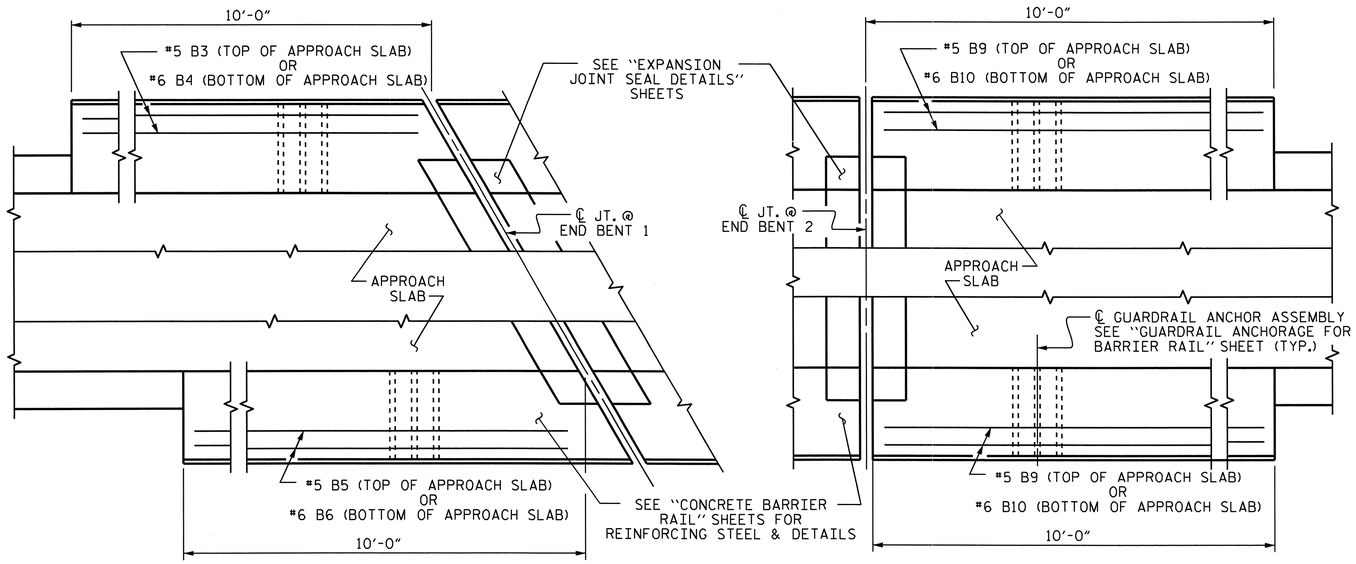

END BENT 1

END BENT 2

PLAN OF BARRIER RAIL

NOTES

APPROACH SLAB SHALL NOT BE CONSTRUCTED PRIOR TO COMPLETION OF THE BRIDGE DECK.

FOR REINFORCED BRIDGE APPROACH FILL INCLUDING GEOTEXTILE, IMPERMEABLE GEOMEMBRANE, 4" Ø DRAINAGE PIPE, #78M STONE, AND SELECT MATERIAL, SEE ROADWAY PLANS.

AREA BETWEEN THE WINGWALL AND APPROACH SLAB SHALL BE GRADED TO DRAIN THE WATER AWAY FROM THE FILL FACE OF THE BRIDGE AND SHALL BE PAVED. SEE ROADWAY PLANS.

FOR EXPANSION JOINT SEALS, SEE SPECIAL PROVISIONS.

THE COST OF THE BARRIER RAIL ON THE APPROACH SLAB SHALL BE INCLUDED IN THE LINEAR FOOT CONTRACT PRICE BID FOR "CONCRETE BARRIER RAIL".

FOR REINFORCING STEEL DETAILS IN THE CONCRETE BARRIER RAIL, SEE THE SUPERSTRUCTURE "CONCRETE BARRIER RAIL" SHEETS.

THE BARRIER RAIL ON EACH APPROACH SLAB SHALL NOT BE CAST UNTIL ALL APPROACH SLAB CONCRETE HAS BEEN CAST AND HAS REACHED A MINIMUM COMPRESSIVE STRENGTH OF 3,000 PSI.

ALL REINFORCING STEEL IN BARRIER RAILS SHALL BE EPOXY COATED.

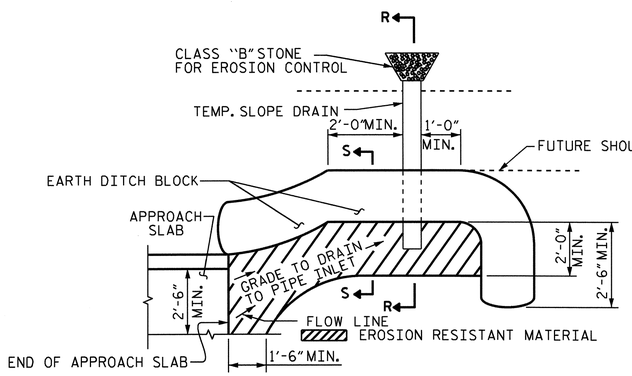

NOTE: IMMEDIATELY AFTER THE CONSTRUCTION OF THE APPROACH SLAB, THE CONTRACTOR SHALL PROVIDE TEMPORARY BERM AND SLOPE DRAIN. CONTRACTOR SHALL GRADE TO PIPE INLET AND PROVIDE EROSION RESISTANT MATERIAL AS SHOWN. THE EROSION RESISTANT MATERIAL SHALL BE EITHER 1) ASPHALT PLANT MIX, TYPE 1 OR TYPE 2, MIN. 2" DEPTH, 2) EROSION CONTROL MAT, OR 3) CONCRETE, AS DIRECTED BY THE ENGINEER. THE SLOPE DRAIN SHALL CONSIST OF A NON-PERFORATED TEMPORARY DRAINAGE PIPE, 12 INCHES IN DIAMETER.

PLAN VIEW

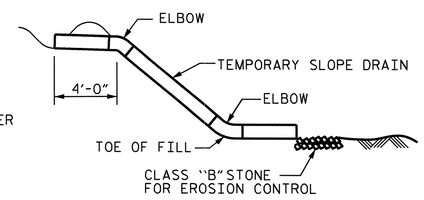

SECTION R-R

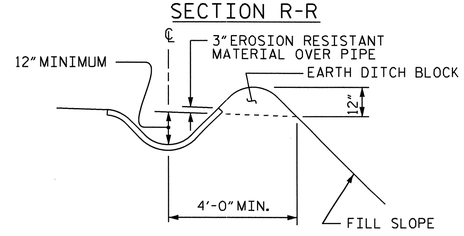

SECTION S-S

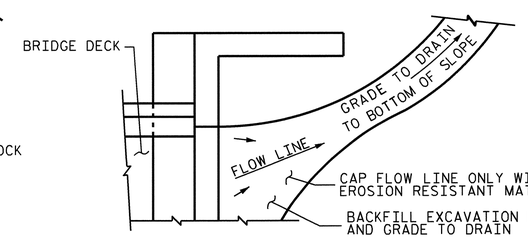

NOTE: IF THE APPROACH SLAB IS NOT CONSTRUCTED IMMEDIATELY AFTER THE BACKFILLING OF THE END BENT EXCAVATION, GRADE TO DRAIN TO THE BOTTOM OF THE SLOPE AND PROVIDE EROSION RESISTANT MATERIAL, SUCH AS FIBERGLASS ROVING OR AS DIRECTED BY THE ENGINEER TO PREVENT SOIL EROSION AND TO PROTECT THE AREA ADJACENT TO THE STRUCTURE. THE CONTRACTOR WILL BE REQUIRED TO REMOVE THESE MATERIALS PRIOR TO CONSTRUCTION OF THE APPROACH SLAB.

TEMPORARY DRAINAGE DETAIL

TEMPORARY BERM AND SLOPE DRAIN DETAILS

(TO BE USED WHEN SHOULDER BERM GUTTER IS REQUIRED)

PROJECT NO. B-4028

BLADEN COUNTY

STATION: 29+02.50 -L-

SHEET 2 OF 2

STATE OF NORTH CAROLINA
DEPARTMENT OF TRANSPORTATION
RALEIGH

STANDARD

BRIDGE APPROACH SLAB DETAILS

ASSEMBLED BY : D. G. ELY	DATE : 4/12		
CHECKED BY : W. F. PARKER	DATE : 4/12		
DRAWN BY : FCJ 11/88	REV. 5/7/03	RWW/JTE	
CHECKED BY : ARB 11/88	REV. 5/1/06RRR	MAA/KMM	
	REV. 10/1/11	MAA/GM	

REVISIONS						SHEET NO.
NO.	BY:	DATE:	NO.	BY:	DATE:	S-76
1			3			TOTAL SHEETS
2			4			147

STR. #1

26-JUN-2012 13:32
R:\Structures\STR1\MiscDrawings\B-4028_sd_AS_str_#1.dgn
dely

F.A. PROJECT No. BRSTP-0011(9)

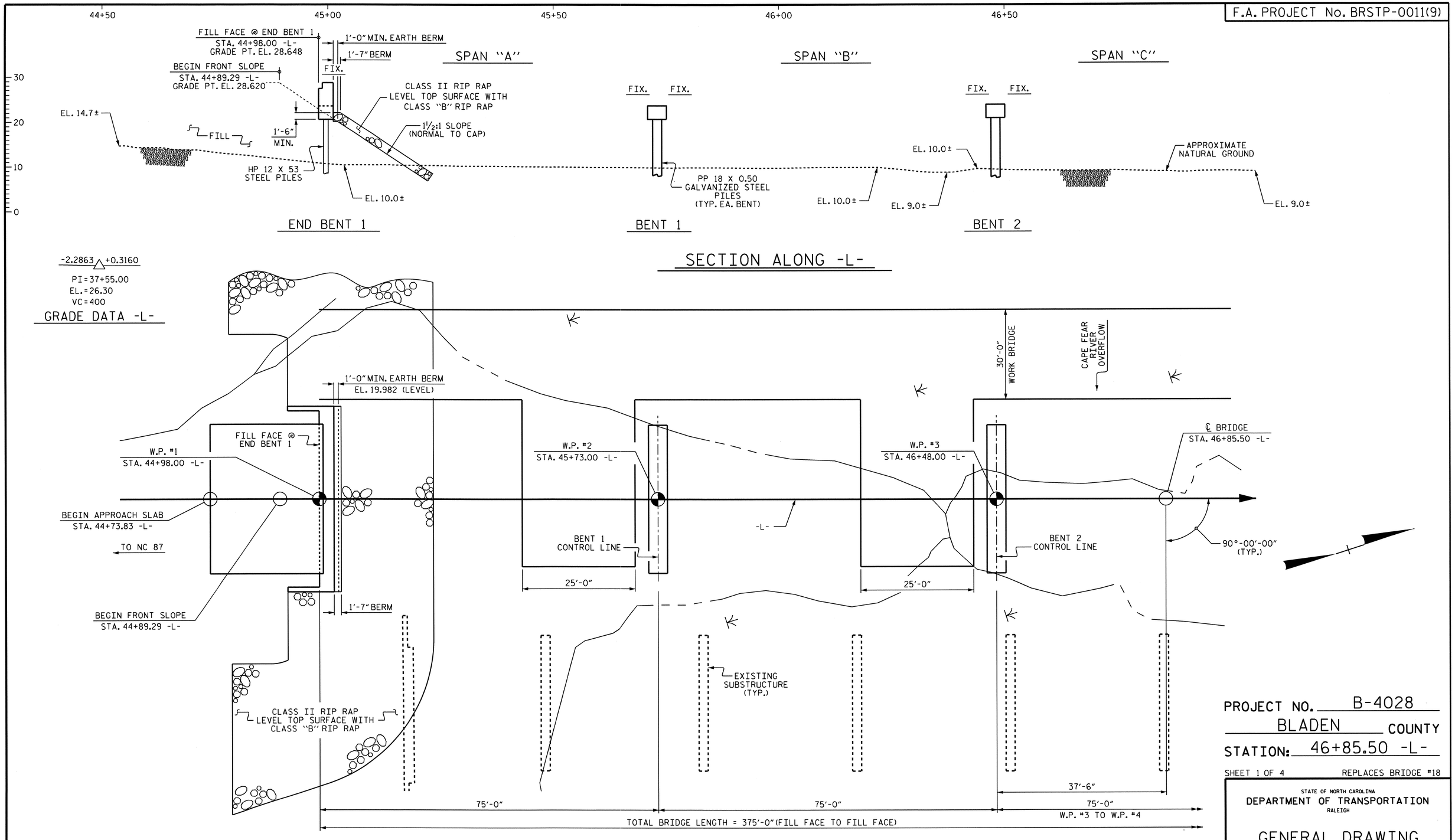

PLAN

(PILES NOT SHOWN IN PLAN VIEW FOR CLARITY)

PROJECT NO. B-4028

BLADEN COUNTY

STATION: 46+85.50 -L-

SHEET 1 OF 4 REPLACES BRIDGE #18

STATE OF NORTH CAROLINA
DEPARTMENT OF TRANSPORTATION
RALEIGH

GENERAL DRAWING

BRIDGE ON NC 11 OVER
CAPE FEAR RIVER OVERFLOW
BETWEEN NC 87 AND SR 1539

NORTH CAROLINA PROFESSIONAL SEAL 14855 ENGINEER DOUGLAS R. CALHOUN
6/25/12

REVISIONS						SHEET NO.
NO.	BY:	DATE:	NO.	BY:	DATE:	S-77
1			3			TOTAL SHEETS
2			4			147

DRAWN BY : A.S./A.V. ROYAL DATE : 8/11
CHECKED BY : M.L. BROWN DATE : 8/11

25-JUN-2012 10:41
R:\Structures\STR2\Gen_draw\B-4028_str2_SD_GD.dgn
asorsenginh

STR. #2

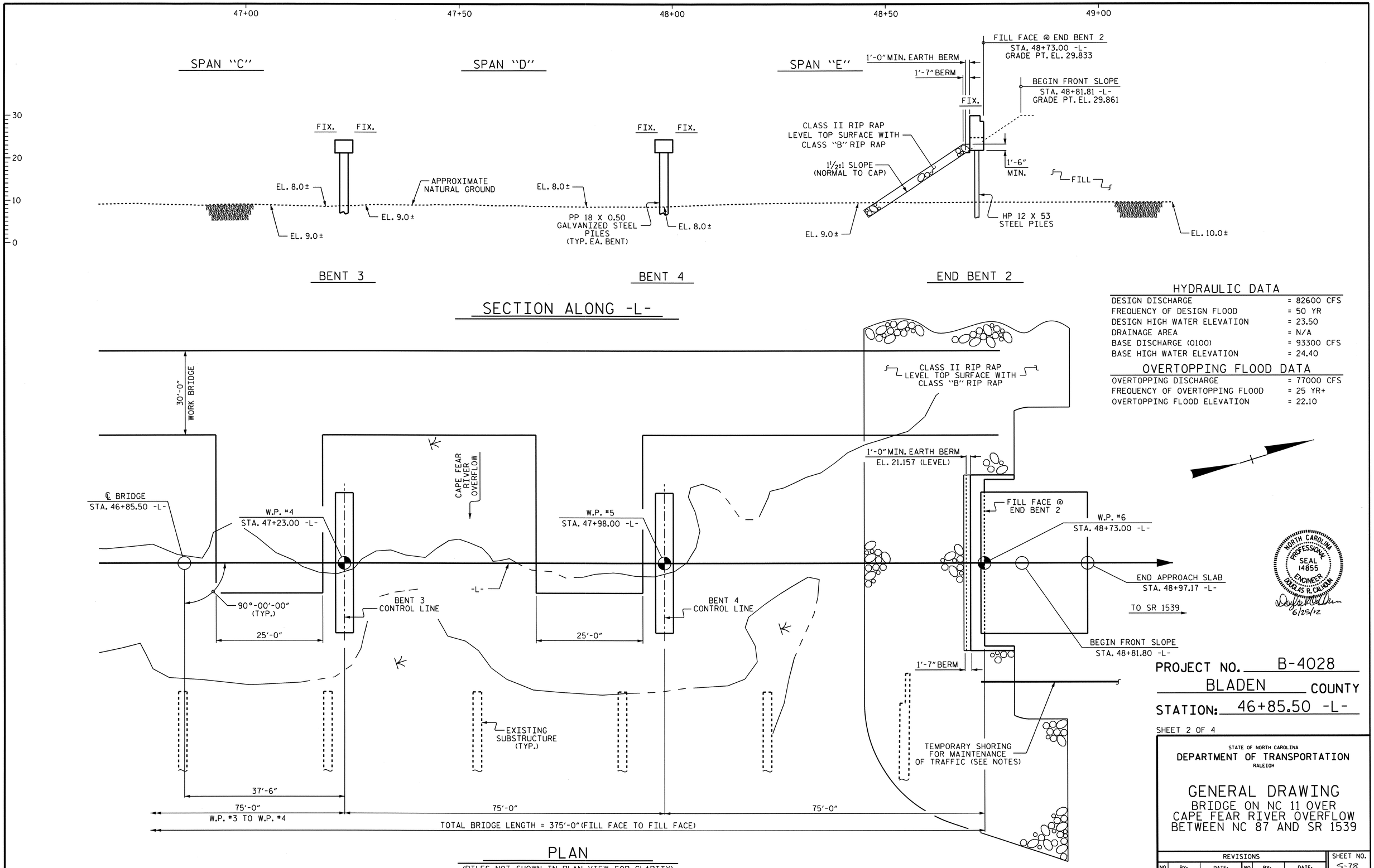

HYDRAULIC DATA

DESIGN DISCHARGE	= 82600 CFS
FREQUENCY OF DESIGN FLOOD	= 50 YR
DESIGN HIGH WATER ELEVATION	= 23.50
DRAINAGE AREA	= N/A
BASE DISCHARGE (Q100)	= 93300 CFS
BASE HIGH WATER ELEVATION	= 24.40

OVERTOPPING FLOOD DATA

OVERTOPPING DISCHARGE	= 77000 CFS
FREQUENCY OF OVERTOPPING FLOOD	= 25 YR+
OVERTOPPING FLOOD ELEVATION	= 22.10

PROJECT NO. B-4028

BLADEN COUNTY

STATION: 46+85.50 -L-

SHEET 2 OF 4

STATE OF NORTH CAROLINA
DEPARTMENT OF TRANSPORTATION
RALEIGH

GENERAL DRAWING

BRIDGE ON NC 11 OVER
CAPE FEAR RIVER OVERFLOW
BETWEEN NC 87 AND SR 1539

REVISIONS						SHEET NO.
NO.	BY:	DATE:	NO.	BY:	DATE:	S-78
1			3			TOTAL SHEETS
2			4			147

DRAWN BY : A.S./A.V. ROYAL DATE : 8/11
CHECKED BY : M. L. BROWN DATE : 8/11

25-JUN-2012 10:42
R:\Structures\STR2\Gen_draw\B-4028_str2_SD_GD.dgn
asorsenglnh

STR. #2

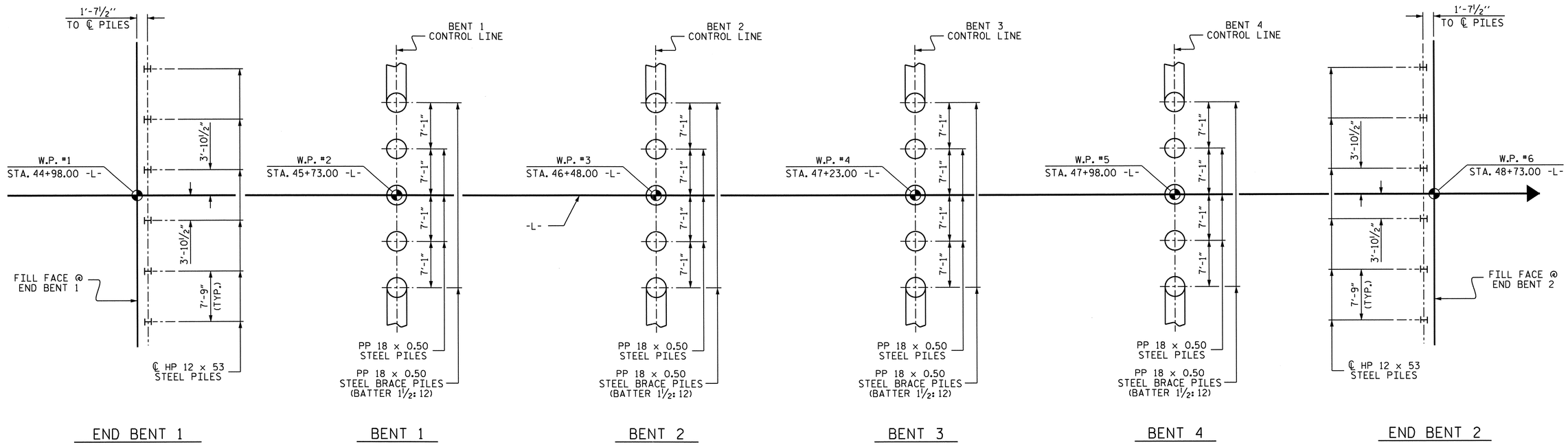

FOUNDATION LAYOUT

(DIMENSIONS LOCATING PILES ARE SHOWN TO ℄ PILES)

FOUNDATION NOTES:

FOR PILES, SEE SECTION 450 OF THE STANDARD SPECIFICATIONS.

PILES AT END BENT 1 AND END BENT 2 ARE DESIGNED FOR A FACTORED RESISTANCE OF 105 TONS PER PILE.

PILES AT BENTS 1, 2, 3, AND 4 ARE DESIGNED FOR A FACTORED RESISTANCE OF 215 TONS PER PILE.

DRIVE PILES AT END BENT 1 AND END BENT 2 TO A REQUIRED DRIVING RESISTANCE OF 175 TONS PER PILE.

STEEL H-PILE POINTS ARE REQUIRED FOR STEEL H-PILES AT END BENT 1 AND END BENT 2. FOR STEEL PILE POINTS, SEE SECTION 450 OF THE STANDARD SPECIFICATIONS.

DRIVE PILES AT BENT 1 THROUGH BENT 4 TO A REQUIRED DRIVING RESISTANCE OF 290 TONS PER PILE. THIS REQUIRED DRIVING RESISTANCE INCLUDES ADDITIONAL RESISTANCE FOR DOWNDRAG OR SCOUR.

INSTALL PILES AT BENTS 1 AND 2 TO A TIP ELEVATION NO HIGHER THAN -25 FT.

INSTALL PILES AT BENTS 3 AND 4 TO A TIP ELEVATION NO HIGHER THAN -30 FT.

TESTING THE FIRST PRODUCTION PILES WITH THE PILE DRIVING ANALYZER DURING DRIVING, RESTRIKING OR REDRIVING IS REQUIRED. FOR PDA TESTING, SEE SECTION 450 OF THE STANDARD SPECIFICATIONS.

IT HAS BEEN ESTIMATED THAT A HAMMER WITH AN EQUIVALENT RATED ENERGY IN THE RANGE OF 40 TO 110 FT-KIPS PER BLOW WILL BE REQUIRED TO DRIVE PILES AT BENT 1 THROUGH BENT 4. THIS ESTIMATED ENERGY RANGE DOES NOT RELEASE THE CONTRACTOR FROM PROVIDING DRIVING EQUIPMENT IN ACCORDANCE WITH SUBARTICLE 450-3(D)(2) OF THE STANDARD SPECIFICATIONS.

THE SCOUR CRITICAL ELEVATION FOR BENTS 1, 2, 3 AND 4 IS ELEVATION 2 FT. SCOUR CRITICAL ELEVATIONS ARE USED TO MONITOR POSSIBLE SCOUR PROBLEMS DURING THE LIFE OF THE STRUCTURE.

PIPE PILE PLATES ARE REQUIRED FOR STEEL PIPE PILES AT BENT 1 THROUGH BENT 4. USE PIPE PILE PLATES WITH A DIAMETER EQUAL TO THE PIPE PILE DIAMETER. FOR STEEL PIPE PILE PLATES, SEE SECTION 450 OF THE STANDARD SPECIFICATIONS.

OBSERVE A 3 MONTH WAITING PERIOD AFTER CONSTRUCTION OF THE EMBANKMENT TO FINISHED GRADE BEFORE BEGINNING END BENT CONSTRUCTION AT END BENT 1.

OBSERVE A 2 MONTH WAITING PERIOD AFTER CONSTRUCTION OF THE EMBANKMENT TO FINISHED GRADE BEFORE BEGINNING END BENT CONSTRUCTION AT END BENT 2.

FOR SETTLEMENT GAUGES, SEE EMBANKMENT MONITORING DETAIL AND SPECIAL PROVISION IN THE ROADWAY PLANS.

NORTH CAROLINA PROFESSIONAL SEAL 14855 ENGINEER DOUGLAS R. CALHOUN
6/25/12

PROJECT NO. B-4028
BLADEN COUNTY
STATION: 46+85.50 -L-

SHEET 3 OF 4

STATE OF NORTH CAROLINA
DEPARTMENT OF TRANSPORTATION
RALEIGH

GENERAL DRAWING
BRIDGE ON NC 11 OVER
CAPE FEAR RIVER OVERFLOW
BETWEEN NC 87 AND SR 1539

REVISIONS						SHEET NO.
NO.	BY:	DATE:	NO.	BY:	DATE:	S-79
1			3			TOTAL SHEETS
2			4			147

DRAWN BY : A.S./A.V. ROYAL DATE : 8/11
CHECKED BY : M.L. BROWN DATE : 8/11

25-JUN-2012 10:42
R:\Structures\STR2\Gen_draw\B-4028_str2_SD_GD.dgn
asorsenginh

STR. #2

BM #81: RR SPIKE IN BASE OF 16" CYPRESS TREE, 66.06' LT. OF STA. 52+23.60 -L-, EL. 11.50 NGVD 29

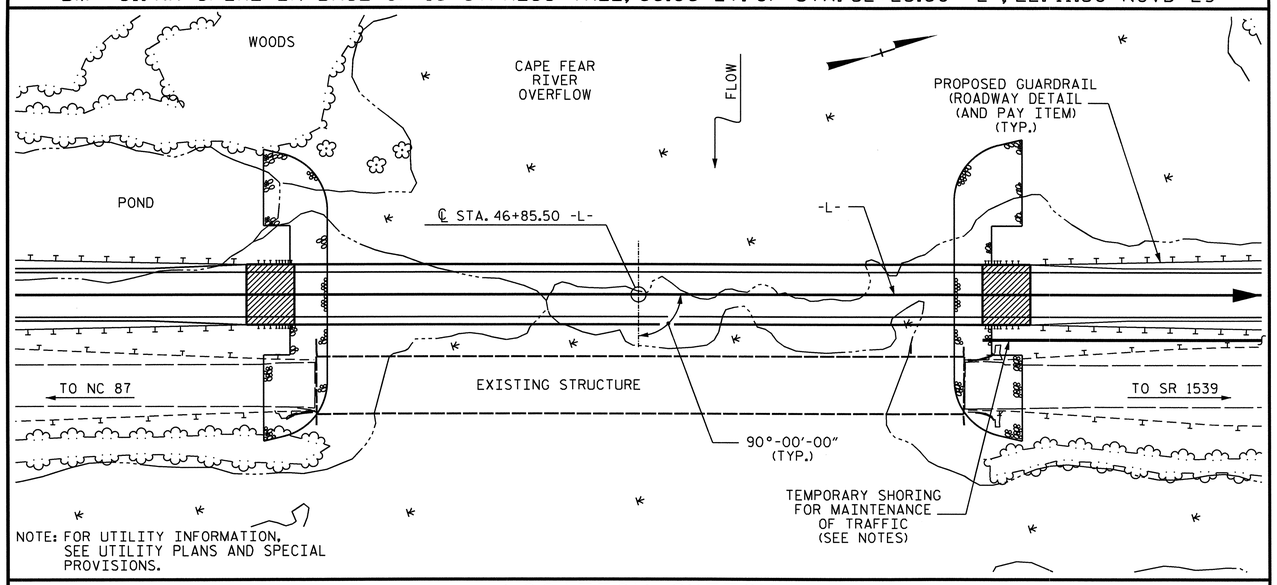

NOTE: FOR UTILITY INFORMATION, SEE UTILITY PLANS AND SPECIAL PROVISIONS.

LOCATION SKETCH

NOTES :

ASSUMED LIVE LOAD = HL-93 OR ALTERNATE LOADING.

FOR OTHER DESIGN DATA AND GENERAL NOTES, SEE SHEET SN.

FOR EROSION CONTROL MEASURES SEE EROSION CONTROL PLANS.

THIS BRIDGE HAS BEEN DESIGNED IN ACCORDANCE WITH THE AASHTO LRFD BRIDGE DESIGN SPECIFICATIONS.

REMOVABLE FORMS MAY BE USED IN LIEU OF METAL STAY-IN-PLACE FORMS IN ACCORDANCE WITH ARTICLE 420-3 OF THE STANDARD SPECIFICATIONS.

AFTER SERVING AS A TEMPORARY STRUCTURE THE EXISTING STRUCTURE CONSISTING OF 10 SPANS 1 @ 34'-0", 1 @ 33'-9", 1 @ 34'-2", 1 @ 33'-10", 1 @ 34'-0", 1 @ 34'-1", 1 @ 33'-8", 1 @ 34'-2", 1 @ 34'-6" AND 1 @ 33'-6" CONSISTING OF A REINFORCED CONCRETE DECK GIRDER SUPERSTRUCTURE ON A SUBSTRUCTURE CONSISTING OF REINFORCING CONCRETE CAPS ON REINFORCED CONCRETE PILES AND LOCATED DOWNSTREAM FROM PROPOSED STRUCTURE SHALL BE REMOVED. THE EXISTING BRIDGE IS PRESENTLY NOT POSTED BELOW THE LEGAL LOAD LIMIT. SHOULD THE STRUCTURAL INTEGRITY OF THE BRIDGE FURTHER DETERIORATE A LOAD LIMITATION MAY BE POSTED AND MAY BE REDUCED AS FOUND NECESSARY DURING THE LIFE OF THE PROJECT.

REMOVAL OF THE EXISTING BRIDGE SHALL BE PERFORMED SO AS NOT TO ALLOW DEBRIS TO FALL INTO THE WATER. THE CONTRACTOR SHALL REMOVE THE BRIDGE AND SUBMIT PLANS FOR DEMOLITION IN ACCORDANCE WITH ARTICLE 402-2 OF THE STANDARD SPECIFICATIONS.

THE SUBSTRUCTURE OF THE EXISTING BRIDGE INDICATED ON THE PLANS IS FROM THE BEST INFORMATION AVAILABLE. SINCE THIS INFORMATION IS SHOWN FOR THE CONVENIENCE OF THE CONTRACTOR, THE CONTRACTOR SHALL HAVE NO CLAIM WHATSOEVER AGAINST THE DEPARTMENT OF TRANSPORTATION FOR ANY DELAYS OR ADDITIONAL COST INCURRED BASED ON DIFFERENCES BETWEEN THE EXISTING BRIDGE SUBSTRUCTURE SHOWN ON THE PLANS AND THE ACTUAL CONDITIONS AT THE PROJECT SITE.

FOR CONSTRUCTION, MAINTENANCE AND REMOVAL OF TEMPORARY ACCESS, SEE SPECIAL PROVISIONS.

THE CONTRACTOR SHALL PROVIDE INDEPENDENT ASSURANCE SAMPLES OF REINFORCING STEEL AS FOLLOWS: FOR PROJECTS REQUIRING UP TO 400 TONS OF REINFORCING STEEL, ONE 30 INCH SAMPLE OF EACH SIZE BAR USED, AND FOR PROJECTS REQUIRING OVER 400 TONS OF REINFORCING STEEL, TWO 30 INCH SAMPLES OF EACH SIZE BAR USED. THE BARS FROM WHICH THE SAMPLES ARE TAKEN MUST THEN BE SPLICED WITH REPLACEMENT BARS OF THE SIZE AND LENGTH OF THE SAMPLE, PLUS A MINIMUM LAP SPLICE OF THIRTY BAR DIAMETERS. PAYMENT FOR THE SAMPLES OF REINFORCING STEEL SHALL BE CONSIDERED INCIDENTAL TO VARIOUS PAY ITEMS.

NEEDLE BEAMS WILL NOT BE ALLOWED UNLESS OTHERWISE CALLED FOR ON THE PLANS OR APPROVED BY THE ENGINEER.

FOR SUBMITTAL OF WORKING DRAWINGS, SEE SPECIAL PROVISIONS.

FOR FALSEWORK AND FORMWORK, SEE SPECIAL PROVISIONS.

FOR CRANE SAFETY, SEE SPECIAL PROVISIONS.

FOR GROUT FOR STRUCTURES, SEE SPECIAL PROVISIONS.

THIS STRUCTURE HAS BEEN DESIGNED IN ACCORDANCE WITH HEC 18, "EVALUATING SCOUR AT BRIDGES", MAY, 2001.

FOR LIMITS OF TEMPORARY SHORING FOR MAINTENANCE OF TRAFFIC, SEE TRAFFIC CONTROL PLANS. FOR PAY ITEM FOR TEMPORARY SHORING FOR MAINTENANCE OF TRAFFIC, SEE ROADWAY PLANS.

STEEL SHEET PILING REQUIRED FOR SHORING SHALL BE HOT ROLLED.

FOR INTERIOR BENTS 1, 2, 3 AND 4 ONLY PARTIAL GALVANIZING OF THE PILES IS REQUIRED. SEE INTERIOR BENT SHEETS FOR REQUIRED GALVANIZED LENGTHS. PAYMENT FOR PARTIALLY GALVANIZED PILES WILL BE MADE UNDER THE CONTRACT UNIT PRICE FOR GALVANIZED STEEL PILES.

THIS BRIDGE IS LOCATED IN SEISMIC ZONE 1.

TOTAL BILL OF MATERIAL

	CONSTRUCTION MAINTENANCE AND REMOVAL OF TEMPORARY ACCESS	REMOVAL OF EXISTING STRUCTURE	PDA TESTING	REINFORCED CONCRETE DECK SLAB	GROOVING BRIDGE FLOORS	CLASS A CONCRETE	BRIDGE APPROACH SLABS	REINFORCING STEEL	45" PRESTRESSED CONCRETE GIRDERS		HP 12 x 53 STEEL PILES		PP 18 x 0.50 GALVANIZED STEEL PILES		STEEL PILE POINTS	PIPE PILE PLATES	PILE REDRIVES	CONCRETE BARRIER RAIL	RIP RAP CLASS B	RIP RAP CLASS II (2'-0" THICK)	GEOTEXTILE FOR DRAINAGE	ELASTOMERIC BEARINGS
	LUMP SUM	LUMP SUM	EACH	SQ.FT.	SQ.FT.	CU.YDS.	LUMP SUM	LBS.	No.	LIN.FT.	No.	LIN.FT.	No.	LIN.FT.	EACH		EACH	LIN.FT.	TONS	TONS	SQ. YDS.	LUMP SUM
SUPERSTRUCTURE				13,219	12,219		LUMP SUM		20	1479.00								746.67				LUMP SUM
END BENT No. 1						18.4		3,176			6	450			6		3		105	420	465	
BENT No. 1						11.8		2,464					5	325		5						
BENT No. 2						11.8		2,464					5	325		5						
BENT No. 3						11.8		2,464					5	325		5						
BENT No. 4						11.8		2,464					5	325		5						
END BENT No. 2						18.4		3,176			6	450			6		3		125	485	540	
TOTAL	LUMP SUM	LUMP SUM	2	13,219	12,219	84.0	LUMP SUM	16,208	20	1479.00	12	900	20	1300	12	20	6	746.67	230	905	1005	LUMP SUM

PROJECT NO. B-4028

BLADEN COUNTY

STATION: 46+85.50 -L-

SHEET 4 OF 4

STATE OF NORTH CAROLINA
DEPARTMENT OF TRANSPORTATION
RALEIGH

GENERAL DRAWING
BRIDGE ON NC 11 OVER CAPE FEAR RIVER OVERFLOW BETWEEN NC 87 AND SR 1539

NORTH CAROLINA PROFESSIONAL SEAL 14855 ENGINEER DOUGLAS R. CALHOUN
6/25/12

REVISIONS						SHEET NO.
NO.	BY:	DATE:	NO.	BY:	DATE:	S-30
1			3			TOTAL SHEETS
2			4			147

DRAWN BY : A.S./A.V. ROYAL DATE : 8/11
CHECKED BY : M. L. BROWN DATE : 8/11

25-JUN-2012 10:42
R:\Structures\STR2\Gen_draw\B-4028_str2_SD_GD.dgn
asorsenginh

STR. #2

LOAD AND RESISTANCE FACTOR RATING (LRFD) SUMMARY FOR PRESTRESSED CONCRETE GIRDERS

LEVEL		VEHICLE	WEIGHT (W) (TONS)	CONTROLLING LOAD RATING (#)	MINIMUM RATING FACTORS (RF)	TONS = W X RF	STRENGTH I LIMIT STATE											SERVICE III LIMIT STATE						COMMENT NUMBER
								MOMENT					SHEAR						MOMENT					
							LIVELOAD FACTORS	DISTRIBUTION FACTORS (DF)	RATING FACTOR	SPAN	GIRDER LOCATION	DISTANCE FROM LEFT END OF SPAN (ft)	DISTRIBUTION FACTORS (DF)	RATING FACTOR	SPAN	GIRDER LOCATION	DISTANCE FROM LEFT END OF SPAN (ft)	LIVELOAD FACTORS	DISTRIBUTION FACTORS (DF)	RATING FACTOR	SPAN	GIRDER LOCATION	DISTANCE FROM LEFT END OF SPAN (ft)	
DESIGN LOAD RATING		HL-93(Inv)	N/A	1	1.005	--	1.75	0.821	1.51	B	EL	36.417	0.907	2.25	B	I	36.417	0.80	0.907	1.00	B	I	36.417	
		HL-93(Opr)	N/A	--	1.954	--	1.35	0.821	1.95	B	EL	36.417	0.907	2.91	B	I	36.417	N/A	--	--	--	--	--	
		HS-20(Inv)	36.000	2	1.315	47.354	1.75	0.821	1.97	B	EL	36.417	0.907	2.65	B	I	36.417	0.80	0.773	1.32	B	I	36.417	
		HS-20(Opr)	36.000	--	2.559	92.113	1.35	0.821	2.56	B	EL	36.417	0.907	3.43	B	I	36.417	N/A	--	--	--	--	--	
LEGAL LOAD RATING	SV	SNSH	13.500	--	2.97	40.094	1.4	0.821	5.57	B	EL	36.417	0.907	7.06	B	I	36.417	0.80	0.773	2.97	B	I	36.417	
		SNGARBS2	20.000	--	2.213	44.258	1.4	0.821	4.15	B	EL	36.417	0.907	5.26	B	I	36.417	0.80	0.773	2.21	B	I	36.417	
		SNAGRIS2	22.000	--	2.096	46.101	1.4	0.821	3.93	B	EL	36.417	0.907	4.98	B	I	36.417	0.80	0.773	2.10	B	I	36.417	
		SNCOTTS3	27.250	--	1.478	40.274	1.4	0.821	2.77	B	EL	36.417	0.907	3.55	B	I	36.417	0.80	0.773	1.48	B	I	36.417	
		SNAGGRS4	34.925	--	1.235	43.13	1.4	0.821	2.32	B	EL	36.417	0.907	3.12	B	I	36.417	0.80	0.773	1.23	B	I	36.417	
		SNS5A	35.550	--	1.208	42.932	1.4	0.821	2.27	B	EL	36.417	0.907	3.26	B	I	36.417	0.80	0.773	1.21	B	I	36.417	
		SNS6A	39.950	--	1.108	44.264	1.4	0.821	2.08	B	EL	36.417	0.907	3.05	B	I	36.417	0.80	0.773	1.11	B	I	36.417	
		SNS7B	42.000	--	1.055	44.315	1.4	0.821	1.98	B	EL	36.417	0.907	3.11	B	I	36.417	0.80	0.773	1.06	B	I	36.417	
	TTST	TNAGRIT3	33.000	--	1.351	44.586	1.4	0.821	2.53	B	EL	36.417	0.907	3.56	B	I	36.417	0.80	0.773	1.35	B	I	36.417	
		TNT4A	33.075	--	1.357	44.884	1.4	0.821	2.55	B	EL	36.417	0.907	3.39	B	I	36.417	0.80	0.773	1.36	B	I	36.417	
		TNT6A	41.600	--	1.109	46.154	1.4	0.821	2.08	B	EL	36.417	0.907	3.54	B	I	36.417	0.80	0.773	1.11	B	I	36.417	
		TNT7A	42.000	--	1.115	46.829	1.4	0.821	2.09	B	EL	36.417	0.907	3.42	B	I	36.417	0.80	0.773	1.11	B	I	36.417	
		TNT7B	42.000	--	1.153	48.442	1.4	0.821	2.16	B	EL	36.417	0.907	2.95	B	I	36.417	0.80	0.773	1.15	B	I	36.417	
		TNAGRIT4	43.000	--	1.097	47.183	1.4	0.821	2.06	B	EL	36.417	0.907	2.83	B	I	36.417	0.80	0.773	1.10	B	I	36.417	
		TNAGT5A	45.000	--	1.035	46.559	1.4	0.821	1.94	B	EL	36.417	0.907	2.94	B	I	36.417	0.80	0.773	1.03	B	I	36.417	
		TNAGT5B	45.000	3	1.022	45.997	1.4	0.821	1.92	B	EL	36.417	0.907	2.68	B	I	36.417	0.80	0.773	1.02	B	I	36.417	

LOAD FACTORS:

DESIGN LOAD RATING FACTORS	LIMIT STATE	γ_{DC}	γ_{DW}
	STRENGTH I	1.25	1.50
	SERVICE III	1.00	1.00

NOTES:

MINIMUM RATING FACTORS ARE BASED ON THE STRENGTH I AND SERVICE III LIMIT STATES.

ALLOWABLE STRESSES FOR SERVICE III LIMIT STATE ARE AS REQUIRED FOR DESIGN.

COMMENTS:

1. RATING FACTORS SHOWN FOR SPAN B ALSO APPLY TO SPANS C & D.
2.
3.
4.

(#) CONTROLLING LOAD RATING

(1) DESIGN LOAD RATING (HL-93)
(2) DESIGN LOAD RATING (HS-20)
(3) LEGAL LOAD RATING **
** SEE CHART FOR VEHICLE TYPE

GIRDER LOCATION

I - INTERIOR GIRDER
EL - EXTERIOR LEFT GIRDER
ER - EXTERIOR RIGHT GIRDER

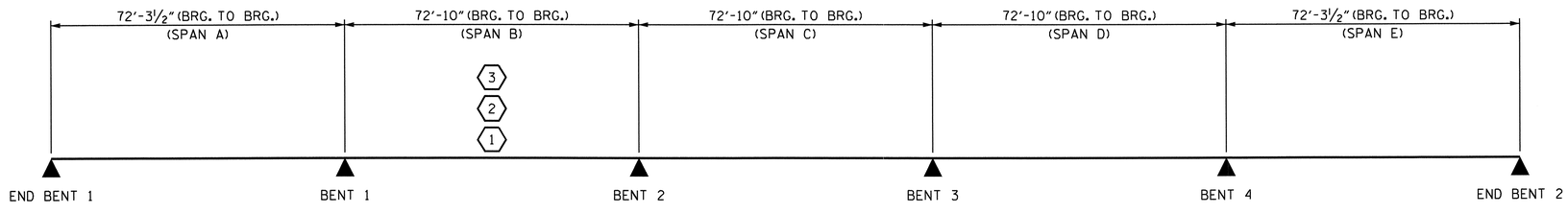

LRFR SUMMARY

PROJECT NO. B-4028
BLADEN COUNTY
STATION: 46+85.50 -L-

STATE OF NORTH CAROLINA
DEPARTMENT OF TRANSPORTATION
RALEIGH

STANDARD
LRFR SUMMARY FOR PRESTRESSED CONCRETE GIRDERS
(NON-INTERSTATE TRAFFIC)

NORTH CAROLINA PROFESSIONAL SEAL 14855 ENGINEER DOUGLAS R. CALHOUN
8/25/12

REVISIONS						SHEET NO.
NO.	BY:	DATE:	NO.	BY:	DATE:	5-31
1			3			TOTAL SHEETS
2			4			147

STD. NO. LRFR1 STR. #2

ASSEMBLED BY : K.P. SEDAI		DATE : 4-2010	
CHECKED BY : W. ARAFAT		DATE : 4-2010	
DRAWN BY : MAA 1/08	REV. 11/12/08R	MAA/GM	
CHECKED BY : GM/DI 2/08			

25-JUN-2012 10:43
R:\Structures\STR2\Super_Draw\B-4028_SD_LRFR.dgn
asorsenginh

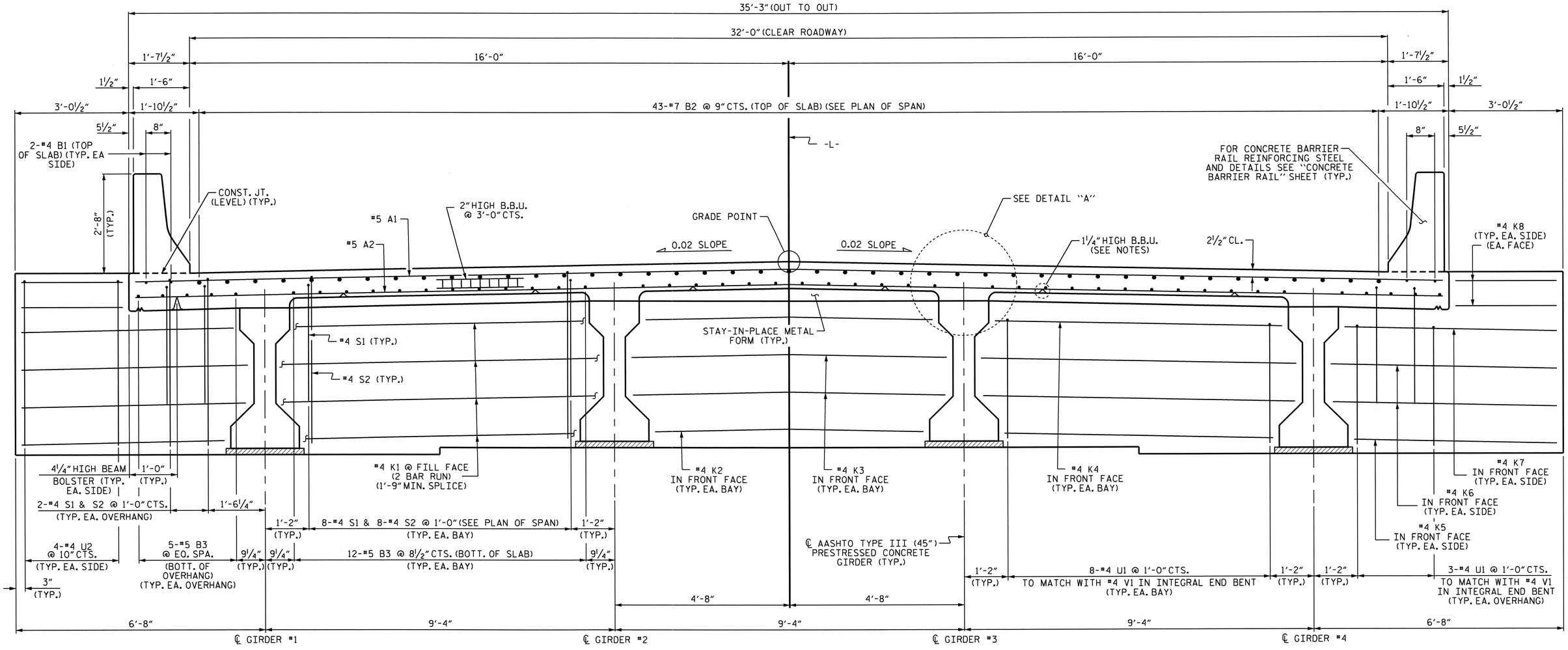

TYPICAL SECTION AT INTEGRAL END BENTS

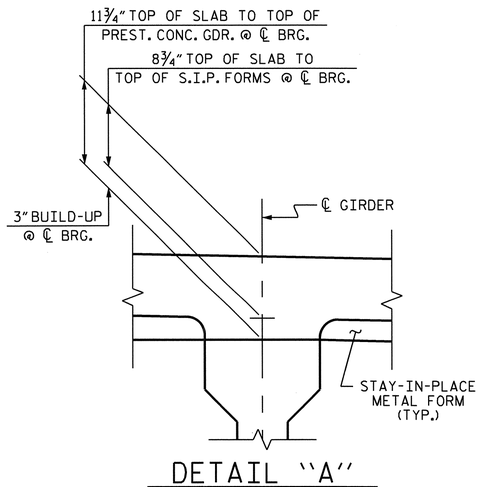

DETAIL "A"

NOTES:

PROVIDE 1¼" HIGH BEAM BOLSTERS UPPER AT 4'-0" CTS. ATOP THE METAL STAY-IN-PLACE FORMS TO SUPPORT THE BOTTOM MAT OF 'A' BARS. WHEN USING REMOVABLE FORMS, PROVIDE CONTINUOUS HIGH CHAIRS FOR METAL DECK (C.H.C.M.) @ 4'-0" CTS. WITH A HEIGHT TO SUPPORT THE BOTTOM MAT OF "A" BARS A CLEAR DISTANCE OF 2½" ABOVE THE TOP OF THE REMOVABLE FORM.

BARRIER RAIL IN A CONTINUOUS UNIT SHALL NOT BE CAST UNTIL ALL SLAB CONCRETE IN THAT UNIT HAS BEEN CAST AND HAS REACHED A MINIMUM COMPRESSIVE STRENGTH OF 3,000 PSI.

LONGITUDINAL STEEL MAY BE SHIFTED SLIGHTLY, AS NECESSARY, TO AVOID INTERFERENCE WITH DECK DRAINS AND STIRRUPS IN PRESTRESSED CONCRETE GIRDERS.

PREVIOUSLY CAST CONCRETE IN A CONTINUOUS UNIT SHALL HAVE ATTAINED A MINIMUM COMPRESSIVE STRENGTH OF 3,000 PSI BEFORE ADDITIONAL CONCRETE IS CAST IN THE UNIT.

NORTH CAROLINA PROFESSIONAL SEAL 14855 ENGINEER DOUGLAS R. CALHOUN
6/25/12

PROJECT NO. B-4028
BLADEN COUNTY
STATION: 46+85.50 -L-

SHEET 1 OF 3

STATE OF NORTH CAROLINA
DEPARTMENT OF TRANSPORTATION
RALEIGH

SUPERSTRUCTURE
TYPICAL SECTION

REVISIONS						SHEET NO.
NO.	BY:	DATE:	NO.	BY:	DATE:	S-32
1			3			TOTAL SHEETS
2			4			147

STR. #2

DRAWN BY : T. BANKOVICH DATE : 1-2010
CHECKED BY : M.L. BROWN DATE : 2-2010

17-MAY-2012 11:14
R:\Structures\STR2\Super_Draw\B-4028_SD_TS.dgn
asorsenglnh

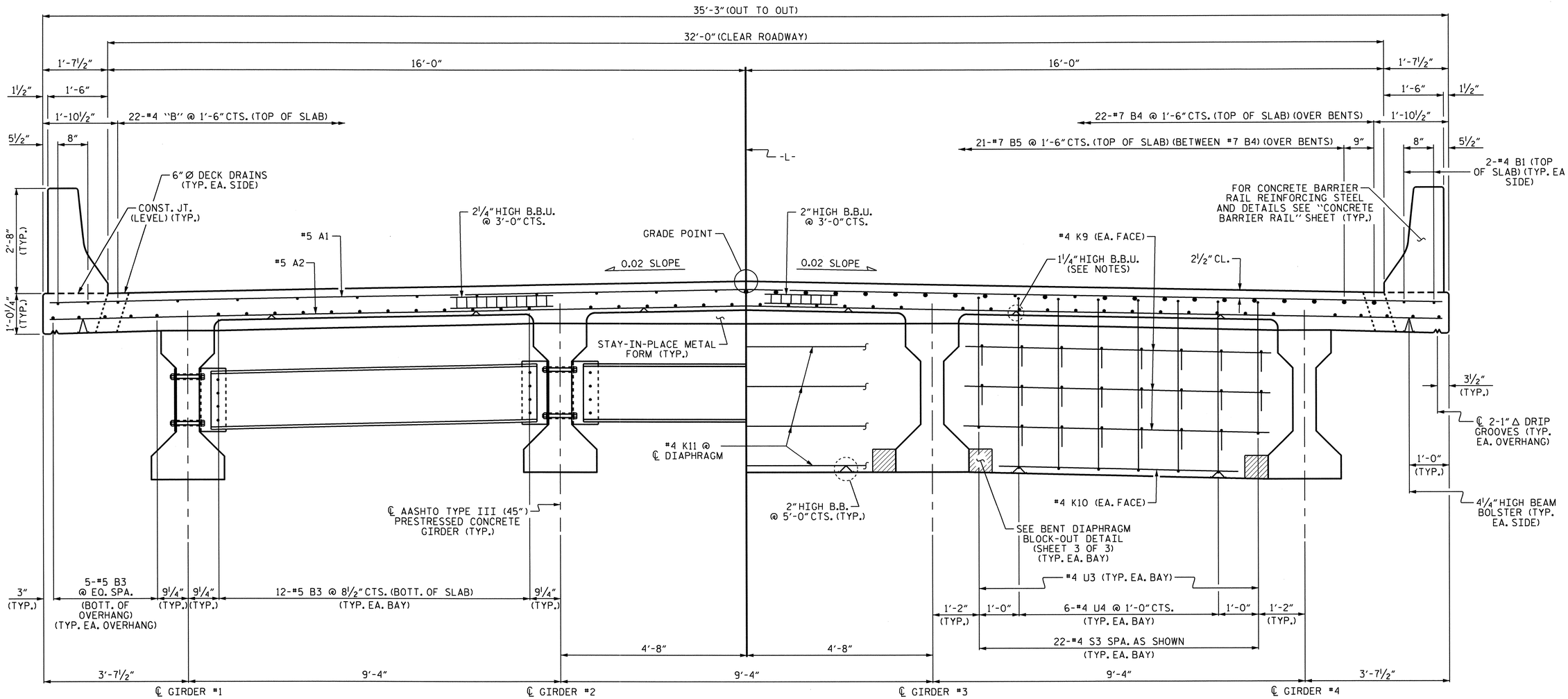

PARTIAL TYPICAL SECTION
(SHOWING INTERMEDIATE DIAPHRAGMS)

PARTIAL TYPICAL SECTION
(SHOWING BENT DIAPHRAGMS)

TYPICAL SECTION

FOR INTERMEDIATE STEEL DIAPHRAGM DETAILS SEE "INTERMEDIATE STEEL DIAPHRAGMS FOR TYPE III PRESTRESSED CONCRETE GIRDERS" SHEET

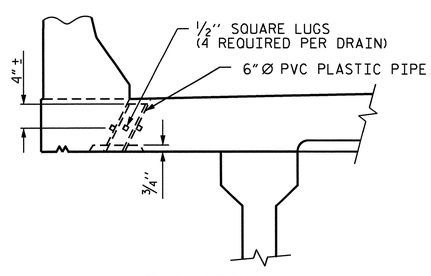

ELEVATION

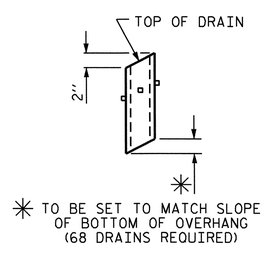

PIPE DETAIL

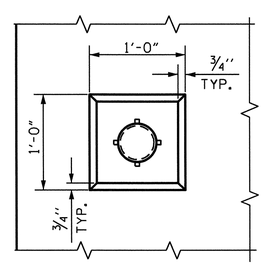

PLAN OF RECESS

DRAIN DETAILS

TOP OF FLOOR DRAINS TO BE SET ⅜" BELOW SURFACE OF SLAB.

4 - ½" SQUARE LUGS TO BE GLUED TO THE P.V.C. PLASTIC PIPE AT EQUAL SPACES AROUND THE PIPE DRAIN APPROXIMATELY 4" FROM THE TOP OF THE PIPE.

THE 6" Ø PVC PLASTIC PIPE AND FITTINGS SHALL BE SCHEDULE 40 AND CONFORM TO ASTM D1785.

PROJECT NO. B-4028
BLADEN COUNTY
STATION: 46+85.50 -L-

SHEET 2 OF 3

STATE OF NORTH CAROLINA
DEPARTMENT OF TRANSPORTATION
RALEIGH

SUPERSTRUCTURE
TYPICAL SECTION

NORTH CAROLINA PROFESSIONAL SEAL 14855 ENGINEER DOUGLAS R. CALHOUN
8/25/12

REVISIONS						SHEET NO.
NO.	BY:	DATE:	NO.	BY:	DATE:	S-33
1			3			TOTAL SHEETS
2			4			147

DRAWN BY : T. BANKOVICH DATE : 1-2010
CHECKED BY : M.L. BROWN DATE : 2-2010

25-JUN-2012 10:44
R:\Structures\STR2\Super_Draw\B-4028_SD_TS.dgn
asorsenglnh

STR. #2

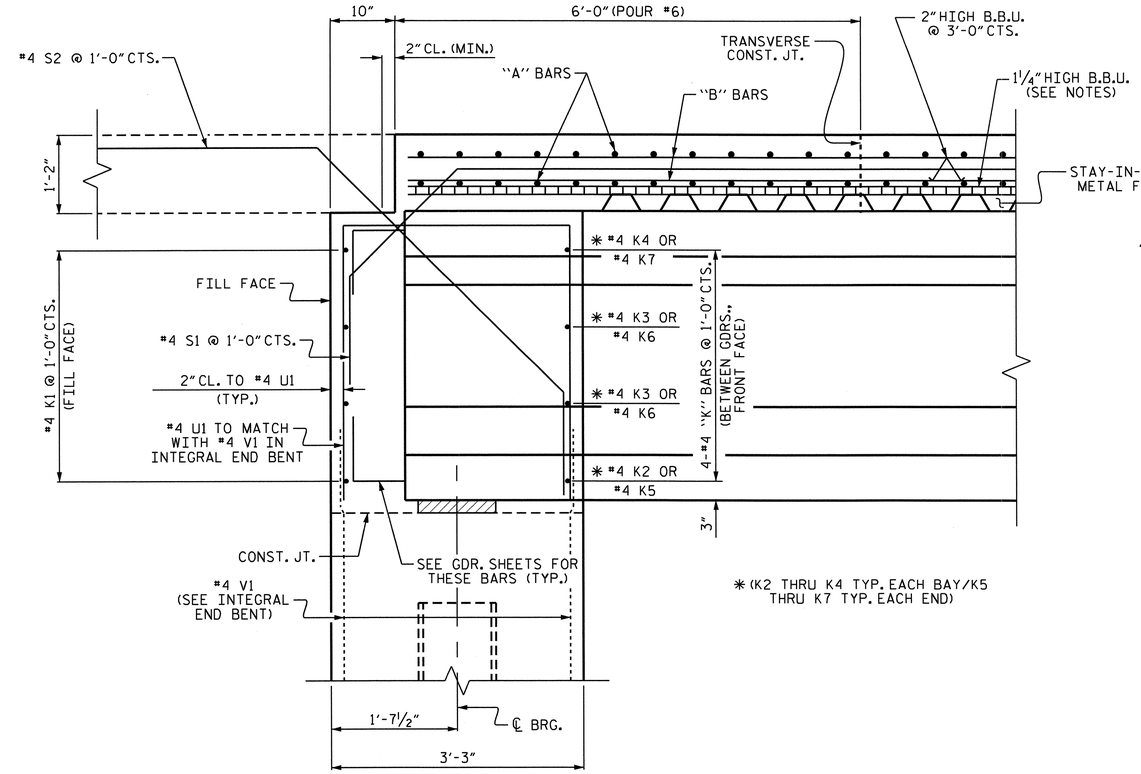

SECTION THRU INTEGRAL END BENT

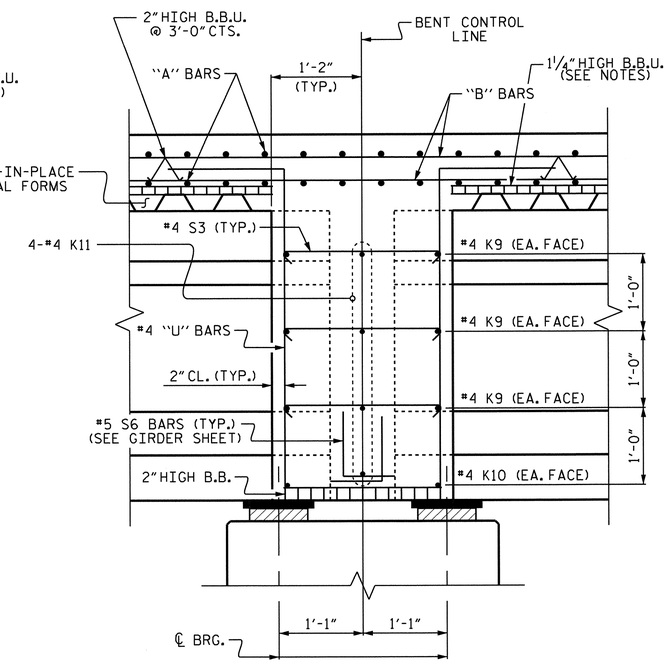

SECTION B-B

(SEE "PLAN OF SPANS" SHEETS)

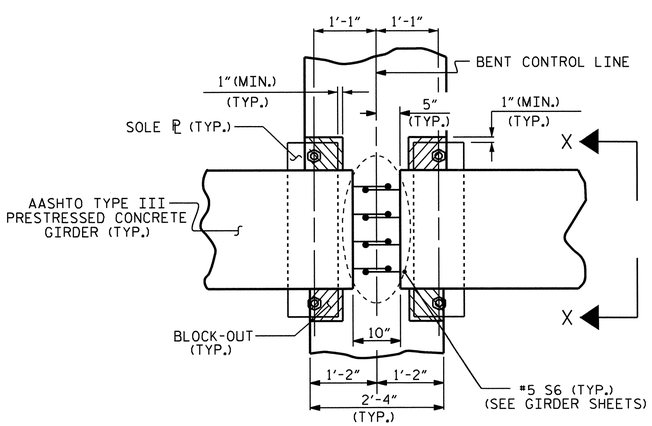

PLAN

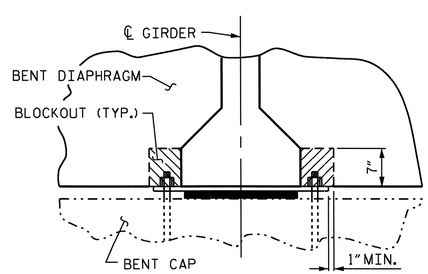

SECTION X-X

BENT DIAPHRAGM BLOCK-OUT DETAIL

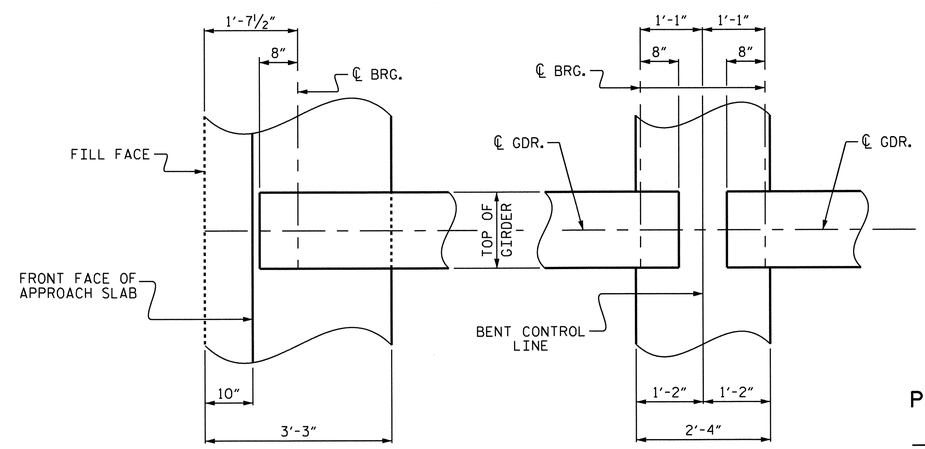

INTEGRAL END BENT

BENT DIAPHRAGM

PLAN OF DIAPHRAGMS

PROJECT NO. B-4028

BLADEN COUNTY

STATION: 46+85.50 -L-

SHEET 3 OF 3

STATE OF NORTH CAROLINA
DEPARTMENT OF TRANSPORTATION
RALEIGH

SUPERSTRUCTURE
TYPICAL SECTION DETAILS

NORTH CAROLINA PROFESSIONAL SEAL 14855 ENGINEER DOUGLAS R. CALHOUN
6/25/12

REVISIONS						SHEET NO.
NO.	BY:	DATE:	NO.	BY:	DATE:	S-84
1			3			TOTAL SHEETS
2			4			147

DRAWN BY : T. BANKOVICH DATE : 1-2010
CHECKED BY : M.L. BROWN DATE : 2-2010

25-JUN-2012 10:45
R:\Structures\STR2\Super_Draw\B-4028_SD_TS.dgn
asorsenginh

STR. #2

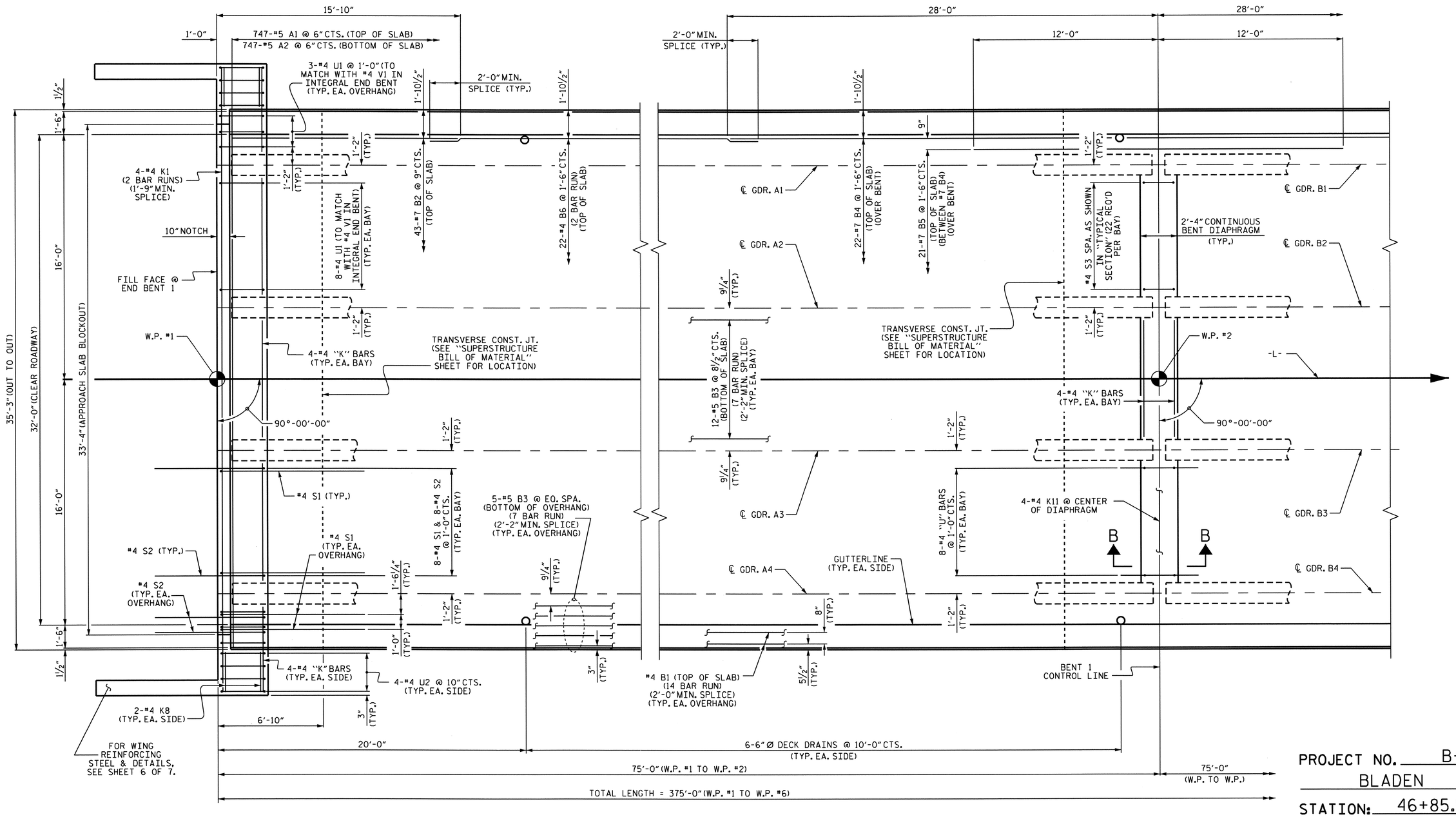

PROJECT NO. B-4028

BLADEN COUNTY

STATION: 46+85.50 -L-

SHEET 1 OF 7

PLAN OF SPAN A

NOTES:

FOR CONCRETE BARRIER RAIL DETAILS AND REINFORCING STEEL, SEE "CONCRETE BARRIER RAIL" SHEETS.

FOR SECTION B-B, SEE "TYPICAL SECTION" SHEET 3 OF 3.

NORTH CAROLINA PROFESSIONAL SEAL 14855 ENGINEER DOUGLAS R. CALHOON
6/25/12

STATE OF NORTH CAROLINA
DEPARTMENT OF TRANSPORTATION
RALEIGH

SUPERSTRUCTURE
PLAN OF SPAN A

REVISIONS						SHEET NO.
NO.	BY:	DATE:	NO.	BY:	DATE:	S-85
1			3			TOTAL SHEETS
2			4			147

STR. #2

DRAWN BY : T. BANKOVICH DATE : 2-2010
CHECKED BY : M.L. BROWN DATE : 3-2010

25-JUN-2012 10:46
R:\Structures\STR2\Super_Draw\B-4028_SD_S*.dgn
asorsenginh

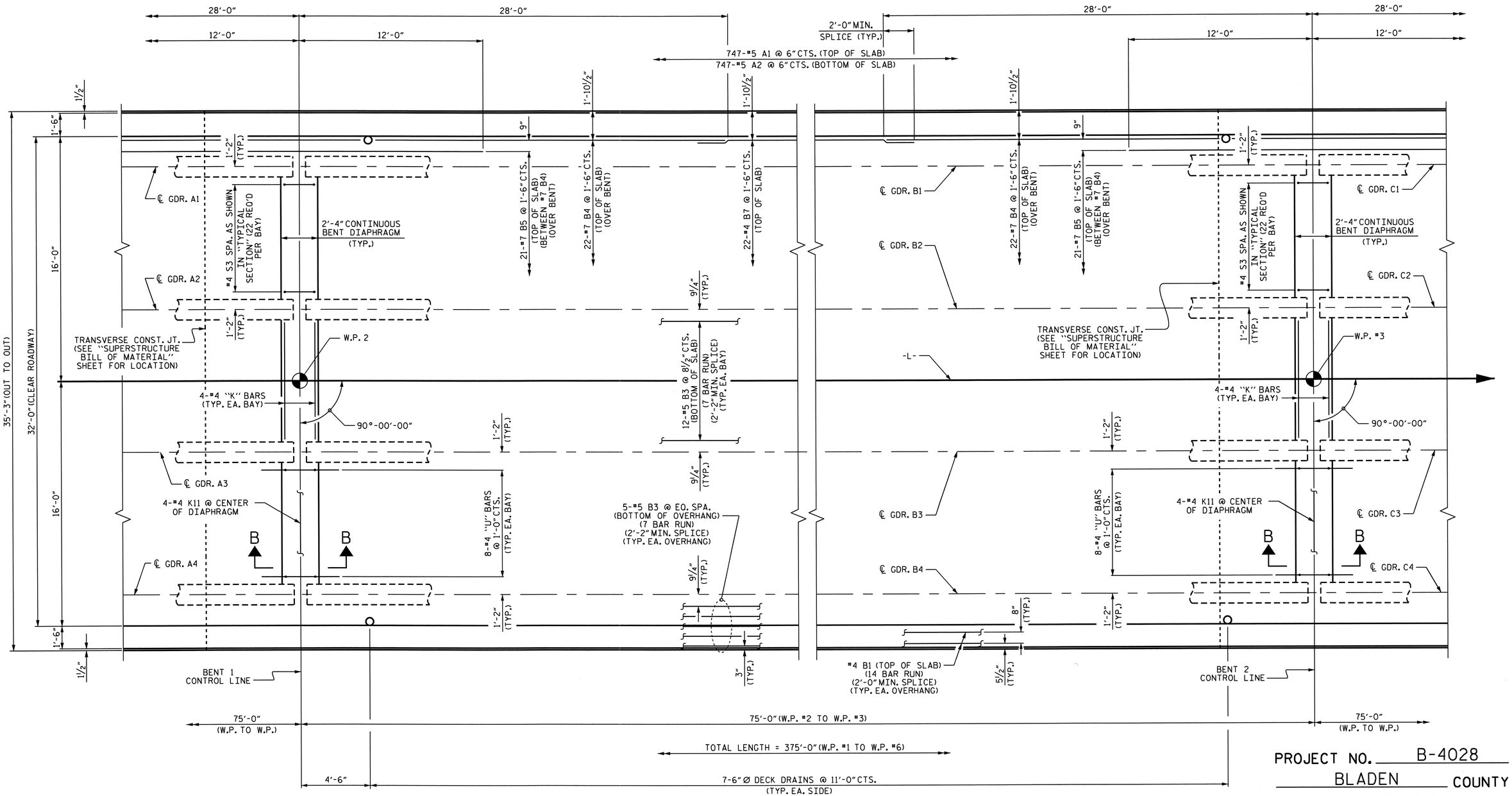

NOTES:

FOR CONCRETE BARRIER RAIL DETAILS AND REINFORCING STEEL, SEE "CONCRETE BARRIER RAIL" SHEETS.

FOR SECTION B-B, SEE "TYPICAL SECTION" SHEET 3 OF 3.

PLAN OF SPAN B

PROJECT NO. B-4028

BLADEN COUNTY

STATION: 46+85.50 -L-

SHEET 2 OF 7

STATE OF NORTH CAROLINA
DEPARTMENT OF TRANSPORTATION
RALEIGH

SUPERSTRUCTURE
PLAN OF SPAN B

NORTH CAROLINA PROFESSIONAL SEAL 14855 ENGINEER DOUGLAS R. CALHOUN
6/25/12

REVISIONS						SHEET NO.
NO.	BY:	DATE:	NO.	BY:	DATE:	S-86
1			3			TOTAL SHEETS
2			4			147

STR. #2

DRAWN BY : T. BANKOVICH DATE : 2-2010
CHECKED BY : M.L. BROWN DATE : 3-2010

25-JUN-2012 10:46
R:\Structures\STR2\Super_Draw\B-4028_SD_S*.dgn
asorsenginh

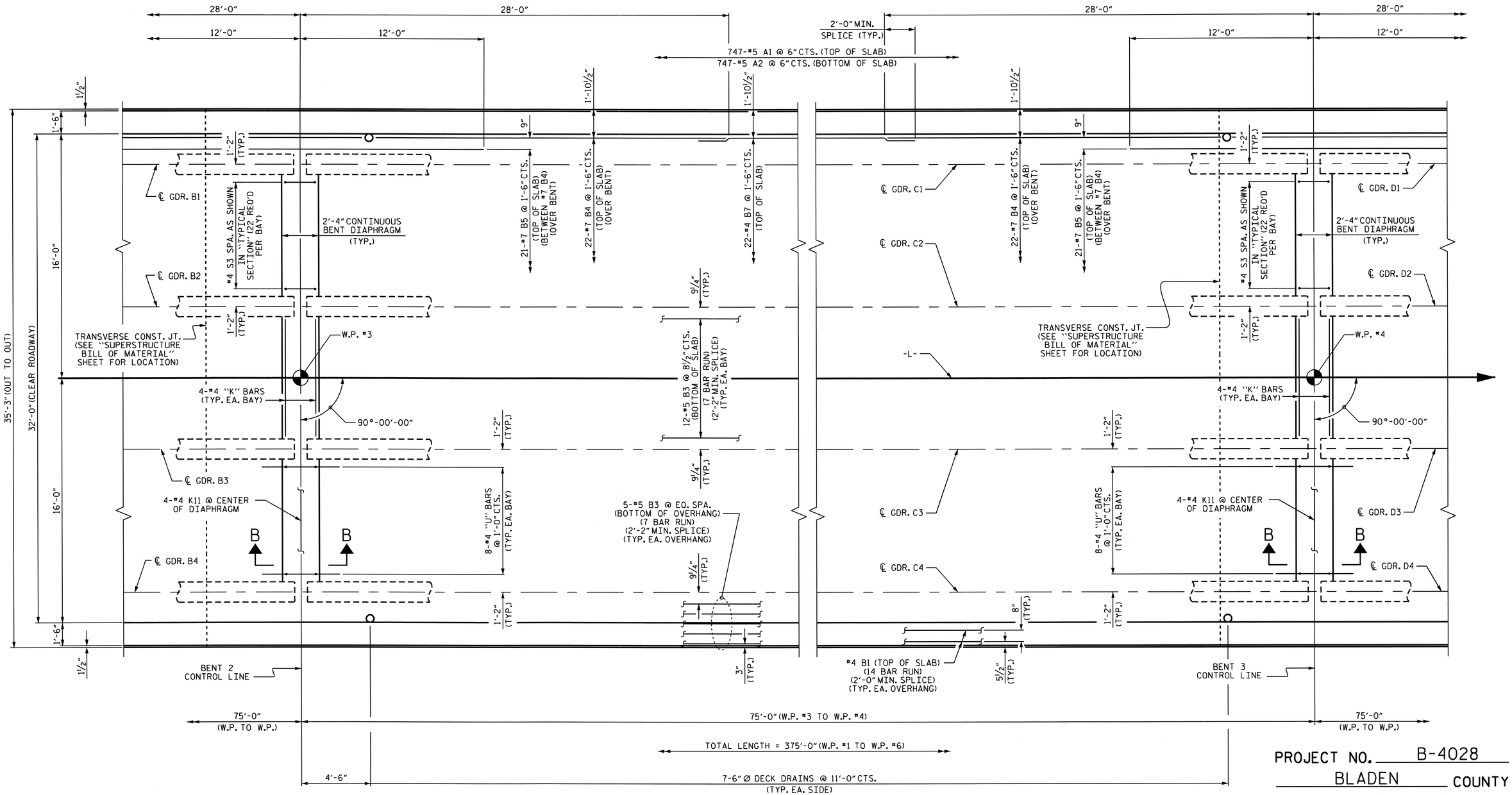

NOTES:

FOR CONCRETE BARRIER RAIL DETAILS AND REINFORCING STEEL, SEE "CONCRETE BARRIER RAIL" SHEETS.

FOR SECTION B-B, SEE "TYPICAL SECTION" SHEET 3 OF 3.

PLAN OF SPAN C

PROJECT NO. B-4028

BLADEN COUNTY

STATION: 46+85.50 -L-

SHEET 3 OF 7

STATE OF NORTH CAROLINA
DEPARTMENT OF TRANSPORTATION
RALEIGH

SUPERSTRUCTURE
PLAN OF SPAN C

NORTH CAROLINA PROFESSIONAL SEAL 14855 ENGINEER DOUGLAS R. CALHOUN
8/23/12

REVISIONS						SHEET NO.
NO.	BY:	DATE:	NO.	BY:	DATE:	S-87
1			3			TOTAL SHEETS
2			4			147

STR. #2

DRAWN BY : T. BANKOVICH DATE : 2-2010
CHECKED BY : M.L. BROWN DATE : 3-2010

25-JUN-2012 10:46
R:\Structures\STR2\Super_Draw\B-4028_SD_S*.dgn
asorsenginh

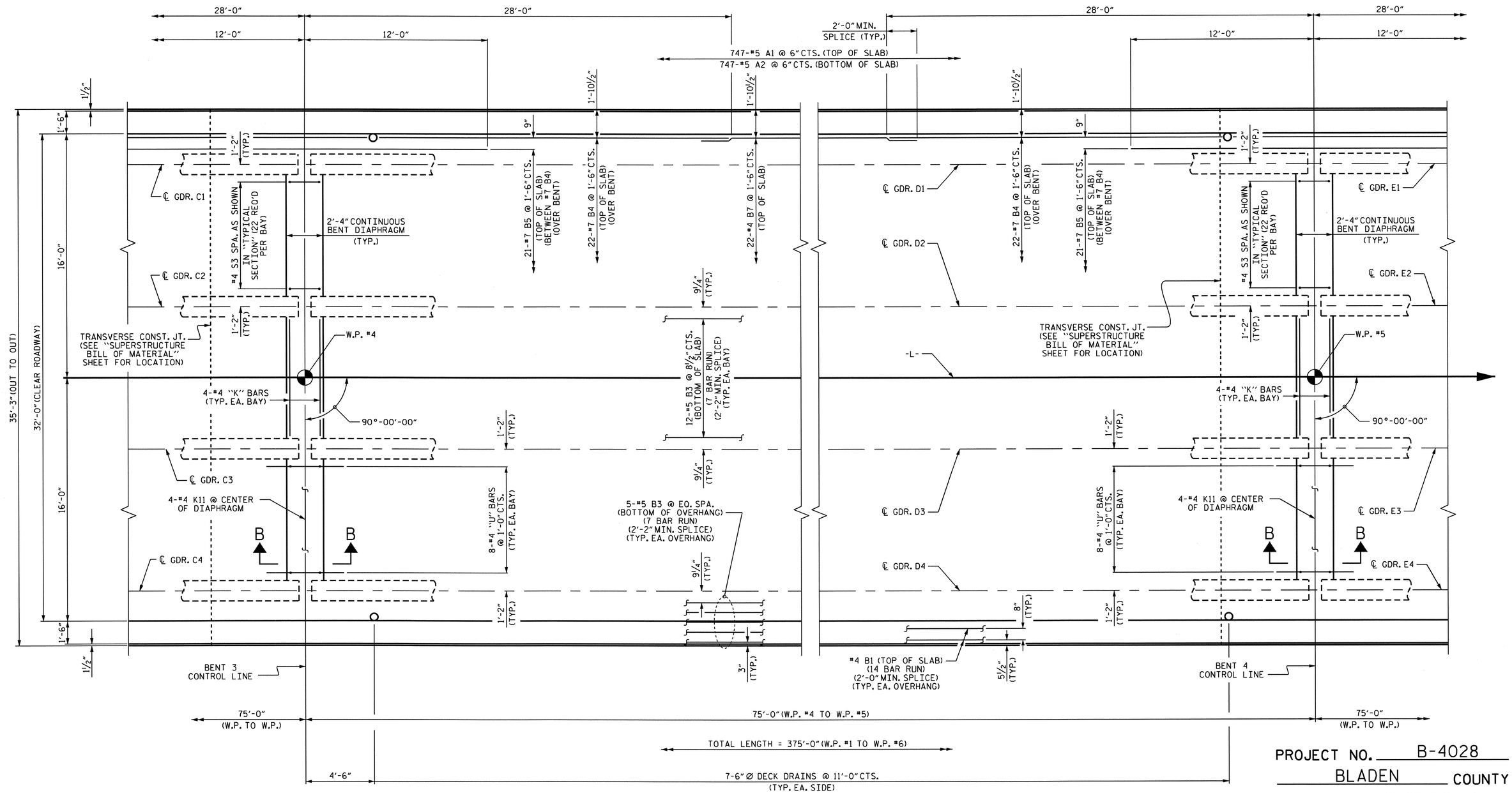

NOTES:

FOR CONCRETE BARRIER RAIL DETAILS AND REINFORCING STEEL, SEE "CONCRETE BARRIER RAIL" SHEETS.

FOR SECTION B-B, SEE "TYPICAL SECTION" SHEET 3 OF 3.

PLAN OF SPAN D

PROJECT NO. B-4028

BLADEN COUNTY

STATION: 46+85.50 -L-

SHEET 4 OF 7

STATE OF NORTH CAROLINA
DEPARTMENT OF TRANSPORTATION
RALEIGH

SUPERSTRUCTURE
PLAN OF SPAN D

NORTH CAROLINA PROFESSIONAL SEAL 14855 ENGINEER DOUGLAS R. CALHOUN
6/25/12

REVISIONS						SHEET NO.
NO.	BY:	DATE:	NO.	BY:	DATE:	S-28
1			3			TOTAL SHEETS
2			4			147

DRAWN BY : T. BANKOVICH DATE : 2-2010
CHECKED BY : M.L. BROWN DATE : 3-2010

25-JUN-2012 10:47
R:\Structures\STR2\Super_Draw\B-4028_SD_S*.dgn
asorsenginh

STR. #2

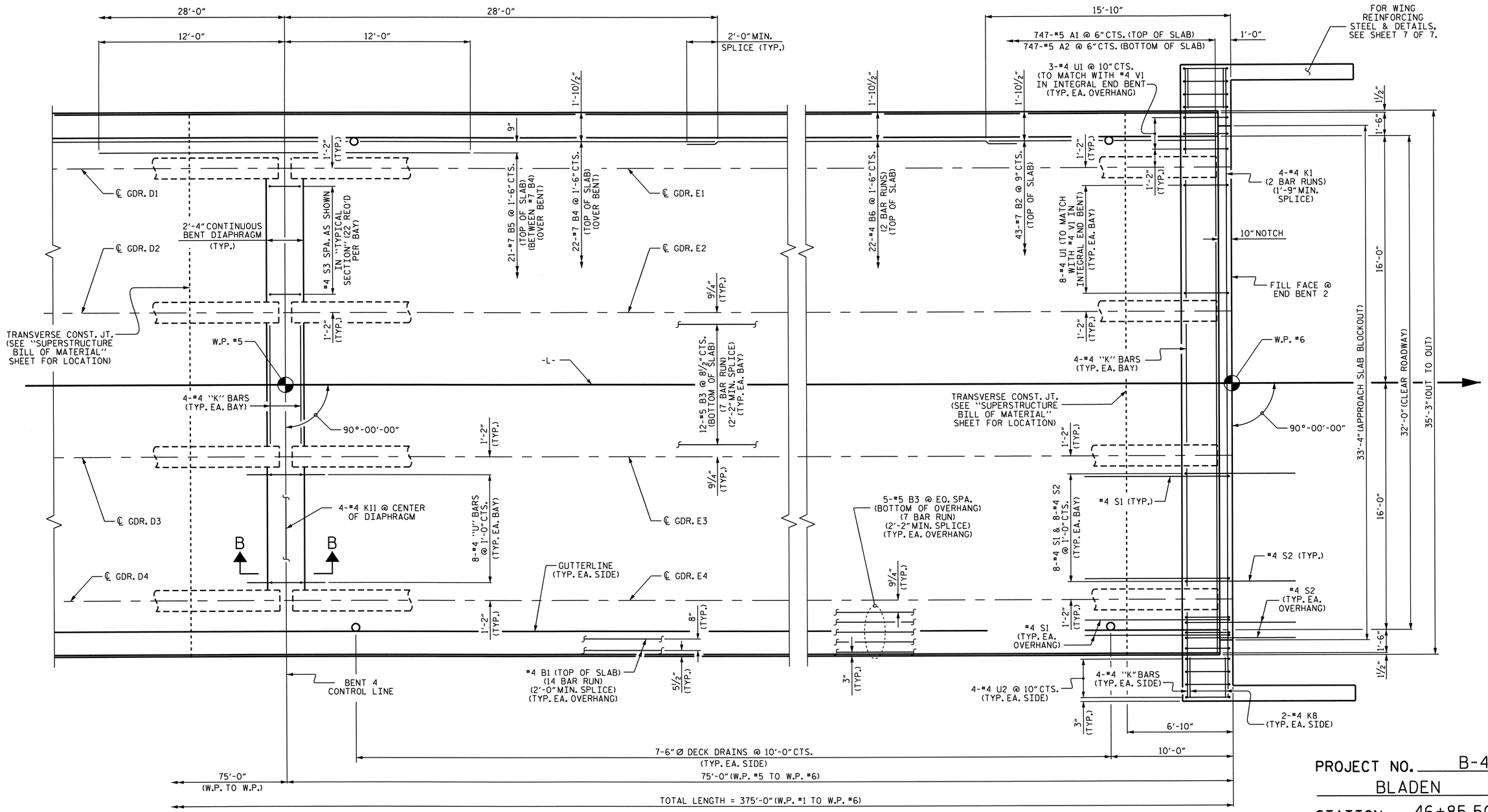

PLAN OF SPAN E

NOTES:

FOR CONCRETE BARRIER RAIL DETAILS AND REINFORCING STEEL, SEE "CONCRETE BARRIER RAIL" SHEETS.

FOR SECTION B-B, SEE "TYPICAL SECTION" SHEET 3 OF 3.

PROJECT NO. B-4028

BLADEN COUNTY

STATION: 46+85.50 -L-

SHEET 5 OF 7

STATE OF NORTH CAROLINA
DEPARTMENT OF TRANSPORTATION
RALEIGH

SUPERSTRUCTURE
PLAN OF SPAN E

NORTH CAROLINA PROFESSIONAL SEAL 14855 ENGINEER DOUGLAS R. CALHOUN
6/25/12

REVISIONS						SHEET NO.
NO.	BY:	DATE:	NO.	BY:	DATE:	5-39
1			3			TOTAL SHEETS
2			4			147

DRAWN BY : T. BANKOVICH DATE : 2-2010
CHECKED BY : M.L. BROWN DATE : 3-2010

25-JUN-2012 10:47
R:\Structures\STR2\Super_Draw\B-4028_SD_S*.dgn
asorsenginh

STR. #2

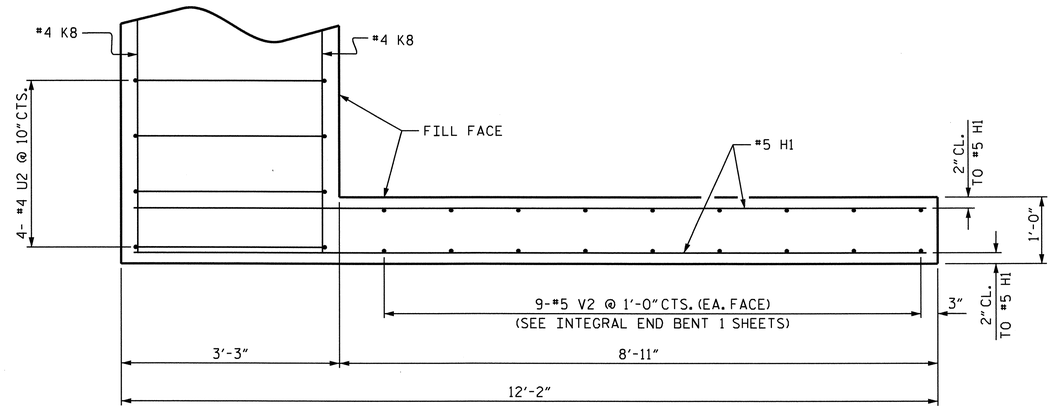

PLAN OF WING

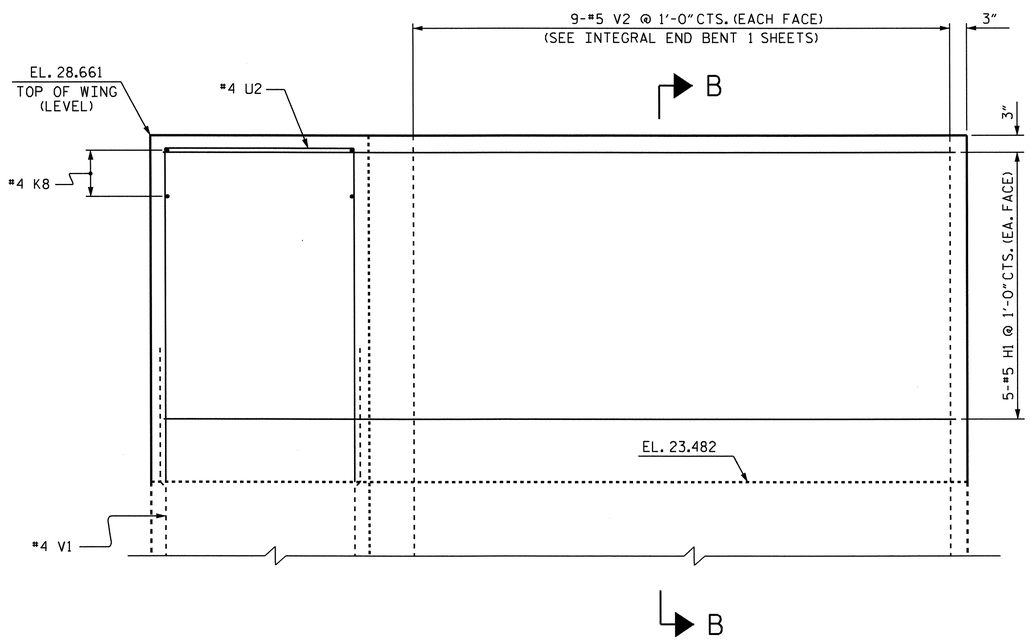

ELEVATION OF WING

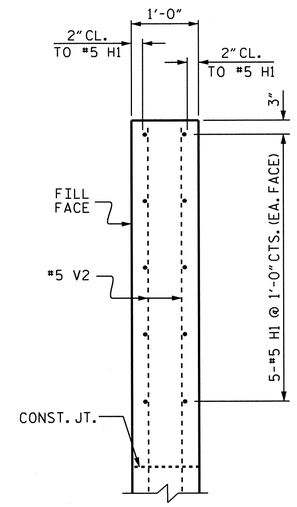

SECTION B-B

UPPER WINGS AT INTEGRAL END BENT 1

(FOR LOWER WING REINFORCING STEEL AND DETAILS, SEE INTEGRAL END BENT 1 SHEETS)

PROJECT NO. B-4028

BLADEN COUNTY

STATION: 46+85.50 -L-

SHEET 6 OF 7

STATE OF NORTH CAROLINA
DEPARTMENT OF TRANSPORTATION
RALEIGH

SUPERSTRUCTURE
PLAN OF SPAN DETAILS

NORTH CAROLINA PROFESSIONAL SEAL 14855 ENGINEER DOUGLAS R. CALHOUN
6/25/12

REVISIONS						SHEET NO.
NO.	BY:	DATE:	NO.	BY:	DATE:	S-90
1			3			TOTAL SHEETS
2			4			147

DRAWN BY : A. SORSENGINH DATE : 4/2012
CHECKED BY : D.R. CALHOUN DATE : 5/2012

17-MAY-2012 11:11
R:\Structures\STR2\Super_Draw\B-4028_SD_S*.dgn
asorsenginh

STR. #2

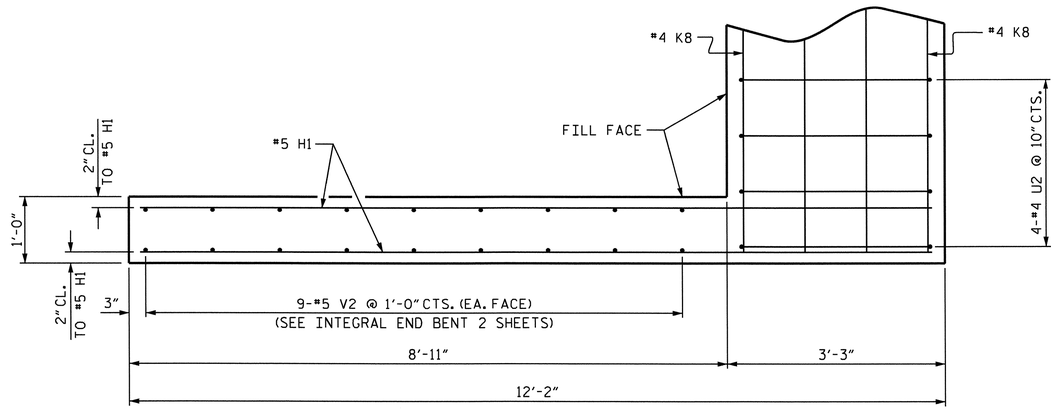

PLAN OF WING

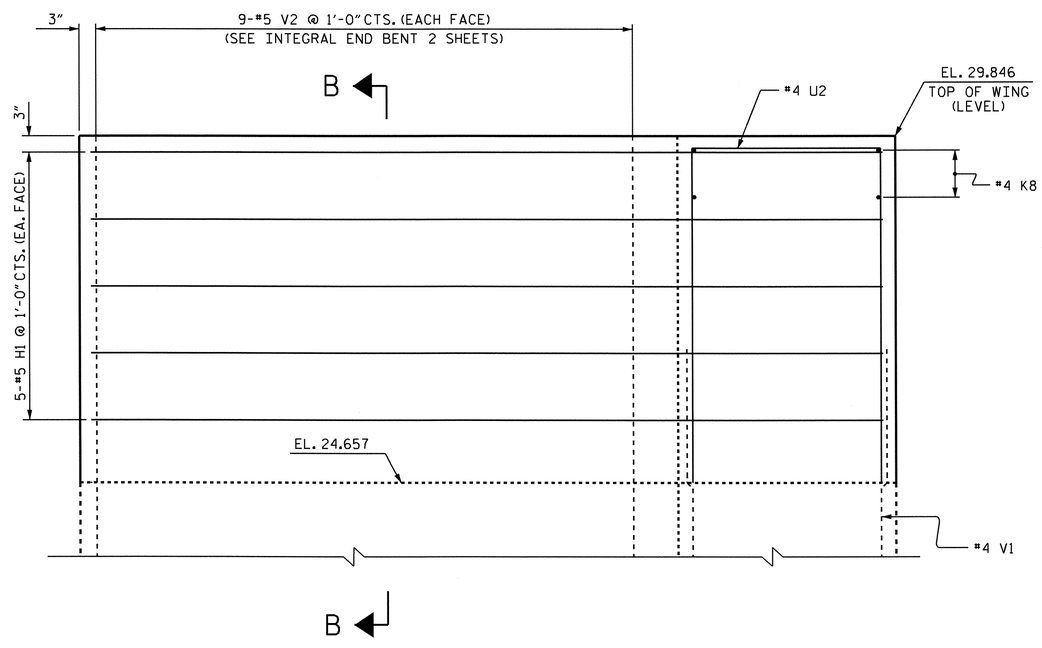

ELEVATION OF WING

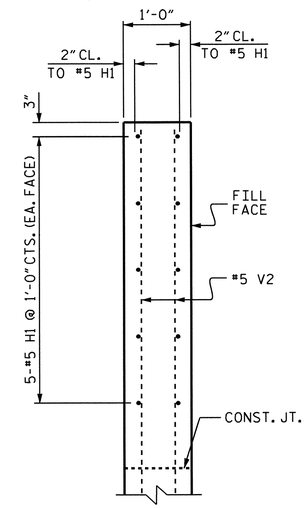

SECTION B-B

UPPER WINGS AT INTEGRAL END BENT 2

(FOR LOWER WING REINFORCING STEEL AND DETAILS, SEE INTEGRAL END BENT 2 SHEETS)

PROJECT NO. B-4028

BLADEN COUNTY

STATION: 46+85.50 -L-

SHEET 7 OF 7

STATE OF NORTH CAROLINA
DEPARTMENT OF TRANSPORTATION
RALEIGH

SUPERSTRUCTURE

PLAN OF SPAN DETAILS

NORTH CAROLINA PROFESSIONAL SEAL 14855 ENGINEER DOUGLAS R. CALHOUN

6/25/12

REVISIONS						SHEET NO.
NO.	BY:	DATE:	NO.	BY:	DATE:	S-91
1			3			TOTAL SHEETS
2			4			147

DRAWN BY : A. SORSENGINH DATE : 4/2012
CHECKED BY : D.R. CALHOUN DATE : 5/2012

25-JUN-2012 10:48
R:\Structures\STR2\Super_Draw\B-4028_SD_S*.dgn
asorsenginh

STR. #2

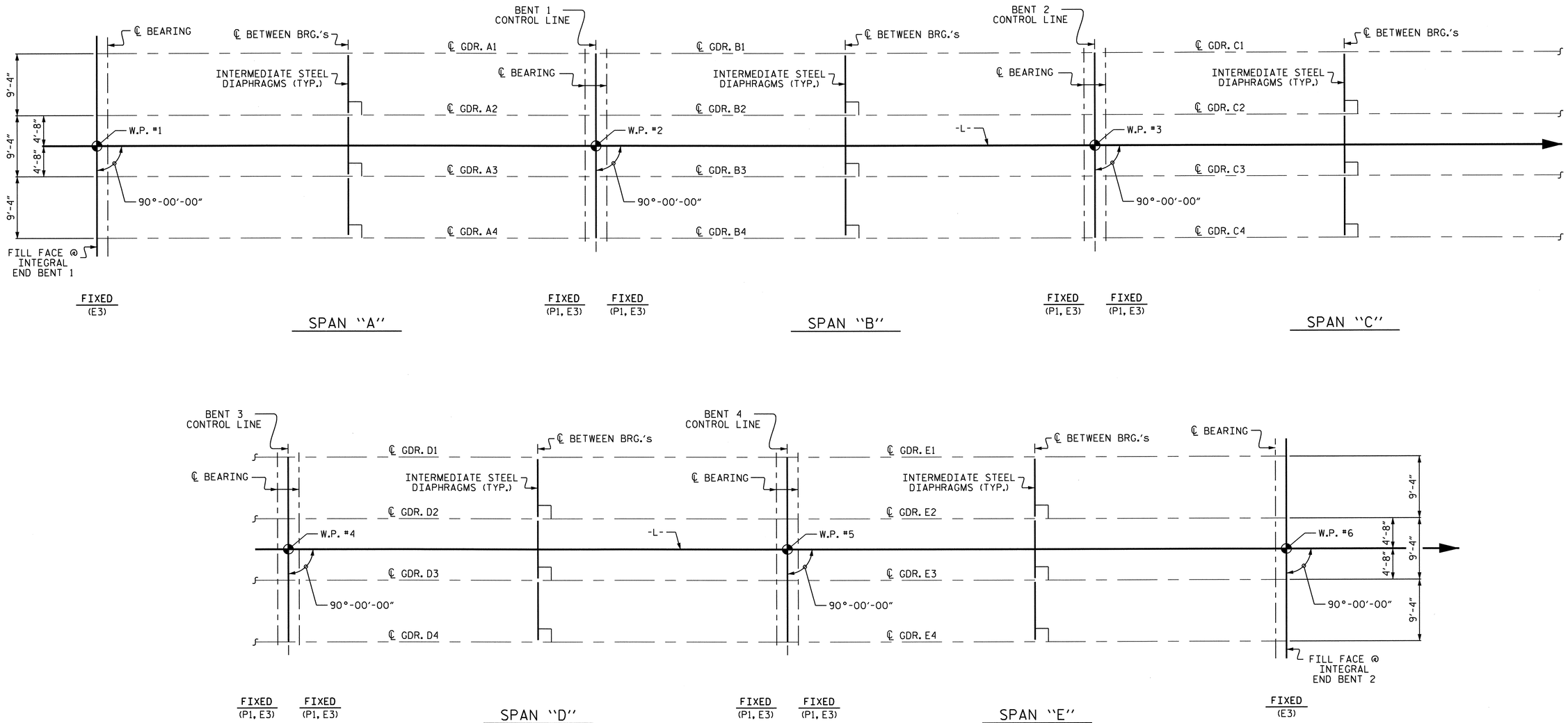

FRAMING PLAN

PROJECT NO. B-4028

BLADEN COUNTY

STATION: 46+85.50 -L-

STATE OF NORTH CAROLINA
DEPARTMENT OF TRANSPORTATION
RALEIGH

SUPERSTRUCTURE
FRAMING PLAN

NORTH CAROLINA PROFESSIONAL SEAL 14855 ENGINEER DOUGLAS R. CALHOUN
6/25/12

REVISIONS						SHEET NO.
NO.	BY:	DATE:	NO.	BY:	DATE:	S-92
1			3			TOTAL SHEETS
2			4			147

DRAWN BY : T. BANKOVICH DATE : 2-2010
CHECKED BY : M.L. BROWN DATE : 3-2010

17-MAY-2012 11:08
R:\Structures\STR2\Super_Draw\B-4028_SD_FP.dgn
asorsenginh

STR. #2

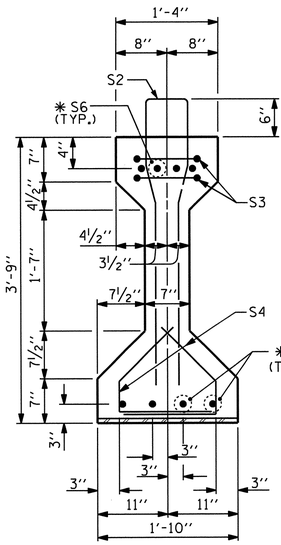

SECTION A-A

AT END BENT

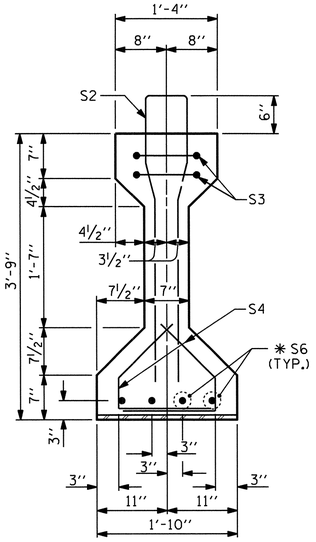

SECTION B-B

AT BENT

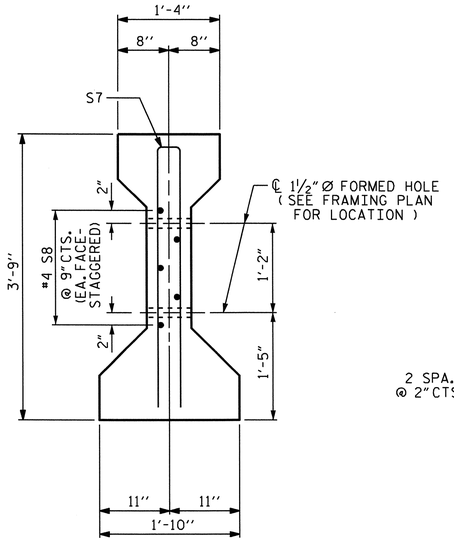

SECTION C-C

(S1 BARS NOT SHOWN)

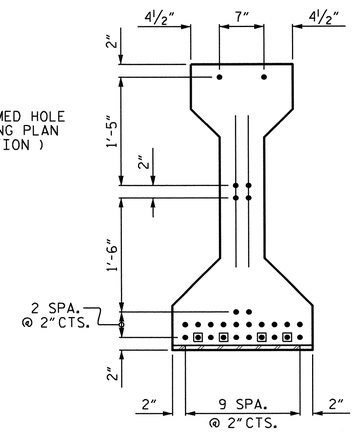

AT END OF GIRDER

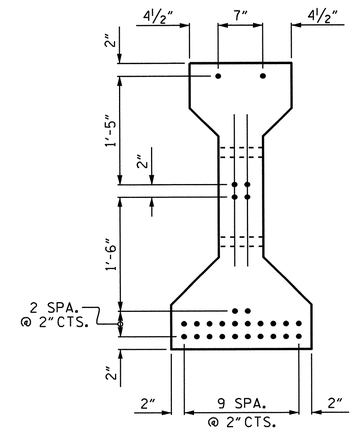

AT ℄ OF GIRDER

0.6" Ø LOW RELAXATION STRAND LAYOUT

(28 STRANDS REQUIRED)

● FULLY BONDED STRANDS

▣ STRANDS DEBONDED FOR 4'-0" FROM END OF GIRDER

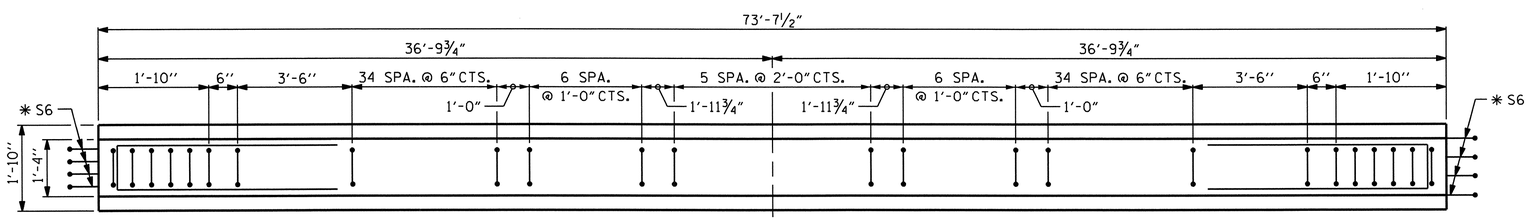

PLAN OF GIRDER

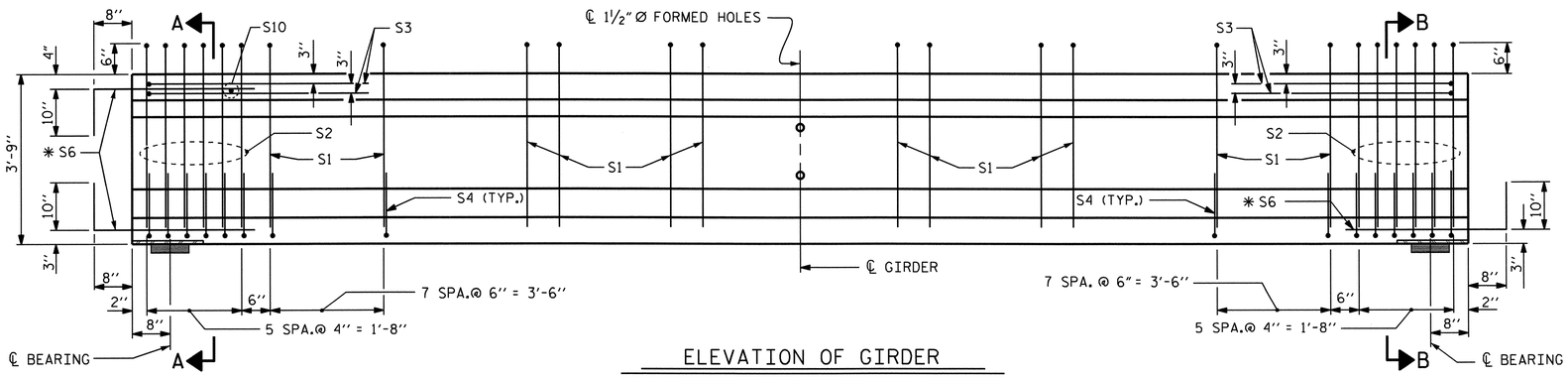

INTEGRAL END BENT

ELEVATION OF GIRDER

(SEE PARTIAL ELEVATION FOR ADDITIONAL "S" BARS)

FIX

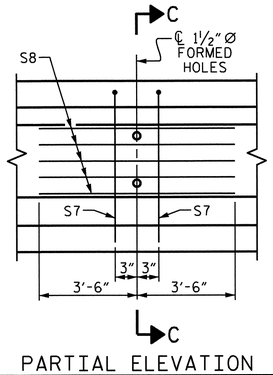

PARTIAL ELEVATION

SHOWING INTERMEDIATE DIAPHRAGM REINFORCING STEEL FOR ALL GIRDERS

0.6" Ø L.R. GRADE 270 STRANDS

AREA (SQUARE INCHES)	ULTIMATE STRENGTH (LBS. PER. STRAND)	APPLIED PRESTRESS (LBS. PER. STRAND)
0.217	58,600	43,950

REINFORCING STEEL FOR ONE GIRDER

BAR	NUMBER	SIZE	TYPE	LENGTH	WEIGHT
S1	104	#4	1	8'-6"	591
S2	12	#6	1	8'-6"	153
S3	4	#4	3	8'-8"	23
S4	56	#4	2	2'-9"	103
✱ S6	12	#5	STR	3'-8"	46
S7	2	#5	3	7'-2"	15
S8	5	#4	STR	7'-0"	23
S10	1	#3	STR	1'-0"	1

✱ NOTE: S6 BARS SHALL BE BENT BEFORE SHIPMENT. HEAT BENDING SHALL NOT BE ALLOWED.

BAR TYPES

ALL BAR DIMENSIONS ARE OUT TO OUT

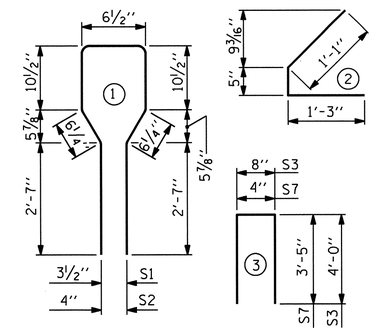

QUANTITIES FOR ONE GIRDER

REINFORCING STEEL	9500 PSI CONCRETE	0.6" Ø L.R. STRANDS
LB.	C.Y.	No.
955	10.6	28

GIRDERS REQUIRED

NUMBER	LENGTH	TOTAL LENGTH
8	73'-7½"	589.00

PROJECT NO. B-4028

BLADEN COUNTY

STATION: 46+85.50 -L-

SHEET 1 OF 4

STATE OF NORTH CAROLINA
DEPARTMENT OF TRANSPORTATION
RALEIGH

STANDARD

AASHTO TYPE III PRESTRESSED CONCRETE GIRDER CONTINUOUS FOR LIVE LOAD SPANS "A" & "E"

NORTH CAROLINA PROFESSIONAL SEAL 14855 ENGINEER DOUGLAS R. CALHOUN

Douglas R. Calhoun 6/25/12

REVISIONS								SHEET NO.
NO.	BY:	DATE:	NO.	BY:	DATE:			S-93
1			3					TOTAL SHEETS
2			4					147

ASSEMBLED BY : T. BANKOVICH	DATE : 3-2010
CHECKED BY : M.L. BROWN	DATE : 4-2010
DRAWN BY : ELR 8/91	REV. 10/17/00R RWW/LES
CHECKED BY : GRP 8/91	REV. 5/1/06R TLA/GM
	REV. 10/1/11 MAA/GM

25-JUN-2012 10:49
R:\Structures\STR2\Super_Draw\B-4028_SD_G*.dgn
asorsenginh

STD. NO. PCG5

STR. #2

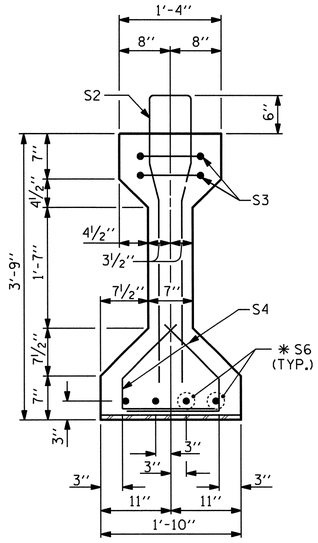

SECTION B-B

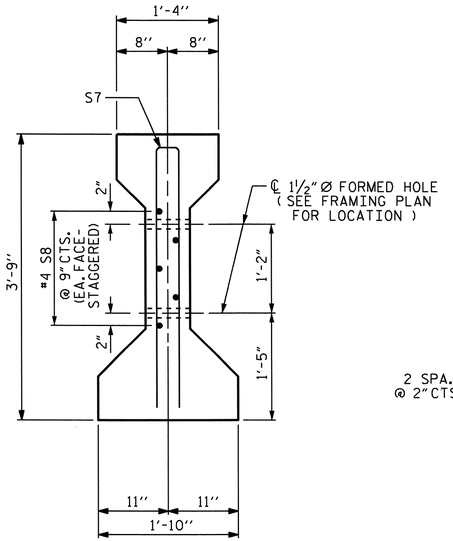

SECTION C-C

(S1 BARS NOT SHOWN)

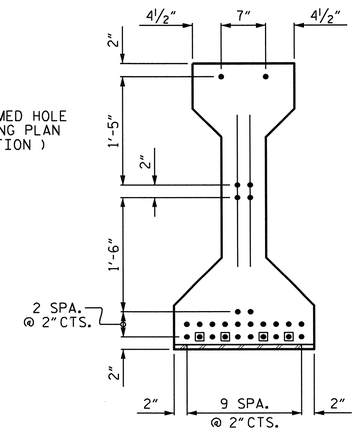

AT END OF GIRDER

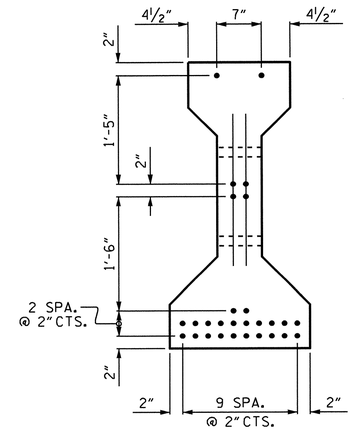

AT ℄ OF GIRDER

0.6" Ø LOW RELAXATION STRAND LAYOUT

(28 STRANDS REQUIRED)

● FULLY BONDED STRANDS

◘ STANDS DEBONDED FOR 4'-0" FROM END OF GIRDER

0.6" Ø L.R. GRADE 270 STRANDS		
AREA (SQUARE INCHES)	ULTIMATE STRENGTH (LBS. PER. STRAND)	APPLIED PRESTRESS (LBS. PER. STRAND)
0.217	58,600	43,950

REINFORCING STEEL FOR ONE GIRDER

BAR	NUMBER	SIZE	TYPE	LENGTH	WEIGHT
S1	106	#4	1	8'-6"	602
S2	12	#6	1	8'-6"	153
S3	4	#4	3	8'-8"	23
S4	56	#4	2	2'-9"	103
✱ S6	8	#5	STR	3'-8"	31
S7	2	#5	3	7'-2"	15
S8	5	#4	STR	7'-0"	23

✱ NOTE: S6 BARS SHALL BE BENT BEFORE SHIPMENT. HEAT BENDING SHALL NOT BE ALLOWED.

BAR TYPES

ALL BAR DIMENSIONS ARE OUT TO OUT

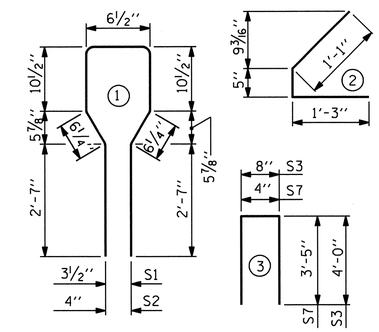

QUANTITIES FOR ONE GIRDER

REINFORCING STEEL	9500 PSI CONCRETE	0.6" Ø L.R. STRANDS
LB.	C.Y.	No.
950	10.7	28

GIRDERS REQUIRED

NUMBER	LENGTH	TOTAL LENGTH
12	74'-2"	890.00

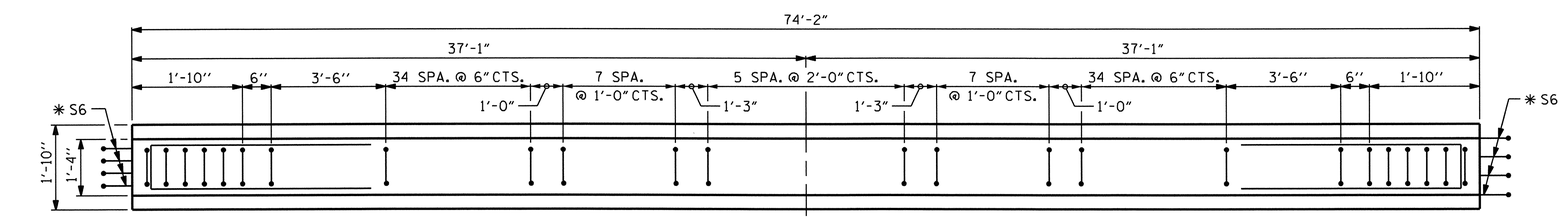

PLAN OF GIRDER

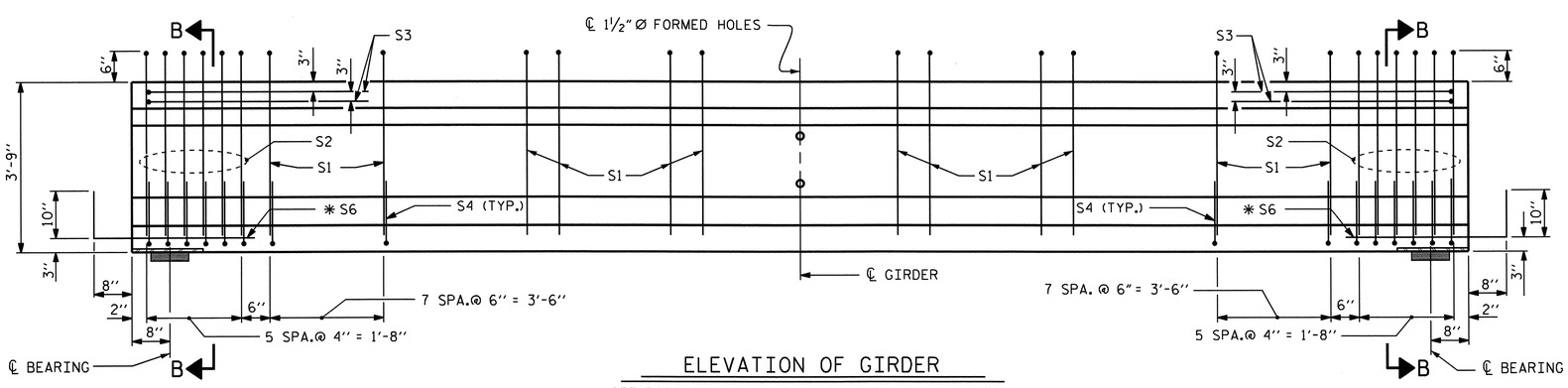

ELEVATION OF GIRDER

(SEE PARTIAL ELEVATION FOR ADDITIONAL "S" BARS)

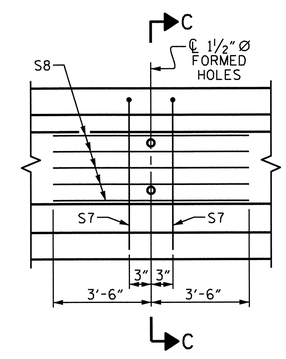

PARTIAL ELEVATION

SHOWING INTERMEDIATE DIAPHRAGM REINFORCING STEEL FOR ALL GIRDERS

PROJECT NO. B-4028

BLADEN COUNTY

STATION: 46+85.50 -L-

SHEET 2 OF 4

STATE OF NORTH CAROLINA
DEPARTMENT OF TRANSPORTATION
RALEIGH

STANDARD

AASHTO TYPE III
PRESTRESSED CONCRETE GIRDER
CONTINUOUS FOR LIVE LOAD
SPANS "B", "C", & "D"

NORTH CAROLINA PROFESSIONAL SEAL 14855 ENGINEER DOUGLAS R. CALHOUN
8/25/12

REVISIONS								SHEET NO.
NO.	BY:	DATE:	NO.	BY:	DATE:			S-94
1			3					TOTAL SHEETS
2			4					147

STD. NO. PCG5

STR. #2

ASSEMBLED BY : T. BANKOVICH	DATE : 3-2010
CHECKED BY : M.L. BROWN	DATE : 4-2010
DRAWN BY : ELR 8/91	REV. 10/17/00R RWW/LES
CHECKED BY : GRP 8/91	REV. 5/1/06R TLA/GM
	REV. 10/1/11 MAA/GM

25-JUN-2012 10:49
R:\Structures\STR2\Super_Draw\B-4028_SD_G*.dgn
asorsenginh

DEAD LOAD DEFLECTION TABLE FOR GIRDERS OF SPANS A & E

0.6" Ø LOW RELAXATION	GIRDERS #1 & #4											GIRDERS #2 & #3										
TENTH POINTS	0	.1	.2	.3	.4	.5	.6	.7	.8	.9	0	0	.1	.2	.3	.4	.5	.6	.7	.8	.9	0
CAMBER (GIRDER ALONE IN PLACE) ↑	0	0.066	0.126	0.172	0.201	0.212	0.201	0.172	0.126	0.066	0	0	0.066	0.126	0.172	0.201	0.212	0.201	0.172	0.126	0.066	0
* DEFLECTION DUE TO SUPERIMPOSED D.L. ↓	0	0.028	0.054	0.073	0.086	0.090	0.086	0.073	0.054	0.028	0	0	0.031	0.058	0.080	0.094	0.098	0.094	0.080	0.058	0.031	0
FINAL CAMBER ↑	0	7/16"	7/8"	1 3/16"	1 3/8"	1 7/16"	1 3/8"	1 3/16"	7/8"	7/16"	0	0	7/16"	13/16"	1 1/8"	1 5/16"	1 3/8"	1 5/16"	1 1/8"	13/16"	7/16"	0

* INCLUDES FUTURE WEARING SURFACE
ALL VALUES ARE SHOWN IN FEET (DECIMAL FORM), EXCEPT "FINAL CAMBER", WHICH IS GIVEN IN INCHES (FRACTION FORM).

DEAD LOAD DEFLECTION TABLE FOR GIRDERS OF SPANS B, C & D

0.6" Ø LOW RELAXATION	GIRDERS #1 & #4											GIRDERS #2 & #3										
TENTH POINTS	0	.1	.2	.3	.4	.5	.6	.7	.8	.9	0	0	.1	.2	.3	.4	.5	.6	.7	.8	.9	0
CAMBER (GIRDER ALONE IN PLACE) ↑	0	0.067	0.127	0.174	0.203	0.213	0.203	0.174	0.127	0.067	0	0	0.067	0.127	0.174	0.203	0.213	0.203	0.174	0.127	0.067	0
* DEFLECTION DUE TO SUPERIMPOSED D.L. ↓	0	0.029	0.055	0.076	0.089	0.093	0.089	0.076	0.055	0.029	0	0	0.032	0.060	0.082	0.096	0.101	0.096	0.082	0.060	0.032	0
FINAL CAMBER ↑	0	7/16"	7/8"	1 3/16"	1 3/8"	1 7/16"	1 3/8"	1 3/16"	7/8"	7/16"	0	0	7/16"	13/16"	1 1/8"	1 5/16"	1 3/8"	1 5/16"	1 1/8"	13/16"	7/16"	0

* INCLUDES FUTURE WEARING SURFACE
ALL VALUES ARE SHOWN IN FEET (DECIMAL FORM), EXCEPT "FINAL CAMBER", WHICH IS GIVEN IN INCHES (FRACTION FORM).

NOTES

ALL PRESTRESSING STRANDS SHALL BE 7-WIRE LOW-RELAXATION GRADE 270 STRANDS AND SHALL CONFORM TO AASHTO M203 EXCEPT FOR SAMPLING REQUIREMENTS WHICH SHALL BE IN ACCORDANCE WITH THE STANDARD SPECIFICATIONS.

ALL REINFORCING STEEL SHALL BE GRADE 60.

EMBEDDED PLATE "B-1" SHALL BE GALVANIZED IN ACCORDANCE WITH THE STANDARD SPECIFICATIONS. BEVEL EDGES OF PLATE "B-1" TO GIVE CLOSE FIT BUT NOT TIGHT FIT TO STEEL CASTING FORM.

ANCHOR STUDS SHALL CONFORM TO AASHTO M169 GRADES 1010 THROUGH 1020 OR APPROVED EQUAL, AND SHALL MEET THE TYPE "B" REQUIREMENTS OF SUBSECTION 7.3 OF THE ANSI/AASHTO/AWS D1.5 BRIDGE WELDING CODE.

AT ENDS OF GIRDERS TO BE EMBEDDED IN CONCRETE DIAPHRAGMS OR END WALLS, PRESTRESSING STRANDS MAY EXTEND A MAXIMUM OF 2" BEYOND THE GIRDER ENDS. OTHERWISE, PRESTRESSING STRANDS SHALL BE CUT FLUSH WITH THE GIRDER ENDS.

THE TRANSFER OF LOAD FROM THE ANCHORAGES TO THE GIRDER SHALL BE DONE WHEN CONCRETE HAS REACHED A COMPRESSIVE STRENGTH OF NOT LESS THAN 6300 PSI.

DEPENDING ON THE TYPE OF SYSTEM USED TO SUPPORT THE DECK SLAB FORMS, PRESET ANCHORS MAY BE NECESSARY IN THE PRESTRESSED CONCRETE GIRDER.

THE TOP SURFACE OF THE GIRDER, EXCLUDING THE OUTSIDE 4", SHALL BE RAKED TO A DEPTH OF 1/4".

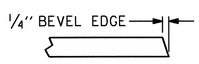

SECTION "G"

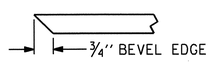

SECTION "F"

(SEE NOTES)

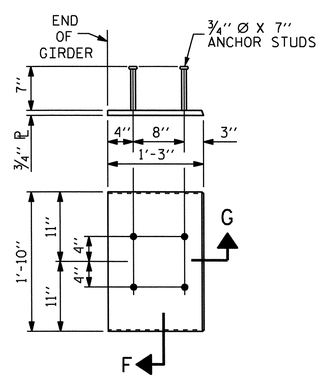

EMBEDDED PLATE "B-1" DETAILS FOR AASHTO TYPE III GIRDER

(2 REQ'D PER GIRDER)

PROJECT NO. B-4028

BLADEN COUNTY

STATION: 46+85.50 -L-

SHEET 3 OF 4

STATE OF NORTH CAROLINA
DEPARTMENT OF TRANSPORTATION
RALEIGH

STANDARD

PRESTRESSED CONCRETE GIRDER CONTINUOUS FOR LIVE LOAD DETAILS

NORTH CAROLINA PROFESSIONAL SEAL 14855 ENGINEER DOUGLAS R. CALHOUN
6/25/12

REVISIONS						SHEET NO.
NO.	BY:	DATE:	NO.	BY:	DATE:	S-95
1			3			TOTAL SHEETS
2			4			147

STD. NO. PCG9

STR. #2

ASSEMBLED BY : T. BANKOVICH	DATE : 2-2010
CHECKED BY : M.L. BROWN	DATE : 3-2010
DRAWN BY : ELR 11/91	REV. 7/10/01RR LES/RDR
CHECKED BY : GRP 11/91	REV. 5/1/06 TLA/GM
	REV. 10/1/11 MAA/GM

17-MAY-2012 11:07
R:\Structures\STR2\Super_Draw\B-4028_SD_DL.dgn
asorsenglnh

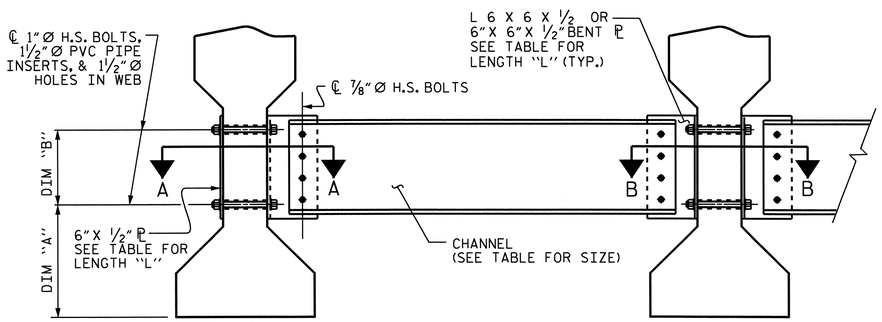

PART SECTION AT INTERMEDIATE DIAPHRAGM

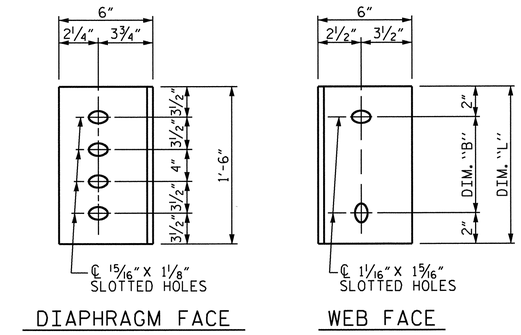

CONNECTOR PLATE DETAILS

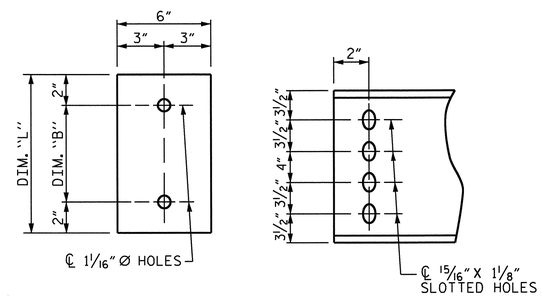

PLATE DETAILS CHANNEL END

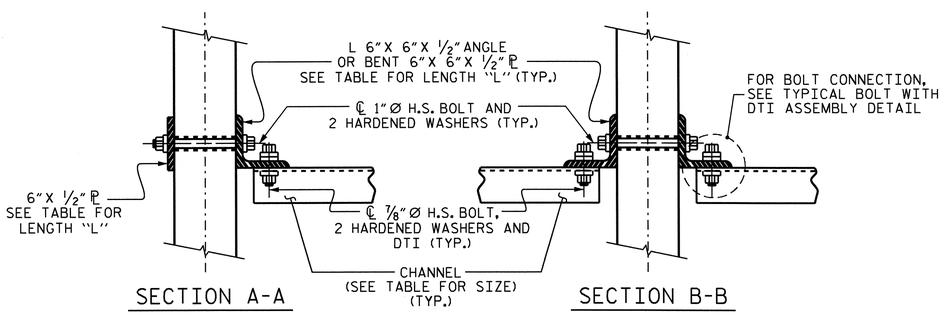

CONNECTION DETAILS

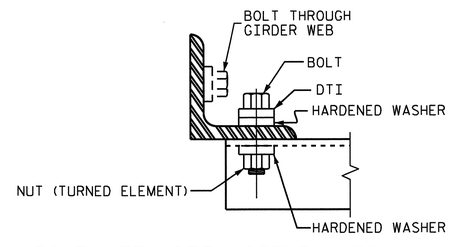

BOLT WITH DTI ASSEMBLY DETAIL

STRUCTURAL STEEL NOTES

ALL INTERMEDIATE DIAPHRAGM STEEL AND CONNECTOR PLATES SHALL BE AASHTO M270 GRADE 50 OR APPROVED EQUAL.

TENSION ON THE ASTM A325 BOLTS THROUGH THE CHANNEL MEMBER SHALL BE CALIBRATED USING DIRECT TENSION INDICATOR WASHERS IN ACCORDANCE WITH THE STANDARD SPECIFICATIONS.

TENSION ON THE ASTM A449 BOLTS THROUGH THE GIRDER WEB SHALL BE SNUG TIGHTENED FOLLOWED BY AN ADDITIONAL ¼ TURN.

THE PLATES, BENT PLATES, CHANNELS, AND ANGLES SHALL BE GALVANIZED OR METALLIZED IN ACCORDANCE WITH THE STANDARD SPECIFICATIONS. FOR THERMAL SPRAYED COATINGS (METALLIZATION), SEE SPECIAL PROVISIONS.

FOR METALLIZATION, APPLY AN 8 MIL THICK 99.99 PERCENT ZINC (W-Zn-1) THERMAL SPRAYED COATING WITH A 0.5 MIL THICK SEAL COAT TO ALL STEEL DIAPHRAGM SURFACES IN ACCORDANCE WITH THE THERMAL SPRAYED COATINGS SPECIAL PROVISION AND SECTION 442 OF THE STANDARD SPECIFICATIONS.

GALVANIZE THE HIGH STRENGTH BOLTS, NUTS, WASHERS AND DIRECT TENSION INDICATORS IN ACCORDANCE WITH THE STANDARD SPECIFICATIONS.

USE AN ASTM F436 HARDENED WASHER WITH STANDARD AND SLOTTED HOLES UNDER EACH BOLT HEAD AND NUT.

FOR BOLTS THROUGH THE GIRDER WEB, PROVIDE SUFFICIENT LENGTH OF THREADS ON ALL BOLTS TO ACCOMMODATE WASHERS AND THE THICKNESS OF CONNECTING MEMBER PLUS AT LEAST ¼" PROJECTION BEYOND THE NUT.

INTERMEDIATE DIAPHRAGM ASSEMBLY SHALL COMPLY WITH SECTION 1072 OF THE STANDARD SPECIFICATIONS.

SUBMIT TWO SETS OF WORKING DRAWINGS FOR THE INTERMEDIATE DIAPHRAGM ASSEMBLY FOR REVIEW, COMMENTS AND ACCEPTANCE. AFTER REVIEW, COMMENTS, AND ACCEPTANCE, SUBMIT SEVEN SETS FOR DISTRIBUTION.

IN THE EXTERIOR BAYS, PLACE TEMPORARY STRUTS BETWEEN PRESTRESSED GIRDERS ADJACENT TO THE STEEL DIAPHRAGMS. STRUTS SHALL REMAIN IN PLACE 3 DAYS AFTER CONCRETE IS PLACED.

THE COST OF THE STEEL DIAPHRAGMS AND ASSEMBLIES SHALL BE INCLUDED IN THE UNIT PRICE BID FOR PRESTRESSED CONCRETE GIRDERS.

TABLE

GIRDER TYPE	CHANNEL SIZE	DIM "A"	DIM "B"	DIM "L"
III	MC 18 x 42.7	1'-5"	1'-2"	1'-6"

PROJECT NO. B-4028

BLADEN COUNTY

STATION: 46+85.50 -L-

SHEET 4 OF 4

STATE OF NORTH CAROLINA
DEPARTMENT OF TRANSPORTATION
RALEIGH

STANDARD

INTERMEDIATE STEEL DIAPHRAGMS FOR TYPE III PRESTRESSED CONCRETE GIRDERS

NORTH CAROLINA PROFESSIONAL SEAL 14855 ENGINEER DOUGLAS R. CALHOUN
6/25/12

REVISIONS							SHEET NO.
NO.	BY:	DATE:	NO.	BY:	DATE:		S-96
1			3				TOTAL SHEETS
2			4				147

STD. NO. PCG10

STR. #2

ASSEMBLED BY : T. BANKOVICH		DATE : 2-2010
CHECKED BY : M.L. BROWN		DATE : 3-2010
DRAWN BY : TLA 6/05	ADDED 10/21/05	
CHECKED BY : VC 6/05	REV. 5/1/06RRR	KMM/GM
	REV. 10/1/11	MAA/GM

17-MAY-2012 11:10
R:\Structures\STR2\Super_Draw\B-4028_SD_SD.dgn
asorsenginh

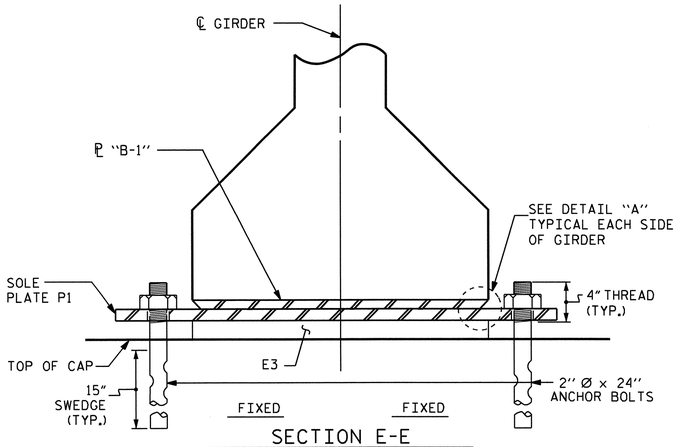

SECTION E-E
(AT BENTS)

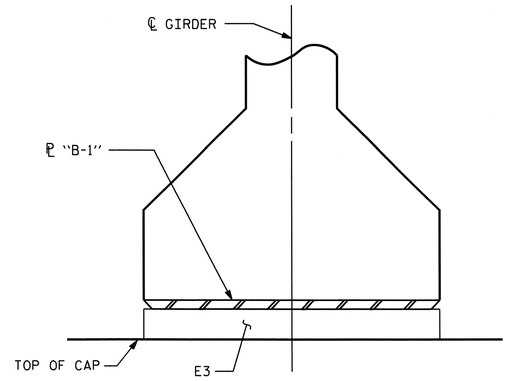

SECTION D-D
(AT INTEGRAL END BENTS)

— LOAD RATINGS —	
	MAX.D.L.+L.L.
TYPE IV	198 K

NOTES

AT ALL FIXED POINTS OF SUPPORT, NUTS FOR ANCHOR BOLTS ARE TO BE TIGHTENED FINGER TIGHT AND THEN BACKED OFF ½ TURN. THE THREAD OF THE NUT AND BOLT SHALL THEN BE BURRED WITH A SHARP POINTED TOOL.

STEEL SOLE PLATES, ANCHOR BOLTS AND NUTS SHALL BE GALVANIZED IN ACCORDANCE WITH THE STANDARD SPECIFICATIONS.

PRIOR TO WELDING, GRIND THE GALVANIZED SURFACE OF THE PORTION OF THE EMBEDDED PLATE AND SOLE PLATE THAT ARE TO BE WELDED. AFTER WELDING, DAMAGED GALVANIZED SURFACES SHALL BE REPAIRED IN ACCORDANCE WITH THE STANDARD SPECIFICATIONS.

WHEN WELDING THE SOLE PLATE TO THE EMBEDDED PLATE IN THE GIRDER, USE TEMPERATURE INDICATING WAX PENS, OR OTHER SUITABLE MEANS, TO ENSURE THAT THE TEMPERATURE OF THE SOLE PLATE DOES NOT EXCEED 300°F. TEMPERATURES ABOVE THIS MAY DAMAGE THE ELASTOMER.

SOLE PLATE "P", BOLTS AND NUTS SHALL BE INCLUDED IN THE PAY ITEM FOR PRESTRESSED CONCRETE GIRDERS.

ANCHOR BOLTS SHALL MEET THE REQUIREMENTS OF ASTM A449. NUTS SHALL MEET THE REQUIREMENTS OF AASHTO M291-DH OR AASHTO M292-2H. SHOP DRAWINGS ARE NOT REQUIRED FOR ANCHOR BOLT AND NUTS. SHOP INSPECTION IS REQUIRED.

ALL SURFACES OF BEARING PLATES SHALL BE SMOOTH AND STRAIGHT.

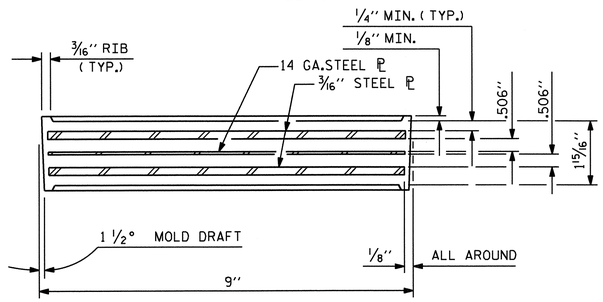

TYPICAL SECTION OF ELASTOMERIC BEARINGS

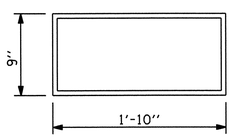

E3 (40 REQ'D)

PLAN VIEW OF ELASTOMERIC BEARING

TYPE IV
(60 DUROMETER HARDNESS)

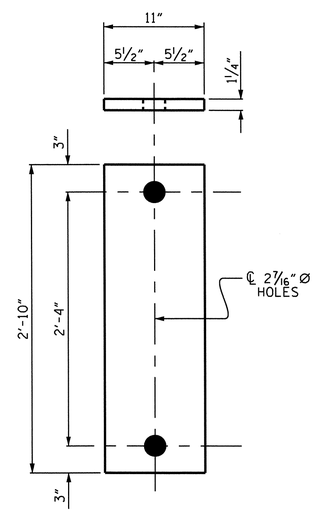

P1
(FIXED)
(32 REQ'D)

SOLE PLATE DETAILS (P1)

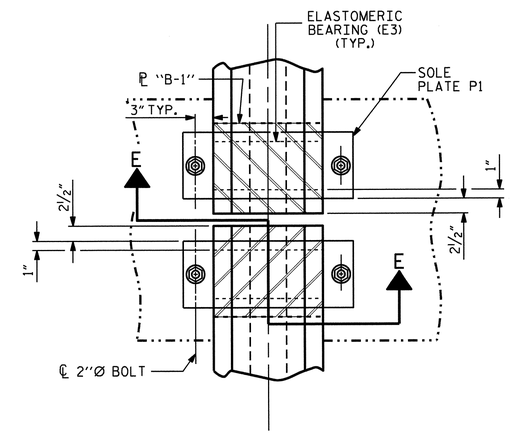

PLAN VIEW AT BENT
(SHOWING CONTINUOUS BENT)

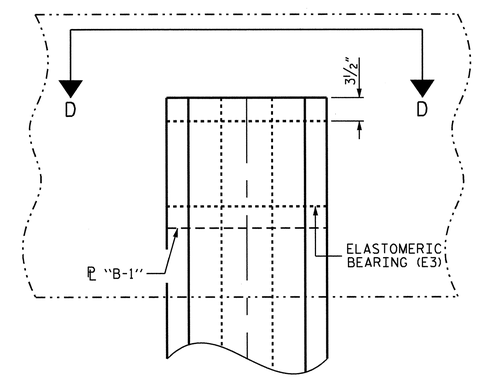

PLAN VIEW AT END BENTS

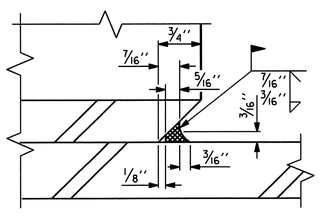

DETAIL "A"

PROJECT NO. B-4028
BLADEN COUNTY
STATION: 46+85.50 -L-

STATE OF NORTH CAROLINA
DEPARTMENT OF TRANSPORTATION
RALEIGH

STANDARD

ELASTOMERIC BEARING DETAILS

PRESTRESSED CONCRETE GIRDER SUPERSTRUCTURE

NORTH CAROLINA PROFESSIONAL SEAL 14855 ENGINEER DOUGLAS R. CALHOUN
6/29/12

REVISIONS							SHEET NO.
NO.	BY:	DATE:	NO.	BY:	DATE:		S-97
1			3				TOTAL SHEETS
2			4				147

ASSEMBLED BY : T. BANKOVICH		DATE : 2-2010	
CHECKED BY : M.L. BROWN		DATE : 3-2010	
DRAWN BY : WJH 8/89	REV. 7/10/01	RWW/LES	
CHECKED BY : CRK 8/89	REV. 5/1/06	TLA/GM	
	REV. 10/1/11	MAA/GM	

17-MAY-2012 11:06
R:\Structures\STR2\Super_Draw\B-4028_SD_BG.dgn
asorsenginh

STD. NO. EB3 STR. #2

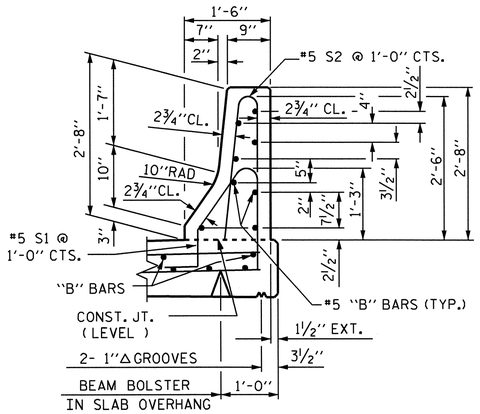

SECTION THRU RAIL

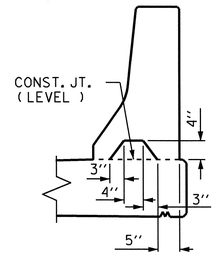

SECTION S-S

AT DAM IN OPEN JOINT
(THIS IS TO BE USED ONLY
WHEN SLIP FORM IS USED)

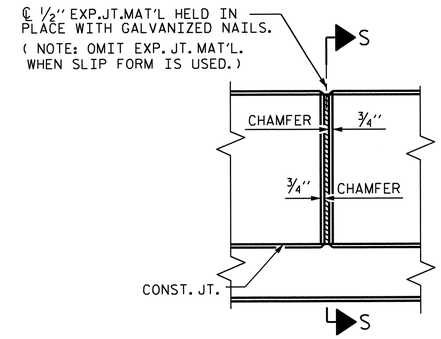

ELEVATION AT EXPANSION JOINTS

BAR TYPES

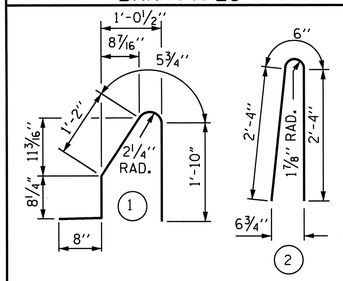

ALL BAR DIMENSIONS ARE OUT TO OUT

BILL OF MATERIAL

FOR CONCRETE BARRIER RAIL ONLY

BAR	NO.	SIZE	TYPE	LENGTH	WEIGHT
* B1	32	#5	STR	23'-9"	793
* B2	208	#5	STR	24'-7"	5333
* S1	748	#5	1	4'-10"	3771
* S2	748	#5	2	5'-2"	4031

* EPOXY COATED REINFORCING STEEL	13,928 LBS.
CLASS AA CONCRETE	74.7 CU. YDS.
CONCRETE BARRIER RAIL	746.67 LIN. FT.

BARRIER RAIL DETAILS

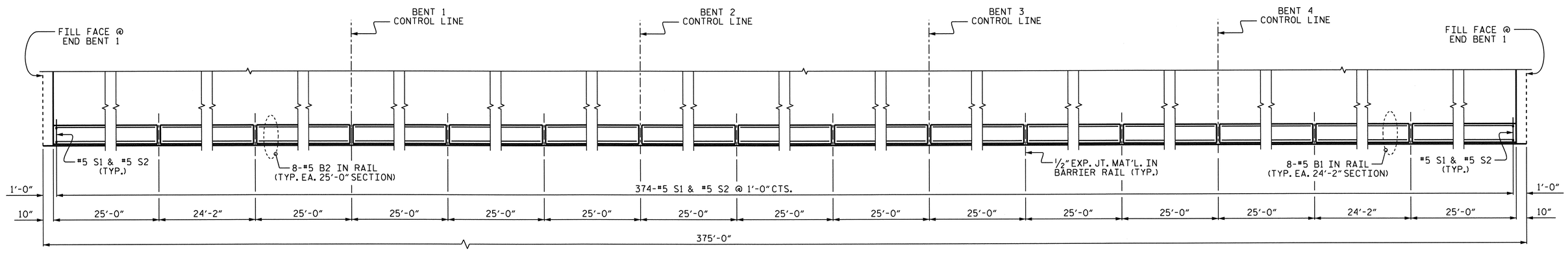

PLAN OF BARRIER RAIL

RIGHT SIDE SHOWN, LEFT SIDE SIMILAR

PROJECT NO. B-4028

BLADEN COUNTY

STATION: 46+85.50 -L-

NOTES:

THE BARRIER RAIL IN A CONTINUOUS UNIT SHALL NOT BE CAST UNTIL ALL SLAB CONCRETE HAS BEEN CAST AND HAS REACHED A MINIMUM COMPRESSIVE STRENGTH OF 3,000 PSI.

ALL REINFORCING STEEL IN BARRIER RAILS SHALL BE EPOXY COATED.

GROOVED CONTRACTION JOINTS, ½" IN DEPTH, SHALL BE TOOLED IN ALL EXPOSED FACES OF THE BARRIER RAIL AND IN ACCORDANCE WITH ARTICLE 825-10(B) OF THE STANDARD SPECIFICATIONS. THE CONTRACTION JOINT SHALL BE LOCATED AT EACH THIRD POINT BETWEEN BARRIER RAIL EXPANSION JOINTS. ONLY ONE CONTRACTION JOINT IS REQUIRED AT MIDPOINT OF BARRIER RAIL SEGMENTS LESS THAN 20 FEET IN LENGTH AND NO CONTRACTION JOINTS ARE REQUIRED FOR THOSE SEGMENTS LESS THAN 10 FEET IN LENGTH.

THE #5 S1 AND S2 BARS MAY BE SHIFTED SLIGHTLY IN ORDER TO MAINTAIN A 2" MINIMUM CLEARANCE TO THE ½" EXPANSION JOINT MATERIAL IN RAIL.

NORTH CAROLINA PROFESSIONAL SEAL 14855 ENGINEER DOUGLAS R. CALHOUN

6/29/12

STATE OF NORTH CAROLINA
DEPARTMENT OF TRANSPORTATION
RALEIGH

CONCRETE BARRIER RAIL

REVISIONS								SHEET NO.
NO.	BY:	DATE:	NO.	BY:	DATE:			S-98
1			3					TOTAL SHEETS
2			4					147

ASSEMBLED BY : T. BANKOVICH	DATE : 2-2010		
CHECKED BY : M.L. BROWN	DATE : 3-2010		
DRAWN BY : ARB 5/87	REV. 5/7/03R	RWW/JTE	
CHECKED BY : SJD 9/87	REV. 5/1/06R	TLA/GM	
	REV. 10/1/11	MAA/GM	

17-MAY-2012 11:07
R:\Structures\STR2\Super_Draw\B-4028_SD_BR.dgn
asorsenginh

STD. NO. CBR1

STR. #2

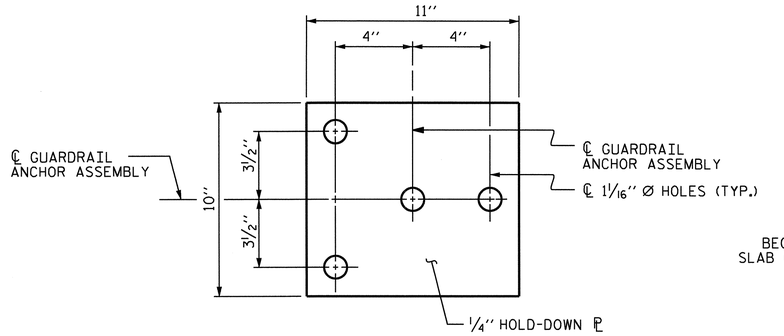

PLAN

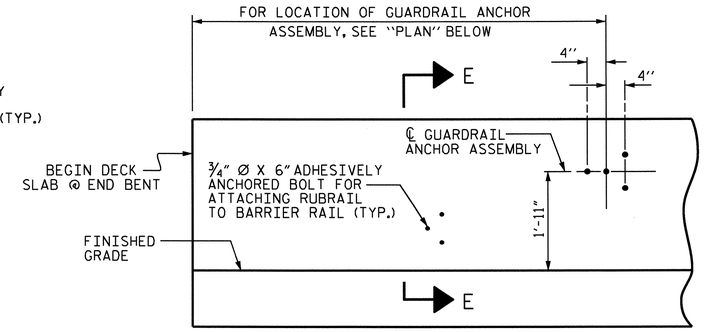

ELEVATION

FOR LOCATION OF RUBRAIL, SEE ROADWAY STD. 862.03

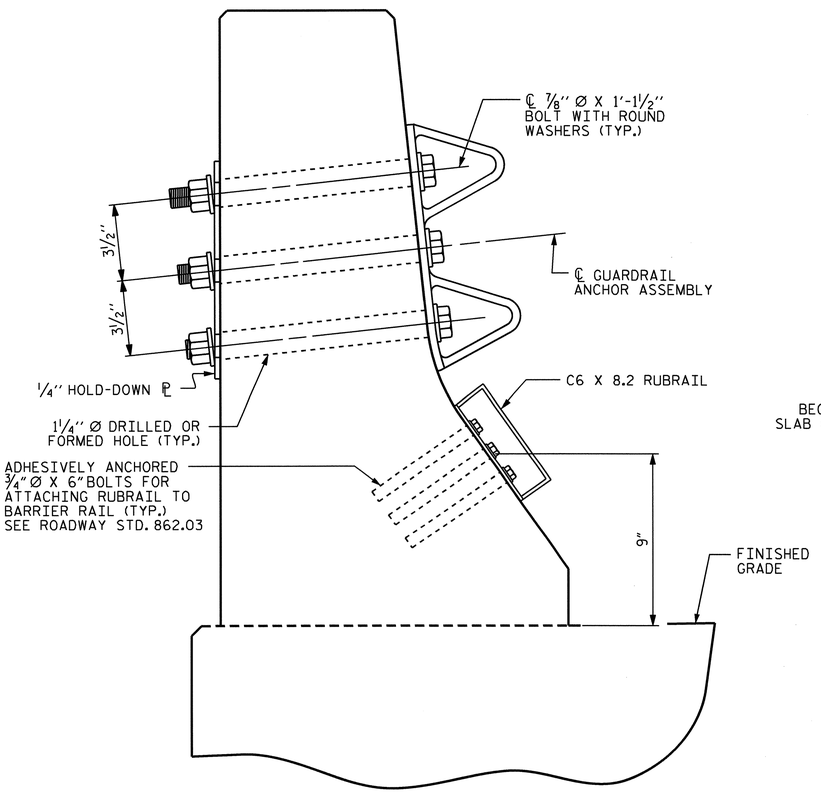

SECTION E-E

GUARDRAIL ANCHOR ASSEMBLY DETAILS

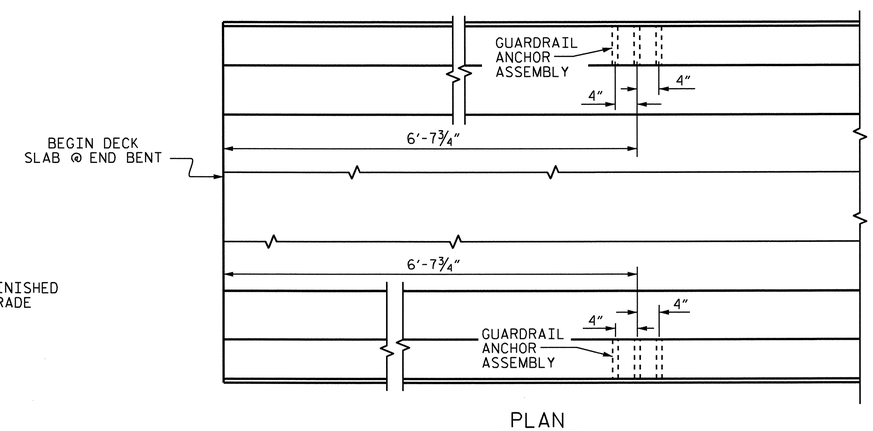

PLAN

LOCATION OF ANCHORS FOR GUARDRAIL

END BENT #1 SHOWN, END BENT #2 SIMILAR.

NOTES

THE GUARDRAIL ANCHOR ASSEMBLY SHALL CONSIST OF A 1/4'' HOLD-DOWN PLATE AND 4 - 7/8'' Ø BOLTS WITH NUTS AND WASHERS, RUBRAIL, AND ADHESIVELY ANCHORED BOLTS.

THE HOLD-DOWN PLATE SHALL CONFORM TO AASHTO M270 GRADE 36. AFTER FABRICATION, THE HOLD-DOWN PLATE SHALL BE HOT-DIP GALVANIZED IN ACCORDANCE WITH AASHTO M111.

BOLTS SHALL CONFORM TO THE REQUIREMENTS OF ASTM A307 AND NUTS SHALL CONFORM TO THE REQUIREMENTS OF AASHTO M291. BOLTS, NUTS AND WASHERS SHALL BE GALVANIZED. (AT THE CONTRACTOR'S OPTION, STAINLESS STEEL BOLTS, NUTS AND WASHERS MAY BE USED AS AN ALTERNATE FOR THE 7/8'' Ø GALVANIZED BOLTS, NUTS AND WASHERS. THEY SHALL CONFORM TO OR EXCEED THE MECHANICAL REQUIREMENTS OF ASTM A307. THE USE OF THIS ALTERNATE SHALL BE APPROVED BY THE ENGINEER.)

THE GUARDRAIL ANCHOR ASSEMBLY IS REQUIRED AT ALL POINTS WHERE APPROACH GUARDRAIL IS TO BE ATTACHED TO THE END OF BARRIER RAIL. FOR POINTS OF ATTACHMENT, SEE SKETCH.

AFTER INSTALLATION, THE EXPOSED THREAD OF THE BOLT SHALL BE BURRED WITH A SHARP POINTED TOOL.

THE COST OF THE GUARDRAIL ANCHOR ASSEMBLY SHALL BE INCLUDED IN THE UNIT CONTRACT PRICE BID FOR CONCRETE BARRIER RAIL.

THE 1 1/4'' Ø HOLES SHALL BE FORMED OR DRILLED WITH A CORE BIT. IMPACT TOOLS WILL NOT BE PERMITTED. ANY CONCRETE DAMAGED BY THIS WORK SHALL BE REPAIRED TO THE SATISFACTION OF THE ENGINEER.

THE C6 X 8.2 RUBRAIL IS TO BE ADHESIVELY ANCHORED TO THE RAIL USING THREE 3/4" Ø X 6" BOLTS WITH WASHERS. LEVEL ONE FIELD TESTING IS REQUIRED, AND THE YIELD LOAD OF THE 3/4" Ø BOLT IS 12 KIPS. FOR ADHESIVELY ANCHORED ANCHOR BOLTS OR DOWELS, SEE STANDARD SPECIFICATIONS. SEE ROADWAY STANDARD 862.03 FOR DETAILS AND LOCATION OF THE RUBRAIL.

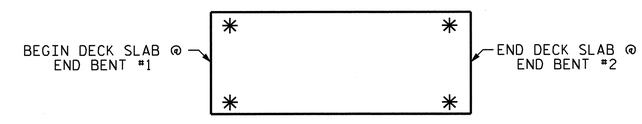

SKETCH SHOWING POINTS OF ATTACHMENTS

✳ DENOTES GUARDRAIL ANCHOR ASSEMBLY

PROJECT NO. B-4028

BLADEN COUNTY

STATION: 46+85.50 -L-

STATE OF NORTH CAROLINA
DEPARTMENT OF TRANSPORTATION
RALEIGH

STANDARD

GUARDRAIL ANCHORAGE FOR BARRIER RAIL

NORTH CAROLINA PROFESSIONAL SEAL 14855 ENGINEER DOUGLAS R. CALHOUN
6/25/12

REVISIONS						SHEET NO.
NO.	BY:	DATE:	NO.	BY:	DATE:	S-99
1			3			TOTAL SHEETS
2			4			147

ASSEMBLED BY : T. BANKOVICH	DATE : 2-2010
CHECKED BY : M.L. BROWN	DATE : 3-2010
DRAWN BY : TLA 5/06	ADDED 5/1/06RR KMM/GM
CHECKED BY : GM 5/06	REV. 10/1/11 MAA/GM

17-MAY-2012 11:06
R:\Structures\STR2\Super_Draw\B-4028_SD_BR.dgn
asorsenginh

STD. NO. GRA2

STR. #2

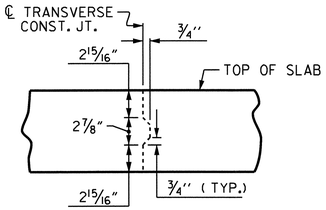

TRANSVERSE CONSTRUCTION JOINT DETAIL

NOTE: REINFORCING STEEL IN SLAB NOT SHOWN. LONGITUDINAL REINFORCING STEEL SHALL BE CONTINUOUS THRU JOINT

SUPERSTRUCTURE REINFORCING STEEL LENGTHS ARE BASED ON THE FOLLOWING MINIMUM SPLICE LENGTHS					
BAR SIZE	SUPERSTRUCTURE EXCEPT APPROACH SLABS, PARAPET, AND BARRIER RAIL		APPROACH SLABS		PARAPET AND BARRIER RAIL
	EPOXY COATED	UNCOATED	EPOXY COATED	UNCOATED	
#4	2'-0"	1'-9"	2'-0"	1'-9"	2'-9"
#5	2'-6"	2'-2"	2'-6"	2'-2"	3'-5"
#6	3'-0"	2'-7"	3'-10"	2'-7"	4'-4"
#7	5'-3"	3'-6"			
#8	6'-10"	4'-7"			

GROOVING BRIDGE FLOORS	
APPROACH SLABS	1,402 SQ. FT.
BRIDGE DECK	10,817 SQ. FT.
TOTAL	12,219 SQ. FT.

BAR TYPE

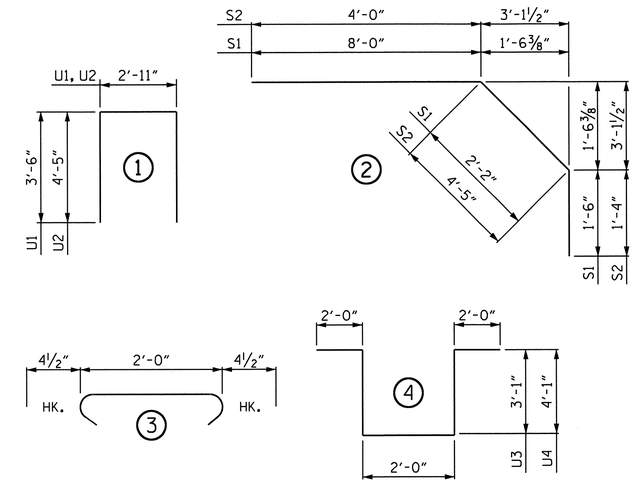

ALL BAR DIMENSIONS ARE OUT TO OUT

BILL OF MATERIAL

BAR	NO.	SIZE	TYPE	LENGTH	WEIGHT
* A1	747	#5	STR	34'-11"	27204
A2	747	#5	STR	34'-11"	27204
* B1	56	#4	STR	28'-6"	1066
* B2	86	#7	STR	14'-10"	2607
B3	322	#5	STR	55'-2"	18528
* B4	88	#7	STR	56'-0"	10073
* B5	84	#7	STR	24'-0"	4121
* B6	88	#4	STR	18'-7"	1092
* B7	66	#4	STR	23'-0"	1014
H1	40	#5	STR	11'-10"	494
K1	16	#4	STR	21'-5"	229
K2	6	#4	STR	7'-2"	29
K3	12	#4	STR	8'-5"	67
K4	6	#4	STR	7'-8"	31
K5	4	#4	STR	5'-5"	14
K6	8	#4	STR	6'-0"	32
K7	4	#4	STR	5'-8"	15
K8	16	#4	STR	2'-8"	29
K9	72	#4	STR	7'-8"	369
K10	24	#4	STR	6'-0"	96
K11	16	#4	STR	27'-8"	296
* S1	56	#4	2	11'-8"	436
* S2	56	#4	2	9'-9"	365
S3	264	#4	3	2'-9"	485
U1	60	#4	1	9'-11"	397
U2	16	#4	1	11'-9"	126
U3	24	#4	4	12'-2"	195
U4	72	#4	4	14'-2"	681
REINFORCING STEEL					49,317 LBS.
* EPOXY COATED					
REINFORCING STEEL					47,978 LBS.

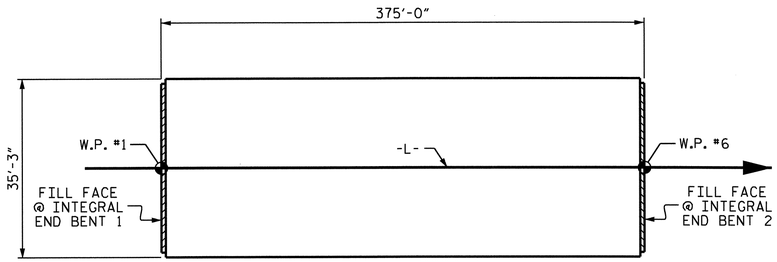

LAYOUT FOR COMPUTING AREA OF REINFORCED CONCRETE DECK SLAB & POURING SEQUENCE (SQ. FT. = 13,219)

SUPERSTRUCTURE BILL OF MATERIAL			
	CLASS AA CONCRETE	REINFORCING STEEL	EPOXY COATED REINFORCING STEEL
	(CU. YDS.)	(LBS.)	(LBS.)
POUR #1	71.9	———	———
POUR #2	95.9	———	———
POUR #3	95.9	———	———
POUR #4	95.9	———	———
POUR #5	95.1	———	———
POUR #6	59.6	———	———
TOTAL **	514.3	49,317	47,978

** QUANTITIES FOR BARRIER RAIL ARE NOT INCLUDED

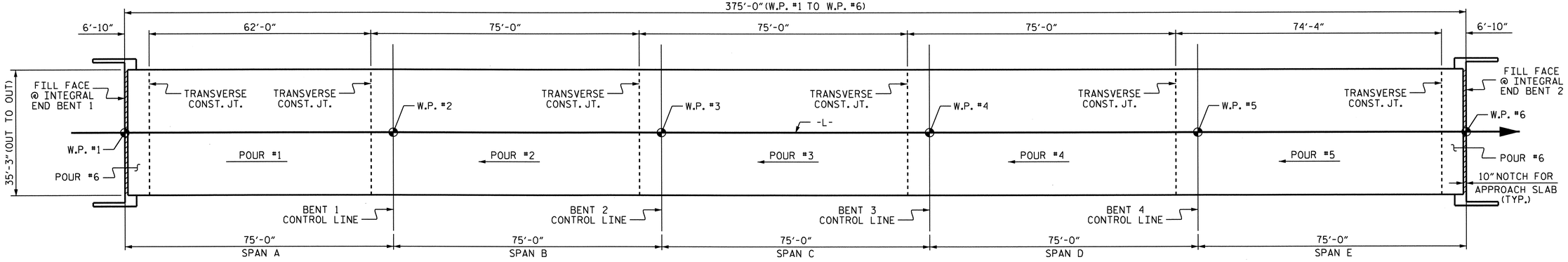

POURING SEQUENCE

NOTE: CONCRETE IN THE UPPER PORTION OF THE WINGS SHALL BE INCLUDED WITH THE SUPERSTRUCTURE POUR.

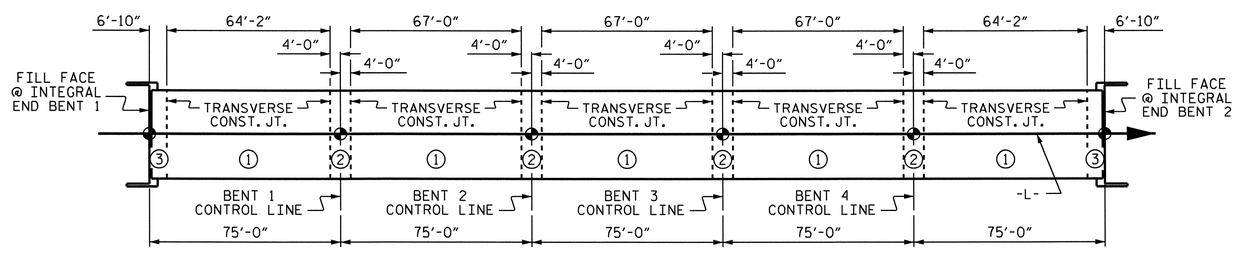

OPTIONAL POURING SEQUENCE

POUR ② SHALL NOT BE STARTED UNTIL BOTH ADJACENT ① POURS REACH A MINIMUM OF 3000 PSI

PROJECT NO. B-4028

BLADEN COUNTY

STATION: 46+85.50 -L-

STATE OF NORTH CAROLINA
DEPARTMENT OF TRANSPORTATION
RALEIGH

SUPERSTRUCTURE
BILL OF MATERIAL

NORTH CAROLINA PROFESSIONAL SEAL 14855 ENGINEER DOUGLAS R. CALHOUN
6/25/12

REVISIONS								SHEET NO.
NO.	BY:	DATE:	NO.	BY:	DATE:			S-100
1			3					TOTAL SHEETS
2			4					147

ASSEMBLED BY : T. BANKOVICH	DATE : 2-2010		
CHECKED BY : M.L. BROWN	DATE : 3-2010		
DRAWN BY : JMB 5/87	REV. 8/16/99	RWW/LES	
CHECKED BY : SJD 9/87	REV. 5/1/06	TLA/GM	
	REV. 10/1/11	MAA/GM	

25-JUN-2012 10:51
R:\Structures\STR2\Super_Draw\B-4028_SD_BOM.dgn
asorsenginh

STD. NO. BOM1

STR. #2

NOTES:

INSTALL THE 4"Ø DIAMETER DRAIN PIPE THROUGH THE WING WALL AS REQUIRED FOR THE REINFORCED BRIDGE APPROACH FILLS. SEE THE ROADWAY PLANS. REINFORCING STEEL IN THE WING WALL MAY BE SHIFTED AS NECESSARY TO CLEAR THE DRAIN PIPE.

SEE SUPERSTRUCTURE SHEETS FOR UPPER PART OF INTEGRAL END BENT DETAILS.

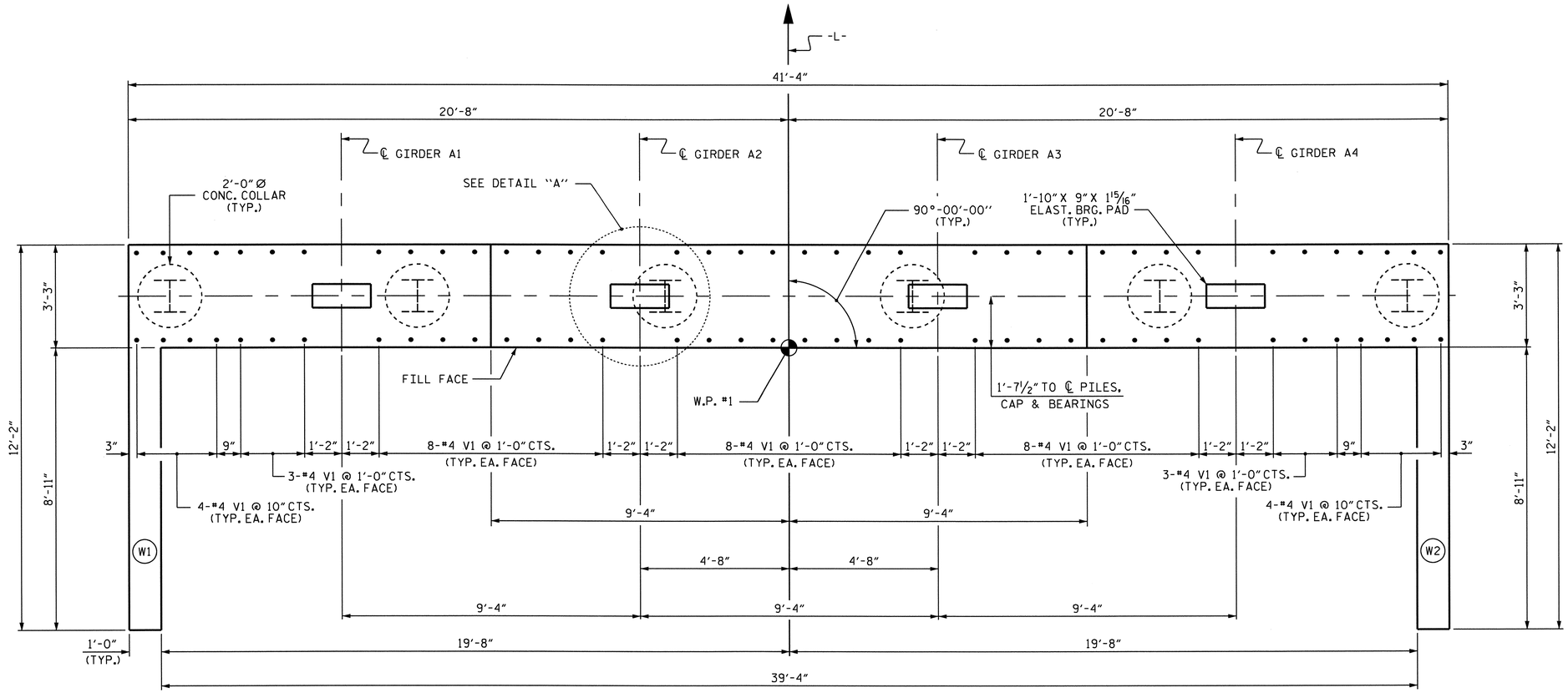

PLAN

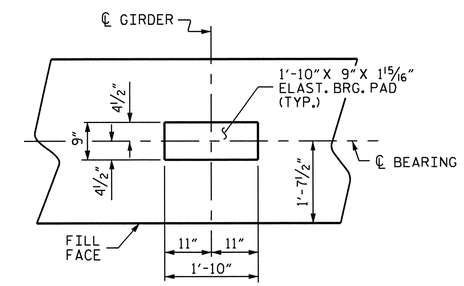

DETAIL "A"

(TYP. EA. GDR.)

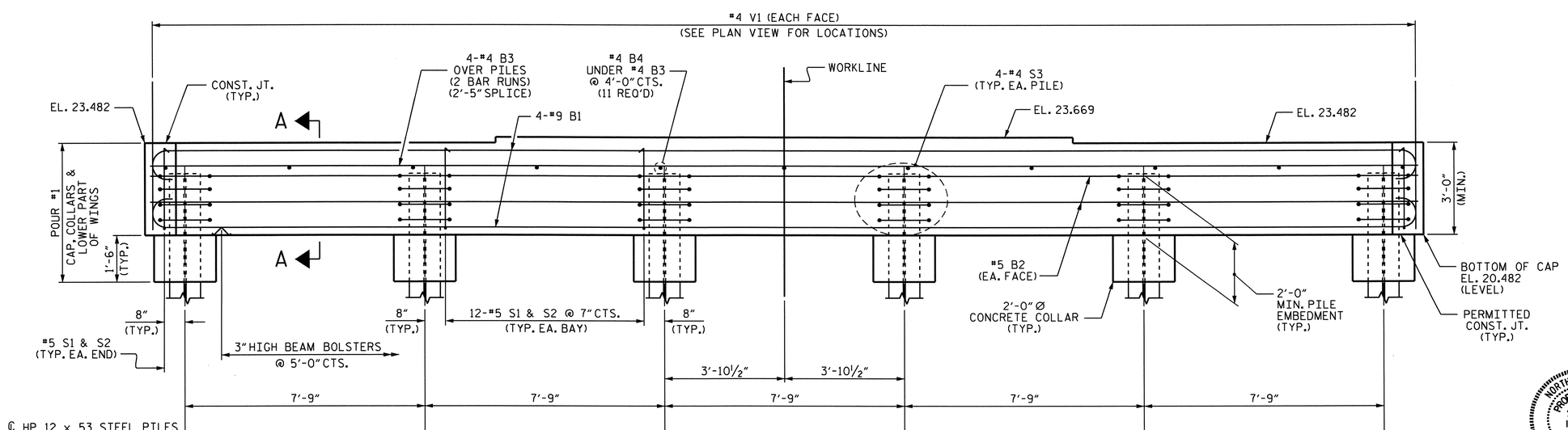

ELEVATION

PROJECT NO. B-4028

BLADEN COUNTY

STATION: 46+85.50 -L-

SHEET 1 OF 3

STATE OF NORTH CAROLINA
DEPARTMENT OF TRANSPORTATION
RALEIGH

SUBSTRUCTURE
INTEGRAL
END BENT 1

NORTH CAROLINA PROFESSIONAL SEAL 14855 ENGINEER DOUGLAS R. CALHOUN
6/25/12

REVISIONS						SHEET NO.
NO.	BY:	DATE:	NO.	BY:	DATE:	S-101
1			3			TOTAL SHEETS
2			4			147

DRAWN BY : M.L. BROWN DATE : 10/10
CHECKED BY : T. BANKOVICH DATE : 11/10

25-JUN-2012 10:51
R:\Structures\STR2\Sub_Draw\B-4028_str2_sd_EB1.dgn
asorsenginh

STR. #2

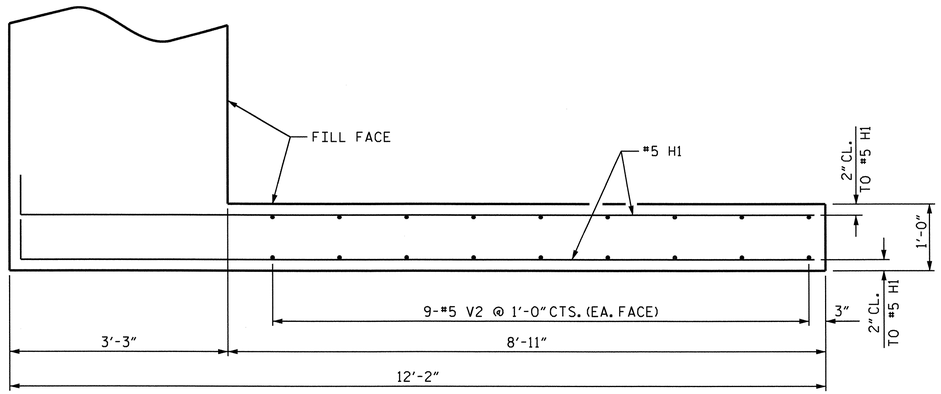

PLAN OF WING

(LEFT WING SHOWN, RIGHT WING SIMILAR)

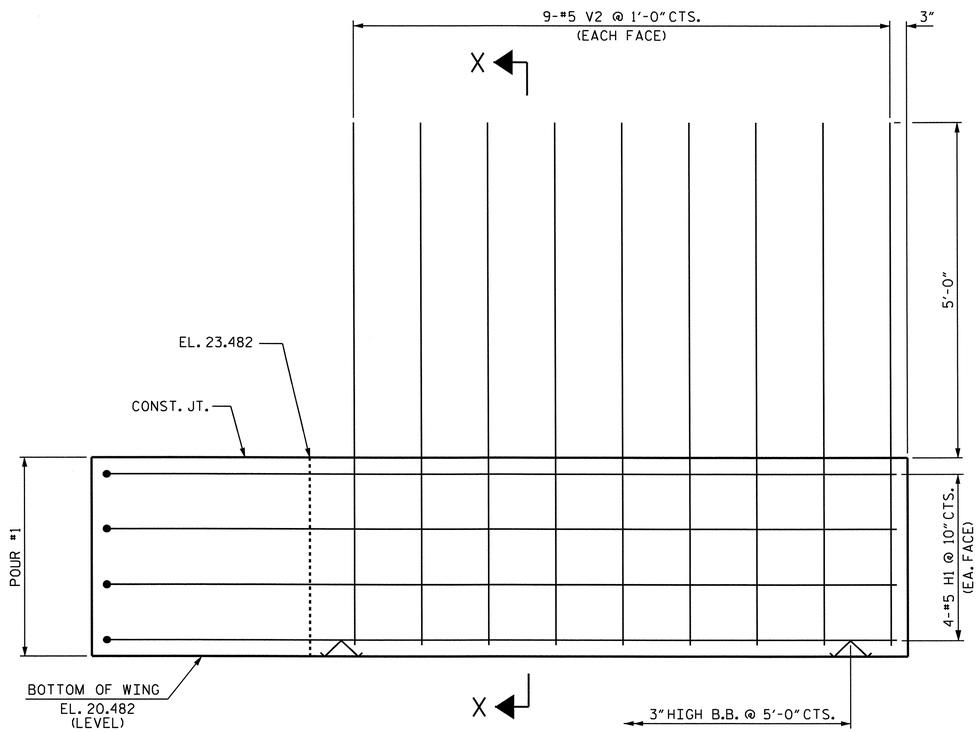

ELEVATION OF WING

(LEFT WING SHOWN, RIGHT WING SIMILAR)

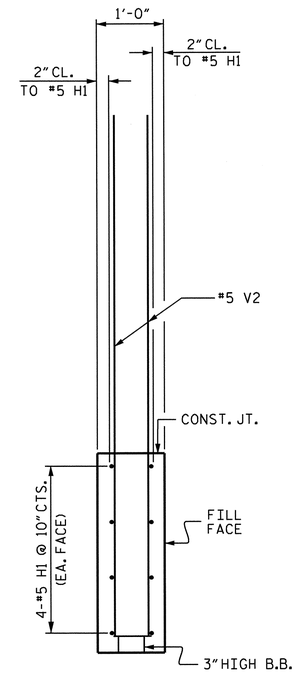

SECTION X-X

PROJECT NO. B-4028

BLADEN COUNTY

STATION: 46+85.50 -L-

SHEET 2 OF 3

STATE OF NORTH CAROLINA
DEPARTMENT OF TRANSPORTATION
RALEIGH

SUBSTRUCTURE
INTEGRAL
END BENT 1

NORTH CAROLINA PROFESSIONAL SEAL 14855 ENGINEER DOUGLAS R. CALHOUN
6/25/12

REVISIONS						SHEET NO.
NO.	BY:	DATE:	NO.	BY:	DATE:	S-102
1			3			TOTAL SHEETS
2			4			147

DRAWN BY : M.L. BROWN DATE : 10/10
CHECKED BY : T. BANKOVICH DATE : 11/10

25-JUN-2012 10:52
R:\Structures\STR2\Sub_Draw\B-4028_str2_sd_EB1.dgn
asorsenginh

STR. #2

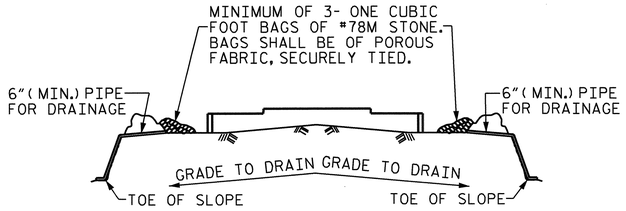

BAGGED STONE AND PIPE SHALL BE PLACED IMMEDIATELY AFTER COMPLETION OF END BENT EXCAVATION. PIPE MAY BE EITHER CONCRETE, CORRUGATED STEEL, CORRUGATED ALUMINUM ALLOY, OR CORRUGATED PLASTIC. PERFORATED PIPE WILL NOT BE ALLOWED.

BAGGED STONE SHALL REMAIN IN PLACE UNTIL THE ENGINEER DIRECTS THAT IT BE REMOVED. THE CONTRACTOR SHALL REMOVE AND DISPOSE OF SILT ACCUMULATIONS AT BAGGED STONE WHEN SO DIRECTED BY THE ENGINEER. BAGS SHALL BE REMOVED AND REPLACED WHENEVER THE ENGINEER DETERMINES THAT THEY HAVE DETERIORATED AND LOST THEIR EFFECTIVENESS.

NO SEPARATE PAYMENT WILL BE MADE FOR THIS WORK AND THE ENTIRE COST OF THIS WORK SHALL BE INCLUDED IN THE UNIT CONTRACT PRICE BID FOR THE SEVERAL PAY ITEMS.

TEMPORARY DRAINAGE AT END BENT

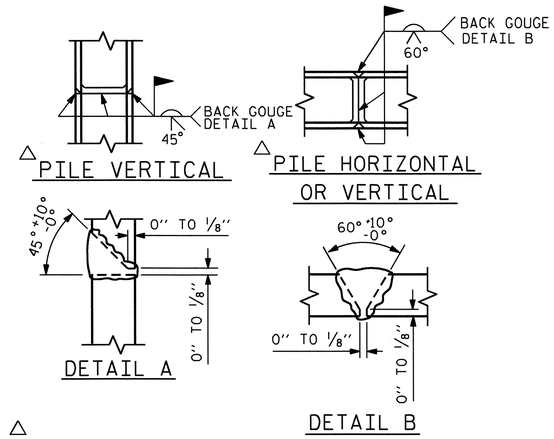

PILE SPLICE DETAILS

BAR TYPES

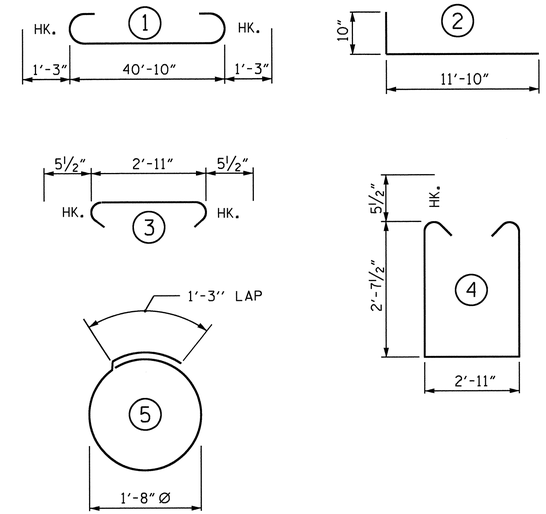

ALL BAR DIMENSIONS ARE OUT TO OUT

BILL OF MATERIAL
END BENT 1

BAR	NO.	SIZE	TYPE	LENGTH	WEIGHT
B1	8	#9	1	43'-4"	1179
B2	4	#5	STR	41'-0"	171
B3	8	#4	STR	21'-9"	116
B4	11	#4	STR	2'-11"	21
H1	16	#5	2	12'-8"	211
S1	62	#5	3	3'-10"	248
S2	62	#5	4	9'-1"	587
S3	24	#4	5	6'-6"	104
V1	76	#4	STR	4'-10"	245
V2	36	#5	STR	7'-10"	294
REINFORCING STEEL					3176 LBS.

CLASS A CONCRETE BREAKDOWN

POUR #1	CAP, CONCRETE COLLARS & LOWER PART OF WINGS	18.4 C.Y.
TOTAL CLASS A CONCRETE		18.4 C.Y.

HP 12 X 53 STEEL PILES
NO: 6 LIN. FT.= 450

PILE REDRIVES
EACH 3

STEEL PILE POINTS
EACH 6

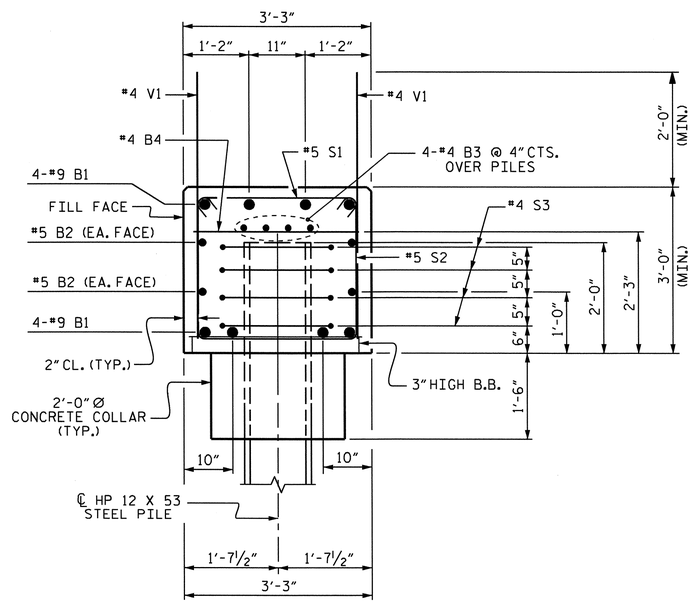

SECTION A-A

PROJECT NO. B-4028
BLADEN COUNTY
STATION: 46+85.50 -L-

SHEET 3 OF 3

STATE OF NORTH CAROLINA
DEPARTMENT OF TRANSPORTATION
RALEIGH

SUBSTRUCTURE
INTEGRAL
END BENT 1

NORTH CAROLINA PROFESSIONAL SEAL 14855 ENGINEER DOUGLAS R. CALHOUN
6/25/12

REVISIONS							SHEET NO.
NO.	BY:	DATE:	NO.	BY:	DATE:		S-103
1			3				TOTAL SHEETS
2			4				147

DRAWN BY : M.L. BROWN DATE : 10/10
CHECKED BY : T. BANKOVICH DATE : 11/10

17-MAY-2012 11:04
R:\Structures\STR2\Sub_Draw\B-4028_str2_sd_EBI.dgn
asorsenginh

STR. #2

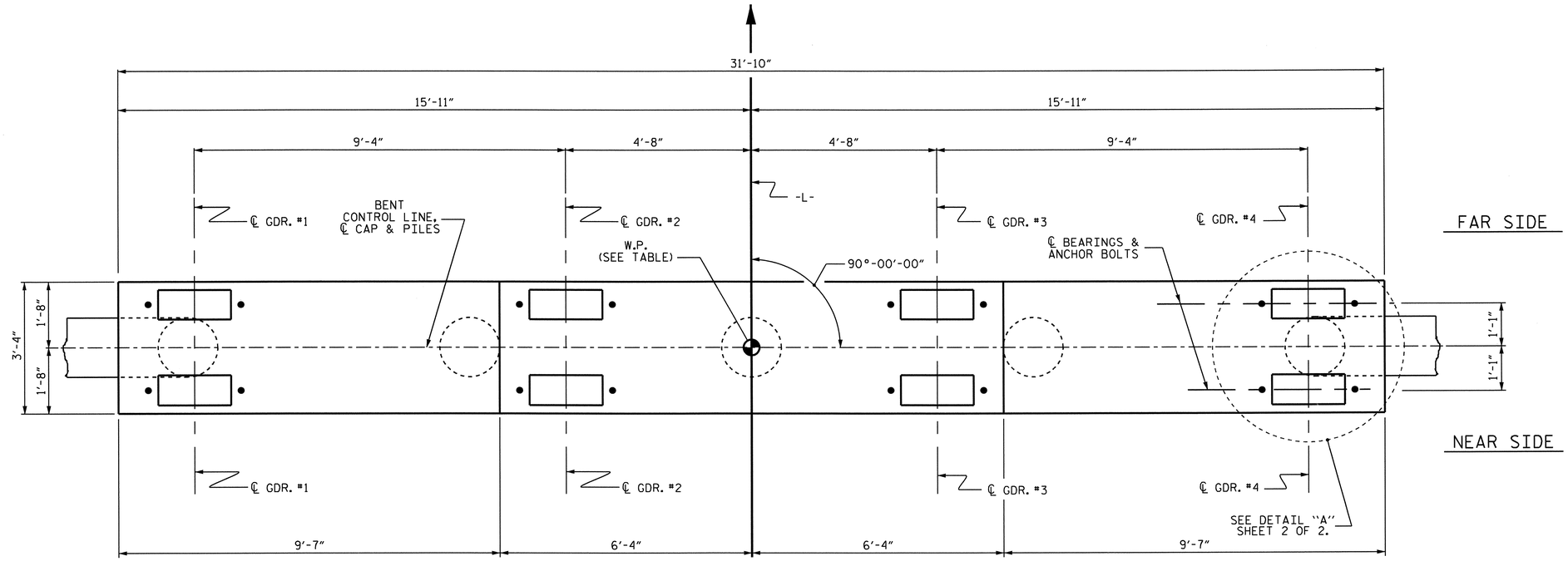

PLAN

NOTES

STIRRUPS AND "U" BARS IN CAP MAY BE SHIFTED AS NECESSARY TO CLEAR ANCHOR BOLTS.

FOR ADDITIONAL REINFORCING STEEL IN PP 18 X 0.50 GALVANIZED STEEL PIPE PILES, SEE 18" STEEL PIPE PILE STANDARD.

FOR PILE SPLICE DETAILS, SEE 18" STEEL PIPE PILE STANDARD.

GALVANIZE THE TOP OF EACH INTERIOR BENT PILE A MINIMUM OF 34 FEET. GALVANIZE IN ACCORDANCE WITH SECTION 1076 OF THE STANDARD SPECIFICATIONS.

CAP ELEVATIONS

BENT	1	2	3	4
WORK POINT	2	3	4	5
ELEV. A	23.607	23.844	24.081	24.318
ELEV. B	23.793	24.030	24.267	24.504
BOTT. OF CAP ELEV. C	20.607	20.844	21.081	21.318

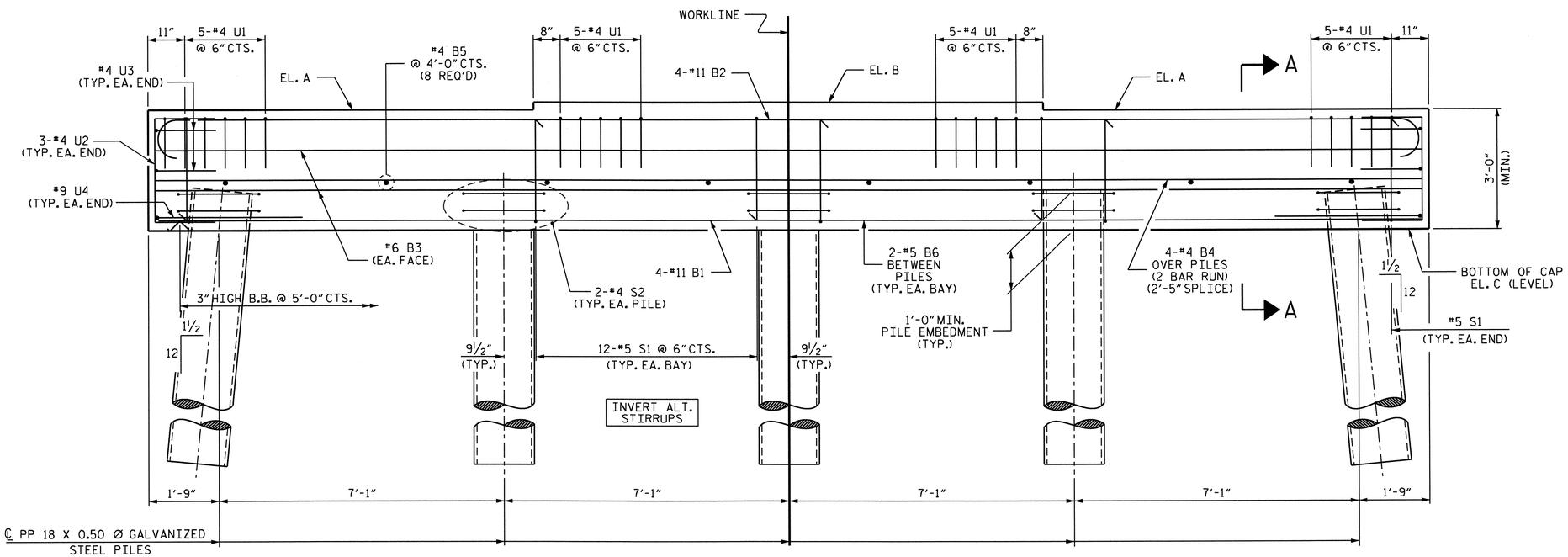

ELEVATION

FOR REINFORCING STEEL IN PIPE PILES.
SEE "PP 18 X 0.50 GALVANIZED STEEL PILE" DETAIL SHEET.

PROJECT NO. B-4028
BLADEN COUNTY
STATION: 46+85.50 -L-

SHEET 1 OF 2

STATE OF NORTH CAROLINA
DEPARTMENT OF TRANSPORTATION
RALEIGH

SUBSTRUCTURE
BENTS 1, 2, 3, & 4

NORTH CAROLINA PROFESSIONAL SEAL 14855 ENGINEER DOUGLAS R. CALHOUN
6/29/12

REVISIONS								SHEET NO.
NO.	BY:	DATE:	NO.	BY:	DATE:			S-104
1			3					TOTAL SHEETS
2			4					147

DRAWN BY : M.L. BROWN DATE : 11/10
CHECKED BY : T.N. CARROLL DATE : 1/11

17-MAY-2012 11:03
R:\Structures\STR2\Sub_Draw\B4028_str2_sd_Bent.dgn
dsorsenginh

STR. #2

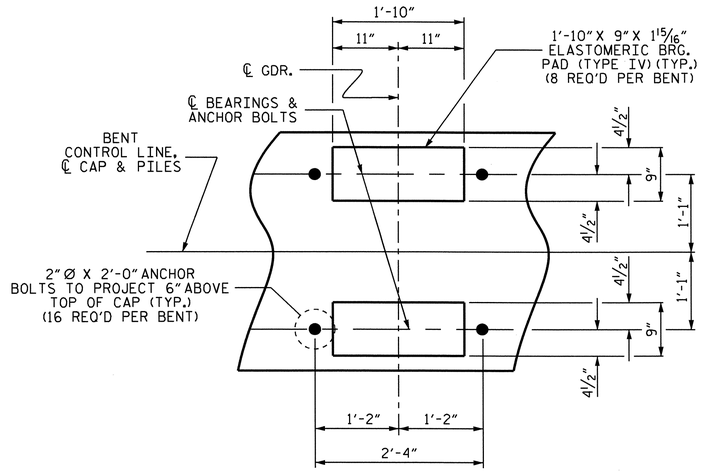

DETAIL "A"

(TYP. EA. GDR.)

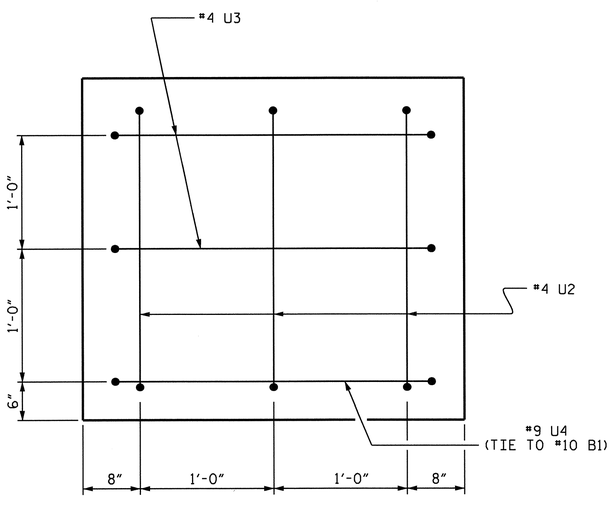

END VIEW

(TYP. EA. END)

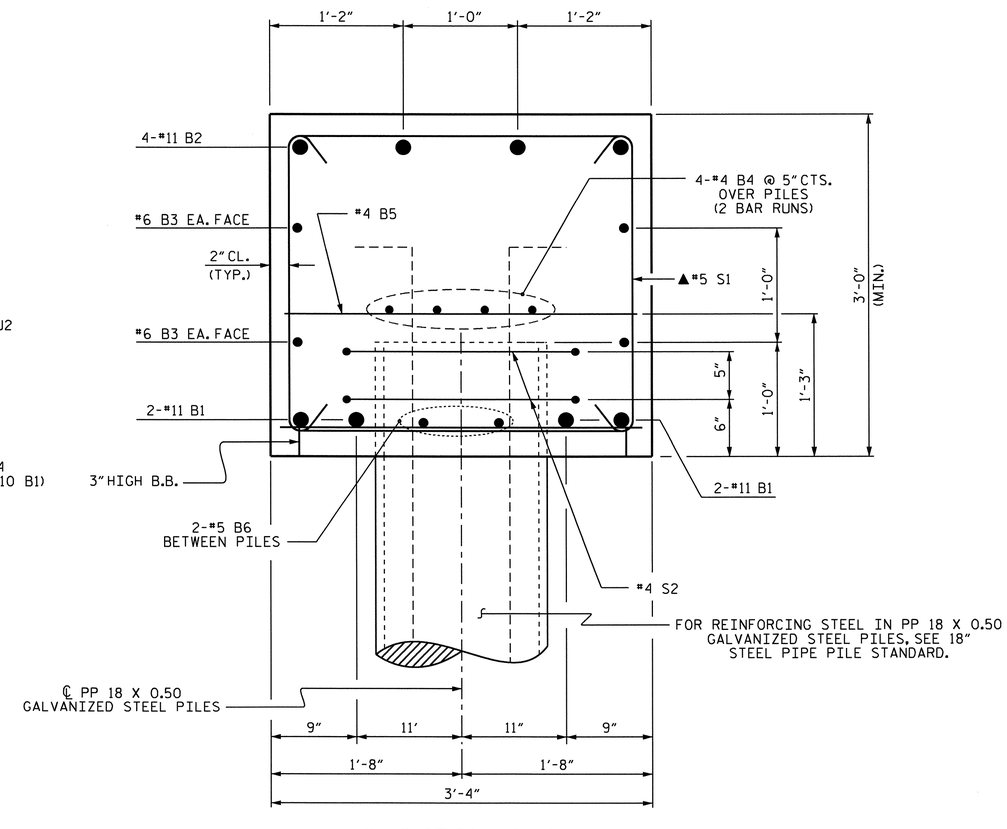

SECTION A-A

(▲INVERT ALTERNATE STIRRUPS)

BAR TYPES

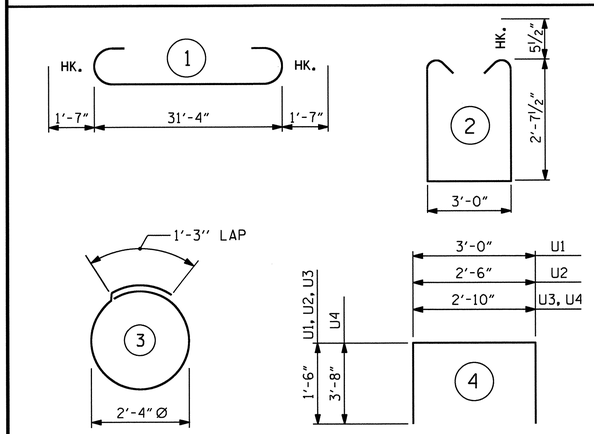

ALL BAR DIMENSIONS ARE OUT TO OUT.

BILL OF MATERIAL

FOR ONE BENT (4 REQUIRED)

BAR	NO.	SIZE	TYPE	LENGTH	WEIGHT
B1	4	#11	STR	31'-6"	669
B2	4	#11	1	34'-6"	733
B3	4	#6	STR	31'-6"	189
B4	8	#4	STR	17'-0"	91
B5	8	#4	STR	3'-0"	16
B6	8	#5	STR	5'-3"	44
S1	50	#5	2	9'-2"	478
S2	10	#4	3	8'-7"	57
U1	20	#4	4	6'-0"	80
U2	6	#4	4	5'-6"	22
U3	4	#4	4	5'-10"	16
U4	2	#9	4	10'-2"	69
REINFORCING STEEL					2464 LBS.

CLASS A CONCRETE
POUR #1 (CAP) 11.8 C.Y.

	PP 18 X 0.50 GALVANIZED STEEL PILES		PIPE PILE PLATES
BENT	NO	LIN. FT.	EACH
1	5	325	5
2	5	325	5
3	5	325	5
4	5	325	5

THE CONCRETE DISPLACED BY THE FILLED PP 18 X 0.50 GALVANIZED STEEL PILES HAS BEEN DEDUCTED FROM THE QUANTITY OF CLASS A CONCRETE FOR THE BENT CAP.

PROJECT NO. B-4028
BLADEN COUNTY
STATION: 46+85.50 -L-

SHEET 2 OF 2

STATE OF NORTH CAROLINA
DEPARTMENT OF TRANSPORTATION
RALEIGH

SUBSTRUCTURE
BENTS 1, 2, 3, & 4

NORTH CAROLINA PROFESSIONAL SEAL 14855 ENGINEER DOUGLAS R. CALHOUN
6/25/12

REVISIONS						SHEET NO.
NO.	BY:	DATE:	NO.	BY:	DATE:	S-105
1			3			TOTAL SHEETS
2			4			147

DRAWN BY : M.L. BROWN DATE : 11/10
CHECKED BY : T.N. CARROLL DATE : 1/11

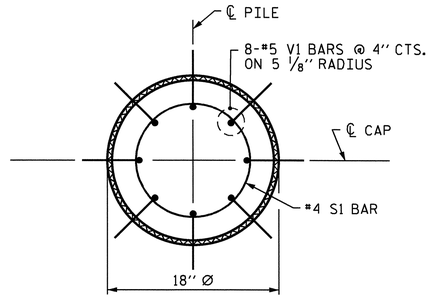

PLAN

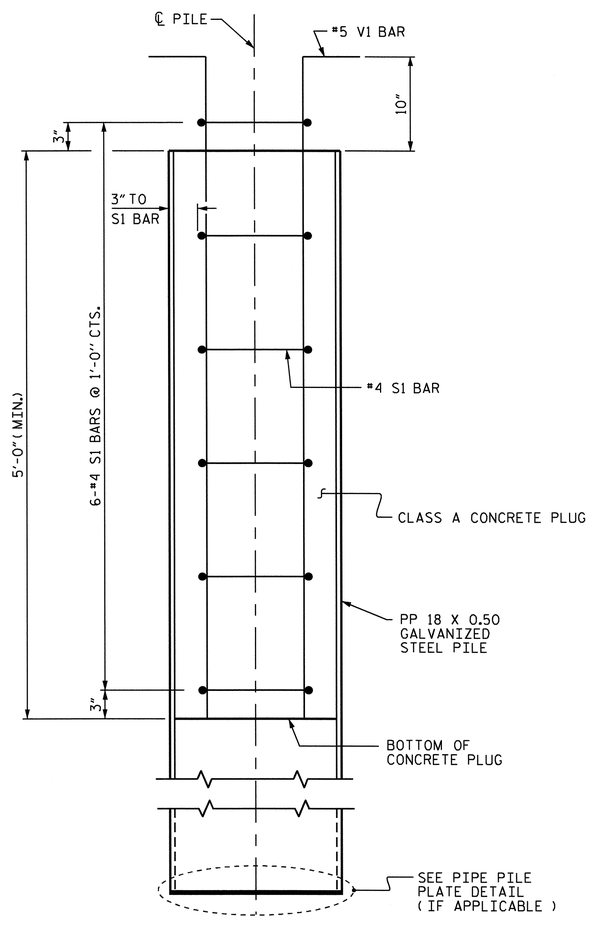

ELEVATION

PP 18 X 0.50 GALVANIZED STEEL PILE

(OPEN OR CLOSED END)

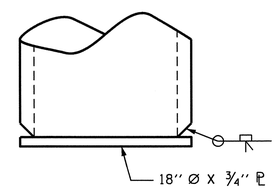

PIPE PILE PLATE DETAIL

(IF APPLICABLE)

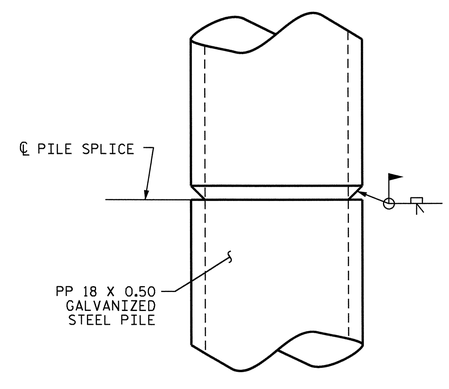

PIPE PILE SPLICE DETAIL

NOTES

PIPE PILES SHALL BE IN ACCORDANCE WITH SECTION 1084 OF THE STANDARD SPECIFICATIONS.

GALVANIZE STEEL PIPE PILES IN ACCORDANCE WITH SECTION 1076 OF THE STANDARD SPECIFICATIONS UNLESS METALLIZING IS REQUIRED. GALVANIZING OR METALLIZING PIPE PILE PLATES IS NOT REQUIRED.

PIPE PILE PLATES, IF REQUIRED, SHALL BE IN ACCORDANCE WITH SECTION 450 OF THE STANDARD SPECIFICATIONS.

REMOVE AND REPLACE OR REPAIR TO THE SATISFACTION OF THE ENGINEER PILES THAT ARE DAMAGED, DEFORMED OR COLLAPSED DURING INSTALLATION OR DRIVING.

PILE SPLICES SHALL BE IN ACCORDANCE WITH THE STANDARD SPECIFICATIONS AND AWS D1.1.

FOR CLOSED END PIPE PILES, REMOVE ALL SOIL AND WATER FROM INSIDE THE PILES JUST PRIOR TO PLACING REINFORCING STEEL AND CONCRETE FOR THE CONCRETE PLUG.

FOR OPEN END PIPE PILES, REMOVE ENOUGH SOIL AND WATER FROM INSIDE THE PILES TO CONSTRUCT THE CONCRETE PLUG WITHOUT FOULING THE CONCRETE.

FORM THE CONCRETE PLUG SUCH THAT THE REINFORCING STEEL OR CONCRETE DOES NOT MOVE AND THE CLEARANCE FROM THE REINFORCING STEEL TO THE INSIDE OF THE PILE IS MAINTAINED AFTER CONCRETE PLACEMENT. DO NOT PLACE CONCRETE IN THE BENT CAP UNTIL THE CONCRETE PLUG HAS ATTAINED A MINIMUM COMPRESSIVE STRENGTH OF 1500 PSI.

THE REINFORCING STEEL, CLASS A CONCRETE, AND GALVANIZING ARE CONSIDERED INCIDENTAL TO THE CONTRACT UNIT PRICE BID PER LINEAR FOOT FOR PP 18 X 0.50 GALVANIZED STEEL PILES.

BILL OF MATERIAL FOR ONE PP 18 X 0.50 GALVANIZED STEEL PILE

BAR	NO.	SIZE	TYPE	LENGTH	WEIGHT
S1	6	#4	1	4'-5''	18
V1	8	#5	2	6'-8''	56
REINFORCING STEEL =					74 lbs
CLASS A CONCRETE					
5'-0'' MINIMUM PLUG					0.3 CY

BAR TYPES

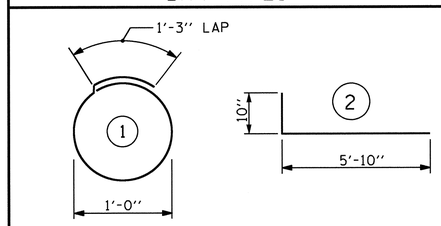

ALL BAR DIMENSIONS ARE OUT TO OUT.

PROJECT NO. B-4028

BLADEN COUNTY

STATION: 46+85.50 -L-

STATE OF NORTH CAROLINA
DEPARTMENT OF TRANSPORTATION
RALEIGH

STANDARD

18'' STEEL PIPE PILE

NORTH CAROLINA PROFESSIONAL SEAL 14855 ENGINEER DOUGLAS R. CALHOUN
6/25/12

REVISIONS						SHEET NO.
NO.	BY:	DATE:	NO.	BY:	DATE:	S-106
1			3			TOTAL SHEETS
2			4			147

STD. NO. SPP3

STR. #2

ASSEMBLED BY : M.L. BROWN	DATE : 11/10		
CHECKED BY : T.N. CARROLL	DATE : 1/11		
DRAWN BY : RWW 1/01	REV. 10/1/05	LBG/TLA	
CHECKED BY : LES 1/01	REV. 5/1/06R	MAA/KMM	
	REV. 10/1/11	MAA/GM	

17-MAY-2012 11:03
R:\Structures\STR2\Sub_Draw\B4028_str2_sd_Bent.dgn
asorsenginh

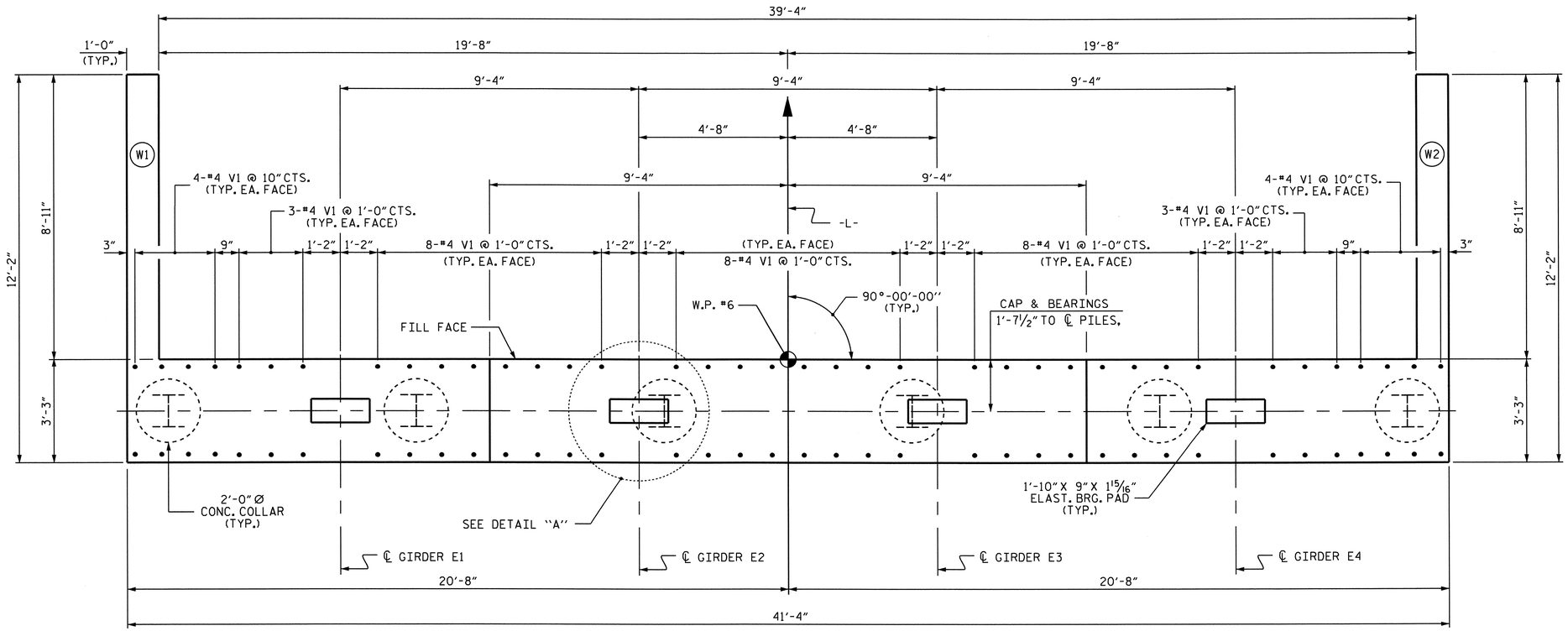

PLAN

NOTES:

INSTALL THE 4" Ø DIAMETER DRAIN PIPE THROUGH THE WING WALL AS REQUIRED FOR THE REINFORCED BRIDGE APPROACH FILLS, SEE THE ROADWAY PLANS. REINFORCING STEEL IN THE WING WALL MAY BE SHIFTED AS NECESSARY TO CLEAR THE DRAIN PIPE.

SEE SUPERSTRUCTURE SHEETS FOR UPPER PART OF INTEGRAL END BENT DETAILS.

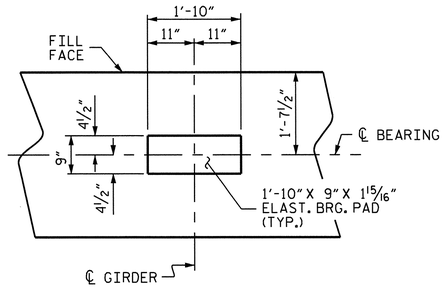

DETAIL "A"

(TYP. EA. GDR.)

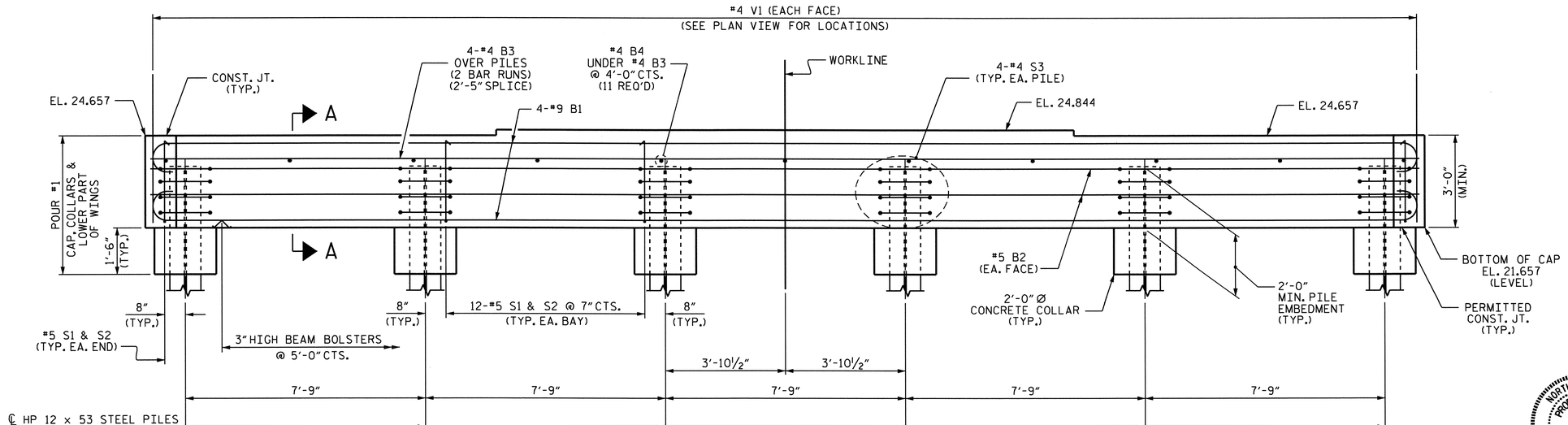

ELEVATION

PROJECT NO. B-4028

BLADEN COUNTY

STATION: 46+85.50 -L-

SHEET 1 OF 3

STATE OF NORTH CAROLINA
DEPARTMENT OF TRANSPORTATION
RALEIGH

SUBSTRUCTURE
INTEGRAL END BENT 2

NORTH CAROLINA PROFESSIONAL SEAL 14855 ENGINEER DOUGLAS R. CALHOUN
6/25/12

REVISIONS						SHEET NO.
NO.	BY:	DATE:	NO.	BY:	DATE:	S-107
1			3			TOTAL SHEETS
2			4			147

DRAWN BY : M.L. BROWN DATE : 10/10
CHECKED BY : T. BANKOVICH DATE : 11/10

25-JUN-2012 10:54
R:\Structures\STR2\Sub_Draw\B-4028_str2_sd_EB2.dgn
asorsenglnh

STR. #2

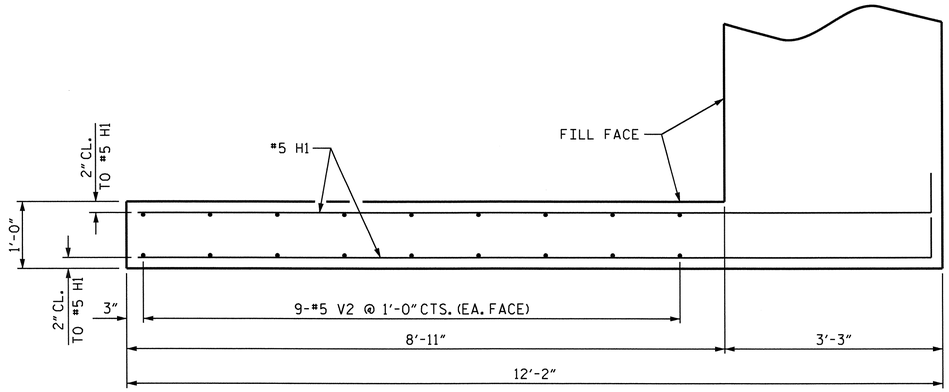

PLAN OF WING

(LEFT WING SHOWN, RIGHT WING SIMILAR)

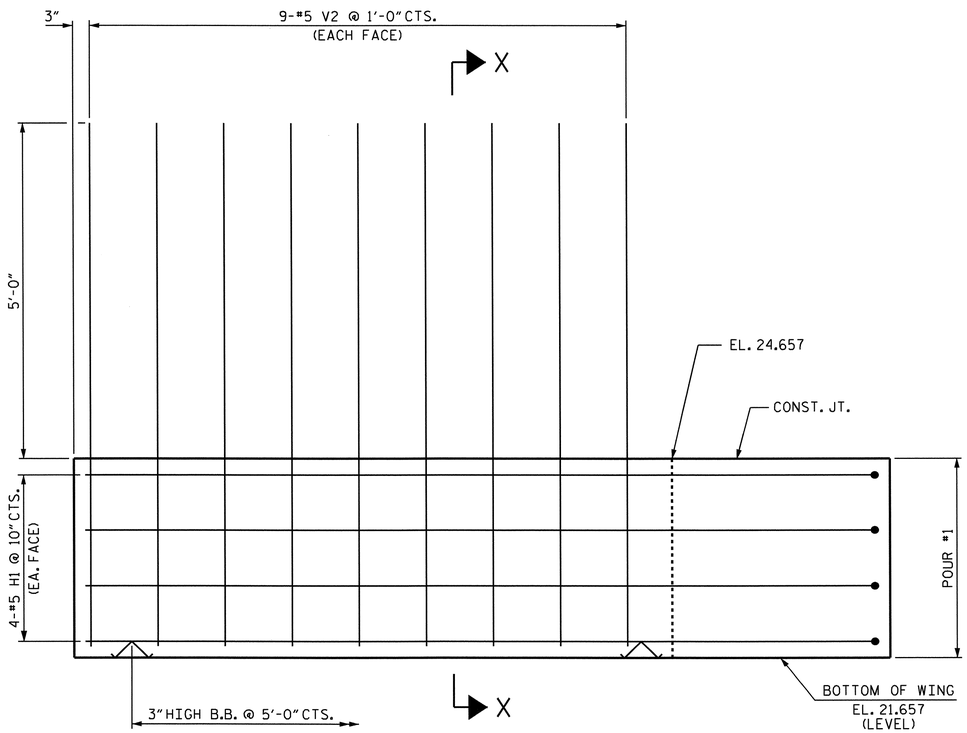

ELEVATION OF WING

(LEFT WING SHOWN, RIGHT WING SIMILAR)

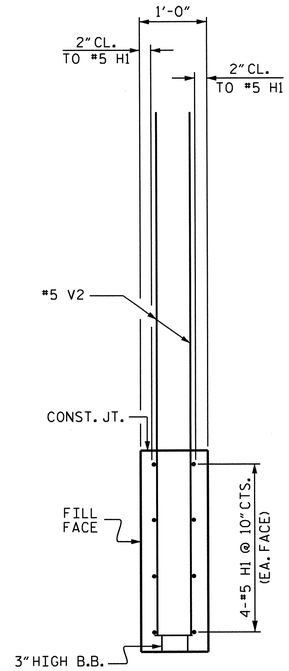

SECTION X-X

PROJECT NO. B-4028

BLADEN COUNTY

STATION: 46+85.50 -L-

SHEET 2 OF 3

STATE OF NORTH CAROLINA
DEPARTMENT OF TRANSPORTATION
RALEIGH

SUBSTRUCTURE
INTEGRAL
END BENT 2

NORTH CAROLINA PROFESSIONAL SEAL 14855 ENGINEER DOUGLAS R. CALHOUN
6/29/12

REVISIONS						SHEET NO.
NO.	BY:	DATE:	NO.	BY:	DATE:	S-108
1			3			TOTAL SHEETS
2			4			147

DRAWN BY : M.L. BROWN DATE : 10/10
CHECKED BY : T. BANKOVICH DATE : 11/10

25-JUN-2012 10:55
R:\Structures\STR2\Sub_Draw\B-4028_str2_sd_EB2.dgn
asorsenglnh

STR. #2

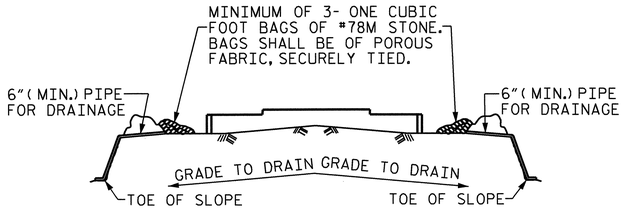

BAGGED STONE AND PIPE SHALL BE PLACED IMMEDIATELY AFTER COMPLETION OF END BENT EXCAVATION. PIPE MAY BE EITHER CONCRETE, CORRUGATED STEEL, CORRUGATED ALUMINUM ALLOY, OR CORRUGATED PLASTIC. PERFORATED PIPE WILL NOT BE ALLOWED.

BAGGED STONE SHALL REMAIN IN PLACE UNTIL THE ENGINEER DIRECTS THAT IT BE REMOVED. THE CONTRACTOR SHALL REMOVE AND DISPOSE OF SILT ACCUMULATIONS AT BAGGED STONE WHEN SO DIRECTED BY THE ENGINEER. BAGS SHALL BE REMOVED AND REPLACED WHENEVER THE ENGINEER DETERMINES THAT THEY HAVE DETERIORATED AND LOST THEIR EFFECTIVENESS.

NO SEPARATE PAYMENT WILL BE MADE FOR THIS WORK AND THE ENTIRE COST OF THIS WORK SHALL BE INCLUDED IN THE UNIT CONTRACT PRICE BID FOR THE SEVERAL PAY ITEMS.

TEMPORARY DRAINAGE AT END BENT

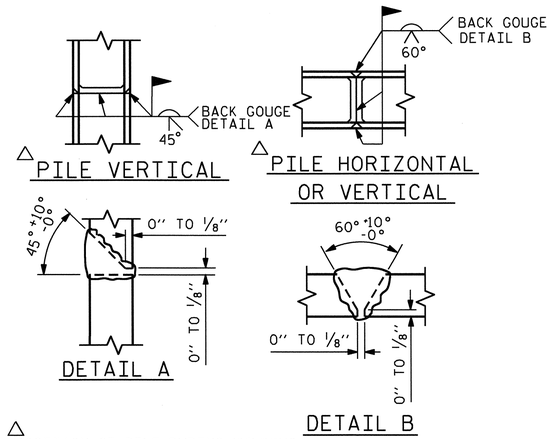

PILE SPLICE DETAILS

BAR TYPES

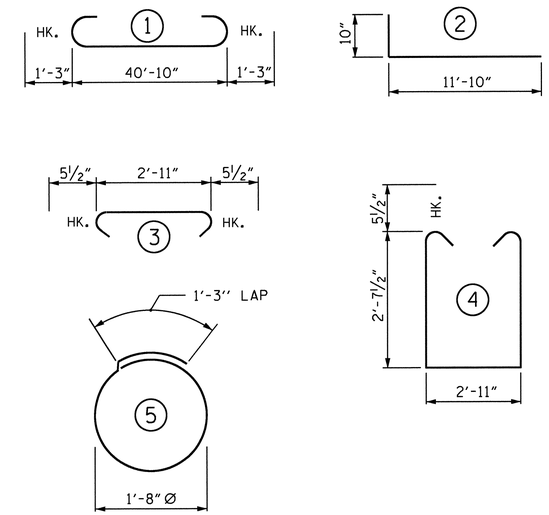

ALL BAR DIMENSIONS ARE OUT TO OUT

BILL OF MATERIAL
END BENT 2

BAR	NO.	SIZE	TYPE	LENGTH	WEIGHT
B1	8	#9	1	43'-4"	1179
B2	4	#5	STR	41'-0"	171
B3	8	#4	STR	21'-9"	116
B4	11	#4	STR	2'-11"	21
H1	16	#5	2	12'-8"	211
S1	62	#5	3	3'-10"	248
S2	62	#5	4	9'-1"	587
S3	24	#4	5	6'-6"	104
V1	76	#4	STR	4'-10"	245
V2	36	#5	STR	7'-10"	294

REINFORCING STEEL 3176 LBS.

CLASS A CONCRETE BREAKDOWN

POUR #1 CAP, CONCRETE COLLARS & LOWER PART OF WINGS 18.4 C.Y.

TOTAL CLASS A CONCRETE 18.4 C.Y.

HP 12 X 53 STEEL PILES
NO: 6 LIN. FT.= 450

PILE REDRIVES
EACH 3

STEEL PILE POINTS
EACH 6

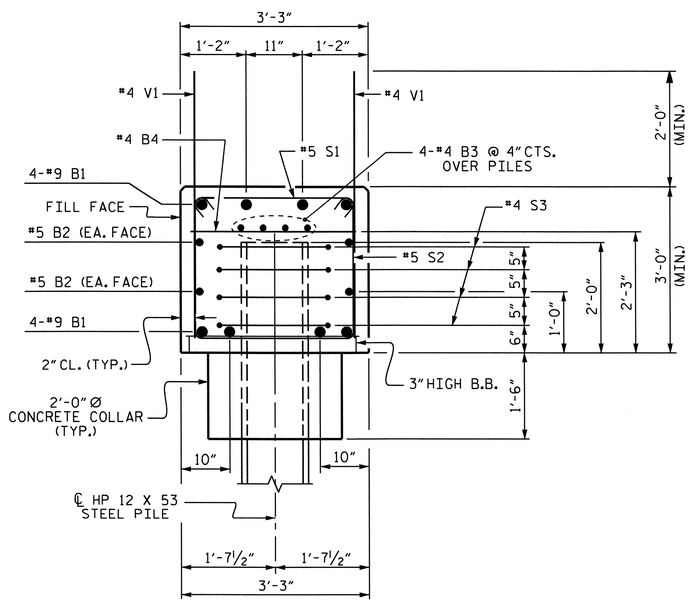

SECTION A-A

PROJECT NO. B-4028
BLADEN COUNTY
STATION: 46+85.50 -L-

SHEET 3 OF 3

STATE OF NORTH CAROLINA
DEPARTMENT OF TRANSPORTATION
RALEIGH

SUBSTRUCTURE
INTEGRAL
END BENT 2

NORTH CAROLINA PROFESSIONAL SEAL 14855 ENGINEER DOUGLAS R. CALHOUN
6/25/12

REVISIONS							SHEET NO.
NO.	BY:	DATE:	NO.	BY:	DATE:		S-109
1			3				TOTAL SHEETS
2			4				147

DRAWN BY : M.L. BROWN DATE : 10/10
CHECKED BY : T. BANKOVICH DATE : 11/10

17-MAY-2012 11:01
R:\Structures\STR2\Sub_Draw\B-4028_str2_sd_EB2.dgn
asorsenginh

STR. #2

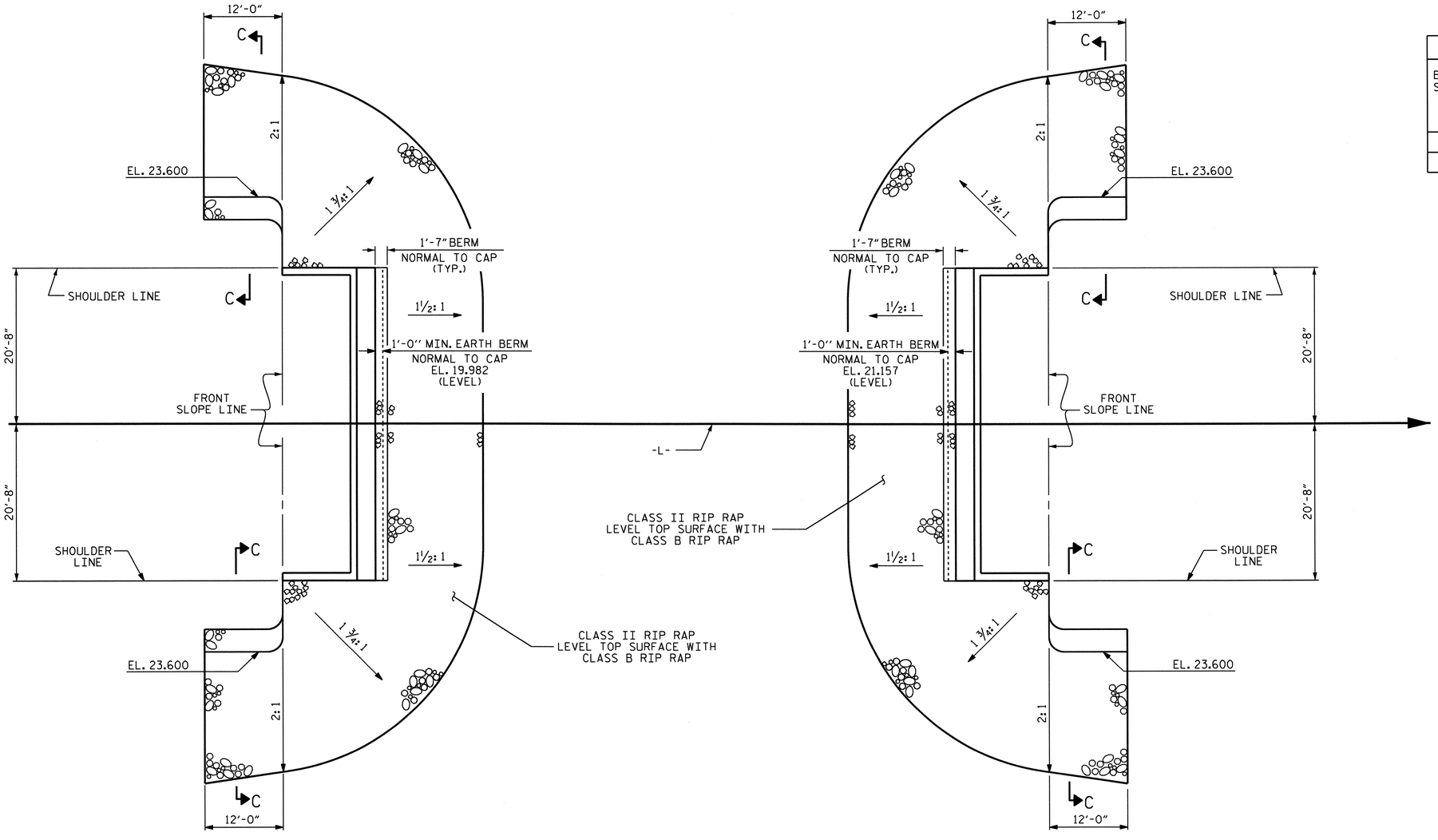

END BENT 1

PLAN OF RIP RAP

END BENT 2

ESTIMATED QUANTITIES			
BRIDGE @ STA. 46+85.50 -L-	CLASS B RIP RAP	RIP RAP CLASS II (2'-0" THICK)	GEOTEXTILE FOR DRAINAGE
	TONS	TONS	SQUARE YARDS
END BENT #1	105	420	465
END BENT #2	125	485	540

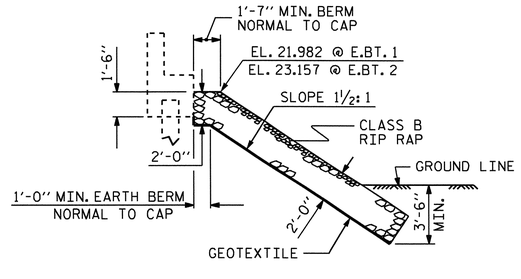

℄ SECTION

BERM RIP RAPPED

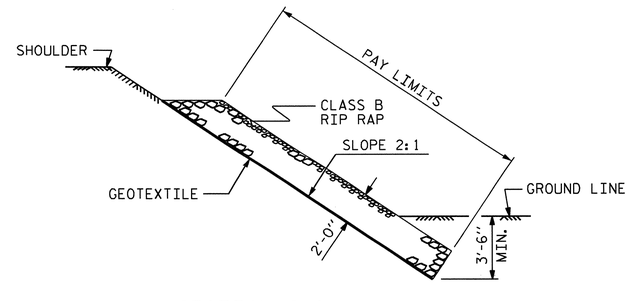

SECTION C-C

PROJECT NO. B-4028

BLADEN COUNTY

STATION: 46+85.50 -L-

STATE OF NORTH CAROLINA
DEPARTMENT OF TRANSPORTATION
RALEIGH

STANDARD

RIP RAP DETAILS

NORTH CAROLINA PROFESSIONAL SEAL 14855 ENGINEER DOUGLAS R. CALHOUN
6/25/12

REVISIONS						
NO.	BY:	DATE:	NO.	BY:	DATE:	
1			3			
2			4			

SHEET NO. S-110

TOTAL SHEETS 147

ASSEMBLED BY :	M. L. BROWN	DATE :	1/11
CHECKED BY :	T. N. CARROLL	DATE :	4/11
DRAWN BY : REK 1/84	REV. 5/1/06R	TLA/GM	
CHECKED BY : RDU 1/84	REV. 10/1/11	MAA/GM	
	REV. 12/21/11	MAA/GM	

17-MAY-2012 11:00
R:\Structures\STR2\Misc_draw\B-4028_sd_RR.dgn
asorsenginh

STD. NO. RR1

STR. #2

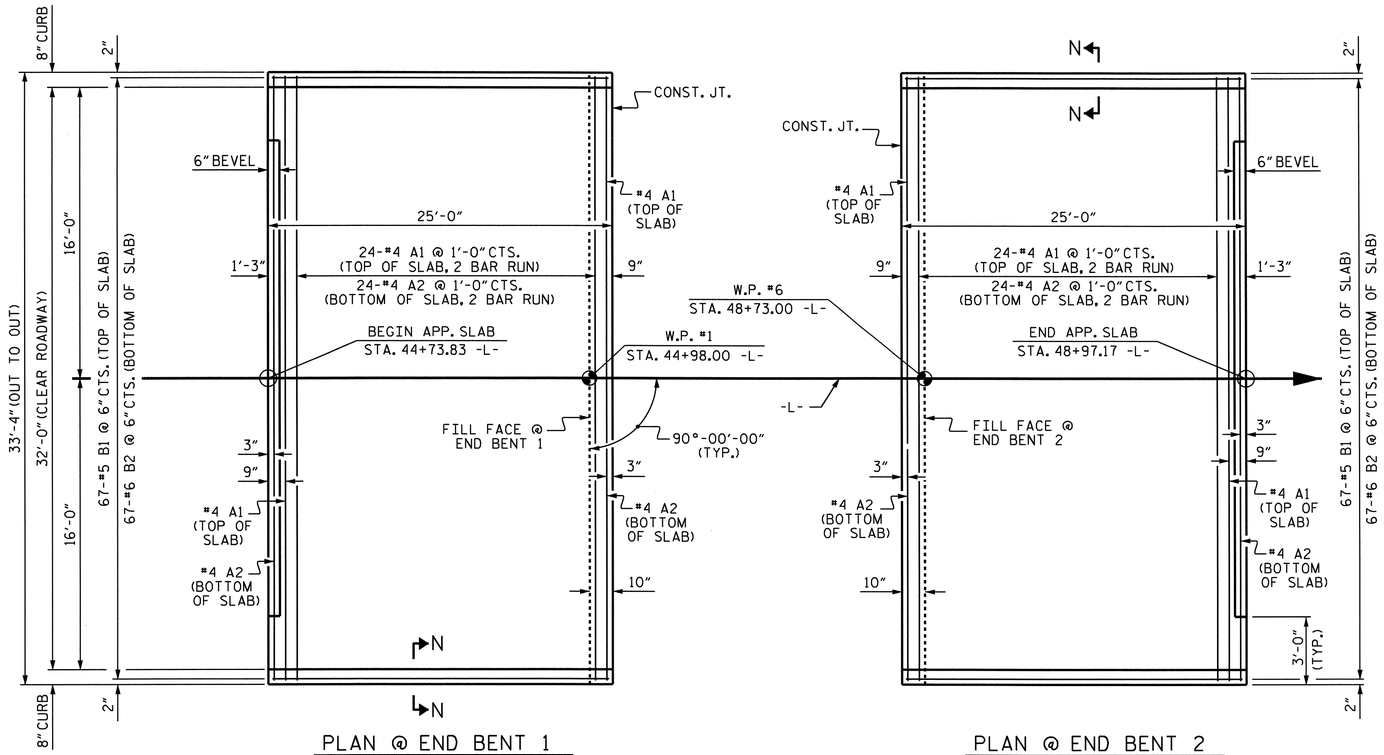

DIMENSIONS SHOWN ARE TYPICAL FOR BOTH APPROACH SLABS

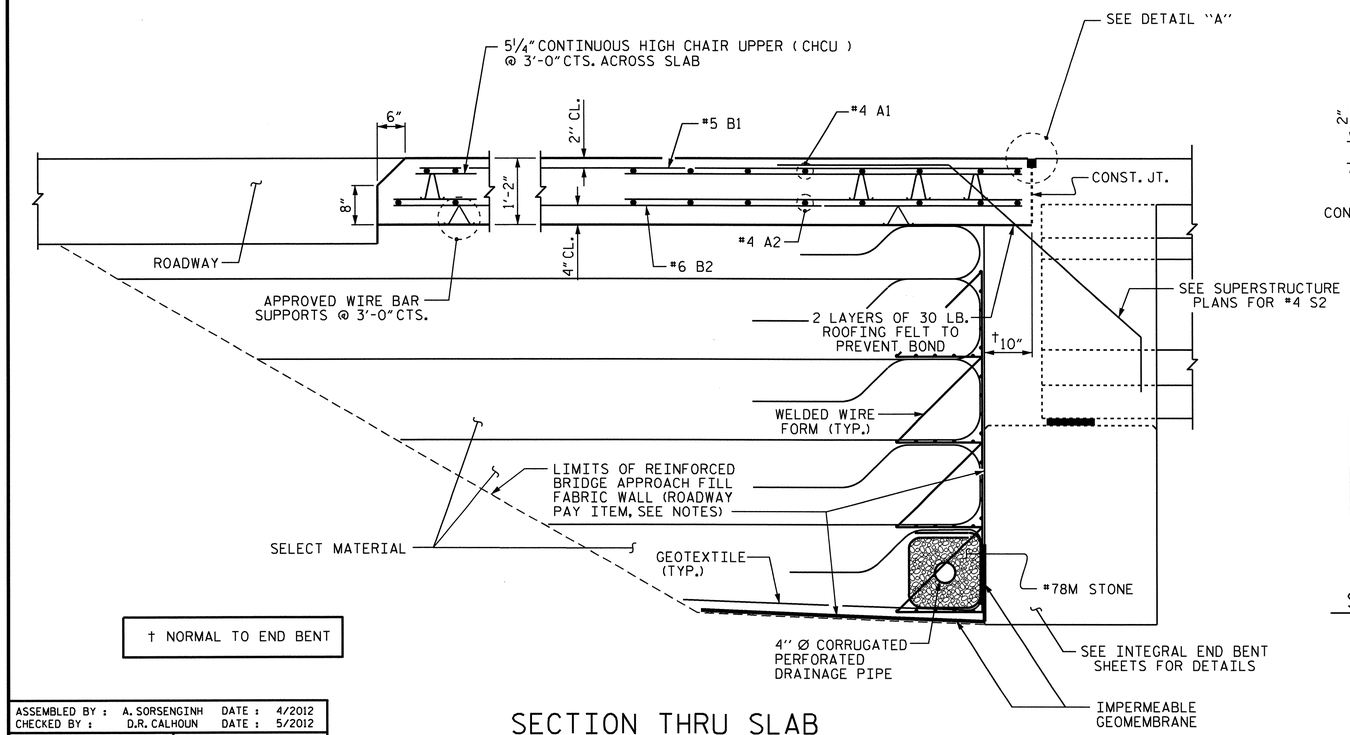

† NORMAL TO END BENT

SECTION THRU SLAB

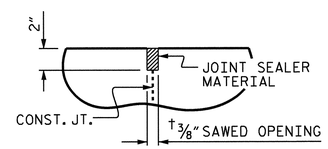

DETAIL "A"

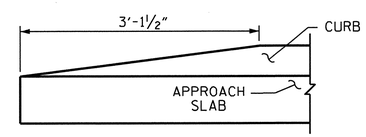

END OF CURB WITHOUT SHOULDER BERM GUTTER

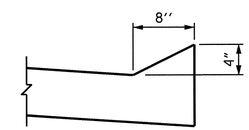

SECTION N-N

NOTES

APPROACH SLAB SHALL NOT BE CONSTRUCTED PRIOR TO COMPLETION OF THE BRIDGE DECK.

FOR REINFORCED BRIDGE APPROACH FILL FABRIC WALL INCLUDING GEOTEXTILE, IMPERMEABLE GEOMEMBRANE, 4" Ø DRAINAGE PIPE, #78M STONE, WELDED WIRE FORM, AND SELECT MATERIAL, SEE ROADWAY PLANS.

AREA BETWEEN THE WINGWALL AND APPROACH SLAB SHALL BE GRADED TO DRAIN THE WATER AWAY FROM THE FILL FACE OF THE BRIDGE AND SHALL BE PAVED. SEE ROADWAY PLANS.

THE JOINT OPENING AT THE APPROACH SLAB/DECK INTERFACE SHALL BE SAWED NO MORE THAN 12 HOURS AFTER THE APPROACH SLAB IS CAST. THE JOINT SHALL BE CLEANED OF ALL DEBRIS BEFORE THE SEALANT IS APPLIED. THE JOINT SEALER MATERIAL SHALL CONFORM TO THE REQUIREMENTS OF SECTION 1028-3 OF THE STANDARD SPECIFICATIONS.

BILL OF MATERIAL

FOR ONE APPROACH SLAB (2 REQ'D)

BAR	NO.	SIZE	TYPE	LENGTH	WEIGHT
* A1	52	#4	STR	17'-6"	608
A2	52	#4	STR	17'-5"	605
* B1	67	#5	STR	24'-2"	1689
B2	67	#6	STR	24'-8"	2482
REINFORCING STEEL				LBS.	3087
* EPOXY COATED REINFORCING STEEL				LBS.	2297
CLASS AA CONCRETE				C. Y.	36.1

SPLICE LENGTHS

BAR SIZE	EPOXY COATED	UNCOATED
#4	2'-0"	1'-9"
#5	2'-6"	2'-2"
#6	3'-10"	2'-7"

PROJECT NO. B-4028

BLADEN COUNTY

STATION: 46+85.50 -L-

SHEET 1 OF 2

STATE OF NORTH CAROLINA
DEPARTMENT OF TRANSPORTATION
RALEIGH

STANDARD

BRIDGE APPROACH SLAB FOR INTEGRAL ABUTMENT

NORTH CAROLINA PROFESSIONAL SEAL 14855 ENGINEER DOUGLAS R. CALHOUN
6/25/12

ASSEMBLED BY :	A. SORSENGINH	DATE :	4/2012
CHECKED BY :	D.R. CALHOUN	DATE :	5/2012
DRAWN BY : TLA	10/05	ADDED 5/1/06RR	KMM/GM
CHECKED BY : GM	5/06	REV. 10/1/11	MAA/GM
		REV. 12/21/11	MAA/GM

REVISIONS								SHEET NO.
NO.	BY:	DATE:	NO.	BY:	DATE:			S-111
1			3					TOTAL SHEETS
2			4					147

STD. NO. BAS5

STR. #2

17-MAY-2012 11:00
R:\Structures\STR2\Misc_draw\B4028_SD_AS.dgn
asorsenginh

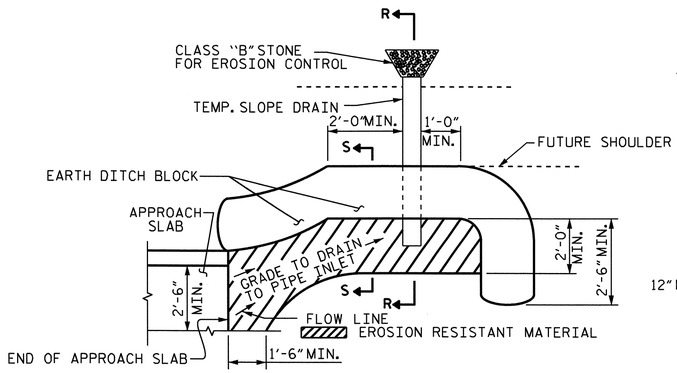

NOTE: IMMEDIATELY AFTER THE CONSTRUCTION OF THE APPROACH SLAB, THE CONTRACTOR SHALL PROVIDE TEMPORARY BERM AND SLOPE DRAIN. CONTRACTOR SHALL GRADE TO PIPE INLET AND PROVIDE EROSION RESISTANT MATERIAL AS SHOWN. THE EROSION RESISTANT MATERIAL SHALL BE EITHER 1) ASPHALT PLANT MIX, TYPE 1 OR TYPE 2, MIN. 2" DEPTH, 2) EROSION CONTROL MAT, OR 3) CONCRETE, AS DIRECTED BY THE ENGINEER. THE SLOPE DRAIN SHALL CONSIST OF A NON-PERFORATED TEMPORARY DRAINAGE PIPE, 12 INCHES IN DIAMETER.

PLAN VIEW

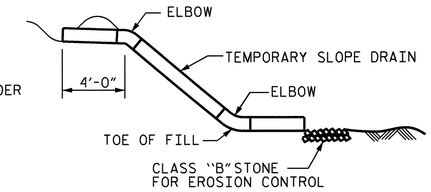

SECTION R-R

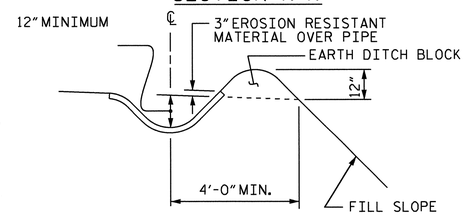

SECTION S-S

TEMPORARY BERM AND SLOPE DRAIN DETAILS

(TO BE USED WHEN SHOULDER BERM GUTTER IS REQUIRED)

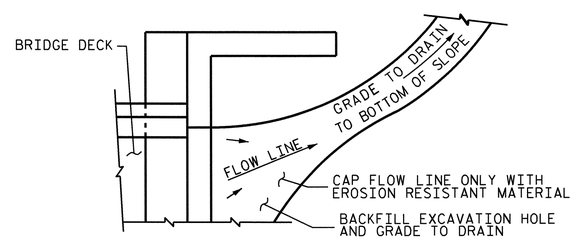

NOTE: IF THE APPROACH SLAB IS NOT CONSTRUCTED IMMEDIATELY AFTER THE BACKFILLING OF THE END BENT EXCAVATION, GRADE TO DRAIN TO THE BOTTOM OF THE SLOPE AND PROVIDE EROSION RESISTANT MATERIAL, SUCH AS FIBERGLASS ROVING OR AS DIRECTED BY THE ENGINEER TO PREVENT SOIL EROSION AND TO PROTECT THE AREA ADJACENT TO THE STRUCTURE. THE CONTRACTOR WILL BE REQUIRED TO REMOVE THESE MATERIALS PRIOR TO CONSTRUCTION OF THE APPROACH SLAB.

TEMPORARY DRAINAGE DETAIL

PROJECT NO. B-4028
BLADEN COUNTY
STATION: 46+85.50 -L-

SHEET 2 OF 2

STATE OF NORTH CAROLINA
DEPARTMENT OF TRANSPORTATION
RALEIGH

STANDARD

BRIDGE APPROACH
SLAB DETAILS

NORTH CAROLINA PROFESSIONAL SEAL 14855 ENGINEER DOUGLAS R. CALHOUN
6/25/12

REVISIONS						SHEET NO.
NO.	BY:	DATE:	NO.	BY:	DATE:	S-112
1			3			TOTAL SHEETS
2			4			147

ASSEMBLED BY :	A. SORSENGINH	DATE :	4/2012
CHECKED BY :	D.R. CALHOUN	DATE :	5/2012
DRAWN BY : FCJ	11/88	REV. 5/7/03	RWW/JTE
CHECKED BY : ARB	11/88	REV. 5/1/06RRR	MAA/KMM
		REV. 10/1/11	MAA/GM

17-MAY-2012 11:00
R:\Structures\STR2\Misc_draw\B4028_SD_AS.dgn
asorsenginh

STD. NO. BAS4

STR. #2

F.A. PROJECT No. BRSTP-0011(9)

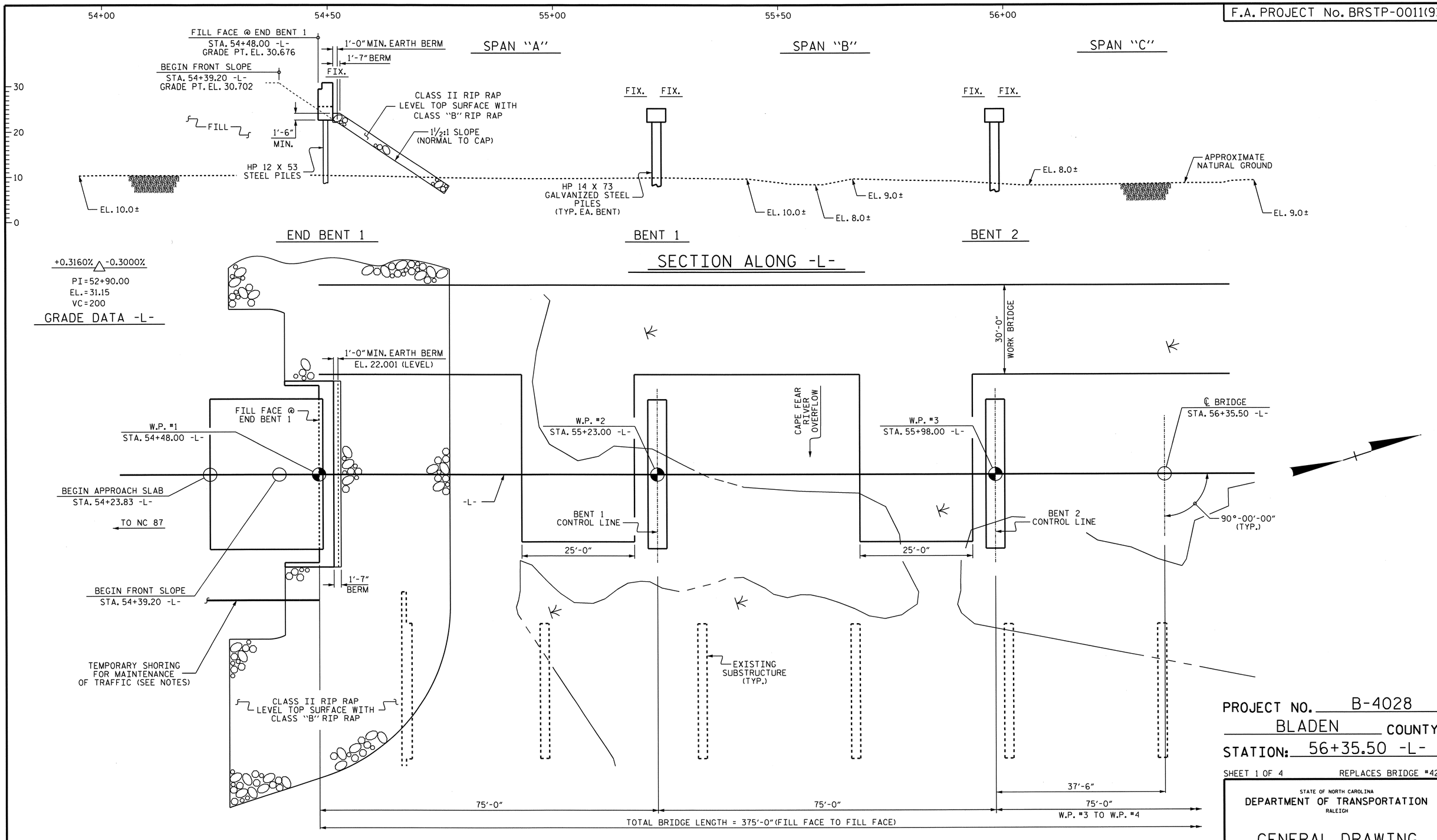

PLAN

(PILES NOT SHOWN IN PLAN VIEW FOR CLARITY)

PROJECT NO. B-4028

BLADEN COUNTY

STATION: 56+35.50 -L-

SHEET 1 OF 4 REPLACES BRIDGE #42

STATE OF NORTH CAROLINA
DEPARTMENT OF TRANSPORTATION
RALEIGH

GENERAL DRAWING
BRIDGE ON NC 11 OVER
CAPE FEAR RIVER OVERFLOW
BETWEEN NC 87 AND SR 1539

NORTH CAROLINA PROFESSIONAL SEAL 14855 ENGINEER DOUGLAS R. CALHOUN
6/25/12

REVISIONS						SHEET NO.
NO.	BY:	DATE:	NO.	BY:	DATE:	S-113
1			3			TOTAL SHEETS
2			4			147

DRAWN BY : A.S./A.V. ROYAL DATE : 8/11
CHECKED BY : M.L. BROWN DATE : 8/11

25-JUN-2012 11:30
R:\Structures\STR3\Gen_draw\B-4028_str3_SD_GD.dgn
asorsenginh

STR. #3

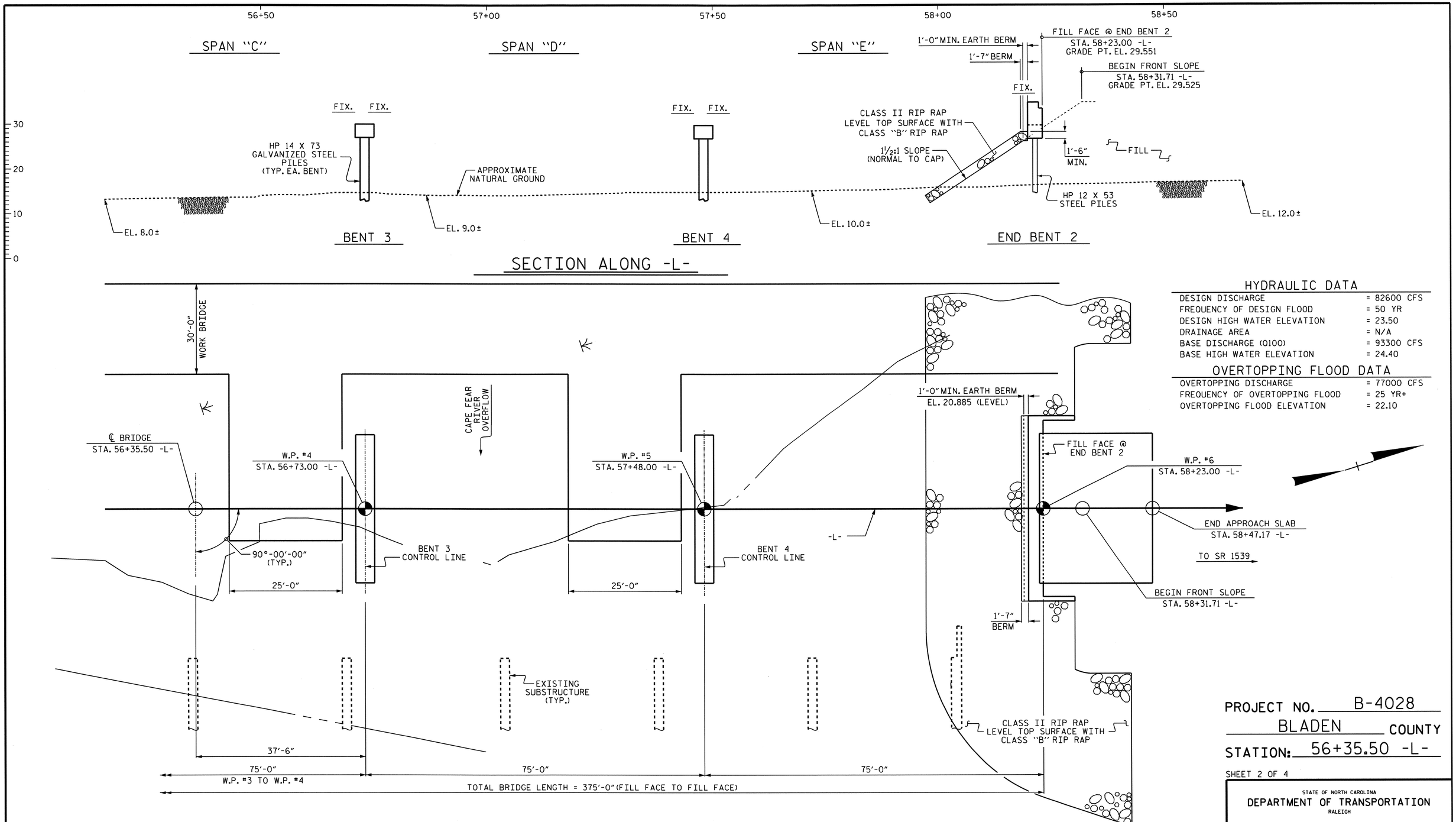

PLAN

(PILES NOT SHOWN IN PLAN VIEW FOR CLARITY)

HYDRAULIC DATA

DESIGN DISCHARGE	= 82600 CFS
FREQUENCY OF DESIGN FLOOD	= 50 YR
DESIGN HIGH WATER ELEVATION	= 23.50
DRAINAGE AREA	= N/A
BASE DISCHARGE (Q100)	= 93300 CFS
BASE HIGH WATER ELEVATION	= 24.40

OVERTOPPING FLOOD DATA

OVERTOPPING DISCHARGE	= 77000 CFS
FREQUENCY OF OVERTOPPING FLOOD	= 25 YR+
OVERTOPPING FLOOD ELEVATION	= 22.10

PROJECT NO. B-4028

BLADEN COUNTY

STATION: 56+35.50 -L-

SHEET 2 OF 4

STATE OF NORTH CAROLINA
DEPARTMENT OF TRANSPORTATION
RALEIGH

GENERAL DRAWING

BRIDGE ON NC 11 OVER
CAPE FEAR RIVER OVERFLOW
BETWEEN NC 87 AND SR 1539

NORTH CAROLINA PROFESSIONAL SEAL 14855 ENGINEER DOUGLAS R. CALHOUN
8/25/12

REVISIONS							SHEET NO.
NO.	BY:	DATE:	NO.	BY:	DATE:		S-114
1			3				TOTAL SHEETS
2			4				147

DRAWN BY : A.S./A.V. ROYAL DATE : 8/11
CHECKED BY : M. L. BROWN DATE : 8/11

25-JUN-2012 11:30
R:\Structures\STR3\Gen_draw\B-4028_str3_SD_GD.dgn
asorsenglnh

STR. #3

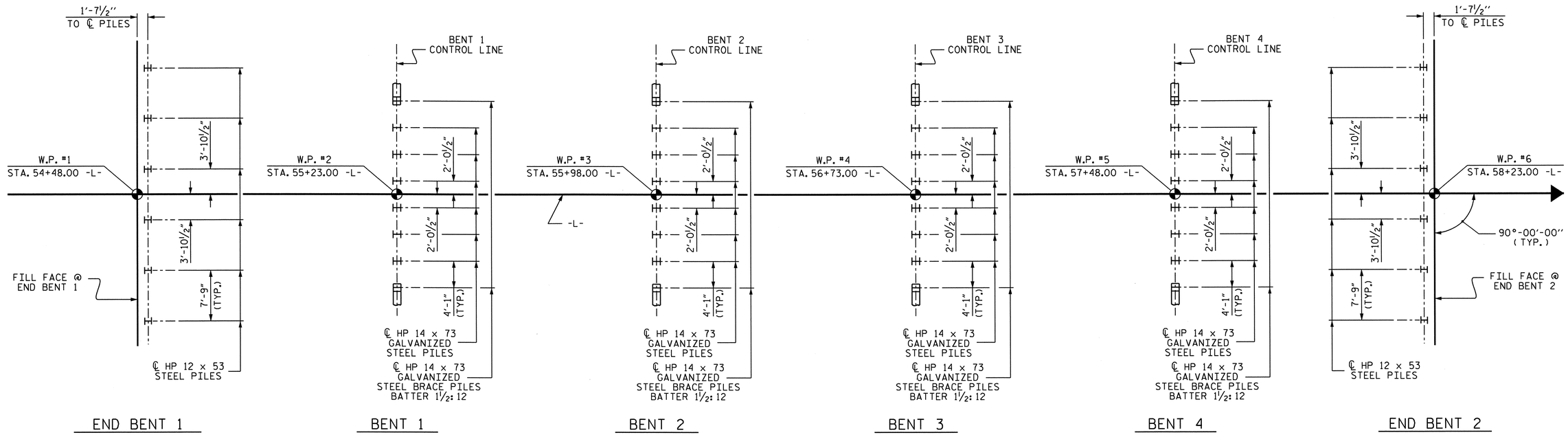

FOUNDATION LAYOUT

(DIMENSIONS LOCATING PILES ARE SHOWN TO ℄ PILES)

FOUNDATION NOTES:

FOR PILES, SEE SECTION 450 OF THE STANDARD SPECIFICATIONS.

PILES AT END BENT 1 AND END BENT 2 ARE DESIGNED FOR A FACTORED RESISTANCE OF 105 TONS PER PILE.

PILES AT BENTS 1, 2, 3 AND 4 ARE DESIGNED FOR A FACTORED RESISTANCE OF 165 TONS PER PILE.

DRIVE PILES AT END BENT 1 AND END BENT 2 TO A REQUIRED DRIVING RESISTANCE OF 175 TONS PER PILE.

STEEL H-PILE POINTS ARE REQUIRED FOR STEEL H-PILE AT END BENT 1 AND END BENT 2. FOR STEEL PILE POINTS, SEE SECTION 450 OF THE STANDARD SPECIFICATIONS.

DRIVE PILES AT BENTS 1, 2, 3 AND 4 TO A REQUIRED DRIVING RESISTANCE OF 320 TONS PER PILE. THIS REQUIRED DRIVING RESISTANCE INCLUDES ADDITIONAL RESISTANCE FOR DOWNDRAG OR SCOUR.

INSTALL PILES AT BENTS 1, 2, 3 AND 4 TO A TIP ELEVATION NO HIGHER THAN -20 FT.

STEEL H-PILE POINTS ARE REQUIRED FOR STEEL H-PILES AT BENTS 1, 2, 3, AND 4. FOR STEEL PILE POINTS, SEE SECTION 450 OF THE STANDARD SPECIFICATIONS.

TESTING PILES WITH THE PDA DURING DRIVING, RESTRIKING OR REDRIVING MAY BE REQUIRED. THE ENGINEER WILL DETERMINE THE NEED FOR PDA TESTING. FOR PILE DRIVING ANALYZER, SEE SECTION 450 OF THE STANDARD SPECIFICATIONS.

IT HAS BEEN ESTIMATED THAT A HAMMER WITH AN EQUIVALENT RATED ENERGY IN THE RANGE OF 75 TO 110 FT-KIPS PER BLOW WILL BE REQUIRED TO DRIVE PILES AT BENTS 1, 2, 3 AND 4. THIS ESTIMATED ENERGY RANGE DOES NOT RELEASE THE CONTRACTOR FROM PROVIDING DRIVING EQUIPMENT IN ACCORDANCE WITH SUBARTICLE 450-3(D)(2) OF THE STANDARD SPECIFICATIONS.

THE SCOUR CRITICAL ELEVATION FOR BENTS 1, 2, 3 AND 4 IS ELEVATION -1 FT. SCOUR CRITICAL ELEVATIONS ARE USED TO MONITOR POSSIBLE SCOUR PROBLEMS DURING THE LIFE OF THE STRUCTURE.

PROJECT NO. B-4028
BLADEN COUNTY
STATION: 56+35.50 -L-

SHEET 3 OF 4

NORTH CAROLINA PROFESSIONAL SEAL 14855 ENGINEER DOUGLAS H. CALHOUN
6/25/12

STATE OF NORTH CAROLINA
DEPARTMENT OF TRANSPORTATION
RALEIGH

GENERAL DRAWING
BRIDGE ON NC 11 OVER
CAPE FEAR RIVER OVERFLOW
BETWEEN NC 87 AND SR 1539

REVISIONS						SHEET NO.
NO.	BY:	DATE:	NO.	BY:	DATE:	S-115
1			3			TOTAL SHEETS
2			4			147

DRAWN BY : A.S./A.V. ROYAL DATE : 8/11
CHECKED BY : M.L. BROWN DATE : 8/11

25-JUN-2012 11:30
R:\Structures\STR3\Gen_draw\B-4028_str3_SD_GD.dgn
asorsenglnh

STR. #3

BM #81: RR SPIKE IN BASE OF 16" CYPRESS TREE, 66.06' LT. OF STA. 52+23.60 -L-, EL. 11.50 NVGD 29

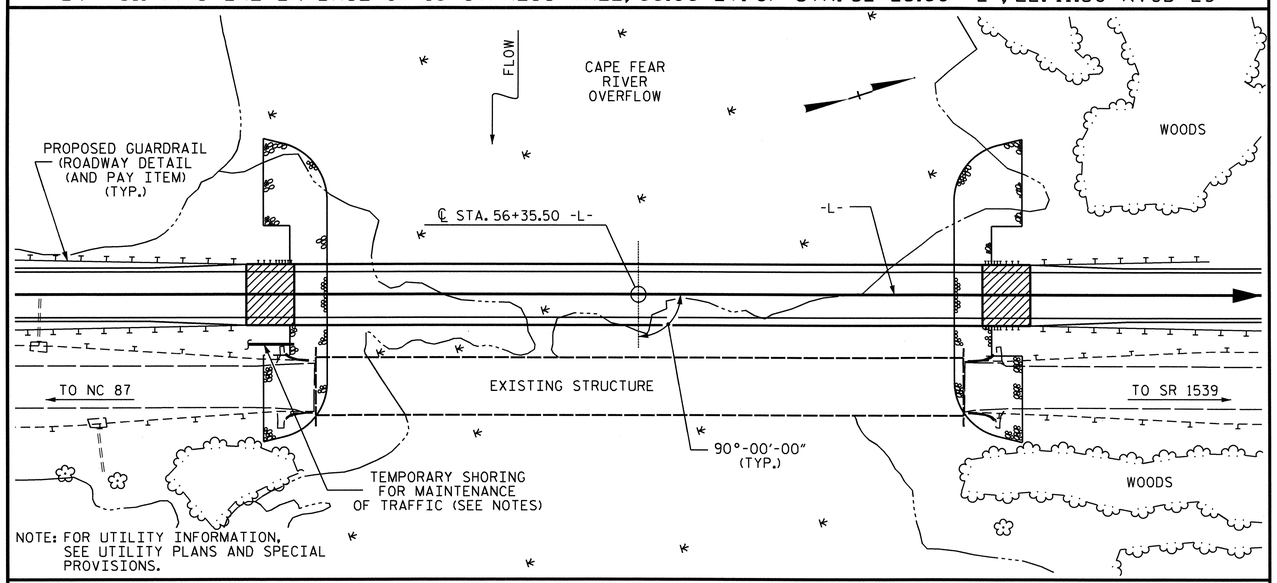

LOCATION SKETCH

NOTES :

ASSUMED LIVE LOAD = HL-93 OR ALTERNATE LOADING.

FOR OTHER DESIGN DATA AND GENERAL NOTES, SEE SHEET SN.

FOR EROSION CONTROL MEASURES SEE EROSION CONTROL PLANS.

THIS BRIDGE HAS BEEN DESIGNED IN ACCORDANCE WITH THE AASHTO LRFD BRIDGE DESIGN SPECIFICATIONS.

REMOVABLE FORMS MAY BE USED IN LIEU OF METAL STAY-IN-PLACE FORMS IN ACCORDANCE WITH ARTICLE 420-3 OF THE STANDARD SPECIFICATIONS.

AFTER SERVING AS TEMPORARY STRUCTURE THE EXISTING STRUCTURE CONSISTING OF 10 SPANS 2 @ 34'-2", 1 @ 33'-8", 2 @ 33'-11", 2 @ 34'-0", 1 @ 34'-2", 1 @ 33'-10" AND 1 @ 34'-0" CONSISTING OF A REINFORCED CONCRETE DECK GIRDER SUPERSTRUCTURE ON A SUBSTRUCTURE CONSISTING OF REINFORCED CONCRETE CAPS ON REINFORCED CONCRETE PILES AND LOCATED DOWNSTREAM FROM PROPOSED STRUCTURE SHALL BE REMOVED. THE EXISTING BRIDGE IS PRESENTLY NOT POSTED BELOW THE LEGAL LOAD LIMIT. SHOULD THE STRUCTURAL INTEGRITY OF THE BRIDGE FURTHER DETERIORATE, A LOAD LIMITATION MAY BE POSTED AND REDUCED AS FOUND NECESSARY DURING THE LIFE OF THE PROJECT.

REMOVAL OF THE EXISTING BRIDGE SHALL BE PERFORMED SO AS NOT TO ALLOW DEBRIS TO FALL INTO THE WATER. THE CONTRACTOR SHALL REMOVE THE BRIDGE AND SUBMIT PLANS FOR DEMOLITION IN ACCORDANCE WITH ARTICLE 402-2 OF THE STANDARD SPECIFICATIONS.

INASMUCH AS THE PAINT SYSTEM ON THE EXISTING STRUCTURAL STEEL CONTAINS LEAD, THE CONTRACTOR'S ATTENTION IS DIRECTED TO ARTICLE 107-1 OF THE STANDARD SPECIFICATIONS. ANY COSTS RESULTING FROM COMPLIANCE WITH APPLICABLE STATE OR FEDERAL REGULATIONS PERTAINING TO HANDLING OF MATERIALS CONTAINING LEAD BASED PAINT SHALL BE INCLUDED IN THE BID PRICE FOR "REMOVAL OF EXISTING STRUCTURE AT STATION 46+85.50 -L-."

THE SUBSTRUCTURE OF THE EXISTING BRIDGE INDICATED ON THE PLANS IS FROM THE BEST INFORMATION AVAILABLE. SINCE THIS INFORMATION IS SHOWN FOR THE CONVENIENCE OF THE CONTRACTOR, THE CONTRACTOR SHALL HAVE NO CLAIM WHATSOEVER AGAINST THE DEPARTMENT OF TRANSPORTATION FOR ANY DELAYS OR ADDITIONAL COST INCURRED BASED ON DIFFERENCES BETWEEN THE EXISTING BRIDGE SUBSTRUCTURE SHOWN ON THE PLANS AND THE ACTUAL CONDITIONS AT THE PROJECT SITE.

FOR CONSTRUCTION, MAINTENANCE AND REMOVAL OF TEMPORARY ACCESS, SEE SPECIAL PROVISIONS.

THE CONTRACTOR SHALL PROVIDE INDEPENDENT ASSURANCE SAMPLES OF REINFORCING STEEL AS FOLLOWS: FOR PROJECTS REQUIRING UP TO 400 TONS OF REINFORCING STEEL, ONE 30 INCH SAMPLE OF EACH SIZE BAR USED, AND FOR PROJECTS REQUIRING OVER 400 TONS OF REINFORCING STEEL, TWO 30 INCH SAMPLES OF EACH SIZE BAR USED. THE BARS FROM WHICH THE SAMPLES ARE TAKEN MUST THEN BE SPLICED WITH REPLACEMENT BARS OF THE SIZE AND LENGTH OF THE SAMPLE, PLUS A MINIMUM LAP SPLICE OF THIRTY BAR DIAMETERS. PAYMENT FOR THE SAMPLES OF REINFORCING STEEL SHALL BE CONSIDERED INCIDENTAL TO VARIOUS PAY ITEMS.

NEEDLE BEAMS WILL NOT BE ALLOWED UNLESS OTHERWISE CALLED FOR ON THE PLANS OR APPROVED BY THE ENGINEER.

FOR SUBMITTAL OF WORKING DRAWINGS, SEE SPECIAL PROVISIONS.

FOR FALSEWORK AND FORMWORK, SEE SPECIAL PROVISIONS.

FOR CRANE SAFETY, SEE SPECIAL PROVISIONS.

FOR GROUT FOR STRUCTURES, SEE SPECIAL PROVISIONS.

THIS STRUCTURE HAS BEEN DESIGNED IN ACCORDANCE WITH HEC 18, "EVALUATING SCOUR AT BRIDGES", MAY, 2001.

FOR LIMITS OF TEMPORARY SHORING FOR MAINTENANCE OF TRAFFIC, SEE TRAFFIC CONTROL PLANS. FOR PAY ITEM FOR TEMPORARY SHORING FOR MAINTENANCE OF TRAFFIC, SEE ROADWAY PLANS.

STEEL SHEET PILING REQUIRED FOR SHORING SHALL BE HOT ROLLED.

FOR INTERIOR BENT 1, 2, 3 AND 4 ONLY PARTIAL GALVANIZING OF THE PILES IS REQUIRED. SEE INTERIOR BENT SHEETS FOR REQUIRED GALVANIZED LENGTHS. PAYMENT FOR PARTIALLY GALVANIZED PILES WILL BE MADE UNDER THE CONTRACT UNIT PRICE FOR GALVANIZED STEEL PILES.

THIS BRIDGE IS LOCATED IN SEISMIC ZONE 1.

TOTAL BILL OF MATERIAL

	CONSTRUCTION MAINTENANCE AND REMOVAL OF TEMPORARY ACCESS	REMOVAL OF EXISTING STRUCTURE	PDA TESTING	REINFORCED CONCRETE DECK SLAB	GROOVING BRIDGE FLOORS	CLASS A CONCRETE	BRIDGE APPROACH SLAB	REINFORCING STEEL	45" PRESTRESSED CONCRETE GIRDERS		HP 12 x 53 STEEL PILES		HP 14 x 73 GALVANIZED STEEL PILES		STEEL PILE POINTS	PILE REDRIVES	CONCRETE BARRIER RAIL	RIP RAP CLASS B	RIP RAP CLASS II (2'-0" THICK)	GEOTEXTILE FOR DRAINAGE	ELASTOMERIC BEARINGS
	LUMP SUM	LUMP SUM	EACH	SQ.FT.	SQ.FT.	CU.YDS.	LUMP SUM	LBS.	No.	LIN.FT.	No.	LIN.FT.	No.	LIN.FT.	EACH	EACH	LIN.FT.	TONS	TONS	SQ. YDS.	LUMP SUM
SUPERSTRUCTURE				13,219	12,219		LUMP SUM		20	1479.00							746.67				LUMP SUM
END BENT No. 1						18.4		3,176			6	450			6	3		135	534	594	
BENT No. 1						12.1		2,017					8	600	8	4					
BENT No. 2						12.1		2,017					8	600	8	4					
BENT No. 3						12.1		2,017					8	640	8	4					
BENT No. 4						12.1		2,017					8	640	8	4					
END BENT No. 2						18.4		3,176			6	450			6	3		125	503	558	
TOTAL	LUMP SUM	LUMP SUM	1	13,219	12,219	85.2	LUMP SUM	14,420	20	1479.00	12	900	32	2480	44	22	746.67	260	1037	1152	LUMP SUM

PROJECT NO. B-4028

BLADEN COUNTY

STATION: 56+35.50 -L-

SHEET 4 OF 4

STATE OF NORTH CAROLINA
DEPARTMENT OF TRANSPORTATION
RALEIGH

GENERAL DRAWING
BRIDGE ON NC 11 OVER
CAPE FEAR RIVER OVERFLOW
BETWEEN NC 87 AND SR 1539

NORTH CAROLINA PROFESSIONAL SEAL 14855 ENGINEER DOUGLAS R. CALHOUN
6/25/12

REVISIONS						SHEET NO.
NO.	BY:	DATE:	NO.	BY:	DATE:	S-116
1			3			TOTAL SHEETS
2			4			147

DRAWN BY : A.S./A.V. ROYAL DATE : 8/11
CHECKED BY : M. L. BROWN DATE : 8/11

25-JUN-2012 11:31
R:\Structures\STR3\Gen_draw\B-4028_str3_SD_GD.dgn
asorsenginh

STR. #3

LOAD AND RESISTANCE FACTOR RATING (LRFD) SUMMARY FOR PRESTRESSED CONCRETE GIRDERS

LEVEL		VEHICLE	WEIGHT (W) (TONS)	CONTROLLING LOAD RATING (#)	MINIMUM RATING FACTORS (RF)	TONS = W X RF	STRENGTH I LIMIT STATE											SERVICE III LIMIT STATE						COMMENT NUMBER
							LIVELOAD FACTORS	MOMENT					SHEAR					LIVELOAD FACTORS	MOMENT					
								DISTRIBUTION FACTORS (DF)	RATING FACTOR	SPAN	GIRDER LOCATION	DISTANCE FROM LEFT END OF SPAN (ft)	DISTRIBUTION FACTORS (DF)	RATING FACTOR	SPAN	GIRDER LOCATION	DISTANCE FROM LEFT END OF SPAN (ft)		DISTRIBUTION FACTORS (DF)	RATING FACTOR	SPAN	GIRDER LOCATION	DISTANCE FROM LEFT END OF SPAN (ft)	
DESIGN LOAD RATING		HL-93(Inv)	N/A	1	1.005	--	1.75	0.821	1.51	B	EL	36.417	0.907	2.25	B	I	36.417	0.80	0.907	1.00	B	I	36.417	
		HL-93(Opr)	N/A	--	1.954	--	1.35	0.821	1.95	B	EL	36.417	0.907	2.91	B	I	36.417	N/A	--	--	--	--	--	
		HS-20(Inv)	36.000	2	1.315	47.354	1.75	0.821	1.97	B	EL	36.417	0.907	2.65	B	I	36.417	0.80	0.773	1.32	B	I	36.417	
		HS-20(Opr)	36.000	--	2.559	92.113	1.35	0.821	2.56	B	EL	36.417	0.907	3.43	B	I	36.417	N/A	--	--	--	--	--	
LEGAL LOAD RATING	SV	SNSH	13.500	--	2.97	40.094	1.4	0.821	5.57	B	EL	36.417	0.907	7.06	B	I	36.417	0.80	0.773	2.97	B	I	36.417	
		SNGARBS2	20.000	--	2.213	44.258	1.4	0.821	4.15	B	EL	36.417	0.907	5.26	B	I	36.417	0.80	0.773	2.21	B	I	36.417	
		SNAGRIS2	22.000	--	2.096	46.101	1.4	0.821	3.93	B	EL	36.417	0.907	4.98	B	I	36.417	0.80	0.773	2.10	B	I	36.417	
		SNCOTTS3	27.250	--	1.478	40.274	1.4	0.821	2.77	B	EL	36.417	0.907	3.55	B	I	36.417	0.80	0.773	1.48	B	I	36.417	
		SNAGGRS4	34.925	--	1.235	43.13	1.4	0.821	2.32	B	EL	36.417	0.907	3.12	B	I	36.417	0.80	0.773	1.23	B	I	36.417	
		SNS5A	35.550	--	1.208	42.932	1.4	0.821	2.27	B	EL	36.417	0.907	3.26	B	I	36.417	0.80	0.773	1.21	B	I	36.417	
		SNS6A	39.950	--	1.108	44.264	1.4	0.821	2.08	B	EL	36.417	0.907	3.05	B	I	36.417	0.80	0.773	1.11	B	I	36.417	
		SNS7B	42.000	--	1.055	44.315	1.4	0.821	1.98	B	EL	36.417	0.907	3.11	B	I	36.417	0.80	0.773	1.06	B	I	36.417	
	TTST	TNAGRIT3	33.000	--	1.351	44.586	1.4	0.821	2.53	B	EL	36.417	0.907	3.56	B	I	36.417	0.80	0.773	1.35	B	I	36.417	
		TNT4A	33.075	--	1.357	44.884	1.4	0.821	2.55	B	EL	36.417	0.907	3.39	B	I	36.417	0.80	0.773	1.36	B	I	36.417	
		TNT6A	41.600	--	1.109	46.154	1.4	0.821	2.08	B	EL	36.417	0.907	3.54	B	I	36.417	0.80	0.773	1.11	B	I	36.417	
		TNT7A	42.000	--	1.115	46.829	1.4	0.821	2.09	B	EL	36.417	0.907	3.42	B	I	36.417	0.80	0.773	1.11	B	I	36.417	
		TNT7B	42.000	--	1.153	48.442	1.4	0.821	2.16	B	EL	36.417	0.907	2.95	B	I	36.417	0.80	0.773	1.15	B	I	36.417	
		TNAGRIT4	43.000	--	1.097	47.183	1.4	0.821	2.06	B	EL	36.417	0.907	2.83	B	I	36.417	0.80	0.773	1.10	B	I	36.417	
		TNAGT5A	45.000	--	1.035	46.559	1.4	0.821	1.94	B	EL	36.417	0.907	2.94	B	I	36.417	0.80	0.773	1.03	B	I	36.417	
		TNAGT5B	45.000	3	1.022	45.997	1.4	0.821	1.92	B	EL	36.417	0.907	2.68	B	I	36.417	0.80	0.773	1.02	B	I	36.417	

LOAD FACTORS:

DESIGN LOAD RATING FACTORS	LIMIT STATE	γ_{DC}	γ_{DW}
	STRENGTH I	1.25	1.50
	SERVICE III	1.00	1.00

NOTES:

MINIMUM RATING FACTORS ARE BASED ON THE STRENGTH I AND SERVICE III LIMIT STATES.

ALLOWABLE STRESSES FOR SERVICE III LIMIT STATE ARE AS REQUIRED FOR DESIGN.

COMMENTS:

1. RATING FACTORS SHOWN FOR SPAN B ALSO APPLY TO SPANS C & D.
2.
3.
4.

(#) CONTROLLING LOAD RATING

(1) DESIGN LOAD RATING (HL-93)

(2) DESIGN LOAD RATING (HS-20)

(3) LEGAL LOAD RATING **

** SEE CHART FOR VEHICLE TYPE

GIRDER LOCATION

I - INTERIOR GIRDER
EL - EXTERIOR LEFT GIRDER
ER - EXTERIOR RIGHT GIRDER

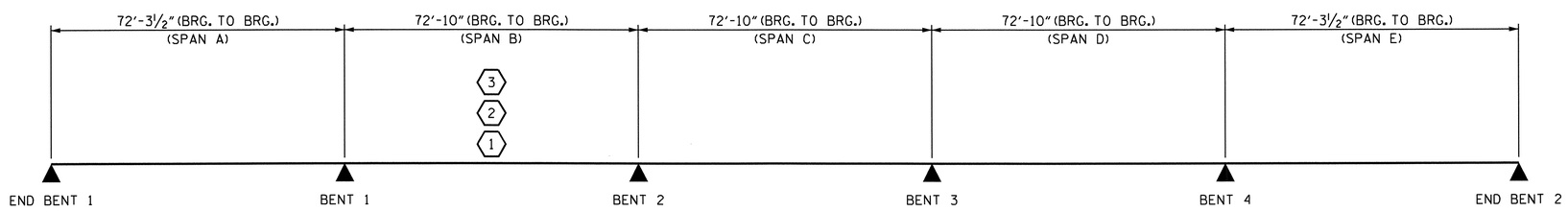

LRFR SUMMARY

PROJECT NO. B-4028
BLADEN COUNTY
STATION: 56+35.50 -L-

STATE OF NORTH CAROLINA
DEPARTMENT OF TRANSPORTATION
RALEIGH

STANDARD
LRFR SUMMARY FOR PRESTRESSED CONCRETE GIRDERS
(NON-INTERSTATE TRAFFIC)

NORTH CAROLINA PROFESSIONAL SEAL 14855 ENGINEER DOUGLAS R. CALHOUN
6/29/12

REVISIONS						SHEET NO.
NO.	BY:	DATE:	NO.	BY:	DATE:	S-117
1			3			TOTAL SHEETS
2			4			147

STD. NO. LRFR1 STR. #3

ASSEMBLED BY : K.P. SEDAI		DATE : 1/2012	
CHECKED BY : W. ARAFAT		DATE : 1/2012	
DRAWN BY : MAA 1/08	REV. 11/12/08R	MAA/GM	
CHECKED BY : GM/DI 2/08			

25-JUN-2012 11:31
R:\Structures\STR3\Super_Draw\B-4028_str3_LRFR.dgn
asorsenglnh

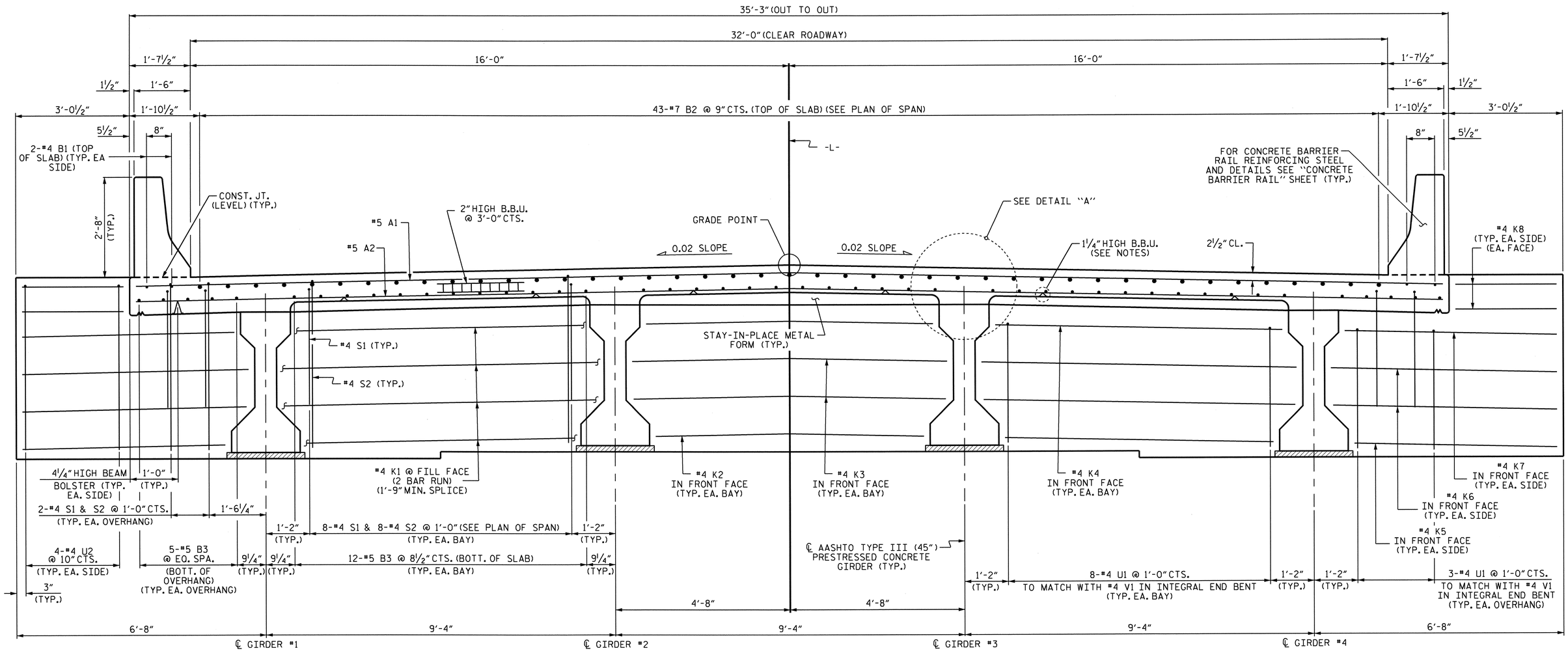

TYPICAL SECTION AT INTEGRAL END BENTS

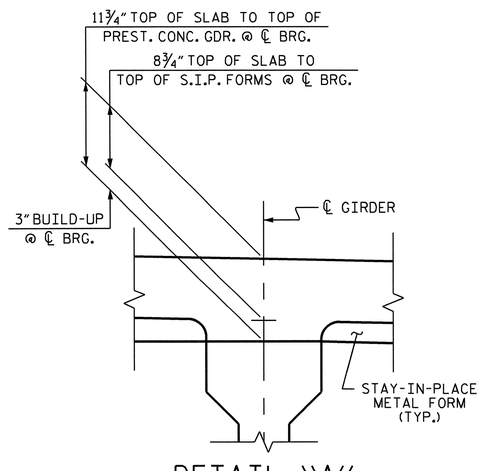

DETAIL "A"

NOTES:

PROVIDE 1¼" HIGH BEAM BOLSTERS UPPER AT 4'-0" CTS. ATOP THE METAL STAY-IN-PLACE FORMS TO SUPPORT THE BOTTOM MAT OF 'A' BARS. WHEN USING REMOVABLE FORMS, PROVIDE CONTINUOUS HIGH CHAIRS FOR METAL DECK (C.H.C.M.) @ 4'-0" CTS. WITH A HEIGHT TO SUPPORT THE BOTTOM MAT OF "A" BARS A CLEAR DISTANCE OF 2½" ABOVE THE TOP OF THE REMOVABLE FORM.

BARRIER RAIL IN A CONTINUOUS UNIT SHALL NOT BE CAST UNTIL ALL SLAB CONCRETE IN THAT UNIT HAS BEEN CAST AND HAS REACHED A MINIMUM COMPRESSIVE STRENGTH OF 3,000 PSI.

LONGITUDINAL STEEL MAY BE SHIFTED SLIGHTLY, AS NECESSARY, TO AVOID INTERFERENCE WITH DECK DRAINS AND STIRRUPS IN PRESTRESSED CONCRETE GIRDERS.

PREVIOUSLY CAST CONCRETE IN A CONTINUOUS UNIT SHALL HAVE ATTAINED A MINIMUM COMPRESSIVE STRENGTH OF 3,000 PSI BEFORE ADDITIONAL CONCRETE IS CAST IN THE UNIT.

NORTH CAROLINA PROFESSIONAL SEAL 14855 ENGINEER DOUGLAS R. CALHOUN
6/25/12

PROJECT NO. B-4028
BLADEN COUNTY
STATION: 56+35.50 -L-

SHEET 1 OF 3

STATE OF NORTH CAROLINA
DEPARTMENT OF TRANSPORTATION
RALEIGH

SUPERSTRUCTURE
TYPICAL SECTION

REVISIONS						SHEET NO.
NO.	BY:	DATE:	NO.	BY:	DATE:	S-118
1			3			TOTAL SHEETS
2			4			147

DRAWN BY : T. BANKOVICH DATE : 1-2010
CHECKED BY : M.L. BROWN DATE : 4-2010

11-MAY-2012 14:10
R:\Structures\STR3\Super_Draw\B-4028_str3_TS.dgn
asorsenjnh

STR. #3

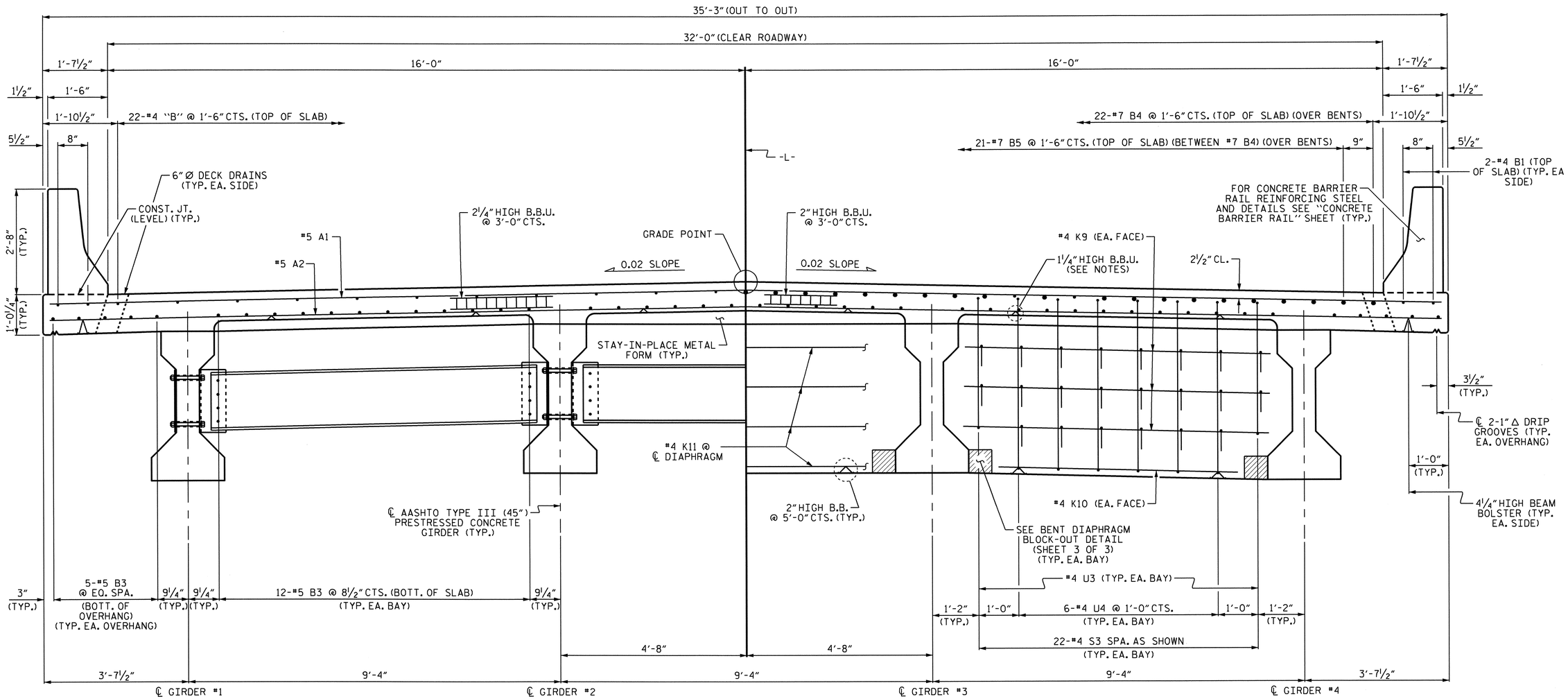

PARTIAL TYPICAL SECTION
(SHOWING INTERMEDIATE DIAPHRAGMS)

PARTIAL TYPICAL SECTION
(SHOWING BENT DIAPHRAGMS)

TYPICAL SECTION

FOR INTERMEDIATE STEEL DIAPHRAGM DETAILS SEE "INTERMEDIATE STEEL DIAPHRAGMS FOR TYPE III PRESTRESSED CONCRETE GIRDERS" SHEET

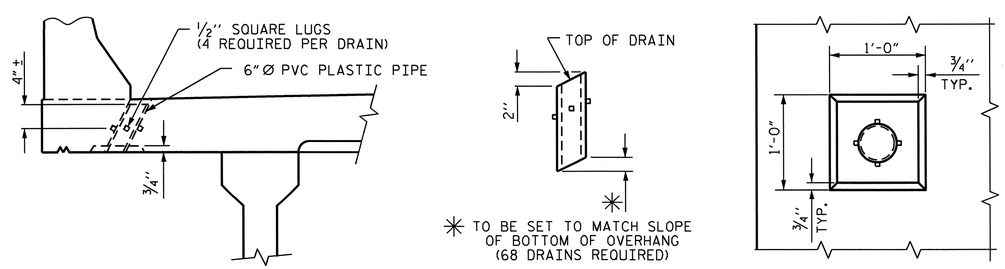

ELEVATION

PIPE DETAIL

PLAN OF RECESS

DRAIN DETAILS

TOP OF FLOOR DRAINS TO BE SET ⅜" BELOW SURFACE OF SLAB.

4 - ½" SQUARE LUGS TO BE GLUED TO THE P.V.C. PLASTIC PIPE AT EQUAL SPACES AROUND THE PIPE DRAIN APPROXIMATELY 4" FROM THE TOP OF THE PIPE.

THE 6" Ø PVC PLASTIC PIPE AND FITTINGS SHALL BE SCHEDULE 40 AND CONFORM TO ASTM D1785.

PROJECT NO. B-4028
BLADEN COUNTY
STATION: 56+35.50 -L-

SHEET 2 OF 3

STATE OF NORTH CAROLINA
DEPARTMENT OF TRANSPORTATION
RALEIGH

SUPERSTRUCTURE
TYPICAL SECTION

NORTH CAROLINA PROFESSIONAL SEAL 14855 ENGINEER DOUGLAS R. CALHOUN
6/25/12

REVISIONS						SHEET NO.
NO.	BY:	DATE:	NO.	BY:	DATE:	S-119
1			3			TOTAL SHEETS
2			4			147

DRAWN BY : T. BANKOVICH DATE : 1-2010
CHECKED BY : M.L. BROWN DATE : 4-2010

25-JUN-2012 11:32
R:\Structures\STR3\Super_Draw\B-4028_str3_TS.dgn
asorsenginh

STR. #3

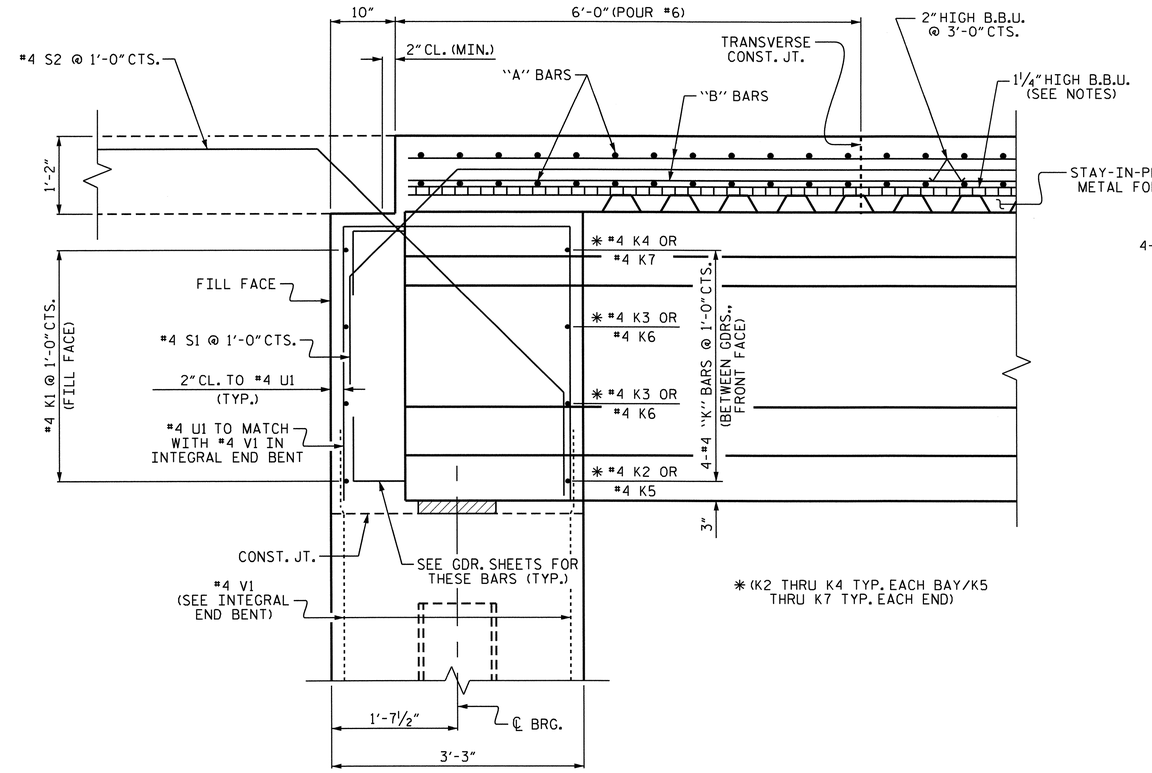

SECTION THRU INTEGRAL END BENT

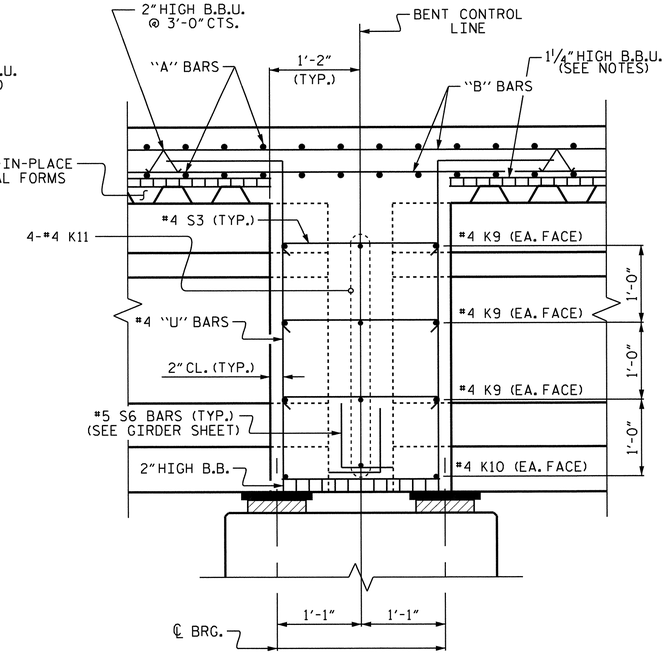

SECTION B-B

(SEE "PLAN OF SPANS" SHEETS)

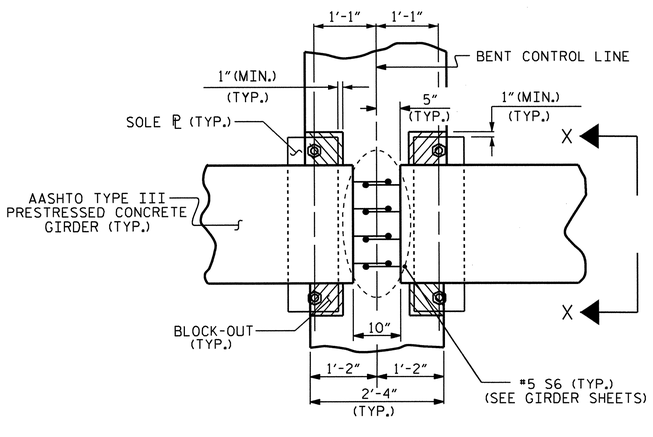

PLAN

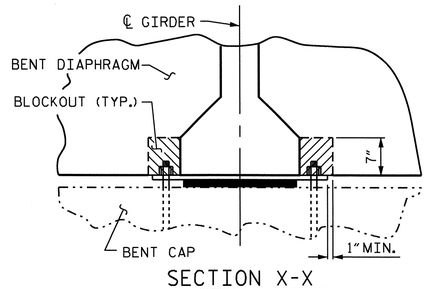

SECTION X-X

BENT DIAPHRAGM BLOCK-OUT DETAIL

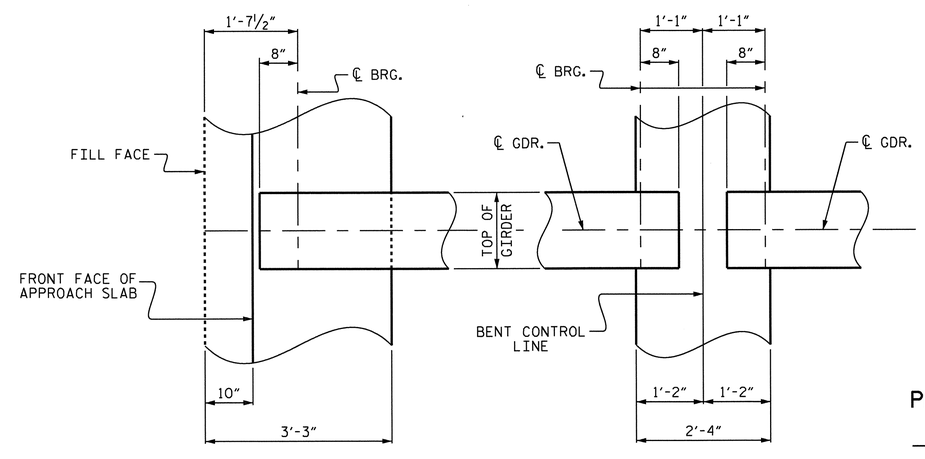

INTEGRAL END BENT

BENT DIAPHRAGM

PLAN OF DIAPHRAGMS

PROJECT NO. B-4028

BLADEN COUNTY

STATION: 56+35.50 -L-

SHEET 3 OF 3

STATE OF NORTH CAROLINA
DEPARTMENT OF TRANSPORTATION
RALEIGH

SUPERSTRUCTURE
TYPICAL SECTION DETAILS

NORTH CAROLINA PROFESSIONAL SEAL 14855 ENGINEER DOUGLAS R. CALHOUN
6/25/12

REVISIONS						SHEET NO.
NO.	BY:	DATE:	NO.	BY:	DATE:	S-120
1			3			TOTAL SHEETS
2			4			147

DRAWN BY : T. BANKOVICH DATE : 1-2010
CHECKED BY : M.L. BROWN DATE : 4-2010

25-JUN-2012 11:33
R:\Structures\STR3\Super_Draw\B-4028_str3_TS.dgn
asorsenglnh

STR. #3

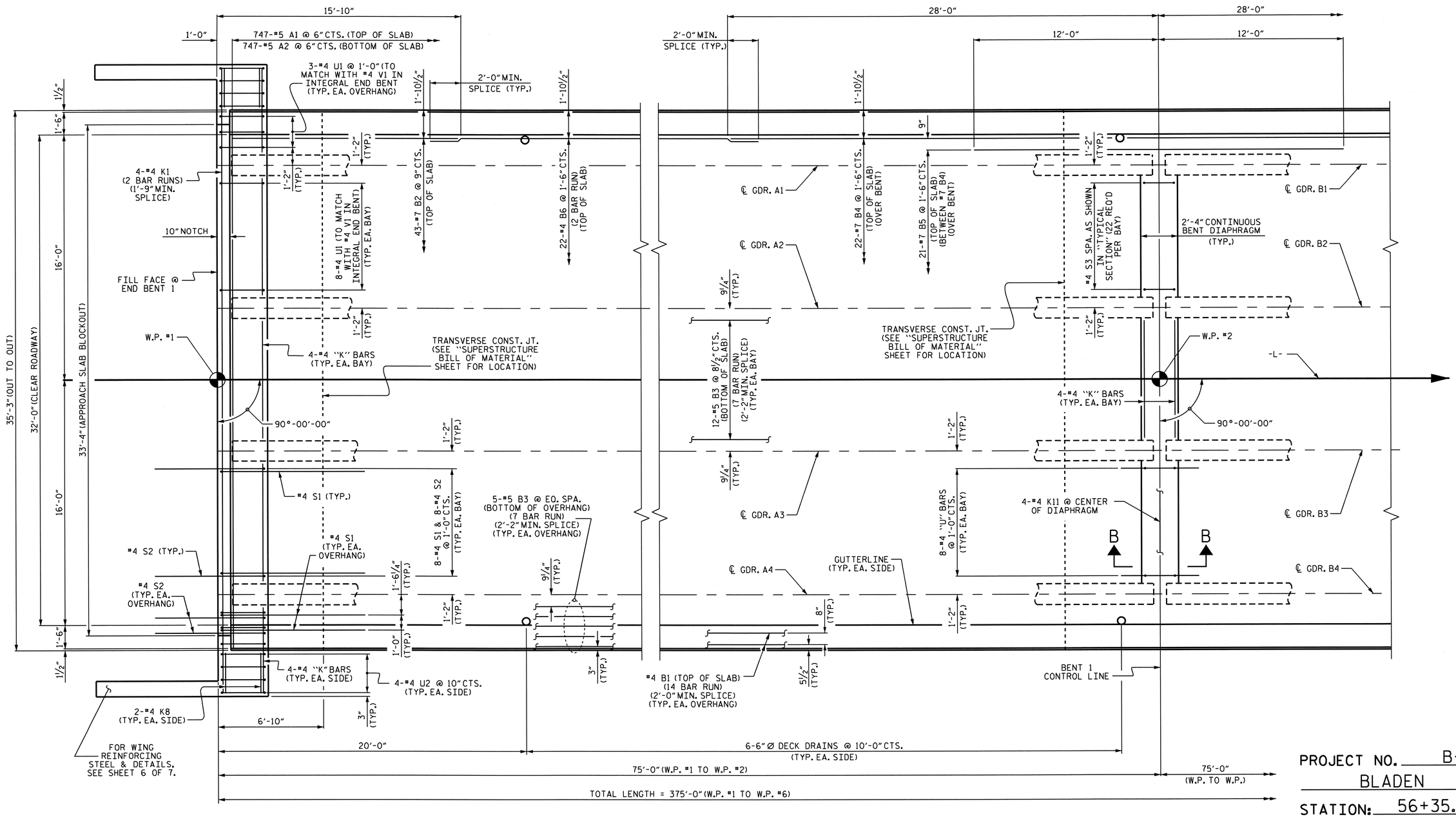

PROJECT NO. B-4028

BLADEN COUNTY

STATION: 56+35.50 -L-

SHEET 1 OF 7

PLAN OF SPAN A

NOTES:

FOR CONCRETE BARRIER RAIL DETAILS AND REINFORCING STEEL, SEE "CONCRETE BARRIER RAIL" SHEETS.

FOR SECTION B-B, SEE "TYPICAL SECTION" SHEET 3 OF 3.

NORTH CAROLINA PROFESSIONAL SEAL 14855 ENGINEER DOUGLAS R. CALHOON

6/25/12

STATE OF NORTH CAROLINA
DEPARTMENT OF TRANSPORTATION
RALEIGH

SUPERSTRUCTURE
PLAN OF SPAN A

REVISIONS						SHEET NO.
NO.	BY:	DATE:	NO.	BY:	DATE:	S-121
1			3			TOTAL SHEETS
2			4			147

DRAWN BY : T. BANKOVICH DATE : 2-2010
CHECKED BY : M.L. BROWN DATE : 4-2010

25-JUN-2012 11:33
R:\Structures\STR3\Super_Draw\B-4028_str3_PS.dgn
asorsenginh

STR. #3

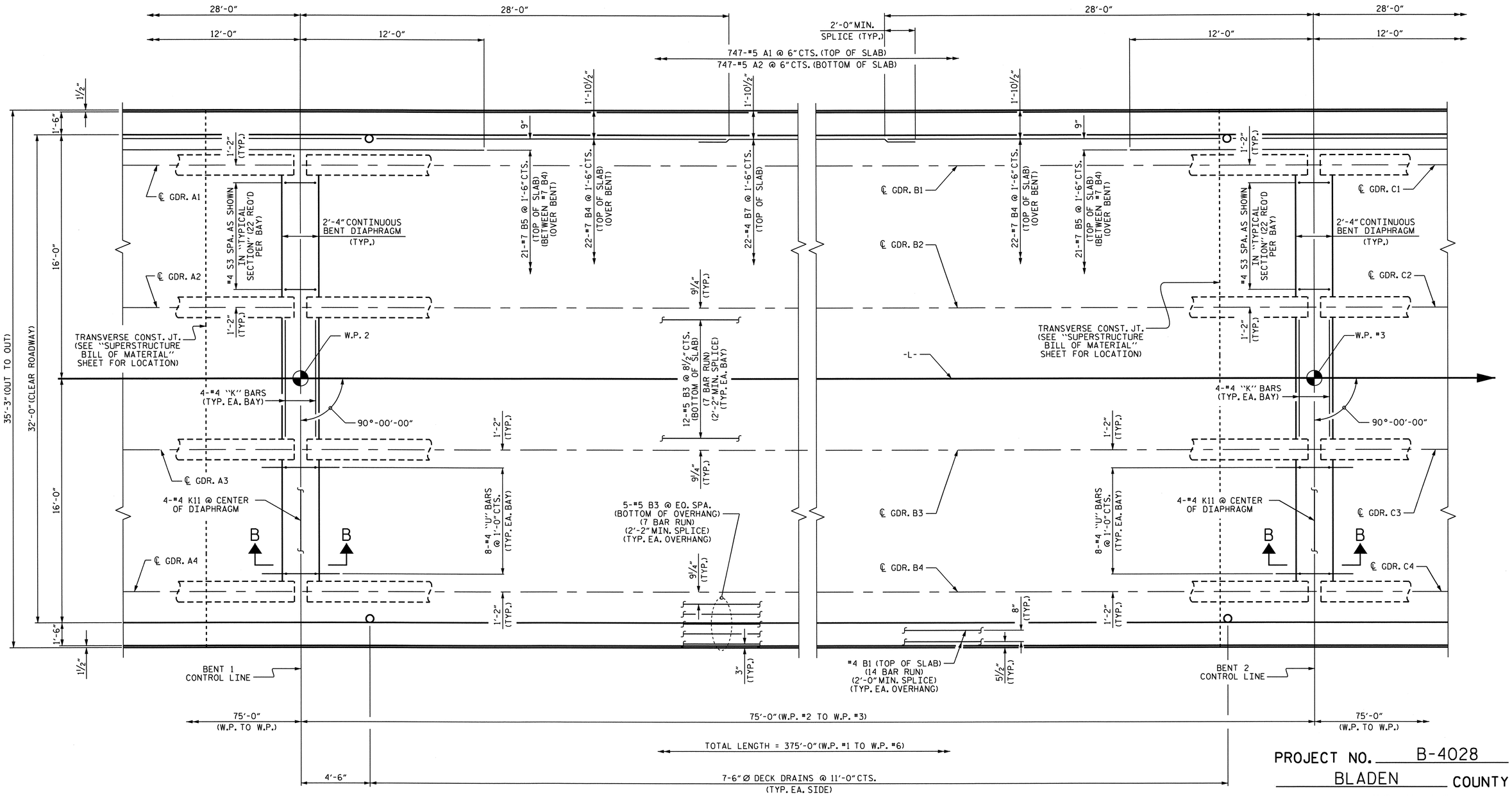

NOTES:

FOR CONCRETE BARRIER RAIL DETAILS AND REINFORCING STEEL, SEE "CONCRETE BARRIER RAIL" SHEETS.

FOR SECTION B-B, SEE "TYPICAL SECTION" SHEET 3 OF 3.

PLAN OF SPAN B

PROJECT NO. B-4028

BLADEN COUNTY

STATION: 56+35.50 -L-

SHEET 2 OF 7

STATE OF NORTH CAROLINA
DEPARTMENT OF TRANSPORTATION
RALEIGH

SUPERSTRUCTURE
PLAN OF SPAN B

NORTH CAROLINA PROFESSIONAL SEAL 14855 ENGINEER DOUGLAS R. CALHOUN
6/25/12

REVISIONS						SHEET NO.
NO.	BY:	DATE:	NO.	BY:	DATE:	S-122
1			3			TOTAL SHEETS
2			4			147

DRAWN BY : T. BANKOVICH DATE : 2-2010
CHECKED BY : M.L. BROWN DATE : 4-2010

25-JUN-2012 11:34
R:\Structures\STR3\Super_Draw\B-4028_str3_PS.dgn
asorsenginh

STR. #3

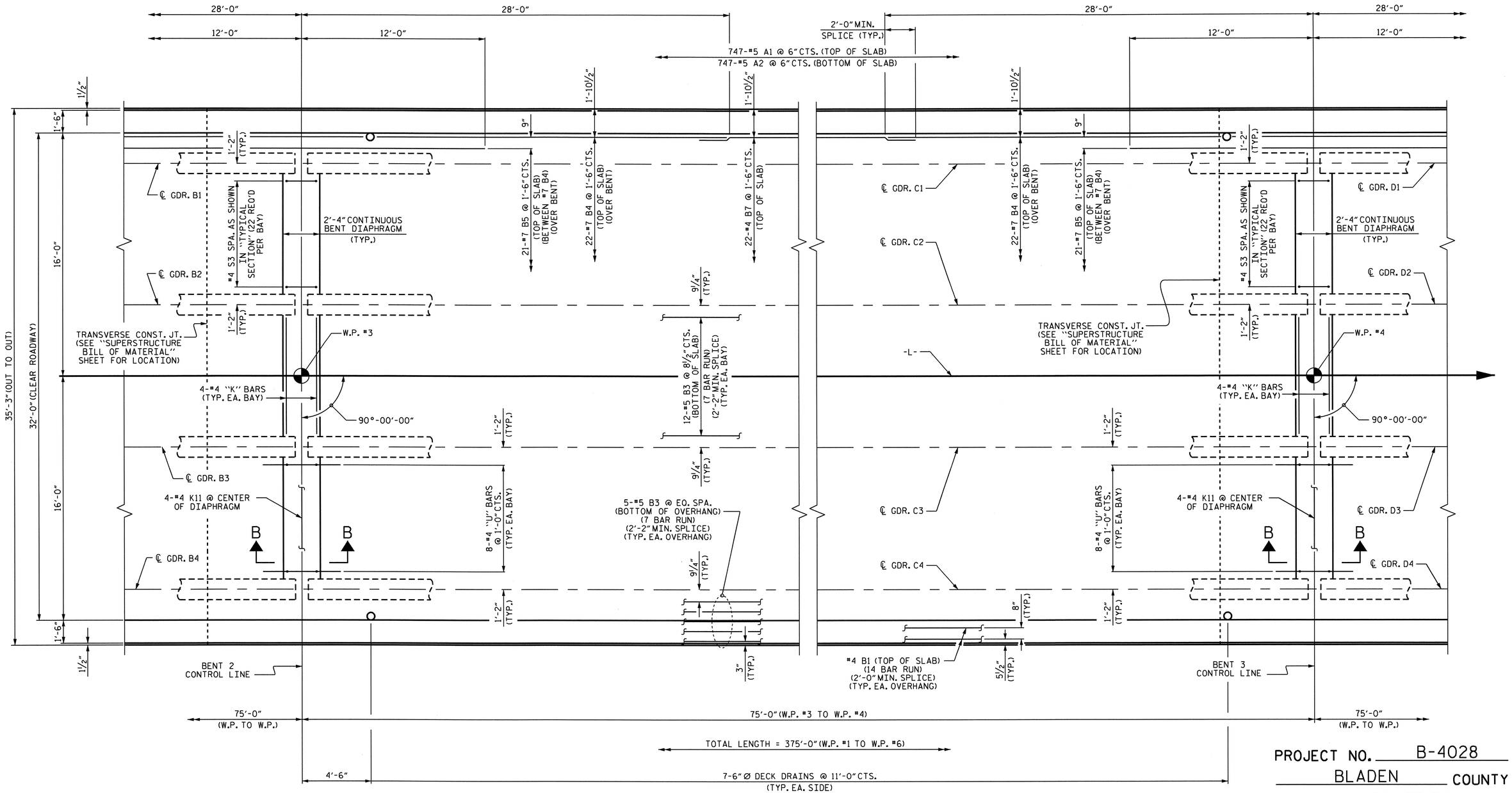

NOTES:

FOR CONCRETE BARRIER RAIL DETAILS AND REINFORCING STEEL, SEE "CONCRETE BARRIER RAIL" SHEETS.

FOR SECTION B-B, SEE "TYPICAL SECTION" SHEET 3 OF 3.

PLAN OF SPAN C

PROJECT NO. B-4028

BLADEN COUNTY

STATION: 56+35.50 -L-

SHEET 3 OF 7

STATE OF NORTH CAROLINA
DEPARTMENT OF TRANSPORTATION
RALEIGH

SUPERSTRUCTURE
PLAN OF SPAN C

NORTH CAROLINA PROFESSIONAL SEAL 14855 ENGINEER DOUGLAS R. CALHOUN
6/25/12

REVISIONS						SHEET NO.
NO.	BY:	DATE:	NO.	BY:	DATE:	S-123
1			3			TOTAL SHEETS
2			4			147

DRAWN BY : T. BANKOVICH DATE : 2-2010
CHECKED BY : M.L. BROWN DATE : 4-2010

25-JUN-2012 11:34
R:\Structures\STR3\Super_Draw\B-4028_str3_PS.dgn
asorsenglnh

STR. #3

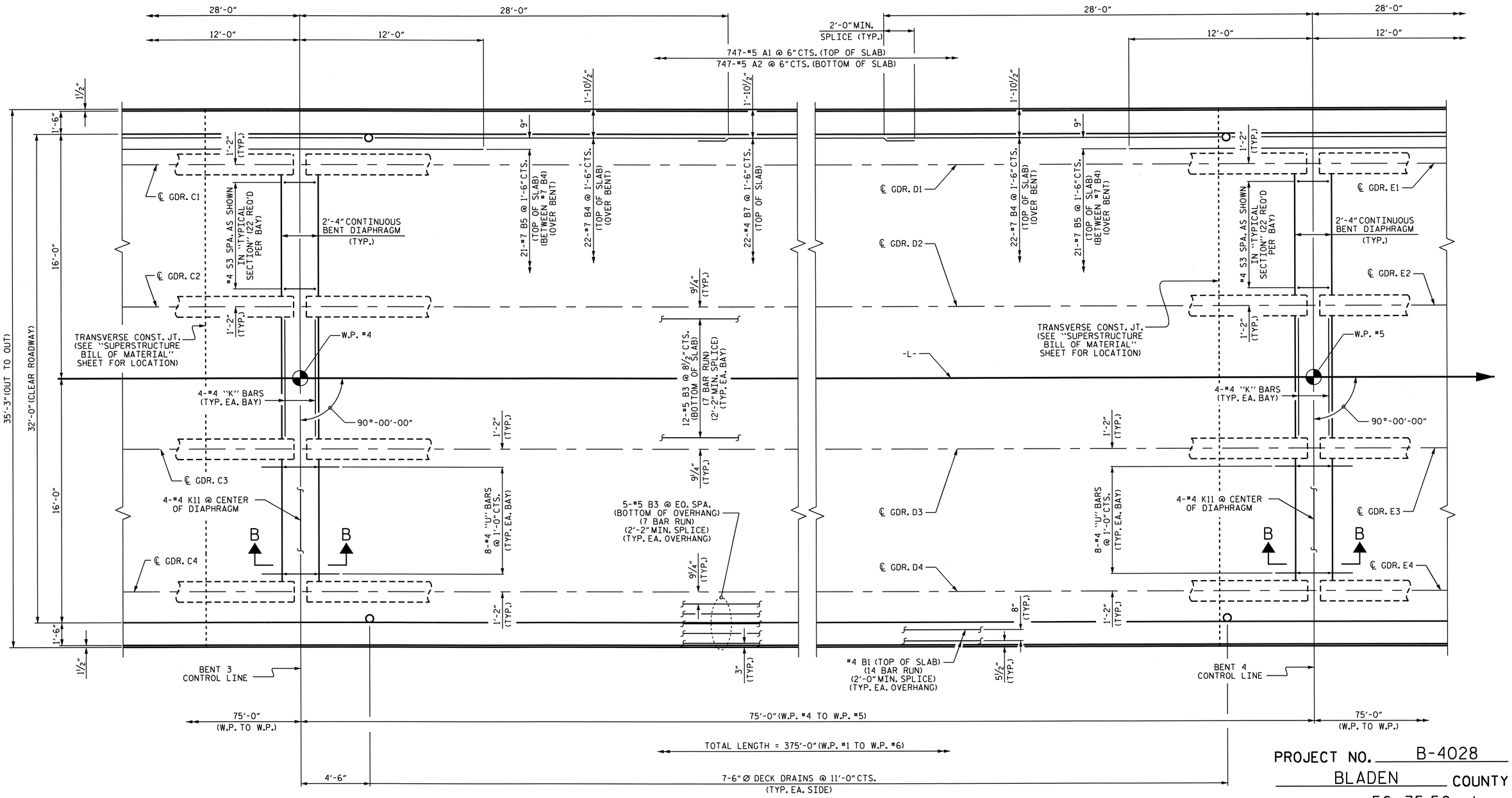

NOTES:

FOR CONCRETE BARRIER RAIL DETAILS AND REINFORCING STEEL, SEE "CONCRETE BARRIER RAIL" SHEETS.

FOR SECTION B-B, SEE "TYPICAL SECTION" SHEET 3 OF 3.

PLAN OF SPAN D

PROJECT NO. B-4028

BLADEN COUNTY

STATION: 56+35.50 -L-

SHEET 4 OF 7

STATE OF NORTH CAROLINA
DEPARTMENT OF TRANSPORTATION
RALEIGH

SUPERSTRUCTURE
PLAN OF SPAN D

NORTH CAROLINA PROFESSIONAL SEAL 14855 ENGINEER DOUGLAS R. CALHOUN
6/25/12

REVISIONS						SHEET NO.
NO.	BY:	DATE:	NO.	BY:	DATE:	S-124
1			3			TOTAL SHEETS
2			4			147

DRAWN BY : T. BANKOVICH DATE : 2-2010
CHECKED BY : M.L. BROWN DATE : 4-2010

25-JUN-2012 11:34
R:\Structures\STR3\Super_Draw\B-4028_str3_PS.dgn
asorsenglnh

STR. #3

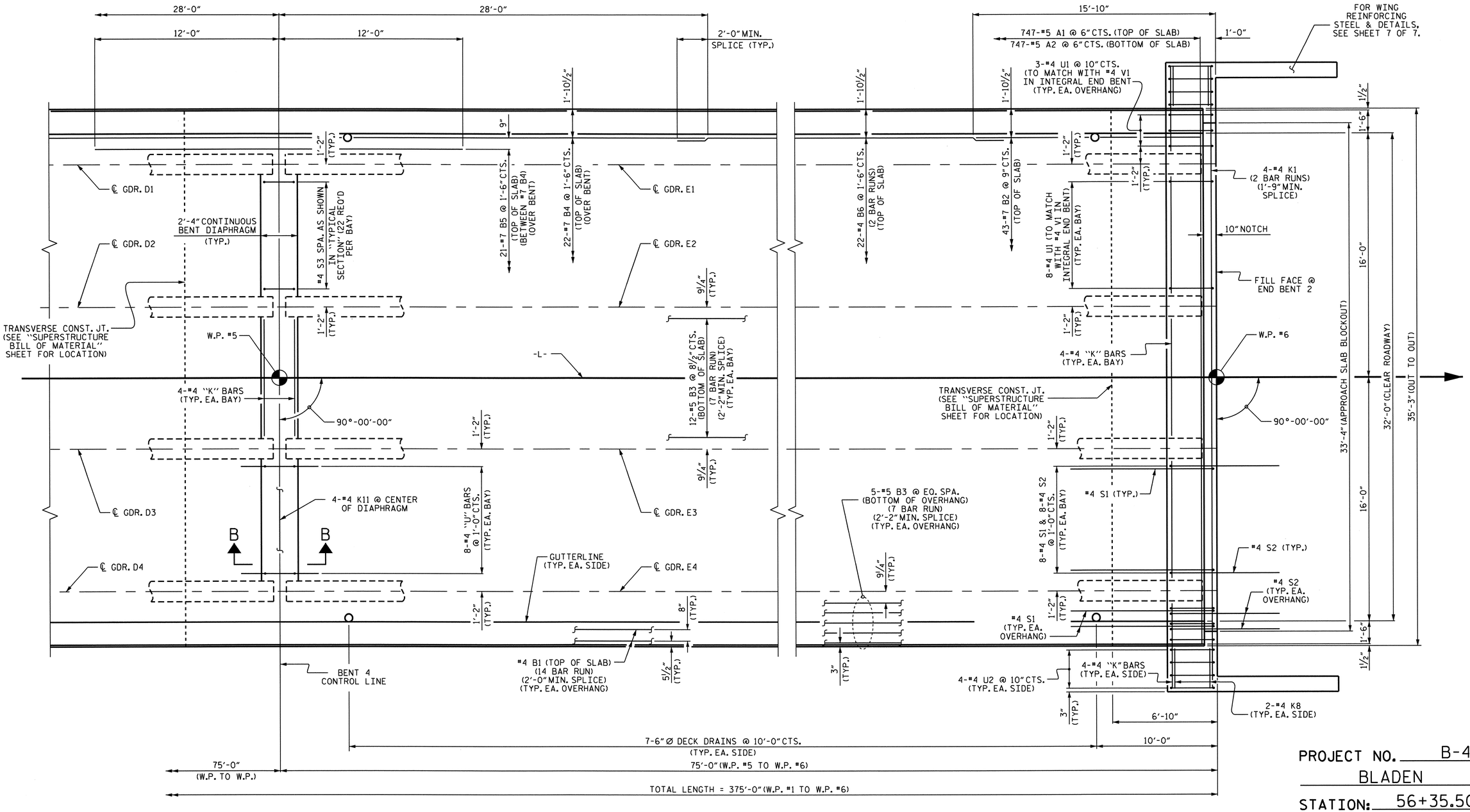

PROJECT NO. B-4028

BLADEN COUNTY

STATION: 56+35.50 -L-

SHEET 5 OF 7

PLAN OF SPAN E

NOTES:

FOR CONCRETE BARRIER RAIL DETAILS AND REINFORCING STEEL, SEE "CONCRETE BARRIER RAIL" SHEETS.

FOR SECTION B-B, SEE "TYPICAL SECTION" SHEET 3 OF 3.

NORTH CAROLINA PROFESSIONAL SEAL 14855 ENGINEER DOUGLAS R. CALHOUN

6/25/12

STATE OF NORTH CAROLINA
DEPARTMENT OF TRANSPORTATION
RALEIGH

SUPERSTRUCTURE
PLAN OF SPAN E

REVISIONS						SHEET NO.
NO.	BY:	DATE:	NO.	BY:	DATE:	5-12S
1			3			TOTAL SHEETS
2			4			147

STR. #3

DRAWN BY : T. BANKOVICH DATE : 2-2010
CHECKED BY : M.L. BROWN DATE : 4-2010

25-JUN-2012 11:34
R:\Structures\STR3\Super_Draw\B-4028_str3_PS.dgn
asorsenglnh

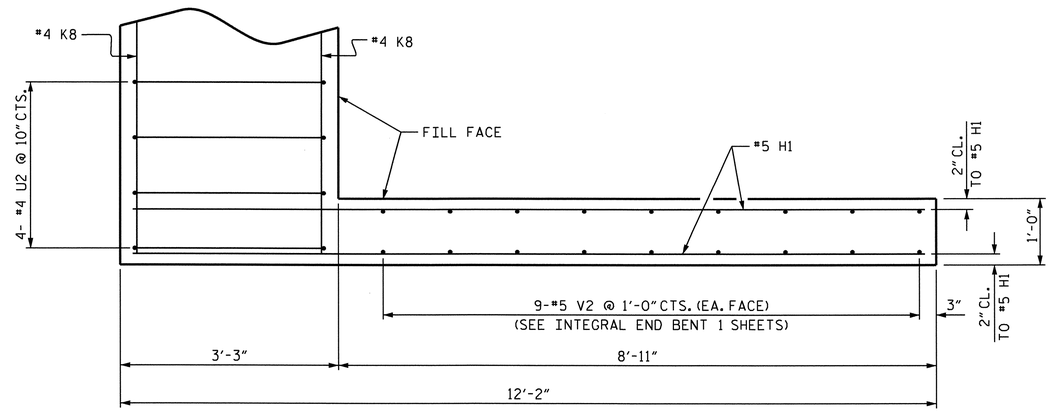

PLAN OF WING

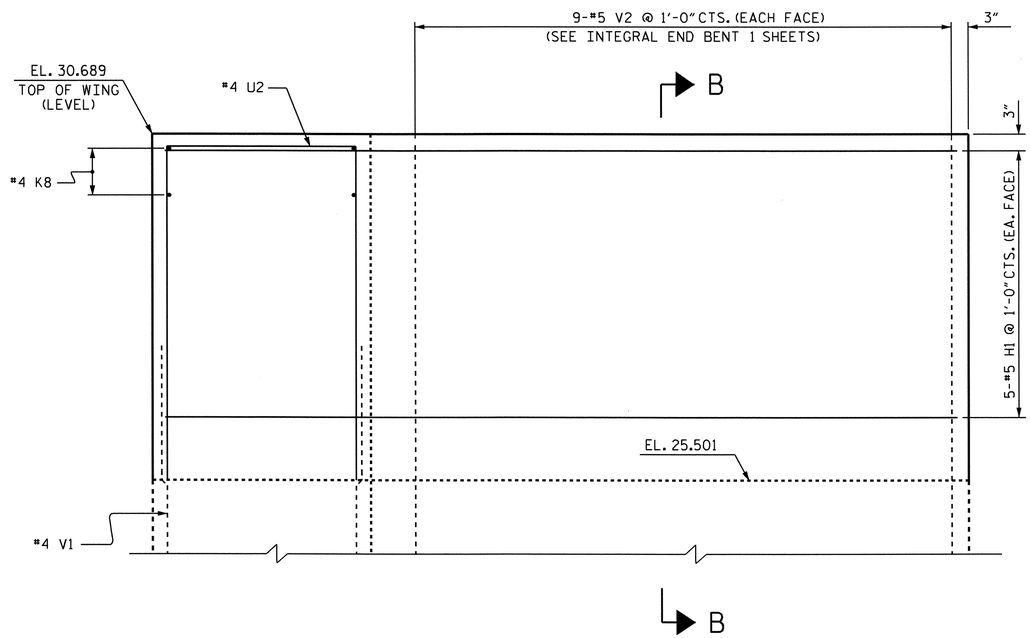

ELEVATION OF WING

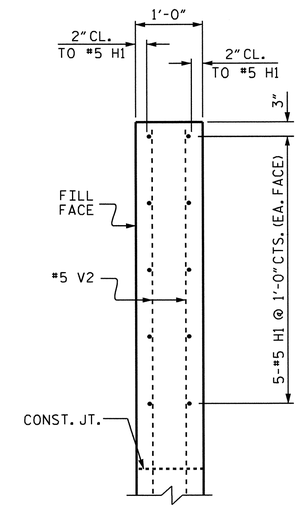

SECTION B-B

UPPER WINGS AT INTEGRAL END BENT 1

(FOR LOWER WING REINFORCING STEEL AND DETAILS, SEE INTEGRAL END BENT 1 SHEETS)

PROJECT NO. B-4028

BLADEN COUNTY

STATION: 56+35.50 -L-

SHEET 6 OF 7

STATE OF NORTH CAROLINA
DEPARTMENT OF TRANSPORTATION
RALEIGH

SUPERSTRUCTURE

PLAN OF SPAN DETAILS

NORTH CAROLINA PROFESSIONAL SEAL 14855 ENGINEER DOUGLAS R. CALHOUN
6/25/12

REVISIONS						SHEET NO.
NO.	BY:	DATE:	NO.	BY:	DATE:	S-126
1			3			TOTAL SHEETS
2			4			147

DRAWN BY : A. SORSENGINH DATE : 4/2012
CHECKED BY : D.R. CALHOUN DATE : 5/2012

25-JUN-2012 11:35
R:\Structures\STR3\Super_Draw\B-4028_str3_PS.dgn
asorsenginh

STR. #3

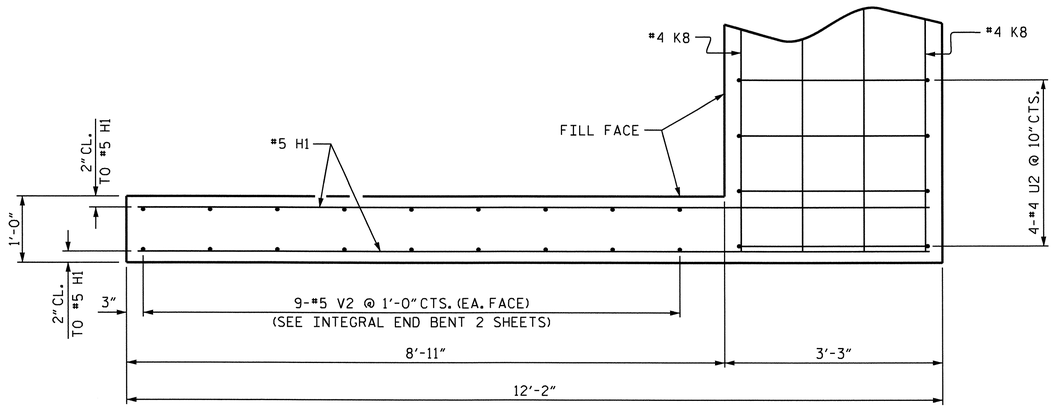

PLAN OF WING

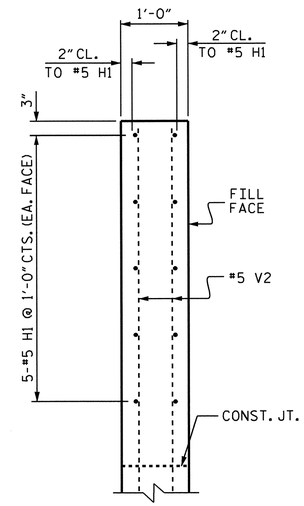

SECTION B-B

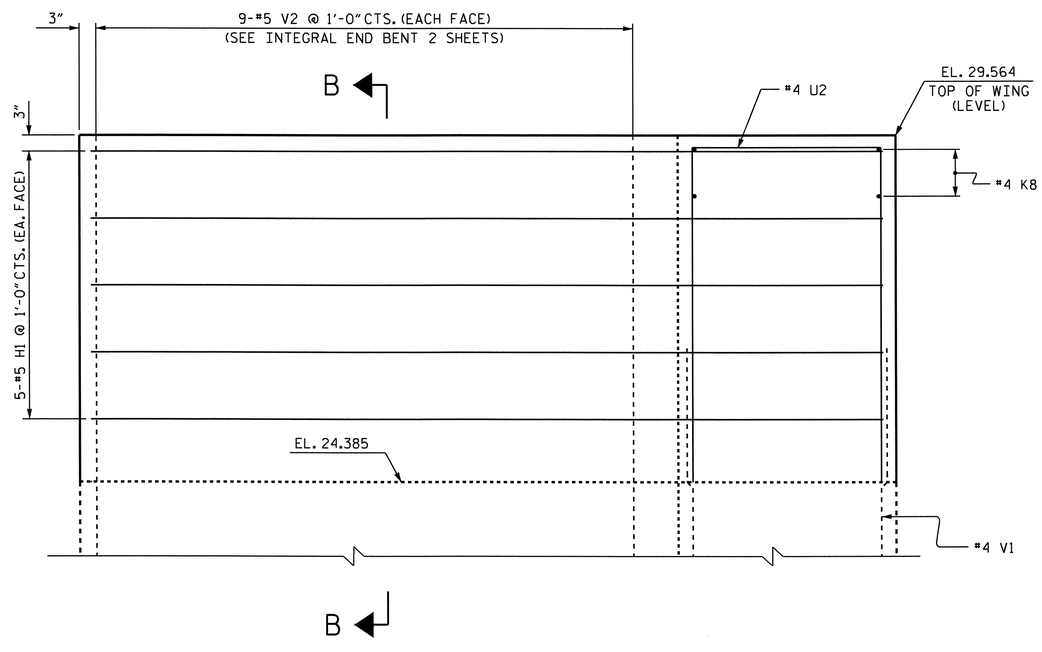

ELEVATION OF WING

UPPER WINGS AT INTEGRAL END BENT 2

(FOR LOWER WING REINFORCING STEEL AND DETAILS, SEE INTEGRAL END BENT 2 SHEETS)

PROJECT NO. B-4028

BLADEN COUNTY

STATION: 56+35.50 -L-

SHEET 7 OF 7

STATE OF NORTH CAROLINA
DEPARTMENT OF TRANSPORTATION
RALEIGH

SUPERSTRUCTURE
PLAN OF SPAN DETAILS

NORTH CAROLINA PROFESSIONAL SEAL 14855 ENGINEER DOUGLAS R. CALHOUN
8/25/12

REVISIONS						SHEET NO.
NO.	BY:	DATE:	NO.	BY:	DATE:	S-127
1			3			TOTAL SHEETS
2			4			147

DRAWN BY : A. SORSENGINH DATE : 4/2012
CHECKED BY : D.R. CALHOUN DATE : 5/2012

25-JUN-2012 11:35
R:\Structures\STR3\Super_Draw\B-4028_str3_PS.dgn
asorsenginh

STR. #3

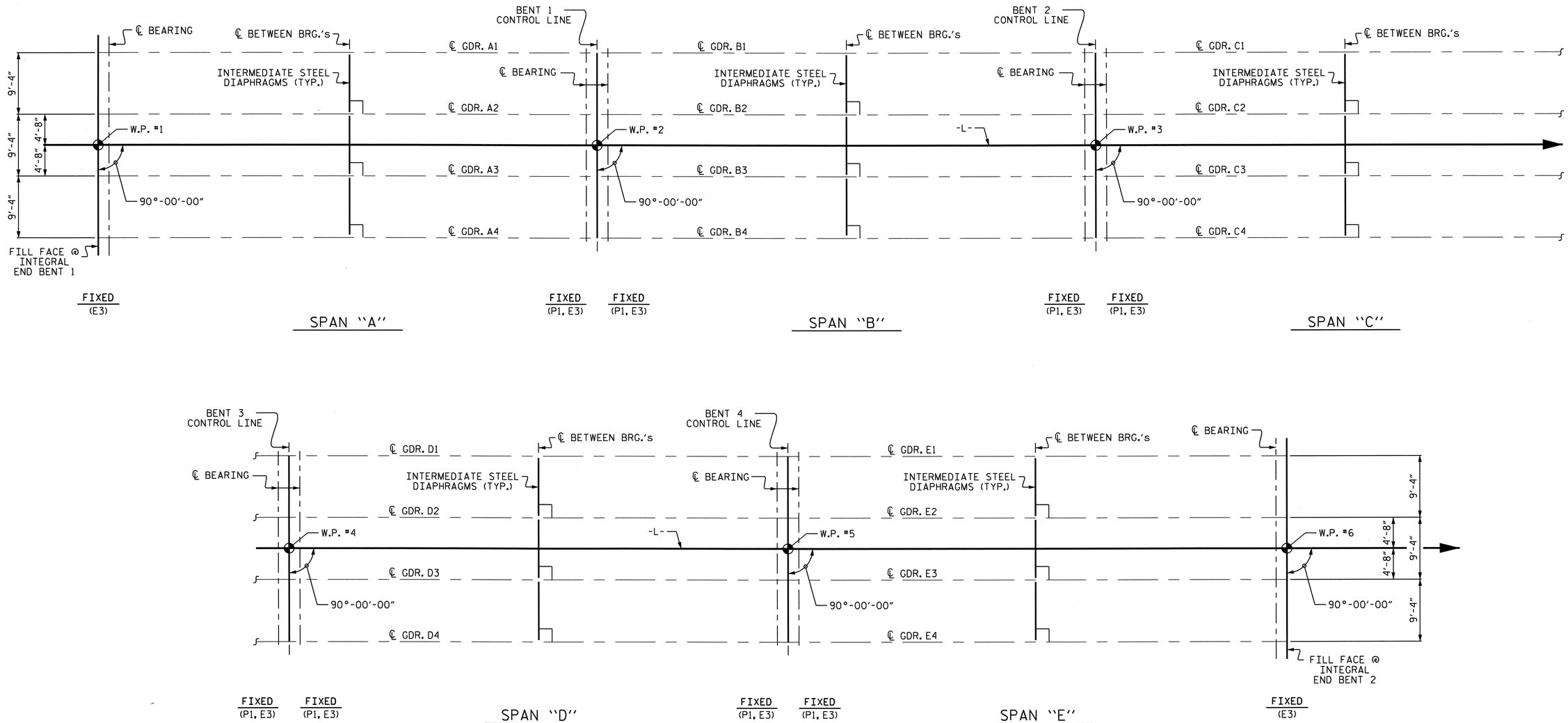

FRAMING PLAN

PROJECT NO. B-4028

BLADEN COUNTY

STATION: 56+35.50 -L-

STATE OF NORTH CAROLINA
DEPARTMENT OF TRANSPORTATION
RALEIGH

SUPERSTRUCTURE
FRAMING PLAN

NORTH CAROLINA PROFESSIONAL SEAL 14855 ENGINEER DOUGLAS R. CALHOUN
6/25/12

REVISIONS						SHEET NO.
NO.	BY:	DATE:	NO.	BY:	DATE:	S-128
1			3			TOTAL SHEETS
2			4			147

DRAWN BY : T. BANKOVICH DATE : 2-2010
CHECKED BY : M.L. BROWN DATE : 4-2010

11-MAY-2012 14:17
R:\Structures\STR3\Super_Draw\B-4028_str3_FP.dgn
asorsenginh

STR. #3

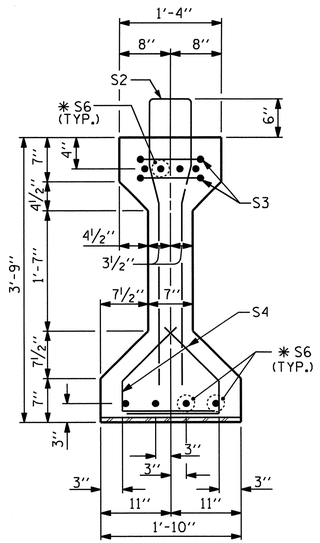

SECTION A-A

AT END BENT

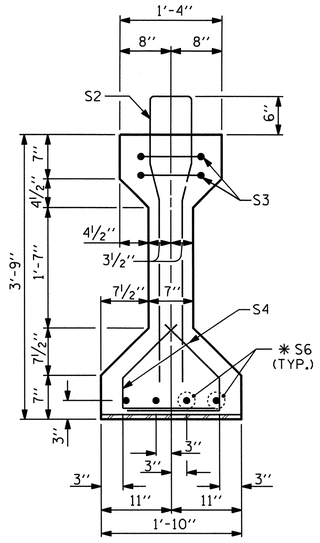

SECTION B-B

AT BENT

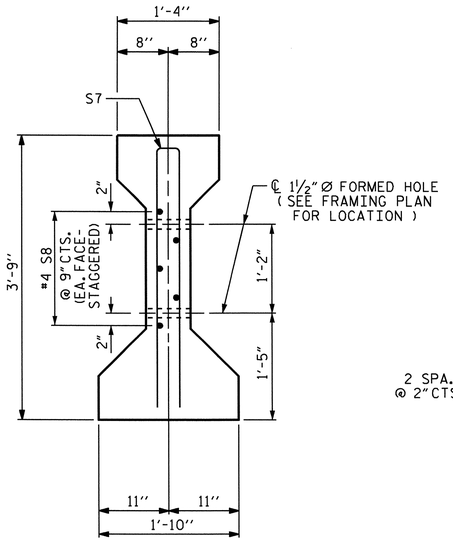

SECTION C-C

(S1 BARS NOT SHOWN)

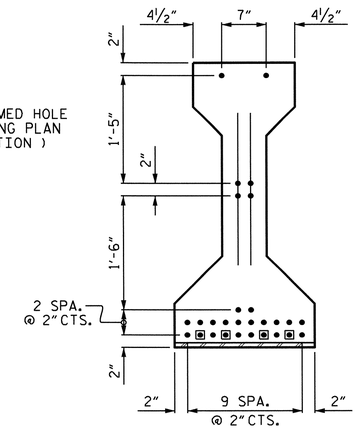

AT END OF GIRDER

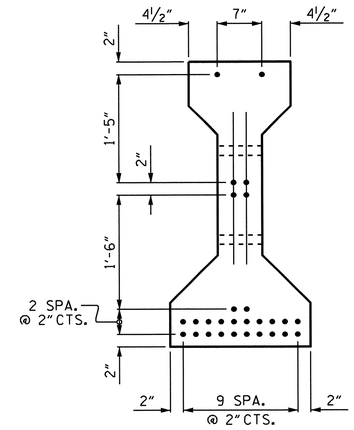

AT ℄ OF GIRDER

0.6" Ø LOW RELAXATION STRAND LAYOUT

(28 STRANDS REQUIRED)

● FULLY BONDED STRANDS

▣ STRANDS DEBONDED FOR 4'-0" FROM END OF GIRDER

0.6" Ø L.R. GRADE 270 STRANDS		
AREA (SQUARE INCHES)	ULTIMATE STRENGTH (LBS. PER. STRAND)	APPLIED PRESTRESS (LBS. PER. STRAND)
0.217	58,600	43,950

REINFORCING STEEL FOR ONE GIRDER

BAR	NUMBER	SIZE	TYPE	LENGTH	WEIGHT
S1	104	#4	1	8'-6"	591
S2	12	#6	1	8'-6"	153
S3	4	#4	3	8'-8"	23
S4	56	#4	2	2'-9"	103
✱ S6	12	#5	STR	3'-8"	46
S7	2	#5	3	7'-2"	15
S8	5	#4	STR	7'-0"	23
S10	1	#3	STR	1'-0"	1

✱ NOTE: S6 BARS SHALL BE BENT BEFORE SHIPMENT. HEAT BENDING SHALL NOT BE ALLOWED.

BAR TYPES

ALL BAR DIMENSIONS ARE OUT TO OUT

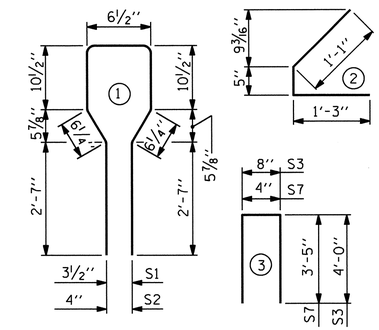

QUANTITIES FOR ONE GIRDER

REINFORCING STEEL	9500 PSI CONCRETE	0.6" Ø L.R. STRANDS
LB.	C.Y.	No.
955	10.6	28

GIRDERS REQUIRED

NUMBER	LENGTH	TOTAL LENGTH
8	73'-7½"	589.00

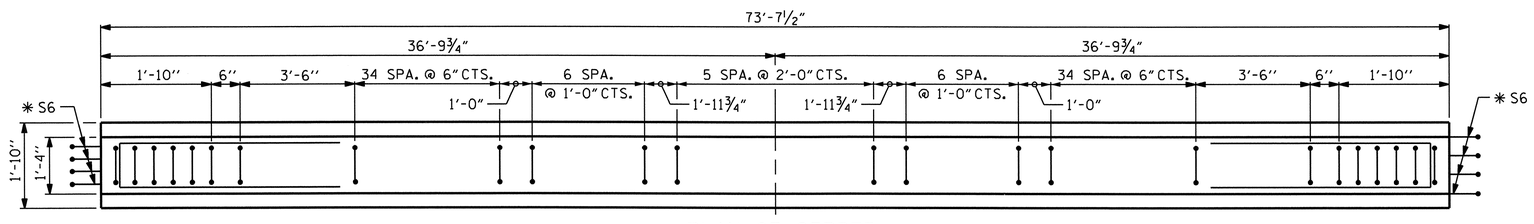

PLAN OF GIRDER

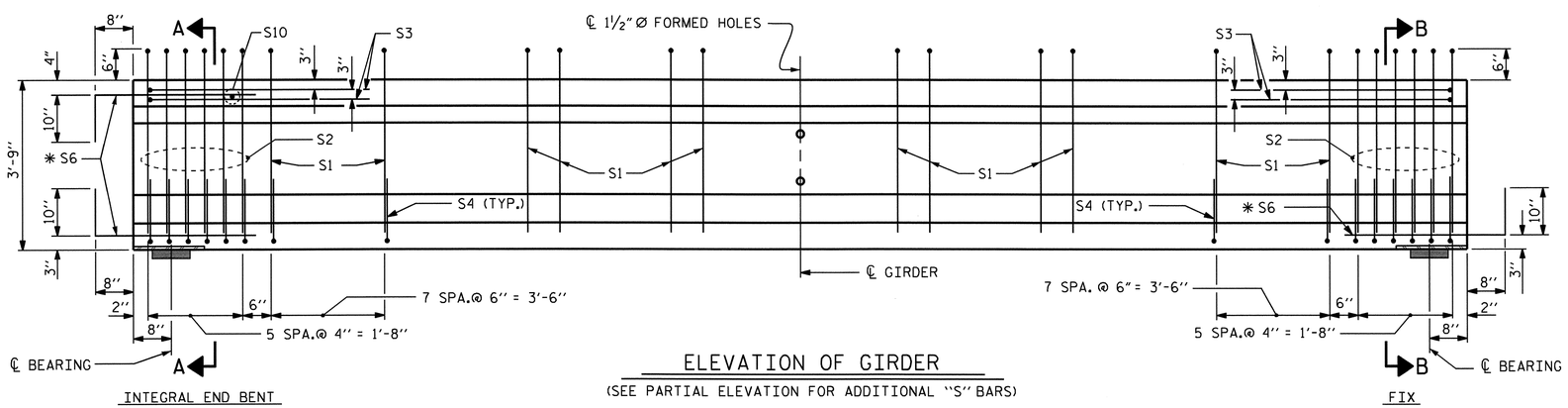

INTEGRAL END BENT

ELEVATION OF GIRDER

(SEE PARTIAL ELEVATION FOR ADDITIONAL "S" BARS)

FIX

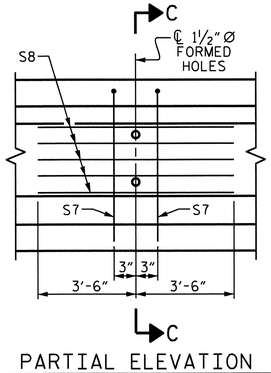

PARTIAL ELEVATION

SHOWING INTERMEDIATE DIAPHRAGM REINFORCING STEEL FOR ALL GIRDERS

PROJECT NO. B-4028

BLADEN COUNTY

STATION: 56+35.50 -L-

SHEET 1 OF 4

STATE OF NORTH CAROLINA
DEPARTMENT OF TRANSPORTATION
RALEIGH

STANDARD

AASHTO TYPE III PRESTRESSED CONCRETE GIRDER CONTINUOUS FOR LIVE LOAD SPANS "A" & "E"

NORTH CAROLINA PROFESSIONAL SEAL 14855 ENGINEER DOUGLAS R. CALHOON
6/25/12

REVISIONS								SHEET NO.
NO.	BY:	DATE:	NO.	BY:	DATE:			S-129
1			3					TOTAL SHEETS
2			4					147

STD. NO. PCG5 STR. #3

ASSEMBLED BY : T. BANKOVICH	DATE : 3-2010
CHECKED BY : M.L. BROWN	DATE : 4-2010
DRAWN BY : ELR 8/91	REV. 10/17/00R RWW/LES
CHECKED BY : GRP 8/91	REV. 5/1/06R TLA/GM
	REV. 10/1/11 MAA/GM

25-JUN-2012 11:36
R:\Structures\STR3\Super_Draw\B-4028_str3_PCG.dgn
asorsenginh

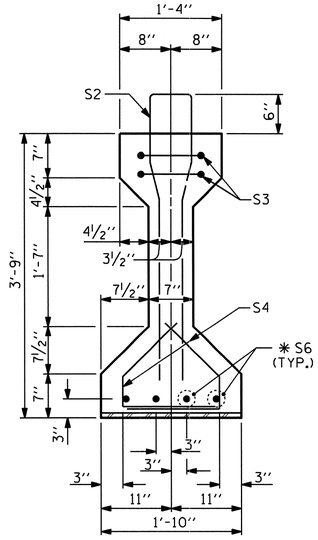

SECTION B-B

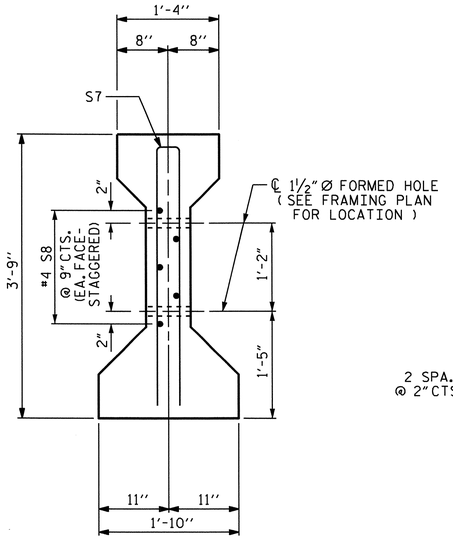

SECTION C-C

(S1 BARS NOT SHOWN)

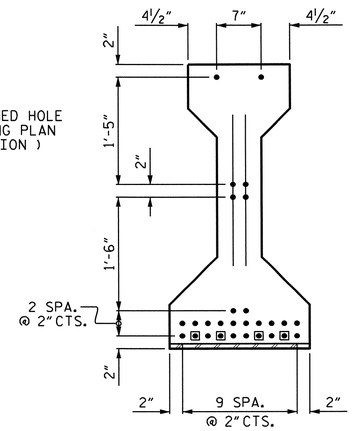

AT END OF GIRDER

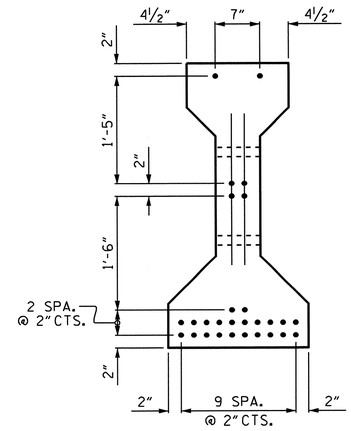

AT ℄ OF GIRDER

0.6" Ø LOW RELAXATION STRAND LAYOUT

(28 STRANDS REQUIRED)

● FULLY BONDED STRANDS

▣ STRANDS DEBONDED FOR 4'-0" FROM END OF GIRDER

0.6" Ø L.R. GRADE 270 STRANDS		
AREA (SQUARE INCHES)	ULTIMATE STRENGTH (LBS. PER. STRAND)	APPLIED PRESTRESS (LBS. PER. STRAND)
0.217	58,600	43,950

REINFORCING STEEL FOR ONE GIRDER

BAR	NUMBER	SIZE	TYPE	LENGTH	WEIGHT
S1	106	#4	1	8'-6"	602
S2	12	#6	1	8'-6"	153
S3	4	#4	3	8'-8"	23
S4	56	#4	2	2'-9"	103
✱ S6	8	#5	STR	3'-8"	31
S7	2	#5	3	7'-2"	15
S8	5	#4	STR	7'-0"	23

✱ NOTE: S6 BARS SHALL BE BENT BEFORE SHIPMENT. HEAT BENDING SHALL NOT BE ALLOWED.

BAR TYPES

ALL BAR DIMENSIONS ARE OUT TO OUT

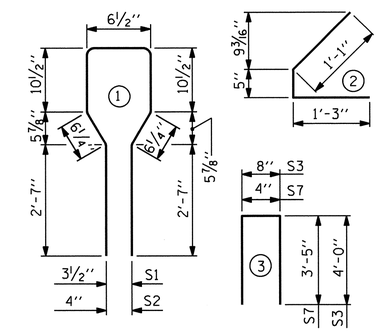

QUANTITIES FOR ONE GIRDER

REINFORCING STEEL	9500 PSI CONCRETE	0.6" Ø L.R. STRANDS
LB.	C.Y.	No.
950	10.7	28

GIRDERS REQUIRED

NUMBER	LENGTH	TOTAL LENGTH
12	74'-2"	890.00

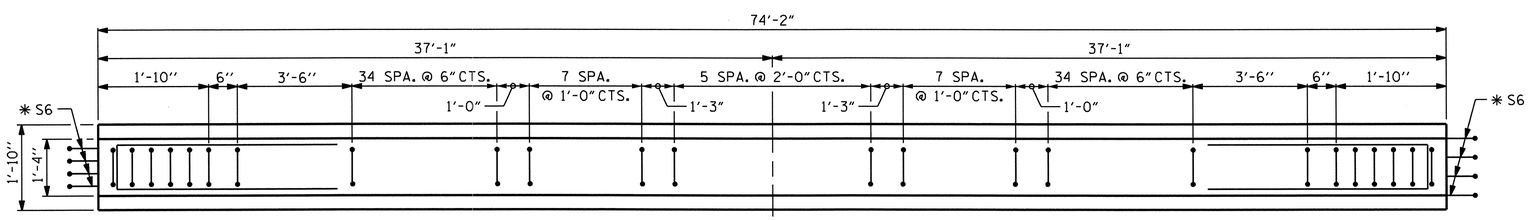

PLAN OF GIRDER

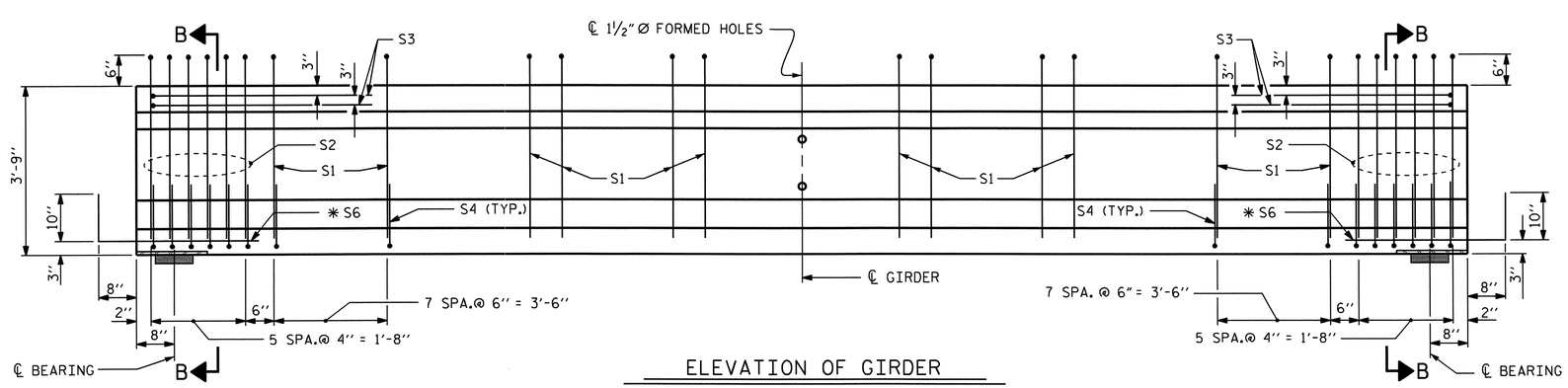

ELEVATION OF GIRDER

(SEE PARTIAL ELEVATION FOR ADDITIONAL "S" BARS)

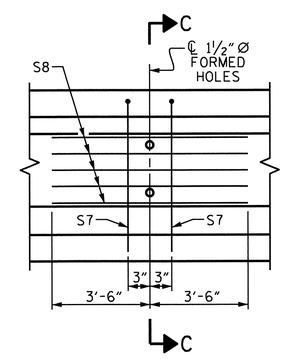

PARTIAL ELEVATION

SHOWING INTERMEDIATE DIAPHRAGM REINFORCING STEEL FOR ALL GIRDERS

PROJECT NO. B-4028

BLADEN COUNTY

STATION: 56+35.50 -L-

SHEET 2 OF 4

STATE OF NORTH CAROLINA
DEPARTMENT OF TRANSPORTATION
RALEIGH

STANDARD

AASHTO TYPE III
PRESTRESSED CONCRETE GIRDER
CONTINUOUS FOR LIVE LOAD
SPANS "B", "C", & "D"

NORTH CAROLINA PROFESSIONAL SEAL 14855 ENGINEER DOUGLAS R. CALHOUN
6/25/12

REVISIONS							SHEET NO.
NO.	BY:	DATE:	NO.	BY:	DATE:		5-130
1			3				TOTAL SHEETS
2			4				147

STD. NO. PCG5

STR. #3

ASSEMBLED BY : T. BANKOVICH	DATE : 3-2010
CHECKED BY : M.L. BROWN	DATE : 4-2010
DRAWN BY : ELR 8/91	REV. 10/17/00R RWW/LES
CHECKED BY : GRP 8/91	REV. 5/1/06R TLA/GM
	REV. 10/1/11 MAA/GM

25-JUN-2012 11:36
R:\Structures\STR3\Super_Draw\B-4028_str3_PCG.dgn
asorsenginh

DEAD LOAD DEFLECTION TABLE FOR GIRDERS OF SPANS A & E

0.6" Ø LOW RELAXATION	GIRDERS #1 & #4											GIRDERS #2 & #3										
TENTH POINTS	0	.1	.2	.3	.4	.5	.6	.7	.8	.9	0	0	.1	.2	.3	.4	.5	.6	.7	.8	.9	0
CAMBER (GIRDER ALONE IN PLACE) ↑	0	0.066	0.126	0.172	0.201	0.212	0.201	0.172	0.126	0.066	0	0	0.066	0.126	0.172	0.201	0.212	0.201	0.172	0.126	0.066	0
✱ DEFLECTION DUE TO SUPERIMPOSED D.L. ↓	0	0.028	0.054	0.073	0.086	0.090	0.086	0.073	0.054	0.028	0	0	0.031	0.058	0.080	0.094	0.098	0.094	0.080	0.058	0.031	0
FINAL CAMBER ↑	0	7/16"	7/8"	1 3/16"	1 3/8"	1 7/16"	1 3/8"	1 3/16"	7/8"	7/16"	0	0	7/16"	13/16"	1 1/8"	1 5/16"	1 3/8"	1 5/16"	1 1/8"	13/16"	7/16"	0

✱ INCLUDES FUTURE WEARING SURFACE
ALL VALUES ARE SHOWN IN FEET (DECIMAL FORM), EXCEPT "FINAL CAMBER", WHICH IS GIVEN IN INCHES (FRACTION FORM).

DEAD LOAD DEFLECTION TABLE FOR GIRDERS OF SPANS B, C & D

0.6" Ø LOW RELAXATION	GIRDERS #1 & #4											GIRDERS #2 & #3										
TENTH POINTS	0	.1	.2	.3	.4	.5	.6	.7	.8	.9	0	0	.1	.2	.3	.4	.5	.6	.7	.8	.9	0
CAMBER (GIRDER ALONE IN PLACE) ↑	0	0.067	0.127	0.174	0.203	0.213	0.203	0.174	0.127	0.067	0	0	0.067	0.127	0.174	0.203	0.213	0.203	0.174	0.127	0.067	0
✱ DEFLECTION DUE TO SUPERIMPOSED D.L. ↓	0	0.029	0.055	0.076	0.089	0.093	0.089	0.076	0.055	0.029	0	0	0.032	0.060	0.082	0.096	0.101	0.096	0.082	0.060	0.032	0
FINAL CAMBER ↑	0	7/16"	7/8"	1 3/16"	1 3/8"	1 7/16"	1 3/8"	1 3/16"	7/8"	7/16"	0	0	7/16"	13/16"	1 1/8"	1 5/16"	1 3/8"	1 5/16"	1 1/8"	13/16"	7/16"	0

✱ INCLUDES FUTURE WEARING SURFACE
ALL VALUES ARE SHOWN IN FEET (DECIMAL FORM), EXCEPT "FINAL CAMBER", WHICH IS GIVEN IN INCHES (FRACTION FORM).

NOTES

ALL PRESTRESSING STRANDS SHALL BE 7-WIRE LOW-RELAXATION GRADE 270 STRANDS AND SHALL CONFORM TO AASHTO M203 EXCEPT FOR SAMPLING REQUIREMENTS WHICH SHALL BE IN ACCORDANCE WITH THE STANDARD SPECIFICATIONS.

ALL REINFORCING STEEL SHALL BE GRADE 60.

EMBEDDED PLATE "B-1" SHALL BE GALVANIZED IN ACCORDANCE WITH THE STANDARD SPECIFICATIONS. BEVEL EDGES OF PLATE "B-1" TO GIVE CLOSE FIT BUT NOT TIGHT FIT TO STEEL CASTING FORM.

ANCHOR STUDS SHALL CONFORM TO AASHTO M169 GRADES 1010 THROUGH 1020 OR APPROVED EQUAL, AND SHALL MEET THE TYPE "B" REQUIREMENTS OF SUBSECTION 7.3 OF THE ANSI/AASHTO/AWS D1.5 BRIDGE WELDING CODE.

AT ENDS OF GIRDERS TO BE EMBEDDED IN CONCRETE DIAPHRAGMS OR END WALLS, PRESTRESSING STRANDS MAY EXTEND A MAXIMUM OF 2" BEYOND THE GIRDER ENDS. OTHERWISE, PRESTRESSING STRANDS SHALL BE CUT FLUSH WITH THE GIRDER ENDS.

THE TRANSFER OF LOAD FROM THE ANCHORAGES TO THE GIRDER SHALL BE DONE WHEN CONCRETE HAS REACHED A COMPRESSIVE STRENGTH OF NOT LESS THAN 6300 PSI.

DEPENDING ON THE TYPE OF SYSTEM USED TO SUPPORT THE DECK SLAB FORMS, PRESET ANCHORS MAY BE NECESSARY IN THE PRESTRESSED CONCRETE GIRDER.

THE TOP SURFACE OF THE GIRDER, EXCLUDING THE OUTSIDE 4", SHALL BE RAKED TO A DEPTH OF 1/4".

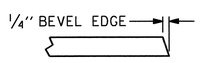

SECTION "G"

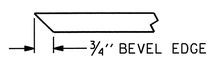

SECTION "F"

(SEE NOTES)

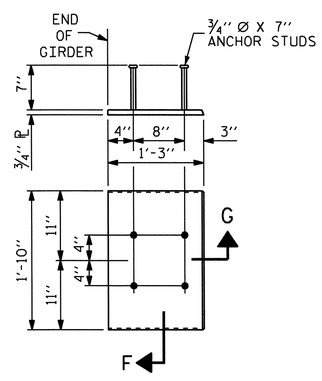

EMBEDDED PLATE "B-1" DETAILS FOR AASHTO TYPE III GIRDER

(2 REQ'D PER GIRDER)

PROJECT NO. B-4028
BLADEN COUNTY
STATION: 56+35.50 -L-

SHEET 3 OF 4

STATE OF NORTH CAROLINA
DEPARTMENT OF TRANSPORTATION
RALEIGH

STANDARD

PRESTRESSED CONCRETE GIRDER CONTINUOUS FOR LIVE LOAD DETAILS

NORTH CAROLINA PROFESSIONAL SEAL 14855 ENGINEER DOUGLAS R. CALHOUN
6/25/12

REVISIONS						SHEET NO.
NO.	BY:	DATE:	NO.	BY:	DATE:	S-131
1			3			TOTAL SHEETS
2			4			147

STD. NO. PCG9

STR. #3

ASSEMBLED BY : T. BANKOVICH	DATE : 2-2010
CHECKED BY : M.L. BROWN	DATE : 4-2010
DRAWN BY : ELR 11/91	REV. 7/10/01RR LES/RDR
CHECKED BY : GRP 11/91	REV. 5/1/06 TLA/GM
	REV. 10/1/11 MAA/GM

11-MAY-2012 14:19
R:\Structures\STR3\Super_Draw\B-4028_str3_DL.dgn
asorsenginh

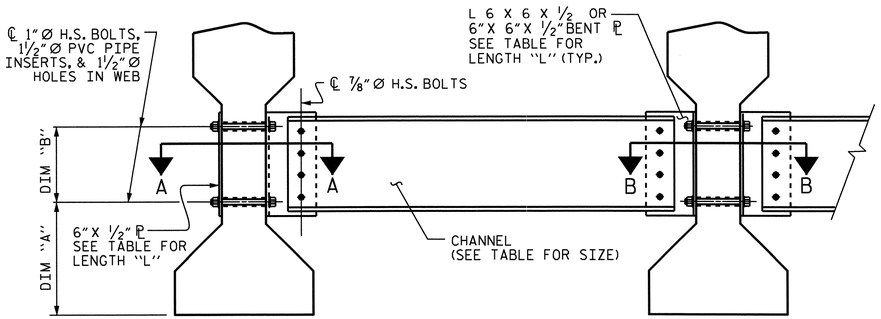

EXTERIOR GIRDER

INTERIOR GIRDER

PART SECTION AT INTERMEDIATE DIAPHRAGM

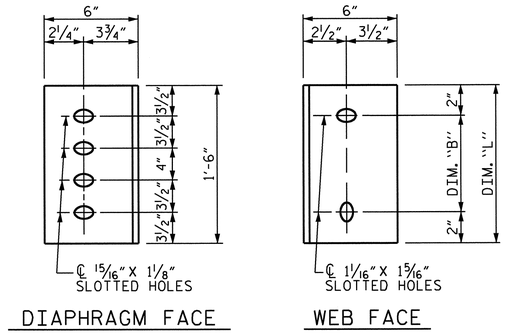

DIAPHRAGM FACE

WEB FACE

CONNECTOR PLATE DETAILS

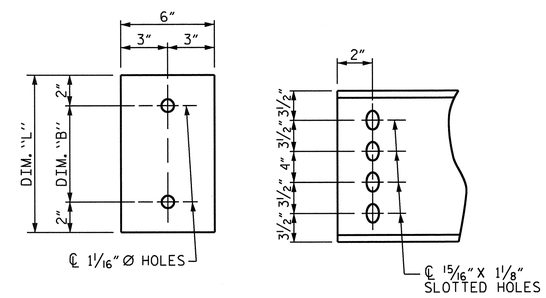

PLATE DETAILS

CHANNEL END

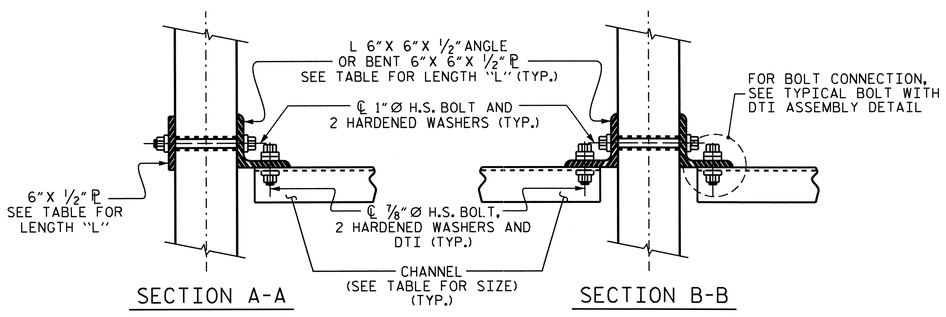

SECTION A-A

SECTION B-B

CONNECTION DETAILS

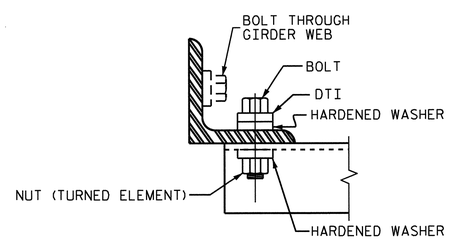

BOLT WITH DTI ASSEMBLY DETAIL

STRUCTURAL STEEL NOTES

ALL INTERMEDIATE DIAPHRAGM STEEL AND CONNECTOR PLATES SHALL BE AASHTO M270 GRADE 50 OR APPROVED EQUAL.

TENSION ON THE ASTM A325 BOLTS THROUGH THE CHANNEL MEMBER SHALL BE CALIBRATED USING DIRECT TENSION INDICATOR WASHERS IN ACCORDANCE WITH THE STANDARD SPECIFICATIONS.

TENSION ON THE ASTM A449 BOLTS THROUGH THE GIRDER WEB SHALL BE SNUG TIGHTENED FOLLOWED BY AN ADDITIONAL ¼ TURN.

THE PLATES, BENT PLATES, CHANNELS, AND ANGLES SHALL BE GALVANIZED OR METALLIZED IN ACCORDANCE WITH THE STANDARD SPECIFICATIONS. FOR THERMAL SPRAYED COATINGS (METALLIZATION), SEE SPECIAL PROVISIONS.

FOR METALLIZATION, APPLY AN 8 MIL THICK 99.99 PERCENT ZINC (W-Zn-1) THERMAL SPRAYED COATING WITH A 0.5 MIL THICK SEAL COAT TO ALL STEEL DIAPHRAGM SURFACES IN ACCORDANCE WITH THE THERMAL SPRAYED COATINGS SPECIAL PROVISION AND SECTION 442 OF THE STANDARD SPECIFICATIONS.

GALVANIZE THE HIGH STRENGTH BOLTS, NUTS, WASHERS AND DIRECT TENSION INDICATORS IN ACCORDANCE WITH THE STANDARD SPECIFICATIONS.

USE AN ASTM F436 HARDENED WASHER WITH STANDARD AND SLOTTED HOLES UNDER EACH BOLT HEAD AND NUT.

FOR BOLTS THROUGH THE GIRDER WEB, PROVIDE SUFFICIENT LENGTH OF THREADS ON ALL BOLTS TO ACCOMMODATE WASHERS AND THE THICKNESS OF CONNECTING MEMBER PLUS AT LEAST ¼" PROJECTION BEYOND THE NUT.

INTERMEDIATE DIAPHRAGM ASSEMBLY SHALL COMPLY WITH SECTION 1072 OF THE STANDARD SPECIFICATIONS.

SUBMIT TWO SETS OF WORKING DRAWINGS FOR THE INTERMEDIATE DIAPHRAGM ASSEMBLY FOR REVIEW, COMMENTS AND ACCEPTANCE. AFTER REVIEW, COMMENTS, AND ACCEPTANCE, SUBMIT SEVEN SETS FOR DISTRIBUTION.

IN THE EXTERIOR BAYS, PLACE TEMPORARY STRUTS BETWEEN PRESTRESSED GIRDERS ADJACENT TO THE STEEL DIAPHRAGMS. STRUTS SHALL REMAIN IN PLACE 3 DAYS AFTER CONCRETE IS PLACED.

THE COST OF THE STEEL DIAPHRAGMS AND ASSEMBLIES SHALL BE INCLUDED IN THE UNIT PRICE BID FOR PRESTRESSED CONCRETE GIRDERS.

TABLE

GIRDER TYPE	CHANNEL SIZE	DIM "A"	DIM "B"	DIM "L"
III	MC 18 x 42.7	1'-5"	1'-2"	1'-6"

PROJECT NO. B-4028

BLADEN COUNTY

STATION: 56+35.50 -L-

SHEET 4 OF 4

STATE OF NORTH CAROLINA
DEPARTMENT OF TRANSPORTATION
RALEIGH

STANDARD

INTERMEDIATE STEEL DIAPHRAGMS FOR TYPE III PRESTRESSED CONCRETE GIRDERS

NORTH CAROLINA PROFESSIONAL SEAL 14855 ENGINEER DOUGLAS R. CALDWELL
6/25/12

REVISIONS						SHEET NO.
NO.	BY:	DATE:	NO.	BY:	DATE:	S-132
1			3			TOTAL SHEETS
2			4			147

STD. NO. PCG10

STR. #3

ASSEMBLED BY : T. BANKOVICH DATE : 2-2010 CHECKED BY : M.L. BROWN DATE : 4-2010	
DRAWN BY : TLA 6/05 CHECKED BY : VC 6/05	ADDED 10/21/05 REV. 5/1/06RRR KMM/GM REV. 10/1/11 MAA/GM

11-MAY-2012 14:21
R:\Structures\STR3\Super_Draw\B-4028_str3_SS.dgn
asorsenginh

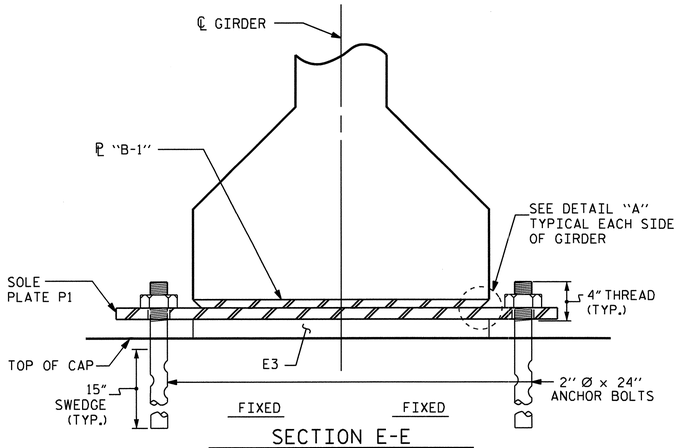

SECTION E-E
(AT BENTS)

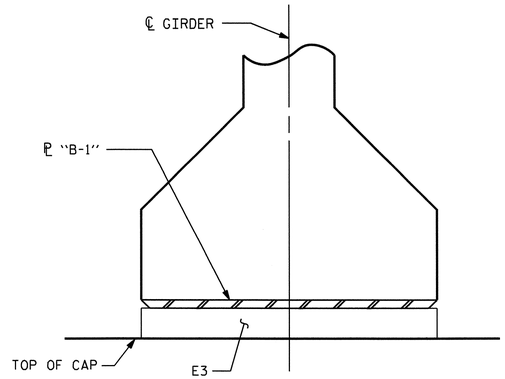

SECTION D-D
(AT INTEGRAL END BENTS)

LOAD RATINGS	
	MAX.D.L.+L.L.
TYPE IV	198 K

NOTES

AT ALL FIXED POINTS OF SUPPORT, NUTS FOR ANCHOR BOLTS ARE TO BE TIGHTENED FINGER TIGHT AND THEN BACKED OFF 1/2 TURN. THE THREAD OF THE NUT AND BOLT SHALL THEN BE BURRED WITH A SHARP POINTED TOOL.

STEEL SOLE PLATES, ANCHOR BOLTS AND NUTS SHALL BE GALVANIZED IN ACCORDANCE WITH THE STANDARD SPECIFICATIONS.

PRIOR TO WELDING, GRIND THE GALVANIZED SURFACE OF THE PORTION OF THE EMBEDDED PLATE AND SOLE PLATE THAT ARE TO BE WELDED. AFTER WELDING, DAMAGED GALVANIZED SURFACES SHALL BE REPAIRED IN ACCORDANCE WITH THE STANDARD SPECIFICATIONS.

WHEN WELDING THE SOLE PLATE TO THE EMBEDDED PLATE IN THE GIRDER, USE TEMPERATURE INDICATING WAX PENS, OR OTHER SUITABLE MEANS, TO ENSURE THAT THE TEMPERATURE OF THE SOLE PLATE DOES NOT EXCEED 300°F. TEMPERATURES ABOVE THIS MAY DAMAGE THE ELASTOMER.

SOLE PLATE "P", BOLTS AND NUTS SHALL BE INCLUDED IN THE PAY ITEM FOR PRESTRESSED CONCRETE GIRDERS.

ANCHOR BOLTS SHALL MEET THE REQUIREMENTS OF ASTM A449. NUTS SHALL MEET THE REQUIREMENTS OF AASHTO M291-DH OR AASHTO M292-2H. SHOP DRAWINGS ARE NOT REQUIRED FOR ANCHOR BOLT AND NUTS. SHOP INSPECTION IS REQUIRED.

ALL SURFACES OF BEARING PLATES SHALL BE SMOOTH AND STRAIGHT.

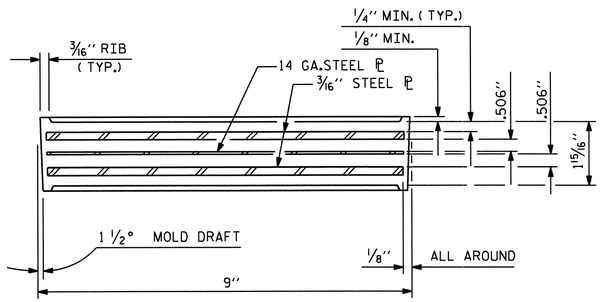

TYPICAL SECTION OF ELASTOMERIC BEARINGS

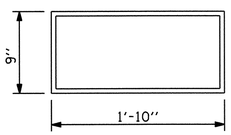

E3 (40 REQ'D)

PLAN VIEW OF ELASTOMERIC BEARING

TYPE IV
(60 DUROMETER HARDNESS)

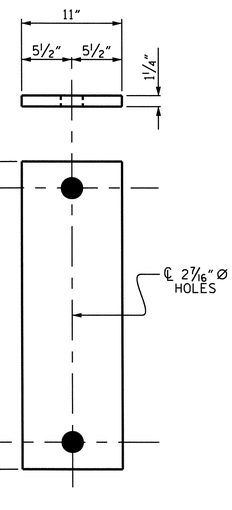

P1
(FIXED)
(32 REQ'D)

SOLE PLATE DETAILS (P1)

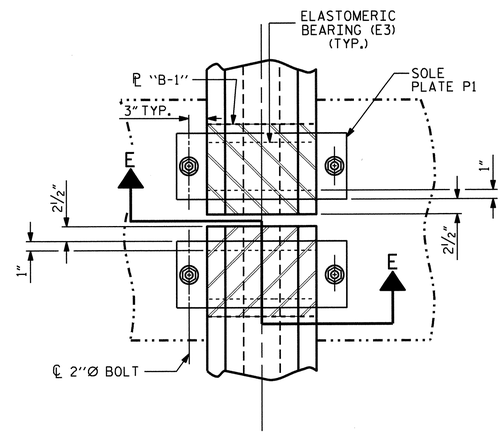

PLAN VIEW AT BENT
(SHOWING CONTINUOUS BENT)

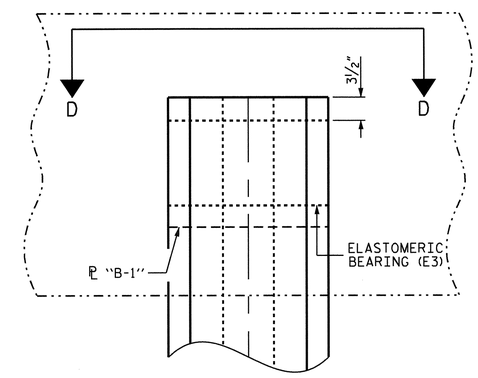

PLAN VIEW AT END BENTS

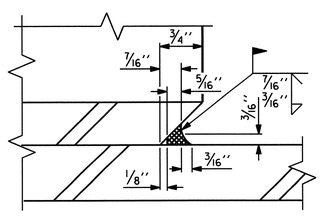

DETAIL "A"

PROJECT NO. B-4028
BLADEN COUNTY
STATION: 56+35.50 -L-

STATE OF NORTH CAROLINA
DEPARTMENT OF TRANSPORTATION
RALEIGH

STANDARD

ELASTOMERIC BEARING DETAILS

PRESTRESSED CONCRETE GIRDER SUPERSTRUCTURE

NORTH CAROLINA PROFESSIONAL SEAL 14855 ENGINEER DOUGLAS R. CALHOUN
6/25/12

REVISIONS						SHEET NO.
NO.	BY:	DATE:	NO.	BY:	DATE:	S-133
1			3			TOTAL SHEETS
2			4			147

ASSEMBLED BY : T. BANKOVICH		DATE : 2-2010	
CHECKED BY : M.L. BROWN		DATE : 4-2010	
DRAWN BY : WJH 8/89	REV. 7/10/01	RWW/LES	
CHECKED BY : CRK 8/89	REV. 5/1/06	TLA/GM	
	REV. 10/1/11	MAA/GM	

11-MAY-2012 14:22
R:\Structures\STR3\Super_Draw\B-4028_str3_BG.dgn
asorsenglnh

STD. NO. EB3 STR. #3

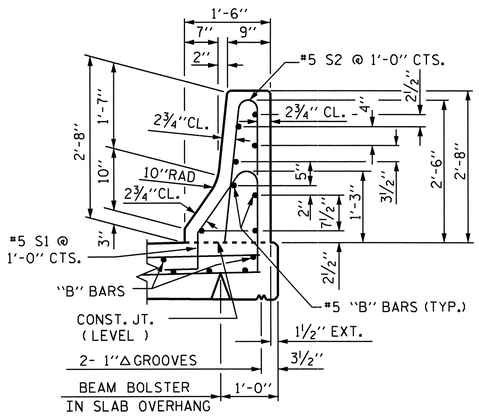

SECTION THRU RAIL

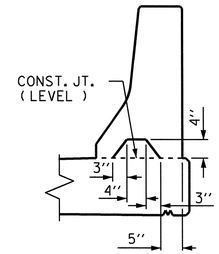

SECTION S-S

AT DAM IN OPEN JOINT
(THIS IS TO BE USED ONLY WHEN SLIP FORM IS USED)

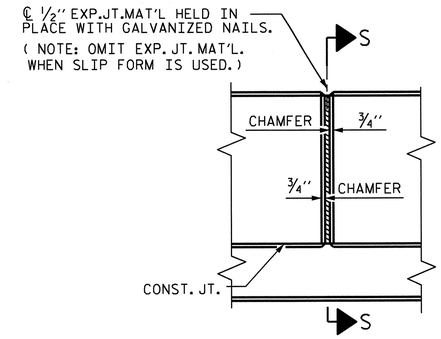

ELEVATION AT EXPANSION JOINTS

BAR TYPES

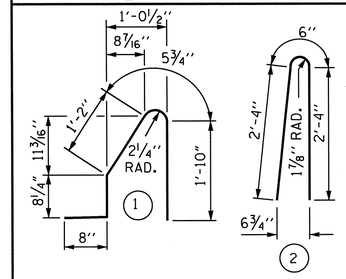

ALL BAR DIMENSIONS ARE OUT TO OUT

BILL OF MATERIAL

FOR CONCRETE BARRIER RAIL ONLY

BAR	NO.	SIZE	TYPE	LENGTH	WEIGHT
* B1	32	#5	STR	23'-9"	793
* B2	208	#5	STR	24'-7"	5333
* S1	748	#5	1	4'-10"	3771
* S2	748	#5	2	5'-2"	4031

* EPOXY COATED REINFORCING STEEL	13,928 LBS.
CLASS AA CONCRETE	74.7 CU. YDS.
CONCRETE BARRIER RAIL	746.67 LIN. FT.

BARRIER RAIL DETAILS

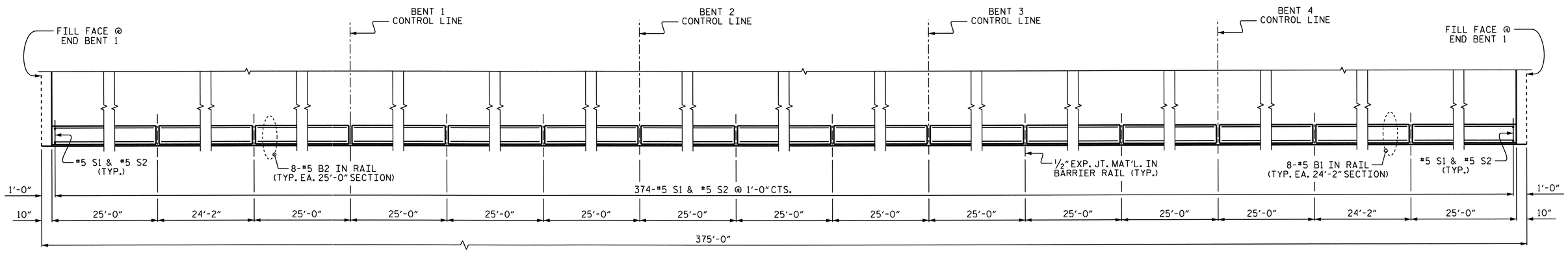

PLAN OF BARRIER RAIL

RIGHT SIDE SHOWN, LEFT SIDE SIMILAR

PROJECT NO. B-4028

BLADEN COUNTY

STATION: 56+35.50 -L-

NOTES:

THE BARRIER RAIL IN A CONTINUOUS UNIT SHALL NOT BE CAST UNTIL ALL SLAB CONCRETE HAS BEEN CAST AND HAS REACHED A MINIMUM COMPRESSIVE STRENGTH OF 3,000 PSI.

ALL REINFORCING STEEL IN BARRIER RAILS SHALL BE EPOXY COATED.

GROOVED CONTRACTION JOINTS, 1/2" IN DEPTH, SHALL BE TOOLED IN ALL EXPOSED FACES OF THE BARRIER RAIL AND IN ACCORDANCE WITH ARTICLE 825-10(B) OF THE STANDARD SPECIFICATIONS. THE CONTRACTION JOINT SHALL BE LOCATED AT EACH THIRD POINT BETWEEN BARRIER RAIL EXPANSION JOINTS. ONLY ONE CONTRACTION JOINT IS REQUIRED AT MIDPOINT OF BARRIER RAIL SEGMENTS LESS THAN 20 FEET IN LENGTH AND NO CONTRACTION JOINTS ARE REQUIRED FOR THOSE SEGMENTS LESS THAN 10 FEET IN LENGTH.

THE #5 S1 AND S2 BARS MAY BE SHIFTED SLIGHTLY IN ORDER TO MAINTAIN A 2" MINIMUM CLEARANCE TO THE 1/2" EXPANSION JOINT MATERIAL IN RAIL.

NORTH CAROLINA PROFESSIONAL SEAL 14855 ENGINEER DOUGLAS R. CALHOUN
6/25/12

STATE OF NORTH CAROLINA
DEPARTMENT OF TRANSPORTATION
RALEIGH

CONCRETE BARRIER RAIL

REVISIONS						SHEET NO.
NO.	BY:	DATE:	NO.	BY:	DATE:	S-134
1			3			TOTAL SHEETS
2			4			147

STD. NO. CBR1

STR. #3

ASSEMBLED BY : T. BANKOVICH		DATE : 2-2010	
CHECKED BY : M.L. BROWN		DATE : 4-2010	
DRAWN BY : ARB 5/87	REV. 5/7/03R	RWW/JTE	
CHECKED BY : SJD 9/87	REV. 5/1/06R	TLA/GM	
	REV. 10/1/11	MAA/GM	

11-MAY-2012 14:23
R:\Structures\STR3\Super_Draw\B-4028_str3_BR.dgn
osorsenginh

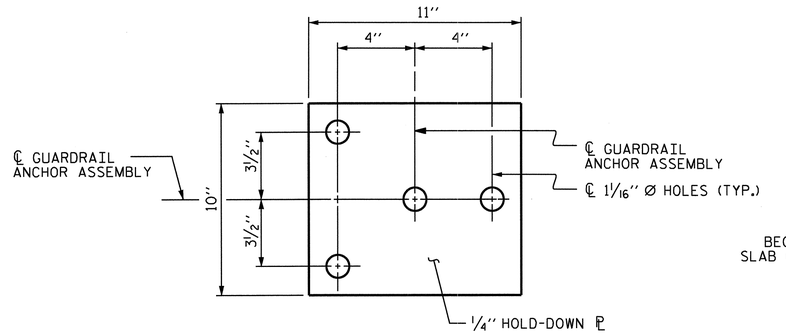

PLAN

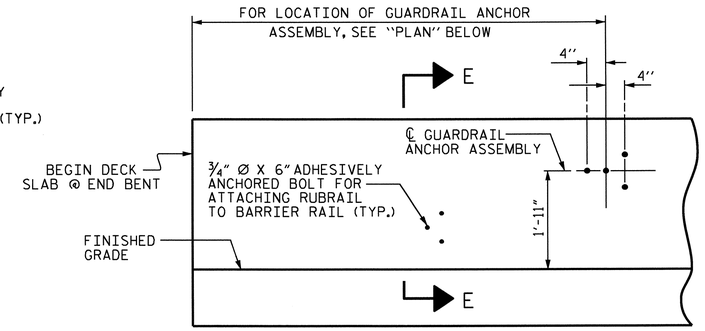

ELEVATION

FOR LOCATION OF RUBRAIL, SEE ROADWAY STD. 862.03

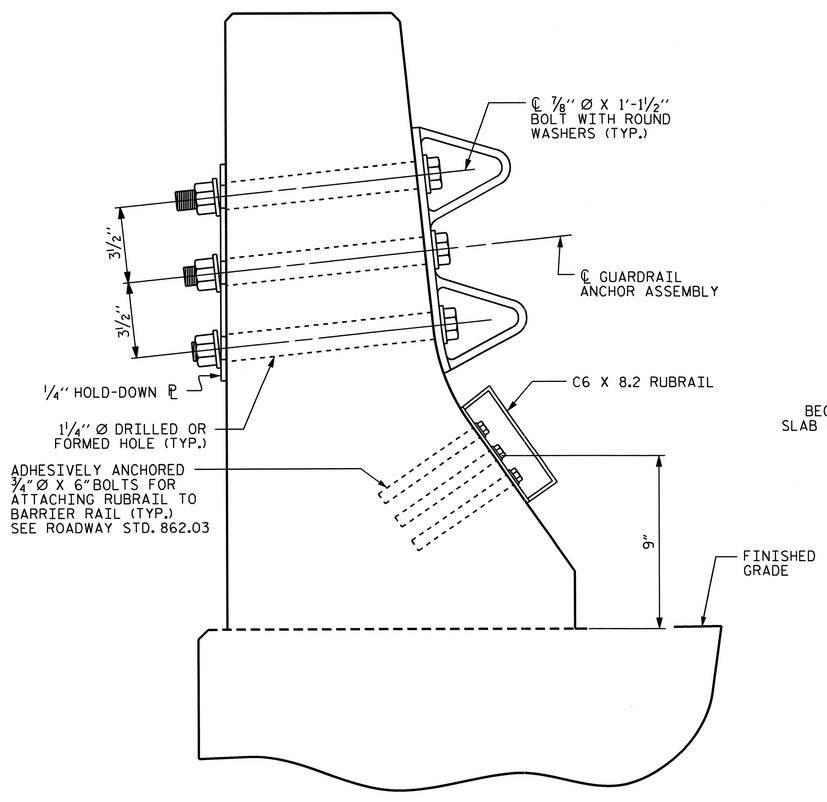

SECTION E-E

GUARDRAIL ANCHOR ASSEMBLY DETAILS

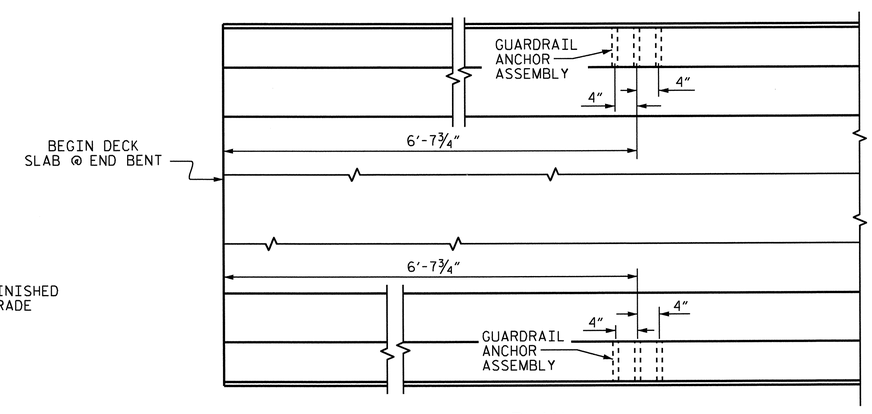

PLAN

LOCATION OF ANCHORS FOR GUARDRAIL

END BENT #1 SHOWN, END BENT #2 SIMILAR.

NOTES

THE GUARDRAIL ANCHOR ASSEMBLY SHALL CONSIST OF A 1/4'' HOLD-DOWN PLATE AND 4 - 7/8'' Ø BOLTS WITH NUTS AND WASHERS, RUBRAIL, AND ADHESIVELY ANCHORED BOLTS.

THE HOLD-DOWN PLATE SHALL CONFORM TO AASHTO M270 GRADE 36. AFTER FABRICATION, THE HOLD-DOWN PLATE SHALL BE HOT-DIP GALVANIZED IN ACCORDANCE WITH AASHTO M111.

BOLTS SHALL CONFORM TO THE REQUIREMENTS OF ASTM A307 AND NUTS SHALL CONFORM TO THE REQUIREMENTS OF AASHTO M291. BOLTS, NUTS AND WASHERS SHALL BE GALVANIZED. (AT THE CONTRACTOR'S OPTION, STAINLESS STEEL BOLTS, NUTS AND WASHERS MAY BE USED AS AN ALTERNATE FOR THE 7/8'' Ø GALVANIZED BOLTS, NUTS AND WASHERS. THEY SHALL CONFORM TO OR EXCEED THE MECHANICAL REQUIREMENTS OF ASTM A307. THE USE OF THIS ALTERNATE SHALL BE APPROVED BY THE ENGINEER.)

THE GUARDRAIL ANCHOR ASSEMBLY IS REQUIRED AT ALL POINTS WHERE APPROACH GUARDRAIL IS TO BE ATTACHED TO THE END OF BARRIER RAIL. FOR POINTS OF ATTACHMENT, SEE SKETCH.

AFTER INSTALLATION, THE EXPOSED THREAD OF THE BOLT SHALL BE BURRED WITH A SHARP POINTED TOOL.

THE COST OF THE GUARDRAIL ANCHOR ASSEMBLY SHALL BE INCLUDED IN THE UNIT CONTRACT PRICE BID FOR CONCRETE BARRIER RAIL.

THE 1 1/4'' Ø HOLES SHALL BE FORMED OR DRILLED WITH A CORE BIT. IMPACT TOOLS WILL NOT BE PERMITTED. ANY CONCRETE DAMAGED BY THIS WORK SHALL BE REPAIRED TO THE SATISFACTION OF THE ENGINEER.

THE C6 X 8.2 RUBRAIL IS TO BE ADHESIVELY ANCHORED TO THE RAIL USING THREE 3/4" Ø X 6" BOLTS WITH WASHERS. LEVEL ONE FIELD TESTING IS REQUIRED, AND THE YIELD LOAD OF THE 3/4" Ø BOLT IS 12 KIPS. FOR ADHESIVELY ANCHORED ANCHOR BOLTS OR DOWELS, SEE STANDARD SPECIFICATIONS. SEE ROADWAY STANDARD 862.03 FOR DETAILS AND LOCATION OF THE RUBRAIL.

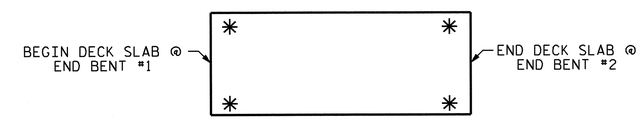

SKETCH SHOWING POINTS OF ATTACHMENTS

✳ DENOTES GUARDRAIL ANCHOR ASSEMBLY

PROJECT NO. B-4028

BLADEN COUNTY

STATION: 56+35.50 -L-

STATE OF NORTH CAROLINA
DEPARTMENT OF TRANSPORTATION
RALEIGH

STANDARD

GUARDRAIL ANCHORAGE FOR BARRIER RAIL

NORTH CAROLINA PROFESSIONAL SEAL 14855 ENGINEER DOUGLAS R. CALHOUN
6/25/12

REVISIONS						SHEET NO.
NO.	BY:	DATE:	NO.	BY:	DATE:	S-135
1			3			TOTAL SHEETS
2			4			147

STD. NO. GRA2

STR. #3

ASSEMBLED BY : T. BANKOVICH	DATE : 2-2010
CHECKED BY : M.L. BROWN	DATE : 4-2010
DRAWN BY : TLA 5/06	ADDED 5/1/06RR KMM/GM
CHECKED BY : GM 5/06	REV. 10/1/11 MAA/GM

11-MAY-2012 14:23
R:\Structures\STR3\Super_Draw\B-4028_str3_BR.dgn
asorsenginh

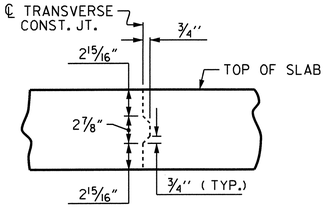

TRANSVERSE CONSTRUCTION JOINT DETAIL

NOTE: REINFORCING STEEL IN SLAB NOT SHOWN. LONGITUDINAL REINFORCING STEEL SHALL BE CONTINUOUS THRU JOINT

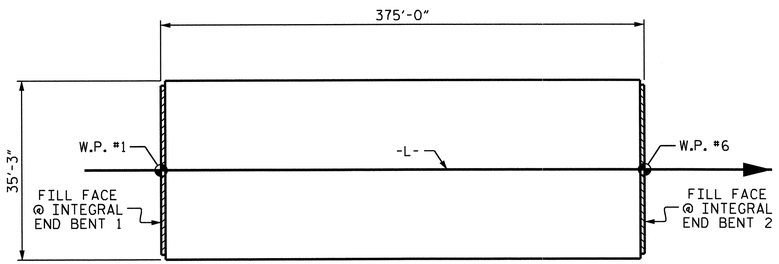

LAYOUT FOR COMPUTING AREA OF REINFORCED CONCRETE DECK SLAB & POURING SEQUENCE (SQ. FT. = 13,219)

SUPERSTRUCTURE REINFORCING STEEL LENGTHS ARE BASED ON THE FOLLOWING MINIMUM SPLICE LENGTHS

BAR SIZE	SUPERSTRUCTURE EXCEPT APPROACH SLABS, PARAPET, AND BARRIER RAIL		APPROACH SLABS		PARAPET AND BARRIER RAIL
	EPOXY COATED	UNCOATED	EPOXY COATED	UNCOATED	
#4	2'-0"	1'-9"	2'-0"	1'-9"	2'-9"
#5	2'-6"	2'-2"	2'-6"	2'-2"	3'-5"
#6	3'-0"	2'-7"	3'-10"	2'-7"	4'-4"
#7	5'-3"	3'-6"			
#8	6'-10"	4'-7"			

GROOVING BRIDGE FLOORS

APPROACH SLABS	1,402 SQ. FT.
BRIDGE DECK	10,817 SQ. FT.
TOTAL	12,219 SQ. FT.

SUPERSTRUCTURE BILL OF MATERIAL

	CLASS AA CONCRETE	REINFORCING STEEL	EPOXY COATED REINFORCING STEEL
	(CU. YDS.)	(LBS.)	(LBS.)
POUR #1	71.9	———	———
POUR #2	95.9	———	———
POUR #3	95.9	———	———
POUR #4	95.9	———	———
POUR #5	95.1	———	———
POUR #6	59.6	———	———
TOTAL **	514.3	49,317	47,978

** QUANTITIES FOR BARRIER RAIL ARE NOT INCLUDED

BAR TYPE

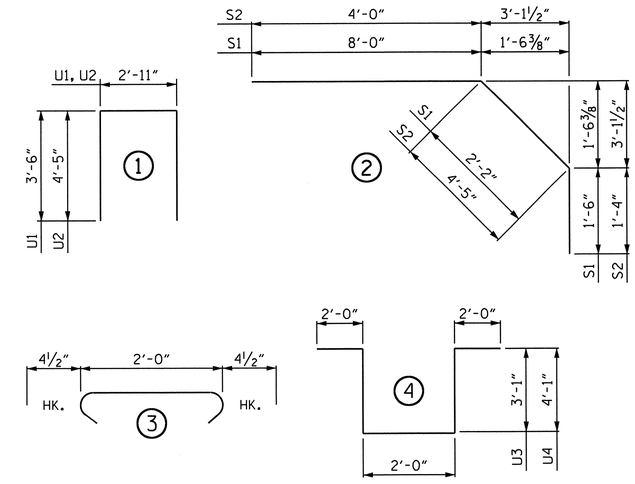

ALL BAR DIMENSIONS ARE OUT TO OUT

BILL OF MATERIAL

BAR	NO.	SIZE	TYPE	LENGTH	WEIGHT
* A1	747	#5	STR	34'-11"	27204
A2	747	#5	STR	34'-11"	27204
* B1	56	#4	STR	28'-6"	1066
* B2	86	#7	STR	14'-10"	2607
B3	322	#5	STR	55'-2"	18528
* B4	88	#7	STR	56'-0"	10073
* B5	84	#7	STR	24'-0"	4121
* B6	88	#4	STR	18'-7"	1092
* B7	66	#4	STR	23'-0"	1014
H1	40	#5	STR	11'-10"	494
K1	16	#4	STR	21'-5"	229
K2	6	#4	STR	7'-2"	29
K3	12	#4	STR	8'-5"	67
K4	6	#4	STR	7'-8"	31
K5	4	#4	STR	5'-5"	14
K6	8	#4	STR	6'-0"	32
K7	4	#4	STR	5'-8"	15
K8	16	#4	STR	2'-8"	29
K9	72	#4	STR	7'-8"	369
K10	24	#4	STR	6'-0"	96
K11	16	#4	STR	27'-8"	296
* S1	56	#4	2	11'-8"	436
* S2	56	#4	2	9'-9"	365
S3	264	#4	3	2'-9"	485
U1	60	#4	1	9'-11"	397
U2	16	#4	1	11'-9"	126
U3	24	#4	4	12'-2"	195
U4	72	#4	4	14'-2"	681
REINFORCING STEEL					49,317 LBS.
* EPOXY COATED					
REINFORCING STEEL					47,978 LBS.

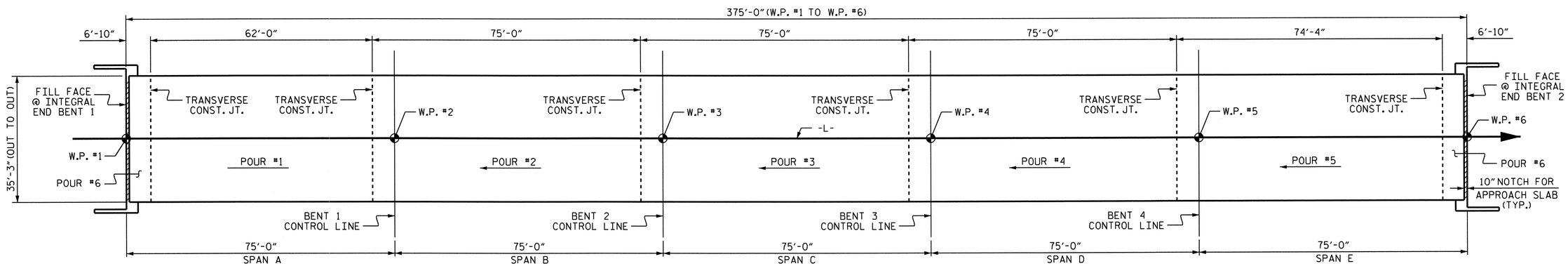

POURING SEQUENCE

NOTE: CONCRETE IN THE UPPER PORTION OF THE WINGS SHALL BE INCLUDED WITH THE SUPERSTRUCTURE POUR.

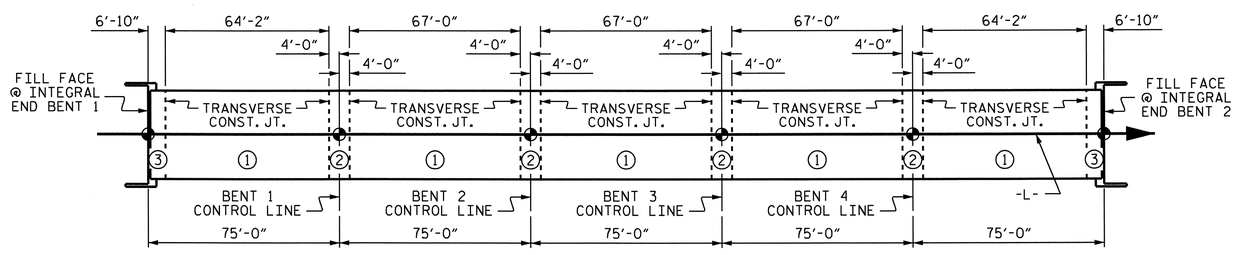

OPTIONAL POURING SEQUENCE

POUR ② SHALL NOT BE STARTED UNTIL BOTH ADJACENT ① POURS REACH A MINIMUM OF 3000 PSI

PROJECT NO. B-4028

BLADEN COUNTY

STATION: 56+35.50 -L-

STATE OF NORTH CAROLINA
DEPARTMENT OF TRANSPORTATION
RALEIGH

SUPERSTRUCTURE
BILL OF MATERIAL

NORTH CAROLINA PROFESSIONAL SEAL 14855 ENGINEER DOUGLAS R. CALHOUN
6/25/12

ASSEMBLED BY : T. BANKOVICH	DATE : 2-2010
CHECKED BY : M.L. BROWN	DATE : 4-2010

DRAWN BY : JMB 5/87	REV. 8/16/99 RWW/LES
CHECKED BY : SJD 9/87	REV. 5/1/06 TLA/GM
	REV. 10/1/11 MAA/GM

REVISIONS

NO.	BY:	DATE:	NO.	BY:	DATE:
1			3		
2			4		

SHEET NO. 5-136
TOTAL SHEETS 147

STD. NO. BOM1

STR. #3

25-JUN-2012 11:37
R:\Structures\STR3\Super_Draw\B-4028_str3_BM.dgn
asorsenginh

NOTES:

INSTALL THE 4"Ø DIAMETER DRAIN PIPE THROUGH THE WING WALL AS REQUIRED FOR THE REINFORCED BRIDGE APPROACH FILLS, SEE THE ROADWAY PLANS. REINFORCING STEEL IN THE WING WALL MAY BE SHIFTED AS NECESSARY TO CLEAR THE DRAIN PIPE.

SEE SUPERSTRUCTURE SHEETS FOR UPPER PART OF INTEGRAL END BENT DETAILS.

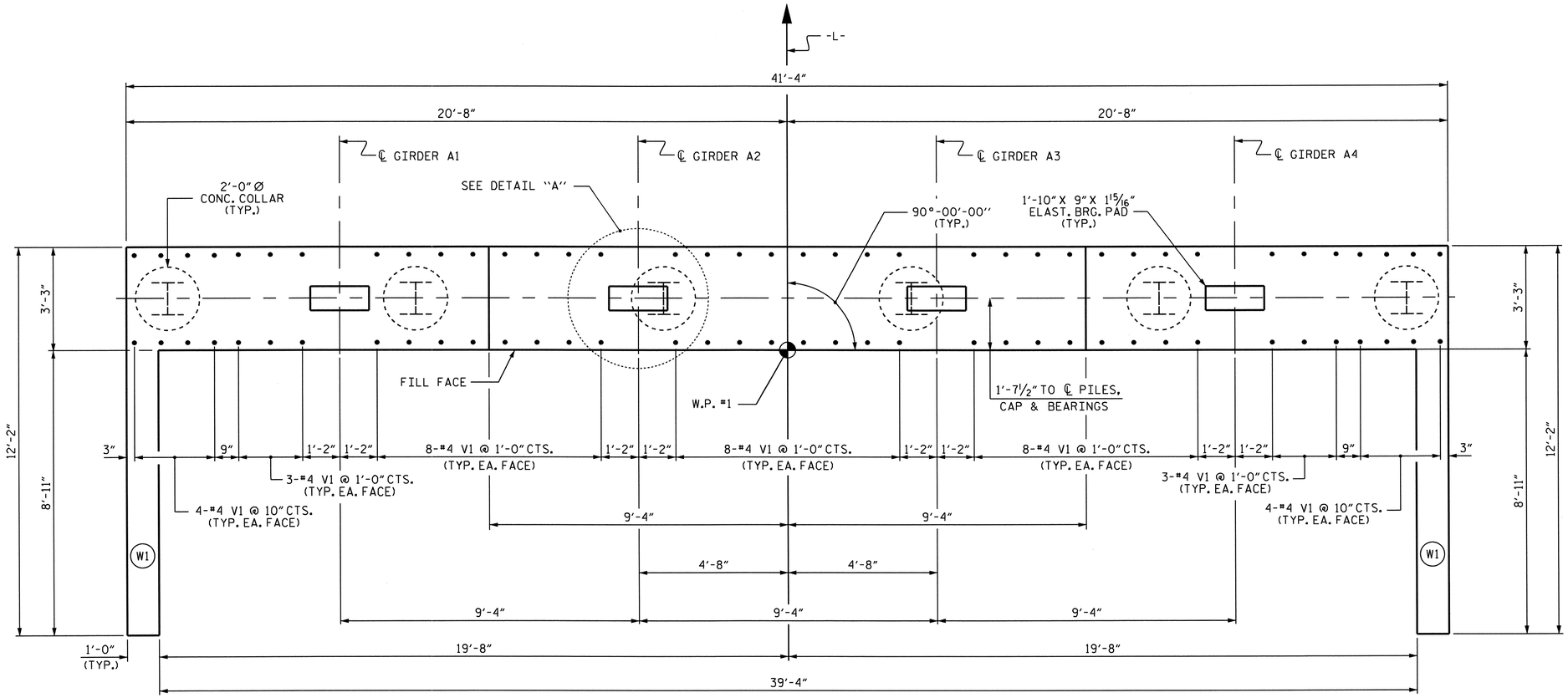

PLAN

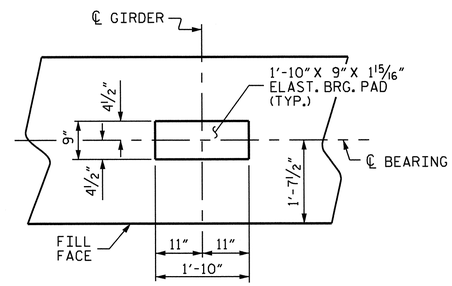

DETAIL "A"

(TYP. EA. GDR.)

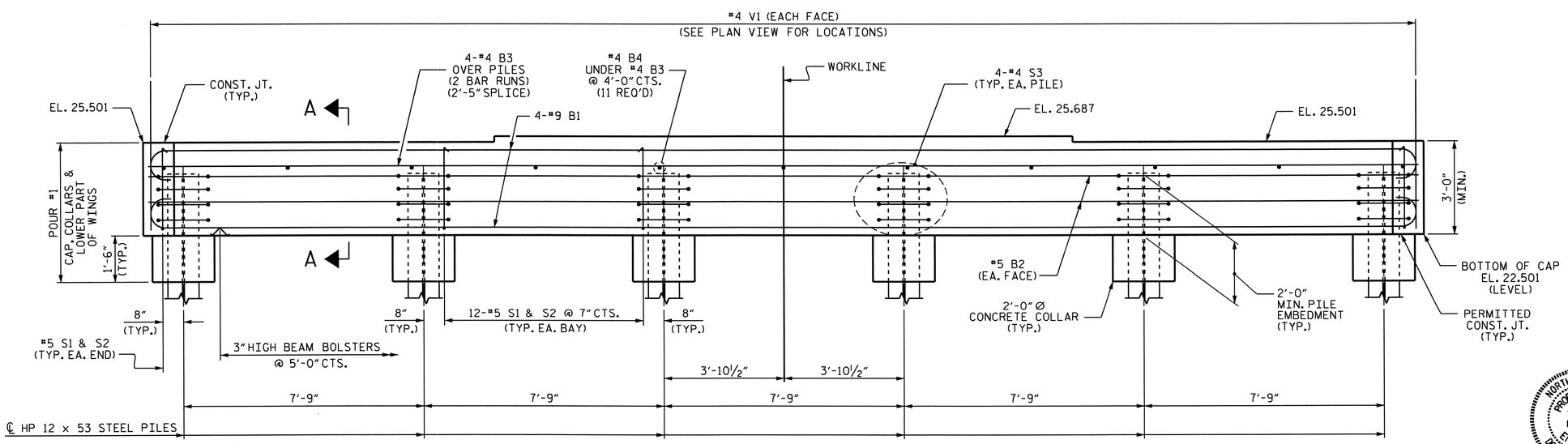

ELEVATION

PROJECT NO. B-4028

BLADEN COUNTY

STATION: 56+35.50 -L-

SHEET 1 OF 3

STATE OF NORTH CAROLINA
DEPARTMENT OF TRANSPORTATION
RALEIGH

SUBSTRUCTURE
INTEGRAL
END BENT 1

NORTH CAROLINA PROFESSIONAL SEAL 14855 ENGINEER DOUGLAS R. CALHOUN
6/25/12

REVISIONS						SHEET NO.
NO.	BY:	DATE:	NO.	BY:	DATE:	S-137
1			3			TOTAL SHEETS
2			4			147

DRAWN BY : M.L. BROWN DATE : 10/10
CHECKED BY : T. BANKOVICH DATE : 11/10

25-JUN-2012 11:38
R:\Structures\STR3\Sub_Draw\B-4028_str3_sd_EB1.dgn
asorsenginh

STR. #3

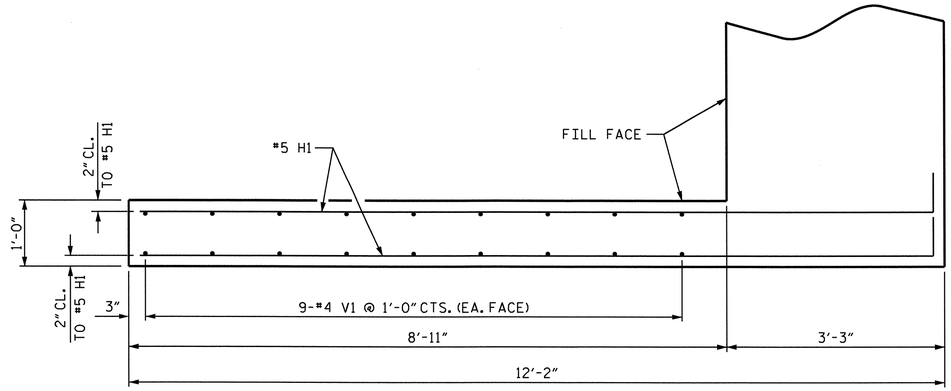

PLAN OF WING (W1)

(LEFT WING SHOWN, RIGHT WING SIMILAR)

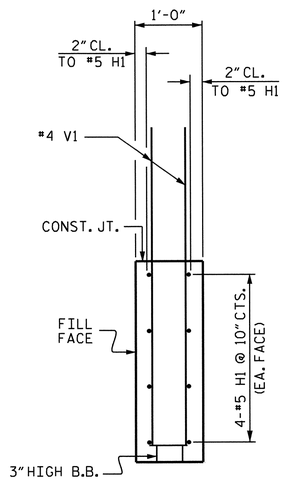

SECTION X-X

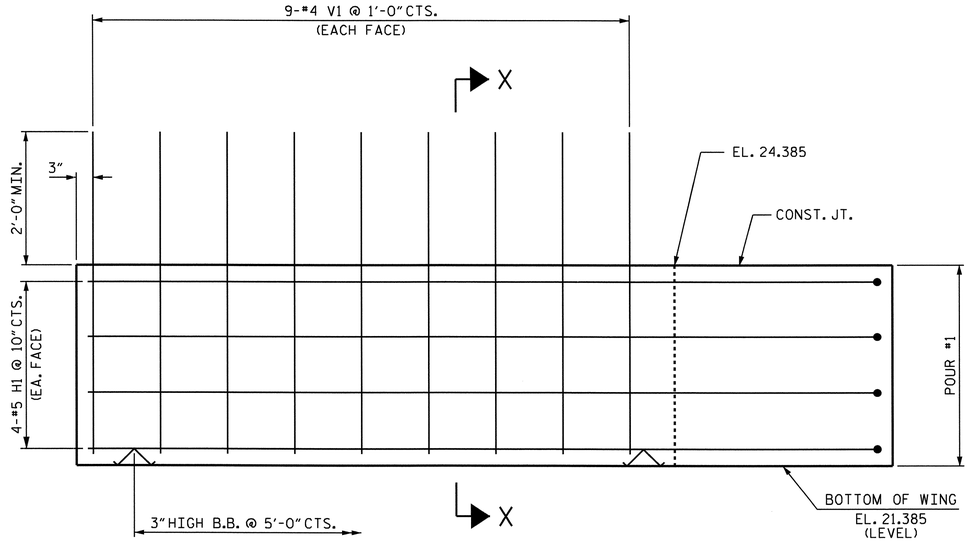

ELEVATION OF WING (W1)

(LEFT WING SHOWN, RIGHT WING SIMILAR)

PROJECT NO. B-4028

BLADEN COUNTY

STATION: 56+35.50 -L-

SHEET 2 OF 3

STATE OF NORTH CAROLINA
DEPARTMENT OF TRANSPORTATION
RALEIGH

SUBSTRUCTURE
INTEGRAL
END BENT 2

NORTH CAROLINA PROFESSIONAL SEAL 14855 ENGINEER DOUGLAS R. CALHOUN
6/25/12

REVISIONS						SHEET NO.
NO.	BY:	DATE:	NO.	BY:	DATE:	S-138
1			3			TOTAL SHEETS
2			4			147

DRAWN BY : M.L. BROWN DATE : 10/10
CHECKED BY : T. BANKOVICH DATE : 11/10

25-JUN-2012 11:39
R:\Structures\STR3\Sub_Draw\B-4028_str3_sd_EB2.dgn
asorsenginh

STR. #3

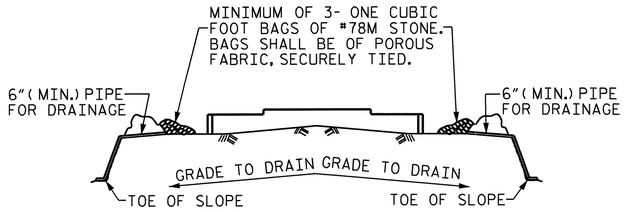

BAGGED STONE AND PIPE SHALL BE PLACED IMMEDIATELY AFTER COMPLETION OF END BENT EXCAVATION. PIPE MAY BE EITHER CONCRETE, CORRUGATED STEEL, CORRUGATED ALUMINUM ALLOY, OR CORRUGATED PLASTIC. PERFORATED PIPE WILL NOT BE ALLOWED.

BAGGED STONE SHALL REMAIN IN PLACE UNTIL THE ENGINEER DIRECTS THAT IT BE REMOVED. THE CONTRACTOR SHALL REMOVE AND DISPOSE OF SILT ACCUMULATIONS AT BAGGED STONE WHEN SO DIRECTED BY THE ENGINEER. BAGS SHALL BE REMOVED AND REPLACED WHENEVER THE ENGINEER DETERMINES THAT THEY HAVE DETERIORATED AND LOST THEIR EFFECTIVENESS.

NO SEPARATE PAYMENT WILL BE MADE FOR THIS WORK AND THE ENTIRE COST OF THIS WORK SHALL BE INCLUDED IN THE UNIT CONTRACT PRICE BID FOR THE SEVERAL PAY ITEMS.

TEMPORARY DRAINAGE AT END BENT

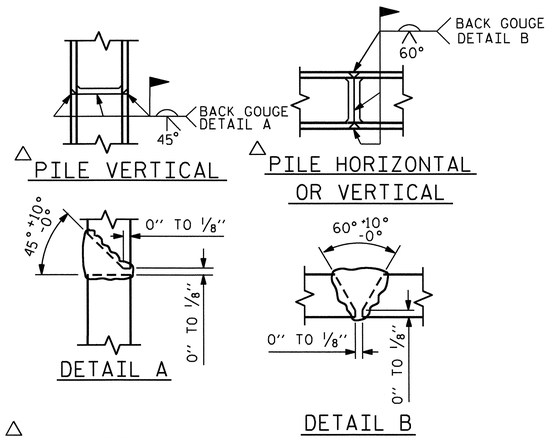

△ POSITION OF PILE DURING WELDING.

PILE SPLICE DETAILS

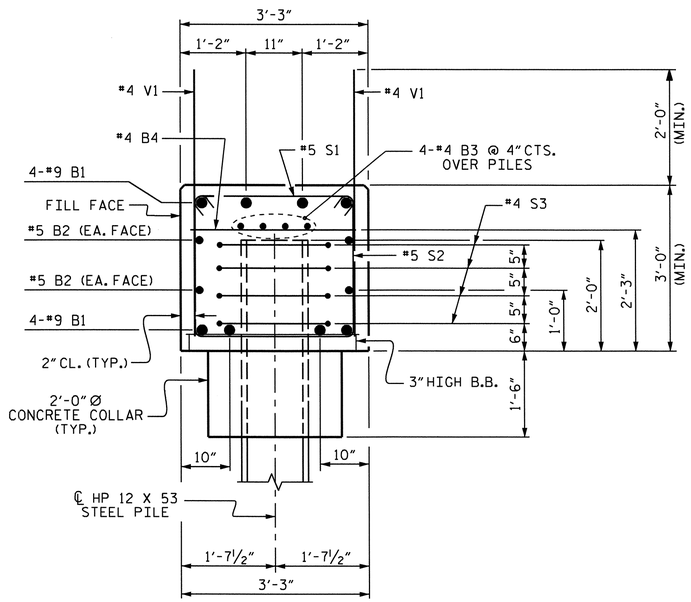

SECTION A-A

BAR TYPES

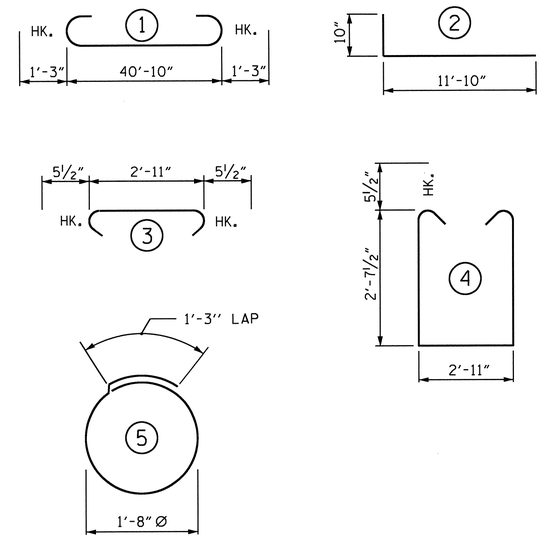

ALL BAR DIMENSIONS ARE OUT TO OUT

BILL OF MATERIAL

END BENT 1

BAR	NO.	SIZE	TYPE	LENGTH	WEIGHT
B1	8	#9	1	43'-4"	1179
B2	4	#5	STR	41'-0"	171
B3	8	#4	STR	21'-9"	116
B4	11	#4	STR	2'-11"	21
H1	16	#5	2	12'-8"	211
S1	62	#5	3	3'-10"	248
S2	62	#5	4	9'-1"	587
S3	24	#4	5	6'-6"	104
V1	76	#4	STR	4'-10"	245
V2	36	#5	STR	7'-10"	294
REINFORCING STEEL					3176 LBS.

CLASS A CONCRETE BREAKDOWN

POUR #1	CAP, CONCRETE COLLARS & LOWER PART OF WINGS	18.4 C.Y.
TOTAL CLASS A CONCRETE		18.4 C.Y.

HP 12 X 53 STEEL PILES
NO: 6 LIN. FT.= 450

PILE REDRIVES
EACH 3

STEEL PILE POINTS
EACH 6

PROJECT NO. B-4028
BLADEN COUNTY
STATION: 56+35.50 -L-

SHEET 3 OF 3

STATE OF NORTH CAROLINA
DEPARTMENT OF TRANSPORTATION
RALEIGH

SUBSTRUCTURE
INTEGRAL
END BENT 1

NORTH CAROLINA PROFESSIONAL SEAL 14855 ENGINEER DOUGLAS R. CALHOUN
6/25/12

REVISIONS							SHEET NO.
NO.	BY:	DATE:	NO.	BY:	DATE:		S-139
1			3				TOTAL SHEETS
2			4				147

DRAWN BY : M.L. BROWN DATE : 10/10
CHECKED BY : T. BANKOVICH DATE : 11/10

17-MAY-2012 10:52
R:\Structures\STR3\Sub_Draw\B-4028_str3_sd_EB1.dgn
asorsenginh

STR. #3

NOTES

STIRRUPS AND "U1" BARS MAY BE SHIFTED AS NECESSARY TO CLEAR ANCHOR BOLTS.

▲ INVERT ALTERNATE STIRRUPS.

GALVANIZE THE TOP OF EACH INTERIOR BENT PILE A MINIMUM OF 35 FEET. GALVANIZE IN ACCORDANCE WITH SECTION 1076 OF THE STANDARD SPECIFICATIONS.

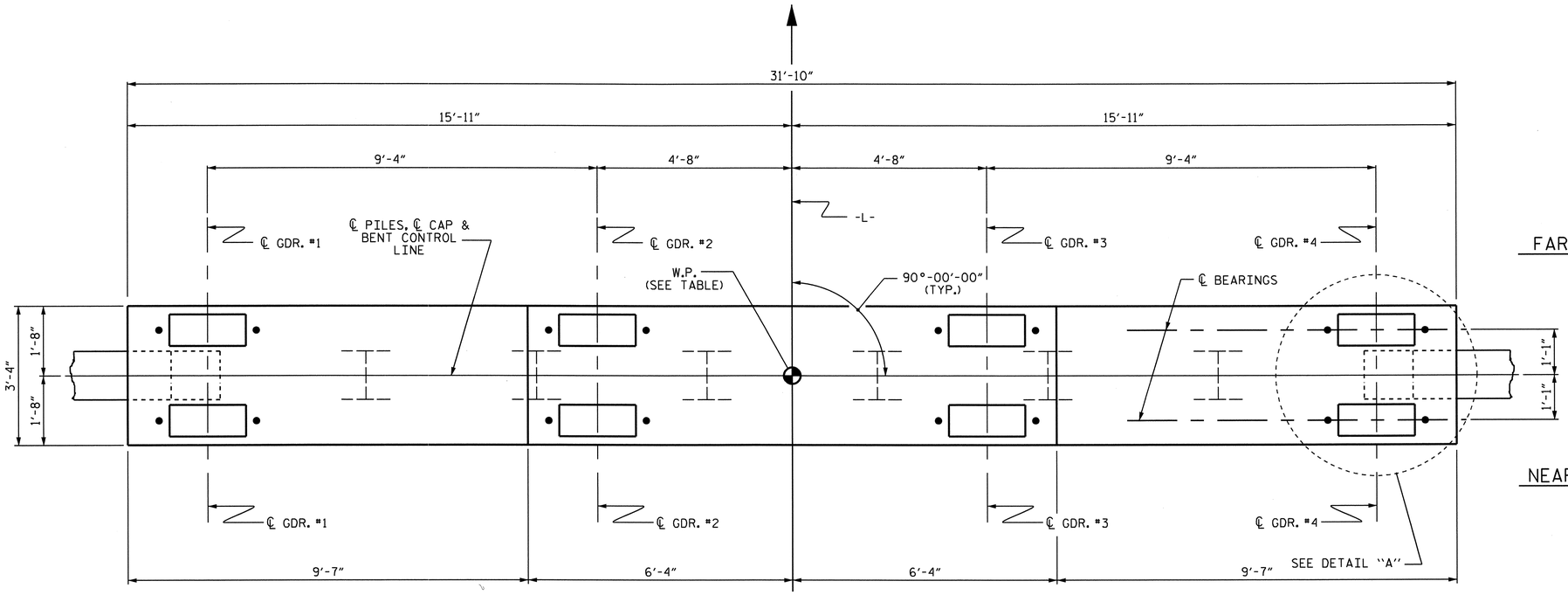

FAR SIDE

PLAN

CAP ELEVATIONS				
BENT	1	2	3	4
WORK POINT	2	3	4	5
EL. A	25.173	24.948	24.723	24.498
EL. B	25.360	25.135	24.910	24.685
BOTTOM OF CAP	22.173	21.948	21.723	21.498

NEAR SIDE

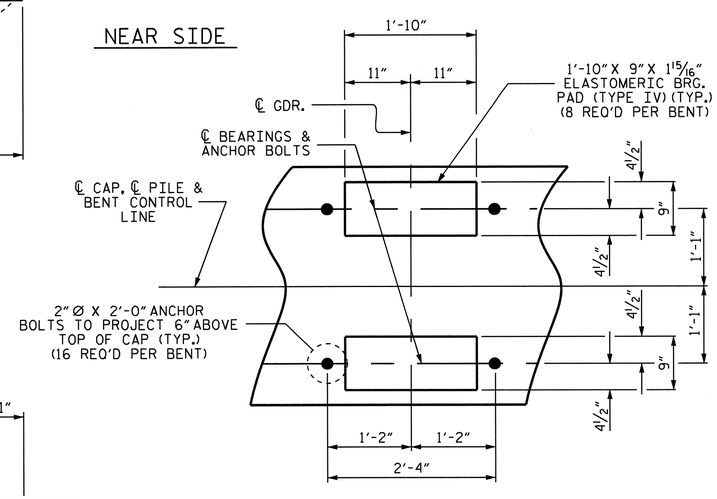

DETAIL "A"
(TYP. EA. GDR.)

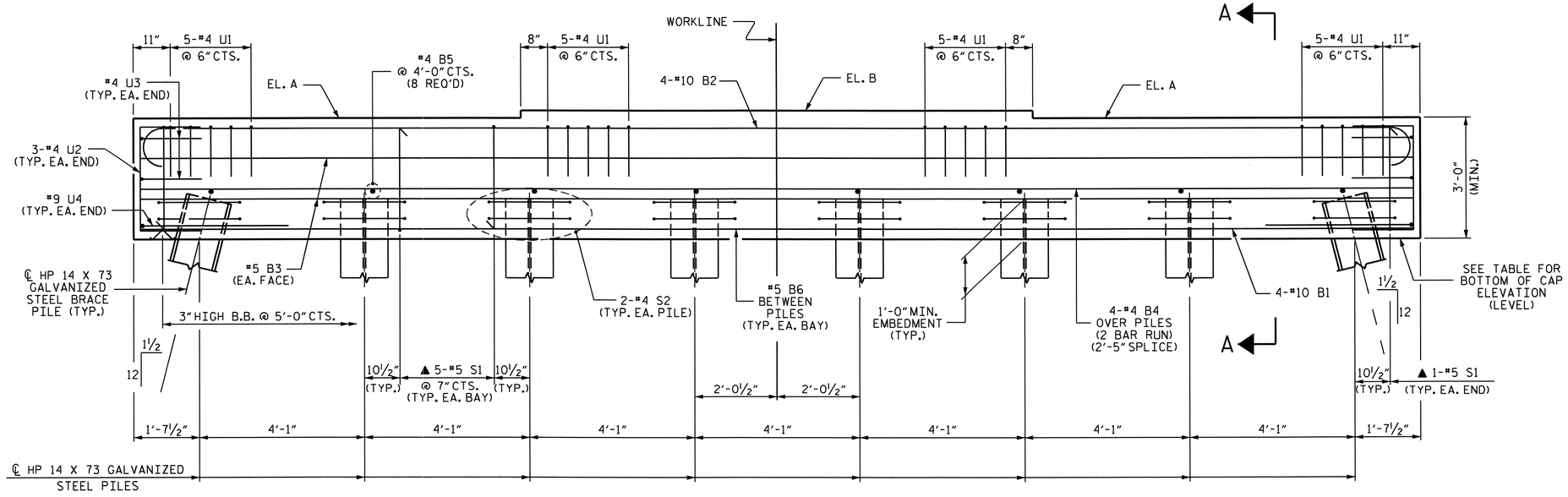

ELEVATION

PROJECT NO. B-4028

BLADEN COUNTY

STATION: 56+35.50 -L-

SHEET 1 OF 2

STATE OF NORTH CAROLINA
DEPARTMENT OF TRANSPORTATION
RALEIGH

SUBSTRUCTURE
BENTS 1, 2, 3, & 4

NORTH CAROLINA PROFESSIONAL SEAL 14855 ENGINEER DOUGLAS R. CALLOUN
6/25/12

REVISIONS						SHEET NO.
NO.	BY:	DATE:	NO.	BY:	DATE:	S-140
1			3			TOTAL SHEETS
2			4			147

DRAWN BY : M. L. BROWN DATE : 11/10
CHECKED BY : T.N. CARROLL DATE : 1/11

17-MAY-2012 10:54
R:\Structures\STR3\Sub_Draw\B4028_str3_sd_Bent.dgn
asorsenginh

STR. #3

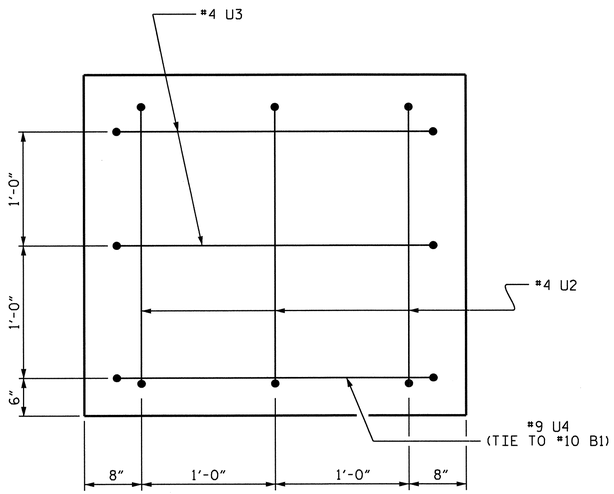

END VIEW

(TYP. EA. END)

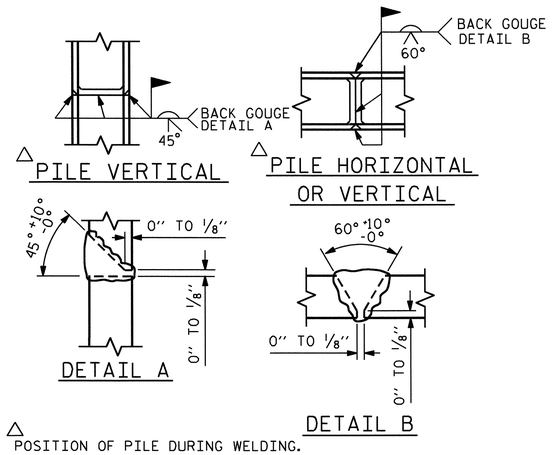

PILE SPLICE DETAILS

BAR TYPES

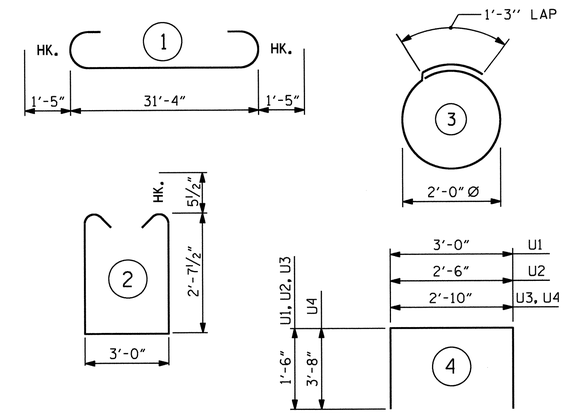

ALL BAR DIMENSIONS ARE OUT TO OUT.

BILL OF MATERIAL

FOR ONE BENT (4 REQUIRED)

BAR	NO.	SIZE	TYPE	LENGTH	WEIGHT
B1	4	#10	STR	31'-6"	542
B2	4	#10	1	34'-2"	588
B3	4	#5	STR	31'-6"	131
B4	8	#4	STR	17'-0"	91
B5	8	#4	STR	3'-0"	16
B6	7	#5	STR	3'-9"	27
S1	37	#5	2	9'-2"	354
S2	16	#4	3	7'-7"	81
U1	20	#4	4	6'-0"	80
U2	6	#4	4	5'-6"	22
U3	4	#4	4	5'-10"	16
U4	2	#9	4	10'-2"	69
REINFORCING STEEL					2017 LBS.

CLASS A CONCRETE
POUR #1 (CAP) 12.1 C.Y.

	HP 14 X 73 GALVANIZED STEEL PILES		PILE REDRIVES	STEEL PILE POINTS
BENT	NO	LIN. FT.	EACH	EACH
1	8	600	4	8
2	8	600	4	8
3	8	640	4	8
4	8	640	4	8

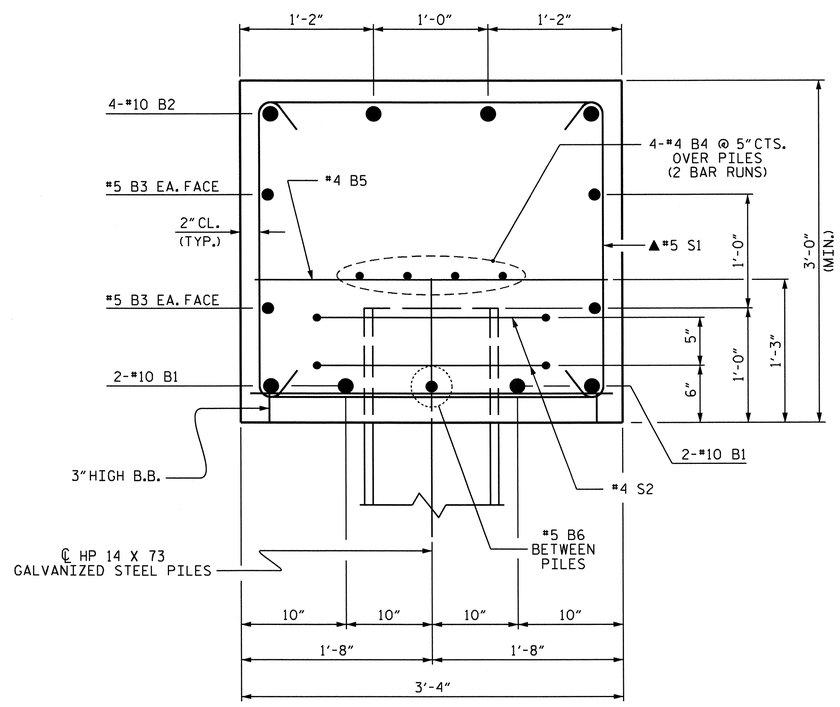

SECTION A-A

(▲ INVERT ALTERNATE STIRRUPS)

PROJECT NO. B-4028
BLADEN COUNTY
STATION: 56+35.50 -L-

SHEET 2 OF 2

STATE OF NORTH CAROLINA
DEPARTMENT OF TRANSPORTATION
RALEIGH

SUBSTRUCTURE
BENTS 1, 2, 3, & 4

NORTH CAROLINA PROFESSIONAL SEAL 14855 ENGINEER DOUGLAS R. CALHOUN
6/29/12

REVISIONS						SHEET NO.
NO.	BY:	DATE:	NO.	BY:	DATE:	S-141
1			3			TOTAL SHEETS
2			4			147

DRAWN BY : M. L. BROWN DATE : 11/10
CHECKED BY : T.N. CARROLL DATE : 1/11

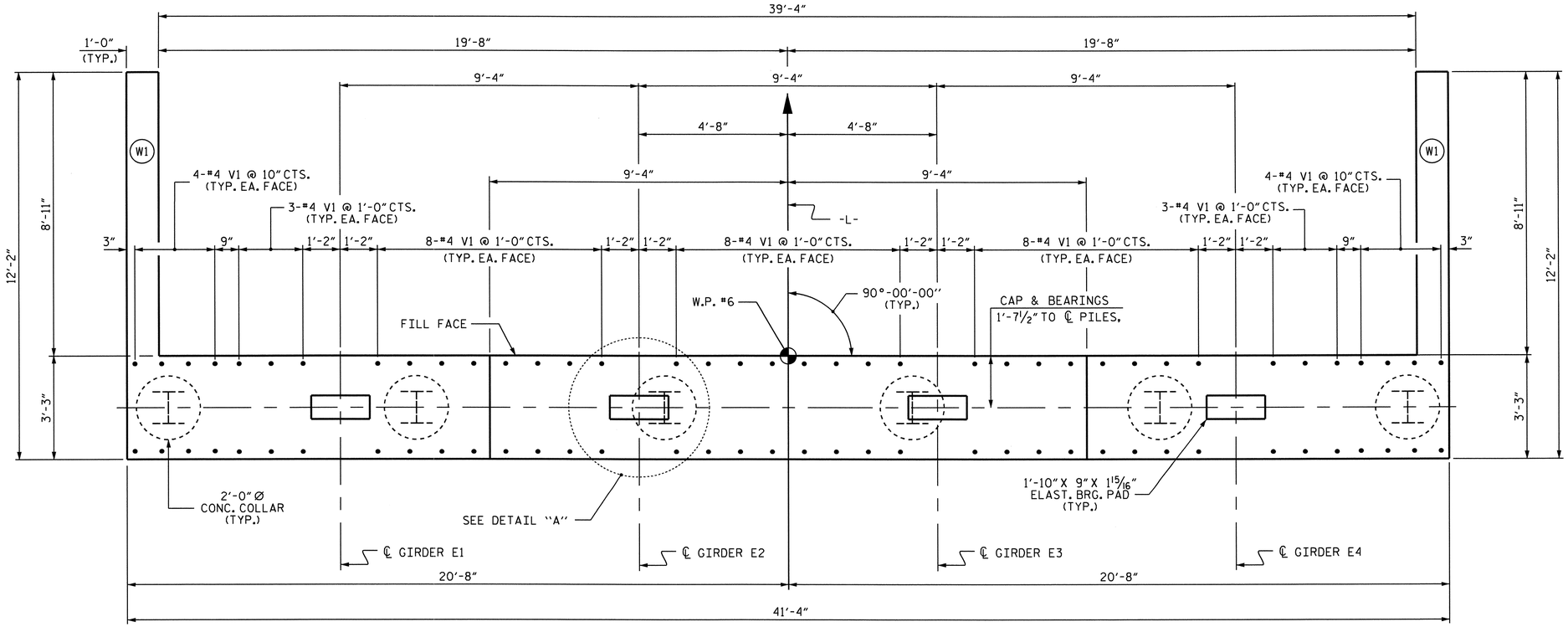

PLAN

NOTES:

INSTALL THE 4" Ø DIAMETER DRAIN PIPE THROUGH THE WING WALL AS REQUIRED FOR THE REINFORCED BRIDGE APPROACH FILLS, SEE THE ROADWAY PLANS. REINFORCING STEEL IN THE WING WALL MAY BE SHIFTED AS NECESSARY TO CLEAR THE DRAIN PIPE.

SEE SUPERSTRUCTURE SHEETS FOR UPPER PART OF INTEGRAL END BENT DETAILS.

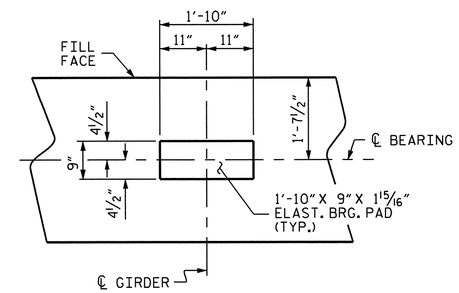

DETAIL "A"

(TYP. EA. GDR.)

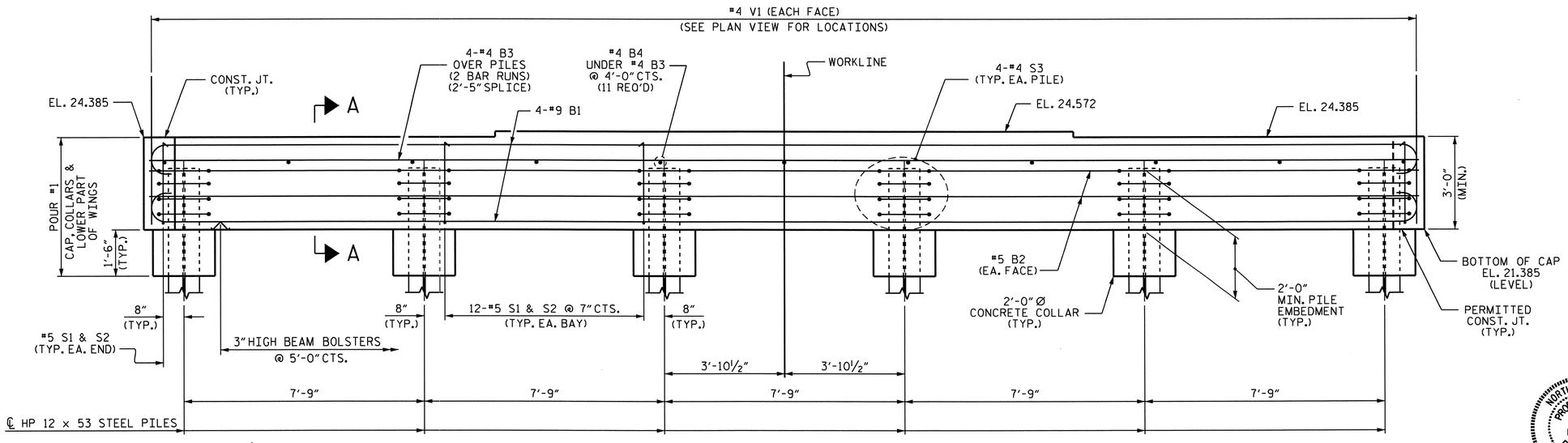

ELEVATION

PROJECT NO. B-4028

BLADEN COUNTY

STATION: 56+35.50 -L-

SHEET 1 OF 3

STATE OF NORTH CAROLINA
DEPARTMENT OF TRANSPORTATION
RALEIGH

SUBSTRUCTURE
INTEGRAL END BENT 2

NORTH CAROLINA PROFESSIONAL SEAL 14855 ENGINEER DOUGLAS R. CALHOUN
6/25/12

REVISIONS						SHEET NO.
NO.	BY:	DATE:	NO.	BY:	DATE:	S-142
1			3			TOTAL SHEETS
2			4			147

DRAWN BY : M.L. BROWN DATE : 10/10
CHECKED BY : T. BANKOVICH DATE : 11/10

25-JUN-2012 11:39
R:\Structures\STR3\Sub_Draw\B-4028_str3_sd_EB2.dgn
asorsenginh

STR. #3

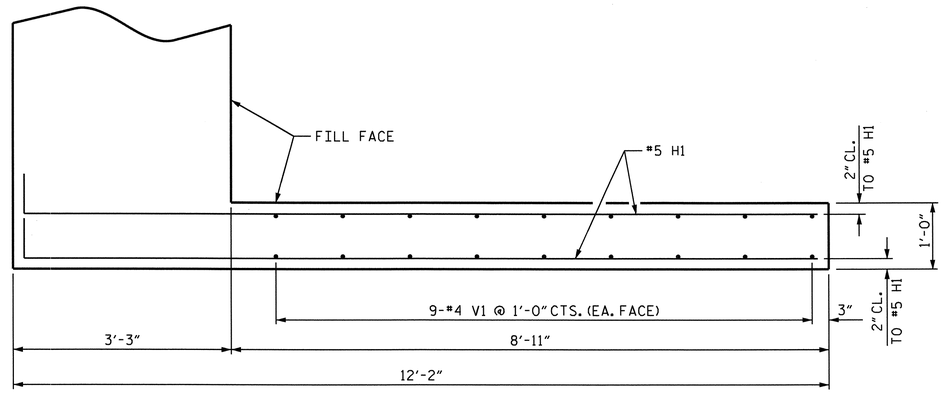

PLAN OF WING (W1)

(LEFT WING SHOWN, RIGHT WING SIMILAR)

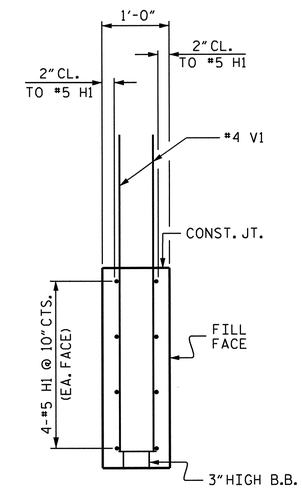

SECTION X-X

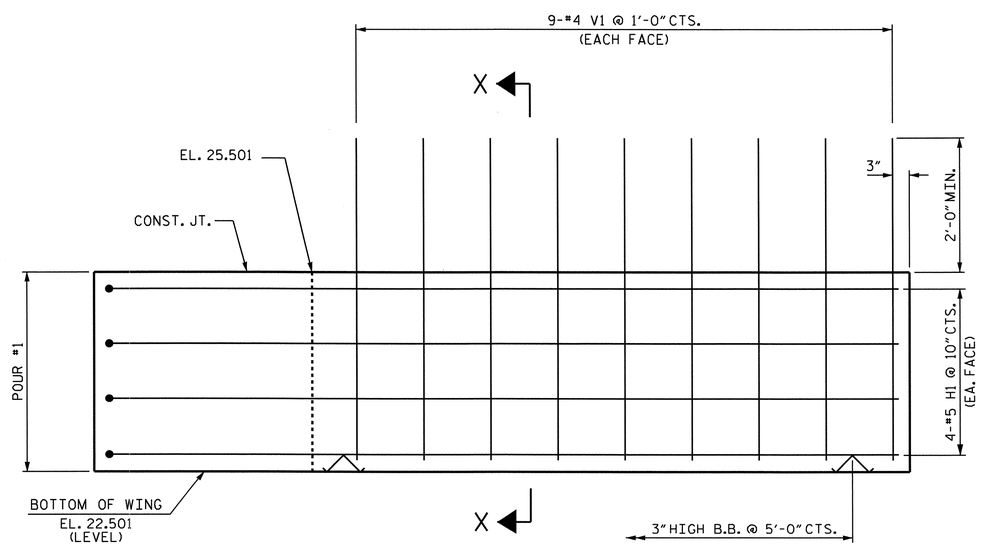

ELEVATION OF WING (W1)

(LEFT WING SHOWN, RIGHT WING SIMILAR)

PROJECT NO. B-4028

BLADEN COUNTY

STATION: 56+35.50 -L-

SHEET 2 OF 3

STATE OF NORTH CAROLINA
DEPARTMENT OF TRANSPORTATION
RALEIGH

SUBSTRUCTURE
INTEGRAL
END BENT 1

NORTH CAROLINA PROFESSIONAL SEAL 14855 ENGINEER DOUGLAS R. CALHOUN
8/23/12

REVISIONS						SHEET NO.
NO.	BY:	DATE:	NO.	BY:	DATE:	S-143
1			3			TOTAL SHEETS
2			4			147

DRAWN BY : M.L. BROWN DATE : 10/10
CHECKED BY : T. BANKOVICH DATE : 11/10

25-JUN-2012 11:38
R:\Structures\STR3\Sub_Draw\B-4028_str3_sd_EB1.dgn
asorsenginh

STR. #3

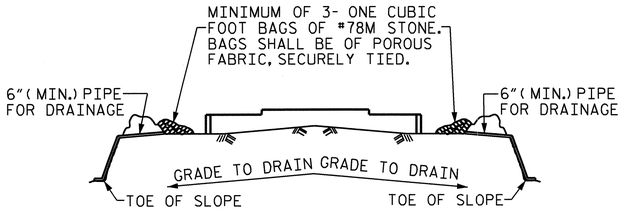

BAGGED STONE AND PIPE SHALL BE PLACED IMMEDIATELY AFTER COMPLETION OF END BENT EXCAVATION. PIPE MAY BE EITHER CONCRETE, CORRUGATED STEEL, CORRUGATED ALUMINUM ALLOY, OR CORRUGATED PLASTIC. PERFORATED PIPE WILL NOT BE ALLOWED.

BAGGED STONE SHALL REMAIN IN PLACE UNTIL THE ENGINEER DIRECTS THAT IT BE REMOVED. THE CONTRACTOR SHALL REMOVE AND DISPOSE OF SILT ACCUMULATIONS AT BAGGED STONE WHEN SO DIRECTED BY THE ENGINEER. BAGS SHALL BE REMOVED AND REPLACED WHENEVER THE ENGINEER DETERMINES THAT THEY HAVE DETERIORATED AND LOST THEIR EFFECTIVENESS.

NO SEPARATE PAYMENT WILL BE MADE FOR THIS WORK AND THE ENTIRE COST OF THIS WORK SHALL BE INCLUDED IN THE UNIT CONTRACT PRICE BID FOR THE SEVERAL PAY ITEMS.

TEMPORARY DRAINAGE AT END BENT

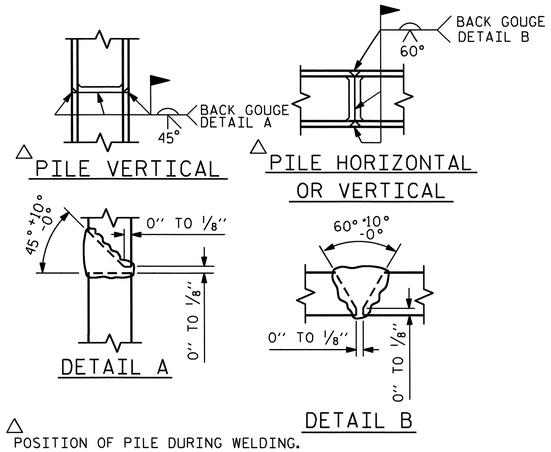

△ POSITION OF PILE DURING WELDING.

PILE SPLICE DETAILS

BAR TYPES

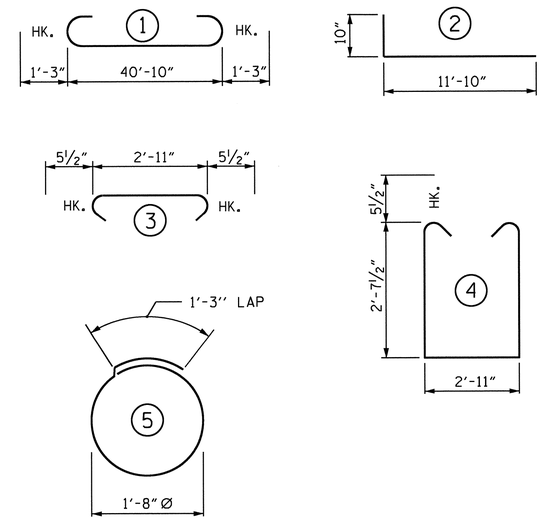

ALL BAR DIMENSIONS ARE OUT TO OUT

BILL OF MATERIAL
END BENT 2

BAR	NO.	SIZE	TYPE	LENGTH	WEIGHT
B1	8	#9	1	43'-4"	1179
B2	4	#5	STR	41'-0"	171
B3	8	#4	STR	21'-9"	116
B4	11	#4	STR	2'-11"	21
H1	16	#5	2	12'-8"	211
S1	62	#5	3	3'-10"	248
S2	62	#5	4	9'-1"	587
S3	24	#4	5	6'-6"	104
V1	76	#4	STR	4'-10"	245
V2	36	#5	STR	7'-10"	294
REINFORCING STEEL					3176 LBS.

CLASS A CONCRETE BREAKDOWN

POUR #1 CAP, CONCRETE COLLARS & LOWER PART OF WINGS 18.4 C.Y.

TOTAL CLASS A CONCRETE 18.4 C.Y.

HP 12 X 53 STEEL PILES
NO: 6 LIN. FT.= 450

PILE REDRIVES
EACH 3

STEEL PILE POINTS
EACH 6

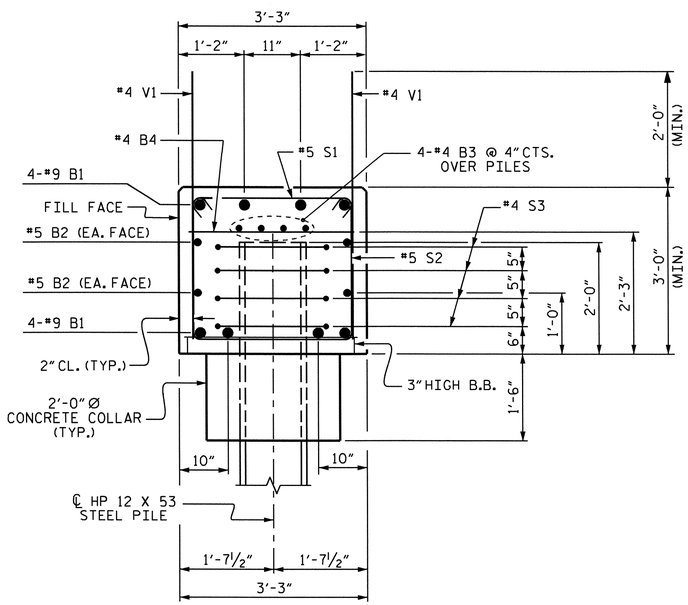

SECTION A-A

PROJECT NO. B-4028
BLADEN COUNTY
STATION: 56+35.50 -L-

SHEET 3 OF 3

STATE OF NORTH CAROLINA
DEPARTMENT OF TRANSPORTATION
RALEIGH

SUBSTRUCTURE
INTEGRAL
END BENT 2

NORTH CAROLINA PROFESSIONAL SEAL 14855 ENGINEER DOUGLAS R. CALHOUN
6/25/12

REVISIONS						SHEET NO.
NO.	BY:	DATE:	NO.	BY:	DATE:	S-144
1			3			TOTAL SHEETS
2			4			147

DRAWN BY : M.L. BROWN DATE : 10/10
CHECKED BY : T. BANKOVICH DATE : 11/10

25-JUN-2012 11:39
R:\Structures\STR3\Sub_Draw\B-4028_str3_sd_EB2.dgn
asorsenglnh

STR. #3

ESTIMATED QUANTITIES			
BRIDGE @ STA. 56+35.50 -L-	CLASS B RIP RAP	RIP RAP CLASS II (2'-0" THICK)	GEOTEXTILE FOR DRAINAGE
	TONS	TONS	SQUARE YARDS
END BENT #1	135	534	594
END BENT #2	125	503	558

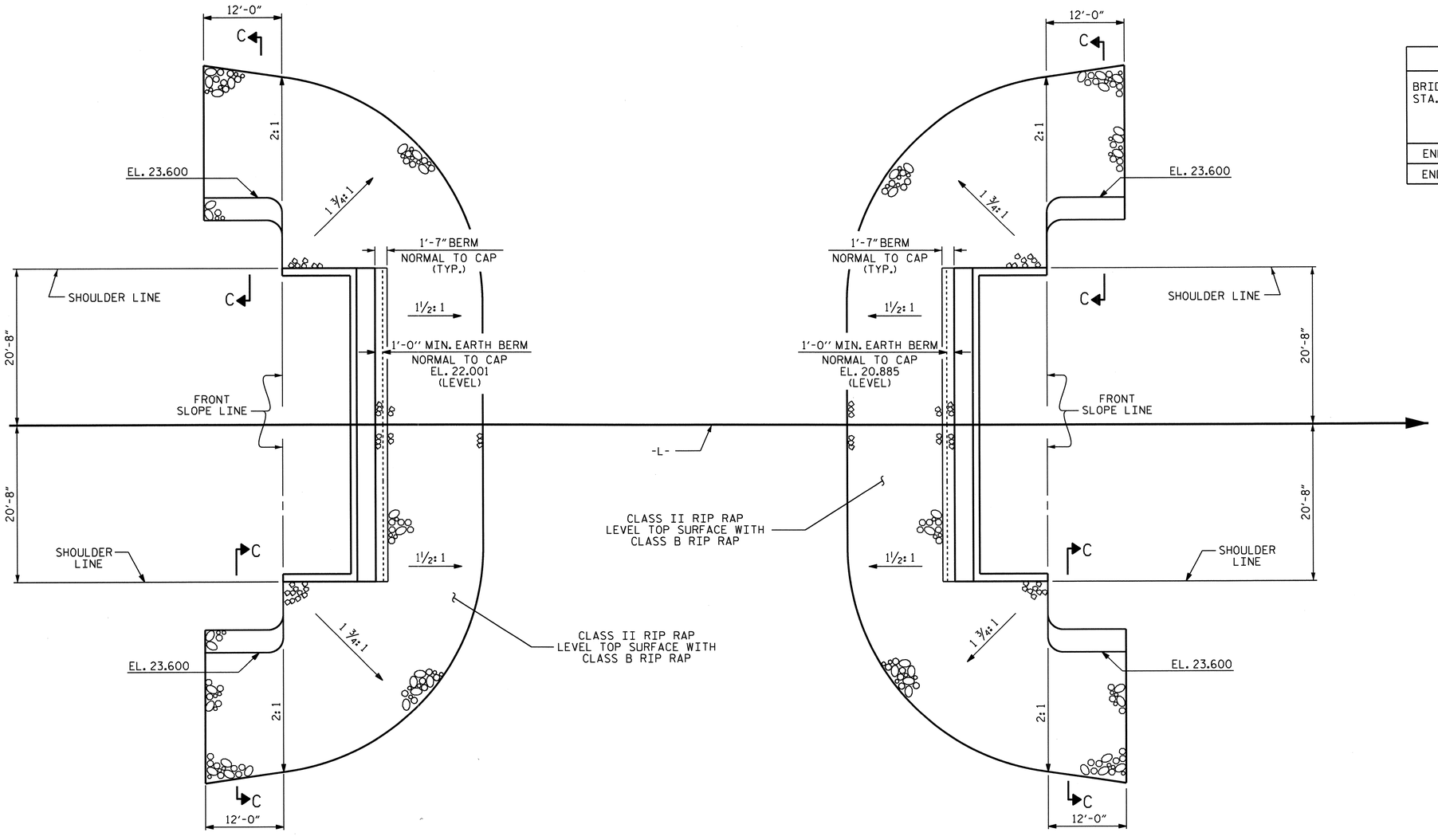

END BENT 1

PLAN OF RIP RAP

END BENT 2

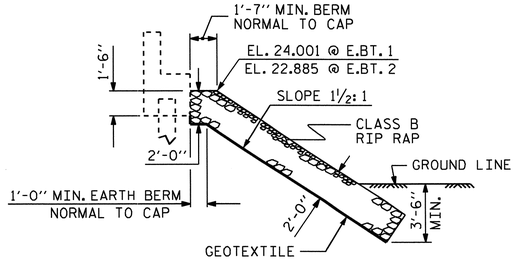

℄ SECTION

BERM RIP RAPPED

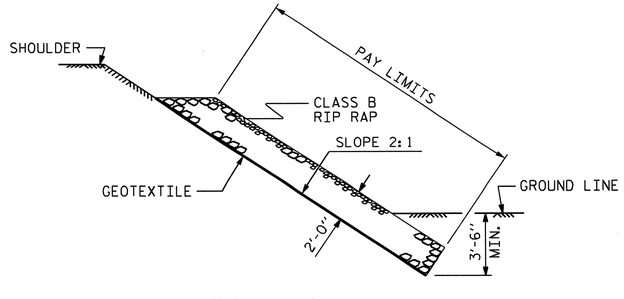

SECTION C-C

PROJECT NO. B-4028

BLADEN COUNTY

STATION: 56+35.50 -L-

STATE OF NORTH CAROLINA
DEPARTMENT OF TRANSPORTATION
RALEIGH

STANDARD

RIP RAP DETAILS

NORTH CAROLINA PROFESSIONAL SEAL 14855 ENGINEER DOUGLAS R. CALHOUN
6/25/12

REVISIONS						
NO.	BY:	DATE:	NO.	BY:	DATE:	
1			3			
2			4			

SHEET NO. S-145

TOTAL SHEETS 147

STD. NO. RR1

STR. #3

ASSEMBLED BY :	M. L. BROWN	DATE :	1/11
CHECKED BY :	T. N. CARROLL	DATE :	4/11
DRAWN BY : REK 1/84	REV. 5/1/06R		TLA/GM
CHECKED BY : RDU 1/84	REV. 10/1/11		MAA/GM
	REV. 12/21/11		MAA/GM

17-MAY-2012 10:51
R:\Structures\STR3\Misc_draw\B-4028_sd_RR.dgn
asorsenglnh

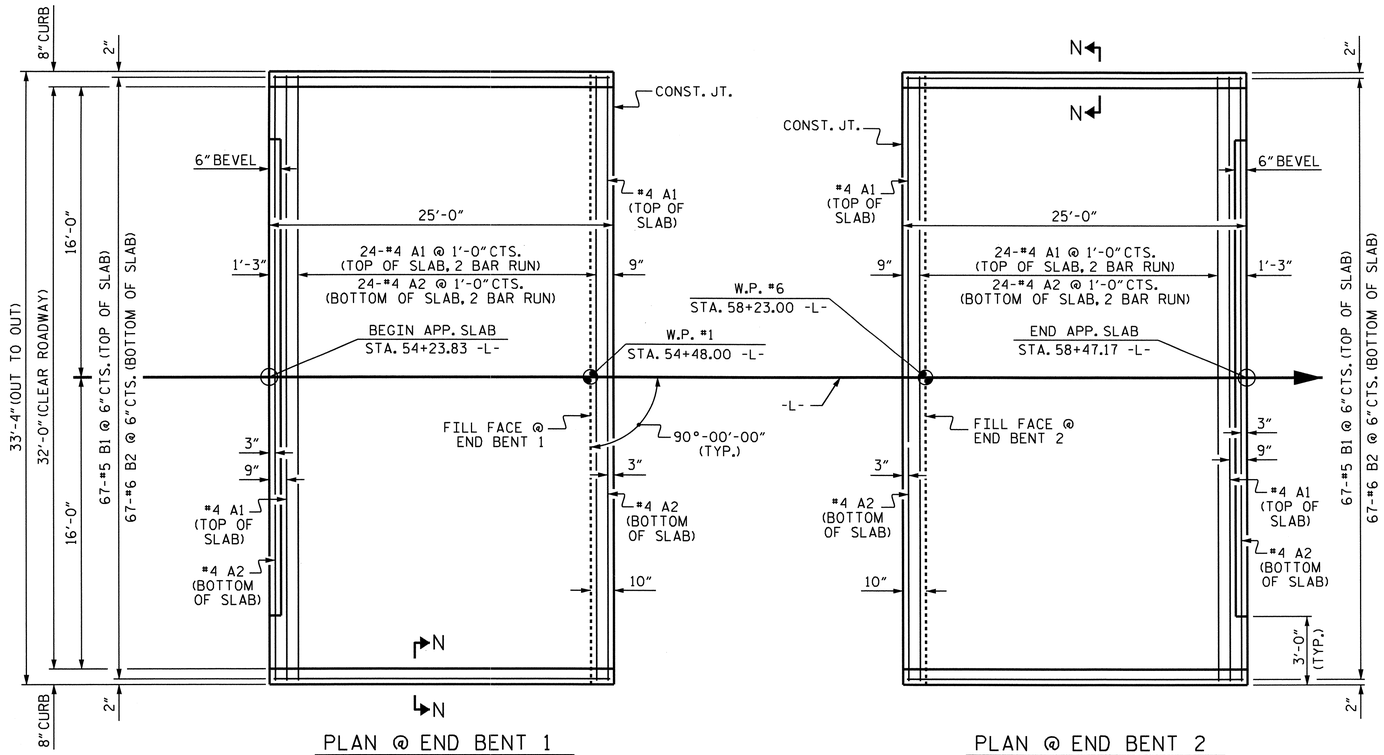

DIMENSIONS SHOWN ARE TYPICAL FOR BOTH APPROACH SLABS

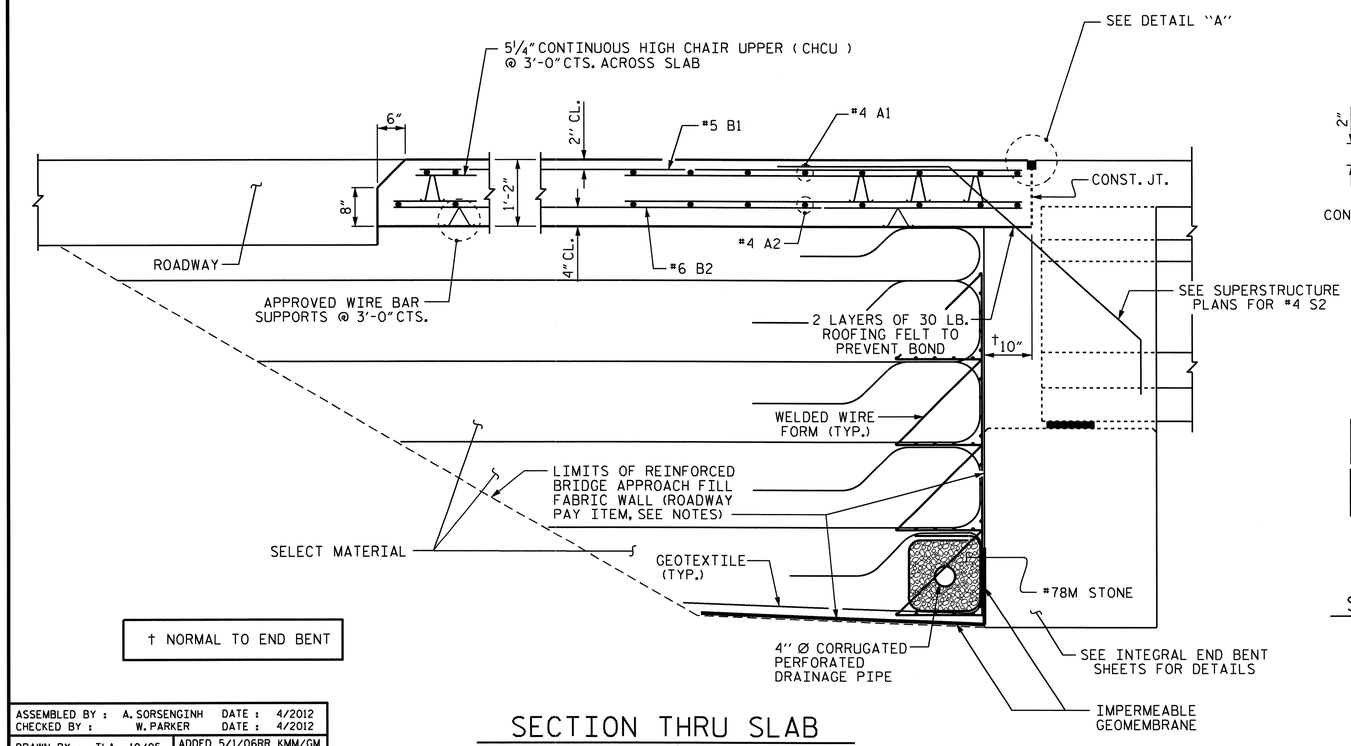

† NORMAL TO END BENT

SECTION THRU SLAB

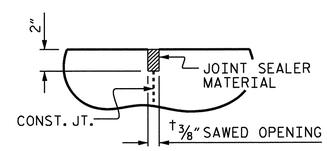

DETAIL "A"

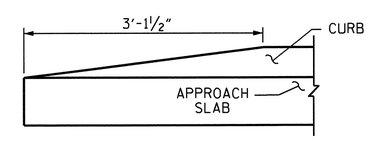

END OF CURB WITHOUT SHOULDER BERM GUTTER

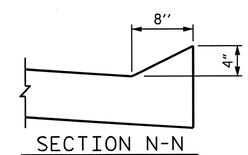

SECTION N-N

NOTES

APPROACH SLAB SHALL NOT BE CONSTRUCTED PRIOR TO COMPLETION OF THE BRIDGE DECK.

FOR REINFORCED BRIDGE APPROACH FILL FABRIC WALL INCLUDING GEOTEXTILE, IMPERMEABLE GEOMEMBRANE, 4" Ø DRAINAGE PIPE, #78M STONE, WELDED WIRE FORM, AND SELECT MATERIAL, SEE ROADWAY PLANS.

AREA BETWEEN THE WINGWALL AND APPROACH SLAB SHALL BE GRADED TO DRAIN THE WATER AWAY FROM THE FILL FACE OF THE BRIDGE AND SHALL BE PAVED. SEE ROADWAY PLANS.

THE JOINT OPENING AT THE APPROACH SLAB/DECK INTERFACE SHALL BE SAWED NO MORE THAN 12 HOURS AFTER THE APPROACH SLAB IS CAST. THE JOINT SHALL BE CLEANED OF ALL DEBRIS BEFORE THE SEALANT IS APPLIED. THE JOINT SEALER MATERIAL SHALL CONFORM TO THE REQUIREMENTS OF SECTION 1028-3 OF THE STANDARD SPECIFICATIONS.

BILL OF MATERIAL

FOR ONE APPROACH SLAB (2 REQ'D)

BAR	NO.	SIZE	TYPE	LENGTH	WEIGHT
* A1	52	#4	STR	17'-6"	608
A2	52	#4	STR	17'-5"	605
* B1	67	#5	STR	24'-2"	1689
B2	67	#6	STR	24'-8"	2482
REINFORCING STEEL				LBS.	3087
* EPOXY COATED REINFORCING STEEL				LBS.	2297
CLASS AA CONCRETE				C. Y.	36.1

SPLICE LENGTHS

BAR SIZE	EPOXY COATED	UNCOATED
#4	2'-0"	1'-9"
#5	2'-6"	2'-2"
#6	3'-10"	2'-7"

PROJECT NO. B-4028

BLADEN COUNTY

STATION: 56+35.50 -L-

SHEET 1 OF 2

STATE OF NORTH CAROLINA
DEPARTMENT OF TRANSPORTATION
RALEIGH

STANDARD

BRIDGE APPROACH SLAB FOR INTEGRAL ABUTMENT

NORTH CAROLINA PROFESSIONAL SEAL 14855 ENGINEER DOUGLAS B. CALDWELL
6/25/12

ASSEMBLED BY :	A. SORSENGINH	DATE :	4/2012
CHECKED BY :	W. PARKER	DATE :	4/2012

DRAWN BY : TLA 10/05	ADDED 5/1/06RR	KMM/GM
CHECKED BY : GM 5/06	REV. 10/1/11	MAA/GM
	REV. 12/21/11	MAA/GM

REVISIONS								SHEET NO.
NO.	BY:	DATE:	NO.	BY:	DATE:			S-146
1			3					TOTAL SHEETS
2			4					147

STD. NO. BAS5

11-MAY-2012 14:26
R:\Structures\STR3\Misc.draw\B4028_SD_AS.dgn
asorsenginh

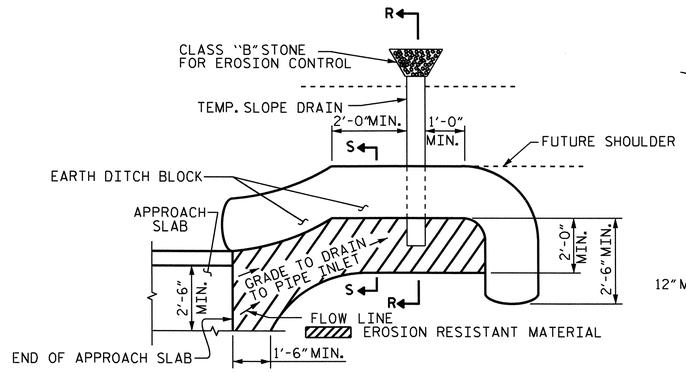

NOTE: IMMEDIATELY AFTER THE CONSTRUCTION OF THE APPROACH SLAB, THE CONTRACTOR SHALL PROVIDE TEMPORARY BERM AND SLOPE DRAIN. CONTRACTOR SHALL GRADE TO PIPE INLET AND PROVIDE EROSION RESISTANT MATERIAL AS SHOWN. THE EROSION RESISTANT MATERIAL SHALL BE EITHER 1) ASPHALT PLANT MIX, TYPE 1 OR TYPE 2, MIN. 2" DEPTH, 2) EROSION CONTROL MAT, OR 3) CONCRETE, AS DIRECTED BY THE ENGINEER. THE SLOPE DRAIN SHALL CONSIST OF A NON-PERFORATED TEMPORARY DRAINAGE PIPE, 12 INCHES IN DIAMETER.

PLAN VIEW

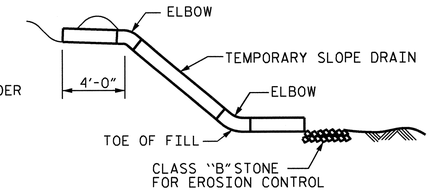

SECTION R-R

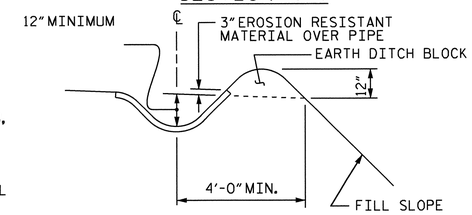

SECTION S-S

TEMPORARY BERM AND SLOPE DRAIN DETAILS

(TO BE USED WHEN SHOULDER BERM GUTTER IS REQUIRED)

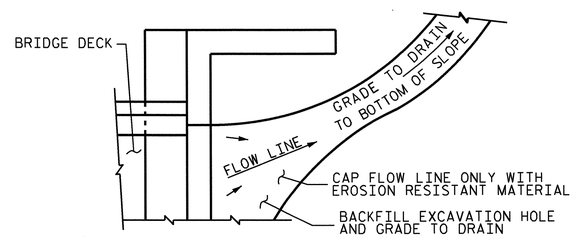

NOTE: IF THE APPROACH SLAB IS NOT CONSTRUCTED IMMEDIATELY AFTER THE BACKFILLING OF THE END BENT EXCAVATION, GRADE TO DRAIN TO THE BOTTOM OF THE SLOPE AND PROVIDE EROSION RESISTANT MATERIAL, SUCH AS FIBERGLASS ROVING OR AS DIRECTED BY THE ENGINEER TO PREVENT SOIL EROSION AND TO PROTECT THE AREA ADJACENT TO THE STRUCTURE. THE CONTRACTOR WILL BE REQUIRED TO REMOVE THESE MATERIALS PRIOR TO CONSTRUCTION OF THE APPROACH SLAB.

TEMPORARY DRAINAGE DETAIL

PROJECT NO. B-4028
BLADEN COUNTY
STATION: 56+35.50 -L-

SHEET 2 OF 2

STATE OF NORTH CAROLINA
DEPARTMENT OF TRANSPORTATION
RALEIGH

STANDARD

BRIDGE APPROACH
SLAB DETAILS

NORTH CAROLINA PROFESSIONAL SEAL 14855 ENGINEER DOUGLAS R. CALHOUN
8/25/12

REVISIONS						SHEET NO.
NO.	BY:	DATE:	NO.	BY:	DATE:	S-147
1			3			TOTAL SHEETS
2			4			147

ASSEMBLED BY : A. SORSENGINH		DATE : 4/2012	
CHECKED BY : W. PARKER		DATE : 4/2012	
DRAWN BY : FCJ 11/88	REV. 5/7/03	RWW/JTE	
CHECKED BY : ARB 11/88	REV. 5/1/06RRR	MAA/KMM	
	REV. 10/1/11	MAA/GM	

11-MAY-2012 14:26
R:\Structures\STR3\Misc_draw\B4028_SD_AS.dgn
asorsenginh

STD. NO. BAS4

STANDARD NOTES

DESIGN DATA:

SPECIFICATIONS	A.A.S.H.T.O. (CURRENT)
LIVE LOAD	SEE PLANS
IMPACT ALLOWANCE	SEE A.A.S.H.T.O.
STRESS IN EXTREME FIBER OF	
STRUCTURAL STEEL - AASHTO M270 GRADE 36	20,000 LBS. PER SQ. IN.
- AASHTO M270 GRADE 50W	27,000 LBS. PER SQ. IN.
- AASHTO M270 GRADE 50	27,000 LBS. PER SQ. IN.
REINFORCING STEEL IN TENSION	
GRADE 60	24,000 LBS. PER SQ. IN.
CONCRETE IN COMPRESSION	1,200 LBS. PER SQ. IN.
CONCRETE IN SHEAR	SEE A.A.S.H.T.O.
STRUCTURAL TIMBER - TREATED OR	
UNTREATED - EXTREME FIBER STRESS	1,800 LBS. PER SQ. IN.
COMPRESSION PERPENDICULAR TO GRAIN OF TIMBER	375 LBS. PER SQ. IN.
EQUIVALENT FLUID PRESSURE OF EARTH	30 LBS. PER CU. FT. (MINIMUM)

MATERIAL AND WORKMANSHIP:

EXCEPT AS MAY OTHERWISE BE SPECIFIED ON PLANS OR IN THE SPECIAL PROVISIONS, ALL MATERIAL AND WORKMANSHIP SHALL BE IN ACCORDANCE WITH THE 2006 "STANDARD SPECIFICATIONS FOR ROADS AND STRUCTURES" OF THE N. C. DEPARTMENT OF TRANSPORTATION.

STEEL SHEET PILING FOR PERMANENT OR TEMPORARY APPLICATIONS SHALL BE HOT ROLLED.

CONCRETE:

UNLESS OTHERWISE REQUIRED ON PLANS, CLASS A CONCRETE SHALL BE USED FOR ALL PORTIONS OF ALL STRUCTURES WITH THE EXCEPTION THAT: CLASS AA CONCRETE SHALL BE USED IN BRIDGE SUPERSTRUCTURES, ABUTMENT BACKWALLS, AND APPROACH SLABS; AND CLASS B CONCRETE SHALL BE USED FOR SLOPE PROTECTION AND RIP RAP.

CONCRETE CHAMFERS:

UNLESS OTHERWISE NOTED ON THE PLANS, ALL EXPOSED CORNERS ON STRUCTURES SHALL BE CHAMFERED 3/4" WITH THE FOLLOWING EXCEPTIONS: TOP CORNERS OF CURBS MAY BE ROUNDED TO 1-1/2" RADIUS WHICH IS BUILT INTO CURB FORMS; CORNERS OF TRANSVERSE FLOOR EXPANSION JOINTS SHALL BE ROUNDED WITH A 1/4" FINISHING TOOL UNLESS OTHERWISE REQUIRED ON PLANS; AND CORNERS OF EXPANSION JOINTS IN THE ROADWAY FACES AND TOPS OF CURBS AND SIDEWALKS SHALL BE ROUNDED TO A 1/4" RADIUS WITH A FINISHING STONE OR TOOL UNLESS OTHERWISE REQUIRED ON PLANS.

DOWELS:

DOWELS WHEN INDICATED ON PLANS AS FOR CULVERT EXTENSIONS, SHALL BE EMBEDDED AT LEAST 12" INTO THE OLD CONCRETE AND GROUTED INTO PLACE WITH 1:2 CEMENT MORTAR.

ALLOWANCE FOR DEAD LOAD DEFLECTION, SETTLEMENT, ETC. IN CASTING SUPERSTRUCTURES:

BRIDGES SHALL BE BUILT ON THE GRADE OR VERTICAL CURVE SHOWN ON PLANS. SLABS, CURBS AND PARAPETS SHALL CONFORM TO THE GRADE OR CURVE.

ALL DIMENSIONS WHICH ARE GIVEN IN SECTION AND ARE AFFECTED BY DEAD LOAD DEFLECTIONS ARE DIMENSIONS AT CENTER LINE OF BEARING UNLESS OTHERWISE NOTED ON PLANS. IN SETTING FORMS FOR STEEL BEAM BRIDGES AND PRESTRESSED CONCRETE GIRDER BRIDGES, ADJUSTMENTS SHALL BE MADE DUE TO THE DEAD LOAD DEFLECTIONS FOR THE ELEVATIONS SHOWN. WHERE BLOCKS ARE SHOWN OVER BEAMS FOR BUILDING UP TO THE SLAB, THE VERTICAL DIMENSIONS OF THE BLOCKS SHALL BE ADJUSTED BETWEEN BEARINGS TO COMPENSATE FOR DEAD LOAD DEFLECTIONS, VERTICAL CURVE ORDINATE, AND ACTUAL BEAM CAMBER. WHERE BOTTOM OF SLAB IS IN LINE WITH BOTTOM OF TOP FLANGES, DEPTH OF SLAB BETWEEN BEARINGS SHALL BE ADJUSTED TO COMPENSATE FOR DEAD LOAD DEFLECTION, VERTICAL CURVE ORDINATE, AND ACTUAL BEAM CAMBER.

IN SETTING FALSEWORK AND FORMS FOR REINFORCED CONCRETE SPANS, AN ALLOWANCE SHALL BE MADE FOR DEAD LOAD DEFLECTIONS, SETTLEMENT OF FALSEWORK, AND PERMANENT CAMBER WHICH SHALL BE PROVIDED FOR IN ADDITION TO THE ELEVATIONS SHOWN. AFTER REMOVAL OF THE FALSEWORK, THE FINISHED STRUCTURES SHALL CONFORM TO THE PROFILE AND ELEVATIONS SHOWN ON THE PLANS AND CONSTRUCTION ELEVATIONS FURNISHED BY THE ENGINEER.

DETAILED DRAWINGS FOR FALSEWORK OR FORMS FOR BRIDGE SUPERSTRUCTURE AND ANY STRUCTURE OR PARTS OF A STRUCTURE AS NOTED ON THE PLANS SHALL BE SUBMITTED TO THE ENGINEER FOR APPROVAL BEFORE CONSTRUCTION OF THE FALSEWORK OR FORMS IS STARTED.

REINFORCING STEEL:

ALL REINFORCING STEEL SHALL BE DEFORMED. DIMENSIONS RELATIVE TO PLACEMENT OF REINFORCING ARE TO CENTERS OF BARS UNLESS OTHERWISE INDICATED IN THE PLANS. DIMENSIONS ON BAR DETAILS ARE TO CENTERS OF BARS OR ARE OUT TO OUT AS INDICATED ON PLANS.

WIRE BAR SUPPORTS SHALL BE PROVIDED FOR REINFORCING STEEL WHERE INDICATED ON THE PLANS. WHEN BAR SUPPORT PIECES ARE PLACED IN CONTINUOUS LINES, THEY SHALL BE SO PLACED THAT THE ENDS OF THE SUPPORTING WIRES SHALL BE LAPPED TO LOCK LEGS ON ADJOINING PIECES.

STRUCTURAL STEEL:

AT THE CONTRACTOR'S OPTION, HE MAY SUBSTITUTE 7/8" Ø SHEAR STUDS FOR THE 3/4" Ø STUDS SPECIFIED ON THE PLANS. THIS SUBSTITUTION SHALL BE MADE AT THE RATE OF 3 - 7/8" Ø STUDS FOR 4 - 3/4" Ø STUDS, AND STUD SPACING CHANGES SHALL BE MADE AS NECESSARY TO PROVIDE THE SAME EQUIVALENT NUMBER OF 7/8" Ø STUDS ALONG THE BEAM AS SHOWN FOR 3/4" Ø STUDS BASED ON THE RATIO OF 3 - 7/8" Ø STUDS FOR 4 - 3/4" Ø STUDS. STUDS OF THE LENGTH SPECIFIED ON THE PLANS MUST BE PROVIDED. THE MAXIMUM SPACING SHALL BE 2'-0".

EXCEPT AT THE INTERIOR SUPPORTS OF CONTINUOUS BEAMS WHERE THE COVER PLATE IS IN CONTACT WITH BEARING PLATE, THE CONTRACTOR MAY, AT HIS OPTION, SUBSTITUTE FOR THE COVER PLATES DESIGNATED ON THE PLANS COVER PLATES OF THE EQUIVALENT AREA PROVIDED THESE PLATES ARE AT LEAST 5/16" IN THICKNESS AND DO NOT EXCEED A WIDTH EQUAL TO THE FLANGE WIDTH LESS 2" OR A THICKNESS EQUAL TO 2 TIMES THE FLANGE THICKNESS. THE SIZE OF FILLET WELDS SHALL CONFORM TO THE REQUIREMENTS OF THE CURRENT ANSI/AASHTO/AWS "BRIDGE WELDING CODE". ELECTROSLAG WELDING WILL NOT BE PERMITTED.

WITH THE SOLE EXCEPTION OF EDGES AT SURFACES WHICH BEAR ON OTHER SURFACES, ALL SHARP EDGES AND ENDS OF SHAPES AND PLATES SHALL BE SLIGHTLY ROUNDED BY SUITABLE MEANS TO A RADIUS OF APPROXIMATELY 1/16 INCH OR EQUIVALENT FLAT SURFACE AT A SUITABLE ANGLE PRIOR TO PAINTING, GALVANIZING, OR METALLIZING.

HANDRAILS AND POSTS:

METAL STANDARDS AND FACES OF THE CONCRETE END POSTS FOR THE METAL RAIL SHALL BE SET NORMAL TO THE GRADE OF THE CURB, UNLESS OTHERWISE SHOWN ON PLANS. THE METAL RAIL AND TOPS OF CONCRETE POSTS USED WITH THE ALUMINUM RAIL SHALL BE BUILT PARALLEL TO THE GRADE OF THE CURB.

METAL HANDRAILS SHALL BE IN ACCORDANCE WITH THE PLANS. RAILS SHALL BE AS MANUFACTURED FOR BRIDGE RAILING. CASTINGS SHALL BE OF A UNIFORM APPEARANCE. FINS AND OTHER DEFORMATIONS RESULTING FROM CASTING OR OTHERWISE SHALL BE REMOVED IN A MANNER SO THAT A UNIFORM COLORING OF THE COMPLETED CASTING SHALL BE OBTAINED. CASTINGS WITH DISCOLORATIONS OR OF NON-UNIFORM COLORING WILL NOT BE ACCEPTED. CERTIFIED MILL REPORTS ARE REQUIRED FOR METAL RAILS AND POSTS.

SPECIAL NOTES:

GENERALLY, IN CASE OF DISCREPANCY, THIS STANDARD SHEET OF NOTES SHALL GOVERN OVER THE SPECIFICATIONS, BUT THE REMAINDER OF THE PLANS SHALL GOVERN OVER NOTES HEREON, AND SPECIAL PROVISIONS SHALL GOVERN OVER ALL. SEE SPECIFICATIONS ARTICLE 105-4.

ENGLISH

JANUARY, 1990

STD. NO. SN