09/08/99

TIP PROJECT: I-4413

CONTRACT: C202847

4/23/2012
C:\Users\jgaddy\Documents\Microstation_Mobile_Files\Shared_Projects\Project_Number\transportation\design\Roadway\Proj\I4413_rdy_tsh.dgn
jgaddy

See Sheet 1-A For Index of Sheets
See Sheet 1-B For Conventional Symbols

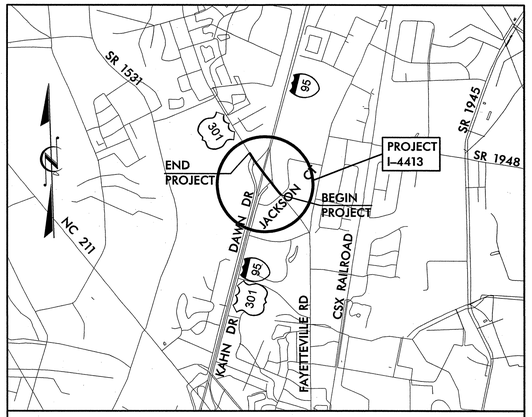

VICINITY MAP

STATE OF NORTH CAROLINA
DIVISION OF HIGHWAYS

ROBESON COUNTY

STATE	STATE PROJECT REFERENCE NO.	SHEET NO.	TOTAL SHEETS
N.C.	I-4413	1	

WBS NO.	F. A. PROJ. NO.	DESCRIPTION
35901.1.2	IMF-95-1(64)22	PE
35901.2.1	IMF-095-1(85)22	ROW/UTIL.
35901.3.1	IMF-095-1(87)22	CONST.

LOCATION: BRIDGE NO. 36 ON US 301 (FAYETTEVILLE ROAD) OVER I-95 (EXIT 22)

TYPE OF WORK: GRADING, PAVING, DRAINAGE, STRUCTURES, SIGNALS, AND SIGNING

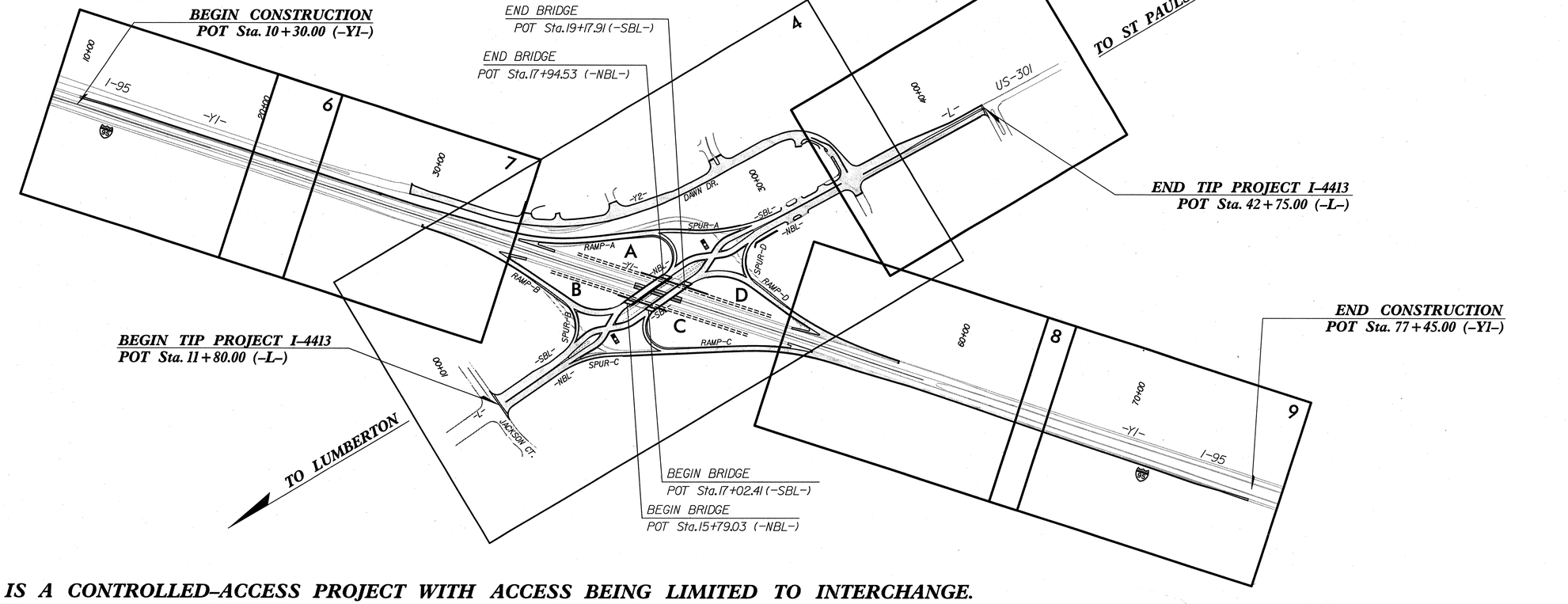

– THIS IS A CONTROLLED-ACCESS PROJECT WITH ACCESS BEING LIMITED TO INTERCHANGE.

GRAPHIC SCALES

50 25 0 50 100
PLANS

50 25 0 50 100
PROFILE (HORIZONTAL)

10 5 0 10 20
PROFILE (VERTICAL)

DESIGN DATA

ADT 2012 = 26,000
ADT 2032 = 37,200
DHV = 9 %
D = 55 %
T = 6 % *
V = 50 MPH
FUNC. CLASS: URBAN COLLECTOR
* (TTST 2% + DUAL 4%)
STATEWIDE TIER

PROJECT LENGTH

LENGTH OF ROADWAY T.I.P. PROJECT I-4413	=	0.545 MI.
LENGTH OF STRUCTURE T.I.P. PROJECT I-4413	=	0.041 MI
TOTAL LENGTH OF T.I.P. PROJECT I-4413	=	0.586 MI

NOTE: NB LANE BRIDGE STATIONING USED TO DETERMINE LENGTH OF STRUCTURES.

PREPARED IN THE OFFICE OF:
Stantec
Stantec Consulting Inc.
801 Jones Franklin Road, Suite 300
Raleigh, NC U.S.A.
27606
Tel. (919) 851-6866
Fax. (919) 851-7024
www.stantec.com
FOR THE NORTH CAROLINA DEPARTMENT OF TRANSPORTATION

2012 STANDARD SPECIFICATIONS

RIGHT OF WAY DATE:
JULY 16, 2010
LETTING DATE:
JULY 17, 2012

G. SCOTT BOYLES, PE
PROJECT ENGINEER

JASON T. GADDY
PROJECT DESIGN ENGINEER

NCDOT CONTACT: BRENDA L. MOORE, PE
PROJECT ENGINEER

HYDRAULICS ENGINEER
NORTH CAROLINA PROFESSIONAL SEAL 9334 ENGINEER HENRY WELLS JR. P.E.
SIGNATURE: 4/23/12

ROADWAY DESIGN ENGINEER
NORTH CAROLINA PROFESSIONAL SEAL 15755 ENGINEER G. SCOTT BOYLES P.E.
SIGNATURE: 4/23/12

STATE OF NORTH CAROLINA • DEPARTMENT OF TRANSPORTATION •

5/28/99

PROJECT REFERENCE NO.	SHEET NO.
I-4413	1A

ROADWAY DESIGN ENGINEER

NORTH CAROLINA PROFESSIONAL SEAL 15755 ENGINEER SCOTT KOHLS

4/23/12

STATE OF NORTH CAROLINA
DIVISION OF HIGHWAYS

INDEX OF SHEETS

1	TITLE SHEET
1-A	INDEX OF SHEETS, GENERAL NOTES, AND LIST OF STANDARDS
1-B	CONVENTIONAL SYMBOLS
1-C THRU 1-D	SURVEY CONTROL SHEET
2 THRU 2-C	TYPICAL SECTIONS
2-D	SHEAR POINT LAYOUT
2-E	CURVE DATA FOR SHEET 4
2-F	PROPOSED CONTOURS AT INTERCHANGE
2-G	SINGLE SLOPE CONC. BARRIER AND TRANSITION DETAIL
2-H	CURB RAMP - PARALLEL RAMP DETAIL
2-I	CURB RAMP - DIRECTIONAL RAMP DETAIL
2-J THRU 2-M	STANDARD TEMPORARY WALL DETAILS
2-N THRU 2-O	SPECIAL CATCH BASIN DETAIL
2-P	SPECIAL DROP INLET DETAIL
2-Q	DETAIL FOR TEMPORARY CONTAINMENT OF CONTAMINATED SOILS
3 (3 SHEETS)	SUMMARY OF QUANTITIES
3-A THRU 3-E	SUMMARY OF DRAINAGE QUANTITIES
3-F	SUMMARY OF EARTHWORK, TEMPORARY GUARDRAIL, PAVEMENT BREAK-UP AND REMOVAL
3-G	GUARDRAIL SUMMARY
3-H	PARCEL INDEX SHEET
4 THRU 9	PLAN SHEETS
10 THRU 19	PROFILE SHEETS
TMP-1 THRU TMP-14	TRANSPORTATION MANAGEMENT PLANS
PMP-1 THRU PMP-8	PAVEMENT MARKING PLANS
E-1 THRU E-4	LIGHTING / ELECTRICAL PLANS
EC-1 THRU EC-15	EROSION CONTROL PLANS
SIGN-1A THRU SIGN-12	SIGNING PLANS
SIG. 1 THRU SIG. 51	SIGNAL PLANS
UC-1 THRU UC-13	UTILITY CONSTRUCTION PLANS
UO-1 THRU UO-6	UTILITIES BY OTHERS PLANS
X-A	CROSS SECTION INDEX
X-B THRU X-C	CROSS SECTION SUMMARIES
X-1 THRU X-102	CROSS-SECTIONS
S-1 THRU S-72	STRUCTURE PLANS
W-1 THRU W-3	RETAINING WALL PLANS

GENERAL NOTES

GENERAL NOTES: 2012 SPECIFICATIONS
EFFECTIVE: 01-17-12
REVISED: 11/01/11

GRADING AND SURFACING OR RESURFACING AND WIDENING:

THE GRADE LINES SHOWN DENOTE THE FINISHED ELEVATION OF THE PROPOSED SURFACING AT GRADE POINTS SHOWN ON THE TYPICAL SECTIONS. WHERE NO GRADE LINES ARE SHOWN, THE PROFILES SHOWN DENOTE THE TOP ELEVATION OF THE EXISTING PAVEMENT ALONG THE CENTER LINE OF SURVEY ON WHICH THE PROPOSED RESURFACING WILL BE PLACED. GRADE LINES MAY BE ADJUSTED BY THE ENGINEER IN ORDER TO SECURE A PROPER TIE-IN.

CLEARING:

CLEARING ON THIS PROJECT SHALL BE PERFORMED TO THE LIMITS ESTABLISHED BY METHOD III.

SUPERELEVATION:

ALL CURVES ON THIS PROJECT SHALL BE SUPERELEVATED IN ACCORDANCE WITH STD. NO. 225.05 & 225.05 USING THE RATE OF SUPERELEVATION AND RUNOFF SHOWN ON THE PLANS. SUPERELEVATION IS TO BE REVOLVED ABOUT THE GRADE POINTS SHOWN ON THE TYPICAL SECTIONS.

SHOULDER CONSTRUCTION:

ASPHALT, EARTH, AND CONCRETE SHOULDER CONSTRUCTION ON THE HIGH SIDE OF SUPERELEVATED CURVES SHALL BE IN ACCORDANCE WITH STD. NO. 560.01.

SIDE ROADS:

THE CONTRACTOR WILL BE REQUIRED TO DO ALL NECESSARY WORK TO PROVIDE SUITABLE CONNECTIONS WITH ALL ROADS, STREETS, AND DRIVES ENTERING THIS PROJECT. THIS WORK WILL BE PAID FOR AT THE CONTRACT UNIT PRICE FOR THE PARTICULAR ITEMS INVOLVED.

DRIVEWAYS:

DRIVEWAYS SHALL BE CONSTRUCTED IN ACCORDANCE WITH STD. 848.03 AT LOCATIONS SHOWN ON PLANS OR AS DIRECTED BY THE ENGINEER.

STREET TURNOUT:

STREET RETURNS SHALL BE CONSTRUCTED IN ACCORDANCE WITH STD. NO. 848.04 USING THE RADII NOTED ON PLANS.

GUARDRAIL:

THE GUARDRAIL LOCATIONS SHOWN ON THE PLANS MAY BE ADJUSTED DURING CONSTRUCTION AS DIRECTED BY THE ENGINEER. THE CONTRACTOR SHOULD CONSULT WITH THE ENGINEER PRIOR TO ORDERING GUARDRAIL MATERIAL.

TEMPORARY SHORING:

SHORING REQUIRED FOR THE MAINTENANCE OF TRAFFIC NOT SHOWN ON THE PLANS WILL BE PAID FOR AT THE CONTRACT PRICE FOR "TEMPORARY SHORING".

END BENTS:

THE ENGINEER SHALL CHECK THE STRUCTURE END BENT PLANS, DETAILS, AND CROSS-SECTION PRIOR TO SETTING OF THE SLOPE STAKES FOR THE EMBANKMENT OR EXCAVATION APPROACHING A BRIDGE.

UTILITIES:

UTILITY OWNERS ON THIS PROJECT ARE Time Warner Cable (Cable TV),

AT&T (Telephone), City of Lumberton (Power, Water, and Sewer),

Lumbee River EMC (Power), Piedmont Natural Gas Company (Gas)

ANY RELOCATION OF EXISTING UTILITIES WILL BE ACCOMPLISHED BY OTHERS, EXCEPT AS SHOWN ON THE PLANS.

RIGHT-OF-WAY MARKERS:

ALL RIGHT-OF-WAY MARKERS ON THIS PROJECT SHALL BE PLACED BY OTHERS.

CURB RAMPS

CURB RAMPS ARE SHOWN ON THE PLANS AT APPROXIMATE LOCATIONS. CONSTRUCT ALL CURB RAMPS IN ACCORDANCE WITH STD. NO. 848.05, 848.06, & ADDITIONAL SPECIAL DETAILS: FOR CURB RAMPS - PARALLEL RAMPS AND DIRECTIONAL RAMPS

ROADWAY STANDARD DRAWINGS

2012 ROADWAY ENGLISH STANDARD DRAWINGS

The following Roadway Standards as appear in "Roadway Standard Drawings" Highway Design Branch - N. C. Department of Transportation - Raleigh, N. C., Dated January, 2012 are applicable to this project and by reference hereby are considered a part of these plans:

STD.NO.	TITLE
DIVISION 2 - EARTHWORK	
200.03	Method of Clearing - Method III
225.01	Guide for Grading Subgrade - Interstate and Freeway
225.02	Guide for Grading Subgrade - Secondary and Local
225.03	Deceleration and Acceleration Lanes
225.04	Method of Obtaining Superelevation - Two Lane Pavement
225.05	Method of Obtaining Superelevation - Divided Highways
225.06	Method of Grading Sight Distance at Intersections
DIVISION 3 - PIPE CULVERTS	
300.01	Method of Pipe Installation
310.02	Parallel Pipe End Section - Precast Concrete Section for 15" to 24" Pipe
310.04	Parallel Pipe End Section - Prefabricated Steel Section for 15" to 24" Pipe
DIVISION 5 - SUBGRADE, BASES AND SHOULDERS	
560.01	Method of Shoulder Construction - High Side of Superelevated Curve - Method I
560.02	Method of Shoulder Construction - High Side of Superelevated Curve - Method II
DIVISION 6 - ASPHALT BASES AND PAVEMENTS	
654.01	Pavement Repairs
665.01	Asphalt Shoulders - Milled Rumble Strips
DIVISION 8 - INCIDENTALS	
838.28	Reinforced Concrete Endwall - for Double and Triple 60" Pipes 90 Skew
838.34	Reinforced Concrete Endwall - for Double and Triple 66" Pipes 90 Skew
838.45	Notes for Reinforced Concrete Endwall - Std. Dwg 838.21 thru 838.40
838.58	Reinforced Brick Endwall - for Double and Triple 60" Pipes 90 Skew
838.64	Reinforced Brick Endwall - for Double and Triple 66" Pipes 90 Skew
838.75	Notes for Reinforced Brick Endwall - Std. Dwg 838.51 thru 838.70
838.80	Precast Endwalls - 12" thru 72" Pipe 90 Skew
840.01	Brick Catch Basin - 12" thru 54" Pipe
840.02	Concrete Catch Basin - 12" thru 54" Pipe
840.03	Frame, Grates and Hood - for Use on Standard Catch Basin
840.14	Concrete Drop Inlet - 12" thru 30" Pipe
840.15	Brick Drop Inlet - 12" thru 30" Pipe
840.16	Drop Inlet Frame and Grates - for use with Std. Dwg 840.14 and 840.15
840.17	Concrete Grated Drop Inlet Type 'A' - 12" thru 72" Pipe
840.18	Concrete Grated Drop Inlet Type 'B' - 12" thru 36" Pipe
840.19	Concrete Grated Drop Inlet Type 'D' - 12" thru 36" Pipe
840.22	Frames and Wide Slot Sag Grates
840.24	Frames and Narrow Slot Sag Grates
840.25	Anchorage for Frames - Brick or Concrete or Precast
840.26	Brick Grated Drop Inlet Type 'A' - 12" thru 72" Pipe
840.27	Brick Grated Drop Inlet Type 'B' - 12" thru 36" Pipe
840.28	Brick Grated Drop Inlet Type 'D' - 12" thru 36" Pipe
840.29	Frames and Narrow Slot Flat Grates
840.31	Concrete Junction Box - 12" thru 66" Pipe
840.32	Brick Junction Box - 12" thru 66" Pipe
840.34	Traffic Bearing Junction Box - for Use with Pipes 42" and Under
840.35	Traffic Bearing Grated Drop Inlet - for Cast Iron Double Frame and Grates
840.45	Precast Drainage Structure
840.46	Traffic Bearing Precast Drainage Structure
840.54	Manhole Frame and Cover
840.66	Drainage Structure Steps
840.71	Concrete and Brick Pipe Plug
840.72	Pipe Collar
846.01	Concrete Curb, Gutter and Curb & Gutter
846.04	Drop Inlet Installation in Shoulder Berm Gutter
848.01	Concrete Sidewalk
848.03	Driveway Turnout - Drop Curb Type
848.04	Street Turnout
848.05	Curb Ramp - Proposed Curb & Gutter
848.06	Curb Ramp - Existing Curb & Gutter
850.01	Concrete Paved Ditches
852.01	Concrete Islands
852.02	Concrete Mountable Median - for Use with Rigid or Flexible Pavement
852.06	Method for Placement of Drop Inlets in Concrete Islands
862.01	Guardrail Placement
862.02	Guardrail Installation
862.03	Structure Anchor Units
866.01	Chain Link Fence - 4', 5' and 6' High Fence
866.02	Woven Wire Fence - with Wood Post
876.01	Rip Rap in Channels
876.02	Guide for Rip Rap at Pipe Outlets
876.04	Drainage Ditches with Class 'B' Rip Rap

4/24/2012
U:\Roadway\Proj\4413_rdy_tsh.dgn
jgaddy

04/16/11

PROJECT REFERENCE NO.	SHEET NO.
I-4413	1B

Note: Not to Scale

****S.U.E. = Subsurface Utility Engineering***

STATE OF NORTH CAROLINA
DIVISION OF HIGHWAYS

CONVENTIONAL PLAN SHEET SYMBOLS

BOUNDARIES AND PROPERTY:

- State Line
- County Line
- Township Line
- City Line
- Reservation Line
- Property Line
- Existing Iron Pin — EIP
- Property Corner
- Property Monument — ECM
- Parcel/Sequence Number — 123
- Existing Fence Line
- Proposed Woven Wire Fence
- Proposed Chain Link Fence
- Proposed Barbed Wire Fence
- Existing Wetland Boundary — WLB
- Proposed Wetland Boundary — WLB
- Existing Endangered Animal Boundary — EAB
- Existing Endangered Plant Boundary — EPB
- Known Soil Contamination: Boundary or Site
- Potential Soil Contamination: Boundary or Site

BUILDINGS AND OTHER CULTURE:

- Gas Pump Vent or U/G Tank Cap
- Sign — S
- Well — W
- Small Mine
- Foundation
- Area Outline
- Cemetery
- Building
- School
- Church
- Dam

HYDROLOGY:

- Stream or Body of Water
- Hydro, Pool or Reservoir
- Jurisdictional Stream — JS
- Buffer Zone 1 — BZ 1
- Buffer Zone 2 — BZ 2
- Flow Arrow
- Disappearing Stream
- Spring
- Wetland
- Proposed Lateral, Tail, Head Ditch — FLOW
- False Sump

RAILROADS:

- Standard Gauge — CSX TRANSPORTATION
- RR Signal Milepost — MILEPOST 35
- Switch — SWITCH
- RR Abandoned
- RR Dismantled

RIGHT OF WAY:

- Baseline Control Point
- Existing Right of Way Marker
- Existing Right of Way Line
- Proposed Right of Way Line — RW
- Proposed Right of Way Line with Iron Pin and Cap Marker — RW
- Proposed Right of Way Line with Concrete or Granite Marker — RW
- Existing Control of Access — CA
- Proposed Control of Access — CA
- Existing Easement Line — E
- Proposed Temporary Construction Easement — E
- Proposed Temporary Drainage Easement — TDE
- Proposed Permanent Drainage Easement — PDE
- Proposed Permanent Drainage / Utility Easement — DUE
- Proposed Permanent Utility Easement — PUE
- Proposed Temporary Utility Easement — TUE
- Proposed Aerial Utility Easement — AUE
- Proposed Permanent Easement with Iron Pin and Cap Marker

ROADS AND RELATED FEATURES:

- Existing Edge of Pavement
- Existing Curb
- Proposed Slope Stakes Cut — C
- Proposed Slope Stakes Fill — F
- Proposed Curb Ramp — CR
- Curb Cut Future Ramp — CCFR
- Existing Metal Guardrail
- Proposed Guardrail
- Existing Cable Guiderail
- Proposed Cable Guiderail
- Equality Symbol
- Pavement Removal

VEGETATION:

- Single Tree
- Single Shrub
- Hedge
- Woods Line
- Orchard
- Vineyard — Vineyard

EXISTING STRUCTURES:

MAJOR:

- Bridge, Tunnel or Box Culvert — CONC
- Bridge Wing Wall, Head Wall and End Wall — CONC WW

MINOR:

- Head and End Wall — CONC HW
- Pipe Culvert
- Footbridge
- Drainage Box: Catch Basin, DI or JB — CB
- Paved Ditch Gutter
- Storm Sewer Manhole — S
- Storm Sewer — S

UTILITIES:

POWER:

- Existing Power Pole
- Proposed Power Pole
- Existing Joint Use Pole
- Proposed Joint Use Pole
- Power Manhole — P
- Power Line Tower
- Power Transformer
- U/G Power Cable Hand Hole
- H-Frame Pole
- Recorded U/G Power Line — P
- Designated U/G Power Line (S.U.E.*) — P

TELEPHONE:

- Existing Telephone Pole
- Proposed Telephone Pole
- Telephone Manhole — T
- Telephone Booth
- Telephone Pedestal — T
- Telephone Cell Tower
- U/G Telephone Cable Hand Hole — HH
- Recorded U/G Telephone Cable — T
- Designated U/G Telephone Cable (S.U.E.*) — T
- Recorded U/G Telephone Conduit — TC
- Designated U/G Telephone Conduit (S.U.E.*) — TC
- Recorded U/G Fiber Optics Cable — T FO
- Designated U/G Fiber Optics Cable (S.U.E.*) — T FO

WATER:

- Water Manhole — W
- Water Meter
- Water Valve
- Water Hydrant
- Recorded U/G Water Line — W
- Designated U/G Water Line (S.U.E.*) — W
- Above Ground Water Line — A/G Water

TV:

- TV Satellite Dish
- TV Pedestal — C
- TV Tower
- U/G TV Cable Hand Hole — HH
- Recorded U/G TV Cable — TV
- Designated U/G TV Cable (S.U.E.*) — TV
- Recorded U/G Fiber Optic Cable — TV FO
- Designated U/G Fiber Optic Cable (S.U.E.*) — TV FO

GAS:

- Gas Valve
- Gas Meter
- Recorded U/G Gas Line — G
- Designated U/G Gas Line (S.U.E.*) — G
- Above Ground Gas Line — A/G Gas

SANITARY SEWER:

- Sanitary Sewer Manhole
- Sanitary Sewer Cleanout
- U/G Sanitary Sewer Line — SS
- Above Ground Sanitary Sewer — A/G Sanitary Sewer
- Recorded SS Forced Main Line — FSS
- Designated SS Forced Main Line (S.U.E.*) — FSS

MISCELLANEOUS:

- Utility Pole
- Utility Pole with Base
- Utility Located Object
- Utility Traffic Signal Box — S
- Utility Unknown U/G Line — ?UTL
- U/G Tank; Water, Gas, Oil
- Underground Storage Tank, Approx. Loc. — UST
- A/G Tank; Water, Gas, Oil
- Geoenvironmental Boring
- U/G Test Hole (S.U.E.*)
- Abandoned According to Utility Records — AATUR
- End of Information — E.O.I.

PROJECT REFERENCE NO.	SHEET NO.
I-4413	1C
Location and Surveys	

SURVEY CONTROL SHEET I-4413

NC GRID NAD 83/2001

BL

POINT	DESC.	NORTH	EAST	ELEVATION	L STATION	OFFSET
1	I-4413 BL1	334011.4915	1998959.5192	131.67	10+97.81	59.88 RT
2	I-4413 BL2	334580.5831	1998473.6452	143.87	18+45.54	30.96 RT
3	I-4413 BL3	335011.7196	1998129.7050	147.51	23+97.05	28.02 RT
4	I-4413 BL4	335421.0979	1997835.1974	135.21	29+04.52	17.69 RT
5	I-4413 BL5	335938.6214	1997521.1813	128.78	35+09.85	21.58 RT
6	I-4413 BL6	336485.8625	1997198.9287	129.46	41+44.80	34.04 RT

BY

POINT	DESC.	NORTH	EAST	ELEVATION	Y1 STATION	OFFSET
7	I-4413 BY7	333085.9730	1997792.0602	128.58	25+20.08	53.96 RT
8	I-4413 BY8	333624.4302	1997937.7434	129.16	30+77.89	57.53 RT
9	I-4413 BY9	334133.8588	1998069.5485	129.72	36+04.09	55.07 RT
10	I-4413 BY10	334906.9866	1998271.8632	130.36	44+03.39	53.40 RT
11	I-4413 BY11	335506.3875	1998430.1617	132.26	50+23.34	51.91 RT
12	I-4413 BY12	336104.3313	1998604.8260	132.55	56+46.10	66.61 RT
13	I-4413 BY13	336667.3089	1998749.4848	135.24	62+27.34	61.32 RT
28	I-4413 BY28	337333.5585	1998937.4882	134.98	69+19.97	67.75 RT
29	I-4413 BY29	337980.6883	1999118.6704	136.50	75+91.97	71.88 RT
30	I-4413 BY30	338619.4785	1999297.4965	138.81	OUTSIDE PROJECT LIMITS	

BY2

POINT	DESC.	NORTH	EAST	ELEVATION	Y2 STATION	OFFSET
25	I-4413 BY2-25	331732.0824	1997251.7404	124.47	OUTSIDE PROJECT LIMITS	
26	I-4413 BY2-26	332334.8192	1997422.7706	126.43	OUTSIDE PROJECT LIMITS	
27	I-4413 BY2-27	332999.3050	1997592.0370	126.95	OUTSIDE PROJECT LIMITS	
14	I-4413 BY2-14	333423.8750	1997680.6274	128.94	OUTSIDE PROJECT LIMITS	
15	I-4413 BY2-15	333895.8556	1997792.2039	130.11	11+83.50	24.21 LT
16	I-4413 BY2-16	334294.0375	1997874.3268	129.95	15+90.78	16.52 RT
17	I-4413 BY2-17	334770.3895	1997767.3169	137.35	20+74.15	26.94 RT
18	I-4413 BY2-18	335103.0547	1997529.5402	132.65	24+79.71	24.12 LT
19	I-4413 BY2-19	335651.0585	1997279.8235	128.82	30+81.18	20.98 LT
20	I-4413 BL5	335938.6214	1997521.1813	128.78	OUTSIDE PROJECT LIMITS	

BM1 ELEVATION = 133.92
N 334656 E 1998664
L STATION 17+87.00 227 RIGHT
RR SPIKE IN BASE OF 15 INCH OAK

BM2 ELEVATION = 129.64
N 335007 E 1997741
L STATION 32+83.00 140 RIGHT
RR SPIKE IN BASE OF 24 INCH PINE

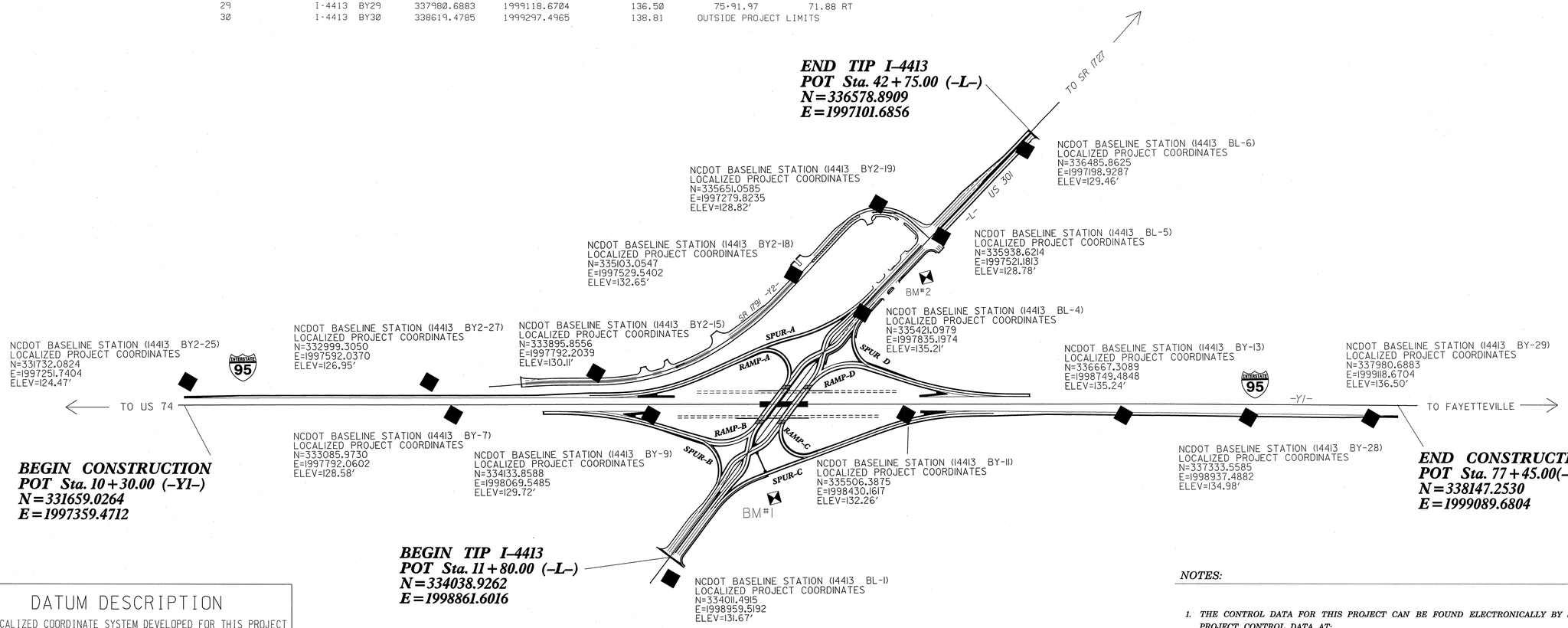

DATUM DESCRIPTION

THE LOCALIZED COORDINATE SYSTEM DEVELOPED FOR THIS PROJECT IS BASED ON THE STATE PLANE COORDINATES ESTABLISHED BY NCGS FOR MONUMENT "LUMBERPORT" WITH NAD 1983/2001 STATE PLANE GRID COORDINATES OF NORTHING: 313829.5134(ft) EASTING: 1981637.7428(ft) THE AVERAGE COMBINED GRID FACTOR USED ON THIS PROJECT (GROUND TO GRID) IS: 0.999916517 THE N.C. LAMBERT GRID BEARING AND LOCALIZED HORIZONTAL GROUND DISTANCE FROM "LUMBERPORT" TO -L- STATION 11+80.00IS N 40°26'23.8" E 26,553.3741' ALL LINEAR DIMENSIONS ARE LOCALIZED HORIZONTAL DISTANCES VERTICAL DATUM USED IS NAVD 88

NOTES:

1. *THE CONTROL DATA FOR THIS PROJECT CAN BE FOUND ELECTRONICALLY BY SELECTING PROJECT CONTROL DATA AT: HTTP://WWW.NCDOT.ORG/DOH/PRECONSTRUCT/HIGHWAY/LOCATION/PROJECT/*

   THE FILES TO BE FOUND ARE AS FOLLOWS: I4413_LS_CONTROL_091125.TXT

   SITE CALIBRATION INFORMATION HAS NOT BEEN PROVIDED FOR THIS PROJECT. IF FURTHER INFORMATION IS NEEDED, PLEASE CONTACT THE LOCATION AND SURVEYS UNIT.

© *INDICATES GEODETIC CONTROL MONUMENTS USED OR SET FOR HORIZONTAL PROJECT CONTROL BY THE NCDOT LOCATION AND SURVEYS UNIT.*

PROJECT CONTROL ESTABLISHED USING GLOBAL POSITIONING SYSTEM.

NETWORK ESTABLISHED FROM EXISTING HARN MONUMENTATION

SEE GPS CALIBRATION SHEET FOR HORIZONTAL AND VERTICAL COORDINATE VALUES.

NOTE: DRAWING NOT TO SCALE

6/2/99

2/2/2012
D:\Highway\Proj\I4413_ls_psh_1C.dgn
rgaddy

6/2/99

PROJECT REFERENCE NO.	SHEET NO.
I-4413	1-D
Location and Surveys	

SURVEY CONTROL SHEET I-4413

ROW MARKER IRON PIN AND CAP-E

ALIGN	STATION	OFFSET	NORTH	EAST
L	11+87.82	-96.08	333985.5525	1998781.3326
L	12+32.00	-56.00	334045.0597	1998785.4282
L	12+65.00	61.50	334143.7505	1998857.2293
L	11+87.07	112.49	334114.1583	1998945.5340
L	14+06.20	61.50	334254.6003	1998769.7628
L	16+44.70	-56.00	334369.0460	1998529.7857
L	27+98.88	100.53	335374.5656	1997961.1172
L	28+40.00	57.00	335386.7589	1997902.4947
L	29+70.00	54.00	335495.8912	1997831.7902
L	42+45.00	54.00	336581.6520	1997163.3977
L	42+45.00	45.00	336576.9319	1997155.7302
L	37+60.00	-80.00	336098.3904	1997303.5376
L	40+00.00	-55.00	336315.8746	1997199.0120
L	35+75.00	-80.00	335940.8486	1997400.5200

ROW MARKER IRON PIN AND CAP-E

ALIGN	STATION	OFFSET	NORTH	EAST
Y2	32+90.33	-60.00	335864.0118	1997386.0501
Y2	28+78.35	-60.00	335419.7612	1997284.7907
Y2	28+78.35	36.00	335471.4170	1997365.7084
Y2	29+93.00	75.00	335568.4782	1997371.0111
Y2	30+80.00	40.00	335637.2517	1997339.2317
Y2	31+46.00	40.00	335689.8640	1997357.5080
Y2	31+80.00	31.70	335719.3495	1997365.0700
Y2	26+09.35	-60.00	335193.0253	1997429.5331
Y2	24+33.44	36.00	335096.4074	1997605.1049
Y2	22+41.72	36.00	334927.8026	1997702.6709
Y2	18+53.76	-50.00	334539.4101	1997768.1050
Y2	11+96.00	-50.00	333914.4372	1997770.3911
Y2	11+36.79	-49.33	333856.9589	1997756.1440

ROW MARKER PERMANENT EASEMENT-E

ALIGN	STATION	OFFSET	NORTH	EAST
L	37+50.00	-154.00	336051.0818	1997245.7635
L	37+95.00	-154.00	336089.4028	1997222.1732
L	28+26.00	-154.00	335264.2246	1997730.1515
L	30+38.14	-100.00	335473.1851	1997664.9275
L	30+37.22	-58.03	335494.4074	1997701.1521
L	13+25.00	-56.00	334118.0689	1998727.8205
L	13+25.00	-70.00	334109.3966	1998716.8296
L	13+45.00	-70.00	334125.0974	1998704.4408
L	13+45.00	-56.03	334133.7494	1998715.4058
L	32+30.00	-54.77	335660.2804	1997602.8637
L	32+52.18	-54.78	335679.1663	1997591.2235
L	35+80.00	-100.00	335934.6219	1997380.8674
L	37+58.00	-100.00	336086.2026	1997287.5545
L	37+50.00	-100.00	336079.3902	1997291.7486
L	37+50.00	-80.00	336089.8748	1997308.7802
L	38+00.00	-75.83	336134.6379	1997286.1170
L	38+00.00	-95.66	336124.2436	1997269.2320
L	40+00.00	-75.00	336305.3900	1997181.9804
L	42+75.00	-75.00	336539.5737	1997037.8173
L	42+75.00	-55.00	336550.0583	1997054.8489
L	31+86.92	78.00	335693.2004	1997738.5104
L	32+17.00	78.00	335718.8125	1997722.7437
L	31+87.01	195.06	335754.6370	1997838.1511
L	32+17.00	215.00	335790.6319	1997839.4097
L	32+35.00	78.00	335734.1413	1997713.3081
L	32+59.00	78.00	335754.5791	1997700.7266
L	32+59.00	54.00	335741.9976	1997680.2887
L	32+35.00	54.00	335721.5594	1997692.8697
L	28+19.99	196.19	335442.6886	1998031.5147
L	28+24.38	216.18	335456.9060	1998046.2382
L	13+55.00	61.50	334214.4046	1998801.4798
L	13+30.00	61.50	334194.7785	1998816.9659
L	13+30.00	75.00	334203.1408	1998827.5637
L	13+55.00	75.00	334222.7668	1998812.0776
L	29+76.00	65.00	335506.7674	1997838.0124
L	29+76.00	54.00	335501.0009	1997828.6451
L	28+90.00	67.00	335434.5802	1997884.7993
L	28+90.00	56.39	335429.0182	1997875.7642
L	42+45.00	74.00	336592.1372	1997180.4301
L	32+59.00	74.00	335752.4822	1997697.3203
L	38+00.00	74.00	336213.1854	1997413.7122
L	37+50.00	74.00	336170.6065	1997439.9236
L	37+50.00	82.00	336174.7998	1997446.7354
L	38+00.00	84.00	336218.4271	1997422.2271
L	38+00.00	54.00	336202.7008	1997396.6806
L	37+50.00	54.00	336160.1219	1997422.8921
L	27+38.05	-205.00	335161.3247	1997733.6896

ROW MARKER PERMANENT EASEMENT-E

ALIGN	STATION	OFFSET	NORTH	EAST
Y2	29+58.23	68.60	335542.5676	1997369.5964
Y2	23+69.29	110.01	335078.9340	1997702.9009
Y2	20+13.00	-68.00	334678.2128	1997702.6347
Y2	22+75.00	-55.27	334914.2211	1997606.5279
Y2	22+75.00	-75.00	334904.8300	1997589.1787
Y2	19+55.94	-91.00	334619.3845	1997700.3159
Y2	19+85.00	-93.00	334644.0136	1997689.1051
Y2	18+69.57	-70.00	334548.6486	1997744.8315
Y2	10+00.00	-70.02	333729.7768	1997701.7074
Y2	10+00.00	-49.89	333724.7129	1997721.1905
Y2	24+20.00	-75.00	335025.7140	1997518.4974
Y2	24+70.00	-74.00	335068.0317	1997492.7163
Y2	25+02.72	-78.25	335093.3223	1997471.5329
Y2	25+92.74	-80.00	335168.2601	1997421.6151
Y2	25+92.70	-76.73	335169.9876	1997424.3903
Y2	28+78.35	-80.00	335408.9998	1997267.9331
Y2	29+88.00	-80.00	335542.3380	1997218.1554
Y2	29+88.00	-60.00	335545.2562	1997237.9414
Y2	32+65.00	-60.00	335846.3370	1997360.3881
Y2	29+30.00	95.00	335532.3563	1997400.6535

L

TYPE	STATION	NORTH	EAST
POT	10+00.00	333897.6184	1998973.1010
PC	24+87.91	335065.6907	1998051.4293
PT	27+55.22	335284.6777	1997898.4011
POT	45+00.00	336770.4958	1996983.7340

Y2

TYPE	STATION	NORTH	EAST
PC	6+00.00	333319.7251	1997692.9783
PRC	7+63.24	333480.3009	1997722.1835
PT	9+94.32	333706.6623	1997768.0492
PC	11+96.00	333901.8595	1997818.7832
PCC	19+84.34	334676.5368	1997776.2352
PT	24+33.44	335077.0365	1997574.7608
PC	28+78.35	335452.0461	1997335.3642
PT	32+90.33	335812.9997	1997417.6376
POT	34+22.77	335882.7267	1997530.2432

NBL

TYPE	STATION	NORTH	EAST
PC	10+00.00	334327.6548	1998663.7139
PRC	12+53.24	334532.4218	1998514.8203
PT	13+30.49	334583.0212	1998457.5833
PC	14+52.94	334638.0874	1998348.2137
PT	15+40.21	334692.8347	1998281.1458
PC	19+36.55	335003.9779	1998035.6371
PT	20+33.56	335091.4774	1997995.9839
PC	21+45.51	335201.5597	1997975.6151
PRC	22+13.90	335263.7139	1997948.5325
PT	24+94.30	335495.7972	1997791.3350

RAMP_A

TYPE	STATION	NORTH	EAST
TS	10+00.00	333843.0317	1997883.6738
SC	12+50.00	334086.7167	1997938.9670
CS	15+06.89	334342.8406	1997950.9213
ST	17+56.89	334590.6165	1997918.5665
PC	19+72.64	334803.4474	1997883.2223
PT	23+15.60	334905.2718	1998113.5215

RAMP_B

TYPE	STATION	NORTH	EAST
TS	10+00.00	333568.3441	1997903.7942
SC	12+00.00	333760.7402	1997958.3195
CS	15+34.76	334068.0177	1998089.9611
ST	17+34.76	334240.2158	1998191.6325
PC	19+30.02	334406.5050	1998293.9678
PT	22+41.04	334698.1105	1998276.9829

RAMP_C

TYPE	STATION	NORTH	EAST
TS	10+00.00	335972.7474	1998554.1029
SC	12+50.00	335729.4655	1998496.9224
CS	15+01.07	335479.5624	1998476.4717
ST	17+51.07	335230.2208	1998493.3385
PC	20+36.33	334946.3180	1998521.0505
PT	23+83.39	334849.5783	1998280.7083

RAMP_D

TYPE	STATION	NORTH	EAST
TS	10+00.00	336194.0557	1998516.3523
SC	12+00.00	336001.7665	1998461.4433
CS	16+21.02	335618.8151	1998288.5709
ST	18+21.02	335450.4469	1998180.6715
PC	19+12.22	335374.5393	1998130.1256
PT	22+88.87	335022.4318	1998144.3176

SBL

TYPE	STATION	NORTH	EAST
PC	10+00.00	334261.2945	1998663.2124
PRC	13+04.65	334491.1793	1998463.4770
PT	13+84.29	334560.3597	1998425.9374
PC	14+94.09	334667.2277	1998400.7234
PT	15+81.36	334745.1898	1998363.0765
PC	19+92.51	335067.9646	1998108.3898
PT	20+70.03	335118.1183	1998049.9175
PC	21+87.59	335176.0368	1997947.6177
PRC	22+75.66	335238.8317	1997887.6851
PT	25+43.81	335472.7730	1997756.7755

SPUR_A

TYPE	STATION	NORTH	EAST
PC	10+00.00	334803.4474	1997883.2223
PRC	12+04.86	335007.4572	1997867.7913
PT	17+47.63	335523.7506	1997725.3938

SPUR_B

TYPE	STATION	NORTH	EAST
PC	10+00.00	334353.1851	1998261.1544
PT	13+56.20	334378.1959	1998566.4145

SPUR_C

TYPE	STATION	NORTH	EAST
POT	10+00.00	334946.3180	1998521.0505
PC	13+25.72	334622.1350	1998552.6943
PT	16+22.16	334350.4449	1998661.0927

SPUR_D

TYPE	STATION	NORTH	EAST
PC	10+00.00	335397.6799	1998145.5346
PT	13+44.07	335397.5966	1997854.2677

Y1

TYPE	STATION	NORTH	EAST
POT	10+00.00	331630.0208	1997351.8113
POT	23+50.00	332935.2729	1997696.5099
POT	43+50.00	334869.1561	1998206.5056
POT	63+50.00	336801.6231	1998721.8416
POT	78+50.00	338248.5369	1999117.3672

DATUM DESCRIPTION

THE LOCALIZED COORDINATE SYSTEM DEVELOPED FOR THIS PROJECT IS BASED ON THE STATE PLANE COORDINATES ESTABLISHED BY NCGS FOR MONUMENT "LUMBERPORT"
WITH NAD 1983/2001 STATE PLANE GRID COORDINATES OF
NORTHING: 313829.5134(ft) EASTING: 1981637.7428(ft)
THE AVERAGE COMBINED GRID FACTOR USED ON THIS PROJECT (GROUND TO GRID) IS: 0.999916517
THE N.C. LAMBERT GRID BEARING AND LOCALIZED HORIZONTAL GROUND DISTANCE FROM "LUMBERPORT" TO -L- STATION 11+80.00 IS
N 40°26'23.8" E 26,553.3741'
ALL LINEAR DIMENSIONS ARE LOCALIZED HORIZONTAL DISTANCES
VERTICAL DATUM USED IS NAVD 88

NOTE: DRAWING NOT TO SCALE

NOTES:

1. *THE CONTROL DATA FOR THIS PROJECT CAN BE FOUND ELECTRONICALLY BY SELECTING PROJECT CONTROL DATA AT:*
   HTTP://WWW.NCDOT.ORG/DOH/PRECONSTRUCT/HIGHWAY/LOCATION/PROJECT/

   THE FILES TO BE FOUND ARE AS FOLLOWS:
   I4413_LS_CONTROL_091125.TXT

   SITE CALIBRATION INFORMATION HAS NOT BEEN PROVIDED FOR THIS PROJECT. IF FURTHER INFORMATION IS NEEDED, PLEASE CONTACT THE LOCATION AND SURVEYS UNIT.

◎ *INDICATES GEODETIC CONTROL MONUMENTS USED OR SET FOR HORIZONTAL PROJECT CONTROL BY THE NCDOT LOCATION AND SURVEYS UNIT.*
PROJECT CONTROL ESTABLISHED USING GLOBAL POSITIONING SYSTEM.
NETWORK ESTABLISHED FROM EXISTING HARN MONUMENTATION
SEE GPS CALIBRATION SHEET FOR HORIZONTAL AND VERTICAL COORDINATE VALUES.

15-MAY-2012 14:58
\\dot\dfsroot01\Proj\TIPProjects-I\I4413\Roadway\Proj\i4413_ls_1d.dgn
$$$$USERNAME$$$$

PAVEMENT SCHEDULE

C1	PROP. APPROX. 1.5" ASPHALT CONCRETE SURFACE COURSE TYPE S9.5B, AT AN AVERAGE RATE OF 168 LBS. PER SQ. YD.
C2	PROP. APPROX. 3.0" ASPHALT CONCRETE SURFACE COURSE TYPE S9.5B, AT AN AVERAGE RATE OF 168 LBS. PER SQ. YD. IN EACH OF TWO LAYERS.
C3	PROP. VAR. DEPTH ASPHALT CONCRETE SURFACE COURSE. TYPE S9.5B, AT AN AVERAGE RATE OF 112 LBS. PER. SQ. YD. PER 1" DEPTH. TO BE PLACED IN LAYERS NOT LESS THAN 1.5" OR GREATER THAN 2.0"
C4	PROP. APPROX. 1.5" ASPHALT CONCRETE SURFACE COURSE TYPE S9.5C, AT AN AVERAGE RATE OF 168 LBS. PER SQ. YD.
C5	PROP. APPROX. 3.0" ASPHALT CONCRETE SURFACE COURSE TYPE S9.5C, AT AN AVERAGE RATE OF 168 LBS. PER SQ. YD. IN EACH OF TWO LAYERS.
C6	PROP. VAR. DEPTH ASPHALT CONCRETE SURFACE COURSE. TYPE S9.5C, AT AN AVERAGE RATE OF 112 LBS. PER. SQ. YD. PER 1" DEPTH. TO BE PLACED IN LAYERS NOT LESS THAN 1.5" OR GREATER THAN 2.0"
D1	PROP. APPROX. 4.0" ASPHALT CONCRETE INTERMEDIATE COURSE TYPE I19.0B, AT AN AVERAGE RATE OF 456 LBS. PER SQ. YD.
D2	PROP. VAR. DEPTH ASPHALT CONCRETE INTERMEDIATE COURSE. TYPE I19.0B, AT AN AVERAGE RATE OF 114 LBS. PER. SQ. YD. PER 1" DEPTH. TO BE PLACED IN LAYERS NOT LESS THAN 2.5" OR GREATER THAN 4.0"
D3	PROP. APPROX 4.0" ASPHALT CONCRETE INTERMEDIATE COURSE. TYPE I19.0C, AT AN AVERAGE RATE OF 456 LBS. PER. SQ. YD.
D4	PROP. VAR. DEPTH ASPHALT CONCRETE INTERMEDIATE COURSE. TYPE I19.0C, AT AN AVERAGE RATE OF 114 LBS. PER. SQ. YD. PER 1" DEPTH. TO BE PLACED IN LAYERS NOT LESS THAN 2.5" OR GREATER THAN 4.0"
E1	PROP. 4.0" DEPTH ASPHALT CONCRETE BASE COURSE, TYPE B25.0B, AT AN AVERAGE RATE OF 456 LBS. PER SQ. YD.
E2	PROP. VAR. DEPTH ASPHALT CONCRETE BASE COURSE, TYPE B25.0B, AT AN AVERAGE RATE OF 114 LBS. PER SQ. YD. PER 1" DEPTH. TO BE PLACED IN LAYERS NOT LESS THAN 3" IN DEPTH OR GREATER THAN 5.5" IN DEPTH.
E3	PROP. 4.0" DEPTH ASPHALT CONCRETE BASE COURSE, TYPE B25.0C, AT AN AVERAGE RATE OF 456 LBS. PER SQ. YD.
E4	PROP. VAR. DEPTH ASPHALT CONCRETE BASE COURSE, TYPE B25.0C, AT AN AVERAGE RATE OF 114 LBS. PER SQ. YD. PER 1" DEPTH. TO BE PLACED IN LAYERS NOT LESS THAN 3" IN DEPTH OR GREATER THAN 5.5" IN DEPTH.
J1	PROP. 8" AGGREGATE BASE COURSE
J2	PROP. VAR. DEPTH AGGREGATE BASE COURSE
K	STABILIZER AGGREGATE
N	GEOTEXTILE FOR PAVEMENT STABILIZATION
R1	2'-6" CONCRETE CURB AND GUTTER
R2	1'-6" CONCRETE CURB AND GUTTER
R3	PROP. 5" MONOLITHIC CONC. ISLAND (KEYED IN)
R4	2'-0" CONCRETE CURB AND GUTTER
R5	RETAINING WALL
T	EARTH MATERIAL
U	EXISTING PAVEMENT
V1	MILLING BITUMINOUS PAVEMENT. DEPTH.
V2	MILLED RUMBLE STRIPS
W	VARIABLE DEPTH ASPHALT PAVEMENT (SEE WEDGING DETAILS ON SHEET 2A)

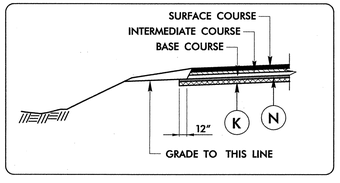

NOTES: AREAS TO BE INVESTIGATED WHICH MAY NEED GEOTEXTILE FOR PAVEMENT STABILIZATION

GENERAL NOTES:

1. PAVEMENT EDGE SLOPES ARE 1:1 UNLESS SHOWN OTHERWISE.
2. FOR RAISED MEDIAN AND LANE LOCATIONS, SEE PLANS.
3. SIDEWALK NOT REFLECTED IN TYPICAL SECTIONS (SEE PLANS FOR ADDITIONAL INFORMATION)

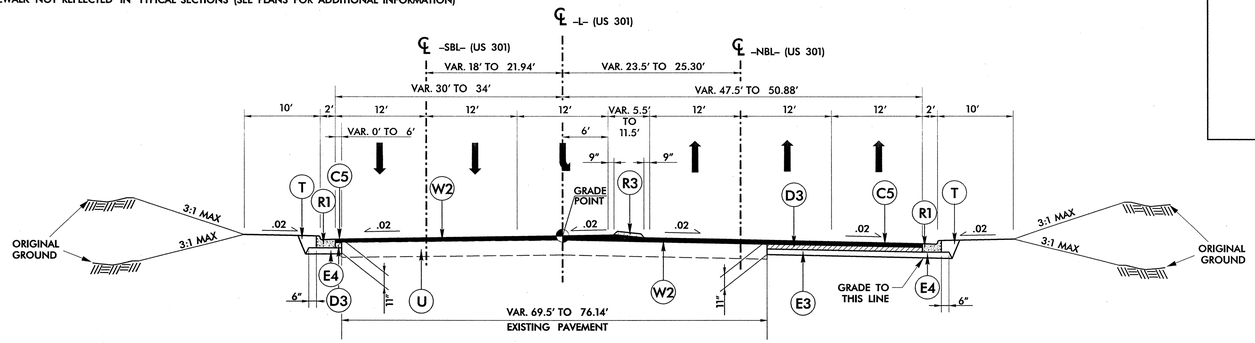

TYPICAL SECTION NO. 1

–L– STA. 11+80.00 TO STA. 16+36.78

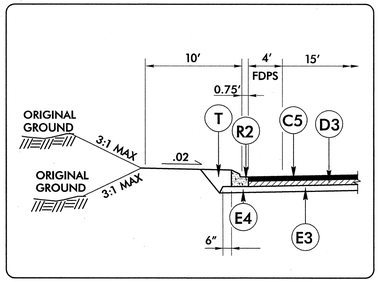

INSET 1

–L– STA. 17+35.33 TO STA. 19+57.93 LT. SIDE
–L– STA. 16+91.83 TO STA. 20+87.32 RT. SIDE
–L– STA. 24+10.66 TO STA. 27+90.57 LT. SIDE
–L– STA. 25+29.22 TO STA. 27+73.52 RT. SIDE

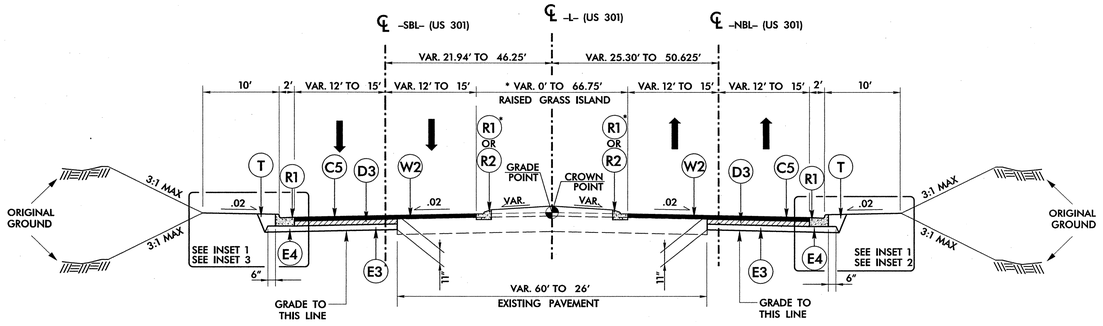

TYPICAL SECTION NO. 2

–L– STA. 16+36.78 TO STA. 21+29.70 (BEGIN BRIDGE)
–L– STA. 23+45.20 (END BRIDGE) TO STA. 28+55.10

* 2'-6" CURB AND GUTTER STA. 19+00 TO STA. 21+29.70 (BEGIN BRIDGE), AND STA. 23+45.20 (END BRIDGE) TO STA. 26+00. SEE PLANS FOR ADDITIONAL INFORMATION.

NOTES: THRU LANES CROSS AND EXCHANGE SIDES OF THE CENTERLINE –L– STA. 19+00 TO STA. 26+00. SEE PLANS FOR ADDITIONAL INFORMATION.

BRIDGE STATIONS ABOVE ARE APPROXIMATE. SEE PLANS FOR EXACT BRIDGE STATIONING REFLECTANT OF –NBL– AND –SBL– ALIGNMENTS.

SEE GENERAL INSET THIS SHEET FOR AREAS POSSIBLY NEEDING GEOTEXTILE FOR PAVEMENT STABILIZATION AND STABILIZER AGGREGATE.

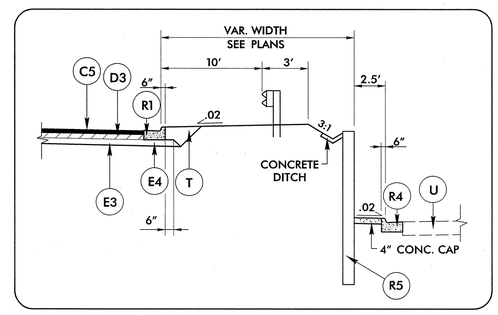

INSET 2

–L– STA. 28+38.00 TO STA. 29+70.00

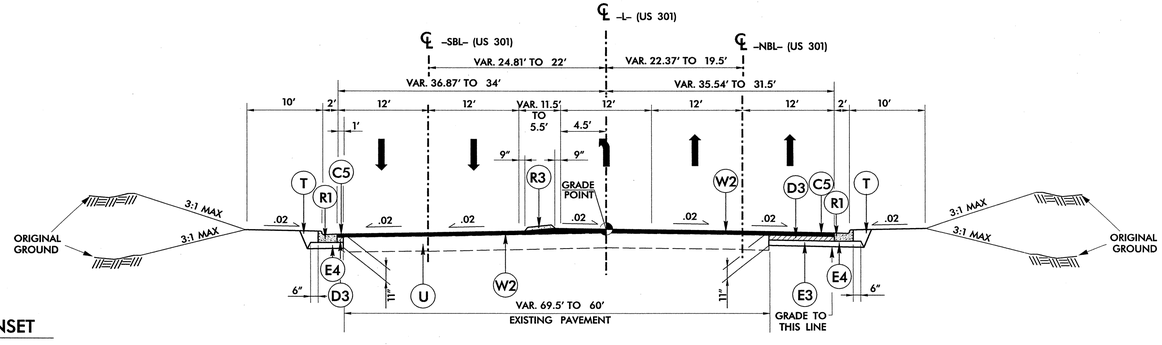

TYPICAL SECTION NO. 3

–L– STA. 28+55.10 TO STA. 33+98.00

GENERAL INSET

–L– STA. 19+50.00 TO 25+50.00
–RAMPA– STA. 18+50.00 TO STA. 21+71.00
–SPURA– STA. 11+50.00 TO STA. 16+00.00
–RAMPB– STA. 19+00.00 TO STA. 21+64.00
–RAMPC– STA. 19+50.00 TO STA. 22+22.00
–SPURC– STA. 12+00.00 TO STA. 14+00.00
–RAMPD– STA. 19+00.00 TO STA. 22+69.00

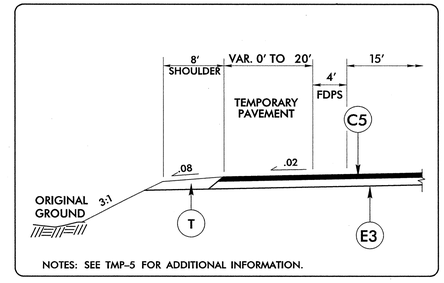

NOTES: SEE TMP-5 FOR ADDITIONAL INFORMATION.

INSET 3

–L– STA. 18+50.00 TO STA. 19+55.00 LT. SIDE
–L– STA. 25+50.00 TO STA. 26+55.00 LT. SIDE

Stantec
Stantec Consulting Services Inc.
801 Jones Franklin Road
Suite 300
Raleigh, NC 27606
Tel. (919) 851-6866
Fax. (919) 851-7024
www.stantec.com
License No. F-0672

PROJECT REFERENCE NO.	SHEET NO.
I-4413	2

ROADWAY DESIGN ENGINEER
NORTH CAROLINA PROFESSIONAL SEAL 15756 ENGINEER SCOTT BOYLES
4/30/12

PAVEMENT DESIGN ENGINEER
NORTH CAROLINA PROFESSIONAL SEAL 031484 ENGINEER VLADIMIR G. MITCHEV
5/01/12

4/30/2012
U:\Roadway\Proj\14413_rdy_typ.dgn
rsadri

PAVEMENT SCHEDULE

C1	1.5" TYPE S9.5B
C2	3.0" TYPE S9.5B
C3	VAR. DEPTH TYPE S9.5B
C4	1.5" TYPE S9.5C
C5	3.0" TYPE S9.5C
C6	VAR. DEPTH TYPE S9.5C
D1	4.0" TYPE I19.0B
D2	VAR. DEPTH TYPE I19.0B
D3	4.0" TYPE I19.0C
D4	VAR. DEPTH TYPE I19.0C
E1	4.0" TYPE B25.0B
E2	VAR. DEPTH TYPE B25.0B
E3	4.0" TYPE B25.0C
E4	VAR. DEPTH TYPE B25.0C
J1	PROP. 8" ABC
J2	PROP. VAR. DEPTH ABC
K	STABILIZER AGGREGATE
N	GEOTEXTILE FOR PAVEMENT STABILIZATION
R1	2'-6" CONCRETE CURB AND GUTTER
R2	1'-6" CONCRETE CURB AND GUTTER
R3	PROP. 5" MONOLITHIC CONC. ISLAND (KEYED IN)
R4	2'-0" CONCRETE CURB AND GUTTER
R5	RETAINING WALL
T	EARTH MATERIAL
U	EXISTING PAVEMENT
V1	MILLING BITUMINOUS PAVEMENT
V2	MILLED RUMBLE STRIPS
W	VAR. DEPTH ASPHALT PAVEMENT (SEE DETAILS THIS SHEET)

GENERAL NOTES:

1. PAVEMENT EDGE SLOPES ARE 1:1 UNLESS SHOWN OTHERWISE.
2. FOR RAISED MEDIAN AND LANE LOCATIONS, SEE PLANS.
3. FOR WEDGING DETAIL, SEE SHEET 2

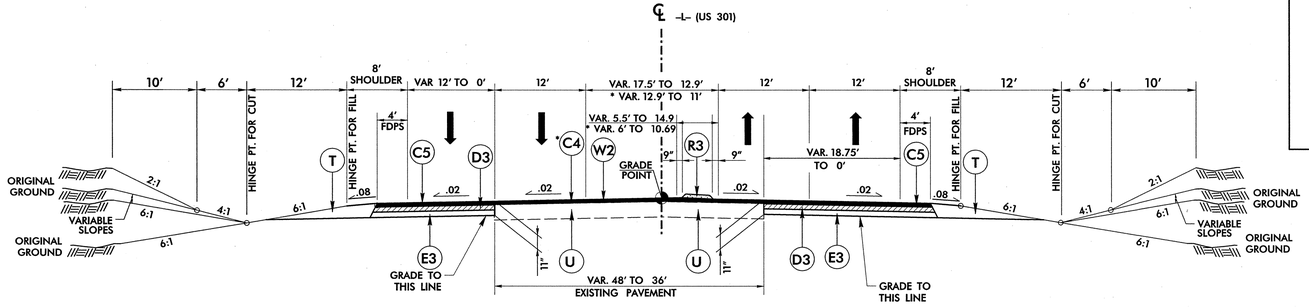

TYPICAL SECTION NO. 4

–L– STA. 33+98.00 TO STA. 40+86.36

* –L– STA. 40+86.36 TO STA. 42+75.00 (OVERLAY ONLY)

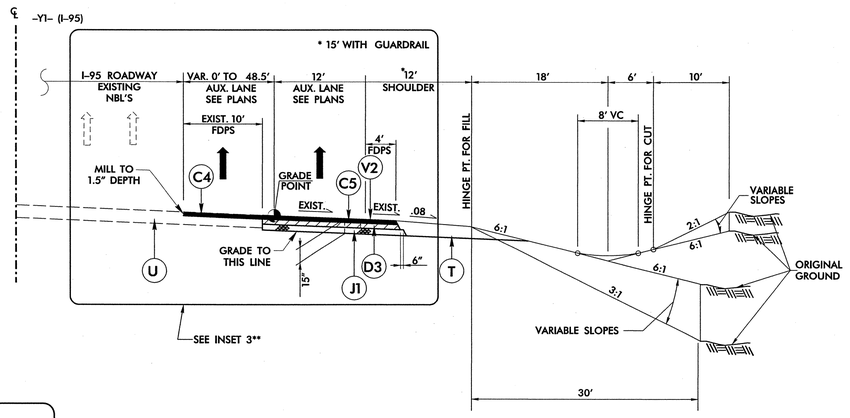

TYPICAL SECTION NO. 5

** –Y1– STA. 30+15.00 TO STA. 35+26.89

–Y1– STA. 35+26.89 TO STA. 36+09.86

** –Y1– STA. 51+05.05 TO STA. 55+05.89

–Y1– STA. 55+05.89 TO STA. 77+45.39

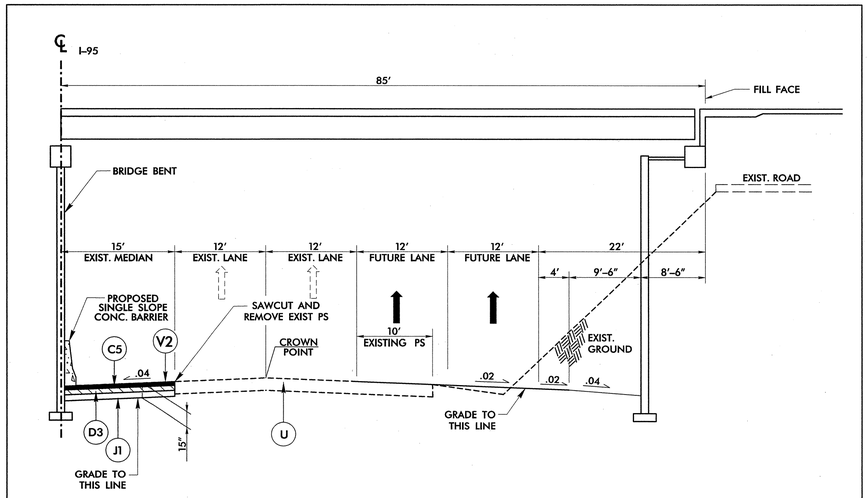

DETAIL OF –Y1– UNDER BRIDGE

–Y1– STA. 42+15.00 TO STA. 44+80.00

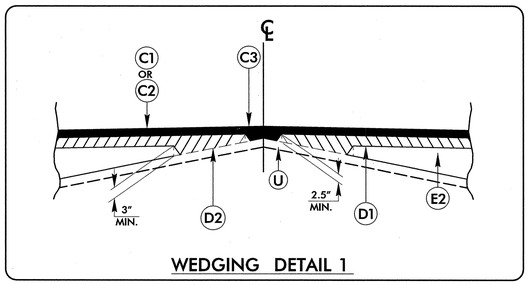

WEDGING DETAIL 1

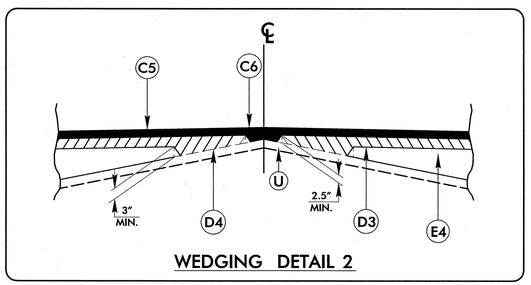

WEDGING DETAIL 2

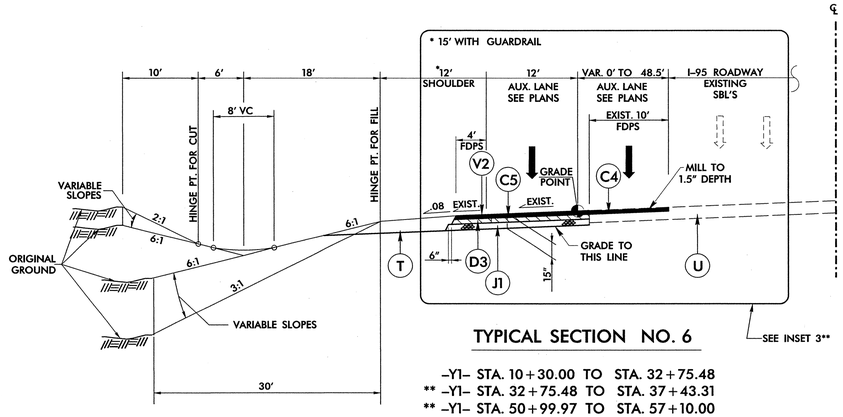

TYPICAL SECTION NO. 6

–Y1– STA. 10+30.00 TO STA. 32+75.48

** –Y1– STA. 32+75.48 TO STA. 37+43.31

** –Y1– STA. 50+99.97 TO STA. 57+10.00

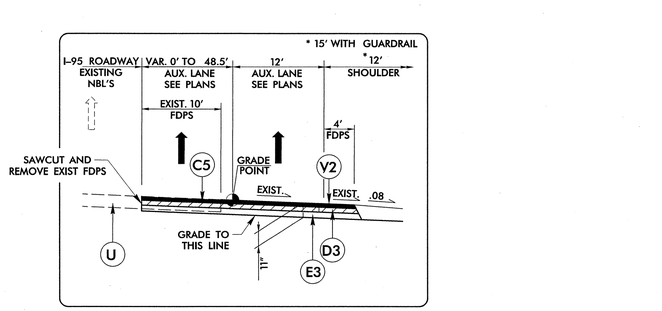

INSET 3

–Y1– STA. 30+15.00	TO STA. 35+26.89	RT. SIDE
–Y1– STA. 51+05.05	TO STA. 55+05.89	RT. SIDE
–Y1– STA. 32+75.48	TO STA. 37+43.31	LT. SIDE (MIRROR IMAGE)
–Y1– STA. 50+99.97	TO STA. 57+10.00	LT. SIDE (MIRROR IMAGE)

Stantec
Stantec Consulting Services Inc.
801 Jones Franklin Road
Suite 300
Raleigh, NC 27606
Tel. (919) 851-6866
Fax. (919) 851-7024
www.stantec.com
License No. F-0672

PROJECT REFERENCE NO.	SHEET NO.
I-4413	2A

ROADWAY DESIGN ENGINEER

NORTH CAROLINA PROFESSIONAL SEAL 15755 ENGINEER G. SCOTT BOYLES
4/18/12

PAVEMENT DESIGN ENGINEER

NORTH CAROLINA PROFESSIONAL SEAL 031484 ENGINEER VLADIMIR G. MITCHEV
04/16/12

4/23/2012
C:\Users\jgaddy\Documents\Microstation_Mobile_Files\Shared_Projects\Project_Number\transportation\design\Roadway\Proj\I4413_rdy_typ.dgn
jgaddy

PAVEMENT SCHEDULE

C1	1.5" TYPE S9.5B
C2	3.0" TYPE S9.5B
C3	VAR. DEPTH TYPE S9.5B
C4	1.5" TYPE S9.5C
C5	3.0" TYPE S9.5C
C6	VAR. DEPTH TYPE S9.5C
D1	4.0" TYPE I19.0B
D2	VAR. DEPTH TYPE I19.0B
D3	4.0" TYPE I19.0C
D4	VAR. DEPTH TYPE I19.0C
E1	4.0" TYPE B25.0B
E2	VAR. DEPTH TYPE B25.0B
E3	4.0" TYPE B25.0C
E4	VAR. DEPTH TYPE B25.0C
J1	PROP. 8" ABC
J2	PROP. VAR. DEPTH ABC
K	STABILIZER AGGREGATE
N	GEOTEXTILE FOR PAVEMENT STABILIZATION
R1	2'-6" CONCRETE CURB AND GUTTER
R2	1'-6" CONCRETE CURB AND GUTTER
R3	PROP. 5" MONOLITHIC CONC. ISLAND (KEYED IN)
R4	2'-0" CONCRETE CURB AND GUTTER
R5	RETAINING WALL
T	EARTH MATERIAL
U	EXISTING PAVEMENT
V1	MILLING BITUMINOUS PAVEMENT
V2	MILLED RUMBLE STRIPS
W	VAR. DEPTH ASPHALT PAVEMENT (SEE SHEET 2A FOR DETAILS)

GENERAL NOTES:

1. PAVEMENT EDGE SLOPES ARE 1:1 UNLESS SHOWN OTHERWISE.
2. FOR RAISED MEDIAN AND LANE LOCATIONS, SEE PLANS.
3. FOR WEDGING DETAIL, SEE SHEET 2

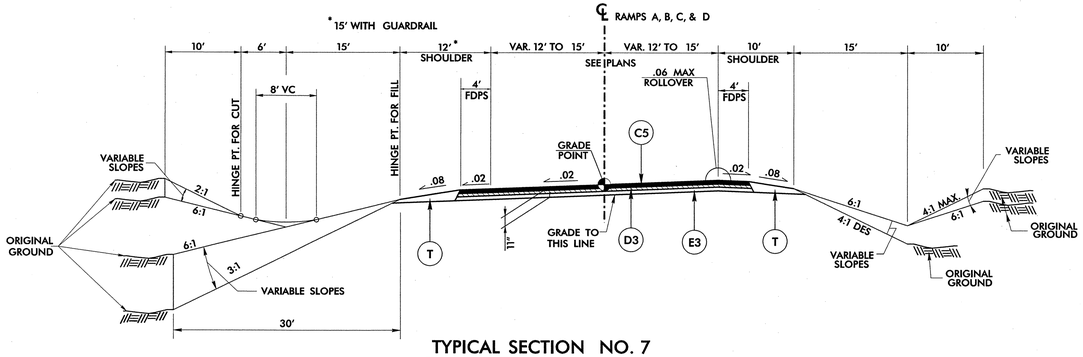

TYPICAL SECTION NO. 7

RAMP–A STA. 13+70.35 TO STA. 20+39.86
RAMP–B STA. 17+80.00 TO STA. 19+71.84
RAMP–C STA. 13+80.07 TO STA. 21+00.80
RAMP–D STA. 18+84.42 TO STA. 19+77.42

NOTE: SEE GENERAL INSET SHEET 2 FOR AREAS POSSIBLY NEEDING GEOTEXTILE FOR PAVEMENT STABILIZATION AND STABILIZER AGGREGATE.

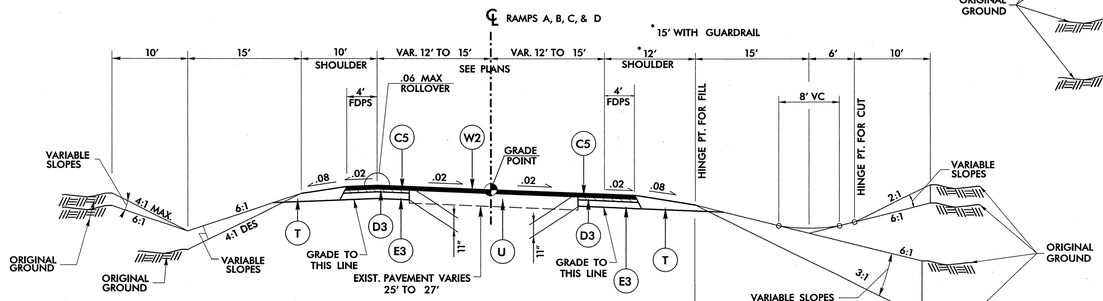

TYPICAL SECTION NO. 8

RAMP–B STA. 15+11.59 TO STA. 17+80.00
RAMP–D STA. 15+16.31 TO STA. 18+84.42

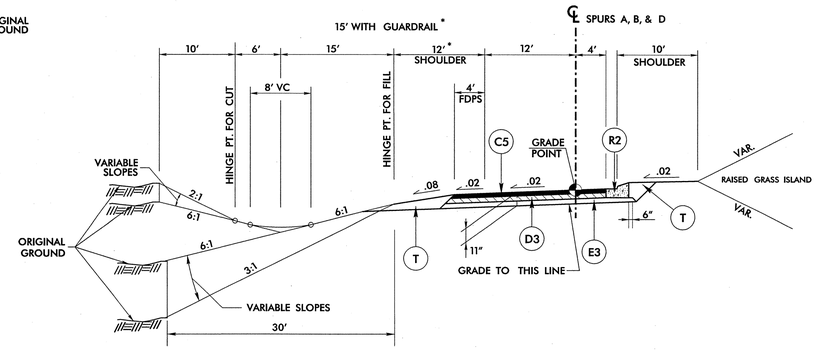

TYPICAL SECTION NO. 10

SPUR–A STA. 10+68.73 TO STA. 14+88.23
SPUR–B STA. 11+07.14 TO STA. 12+45.00 (MIRROR IMAGE)
SPUR–C STA. 10+65.73 TO STA. 12+47.65
SPUR–D STA. 10+95.93 TO STA. 12+40.00 (MIRROR IMAGE)

NOTE: SEE GENERAL INSET SHEET 2 FOR AREAS POSSIBLY NEEDING GEOTEXTILE FOR PAVEMENT STABILIZATION AND STABILIZER AGGREGATE.

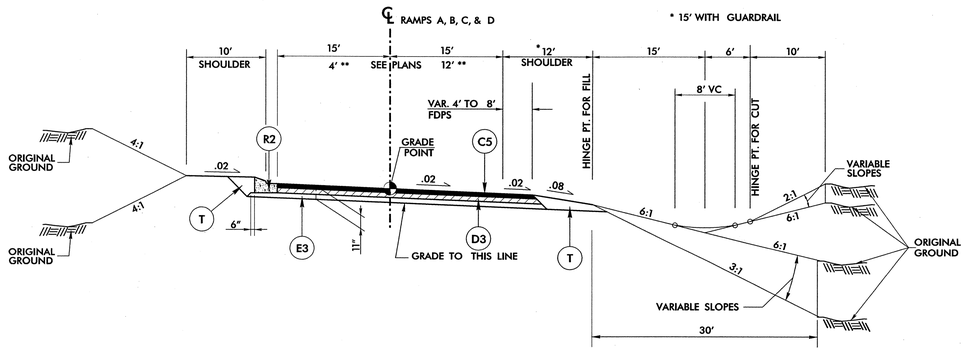

TYPICAL SECTION NO. 9

** RAMP–A STA. 20+39.86 TO STA. 22+26.74
RAMP–B STA. 19+71.84 TO STA. 21+42.70 (MIRROR IMAGE)
** RAMP–C STA. 21+00.80 TO STA. 22+92.81
RAMP–D STA. 19+77.42 TO STA. 21+59.90 (MIRROR IMAGE)

NOTE: SEE GENERAL INSET SHEET 2 FOR AREAS POSSIBLY NEEDING GEOTEXTILE FOR PAVEMENT STABILIZATION AND STABILIZER AGGREGATE.

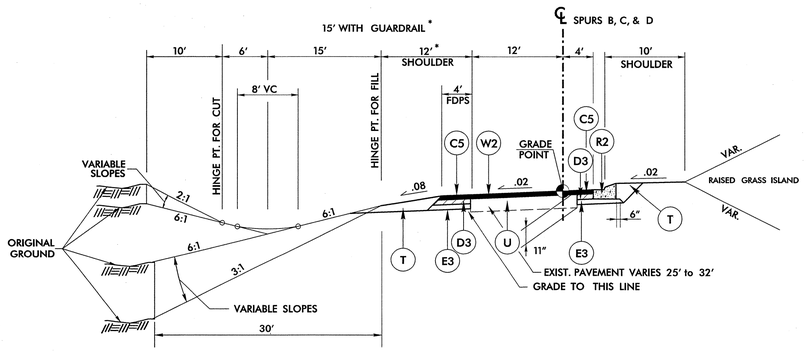

TYPICAL SECTION NO. 11

SPUR–C STA. 12+47.65 TO STA. 14+79.69

NOTE: SEE GENERAL INSET SHEET 2 FOR AREAS POSSIBLY NEEDING GEOTEXTILE FOR PAVEMENT STABILIZATION AND STABILIZER AGGREGATE.

Stantec
Stantec Consulting Services Inc.
801 Jones Franklin Road
Suite 300
Raleigh, NC 27606
Tel. (919) 851-6866
Fax. (919) 851-7024
www.stantec.com
License No. F-0672

PROJECT REFERENCE NO.	SHEET NO.
I-4413	2B

ROADWAY DESIGN ENGINEER
NORTH CAROLINA PROFESSIONAL SEAL 15755 ENGINEER G. SCOTT BOYLES
4/23/12

PAVEMENT DESIGN ENGINEER
NORTH CAROLINA PROFESSIONAL SEAL 031484 ENGINEER VLADIMIR G. MITCHEV
04/16/12

4/23/2012
C:\Users\ggaddy\Documents\Microstation_Mobile_Files\Shared_Projects\Project_Number\transportation\design\Roadway\Proj\14413_rdy_typ.dgn
ggaddy

PAVEMENT SCHEDULE

C1	1.5" TYPE S9.5B
C2	3.0" TYPE S9.5B
C3	VAR. DEPTH TYPE S9.5B
C4	1.5" TYPE S9.5C
C5	3.0" TYPE S9.5C
C6	VAR. DEPTH TYPE S9.5C
D1	4.0" TYPE I19.0B
D2	VAR. DEPTH TYPE I19.0B
D3	4.0" TYPE I19.0C
D4	VAR. DEPTH TYPE I19.0C
E1	4.0" TYPE B25.0B
E2	VAR. DEPTH TYPE B25.0B
E3	4.0" TYPE B25.0C
E4	VAR. DEPTH TYPE B25.0C
J1	PROP. 8" ABC
J2	PROP. VAR. DEPTH ABC
K	STABILIZER AGGREGATE
N	GEOTEXTILE FOR PAVEMENT STABILIZATION
R1	2'-6" CONCRETE CURB AND GUTTER
R2	1'-6" CONCRETE CURB AND GUTTER
R3	PROP. 5" MONOLITHIC CONC. ISLAND (KEYED IN)
R4	2'-0" CONCRETE CURB AND GUTTER
R5	RETAINING WALL
T	EARTH MATERIAL
U	EXISTING PAVEMENT
V1	MILLING BITUMINOUS PAVEMENT
V2	MILLED RUMBLE STRIPS
W	VAR. DEPTH ASPHALT PAVEMENT (SEE SHEET 2A FOR DETAILS)

GENERAL NOTES;

1. PAVEMENT EDGE SLOPES ARE 1:1 UNLESS SHOWN OTHERWISE.
2. FOR RAISED MEDIAN AND LANE LOCATIONS, SEE PLANS.
3. FOR WEDGING DETAIL, SEE SHEET 2

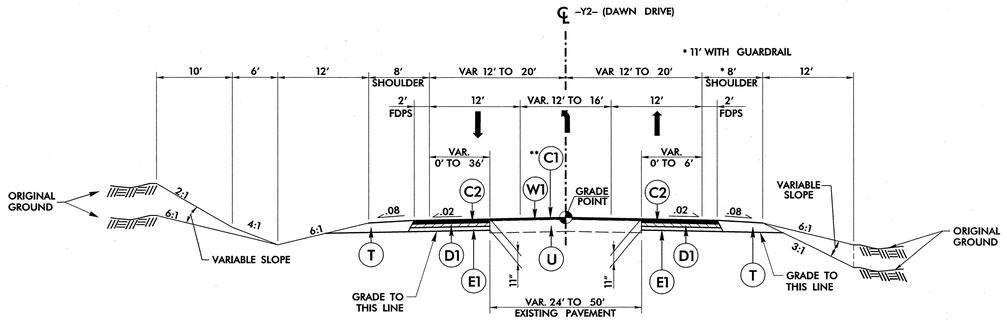

TYPICAL SECTION NO. 12

** –Y2– STA. 7+75.00 TO STA. 12+00.00 (OVERLAY ONLY)
–Y2– STA. 12+00.00 TO STA. 14+75.00
–Y2– STA. 17+25.00 TO STA. 20+00.00
** –Y2– STA. 20+00.00 TO STA. 30+40.00 (OVERLAY ONLY)

SEE PLANS FOR ADDITIONAL INFORMATION

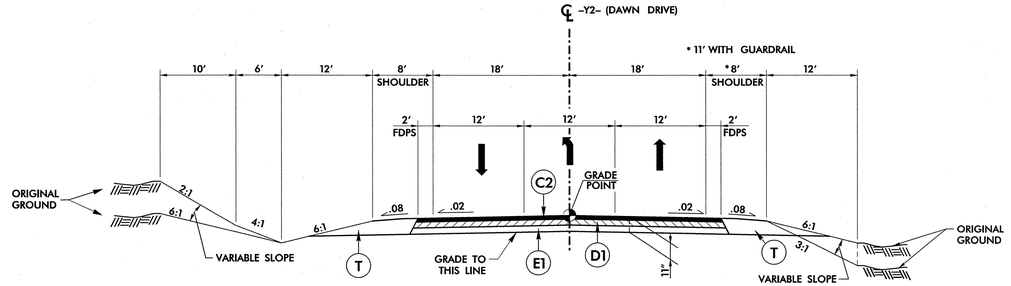

TYPICAL SECTION NO. 13

–Y2– STA. 14+75.00 TO 17+25.00

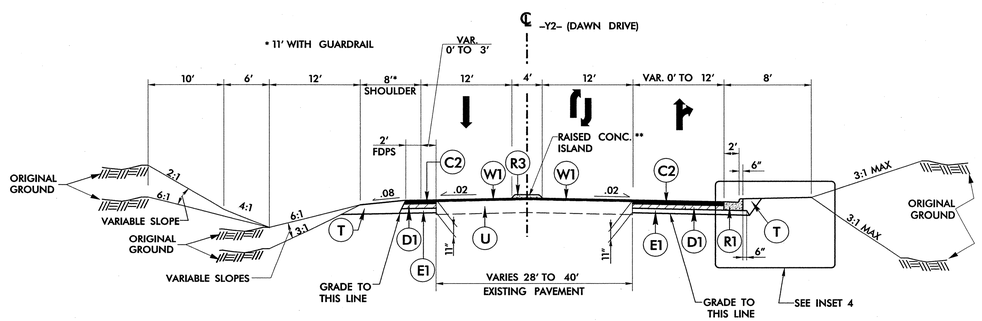

TYPICAL SECTION NO. 14

–Y2– STA. 30+40.00 TO STA. 33+76.77
** –Y2– STA. 30+90.10 TO STA. 33+78.00 (RAISED CONC. ISLAND)

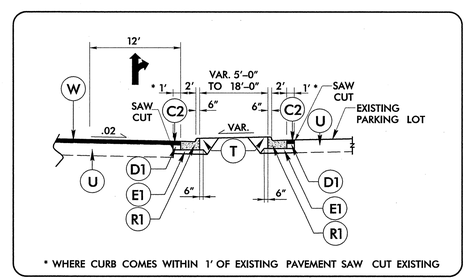

* WHERE CURB COMES WITHIN 1' OF EXISTING PAVEMENT SAW CUT EXISTING

INSET 4

–Y2– STA. 30+34.50 TO STA. 33+88.57

Stantec
Stantec Consulting Services Inc.
801 Jones Franklin Road
Suite 300
Raleigh, NC 27606
Tel. (919) 851-6866
Fax. (919) 851-7024
www.stantec.com
License No. F-0672

PROJECT REFERENCE NO.	SHEET NO.
I-4413	2C

ROADWAY DESIGN ENGINEER
NORTH CAROLINA PROFESSIONAL SEAL 15755 ENGINEER GARRETT BOYLES
4/23/12

PAVEMENT DESIGN ENGINEER
NORTH CAROLINA PROFESSIONAL SEAL 031484 ENGINEER VLADIMIR G. MITCHEV
04/25/12

4/23/2012
C:\Users\jgaddy\Documents\Microstation_Mobile_Files\Shared_Projects\Project_Number\transportation\design\Roadway\Proj\14413_rdy_typ.dgn
jgaddy

PROJECT REFERENCE NO.	SHEET NO.
I-4413	2D
R/W SHEET NO.	

ROADWAY DESIGN ENGINEER

NORTH CAROLINA PROFESSIONAL SEAL 15755 ENGINEER

4/23/12

SHEAR POINT LAYOUT

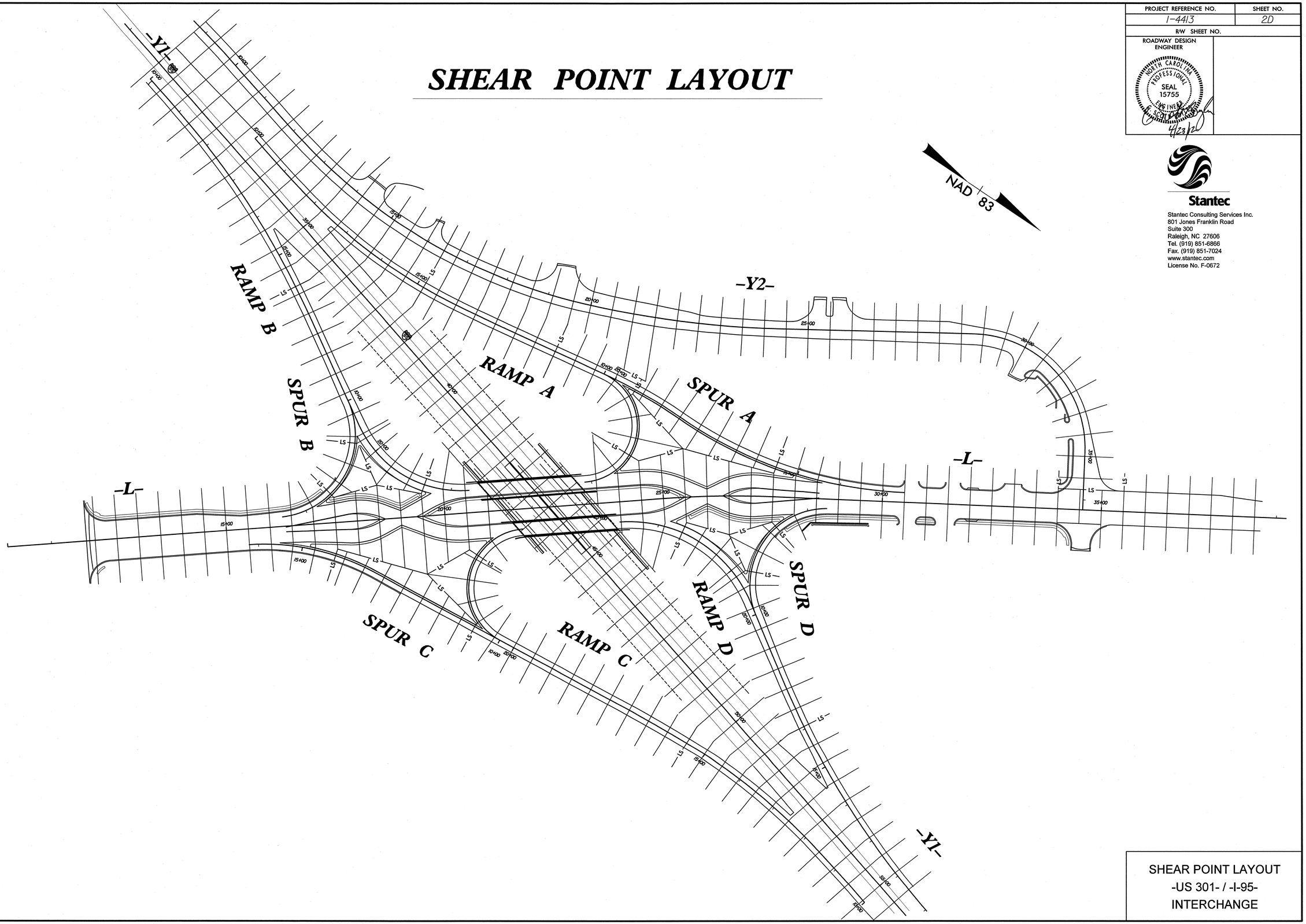

Stantec

Stantec Consulting Services Inc.
801 Jones Franklin Road
Suite 300
Raleigh, NC 27606
Tel. (919) 851-6866
Fax. (919) 851-7024
www.stantec.com
License No. F-0672

SHEAR POINT LAYOUT
-US 301- / -I-95-
INTERCHANGE

8/17/99

4/23/2012
U:\Roadway\Proj\i4413_rdy_psh 02D.dgn
jgaddy

8/17/99

CURVE DATA FOR SHEET 4

PROJECT REFERENCE NO.	SHEET NO.
I-4413	2E
RW SHEET NO.	

ROADWAY DESIGN ENGINEER

NORTH CAROLINA PROFESSIONAL SEAL 15755 ENGINEER G. WAYNE HOBBS 4/23/12

-L-
PI Sta 26+21.71
Δ = 6° 39' 32.2" (RT)
D = 2° 29' 28.0"
L = 267.31'
T = 133.80'
R = 2,300.00'
e = N/A
DS = 30 MPH

-Y1-
PINC Sta.43+50.00
Δ = 0° 01' 11.4" (LT)
NO CURVE

-Y2-
PI Sta 16+03.23
Δ = 35° 25' 35.2" (LT)
D = 4° 29' 37.6"
L = 788.34'
T = 407.23'
R = 1,275.00'
e = .04
DS = 50 MPH

-Y2-
PI Sta 22+09.68
Δ = 11° 41' 46.2" (LT)
D = 2° 36' 15.7"
L = 449.10'
T = 225.33'
R = 2,200.00'
e = .04
DS = 50 MPH

-Y2-
PI Sta 31+41.95
Δ = 90° 47' 12.2" (RT)
D = 22° 02' 12.6"
L = 411.98'
T = 263.59'
R = 260.00'
e = .04
DS = 30 MPH

-SBL-
PI Sta 11+52.44
Δ = 5° 25' 15.0" (LT)
D = 1° 46' 45.7"
L = 304.65'
T = 152.44'
R = 3,220.00'
e = N/A
DS = 30 MPH

-SBL-
PI Sta 13+45.43
Δ = 30° 25' 15.0" (RT)
D = 38° 11' 49.9"
L = 79.64'
T = 40.78'
R = 150.00'
e = N/A
DS = 30 MPH

-SBL-
PI Sta 15+38.43
Δ = 25° 00' 00.0" (LT)
D = 28° 38' 52.4"
L = 87.27'
T = 44.34'
R = 200.00'
e = N/A
DS = 30 MPH

-SBL-
PI Sta 20+31.77
Δ = 22° 12' 27.6" (LT)
D = 28° 38' 52.4"
L = 77.52'
T = 39.25'
R = 200.00'
e = N/A
DS = 30 MPH

-SBL-
PI Sta 22+32.93
Δ = 33° 38' 17.2" (RT)
D = 38° 11' 49.9"
L = 88.06'
T = 45.34'
R = 150.00'
e = N/A
DS = 30 MPH

-SBL-
PI Sta 24+09.81
Δ = 4° 46' 17.3" (LT)
D = 1° 46' 45.7"
L = 268.16'
T = 134.16'
R = 3,220.00'
e = N/A
DS = 30 MPH

-NBL-
PI Sta 11+26.69
Δ = 4° 30' 22.1" (RT)
D = 1° 46' 45.7"
L = 253.24'
T = 126.69'
R = 3,220.00'
e = N/A
DS = 30 MPH

-NBL-
PI Sta 12+92.74
Δ = 29° 30' 22.1" (LT)
D = 38° 11' 49.9"
L = 77.25'
T = 39.50'
R = 150.00'
e = N/A
DS = 30 MPH

-NBL-
PI Sta 14+97.28
Δ = 25° 00' 00.0" (RT)
D = 28° 38' 52.4"
L = 87.27'
T = 44.34'
R = 200.00'
e = N/A
DS = 30 MPH

-NBL-
PI Sta 19+86.03
Δ = 27° 47' 32.4" (RT)
D = 28° 38' 52.4"
L = 97.01'
T = 49.48'
R = 200.00'
e = N/A
DS = 30 MPH

-NBL-
PI Sta 21+80.31
Δ = 26° 07' 21.8" (LT)
D = 38° 11' 49.9"
L = 68.39'
T = 34.80'
R = 150.00'
e = N/A
DS = 30 MPH

-NBL-
PI Sta 23+54.19
Δ = 4° 59' 21.6" (RT)
D = 1° 46' 45.7"
L = 280.40'
T = 140.29'
R = 3,220.00'
e = N/A
DS = 30 MPH

RAMP-A
PIs Sta 11+66.76
Θs = 5° 58' 05.9"
Ls = 250.00'
LT = 166.76'
ST = 83.42'

RAMP-A
PI Sta 13+78.94
Δ = 12° 15' 56.6" (LT)
D = 4° 46' 28.7"
L = 256.89'
T = 128.94'
R = 1,200.00'
e = .08
DS = 60 MPH

RAMP-A
PIs Sta 15+90.31
Θs = 5° 58' 05.9"
Ls = 250.00'
LT = 166.76'
ST = 83.42'

RAMP-A
PI Sta 24+78.10
Δ = 151° 09' 12.8" (RT)
D = 44° 04' 25.2"
L = 342.96'
T = 505.47'
R = 130.00'
e = .04
DS = 20 MPH

SPUR-A
PI Sta 11+02.70
Δ = 10° 12' 24.4" (RT)
D = 4° 58' 56.1"
L = 204.86'
T = 102.70'
R = 1,150.00'
e = .03
DS = 30 MPH

SPUR-A
PI Sta 14+83.72
Δ = 32° 23' 39.4" (LT)
D = 5° 58' 05.9"
L = 542.77'
T = 278.85'
R = 960.00'
e = .03
DS = 25 MPH

RAMP-B
PIs Sta 11+33.35
Θs = 3° 08' 53.2"
Ls = 200.00'
LT = 133.35'
ST = 66.69'

RAMP-B
PI Sta 13+67.85
Δ = 10° 32' 19.2" (RT)
D = 3° 08' 53.2"
L = 334.76'
T = 167.85'
R = 1,820.00'
e = .07
DS = 60 MPH

RAMP-B
PIs Sta 16+01.45
Θs = 3° 08' 53.2"
Ls = 200.00'
LT = 133.35'
ST = 66.69'

RAMP-B
PI Sta 21+08.18
Δ = 69° 53' 01.3" (LT)
D = 22° 28' 08.2"
L = 311.02'
T = 178.17'
R = 255.00'
e = .03
DS = 25 MPH

SPUR-B
PI Sta 12+58.73
Δ = 107° 24' 55.5" (RT)
D = 30° 09' 20.4"
L = 356.20'
T = 258.73'
R = 190.00'
e = .035
DS = 20 MPH

RAMP-C
PIs Sta 11+66.74
Θs = 5° 06' 56.5"
Ls = 250.00'
LT = 166.74'
ST = 83.40'

RAMP-C
PI Sta 13+75.87
Δ = 10° 16' 31.4" (LT)
D = 4° 05' 33.2"
L = 251.07'
T = 125.87'
R = 1,400.00'
e = .08
DS = 60 MPH

RAMP-C
PIs Sta 15+84.47
Θs = 5° 06' 56.5"
Ls = 250.00'
LT = 166.74'
ST = 83.40'

RAMP-C
PI Sta 24+96.50
Δ = 141° 17' 58.9" (RT)
D = 42° 26' 28.7"
L = 347.07'
T = 460.17'
R = 135.00'
e = .04
DS = 20 MPH

SPUR-C
PI Sta 14+78.01
Δ = 32° 21' 06.4" (LT)
D = 10° 54' 48.5"
L = 296.44'
T = 152.29'
R = 525.00'
e = .03
DS = 25 MPH

RAMP-D
PIs Sta 11+33.35
Θs = 3° 00' 56.0"
Ls = 200.00'
LT = 133.35'
ST = 66.68'

RAMP-D
PI Sta 14+11.38
Δ = 12° 41' 46.5" (RT)
D = 3° 00' 56.0"
L = 421.02'
T = 211.38'
R = 1,900.00'
e = .07
DS = 60 MPH

RAMP-D
PIs Sta 16+87.71
Θs = 3° 00' 56.0"
Ls = 200.00'
LT = 133.35'
ST = 66.68'

RAMP-D
PI Sta 21+29.92
Δ = 71° 56' 04.0" (LT)
D = 19° 05' 54.9"
L = 376.65'
T = 217.70'
R = 300.00'
e = .03
DS = 25 MPH

SPUR-D
PI Sta 12+62.64
Δ = 112° 38' 56.4" (RT)
D = 32° 44' 25.6"
L = 344.07'
T = 262.64'
R = 175.00'
e = .035
DS = 30 MPH

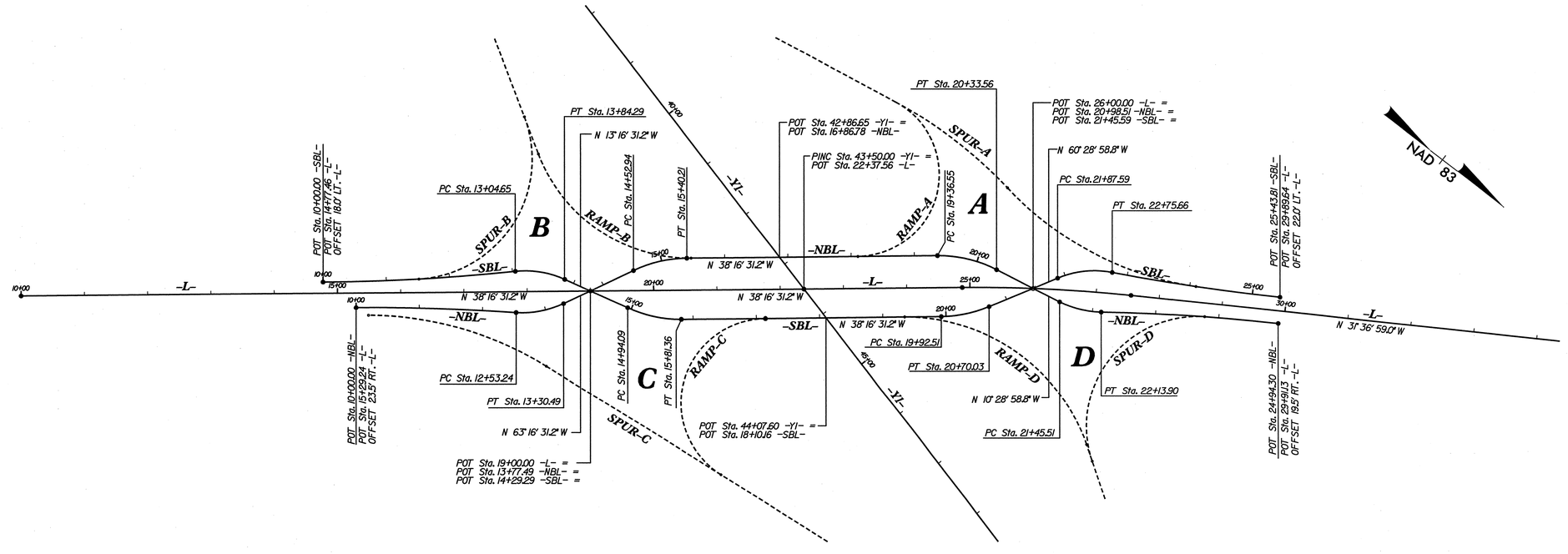

DIVERGING DIAMOND ALIGNMENT DETAIL

Stantec
Stantec Consulting Services Inc.
801 Jones Franklin Road
Suite 300
Raleigh, NC 27606
Tel. (919) 851-6866
Fax. (919) 851-7024
www.stantec.com
License No. F-0672

4/23/2012
I:\Highway\Proj\14413_rdy_Psh 02E.dgn
rpaddu

PROPOSED CONTOURS

PROJECT REFERENCE NO.	SHEET NO.
I-4413	2F
R/W SHEET NO.	
ROADWAY DESIGN ENGINEER	

NORTH CAROLINA PROFESSIONAL SEAL 15755 ENGINEER G. SCOTT BOYLES

4/23/12

Stantec

Stantec Consulting Services Inc.
801 Jones Franklin Road
Suite 300
Raleigh, NC 27606
Tel. (919) 851-6866
Fax. (919) 851-7024
www.stantec.com
License No. F-0672

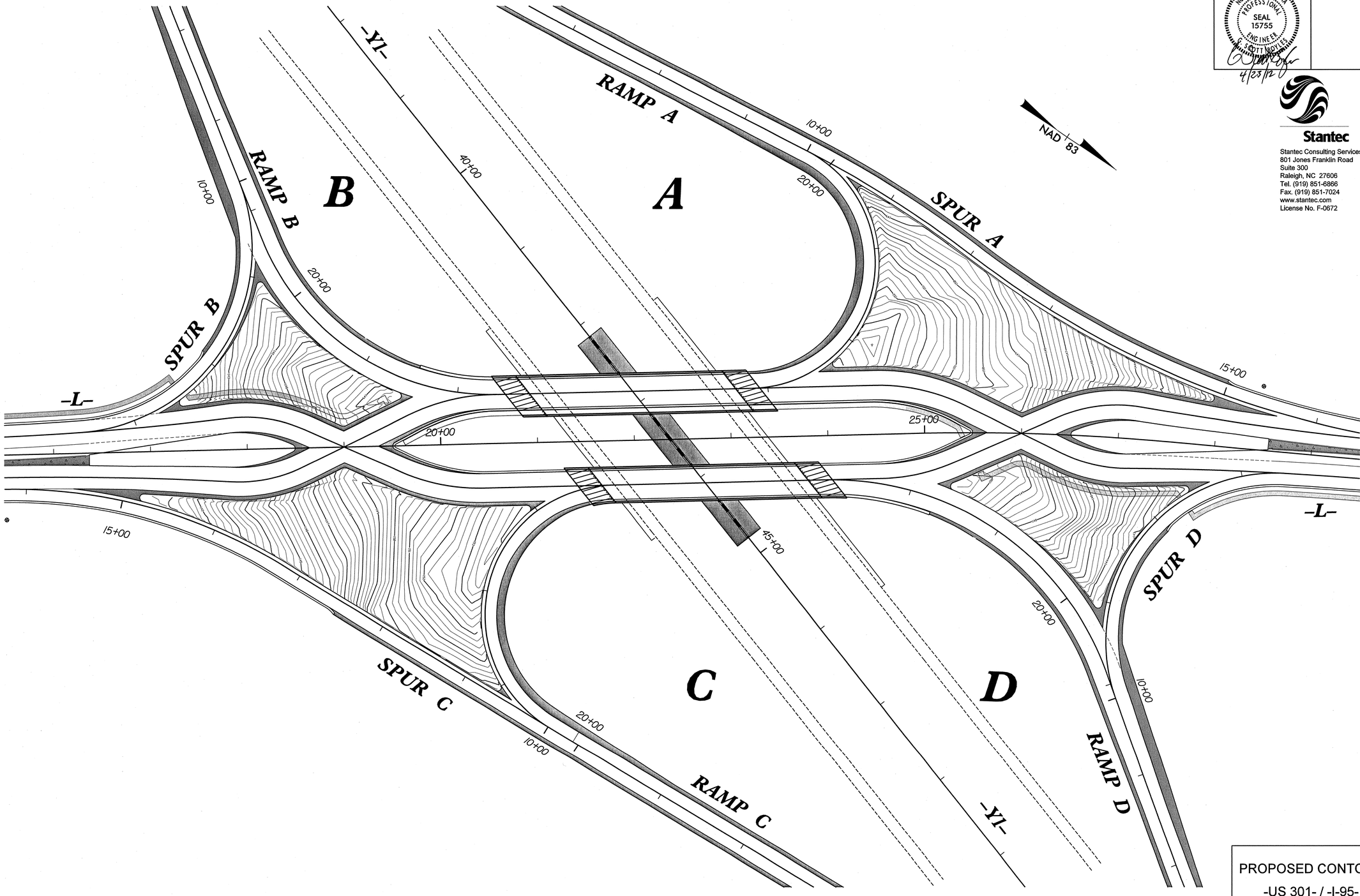

PROPOSED CONTOURS
-US 301- / -I-95-
INTERCHANGE

8/17/99
4/23/2012
U:\Roadway\Proj\i4413_rdy_psh 2f.dgn

PROJECT REFERENCE NO.	SHEET NO.
I-4413	2-G

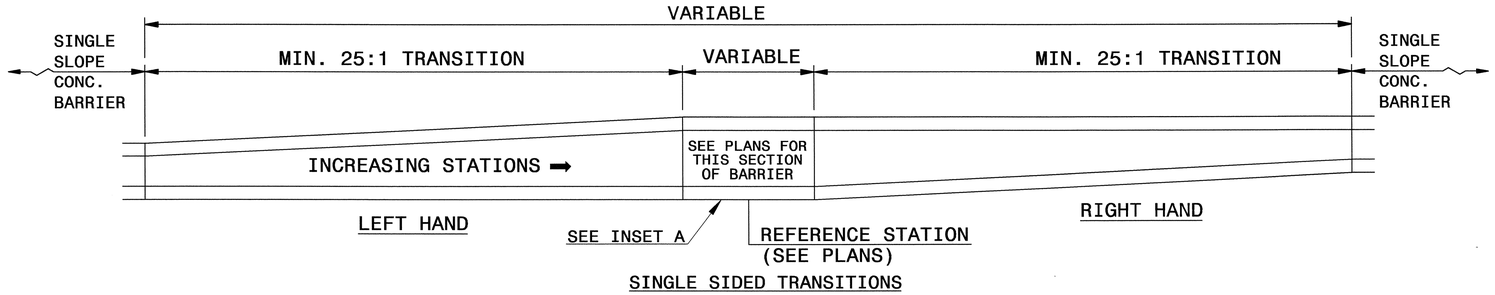

SINGLE SIDED TRANSITIONS

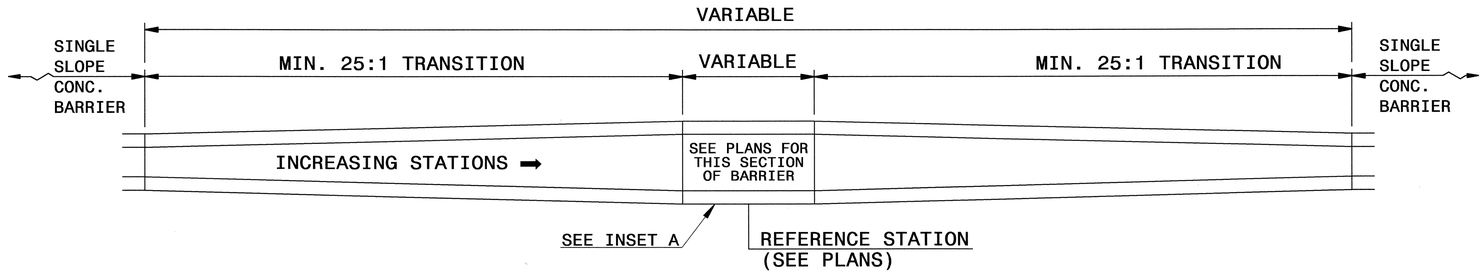

CENTER TRANSITION

GENERAL NOTES:

1. ALL CONCRETE SHALL BE CLASS AA. CHAMFER OR RADIUS EXTERIOR CORNERS ½"
2. ALL REINFORCING STEEL SHALL BE GRADE 60 UNLESS OTHERWISE SPECIFIED. SPLICE LENGTHS A MINIMUM OF 24 BAR DIAMETERS.
3. WELDED WIRE FABRIC, MEETING REQ.S OF A497, MAY BE USED IN LIEU OF REINFORCING STEEL
4. ROADWAY PLANS SHOW TRANSITION TYPE. PLACE SINGLE SLOPE BARRIER TRANSITION IN WIDTH (AND HEIGHT IF REQUIRED) TO MATCH THE PIER PROTECTION. USE 1" THICK EXPANSION JOINTS AT THE ENDS. GLARE SCREEN, IF REQUIRED, SHALL CONTINUE ALONG THE CENTER OF THE TRANSITION TO THE EXPANSION JOINT AT THE PIER PROTECTION UNLESS OTHERWISE DIRECTED.
5. CONSTRUCT BARRIER AND TRANSITIONS IN ACCORDANCE WITH SECTION 854 OF THE STANDARD SPECIFICATIONS.

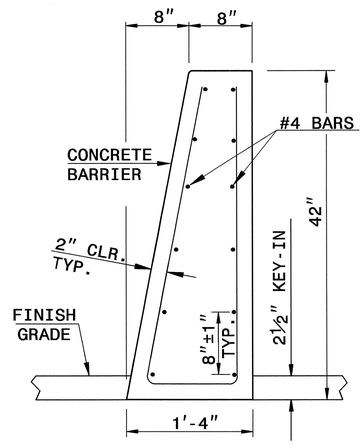

SECTION VIEW

TYPICAL BARRIER CONFIGURATION AT BRIDGE PIER

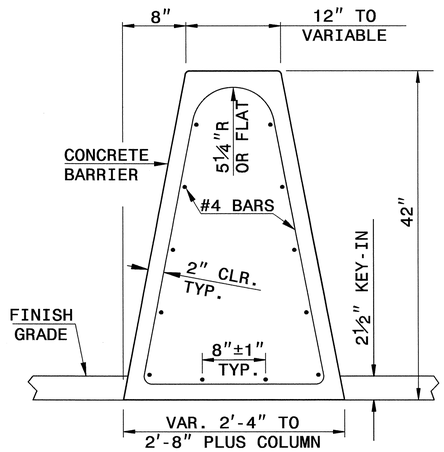

SECTION VIEW

TYPICAL BARRIER CONFIGURATION

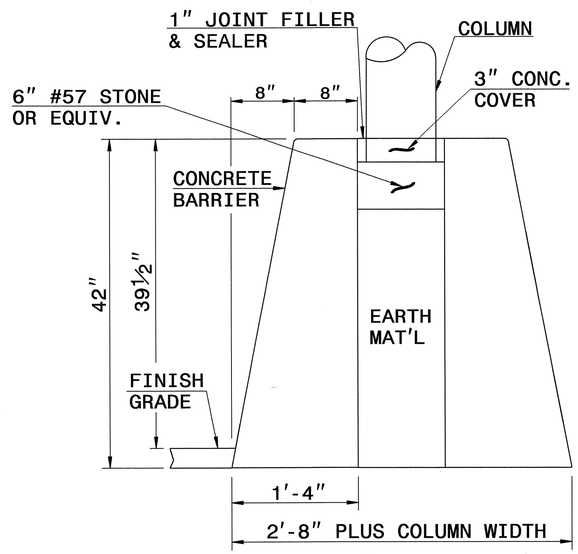

INSET A

NORTH CAROLINA PROFESSIONAL SEAL 022966 ENGINEER JOE HONEYCUTT 5/1/12

CONTRACT STANDARDS AND DEVELOPMENT UNIT
Office 919-707-6950 FAX 919-250-4119

SINGLE SLOPE CONCRETE BARRIER AND TRANSITIONS

ORIGINAL BY: L. Robinson DATE: Dec. 1996
MODIFIED BY: DATE:
CHECKED BY: DATE: 4/2/12
FILE SPEC.: 0937:\usr\details\stand\ssbar01.dgn

02-APR-2012 10:35
\\Ctcfpnw\Projects\Contracts\Special Details\ericward\usr\details\stand\ssbar01.dgn
$$$$USERNAME$$$$

PROJECT REFERENCE NO.	SHEET NO.
I-4413	2-H

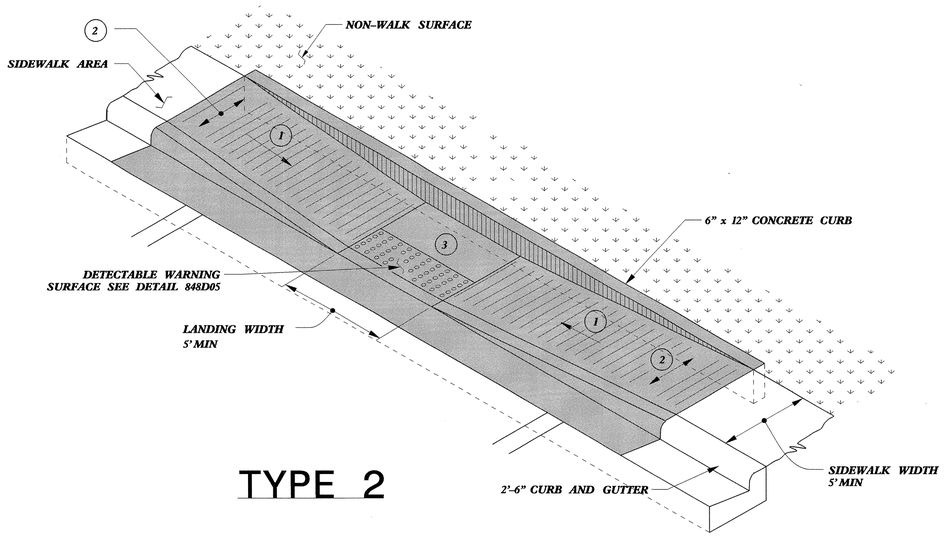

TYPE 2

PAY LIMITS FOR CURB RAMP

1. *8.33% (12:1) MAX RAMP SLOPE*
2. *CROSS SLOPE: 2.00%*
3. *CURB RAMPS REQUIRE A (4'–0") MINIMUM LANDING WITH A MAXIMUM CROSS SLOPE AND LONGITUDINAL SLOPE OF 2.00% WHERE PEDESTRIANS PERFORM TURNING MANEUVERS. SLOPE TO DRAIN TO CURB.*

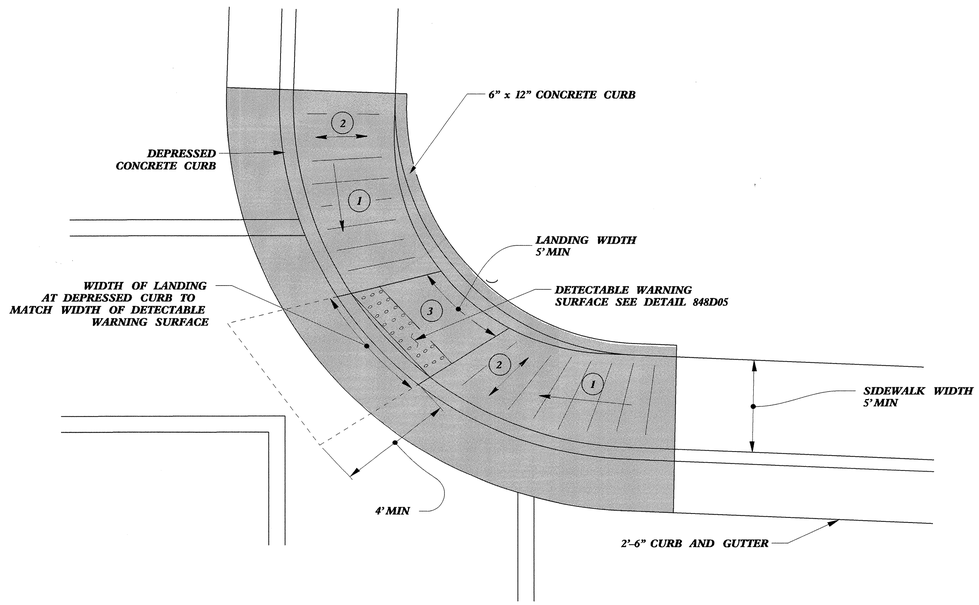

TYPE 2A

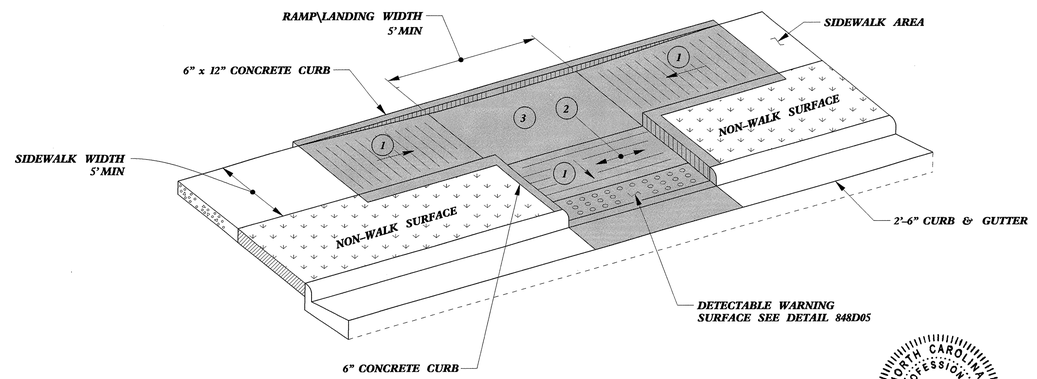

TYPE 3

NORTH CAROLINA PROFESSIONAL SEAL 022966 ENGINEER JOEL S. HOWERTON
5/1/12

REFER TO ROADWAY STANDARD DRAWING NUMBER 848.05 SHEET 3 OF 3 FOR ALL RAMP NOTES

CONTRACT STANDARDS AND DEVELOPMENT UNIT
Office 919-707-6950 FAX 919-250-4119

CURB RAMPS

Parallel Ramps

ORIGINAL BY: J.S. HOWERTON DATE: 7/7/11
MODIFIED BY: DATE:
CHECKED BY: DATE: 3/28/12
FILE SPEC.: stds/2012CurbRamp/CurbRampDetails.dgn

5/14/99

28-MAR-2012 08:57
S:\Contracts\Contracts\Special Details\jhowerton\Standard Drawings\2012 Standard Drawings\2012 Curb Ramp Special Details.dgn
jhowerton
AT CSD23750I

PROJECT REFERENCE NO.	SHEET NO.
I-4413	2-1

PAY LIMITS FOR CURB RAMP

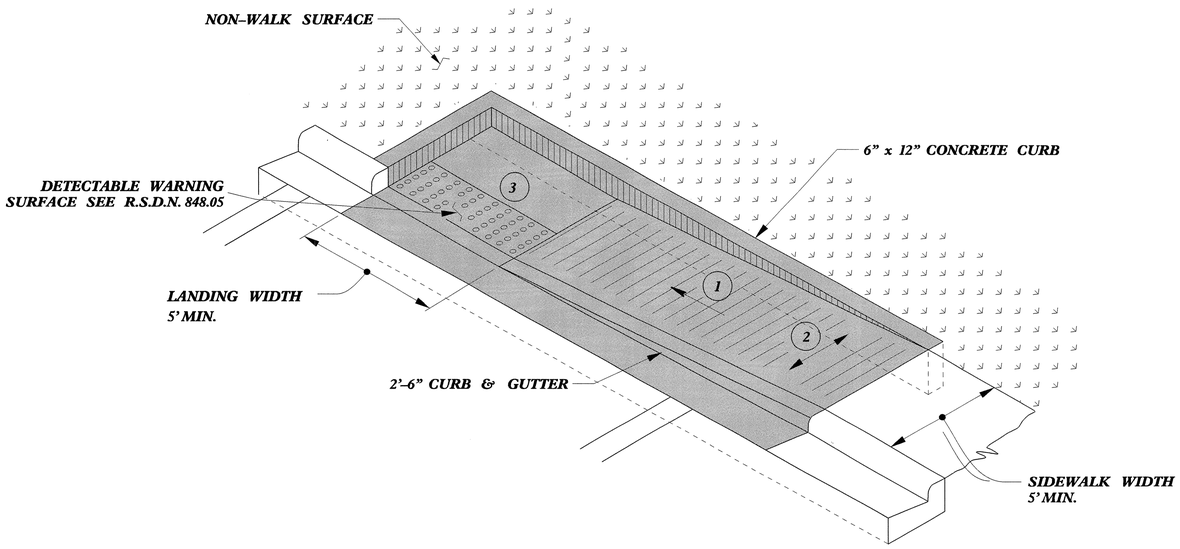

TYPE 1A

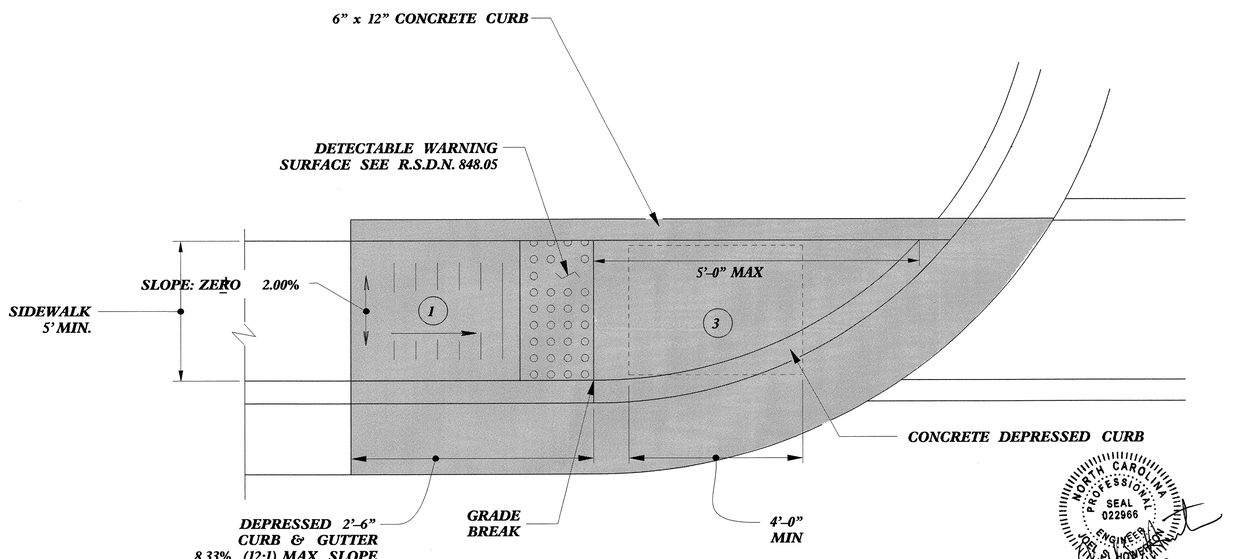

TYPE 1

(1) *8.33% (12:1) MAX RAMP SLOPE*

(2) *CROSS SLOPE: 2.00%*

(3) *CURB RAMPS REQUIRE A (4'-0") MINIMUM LANDING WITH A MAXIMUM CROSS SLOPE AND LONGITUDINAL SLOPE OF 2.00% WHERE PEDESTRIANS PERFORM TURNING MANEUVERS. SLOPE TO DRAIN TO CURB.*

REFER TO ROADWAY STANDARD DRAWING NUMBER 848.05 SHEET 3 OF 3 FOR ALL RAMP NOTES

NORTH CAROLINA PROFESSIONAL ENGINEER SEAL 022966 JOE S. HOWERTON WITNESS 5/11/12

CONTRACT STANDARDS AND DEVELOPMENT UNIT
Office 919-707-6950 FAX 919-250-4119

CURB RAMPS

Directional Ramps

ORIGINAL BY: J.S. HOWERTON DATE: 7/7/11
MODIFIED BY: DATE:
CHECKED BY: DATE: 3/28/12
FILE SPEC.: stds/2012CurbRamp/CurbRampDetails.dgn

5/14/99

28-MAR-2012 08:56
S:\Contracts\Special Details\jhowerton\Standard Drawings\2012 Standard Drawings\2012 Curb Ramp Special Details.dgn
jhowerton AT CSD237501

PROJECT REFERENCE NO.	SHEET
I-4413	2-J

GEOTECHNICAL ENGINEER

NORTH CAROLINA PROFESSIONAL SEAL 022246 ENGINEER SCOTT A. HIDDEN

Scott A. Hidden 11/18/11
SIGNATURE DATE

ENGINEER

SIGNATURE DATE

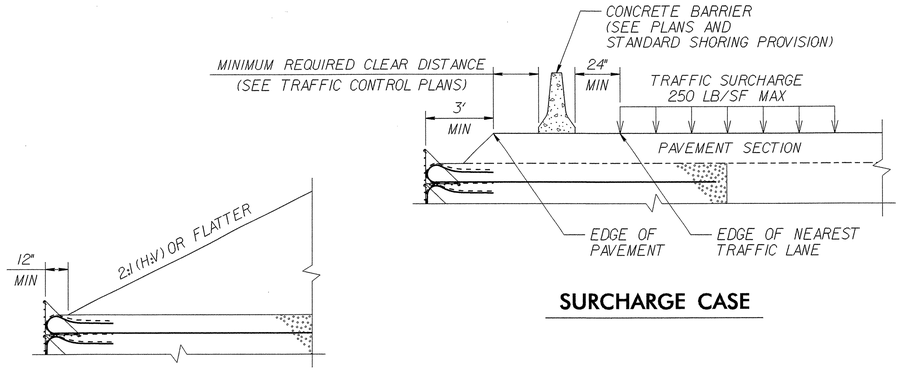

SURCHARGE CASE

SLOPE CASE

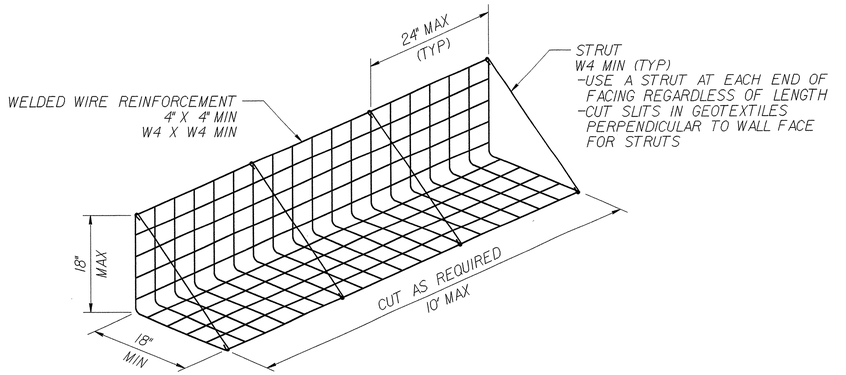

FACING DETAIL

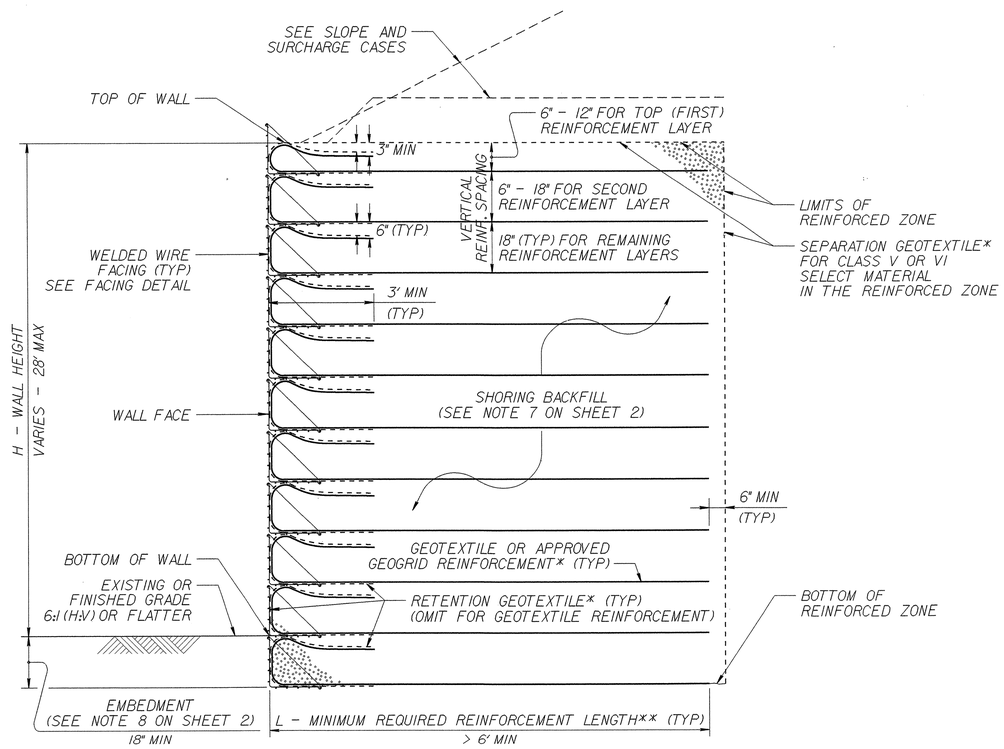

STANDARD TEMPORARY WALL

(FOR STANDARD TEMPORARY WALLS ON STRUCTURES, SEE TEMPORARY WALL ON STRUCTURE DETAIL ON SHEET 2.)
***SEE GEOSYNTHETIC PLACEMENT DETAILS ON SHEET 2.**
****SEE REINFORCEMENT TABLES ON SHEET 3.**

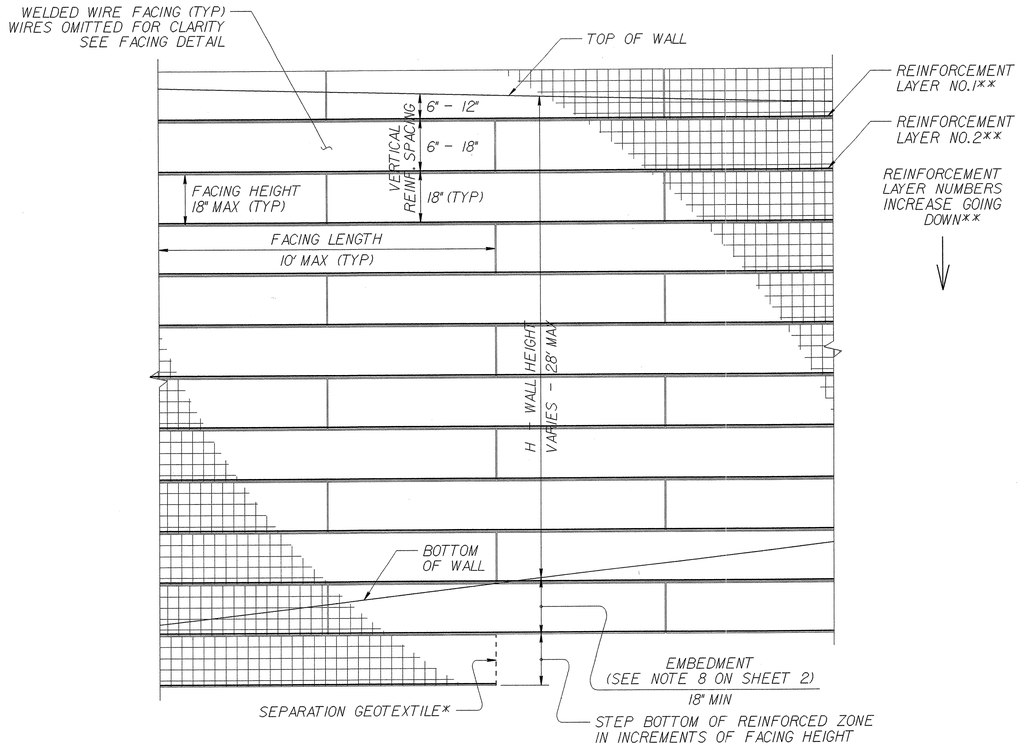

STANDARD TEMPORARY WALL – PARTIAL ELEVATION

***SEE GEOSYNTHETIC PLACEMENT DETAILS ON SHEET 2.**
****SEE REINFORCEMENT TABLES ON SHEET 3.**

STATE OF NORTH CAROLINA DEPARTMENT OF TRANSPORTATION

GEOTECHNICAL ENGINEERING UNIT

STATE OF NORTH CAROLINA
DEPARTMENT OF TRANSPORTATION
RALEIGH

STANDARD DRAWING NO. 1801.02

STANDARD
TEMPORARY WALL
Sheet 1 of 3

DATE: 1-17-12

PROJECT REFERENCE NO.	SHEET
I-4413	2-K

GEOTECHNICAL ENGINEER

NORTH CAROLINA PROFESSIONAL SEAL 022246 ENGINEER SCOTT A. HIDDEN

Scott A. Hidden 11/18/11
SIGNATURE DATE

ENGINEER

SIGNATURE DATE

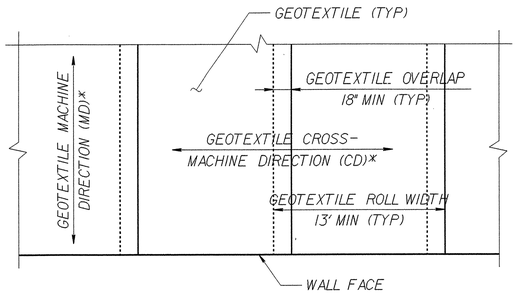

GEOTEXTILE PLACEMENT

(100% COVERAGE MIN FOR GEOTEXTILE REINFORCEMENT)

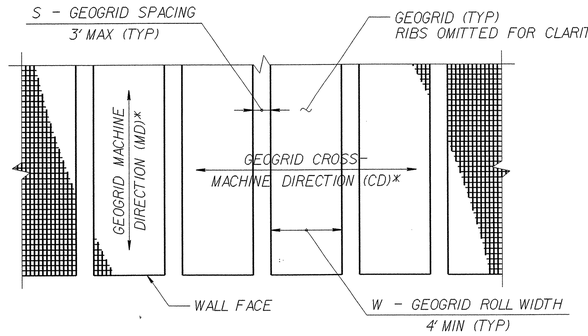

GEOGRID PLACEMENT

(80% COVERAGE MIN FOR GEOGRID REINFORCEMENT – $\frac{W}{W+S}$ x 100 $\geq$ 80%, SEE NOTE 11)

GEOSYNTHETIC PLACEMENT DETAILS

(PLAN VIEW)
***SEE NOTE 12.**

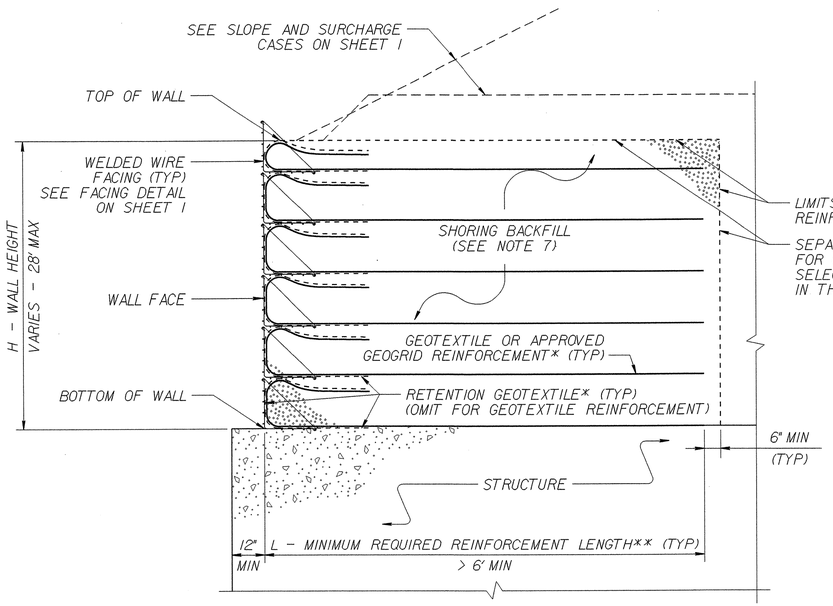

TEMPORARY WALL ON STRUCTURE DETAIL

***SEE GEOSYNTHETIC PLACEMENT DETAILS.**
****SEE REINFORCEMENT TABLES ON SHEET 3.**

NOTES:

1. AT THE CONTRACTOR'S OPTION, USE STANDARD TEMPORARY WALLS AS NOTED IN THE PLANS.
2. FOR STANDARD TEMPORARY WALLS, SEE STANDARD SHORING PROVISION.
3. STANDARD TEMPORARY WALLS ARE BASED ON THE FOLLOWING IN-SITU ASSUMED SOIL PARAMETERS:
   UNIT WEIGHT, γ = 120 LB/CF
   FRICTION ANGLE, ϕ = 30 DEGREES
   COHESION, c = 0 LB/SF
4. DO NOT USE STANDARD TEMPORARY WALLS IF ASSUMED SOIL PARAMETERS ARE NOT APPLICABLE.
5. DO NOT USE STANDARD TEMPORARY WALLS WHEN VERY LOOSE OR SOFT SOIL OR MUCK IS BELOW TEMPORARY WALLS.
6. USE GROUNDWATER ELEVATION NOTED IN THE PLANS. IF NO GROUNDWATER ELEVATION IS SHOWN IN THE PLANS, ASSUME GROUNDWATER DEPTH IS LESS THAN 7' BELOW BOTTOM OF REINFORCED ZONE. DO NOT USE STANDARD TEMPORARY WALLS IF GROUNDWATER IS ABOVE BOTTOM OF REINFORCED ZONE.
7. DO NOT USE A-2-4 SOIL FOR STANDARD TEMPORARY WALLS AROUND CULVERTS OR IN THE REINFORCED ZONE OF STANDARD TEMPORARY WALLS FOR SLOPE CASES. DO NOT USE CLASS VI SELECT MATERIAL IN THE REINFORCED ZONE OF STANDARD TEMPORARY WALLS WITH GEOTEXTILE REINFORCEMENT.
8. EMBEDMENT IS NOT REQUIRED FOR STANDARD TEMPORARY WALLS ON STRUCTURES OR ROCK AS DETERMINED BY THE ENGINEER.
9. DO NOT USE MORE THAN 4 DIFFERENT REINFORCEMENT STRENGTHS FOR EACH STANDARD TEMPORARY WALL.
10. GEOGRIDS ARE APPROVED FOR SHORT-TERM DESIGN STRENGTHS FOR A 3-YEAR DESIGN LIFE IN THE MACHINE DIRECTION (MD) AND CROSS-MACHINE DIRECTION (CD) BASED ON MATERIAL TYPE. FOR DETAILS OF APPROVED GEOGRIDS AND SHORT-TERM DESIGN STRENGTHS, SEE www.ncdot.org/doh/operations/materials/soils/gep.html
    DEFINE MATERIAL TYPE FROM THE WEBSITE ABOVE FOR SHORING BACKFILL AS FOLLOWS:

MATERIAL TYPE	SHORING BACKFILL
BORROW	A-2-4 SOIL
FINE AGGREGATE	CLASS II, TYPE I OR CLASS III SELECT MATERIAL
COARSE AGGREGATE	CLASS V OR VI SELECT MATERIAL

11. FOR GEOGRID REINFORCEMENT WITH LESS THAN 100% COVERAGE, STAGGER REINFORCEMENT SO GEOGRIDS ARE CENTERED OVER GAPS IN THE REINFORCEMENT LAYER BELOW.
12. AT THE CONTRACTOR'S OPTION, REINFORCEMENT MAY BE INSTALLED WITH THE MD PARALLEL TO THE WALL FACE IF BOTH THE FOLLOWING CONDITIONS OCCUR:
    - W (REINFORCEMENT ROLL WIDTH) $\geq$ L (MINIMUM REQUIRED REINFORCEMENT LENGTH) + 4.5' AND
    - REINFORCEMENT STRENGTH IN CD $\geq$ MINIMUM REQUIRED REINFORCEMENT STRENGTH IN MD.
13. SUBMIT A "STANDARD TEMPORARY WALL SELECTION FORM" AT LEAST 7 DAYS BEFORE STARTING TEMPORARY WALL CONSTRUCTION.
14. DO NOT PLACE SHORING BACKFILL OR REINFORCEMENT UNTIL EXCAVATION DIMENSIONS AND FOUNDATION MATERIAL ARE APPROVED.
15. FOR STANDARD TEMPORARY WALLS WITH PILE FOUNDATIONS IN THE REINFORCED ZONE, DRIVE PILES THROUGH REINFORCEMENT AFTER CONSTRUCTING TEMPORARY WALLS.
16. DO NOT SPLICE OR OVERLAP REINFORCEMENT SO SEAMS ARE PARALLEL TO THE WALL FACE.
17. CONTACT THE ENGINEER WHEN EXISTING OR FUTURE OBSTRUCTIONS SUCH AS FOUNDATIONS, PAVEMENTS, PIPES, INLETS OR UTILITIES WILL INTERFERE WITH REINFORCEMENT.
18. FOR STANDARD TEMPORARY WALLS WITH INTERIOR ANGLES LESS THAN 90 DEGREES, WRAP GEOSYNTHETICS AT ACUTE CORNERS AS DIRECTED BY THE ENGINEER.
19. FOR STANDARD TEMPORARY WALLS WITH TOP OF WALL WITHIN 5' OF FINISHED GRADE, REMOVE TOP FACING AND INCORPORATE TOP REINFORCEMENT LAYER INTO FILL WHEN PLACING FILL IN FRONT OF WALL.

GEOTECHNICAL ENGINEERING UNIT

STATE OF NORTH CAROLINA DEPARTMENT OF TRANSPORTATION RALEIGH

STANDARD DRAWING NO. 1801.02

STANDARD TEMPORARY WALL
Sheet 2 of 3

DATE: 1-17-12

PROJECT REFERENCE NO.	SHEET
1-4413	2-L

GEOTECHNICAL ENGINEER

NORTH CAROLINA PROFESSIONAL SEAL 022246 ENGINEER SCOTT A. HIDDEN

scott a. hidden 11/18/11
SIGNATURE DATE

ENGINEER

SIGNATURE DATE

SLOPE OR SURCHARGE CASE	GROUNDWATER DEPTH BELOW BOTTOM OF REINFORCED ZONE (SEE NOTE 6 ON SHEET 2) (FT)	SHORING BACKFILL TYPE IN THE REINFORCED ZONE (SEE NOTE 7 ON SHEET 2)	H - WALL HEIGHT (FT)																								
			< 4	5	6	7	8	9	10	11	12	13	14	15	16	17	18	19	20	21	22	23	24	25	26	27	28
SLOPE CASE	> 0	CLASS II,TYPE I, CLASS III,CLASS V OR CLASS VI SELECT MATERIAL	6	6	7	8	9	11	12	13	13	14	15	16	17	18	19	20	21	22	23	24	24	25	26	27	27
SURCHARGE CASE	> 0 TO 7 FOR H < 20' > 0 TO 10 FOR H ≥ 20'	ALL SHORING BACKFILL TYPES	6	7	7	8	8	9	9	10	11	11	12	12	13	14	14	15	16	16	17	18	18	19	20	20	21
	> 7 FOR H < 20' > 10 FOR H ≥ 20'	A-2-4 SOIL	6	6	7	8	8	9	9	10	11	11	12	12	13	14	14	15	15	16	16	17	17	18	19	19	20
		CLASS II,TYPE I OR CLASS III SELECT MATERIAL	6	6	7	7	8	8	9	10	10	11	11	12	12	13	13	14	14	15	15	16	16	17	17	18	19
		CLASS V OR CLASS VI SELECT MATERIAL	6	6	7	7	7	8	8	9	9	10	10	11	11	12	12	13	13	14	14	15	16	16	17	18	18

L – MINIMUM REQUIRED REINFORCEMENT LENGTH (FT)

(FOR ALL REINFORCEMENT TYPES)

WALL HEIGHT (H) + EMBEDMENT (FT)	NUMBER OF REINFORCEMENT LAYERS*
2.5 - 4	3
4 - 5.5	4
5.5 - 7	5
7 - 8.5	6
8.5 - 10	7
10 - 11.5	8
11.5 - 13	9
13 - 14.5	10
14.5 - 16	11
16 - 17.5	12
17.5 - 19	13
19 - 20.5	14
20.5 - 22	15
22 - 23.5	16
23.5 - 25	17
25 - 26.5	18
26.5 - 28	19
28 - 29.5	20

***BASED ON VERTICAL REINFORCEMENT SPACING SHOWN ON SHEET 1.**

REINFORCEMENT LAYER NUMBER*	SHORING BACKFILL TYPE IN THE REINFORCED ZONE (SEE NOTE 7 ON SHEET 2)				
	SLOPE CASE		SURCHARGE CASE		
	CLASS II,TYPE I OR CLASS III SELECT MATERIAL	CLASS V SELECT MATERIAL	A-2-4 SOIL	CLASS II,TYPE I OR CLASS III SELECT MATERIAL	CLASS V SELECT MATERIAL
1	2400	2400	2400	2400	2400
2	2400	2400	2400	2400	2400
3	2400	2400	2400	2400	2400
4	2400	2400	2500	2400	2400
5	2500	2400	3000	2400	2400
6	3000	2400	3500	2800	2400
7	3500	2700	4000	3200	2600
8	4000	3100	4500	3600	2900
9	4500	3500	5000	4000	3200
10	5000	3900	5500	4400	3500
11	5500	4300	6000	4800	3800
12	6000	4700	6500	5200	4100
13	6500	5100	7000	5600	4400
14	7000	5400	7500	6000	4700
15	7500	5800	8000	6400	5000
16	8000	6200	8500	6800	5300
17	8500	6600	9000	7200	5600
18	9000	7000	9500	7600	5900
19	9500	7400	10000	8000	6200
20	10000	7800	10500	8400	6500

GEOTEXTILE REINFORCEMENT ULTIMATE TENSILE STRENGTH (LB/FT)

REINFORCEMENT LAYER NUMBER*	SHORING BACKFILL TYPE IN THE REINFORCED ZONE (SEE NOTE 7 ON SHEET 2)				
	SLOPE CASE		SURCHARGE CASE		
	CLASS II,TYPE I OR CLASS III SELECT MATERIAL	CLASS V OR CLASS VI SELECT MATERIAL	A-2-4 SOIL	CLASS II,TYPE I OR CLASS III SELECT MATERIAL	CLASS V OR CLASS VI SELECT MATERIAL
1	240	200	340	290	240
2	380	310	520	430	350
3	530	420	700	570	460
4	690	550	870	720	570
5	860	690	1050	860	680
6	1030	830	1220	1000	790
7	1200	970	1400	1150	900
8	1370	1110	1580	1290	1010
9	1550	1240	1750	1430	1120
10	1720	1380	1930	1580	1230
11	1890	1520	2100	1720	1340
12	2060	1660	2280	1860	1450
13	2240	1800	2450	2010	1560
14	2410	1940	2630	2150	1670
15	2580	2080	2800	2290	1780
16	2750	2220	2980	2440	1890
17	2930	2360	3160	2580	2000
18	3100	2500	3330	2720	2110
19	3270	2640	3510	2860	2220
20	3440	2780	3690	3000	2330

GEOGRID REINFORCEMENT SHORT-TERM DESIGN STRENGTH (LB/FT)

(SEE NOTE 10 ON SHEET 2.)

MINIMUM REQUIRED REINFORCEMENT STRENGTH IN MD

(SEE NOTE 9 ON SHEET 2.)

*SEE PARTIAL ELEVATION ON SHEET 1 FOR REINFORCEMENT LAYER NUMBERING.

STATE OF NORTH CAROLINA DEPARTMENT OF TRANSPORTATION

GEOTECHNICAL ENGINEERING UNIT

STATE OF NORTH CAROLINA DEPARTMENT OF TRANSPORTATION RALEIGH

STANDARD DRAWING NO. 1801.02

STANDARD TEMPORARY WALL
Sheet 3 of 3

DATE: 1-17-12

PROJECT REFERENCE NO.	SHEET
I-4413	2-M

GEOTECHNICAL ENGINEER

NORTH CAROLINA PROFESSIONAL SEAL 022246 ENGINEER SCOTT A. HIDDEN

Scott A. Hidden 11/18/11
SIGNATURE DATE

ENGINEER

SIGNATURE DATE

GROUNDWATER CONDITION (SEE NOTE 6)	H SHORING HEIGHT (FT)	SLOPE OR SURCHARGE CASE WITH NO TRAFFIC IMPACT					SURCHARGE CASE WITH TRAFFIC IMPACT				
		SHEET PILES		H-PILES WITH TIMBER LAGGING			SHEET PILES		H-PILES WITH TIMBER LAGGING		
		MINIMUM REQUIRED EMBEDMENT (FT)	MINIMUM REQUIRED SECTION MODULUS (IN^3/FT)	MINIMUM REQUIRED EMBEDMENT* (FT) (SEE NOTE 10)			MINIMUM REQUIRED EMBEDMENT (FT)	MINIMUM REQUIRED SECTION MODULUS (IN^3/FT)	MINIMUM REQUIRED EMBEDMENT* (FT) (SEE NOTE 10)		
				HP 10x42	HP 12x53	HP 14x73			HP 10x42	HP 12x53	HP 14x73
GROUNDWATER ELEVATION BEWTEEN BOTTOM OF SHORING AND PILE TIP	< 6	11.5	4.5	11.5	11.5	11.5	16.0	12.0	13.0	13.0	13.0
	7	13.0	7.0	13.0	13.0	13.0	17.0	14.5	14.5	14.5	14.5
	8	15.0	10.0	--	15.0	15.0	18.0	17.0	--	15.5	15.5
	9	17.0	14.0	--	17.0	17.0	19.0	20.0	--	17.0	17.0
	10	18.5	19.5	--	--	18.5	20.0	23.5	--	--	18.5
	11	20.5	26.0	--	--	--	21.0	28.0	--	--	20.0
	12	22.5	33.0	--	--	--	22.0	33.0	--	--	21.5
GROUNDWATER ELEVATION BELOW PILE TIP	< 6	7.5	3.0	8.0	8.0	8.0	11.0	10.0	9.5	9.5	9.5
	7	8.5	4.5	9.5	9.5	9.5	12.0	12.0	10.5	10.5	10.5
	8	10.0	6.5	10.5	10.5	10.5	12.5	14.0	11.5	11.5	11.5
	9	11.0	9.5	--	12.0	12.0	13.5	16.5	--	12.5	12.5
	10	12.5	13.0	--	--	13.5	14.0	19.5	--	13.5	13.5
	11	13.5	17.0	--	--	14.5	15.0	22.5	--	--	14.5
	12	15.0	21.5	--	--	16.0	16.0	25.5	--	--	15.5

MINIMUM REQUIRED EMBEDMENT AND SECTION MODULUS

***DO NOT USE H-PILES WITH TIMBER LAGGING FOR GROUNDWATER CONDITION, SHORING HEIGHT AND H-PILE SIZE SHOWN IF MINIMUM REQUIRED EMBEDMENT IS "--".**

NOTES:

1. AT THE CONTRACTOR'S OPTION, USE STANDARD TEMPORARY SHORING AS NOTED IN THE PLANS.
2. FOR STANDARD TEMPORARY SHORING, SEE STANDARD SHORING PROVISION.
3. STANDARD TEMPORARY SHORING IS BASED ON THE FOLLOWING IN-SITU ASSUMED SOIL PARAMETERS:
   UNIT WEIGHT, γ = 120 LB/CF
   FRICTION ANGLE, ϕ = 30 DEGREES
   COHESION, c = 0 LB/SF
4. DO NOT USE STANDARD TEMPORARY SHORING IF ASSUMED SOIL PARAMETERS ARE NOT APPLICABLE.
5. DO NOT USE STANDARD TEMPORARY SHORING WHEN VERY LOOSE OR SOFT SOIL OR MUCK IS WITHIN THE EMBEDMENT DEPTH.
6. USE GROUNDWATER ELEVATION NOTED IN THE PLANS. IF NO GROUNDWATER ELEVATION IS SHOWN IN THE PLANS, USE "GROUNDWATER ELEVATION BETWEEN BOTTOM OF SHORING AND PILE TIP" FOR GROUNDWATER CONDITION. DO NOT USE STANDARD TEMPORARY SHORING IF GROUNDWATER IS ABOVE BOTTOM OF SHORING.
7. AT THE CONTRACTOR'S OPTION OR IF AVAILABLE CLEAR DISTANCE IS LESS THAN THE MINIMUM REQUIRED FOR CONCRETE BARRIER, SET BARRIER NEXT TO AND UP AGAINST TRAFFIC SIDE OF PILES AND USE "SURCHARGE CASE WITH TRAFFIC IMPACT".
8. AT THE CONTRACTOR'S OPTION OR IF AVAILABLE CLEAR DISTANCE IS LESS THAN 4' FOR TEMPORARY GUARDRAIL, ATTACH GUARDRAIL TO TRAFFIC SIDE OF PILES AS SHOWN IN THE PLANS AND USE "SURCHARGE CASE WITH TRAFFIC IMPACT".
9. MINIMUM REQUIRED EXTENSION IS 6" FOR "SLOPE OR SURCHARGE CASE WITH NO TRAFFIC IMPACT" AND 32" FOR "SURCHARGE CASE WITH TRAFFIC IMPACT".
10. MINIMUM REQUIRED EMBEDMENT FOR H-PILES WITH TIMBER LAGGING IS BASED ON DRIVEN H-PILES AT MAXIMUM 6' SPACING. AT THE CONTRACTOR'S OPTION, EMBEDMENT DEPTHS MAY BE REDUCED BY 25% FOR DRILLED-IN H-PILES.
11. SUBMIT A "STANDARD TEMPORARY SHORING SELECTION FORM" AT LEAST 7 DAYS BEFORE STARTING TEMPORARY SHORING CONSTRUCTION. UP TO 3 SHORING LOCATIONS MAY BE INCLUDED ON EACH FORM.
12. CONTACT THE ENGINEER IF PILES DO NOT ATTAIN THE MINIMUM REQUIRED EMBEDMENT.

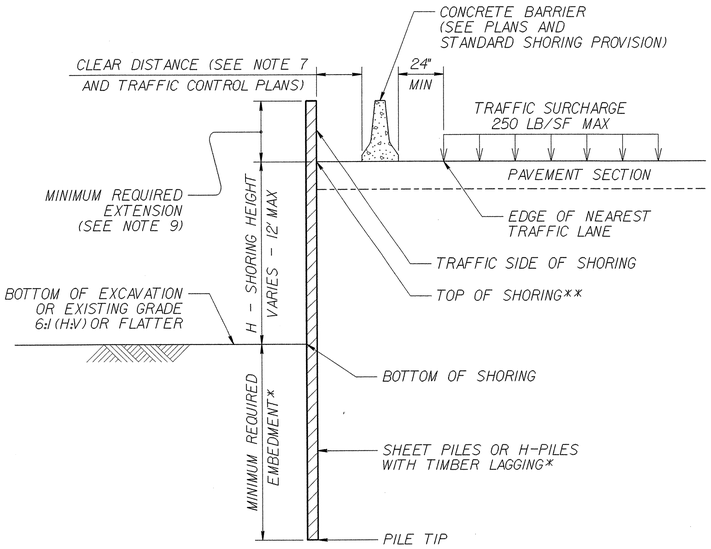

CONCRETE BARRIER

****TOP OF SHORING = EDGE OF PAVEMENT**

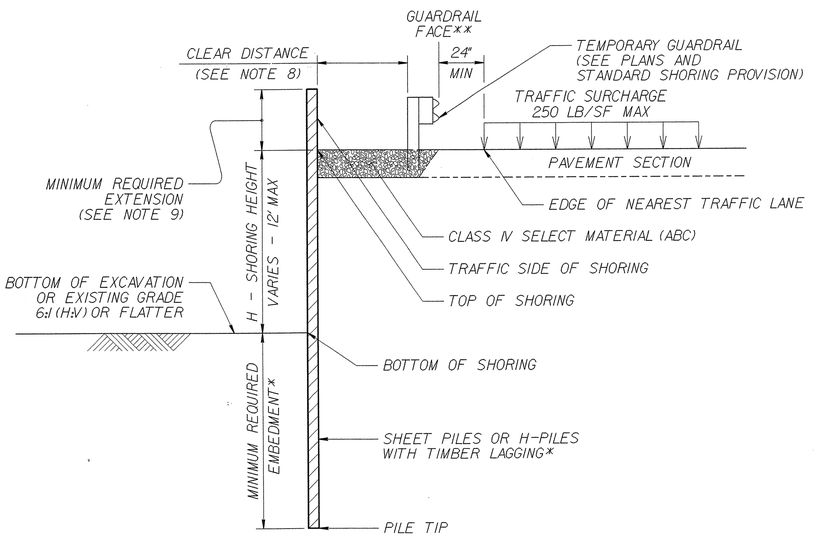

TEMPORARY GUARDRAIL

****GUARDRAIL FACE = EDGE OF PAVEMENT**

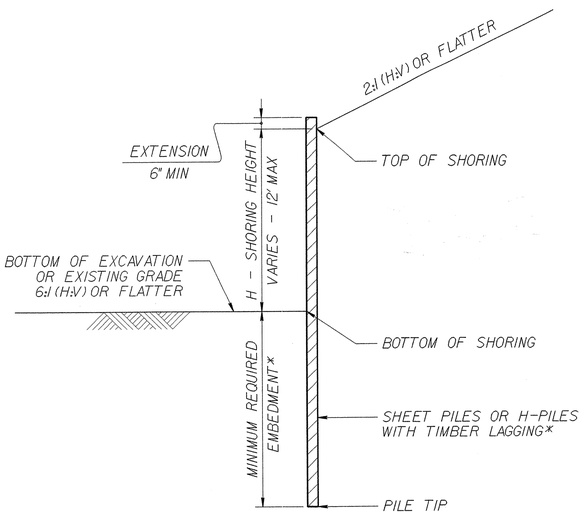

STANDARD TEMPORARY SHORING

(SLOPE CASE)
***SEE TABLE ABOVE.**

STANDARD TEMPORARY SHORING

(SURCHARGE CASE)
***SEE TABLE ABOVE.**

STATE OF NORTH CAROLINA DEPARTMENT OF TRANSPORTATION

GEOTECHNICAL ENGINEERING UNIT

STATE OF NORTH CAROLINA DEPARTMENT OF TRANSPORTATION RALEIGH

STANDARD DRAWING NO. 1801.01

STANDARD TEMPORARY SHORING

DATE: 1-17-12

PROJECT REFERENCE NO.	SHEET NO.
I-4413	2-N

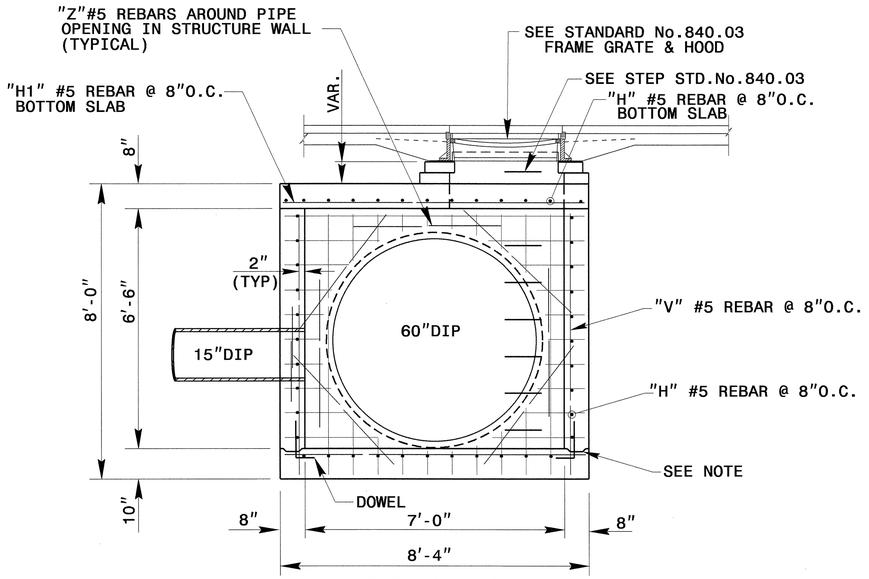

SECTION A-A

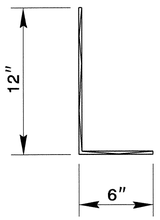

DOWEL

SEE NOTE

GENERAL NOTES:

USE CLASS "AA" CONCRETE THROUGHOUT.

PROVIDE ALL JUNCTION BOXES OVER 3'-6" IN DEPTH WITH STEPS 12" ON CENTER. USE STEPS WHICH COMPLY WITH STD. DRAWING 840.66.

OPTIONAL CONSTRUCTION - MONOLITHIC POUR, 2" KEYWAY, OR #4 BAR DOWELS AT 12" CENTERS AS DIRECTED BY THE ENGINEER.

USE FORMS FOR THE CONSTRUCTION OF THE BOTTOM SLAB.

INSTALL HOOD,GRATE AND FRAME IN POSITION AS DIRECTED BY THE ENGINEER. CUT AND BEND ALL REBAR CROSSING THIS OPENING TO ALLOW 2" MINIMUM CONCRETE COVERAGE.

CHAMFER ALL EXPOSED CORNERS 1".

2" MINIMUM CONCRETE COVERAGE ON ALL REBAR.

BILL OF MATERIALS

BAR	NO.	SIZE	LENGTH	WEIGHT
H	92	#5	7'-0"	672
H1	84	#5	8'-0"	701
V	92	#5	7'-0"	672
Z	14	#5	4'-0"	59
TOTAL REINF. STEEL (LBS.)				2104
TOTAL CONC. (CU. YDS.)				8.1

* 1.10 CU.YD. DEDUCTION FOR 2-60" DUCTILE IRON PIPE
* 0.30 CU.YD. DEDUCTION FOR 1-15" DUCTILE PIPE
* NO DEDUCTION HAS BEEN MADE FOR PIPES

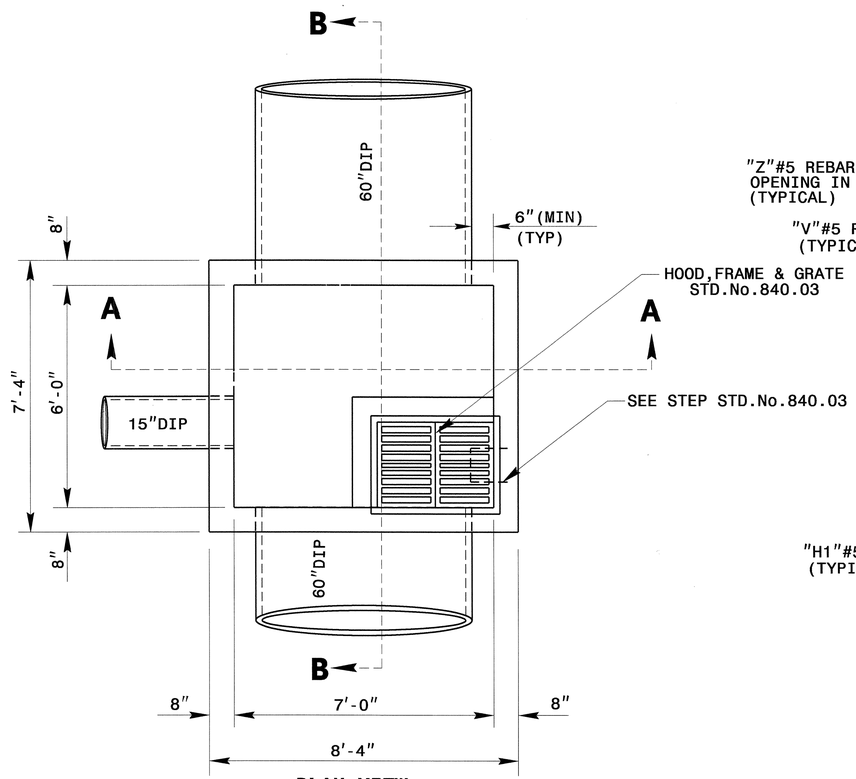

PLAN VIEW

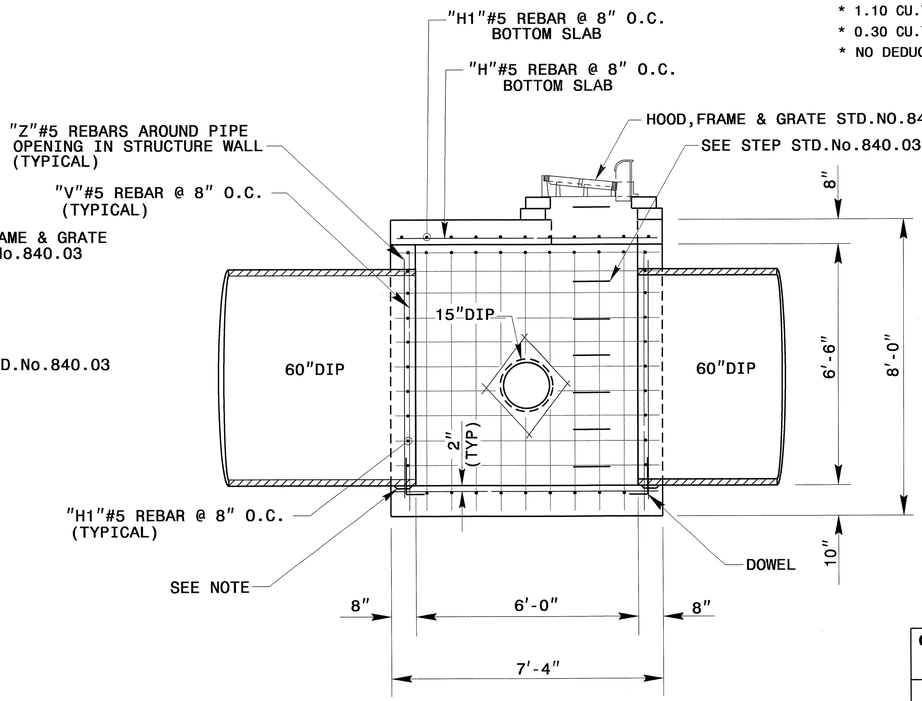

SECTION B-B

NORTH CAROLINA PROFESSIONAL SEAL 022966 ENGINEER JOEL S. HOMERTON
5/2/12

STR.#0407 & STR.#0490

CONTRACT STANDARDS & DEVELOPMENT UNIT
STANDARDS AND SPECIAL DESIGN
Office 919-250-4128 FAX 919-250-4119

CATCH BASIN

ORIGINAL BY: DATE:
MODIFIED BY: nbritt DATE: 05/01/12
CHECKED BY: DATE:
FILE SPEC.: detail/nbritt/english/interstate/i4413 60.dgn

5/14/99

PROJECT REFERENCE NO.	SHEET NO.
I-4413	2-0

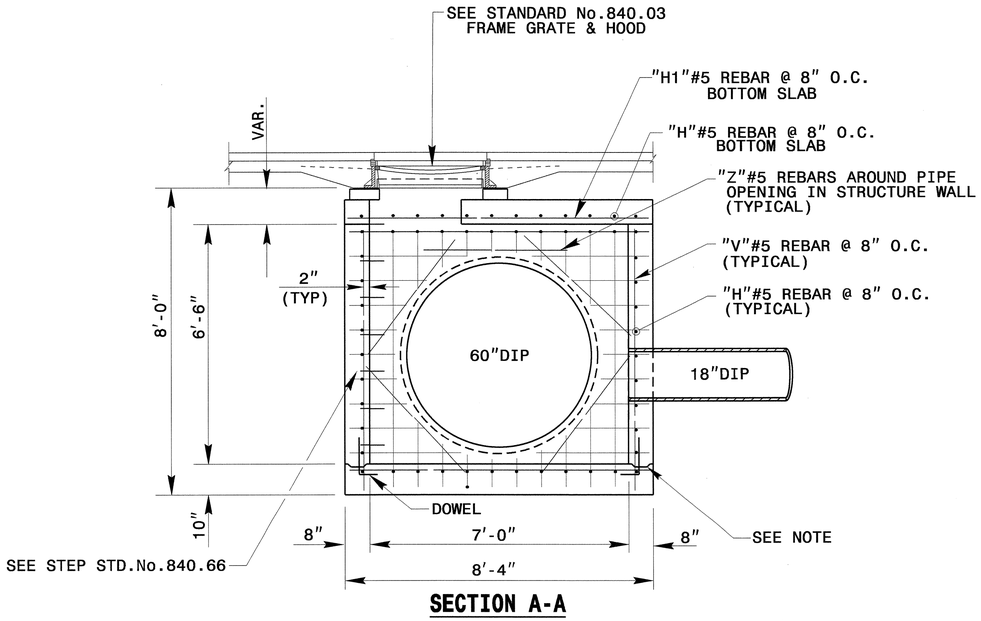

SECTION A-A

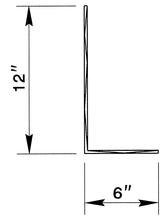

DOWEL

SEE NOTE

GENERAL NOTES:

USE CLASS "AA" CONCRETE THROUGHOUT.

PROVIDE ALL JUNCTION BOXES OVER 3'-6" IN DEPTH WITH STEPS 12" ON CENTER. USE STEPS WHICH COMPLY WITH STD. DRAWING 840.66.

OPTIONAL CONSTRUCTION - MONOLITHIC POUR, 2" KEYWAY, OR #4 BAR DOWELS AT 12" CENTERS AS DIRECTED BY THE ENGINEER.

USE FORMS FOR THE CONSTRUCTION OF THE BOTTOM SLAB.

INSTALL FRAME,GRATE AND HOOD IN POSITION AS DIRECTED BY THE ENGINEER. CUT AND BEND ALL REBAR CROSSING THIS OPENING TO ALLOW 2" MINIMUM CONCRETE COVERAGE.

CHAMFER ALL EXPOSED CORNERS 1".

2" MINIMUM CONCRETE COVERAGE ON ALL REBAR.

BILL OF MATERIALS

BAR	NO.	SIZE	LENGTH	WEIGHT
H	92	#5	7'-0"	672
H1	84	#5	8'-0"	701
V	92	#5	7'-0"	672
Z	14	#5	4'-0"	59
TOTAL REINF. STEEL (LBS.)				2104
TOTAL CONC. (CU. YDS.)				8.1

* 0.30 CU. YD. PER FOOT OF RISER HEIGHT
* 1.10 CU. YD. DEDUCTION FOR 2-60" DUCTILE IRON PIPE
* 0.30 CU. YD. DEDUCTION FOR 1-18" DUCTILE IRON PIPE
* NO DEDUCTION HAS BEEN MADE FOR PIPES

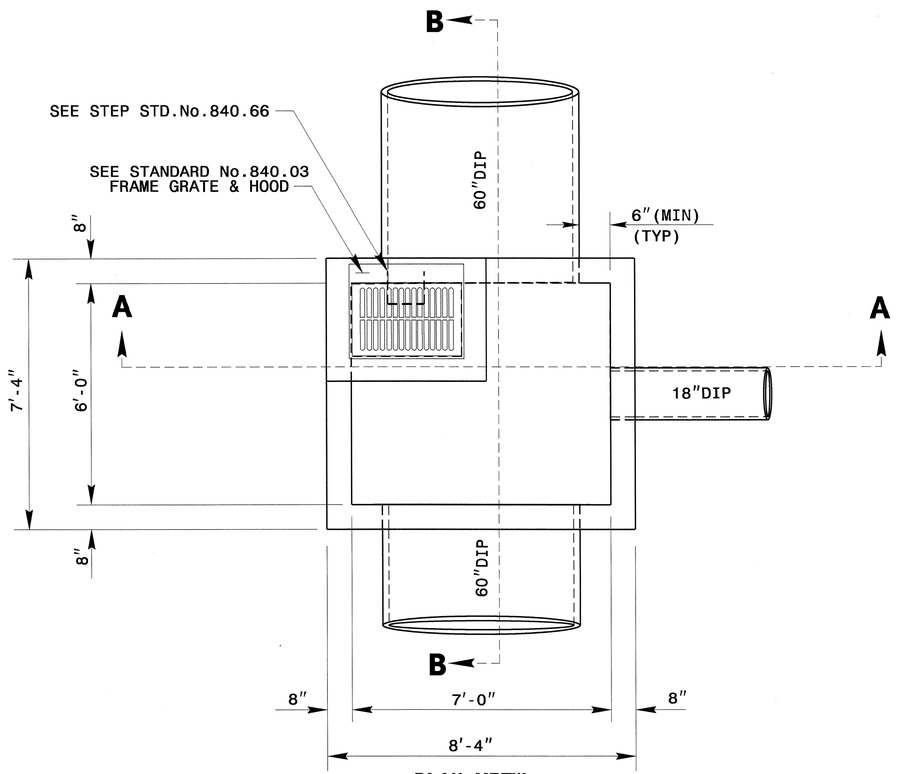

PLAN VIEW

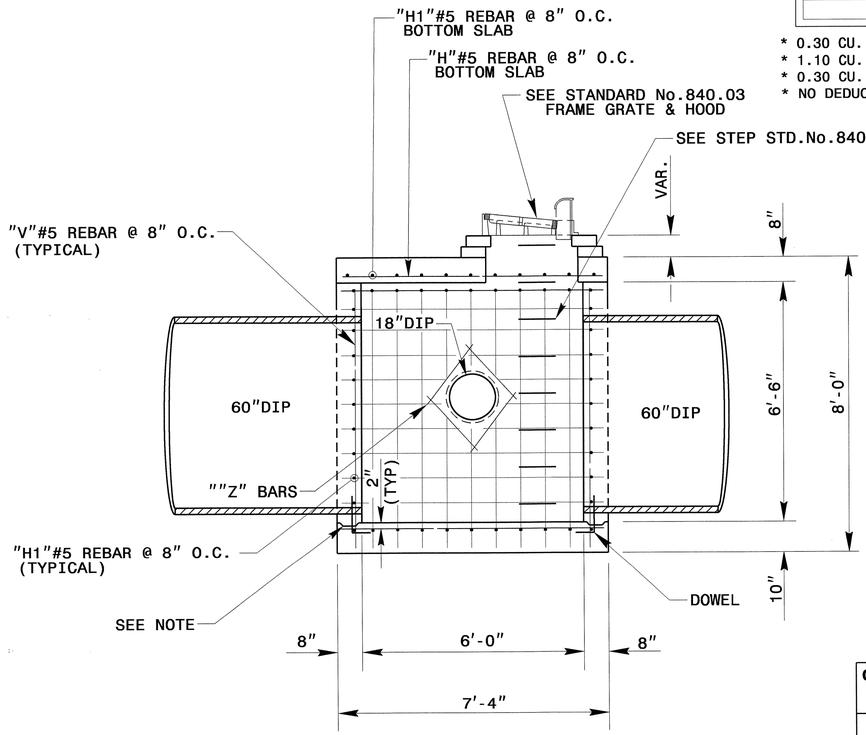

SECTION B-B

NORTH CAROLINA PROFESSIONAL SEAL 022966 ENGINEER JOEL S. HOWERTON 5/2/12

STR.#0406

CONTRACT STANDARDS & DEVELOPMENT UNIT
STANDARDS AND SPECIAL DESIGN
Office 919-250-4128 FAX 919-250-4119

CATCH BASIN

ORIGINAL BY:		DATE:	
MODIFIED BY:	nbritt	DATE:	05/01/12
CHECKED BY:		DATE:	
FILE SPEC.:	detail/nbritt/english/interstate/i4413 60.dgn		

5/14/99

$$$$$$SYSTIME$$$$
$$$$$$DGN$$$$$$$$$$$$$$$$
$$$$$$USERNAME$$$$

5/14/99

PROJECT REFERENCE NO.	SHEET NO.
I-4413	2-P

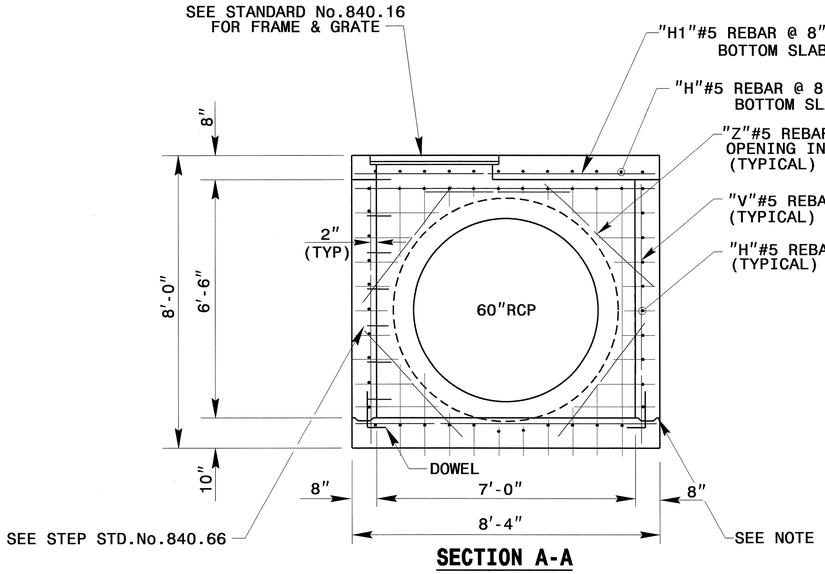

SECTION A-A

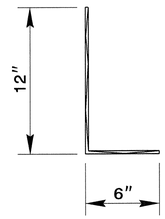

DOWEL

SEE NOTE

GENERAL NOTES:

USE CLASS "AA" CONCRETE THROUGHOUT.

PROVIDE ALL JUNCTION BOXES OVER 3'-6" IN DEPTH WITH STEPS 12" ON CENTER. USE STEPS WHICH COMPLY WITH STD. DRAWING 840.66.

OPTIONAL CONSTRUCTION - MONOLITHIC POUR, 2" KEYWAY, OR #4 BAR DOWELS AT 12" CENTERS AS DIRECTED BY THE ENGINEER.

USE FORMS FOR THE CONSTRUCTION OF THE BOTTOM SLAB.

INSTALL FRAME AND GRATE IN POSITION AS DIRECTED BY THE ENGINEER. CUT AND BEND ALL REBAR CROSSING THIS OPENING TO ALLOW 2" MINIMUM CONCRETE COVERAGE.

CHAMFER ALL EXPOSED CORNERS 1".

2" MINIMUM CONCRETE COVERAGE ON ALL REBAR.

BILL OF MATERIALS

BAR	NO.	SIZE	LENGTH	WEIGHT
H	92	#5	7'-0"	672
H1	84	#5	8'-0"	701
V	92	#5	7'-0"	672
Z	14	#5	4'-0"	59
TOTAL REINF. STEEL (LBS.)				2104
TOTAL CONC. (CU. YDS.)				8.1

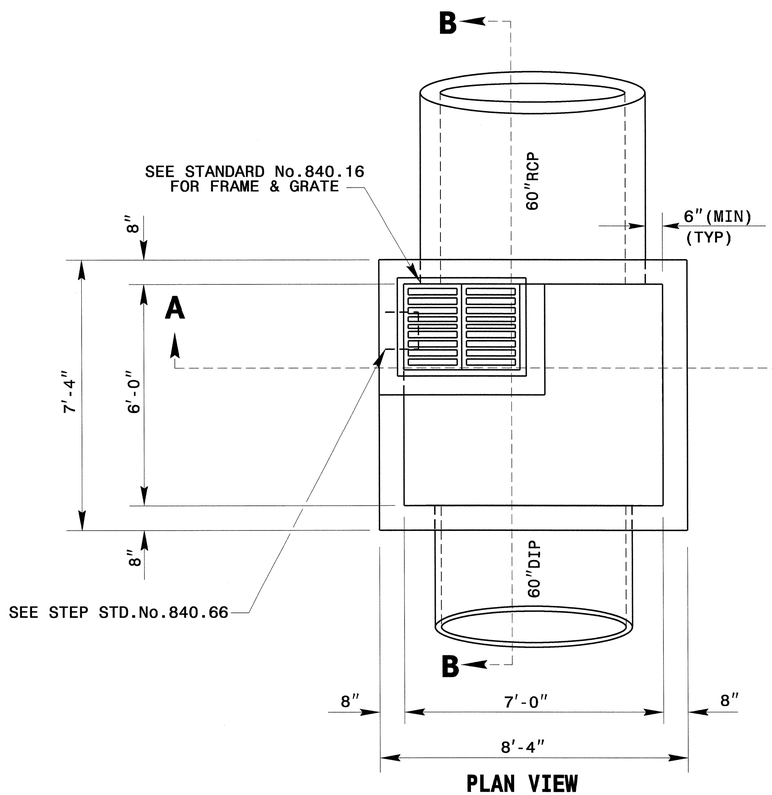

PLAN VIEW

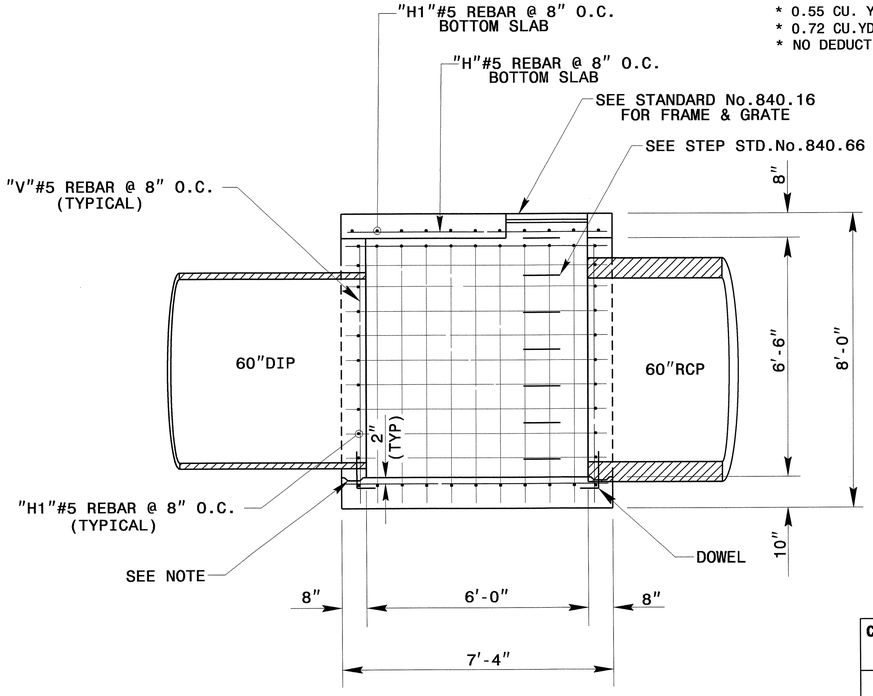

SECTION B-B

* 0.55 CU. YD. DEDUCTION FOR 1-60" DUCTILE IRON PIPE
* 0.72 CU.YD. DEDUCTION FOR 1-60"RCP
* NO DEDUCTION HAS BEEN MADE FOR PIPES

NORTH CAROLINA PROFESSIONAL SEAL 022966 ENGINEER JOEL G. HONEYCUTT 5/2/12

STR.#0408

CONTRACT STANDARDS & DEVELOPMENT UNIT
STANDARDS AND SPECIAL DESIGN
Office 919-250-4128 FAX 919-250-4119

SPECIAL DROP INLET

ORIGINAL BY: _____ DATE: _____
MODIFIED BY: nbritt DATE: 05/01/12
CHECKED BY: _____ DATE: _____
FILE SPEC.: detail/nbritt/english/interstate/i4413 60.dgn

$$$$SYSTIME$$$$
$$$$USERNAME$$$$

PROJECT REFERENCE NO.	SHEET
I-4413	2-Q

Detail for Temporary Containment of Contaminated Soil

Cross-Section View

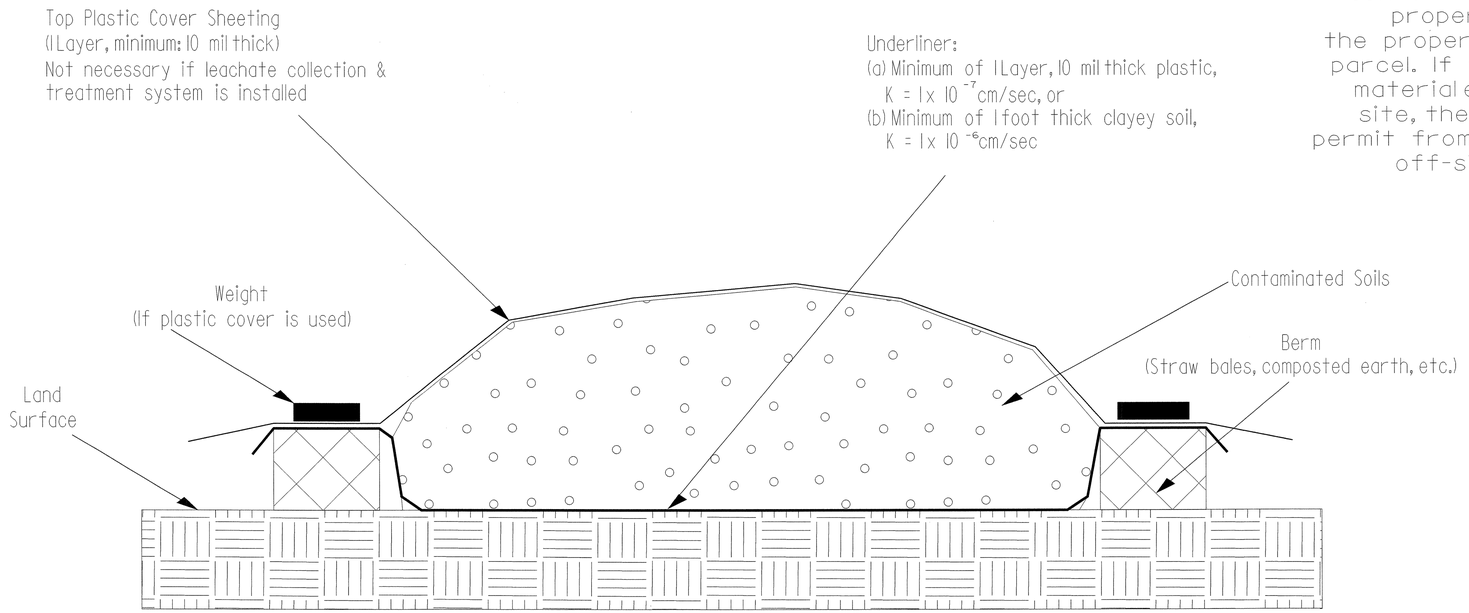

NOTE:
The Contractor shall stockpile all contaminated soil excavated from a property in a location within the property boundaries of the source parcel. If the volume of contaminated material exceeds available space on site, the Contractor shall obtain a permit from the NCDENR UST Section for off-site temporary storage.

Map View

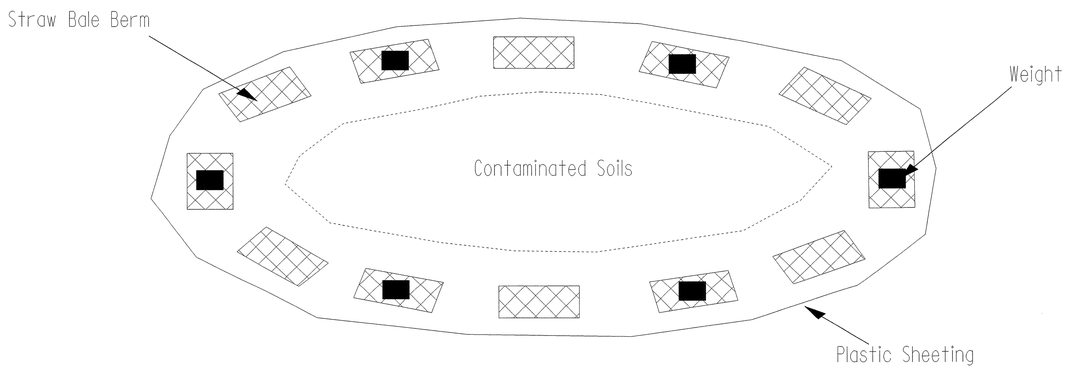

5/28/99

PROJECT REFERENCE NO.	SHEET NO.
I-4413	3 C (of 3)

STATE OF NORTH CAROLINA
DIVISION OF HIGHWAYS

SUMMARY OF QUANTITIES

STATE OF NORTH CAROLINA
DIVISION OF HIGHWAYS
ROADWAY SUMMARY OF QUANTITIES FOR CONTRACT - C202847

ItemNumber	Sec #	Quantity	Unit	Description
0000100000-N	800	Lump Sum		MOBILIZATION
0000400000-N	801	Lump Sum		CONSTRUCTION SURVEYING
0001000000-E	200	Lump Sum		CLEARING & GRUBBING .. ACRE(S)
0008000000-E	200	1	ACR	SUPPLEMENTARY CLEARING & GRUBBING
0022000000-E	225	27,000	CY	UNCLASSIFIED EXCAVATION
0036000000-E	225	400	CY	UNDERCUT EXCAVATION
0106000000-E	230	15,500	CY	BORROW EXCAVATION
0134000000-E	240	1,400	CY	DRAINAGE DITCH EXCAVATION
0156000000-E	250	1,540	SY	REMOVAL OF EXISTING ASPHALT PAVEMENT
0177000000-E	250	4,040	SY	BREAKING OF EXISTING ASPHALT PAVEMENT
0195000000-E	265	400	CY	SELECT GRANULAR MATERIAL
0196000000-E	270	3,800	SY	GEOTEXTILE FOR SOIL STABILIZATION
0199000000-E	SP	4,874.5	SF	TEMPORARY SHORING
0234000000-E	SP	155,000	CY	GENERIC GRADING ITEM BORROW EXCAVATION (STATE FURNISHED SOURCE)
0255000000-E	SP	200	TON	GENERIC GRADING ITEM EXCAVATION & STOCKPILING CONTAMINATED SOIL
0318000000-E	300	916	TON	FOUNDATION CONDITIONING MATERIAL, MINOR STRUCTURES
0320000000-E	300	7,260	SY	FOUNDATION CONDITIONING GEOTEXTILE
0342000000-E	310	592	LF	**" SIDE DRAIN PIPE (30")
0343000000-E	310	800	LF	15" SIDE DRAIN PIPE
0344000000-E	310	120	LF	18" SIDE DRAIN PIPE
0345000000-E	310	52	LF	24" SIDE DRAIN PIPE
0348000000-E	310	5	EA	**" SIDE DRAIN PIPE ELBOWS (15")
0366000000-E	310	368	LF	15" RC PIPE CULVERTS, CLASS III
0372000000-E	310	412	LF	18" RC PIPE CULVERTS, CLASS III
0378000000-E	310	80	LF	24" RC PIPE CULVERTS, CLASS III
0448000000-E	310	216	LF	****" RC PIPE CULVERTS, CLASS IV (66")
0448200000-E	310	2,044	LF	15" RC PIPE CULVERTS, CLASS IV
0448300000-E	310	188	LF	18" RC PIPE CULVERTS, CLASS IV
0448400000-E	310	136	LF	24" RC PIPE CULVERTS, CLASS IV
0453000000-E	310	1	EA	**" PIPE END SECTION (18")
0582000000-E	310	12	LF	15" CS PIPE CULVERTS, 0.064" THICK
0986000000-E	SP	332	LF	GENERIC PIPE ITEM 15" DUCTILE IRON PIPE (SEALED SYSTEM)
0986000000-E	SP	164	LF	GENERIC PIPE ITEM 18" DUCTILE IRON PIPE (SEALED SYSTEM)
0986000000-E	SP	532	LF	GENERIC PIPE ITEM 60" DUCTILE IRON PIPE (SEALED SYSTEM)
0995000000-E	340	1,784	LF	PIPE REMOVAL
1011000000-N	500	Lump Sum		FINE GRADING
1099500000-E	505	1,000	CY	SHALLOW UNDERCUT
1099700000-E	505	2,000	TON	CLASS IV SUBGRADE STABILIZATION
1110000000-E	510	500	TON	STABILIZER AGGREGATE
1121000000-E	520	1,390	TON	AGGREGATE BASE COURSE
1220000000-E	545	100	TON	INCIDENTAL STONE BASE
1297000000-E	607	5,080	SY	MILLING ASPHALT PAVEMENT, ***" DEPTH (1-1/2")
1489000000-E	610	970	TON	ASPHALT CONC BASE COURSE, TYPE B25.0B
1491000000-E	610	9,880	TON	ASPHALT CONC BASE COURSE, TYPE B25.0C
1498000000-E	610	950	TON	ASPHALT CONC INTERMEDIATE COURSE, TYPE I19.0B

ItemNumber	Sec #	Quantity	Unit	Description
1503000000-E	610	9,710	TON	ASPHALT CONC INTERMEDIATE COURSE, TYPE I19.0C
1519000000-E	610	1,660	TON	ASPHALT CONC SURFACE COURSE, TYPE S9.5B
1523000000-E	610	9,040	TON	ASPHALT CONC SURFACE COURSE, TYPE S9.5C
1575000000-E	620	1,625	TON	ASPHALT BINDER FOR PLANT MIX
1693000000-E	654	98	TON	ASPHALT PLANT MIX, PAVEMENT REPAIR
1840000000-E	665	7,090	LF	MILLED RUMBLE STRIPS (ASPHALT CONCRETE)
1891000000-E	SP	13,000	SY	GENERIC PAVING ITEM GEOTEXTILE FOR PAVEMENT STABILIZATION
2220000000-E	838	16.6	CY	REINFORCED ENDWALLS
2253000000-E	840	2.138	CY	PIPE COLLARS
2264000000-E	840	0.232	CY	PIPE PLUGS
2275000000-E	SP	25	CY	FLOWABLE FILL
2286000000-N	840	57	EA	MASONRY DRAINAGE STRUCTURES
2297000000-E	840	37.06	CY	MASONRY DRAINAGE STRUCTURES
2308000000-E	840	12.91	LF	MASONRY DRAINAGE STRUCTURES
2364000000-N	840	4	EA	FRAME WITH TWO GRATES, STD 840.16
2365000000-N	840	9	EA	FRAME WITH TWO GRATES, STD 840.22
2366000000-N	840	3	EA	FRAME WITH TWO GRATES, STD 840.24
2367000000-N	840	6	EA	FRAME WITH TWO GRATES, STD 840.29
2374000000-N	840	12	EA	FRAME WITH GRATE & HOOD, STD 840.03, TYPE ** (E)
2374000000-N	840	13	EA	FRAME WITH GRATE & HOOD, STD 840.03, TYPE ** (F)
2374000000-N	840	12	EA	FRAME WITH GRATE & HOOD, STD 840.03, TYPE ** (G)
2396000000-N	840	3	EA	FRAME WITH COVER, STD 840.54

ItemNumber	Sec #	Quantity	Unit	Description
2440000000-N	852	9	EA	CONCRETE TRANSITIONAL SECTION FOR CATCH BASIN
2451000000-N	852	1	EA	CONCRETE TRANSITIONAL SECTION FOR DROP INLET
2538000000-E	846	130	LF	**'-**" CONCRETE CURB & GUTTER (2'-0")
2542000000-E	846	4,160	LF	1'-6" CONCRETE CURB & GUTTER
2549000000-E	846	4,270	LF	2'-6" CONCRETE CURB & GUTTER
2556000000-E	846	310	LF	SHOULDER BERM GUTTER
2591000000-E	848	1,220	SY	4" CONCRETE SIDEWALK
2605000000-N	848	20	EA	CONCRETE CURB RAMP
2612000000-E	848	40	SY	6" CONCRETE DRIVEWAY
2619000000-E	850	370	SY	4" CONCRETE PAVED DITCH
2627000000-E	852	40	SY	4" CONCRETE ISLAND COVER
2655000000-E	852	1,280	SY	5" MONOLITHIC CONCRETE ISLANDS (KEYED IN)
2703000000-E	854	530	LF	CONCRETE BARRIER, TYPE ******* (SINGLE SLOPE)
2815000000-N	858	1	EA	ADJUSTMENT OF DROP INLETS
2905000000-N	859	1	EA	CONVERT EXISTING DROP INLET TO JUNCTION BOX
3030000000-E	862	2,762.5	LF	STEEL BM GUARDRAIL
3045000000-E	862	162.5	LF	STEEL BM GUARDRAIL, SHOP CURVED
3150000000-N	862	4	EA	ADDITIONAL GUARDRAIL POSTS
3165000000-N	SP	2	EA	GUARDRAIL ANCHOR UNITS, TYPE ********* (350, TL-2)
3195000000-N	862	4	EA	GUARDRAIL ANCHOR UNITS, TYPE AT-1
3210000000-N	862	6	EA	GUARDRAIL ANCHOR UNITS, TYPE CAT-1
3215000000-N	862	4	EA	GUARDRAIL ANCHOR UNITS, TYPE III
3270000000-N	SP	7	EA	GUARDRAIL ANCHOR UNITS, TYPE 350
3360000000-E	863	3,920	LF	REMOVE EXISTING GUARDRAIL
3380000000-E	862	125	LF	TEMPORARY STEEL BM GUARDRAIL
3387000000-N	862	1	EA	TEMPORARY GUARDRAIL ANCHOR UNITS, TYPE ********** (AT-1)
3387000000-N	862	2	EA	TEMPORARY GUARDRAIL ANCHOR UNITS, TYPE ********** (III)
3389100000-N	SP	5	EA	TEMPORARY GUARDRAIL ANCHOR UNITS, TYPE 350
3500000000-E	866	3,760	LF	WOVEN WIRE FENCE, **" FABRIC (48")
3509000000-E	866	240	EA	4" TIMBER FENCE POSTS, 7'-6" LONG
3515000000-E	866	60	EA	5" TIMBER FENCE POSTS, 8'-0" LONG
3536000000-E	866	1,440	LF	CHAIN LINK FENCE, 48" FABRIC
3542000000-E	866	119	EA	METAL LINE POSTS FOR 48" CHAIN LINK FENCE
3548000000-E	866	17	EA	METAL TERMINAL POSTS FOR 48" CHAIN LINK FENCE
3628000000-E	876	80	TON	RIP RAP, CLASS I
3649000000-E	876	35	TON	RIP RAP, CLASS B
3656000000-E	876	1,785	SY	GEOTEXTILE FOR DRAINAGE
4048000000-E	902	27	CY	REINFORCED CONCRETE SIGN FOUNDATIONS
4054000000-E	902	1	CY	PLAIN CONCRETE SIGN FOUNDATIONS
4057000000-E	SP	60	CY	OVERHEAD FOOTING
4060000000-E	903	21,210	LB	SUPPORTS, BREAKAWAY STEEL BEAM
4072000000-E	903	1,507	LF	SUPPORTS, 3-LB STEEL U-CHANNEL
4078000000-E	903	4	EA	SUPPORTS, 2-LB STEEL U-CHANNEL
4082100000-N	SP	Lump Sum		SUPPORTS, OVERHEAD SIGN STRUCTURE AT STA ****** (15+50-L-)
4082100000-N	SP	Lump Sum		SUPPORTS, OVERHEAD SIGN STRUCTURE AT STA ****** (19+50-RP B-)
4082100000-N	SP	Lump Sum		SUPPORTS, OVERHEAD SIGN STRUCTURE AT STA ****** (19+57-RP D-)

4/6/2012
11:58:20 K:\Proj\4413_rdy_tsh.dgn
jpadgett

STATE OF NORTH CAROLINA
SUMMARY OF QUANTITIES

PROJECT REFERENCE No.	SHEET No.
I-4413	3 (23-31)

ItemNumber	Sec #	Quantity	Unit	Description
4082100000-N	SP	Lump Sum		SUPPORTS, OVERHEAD SIGN STRUCTURE AT STA ****** (28+45-L-)
4096000000-N	904	2	EA	SIGN ERECTION, TYPE D
4102000000-N	904	69	EA	SIGN ERECTION, TYPE E
4108000000-N	904	7	EA	SIGN ERECTION, TYPE F
4110000000-N	904	14	EA	SIGN ERECTION, TYPE *** (GROUND MOUNTED) (A)
4110000000-N	904	8	EA	SIGN ERECTION, TYPE *** (GROUND MOUNTED) (B)
4114000000-N	904	4	EA	SIGN ERECTION, MILEMARKERS
4116100000-N	904	7	EA	SIGN ERECTION, RELOCATE, TYPE **** (GROUND MOUNTED) (A)
4116100000-N	904	2	EA	SIGN ERECTION, RELOCATE, TYPE **** (GROUND MOUNTED) (E)
4138000000-N	907	7	EA	DISPOSAL OF SUPPORT, STEEL BEAM
4152000000-N	907	15	EA	DISPOSAL OF SIGN SYSTEM, STEEL BEAM
4155000000-N	907	49	EA	DISPOSAL OF SIGN SYSTEM, U-CHANNEL
4158000000-N	907	1	EA	DISPOSAL OF SIGN SYSTEM, WOOD
4192000000-N	907	2	EA	DISPOSAL OF SUPPORT, U-CHANNEL
4400000000-E	1110	328	SF	WORK ZONE SIGNS (STATIONARY)
4405000000-E	1110	688	SF	WORK ZONE SIGNS (PORTABLE)
4410000000-E	1110	144	SF	WORK ZONE SIGNS (BARRICADE MOUNTED)
4415000000-N	1115	4	EA	FLASHING ARROW BOARD
4420000000-N	1120	4	EA	PORTABLE CHANGEABLE MESSAGE SIGN
4430000000-N	1130	470	EA	DRUMS
4445000000-E	1145	148	LF	BARRICADES (TYPE III)
4450000000-N	1150	7,200	HR	FLAGGER
4465000000-N	1160	2	EA	TEMPORARY CRASH CUSHIONS
4480000000-N	1165	4	EA	TMA
4485000000-E	1170	954	LF	PORTABLE CONCRETE BARRIER
4510000000-N	SP	160	HR	LAW ENFORCEMENT
4650000000-N	1251	80	EA	TEMPORARY RAISED PAVEMENT MARKERS
4685000000-E	1205	3,600	LF	THERMOPLASTIC PAVEMENT MARKING LINES (4", 90 MILS)
4686000000-E	1205	7,844	LF	THERMOPLASTIC PAVEMENT MARKING LINES (4", 120 MILS)
4688000000-E	1205	28,740	LF	THERMOPLASTIC PAVEMENT MARKING LINES (6", 90 MILS)
4690000000-E	1205	6,622	LF	THERMOPLASTIC PAVEMENT MARKING LINES (6", 120 MILS)
4695000000-E	1205	300	LF	THERMOPLASTIC PAVEMENT MARKING LINES (8", 90 MILS)
4697000000-E	1205	925	LF	THERMOPLASTIC PAVEMENT MARKING LINES (8", 120 MILS)
4710000000-E	1205	1,060	LF	THERMOPLASTIC PAVEMENT MARKING LINES (24", 120 MILS)
4721000000-E	1205	16	EA	THERMOPLASTIC PAVEMENT MARKING CHARACTER (120 MILS)
4725000000-E	1205	101	EA	THERMOPLASTIC PAVEMENT MARKING SYMBOL (90 MILS)
4775000000-E	1205	1,350	LF	COLD APPLIED PLASTIC PAVEMENT MARKING LINES, TYPE ** (6") (III)
4810000000-E	1205	43,660	LF	PAINT PAVEMENT MARKING LINES (4")
4815000000-E	1205	5,549	LF	PAINT PAVEMENT MARKING LINES (6")
4820000000-E	1205	10,504	LF	PAINT PAVEMENT MARKING LINES (8")
4825000000-E	1205	2,417	LF	PAINT PAVEMENT MARKING LINES (12")
4835000000-E	1205	1,205	LF	PAINT PAVEMENT MARKING LINES (24")
4840000000-N	1205	16	EA	PAINT PAVEMENT MARKING CHARACTER
4845000000-N	1205	111	EA	PAINT PAVEMENT MARKING SYMBOL
4850000000-E	1205	1,813	LF	REMOVAL OF PAVEMENT MARKING LINES (4")
4855000000-E	1205	9,292	LF	REMOVAL OF PAVEMENT MARKING LINES (6")
4870000000-E	1205	50	LF	REMOVAL OF PAVEMENT MARKING LINES (24")
4900000000-N	1251	532	EA	PERMANENT RAISED PAVEMENT MARKERS
4905000000-N	1253	130	EA	SNOWPLOWABLE PAVEMENT MARKERS
4935000000-N	1267	50	EA	FLEXIBLE DELINEATORS (CRYSTAL)
4940000000-N	1267	10	EA	FLEXIBLE DELINEATORS (YELLOW)
5025000000-E	SP	14.8	CY	HIGH MOUNT FOUNDATIONS
5070000000-N	1405	8	EA	STANDARD FOUNDATION ********* (TYPE R1)
5070000000-N	1405	2	EA	STANDARD FOUNDATION ********* (TYPE R2)
5120000000-N	1407	1	EA	ELECTRIC SERVICE POLE **** ******** (30', CLASS 4)
5125000000-E	1407	65	LF	ELECTRIC SERVICE LATERAL ********** (3 #1/0 USE)
5155000000-E	1409	85	LF	ELECTRICAL DUCT, TYPE BD, SIZE ***** (2")
5155000000-E	1409	285	LF	ELECTRICAL DUCT, TYPE BD, SIZE ***** (3")
5155000000-E	1409	45	LF	ELECTRICAL DUCT, TYPE BD, SIZE ***** (4")
5160000000-E	1409	95	LF	ELECTRICAL DUCT, TYPE JA, SIZE ***** (3")
5160000000-E	1409	130	LF	ELECTRICAL DUCT, TYPE JA, SIZE ***** (6")
5170000000-E	1410	215	LF	** #8 W/G FEEDER CIRCUIT (2)
5180000000-E	1410	1,135	LF	** #4 W/G FEEDER CIRCUIT (2)
5185000000-E	1410	275	LF	** #2 W/G FEEDER CIRCUIT (2)
5190000000-E	1410	1,482	LF	********** FEEDER CIRCUIT (2 #1 W/G)
5190000000-E	1410	515	LF	********** FEEDER CIRCUIT (2 #1/0 W/G)
5205000000-E	1410	2,754	LF	** #8 W/G FEEDER CIRCUIT IN ***** CONDUIT (2, 1.5")
5210000000-E	1410	895	LF	** #6 W/G FEEDER CIRCUIT IN ***** CONDUIT (2, 1.5")
5215000000-E	1410	311	LF	** #4 W/G FEEDER CIRCUIT IN ***** CONDUIT (2, 1.5")
5220000000-E	1410	740	LF	** #2 W/G FEEDER CIRCUIT IN ***** CONDUIT (2, 1.5")
5225000000-E	1410	1,220	LF	** #1 W/G FEEDER CIRCUIT IN ***** CONDUIT (2, IN 2" CONDUIT)
5230000000-E	1410	1,095	LF	********** FEEDER CIRCUIT IN ** CONDUIT (2 #1/0 W/G, 2")
5240000000-N	1411	9	EA	ELECTRICAL JUNCTION BOXES ********** (PC18)
5240000000-N	1411	3	EA	ELECTRICAL JUNCTION BOXES ********** (PC30)
5240000000-N	1411	2	EA	ELECTRICAL JUNCTION BOXES ********** (PC36)
5255000000-N	1413	Lump Sum		PORTABLE LIGHTING
5270000000-N	SP	2	EA	GENERIC LIGHTING ITEM FOUNDATION COVER
5270000000-N	SP	1	EA	GENERIC LIGHTING ITEM RELOCATE CONTROL SYSTEM
5270000000-N	SP	10	EA	GENERIC LIGHTING ITEM RELOCATE LIGHT STANDARD
5270000000-N	SP	2	EA	GENERIC LIGHTING ITEM REMOVE LIGHT STANDARD
5270000000-N	SP	12	EA	GENERIC LIGHTING ITEM REMOVE LIGHT STANDARD FOUNDATION
5270000000-N	SP	2	EA	GENERIC LIGHTING ITEM REMOVE TWIN ARM LIGHT STANDARD
5270000000-N	SP	8	EA	GENERIC LIGHTING ITEM REPLACE LUMINAIRE, TYPE HIGH MAST, 1KW, HPS
5270000000-N	SP	22	EA	GENERIC LIGHTING ITEM REPLACE LUMINAIRE, TYPE RDW 250W HPS, MS2
5325200000-E	1510	143	LF	2" WATER LINE
5325600000-E	1510	218	LF	6" WATER LINE
5326200000-E	1510	571	LF	12" WATER LINE
5536000000-E	1515	2	EA	2" VALVE
5540000000-E	1515	3	EA	6" VALVE
5558000000-E	1515	4	EA	12" VALVE
5589200000-E	1515	2	EA	2" AIR RELEASE VALVE
5648000000-N	1515	1	EA	RELOCATE WATER METER
5649000000-N	1515	2	EA	RECONNECT WATER METER
5672000000-N	1515	5	EA	RELOCATE FIRE HYDRANT
5691500000-E	1520	20	LF	12" SANITARY GRAVITY SEWER
5709300000-E	1520	299	LF	6" FORCE MAIN SEWER
5768000000-N	1520	5	EA	SANITARY SEWER CLEAN-OUT
5804000000-E	1530	280	LF	ABANDON 12" UTILITY PIPE
6000000000-E	1605	12,600	LF	TEMPORARY SILT FENCE
6006000000-E	1610	1,320	TON	STONE FOR EROSION CONTROL, CLASS A
6009000000-E	1610	3,040	TON	STONE FOR EROSION CONTROL, CLASS B
6012000000-E	1610	2,360	TON	SEDIMENT CONTROL STONE
6015000000-E	1615	49	ACR	TEMPORARY MULCHING
6018000000-E	1620	1,400	LB	SEED FOR TEMPORARY SEEDING
6021000000-E	1620	6.25	TON	FERTILIZER FOR TEMPORARY SEEDING
6024000000-E	1622	4,000	LF	TEMPORARY SLOPE DRAINS
6029000000-E	SP	1,300	LF	SAFETY FENCE
6030000000-E	1630	6,010	CY	SILT EXCAVATION
6036000000-E	1631	30,000	SY	MATTING FOR EROSION CONTROL
6037000000-E	SP	1,300	SY	COIR FIBER MAT
6038000000-E	SP	3,930	SY	PERMANENT SOIL REINFORCEMENT MAT
6042000000-E	1632	2,850	LF	1/4" HARDWARE CLOTH
6070000000-N	1639	4	EA	SPECIAL STILLING BASINS
6071010000-E	SP	2,400	LF	WATTLE
6071012000-E	SP	100	LF	COIR FIBER WATTLE
6071020000-E	SP	1,200	LB	POLYACRYLAMIDE (PAM)
6071030000-E	1640	2,000	LF	COIR FIBER BAFFLE
6071050000-E	SP	10	EA	"*" SKIMMER (1-1/2")
6071050000-E	SP	1	EA	"*" SKIMMER (2")
6071050000-E	SP	1	EA	"*" SKIMMER (2-1/2")
6084000000-E	1660	48	ACR	SEEDING & MULCHING
6087000000-E	1660	28	ACR	MOWING
6090000000-E	1661	500	LB	SEED FOR REPAIR SEEDING
6093000000-E	1661	1.75	TON	FERTILIZER FOR REPAIR SEEDING
6096000000-E	1662	1,175	LB	SEED FOR SUPPLEMENTAL SEEDING
6108000000-E	1665	35	TON	FERTILIZER TOPDRESSING
6114500000-N	1667	60	MHR	SPECIALIZED HAND MOWING
6117000000-N	SP	75	EA	RESPONSE FOR EROSION CONTROL
7048500000-E	1705	16	EA	PEDESTRIAN SIGNAL HEAD (16", 1 SECTION W/COUNTDOWN)
7060000000-E	1705	10,185	LF	SIGNAL CABLE
7120000000-E	1705	49	EA	VEHICLE SIGNAL HEAD (12", 3 SECTION)
7132000000-E	1705	7	EA	VEHICLE SIGNAL HEAD (12", 4 SECTION)
7144000000-E	1705	3	EA	VEHICLE SIGNAL HEAD (12", 5 SECTION)
7264000000-E	1710	2,045	LF	MESSENGER CABLE (3/8")
7300000000-E	1715	2,960	LF	UNPAVED TRENCHING (*********) (1,2")

STATE OF NORTH CAROLINA
SUMMARY OF QUANTITIES

PROJECT REFERENCE No.	SHEET No.
I-4413	3 C30253

ItemNumber	Sec #	Quantity	Unit	Description
7300000000-E	1715	20	LF	UNPAVED TRENCHING (**********) (2,2")
7300000000-E	1715	40	LF	UNPAVED TRENCHING (**********) (3,2")
7300100000-E	1715	2,980	LF	UNPAVED TRENCHING FOR TEMP-ORARY LEAD-IN
7301000000-E	1715	440	LF	DIRECTIONAL DRILL (**********) (1,2")
7301000000-E	1715	155	LF	DIRECTIONAL DRILL (**********) (2,2")
7324000000-N	1716	50	EA	JUNCTION BOX (STANDARD SIZE)
7348000000-N	1716	4	EA	JUNCTION BOX (OVER-SIZED, HEA-VY DUTY)
7360000000-N	1720	7	EA	WOOD POLE
7372000000-N	1721	20	EA	GUY ASSEMBLY
7408000000-E	1722	1	EA	1" RISER WITH WEATHERHEAD
7420000000-E	1722	12	EA	2" RISER WITH WEATHERHEAD
7444000000-E	1725	10,600	LF	INDUCTIVE LOOP SAWCUT
7456000000-E	1726	27,920	LF	LEAD-IN CABLE (**********) (14-2)
7575142000-N	1736	6	EA	900MHZ RADIO
7575142060-N	SP	1	EA	MODIFY RADIO INSTALLATION
7575160000-E	1734	2,400	LF	REMOVE EXISTING COMMUNICATIONS CABLE
7576000000-N	SP	5	EA	METAL STRAIN SIGNAL POLE
7588000000-N	SP	4	EA	METAL POLE WITH SINGLE MAST ARM
7590000000-N	SP	2	EA	METAL POLE WITH DUAL MAST ARM
7613000000-N	SP	11	EA	SOIL TEST
7614100000-E	SP	77	CY	DRILLED PIER FOUNDATION
7631000000-N	SP	6	EA	MAST ARM WITH METAL POLE DE-SIGN
7636000000-N	1745	19	EA	SIGN FOR SIGNALS
7642100000-N	1743	2	EA	TYPE I POST WITH FOUNDATION
7642200000-N	1743	17	EA	TYPE II PEDESTAL WITH FOUND-ATION

ItemNumber	Sec #	Quantity	Unit	Description
7684000000-N	1750	3	EA	SIGNAL CABINET FOUNDATION
7756000000-N	1751	3	EA	CONTROLLER WITH CABINET (TYPE 2070L, BASE MOUNTED)
7768000000-N	1751	1	EA	CONTROLLER WITH CABINET (TYPE 2070L, POLE MOUNTED)
7780000000-N	1751	28	EA	DETECTOR CARD (TYPE 2070L)
7901000000-N	1753	3	EA	CABINET BASE EXTENDER
7960000000-N	SP	1	EA	METAL POLE FOUNDATION REMOVAL
7972000000-N	SP	1	EA	METAL POLE REMOVAL
7985000000-N	SP	Lump Sum		GENERIC SIGNAL ITEM REMOVE OVER HEIGHT VEHICLE DETECTION SYSTEM

COMPUTED BY: B. ELAM DATE: 4/9/2012

CHECKED BY: J. DALTON DATE: 4/9/2012

NORTH CAROLINA DEPARTMENT OF TRANSPORTATION
DIVISION OF HIGHWAYS

PROJECT NO.	SHEET NO.
I-4413	3-A

Note: Invert Elevations indicated are for Bid Purposes only and shall not be used for project construction stakeout. See "Standard Specifications For Roads and Structures, Section 300-5".

LIST OF PIPES, ENDWALLS, ETC. (FOR PIPES 48 INCHES & UNDER)

STATION	LOCATION (LT, RT, OR CL)	STRUCTURE NO. FROM	STRUCTURE NO. TO	TOP ELEVATION	INVERT ELEVATION	INVERT ELEVATION	SLOPE CRITICAL	SIDE DRAIN PIPE (RCP, CSP, CAAP, HDPE, or PVC) 12"	15"	18"	24"	30"	36"	42"	48"	DO NOT USE RCP	DO NOT USE CSP	DO NOT USE CAAP	DO NOT USE HDPE
14+50.00 -L-	LT	0451		133.22															
		0451	0450		130.22	128.83													
13+35 -L-	LT	0449		131.50															
13+35 -L-	LT	0450		131.85															
		0449	0450		129.25	128.83			16								X	X	X
12+30-L-	LT	0448		131.43															
		0450	0448		128.83	128.40													
11+82.25-L-	LT	0446		130.78															
		0448	0446		128.40	128.26													
17+05-L-	RT	0430		139.87															
		0430	0444		136.87	133.35													
16+00-L-	RT	0444		136.35															
		0444	0443		133.35	128.78													
13+41-L-	RT	0442		132.10															
		0442	0443		129.85	128.78			16								X	X	X
13+41-L-	RT	0443		131.78															
		0443	0447		128.78	128.33	X												
12+55-L-	RT	0447		131.40															
		0447	0468		128.33	128.00	X												
11+87.26-L-	RT	0452		130.86															
		0452	0453		128.42	128.40													
11+79.40-L-	RT	0453																	
17+47-L-	LT	0427		141.40															
		0427	0428		138.40	136.30													
19+12-L-	RT	0445		148.00															
		0445	0431		145.00	144.82													
19+12-L-	LT	0431		148.00															
		0431	0435		144.82	144.53													
20+45-L-	LT	0437		152.40															
		0437	0435		149.65	144.53													
19+85-L-	LT	0435		150.10															
		0435	0436		144.53	129.82			88							X			X
32+65-Y1-	RT	0419																	
		0419	0420		125.51	125.48													
21+45-L-	RT	0439		155.70															
		0439	0440		152.95	131.09			100							X			X
23+50-L-	LT	0409		155.23															
		0409	0410		152.48	130.14			108							X			X
24+50-L-	RT	0414		152.94															
		0414	0415		150.19	148.45													
25+00-L-	RT	0415		151.20															
		0415	0416		148.45	128.92			92							X			X
SHEET TOTALS									420										

STATION	FROM	TO	C.S. PIPE 12" .064	15" .064	18" .064	24" .064	30" .079	36" .079	42" .109	48" .109	R.C. PIPE CLASS III 12"	15"	18"	24"	30"	36"	42"	48"	R.C. PIPE CLASS IV 12"	15"	18"	24"	30"	36"	42"	48"
14+50.00 -L-	0451																									
	0451	0450																		116						
13+35 -L-	0449																									
13+35 -L-	0450																									
	0449	0450																								
12+30-L-	0448																									
	0450	0448																		108						
11+82.25-L-	0446																									
	0448	0446										64														
17+05-L-	0430																									
	0430	0444																		108						
16+00-L-	0444																									
	0444	0443																		260						
13+41-L-	0442																									
	0442	0443																								
13+41-L-	0443																									
	0443	0447																		88						
12+55-L-	0447																									
	0447	0468																		160						
11+87.26-L-	0452																									
	0452	0453																		8						
11+79.40-L-	0453																									
17+47-L-	0427																									
	0427	0428																		60						
19+12-L-	0445																									
	0445	0431																		60						
19+12-L-	0431																									
	0431	0435										92														
20+45-L-	0437																									
	0437	0435																		64						
19+85-L-	0435																									
	0435	0436																								
32+65-Y1-	0419																									
	0419	0420	12																							
21+45-L-	0439																									
	0439	0440																								
23+50-L-	0409																									
	0409	0410																								
24+50-L-	0414																									
	0414	0415																		52						
25+00-L-	0415																									
	0415	0416																								
SHEET TOTALS			12									156								1084						

STATION	FROM	TO	15" DUCTILE IRON PIPE (SEALED DRAINAGE SYSTEM)	18" DUCTILE IRON PIPE (SEALED DRAINAGE SYSTEM)		15" SIDE DRAIN PIPE	18" SIDE DRAIN PIPE	ENDWALLS STD. 838.01 OR STD. 838.11 (UNLESS NOTED OTHERWISE) CU. YARDS R.C.P.	C.S.P.	QUANTITIES FOR DRAINAGE STRUCTURES PER EACH (0' THRU 5.0')	*TOTAL L.F. FOR PAY QUANTITY SHALL BE COL. 'A' + (1.3 X COL.'B') LIN. FT. A 5.0' THRU 10.0'	B 10.0' AND ABOVE	C.B. STD. 840.01 OR STD. 840.02	FRAME, GRATES, AND HOOD STANDARD 840.03 TYPE OF GRATE E	F	G	CONCRETE TRANSITIONAL SECTION DROP INLET	CATCH BASIN
14+50.00 -L-	0451									1			1		1			
	0451	0450																
13+35 -L-	0449									1								
13+35 -L-	0450									1			1		1			
	0449	0450																
12+30-L-	0448									1			1		1			
	0450	0448																
11+82.25-L-	0446									1			1	1				
	0448	0446																
17+05-L-	0430									1			1			1		1
	0430	0444																
16+00-L-	0444									1			1			1		
	0444	0443																
13+41-L-	0442									1								
	0442	0443																
13+41-L-	0443									1			1			1		
	0443	0447																
12+55-L-	0447									1			1			1		
	0447	0468																
11+87.26-L-	0452									1			1	1				
	0452	0453																
11+79.40-L-	0453																	
17+47-L-	0427									1			1		1			1
	0427	0428																
19+12-L-	0445									1			1			1		1
	0445	0431																
19+12-L-	0431									1			1		1			1
	0431	0435																
20+45-L-	0437									1								
	0437	0435																
19+85-L-	0435									1	0.57							
	0435	0436																
32+65-Y1-	0419																	
	0419	0420																
21+45-L-	0439									1								
	0439	0440																
23+50-L-	0409									1								
	0409	0410																
24+50-L-	0414									1								
	0414	0415																
25+00-L-	0415									1								
	0415	0416																
SHEET TOTALS										20	0.57		12	2	5	5		4

STATION	FROM	TO	D.I. STD. 840.14 OR STD. 840.15	D.I. FRAME AND GRATES STD. 840.16	G.D.I. TYPE "A" STD. 840.17 OR 840.26	G.D.I. TYPE "B" STD. 840.18 OR 840.27	G.D.I. TYPE "D" STD. 840.19 OR 840.28	T.B.D.I. STD. 840.35	G.D.I. FRAME WITH TWO GRATES STD. 840.22	G.D.I. (N.S.) FRAME WITH TWO GRATES STD. 840.24	G.D.I. (N.S.) FRAME WITH TWO GRATES STD. 840.29	J.B. STD. 840.31 OR 840.32	T.B.J.B. STD. 840.34	MH FRAME & COVER STD. 840.54	P.P.E.S. STD. 310.02 OR 310.04	ADJUST 2GI	CONVERT DI TO JB	SIDE DRAIN PIPE ELBOWS NO. & SIZE	CONC. & BRICK PIPE PLUG, C.Y. STD. 840.71	FLOWABLE PIPE FILL MATERIAL, CY	CONC. COLLARS CL. "B" C.Y. STD. 840.72	PIPE REMOVAL LIN. FT.	REMARKS
14+50.00 -L-	0451																						
	0451	0450																					
13+35 -L-	0449		1	1																			
13+35 -L-	0450																						
	0449	0450																					
12+30-L-	0448																						
	0450	0448																					
11+82.25-L-	0446																						REMOVE EXISTING CB
	0448	0446																					
17+05-L-	0430																						
	0430	0444																					
16+00-L-	0444																						
	0444	0443																					
13+41-L-	0442		1	1																			
	0442	0443																					
13+41-L-	0443																						
	0443	0447																				240	
12+55-L-	0447																						REMOVE 240 LF EXTG. 18" RCP
	0447	0468																					
11+87.26-L-	0452																						REMOVE EXISTING CB
	0452	0453																					
11+79.40-L-	0453																				0.399		COLLAR AND EXTEND EXTG. 15" RCP
17+47-L-	0427																						
	0427	0428																					
19+12-L-	0445																						
	0445	0431																					
19+12-L-	0431																						
	0431	0435																					
20+45-L-	0437							1			1												
	0437	0435																					
19+85-L-	0435							1			1												
	0435	0436																1 - 15"					
32+65-Y1-	0419																				0.399		COLLAR AND EXTEND EXTG. 15" CMP
	0419	0420																					
21+45-L-	0439							1			1												
	0439	0440																1 - 15"					
23+50-L-	0409							1			1												
	0409	0410																1 - 15"					
24+50-L-	0414							1			1												
	0414	0415																					
25+00-L-	0415							1			1												
	0415	0416																1 - 15"					
SHEET TOTALS			2	2				6			6							4 - 15"			0.798	240	

ABBREVIATIONS

C.B.	CATCH BASIN
N.D.I.	NARROW DROP INLET
D.I.	DROP INLET
G.D.I.	GRATED DROP INLET
G.D.I.(N.S.)	(NARROW SLOT)
J.B.	JUNCTION BOX
M.H.	MANHOLE
T.B.D.I.	TRAFFIC BEARING DROP INLET
T.B.J.B.	TRAFFIC BEARING JUNCTION BOX

GADDYJ-LT

COMPUTED BY: B. ELAM DATE: 4/9/2012

CHECKED BY: J. DALTON DATE: 4/9/2012

NORTH CAROLINA DEPARTMENT OF TRANSPORTATION
DIVISION OF HIGHWAYS

PROJECT NO.	SHEET NO.
I-4413	3-B

LIST OF PIPES, ENDWALLS, ETC. (FOR PIPES 48 INCHES & UNDER)

STATION / SIZE / THICKNESS OR GAUGE	LOCATION (LT, RT, OR CL)'	STRUCTURE NO. FROM	STRUCTURE NO. TO	TOP ELEVATION	INVERT ELEVATION	INVERT ELEVATION	SLOPE CRITICAL	SIDE DRAIN PIPE (RCP, CSP, CAAP, HDPE, or PVC) 12"	15"	18"	24"	30"	36"	42"	48"	DO NOT USE RCP	DO NOT USE CSP	DO NOT USE CAAP	DO NOT USE HDPE
25+88-L-	LT	0441		148.60															
		0441	0413		145.60	145.42													
25+88-L-	RT	0413		148.60															
		0413	0412		145.42	138.66													
27+62-L-	RT	0412		141.68															
		0412	0421		138.66	132.25													
29+25-L-	RT	0421		135.26															
		0421	0423		132.25	126.72													
29+00-L-	RT	0411		130.13															
		0411	0422		127.13	126.93													
29+66-L-	RT	0422		130.33															
		0422	0423		126.93	126.72			64								X	X	X
30+25-L-	RT	0423		131.88															
		0423	0418		125.97	125.76													
30+25-L-	LT	0418		131.82															
		0418	0459		125.76	123.49					52						X	X	X
27+79-L-	LT	0496		140.96															
		0496	0497		137.96	122.89			92							X			X
31+68-L-	RT	0480		128.40															
		0480	0488		125.23	125.15													
31+85-L-	RT	0488		128.55															
		0488	0489		125.15	123.50													
31+78-L-	LT	0481		128.90															
		0481	0490		125.73	124.00													
35+50-L-	RT	0401																	
		0401	0402		126.80	124.98													
34+96-L-	RT	0402		128.23															
		0402	0403		124.98	124.68													
34+00	RT	0403		128.04															
		0403	0404		124.68	124.41													
33+09-L-	RT	0404		127.77															
		0404	0406		124.41	122.50													
33+62-Y2-	RT	0434		127.43															
		0434	0424		124.43	124.38													
33+75-Y2-	RT	0424		127.73															
		0424	0405		124.38	124.17													
33+[illegible]	LT	0405		127.78															
		0405	0407		123.36	122.40													
32+05-Y2-	RT	0456		128.03															
		0456	0457		125.03	124.72													
31+50-Y2-	RT	0455		128.60															
		0455	0457		125.43	124.73													
31+50-Y2-	RT	0457		127.73															
		0457	0458		124.72	123.21													
30+70-Y2-	RT	0458		126.22															
		0458	0460		123.21	122.90													
SHEET TOTALS									156		52								

STATION	FROM	TO	C.S. PIPE 12" (.064)	15" (.064)	18" (.064)	24" (.064)	30" (.079)	36" (.079)	42" (.109)	48" (.109)	R.C. PIPE CLASS III 12"	15"	18"	24"	30"	36"	42"	48"	R.C. PIPE CLASS IV 12"	15"	18"	24"	30"	36"	42"	48"	15" DUCTILE IRON PIPE (SEALED DRAINAGE SYSTEM)	18" DUCTILE IRON PIPE (SEALED DRAINAGE SYSTEM)		15" SIDE DRAIN PIPE	18" SIDE DRAIN PIPE
25+88-L-	0441																														
	0441	0413																		60											
25+88-L-	0413																														
	0413	0412																		172											
27+62-L-	0412																														
	0412	0421																		164											
29+25-L-	0421																														
	0421	0423																		100											
29+00-L-	0411																														
	0411	0422																		68											
29+66-L-	0422																														
	0422	0423																													
30+25-L-	0423																														
	0423	0418												72																	
30+25-L-	0418																														
	0418	0459																													
27+79-L-	0496																														
	0496	0497																													
31+68-L-	0480																														
	0480	0488																									24				
31+85-L-	0488																														
	0488	0489																									56				
31+78-L-	0481																														
	0481	0490																									64				
35+50-L-	0401																														
	0401	0402											56																		
34+96-L-	0402																														
	0402	0403																			92										
34+00	0403																														
	0403	0404																										104			
33+09-L-	0404																														
	0404	0406																										60			
33+62-Y2-	0434																														
	0434	0424																									16				
33+75-Y2-	0424																														
	0424	0405																									72				
33+[illegible]	0405																														
	0405	0407																									100				
32+05-Y2-	0456																														
	0456	0457																		52											
31+50-Y2-	0455																														
	0455	0457																		20											
31+50-Y2-	0457																														
	0457	0458																		72											
30+70-Y2-	0458																														
	0458	0460																		92											
SHEET TOTALS													56	72						800	92						332	164			

STATION	FROM	TO	ENDWALLS STD. 838.01 OR STD. 838.11 (UNLESS NOTED OTHERWISE) CU. YARDS R.C.P.	C.S.P.	QUANTITIES FOR DRAINAGE STRUCTURES PER EACH (0' THRU 5.0')	LIN. FT. A 5.0' THRU 10.0'	LIN. FT. B 10.0' AND ABOVE (*TOTAL L.F. FOR PAY QUANTITY SHALL BE COL. 'A' + (1.3 X COL.'B'))	C.B. STD. 840.01 OR STD. 840.02	FRAME, GRATES, AND HOOD STANDARD 840.03 TYPE OF GRATE E	F	G	CONCRETE TRANSITIONAL SECTION DROP INLET	CATCH BASIN	D.I. STD. 840.14 OR STD. 840.15	D.I. FRAME AND GRATES STD. 840.16	G.D.I. TYPE "A" STD. 840.17 OR 840.26	G.D.I. TYPE "B" STD. 840.18 OR 840.27	G.D.I. TYPE "D" STD. 840.19 OR 840.28	T.B.D.I. STD. 840.35	G.D.I. FRAME WITH TWO GRATES STD. 840.22	G.D.I. (N.S.) FRAME WITH TWO GRATES STD. 840.24	G.D.I. (N.S.) FRAME WITH TWO GRATES STD. 840.29	J.B. STD. 840.31 OR 840.32	T.B.J.B. STD. 840.34	MH FRAME & COVER STD. 840.54	P.P.E.S. STD. 310.02 OR 310.04	ADJUST 2GI	CONVERT DI TO JB	SIDE DRAIN PIPE ELBOWS NO. & SIZE	CONC. & BRICK PIPE PLUG, C.Y. STD. 840.71	FLOWABLE PIPE FILL MATERIAL, CY	CONC. COLLARS CL. "B" C.Y. STD. 840.72	PIPE REMOVAL LIN. FT.	REMARKS
25+88-L-	0441				1			1			1		1																					
	0441	0413																																
25+88-L-	0413				1			1		1			1																					
	0413	0412																																
27+62-L-	0412				1			1		1			1																					
	0412	0421																																
29+25-L-	0421				1			1		1																								
	0421	0423																																
29+00-L-	0411				1			1	1																									
	0411	0422																																
29+66-L-	0422				1			1	1																									
	0422	0423																																
30+25-L-	0423				1	0.90		1		1																								
	0423	0418																																
30+25-L-	0418				1	1.06		1			1																							
	0418	0459																																
27+79-L-	0496				1			1			1		1																					
	0496	0497																										1 - 15"					
31+68-L-	0480				1			1	1																									
	0480	0488																																
31+85-L-	0488				1			1		1																								
	0488	0489																																
31+78-L-	0481				1			1	1																									
	0481	0490																																
35+50-L-	0401																								1								OPEN END PIPE
	0401	0402																														49	REMOVE 49 LF EXTG. 18" RCP
34+96-L-	0402				1			1	1																								REMOVE EXTG. CB
	0402	0403																														76	REMOVE 76 LF EXTG. 18" RCP
34+00	0403				1			1			1																						REMOVE EXTG. CB
	0403	0404																														56	REMOVE 56 LF EXTG. 18" RCP AND CB
33+09-L-	0404				1			1	1																									
	0404	0406																														100	REMOVE 100 LF EXTG. 18" RCP AND JB
33+62-Y2-	0434				1			1	1																									
	0434	0424																																
33+75-Y2-	0424				1			1	1																									
	0424	0405																																
33+[illegible]	0405				1			1	1																									
	0405	0407																																
32+05-Y2-	0456				1			1		1																								
	0456	0457																																
31+50-Y2-	0455				1							1		1	1																			
	0455	0457																																
31+50-Y2-	0457				1			1		1																								
	0457	0458																																
30+70-Y2-	0458				1			1	1																									
	0458	0460																																
SHEET TOTALS					22	1.96		21	10	7	4	1	4	1	1												1			1 - 15"				281	

ABBREVIATIONS

C.B.	CATCH BASIN
N.D.I.	NARROW DROP INLET
D.I.	DROP INLET
G.D.I.	GRATED DROP INLET
G.D.I.(N.S.)	GRATED DROP INLET (NARROW SLOT)
J.B.	JUNCTION BOX
M.H.	MANHOLE
T.B.D.I.	TRAFFIC BEARING DROP INLET
T.B.J.B.	TRAFFIC BEARING JUNCTION BOX

GADDYJ-LT

COMPUTED BY:	B. ELAM	DATE:	4/9/2012
CHECKED BY:	J. DALTON	DATE:	4/9/2012

NORTH CAROLINA DEPARTMENT OF TRANSPORTATION
DIVISION OF HIGHWAYS

PROJECT NO.	SHEET NO.
I-4413	3-C

LIST OF PIPES, ENDWALLS, ETC. (FOR PIPES 48 INCHES & UNDER)

STATION / SIZE / THICKNESS OR GAUGE	LOCATION (LT, RT, OR CL)'	STRUCTURE NO. FROM	STRUCTURE NO. TO	TOP ELEVATION	INVERT ELEVATION	INVERT ELEVATION	SLOPE CRITICAL	SIDE DRAIN PIPE (RCP, CSP, CAAP, HDPE, or PVC) 12"	15"	18"	24"	30"	36"	42"	48"	DO NOT USE RCP	DO NOT USE CSP	DO NOT USE CAAP	DO NOT USE HDPE	C.S. PIPE 12" .064	15" .064	18" .064	24" .064	30" .079	36" .079	42" .109	48" .109	R.C. PIPE CLASS III 12"	15"	18"	24"	30"	36"	42"	48"	R.C. PIPE CLASS IV 12"	15"	18"	24"	30"	36"	42"	48"	15" DUCTILE IRON PIPE (SEALED DRAINAGE SYSTEM)	18" DUCTILE IRON PIPE (SEALED DRAINAGE SYSTEM)		15" SIDE DRAIN PIPE	18" SIDE DRAIN PIPE	ENDWALLS STD. 838.01 OR STD. 838.11 (UNLESS NOTED OTHERWISE) CU. YARDS R.C.P.	C.S.P.	QUANTITIES FOR DRAINAGE STRUCTURES PER EACH (0' THRU 5.0')	*TOTAL L.F. FOR PAY QUANTITY SHALL BE COL. 'A' + (1.3 X COL.'B') LIN. FT. A 5.0' THRU 10.0'	B 10.0' AND ABOVE	C.B. STD. 840.01 OR STD. 840.02	FRAME, GRATES, AND HOOD STANDARD 840.03 TYPE OF GRATE E	F	G	CONCRETE TRANSITIONAL SECTION DROP INLET	CATCH BASIN	D.I. STD. 840.14 OR STD. 840.15	D.I. FRAME AND GRATES STD. 840.16	G.D.I. TYPE "A" STD. 840.17 OR 840.26	G.D.I. TYPE "B" STD. 840.18 OR 840.27	G.D.I. TYPE "D" STD. 840.19 OR 840.28	T.B.D.I. STD. 840.35	G.D.I. FRAME WITH TWO GRATES STD. 840.22	G.D.I. (N.S.) FRAME WITH TWO GRATES STD. 840.24	G.D.I. (N.S.) FRAME WITH TWO GRATES STD. 840.29	J.B. STD. 840.31 OR 840.32	T.B.J.B. STD. 840.34	MH FRAME & COVER STD. 840.54	P.P.E.S. STD. 310.02 OR 310.04	ADJUST 2GI	CONVERT DI TO JB	SIDE DRAIN PIPE ELBOWS NO. & SIZE	CONC. & BRICK PIPE PLUG, C.Y. STD. 840.71	FLOWABLE PIPE FILL MATERIAL, CY	CONC. COLLARS CL. "B" C.Y. STD. 840.72	PIPE REMOVAL LIN. FT.	REMARKS
12+90-Y2-	LT	0473		127.50																																															1												1				1													
		0473	0475		124.75	124.11																							212																																																			
15+10-Y2-	LT	0475		128.10																																															1												1				1													
		0475	0476		123.86	123.49																								124																																																	
16+35-Y2-	LT	0476		128.80																																															1	0.31											1				1													
		0476	0477		123.49	121.32																																96																																										
34+50-Y1-	LT	0474		126.90																																															1												1			1														
		0474	0472		124.15	123.32			204																																																																									
36+50-Y1-	LT	0472		126.10																																															1												1			1														
		0472	0477		123.07	121.32				120																																																																						
15+08-RAMPA-	LT	0477		126.60																																															1	0.28										1				1														
		0477	0471		121.32	120.30						340																																																																				
18+50-RAMPA-	LT	0471		129.00																																															1	3.70										1				1														
		0471	0479		120.30	119.71						200																																																																			
10+84-SPURA-	RT	0433		147.35																																															1			1			1		1																						
		0433	0479		144.35	125.50																																104																																											
21+50-Y2-	RT	0479		129.60																																															1	4.89										1				1														
		0479	0478		119.71	119.55						52																																																																				
19+28-RAMPC-	LT	0463	0464		126.00	125.91																									8																																																	
19+27-RAMPC-	LT	0464		130.00																																															1										1				1													REMOVE EXTG. DI
16+47-RAMPC-	LT	0483		130.60																																																																						1							ADJUST 2GI
50+75-Y1-	RT	0484		127.50																																															1													1		1														
		0484	0485		125.58	125.50			20																																																																								
14+40-RAMPC-	LT	0485		129.30																																																																							1						CONVERT DI TO JB
10+00-RAMPD-	RT	0486																																																																											0.4465		COLLAR AND EXTEND EXTG. 18" RCP
		0486	0487	126.10	126.00																									16																																																		
42+48-Y1-	LT	0491		127.20																																															1													1		1													REMOVE EXTG. DI
		0491	0492		125.30	124.60																																56																																										68	REMOVE 68 LF EXTG. 18" RCP
43+01-Y1-	LT	0492		129.50																																															1																			1	1									REMOVE EXTG. JB
		0492	0493		124.60	123.80																								204																																																		190	REMOVE 190 LF EXTG. 18" RCP
45+04-Y1-	LT	0493		130.00																																															1	1.20																			1	1									REMOVE EXTG. JB
37+75-L-	CL	0501		125.40	124.60																																		136																																												
26+[illegible]Y1-	LT	0701																																																																														0.4465		COLLAR AND EXTEND EXTG. 18" RCP
		0701	0702		123.63	123.60																								8																																																			
26+00-Y1-	LT	0702		125.80																																															1													1		1													REMOVE EXTG. 2GI
19+02-Y1-	LT	0704																																																																														0.4465		COLLAR AND EXTEND EXTG. 18" RCP
		0704	0705		122.79	122.75																								4																																																			
SHEET TOTALS									224	120	0	592																	212	356	8						160	96	136														15	10.38		1			1		1			4	5	3		9	3		0	2	2		1	1				1.3395	258	

ABBREVIATIONS

C.B.	CATCH BASIN
N.D.I.	NARROW DROP INLET
D.I.	DROP INLET
G.D.I.	GRATED DROP INLET
G.D.I.(N.S.)	(NARROW SLOT)
J.B.	JUNCTION BOX
M.H.	MANHOLE
T.B.D.I.	TRAFFIC BEARING DROP INLET
T.B.J.B.	TRAFFIC BEARING JUNCTION BOX

COMPUTED BY: B. ELAM DATE: 4/9/2012

CHECKED BY: J. DALTON DATE: 4/9/2012

GADDYJ-LT

PROJECT NO.	SHEET NO.
I-4413	3-D

NORTH CAROLINA DEPARTMENT OF TRANSPORTATION
DIVISION OF HIGHWAYS

LIST OF PIPES, ENDWALLS, ETC. (FOR PIPES 48 INCHES & UNDER)

STATION / SIZE / THICKNESS OR GAUGE	LOCATION (LT, RT, OR CL)	STRUCTURE NO. FROM	STRUCTURE NO. TO	TOP ELEVATION	INVERT ELEVATION	INVERT ELEVATION	SLOPE CRITICAL	SIDE DRAIN PIPE (RCP, CSP, CAAP, HDPE, or PVC) 12"	15"	18"	24"	30"	36"	42"	48"	DO NOT USE RCP	DO NOT USE CSP	DO NOT USE CAAP	DO NOT USE HDPE	C.S. PIPE 12" .064	15" .064	18" .064	24" .064	30" .079	36" .079	42" .109	48" .109
52+00-Y1-	RT																										
25+34-L-	LT																										
25+67-L-	CL																										
25+89-L-	RT																										
30+27 - 32+39-L-	RT																										
38+35-L-	CL																										
30+00-Y2-	RT																										
20+70-Y2-	RT																										
16+00-Y2-	RT																										
14+80-Y2-	RT																										
SHEET TOTALS																											
GRAND TOTALS									800	120	52	592									12						

STATION	R.C. PIPE CLASS III 12"	15"	18"	24"	30"	36"	42"	48"	R.C. PIPE CLASS IV 12"	15"	18"	24"	30"	36"	42"	48"	15" DUCTILE IRON PIPE (SEALED DRAINAGE SYSTEM)	18" DUCTILE IRON PIPE (SEALED DRAINAGE SYSTEM)		15" SIDE DRAIN PIPE	18" SIDE DRAIN PIPE	ENDWALLS STD. 838.01 OR STD. 838.11 (UNLESS NOTED OTHERWISE) CU. YARDS R.C.P.	C.S.P.	QUANTITIES FOR DRAINAGE STRUCTURES PER EACH (0' THRU 5.0')	LIN. FT. A 5.0' THRU 10.0'	B 10.0' AND ABOVE	C.B. STD. 840.01 OR STD. 840.02
52+00-Y1-																											
25+34-L-																											
25+67-L-																											
25+89-L-																											
30+27 - 32+39-L-																											
38+35-L-																											
30+00-Y2-																											
20+70-Y2-																											
16+00-Y2-																											
14+80-Y2-																											
SHEET TOTALS																											
GRAND TOTALS		368	412	80						2044	188	136					332	164						57	12.91		34

*TOTAL L.F. FOR PAY QUANTITY SHALL BE COL. 'A' + (1.3 X COL.'B')

STATION	FRAME, GRATES, AND HOOD STANDARD 840.03 TYPE OF GRATE E	F	G	CONCRETE TRANSITIONAL SECTION DROP INLET	CATCH BASIN	D.I. STD. 840.14 OR STD. 840.15	D.I. FRAME AND GRATES STD. 840.16	G.D.I. TYPE "A" STD. 840.17 OR 840.26	G.D.I. TYPE "B" STD. 840.18 OR 840.27	G.D.I. TYPE "D" STD. 840.19 OR 840.28	T.B.D.I. STD. 840.35	G.D.I. FRAME WITH TWO GRATES STD. 840.22	G.D.I. (N.S.) FRAME WITH TWO GRATES STD. 840.24	G.D.I. (N.S.) FRAME WITH TWO GRATES STD. 840.29	J.B. STD. 840.31 OR 840.32	T.B.J.B. STD. 840.34	MH FRAME & COVER STD. 840.54	P.P.E.S. STD. 310.02 OR 310.04	ADJUST 2GI	CONVERT DI TO JB	SIDE DRAIN PIPE ELBOWS NO. & SIZE	CONC. & BRICK PIPE PLUG, C.Y. STD. 840.71	FLOWABLE PIPE FILL MATERIAL, CY	CONC. COLLARS CL. "B" C.Y. STD. 840.72	PIPE REMOVAL LIN. FT.	REMARKS
52+00-Y1-																									158	REMOVE EXTG. 24" RCP
25+34-L-																						0.116				REMOVE EXTG. DI
25+67-L-																							25			
25+89-L-																						0.116				
30+27 - 32+39-L-																									213	REMOVE EXTG. 15" RCP AND CB'S (2)
38+35-L-																									62	REMOVE EXTG. 24" RCP
30+00-Y2-																									57	REMOVE EXTG. 24" RCP
20+70-Y2-																									133	REMOVE EXTG. 24" RCP
16+00-Y2-																									172	REMOVE EXTG. 15" RCP AND DI
14+80-Y2-																									48	REMOVE EXTG. 15" RCP
SHEET TOTALS																						0.232	25		843	
GRAND TOTALS	12	12	10	1	9	3	3	4	5	3	6	9	3	6		2	2	1	1	1	5 - 15"	0.232	25	2.1375	1622	

ABBREVIATIONS

C.B.	CATCH BASIN
N.D.I.	NARROW DROP INLET
D.I.	DROP INLET
G.D.I.	GRATED DROP INLET
G.D.I.(N.S.)	(NARROW SLOT)
J.B.	JUNCTION BOX
M.H.	MANHOLE
T.B.D.I.	TRAFFIC BEARING DROP INLET
T.B.J.B.	TRAFFIC BEARING JUNCTION BOX

COMPUTED BY: B. ELAM DATE: 4/9/2012

CHECKED BY: J. DALTON DATE: 4/9/2012

NORTH CAROLINA DEPARTMENT OF TRANSPORTATION
DIVISION OF HIGHWAYS

PROJECT NO.	SHEET NO.
I-4413	3-E

LIST OF PIPES, ENDWALLS, ETC. (FOR PIPES 54" & OVER)

GADDY-LT

STRUCTURE NO. FROM	STRUCTURE NO. TO	LOCATION (LT, RT, OR CL)*	TOP ELEVATION	INVERT ELEVATION	INVERT ELEVATION	SLOPE CRITICAL	CLASS III R.C. PIPE (UNLESS NOTED OTHERWISE) SIZE	CLASS III R.C. PIPE (UNLESS NOTED OTHERWISE) THICKNESS OR GAUGE	BITUMINOUS COATED C.S. PIPE TYPE B (UNLESS NOTED OTHERWISE) SIZE	BITUMINOUS COATED C.S. PIPE TYPE B (UNLESS NOTED OTHERWISE) THICKNESS OR GAUGE	DUCTILE IRON PIPE (SEALED DRAINAGE SYSTEM) SIZE	DUCTILE IRON PIPE (SEALED DRAINAGE SYSTEM) THICKNESS OR GAUGE	REINFORCED ENDWALLS WITH R.C. - C.Y.	REINFORCED ENDWALLS WITH C.S. - C.Y.	MASONRY DRAINAGE STRUCTURES CUBIC YARDS	C.B. STD. 840.01 OR 840.02	FRAMES, GRATES & HOOD STANDARD 840.03 TYPE OF GRATE E	F	G	CONCRETE TRANSITIONAL SECTION DROP INLET	CATCH BASIN	J.B. STD. 840.31 OR 840.32	MH FRAME & COVER STD. 840.54	D.I. STD. 840.14 OR STD. 840.15	D.I. FRAME AND GRATES STD. 840.16	REINF. CONC. FLARED END SECTIONS NO. & SIZE	CORR. STEEL FLARED END SECTIONS NO. & Size	CORR. STEEL ELBOWS NO. & SIZE	CONC. COLLARS CL. "B" C.Y. STD. 840.72	PIPE REMOVAL LIN. FT.	REMARKS
							54"		54"	.109	54"																					
							60"			.138	60"																					
							66"	CLASS IV		.168	66"																					
							72"		SHOP ELON-GATED	.133	72"																					
							78"			.168	78"																					
							84"			.138	84"																					
										.168																					
										.139																					
										.168																					
32+41.75-L-	RT	0425											7.9																		
		0425	0489		119.80	119.71									28																
32+40.85-L-	RT	0489		128.80											4.66					1	1										STANDARD DETAIL
		0489	0490		119.71	119.47									76																
32+38.5-L-	LT	0490		127.97											8.1				1												CB - SEE SPECIAL DETAIL
		0490	0498		119.47	118.60									276																
32+50.25-L-	RT	0426																													
		0426	0406		119.80	119.68									36																
32+49.15-L-	RT	0406		127.95											8.1				1												CB - SEE SPECIAL DETAIL
		0406	0407		119.68	119.46									68																REMOVE EXTG. 3'X4' RCBC (+/-40 LF)
32+47-L-	LT	0407		127.92											8.1				1												CB - SEE SPEC. DETAIL, REM. EXTG. CB
		0407	0408		119.46	119.31									48															72	REMOVE EXTG. 48" RCP (+/-72 LF)
32+45.52-L-	LT	0408		126.39											8.1												1				DI - SEE SPECIAL DETAIL
29+47.75-Y2-	RT	0465											8.7																		
		0465	0466		118.30	118.00		108																						90	REMOVE EXTG. 60" RCP (+/-90 LF)
29+58.9-Y2-	RT	0481																													
		0481	0482		118.30	118.00		108																							
SHEET TOTALS								216					16.6		37.06			1	2		1	1		1						162	

ABBREVIATIONS

C.B.	CATCH BASIN
N.D.I.	NARROW DROP INLET
D.I.	DROP INLET
G.D.I.	GRATED DROP INLET
G.D.I.(N.S.)	GRATED DROP INLET (NARROW SLOT)
J.B.	JUNCTION BOX
M.H.	MANHOLE
T.B.D.I.	TRAFFIC BEARING DROP INLET
T.B.J.B.	TRAFFIC BEARING JUNCTION BOX

COMPUTED BY: RAW DATE: 3-20-2012
CHECKED BY: JTG DATE: 4-2-2012

PROJECT NO.	SHEET NO.
I-4413	3-F

STATE OF NORTH CAROLINA
DIVISION OF HIGHWAYS

SUMMARY OF EARTHWORK
IN CUBIC YARDS

LOCATION	STATION	STATION	UNCL. EXCAV.	UNDERCUT	EMBANK. +%	BORROW	WASTE
-L-	12+00.00	21+31.06	387		32551	32164	
-RAMPB-	15+81.45	21+37.23	390		11570	11180	
-RAMPC-	15+49.04	22+59.97	1108		16299	15191	
-SPURB-	10+84.82	12+32.02	222		1120	898	
-SPURC-	10+64.83	14+21.79			7368	7368	
SUBTOTALS:			**2107**		**68908**	**66801**	**0**
-L-	23+44.07	42+50.00	2345		44645	42300	
-RAMPA-	15+15.55	21+91.81	713		28338	27625	
-RAMPD-	16+05.95	21+42.87	1242		12303	11061	
-SPURA-	10+79.26	14+47.71	1307		11423	10116	
-SPURD-	11+00.00	12+18.14	98		2738	2640	
SUBTOTALS:			**5705**		**99447**	**93742**	**0**
-Y1-	10+50.00	38+00.00	4346		1705		2641
-Y2-	19+59.30	33+76.41	8863		4176		4687
SUBTOTALS:			**13209**		**5881**	**0**	**7328**
-Y1-	49+50.00	77+00.00	5282		7203	1921	
SUBTOTALS:			**5282**		**7203**	**1921**	**0**
PROJECT SUBTOTAL:			**26303**		**181439**	**162464**	**7328**
ADJUSTMENT DUE TO:							
WASTE IN LIEU OF BORROW						-7328	-7328
EST. SHOULDER MATERIAL					7188	7188	
PROJECT TOTAL:			**26303**		**188627**	**162324**	
EST. 5% TO REPLACE TOPSOIL ON BORROW PIT						8117.0	
GRAND TOTAL:			26303		188627	170441	
SAY:			**27000**			**170500**	
EST. DRAINAGE DITCH EXCAVATION			1,400 CY				
STABILIZER AGGREGATE			500 TONS				
SHALLOW UNDERCUT			1,000 CY				
FABRIC FOR SOIL STABILIZATION			3,400 SY				
CLASS IV SUBGRADE STABILIZATION			2,000 TONS				

SUMMARY OF EXISTING ASPHALT PAVEMENT REMOVAL

LINE	Station	Station	LOC LT/RT/CL	YD²
-SPURB-	10+17	10+96	RT	16.44
-RAMPA-	15+15	16+50	RT	381.11
-RAMPC-	18+75	19+25	LT/RT	142.56
-SPURA-	10+80	11+75	LT	288.89
-SPURA-	13+17	13+85	LT/RT	296.78
-SPURB-	11+50	12+50	LT/RT	307.11
Temporary Pavement				
-L-	18+50	19+55	LT	51.11
-L-	25+50	26+55	LT	51.11
			TOTAL:	1535.11
			SAY:	1540

SUMMARY OF BREAKING EXISTING ASPHALT PAVEMENT

LINE	Station	Station	LOC LT/RT/CL	YD²
-L-	20+00	21+08	RT/LT	335.56
-L-	23+68	25+00	RT/LT	440.67
-Y2-	15+05	17+20	RT	712.22
-RAMPA-	17+00	20+00	LT	1198.11
-RAMPC-	19+25	21+00	RT/LT	491.11
-RAMPD-	19+00	19+81	RT	190.11
-SPURC-	10+65	12+25	RT/LT	465.78
-SPURD-	11+00	11+75	RT	205.00
			TOTAL:	4038.56
			SAY:	4040

Note: Earthwork quantities are calculated by the Roadway Design Unit. These earthwork quantities are based in part on subsurface data provided by the Geotechnical Engineering Unit.

"N" = DISTANCE FROM EDGE OF LANE TO FACE OF GUARDRAIL
TOTAL SHOULDER WIDTH = DISTANCE FROM EDGE OF TRAVEL LANE TO SHOULDER BREAK POINT.
FLARE LENGTH = DISTANCE FROM LAST SECTION OF PARALLEL GUARDRAIL TO END OF GUARDRAIL.
W = TOTAL WIDTH OF FLARE FROM BEGINNING OF TAPER TO END OF GUARDRAIL.
G = GATING IMPACT ATTENUATOR TYPE 350
NG = NON-GATING IMPACT ATTENUATOR TYPE 350

TEMPORARY GUARDRAIL SUMMARY

LINE	BEG. STA.	END STA.	LOC.	LENGTH STRAIGHT	LENGTH SHOP CURVED	LENGTH DOUBLE FACED	WARRANT POINT APPR. END	WARRANT POINT TRAIL. END	"N" DIST. FROM E.O.L.	TOTAL SHLDR WIDTH	FLAIR LENGTH APPR. END	FLAIR LENGTH TRAIL. END	W APPR. END	W TRAIL. END	ANCHORS GRAU 350, TL-2	ANCHORS III	ANCHORS GRAU 350, TL-3	ANCHORS M-350	ANCHORS AT-1	ANCHORS CAT-1	ANCHORS VI MOD	IMP. ATTEN. TYPE 350 EA	IMP. ATTEN. TYPE 350 G	IMP. ATTEN. TYPE 350 NG	AMOUNT OF EXISTING GURADRAIL TO BE REMOVED	REMARKS
-L-	23+18.26	24+49.51	LT	137.5												1			1							TEMPORARY GUARDRAIL, SEE TMP-10
-L-	23+47.81	24+29.06	LT	81.25					Type III		2	ea. at	18.75	37.5		1	1									TEMPORARY GUARDRAIL, SEE TMP-10
-L-	20+45	BEGIN BRIDGE	LT						Type GRAU-350, TL-3		1	ea. at	50	50			1								150	ATTACH ANCHOR TO EXIST. GUARDRAIL
-L-	20+15	BEGIN BRIDGE	RT						Type AT-1		1	ea. at	6.25	6.25			1								150	ATTACH ANCHOR TO EXIST. GUARDRAIL
-L-	END BRIDGE	24+80	LT											93.75			1								115	ATTACH ANCHOR TO EXIST. GUARDRAIL
-L-	END BRIDGE	24+70	RT														1								65	ATTACH ANCHOR TO EXIST. GUARDRAIL
			SUBTOTAL	218.75																						
			DEDUCTIONS FROM ANCHORS	93.75																						
			TOTAL	125											**SUBTOTAL ANCHORS**	2	5		1						480	

GADD13-LT1,4/30/2012,C:\Roadway Proj\comboplsh.xls

COMPUTED BY: RAW DATE: 3-20-2012	PROJECT NO.	SHEET NO.
CHECKED BY: JTG DATE: 4-2-2012	I-4413	3-G

STATE OF NORTH CAROLINA DIVISION OF HIGHWAYS

"N" = DISTANCE FROM EDGE OF LANE TO FACE OF GUARDRAIL
TOTAL SHOULDER WIDTH = DISTANCE FROM EDGE OF TRAVEL LANE TO SHOULDER BREAK POINT.
FLARE LENGTH = DISTANCE FROM LAST SECTION OF PARALLEL GUARDRAIL TO END OF GUARDRAIL.
W = TOTAL WIDTH OF FLARE FROM BEGINNING OF TAPER TO END OF GUARDRAIL.
G = GATING IMPACT ATTENUATOR TYPE 349
NG = NON-GATING IMPACT ATTENUATOR TYPE 349

GUARDRAIL SUMMARY

ADDITIONAL GUARDRAIL POSTS = 4

LINE	BEG. STA.	END STA.	LOC.	LENGTH STRAIGHT	LENGTH SHOP CURVED	LENGTH DOUBLE FACED	WARRANT POINT APPR. END	WARRANT POINT TRAIL. END	"N" DIST. FROM E.O.L.	TOTAL SHLDR WIDTH	FLAIR LENGTH APPR. END	FLAIR LENGTH TRAIL. END	W APPR. END	W TRAIL. END	ANCHORS GRAU 350, TL-2	ANCHORS III	ANCHORS GRAU 350, TL-3	ANCHORS M-350	ANCHORS AT-1	ANCHORS CAT-1	ANCHORS VI MOD	IMP. ATTEN. TYPE 350 EA	IMP. ATTEN. TYPE 350 G	IMP. ATTEN. TYPE 350 NG	REMOVE EXISTING GRDRAIL		REMARKS
Spur-D / L	12+50	29+70	RT	181.25																2							
L	32+20	32+66.50	RT	25	37.5														1	1							
RAMP-B / L	20+85	20+80	LT	175												1	1										
SP-C / RP-C	12+75	19+75	LT	337.5													1			1							
L / RAMP-D	23+91	21+15	RT/LT	175			Type III			4	ea. at	18.75	=	75		1	1										
Y2	18+57.72	29+84	RT	1112.5	37.5		Type GRAU-350, TL-3			7	ea. at	50	=	350			1		1								RADIUS = 20'
Y2	19+53	22+55	LT	250	75		Type AT-1			4	ea. at	6.25	=	25					1								TIE TO EXIST. GUARDRAIL
Y2	26+00	30+70	LT	462.5	37.5		Type CAT-1			6	ea. at	6.25	=	37.5			1		1								
L	14+31	15+56	RT	125			Type GRAU-350, TL-2			2	ea. at	25	=	50			1			1							
L	28+35	30+34	LT	200										537.5			1			1							
L	19+96.07	20+83.57	LT	87.5											1	1											
L	23+91.5	25+04	RT	143.75											1	1											
Y2	16+53.88	18+93	LT																						252		
Y2	19+46.55	22+55	LT																						321		
Y2	20+74.09	29+01.47	RT																						830		
Y2	25+97.25	30+66.02	LT																						491		
RP-A / SP-A	19+18.65	13+66.18	LT																						428		
RP-C / SP-C	18+86.18	13+51.75	LT																						502		
L	18+93.46	20+88.23	LT																						46		
L	18+65.99	21+12.09	RT																						97		
L	23+62.49	25+95.79	LT																						120		
L	23+86.16	25+33.72	RT																						83		
Y1	41+55.05	42+89.94	RT																						136		
Y1	44+13.28	45+45.78	LT																						134		
			SUBTOTAL	3275	187.5										SUBTOTAL ANCHORS	2	4	7		4	6				3440.00		
			DEDUCTIONS FROM ANCHORS	512.5	25																						
			TOTAL	2762.5	162.5																						

PROJ. REFERENCE NO.	SHEET NO.
I-4413	3-H

STATE OF NORTH CAROLINA
DIVISION OF HIGHWAYS

PARCEL INDEX SHEET

PARCEL No.	SHEET No.	PROPERTY OWNER NAME
1	4	WAFFLE HOUSE INC.
2	4	JIJ INC.
3	4	SREE-LUMBERTON, LLC
7	4	NORTHBRIDGE PROPERTIES, LLC
8	4	GEORGE VASILOPOULOS AND WIFE
9	4	ALHOBISHI CONVENIENCE STORES
10	4	ROBESON TECH. INSTITUTE
11	4	DAVID J. GOODE & SUSAN G. BATTEN
12	4	NOURALDIN SARAMAH
13	4	SONNY OLIVER REALTY COMPANY
16	4	SAM'S REAL ESTATE BUSINESS TRUST
17	4	DAVID L. EDGE
10	5	ROBESON TECH. INSTITUTE
11	5	DAVID J. GOODE & SUSAN G. BATTEN
13	5	SONNY OLIVER REALTY COMPANY
17	7	DAVID L. EDGE
7	8	NORTHBRIDGE PROPERTIES, LLC

PARCEL No.	SHEET No.	PROPERTY OWNER NAME

PROJECT REFERENCE NO. I-4413
SHEET NO. 4
R/W SHEET NO.
ROADWAY DESIGN ENGINEER
HYDRAULICS ENGINEER
Stantec
Stantec Consulting Services Inc.
801 Jones Franklin Road
Suite 300
Raleigh, NC 27606
Tel. (919) 851-6866
Fax. (919) 851-7024
www.stantec.com
License No. F-0672
NAD 83
BRIDGE SKETCH
-L- OVER -Y1-
BEGIN BRIDGE POT Sta.15+79.03 (-NBL-)
BEGIN APPROACH SLAB POT Sta.15+55.28 (-NBL-)
END APPROACH SLAB POT Sta.18+18.28 (-NBL-)
END BRIDGE POT Sta.17+94.53 (-NBL-)
BEGIN BRIDGE POT Sta.17+02.41 (-SBL-)
BEGIN APPROACH SLAB POT Sta.16+78.66 (-SBL-)
END BRIDGE POT Sta.19+17.91 (-SBL-)
END APPROACH SLAB POT Sta.19+41.67 (-SBL-)
53°12'25"
BEGIN TIP PROJECT I-4413
BEGIN CONSTRUCTION
POT Sta. 11+80.00 (-L-)
DETAIL #1 SPECIAL CUT DITCH
DETAIL #2 SPECIAL LATERAL 'V' DITCH
DETAIL #3 STANDARD BASE DITCH
DETAIL #4 LATERAL BASE DITCH
DETAIL #5 FALSE SUMP
DETAIL #6 FALSE SUMP
DETAIL #7 SPECIAL LATERAL BASE DITCH
DETAIL #9 TOE PROTECTION
DETAIL #10 STANDARD BASE DITCH
DETAIL #11 PIPE OUTLET CHANNEL
DETAIL #12 PIPE OUTLET CHANNEL
TRAFFIC COUNTS
EST. ADT 2012/2032
US 301
DAWN DRIVE
JACKSON CT
WINTERGREEN
I-95
A
B
C
D
I-95 SBL
I-95 NBL
RAMP-A
RAMP-B
RAMP-C
RAMP-D
-L-
-NBL-
-SBL-
-Y1-
-Y2-
MATCHLINE SHEET 7 STA.32+50.00 -Y1-
MATCHLINE SHEET 8 STA.51+50.00 -Y1-
MATCHLINE SHEET 5 STA.36+00.00 -L-
POT Sta.22+37.56 -L-
PINC Sta. 43+50.00 -Y1-
(POINT ASSUMED, NOT ON GROUND)
ANGLE: 53°12'25"
LEGEND
PROPOSED PAVED SHOULDER
PROPOSED CONCRETE
REFERENCES:
FOR CURVE DATA, SEE SHEET 2E
FOR -L-, -NBL-, -SBL- ALIGNMENT INFORMATION, SEE SHEET 2E
FOR PROFILE -L-, SEE SHEETS 10-11
FOR PROFILE RAMP-A, SEE SHEET 12
FOR PROFILE SPUR-A, SEE SHEET 12
FOR PROFILE RAMP-B, SEE SHEET 13
FOR PROFILE SPUR-B, SEE SHEET 13
FOR PROFILE RAMP-C, SEE SHEET 14
FOR PROFILE SPUR-C, SEE SHEET 14
FOR PROFILE RAMP-D, SEE SHEET 15
FOR PROFILE SPUR-D, SEE SHEET 15
FOR PROFILE -Y1-, SEE SHEETS 16-18
FOR PROFILE -Y2-, SEE SHEET 19
FOR STRUCTURE PLANS, SEE SHEET S-1 THRU S-72
NOTES:
FENCE TO BE PLACED IN RETAINING WALL COPING, SEE STRUCTURE PLANS
FOR CURB RAMP TYPES, SEE PAVEMENT MARKING PLANS
FOR BARRIER TYPE, SEE DETAIL SHEET 2G
EXISTING CONCRETE BARRIER TO BE REMOVED, STA.42+15 TO STA.44+80 (-Y1-)
GRAPHIC SCALE
50 25 0 50 100
PLANS
LOCATION: US 301 (FAYETTEVILLE ROAD)
OVER I-95 (EXIT 22)
TIP NO.: I-4413
COUNTY: ROBESON
DESIGNED BY: JASON GADDY
CHECKED BY: SCOTT BOYLES, PE
DATE:
4

PROJECT REFERENCE NO.	SHEET NO.
I-4413	5
R/W SHEET NO.	
ROADWAY DESIGN ENGINEER	HYDRAULICS ENGINEER
NORTH CAROLINA PROFESSIONAL SEAL 15755 ENGINEER C. ROBERT BOONE 4/23/12	NORTH CAROLINA PROFESSIONAL SEAL 9334 ENGINEER W. HENRY WELLS JR. 4/23/12

Stantec

Stantec Consulting Services Inc.
801 Jones Franklin Road
Suite 300
Raleigh, NC 27606
Tel. (919) 851-6866
Fax. (919) 851-7024
www.stantec.com
License No. F-0672

END TIP PROJECT I-4413
END CONSTRUCTION
POT Sta. 42+75.00 (-L-)

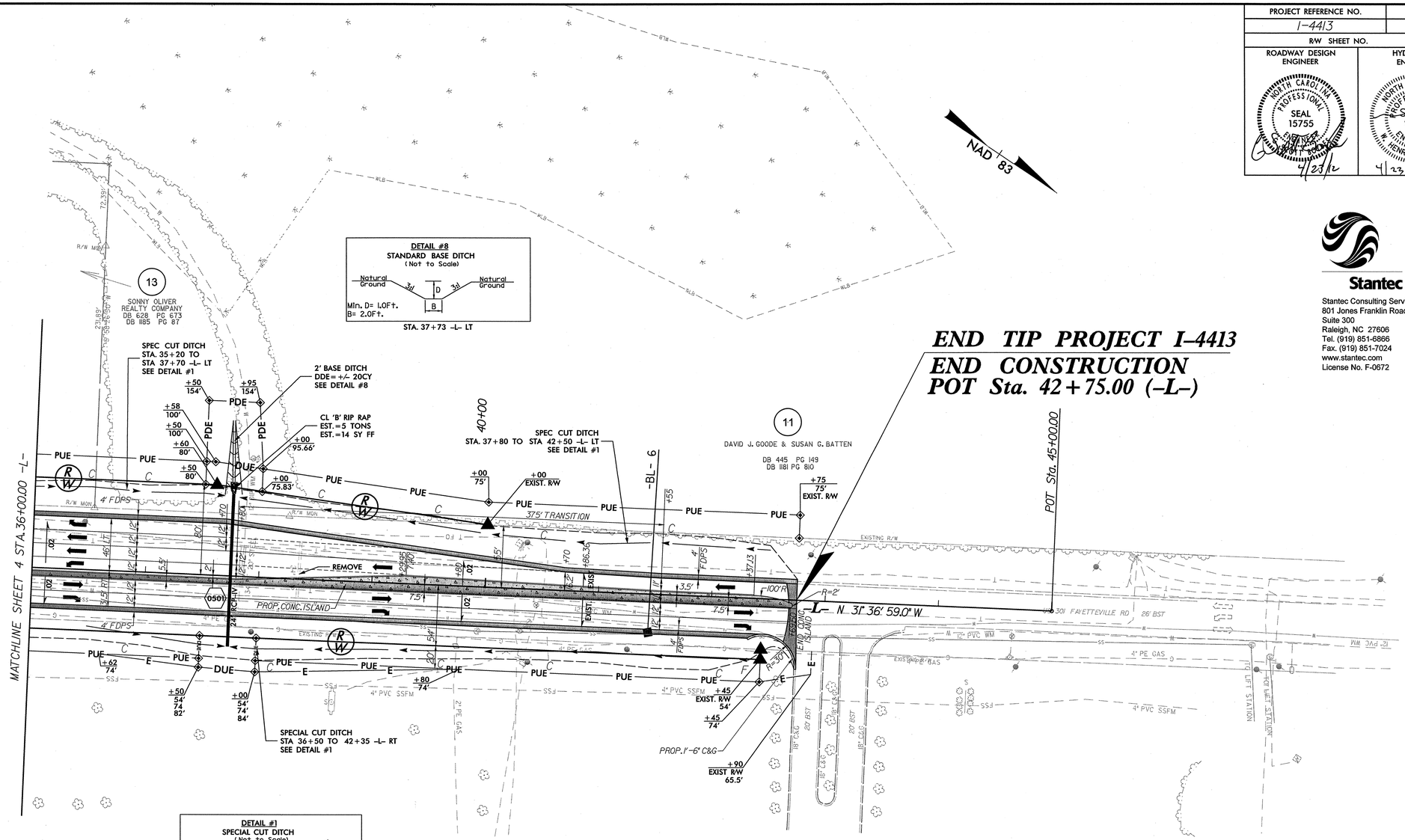

LEGEND

PROPOSED PAVED SHOULDER

PROPOSED CONCRETE

REFERENCES:
FOR PROFILE -L-, SEE SHEET 11

8/17/99

4/23/2012
U:\Roadway\Proj\I4413_rdy_Psh 05.dgn
jaaddy

8/17/99

PROJECT REFERENCE NO.	SHEET NO.
I-4413	6
R/W SHEET NO.	

ROADWAY DESIGN ENGINEER

NORTH CAROLINA PROFESSIONAL SEAL 15755 ENGINEER GREGORY BROOKS

4/23/12

HYDRAULICS ENGINEER

NORTH CAROLINA PROFESSIONAL SEAL 9334 ENGINEER HENRY WELLS JR.

4/23/12

Stantec

Stantec Consulting Services Inc.
801 Jones Franklin Road
Suite 300
Raleigh, NC 27606
Tel. (919) 851-6866
Fax. (919) 851-7024
www.stantec.com
License No. F-0672

DETAIL #9
TOE PROTECTION
(Not to Scale)

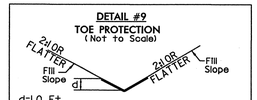

Type of Liner= PSRM

STA. 11+00 TO STA. 27+50 -Y1- LT

NAD 83

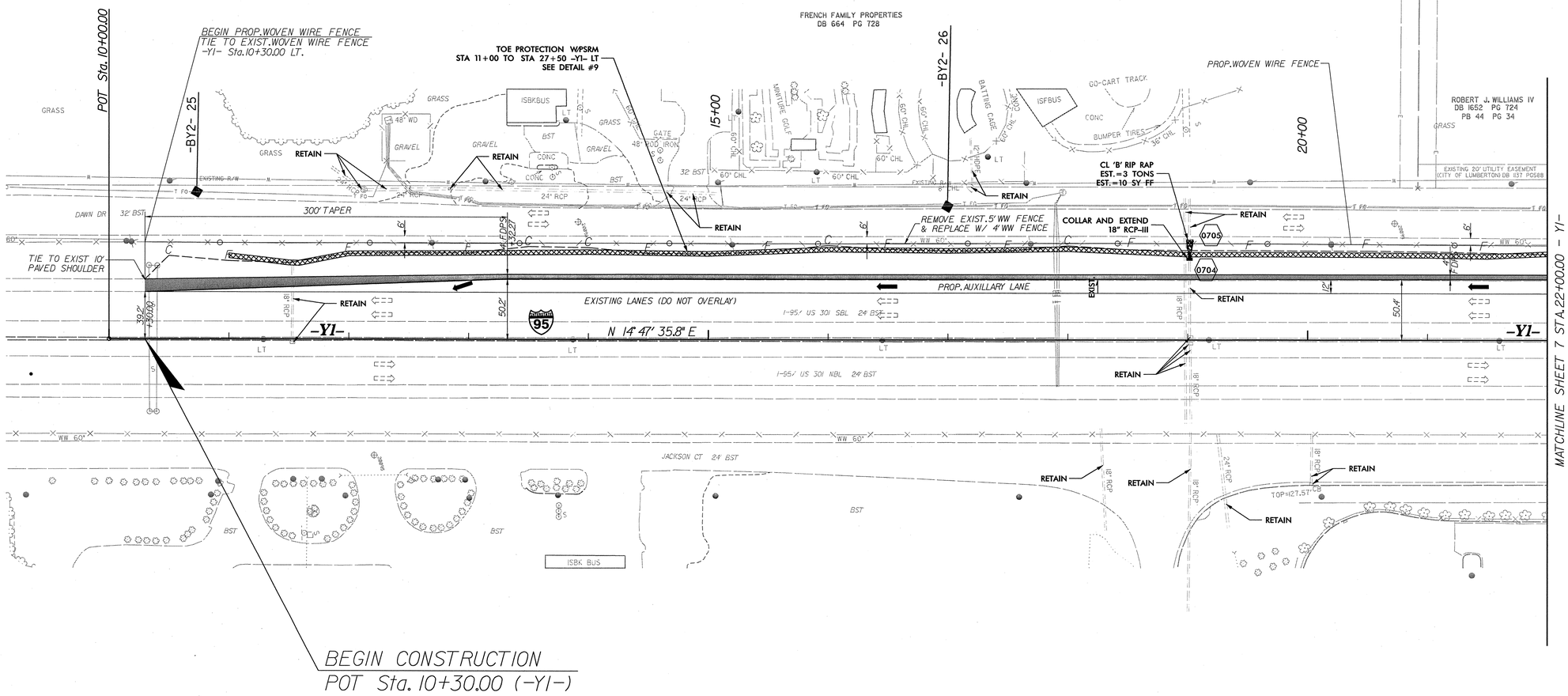

LEGEND

PROPOSED PAVED SHOULDER

REFERENCES:
FOR PROFILE -YI-, SEE SHEET 16

4/23/2012
U:\Roadway\Proj\I4413_rdy_Psh 06.dgn
gaddu

PROJECT REFERENCE NO.	SHEET NO.
I-4413	7
R/W SHEET NO.	
ROADWAY DESIGN ENGINEER	HYDRAULICS ENGINEER
NORTH CAROLINA PROFESSIONAL SEAL 15755 ENGINEER G. GOSSE BAYLES 4/23/12	NORTH CAROLINA PROFESSIONAL SEAL 9334 ENGINEER W. HENRY WELLS JR. 4/23/12

Stantec

Stantec Consulting Services Inc.
801 Jones Franklin Road
Suite 300
Raleigh, NC 27606
Tel. (919) 851-6866
Fax. (919) 851-7024
www.stantec.com
License No. F-0672

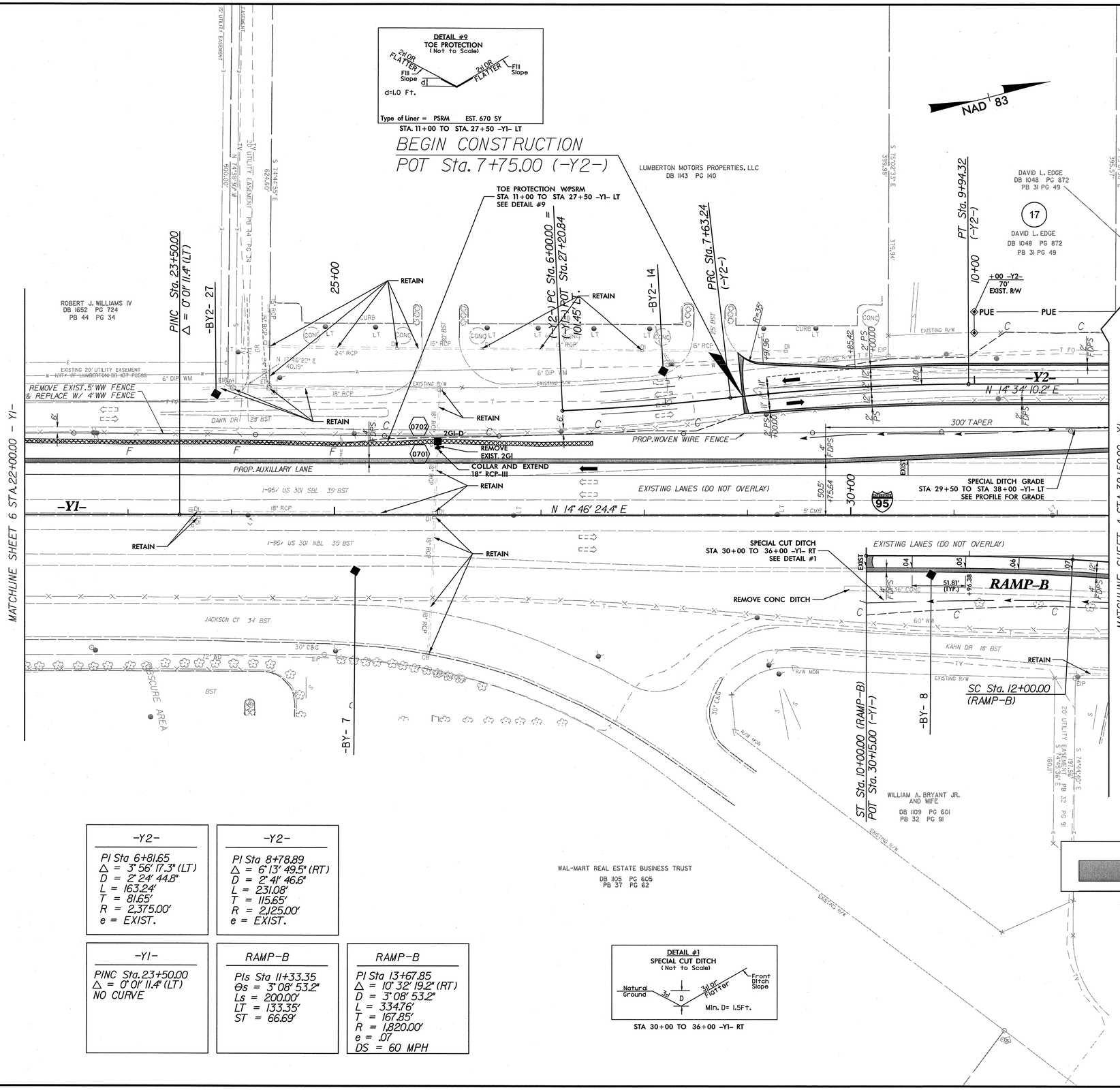

-Y2-	-Y2-
PI Sta 6+81.65 Δ = 3° 56' 17.3" (LT) D = 2° 24' 44.8" L = 163.24' T = 81.65' R = 2,375.00' e = EXIST.	PI Sta 8+78.89 Δ = 6° 13' 49.5" (RT) D = 2° 41' 46.6" L = 231.08' T = 115.65' R = 2,125.00' e = EXIST.

-Y1-	RAMP-B	RAMP-B
PINC Sta. 23+50.00 Δ = 0° 01' 11.4" (LT) NO CURVE	PIs Sta 11+33.35 Θs = 3° 08' 53.2" Ls = 200.00' LT = 133.35' ST = 66.69'	PI Sta 13+67.85 Δ = 10° 32' 19.2" (RT) D = 3° 08' 53.2" L = 334.76' T = 167.85' R = 1,820.00' e = .07 DS = 60 MPH

LEGEND

PROPOSED PAVED SHOULDER

REFERENCES:
FOR PROFILE -Y1-, SEE SHEET 16
FOR PROFILE -Y2-, SEE SHEET 19
FOR PROFILE RAMP-B, SEE SHEET 13

8/17/99

4/23/2012
U:\Roadway\Proj\I4413_rdy_Psh 07.dgn

8/17/99

PROJECT REFERENCE NO.	SHEET NO.
I-4413	8
R/W SHEET NO.	

ROADWAY DESIGN ENGINEER

NORTH CAROLINA PROFESSIONAL SEAL 15755 ENGINEER SCOTT ROBERTS
4/23/12

HYDRAULICS ENGINEER

NORTH CAROLINA PROFESSIONAL SEAL 9334 ENGINEER W. HENRY WELLS JR.
4/23/12

Stantec

Stantec Consulting Services Inc.
801 Jones Franklin Road
Suite 300
Raleigh, NC 27606
Tel. (919) 851-6866
Fax. (919) 851-7024
www.stantec.com
License No. F-0672

NAD 83

RAMP-D
PIs Sta 11+33.35
Θs = 3° 00' 56.0"
Ls = 200.00'
LT = 133.35'
ST = 66.68'

RAMP-D
PI Sta 14+11.38
Δ = 12° 41' 46.5" (RT)
D = 3° 00' 56.0"
L = 421.02'
T = 211.38'
R = 1,900.00'
e = .07
DS = 60 MPH

MATCHLINE SHEET 4 STA.51+50.00 -Y1-

MATCHLINE SHEET 9 STA.65+00.00 -Y1-

SPEC LAT 'V' DITCH
STA 51+00 TO STA 54+20 -Y1- LT
SEE DETAIL #2

7

NORTHBRIDGE PROPERTIES, LLC
DB 1550 PG 164,166
PB 42 PG 104

DO NOT DISTURB FENCE

SC Sta. 12+00.00 (RAMP-D)

ST Sta. 10+00.00 (RAMP-D)
POT Sta. 57+10.90 (-Y1-)

ROBESON TECH. INSTITUTE
DB 413 PG 290

PINC Sta. 63+50.00
Δ = 0° 21' 25.2" (RT)

TIE TO EXISTING DITCH

RAMP-D

40.57' (TYP.)

TIE TO EXISTING PAVED SHOULDER

RETAIN

-Y1-

N 14° 55' 54.2" E

N 15° 17' 19.5" E

I-95 SBL 39' BST

I-95 NBL 39' BST

EXISTING LANES (DO NOT OVERLAY)

PROP. AUXILLARY LANE

50.61' (TYP.)

REMOVE +/-158'

RAMP-C

SC Sta. 12+50.00 (RAMP-C)

ST Sta. 10+00.00 (RAMP-C)
POT Sta. 55+05.89 (-Y1-)

SPEC LAT 5.0' BASE DITCH
STA 52+00 TO STA 54+50 -Y1- RT
SEE DETAIL #7

CL 'B' RIP RAP
EST. = 5 TONS
EST. = 14 SY FF

DO NOT DISTURB FENCE

SPEC LAT 'V' DITCH
STA 49+50 TO STA 52+00 -Y1- RT
SEE DETAIL #2

SPEC LAT 5.0' BASE DITCH W/PSRM
EST. 380 SY PSRM
STA 54+50 TO STA 56+50 -Y1- RT
SEE DETAIL #13

SPEC LAT 5.0' BASE DITCH
STA 56+50 TO STA 57+50 -Y1- RT
SEE DETAIL #7

300' TAPER

-BY- 12

-BY- 13

TIE TO EXISTING CHANNEL

HAPPY VALLEY FARM, LLC
DB 1587 PG 712
PB 32 PG 77

DOHERTY HOLDINGS, LLC
DB 1630 PG 697
TRACT 2-A

DOHERTY HOLDINGS, LLC
DB 1357 PG 608
PB 31 PG 200

OSF REAL ESTATE, LLC
DB 1613 PG 353

SPEC LAT 'V' DITCH
STA 59+00 TO STA 76+00 -Y1- RT
SEE DETAIL #2

POND

RAMP-C
PIs Sta 11+66.74
Θs = 5° 06' 56.5"
Ls = 250.00'
LT = 166.74'
ST = 83.40'

RAMP-C
PI Sta 13+75.87
Δ = 10° 16' 31.4" (LT)
D = 4° 05' 33.2"
L = 251.07'
T = 125.87'
R = 1,400.00'
e = .08
DS = 60 MPH

DETAIL #2
SPECIAL LATERAL 'V' DITCH
(Not to Scale)

Natural Ground, 3:1, D, 3:1 or Flatter, Fill Slope

Min. D= 1.5Ft.

STA 49+50 TO STA 52+00 -Y1- RT
STA 51+00 TO STA 54+20 -Y1- LT
STA 59+00 TO STA 76+00 -Y1- RT

DETAIL #13
SPECIAL LATERAL BASE DITCH
(Not to Scale)

Natural Ground, 2.5:1, D, B, 3:1 or Flatter, Fill Slope, PSRM

Min. D= 2.0Ft.
B= 5.0Ft.

Type of Liner = PSRM EST. 380 SY

STA 54+50 TO STA 56+50 -Y1- RT

DETAIL #7
SPECIAL LATERAL BASE DITCH
(Not to Scale)

Natural Ground, 3:1, D, B, 3:1 or Flatter, Fill Slope

Min. D= 2.0Ft.
B= 5.0Ft.

STA 52+00 TO STA 54+50 -Y1- RT
STA 56+50 TO STA 57+50 -Y1- RT

-Y1-
PINC Sta.63+50.00
Δ = 0° 21' 25.2" (RT)
NO CURVE

LEGEND

PROPOSED PAVED SHOULDER

REFERENCES:
FOR PROFILE RAMP-C, SEE SHEET 14
FOR PROFILE RAMP-D, SEE SHEET 15
FOR PROFILE -Y1-, SEE SHEETS 17 AND 18

4/23/2012
11:18:06 Proj\I4413_rdy_Psh 08.dgn
dandu

PROJECT REFERENCE NO.	SHEET NO.
I-4413	9
R/W SHEET NO.	
ROADWAY DESIGN ENGINEER	HYDRAULICS ENGINEER
NORTH CAROLINA PROFESSIONAL SEAL 15755 ENGINEER G. SCOTT BENDER 4/23/12	NORTH CAROLINA PROFESSIONAL SEAL 9334 ENGINEER W. HENRY WELLS JR. 4/23/12

Stantec
Stantec Consulting Services Inc.
801 Jones Franklin Road
Suite 300
Raleigh, NC 27606
Tel. (919) 851-6866
Fax. (919) 851-7024
www.stantec.com
License No. F-0672

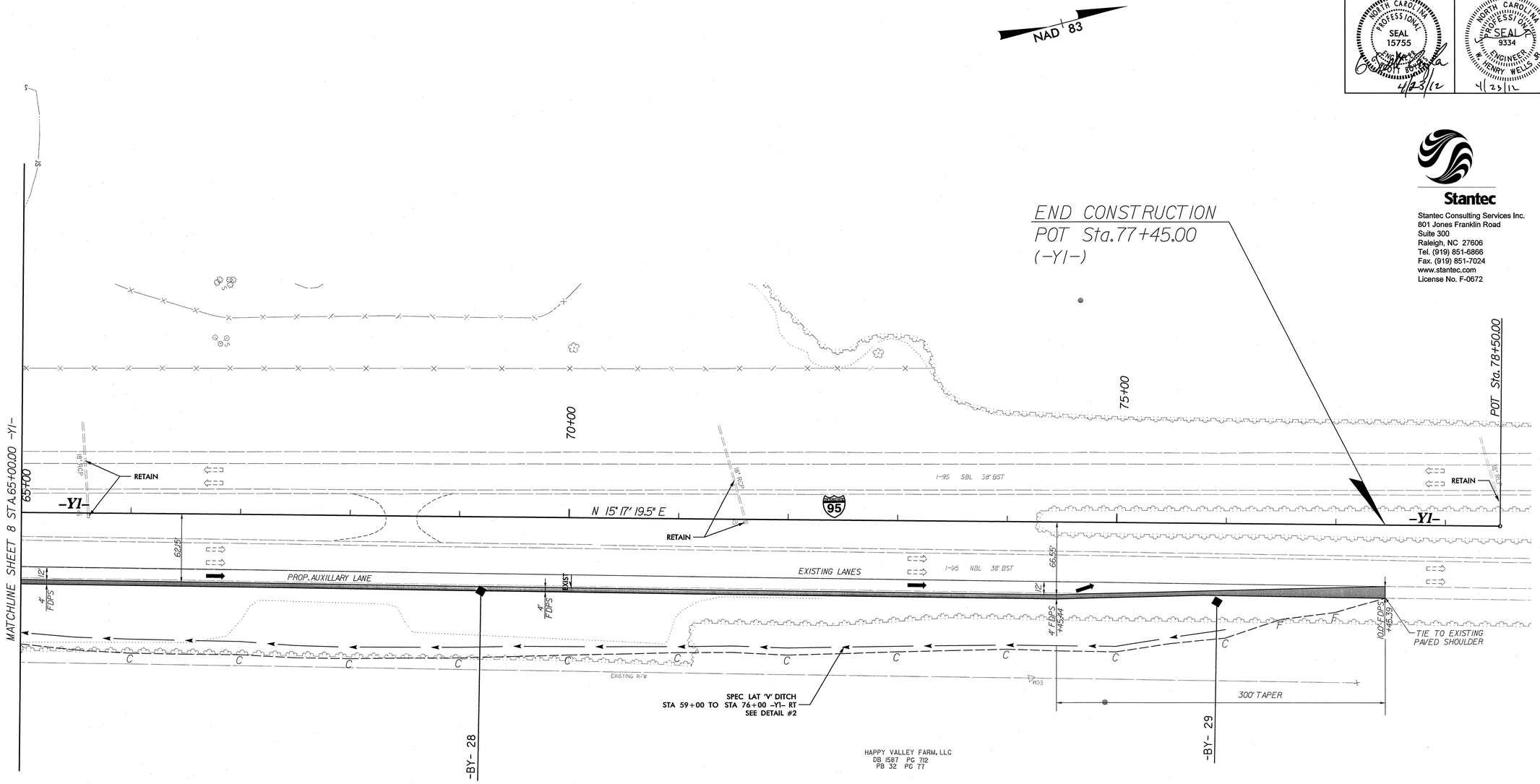

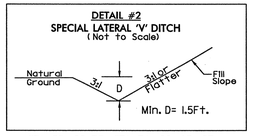

STA 59+00 TO STA 76+00 -Y1- RT

LEGEND

PROPOSED PAVED SHOULDER

REFERENCES:
FOR PROFILE -Y1-, SEE SHEET 18

8/17/99

4/23/2012
U:\Roadway\Proj\I4413_rdy_Psh 09.dgn
jaaddy

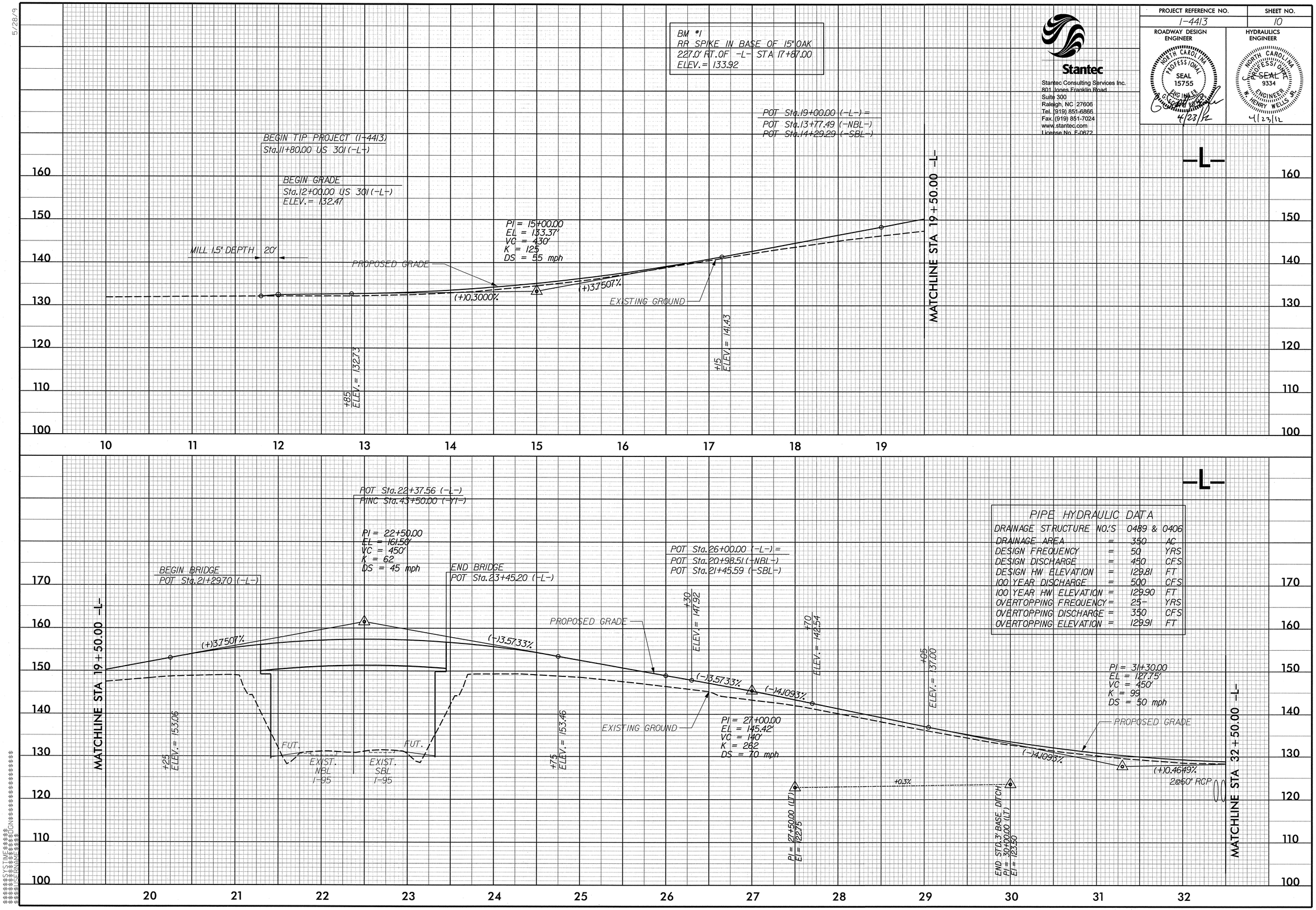

PIPE HYDRAULIC DATA

DRAINAGE STRUCTURE NO.'S		0489 & 0406	
DRAINAGE AREA	=	350	AC
DESIGN FREQUENCY	=	50	YRS
DESIGN DISCHARGE	=	450	CFS
DESIGN HW ELEVATION	=	129.81	FT
100 YEAR DISCHARGE	=	500	CFS
100 YEAR HW ELEVATION	=	129.90	FT
OVERTOPPING FREQUENCY	=	25-	YRS
OVERTOPPING DISCHARGE	=	350	CFS
OVERTOPPING ELEVATION	=	129.91	FT

Stantec
Stantec Consulting Services Inc.
801 Jones Franklin Road
Suite 300
Raleigh, NC 27606
Tel. (919) 851-6866
Fax. (919) 851-7024
www.stantec.com
License No. F-0672

PROJECT REFERENCE NO.	SHEET NO.
I-4413	10

ROADWAY DESIGN ENGINEER — NORTH CAROLINA PROFESSIONAL SEAL 15755 ENGINEER — 4/23/12

HYDRAULICS ENGINEER — NORTH CAROLINA PROFESSIONAL SEAL 9334 ENGINEER W. HENRY WELLS JR. — 4/23/12

5/28/9

PROJECT REFERENCE NO.	SHEET NO.
I-4413	11

ROADWAY DESIGN ENGINEER — NORTH CAROLINA PROFESSIONAL ENGINEER SEAL 15755 G. SCOTT BOYLES — 4/23/12

HYDRAULICS ENGINEER — NORTH CAROLINA PROFESSIONAL ENGINEER SEAL 9334 W. HENRY WELLS JR. — 4/23/12

Stantec
Stantec Consulting Services Inc.
801 Jones Franklin Road
Suite 300
Raleigh, NC 27606
Tel. (919) 851-6866
Fax. (919) 851-7024
www.stantec.com
License No. F-0672

-L-

PIPE HYDRAULIC DATA
DRAINAGE STRUCTURE NO. 0501

DRAINAGE AREA	=	4.20	AC
DESIGN FREQUENCY	=	50	YRS
DESIGN DISCHARGE	=	16	CFS
DESIGN HW ELEVATION	=	127.76	FT
100 YEAR DISCHARGE	=	18	CFS
100 YEAR HW ELEVATION	=	127.80	FT
OVERTOPPING FREQUENCY	=	100+	YRS
OVERTOPPING DISCHARGE	=	25	CFS
OVERTOPPING ELEVATION	=	128.80	FT

5/28/9

$$$$$$SYSTIME$$$$
$$$$$$$$$$$$$$$$$$$$DGN$$$$$$$$$$$$$$$$$
$$$$USERNAME$$$$

PROJECT REFERENCE NO.	SHEET NO.
I-4413	12

ROADWAY DESIGN ENGINEER — NORTH CAROLINA PROFESSIONAL SEAL 15755 ENGINEER G. SCOTT BOYLES — 4/23/12

HYDRAULICS ENGINEER — NORTH CAROLINA PROFESSIONAL SEAL 9334 ENGINEER W. HENRY WELLS JR. — 4/23/12

Stantec
Stantec Consulting Services Inc.
801 Jones Franklin Road
Suite 300
Raleigh, NC 27606
Tel. (919) 851-6866
Fax. (919) 851-7024
www.stantec.com
License No. F-0672

5/28/9

$$$$$$SYSTIME$$$$$ $$$$$$$$$DGN$$$$$$$$$$$$$$$$$$ $$$$USERNAME$$$$

PROJECT REFERENCE NO.	SHEET NO.
I-4413	13

ROADWAY DESIGN ENGINEER — NORTH CAROLINA PROFESSIONAL ENGINEER SEAL 15755 G. SCOTT BOYLES 4/23/12

HYDRAULICS ENGINEER — NORTH CAROLINA PROFESSIONAL ENGINEER SEAL 9334 W. HENRY WELLS JR. 4/23/12

Stantec

Stantec Consulting Services Inc.
801 Jones Franklin Road
Suite 300
Raleigh, NC 27606
Tel. (919) 851-6866
Fax. (919) 851-7024
www.stantec.com
License No. F-0672

5/28/9

$$$$$SYSTIME$$$$$
$$$$$$$$$$DGN$$$$$$$$$$$$$$$$$$$
$$$$$USERNAME$$$$$

PROJECT REFERENCE NO.	SHEET NO.
I-4413	14

ROADWAY DESIGN ENGINEER — NORTH CAROLINA PROFESSIONAL ENGINEER SEAL 15755 C. SCOTT BOYLES 4/23/12

HYDRAULICS ENGINEER — NORTH CAROLINA PROFESSIONAL ENGINEER SEAL 9334 W. HENRY WELLS JR. 4/23/12

Stantec
Stantec Consulting Services Inc.
801 Jones Franklin Road
Suite 300
Raleigh, NC 27606
Tel. (919) 851-6866
Fax. (919) 851-7024
www.stantec.com
License No. F-0672

5/28/9

PROJECT REFERENCE NO.	SHEET NO.
I-4413	15

ROADWAY DESIGN ENGINEER

NORTH CAROLINA PROFESSIONAL SEAL 15755 ENGINEER CHRISTOPHER WOOD

4/23/12

HYDRAULICS ENGINEER

NORTH CAROLINA PROFESSIONAL SEAL 9334 ENGINEER HENRY WELLS JR.

4/23/12

Stantec

Stantec Consulting Services Inc.
801 Jones Franklin Road
Suite 300
Raleigh, NC 27606
Tel. (919) 851-6866
Fax. (919) 851-7024
www.stantec.com
License No. F-0672

RAMP-D

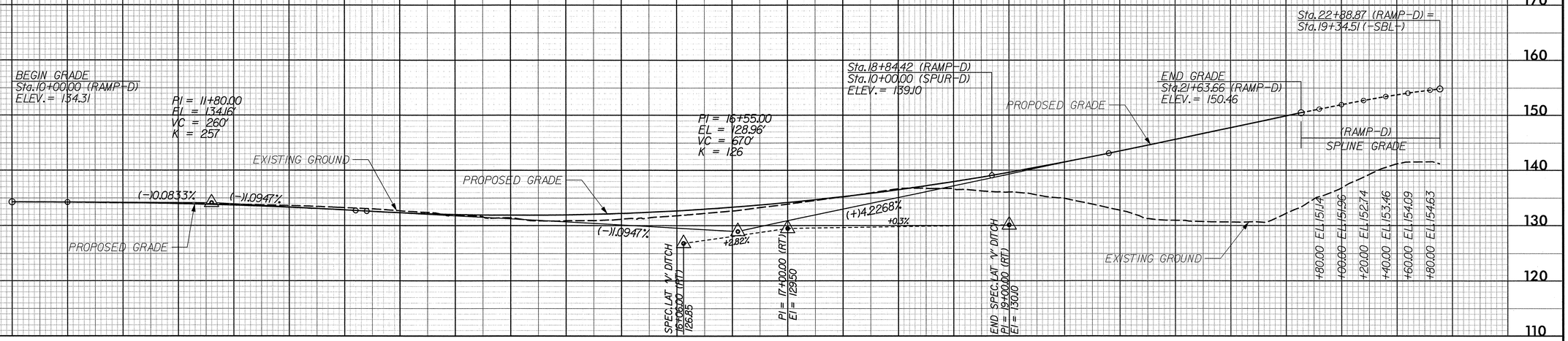

SPUR-D

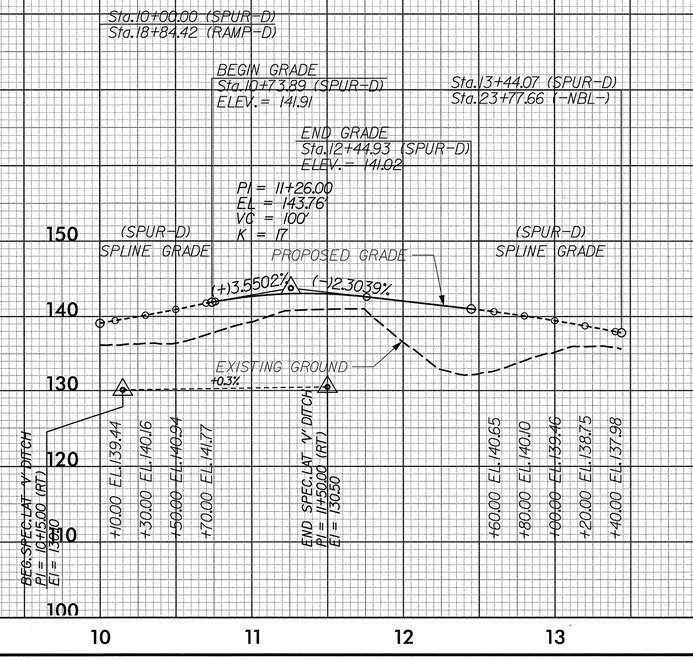

USER NAME = $$USER
DESIGN = $$DESIGN
DRAWN = $$DRAWN
CHECKED = $$CHECKED
SUBMITTED = $$SUBMITTED
DATE = $$DATE
SCALE = $$SCALE
DGN FILE = $$FILENAME

5/28/9

PROJECT REFERENCE NO.	SHEET NO.
I-4413	16

ROADWAY DESIGN ENGINEER
NORTH CAROLINA PROFESSIONAL SEAL 15755 ENGINEER G. SCOTT BOYLES
4/23/12

HYDRAULICS ENGINEER
NORTH CAROLINA PROFESSIONAL SEAL 9334 ENGINEER W. HENRY WELLS JR.
4/23/12

Stantec
Stantec Consulting Services Inc.
801 Jones Franklin Road
Suite 300
Raleigh, NC 27606
Tel. (919) 851-6866
Fax. (919) 851-7024
www.stantec.com
License No. F-0672

$$$$SYSTIME$$$$
$$$$$$DGN$$$$$$$$$$$$$$$$$$$$
$$$$USERNAME$$$$

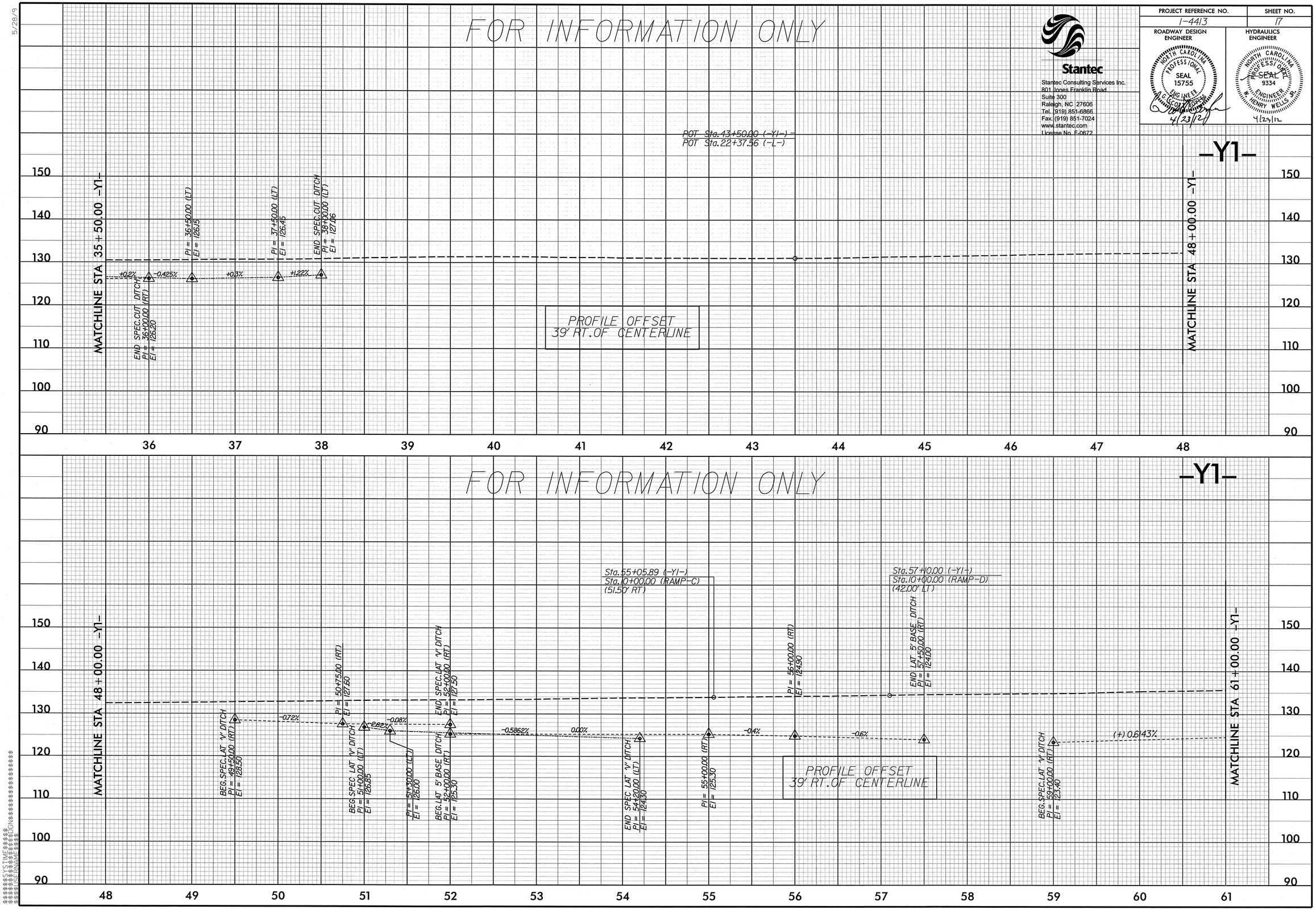

Stantec

Stantec Consulting Services Inc.
801 Jones Franklin Road
Suite 300
Raleigh, NC 27606
Tel. (919) 851-6866
Fax. (919) 851-7024
www.stantec.com
License No. F-0672

PROJECT REFERENCE NO.	SHEET NO.
I-4413	17

ROADWAY DESIGN ENGINEER — NORTH CAROLINA PROFESSIONAL SEAL 15755 ENGINEER GISCOTT BOYLES — 4/23/12

HYDRAULICS ENGINEER — NORTH CAROLINA PROFESSIONAL SEAL 9334 ENGINEER W. HENRY WELLS JR. — 4/23/12

5/28/9

PROJECT REFERENCE NO.	SHEET NO.
I-4413	18

ROADWAY DESIGN ENGINEER
NORTH CAROLINA PROFESSIONAL SEAL 15755 ENGINEER GISCOTT ROTLER
4/23/12

HYDRAULICS ENGINEER
NORTH CAROLINA PROFESSIONAL SEAL 9334 ENGINEER W. HENRY WELLS JR.
4/23/12

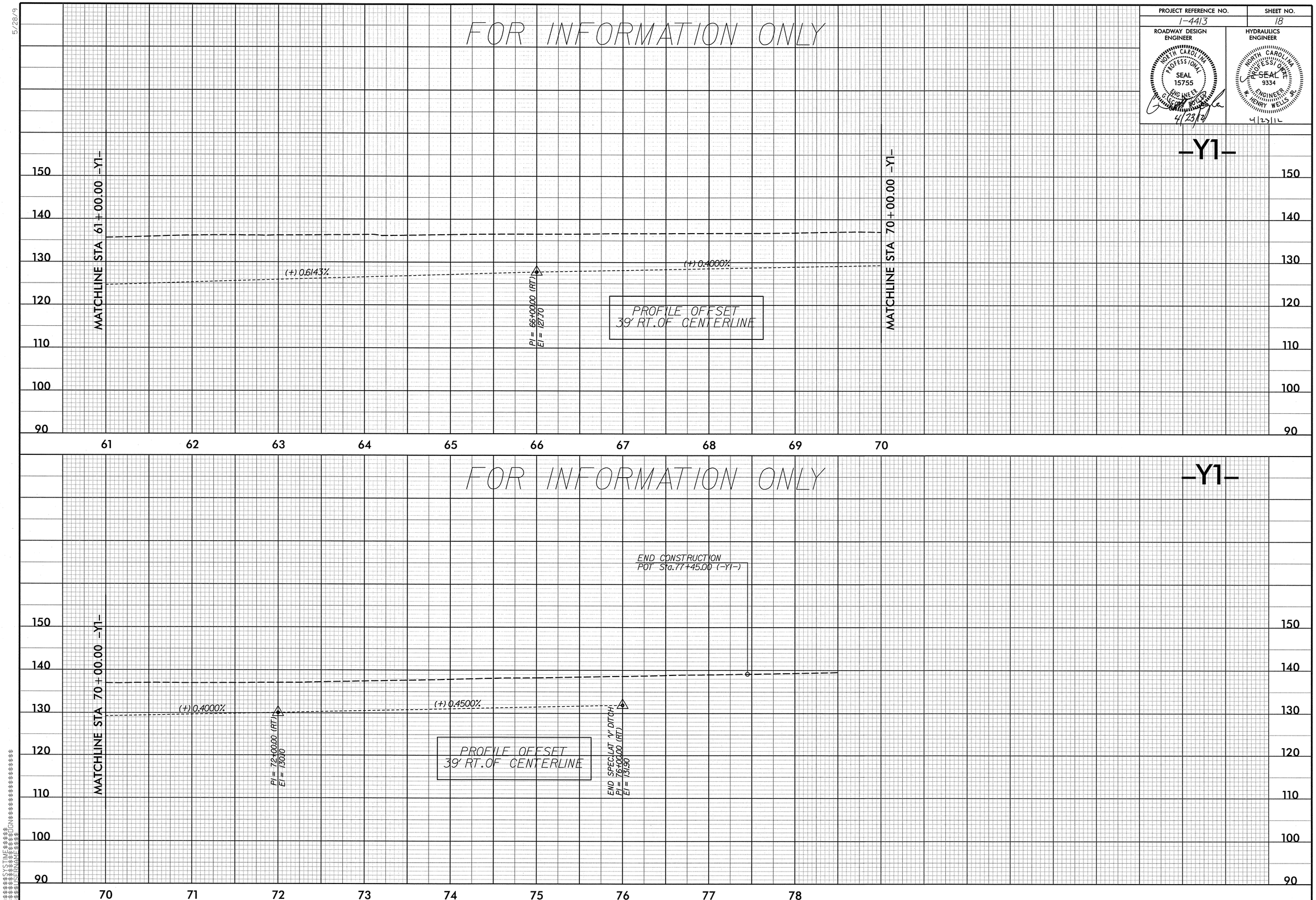

5/28/9

5/28/13

PROJECT REFERENCE NO.	SHEET NO.
I-4413	19

ROADWAY DESIGN ENGINEER

NORTH CAROLINA PROFESSIONAL SEAL 15755 ENGINEER JOSEPH C. HUGHES

4/23/12

HYDRAULICS ENGINEER

NORTH CAROLINA PROFESSIONAL SEAL 9334 ENGINEER HENRY WELLS, JR.

4/27/12

Stantec

Stantec Consulting Services Inc.
801 Jones Franklin Road
Suite 300
Raleigh, NC 27606
Tel. (919) 851-6866
Fax. (919) 851-7024
www.stantec.com
License No. F-0672

-Y2-

BEGIN CONSTRUCTION
POT Sta.7+75.00 (-Y2-)
ELEV. = 130.59

BEGIN WIDENING / 1.5" OVERLAY
POT Sta.7+95.00 (-Y2-)
ELEV = 130.93

20' MILL 1.5"

END 1.5" OVERLAY
BEGIN GRADE
POC Sta.12+00.00 (-Y2-)
ELEV. = 130.95

PI = 13+00.00
EL = 130.63'
VC = 200'
K = 281
DS = 50 mph

PI = 17+00.00
EL = 132.20'
VC = 360'
K = 264
DS = 50 mph

END GRADE
BEGIN 1.5" OVERLAY
POC Sta.20+00.00 (-Y2-)
ELEV. = 137.47

PROPOSED GRADE

(-)0.3200% (+)0.3925% (+)0.3925% (+)1.7567%

EXISTING GROUND

BEG.SPEC.DITCH
PI = 19+58.00 (RT)
EI = 129.04

BEG.SPEC. LAT "Y" DITCH
PI = 20+00.00 (LT)
EI = 128.50

+4.9022% -3.84% -0.884%

PI = 20+50.00 (RT)
EI = 133.55

MATCHLINE STA 21+00.00 -Y2-

150 140 130 120 110 100

8 9 10 11 12 13 14 15 16 17 18 19 20 21

-Y2-

PIPE HYDRAULIC DATA
DRAINAGE STRUCTURE NO. 0465 & 0481

DRAINAGE AREA	= 370	AC
DESIGN FREQUENCY	= 25	YRS
DESIGN DISCHARGE	= 400	CFS
DESIGN HW ELEVATION	= 126.57	FT
100 YEAR DISCHARGE	= 520	CFS
100 YEAR HW ELEVATION	= 127.88	FT
OVERTOPPING FREQUENCY	= 100+	YRS
OVERTOPPING DISCHARGE	= 550	CFS
OVERTOPPING ELEVATION	= 128.2	FT

MATCHLINE STA 21+00.00 -Y2-

END SPEC LAT 'V' DITCH
PI = 22+50.00 (LT)
EI = 126.29

END SPEC.DITCH
PI = 21+50.00 (RT)
EI = 129.71

BEG.SPEC. LAT 5' DITCH
PI = 22+40.00 (RT)
EI = 119.80

-3.84% -0.884%

EXISTING GROUND

-0.108%

BEG.SPEC LAT 5' DITCH
PI = 26+50.00 (LT)
EI = 124.30

PI = 28+00.00 (LT)
EI = 123.00

-1.27%

-0.4790%

2@66" RCP

BEG.SPEC.LAT 'Y' DITCH
PI = 29+60.00 (RT)
EI = 121.50

END SPEC LAT 5' DITCH
PI = 29+67.00 (LT)
EI = 122.20

+1.7647%

OVERLAY ONLY

END SPEC.LAT 5' DITCH
PI = 29+40.00 (RT)
EI = 119.00

BEG.SPEC.LAT 'Y' DITCH
PI = 31+30.00 (RT)
EI = 124.50

END CONSTRUCTION
POT 34+57.50 (-L-)
POT Sta.34+22.77 (-Y2-)

END 1.5" OVERLAY
POT Sta.33+76.41 (-Y2-)
ELEV. = 128.35

FEATHER 46.36'

150 140 130 120 110 100 90

21 22 23 24 25 26 27 28 29 30 31 32 33 34

USERNAME = jbenfield
DGN = I-4413_Y2_PROFILE.dgn