TIP PROJECT: R-2554A

CONTRACT No.: C202837

STRUCTURES

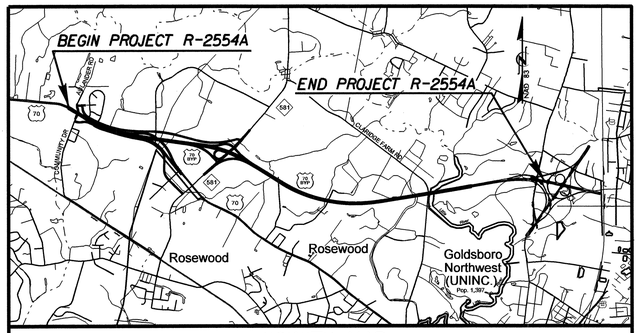

STATE OF NORTH CAROLINA
DIVISION OF HIGHWAYS

METRIC

ALL DIMENSIONS IN THESE PLANS ARE IN METERS AND/OR MILLIMETERS UNLESS OTHERWISE SHOWN

STATE	STATE PROJECT REFERENCE NO.	SHEET NO.	TOTAL SHEETS
N.C.	R-2554A		

STATE PROJ. NO.	F. A. PROJ. NO.	DESCRIPTION
34461.1.3	NHF-70(30)	P.E.
34461.3.4	NHF-70(30)	CONST.

WAYNE COUNTY

LOCATION: US 70 (GOLDSBORO BYPASS) FROM WEST OF NC 581 TO SR 1300 (SALEM CHURCH ROAD)

TYPE OF WORK: GRADING, DRAINAGE, PAVING, STRUCTURES, CULVERTS AND SIGNING

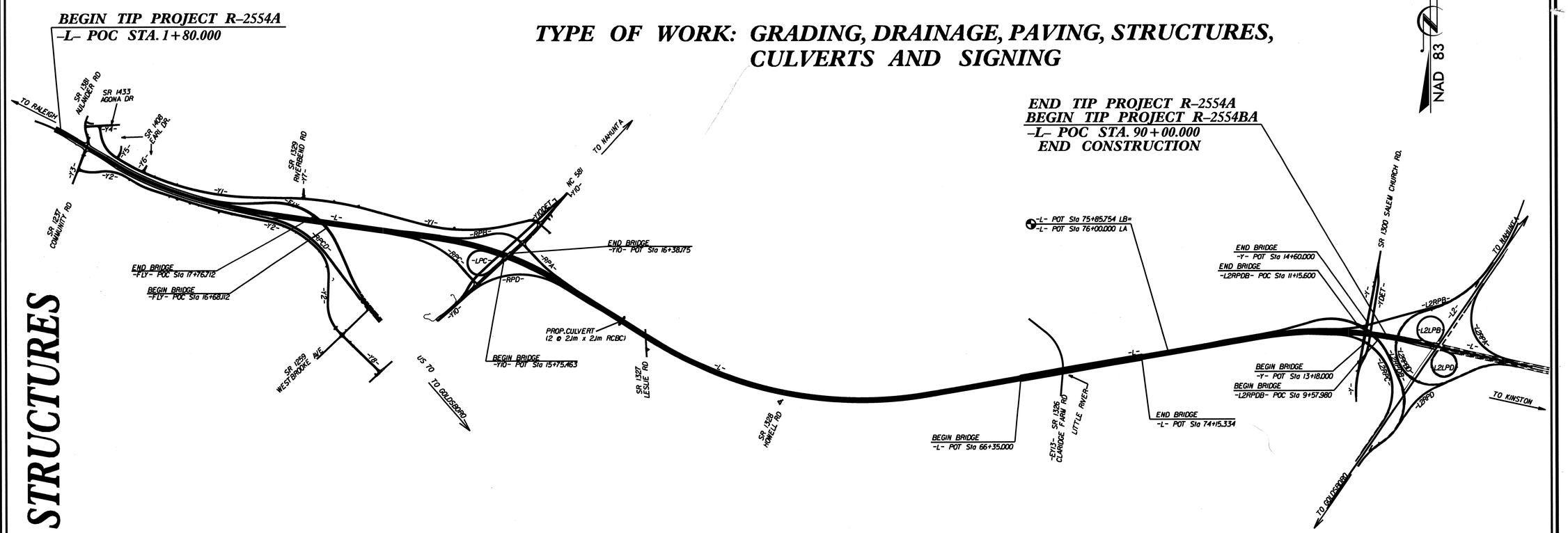

DESIGN DATA

ADT 2012 = 20,600
ADT 2037 = 40,000
DHV = 10 %
D = 55 %
T = 22 % *
V = 110 km/h
* TTST 15 % + DUAL 7 %
FUNC. CLASS.: FREEWAY
STATEWIDE TIER

PROJECT LENGTH

LENGTH ROADWAY T.I.P. PROJECT R-2554A	8.028 KM.
LENGTH STRUCTURES T.I.P. PROJECT R-2554A	0.780 KM.
TOTAL LENGTH OF STATE T.I.P. PROJECT R-2554A	8.808 KM.

NOTE: EB LANE USED TO DETERMINE PROJECT LENGTH, EXCEPT FOR BRIDGE WHICH USES THE WB LANE

Prepared in the Office of:

DIVISION OF HIGHWAYS

2006 STANDARD SPECIFICATIONS

LETTING DATE:
JUNE 19, 2012

OMAR R. AZIZI, P.E.
PROJECT ENGINEER

TIMOTHY L. COGGINS, P.E.
PROJECT DESIGN ENGINEER

STRUCTURES MANAGEMENT UNIT
1000 Birch Ridge Dr.
Raleigh, N.C. 27610

DIVISION OF HIGHWAYS STATE OF NORTH CAROLINA

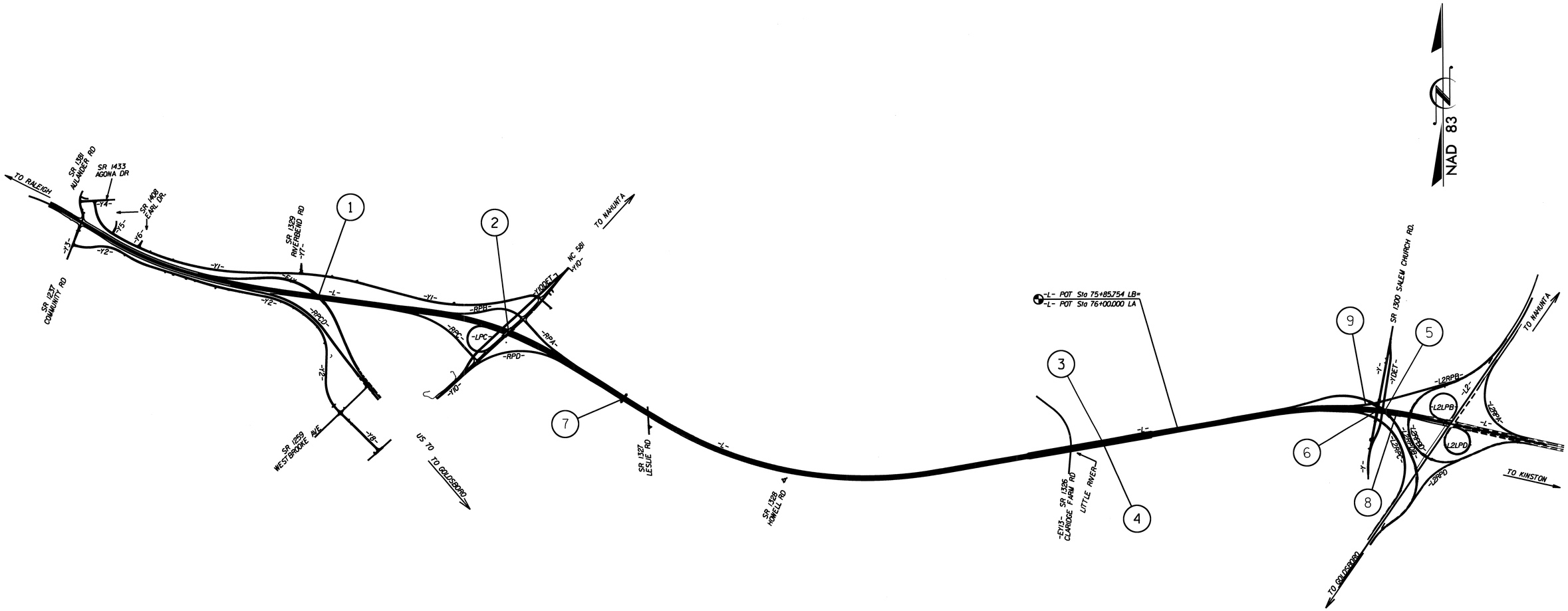

PART 1 OF 2

	INDEX			
	STR. NO.	STATION	DESCRIPTION	SHEETS
PART 1	1	19+40.684 -L-	FLYOVER BRIDGE OVER GOLDSBORO BYPASS BETWEEN SR 1237 & NC 581	S-1 THRU S-43
	2	31+55.609 -L-	BRIDGE OVER GOLDSBORO BYPASS ON NC 581 BETWEEN US 70 AND SR 1329	S-44 THRU S-71
	3	70+24.000 -L-	LEFT LANE BRIDGE OVER LITTLE RIVER ON GOLDSBORO BYPASS BETWEEN NC 581 AND SR 1300	S-72 THRU S-131
	4	70+24.000 -L-	RIGHT LANE BRIDGE OVER LITTLE RIVER ON GOLDSBORO BYPASS BETWEEN NC 581 AND SR 1300	S-132 THRU S-191
PART 2	5	89+04.195 -L-	BRIDGE OVER GOLDSBORO BYPASS ON RAMP DB BETWEEN US 117 BYPASS AND US 70	S-192 THRU S-242
	6	88+58.525 -L-	BRIDGE OVER GOLDSBORO BYPASS ON SR 1300 BETWEEN US 117 BYPASS AND SR 1313	S-243 THRU S-276
	7	39+85.600 -L-	DOUBLE 2.100m x 2.100m RCBC	C-1 THRU C-3
	8	10+03.224 -L2RPDB-	MSE RETAINING WALL #1 @ STR. #5 (END BENT #1)	W-1 THRU W-4
	9	10+03.224 -L2RPDB-	MSE RETAINING WALL #2 @ STR. #5 (END BENT #2)	W-1 THRU W-4

PROJECT NO. R-2554A
WAYNE COUNTY

STATE OF NORTH CAROLINA
DEPARTMENT OF TRANSPORTATION
RALEIGH

INDEX

REVISIONS						
NO.	BY:	DATE:	NO.	BY:	DATE:	
1			3			
2			4			

22-MAR-2012 09:07
R:\TIPProjects-R\R2554A\Structures\R2554A_SD_IS.dgn
taverette

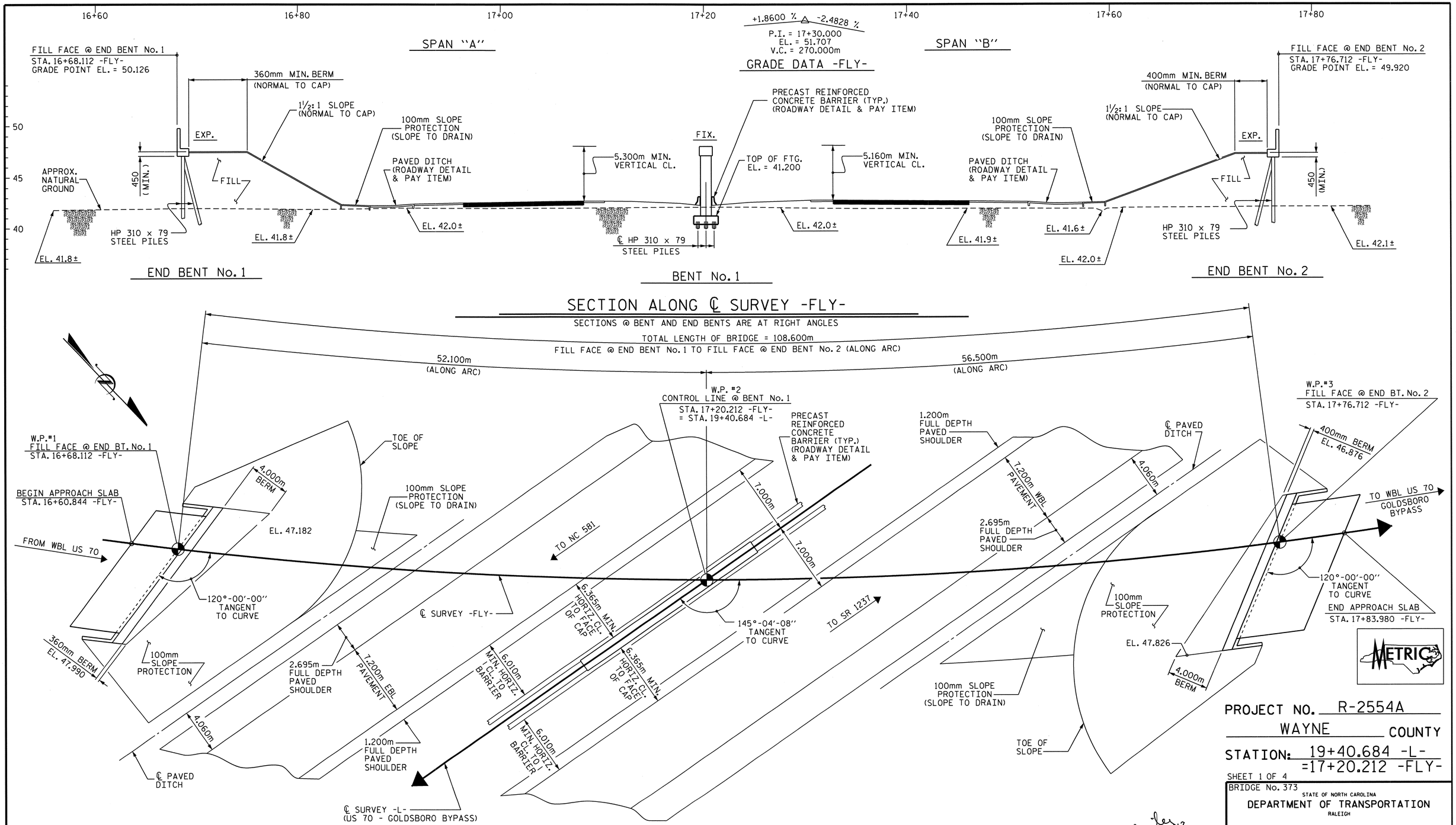

HORIZONTAL CURVE DATA -FLY-

PI STA. = 18+20.871 -FLY-
Δ = 57°-20'-19" LT.
L = 440.329
T = 240.587
R = 440.000
SE = 0.06

PLAN

FOOTINGS AND PILES ARE NOT SHOWN IN PLAN VIEW

PROJECT NO. R-2554A
WAYNE COUNTY
STATION: 19+40.684 -L-
=17+20.212 -FLY-

SHEET 1 OF 4

BRIDGE No. 373

STATE OF NORTH CAROLINA
DEPARTMENT OF TRANSPORTATION
RALEIGH

GENERAL DRAWING

FLYOVER BRIDGE OVER
US 70 (GOLDSBORO BYPASS)
BETWEEN SR 1237 & NC 581

REVISIONS						SHEET NO.
NO.	BY:	DATE:	NO.	BY:	DATE:	S-1
1			3			TOTAL SHEETS
2			4			276

DRAWN BY : J. LAMBERT DATE : 11/2011
CHECKED BY : T.N.C. DATE : 12/2011

19-MAR-2012 09:22
V:\Structures\Str#1\Gen_draw\R2554A_str1_GD.dgn
kalford

STR.#1

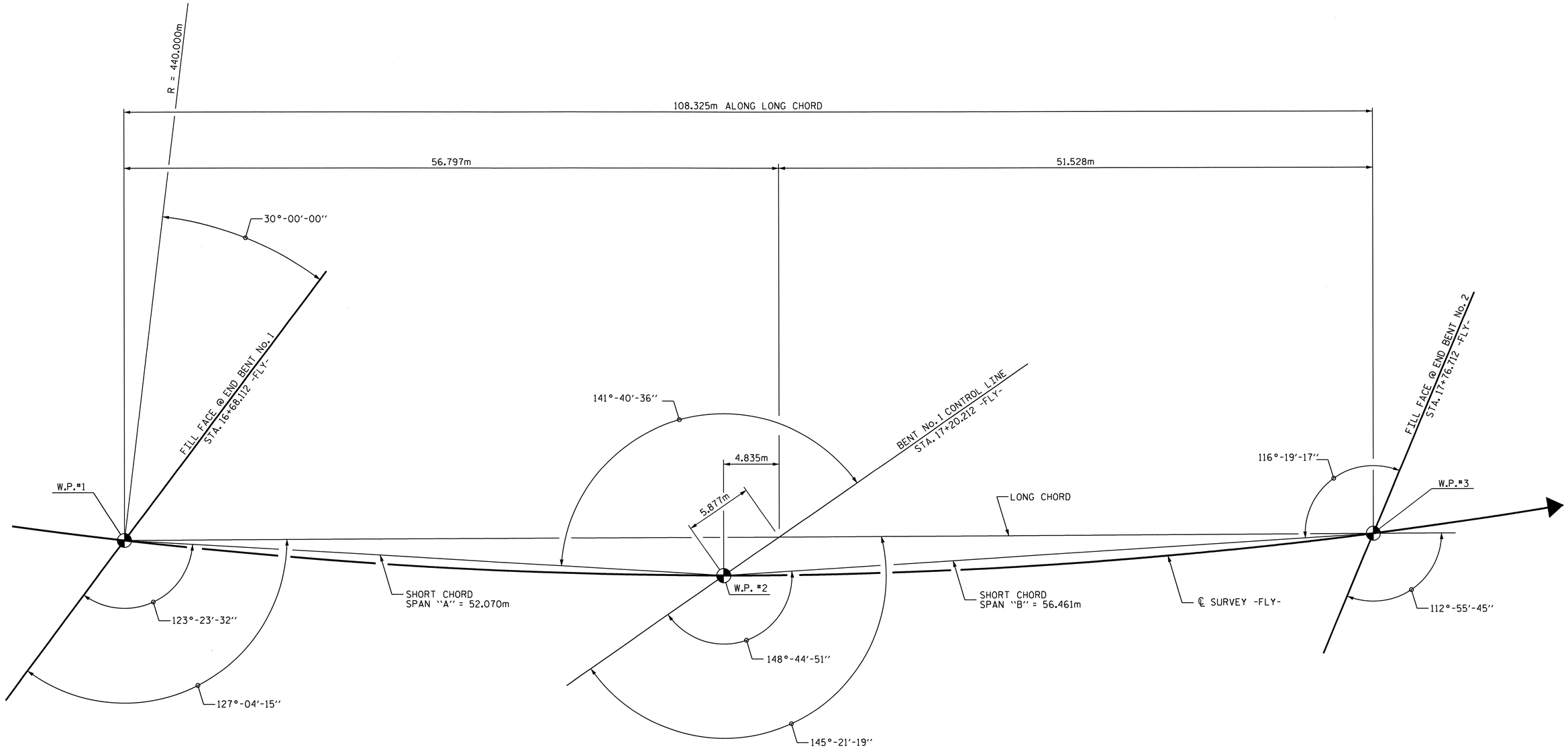

LONG CHORD LAYOUT

HORIZONTAL CURVE DATA -FLY-

PI STA. = 18+20.871 -FLY-
Δ = 57°-20'-19.0" LT.
L = 440.329
T = 240.587
R = 440.000
SE = 0.06

PROJECT NO. R-2554A
WAYNE COUNTY
STATION: 19+40.684 -L-

SHEET 2 OF 4

STATE OF NORTH CAROLINA
DEPARTMENT OF TRANSPORTATION
RALEIGH

GENERAL DRAWING

FLYOVER BRIDGE OVER
US 70 (GOLDSBORO BYPASS)
BETWEEN
SR 1237 & NC 581

NORTH CAROLINA PROFESSIONAL SEAL 022441 CIVIL ENGINEER KRISTY W. ALFORD

REVISIONS						SHEET NO.
NO.	BY:	DATE:	NO.	BY:	DATE:	S-2
1			3			TOTAL SHEETS
2			4			276

DRAWN BY : J. LAMBERT DATE : 11/2011
CHECKED BY : T.N.C. DATE : 12/2011

14-FEB-2012 07:39
V:\Structures\Str#1\Gen_draw\R2554A_str1_GD.dgn
kalford

STR.#1

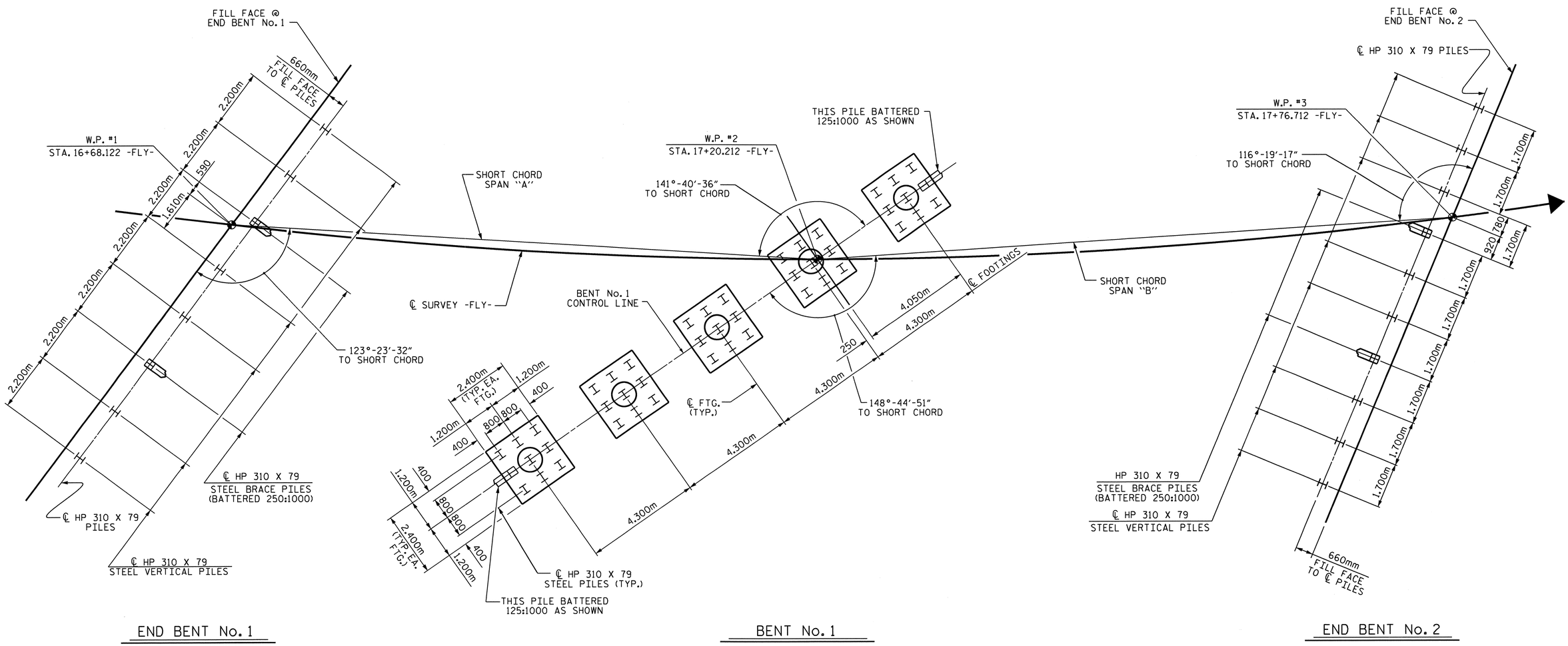

FOUNDATION LAYOUT

DIMENSIONS LOCATING PILES ARE SHOWN TO THE PILE CENTERLINES AT THE BOTTOM OF CAPS AND FOOTINGS.

PROJECT NO. R-2554A
WAYNE COUNTY
STATION: 19+40.684 -L-

SHEET 3 OF 4

FOUNDATION NOTES

FOR PILES, SEE SPECIAL PROVISIONS.

DRIVE PILES AT END BENT NO. 1, BENT NO. 1, AND END BENT NO. 2 TO A REQUIRED BEARING CAPACITY OF 1180 KN PER PILE. THE REQUIRED BEARING CAPACITY IS EQUAL TO THE ALLOWABLE BEARING CAPACITY WITH A MINIMUM FACTOR OF SAFETY OF TWO.

THE ALLOWABLE BEARING CAPACITY FOR PILES AT END BENT NO. 1, BENT NO. 1, AND END BENT NO. 2 IS 590 KN PER PILE.

TESTING PILES WITH THE PILE DRIVING ANALYZER (PDA) DURING DRIVING, RESTRIKING OR REDRIVING MAY BE REQUIRED. THE ENGINEER WILL DETERMINE THE NEED FOR PDA TESTING. FOR PILE DRIVING ANALYZER, SEE SPECIAL PROVISIONS.

NORTH CAROLINA PROFESSIONAL SEAL 029441 ENGINEER KRISTY W. ALFORD

STATE OF NORTH CAROLINA
DEPARTMENT OF TRANSPORTATION
RALEIGH

GENERAL DRAWING

FLYOVER BRIDGE OVER
US 70 (GOLDSBORO BYPASS)
BETWEEN SR 1237 & NC 581

REVISIONS						SHEET NO.
NO.	BY:	DATE:	NO.	BY:	DATE:	S-3
1			3			TOTAL SHEETS
2			4			276

DRAWN BY : J. LAMBERT DATE : 11/2011
CHECKED BY : T.N.C. DATE : 12/2011

14-FEB-2012 07:38
V:\Structures\Str#1\Gen_draw\R2554A_str1_GD.dgn
kalford

STR. #1

BENCHMARK (TBM-H) -BY- STA. 26+54.29 (25.664m RT) -FLY- STA. 10+33.578 (31.097m LT) EL. = 41.413

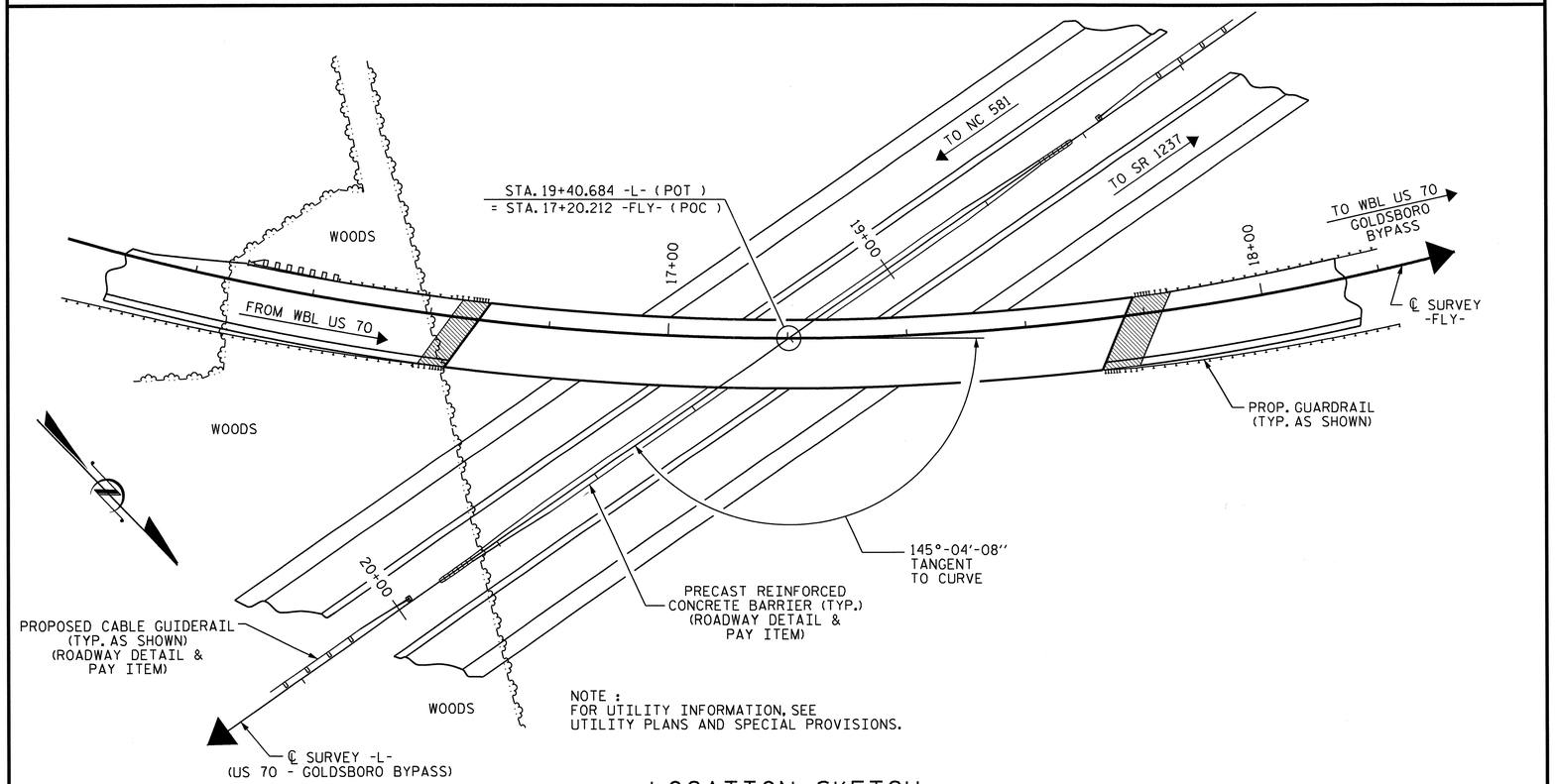

LOCATION SKETCH

NOTES :

ALL DIMENSIONS ARE IN MILLIMETERS UNLESS OTHERWISE NOTED.

ALL ELEVATIONS ARE IN METERS.

ASSUMED LIVE LOAD = MS 18 OR ALTERNATE LOADING, EXCEPT THAT GIRDERS HAVE BEEN DESIGNED FOR MS 22.5.

FOR OTHER DESIGN DATA AND GENERAL NOTES, SEE SHEET SNSM.

THIS BRIDGE HAS BEEN DESIGNED BY THE STRENGTH DESIGN METHOD AS SPECIFIED IN AASHTO STANDARD SPECIFICATIONS.

ALL STRUCTURAL STEEL SHALL BE AASHTO M270 GRADE 345W AND PAINTED IN ACCORDANCE WITH SYSTEM 4 OF ARTICLE 442-7 OF THE STANDARD SPECIFICATIONS UNLESS OTHERWISE NOTED ON THE PLANS.

REMOVABLE FORMS MAY BE USED IN LIEU OF METAL STAY-IN-PLACE FORMS IN ACCORDANCE WITH ARTICLE 420-3 OF THE STANDARD SPECIFICATIONS.

NEEDLE BEAMS WILL NOT BE ALLOWED UNLESS OTHERWISE CALLED FOR ON THE PLANS OR APPROVED BY THE ENGINEER.

FOR SUBMITTAL OF WORKING DRAWINGS, SEE SPECIAL PROVISIONS.

FOR FALSEWORK AND FORMWORK, SEE SPECIAL PROVISIONS.

FOR CRANE SAFETY, SEE SPECIAL PROVISIONS.

FOR GROUT FOR STRUCTURES, SEE SPECIAL PROVISIONS.

FOR CURING CONCRETE, SEE SPECIAL PROVISIONS.

FOR PLACING LOAD ON STRUCTURE MEMBERS, SEE SPECIAL PROVISIONS.

FOR METRIC STRUCTURAL STEEL, SEE SPECIAL PROVISIONS.

TOTAL BILL OF MATERIAL

	FOUNDATION EXCAVATION	PDA TESTING	PDA ASSISTANCE	REINFORCED CONCRETE DECK SLAB	GROOVING BRIDGE FLOORS	CLASS A CONCRETE	BRIDGE APPROACH SLABS	REINFORCING STEEL	SPIRAL COLUMN REINFORCING STEEL	STRUCTURAL STEEL	HP 310 X 79 STEEL PILES		PILE REDRIVES	CONCRETE BARRIER RAIL	100mm SLOPE PROTECTION	ELASTOMERIC BEARINGS	EXPANSION JOINT SEALS	DISC BEARINGS
	LUMP SUM	EA.	EA.	SQ. METERS	SQ. METERS	CU. METERS	LUMP SUM	kg	kg	APPR. kg	NO.	METERS	EACH	METERS	SQ. METERS	LUMP SUM	LUMP SUM	LUMP SUM
SUPERSTRUCTURE				1344.0	1284.0		LUMP SUM			468153				231.035		LUMP SUM	LUMP SUM	LUMP SUM
END BENT No. 1						32.8		3044			8	219.2	4		537.0			
BENT No. 1	LUMP SUM					60.6		8505	1065		45	958.5	23					
END BENT No. 2						34.3		3188			10	274.0	5		634.0			
TOTAL	LUMP SUM	1	1	1344.0	1284.0	127.7	LUMP SUM	14737	1065	468153	63	1451.7	32	231.035	1171.0	LUMP SUM	LUMP SUM	LUMP SUM

PROJECT NO. R-2554A

WAYNE COUNTY

STATION: 19+40.684 -L-

SHEET 4 OF 4

STATE OF NORTH CAROLINA
DEPARTMENT OF TRANSPORTATION
RALEIGH

GENERAL DRAWING
FLYOVER BRIDGE OVER
US 70 (GOLDSBORO BYPASS)
BETWEEN
SR 1237 & NC 581

NORTH CAROLINA PROFESSIONAL SEAL 029441 ENGINEER KRISTY W. ALFORD

REVISIONS						SHEET NO.
NO.	BY:	DATE:	NO.	BY:	DATE:	S-4
1			3			TOTAL SHEETS
2			4			276

DRAWN BY : J. LAMBERT DATE : 11/2011
CHECKED BY : T.N.C. DATE : 12/2011

12-MAR-2012 12:34
V:\Structures\Str*1\Gen_draw\R2554A_str1_GD.dgn
kalford

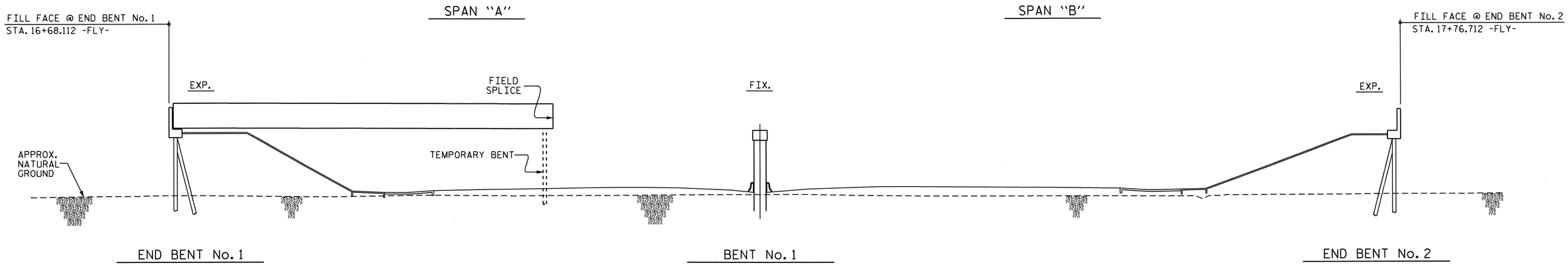

STAGE I GIRDER ERECTION

(SECTIONS AT BENT & END BENTS ARE AT RIGHT ANGLES)

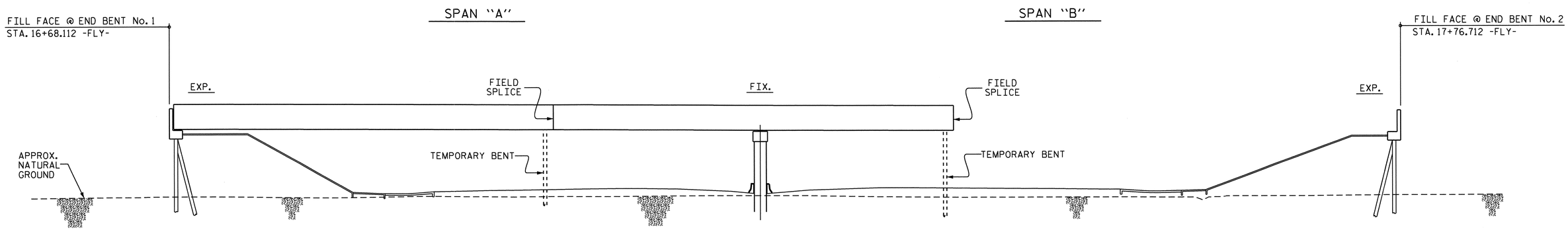

STAGE II GIRDER ERECTION

(SECTIONS AT BENT & END BENTS ARE AT RIGHT ANGLES)

ERECTION NOTES

ERECT A MINIMUM OF TWO GIRDERS WITH ALL DIAPHRAGMS/CROSSFRAMES BETWEEN THE GIRDERS IN PLACE AND THE BOLTS TIGHTENED PRIOR TO RELEASING THE GIRDERS.

ERECT EACH SUBSEQUENT GIRDER WITH DIAPHRAGMS/CROSSFRAMES CONNECTING TO THE ADJACENT PREVIOUSLY ERECTED GIRDER AND TIGHTEN ALL BOLTS BEFORE RELEASING THE GIRDER.

THE STRUCTURAL STEEL SHALL BE SUPPORTED DURING ERECTION IN ITS CAMBERED POSITION. A MINIMUM OF ONE TEMPORARY BENT SHALL BE USED IN BOTH SPANS "A" & "B".

PLACEMENT OF TEMPORARY BENTS SHALL BE COORDINATED WITH TRAFFIC PHASING REQUIREMENTS. SEE TRAFFIC CONTROL PLANS.

TEMPORARY BENTS SHALL REMAIN IN PLACE UNTIL ALL DIAPHRAGMS/CROSSFRAMES ARE IN PLACE AND ALL HIGH STRENGTH BOLTS ARE TIGHTENED.

TEMPORARY BENTS SHALL PROVIDE BEARING AT CONNECTOR PLATE LOCATIONS. WHEN CONNECTOR PLATES ARE USED AS TEMPORARY BEARING STIFFENERS, DIAPHRAGMS MUST BE ATTACHED.

THE CONTRACTOR'S ERECTION PLANS SHALL INCLUDE A METHOD OF TEMPORARY BENT REMOVAL THAT WILL UNIFORMLY TRANSFER THE STRUCTURAL WEIGHT TO THE DIAPHRAGMS/CROSSFRAMES AND THE GIRDERS WILL REMAIN IN THE CAMBERED POSITIONS.

PLANS FOR TEMPORARY BENT ERECTION AND REMOVAL SHALL BE SUBMITTED TO THE ENGINEER FOR REVIEW.

THE CONTRACTOR IS RESPONSIBLE FOR DESIGNING THE TEMPORARY BENTS. THE DESIGNS SHALL BE COMPLETED BY A PROFESSIONAL ENGINEER REGISTERED IN THE STATE OF NORTH CAROLINA. THE CONTRACTOR SHALL SUBMIT SIGNED AND SEALED WORKING DRAWINGS AND CALCULATIONS FOR APPROVAL BY THE ENGINEER.

DURING THE GIRDER ERECTION PROCEDURE, THE CONTRACTOR IS RESPONSIBLE FOR PROVIDING TEMPORARY LATERAL BRACING AND OTHER MEANS OF SUPPORT, AS REQUIRED, TO ENSURE STABILITY OF THE GIRDERS, AVOID UPLIFT OF THE GIRDERS AT THE TEMPORARY BENTS AND TO ENSURE PLUMBNESS OF THE GIRDERS IN THE FINAL CONDITION.

NO SEPARATE MEASUREMENT OR PAYMENT WILL BE MADE FOR PROVIDING THE TEMPORARY BENT. THE COST FOR ALL MATERIALS, EQUIPMENT, TOOLS, LABOR AND ANY INCIDENTALS NECESSARY TO PROVIDE THE TEMPORARY BENT SHALL BE CONSIDERED INCIDENTAL TO THE LUMP SUM BID PRICE FOR STRUCTURAL STEEL.

THE CONTRACTOR MAY SUBMIT AN ALTERNATE ERECTION METHOD TO THE ENGINEER FOR REVIEW AND APPROVAL.

PROJECT NO. R-2554 A
WAYNE COUNTY
STATION: 19+40.684 -L-

NORTH CAROLINA PROFESSIONAL SEAL 020441 ENGINEER KRISTY W. ALFORD

STATE OF NORTH CAROLINA
DEPARTMENT OF TRANSPORTATION
RALEIGH

GIRDER ERECTION DETAILS

REVISIONS						SHEET NO.
NO.	BY:	DATE:	NO.	BY:	DATE:	S-5
1			3			TOTAL SHEETS
2			4			276

DRAWN BY : MIKE BRITT DATE : 7-14-10
CHECKED BY : K.W. ALFORD DATE : 8/10

14-FEB-2012 07:38
V:\Structures\Str#1\Gen_draw\R2554A_str1_ERECT.dgn
kalford

STR.#1

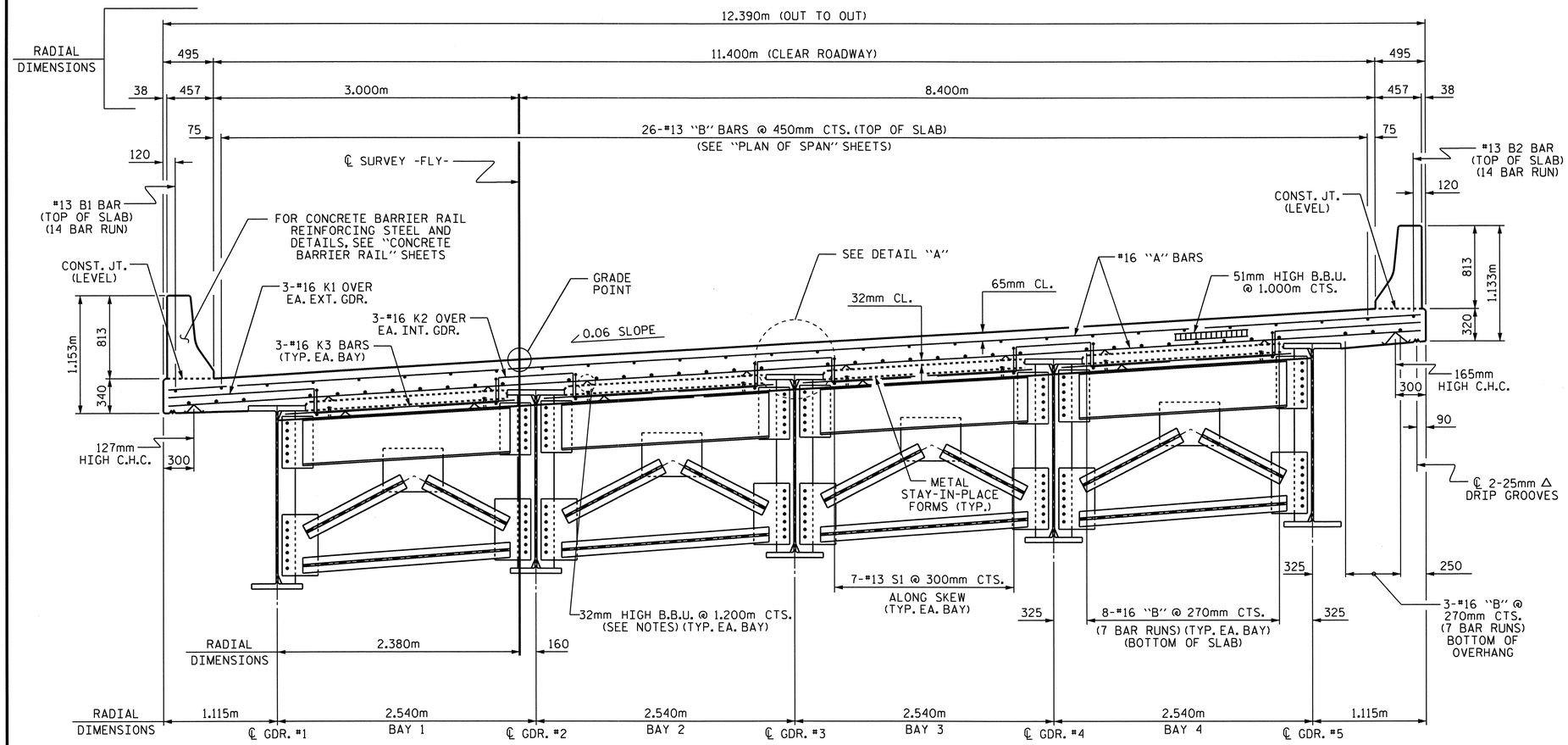

TYPICAL SECTION

SHOWING END BENT DIAPHRAGMS

NOTES:

PROVIDE 32mm HIGH BEAM BOLSTERS UPPER AT 1.200m CTS. ATOP THE METAL STAY-IN-PLACE FORMS TO SUPPORT THE BOTTOM MAT OF "A" BARS. WHEN USING REMOVABLE FORMS, PROVIDE CONTINUOUS HIGH CHAIRS FOR METAL DECK (C.H.C.M.) @ 1.200m CTS. WITH A HEIGHT TO SUPPORT THE BOTTOM MAT OF "A" BARS A CLEAR DISTANCE OF 65mm ABOVE THE TOP OF THE REMOVABLE FORM.

BARRIER RAIL IN A CONTINUOUS UNIT SHALL NOT BE CAST UNTIL ALL SLAB CONCRETE IN THAT UNIT HAS BEEN CAST AND HAS REACHED A MINIMUM COMPRESSIVE STRENGTH OF 20.7 MPa.

METAL STAY-IN-PLACE FORMS SHALL NOT BE WELDED TO GIRDER FLANGES IN THE ZONES REQUIRING CHARPY V-NOTCH TEST. SEE STRUCTURAL STEEL DETAIL SHEETS.

PREVIOUSLY CAST CONCRETE IN A CONTINUOUS UNIT SHALL HAVE ATTAINED A MINIMUM COMPRESSIVE STRENGTH OF 20.7 MPa BEFORE ADDITIONAL CONCRETE IS CAST IN THE UNIT.

ALL REINFORCING STEEL IN BARRIER RAILS SHALL BE EPOXY COATED.

#16 G1 BAR MAY BE SHIFTED SLIGHTLY, AS NECESSARY, TO CLEAR REINFORCING STEEL AND STIRRUPS.

THE CONTRACTOR MAY, WHEN NECESSARY, PROPOSE A SCHEME FOR AVOIDING INTERFERENCE BETWEEN METAL STAY-IN-PLACE FORM SUPPORTS OR FORMS AND GIRDER STIFFENERS OR CONNECTOR PLATES. THE PROPOSAL SHALL BE INDICATED, AS APPROPRIATE, ON EITHER THE STEEL WORKING DRAWINGS OR THE METAL STAY-IN-PLACE FORM WORKING DRAWINGS.

THE CONTRACTOR SHALL ADJUST THE GIRDER BUILDUPS AS NECESSARY TO INCORPORATE A MAXIMUM PERMISSIBLE VARIATION IN DISC BEARING DEPTH OF 13mm, SEE SPECIAL PROVISION FOR DISC BEARINGS.

STRUCTURAL STEEL ERECTION IN A CONTINUOUS UNIT SHALL BE COMPLETE BEFORE FALSEWORK OR FORMS ARE PLACED ON THE UNIT.

FOR EXPANSION JOINT SEALS, SEE SPECIAL PROVISIONS.

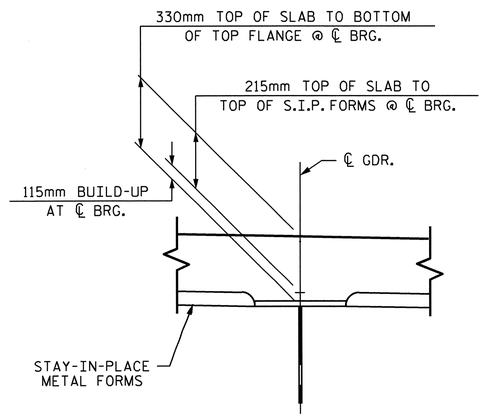

DETAIL "A"

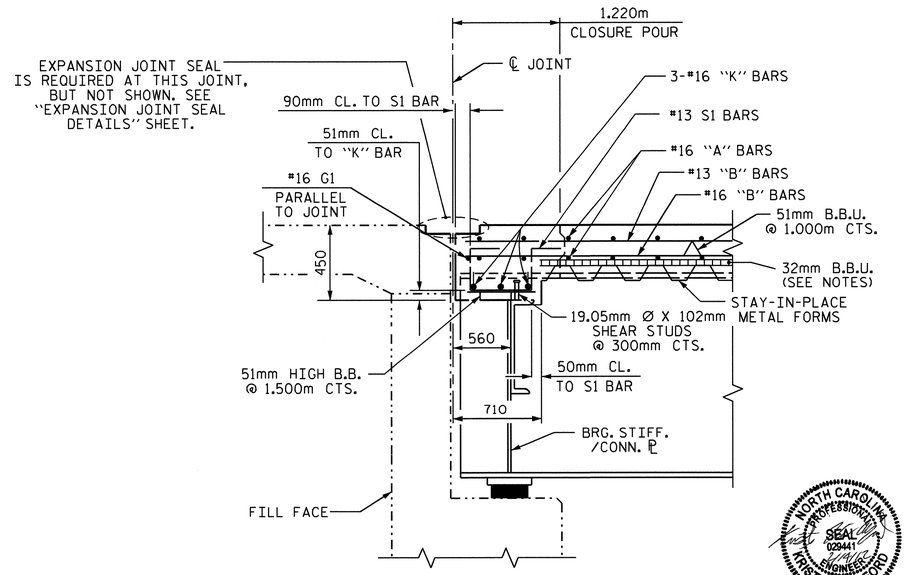

SECTION A-A

(AT END BENTS)
(SECTION TAKEN NORMAL TO FILL FACE)

PROJECT NO. R-2554A
WAYNE COUNTY
STATION: 19+40.684 -L-

SHEET 1 OF 2

STATE OF NORTH CAROLINA
DEPARTMENT OF TRANSPORTATION
RALEIGH

SUPERSTRUCTURE
TYPICAL SECTION

NORTH CAROLINA PROFESSIONAL SEAL 029441 ENGINEER KRISTY W. ALFORD

REVISIONS						SHEET NO.
NO.	BY:	DATE:	NO.	BY:	DATE:	S-6
1			3			TOTAL SHEETS
2			4			276

STR. #1

DRAWN BY : D. G. ELY DATE : 10/10
CHECKED BY : N. PIERCE DATE : 01/11

14-FEB-2012 07:37
V:\Structures\Str#1\Super_Draw\R-2554A_SD_TS_STR 1.dgn
kalford

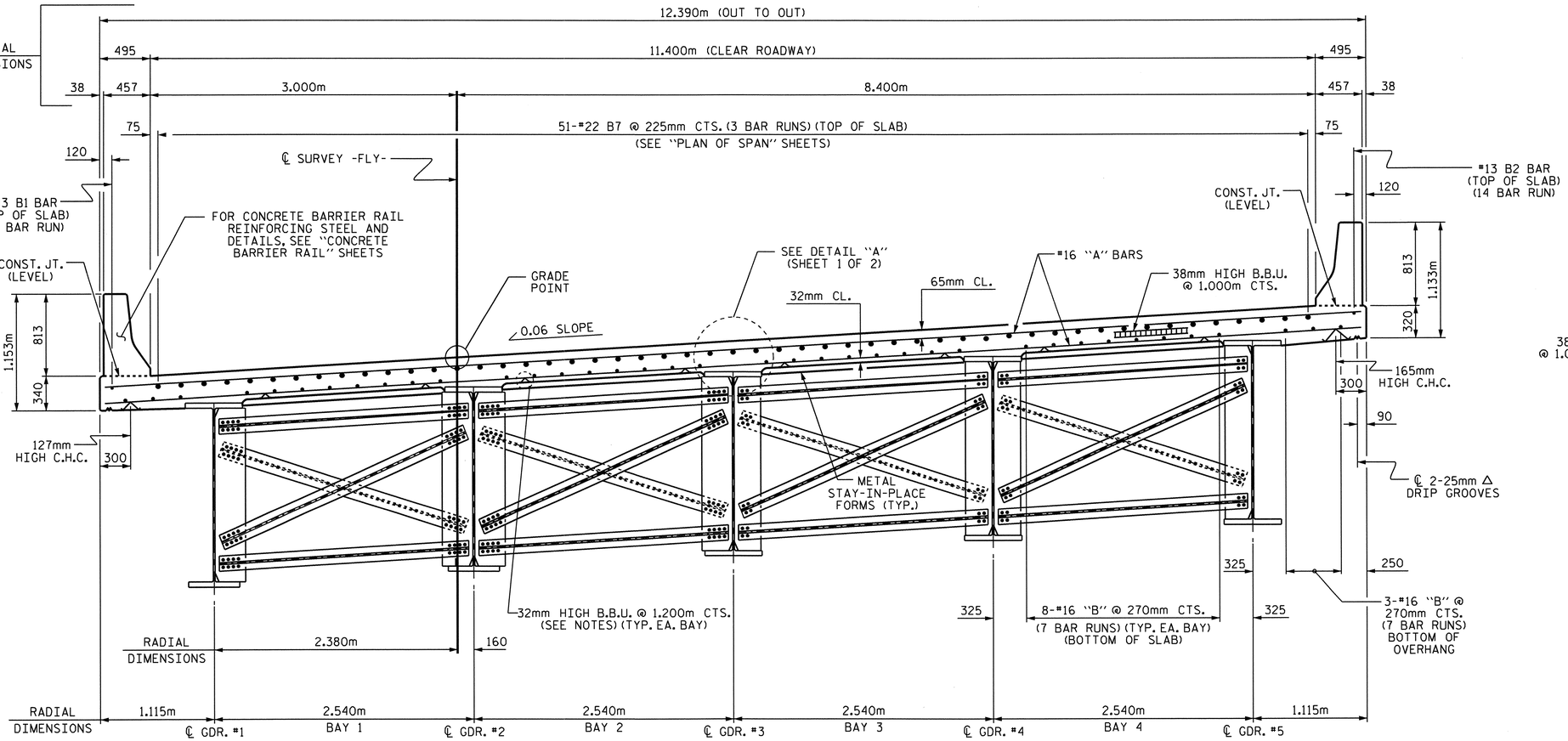

HALF TYPICAL SECTION

SHOWING BENT DIAPHRAGMS

HALF TYPICAL SECTION

SHOWING INTERMEDIATE DIAPHRAGMS

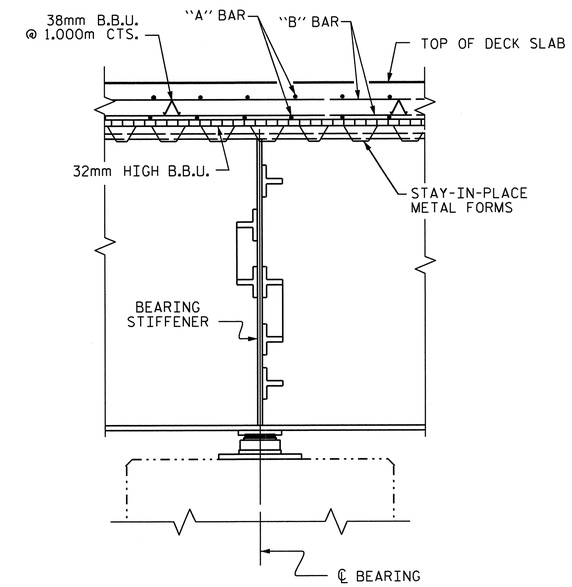

SECTION @ BENT 1

PROJECT NO. R-2554A

WAYNE COUNTY

STATION: 19+40.684 -L-

SHEET 2 OF 2

STATE OF NORTH CAROLINA
DEPARTMENT OF TRANSPORTATION
RALEIGH

SUPERSTRUCTURE

TYPICAL SECTION

NORTH CAROLINA PROFESSIONAL SEAL 029441 ENGINEER KRISTY W. ALFORD

REVISIONS						SHEET NO.
NO.	BY:	DATE:	NO.	BY:	DATE:	S-7
1			3			TOTAL SHEETS
2			4			276

DRAWN BY : D. G. ELY DATE : 10/10
CHECKED BY : N. PIERCE DATE : 01/11

12-MAR-2012 09:01
V:\Structures\Str#1\Super_Draw\R-2554A_SD_TS_STR 1.dgn
kalford

STR. #1

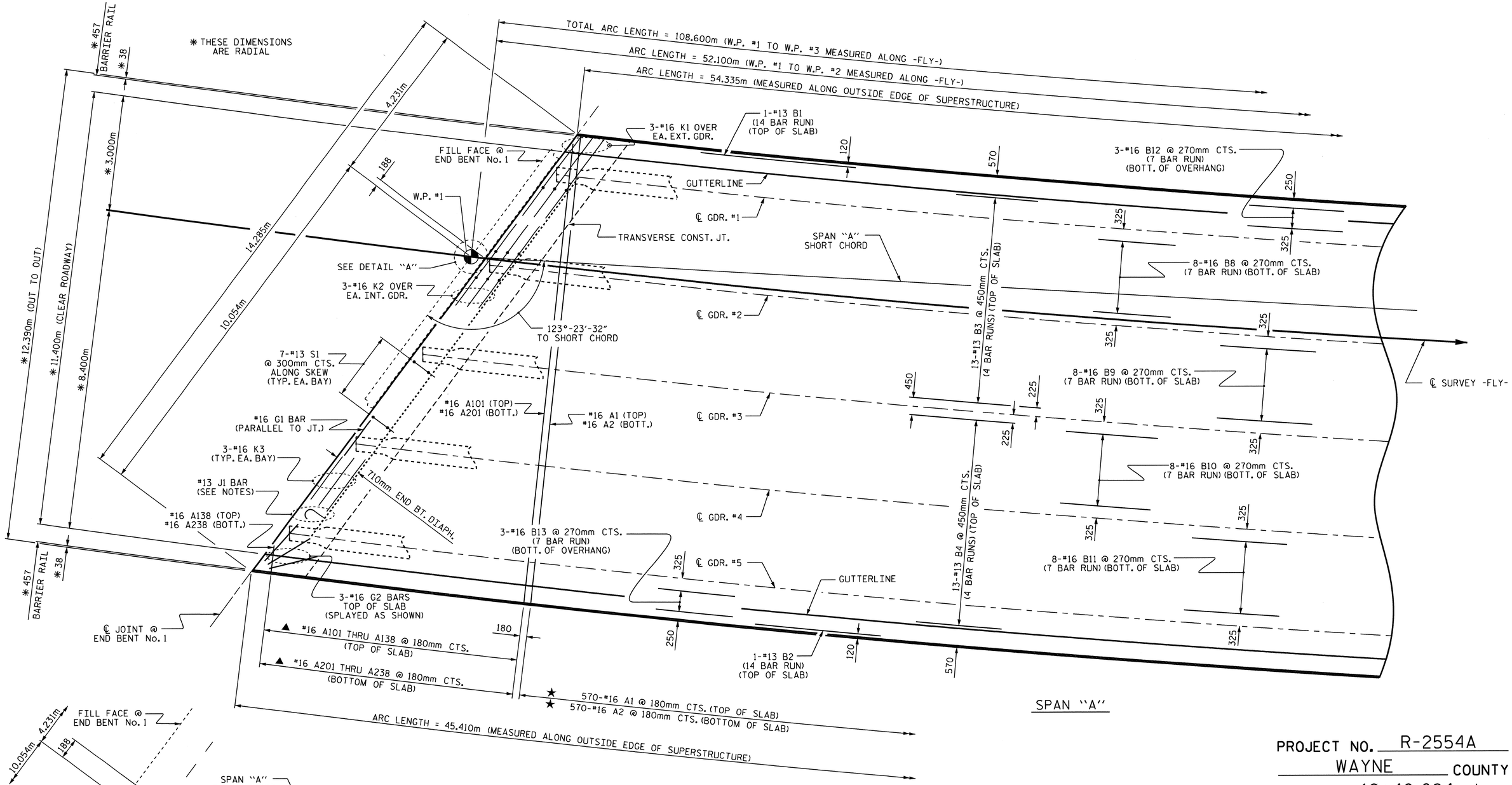

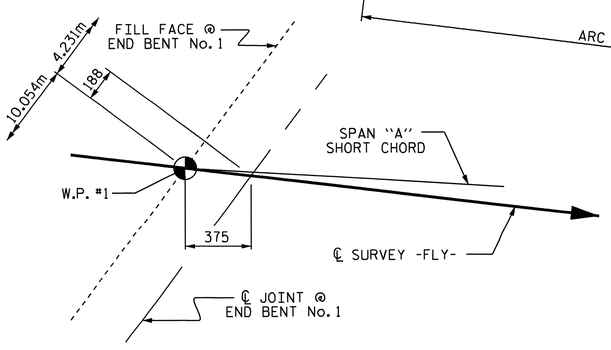

DETAIL "A"

PARTIAL PLAN OF SPAN

NOTES:

FOR TRANSVERSE CONSTRUCTION JOINT LOCATIONS, SEE "BILL OF MATERIAL" SHEET 2 OF 2.

FOR BARRIER RAIL REINFORCING STEEL, SEE "CONCRETE BARRIER RAIL" SHEETS.

★ #16 MAIN "A" BARS ARE TO BE PLACED RADIALLY ALONG RIGHT OUTSIDE EDGE OF SUPERSTRUCTURE.

▲ #16 CUT "A" BARS ARE TO BE PLACED PARALLEL TO THE FIRST #16 MAIN "A" BAR.

FOR PLACEMENT OF #13 J1 BAR, SEE "EXPANSION JOINT SEAL DETAILS" SHEET.

PROJECT NO. R-2554A
WAYNE COUNTY
STATION: 19+40.684 -L-

SHEET 1 OF 3

STATE OF NORTH CAROLINA
DEPARTMENT OF TRANSPORTATION
RALEIGH

SUPERSTRUCTURE

PLAN OF SPANS

NORTH CAROLINA PROFESSIONAL SEAL 029441 ENGINEER KRISTY W. ALFORD

REVISIONS						SHEET NO.
NO.	BY:	DATE:	NO.	BY:	DATE:	S-8
1			3			TOTAL SHEETS
2			4			276

DRAWN BY : D. G. ELY DATE : 10/10
CHECKED BY : N. PIERCE DATE : 01/11

12-MAR-2012 09:02
V:\Structures\Str#1\Super_Draw\R-2554A_SD_PS_STR 1.dgn
kalford

STR. #1

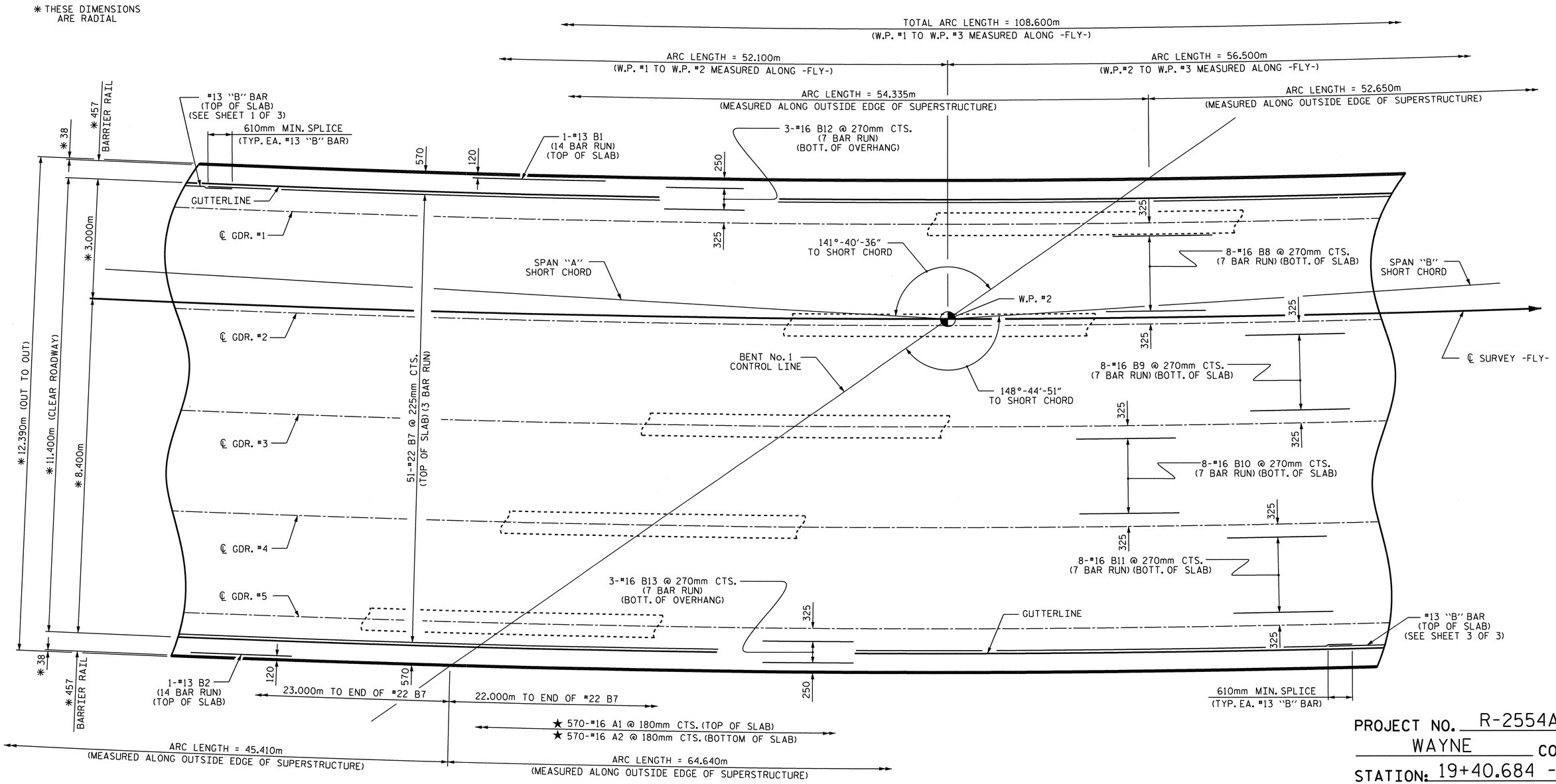

PARTIAL PLAN OF SPANS

NOTES:

FOR TRANSVERSE CONSTRUCTION JOINT LOCATIONS, SEE "BILL OF MATERIAL" SHEET 2 OF 2.

FOR BARRIER RAIL REINFORCING STEEL, SEE "CONCRETE BARRIER RAIL" SHEETS.

★ #16 MAIN "A" BARS ARE TO BE PLACED RADIALLY ALONG RIGHT OUTSIDE EDGE OF SUPERSTRUCTURE.

▲ #16 CUT "A" BARS ARE TO BE PLACED PARALLEL TO THE FIRST #16 MAIN "A" BAR.

PROJECT NO. R-2554A
WAYNE COUNTY
STATION: 19+40.684 -L-

SHEET 2 OF 3

STATE OF NORTH CAROLINA
DEPARTMENT OF TRANSPORTATION
RALEIGH

SUPERSTRUCTURE

PLAN OF SPANS

NORTH CAROLINA PROFESSIONAL SEAL 029441 ENGINEER KRISTY W. ALFORD

REVISIONS						SHEET NO.
NO.	BY:	DATE:	NO.	BY:	DATE:	S-9
1			3			TOTAL SHEETS
2			4			276

DRAWN BY : D. G. ELY DATE : 10/10
CHECKED BY : N. PIERCE DATE : 01/11

14-FEB-2012 07:36
V:\Structures\Str#1\Super_Draw\R-2554A_SD_PS_STR 1.dgn
kalford

STR. #1

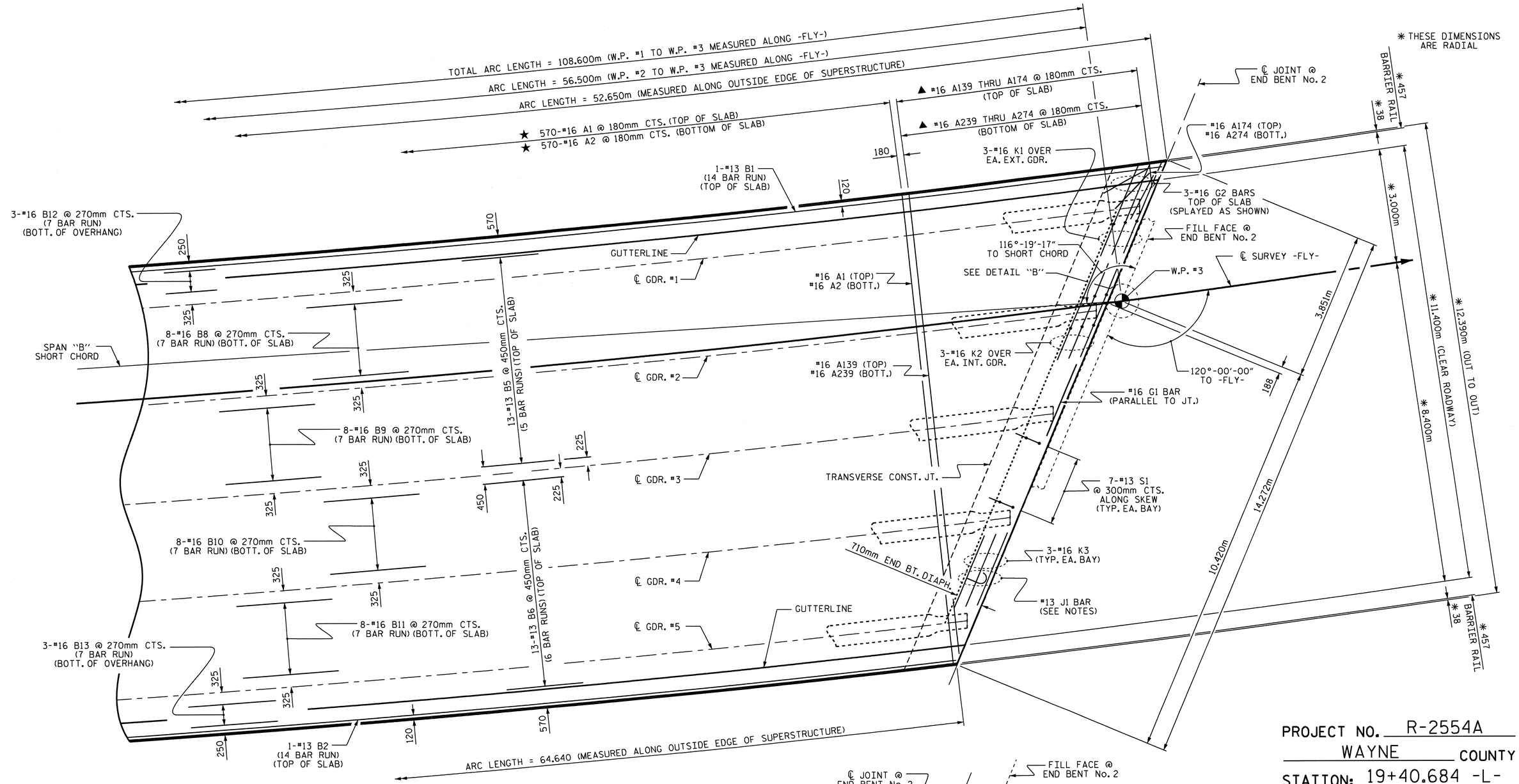

SPAN "B"

PARTIAL PLAN OF SPAN

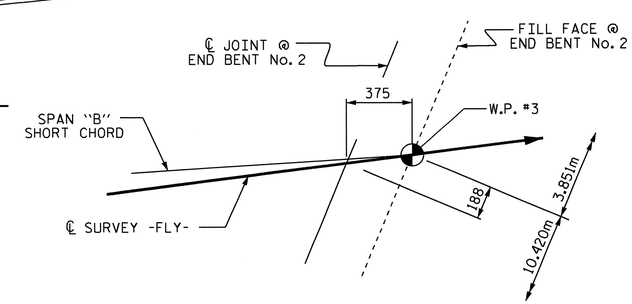

DETAIL "B"

PROJECT NO. R-2554A

WAYNE COUNTY

STATION: 19+40.684 -L-

SHEET 3 OF 3

NOTES:

FOR TRANSVERSE CONSTRUCTION JOINT LOCATIONS, SEE "BILL OF MATERIAL" SHEET 2 OF 2.

FOR BARRIER RAIL REINFORCING STEEL, SEE "CONCRETE BARRIER RAIL" SHEETS.

★ #16 MAIN "A" BARS ARE TO BE PLACED RADIALLY ALONG RIGHT OUTSIDE EDGE OF SUPERSTRUCTURE.

▲ #16 CUT "A" BARS ARE TO BE PLACED PARALLEL TO THE FIRST #16 MAIN "A" BAR.

FOR PLACEMENT OF #13 J1 BAR, SEE "EXPANSION JOINT SEAL DETAILS" SHEET.

STATE OF NORTH CAROLINA
DEPARTMENT OF TRANSPORTATION
RALEIGH

SUPERSTRUCTURE

PLAN OF SPANS

NORTH CAROLINA PROFESSIONAL SEAL 029441 ENGINEER KRISTY W. ALFORD

REVISIONS								SHEET NO.
NO.	BY:	DATE:	NO.	BY:	DATE:			S-10
1			3					TOTAL SHEETS
2			4					276

DRAWN BY : D. G. ELY DATE : 10/10
CHECKED BY : N. PIERCE DATE : 01/11

12-MAR-2012 09:02
V:\Structures\Str#1\Super_Draw\R-2554A_SD_PS_STR 1.dgn
kalford

STR. #1

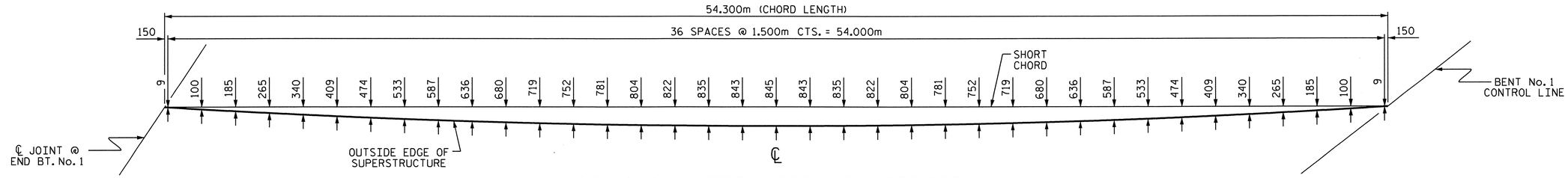

SPAN "A" LEFT SIDE ARC OFFSETS

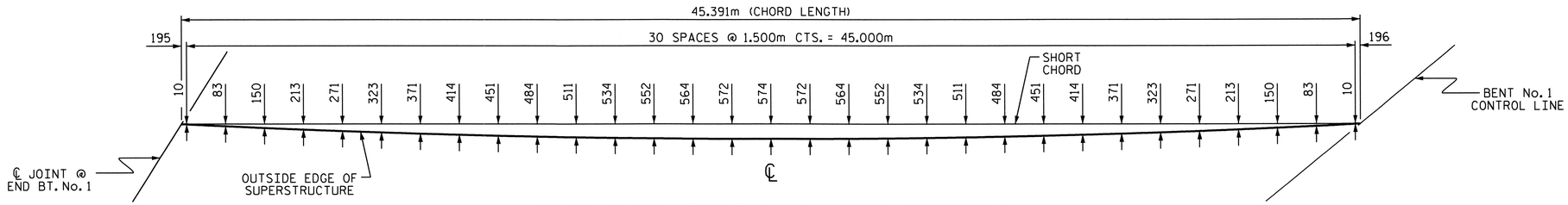

SPAN "A" RIGHT SIDE ARC OFFSETS

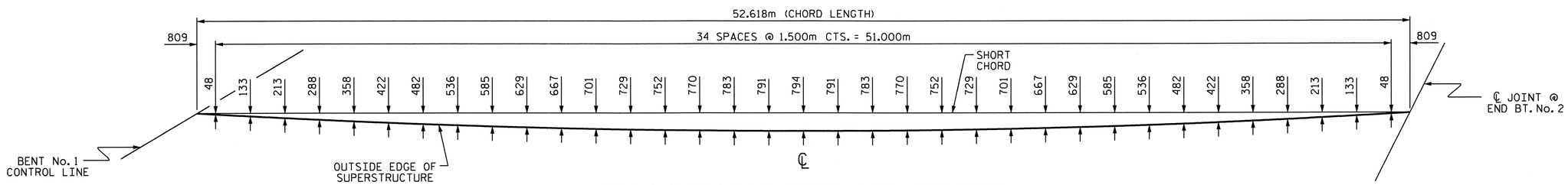

SPAN "B" LEFT SIDE ARC OFFSETS

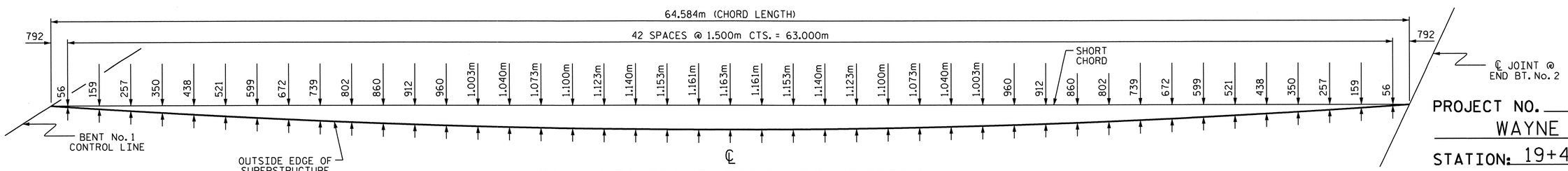

SPAN "B" RIGHT SIDE ARC OFFSETS

PROJECT NO. R-2455A
WAYNE COUNTY
STATION: 19+40.684 -L-

STATE OF NORTH CAROLINA
DEPARTMENT OF TRANSPORTATION
RALEIGH

SUPERSTRUCTURE
ARC OFFSETS

NORTH CAROLINA PROFESSIONAL SEAL 029441 ENGINEER KRISTY W. ALFORD

REVISIONS						SHEET NO.
NO.	BY:	DATE:	NO.	BY:	DATE:	S-11
1			3			TOTAL SHEETS
2			4			276

DRAWN BY : D. G. ELY DATE : 11/10
CHECKED BY : N. PIERCE DATE : 01/11

14-FEB-2012 07:36
V:\Structures\Str#1\Super_Draw\R-2554A_SD_ARC_STR 1.dgn
kalford

STR. #1

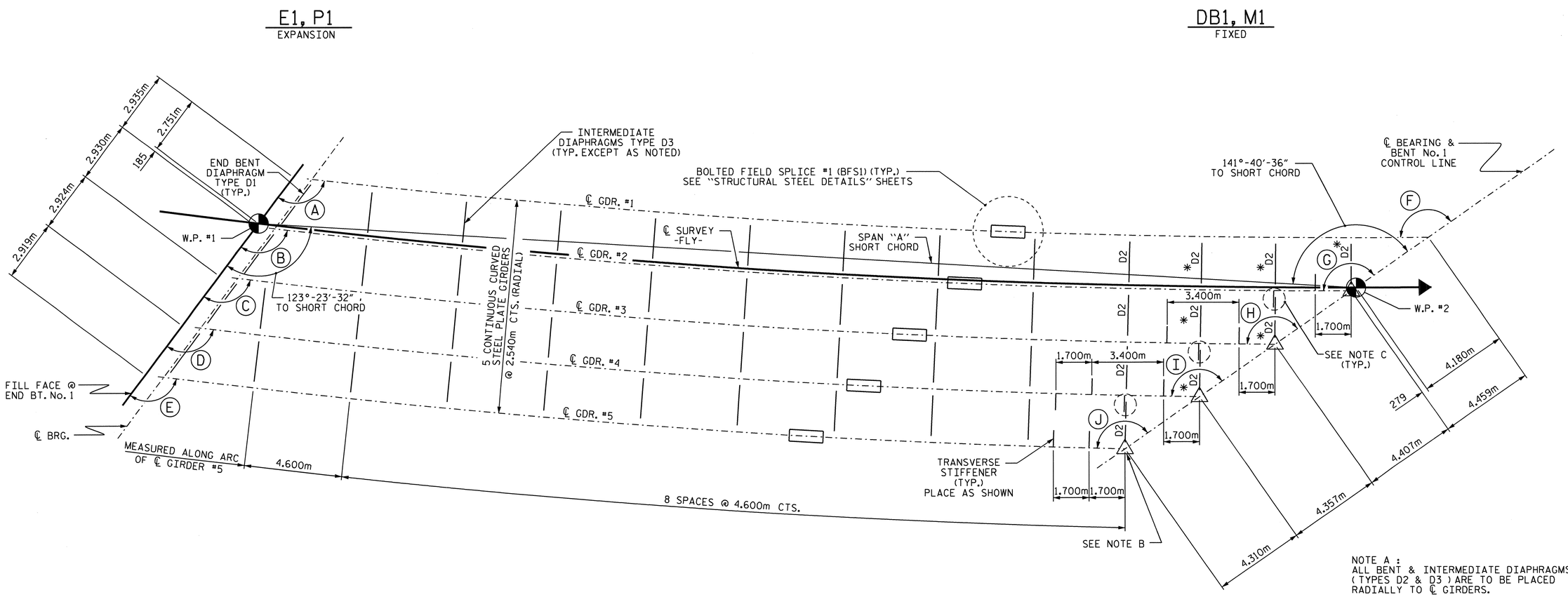

SPAN "A" FRAMING PLAN

ANGLES

A	120°-10'-48"	F	145°-31'-03"
B	119°-59'-17"	G	145°-02'-21"
C	119°-47'-54"	H	144°-34'-18"
D	119°-36'-41"	I	144°-06'-53"
E	119°-25'-37"	J	143°-40'-05"

NOTE A :
ALL BENT & INTERMEDIATE DIAPHRAGMS (TYPES D2 & D3) ARE TO BE PLACED RADIALLY TO ℄ GIRDERS.

△ NOTE B :
BEARING STIFFENERS TO BE USED AS CONNECTOR PLATES IN THIS AREA.

◌ NOTE C :
CONNECTOR PLATES TO BE USED AS TRANSVERSE STIFFENERS IN THIS AREA.

* NOTE D :
FOR LOCATION OF BENT DIAPHRAGMS (TYPE D2) SEE SHEET 2 OF 2.

PROJECT NO. R-2554A
WAYNE COUNTY
STATION: 19+40.684 -L-

SHEET 1 OF 2

STATE OF NORTH CAROLINA
DEPARTMENT OF TRANSPORTATION
RALEIGH

SUPERSTRUCTURE
FRAMING PLAN

NORTH CAROLINA PROFESSIONAL SEAL 029441 ENGINEER KRISTY W. ALFORD

REVISIONS						SHEET NO.
NO.	BY:	DATE:	NO.	BY:	DATE:	S-12
1			3			TOTAL SHEETS
2			4			276

DRAWN BY : D. G. ELY DATE : 11/10
CHECKED BY : N. PIERCE DATE : 01/11

14-FEB-2012 10:46
V:\Structures\Str#1\Super_Draw\R-2554A_SD_FP_STR 1.dgn
kalford

STR. #1

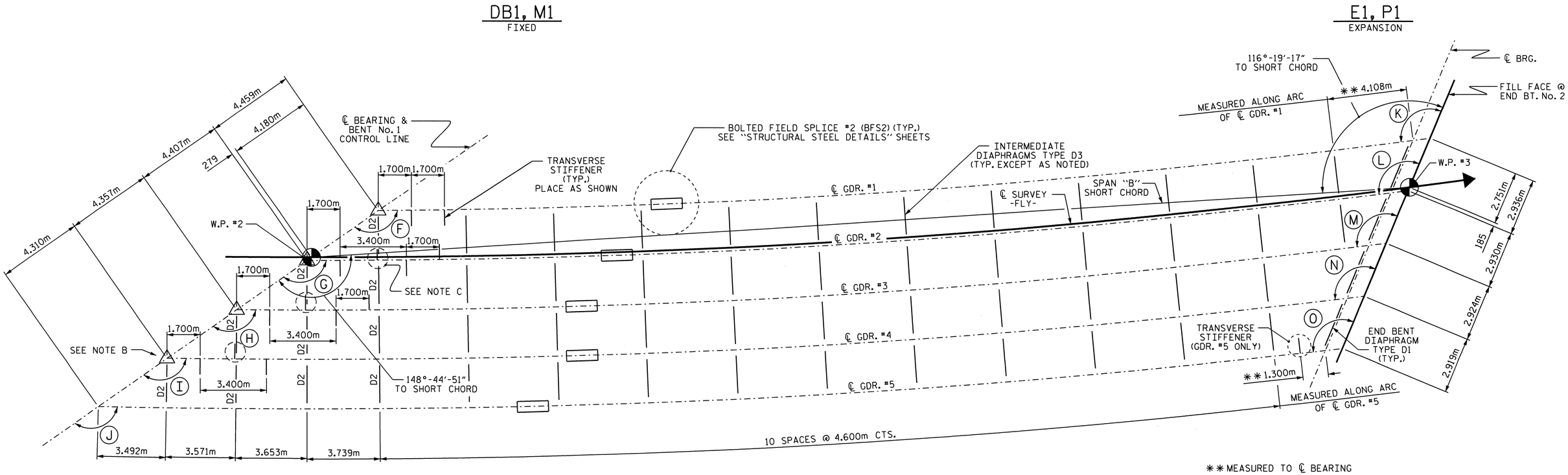

** MEASURED TO ℄ BEARING

SPAN "B" FRAMING PLAN

ANGLES

F	145°-31′-03″	K	120°-10′-48″
G	145°-02′-21″	L	119°-59′-17″
H	144°-34′-18″	M	119°-47′-54″
I	144°-06′-53″	N	119°-36′-41″
J	143°-40′-05″	O	119°-25′-37″

NOTE A :
ALL BENT & INTERMEDIATE DIAPHRAGMS (TYPES D2 & D3) ARE TO BE PLACED RADIALLY TO ℄ GIRDERS.

△ NOTE B :
BEARING STIFFENERS TO BE USED AS CONNECTOR PLATES IN THIS AREA.

◌ NOTE C :
CONNECTOR PLATES TO BE USED AS TRANSVERSE STIFFENERS IN THIS AREA.

PROJECT NO. R-2554A
WAYNE COUNTY
STATION: 19+40.684 -L-

SHEET 2 OF 2

STATE OF NORTH CAROLINA
DEPARTMENT OF TRANSPORTATION
RALEIGH

SUPERSTRUCTURE
FRAMING PLAN

NORTH CAROLINA PROFESSIONAL SEAL 029441 ENGINEER KRISTY W. ALFORD

REVISIONS						SHEET NO.
NO.	BY:	DATE:	NO.	BY:	DATE:	S-13
1			3			TOTAL SHEETS
2			4			276

DRAWN BY : D. G. ELY DATE : 11/10
CHECKED BY : N. PIERCE DATE : 01/11

14-FEB-2012 10:48
V:\Structures\Str#1\Super_Draw\R-2554A_SD_FP_STR 1.dgn
kalford

STR. #1

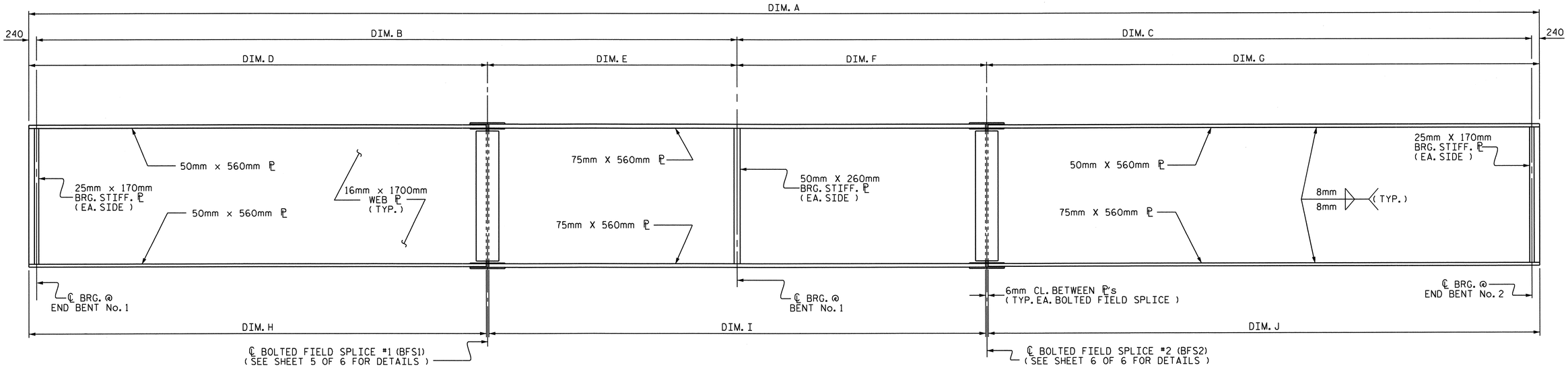

PLATE GIRDER ELEVATION

SEE GIRDER TABLE (ALL DIMENSIONS ARE ALONG ARC)
TRANSVERSE STIFFENERS AND CONNECTOR ℙ's NOT SHOWN, SEE "FRAMING PLAN" SHEETS.
SHEAR STUDS NOT SHOWN, SEE SHEET 2 OF 6 FOR SHEAR STUD LOCATIONS

GIRDER TABLE

GIRDER	RADIUS	DIM. A	DIM. B	DIM. C	DIM. D	DIM. E	DIM. F	DIM. G	DIM. H	DIM. I	DIM. J
#1	437.620	106.734	52.990	53.264	33.330	19.900	14.800	38.704	33.327	34.694	38.701
#2	440.160	107.364	51.104	55.780	33.044	18.300	15.900	40.120	33.041	34.194	40.117
#3	442.700	107.995	49.259	58.256	32.199	17.300	17.700	40.796	32.196	34.994	40.793
#4	445.240	108.625	47.451	60.694	31.791	15.900	21.300	39.634	31.788	37.194	39.631
#5	447.780	109.255	45.678	63.097	30.818	15.100	22.300	41.037	30.815	37.394	41.034

NOTE :
ALL VALUES GIVEN IN METERS.
ALL LENGTHS ARE HORIZONTAL DISTANCES UNLESS OTHERWISE NOTED.
ALL GIRDER DIMENSIONS ARE MEASURED ALONG THE ℄ GIRDER.

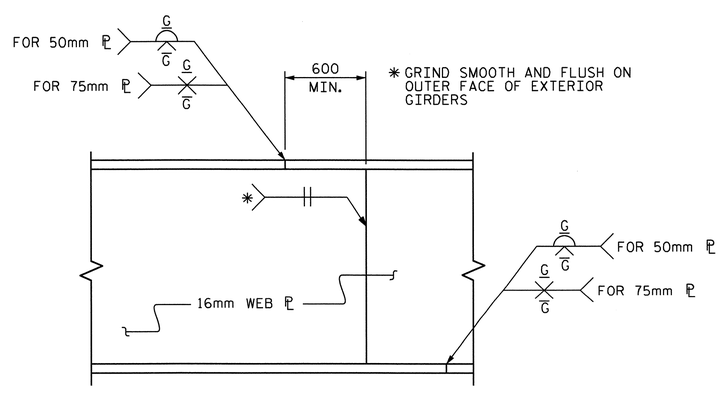

ELEVATION

PERMISSIBLE SHOP FLANGE & WEB SPLICE

PROJECT NO. R-2554A
WAYNE COUNTY
STATION: 19+40.684 -L-

SHEET 1 OF 6

STATE OF NORTH CAROLINA
DEPARTMENT OF TRANSPORTATION
RALEIGH

SUPERSTRUCTURE
STRUCTURAL STEEL DETAILS

NORTH CAROLINA PROFESSIONAL SEAL 029441 ENGINEER KRISTY W. ALFORD

REVISIONS						SHEET NO.
NO.	BY:	DATE:	NO.	BY:	DATE:	S-14
1			3			TOTAL SHEETS
2			4			276

DRAWN BY : D. G. ELY DATE : 11/10
CHECKED BY : N. PIERCE DATE : 01/11

12-MAR-2012 09:03
V:\Structures\Str#1\Super_Draw\R-2554A_SD_SS_STR 1.dgn
kalford

STR. #1

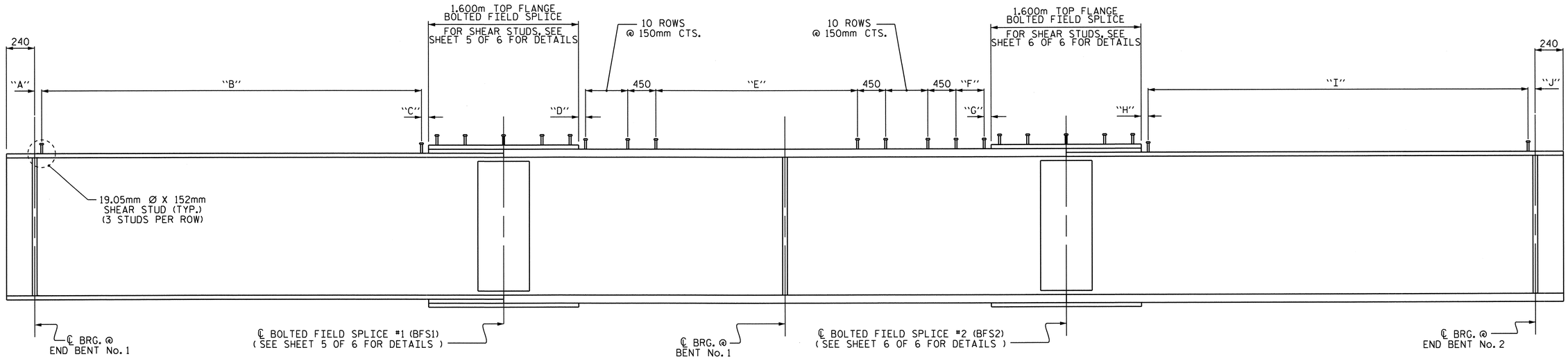

SHEAR STUD LOCATIONS

SEE TABLE BELOW (ALL SPACES ARE MEASURED ALONG ARC @ ℄ GIRDER)

SHEAR STUD SPACING TABLE

GIRDER	"A"	"B"	"C"	"D"	"E"	"F"	"G"	"H"	"I"	"J"
#1	220	72 ROWS @ 450mm CTS.	120	350	63 ROWS @ 450mm CTS.	2 ROWS @ 450mm CTS.	350	90	84 ROWS @ 450mm CTS.	224
#2	224	71 ROWS @ 450mm CTS.	280	325	59 ROWS @ 450mm CTS.	5 ROWS @ 450mm CTS.	325	160	87 ROWS @ 450mm CTS.	220
#3	219	69 ROWS @ 450mm CTS.	340	275	60 ROWS @ 450mm CTS.	6 ROWS @ 450mm CTS.	275	360	88 ROWS @ 450mm CTS.	246
#4	241	68 ROWS @ 450mm CTS.	360	250	60 ROWS @ 450mm CTS.	11 ROWS @ 450mm CTS.	250	120	86 ROWS @ 450mm CTS.	224
#5	218	66 ROWS @ 450mm CTS.	310	350	63 ROWS @ 450mm CTS.	8 ROWS @ 450mm CTS.	350	170	89 ROWS @ 450mm CTS.	227

NOTE :
ALL VALUES GIVEN IN MILLIMETERS.

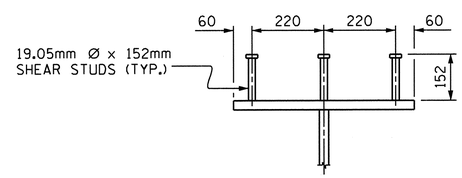

SHEAR STUD DETAIL

TYPICAL EXCEPT @ BOLTED FIELD SPLICE

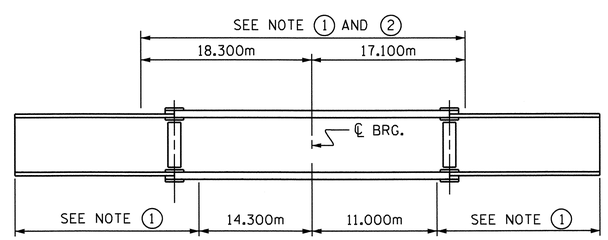

GIRDER MAKE UP

NOTE 1 : CHARPY V-NOTCH TESTS ARE REQUIRED FOR ALL TOP OR BOTTOM FLANGE PLATES WHICH FALL WITHIN THESE LIMITS, ALL WEB PLATES, AND ALL SPLICE PLATES. IF A PERMITTED SHOP FLANGE SPLICE IS NOT USED, CHARPY V-NOTCH TESTS WILL BE REQUIRED FOR THE ENTIRE FLANGE PLATE. FOR CHARPY V-NOTCH TESTS, SEE ARTICLE 1072-9 OF THE STANDARD SPECIFICATIONS.

NOTE 2 : NO WELDING OF FORMS OR FALSEWORK TO THE TOP FLANGE WILL BE PERMITTED IN THIS REGION

CHARPY V-NOTCH TESTS FOR CONTINUOUS PLATE GIRDERS

NOTE : ALL GIRDER DIMENSIONS IN THE ABOVE DETAIL ARE MEASURED ALONG THE ARC AT THE ℄ GIRDER AND ARE HORIZONTAL DIMENSIONS.

PROJECT NO. R-2554A
WAYNE COUNTY
STATION: 19+40.684 -L-

SHEET 2 OF 6

STATE OF NORTH CAROLINA
DEPARTMENT OF TRANSPORTATION
RALEIGH

SUPERSTRUCTURE
STRUCTURAL STEEL DETAILS

NORTH CAROLINA PROFESSIONAL SEAL 029441 ENGINEER KRISTY W. ALFORD

REVISIONS						SHEET NO.
NO.	BY:	DATE:	NO.	BY:	DATE:	S-15
1			3			TOTAL SHEETS
2			4			276

DRAWN BY : D. G. ELY DATE : 11/10
CHECKED BY : N. PIERCE DATE : 01/11

12-MAR-2012 09:03
V:\Structures\Str#1\Super_Draw\R-2554A_SD_SS_STR 1.dgn
kalford

STR. #1

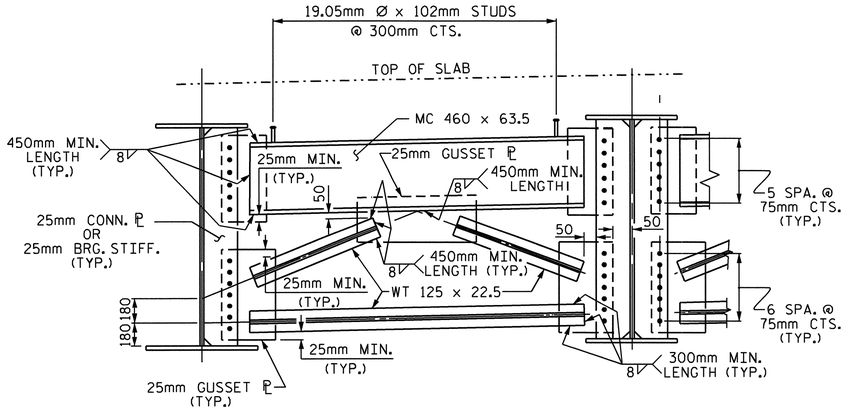

TYPICAL END BENT DIAPHRAGM (TYPE D1)

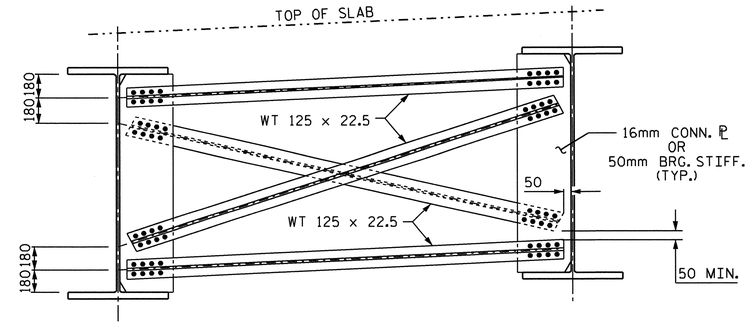

TYPICAL BENT DIAPHRAGM (TYPE D2)

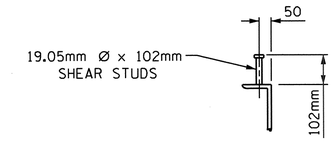

SHEAR STUD DETAILS

(TYP. EA. END BENT DIAPHRAGM)

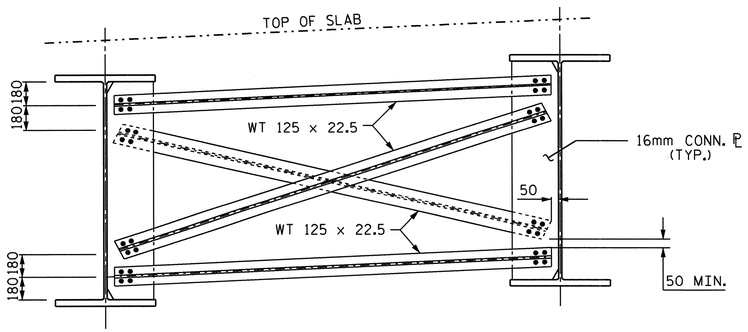

TYPICAL INTERMEDIATE DIAPHRAGM (TYPE D3)

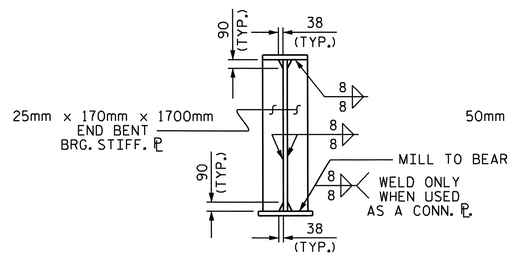

BEARING STIFFENER

(AT END BENTS)

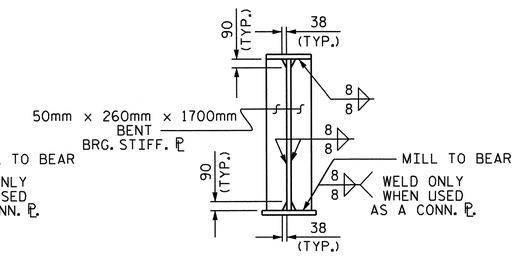

BEARING STIFFENER

(AT BENT No. 1)

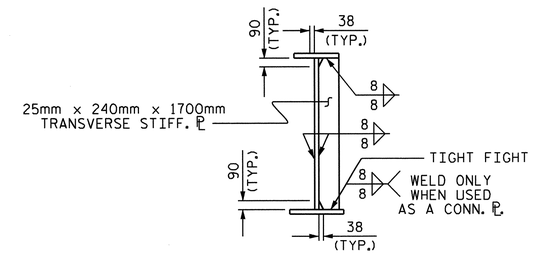

TRANSVERSE STIFFENER

NOTE:
WHEN USED AS A CONNECTOR PLATE, THE BEARING STIFFENER MAY REQUIRE COPING IF WIDER THAN BOTTOM FLANGE TO AVOID INTERFERENCE WITH THE ANCHOR BOLTS.

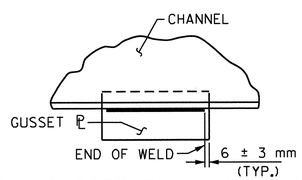

TYPICAL GUSSET PLATE CONNECTION

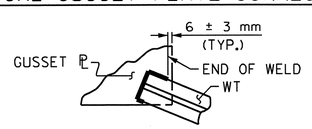

TYPICAL "TEE" TO GUSSET PLATE CONNECTION

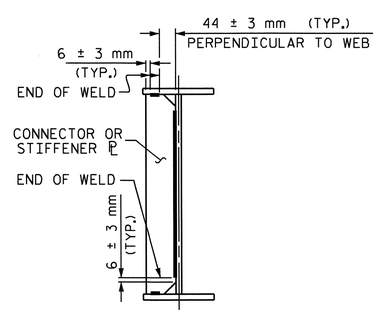

TYPICAL STIFFENER OR CONNECTOR PLATE CONNECTIONS

WELD TERMINATION DETAILS

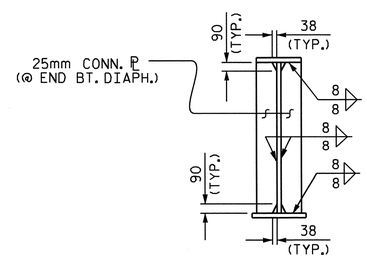

CONNECTOR ℙ

(AT END BENTS)

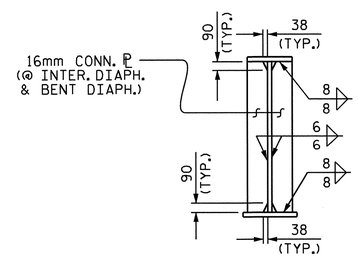

CONNECTOR ℙ

(AT INTERMEDIATE DIAPHRAGMS & BENT DIAPHRAGMS)

PROJECT NO. R-2554A
WAYNE COUNTY
STATION: 19+40.684 -L-

SHEET 3 OF 6

STATE OF NORTH CAROLINA
DEPARTMENT OF TRANSPORTATION
RALEIGH

SUPERSTRUCTURE

STRUCTURAL STEEL DETAILS

NORTH CAROLINA PROFESSIONAL SEAL 029441 ENGINEER KRISTY W. ALFORD

REVISIONS						SHEET NO.
NO.	BY:	DATE:	NO.	BY:	DATE:	S-16
1			3			TOTAL SHEETS
2			4			276

DRAWN BY : D. G. ELY DATE : 11/10
CHECKED BY : N. PIERCE DATE : 01/11

14-FEB-2012 07:34
V:\Structures\Str#1\Super_Draw\R-2554A_SD_SS_STR 1.dgn
kalford

STR. #1

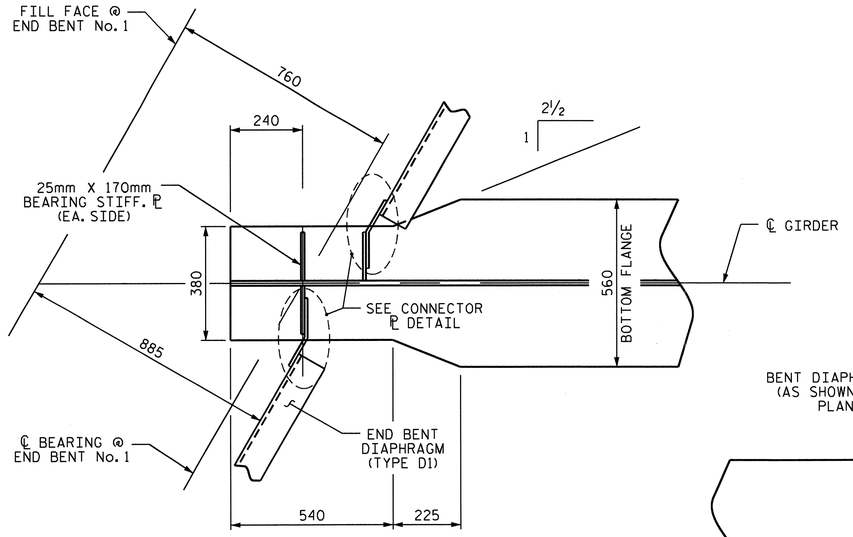

@ END BENT No. 1

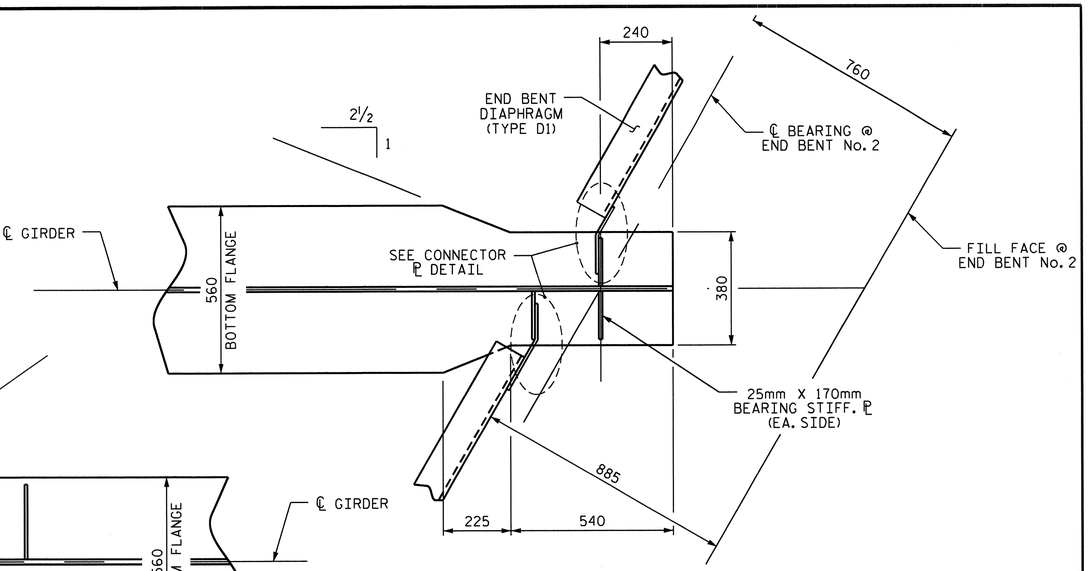

@ END BENT No. 2

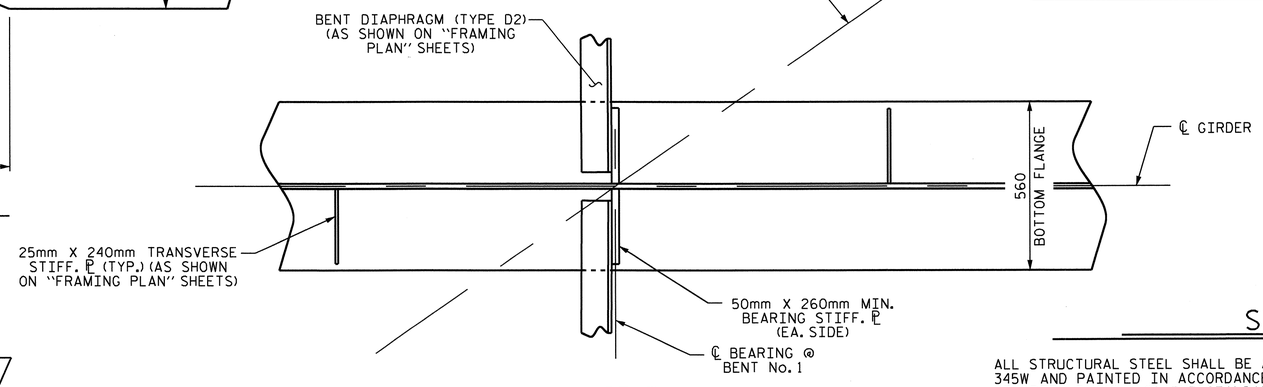

@ BENT No. 1

SPAN "A-B" BOTTOM FLANGE DETAIL

SEE FRAMING PLAN SHEETS FOR DIAPHRAGM LOCATIONS

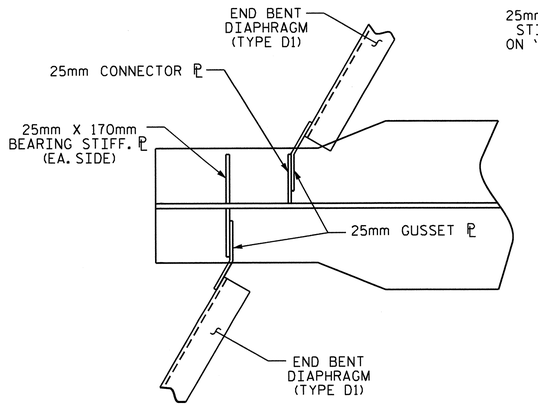

CONNECTOR ℙ DETAIL

(EACH END SIMILAR)

STRUCTURAL STEEL NOTES

ALL STRUCTURAL STEEL SHALL BE AASHTO M270 GRADE 345W AND PAINTED IN ACCORDANCE WITH SYSTEM 4 OF ARTICLE 442-7 OF THE STANDARD SPECIFICATIONS UNLESS OTHERWISE NOTED ON THE PLANS.

ALL DIMENSIONS SHOWN ARE HORIZONTAL OR VERTICAL, UNLESS OTHERWISE NOTED.

ALL FIELD CONNECTIONS TO BE 22.23mm DIA. HIGH STRENGTH BOLTS UNLESS OTHERWISE NOTED. FOR HIGH STRENGTH BOLTS, SEE SPECIAL PROVISIONS.

BEARING STIFFENERS ARE TO BE PLACED NORMAL TO THE WEB OF THE GIRDER AND SHALL BE PLUMB.

PERMITTED FLANGE AND WEB SHOP SPLICES SHALL NOT BE LOCATED WITHIN 4.5 METERS OF MAXIMUM DEAD LOAD DEFLECTION (NOR WITHIN 4.5 METERS OF INTERMEDIATE BEARINGS OF CONTINUOUS UNITS). KEEP 600mm MINIMUM BETWEEN WEB AND FLANGE SHOP SPLICES. KEEP 150mm MINIMUM BETWEEN CONNECTOR PLATE OR TRANSVERSE STIFFENER WELDS AND WEB OR FLANGE SHOP SPLICES.

STUDS ON GIRDERS MAY BE SHIFTED UP TO 25mm IF NECESSARY TO CLEAR FLANGE SPLICE WELD.

TENSION ON THE AASHTO M164 BOLTS SHALL BE CALIBRATED USING DIRECT TENSION INDICATOR WASHERS. FOR DIRECT TENSION INDICATORS, SEE SPECIAL PROVISIONS.

END OF GIRDERS SHALL BE PLUMB.

THE CONTRACTOR SHALL MAINTAIN STABILITY OF THE CURVED GIRDERS UNTIL ALL FIELD SPLICES AND CROSSFRAME CONNECTIONS HAVE BEEN COMPLETED. STRUCTURAL STEEL ERECTION IN A CONTINUOUS UNIT SHALL BE COMPLETE BEFORE FALSEWORK OR FORMS ARE PLACED ON THE UNIT.

BEARING STIFFENER PLATE WIDTH SHOWN AT THE BENT IS A MINIMUM WIDTH. THE BEARING STIFFENER PLATE WIDTH AT THE BENT MAY BE INCREASED AS NECESSARY IN ORDER TO CONNECT THE DIAPHRAGM MEMBERS WHEN REQUIRED.

CURVATURE OF STEEL GIRDERS MAY BE ACCOMPLISHED BY CUTTING PLATES TO THE REQUIRED CURVATURE OR BY HEAT TREATMENT.

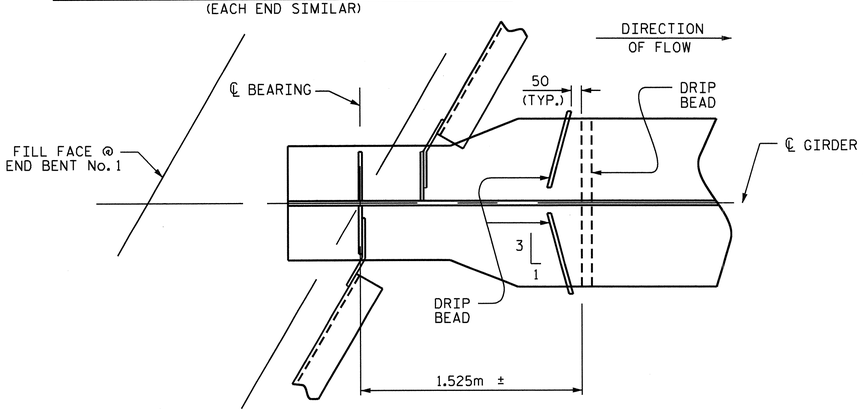

PART PLAN - BOTTOM FLANGE

(END BENT No. 2 & BENT No. 1 SIMILAR)

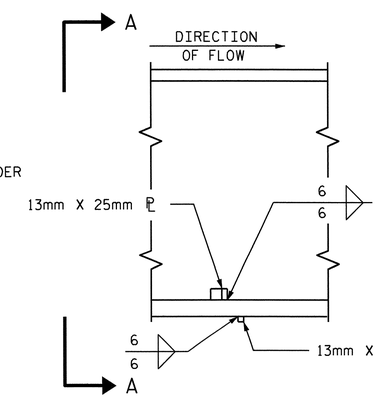

SECTION

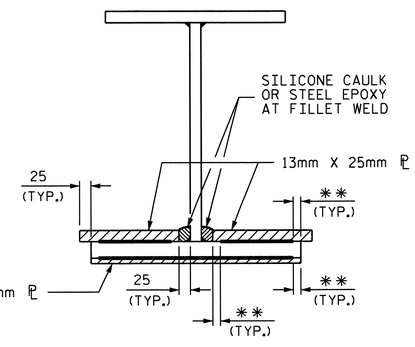

VIEW A-A

** SEE "WELD TERMINATION DETAILS" SHEET 3 OF 6

DRIP BEAD DETAILS

PROJECT NO. R-2554A

WAYNE COUNTY

STATION: 19+40.684 -L-

SHEET 4 OF 6

STATE OF NORTH CAROLINA
DEPARTMENT OF TRANSPORTATION
RALEIGH

SUPERSTRUCTURE

STRUCTURAL STEEL DETAILS

NORTH CAROLINA PROFESSIONAL SEAL 029441 ENGINEER KRISTY W. ALFORD

REVISIONS						SHEET NO.
NO.	BY:	DATE:	NO.	BY:	DATE:	S-17
1			3			TOTAL SHEETS
2			4			276

DRAWN BY : D. G. ELY DATE : 11/10
CHECKED BY : N. PIERCE DATE : 01/11

12-MAR-2012 09:04
V:\Structures\Str#1\Super_Draw\R-2554A_SD_SS_STR 1.dgn
kalford

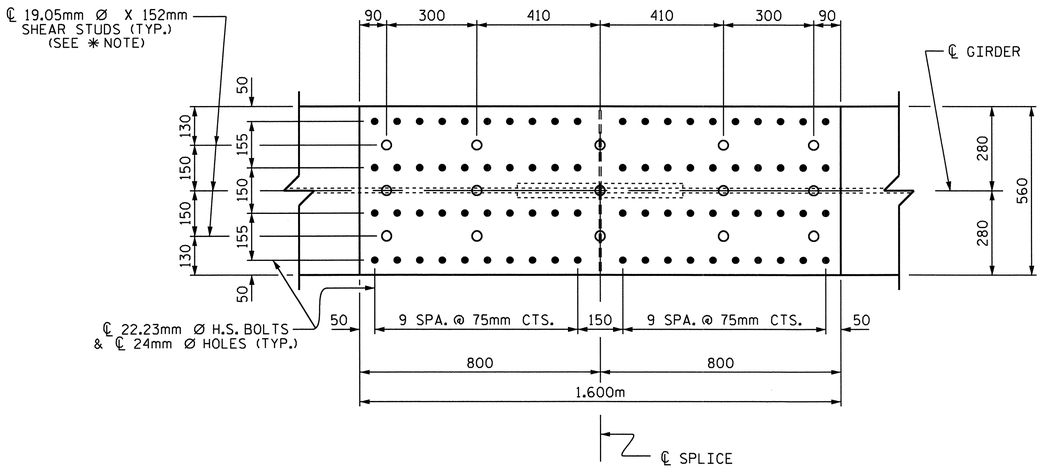

PLAN (TOP OF TOP FLANGE)

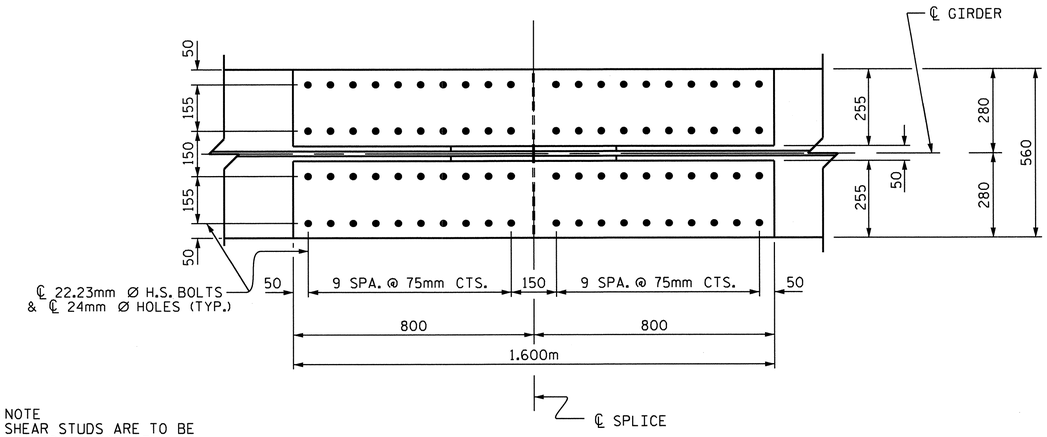

✱ NOTE
SHEAR STUDS ARE TO BE WELDED ON TOP OF PLATE BEFORE FIELD ASSEMBLY.

PLAN (TOP OF BOTTOM FLANGE)

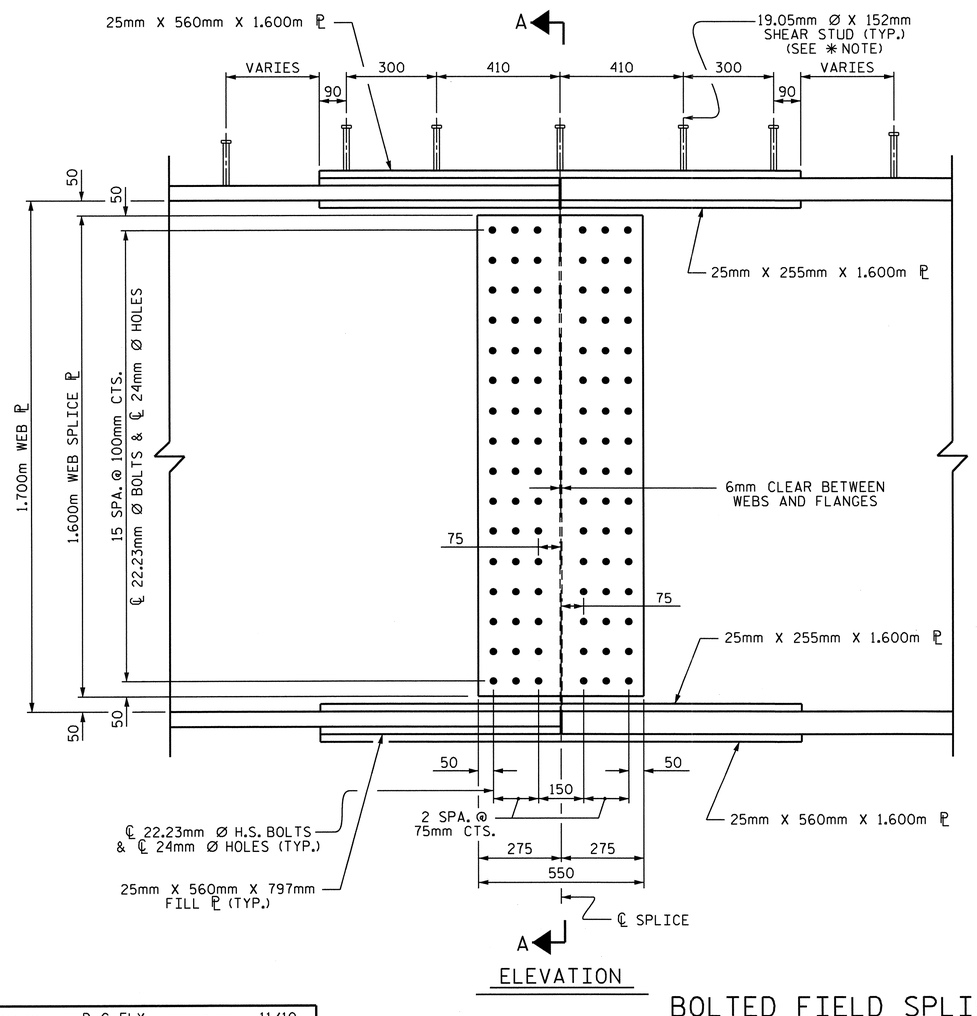

ELEVATION

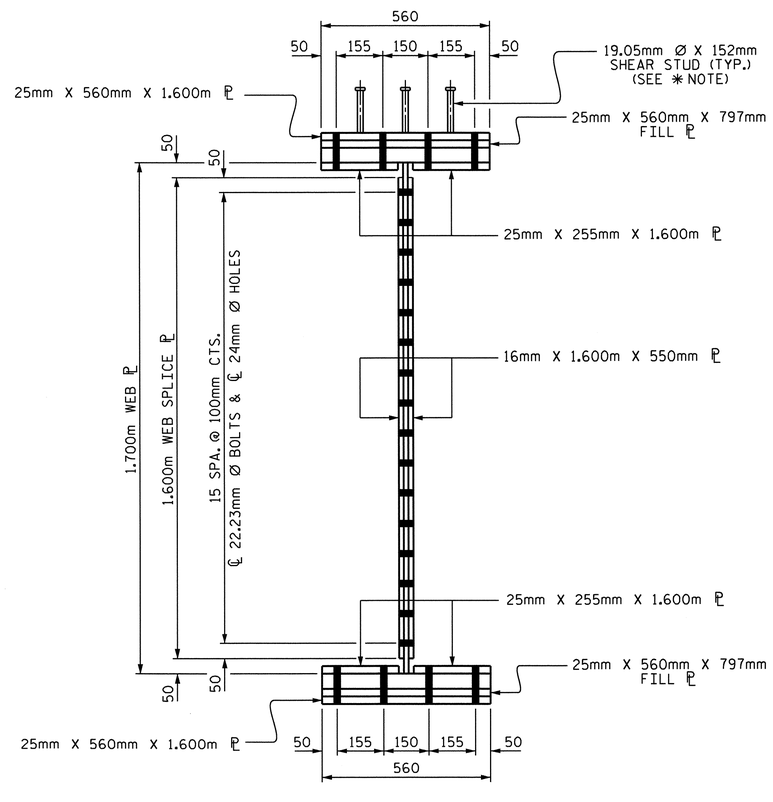

SECTION A-A

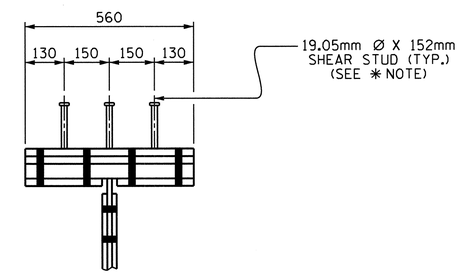

SHEAR STUD DETAIL FOR TOP FLANGE SPLICE PLATE

PROJECT NO. R-2554A
WAYNE COUNTY
STATION: 19+40.684 -L-

SHEET 5 OF 6

STATE OF NORTH CAROLINA
DEPARTMENT OF TRANSPORTATION
RALEIGH

SUPERSTRUCTURE

STRUCTURAL STEEL DETAILS

NORTH CAROLINA PROFESSIONAL SEAL 029441 ENGINEER KRISTY W. ALFORD

REVISIONS						SHEET NO.
NO.	BY:	DATE:	NO.	BY:	DATE:	S-18
1			3			TOTAL SHEETS
2			4			276

BOLTED FIELD SPLICE #1 DETAILS (BFS1)

DRAWN BY : D. G. ELY DATE : 11/10
CHECKED BY : N. PIERCE DATE : 01/11

14-FEB-2012 07:33
V:\Structures\Str#1\Super_Draw\R-2554A_SD_SS_STR 1.dgn
kalford

STR. #1

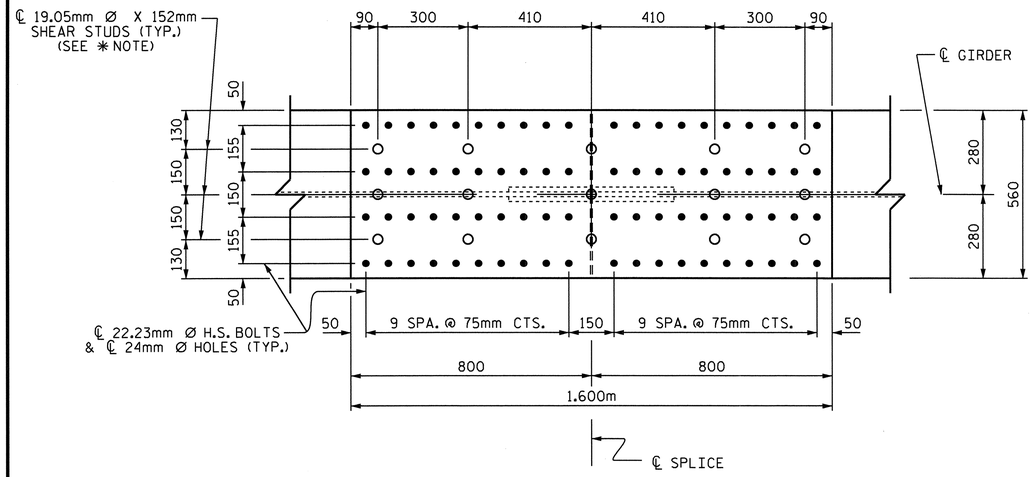

PLAN (TOP OF TOP FLANGE)

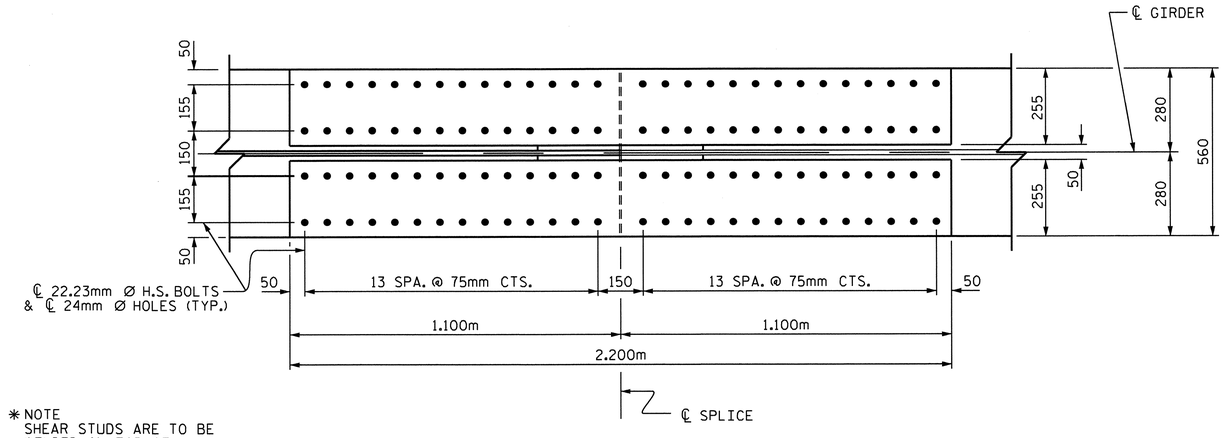

✱ NOTE
SHEAR STUDS ARE TO BE WELDED ON TOP OF PLATE BEFORE FIELD ASSEMBLY.

PLAN (TOP OF BOTTOM FLANGE)

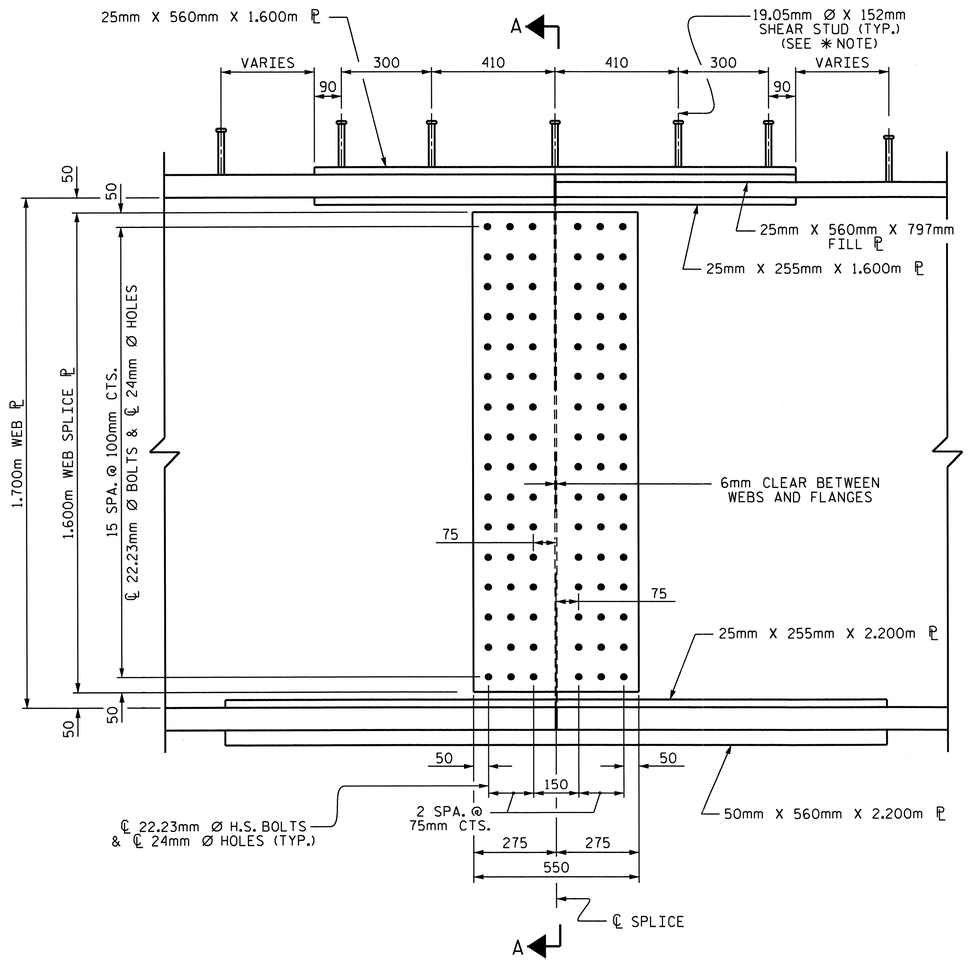

ELEVATION

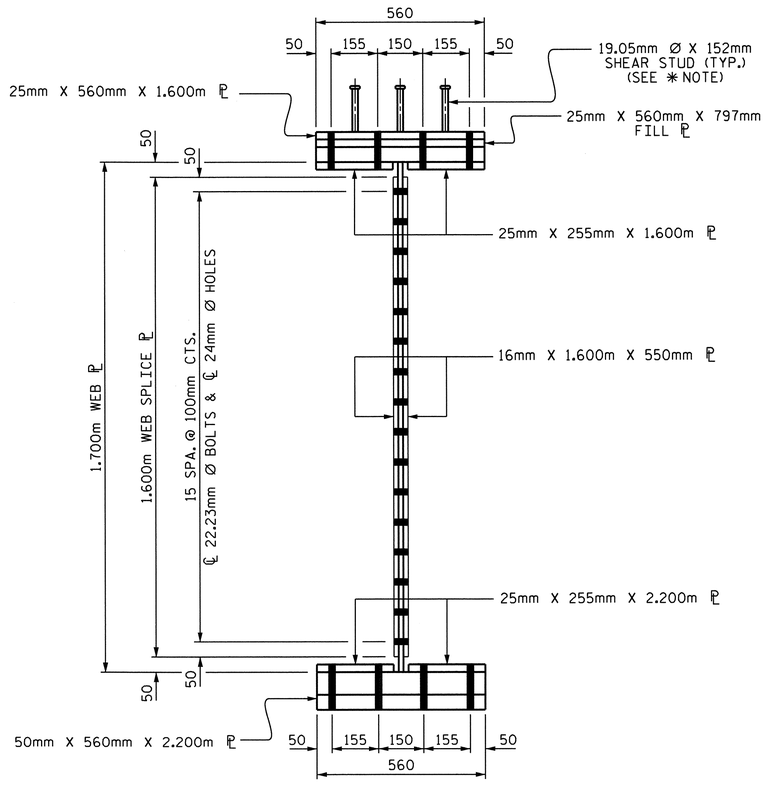

SECTION A-A

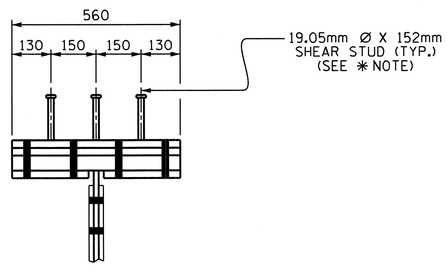

SHEAR STUD DETAIL FOR TOP FLANGE SPLICE PLATE

PROJECT NO. R-2554A
WAYNE COUNTY
STATION: 19+40.684 -L-

SHEET 6 OF 6

STATE OF NORTH CAROLINA
DEPARTMENT OF TRANSPORTATION
RALEIGH

SUPERSTRUCTURE

STRUCTURAL STEEL DETAILS

NORTH CAROLINA PROFESSIONAL SEAL 029441 ENGINEER KRISTY W. ALFORD

REVISIONS						SHEET NO.
NO.	BY:	DATE:	NO.	BY:	DATE:	S-19
1			3			TOTAL SHEETS
2			4			276

BOLTED FIELD SPLICE #2 DETAILS (BFS2)

DRAWN BY : D. G. ELY DATE : 11/10
CHECKED BY : N. PIERCE DATE : 01/11

12-MAR-2012 09:04
V:\Structures\Str#1\Super_Draw\R-2554A_SD_SS_STR 1.dgn
kalford

STR. #1

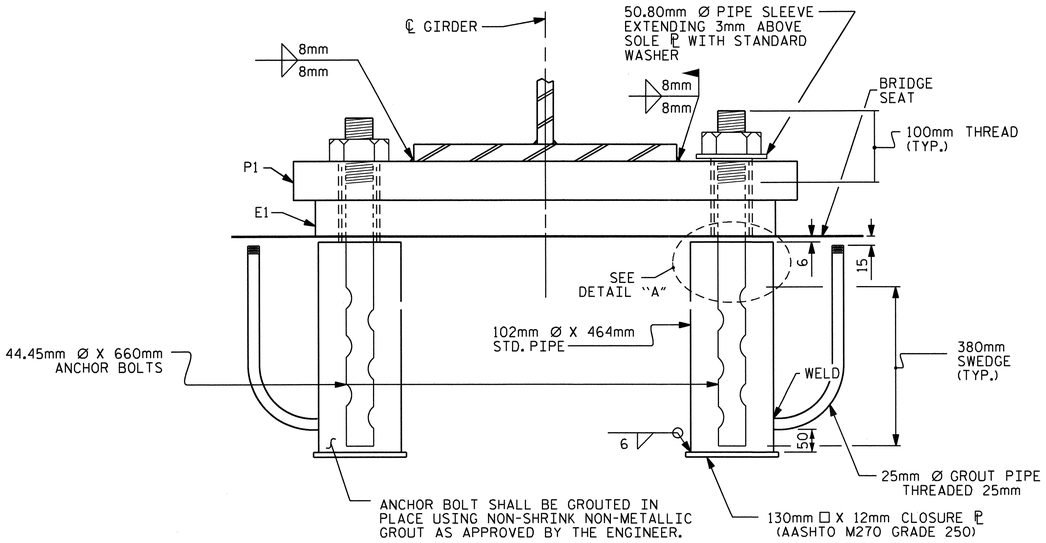

EXPANSION

END VIEW

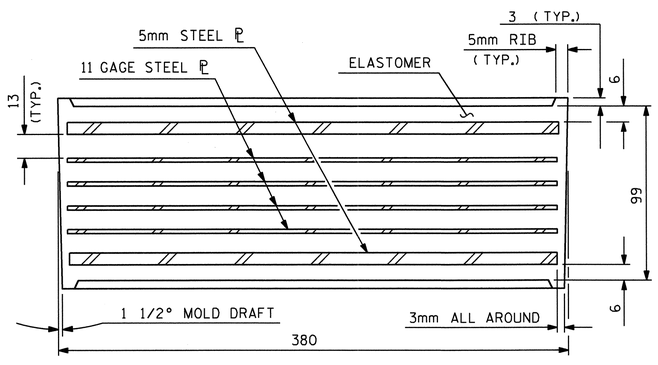

TYPICAL SECTION OF ELASTOMERIC BEARING

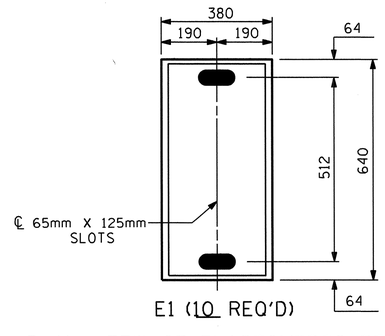

E1 (10 REQ'D)

PLAN VIEW OF ELASTOMERIC BEARING

TYPE VI

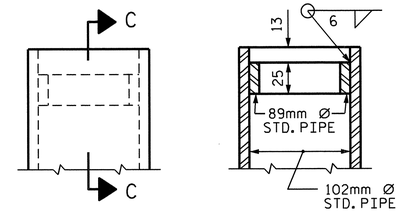

SECTION C-C

DETAIL "A"

—LOAD RATINGS—	
	MAX.D.L.+ L.L.
TYPE VI	1577 kN

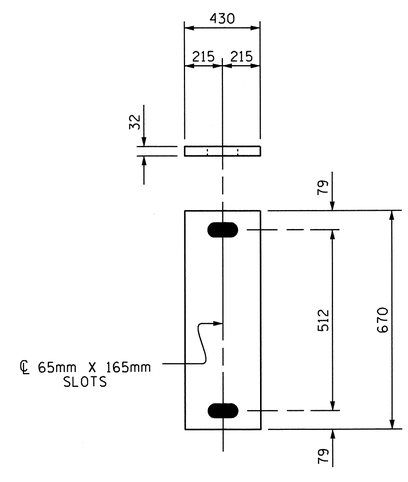

P1
(EXPANSION)
(10 REQUIRED)

SOLE PLATE DETAILS ("P")

NOTES

AT ALL FIXED POINTS OF SUPPORT, NUTS FOR ANCHOR BOLTS ARE TO BE TIGHTENED FINGER TIGHT AND THEN BACKED OFF ½ TURN. THE THREAD OF THE NUT AND BOLT SHALL THEN BE BURRED WITH A SHARP POINTED TOOL.

THE 51mm Ø PIPE SLEEVE SHALL BE CUT FROM SCHEDULE 40 PVC PLASTIC PIPE. THE PVC PLASTIC PIPE SHALL MEET THE REQUIREMENTS OF ASTM D1785.

THE PAYMENT FOR THE PIPE SLEEVES SHALL BE INCLUDED IN THE SEVERAL PAY ITEMS.

FOR AASHTO M270 GRADE 345W STRUCTURAL STEEL, SOLE PLATE SHALL BE AASHTO M270 GRADE 345W AND SHALL NOT BE GALVANIZED. ANCHOR BOLTS AND NUTS AND WASHERS SHALL BE GALVANIZED IN ACCORDANCE WITH THE STANDARD SPECIFICATIONS.

ANCHOR BOLTS SHALL MEET THE REQUIREMENTS OF ASTM A449. NUTS SHALL MEET THE REQUIREMENTS OF AASHTO M291M-12 OR AASHTO M292M-2H. WASHERS SHALL MEET THE REQUIREMENTS OF AASHTO M293M. SHOP DRAWINGS ARE NOT REQUIRED FOR ANCHOR BOLTS, NUTS AND WASHERS. SHOP INSPECTION IS REQUIRED.

WHEN FIELD WELDING THE SOLE PLATE TO THE GIRDER FLANGE, USE TEMPERATURE INDICATING WAX PENS, OR OTHER SUITABLE MEANS, TO ENSURE THAT THE TEMPERATURE OF THE SOLE PLATE DOES NOT EXCEED 149°C. TEMPERATURES ABOVE THIS MAY DAMAGE THE ELASTOMER.

ALL SURFACES OF BEARING PLATES SHALL BE SMOOTH AND STRAIGHT.

THE CLOSURE PLATE, GROUT PIPE AND STANDARD PIPE FOR THE EXPANSION ASSEMBLY NEED NOT BE GALVANIZED.

THE CONTRACTOR'S ATTENTION IS CALLED TO THE FOLLOWING PROCEDURES TO ACCOMMODATE GIRDER TRANSLATION AND END ROTATION:

1. ONCE THE DECK HAS CURED, THE GIRDERS SHALL BE JACKED AND THE ANCHOR BOLTS, SOLE PLATE, AND ELASTOMERIC BEARING SLOTS SHALL BE CENTERED AS NEARLY AS PRACTICAL ABOUT THE BEARING STIFFENER. THIS OPERATION SHALL BE PERFORMED AT APPROXIMATELY 16° C (60° F).

2. AFTER CENTERING THE SLOTS AND ANCHOR BOLTS, THE SOLE PLATES SHALL BE FIELD WELDED TO THE GIRDER FLANGES AND ANCHOR BOLTS GROUTED.

THE CONTRACTOR MAY PROPOSE ALTERNATE METHODS, PROVIDED DETAILS ARE SUBMITTED TO THE ENGINEER FOR REVIEW AND APPROVAL.

ELASTOMER IN ALL BEARINGS SHALL BE 60 DUROMETER HARDNESS.

PROJECT NO. R-2554A
WAYNE COUNTY
STATION: 19+40.684 -L-

STATE OF NORTH CAROLINA
DEPARTMENT OF TRANSPORTATION
RALEIGH

ELASTOMERIC BEARING DETAILS

NORTH CAROLINA PROFESSIONAL SEAL 029441 ENGINEER CHRISTY W. ALFORD

REVISIONS								SHEET NO.
NO.	BY:	DATE:	NO.	BY:	DATE:			S-20
1			3					TOTAL SHEETS
2			4					276

STD. NO. EB2SM

ASSEMBLED BY : D. G. ELY		DATE : 10/10	
CHECKED BY : N. PIERCE		DATE : 01/11	
DRAWN BY : EEM 10/95	REV. 8/16/99	MAB/LES	
CHECKED BY : PEK 10/95	REV. 10/17/00	RWW/LES	
	REV. 5/1/06	TLA/GM	

12-MAR-2012 09:05
V:\Structures\Str*1\Super_Draw\R-2554A_SD_BG_STR 1.dgn
kalford

NOTES

FOR DISC BEARINGS, SEE SPECIAL PROVISIONS.

AT ALL POINTS OF SUPPORT, NUTS FOR ANCHOR BOLTS SHALL BE TIGHTENED FINGER TIGHT AND GIVEN AN ADDITIONAL 1/4 TURN. THE THREAD OF THE NUT AND BOLT SHALL THEN BE BURRED WITH A SHARP POINTED TOOL.

WHEN WELDING THE SOLE PLATE TO THE GIRDER, USE TEMPERATURE INDICATING WAX PENS, OR OTHER SUITABLE MEANS, TO ENSURE THAT THE TEMPERATURE OF THE BEARING DOES NOT EXCEED 250°F TEMPERATURES ABOVE THIS MAY DAMAGE THE PTFE OR ELASTOMER.

SOLE PLATES SHOULD BE WELDED TO BEAM FLANGES BEFORE FALSEWORK IS PLACED.

ALL SURFACES OF BEARING PLATES SHALL BE SMOOTH AND STRAIGHT.

FOR THERMAL SPRAYED COATINGS (METALLIZATION), SEE SPECIAL PROVISIONS.

THE MINIMUM ROTATIONAL CAPACITY FOR ALL BEARINGS SHALL BE 0.02 RADIANS.

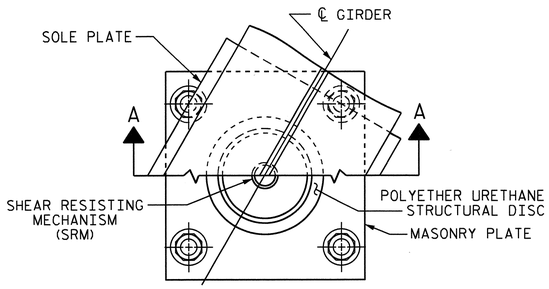

CUT-AWAY PLAN

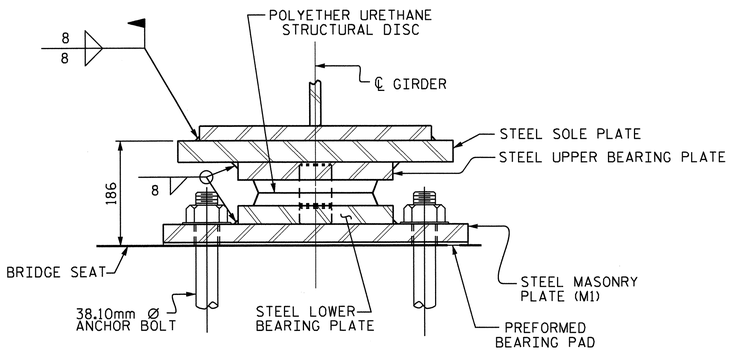

SECTION A-A

DB1, FIXED
(5 REQ'D)

DISC BEARING DETAILS

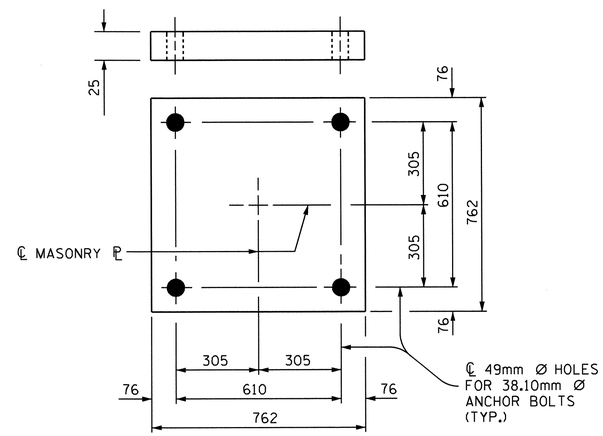

PLAN
M1 (5 REQ'D)

MASONRY PLATE DETAILS

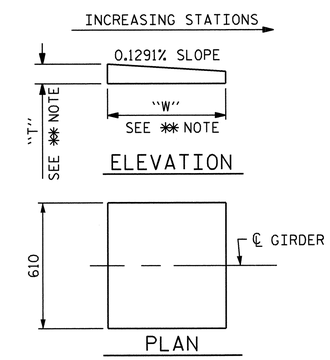

✱✱ NOTE:
DIMENSIONS "W" AND "T" ARE TO BE DETERMINED BY THE MANUFACTURER.

SOLE PLATE DETAILS

TABLE FOR UNFACTORED LOADS AND MOVEMENT

BEARING	LOCATION	VERTICAL LOAD (kN)				LATERAL LOAD (kN)	TOTAL MOVEMENT (mm)
		DEAD		LIVE			
		(W/OUT FWS)	FWS	LL+I	TOTAL		
DB1 (FIXED)	BENT No. 1	2578	277	746	3601	807	0

NOTE: LIVE LOAD REACTIONS ARE FROM MS-18 LOADING AND INCLUDE IMPACT.

PROJECT NO. R-2554A
WAYNE COUNTY
STATION: 19+40.684 -L-

STATE OF NORTH CAROLINA
DEPARTMENT OF TRANSPORTATION
RALEIGH

SUPERSTRUCTURE

DISC BEARING DETAILS

NORTH CAROLINA PROFESSIONAL SEAL 029441 ENGINEER KRISTY W. ALFORD

REVISIONS						SHEET NO.
NO.	BY:	DATE:	NO.	BY:	DATE:	S-21
1			3			TOTAL SHEETS
2			4			276

STR. #1

DRAWN BY : T. M. GARRISON DATE : 10/3/11
CHECKED BY : K.W. ALFORD DATE : 1/12

12-MAR-2012 09:05
V:\Structures\Str#1\Super_Draw\R-2554A_SD_DISC_STR 1.dgn
kalford

DEAD LOAD DEFLECTION TABLE FOR GIRDERS

SPAN "A" GIRDER #1

TWENTIETH POINTS	0	.05	.10	.15	.20	.25	.30	.35	.40	.45	.50	.55	.60	.65	.70	.75	.80	.85	.90	.95	0
DEFLECTION DUE TO WEIGHT OF GIRDER ↓	0.000	0.004	0.007	0.010	0.013	0.015	0.016	0.016	0.016	0.015	0.013	0.011	0.009	0.006	0.004	0.002	0.000	-0.002	-0.002	-0.002	0.000
DEFLECTION DUE TO WEIGHT OF SLAB * ↓	0.000	0.008	0.016	0.023	0.029	0.033	0.036	0.038	0.037	0.036	0.033	0.028	0.023	0.018	0.013	0.007	0.003	0.000	-0.002	-0.002	0.000
DEFLECTION DUE TO WEIGHT OF BARRIER RAIL ↓	0.000	0.001	0.002	0.003	0.004	0.004	0.004	0.005	0.005	0.005	0.004	0.004	0.003	0.003	0.002	0.001	0.001	0.000	0.000	0.000	0.000
TOTAL DEAD LOAD DEFLECTION ↓	0.000	0.013	0.025	0.036	0.046	0.052	0.056	0.059	0.058	0.056	0.050	0.043	0.035	0.027	0.019	0.010	0.004	-0.002	-0.004	-0.004	0.000
VERTICAL CURVE ORDINATE ↑	0.000	0.011	0.021	0.029	0.037	0.043	0.048	0.052	0.055	0.057	0.057	0.057	0.055	0.052	0.048	0.043	0.037	0.029	0.021	0.011	0.000
REQUIRED CAMBER ↑	0	24	46	65	83	95	104	111	113	113	107	100	90	79	67	53	41	27	17	7	0

SPAN "A" GIRDER #2

TWENTIETH POINTS	0	.05	.10	.15	.20	.25	.30	.35	.40	.45	.50	.55	.60	.65	.70	.75	.80	.85	.90	.95	0
DEFLECTION DUE TO WEIGHT OF GIRDER ↓	0.000	0.003	0.006	0.009	0.011	0.013	0.014	0.015	0.014	0.014	0.012	0.011	0.008	0.006	0.004	0.002	0.000	-0.001	-0.002	-0.002	0.000
DEFLECTION DUE TO WEIGHT OF SLAB * ↓	0.000	0.008	0.015	0.021	0.026	0.030	0.033	0.034	0.034	0.033	0.031	0.027	0.023	0.018	0.013	0.008	0.003	0.000	-0.002	-0.002	0.000
DEFLECTION DUE TO WEIGHT OF BARRIER RAIL ↓	0.000	0.001	0.002	0.003	0.003	0.004	0.004	0.004	0.004	0.004	0.004	0.004	0.003	0.002	0.002	0.001	0.001	0.000	0.000	0.000	0.000
TOTAL DEAD LOAD DEFLECTION ↓	0.000	0.012	0.023	0.033	0.040	0.047	0.051	0.053	0.052	0.051	0.047	0.042	0.034	0.026	0.019	0.011	0.004	-0.001	-0.004	-0.004	0.000
VERTICAL CURVE ORDINATE ↑	0.000	0.010	0.019	0.027	0.034	0.039	0.044	0.048	0.050	0.052	0.053	0.052	0.050	0.048	0.044	0.039	0.034	0.027	0.019	0.010	0.000
REQUIRED CAMBER ↑	0	22	42	60	74	86	95	101	102	103	100	94	84	74	63	50	38	26	15	6	0

SPAN "A" GIRDER #3

TWENTIETH POINTS	0	.05	.10	.15	.20	.25	.30	.35	.40	.45	.50	.55	.60	.65	.70	.75	.80	.85	.90	.95	0
DEFLECTION DUE TO WEIGHT OF GIRDER ↓	0.000	0.003	0.006	0.008	0.010	0.012	0.013	0.013	0.013	0.012	0.011	0.010	0.008	0.006	0.004	0.002	0.000	-0.001	-0.002	-0.002	0.000
DEFLECTION DUE TO WEIGHT OF SLAB * ↓	0.000	0.007	0.013	0.019	0.024	0.028	0.030	0.032	0.032	0.031	0.029	0.025	0.021	0.017	0.012	0.008	0.004	0.000	-0.002	-0.002	0.000
DEFLECTION DUE TO WEIGHT OF BARRIER RAIL ↓	0.000	0.001	0.002	0.002	0.003	0.003	0.004	0.004	0.004	0.004	0.004	0.003	0.003	0.002	0.002	0.001	0.001	0.000	0.000	0.000	0.000
TOTAL DEAD LOAD DEFLECTION ↓	0.000	0.011	0.021	0.029	0.037	0.043	0.047	0.049	0.049	0.047	0.044	0.038	0.032	0.025	0.018	0.011	0.005	-0.001	-0.004	-0.004	0.000
VERTICAL CURVE ORDINATE ↑	0.000	0.009	0.017	0.025	0.031	0.036	0.041	0.044	0.046	0.048	0.048	0.048	0.046	0.044	0.041	0.036	0.031	0.025	0.017	0.009	0.000
REQUIRED CAMBER ↑	0	20	38	54	68	79	88	93	95	95	92	86	78	69	59	47	36	24	13	5	0

SPAN "A" GIRDER #4

TWENTIETH POINTS	0	.05	.10	.15	.20	.25	.30	.35	.40	.45	.50	.55	.60	.65	.70	.75	.80	.85	.90	.95	0
DEFLECTION DUE TO WEIGHT OF GIRDER ↓	0.000	0.003	0.005	0.007	0.009	0.011	0.012	0.012	0.012	0.011	0.010	0.009	0.007	0.005	0.003	0.001	0.000	-0.001	-0.002	-0.002	0.000
DEFLECTION DUE TO WEIGHT OF SLAB * ↓	0.000	0.007	0.013	0.018	0.023	0.026	0.029	0.030	0.030	0.029	0.027	0.024	0.020	0.016	0.012	0.007	0.004	0.001	-0.001	-0.002	0.000
DEFLECTION DUE TO WEIGHT OF BARRIER RAIL ↓	0.000	0.001	0.002	0.002	0.003	0.003	0.004	0.004	0.004	0.004	0.003	0.003	0.003	0.002	0.002	0.001	0.001	0.000	0.000	0.000	0.000
TOTAL DEAD LOAD DEFLECTION ↓	0.000	0.011	0.020	0.027	0.035	0.040	0.045	0.046	0.046	0.044	0.040	0.036	0.030	0.023	0.017	0.009	0.005	0.000	-0.003	-0.004	0.000
VERTICAL CURVE ORDINATE ↑	0.000	0.008	0.016	0.023	0.028	0.033	0.037	0.040	0.042	0.044	0.044	0.044	0.042	0.040	0.037	0.033	0.028	0.023	0.016	0.008	0.000
REQUIRED CAMBER ↑	0	19	36	50	63	73	82	86	88	88	84	80	72	63	54	42	33	23	13	4	0

SPAN "A" GIRDER #5

TWENTIETH POINTS	0	.05	.10	.15	.20	.25	.30	.35	.40	.45	.50	.55	.60	.65	.70	.75	.80	.85	.90	.95	0
DEFLECTION DUE TO WEIGHT OF GIRDER ↓	0.000	0.003	0.005	0.007	0.009	0.010	0.011	0.011	0.011	0.010	0.009	0.008	0.006	0.004	0.002	0.001	-0.001	-0.002	-0.002	-0.001	0.000
DEFLECTION DUE TO WEIGHT OF SLAB * ↓	0.000	0.006	0.012	0.018	0.022	0.025	0.028	0.029	0.029	0.028	0.026	0.023	0.019	0.015	0.011	0.007	0.003	0.001	-0.001	-0.001	0.000
DEFLECTION DUE TO WEIGHT OF BARRIER RAIL ↓	0.000	0.001	0.001	0.002	0.003	0.003	0.003	0.004	0.004	0.004	0.003	0.003	0.003	0.002	0.002	0.001	0.001	0.000	0.000	0.000	0.000
TOTAL DEAD LOAD DEFLECTION ↓	0.000	0.010	0.018	0.027	0.034	0.038	0.042	0.044	0.044	0.042	0.038	0.034	0.028	0.021	0.015	0.009	0.003	-0.001	-0.003	-0.002	0.000
VERTICAL CURVE ORDINATE ↑	0.000	0.008	0.015	0.021	0.026	0.030	0.034	0.037	0.039	0.040	0.041	0.040	0.039	0.037	0.034	0.030	0.026	0.021	0.015	0.008	0.000
REQUIRED CAMBER ↑	0	18	33	48	60	68	76	81	83	82	79	74	67	58	49	39	29	20	12	6	0

NOTES:
* INCLUDES SLAB, BUILDUPS & STAY-IN-PLACE FORMS.
ALL VALUES ARE SHOWN IN METERS, EXCEPT "FINAL CAMBER" WHICH IS SHOWN IN MILLIMETERS.
THERE IS NO CAMBER DISSIPATION DUE TO HEAT CURVING.

NORTH CAROLINA PROFESSIONAL SEAL 029441 ENGINEER KRISTY W. ALFORD

PROJECT NO. R-2554A
WAYNE COUNTY
STATION: 19+40.684 -L-

SHEET 1 OF 2

STATE OF NORTH CAROLINA
DEPARTMENT OF TRANSPORTATION
RALEIGH

SUPERSTRUCTURE
DEAD LOAD DEFLECTIONS

REVISIONS						SHEET NO.
NO.	BY:	DATE:	NO.	BY:	DATE:	S-22
1			3			TOTAL SHEETS
2			4			276

DRAWN BY : D. G. ELY DATE : 10/10
CHECKED BY : N. PIERCE DATE : 01/11

14-FEB-2012 07:31
V:\Structures\Str#1\Super_Draw\R-2554A_SD_DL_STR 1.dgn
kalford

DEAD LOAD DEFLECTION TABLE FOR GIRDERS

SPAN "B" GIRDER #1

TWENTIETH POINTS	0	.05	.10	.15	.20	.25	.30	.35	.40	.45	.50	.55	.60	.65	.70	.75	.80	.85	.90	.95	0
DEFLECTION DUE TO WEIGHT OF GIRDER ↓	0.000	0.003	0.007	0.011	0.016	0.021	0.025	0.029	0.033	0.035	0.037	0.038	0.038	0.036	0.034	0.030	0.025	0.020	0.014	0.007	0.000
DEFLECTION DUE TO WEIGHT OF SLAB * ↓	0.000	0.005	0.011	0.018	0.026	0.034	0.042	0.049	0.056	0.060	0.064	0.065	0.065	0.062	0.058	0.052	0.044	0.035	0.024	0.012	0.000
DEFLECTION DUE TO WEIGHT OF BARRIER RAIL ↓	0.000	0.001	0.001	0.002	0.003	0.004	0.005	0.006	0.006	0.007	0.007	0.007	0.007	0.007	0.007	0.006	0.005	0.004	0.003	0.001	0.000
TOTAL DEAD LOAD DEFLECTION ↓	0.000	0.009	0.019	0.031	0.045	0.059	0.072	0.084	0.095	0.102	0.108	0.110	0.110	0.105	0.099	0.088	0.074	0.059	0.041	0.020	0.000
VERTICAL CURVE ORDINATE ↑	0.000	0.011	0.021	0.029	0.037	0.043	0.048	0.053	0.055	0.057	0.058	0.057	0.055	0.053	0.048	0.043	0.037	0.029	0.021	0.011	0.000
REQUIRED CAMBER ↑	0	20	40	60	82	102	120	137	150	159	166	167	165	158	147	131	111	88	62	31	0

SPAN "B" GIRDER #2

TWENTIETH POINTS	0	.05	.10	.15	.20	.25	.30	.35	.40	.45	.50	.55	.60	.65	.70	.75	.80	.85	.90	.95	0
DEFLECTION DUE TO WEIGHT OF GIRDER ↓	0.000	0.004	0.008	0.014	0.020	0.025	0.031	0.036	0.040	0.043	0.045	0.046	0.045	0.043	0.040	0.035	0.030	0.023	0.016	0.008	0.000
DEFLECTION DUE TO WEIGHT OF SLAB * ↓	0.000	0.006	0.013	0.022	0.032	0.042	0.052	0.061	0.068	0.073	0.077	0.078	0.078	0.074	0.069	0.061	0.052	0.041	0.028	0.014	0.000
DEFLECTION DUE TO WEIGHT OF BARRIER RAIL ↓	0.000	0.001	0.002	0.003	0.004	0.005	0.006	0.007	0.008	0.008	0.009	0.009	0.009	0.008	0.008	0.007	0.006	0.005	0.003	0.002	0.000
TOTAL DEAD LOAD DEFLECTION ↓	0.000	0.011	0.023	0.039	0.056	0.072	0.089	0.104	0.116	0.124	0.131	0.133	0.132	0.125	0.117	0.103	0.088	0.069	0.047	0.024	0.000
VERTICAL CURVE ORDINATE ↑	0.000	0.012	0.023	0.032	0.040	0.047	0.053	0.057	0.060	0.062	0.063	0.062	0.060	0.057	0.053	0.047	0.040	0.032	0.023	0.012	0.000
REQUIRED CAMBER ↑	0	23	46	71	96	119	142	161	176	186	194	195	192	182	170	150	128	101	70	36	0

SPAN "B" GIRDER #3

TWENTIETH POINTS	0	.05	.10	.15	.20	.25	.30	.35	.40	.45	.50	.55	.60	.65	.70	.75	.80	.85	.90	.95	0
DEFLECTION DUE TO WEIGHT OF GIRDER ↓	0.000	0.004	0.009	0.016	0.022	0.029	0.036	0.042	0.047	0.051	0.053	0.054	0.054	0.051	0.048	0.042	0.036	0.028	0.019	0.010	0.000
DEFLECTION DUE TO WEIGHT OF SLAB * ↓	0.000	0.006	0.015	0.025	0.037	0.049	0.060	0.071	0.080	0.087	0.091	0.093	0.093	0.089	0.082	0.073	0.062	0.048	0.033	0.017	0.000
DEFLECTION DUE TO WEIGHT OF BARRIER RAIL ↓	0.000	0.001	0.002	0.003	0.004	0.006	0.007	0.008	0.009	0.010	0.010	0.011	0.010	0.010	0.009	0.008	0.007	0.005	0.004	0.002	0.000
TOTAL DEAD LOAD DEFLECTION ↓	0.000	0.011	0.026	0.044	0.063	0.084	0.103	0.121	0.136	0.148	0.154	0.158	0.157	0.150	0.139	0.123	0.105	0.081	0.056	0.029	0.000
VERTICAL CURVE ORDINATE ↑	0.000	0.013	0.024	0.034	0.043	0.051	0.057	0.061	0.065	0.067	0.067	0.067	0.065	0.061	0.057	0.051	0.043	0.034	0.024	0.013	0.000
REQUIRED CAMBER ↑	0	24	50	78	106	135	160	182	201	215	221	225	222	211	196	174	148	115	80	42	0

SPAN "B" GIRDER #4

TWENTIETH POINTS	0	.05	.10	.15	.20	.25	.30	.35	.40	.45	.50	.55	.60	.65	.70	.75	.80	.85	.90	.95	0
DEFLECTION DUE TO WEIGHT OF GIRDER ↓	0.000	0.004	0.010	0.017	0.025	0.033	0.040	0.048	0.054	0.059	0.062	0.064	0.063	0.061	0.057	0.051	0.043	0.033	0.023	0.012	0.000
DEFLECTION DUE TO WEIGHT OF SLAB * ↓	0.000	0.006	0.015	0.027	0.040	0.054	0.068	0.080	0.092	0.101	0.107	0.110	0.109	0.106	0.098	0.088	0.074	0.058	0.040	0.020	0.000
DEFLECTION DUE TO WEIGHT OF BARRIER RAIL ↓	0.000	0.001	0.002	0.003	0.005	0.006	0.008	0.009	0.011	0.012	0.012	0.012	0.012	0.012	0.011	0.010	0.008	0.006	0.004	0.002	0.000
TOTAL DEAD LOAD DEFLECTION ↓	0.000	0.011	0.027	0.047	0.070	0.093	0.116	0.137	0.157	0.172	0.181	0.186	0.184	0.179	0.166	0.149	0.125	0.097	0.067	0.034	0.000
VERTICAL CURVE ORDINATE ↑	0.000	0.014	0.026	0.037	0.046	0.054	0.061	0.066	0.069	0.072	0.072	0.072	0.069	0.066	0.061	0.054	0.046	0.037	0.026	0.014	0.000
REQUIRED CAMBER ↑	0	25	53	84	116	147	177	203	226	244	253	258	253	245	227	203	171	134	93	48	0

SPAN "B" GIRDER #5

TWENTIETH POINTS	0	.05	.10	.15	.20	.25	.30	.35	.40	.45	.50	.55	.60	.65	.70	.75	.80	.85	.90	.95	0
DEFLECTION DUE TO WEIGHT OF GIRDER ↓	0.000	0.004	0.010	0.017	0.026	0.035	0.044	0.053	0.060	0.067	0.071	0.074	0.074	0.072	0.067	0.060	0.051	0.041	0.028	0.014	0.000
DEFLECTION DUE TO WEIGHT OF SLAB * ↓	0.000	0.006	0.015	0.027	0.042	0.057	0.073	0.088	0.102	0.113	0.122	0.127	0.128	0.124	0.117	0.105	0.090	0.071	0.049	0.025	0.000
DEFLECTION DUE TO WEIGHT OF BARRIER RAIL ↓	0.000	0.001	0.002	0.003	0.005	0.007	0.009	0.010	0.012	0.013	0.014	0.014	0.014	0.014	0.013	0.012	0.010	0.008	0.005	0.003	0.000
TOTAL DEAD LOAD DEFLECTION ↓	0.000	0.011	0.027	0.047	0.073	0.099	0.126	0.151	0.174	0.193	0.207	0.215	0.216	0.210	0.197	0.177	0.151	0.120	0.082	0.042	0.000
VERTICAL CURVE ORDINATE ↑	0.000	0.015	0.028	0.039	0.050	0.058	0.065	0.070	0.074	0.077	0.077	0.077	0.074	0.070	0.065	0.058	0.050	0.039	0.028	0.015	0.000
REQUIRED CAMBER ↑	0	26	55	86	123	157	191	221	248	270	284	292	290	280	262	235	201	159	110	57	0

NOTES:
* INCLUDES SLAB, BUILDUPS & STAY-IN-PLACE FORMS.
ALL VALUES ARE SHOWN IN METERS, EXCEPT "FINAL CAMBER" WHICH IS SHOWN IN MILLIMETERS.
THERE IS NO CAMBER DISSIPATION DUE TO HEAT CURVING.

NORTH CAROLINA PROFESSIONAL SEAL 029441 ENGINEER KRISTY W. ALFORD

PROJECT NO. R-2554A
WAYNE COUNTY
STATION: 19+40.684 -L-

SHEET 2 OF 2

STATE OF NORTH CAROLINA
DEPARTMENT OF TRANSPORTATION
RALEIGH

SUPERSTRUCTURE
DEAD LOAD DEFLECTIONS

REVISIONS						SHEET NO.
NO.	BY:	DATE:	NO.	BY:	DATE:	S-23
1			3			TOTAL SHEETS
2			4			276

DRAWN BY : D. G. ELY DATE : 10/10
CHECKED BY : N. PIERCE DATE : 01/11

14-FEB-2012 07:31
V:\Structures\Str#1\Super_Draw\R-2554A_SD_DL_STR 1.dgn
kalford

STR. #1

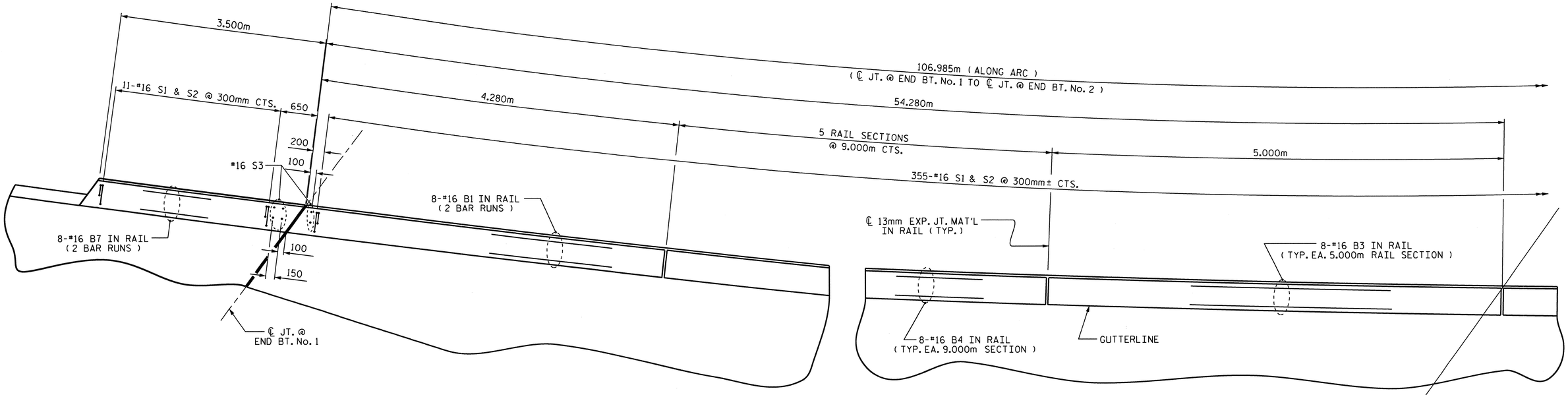

PLAN OF LEFT SIDE (SPAN "A")

ALL DIMENSIONS ARE TAKEN ALONG ARC AT OUTSIDE EDGE OF SUPERSTRUCTURE

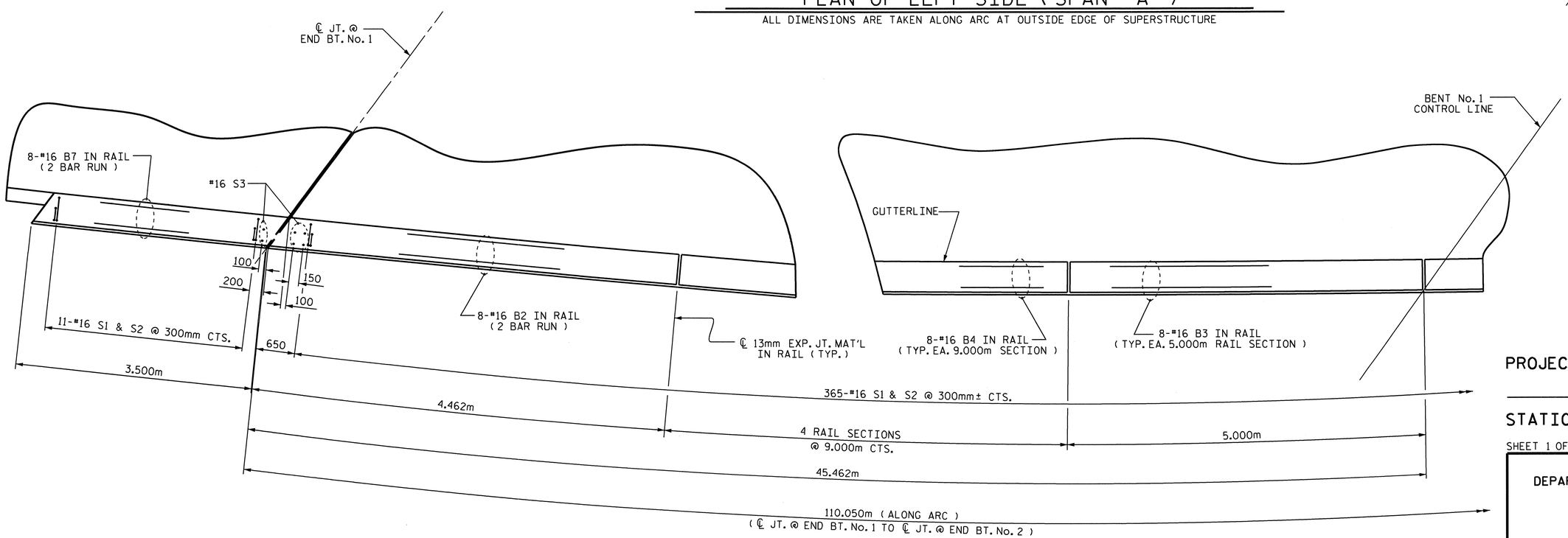

PLAN OF RIGHT SIDE (SPAN "A")

ALL DIMENSIONS ARE TAKEN ALONG ARC AT OUTSIDE EDGE OF SUPERSTRUCTURE

NORTH CAROLINA PROFESSIONAL SEAL 029441 ENGINEER KENETH W. ALFORD

PROJECT NO. R-2554A

WAYNE COUNTY

STATION: 19+40.684 -L-

SHEET 1 OF 3

STATE OF NORTH CAROLINA
DEPARTMENT OF TRANSPORTATION
RALEIGH

SUPERSTRUCTURE

CONCRETE BARRIER RAIL

(SPAN "A")

REVISIONS						SHEET NO.
NO.	BY:	DATE:	NO.	BY:	DATE:	S-24
1			3			TOTAL SHEETS
2			4			276

DRAWN BY : D. G. ELY DATE : 11/10
CHECKED BY : N. PIERCE DATE : 01/11

14-FEB-2012 07:30
V:\Structures\Str#1\Super_Draw\R-2554A_SD_BR_STR 1.dgn
kalford

STR. #1

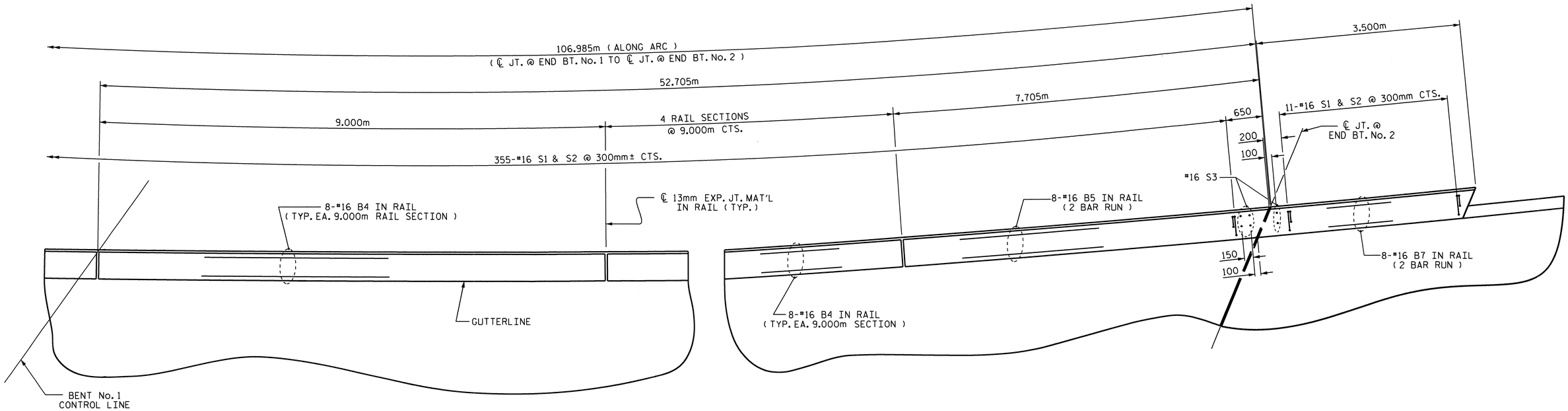

PLAN OF LEFT SIDE (SPAN "B")

ALL DIMENSIONS ARE TAKEN ALONG ARC AT OUTSIDE EDGE OF SUPERSTRUCTURE

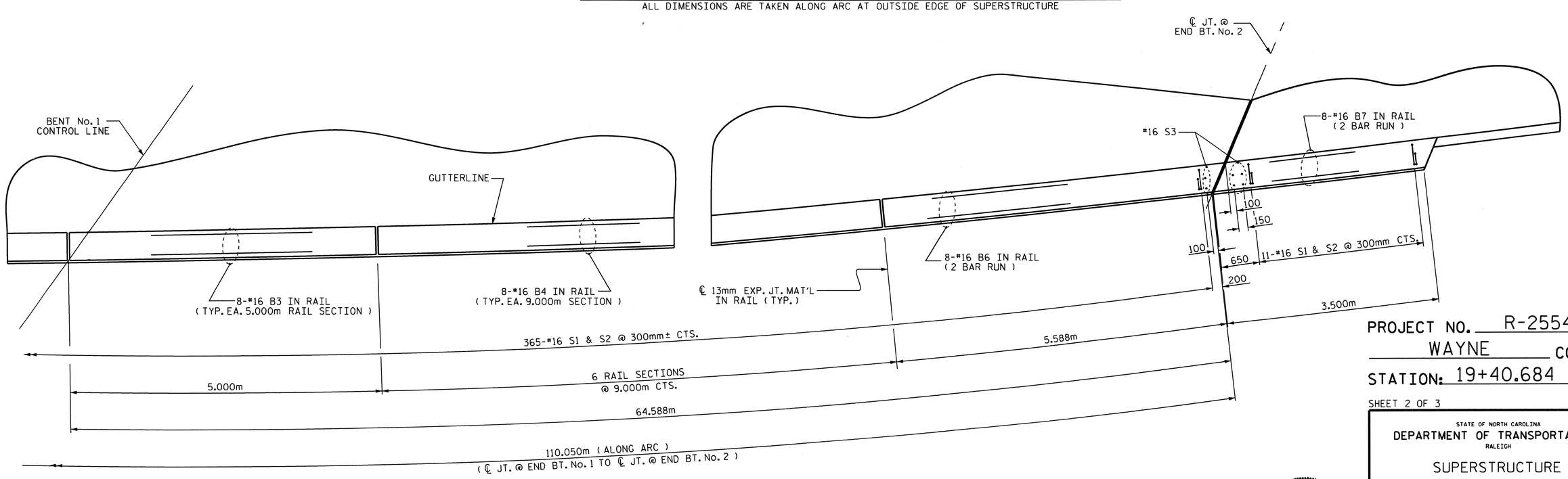

PLAN OF RIGHT SIDE (SPAN "B")

ALL DIMENSIONS ARE TAKEN ALONG ARC AT OUTSIDE EDGE OF SUPERSTRUCTURE

PROJECT NO. R-2554A

WAYNE COUNTY

STATION: 19+40.684 -L-

SHEET 2 OF 3

STATE OF NORTH CAROLINA
DEPARTMENT OF TRANSPORTATION
RALEIGH

SUPERSTRUCTURE

CONCRETE
BARRIER RAIL

(SPAN "B")

NORTH CAROLINA PROFESSIONAL SEAL 029441 ENGINEER KRISTY W. ALFORD

REVISIONS						SHEET NO.
NO.	BY:	DATE:	NO.	BY:	DATE:	S-25
1			3			TOTAL SHEETS
2			4			276

DRAWN BY : D. G. ELY DATE : 11/10
CHECKED BY : N. PIERCE DATE : 01/11

12-MAR-2012 09:06
V:\Structures\Str#1\Super_Draw\R-2554A_SD_BR_STR 1.dgn
kalford

STR. #1

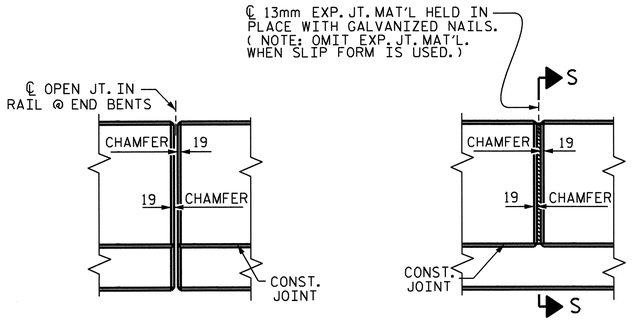

ELEVATION AT EXPANSION JOINTS

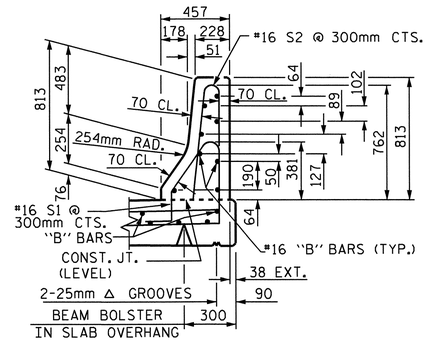

SECTION THRU RAIL

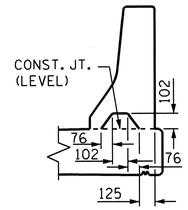

SECTION S-S

AT DAM IN OPEN JOINT
(THIS IS TO BE USED ONLY WHEN SLIP FORM IS USED)

NOTES

THE BARRIER RAIL IN A CONTINUOUS UNIT SHALL NOT BE CAST UNTIL ALL SLAB CONCRETE IN THAT SPAN HAS BEEN CAST AND HAS REACHED A MINIMUM COMPRESSIVE STRENGTH OF 20.7 MPa.

ALL REINFORCING STEEL IN BARRIER RAILS SHALL BE EPOXY COATED.

GROOVED CONTRACTION JOINTS, 12mm IN DEPTH, SHALL BE TOOLED IN ALL EXPOSED FACES OF THE BARRIER RAIL AND IN ACCORDANCE WITH ARTICLE 825-10(B) OF THE STANDARD SPECIFICATIONS. THE CONTRACTION JOINT SHALL BE LOCATED AT EACH THIRD POINT BETWEEN BARRIER RAIL EXPANSION JOINTS. ONLY ONE CONTRACTION JOINT IS REQUIRED AT MIDPOINT OF BARRIER RAIL SEGMENTS LESS THAN 6.1m IN LENGTH AND NO CONTRACTION JOINTS ARE REQUIRED FOR THOSE SEGMENTS LESS THAN 3.5m IN LENGTH.

THE #16 S1 & S2 BARS MAY BE SHIFTED SLIGHTLY IN ORDER TO MAINTAIN A 50mm MINIMUM CLEARANCE TO THE 13mm EXPANSION JOINT MATERIAL.

BAR TYPES

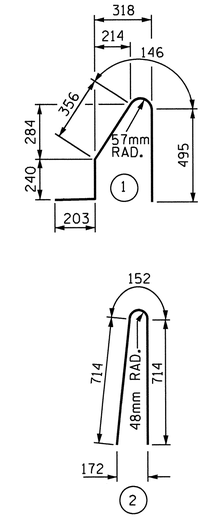

ALL BAR DIMENSIONS ARE OUT TO OUT

BILL OF MATERIAL

FOR CONCRETE BARRIER RAIL ONLY

BAR	NO.	SIZE	TYPE	LENGTH	WEIGHT
* S1	764	#16	1	1440	1707
* S2	764	#16	2	1580	1873
* S3	24	#16	STR	1020	38
* B1	16	#16	STR	2740	68
* B2	16	#16	STR	2660	66
* B3	24	#16	STR	4880	182
* B4	160	#16	STR	8880	2205
* B5	16	#16	STR	4280	106
* B6	16	#16	STR	3400	84
* B7	64	#16	STR	2240	222

* EPOXY COATED REINFORCING STEEL 6551 kg

CLASS AA CONCRETE 58.0 CU. METER

CONCRETE BARRIER RAIL 231.035 METERS

BARRIER RAIL DETAILS

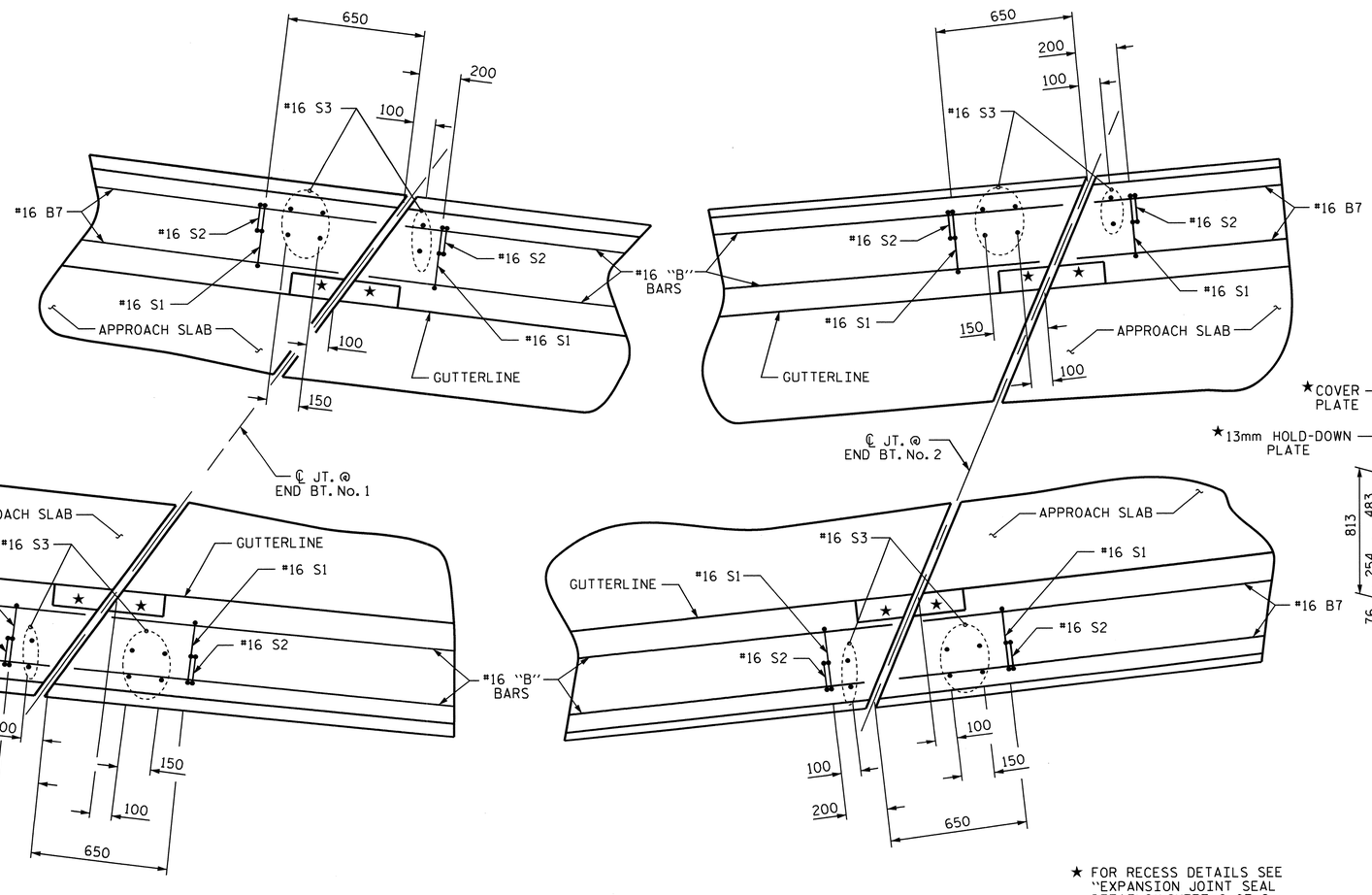

END OF RAIL DETAILS

★ FOR RECESS DETAILS SEE "EXPANSION JOINT SEAL DETAILS" SHEET 2 OF 2

PROJECT NO. R-2554A

WAYNE COUNTY

STATION: 19+40.684 -L-

SHEET 3 OF 3

STATE OF NORTH CAROLINA
DEPARTMENT OF TRANSPORTATION
RALEIGH

STANDARD

CONCRETE BARRIER RAIL

NORTH CAROLINA PROFESSIONAL SEAL 020441 ENGINEER KRISTY W. ALFORD

REVISIONS						SHEET NO.
NO.	BY:	DATE:	NO.	BY:	DATE:	S-26
1			3			TOTAL SHEETS
2			4			276

ASSEMBLED BY : D. G. ELY		DATE : 11/10	
CHECKED BY : N. PIERCE		DATE : 01/11	
DRAWN BY : ARB 5/87	REV. 10/17/00	RWW/LES	
CHECKED BY : SJD 9/87	REV. 5/7/03R	RWW/JTE	
	REV. 5/1/06	TLA/GM	

12-MAR-2012 09:06
V:\Structures\Str#1\Super_Draw\R-2554A_SD_BR_STR 1.dgn
kalford

STD. No. CBR1SM

STR. #1

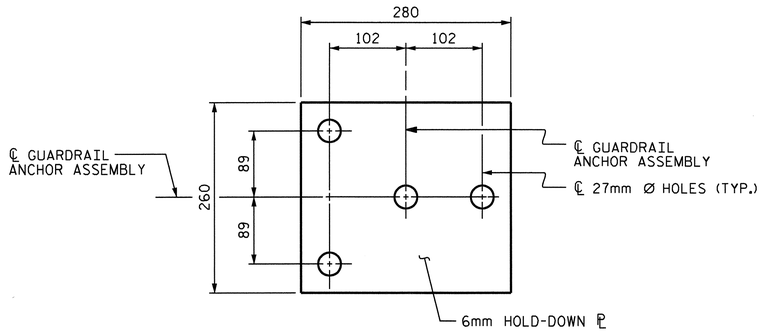

PLAN

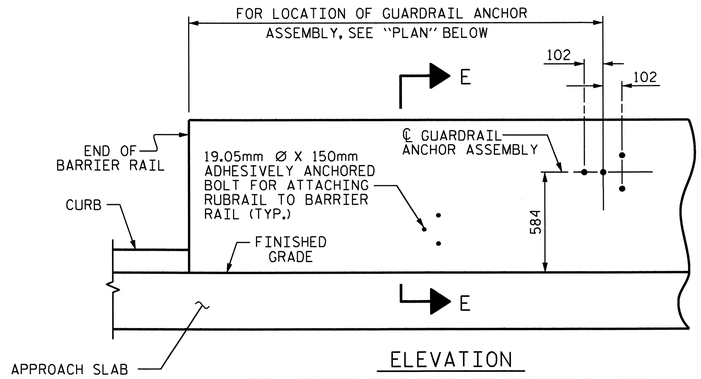

ELEVATION

FOR LOCATION OF RUBRAIL, SEE ROADWAY STD. 862.03

NOTES

THE GUARDRAIL ANCHOR ASSEMBLY SHALL CONSIST OF A 6mm HOLD DOWN PLATE AND 4 - 22.23mm Ø BOLTS WITH NUTS AND WASHERS, RUBRAIL, AND ADHESIVELY ANCHORED BOLTS.

THE HOLD-DOWN PLATE SHALL CONFORM TO AASHTO M270 GRADE 36. AFTER FABRICATION, THE HOLD-DOWN PLATE SHALL BE HOT-DIP GALVANIZED IN ACCORDANCE WITH AASHTO M111.

BOLTS SHALL CONFORM TO THE REQUIREMENTS OF ASTM A307 AND NUTS SHALL CONFORM TO THE REQUIREMENTS OF AASHTO M291. BOLTS, NUTS AND WASHERS SHALL BE GALVANIZED. (AT THE CONTRACTOR'S OPTION, STAINLESS STEEL BOLTS, NUTS AND WASHERS MAY BE USED AS AN ALTERNATE FOR THE 22.23mm Ø GALVANIZED BOLTS, NUTS AND WASHERS. THEY SHALL CONFORM TO OR EXCEED THE MECHANICAL REQUIREMENTS OF ASTM A307. THE USE OF THIS ALTERNATE SHALL BE APPROVED BY THE ENGINEER.)

THE GUARDRAIL ANCHOR ASSEMBLY IS REQUIRED AT ALL POINTS WHERE APPROACH GUARDRAIL IS TO BE ATTACHED TO THE END OF BARRIER RAIL. FOR POINTS OF ATTACHMENT, SEE SKETCH.

AFTER INSTALLATION, THE EXPOSED THREAD OF THE BOLT SHALL BE BURRED WITH A SHARP POINTED TOOL.

THE COST OF THE GUARDRAIL ANCHOR ASSEMBLY SHALL BE INCLUDED IN THE UNIT CONTRACT PRICE BID FOR CONCRETE BARRIER RAIL.

THE 32mm Ø HOLES SHALL BE FORMED OR DRILLED WITH A CORE BIT. IMPACT TOOLS WILL NOT BE PERMITTED. ANY CONCRETE DAMAGED BY THIS WORK SHALL BE REPAIRED TO THE SATISFACTION OF THE ENGINEER.

THE C150 X 12 RUBRAIL IS TO BE ADHESIVELY ANCHORED TO THE RAIL USING THREE 19.05mm Ø X 150mm BOLTS WITH WASHERS. LEVEL ONE FIELD TESTING IS REQUIRED, AND THE YIELD LOAD OF THE 19.05mm Ø BOLTS IS 53.4kN. FOR ADHESIVELY ANCHORED ANCHOR BOLTS OR DOWELS, SEE SPECIAL PROVISIONS. SEE ROADWAY STANDARD 862.03 FOR DETAILS AND LOCATION OF THE RUBRAIL.

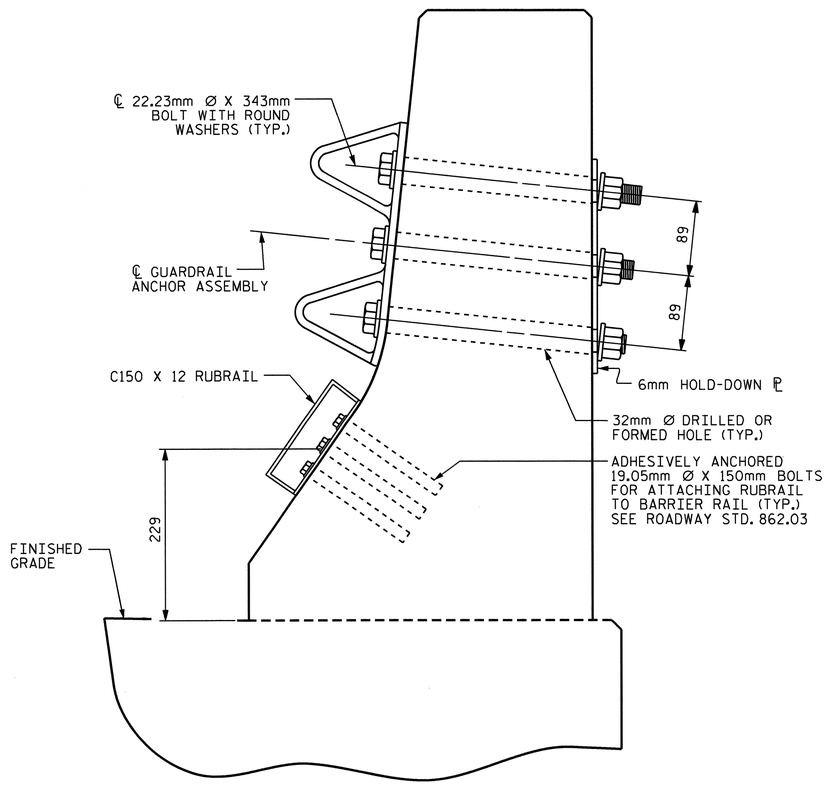

SECTION E-E

GUARDRAIL ANCHOR ASSEMBLY DETAILS

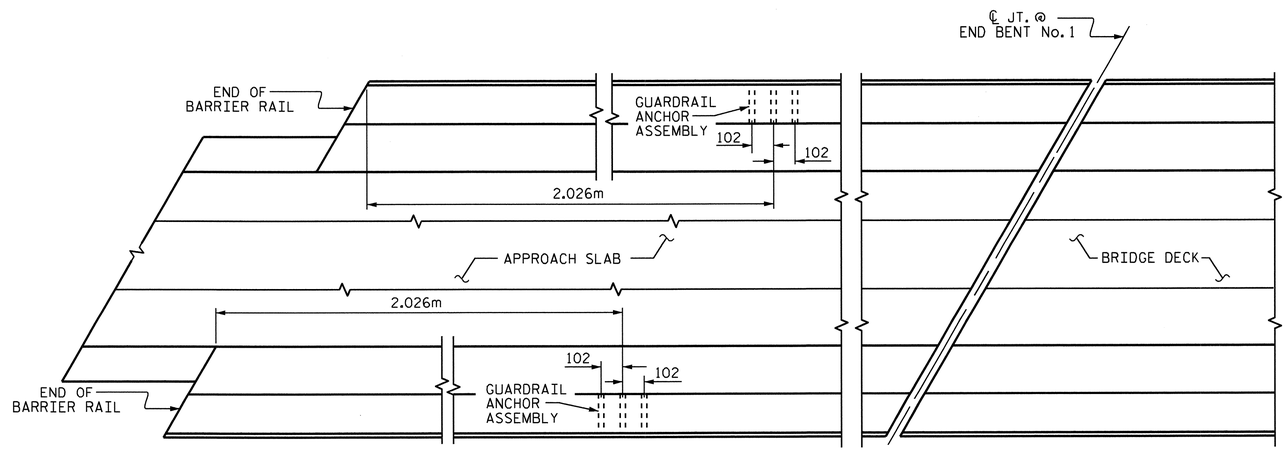

LOCATION OF ANCHORS FOR GUARDRAIL

END BENT No. 1 SHOWN, END BENT No. 2 SIMILAR

PROJECT NO. R-2554A

WAYNE COUNTY

STATION: 19+40.684 -L-

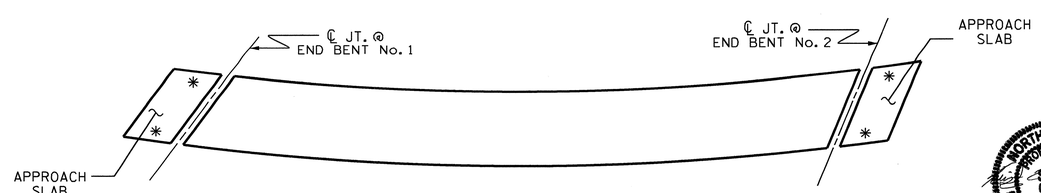

SKETCH SHOWING POINTS OF ATTACHMENTS

* DENOTES GUARDRAIL ANCHOR ASSEMBLY

STATE OF NORTH CAROLINA
DEPARTMENT OF TRANSPORTATION
RALEIGH

STANDARD

GUARDRAIL ANCHORAGE FOR BARRIER RAIL

REVISIONS								SHEET NO.
NO.	BY:	DATE:	NO.	BY:	DATE:			S-27
1			3					TOTAL SHEETS
2			4					276

ASSEMBLED BY : D. G. ELY		DATE : 03/11	
CHECKED BY : K.W. ALFORD		DATE : 01/12	
DRAWN BY : TLA 5/06	ADDED 5/1/06R KMM/GM		
CHECKED BY : GM 5/06			

12-MAR-2012 09:07
V:\Structures\Str*1\Super_Draw\R-2554A_SD_BR_STR 1.dgn
kalford

STD. NO. GRA2

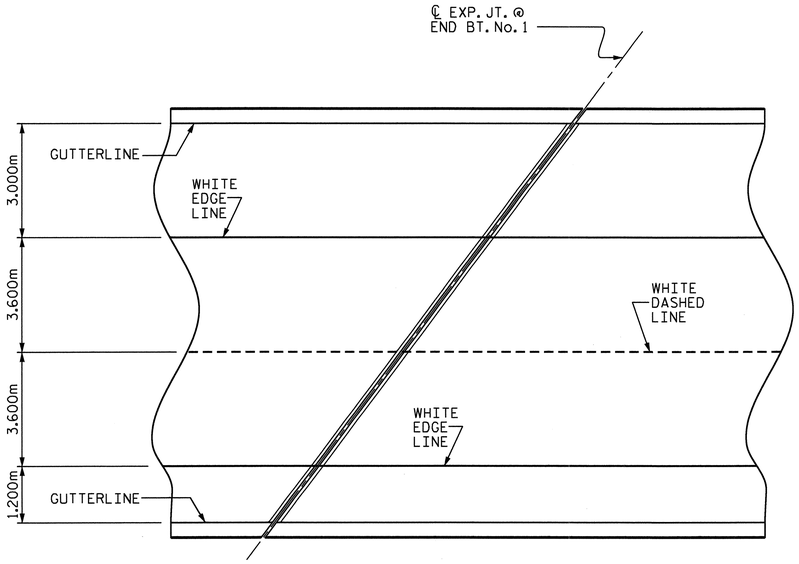

PAVEMENT MARKING ALIGNMENT

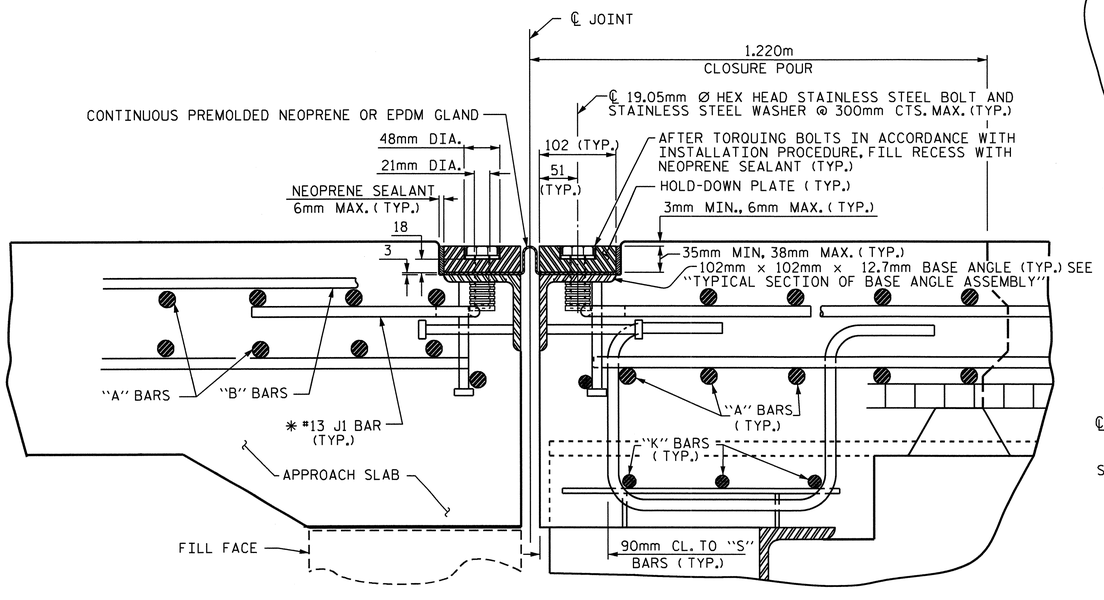

EXPANSION JOINT DETAILS

SECTION NORMAL TO JOINT -- STEEL SUPERSTRUCTURE

* THE QUANTITY OF #13 J1 BARS ON THE BILL OF MATERIAL IS BASED ON 300mm CENTERS. J1 BARS SHALL BE PLACED AT EACH VERTICAL STUD ANCHOR BOLT. IN THE EVENT THAT THE NUMBER OF VERTICAL STUD ANCHOR BOLTS EXCEEDS THE NUMBER OF J1 BARS SPECIFIED, ADDITIONAL J1 BARS WILL NOT BE REQUIRED.

INSTALLATION PROCEDURE

1. A TEMPLATE OR OTHER SUITABLE DEVICE SHALL BE USED TO FORM THE TOP OF THE EXPANSION JOINT SEAL BLOCKOUT TO THE PROPER DEPTH AND WIDTH. THE TEMPLATE SHALL BE 105mm TO 108mm WIDE AND OF SUCH THICKNESS AS TO PROVIDE FOR CORRECT FINAL ELEVATION OF TOP OF HOLD-DOWN PLATES. THE TEMPLATE SHALL BE ATTACHED TO THE BASE ANGLE ASSEMBLY WITH THE 19.05mm Ø HEX HEAD BOLTS PROVIDED FOR THE HOLD-DOWN PLATES. A 25mm Ø HOLE SHALL BE PROVIDED IN THE TEMPLATE CENTERED OVER EACH WEEP HOLE IN THE 102mm X 102mm X 12.7mm BASE ANGLE. OTHER METHODS OF INSURING DRAINAGE THROUGH WEEP HOLES MAY BE EMPLOYED SUBJECT TO ENGINEER'S APPROVAL.
2. AFTER THE CONCRETE HAS BEEN CAST ON BOTH SIDES OF THE JOINT, REMOVE THE TEMPLATE. THOROUGHLY CLEAN THE BOLT HOLES AND THE ANGLE PLATE. REMOVE ANY EXCESS CONCRETE THAT COMES OUT OF THE WEEP HOLES. ANY DAMAGED STEEL SHALL BE COATED WITH A MINIMUM THICKNESS OF 0.100mm (DRY) OF ZINC-RICH PAINT IN ACCORDANCE WITH THE STANDARD SPECIFICATIONS.
3. LAY THE GLAND ON THE BASE ANGLE AND FIELD MARK THE GLAND FOR THE BOLT HOLES. HOLES IN THE GLAND SHALL BE PUNCHED 22mm IN DIAMETER WITH A HAND PUNCH.
4. IN ORDER TO CHECK FOR PROPER ALIGNMENT, PLACE THE GLAND AND HOLD-DOWN PLATES ON THE BASE ANGLE. DO NOT APPLY NEOPRENE SEALANT. BOLT THE HOLD-DOWN PLATES TO THE BASE ANGLE BUT DO NOT TIGHTEN. THE ENGINEER SHALL INSPECT THE JOINT SEAL DEVICE FOR PROPER ALIGNMENT.
5. AFTER INSPECTION, REMOVE THE HOLD-DOWN PLATES AND GLAND. APPLY NEOPRENE SEALANT TO THE BASE ANGLE IN ACCORDANCE WITH THE "INSTALLATION SKETCH". PLACE GLAND AND HOLD-DOWN PLATES ON THE BASE ANGLE. BOLT THE HOLD-DOWN PLATES TO THE BASE ANGLE ASSEMBLY AND TORQUE THE BOLTS TO 119.3 N-m WITH A TORQUE WRENCH. THE TORQUE WRENCH SHALL BE CALIBRATED IN ACCORDANCE WITH SECTION 440-10 (D) OF THE STANDARD SPECIFICATIONS. CHECK THE TORQUE AFTER THREE (3) HOURS AND, IF NECESSARY, RETIGHTEN TO 119.3 N-m. A FINAL CHECK SHALL BE MADE AT SEVEN (7) DAYS. TORQUE SHALL NOT BE LESS THAN 108.5 N-m AFTER SEVEN (7) DAYS.
6. AFTER PROPER TORQUING, CLEAN THE BOLT HOLE RECESSES AND THE RECESS BETWEEN THE JOINT SEAL DEVICE AND CONCRETE, COMPLETELY FILL THESE RECESSES WITH NEOPRENE SEALANT.

GENERAL NOTES

1. FOR EXPANSION JOINT SEALS, SEE SPECIAL PROVISIONS.
2. ALL PLATES AND ANGLES SHALL CONFORM TO AASHTO M270 GRADE 250 STEEL OR APPROVED EQUAL. ALL HOLD-DOWN BOLTS SHALL CONFORM TO ASTM F593 ALLOY 304 STAINLESS STEEL. WASHERS SHALL CONFORM TO ASTM F844 EXCEPT THEY SHALL BE MADE FROM ALLOY 304 STAINLESS STEEL. ALL STUD ANCHORS SHALL CONFORM TO AASHTO M169, GRADES 1010 THRU 1020 OR APPROVED EQUAL. ALL CONCRETE INSERTS SHALL BE CLOSED END AND SHALL CONFORM TO AASHTO M169, GRADE 12L14. TENSILE CAPACITY SHALL BE 13.3 kN MIN.
3. A PREMOLDED CORRUGATED OR NON-CORRUGATED GLAND SHALL BE USED FOR JOINTS SKEWED BETWEEN 50° THRU 130° . FOR JOINTS SKEWED LESS THAN 50° OR MORE THAN 130° , ONLY A CORRUGATED GLAND SHALL BE USED.
4. CLOSED END FERRULES AND STUD ANCHORS SHALL BE SHOP WELDED AND ALL HOLES SHALL BE SHOP DRILLED AS SHOWN ON PLANS. STUD ANCHORS SHALL BE ELECTRIC ARC END WELDED WITH COMPLETE FUSION.
5. SURFACES COMING IN CONTACT WITH NEOPRENE SHALL BE GROUND SMOOTH PRIOR TO METALLIZING.
6. UPON COMPLETION OF SHOP FABRICATION, THE HOLD DOWN PLATE AND BASE ANGLE ASSEMBLY AS SHOWN IN THE "TYPICAL SECTION OF BASE ANGLE ASSEMBLY", SHALL BE METALLIZED. SEE SPECIAL PROVISION FOR THERMAL SPRAYED COATINGS (METALLIZATION).
7. BASE ANGLE ASSEMBLY SHALL BE CONTINUOUS FOR THE LENGTH OF THE JOINT. AT CROWN BREAKS, THE ENDS OF THE BASE ANGLE ASSEMBLY SHALL BE CUT PARALLEL TO THE BRIDGE CENTERLINE FOR SKEWS LESS THAN 80° AND GREATER THAN 100°. FINISHED WELD SHALL BE GROUND SMOOTH AND COATED WITH A MINIMUM THICKNESS OF 0.100mm (DRY) OF ZINC-RICH PAINT IN ACCORDANCE WITH THE STANDARD SPECIFICATIONS.
8. FIELD SPLICES OF HOLD-DOWN PLATES SHALL BE KEPT TO A MINIMUM. CONTRACTOR SHALL FURNISH DETAILED PLANS SHOWING PROPOSED SPLICE LOCATIONS FOR APPROVAL. HOLD-DOWN PLATES SHALL NOT EXCEED 6.1m LENGTHS UNLESS APPROVED BY THE ENGINEER.
9. NO ALTERNATE JOINT DETAILS SHALL BE PERMITTED IN LIEU OF THOSE SHOWN ON THESE PLANS.
10. THE CONTRACTOR MAY, AT HIS OPTION, USE ADHESIVELY ANCHORED ANCHOR BOLTS IN PLACE OF CONCRETE INSERTS FOR COVER PLATES. THE YIELD LOAD OF THE 19.05mm DIA. BOLT IS 44.5 kN. FIELD TESTING OF THE ADHESIVE BONDING SYSTEM IS NOT REQUIRED.

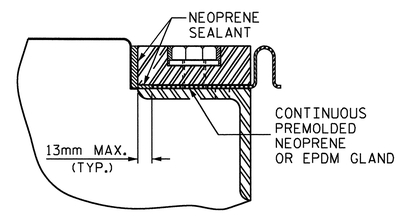

DETAIL "A"

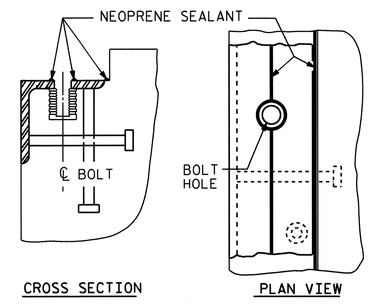

INSTALLATION SKETCH

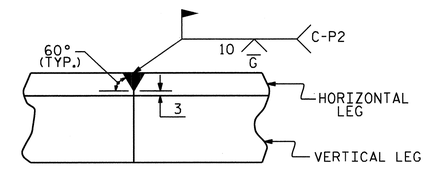

DETAIL- FIELD WELD SPLICE OF BASE ANGLE

MOVEMENT AND SETTING AT JOINT					
LOCATION	SKEW ANGLE	TOTAL MOVEMENT (ALONG ℄ RDWY)	PERPENDICULAR JOINT OPENING AT 0° C	PERPENDICULAR JOINT OPENING AT 16° C	PERPENDICULAR JOINT OPENING AT 32° C
END BENT No. 1	120°-00'-00"	35mm	49mm	40mm	31mm
END BENT No. 2	120°-00'-00"	35mm	49mm	40mm	31mm

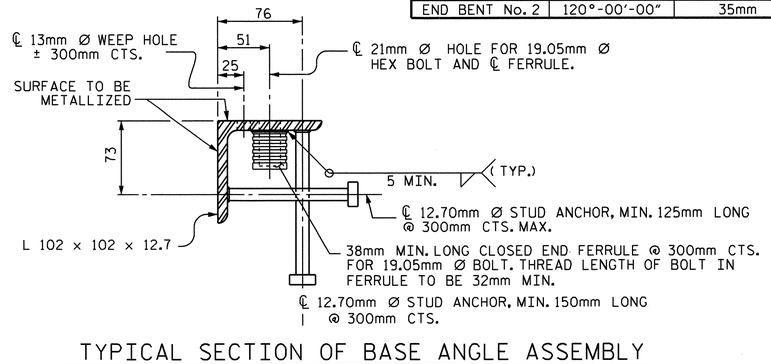

TYPICAL SECTION OF BASE ANGLE ASSEMBLY

PROJECT NO. R-2554A
WAYNE COUNTY
STATION: 19+40.684 -L-

SHEET 1 OF 2

STATE OF NORTH CAROLINA
DEPARTMENT OF TRANSPORTATION
RALEIGH

STANDARD
EXPANSION JOINT
SEAL DETAILS

NORTH CAROLINA PROFESSIONAL SEAL 029441 ENGINEER KRISTY W. ALFORD

ASSEMBLED BY : D. G. ELY	DATE : 10/10
CHECKED BY : K. W. ALFORD	DATE : 01/12

DRAWN BY : REK 9/87	REV. 10/17/00	RWW/LES
CHECKED BY : CRK 10/87	REV. 5/7/03R	RWW/JTE
	REV. 5/1/06	TLA/GM

REVISIONS								SHEET NO.
NO.	BY:	DATE:	NO.	BY:	DATE:			S-28
1			3					TOTAL SHEETS
2			4					276

14-FEB-2012 07:29
V:\Structures\Str#1\Super_Draw\R-2554A_SD_EJS_STR 1.dgn
kalford

STD. NO. EJS1SM

STR. #1

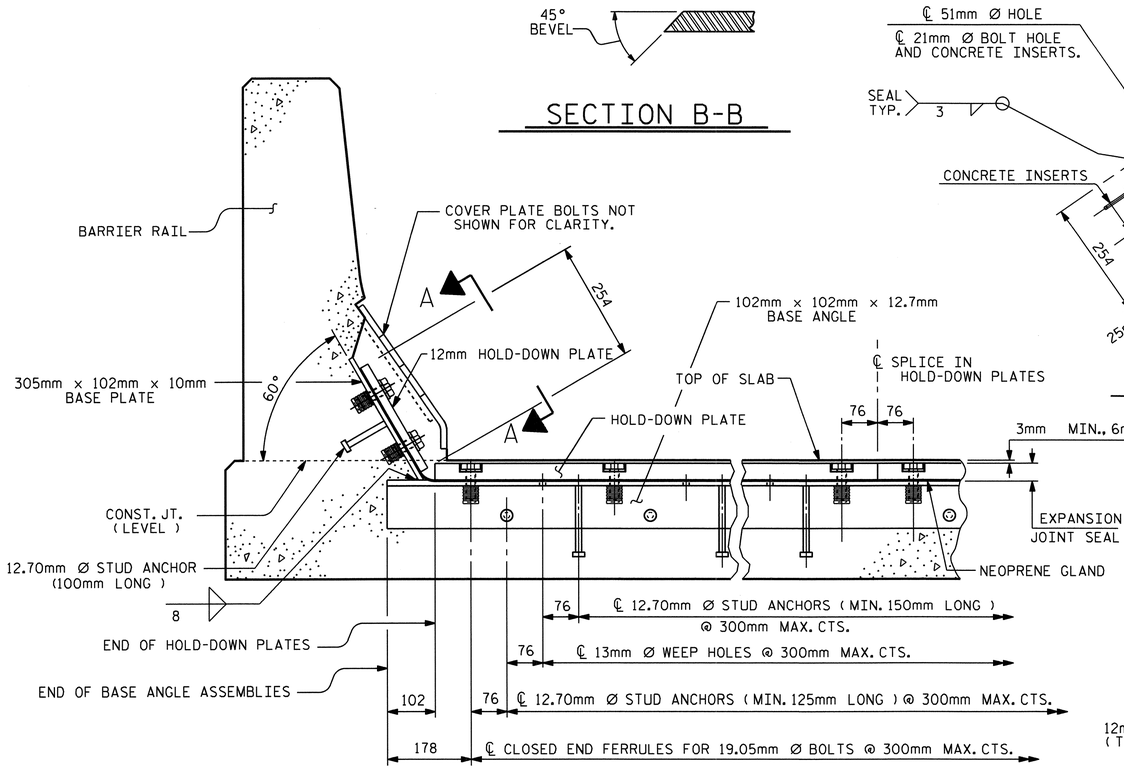

SECTION THRU RAIL NORMAL TO JOINT

SECTION B-B

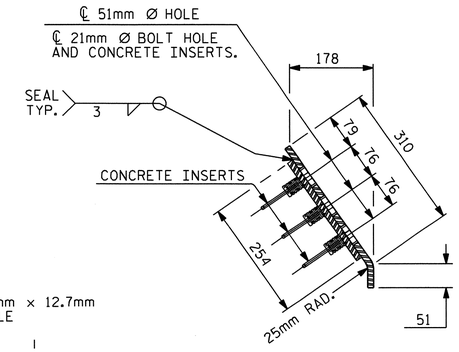

END VIEW

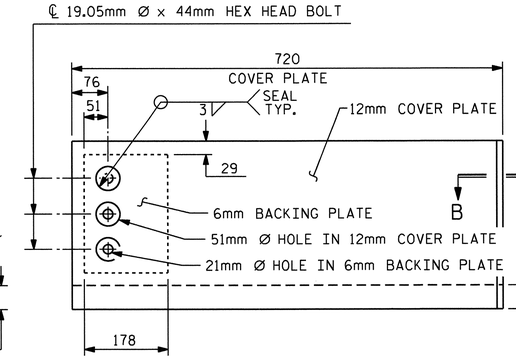

TYPE I - ELEVATION VIEW

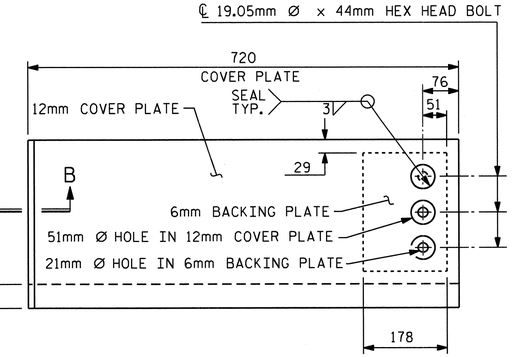

TYPE II - ELEVATION VIEW

BEND ALONG THIS LINE

51

COVER PLATE DETAILS

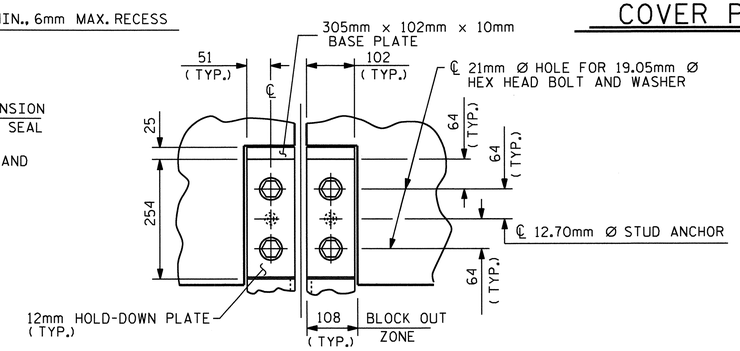

SECTION A-A

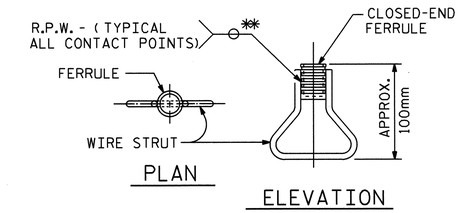

CONCRETE INSERT

** EACH WELDED ATTACHMENT OF WIRE TO FERRULE SHALL DEVELOP THE TENSILE STRENGTH OF THE WIRE.

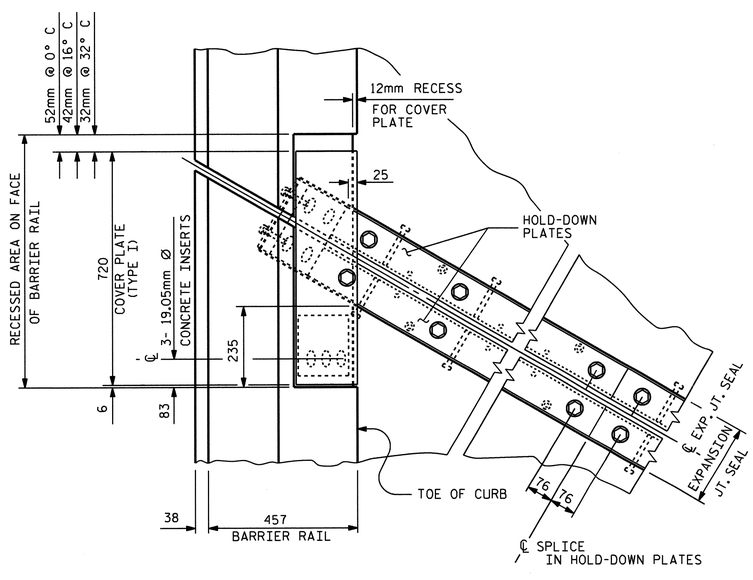

PLAN OF EXPANSION JOINT SEAL - LEFT SIDE

FLOW OF TRAFFIC

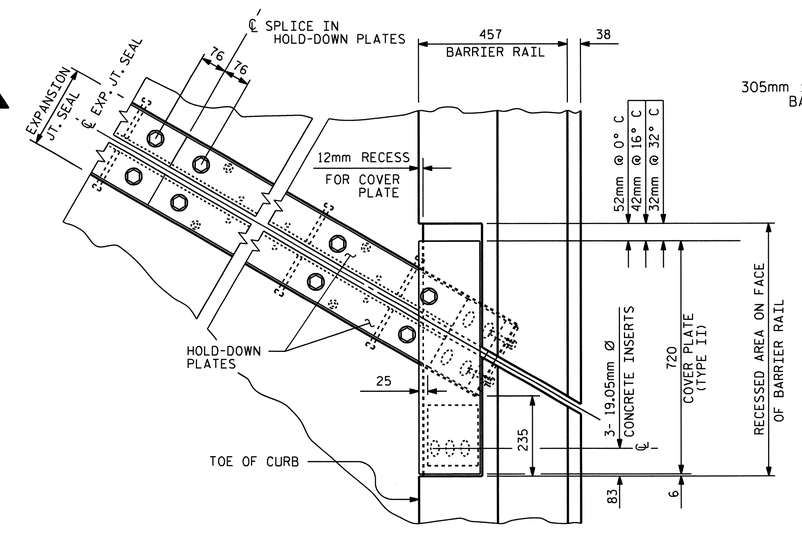

PLAN OF EXPANSION JOINT SEAL - RIGHT SIDE

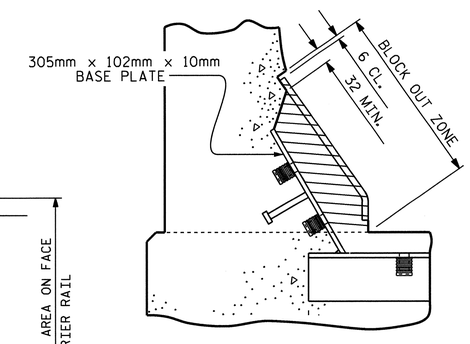

BLOCK OUT DETAIL

SEE "SECTION A - A" FOR OTHER DETAILS.

PROJECT NO. R-2554A
WAYNE COUNTY
STATION: 19+40.684 -L-

SHEET 2 OF 2

STATE OF NORTH CAROLINA
DEPARTMENT OF TRANSPORTATION
RALEIGH

STANDARD

EXPANSION JOINT SEAL DETAILS FOR BARRIER RAIL

NORTH CAROLINA PROFESSIONAL SEAL 029441 ENGINEER KRISTY W. ALFORD

ASSEMBLED BY : D. G. ELY	DATE : 03/11
CHECKED BY : K. W. ALFORD	DATE : 01/12

DRAWN BY : REK 9/87	REV. 7/17/98	RWW/LES
CHECKED BY : CRK 10/87	REV. 10/17/00	RWW/LES
	REV. 5/1/06	TLA/GM

REVISIONS

NO.	BY:	DATE:	NO.	BY:	DATE:
1			3		
2			4		

SHEET NO. S-29
TOTAL SHEETS 276

14-FEB-2012 07:29
V:\Structures\Str#1\Super_Draw\R-2554A_SD_EJS_STR 1.dgn
kalford

STD. NO. EJS2SM

STR. #1

BILL OF MATERIAL

BAR	NO.	SIZE	TYPE	LENGTH	WEIGHT
* A1	570	#16	STR	12280	10863
A2	570	#16	STR	12280	10863
* A101	1	#16	STR	12060	19
* A102	1	#16	STR	11760	18
* A103	1	#16	STR	11460	18
* A104	1	#16	STR	11160	17
* A105	1	#16	STR	10840	17
* A106	1	#16	STR	10540	16
* A107	1	#16	STR	10240	16
* A108	1	#16	STR	9920	15
* A109	1	#16	STR	9620	15
* A110	1	#16	STR	9320	14
* A111	1	#16	STR	9000	14
* A112	1	#16	STR	8700	14
* A113	1	#16	STR	8400	13
* A114	1	#16	STR	8080	13
* A115	1	#16	STR	7780	12
* A116	1	#16	STR	7480	12
* A117	1	#16	STR	7160	11
* A118	1	#16	STR	6860	11
* A119	1	#16	STR	6560	10
* A120	1	#16	STR	6240	10
* A121	1	#16	STR	5940	9
* A122	1	#16	STR	5620	9
* A123	1	#16	STR	5320	8
* A124	1	#16	STR	5020	8
* A125	1	#16	STR	4700	7
* A126	1	#16	STR	4400	7
* A127	1	#16	STR	4100	6
* A128	1	#16	STR	3780	6
* A129	1	#16	STR	3480	5
* A130	1	#16	STR	3160	5
* A131	1	#16	STR	2860	4
* A132	1	#16	STR	2560	4
* A133	1	#16	STR	2240	3
* A134	1	#16	STR	1940	3
* A135	1	#16	STR	1620	3
* A136	1	#16	STR	1320	2
* A137	1	#16	STR	1020	2
* A138	1	#16	STR	700	1
* A139	1	#16	STR	12060	19
* A140	1	#16	STR	11720	18
* A141	1	#16	STR	11400	18
* A142	1	#16	STR	11080	17
* A143	1	#16	STR	10740	17
* A144	1	#16	STR	10420	16
* A145	1	#16	STR	10100	16
* A146	1	#16	STR	9780	15
* A147	1	#16	STR	9440	15
* A148	1	#16	STR	9120	14
* A149	1	#16	STR	8800	14
* A150	1	#16	STR	8460	13
* A151	1	#16	STR	8140	13
* A152	1	#16	STR	7820	12
* A153	1	#16	STR	7480	12
* A154	1	#16	STR	7160	11
* A155	1	#16	STR	6840	11
* A156	1	#16	STR	6520	10
* A157	1	#16	STR	6180	10

BAR	NO.	SIZE	TYPE	LENGTH	WEIGHT
* A158	1	#16	STR	5860	9
* A159	1	#16	STR	5540	9
* A160	1	#16	STR	5220	8
* A161	1	#16	STR	4880	8
* A162	1	#16	STR	4560	7
* A163	1	#16	STR	4240	7
* A164	1	#16	STR	3920	6
* A165	1	#16	STR	3580	6
* A166	1	#16	STR	3260	5
* A167	1	#16	STR	2940	5
* A168	1	#16	STR	2620	4
* A169	1	#16	STR	2280	4
* A170	1	#16	STR	1960	3
* A171	1	#16	STR	1640	3
* A172	1	#16	STR	1320	2
* A173	1	#16	STR	1000	2
* A174	1	#16	STR	660	1
A201	1	#16	STR	12060	19
A202	1	#16	STR	11760	18
A203	1	#16	STR	11460	18
A204	1	#16	STR	11160	17
A205	1	#16	STR	10840	17
A206	1	#16	STR	10540	16
A207	1	#16	STR	10240	16
A208	1	#16	STR	9920	15
A209	1	#16	STR	9620	15
A210	1	#16	STR	9320	14
A211	1	#16	STR	9000	14
A212	1	#16	STR	8700	14
A213	1	#16	STR	8400	13
A214	1	#16	STR	8080	13
A215	1	#16	STR	7780	12
A216	1	#16	STR	7480	12
A217	1	#16	STR	7160	11
A218	1	#16	STR	6860	11
A219	1	#16	STR	6560	10
A220	1	#16	STR	6240	10
A221	1	#16	STR	5940	9
A222	1	#16	STR	5620	9
A223	1	#16	STR	5320	8
A224	1	#16	STR	5020	8
A225	1	#16	STR	4700	7
A226	1	#16	STR	4400	7
A227	1	#16	STR	4100	6
A228	1	#16	STR	3780	6
A229	1	#16	STR	3480	5
A230	1	#16	STR	3160	5
A231	1	#16	STR	2860	4
A232	1	#16	STR	2560	4
A233	1	#16	STR	2240	3
A234	1	#16	STR	1940	3
A235	1	#16	STR	1620	3
A236	1	#16	STR	1320	2
A237	1	#16	STR	1020	2
A238	1	#16	STR	700	1
A239	1	#16	STR	12060	19
A240	1	#16	STR	11720	18
A241	1	#16	STR	11400	18
A242	1	#16	STR	11080	17

BAR	NO.	SIZE	TYPE	LENGTH	WEIGHT
A243	1	#16	STR	10740	17
A244	1	#16	STR	10420	16
A245	1	#16	STR	10100	16
A246	1	#16	STR	9780	15
A247	1	#16	STR	9440	15
A248	1	#16	STR	9120	14
A249	1	#16	STR	8800	14
A250	1	#16	STR	8460	13
A251	1	#16	STR	8140	13
A252	1	#16	STR	7820	12
A253	1	#16	STR	7480	12
A254	1	#16	STR	7160	11
A255	1	#16	STR	6840	11
A256	1	#16	STR	6520	10
A257	1	#16	STR	6180	10
A258	1	#16	STR	5860	9
A259	1	#16	STR	5540	9
A260	1	#16	STR	5220	8
A261	1	#16	STR	4880	8
A262	1	#16	STR	4560	7
A263	1	#16	STR	4240	7
A264	1	#16	STR	3920	6
A265	1	#16	STR	3580	6
A266	1	#16	STR	3260	5
A267	1	#16	STR	2940	5
A268	1	#16	STR	2620	4
A269	1	#16	STR	2280	4
A270	1	#16	STR	1960	3
A271	1	#16	STR	1640	3
A272	1	#16	STR	1320	2
A273	1	#16	STR	1000	2
A274	1	#16	STR	660	1
* B1	14	#13	STR	8440	117
* B2	14	#13	STR	8500	118
* B3	52	#13	STR	8340	431
* B4	52	#13	STR	7260	375
* B5	65	#13	STR	7920	512
* B6	78	#13	STR	7620	591
* B7	153	#22	STR	16060	7475
B8	56	#16	STR	15960	1387
B9	56	#16	STR	16040	1394
B10	56	#16	STR	16140	1403
B11	56	#16	STR	16220	1410
B12	21	#16	STR	15860	517
B13	21	#16	STR	16260	530
* G1	2	#16	STR	14140	44
* G2	6	#16	STR	1300	12
* J1	94	#13	4	440	41
* K1	12	#16	1	2680	50
* K2	18	#16	2	2840	79
* K3	24	#16	STR	2360	88
* S1	56	#13	3	1340	74
REINFORCING STEEL - kg					18241
* EPOXY COATED REINFORCING STEEL - kg					21607

BAR TYPES

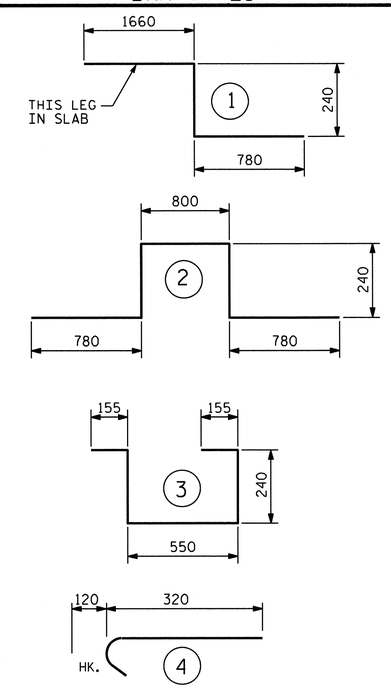

ALL BAR DIMENSIONS ARE OUT TO OUT

SUPERSTRUCTURE REINFORCING STEEL LENGTHS ARE BASED ON THE FOLLOWING MINIMUM SPLICE LENGTHS

BAR SIZE	SUPERSTRUCTURE EXCEPT APPROACH SLABS, PARAPET, AND BARRIER RAIL		APPROACH SLABS		PARAPET AND BARRIER RAIL
	EPOXY COATED	UNCOATED	EPOXY COATED	UNCOATED	
#13	610	540	610	540	840
#16	770	660	770	660	1050
#19	920	790	1190	790	1330
#22	1580	1060			
#25	2080	1390			

PROJECT NO. R-2554A

WAYNE COUNTY

STATION: 19+40.684 -L-

SHEET 1 OF 2

STATE OF NORTH CAROLINA
DEPARTMENT OF TRANSPORTATION
RALEIGH

SUPERSTRUCTURE
BILL OF MATERIAL

NORTH CAROLINA PROFESSIONAL SEAL 029441 ENGINEER KRISTY W. ALFORD

ASSEMBLED BY : D. G. ELY	DATE : 11/2010		
CHECKED BY : N. PIERCE	DATE : 02/2011		
DRAWN BY : JMB 5/87	REV. 5/16/97	EEM/RGW	
CHECKED BY : SJD 9/87	REV. 5/1/06	TLA/GM	

REVISIONS						SHEET NO.
NO.	BY:	DATE:	NO.	BY:	DATE:	S-30
1			3			TOTAL SHEETS
2			4			276

STD. NO. BOM1SM STR. #1

14-FEB-2012 07:28
V:\Structures\Str#1\Super_Draw\R-2554A_SD_BM_STR 1.dgn
kalford

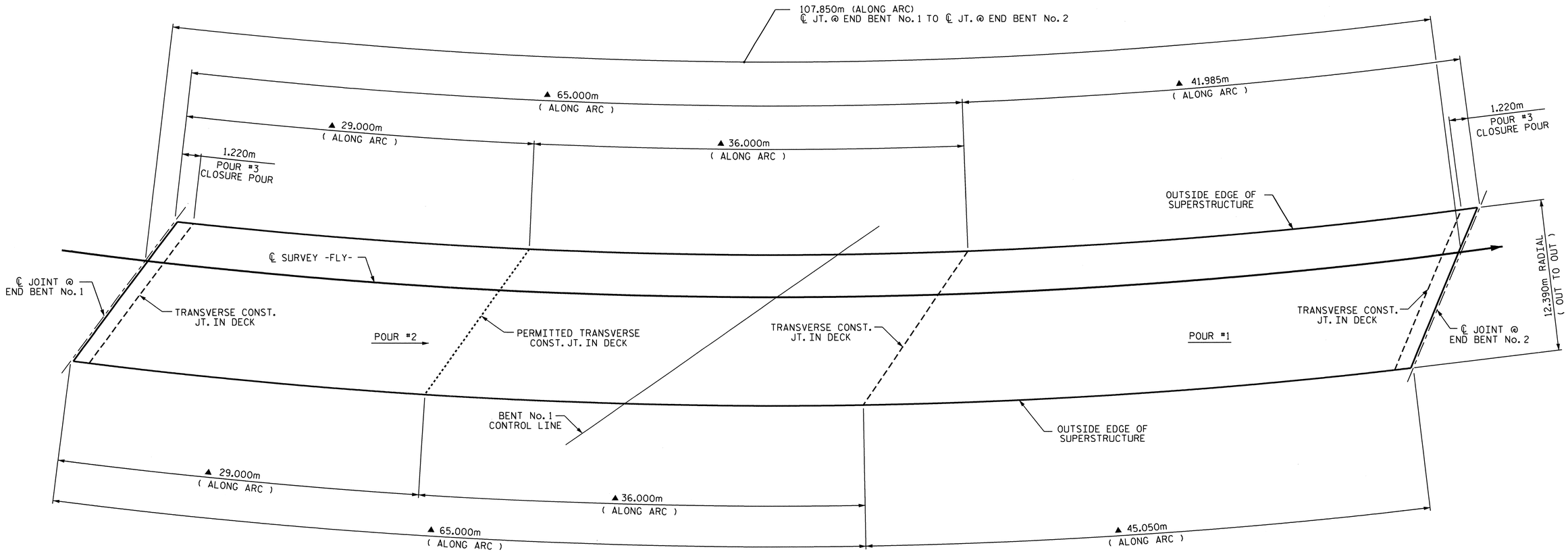

▲ DIMENSIONS ARE GIVEN ALONG OUTSIDE EDGE OF SUPERSTRUCTURE

CONCRETE POURING SEQUENCE AND LAYOUT FOR COMPUTING AREA OF REINFORCED CONCRETE DECK SLAB
(SQ. METER = 1344.0)

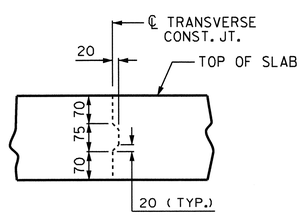

TRANSVERSE CONST. JT. DETAIL

NOTE: REINFORCING STEEL IN SLAB NOT SHOWN. LONGITUDINAL REINFORCING STEEL SHALL BE CONTINUOUS THRU JOINT.

SUPERSTRUCTURE BILL OF MATERIAL

	CLASS AA CONCRETE	REINFORCING STEEL	EPOXY COATED REINFORCING STEEL
	(CU.METER)	(kg)	(kg)
SPANS "A" & "B"		18241	21607
POUR #1	136.5		
POUR #2	206.1		
POUR #3	12.1		
TOTALS **	354.7	18241	21607

** QUANTITIES FOR CONCRETE BARRIER RAIL ARE NOT INCLUDED

GROOVING BRIDGE FLOORS

APPROACH SLABS	151	SQ.METER
BRIDGE DECK	1133	SQ.METER
TOTAL	1284	SQ.METER

PROJECT NO. R-2554A
WAYNE COUNTY
STATION: 19+40.684 -L-

SHEET 2 OF 2

STATE OF NORTH CAROLINA
DEPARTMENT OF TRANSPORTATION
RALEIGH

SUPERSTRUCTURE
BILL OF MATERIAL

NORTH CAROLINA PROFESSIONAL SEAL 029441 ENGINEER KRISTY W. ALFORD

REVISIONS						SHEET NO.
NO.	BY:	DATE:	NO.	BY:	DATE:	S-31
1			3			TOTAL SHEETS
2			4			276

ASSEMBLED BY : D. G. ELY		DATE : 11/2010	
CHECKED BY : N. PIERCE		DATE : 02/2011	
DRAWN BY : JMB 5/87	REV. 5/16/97	EEM/RGW	
CHECKED BY : SJD 9/87	REV. 5/1/06	TLA/GM	

12-MAR-2012 09:08
V:\Structures\Str#1\Super_Draw\R-2554A_SD_BM_STR 1.dgn
kalford

STR. #1

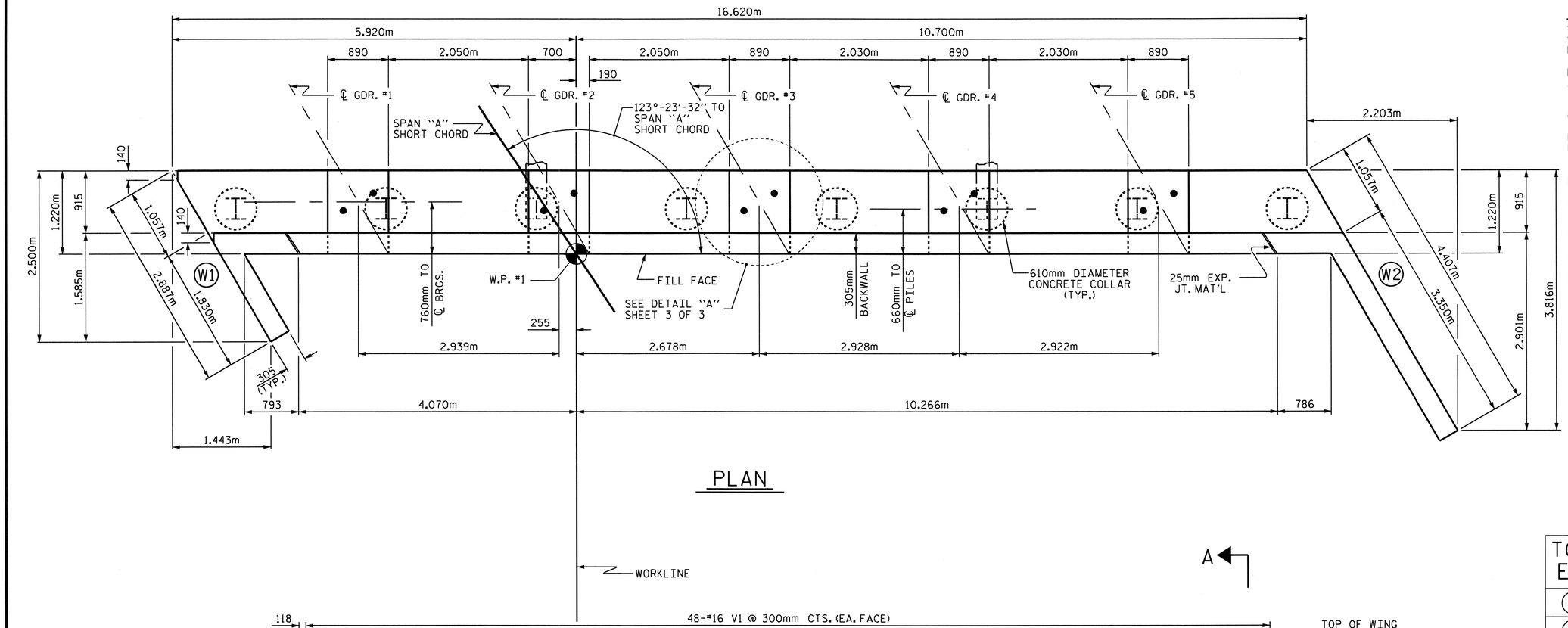

PLAN

NOTES:

STIRRUPS AND U2 BARS IN CAP MAY BE SHIFTED AS NECESSARY TO CLEAR ANCHOR BOLTS.

BACKWALL SHALL BE PLACED BEFORE APPLYING THE EPOXY PROTECTIVE COATING.

THE TOP SURFACE AREAS OF THE END BENT CAP SHALL BE CURED IN ACCORDANCE WITH THE STANDARD SPECIFICATIONS EXCEPT THE MEMBRANE CURING COMPOUND METHOD SHALL NOT BE USED.

THE TOP SURFACE OF THE CAP EXCEPT THE BRIDGE SEAT BUILDUPS SHALL BE SLOPED TRANSVERSELY FROM THE FILL FACE TO THE BACK FACE AT THE RATE OF 2%.

THE #16 V1 IN THE BACKWALL SHALL BE PLACED 50mm CLEAR FROM THE TOP OF THE BACKWALL.

FOR SECTIONS A-A AND B-B, SEE SHEET 3 OF 3.

EPOXY COAT THE END BENT CAP AFTER ADJUSTMENTS ARE MADE TO BEARINGS AND ANCHOR BOLTS ARE GROUTED.

▲FOR LOCATION OF ELEVATION BETWEEN BRIDGE SEATS, SEE "SECTION A-A", SHEET 3 OF 3.

★THIS ELEVATION TAKEN ON FILL FACE OF BACKWALL.

WORKLINE

A

TOP OF PILE ELEVATIONS	
1	47.074
2	47.181
3	47.288
4	47.395
5	47.502
6	47.609
7	47.716
8	47.823

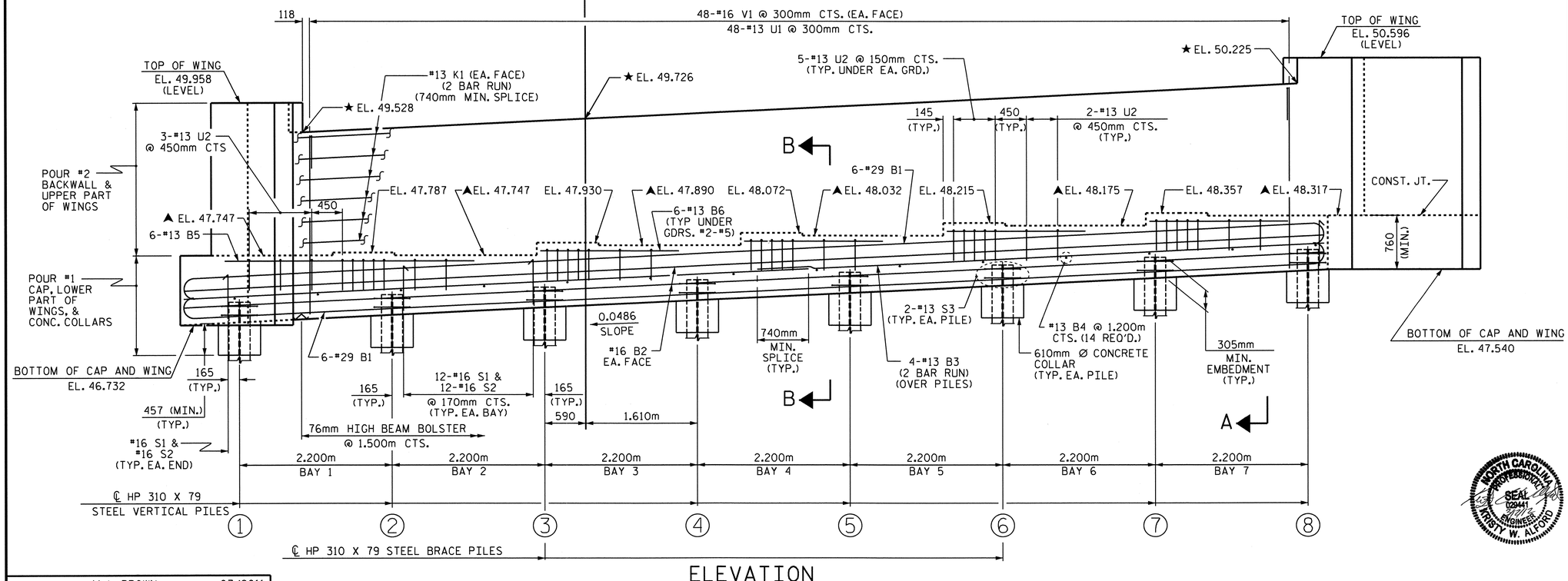

ELEVATION

PROJECT NO. R-2554A
WAYNE COUNTY
STATION: 19+40.684 -L-

SHEET 1 OF 3

STATE OF NORTH CAROLINA
DEPARTMENT OF TRANSPORTATION
RALEIGH

SUBSTRUCTURE
END BENT No. 1

NORTH CAROLINA PROFESSIONAL SEAL 029441 ENGINEER KRISTY W. ALFORD

REVISIONS								SHEET NO.
NO.	BY:	DATE:	NO.	BY:	DATE:			S-32
1			3					TOTAL SHEETS
2			4					276

DRAWN BY : M. L. BROWN DATE : 07/2011
CHECKED BY : N. PIERCE DATE : 08/2011

STR. #1

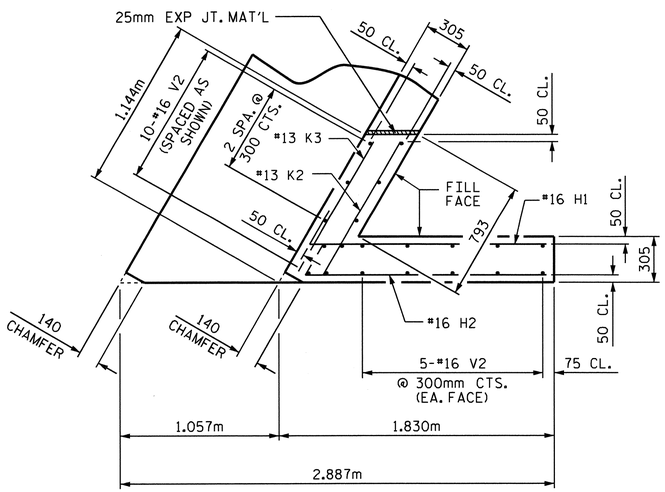

PLAN OF WING (W1)

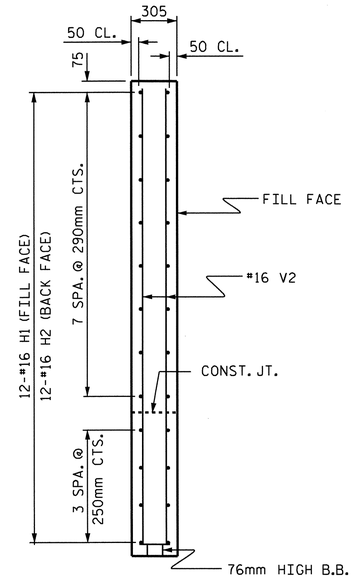

SECTION X-X

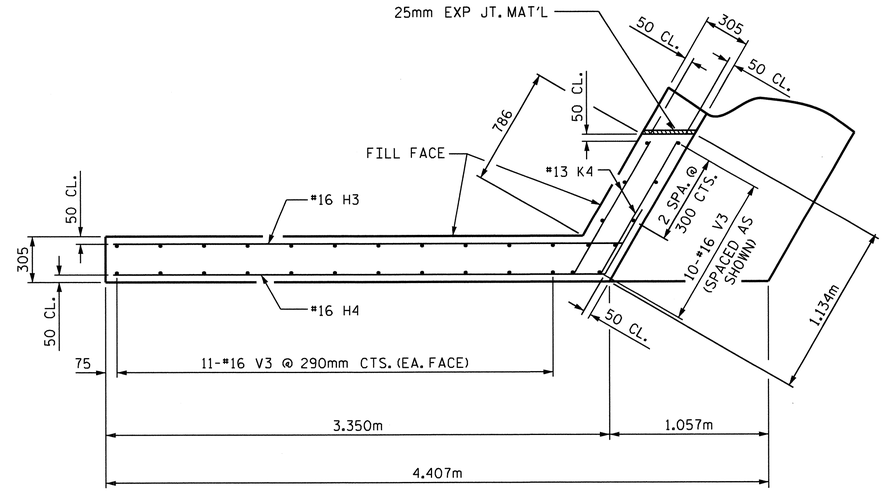

PLAN OF WING (W2)

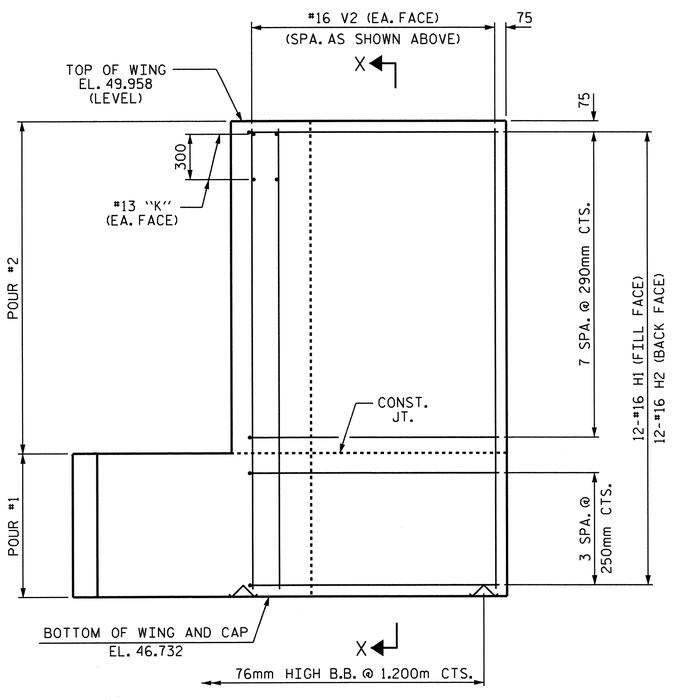

ELEVATION OF WING (W1)

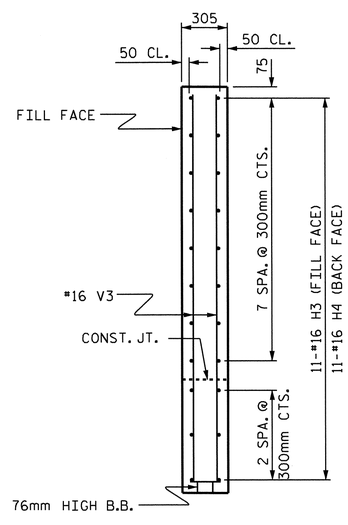

SECTION Y-Y

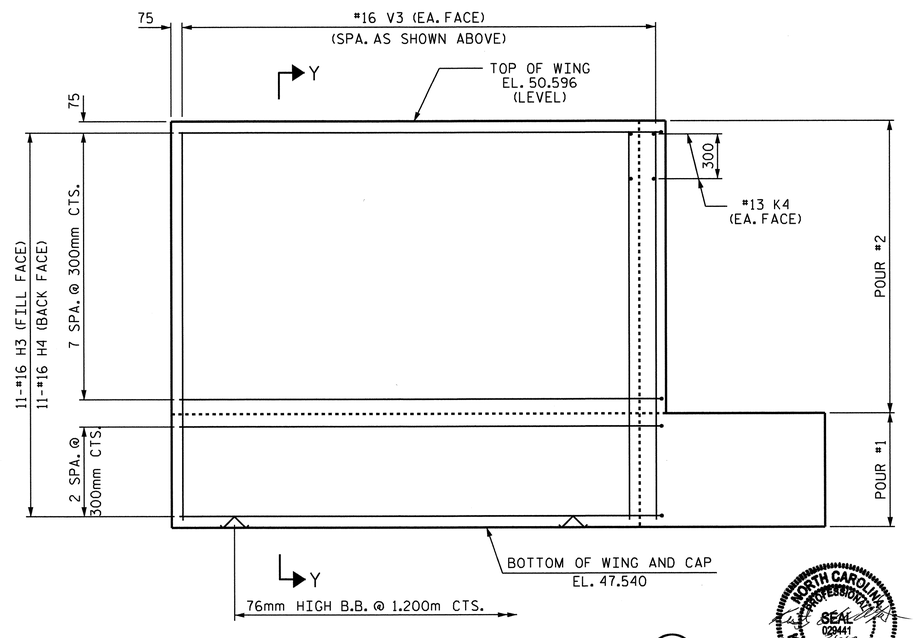

ELEVATION OF WING (W2)

PROJECT NO. R-2554A

WAYNE COUNTY

STATION: 19+40.684 -L-

SHEET 2 OF 3

STATE OF NORTH CAROLINA
DEPARTMENT OF TRANSPORTATION
RALEIGH

SUBSTRUCTURE

END BENT No. 1

REVISIONS						SHEET NO.
NO.	BY:	DATE:	NO.	BY:	DATE:	S-33
1			3			TOTAL SHEETS
2			4			276

DRAWN BY : M. L. BROWN DATE : 07/2011
CHECKED BY : N. PIERCE DATE : 08/2011

12-MAR-2012 09:09
V:\Structures\Str#1\Sub_Draw\R-2554A_sd_EB1_STR1.dgn
kalford

STR. #1

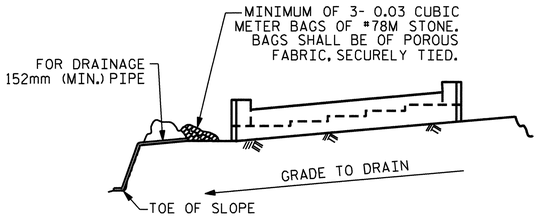

BAGGED STONE AND PIPE SHALL BE PLACED IMMEDIATELY AFTER COMPLETION OF END BENT EXCAVATION. PIPE MAY BE EITHER CONCRETE, CORRUGATED STEEL, CORRUGATED ALUMINUM ALLOY, OR CORRUGATED PLASTIC. PERFORATED PIPE WILL NOT BE ALLOWED.

BAGGED STONE SHALL REMAIN IN PLACE UNTIL THE ENGINEER DIRECTS THAT IT BE REMOVED. THE CONTRACTOR SHALL REMOVE AND DISPOSE OF SILT ACCUMULATIONS AT BAGGED STONE WHEN SO DIRECTED BY THE ENGINEER. BAGS SHALL BE REMOVED AND REPLACED WHENEVER THE ENGINEER DETERMINES THAT THEY HAVE DETERIORATED AND LOST THEIR EFFECTIVENESS.

NO SEPARATE PAYMENT WILL BE MADE FOR THIS WORK AND THE ENTIRE COST OF THIS WORK SHALL BE INCLUDED IN THE UNIT CONTRACT PRICE BID FOR THE SEVERAL PAY ITEMS.

TEMPORARY DRAINAGE AT END BENT

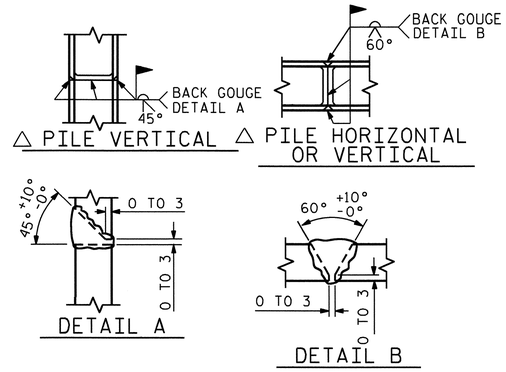

△ POSITION OF PILE DURING WELDING.

PILE SPLICE DETAILS

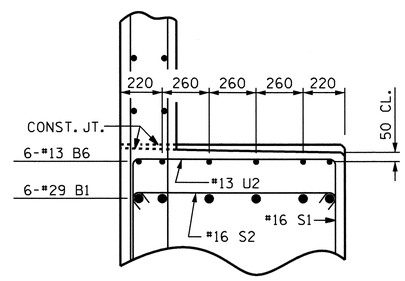

PARTIAL SECTION B-B

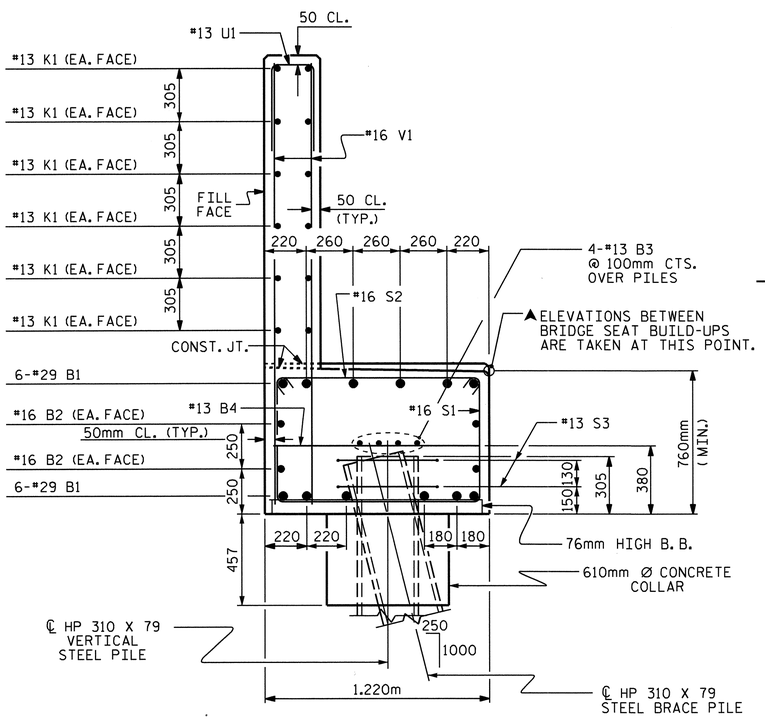

SECTION A-A

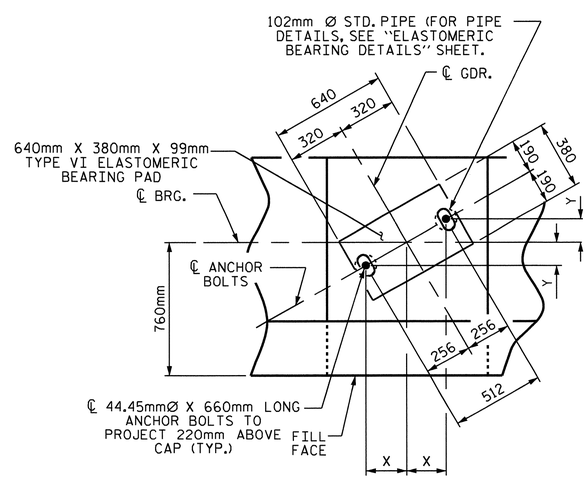

DETAIL "A"

ANCHOR BOLT LOCATION		
GIRDER	X	Y
1	221	129
2	221	128
3	222	128
4	222	127
5	223	126

BAR TYPES

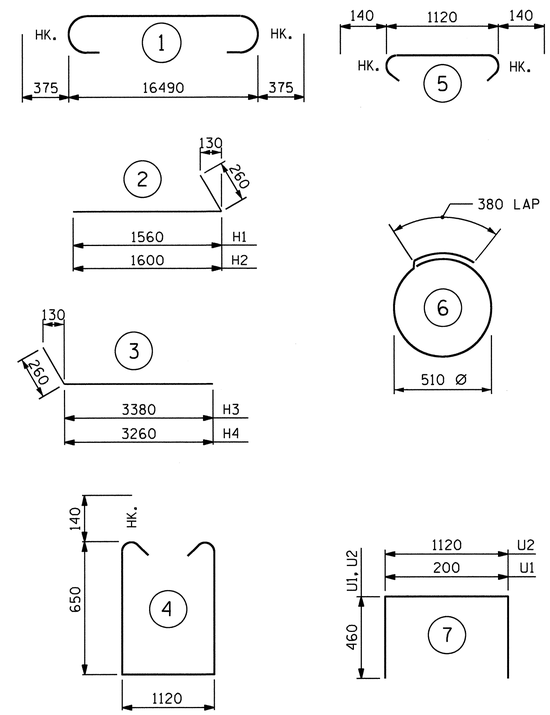

ALL BAR DIMENSIONS ARE OUT TO OUT.

BILL OF MATERIAL

END BENT No. 1

BAR	NUMBER	SIZE	TYPE	LENGTH	WEIGHT
B1	12	#29	1	17240	1047
B2	4	#16	STR	16480	102
B3	8	#13	STR	8640	69
B4	14	#13	STR	1120	16
B5	6	#13	STR	3600	21
B6	24	#13	STR	2000	48
H1	12	#16	2	1820	34
H2	12	#16	2	1860	35
H3	11	#16	3	3640	62
H4	11	#16	3	3520	60
K1	24	#13	STR	8640	206
K2	2	#13	STR	1040	2
K3	2	#13	STR	1000	2
K4	4	#13	STR	1020	4
S1	86	#16	4	2700	360
S2	86	#16	5	1400	187
S3	16	#13	6	1980	31
U1	48	#13	7	1120	53
U2	38	#13	7	2040	77
V1	96	#16	STR	2540	378
V2	20	#16	STR	3100	96
V3	32	#16	STR	3040	151

REINFORCING STEEL 3044 kg

CLASS A CONCRETE BREAKDOWN

POUR #1 - CAP, LOWER WINGS & CONC. COLLARS 20.0 m^3

POUR #2 - BACKWALL & UPPER PART OF WINGS 12.8 m^3

TOTAL CLASS A CONCRETE 32.8 m^3

HP 310 X 79 STEEL PILES
NO. = 8 219.2 METERS
PILE REDRIVES 4 EA.

PROJECT NO. R-2554A
WAYNE COUNTY
STATION: 19+40.684 -L-

SHEET 3 OF 3

STATE OF NORTH CAROLINA
DEPARTMENT OF TRANSPORTATION
RALEIGH

SUBSTRUCTURE
END BENT No. 1

NORTH CAROLINA PROFESSIONAL SEAL 020441 ENGINEER KRISTY W. ALFORD

REVISIONS						SHEET NO.
NO.	BY:	DATE:	NO.	BY:	DATE:	S-34
1			3			TOTAL SHEETS
2			4			

DRAWN BY : M. L. BROWN DATE : 08/2011
CHECKED BY : N. PIERCE DATE : 08/2011

14-FEB-2012 07:27
V:\Structures\Str#1\Sub_Draw\R-2554A_sd_EBI_STR1.dgn
kalford

STR. #1

ELEVATION

STIRRUPS AND "U" BARS IN CAP MAY BE SHIFTED AS NECESSARY TO CLEAR ANCHOR BOLTS.

HOOKS ON "V" BARS MAY BE TURNED AS NECESSARY FOR PLACING REINFORCING STEEL.

FOR SECTION A-A, SEE SHEET 2 OF 2.

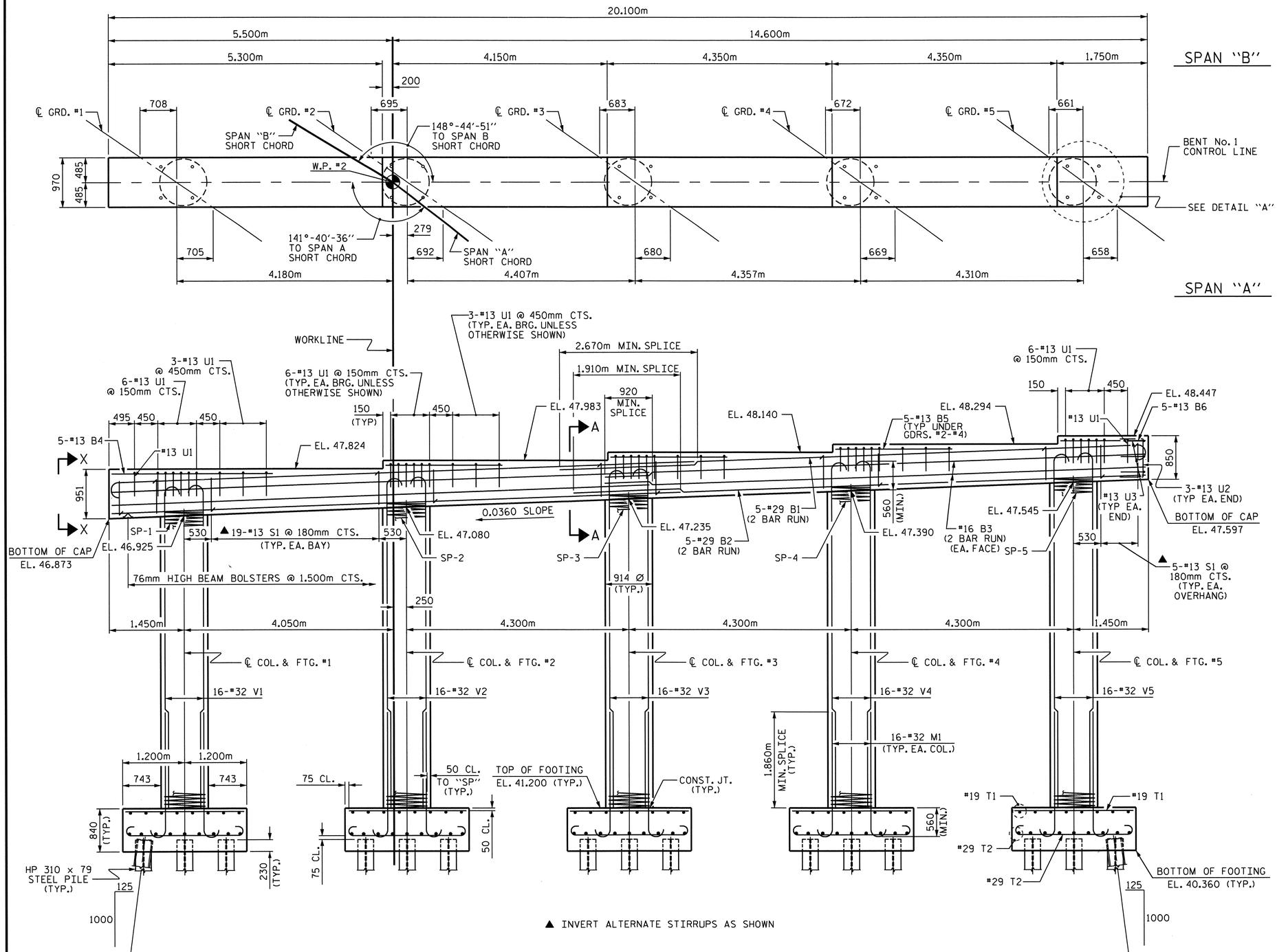

ELEVATION

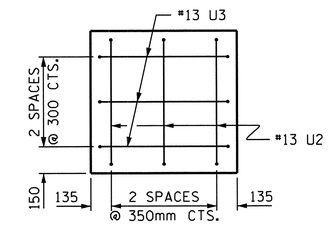

VIEW X-X

REINFORCING STEEL IN END OF CAP

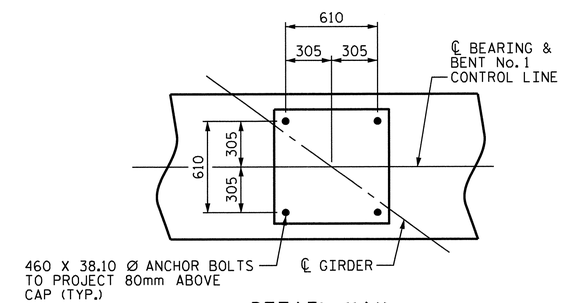

DETAIL "A"

(TYP. ALL GIRDERS)

PROJECT NO. R-2554A

WAYNE COUNTY

STATION: 19+40.684 -L-

SHEET 1 OF 2

STATE OF NORTH CAROLINA
DEPARTMENT OF TRANSPORTATION
RALEIGH

SUBSTURUCTURE

BENT No. 1

REVISIONS						
NO.	BY:	DATE:	NO.	BY:	DATE:	
1			3			
2			4			

SHEET NO. S-35

TOTAL SHEETS 276

STR #1

DRAWN BY : M. K. TOM DATE : 7/25/11
CHECKED BY : A. V. ROYAL DATE : 8/1/11

12-MAR-2012 09:11
V:\Structures\Str#1\Sub_Draw\R2554A_SD_BT_STR1.dgn
kalford

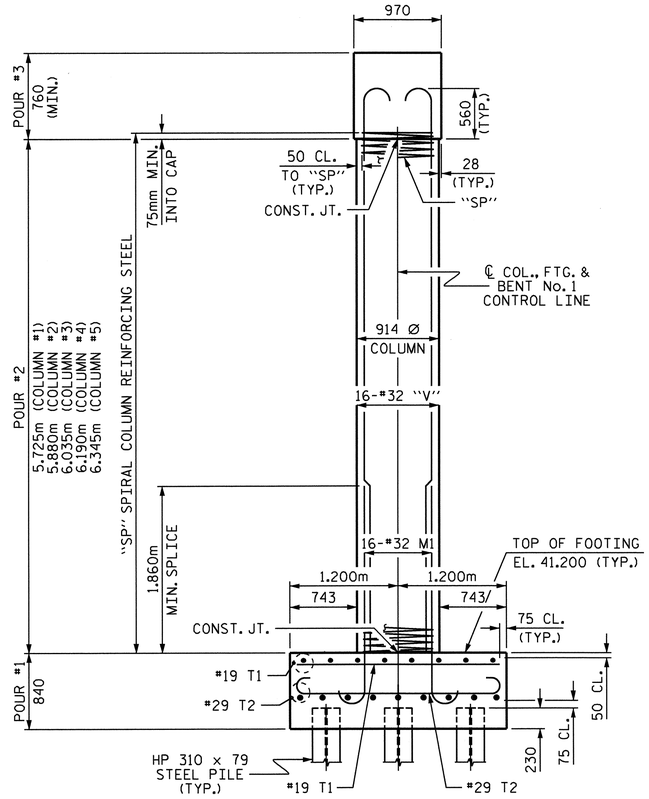

ELEVATION

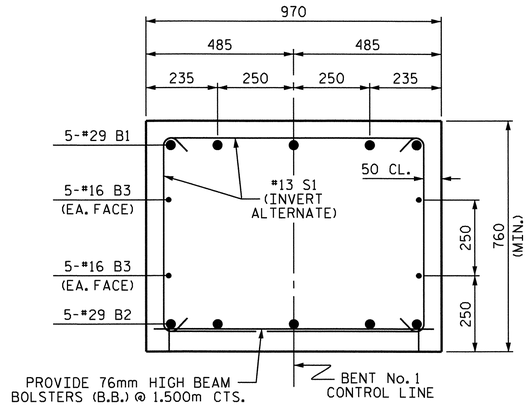

SECTION A-A

BAR TYPE

ALL BAR DIMENSIONS ARE OUT TO OUT.

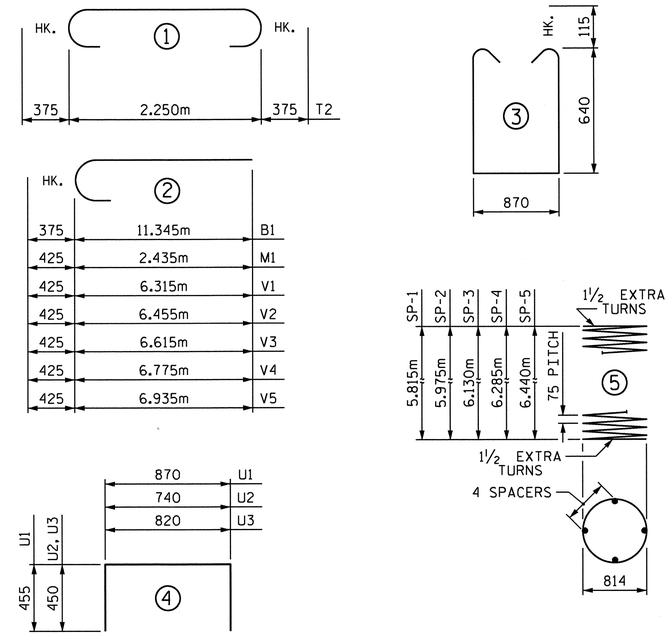

BILL OF MATERIAL
BENT No. 1

BAR	NO.	SIZE	TYPE	LENGTH	WEIGHT
B1	10	#29	1	11720	593
B2	10	#29	STR	10960	555
B3	8	#16	STR	10460	130
B4	5	#13	STR	3120	16
B5	15	#13	STR	2260	34
B6	5	#13	STR	1640	8
M1	80	#32	2	2860	1465
S1	86	#13	3	2380	203
T1	80	#19	STR	2300	411
T2	90	#29	1	3000	1366
U1	44	#13	4	1780	78
U2	6	#13	4	1640	10
U3	6	#13	4	1720	10
V1	16	#32	2	6740	691
V2	16	#32	2	6880	705
V3	16	#32	2	7040	721
V4	16	#32	2	7200	738
V5	16	#32	2	7360	754
REINFORCING STEEL				=	8488 KG

* SP-1	1	*	5	203920	203
* SP-2	1	*	5	208960	208
* SP-3	1	*	5	214000	213
* SP-4	1	*	5	219040	218
* SP-5	1	*	5	224080	223
SPIRAL COLUMN REINFORCING STEEL				=	1065 KG

* THE "SP" SPIRAL REINFORCING STEEL SHALL BE W20 OR D-20 COLD DRAWN WIRE OR #13 PLAIN OR DEFORMED BAR

CLASS A CONCRETE BREAKDOWN		
POUR #1 (FOOTING)	=	24.2 C.M.
POUR #2 (COLUMN)	=	19.8 C.M.
POUR #3 (CAP)	=	16.6 C.M.
TOTAL CLASS A CONCRETE	=	60.6 C.M.

HP 310 x 79 STEEL PILES
No. 45 METERS 958.5
PILE REDRIVES 23 EA.

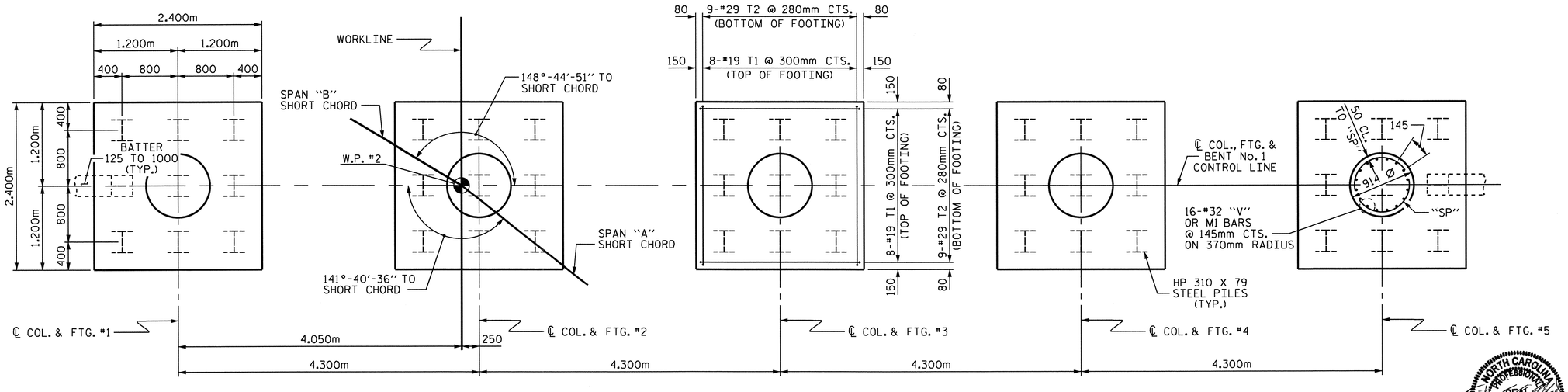

PLAN OF FOOTINGS

PROJECT NO. R-2554A
WAYNE COUNTY
STATION: 19+40.684 -L-

SHEET 2 OF 2

STATE OF NORTH CAROLINA
DEPARTMENT OF TRANSPORTATION
RALEIGH

SUBSTURUCTURE

BENT No. 1

NORTH CAROLINA PROFESSIONAL SEAL 029441 ENGINEER KRISTY W. ALFORD

REVISIONS						SHEET NO.
NO.	BY:	DATE:	NO.	BY:	DATE:	S-36
1			3			TOTAL SHEETS
2			4			276

DRAWN BY : M. K. TOM DATE : 7/25/11
CHECKED BY : A.V. ROYAL DATE : 8/1/11

12-MAR-2012 09:12
V:\Structures\Str#1\Sub_Draw\R2554A_SD_BT_STR1.dgn
kalford

STR #1

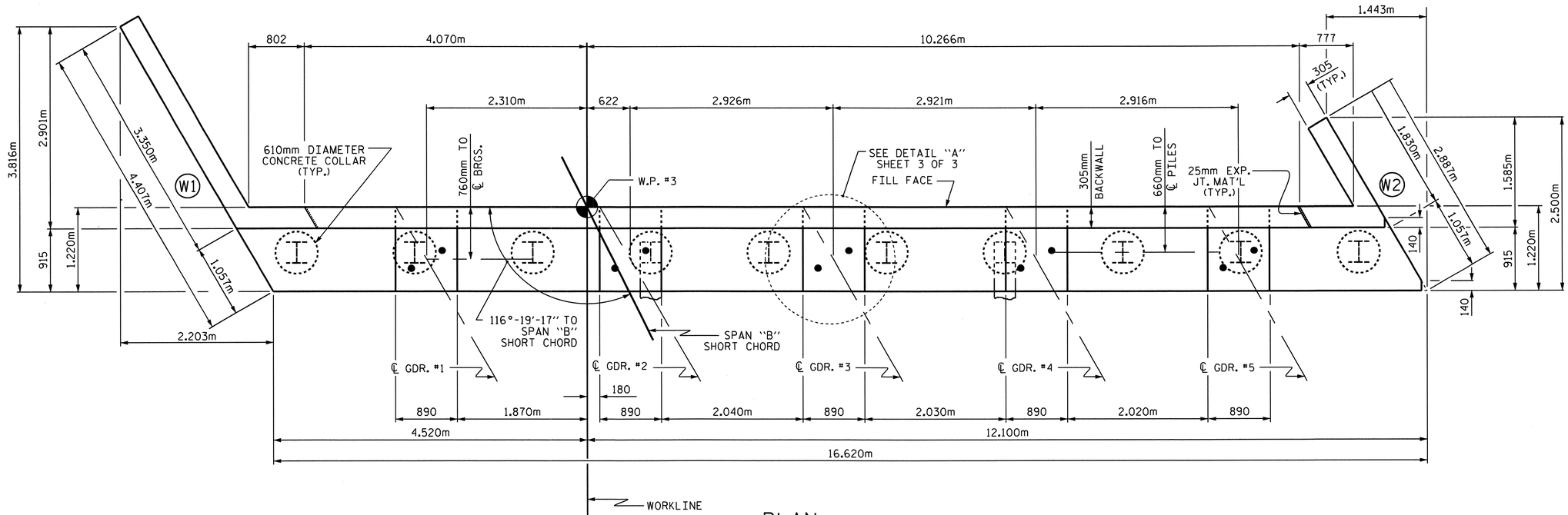

PLAN

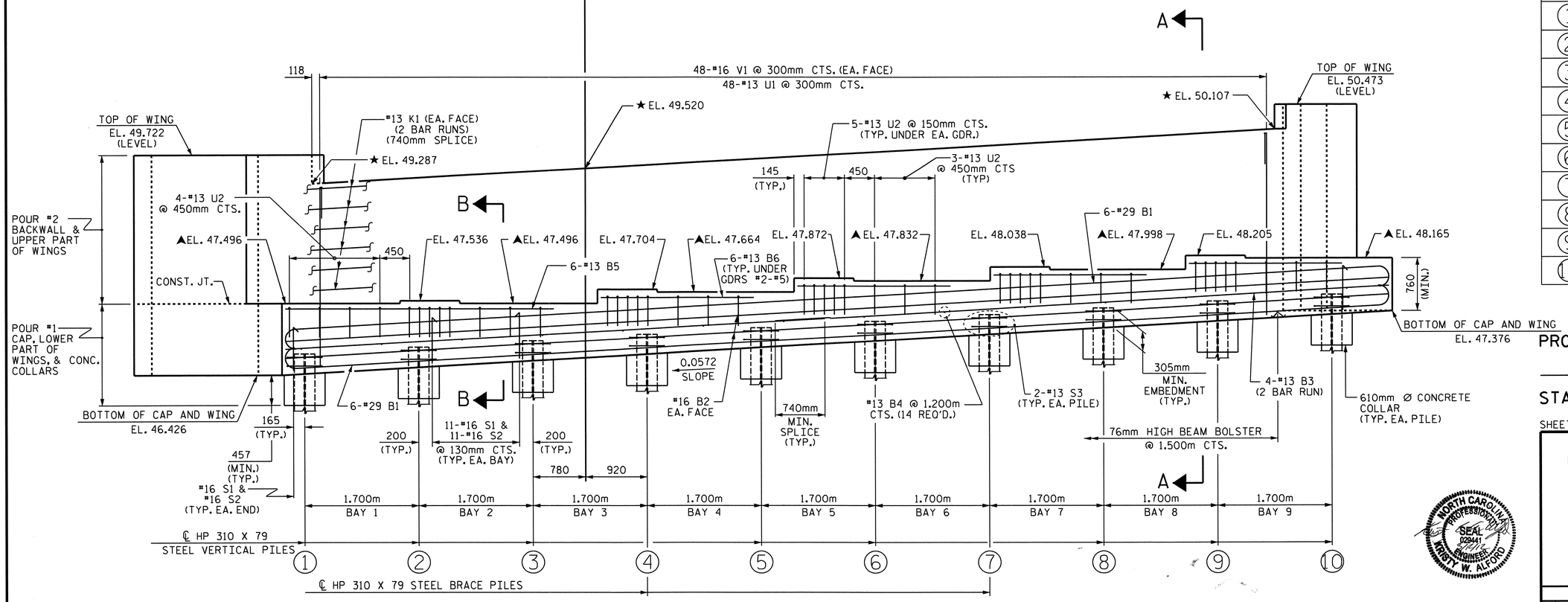

ELEVATION

NOTES:

STIRRUPS AND U2 BARS IN CAP MAY BE SHIFTED AS NECESSARY TO CLEAR ANCHOR BOLTS.

BACKWALL SHALL BE PLACED BEFORE APPLYING THE EPOXY PROTECTIVE COATING.

THE TOP SURFACE AREAS OF THE END BENT CAP SHALL BE CURED IN ACCORDANCE WITH THE STANDARD SPECIFICATIONS EXCEPT THE MEMBRANE CURING COMPOUND METHOD SHALL NOT BE USED.

THE TOP SURFACE OF THE CAP EXCEPT THE BRIDGE SEAT BUILDUPS SHALL BE SLOPED TRANSVERSELY FROM THE FILL FACE TO THE BACK FACE AT THE RATE OF 2%.

THE #16 V1 IN THE BACKWALL SHALL BE PLACED 50mm CLEAR FROM THE TOP OF THE BACKWALL.

FOR SECTIONS A-A AND B-B, SEE SHEET 3 OF 3.

EPOXY COAT THE END BENT CAP AFTER ADJUSTMENTS ARE MADE TO BEARINGS AND ANCHOR BOLTS ARE GROUTED.

▲FOR LOCATION OF ELEVATION BETWEEN BRIDGE SEATS, SEE "SECTION A-A", SHEET 3 OF 3.

★THIS ELEVATION TAKEN ON FILL FACE OF BACKWALL.

TOP OF PILE ELEVATIONS	
1	46.810
2	46.904
3	46.997
4	47.091
5	47.185
6	47.278
7	47.372
8	47.466
9	47.560
10	47.653

PROJECT NO. R-2554A
WAYNE COUNTY
STATION: 19+40.684 -L-

SHEET 1 OF 3

STATE OF NORTH CAROLINA
DEPARTMENT OF TRANSPORTATION
RALEIGH

SUBSTRUCTURE
END BENT No. 2

NORTH CAROLINA PROFESSIONAL SEAL 020441 ENGINEER KRISTY W. ALFORD

REVISIONS						
NO.	BY:	DATE:	NO.	BY:	DATE:	
1			3			
2			4			

SHEET NO. S-37
TOTAL SHEETS 276

DRAWN BY : M. L. BROWN DATE : 07/2011
CHECKED BY : N. PIERCE DATE : 08/2011

STR. #1

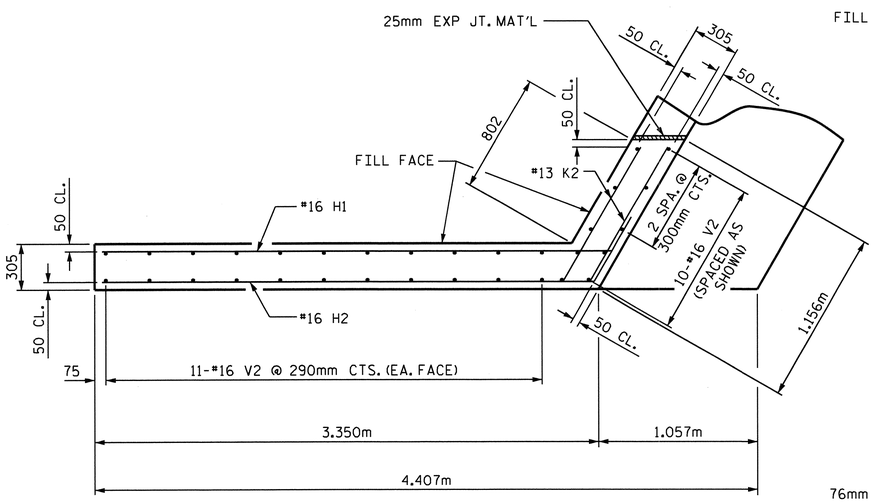

PLAN OF WING (W1)

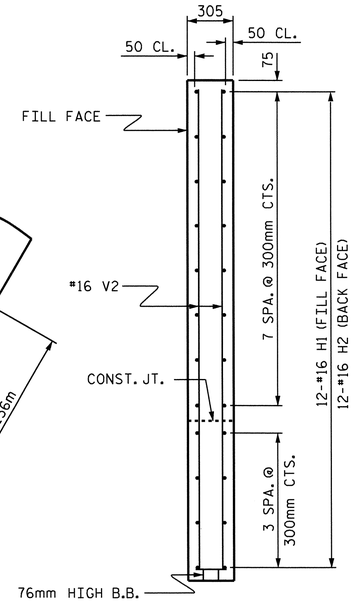

SECTION X-X

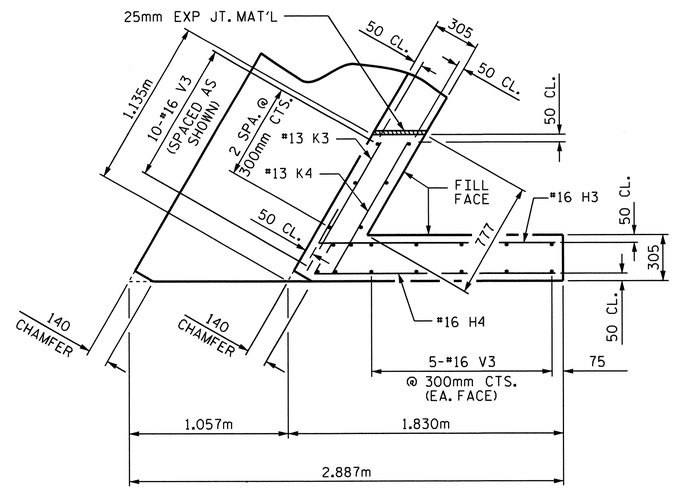

PLAN OF WING (W2)

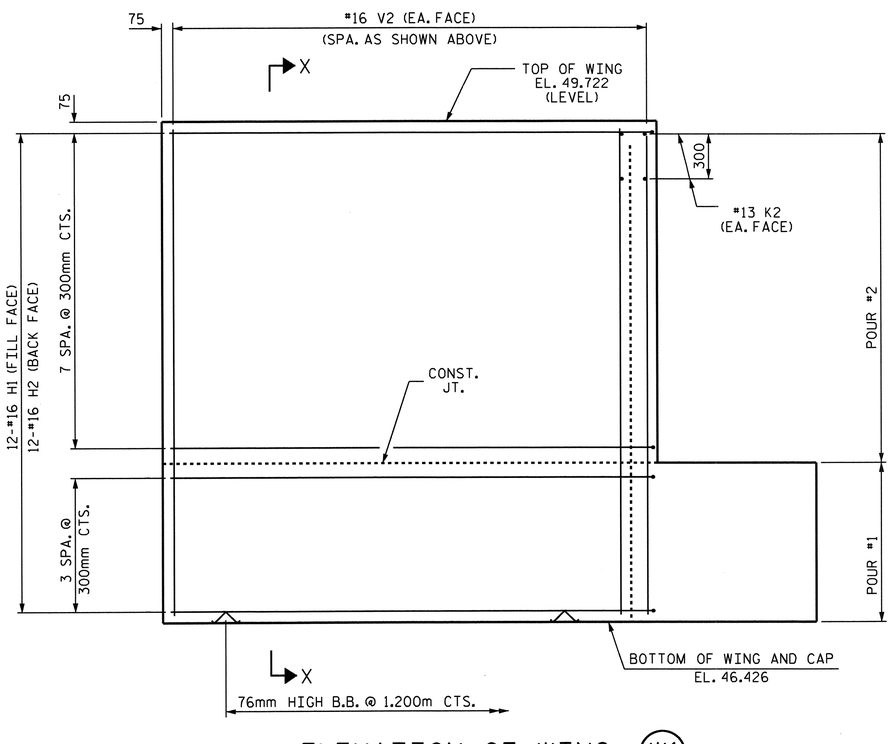

ELEVATION OF WING (W1)

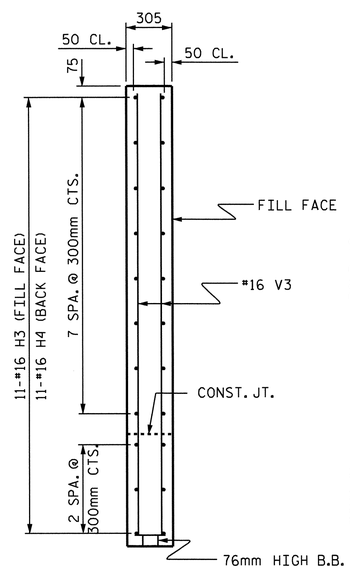

SECTION Y-Y

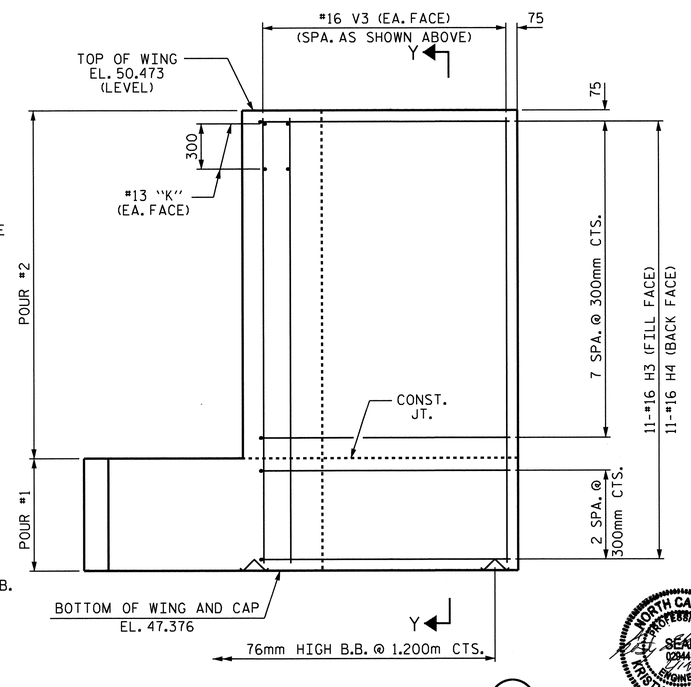

ELEVATION OF WING (W2)

PROJECT NO. R-2554A
WAYNE COUNTY
STATION: 19+40.684 -L-

SHEET 2 OF 3

STATE OF NORTH CAROLINA
DEPARTMENT OF TRANSPORTATION
RALEIGH

SUBSTRUCTURE

END BENT No. 2

REVISIONS						SHEET NO.
NO.	BY:	DATE:	NO.	BY:	DATE:	S-38
1			3			TOTAL SHEETS
2			4			276

DRAWN BY : M. L. BROWN DATE : 07/2011
CHECKED BY : N. PIERCE DATE : 08/2011

14-FEB-2012 07:26
V:\Structures\Str#1\Sub_Draw\R-2554A_sd_EB2_STR1.dgn
kalford

STR. #1

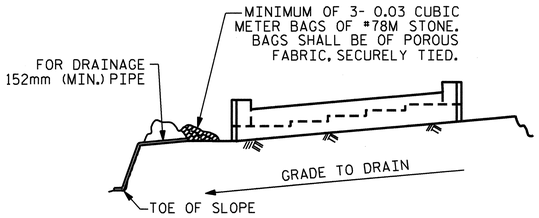

BAGGED STONE AND PIPE SHALL BE PLACED IMMEDIATELY AFTER COMPLETION OF END BENT EXCAVATION. PIPE MAY BE EITHER CONCRETE, CORRUGATED STEEL, CORRUGATED ALUMINUM ALLOY, OR CORRUGATED PLASTIC. PERFORATED PIPE WILL NOT BE ALLOWED.

BAGGED STONE SHALL REMAIN IN PLACE UNTIL THE ENGINEER DIRECTS THAT IT BE REMOVED. THE CONTRACTOR SHALL REMOVE AND DISPOSE OF SILT ACCUMULATIONS AT BAGGED STONE WHEN SO DIRECTED BY THE ENGINEER. BAGS SHALL BE REMOVED AND REPLACED WHENEVER THE ENGINEER DETERMINES THAT THEY HAVE DETERIORATED AND LOST THEIR EFFECTIVENESS.

NO SEPARATE PAYMENT WILL BE MADE FOR THIS WORK AND THE ENTIRE COST OF THIS WORK SHALL BE INCLUDED IN THE UNIT CONTRACT PRICE BID FOR THE SEVERAL PAY ITEMS.

TEMPORARY DRAINAGE AT END BENT

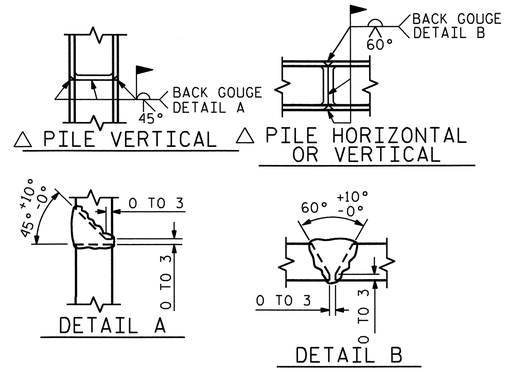

△ POSITION OF PILE DURING WELDING.

PILE SPLICE DETAILS

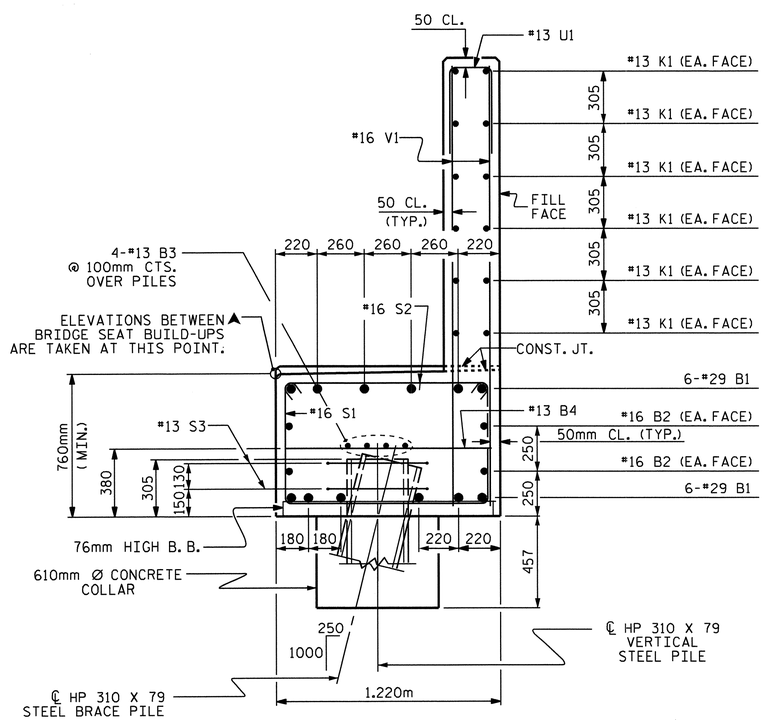

SECTION A-A

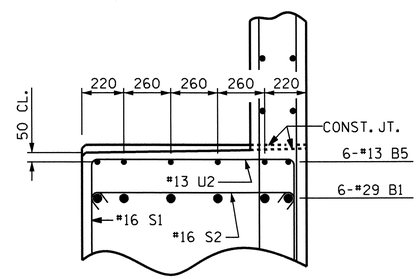

PARTIAL SECTION B-B

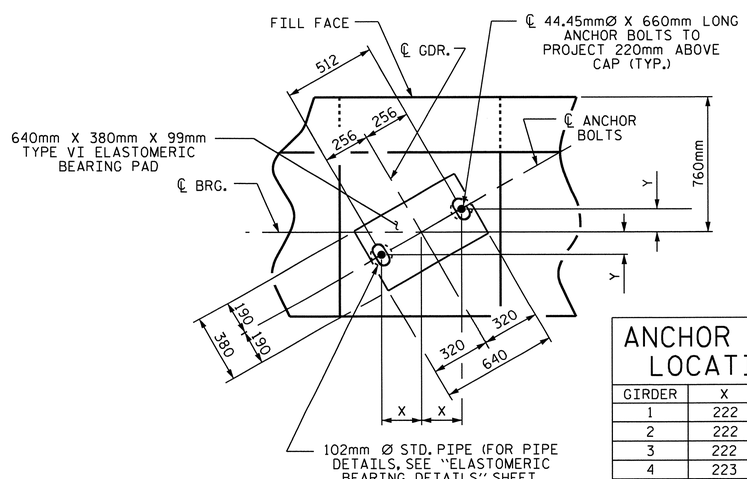

DETAIL "A"

ANCHOR BOLT LOCATION		
GIRDER	X	Y
1	222	128
2	222	128
3	222	127
4	223	126
5	224	125

BAR TYPES

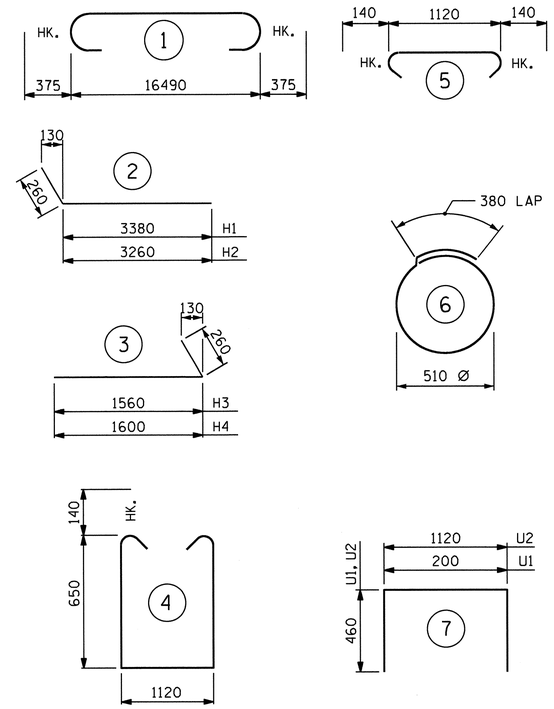

ALL BAR DIMENSIONS ARE OUT TO OUT.

BILL OF MATERIAL
END BENT No. 2

BAR	NUMBER	SIZE	TYPE	LENGTH	WEIGHT
B1	12	#29	1	17240	1047
B2	4	#16	STR	16480	102
B3	8	#13	STR	8640	69
B4	14	#13	STR	1120	16
B5	6	#13	STR	4000	24
B6	24	#13	STR	2280	54
H1	12	#16	2	3640	68
H2	12	#16	2	3520	66
H3	11	#16	3	1820	31
H4	11	#16	3	1860	32
K1	24	#13	STR	8640	206
K2	4	#13	STR	1020	4
K3	2	#13	STR	1000	2
K4	2	#13	STR	1040	2
S1	101	#16	4	2700	423
S2	101	#16	5	1400	219
S3	20	#13	6	1980	39
U1	48	#13	7	1120	53
U2	44	#13	7	2040	89
V1	96	#16	STR	2640	393
V2	32	#16	STR	3160	157
V3	20	#16	STR	2980	92

REINFORCING STEEL 3188 kg

CLASS A CONCRETE BREAKDOWN

POUR #1 - CAP & LOWER WINGS 20.6 m^3

POUR #2 - BACKWALL & UPPER PART OF WINGS 13.7 m^3

TOTAL CLASS A CONCRETE 34.3 m^3

HP 310 X 79 STEEL PILES
NO. = 10 274 METERS
PILE REDRIVES 5 EA.

PROJECT NO. R-2554A
WAYNE COUNTY
STATION: 19+40.684 -L-

SHEET 3 OF 3

STATE OF NORTH CAROLINA
DEPARTMENT OF TRANSPORTATION
RALEIGH

SUBSTRUCTURE
END BENT No. 2

NORTH CAROLINA PROFESSIONAL SEAL 029441 ENGINEER KRISTY W. ALFORD

REVISIONS						SHEET NO.
NO.	BY:	DATE:	NO.	BY:	DATE:	S-39
1			3			TOTAL SHEETS
2			4			276

DRAWN BY : M. L. BROWN DATE : 08/2011
CHECKED BY : N. PIERCE DATE : 08/2011

14-FEB-2012 07:26
V:\Structures\Str#1\Sub_Draw\R-2554A_sd_EB2_STR1.dgn
kalford

STR. #1

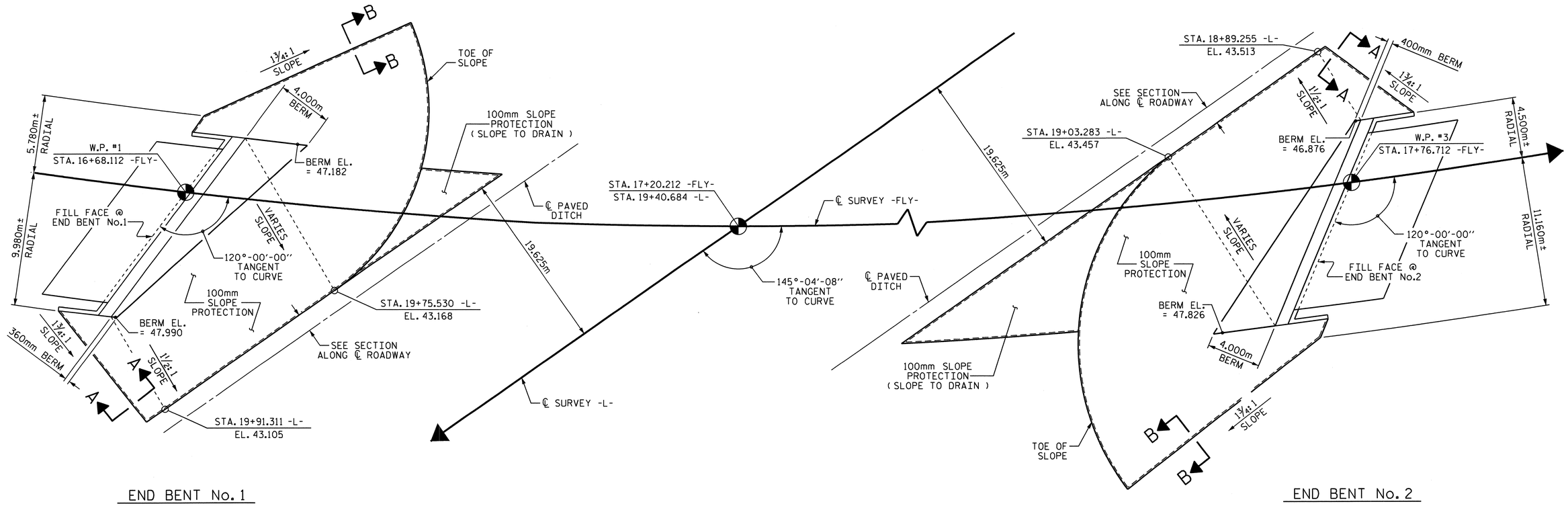

END BENT No. 1

PLAN

END BENT No. 2

GENERAL NOTES

SLOPE PROTECTION SHALL BE PLACED UNDER THE ENDS OF THE BRIDGE AS SHOWN IN THE DETAILS. MEASUREMENT AND PAYMENT SHALL BE AS PRESCRIBED IN SECTION 462 OF THE STANDARD SPECIFICATIONS.

SLOPE PROTECTION SHALL CONSIST OF 100mm POURED-IN-PLACE CONCRETE PAVING AS SHOWN IN THE DETAILS ON THIS SHEET. CONCRETE SHALL BE CLASS "B". THE CONCRETE SURFACE SHALL BE FLOATED WITH A WOODEN FLOAT AND FINISHED. WELDED WIRE FABRIC REINFORCING SHALL BE 152 X 152 - W9.1 X W9.1, 1520mm WIDE. SLOPE PROTECTION SHALL BE POURED IN 1520mm STRIPS AS SHOWN IN THE "POURING DETAIL" WITH 600mm LONG #13 BARS PLACED ALONG THE SLOPE BETWEEN STRIPS AT 450mm MAXIMUM SPACING. SLOPE PROTECTION MAY BE POURED IN ALTERNATE 1220mm AND 1520mm STRIPS AS SHOWN IN THE "OPTIONAL POURING DETAIL" WITH ADJACENT RUNS OF WELDED WIRE FABRIC LAPPING AT LEAST 152mm. THE COST OF THE WELDED WIRE FABRIC AND #13 BARS, IF USED, SHALL BE INCLUDED IN THE CONTRACT UNIT PRICE BID PER SQUARE METER FOR SLOPE PROTECTION.

ESTIMATED QUANTITIES

BRIDGE @ STA. 19+40.684 -L-	100mm SLOPE PROTECTION	* WELDED WIRE FABRIC 1520mm WIDE
	SQUARE METERS	APPROX. METERS
END BENT No. 1	537	353
END BENT No. 2	634	418

* QUANTITY SHOWN IS BASED ON 1.520m POURS.

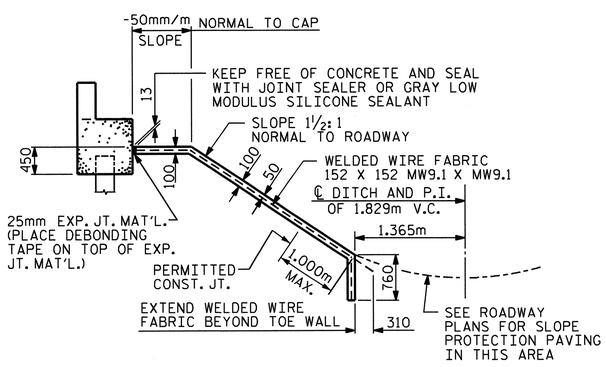

SECTION ALONG ℄ ROADWAY WHEN FILL CATCHES IN DITCH

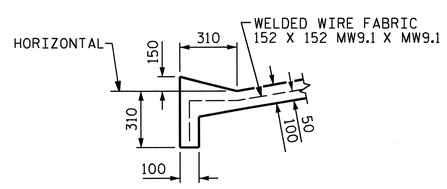

SECTION A-A

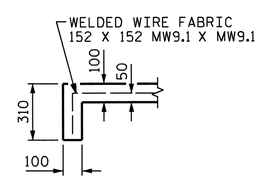

SECTION B-B

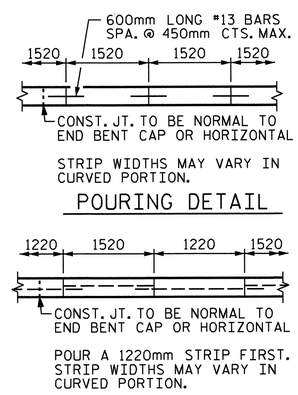

POURING DETAIL

OPTIONAL POURING DETAIL

DETAILS FOR SLOPE PROTECTION

PROJECT NO. R-2554A
WAYNE COUNTY
STATION: 19+40.684 -L-

STATE OF NORTH CAROLINA
DEPARTMENT OF TRANSPORTATION
RALEIGH

SLOPE PROTECTION DETAILS

NORTH CAROLINA PROFESSIONAL SEAL 029441 ENGINEER KRISTY W. ALFORD 9/12/12

REVISIONS						
NO.	BY:	DATE:	NO.	BY:	DATE:	
1			3			
2			4			

SHEET NO. S-40
TOTAL SHEETS 276

DRAWN BY : M. K. TOM DATE : 9/11
CHECKED BY : T. M. GARRISON DATE : 9/11

12-MAR-2012 09:13
V:\Structures\Str#1\Misc_draw\R-2554A_SD_SP.dgn
kalford

STR. #1

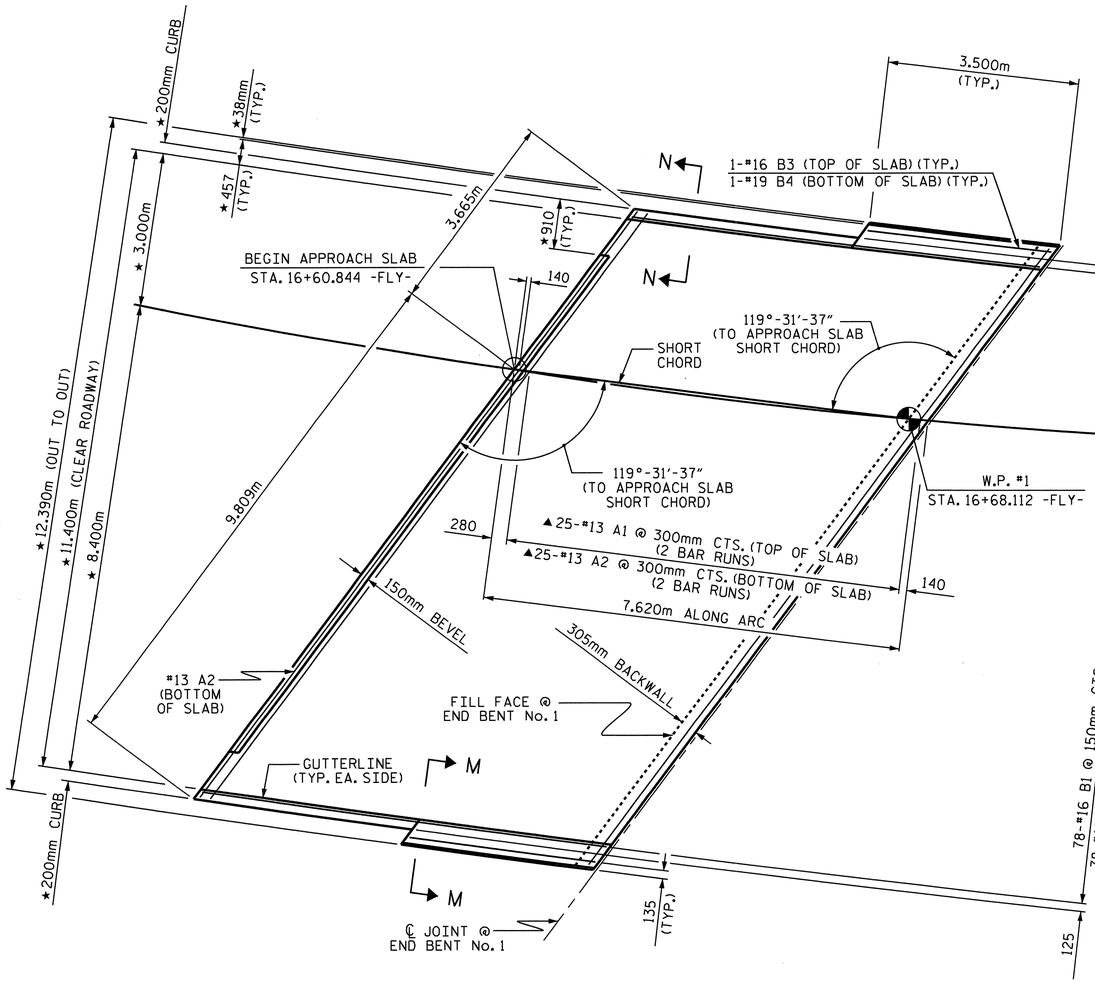

PLAN AT END BENT No. 1

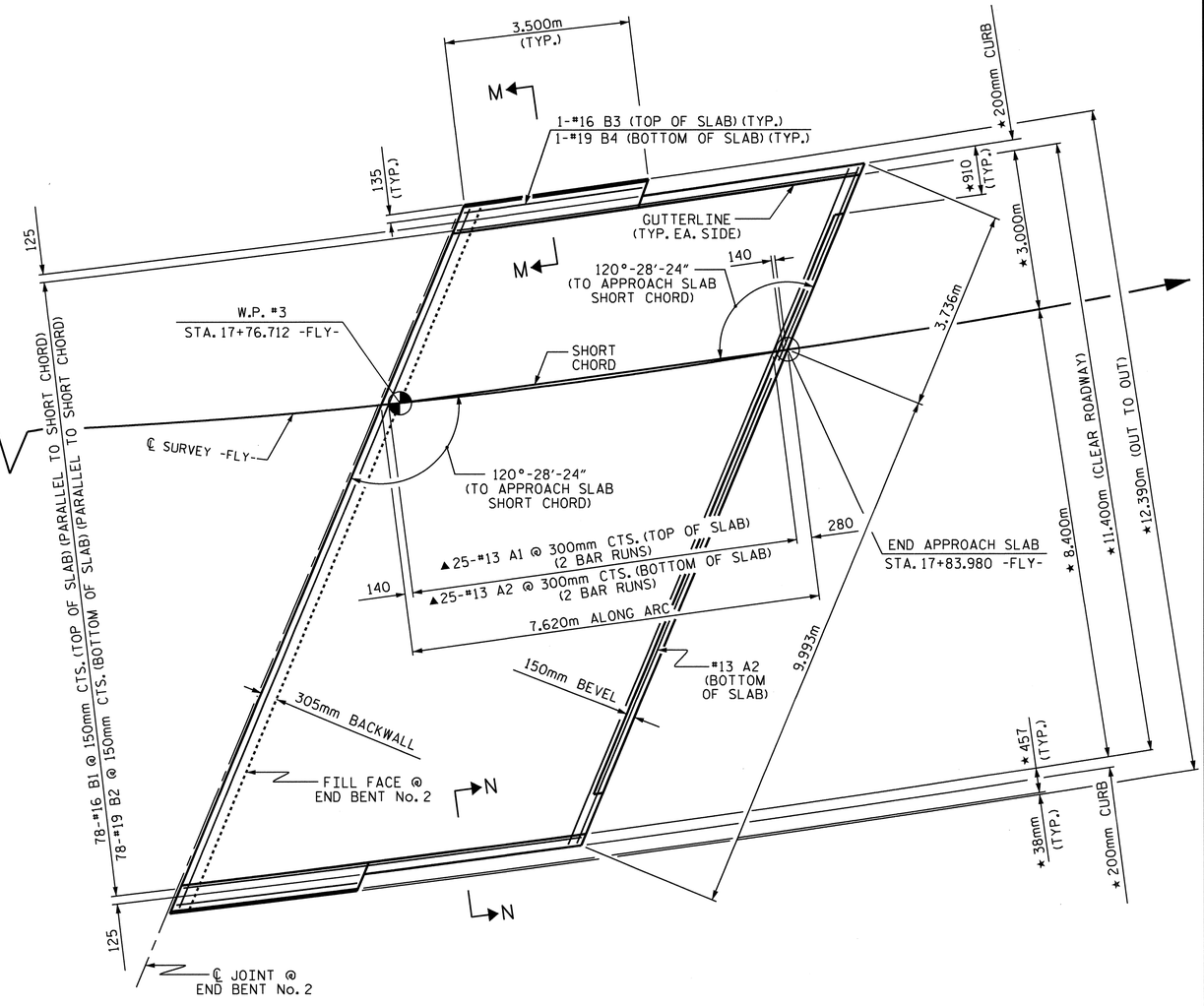

PLAN AT END BENT No. 2

NOTES:

★MEASURED RADIALLY

▲"A" BARS ARE SPACED ALONG APPROACH SLAB CHORD AND PLACED PARALLEL TO FILL FACE

FOR ARC OFFSETS, SEE SHEET 2 OF 3.

FOR SECTIONS M-M AND N-N, SEE SHEET 2 OF 3.

PLAN OF APPROACH SLABS

PROJECT NO. R-2554A

WAYNE COUNTY

STATION: 19+40.684 -L-

SHEET 1 OF 3

STATE OF NORTH CAROLINA
DEPARTMENT OF TRANSPORTATION
RALEIGH

BRIDGE APPROACH SLAB

NORTH CAROLINA PROFESSIONAL SEAL 029441 ENGINEER KRISTY W. ALFORD

REVISIONS						SHEET NO.
NO.	BY:	DATE:	NO.	BY:	DATE:	S-41
1			3			TOTAL SHEETS
2			4			276

DRAWN BY : M.L. BROWN DATE : 9-11
CHECKED BY : M.K. TOM DATE : 9-11

14-FEB-2012 07:25
V:\Structures\Str#1\Misc_draw\R-2554A_sd_AS.dgn
kalford

STR. #1

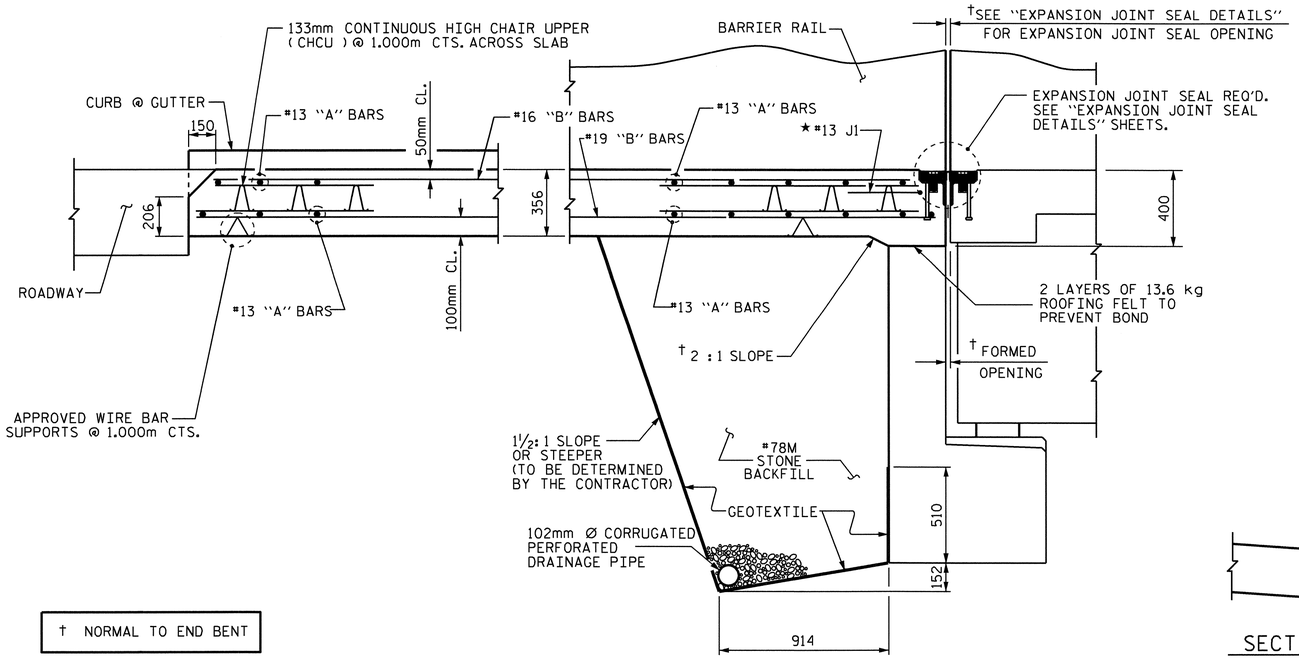

† NORMAL TO END BENT

SECTION THRU SLAB

SHOWING SECTION WITHOUT CONCRETE WEARING SURFACE

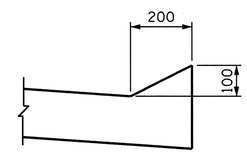

SECTION N-N

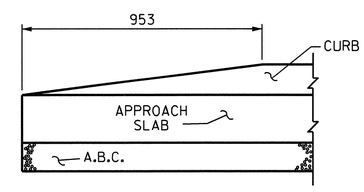

END OF CURB WITHOUT SHOULDER BERM GUTTER

CURB DETAILS

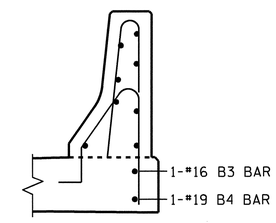

SECTION M-M

FOR REINFORCING STEEL LOCATION AND QUANTITIES AND BARRIER RAIL CONCRETE QUANTITIES, SEE "CONCRETE BARRIER RAIL" SHEET.

NOTES

APPROACH SLAB SHALL NOT BE CONSTRUCTED PRIOR TO COMPLETION OF THE BRIDGE DECK.

FOR BRIDGE APPROACH FILL INCLUDING GEOTEXTITLE, 102mm Ø DRAINAGE PIPE, AND #78M STONE, SEE ROADWAY PLANS.

AREA BETWEEN THE WINGWALL AND APPROACH SLAB SHALL BE GRADED TO DRAIN THE WATER AWAY FROM THE FILL FACE OF THE BRIDGE AND SHALL BE PAVED. SEE ROADWAY PLANS.

GEOTEXTILE SHALL BE TYPE 1 IN ACCORDANCE WITH THE STANDARD SPECIFICATIONS SECTION 1056.

#78M STONE BACKFILL (CLASS V SELECT BACKFILL) SHALL BE IN ACCORDANCE WITH STANDARD SPECIFICATIONS SECTION 1016.

#78M STONE BACKFILL IS TO BE CONTINUOUS ALONG THE FILL FACE OF BACKWALL FROM OUTSIDE EDGE OF APPROACH SLAB.

FOR THE 102mm Ø DRAINAGE PIPE OUTLET(S), SEE ROADWAY STANDARD DRAWINGS.

FOR EXPANSION JOINT SEALS, SEE SPECIAL PROVISIONS.

★ FOR PLACEMENT OF #13 J1 BARS, SEE "EXPANSION JOINT SEAL DETAILS" SHEET.

FOR BARRIER RAIL DETAILS AND QUANTITIES, SEE "CONCRETE BARRIER RAIL" SHEETS.

BILL OF MATERIAL

APPROACH SLAB AT EB #1

BAR	NO.	SIZE	TYPE	LENGTH	WEIGHT
✱ A1	50	#13	STR	7400	368
A2	52	#13	STR	7380	381
✱ B1	78	#16	STR	7220	874
B2	78	#19	STR	7520	1311
✱ B3	2	#16	STR	3340	10
B4	2	#19	STR	3400	15
✱ J1	47	#13	1	440	21
REINFORCING STEEL					1707 kg.
✱ EPOXY COATED REINFORCING STEEL					1273 kg.
CLASS AA CONCRETE					32.9 C.M.

APPROACH SLAB AT EB #2

BAR	NO.	SIZE	TYPE	LENGTH	WEIGHT
✱ A1	50	#13	STR	7400	368
A2	52	#13	STR	7380	381
✱ B1	78	#16	STR	7220	874
B2	78	#19	STR	7520	1311
✱ B3	2	#16	STR	3340	10
B4	2	#19	STR	3400	15
✱ J1	47	#13	1	440	21
REINFORCING STEEL					1707 kg.
✱ EPOXY COATED REINFORCING STEEL					1273 kg.
CLASS AA CONCRETE					32.9 C.M.

BAR TYPES

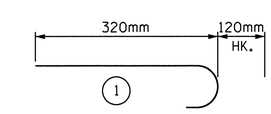

ALL BAR DIMENSIONS ARE OUT TO OUT

SPLICE LENGTH CHART		
SIZE	EPOXY COATED	UNCOATED
#13	610	540
#16	770	660
#19	1190	790

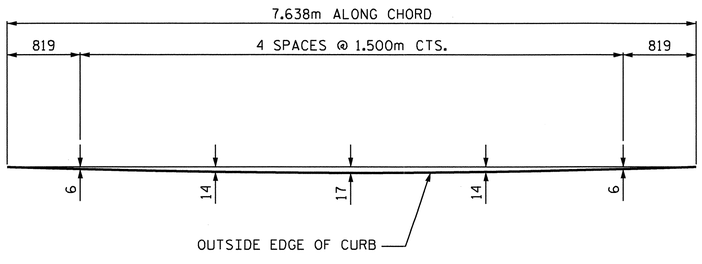

LEFT SIDE

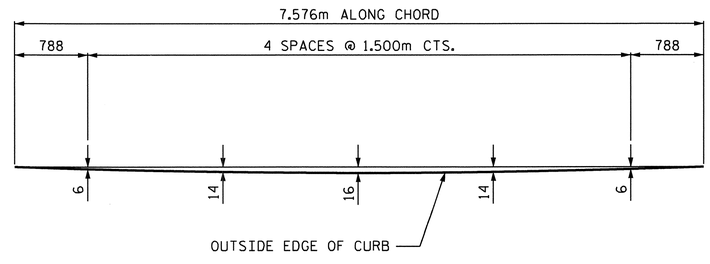

RIGHT SIDE

ARC OFFSETS

END BENT No. 1 SHOWN, END BENT No. 2 SIMILAR

PROJECT NO. R-2554A

WAYNE COUNTY

STATION: 19+40.684 -L-

SHEET 2 OF 3

STATE OF NORTH CAROLINA
DEPARTMENT OF TRANSPORTATION
RALEIGH

STANDARD

BRIDGE APPROACH SLAB FOR FLEXIBLE PAVEMENT

NORTH CAROLINA PROFESSIONAL SEAL 029441 ENGINEER KRISTY W. ALFORD

REVISIONS						SHEET NO.
NO.	BY:	DATE:	NO.	BY:	DATE:	S-42
1			3			TOTAL SHEETS
2			4			276

STR. #1

ASSEMBLED BY : M. L. BROWN		DATE : 9-11	
CHECKED BY : M. K. TOM		DATE : 9-11	
DRAWN BY : FCJ 6/87	REV. 7/10/01	RWW/LES	
CHECKED BY : EGA 6/87	REV. 5/7/03R	RWW/JTE	
	REV. 5/1/06R	KMM/GM	

14-FEB-2012 07:25
V:\Structures\Str#1\Misc_draw\R-2554A_sd_AS.dgn
kalford

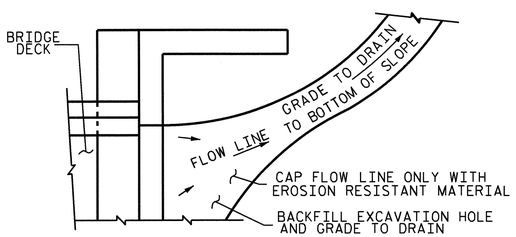

NOTE: IF THE APPROACH SLAB IS NOT CONSTRUCTED IMMEDIATELY AFTER THE BACKFILLING OF THE END BENT EXCAVATION, GRADE TO DRAIN TO THE BOTTOM OF THE SLOPE AND PROVIDE EROSION RESISTANT MATERIAL, SUCH AS FIBERGLASS ROVING OR AS DIRECTED BY THE ENGINEER TO PREVENT SOIL EROSION AND TO PROTECT THE AREA ADJACENT TO THE STRUCTURE. THE CONTRACTOR WILL BE REQUIRED TO REMOVE THESE MATERIALS PRIOR TO CONSTRUCTION OF THE APPROACH SLAB.

TEMPORARY DRAINAGE DETAIL

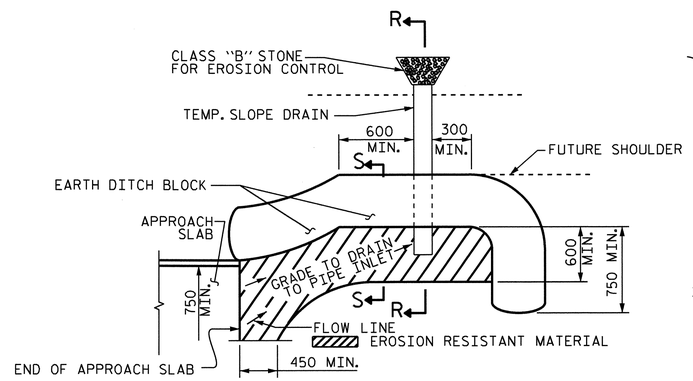

NOTE: IMMEDIATELY AFTER THE CONSTRUCTION OF THE APPROACH SLAB, THE CONTRACTOR SHALL PROVIDE TEMPORARY BERM AND SLOPE DRAIN. CONTRACTOR SHALL GRADE TO PIPE INLET AND PROVIDE EROSION RESISTANT MATERIAL AS SHOWN. THE EROSION RESISTANT MATERIAL SHALL BE EITHER 1) ASPHALT PLANT MIX, TYPE 1 OR TYPE 2, MIN. 50mm DEPTH, 2) EROSION CONTROL MAT, OR 3) CONCRETE, AS DIRECTED BY THE ENGINEER. THE SLOPE DRAIN SHALL CONSIST OF A NON-PERFORATED TEMPORARY DRAINAGE PIPE, 305mm IN DIAMETER.

PLAN VIEW

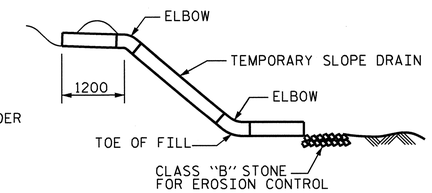

SECTION R-R

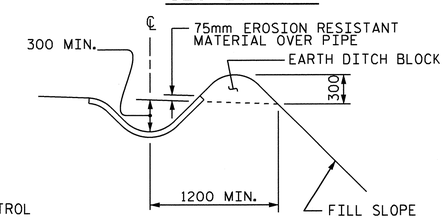

SECTION S-S

TEMPORARY BERM AND SLOPE DRAIN DETAILS

(TO BE USED WHEN SHOULDER BERM GUTTER IS REQUIRED)

PROJECT NO. R-2554A
WAYNE COUNTY
STATION: 19+40.684 -L-

SHEET 3 OF 3

STATE OF NORTH CAROLINA
DEPARTMENT OF TRANSPORTATION
RALEIGH

STANDARD
BRIDGE APPROACH
SLAB DETAILS

NORTH CAROLINA PROFESSIONAL SEAL 029441 ENGINEER KRISTY W. ALFORD

REVISIONS						SHEET NO.
NO.	BY:	DATE:	NO.	BY:	DATE:	S-43
1			3			TOTAL SHEETS
2			4			276

ASSEMBLED BY : M. L. BROWN	DATE : 9-11
CHECKED BY : M. K. TOM	DATE : 9-11
DRAWN BY : FCJ 11/88	REV. 10/17/00 RWW/LES
CHECKED BY : ARB 11/88	REV. 5/7/03 RWW/JTE
	REV. 5/1/06R MAA/KMM

12-MAR-2012 09:13
V:\Structures\Str#1\Misc_draw\R-2554A_sd_AS.dgn
kalford

STR. #1

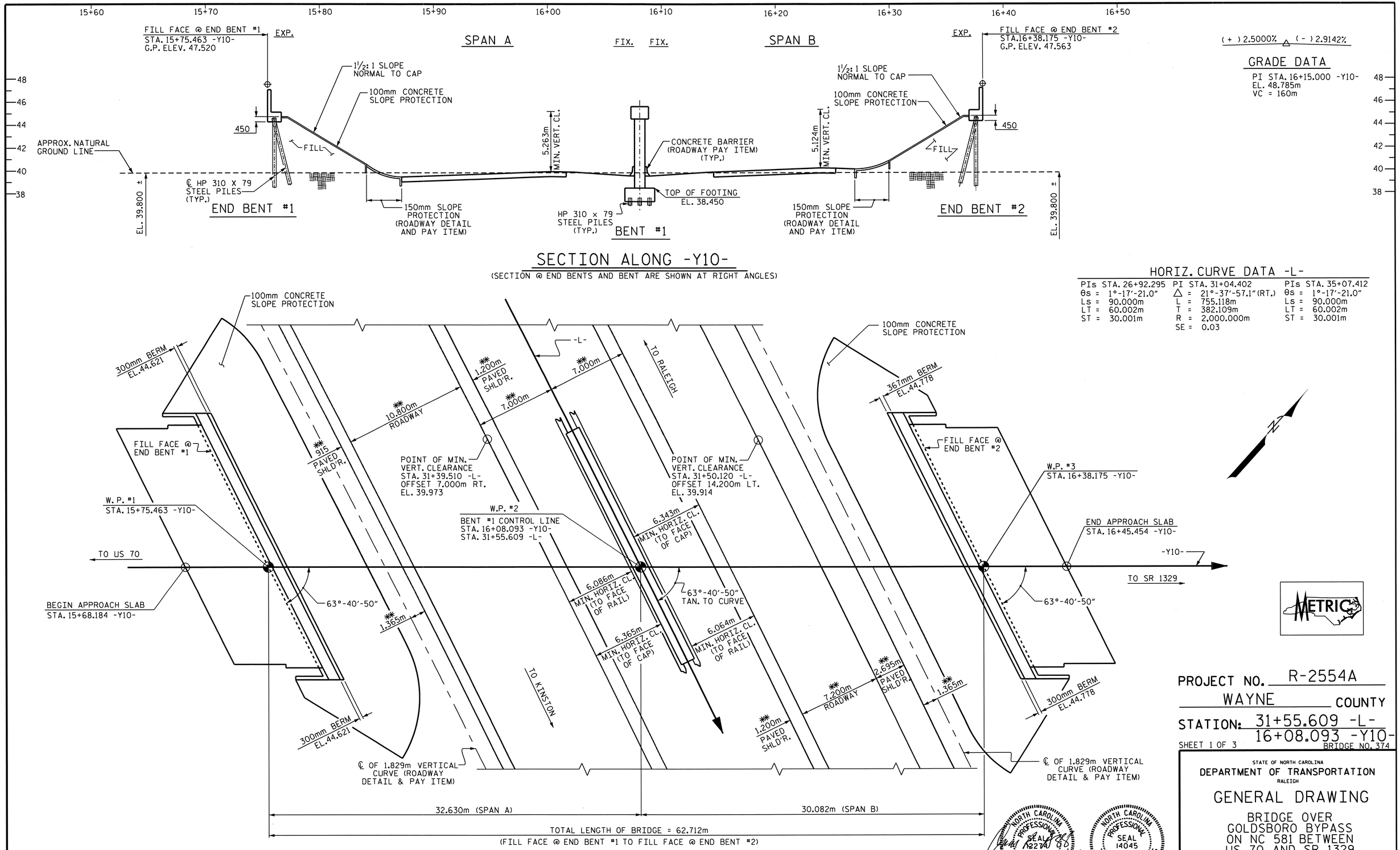

PROJECT NO. R-2554A

WAYNE COUNTY

STATION: 31+55.609 -L-
16+08.093 -Y10-

SHEET 1 OF 3

BRIDGE NO. 374

STATE OF NORTH CAROLINA
DEPARTMENT OF TRANSPORTATION
RALEIGH

GENERAL DRAWING

BRIDGE OVER GOLDSBORO BYPASS ON NC 581 BETWEEN US 70 AND SR 1329

REVISIONS							
NO.	BY:	DATE:	NO.	BY:	DATE:	SHEET NO.	S-44
1			3			TOTAL SHEETS	276
2			4				

STR.#2

DRAWN BY : M.D. PISO/TLA DATE : 01-31-12
CHECKED BY : E. MURRAY DATE : 2-6-12

22-MAR-2012 13:13
Z:\TIPProjects-R\R2554A\Structures\FinalPlans\Str#2\r2554a_sd_gd_02.dgn
emurray

FOUNDATION NOTES

FOR PILES, SEE SPECIAL PROVISIONS.

DRIVE PILES AT END BENT NO. 1 AND END BENT NO. 2 TO A REQUIRED BEARING CAPACITY OF 1240 KN PER PILE. THE REQUIRED BEARING CAPACITY IS EQUAL TO THE ALLOWABLE BEARING CAPACITY WITH A MINIMUM FACTOR OF SAFETY OF TWO.

THE ALLOWABLE BEARING CAPACITY FOR PILES AT END BENT NO. 1 AND END BENT NO. 2 IS 620 KN PER PILE.

DRIVE PILES AT BENT NO. 1 TO A REQUIRED BEARING CAPACITY OF 1340 KN PER PILE. THE REQUIRED BEARING CAPACITY IS EQUAL TO THE ALLOWABLE BEARING CAPACITY WITH A MINIMUM FACTOR OF SAFETY OF TWO.

THE ALLOWABLE BEARING CAPACITY FOR PILES AT BENT NO. 1 IS 670 KN PER PILE.

TESTING PILES WITH THE PILE DRIVING ANALYZER (PDA) DURING DRIVING, RESTRIKING OR REDRIVING MAY BE REQUIRED. THE ENGINEER WILL DETERMINE THE NEED FOR PDA TESTING. FOR PILE DRIVING ANALYZER, SEE SPECIAL PROVISIONS.

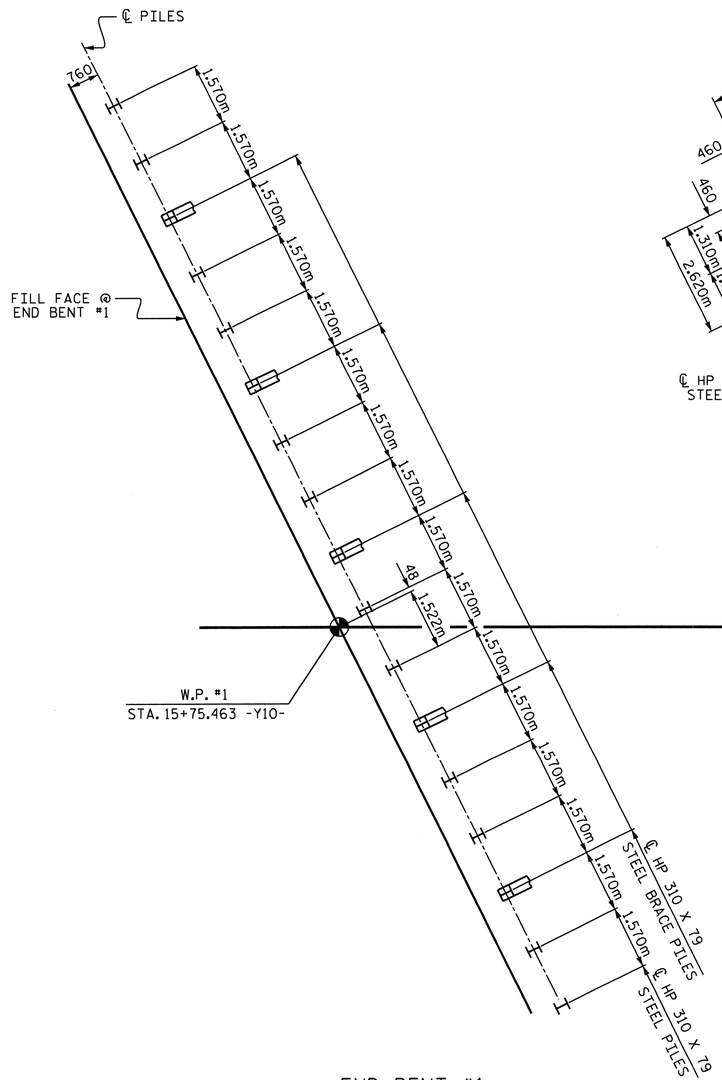

END BENT #1

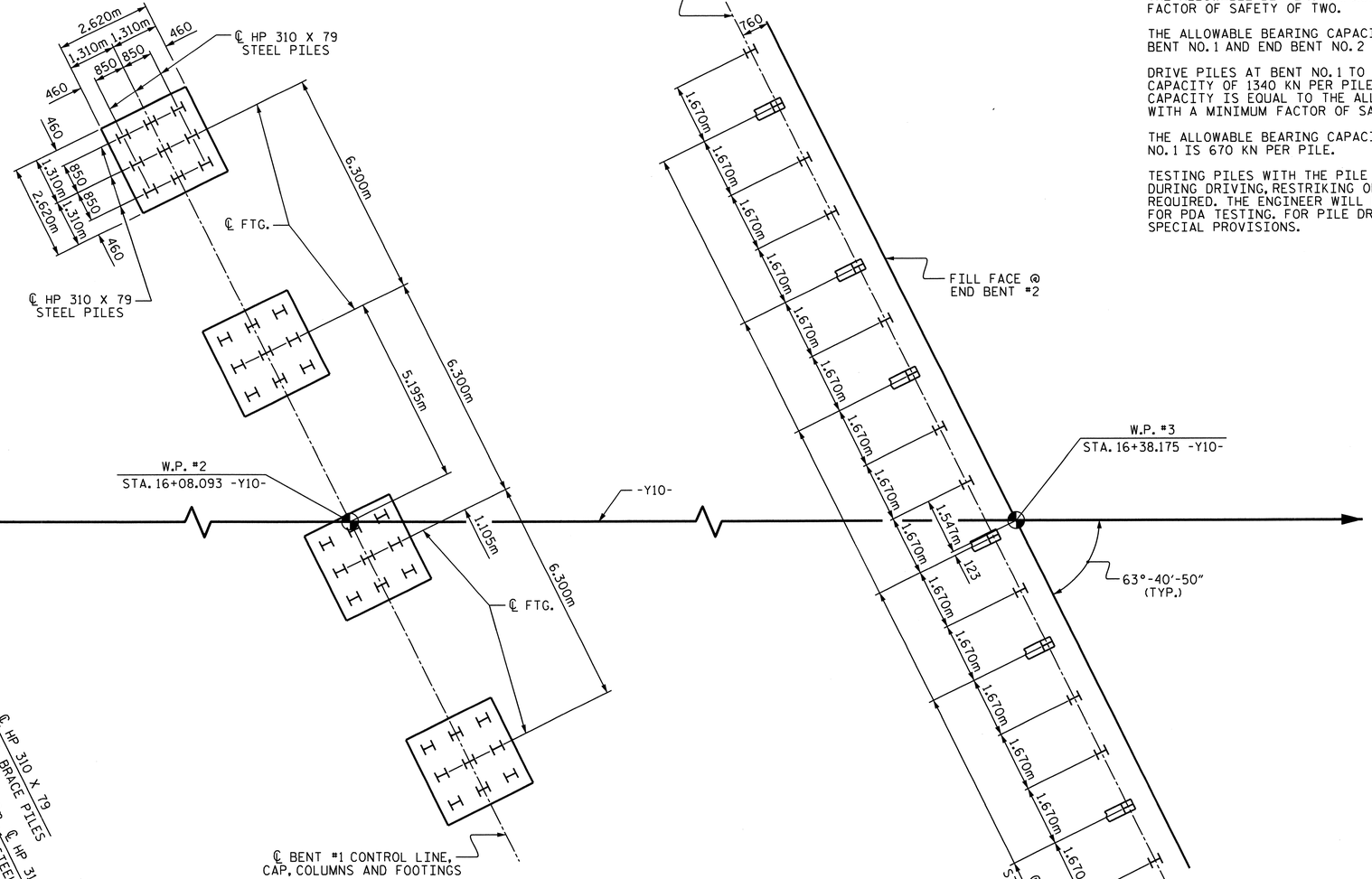

BENT #1

END BENT #2

FOUNDATION LAYOUT

DIMENSIONS LOCATING PILES ARE TO THE PILE CENTERLINE.
BRACE PILES AT END BENTS ARE TO BE BATTERED @ 250 : 1000.
DIMENSIONS, PILE TYPE AND PILE LOCATION ARE TYPICAL FOR EACH BENT FOOTING.

PROJECT NO. R-2554A
WAYNE COUNTY
STATION: 31+55.609 -L-
16+08.093 -Y10-

SHEET 2 OF 3

STATE OF NORTH CAROLINA
DEPARTMENT OF TRANSPORTATION
RALEIGH

GENERAL DRAWING

BRIDGE OVER
GOLDSBORO BYPASS
ON NC 581 BETWEEN
US 70 AND SR 1329

NORTH CAROLINA PROFESSIONAL SEAL 14045 ENGINEER TIMOTHY W. COBGINS
03/26/12

REVISIONS						SHEET NO.
NO.	BY:	DATE:	NO.	BY:	DATE:	S-45
1			3			TOTAL SHEETS
2			4			276

DRAWN BY : T.L. AVERETTE DATE : 01-31-12
CHECKED BY : E. MURRAY DATE : 2-6-12

22-MAR-2012 09:43
R:\TIPProjects-R\R2554A\Structures\FinalPlans\Str#2\r2554a_sd_gd_02.dgn
taverette

STR.#2

BM - (TBM-J): -Y10- STA. 10+37.426 (6.721m RIGHT) EL. 41.499

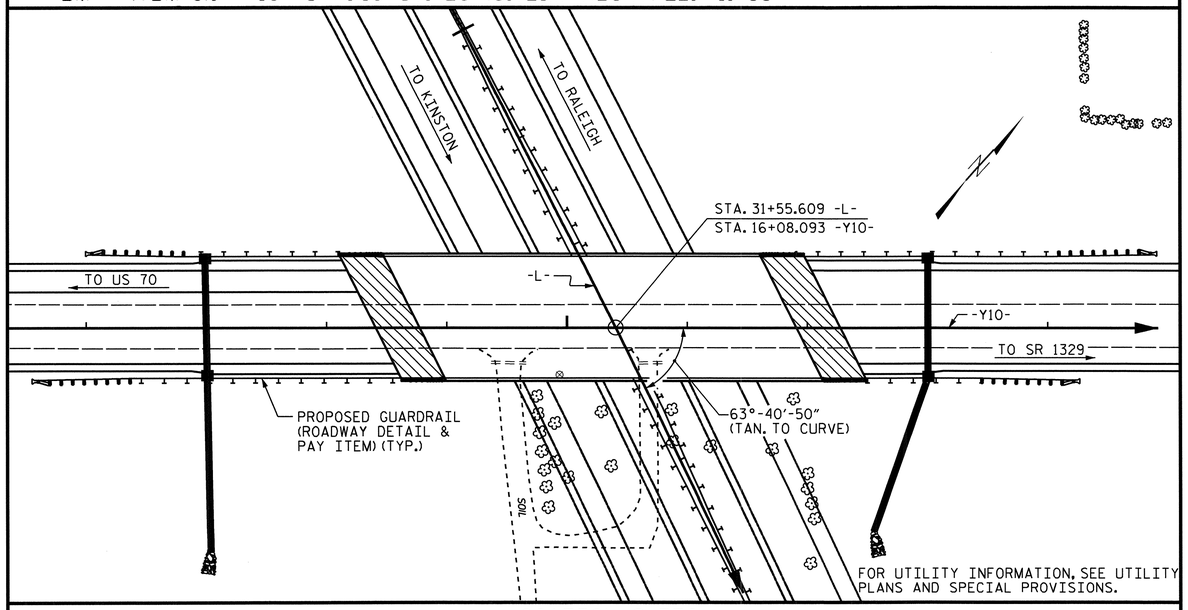

LOCATION SKETCH

NOTES

ALL DIMENSIONS ARE IN MILLIMETERS UNLESS OTHERWISE NOTED.

ALL ELEVATIONS ARE IN METERS.

ASSUMED LIVE LOAD = MS 18 OR ALTERNATE LOADING, EXCEPT THAT THE GIRDERS HAVE BEEN DESIGNED FOR MS 22.5.

FOR OTHER DESIGN DATA AND GENERAL NOTES, SEE SHEET SNSM.

THIS BRIDGE HAS BEEN DESIGNED BY THE STRENGTH DESIGN METHOD AS SPECIFIED IN AASHTO STANDARD SPECIFICATIONS.

PRESTRESSED CONCRETE DECK PANELS MAY BE USED IN LIEU OF METAL STAY-IN-PLACE FORMS IN ACCORDANCE WITH ARTICLE 420-3 OF THE STANDARD SPECIFICATIONS.

THE SKEWED END CONDITIONS ARE SUCH THAT THE USE OF 1.22m WIDE PRESTRESSED CONCRETE DECK PANELS IS NOT POSSIBLE; USE OF 2.44m WIDE PRESTRESSED CONCRETE DECK PANELS IS NECESSARY.

REMOVABLE FORMS MAY BE USED IN LIEU OF METAL STAY-IN-PLACE FORMS IN ACCORDANCE WITH ARTICLE 420-3 OF THE STANDARD SPECIFICATIONS.

NEEDLE BEAMS WILL NOT BE ALLOWED UNLESS OTHERWISE CALLED FOR ON THE PLANS OR APPROVED BY THE ENGINEER.

FOR SUBMITTAL OF WORKING DRAWINGS, SEE SPECIAL PROVISIONS.

FOR FALSEWORK AND FORMWORK, SEE SPECIAL PROVISIONS.

FOR CRANE SAFETY, SEE SPECIAL PROVISIONS.

FOR GROUT FOR STRUCTURES, SEE SPECIAL PROVISIONS.

FOR CURING CONCRETE, SEE SPECIAL PROVISIONS.

FOR PLACING LOAD ON STRUCTURE MEMBERS, SEE SPECIAL PROVISIONS.

FOR MAINTENANCE OF TRAFFIC, SEE TRAFFIC CONTROL PLANS.

FOR EROSION CONTROL MEASURES, SEE EROSION CONTROL PLANS.

FOR PRESTRESSED CONCRETE MEMBERS, SEE SPECIAL PROVISIONS.

FOR METRIC STRUCTURAL STEEL, SEE SPECIAL PROVISIONS.

TOTAL BILL OF MATERIAL

	FOUNDATION EXCAVATION FOR BENT	PDA TESTING	PDA ASSISTANCE	REINFORCED CONCRETE DECK SLAB	GROOVING BRIDGE FLOORS	CLASS A CONCRETE	BRIDGE APPROACH SLABS	REINFORCING STEEL	SPIRAL COLUMN REINFORCING STEEL	MODIFIED 1829mm PRESTRESSED CONCRETE GIRDERS		HP 310 X 79 STEEL PILES		PILE REDRIVES	CONCRETE BARRIER RAIL	100mm SLOPE PROTECTION	ELASTOMERIC BEARINGS	EXPANSION JOINT SEALS
	LUMP SUM	EACH	EACH	SQ. METERS	SQ. METERS	CU. METERS	LUMP SUM	kg	kg	NO.	METERS	NO.	METERS	EACH	METERS	SQ. METERS	LUMP SUM	LUMP SUM
SUPERSTRUCTURE				1326.0	1494.8		LUMP SUM			16	487.760				136.434		LUMP SUM	LUMP SUM
END BENT #1						51.9		4,285				17	408.0	8		381		
BENT #1	LUMP SUM					96.6		7,993	729			36	504.0	8				
END BENT #2						48.7		3,968				16	384.0	8		357		
TOTAL	LUMP SUM	1	1	1326.0	1494.8	197.2	LUMP SUM	16,246	729	16	487.760	69	1296.0	24	136.434	738	LUMP SUM	LUMP SUM

PROJECT NO. R-2554A

WAYNE COUNTY

STATION: 31+55.609 -L-
16+08.093 -Y10-

SHEET 3 OF 3

STATE OF NORTH CAROLINA
DEPARTMENT OF TRANSPORTATION
RALEIGH

GENERAL DRAWING

BRIDGE OVER
GOLDSBORO BYPASS
ON NC 581 BETWEEN
US 70 AND SR 1329

NORTH CAROLINA PROFESSIONAL SEAL 14045 ENGINEER TIMOTHY A. COGGINS
03/26/12

REVISIONS							SHEET NO.
NO.	BY:	DATE:	NO.	BY:	DATE:		S-46
1			3				TOTAL SHEETS
2			4				276

DRAWN BY : T.L. AVERETTE DATE : 02-01-12
CHECKED BY : E. MURRAY DATE : 2-6-12

22-MAR-2012 09:44
R:\TIPProjects-R\R2554A\Structures\FinalPlans\Str#2\r2554a_sd_gd_02.dgn
taverette

STR.#2

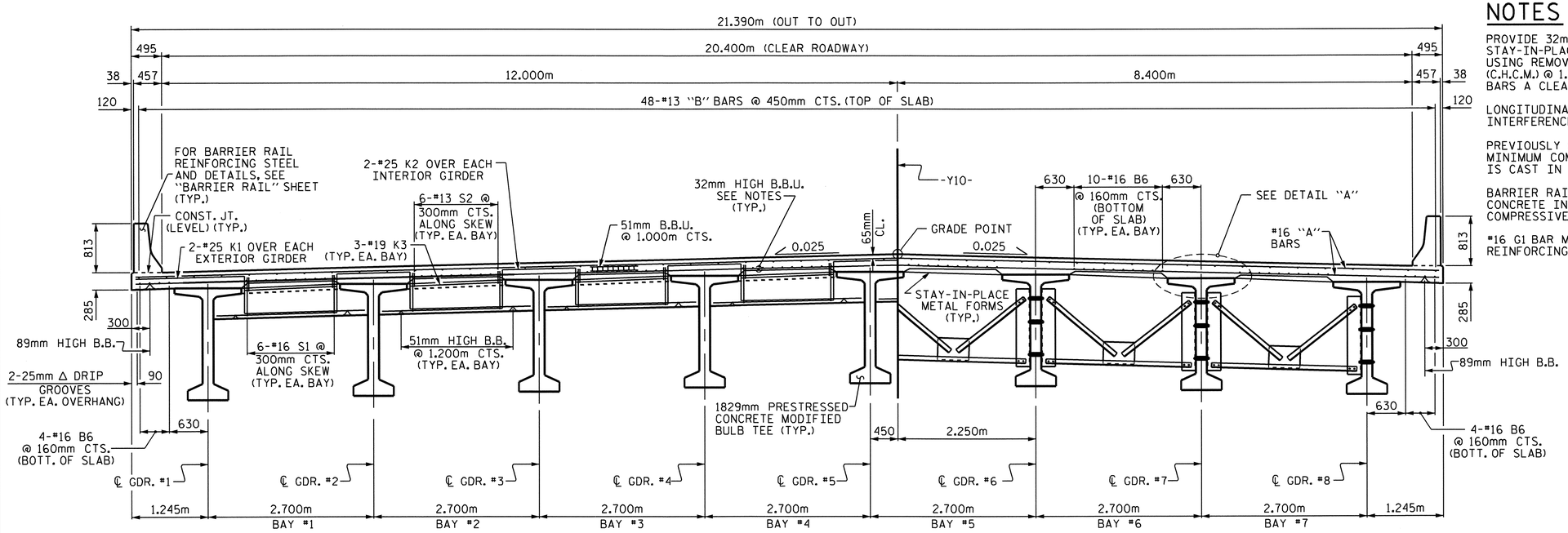

TYPICAL HALF SECTION

SHOWING END BENT DIAPHRAGMS

TYPICAL HALF SECTION

SHOWING INTERMEDIATE DIAPHRAGMS

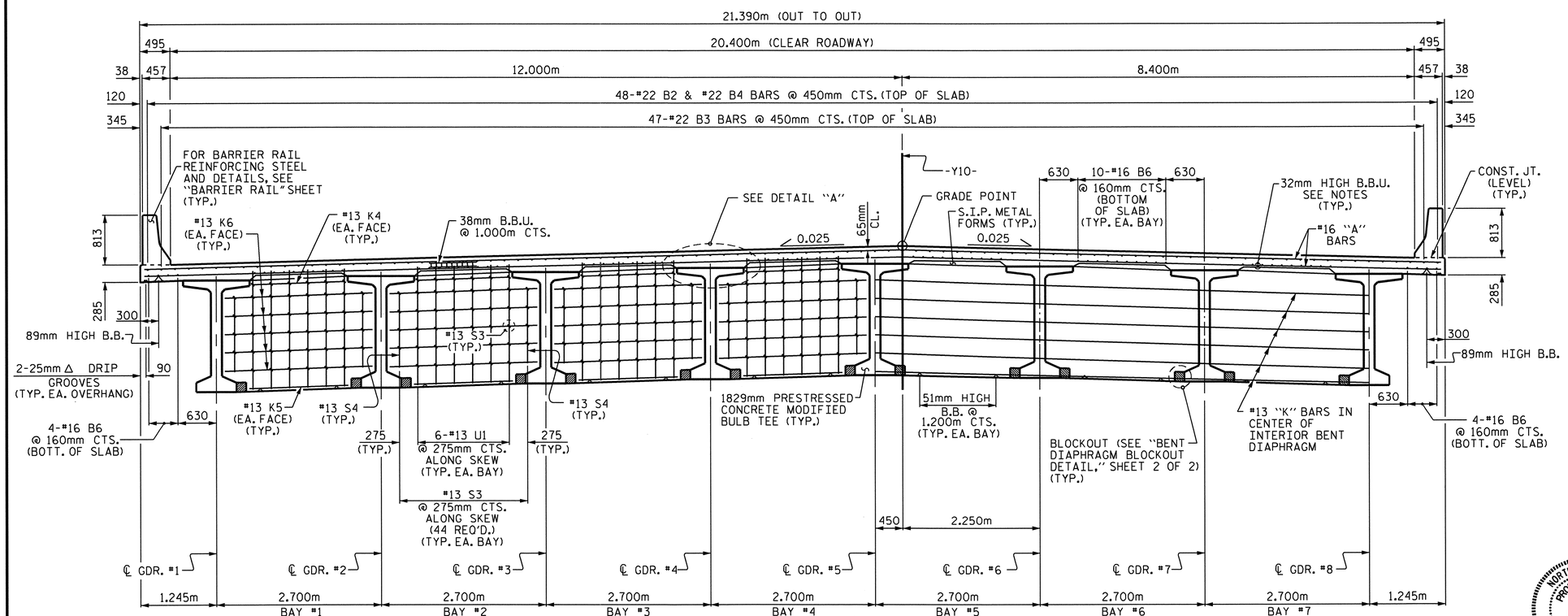

TYPICAL SECTION

SHOWING CONTINUOUS BENT DIAPHRAGM

NOTES

PROVIDE 32mm HIGH BEAM BOLSTERS UPPER AT 1.2m CTS. ATOP THE METAL STAY-IN-PLACE FORMS TO SUPPORT THE BOTTOM MAT OF 'A' BARS. WHEN USING REMOVABLE FORMS, PROVIDE CONTINUOUS HIGH CHAIRS FOR METAL DECK (C.H.C.M.) @ 1.2m CTS. WITH A HEIGHT TO SUPPORT THE BOTTOM MAT OF 'A' BARS A CLEAR DISTANCE OF 65mm ABOVE THE TOP OF THE REMOVABLE FORM.

LONGITUDINAL STEEL MAY BE SHIFTED SLIGHTLY, AS NECESSARY, TO AVOID INTERFERENCE WITH STIRRUPS IN PRESTRESSED CONCRETE GIRDERS.

PREVIOUSLY CAST CONCRETE IN A CONTINUOUS UNIT SHALL HAVE ATTAINED A MINIMUM COMPRESSIVE STRENGTH OF 20.7 MPa BEFORE ADDITIONAL CONCRETE IS CAST IN THE UNIT.

BARRIER RAIL IN A CONTINUOUS UNIT SHALL NOT BE CAST UNTIL ALL SLAB CONCRETE IN THE UNIT HAS BEEN CAST AND HAS REACHED A MINIMUM COMPRESSIVE STRENGTH OF 20.7 MPa.

#16 G1 BAR MAY BE SHIFTED SLIGHTLY, AS NECESSARY, TO CLEAR REINFORCING STEEL AND STIRRUPS.

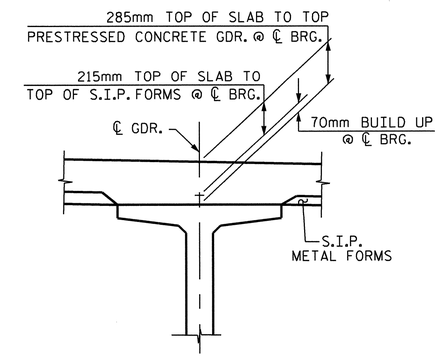

DETAIL "A"

PROJECT NO. R-2554A

WAYNE COUNTY

STATION: 31+55.609 -L-

SHEET 1 OF 2

STATE OF NORTH CAROLINA
DEPARTMENT OF TRANSPORTATION
RALEIGH

SUPERSTRUCTURE
TYPICAL SECTION

NORTH CAROLINA PROFESSIONAL SEAL 14045 ENGINEER TIMOTHY W. COGGINS
Timothy W. Coggins 03/26/12

REVISIONS							SHEET NO.
NO.	BY:	DATE:	NO.	BY:	DATE:		5-47
1			3				TOTAL SHEETS
2			4				276

DRAWN BY : J. B. WILSON/TLA DATE : 7/27/11
CHECKED BY : B.N. BARODAWALA DATE : 1/10/12

26-MAR-2012 10:17
R:\TIPProjects-R\R2554A\Structures\FinalPlans\Str#2\r2554a_sd_ts_02.dgn
tcoggins

STR. #2

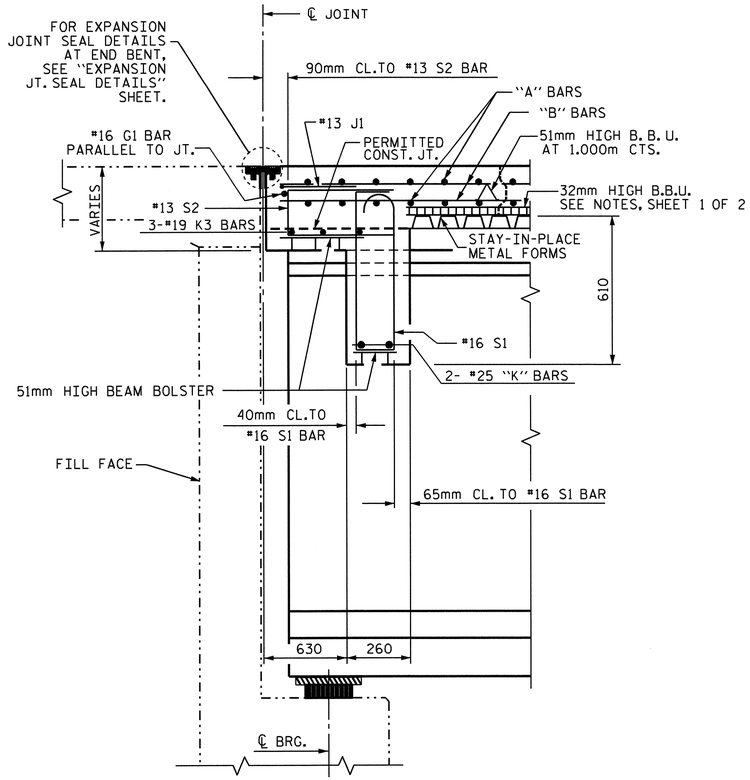

SECTION THRU END BENT DIAPHRAGM

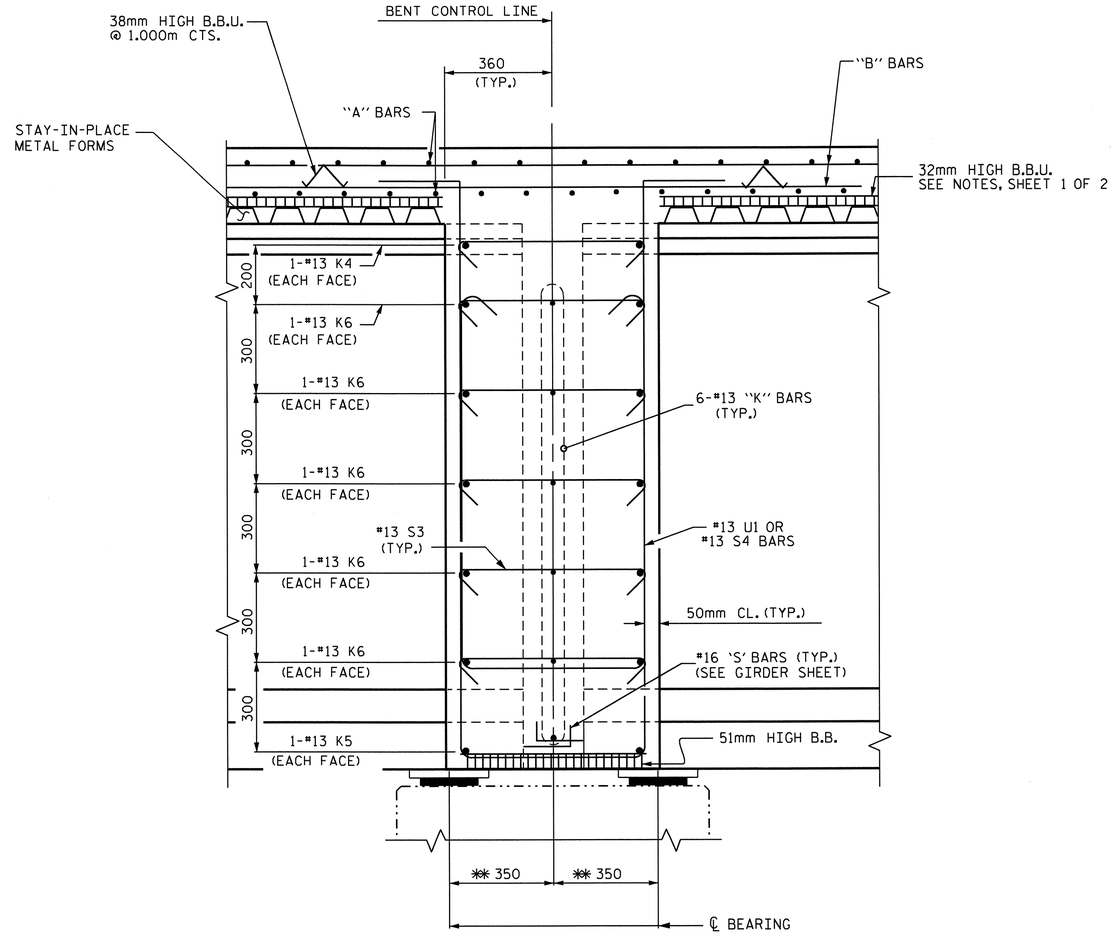

SECTION THRU CONTINUOUS BENT DIAPHRAGM

✱✱ MEASURED ALONG ℄ GDR.

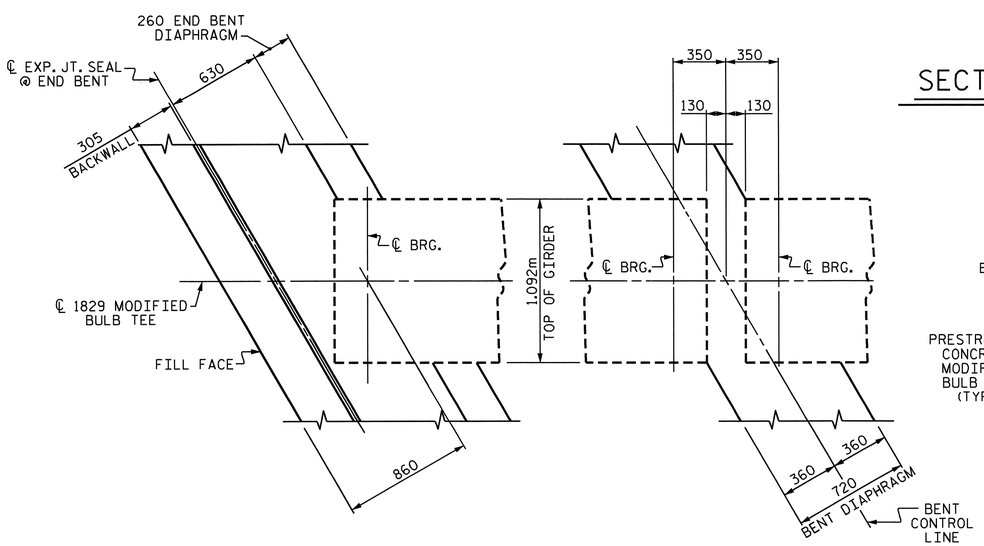

END BENT DIAPHRAGM

(END BENT #1 SHOWN, END BENT #2 SIMILAR)

BENT DIAPHRAGM

PLAN

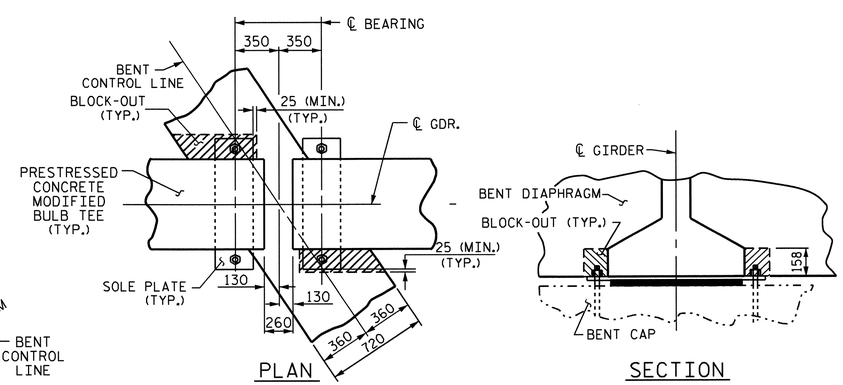

PLAN

SECTION

BENT DIAPHRAGM BLOCK-OUT DETAIL

PROJECT NO. R-2554A

WAYNE COUNTY

STATION: 31+55.609 -L-

SHEET 2 OF 2

STATE OF NORTH CAROLINA
DEPARTMENT OF TRANSPORTATION
RALEIGH

SUPERSTRUCTURE

TYPICAL SECTION DETAILS

NORTH CAROLINA PROFESSIONAL SEAL 14045 ENGINEER TIMOTHY J. COGGINS
03/26/12

REVISIONS								SHEET NO.
NO.	BY:	DATE:	NO.	BY:	DATE:			S-48
1			3					TOTAL SHEETS
2			4					216

DRAWN BY : J. B. WILSON/TLA DATE : 7/27/11
CHECKED BY : B.N. BARODAWALA DATE : 1/10/12

26-MAR-2012 10:19
R:\TIPProjects-R\R2554A\Structures\FinalPlans\Str#2\r2554a_sd_ts_02.dgn
tcoggins

STR. #2

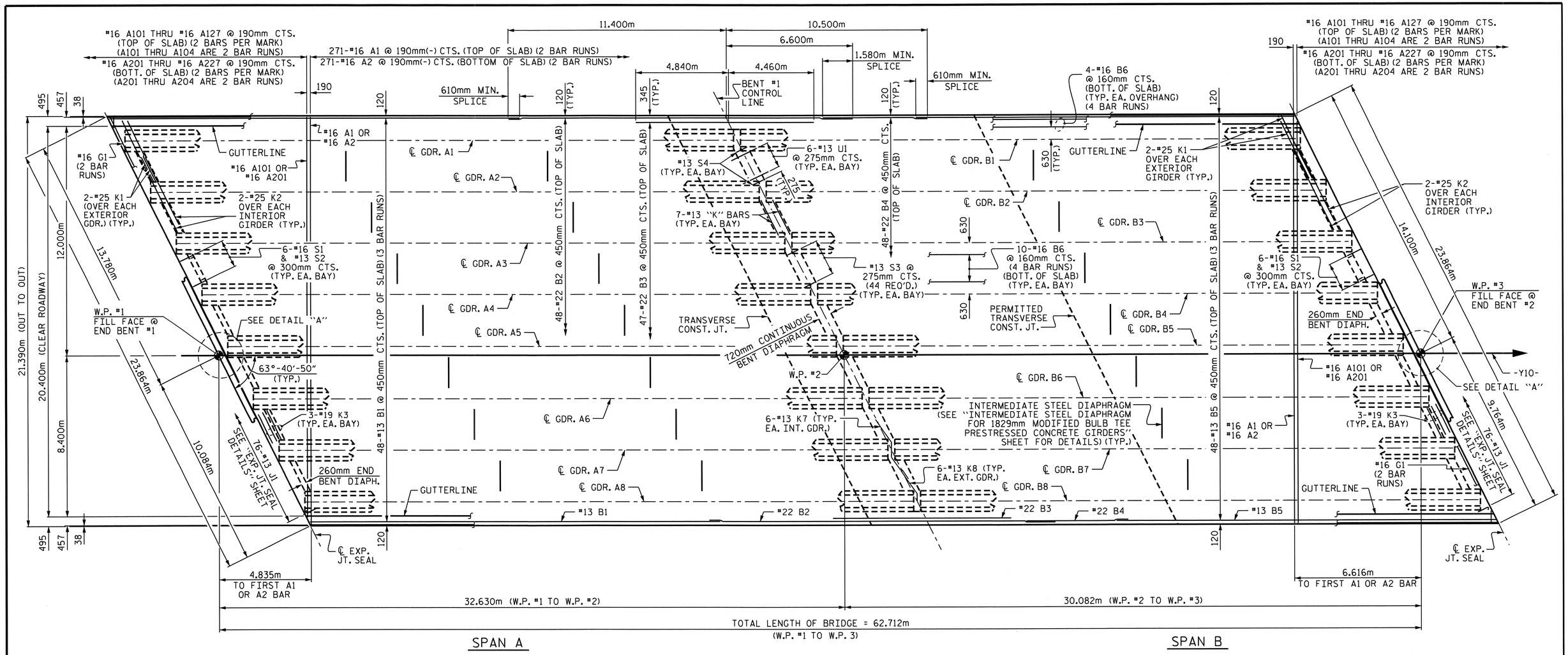

PLAN OF SPANS

FOR LOCATION OF INTERMEDIATE DIAPHRAGMS, SEE "GIRDER LAYOUT".

FOR BARRIER RAIL REINFORCING STEEL, SEE "CONCRETE BARRIER RAIL".

FOR POURING SEQUENCE AND TRANSVERSE CONSTRUCTION JOINT DETAILS, SEE "BILL OF MATERIAL".

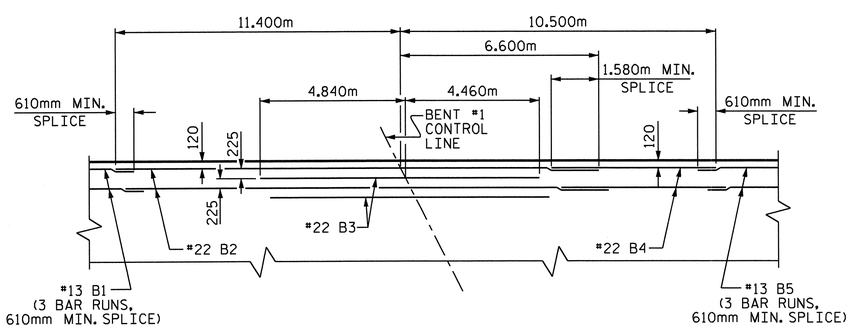

TOP OF SLAB REINFORCING LAYOUT

@ BENT #1

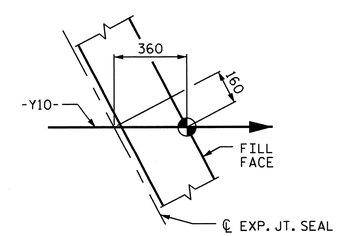

DETAIL "A"

(END BENT #2 SHOWN, END BENT #1 SIMILAR)

PROJECT NO. R-2554A

WAYNE COUNTY

STATION: 31+55.609 -L-

STATE OF NORTH CAROLINA
DEPARTMENT OF TRANSPORTATION
RALEIGH

SUPERSTRUCTURE

PLAN OF SPANS

NORTH CAROLINA PROFESSIONAL SEAL 14045 ENGINEER TIMOTHY W. COGGINS

03/26/12

REVISIONS							SHEET NO.
NO.	BY:	DATE:	NO.	BY:	DATE:		S-49
1			3				TOTAL SHEETS
2			4				276

DRAWN BY : J.B. WILSON/TLA DATE : 7/27/11
CHECKED BY : B.N. BARODAWALA DATE : 1/10/12

26-MAR-2012 10:19
R:\TIPProjects-R\R2554A\Structures\FinalPlans\Str#2\r2554a_sd_ts_02.dgn
tcoggins

STR. #2

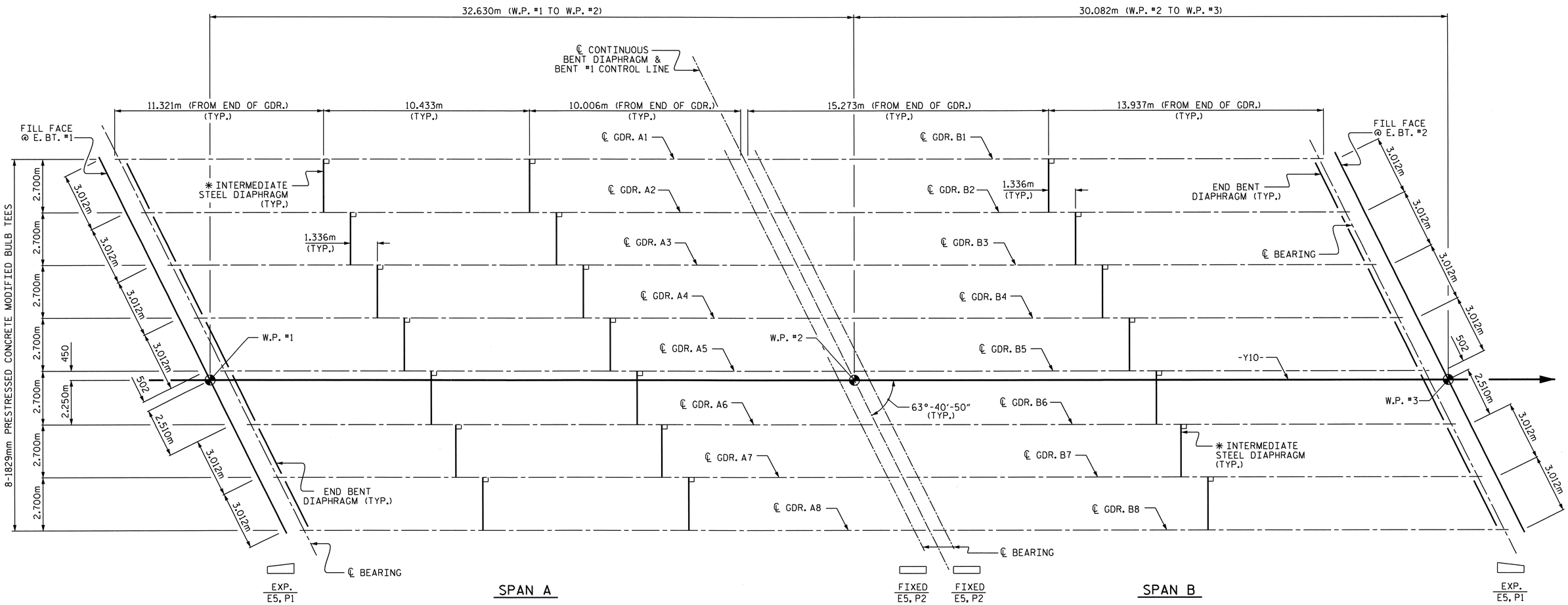

GIRDER LAYOUT

✱ NOTE: SEE "INTERMEDIATE STEEL DIAPHRAGMS FOR 1829mm MODIFIED BULB TEE PRESTRESSED CONCRETE GIRDERS" SHEET FOR DETAILS.

PROJECT NO. R-2554A

WAYNE COUNTY

STATION: 31+55.609 -L-

STATE OF NORTH CAROLINA
DEPARTMENT OF TRANSPORTATION
RALEIGH

SUPERSTRUCTURE

GIRDER LAYOUT

NORTH CAROLINA PROFESSIONAL SEAL 14045 ENGINEER TIMOTHY W. COGGINS
03/23/12

REVISIONS						SHEET NO.
NO.	BY:	DATE:	NO.	BY:	DATE:	5-50
1			3			TOTAL SHEETS
2			4			276

DRAWN BY : J.B. WILSON/TLA DATE : 7/27/11
CHECKED BY : B.N. BARODAWALA DATE : 1/10/12

10-FEB-2012 11:00
Z:\TIPProjects-R\R2554A\Structures\Str#2\FinalPlans\r2554a_sd_ts_02.dgn
padkins

STR. #2

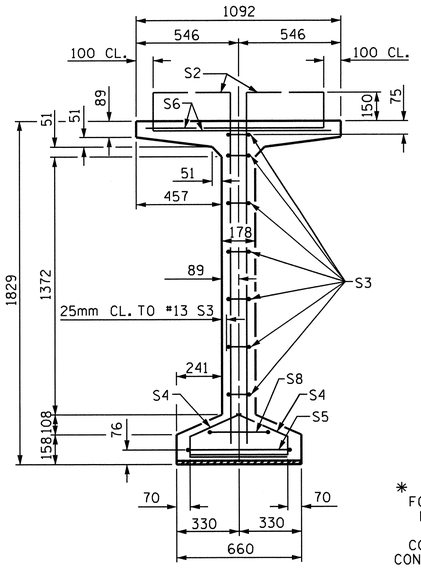

SECTION A-A

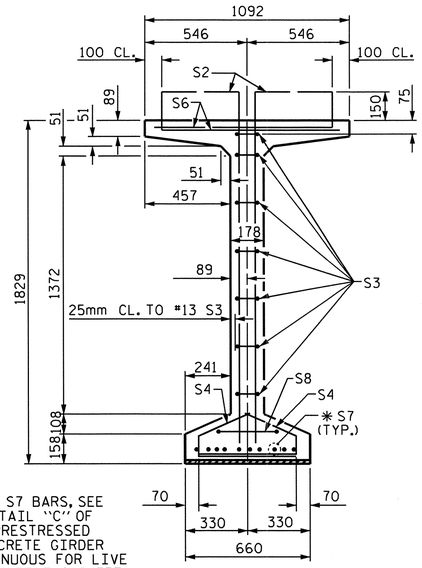

✱ FOR S7 BARS, SEE DETAIL "C" OF PRESTRESSED CONCRETE GIRDER CONTINUOUS FOR LIVE LOAD DETAILS SHEET

SECTION B-B

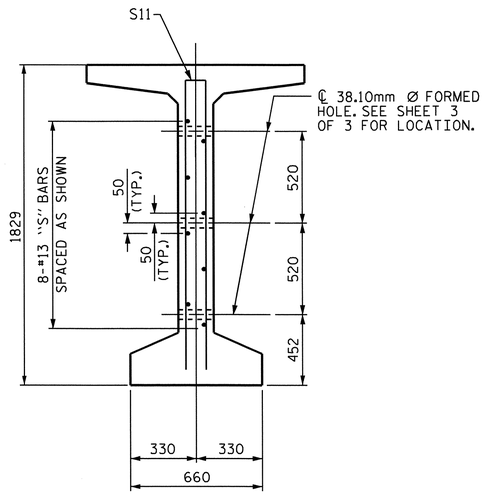

SECTION C-C

(S1, S6 AND S9 BARS NOT SHOWN)

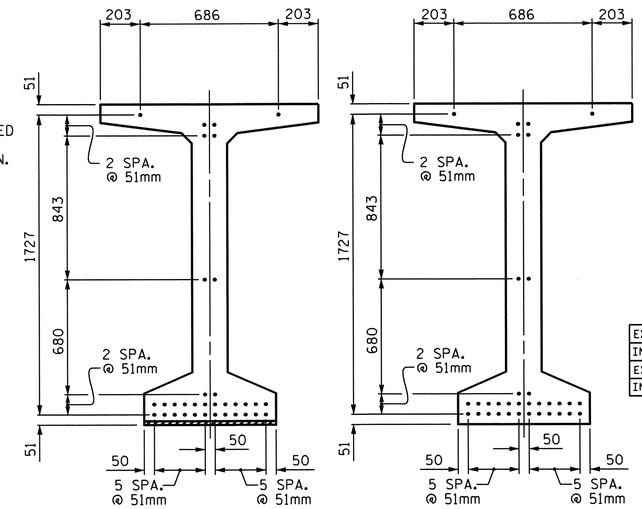

AT END OF GIRDER

AT ℄ OF GIRDER

15.24mm Ø LOW RELAXATION STRAND LAYOUT

15.24mm Ø L. R. GRADE 270 STRANDS

AREA (mm²)	ULTIMATE STRENGTH (kN PER STRAND)	APPLIED PRESTRESS (kN PER STRAND)
140.00	260.7	195.5

REINFORCING STEEL FOR ONE GDR

	BAR	NUMBER	SIZE	TYPE	LENGTH	WEIGHT
	S1	158	#13	1	2100	330
	S2	24	#16	1	2100	78
	S3	14	#13	2	2560	36
	S4	84	#13	3	920	77
	S5	1	#16	2	3000	5
	S6	182	#16	4	1320	373
	✱ S7	10	#16	STR	1120	17
	S8	2	#16	2	2740	9
	S9	46	#16	STR	980	70
	S10	1	#10	STR	560	1
EXTERIOR GDR.	S11	8	#16	2	3540	44
INTERIOR GDR.	S11	16	#16	2	3540	88
EXTERIOR GDR.	S12	16	#13	STR	2440	39
INTERIOR GDR.	S13	16	#13	STR	3780	60

✱ NOTE: S7 BARS SHALL BE BENT BEFORE SHIPMENT. HEAT BENDING SHALL NOT BE ALLOWED.

BAR TYPES

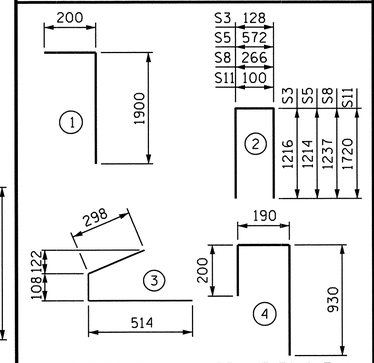

ALL BAR DIMENSIONS ARE OUT-TO-OUT

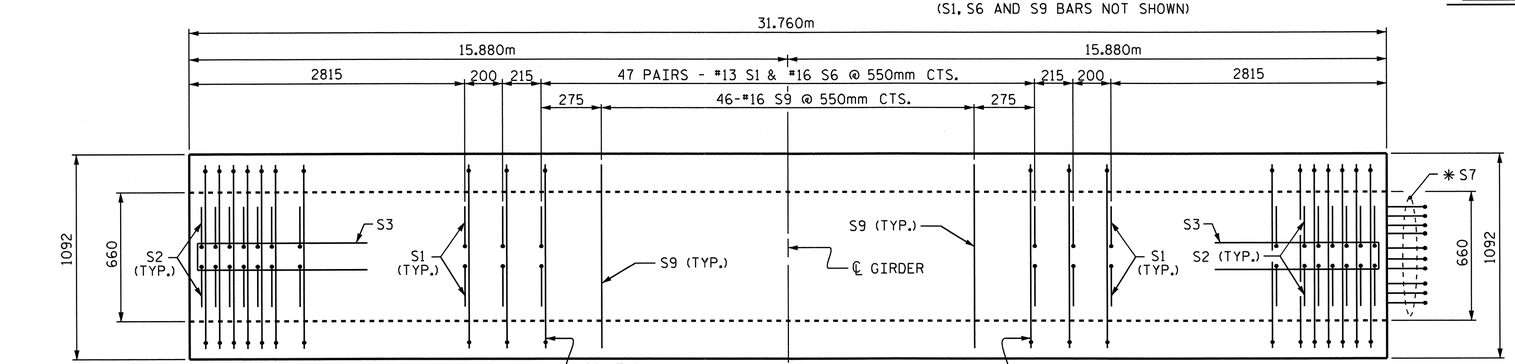

PLAN OF GIRDER

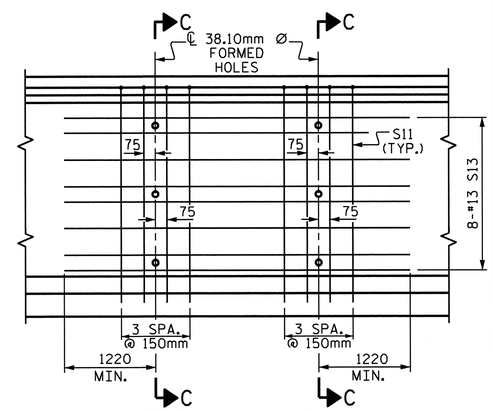

PARTIAL ELEVATION

SHOWING INTERMEDIATE STEEL DIAPHRAGM REINFORCING STEEL FOR GIRDERS A2 THRU A7

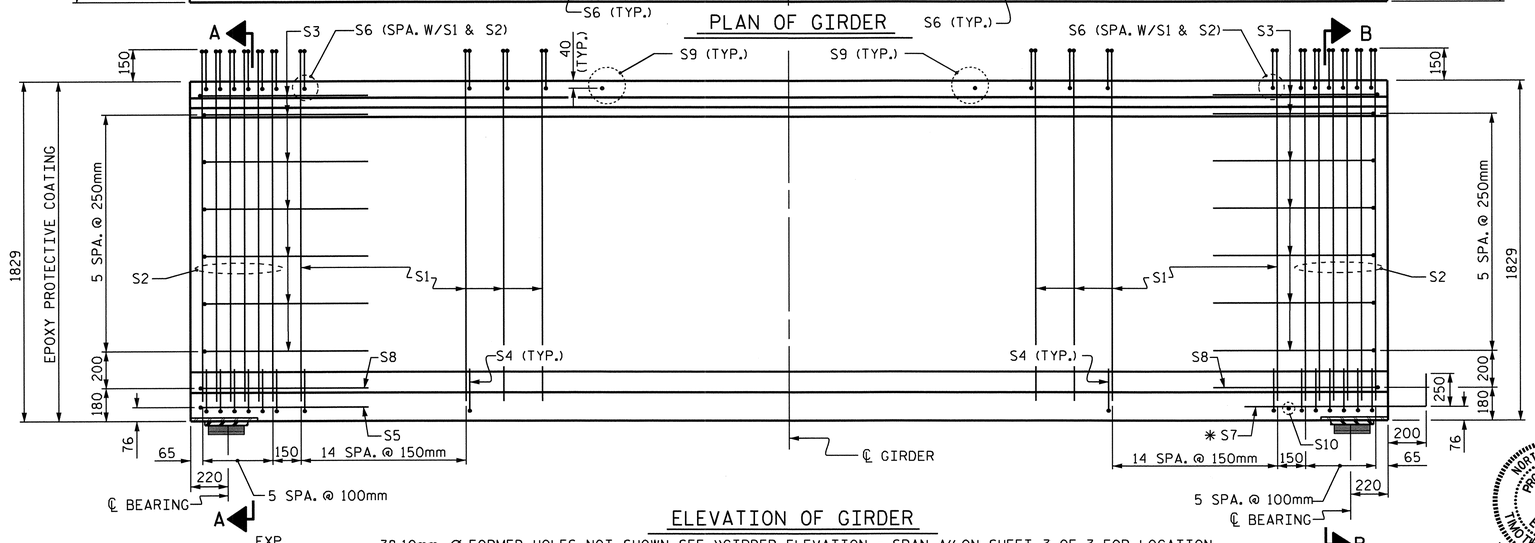

ELEVATION OF GIRDER

38.10mm Ø FORMED HOLES NOT SHOWN. SEE "GIRDER ELEVATION - SPAN A" ON SHEET 3 OF 3 FOR LOCATION.

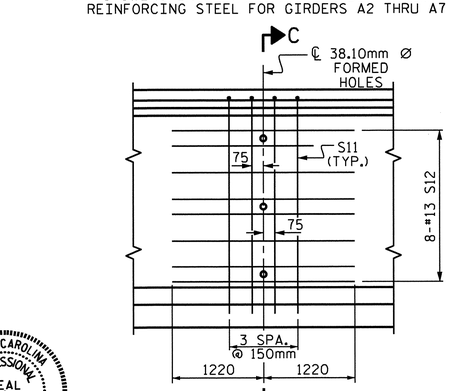

PARTIAL ELEVATION

SHOWING INTERMEDIATE STEEL DIAPHRAGM REINFORCING STEEL FOR GIRDERS A1 & A8

QUANTITIES FOR ONE GIRDER

	REINFORCING STEEL	55.00 MPa CONCRETE	15.24mm Ø L.R. STRANDS
	kg	m³	No.
EXTERIOR GIRDER	1079	17.1	34
INTERIOR GIRDER	1144	17.1	34

GIRDERS REQUIRED

NUMBER	LENGTH	TOTAL LENGTH
8	31.760m	254.080m

PROJECT NO. R-2554A

WAYNE COUNTY

STATION: 31+55.609 -L-

SHEET 1 OF 3

STATE OF NORTH CAROLINA
DEPARTMENT OF TRANSPORTATION
RALEIGH

STANDARD
1829mm PRESTRESSED CONCRETE MODIFIED BULB TEE CONTINUOUS FOR LIVE LOAD SPAN A

NORTH CAROLINA PROFESSIONAL SEAL 14045 ENGINEER TIMOTHY L. COGGINS
03/26/12

REVISIONS						SHEET NO.
NO.	BY:	DATE:	NO.	BY:	DATE:	S-51
1			3			TOTAL SHEETS
2			4			276

ASSEMBLED BY : T.L. AVERETTE DATE : 01-04-12
CHECKED BY : B.N. BARODAWALA DATE : 01-10-12

DRAWN BY : EEM 2/6/97
CHECKED BY : VAP 2/6/97

REV. 8/16/99 RWW/LES
REV. 10/17/00 RWW/LES
REV. 5/1/06R TLA/GM

STR. #2

STD. NO. PCG10SM

26-MAR-2012 11:08
R:\TIPProjects-R\R2554A\Structures\FinalPlans\Str#2\r2554a_sd_ts_02.dgn
tcoggins

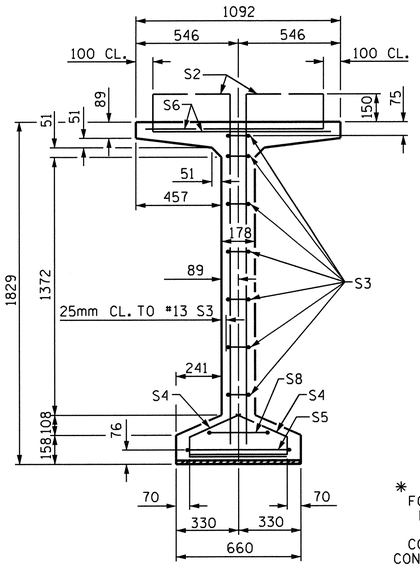

SECTION A-A

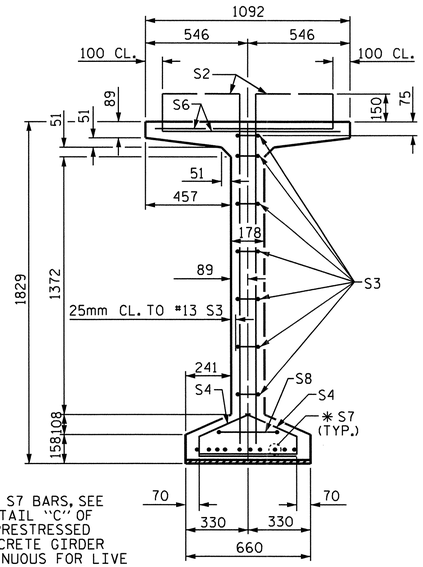

✱ FOR S7 BARS, SEE DETAIL "C" OF PRESTRESSED CONCRETE GIRDER CONTINUOUS FOR LIVE LOAD DETAILS SHEET

SECTION B-B

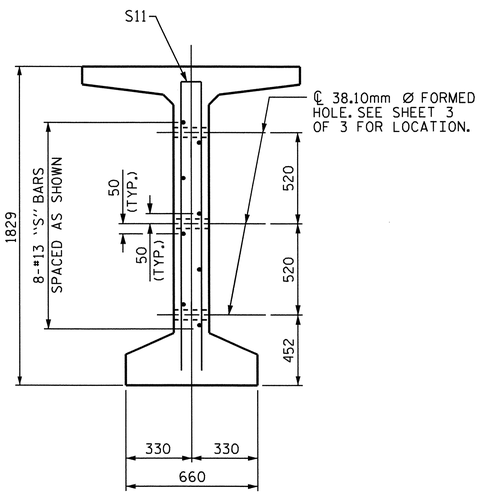

SECTION C-C

(S1, S6 AND S9 BARS NOT SHOWN)

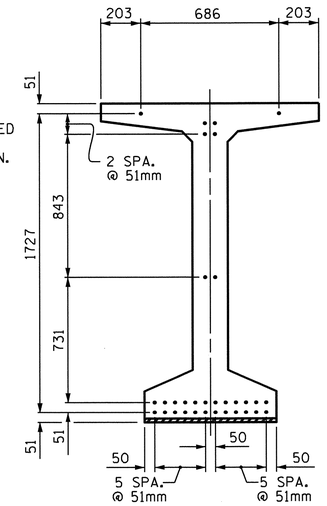

AT END OF GIRDER

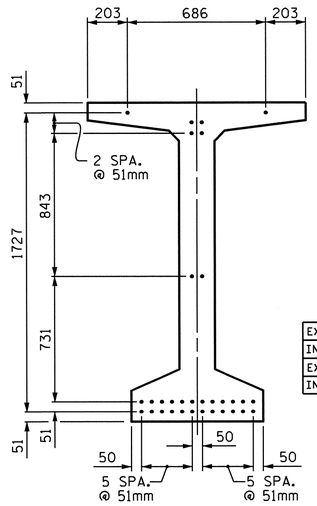

AT ℄ OF GIRDER

15.24mm Ø LOW RELAXATION STRAND LAYOUT

15.24mm Ø L. R. GRADE 270 STRANDS

AREA (mm²)	ULTIMATE STRENGTH (kN PER STRAND)	APPLIED PRESTRESS (kN PER STRAND)
140.00	260.7	195.5

REINFORCING STEEL FOR ONE GDR

	BAR	NUMBER	SIZE	TYPE	LENGTH	WEIGHT
	S1	144	#13	1	2100	301
	S2	24	#16	1	2100	78
	S3	14	#13	2	2560	36
	S4	84	#13	3	920	77
	S5	1	#16	2	3000	5
	S6	168	#16	4	1320	344
	✱S7	10	#16	STR	1120	17
	S8	2	#16	2	2740	9
	S9	29	#16	STR	980	44
	S10	1	#10	STR	560	1
EXTERIOR GDR.	S11	4	#16	2	3540	22
INTERIOR GDR.	S11	8	#16	2	3540	44
EXTERIOR GDR.	S12	8	#13	STR	2440	19
INTERIOR GDR.	S13	8	#13	STR	3780	30

✱NOTE: S7 BARS SHALL BE BENT BEFORE SHIPMENT. HEAT BENDING SHALL NOT BE ALLOWED.

BAR TYPES

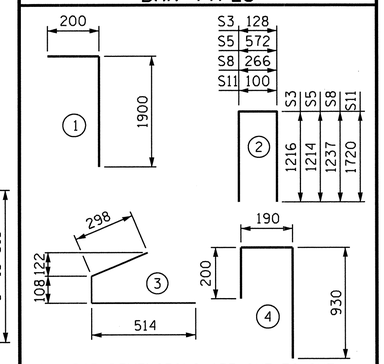

ALL BAR DIMENSIONS ARE OUT-TO-OUT

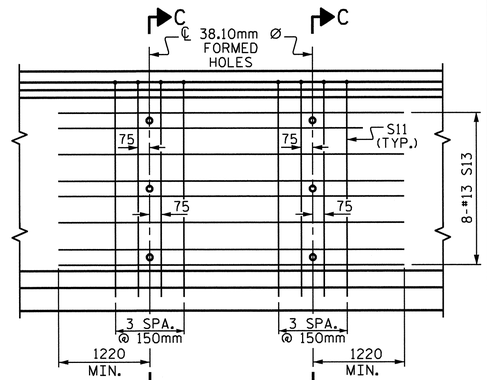

PARTIAL ELEVATION

SHOWING INTERMEDIATE STEEL DIAPHRAGM REINFORCING STEEL FOR GIRDERS B2 THRU B7

QUANTITIES FOR ONE GIRDER

	REINFORCING STEEL (Kg)	48.00 MPa CONCRETE (m³)	15.24mm Ø L.R. STRANDS (No.)
EXTERIOR GIRDER	953	15.7	32
INTERIOR GIRDER	986	15.7	32

GIRDERS REQUIRED

NUMBER	LENGTH	TOTAL LENGTH
8	29.210m	233.680m

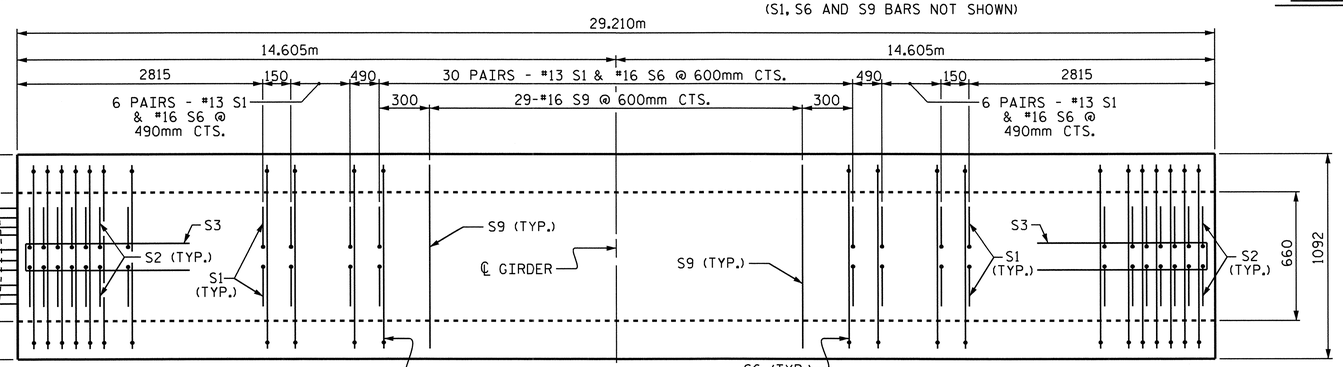

PLAN OF GIRDER

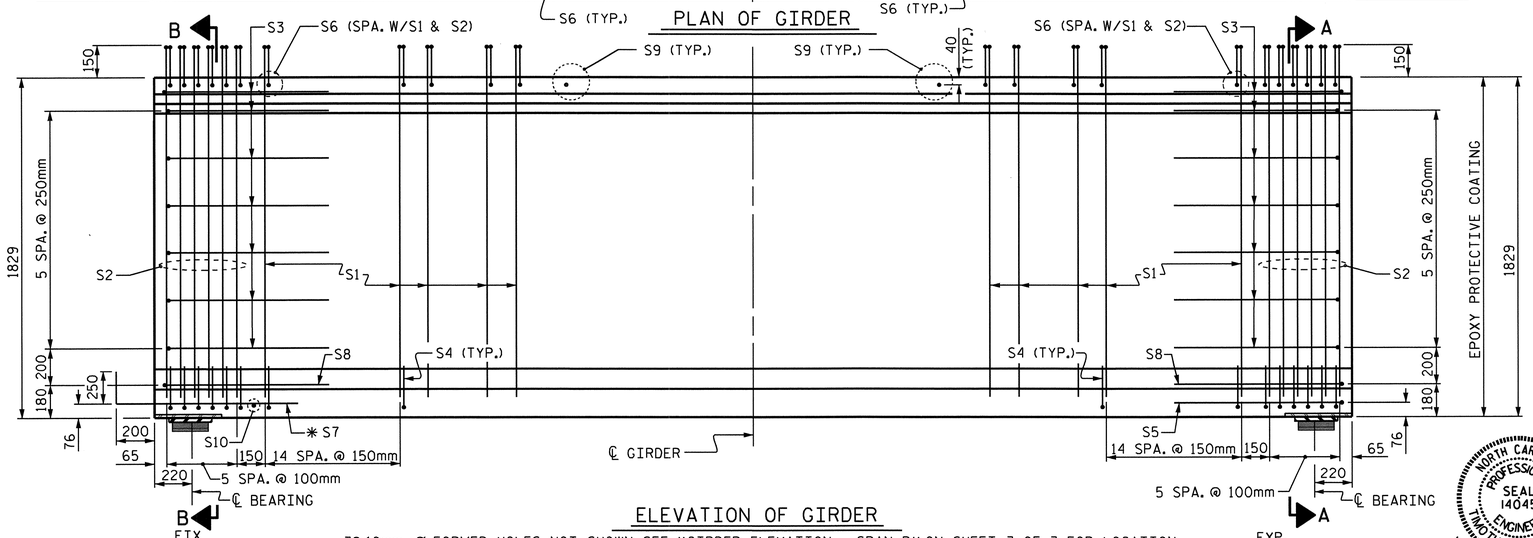

ELEVATION OF GIRDER

38.10mm Ø FORMED HOLES NOT SHOWN. SEE "GIRDER ELEVATION - SPAN B" ON SHEET 3 OF 3 FOR LOCATION.

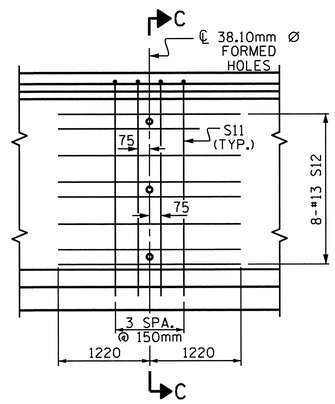

PARTIAL ELEVATION

SHOWING INTERMEDIATE STEEL DIAPHRAGM REINFORCING STEEL FOR GIRDERS B1 & B8

PROJECT NO. R-2554A

WAYNE COUNTY

STATION: 31+55.609 -L-

SHEET 2 OF 3

STATE OF NORTH CAROLINA
DEPARTMENT OF TRANSPORTATION
RALEIGH

STANDARD
1829mm PRESTRESSED CONCRETE MODIFIED BULB TEE CONTINUOUS FOR LIVE LOAD SPAN B

NORTH CAROLINA PROFESSIONAL SEAL 14045 ENGINEER TIMOTHY L. COGGINS
03/26/12

ASSEMBLED BY : T.L. AVERETTE	DATE : 01-04-12				
CHECKED BY : B.N. BARODAWALA	DATE : 01-10-12				
DRAWN BY : EEM 2/6/97	REV. 8/16/99	RWW/LES			
CHECKED BY : VAP 2/6/97	REV. 10/17/00	RWW/LES			
	REV. 5/1/06R	TLA/GM			

REVISIONS

NO.	BY:	DATE:	NO.	BY:	DATE:
1			3		
2			4		

SHEET NO. S-52

TOTAL SHEETS 276

STR. #2

STD. NO. PCG10SM

26-MAR-2012 11:09
R:\TIPProjects-R\R2554A\Structures\FinalPlans\Str#2\r2554a_sd_ts_02.dgn
tcoggins

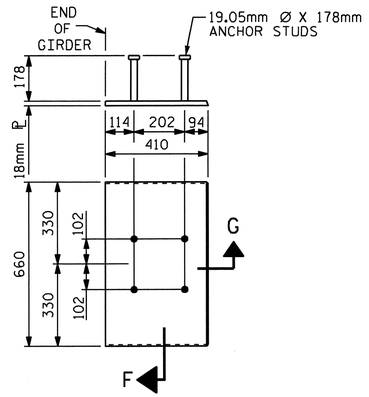

EMBEDDED PLATE "B-1" DETAILS FOR AASHTO 1829mm MODIFIED BULB TEES

(2 REQ'D PER GIRDER)

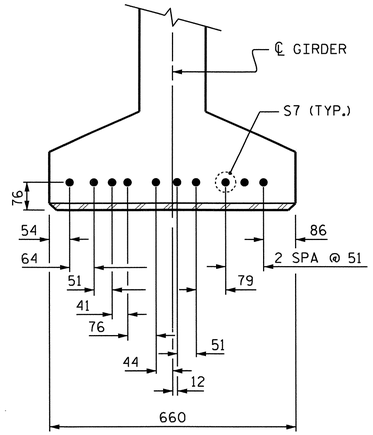

DETAIL "C"

NOTES

ALL PRESTRESSING STRANDS SHALL BE 7-WIRE LOW-RELAXATION GRADE 270 STRANDS AND SHALL CONFORM TO AASHTO M203M EXCEPT FOR SAMPLING REQUIREMENTS WHICH SHALL BE IN ACCORDANCE WITH THE STANDARD SPECIFICATIONS.

ALL REINFORCING STEEL SHALL BE GRADE 420.

APPLY EPOXY PROTECTIVE COATING TO END OF GIRDER SURFACES INDICATED IN ELEVATION VIEW.

EMBEDDED PLATE "B-1" SHALL BE GALVANIZED IN ACCORDANCE WITH THE SPECIFICATIONS. BEVEL EDGES OF PLATE "B-1" TO GIVE CLOSE FIT BUT NOT TIGHT FIT TO STEEL CASTING FORM.

ANCHOR STUDS SHALL CONFORM TO AASHTO M169 GRADES 1010 THROUGH 1020 OR APPROVED EQUAL, AND SHALL MEET THE TYPE "B" REQUIREMENTS OF SUBSECTION 7.3 OF THE ANSI/AASHTO/AWS D1.5 BRIDGE WELDING CODE.

AT ENDS OF GIRDERS TO BE EMBEDDED IN CONCRETE DIAPHRAGMS OR END WALLS, PRESTRESSING STRANDS MAY EXTEND A MAXIMUM OF 50mm BEYOND THE GIRDER ENDS. OTHERWISE, PRESTRESSING STRANDS SHALL BE CUT FLUSH WITH THE GIRDER ENDS.

THE TRANSFER OF LOAD FROM THE ANCHORAGES TO THE GIRDER SHALL BE DONE WHEN CONCRETE HAS REACHED A COMPRESSIVE STRENGTH OF NOT LESS THAN 43.00 MPa FOR SPAN A AND 38.00 MPa FOR SPAN B.

DEPENDING ON THE TYPE OF SYSTEM USED TO SUPPORT THE DECK SLAB FORMS, PRESET ANCHORS MAY BE NECESSARY IN THE PRESTRESSED CONCRETE GIRDER.

THE TOP SURFACE OF THE GIRDER, EXCLUDING THE OUTSIDE 100mm, SHALL BE RAKED TO A DEPTH OF 6mm.

A 51mm x 51mm CHAMFER IS ALLOWED AT THE INTERSECTION OF THE WEB AND THE BOTTOM FLANGE OF THE 1829mm MODIFIED BULB TEES.

THE CONTRACTOR HAS THE OPTION TO PROVIDE, AT NO ADDITIONAL COST TO THE DEPARTMENT, 2 ADDITIONAL STRANDS AT THE TOP OF THE GIRDER TO FACILITATE TYING OF THE REINFORCING STEEL. THESE STRANDS SHALL BE PULLED TO A LOAD OF 20 Kn.

FOR PRESTRESSED CONCRETE MEMBERS, SEE SPECIAL PROVISIONS.

DEAD LOAD DEFLECTION TABLE

15.24mm Ø LOW RELAXATION		SPAN A ALL GIRDERS											SPAN B ALL GIRDERS										
TENTH POINTS		0	.1	.2	.3	.4	.5	.6	.7	.8	.9	0	0	.1	.2	.3	.4	.5	.6	.7	.8	.9	0
CAMBER (GIRDER ALONE IN PLACE)	↑	0.0	0.023	0.043	0.058	0.068	0.072	0.068	0.058	0.043	0.023	0.0	0.0	0.019	0.037	0.050	0.059	0.062	0.059	0.050	0.037	0.019	0.0
* DEFLECTION DUE TO SUPERIMPOSED D.L.	↓	0.0	0.009	0.018	0.024	0.029	0.031	0.029	0.024	0.018	0.009	0.0	0.0	0.007	0.013	0.018	0.022	0.023	0.022	0.018	0.013	0.007	0.0
FINAL CAMBER	↑	0	14	25	34	39	41	39	34	25	14	0	0	12	24	32	37	39	37	32	24	12	0

* INCLUDES FUTURE WEARING SURFACE IN SUPERIMPOSED DEAD LOAD.
ALL VALUES ARE SHOWN IN METERS, EXCEPT "FINAL CAMBER" WHICH IS SHOWN IN MILLIMETERS.

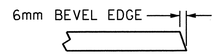

SECTION "G"

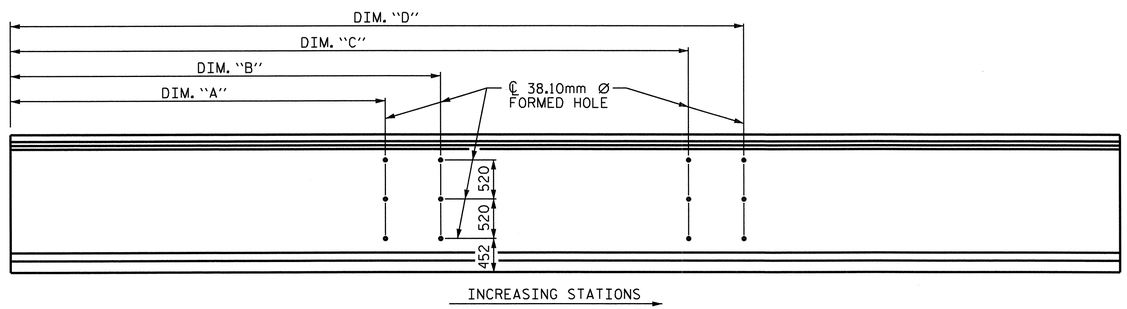

GIRDER ELEVATION - SPAN A

SHOWING LOCATION OF 38.10mm Ø FORMED HOLES

SPAN A				
GIRDER	DIM. "A"	DIM. "B"	DIM. "C"	DIM. "D"
1	—	11.321m	—	21.754m
2	9.985m	11.321m	20.418m	21.754m
3	9.985m	11.321m	20.418m	21.754m
4	9.985m	11.321m	20.418m	21.754m
5	9.985m	11.321m	20.418m	21.754m
6	9.985m	11.321m	20.418m	21.754m
7	9.985m	11.321m	20.418m	21.754m
8	9.985m	—	20.418m	—

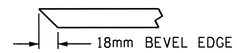

SECTION "F"

(SEE NOTES)

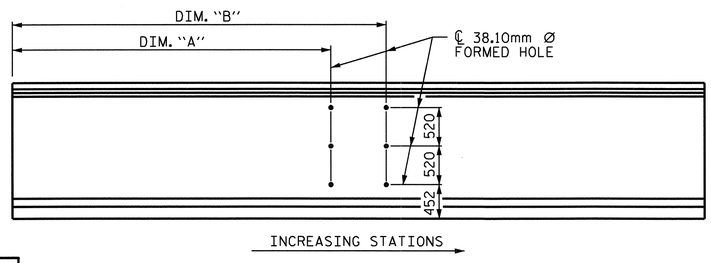

GIRDER ELEVATION - SPAN B

SHOWING LOCATION OF 38.10mm Ø FORMED HOLES

SPAN B		
GIRDER	DIM. "A"	DIM. "B"
1	—	15.273m
2	13.937m	15.273m
3	13.937m	15.273m
4	13.937m	15.273m
5	13.937m	15.273m
6	13.937m	15.273m
7	13.937m	15.273m
8	13.937m	—

PROJECT NO. R-2554A
WAYNE COUNTY
STATION: 31+55.609 -L-

SHEET 3 OF 3

STATE OF NORTH CAROLINA
DEPARTMENT OF TRANSPORTATION
RALEIGH

STANDARD
PRESTRESSED CONCRETE GIRDER
CONTINUOUS FOR LIVE LOAD
DETAILS

NORTH CAROLINA PROFESSIONAL SEAL 14045 ENGINEER TIMOTHY L. COGGINS
03/23/12

REVISIONS						SHEET NO.
NO.	BY:	DATE:	NO.	BY:	DATE:	S-53
1			3			TOTAL SHEETS
2			4			270

STR. #2

STD. NO. PCG11SM

ASSEMBLED BY : T.L. AVERETTE DATE : 01-04-12	
CHECKED BY : B.N. BARODAWALA DATE : 01-10-12	
DRAWN BY : ELR 11/91	REV. 10/17/00 RWW/LES
CHECKED BY : GRP 11/91	REV. 7/10/01RR LES/RDR
	REV. 5/1/06 TLA/GM

10-FEB-2012 11:01
Z:\TIPProjects-R\R2554A\Structures\Str#2\FinalPlans\r2554a_sd_ts_02.dgn
padkins

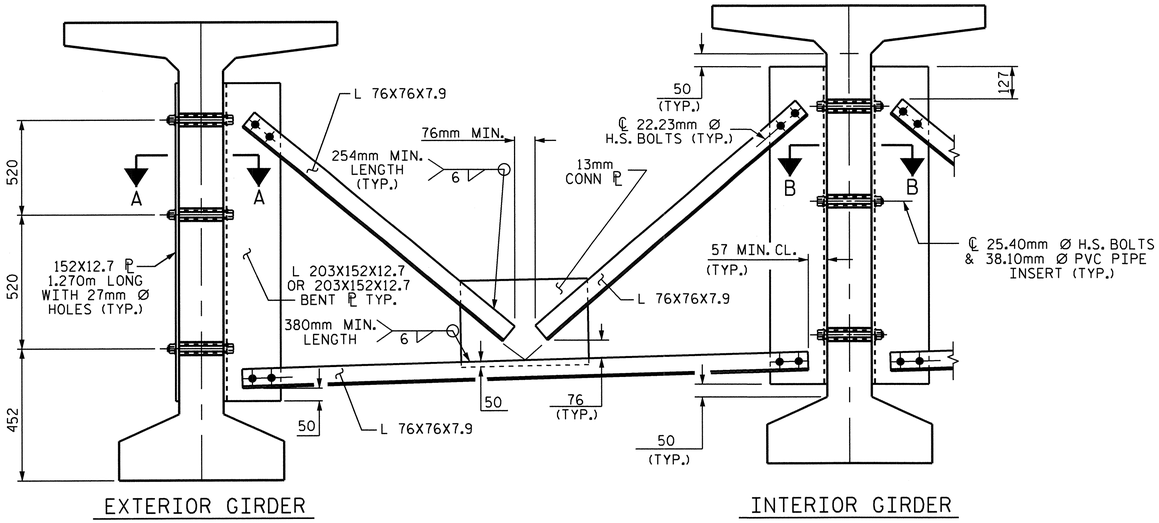

EXTERIOR GIRDER

INTERIOR GIRDER

PART SECTION AT INTERMEDIATE DIAPHRAGM

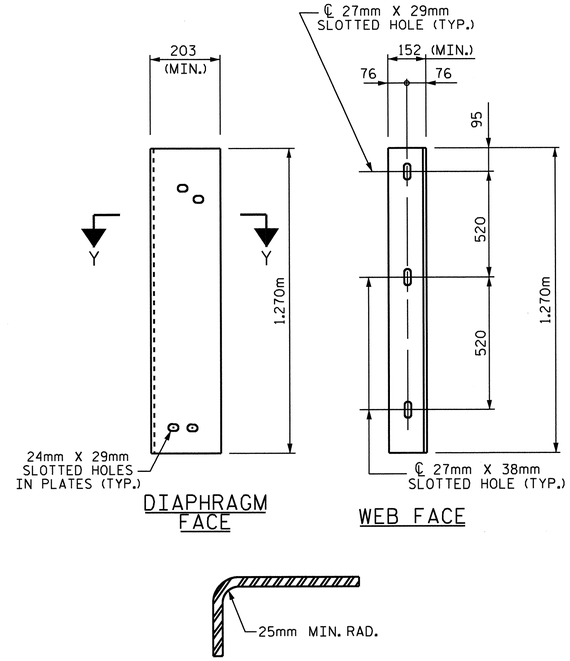

DIAPHRAGM FACE

WEB FACE

SECTION Y-Y

CONNECTOR PLATE DETAIL

STRUCTURAL STEEL NOTES

ALL INTERMEDIATE DIAPHRAGM STEEL AND CONNECTOR PLATES SHALL BE AASHTO M270 GRADE 345 OR APPROVED EQUAL.

TENSION ON THE ASTM A325 BOLTS THROUGH THE CHANNEL MEMBER SHALL BE CALIBRATED USING DIRECT TENSION INDICATOR WASHERS IN ACCORDANCE WITH THE STANDARD SPECIFICATIONS. FOR DIRECT TENSION INDICATORS, SEE SPECIAL PROVISIONS.

TENSION ON THE ASTM A449 BOLTS THROUGH THE GIRDER WEB SHALL BE SNUG TIGHTENED FOLLOWED BY AN ADDITIONAL 1/4 TURN.

THE PLATES, BENT PLATES, AND ANGLES SHALL BE GALVANIZED OR METALLIZED IN ACCORDANCE WITH THE STANDARD SPECIFICATIONS. FOR THERMAL SPRAYED COATINGS (METALLIZATION), SEE SPECIAL PROVISIONS.

FOR METALLIZATION, APPLY AN 8 MIL THICK 99.99 PERCENT ZINC (W-Zn-1) THERMAL SPRAYED COATING WITH A 0.5 MIL THICK SEAL COAT TO ALL STEEL DIAPHRAGM SURFACES IN ACCORDANCE WITH THE THERMAL SPRAYED COATINGS SPECIAL PROVISION AND SECTION 442 OF THE STANDARD SPECIFICATIONS.

GALVANIZE THE HIGH STRENGTH BOLTS, NUTS, WASHERS AND DIRECT TENSION INDICATORS IN ACCORDANCE WITH THE STANDARD SPECIFICATIONS. FOR HIGH STRENGTH BOLTS, SEE SPECIAL PROVISIONS.

USE AN ASTM F436 HARDENED WASHER WITH STANDARD AND SLOTTED HOLES UNDER EACH BOLT HEAD AND NUT.

FOR BOLTS THROUGH THE GIRDER WEB, PROVIDE SUFFICIENT LENGTH OF THREADS ON ALL BOLTS TO ACCOMMODATE WASHERS AND THE THICKNESS OF CONNECTING MEMBER PLUS AT LEAST 6mm PROJECTION BEYOND THE NUT.

INTERMEDIATE DIAPHRAGM ASSEMBLY SHALL COMPLY WITH SECTION 1072 OF THE STANDARD SPECIFICATIONS.

SUBMIT TWO SETS OF WORKING DRAWINGS FOR THE INTERMEDIATE DIAPHRAGM ASSEMBLY FOR REVIEW, COMMENTS AND ACCEPTANCE. AFTER REVIEW, COMMENTS, AND ACCEPTANCE, SUBMIT SEVEN SETS FOR DISTRIBUTION.

IN THE EXTERIOR BAYS, PLACE TEMPORARY STRUTS BETWEEN PRESTRESSED GIRDERS ADJACENT TO THE STEEL DIAPHRAGMS. STRUTS SHALL REMAIN IN PLACE 3 DAYS AFTER CONCRETE IS PLACED.

THE COST OF THE STEEL DIAPHRAGMS AND ASSEMBLIES SHALL BE INCLUDED IN THE UNIT PRICE BID FOR PRESTRESSED CONCRETE GIRDERS.

FOR METRIC STRUCTURAL STEEL, SEE SPECIAL PROVISIONS.

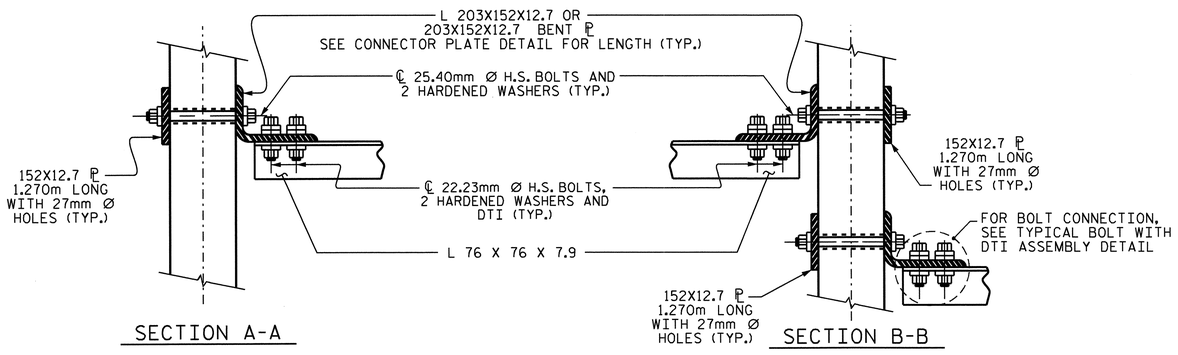

SECTION A-A

SECTION B-B

CONNECTION DETAILS

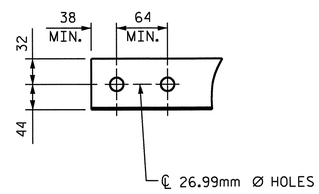

ANGLE END

(L 76 X 76 X 7.9)

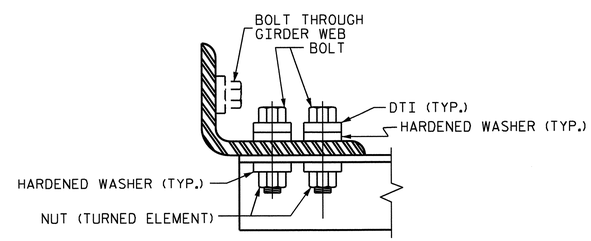

BOLT WITH DTI ASSEMBLY DETAIL

PROJECT NO. R-2554A

WAYNE COUNTY

STATION: 31+55.609 -L-

STATE OF NORTH CAROLINA
DEPARTMENT OF TRANSPORTATION
RALEIGH

STANDARD

INTERMEDIATE STEEL DIAPHRAGMS FOR 1829mm MODIFIED BULB TEE PRESTRESSED CONCRETE GIRDERS

NORTH CAROLINA PROFESSIONAL SEAL 14045 ENGINEER TIMOTHY W. COGGINS
03/26/12

REVISIONS						SHEET NO.
NO.	BY:	DATE:	NO.	BY:	DATE:	S-54
1			3			TOTAL SHEETS
2			4			276

ASSEMBLED BY : T.L. AVERETTE DATE : 01-04-12
CHECKED BY : B.N. BARODAWALA DATE : 01-10-12

DRAWN BY : RWW 11/09
CHECKED BY : GM 11/09

ADDED 11/23/09

26-MAR-2012 10:20
R:\TIPProjects-R\R2554A\Structures\FinalPlans\Str#2\r2554a_sd_ts_02.dgn
tcoggins

STR. #2 STD. NO. PCG13SM

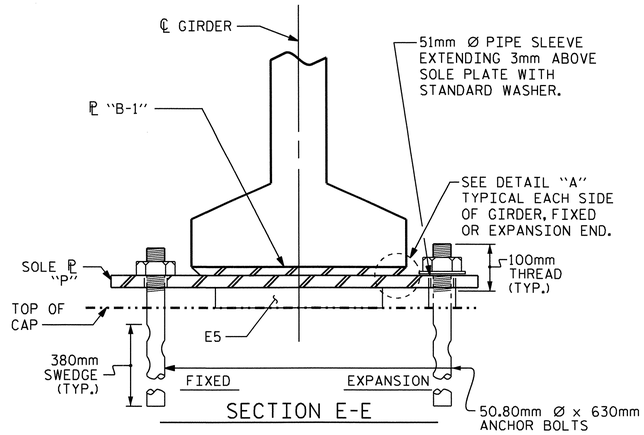

SECTION E-E

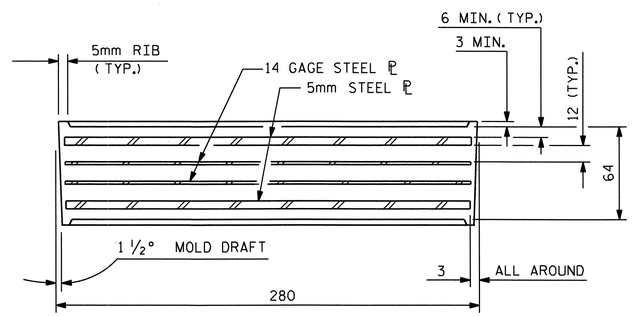

TYPICAL SECTION OF ELASTOMERIC BEARINGS

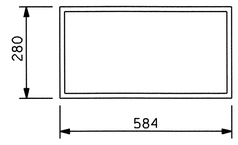

E5 (32 REQ'D)

PLAN VIEW OF ELASTOMERIC BEARING

TYPE VI

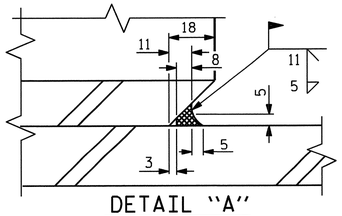

DETAIL "A"

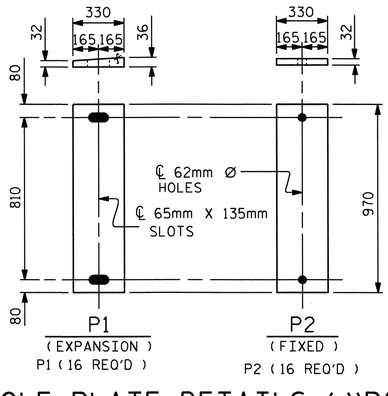

SOLE PLATE DETAILS ("P")

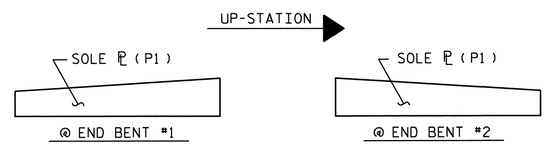

SOLE ℗ PLACEMENT DETAIL

NOTES

AT ALL FIXED POINTS OF SUPPORT, NUTS FOR ANCHOR BOLTS ARE TO BE TIGHTENED FINGER TIGHT AND THEN BACKED OFF ½ TURN. THE THREAD OF THE NUT AND BOLT SHALL THEN BE BURRED WITH A SHARP POINTED TOOL.

THE 51mm Ø PIPE SLEEVE SHALL BE CUT FROM SCHEDULE 40 PVC PLASTIC PIPE. THE PVC PLASTIC PIPE SHALL MEET THE REQUIREMENTS OF ASTM D1785.

STEEL SOLE PLATES, ANCHOR BOLTS, NUTS, AND WASHERS SHALL BE GALVANIZED IN ACCORDANCE WITH THE STANDARD SPECIFICATIONS.

PRIOR TO WELDING, GRIND THE GALVANIZED SURFACE OF THE PORTION OF THE EMBEDDED PLATE AND SOLE PLATE THAT ARE TO BE WELDED. AFTER WELDING, DAMAGED GALVANIZED SURFACES SHALL BE REPAIRED IN ACCORDANCE WITH THE STANDARD SPECIFICATIONS.

WHEN WELDING THE SOLE PLATE TO THE EMBEDDED PLATE IN THE GIRDER, USE TEMPERATURE INDICATING WAX PENS, OR OTHER SUITABLE MEANS, TO ENSURE THAT THE TEMPERATURE OF THE SOLE PLATE DOES NOT EXCEED 149°C. TEMPERATURES ABOVE THIS MAY DAMAGE THE ELASTOMER.

SOLE PLATE "P", BOLTS, NUTS, WASHERS, AND PIPE SLEEVE SHALL BE INCLUDED IN THE PAY ITEM FOR PRESTRESSED CONCRETE GIRDERS.

ANCHOR BOLTS SHALL MEET THE REQUIREMENTS OF ASTM A449. NUTS SHALL MEET THE REQUIREMENTS OF AASHTO M291M-12 OR AASHTO M292M-2H. WASHERS SHALL MEET THE REQUIREMENTS OF AASHTO M293M. SHOP DRAWINGS ARE NOT REQUIRED FOR ANCHOR BOLTS, NUTS AND WASHERS. SHOP INSPECTION IS REQUIRED.

ALL SURFACES OF BEARING PLATES SHALL BE SMOOTH AND STRAIGHT.

ALL BEARING PLATES SHALL BE AASHTO M270 GRADE 250.

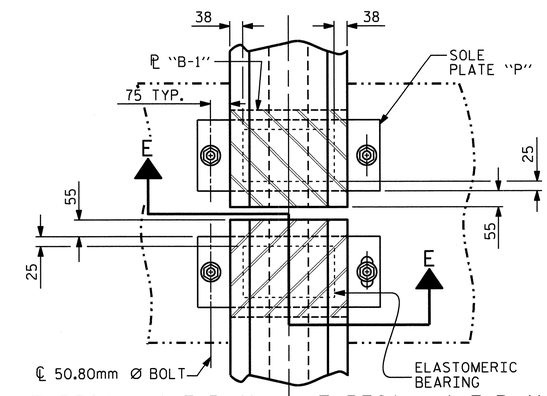

TYPICAL HALF-PLAN (SHOWING CONTINUOUS BENT)

TYPICAL HALF-PLAN (SHOWING SIMPLE SPAN BENT)

—LOAD RATINGS—	
	MAX.D.L.+ L.L.
TYPE VI	936 kN

PROJECT NO. R-2554A

WAYNE COUNTY

STATION: 31+55.609 -L-

STATE OF NORTH CAROLINA
DEPARTMENT OF TRANSPORTATION
RALEIGH

STANDARD
ELASTOMERIC BEARING DETAILS
PRESTRESSED CONCRETE GIRDER SUPERSTRUCTURE

NORTH CAROLINA PROFESSIONAL SEAL 14045 ENGINEER TIMOTHY L. COGGINS
03/23/12

REVISIONS						SHEET NO.
NO.	BY:	DATE:	NO.	BY:	DATE:	S-55
1			3			TOTAL SHEETS
2			4			276

STR. #2

STD. NO. EB4SM

ASSEMBLED BY : T.L. AVERETTE	DATE : 01-04-12
CHECKED BY : B.N. BARODAWALA	DATE : 01-10-12
DRAWN BY : EEM 2/97	REV. 8/16/99 RWW/LES
CHECKED BY : VAP 2/97	REV. 10/17/00 RWW/LES
	REV. 5/1/06 TLA/GM

10-FEB-2012 11:02
Z:\TIPProjects-R\R2554A\Structures\Str#2\FinalPlans\r2554a_sd_ts_02.dgn
padkins

NOTES

THE BARRIER RAIL IN A CONTINUOUS UNIT SHALL NOT BE CAST UNTIL ALL SLAB CONCRETE IN THE UNIT HAS BEEN CAST AND HAS REACHED A MINIMUM COMPRESSIVE STRENGTH OF 20.7 MPa.

ALL REINFORCING STEEL IN BARRIER RAILS SHALL BE EPOXY COATED.

GROOVED CONTRACTION JOINTS, 12mm IN DEPTH, SHALL BE TOOLED IN ALL EXPOSED FACES OF THE BARRIER RAIL AND IN ACCORDANCE WITH ARTICLE 825-10(B) OF THE STANDARD SPECIFICATIONS. THE CONTRACTION JOINT SHALL BE LOCATED AT EACH THIRD POINT BETWEEN BARRIER RAIL EXPANSION JOINTS. ONLY ONE CONTRACTION JOINT IS REQUIRED AT MIDPOINT OF BARRIER RAIL SEGMENTS LESS THAN 6.1m IN LENGTH AND NO CONTRACTION JOINTS ARE REQUIRED FOR THOSE SEGMENTS LESS THAN 3.5m IN LENGTH.

BAR TYPES

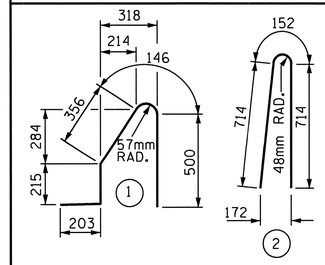

ALL BAR DIMENSIONS ARE OUT TO OUT

BILL OF MATERIAL

FOR CONCRETE BARRIER RAIL ONLY

BAR	NO.	SIZE	TYPE	LENGTH	WEIGHT
✳ S1	414	#16	1	1420	912
✳ S2	414	#16	2	1580	1015
✳ B1	96	#16	STR	7880	1174
✳ B2	32	#16	STR	4680	232
✳ B3	32	#16	STR	3420	170

✳ EPOXY COATED REINFORCING STEEL 3503 kg

CLASS AA CONCRETE 31.1 CU. METER

CONCRETE BARRIER RAIL
SUPERSTRUCTURE 123.982 METERS
● APPROACH SLABS 12.452 METERS
TOTAL 136.434 METERS

● FOR EPOXY COATED REINFORCING STEEL AND CLASS AA CONCRETE IN THE BARRIER RAIL ON THE APPROACH SLABS, SEE "BRIDGE APPROACH SLAB DETAILS" SHEET.

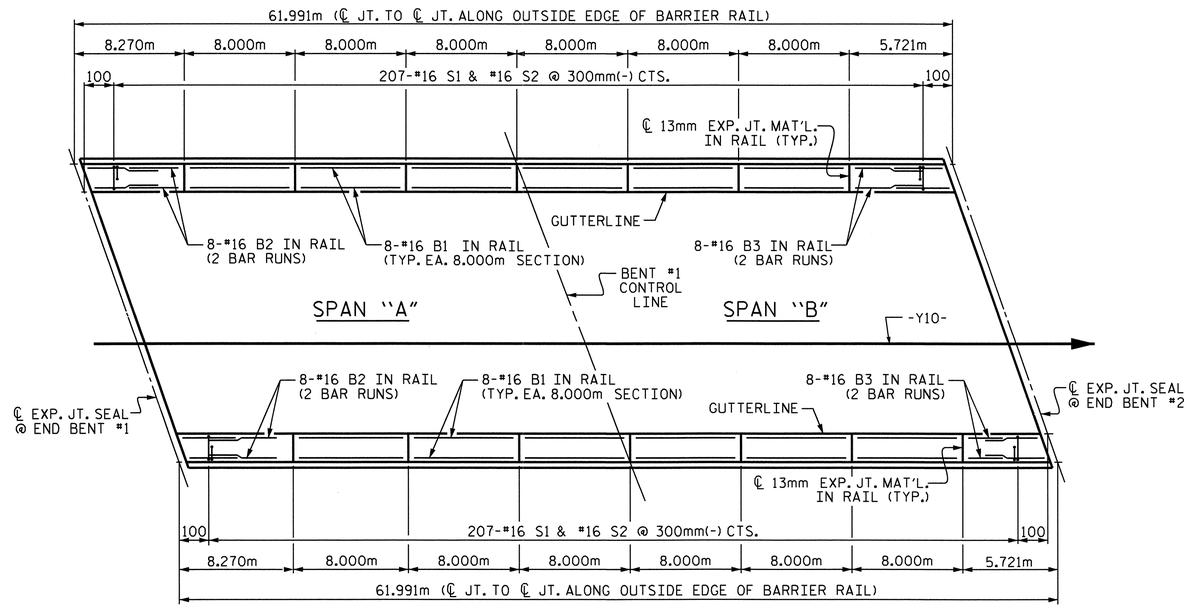

PLAN

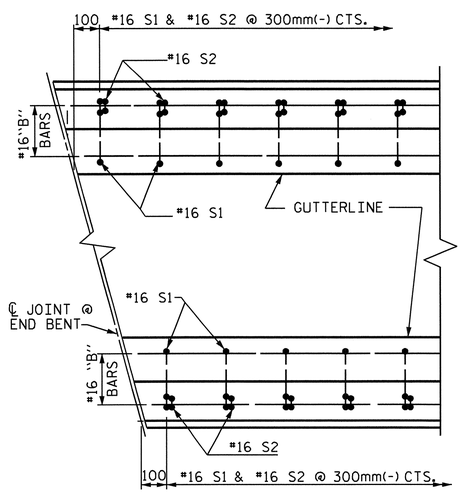

PLAN

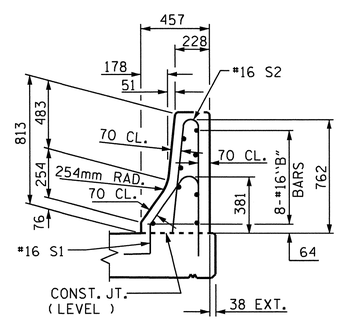

END VIEW

END OF RAIL DETAILS

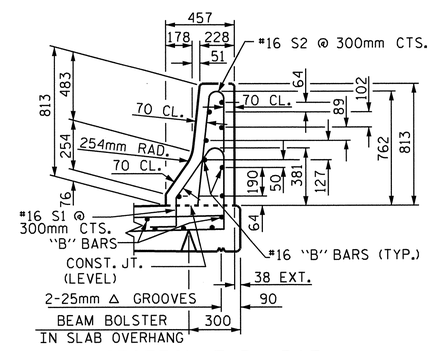

SECTION THRU RAIL

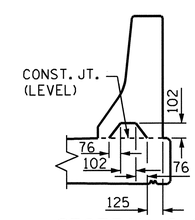

SECTION S-S

AT DAM IN OPEN JOINT
(THIS IS TO BE USED ONLY WHEN SLIP FORM IS USED)

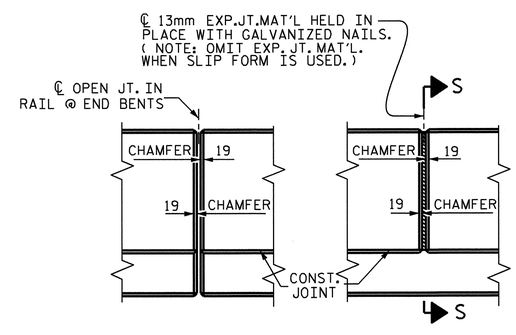

ELEVATION AT EXPANSION JOINTS

BARRIER RAIL DETAILS

PROJECT NO. R-2554A
WAYNE COUNTY
STATION: 31+55.609 -L-

STATE OF NORTH CAROLINA
DEPARTMENT OF TRANSPORTATION
RALEIGH

STANDARD

CONCRETE BARRIER RAIL

NORTH CAROLINA PROFESSIONAL SEAL 14045 ENGINEER TIMOTHY W. COGGINS
03/26/12

REVISIONS							SHEET NO.
NO.	BY:	DATE:	NO.	BY:	DATE:		S-56
1			3				TOTAL SHEETS
2			4				276

STR. #2 STD. No. CBR1SM

ASSEMBLED BY : T.L. AVERETTE DATE : 1-04-12
CHECKED BY : B.N. BARODAWALA DATE : 1-10-12

DRAWN BY : ARB 5/87
CHECKED BY : SJD 9/87

REV. 10/17/00 RWW/LES
REV. 5/7/03R RWW/JTE
REV. 5/1/06 TLA/GM

26-MAR-2012 10:21
R:\TIPProjects-R\R2554A\Structures\FinalPlans\Str#2\r2554a_sd_ts_02.dgn
tcoggins

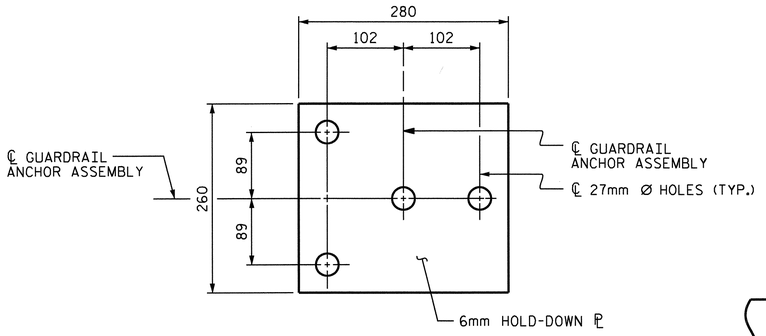

PLAN

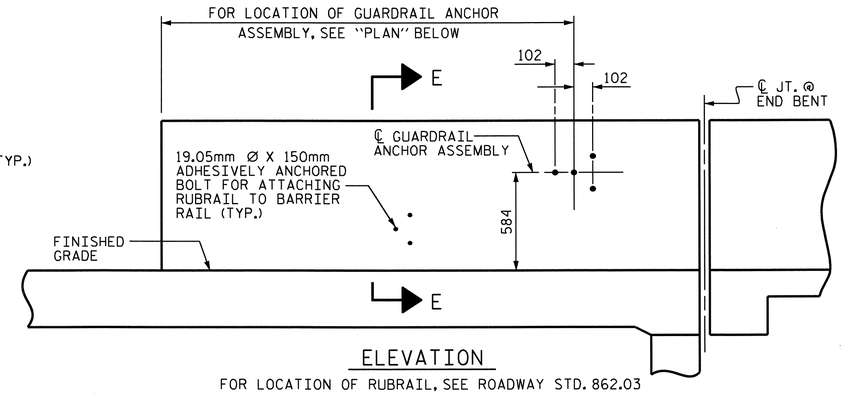

ELEVATION

FOR LOCATION OF RUBRAIL, SEE ROADWAY STD. 862.03

NOTES

THE GUARDRAIL ANCHOR ASSEMBLY SHALL CONSIST OF A 6mm HOLD DOWN PLATE AND 4 - 22.23mm Ø BOLTS WITH NUTS AND WASHERS, RUBRAIL, AND ADHESIVELY ANCHORED BOLTS.

THE HOLD-DOWN PLATE SHALL CONFORM TO AASHTO M270 GRADE 36. AFTER FABRICATION, THE HOLD-DOWN PLATE SHALL BE HOT-DIP GALVANIZED IN ACCORDANCE WITH AASHTO M111.

BOLTS SHALL CONFORM TO THE REQUIREMENTS OF ASTM A307 AND NUTS SHALL CONFORM TO THE REQUIREMENTS OF AASHTO M291. BOLTS, NUTS AND WASHERS SHALL BE GALVANIZED. (AT THE CONTRACTOR'S OPTION, STAINLESS STEEL BOLTS, NUTS AND WASHERS MAY BE USED AS AN ALTERNATE FOR THE 22.23mm Ø GALVANIZED BOLTS, NUTS AND WASHERS. THEY SHALL CONFORM TO OR EXCEED THE MECHANICAL REQUIREMENTS OF ASTM A307. THE USE OF THIS ALTERNATE SHALL BE APPROVED BY THE ENGINEER.)

THE GUARDRAIL ANCHOR ASSEMBLY IS REQUIRED AT ALL POINTS WHERE APPROACH GUARDRAIL IS TO BE ATTACHED TO THE END OF BARRIER RAIL. FOR POINTS OF ATTACHMENT, SEE SKETCH.

AFTER INSTALLATION, THE EXPOSED THREAD OF THE BOLT SHALL BE BURRED WITH A SHARP POINTED TOOL.

THE COST OF THE GUARDRAIL ANCHOR ASSEMBLY SHALL BE INCLUDED IN THE UNIT CONTRACT PRICE BID FOR CONCRETE BARRIER RAIL.

THE 32mm Ø HOLES SHALL BE FORMED OR DRILLED WITH A CORE BIT. IMPACT TOOLS WILL NOT BE PERMITTED. ANY CONCRETE DAMAGED BY THIS WORK SHALL BE REPAIRED TO THE SATISFACTION OF THE ENGINEER.

THE C150 X 12 RUBRAIL IS TO BE ADHESIVELY ANCHORED TO THE RAIL USING THREE 19.05mm Ø X 150mm BOLTS WITH WASHERS. LEVEL ONE FIELD TESTING IS REQUIRED, AND THE YIELD LOAD OF THE 19.05mm Ø BOLTS IS 53.4kN. FOR ADHESIVELY ANCHORED ANCHOR BOLTS OR DOWELS, SEE SPECIAL PROVISIONS. SEE ROADWAY STANDARD 862.03 FOR DETAILS AND LOCATION OF THE RUBRAIL.

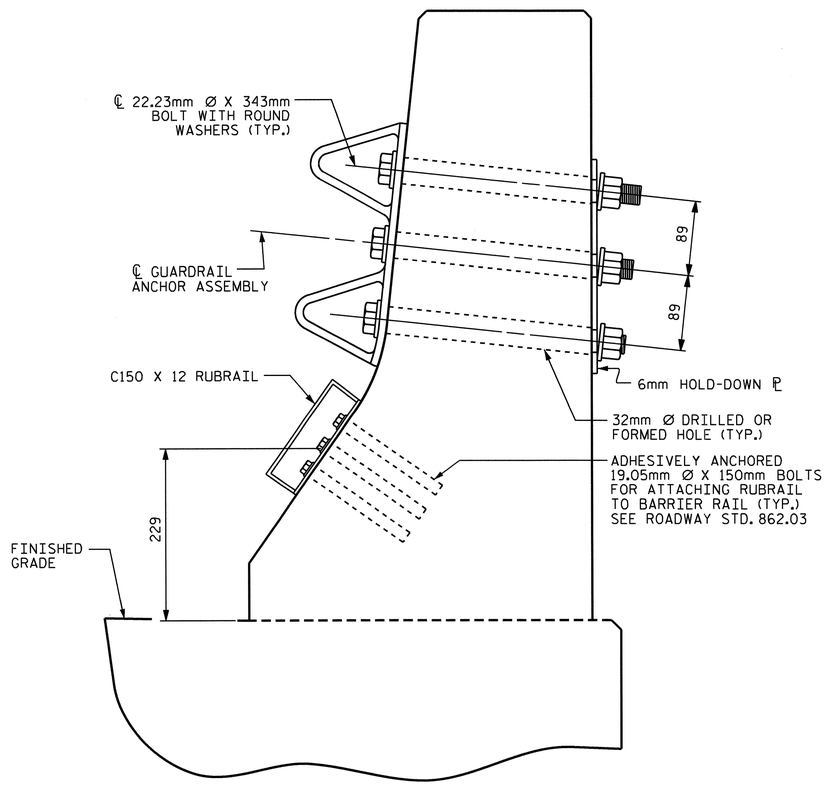

SECTION E-E

GUARDRAIL ANCHOR ASSEMBLY DETAILS

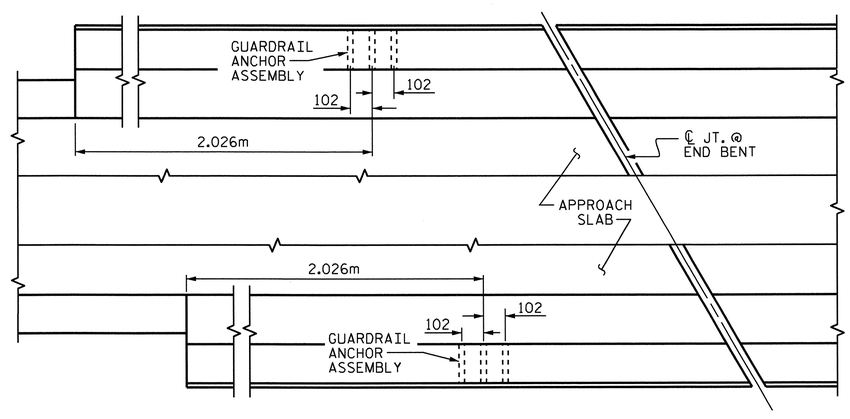

PLAN

LOCATION OF ANCHORS FOR GUARDRAIL

END BENT #1 SHOWN, END BENT #2 SIMILAR.

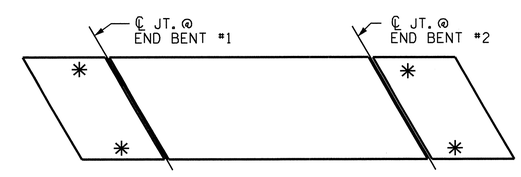

SKETCH SHOWING POINTS OF ATTACHMENTS

✳ DENOTES GUARDRAIL ANCHOR ASSEMBLY

PROJECT NO. R-2554A

WAYNE COUNTY

STATION: 31+55.609 -L-

STATE OF NORTH CAROLINA
DEPARTMENT OF TRANSPORTATION
RALEIGH

STANDARD

GUARDRAIL ANCHORAGE FOR BARRIER RAIL

NORTH CAROLINA PROFESSIONAL SEAL 14045 ENGINEER TIMOTHY L. COGGINS
03/26/12

REVISIONS						SHEET NO.
NO.	BY:	DATE:	NO.	BY:	DATE:	S-57
1			3			TOTAL SHEETS
2			4			216

ASSEMBLED BY : T.L. AVERETTE DATE : 1-04-12
CHECKED BY : B.N. BARODAWALA DATE : 1-10-12

DRAWN BY : TLA 5/06
CHECKED BY : GM 5/06

ADDED 5/1/06RR KMM/GM

26-MAR-2012 10:42
R:\TIPProjects-R\R2554A\Structures\FinalPlans\Str#2\r2554a_sd_ts_02.dgn
tcoggins

STR. #2 STD. NO. GRA2

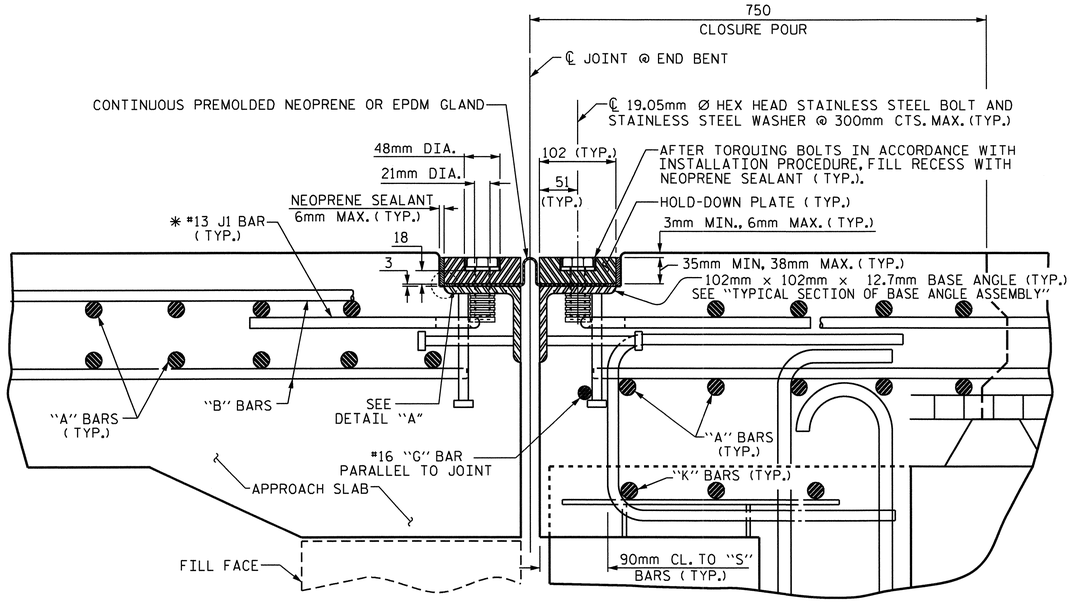

EXPANSION JOINT DETAILS

SECTION NORMAL TO JOINT -- PRESTRESSED GIRDER SUPERSTRUCTURE

* THE QUANTITY OF #13 J1 BARS ON THE BILL OF MATERIAL IS BASED ON 300mm CENTERS. J1 BARS SHALL BE PLACED AT EACH VERTICAL STUD ANCHOR BOLT. IN THE EVENT THAT THE NUMBER OF VERTICAL STUD ANCHOR BOLTS EXCEEDS THE NUMBER OF J1 BARS SPECIFIED, ADDITIONAL J1 BARS WILL NOT BE REQUIRED.

INSTALLATION PROCEDURE

1. A TEMPLATE OR OTHER SUITABLE DEVICE SHALL BE USED TO FORM THE TOP OF THE EXPANSION JOINT SEAL BLOCKOUT TO THE PROPER DEPTH AND WIDTH. THE TEMPLATE SHALL BE 105mm TO 108mm WIDE AND OF SUCH THICKNESS AS TO PROVIDE FOR CORRECT FINAL ELEVATION OF TOP OF HOLD-DOWN PLATES. THE TEMPLATE SHALL BE ATTACHED TO THE BASE ANGLE ASSEMBLY WITH THE 19.05mm Ø HEX HEAD BOLTS PROVIDED FOR THE HOLD-DOWN PLATES. A 25mm Ø HOLE SHALL BE PROVIDED IN THE TEMPLATE CENTERED OVER EACH WEEP HOLE IN THE 102mm X 102mm X 12.7mm BASE ANGLE. OTHER METHODS OF INSURING DRAINAGE THROUGH WEEP HOLES MAY BE EMPLOYED SUBJECT TO ENGINEER'S APPROVAL.
2. AFTER THE CONCRETE HAS BEEN CAST ON BOTH SIDES OF THE JOINT, REMOVE THE TEMPLATE. THOROUGHLY CLEAN THE BOLT HOLES AND THE ANGLE PLATE. REMOVE ANY EXCESS CONCRETE THAT COMES OUT OF THE WEEP HOLES. ANY DAMAGED STEEL SHALL BE COATED WITH A MINIMUM THICKNESS OF 0.100mm (DRY) OF ZINC-RICH PAINT IN ACCORDANCE WITH THE STANDARD SPECIFICATIONS.
3. LAY THE GLAND ON THE BASE ANGLE AND FIELD MARK THE GLAND FOR THE BOLT HOLES. HOLES IN THE GLAND SHALL BE PUNCHED 22mm IN DIAMETER WITH A HAND PUNCH.
4. IN ORDER TO CHECK FOR PROPER ALIGNMENT, PLACE THE GLAND AND HOLD-DOWN PLATES ON THE BASE ANGLE. DO NOT APPLY NEOPRENE SEALANT. BOLT THE HOLD-DOWN PLATES TO THE BASE ANGLE BUT DO NOT TIGHTEN. THE ENGINEER SHALL INSPECT THE JOINT SEAL DEVICE FOR PROPER ALIGNMENT.
5. AFTER INSPECTION, REMOVE THE HOLD-DOWN PLATES AND GLAND. APPLY NEOPRENE SEALANT TO THE BASE ANGLE IN ACCORDANCE WITH THE "INSTALLATION SKETCH". PLACE GLAND AND HOLD-DOWN PLATES ON THE BASE ANGLE. BOLT THE HOLD-DOWN PLATES TO THE BASE ANGLE ASSEMBLY AND TORQUE THE BOLTS TO 119.3 N-m WITH A TORQUE WRENCH. THE TORQUE WRENCH SHALL BE CALIBRATED IN ACCORDANCE WITH SECTION 440-10 (D) OF THE STANDARD SPECIFICATIONS. CHECK THE TORQUE AFTER THREE (3) HOURS AND, IF NECESSARY, RETIGHTEN TO 119.3 N-m. A FINAL CHECK SHALL BE MADE AT SEVEN (7) DAYS. TORQUE SHALL NOT BE LESS THAN 108.5 N-m AFTER SEVEN (7) DAYS.
6. AFTER PROPER TORQUING, CLEAN THE BOLT HOLE RECESSES AND THE RECESS BETWEEN THE JOINT SEAL DEVICE AND CONCRETE, COMPLETELY FILL THESE RECESSES WITH NEOPRENE SEALANT.

GENERAL NOTES

1. FOR EXPANSION JOINT SEALS, SEE SPECIAL PROVISIONS.
2. ALL PLATES AND ANGLES SHALL CONFORM TO AASHTO M270 GRADE 250 STEEL OR APPROVED EQUAL. ALL HOLD-DOWN BOLTS SHALL CONFORM TO ASTM F593 ALLOY 304 STAINLESS STEEL. WASHERS SHALL CONFORM TO ASTM F844 EXCEPT THEY SHALL BE MADE FROM ALLOY 304 STAINLESS STEEL. ALL STUD ANCHORS SHALL CONFORM TO AASHTO M169, GRADES 1010 THRU 1020 OR APPROVED EQUAL. ALL CONCRETE INSERTS SHALL BE CLOSED END AND SHALL CONFORM TO AASHTO M169, GRADE 12L14. TENSILE CAPACITY SHALL BE 13.3 kN MIN.
3. A PREMOLDED CORRUGATED OR NON-CORRUGATED GLAND SHALL BE USED FOR JOINTS SKEWED BETWEEN 50° THRU 130° . FOR JOINTS SKEWED LESS THAN 50° OR MORE THAN 130° , ONLY A CORRUGATED GLAND SHALL BE USED.
4. CLOSED END FERRULES AND STUD ANCHORS SHALL BE SHOP WELDED AND ALL HOLES SHALL BE SHOP DRILLED AS SHOWN ON PLANS. STUD ANCHORS SHALL BE ELECTRIC ARC END WELDED WITH COMPLETE FUSION.
5. SURFACES COMING IN CONTACT WITH NEOPRENE SHALL BE GROUND SMOOTH PRIOR TO METALLIZING.
6. UPON COMPLETION OF SHOP FABRICATION, THE HOLD DOWN PLATE AND BASE ANGLE ASSEMBLY AS SHOWN IN THE "TYPICAL SECTION OF BASE ANGLE ASSEMBLY", SHALL BE METALLIZED. SEE SPECIAL PROVISION FOR THERMAL SPRAYED COATINGS (METALLIZATION).
7. BASE ANGLE ASSEMBLY SHALL BE CONTINUOUS FOR THE LENGTH OF THE JOINT. AT CROWN BREAKS, THE ENDS OF THE BASE ANGLE ASSEMBLY SHALL BE CUT PARALLEL TO THE BRIDGE CENTERLINE FOR SKEWS LESS THAN 80° AND GREATER THAN 100°. FINISHED WELD SHALL BE GROUND SMOOTH AND COATED WITH A MINIMUM THICKNESS OF 0.100mm (DRY) OF ZINC-RICH PAINT IN ACCORDANCE WITH THE STANDARD SPECIFICATIONS.
8. FIELD SPLICES OF HOLD-DOWN PLATES SHALL BE KEPT TO A MINIMUM. CONTRACTOR SHALL FURNISH DETAILED PLANS SHOWING PROPOSED SPLICE LOCATIONS FOR APPROVAL. HOLD-DOWN PLATES SHALL NOT EXCEED 6.1m LENGTHS UNLESS APPROVED BY THE ENGINEER.
9. NO ALTERNATE JOINT DETAILS SHALL BE PERMITTED IN LIEU OF THOSE SHOWN ON THESE PLANS.
10. THE CONTRACTOR MAY, AT HIS OPTION, USE ADHESIVELY ANCHORED ANCHOR BOLTS IN PLACE OF CONCRETE INSERTS FOR COVER PLATES. THE YIELD LOAD OF THE 19.05mm DIA. BOLT IS 44.5 kN. FIELD TESTING OF THE ADHESIVE BONDING SYSTEM IS NOT REQUIRED.

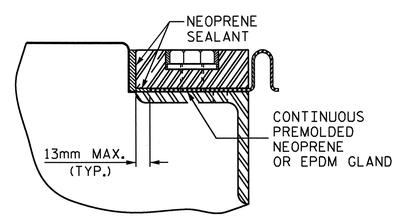

DETAIL "A"

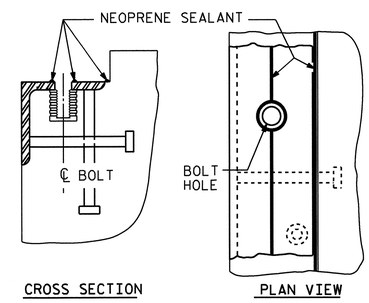

INSTALLATION SKETCH

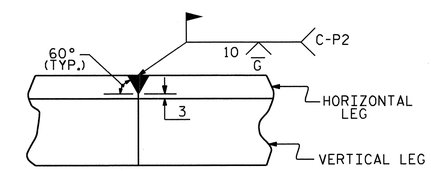

DETAIL- FIELD WELD SPLICE OF BASE ANGLE

MOVEMENT AND SETTING AT JOINT					
END BENT NO.	SKEW ANGLE	TOTAL MOVEMENT (ALONG ℄ RDWY)	PERPENDICULAR JOINT OPENING AT 7° C	PERPENDICULAR JOINT OPENING AT 16° C	PERPENDICULAR JOINT OPENING AT 32° C
1	63°-40'-50"	20mm	39mm	36mm	29mm
2	63°-40'-50"	20mm	39mm	36mm	29mm

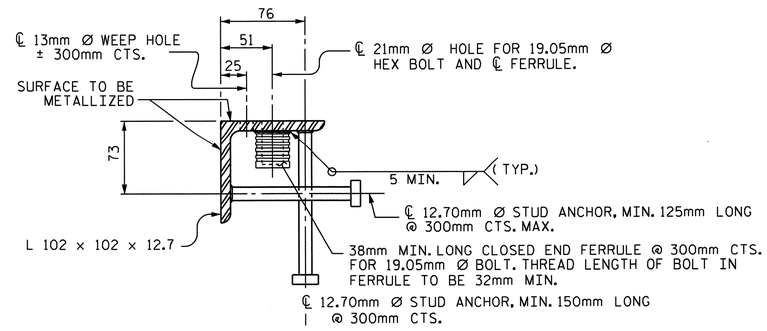

TYPICAL SECTION OF BASE ANGLE ASSEMBLY

PROJECT NO. R-2554A
WAYNE COUNTY
STATION: 31+55.609 -L-

SHEET 1 OF 2

STATE OF NORTH CAROLINA
DEPARTMENT OF TRANSPORTATION
RALEIGH

STANDARD

EXPANSION JOINT SEAL DETAILS

NORTH CAROLINA PROFESSIONAL SEAL 14045 ENGINEER TIMOTHY W. COGGINS
03/26/12

REVISIONS							SHEET NO.
NO.	BY:	DATE:	NO.	BY:	DATE:		S-58
1			3				TOTAL SHEETS
2			4				276

ASSEMBLED BY : T.L. AVERETTE		DATE : 1-04-12	
CHECKED BY : B.N. BARODAWALA		DATE : 1-10-12	
DRAWN BY : REK 9/87	REV. 10/17/00	RWW/LES	
CHECKED BY : CRK 10/87	REV. 5/7/03R	RWW/JTE	
	REV. 5/1/06R	TLA/GM	

STR. #2

STD. NO. EJS1SM

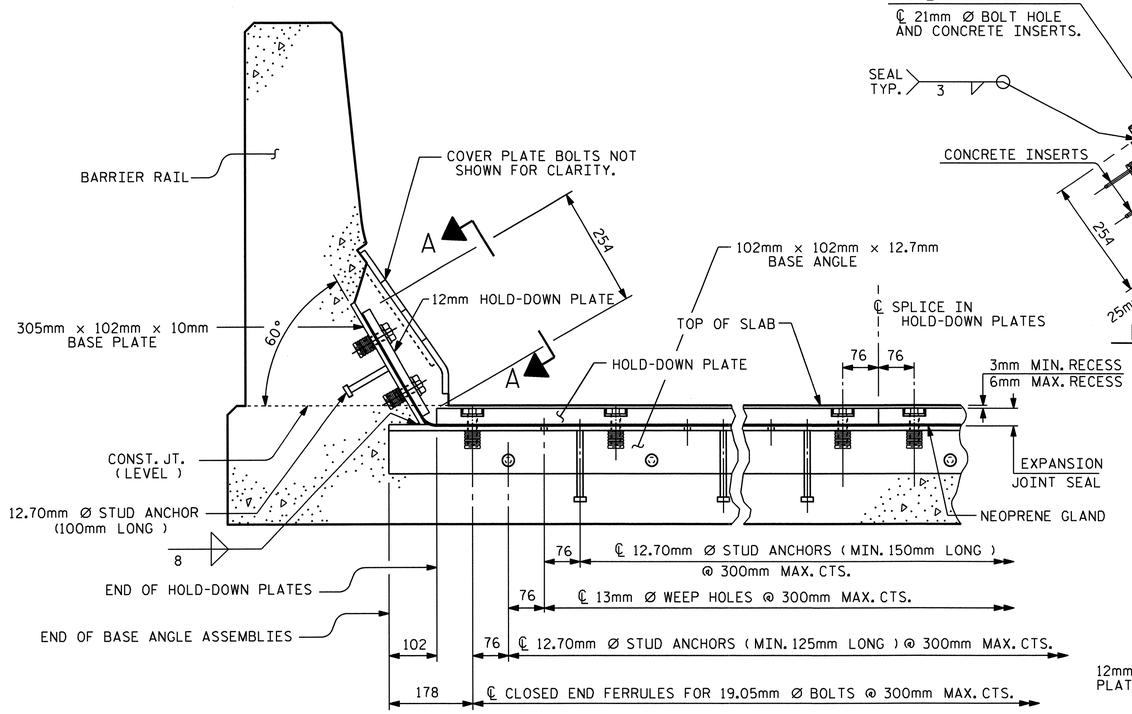

SECTION THRU RAIL NORMAL TO JOINT

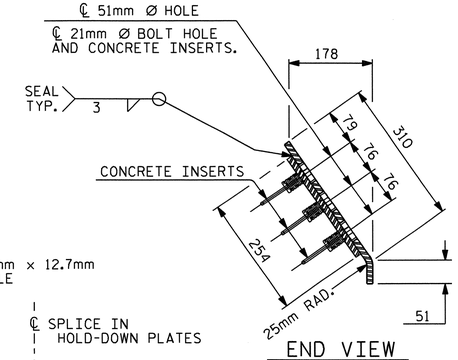

END VIEW

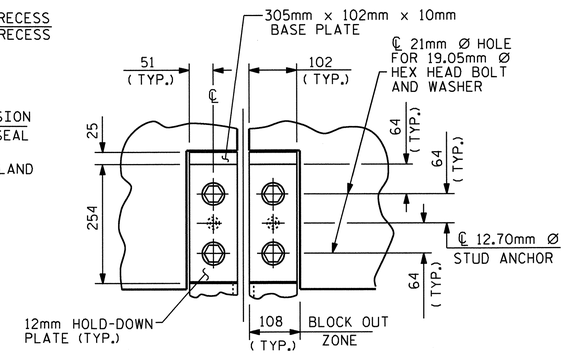

SECTION A-A

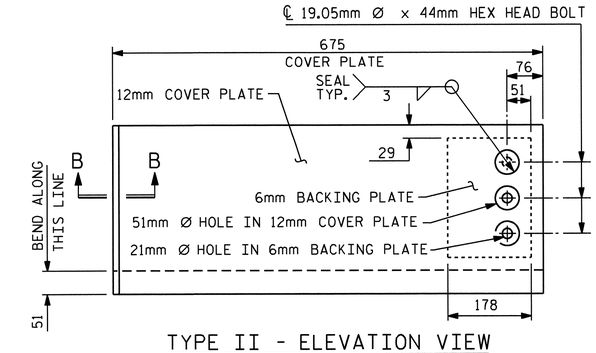

TYPE II - ELEVATION VIEW
COVER PLATE DETAILS

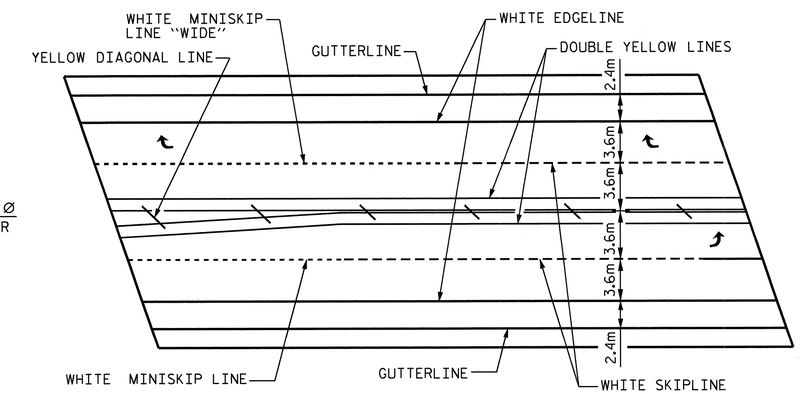

PAVEMENT MARKING ALIGNMENT

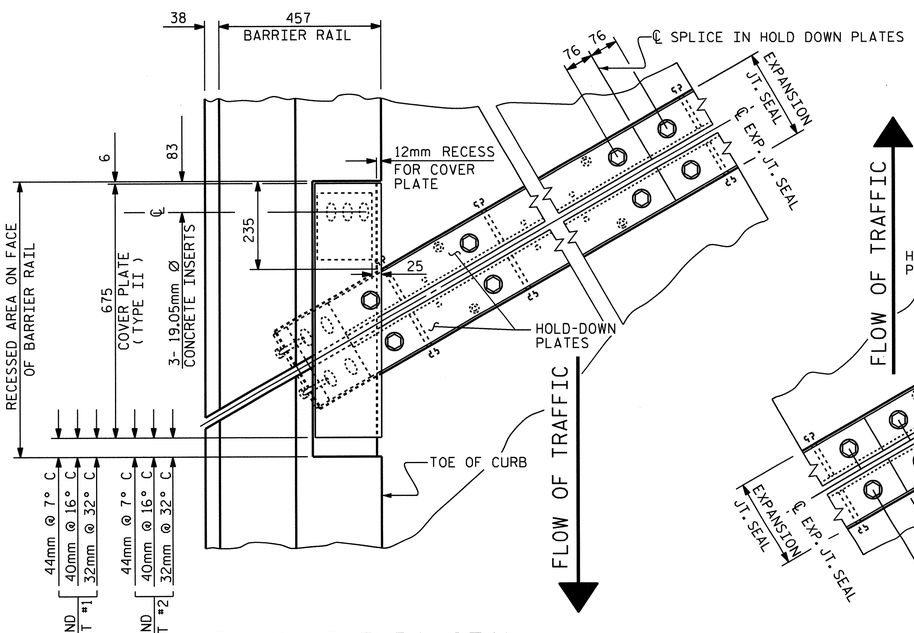

PLAN OF EXPANSION JOINT SEAL - LEFT SIDE

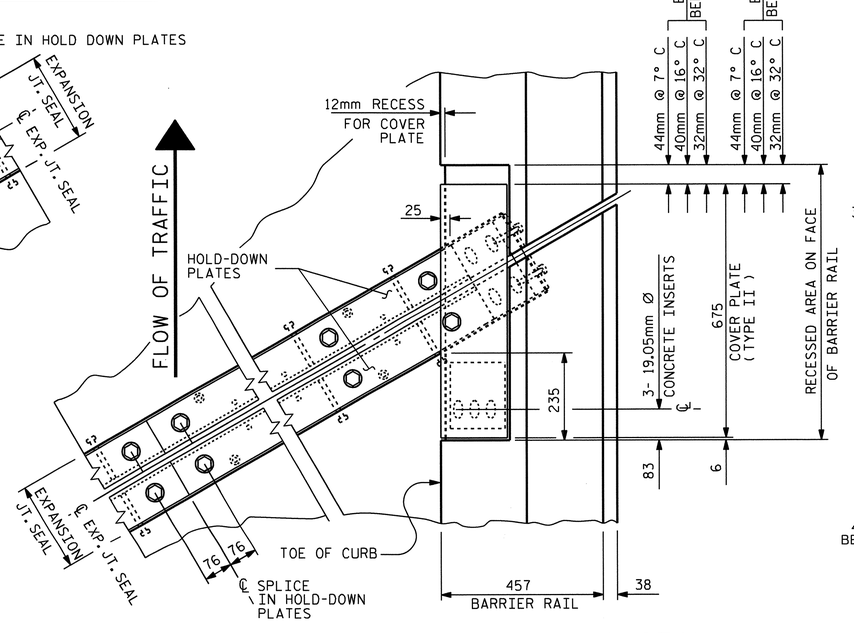

PLAN OF EXPANSION JOINT SEAL - RIGHT SIDE

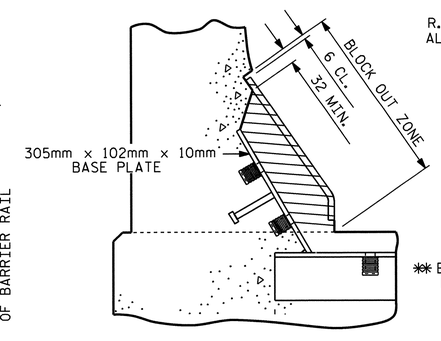

BLOCK OUT DETAIL

SEE "SECTION A-A" FOR OTHER DETAILS.

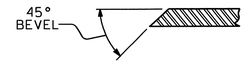

SECTION B-B

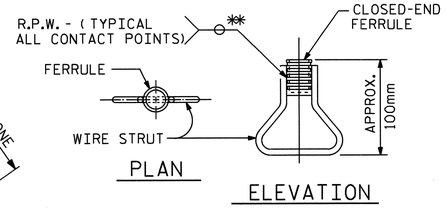

CONCRETE INSERT

** EACH WELDED ATTACHMENT OF WIRE TO FERRULE SHALL DEVELOP THE TENSILE STRENGTH OF THE WIRE.

PROJECT NO. R-2554A
WAYNE COUNTY
STATION: 31+55.609 -L-

SHEET 2 OF 2

STATE OF NORTH CAROLINA
DEPARTMENT OF TRANSPORTATION
RALEIGH

STANDARD EXPANSION JOINT SEAL DETAILS FOR BARRIER RAIL

NORTH CAROLINA PROFESSIONAL SEAL 14045 ENGINEER TIMOTHY W. COGGINS
03/26/12

ASSEMBLED BY : T.L. AVERETTE	DATE : 1-04-12		
CHECKED BY : B.N. BARODAWALA	DATE : 1-10-12		
DRAWN BY : REK 9/87	REV. 7/17/98	RWW/LES	
CHECKED BY : CRK 10/87	REV. 10/17/00	RWW/LES	
	REV. 5/1/06	TLA/GM	

REVISIONS								SHEET NO.
NO.	BY:	DATE:	NO.	BY:	DATE:			S-59
1			3					TOTAL SHEETS
2			4					276

STR. #2

STD. NO. EJS2SM

26-MAR-2012 10:23
R:\TIPProjects-R\R2554A\Structures\FinalPlans\Str#2\r2554a_sd_ts_02.dgn
tcoggins

SUPERSTRUCTURE REINFORCING STEEL LENGTHS ARE BASED ON THE FOLLOWING MINIMUM SPLICE LENGTHS					
BAR SIZE	SUPERSTRUCTURE EXCEPT APPROACH SLABS, PARAPET, AND BARRIER RAIL		APPROACH SLABS		PARAPET AND BARRIER RAIL
	EPOXY COATED	UNCOATED	EPOXY COATED	UNCOATED	
#13	610	540	610	540	840
#16	770	660	770	660	1050
#19	920	790	1190	790	1330
#22	1580	1060			
#25	2080	1390			

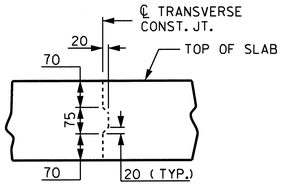

TRANSVERSE CONSTRUCTION JOINT DETAIL

NOTE: REINFORCING STEEL IN SLAB NOT SHOWN. LONGITUDINAL REINFORCING STEEL SHALL BE CONTINUOUS THRU JOINT.

REINFORCING BAR SCHEDULE

BAR	NO.	SIZE	TYPE	LENGTH	WEIGHT	BAR	NO.	SIZE	TYPE	LENGTH	WEIGHT	BAR	NO.	SIZE	TYPE	LENGTH	WEIGHT
* A1	542	#16	STR	11040	9287	A201	8	#16	STR	10620	132	* B3	47	#22	STR	9300	1330
A2	542	#16	STR	10980	9236	A202	8	#16	STR	10240	127	* B4	48	#22	STR	5480	800
						A203	8	#16	STR	9860	122	* B5	144	#13	STR	7000	1002
* A101	8	#16	STR	10560	131	A204	8	#16	STR	9480	118	B6	312	#16	STR	15960	7728
* A102	8	#16	STR	10180	126	A205	4	#16	STR	17480	109						
* A103	8	#16	STR	9800	122	A206	4	#16	STR	16720	104	* G1	4	#16	STR	12260	76
* A104	8	#16	STR	9420	117	A207	4	#16	STR	15960	99						
* A105	4	#16	STR	17260	107	A208	4	#16	STR	15180	94	* J1	152	#13	10	440	66
* A106	4	#16	STR	16500	102	A209	4	#16	STR	14420	90						
* A107	4	#16	STR	15720	98	A210	4	#16	STR	13640	85	* K1	8	#25	1	4740	151
* A108	4	#16	STR	14960	93	A211	4	#16	STR	12880	80	* K2	24	#25	2	6880	656
* A109	4	#16	STR	14180	88	A212	4	#16	STR	12120	75	* K3	42	#19	STR	1680	158
* A110	4	#16	STR	13420	83	A213	4	#16	STR	11340	70	K4	14	#13	STR	1680	23
* A111	4	#16	STR	12640	78	A214	4	#16	STR	10580	66	K5	14	#13	STR	1760	24
* A112	4	#16	STR	11880	74	A215	4	#16	STR	9800	61	K6	70	#13	STR	2700	188
* A113	4	#16	STR	11120	69	A216	4	#16	STR	9040	56	K7	36	#13	7	3660	131
* A114	4	#16	STR	10340	64	A217	4	#16	STR	8280	51	K8	12	#13	9	1840	22
* A115	4	#16	STR	9580	59	A218	4	#16	STR	7500	47						
* A116	4	#16	STR	8800	55	A219	4	#16	STR	6740	42	* S1	84	#16	3	1780	232
* A117	4	#16	STR	8040	50	A220	4	#16	STR	5960	37	* S2	84	#13	8	1640	137
* A118	4	#16	STR	7280	45	A221	4	#16	STR	5200	32	S3	308	#13	4	840	257
* A119	4	#16	STR	6500	40	A222	4	#16	STR	4420	27	S4	14	#13	5	3340	46
* A120	4	#16	STR	5740	36	A223	4	#16	STR	3660	23						
* A121	4	#16	STR	4960	31	A224	4	#16	STR	2900	18	* U1	42	#13	6	5440	227
* A122	4	#16	STR	4200	26	A225	4	#16	STR	2120	13						
* A123	4	#16	STR	3440	21	A226	4	#16	STR	1360	8						
* A124	4	#16	STR	2660	17	A227	4	#16	STR	580	4						
* A125	4	#16	STR	1900	12												
* A126	4	#16	STR	1120	7	* B1	144	#13	STR	7540	1079	REINFORCING STEEL = 19445 KG					
* A127	4	#16	STR	740	5	* B2	48	#22	STR	18000	2628	* EPOXY COATED REINF. STEEL = 19585 KG					

BAR TYPES

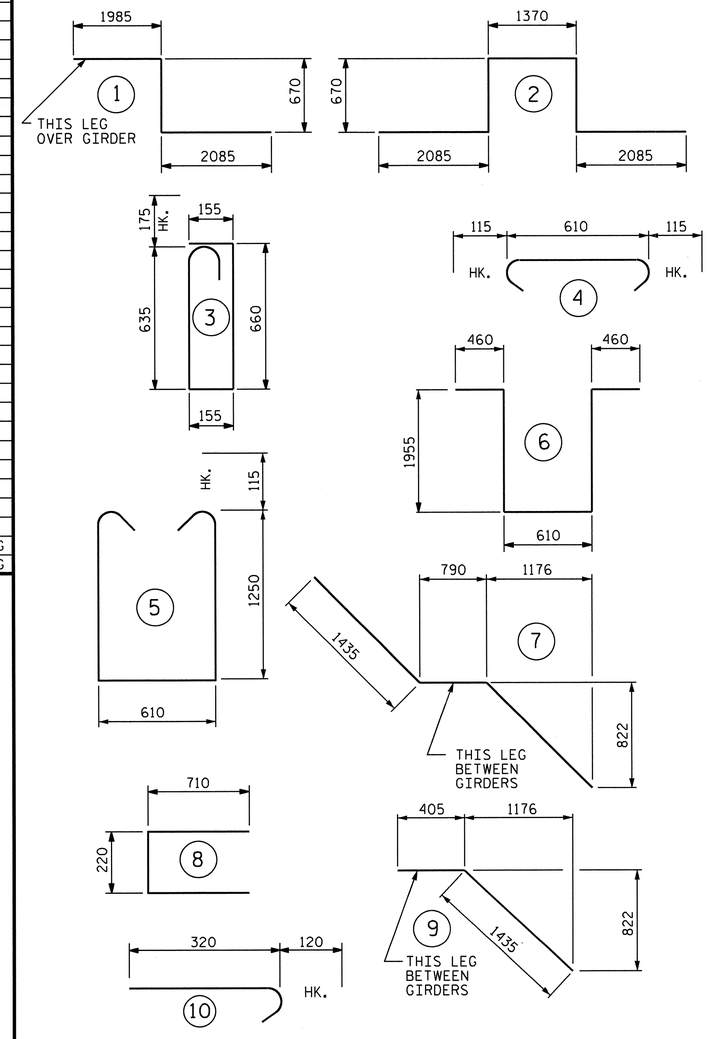

ALL BAR DIMENSIONS ARE OUT TO OUT

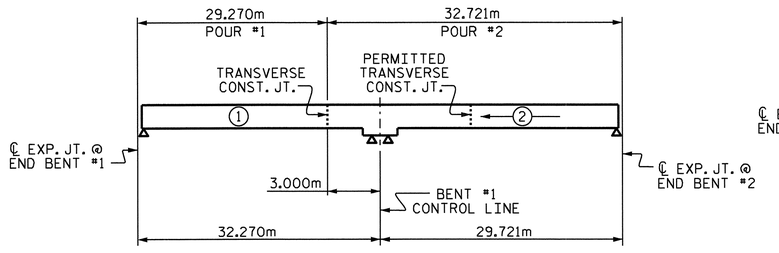

POURING SEQUENCE

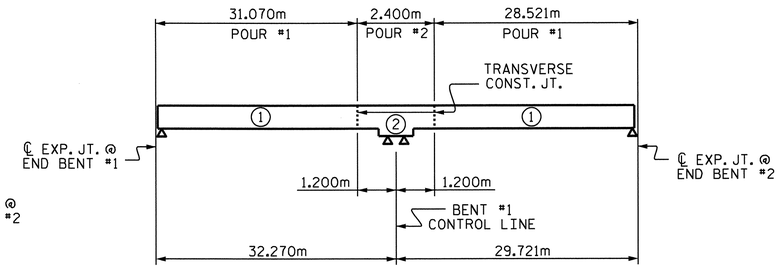

OPTIONAL POURING SEQUENCE

POUR (2) CAN NOT BE STARTED UNTIL BOTH ADJACENT (1) POURS REACH A MINIMUM OF 20.7MPa.

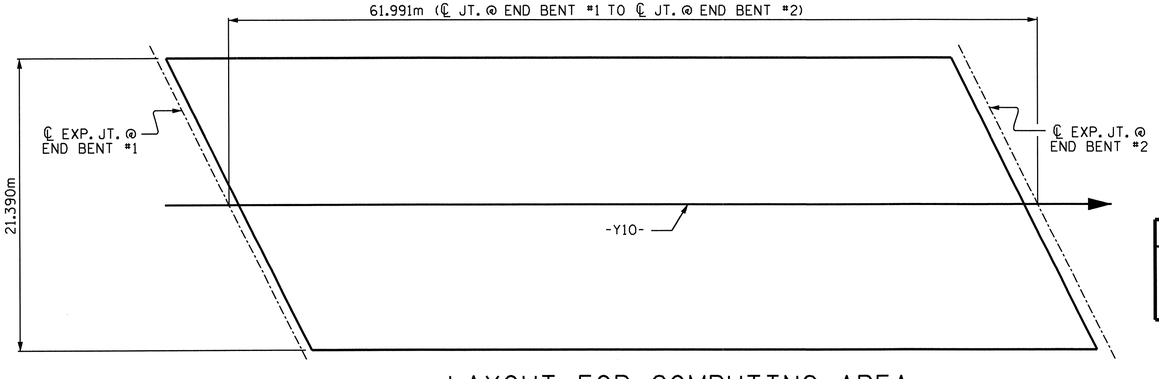

LAYOUT FOR COMPUTING AREA OF REINFORCED CONCRETE DECK SLAB (SQ. METER = 1326.0)

GROOVING BRIDGE FLOORS	
APPROACH SLABS	292.4 SQ.METER
BRIDGE DECK	1202.4 SQ.METER
TOTAL	1494.8 SQ.METER

SUPERSTRUCTURE BILL OF MATERIAL

	CONCRETE CLASS AA	REINFORCING STEEL	EPOXY COATED REINFORCING STEEL
	m3	(KG)	(KG)
POUR #1	167.3	19,445	19,585
POUR #2	212.6		
* * TOTALS	379.9		

* * QUANTITIES FOR BARRIER RAILS ARE NOT INCLUDED

NORTH CAROLINA PROFESSIONAL SEAL 14045 ENGINEER TIMOTHY K. COGGINS
03/26/12

PROJECT NO. R-2554A
WAYNE COUNTY
STATION: 31+55.609 -L-

STATE OF NORTH CAROLINA
DEPARTMENT OF TRANSPORTATION
RALEIGH

SUPERSTRUCTURE
BILL OF MATERIAL

REVISIONS								SHEET NO.
NO.	BY:	DATE:	NO.	BY:	DATE:			5-60
1			3					TOTAL SHEETS
2			4					276

ASSEMBLED BY : J.B. WILSON/TLA	DATE : 7/27/11		
CHECKED BY : B.N. BARODAWALA	DATE : 1/10/12		
DRAWN BY : JMB 5/87	REV. 5/16/97	EEM/RGW	
CHECKED BY : SJD 9/87	REV. 5/1/06	TLA/GM	

26-MAR-2012 10:24
R:\TIPProjects-R\R2554A\Structures\FinalPlans\Str#2\r2554a_sd_ts_02.dgn
tcoggins

STR. #2

STD. NO. BOM2SM

NOTES:

STIRRUPS AND U2 BARS IN THE CAP MAY BE SHIFTED AS NECESSARY TO CLEAR ANCHOR BOLTS.

BACKWALL SHALL BE PLACED BEFORE APPLYING THE EPOXY PROTECTIVE COATING.

THE TOP SURFACE AREAS OF THE END BENT CAP SHALL BE CURED IN ACCORDANCE WITH THE STANDARD SPECIFICATIONS EXCEPT THE MEMBRANE CURING COMPOUND METHOD SHALL NOT BE USED.

THE TOP SURFACE OF THE END BENT CAP EXCEPT THE BRIDGE SEAT BUILDUPS SHALL BE SLOPED TRANSVERSELY FROM THE FILL FACE TO THE BACK FACE AT THE RATE OF 2%.

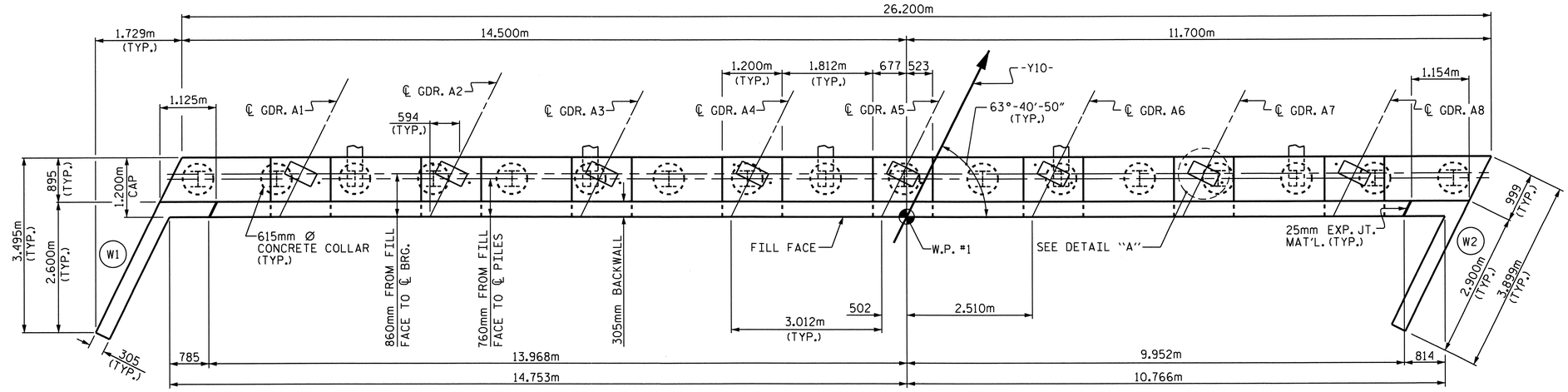

PLAN

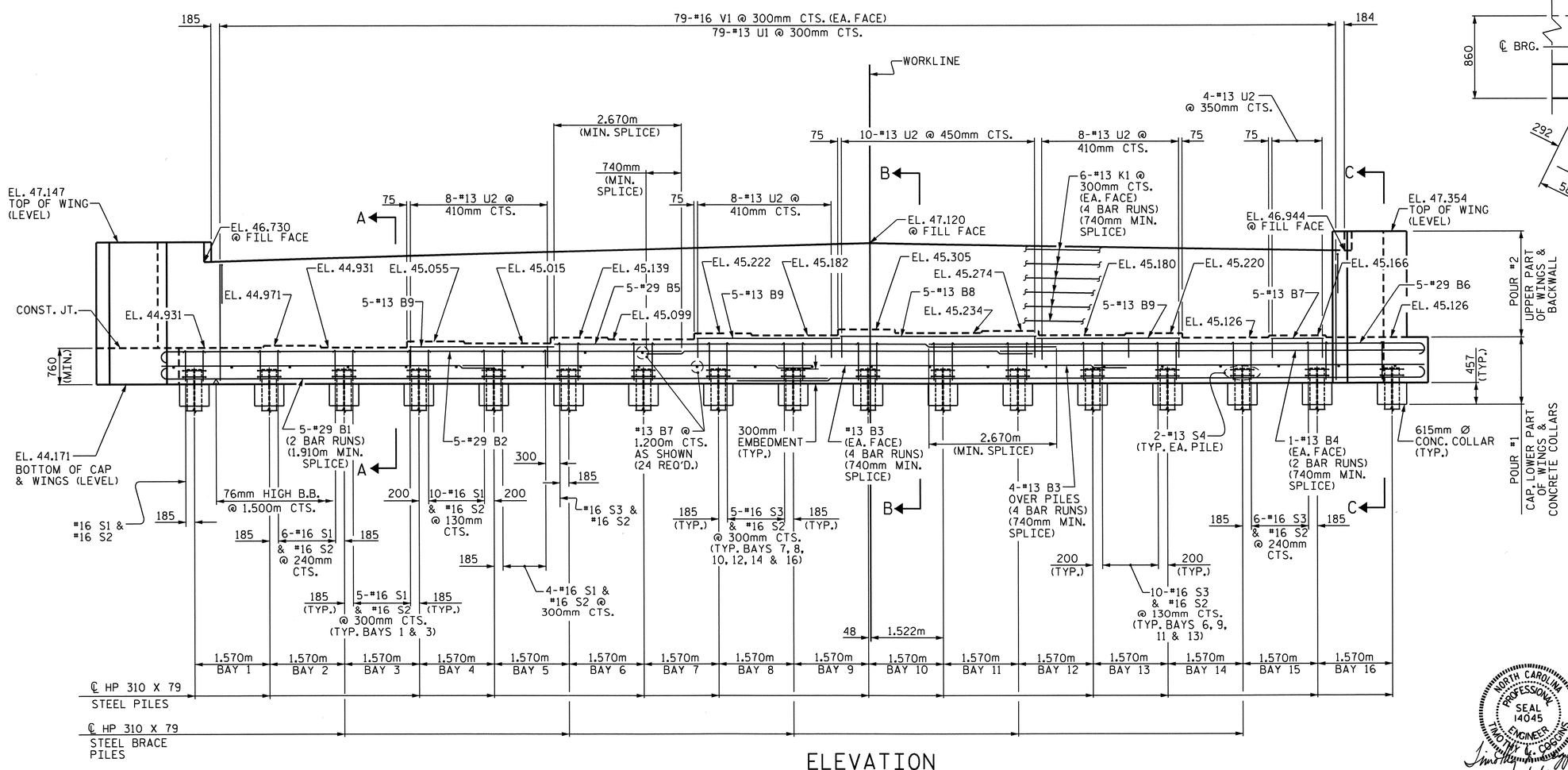

ELEVATION

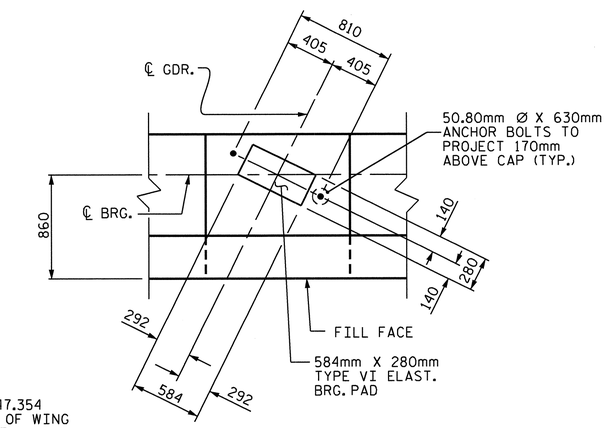

DETAIL "A"
(TYP. EA. GDR.)

PROJECT NO. R-2554A
WAYNE COUNTY
STATION: 31+55.609 -L-

SHEET 1 OF 3

STATE OF NORTH CAROLINA
DEPARTMENT OF TRANSPORTATION
RALEIGH

SUBSTRUCTURE

END BENT #1

NORTH CAROLINA PROFESSIONAL SEAL 14045 ENGINEER TIMOTHY W. COSGRIFF
03/26/12

REVISIONS							SHEET NO.
NO.	BY:	DATE:	NO.	BY:	DATE:		S-61
1			3				TOTAL SHEETS
2			4				276

STR. #2

DRAWN BY : M.D.PISO DATE : 10-05-11
CHECKED BY : P.A.PARISI DATE : 11-15-11

22-MAR-2012 07:49
R:\TIPProjects-R\R2554A\Structures\FinalPlans\Str#2\r2554a_sd_ebl_02.dgn
taverette

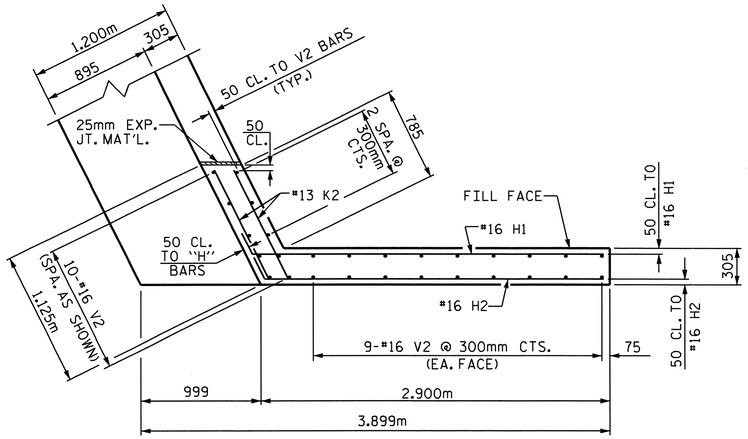

PLAN OF WING (W1)

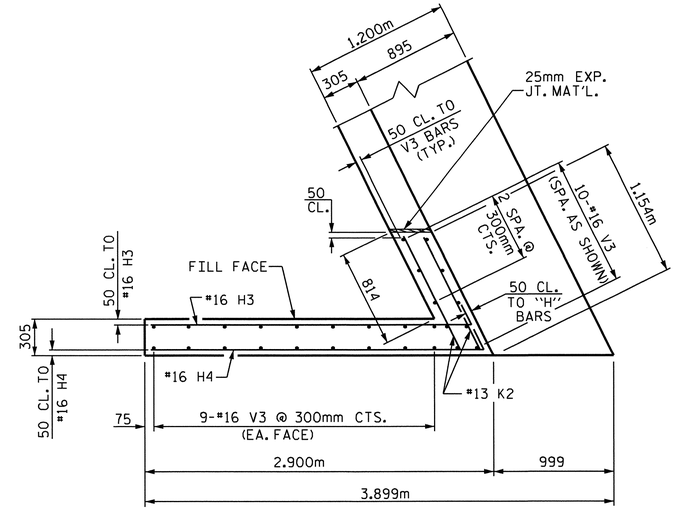

PLAN OF WING (W2)

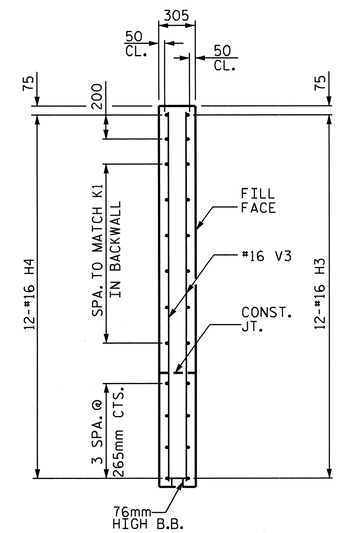

SECTION Y-Y

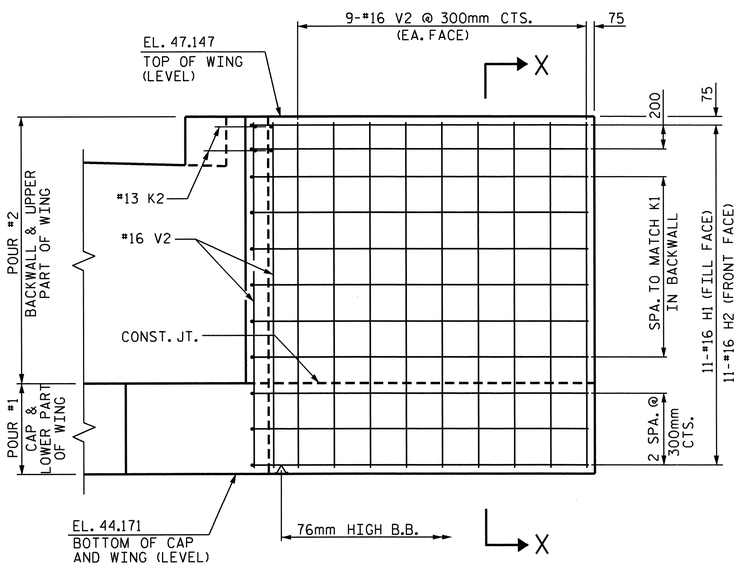

ELEVATION OF WING (W1)

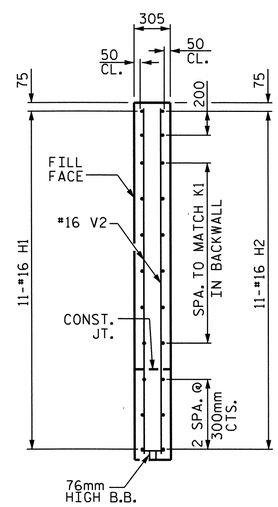

SECTION X-X

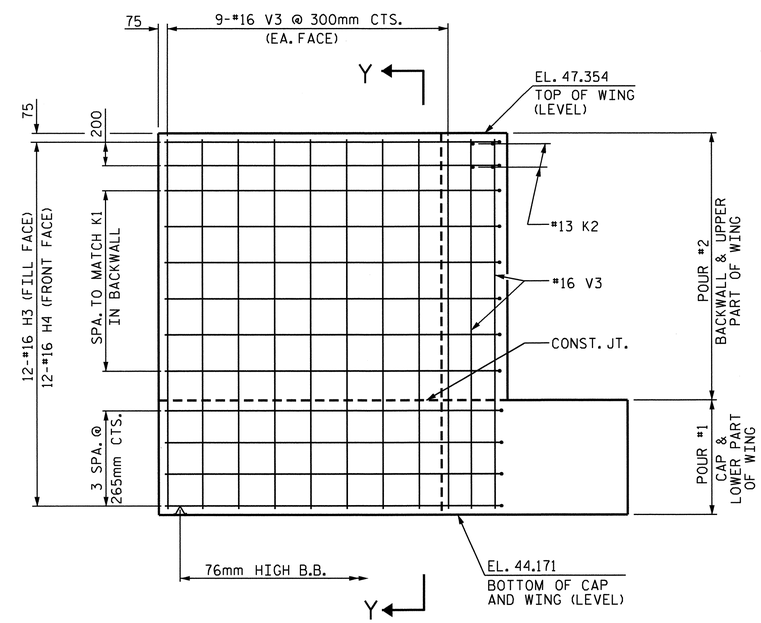

ELEVATION OF WING (W2)

PROJECT NO. R-2554A
WAYNE COUNTY
STATION: 31+55.609 -L-

SHEET 2 OF 3

STATE OF NORTH CAROLINA
DEPARTMENT OF TRANSPORTATION
RALEIGH

SUBSTRUCTURE

END BENT #1

NORTH CAROLINA PROFESSIONAL SEAL 14045 ENGINEER TIMOTHY W. COGGINS
03/24/12

REVISIONS						SHEET NO.
NO.	BY:	DATE:	NO.	BY:	DATE:	S-62
1			3			TOTAL SHEETS
2			4			276

DRAWN BY : M.D.PISO DATE : 10-05-11
CHECKED BY : P.A.PARISI DATE : 11-15-11

13-FEB-2012 14:21
Z:\TIPProjects-R\R2554A\Structures\Str#2\FinalPlans\R-2554A_SD_EB1.dgn
emurray

STR. #2

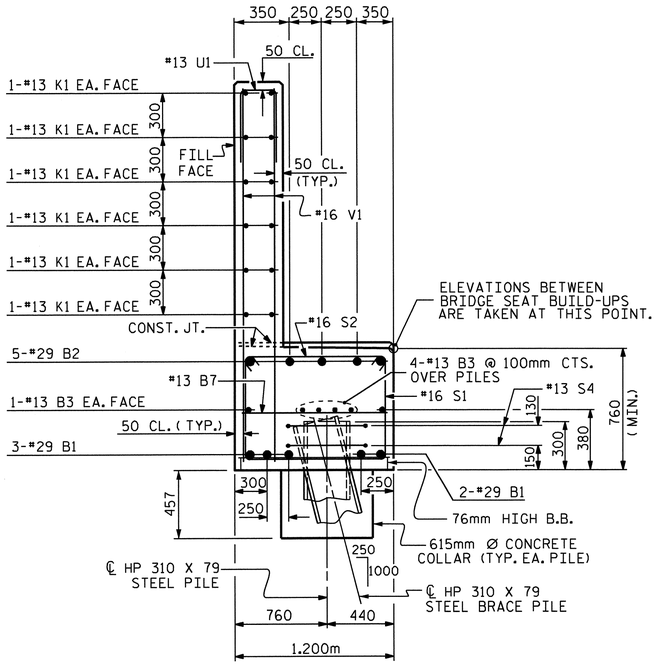

SECTION A-A

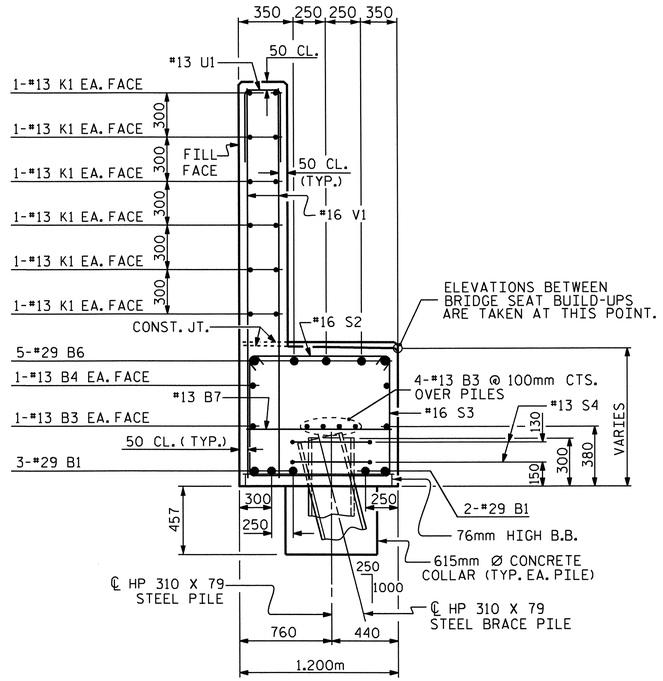

SECTION C-C

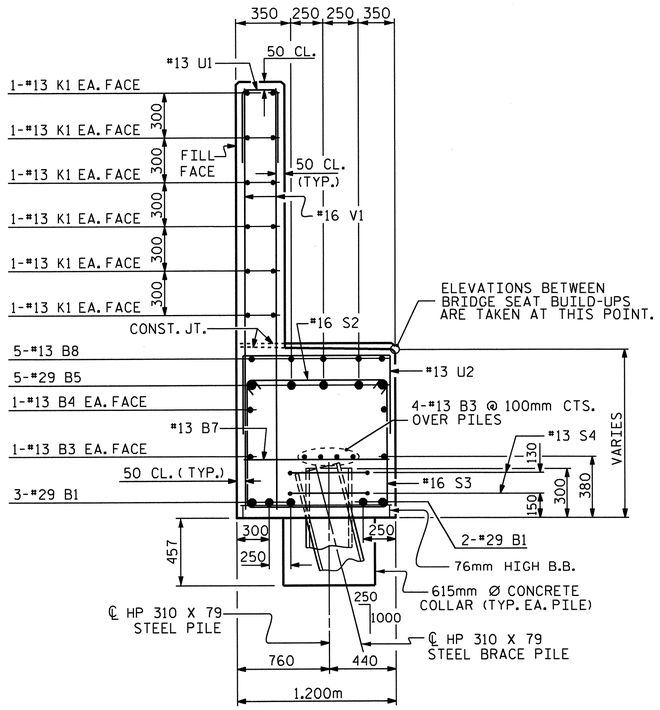

SECTION B-B

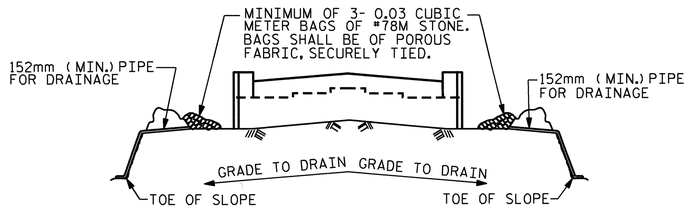

BAGGED STONE AND PIPE SHALL BE PLACED IMMEDIATELY AFTER COMPLETION OF END BENT EXCAVATION. PIPE MAY BE EITHER CONCRETE, CORRUGATED STEEL, CORRUGATED ALUMINUM ALLOY, OR CORRUGATED PLASTIC. PERFORATED PIPE WILL NOT BE ALLOWED.

BAGGED STONE SHALL REMAIN IN PLACE UNTIL THE ENGINEER DIRECTS THAT IT BE REMOVED. THE CONTRACTOR SHALL REMOVE AND DISPOSE OF SILT ACCUMULATIONS AT BAGGED STONE WHEN SO DIRECTED BY THE ENGINEER. BAGS SHALL BE REMOVED AND REPLACED WHENEVER THE ENGINEER DETERMINES THAT THEY HAVE DETERIORATED AND LOST THEIR EFFECTIVENESS.

NO SEPARATE PAYMENT WILL BE MADE FOR THIS WORK AND THE ENTIRE COST OF THIS WORK SHALL BE INCLUDED IN THE UNIT CONTRACT PRICE FOR THE SEVERAL PAY ITEMS.

TEMPORARY DRAINAGE AT END BENT

BAR TYPES

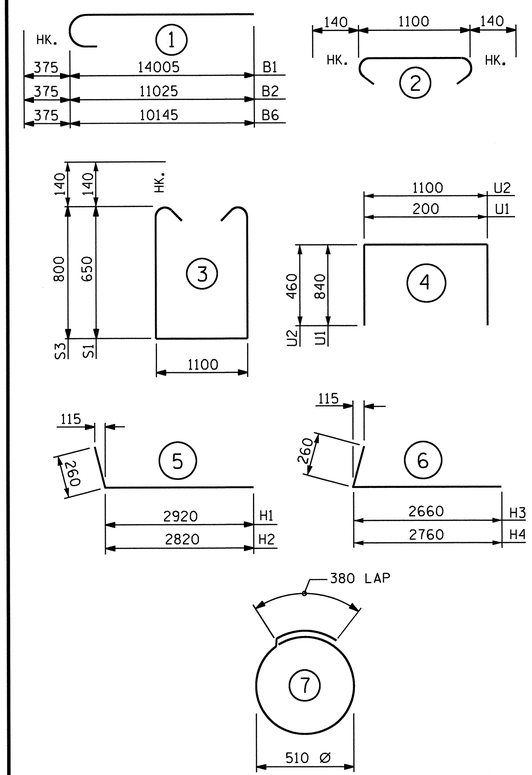

ALL BAR DIMENSIONS ARE OUT TO OUT.

BILL OF MATERIAL

END BENT #1

BAR	NO.	SIZE	TYPE	LENGTH	WEIGHT
B1	10	#29	1	14380	728
B2	5	#29	1	11400	288
B3	24	#13	STR	7080	169
B4	4	#13	STR	8280	33
B5	5	#29	STR	10780	273
B6	5	#29	1	10520	266
B7	29	#13	STR	1100	32
B8	5	#13	STR	4100	20
B9	15	#13	STR	3020	45
H1	11	#16	5	3180	54
H2	11	#16	5	3080	53
H3	12	#16	6	2920	54
H4	12	#16	6	3020	56
K1	48	#13	STR	7080	338
K2	8	#13	STR	1000	8
S1	31	#16	3	2680	129
S2	108	#16	2	1380	231
S3	77	#16	3	2980	356
S4	34	#13	7	1980	67
U1	79	#13	4	1880	148
U2	38	#13	4	2020	76
V1	158	#16	STR	2460	603
V2	28	#16	STR	2860	124
V3	28	#16	STR	3080	134

REINFORCING STEEL = 4285 kg

POUR #1
CAP, LOWER PART OF WINGS, & CONCRETE PILE COLLARS 33.4 m3

POUR #2
BACKWALL & UPPER PART OF WINGS 18.5 m3

CLASS "A" CONCRETE TOTAL 51.9 m3

HP 310 x 79 STEEL PILES
No. 17 408.0 METERS

PILE REDRIVES 8 EACH

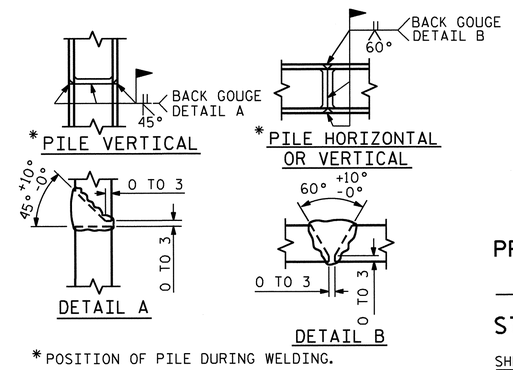

* POSITION OF PILE DURING WELDING.

PILE SPLICE DETAILS

PROJECT NO. R-2554A
WAYNE COUNTY
STATION: 31+55.609 -L-

SHEET 3 OF 3

STATE OF NORTH CAROLINA
DEPARTMENT OF TRANSPORTATION
RALEIGH

SUBSTRUCTURE
END BENT #1

NORTH CAROLINA PROFESSIONAL SEAL 14045 ENGINEER TIMOTHY W. COGGINS
03/26/12

REVISIONS							SHEET NO.
NO.	BY:	DATE:	NO.	BY:	DATE:		S-63
1			3				TOTAL SHEETS
2			4				276

STR. #2

DRAWN BY : M.D.PISO DATE : 10-05-11
CHECKED BY : P.A.PARISI DATE : 11-15-11

13-FEB-2012 14:21
Z:\TIPProjects-R\R2554A\Structures\Str#2\FinalPlans\R-2554A_SD_EB1.dgn
emurray

NOTES:

STIRRUPS AND U1 BARS IN CAP MAY BE SHIFTED AS NECESSARY TO CLEAR ANCHOR BOLTS.

HOOKS ON "V" BARS MAY BE TURNED AS NECESSARY FOR PLACING REINFORCING STEEL.

FOR PILE SPLICE DETAILS, SEE END BENT SHEETS.

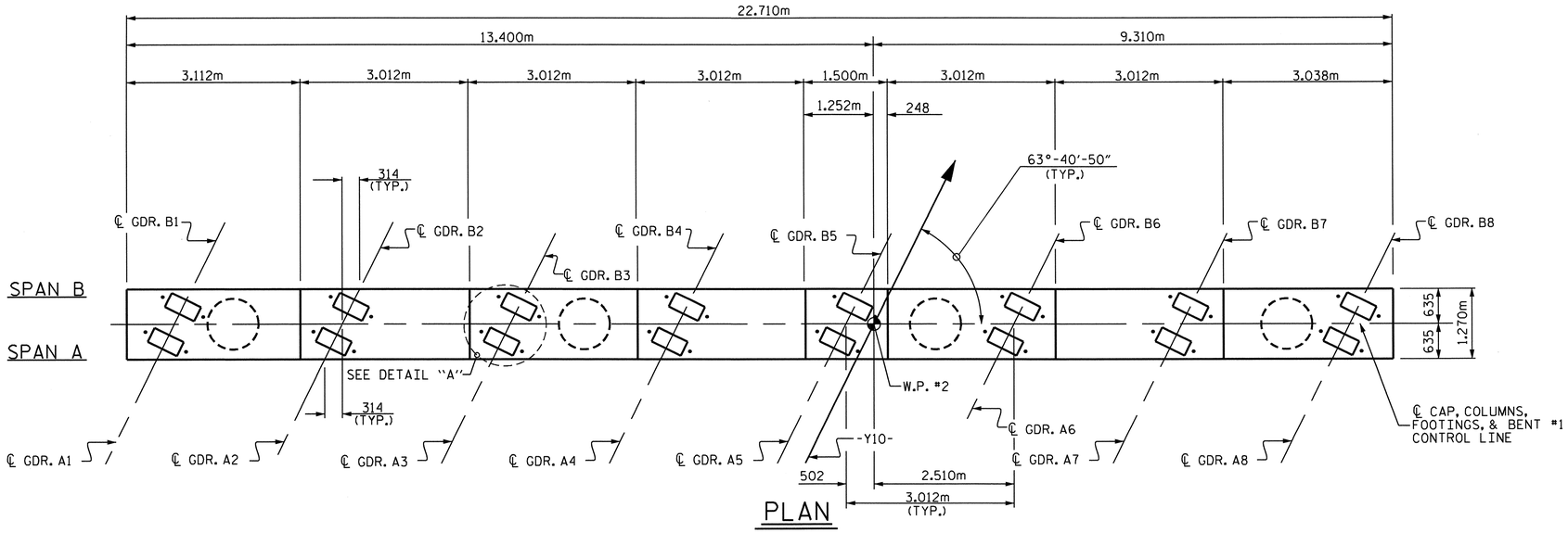

PLAN

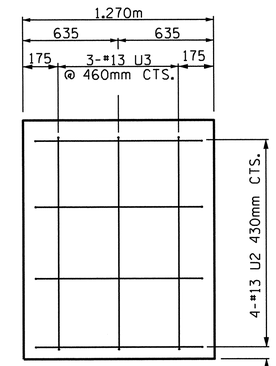

END VIEW
(LEFT SIDE)

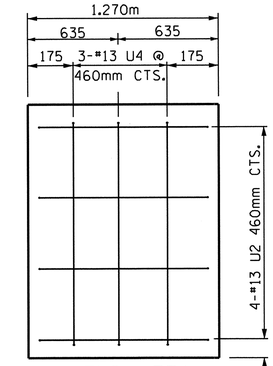

END VIEW
(RIGHT SIDE)

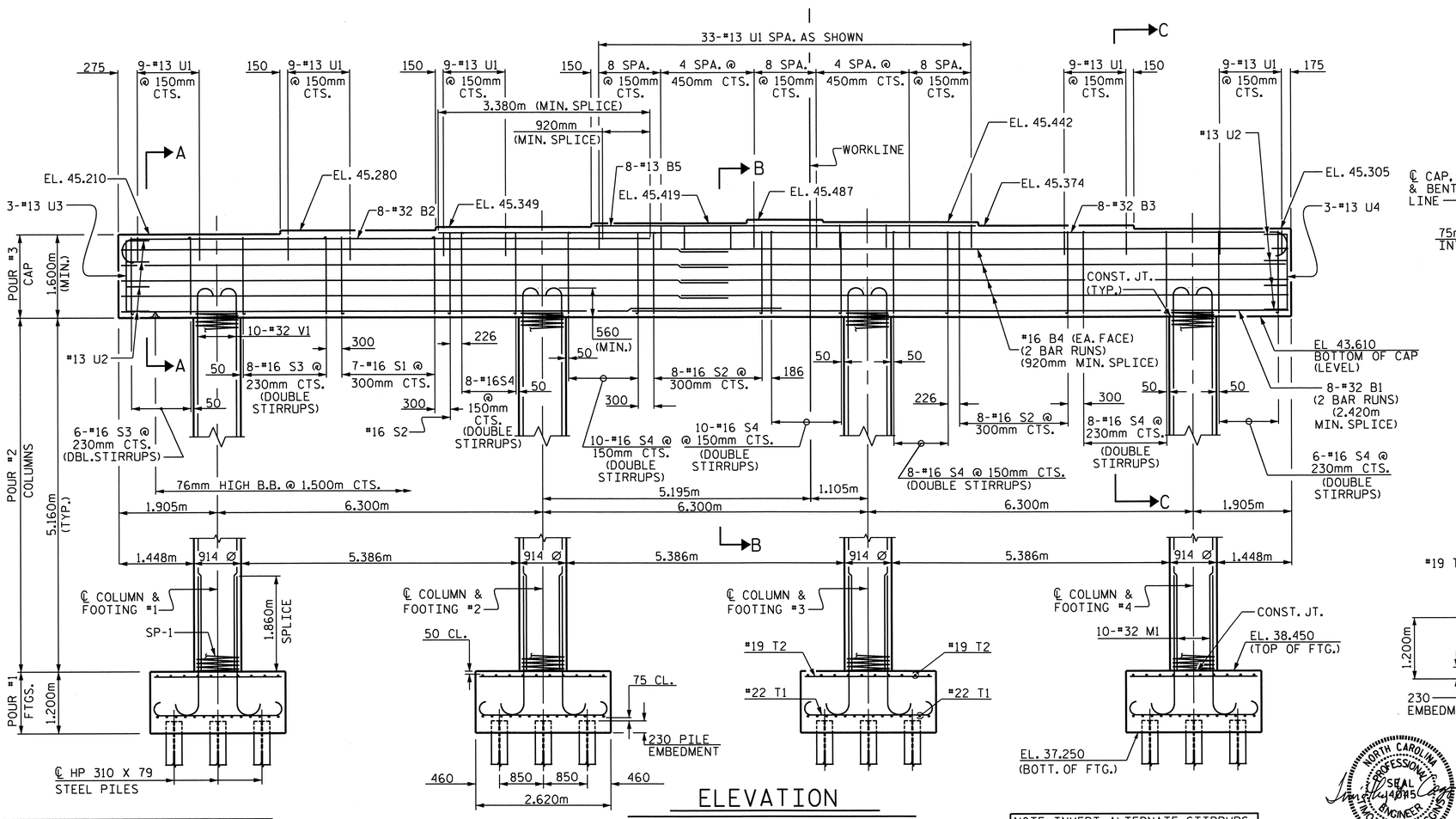

ELEVATION

DIMENSIONS AND REINFORCING STEEL ARE TYPICAL FOR EACH COLUMN AND FOOTING.

NOTE: INVERT ALTERNATE STIRRUPS.

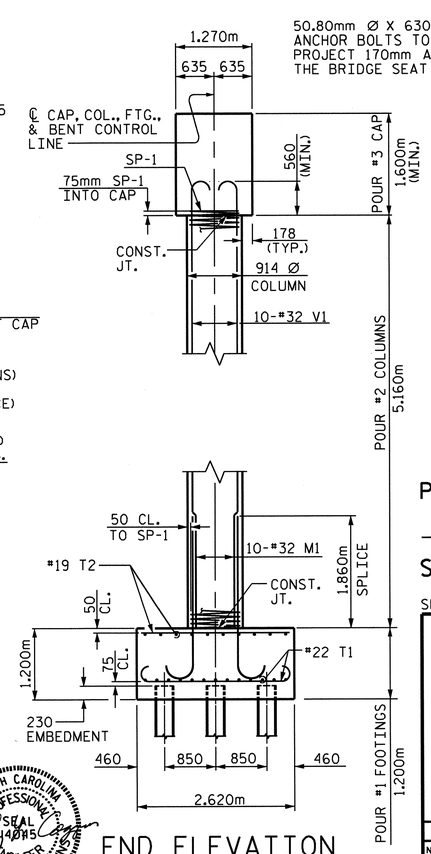

END ELEVATION

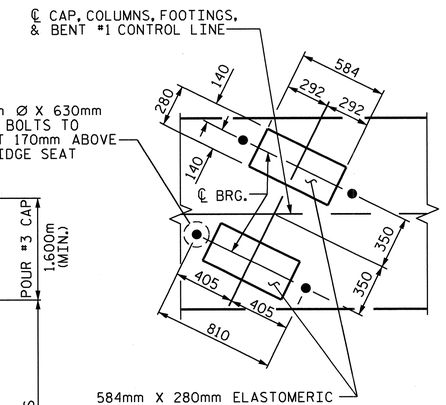

DETAIL "A"
(TYP. EA. GDR.)

PROJECT NO. R-2554A

WAYNE COUNTY

STATION: 31+55.609 -L-

SHEET 1 OF 2

STATE OF NORTH CAROLINA
DEPARTMENT OF TRANSPORTATION
RALEIGH

SUBSTRUCTURE

BENT #1

REVISIONS								SHEET NO.
NO.	BY:	DATE:	NO.	BY:	DATE:			S-64
1			3					TOTAL SHEETS
2			4					276

DRAWN BY : M.D.PISO DATE : 12-02-11
CHECKED BY : B.L.GREEN DATE : 12-30-11

22-MAR-2012 09:48
R:\TIPProjects-R\R2554A\Structures\FinalPlans\Str#2\r2554a_sd_bl_02.dgn
taverette

STR. #2

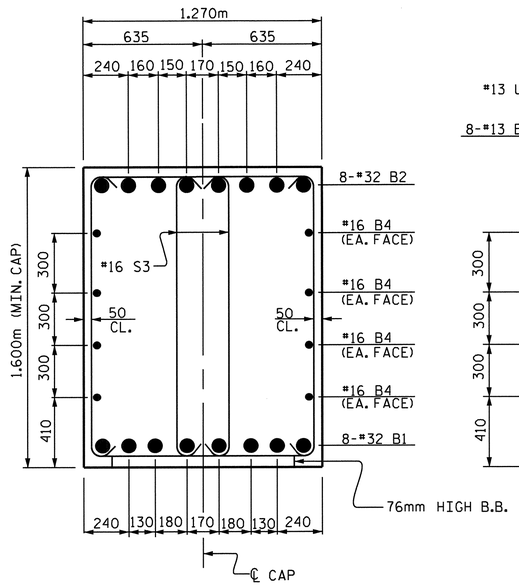

SECTION A-A

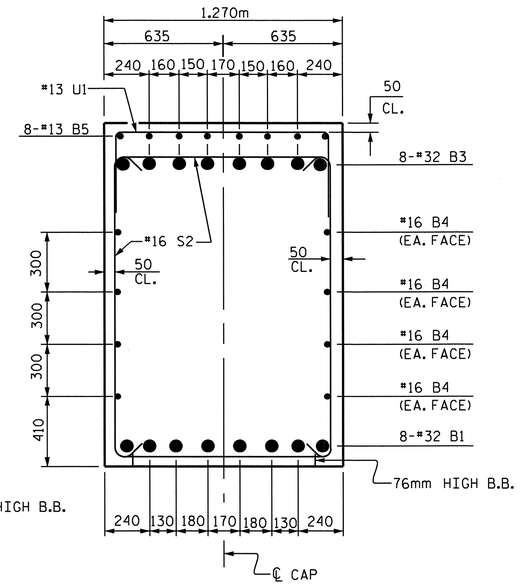

SECTION B-B

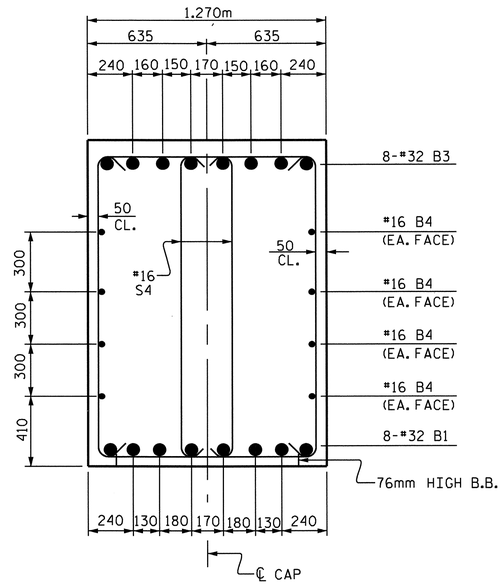

SECTION C-C

(DOUBLE STIRRUPS SHOWN)

BAR TYPES

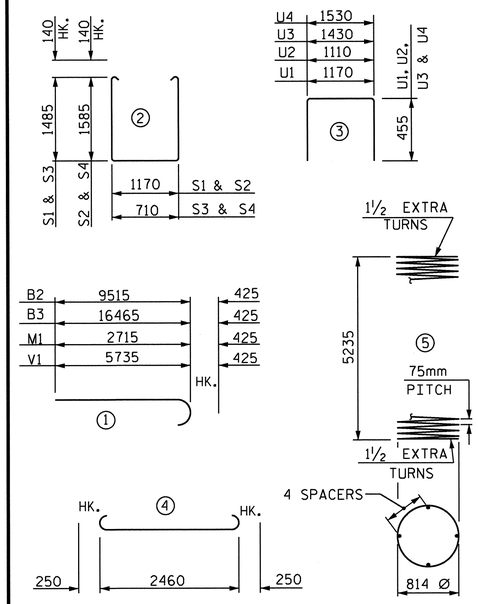

ALL BAR DIMENSIONS ARE OUT TO OUT

BILL OF MATERIAL

BENT #1

BAR	NO.	SIZE	TYPE	LENGTH	WEIGHT
B1	16	#32	STR.	12520	1283
B2	8	#32	1	9940	509
B3	8	#32	1	16890	865
B4	16	#16	STR.	11780	293
B5	8	#13	STR.	7420	59
M1	40	#32	1	3140	804
S1	7	#16	2	4420	48
S2	17	#16	2	4620	122
S3	28	#16	2	3960	172
S4	100	#16	2	4160	646
T1	108	#22	4	2960	972
T2	80	#19	STR.	2520	451
U1	78	#13	3	2080	161
U2	8	#13	3	2020	16
U3	3	#13	3	2340	7
U4	3	#13	3	2440	7
V1	40	#32	1	6160	1578

REINFORCING STEEL 7993 kg

SP-1	4	*	5	183,280	729

SPIRAL COLUMN REINFORCING STEEL 729 kg

CLASS A CONCRETE
- POUR #1 FOOTINGS 32.9 m³
- POUR #2 COLUMNS 13.5 m³
- POUR #3 CAP 50.2 m³

TOTAL CLASS A CONCRETE 96.6 m³

HP 310 X 79 STEEL PILES
NO. 36 504.0 METERS

PILE REDRIVES 8 EA.

FOUNDATION EXCAVATION LUMP SUM

* THE SP-1 SPIRAL REINFORCING STEEL SHALL BE W20 OR D-20 COLD DRAWN WIRE OR #13 PLAIN OR DEFORMED BAR.

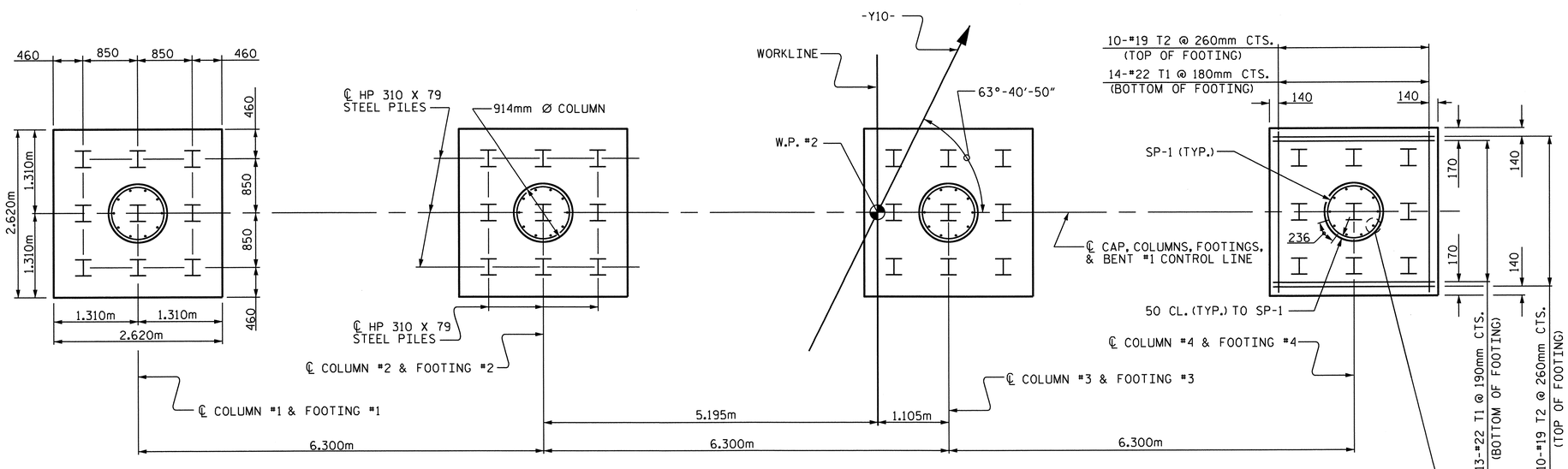

PLAN OF COLUMNS AND FOOTINGS

(ALL FOOTING, COLUMN AND PILE DIMENSIONS AND REINFORCING STEEL ARE TYPICAL)

PROJECT NO. R-2554A
WAYNE COUNTY
STATION: 31+55.609 -L-

SHEET 2 OF 2

STATE OF NORTH CAROLINA
DEPARTMENT OF TRANSPORTATION
RALEIGH

SUBSTRUCTURE

BENT #1

NORTH CAROLINA PROFESSIONAL SEAL 14045 ENGINEER TIMOTHY L. COGGINS
03/26/12

REVISIONS								SHEET NO.
NO.	BY:	DATE:	NO.	BY:	DATE:			S-65
1			3					TOTAL SHEETS
2			4					276

STR. #2

DRAWN BY : M.D.PISO DATE : 12-02-11
CHECKED BY : B.L.GREEN DATE : 12-30-11

22-MAR-2012 09:50
R:\TIPProjects-R\R2554A\Structures\FinalPlans\Str#2\r2554a_sd_bl_02.dgn
taverette

NOTES:

STIRRUPS AND U2 BARS IN CAP MAY BE SHIFTED AS NECESSARY TO CLEAR ANCHOR BOLTS.

BACKWALL SHALL BE PLACED BEFORE APPLYING THE EPOXY PROTECTIVE COATING.

THE TOP SURFACE AREAS OF THE END BENT CAPS SHALL BE CURED IN ACCORDANCE WITH THE STANDARD SPECIFICATIONS EXCEPT THE MEMBRANE CURING COMPOUND METHOD SHALL NOT BE USED.

THE TOP SURFACE OF THE END BENT CAP EXCEPT THE BRIDGE SEAT BUILDUPS SHALL BE SLOPED TRANSVERSELY FROM THE FILL FACE TO THE BACK FACE AT THE RATE OF 2%.

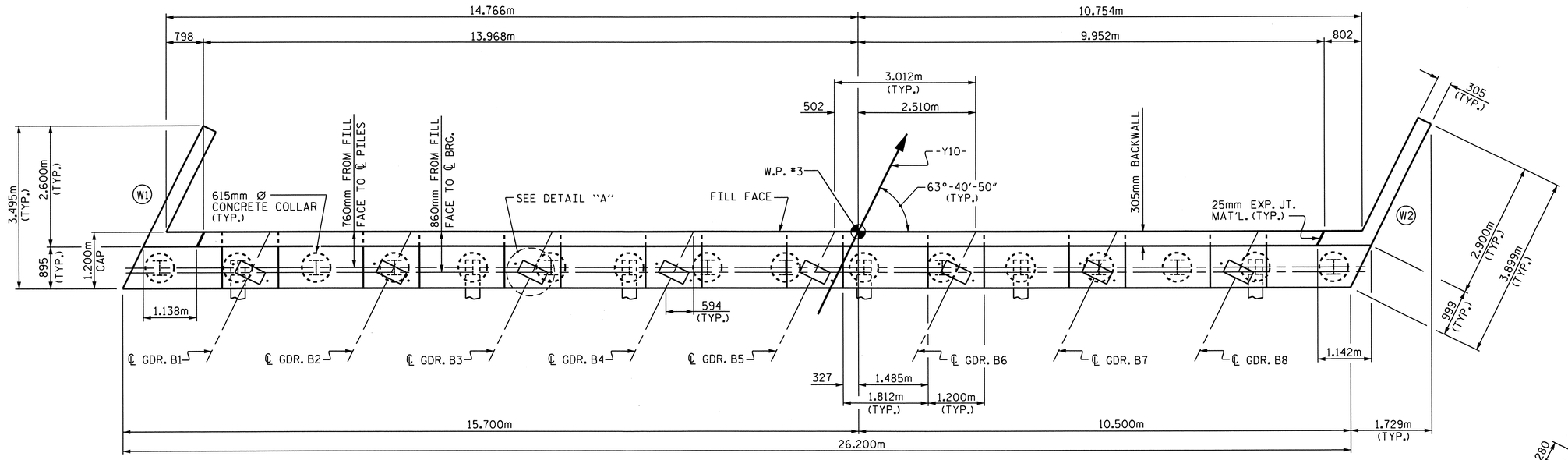

PLAN

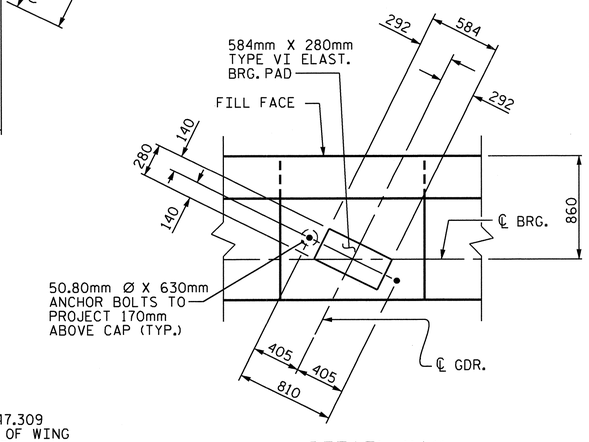

DETAIL "A"

(TYP. EA. GDR.)

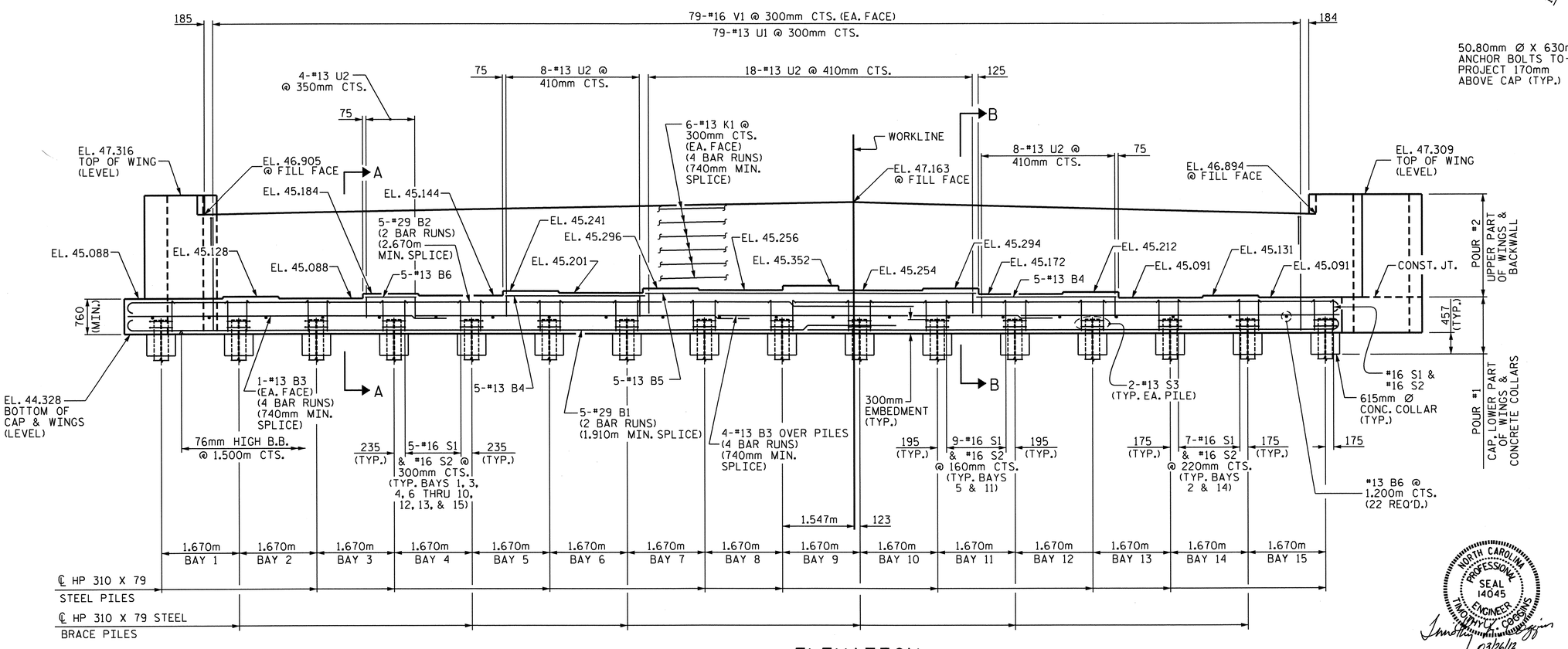

ELEVATION

NORTH CAROLINA PROFESSIONAL SEAL 14045 ENGINEER TIMOTHY L. CORSINO

03/26/12

PROJECT NO. R-2554A

WAYNE COUNTY

STATION: 31+55.609 -L-

SHEET 1 OF 3

STATE OF NORTH CAROLINA
DEPARTMENT OF TRANSPORTATION
RALEIGH

SUBSTRUCTURE

END BENT #2

REVISIONS						SHEET NO.
NO.	BY:	DATE:	NO.	BY:	DATE:	S- 66
1			3			TOTAL SHEETS
2			4			276

STR. #2

DRAWN BY : M.D.PISO DATE : 10-19-11
CHECKED BY : P.A.PARISI DATE : 11-15-11

10-FEB-2012 11:11
Z:\TIPProjects-R\R2554A\Structures\Str#2\Final Plans\R-2554A_SD_EB2.dgn
padkins

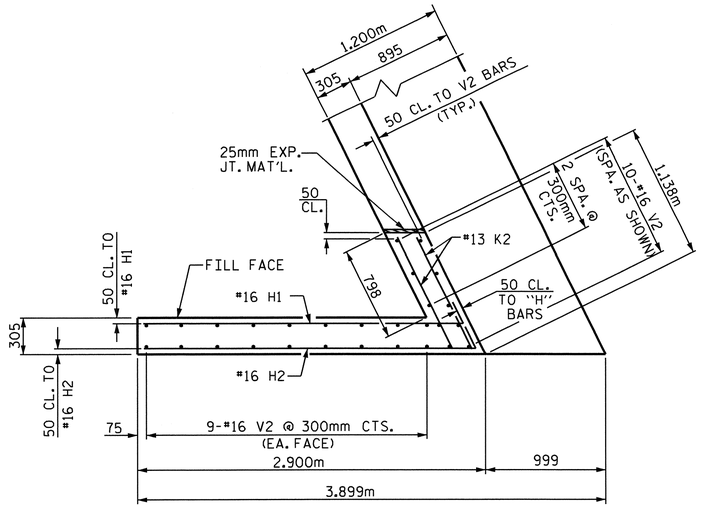

PLAN OF WING (W1)

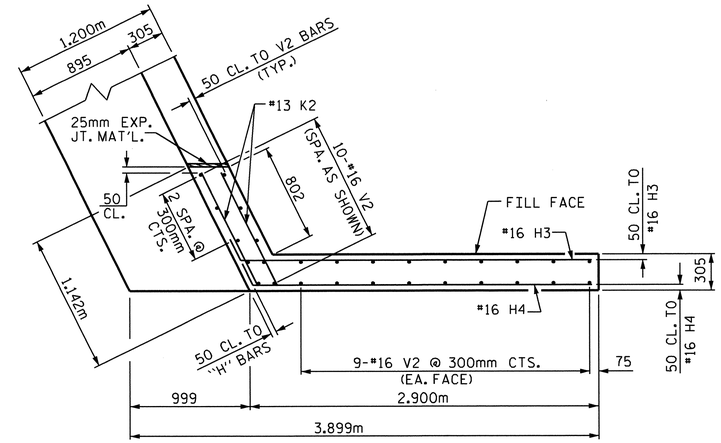

PLAN OF WING (W2)

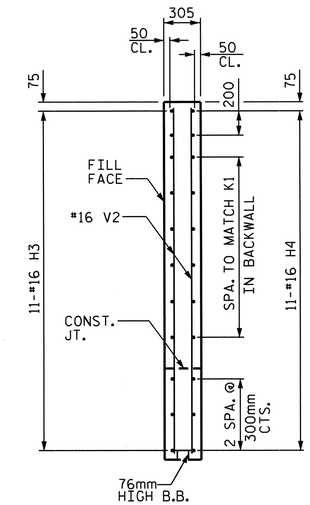

SECTION Y-Y

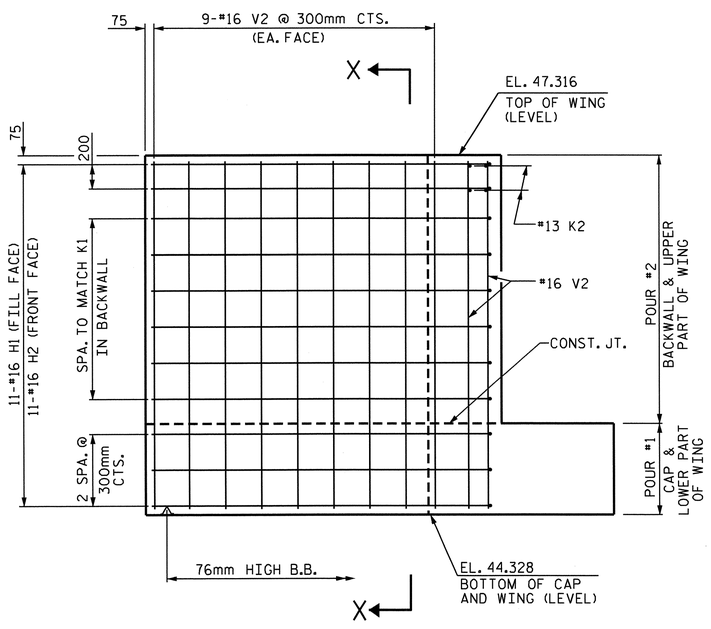

ELEVATION OF WING (W1)

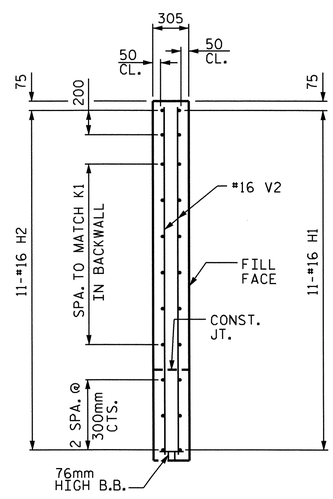

SECTION X-X

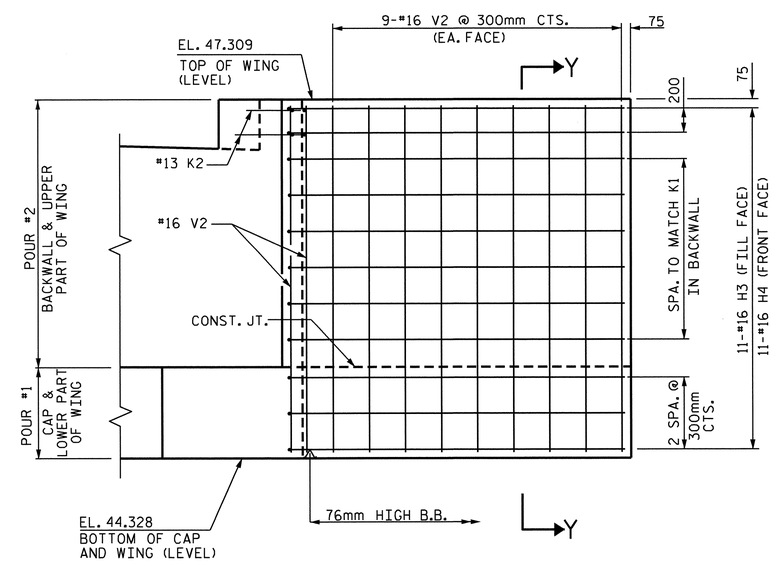

ELEVATION OF WING (W2)

PROJECT NO. R-2554A
WAYNE COUNTY
STATION: 31+55.609 -L-

SHEET 2 OF 3

STATE OF NORTH CAROLINA
DEPARTMENT OF TRANSPORTATION
RALEIGH

SUBSTRUCTURE

END BENT #2

NORTH CAROLINA PROFESSIONAL SEAL 14045 ENGINEER TIMOTHY W. CROSKINS
03/26/12

REVISIONS						SHEET NO.
NO.	BY:	DATE:	NO.	BY:	DATE:	S-67
1			3			TOTAL SHEETS
2			4			276

STR. #2

DRAWN BY : M.D.PISO DATE : 10-19-11
CHECKED BY : P.A.PARISI DATE : 11-15-11

10-FEB-2012 11:12
Z:\TIPProjects-R\R2554A\Structures\Str#2\Final Plans\R-2554A_SD_EB2.dgn
padkins

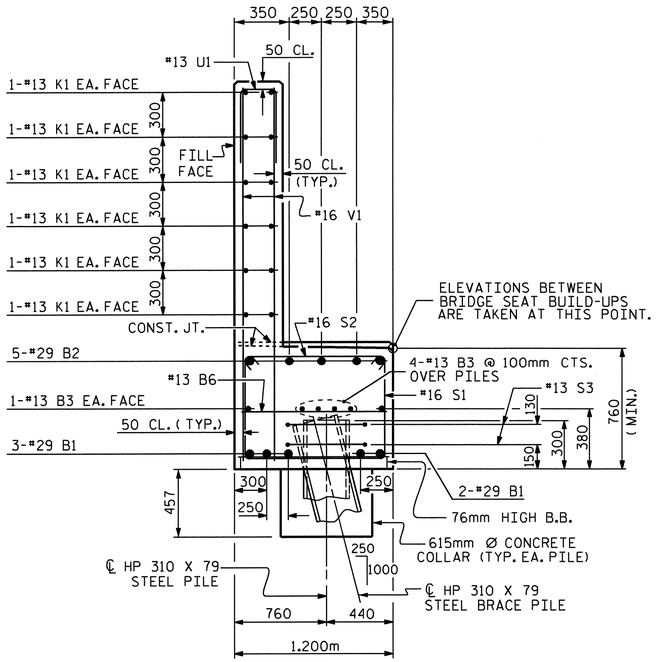

SECTION A-A

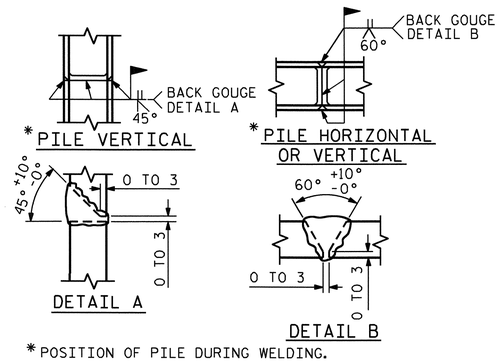

PILE SPLICE DETAILS

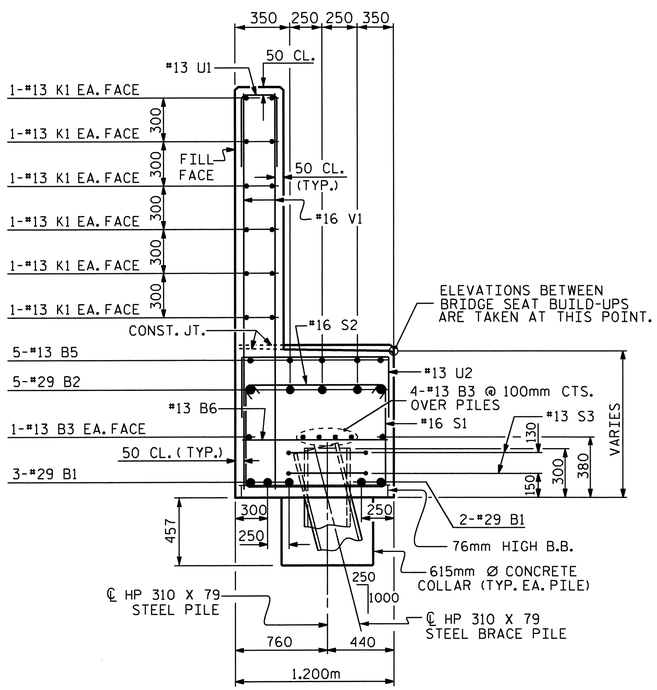

SECTION B-B

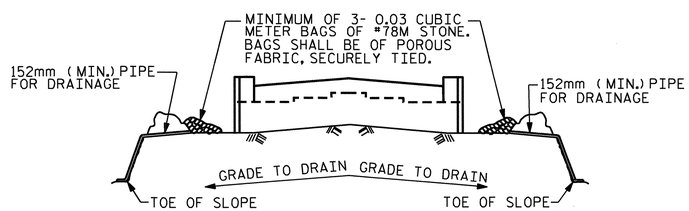

BAGGED STONE AND PIPE SHALL BE PLACED IMMEDIATELY AFTER COMPLETION OF END BENT EXCAVATION. PIPE MAY BE EITHER CONCRETE, CORRUGATED STEEL, CORRUGATED ALUMINUM ALLOY, OR CORRUGATED PLASTIC. PERFORATED PIPE WILL NOT BE ALLOWED.

BAGGED STONE SHALL REMAIN IN PLACE UNTIL THE ENGINEER DIRECTS THAT IT BE REMOVED. THE CONTRACTOR SHALL REMOVE AND DISPOSE OF SILT ACCUMULATIONS AT BAGGED STONE WHEN SO DIRECTED BY THE ENGINEER. BAGS SHALL BE REMOVED AND REPLACED WHENEVER THE ENGINEER DETERMINES THAT THEY HAVE DETERIORATED AND LOST THEIR EFFECTIVENESS.

NO SEPARATE PAYMENT WILL BE MADE FOR THIS WORK AND THE ENTIRE COST OF THIS WORK SHALL BE INCLUDED IN THE UNIT CONTRACT PRICE FOR THE SEVERAL PAY ITEMS.

TEMPORARY DRAINAGE AT END BENT

BAR TYPES

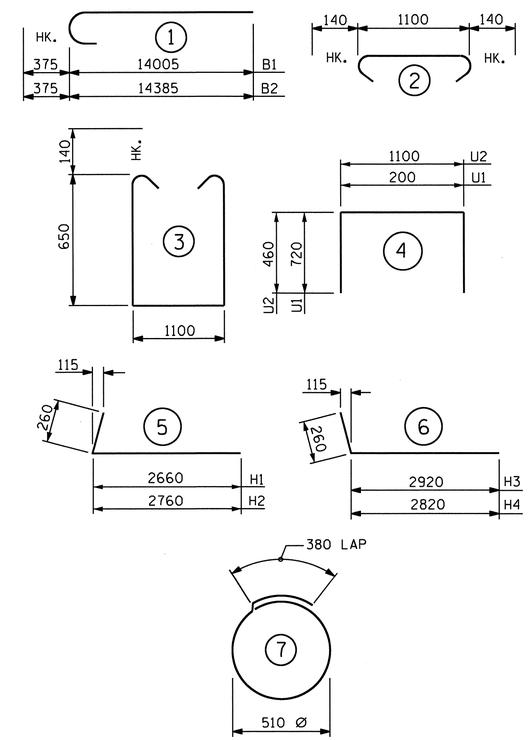

ALL BAR DIMENSIONS ARE OUT TO OUT.

BILL OF MATERIAL

END BENT #2

BAR	NO.	SIZE	TYPE	LENGTH	WEIGHT
B1	10	#29	1	14380	728
B2	10	#29	1	14760	747
B3	24	#13	STR	7080	169
B4	10	#13	STR	3020	30
B5	5	#13	STR	7120	35
B6	27	#13	STR	1100	30
H1	11	#16	5	2920	50
H2	11	#16	5	3020	52
H3	11	#16	6	3180	53
H4	11	#16	6	3080	53
K1	48	#13	STR	7080	338
K2	8	#13	STR	1020	8
S1	88	#16	3	2680	366
S2	88	#16	2	1380	188
S3	32	#13	7	1980	63
U1	79	#13	4	1640	129
U2	38	#13	4	2020	76
V1	158	#16	STR	2460	603
V2	56	#16	STR	2880	250

REINFORCING STEEL = 3968 kg

POUR #1
CAP, LOWER PART OF WINGS, & CONCRETE PILE COLLARS 30.2 m3

POUR #2
BACKWALL & UPPER PART OF WINGS 18.5 m3

CLASS "A" CONCRETE TOTAL 48.7 m3

HP 310 x 79 STEEL PILES
No. 16 384.0 METERS

PILE REDRIVES 8 EACH

PROJECT NO. R-2554A
WAYNE COUNTY
STATION: 31+55.609 -L-

SHEET 3 OF 3

STATE OF NORTH CAROLINA
DEPARTMENT OF TRANSPORTATION
RALEIGH

SUBSTRUCTURE
END BENT #2

NORTH CAROLINA PROFESSIONAL SEAL 14045 ENGINEER TIMOTHY W. COGGINS
03/26/12

REVISIONS							SHEET NO.
NO.	BY:	DATE:	NO.	BY:	DATE:		S-68
1			3				TOTAL SHEETS
2			4				276

DRAWN BY : M.D.PISO DATE : 10-19-11
CHECKED BY : P.A.PARISI DATE : 11-15-11

22-MAR-2012 06:55
R:\TIPProjects-R\R2554A\Structures\FinalPlans\Str#2\r2554a_sd_eb2_02.dgn
taverette

STR. #2

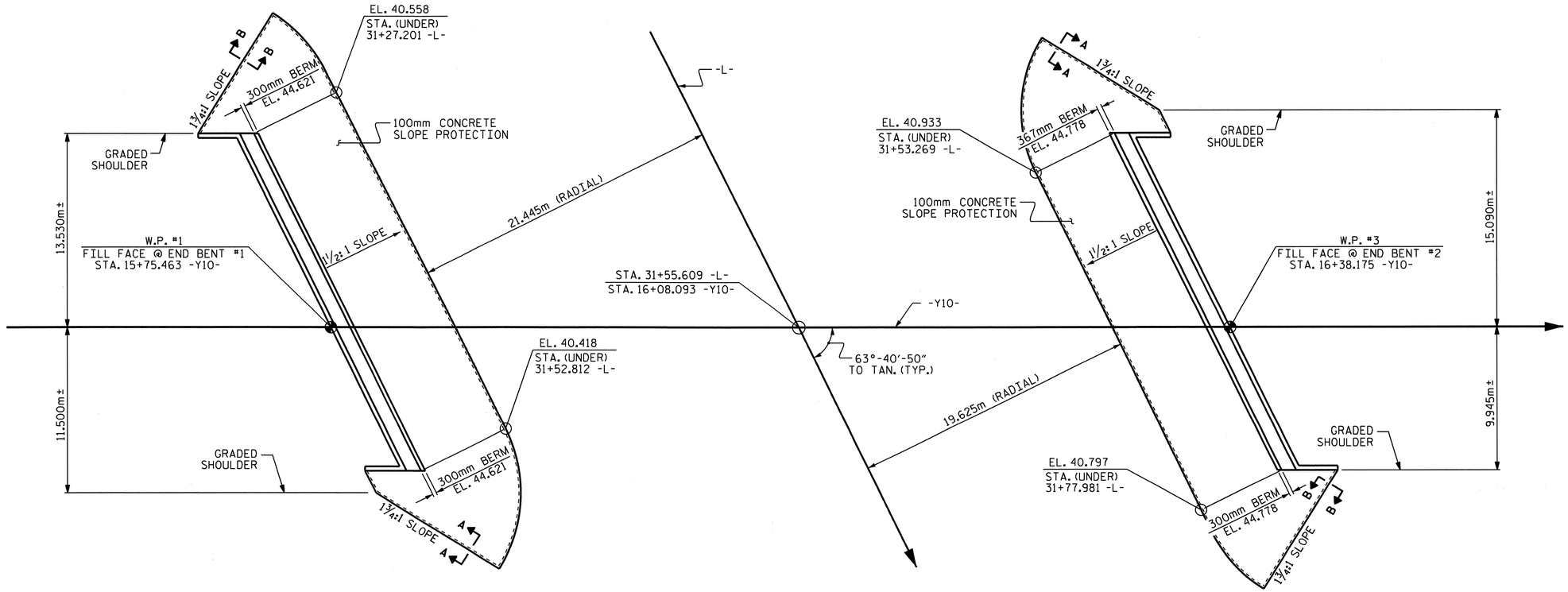

PLAN

BRIDGE @ STA. 31+55.609 -L-	100mm SLOPE PROTECTION	* WELDED WIRE FABRIC 1520mm WIDE
	SQUARE METERS	APPROX. METERS
END BENT 1	381	278
END BENT 2	357	260

* QUANTITY SHOWN IS BASED ON 1520mm POURS.

NOTES

SLOPE PROTECTION SHALL BE PLACED UNDER THE ENDS OF THE BRIDGE AS SHOWN IN THE DETAILS. STRAIGHT EDGING WILL NOT BE REQUIRED UNLESS, IN THE OPINION OF THE ENGINEER, VISUAL INSPECTION INDICATES A NEED FOR IT. MEASUREMENT AND PAYMENT SHALL BE AS PRESCRIBED IN SECTION 462 OF THE STANDARD SPECIFICATIONS.

SLOPE PROTECTION SHALL CONSIST OF 100mm POURED-IN-PLACE CONCRETE PAVING AS SHOWN IN THE DETAILS ON THIS SHEET. CONCRETE SHALL BE CLASS "B". THE CONCRETE SURFACE SHALL BE FLOATED WITH A WOODEN FLOAT AND FINISHED. WELDED WIRE FABRIC REINFORCING SHALL BE 152 X 152 - W9.1 X W9.1, 1520mm WIDE. SLOPE PROTECTION SHALL BE POURED IN 1520mm STRIPS AS SHOWN IN THE "POURING DETAIL" WITH 600mm LONG #13 BARS PLACED ALONG THE SLOPE BETWEEN STRIPS AT 450mm MAXIMUM SPACING. SLOPE PROTECTION MAY BE POURED IN ALTERNATE 1220mm AND 1520mm STRIPS AS SHOWN IN THE "OPTIONAL POURING DETAIL" WITH ADJACENT RUNS OF WELDED WIRE FABRIC LAPPING AT LEAST 152mm. THE COST OF THE WELDED WIRE FABRIC AND #13 BARS, IF USED, SHALL BE INCLUDED IN THE CONTRACT UNIT PRICE BID PER SQUARE METER FOR SLOPE PROTECTION.

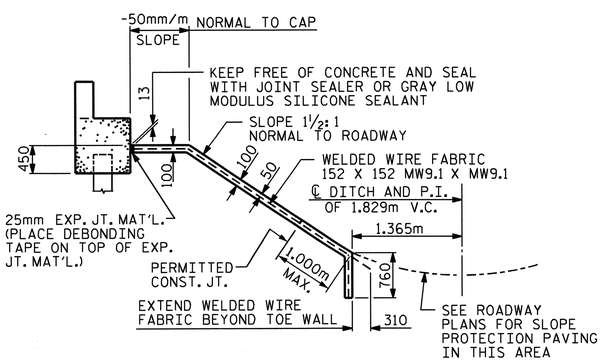

SECTION ALONG ℄ ROADWAY WHEN FILL CATCHES IN DITCH

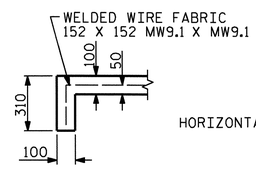

SECTION A-A

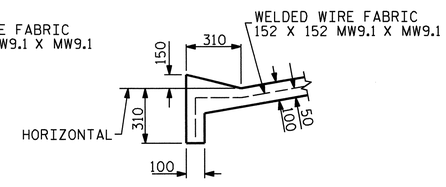

SECTION B-B

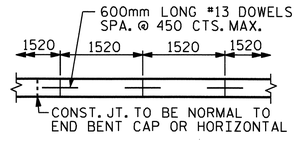

STRIP WIDTHS MAY VARY IN CURVED PORTION.

POURING DETAIL

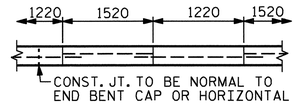

POUR A 1220mm STRIP FIRST. STRIP WIDTHS MAY VARY IN CURVED PORTION.

OPTIONAL POURING DETAIL

PROJECT NO. R-2554A
WAYNE COUNTY
STATION: 31+55.609 -L-

STATE OF NORTH CAROLINA
DEPARTMENT OF TRANSPORTATION
RALEIGH

STANDARD SLOPE PROTECTION DETAILS

NORTH CAROLINA PROFESSIONAL SEAL 14045 ENGINEER TIMOTHY W. COGGINS
03/26/12

REVISIONS						SHEET NO.
NO.	BY:	DATE:	NO.	BY:	DATE:	5-69
1			3			TOTAL SHEETS
2			4			276

STR. #2

STD. NO. SP1SM

ASSEMBLED BY : JASON WILSON		DATE : 8/4/11
CHECKED BY : T.L. AVERETTE		DATE : 12/01/11
DRAWN BY : ELR 5/92	REV. 5/7/03	RWW/JTE
CHECKED BY : GRP 6/92	REV. 5/1/06	TLA/GM
	REV. 10/1/11	MAA/GM

10-FEB-2012 11:00
Z:\TIPProjects-R\R2554A\Structures\Str#2\FinalPlans\r2554a_sd_sp_02.dgn
pdckins

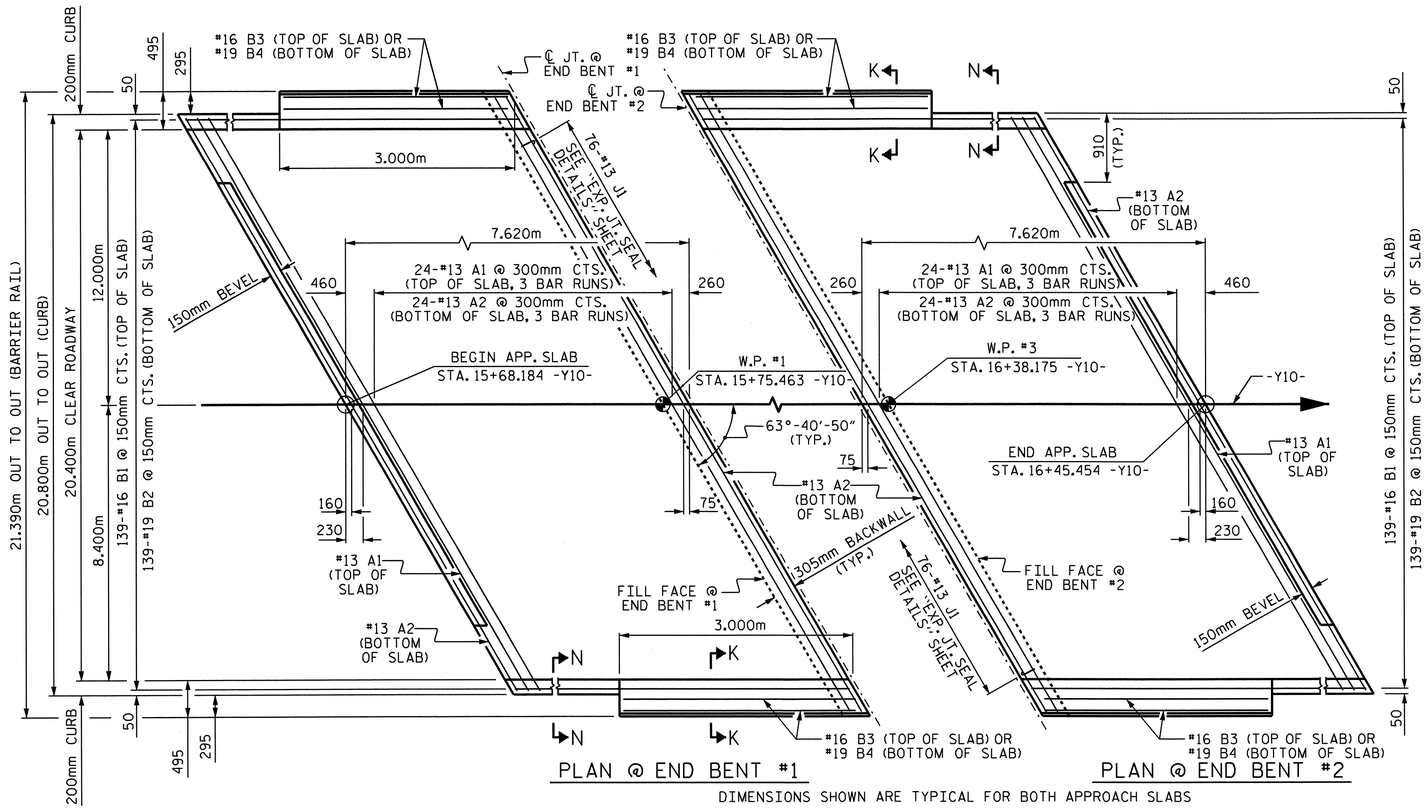

DIMENSIONS SHOWN ARE TYPICAL FOR BOTH APPROACH SLABS

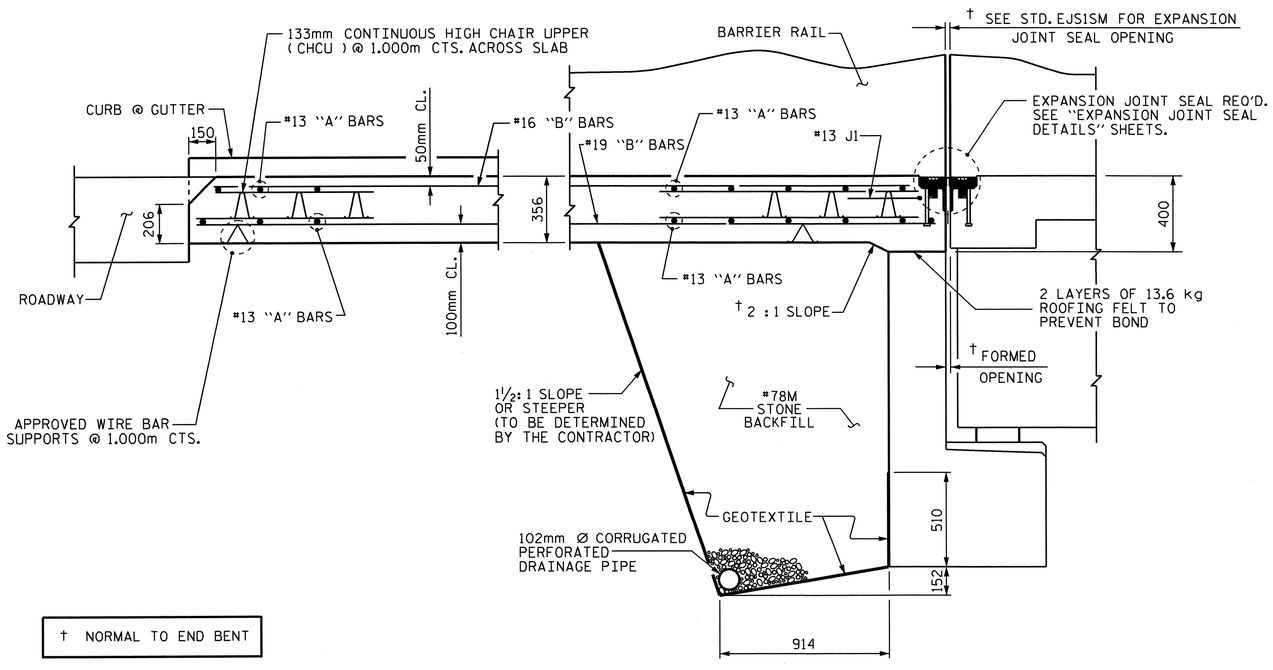

† NORMAL TO END BENT

SECTION THRU SLAB

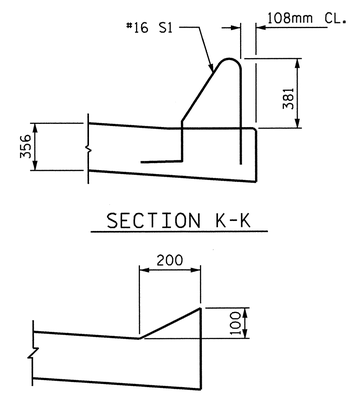

SECTION K-K

SECTION N-N

CURB DETAILS

NOTES

APPROACH SLAB SHALL NOT BE CONSTRUCTED PRIOR TO COMPLETION OF THE BRIDGE DECK.

SUBDRAIN FINE AGGREGATE IS TO BE CONTINUOUS ALONG FILL FACE OF BACKWALL AND END BENT FROM OUTSIDE EDGE TO OUTSIDE EDGE OF APPROACH SLAB.

AREA BETWEEN THE WINGWALL AND APPROACH SLAB SHALL BE GRADED TO DRAIN THE WATER AWAY FROM THE FILL FACE OF THE BRIDGE AND SHALL BE PAVED. SEE ROADWAY PLANS.

FOR EXPANSION JOINT SEALS, SEE SPECIAL PROVISIONS.

BILL OF MATERIAL

APPROACH SLAB AT EB #1

BAR	NO.	SIZE	TYPE	LENGTH	WEIGHT
* A1	75	#13	STR	8340	622
A2	78	#13	STR	8280	642
* B1	139	#16	STR	7220	1558
B2	139	#19	STR	7500	2330
* B3	4	#16	STR	2900	18
B4	4	#19	STR	2900	26
* J1	76	#13	1	440	33
REINFORCING STEEL				kg.	2998
* EPOXY COATED REINFORCING STEEL				** kg.	2231
CLASS AA CONCRETE				** C.M.	57.3

APPROACH SLAB AT EB #2

BAR	NO.	SIZE	TYPE	LENGTH	WEIGHT
* A1	75	#13	STR	8340	622
A2	78	#13	STR	8280	642
* B1	139	#16	STR	7220	1558
B2	139	#19	STR	7500	2330
* B3	4	#16	STR	2900	18
B4	4	#19	STR	2900	26
* J1	76	#13	1	440	33
REINFORCING STEEL				kg.	2998
* EPOXY COATED REINFORCING STEEL				** kg.	2231
CLASS AA CONCRETE				** C.M.	57.3

BAR TYPE

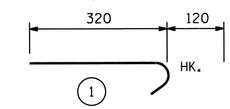

ALL BAR DIMENSIONS ARE OUT TO OUT

** QUANTITIES FOR BARRIER RAIL ARE NOT INCLUDED. SEE SHEET 2 OF 2.

SPLICE CHART	
* #13 A1	610
#13 A2	540

PROJECT NO. R-2554A

WAYNE COUNTY

STATION: 31+55.609 -L-

SHEET 1 OF 2

STATE OF NORTH CAROLINA
DEPARTMENT OF TRANSPORTATION
RALEIGH

STANDARD

BRIDGE APPROACH SLAB FOR FLEXIBLE PAVEMENT

NORTH CAROLINA PROFESSIONAL SEAL 14045 ENGINEER TIMOTHY J. COGGINS
03/26/12

REVISIONS								SHEET NO.
NO.	BY:	DATE:	NO.	BY:	DATE:			5-70
1			3					TOTAL SHEETS
2			4					276

STR. #2 STD. NO. BAS2SM

ASSEMBLED BY : PEGGY PARISI	DATE : 12-22-11	
CHECKED BY : B. GREEN	DATE : 12-29-11	
DRAWN BY : RH 5/99	REV. 5/7/03R	RWW/JTE
CHECKED BY : RDR 5/99	REV. 5/1/06RR	KMM/GM

10-FEB-2012 11:03
Z:\TIPProjects-R\R2554A\Structures\Str#2\Final Plans\R2554A_sd_as_02.dgn
padkins

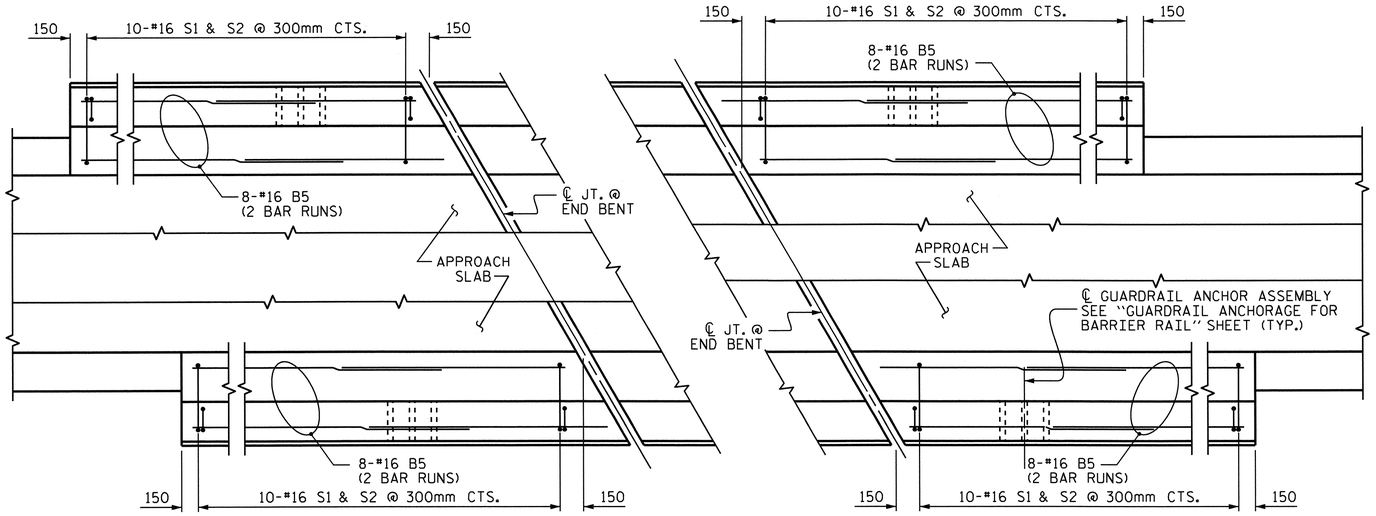

END BENT #1

END BENT #2

PLAN OF BARRIER RAIL

NOTES

THE COST OF THE BARRIER RAIL ON THE APPROACH SLAB SHALL BE INCLUDED IN THE CONTRACT PRICE BID FOR "CONCRETE BARRIER RAIL".

THE BARRIER RAIL ON EACH APPROACH SLAB SHALL NOT BE CAST UNTIL ALL APPROACH SLAB CONCRETE HAS BEEN CAST AND HAS REACHED A MINIMUM COMPRESSIVE STRENGTH OF 20.7 MPa.

ALL REINFORCING STEEL IN BARRIER RAILS SHALL BE EPOXY COATED.

BAR TYPES

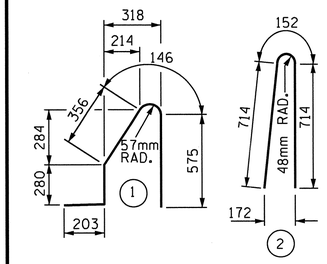

ALL BAR DIMENSIONS ARE OUT TO OUT

BILL OF MATERIAL

BARRIER RAIL ONLY

BAR	NO.	SIZE	TYPE	LENGTH	WEIGHT
* B5	64	#16	STR	2060	205
* S1	40	#16	1	1560	97
* S2	40	#16	2	1580	98
* EPOXY COATED REINFORCING STEEL					400 kg.
CLASS AA CONCRETE					3.1 CU. METER
CONCRETE BARRIER RAIL					12.452 METERS

SPLICE CHART	
* #16 B5	1050

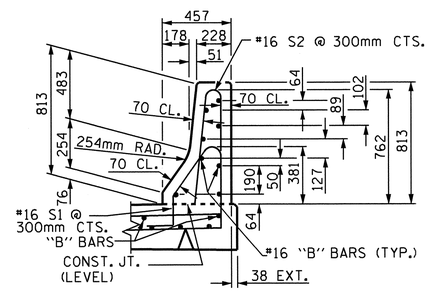

SECTION THRU RAIL

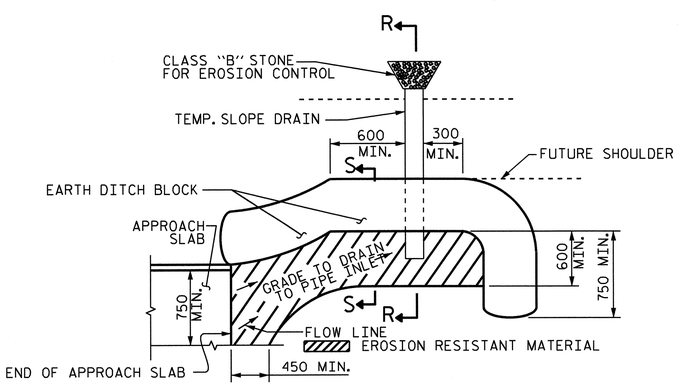

NOTE: IMMEDIATELY AFTER THE CONSTRUCTION OF THE APPROACH SLAB, THE CONTRACTOR SHALL PROVIDE TEMPORARY BERM AND SLOPE DRAIN. CONTRACTOR SHALL GRADE TO PIPE INLET AND PROVIDE EROSION RESISTANT MATERIAL AS SHOWN. THE EROSION RESISTANT MATERIAL SHALL BE EITHER 1) ASPHALT PLANT MIX, TYPE 1 OR TYPE 2, MIN. 50mm DEPTH, 2) EROSION CONTROL MAT, OR 3) CONCRETE, AS DIRECTED BY THE ENGINEER. THE SLOPE DRAIN SHALL CONSIST OF A NON-PERFORATED TEMPORARY DRAINAGE PIPE, 305mm IN DIAMETER.

PLAN VIEW

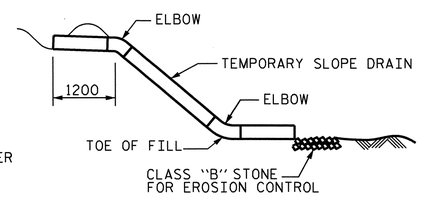

SECTION R-R

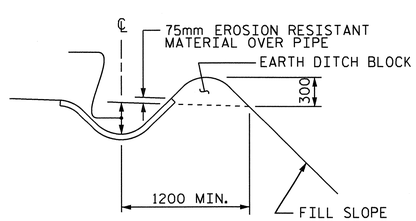

SECTION S-S

TEMPORARY BERM AND SLOPE DRAIN DETAILS

(TO BE USED WHEN SHOULDER BERM GUTTER IS REQUIRED)

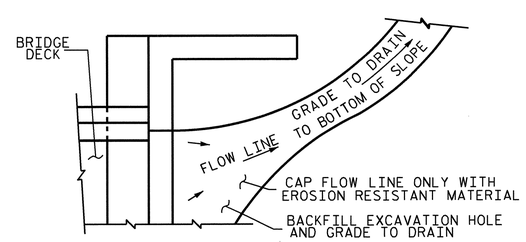

NOTE: IF THE APPROACH SLAB IS NOT CONSTRUCTED IMMEDIATELY AFTER THE BACKFILLING OF THE END BENT EXCAVATION, GRADE TO DRAIN TO THE BOTTOM OF THE SLOPE AND PROVIDE EROSION RESISTANT MATERIAL, SUCH AS FIBERGLASS ROVING OR AS DIRECTED BY THE ENGINEER TO PREVENT SOIL EROSION AND TO PROTECT THE AREA ADJACENT TO THE STRUCTURE. THE CONTRACTOR WILL BE REQUIRED TO REMOVE THESE MATERIALS PRIOR TO CONSTRUCTION OF THE APPROACH SLAB.

TEMPORARY DRAINAGE DETAIL

PROJECT NO. R-2554A
WAYNE COUNTY
STATION: 31+55.609 -L-

SHEET 2 OF 2

STATE OF NORTH CAROLINA
DEPARTMENT OF TRANSPORTATION
RALEIGH

STANDARD

BRIDGE APPROACH
SLAB DETAILS

NORTH CAROLINA PROFESSIONAL SEAL 14045 ENGINEER TIMOTHY L. COGGINS
03/26/12

REVISIONS						SHEET NO.
NO.	BY:	DATE:	NO.	BY:	DATE:	S-71
1			3			TOTAL SHEETS
2			4			276

ASSEMBLED BY PEGGY PARISI DATE :12-22-11
CHECKED BY : B. GREEN DATE :12-29-11
DRAWN BY : FCJ 11/88
CHECKED BY : ARB 11/88
REV. 5/7/03 RWW/JTE
REV. 5/1/06RRR MAA/KMM
REV. 10/1/11 MAA/GM

10-FEB-2012 11:03
Z:\TIPProjects-R\R2554A\Structures\Str#2\FinalPlans\R2554A_sd_as_02.dgn
pdkins

STR. #2 STD. NO. BAS4SM

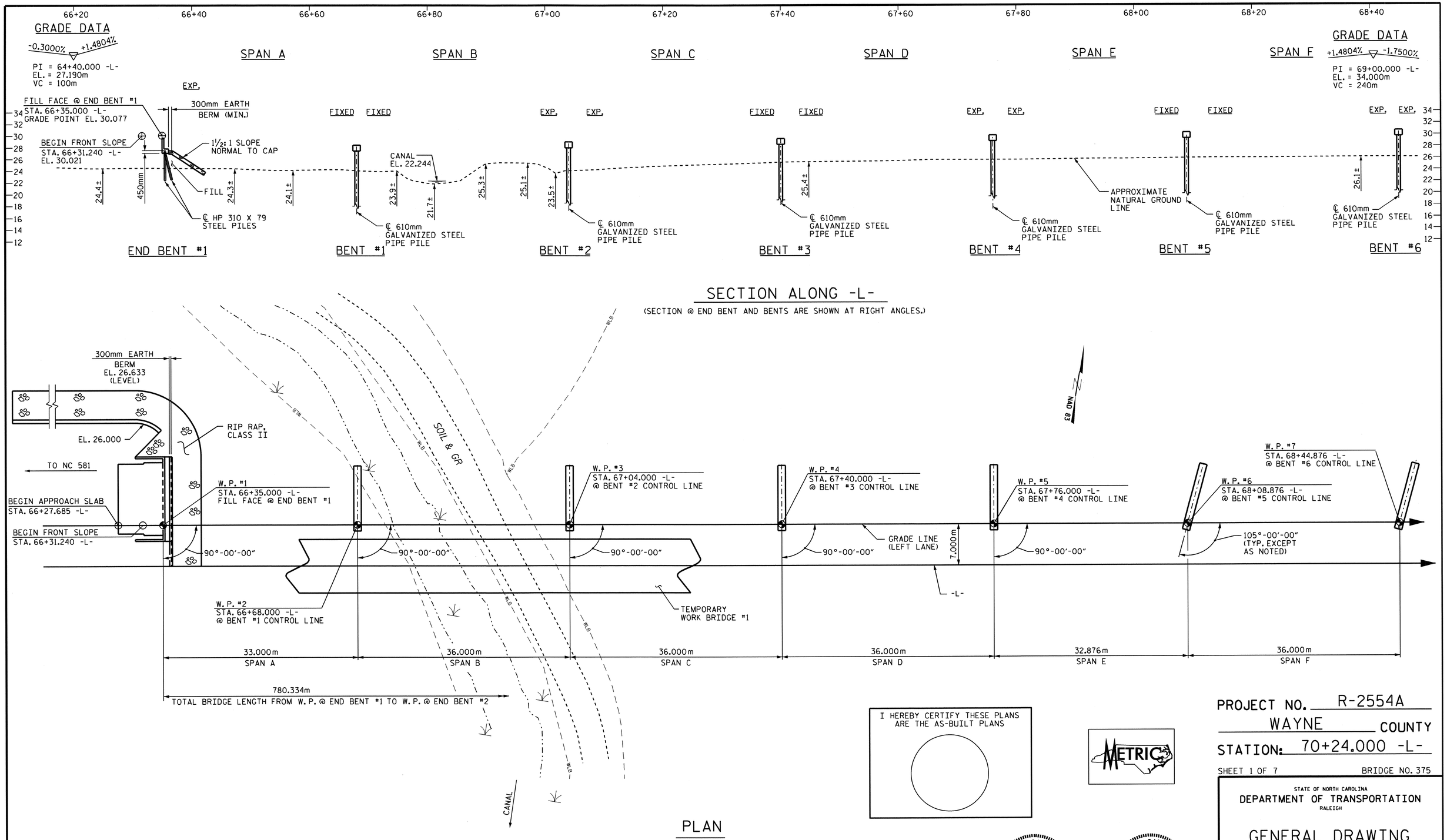

I HEREBY CERTIFY THESE PLANS ARE THE AS-BUILT PLANS

METRIC

NORTH CAROLINA PROFESSIONAL SEAL 22743 ENGINEER OMAR R. AZIZ 03/23/12

NORTH CAROLINA PROFESSIONAL SEAL 14045 ENGINEER TIMOTHY L. COGGINS 03/23/12

PROJECT NO. R-2554A

WAYNE COUNTY

STATION: 70+24.000 -L-

SHEET 1 OF 7

BRIDGE NO. 375

STATE OF NORTH CAROLINA
DEPARTMENT OF TRANSPORTATION
RALEIGH

GENERAL DRAWING

BRIDGE OVER LITTLE RIVER
ON PROP. US 70 BYP.
BETWEEN NC 581 AND SR 1300
(LEFT LANE)

REVISIONS								SHEET NO.
NO.	BY:	DATE:	NO.	BY:	DATE:			S-72
1			3					TOTAL SHEETS
2			4					276

DRAWN BY : PEGGY PARISI DATE : 1-11-12
CHECKED BY : T.L. COGGINS DATE : 2-13-12

23-MAR-2012 10:37
Z:\TIPProjects-R\R2554A\Structures\FinalPlans\Str#3\r2554a_sd_gd_03 .dgn
padkins

STR. #3

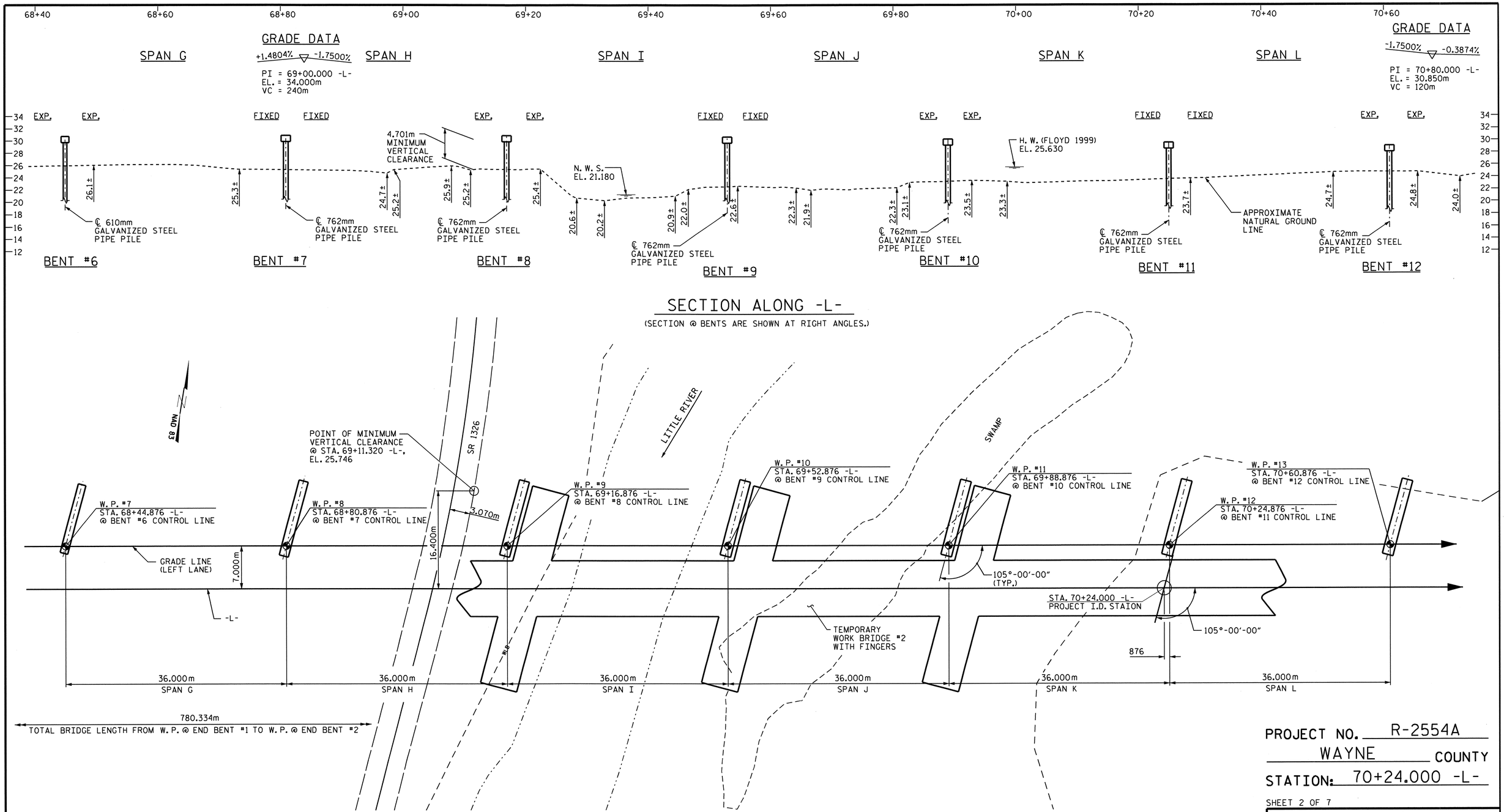

PLAN

(PILES NOT SHOWN FOR CLARITY)

PROJECT NO. R-2554A

WAYNE COUNTY

STATION: 70+24.000 -L-

SHEET 2 OF 7

STATE OF NORTH CAROLINA
DEPARTMENT OF TRANSPORTATION
RALEIGH

GENERAL DRAWING

BRIDGE OVER LITTLE RIVER
ON PROP. US 70 BYP.
BETWEEN NC 581 AND SR 1300
(LEFT LANE)

NORTH CAROLINA PROFESSIONAL SEAL 14045 ENGINEER TIMOTHY L. COGGINS
03/23/12

REVISIONS						SHEET NO.
NO.	BY:	DATE:	NO.	BY:	DATE:	S-73
1			3			TOTAL SHEETS
2			4			276

DRAWN BY : PEGGY PARISI DATE : 1-11-12
CHECKED BY : T.L. COGGINS DATE : 2-13-12

23-MAR-2012 10:38
Z:\TIPProjects-R\R2554A\Structures\FinalPlans\Str#3\r2554a_sd_gd_03 .dgn
padkins

STR. #3

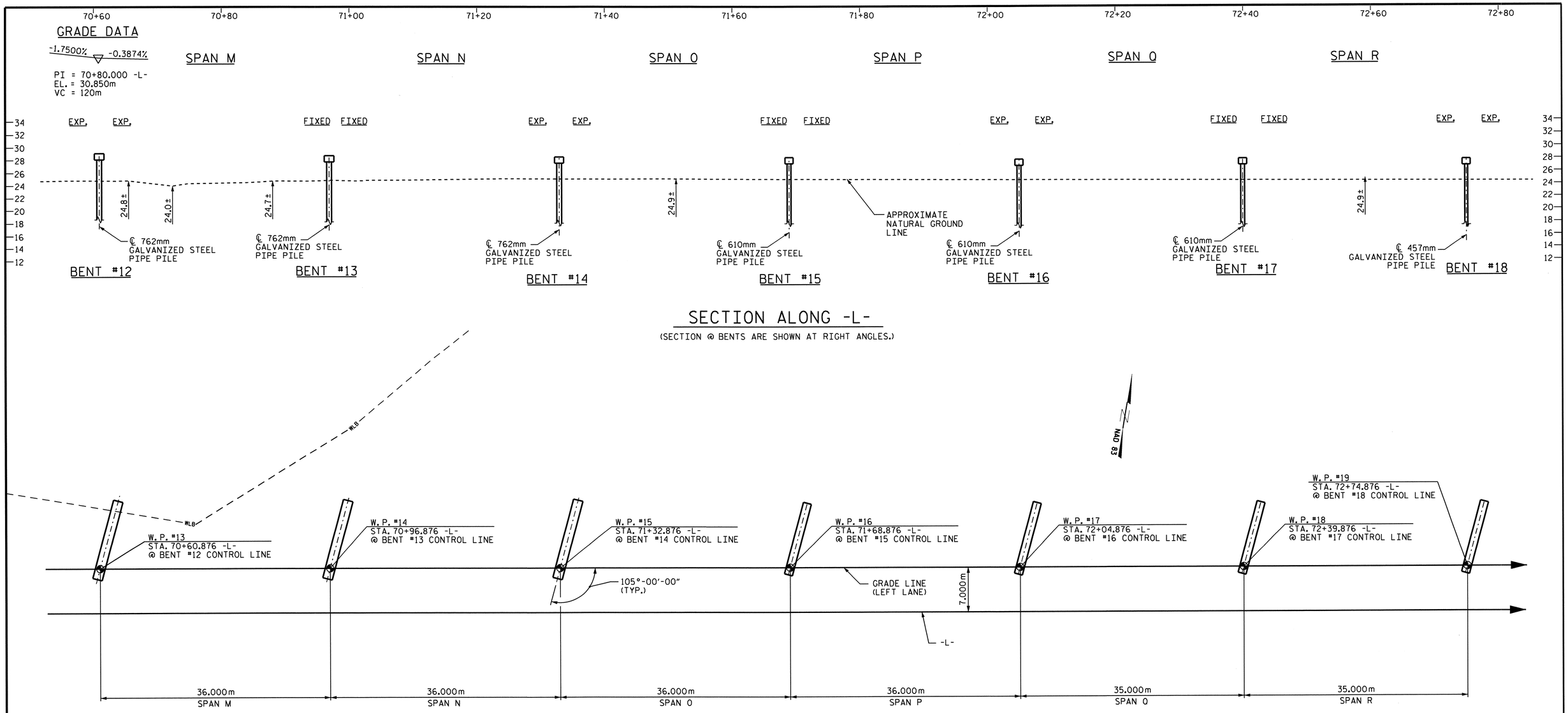

PLAN

(PILES NOT SHOWN FOR CLARITY)

PROJECT NO. R-2554A

WAYNE COUNTY

STATION: 70+24.000 -L-

SHEET 3 OF 7

STATE OF NORTH CAROLINA
DEPARTMENT OF TRANSPORTATION
RALEIGH

GENERAL DRAWING
BRIDGE OVER LITTLE RIVER
ON PROP. US 70 BYP.
BETWEEN NC 581 AND SR 1300
(LEFT LANE)

NORTH CAROLINA PROFESSIONAL SEAL 14045 ENGINEER TIMOTHY L. COGGINS
03/23/12

REVISIONS							SHEET NO.
NO.	BY:	DATE:	NO.	BY:	DATE:		5-74
1			3				TOTAL SHEETS
2			4				276

DRAWN BY : PEGGY PARISI DATE : 1-11-12
CHECKED BY : T.L. COGGINS DATE : 2-13-12

23-MAR-2012 10:38
Z:\TIPProjects-R\R2554A\Structures\FinalPlans\Str#3\r2554a_sd_gd_03 .dgn
padkins

STR. #3

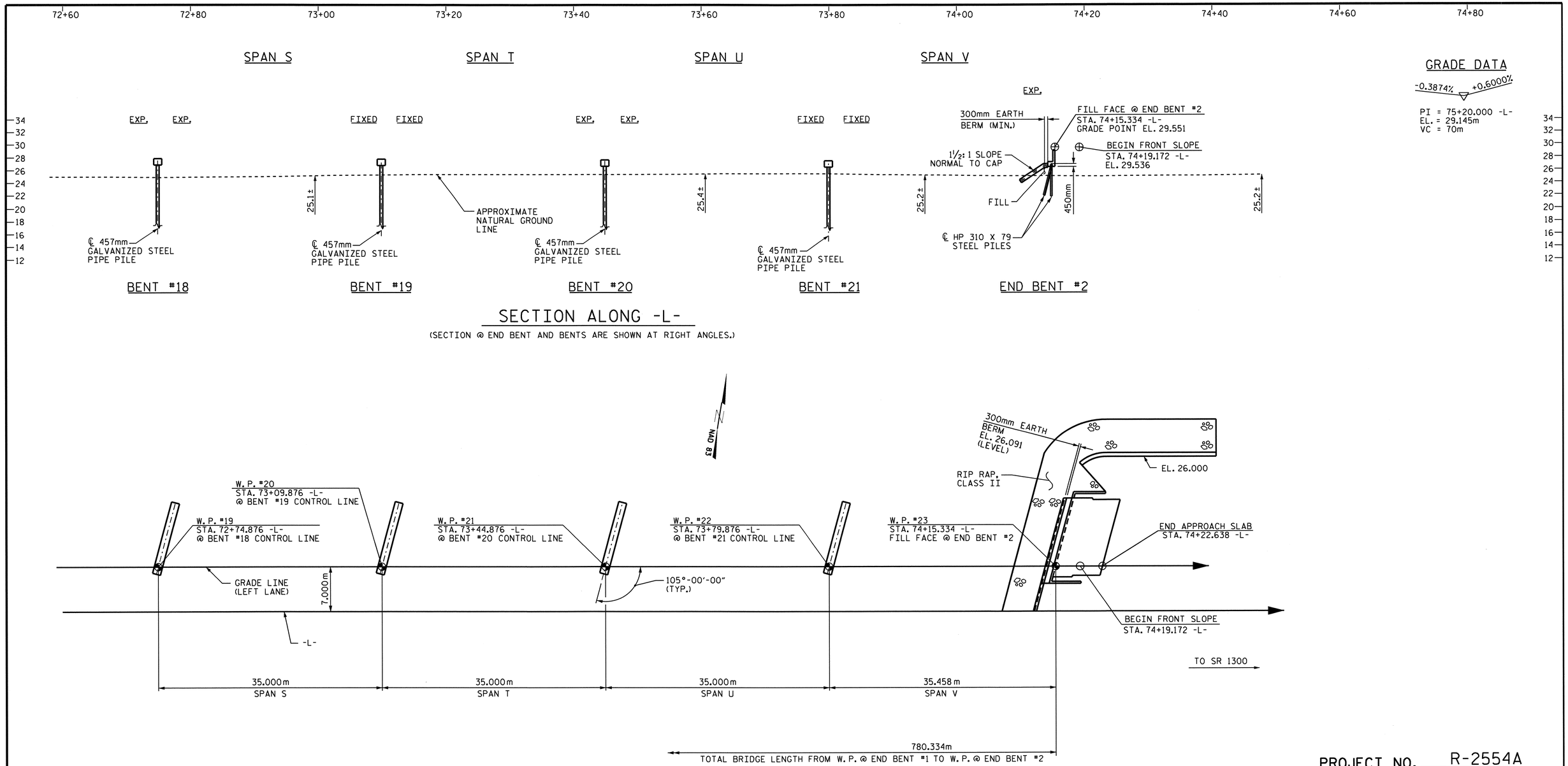

SECTION ALONG -L-

(SECTION @ END BENT AND BENTS ARE SHOWN AT RIGHT ANGLES.)

PLAN

(PILES NOT SHOWN FOR CLARITY)

PROJECT NO. R-2554A

WAYNE COUNTY

STATION: 70+24.000 -L-

SHEET 4 OF 7

STATE OF NORTH CAROLINA
DEPARTMENT OF TRANSPORTATION
RALEIGH

GENERAL DRAWING

BRIDGE OVER LITTLE RIVER
ON PROP. US 70 BYP.
BETWEEN NC 581 AND SR 1300
(LEFT LANE)

NORTH CAROLINA PROFESSIONAL SEAL 14045 ENGINEER TIMOTHY L. COGGINS
03/23/12

REVISIONS						SHEET NO.
NO.	BY:	DATE:	NO.	BY:	DATE:	S-75
1			3			TOTAL SHEETS
2			4			276

DRAWN BY : PEGGY PARISI DATE : 1-11-12
CHECKED BY : T.L. COGGINS DATE : 2-13-12

23-MAR-2012 10:38
Z:\TIPProjects-R\R2554A\Structures\FinalPlans\Str#3\r2554a_sd_gd_03 .dgn
padkins

STR. #3

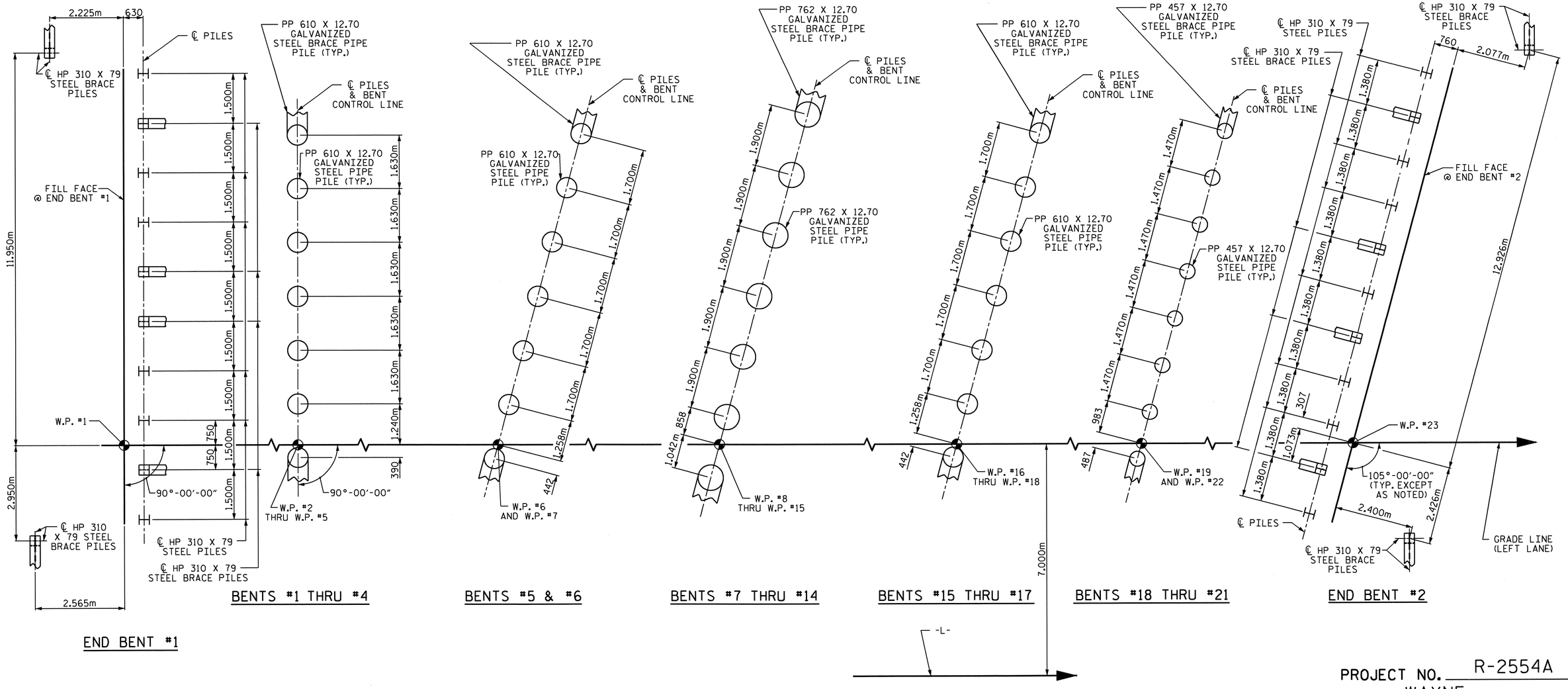

FOUNDATION LAYOUT

DIMENSIONS LOCATING PILES ARE SHOWN TO THE PILE CENTERLINE AT THE BOTTOM OF THE CAP.
BRACE PILES AT THE END BENT ARE TO BE BATTERED @ 250:1000.
BRACE PILES AT THE INTERIOR BENTS ARE LOCATED AS SHOWN AND ARE TO BE BATTERED @ 125:1000.

PROJECT NO. R-2554A
WAYNE COUNTY
STATION: 70+24.000 -L-

SHEET 5 OF 7

STATE OF NORTH CAROLINA
DEPARTMENT OF TRANSPORTATION
RALEIGH

GENERAL DRAWING

BRIDGE OVER LITTLE RIVER
ON PROP. US 70 BYP.
BETWEEN NC 581 AND SR 1300

(LEFT LANE)

NORTH CAROLINA PROFESSIONAL SEAL 14045 ENGINEER TIMOTHY L. COGGINS
03/23/12

REVISIONS						SHEET NO.
NO.	BY:	DATE:	NO.	BY:	DATE:	S-76
1			3			TOTAL SHEETS
2			4			276

DRAWN BY : PEGGY PARISI DATE : 1-11-12
CHECKED BY : T.L. COGGINS DATE : 2-13-12

23-MAR-2012 10:38
Z:\TIPProjects-R\R2554A\Structures\FinalPlans\Str#3\r2554a_sd_gd_03 .dgn
padkins

STR. #3

BM #16: STATION 68+76.148 -L-, 280.096m RIGHT, EL. 25.167m.

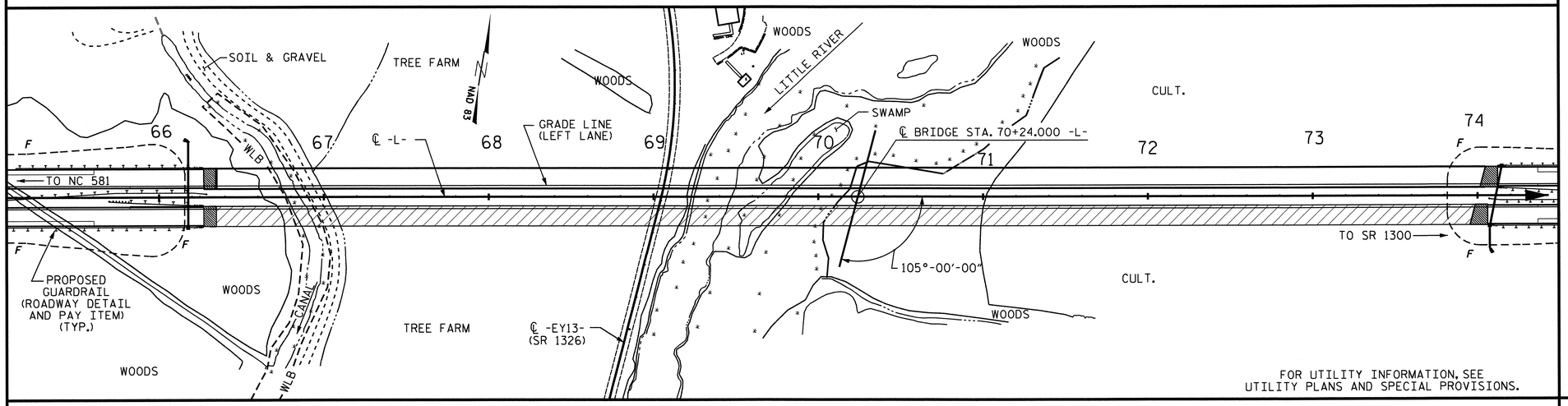

LOCATION SKETCH

WORK BRIDGES NOT SHOWN FOR CLARITY, SEE SHEET 1 OF 7 AND 2 OF 7.

HYDRAULIC DATA

DESIGN DISCHARGE	=	354.3 m^3/s
FREQUENCY OF DESIGN FLOOD	=	50 YR.
DESIGN HIGH WATER ELEVATION	=	26.036m
DRAINAGE AREA	=	792 Sq. Km
BASE DISCHARGE (Q100)	=	443.4 m^3/s
BASE HIGH WATER ELEVATION	=	26.237m

OVERTOPPING FLOOD DATA

OVERTOPPING DISCHARGE	=	> 739.1 m^3/s
FREQUENCY OF OVERTOPPING FLOOD	=	500 YR. +
OVERTOPPING FLOOD ELEVATION	=	27.315*

* OT OCCURS AT SAG STA. 64+06.700.
OT ELEV. IS ROADWAY GRADE POINT.

NOTES:

ALL DIMENSIONS ARE IN MILLIMETERS UNLESS OTHERWISE NOTED.

ALL ELEVATIONS ARE IN METERS.

ASSUMED LIVE LOAD = MS 18 OR ALTERNATE LOADING, EXCEPT THAT THE GIRDERS HAVE BEEN DESIGNED FOR MS 22.5.

FOR OTHER DESIGN DATA AND GENERAL NOTES, SEE SHEET SNSM.

FOR EROSION CONTROL MEASURES SEE EROSION CONTROL PLANS.

THIS BRIDGE IS LOCATED IN SEISMIC ZONE 1.

REMOVABLE FORMS MAY BE USED IN LIEU OF METAL STAY-IN-PLACE FORMS IN ACCORDANCE WITH ARTICLE 420-3 OF THE STANDARD SPECIFICATIONS.

THIS STRUCTURE HAS BEEN DESIGNED IN ACCORDANCE WITH HEC 18, "EVALUATING SCOUR AT BRIDGES", MAY, 2001.

NEEDLE BEAMS WILL NOT BE ALLOWED UNLESS OTHERWISE CALLED FOR ON THE PLANS OR APPROVED BY THE ENGINEER.

FOR SUBMITTAL OF WORKING DRAWINGS, SEE SPECIAL PROVISIONS.

FOR FALSEWORK AND FORMWORK, SEE SPECIAL PROVISIONS.

FOR CRANE SAFETY, SEE SPECIAL PROVISIONS.

FOR PRESTRESSED CONCRETE MEMBERS, SEE SPECIAL PROVISIONS.

THIS BRIDGE HAS BEEN DESIGNED BY THE STRENGTH DESIGN METHOD AS SPECIFIED IN AASHTO STANDARD SPECIFICATIONS.

FOR GROUT FOR STRUCTURES, SEE SPECIAL PROVISIONS.

FOR CURING CONCRETE, SEE SPECIAL PROVISIONS.

FOR PLACING LOAD ON STRUCTURE MEMBERS, SEE SPECIAL PROVISIONS.

FOR MAINTENANCE AND PROTECTION OF TRAFFIC BENEATH PROPOSED STRUCTURE, SEE SPECIAL PROVISIONS.

FOR ALL INTERIOR BENTS, ONLY PARTIAL GALVANIZING OF THE PILES IS REQUIRED. SEE INTERIOR BENT SHEETS FOR REQUIRED GALVANIZED LENGTHS. PAYMENT FOR PARTIALLY GALVANIZED PILES WILL BE MADE UNDER THE CONTRACT UNIT PRICE FOR GALVANIZED STEEL PILES.

FOR CONSTRUCTION, MAINTENANCE AND REMOVAL OF TEMPORARY ACCESS AT STATION 70+24.000 -L-, SEE SPECIAL PROVISIONS.

FOR BRIDGE DECK RIDEABILITY AND GROOVING AT STATION 70+24.000 -L-, SEE SPECIAL PROVISIONS.

FOR METRIC STRUCTURAL STEEL, SEE SPECIAL PROVISIONS.

FOR ALL INTERIOR BENTS, ONLY PARTIAL GALVANIZING OF THE PILES IS REQUIRED. SEE INTERIOR BENT SHEETS FOR REQUIRED GALVANIZED LENGTHS. PAYMENT FOR PARTIALLY GALVANIZED PILES WILL BE MADE UNDER THE CONTRACT UNIT PRICE FOR GALVANIZED STEEL PILES.

PROJECT NO. R-2554A
WAYNE COUNTY
STATION: 70+24.000 -L-

SHEET 6 OF 7

NORTH CAROLINA PROFESSIONAL SEAL 14045 ENGINEER TIMOTHY L. COGGINS
03/23/12

STATE OF NORTH CAROLINA
DEPARTMENT OF TRANSPORTATION
RALEIGH

GENERAL DRAWING
BRIDGE OVER LITTLE RIVER
ON PROP. US 70 BYP.
BETWEEN NC 581 AND SR 1300
(LEFT LANE)

REVISIONS							SHEET NO.
NO.	BY:	DATE:	NO.	BY:	DATE:		S-77
1			3				TOTAL SHEETS
2			4				276

DRAWN BY : PEGGY PARISI DATE : 1-11-12
CHECKED BY : T.L. COGGINS DATE : 2-13-12

23-MAR-2012 10:48
Z:\TIPProjects-R\R2554A\Structures\FinalPlans\Str#3\r2554a_sd_gd_03 .dgn
padkins

STR. #3

TOTAL BILL OF MATERIAL

	CONSTRUCTION, MAINTENANCE AND REMOVAL OF TEMPORARY ACCESS	PDA TESTING	PDA ASSISTANCE	REINFORCED CONCRETE DECK SLAB	GROOVING BRIDGE FLOORS	CLASS A CONCRETE	BRIDGE APPROACH SLABS	REINFORCING STEEL	MODIFIED 1829mm PRESTRESSED CONCRETE GIRDERS		HP 310 X 79 STEEL PILES		PP 457 X 12.70 GALVANIZED STEEL PILES		PP 610 X 12.70 GALVANIZED STEEL PILES		PP 762 X 12.70 GALVANIZED STEEL PILES		PIPE PILE PLATES	PILE REDRIVES	CONCRETE BARRIER RAIL	RIP RAP CLASS II (600mm THICK)	FILTER FABRIC FOR DRAINAGE	ELASTOMERIC BEARINGS	EXPANSION JOINT SEAL
	LUMP SUM	EACH	EACH	SQ. METERS	SQ. METERS	CU. METERS	LUMP SUM	kg	NO.	METERS	NO.	METERS	NO.	METERS	NO.	METERS	NO.	METERS	EACH	EACH	METERS	METRIC TONS	SQ. METERS	LUMP SUM	LUMP SUM
SUPERSTRUCTURE				9675.1	8306.6		LUMP SUM		110	3875.308											1573.883			LUMP SUM	LUMP SUM
END BENT 1						30.7		2685			12	182.4								5		420	429		
BENT 1		1	1			15.0		1367							7	149.1				3					
BENT 2						15.0		1367							7	123.2				3					
BENT 3						15.0		1367							7	128.1				3					
BENT 4						15.0		1367							7	128.1				3					
BENT 5						15.5		1533							7	128.1				3					
BENT 6						15.6		1533							7	128.1				3					
BENT 7						20.5		1953									7	128.1		3					
BENT 8						20.6		1953									7	128.1		3					
BENT 9						20.7		1953									7	149.1		3					
BENT 10						20.8		1953									7	149.1		3					
BENT 11						20.9		1953									7	149.1		3					
BENT 12						20.8		1953									7	128.1		3					
BENT 13		1	1			20.7		1953									7	128.1		4					
BENT 14						20.6		1953									7	128.1		4					
BENT 15		1	1			15.8		1533							7	106.4			7	3					
BENT 16						15.8		1533							7	95.9			7	3					
BENT 17						15.8		1533							7	95.9			7	3					
BENT 18						16.0		1541					8	109.6					8	4					
BENT 19						16.0		1541					8	109.6					8	4					
BENT 20						16.0		1541					8	109.6					8	4					
BENT 21						16.0		1541					8	109.6					8	4					
END BENT 2						33.5		2751			13	197.6								5		168	171		
TOTAL	LUMP SUM	3	3	9675.1	8306.6	432.3	LUMP SUM	40357	110	3875.308	25	380.0	32	438.4	63	1082.9	56	1087.8	53	79	1573.883	588	600	LUMP SUM	LUMP SUM

FOR PILES, SEE SPECIAL PROVISIONS.

THE ALLOWABLE BEARING CAPACITY FOR PILES AT END BENTS NO. 1 & 2 IS 670 KN PER PILE.

THE ALLOWABLE BEARING CAPACITY FOR PILES AT BENTS NO. 1 THRU 6, AND 15 THRU 17 IS 1960 KN PER PILE.

THE ALLOWABLE BEARING CAPACITY FOR PILES AT BENTS NO. 7 THRU 14 IS 1850 KN PER PILE.

THE ALLOWABLE BEARING CAPACITY FOR PILES AT BENTS NO. 18 THRU 21 IS 1680 KN PER PILE.

DRIVE PILES AT END BENTS NO. 1 & 2 TO A REQUIRED BEARING CAPACITY OF 1390 KN PER PILE. THE REQUIRED BEARING CAPACITY IS EQUAL TO THE ALLOWABLE BEARING CAPACITY WITH A MINIMUM FACTOR OF SAFETY OF TWO PLUS ANY ADDITIONAL CAPACITY TO ACCOUNT FOR DOWNDRAG OR NEGATIVE SKIN FRICTION AND SCOUR.

DRIVE PILES AT BENTS NO. 1 & 2 TO A REQUIRED BEARING CAPACITY OF 4730 KN PER PILE. THE REQUIRED BEARING CAPACITY IS EQUAL TO THE ALLOWABLE BEARING CAPACITY WITH A MINIMUM FACTOR OF SAFETY OF TWO PLUS ANY ADDITIONAL CAPACITY TO ACCOUNT FOR DOWNDRAG OR NEGATIVE SKIN FRICTION AND SCOUR.

DRIVE PILES AT BENTS NO. 3 THRU 6, 9 THRU 12, 16 & 17 TO A REQUIRED BEARING CAPACITY OF 4280 KN PER PILE. THE REQUIRED BEARING CAPACITY IS EQUAL TO THE ALLOWABLE BEARING CAPACITY WITH A MINIMUM FACTOR OF SAFETY OF TWO PLUS ANY ADDITIONAL CAPACITY TO ACCOUNT FOR DOWNDRAG OR NEGATIVE SKIN FRICTION AND SCOUR.

DRIVE PILES AT BENTS NO. 7, 8 & 15 TO A REQUIRED BEARING CAPACITY OF 4430 KN PER PILE. THE REQUIRED BEARING CAPACITY IS EQUAL TO THE ALLOWABLE BEARING CAPACITY WITH A MINIMUM FACTOR OF SAFETY OF TWO PLUS ANY ADDITIONAL CAPACITY TO ACCOUNT FOR DOWNDRAG OR NEGATIVE SKIN FRICTION AND SCOUR.

DRIVE PILES AT BENTS NO. 13 & 14 TO A REQUIRED BEARING CAPACITY OF 4570 KN PER PILE. THE REQUIRED BEARING CAPACITY IS EQUAL TO THE ALLOWABLE BEARING CAPACITY WITH A MINIMUM FACTOR OF SAFETY OF TWO PLUS ANY ADDITIONAL CAPACITY TO ACCOUNT FOR DOWNDRAG OR NEGATIVE SKIN FRICTION AND SCOUR.

DRIVE PILES AT BENTS NO. 18 THRU 21 TO A REQUIRED BEARING CAPACITY OF 3530 KN PER PILE. THE REQUIRED BEARING CAPACITY IS EQUAL TO THE ALLOWABLE BEARING CAPACITY WITH A MINIMUM FACTOR OF SAFETY OF TWO PLUS ANY ADDITIONAL CAPACITY TO ACCOUNT FOR DOWNDRAG OR NEGATIVE SKIN FRICTION AND SCOUR.

INSTALL PILES AT BENTS NO. 1, 2 & 15 TO A TIP ELEVATION NO HIGHER THAN 12.8m.

INSTALL PILES AT BENTS NO. 3 THRU 6 TO A TIP ELEVATION NO HIGHER THAN 15.8m.

INSTALL PILES AT BENTS NO. 7 & 8 TO A TIP ELEVATION NO HIGHER THAN 14.6m.

INSTALL PILES AT BENTS NO. 9 & 10 TO A TIP ELEVATION NO HIGHER THAN 13.1m.

INSTALL PILES AT BENTS NO. 11 & 12 TO A TIP ELEVATION NO HIGHER THAN 13.7m.

INSTALL PILES AT BENTS NO. 13 & 14 TO A TIP ELEVATION NO HIGHER THAN 10.7m.

INSTALL PILES AT BENTS NO. 16 & 17 TO A TIP ELEVATION NO HIGHER THAN 14.0m.

INSTALL PILES AT BENTS NO. 18 THRU 21 TO A TIP ELEVATION NO HIGHER THAN 17.1m.

THE SCOUR CRITICAL ELEVATION FOR BENTS NO. 1 THRU 21 ARE ELEVATION 19.2m., 19.2m., 21.6m., 21.6m., 21.6m., 21.6m., 19.5m., 19.5m., 18.3m., 18.3m., 18.9m., 18.9m., 17.4m., 17.4m., 18.9m., 20.4m., 20.4m., 22.9m., 22.9m., 22.9m., AND 22.9m., RESPECTIVELY. SCOUR CRITICAL ELEVATIONS ARE USED TO MONITOR POSSIBLE SCOUR PROBLEMS DURING THE LIFE OF THE STRUCTURE.

IT HAS BEEN ESTIMATED THAT A HAMMER WITH AN EQUIVALENT RATED ENERGY IN THE RANGE OF 155-220 KJ PER BLOW WILL BE REQUIRED TO DRIVE PILES AT BENTS NO. 1 THRU 17. THIS ESTIMATED ENERGY RANGE DOES NOT RELEASE THE CONTRACTOR FROM ARTICLE 450-5 OF THE STANDARD SPECIFICATIONS.

IT HAS BEEN ESTIMATED THAT A HAMMER WITH AN EQUIVALENT RATED ENERGY IN THE RANGE OF 95-170 KJ PER BLOW WILL BE REQUIRED TO DRIVE PILES AT BENTS NO. 18 THRU 21. THIS ESTIMATED ENERGY RANGE DOES NOT RELEASE THE CONTRACTOR FROM ARTICLE 450-5 OF THE STANDARD SPECIFICATIONS.

PIPE PILE PLATES ARE NOT REQUIRED FOR STEEL PIPE PILES AT BENTS 1 THRU 14.

PIPE PILE PLATES ARE REQUIRED FOR PIPE PILES AT BENTS NO. 15 THRU 21. USE PIPE PILE PLATES WITH A DIAMETER EQUAL TO THE PIPE PILE DIAMETER.

TESTING THE FIRST PRODUCTION PILES WITH THE PILE DRIVING ANALYZER DURING DRIVING, RESTRIKING OR REDRIVING IS REQUIRED BETWEEN BENTS NO. 1 THRU 6, 7 THRU 14 AND 15 THRU 21. FOR PILE DRIVING ANALYZER, SEE PILES PROVISION.

FOUNDATION NOTES

PROJECT NO. R-2554A

WAYNE COUNTY

STATION: 70+24.000 -L-

SHEET 7 OF 7

STATE OF NORTH CAROLINA
DEPARTMENT OF TRANSPORTATION
RALEIGH

NORTH CAROLINA PROFESSIONAL SEAL 14045 ENGINEER TIMOTHY L. COGGINS
03/26/12

GENERAL DRAWING

BRIDGE OVER LITTLE RIVER ON PROP. US 70 BYP. BETWEEN NC 581 AND SR 1300 (LEFT LANE)

REVISIONS						SHEET NO.
NO.	BY:	DATE:	NO.	BY:	DATE:	S-78
1			3			TOTAL SHEETS
2			4			276

DRAWN BY : PEGGY PARISI DATE : 1-11-12
CHECKED BY : T.L. COGGINS DATE : 2-13-12

26-MAR-2012 09:39
R:\TIPProjects-R\R2554A\Structures\FinalPlans\Str#3\r2554a_sd_gd_03 .dgn
toverette

STR. #3

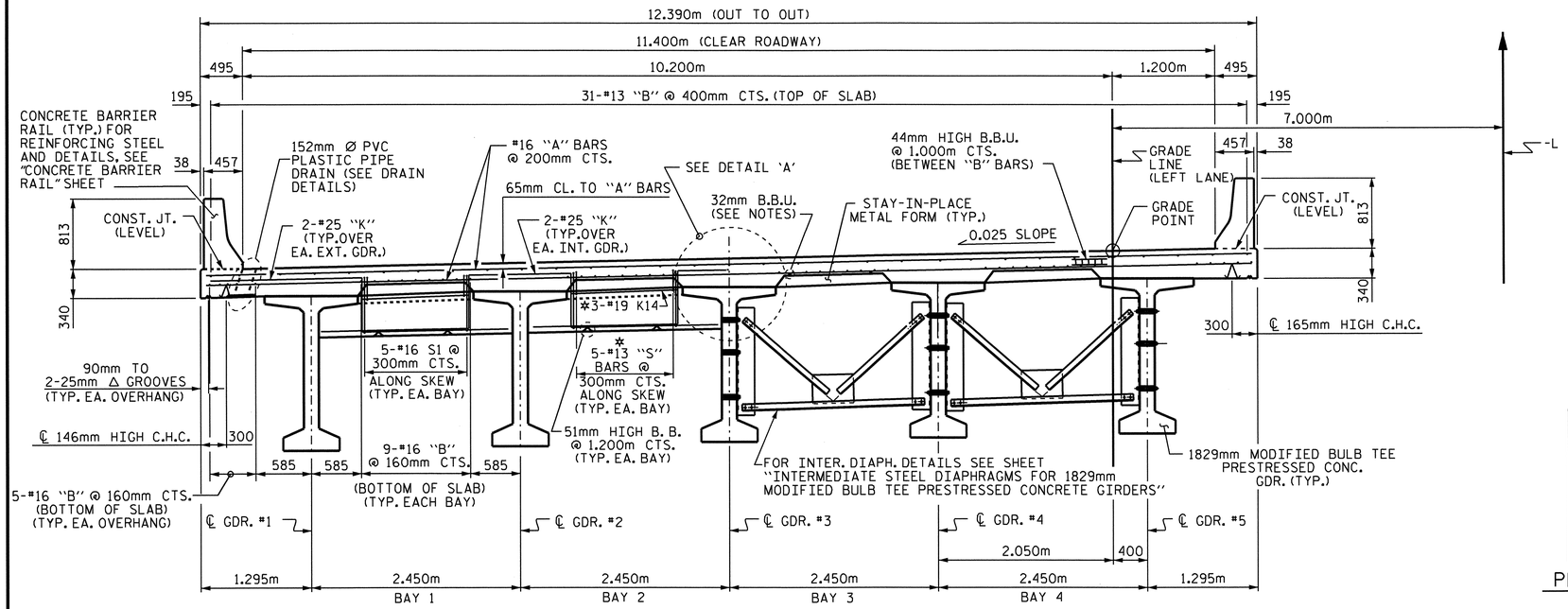

PARTIAL TYPICAL SECTION AT END BENT & BENT

@ EXPANSION JOINT

* NOTE: THESE BARS @ SKEWED EXPANSION JOINTS ONLY

PARTIAL TYPICAL SECTION AT INTERMEDIATE DIAPHRAGM

NOTES

PROVIDE 32mm HIGH BEAM BOLSTERS UPPER AT 1.2m CTS. ATOP THE METAL STAY-IN-PLACE FORMS TO SUPPORT THE BOTTOM MAT OF "A" BARS. WHEN USING REMOVABLE FORMS, PROVIDE CONTINUOUS HIGH CHAIRS FOR METAL DECK (C.H.C.M.) @ 1.2m CTS. WITH A HEIGHT TO SUPPORT THE BOTTOM MAT OF "A" BARS A CLEAR DISTANCE OF 65mm ABOVE THE TOP OF THE REMOVABLE FORM.

LONGITUDINAL STEEL MAY BE SHIFTED SLIGHTLY, AS NECESSARY, TO AVOID INTERFERENCE WITH STIRRUPS IN PRESTRESSED CONCRETE GIRDERS.

PREVIOUSLY CAST CONCRETE IN A CONTINUOUS UNIT SHALL HAVE ATTAINED A MINIMUM COMPRESSIVE STRENGTH OF 20.7MPa BEFORE ADDITIONAL CONCRETE IS CAST IN THE UNIT.

BARRIER RAIL IN A CONTINUOUS UNIT SHALL NOT BE CAST UNTIL ALL SLAB CONCRETE IN THE UNIT HAS BEEN CAST AND HAS REACHED A MINIMUM COMPRESSIVE STRENGTH OF 20.7MPa.

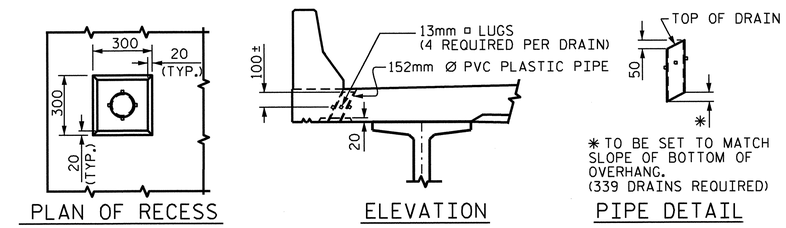

PLAN OF RECESS

ELEVATION

PIPE DETAIL

DRAIN DETAILS

TOP OF FLOOR DRAINS TO BE SET 10mm BELOW SURFACE OF SLAB.

4-13mm □ LUGS TO BE GLUED TO THE PVC PLASTIC PIPE AT EQUAL SPACES AROUND THE PIPE DRAIN APPROXIMATELY 100mm FROM THE TOP OF THE PIPE.

THE 152mm Ø PVC PLASTIC PIPE AND FITTINGS SHALL BE SCHEDULE 40 AND CONFORM TO ASTM D1785.

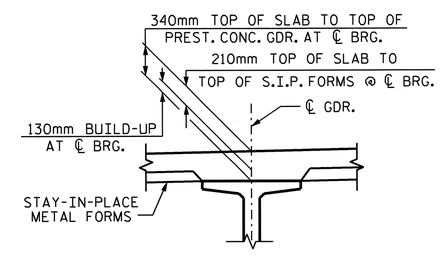

DETAIL 'A'

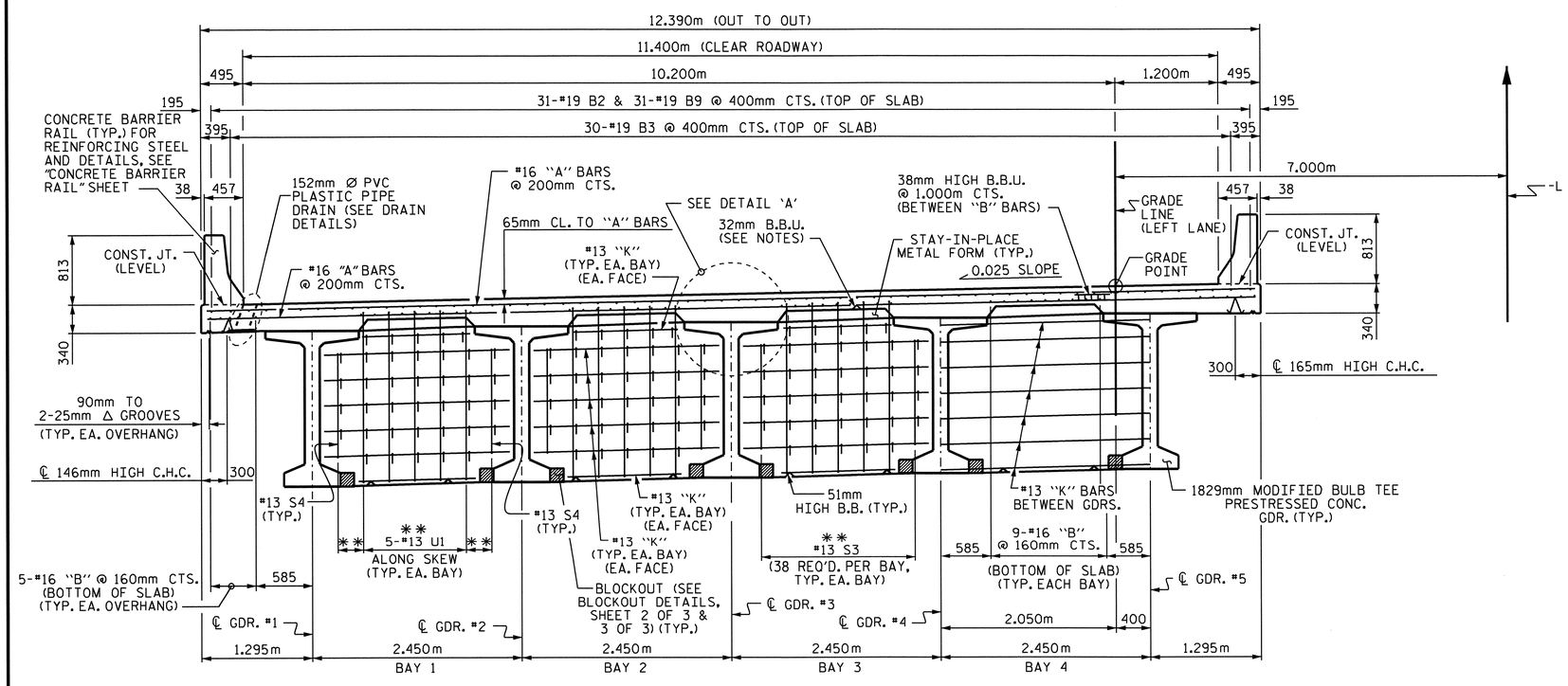

TYPICAL SECTION

SHOWING CONTINUOUS BENT DIAPHRAGM

** NOTE: SEE PLAN OF SPANS FOR SPACING OF THESE BARS

PROJECT NO. R-2554A

WAYNE COUNTY

STATION: 70+24.000 -L-

SHEET 1 OF 3

STATE OF NORTH CAROLINA
DEPARTMENT OF TRANSPORTATION
RALEIGH

SUPERSTRUCTURE

TYPICAL SECTIONS

(LEFT LANE)

NORTH CAROLINA PROFESSIONAL SEAL 14045 ENGINEER TIMOTHY L. COGGINS

03/23/12

REVISIONS							SHEET NO.
NO.	BY:	DATE:	NO.	BY:	DATE:		S-79
1			3				TOTAL SHEETS
2			4				276

DRAWN BY : B.N.BARODAWALA DATE : 11-15-11
CHECKED BY : PEGGY PARISI DATE : 12-22-11

23-MAR-2012 10:42
Z:\TIPProjects-R\R2554A\Structures\FinalPlans\Str#3\r2554a_sd_ts_03.dgn
pdkins

STR. #3

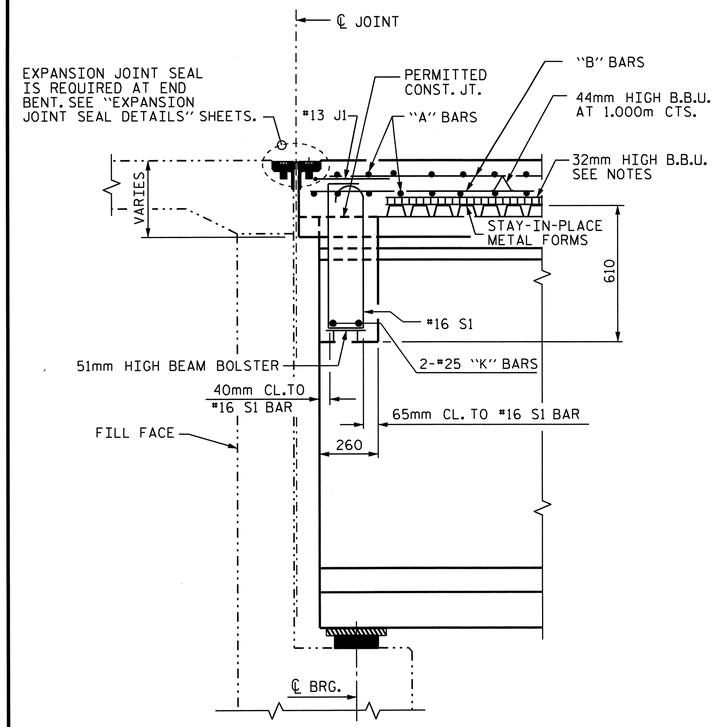

SECTION THRU END BENT #1 DIAPHRAGM

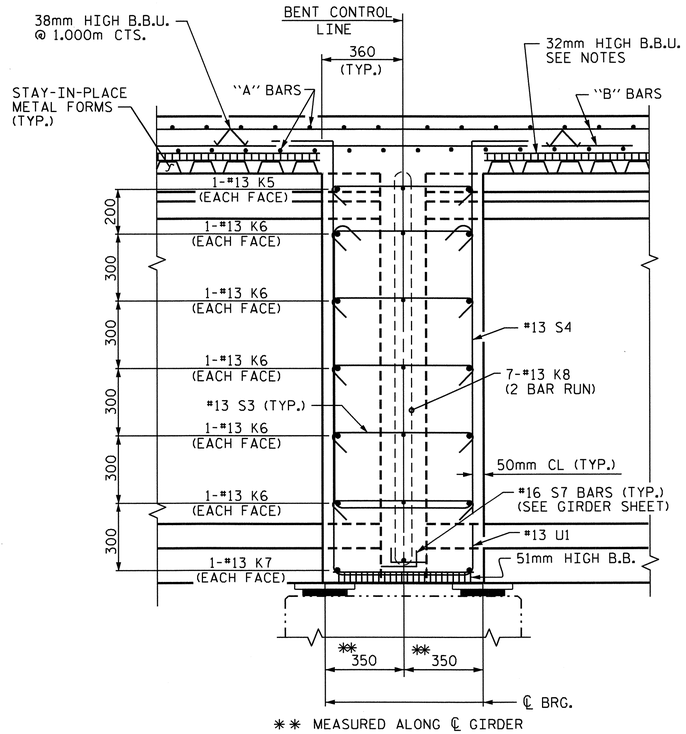

** MEASURED ALONG ℄ GIRDER

SECTION THRU CONTINUOUS BENT DIAPHRAGM

(@ BENTS #1 & #3)

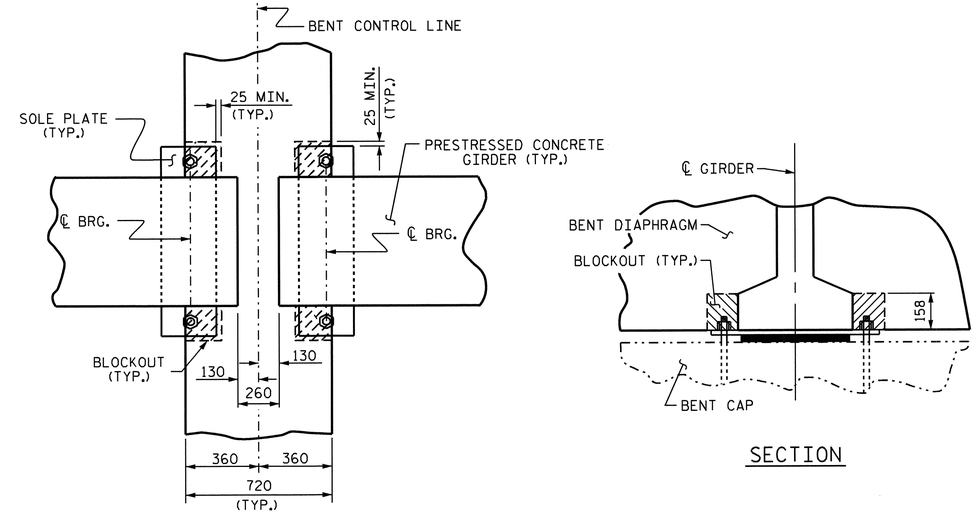

PLAN VIEW

SECTION

BENT DIAPHRAGM BLOCKOUT DETAIL

(@ BENTS #1 & #3)

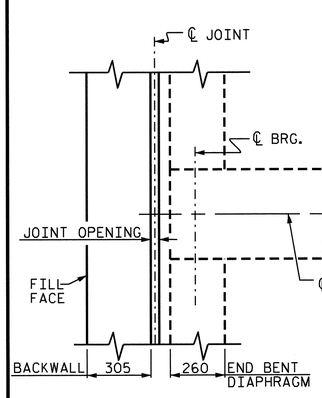

END BENT #1 DIAPHRAGM

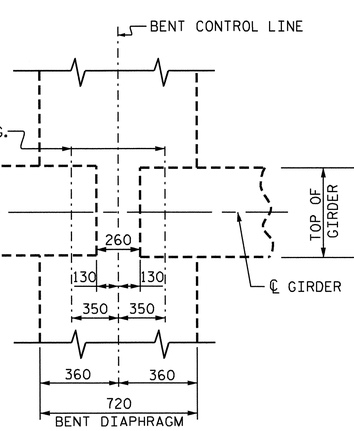

CONTINUOUS BENT DIAPHRAGM

(@ BENTS #1 & #3)

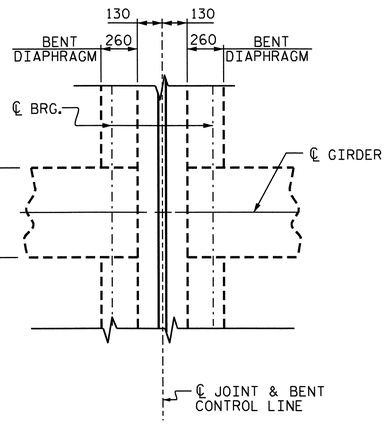

BENT DIAPHRAGM

(@ BENTS #2 & #4)

PLAN

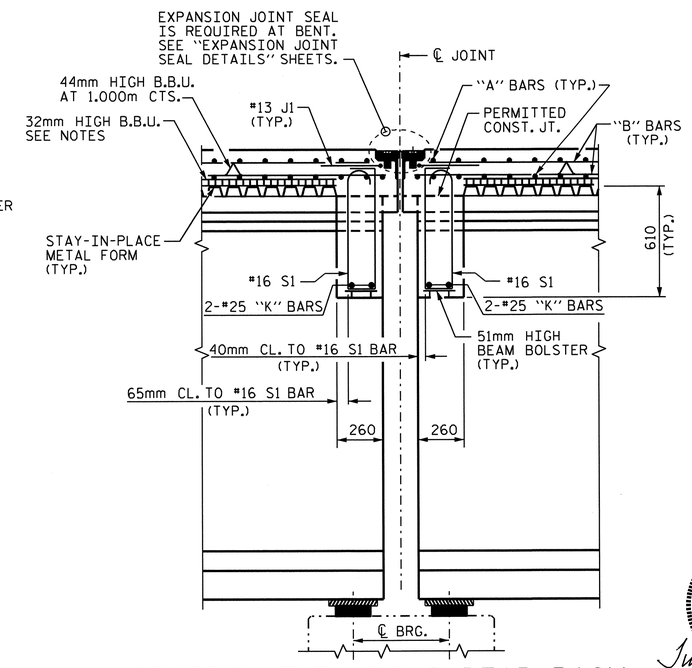

SECTION THRU BENT DIAPHRAGM

(@ BENTS #2 & #4)

NORTH CAROLINA PROFESSIONAL SEAL 14045 ENGINEER TIMOTHY W. COGGINS

Timothy W. Coggins 03/23/12

PROJECT NO. R-2554A

WAYNE COUNTY

STATION: 70+24.000 -L-

SHEET 2 OF 3

STATE OF NORTH CAROLINA
DEPARTMENT OF TRANSPORTATION
RALEIGH

SUPERSTRUCTURE

TYPICAL SECTION DETAILS

(LEFT LANE)

REVISIONS						SHEET NO.
NO.	BY:	DATE:	NO.	BY:	DATE:	S-80
1			3			TOTAL SHEETS
2			4			276

STR. #3

DRAWN BY : B.N.BARODAWALA DATE : 11-15-11
CHECKED BY : PEGGY PARISI DATE : 12-22-11

23-MAR-2012 10:42
Z:\TIPProjects-R\R2554A\Structures\FinalPlans\Str#3\r2554a_sd_ts_03.dgn
padkins

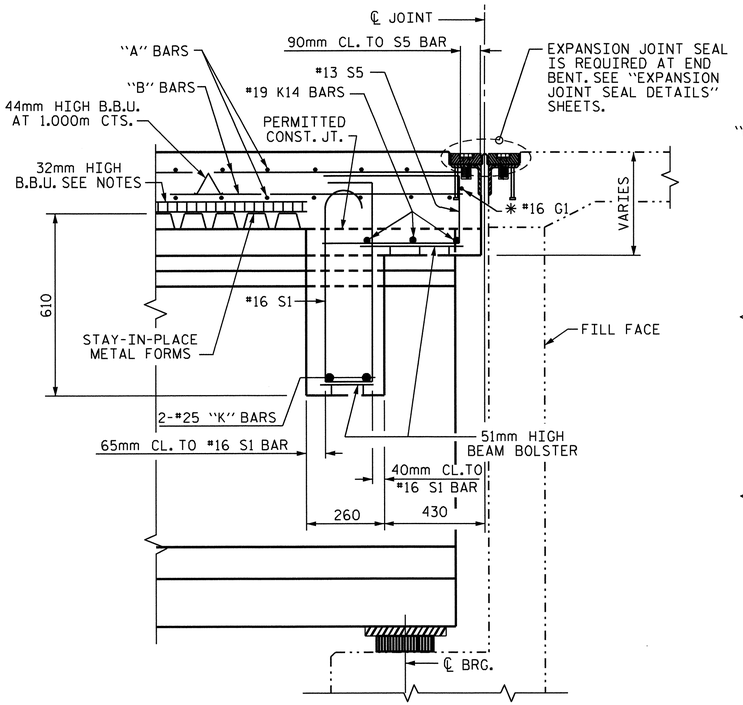

✱ #16 G1 BAR MAY BE SHIFTED SLIGHTLY, AS NECESSARY, TO CLEAR REINFORCING STEEL AND STIRRUPS.

SECTION THRU END BENT #2 DIAPHRAGM

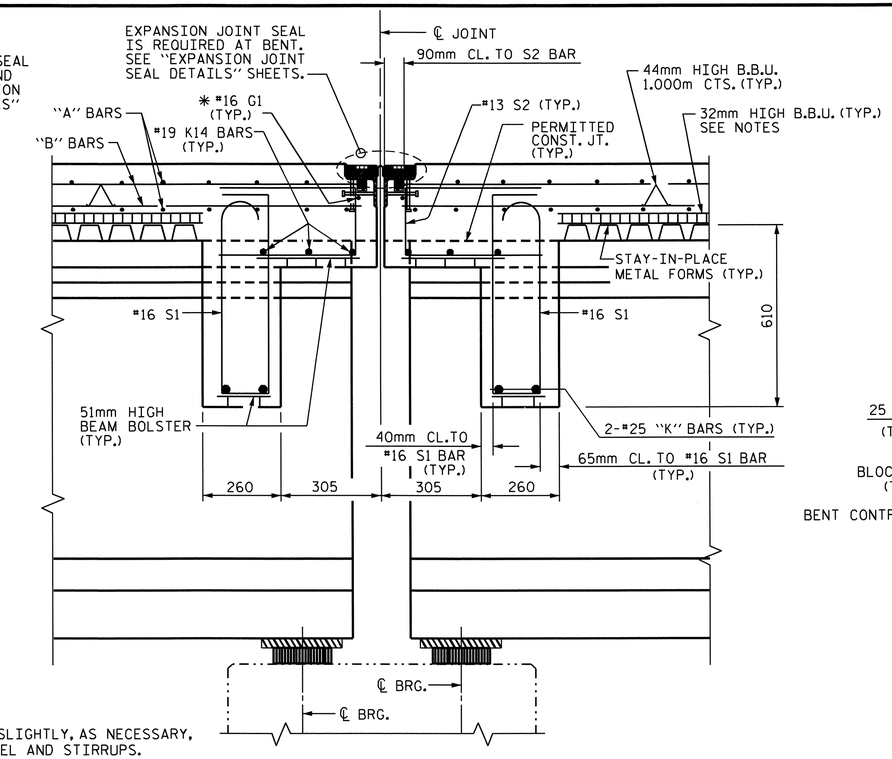

SECTION THRU BENT DIAPHRAGM

(@ BENTS #6, #8, #10, #12, #14, #16, #18 & #20)

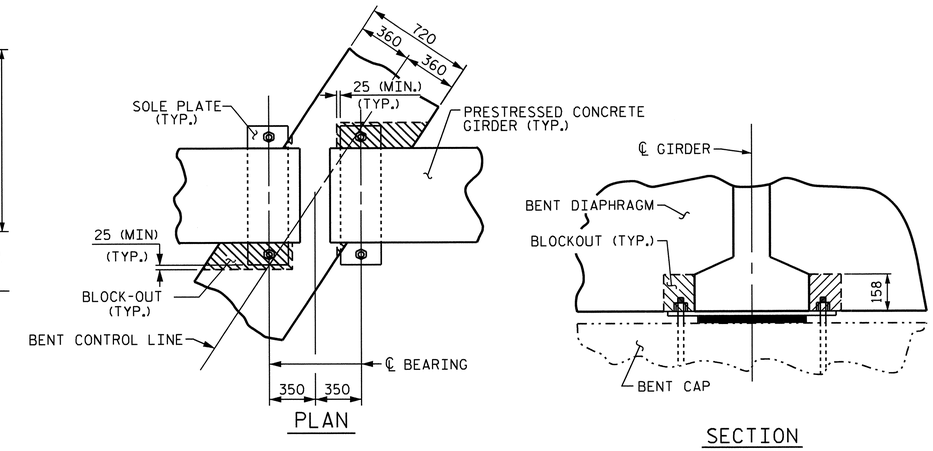

BENT DIAPHRAGM BLOCKOUT DETAIL

(@ BENTS #5, #7, #9, #11, #13, #15, #17, #19 & #21)

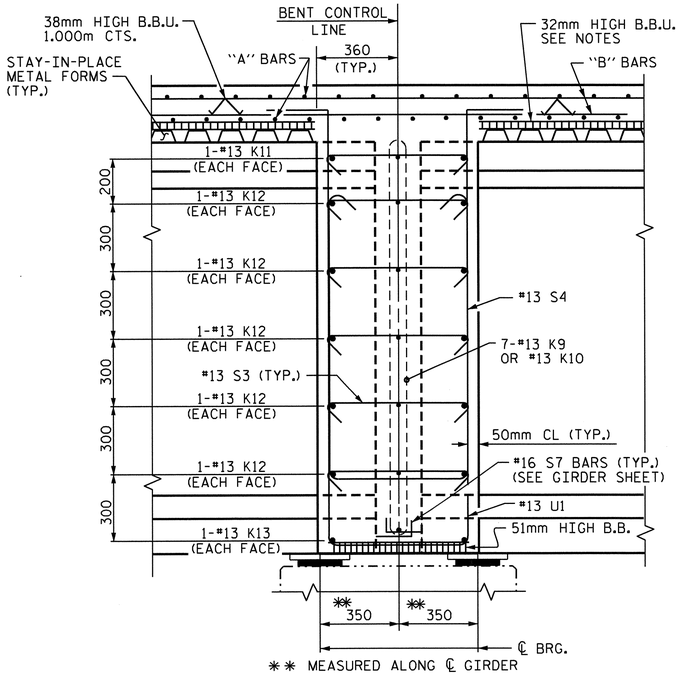

✱✱ MEASURED ALONG ℄ GIRDER

SECTION THRU CONTINUOUS BENT DIAPHGRAM

(@ BENTS #5, #7, #9, #11, #13, #15, #17, #19 & #21)

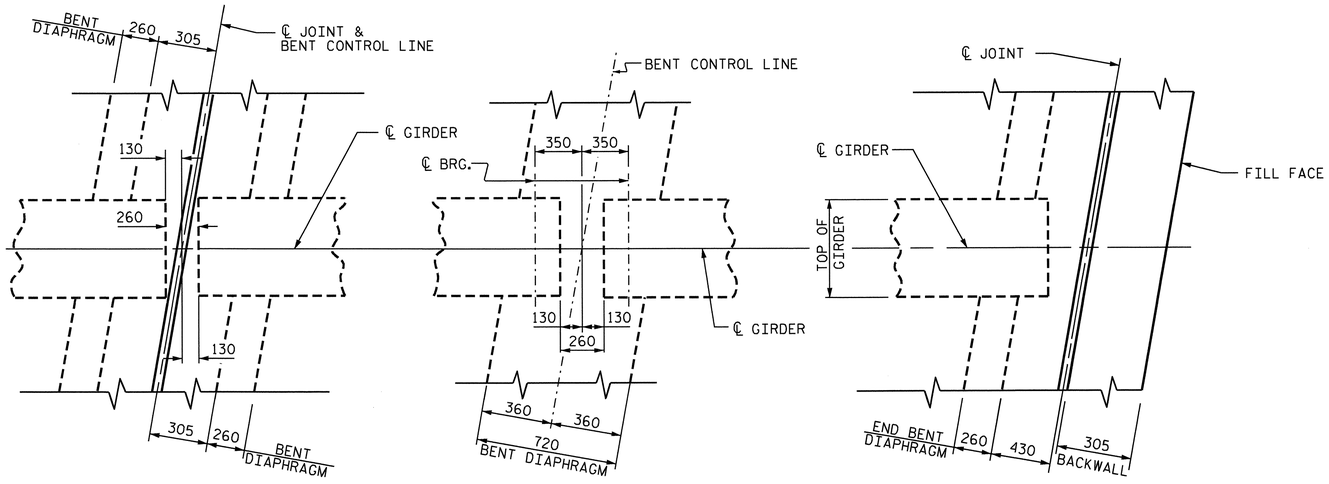

BENT DIAPHRAGM

(@ BENTS #6, #8, #10, #12, #14, #16, #18 & #20)

CONTINUOUS BENT DIAPHRAGM

(@ BENTS #5 #7, #9, #11, #13, #15, #17, #19 & #21)

END BENT #2 DIAPHRAGM

PLAN

NORTH CAROLINA PROFESSIONAL SEAL 14045 ENGINEER TIMOTHY L. COGGINS
03/23/12

PROJECT NO. R-2554A
WAYNE COUNTY
STATION: 70+24.000 -L-

SHEET 3 OF 3

STATE OF NORTH CAROLINA
DEPARTMENT OF TRANSPORTATION
RALEIGH

SUPERSTRUCTURE
TYPICAL SECTION DETAILS
(LEFT LANE)

REVISIONS							SHEET NO.
NO.	BY:	DATE:	NO.	BY:	DATE:		S-81
1			3				TOTAL SHEETS
2			4				276

STR. #3

DRAWN BY : B.N.BARODAWALA DATE : 11-15-11
CHECKED BY : PEGGY PARISI DATE : 12-22-11

23-MAR-2012 10:41
Z:\TIPProjects-R\R2554A\Structures\FinalPlans\Str#3\r2554a_sd_ts_03.dgn
padkins

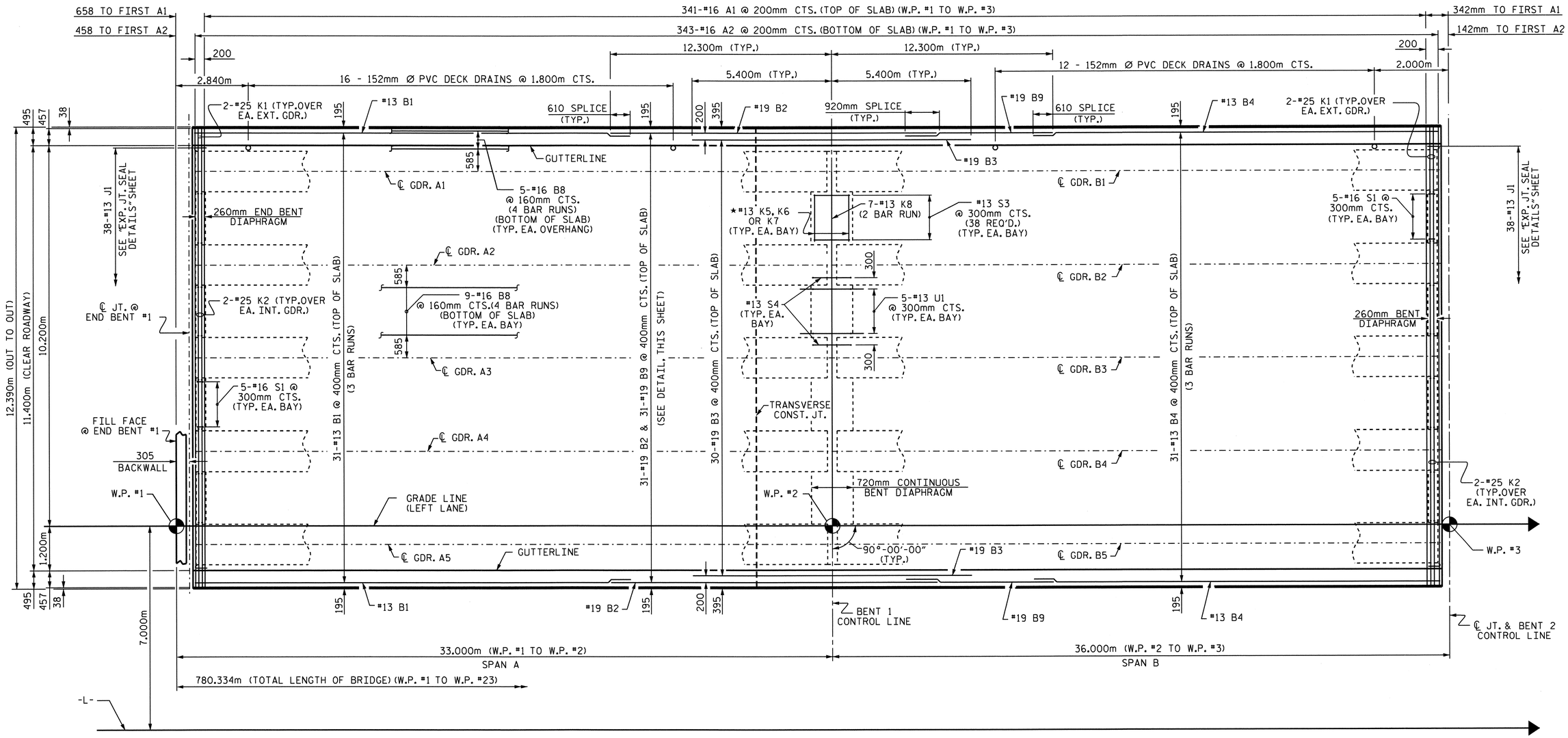

★ FOR DETAILS, SEE "SECTION THRU CONTINUOUS BENT DIAPHRAGM"

PLAN OF SPANS A & B

FOR LOCATION OF INTERMEDIATE DIAPHRAGMS, SEE 'GIRDER LAYOUT'' SHEETS.
FOR LOCATION OF TRANSVERSE CONSTRUCTION JOINT, SEE SHEET 2 OF 2 OF BILL OF MATERIAL.

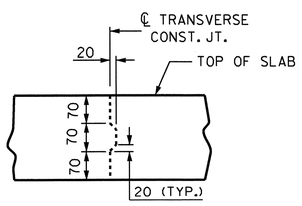

TRANSVERSE CONSTRUCTION JOINT DETAIL

NOTE: REINFORCING STEEL IN SLAB NOT SHOWN.
LONGITUDINAL REINFORCING STEEL SHALL BE CONTINUOUS THRU JOINT.

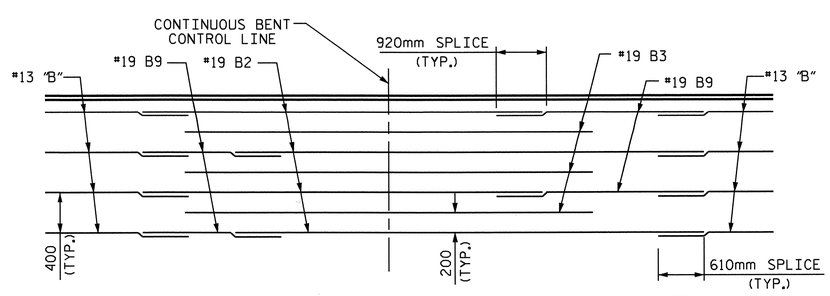

TOP OF SLAB REINFORCING LAYOUT

ALTERNATE THE SPLICE LOCATIONS AS SHOWN

PROJECT NO. R-2554A
WAYNE COUNTY
STATION: 70+24.000 -L-

SHEET 1 OF 6

STATE OF NORTH CAROLINA
DEPARTMENT OF TRANSPORTATION
RALEIGH

SUPERSTRUCTURE

PLAN OF SPANS A & B

(LEFT LANE)

NORTH CAROLINA PROFESSIONAL SEAL 14045 ENGINEER TIMOTHY L. COGGINS
03/23/12

REVISIONS							SHEET NO.
NO.	BY:	DATE:	NO.	BY:	DATE:		S-82
1			3				TOTAL SHEETS
2			4				276

STR. #3

DRAWN BY : B.N.BARODAWALA DATE : 12-15-11
CHECKED BY : PEGGY PARISI DATE : 12-22-11

23-MAR-2012 10:40
Z:\TIPProjects-R\R2554A\Structures\FinalPlans\Str#3\r2554a_sd_s#_03.dgn
padkins

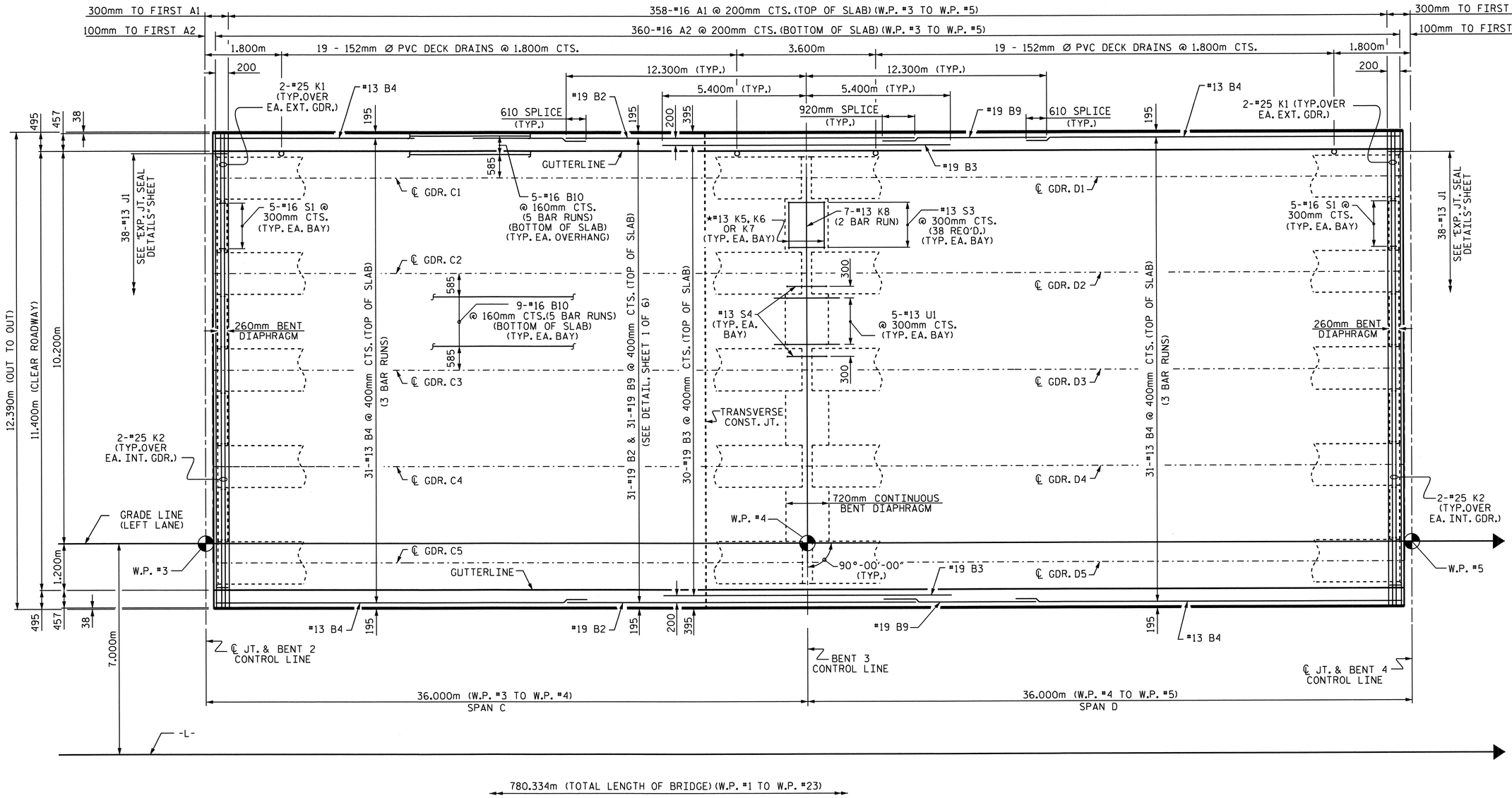

★ FOR DETAILS, SEE "SECTION THRU CONTINUOUS BENT DIAPHRAGM"

PLAN OF SPANS C & D

FOR LOCATION OF INTERMEDIATE DIAPHRAGMS, SEE "GIRDER LAYOUT."
FOR "TRANSVERSE CONSTRUCTION JOINT DETAIL," SEE SHEET 1 OF 6.
FOR "TOP OF SLAB REINFORCING LAYOUT," SEE SHEET 1 OF 6.
FOR LOCATION OF TRANSVERSE CONSTRUCTION JOINT, SEE SHEET 2 OF 2 OF BILL OF MATERIAL.

PROJECT NO. R-2554A
WAYNE COUNTY
STATION: 70+24.000 -L-

SHEET 2 OF 6

STATE OF NORTH CAROLINA
DEPARTMENT OF TRANSPORTATION
RALEIGH

SUPERSTRUCTURE

PLAN OF SPANS C & D

(LEFT LANE)

NORTH CAROLINA PROFESSIONAL SEAL 14045 ENGINEER TIMOTHY K. COGGINS
Timothy K. Coggins 03/23/12

REVISIONS						SHEET NO.
NO.	BY:	DATE:	NO.	BY:	DATE:	S-83
1			3			TOTAL SHEETS
2			4			276

STR. #3

DRAWN BY : B.N.BARODAWALA DATE : 12-15-11
CHECKED BY : PEGGY PARISI DATE : 12-22-11

23-MAR-2012 10:40
Z:\TIPProjects-R\R2554A\Structures\FinalPlans\Str#3\r2554a_sd_s#_03.dgn
padkins

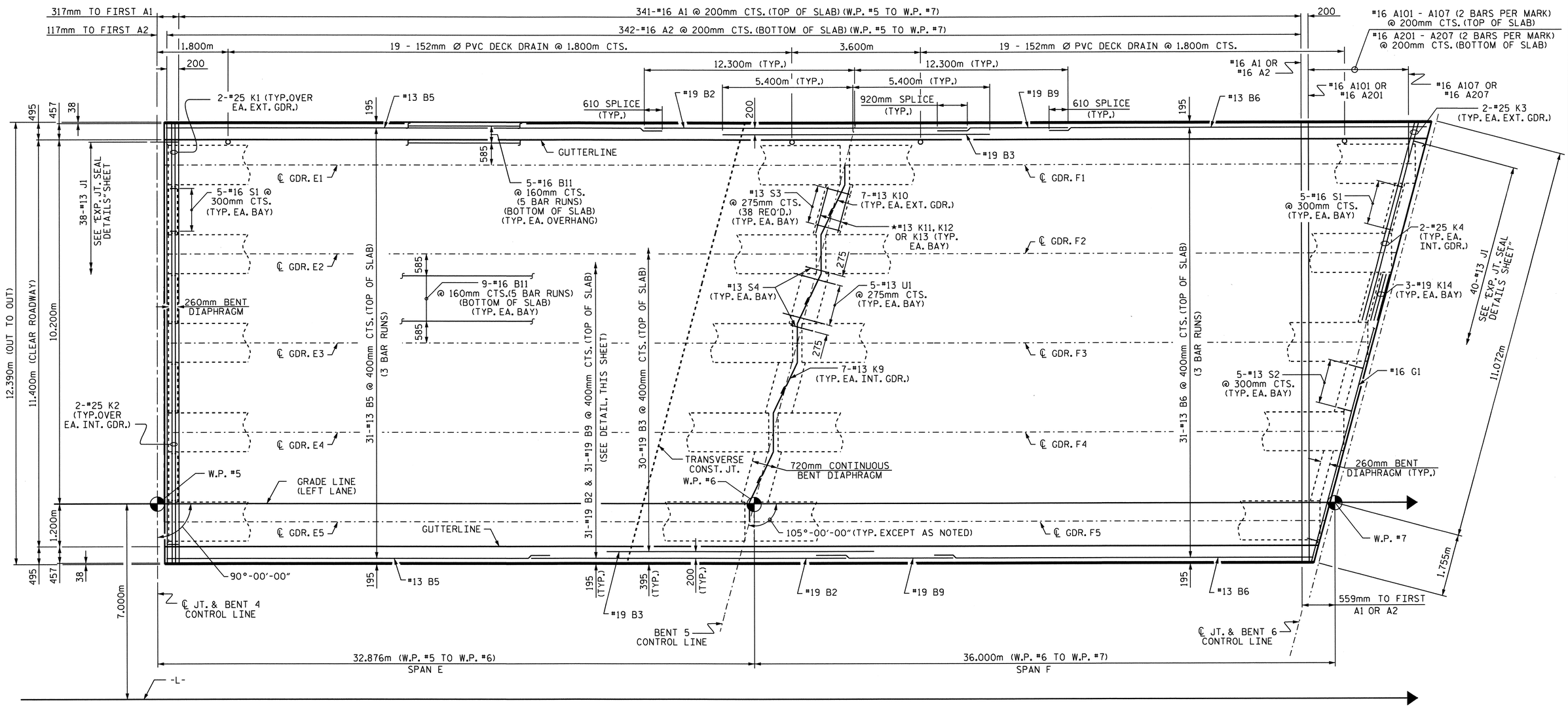

★ FOR DETAILS, SEE "SECTION THRU CONTINUOUS BENT DIAPHRAGM"

PLAN OF SPAN E & F

FOR LOCATION OF INTERMEDIATE DIAPHRAGMS, SEE "GIRDER LAYOUT."
FOR "TRANSVERSE CONSTRUCTION JOINT DETAIL," SEE SHEET 1 OF 6.
FOR LOCATION OF TRANSVERSE CONSTRUCTION JOINT, SEE SHEET 2 OF 2 OF BILL OF MATERIAL.

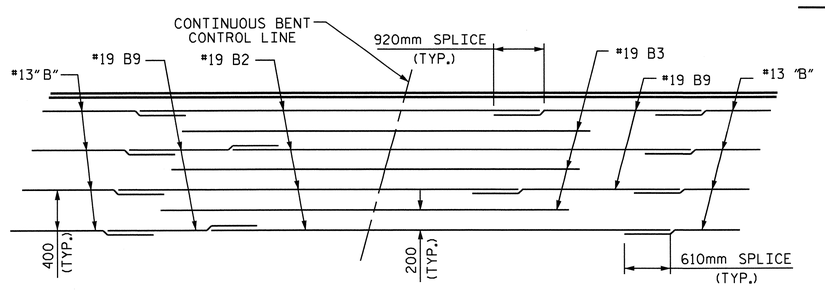

TOP OF SLAB REINFORCING LAYOUT

ALTERNATE THE SPLICE LOCATIONS AS SHOWN

PROJECT NO. R-2554A
WAYNE COUNTY
STATION: 70+24.000 -L-

SHEET 3 OF 6

STATE OF NORTH CAROLINA
DEPARTMENT OF TRANSPORTATION
RALEIGH

SUPERSTRUCTURE

PLAN OF SPANS E & F
(LEFT LANE)

NORTH CAROLINA PROFESSIONAL SEAL 14045 ENGINEER
03/23/12

REVISIONS						SHEET NO.
NO.	BY:	DATE:	NO.	BY:	DATE:	S-84
1			3			TOTAL SHEETS
2			4			276

STR. #3

DRAWN BY : B.N.BARODAWALA DATE : 12-15-11
CHECKED BY : PEGGY PARISI DATE : 12-22-11

23-MAR-2012 10:40
Z:\TIPProjects-R\R2554A\Structures\FinalPlans\Str#3\r2554a_sd_s#_03.dgn
padkins

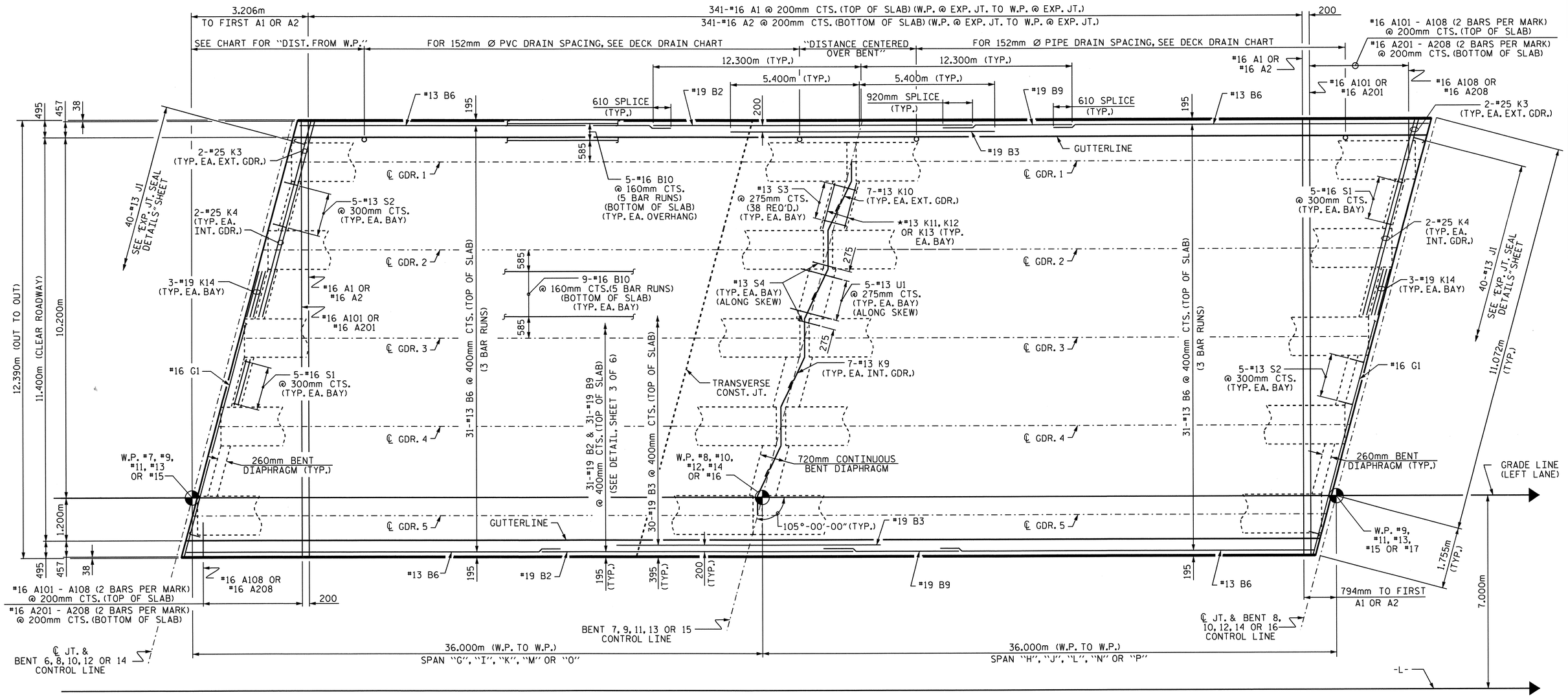

★ FOR DETAILS, SEE "SECTION THRU CONTINUOUS BENT DIAPHRAGM"

PLAN OF SPANS G & H, I & J, K & L, M & N OR O & P

FOR LOCATION OF INTERMEDIATE DIAPHRAGMS AND GIRDER DESIGNATION PER SPAN, SEE "GIRDER LAYOUT" SHEETS.
FOR "TRANSVERSE CONSTRUCTION JOINT DETAIL," SEE SHEET 1 OF 6.
FOR "TOP OF SLAB REINFORCING LAYOUT," SEE SHEET 3 OF 6.
FOR LOCATION OF TRANSVERSE CONSTRUCTION JOINT, SEE SHEET 2 OF 2 OF BILL OF MATERIAL.

SPANS	DISTANCE FROM W.P.	DRAIN SPA. LEFT OF BENT	DISTANCE CENTERED OVER BENT	DRAIN SPA. RIGHT OF BENT	
G & H	4.533m	19 @ 1.800m CTS.	3.600m	11 @ 1.800m CTS.	
I & J	0	0	0	0	NO DRAINS
K & L	35.133m	2 @ 1.800m CTS.	3.600m	19 @ 1.800m CTS.	
M & N	4.533m	19 @ 1.800m CTS.	3.600m	19 @ 1.800m CTS.	
O & P	4.533m	19 @ 1.800m CTS.	3.600m	19 @ 1.800m CTS.	

DECK DRAIN CHART

PROJECT NO. R-2554A
WAYNE COUNTY
STATION: 70+24.000 -L-

SHEET 4 OF 6

STATE OF NORTH CAROLINA
DEPARTMENT OF TRANSPORTATION
RALEIGH

SUPERSTRUCTURE
PLAN OF SPANS G & H, I & J, K & L, M & N OR O & P
(LEFT LANE)

NORTH CAROLINA PROFESSIONAL SEAL 14045 ENGINEER TIMOTHY W. COGGINS
03/23/12

REVISIONS						SHEET NO.
NO.	BY:	DATE:	NO.	BY:	DATE:	S-85
1			3			TOTAL SHEETS
2			4			276

STR. #3

DRAWN BY : B.N.BARODAWALA DATE : 12-15-11
CHECKED BY : PEGGY PARISI DATE : 12-22-11

23-MAR-2012 10:41
Z:\TIPProjects-R\R2554A\Structures\FinalPlans\Str#3\r2554a_sd_s#_03.dgn
padkins

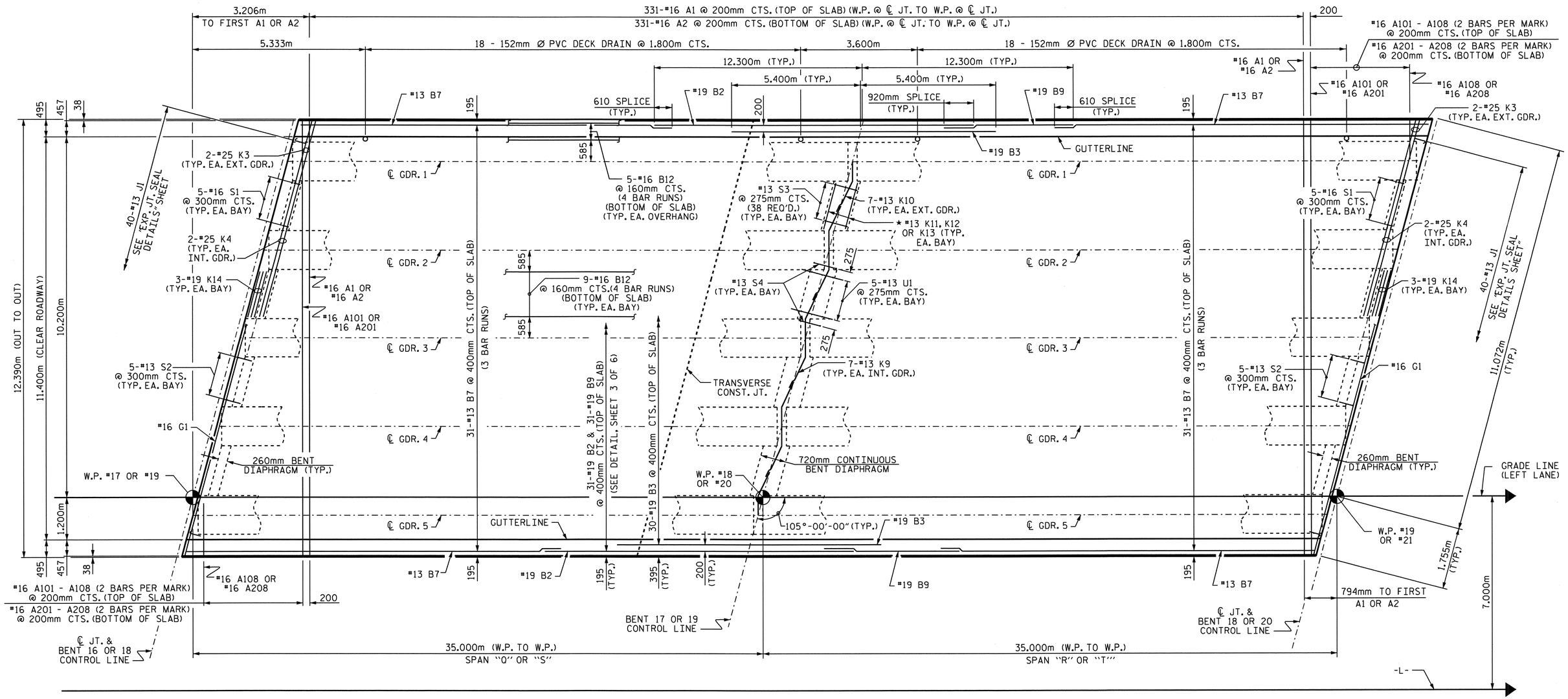

780.334m (TOTAL LENGTH OF BRIDGE) (W.P. #1 TO W.P. #23)

★ FOR DETAILS, SEE "SECTION THRU CONTINUOUS BENT DIAPHRAGM"

PLAN OF SPANS Q & R OR S & T

FOR LOCATION OF INTERMEDIATE DIAPHRAGMS AND GIRDER DESIGNATION PER SPAN, SEE "GIRDER LAYOUT" SHEETS.
FOR "TRANSVERSE CONSTRUCTION JOINT DETAIL," SEE SHEET 1 OF 6.
FOR "TOP OF SLAB REINFORCING LAYOUT," SEE SHEET 3 OF 6.
FOR LOCATION OF TRANSVERSE CONSTRUCTION JOINT, SEE SHEET 2 OF 2 OF BILL OF MATERIAL.

PROJECT NO. R-2554A
WAYNE COUNTY
STATION: 70+24.000 -L-

SHEET 5 OF 6

STATE OF NORTH CAROLINA
DEPARTMENT OF TRANSPORTATION
RALEIGH

SUPERSTRUCTURE

PLAN OF SPANS
Q & R OR S & T

(LEFT LANE)

NORTH CAROLINA PROFESSIONAL SEAL 14045 ENGINEER TIMOTHY L. COGGINS
03/23/12

REVISIONS								SHEET NO.
NO.	BY:	DATE:	NO.	BY:	DATE:			S-86
1			3					TOTAL SHEETS
2			4					276

STR. #3

DRAWN BY : B.N.BARODAWALA DATE : 12-15-11
CHECKED BY : PEGGY PARISI DATE : 12-22-11

23-MAR-2012 10:41
Z:\TIPProjects-R\R2554A\Structures\FinalPlans\Str#3\r2554a_sd_s#_03.dgn
padkins

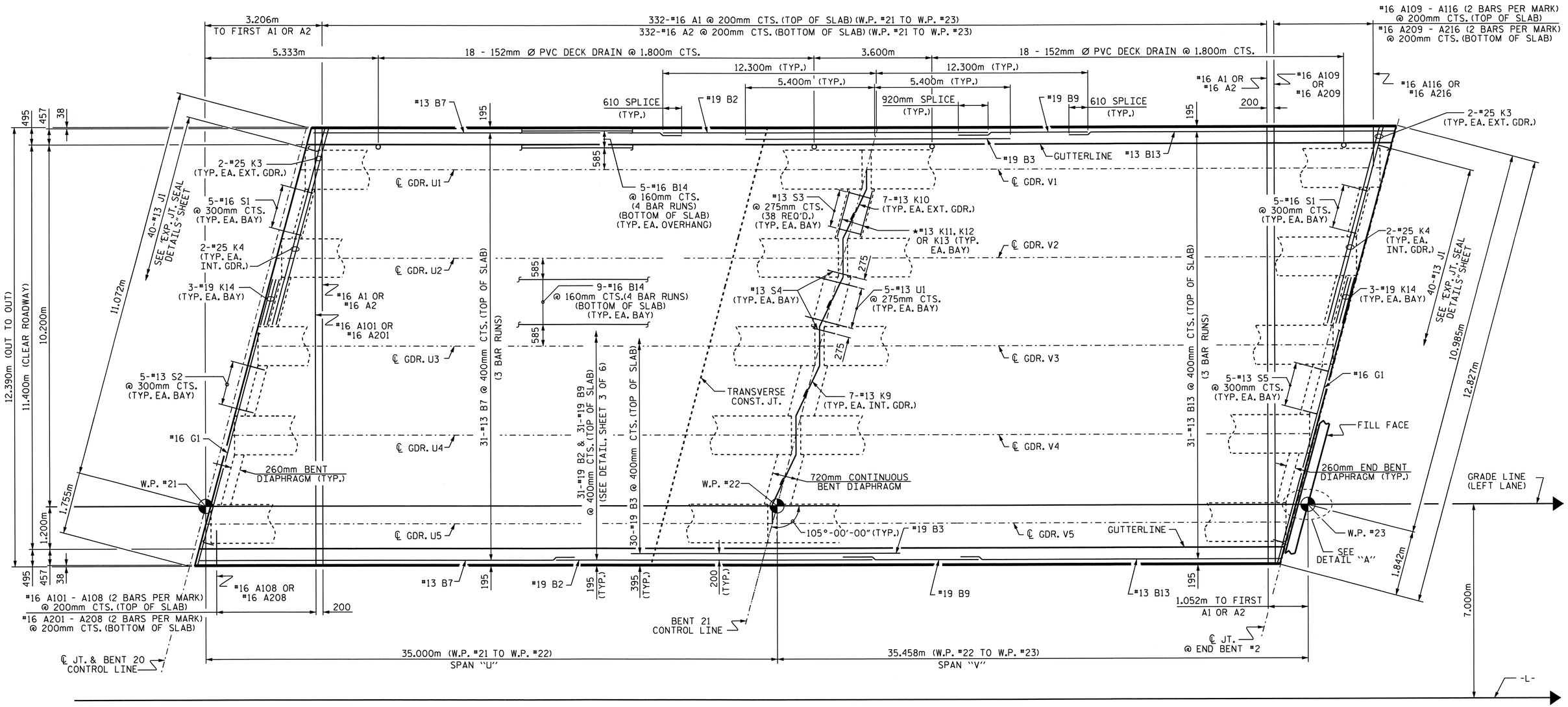

780.334m (TOTAL LENGTH OF BRIDGE) (W.P. #1 TO W.P. #23)

★ FOR DETAILS, SEE "SECTION THRU CONTINUOUS BENT DIAPHRAGM"

PLAN OF SPANS U & V

FOR LOCATION OF INTERMEDIATE DIAPHRAGMS, SEE "GIRDER LAYOUT" SHEETS.
FOR "TRANSVERSE CONSTRUCTION JOINT DETAIL," SEE SHEET 1 OF 6.
FOR "TOP OF SLAB REINFORCING LAYOUT," SEE SHEET 3 OF 6.
FOR LOCATION OF TRANSVERSE CONSTRUCTION JOINT, SEE SHEET 2 OF 2 OF BILL OF MATERIAL.

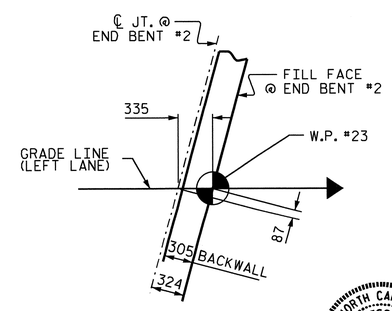

DETAIL "A"

NORTH CAROLINA PROFESSIONAL SEAL 14045 ENGINEER TIMOTHY W. COCONS
03/23/12

PROJECT NO. R-2554A
WAYNE COUNTY
STATION: 70+24.000 -L-

SHEET 6 OF 6

STATE OF NORTH CAROLINA
DEPARTMENT OF TRANSPORTATION
RALEIGH

SUPERSTRUCTURE
PLAN OF SPANS
U & V
(LEFT LANE)

REVISIONS						SHEET NO.
NO.	BY:	DATE:	NO.	BY:	DATE:	S-87
1			3			TOTAL SHEETS
2			4			276

STR. #3

DRAWN BY : B.N.BARODAWALA DATE : 12-15-11
CHECKED BY : PEGGY PARISI DATE : 12-22-11

23-MAR-2012 10:41
Z:\TIPProjects-R\R2554A\Structures\FinalPlans\Str#3\r2554a_sd_s#_03.dgn
padkins

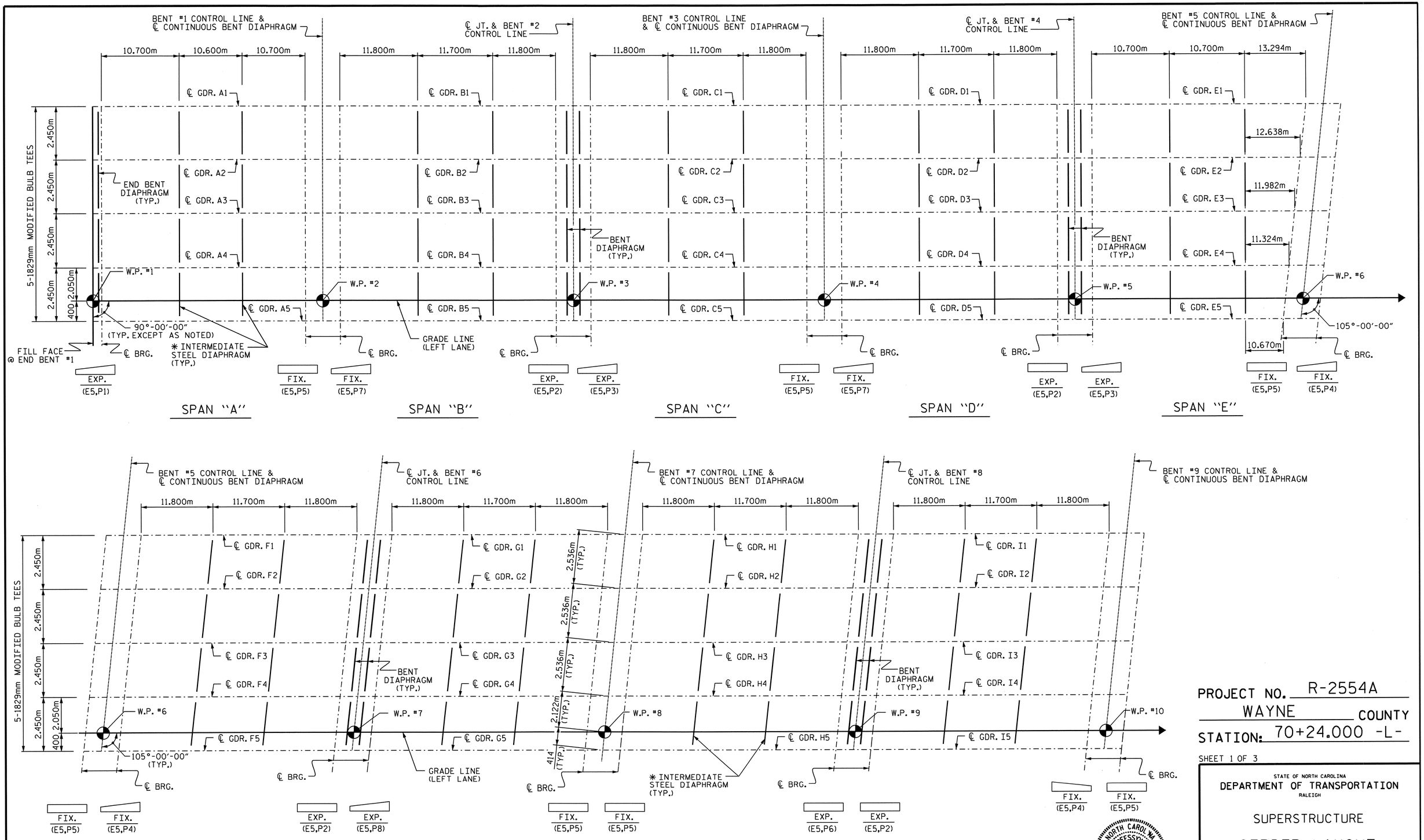

GIRDER LAYOUT PLAN

✱ NOTE: SEE "INTERMEDIATE STEEL DIAPHRAGMS FOR 1829mm MODIFIED BULB TEE CONCRETE GIRDERS" SHEET FOR DETAILS.

PROJECT NO. R-2554A
WAYNE COUNTY
STATION: 70+24.000 -L-

SHEET 1 OF 3

STATE OF NORTH CAROLINA
DEPARTMENT OF TRANSPORTATION
RALEIGH

SUPERSTRUCTURE

GIRDER LAYOUT
(LEFT LANE)

NORTH CAROLINA PROFESSIONAL SEAL 14045 ENGINEER TIMOTHY L. COBGNIS
03/23/12

REVISIONS							SHEET NO.
NO.	BY:	DATE:	NO.	BY:	DATE:		S-88
1			3				TOTAL SHEETS
2			4				276

DRAWN BY : B.N.BARODAWALA DATE : 11-15-11
CHECKED BY : PEGGY PARISI DATE : 12-22-11

23-MAR-2012 10:35
Z:\TIPProjects-R\R2554A\Structures\FinalPlans\Str#3\r2554a_sd_fp_03.dgn
padkins

STR. #3

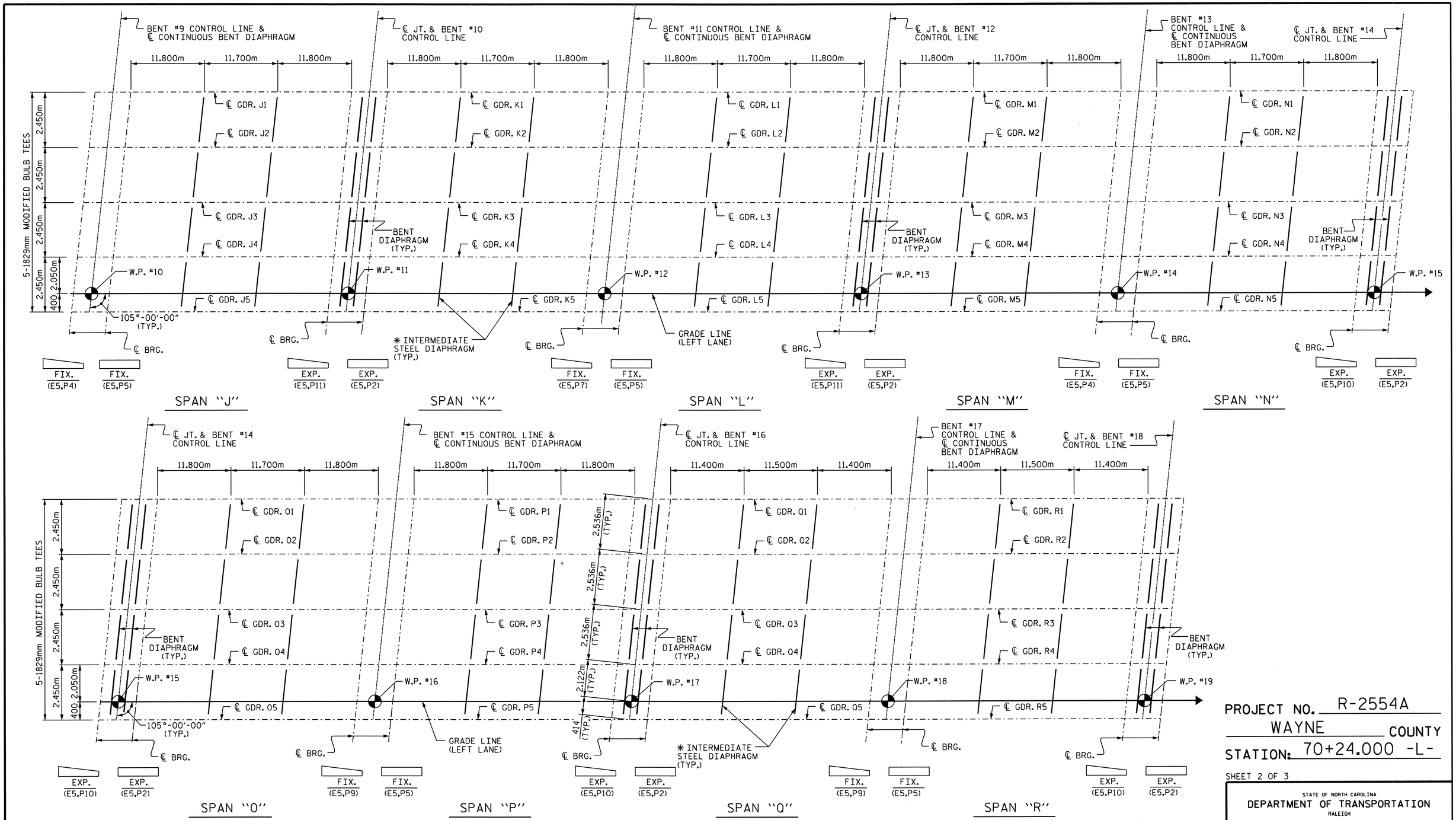

GIRDER LAYOUT PLAN

✱ NOTE: SEE "INTERMEDIATE STEEL DIAPHRAGMS FOR 1829mm MODIFIED BULB TEE CONCRETE GIRDERS" SHEET FOR DETAILS.

PROJECT NO. R-2554A
WAYNE COUNTY
STATION: 70+24.000 -L-

SHEET 2 OF 3

STATE OF NORTH CAROLINA
DEPARTMENT OF TRANSPORTATION
RALEIGH

SUPERSTRUCTURE

GIRDER LAYOUT
(LEFT LANE)

NORTH CAROLINA PROFESSIONAL SEAL 14045 ENGINEER TIMOTHY W. COGGINS
03/23/12

REVISIONS						SHEET NO.
NO.	BY:	DATE:	NO.	BY:	DATE:	S-89
1			3			TOTAL SHEETS
2			4			276

DRAWN BY : B.N.BARODAWALA DATE : 11-15-11
CHECKED BY : PEGGY PARISI DATE : 12-22-11

23-MAR-2012 10:35
Z:\TIPProjects-R\R2554A\Structures\FinalPlans\Str#3\r2554a_sd_fp_03.dgn
padkins

STR. #3

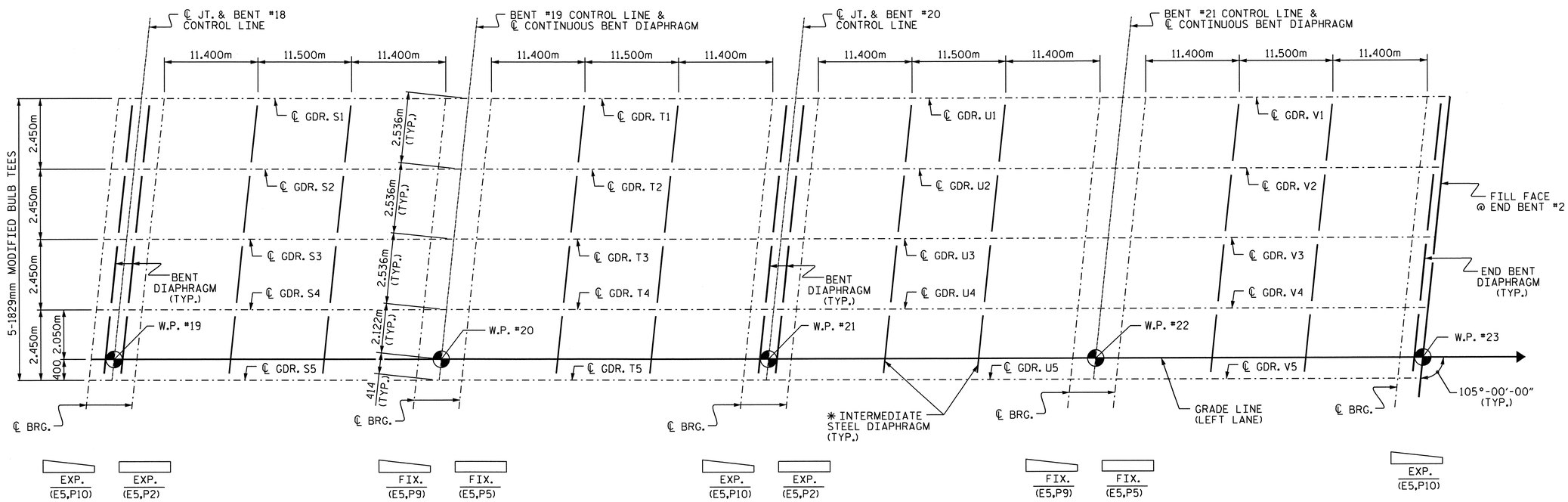

GIRDER LAYOUT PLAN

✱ NOTE: SEE "INTERMEDIATE STEEL DIAPHRAGMS FOR 1829mm MODIFIED BULB TEE CONCRETE GIRDERS" SHEET FOR DETAILS.

PROJECT NO. R-2554A
WAYNE COUNTY
STATION: 70+24.000 -L-

SHEET 3 OF 3

STATE OF NORTH CAROLINA
DEPARTMENT OF TRANSPORTATION
RALEIGH

SUPERSTRUCTURE

GIRDER LAYOUT
(LEFT LANE)

NORTH CAROLINA PROFESSIONAL SEAL 14045 ENGINEER TIMOTHY W. COGGINS
03/23/12

REVISIONS							SHEET NO.
NO.	BY:	DATE:	NO.	BY:	DATE:		S-90
1			3				TOTAL SHEETS
2			4				276

DRAWN BY : B.N.BARODAWALA DATE : 11-15-11
CHECKED BY : PEGGY PARISI DATE : 12-22-11

23-MAR-2012 10:35
Z:\TIPProjects-R\R2554A\Structures\FinalPlans\Str#3\r2554a_sd_fp_03.dgn
padkins

STR. #3

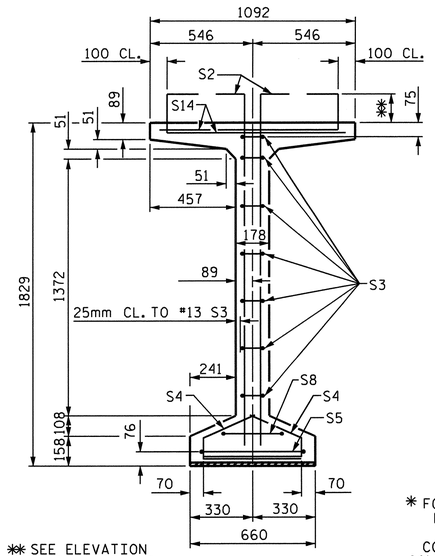

✱✱ SEE ELEVATION VIEW FOR STIRRUP PROJECTION

SECTION A-A

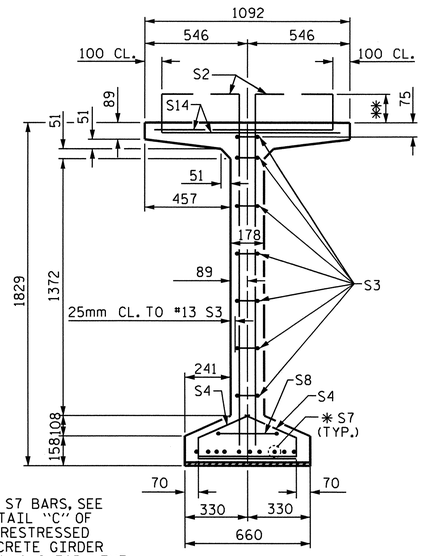

✱ FOR S7 BARS, SEE DETAIL "C" OF PRESTRESSED CONCRETE GIRDER CONTINUOUS FOR LIVE LOAD DETAILS SHEET

SECTION B-B

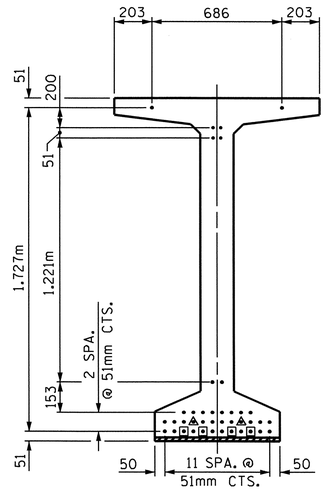

AT END OF GIRDERS

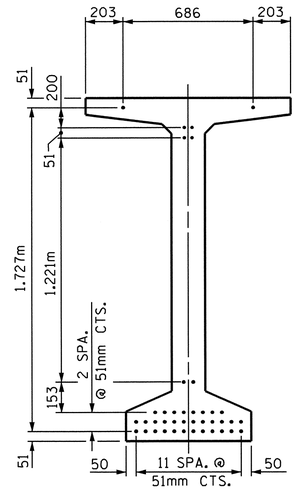

AT ℄ OF GIRDERS

15.24mm Ø LOW RELAXATION STRAND LAYOUT

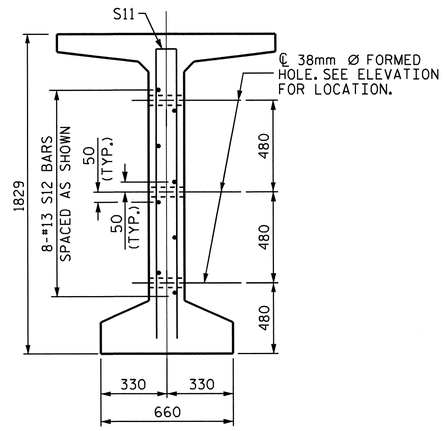

SECTION C-C

(S1, S6 AND S9 BARS NOT SHOWN)

DEBONDING LEGEND

- • FULLY BONDED STRANDS
- ▣ STRANDS DEBONDED FOR 3.050m FROM END OF GIRDER
- ◬ STRANDS DEBONDED FOR 3.660m FROM END OF GIRDER

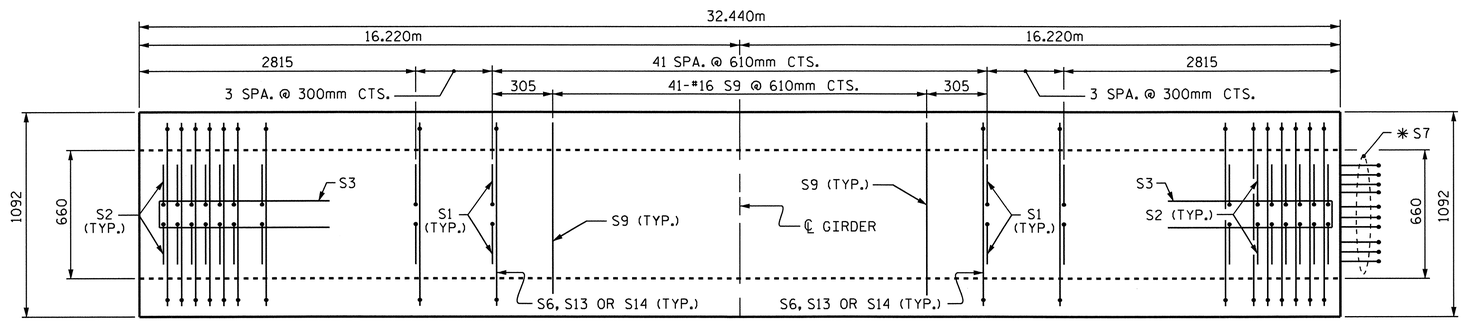

PLAN OF GIRDER

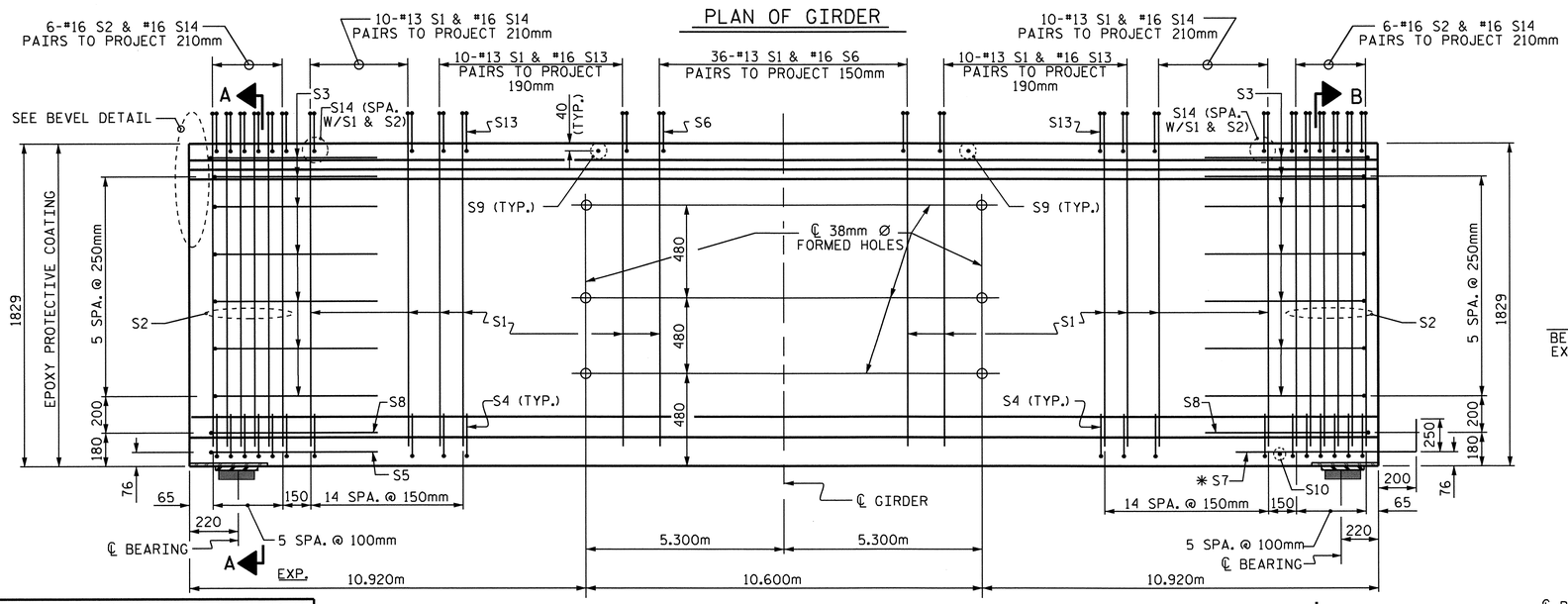

ELEVATION OF GIRDER

B

FIX

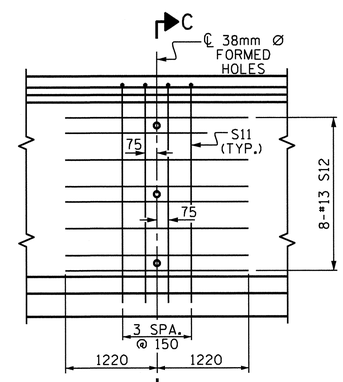

PARTIAL ELEVATION

SHOWING INTERMEDIATE DIAPHRAGM REINFORCING STEEL FOR ALL GIRDERS

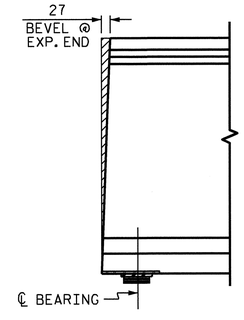

BEVEL DETAIL

15.24mm Ø L.R. GRADE 270 STRANDS

AREA (mm²)	ULTIMATE STRENGTH (kN PER STRAND)	APPLIED PRESTRESS (kN PER STRAND)
140.00	260.7	195.5

REINFORCING STEEL FOR ONE GIRDER

BAR	NUMBER	SIZE	TYPE	LENGTH	WEIGHT
S1	152	#13	1	2120	320
S2	24	#16	1	2120	79
S3	14	#13	2	2560	36
S4	84	#13	3	920	77
S5	1	#16	2	3000	5
S6	72	#16	4	1320	148
✱ S7	10	#16	STR	1120	17
S8	2	#16	2	2740	9
S9	41	#16	STR	980	62
S10	1	#10	STR	560	1
S11	8	#16	2	3540	44
S12	16	#13	STR	2440	39
S13	40	#16	4	1360	84
S14	64	#16	4	1380	137

✱ NOTE: S7 BARS SHALL BE BENT BEFORE SHIPMENT. HEAT BENDING SHALL NOT BE ALLOWED.

BAR TYPES

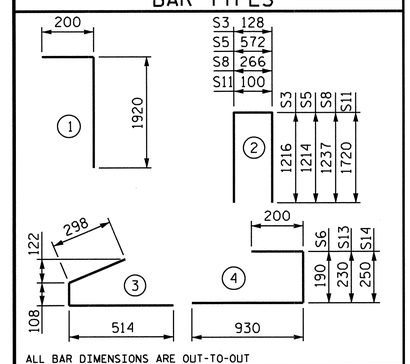

ALL BAR DIMENSIONS ARE OUT-TO-OUT

QUANTITIES FOR ONE GIRDER

	REINFORCING STEEL	55.16 MPa CONCRETE	15.24mm Ø L.R. STRANDS
	kg	m³	No.
ALL GIRDERS	1058	17.4	40

GIRDERS REQUIRED

NUMBER	LENGTH	TOTAL LENGTH
5	32.440m	162.200m

PROJECT NO. R-2554A

WAYNE COUNTY

STATION: 70+24.000 -L-

SHEET 1 OF 8

STATE OF NORTH CAROLINA
DEPARTMENT OF TRANSPORTATION
RALEIGH

1829mm PRESTRESSED CONCRETE MODIFIED BULB TEE CONTINUOUS FOR LIVE LOAD

SPAN A

(LEFT LANE)

NORTH CAROLINA PROFESSIONAL SEAL 14045 ENGINEER TIMOTHY W. COGGINS 03/23/12

REVISIONS							SHEET NO.
NO.	BY:	DATE:	NO.	BY:	DATE:		S-91
1			3				TOTAL SHEETS
2			4				276

ASSEMBLED BY : B.N.BARODAWALA	DATE : 11-16-11		
CHECKED BY : PEGGY PARISI	DATE : 12-22-11		
DRAWN BY : EEM 2/6/97	REV. 8/16/99	RWW/LES	
CHECKED BY : VAP 2/6/97	REV. 10/17/00	RWW/LES	
	REV. 5/1/06R	TLA/GM	

23-MAR-2012 10:35
Z:\TIPProjects-R\R2554A\Structures\Final Plans\Str#3\r2554a_sd_g_03.dgn
padkins

STR. #3

STD. NO. PCG10SM

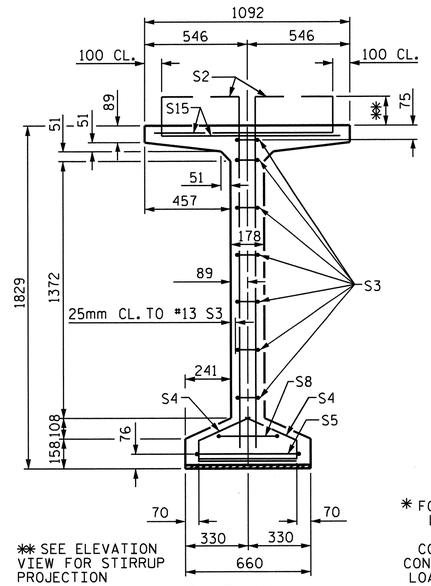

✱✱ SEE ELEVATION VIEW FOR STIRRUP PROJECTION

SECTION A-A

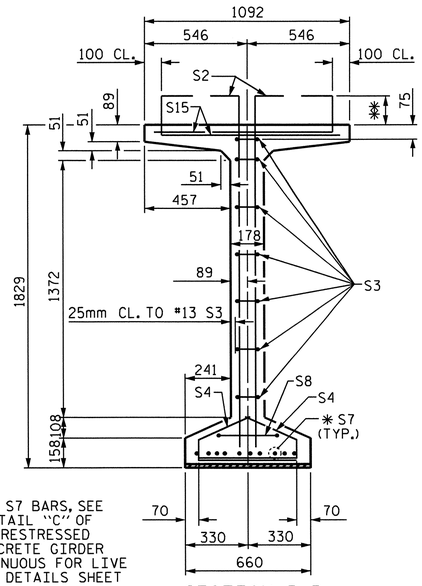

✱ FOR S7 BARS, SEE DETAIL "C" OF PRESTRESSED CONCRETE GIRDER CONTINUOUS FOR LIVE LOAD DETAILS SHEET

SECTION B-B

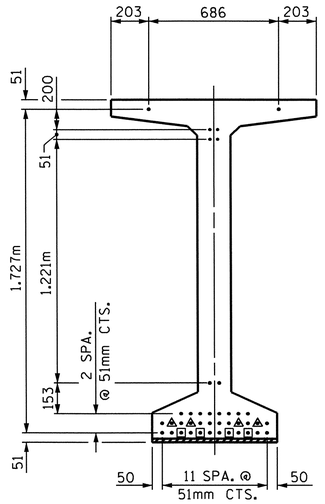

AT END OF GIRDERS

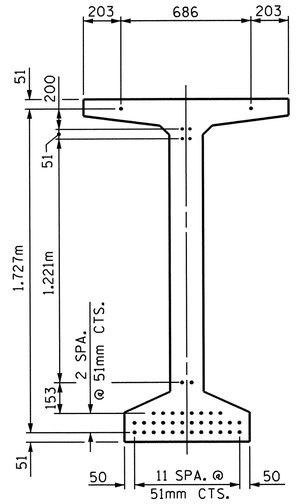

AT ℄ OF GIRDERS

15.24mm Ø LOW RELAXATION STRAND LAYOUT

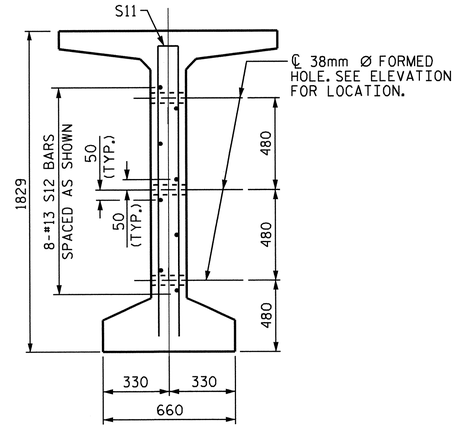

SECTION C-C

(S1, S6 AND S9 BARS NOT SHOWN)

DEBONDING LEGEND

- • FULLY BONDED STRANDS
- ▣ STRANDS DEBONDED FOR 1.220m FROM END OF GIRDER
- ◬ STRANDS DEBONDED FOR 1.830m FROM END OF GIRDER

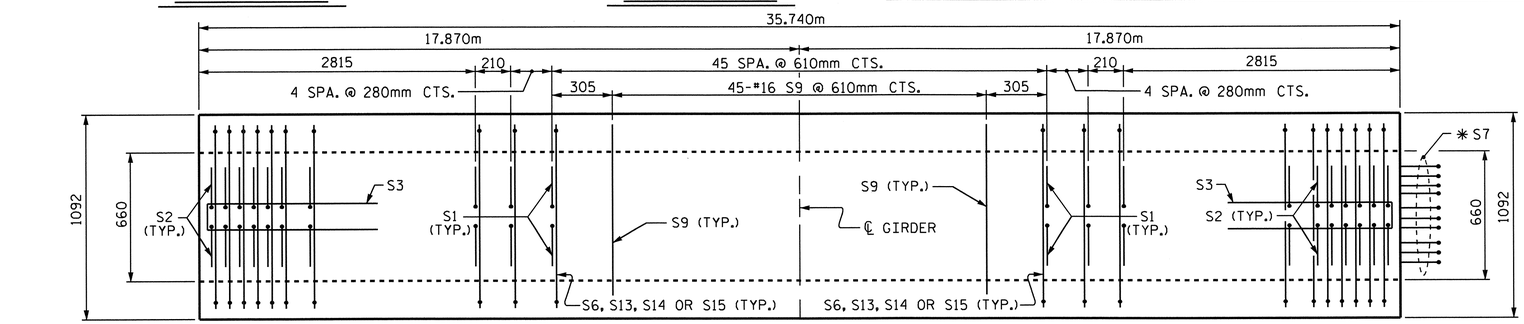

PLAN OF GIRDER

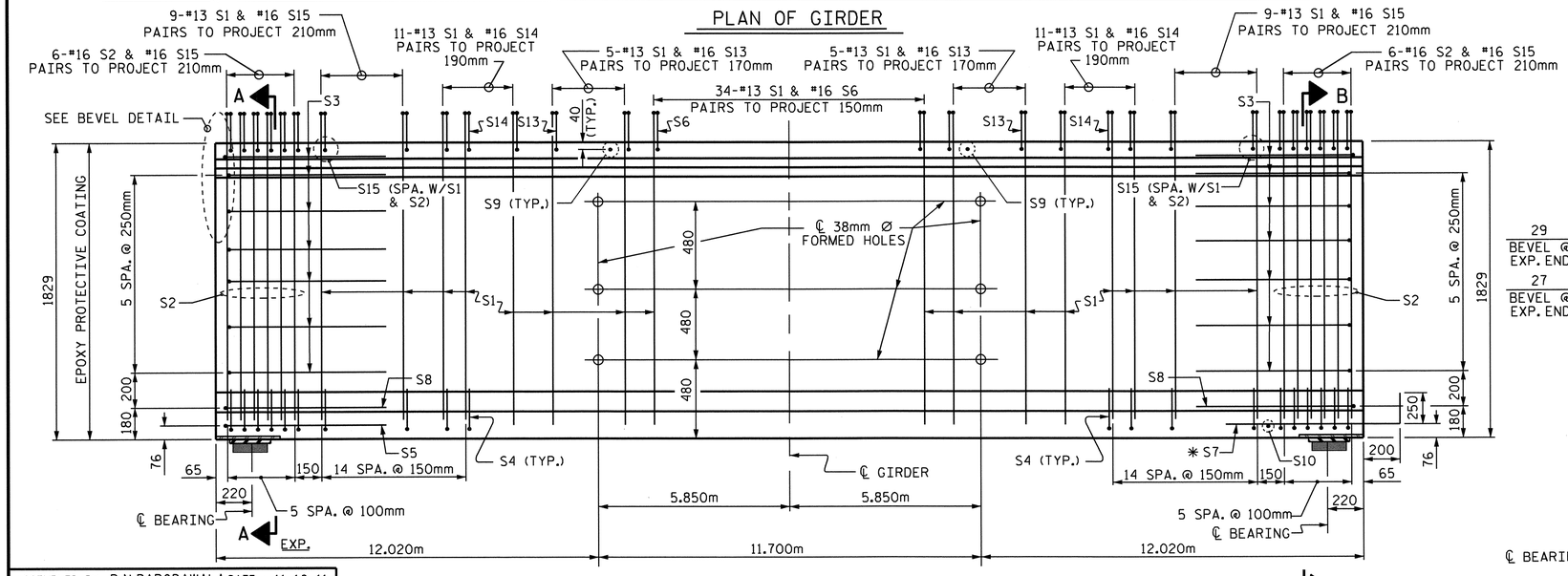

ELEVATION OF GIRDER

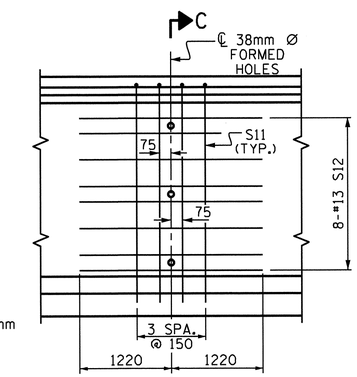

PARTIAL ELEVATION

SHOWING INTERMEDIATE DIAPHRAGM REINFORCING STEEL FOR ALL GIRDERS

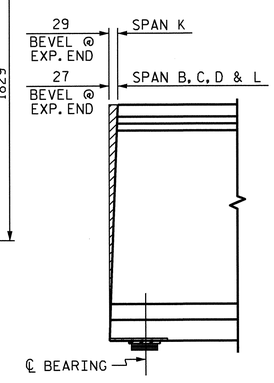

BEVEL DETAIL

15.24mm Ø L.R. GRADE 270 STRANDS

AREA (mm²)	ULTIMATE STRENGTH (kN PER STRAND)	APPLIED PRESTRESS (kN PER STRAND)
140.00	260.7	195.5

REINFORCING STEEL FOR ONE GIRDER

BAR	NUMBER	SIZE	TYPE	LENGTH	WEIGHT
S1	168	#13	1	2120	354
S2	24	#16	1	2120	79
S3	14	#13	2	2560	36
S4	84	#13	3	920	77
S5	1	#16	2	3000	5
S6	68	#16	4	1320	139
✱ S7	10	#16	STR	1120	17
S8	2	#16	2	2740	9
S9	45	#16	STR	980	68
S10	1	#10	STR	560	1
S11	8	#16	2	3540	44
S12	16	#13	STR	2440	39
S13	20	#16	4	1340	42
S14	44	#16	4	1360	93
S15	60	#16	4	1380	129

✱ NOTE: S7 BARS SHALL BE BENT BEFORE SHIPMENT. HEAT BENDING SHALL NOT BE ALLOWED.

BAR TYPES

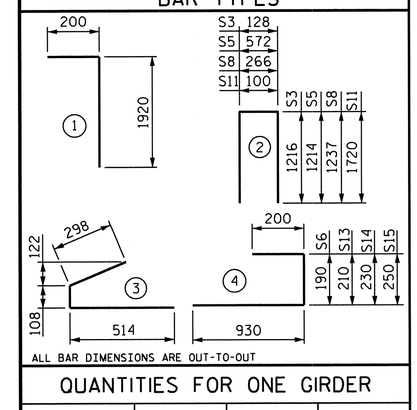

ALL BAR DIMENSIONS ARE OUT-TO-OUT

QUANTITIES FOR ONE GIRDER

	REINFORCING STEEL (kg)	62.06 MPa CONCRETE (m³)	15.24mm Ø L.R. STRANDS (No.)
ALL GIRDERS	1132	19.2	40

GIRDERS REQUIRED

NUMBER	LENGTH	TOTAL LENGTH
70	35.740m	2501.800m

PROJECT NO. R-2554A

WAYNE COUNTY

STATION: 70+24.000 -L-

SHEET 2 OF 8

STATE OF NORTH CAROLINA
DEPARTMENT OF TRANSPORTATION
RALEIGH

1829mm PRESTRESSED CONCRETE MODIFIED BULB TEE CONTINUOUS FOR LIVE LOAD SPANS B, C, D, & F THRU P (LEFT LANE)

NORTH CAROLINA PROFESSIONAL SEAL 14045 ENGINEER TIMOTHY W. COGGINS

03/23/12

REVISIONS								SHEET NO.
NO.	BY:	DATE:	NO.	BY:	DATE:			S-92
1			3					TOTAL SHEETS
2			4					276

ASSEMBLED BY : B.N.BARODAWALA DATE : 11-16-11
CHECKED BY : PEGGY PARISI DATE : 12-22-11

DRAWN BY : EEM 2/6/97
CHECKED BY : VAP 2/6/97

REV. 8/16/99 RWW/LES
REV. 10/17/00 RWW/LES
REV. 5/1/06R TLA/GM

23-MAR-2012 10:36
Z:\TIPProjects-R\R2554A\Structures\FinalPlans\Str#3\r2554a_sd_g_03.dgn
padkins

STR. #3

STD. NO. PCG10SM

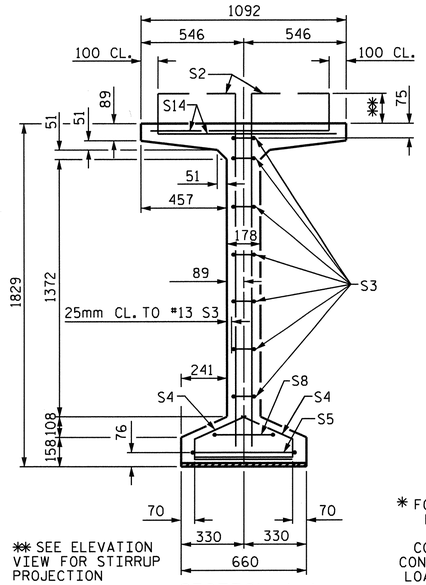

✱✱ SEE ELEVATION VIEW FOR STIRRUP PROJECTION

SECTION A-A

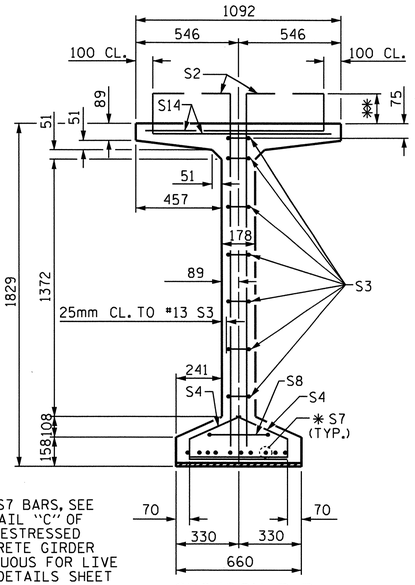

✱ FOR S7 BARS, SEE DETAIL "C" OF PRESTRESSED CONCRETE GIRDER CONTINUOUS FOR LIVE LOAD DETAILS SHEET

SECTION B-B

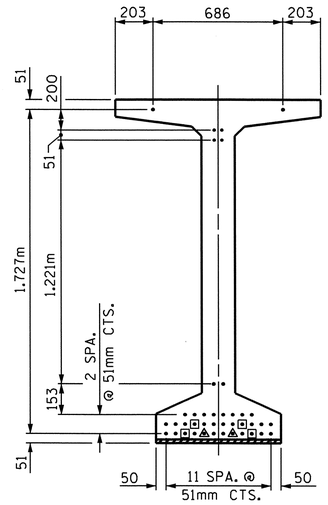

AT END OF GIRDERS

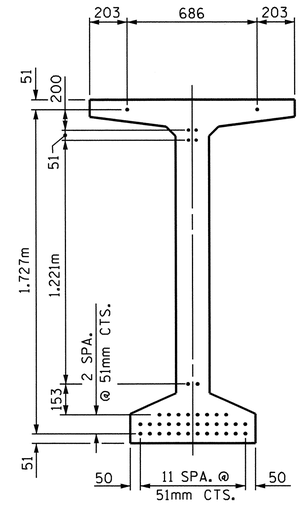

AT ℄ OF GIRDERS

15.24mm Ø LOW RELAXATION STRAND LAYOUT

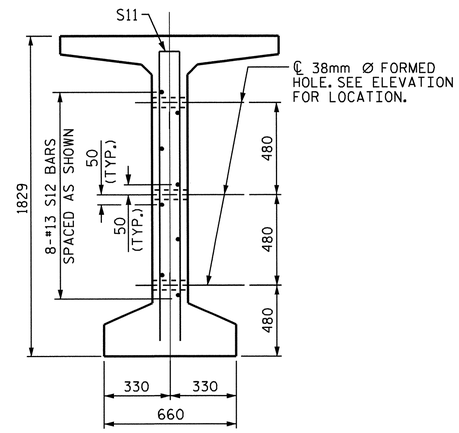

SECTION C-C

(S1, S6 AND S9 BARS NOT SHOWN)

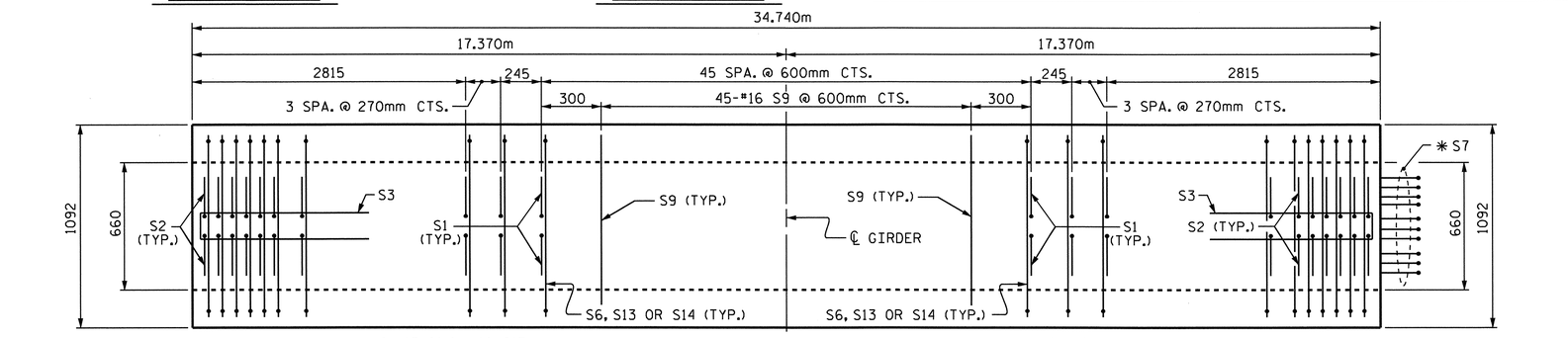

PLAN OF GIRDER

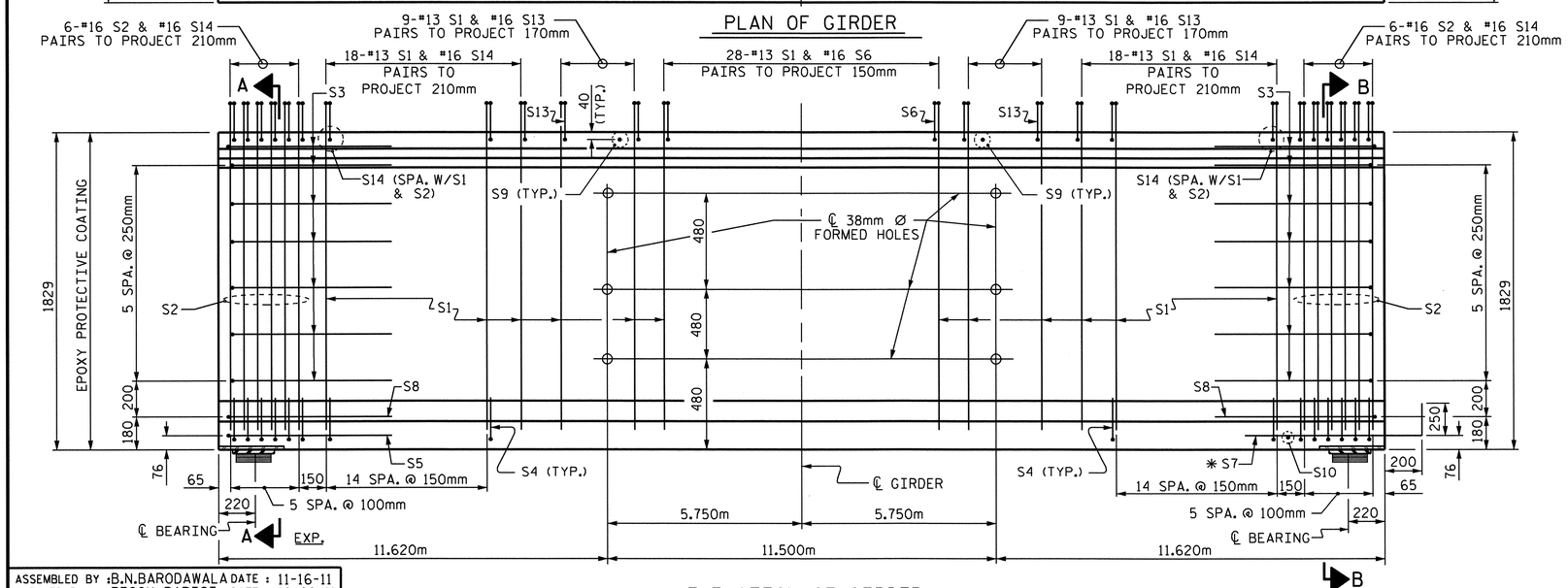

ELEVATION OF GIRDER

DEBONDING LEGEND

- • FULLY BONDED STRANDS
- ▣ STRANDS DEBONDED FOR 3.050m FROM END OF GIRDER
- ◬ STRANDS DEBONDED FOR 3.660m FROM END OF GIRDER

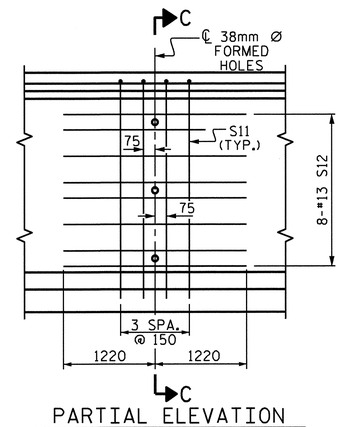

PARTIAL ELEVATION

SHOWING INTERMEDIATE DIAPHRAGM REINFORCING STEEL FOR ALL GIRDERS

NO BEVEL REQUIRED

NORTH CAROLINA PROFESSIONAL SEAL 14045 ENGINEER TIMOTHY W. COGGINS

03/23/12

15.24mm Ø L.R. GRADE 270 STRANDS

AREA (mm²)	ULTIMATE STRENGTH (kN PER STRAND)	APPLIED PRESTRESS (kN PER STRAND)
140.00	260.7	195.5

REINFORCING STEEL FOR ONE GIRDER

BAR	NUMBER	SIZE	TYPE	LENGTH	WEIGHT
S1	164	#13	1	2120	346
S2	24	#16	1	2120	79
S3	14	#13	2	2560	36
S4	84	#13	3	920	77
S5	1	#16	2	3000	5
S6	56	#16	4	1320	115
✱ S7	10	#16	STR	1120	17
S8	2	#16	2	2740	9
S9	45	#16	STR	980	68
S10	1	#10	STR	560	1
S11	8	#16	2	3540	44
S12	16	#13	STR	2440	39
S13	36	#16	4	1340	75
S14	96	#16	4	1380	206

✱ NOTE: S7 BARS SHALL BE BENT BEFORE SHIPMENT. HEAT BENDING SHALL NOT BE ALLOWED.

BAR TYPES

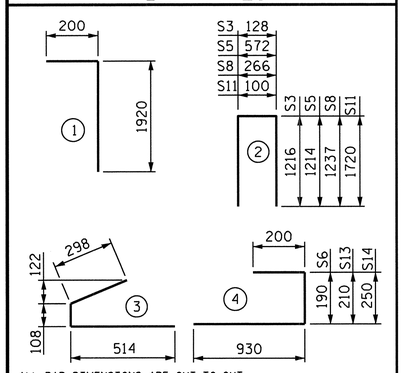

ALL BAR DIMENSIONS ARE OUT-TO-OUT

QUANTITIES FOR ONE GIRDER

	REINFORCING STEEL	55.16 MPa CONCRETE	15.24mm Ø L.R. STRANDS
	kg	m³	No.
ALL GIRDERS	1117	18.7	40

GIRDERS REQUIRED

NUMBER	LENGTH	TOTAL LENGTH
30	34.740m	1042.200m

PROJECT NO. R-2554A

WAYNE COUNTY

STATION: 70+24.000 -L-

SHEET 3 OF 8

STATE OF NORTH CAROLINA
DEPARTMENT OF TRANSPORTATION
RALEIGH

1829mm PRESTRESSED CONCRETE MODIFIED BULB TEE CONTINUOUS FOR LIVE LOAD SPANS Q THRU V (LEFT LANE)

REVISIONS						SHEET NO.
NO.	BY:	DATE:	NO.	BY:	DATE:	S-93
1			3			TOTAL SHEETS
2			4			276

ASSEMBLED BY : B.N.BARODAWALA	DATE : 11-16-11		
CHECKED BY : PEGGY PARISI	DATE : 12-22-11		
DRAWN BY : EEM 2/6/97	REV. 8/16/99	RWW/LES	
CHECKED BY : VAP 2/6/97	REV. 10/17/00	RWW/LES	
	REV. 5/1/06R	TLA/GM	

23-MAR-2012 10:36
Z:\TIPProjects-R\R2554A\Structures\FinalPlans\Str#3\r2554a_sd_g_03.dgn
padkins

STR. #3

STD. NO. PCG10SM

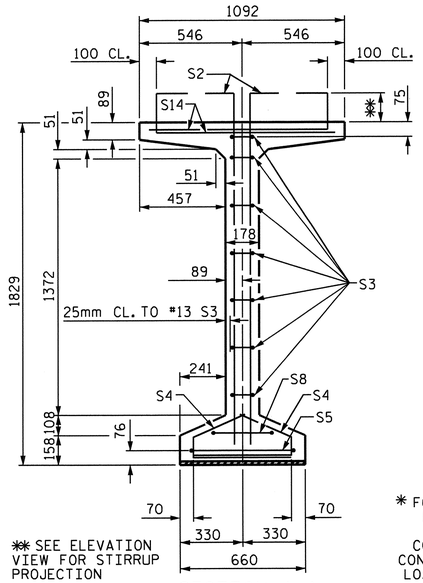

✱✱ SEE ELEVATION VIEW FOR STIRRUP PROJECTION

SECTION A-A

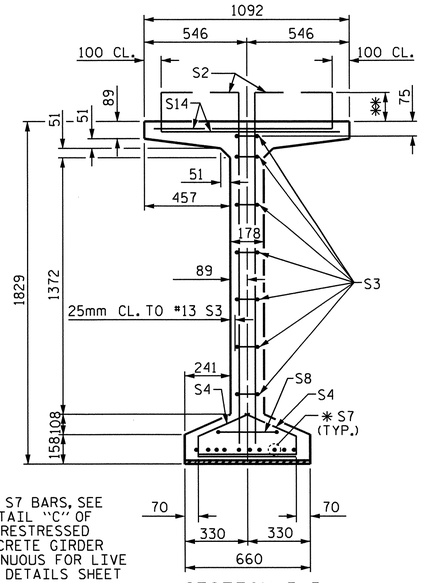

✱ FOR S7 BARS, SEE DETAIL "C" OF PRESTRESSED CONCRETE GIRDER CONTINUOUS FOR LIVE LOAD DETAILS SHEET

SECTION B-B

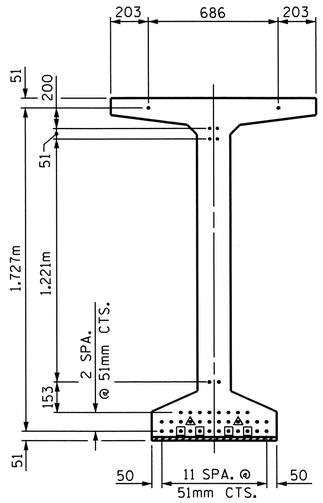

AT END OF GIRDERS

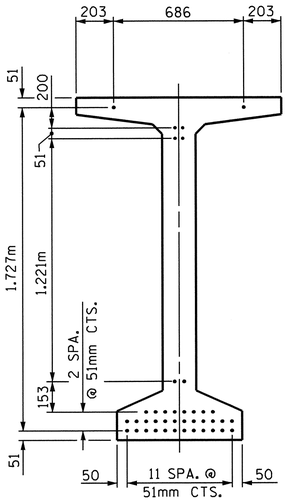

AT ℄ OF GIRDERS

15.24mm Ø LOW RELAXATION STRAND LAYOUT

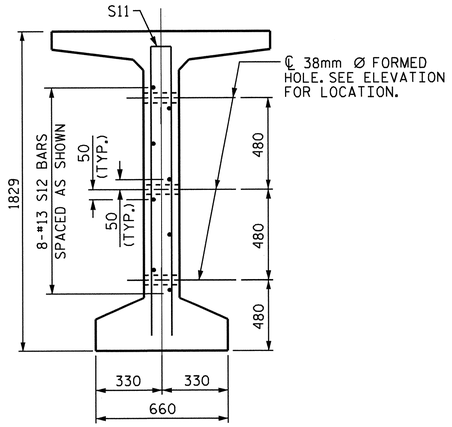

SECTION C-C

(S1, S6 AND S9 BARS NOT SHOWN)

DEBONDING LEGEND

- • FULLY BONDED STRANDS
- ▣ STRANDS DEBONDED FOR 3.050m FROM END OF GIRDER
- ◬ STRANDS DEBONDED FOR 3.660m FROM END OF GIRDER

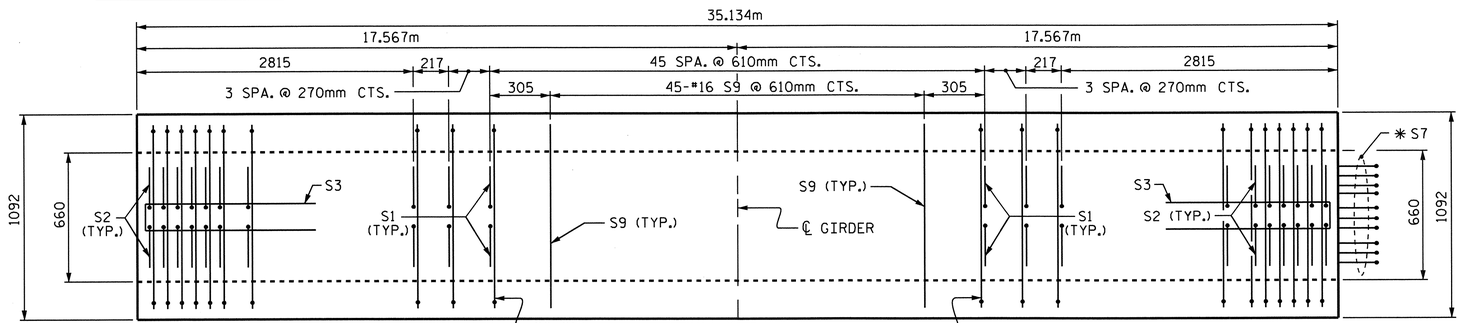

PLAN OF GIRDER

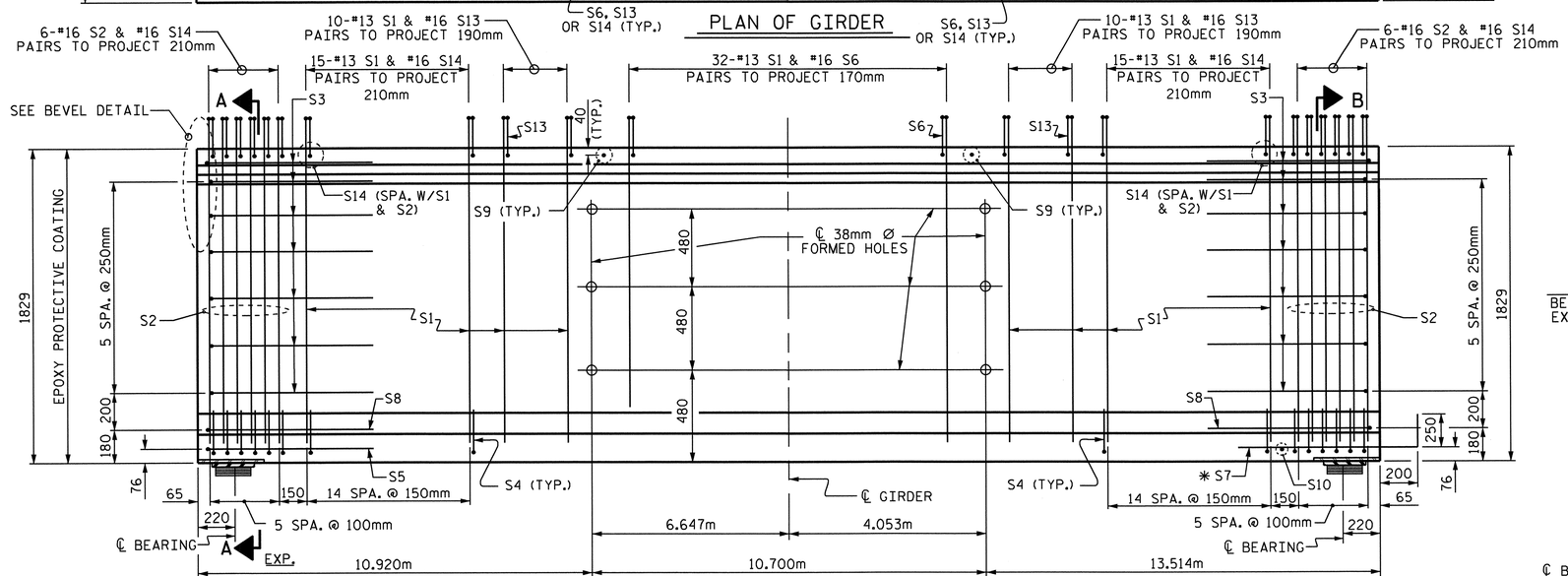

ELEVATION OF GIRDER

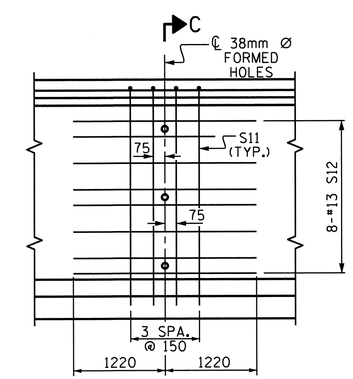

PARTIAL ELEVATION

SHOWING INTERMEDIATE DIAPHRAGM REINFORCING STEEL

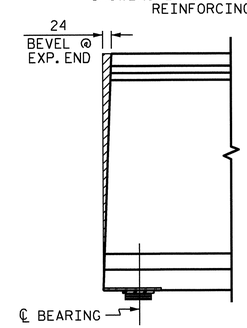

BEVEL DETAIL

15.24mm Ø L.R. GRADE 270 STRANDS

AREA (mm²)	ULTIMATE STRENGTH (kN PER STRAND)	APPLIED PRESTRESS (kN PER STRAND)
140.00	260.7	195.5

REINFORCING STEEL FOR ONE GIRDER

BAR	NUMBER	SIZE	TYPE	LENGTH	WEIGHT
S1	164	#13	1	2120	346
S2	24	#16	1	2120	79
S3	14	#13	2	2560	36
S4	84	#13	3	920	77
S5	1	#16	2	3000	5
S6	64	#16	4	1340	133
✱ S7	10	#16	STR	1120	17
S8	2	#16	2	2740	9
S9	45	#16	STR	980	68
S10	1	#10	STR	560	1
S11	8	#16	2	3540	44
S12	16	#13	STR	2440	39
S13	40	#16	4	1360	84
S14	84	#16	4	1380	180

✱ NOTE: S7 BARS SHALL BE BENT BEFORE SHIPMENT. HEAT BENDING SHALL NOT BE ALLOWED.

BAR TYPES

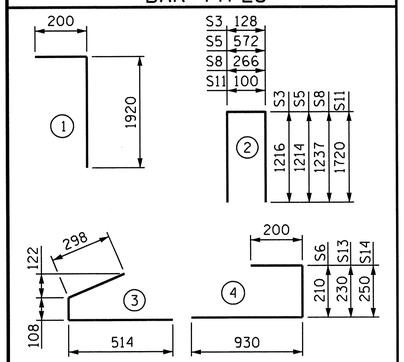

ALL BAR DIMENSIONS ARE OUT-TO-OUT

QUANTITIES FOR ONE GIRDER

	REINFORCING STEEL	55.16 MPa CONCRETE	15.24mm Ø L.R. STRANDS
	kg	m³	No.
EXTERIOR GIRDER E1	1118	18.9	40

GIRDERS REQUIRED

NUMBER	LENGTH	TOTAL LENGTH
1	35.134m	35.134m

PROJECT NO. R-2554A

WAYNE COUNTY

STATION: 70+24.000 -L-

SHEET 4 OF 8

STATE OF NORTH CAROLINA
DEPARTMENT OF TRANSPORTATION
RALEIGH

1829mm PRESTRESSED CONCRETE MODIFIED BULB TEE CONTINUOUS FOR LIVE LOAD SPAN E (GDR #1) (LEFT LANE)

NORTH CAROLINA PROFESSIONAL SEAL 14045 ENGINEER TIMOTHY W. COGGINS

03/23/12

REVISIONS								SHEET NO.
NO.	BY:	DATE:	NO.	BY:	DATE:			S-94
1			3					TOTAL SHEETS
2			4					276

STR. #3

STD. NO. PCG10SM

ASSEMBLED BY : B.N.BARODAWALA DATE : 11-16-11
CHECKED BY : PEGGY PARISI DATE : 12-22-11

DRAWN BY : EEM 2/6/97
CHECKED BY : VAP 2/6/97

REV. 8/16/99 RWW/LES
REV. 10/17/00 RWW/LES
REV. 5/1/06R TLA/GM

23-MAR-2012 10:36
Z:\TIPProjects-R\R2554A\Structures\FinalPlans\Str#3\r2554a_sd_g_03.dgn
padkins

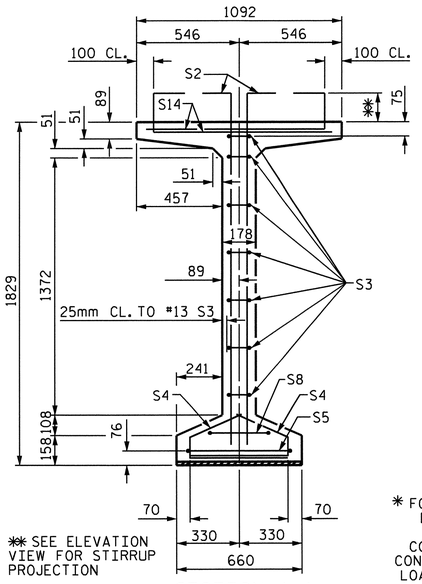

✱✱ SEE ELEVATION VIEW FOR STIRRUP PROJECTION

SECTION A-A

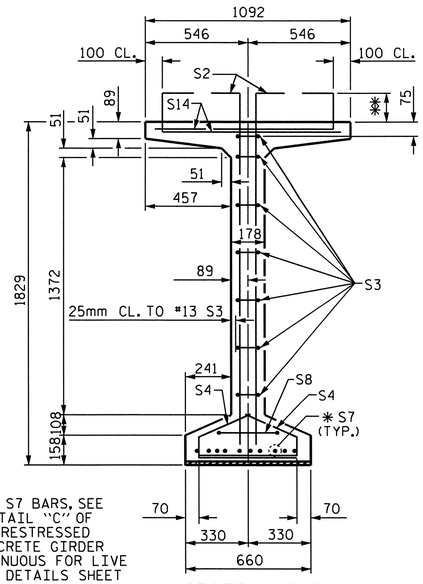

✱ FOR S7 BARS, SEE DETAIL "C" OF PRESTRESSED CONCRETE GIRDER CONTINUOUS FOR LIVE LOAD DETAILS SHEET

SECTION B-B

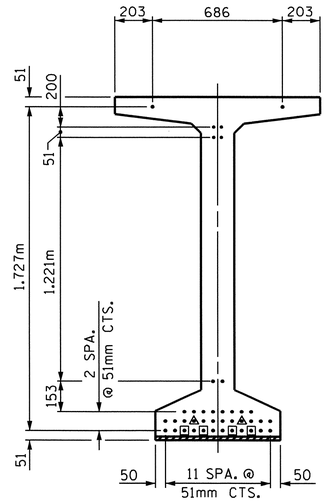

AT END OF GIRDERS

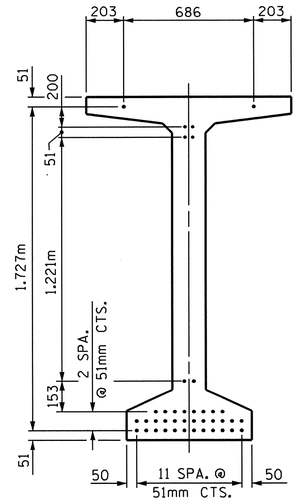

AT ℄ OF GIRDERS

15.24mm Ø LOW RELAXATION STRAND LAYOUT

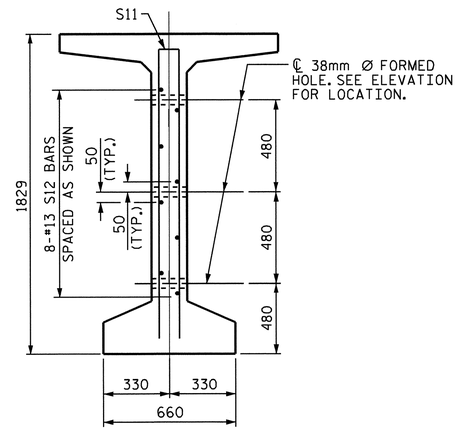

SECTION C-C

(S1, S6 AND S9 BARS NOT SHOWN)

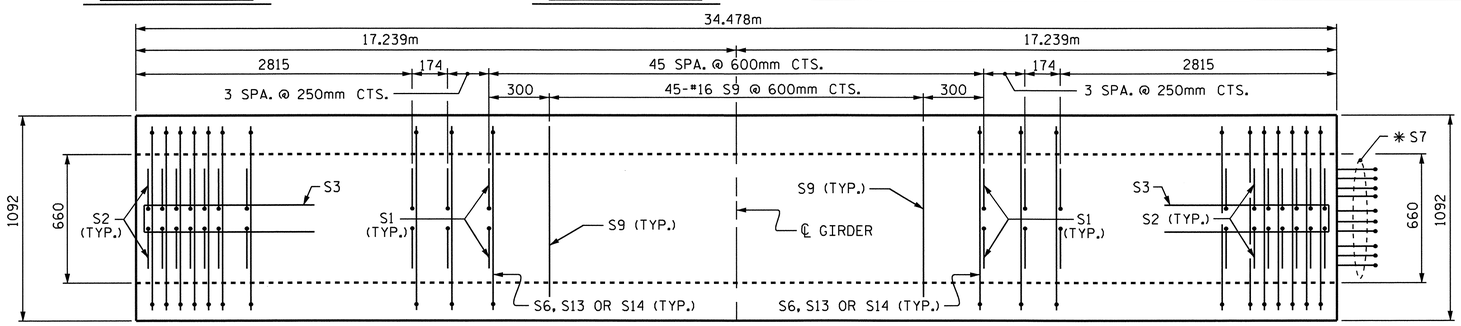

PLAN OF GIRDER

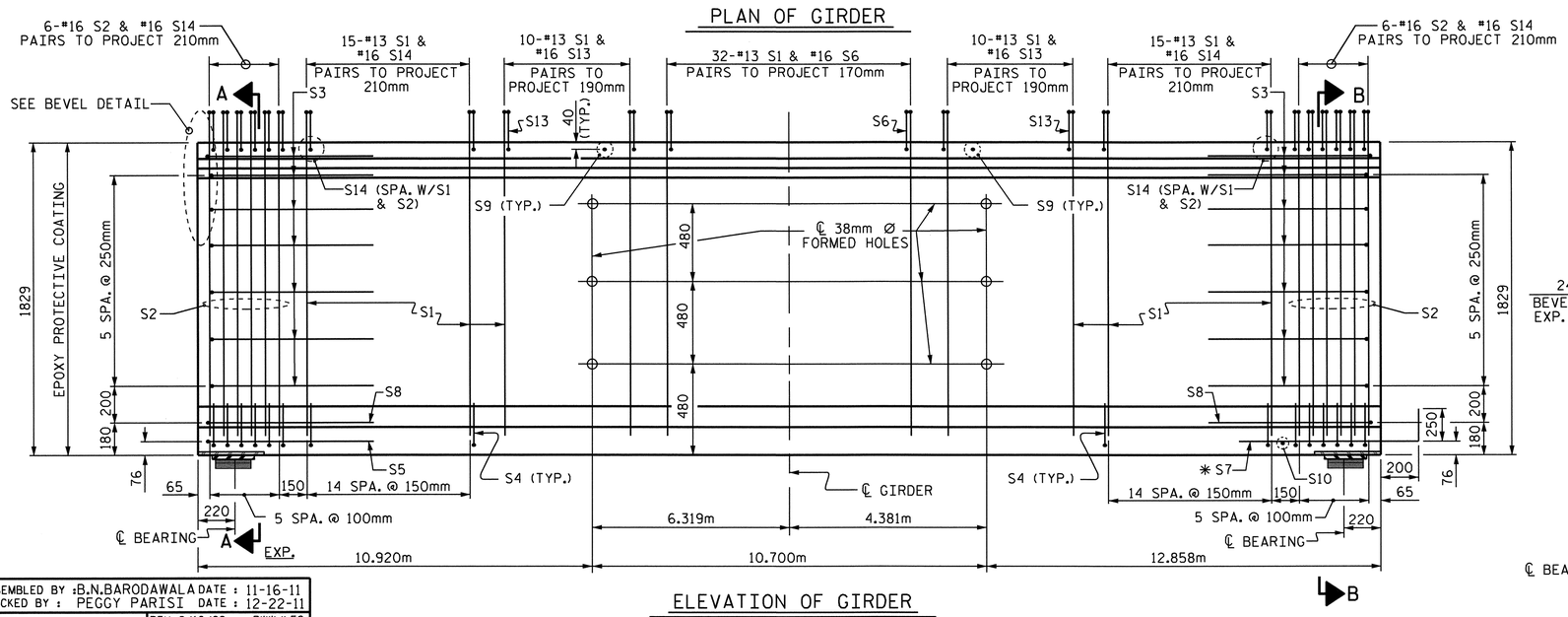

ELEVATION OF GIRDER

DEBONDING LEGEND

- • FULLY BONDED STRANDS
- ▣ STRANDS DEBONDED FOR 3.050m FROM END OF GIRDER
- ◬ STRANDS DEBONDED FOR 3.660m FROM END OF GIRDER

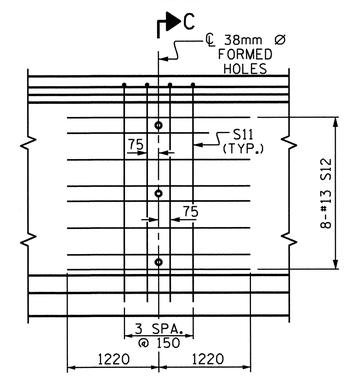

PARTIAL ELEVATION

SHOWING INTERMEDIATE DIAPHRAGM REINFORCING STEEL

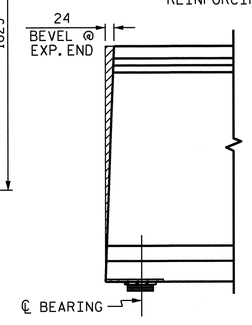

BEVEL DETAIL

15.24mm Ø L.R. GRADE 270 STRANDS

AREA (mm²)	ULTIMATE STRENGTH (kN PER STRAND)	APPLIED PRESTRESS (kN PER STRAND)
140.00	260.7	195.5

REINFORCING STEEL FOR ONE GIRDER

BAR	NUMBER	SIZE	TYPE	LENGTH	WEIGHT
S1	164	#13	1	2120	346
S2	24	#16	1	2120	79
S3	14	#13	2	2560	36
S4	84	#13	3	920	77
S5	1	#16	2	3000	5
S6	64	#16	4	1340	133
✱ S7	10	#16	STR	1120	17
S8	2	#16	2	2740	9
S9	45	#16	STR	980	68
S10	1	#10	STR	560	1
S11	8	#16	2	3540	44
S12	16	#13	STR	2440	39
S13	40	#16	4	1360	84
S14	84	#16	4	1380	180

✱ NOTE: S7 BARS SHALL BE BENT BEFORE SHIPMENT. HEAT BENDING SHALL NOT BE ALLOWED.

BAR TYPES

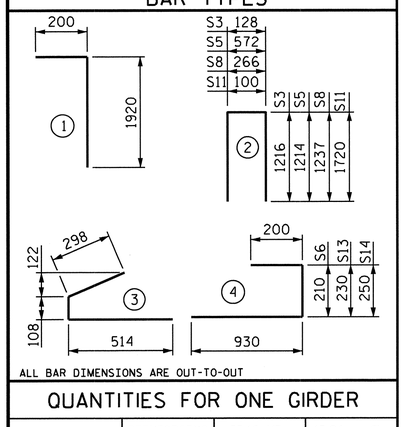

ALL BAR DIMENSIONS ARE OUT-TO-OUT

QUANTITIES FOR ONE GIRDER

	REINFORCING STEEL (kg)	55.16 MPa CONCRETE (m³)	15.24mm Ø L.R. STRANDS (No.)
INTERIOR GIRDER E2	1118	18.5	40

GIRDERS REQUIRED

NUMBER	LENGTH	TOTAL LENGTH
1	34.478m	34.478m

PROJECT NO. R-2554A

WAYNE COUNTY

STATION: 70+24.000 -L-

SHEET 5 OF 8

STATE OF NORTH CAROLINA
DEPARTMENT OF TRANSPORTATION
RALEIGH

1829mm PRESTRESSED CONCRETE MODIFIED BULB TEE CONTINUOUS FOR LIVE LOAD SPAN E (GDR #2) (LEFT LANE)

NORTH CAROLINA PROFESSIONAL SEAL 14045 ENGINEER TIMOTHY L. COGGINS
03/23/12

ASSEMBLED BY : B.N.BARODAWALA	DATE : 11-16-11
CHECKED BY : PEGGY PARISI	DATE : 12-22-11

DRAWN BY : EEM 2/6/97	REV. 8/16/99	RWW/LES
CHECKED BY : VAP 2/6/97	REV. 10/17/00	RWW/LES
	REV. 5/1/06R	TLA/GM

REVISIONS

NO.	BY:	DATE:	NO.	BY:	DATE:
1			3		
2			4		

SHEET NO. S-95

TOTAL SHEETS 276

STR. #3

STD. NO. PCG10SM

23-MAR-2012 10:36
Z:\TIPProjects-R\R2554A\Structures\FinalPlans\Str#3\r2554a_sd_g_03.dgn
padkins

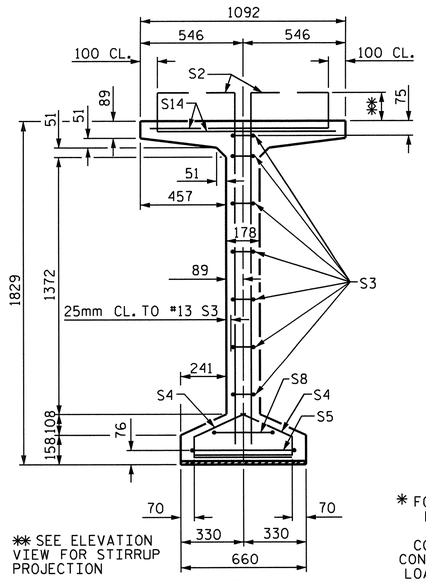

SECTION A-A

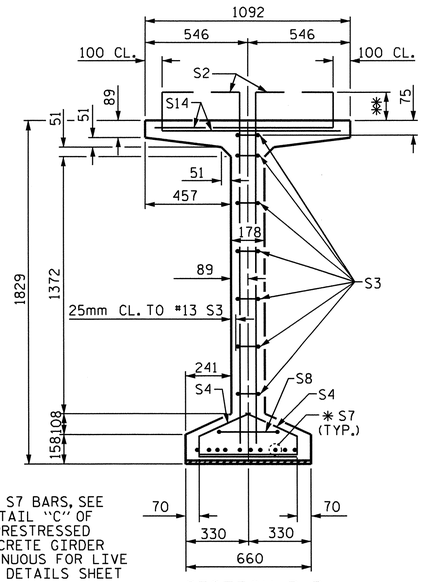

✱ FOR S7 BARS, SEE DETAIL "C" OF PRESTRESSED CONCRETE GIRDER CONTINUOUS FOR LIVE LOAD DETAILS SHEET

SECTION B-B

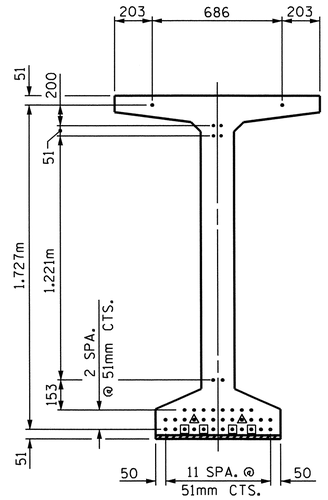

AT END OF GIRDERS

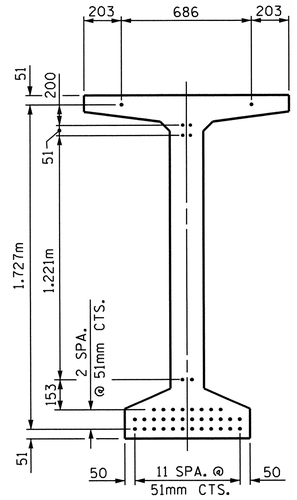

AT ℄ OF GIRDERS

15.24mm Ø LOW RELAXATION STRAND LAYOUT

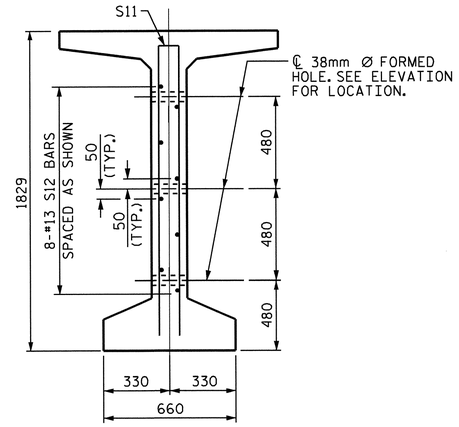

SECTION C-C

(S1, S6 AND S9 BARS NOT SHOWN)

DEBONDING LEGEND

- • FULLY BONDED STRANDS
- ▣ STRANDS DEBONDED FOR 3.050m FROM END OF GIRDER
- ◬ STRANDS DEBONDED FOR 3.660m FROM END OF GIRDER

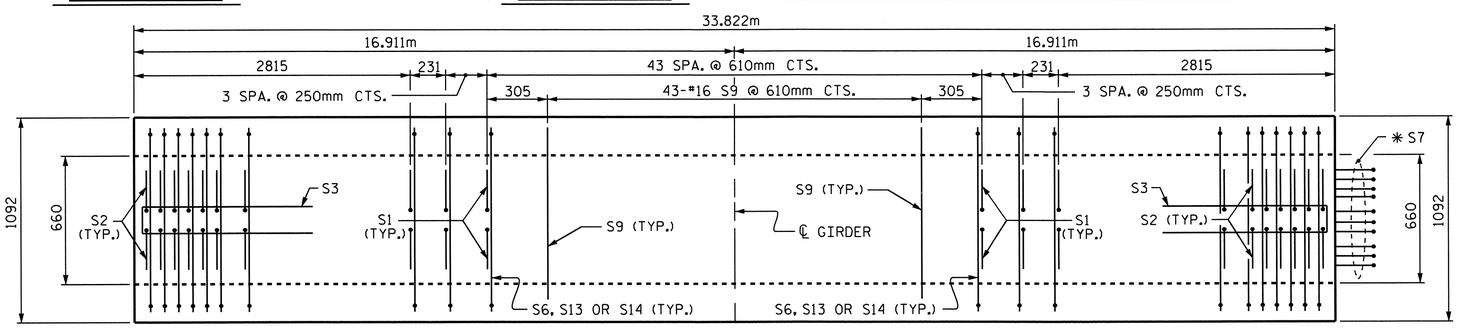

PLAN OF GIRDER

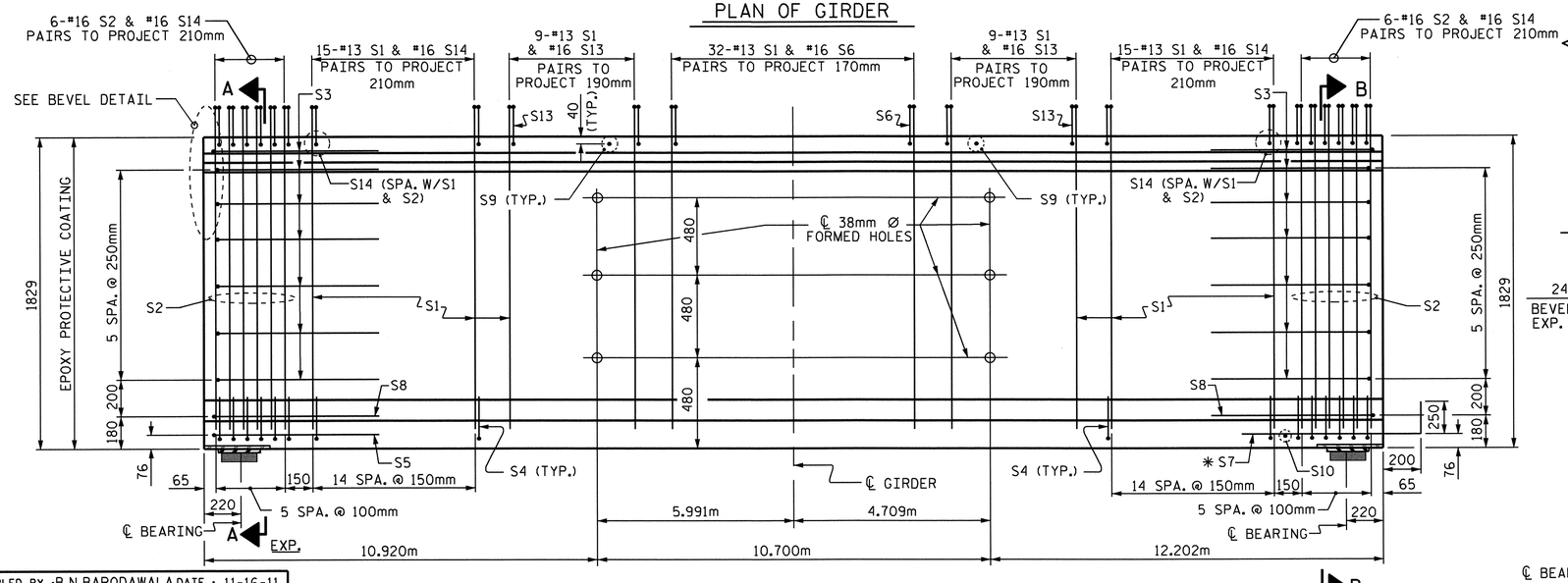

ELEVATION OF GIRDER

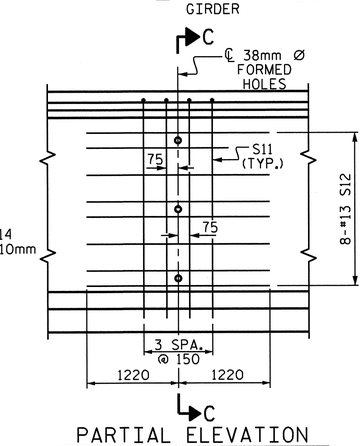

PARTIAL ELEVATION

SHOWING INTERMEDIATE DIAPHRAGM REINFORCING STEEL

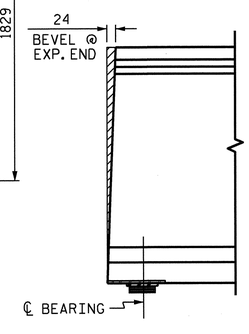

BEVEL DETAIL

15.24mm Ø L.R. GRADE 270 STRANDS

AREA (mm²)	ULTIMATE STRENGTH (kN PER STRAND)	APPLIED PRESTRESS (kN PER STRAND)
140.00	260.7	195.5

REINFORCING STEEL FOR ONE GIRDER

BAR	NUMBER	SIZE	TYPE	LENGTH	WEIGHT
S1	160	#13	1	2120	337
S2	24	#16	1	2120	79
S3	14	#13	2	2560	36
S4	84	#13	3	920	77
S5	1	#16	2	3000	5
S6	64	#16	4	1340	133
✱ S7	10	#16	STR	1120	17
S8	2	#16	2	2740	9
S9	43	#16	STR	980	65
S10	1	#10	STR	560	1
S11	8	#16	2	3540	44
S12	16	#13	STR	2440	39
S13	36	#16	4	1360	76
S14	84	#16	4	1380	180

✱ NOTE: S7 BARS SHALL BE BENT BEFORE SHIPMENT. HEAT BENDING SHALL NOT BE ALLOWED.

BAR TYPES

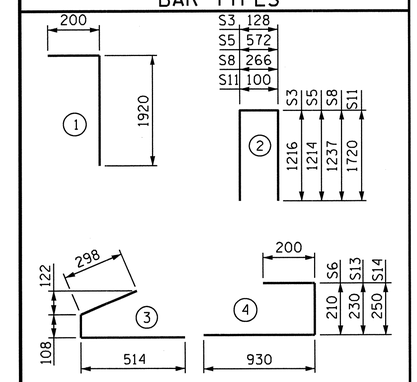

ALL BAR DIMENSIONS ARE OUT-TO-OUT

QUANTITIES FOR ONE GIRDER

	REINFORCING STEEL	55.16 MPa CONCRETE	15.24mm Ø L.R. STRANDS
	kg	m³	No.
INTERIOR GIRDER E3	1098	18.2	40

GIRDERS REQUIRED

NUMBER	LENGTH	TOTAL LENGTH
1	33.822m	33.822m

PROJECT NO. R-2554A

WAYNE COUNTY

STATION: 70+24.000 -L-

SHEET 6 OF 8

STATE OF NORTH CAROLINA
DEPARTMENT OF TRANSPORTATION
RALEIGH

1829mm PRESTRESSED CONCRETE MODIFIED BULB TEE CONTINUOUS FOR LIVE LOAD SPAN E (GDR #3) (LEFT LANE)

NORTH CAROLINA PROFESSIONAL SEAL 14045 ENGINEER TIMOTHY W. COGGINS
03/23/12

ASSEMBLED BY : B.N.BARODAWALA DATE : 11-16-11	
CHECKED BY : PEGGY PARISI DATE : 12-22-11	
DRAWN BY : EEM 2/6/97	REV. 8/16/99 RWW/LES
CHECKED BY : VAP 2/6/97	REV. 10/17/00 RWW/LES
	REV. 5/1/06R TLA/GM

REVISIONS							SHEET NO.
NO.	BY:	DATE:	NO.	BY:	DATE:		S-96
1			3				TOTAL SHEETS
2			4				276

STR. #3

STD. NO. PCG10SM

23-MAR-2012 10:36
Z:\TIPProjects-R\R2554A\Structures\FinalPlans\Str#3\r2554a_sd_g_03.dgn
padkins

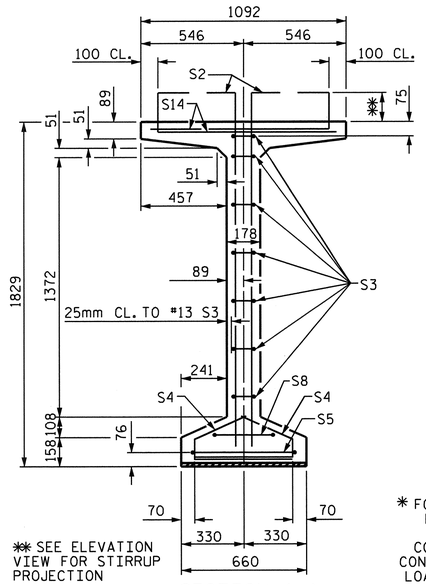

✱✱ SEE ELEVATION VIEW FOR STIRRUP PROJECTION

SECTION A-A

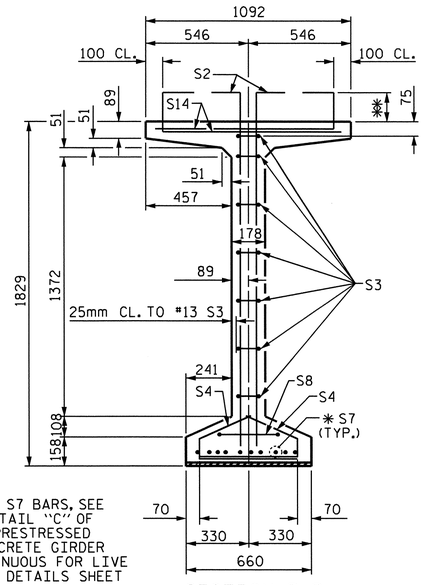

✱ FOR S7 BARS, SEE DETAIL "C" OF PRESTRESSED CONCRETE GIRDER CONTINUOUS FOR LIVE LOAD DETAILS SHEET

SECTION B-B

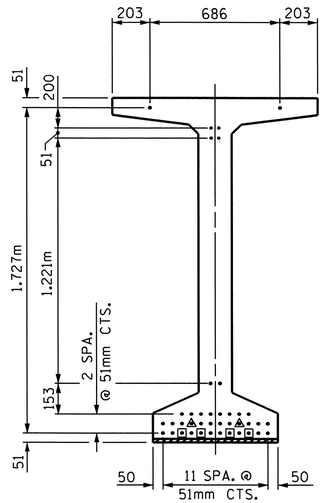

AT END OF GIRDERS

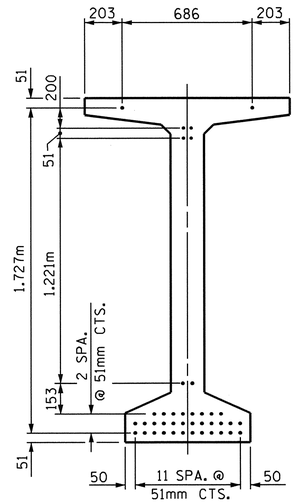

AT ℄ OF GIRDERS

15.24mm Ø LOW RELAXATION STRAND LAYOUT

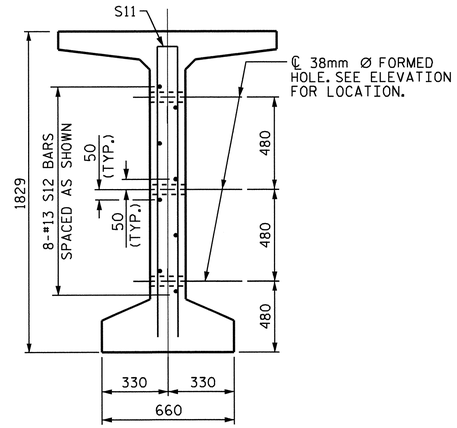

SECTION C-C

(S1, S6 AND S9 BARS NOT SHOWN)

DEBONDING LEGEND

- ● FULLY BONDED STRANDS
- ▣ STRANDS DEBONDED FOR 3.050m FROM END OF GIRDER
- ◬ STRANDS DEBONDED FOR 3.660m FROM END OF GIRDER

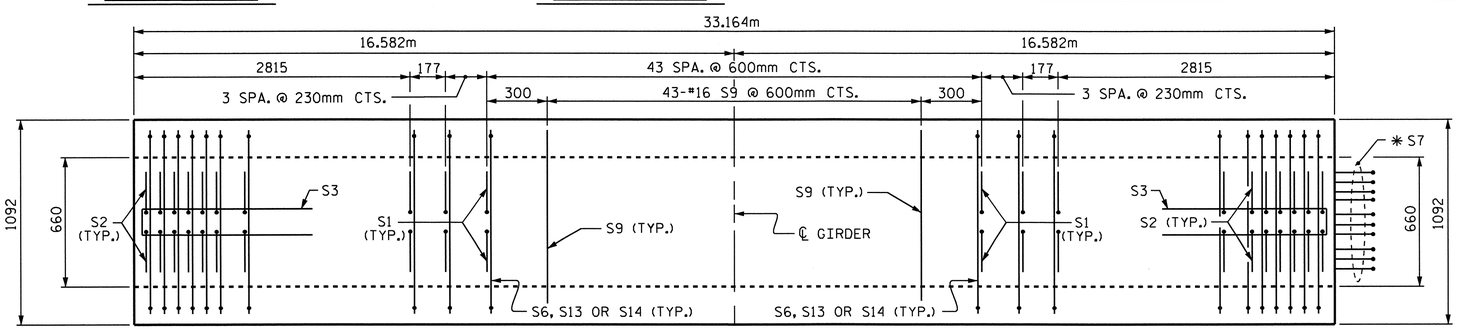

PLAN OF GIRDER

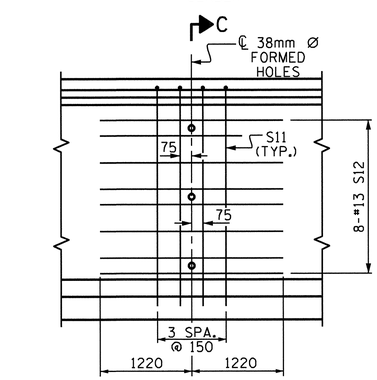

PARTIAL ELEVATION

SHOWING INTERMEDIATE DIAPHRAGM REINFORCING STEEL

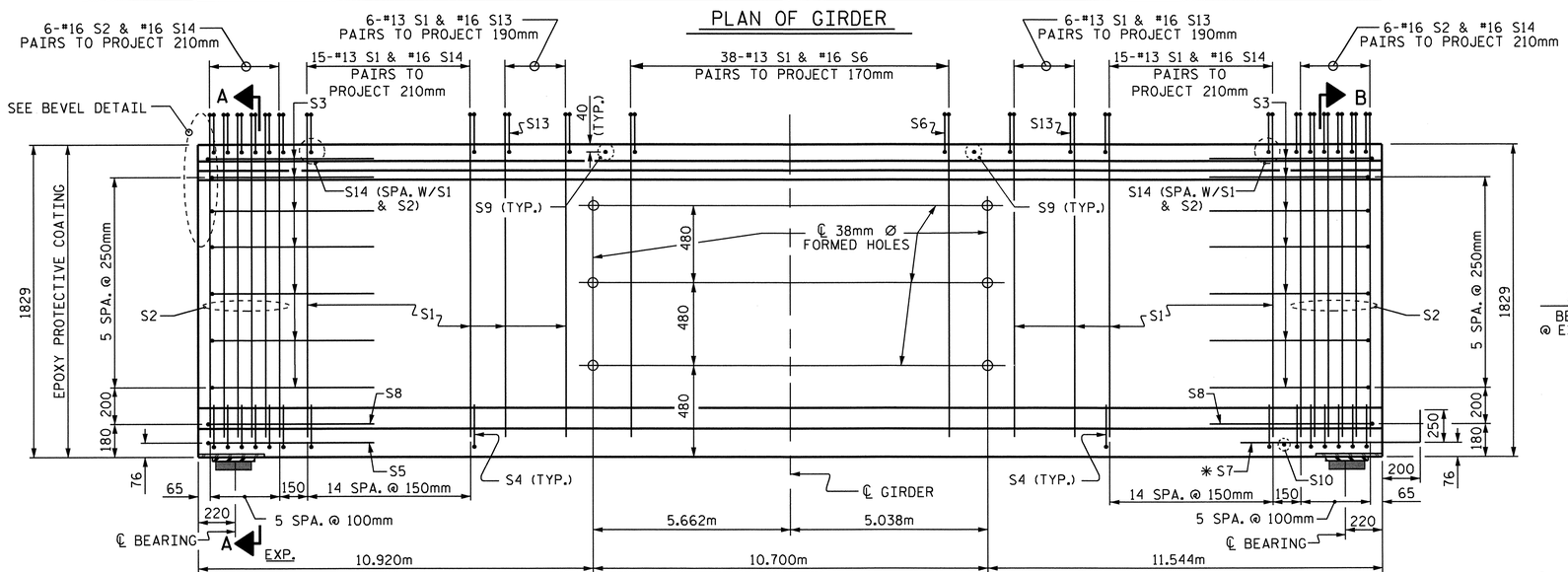

ELEVATION OF GIRDER

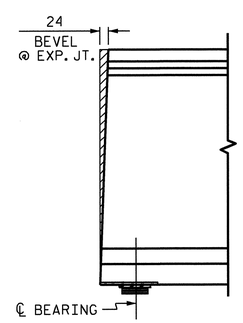

BEVEL DETAIL

15.24mm Ø L.R. GRADE 270 STRANDS

AREA (mm²)	ULTIMATE STRENGTH (kN PER STRAND)	APPLIED PRESTRESS (kN PER STRAND)
140.00	260.7	195.5

REINFORCING STEEL FOR ONE GIRDER

BAR	NUMBER	SIZE	TYPE	LENGTH	WEIGHT
S1	160	#13	1	2120	337
S2	24	#16	1	2120	79
S3	14	#13	2	2560	36
S4	84	#13	3	920	77
S5	1	#16	2	3000	5
S6	76	#16	4	1340	158
✱ S7	10	#16	STR	1120	17
S8	2	#16	2	2740	9
S9	43	#16	STR	980	65
S10	1	#10	STR	560	1
S11	8	#16	2	3540	44
S12	16	#13	STR	2440	39
S13	24	#16	4	1360	51
S14	84	#16	4	1380	180

✱ NOTE: S7 BARS SHALL BE BENT BEFORE SHIPMENT. HEAT BENDING SHALL NOT BE ALLOWED.

BAR TYPES

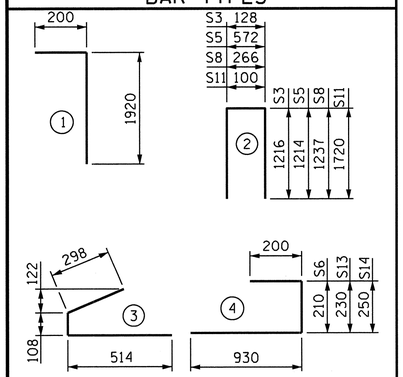

ALL BAR DIMENSIONS ARE OUT-TO-OUT

QUANTITIES FOR ONE GIRDER

	REINFORCING STEEL (kg)	55.16 MPa CONCRETE (m³)	15.24mm Ø L.R. STRANDS (No.)
INTERIOR GIRDER E4	1098	17.8	40

GIRDERS REQUIRED

NUMBER	LENGTH	TOTAL LENGTH
1	33.164m	33.164m

PROJECT NO. R-2554A

WAYNE COUNTY

STATION: 70+24.000 -L-

SHEET 7 OF 8

STATE OF NORTH CAROLINA
DEPARTMENT OF TRANSPORTATION
RALEIGH

1829mm PRESTRESSED CONCRETE MODIFIED BULB TEE CONTINUOUS FOR LIVE LOAD SPAN E (GDR #4) (LEFT LANE)

NORTH CAROLINA PROFESSIONAL SEAL 14045 ENGINEER TIMOTHY A. COGGINS
03/23/12

REVISIONS							SHEET NO.
NO.	BY:	DATE:	NO.	BY:	DATE:		597
1			3				TOTAL SHEETS
2			4				276

STR. #3

STD. NO. PCG10SM

ASSEMBLED BY : B.N.BARODAWALA DATE : 11-16-11
CHECKED BY : PEGGY PARISI DATE : 12-22-11

DRAWN BY : EEM 2/6/97	REV. 8/16/99	RWW/LES
CHECKED BY : VAP 2/6/97	REV. 10/17/00	RWW/LES
	REV. 5/1/06R	TLA/GM

23-MAR-2012 10:36
Z:\TIPProjects-R\R2554A\Structures\FinalPlans\Str#3\r2554a_sd_g_03.dgn
padkins

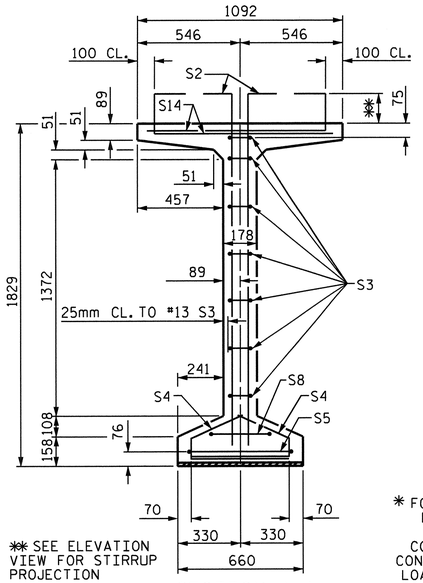

SECTION A-A

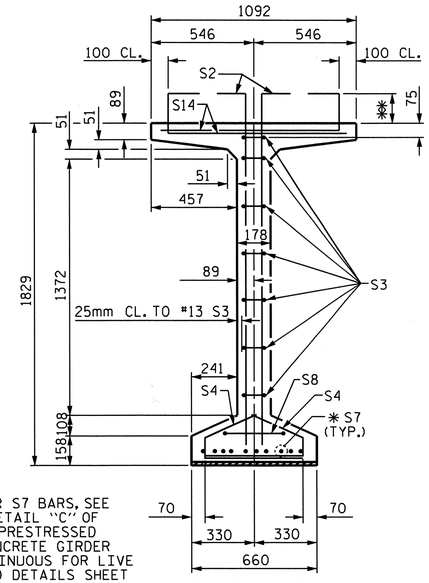

✱ FOR S7 BARS, SEE DETAIL "C" OF PRESTRESSED CONCRETE GIRDER CONTINUOUS FOR LIVE LOAD DETAILS SHEET

SECTION B-B

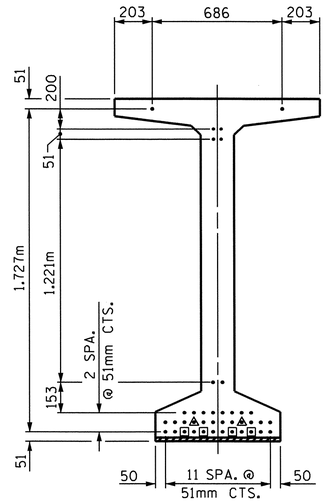

AT END OF GIRDERS

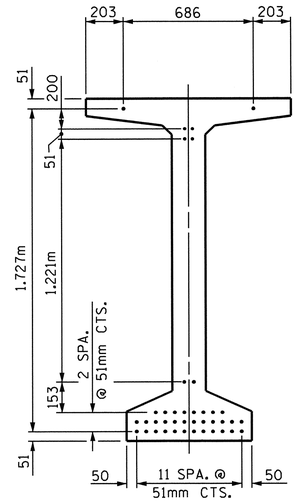

AT ℄ OF GIRDERS

15.24mm Ø LOW RELAXATION STRAND LAYOUT

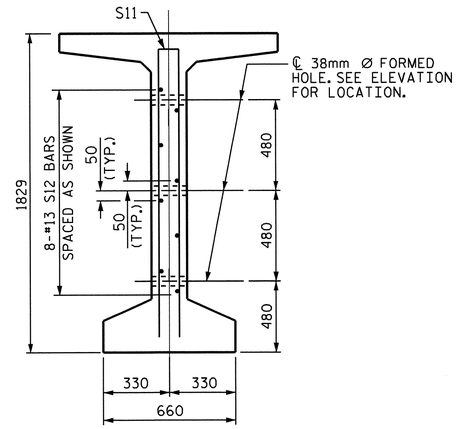

SECTION C-C

(S1, S6 AND S9 BARS NOT SHOWN)

DEBONDING LEGEND

- • FULLY BONDED STRANDS
- ▣ STRANDS DEBONDED FOR 3.050m FROM END OF GIRDER
- ◬ STRANDS DEBONDED FOR 3.660m FROM END OF GIRDER

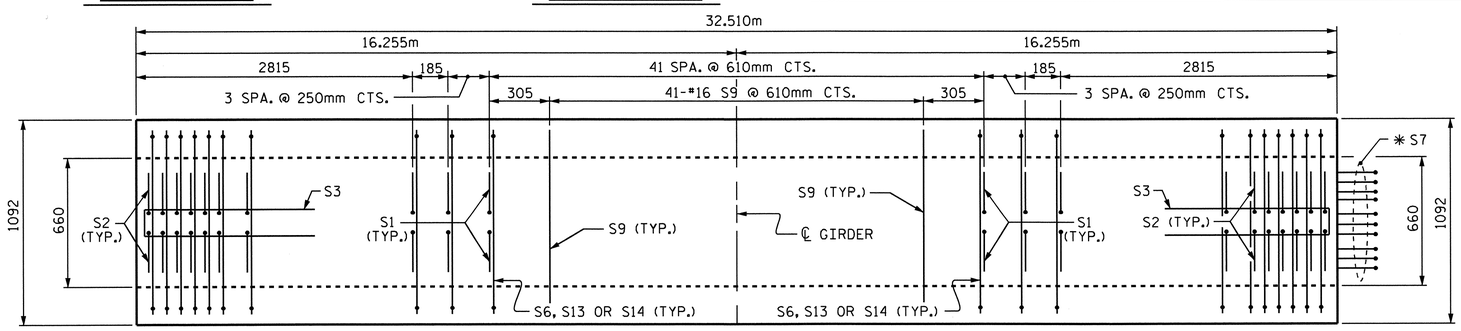

PLAN OF GIRDER

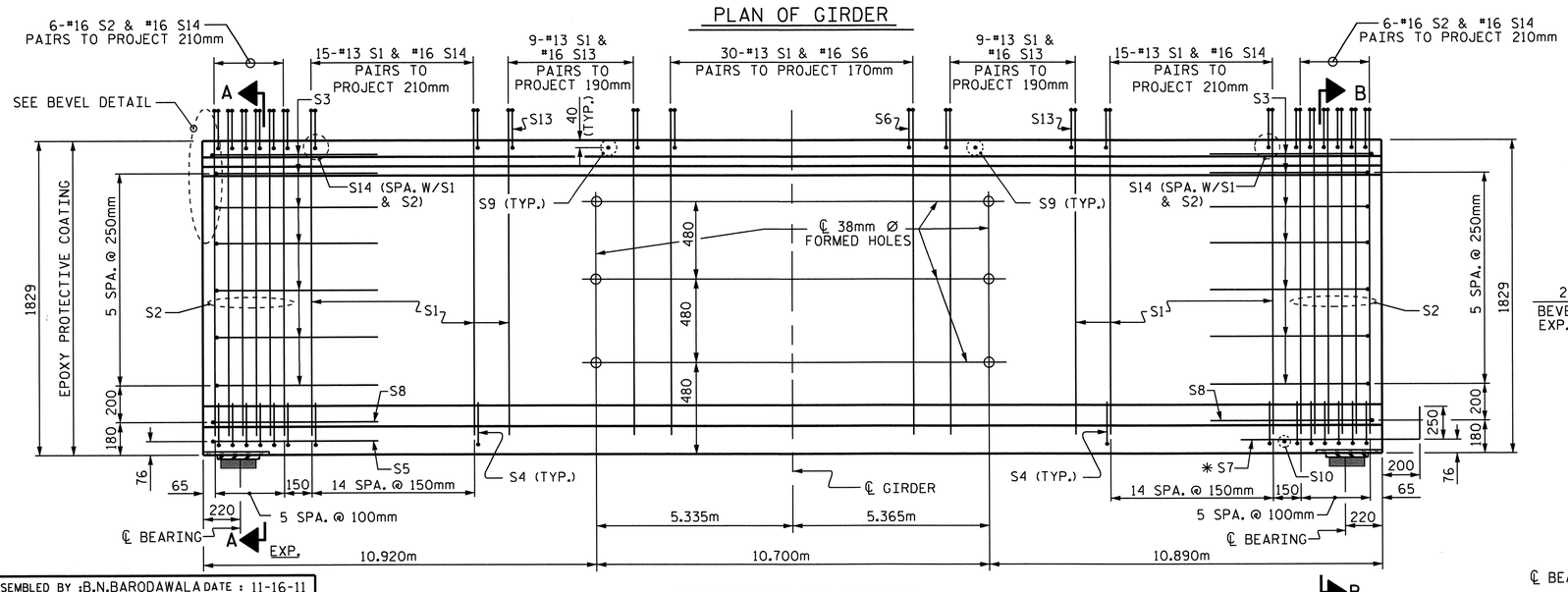

ELEVATION OF GIRDER

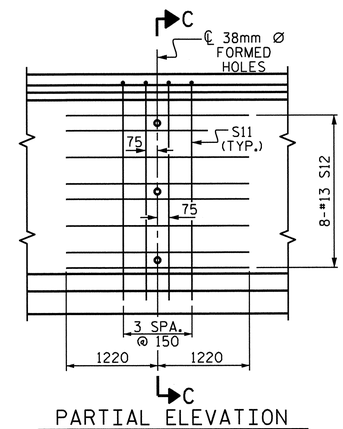

PARTIAL ELEVATION

SHOWING INTERMEDIATE DIAPHRAGM REINFORCING STEEL

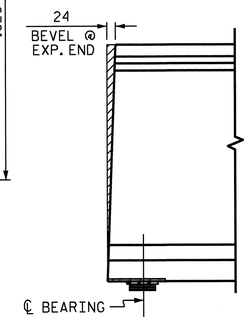

BEVEL DETAIL

15.24mm Ø L.R. GRADE 270 STRANDS

AREA (mm²)	ULTIMATE STRENGTH (kN PER STRAND)	APPLIED PRESTRESS (kN PER STRAND)
140.00	260.7	195.5

REINFORCING STEEL FOR ONE GIRDER

BAR	NUMBER	SIZE	TYPE	LENGTH	WEIGHT
S1	156	#13	1	2120	329
S2	24	#16	1	2120	79
S3	14	#13	2	2560	36
S4	84	#13	3	920	77
S5	1	#16	2	3000	5
S6	60	#16	4	1340	125
✱ S7	10	#16	STR	1120	17
S8	2	#16	2	2740	9
S9	41	#16	STR	980	62
S10	1	#10	STR	560	1
S11	8	#16	2	3540	44
S12	16	#13	STR	2440	39
S13	36	#16	4	1360	76
S14	84	#16	4	1380	180

✱ NOTE: S7 BARS SHALL BE BENT BEFORE SHIPMENT. HEAT BENDING SHALL NOT BE ALLOWED.

BAR TYPES

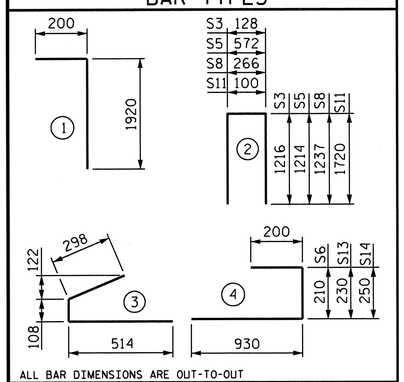

ALL BAR DIMENSIONS ARE OUT-TO-OUT

QUANTITIES FOR ONE GIRDER

	REINFORCING STEEL	55.16 MPa CONCRETE	15.24mm Ø L.R. STRANDS
	kg	m³	No.
EXTERIOR GIRDER E5	1079	17.5	40

GIRDERS REQUIRED

NUMBER	LENGTH	TOTAL LENGTH
1	32.510m	32.510m

PROJECT NO. R-2554A

WAYNE COUNTY

STATION: 70+24.000 -L-

SHEET 8 OF 8

STATE OF NORTH CAROLINA
DEPARTMENT OF TRANSPORTATION
RALEIGH

1829mm PRESTRESSED CONCRETE MODIFIED BULB TEE CONTINUOUS FOR LIVE LOAD SPAN E (GDR #5) (LEFT LANE)

NORTH CAROLINA PROFESSIONAL SEAL 14045 ENGINEER TIMOTHY G. COGGINS
03/23/12

ASSEMBLED BY : B.N.BARODAWALA	DATE : 11-16-11
CHECKED BY : PEGGY PARISI	DATE : 12-22-11
DRAWN BY : EEM 2/6/97	REV. 8/16/99 RWW/LES
CHECKED BY : VAP 2/6/97	REV. 10/17/00 RWW/LES
	REV. 5/1/06R TLA/GM

REVISIONS							SHEET NO.
NO.	BY:	DATE:	NO.	BY:	DATE:		5-98
1			3				TOTAL SHEETS
2			4				276

STR. #3

STD. NO. PCG10SM

23-MAR-2012 10:36
Z:\TIPProjects-R\R2554A\Structures\FinalPlans\Str#3\r2554a_sd_g_03.dgn
padkins

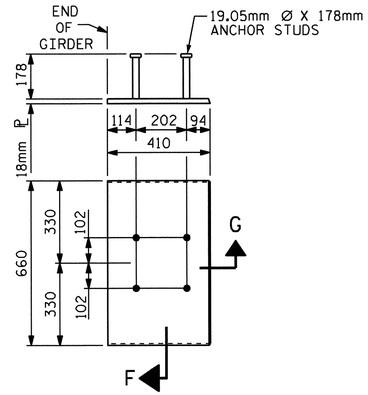

EMBEDDED PLATE "B-1" DETAILS FOR AASHTO TYPE IV GIRDER 1829mm MODIFIED BULB TEES

(2 REQ'D PER GIRDER)

NOTES

ALL PRESTRESSING STRANDS SHALL BE 7-WIRE LOW-RELAXATION GRADE 270 STRANDS AND SHALL CONFORM TO AASHTO M203M EXCEPT FOR SAMPLING REQUIREMENTS WHICH SHALL BE IN ACCORDANCE WITH THE STANDARD SPECIFICATIONS.

ALL REINFORCING STEEL SHALL BE GRADE 420.

APPLY EPOXY PROTECTIVE COATING TO END OF GIRDER SURFACES INDICATED IN ELEVATION VIEW.

EMBEDDED PLATE "B-1" SHALL BE GALVANIZED IN ACCORDANCE WITH THE SPECIFICATIONS. BEVEL EDGES OF PLATE "B-1" TO GIVE CLOSE FIT BUT NOT TIGHT FIT TO STEEL CASTING FORM.

ANCHOR STUDS SHALL CONFORM TO AASHTO M169 GRADES 1010 THROUGH 1020 OR APPROVED EQUAL, AND SHALL MEET THE TYPE "B" REQUIREMENTS OF SUBSECTION 7.3 OF THE ANSI/AASHTO/AWS D1.5 BRIDGE WELDING CODE.

AT ENDS OF GIRDERS TO BE EMBEDDED IN CONCRETE DIAPHRAGMS OR END WALLS, PRESTRESSING STRANDS MAY EXTEND A MAXIMUM OF 50mm BEYOND THE GIRDER ENDS. OTHERWISE, PRESTRESSING STRANDS SHALL BE CUT FLUSH WITH THE GIRDER ENDS.

THE TRANSFER OF LOAD FROM THE ANCHORAGES TO THE GIRDER SHALL BE DONE WHEN CONCRETE HAS REACHED A COMPRESSIVE STRENGTH OF NOT LESS THAN 45.50 MPa FOR SPANS A, E AND Q THRU V, AND 48.26 MPa FOR SPANS B THRU D AND F THRU P.

DEPENDING ON THE TYPE OF SYSTEM USED TO SUPPORT THE DECK SLAB FORMS, PRESET ANCHORS MAY BE NECESSARY IN THE PRESTRESSED CONCRETE GIRDER.

THE TOP SURFACE OF THE GIRDER, EXCLUDING THE OUTSIDE 100mm, SHALL BE RAKED TO A DEPTH OF 6mm.

A 51mm x 51mm CHAMFER IS ALLOWED AT THE INTERSECTION OF THE WEB AND THE BOTTOM FLANGE OF THE 1829mm MODIFIED BULB TEES ONLY.

THE CONTRACTOR HAS THE OPTION TO PROVIDE, AT NO ADDITIONAL COST TO THE DEPARTMENT, 2 ADDITIONAL STRANDS AT THE TOP OF THE GIRDER TO FACILITATE TYING OF THE REINFORCING STEEL. THESE STRANDS SHALL BE PULLED TO A LOAD OF 20 Kn.

FOR PRESTRESSED CONCRETE MEMBERS, SEE SPECIAL PROVISIONS.

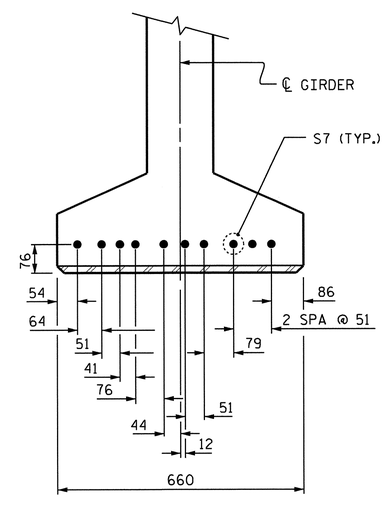

DETAIL "C"

(1829mm MODIFIED BULB TEES)

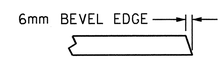

SECTION "G"

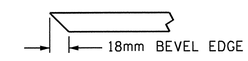

SECTION "F"

(SEE NOTES)

PROJECT NO. R-2554A

WAYNE COUNTY

STATION: 70+24.000 -L-

STATE OF NORTH CAROLINA
DEPARTMENT OF TRANSPORTATION
RALEIGH

STANDARD
PRESTRESSED CONCRETE GIRDER
CONTINUOUS FOR LIVE LOAD
DETAILS
(LEFT LANE)

NORTH CAROLINA PROFESSIONAL SEAL 14045 ENGINEER TIMOTHY L. COCKINS
03/23/12

REVISIONS						SHEET NO.
NO.	BY:	DATE:	NO.	BY:	DATE:	5-99
1			3			TOTAL SHEETS
2			4			276

ASSEMBLED BY : B.N.BARODAWALA DATE : 11-16-11	
CHECKED BY : PEGGY PARISI DATE : 12-22-11	
DRAWN BY : ELR 11/91	REV. 10/17/00 RWW/LES
CHECKED BY : GRP 11/91	REV. 7/10/01RR LES/RDR
	REV. 5/1/06 TLA/GM

23-MAR-2012 10:37
Z:\TIPProjects-R\R2554A\Structures\FinalPlans\Str#3\r2554a_sd_g_03.dgn
padkins

STR. #3

STD. NO. PCG11SM

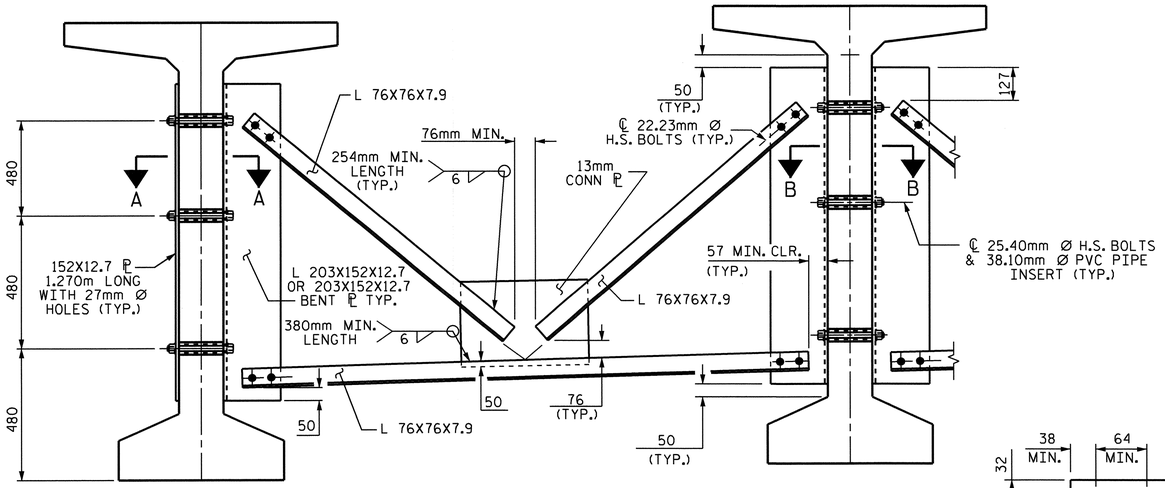

EXTERIOR GIRDER

INTERIOR GIRDER

PART SECTION AT INTERMEDIATE DIAPHRAGM

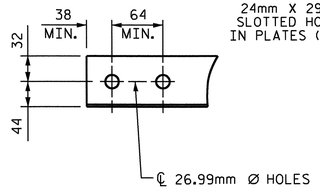

ANGLE END

(L 76 X 76 X 7.9)

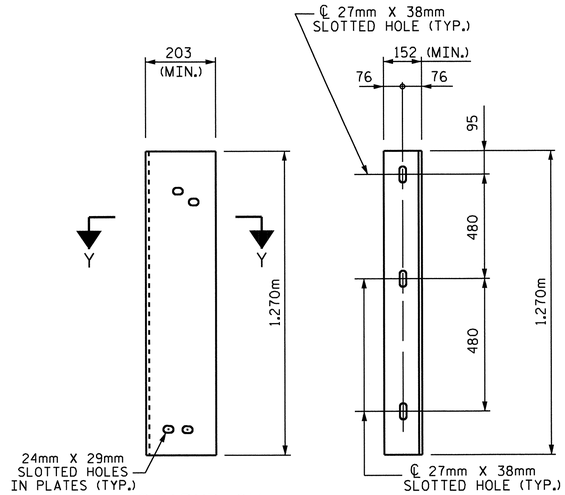

DIAPHRAGM FACE

WEB FACE

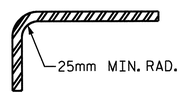

SECTION Y-Y

CONNECTOR PLATE DETAIL

STRUCTURAL STEEL NOTES

ALL INTERMEDIATE DIAPHRAGM STEEL AND CONNECTOR PLATES SHALL BE AASHTO M270 GRADE 345 OR APPROVED EQUAL.

TENSION ON THE ASTM A325 BOLTS THROUGH THE CHANNEL MEMBER SHALL BE CALIBRATED USING DIRECT TENSION INDICATOR WASHERS IN ACCORDANCE WITH THE STANDARD SPECIFICATIONS. FOR DIRECT TENSION INDICATORS, SEE SPECIAL PROVISIONS.

TENSION ON THE ASTM A449 BOLTS THROUGH THE GIRDER WEB SHALL BE SNUG TIGHTENED FOLLOWED BY AN ADDITIONAL 1/4 TURN.

THE PLATES, BENT PLATES, AND ANGLES SHALL BE GALVANIZED OR METALLIZED IN ACCORDANCE WITH THE STANDARD SPECIFICATIONS. FOR THERMAL SPRAYED COATINGS (METALLIZATION), SEE SPECIAL PROVISIONS.

FOR METALLIZATION, APPLY AN 8 MIL THICK 99.99 PERCENT ZINC (W-Zn-1) THERMAL SPRAYED COATING WITH A 0.5 MIL THICK SEAL COAT TO ALL STEEL DIAPHRAGM SURFACES IN ACCORDANCE WITH THE THERMAL SPRAYED COATINGS SPECIAL PROVISION AND SECTION 442 OF THE STANDARD SPECIFICATIONS.

GALVANIZE THE HIGH STRENGTH BOLTS, NUTS, WASHERS AND DIRECT TENSION INDICATORS IN ACCORDANCE WITH THE STANDARD SPECIFICATIONS. FOR HIGH STRENGTH BOLTS, SEE SPECIAL PROVISIONS.

USE AN ASTM F436 HARDENED WASHER WITH STANDARD AND SLOTTED HOLES UNDER EACH BOLT HEAD AND NUT.

FOR BOLTS THROUGH THE GIRDER WEB, PROVIDE SUFFICIENT LENGTH OF THREADS ON ALL BOLTS TO ACCOMMODATE WASHERS AND THE THICKNESS OF CONNECTING MEMBER PLUS AT LEAST 6mm PROJECTION BEYOND THE NUT.

INTERMEDIATE DIAPHRAGM ASSEMBLY SHALL COMPLY WITH SECTION 1072 OF THE STANDARD SPECIFICATIONS.

SUBMIT TWO SETS OF WORKING DRAWINGS FOR THE INTERMEDIATE DIAPHRAGM ASSEMBLY FOR REVIEW, COMMENTS AND ACCEPTANCE. AFTER REVIEW, COMMENTS, AND ACCEPTANCE, SUBMIT SEVEN SETS FOR DISTRIBUTION.

IN THE EXTERIOR BAYS, PLACE TEMPORARY STRUTS BETWEEN PRESTRESSED GIRDERS ADJACENT TO THE STEEL DIAPHRAGMS. STRUTS SHALL REMAIN IN PLACE 3 DAYS AFTER CONCRETE IS PLACED.

THE COST OF THE STEEL DIAPHRAGMS AND ASSEMBLIES SHALL BE INCLUDED IN THE UNIT PRICE BID FOR PRESTRESSED CONCRETE GIRDERS.

FOR METRIC STRUCTURAL STEEL, SEE SPECIAL PROVISIONS.

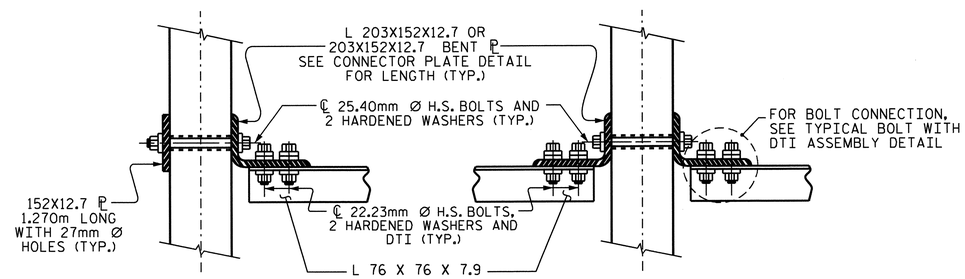

SECTION A-A

SECTION B-B

CONNECTION DETAILS

(FOR SKEW = 90°)

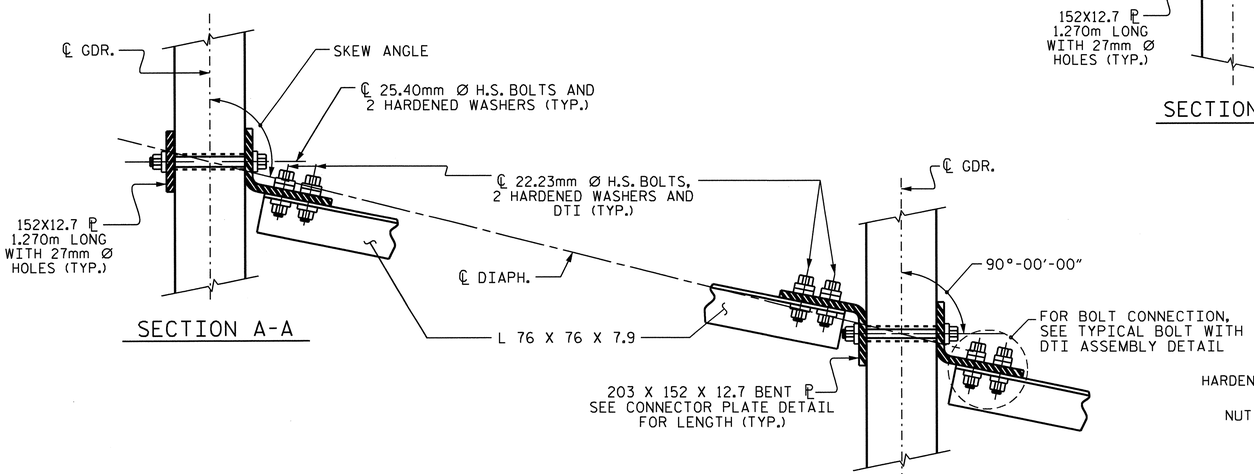

SECTION A-A

SECTION B-B

CONNECTION DETAILS

(FOR 70° ≤ SKEW < 90° OR 90° < SKEW ≤ 110°)

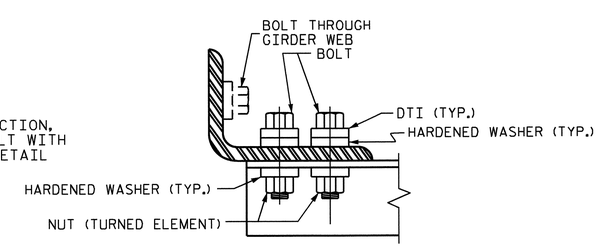

BOLT WITH DTI ASSEMBLY DETAIL

PROJECT NO. R-2554A

WAYNE COUNTY

STATION: 70+24.000 -L-

STATE OF NORTH CAROLINA
DEPARTMENT OF TRANSPORTATION
RALEIGH

STANDARD
INTERMEDIATE
STEEL DIAPHRAGMS
FOR 1829mm MODIFIED BULB TEE
PRESTRESSED CONCRETE GIRDERS

(LEFT LANE)

NORTH CAROLINA PROFESSIONAL SEAL 14045 ENGINEER TIMOTHY W. COGGINS
03/23/12

REVISIONS								SHEET NO.
NO.	BY:	DATE:	NO.	BY:	DATE:			S-100
1			3					TOTAL SHEETS
2			4					276

STR. #3 STD. NO. PCG13SM

ASSEMBLED BY : B.N.BARODAWALA DATE : 11-16-11	
CHECKED BY : PEGGY PARISI DATE : 12-22-11	
DRAWN BY : RWW 11/09	ADDED 11/23/09R
CHECKED BY : GM 11/09	

23-MAR-2012 10:37
Z:\TIPProjects-R\R2554A\Structures\FinalPlans\Str#3\r2554a_sd_g_03.dgn
padkins

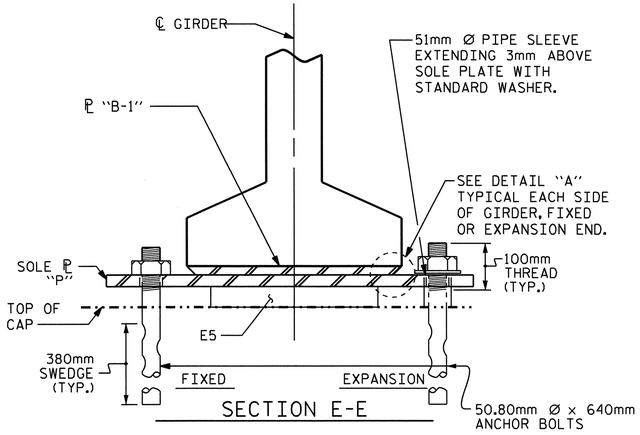

SECTION E-E

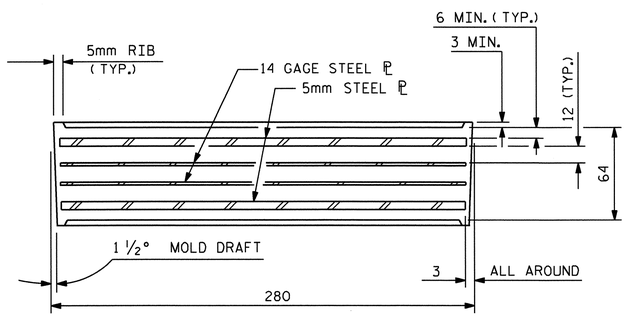

TYPICAL SECTION OF ELASTOMERIC BEARINGS

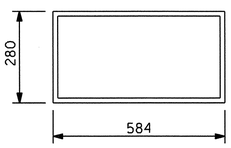

E5 (220 REQ'D)

PLAN VIEW OF ELASTOMERIC BEARING

TYPE VI

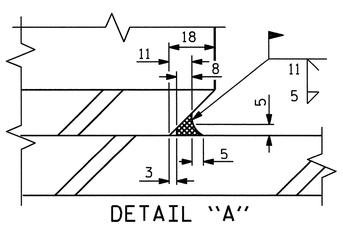

DETAIL "A"

—LOAD RATINGS—	
	MAX.D.L.+ L.L.
TYPE VI	936 kN

NOTES

AT ALL FIXED POINTS OF SUPPORT, NUTS FOR ANCHOR BOLTS ARE TO BE TIGHTENED FINGER TIGHT AND THEN BACKED OFF 1/2 TURN. THE THREAD OF THE NUT AND BOLT SHALL THEN BE BURRED WITH A SHARP POINTED TOOL.

THE 51mm Ø PIPE SLEEVE SHALL BE CUT FROM SCHEDULE 40 PVC PLASTIC PIPE. THE PVC PLASTIC PIPE SHALL MEET THE REQUIREMENTS OF ASTM D1785.

STEEL SOLE PLATES, ANCHOR BOLTS, NUTS, AND WASHERS SHALL BE GALVANIZED IN ACCORDANCE WITH THE STANDARD SPECIFICATIONS.

PRIOR TO WELDING, GRIND THE GALVANIZED SURFACE OF THE PORTION OF THE EMBEDDED PLATE AND SOLE PLATE THAT ARE TO BE WELDED. AFTER WELDING, DAMAGED GALVANIZED SURFACES SHALL BE REPAIRED IN ACCORDANCE WITH THE STANDARD SPECIFICATIONS.

WHEN WELDING THE SOLE PLATE TO THE EMBEDDED PLATE IN THE GIRDER, USE TEMPERATURE INDICATING WAX PENS, OR OTHER SUITABLE MEANS, TO ENSURE THAT THE TEMPERATURE OF THE SOLE PLATE DOES NOT EXCEED 149°C. TEMPERATURES ABOVE THIS MAY DAMAGE THE ELASTOMER.

SOLE PLATE "P", BOLTS, NUTS, WASHERS, AND PIPE SLEEVE SHALL BE INCLUDED IN THE PAY ITEM FOR PRESTRESSED CONCRETE GIRDERS.

ANCHOR BOLTS SHALL MEET THE REQUIREMENTS OF ASTM A449. NUTS SHALL MEET THE REQUIREMENTS OF AASHTO M291M-12 OR AASHTO M292M-2H. WASHERS SHALL MEET THE REQUIREMENTS OF AASHTO M293M. NO SHOP DRAWINGS ARE REQUIRED FOR ANCHOR BOLTS, NUTS AND WASHERS. SHOP INSPECTION IS REQUIRED.

ALL SURFACES OF BEARING PLATES SHALL BE SMOOTH AND STRAIGHT.

ALL BEARING PLATES SHALL BE AASHTO M270 GRADE 250.

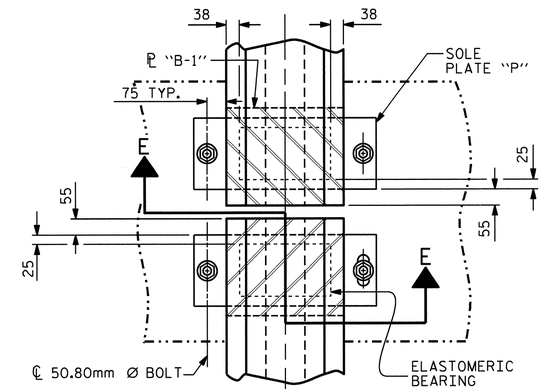

TYPICAL HALF-PLAN (SHOWING CONTINUOUS BENT)

TYPICAL HALF-PLAN (SHOWING SIMPLE BENT WITH EXPANSION JOINT)

PROJECT NO. R-2554A

WAYNE COUNTY

STATION: 70+24.000 -L-

STATE OF NORTH CAROLINA
DEPARTMENT OF TRANSPORTATION
RALEIGH

STANDARD ELASTOMERIC BEARING DETAILS

PRESTRESSED CONCRETE GIRDER SUPERSTRUCTURE (LEFT LANE)

NORTH CAROLINA PROFESSIONAL SEAL 14045 ENGINEER TIMOTHY L. COGGINS
03/23/12

REVISIONS						SHEET NO.
NO.	BY:	DATE:	NO.	BY:	DATE:	5-101
1			3			TOTAL SHEETS
2			4			276

ASSEMBLED BY : B.N.BARODAWALA	DATE : 11-15-11
CHECKED BY : PEGGY PARISI	DATE : 12-22-11
DRAWN BY : EEM 2/97	REV. 10/17/00 RWW/LES
CHECKED BY : VAP 2/97	REV. 5/1/06 TLA/GM

STR. #3

STD. NO. EB4SM

23-MAR-2012 10:30
Z:\TIPProjects-R\R2554A\Structures\FinalPlans\Str#3\r2554a_sd_bg_03.dgn
padkins

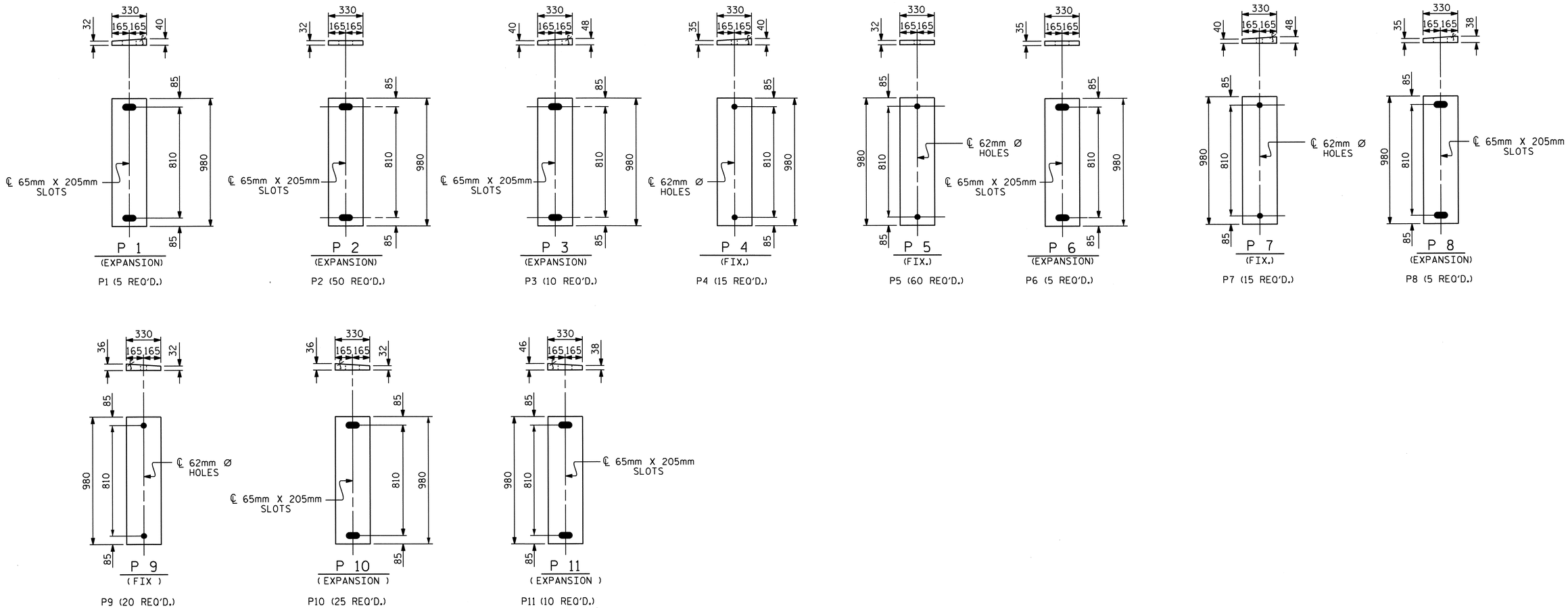

P1 (5 REQ'D.)
P2 (50 REQ'D.)
P3 (10 REQ'D.)
P4 (15 REQ'D.)
P5 (60 REQ'D.)
P6 (5 REQ'D.)
P7 (15 REQ'D.)
P8 (5 REQ'D.)
P9 (20 REQ'D.)
P10 (25 REQ'D.)
P11 (10 REQ'D.)

SOLE PLATE DETAILS ("P")

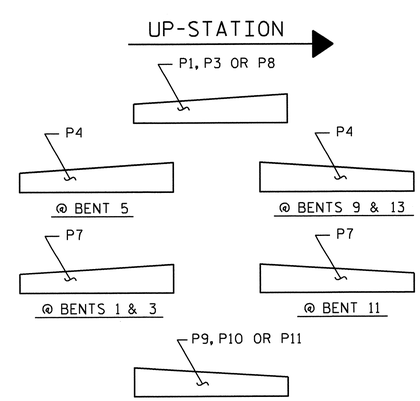

SOLE PL PLACEMENT DETAIL

PROJECT NO. R-2554A
WAYNE COUNTY
STATION: 70+24.000 -L-

STATE OF NORTH CAROLINA
DEPARTMENT OF TRANSPORTATION
RALEIGH

SOLE PLATES

(LEFT LANE)

NORTH CAROLINA PROFESSIONAL SEAL 14045 ENGINEER TIMOTHY L. COGGINS
03/23/12

REVISIONS						SHEET NO.
NO.	BY:	DATE:	NO.	BY:	DATE:	S-102
1			3			TOTAL SHEETS
2			4			276

ASSEMBLED BY : B.N.BARODAWALA DATE : 11-15-11
CHECKED BY : PEGGY PARISI DATE : 12-22-11

23-MAR-2012 10:31
Z:\TIPProjects-R\R2554A\Structures\FinalPlans\Str#3\r2554a_sd_bg_03.dgn
padkins

STR. #3

DEAD LOAD DEFLECTION TABLE FOR SPAN A

15.24mm Ø LOW RELAXATION	GIRDER 1											GIRDERS 2, 3 & 4											GIRDER 5										
TENTH POINTS	0	.1	.2	.3	.4	.5	.6	.7	.8	.9	0	0	.1	.2	.3	.4	.5	.6	.7	.8	.9	0	0	.1	.2	.3	.4	.5	.6	.7	.8	.9	0
CAMBER (GIRDER ALONE IN PLACE) ↑	0.0	0.035	0.067	0.091	0.107	0.112	0.107	0.091	0.067	0.035	0.0	0.0	0.035	0.067	0.091	0.107	0.112	0.107	0.091	0.067	0.035	0.0	0.0	0.035	0.067	0.091	0.107	0.112	0.107	0.091	0.067	0.035	0.0
✱ DEFLECTION DUE TO SUPERIMPOSED D.L. ↓	0.0	0.011	0.021	0.029	0.034	0.036	0.034	0.029	0.021	0.011	0.0	0.0	0.010	0.019	0.027	0.031	0.034	0.031	0.027	0.019	0.010	0.0	0.0	0.011	0.021	0.029	0.034	0.036	0.034	0.029	0.021	0.011	0.0
FINAL CAMBER ↑	0.0	24	46	62	73	76	73	62	46	24	0.0	0.0	25	48	64	76	78	76	64	48	25	0.0	0.0	24	46	62	73	76	73	62	46	24	0.0

✱ INCLUDES FUTURE WEARING SURFACE.
ALL VALUES ARE SHOWN IN METERS, EXCEPT "FINAL CAMBER", WHICH IS GIVEN IN MILLIMETERS.

DEAD LOAD DEFLECTION TABLE FOR SPANS B, C, D, F, G, H, I, J, K, L, M, N, O & P

15.24mm Ø LOW RELAXATION	GIRDER 1											GIRDERS 2, 3 & 4											GIRDER 5										
TENTH POINTS	0	.1	.2	.3	.4	.5	.6	.7	.8	.9	0	0	.1	.2	.3	.4	.5	.6	.7	.8	.9	0	0	.1	.2	.3	.4	.5	.6	.7	.8	.9	0
CAMBER (GIRDER ALONE IN PLACE) ↑	0.0	0.038	0.071	0.097	0.114	0.120	0.114	0.097	0.071	0.038	0.0	0.0	0.038	0.071	0.097	0.114	0.120	0.114	0.097	0.071	0.038	0.0	0.0	0.038	0.071	0.097	0.114	0.120	0.114	0.097	0.071	0.038	0.0
✱ DEFLECTION DUE TO SUPERIMPOSED D.L. ↓	0.0	0.015	0.029	0.040	0.047	0.050	0.047	0.040	0.029	0.015	0.0	0.0	0.014	0.027	0.038	0.044	0.047	0.044	0.038	0.027	0.014	0.0	0.0	0.015	0.030	0.041	0.048	0.051	0.048	0.041	0.030	0.015	0.0
FINAL CAMBER ↑	0.0	23	42	57	67	70	67	57	42	23	0.0	0.0	24	44	59	70	73	70	59	44	24	0.0	0.0	23	41	56	66	69	66	56	41	23	0.0

✱ INCLUDES FUTURE WEARING SURFACE.
ALL VALUES ARE SHOWN IN METERS, EXCEPT "FINAL CAMBER", WHICH IS GIVEN IN MILLIMETERS.

DEAD LOAD DEFLECTION TABLE FOR SPAN E

15.24mm Ø LOW RELAXATION	GIRDER 1											GIRDERS 2, 3 & 4											GIRDER 5										
TENTH POINTS	0	.1	.2	.3	.4	.5	.6	.7	.8	.9	0	0	.1	.2	.3	.4	.5	.6	.7	.8	.9	0	0	.1	.2	.3	.4	.5	.6	.7	.8	.9	0
CAMBER (GIRDER ALONE IN PLACE) ↑	0.0	0.038	0.072	0.099	0.116	0.121	0.116	0.099	0.072	0.038	0.0	0.0	0.037	0.071	0.097	0.114	0.119	0.114	0.097	0.071	0.037	0.0	0.0	0.035	0.067	0.091	0.107	0.112	0.107	0.091	0.067	0.035	0.0
✱ DEFLECTION DUE TO SUPERIMPOSED D.L. ↓	0.0	0.015	0.029	0.040	0.047	0.050	0.047	0.040	0.029	0.015	0.0	0.0	0.013	0.025	0.034	0.040	0.043	0.040	0.034	0.025	0.013	0.0	0.0	0.011	0.021	0.029	0.034	0.037	0.034	0.029	0.021	0.011	0.0
FINAL CAMBER ↑	0.0	23	43	59	69	71	69	59	43	23	0.0	0.0	24	46	63	74	76	74	63	46	24	0.0	0.0	24	46	62	73	75	73	62	46	24	0.0

✱ INCLUDES FUTURE WEARING SURFACE.
ALL VALUES ARE SHOWN IN METERS, EXCEPT "FINAL CAMBER", WHICH IS GIVEN IN MILLIMETERS.

DEAD LOAD DEFLECTION TABLE FOR SPANS Q, R, S, T, U & V

15.24mm Ø LOW RELAXATION	GIRDER 1											GIRDERS 2, 3 & 4											GIRDER 5										
TENTH POINTS	0	.1	.2	.3	.4	.5	.6	.7	.8	.9	0	0	.1	.2	.3	.4	.5	.6	.7	.8	.9	0	0	.1	.2	.3	.4	.5	.6	.7	.8	.9	0
CAMBER (GIRDER ALONE IN PLACE) ↑	0.0	0.038	0.071	0.098	0.114	0.120	0.114	0.098	0.071	0.038	0.0	0.0	0.038	0.071	0.098	0.114	0.120	0.114	0.098	0.071	0.038	0.0	0.0	0.038	0.071	0.098	0.114	0.120	0.114	0.098	0.071	0.038	0.0
✱ DEFLECTION DUE TO SUPERIMPOSED D.L. ↓	0.0	0.014	0.028	0.038	0.045	0.047	0.045	0.038	0.028	0.014	0.0	0.0	0.013	0.026	0.035	0.042	0.044	0.042	0.035	0.026	0.013	0.0	0.0	0.015	0.028	0.039	0.045	0.048	0.045	0.039	0.028	0.015	0.0
FINAL CAMBER ↑	0.0	24	43	60	69	73	69	60	43	24	0.0	0.0	25	45	63	72	76	72	63	45	25	0.0	0.0	23	43	59	69	72	69	59	43	23	0.0

✱ INCLUDES FUTURE WEARING SURFACE.
ALL VALUES ARE SHOWN IN METERS, EXCEPT "FINAL CAMBER", WHICH IS GIVEN IN MILLIMETERS.

PROJECT NO. R-2554A
WAYNE COUNTY
STATION: 70+24.000 -L-

STATE OF NORTH CAROLINA
DEPARTMENT OF TRANSPORTATION
RALEIGH

SUPERSTRUCTURE
DEAD LOAD DEFLECTIONS
(LEFT LANE)

NORTH CAROLINA PROFESSIONAL SEAL 14045 ENGINEER TIMOTHY W. COGGINS
03/23/12

REVISIONS						SHEET NO.
NO.	BY:	DATE:	NO.	BY:	DATE:	S-103
1			3			TOTAL SHEETS 276
2			4			

STR. #3

DRAWN BY : B.N.BARODAWALA DATE : 11-15-11
CHECKED BY : PEGGY PARISI DATE : 12-22-11

23-MAR-2012 10:33
Z:\TIPProjects-R\R2554A\Structures\FinalPlans\Str#3\r2554a_sd_dl_03.dgn
padkins

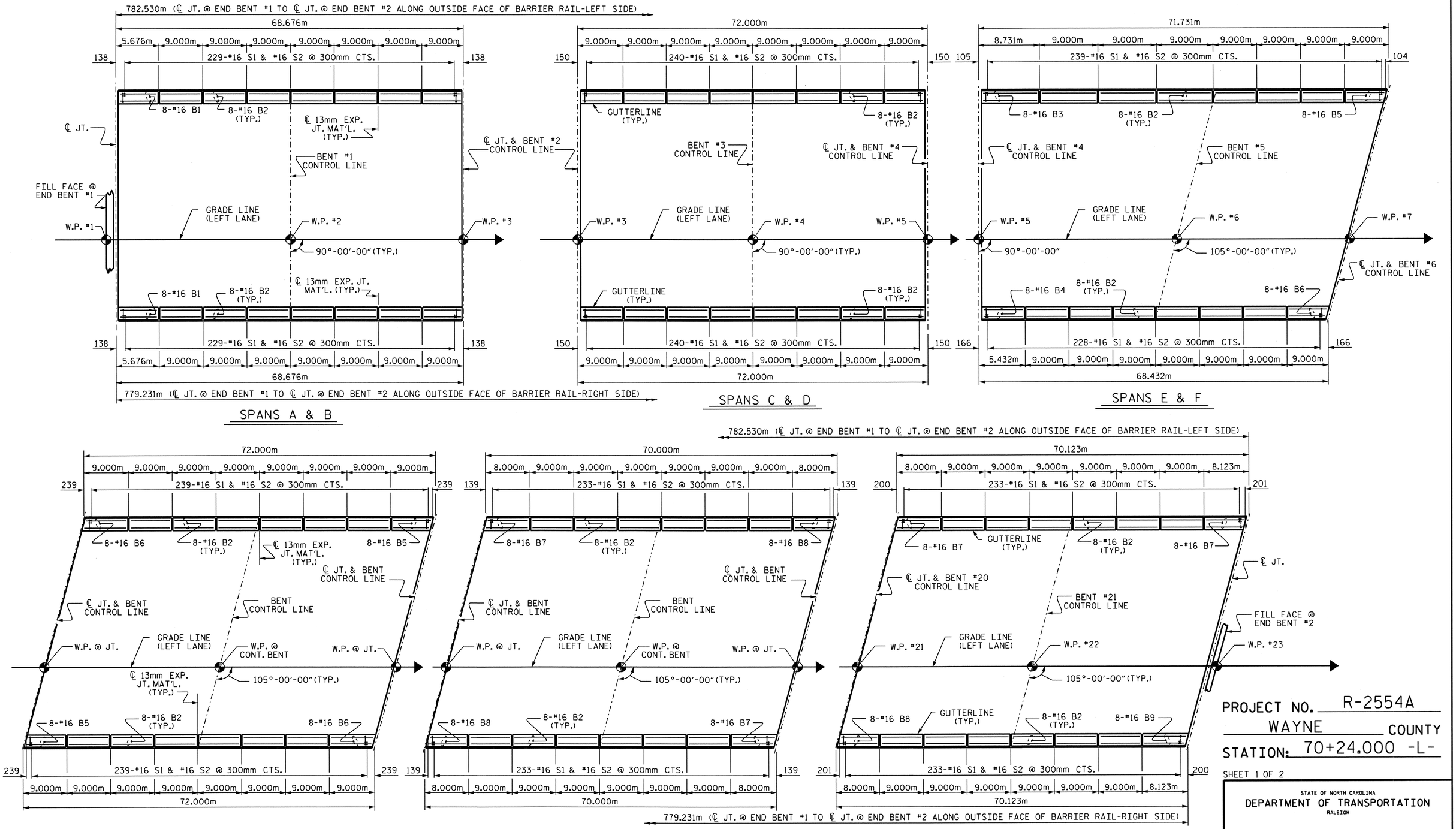

PLAN OF BARRIER RAIL

PROJECT NO. R-2554A
WAYNE COUNTY
STATION: 70+24.000 -L-

SHEET 1 OF 2

STATE OF NORTH CAROLINA
DEPARTMENT OF TRANSPORTATION
RALEIGH

CONCRETE BARRIER RAIL

(LEFT LANE)

NORTH CAROLINA PROFESSIONAL SEAL 14045 ENGINEER TIMOTHY A. COGGINS
03/23/12

REVISIONS						SHEET NO.
NO.	BY:	DATE:	NO.	BY:	DATE:	S-104
1			3			TOTAL SHEETS
2			4			276

STR. #3

DRAWN BY : B.N.BARODAWALA DATE : 11-15-11
CHECKED BY : PEGGY PARISI DATE : 12-22-11

23-MAR-2012 10:32
Z:\TIPProjects-R\R2554A\Structures\FinalPlans\Str#3\r2554a_sd_br_03.dgn
padkins

NOTES

BARRIER RAIL IN A CONTINUOUS UNIT SHALL NOT BE CAST UNTIL ALL SLAB CONCRETE IN THE UNIT HAS BEEN CAST AND HAS REACHED A MINIMUM COMPRESSIVE STRENGTH OF 20.7 MPa.

ALL REINFORCING STEEL IN BARRIER RAILS SHALL BE EPOXY COATED.

GROOVED CONTRACTION JOINTS, 12mm IN DEPTH, SHALL BE TOOLED IN ALL EXPOSED FACES OF THE BARRIER RAIL AND IN ACCORDANCE WITH ARTICLE 825-10(B) OF THE STANDARD SPECIFICATIONS. THE CONTRACTION JOINT SHALL BE LOCATED AT EACH THIRD POINT BETWEEN BARRIER RAIL EXPANSION JOINTS. ONLY ONE CONTRACTION JOINT IS REQUIRED AT MIDPOINT OF BARRIER RAIL SEGMENTS LESS THAN 6.1m IN LENGTH AND NO CONTRACTION JOINTS ARE REQUIRED FOR THOSE SEGMENTS LESS THAN 3.5m IN LENGTH.

BAR TYPES

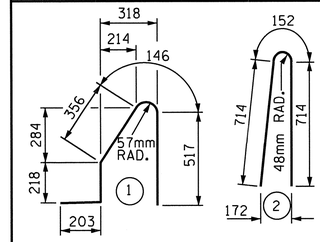

ALL BAR DIMENSIONS ARE OUT TO OUT

BILL OF MATERIAL

FOR CONCRETE BARRIER RAIL ONLY

BAR	NO.	SIZE	TYPE	LENGTH	WEIGHT
✳ B1	16	#16	STR	5540	138
✳ B2	1104	#16	STR	8860	15181
✳ B3	8	#16	STR	8600	107
✳ B4	8	#16	STR	5300	66
✳ B5	88	#16	STR	8740	1194
✳ B6	88	#16	STR	8880	1213
✳ B7	48	#16	STR	7880	587
✳ B8	40	#16	STR	7740	480
✳ B9	8	#16	STR	8020	100
✳ S1	5193	#16	1	1440	11606
✳ S2	5193	#16	2	1580	12734

✳ EPOXY COATED REINFORCING STEEL 43406 kg

CLASS AA CONCRETE 392.2 CU. METER

CONCRETE BARRIER RAIL
SUPERSTRUCTURE 1561.761 METERS
● APPROACH SLABS 12.122 METERS
TOTAL 1573.883 METERS

● FOR EPOXY COATED REINFORCING STEEL AND CLASS AA CONCRETE IN THE BARRIER RAIL ON THE APPROACH SLABS, SEE "BRIDGE APPROACH SLAB DETAILS" SHEET.

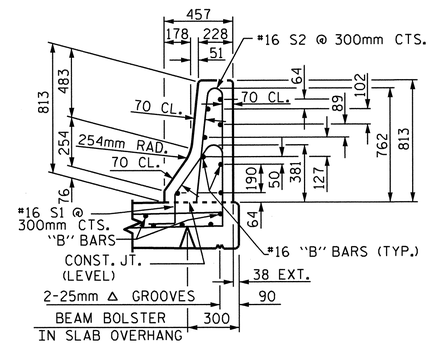

SECTION THRU RAIL

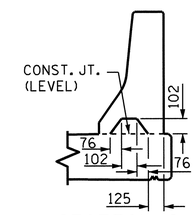

SECTION S-S

AT DAM IN OPEN JOINT
(THIS IS TO BE USED ONLY WHEN SLIP FORM IS USED)

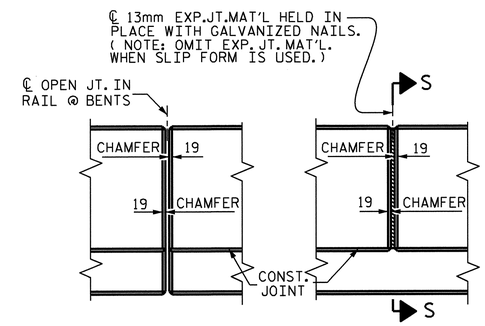

ELEVATION AT EXPANSION JOINTS

BARRIER RAIL DETAILS

PROJECT NO. R-2554A
WAYNE COUNTY
STATION: 70+24.000 -L-

SHEET 2 OF 2

STATE OF NORTH CAROLINA
DEPARTMENT OF TRANSPORTATION
RALEIGH

STANDARD

CONCRETE BARRIER RAIL

(LEFT LANE)

NORTH CAROLINA PROFESSIONAL SEAL 14045 ENGINEER TIMOTHY W. COCKINS
03/23/12

REVISIONS								SHEET NO.
NO.	BY:	DATE:	NO.	BY:	DATE:			S-105
1			3					TOTAL SHEETS
2			4					276

STR. #3

STD. No. CBR1SM

ASSEMBLED BY : B.N.BARODAWALA	DATE : 11-15-11		
CHECKED BY : PEGGY PARISI	DATE : 12-22-11		
DRAWN BY : ARB 5/87	REV. 10/17/00	RWW/LES	
CHECKED BY : SJD 9/87	REV. 5/7/03R	RWW/JTE	
	REV. 5/1/06	TLA/GM	

23-MAR-2012 10:32
Z:\TIPProjects-R\R2554A\Structures\FinalPlans\Str#3\r2554a_sd_br_03.dgn
padkins

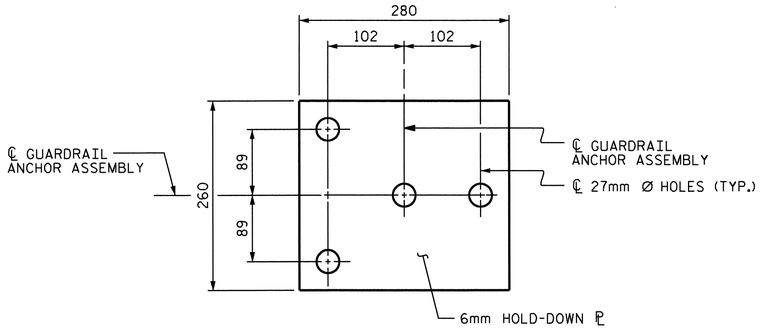

PLAN

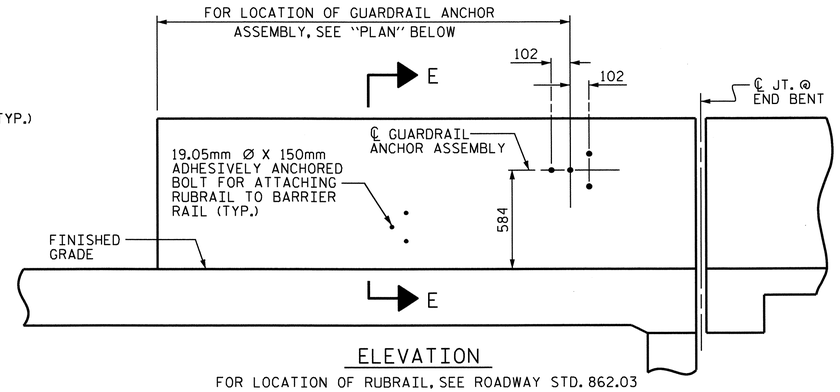

ELEVATION

FOR LOCATION OF RUBRAIL, SEE ROADWAY STD. 862.03

NOTES

THE GUARDRAIL ANCHOR ASSEMBLY SHALL CONSIST OF A 6mm HOLD DOWN PLATE AND 4 - 22.23mm Ø BOLTS WITH NUTS AND WASHERS, RUBRAIL, AND ADHESIVELY ANCHORED BOLTS.

THE HOLD-DOWN PLATE SHALL CONFORM TO AASHTO M270 GRADE 36. AFTER FABRICATION, THE HOLD-DOWN PLATE SHALL BE HOT-DIP GALVANIZED IN ACCORDANCE WITH AASHTO M111.

BOLTS SHALL CONFORM TO THE REQUIREMENTS OF ASTM A307 AND NUTS SHALL CONFORM TO THE REQUIREMENTS OF AASHTO M291. BOLTS, NUTS AND WASHERS SHALL BE GALVANIZED. (AT THE CONTRACTOR'S OPTION, STAINLESS STEEL BOLTS, NUTS AND WASHERS MAY BE USED AS AN ALTERNATE FOR THE 22.23mm Ø GALVANIZED BOLTS, NUTS AND WASHERS. THEY SHALL CONFORM TO OR EXCEED THE MECHANICAL REQUIREMENTS OF ASTM A307. THE USE OF THIS ALTERNATE SHALL BE APPROVED BY THE ENGINEER.)

THE GUARDRAIL ANCHOR ASSEMBLY IS REQUIRED AT ALL POINTS WHERE APPROACH GUARDRAIL IS TO BE ATTACHED TO THE END OF BARRIER RAIL. FOR POINTS OF ATTACHMENT, SEE SKETCH.

AFTER INSTALLATION, THE EXPOSED THREAD OF THE BOLT SHALL BE BURRED WITH A SHARP POINTED TOOL.

THE COST OF THE GUARDRAIL ANCHOR ASSEMBLY SHALL BE INCLUDED IN THE UNIT CONTRACT PRICE BID FOR CONCRETE BARRIER RAIL.

THE 32mm Ø HOLES SHALL BE FORMED OR DRILLED WITH A CORE BIT. IMPACT TOOLS WILL NOT BE PERMITTED. ANY CONCRETE DAMAGED BY THIS WORK SHALL BE REPAIRED TO THE SATISFACTION OF THE ENGINEER.

THE C150 X 12 RUBRAIL IS TO BE ADHESIVELY ANCHORED TO THE RAIL USING THREE 19.05mm Ø X 150mm BOLTS WITH WASHERS. LEVEL ONE FIELD TESTING IS REQUIRED, AND THE YIELD LOAD OF THE 19.05mm Ø BOLTS IS 53.4kN. FOR ADHESIVELY ANCHORED ANCHOR BOLTS OR DOWELS, SEE SPECIAL PROVISIONS. SEE ROADWAY STANDARD 862.03 FOR DETAILS AND LOCATION OF THE RUBRAIL.

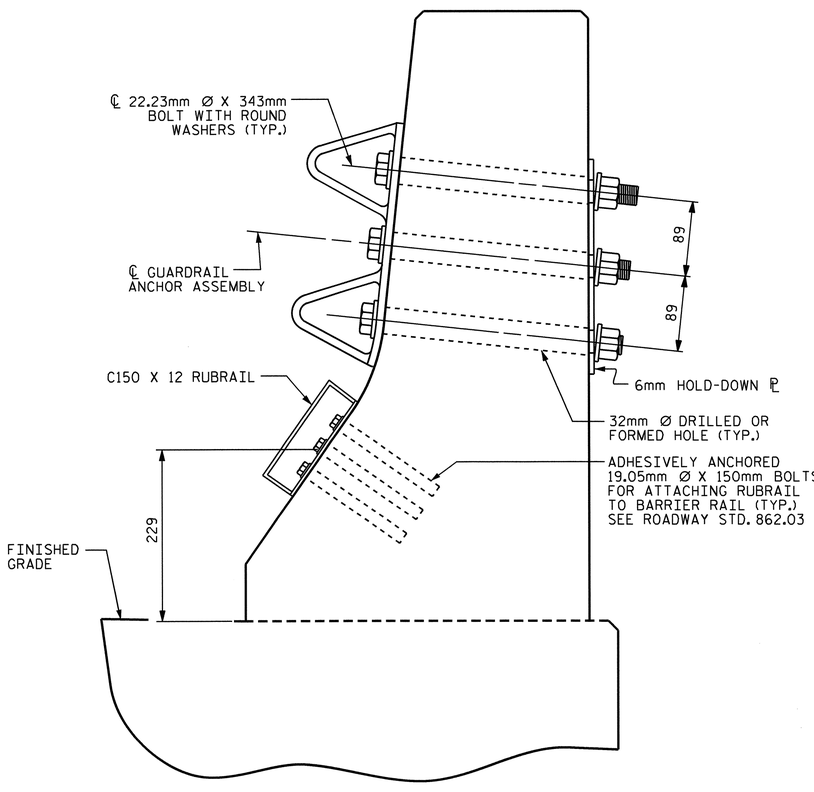

SECTION E-E

GUARDRAIL ANCHOR ASSEMBLY DETAILS

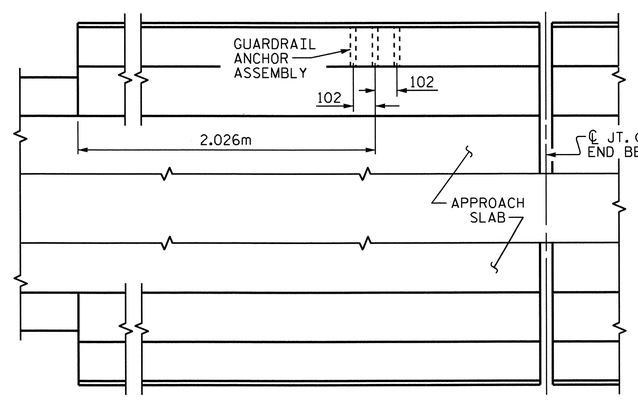

PLAN
@ END BENT #1

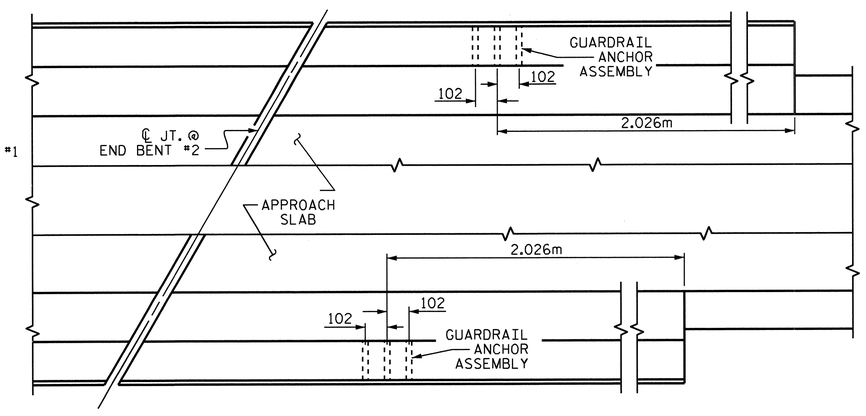

PLAN
@ END BENT #2

LOCATION OF ANCHORS FOR GUARDRAIL

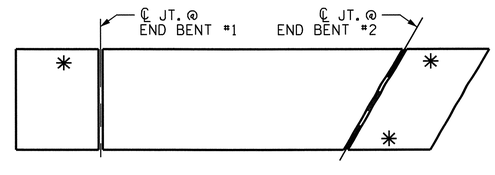

SKETCH SHOWING POINTS OF ATTACHMENTS

* DENOTES GUARDRAIL ANCHOR ASSEMBLY

PROJECT NO. R-2554A
WAYNE COUNTY
STATION: 70+24.000 -L-

STATE OF NORTH CAROLINA
DEPARTMENT OF TRANSPORTATION
RALEIGH

STANDARD
GUARDRAIL ANCHORAGE FOR BARRIER RAIL
(LEFT LANE)

NORTH CAROLINA PROFESSIONAL SEAL 14045 ENGINEER TIMOTHY A. GOODWIN
03/23/12

REVISIONS								SHEET NO.
NO.	BY:	DATE:	NO.	BY:	DATE:			S-106
1			3					TOTAL SHEETS
2			4					276

STR. #3 STD. NO. GRA2SM

ASSEMBLED BY : B.N.BARODAWALA DATE : 11-15-11	
CHECKED BY : PEGGY PARISI DATE : 12-22-11	
DRAWN BY : TLA 5/06	ADDED 5/1/06RR KMM/GM
CHECKED BY : GM 5/06	

23-MAR-2012 10:32
Z:\TIPProjects-R\R2554A\Structures\FinalPlans\Str#3\r2554a_sd_br_03.dgn
padkins

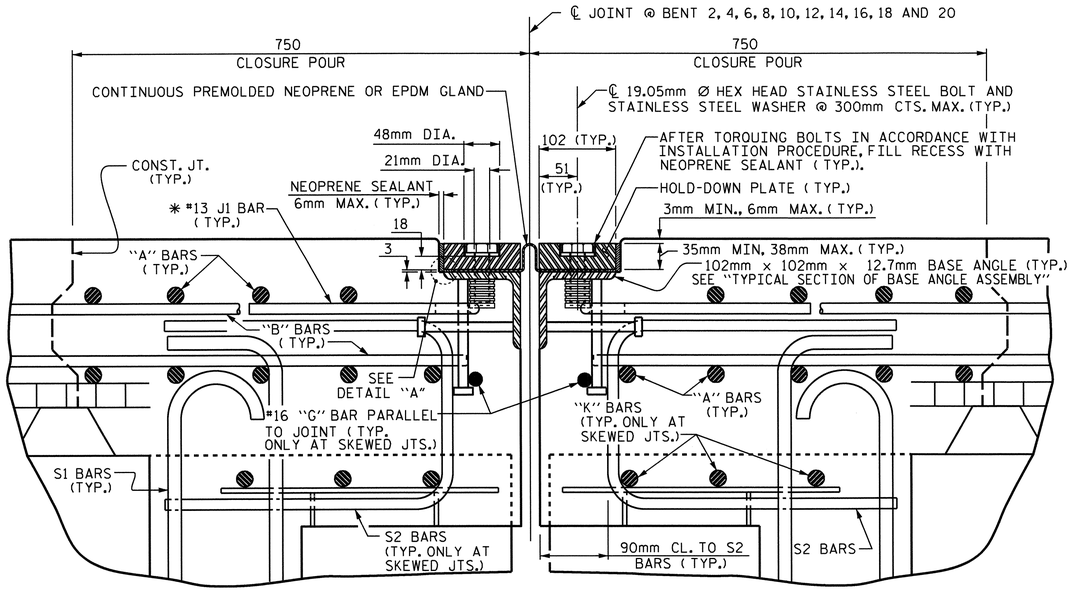

EXPANSION JOINT DETAILS

SECTION NORMAL TO JOINT -- PRESTRESSED GIRDER SUPERSTRUCTURE

* THE QUANTITY OF #13 J1 BARS ON THE BILL OF MATERIAL IS BASED ON 300mm CENTERS. J1 BARS SHALL BE PLACED AT EACH VERTICAL STUD ANCHOR BOLT. IN THE EVENT THAT THE NUMBER OF VERTICAL STUD ANCHOR BOLTS EXCEEDS THE NUMBER OF J1 BARS SPECIFIED, ADDITIONAL J1 BARS WILL NOT BE REQUIRED.

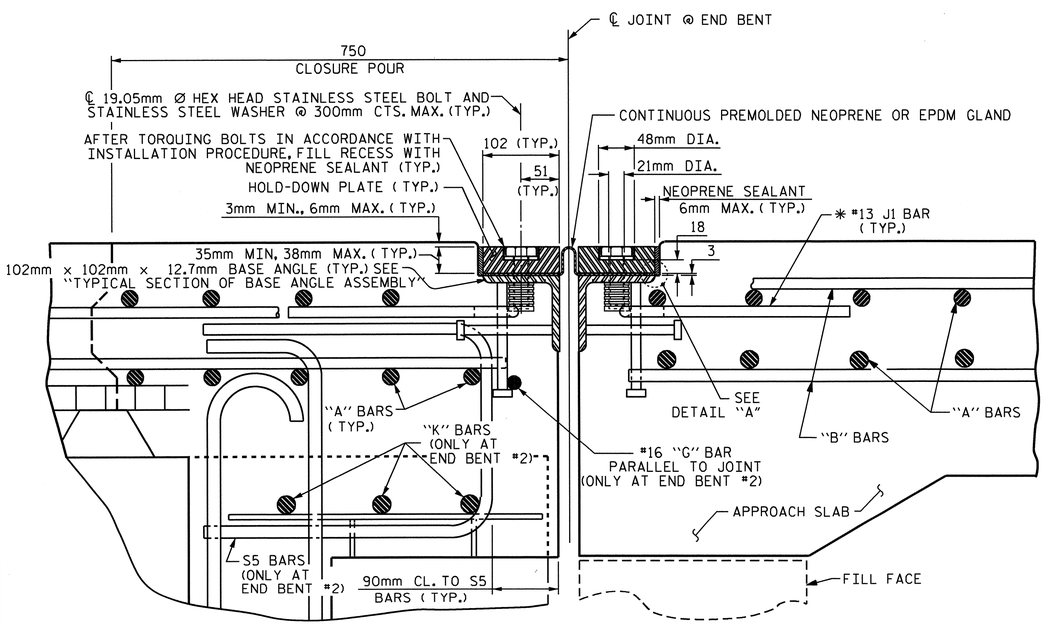

EXPANSION JOINT DETAILS

SECTION NORMAL TO JOINT -- PRESTRESSED GIRDER SUPERSTRUCTURE

END BENT #2 SHOWN, END BENT #1 SIMILAR

* THE QUANTITY OF #13 J1 BARS ON THE BILL OF MATERIAL IS BASED ON 300mm CENTERS. J1 BARS SHALL BE PLACED AT EACH VERTICAL STUD ANCHOR BOLT. IN THE EVENT THAT THE NUMBER OF VERTICAL STUD ANCHOR BOLTS EXCEEDS THE NUMBER OF J1 BARS SPECIFIED, ADDITIONAL J1 BARS WILL NOT BE REQUIRED.

INSTALLATION PROCEDURE

1. A TEMPLATE OR OTHER SUITABLE DEVICE SHALL BE USED TO FORM THE TOP OF THE EXPANSION JOINT SEAL BLOCKOUT TO THE PROPER DEPTH AND WIDTH. THE TEMPLATE SHALL BE 105mm TO 108mm WIDE AND OF SUCH THICKNESS AS TO PROVIDE FOR CORRECT FINAL ELEVATION OF TOP OF HOLD-DOWN PLATES. THE TEMPLATE SHALL BE ATTACHED TO THE BASE ANGLE ASSEMBLY WITH THE 19.05mm Ø HEX HEAD BOLTS PROVIDED FOR THE HOLD-DOWN PLATES. A 25mm Ø HOLE SHALL BE PROVIDED IN THE TEMPLATE CENTERED OVER EACH WEEP HOLE IN THE 102mm X 102mm X 12.7mm BASE ANGLE. OTHER METHODS OF INSURING DRAINAGE THROUGH WEEP HOLES MAY BE EMPLOYED SUBJECT TO ENGINEER'S APPROVAL.
2. AFTER THE CONCRETE HAS BEEN CAST ON BOTH SIDES OF THE JOINT, REMOVE THE TEMPLATE. THOROUGHLY CLEAN THE BOLT HOLES AND THE ANGLE PLATE. REMOVE ANY EXCESS CONCRETE THAT COMES OUT OF THE WEEP HOLES. ANY DAMAGED STEEL SHALL BE COATED WITH A MINIMUM THICKNESS OF 0.100mm (DRY) OF ZINC-RICH PAINT IN ACCORDANCE WITH THE STANDARD SPECIFICATIONS.
3. LAY THE GLAND ON THE BASE ANGLE AND FIELD MARK THE GLAND FOR THE BOLT HOLES. HOLES IN THE GLAND SHALL BE PUNCHED 22mm IN DIAMETER WITH A HAND PUNCH.
4. IN ORDER TO CHECK FOR PROPER ALIGNMENT, PLACE THE GLAND AND HOLD-DOWN PLATES ON THE BASE ANGLE. DO NOT APPLY NEOPRENE SEALANT. BOLT THE HOLD-DOWN PLATES TO THE BASE ANGLE BUT DO NOT TIGHTEN. THE ENGINEER SHALL INSPECT THE JOINT SEAL DEVICE FOR PROPER ALIGNMENT.
5. AFTER INSPECTION, REMOVE THE HOLD-DOWN PLATES AND GLAND. APPLY NEOPRENE SEALANT TO THE BASE ANGLE IN ACCORDANCE WITH THE "INSTALLATION SKETCH". PLACE GLAND AND HOLD-DOWN PLATES ON THE BASE ANGLE. BOLT THE HOLD-DOWN PLATES TO THE BASE ANGLE ASSEMBLY AND TORQUE THE BOLTS TO 119.3 N-m WITH A TORQUE WRENCH. THE TORQUE WRENCH SHALL BE CALIBRATED IN ACCORDANCE WITH SECTION 440-10 (D) OF THE STANDARD SPECIFICATIONS. CHECK THE TORQUE AFTER THREE (3) HOURS AND, IF NECESSARY, RETIGHTEN TO 119.3 N-m. A FINAL CHECK SHALL BE MADE AT SEVEN (7) DAYS. TORQUE SHALL NOT BE LESS THAN 108.5 N-m AFTER SEVEN (7) DAYS.
6. AFTER PROPER TORQUING, CLEAN THE BOLT HOLE RECESSES AND THE RECESS BETWEEN THE JOINT SEAL DEVICE AND CONCRETE, COMPLETELY FILL THESE RECESSES WITH NEOPRENE SEALANT.

GENERAL NOTES

1. FOR EXPANSION JOINT SEALS, SEE SPECIAL PROVISIONS.
2. ALL PLATES AND ANGLES SHALL CONFORM TO AASHTO M270 GRADE 250 STEEL OR APPROVED EQUAL. ALL HOLD-DOWN BOLTS SHALL CONFORM TO ASTM F593 ALLOY 304 STAINLESS STEEL. WASHERS SHALL CONFORM TO ASTM F844 EXCEPT THEY SHALL BE MADE FROM ALLOY 304 STAINLESS STEEL. ALL STUD ANCHORS SHALL CONFORM TO AASHTO M169, GRADES 1010 THRU 1020 OR APPROVED EQUAL. ALL CONCRETE INSERTS SHALL BE CLOSED END AND SHALL CONFORM TO AASHTO M169, GRADE 12L14. TENSILE CAPACITY SHALL BE 13.3 kN MIN.
3. A PREMOLDED CORRUGATED OR NON-CORRUGATED GLAND SHALL BE USED FOR JOINTS SKEWED BETWEEN 50° THRU 130°. FOR JOINTS SKEWED LESS THAN 50° OR MORE THAN 130°, ONLY A CORRUGATED GLAND SHALL BE USED.
4. CLOSED END FERRULES AND STUD ANCHORS SHALL BE SHOP WELDED AND ALL HOLES SHALL BE SHOP DRILLED AS SHOWN ON PLANS. STUD ANCHORS SHALL BE ELECTRIC ARC END WELDED WITH COMPLETE FUSION.
5. SURFACES COMING IN CONTACT WITH NEOPRENE SHALL BE GROUND SMOOTH PRIOR TO METALLIZING.
6. UPON COMPLETION OF SHOP FABRICATION, THE HOLD DOWN PLATE AND BASE ANGLE ASSEMBLY AS SHOWN IN THE "TYPICAL SECTION OF BASE ANGLE ASSEMBLY", SHALL BE METALLIZED. SEE SPECIAL PROVISION FOR THERMAL SPRAYED COATINGS (METALLIZATION).
7. BASE ANGLE ASSEMBLY SHALL BE CONTINUOUS FOR THE LENGTH OF THE JOINT. AT CROWN BREAKS, THE ENDS OF THE BASE ANGLE ASSEMBLY SHALL BE CUT PARALLEL TO THE BRIDGE CENTERLINE FOR SKEWS LESS THAN 80° AND GREATER THAN 100°. FINISHED WELD SHALL BE GROUND SMOOTH AND COATED WITH A MINIMUM THICKNESS OF 0.100mm (DRY) OF ZINC-RICH PAINT IN ACCORDANCE WITH THE STANDARD SPECIFICATIONS.
8. FIELD SPLICES OF HOLD-DOWN PLATES SHALL BE KEPT TO A MINIMUM. CONTRACTOR SHALL FURNISH DETAILED PLANS SHOWING PROPOSED SPLICE LOCATIONS FOR APPROVAL. HOLD-DOWN PLATES SHALL NOT EXCEED 6.1m LENGTHS UNLESS APPROVED BY THE ENGINEER.
9. NO ALTERNATE JOINT DETAILS SHALL BE PERMITTED IN LIEU OF THOSE SHOWN ON THESE PLANS.
10. THE CONTRACTOR MAY, AT HIS OPTION, USE ADHESIVELY ANCHORED ANCHOR BOLTS IN PLACE OF CONCRETE INSERTS FOR COVER PLATES. THE YIELD LOAD OF THE 19.05mm DIA. BOLT IS 44.5 kN. FIELD TESTING OF THE ADHESIVE BONDING SYSTEM IS NOT REQUIRED.

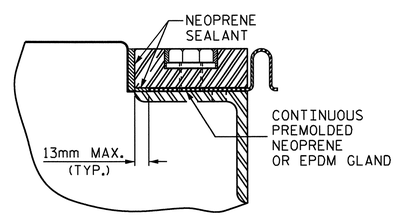

DETAIL "A"

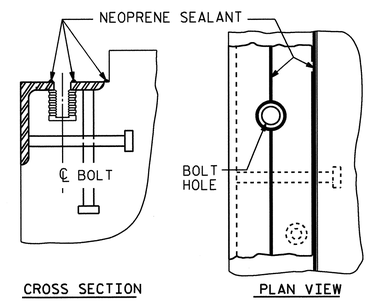

INSTALLATION SKETCH

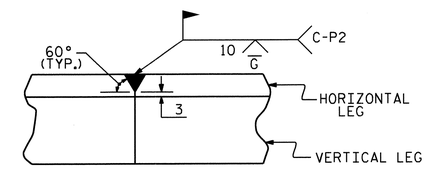

DETAIL- FIELD WELD SPLICE OF BASE ANGLE

MOVEMENT AND SETTING AT JOINTS					
BENT NOS.	SKEW ANGLE	TOTAL MOVEMENT (ALONG ℄ RDWY)	PERPENDICULAR JOINT OPENING AT 7° C	PERPENDICULAR JOINT OPENING AT 16° C	PERPENDICULAR JOINT OPENING AT 32° C
END BENT 1	90°-00'-00"	24mm	41mm	37mm	29mm
BENTS 2 & 4	90°-00'-00"	50mm	61mm	51mm	34mm
BENTS 6, 8, 10 12,14,16,18 & 20	105°-00'-00"	50mm	61mm	51mm	34mm
END BENT 2	105°-00'-00"	24mm	41mm	37mm	29mm

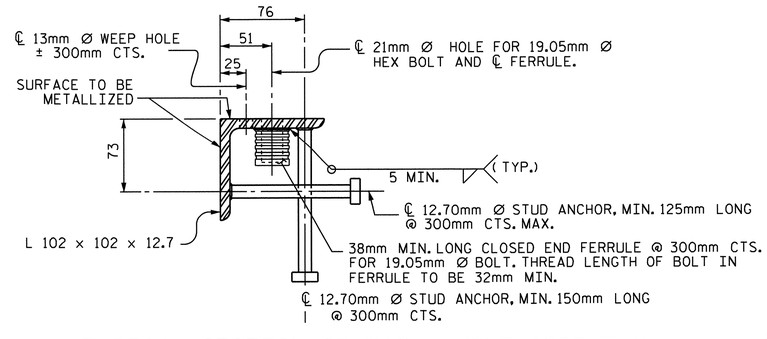

TYPICAL SECTION OF BASE ANGLE ASSEMBLY

NORTH CAROLINA PROFESSIONAL SEAL 14045 ENGINEER TIMOTHY L. COPPINS
03/23/12

PROJECT NO. R-2554A
WAYNE COUNTY
STATION: 70+24.000 -L-

SHEET 1 OF 3

STATE OF NORTH CAROLINA
DEPARTMENT OF TRANSPORTATION
RALEIGH

STANDARD

EXPANSION JOINT SEAL DETAILS

(LEFT LANE)

ASSEMBLED BY : B.N.BARODAWALA DATE : 11-15-11	
CHECKED BY : PEGGY PARISI DATE : 12-22-11	
DRAWN BY : REK 9/87	REV. 10/17/00 RWW/LES
CHECKED BY : CRK 10/87	REV. 5/7/03R RWW/JTE
	REV. 5/1/06R TLA/GM

REVISIONS								SHEET NO.
NO.	BY:	DATE:	NO.	BY:	DATE:			3-107
1			3					TOTAL SHEETS
2			4					276

STR. #3

STD. NO. EJS1SM

23-MAR-2012 10:39
Z:\TIPProjects-R\R2554A\Structures\FinalPlans\Str#3\r2554a_sd_js_03.dgn
padkins

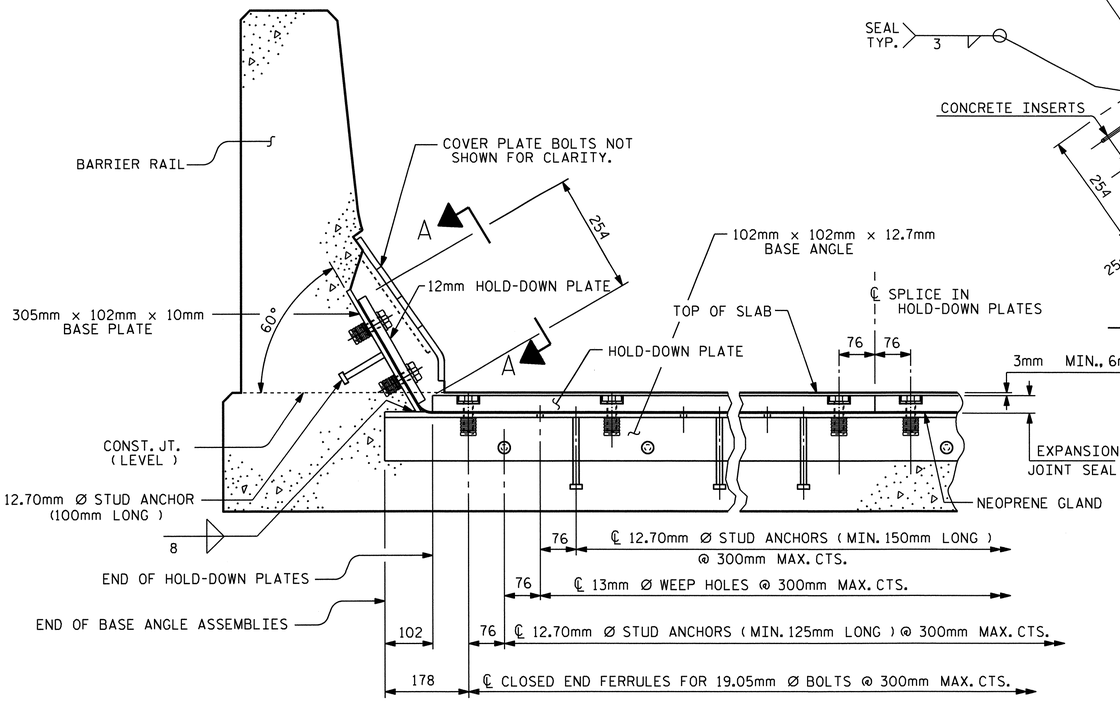

SECTION THRU RAIL NORMAL TO JOINT

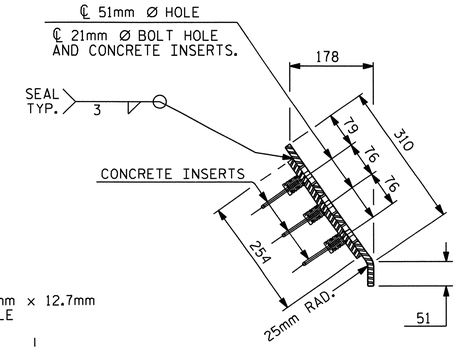

END VIEW

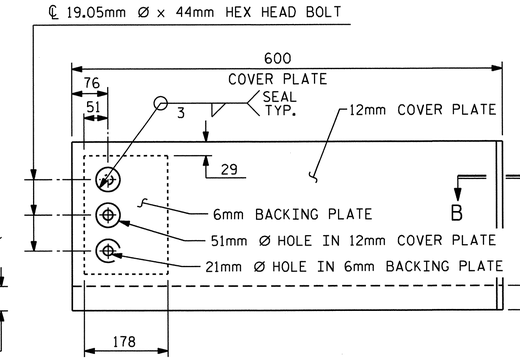

TYPE I - ELEVATION VIEW

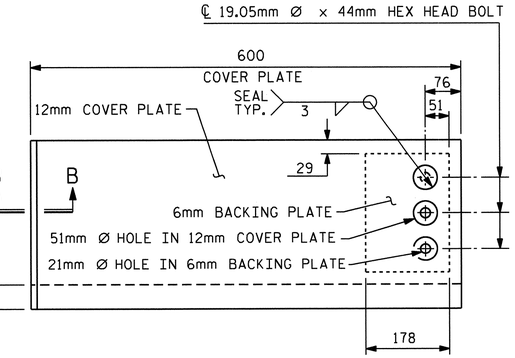

TYPE II - ELEVATION VIEW

COVER PLATE DETAILS

FOR END BENT 1, BENT 2 & BENT 4

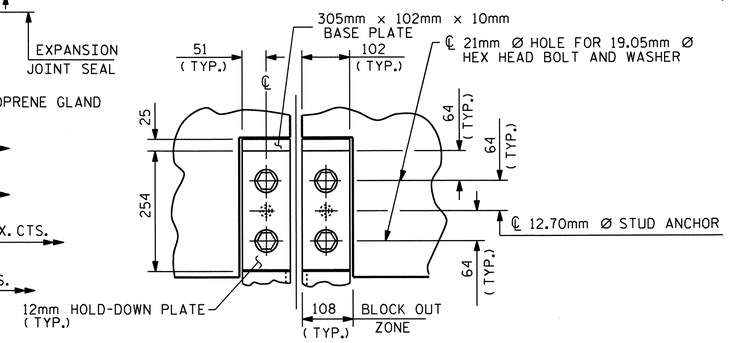

SECTION A - A

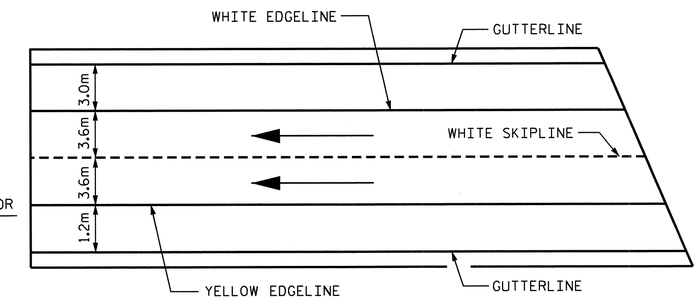

PAVEMENT MARKING ALIGNMENT

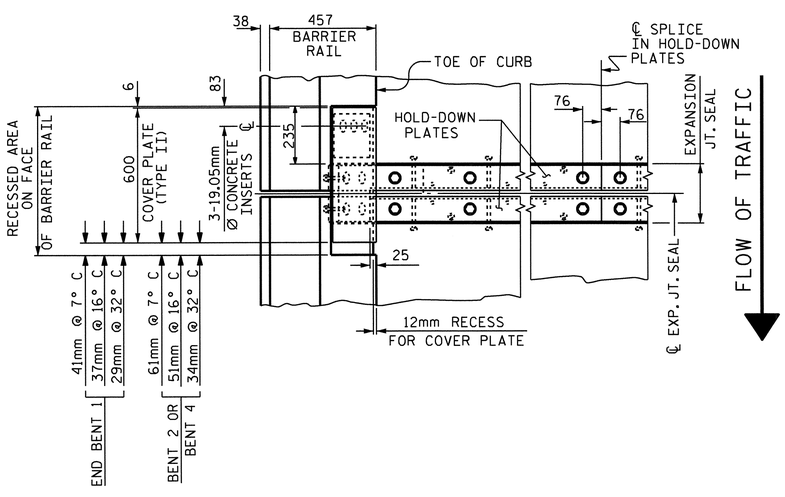

PLAN OF EXPANSION JOINT SEAL - LEFT SIDE

FOR END BENT 1, BENT 2 & BENT 4

FLOW OF TRAFFIC

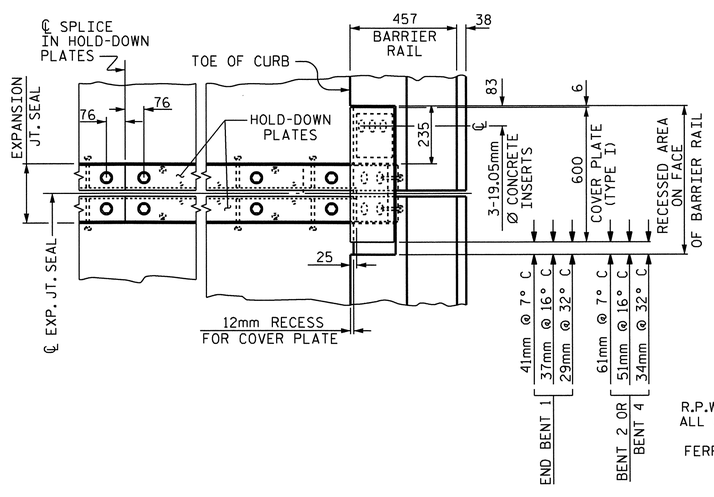

PLAN OF EXPANSION JOINT SEAL - RIGHT SIDE

FOR END BENT 1, BENT 2 & BENT 4

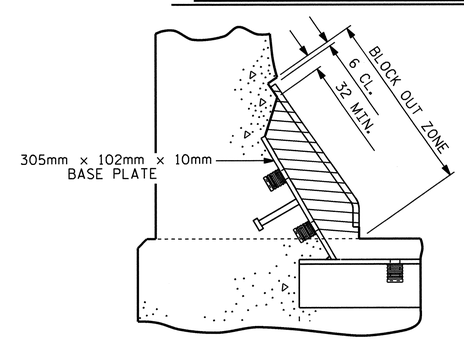

BLOCK OUT DETAIL

SEE "SECTION A - A" FOR OTHER DETAILS.

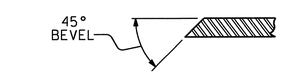

SECTION B - B

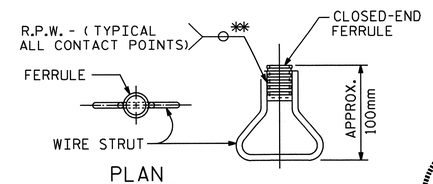

PLAN

ELEVATION

CONCRETE INSERT

** EACH WELDED ATTACHMENT OF WIRE TO FERRULE SHALL DEVELOP THE TENSILE STRENGTH OF THE WIRE.

NORTH CAROLINA PROFESSIONAL SEAL 14045 ENGINEER TIMOTHY L. COGGINS
03/23/12

PROJECT NO. R-2554A
WAYNE COUNTY
STATION: 70+24.000 -L-

SHEET 2 OF 3

STATE OF NORTH CAROLINA
DEPARTMENT OF TRANSPORTATION
RALEIGH

STANDARD EXPANSION JOINT SEAL DETAILS FOR BARRIER RAIL

(LEFT LANE)

REVISIONS								SHEET NO.
NO.	BY:	DATE:	NO.	BY:	DATE:			S-108
1			3					TOTAL SHEETS
2			4					276

ASSEMBLED BY : B.N.BARODAWALA	DATE : 11-15-11		
CHECKED BY : PEGGY PARISI	DATE : 12-22-11		
DRAWN BY : REK 9/87	REV. 7/17/98	RWW/LES	
CHECKED BY : CRK 10/87	REV. 10/17/00	RWW/LES	
	REV. 5/1/06	TLA/GM	

23-MAR-2012 10:39
Z:\TIPProjects-R\R2554A\Structures\FinalPlans\Str*3\r2554a_sd_js_03.dgn
padkins

STR. #3

STD. NO. EJS2SM

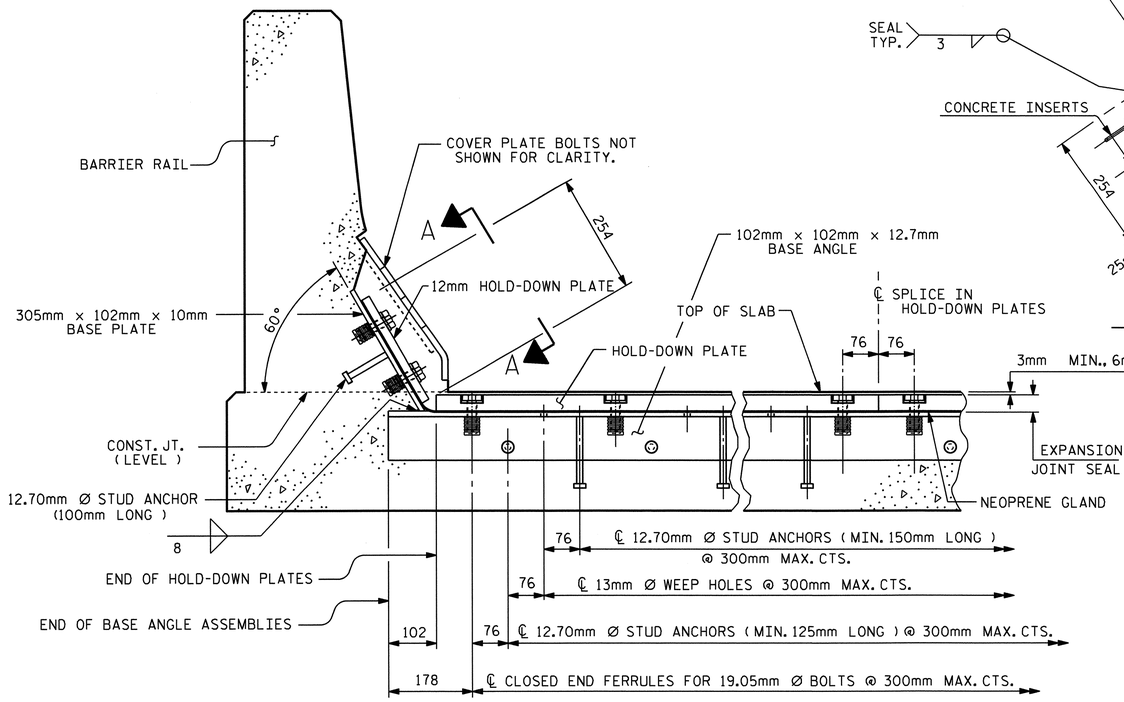

SECTION THRU RAIL NORMAL TO JOINT

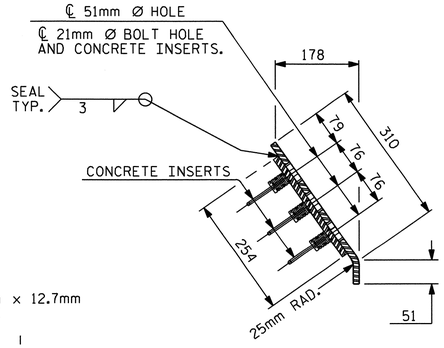

END VIEW

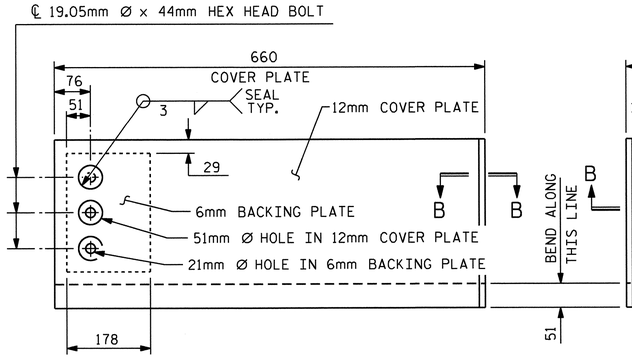

TYPE I - ELEVATION VIEW

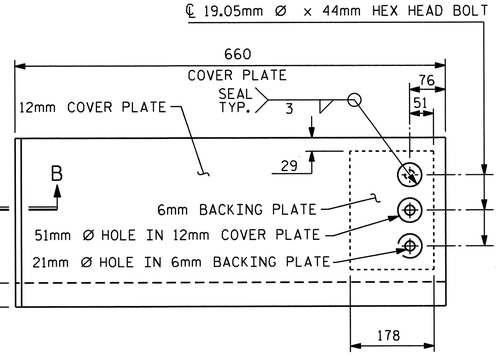

TYPE II - ELEVATION VIEW

COVER PLATE DETAILS

FOR BENTS 6, 8, 10, 12, 14, 16, 18, 20 & END BENT 2

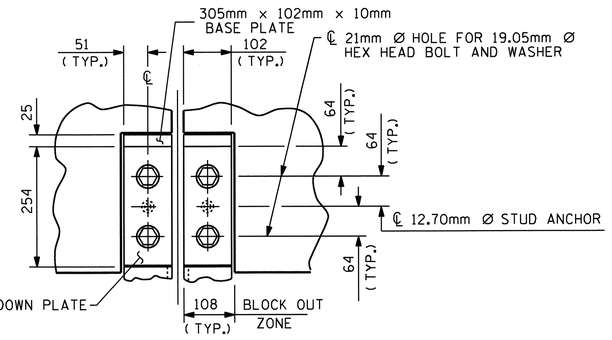

SECTION A - A

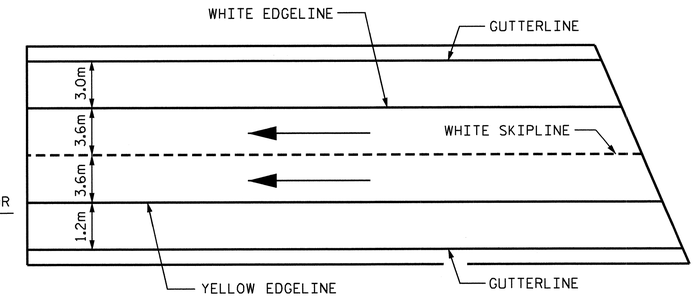

PAVEMENT MARKING ALIGNMENT

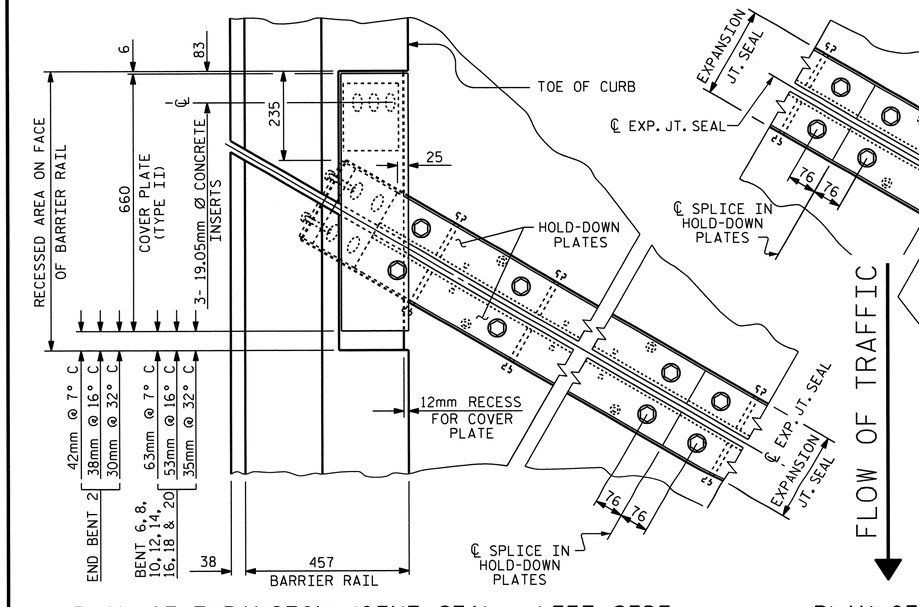

PLAN OF EXPANSION JOINT SEAL - LEFT SIDE

FOR BENTS 6, 8, 10, 12, 14, 16, 18, 20 & END BENT 2

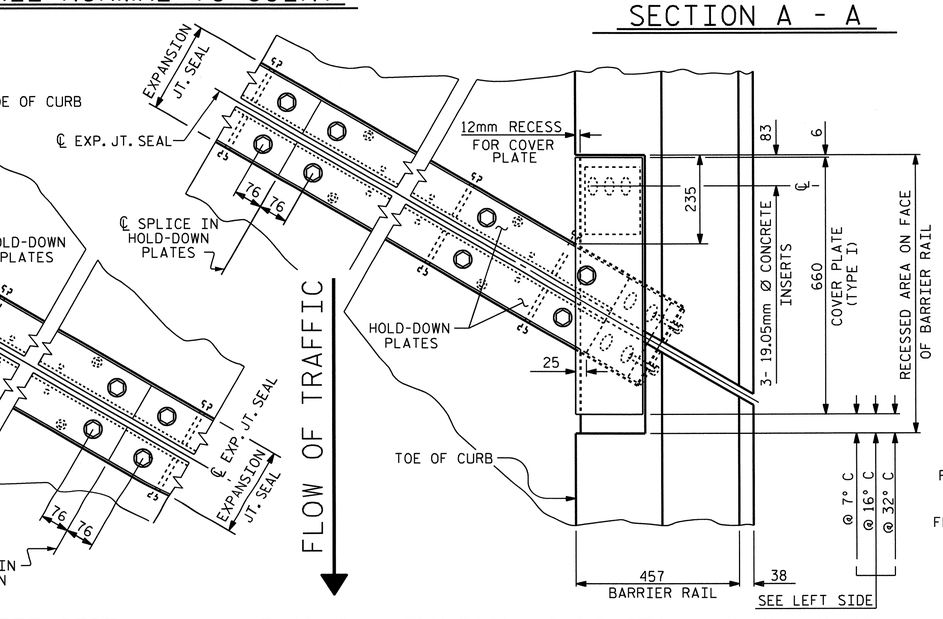

PLAN OF EXPANSION JOINT SEAL - RIGHT SIDE

FOR BENTS 6, 8, 10, 12, 14, 16, 18, 20 & END BENT 2

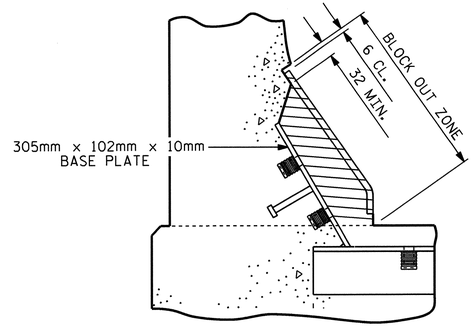

BLOCK OUT DETAIL

SEE "SECTION A - A" FOR OTHER DETAILS.

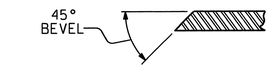

SECTION B - B

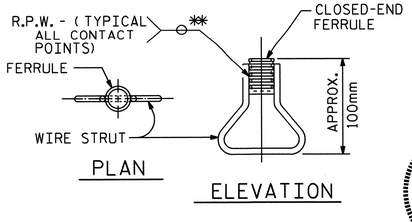

CONCRETE INSERT

** EACH WELDED ATTACHMENT OF WIRE TO FERRULE SHALL DEVELOP THE TENSILE STRENGTH OF THE WIRE.

PROJECT NO. R-2554A

WAYNE COUNTY

STATION: 70+24.000 -L-

SHEET 3 OF 3

STATE OF NORTH CAROLINA
DEPARTMENT OF TRANSPORTATION
RALEIGH

STANDARD EXPANSION JOINT SEAL DETAILS FOR BARRIER RAIL

(LEFT LANE)

NORTH CAROLINA PROFESSIONAL SEAL 14045 ENGINEER TIMOTHY L. LEGGINS 03/23/12

REVISIONS								SHEET NO.
NO.	BY:	DATE:	NO.	BY:	DATE:			S-109
1			3					TOTAL SHEETS
2			4					276

STR. #3

STD. NO. EJS2SM

ASSEMBLED BY : B.N.BARODAWALA	DATE : 11-15-11		
CHECKED BY : PEGGY PARISI	DATE : 12-22-11		
DRAWN BY : REK 9/87	REV. 7/17/98	RWW/LES	
CHECKED BY : CRK 10/87	REV. 10/17/00	RWW/LES	
	REV. 5/1/06	TLA/GM	

23-MAR-2012 10:39
Z:\TIPProjects-R\R2554A\Structures\FinalPlans\Str#3\r2554a_sd_js_03.dgn
padkins

BILL OF MATERIAL — SPANS A & B

BAR	NO.	SIZE	TYPE	LENGTH	WEIGHT
* A1	341	#16	STR	12280	6499
A2	343	#16	STR	12280	6537
* B1	93	#13	STR	7360	680
* B2	31	#19	STR	18000	1247
* B3	30	#19	STR	10800	724
* B4	93	#13	STR	8460	782
B8	184	#16	STR	17620	5032
* B9	31	#19	STR	7520	521
* J1	76	#13	10	440	33
* K1	8	#25	1	4200	133
* K2	12	#25	2	5920	282
K5	8	#13	STR	1240	10
K6	40	#13	STR	2160	86
K7	8	#13	STR	1320	10
K8	14	#13	STR	5180	72
* S1	40	#16	3	1760	109
S3	152	#13	8	860	130
S4	8	#13	5	3340	27
* U1	20	#13	7	5180	103

REINFORCING STEEL = 11904 kg
*EPOXY COATED REINFORCING STEEL = 11113 kg

BILL OF MATERIAL — SPANS C & D

BAR	NO.	SIZE	TYPE	LENGTH	WEIGHT
* A1	358	#16	STR	12280	6823
A2	360	#16	STR	12280	6861
* B2	31	#19	STR	18000	1247
* B3	30	#19	STR	10800	724
* B4	186	#13	STR	8460	1564
* B9	31	#19	STR	7520	521
B10	230	#16	STR	14920	5326
* J1	76	#13	10	440	33
* K1	8	#25	1	4200	133
* K2	12	#25	2	5920	282
K5	8	#13	STR	1240	10
K6	40	#13	STR	2160	86
K7	8	#13	STR	1320	10
K8	14	#13	STR	5180	72
* S1	40	#16	3	1760	109
S3	152	#13	8	860	130
S4	8	#13	5	3340	27
* U1	20	#13	7	5180	103

REINFORCING STEEL = 12522 kg
*EPOXY COATED REINFORCING STEEL = 11539 kg

BILL OF MATERIAL — SPANS E & F

BAR	NO.	SIZE	TYPE	LENGTH	WEIGHT
* A1	341	#16	STR	12280	6499
A2	342	#16	STR	12280	6518
*A101	2	#16	STR	10540	33
*A102	2	#16	STR	9040	28
*A103	2	#16	STR	7560	23
*A104	2	#16	STR	6060	19
*A105	2	#16	STR	4560	14
*A106	2	#16	STR	3080	10
*A107	2	#16	STR	1580	5
A201	2	#16	STR	10700	33
A202	2	#16	STR	9200	29
A203	2	#16	STR	7700	24
A204	2	#16	STR	6220	19
A205	2	#16	STR	4720	15
A206	2	#16	STR	3240	10
A207	2	#16	STR	1740	5
* B2	31	#19	STR	18000	1247
* B3	30	#19	STR	10800	724
* B5	93	#13	STR	8360	773
* B6	93	#13	STR	8460	782
* B9	31	#19	STR	7520	521
B11	230	#16	STR	14880	5312
* G1	1	#16	STR	12720	20
* J1	78	#13	10	440	34
* K1	4	#25	1	4200	67
* K2	6	#25	2	5920	141
* K3	4	#25	1	4320	69
* K4	6	#25	2	6080	145
K9	21	#13	9	3160	66
K10	14	#13	6	1640	23
K11	8	#13	STR	1300	10
K12	40	#13	STR	2240	89
K13	8	#13	STR	1360	11
*K14	12	#19	STR	1300	35
* S1	40	#16	3	1760	109
* S2	20	#13	4	1080	21
S3	152	#13	8	860	130
S4	8	#13	5	3340	27
* U1	20	#13	7	5180	103

REINFORCING STEEL = 12321 kg
*EPOXY COATED REINFORCING STEEL = 11422 kg

BILL OF MATERIAL — SPANS G & H, I & J, K & L, M & N OR O & P

BAR	NO.	SIZE	TYPE	LENGTH	WEIGHT
* A1	341	#16	STR	12280	6499
A2	341	#16	STR	12280	6499
*A101	4	#16	STR	11420	71
*A102	4	#16	STR	9920	62
*A103	4	#16	STR	8420	52
*A104	4	#16	STR	6940	43
*A105	4	#16	STR	5440	34
*A106	4	#16	STR	3960	25
*A107	4	#16	STR	2460	15
*A108	4	#16	STR	960	6
A201	4	#16	STR	11580	72
A202	4	#16	STR	10080	63
A203	4	#16	STR	8580	53
A204	4	#16	STR	7100	44
A205	4	#16	STR	5600	35
A206	4	#16	STR	4100	25
A207	4	#16	STR	2620	16
A208	4	#16	STR	1120	7
* B2	31	#19	STR	18000	1247
* B3	30	#19	STR	10800	724
* B6	186	#13	STR	8460	1564
* B9	31	#19	STR	7520	521
B10	230	#16	STR	14920	5326
* G1	2	#16	STR	12720	39
* J1	80	#13	10	440	35
* K3	8	#25	1	4320	137
* K4	12	#25	2	6080	290
K9	21	#13	9	3160	66
K10	14	#13	6	1640	23
K11	8	#13	STR	1300	10
K12	40	#13	STR	2240	89
K13	8	#13	STR	1360	11
*K14	24	#19	STR	1300	70
* S1	40	#16	3	1760	109
* S2	40	#13	4	1080	43
S3	152	#13	8	860	130
S4	8	#13	5	3340	27
* U1	20	#13	7	5180	103

REINFORCING STEEL = 12496 kg
*EPOXY COATED REINFORCING STEEL = 11689 kg

BILL OF MATERIAL — SPANS Q & R OR S & T

BAR	NO.	SIZE	TYPE	LENGTH	WEIGHT
* A1	331	#16	STR	12280	6308
A2	331	#16	STR	12280	6308
*A101	4	#16	STR	11420	71
*A102	4	#16	STR	9920	62
*A103	4	#16	STR	8420	52
*A104	4	#16	STR	6940	43
*A105	4	#16	STR	5440	34
*A106	4	#16	STR	3960	25
*A107	4	#16	STR	2460	15
*A108	4	#16	STR	960	6
A201	4	#16	STR	11580	72
A202	4	#16	STR	10080	63
A203	4	#16	STR	8580	53
A204	4	#16	STR	7100	44
A205	4	#16	STR	5600	35
A206	4	#16	STR	4100	25
A207	4	#16	STR	2620	16
A208	4	#16	STR	1120	7
* B2	31	#19	STR	18000	1247
* B3	30	#19	STR	10800	724
* B7	186	#13	STR	8120	1501
* B9	31	#19	STR	7520	521
B12	184	#16	STR	17960	5129
* G1	2	#16	STR	12720	39
* J1	80	#13	10	440	35
* K3	8	#25	1	4320	137
* K4	12	#25	2	6080	290
K9	21	#13	9	3160	66
K10	14	#13	6	1640	23
K11	8	#13	STR	1300	10
K12	40	#13	STR	2240	89
K13	8	#13	STR	1360	11
*K14	24	#19	STR	1300	70
* S1	40	#16	3	1760	109
* S2	40	#13	4	1080	43
S3	152	#13	8	860	130
S4	8	#13	5	3340	27
* U1	20	#13	7	5180	103

REINFORCING STEEL = 12108 kg
*EPOXY COATED REINFORCING STEEL = 11435 kg

BILL OF MATERIAL — SPANS U & V

BAR	NO.	SIZE	TYPE	LENGTH	WEIGHT
* A1	332	#16	STR	12280	6327
A2	332	#16	STR	12280	6327
*A101	2	#16	STR	11420	35
*A102	2	#16	STR	9920	31
*A103	2	#16	STR	8420	26
*A104	2	#16	STR	6940	22
*A105	2	#16	STR	5440	17
*A106	2	#16	STR	3960	12
*A107	2	#16	STR	2460	8
*A108	2	#16	STR	960	3
*A109	2	#16	STR	11180	35
*A110	2	#16	STR	9700	30
*A111	2	#16	STR	8200	25
*A112	2	#16	STR	6720	21
*A113	2	#16	STR	5220	16
*A114	2	#16	STR	3720	12
*A115	2	#16	STR	2240	7
*A116	2	#16	STR	740	2
A201	2	#16	STR	11580	36
A202	2	#16	STR	10080	31
A203	2	#16	STR	8500	27
A204	2	#16	STR	7100	22
A205	2	#16	STR	5600	17
A206	2	#16	STR	4100	13
A207	2	#16	STR	2620	8
A208	2	#16	STR	1120	3
A209	2	#16	STR	11340	35
A210	2	#16	STR	9860	31
A211	2	#16	STR	8360	26
A212	2	#16	STR	6860	21
A213	2	#16	STR	5380	17
A214	2	#16	STR	3880	12
A215	2	#16	STR	2380	7
A216	2	#16	STR	900	3
* B2	31	#19	STR	18000	1247
* B3	30	#19	STR	10800	724
* B7	93	#13	STR	8120	751
* B9	31	#19	STR	7520	521
*B13	93	#13	STR	8200	758
B14	184	#16	STR	18000	5140
* G1	2	#16	STR	12720	39
* J1	80	#13	10	440	35
* K3	8	#25	1	4320	137
* K4	12	#25	2	6080	290
K9	21	#13	9	3160	66
K10	14	#13	6	1640	23
K11	8	#13	STR	1300	10
K12	40	#13	STR	2240	89
K13	8	#13	STR	1360	11
*K14	24	#19	STR	1300	70
* S1	40	#16	3	1760	109
* S2	20	#13	4	1080	21
S3	152	#13	8	860	130
S4	8	#13	5	3340	27
* S5	20	#13	4	1340	27
* U1	20	#13	7	5180	103

REINFORCING STEEL = 12132 kg
*EPOXY COATED REINFORCING STEEL = 11461 kg

BAR TYPES

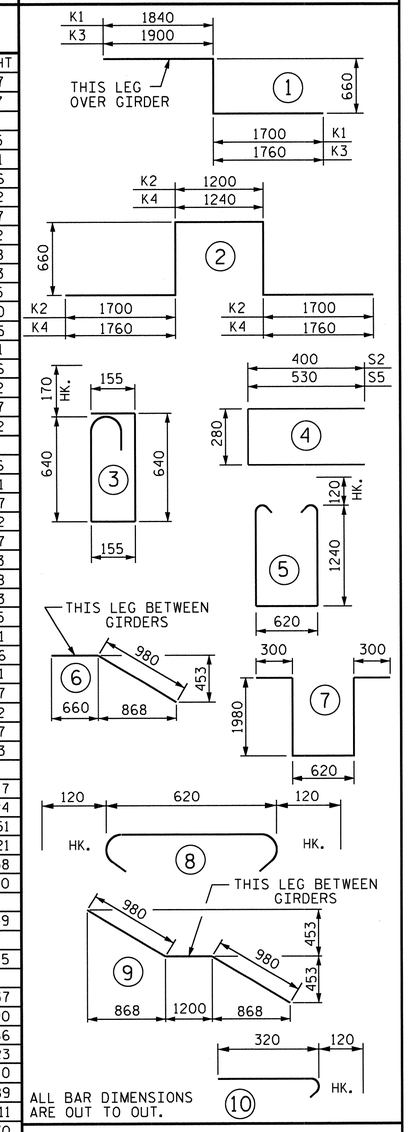

SPAN	CLASS AA CONCRETE (CU. METER)		REINFORCING STEEL (kg)	EPOXY COATED REINFORCING STEEL (kg)
A-B	POUR 1	110.5	11904	11113
	POUR 2	156.9		
C-D	POUR 3	122.8	12522	11539
	POUR 4	156.9		
E-F	POUR 5	115.7	12321	11422
	POUR 6	157.1		
G-H	POUR 7	122.8	12496	11689
	POUR 8	157.1		
I-J	POUR 9	122.8	12496	11689
	POUR 10	157.1		
K-L	POUR 11	122.8	12496	11689
	POUR 12	157.1		
M-N	POUR 13	122.8	12496	11689
	POUR 14	157.1		
O-P	POUR 15	122.8	12496	11689
	POUR 16	157.1		
Q-R	POUR 17	119.3	12108	11435
	POUR 18	153.4		
S-T	POUR 19	119.3	12108	11435
	POUR 20	153.4		
U-V	POUR 21	119.3	12132	11461
	POUR 22	153.9		
**	TOTALS	3038.0	135575	126850

** QUANTITIES FOR BARRIER RAIL ARE NOT INCLUDED. FOR POURING SEQUENCE, SEE SHEET 2 OF 2.

SUPERSTRUCTURE REINFORCING STEEL LENGTHS ARE BASED ON THE FOLLOWING MINIMUM SPLICE LENGTHS

BAR SIZE	SUPERSTRUCTURE EXCEPT APPROACH SLABS, PARAPET, AND BARRIER RAIL		APPROACH SLABS		PARAPET AND BARRIER RAIL
	EPOXY COATED	UNCOATED	EPOXY COATED	UNCOATED	
#13	610	540	610	540	840
#16	770	660	770	660	1050
#19	920	790	1190	790	1330
#22	1580	1060			
#25	2080	1390			

GROOVING BRIDGE FLOORS

BRIDGE DECK	8151.1	SQ.METER
APPROACH SLABS	155.5	SQ.METER
TOTAL	8306.6	SQ.METER

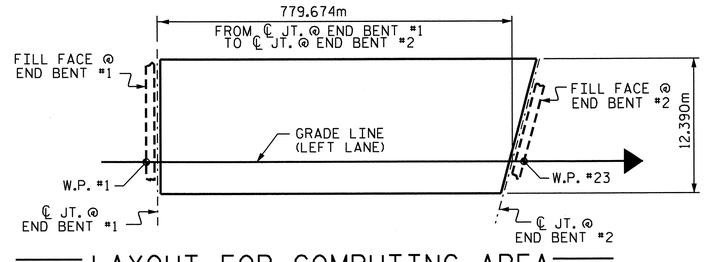

LAYOUT FOR COMPUTING AREA OF REINFORCED CONCRETE DECK SLAB (9675.1 SQ. METER)

NORTH CAROLINA PROFESSIONAL SEAL 14045 ENGINEER TIMOTHY W. COGGINS
03/23/12

PROJECT NO. R-2554A
WAYNE COUNTY
STATION: 70+24.000 -L-

SHEET 1 OF 2

STATE OF NORTH CAROLINA
DEPARTMENT OF TRANSPORTATION
RALEIGH

STANDARD
SUPERSTRUCTURE BILL OF MATERIAL
(LEFT LANE)

REVISIONS						SHEET NO.
NO.	BY:	DATE:	NO.	BY:	DATE:	S-110
1			3			TOTAL SHEETS
2			4			276

ASSEMBLED BY : B.N. BARODAWALA DATE : 11-15-11
CHECKED BY : PEGGY PARISI DATE : 12-22-11
DRAWN BY : JMB 5/87 REV. 5/16/97 EEM/RGW
CHECKED BY : SJD 9/87 REV. 5/1/06 TLA/GM

23-MAR-2012 10:31
Z:\TIPProjects-R\R2554A\Structures\Final Plans\Str#3\r2554a_sd_bm_03.dgn
padkins

STR. #3

STD. NO. BOM2SM

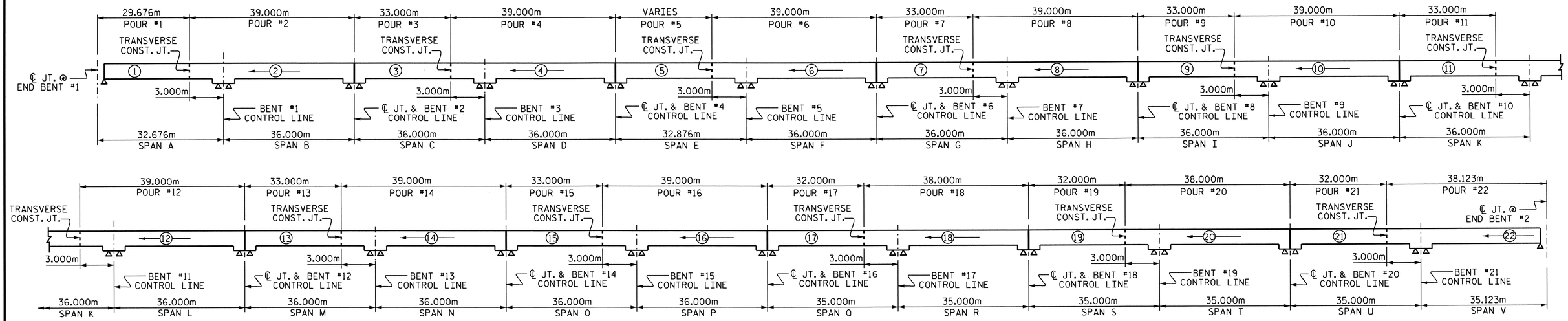

POURING SEQUENCE

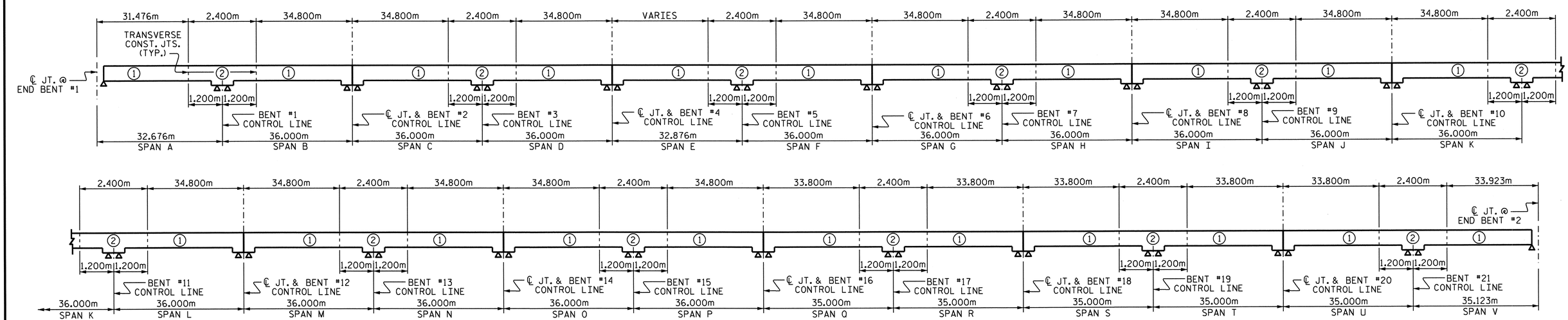

OPTIONAL POURING SEQUENCE

PROJECT NO. R-2554A

WAYNE COUNTY

STATION: 70+24.000 -L-

SHEET 2 OF 2

STATE OF NORTH CAROLINA
DEPARTMENT OF TRANSPORTATION
RALEIGH

SUPERSTRUCTURE BILL OF MATERIAL

(LEFT LANE)

NORTH CAROLINA PROFESSIONAL SEAL 14045 ENGINEER TIMOTHY A. COGGINS
03/23/12

REVISIONS							SHEET NO.
NO.	BY:	DATE:	NO.	BY:	DATE:		S-111
1			3				TOTAL SHEETS
2			4				276

DRAWN BY : B.N.BARODAWALA DATE : 11-15-11
CHECKED BY : PEGGY PARISI DATE : 12-22-11

23-MAR-2012 10:31
Z:\TIPProjects-R\R2554A\Structures\FinalPlans\Str#3\r2554a_sd_bm_03.dgn
pdkins

STR. #3

NOTES:

STIRRUPS AND U2 BARS IN CAP MAY BE SHIFTED AS NECESSARY TO CLEAR ANCHOR BOLTS.

BACKWALL SHALL BE PLACED BEFORE APPLYING THE EPOXY PROTECTIVE COATING.

THE TOP SURFACE AREAS OF THE END BENT CAP SHALL BE CURED IN ACCORDANCE WITH THE STANDARD SPECIFICATIONS EXCEPT THE MEMBRANE CURING COMPOUND METHOD SHALL NOT BE USED.

THE TOP SURFACE OF THE END BENT CAP EXCEPT THE BRIDGE SEAT BUILDUPS SHALL BE SLOPED TRANSVERSELY FROM THE FILL FACE TO THE BACK FACE AT A RATE OF 2%.

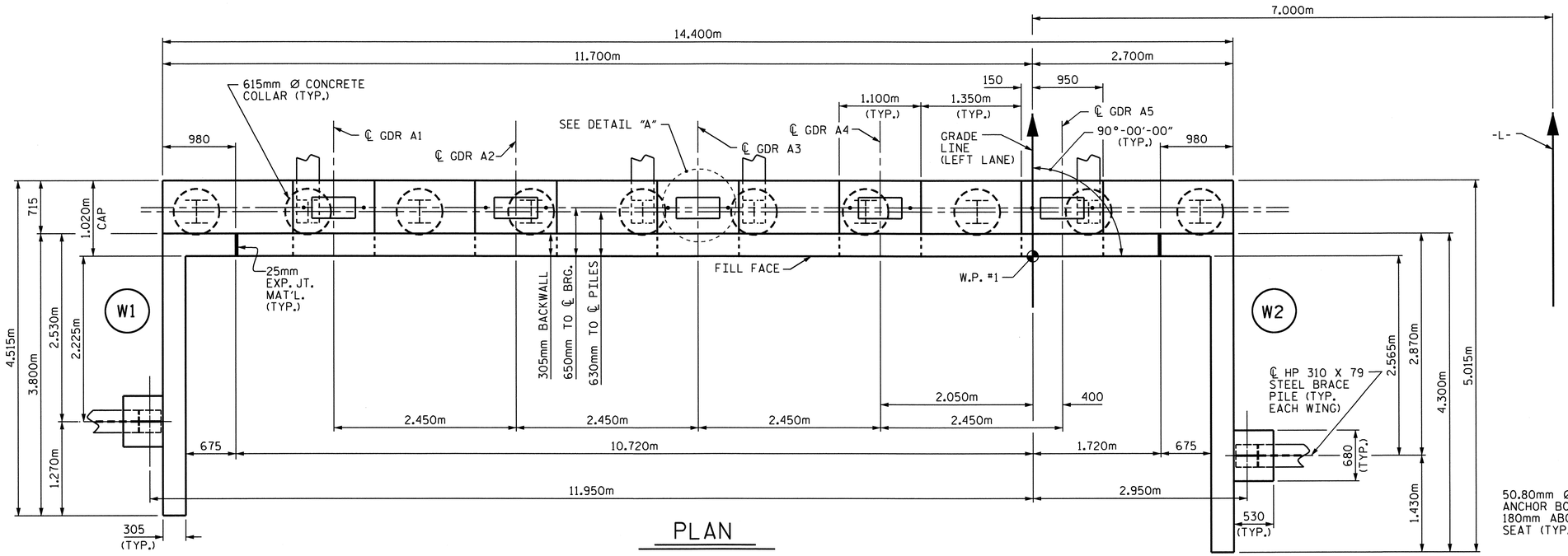

PLAN

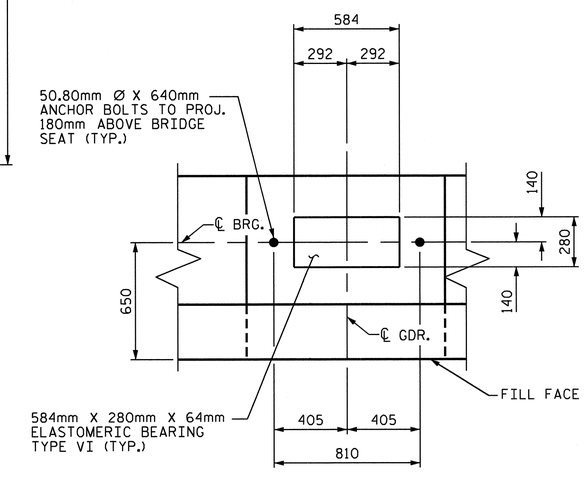

DETAIL "A"

(TYP. EACH GIRDER)

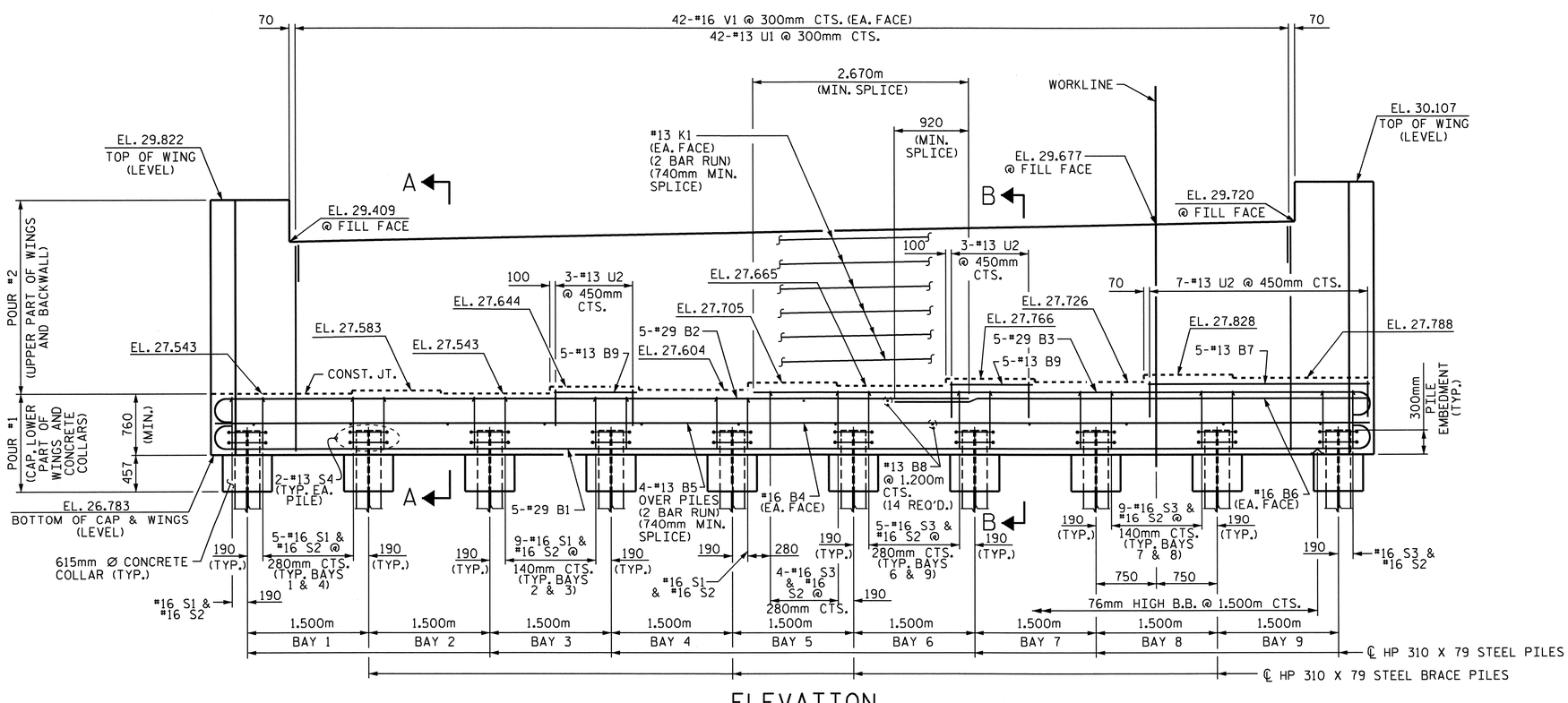

ELEVATION

WING BRACE PILES NOT SHOWN FOR CLARITY.

PROJECT NO. R-2554A

WAYNE COUNTY

STATION: 70+24.000 -L-

SHEET 1 OF 3

STATE OF NORTH CAROLINA
DEPARTMENT OF TRANSPORTATION
RALEIGH

SUBSTRUCTURE

END BENT #1

(LEFT LANE)

NORTH CAROLINA PROFESSIONAL SEAL 14045 ENGINEER TIMOTHY W. COGGINS 03/23/12

REVISIONS						SHEET NO.
NO.	BY:	DATE:	NO.	BY:	DATE:	S-112
1			3			TOTAL SHEETS
2			4			276

DRAWN BY : PEGGY PARISI DATE : 11-17-11
CHECKED BY : B. GREEN DATE : 12-11-11

23-MAR-2012 10:34
Z:\TIPProjects-R\R2554A\Structures\FinalPlans\Str#3\r2554a_sd_eb_03.dgn
padkins

STR. #3

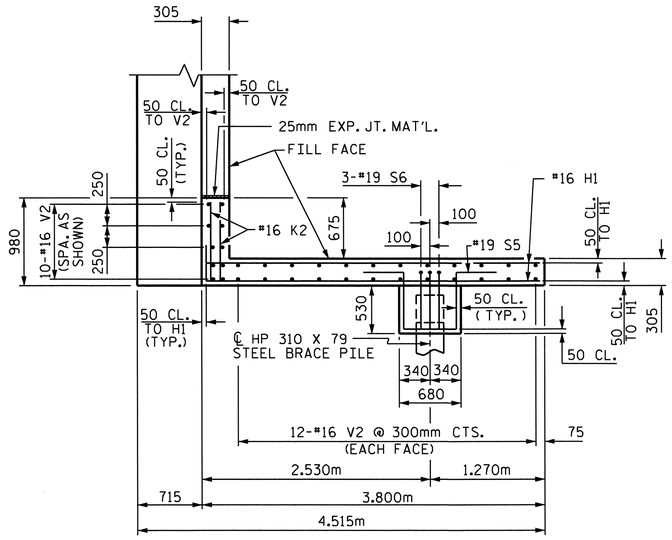

PLAN OF LEFT WING (W1)

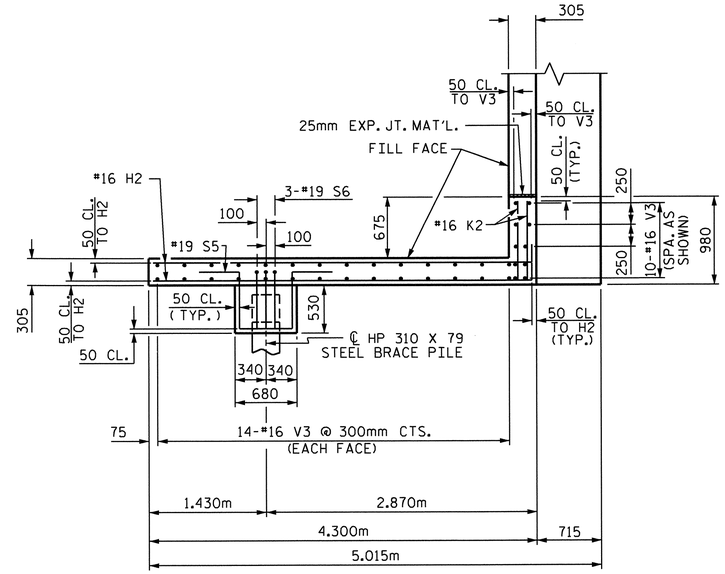

PLAN OF RIGHT WING (W2)

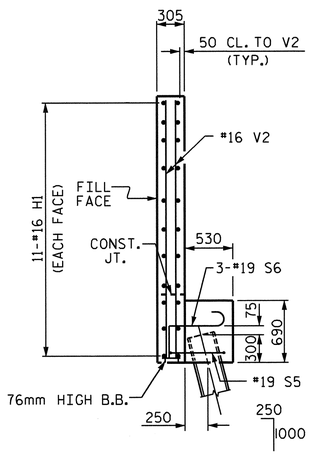

SECTION X-X

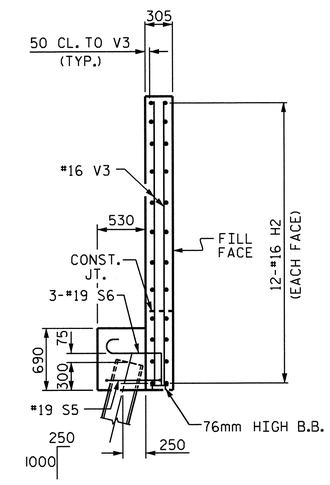

SECTION Y-Y

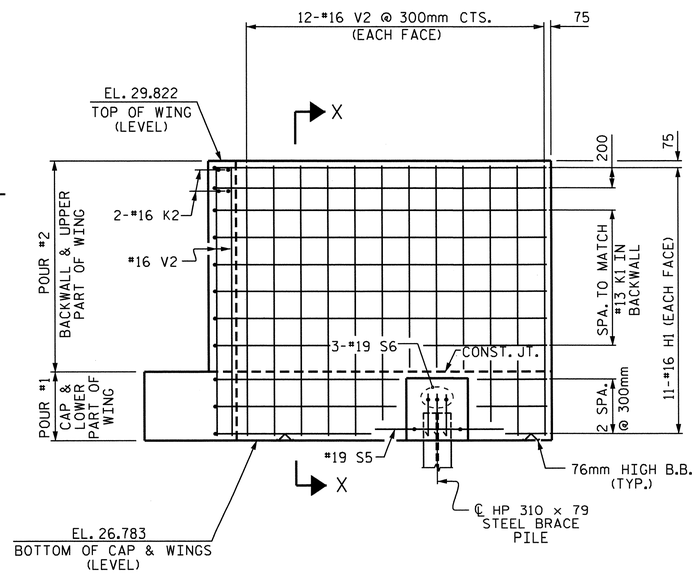

ELEVATION OF LEFT WING (W1)

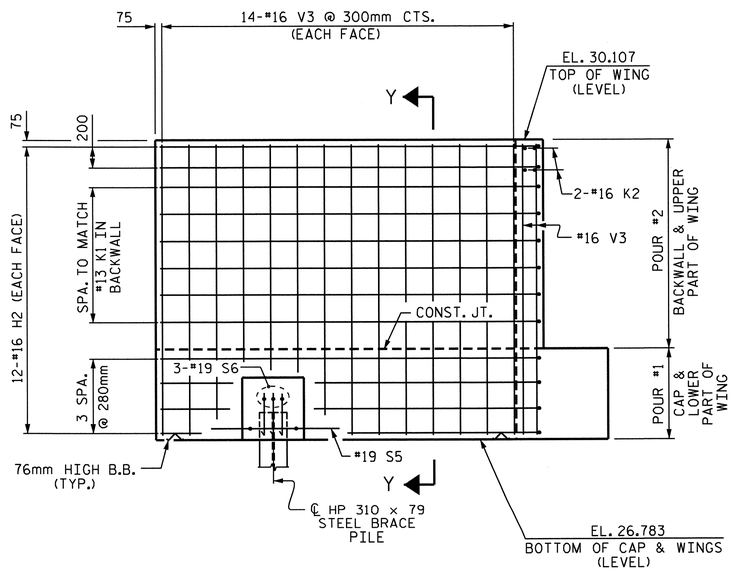

ELEVATION OF RIGHT WING (W2)

PROJECT NO. R-2554A
WAYNE COUNTY
STATION: 70+24.000 -L-

SHEET 2 OF 3

STATE OF NORTH CAROLINA
DEPARTMENT OF TRANSPORTATION
RALEIGH

SUBSTRUCTURE

END BENT #1

(LEFT LANE)

NORTH CAROLINA PROFESSIONAL SEAL 14045 ENGINEER TIMOTHY L. COGGINS
03/23/12

REVISIONS							SHEET NO. S-113
NO.	BY:	DATE:	NO.	BY:	DATE:		TOTAL SHEETS 276
1			3				
2			4				

DRAWN BY : PEGGY PARISI DATE : 11-17-11
CHECKED BY : B. GREEN DATE : 12-11-11

23-MAR-2012 10:34
Z:\TIPProjects-R\R2554A\Structures\FinalPlans\Str#3\r2554a_sd_eb_03.dgn
padkins

STR. #3

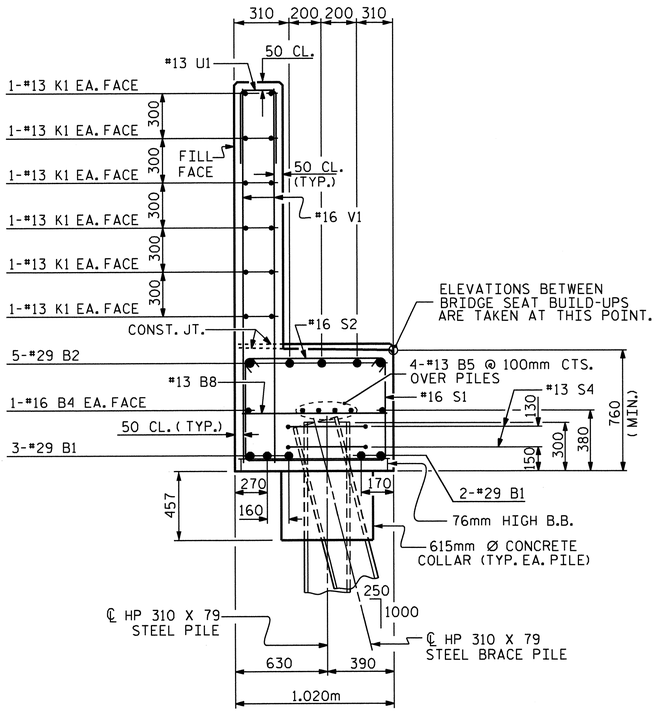

SECTION A-A

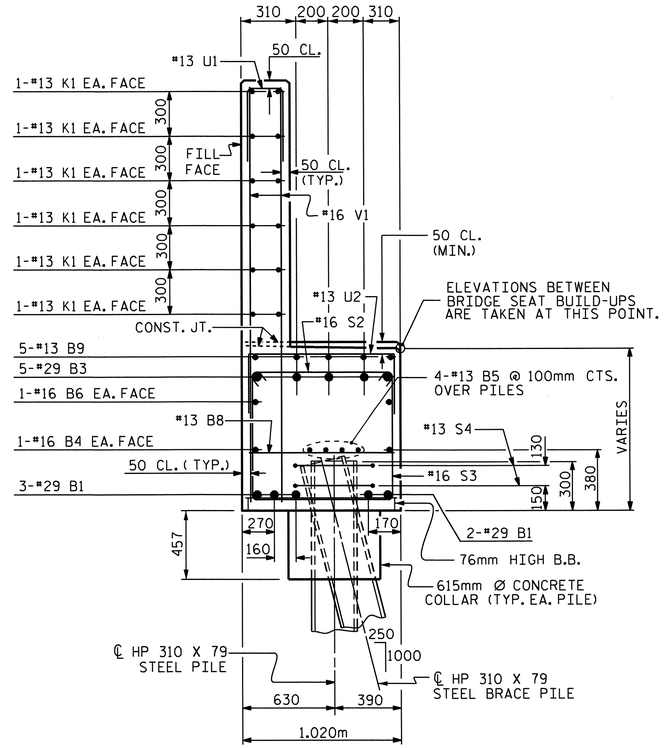

SECTION B-B

BAR TYPES

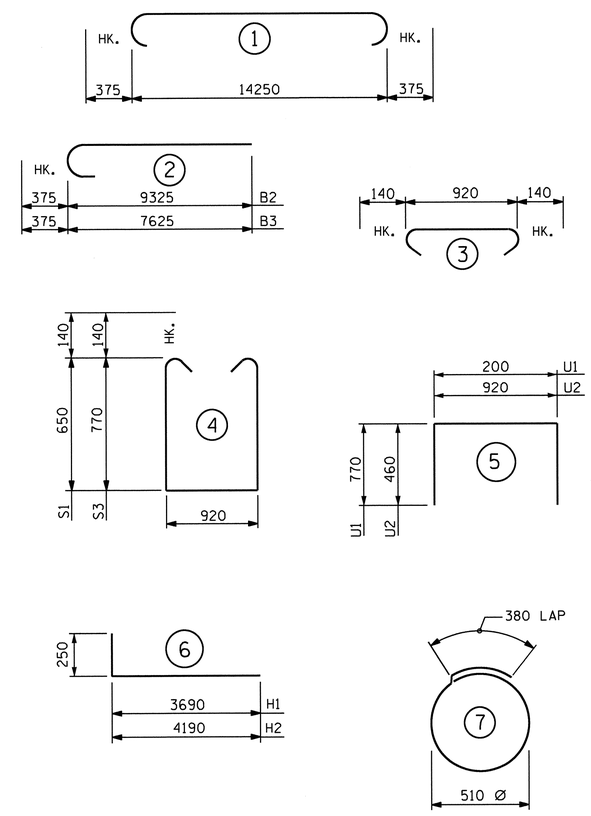

ALL BAR DIMENSIONS ARE OUT TO OUT.

BILL OF MATERIAL

END BENT #1

BAR	NO.	SIZE	TYPE	LENGTH	WEIGHT
B1	5	#29	1	15000	380
B2	5	#29	2	9700	245
B3	5	#29	2	8000	202
B4	2	#16	STR	14300	44
B5	8	#13	STR	7520	60
B6	2	#16	STR	5900	18
B7	5	#13	STR	2740	14
B8	14	#13	STR	920	13
B9	10	#13	STR	1000	10
H1	22	#16	6	3940	135
H2	24	#16	6	4440	165
K1	24	#13	STR	7520	179
K2	8	#16	STR	880	11
S1	30	#16	4	2500	116
S2	63	#16	3	1200	117
S3	33	#16	4	2740	140
S4	20	#13	7	1980	39
S5	2	#19	8	2700	12
S6	6	#19	9	1140	15
U1	42	#13	5	1740	73
U2	13	#13	5	1840	24
V1	84	#16	STR	2520	329
V2	34	#16	STR	2920	154
V3	38	#16	STR	3220	190

REINFORCING STEEL KG. 2685

CLASS A CONCRETE BREAKDOWN

POUR #1 (CAP, LOWER WINGS, WING BRACE PILE CAPS & CONCRETE COLLARS) 16.9 C.M.

POUR #2 (BACKWALL & UPPER WINGS) 13.8 C.M.

TOTAL CLASS A CONCRETE 30.7 C.M.

HP 310 X 79 STEEL PILES

NO. 12 182.4 METERS

PILE REDRIVES EACH 5

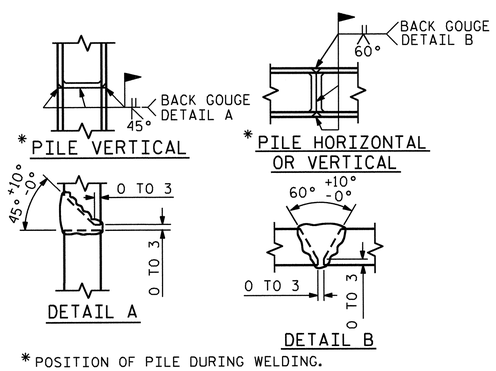

* POSITION OF PILE DURING WELDING.

PILE SPLICE DETAILS

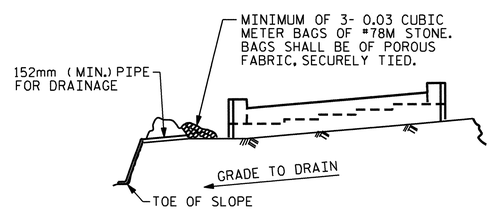

BAGGED STONE AND PIPE SHALL BE PLACED IMMEDIATELY AFTER COMPLETION OF END BENT EXCAVATION. PIPE MAY BE EITHER CONCRETE, CORRUGATED STEEL, CORRUGATED ALUMINUM ALLOY, OR CORRUGATED PLASTIC. PERFORATED PIPE WILL NOT BE ALLOWED.

BAGGED STONE SHALL REMAIN IN PLACE UNTIL THE ENGINEER DIRECTS THAT IT BE REMOVED. THE CONTRACTOR SHALL REMOVE AND DISPOSE OF SILT ACCUMULATIONS AT BAGGED STONE WHEN SO DIRECTED BY THE ENGINEER. BAGS SHALL BE REMOVED AND REPLACED WHENEVER THE ENGINEER DETERMINES THAT THEY HAVE DETERIORATED AND LOST THEIR EFFECTIVENESS.

NO SEPARATE PAYMENT WILL BE MADE FOR THIS WORK AND THE ENTIRE COST OF THIS WORK SHALL BE INCLUDED IN THE UNIT CONTRACT PRICE BID FOR THE SEVERAL PAY ITEMS.

TEMPORARY DRAINAGE AT END BENT

PROJECT NO. R-2554A

WAYNE COUNTY

STATION: 70+24.000 -L-

SHEET 3 OF 3

STATE OF NORTH CAROLINA
DEPARTMENT OF TRANSPORTATION
RALEIGH

SUBSTRUCTURE

END BENT #1

(LEFT LANE)

NORTH CAROLINA PROFESSIONAL SEAL 14045 ENGINEER TIMOTHY W. COGGINS

03/23/12

REVISIONS						SHEET NO.
NO.	BY:	DATE:	NO.	BY:	DATE:	S-114
1			3			TOTAL SHEETS
2			4			276

STR. #3

DRAWN BY : PEGGY PARISI DATE : 11-21-11
CHECKED BY : B. GREEN DATE : 12-11-11

23-MAR-2012 10:34
Z:\TIPProjects-R\R2554A\Structures\Final Plans\Str#3\r2554a_sd_eb_03.dgn
padkins

NOTES

STIRRUPS AND U1 BARS IN CAP MAY BE SHIFTED AS NECESSARY TO CLEAR ANCHOR BOLTS.

THE TOP SURFACE AREAS OF INTERIOR BENTS #2 AND #4 SHALL BE CURED IN ACCORDANCE WITH THE STANDARD SPECIFICATIONS EXCEPT THE MEMBRANE CURING COMPOUND METHOD SHALL NOT BE USED.

AS A MINIMUM, GALVANIZE THE TOP OF EACH INTERIOR BENT PILE AS LISTED. GALVANIZE IN ACCORDANCE WITH SECTION 1076 OF THE STANDARD SPECIFICATIONS. BENT #1-9.2m; BENT #2-9.7m; BENT #3-8.8m; BENT #4-9.0m.

FOR REINFORCING STEEL IN PIPE PILES, SEE "610mm STEEL PIPE PILE" SHEET.

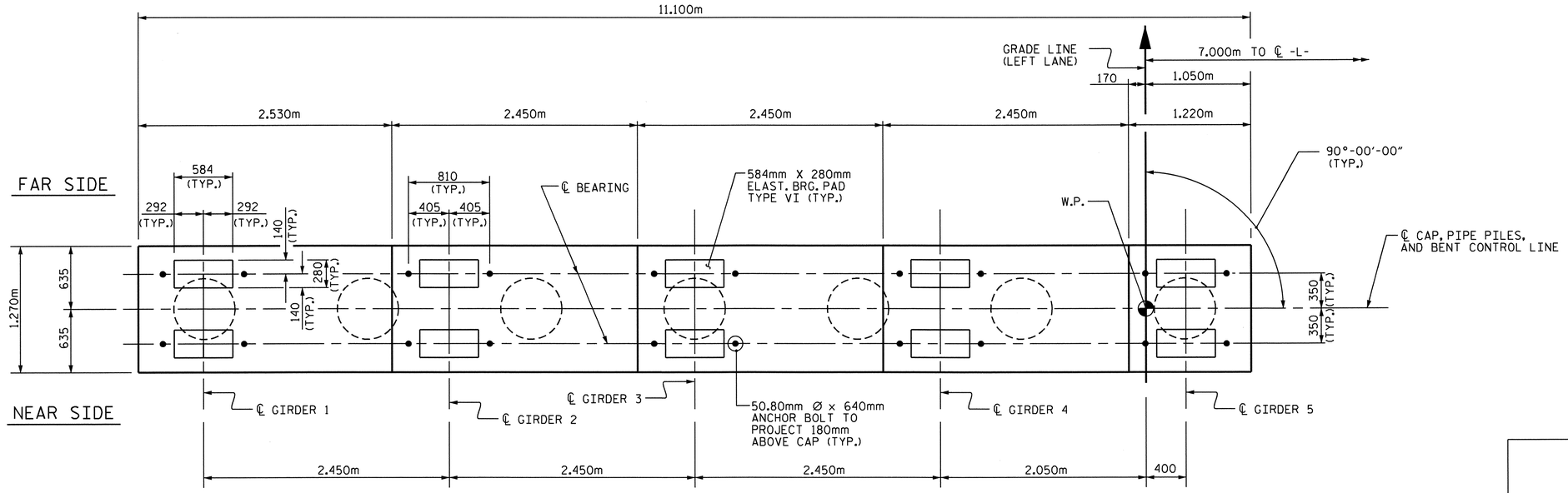

PLAN

	ELEVATIONS					
	A	B	C	D	E	F
BENT #1	28.059	28.120	28.181	28.242	28.304	27.059
BENT #2	28.592	28.653	28.714	28.775	28.837	27.592
BENT #3	29.125	29.186	29.247	29.308	29.370	28.125
BENT #4	29.657	29.719	29.780	29.841	29.902	28.657

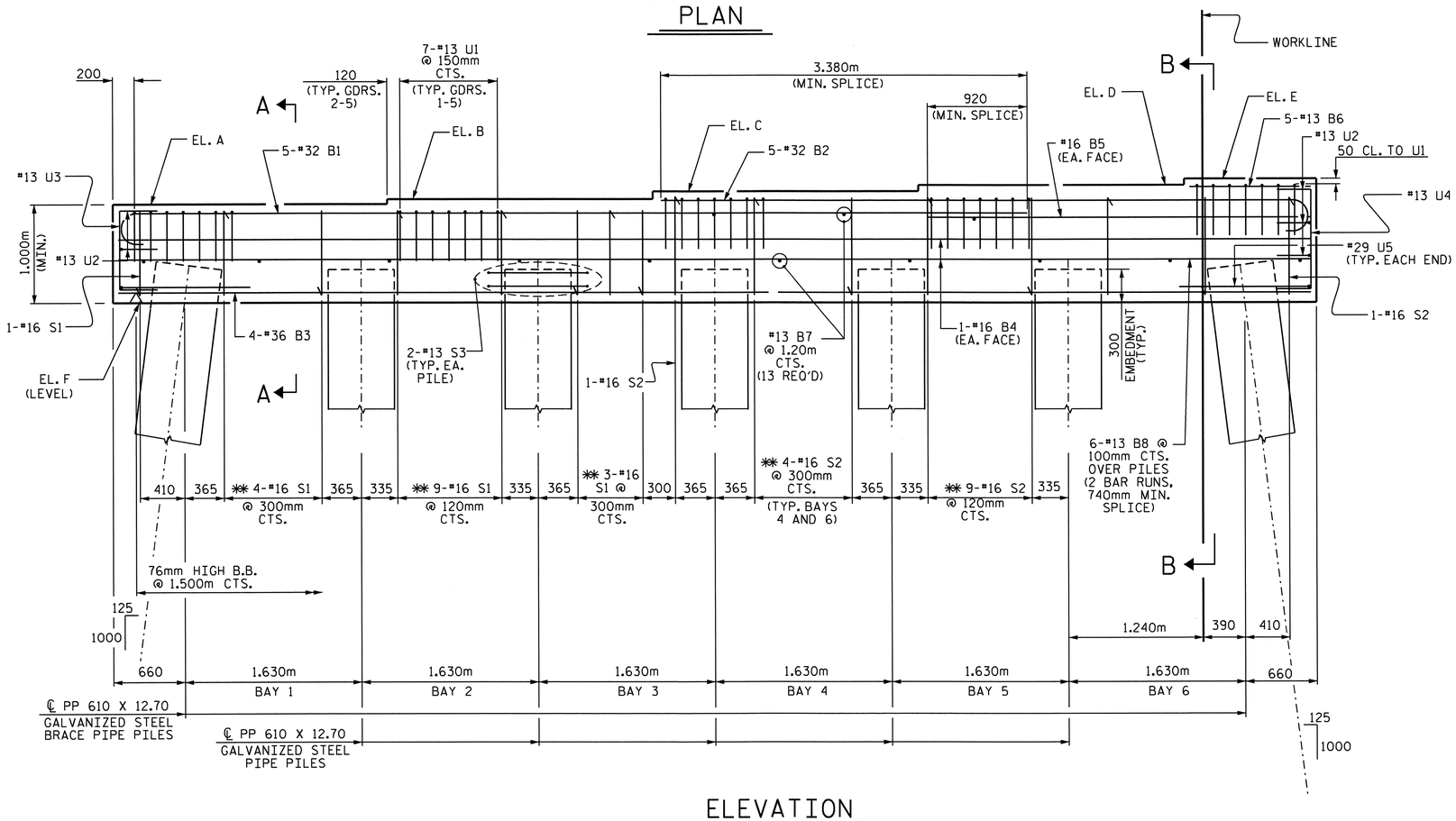

ELEVATION

** INVERT ALTERNATE STIRRUPS

PROJECT NO. R-2554A

WAYNE COUNTY

STATION: 70+24.000 -L-

SHEET 1 OF 2

STATE OF NORTH CAROLINA
DEPARTMENT OF TRANSPORTATION
RALEIGH

SUBSTRUCTURE

BENTS #1-#4
(LEFT LANE)

NORTH CAROLINA PROFESSIONAL SEAL 14045 ENGINEER TIMOTHY L. COGGINS
03/23/12

REVISIONS						SHEET NO.
NO.	BY:	DATE:	NO.	BY:	DATE:	S-115
1			3			TOTAL SHEETS
2			4			276

DRAWN BY : M.L. RORIE DATE : 12-28-11
CHECKED BY : A.M. LEE DATE : 1-20-12

23-MAR-2012 11:03
Z:\TIPProjects-R\R2554A\Structures\FinalPlans\Str#3\r2554a_sd_b#_03.dgn
pdkins

STR. #3

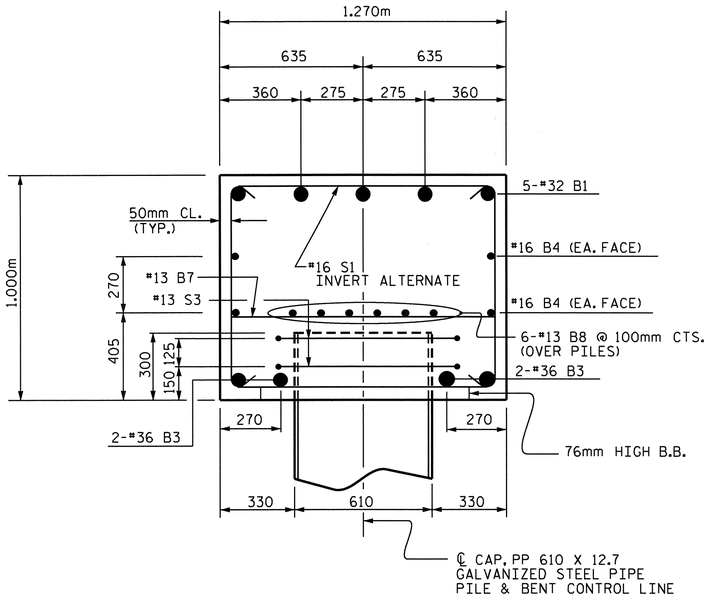

SECTION A-A

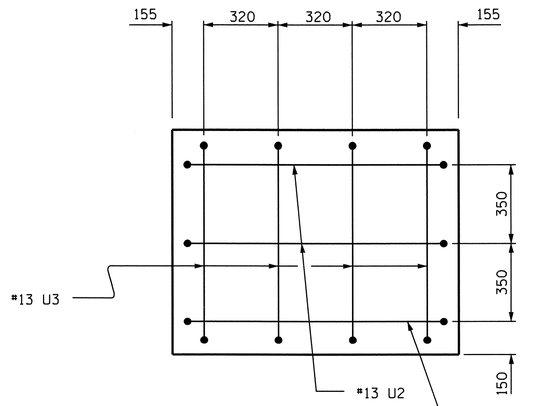

END VIEW

(LEFT SIDE)

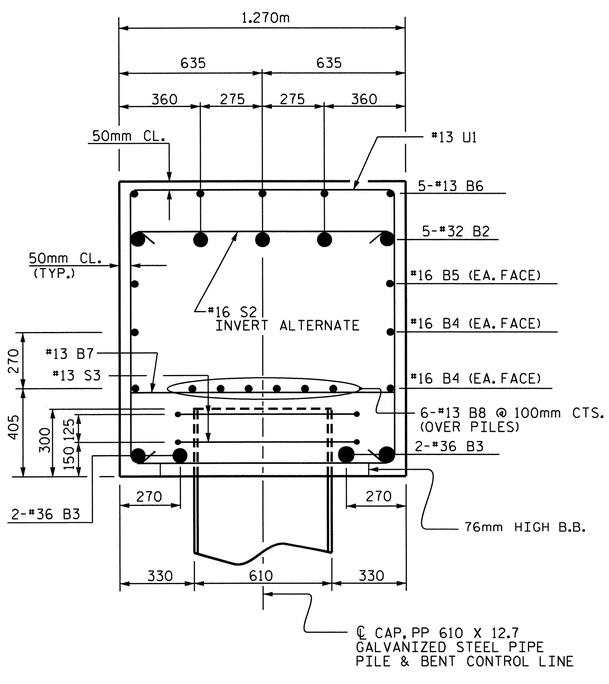

SECTION B-B

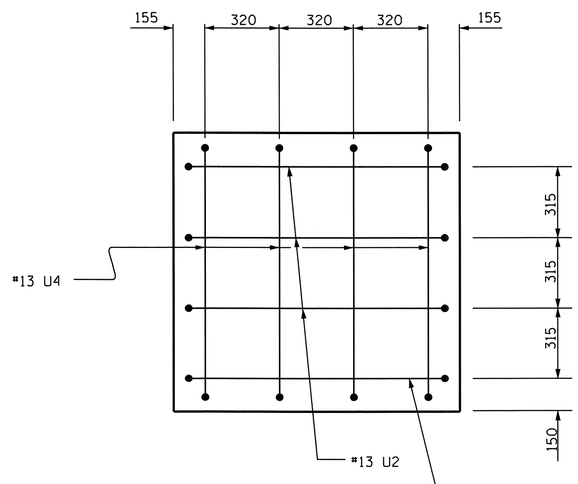

END VIEW

(RIGHT SIDE)

BAR TYPES

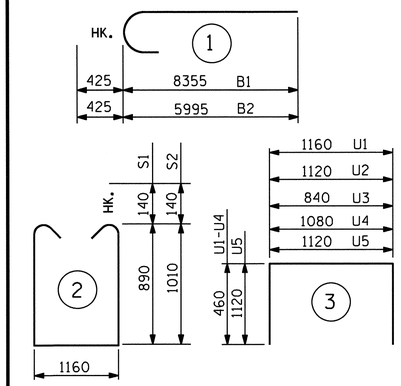

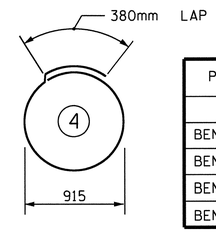

PP 610 X 12.7 GALVANIZED STEEL PILES		
	NO.	LIN. METERS
BENT #1	7	149.1
BENT #2	7	123.2
BENT #3	7	128.1
BENT #4	7	128.1

ALL BAR DIMENSIONS ARE OUT TO OUT.

BILL OF MATERIAL
FOR ONE BENT ONLY

BAR	NO.	SIZE	TYPE	LENGTH	WEIGHT
B1	5	#32	1	8780	281
B2	5	#32	1	6420	206
B3	4	#36	STR.	10980	347
B4	4	#16	STR.	11000	68
B5	2	#16	STR.	3560	11
B6	5	#13	STR.	1120	6
B7	13	#13	STR.	1160	15
B8	12	#13	STR.	5880	70
S1	17	#16	2	3220	85
S2	19	#16	2	3460	102
S3	14	#13	4	3260	45
U1	35	#13	3	2080	72
U2	5	#13	3	2040	10
U3	4	#13	3	1760	7
U4	4	#13	3	2000	8
U5	2	#29	3	3360	34

TOTAL REINFORCING STEEL kg 1367

CLASS A CONCRETE

POUR #1 (CAP) ✱ m^3 15.0

TOTAL CLASS A CONCRETE m^3 15.0

PILE REDRIVES EA. 3

✱ CONCRETE DISPLACED BY THE FILLED 610mm STEEL PIPE PILES HAS BEEN DEDUCTED FROM THE QUANTITY OF CLASS "A" CONCRETE FOR THE BENT CAP.

PROJECT NO. R-2554A

WAYNE COUNTY

STATION: 70+24.000 -L-

SHEET 2 OF 2

STATE OF NORTH CAROLINA
DEPARTMENT OF TRANSPORTATION
RALEIGH

SUBSTRUCTURE

BENTS #1-#4
(LEFT LANE)

NORTH CAROLINA PROFESSIONAL SEAL 14045 ENGINEER TIMOTHY W. COGGINS
03/23/12

REVISIONS						SHEET NO.
NO.	BY:	DATE:	NO.	BY:	DATE:	S-116
1			3			TOTAL SHEETS
2			4			276

DRAWN BY : M.L. RORIE DATE : 12-28-11
CHECKED BY : A.M. LEE DATE : 1-20-12

23-MAR-2012 12:26
Z:\TIPProjects-R\R2554A\Structures\Final Plans\Str#3\r2554a_sd_b#_03.dgn

STR.#3

NOTES

STIRRUPS AND U1 BARS IN CAP MAY BE SHIFTED AS NECESSARY TO CLEAR ANCHOR BOLTS.

THE TOP SURFACE AREAS OF INTERIOR BENTS #6 AND #16 SHALL BE CURED IN ACCORDANCE WITH THE STANDARD SPECIFICATIONS EXCEPT THE MEMBRANE CURING COMPOUND METHOD SHALL NOT BE USED.

AS A MINIMUM, GALVANIZE THE TOP OF EACH INTERIOR BENT PILE AS LISTED. GALVANIZE IN ACCORDANCE WITH SECTION 1076 OF THE STANDARD SPECIFICATIONS. BENT #5-9.2m; BENT #6-9.5m; BENT #15-8.3m; BENT #16-7.8m; BENT #17-7.6m.

FOR REINFORCING STEEL IN PIPE PILES, SEE "610mm STEEL PIPE PILE" SHEET.

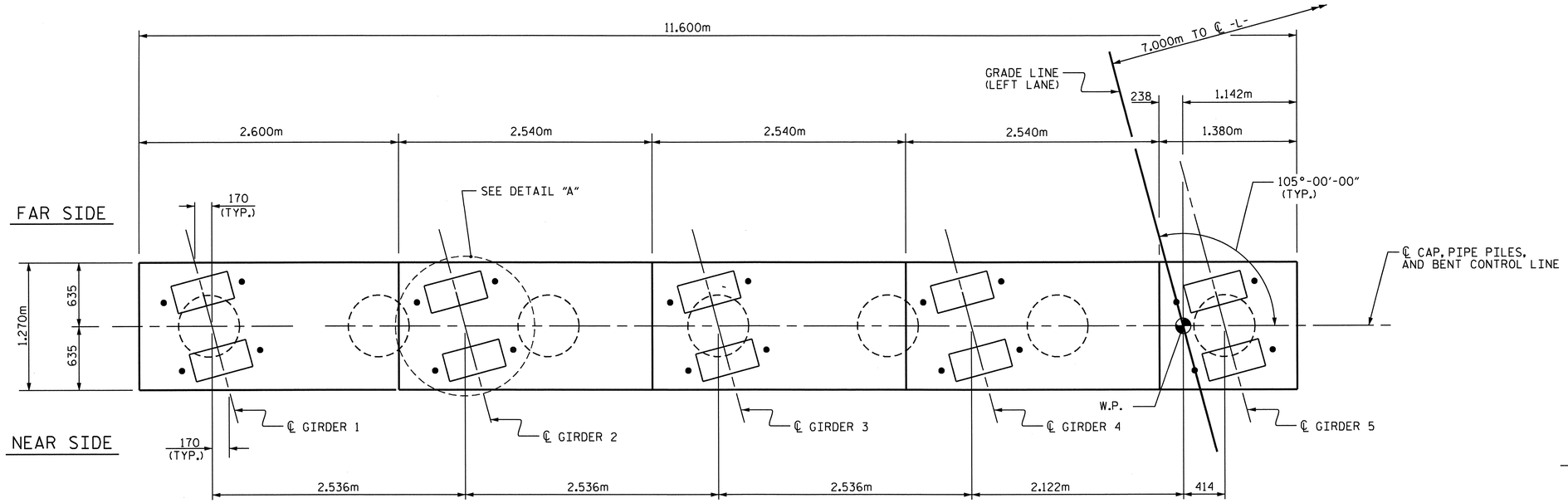

PLAN

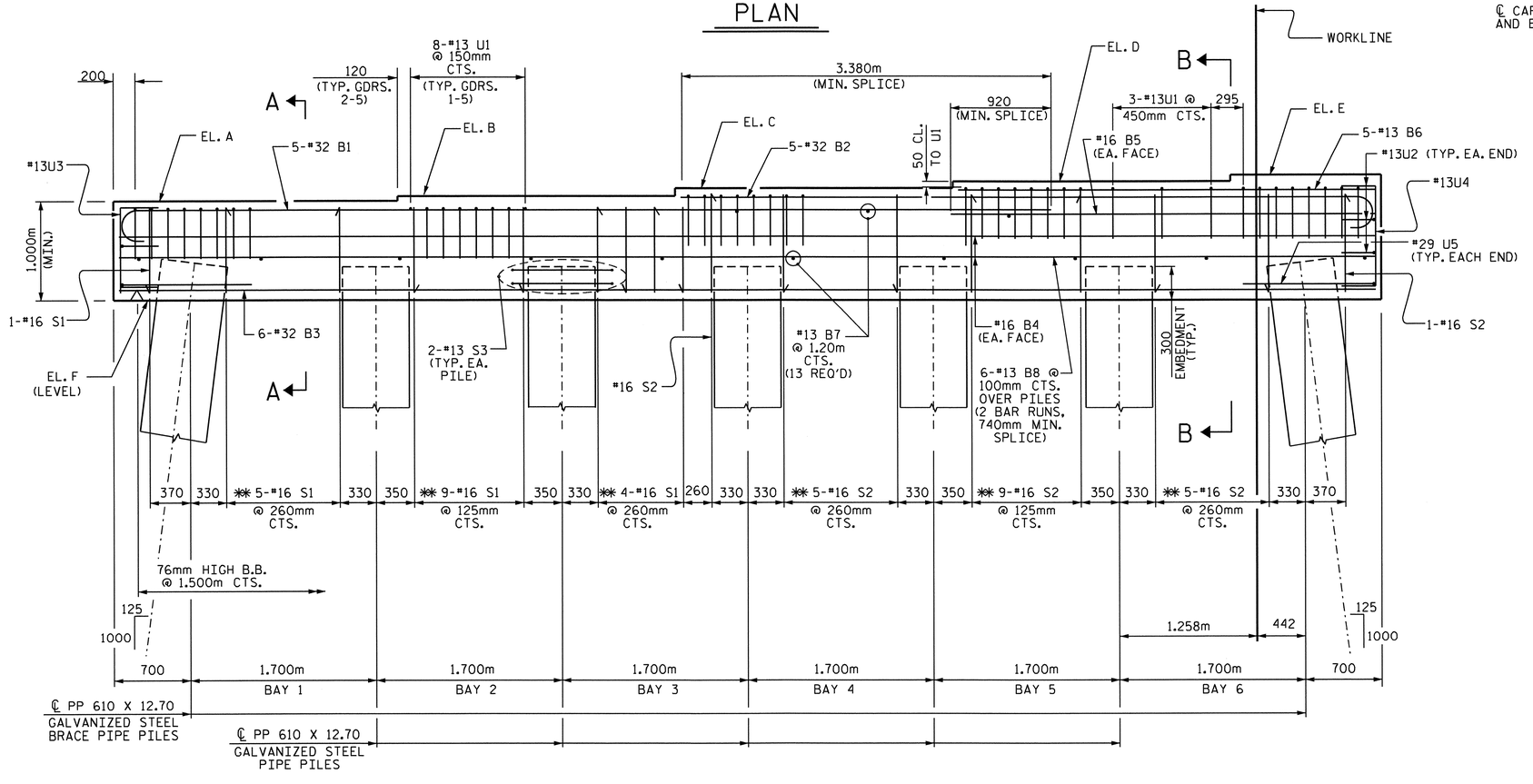

ELEVATION

✱✱ INVERT ALTERNATE STIRRUPS

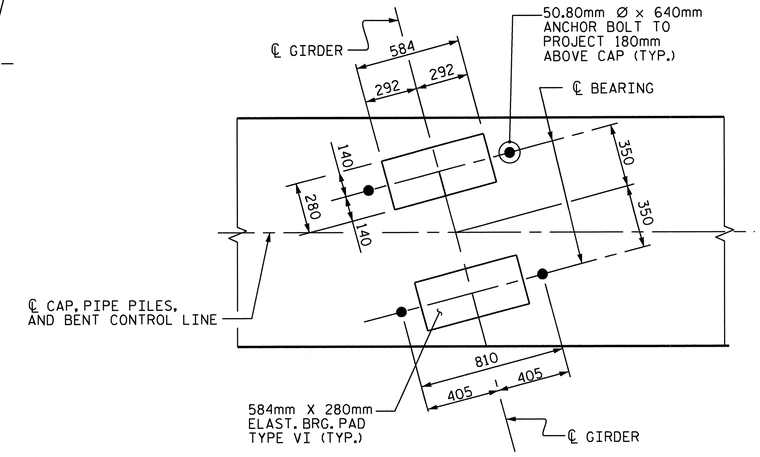

DETAIL "A"

TYP. EACH GIRDER
(PIPE PILE NOT SHOWN)

	ELEVATIONS					
	A	B	C	D	E	F
BENT #5	30.118	30.172	30.227	30.281	30.335	29.118
BENT #6	30.413	30.471	30.528	30.585	30.643	29.413
BENT #15	27.994	28.058	28.122	28.186	28.249	26.994
BENT #16	27.855	27.919	27.982	28.046	28.110	26.855
BENT #17	27.719	27.783	27.847	27.911	27.974	26.719

PROJECT NO. R-2554A

WAYNE COUNTY

STATION: 70+24.000 -L-

SHEET 1 OF 2

STATE OF NORTH CAROLINA
DEPARTMENT OF TRANSPORTATION
RALEIGH

SUBSTRUCTURE

BENTS #5, #6, #15-#17

(LEFT LANE)

NORTH CAROLINA PROFESSIONAL SEAL 14045 ENGINEER TIMOTHY L. COGGINS

03/23/12

REVISIONS								SHEET NO.
NO.	BY:	DATE:	NO.	BY:	DATE:			S-117
1			3					TOTAL SHEETS
2			4					276

DRAWN BY : M.L. RORIE DATE : 1-4-12
CHECKED BY : A.M. LEE DATE : 1-20-12

23-MAR-2012 11:03
Z:\TIPProjects-R\R2554A\Structures\FinalPlans\Str#3\r2554a_sd_b#_03.dgn
padkins

STR. #3

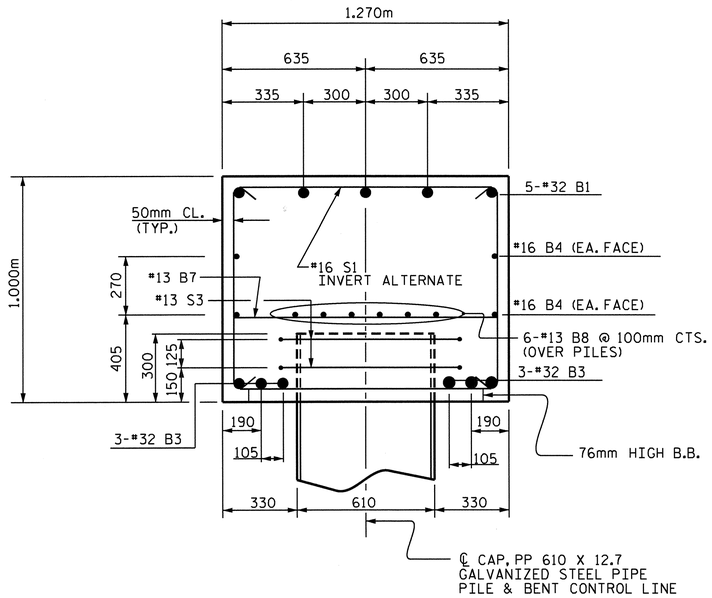

SECTION A-A

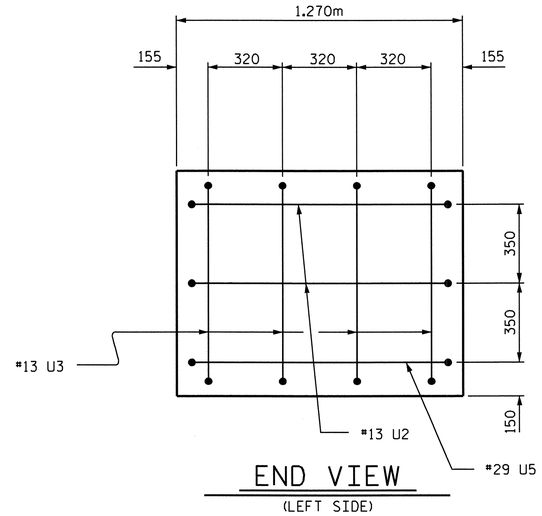

END VIEW

(LEFT SIDE)

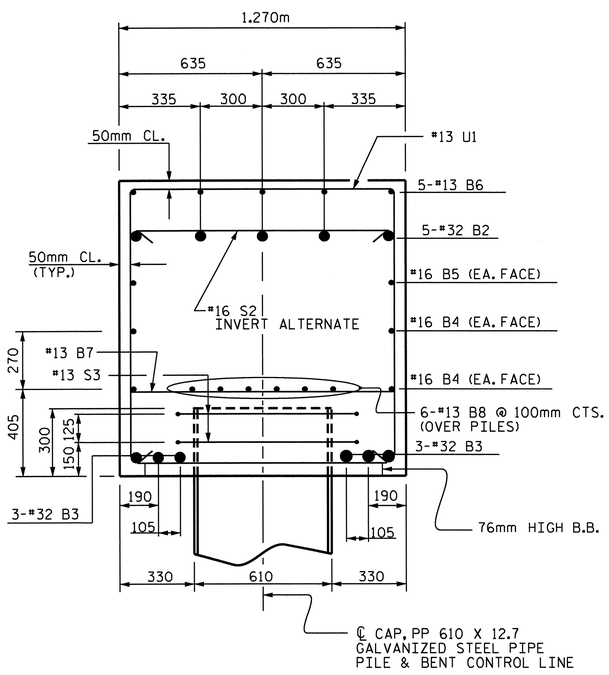

SECTION B-B

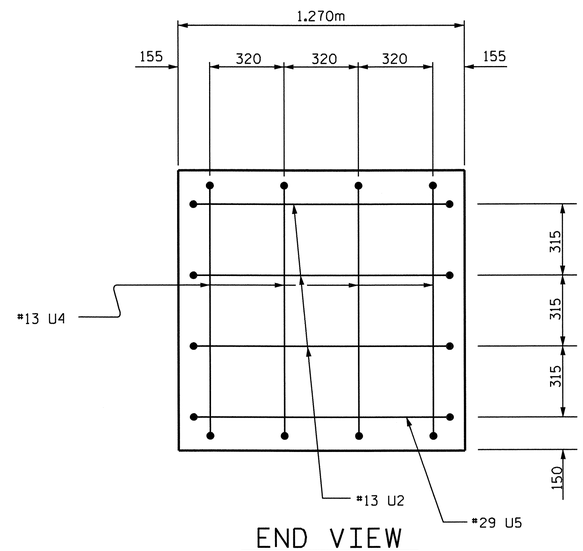

END VIEW

(RIGHT SIDE)

BAR TYPES

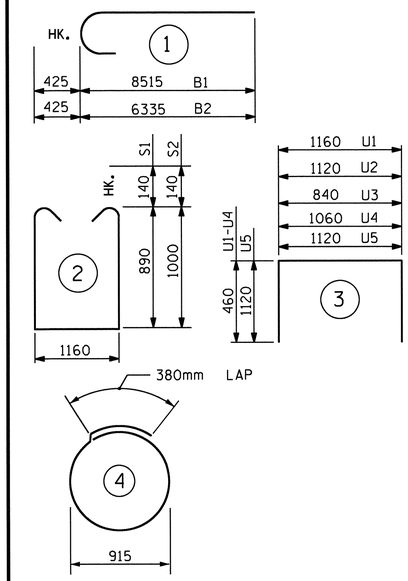

ALL BAR DIMENSIONS ARE OUT TO OUT.

BILL OF MATERIAL
FOR ONE BENT ONLY

BAR	NO.	SIZE	TYPE	LENGTH	WEIGHT
B1	5	#32	1	8940	286
B2	5	#32	1	6760	216
B3	6	#32	STR.	11480	441
B4	4	#16	STR.	11500	71
B5	2	#16	STR.	3900	12
B6	5	#13	STR.	3820	19
B7	13	#13	STR.	1160	15
B8	12	#13	STR.	6120	73
S1	19	#16	2	3220	95
S2	21	#16	2	3440	112
S3	14	#13	4	3260	45
U1	43	#13	3	2080	89
U2	5	#13	3	2040	10
U3	4	#13	3	1760	7
U4	4	#13	3	1980	8
U5	2	#29	3	3360	34

TOTAL REINFORCING STEEL kg 1533

PILE REDRIVES EA. 3

CLASS A CONCRETE

POUR #1 (CAP) ✱

BENT #5	m^3	15.5
BENT #6	m^3	15.6
BENT #15	m^3	15.8
BENT #16	m^3	15.8
BENT #17	m^3	15.8

PP 610 X 12.70 GALVANIZED STEEL PIPE PILES

BENT #5	NO. 7	LIN. METERS	128.1
BENT #6	NO. 7	LIN. METERS	128.1
BENT #15	NO. 7	LIN. METERS	106.4
BENT #16	NO. 7	LIN. METERS	95.9
BENT #17	NO. 7	LIN. METERS	95.9

PIPE PILE PLATES

BENT #5	EA.	0
BENT #6	EA.	0
BENT #15	EA.	7
BENT #16	EA.	7
BENT #17	EA.	7

✱ CONCRETE DISPLACED BY THE FILLED 610mm STEEL PIPE PILES HAS BEEN DEDUCTED FROM THE QUANTITY OF CLASS "A" CONCRETE FOR THE BENT CAP.

PROJECT NO. R-2554A
WAYNE COUNTY
STATION: 70+24.000 -L-

SHEET 2 OF 2

STATE OF NORTH CAROLINA
DEPARTMENT OF TRANSPORTATION
RALEIGH

SUBSTRUCTURE

BENTS #5, #6, #15-#17

(LEFT LANE)

NORTH CAROLINA PROFESSIONAL SEAL 14045 ENGINEER TIMOTHY L. COGGINS
03/23/12

REVISIONS						SHEET NO.
NO.	BY:	DATE:	NO.	BY:	DATE:	S-18
1			3			TOTAL SHEETS
2			4			276

DRAWN BY : M.L. RORIE DATE : 12-28-11
CHECKED BY : A.M. LEE DATE : 1-20-12

23-MAR-2012 12:27
Z:\TIPProjects-R\R2554A\Structures\FinalPlans\Str#3\r2554a_sd_b#_03.dgn

STR.#3

NOTES

STIRRUPS AND U1 BARS IN CAP MAY BE SHIFTED AS NECESSARY TO CLEAR ANCHOR BOLTS.

THE TOP SURFACE AREAS OF INTERIOR BENTS #8, #10, #12 AND #14 SHALL BE CURED IN ACCORDANCE WITH THE STANDARD SPECIFICATIONS EXCEPT THE MEMBRANE CURING COMPOUND METHOD SHALL NOT BE USED.

AS A MINIMUM, GALVANIZE THE TOP OF EACH INTERIOR BENT PILE AS LISTED. GALVANIZE IN ACCORDANCE WITH SECTION 1076 OF THE STANDARD SPECIFICATIONS. BENT #7-11.4m; BENT #8-10.4m; BENT #9-12.9m; BENT #10-11.7m; BENT #11-10.8m; BENT #12-9.0m; BENT #13-8.7m; BENT #14-8.2m.

FOR REINFORCING STEEL IN PIPE PILES, SEE "762mm STEEL PIPE PILE" SHEET.

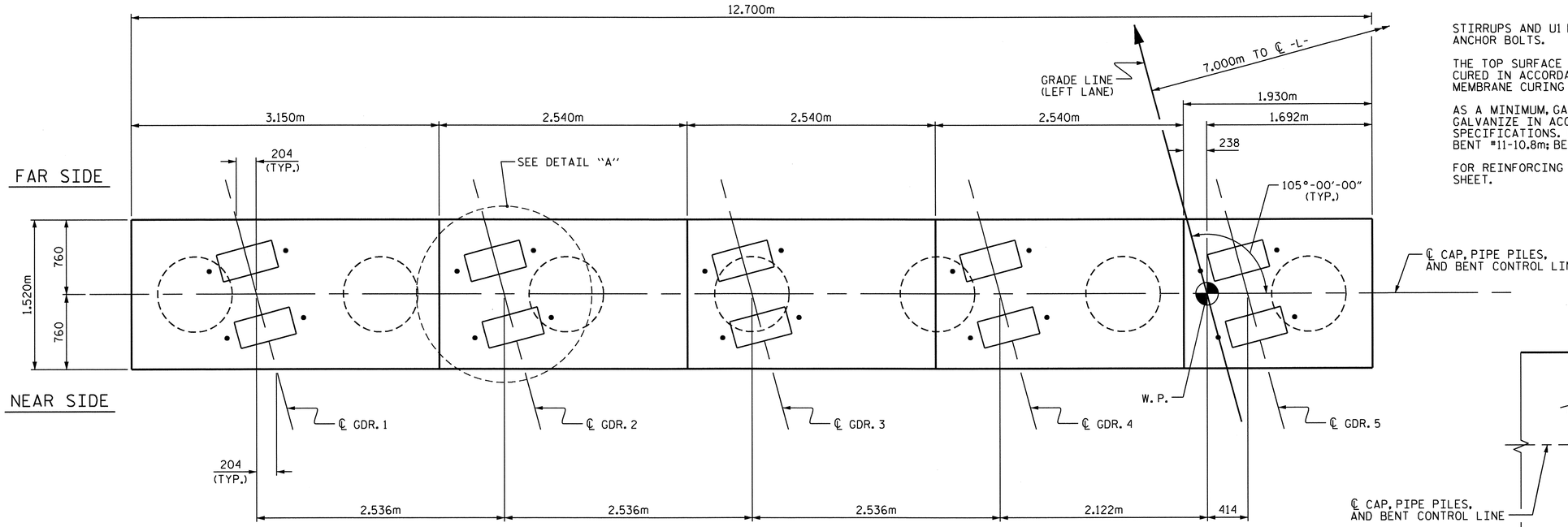

PLAN

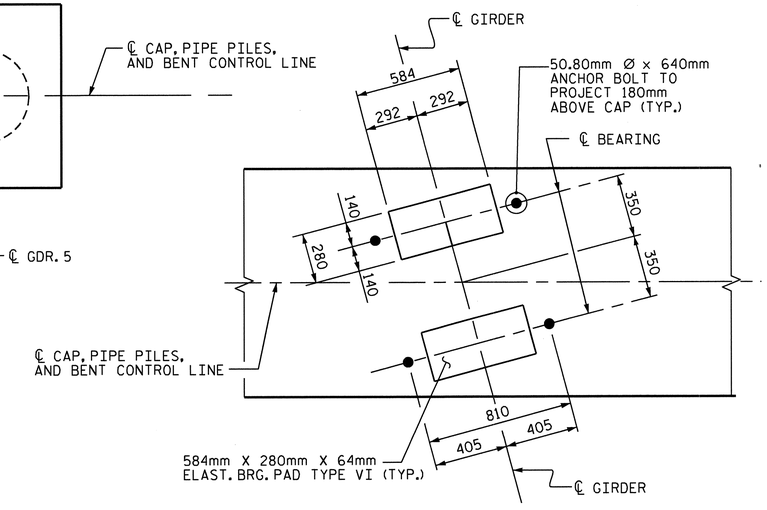

DETAIL "A"

TYP. EACH GIRDER
(PIPE PILE NOT SHOWN)

	ELEVATIONS					
	A	B	C	D	E	F
BENT #7	30.534	30.595	30.656	30.716	30.776	29.534
BENT #8	30.478	30.542	30.605	30.669	30.733	29.478
BENT #9	30.247	30.314	30.381	30.448	30.514	29.247
BENT #10	29.840	29.910	29.981	30.051	30.121	28.840
BENT #11	29.268	29.340	29.412	29.484	29.557	28.268
BENT #12	28.742	28.811	28.881	28.951	29.020	27.742
BENT #13	28.365	28.432	28.499	28.566	28.633	27.365
BENT #14	28.135	28.199	28.263	28.328	28.392	27.135

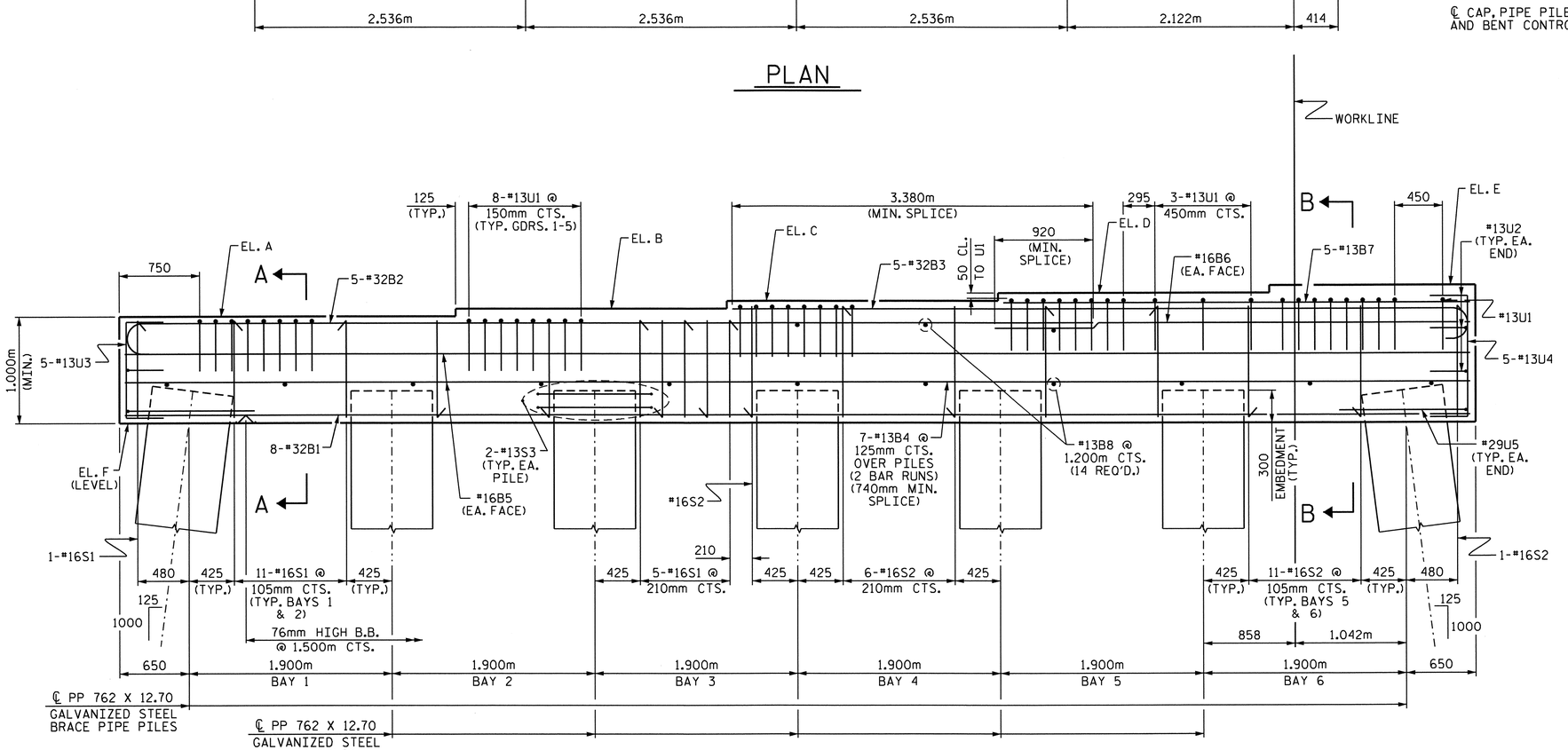

NOTE: INVERT ALTERNATE STIRRUPS

ELEVATION

PROJECT NO. R-2554A
WAYNE COUNTY
STATION: 70+24.000 -L-

SHEET 1 OF 2

STATE OF NORTH CAROLINA
DEPARTMENT OF TRANSPORTATION
RALEIGH

SUBSTRUCTURE

BENTS #7-#14
(LEFT LANE)

NORTH CAROLINA PROFESSIONAL SEAL 14045 ENGINEER TIMOTHY W. COGGINS
03/23/12

REVISIONS						
NO.	BY:	DATE:	NO.	BY:	DATE:	
1			3			
2			4			

SHEET NO. S-119
TOTAL SHEETS 276

DRAWN BY : B. L. GREEN DATE : 1/4/12
CHECKED BY : O. PUIGCERVER DATE : 1/17/12

23-MAR-2012 11:02
Z:\TIPProjects-R\R2554A\Structures\FinalPlans\Str#3\r2554a_sd_b#_03.dgn
pdkins

STR. #3

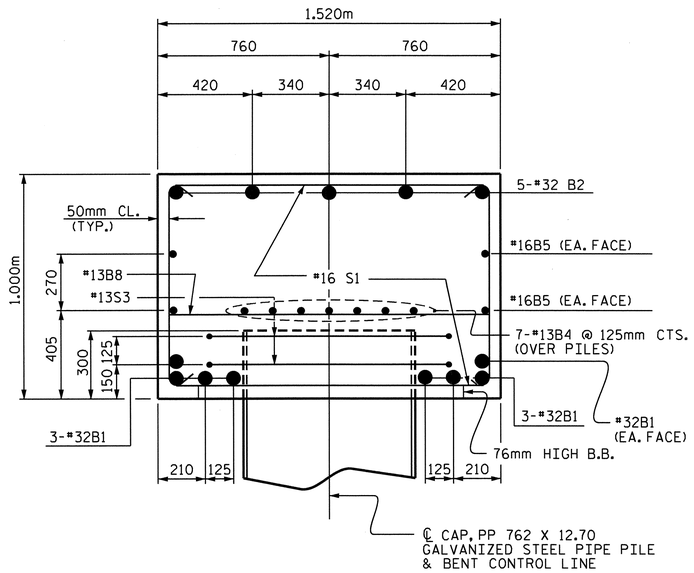

SECTION A-A

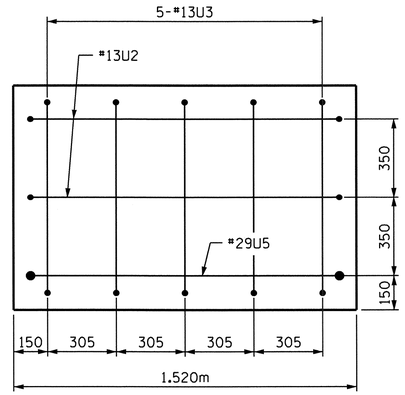

END VIEW

(LEFT SIDE)

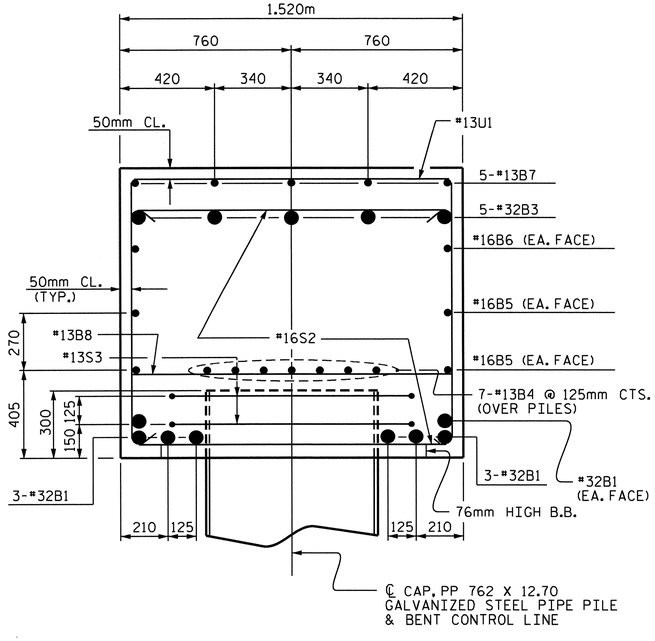

SECTION B-B

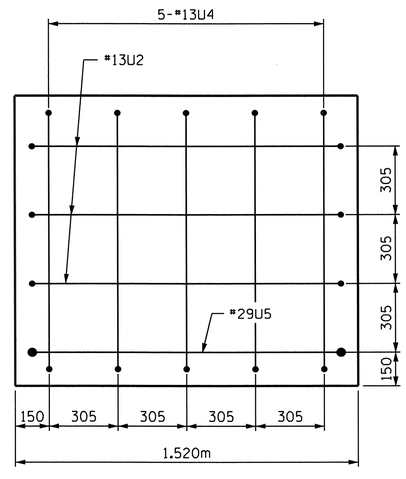

END VIEW

(RIGHT SIDE)

BAR TYPES

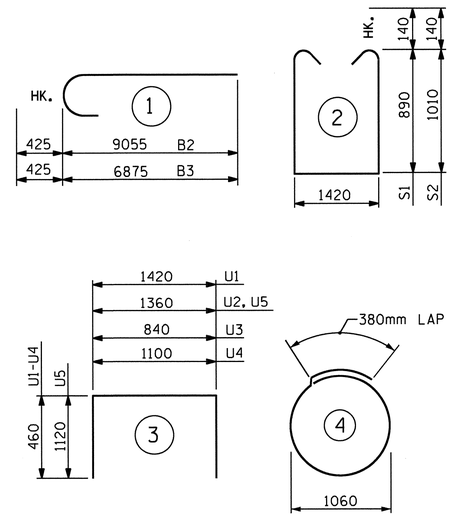

ALL BAR DIMENSIONS ARE OUT TO OUT.

BILL OF MATERIAL

REINFORCING STEEL FOR ONE BENT

BAR	NO.	SIZE	TYPE	LENGTH	WEIGHT
B1	8	#32	STR	12580	644
B2	5	#32	1	9480	304
B3	5	#32	1	7300	234
B4	14	#13	STR	6680	93
B5	4	#16	STR	12600	78
B6	2	#16	STR	4460	14
B7	5	#13	STR	4360	22
B8	14	#13	STR	1420	20
S1	28	#16	2	3480	151
S2	30	#16	2	3720	173
S3	14	#13	4	3720	52
U1	44	#13	3	2340	102
U2	5	#13	3	2280	11
U3	5	#13	3	1760	9
U4	5	#13	3	2020	10
U5	2	#29	3	3600	36
REINFORCING STEEL					1953 kg

CLASS A CONCRETE

POUR #1 (CAP) ✱		
BENT #7	m^3	20.5
BENT #8	m^3	20.6
BENT #9	m^3	20.7
BENT #10	m^3	20.8
BENT #11	m^3	20.9
BENT #12	m^3	20.8
BENT #13	m^3	20.7
BENT #14	m^3	20.6

✱ CONCRETE DISPLACED BY THE FILLED 762mm STEEL PIPE PILES HAS BEEN DEDUCTED FROM THE QUANTITY OF CLASS "A" CONCRETE FOR THE BENT CAP.

PP 762 X 12.70 GALVANIZED STEEL PIPE PILES

BENT #7	NO. 7	LIN. METERS 128.1
BENT #8	NO. 7	LIN. METERS 128.1
BENT #9	NO. 7	LIN. METERS 149.1
BENT #10	NO. 7	LIN. METERS 149.1
BENT #11	NO. 7	LIN. METERS 149.1
BENT #12	NO. 7	LIN. METERS 128.1
BENT #13	NO. 7	LIN. METERS 128.1
BENT #14	NO. 7	LIN. METERS 128.1

PILE REDRIVES	EACH
BENT #7	3
BENT #8	3
BENT #9	3
BENT #10	3
BENT #11	3
BENT #12	3
BENT #13	4
BENT #14	4

PROJECT NO. R-2554A
WAYNE COUNTY
STATION: 70+24.000 -L-

SHEET 2 OF 2

STATE OF NORTH CAROLINA
DEPARTMENT OF TRANSPORTATION
RALEIGH

SUBSTRUCTURE

BENTS #7-#14
(LEFT LANE)

NORTH CAROLINA PROFESSIONAL SEAL 14045 ENGINEER TIMOTHY L. COGGINS
03/23/12

REVISIONS								SHEET NO.
NO.	BY:	DATE:	NO.	BY:	DATE:			S-120
1			3					TOTAL SHEETS
2			4					276

DRAWN BY : B. L. GREEN DATE : 1/4/12
CHECKED BY : O. PUIGCERVER DATE : 1/17/12

23-MAR-2012 11:02
Z:\TIPProjects-R\R2554A\Structures\FinalPlans\Str#3\r2554a_sd_b#_03.dgn
padkins

STR. #3

NOTES

STIRRUPS AND U1 BARS IN CAP MAY BE SHIFTED AS NECESSARY TO CLEAR ANCHOR BOLTS.

THE TOP SURFACE AREAS OF INTERIOR BENTS #18 AND #20 SHALL BE CURED IN ACCORDANCE WITH THE STANDARD SPECIFICATIONS EXCEPT THE MEMBRANE CURING COMPOUND METHOD SHALL NOT BE USED.

AS A MINIMUM, GALVANIZE THE TOP OF EACH INTERIOR BENT PILE AS LISTED. GALVANIZE IN ACCORDANCE WITH SECTION 1076 OF THE STANDARD SPECIFICATIONS. BENT #18-7.7m; BENT #19-7.3m; BENT #20-7.2m; BENT #21-6.9m.

FOR REINFORCING STEEL IN PIPE PILES, SEE "457mm STEEL PIPE PILE" SHEET.

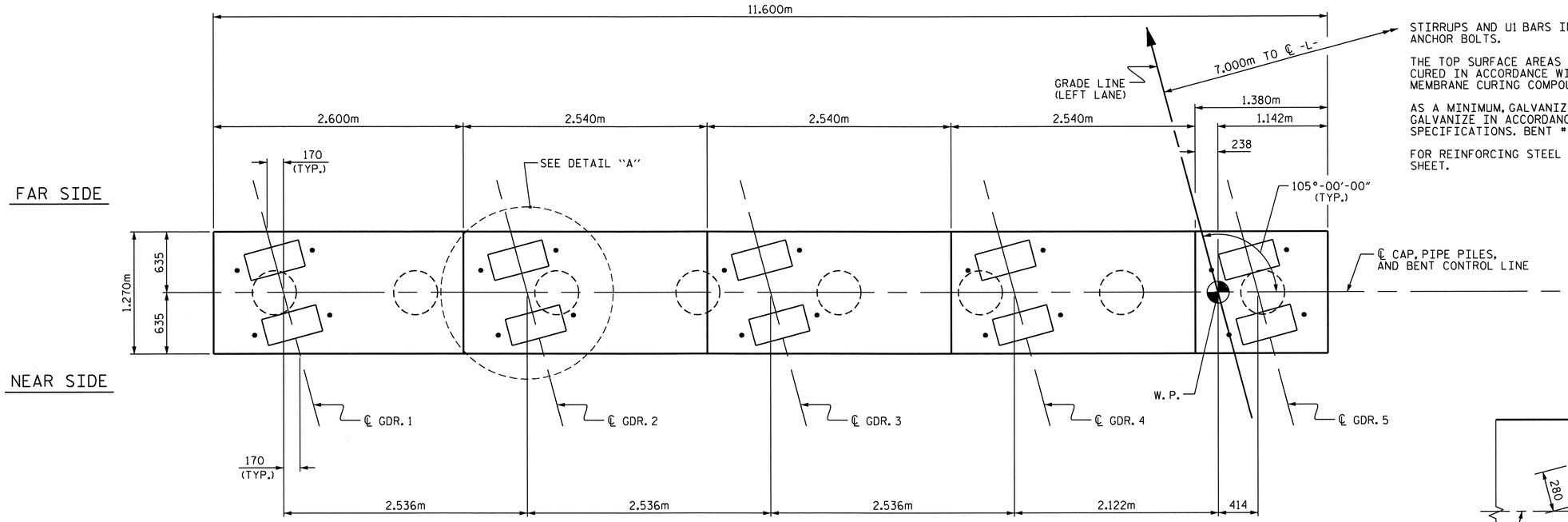

PLAN

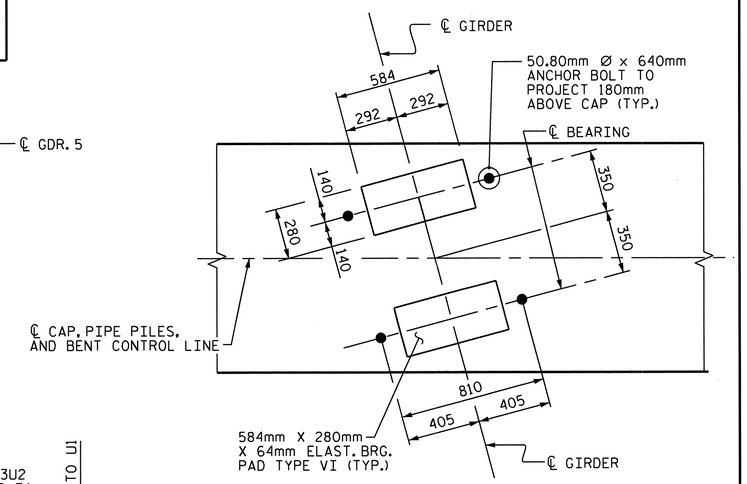

DETAIL "A"

TYP. EACH GIRDER
(PIPE PILE NOT SHOWN)

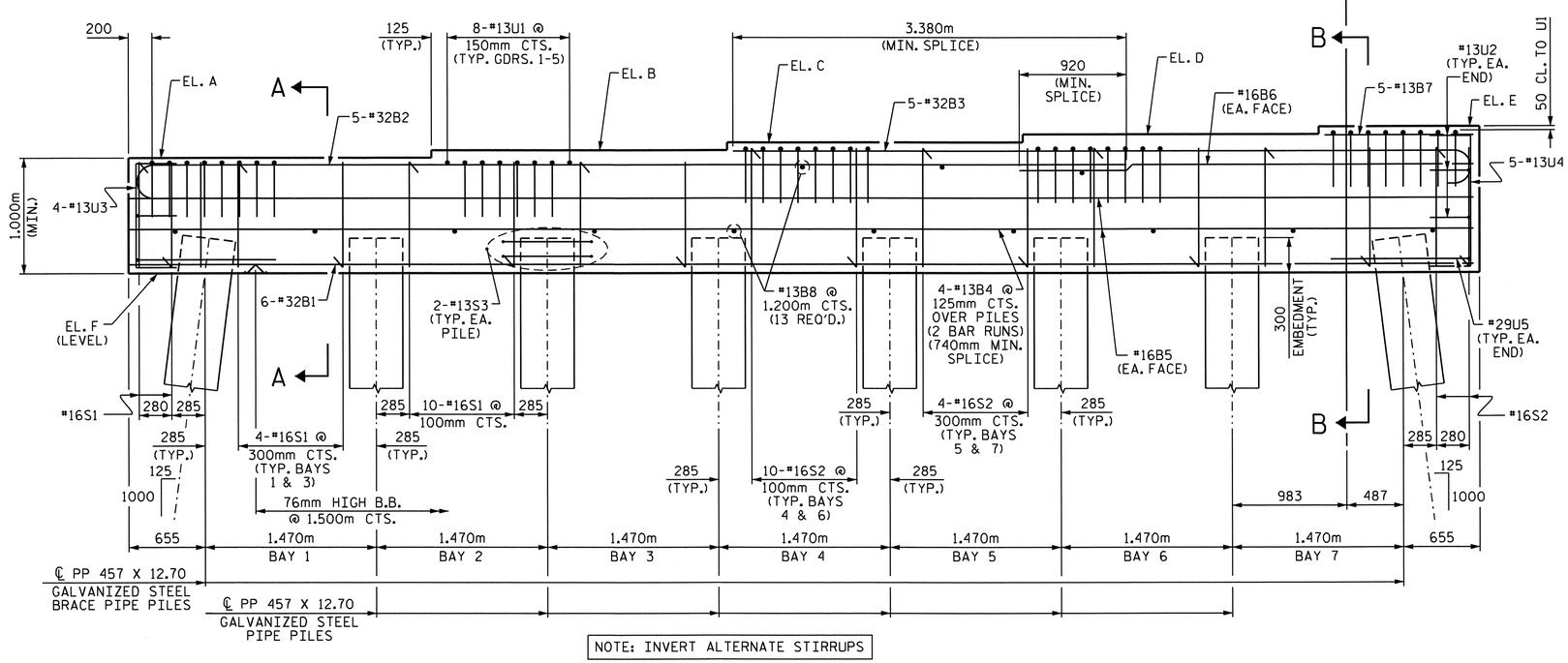

NOTE: INVERT ALTERNATE STIRRUPS

ELEVATION

	ELEVATIONS					
	A	B	C	D	E	F
BENT #18	27.584	27.647	27.711	27.775	27.839	26.584
BENT #19	27.448	27.512	27.576	27.639	27.703	26.448
BENT #20	27.312	27.376	27.440	27.504	27.568	26.312
BENT #21	27.177	27.241	27.304	27.368	27.432	26.177

PROJECT NO. R-2554A
WAYNE COUNTY
STATION: 70+24.000 -L-

SHEET 1 OF 2

STATE OF NORTH CAROLINA
DEPARTMENT OF TRANSPORTATION
RALEIGH

SUBSTRUCTURE
BENTS #18-#21
(LEFT LANE)

NORTH CAROLINA PROFESSIONAL SEAL 14045 ENGINEER TIMOTHY L. COGGINS
03/23/12

REVISIONS							SHEET NO.
NO.	BY:	DATE:	NO.	BY:	DATE:		S-121
1			3				TOTAL SHEETS
2			4				276

DRAWN BY : B. L. GREEN DATE : 1/11/12
CHECKED BY : O. PUIGCERVER DATE : 1/18/12

23-MAR-2012 11:01
Z:\TIPProjects-R\R2554A\Structures\FinalPlans\Str#3\r2554a_sd_b#_03.dgn
padkins

STR. #3

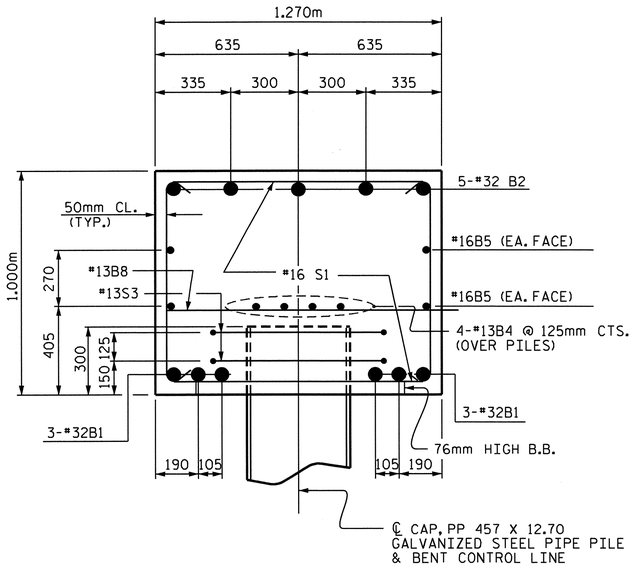

SECTION A-A

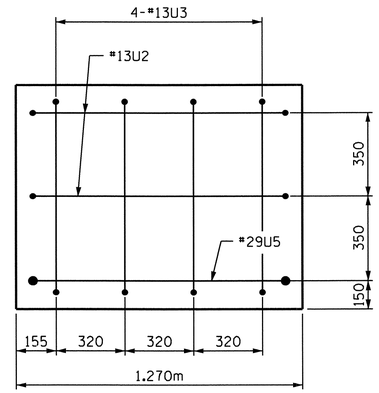

END VIEW

(LEFT SIDE)

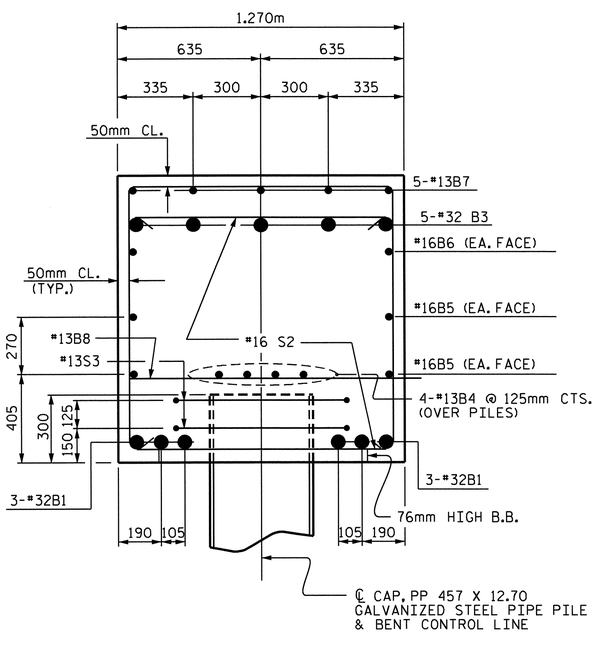

SECTION B-B

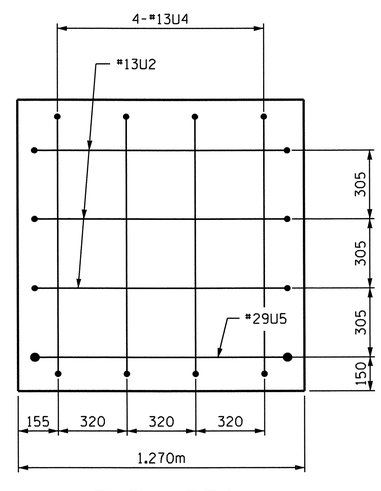

END VIEW

(RIGHT SIDE)

BAR TYPES

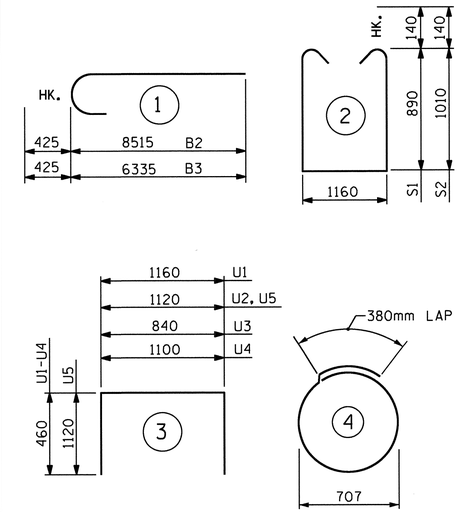

ALL BAR DIMENSIONS ARE OUT TO OUT.

BILL OF MATERIAL FOR ONE BENT

BAR	NO.	SIZE	TYPE	LENGTH	WEIGHT
B1	6	#32	STR	11480	441
B2	5	#32	1	8940	286
B3	5	#32	1	6760	216
B4	8	#13	STR	6120	49
B5	4	#16	STR	11500	71
B6	2	#16	STR	3900	12
B7	5	#13	STR	1280	6
B8	13	#13	STR	1160	15
S1	20	#16	2	3220	100
S2	30	#16	2	3460	161
S3	16	#13	4	2620	42
U1	40	#13	3	2080	83
U2	5	#13	3	2040	10
U3	4	#13	3	1760	7
U4	4	#13	3	2020	8
U5	2	#29	3	3360	34
REINFORCING STEEL					1541 kg

CLASS A CONCRETE

POUR #1 (CAP) ✱ m^3 16.0

TOTAL CLASS A CONCRETE m^3 16.0

PP 457 X 12.70 GALVANIZED STEEL PIPE PILES

NO. 8 LIN. METERS 109.6

PIPE PILE PLATES EA. 8

PILE REDRIVES EA. 4

✱ CONCRETE DISPLACED BY THE FILLED 457mm STEEL PIPE PILES HAS BEEN DEDUCTED FROM THE QUANTITY OF CLASS "A" CONCRETE FOR THE BENT CAP.

PROJECT NO. R-2554A

WAYNE COUNTY

STATION: 70+24.000 -L-

SHEET 2 OF 2

STATE OF NORTH CAROLINA
DEPARTMENT OF TRANSPORTATION
RALEIGH

SUBSTRUCTURE

BENTS #18-#21

(LEFT LANE)

NORTH CAROLINA PROFESSIONAL SEAL 14045 ENGINEER TIMOTHY L. COSKINS

03/23/12

REVISIONS						SHEET NO.
NO.	BY:	DATE:	NO.	BY:	DATE:	S-122
1			3			TOTAL SHEETS
2			4			276

DRAWN BY : B. L. GREEN DATE : 1/11/12
CHECKED BY : O. PUIGCERVER DATE : 1/18/12

23-MAR-2012 11:01
Z:\TIPProjects-R\R2554A\Structures\FinalPlans\Str#3\r2554a_sd_b#_03.dgn
pdkins

STR. #3

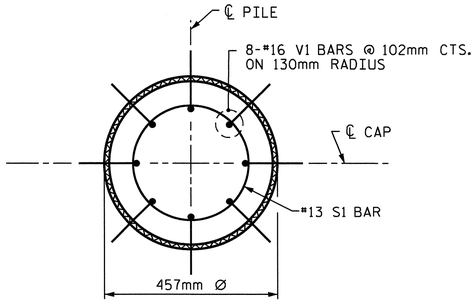

PLAN

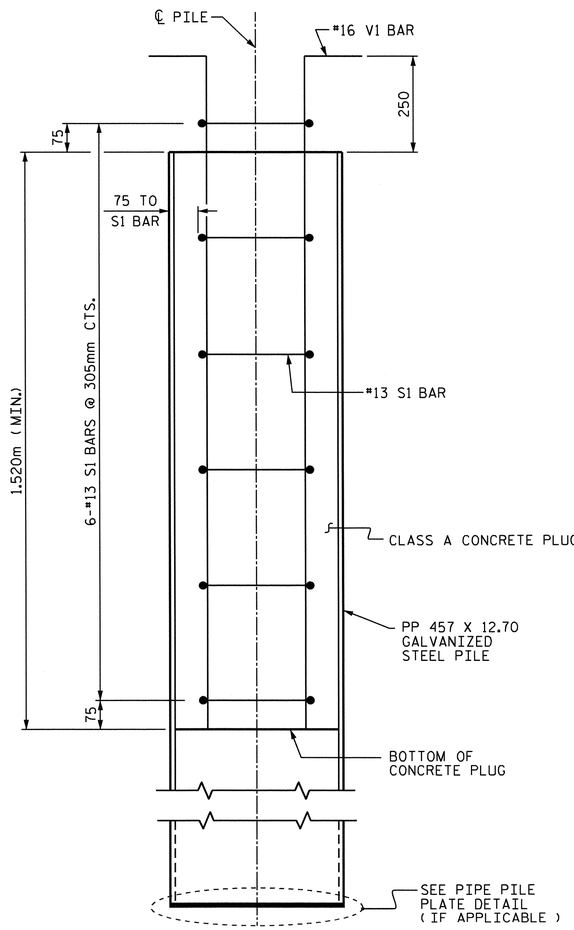

ELEVATION

PP 457 X 12.70 GALVANIZED STEEL PILE

(OPEN OR CLOSED END)

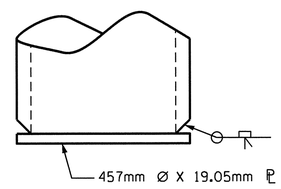

PIPE PILE PLATE DETAIL

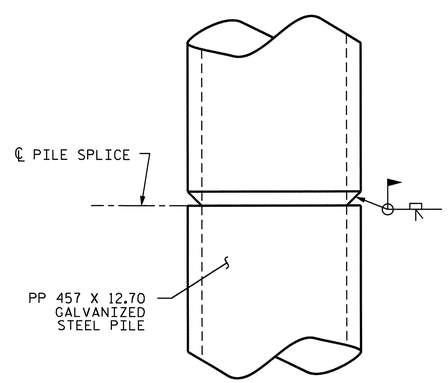

PIPE PILE SPLICE DETAIL

NOTES

PIPE PILES SHALL BE IN ACCORDANCE WITH SECTION 1084 OF THE STANDARD SPECIFICATIONS.

GALVANIZE STEEL PIPE PILES IN ACCORDANCE WITH SECTION 1076 OF THE STANDARD SPECIFICATIONS UNLESS METALLIZING IS REQUIRED. GALVANIZING OR METALLIZING PIPE PILE PLATES IS NOT REQUIRED.

PIPE PILE PLATES, IF REQUIRED, SHALL BE IN ACCORDANCE WITH SECTION 450 OF THE STANDARD SPECIFICATIONS.

REMOVE AND REPLACE OR REPAIR TO THE SATISFACTION OF THE ENGINEER PILES THAT ARE DAMAGED, DEFORMED OR COLLAPSED DURING INSTALLATION OR DRIVING.

PILE SPLICES SHALL BE IN ACCORDANCE WITH THE STANDARD SPECIFICATIONS AND AWS D1.1.

FOR CLOSED END PIPE PILES, REMOVE ALL SOIL AND WATER FROM INSIDE THE PILES JUST PRIOR TO PLACING REINFORCING STEEL AND CONCRETE FOR THE CONCRETE PLUG.

FOR OPEN END PIPE PILES, REMOVE ENOUGH SOIL AND WATER FROM INSIDE THE PILES TO CONSTRUCT THE CONCRETE PLUG WITHOUT FOULING THE CONCRETE.

FORM THE CONCRETE PLUG SUCH THAT THE REINFORCING STEEL OR CONCRETE DOES NOT MOVE AND THE CLEARANCE FROM THE REINFORCING STEEL TO THE INSIDE OF THE PILE IS MAINTAINED AFTER CONCRETE PLACEMENT. DO NOT PLACE CONCRETE IN THE BENT CAP UNTIL THE CONCRETE PLUG HAS ATTAINED A MINIMUM COMPRESSIVE STRENGTH OF 10.3 MPa.

THE REINFORCING STEEL, CLASS A CONCRETE, AND GALVANIZING ARE CONSIDERED INCIDENTAL TO THE CONTRACT UNIT PRICE BID PER METER FOR PP 457 X 12.70 GALVANIZED STEEL PILES.

BILL OF MATERIAL FOR ONE PP 457 X 12.70 GALVANIZED STEEL PILE

BAR	NO.	SIZE	TYPE	LENGTH	WEIGHT
S1	6	#13	1	1340	8
V1	8	#16	2	2020	25
REINFORCING STEEL =					33 kg
CLASS A CONCRETE					
1.520m MINIMUM PLUG					0.2 CU. METER

BAR TYPES

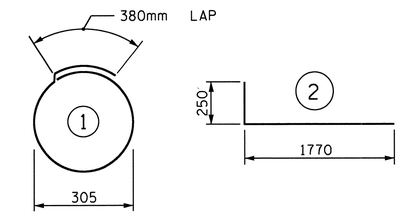

ALL BAR DIMENSIONS ARE OUT TO OUT.

PROJECT NO. R-2554A
WAYNE COUNTY
STATION: 70+24.000 -L-

STATE OF NORTH CAROLINA
DEPARTMENT OF TRANSPORTATION
RALEIGH

STANDARD

457mm STEEL PIPE PILE

(LEFT LANE)

NORTH CAROLINA PROFESSIONAL SEAL 14045 ENGINEER TIMOTHY U. COGGINS
03/23/12

REVISIONS						
NO.	BY:	DATE:	NO.	BY:	DATE:	
1			3			
2			4			

SHEET NO. S-123
TOTAL SHEETS 276

STR. #3 STD. NO. SPP3SM

ASSEMBLED BY : B. L. GREEN		DATE : 1/11/12	
CHECKED BY : O. PUIGCERVER		DATE : 1/18/12	
DRAWN BY : RWW 1/01	REV. 10/1/05	LBG/TLA	
CHECKED BY : LES 1/01	REV. 5/1/06R	MAA/KMM	
	REV. 10/1/11	MAA/GM	

23-MAR-2012 11:01
Z:\TIPProjects-R\R2554A\Structures\FinalPlans\Str#3\r2554a_sd_b#_03.dgn
padkins

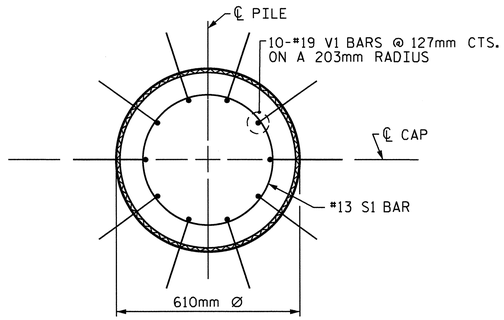

PLAN

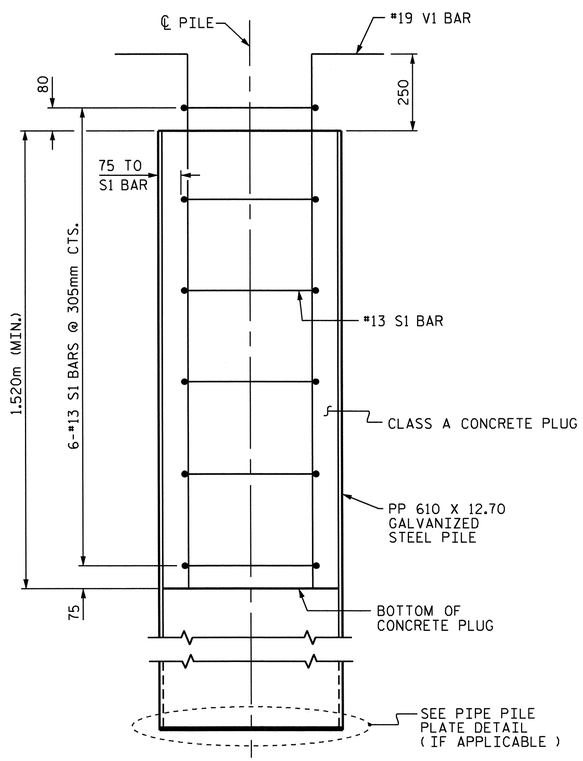

ELEVATION

PP 610 X 12.70 GALVANIZED STEEL PILE

(OPEN OR CLOSED END)

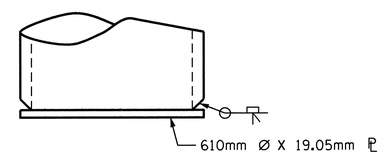

PIPE PILE PLATE DETAIL

(IF APPLICABLE)

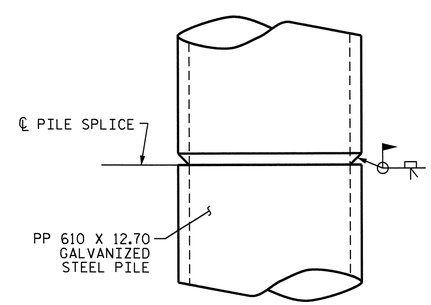

PIPE PILE SPLICE DETAIL

NOTES

PIPE PILES SHALL BE IN ACCORDANCE WITH SECTION 1084 OF THE STANDARD SPECIFICATIONS.

GALVANIZE STEEL PIPE PILES IN ACCORDANCE WITH SECTION 1076 OF THE STANDARD SPECIFICATIONS UNLESS METALLIZING IS REQUIRED. GALVANIZING OR METALLIZING PIPE PILE PLATES IS NOT REQUIRED.

PIPE PILE PLATES, IF REQUIRED, SHALL BE IN ACCORDANCE WITH SECTION 450 OF THE STANDARD SPECIFICATIONS.

REMOVE AND REPLACE OR REPAIR TO THE SATISFACTION OF THE ENGINEER PILES THAT ARE DAMAGED, DEFORMED OR COLLAPSED DURING INSTALLATION OR DRIVING.

PILE SPLICES SHALL BE IN ACCORDANCE WITH THE STANDARD SPECIFICATIONS AND AWS D1.1.

FOR CLOSED END PIPE PILES, REMOVE ALL SOIL AND WATER FROM INSIDE THE PILES JUST PRIOR TO PLACING REINFORCING STEEL AND CONCRETE FOR THE CONCRETE PLUG.

FOR OPEN END PIPE PILES, REMOVE ENOUGH SOIL AND WATER FROM INSIDE THE PILES TO CONSTRUCT THE CONCRETE PLUG WITHOUT FOULING THE CONCRETE.

FORM THE CONCRETE PLUG SUCH THAT THE REINFORCING STEEL OR CONCRETE DOES NOT MOVE AND THE CLEARANCE FROM THE REINFORCING STEEL TO THE INSIDE OF THE PILE IS MAINTAINED AFTER CONCRETE PLACEMENT. DO NOT PLACE CONCRETE IN THE BENT CAP UNTIL THE CONCRETE PLUG HAS ATTAINED A MINIMUM COMPRESSIVE STRENGTH OF 10.3 MPa.

THE REINFORCING STEEL, CLASS A CONCRETE, AND GALVANIZING ARE CONSIDERED INCIDENTAL TO THE CONTRACT UNIT PRICE BID PER METER FOR PP 610 X 12.70 GALVANIZED STEEL PILES.

BILL OF MATERIAL FOR ONE PP 610 X 12.70 GALVANIZED STEEL PILE

BAR	NO.	SIZE	TYPE	LENGTH	WEIGHT
S1	6	#13	1	1840	11
V1	10	#16	2	2020	45
REINFORCING STEEL =					56 kg
CLASS A CONCRETE					
1.520m MINIMUM PLUG					0.4 CU. METER

BAR TYPES

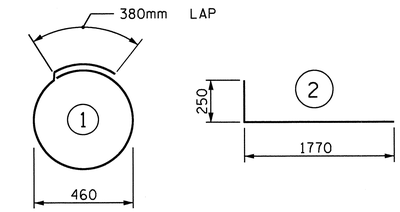

ALL BAR DIMENSIONS ARE OUT TO OUT.

PROJECT NO. R-2554A

WAYNE COUNTY

STATION: 70+24.000 -L-

STATE OF NORTH CAROLINA
DEPARTMENT OF TRANSPORTATION
RALEIGH

STANDARD

610mm STEEL PIPE PILE

(LEFT LANE)

NORTH CAROLINA PROFESSIONAL SEAL 14045 ENGINEER TIMOTHY W. COGGINS
03/23/12

REVISIONS							SHEET NO.
NO.	BY:	DATE:	NO.	BY:	DATE:		3-124
1			3				TOTAL SHEETS
2			4				276

ASSEMBLED BY : M. L. RORIE DATE : 1-4-12	
CHECKED BY : A. M. LEE DATE : 1-20-12	
DRAWN BY : TLA 8/05	ADDED 10/1/05
CHECKED BY : GM 9/05	REV. 5/1/06R MAA/KMM

23-MAR-2012 11:03
Z:\TIPProjects-R\R2554A\Structures\FinalPlans\Str#3\r2554a_sd_b#_03.dgn
padkins

STR. #3

STD. NO. SPP4SM

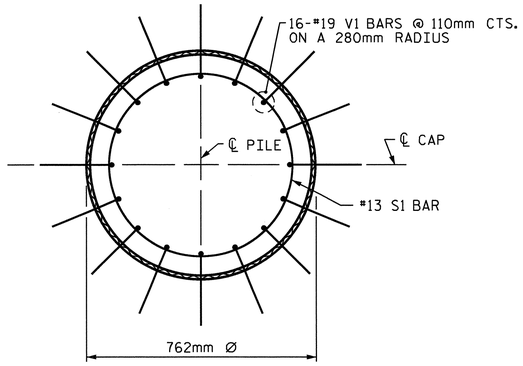

PLAN

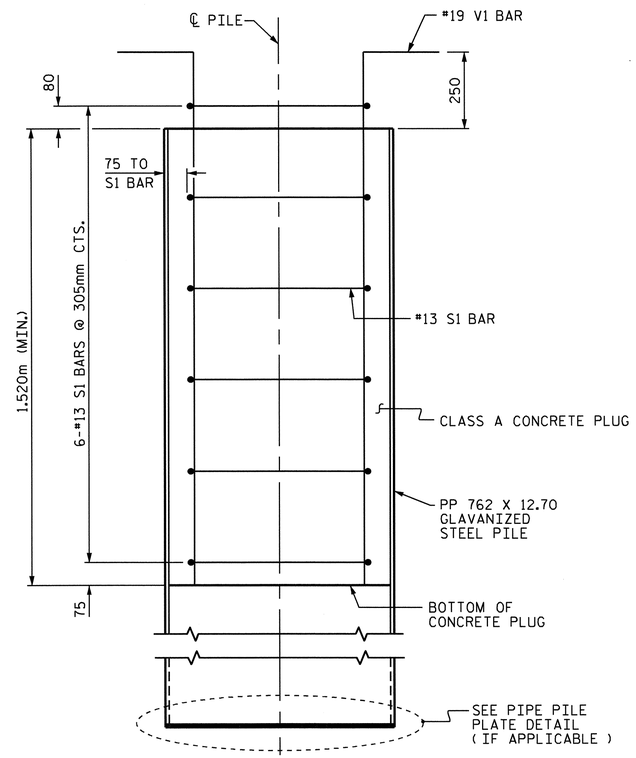

ELEVATION

PP 762 X 12.70 GALVANIZED STEEL PILE

(OPEN OR CLOSED END)

NOTES

PIPE PILES SHALL BE IN ACCORDANCE WITH SECTION 1084 OF THE STANDARD SPECIFICATIONS.

GALVANIZE STEEL PIPE PILES IN ACCORDANCE WITH SECTION 1076 OF THE STANDARD SPECIFICATIONS UNLESS METALLIZING IS REQUIRED. GALVANIZING OR METALLIZING PIPE PILE PLATES IS NOT REQUIRED.

PIPE PILE PLATES, IF REQUIRED, SHALL BE IN ACCORDANCE WITH SECTION 450 OF THE STANDARD SPECIFICATIONS.

REMOVE AND REPLACE OR REPAIR TO THE SATISFACTION OF THE ENGINEER PILES THAT ARE DAMAGED, DEFORMED OR COLLAPSED DURING INSTALLATION OR DRIVING.

PILE SPLICES SHALL BE IN ACCORDANCE WITH THE STANDARD SPECIFICATIONS AND AWS D1.1.

FOR CLOSED END PIPE PILES, REMOVE ALL SOIL AND WATER FROM INSIDE THE PILES JUST PRIOR TO PLACING REINFORCING STEEL AND CONCRETE FOR THE CONCRETE PLUG.

FOR OPEN END PIPE PILES, REMOVE ENOUGH SOIL AND WATER FROM INSIDE THE PILES TO CONSTRUCT THE CONCRETE PLUG WITHOUT FOULING THE CONCRETE.

FORM THE CONCRETE PLUG SUCH THAT THE REINFORCING STEEL OR CONCRETE DOES NOT MOVE AND THE CLEARANCE FROM THE REINFORCING STEEL TO THE INSIDE OF THE PILE IS MAINTAINED AFTER CONCRETE PLACEMENT. DO NOT PLACE CONCRETE IN THE BENT CAP UNTIL THE CONCRETE PLUG HAS ATTAINED A MINIMUM COMPRESSIVE STRENGTH OF 10.3 MPa.

THE REINFORCING STEEL, CLASS A CONCRETE, AND GALVANIZING ARE CONSIDERED INCIDENTAL TO THE CONTRACT UNIT PRICE BID PER METER FOR PP 762 X 12.70 GALVANIZED STEEL PILES.

BILL OF MATERIAL FOR ONE PP 762 X 12.70 GALVANIZED STEEL PILE

BAR	NO.	SIZE	TYPE	LENGTH	WEIGHT
S1	6	#13	1	2300	14
V1	16	#19	2	2020	74
REINFORCING STEEL =					88 kg

CLASS A CONCRETE

1.520m MINIMUM PLUG — 0.6 CU. METER

BAR TYPES

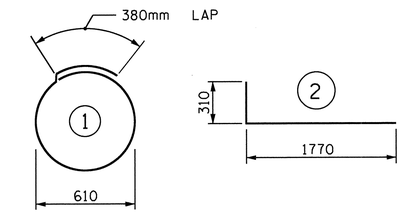

ALL BAR DIMENSIONS ARE OUT TO OUT.

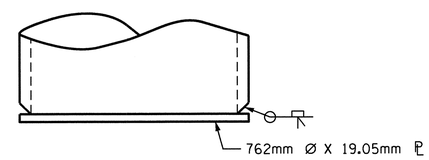

PIPE PILE PLATE DETAIL

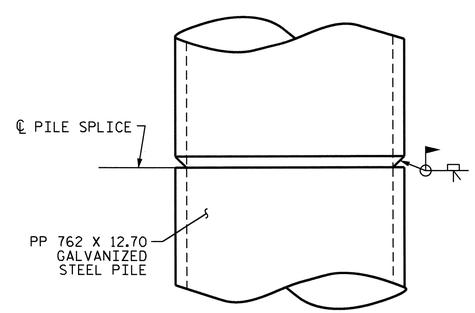

PIPE PILE SPLICE DETAIL

PROJECT NO. R-2554A

WAYNE COUNTY

STATION: 70+24.000 -L-

STATE OF NORTH CAROLINA
DEPARTMENT OF TRANSPORTATION
RALEIGH

STANDARD

762mm STEEL
PIPE PILE
(LEFT LANE)

NORTH CAROLINA PROFESSIONAL SEAL 14045 ENGINEER TIMOTHY A. COGGINS
03/29/12

REVISIONS						SHEET NO.
NO.	BY:	DATE:	NO.	BY:	DATE:	S-125
1			3			TOTAL SHEETS
2			4			276

STR. #3 STD. NO. SPP5SM

ASSEMBLED BY : B. L. GREEN	DATE : 1/4/12		
CHECKED BY : O. PUIGCERVER	DATE : 1/17/12		
DRAWN BY : TLA 8/05	ADDED 10/1/05		
CHECKED BY : GM 9/05	REV. 5/1/06R	MAA/KMM	
	REV. 10/1/11	MAA/GM	

23-MAR-2012 11:02
Z:\TIPProjects-R\R2554A\Structures\FinalPlans\Str#3\r2554a_sd_b#_03.dgn
padkins

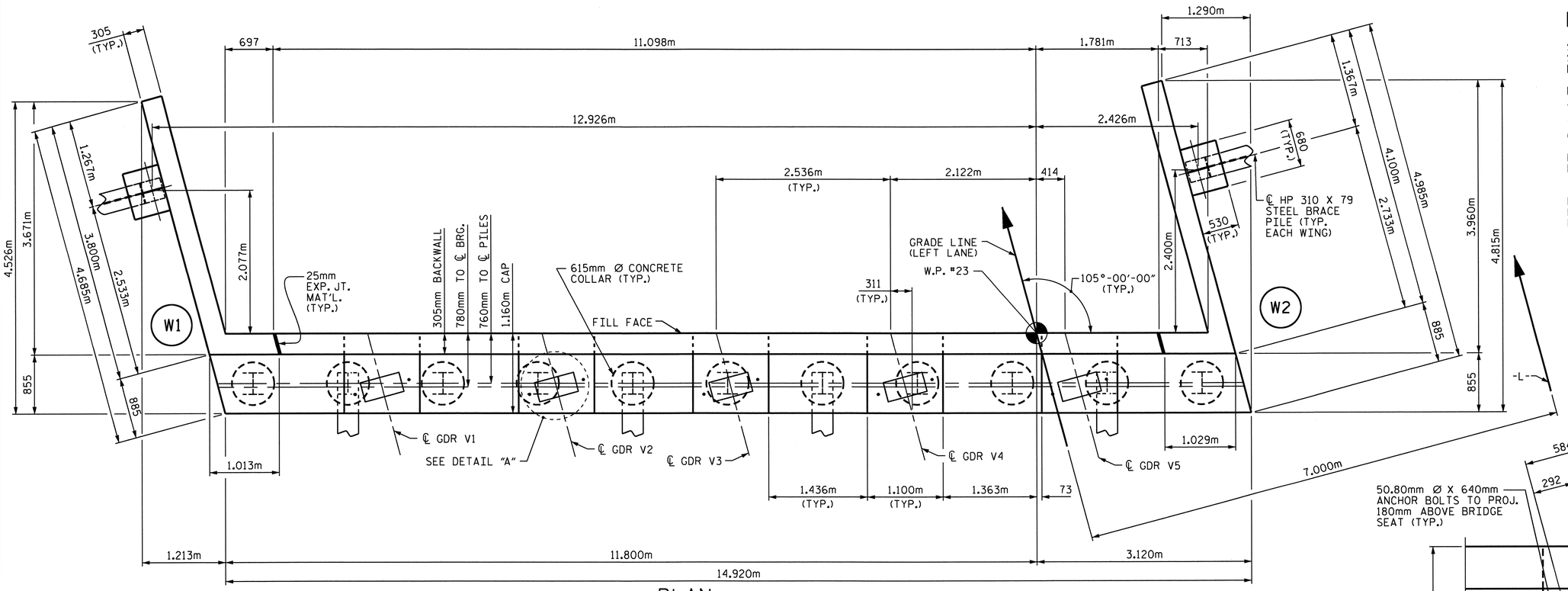

PLAN

NOTES:

STIRRUPS AND U2 BARS IN CAP MAY BE SHIFTED AS NECESSARY TO CLEAR ANCHOR BOLTS.

BACKWALL SHALL BE PLACED BEFORE APPLYING THE EPOXY PROTECTIVE COATING.

THE TOP SURFACE AREAS OF THE END BENT CAP SHALL BE CURED IN ACCORDANCE WITH THE STANDARD SPECIFICATIONS EXCEPT THE MEMBRANE CURING COMPOUND METHOD SHALL NOT BE USED.

THE TOP SURFACE OF THE END BENT CAP EXCEPT THE BRIDGE SEAT BUILDUPS SHALL BE SLOPED TRANSVERSELY FROM THE FILL FACE TO THE BACK FACE AT A RATE OF 2%.

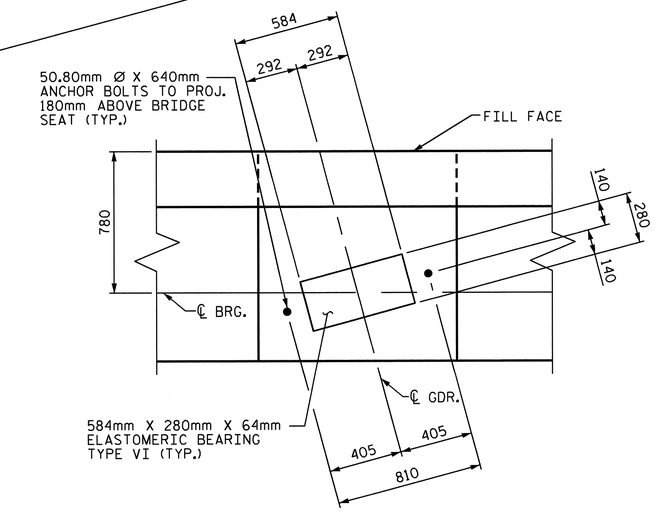

DETAIL "A"

(TYP. EACH GIRDER)

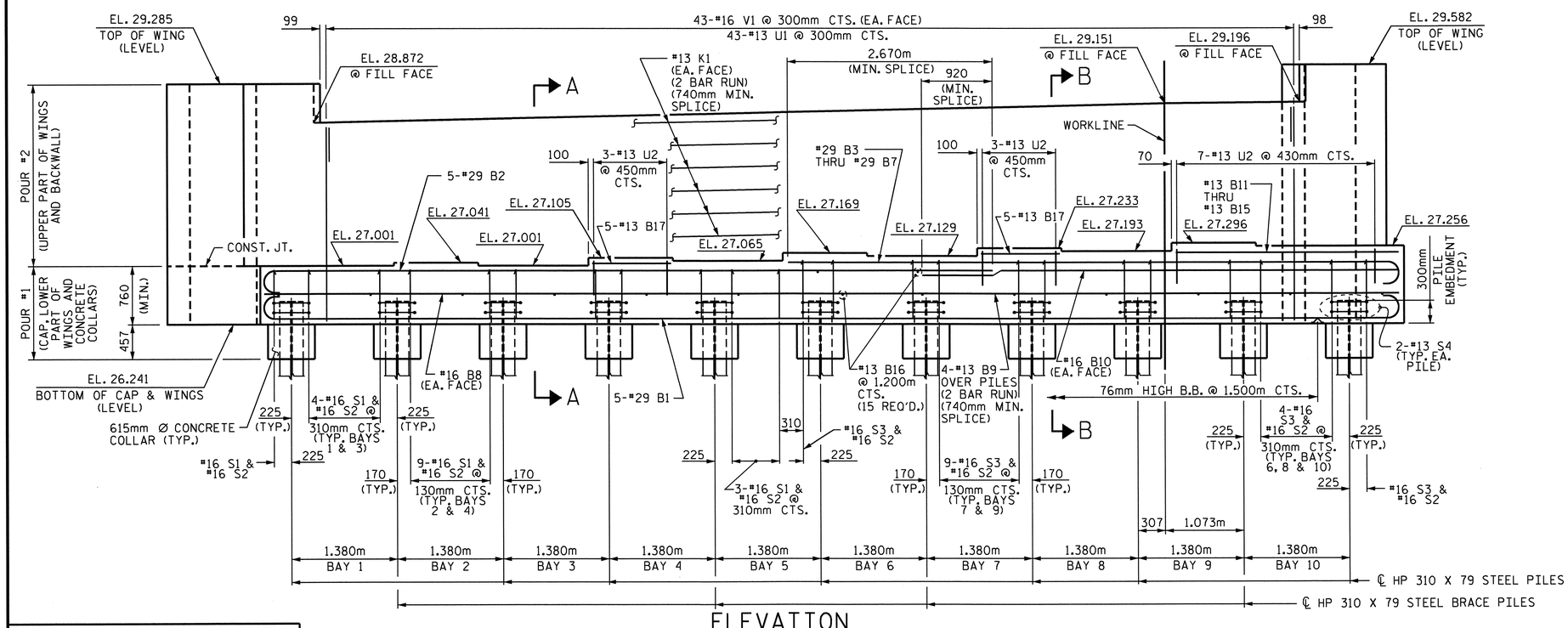

ELEVATION

WING BRACE PILES NOT SHOWN FOR CLARITY.

PROJECT NO. R-2554A

WAYNE COUNTY

STATION: 70+24.000 -L-

SHEET 1 OF 3

STATE OF NORTH CAROLINA
DEPARTMENT OF TRANSPORTATION
RALEIGH

SUBSTRUCTURE

END BENT #2

(LEFT LANE)

NORTH CAROLINA PROFESSIONAL SEAL 14045 ENGINEER TIMOTHY K. COGGINS
03/23/12

REVISIONS								SHEET NO.
NO.	BY:	DATE:	NO.	BY:	DATE:			S-126
1			3					TOTAL SHEETS
2			4					276

DRAWN BY : PEGGY PARISI DATE : 11-30-11
CHECKED BY : B. GREEN DATE : 12-11-11

23-MAR-2012 10:33
Z:\TIPProjects-R\R2554A\Structures\FinalPlans\Str#3\r2554a_sd_eb_03.dgn
padkins

STR. #3

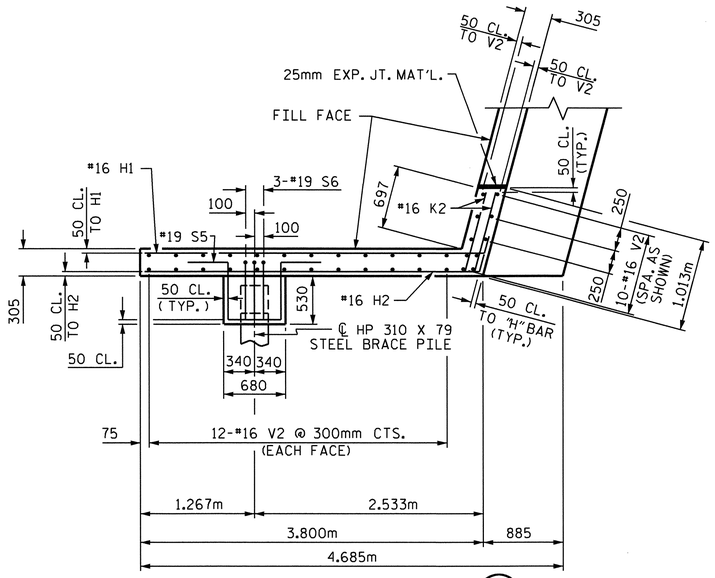

PLAN OF LEFT WING (W1)

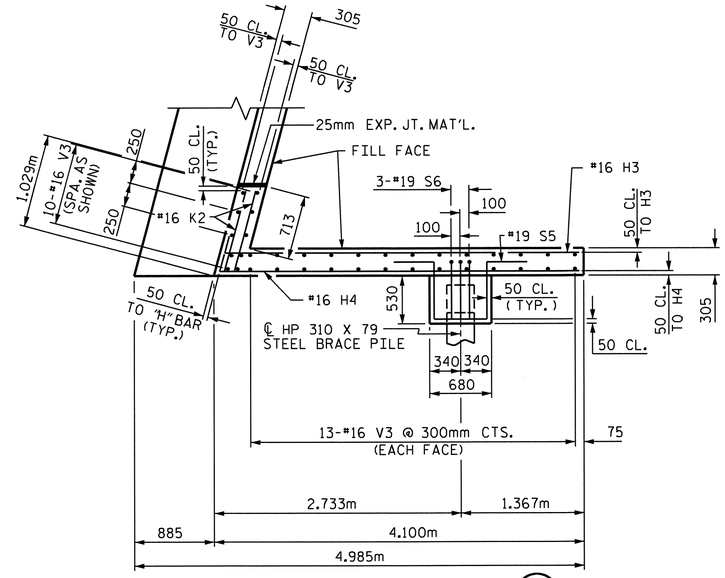

PLAN OF RIGHT WING (W2)

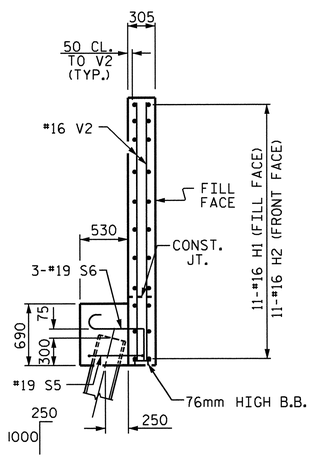

SECTION X-X

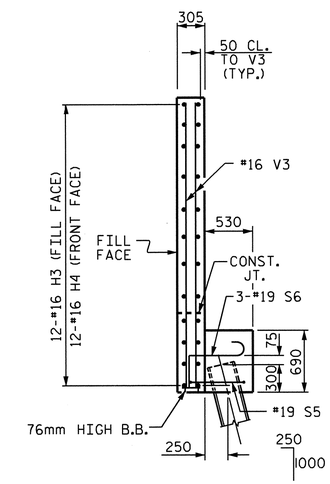

SECTION Y-Y

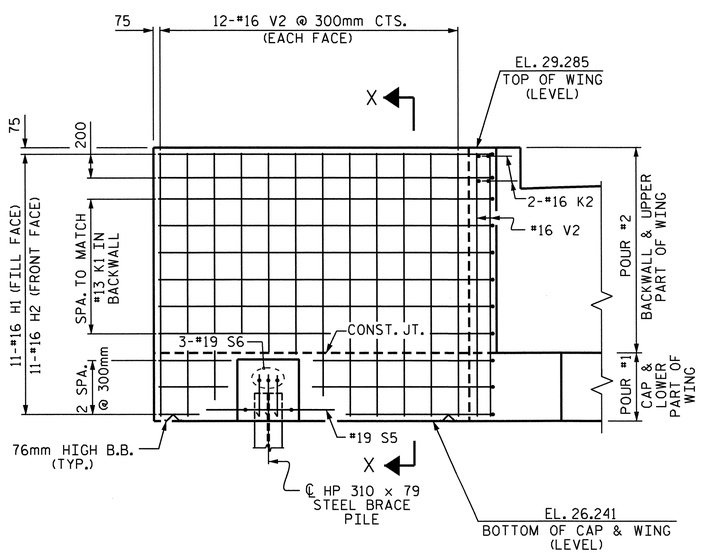

ELEVATION OF LEFT WING (W1)

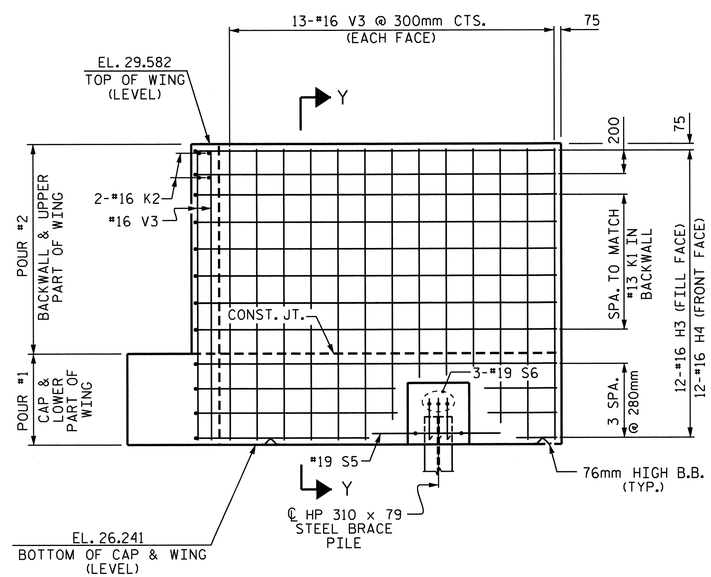

ELEVATION OF RIGHT WING (W2)

NORTH CAROLINA PROFESSIONAL SEAL 14045 ENGINEER TIMOTHY W. COGGINS
03/23/12

PROJECT NO. R-2554A
WAYNE COUNTY
STATION: 70+24.000 -L-

SHEET 2 OF 3

STATE OF NORTH CAROLINA
DEPARTMENT OF TRANSPORTATION
RALEIGH

SUBSTRUCTURE

END BENT #2

(LEFT LANE)

REVISIONS						SHEET NO.
NO.	BY:	DATE:	NO.	BY:	DATE:	S-127
1			3			TOTAL SHEETS
2			4			276

DRAWN BY : PEGGY PARISI DATE : 12-1-11
CHECKED BY : B. GREEN DATE : 12-11-11

23-MAR-2012 10:33
Z:\TIPProjects-R\R2554A\Structures\FinalPlans\Str#3\r2554a_sd_eb_03.dgn
padkins

STR. #3

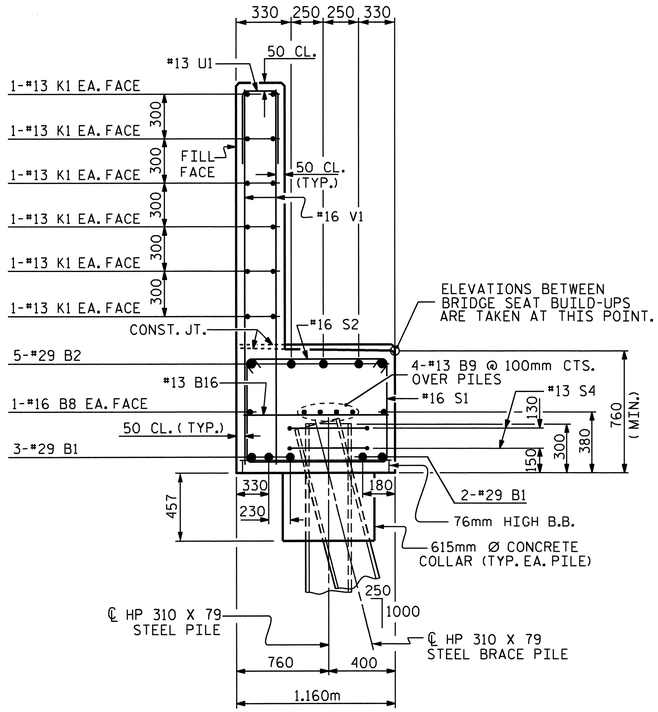

SECTION A-A

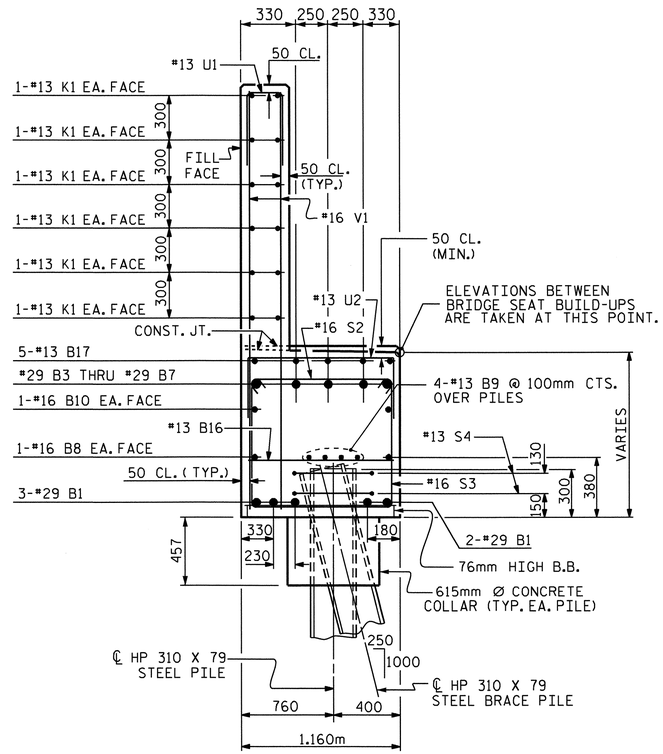

SECTION B-B

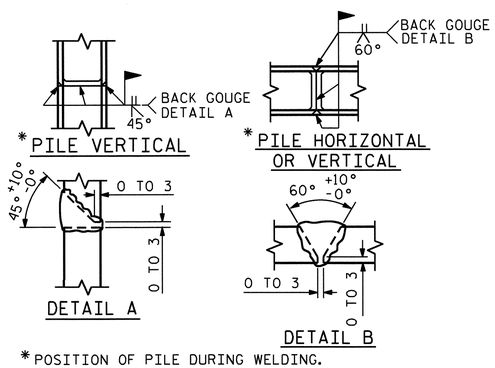

*POSITION OF PILE DURING WELDING.

PILE SPLICE DETAILS

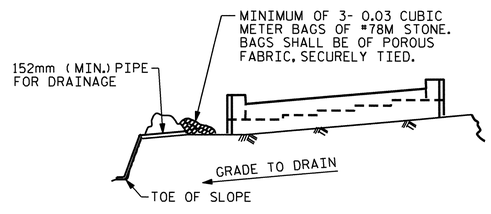

BAGGED STONE AND PIPE SHALL BE PLACED IMMEDIATELY AFTER COMPLETION OF END BENT EXCAVATION. PIPE MAY BE EITHER CONCRETE, CORRUGATED STEEL, CORRUGATED ALUMINUM ALLOY, OR CORRUGATED PLASTIC. PERFORATED PIPE WILL NOT BE ALLOWED.

BAGGED STONE SHALL REMAIN IN PLACE UNTIL THE ENGINEER DIRECTS THAT IT BE REMOVED. THE CONTRACTOR SHALL REMOVE AND DISPOSE OF SILT ACCUMULATIONS AT BAGGED STONE WHEN SO DIRECTED BY THE ENGINEER. BAGS SHALL BE REMOVED AND REPLACED WHENEVER THE ENGINEER DETERMINES THAT THEY HAVE DETERIORATED AND LOST THEIR EFFECTIVENESS.

NO SEPARATE PAYMENT WILL BE MADE FOR THIS WORK AND THE ENTIRE COST OF THIS WORK SHALL BE INCLUDED IN THE UNIT CONTRACT PRICE BID FOR THE SEVERAL PAY ITEMS.

TEMPORARY DRAINAGE AT END BENT

BAR TYPES

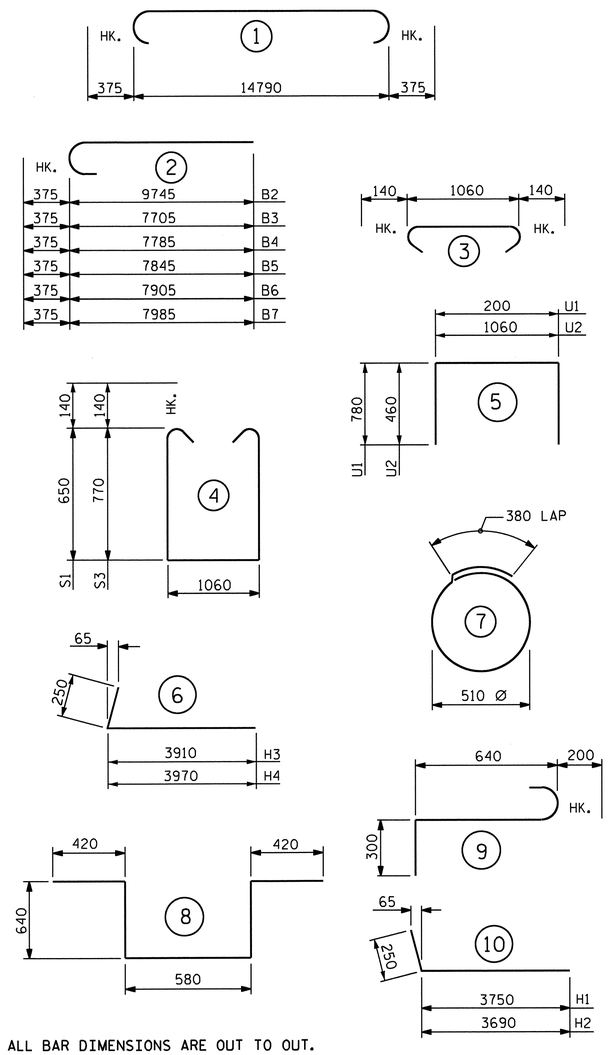

ALL BAR DIMENSIONS ARE OUT TO OUT.

BILL OF MATERIAL

END BENT #2

BAR	NO.	SIZE	TYPE	LENGTH	WEIGHT
B1	5	#29	1	15540	393
B2	5	#29	2	10120	256
B3	1	#29	2	8080	41
B4	1	#29	2	8160	41
B5	1	#29	2	8220	42
B6	1	#29	2	8280	42
B7	1	#29	2	8360	42
B8	2	#16	STR	14800	46
B9	8	#13	STR	7780	62
B10	2	#16	STR	6000	19
B11	1	#13	STR	2640	3
B12	1	#13	STR	2720	3
B13	1	#13	STR	2780	3
B14	1	#13	STR	2840	3
B15	1	#13	STR	2920	3
B16	15	#13	STR	1060	16
B17	10	#13	STR	1000	10
H1	11	#16	10	4000	68
H2	11	#16	10	3940	67
H3	12	#16	6	4160	77
H4	12	#16	6	4220	79
K1	24	#13	STR	7780	186
K2	8	#16	STR	900	11
S1	30	#16	4	2640	123
S2	62	#16	3	1340	129
S3	32	#16	4	2880	143
S4	22	#13	7	1980	43
S5	2	#19	8	2700	12
S6	6	#19	9	1140	15
U1	43	#13	5	1760	75
U2	13	#13	5	1980	26
V1	86	#16	STR	2520	336
V2	34	#16	STR	2940	155
V3	36	#16	STR	3240	181

REINFORCING STEEL KG. 2751

CLASS A CONCRETE BREAKDOWN

POUR #1 (CAP, LOWER WINGS, WING BRACE PILE CAPS & CONCRETE COLLARS) 19.4 C.M.

POUR #2 (BACKWALL & UPPER WINGS) 14.1 C.M.

TOTAL CLASS A CONCRETE 33.5 C.M.

HP 310 X 79 STEEL PILES

NO. 13 197.6 METERS

PILE REDRIVES EACH 5

PROJECT NO. R-2554A

WAYNE COUNTY

STATION: 70+24.000 -L-

SHEET 3 OF 3

STATE OF NORTH CAROLINA
DEPARTMENT OF TRANSPORTATION
RALEIGH

SUBSTRUCTURE

END BENT #2

(LEFT LANE)

NORTH CAROLINA PROFESSIONAL SEAL 14045 ENGINEER TIMOTHY W. COGGINS
03/23/12

REVISIONS							SHEET NO.
NO.	BY:	DATE:	NO.	BY:	DATE:		S-128
1			3				TOTAL SHEETS
2			4				276

DRAWN BY : PEGGY PARISI DATE : 12-1-11
CHECKED BY : B. GREEN DATE : 12-11-11

23-MAR-2012 10:33
Z:\TIPProjects-R\R2554A\Structures\FinalPlans\Str*3\r2554a_sd_eb_03.dgn
padkins

STR. #3

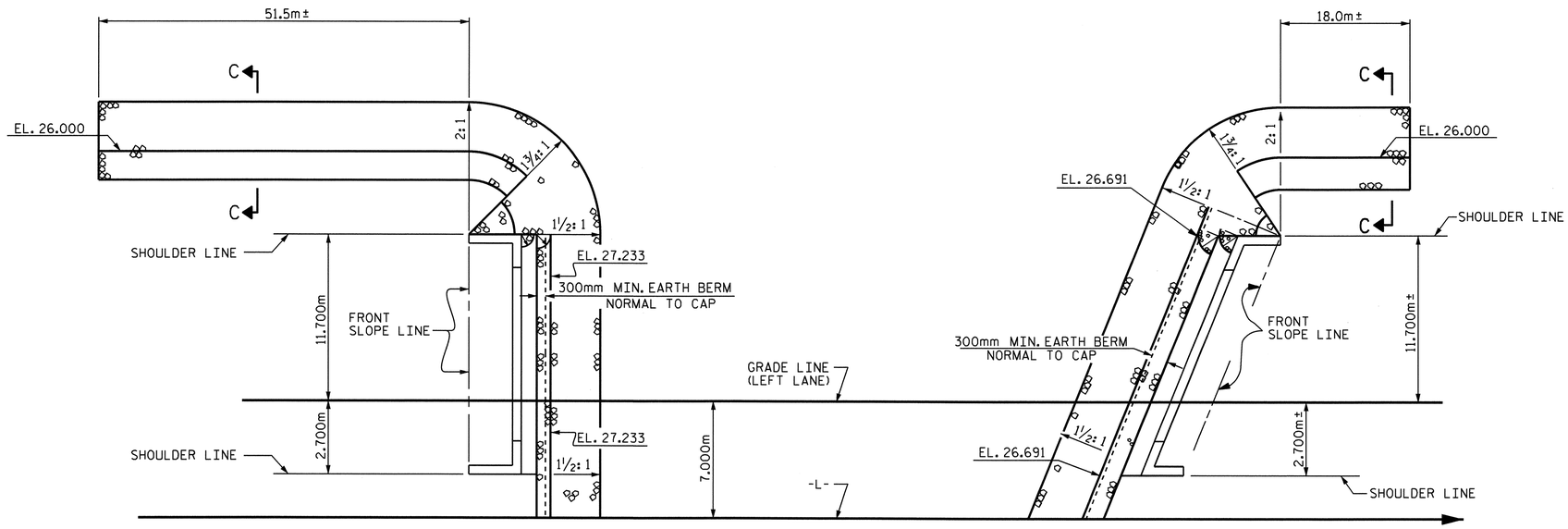

PLAN

ESTIMATED QUANTITIES		
BRIDGE @ STA. 70+24.000 -L- (LEFT LANE)	RIP RAP CLASS II (600mm THICK)	FILTER FABRIC FOR DRAINAGE
	METRIC TON	SQUARE METERS
END BENT 1	420	429
END BENT 2	168	171

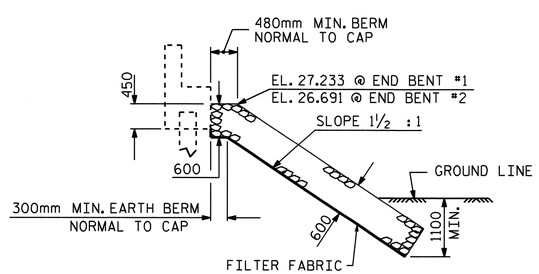

℄ SECTION

BERM RIP RAPPED

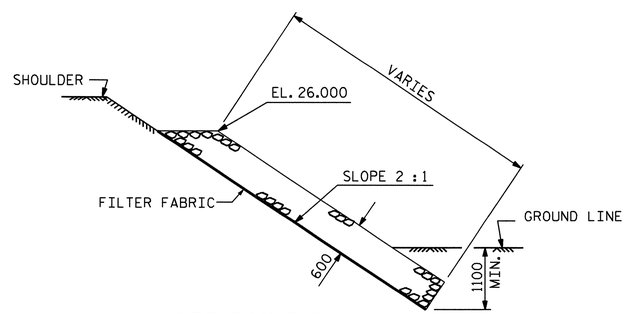

SECTION C-C

PROJECT NO. R-2554A

WAYNE COUNTY

STATION: 70+24.000 -L-

STATE OF NORTH CAROLINA
DEPARTMENT OF TRANSPORTATION
RALEIGH

STANDARD

RIP RAP DETAILS

(LEFT LANE)

NORTH CAROLINA PROFESSIONAL SEAL 14045 ENGINEER TIMOTHY L. COLLINS
03/26/12

REVISIONS							SHEET NO.
NO.	BY:	DATE:	NO.	BY:	DATE:		S-129
1			3				TOTAL SHEETS
2			4				276

ASSEMBLED BY : J.B. WILSON	DATE : 8/15/11	
CHECKED BY : T.L. AVERETTE	DATE : 12/05/11	
DRAWN BY : REK 1/84	REV. 10/17/00	RWW/LES
CHECKED BY : RDU 1/84	REV. 5/1/06R	TLA/GM
	REV. 10/1/11	MAA/GM

26-MAR-2012 09:40
R:\TIPProjects-R\R2554A\Structures\FinalPlans\Str#3\r2554a_sd_rr_03.dgn
taverette

STR. #3

STD. NO. RR1SM

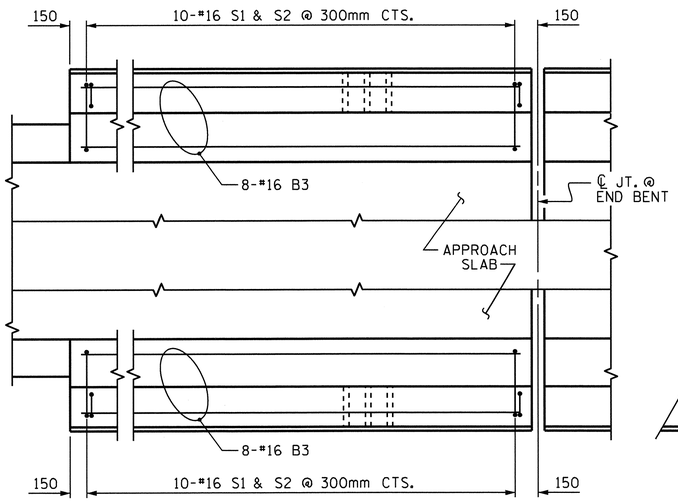

END BENT #1

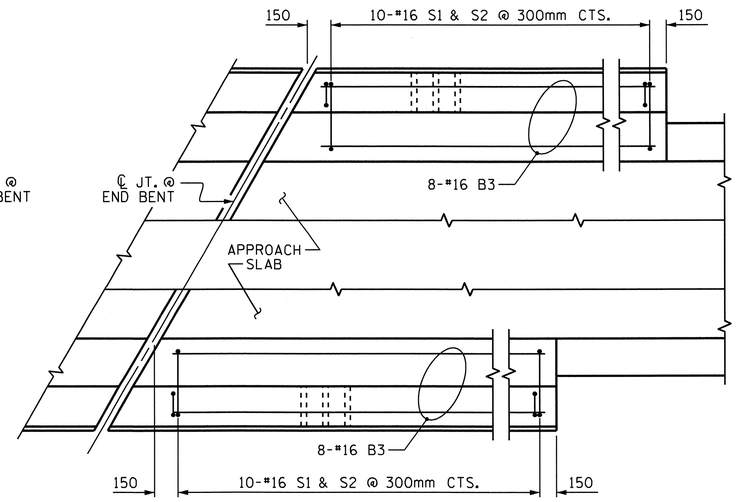

END BENT #2

PLAN OF BARRIER RAIL

NOTES

THE COST OF THE BARRIER RAIL ON THE APPROACH SLAB SHALL BE INCLUDED IN THE CONTRACT PRICE BID FOR "CONCRETE BARRIER RAIL".

THE BARRIER RAIL ON EACH APPROACH SLAB SHALL NOT BE CAST UNTIL ALL APPROACH SLAB CONCRETE HAS BEEN CAST AND HAS REACHED A MINIMUM COMPRESSIVE STRENGTH OF 20.7 MPa.

ALL REINFORCING STEEL IN BARRIER RAILS SHALL BE EPOXY COATED.

BAR TYPES

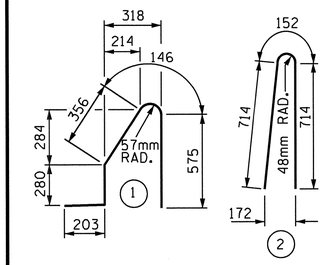

ALL BAR DIMENSIONS ARE OUT TO OUT

BILL OF MATERIAL

BARRIER RAIL ONLY

BAR	NO.	SIZE	TYPE	LENGTH	WEIGHT
* B3	32	#16	STR	2880	143
* S1	40	#16	1	1560	97
* S2	40	#16	2	1580	98
* EPOXY COATED REINFORCING STEEL					338 kg.
CLASS AA CONCRETE					3.0 CU. METER
CONCRETE BARRIER RAIL					12.122 METERS

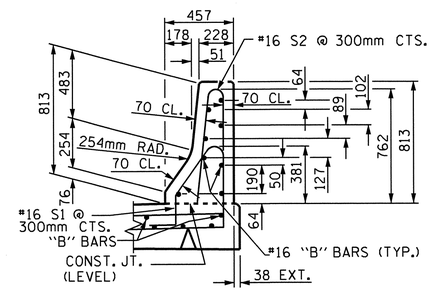

SECTION THRU RAIL

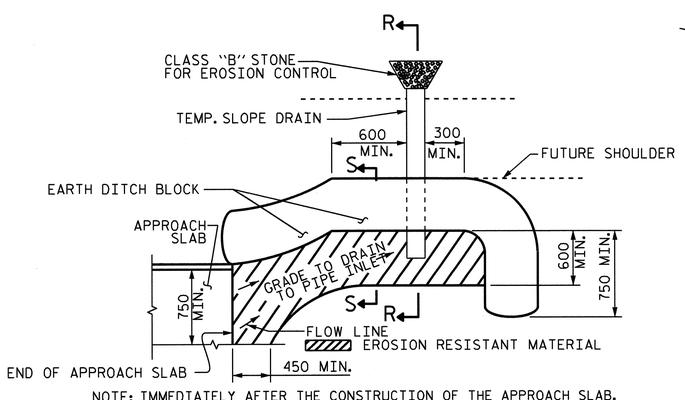

NOTE: IMMEDIATELY AFTER THE CONSTRUCTION OF THE APPROACH SLAB, THE CONTRACTOR SHALL PROVIDE TEMPORARY BERM AND SLOPE DRAIN. CONTRACTOR SHALL GRADE TO PIPE INLET AND PROVIDE EROSION RESISTANT MATERIAL AS SHOWN. THE EROSION RESISTANT MATERIAL SHALL BE EITHER 1) ASPHALT PLANT MIX, TYPE 1 OR TYPE 2, MIN. 50mm DEPTH, 2) EROSION CONTROL MAT, OR 3) CONCRETE, AS DIRECTED BY THE ENGINEER. THE SLOPE DRAIN SHALL CONSIST OF A NON-PERFORATED TEMPORARY DRAINAGE PIPE, 305mm IN DIAMETER.

PLAN VIEW

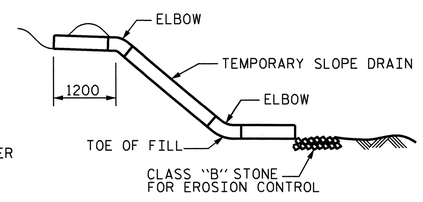

SECTION R-R

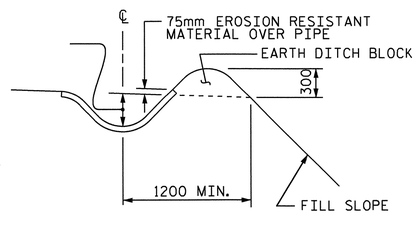

SECTION S-S

TEMPORARY BERM AND SLOPE DRAIN DETAILS

(TO BE USED WHEN SHOULDER BERM GUTTER IS REQUIRED)

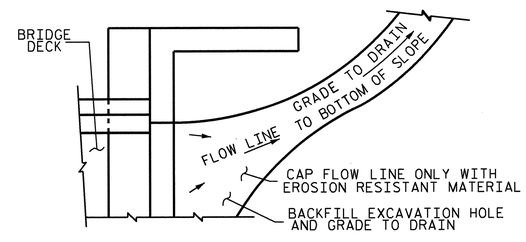

NOTE: IF THE APPROACH SLAB IS NOT CONSTRUCTED IMMEDIATELY AFTER THE BACKFILLING OF THE END BENT EXCAVATION, GRADE TO DRAIN TO THE BOTTOM OF THE SLOPE AND PROVIDE EROSION RESISTANT MATERIAL, SUCH AS FIBERGLASS ROVING OR AS DIRECTED BY THE ENGINEER TO PREVENT SOIL EROSION AND TO PROTECT THE AREA ADJACENT TO THE STRUCTURE. THE CONTRACTOR WILL BE REQUIRED TO REMOVE THESE MATERIALS PRIOR TO CONSTRUCTION OF THE APPROACH SLAB.

TEMPORARY DRAINAGE DETAIL

PROJECT NO. R-2554A
WAYNE COUNTY
STATION: 70+24.000 -L-

SHEET 2 OF 2

STATE OF NORTH CAROLINA
DEPARTMENT OF TRANSPORTATION
RALEIGH

STANDARD

BRIDGE APPROACH SLAB DETAILS

(LEFT LANE)

NORTH CAROLINA PROFESSIONAL SEAL 14045 ENGINEER TIMOTHY W. COGGINS
03/23/12

REVISIONS						SHEET NO.
NO.	BY:	DATE:	NO.	BY:	DATE:	S-130
1			3			TOTAL SHEETS
2			4			276

ASSEMBLED BY : PEGGY PARIS DATE : 12-7-11	
CHECKED BY : B. GREEN DATE : 12-28-11	
DRAWN BY : FCJ 11/88	REV. 5/7/03 RWW/JTE
CHECKED BY : ARB 11/88	REV. 5/1/06 RRR MAA/KMM
	REV. 10/1/11 MAA/GM

23-MAR-2012 10:30
Z:\TIPProjects-R\R2554A\Structures\FinalPlans\Str#3\r2554a_sd_as_03.dgn
pdkins

STR #3 STD. NO. BAS4SM

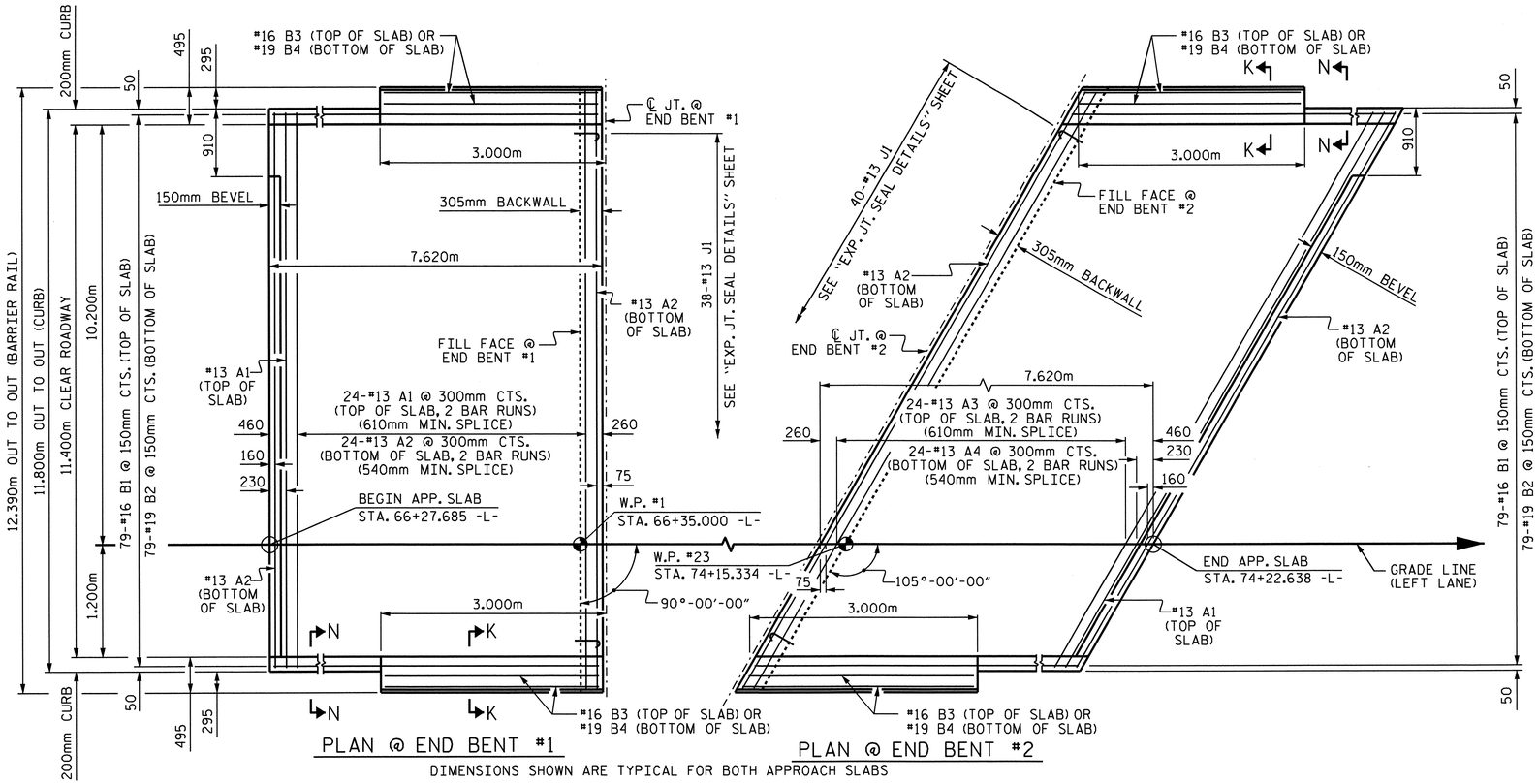

NOTES

APPROACH SLAB SHALL NOT BE CONSTRUCTED PRIOR TO COMPLETION OF THE BRIDGE DECK.

SUBDRAIN FINE AGGREGATE IS TO BE CONTINUOUS ALONG FILL FACE OF BACKWALL AND END BENT FROM OUTSIDE EDGE TO OUTSIDE EDGE OF APPROACH SLAB.

AREA BETWEEN THE WINGWALL AND APPROACH SLAB SHALL BE GRADED TO DRAIN THE WATER AWAY FROM THE FILL FACE OF THE BRIDGE AND SHALL BE PAVED. SEE ROADWAY PLANS.

FOR EXPANSION JOINT SEALS, SEE SPECIAL PROVISIONS.

BILL OF MATERIAL

APPROACH SLAB AT EB #1

BAR	NO.	SIZE	TYPE	LENGTH	WEIGHT
* A1	50	#13	STR	6460	321
A2	52	#13	STR	6420	332
* B1	79	#16	STR	7260	890
B2	79	#19	STR	7500	1324
* B3	4	#16	STR	2880	18
B4	4	#19	STR	2880	26
* J1	38	#13	1	440	17
REINFORCING STEEL				kg.	1682
* EPOXY COATED REINFORCING STEEL				** kg.	1246
CLASS AA CONCRETE				** C.M.	32.8

APPROACH SLAB AT EB #2

BAR	NO.	SIZE	TYPE	LENGTH	WEIGHT
* A3	50	#13	STR	6680	332
A4	52	#13	STR	6640	343
* B1	79	#16	STR	7260	890
B2	79	#19	STR	7500	1324
* B3	4	#16	STR	2880	18
B4	4	#19	STR	2880	26
* J1	40	#13	1	440	17
REINFORCING STEEL				kg.	1693
* EPOXY COATED REINFORCING STEEL				** kg.	1257
CLASS AA CONCRETE				** C.M.	32.8

BAR TYPE

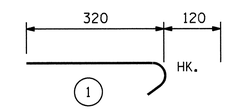

ALL BAR DIMENSIONS ARE OUT TO OUT

** QUANTITIES FOR BARRIER RAIL ARE NOT INCLUDED. SEE SHEET 2 OF 2.

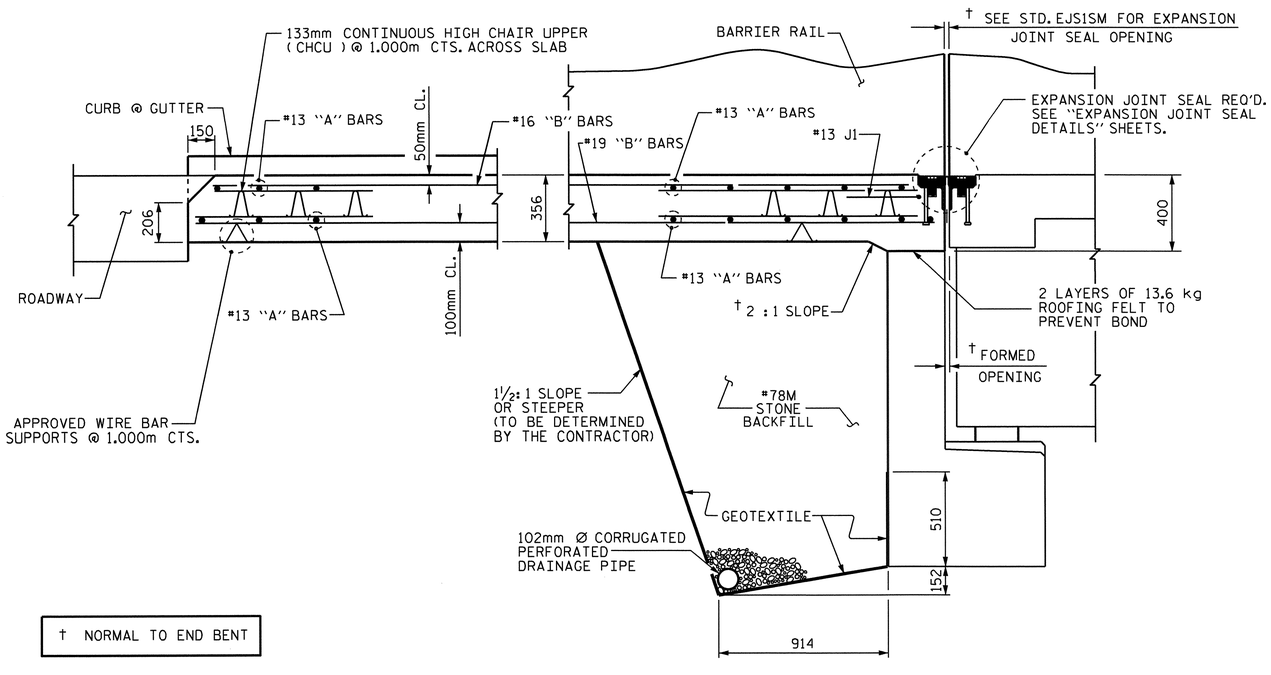

† NORMAL TO END BENT

SECTION THRU SLAB

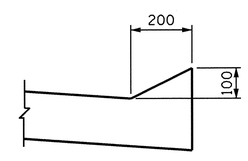

SECTION N-N

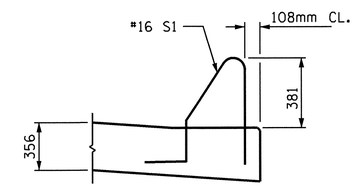

SECTION K-K

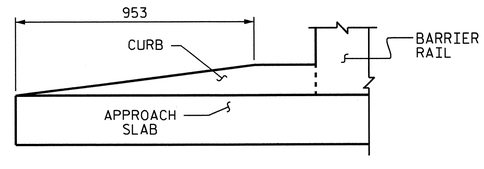

END OF CURB WITHOUT SHOULDER BERM GUTTER

CURB DETAILS

PROJECT NO. R-2554A

WAYNE COUNTY

STATION: 70+24.000 -L-

SHEET 1 OF 2

STATE OF NORTH CAROLINA
DEPARTMENT OF TRANSPORTATION
RALEIGH

STANDARD

BRIDGE APPROACH SLAB
FOR FLEXIBLE PAVEMENT

(LEFT LANE)

NORTH CAROLINA PROFESSIONAL SEAL 14045 ENGINEER TIMOTHY J. COGGINS
03/23/12

REVISIONS						SHEET NO.
NO.	BY:	DATE:	NO.	BY:	DATE:	S-131
1			3			TOTAL SHEETS
2			4			276

ASSEMBLED BY : PEGGY PARISI	DATE : 12-7-11
CHECKED BY : B. GREEN	DATE : 12-28-11
DRAWN BY : RH 5/99	REV. 5/7/03R RWW/JTE
CHECKED BY : RDR 5/99	REV. 5/1/06RR KMM/GM

STR #3 STD. NO. BAS2SM

23-MAR-2012 10:30
Z:\TIPProjects-R\R2554A\Structures\FinalPlans\Str#3\r2554a_sd_as_03.dgn
padkins

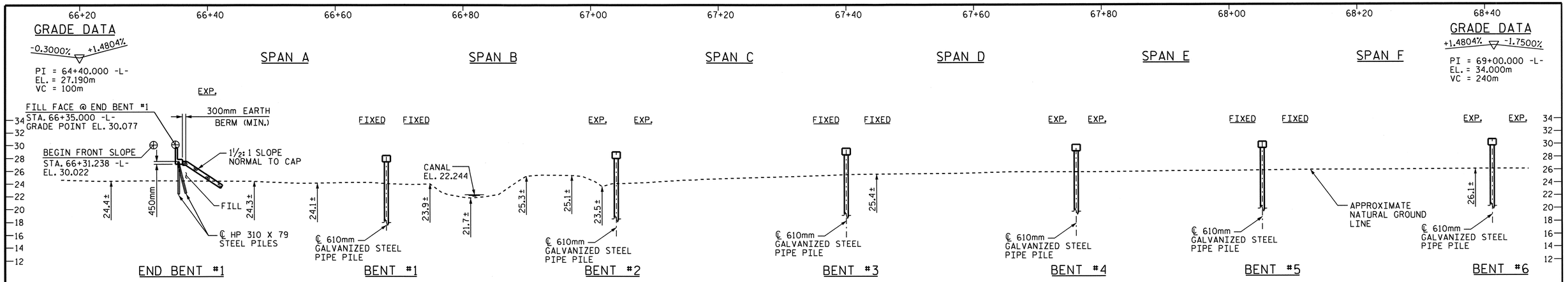

SECTION ALONG -L-

(SECTION @ END BENT AND BENTS ARE SHOWN AT RIGHT ANGLES.)

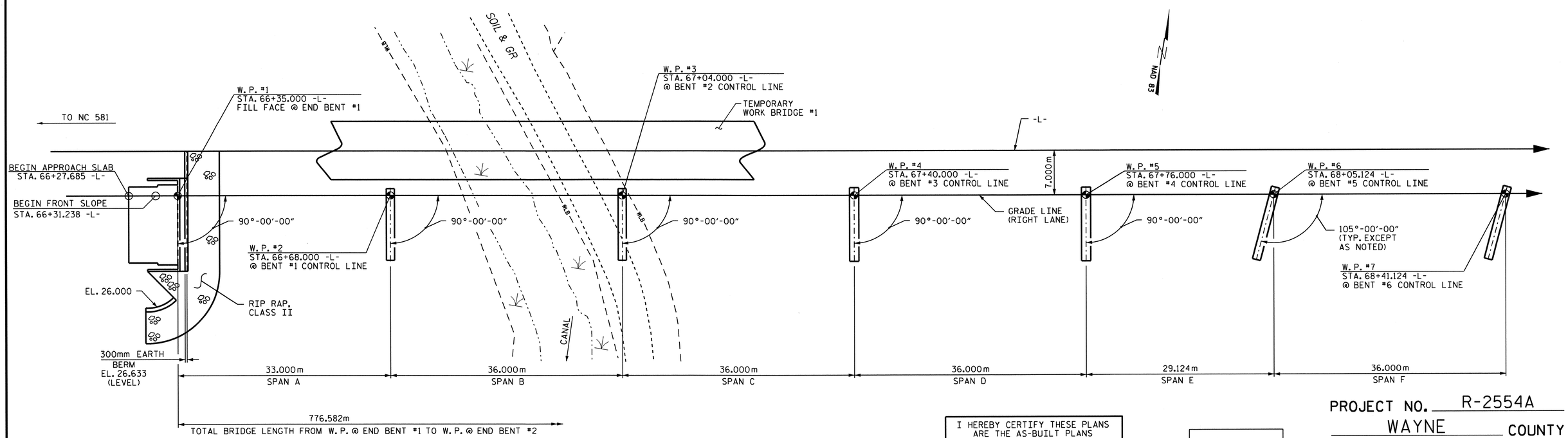

PLAN

(PILES NOT SHOWN FOR CLARITY)

I HEREBY CERTIFY THESE PLANS ARE THE AS-BUILT PLANS

METRIC

PROJECT NO. R-2554A

WAYNE COUNTY

STATION: 70+24.000 -L-

SHEET 1 OF 7 BRIDGE NO. 376

STATE OF NORTH CAROLINA
DEPARTMENT OF TRANSPORTATION
RALEIGH

GENERAL DRAWING

BRIDGE OVER LITTLE RIVER
ON PROP. US 70 BYP.
BETWEEN NC 581 AND SR 1300
(RIGHT LANE)

NORTH CAROLINA PROFESSIONAL SEAL 22274 ENGINEER OMAR R. AZIZ 03/23/12

NORTH CAROLINA PROFESSIONAL SEAL 14045 ENGINEER TIMOTHY L. COGGINS 03/23/12

REVISIONS						SHEET NO.
NO.	BY:	DATE:	NO.	BY:	DATE:	S-132
1			3			TOTAL SHEETS
2			4			276

DRAWN BY : PEGGY PARISI DATE : 1-18-12
CHECKED BY : T.L. COGGINS DATE : 2-13-12

23-MAR-2012 11:40
Z:\TIPProjects-R\R2554A\Structures\FinalPlans\Str#4\r2554a_sd_gd_04 .dgn
padkins

STR. #4

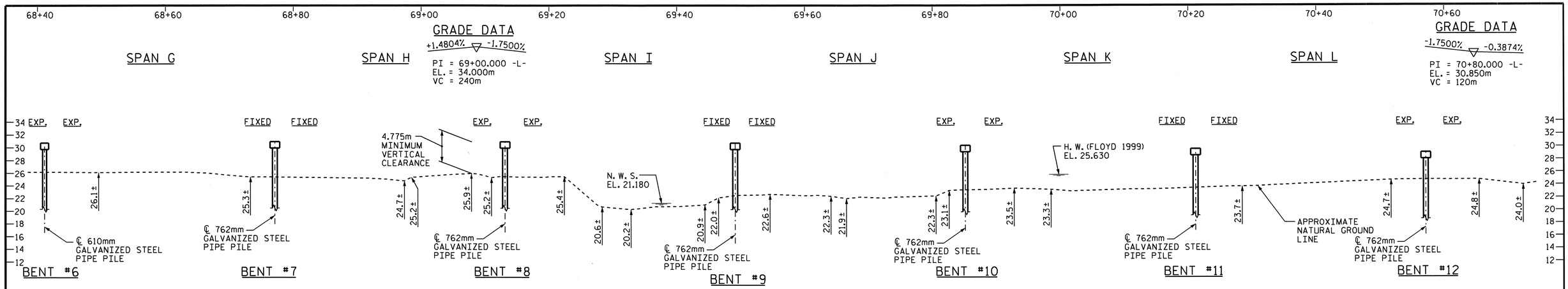

SECTION ALONG -L-

(SECTION @ BENTS ARE SHOWN AT RIGHT ANGLES.)

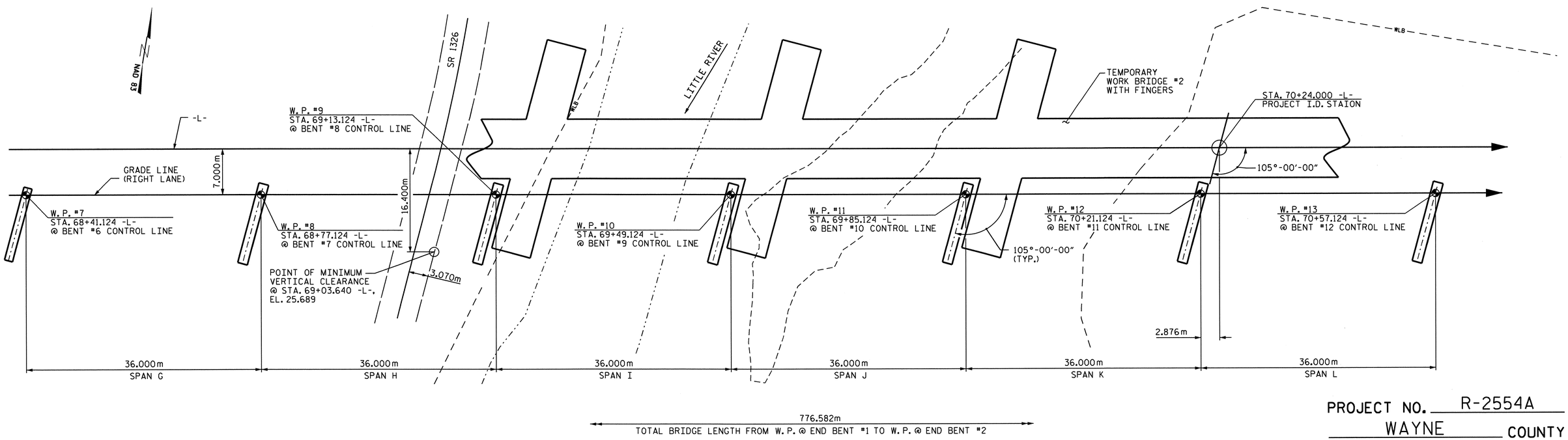

PLAN

(PILES NOT SHOWN FOR CLARITY)

PROJECT NO. R-2554A

WAYNE COUNTY

STATION: 70+24.000 -L-

SHEET 2 OF 7

STATE OF NORTH CAROLINA
DEPARTMENT OF TRANSPORTATION
RALEIGH

GENERAL DRAWING

BRIDGE OVER LITTLE RIVER
ON PROP. US 70 BYP.
BETWEEN NC 581 AND SR 1300
(RIGHT LANE)

NORTH CAROLINA PROFESSIONAL SEAL 14045 ENGINEER TIMOTHY L. COGGINS
03/23/12

REVISIONS						SHEET NO.
NO.	BY:	DATE:	NO.	BY:	DATE:	S-133
1			3			TOTAL SHEETS
2			4			276

DRAWN BY : PEGGY PARISI DATE : 1-18-12
CHECKED BY : T.L. COGGINS DATE : 2-13-12

23-MAR-2012 11:40
Z:\TIPProjects-R\R2554A\Structures\FinalPlans\Str#4\r2554a_sd_gd_04 .dgn
padkins

STR. #4

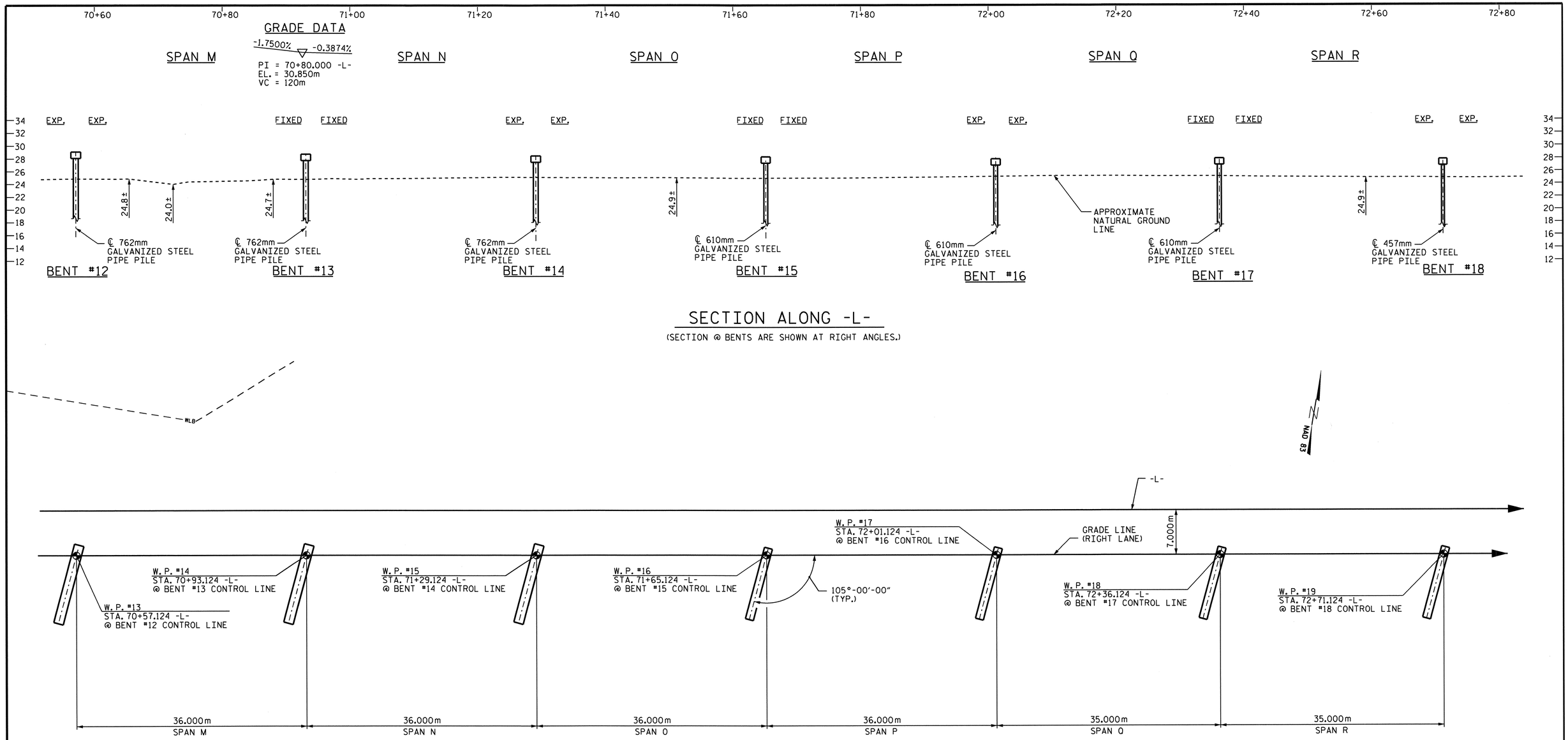

PLAN

(PILES NOT SHOWN FOR CLARITY)

PROJECT NO. R-2554A

WAYNE COUNTY

STATION: 70+24.000 -L-

SHEET 3 OF 7

STATE OF NORTH CAROLINA
DEPARTMENT OF TRANSPORTATION
RALEIGH

GENERAL DRAWING

BRIDGE OVER LITTLE RIVER
ON PROP. US 70 BYP.
BETWEEN NC 581 AND SR 1300
(RIGHT LANE)

NORTH CAROLINA PROFESSIONAL SEAL 14045 ENGINEER TIMOTHY L. COGGINS
03/23/12

REVISIONS						SHEET NO.
NO.	BY:	DATE:	NO.	BY:	DATE:	S-134
1			3			TOTAL SHEETS
2			4			276

DRAWN BY : PEGGY PARISI DATE : 1-18-12
CHECKED BY : T.L. COGGINS DATE : 2-13-12

23-MAR-2012 11:40
Z:\TIPProjects-R\R2554A\Structures\FinalPlans\Str#4\r2554a_sd_gd_04 .dgn
padkins

STR. #4

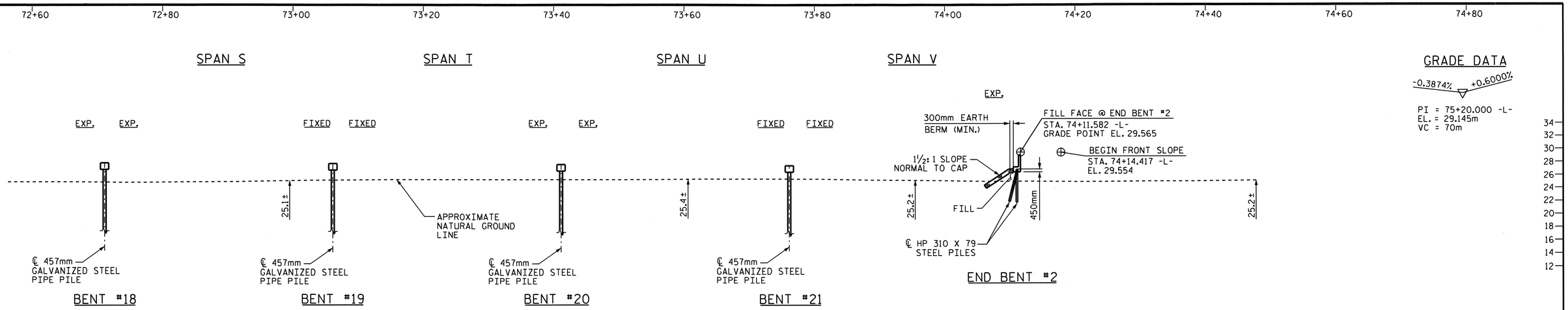

SECTION ALONG -L-

(SECTION @ END BENT AND BENTS ARE SHOWN AT RIGHT ANGLES.)

GRADE DATA

-0.3874% +0.6000%

PI = 75+20.000 -L-
EL. = 29.145m
VC = 70m

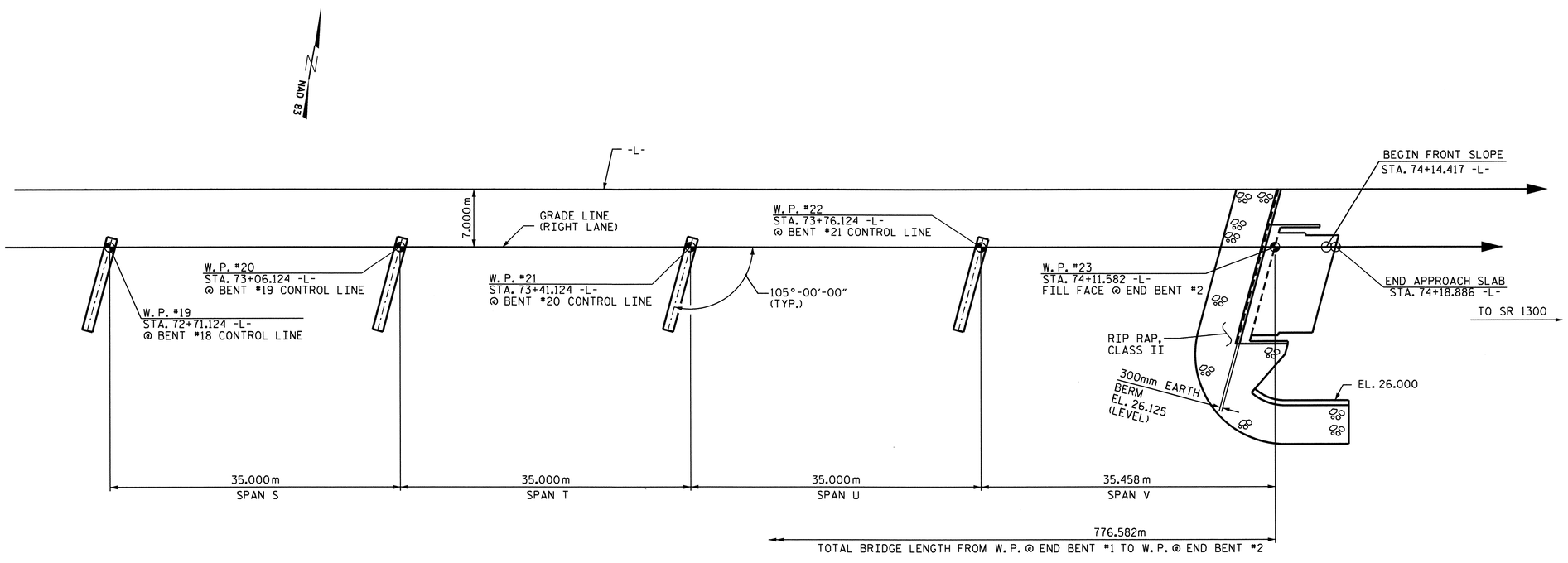

PLAN

(PILES NOT SHOWN FOR CLARITY)

PROJECT NO. R-2554A
WAYNE COUNTY
STATION: 70+24.000 -L-

SHEET 4 OF 7

STATE OF NORTH CAROLINA
DEPARTMENT OF TRANSPORTATION
RALEIGH

GENERAL DRAWING

BRIDGE OVER LITTLE RIVER
ON PROP. US 70 BYP.
BETWEEN NC 581 AND SR 1300
(RIGHT LANE)

NORTH CAROLINA PROFESSIONAL SEAL 14045 ENGINEER TIMOTHY L. COGGINS
03/23/12

REVISIONS						SHEET NO.
NO.	BY:	DATE:	NO.	BY:	DATE:	S-135
1			3			TOTAL SHEETS
2			4			276

DRAWN BY : PEGGY PARISI DATE : 1-18-12
CHECKED BY : T.L. COGGINS DATE : 2-13-12

23-MAR-2012 11:39
Z:\TIPProjects-R\R2554A\Structures\FinalPlans\Str#4\r2554a_sd_gd_04 .dgn
padkins

STR. #4

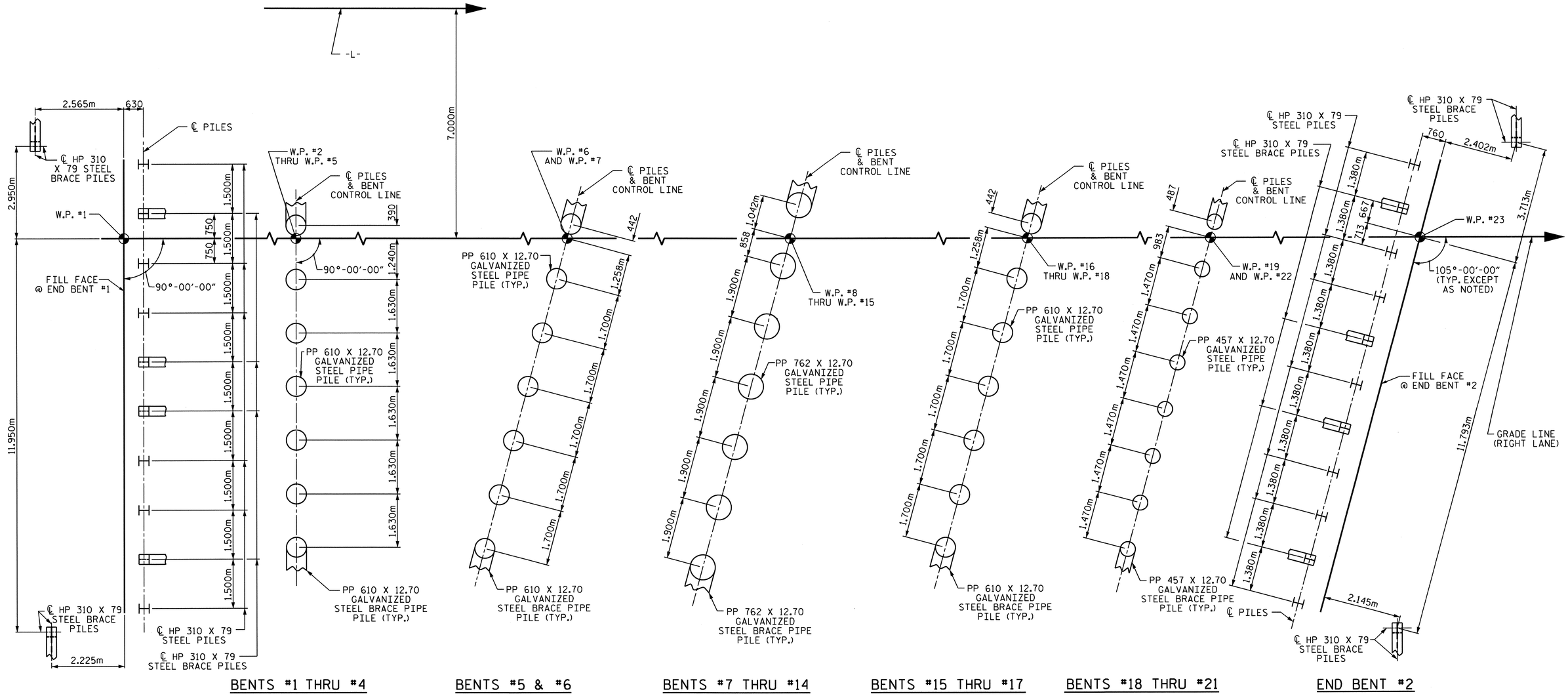

FOUNDATION LAYOUT

DIMENSIONS LOCATING PILES ARE SHOWN TO THE PILE CENTERLINE AT THE BOTTOM OF THE CAP.
BRACE PILES AT THE END BENT ARE TO BE BATTERED @ 250:1000.
BRACE PILES AT THE INTERIOR BENTS ARE LOCATED AS SHOWN AND ARE TO BE BATTERED @ 125:1000.

PROJECT NO. R-2554A
WAYNE COUNTY
STATION: 70+24.000 -L-

SHEET 5 OF 7

STATE OF NORTH CAROLINA
DEPARTMENT OF TRANSPORTATION
RALEIGH

GENERAL DRAWING

BRIDGE OVER LITTLE RIVER
ON PROP. US 70 BYP.
BETWEEN NC 581 AND SR 1300

(RIGHT LANE)

NORTH CAROLINA PROFESSIONAL SEAL 14045 ENGINEER TIMOTHY L. COGGINS
03/23/12

REVISIONS							SHEET NO.
NO.	BY:	DATE:	NO.	BY:	DATE:		S-136
1			3				TOTAL SHEETS
2			4				276

DRAWN BY : PEGGY PARISI DATE : 1-11-12
CHECKED BY : T.L. COGGINS DATE : 2-13-12

23-MAR-2012 11:39
Z:\TIPProjects-R\R2554A\Structures\FinalPlans\Str#4\r2554a_sd_gd_04 .dgn
padkins

STR. #4

BM #16: STATION 68+76.148 -L-, 280.096m RIGHT, EL. 25.167m.

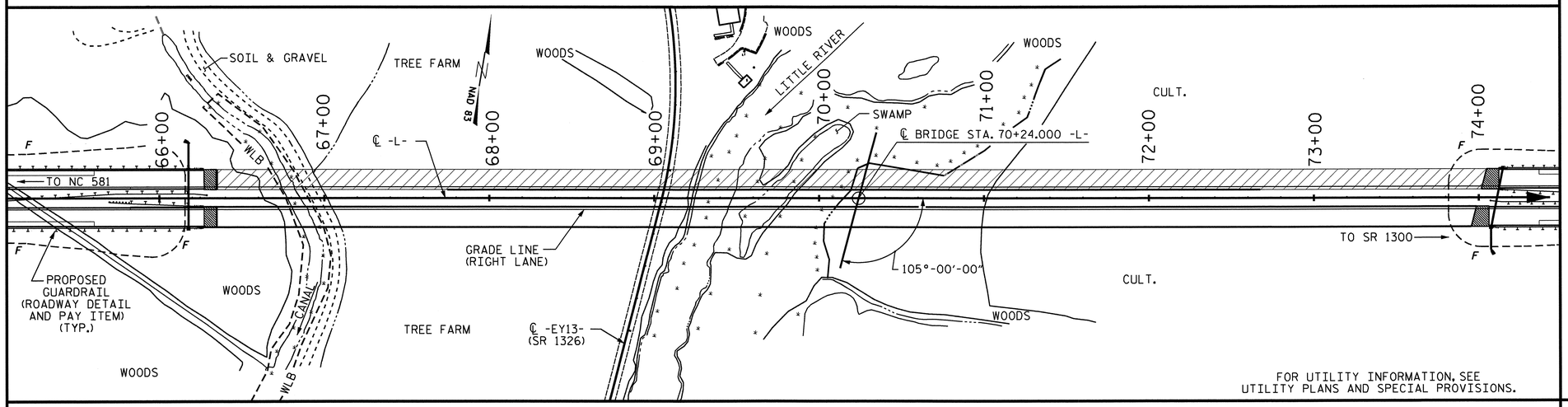

LOCATION SKETCH

WORK BRIDGES NOT SHOWN FOR CLARITY, SEE SHEET 1 OF 7 AND 2 OF 7.

HYDRAULIC DATA

DESIGN DISCHARGE	=	354.3 m3/s
FREQUENCY OF DESIGN FLOOD	=	50 YR.
DESIGN HIGH WATER ELEVATION	=	26.036m
DRAINAGE AREA	=	792 Sq. Km
BASE DISCHARGE (Q100)	=	443.4 m3/s
BASE HIGH WATER ELEVATION	=	26.237m

OVERTOPPING FLOOD DATA

OVERTOPPING DISCHARGE	> 739.1 m3/s
FREQUENCY OF OVERTOPPING FLOOD	500 YR. +
OVERTOPPING FLOOD ELEVATION	27.315*

* OT OCCURS AT SAG STA. 64+06.700.
OT ELEV. IS ROADWAY GRADE POINT.

NOTES:

ALL DIMENSIONS ARE IN MILLIMETERS UNLESS OTHERWISE NOTED.

ALL ELEVATIONS ARE IN METERS.

ASSUMED LIVE LOAD = MS 18 OR ALTERNATE LOADING, EXCEPT THAT THE GIRDERS HAVE BEEN DESIGNED FOR MS 22.5.

FOR OTHER DESIGN DATA AND GENERAL NOTES, SEE SHEET SNSM.

FOR EROSION CONTROL MEASURES SEE EROSION CONTROL PLANS.

THIS BRIDGE IS LOCATED IN SEISMIC ZONE 1.

REMOVABLE FORMS MAY BE USED IN LIEU OF METAL STAY-IN-PLACE FORMS IN ACCORDANCE WITH ARTICLE 420-3 OF THE STANDARD SPECIFICATIONS.

THIS STRUCTURE HAS BEEN DESIGNED IN ACCORDANCE WITH HEC 18, "EVALUATING SCOUR AT BRIDGES", MAY, 2001.

NEEDLE BEAMS WILL NOT BE ALLOWED UNLESS OTHERWISE CALLED FOR ON THE PLANS OR APPROVED BY THE ENGINEER.

FOR SUBMITTAL OF WORKING DRAWINGS, SEE SPECIAL PROVISIONS.

FOR FALSEWORK AND FORMWORK, SEE SPECIAL PROVISIONS.

FOR CRANE SAFETY, SEE SPECIAL PROVISIONS.

FOR PRESTRESSED CONCRETE MEMBERS, SEE SPECIAL PROVISIONS.

THIS BRIDGE HAS BEEN DESIGNED BY THE STRENGTH DESIGN METHOD AS SPECIFIED IN AASHTO STANDARD SPECIFICATIONS.

FOR GROUT FOR STRUCTURES, SEE SPECIAL PROVISIONS.

FOR CURING CONCRETE, SEE SPECIAL PROVISIONS.

FOR PLACING LOAD ON STRUCTURE MEMBERS, SEE SPECIAL PROVISIONS.

FOR MAINTENANCE AND PROTECTION OF TRAFFIC BENEATH PROPOSED STRUCTURE, SEE SPECIAL PROVISIONS.

FOR ALL INTERIOR BENTS, ONLY PARTIAL GALVANIZING OF THE PILES IS REQUIRED. SEE INTERIOR BENT SHEETS FOR REQUIRED GALVANIZED LENGTHS. PAYMENT FOR PARTIALLY GALVANIZED PILES WILL BE MADE UNDER THE CONTRACT UNIT PRICE FOR GALVANIZED STEEL PILES.

FOR CONSTRUCTION, MAINTENANCE AND REMOVAL OF TEMPORARY ACCESS AT STATION 70+24.000 -L-, SEE SPECIAL PROVISIONS.

FOR BRIDGE DECK RIDEABILITY AND GROOVING AT STATION 70+24.000 -L-, SEE SPECIAL PROVISIONS.

FOR METRIC STRUCTURAL STEEL, SEE SPECIAL PROVISIONS.

FOR ALL INTERIOR BENTS, ONLY PARTIAL GALVANIZING OF THE PILES IS REQUIRED. SEE INTERIOR BENT SHEETS FOR REQUIRED GALVANIZED LENGTHS. PAYMENT FOR PARTIALLY GALVANIZED PILES WILL BE MADE UNDER THE CONTRACT UNIT PRICE FOR GALVANIZED STEEL PILES.

PROJECT NO. R-2554A
WAYNE COUNTY
STATION: 70+24.000 -L-

SHEET 6 OF 7

STATE OF NORTH CAROLINA
DEPARTMENT OF TRANSPORTATION
RALEIGH

GENERAL DRAWING

BRIDGE OVER LITTLE RIVER
ON PROP. US 70 BYP.
BETWEEN NC 581 AND SR 1300
(RIGHT LANE)

NORTH CAROLINA PROFESSIONAL SEAL 14045 ENGINEER TIMOTHY L. COGGINS
03/23/12

REVISIONS						SHEET NO.
NO.	BY:	DATE:	NO.	BY:	DATE:	S-137
1			3			TOTAL SHEETS
2			4			276

DRAWN BY : PEGGY PARISI DATE : 1-18-12
CHECKED BY : T.L. COGGINS DATE : 2-13-12

23-MAR-2012 11:39
Z:\TIPProjects-R\R2554A\Structures\FinalPlans\Str#4\r2554a_sd_gd_04 .dgn
padkins

STR. #4

TOTAL BILL OF MATERIAL

	PDA TESTING	PDA ASSISTANCE	REINFORCED CONCRETE DECK SLAB	GROOVING BRIDGE FLOORS	CLASS A CONCRETE	BRIDGE APPROACH SLABS	REINFORCING STEEL	MODIFIED 1829mm PRESTRESSED CONCRETE GIRDERS		HP 310 X 79 STEEL PILES		PP 457 X 12.70 GALVANIZED STEEL PILES		PP 610 X 12.70 GALVANIZED STEEL PILES		PP 762 X 12.70 GALVANIZED STEEL PILES		PIPE PILE PLATES	PILE REDRIVES	CONCRETE BARRIER RAIL	RIP RAP CLASS II (600mm THICK)	FILTER FABRIC FOR DRAINAGE	ELASTOMERIC BEARINGS	EXPANSION JOINT SEAL
	EACH	EACH	SQ. METERS	SQ. METERS	CU. METERS	LUMP SUM	kg	NO.	METERS	NO.	METERS	NO.	METERS	NO.	METERS	NO.	METERS	EACH	EACH	METERS	METRIC TONS	SQ. METERS	LUMP SUM	LUMP SUM
SUPERSTRUCTURE			9598.7	8292.0		LUMP SUM		110	3844.496											1561.557			LUMP SUM	LUMP SUM
END BENT 1					30.7		2685			12	182.4								5		277	282		
BENT 1	1	1			15.0		1367							7	123.2				3					
BENT 2					15.0		1367							7	123.2				3					
BENT 3					15.0		1367							7	128.1				3					
BENT 4					15.0		1367							7	128.1				3					
BENT 5					15.9		1533							7	128.1				3					
BENT 6					15.8		1533							7	128.1				3					
BENT 7					20.5		1951									7	128.1		3					
BENT 8					20.4		1951									7	128.1		3					
BENT 9					20.3		1951									7	149.1		3					
BENT 10					20.2		1951									7	149.1		3					
BENT 11					20.1		1951									7	149.1		3					
BENT 12					20.2		1951									7	128.1		3					
BENT 13	1	1			20.3		1951									7	128.1		4					
BENT 14					20.4		1951									7	128.1		4					
BENT 15	1	1			15.5		1533							7	106.4			7	3					
BENT 16					15.5		1533							7	95.9			7	3					
BENT 17					15.5		1533							7	95.9			7	3					
BENT 18					15.9		1540					8	109.6					8	4					
BENT 19					15.9		1540					8	109.6					8	4					
BENT 20					15.9		1540					8	109.6					8	4					
BENT 21					15.9		1540					8	109.6					8	4					
END BENT 2					33.4		2756			13	197.6								5		146	149		
TOTAL	3	3	9598.7	8292.0	428.3	LUMP SUM	40342	110	3844.496	25	380.0	32	438.4	63	1057.0	56	1087.8	53	79	1561.557	423	431	LUMP SUM	LUMP SUM

FOR PILES, SEE SPECIAL PROVISIONS.

THE ALLOWABLE BEARING CAPACITY FOR PILES AT END BENTS NO. 1 & 2 IS 670 KN PER PILE.

THE ALLOWABLE BEARING CAPACITY FOR PILES AT BENTS NO. 1 THRU 6, AND 15 THRU 17 IS 1960 KN PER PILE.

THE ALLOWABLE BEARING CAPACITY FOR PILES AT BENTS NO. 7 THRU 14 IS 1850 KN PER PILE.

THE ALLOWABLE BEARING CAPACITY FOR PILES AT BENTS NO. 18 THRU 21 IS 1680 KN PER PILE.

DRIVE PILES AT END BENTS NO. 1 & 2 TO A REQUIRED BEARING CAPACITY OF 1390 KN PER PILE. THE REQUIRED BEARING CAPACITY IS EQUAL TO THE ALLOWABLE BEARING CAPACITY WITH A MINIMUM FACTOR OF SAFETY OF TWO PLUS ANY ADDITIONAL CAPACITY TO ACCOUNT FOR DOWNDRAG OR NEGATIVE SKIN FRICTION AND SCOUR.

DRIVE PILES AT BENTS NO. 1 & 2 TO A REQUIRED BEARING CAPACITY OF 4730 KN PER PILE. THE REQUIRED BEARING CAPACITY IS EQUAL TO THE ALLOWABLE BEARING CAPACITY WITH A MINIMUM FACTOR OF SAFETY OF TWO PLUS ANY ADDITIONAL CAPACITY TO ACCOUNT FOR DOWNDRAG OR NEGATIVE SKIN FRICTION AND SCOUR.

DRIVE PILES AT BENTS NO. 3 THRU 6, 9 THRU 12, 16 & 17 TO A REQUIRED BEARING CAPACITY OF 4280 KN PER PILE. THE REQUIRED BEARING CAPACITY IS EQUAL TO THE ALLOWABLE BEARING CAPACITY WITH A MINIMUM FACTOR OF SAFETY OF TWO PLUS ANY ADDITIONAL CAPACITY TO ACCOUNT FOR DOWNDRAG OR NEGATIVE SKIN FRICTION AND SCOUR.

DRIVE PILES AT BENTS NO. 7, 8 & 15 TO A REQUIRED BEARING CAPACITY OF 4430 KN PER PILE. THE REQUIRED BEARING CAPACITY IS EQUAL TO THE ALLOWABLE BEARING CAPACITY WITH A MINIMUM FACTOR OF SAFETY OF TWO PLUS ANY ADDITIONAL CAPACITY TO ACCOUNT FOR DOWNDRAG OR NEGATIVE SKIN FRICTION AND SCOUR.

DRIVE PILES AT BENTS NO. 13 & 14 TO A REQUIRED BEARING CAPACITY OF 4570 KN PER PILE. THE REQUIRED BEARING CAPACITY IS EQUAL TO THE ALLOWABLE BEARING CAPACITY WITH A MINIMUM FACTOR OF SAFETY OF TWO PLUS ANY ADDITIONAL CAPACITY TO ACCOUNT FOR DOWNDRAG OR NEGATIVE SKIN FRICTION AND SCOUR.

DRIVE PILES AT BENTS NO. 18 THRU 21 TO A REQUIRED BEARING CAPACITY OF 3530 KN PER PILE. THE REQUIRED BEARING CAPACITY IS EQUAL TO THE ALLOWABLE BEARING CAPACITY WITH A MINIMUM FACTOR OF SAFETY OF TWO PLUS ANY ADDITIONAL CAPACITY TO ACCOUNT FOR DOWNDRAG OR NEGATIVE SKIN FRICTION AND SCOUR.

INSTALL PILES AT BENTS NO. 1, 2 & 15 TO A TIP ELEVATION NO HIGHER THAN 12.8m.

INSTALL PILES AT BENTS NO. 3 THRU 6 TO A TIP ELEVATION NO HIGHER THAN 15.8m.

INSTALL PILES AT BENTS NO. 7 & 8 TO A TIP ELEVATION NO HIGHER THAN 14.6m.

INSTALL PILES AT BENTS NO. 9 & 10 TO A TIP ELEVATION NO HIGHER THAN 13.1m.

INSTALL PILES AT BENTS NO. 11 & 12 TO A TIP ELEVATION NO HIGHER THAN 13.7m.

INSTALL PILES AT BENTS NO. 13 & 14 TO A TIP ELEVATION NO HIGHER THAN 10.7m.

INSTALL PILES AT BENTS NO. 16 & 17 TO A TIP ELEVATION NO HIGHER THAN 14.0m.

INSTALL PILES AT BENTS NO. 18 THRU 21 TO A TIP ELEVATION NO HIGHER THAN 17.1m.

THE SCOUR CRITICAL ELEVATION FOR BENTS NO. 1 THRU 21 ARE ELEVATION 19.2m., 19.2m., 21.6m., 21.6m., 21.6m., 21.6m., 19.5m., 19.5m., 18.3m., 18.3m., 18.9m., 18.9m., 17.4m., 17.4m., 18.9m., 20.4m., 20.4m., 22.9m., 22.9m., 22.9m., AND 22.9m., RESPECTIVELY. SCOUR CRITICAL ELEVATIONS ARE USED TO MONITOR POSSIBLE SCOUR PROBLEMS DURING THE LIFE OF THE STRUCTURE.

IT HAS BEEN ESTIMATED THAT A HAMMER WITH AN EQUIVALENT RATED ENERGY IN THE RANGE OF 155-220 KJ PER BLOW WILL BE REQUIRED TO DRIVE PILES AT BENTS NO. 1 THRU 17. THIS ESTIMATED ENERGY RANGE DOES NOT RELEASE THE CONTRACTOR FROM ARTICLE 450-5 OF THE STANDARD SPECIFICATIONS.

IT HAS BEEN ESTIMATED THAT A HAMMER WITH AN EQUIVALENT RATED ENERGY IN THE RANGE OF 95-170 KJ PER BLOW WILL BE REQUIRED TO DRIVE PILES AT BENTS NO. 18 THRU 21. THIS ESTIMATED ENERGY RANGE DOES NOT RELEASE THE CONTRACTOR FROM ARTICLE 450-5 OF THE STANDARD SPECIFICATIONS.

PIPE PILE PLATES ARE NOT REQUIRED FOR STEEL PIPE PILES AT BENTS 1 THRU 14.

PIPE PILE PLATES ARE REQUIRED FOR PIPE PILES AT BENTS NO. 15 THRU 21. USE PIPE PILE PLATES WITH A DIAMETER EQUAL TO THE PIPE PILE DIAMETER.

TESTING THE FIRST PRODUCTION PILES WITH THE PILE DRIVING ANALYZER DURING DRIVING, RESTRIKING OR REDRIVING IS REQUIRED BETWEEN BENTS NO. 1 THRU 6, 7 THRU 14 AND 15 THRU 21. FOR PILE DRIVING ANALYZER, SEE PILES PROVISION.

FOUNDATION NOTES

PROJECT NO. R-2554A
WAYNE COUNTY
STATION: 70+24.000 -L-

SHEET 7 OF 7

NORTH CAROLINA PROFESSIONAL SEAL 14045 ENGINEER TIMOTHY L. COGGINS
03/26/12

STATE OF NORTH CAROLINA
DEPARTMENT OF TRANSPORTATION
RALEIGH

GENERAL DRAWING
BRIDGE OVER LITTLE RIVER
ON PROP. US 70 BYP.
BETWEEN NC 581 AND SR 1300
(RIGHT LANE)

REVISIONS						SHEET NO.
NO.	BY:	DATE:	NO.	BY:	DATE:	S-138
1			3			TOTAL SHEETS
2			4			276

DRAWN BY : PEGGY PARISI DATE : 1-11-12
CHECKED BY : T.L. COGGINS DATE : 2-13-12

26-MAR-2012 09:41
R:\TIPProjects-R\R2554A\Structures\FinalPlans\Str#4\r2554a_sd_gd_04 .dgn
taverette

STR. #4

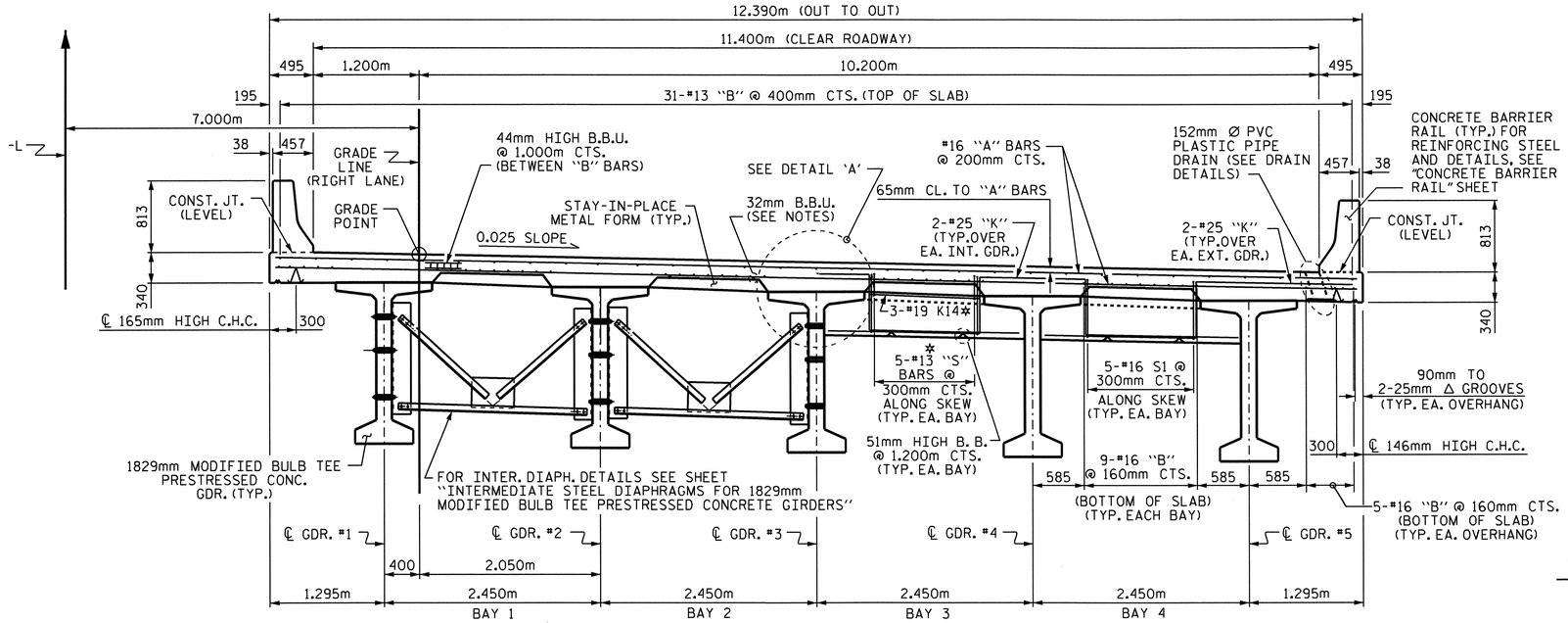

PARTIAL TYPICAL SECTION AT INTERMEDIATE DIAPHRAGM

PARTIAL TYPICAL SECTION AT END BENT & BENT

@ EXPANSION JOINT

* NOTE: THESE BARS @ SKEWED EXPANSION JOINTS ONLY

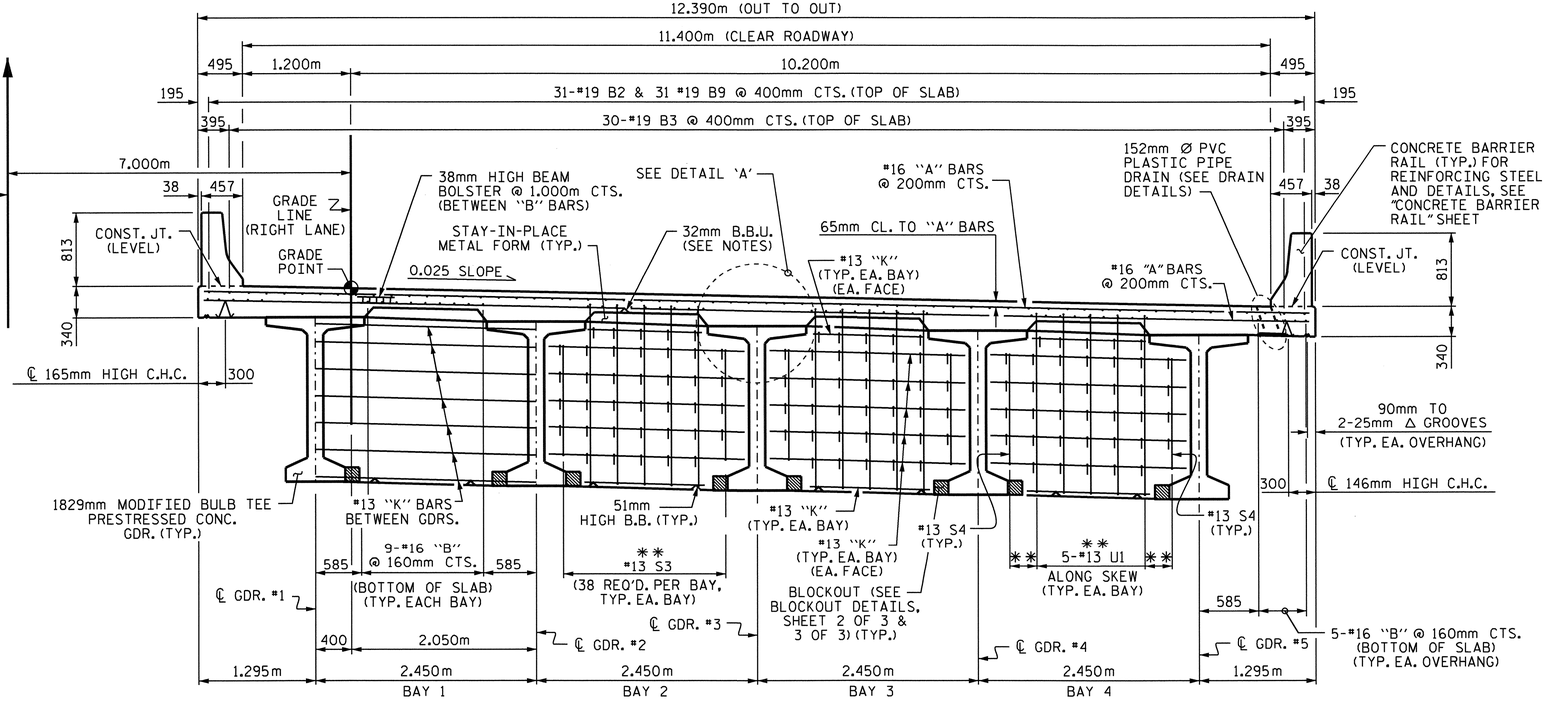

TYPICAL SECTION

SHOWING CONTINUOUS BENT DIAPHRAGM

** NOTE: SEE PLAN OF SPANS FOR SPACING OF THESE BARS

NOTES

PROVIDE 32mm HIGH BEAM BOLSTERS UPPER AT 1.2m CTS. ATOP THE METAL STAY-IN-PLACE FORMS TO SUPPORT THE BOTTOM MAT OF "A" BARS. WHEN USING REMOVABLE FORMS, PROVIDE CONTINUOUS HIGH CHAIRS FOR METAL DECK (C.H.C.M.) @ 1.2m CTS. WITH A HEIGHT TO SUPPORT THE BOTTOM MAT OF "A" BARS A CLEAR DISTANCE OF 65mm ABOVE THE TOP OF THE REMOVABLE FORM.

LONGITUDINAL STEEL MAY BE SHIFTED SLIGHTLY, AS NECESSARY, TO AVOID INTERFERENCE WITH STIRRUPS IN PRESTRESSED CONCRETE GIRDERS.

PREVIOUSLY CAST CONCRETE IN A CONTINUOUS UNIT SHALL HAVE ATTAINED A MINIMUM COMPRESSIVE STRENGTH OF 20.7MPa BEFORE ADDITIONAL CONCRETE IS CAST IN THE UNIT.

BARRIER RAIL IN A CONTINUOUS UNIT SHALL NOT BE CAST UNTIL ALL SLAB CONCRETE IN THE UNIT HAS BEEN CAST AND HAS REACHED A MINIMUM COMPRESSIVE STRENGTH OF 20.7MPa.

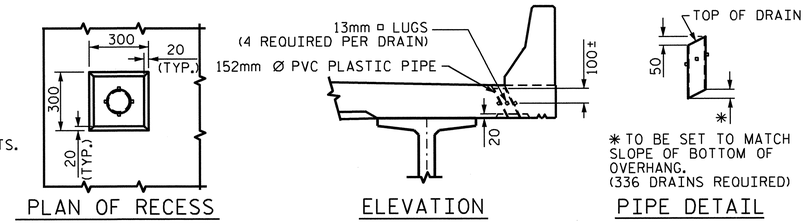

PLAN OF RECESS

ELEVATION

PIPE DETAIL

DRAIN DETAILS

TOP OF FLOOR DRAINS TO BE SET 10mm BELOW SURFACE OF SLAB.

4-13mm □ LUGS TO BE GLUED TO THE PVC PLASTIC PIPE AT EQUAL SPACES AROUND THE PIPE DRAIN APPROXIMATELY 100mm FROM THE TOP OF THE PIPE.

THE 152mm Ø PVC PLASTIC PIPE AND FITTINGS SHALL BE SCHEDULE 40 AND CONFORM TO ASTM D1785.

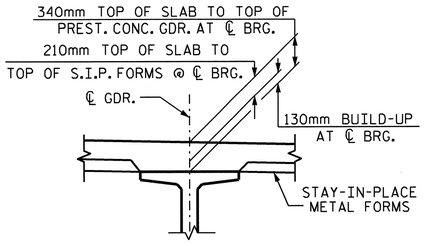

DETAIL 'A'

PROJECT NO. R-2554A

WAYNE COUNTY

STATION: 70+24.00 -L-

SHEET 1 OF 3

STATE OF NORTH CAROLINA
DEPARTMENT OF TRANSPORTATION
RALEIGH

SUPERSTRUCTURE

TYPICAL SECTION

(RIGHT LANE)

NORTH CAROLINA PROFESSIONAL SEAL 14045 ENGINEER TIMOTHY A. COCKINS
03/23/12

REVISIONS								SHEET NO.
NO.	BY:	DATE:	NO.	BY:	DATE:			S-139
1			3					TOTAL SHEETS
2			4					276

STR. #4

DRAWN BY : B.N.BARODAWALA DATE : 11-15-11
CHECKED BY : PEGGY PARISI DATE : 1-5-12

23-MAR-2012 11:43
Z:\TIPProjects-R\R2554A\Structures\FinalPlans\Str#4\r2554a_sd_ts_04.dgn
padkins

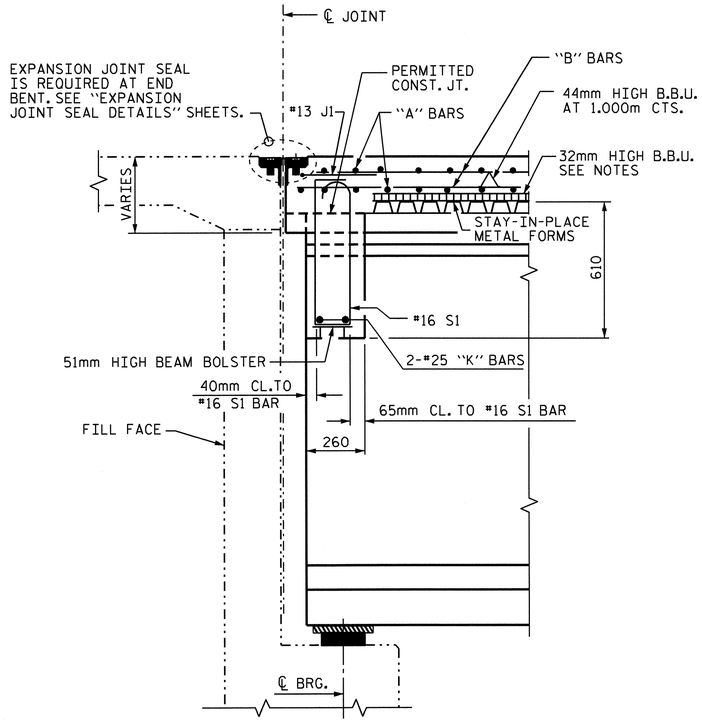

SECTION THRU END BENT #1 DIAPHRAGM

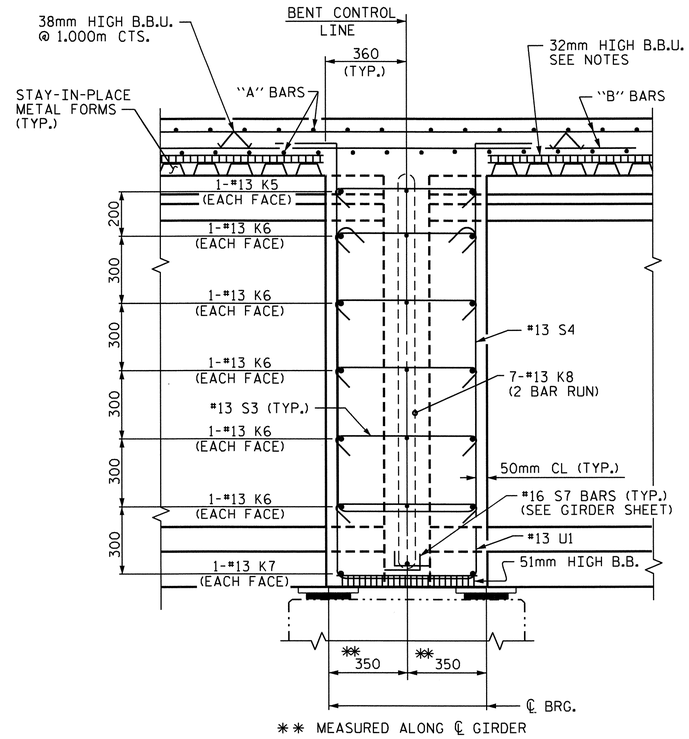

SECTION THRU CONTINUOUS BENT DIAPHRAGM

(@ BENTS #1 & #3)

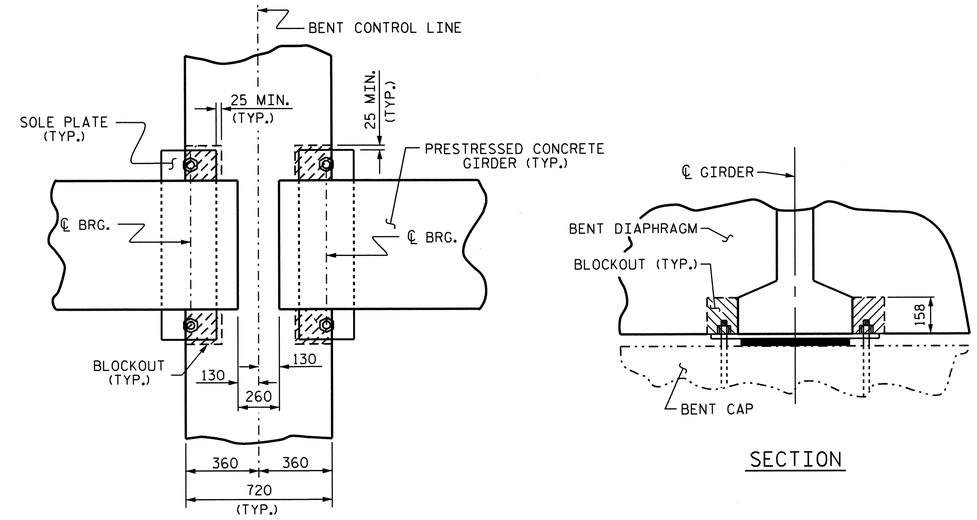

PLAN VIEW

SECTION

BENT DIAPHRAGM BLOCKOUT DETAIL

(@ BENTS #1 & #3)

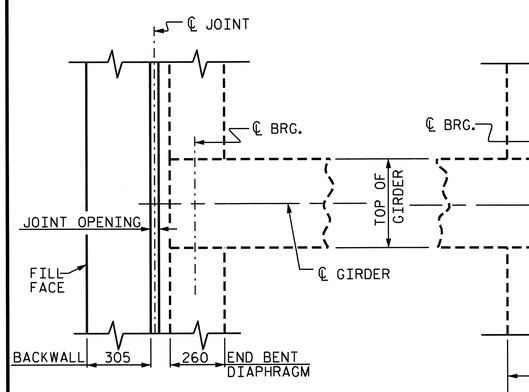

END BENT #1 DIAPHRAGM

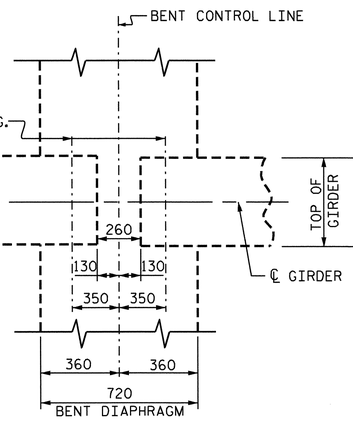

CONTINUOUS BENT DIAPHRAGM

(@ BENTS #1 & #3)

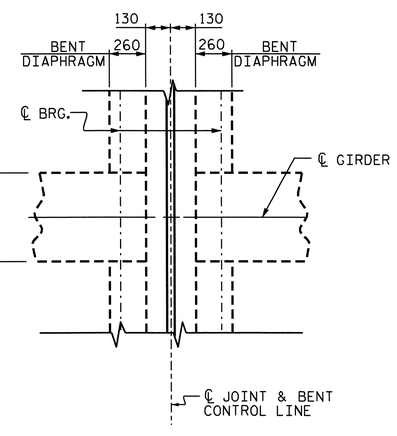

BENT DIAPHRAGM

(@ BENTS #2 & #4)

PLAN

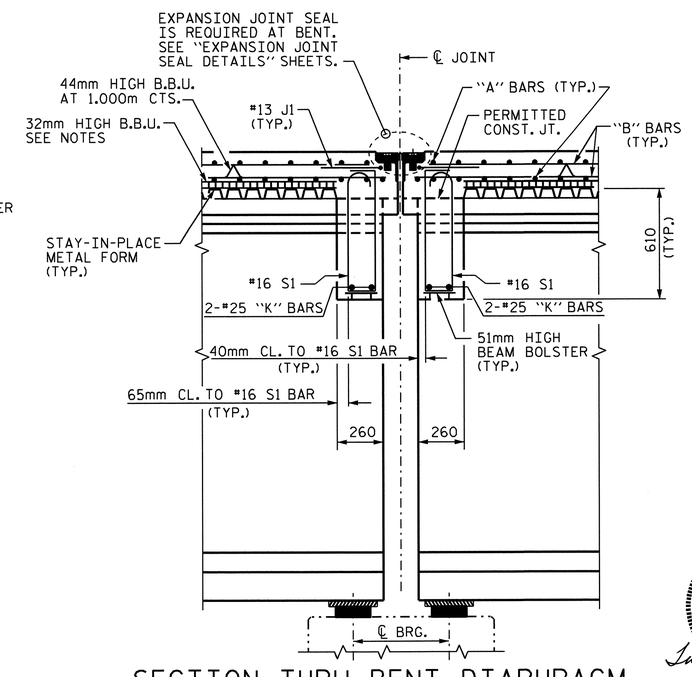

SECTION THRU BENT DIAPHRAGM

(@ BENTS #2 & #4)

NORTH CAROLINA PROFESSIONAL SEAL 14045 ENGINEER TIMOTHY L. COGGINS
03/23/12

PROJECT NO. R-2554A
WAYNE COUNTY
STATION: 70+24.000 -L-

SHEET 2 OF 3

STATE OF NORTH CAROLINA
DEPARTMENT OF TRANSPORTATION
RALEIGH

SUPERSTRUCTURE

TYPICAL SECTION DETAILS

(RIGHT LANE)

REVISIONS						SHEET NO.
NO.	BY:	DATE:	NO.	BY:	DATE:	S-140
1			3			TOTAL SHEETS
2			4			276

STR. #4

DRAWN BY : B.N.BARODAWALA DATE : 11-15-11
CHECKED BY : PEGGY PARISI DATE : 1-5-12

23-MAR-2012 11:42
Z:\TIPProjects-R\R2554A\Structures\FinalPlans\Str#4\r2554a_sd_ts_04.dgn
padkins

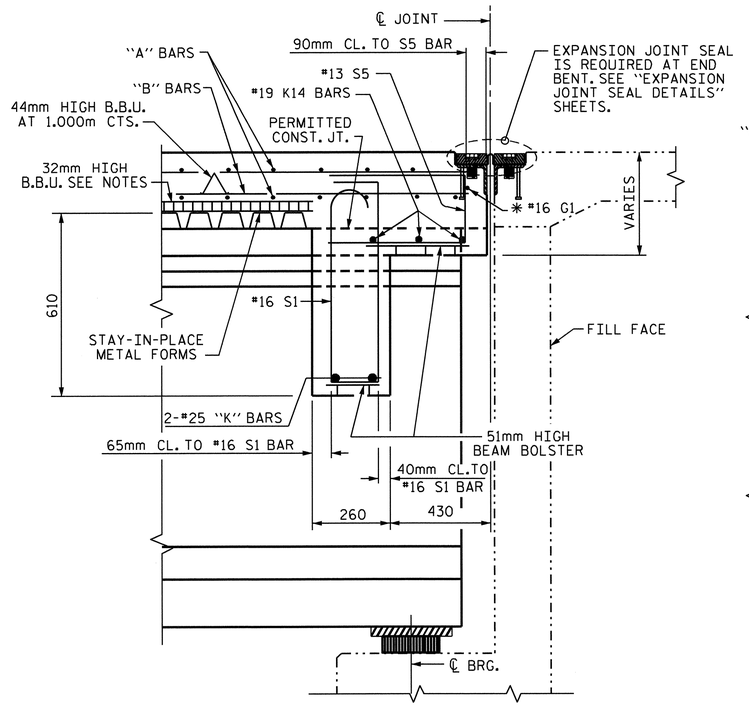

✱ #16 G1 BAR MAY BE SHIFTED SLIGHTLY, AS NECESSARY, TO CLEAR REINFORCING STEEL AND STIRRUPS.

SECTION THRU END BENT #2 DIAPHRAGM

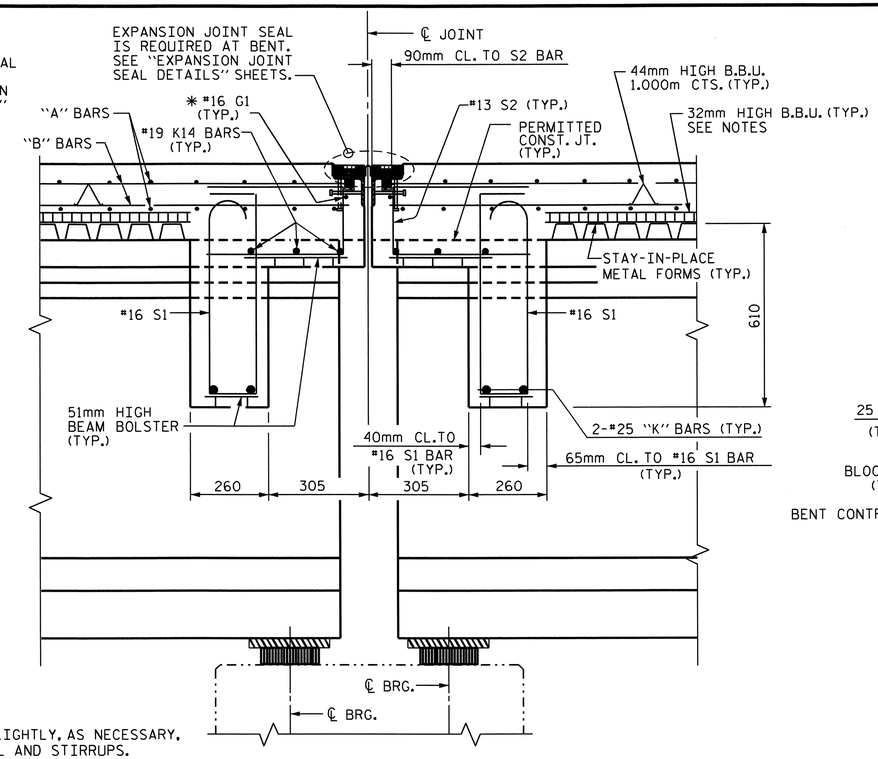

SECTION THRU BENT DIAPHRAGM

(@ BENTS #6, #8, #10, #12, #14, #16, #18 & #20)

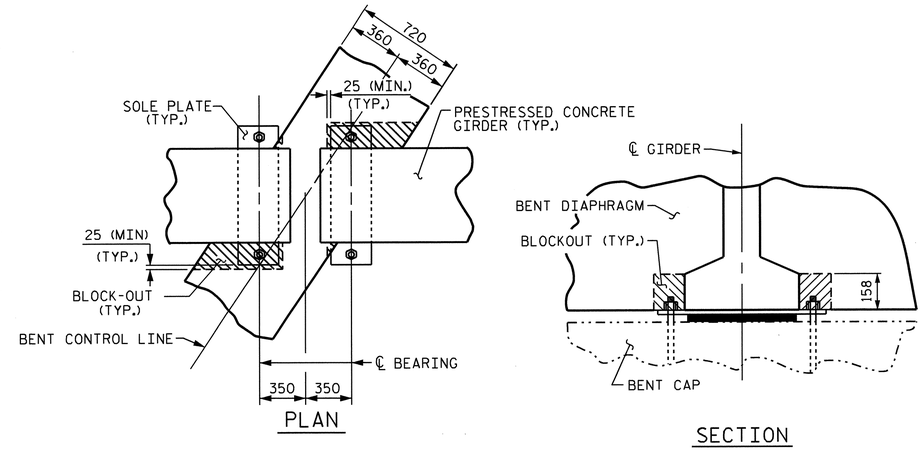

BENT DIAPHRAGM BLOCKOUT DETAIL

(@ BENTS #5, #7, #9, #11, #13, #15, #17, #19 & #21)

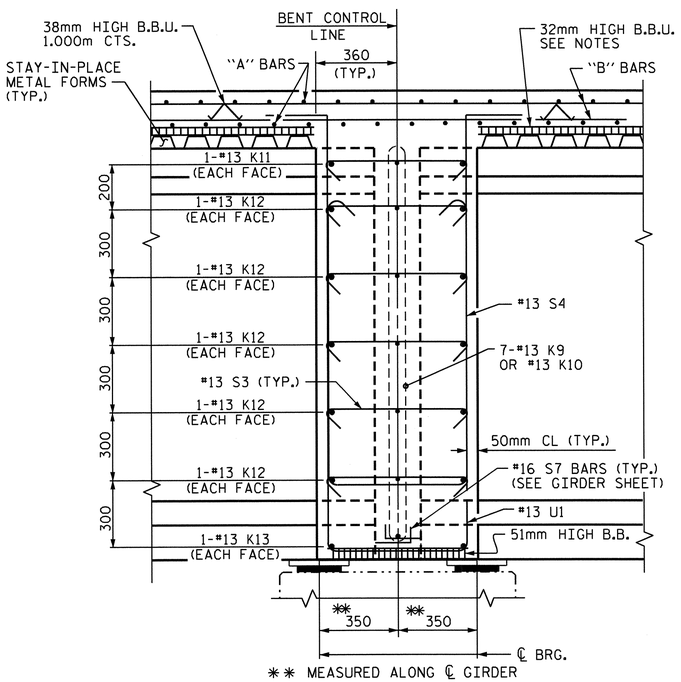

✱✱ MEASURED ALONG ℄ GIRDER

SECTION THRU CONTINUOUS BENT DIAPHGRAM

(@ BENTS #5, #7, #9, #11, #13, #15, #17, #19 & #21)

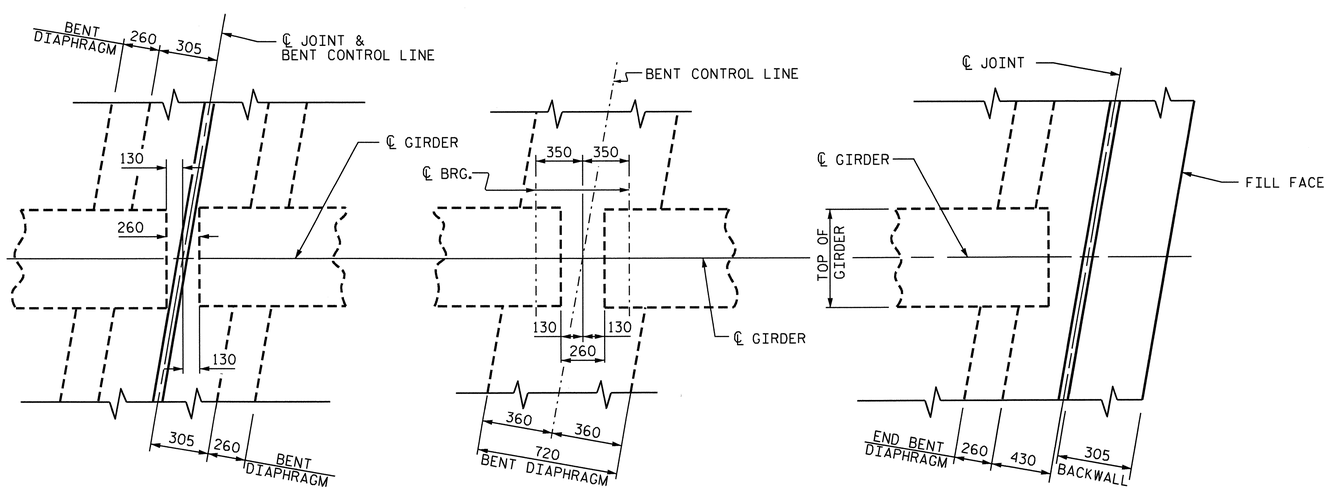

BENT DIAPHRAGM
(@ BENTS #6, #8, #10, #12, #14, #16, #18 & #20)

CONTINUOUS BENT DIAPHRAGM
(@ BENTS #5 #7, #9, #11, #13, #15, #17, #19 & #21)

PLAN

END BENT #2 DIAPHRAGM

NORTH CAROLINA PROFESSIONAL SEAL 14045 ENGINEER TIMOTHY L. COGGINS

Timothy L. Coggins 03/23/12

PROJECT NO. R-2554A
WAYNE COUNTY
STATION: 70+24.000 -L-

SHEET 3 OF 3

STATE OF NORTH CAROLINA
DEPARTMENT OF TRANSPORTATION
RALEIGH

SUPERSTRUCTURE
TYPICAL SECTION DETAILS
(RIGHT LANE)

REVISIONS						SHEET NO.
NO.	BY:	DATE:	NO.	BY:	DATE:	S-141
1			3			TOTAL SHEETS
2			4			276

DRAWN BY : B.N.BARODAWALA DATE : 11-15-11
CHECKED BY : PEGGY PARISI DATE : 1-5-12

23-MAR-2012 11:42
Z:\TIPProjects-R\R2554A\Structures\FinalPlans\Str#4\r2554a_sd_ts_04.dgn
pdkins

STR. #4

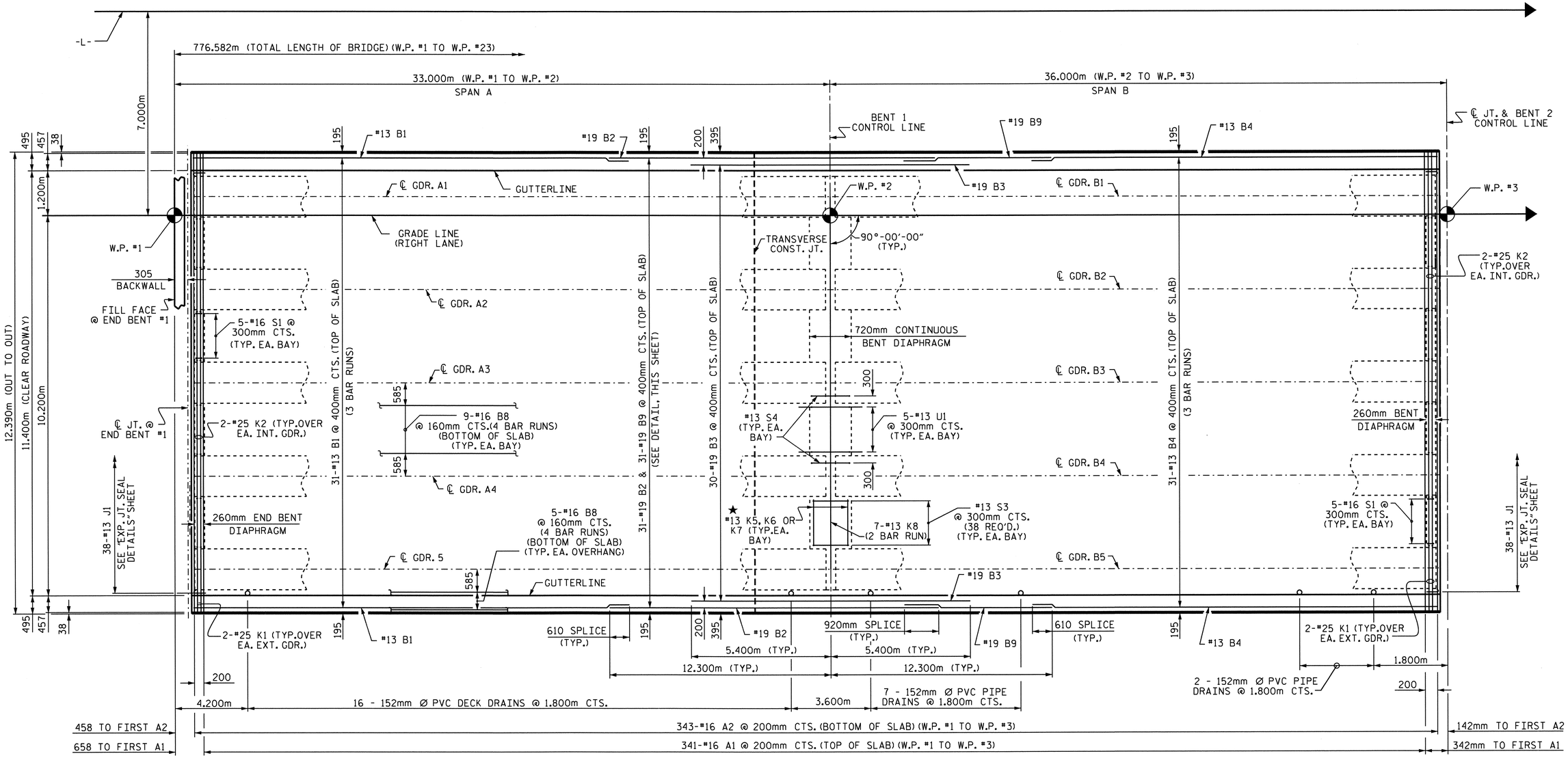

PLAN OF SPANS A & B

FOR LOCATION OF INTERMEDIATE DIAPHRAGMS, SEE 'GIRDER LAYOUT'' SHEETS.
FOR LOCATION OF TRANSVERSE CONSTRUCTION JOINT, SEE SHEET 2 OF 2 OF BILL OF MATERIAL.

★FOR DETAILS, SEE "SECTION THRU CONTINUOUS BENT DIAPHRAGM"

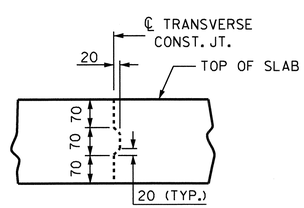

TRANSVERSE CONSTRUCTION JOINT DETAIL

NOTE: REINFORCING STEEL IN SLAB NOT SHOWN.
LONGITUDINAL REINFORCING STEEL SHALL
BE CONTINUOUS THRU JOINT.

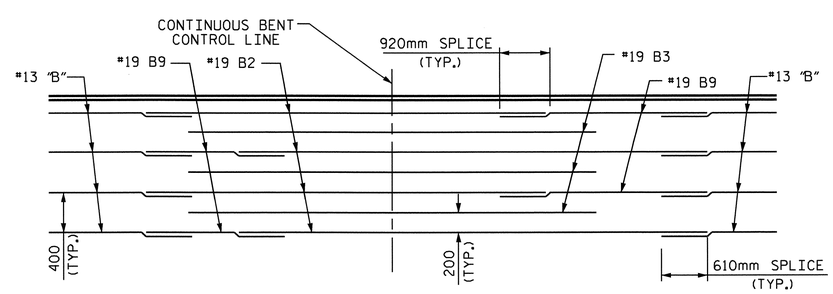

TOP OF SLAB REINFORCING LAYOUT

ALTERNATE THE SPLICE LOCATIONS AS SHOWN

PROJECT NO. R-2554A
WAYNE COUNTY
STATION: 70+24.000 -L-

SHEET 1 OF 6

STATE OF NORTH CAROLINA
DEPARTMENT OF TRANSPORTATION
RALEIGH

SUPERSTRUCTURE

PLAN OF SPANS A & B
(RIGHT LANE)

NORTH CAROLINA PROFESSIONAL SEAL 14045 ENGINEER TIMOTHY W. COGGINS
03/23/12

REVISIONS						SHEET NO.
NO.	BY:	DATE:	NO.	BY:	DATE:	S-142
1			3			TOTAL SHEETS
2			4			276

STR. #4

DRAWN BY : B.N.BARODAWALA DATE : 12-15-11
CHECKED BY : PEGGY PARISI DATE : 1-5-12

23-MAR-2012 11:42
Z:\TIPProjects-R\R2554A\Structures\FinalPlans\Str#4\r2554a_sd_s#_04.dgn
padkins

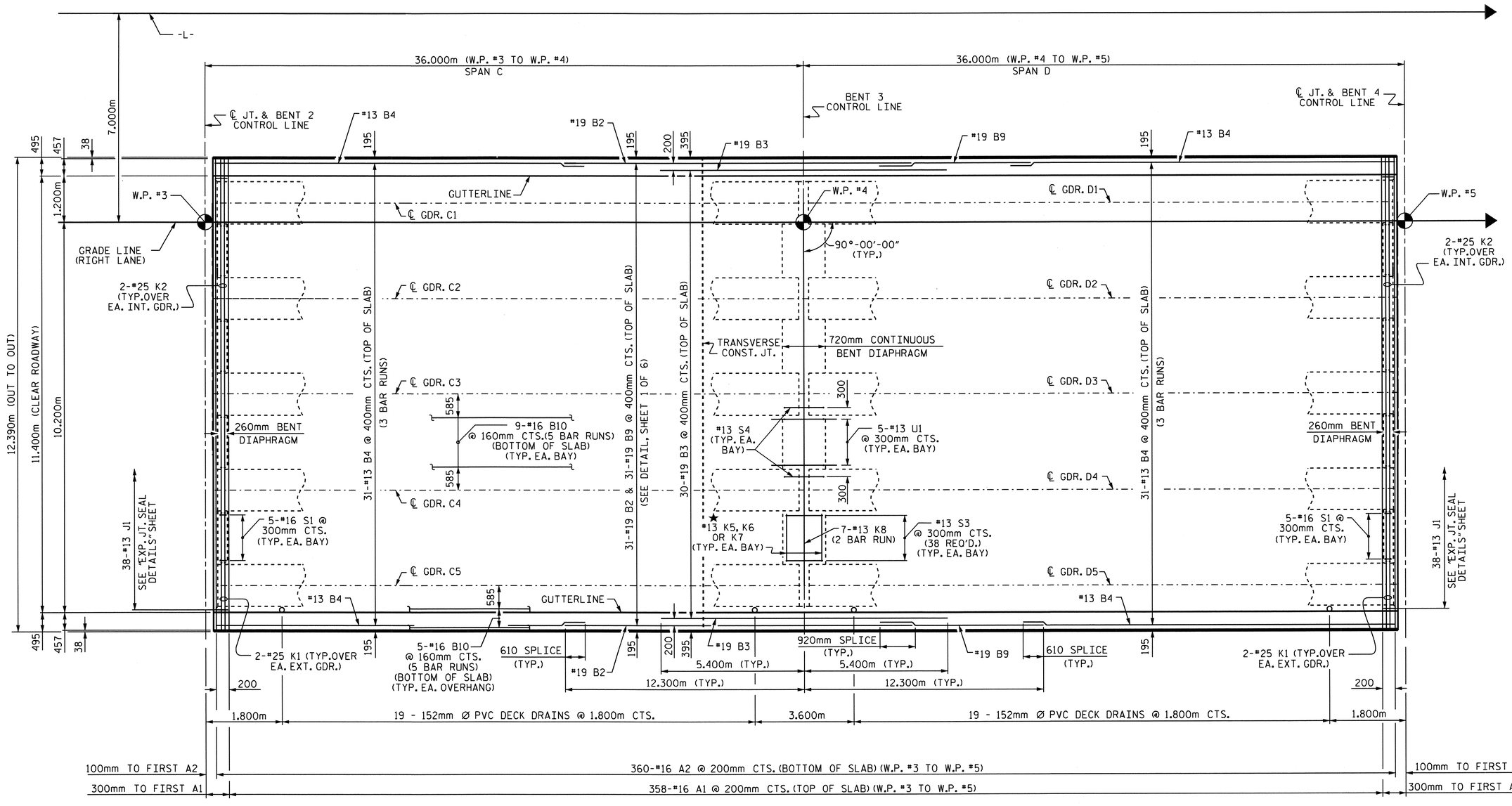

★FOR DETAILS, SEE "SECTION THRU CONTINUOUS BENT DIAPHRAGM"

776.582m (TOTAL LENGTH OF BRIDGE) (W.P. #1 TO W.P. #23)

PLAN OF SPANS C & D

FOR LOCATION OF INTERMEDIATE DIAPHRAGMS, SEE "GIRDER LAYOUT" SHEETS.
FOR "TRANSVERSE CONSTRUCTION JOINT DETAIL," SEE SHEET 1 OF 6.
FOR "TOP OF SLAB REINFORCING LAYOUT," SEE SHEET 1 OF 6.
FOR LOCATION OF TRANSVERSE CONSTRUCTION JOINT, SEE SHEET 2 OF 2 OF BILL OF MATERIAL.

PROJECT NO. R-2554A
WAYNE COUNTY
STATION: 70+24.000-L-

SHEET 2 OF 6

STATE OF NORTH CAROLINA
DEPARTMENT OF TRANSPORTATION
RALEIGH

SUPERSTRUCTURE

PLAN OF SPANS C & D

(RIGHT LANE)

NORTH CAROLINA PROFESSIONAL SEAL 14045 ENGINEER TIMOTHY J. COGGINS
03/23/12

REVISIONS						SHEET NO.
NO.	BY:	DATE:	NO.	BY:	DATE:	S-143
1			3			TOTAL SHEETS
2			4			276

STR. #4

DRAWN BY : B.N.BARODAWALA DATE : 12-15-11
CHECKED BY : PEGGY PARISI DATE : 1-5-12

23-MAR-2012 11:42
Z:\TIPProjects-R\R2554A\Structures\FinalPlans\Str#4\r2554a_sd_s#_04.dgn
padkins

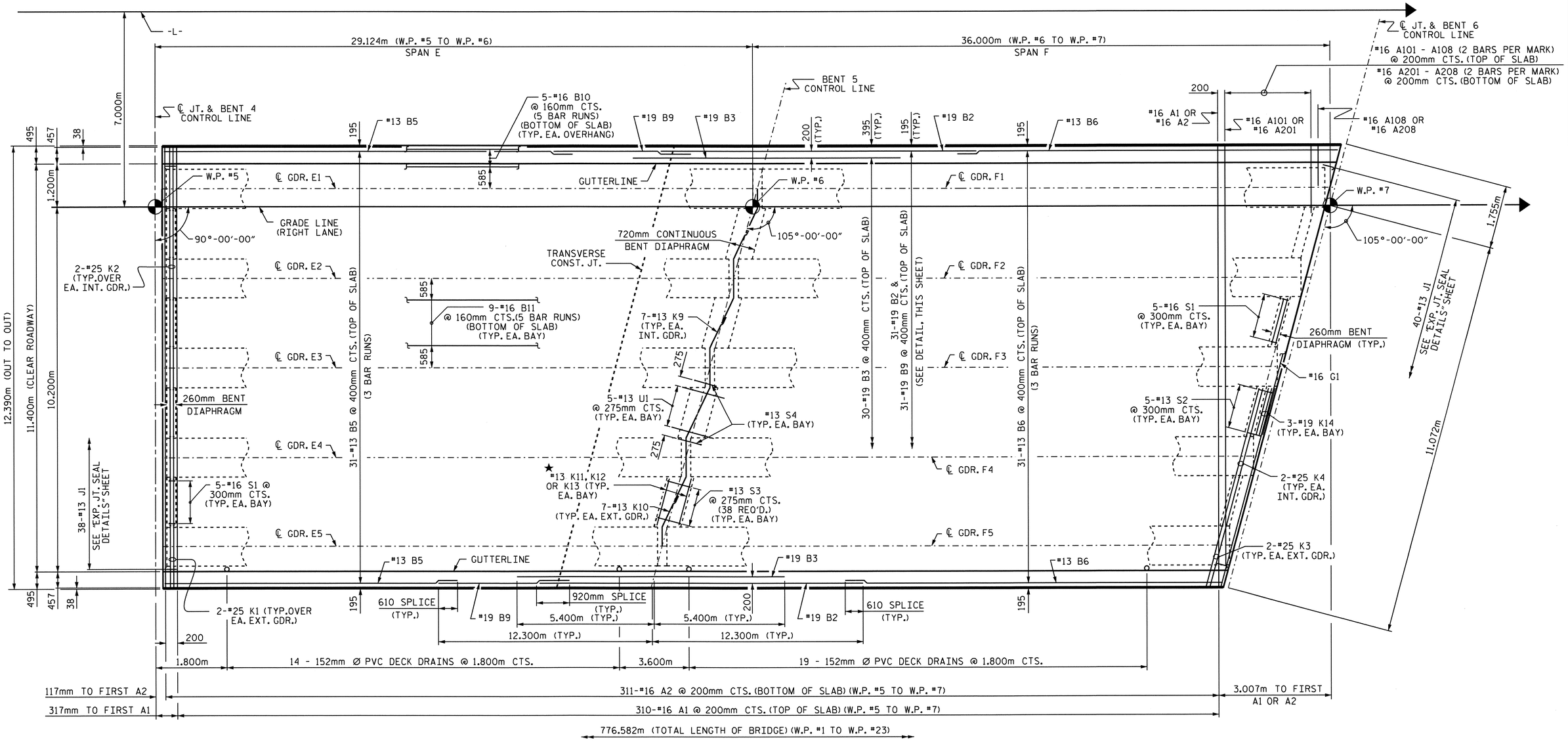

★FOR DETAILS, SEE "SECTION THRU CONTINUOUS BENT DIAPHRAGM"

PLAN OF SPANS E & F

FOR LOCATION OF INTERMEDIATE DIAPHRAGMS, SEE "GIRDER LAYOUT" SHEETS.
FOR "TRANSVERSE CONSTRUCTION JOINT DETAIL," SEE SHEET 1 OF 6.
FOR LOCATION OF TRANSVERSE CONSTRUCTION JOINT, SEE SHEET 2 OF 2 OF BILL OF MATERIAL.

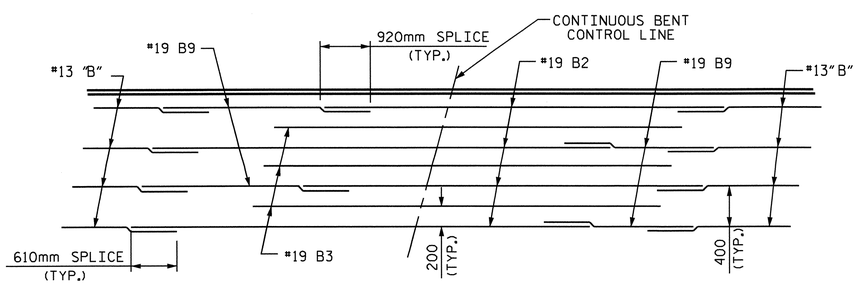

TOP OF SLAB REINFORCING LAYOUT

ALTERNATE THE SPLICE LOCATIONS AS SHOWN

PROJECT NO. R-2554A
WAYNE COUNTY
STATION: 70+24.000 -L-

SHEET 3 OF 6

STATE OF NORTH CAROLINA
DEPARTMENT OF TRANSPORTATION
RALEIGH

SUPERSTRUCTURE

PLAN OF SPANS E & F
(RIGHT LANE)

NORTH CAROLINA PROFESSIONAL SEAL 14045 ENGINEER TIMOTHY W. COGGINS
Timothy W. Coggins 03/23/12

REVISIONS						SHEET NO.
NO.	BY:	DATE:	NO.	BY:	DATE:	S-144
1			3			TOTAL SHEETS
2			4			276

STR. #4

DRAWN BY : B.N.BARODAWALA DATE : 12-15-11
CHECKED BY : PEGGY PARISI DATE : 1-5-12

23-MAR-2012 11:41
Z:\TIPProjects-R\R2554A\Structures\FinalPlans\Str#4\r2554a_sd_s#_04.dgn
padkins

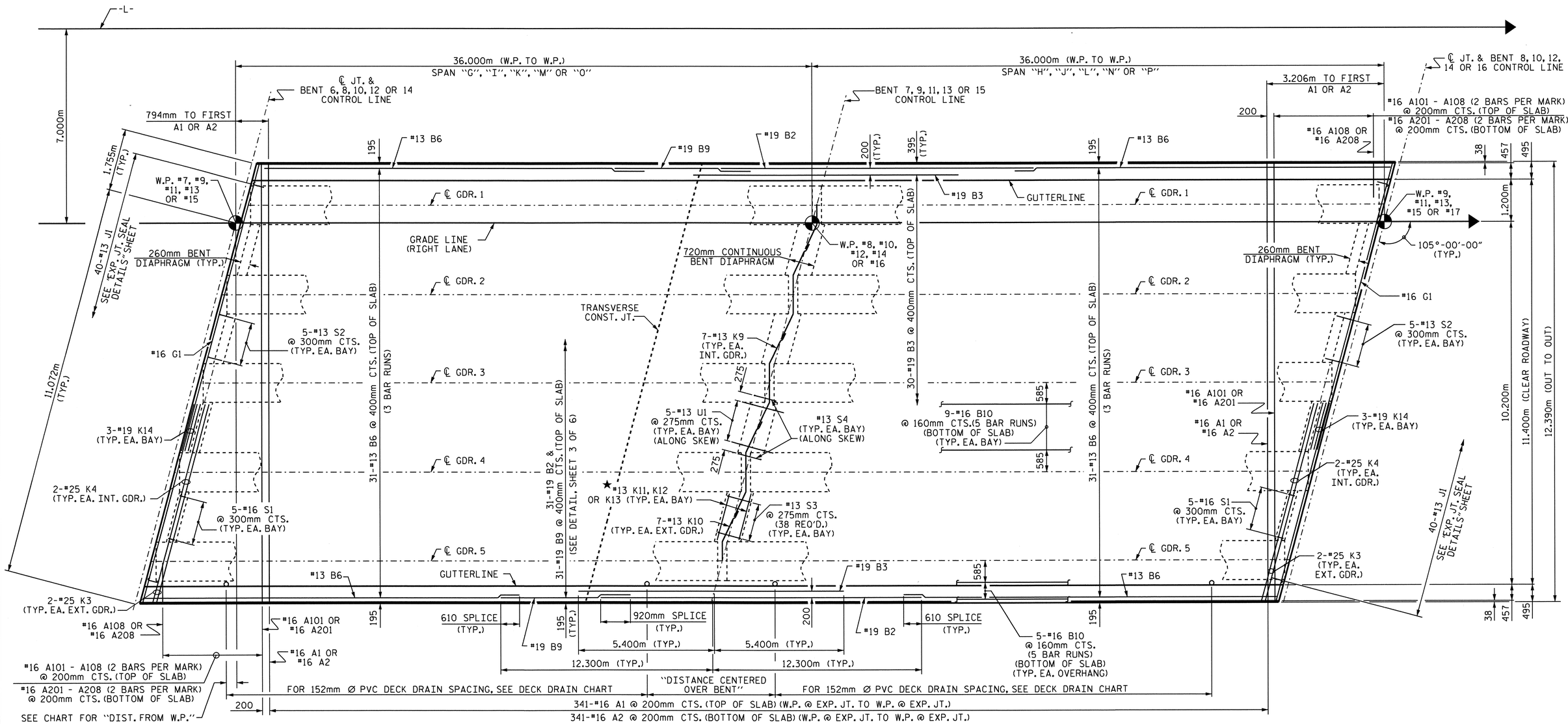

PLAN OF SPANS G & H, I & J, K & L, M & N OR O & P

★ FOR DETAILS, SEE "SECTION THRU CONTINUOUS BENT DIAPHRAGM"

FOR LOCATION OF INTERMEDIATE DIAPHRAGMS AND GIRDER DESIGNATION PER SPAN, SEE "GIRDER LAYOUT" SHEETS.
FOR "TRANSVERSE CONSTRUCTION JOINT DETAIL," SEE SHEET 1 OF 6.
FOR "TOP OF SLAB REINFORCING LAYOUT," SEE SHEET 3 OF 6.
FOR LOCATION OF TRANSVERSE CONSTRUCTION JOINT, SEE SHEET 2 OF 2 OF BILL OF MATERIAL.

SPANS	DISTANCE FROM W.P.	DRAIN SPA. LEFT OF BENT	DISTANCE CENTERED OVER BENT	DRAIN SPA. RIGHT OF BENT	
G & H	(-) 0.933m	19 @ 1.800m CTS.	3.600m	11 @ 1.800m CTS.	
I & J	0	0	0	0	NO DRAINS
K & L	(+) 20.667m	7 @ 1.800m CTS.	3.600m	19 @ 1.800m CTS.	
M & N	(-) 0.933m	19 @ 1.800m CTS.	3.600m	19 @ 1.800m CTS.	
O & P	(-) 0.933m	19 @ 1.800m CTS.	3.600m	19 @ 1.800m CTS.	

DECK DRAIN CHART

PROJECT NO. R-2554A
WAYNE COUNTY
STATION: 70+24.000 -L-

SHEET 4 OF 6

STATE OF NORTH CAROLINA
DEPARTMENT OF TRANSPORTATION
RALEIGH

SUPERSTRUCTURE
PLAN OF SPANS G & H, I & J, K & L, M & N OR O & P
(RIGHT LANE)

NORTH CAROLINA PROFESSIONAL SEAL 14045 ENGINEER TIMOTHY J. COGGINS
03/23/12

REVISIONS								SHEET NO.
NO.	BY:	DATE:	NO.	BY:	DATE:			S-145
1			3					TOTAL SHEETS
2			4					276

DRAWN BY : B.N.BARODAWALA DATE : 12-15-11
CHECKED BY : PEGGY PARISI DATE : 1-5-12

23-MAR-2012 STR #3
Z:\TIPProjects-R\R2554A\Structures\FinalPlans\Str#4\r2554a_sd_s#_04.dgn
padkins

STR. #4

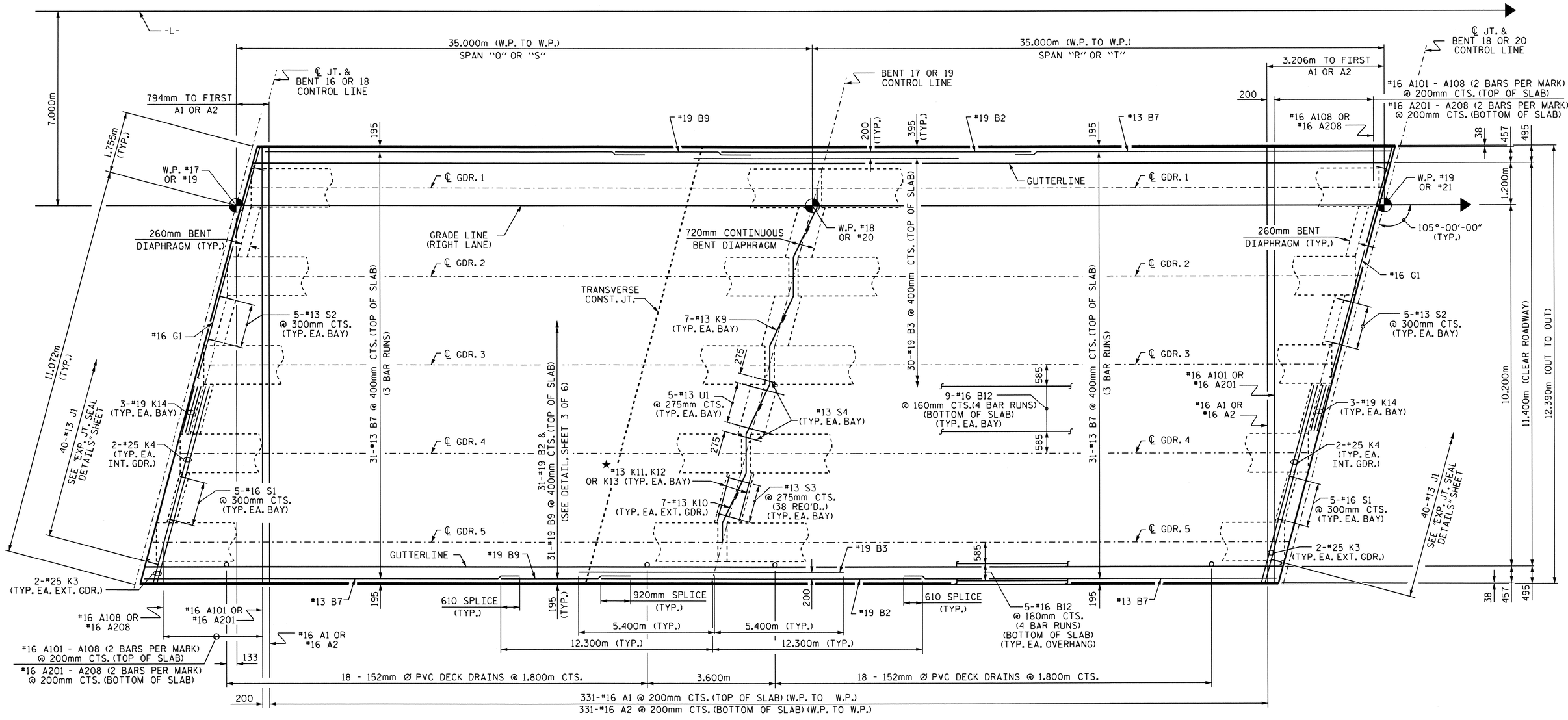

★ FOR DETAILS, SEE "SECTION THRU CONTINUOUS BENT DIAPHRAGM"

PLAN OF SPANS Q & R OR S & T

FOR LOCATION OF INTERMEDIATE DIAPHRAGMS AND GIRDER DESIGNATION PER SPAN, SEE "GIRDER LAYOUT" SHEETS.
FOR "TRANSVERSE CONSTRUCTION JOINT DETAIL," SEE SHEET 1 OF 6.
FOR "TOP OF SLAB REINFORCING LAYOUT," SEE SHEET 3 OF 6.
FOR LOCATION OF TRANSVERSE CONSTRUCTION JOINT, SEE SHEET 2 OF 2 OF BILL OF MATERIAL.

PROJECT NO. R-2554A
WAYNE COUNTY
STATION: 70+24.000 -L-

SHEET 5 OF 6

STATE OF NORTH CAROLINA
DEPARTMENT OF TRANSPORTATION
RALEIGH

SUPERSTRUCTURE

PLAN OF SPANS
Q & R OR S & T
(RIGHT LANE)

NORTH CAROLINA PROFESSIONAL SEAL 14045 ENGINEER TIMOTHY W. COGGINS
03/23/12

REVISIONS						SHEET NO.
NO.	BY:	DATE:	NO.	BY:	DATE:	S-146
1			3			TOTAL SHEETS
2			4			276

DRAWN BY : B.N.BARODAWALA DATE : 12-15-11
CHECKED BY : PEGGY PARISI DATE : 1-5-12

23-MAR-2012 11:41
Z:\TIPProjects-R\R2554A\Structures\FinalPlans\Str#4\r2554a_sd_s#_04.dgn
padkins

STR. #4

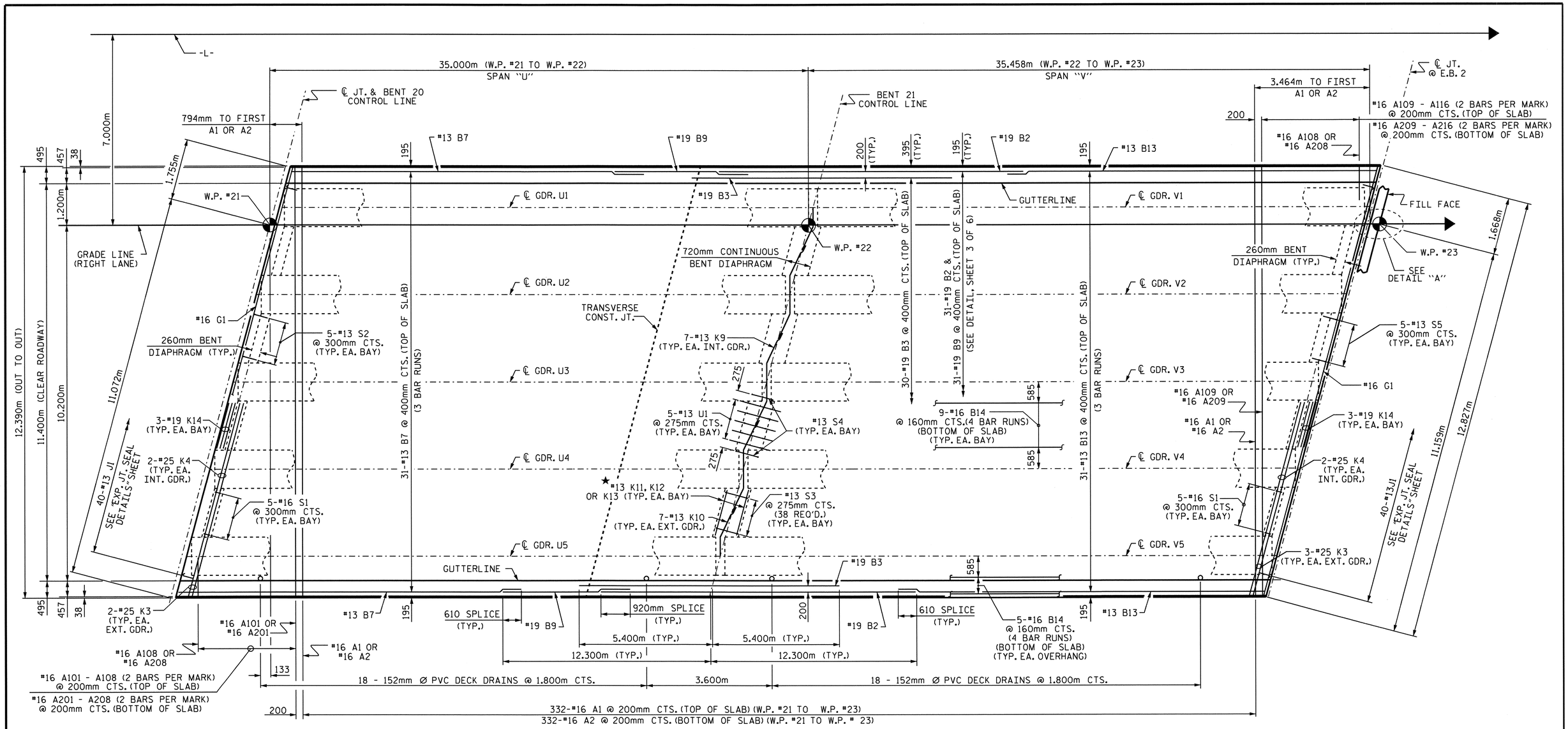

★ FOR DETAILS, SEE "SECTION THRU CONTINUOUS BENT DIAPHRAGM"

776.582m (TOTAL LENGTH OF BRIDGE) (W.P. #1 TO W.P. #23)

PLAN OF SPANS U & V

FOR LOCATION OF INTERMEDIATE DIAPHRAGMS, SEE "GIRDER LAYOUT" SHEETS.
FOR "TRANSVERSE CONSTRUCTION JOINT DETAIL," SEE SHEET 1 OF 6.
FOR "TOP OF SLAB REINFORCING LAYOUT," SEE SHEET 3 OF 6.
FOR LOCATION OF TRANSVERSE CONSTRUCTION JOINT, SEE SHEET 2 OF 2 OF BILL OF MATERIAL.

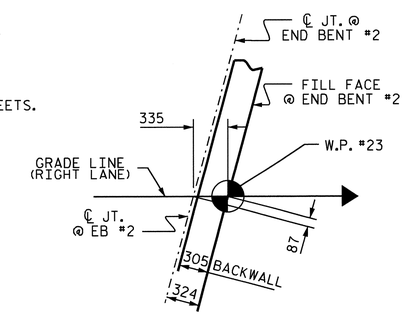

DETAIL "A"

PROJECT NO. R-2554A
WAYNE COUNTY
STATION: 70+24.000 -L-

SHEET 6 OF 6

STATE OF NORTH CAROLINA
DEPARTMENT OF TRANSPORTATION
RALEIGH

SUPERSTRUCTURE

PLAN OF SPANS U & V

(RIGHT LANE)

NORTH CAROLINA PROFESSIONAL SEAL 14045 ENGINEER TIMOTHY G. COGGINS
03/23/12

REVISIONS						SHEET NO.
NO.	BY:	DATE:	NO.	BY:	DATE:	S-147
1			3			TOTAL SHEETS
2			4			276

STR. #4

DRAWN BY : B.N.BARODAWALA DATE : 12-15-11
CHECKED BY : PEGGY PARISI DATE : 1-5-12

23-MAR-2012 11:41
Z:\TIPProjects-R\R2554A\Structures\FinalPlans\Str#4\r2554a_sd_s#_04.dgn
pdkins

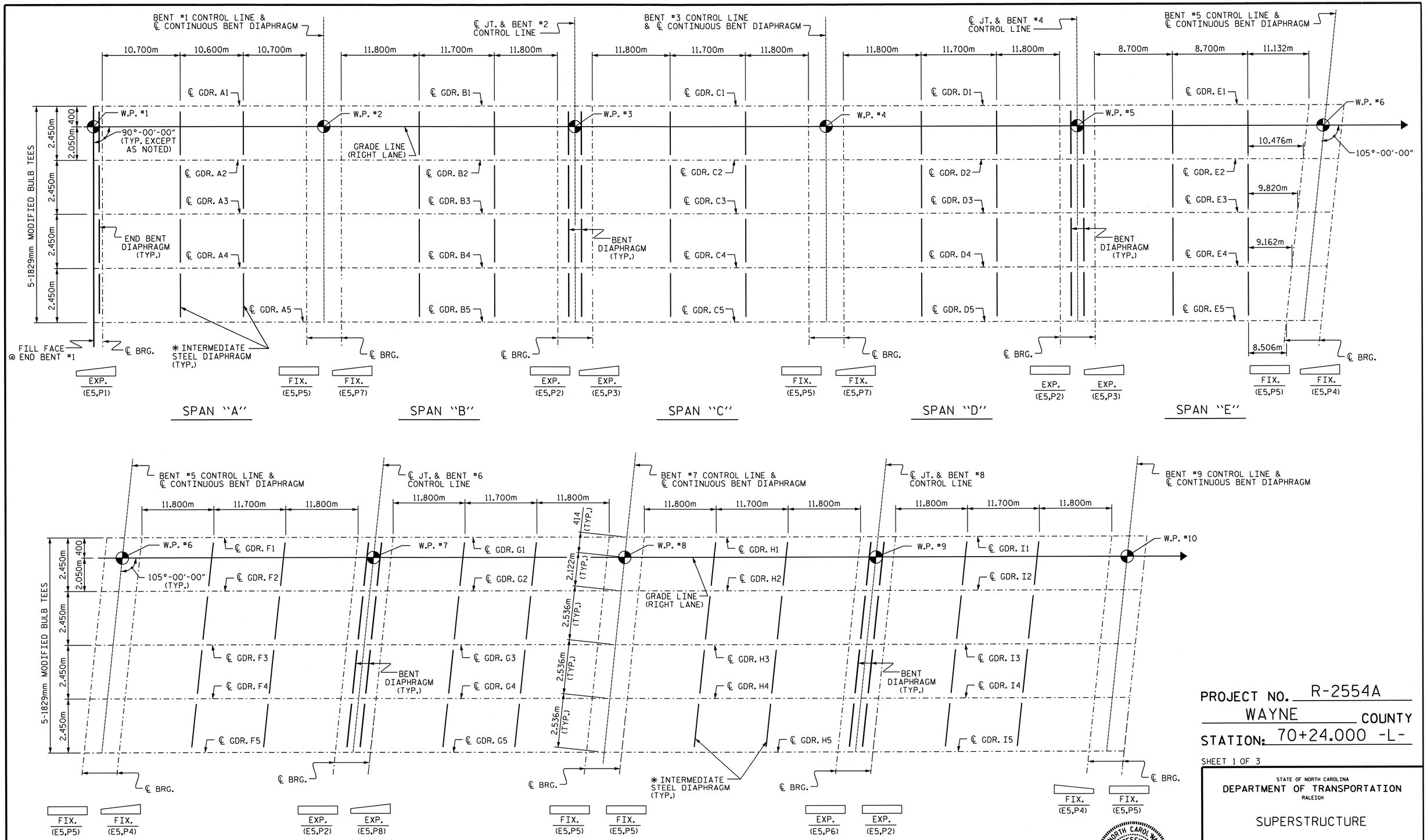

GIRDER LAYOUT PLAN

✱ NOTE: SEE "INTERMEDIATE STEEL DIAPHRAGMS FOR 1829mm MODIFIED BULB TEE CONCRETE GIRDERS" SHEET FOR DETAILS.

PROJECT NO. R-2554A
WAYNE COUNTY
STATION: 70+24.000 -L-

SHEET 1 OF 3

STATE OF NORTH CAROLINA
DEPARTMENT OF TRANSPORTATION
RALEIGH

SUPERSTRUCTURE

GIRDER LAYOUT
(RIGHT LANE)

NORTH CAROLINA PROFESSIONAL SEAL 14045 ENGINEER TIMOTHY L. COGGINS
03/23/12

REVISIONS						SHEET NO.
NO.	BY:	DATE:	NO.	BY:	DATE:	S-148
1			3			TOTAL SHEETS
2			4			276

STR. #4

DRAWN BY : B.N.BARODAWALA DATE : 11-15-11
CHECKED BY : PEGGY PARISI DATE : 1-5-12

23-MAR-2012 11:36
Z:\TIPProjects-R\R2554A\Structures\FinalPlans\Str#4\r2554a_sd_fp_04.dgn
padkins

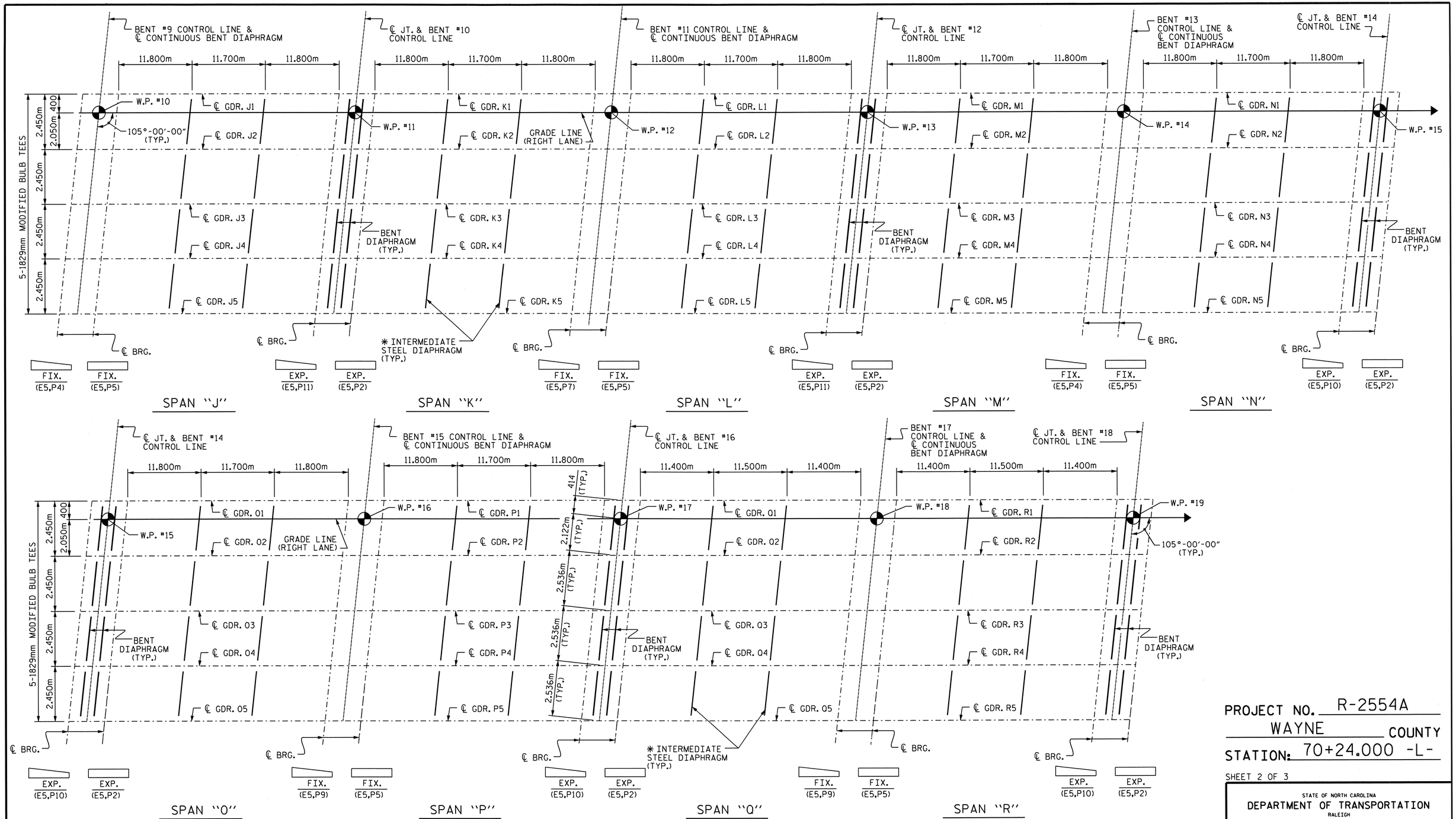

GIRDER LAYOUT PLAN

* NOTE: SEE "INTERMEDIATE STEEL DIAPHRAGMS FOR 1829mm MODIFIED BULB TEE CONCRETE GIRDERS" SHEET FOR DETAILS.

PROJECT NO. R-2554A
WAYNE COUNTY
STATION: 70+24.000 -L-

SHEET 2 OF 3

STATE OF NORTH CAROLINA
DEPARTMENT OF TRANSPORTATION
RALEIGH

SUPERSTRUCTURE

GIRDER LAYOUT
(RIGHT LANE)

NORTH CAROLINA PROFESSIONAL SEAL 14045 ENGINEER TIMOTHY Q. COGGINS
03/23/12

REVISIONS						SHEET NO.
NO.	BY:	DATE:	NO.	BY:	DATE:	S-149
1			3			TOTAL SHEETS
2			4			276

DRAWN BY : B.N.BARODAWALA DATE : 11-15-11
CHECKED BY : PEGGY PARISI DATE : 1-5-12

23-MAR-2012 11:36
Z:\TIPProjects-R\R2554A\Structures\FinalPlans\Str#4\r2554a_sd_fp_04.dgn
padkins

STR. #4

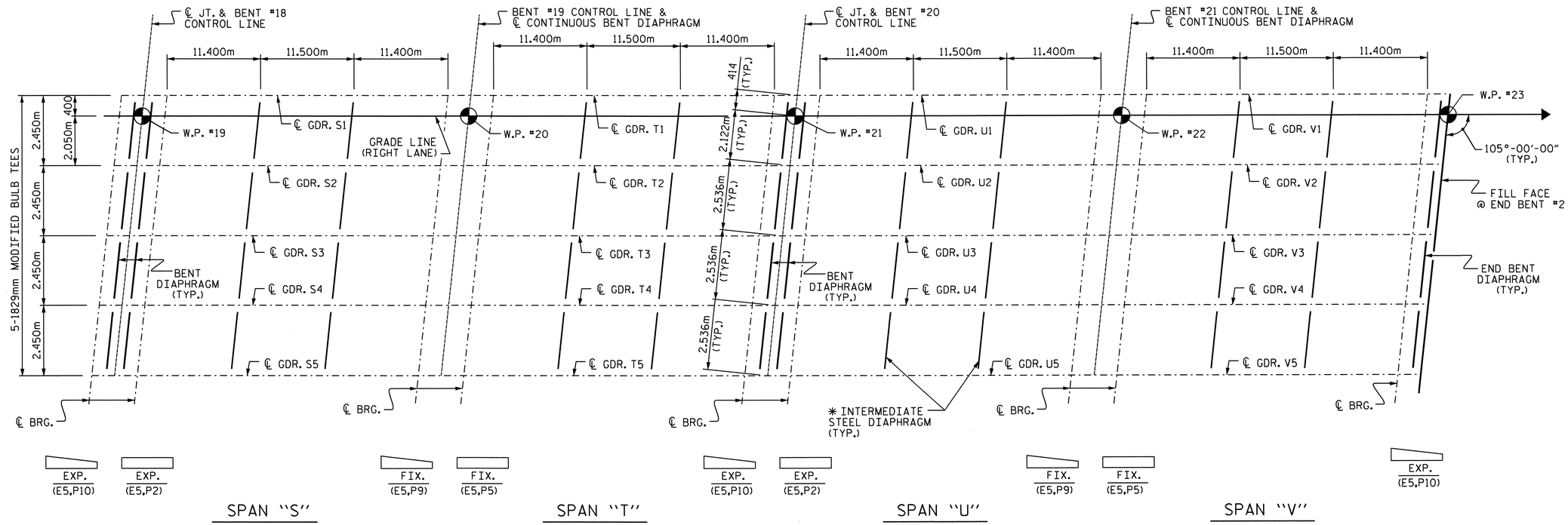

GIRDER LAYOUT PLAN

* NOTE: SEE "INTERMEDIATE STEEL DIAPHRAGMS FOR 1829mm MODIFIED BULB TEE CONCRETE GIRDERS" SHEET FOR DETAILS.

PROJECT NO. R-2554A
WAYNE COUNTY
STATION: 70+24.000 -L-

SHEET 3 OF 3

STATE OF NORTH CAROLINA
DEPARTMENT OF TRANSPORTATION
RALEIGH

SUPERSTRUCTURE

GIRDER LAYOUT
(RIGHT LANE)

NORTH CAROLINA PROFESSIONAL SEAL 14045 ENGINEER TIMOTHY W. COCKING
03/23/12

REVISIONS						SHEET NO.
NO.	BY:	DATE:	NO.	BY:	DATE:	S-150
1			3			TOTAL SHEETS
2			4			276

DRAWN BY : B.N.BARODAWALA DATE : 11-15-11
CHECKED BY : PEGGY PARISI DATE : 1-5-12

23-MAR-2012 11:36
Z:\TIPProjects-R\R2554A\Structures\FinalPlans\Str#4\r2554a_sd_fp_04.dgn
padkins

STR. #4

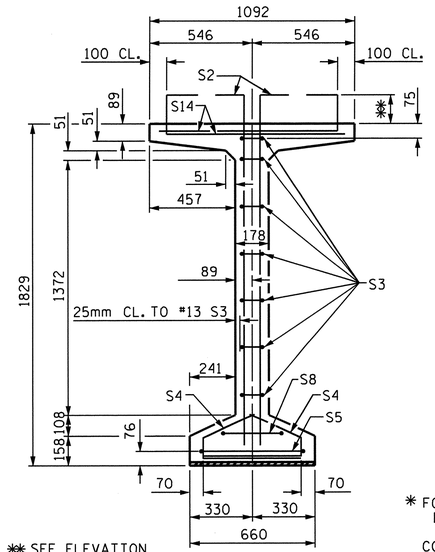

✱✱ SEE ELEVATION VIEW FOR STIRRUP PROJECTION

SECTION A-A

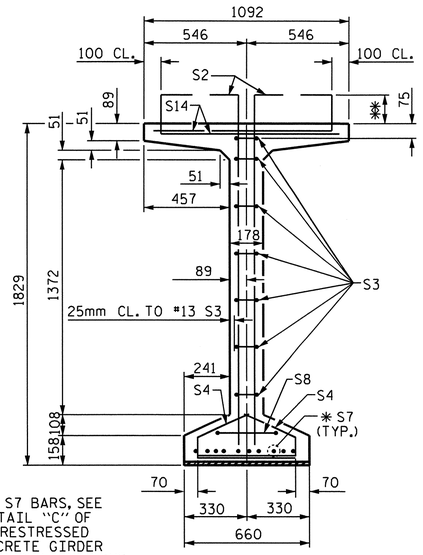

✱ FOR S7 BARS, SEE DETAIL "C" OF PRESTRESSED CONCRETE GIRDER CONTINUOUS FOR LIVE LOAD DETAILS SHEET

SECTION B-B

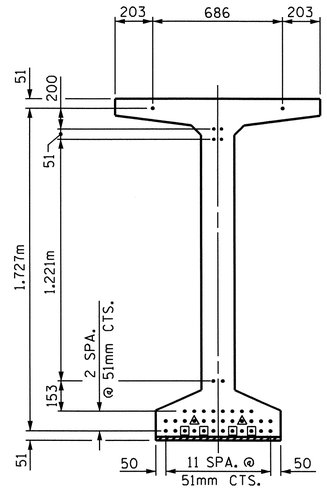

AT END OF GIRDERS

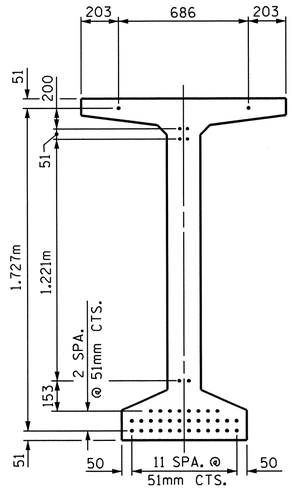

AT ℄ OF GIRDERS

15.24mm Ø LOW RELAXATION STRAND LAYOUT

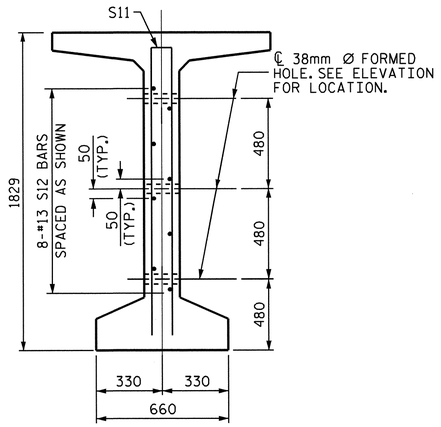

SECTION C-C

(S1, S6 AND S9 BARS NOT SHOWN)

DEBONDING LEGEND

- • FULLY BONDED STRANDS
- ▣ STRANDS DEBONDED FOR 3.050m FROM END OF GIRDER
- ◬ STRANDS DEBONDED FOR 3.660m FROM END OF GIRDER

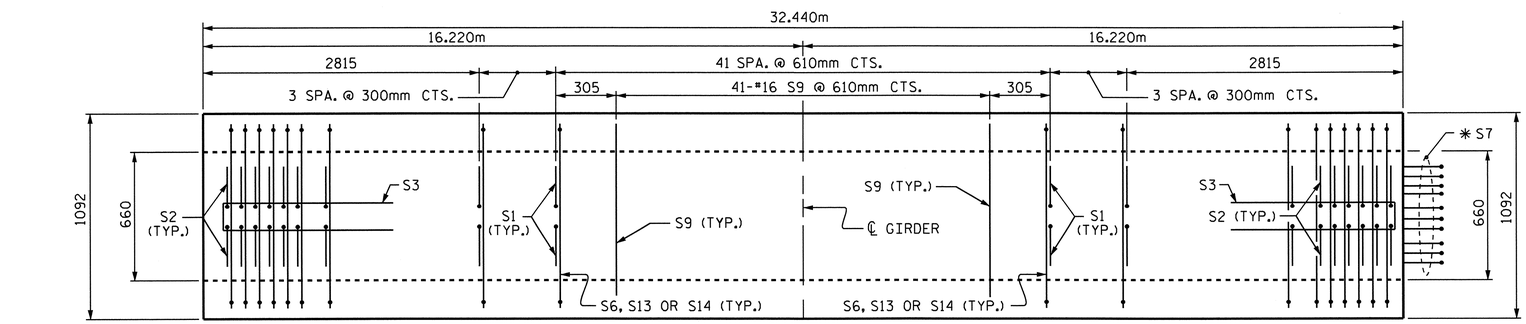

PLAN OF GIRDER

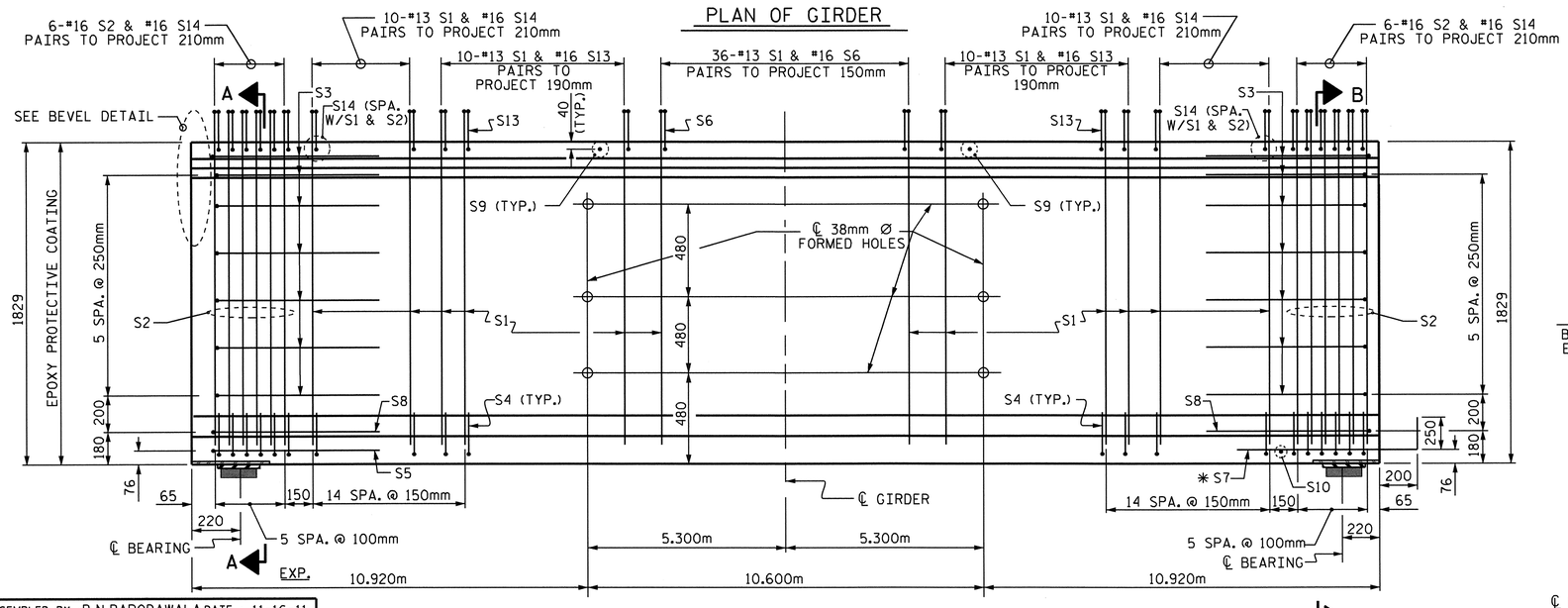

ELEVATION OF GIRDER

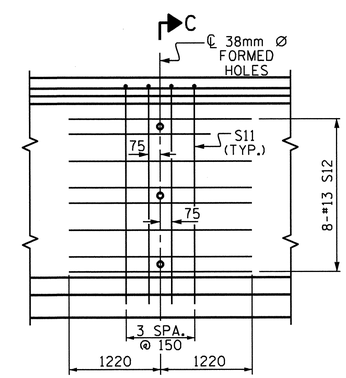

PARTIAL ELEVATION

SHOWING INTERMEDIATE DIAPHRAGM REINFORCING STEEL FOR ALL GIRDERS

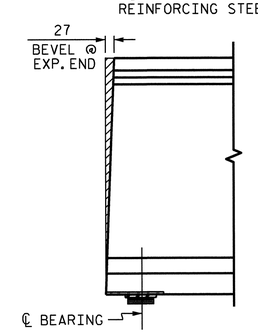

BEVEL DETAIL

15.24mm Ø L.R. GRADE 270 STRANDS

AREA (mm²)	ULTIMATE STRENGTH (kN PER STRAND)	APPLIED PRESTRESS (kN PER STRAND)
140.00	260.7	195.5

REINFORCING STEEL FOR ONE GIRDER

BAR	NUMBER	SIZE	TYPE	LENGTH	WEIGHT
S1	152	#13	1	2120	320
S2	24	#16	1	2120	79
S3	14	#13	2	2560	36
S4	84	#13	3	920	77
S5	1	#16	2	3000	5
S6	72	#16	4	1320	148
✱ S7	10	#16	STR	1120	17
S8	2	#16	2	2740	9
S9	41	#16	STR	980	62
S10	1	#10	STR	560	1
S11	8	#16	2	3540	44
S12	16	#13	STR	2440	39
S13	40	#16	4	1360	84
S14	64	#16	4	1380	137

✱ NOTE: S7 BARS SHALL BE BENT BEFORE SHIPMENT. HEAT BENDING SHALL NOT BE ALLOWED.

BAR TYPES

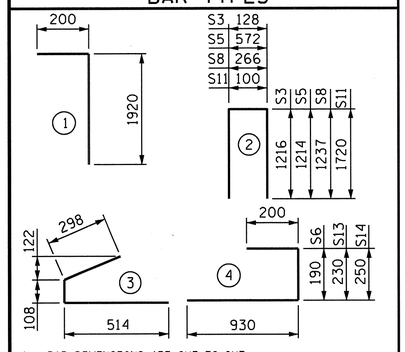

ALL BAR DIMENSIONS ARE OUT-TO-OUT

QUANTITIES FOR ONE GIRDER

	REINFORCING STEEL (kg)	55.16 MPa CONCRETE (m³)	15.24mm Ø L.R. STRANDS (No.)
ALL GIRDERS	1058	17.4	40

GIRDERS REQUIRED

NUMBER	LENGTH	TOTAL LENGTH
5	32.440m	162.200m

PROJECT NO. R-2554A

WAYNE COUNTY

STATION: 70+24.000 -L-

SHEET 1 OF 8

STATE OF NORTH CAROLINA
DEPARTMENT OF TRANSPORTATION
RALEIGH

1829mm PRESTRESSED CONCRETE MODIFIED BULB TEE CONTINUOUS FOR LIVE LOAD

SPAN A

(RIGHT LANE)

NORTH CAROLINA PROFESSIONAL SEAL 14045 ENGINEER TIMOTHY W. COCKING
03/23/12

ASSEMBLED BY : B.N.BARODAWALA	DATE : 11-16-11
CHECKED BY : PEGGY PARISI	DATE : 1-5-12
DRAWN BY : EEM 2/6/97	REV. 8/16/99 RWW/LES
CHECKED BY : VAP 2/6/97	REV. 10/17/00 RWW/LES
	REV. 5/1/06R TLA/GM

REVISIONS						SHEET NO.
NO.	BY:	DATE:	NO.	BY:	DATE:	S-151
1			3			TOTAL SHEETS
2			4			276

STR. #4

STD. NO. PCG10SM

23-MAR-2012 11:38
Z:\TIPProjects-R\R2554A\Structures\FinalPlans\Str#4\r2554a_sd_g_04.dgn
padkins

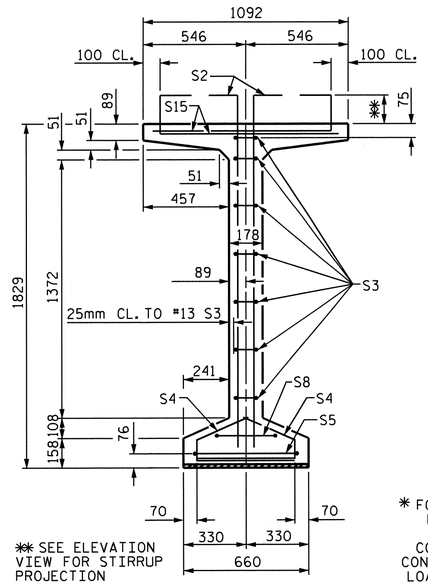

✱✱ SEE ELEVATION VIEW FOR STIRRUP PROJECTION

SECTION A-A

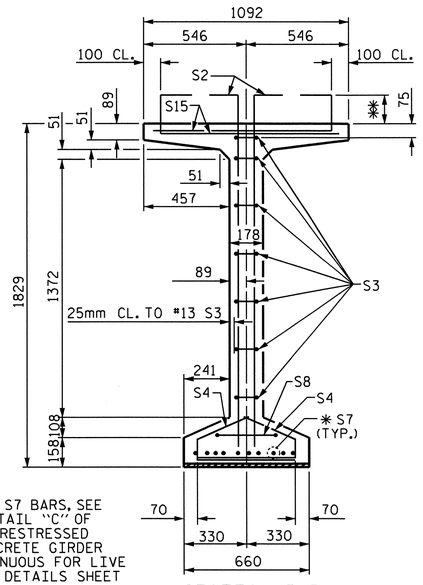

✱ FOR S7 BARS, SEE DETAIL "C" OF PRESTRESSED CONCRETE GIRDER CONTINUOUS FOR LIVE LOAD DETAILS SHEET

SECTION B-B

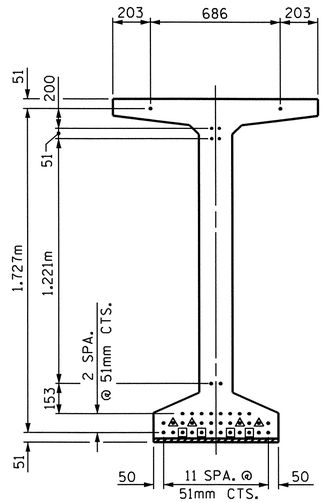

AT END OF GIRDERS

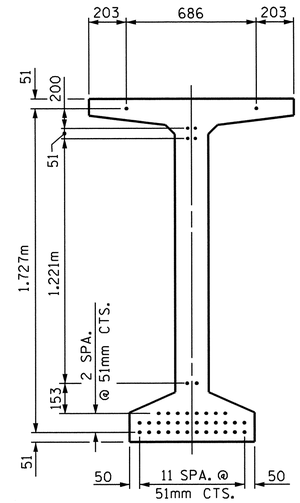

AT ℄ OF GIRDERS

15.24mm Ø LOW RELAXATION STRAND LAYOUT

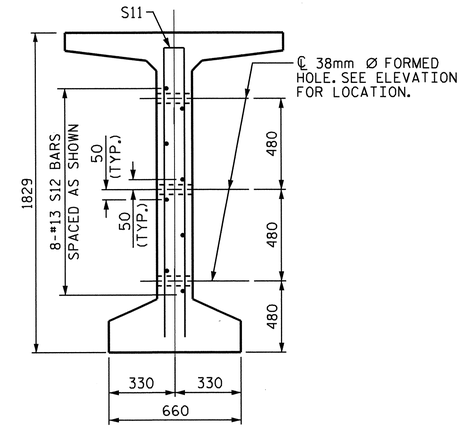

SECTION C-C

(S1, S6 AND S9 BARS NOT SHOWN)

DEBONDING LEGEND

- • FULLY BONDED STRANDS
- ▣ STRANDS DEBONDED FOR 1.220m FROM END OF GIRDER
- ◬ STRANDS DEBONDED FOR 1.830m FROM END OF GIRDER

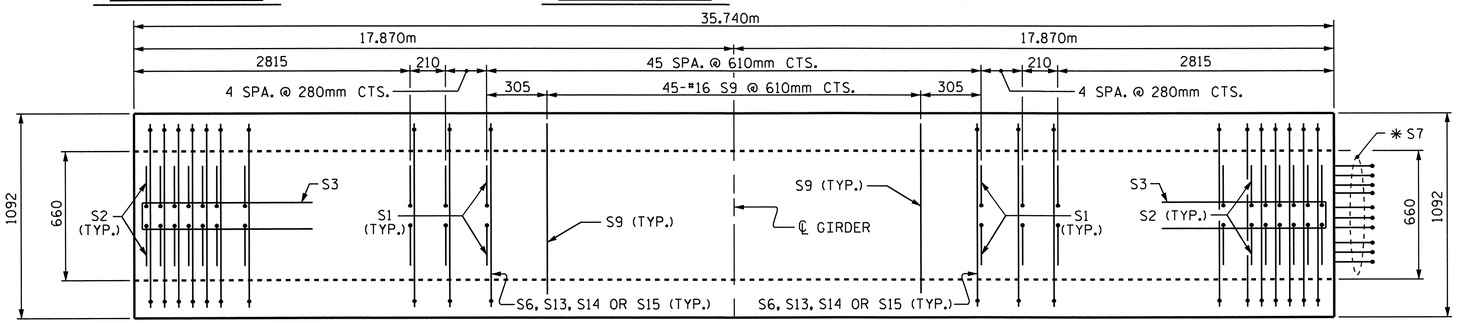

PLAN OF GIRDER

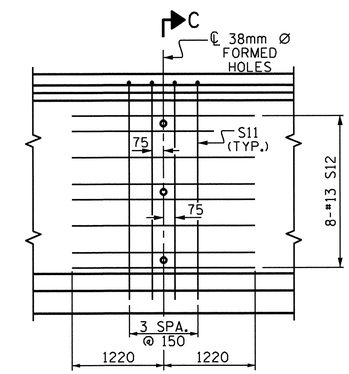

PARTIAL ELEVATION

SHOWING INTERMEDIATE DIAPHRAGM REINFORCING STEEL FOR ALL GIRDERS

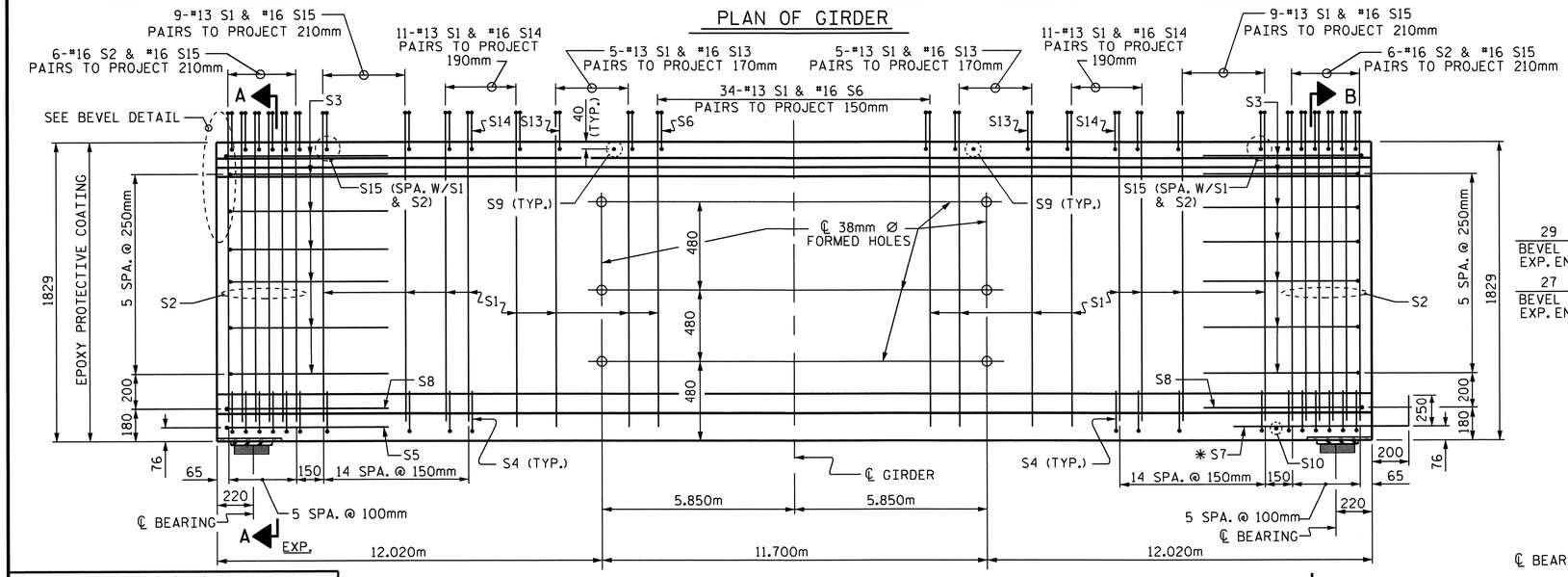

ELEVATION OF GIRDER

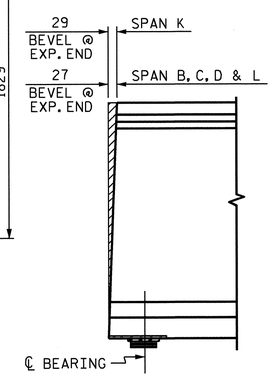

BEVEL DETAIL

15.24mm Ø L.R. GRADE 270 STRANDS

AREA (mm²)	ULTIMATE STRENGTH (kN PER STRAND)	APPLIED PRESTRESS (kN PER STRAND)
140.00	260.7	195.5

REINFORCING STEEL FOR ONE GIRDER

BAR	NUMBER	SIZE	TYPE	LENGTH	WEIGHT
S1	168	#13	1	2120	354
S2	24	#16	1	2120	79
S3	14	#13	2	2560	36
S4	84	#13	3	920	77
S5	1	#16	2	3000	5
S6	68	#16	4	1320	139
✱ S7	10	#16	STR	1120	17
S8	2	#16	2	2740	9
S9	45	#16	STR	980	68
S10	1	#10	STR	560	1
S11	8	#16	2	3540	44
S12	16	#13	STR	2440	39
S13	20	#16	4	1340	42
S14	44	#16	4	1360	93
S15	60	#16	4	1380	129

✱ NOTE: S7 BARS SHALL BE BENT BEFORE SHIPMENT. HEAT BENDING SHALL NOT BE ALLOWED.

BAR TYPES

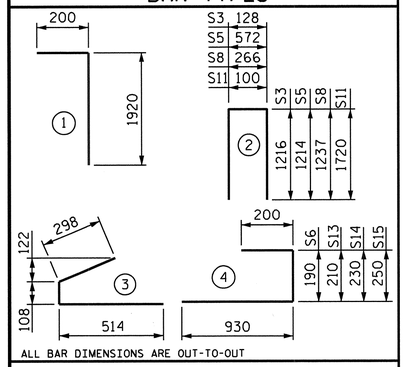

QUANTITIES FOR ONE GIRDER

	REINFORCING STEEL (kg)	62.06 MPa CONCRETE (m³)	15.24mm Ø L.R. STRANDS (No.)
ALL GIRDERS	1132	19.2	40

GIRDERS REQUIRED

NUMBER	LENGTH	TOTAL LENGTH
70	35.740m	2501.800m

PROJECT NO. R-2554A

WAYNE COUNTY

STATION: 70+24.000 -L-

SHEET 2 OF 8

STATE OF NORTH CAROLINA
DEPARTMENT OF TRANSPORTATION
RALEIGH

1829mm PRESTRESSED CONCRETE MODIFIED BULB TEE CONTINUOUS FOR LIVE LOAD SPANS B, C, D, & F THRU P (RIGHT LANE)

NORTH CAROLINA PROFESSIONAL SEAL 14045 ENGINEER TIMOTHY L. COGGINS 03/23/12

ASSEMBLED BY : B.N.BARODAWALA	DATE : 11-16-11
CHECKED BY : PEGGY PARISI	DATE : 1-5-12
DRAWN BY : EEM 2/6/97	REV. 8/16/99 RWW/LES
CHECKED BY : VAP 2/6/97	REV. 10/17/00 RWW/LES
	REV. 5/1/06R TLA/GM

REVISIONS							SHEET NO.
NO.	BY:	DATE:	NO.	BY:	DATE:		S-152
1			3				TOTAL SHEETS
2			4				276

23-MAR-2012 11:38
Z:\TIPProjects-R\R2554A\Structures\FinalPlans\Str#4\r2554a_sd_g_04.dgn
padkins

STR. #4

STD. NO. PCG10SM

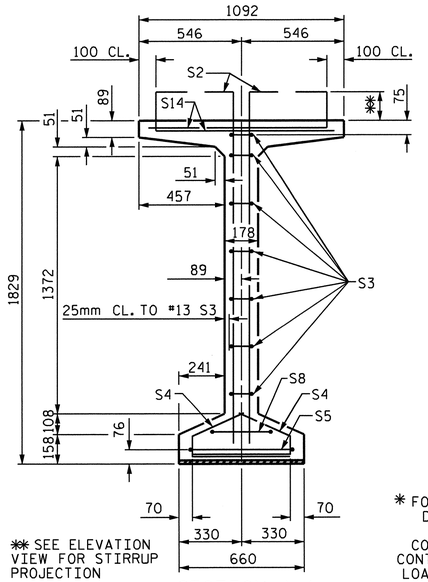

✱✱ SEE ELEVATION VIEW FOR STIRRUP PROJECTION

SECTION A-A

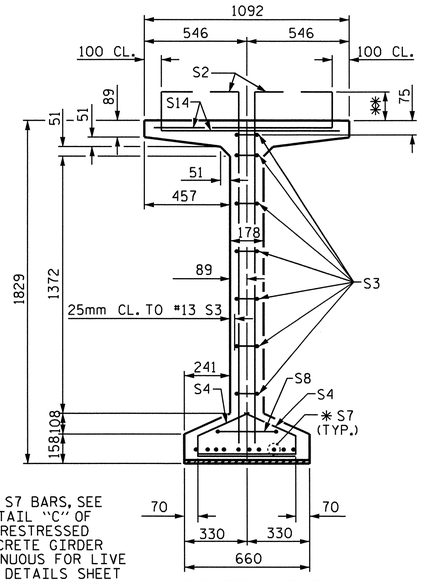

✱ FOR S7 BARS, SEE DETAIL "C" OF PRESTRESSED CONCRETE GIRDER CONTINUOUS FOR LIVE LOAD DETAILS SHEET

SECTION B-B

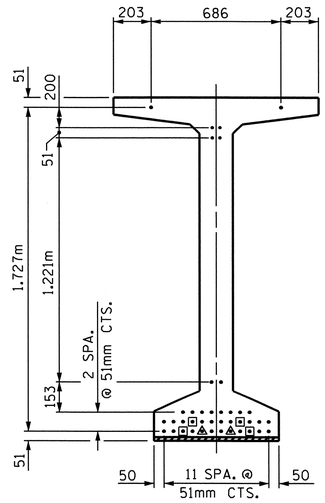

AT END OF GIRDERS

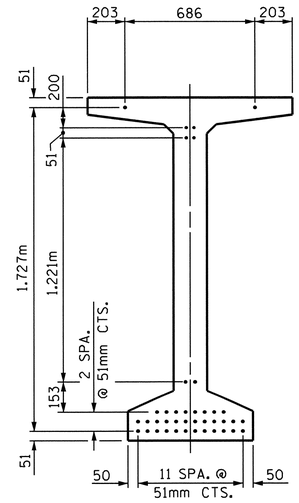

AT ℄ OF GIRDERS

15.24mm Ø LOW RELAXATION STRAND LAYOUT

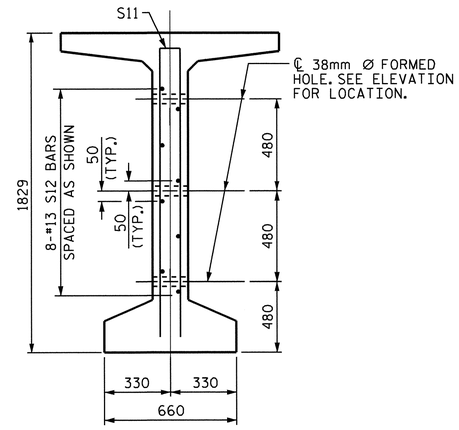

SECTION C-C

(S1, S6 AND S9 BARS NOT SHOWN)

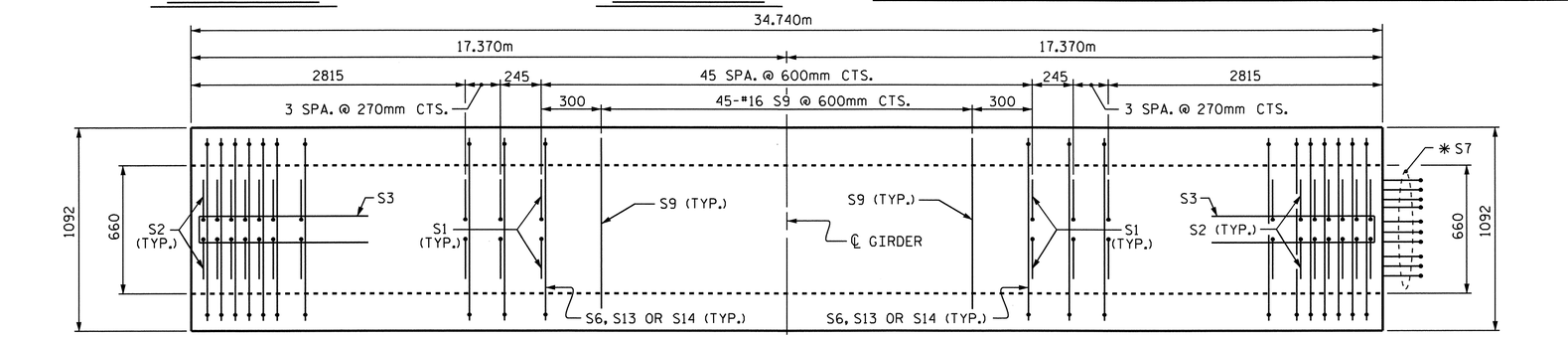

PLAN OF GIRDER

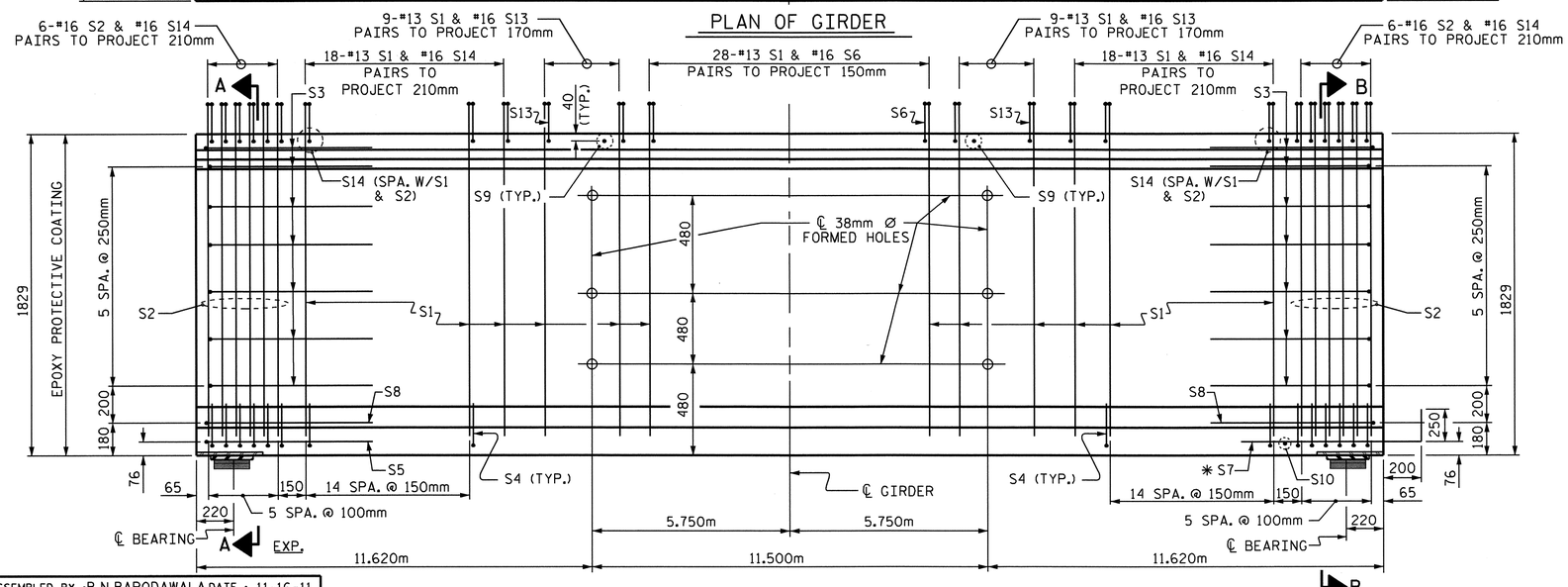

ELEVATION OF GIRDER

DEBONDING LEGEND

- • FULLY BONDED STRANDS
- ▣ STRANDS DEBONDED FOR 3.050m FROM END OF GIRDER
- ◬ STRANDS DEBONDED FOR 3.660m FROM END OF GIRDER

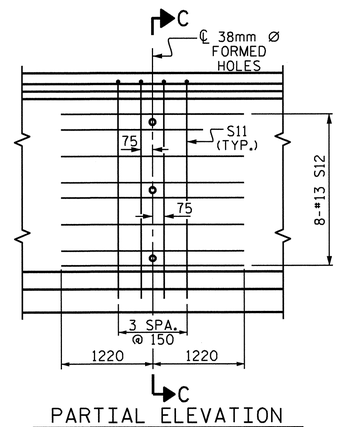

PARTIAL ELEVATION

SHOWING INTERMEDIATE DIAPHRAGM REINFORCING STEEL FOR ALL GIRDERS

NO BEVEL REQUIRED

NORTH CAROLINA PROFESSIONAL SEAL 14045 ENGINEER TIMOTHY W. COCONIS

03/23/12

15.24mm Ø L.R. GRADE 270 STRANDS

AREA (mm²)	ULTIMATE STRENGTH (kN PER STRAND)	APPLIED PRESTRESS (kN PER STRAND)
140.00	260.7	195.5

REINFORCING STEEL FOR ONE GIRDER

BAR	NUMBER	SIZE	TYPE	LENGTH	WEIGHT
S1	164	#13	1	2120	346
S2	24	#16	1	2120	79
S3	14	#13	2	2560	36
S4	84	#13	3	920	77
S5	1	#16	2	3000	5
S6	56	#16	4	1320	115
✱ S7	10	#16	STR	1120	17
S8	2	#16	2	2740	9
S9	45	#16	STR	980	68
S10	1	#10	STR	560	1
S11	8	#16	2	3540	44
S12	16	#13	STR	2440	39
S13	36	#16	4	1340	75
S14	96	#16	4	1380	206

✱ NOTE: S7 BARS SHALL BE BENT BEFORE SHIPMENT. HEAT BENDING SHALL NOT BE ALLOWED.

BAR TYPES

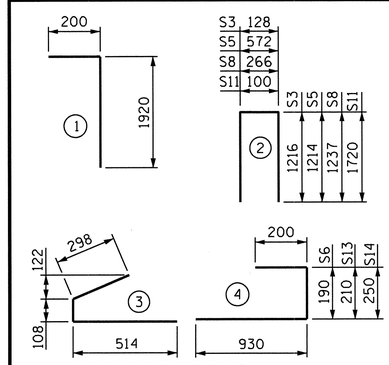

ALL BAR DIMENSIONS ARE OUT-TO-OUT

QUANTITIES FOR ONE GIRDER

	REINFORCING STEEL	55.16 MPa CONCRETE	15.24mm Ø L.R. STRANDS
	kg	m³	No.
ALL GIRDERS	1117	18.7	40

GIRDERS REQUIRED

NUMBER	LENGTH	TOTAL LENGTH
30	34.740m	1042.200m

PROJECT NO. R-2554A

WAYNE COUNTY

STATION: 70+24.000 -L-

SHEET 3 OF 8

STATE OF NORTH CAROLINA
DEPARTMENT OF TRANSPORTATION
RALEIGH

1829mm PRESTRESSED CONCRETE MODIFIED BULB TEE CONTINUOUS FOR LIVE LOAD SPANS Q THRU V (RIGHT LANE)

REVISIONS						SHEET NO.
NO.	BY:	DATE:	NO.	BY:	DATE:	S-153
1			3			TOTAL SHEETS
2			4			276

ASSEMBLED BY : B.N.BARODAWALA	DATE : 11-16-11		
CHECKED BY : PEGGY PARISI	DATE : 1-5-12		
DRAWN BY : EEM 2/6/97	REV. 8/16/99	RWW/LES	
CHECKED BY : VAP 2/6/97	REV. 10/17/00	RWW/LES	
	REV. 5/1/06R	TLA/GM	

23-MAR-2012 11:38
Z:\TIPProjects-R\R2554A\Structures\FinalPlans\Str#4\r2554a_sd_g_04.dgn
padkins

STR. #4

STD. NO. PCG10SM

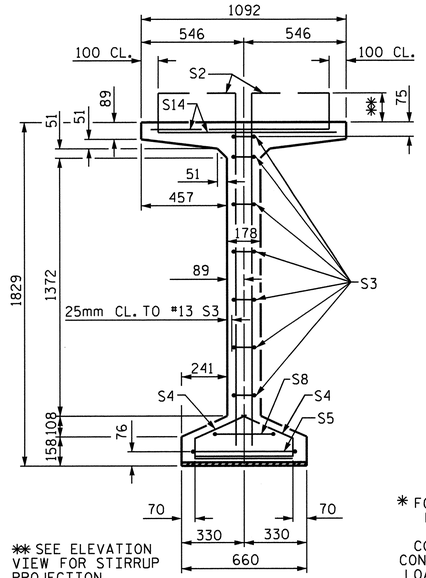

✱✱ SEE ELEVATION VIEW FOR STIRRUP PROJECTION

SECTION A-A

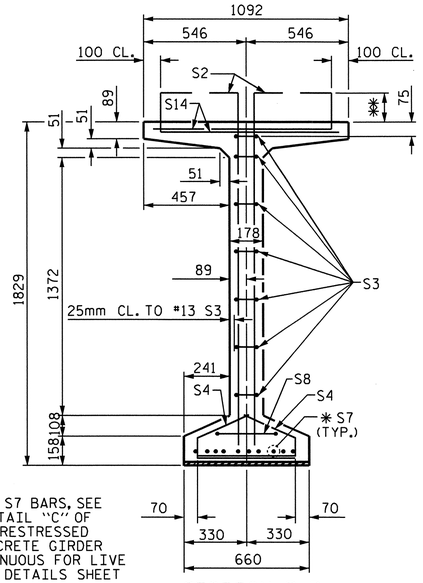

✱ FOR S7 BARS, SEE DETAIL "C" OF PRESTRESSED CONCRETE GIRDER CONTINUOUS FOR LIVE LOAD DETAILS SHEET

SECTION B-B

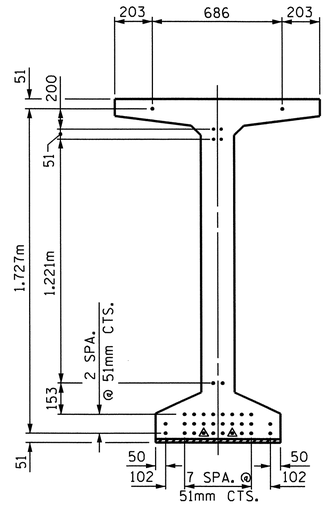

AT END OF GIRDERS

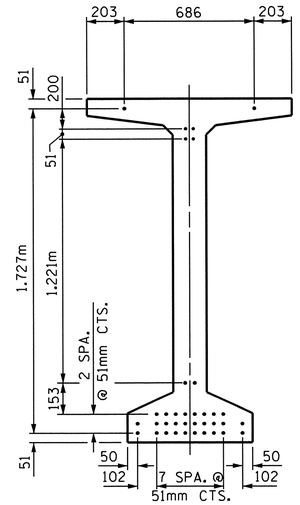

AT ℄ OF GIRDERS

15.24mm Ø LOW RELAXATION STRAND LAYOUT

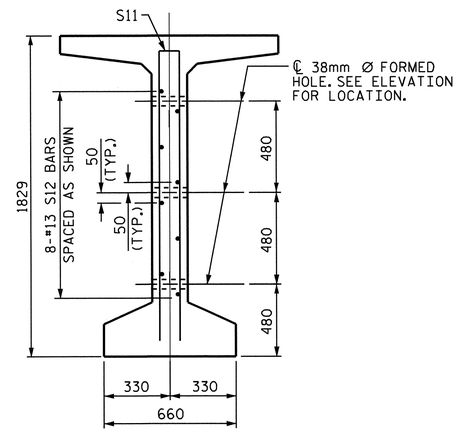

SECTION C-C

(S1, S6 AND S9 BARS NOT SHOWN)

DEBONDING LEGEND

- • FULLY BONDED STRANDS
- ▲ STRANDS DEBONDED FOR 1.830m FROM END OF GIRDER

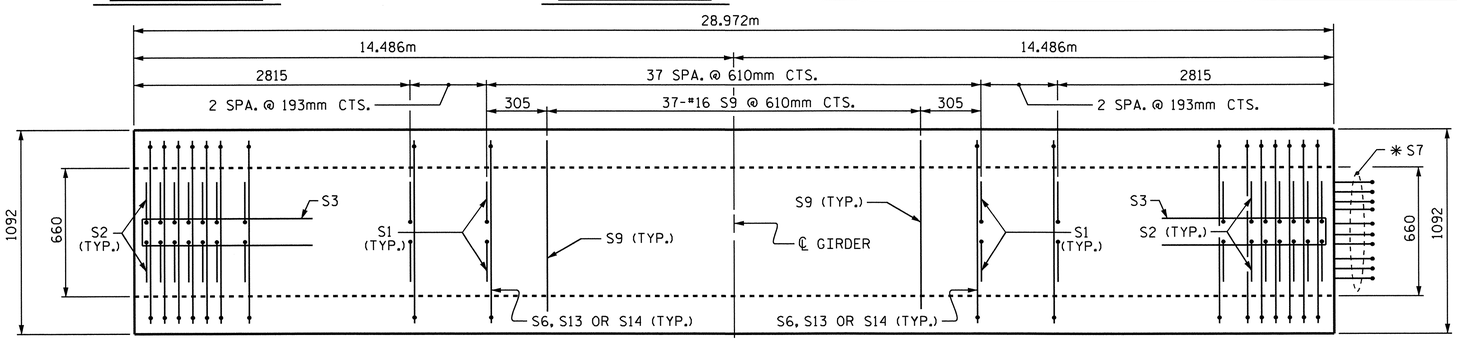

PLAN OF GIRDER

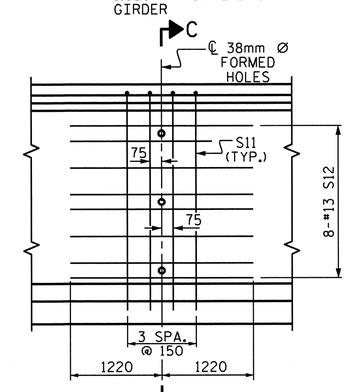

PARTIAL ELEVATION

SHOWING INTERMEDIATE DIAPHRAGM REINFORCING STEEL

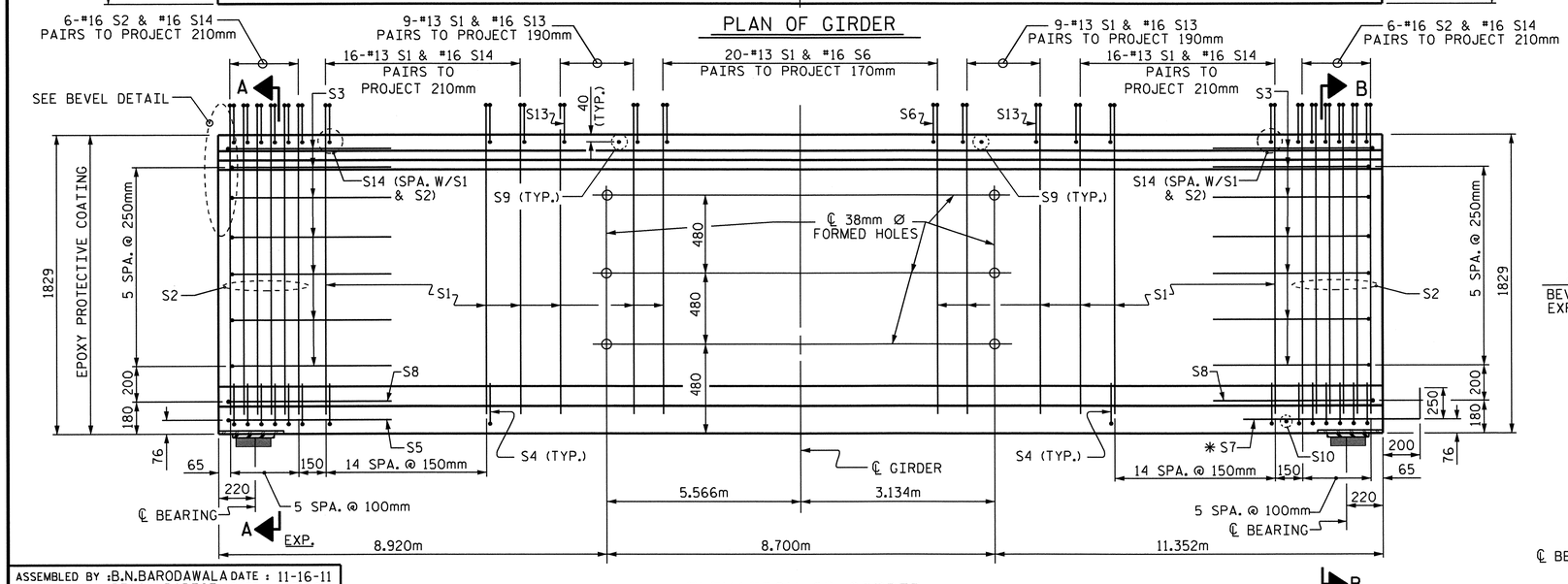

ELEVATION OF GIRDER

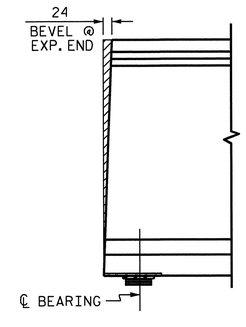

BEVEL DETAIL

NORTH CAROLINA PROFESSIONAL SEAL 14045 ENGINEER TIMOTHY K. COGGINS
03/23/12

15.24mm Ø L.R. GRADE 270 STRANDS

AREA (mm²)	ULTIMATE STRENGTH (kN PER STRAND)	APPLIED PRESTRESS (kN PER STRAND)
140.00	260.7	195.5

REINFORCING STEEL FOR ONE GIRDER

BAR	NUMBER	SIZE	TYPE	LENGTH	WEIGHT
S1	140	#13	1	2120	295
S2	24	#16	1	2120	79
S3	14	#13	2	2560	36
S4	84	#13	3	920	77
S5	1	#16	2	3000	5
S6	40	#16	4	1340	83
✱ S7	10	#16	STR	1120	17
S8	2	#16	2	2740	9
S9	37	#16	STR	980	56
S10	1	#10	STR	560	1
S11	8	#16	2	3540	44
S12	16	#13	STR	2440	39
S13	36	#16	4	1360	76
S14	88	#16	4	1380	188

✱ NOTE: S7 BARS SHALL BE BENT BEFORE SHIPMENT. HEAT BENDING SHALL NOT BE ALLOWED.

BAR TYPES

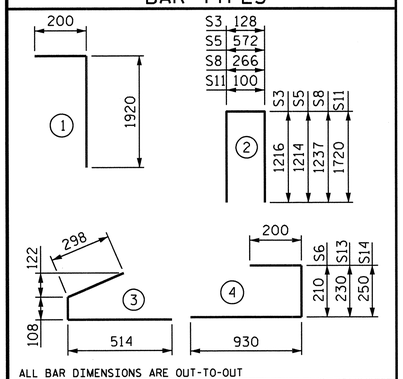

ALL BAR DIMENSIONS ARE OUT-TO-OUT

QUANTITIES FOR ONE GIRDER

	REINFORCING STEEL	51.71 MPa CONCRETE	15.24mm Ø L.R. STRANDS
	kg	m³	No.
EXTERIOR GIRDER E1	1005	15.6	36

GIRDERS REQUIRED

NUMBER	LENGTH	TOTAL LENGTH
1	28.972m	28.972m

PROJECT NO. R-2554A

WAYNE COUNTY

STATION: 70+24.000 -L-

SHEET 4 OF 8

STATE OF NORTH CAROLINA
DEPARTMENT OF TRANSPORTATION
RALEIGH

1829mm PRESTRESSED CONCRETE MODIFIED BULB TEE CONTINUOUS FOR LIVE LOAD SPAN E (GDR #1) (RIGHT LANE)

REVISIONS						SHEET NO.
NO.	BY:	DATE:	NO.	BY:	DATE:	S-154
1			3			TOTAL SHEETS
2			4			276

ASSEMBLED BY : B.N. BARODAWALA	DATE : 11-16-11		
CHECKED BY : PEGGY PARISI	DATE : 1-5-12		
DRAWN BY : EEM 2/6/97	REV. 8/16/99	RWW/LES	
CHECKED BY : VAP 2/6/97	REV. 10/17/00	RWW/LES	
	REV. 5/1/06R	TLA/GM	

23-MAR-2012 11:38
Z:\TIPProjects-R\R2554A\Structures\FinalPlans\Str#4\r2554a_sd_g_04.dgn
padkins

STR. #4

STD. NO. PCG10SM

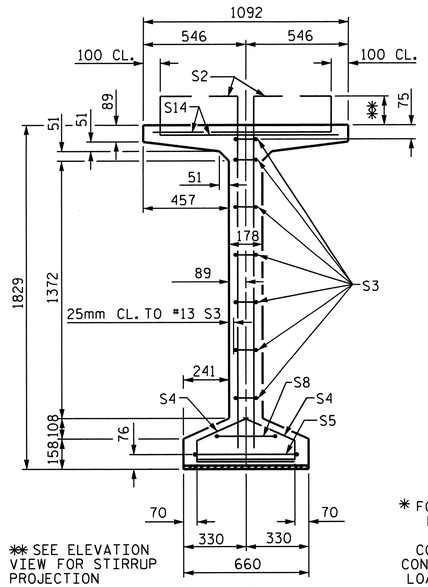

✱✱ SEE ELEVATION VIEW FOR STIRRUP PROJECTION

SECTION A-A

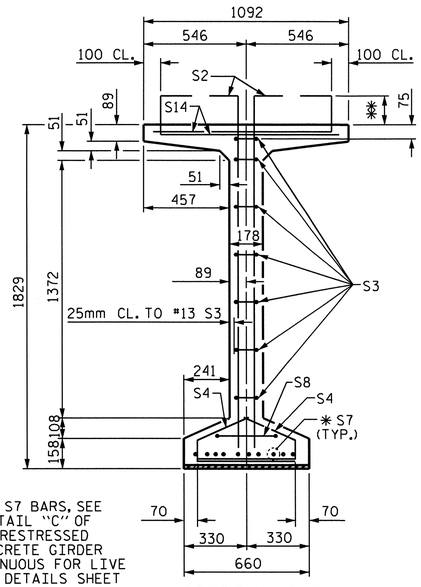

✱ FOR S7 BARS, SEE DETAIL "C" OF PRESTRESSED CONCRETE GIRDER CONTINUOUS FOR LIVE LOAD DETAILS SHEET

SECTION B-B

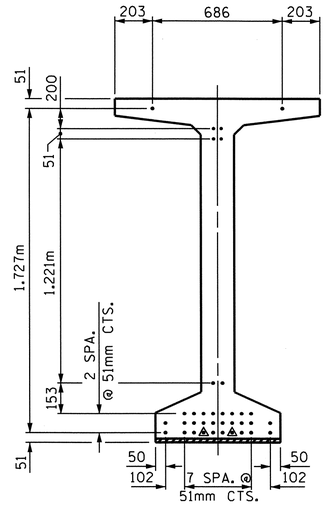

AT END OF GIRDERS

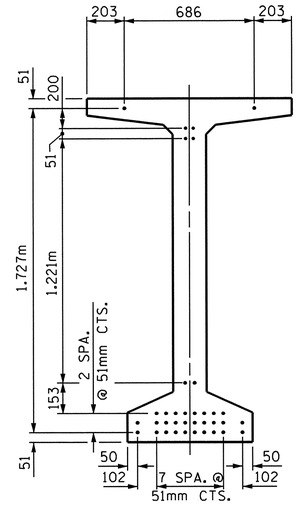

AT ℄ OF GIRDERS

15.24mm Ø LOW RELAXATION STRAND LAYOUT

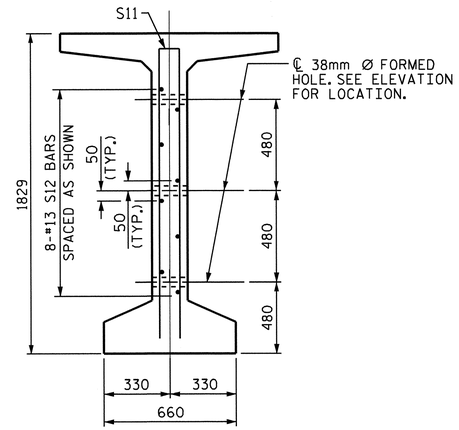

SECTION C-C

(S1, S6 AND S9 BARS NOT SHOWN)

DEBONDING LEGEND

- • FULLY BONDED STRANDS
- △ STRANDS DEBONDED FOR 1.830m FROM END OF GIRDER

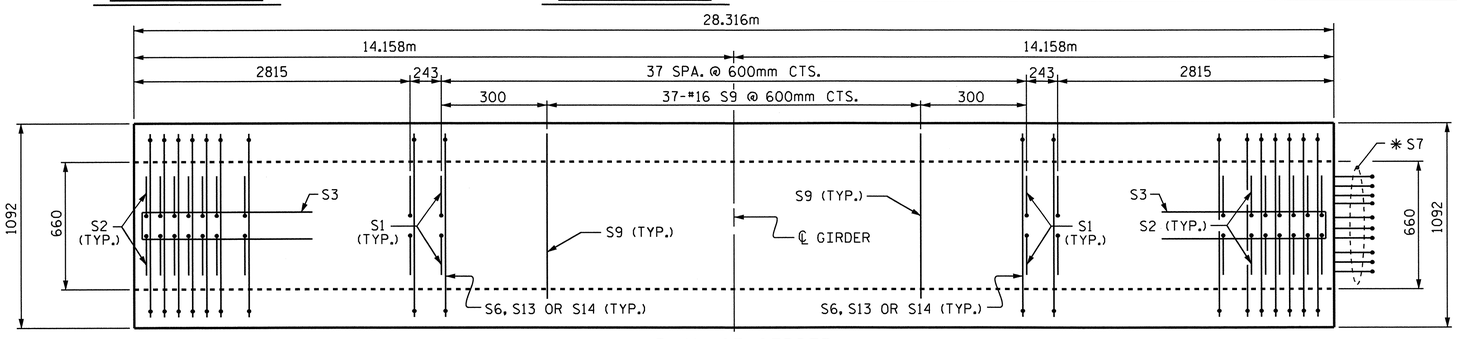

PLAN OF GIRDER

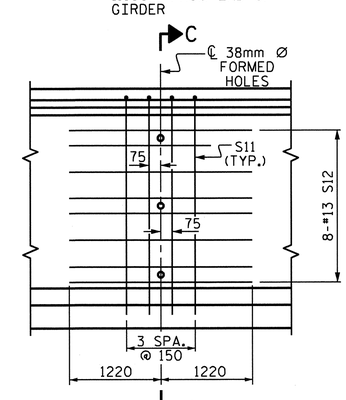

PARTIAL ELEVATION

SHOWING INTERMEDIATE DIAPHRAGM REINFORCING STEEL

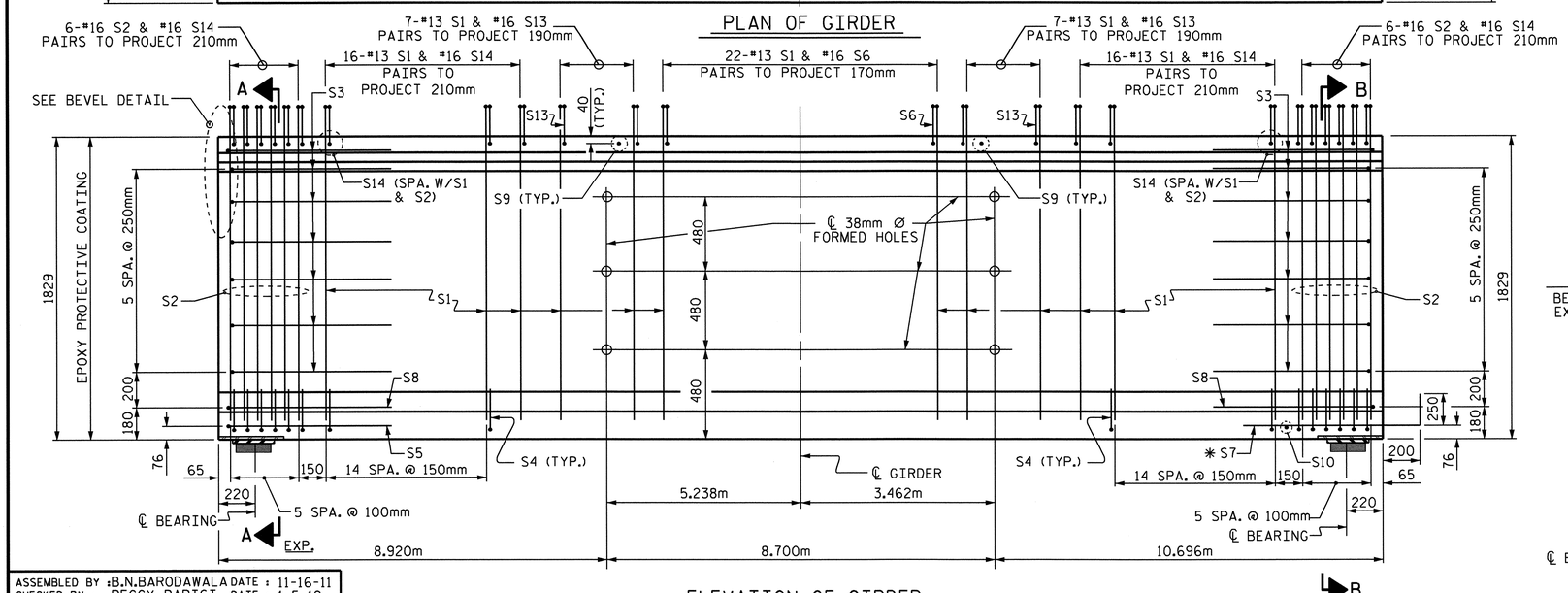

ELEVATION OF GIRDER

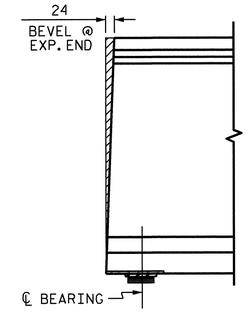

BEVEL DETAIL

ASSEMBLED BY : B.N. BARODAWALA DATE : 11-16-11		
CHECKED BY : PEGGY PARISI DATE : 1-5-12		
DRAWN BY : EEM 2/6/97	REV. 8/16/99	RWW/LES
CHECKED BY : VAP 2/6/97	REV. 10/17/00	RWW/LES
	REV. 5/1/06R	TLA/GM

15.24mm Ø L.R. GRADE 270 STRANDS

AREA (mm²)	ULTIMATE STRENGTH (kN PER STRAND)	APPLIED PRESTRESS (kN PER STRAND)
140.00	260.7	195.5

REINFORCING STEEL FOR ONE GIRDER

BAR	NUMBER	SIZE	TYPE	LENGTH	WEIGHT
S1	136	#13	1	2120	287
S2	24	#16	1	2120	79
S3	14	#13	2	2560	36
S4	84	#13	3	920	77
S5	1	#16	2	3000	5
S6	44	#16	4	1340	92
✱ S7	10	#16	STR	1120	17
S8	2	#16	2	2740	9
S9	37	#16	STR	980	56
S10	1	#10	STR	560	1
S11	8	#16	2	3540	44
S12	16	#13	STR	2440	39
S13	28	#16	4	1360	59
S14	88	#16	4	1380	188

✱ NOTE: S7 BARS SHALL BE BENT BEFORE SHIPMENT. HEAT BENDING SHALL NOT BE ALLOWED.

BAR TYPES

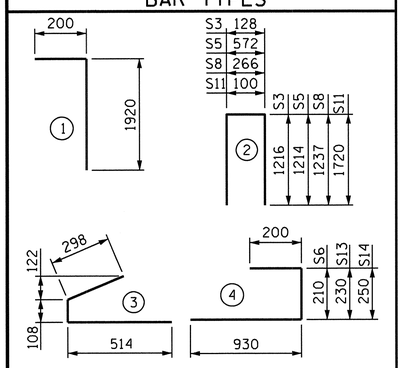

ALL BAR DIMENSIONS ARE OUT-TO-OUT

QUANTITIES FOR ONE GIRDER

	REINFORCING STEEL	51.71 MPa CONCRETE	15.24mm Ø L.R. STRANDS
	kg	m³	No.
INTERIOR GIRDER	989	15.2	36
E2			

GIRDERS REQUIRED

NUMBER	LENGTH	TOTAL LENGTH
1	28.316m	28.316m

PROJECT NO. R-2554A

WAYNE COUNTY

STATION: 70+24.000 -L-

SHEET 5 OF 8

STATE OF NORTH CAROLINA
DEPARTMENT OF TRANSPORTATION
RALEIGH

1829mm PRESTRESSED CONCRETE MODIFIED BULB TEE CONTINUOUS FOR LIVE LOAD SPAN E (GDR #2) (RIGHT LANE)

NORTH CAROLINA PROFESSIONAL SEAL 14045 ENGINEER TIMOTHY L. COGGINS
03/23/12

REVISIONS						SHEET NO.
NO.	BY:	DATE:	NO.	BY:	DATE:	S-155
1			3			TOTAL SHEETS
2			4			276

STR. #4

STD. NO. PCG10SM

23-MAR-2012 11:38
Z:\TIPProjects-R\R2554A\Structures\FinalPlans\Str#4\r2554a_sd_g_04.dgn
padkins

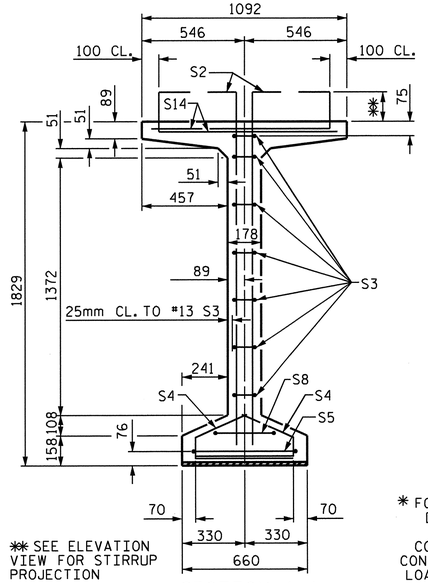

✱✱ SEE ELEVATION VIEW FOR STIRRUP PROJECTION

SECTION A-A

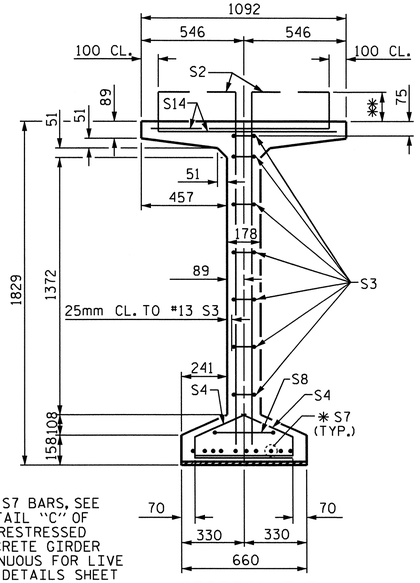

✱ FOR S7 BARS, SEE DETAIL "C" OF PRESTRESSED CONCRETE GIRDER CONTINUOUS FOR LIVE LOAD DETAILS SHEET

SECTION B-B

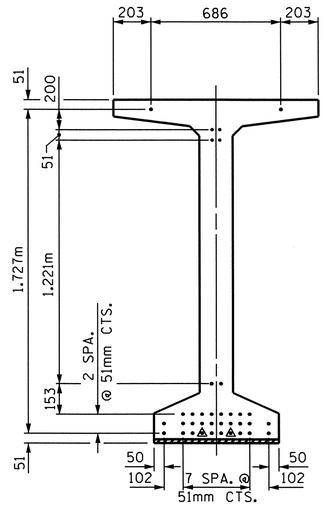

AT END OF GIRDERS

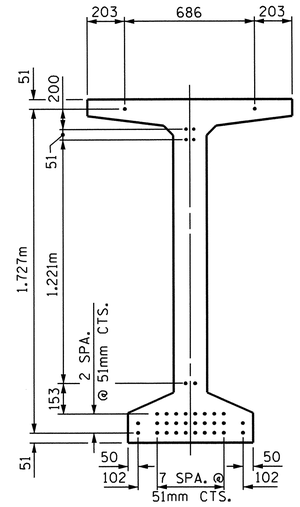

AT ℄ OF GIRDERS

15.24mm Ø LOW RELAXATION STRAND LAYOUT

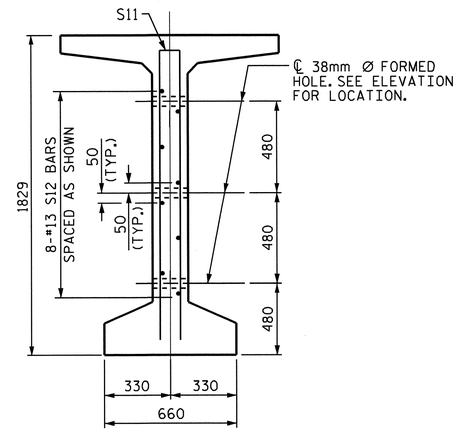

SECTION C-C

(S1, S6 AND S9 BARS NOT SHOWN)

DEBONDING LEGEND

- • FULLY BONDED STRANDS
- ◬ STRANDS DEBONDED FOR 1.830m FROM END OF GIRDER

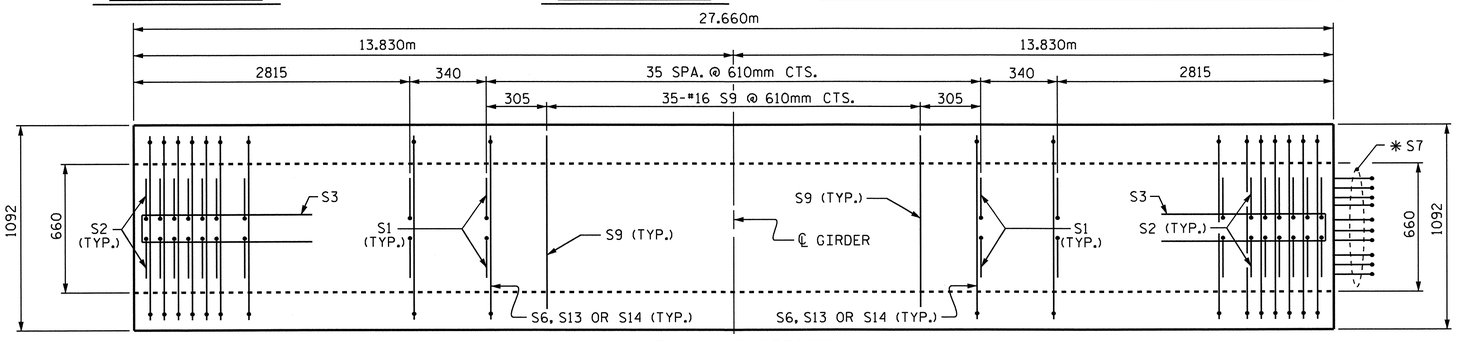

PLAN OF GIRDER

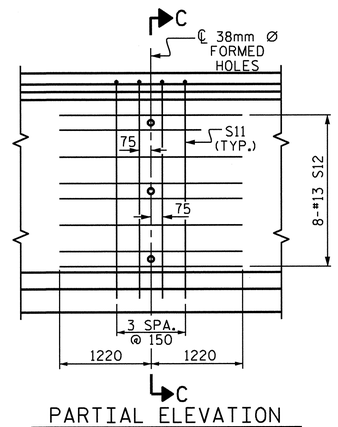

PARTIAL ELEVATION

SHOWING INTERMEDIATE DIAPHRAGM REINFORCING STEEL

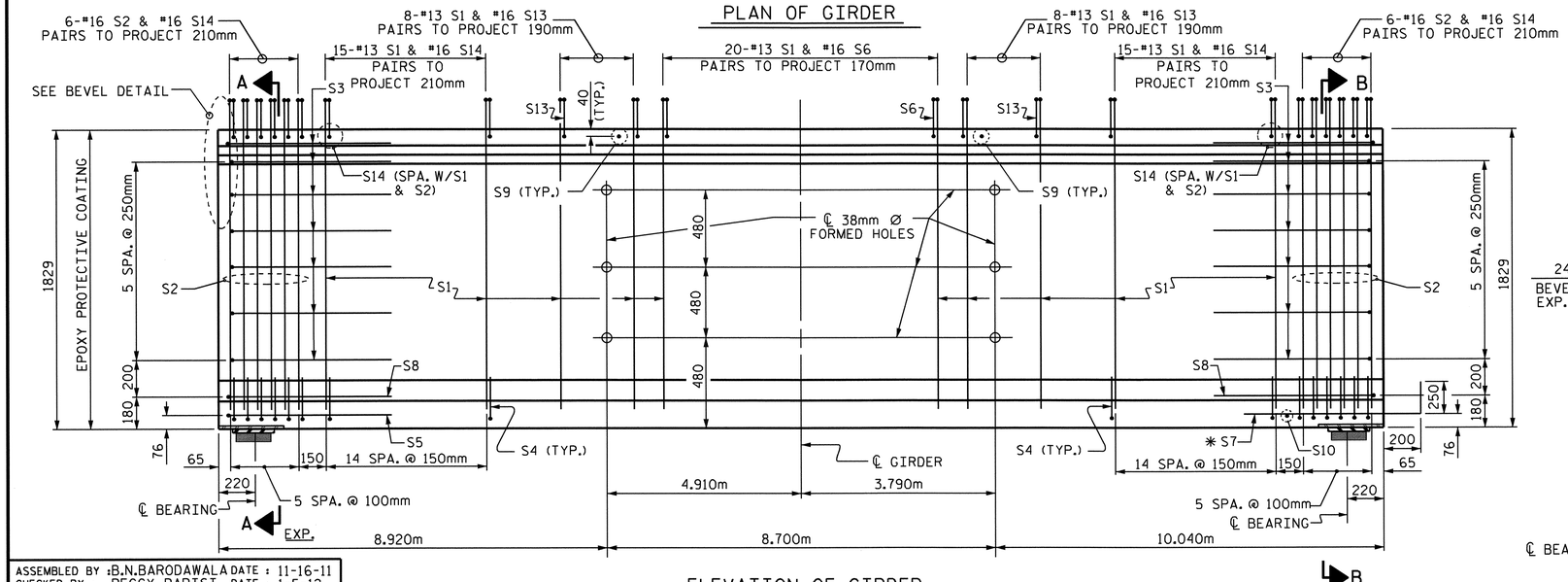

ELEVATION OF GIRDER

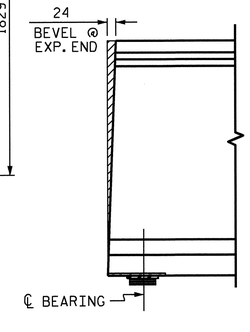

BEVEL DETAIL

15.24mm Ø L.R. GRADE 270 STRANDS

AREA (mm²)	ULTIMATE STRENGTH (kN PER STRAND)	APPLIED PRESTRESS (kN PER STRAND)
140.00	260.7	195.5

REINFORCING STEEL FOR ONE GIRDER

BAR	NUMBER	SIZE	TYPE	LENGTH	WEIGHT
S1	132	#13	1	2120	278
S2	24	#16	1	2120	79
S3	14	#13	2	2560	36
S4	84	#13	3	920	77
S5	1	#16	2	3000	5
S6	40	#16	4	1340	83
✱ S7	10	#16	STR	1120	17
S8	2	#16	2	2740	9
S9	35	#16	STR	980	53
S10	1	#10	STR	560	1
S11	8	#16	2	3540	44
S12	16	#13	STR	2440	39
S13	32	#16	4	1360	68
S14	84	#16	4	1380	180

✱ NOTE: S7 BARS SHALL BE BENT BEFORE SHIPMENT. HEAT BENDING SHALL NOT BE ALLOWED.

BAR TYPES

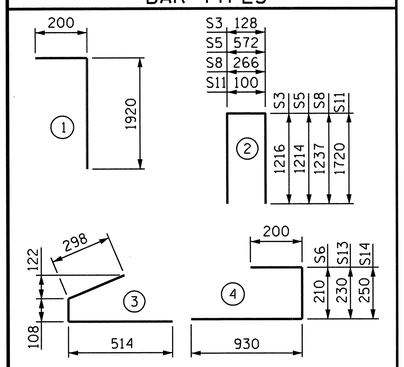

ALL BAR DIMENSIONS ARE OUT-TO-OUT

QUANTITIES FOR ONE GIRDER

	REINFORCING STEEL	51.71 MPa CONCRETE	15.24mm Ø L.R. STRANDS
	kg	m³	No.
INTERIOR GIRDER E3	969	14.9	36

GIRDERS REQUIRED

NUMBER	LENGTH	TOTAL LENGTH
1	27.660m	27.660m

PROJECT NO. R-2554A

WAYNE COUNTY

STATION: 70+24.000 -L-

SHEET 6 OF 8

STATE OF NORTH CAROLINA
DEPARTMENT OF TRANSPORTATION
RALEIGH

1829mm PRESTRESSED CONCRETE MODIFIED BULB TEE CONTINUOUS FOR LIVE LOAD SPAN E (GDR #3) (RIGHT LANE)

NORTH CAROLINA PROFESSIONAL SEAL 14045 ENGINEER TIMOTHY C. COGGINS

03/23/12

REVISIONS							SHEET NO.
NO.	BY:	DATE:	NO.	BY:	DATE:		S-156
1			3				TOTAL SHEETS
2			4				276

ASSEMBLED BY : B.N.BARODAWALA DATE : 11-16-11
CHECKED BY : PEGGY PARISI DATE : 1-5-12

DRAWN BY : EEM 2/6/97 REV. 8/16/99 RWW/LES
CHECKED BY : VAP 2/6/97 REV. 10/17/00 RWW/LES
REV. 5/1/06R TLA/GM

23-MAR-2012 11:37
Z:\TIPProjects-R\R2554A\Structures\FinalPlans\Str#4\r2554a_sd_g_04.dgn
padkins

STR. #4

STD. NO. PCG10SM

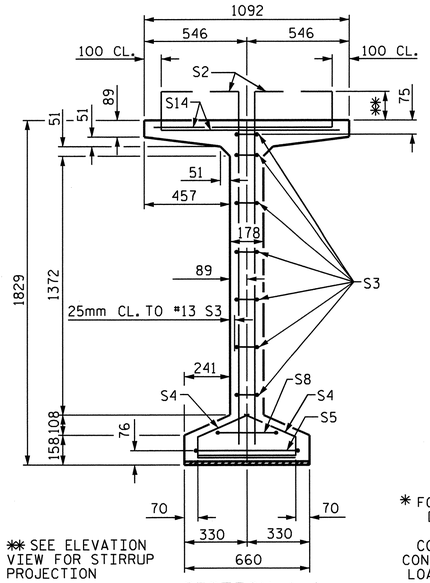

SECTION A-A

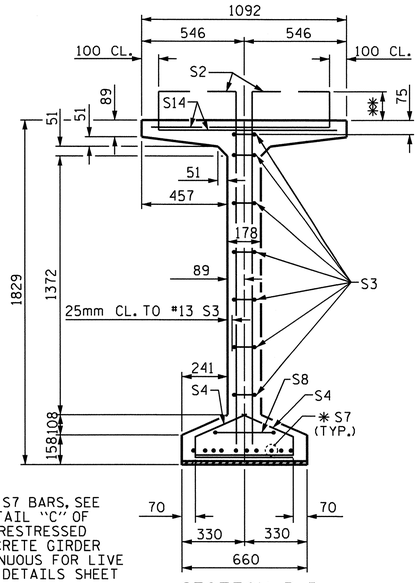

SECTION B-B

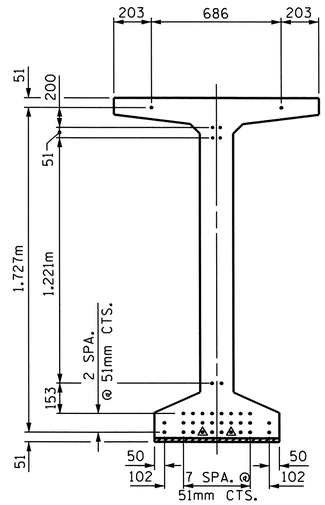

AT END OF GIRDERS

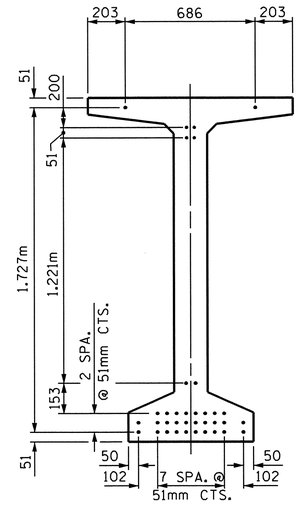

AT ℄ OF GIRDERS

15.24mm Ø LOW RELAXATION STRAND LAYOUT

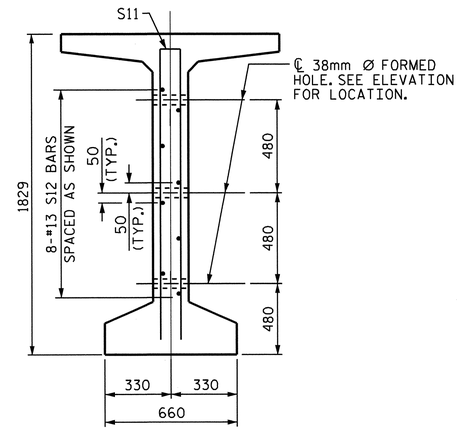

SECTION C-C

(S1, S6 AND S9 BARS NOT SHOWN)

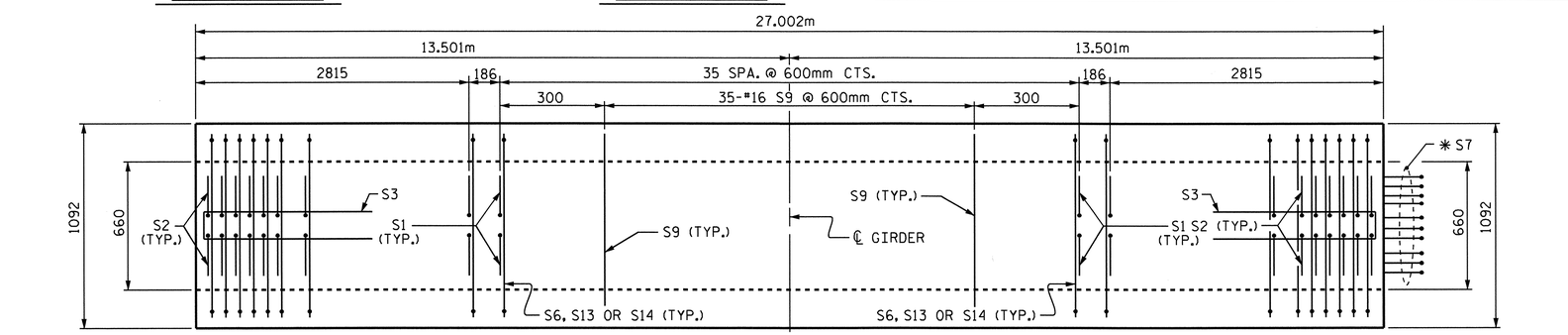

PLAN OF GIRDER

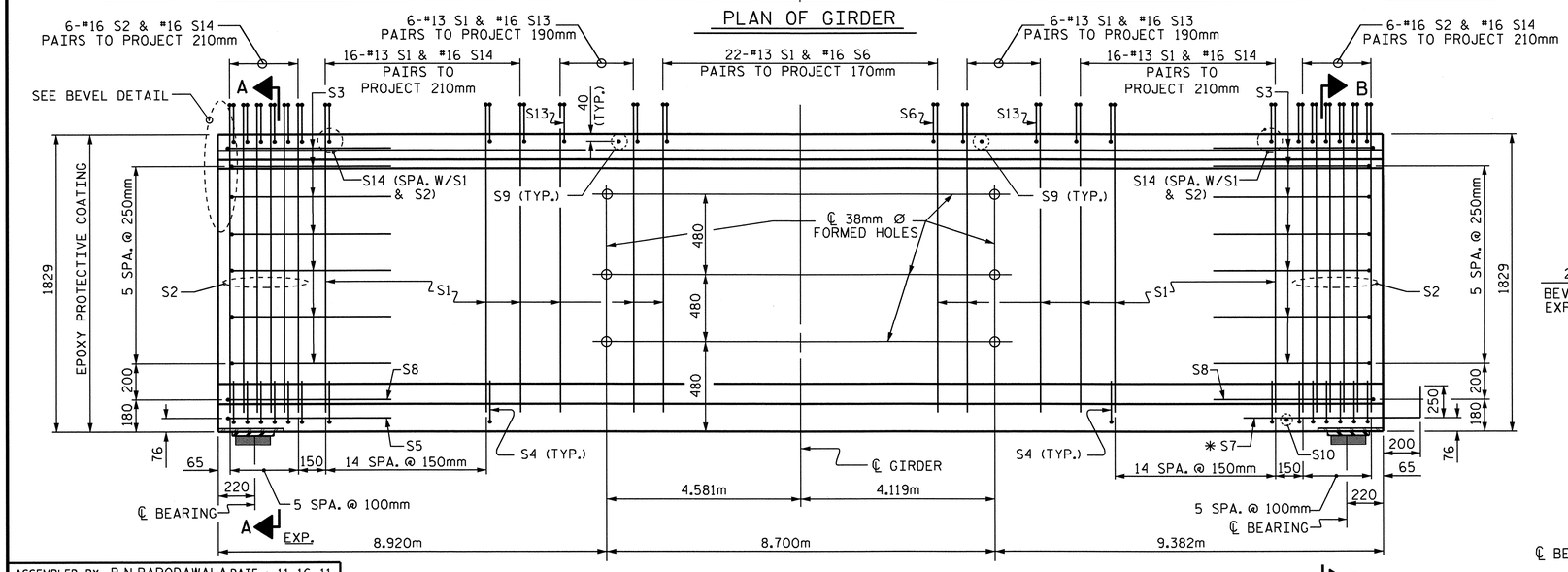

ELEVATION OF GIRDER

DEBONDING LEGEND

- • FULLY BONDED STRANDS
- ◬ STRANDS DEBONDED FOR 1.830m FROM END OF GIRDER

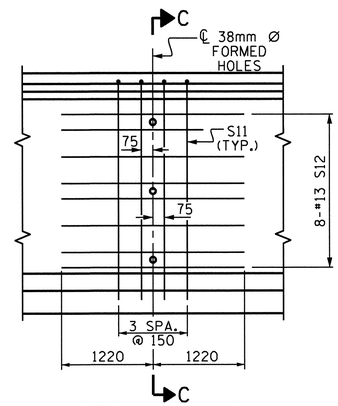

PARTIAL ELEVATION

SHOWING INTERMEDIATE DIAPHRAGM REINFORCING STEEL

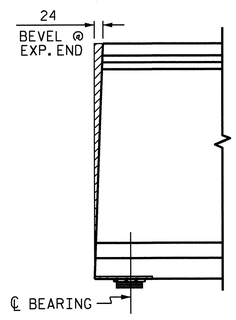

BEVEL DETAIL

15.24mm Ø L.R. GRADE 270 STRANDS

AREA (mm²)	ULTIMATE STRENGTH (kN PER STRAND)	APPLIED PRESTRESS (kN PER STRAND)
140.00	260.7	195.5

REINFORCING STEEL FOR ONE GIRDER

BAR	NUMBER	SIZE	TYPE	LENGTH	WEIGHT
S1	132	#13	1	2120	278
S2	24	#16	1	2120	79
S3	14	#13	2	2560	36
S4	84	#13	3	920	77
S5	1	#16	2	3000	5
S6	44	#16	4	1340	92
✱ S7	10	#16	STR	1120	17
S8	2	#16	2	2740	9
S9	35	#16	STR	980	53
S10	1	#10	STR	560	1
S11	8	#16	2	3540	44
S12	16	#13	STR	2440	39
S13	24	#16	4	1360	51
S14	88	#16	4	1380	188

✱ NOTE: S7 BARS SHALL BE BENT BEFORE SHIPMENT. HEAT BENDING SHALL NOT BE ALLOWED.

BAR TYPES

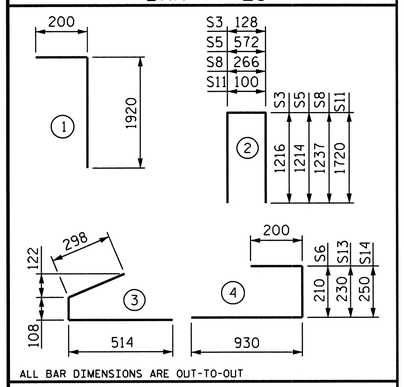

ALL BAR DIMENSIONS ARE OUT-TO-OUT

QUANTITIES FOR ONE GIRDER

	REINFORCING STEEL	51.71 MPa CONCRETE	15.24mm Ø L.R. STRANDS
	kg	m³	No.
INTERIOR GIRDER E4	969	14.5	36

GIRDERS REQUIRED

NUMBER	LENGTH	TOTAL LENGTH
1	27.002m	27.002m

PROJECT NO. R-2554A

WAYNE COUNTY

STATION: 70+24.000 -L-

SHEET 7 OF 8

STATE OF NORTH CAROLINA
DEPARTMENT OF TRANSPORTATION
RALEIGH

1829mm PRESTRESSED CONCRETE MODIFIED BULB TEE CONTINUOUS FOR LIVE LOAD SPAN E (GDR #4) (RIGHT LANE)

NORTH CAROLINA PROFESSIONAL SEAL 14045 ENGINEER TIMOTHY L. COGGINS
03/23/12

REVISIONS							SHEET NO.
NO.	BY:	DATE:	NO.	BY:	DATE:		S-157
1			3				TOTAL SHEETS
2			4				276

ASSEMBLED BY : B.N.BARODAWALA	DATE : 11-16-11		
CHECKED BY : PEGGY PARISI	DATE : 1-5-12		
DRAWN BY : EEM 2/6/97	REV. 8/16/99	RWW/LES	
CHECKED BY : VAP 2/6/97	REV. 10/17/00	RWW/LES	
	REV. 5/1/06R	TLA/GM	

23-MAR-2012 11:37
Z:\TIPProjects-R\R2554A\Structures\FinalPlans\Str#4\r2554a_sd_g_04.dgn
padkins

STR. #4

STD. NO. PCG10SM

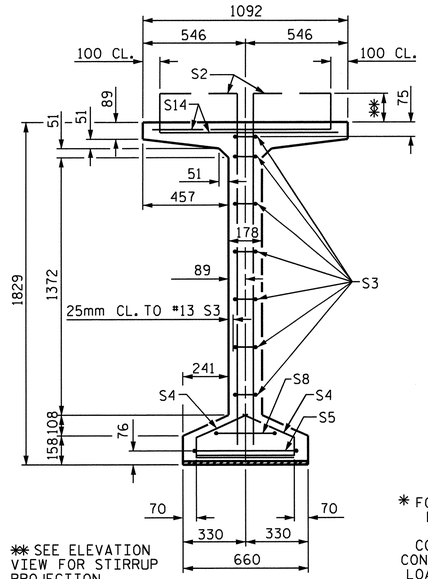

✱✱ SEE ELEVATION VIEW FOR STIRRUP PROJECTION

SECTION A-A

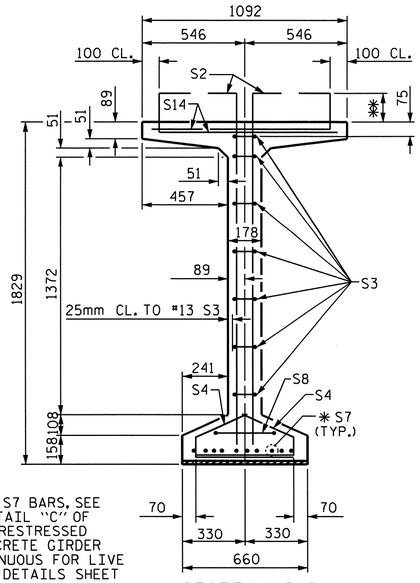

✱ FOR S7 BARS, SEE DETAIL "C" OF PRESTRESSED CONCRETE GIRDER CONTINUOUS FOR LIVE LOAD DETAILS SHEET

SECTION B-B

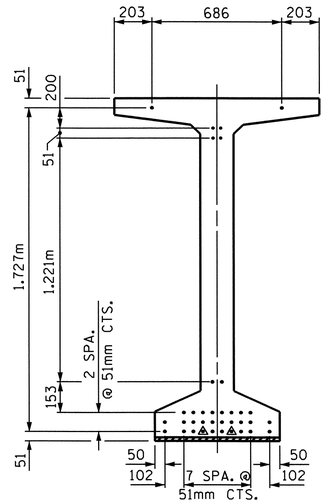

AT END OF GIRDERS

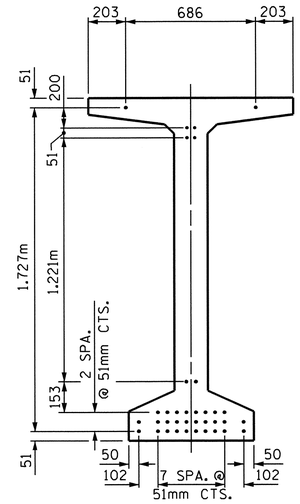

AT ℄ OF GIRDERS

15.24mm Ø LOW RELAXATION STRAND LAYOUT

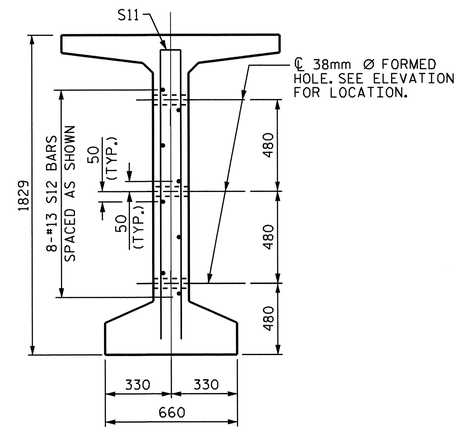

SECTION C-C

(S1, S6 AND S9 BARS NOT SHOWN)

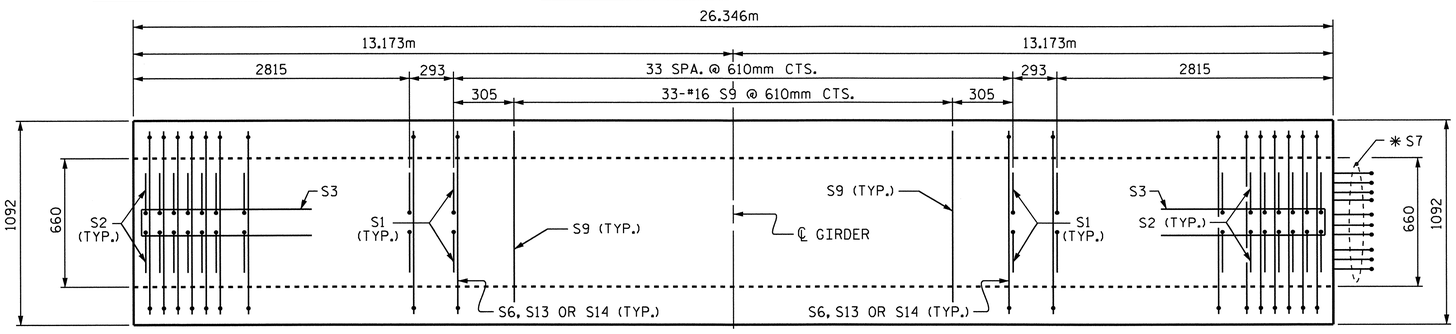

PLAN OF GIRDER

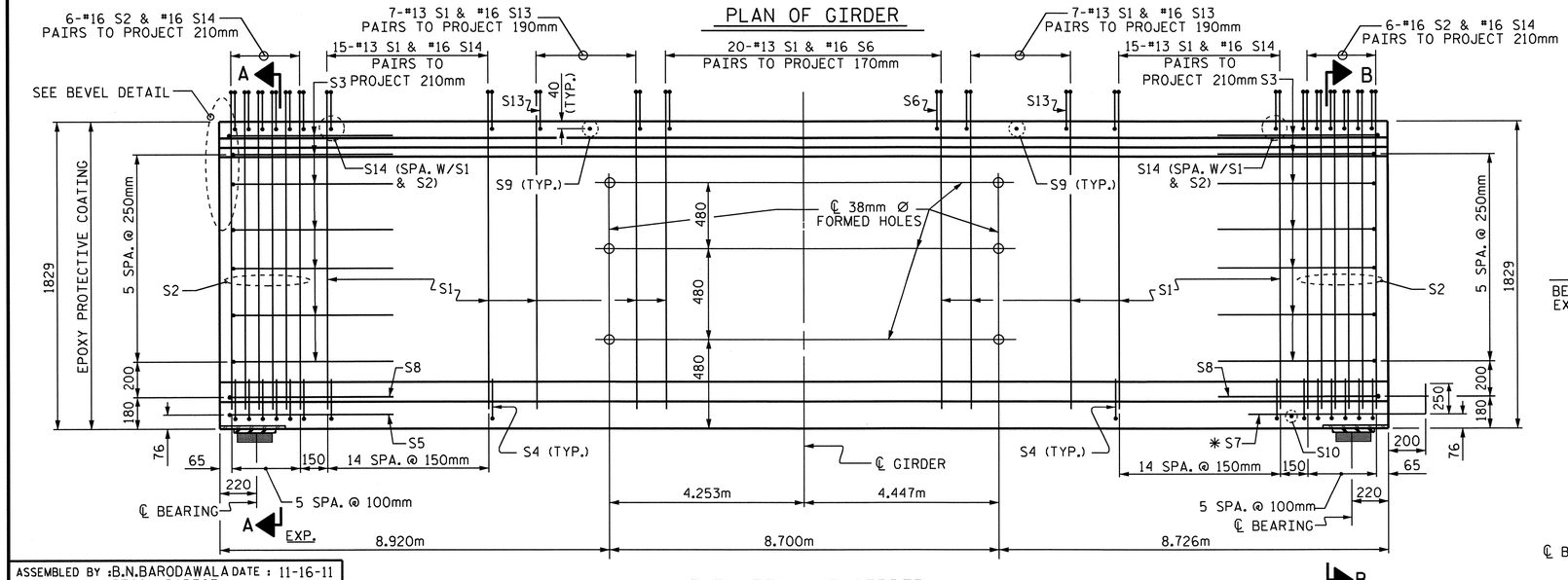

ELEVATION OF GIRDER

DEBONDING LEGEND

- • FULLY BONDED STRANDS
- ▲ STRANDS DEBONDED FOR 1.830m FROM END OF GIRDER

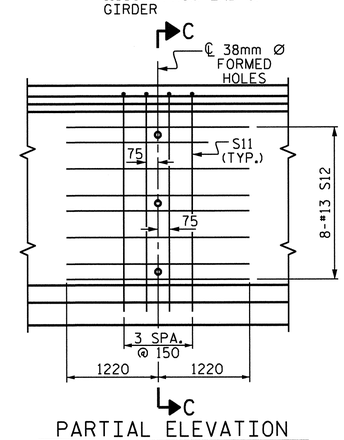

PARTIAL ELEVATION

SHOWING INTERMEDIATE DIAPHRAGM REINFORCING STEEL

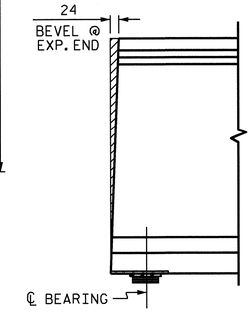

BEVEL DETAIL

15.24mm Ø L.R. GRADE 270 STRANDS

AREA (mm²)	ULTIMATE STRENGTH (kN PER STRAND)	APPLIED PRESTRESS (kN PER STRAND)
140.00	260.7	195.5

REINFORCING STEEL FOR ONE GIRDER

BAR	NUMBER	SIZE	TYPE	LENGTH	WEIGHT
S1	128	#13	1	2120	270
S2	24	#16	1	2120	79
S3	14	#13	2	2560	36
S4	84	#13	3	920	77
S5	1	#16	2	3000	5
S6	40	#16	4	1340	83
✱ S7	10	#16	STR	1120	17
S8	2	#16	2	2740	9
S9	33	#16	STR	980	50
S10	1	#10	STR	560	1
S11	8	#16	2	3540	44
S12	16	#13	STR	2440	39
S13	28	#16	4	1360	59
S14	84	#16	4	1380	180

✱ NOTE: S7 BARS SHALL BE BENT BEFORE SHIPMENT. HEAT BENDING SHALL NOT BE ALLOWED.

BAR TYPES

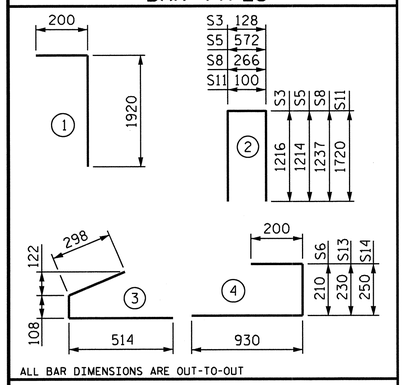

ALL BAR DIMENSIONS ARE OUT-TO-OUT

QUANTITIES FOR ONE GIRDER

	REINFORCING STEEL	51.71 MPa CONCRETE	15.24mm Ø L.R. STRANDS
	kg	m³	No.
EXTERIOR GIRDER E5	949	14.2	36

GIRDERS REQUIRED

NUMBER	LENGTH	TOTAL LENGTH
1	26.346m	26.346m

PROJECT NO. R-2554A

WAYNE COUNTY

STATION: 70+24.000 -L-

SHEET 8 OF 8

STATE OF NORTH CAROLINA
DEPARTMENT OF TRANSPORTATION
RALEIGH

1829mm PRESTRESSED CONCRETE MODIFIED BULB TEE CONTINUOUS FOR LIVE LOAD SPAN E (GDR #5) (RIGHT LANE)

NORTH CAROLINA PROFESSIONAL SEAL 14045 ENGINEER TIMOTHY W. COCKINS
03/23/12

REVISIONS						SHEET NO.
NO.	BY:	DATE:	NO.	BY:	DATE:	S-158
1			3			TOTAL SHEETS
2			4			276

ASSEMBLED BY : B.N.BARODAWALA DATE : 11-16-11
CHECKED BY : PEGGY PARISI DATE : 1-5-12

DRAWN BY : EEM 2/6/97 REV. 8/16/99 RWW/LES
CHECKED BY : VAP 2/6/97 REV. 10/17/00 RWW/LES
REV. 5/1/06R TLA/GM

23-MAR-2012 11:37
Z:\TIPProjects-R\R2554A\Structures\FinalPlans\Str#4\r2554a_sd_g_04.dgn
padkins

STR. #4

STD. NO. PCG10SM

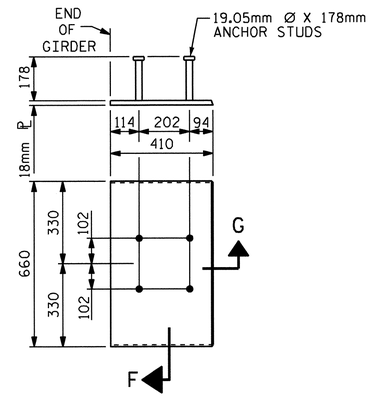

EMBEDDED PLATE "B-1" DETAILS FOR AASHTO TYPE IV GIRDER 1829mm MODIFIED BULB TEES

(2 REQ'D PER GIRDER)

NOTES

ALL PRESTRESSING STRANDS SHALL BE 7-WIRE LOW-RELAXATION GRADE 270 STRANDS AND SHALL CONFORM TO AASHTO M203M EXCEPT FOR SAMPLING REQUIREMENTS WHICH SHALL BE IN ACCORDANCE WITH THE STANDARD SPECIFICATIONS.

ALL REINFORCING STEEL SHALL BE GRADE 420.

APPLY EPOXY PROTECTIVE COATING TO END OF GIRDER SURFACES INDICATED IN ELEVATION VIEW.

EMBEDDED PLATE "B-1" SHALL BE GALVANIZED IN ACCORDANCE WITH THE SPECIFICATIONS. BEVEL EDGES OF PLATE "B-1" TO GIVE CLOSE FIT BUT NOT TIGHT FIT TO STEEL CASTING FORM.

ANCHOR STUDS SHALL CONFORM TO AASHTO M169 GRADES 1010 THROUGH 1020 OR APPROVED EQUAL, AND SHALL MEET THE TYPE "B" REQUIREMENTS OF SUBSECTION 7.3 OF THE ANSI/AASHTO/AWS D1.5 BRIDGE WELDING CODE.

AT ENDS OF GIRDERS TO BE EMBEDDED IN CONCRETE DIAPHRAGMS OR END WALLS, PRESTRESSING STRANDS MAY EXTEND A MAXIMUM OF 50mm BEYOND THE GIRDER ENDS. OTHERWISE, PRESTRESSING STRANDS SHALL BE CUT FLUSH WITH THE GIRDER ENDS.

THE TRANSFER OF LOAD FROM THE ANCHORAGES TO THE GIRDER SHALL BE DONE WHEN CONCRETE HAS REACHED A COMPRESSIVE STRENGTH OF NOT LESS THAN 45.50 MPa FOR SPANS A AND O THRU V, 48.26 MPa FOR SPANS B THRU D AND F THRU P, AND 42.05 MPa FOR SPAN E.

DEPENDING ON THE TYPE OF SYSTEM USED TO SUPPORT THE DECK SLAB FORMS, PRESET ANCHORS MAY BE NECESSARY IN THE PRESTRESSED CONCRETE GIRDER.

THE TOP SURFACE OF THE GIRDER, EXCLUDING THE OUTSIDE 100mm, SHALL BE RAKED TO A DEPTH OF 6mm.

A 51mm x 51mm CHAMFER IS ALLOWED AT THE INTERSECTION OF THE WEB AND THE BOTTOM FLANGE OF THE 1829mm MODIFIED BULB TEES ONLY.

THE CONTRACTOR HAS THE OPTION TO PROVIDE, AT NO ADDITIONAL COST TO THE DEPARTMENT, 2 ADDITIONAL STRANDS AT THE TOP OF THE GIRDER TO FACILITATE TYING OF THE REINFORCING STEEL. THESE STRANDS SHALL BE PULLED TO A LOAD OF 20 Kn.

FOR PRESTRESSED CONCRETE MEMBERS, SEE SPECIAL PROVISIONS.

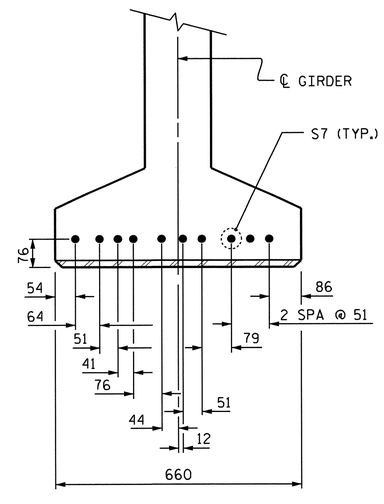

DETAIL "C"

(1829mm MODIFIED BULB TEES)

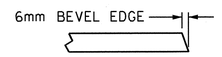

SECTION "G"

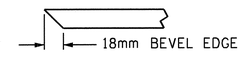

SECTION "F"

(SEE NOTES)

PROJECT NO. R-2554A

WAYNE COUNTY

STATION: 70+24.000 -L-

STATE OF NORTH CAROLINA
DEPARTMENT OF TRANSPORTATION
RALEIGH

STANDARD
PRESTRESSED CONCRETE GIRDER
CONTINUOUS FOR LIVE LOAD
DETAILS
(RIGHT LANE)

NORTH CAROLINA PROFESSIONAL SEAL 14045 ENGINEER TIMOTHY L. COGGINS

03/23/12

REVISIONS						SHEET NO.
NO.	BY:	DATE:	NO.	BY:	DATE:	S-159
1			3			TOTAL SHEETS
2			4			276

ASSEMBLED BY : B.N.BARODAWALA DATE : 11-16-11	
CHECKED BY : PEGGY PARISI DATE : 1-5-12	
DRAWN BY : ELR 11/91	REV. 10/17/00 RWW/LES
CHECKED BY : GRP 11/91	REV. 7/10/01RR LES/RDR
	REV. 5/1/06 TLA/GM

23-MAR-2012 11:37
Z:\TIPProjects-R\R2554A\Structures\FinalPlans\Str#4\r2554a_sd_g_04.dgn
padkins

STR. #4

STD. NO. PCG11SM

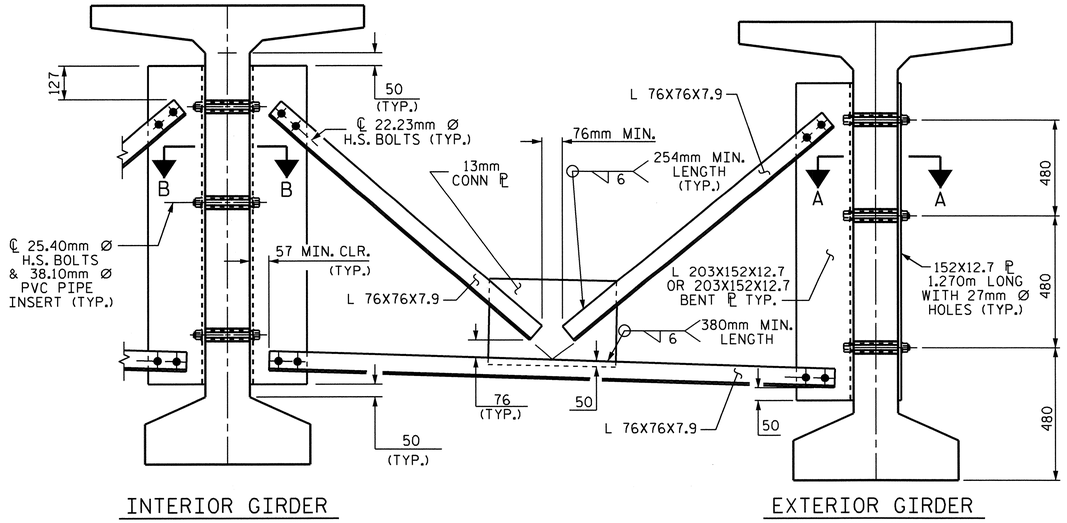

INTERIOR GIRDER

EXTERIOR GIRDER

PART SECTION AT INTERMEDIATE DIAPHRAGM

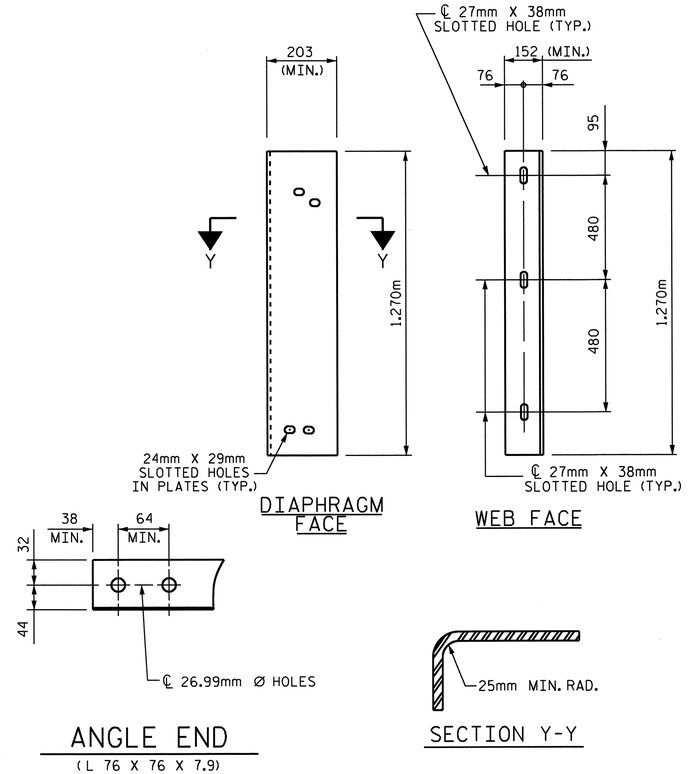

DIAPHRAGM FACE

WEB FACE

ANGLE END

(L 76 X 76 X 7.9)

SECTION Y-Y

CONNECTOR PLATE DETAIL

STRUCTURAL STEEL NOTES

ALL INTERMEDIATE DIAPHRAGM STEEL AND CONNECTOR PLATES SHALL BE AASHTO M270 GRADE 345 OR APPROVED EQUAL.

TENSION ON THE ASTM A325 BOLTS THROUGH THE CHANNEL MEMBER SHALL BE CALIBRATED USING DIRECT TENSION INDICATOR WASHERS IN ACCORDANCE WITH THE STANDARD SPECIFICATIONS. FOR DIRECT TENSION INDICATORS, SEE SPECIAL PROVISIONS.

TENSION ON THE ASTM A449 BOLTS THROUGH THE GIRDER WEB SHALL BE SNUG TIGHTENED FOLLOWED BY AN ADDITIONAL 1/4 TURN.

THE PLATES, BENT PLATES, AND ANGLES SHALL BE GALVANIZED OR METALLIZED IN ACCORDANCE WITH THE STANDARD SPECIFICATIONS. FOR THERMAL SPRAYED COATINGS (METALLIZATION), SEE SPECIAL PROVISIONS.

FOR METALLIZATION, APPLY AN 8 MIL THICK 99.99 PERCENT ZINC (W-Zn-1) THERMAL SPRAYED COATING WITH A 0.5 MIL THICK SEAL COAT TO ALL STEEL DIAPHRAGM SURFACES IN ACCORDANCE WITH THE THERMAL SPRAYED COATINGS SPECIAL PROVISION AND SECTION 442 OF THE STANDARD SPECIFICATIONS.

GALVANIZE THE HIGH STRENGTH BOLTS, NUTS, WASHERS AND DIRECT TENSION INDICATORS IN ACCORDANCE WITH THE STANDARD SPECIFICATIONS. FOR HIGH STRENGTH BOLTS, SEE SPECIAL PROVISIONS.

USE AN ASTM F436 HARDENED WASHER WITH STANDARD AND SLOTTED HOLES UNDER EACH BOLT HEAD AND NUT.

FOR BOLTS THROUGH THE GIRDER WEB, PROVIDE SUFFICIENT LENGTH OF THREADS ON ALL BOLTS TO ACCOMMODATE WASHERS AND THE THICKNESS OF CONNECTING MEMBER PLUS AT LEAST 6mm PROJECTION BEYOND THE NUT.

INTERMEDIATE DIAPHRAGM ASSEMBLY SHALL COMPLY WITH SECTION 1072 OF THE STANDARD SPECIFICATIONS.

SUBMIT TWO SETS OF WORKING DRAWINGS FOR THE INTERMEDIATE DIAPHRAGM ASSEMBLY FOR REVIEW, COMMENTS AND ACCEPTANCE. AFTER REVIEW, COMMENTS, AND ACCEPTANCE, SUBMIT SEVEN SETS FOR DISTRIBUTION.

IN THE EXTERIOR BAYS, PLACE TEMPORARY STRUTS BETWEEN PRESTRESSED GIRDERS ADJACENT TO THE STEEL DIAPHRAGMS. STRUTS SHALL REMAIN IN PLACE 3 DAYS AFTER CONCRETE IS PLACED.

THE COST OF THE STEEL DIAPHRAGMS AND ASSEMBLIES SHALL BE INCLUDED IN THE UNIT PRICE BID FOR PRESTRESSED CONCRETE GIRDERS.

FOR METRIC STRUCTURAL STEEL, SEE SPECIAL PROVISIONS.

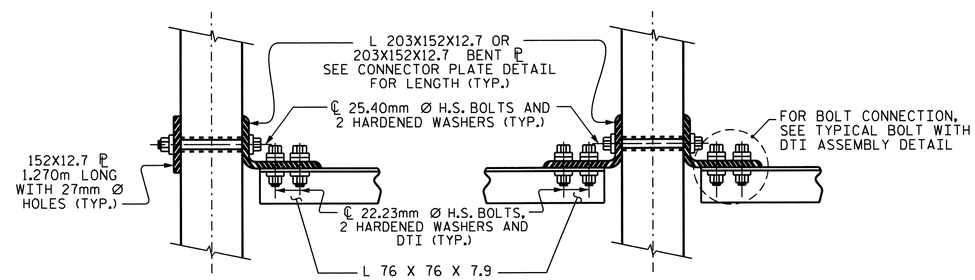

SECTION A-A

SECTION B-B

CONNECTION DETAILS

(FOR SKEW = 90°)

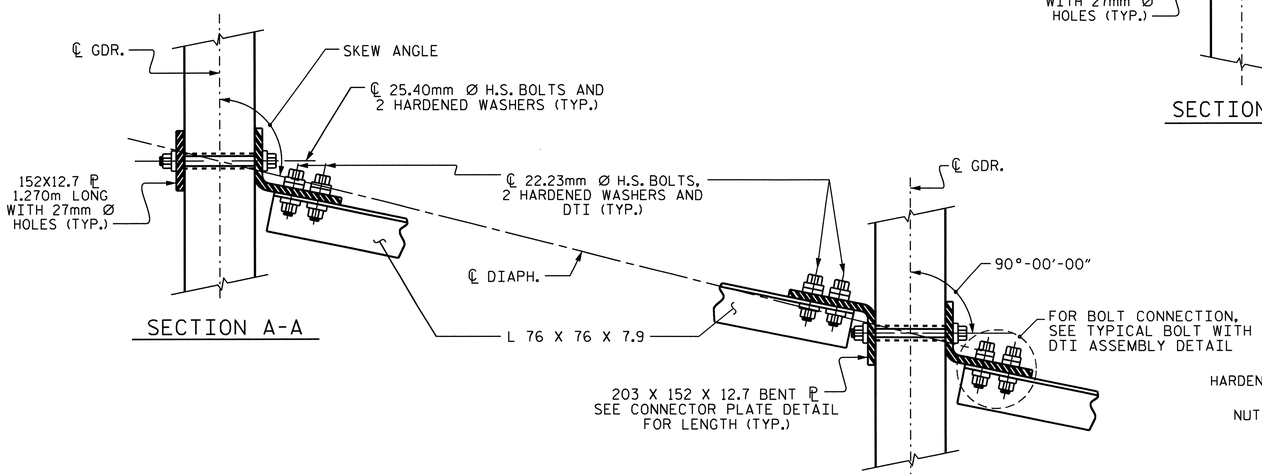

SECTION A-A

SECTION B-B

CONNECTION DETAILS

(FOR 70° ≤ SKEW < 90° OR 90° < SKEW ≤ 110°)

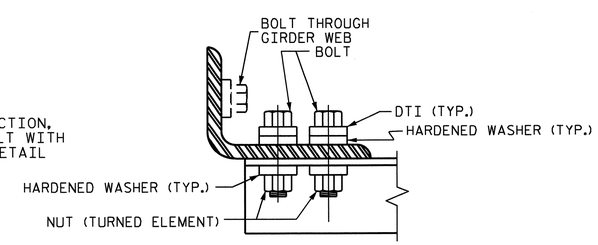

BOLT WITH DTI ASSEMBLY DETAIL

PROJECT NO. R-2554A

WAYNE COUNTY

STATION: 70+24.000 -L-

STATE OF NORTH CAROLINA
DEPARTMENT OF TRANSPORTATION
RALEIGH

STANDARD
INTERMEDIATE
STEEL DIAPHRAGMS
FOR 1829mm MODIFIED BULB TEE
PRESTRESSED CONCRETE GIRDERS

(RIGHT LANE)

NORTH CAROLINA PROFESSIONAL SEAL 14045 ENGINEER TIMOTHY A. COGGINS
03/23/12

REVISIONS						SHEET NO.
NO.	BY:	DATE:	NO.	BY:	DATE:	S-160
1			3			TOTAL SHEETS
2			4			276

STR. #4 STD. NO. PCG13SM

ASSEMBLED BY : B.N.BARODAWALA DATE : 11-16-11	
CHECKED BY : PEGGY PARISI DATE : 1-5-12	
DRAWN BY : RWW 11/09	ADDED 11/23/09R
CHECKED BY : GM 11/09	

23-MAR-2012 11:37
Z:\TIPProjects-R\R2554A\Structures\FinalPlans\Str#4\r2554a_sd_g_04.dgn
padkins

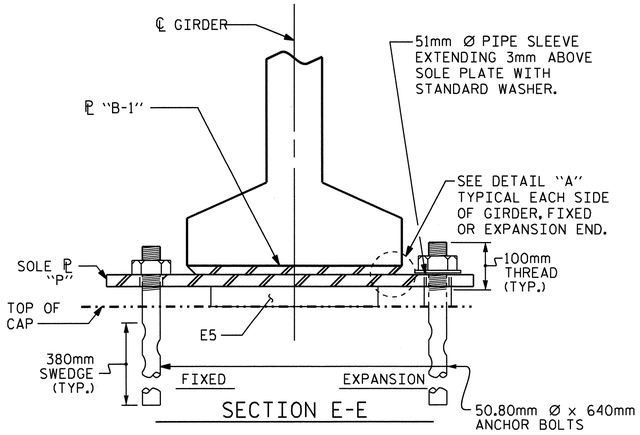

SECTION E-E

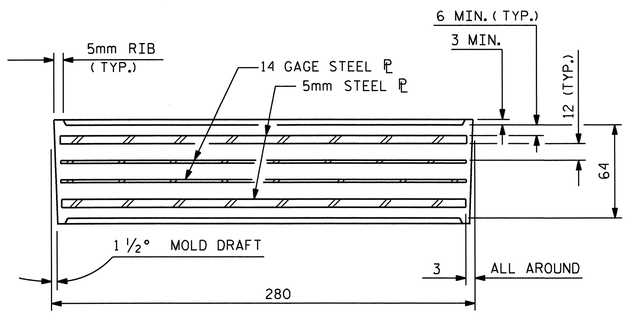

TYPICAL SECTION OF ELASTOMERIC BEARINGS

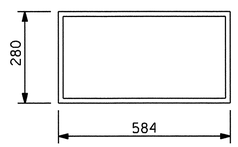

E5 (220 REQ'D)

PLAN VIEW OF ELASTOMERIC BEARING

TYPE VI

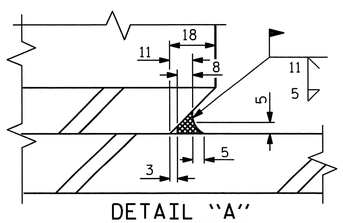

DETAIL "A"

—LOAD RATINGS—	
	MAX.D.L.+ L.L.
TYPE VI	936 kN

NOTES

AT ALL FIXED POINTS OF SUPPORT, NUTS FOR ANCHOR BOLTS ARE TO BE TIGHTENED FINGER TIGHT AND THEN BACKED OFF ½ TURN. THE THREAD OF THE NUT AND BOLT SHALL THEN BE BURRED WITH A SHARP POINTED TOOL.

THE 51mm Ø PIPE SLEEVE SHALL BE CUT FROM SCHEDULE 40 PVC PLASTIC PIPE. THE PVC PLASTIC PIPE SHALL MEET THE REQUIREMENTS OF ASTM D1785.

STEEL SOLE PLATES, ANCHOR BOLTS, NUTS, AND WASHERS SHALL BE GALVANIZED IN ACCORDANCE WITH THE STANDARD SPECIFICATIONS.

PRIOR TO WELDING, GRIND THE GALVANIZED SURFACE OF THE PORTION OF THE EMBEDDED PLATE AND SOLE PLATE THAT ARE TO BE WELDED. AFTER WELDING, DAMAGED GALVANIZED SURFACES SHALL BE REPAIRED IN ACCORDANCE WITH THE STANDARD SPECIFICATIONS.

WHEN WELDING THE SOLE PLATE TO THE EMBEDDED PLATE IN THE GIRDER, USE TEMPERATURE INDICATING WAX PENS, OR OTHER SUITABLE MEANS, TO ENSURE THAT THE TEMPERATURE OF THE SOLE PLATE DOES NOT EXCEED 149°C. TEMPERATURES ABOVE THIS MAY DAMAGE THE ELASTOMER.

SOLE PLATE "P", BOLTS, NUTS, WASHERS, AND PIPE SLEEVE SHALL BE INCLUDED IN THE PAY ITEM FOR PRESTRESSED CONCRETE GIRDERS.

ANCHOR BOLTS SHALL MEET THE REQUIREMENTS OF ASTM A449. NUTS SHALL MEET THE REQUIREMENTS OF AASHTO M291M-12 OR AASHTO M292M-2H. WASHERS SHALL MEET THE REQUIREMENTS OF AASHTO M293M. NO SHOP DRAWINGS ARE REQUIRED FOR ANCHOR BOLTS, NUTS AND WASHERS. SHOP INSPECTION IS REQUIRED.

ALL SURFACES OF BEARING PLATES SHALL BE SMOOTH AND STRAIGHT.

ALL BEARING PLATES SHALL BE AASHTO M270 GRADE 250.

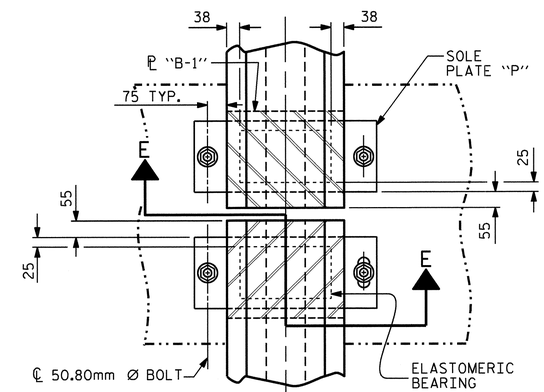

TYPICAL HALF-PLAN (SHOWING CONTINUOUS BENT)

TYPICAL HALF-PLAN (SHOWING SIMPLE BENT WITH EXPANSION JOINT)

PROJECT NO. R-2554A

WAYNE COUNTY

STATION: 70+24.000 -L-

STATE OF NORTH CAROLINA
DEPARTMENT OF TRANSPORTATION
RALEIGH

STANDARD ELASTOMERIC BEARING DETAILS

PRESTRESSED CONCRETE GIRDER SUPERSTRUCTURE (RIGHT LANE)

NORTH CAROLINA PROFESSIONAL SEAL 14045 ENGINEER TIMOTHY L. COGGINS

03/23/12

REVISIONS						
NO.	BY:	DATE:	NO.	BY:	DATE:	
1			3			
2			4			

SHEET NO. S-161

TOTAL SHEETS 276

STR. #4

STD. NO. EB4SM

ASSEMBLED BY : B.N.BARODAWALA DATE : 11-15-11	
CHECKED BY : PEGGY PARISI DATE : 1-5-12	
DRAWN BY : EEM 2/97	REV. 10/17/00 RWW/LES
CHECKED BY : VAP 2/97	REV. 5/1/06 TLA/GM

23-MAR-2012 11:33
Z:\TIPProjects-R\R2554A\Structures\FinalPlans\Str#4\r2554a_sd_bg_04.dgn
padkins

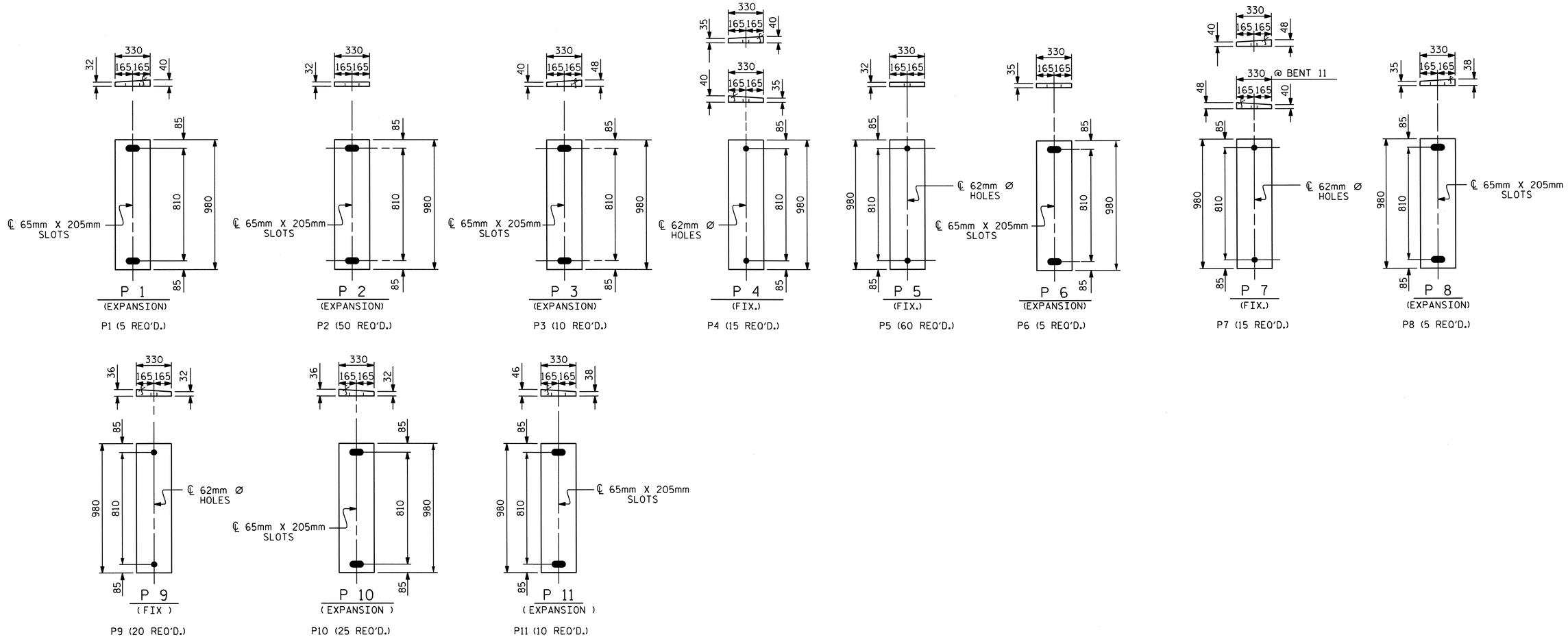

P1 (5 REQ'D.)
P2 (50 REQ'D.)
P3 (10 REQ'D.)
P4 (15 REQ'D.)
P5 (60 REQ'D.)
P6 (5 REQ'D.)
P7 (15 REQ'D.)
P8 (5 REQ'D.)
P9 (20 REQ'D.)
P10 (25 REQ'D.)
P11 (10 REQ'D.)

SOLE PLATE DETAILS ("P")

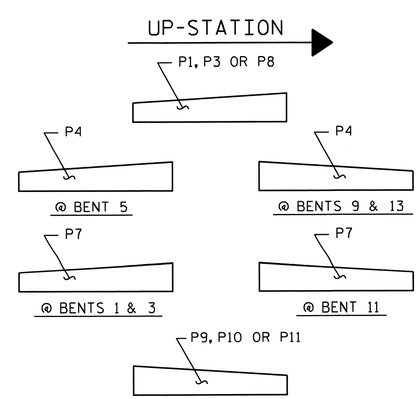

SOLE ℙ PLACEMENT DETAIL

PROJECT NO. R-2554A
WAYNE COUNTY
STATION: 70+24.000 -L-

STATE OF NORTH CAROLINA
DEPARTMENT OF TRANSPORTATION
RALEIGH

SOLE PLATES

(RIGHT LANE)

NORTH CAROLINA PROFESSIONAL SEAL 14045 ENGINEER TIMOTHY W. COGGINS
03/23/12

REVISIONS						SHEET NO.
NO.	BY:	DATE:	NO.	BY:	DATE:	S-162
1			3			TOTAL SHEETS
2			4			276

ASSEMBLED BY : B.N.BARODAWALA DATE : 11-15-11
CHECKED BY : PEGGY PARISI DATE : 1-5-12

23-MAR-2012 11:33
Z:\TIPProjects-R\R2554A\Structures\FinalPlans\Str#4\r2554a_sd_bg_04.dgn
padkins

STR. #4

DEAD LOAD DEFLECTION TABLE FOR SPAN A

15.24mm Ø LOW RELAXATION	GIRDER 1											GIRDERS 2, 3 & 4											GIRDER 5										
TENTH POINTS	0	.1	.2	.3	.4	.5	.6	.7	.8	.9	0	0	.1	.2	.3	.4	.5	.6	.7	.8	.9	0	0	.1	.2	.3	.4	.5	.6	.7	.8	.9	0
CAMBER (GIRDER ALONE IN PLACE) ↑	0.0	0.035	0.067	0.091	0.107	0.112	0.107	0.091	0.067	0.035	0.0	0.0	0.035	0.067	0.091	0.107	0.112	0.107	0.091	0.067	0.035	0.0	0.0	0.035	0.067	0.091	0.107	0.112	0.107	0.091	0.067	0.035	0.0
* DEFLECTION DUE TO SUPERIMPOSED D.L. ↓	0.0	0.011	0.021	0.029	0.034	0.036	0.034	0.029	0.021	0.011	0.0	0.0	0.010	0.019	0.027	0.031	0.034	0.031	0.027	0.019	0.010	0.0	0.0	0.011	0.021	0.029	0.034	0.036	0.034	0.029	0.021	0.011	0.0
FINAL CAMBER ↑	0	24	46	62	73	76	73	62	46	24	0	0	25	48	64	76	78	76	64	48	25	0	0	24	46	62	73	76	73	62	46	24	0

* INCLUDES FUTURE WEARING SURFACE.
ALL VALUES ARE SHOWN IN METERS, EXCEPT "FINAL CAMBER", WHICH IS GIVEN IN MILLIMETERS.

DEAD LOAD DEFLECTION TABLE FOR SPANS B, C, D, F, G, H, I, J, K, L, M, N, O & P

15.24mm Ø LOW RELAXATION	GIRDER 1											GIRDERS 2, 3 & 4											GIRDER 5										
TENTH POINTS	0	.1	.2	.3	.4	.5	.6	.7	.8	.9	0	0	.1	.2	.3	.4	.5	.6	.7	.8	.9	0	0	.1	.2	.3	.4	.5	.6	.7	.8	.9	0
CAMBER (GIRDER ALONE IN PLACE) ↑	0.0	0.038	0.071	0.097	0.114	0.120	0.114	0.097	0.071	0.038	0.0	0.0	0.038	0.071	0.097	0.114	0.120	0.114	0.097	0.071	0.038	0.0	0.0	0.038	0.071	0.097	0.114	0.120	0.114	0.097	0.071	0.038	0.0
* DEFLECTION DUE TO SUPERIMPOSED D.L. ↓	0.0	0.015	0.029	0.040	0.047	0.050	0.047	0.040	0.029	0.015	0.0	0.0	0.014	0.027	0.038	0.044	0.047	0.044	0.038	0.027	0.014	0.0	0.0	0.015	0.030	0.041	0.048	0.051	0.048	0.041	0.030	0.015	0.0
FINAL CAMBER ↑	0	23	42	57	67	70	67	57	42	23	0	0	24	44	59	70	73	70	59	44	24	0	0	23	41	56	66	69	66	56	41	23	0

* INCLUDES FUTURE WEARING SURFACE.
ALL VALUES ARE SHOWN IN METERS, EXCEPT "FINAL CAMBER", WHICH IS GIVEN IN MILLIMETERS.

DEAD LOAD DEFLECTION TABLE FOR SPAN E

15.24mm Ø LOW RELAXATION	GIRDER 1											GIRDERS 2, 3 & 4											GIRDER 5										
TENTH POINTS	0	.1	.2	.3	.4	.5	.6	.7	.8	.9	0	0	.1	.2	.3	.4	.5	.6	.7	.8	.9	0	0	.1	.2	.3	.4	.5	.6	.7	.8	.9	0
CAMBER (GIRDER ALONE IN PLACE) ↑	0.0	0.026	0.049	0.067	0.079	0.083	0.079	0.067	0.049	0.026	0.0	0.0	0.025	0.048	0.066	0.077	0.081	0.077	0.066	0.048	0.025	0.0	0.0	0.023	0.044	0.060	0.070	0.073	0.070	0.060	0.044	0.023	0.0
* DEFLECTION DUE TO SUPERIMPOSED D.L. ↓	0.0	0.007	0.014	0.019	0.022	0.024	0.022	0.019	0.014	0.007	0.0	0.0	0.006	0.011	0.016	0.019	0.020	0.019	0.016	0.011	0.006	0.0	0.0	0.005	0.009	0.012	0.015	0.016	0.015	0.012	0.009	0.005	0.0
FINAL CAMBER ↑	0	19	35	48	57	59	57	48	35	19	0	0	19	37	50	58	61	58	50	37	19	0	0	18	35	48	55	57	55	48	35	18	0

* INCLUDES FUTURE WEARING SURFACE.
ALL VALUES ARE SHOWN IN METERS, EXCEPT "FINAL CAMBER", WHICH IS GIVEN IN MILLIMETERS.

DEAD LOAD DEFLECTION TABLE FOR SPANS Q, R, S, T, U & V

15.24mm Ø LOW RELAXATION	GIRDER 1											GIRDERS 2, 3 & 4											GIRDER 5										
TENTH POINTS	0	.1	.2	.3	.4	.5	.6	.7	.8	.9	0	0	.1	.2	.3	.4	.5	.6	.7	.8	.9	0	0	.1	.2	.3	.4	.5	.6	.7	.8	.9	0
CAMBER (GIRDER ALONE IN PLACE) ↑	0.0	0.038	0.071	0.098	0.114	0.120	0.114	0.098	0.071	0.038	0.0	0.0	0.038	0.071	0.098	0.114	0.120	0.114	0.098	0.071	0.038	0.0	0.0	0.038	0.071	0.098	0.114	0.120	0.114	0.098	0.071	0.038	0.0
* DEFLECTION DUE TO SUPERIMPOSED D.L. ↓	0.0	0.014	0.028	0.038	0.045	0.047	0.045	0.038	0.028	0.014	0.0	0.0	0.013	0.026	0.035	0.042	0.044	0.042	0.035	0.026	0.013	0.0	0.0	0.015	0.028	0.039	0.045	0.048	0.045	0.039	0.028	0.015	0.0
FINAL CAMBER ↑	0	24	43	60	69	73	69	60	43	24	0	0	25	45	63	72	76	72	63	45	25	0	0	23	43	59	69	72	69	59	43	23	0

* INCLUDES FUTURE WEARING SURFACE.
ALL VALUES ARE SHOWN IN METERS, EXCEPT "FINAL CAMBER", WHICH IS GIVEN IN MILLIMETERS.

PROJECT NO. R-2554A
WAYNE COUNTY
STATION: 70+24.000 -L-

NORTH CAROLINA PROFESSIONAL SEAL 14045 ENGINEER TIMOTHY K. COGGINS
03/23/12

STATE OF NORTH CAROLINA
DEPARTMENT OF TRANSPORTATION
RALEIGH

SUPERSTRUCTURE
DEAD LOAD DEFLECTIONS
(RIGHT LANE)

REVISIONS						SHEET NO.
NO.	BY:	DATE:	NO.	BY:	DATE:	S-163
1			3			TOTAL SHEETS
2			4			276

STR. #4

DRAWN BY : B.N.BARODAWALA DATE : 11-15-11
CHECKED BY : PEGGY PARISI DATE : 1-5-12

23-MAR-2012 11:35
Z:\TIPProjects-R\R2554A\Structures\FinalPlans\Str#4\r2554a_sd_dl_04.dgn
padkins

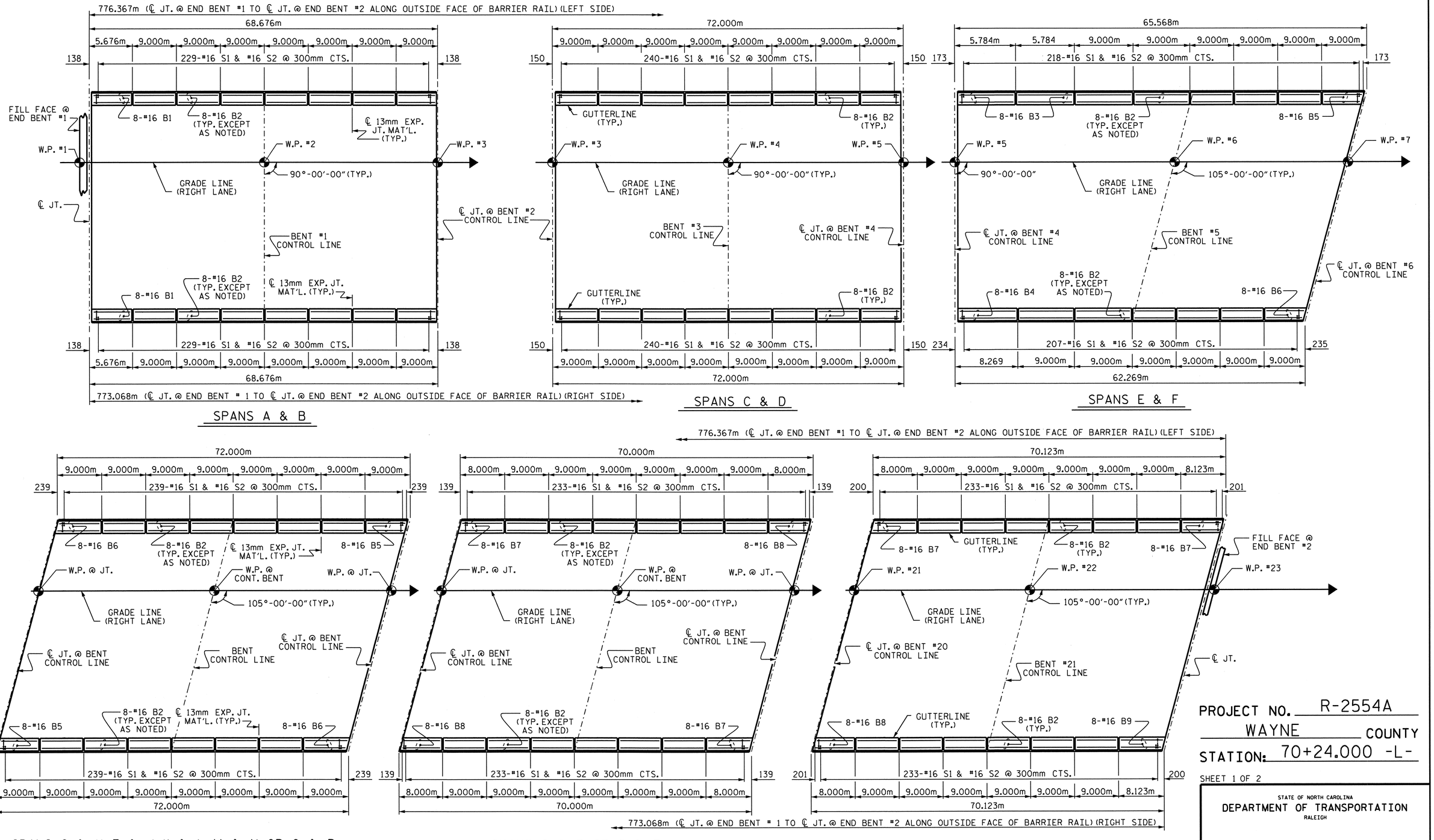

PLAN OF BARRIER RAIL

PROJECT NO. R-2554A
WAYNE COUNTY
STATION: 70+24.000 -L-

SHEET 1 OF 2

STATE OF NORTH CAROLINA
DEPARTMENT OF TRANSPORTATION
RALEIGH

CONCRETE BARRIER RAIL

(RIGHT LANE)

NORTH CAROLINA PROFESSIONAL SEAL 14045 ENGINEER TIMOTHY W. COGGINS
03/23/12

REVISIONS						
NO.	BY:	DATE:	NO.	BY:	DATE:	
1			3			
2			4			

SHEET NO. S-164
TOTAL SHEETS 276

STR. #4

DRAWN BY : B.N.BARODAWALA DATE : 11-15-11
CHECKED BY : PEGGY PARISI DATE : 1-5-12

23-MAR-2012 11:34
Z:\TIPProjects-R\R2554A\Structures\FinalPlans\Str#4\r2554a_sd_br_04.dgn
pdkins

NOTES

BARRIER RAIL IN A CONTINUOUS UNIT SHALL NOT BE CAST UNTIL ALL SLAB CONCRETE IN THE UNIT HAS BEEN CAST AND HAS REACHED A MINIMUM COMPRESSIVE STRENGTH OF 20.7 MPa.

ALL REINFORCING STEEL IN BARRIER RAILS SHALL BE EPOXY COATED.

GROOVED CONTRACTION JOINTS, 12mm IN DEPTH, SHALL BE TOOLED IN ALL EXPOSED FACES OF THE BARRIER RAIL AND IN ACCORDANCE WITH ARTICLE 825-10(B) OF THE STANDARD SPECIFICATIONS. THE CONTRACTION JOINT SHALL BE LOCATED AT EACH THIRD POINT BETWEEN BARRIER RAIL EXPANSION JOINTS. ONLY ONE CONTRACTION JOINT IS REQUIRED AT MIDPOINT OF BARRIER RAIL SEGMENTS LESS THAN 6.1m IN LENGTH AND NO CONTRACTION JOINTS ARE REQUIRED FOR THOSE SEGMENTS LESS THAN 3.5m IN LENGTH.

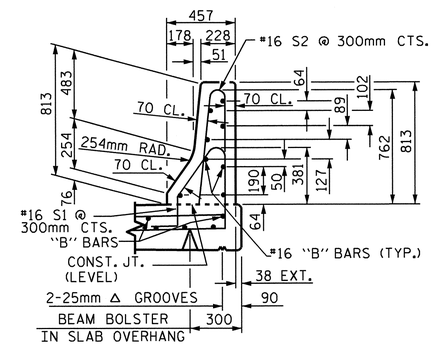

SECTION THRU RAIL

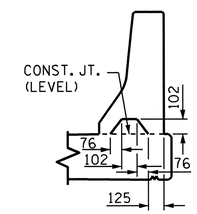

SECTION S-S

AT DAM IN OPEN JOINT
(THIS IS TO BE USED ONLY WHEN SLIP FORM IS USED)

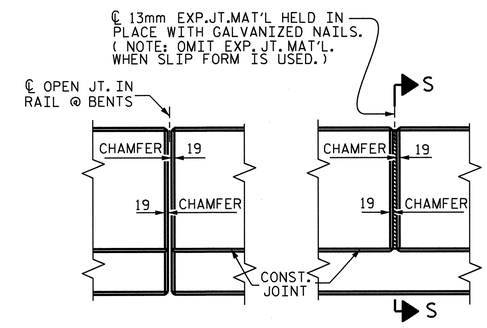

ELEVATION AT EXPANSION JOINTS

BARRIER RAIL DETAILS

BAR TYPES

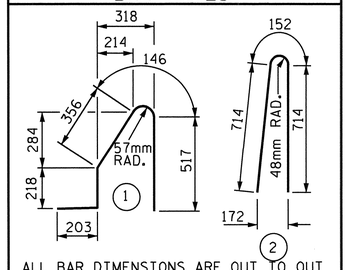

ALL BAR DIMENSIONS ARE OUT TO OUT

BILL OF MATERIAL

FOR CONCRETE BARRIER RAIL ONLY

BAR	NO.	SIZE	TYPE	LENGTH	WEIGHT
✱ B1	16	#16	STR	5540	138
✱ B2	1088	#16	STR	8860	14961
✱ B3	16	#16	STR	5640	140
✱ B4	8	#16	STR	8140	101
✱ B5	88	#16	STR	8740	1194
✱ B6	88	#16	STR	8880	1213
✱ B7	48	#16	STR	7860	586
✱ B8	40	#16	STR	7740	480
✱ B9	8	#16	STR	8020	100
✱ S1	5151	#16	1	1440	11512
✱ S2	5151	#16	2	1580	12631

✱ EPOXY COATED REINFORCING STEEL	43056 kg
CLASS AA CONCRETE	389.0 CU. METER
CONCRETE BARRIER RAIL	
SUPERSTRUCTURE	1549.435 METERS
● APPROACH SLABS	12.122 METERS
TOTAL	1561.557 METERS

● FOR EPOXY COATED REINFORCING STEEL AND CLASS AA CONCRETE IN THE BARRIER RAIL ON THE APPROACH SLABS, SEE "BRIDGE APPROACH SLAB DETAILS" SHEET.

PROJECT NO. R-2554A
WAYNE COUNTY
STATION: 70+24.000 -L-

SHEET 2 OF 2

STATE OF NORTH CAROLINA
DEPARTMENT OF TRANSPORTATION
RALEIGH

STANDARD

CONCRETE BARRIER RAIL

(RIGHT LANE)

NORTH CAROLINA PROFESSIONAL SEAL 14045 ENGINEER TIMOTHY L. COGGINS
03/23/12

REVISIONS							SHEET NO.
NO.	BY:	DATE:	NO.	BY:	DATE:		5-165
1			3				TOTAL SHEETS
2			4				276

STR. #4

STD. No. CBR1SM

ASSEMBLED BY : B.N.BARODAWALA		DATE : 11-15-11	
CHECKED BY : PEGGY PARISI		DATE : 1-5-12	
DRAWN BY : ARB 5/87	REV. 10/17/00	RWW/LES	
CHECKED BY : SJD 9/87	REV. 5/7/03R	RWW/JTE	
	REV. 5/1/06	TLA/GM	

23-MAR-2012 11:34
Z:\TIPProjects-R\R2554A\Structures\Final Plans\Str#4\r2554a_sd_br_04.dgn
padkins

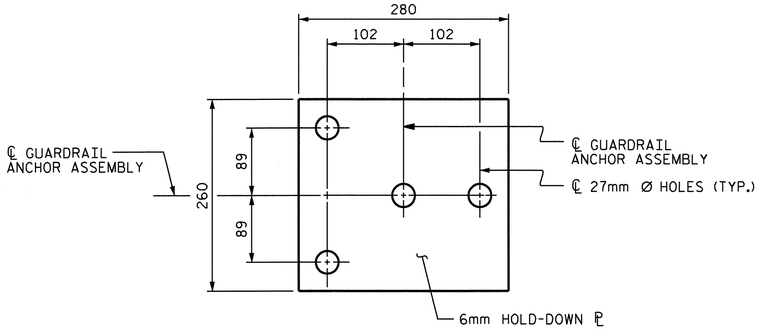

PLAN

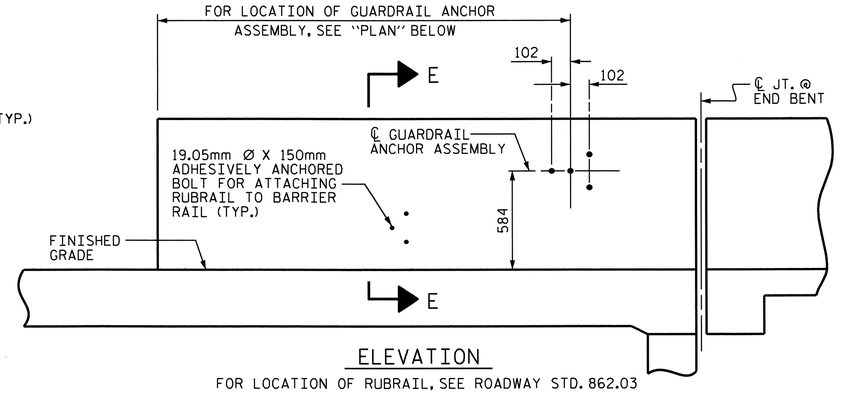

ELEVATION

FOR LOCATION OF RUBRAIL, SEE ROADWAY STD. 862.03

NOTES

THE GUARDRAIL ANCHOR ASSEMBLY SHALL CONSIST OF A 6mm HOLD DOWN PLATE AND 4 - 22.23mm Ø BOLTS WITH NUTS AND WASHERS, RUBRAIL, AND ADHESIVELY ANCHORED BOLTS.

THE HOLD-DOWN PLATE SHALL CONFORM TO AASHTO M270 GRADE 36. AFTER FABRICATION, THE HOLD-DOWN PLATE SHALL BE HOT-DIP GALVANIZED IN ACCORDANCE WITH AASHTO M111.

BOLTS SHALL CONFORM TO THE REQUIREMENTS OF ASTM A307 AND NUTS SHALL CONFORM TO THE REQUIREMENTS OF AASHTO M291. BOLTS, NUTS AND WASHERS SHALL BE GALVANIZED. (AT THE CONTRACTOR'S OPTION, STAINLESS STEEL BOLTS, NUTS AND WASHERS MAY BE USED AS AN ALTERNATE FOR THE 22.23mm Ø GALVANIZED BOLTS, NUTS AND WASHERS. THEY SHALL CONFORM TO OR EXCEED THE MECHANICAL REQUIREMENTS OF ASTM A307. THE USE OF THIS ALTERNATE SHALL BE APPROVED BY THE ENGINEER.)

THE GUARDRAIL ANCHOR ASSEMBLY IS REQUIRED AT ALL POINTS WHERE APPROACH GUARDRAIL IS TO BE ATTACHED TO THE END OF BARRIER RAIL. FOR POINTS OF ATTACHMENT, SEE SKETCH.

AFTER INSTALLATION, THE EXPOSED THREAD OF THE BOLT SHALL BE BURRED WITH A SHARP POINTED TOOL.

THE COST OF THE GUARDRAIL ANCHOR ASSEMBLY SHALL BE INCLUDED IN THE UNIT CONTRACT PRICE BID FOR CONCRETE BARRIER RAIL.

THE 32mm Ø HOLES SHALL BE FORMED OR DRILLED WITH A CORE BIT. IMPACT TOOLS WILL NOT BE PERMITTED. ANY CONCRETE DAMAGED BY THIS WORK SHALL BE REPAIRED TO THE SATISFACTION OF THE ENGINEER.

THE C150 X 12 RUBRAIL IS TO BE ADHESIVELY ANCHORED TO THE RAIL USING THREE 19.05mm Ø X 150mm BOLTS WITH WASHERS. LEVEL ONE FIELD TESTING IS REQUIRED, AND THE YIELD LOAD OF THE 19.05mm Ø BOLTS IS 53.4kN. FOR ADHESIVELY ANCHORED ANCHOR BOLTS OR DOWELS, SEE SPECIAL PROVISIONS. SEE ROADWAY STANDARD 862.03 FOR DETAILS AND LOCATION OF THE RUBRAIL.

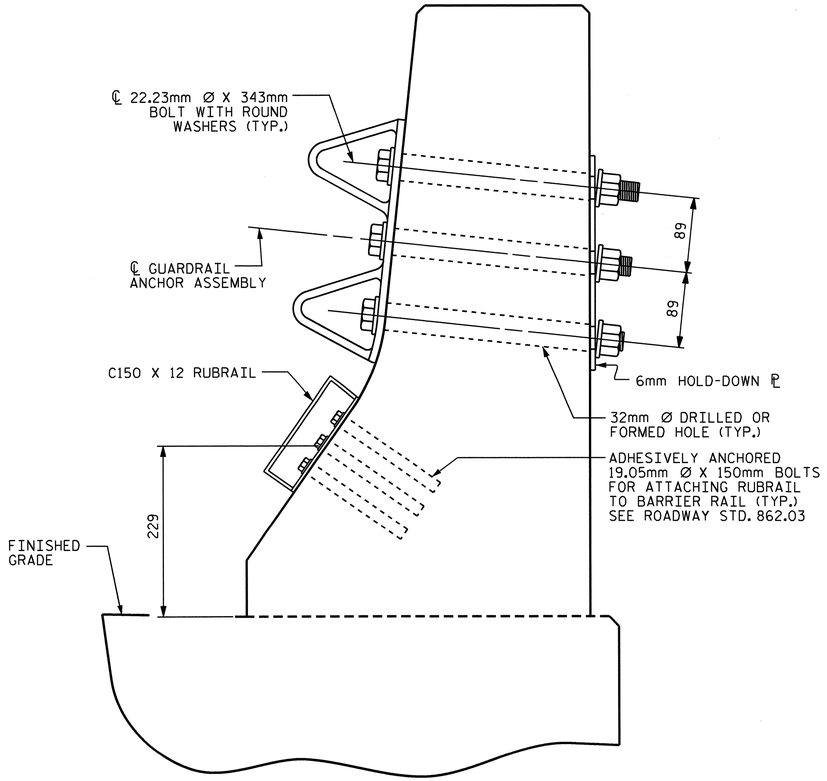

SECTION E-E

GUARDRAIL ANCHOR ASSEMBLY DETAILS

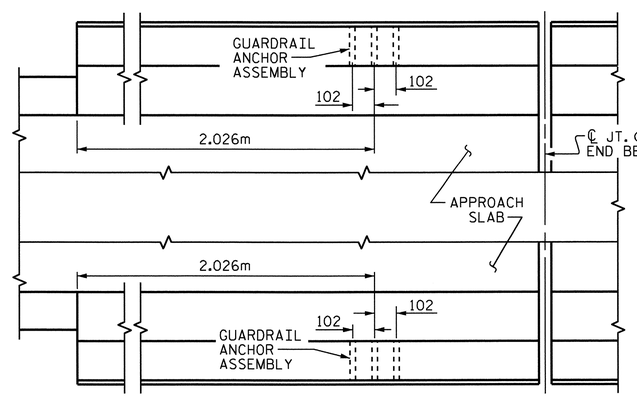

PLAN

@ END BENT #1

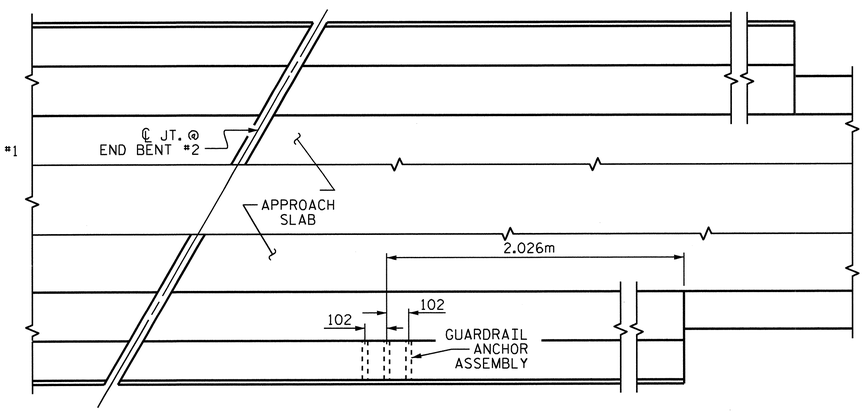

PLAN

@ END BENT #2

LOCATION OF ANCHORS FOR GUARDRAIL

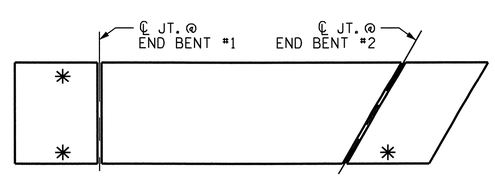

SKETCH SHOWING POINTS OF ATTACHMENTS

* DENOTES GUARDRAIL ANCHOR ASSEMBLY

PROJECT NO. R-2554A

WAYNE COUNTY

STATION: 70+24.000 -L-

STATE OF NORTH CAROLINA
DEPARTMENT OF TRANSPORTATION
RALEIGH

STANDARD

GUARDRAIL ANCHORAGE FOR BARRIER RAIL

(RIGHT LANE)

NORTH CAROLINA PROFESSIONAL SEAL 14045 ENGINEER TIMOTHY L. COBGINS
03/23/12

REVISIONS						SHEET NO.
NO.	BY:	DATE:	NO.	BY:	DATE:	5-166
1			3			TOTAL SHEETS
2			4			276

ASSEMBLED BY : B.N.BARODAWALA DATE : 11-15-11
CHECKED BY : PEGGY PARISI DATE : 1-5-12
DRAWN BY : TLA 5/06
CHECKED BY : GM 5/06
ADDED 5/1/06RR KMM/GM

23-MAR-2012 11:34
Z:\TIPProjects-R\R2554A\Structures\FinalPlans\Str#4\r2554a_sd_br_04.dgn
podkins

STR. #4

STD. NO. GRA2SM

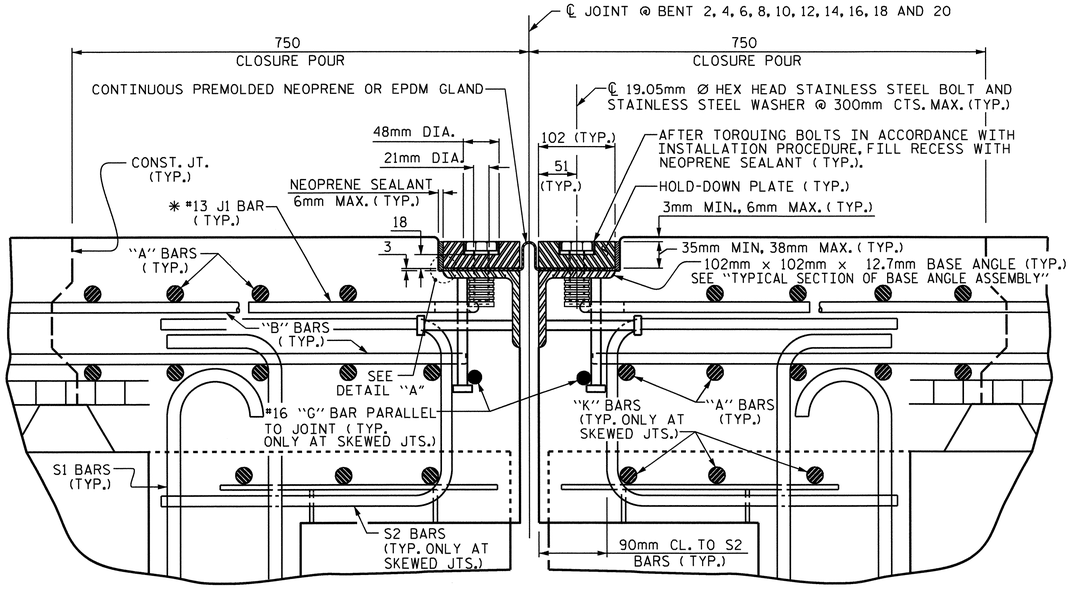

EXPANSION JOINT DETAILS

SECTION NORMAL TO JOINT -- PRESTRESSED GIRDER SUPERSTRUCTURE

* THE QUANTITY OF #13 J1 BARS ON THE BILL OF MATERIAL IS BASED ON 300mm CENTERS. J1 BARS SHALL BE PLACED AT EACH VERTICAL STUD ANCHOR BOLT. IN THE EVENT THAT THE NUMBER OF VERTICAL STUD ANCHOR BOLTS EXCEEDS THE NUMBER OF J1 BARS SPECIFIED, ADDITIONAL J1 BARS WILL NOT BE REQUIRED.

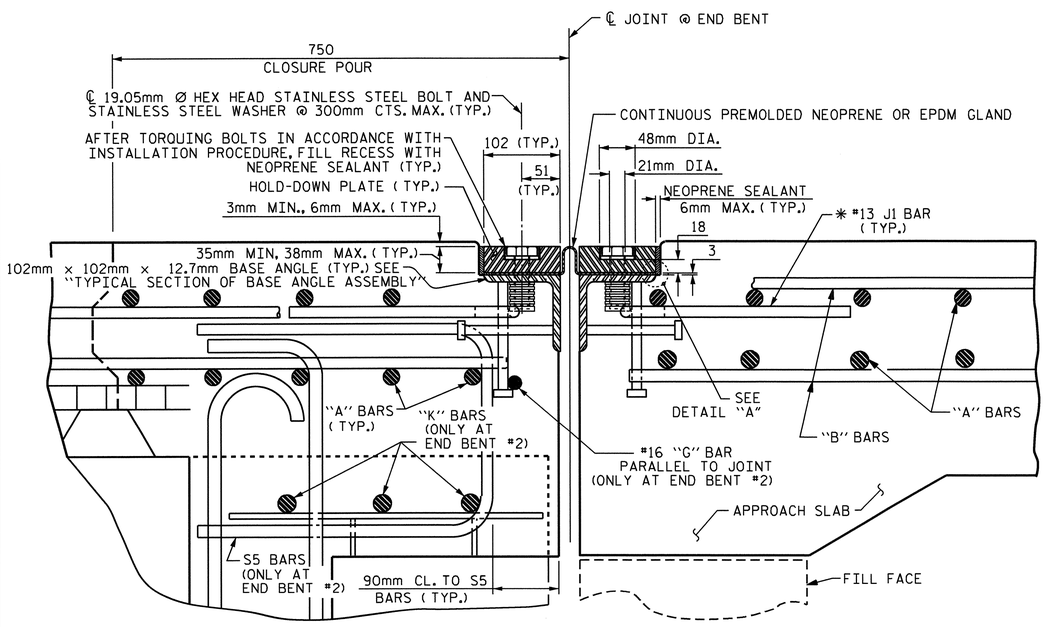

EXPANSION JOINT DETAILS

SECTION NORMAL TO JOINT -- PRESTRESSED GIRDER SUPERSTRUCTURE

END BENT #2 SHOWN, END BENT #1 SIMILAR

* THE QUANTITY OF #13 J1 BARS ON THE BILL OF MATERIAL IS BASED ON 300mm CENTERS. J1 BARS SHALL BE PLACED AT EACH VERTICAL STUD ANCHOR BOLT. IN THE EVENT THAT THE NUMBER OF VERTICAL STUD ANCHOR BOLTS EXCEEDS THE NUMBER OF J1 BARS SPECIFIED, ADDITIONAL J1 BARS WILL NOT BE REQUIRED.

INSTALLATION PROCEDURE

1. A TEMPLATE OR OTHER SUITABLE DEVICE SHALL BE USED TO FORM THE TOP OF THE EXPANSION JOINT SEAL BLOCKOUT TO THE PROPER DEPTH AND WIDTH. THE TEMPLATE SHALL BE 105mm TO 108mm WIDE AND OF SUCH THICKNESS AS TO PROVIDE FOR CORRECT FINAL ELEVATION OF TOP OF HOLD-DOWN PLATES. THE TEMPLATE SHALL BE ATTACHED TO THE BASE ANGLE ASSEMBLY WITH THE 19.05mm Ø HEX HEAD BOLTS PROVIDED FOR THE HOLD-DOWN PLATES. A 25mm Ø HOLE SHALL BE PROVIDED IN THE TEMPLATE CENTERED OVER EACH WEEP HOLE IN THE 102mm X 102mm X 12.7mm BASE ANGLE. OTHER METHODS OF INSURING DRAINAGE THROUGH WEEP HOLES MAY BE EMPLOYED SUBJECT TO ENGINEER'S APPROVAL.
2. AFTER THE CONCRETE HAS BEEN CAST ON BOTH SIDES OF THE JOINT, REMOVE THE TEMPLATE. THOROUGHLY CLEAN THE BOLT HOLES AND THE ANGLE PLATE. REMOVE ANY EXCESS CONCRETE THAT COMES OUT OF THE WEEP HOLES. ANY DAMAGED STEEL SHALL BE COATED WITH A MINIMUM THICKNESS OF 0.100mm (DRY) OF ZINC-RICH PAINT IN ACCORDANCE WITH THE STANDARD SPECIFICATIONS.
3. LAY THE GLAND ON THE BASE ANGLE AND FIELD MARK THE GLAND FOR THE BOLT HOLES. HOLES IN THE GLAND SHALL BE PUNCHED 22mm IN DIAMETER WITH A HAND PUNCH.
4. IN ORDER TO CHECK FOR PROPER ALIGNMENT, PLACE THE GLAND AND HOLD-DOWN PLATES ON THE BASE ANGLE. DO NOT APPLY NEOPRENE SEALANT. BOLT THE HOLD-DOWN PLATES TO THE BASE ANGLE BUT DO NOT TIGHTEN. THE ENGINEER SHALL INSPECT THE JOINT SEAL DEVICE FOR PROPER ALIGNMENT.
5. AFTER INSPECTION, REMOVE THE HOLD-DOWN PLATES AND GLAND. APPLY NEOPRENE SEALANT TO THE BASE ANGLE IN ACCORDANCE WITH THE "INSTALLATION SKETCH". PLACE GLAND AND HOLD-DOWN PLATES ON THE BASE ANGLE. BOLT THE HOLD-DOWN PLATES TO THE BASE ANGLE ASSEMBLY AND TORQUE THE BOLTS TO 119.3 N-m WITH A TORQUE WRENCH. THE TORQUE WRENCH SHALL BE CALIBRATED IN ACCORDANCE WITH SECTION 440-10 (D) OF THE STANDARD SPECIFICATIONS. CHECK THE TORQUE AFTER THREE (3) HOURS AND, IF NECESSARY, RETIGHTEN TO 119.3 N-m. A FINAL CHECK SHALL BE MADE AT SEVEN (7) DAYS. TORQUE SHALL NOT BE LESS THAN 108.5 N-m AFTER SEVEN (7) DAYS.
6. AFTER PROPER TORQUING, CLEAN THE BOLT HOLE RECESSES AND THE RECESS BETWEEN THE JOINT SEAL DEVICE AND CONCRETE, COMPLETELY FILL THESE RECESSES WITH NEOPRENE SEALANT.

GENERAL NOTES

1. FOR EXPANSION JOINT SEALS, SEE SPECIAL PROVISIONS.
2. ALL PLATES AND ANGLES SHALL CONFORM TO AASHTO M270 GRADE 250 STEEL OR APPROVED EQUAL. ALL HOLD-DOWN BOLTS SHALL CONFORM TO ASTM F593 ALLOY 304 STAINLESS STEEL. WASHERS SHALL CONFORM TO ASTM F844 EXCEPT THEY SHALL BE MADE FROM ALLOY 304 STAINLESS STEEL. ALL STUD ANCHORS SHALL CONFORM TO AASHTO M169, GRADES 1010 THRU 1020 OR APPROVED EQUAL. ALL CONCRETE INSERTS SHALL BE CLOSED END AND SHALL CONFORM TO AASHTO M169, GRADE 12L14. TENSILE CAPACITY SHALL BE 13.3 kN MIN.
3. A PREMOLDED CORRUGATED OR NON-CORRUGATED GLAND SHALL BE USED FOR JOINTS SKEWED BETWEEN 50° THRU 130° . FOR JOINTS SKEWED LESS THAN 50° OR MORE THAN 130° , ONLY A CORRUGATED GLAND SHALL BE USED.
4. CLOSED END FERRULES AND STUD ANCHORS SHALL BE SHOP WELDED AND ALL HOLES SHALL BE SHOP DRILLED AS SHOWN ON PLANS. STUD ANCHORS SHALL BE ELECTRIC ARC END WELDED WITH COMPLETE FUSION.
5. SURFACES COMING IN CONTACT WITH NEOPRENE SHALL BE GROUND SMOOTH PRIOR TO METALLIZING.
6. UPON COMPLETION OF SHOP FABRICATION, THE HOLD DOWN PLATE AND BASE ANGLE ASSEMBLY AS SHOWN IN THE "TYPICAL SECTION OF BASE ANGLE ASSEMBLY", SHALL BE METALLIZED. SEE SPECIAL PROVISION FOR THERMAL SPRAYED COATINGS (METALLIZATION).
7. BASE ANGLE ASSEMBLY SHALL BE CONTINUOUS FOR THE LENGTH OF THE JOINT. AT CROWN BREAKS, THE ENDS OF THE BASE ANGLE ASSEMBLY SHALL BE CUT PARALLEL TO THE BRIDGE CENTERLINE FOR SKEWS LESS THAN 80° AND GREATER THAN 100°. FINISHED WELD SHALL BE GROUND SMOOTH AND COATED WITH A MINIMUM THICKNESS OF 0.100mm (DRY) OF ZINC-RICH PAINT IN ACCORDANCE WITH THE STANDARD SPECIFICATIONS.
8. FIELD SPLICES OF HOLD-DOWN PLATES SHALL BE KEPT TO A MINIMUM. CONTRACTOR SHALL FURNISH DETAILED PLANS SHOWING PROPOSED SPLICE LOCATIONS FOR APPROVAL. HOLD-DOWN PLATES SHALL NOT EXCEED 6.1m LENGTHS UNLESS APPROVED BY THE ENGINEER.
9. NO ALTERNATE JOINT DETAILS SHALL BE PERMITTED IN LIEU OF THOSE SHOWN ON THESE PLANS.
10. THE CONTRACTOR MAY, AT HIS OPTION, USE ADHESIVELY ANCHORED ANCHOR BOLTS IN PLACE OF CONCRETE INSERTS FOR COVER PLATES. THE YIELD LOAD OF THE 19.05mm DIA. BOLT IS 44.5 kN. FIELD TESTING OF THE ADHESIVE BONDING SYSTEM IS NOT REQUIRED.

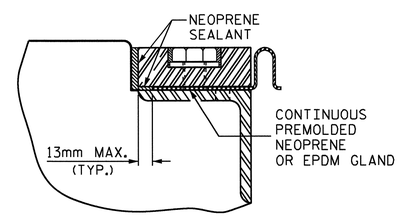

DETAIL "A"

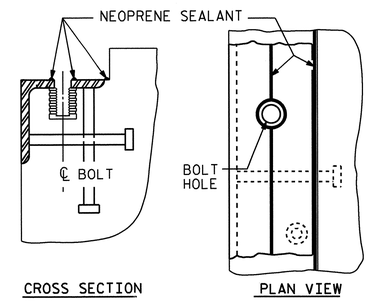

INSTALLATION SKETCH

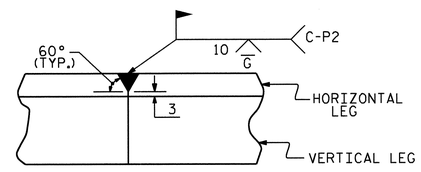

DETAIL- FIELD WELD SPLICE OF BASE ANGLE

MOVEMENT AND SETTING AT JOINTS					
BENT NOS.	SKEW ANGLE	TOTAL MOVEMENT (ALONG ℄ RDWY)	PERPENDICULAR JOINT OPENING AT 7° C	PERPENDICULAR JOINT OPENING AT 16° C	PERPENDICULAR JOINT OPENING AT 32° C
END BENT 1	90°-00'-00"	24mm	41mm	37mm	29mm
BENTS 2 & 4	90°-00'-00"	50mm	61mm	51mm	34mm
BENTS 6, 8, 10 12,14,16,18 & 20	105°-00'-00"	50mm	61mm	51mm	34mm
END BENT 2	105°-00'-00"	24mm	41mm	37mm	29mm

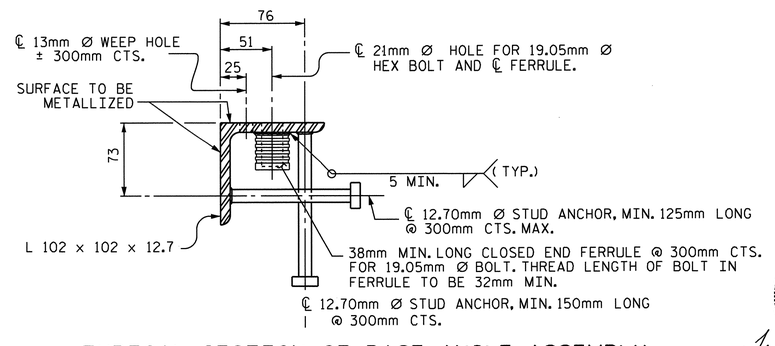

TYPICAL SECTION OF BASE ANGLE ASSEMBLY

NORTH CAROLINA PROFESSIONAL SEAL 14045 ENGINEER TIMOTHY K. COGGINS
03/23/12

PROJECT NO. R-2554A
WAYNE COUNTY
STATION: 70+24.000 -L-

SHEET 1 OF 3

STATE OF NORTH CAROLINA
DEPARTMENT OF TRANSPORTATION
RALEIGH

STANDARD

EXPANSION JOINT SEAL DETAILS

(RIGHT LANE)

REVISIONS							SHEET NO.
NO.	BY:	DATE:	NO.	BY:	DATE:		5-167
1			3				TOTAL SHEETS
2			4				276

STR. #4

STD. NO. EJS1SM

ASSEMBLED BY : B.N.BARODAWALA	DATE : 11-15-11		
CHECKED BY : PEGGY PARISI	DATE : 1-5-12		
DRAWN BY : REK 9/87	REV. 10/17/00	RWW/LES	
CHECKED BY : CRK 10/87	REV. 5/7/03R	RWW/JTE	
	REV. 5/1/06R	TLA/GM	

23-MAR-2012 11:41
Z:\TIPProjects-R\R2554A\Structures\FinalPlans\Str#4\r2554a_sd_js_04.dgn
padkins

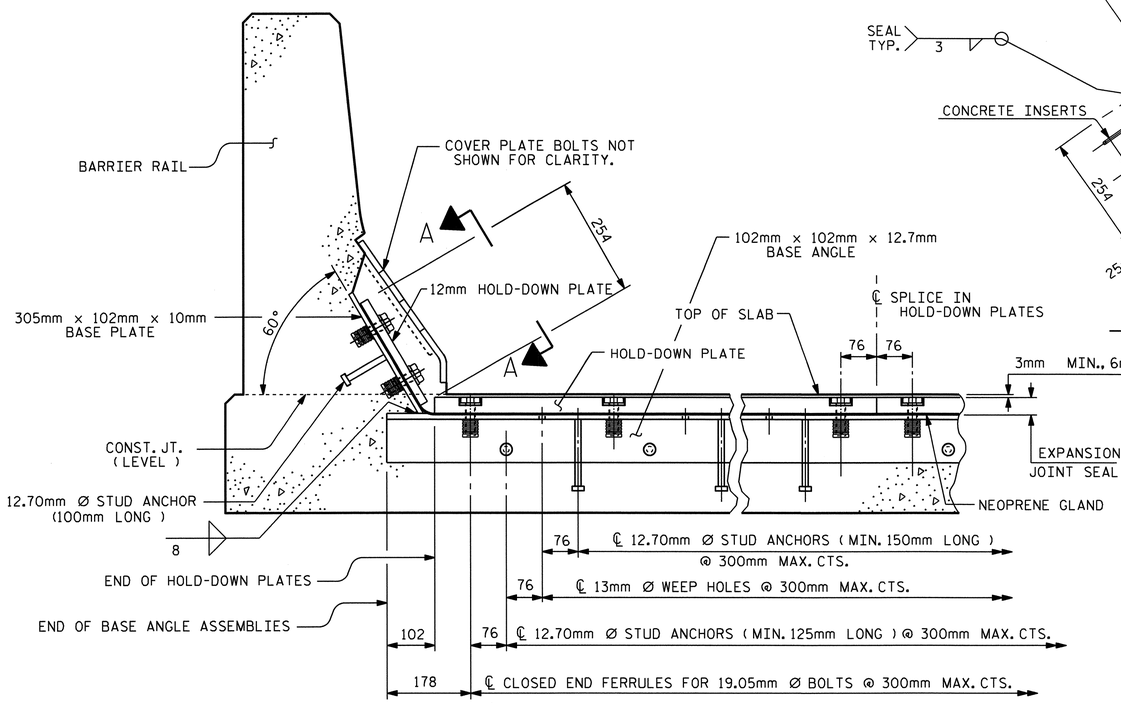

SECTION THRU RAIL NORMAL TO JOINT

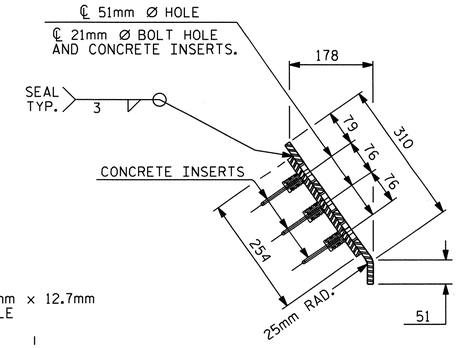

END VIEW

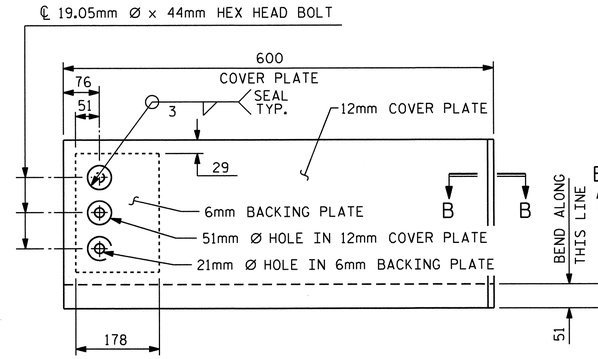

TYPE I - ELEVATION VIEW

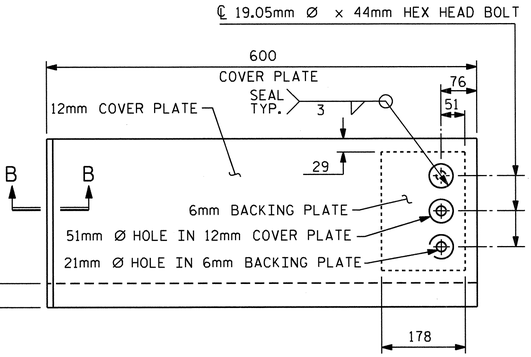

TYPE II - ELEVATION VIEW

COVER PLATE DETAILS

FOR END BENT 1, BENT 2 & BENT 4

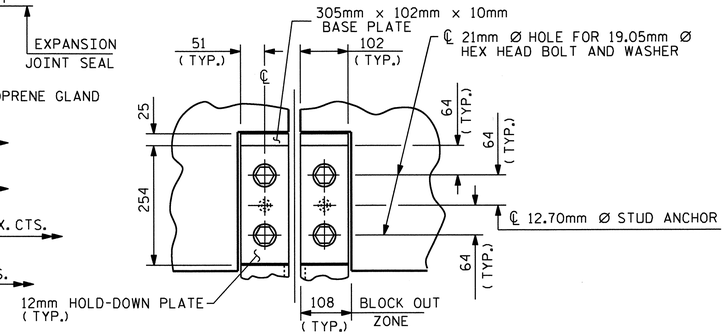

SECTION A - A

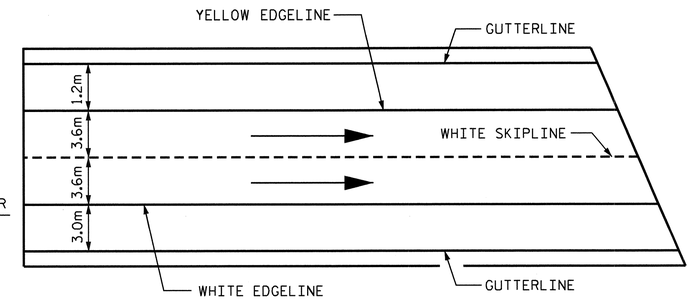

PAVEMENT MARKING ALIGNMENT

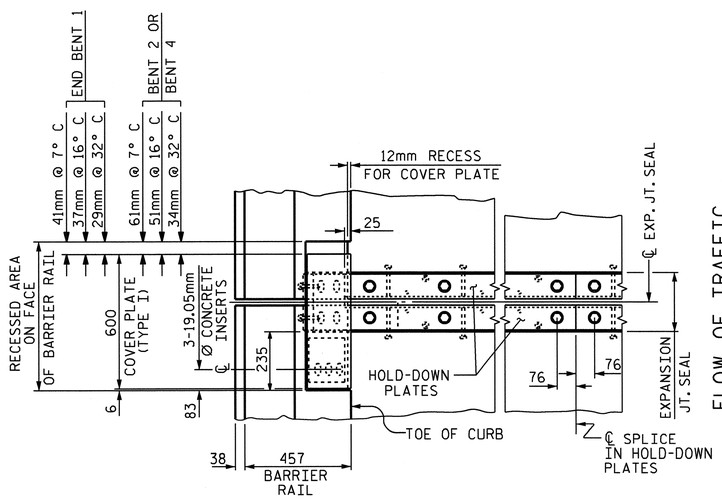

PLAN OF EXPANSION JOINT SEAL - LEFT SIDE

FOR END BENT 1, BENT 2 & BENT 4

FLOW OF TRAFFIC

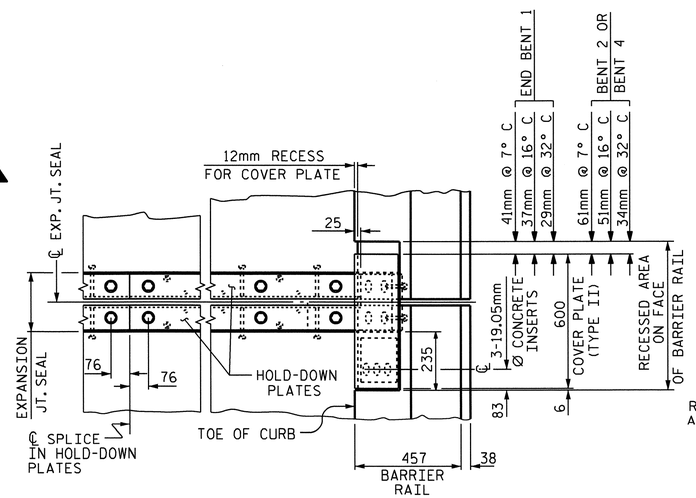

PLAN OF EXPANSION JOINT SEAL - RIGHT SIDE

FOR END BENT 1, BENT 2 & BENT 4

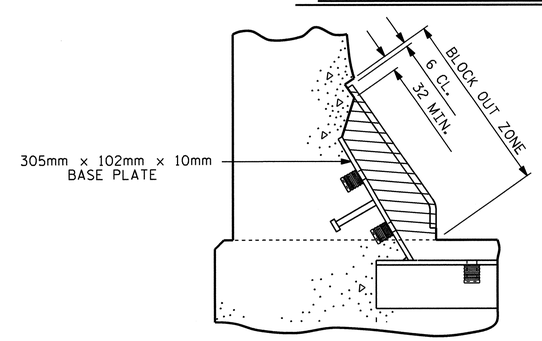

BLOCK OUT DETAIL

SEE "SECTION A - A" FOR OTHER DETAILS.

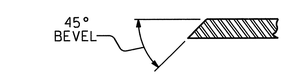

SECTION B - B

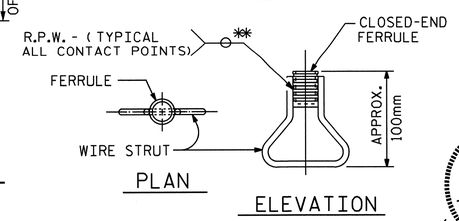

CONCRETE INSERT

** EACH WELDED ATTACHMENT OF WIRE TO FERRULE SHALL DEVELOP THE TENSILE STRENGTH OF THE WIRE.

PROJECT NO. R-2554A
WAYNE COUNTY
STATION: 70+24.000 -L-

SHEET 2 OF 3

STATE OF NORTH CAROLINA
DEPARTMENT OF TRANSPORTATION
RALEIGH

STANDARD EXPANSION JOINT SEAL DETAILS FOR BARRIER RAIL

(RIGHT LANE)

NORTH CAROLINA PROFESSIONAL SEAL 14045 ENGINEER TIMOTHY W. COGGINS
03/23/12

REVISIONS						SHEET NO.
NO.	BY:	DATE:	NO.	BY:	DATE:	5-168
1			3			TOTAL SHEETS
2			4			276

STR. #4

STD. NO. EJS2SM

ASSEMBLED BY : B.N.BARODAWALA	DATE : 11-15-11		
CHECKED BY : PEGGY PARISI	DATE : 1-5-12		
DRAWN BY : REK 9/87	REV. 7/17/98	RWW/LES	
CHECKED BY : CRK 10/87	REV. 10/17/00	RWW/LES	
	REV. 5/1/06	TLA/GM	

23-MAR-2012 11:40
Z:\TIPProjects-R\R2554A\Structures\FinalPlans\Str#4\r2554a_sd_js_04.dgn
padkins

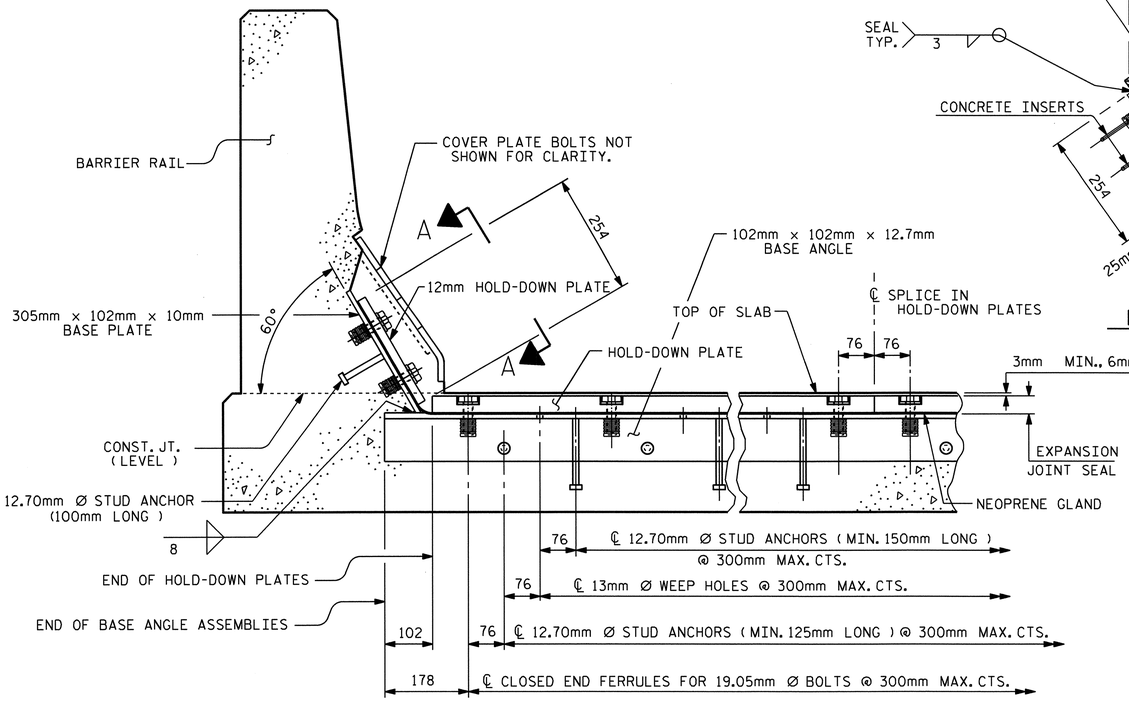

SECTION THRU RAIL NORMAL TO JOINT

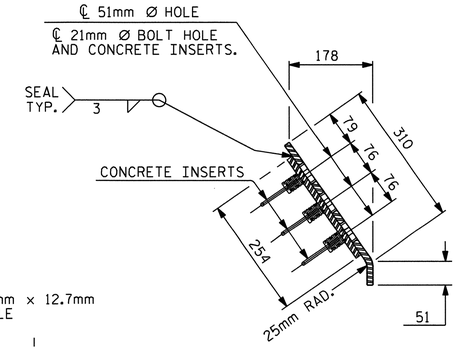

END VIEW

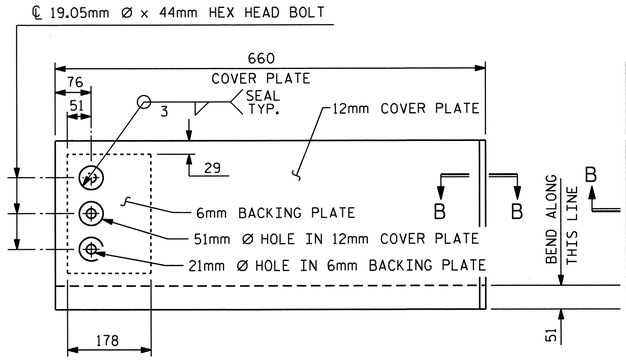

TYPE I - ELEVATION VIEW

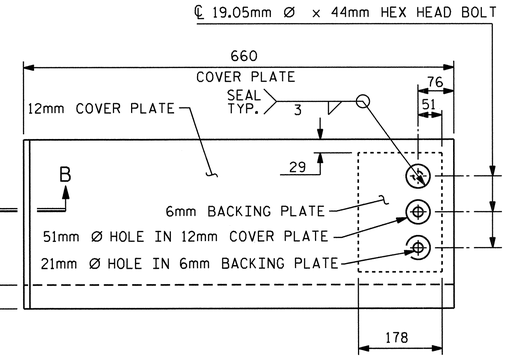

TYPE II - ELEVATION VIEW

BEND ALONG THIS LINE

COVER PLATE DETAILS

FOR BENTS 6, 8, 10, 12, 14, 16, 18, 20 & END BENT 2

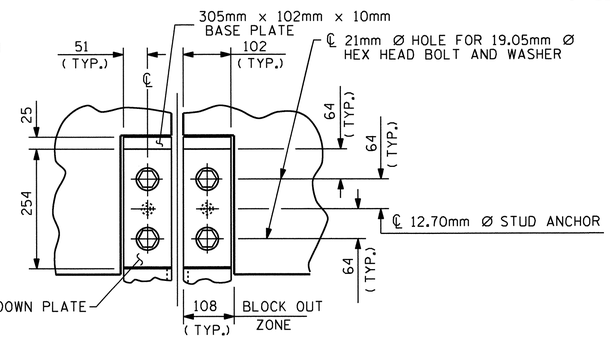

SECTION A - A

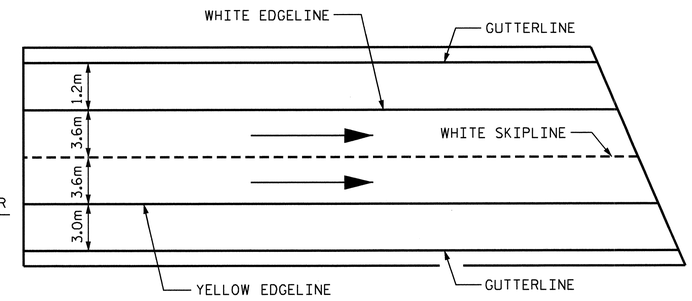

PAVEMENT MARKING ALIGNMENT

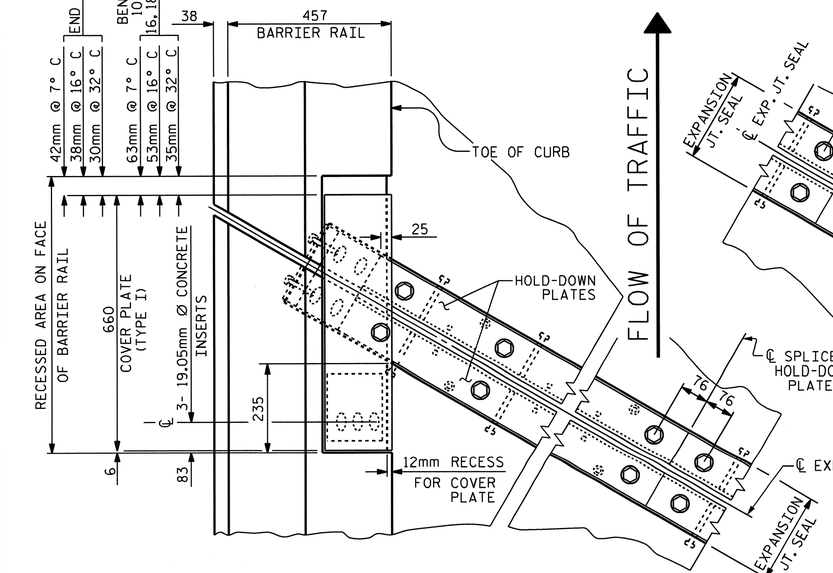

PLAN OF EXPANSION JOINT SEAL - LEFT SIDE

FOR BENTS 6, 8, 10, 12, 14, 16, 18, 20 & END BENT 2

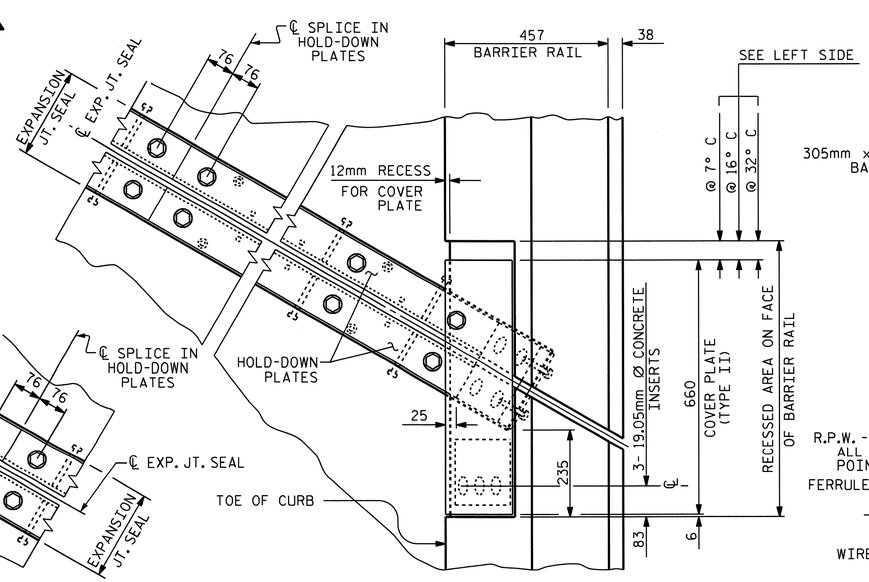

PLAN OF EXPANSION JOINT SEAL - RIGHT SIDE

FOR BENTS 6, 8, 10, 12, 14, 16, 18, 20 & END BENT 2

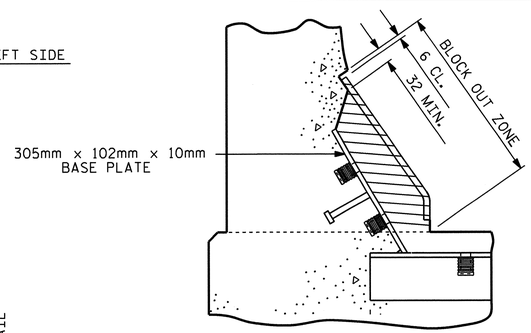

BLOCK OUT DETAIL

SEE " SECTION A - A " FOR OTHER DETAILS.

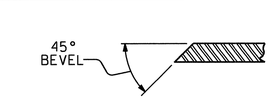

SECTION B - B

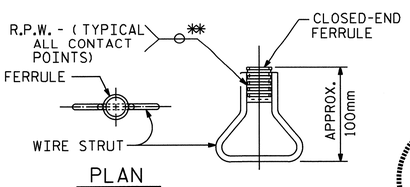

CONCRETE INSERT

** EACH WELDED ATTACHMENT OF WIRE TO FERRULE SHALL DEVELOP THE TENSILE STRENGTH OF THE WIRE.

NORTH CAROLINA PROFESSIONAL SEAL 14045 ENGINEER TIMOTHY L. COGGINS 03/23/12

PROJECT NO. R-2554A
WAYNE COUNTY
STATION: 70+24.000 -L-

SHEET 3 OF 3

STATE OF NORTH CAROLINA
DEPARTMENT OF TRANSPORTATION
RALEIGH

STANDARD EXPANSION JOINT SEAL DETAILS FOR BARRIER RAIL (RIGHT LANE)

REVISIONS								SHEET NO.
NO.	BY:	DATE:	NO.	BY:	DATE:			S-169
1			3					TOTAL SHEETS
2			4					276

STR. #4

STD. NO. EJS2SM

ASSEMBLED BY : B.N.BARODAWALA DATE : 11-15-11			
CHECKED BY : PEGGY PARISI DATE : 1-5-12			
DRAWN BY : REK 9/87	REV. 7/17/98	RWW/LES	
CHECKED BY : CRK 10/87	REV. 10/17/00	RWW/LES	
	REV. 5/1/06	TLA/GM	

23-MAR-2012 11:40
Z:\TIPProjects-R\R2554A\Structures\FinalPlans\Str#4\r2554a_sd_js_04.dgn
padkins

BILL OF MATERIAL — SPANS A & B

BAR	NO.	SIZE	TYPE	LENGTH	WEIGHT
* A1	341	#16	STR	12280	6499
A2	343	#16	STR	12280	6537
* B1	93	#13	STR	7360	680
* B2	31	#19	STR	18000	1247
* B3	30	#19	STR	10800	724
* B4	93	#13	STR	8460	782
B8	184	#16	STR	17620	5032
* B9	31	#19	STR	7520	521
* J1	76	#13	10	440	33
* K1	8	#25	1	4200	133
* K2	12	#25	2	5920	282
K5	8	#13	STR	1240	10
K6	40	#13	STR	2160	86
K7	8	#13	STR	1320	10
K8	14	#13	STR	5180	72
* S1	40	#16	3	1760	109
S3	152	#13	8	860	130
S4	8	#13	5	3340	27
* U1	20	#13	7	5180	103

REINFORCING STEEL = 11904 kg
*EPOXY COATED REINFORCING STEEL = 11113 kg

BILL OF MATERIAL — SPANS C & D

BAR	NO.	SIZE	TYPE	LENGTH	WEIGHT
* A1	358	#16	STR	12280	6823
A2	360	#16	STR	12280	6861
* B2	31	#19	STR	18000	1247
* B3	30	#19	STR	10800	724
* B4	186	#13	STR	8460	1564
* B9	31	#19	STR	7520	521
B10	230	#16	STR	14920	5326
* J1	76	#13	10	440	33
* K1	8	#25	1	4200	133
* K2	12	#25	2	5920	282
K5	8	#13	STR	1240	10
K6	40	#13	STR	2160	86
K7	8	#13	STR	1320	10
K8	14	#13	STR	5180	72
* S1	40	#16	3	1760	109
S3	152	#13	8	860	130
S4	8	#13	5	3340	27
* U1	20	#13	7	5180	103

REINFORCING STEEL = 12522 kg
*EPOXY COATED REINFORCING STEEL = 11539 kg

BILL OF MATERIAL — SPANS E & F

BAR	NO.	SIZE	TYPE	LENGTH	WEIGHT
* A1	310	#16	STR	12280	5908
A2	311	#16	STR	12280	5927
*A101	2	#16	STR	10680	33
*A102	2	#16	STR	9180	28
*A103	2	#16	STR	7700	24
*A104	2	#16	STR	6200	19
*A105	2	#16	STR	4700	15
*A106	2	#16	STR	3220	10
*A107	2	#16	STR	1720	5
A201	2	#16	STR	10840	34
A202	2	#16	STR	9340	29
A203	2	#16	STR	7840	24
A204	2	#16	STR	6360	20
A205	2	#16	STR	4860	15
A206	2	#16	STR	3380	10
A207	2	#16	STR	1880	6
* B2	31	#19	STR	18000	1247
* B3	30	#19	STR	10800	724
* B5	93	#13	STR	6320	584
* B6	93	#13	STR	8460	782
* B9	31	#19	STR	7520	521
B11	230	#16	STR	13640	4869
* G1	1	#16	STR	12720	20
* J1	78	#13	10	440	34
* K1	4	#25	1	4200	67
* K2	6	#25	2	5920	141
* K3	4	#25	1	4320	69
* K4	6	#25	2	6080	145
K9	21	#13	9	3160	66
K10	14	#13	6	1640	23
K11	8	#13	STR	1300	10
K12	40	#13	STR	2240	89
K13	8	#13	STR	1360	11
*K14	12	#19	STR	1300	35
* S1	40	#16	3	1760	109
* S2	20	#13	4	1080	21
S3	152	#13	8	860	130
S4	8	#13	5	3340	27
* U1	20	#13	7	5180	103

REINFORCING STEEL = 11290 kg
*EPOXY COATED REINFORCING STEEL = 10644 kg

BILL OF MATERIAL — SPANS G & H, I & J, K & L, M & N OR O & P

BAR	NO.	SIZE	TYPE	LENGTH	WEIGHT
* A1	341	#16	STR	12280	6499
A2	341	#16	STR	12280	6499
*A101	4	#16	STR	11420	71
*A102	4	#16	STR	9920	62
*A103	4	#16	STR	8420	52
*A104	4	#16	STR	6940	43
*A105	4	#16	STR	5440	34
*A106	4	#16	STR	3960	25
*A107	4	#16	STR	2460	15
*A108	4	#16	STR	960	6
A201	4	#16	STR	11580	72
A202	4	#16	STR	10080	63
A203	4	#16	STR	8580	53
A204	4	#16	STR	7100	44
A205	4	#16	STR	5600	35
A206	4	#16	STR	4100	25
A207	4	#16	STR	2620	16
A208	4	#16	STR	1120	7
* B2	31	#19	STR	18000	1247
* B3	30	#19	STR	10800	724
* B6	186	#13	STR	8460	1564
* B9	31	#19	STR	7520	521
B10	230	#16	STR	14920	5326
* G1	2	#16	STR	12720	39
* J1	80	#13	10	440	35
* K3	8	#25	1	4320	137
* K4	12	#25	2	6080	290
K9	21	#13	9	3160	66
K10	14	#13	6	1640	23
K11	8	#13	STR	1300	10
K12	40	#13	STR	2240	89
K13	8	#13	STR	1360	11
*K14	24	#19	STR	1300	70
* S1	40	#16	3	1760	109
* S2	40	#13	4	1080	43
S3	152	#13	8	860	130
S4	8	#13	5	3340	27
* U1	20	#13	7	5180	103

REINFORCING STEEL = 12496 kg
*EPOXY COATED REINFORCING STEEL = 11689 kg

BILL OF MATERIAL — SPANS Q & R OR S & T

BAR	NO.	SIZE	TYPE	LENGTH	WEIGHT
* A1	331	#16	STR	12280	6308
A2	331	#16	STR	12280	6308
*A101	4	#16	STR	11420	71
*A102	4	#16	STR	9920	62
*A103	4	#16	STR	8420	52
*A104	4	#16	STR	6940	43
*A105	4	#16	STR	5440	34
*A106	4	#16	STR	3960	25
*A107	4	#16	STR	2460	15
*A108	4	#16	STR	960	6
A201	4	#16	STR	11580	72
A202	4	#16	STR	10080	63
A203	4	#16	STR	8580	53
A204	4	#16	STR	7100	44
A205	4	#16	STR	5600	35
A206	4	#16	STR	4100	25
A207	4	#16	STR	2620	16
A208	4	#16	STR	1120	7
* B2	31	#19	STR	18000	1247
* B3	30	#19	STR	10800	724
* B7	186	#13	STR	8120	1501
* B9	31	#19	STR	7520	521
B12	184	#16	STR	17960	5129
* G1	2	#16	STR	12720	39
* J1	80	#13	10	440	35
* K3	8	#25	1	4320	137
* K4	12	#25	2	6080	290
K9	21	#13	9	3160	66
K10	14	#13	6	1640	23
K11	8	#13	STR	1300	10
K12	40	#13	STR	2240	89
K13	8	#13	STR	1360	11
*K14	24	#19	STR	1300	70
* S1	40	#16	3	1760	109
* S2	40	#13	4	1080	43
S3	152	#13	8	860	130
S4	8	#13	5	3340	27
* U1	20	#13	7	5180	103

REINFORCING STEEL = 12108 kg
*EPOXY COATED REINFORCING STEEL = 11435 kg

BILL OF MATERIAL — SPANS U & V

BAR	NO.	SIZE	TYPE	LENGTH	WEIGHT
* A1	332	#16	STR	12280	6327
A2	332	#16	STR	12280	6327
*A101	2	#16	STR	11420	35
*A102	2	#16	STR	9920	31
*A103	2	#16	STR	8420	26
*A104	2	#16	STR	6940	22
*A105	2	#16	STR	5440	17
*A106	2	#16	STR	3960	12
*A107	2	#16	STR	2460	8
*A108	2	#16	STR	960	3
*A109	2	#16	STR	11180	35
*A110	2	#16	STR	9700	30
*A111	2	#16	STR	8200	25
*A112	2	#16	STR	6720	21
*A113	2	#16	STR	5220	16
*A114	2	#16	STR	3720	12
*A115	2	#16	STR	2240	7
*A116	2	#16	STR	740	2
A201	2	#16	STR	11580	36
A202	2	#16	STR	10080	31
A203	2	#16	STR	8500	27
A204	2	#16	STR	7100	22
A205	2	#16	STR	5600	17
A206	2	#16	STR	4100	13
A207	2	#16	STR	2620	8
A208	2	#16	STR	1120	3
A209	2	#16	STR	11340	35
A210	2	#16	STR	9860	31
A211	2	#16	STR	8360	26
A212	2	#16	STR	6860	21
A213	2	#16	STR	5380	17
A214	2	#16	STR	3880	12
A215	2	#16	STR	2380	7
A216	2	#16	STR	900	3
* B2	31	#19	STR	18000	1247
* B3	30	#19	STR	10800	724
* B7	93	#13	STR	8120	751
* B9	31	#19	STR	7520	521
*B13	93	#13	STR	8200	758
B14	184	#16	STR	18000	5140
* G1	2	#16	STR	12720	39
* J1	80	#13	10	440	35
*K3	8	#25	1	4320	137
*K4	12	#25	2	6080	290
K9	21	#13	9	3160	66
K10	14	#13	6	1640	23
K11	8	#13	STR	1300	10
K12	40	#13	STR	2240	89
K13	8	#13	STR	1360	11
*K14	24	#19	STR	1300	70
* S1	40	#16	3	1760	109
*S2	20	#13	4	1080	21
S3	152	#13	8	860	130
S4	8	#13	5	3340	27
*S5	20	#13	4	1340	27
* U1	20	#13	7	5180	103

REINFORCING STEEL = 12132 kg
*EPOXY COATED REINFORCING STEEL = 11461 kg

BAR TYPES

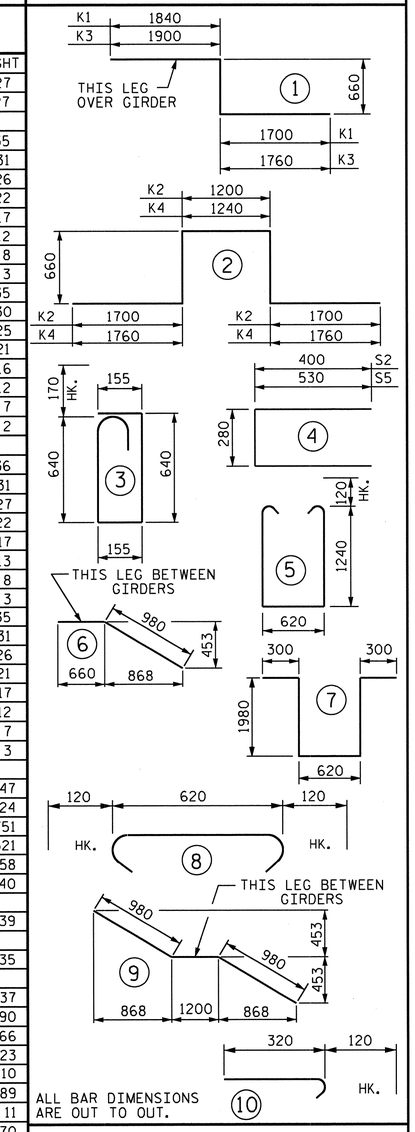

ALL BAR DIMENSIONS ARE OUT TO OUT.

SPAN	CLASS AA CONCRETE (CU. METER)		REINFORCING STEEL (kg)	EPOXY COATED REINFORCING STEEL (kg)
A-B	POUR 1	110.5	11904	11113
	POUR 2	156.9		
C-D	POUR 3	122.8	12522	11539
	POUR 4	156.9		
E-F	POUR 5	115.7	11290	10644
	POUR 6	157.1		
G-H	POUR 7	122.8	12496	11689
	POUR 8	157.1		
I-J	POUR 9	122.8	12496	11689
	POUR 10	157.1		
K-L	POUR 11	122.8	12496	11689
	POUR 12	157.1		
M-N	POUR 13	122.8	12496	11689
	POUR 14	157.1		
O-P	POUR 15	122.8	12496	11689
	POUR 16	157.1		
Q-R	POUR 17	119.3	12108	11435
	POUR 18	153.4		
S-T	POUR 19	119.3	12108	11435
	POUR 20	153.4		
U-V	POUR 21	119.3	12132	11461
	POUR 22	153.9		
**	TOTALS	3038.0	134544	126072

** QUANTITIES FOR BARRIER RAIL ARE NOT INCLUDED. FOR POURING SEQUENCE, SEE SHEET 2 OF 2.

SUPERSTRUCTURE REINFORCING STEEL LENGTHS ARE BASED ON THE FOLLOWING MINIMUM SPLICE LENGTHS

BAR SIZE	SUPERSTRUCTURE EXCEPT APPROACH SLABS, PARAPET, AND BARRIER RAIL		APPROACH SLABS		PARAPET AND BARRIER RAIL
	EPOXY COATED	UNCOATED	EPOXY COATED	UNCOATED	
#13	610	540	610	540	840
#16	770	660	770	660	1050
#19	920	790	1190	790	1330
#22	1580	1060			
#25	2080	1390			

GROOVING BRIDGE FLOORS

BRIDGE DECK	8136.5 SQ.METER
APPROACH SLABS	155.5 SQ.METER
TOTAL	8292.0 SQ.METER

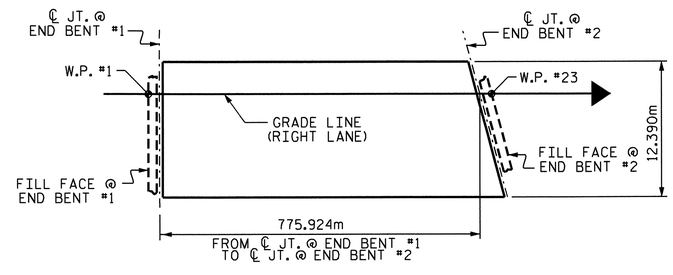

LAYOUT FOR COMPUTING AREA OF REINFORCED CONCRETE DECK SLAB (9598.7 SQ. METER)

NORTH CAROLINA PROFESSIONAL SEAL 14045 ENGINEER TIMOTHY W. COGGINS
03/23/12

PROJECT NO. R-2554A
WAYNE COUNTY
STATION: 70+24.000 -L-

SHEET 1 OF 2

STATE OF NORTH CAROLINA
DEPARTMENT OF TRANSPORTATION
RALEIGH

STANDARD
SUPERSTRUCTURE BILL OF MATERIAL
(RIGHT LANE)

REVISIONS								SHEET NO.
NO.	BY:	DATE:	NO.	BY:	DATE:			S-170
1			3					TOTAL SHEETS
2			4					276

STR. #4 STD. NO. BOM2SM

ASSEMBLED BY : B.N. BARODAWALA DATE : 11-15-11
CHECKED BY : PEGGY PARISI DATE : 1-5-12
DRAWN BY : JMB 5/87 REV. 5/16/97 EEM/RGW
CHECKED BY : SJD 9/87 REV. 5/1/06 TLA/GM

23-MAR-2012 11:33
Z:\TIPProjects-R\R2554A\Structures\FinalPlans\Str#4\r2554a_sd_bm_04.dgn
padkins

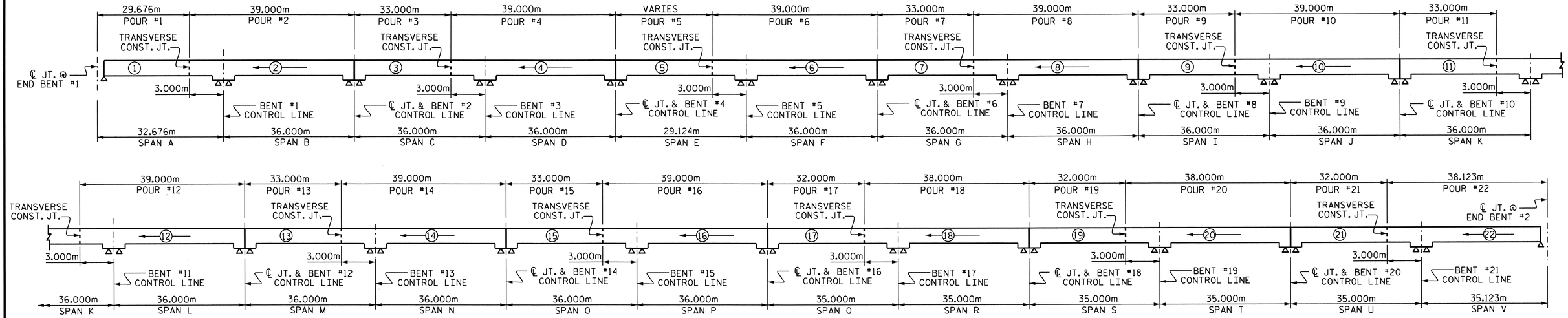

POURING SEQUENCE

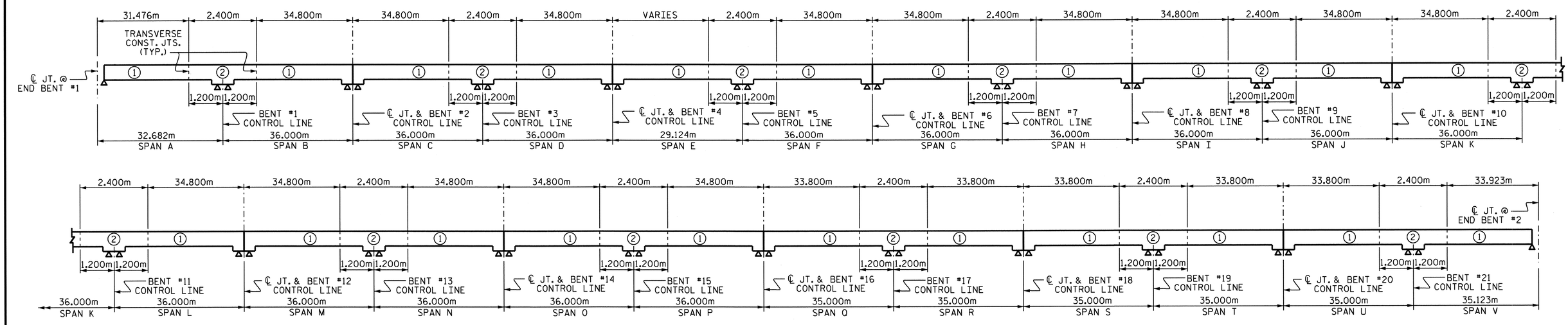

OPTIONAL POURING SEQUENCE

PROJECT NO. R-2554A

WAYNE COUNTY

STATION: 70+24.000 -L-

SHEET 2 OF 2

STATE OF NORTH CAROLINA
DEPARTMENT OF TRANSPORTATION
RALEIGH

SUPERSTRUCTURE BILL OF MATERIAL

(RIGHT LANE)

NORTH CAROLINA PROFESSIONAL SEAL 14045 ENGINEER TIMOTHY L. COGGINS
03/23/12

REVISIONS						SHEET NO.
NO.	BY:	DATE:	NO.	BY:	DATE:	S-171
1			3			TOTAL SHEETS
2			4			276

STR. #4

DRAWN BY : B.N.BARODAWALA DATE : 11-15-11
CHECKED BY : PEGGY PARISI DATE : 1-5-12

23-MAR-2012 11:33
Z:\TIPProjects-R\R2554A\Structures\FinalPlans\Str#4\r2554a_sd_bm_04.dgn
padkins

NOTES:

STIRRUPS AND U2 BARS IN CAP MAY BE SHIFTED AS NECESSARY TO CLEAR ANCHOR BOLTS.

BACKWALL SHALL BE PLACED BEFORE APPLYING THE EPOXY PROTECTIVE COATING.

THE TOP SURFACE AREAS OF THE END BENT CAP SHALL BE CURED IN ACCORDANCE WITH THE STANDARD SPECIFICATIONS EXCEPT THE MEMBRANE CURING COMPOUND METHOD SHALL NOT BE USED.

THE TOP SURFACE OF THE END BENT CAP EXCEPT THE BRIDGE SEAT BUILDUPS SHALL BE SLOPED TRANSVERSELY FROM THE FILL FACE TO THE BACK FACE AT A RATE OF 2%.

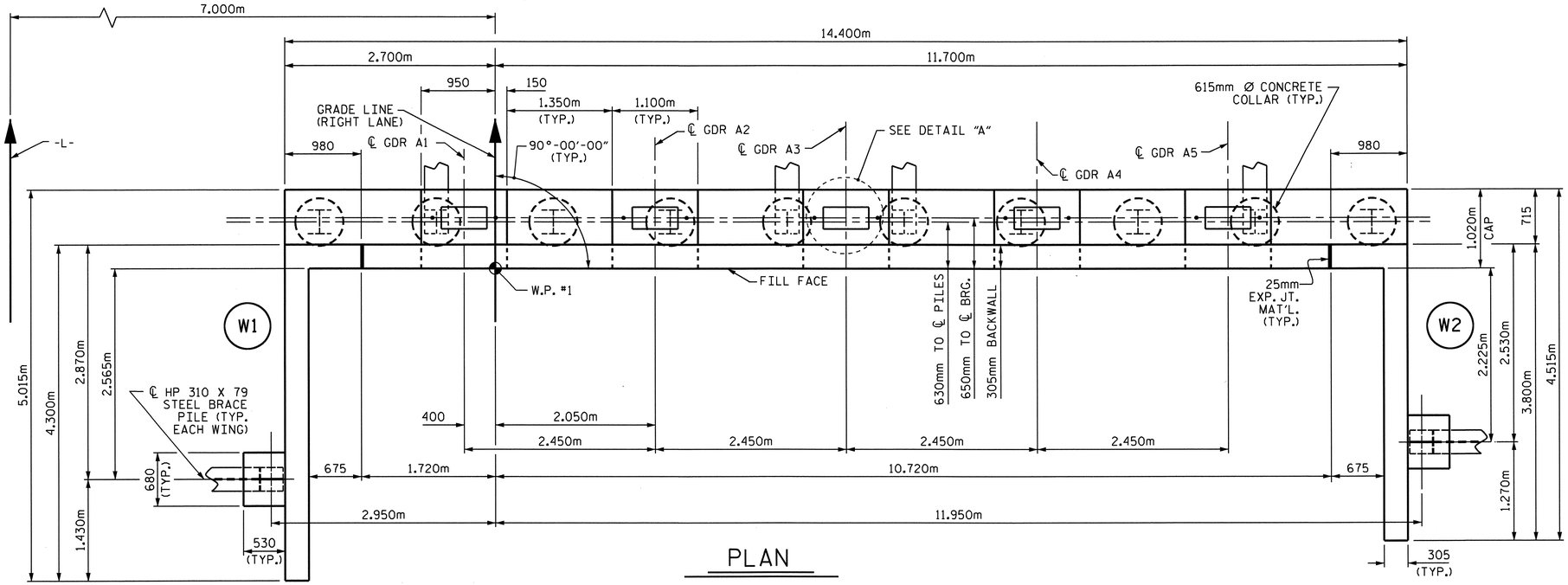

PLAN

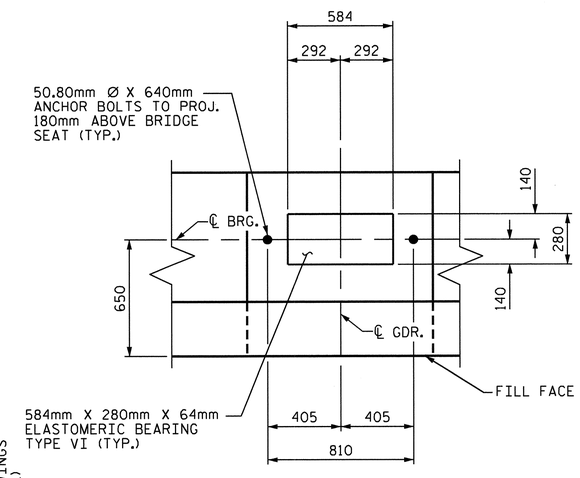

DETAIL "A"

(TYP. EACH GIRDER)

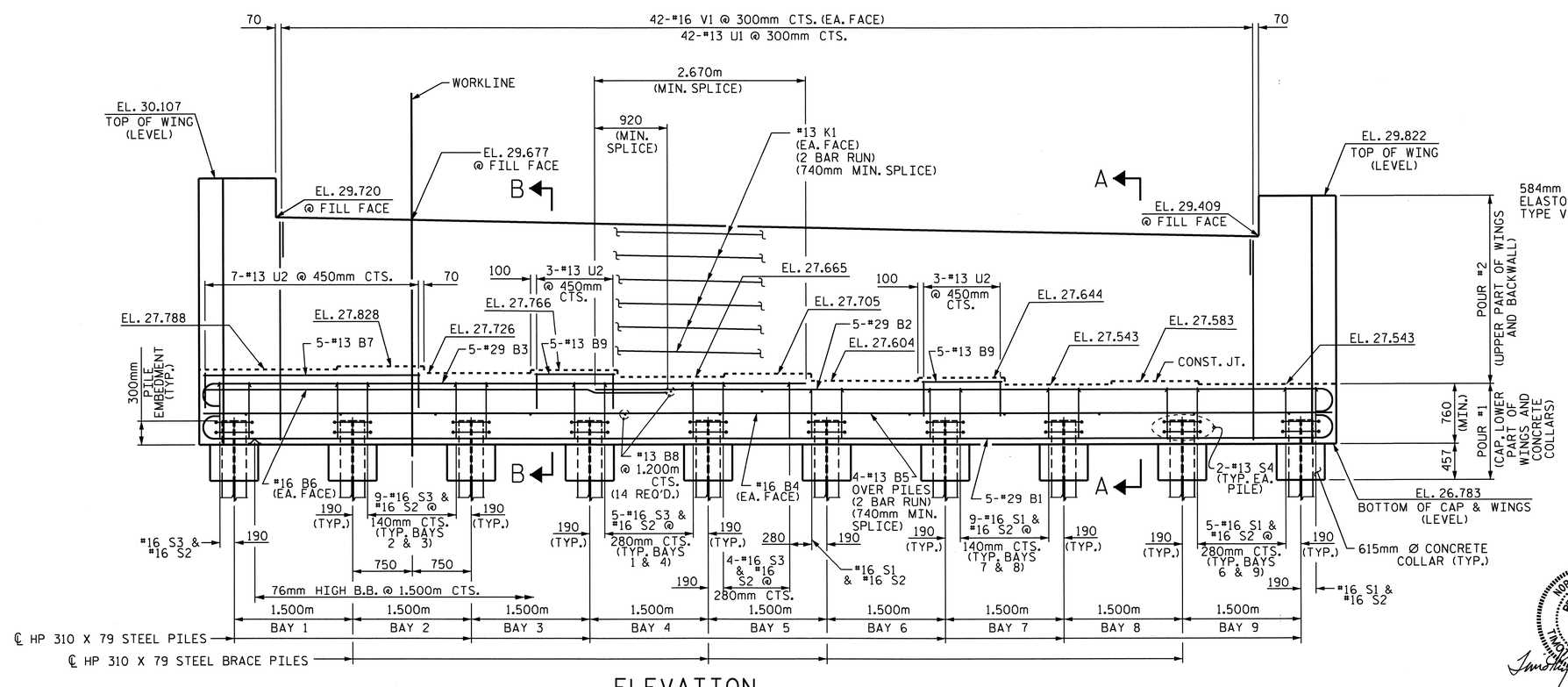

ELEVATION

WING BRACE PILES NOT SHOWN FOR CLARITY.

PROJECT NO. R-2554A

WAYNE COUNTY

STATION: 70+24.000 -L-

SHEET 1 OF 3

STATE OF NORTH CAROLINA
DEPARTMENT OF TRANSPORTATION
RALEIGH

SUBSTRUCTURE

END BENT #1

(RIGHT LANE)

NORTH CAROLINA PROFESSIONAL SEAL 14045 ENGINEER TIMOTHY A. COGGINS
03/23/12

REVISIONS							SHEET NO.
NO.	BY:	DATE:	NO.	BY:	DATE:		S-172
1			3				TOTAL SHEETS
2			4				276

DRAWN BY : PEGGY PARISI DATE : 11-29-11
CHECKED BY : B. GREEN DATE : 12-11-11

23-MAR-2012 11:36
Z:\TIPProjects-R\R2554A\Structures\FinalPlans\Str#4\r2554a_sd_e#_04.dgn
padkins

STR. #4

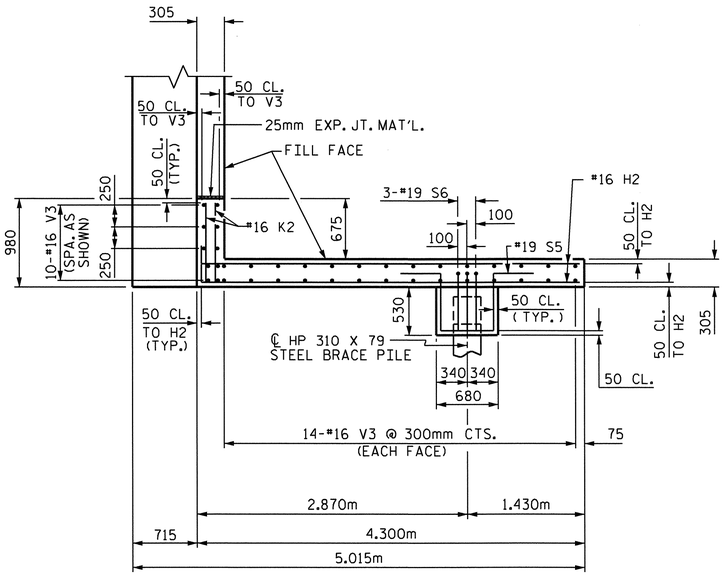

PLAN OF LEFT WING (W1)

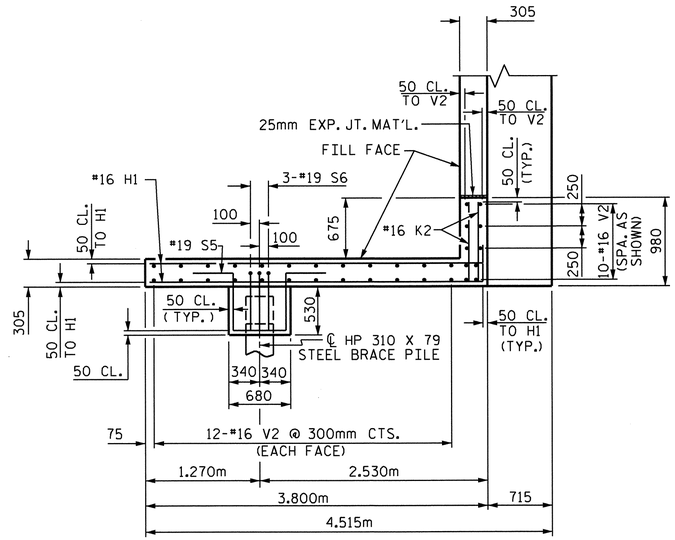

PLAN OF RIGHT WING (W2)

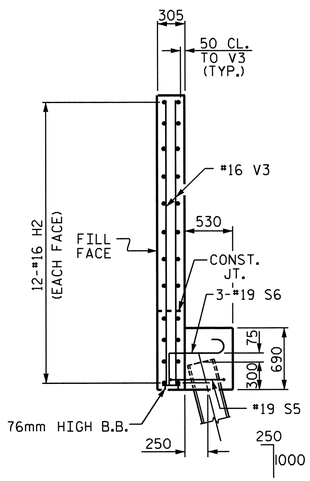

SECTION Y-Y

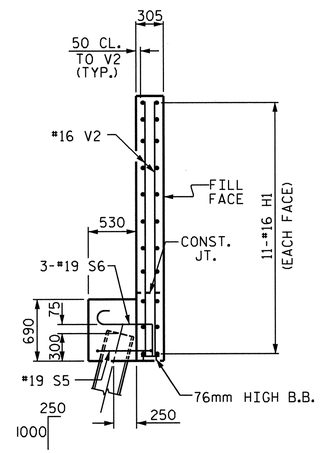

SECTION X-X

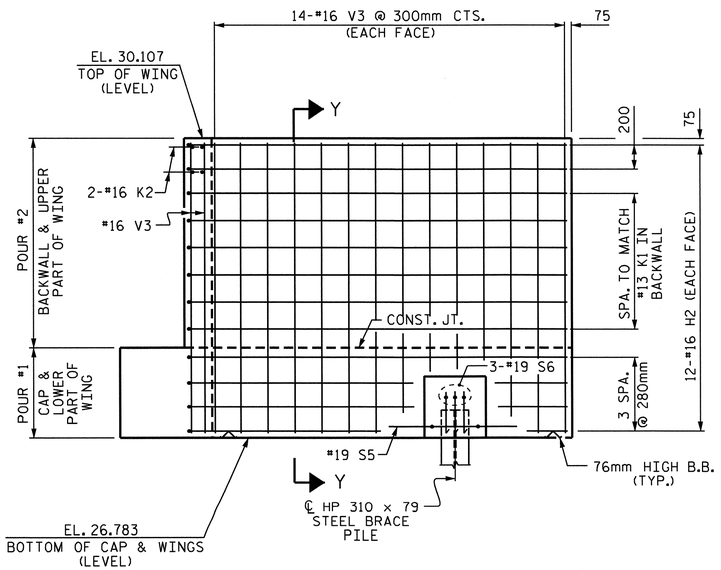

ELEVATION OF LEFT WING (W1)

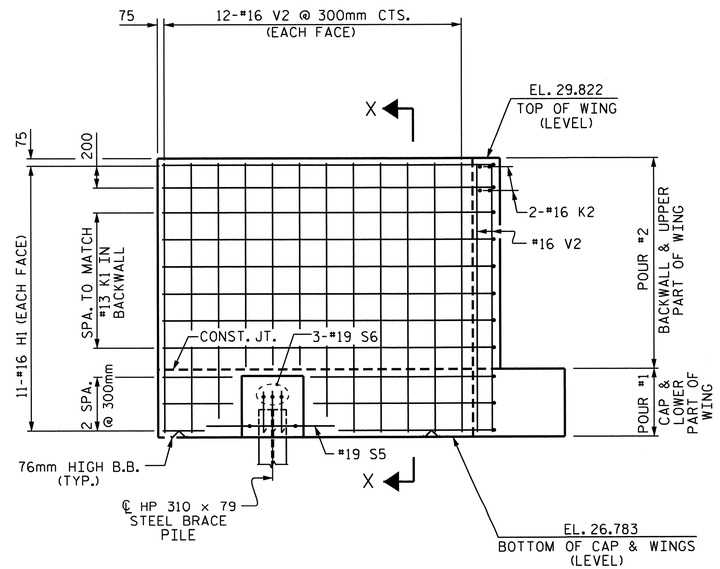

ELEVATION OF RIGHT WING (W2)

NORTH CAROLINA PROFESSIONAL SEAL 14045 ENGINEER TIMOTHY W. COGGINS

03/23/12

PROJECT NO. R-2554A

WAYNE COUNTY

STATION: 70+24.000 -L-

SHEET 2 OF 3

STATE OF NORTH CAROLINA
DEPARTMENT OF TRANSPORTATION
RALEIGH

SUBSTRUCTURE

END BENT #1

(RIGHT LANE)

REVISIONS						SHEET NO.
NO.	BY:	DATE:	NO.	BY:	DATE:	S-173
1			3			TOTAL SHEETS
2			4			276

DRAWN BY : PEGGY PARISI DATE : 11-29-11
CHECKED BY : B. GREEN DATE : 12-11-11

23-MAR-2012 11:35
Z:\TIPProjects-R\R2554A\Structures\FinalPlans\Str#4\r2554a_sd_e*_04.dgn
padkins

STR. #4

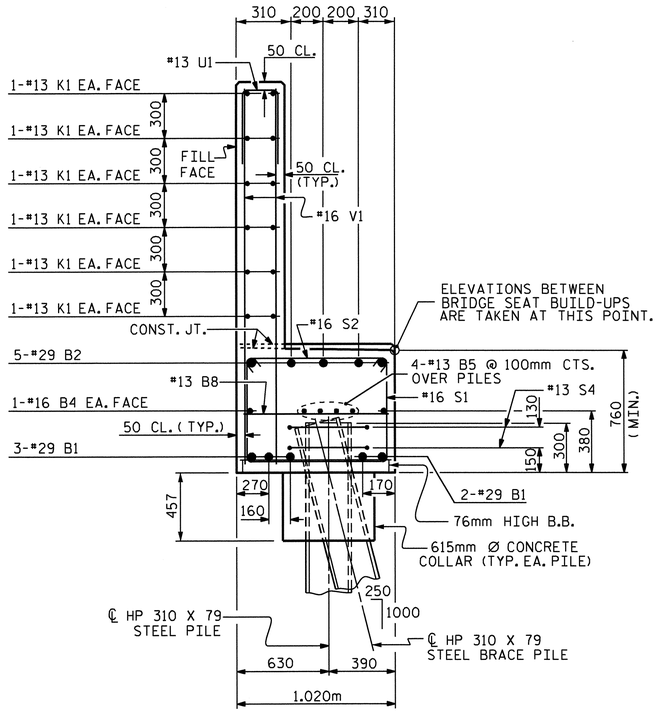

SECTION A-A

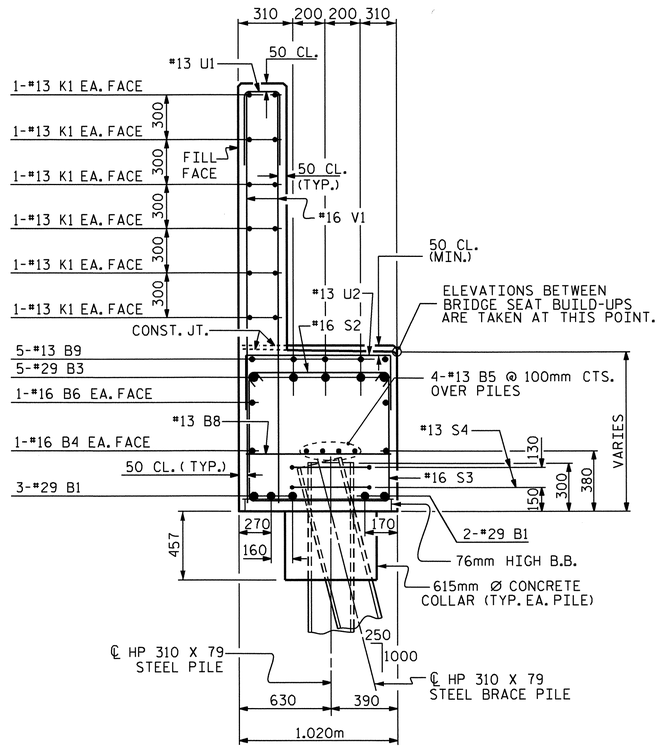

SECTION B-B

BAR TYPES

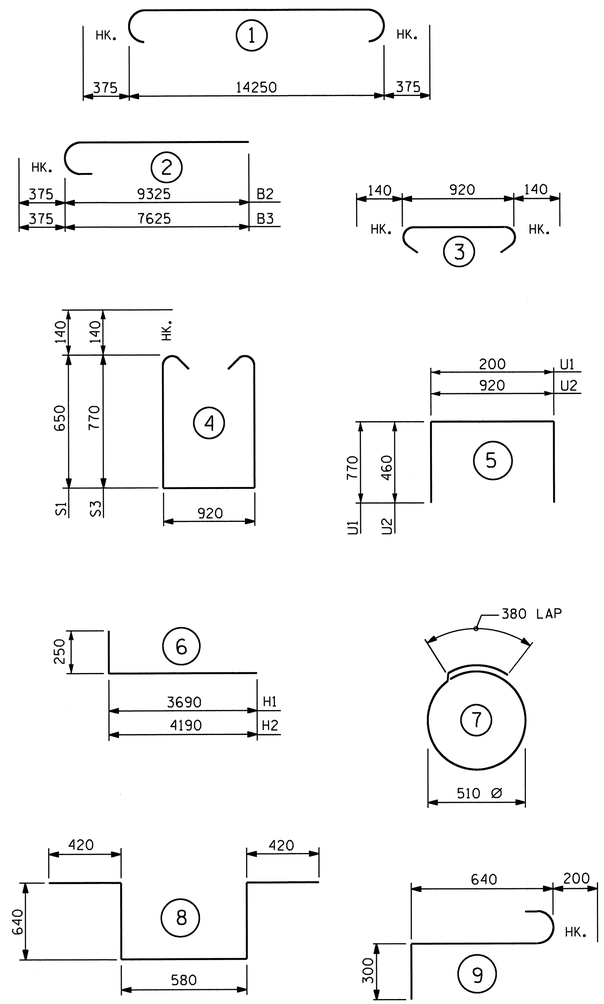

ALL BAR DIMENSIONS ARE OUT TO OUT.

BILL OF MATERIAL

END BENT #1

BAR	NO.	SIZE	TYPE	LENGTH	WEIGHT
B1	5	#29	1	15000	380
B2	5	#29	2	9700	245
B3	5	#29	2	8000	202
B4	2	#16	STR	14300	44
B5	8	#13	STR	7520	60
B6	2	#16	STR	5900	18
B7	5	#13	STR	2740	14
B8	14	#13	STR	920	13
B9	10	#13	STR	1000	10
H1	22	#16	6	3940	135
H2	24	#16	6	4440	165
K1	24	#13	STR	7520	179
K2	8	#16	STR	880	11
S1	30	#16	4	2500	116
S2	63	#16	3	1200	117
S3	33	#16	4	2740	140
S4	20	#13	7	1980	39
S5	2	#19	8	2700	12
S6	6	#19	9	1140	15
U1	42	#13	5	1740	73
U2	13	#13	5	1840	24
V1	84	#16	STR	2520	329
V2	34	#16	STR	2920	154
V3	38	#16	STR	3220	190
REINFORCING STEEL				KG.	2685

CLASS A CONCRETE BREAKDOWN

POUR #1 (CAP, LOWER WINGS, WING BRACE PILE CAPS & CONCRETE COLLARS) 16.9 C.M.

POUR #2 (BACKWALL & UPPER WINGS) 13.8 C.M.

TOTAL CLASS A CONCRETE 30.7 C.M.

HP 310 X 79 STEEL PILES

NO. 12 182.4 METERS

PILE REDRIVES EACH 5

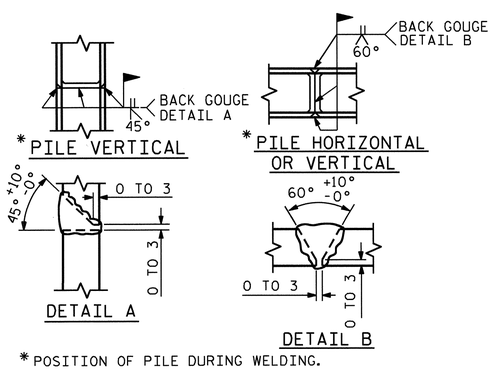

* POSITION OF PILE DURING WELDING.

PILE SPLICE DETAILS

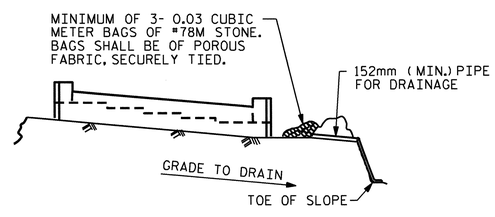

BAGGED STONE AND PIPE SHALL BE PLACED IMMEDIATELY AFTER COMPLETION OF END BENT EXCAVATION. PIPE MAY BE EITHER CONCRETE, CORRUGATED STEEL, CORRUGATED ALUMINUM ALLOY, OR CORRUGATED PLASTIC. PERFORATED PIPE WILL NOT BE ALLOWED.

BAGGED STONE SHALL REMAIN IN PLACE UNTIL THE ENGINEER DIRECTS THAT IT BE REMOVED. THE CONTRACTOR SHALL REMOVE AND DISPOSE OF SILT ACCUMULATIONS AT BAGGED STONE WHEN SO DIRECTED BY THE ENGINEER. BAGS SHALL BE REMOVED AND REPLACED WHENEVER THE ENGINEER DETERMINES THAT THEY HAVE DETERIORATED AND LOST THEIR EFFECTIVENESS.

NO SEPARATE PAYMENT WILL BE MADE FOR THIS WORK AND THE ENTIRE COST OF THIS WORK SHALL BE INCLUDED IN THE UNIT CONTRACT PRICE BID FOR THE SEVERAL PAY ITEMS.

TEMPORARY DRAINAGE AT END BENT

PROJECT NO. R-2554A

WAYNE COUNTY

STATION: 70+24.000 -L-

SHEET 3 OF 3

STATE OF NORTH CAROLINA
DEPARTMENT OF TRANSPORTATION
RALEIGH

SUBSTRUCTURE

END BENT #1

(RIGHT LANE)

NORTH CAROLINA PROFESSIONAL SEAL 14045 ENGINEER TIMOTHY G. COGGINS

03/23/12

REVISIONS						SHEET NO.
NO.	BY:	DATE:	NO.	BY:	DATE:	S-174
1			3			TOTAL SHEETS
2			4			276

STR. #4

DRAWN BY : PEGGY PARISI DATE : 11-29-11
CHECKED BY : B. GREEN DATE : 12-11-11

23-MAR-2012 11:35
Z:\TIPProjects-R\R2554A\Structures\FinalPlans\Str#4\r2554a_sd_e*_04.dgn
padkins

NOTES

STIRRUPS AND U1 BARS IN CAP MAY BE SHIFTED AS NECESSARY TO CLEAR ANCHOR BOLTS.

THE TOP SURFACE AREAS OF INTERIOR BENTS #2 AND #4 SHALL BE CURED IN ACCORDANCE WITH THE STANDARD SPECIFICATIONS EXCEPT THE MEMBRANE CURING COMPOUND METHOD SHALL NOT BE USED.

AS A MINIMUM, GALVANIZE THE TOP OF EACH INTERIOR BENT PILE AS LISTED. GALVANIZE IN ACCORDANCE WITH SECTION 1076 OF THE STANDARD SPECIFICATIONS. BENT #1-9.2m; BENT #2-9.7m; BENT #3-8.8m; BENT #4-9.0m.

FOR REINFORCING STEEL IN PIPE PILES, SEE "762mm STEEL PIPE PILE" SHEET.

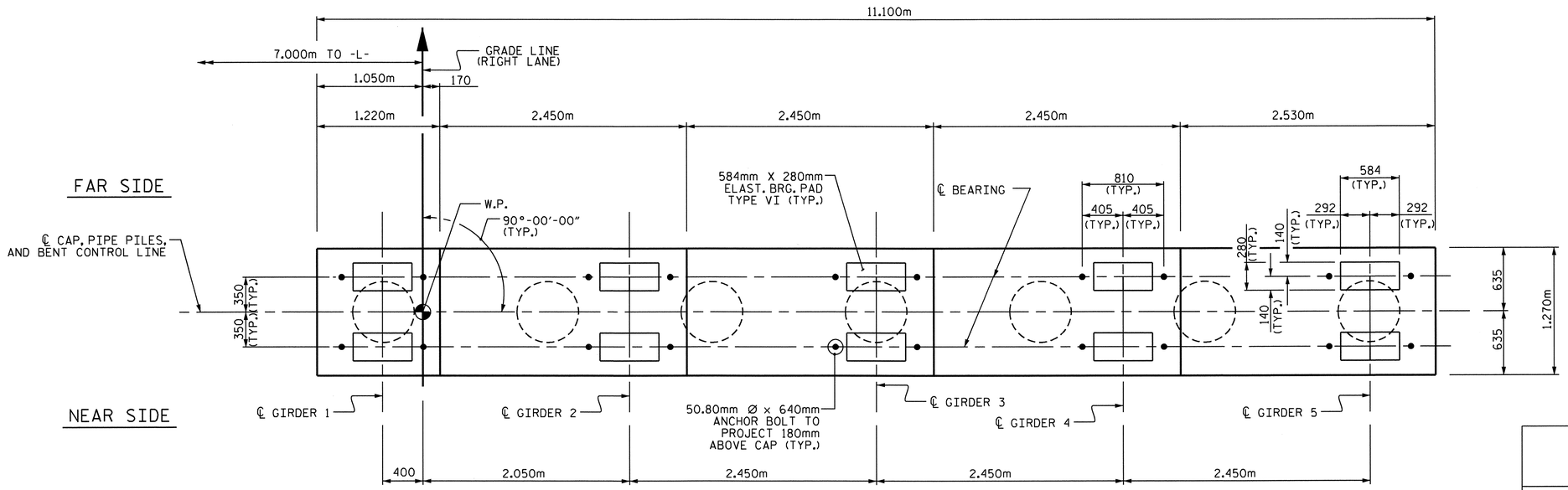

PLAN

	ELEVATIONS					
	A	B	C	D	E	F
BENT #1	28.059	28.120	28.181	28.242	28.304	27.059
BENT #2	28.592	28.653	28.714	28.775	28.837	27.592
BENT #3	29.125	29.186	29.247	29.308	29.370	28.125
BENT #4	29.657	29.719	29.780	29.841	29.902	28.657

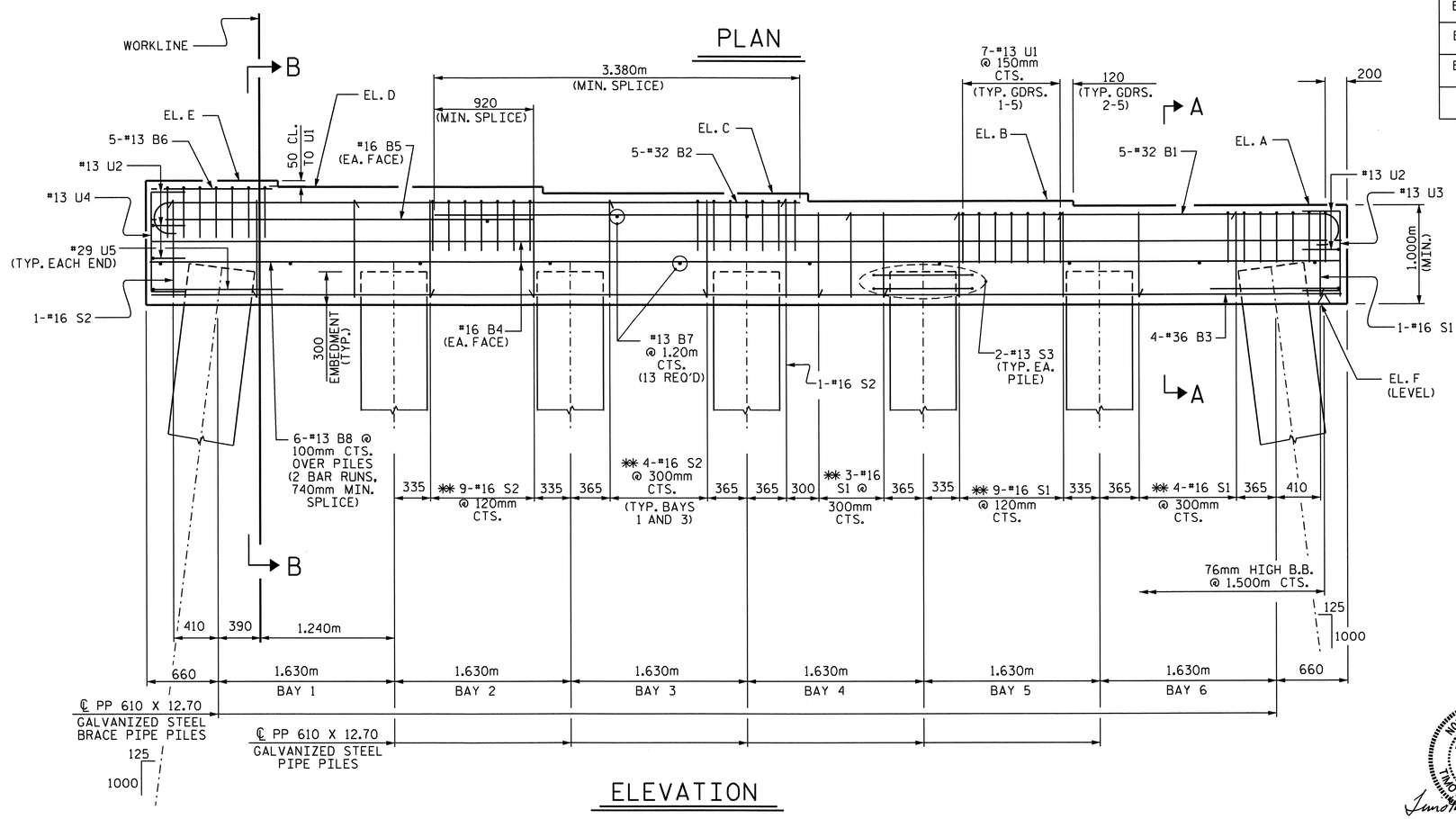

ELEVATION

✱✱ INVERT ALTERNATE STIRRUPS.

PROJECT NO. R-2554A

WAYNE COUNTY

STATION: 70+24.000 -L-

SHEET 1 OF 2

STATE OF NORTH CAROLINA
DEPARTMENT OF TRANSPORTATION
RALEIGH

SUBSTRUCTURE

BENTS #1-#4

(RIGHT LANE)

NORTH CAROLINA PROFESSIONAL SEAL 14045 ENGINEER TIMOTHY W. COLLINS

03/23/12

REVISIONS						SHEET NO.
NO.	BY:	DATE:	NO.	BY:	DATE:	S-175
1			3			TOTAL SHEETS
2			4			276

DRAWN BY : M.L. RORIE DATE : 1-6-12
CHECKED BY : A.M. LEE DATE : 1-20-12

23-MAR-2012 12:30
Z:\TIPProjects-R\R2554A\Structures\FinalPlans\Str#4\r2554a_sd_b*_04.dgn
padkins

STR #4

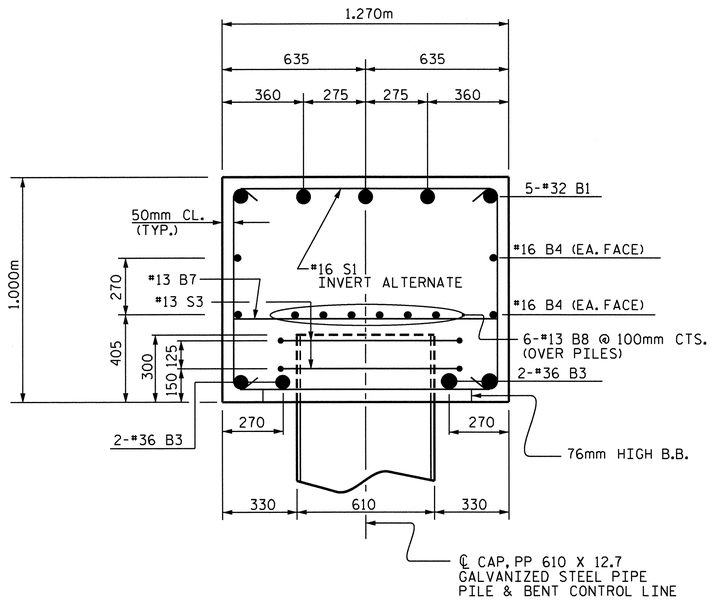

SECTION A-A

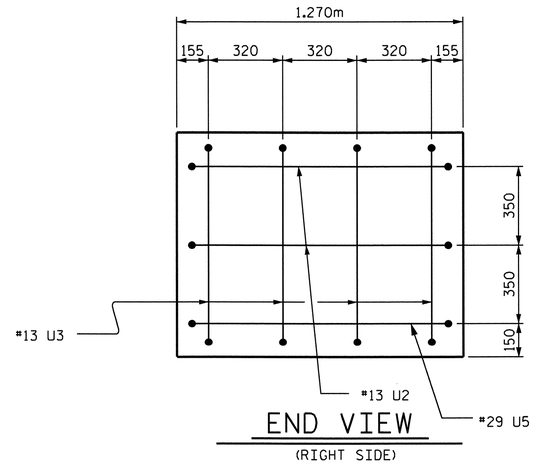

END VIEW

(RIGHT SIDE)

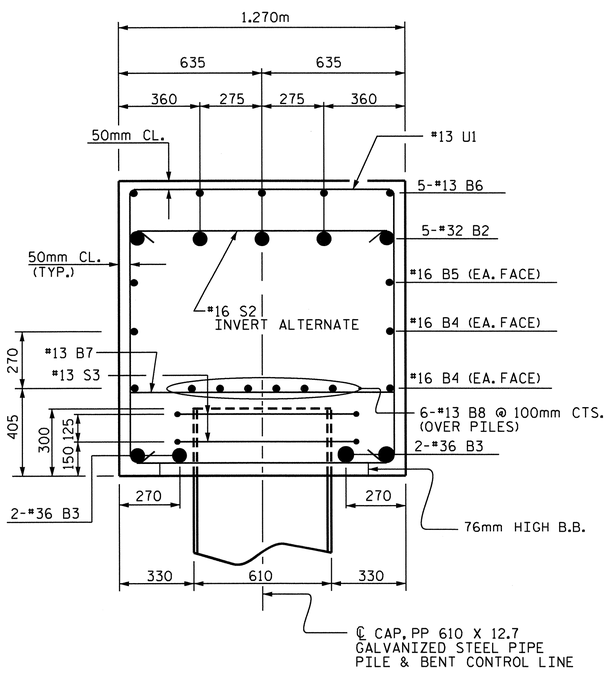

SECTION B-B

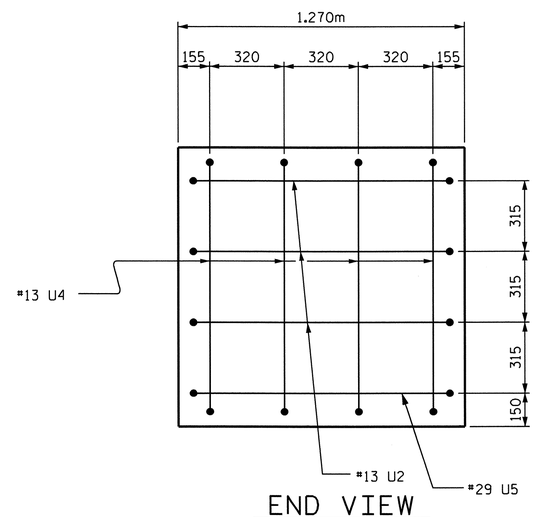

END VIEW

(LEFT SIDE)

BAR TYPES

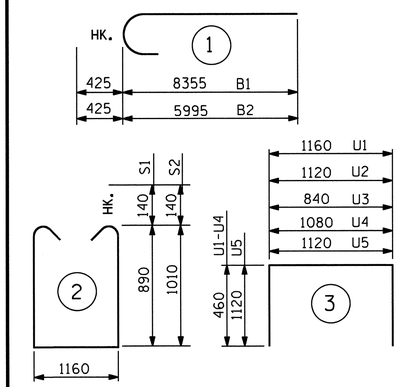

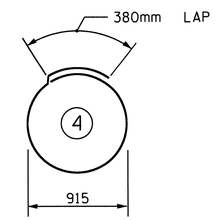

BILL OF MATERIAL
FOR ONE BENT ONLY

BAR	NO.	SIZE	TYPE	LENGTH	WEIGHT
B1	5	#32	1	8780	281
B2	5	#32	1	6420	206
B3	4	#36	STR.	10980	347
B4	4	#16	STR.	11000	68
B5	2	#16	STR.	3560	11
B6	5	#13	STR.	1120	6
B7	13	#13	STR.	1160	15
B8	12	#13	STR.	5880	70
S1	17	#16	2	3220	85
S2	19	#16	2	3460	102
S3	14	#13	4	3260	45
U1	35	#13	3	2080	72
U2	5	#13	3	2040	10
U3	4	#13	3	1760	7
U4	4	#13	3	2000	8
U5	2	#29	3	3360	34

TOTAL REINFORCING STEEL kg 1367

CLASS A CONCRETE BREAKDOWN

POUR #1 (CAP) *	m^3	15.0
TOTAL CLASS A CONCRETE	m^3	15.0

PILE REDRIVES EA. 3

* CONCRETE DISPLACED BY THE FILLED 610mm STEEL PIPE PILES HAS BEEN DEDUCTED FROM THE QUANTITY OF CLASS "A" CONCRETE FOR THE BENT CAP.

PP 610 X 12.7 GALVANIZED STEEL PILES		
	NO.	LIN. METERS
BENT #1	7	123.2
BENT #2	7	123.2
BENT #3	7	128.1
BENT #4	7	128.1

ALL BAR DIMENSIONS ARE OUT TO OUT.

PROJECT NO. R-2554A
WAYNE COUNTY
STATION: 70+24.000 -L-

SHEET 2 OF 2

STATE OF NORTH CAROLINA
DEPARTMENT OF TRANSPORTATION
RALEIGH

SUBSTRUCTURE
BENTS #1-#4
(RIGHT LANE)

NORTH CAROLINA PROFESSIONAL SEAL 14045 ENGINEER TIMOTHY W. COLGINS
03/23/12

REVISIONS								SHEET NO.
NO.	BY:	DATE:	NO.	BY:	DATE:			S-176
1			3					TOTAL SHEETS
2			4					276

DRAWN BY : M.L. RORIE DATE : 1-6-12
CHECKED BY : A.M. LEE DATE : 1-20-12

23-MAR-2012 12:30
Z:\TIPProjects-R\R2554A\Structures\Final Plans\Str#4\r2554a_sd_b#_04.dgn

STR.#4

NOTES

STIRRUPS AND U1 BARS IN CAP MAY BE SHIFTED AS NECESSARY TO CLEAR ANCHOR BOLTS.

THE TOP SURFACE AREAS OF INTERIOR BENTS #6 AND #16 SHALL BE CURED IN ACCORDANCE WITH THE STANDARD SPECIFICATIONS EXCEPT THE MEMBRANE CURING COMPOUND METHOD SHALL NOT BE USED.

AS A MINIMUM, GALVANIZE THE TOP OF EACH INTERIOR BENT PILE AS LISTED. GALVANIZE IN ACCORDANCE WITH SECTION 1076 OF THE STANDARD SPECIFICATIONS. BENT #5-9.2m; BENT #6-9.5m; BENT #15-8.3m; BENT #16-7.8m; BENT #17-7.6m.

FOR REINFORCING STEEL IN PIPE PILES, SEE "610mm STEEL PIPE PILE" SHEET.

CONCRETE DISPLACED BY THE FILLED 610mm STEEL PIPE PILES HAS BEEN DEDUCTED FROM THE QUANTITY OF CLASS "A" CONCRETE FOR THE BENT CAP.

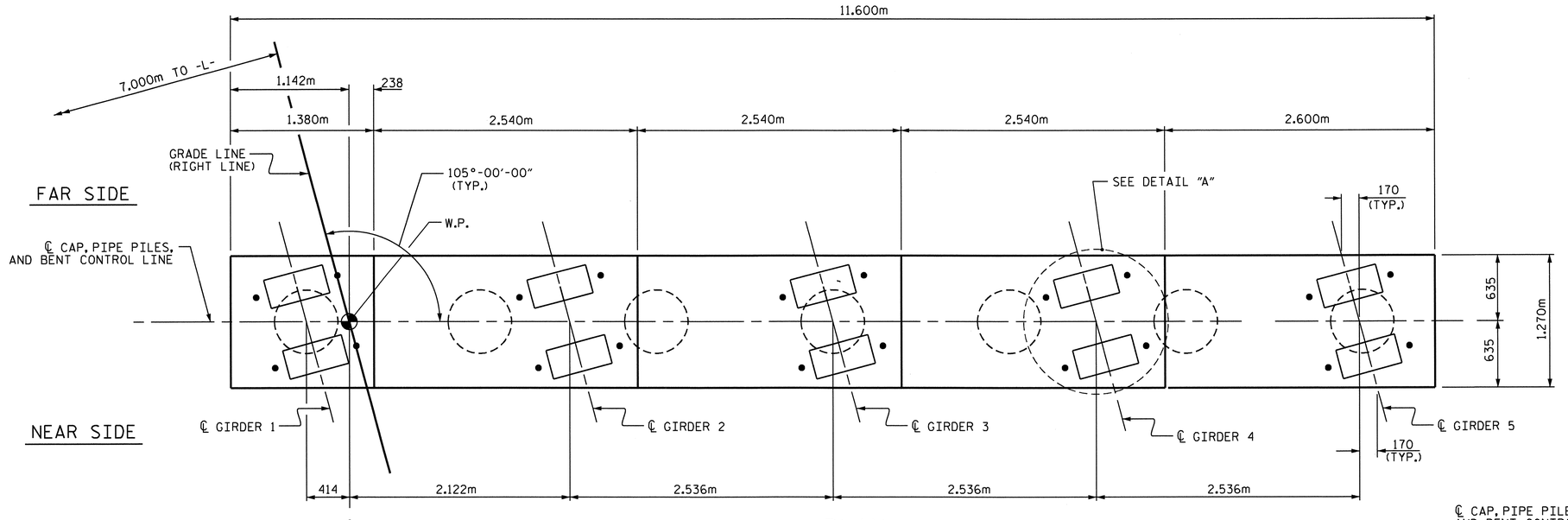

PLAN

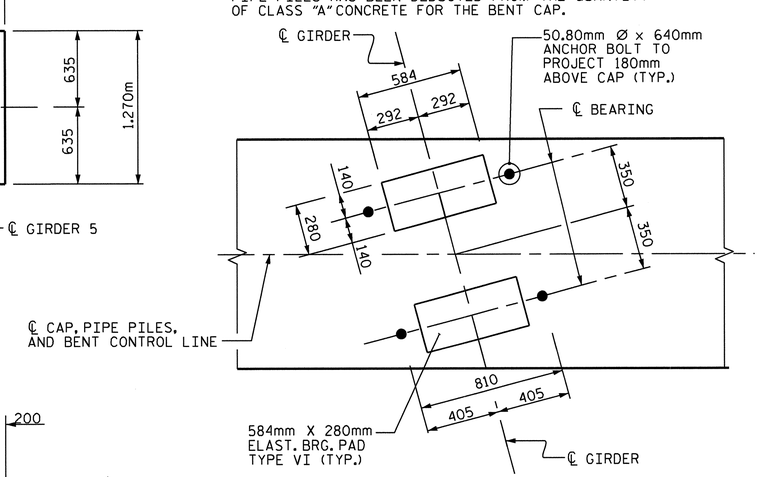

DETAIL "A"

TYP. EACH GIRDER (PIPE PILE NOT SHOWN)

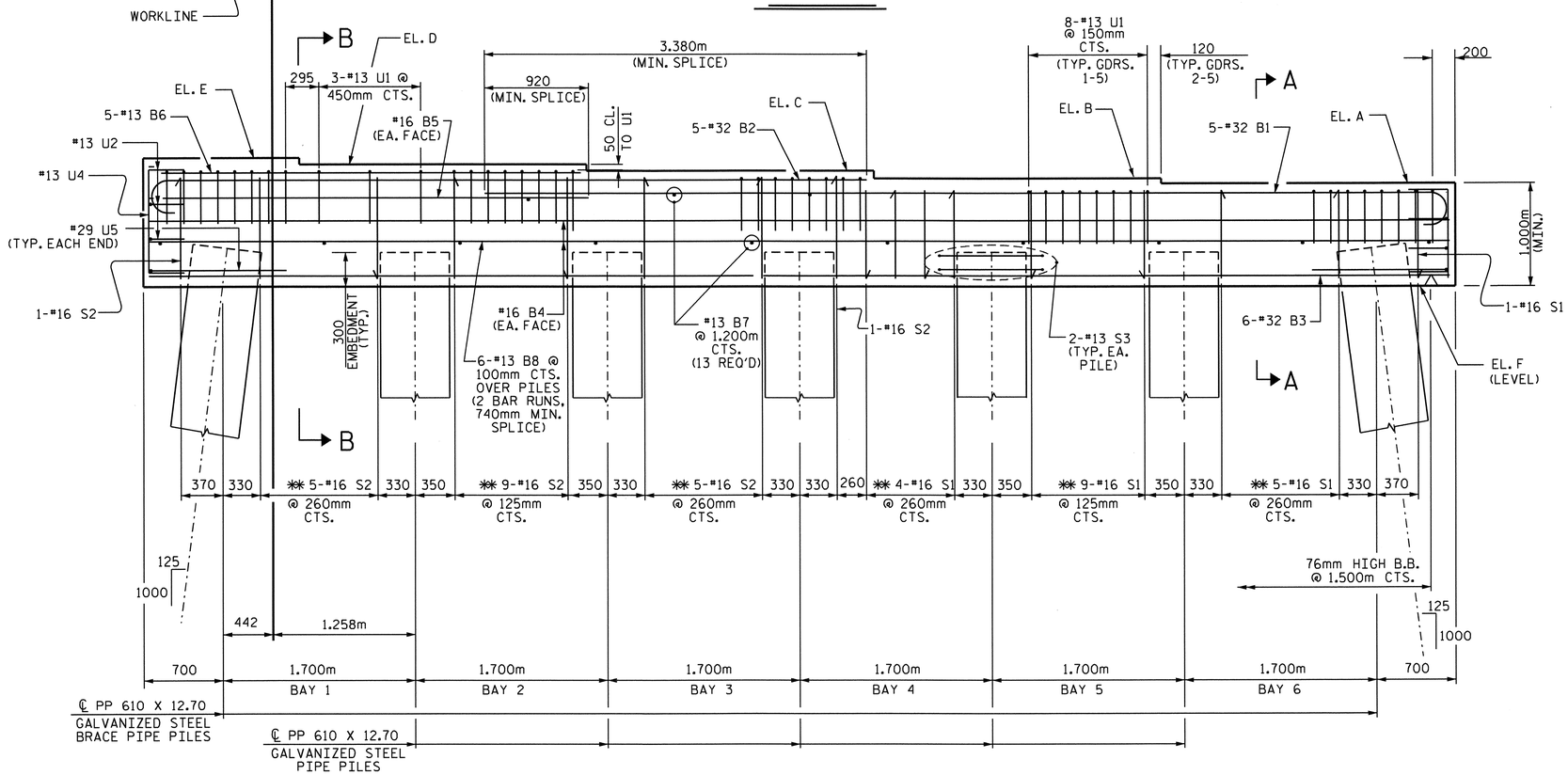

ELEVATION

✱✱ INVERT ALTERNATE STIRRUPS.

	ELEVATIONS					
	A	B	C	D	E	F
BENT #5	30.020	30.089	30.158	30.226	30.295	29.020
BENT #6	30.358	30.423	30.489	30.555	30.620	29.358
BENT #15	28.028	28.087	28.146	28.204	28.263	27.028
BENT #16	27.889	27.948	28.006	28.065	28.124	26.889
BENT #17	27.753	27.812	27.871	27.929	27.988	26.753

PROJECT NO. R-2554A

WAYNE COUNTY

STATION: 70+24.000 -L-

SHEET 1 OF 2

STATE OF NORTH CAROLINA
DEPARTMENT OF TRANSPORTATION
RALEIGH

SUBSTRUCTURE

BENTS #5, #6, #15-#17

(RIGHT LANE)

NORTH CAROLINA PROFESSIONAL SEAL 14045 ENGINEER TIMOTHY L. COGGINS
03/23/12

REVISIONS						SHEET NO.
NO.	BY:	DATE:	NO.	BY:	DATE:	S-177
1			3			TOTAL SHEETS
2			4			276

STR. #4

DRAWN BY : M.L. RORIE DATE : 1-6-12
CHECKED BY : A.M. LEE DATE : 1-20-12

23-MAR-2012 12:29
Z:\TIPProjects-R\R2554A\Structures\FinalPlans\Str#4\r2554a_sd_b#_04.dgn
padkins

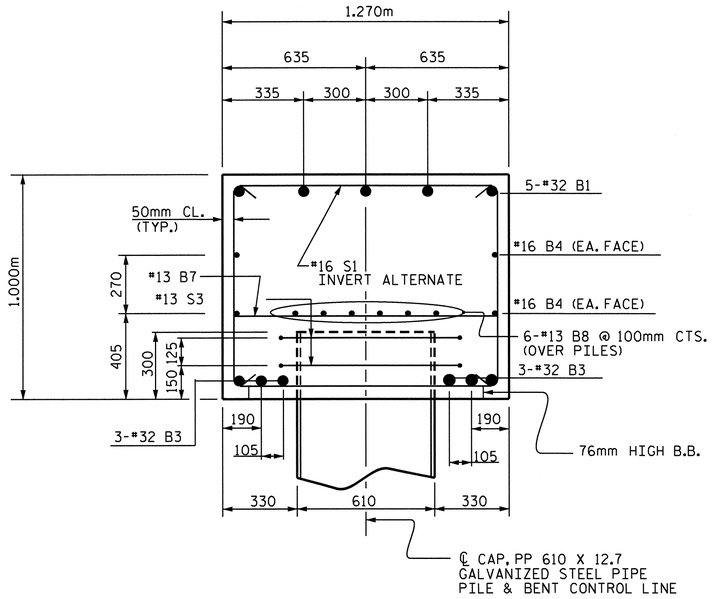

SECTION A-A

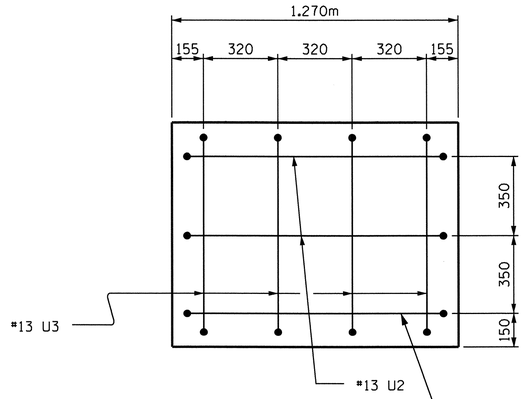

END VIEW

(RIGHT SIDE)

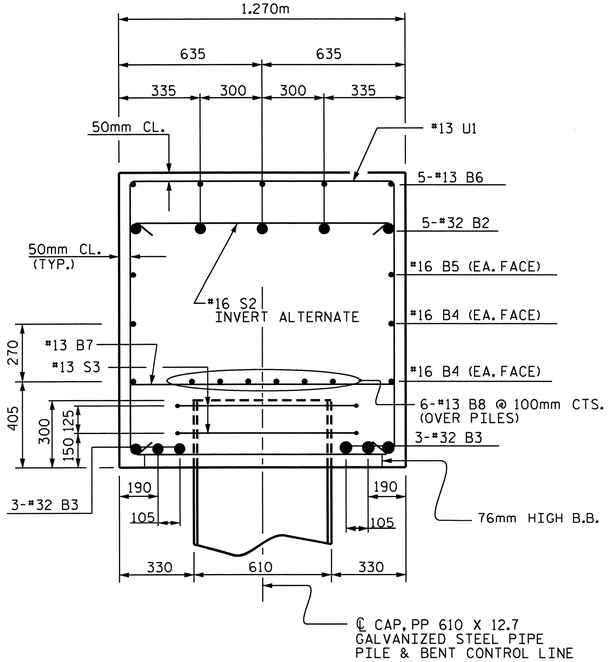

SECTION B-B

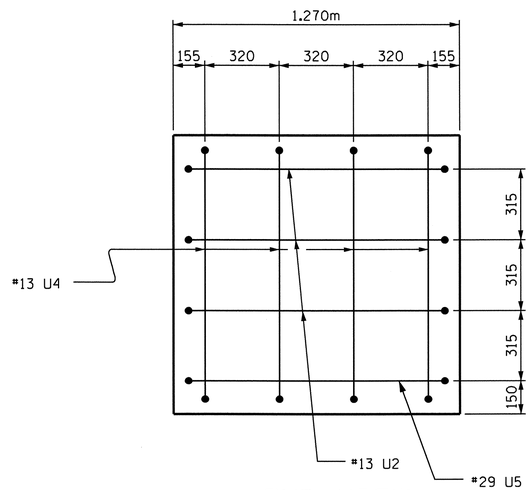

END VIEW

(LEFT SIDE)

BAR TYPES

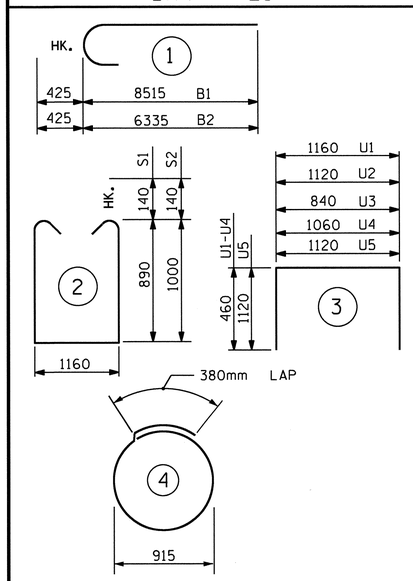

ALL BAR DIMENSIONS ARE OUT TO OUT.

✳ CONCRETE DISPLACED BY THE FILLED 610mm STEEL PIPE PILES HAS BEEN DEDUCTED FROM THE QUANTITY OF CLASS "A" CONCRETE FOR THE BENT CAP.

BILL OF MATERIAL

REINFORCING STEEL FOR ONE BENT ONLY

BAR	NO.	SIZE	TYPE	LENGTH	WEIGHT
B1	5	#32	1	8940	286
B2	5	#32	1	6760	216
B3	6	#32	STR.	11480	441
B4	4	#16	STR.	11500	71
B5	2	#16	STR.	3900	12
B6	5	#13	STR.	3820	19
B7	13	#13	STR.	1160	15
B8	12	#13	STR.	6120	73
S1	19	#16	2	3220	95
S2	21	#16	2	3440	112
S3	14	#13	4	3260	45
U1	43	#13	3	2080	89
U2	5	#13	3	2040	10
U3	4	#13	3	1760	7
U4	4	#13	3	1980	8
U5	2	#29	3	3360	34

TOTAL REINFORCING STEEL kg 1533

PILE REDRIVES EA. 3

CLASS A CONCRETE

POUR #1 (CAP) ✳

BENT #5	m^3	15.9
BENT #6	m^3	15.8
BENT #15	m^3	15.5
BENT #16	m^3	15.5
BENT #17	m^3	15.5

PP 610 X 12.70 GALVANIZED STEEL PIPE PILES

BENT #5	NO. 7	LIN. METERS	128.1
BENT #6	NO. 7	LIN. METERS	128.1
BENT #15	NO. 7	LIN. METERS	106.4
BENT #16	NO. 7	LIN. METERS	95.9
BENT #17	NO. 7	LIN. METERS	95.9

PIPE PILE PLATES

BENT #5	EA.	0
BENT #6	EA.	0
BENT #15	EA.	7
BENT #16	EA.	7
BENT #17	EA.	7

PROJECT NO. R-2554A
WAYNE COUNTY
STATION: 70+24.000 -L-

SHEET 2 OF 2

STATE OF NORTH CAROLINA
DEPARTMENT OF TRANSPORTATION
RALEIGH

SUBSTRUCTURE

BENTS 5, 6, 15-17

(RIGHT LANE)

NORTH CAROLINA PROFESSIONAL SEAL 14045 ENGINEER TIMOTHY W. COLGRINS
03/23/12

REVISIONS						SHEET NO.
NO.	BY:	DATE:	NO.	BY:	DATE:	S-178
1			3			TOTAL SHEETS
2			4			276

DRAWN BY : M.L. RORIE DATE : 12-28-11
CHECKED BY : A.M. LEE DATE : 1-20-12

23-MAR-2012 12:29
Z:\TIPProjects-R\R2554A\Structures\Final Plans\Str#4\r2554a_sd_b#_04.dgn

STR.#4

NOTES

STIRRUPS AND U1 BARS IN CAP MAY BE SHIFTED AS NECESSARY TO CLEAR ANCHOR BOLTS.

THE TOP SURFACE AREAS OF INTERIOR BENTS #8, #10, #12 AND #14 SHALL BE CURED IN ACCORDANCE WITH THE STANDARD SPECIFICATIONS EXCEPT THE MEMBRANE CURING COMPOUND METHOD SHALL NOT BE USED.

AS A MINIMUM, GALVANIZE THE TOP OF EACH INTERIOR BENT PILE AS LISTED. GALVANIZE IN ACCORDANCE WITH SECTION 1076 OF THE STANDARD SPECIFICATIONS. BENT #7-11.4m; BENT #8-10.4m; BENT #9-12.9m; BENT #10-11.7m; BENT #11-10.8m; BENT #12-9.0m; BENT #13-8.7m; BENT #14-8.2m.

FOR REINFORCING STEEL IN PIPE PILES, SEE "762mm STEEL PIPE PILE" SHEET.

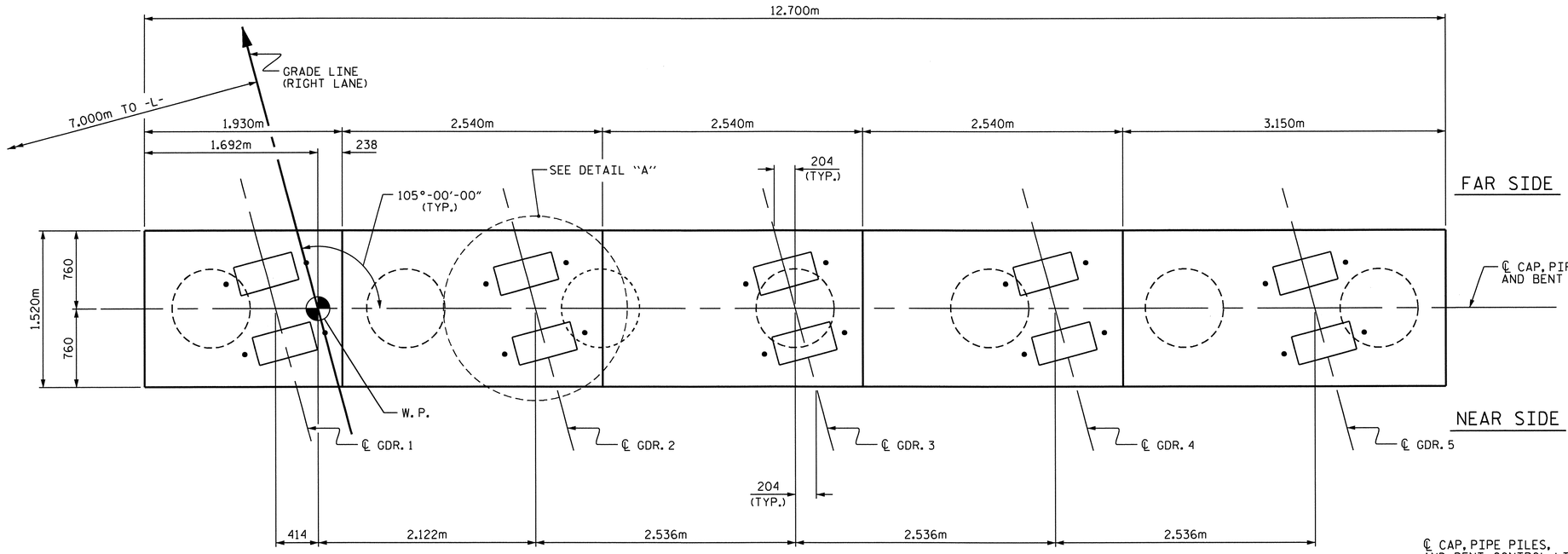

PLAN

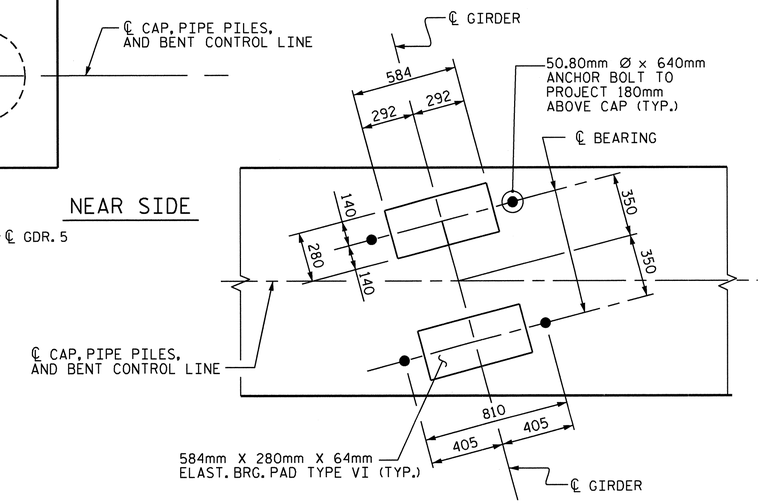

DETAIL "A"

TYP. EACH GIRDER (PIPE PILE NOT SHOWN)

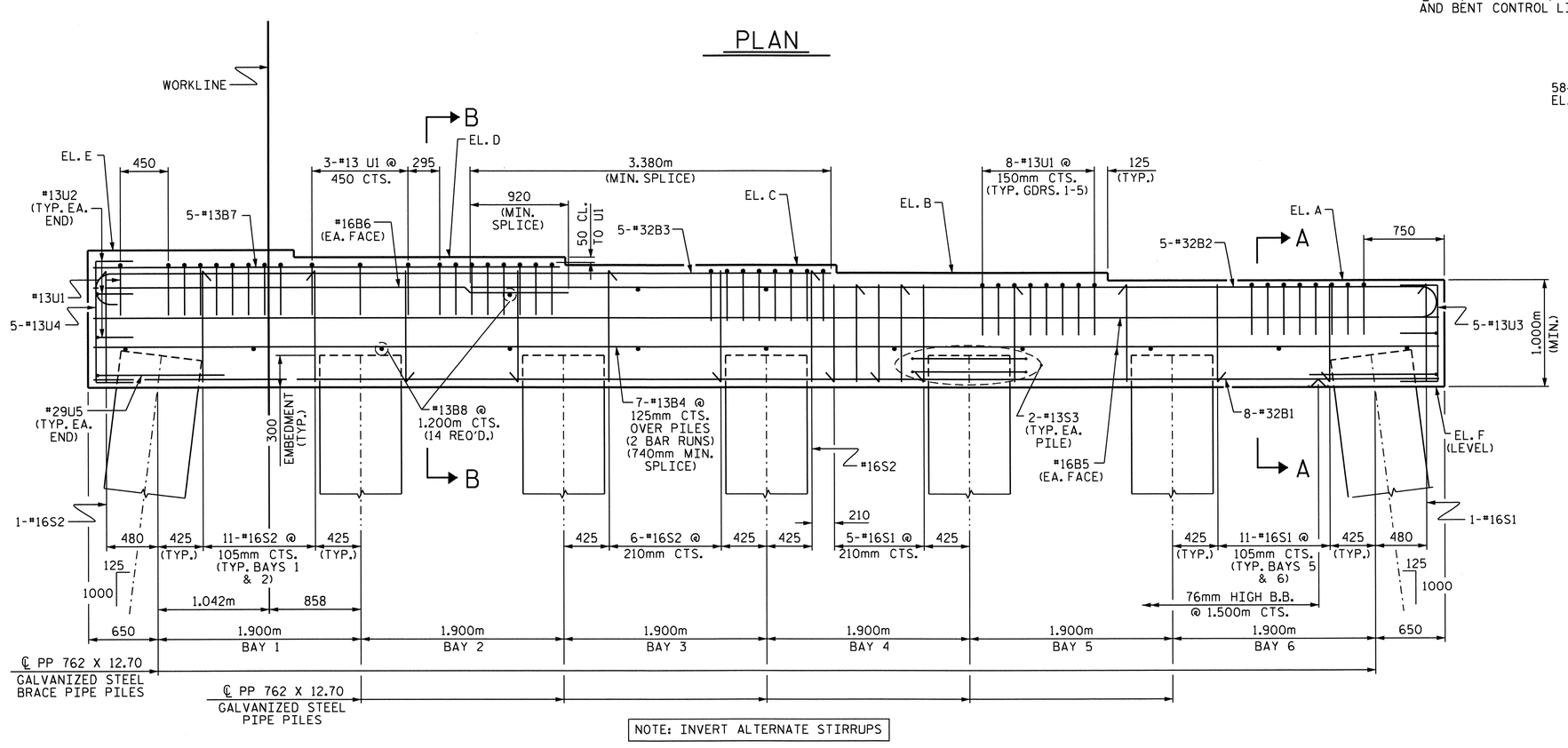

NOTE: INVERT ALTERNATE STIRRUPS

ELEVATION

	ELEVATIONS					
	A	B	C	D	E	F
BENT #7	30.521	30.584	30.646	30.709	30.771	29.521
BENT #8	30.507	30.566	30.626	30.685	30.744	29.507
BENT #9	30.319	30.375	30.431	30.488	30.544	29.319
BENT #10	29.955	30.008	30.061	30.114	30.167	28.955
BENT #11	29.418	29.468	29.518	29.568	29.617	28.418
BENT #12	28.858	28.910	28.962	29.015	29.067	27.858
BENT #13	28.444	28.499	28.554	28.609	28.665	27.444
BENT #14	28.178	28.236	28.293	28.351	28.409	27.178

PROJECT NO. R-2554A

WAYNE COUNTY

STATION: 70+24.000 -L-

SHEET 1 OF 2

STATE OF NORTH CAROLINA
DEPARTMENT OF TRANSPORTATION
RALEIGH

SUBSTRUCTURE

BENTS #7-#14

(RIGHT LANE)

NORTH CAROLINA PROFESSIONAL SEAL 14045 ENGINEER TIMOTHY W. COCCONI

08/23/12

REVISIONS						SHEET NO.
NO.	BY:	DATE:	NO.	BY:	DATE:	S-179
1			3			TOTAL SHEETS
2			4			276

DRAWN BY : B. L. GREEN DATE : 1/17/12
CHECKED BY : O. PUIGCERVER DATE : 1/19/12

23-MAR-2012 12:29
Z:\TIPProjects-R\R2554A\Structures\FinalPlans\Str#4\r2554a_sd_b#_04.dgn
padkins

STR. #4

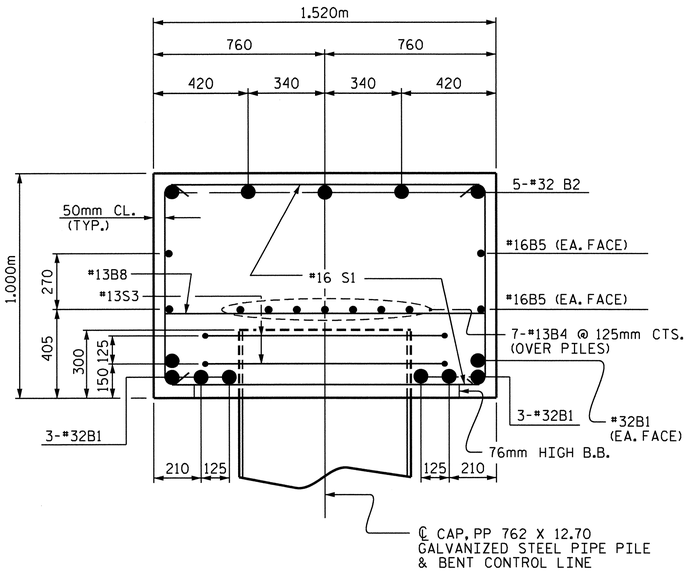

SECTION A-A

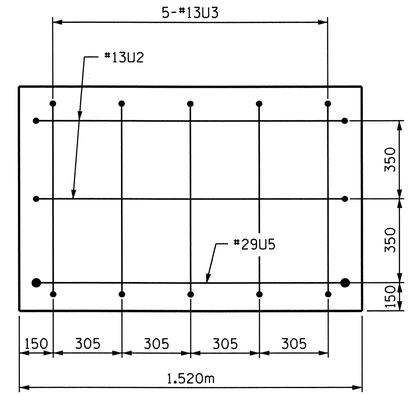

END VIEW

(RIGHT SIDE)

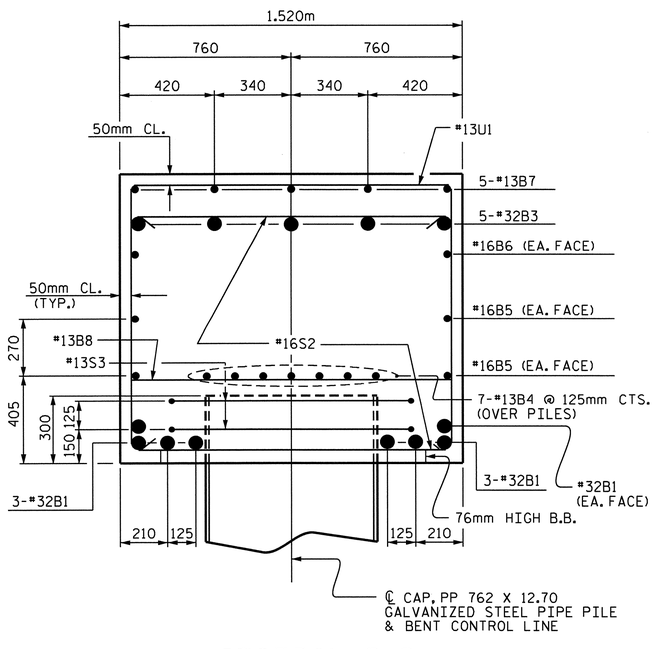

SECTION B-B

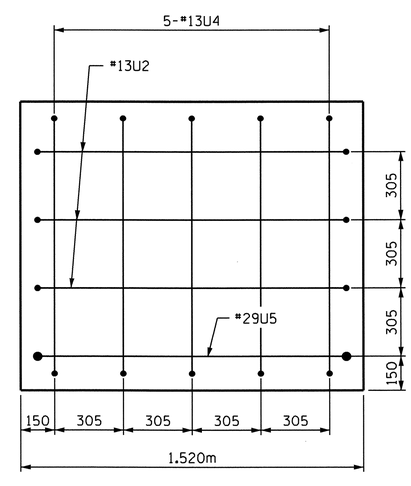

END VIEW

(LEFT SIDE)

BAR TYPES

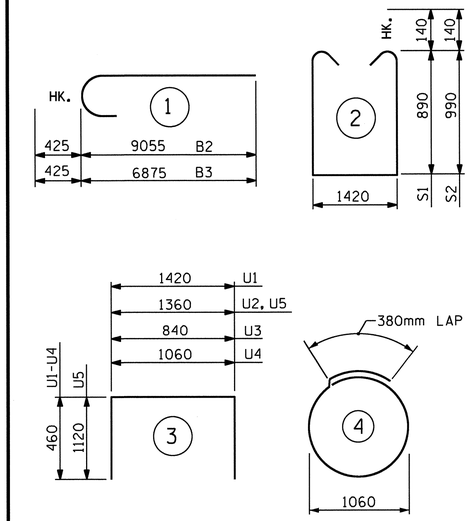

ALL BAR DIMENSIONS ARE OUT TO OUT.

BILL OF MATERIAL FOR ONE BENT

BAR	NO.	SIZE	TYPE	LENGTH	WEIGHT
B1	8	#32	STR	12580	644
B2	5	#32	1	9480	304
B3	5	#32	1	7300	234
B4	14	#13	STR	6680	93
B5	4	#16	STR	12600	78
B6	2	#16	STR	4460	14
B7	5	#13	STR	4360	22
B8	14	#13	STR	1420	20
S1	28	#16	2	3480	151
S2	30	#16	2	3680	171
S3	14	#13	4	3720	52
U1	44	#13	3	2340	102
U2	5	#13	3	2280	11
U3	5	#13	3	1760	9
U4	5	#13	3	1980	10
U5	2	#29	3	3600	36
REINFORCING STEEL					1951 kg

CLASS A CONCRETE

POUR #1 (CAP) ✱		
BENT #7	m^3	20.5
BENT #8	m^3	20.4
BENT #9	m^3	20.3
BENT #10	m^3	20.2
BENT #11	m^3	20.1
BENT #12	m^3	20.2
BENT #13	m^3	20.3
BENT #14	m^3	20.4

✱ CONCRETE DISPLACED BY THE FILLED 762mm STEEL PIPE PILES HAS BEEN DEDUCTED FROM THE QUANTITY OF CLASS "A" CONCRETE FOR THE BENT CAP.

PP 762 X 12.70 GALVANIZED STEEL PIPE PILES

BENT #7	NO. 7	LIN. METERS 128.1
BENT #8	NO. 7	LIN. METERS 128.1
BENT #9	NO. 7	LIN. METERS 149.1
BENT #10	NO. 7	LIN. METERS 149.1
BENT #11	NO. 7	LIN. METERS 149.1
BENT #12	NO. 7	LIN. METERS 128.1
BENT #13	NO. 7	LIN. METERS 128.1
BENT #14	NO. 7	LIN. METERS 128.1

PILE REDRIVES	EACH
BENT #7	3
BENT #8	3
BENT #9	3
BENT #10	3
BENT #11	3
BENT #12	3
BENT #13	4
BENT #14	4

PROJECT NO. R-2554A

WAYNE COUNTY

STATION: 70+24.000 -L-

SHEET 2 OF 2

STATE OF NORTH CAROLINA
DEPARTMENT OF TRANSPORTATION
RALEIGH

SUBSTRUCTURE

BENTS #7-#14

(RIGHT LANE)

NORTH CAROLINA PROFESSIONAL SEAL 14045 ENGINEER TIMOTHY K. COGGINS

03/28/12

REVISIONS						SHEET NO.
NO.	BY:	DATE:	NO.	BY:	DATE:	S-180
1			3			TOTAL SHEETS
2			4			276

STR. #4

DRAWN BY : B. L. GREEN DATE : 1/17/12
CHECKED BY : O. PUIGCERVER DATE : 1/19/12

23-MAR-2012 12:29
Z:\TIPProjects-R\R2554A\Structures\FinalPlans\Str#4\r2554a_sd_b#_04.dgn
padkins

NOTES

STIRRUPS AND U1 BARS IN CAP MAY BE SHIFTED AS NECESSARY TO CLEAR ANCHOR BOLTS.

THE TOP SURFACE AREAS OF INTERIOR BENTS #18 AND #20 SHALL BE CURED IN ACCORDANCE WITH THE STANDARD SPECIFICATIONS EXCEPT THE MEMBRANE CURING COMPOUND METHOD SHALL NOT BE USED.

AS A MINIMUM, GALVANIZE THE TOP OF EACH INTERIOR BENT PILE AS LISTED. GALVANIZE IN ACCORDANCE WITH SECTION 1076 OF THE STANDARD SPECIFICATIONS. BENT #18-7.7m; BENT #19-7.3m; BENT #20-7.2m; BENT #21-6.9m.

FOR REINFORCING STEEL IN PIPE PILES, SEE "457mm STEEL PIPE PILE" SHEET.

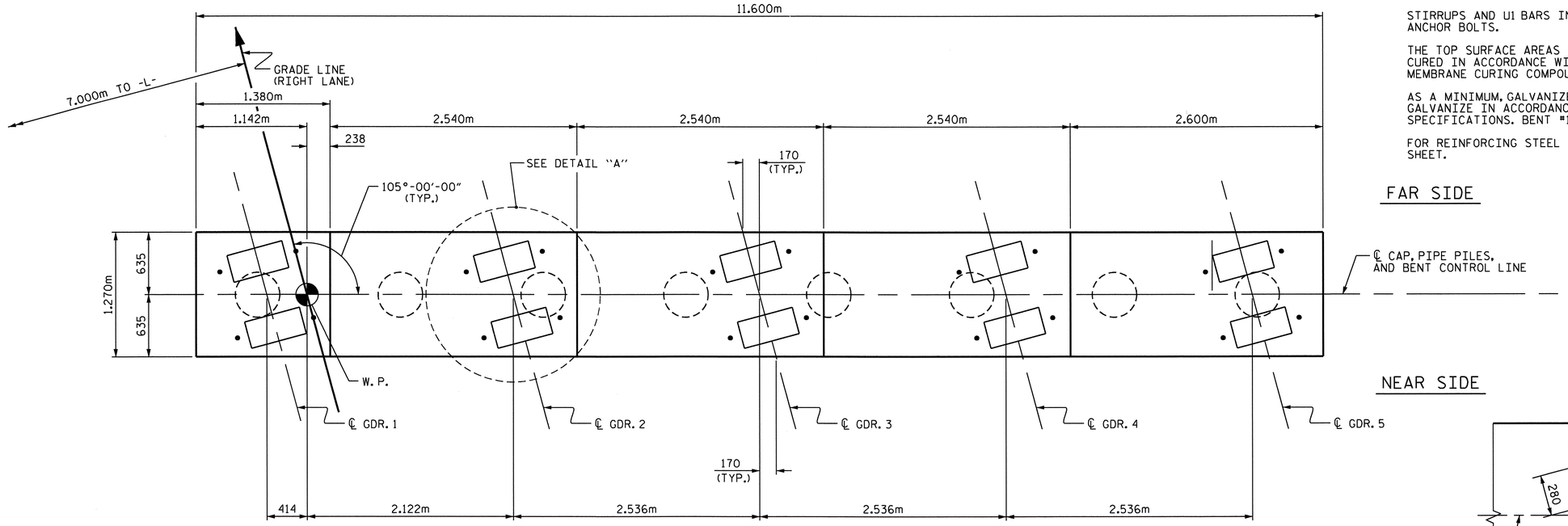

FAR SIDE

NEAR SIDE

PLAN

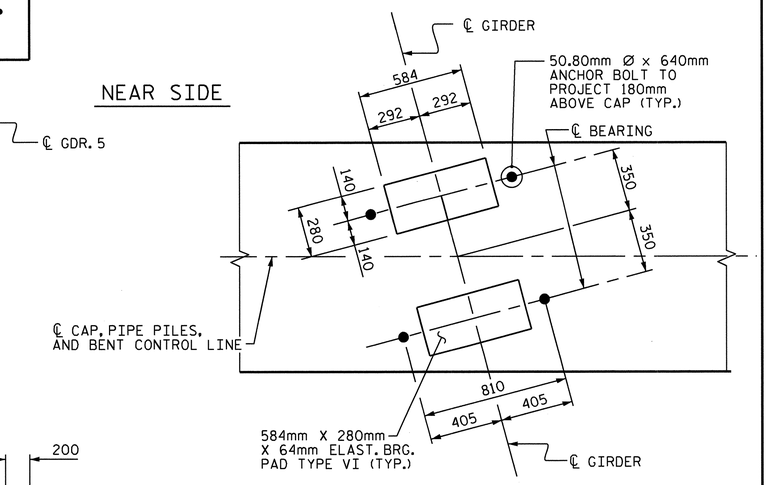

DETAIL "A"

TYP. EACH GIRDER
(PIPE PILE NOT SHOWN)

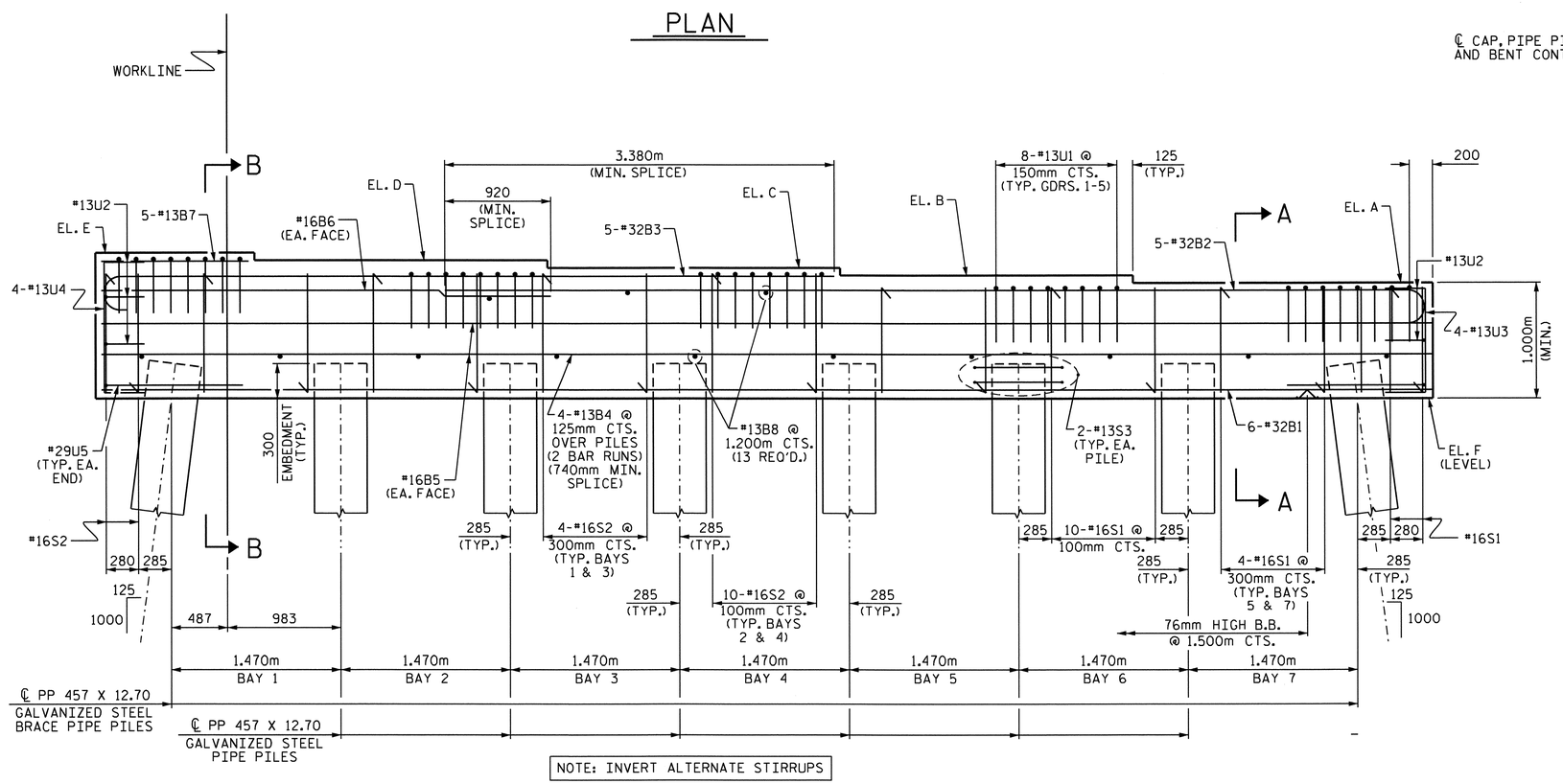

NOTE: INVERT ALTERNATE STIRRUPS

ELEVATION

	ELEVATIONS					
	A	B	C	D	E	F
BENT #18	27.618	27.676	27.735	27.794	27.853	26.618
BENT #19	27.482	27.541	27.600	27.658	27.717	26.482
BENT #20	27.347	27.405	27.464	27.523	27.581	26.347
BENT #21	27.211	27.270	27.328	27.387	27.446	26.211

PROJECT NO. R-2554A

WAYNE COUNTY

STATION: 70+24.000 -L-

SHEET 1 OF 2

STATE OF NORTH CAROLINA
DEPARTMENT OF TRANSPORTATION
RALEIGH

SUBSTRUCTURE

BENTS #18-#21

(RIGHT LANE)

NORTH CAROLINA PROFESSIONAL SEAL 14045 ENGINEER TIMOTHY W. COCCONS

03/23/12

REVISIONS						SHEET NO.
NO.	BY:	DATE:	NO.	BY:	DATE:	S-181
1			3			TOTAL SHEETS
2			4			276

STR. #4

DRAWN BY : B. L. GREEN DATE : 1/17/12
CHECKED BY : O. PUIGCERVER DATE : 1/23/12

23-MAR-2012 12:29
Z:\TIPProjects-R\R2554A\Structures\FinalPlans\Str#4\r2554a_sd_b#_04.dgn
padkins

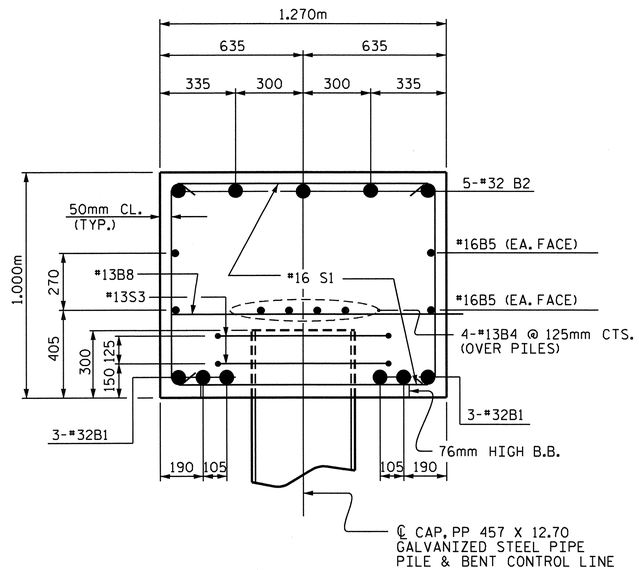

SECTION A-A

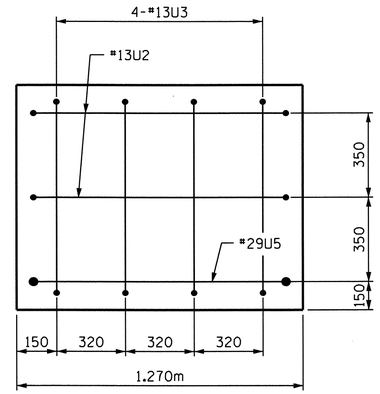

END VIEW

(RIGHT SIDE)

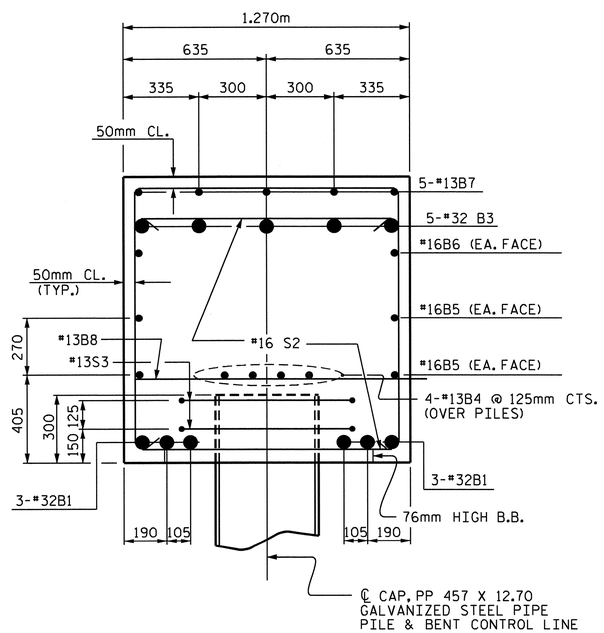

SECTION B-B

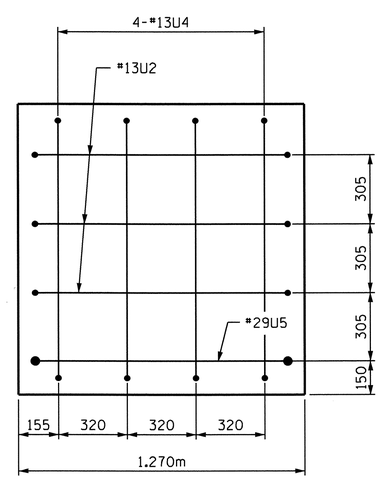

END VIEW

(LEFT SIDE)

BAR TYPES

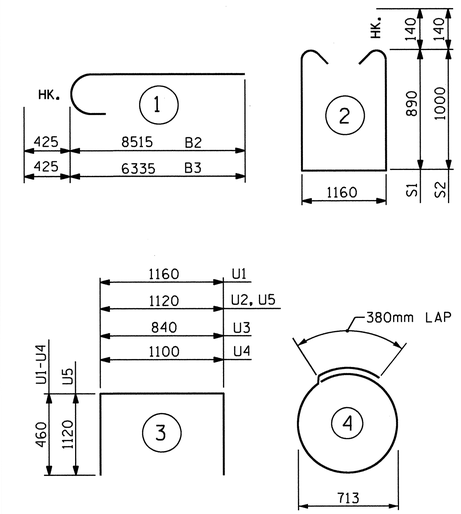

ALL BAR DIMENSIONS ARE OUT TO OUT.

BILL OF MATERIAL FOR ONE BENT

BAR	NO.	SIZE	TYPE	LENGTH	WEIGHT
B1	6	#32	STR	11480	441
B2	5	#32	1	8940	286
B3	5	#32	1	6760	216
B4	8	#13	STR	6120	49
B5	4	#16	STR	11500	71
B6	2	#16	STR	3900	12
B7	5	#13	STR	1280	6
B8	13	#13	STR	1160	15
S1	20	#16	2	3220	100
S2	30	#16	2	3440	160
S3	16	#13	4	2620	42
U1	40	#13	3	2080	83
U2	5	#13	3	2040	10
U3	4	#13	3	1760	7
U4	4	#13	3	2020	8
U5	2	#29	3	3360	34
REINFORCING STEEL					1540 kg

CLASS A CONCRETE BREAKDOWN

POUR #1 (CAP) ✱	m^3	15.9
TOTAL CLASS A CONCRETE	m^3	15.9

PP 457 X 12.70 GALVANIZED STEEL PIPE PILES

NO. 8 LIN. METERS 109.6

PIPE PILE PLATES	EA.	8
PILE REDRIVES	EA.	4

✱ CONCRETE DISPLACED BY THE FILLED 457mm STEEL PIPE PILES HAS BEEN DEDUCTED FROM THE QUANTITY OF CLASS "A" CONCRETE FOR THE BENT CAP.

PROJECT NO. R-2554A

WAYNE COUNTY

STATION: 70+24.000 -L-

SHEET 2 OF 2

STATE OF NORTH CAROLINA
DEPARTMENT OF TRANSPORTATION
RALEIGH

SUBSTRUCTURE

BENTS #18-#21

(RIGHT LANE)

NORTH CAROLINA PROFESSIONAL SEAL 14045 ENGINEER TIMOTHY W. COGGINS

03/23/12

REVISIONS						SHEET NO.
NO.	BY:	DATE:	NO.	BY:	DATE:	S-182
1			3			TOTAL SHEETS
2			4			276

DRAWN BY : B. L. GREEN DATE : 1/17/12
CHECKED BY : O. PUIGCERVER DATE : 1/23/12

23-MAR-2012 12:28
Z:\TIPProjects-R\R2554A\Structures\FinalPlans\Str#4\r2554a_sd_b#_04.dgn
padkins

STR. #4

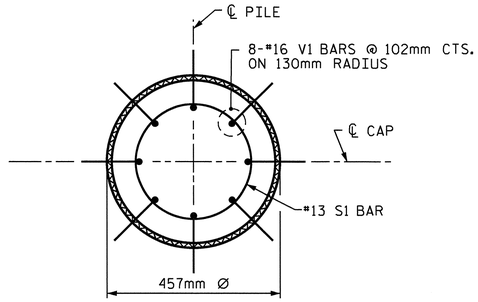

PLAN

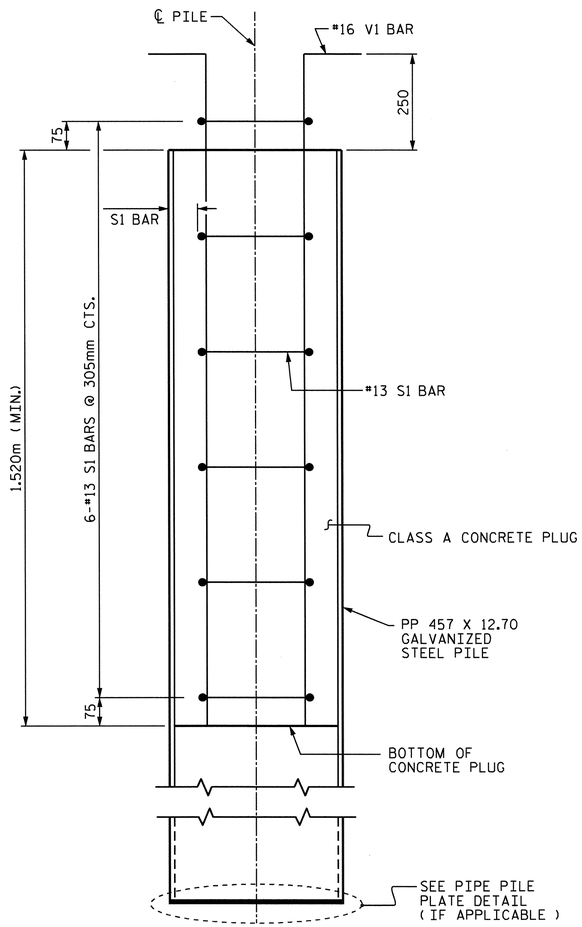

ELEVATION

PP 457 X 12.70 GALVANIZED STEEL PILE

(OPEN OR CLOSED END)

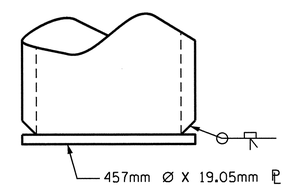

PIPE PILE PLATE DETAIL

(IF APPLICABLE)

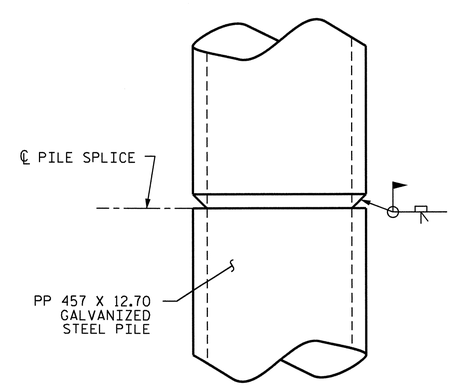

PIPE PILE SPLICE DETAIL

NOTES

PIPE PILES SHALL BE IN ACCORDANCE WITH SECTION 1084 OF THE STANDARD SPECIFICATIONS.

GALVANIZE STEEL PIPE PILES IN ACCORDANCE WITH SECTION 1076 OF THE STANDARD SPECIFICATIONS UNLESS METALLIZING IS REQUIRED. GALVANIZING OR METALLIZING PIPE PILE PLATES IS NOT REQUIRED.

PIPE PILE PLATES, IF REQUIRED, SHALL BE IN ACCORDANCE WITH SECTION 450 OF THE STANDARD SPECIFICATIONS.

REMOVE AND REPLACE OR REPAIR TO THE SATISFACTION OF THE ENGINEER PILES THAT ARE DAMAGED, DEFORMED OR COLLAPSED DURING INSTALLATION OR DRIVING.

PILE SPLICES SHALL BE IN ACCORDANCE WITH THE STANDARD SPECIFICATIONS AND AWS D1.1.

FOR CLOSED END PIPE PILES, REMOVE ALL SOIL AND WATER FROM INSIDE THE PILES JUST PRIOR TO PLACING REINFORCING STEEL AND CONCRETE FOR THE CONCRETE PLUG.

FOR OPEN END PIPE PILES, REMOVE ENOUGH SOIL AND WATER FROM INSIDE THE PILES TO CONSTRUCT THE CONCRETE PLUG WITHOUT FOULING THE CONCRETE.

FORM THE CONCRETE PLUG SUCH THAT THE REINFORCING STEEL OR CONCRETE DOES NOT MOVE AND THE CLEARANCE FROM THE REINFORCING STEEL TO THE INSIDE OF THE PILE IS MAINTAINED AFTER CONCRETE PLACEMENT. DO NOT PLACE CONCRETE IN THE BENT CAP UNTIL THE CONCRETE PLUG HAS ATTAINED A MINIMUM COMPRESSIVE STRENGTH OF 10.3 MPa.

THE REINFORCING STEEL, CLASS A CONCRETE, AND GALVANIZING ARE CONSIDERED INCIDENTAL TO THE CONTRACT UNIT PRICE BID PER METER FOR PP 457 X 12.70 GALVANIZED STEEL PILES.

BILL OF MATERIAL FOR ONE PP 457 X 12.70 GALVANIZED STEEL PILE

BAR	NO.	SIZE	TYPE	LENGTH	WEIGHT
S1	6	#13	1	1340	8
V1	8	#16	2	2020	25
REINFORCING STEEL =					33 kg
CLASS A CONCRETE					
1.520m MINIMUM PLUG					0.2 CU. METER

BAR TYPES

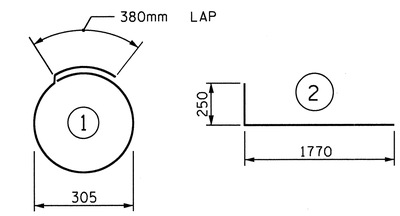

ALL BAR DIMENSIONS ARE OUT TO OUT.

PROJECT NO. R-2554A
WAYNE COUNTY
STATION: 70+24.000 -L-

STATE OF NORTH CAROLINA
DEPARTMENT OF TRANSPORTATION
RALEIGH

STANDARD

457mm STEEL PIPE PILE

(RIGHT LANE)

NORTH CAROLINA PROFESSIONAL SEAL 14045 ENGINEER TIMOTHY L. CODDINS
03/23/12

REVISIONS						SHEET NO.
NO.	BY:	DATE:	NO.	BY:	DATE:	S-183
1			3			TOTAL SHEETS
2			4			276

ASSEMBLED BY : B. L. GREEN DATE : 1/17/12
CHECKED BY : O. PUIGCERVER DATE : 1/23/12

DRAWN BY : RWW 1/01
CHECKED BY : LES 1/01

REV. 10/1/05 LBG/TLA
REV. 5/1/06R MAA/KMM
REV. 10/1/11 MAA/GM

STR. #4 STD. NO. SPP3SM

23-MAR-2012 12:28
Z:\TIPProjects-R\R2554A\Structures\FinalPlans\Str#4\r2554a_sd_b#_04.dgn
padkins

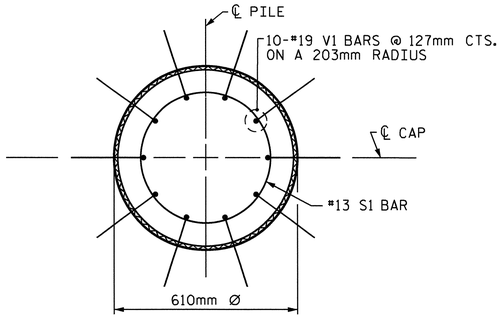

PLAN

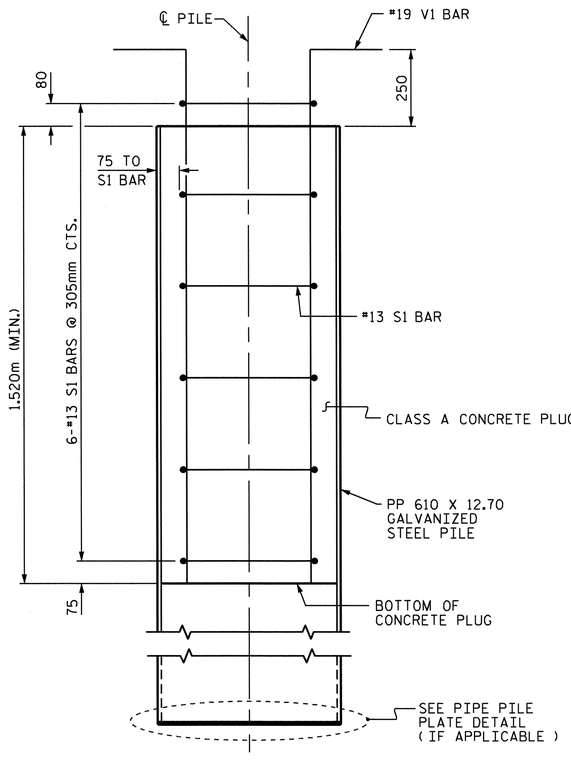

ELEVATION

PP 610 X 12.70 GALVANIZED STEEL PILE

(OPEN OR CLOSED END)

NOTES

PIPE PILES SHALL BE IN ACCORDANCE WITH SECTION 1084 OF THE STANDARD SPECIFICATIONS.

GALVANIZE STEEL PIPE PILES IN ACCORDANCE WITH SECTION 1076 OF THE STANDARD SPECIFICATIONS UNLESS METALLIZING IS REQUIRED. GALVANIZING OR METALLIZING PIPE PILE PLATES IS NOT REQUIRED.

PIPE PILE PLATES, IF REQUIRED, SHALL BE IN ACCORDANCE WITH SECTION 450 OF THE STANDARD SPECIFICATIONS.

REMOVE AND REPLACE OR REPAIR TO THE SATISFACTION OF THE ENGINEER PILES THAT ARE DAMAGED, DEFORMED OR COLLAPSED DURING INSTALLATION OR DRIVING.

PILE SPLICES SHALL BE IN ACCORDANCE WITH THE STANDARD SPECIFICATIONS AND AWS D1.1.

FOR CLOSED END PIPE PILES, REMOVE ALL SOIL AND WATER FROM INSIDE THE PILES JUST PRIOR TO PLACING REINFORCING STEEL AND CONCRETE FOR THE CONCRETE PLUG.

FOR OPEN END PIPE PILES, REMOVE ENOUGH SOIL AND WATER FROM INSIDE THE PILES TO CONSTRUCT THE CONCRETE PLUG WITHOUT FOULING THE CONCRETE.

FORM THE CONCRETE PLUG SUCH THAT THE REINFORCING STEEL OR CONCRETE DOES NOT MOVE AND THE CLEARANCE FROM THE REINFORCING STEEL TO THE INSIDE OF THE PILE IS MAINTAINED AFTER CONCRETE PLACEMENT. DO NOT PLACE CONCRETE IN THE BENT CAP UNTIL THE CONCRETE PLUG HAS ATTAINED A MINIMUM COMPRESSIVE STRENGTH OF 10.3 MPa.

THE REINFORCING STEEL, CLASS A CONCRETE, AND GALVANIZING ARE CONSIDERED INCIDENTAL TO THE CONTRACT UNIT PRICE BID PER METER FOR PP 610 X 12.70 GALVANIZED STEEL PILES.

BILL OF MATERIAL FOR ONE PP 610 X 12.70 GALVANIZED STEEL PILE

BAR	NO.	SIZE	TYPE	LENGTH	WEIGHT
S1	6	#13	1	1840	11
V1	10	#16	2	2020	45
REINFORCING STEEL =					56 kg
CLASS A CONCRETE					
1.520m MINIMUM PLUG					0.4 CU. METER

BAR TYPES

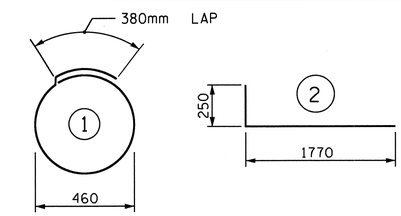

ALL BAR DIMENSIONS ARE OUT TO OUT.

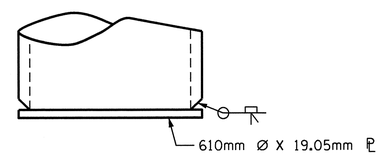

PIPE PILE PLATE DETAIL

(IF APPLICABLE)

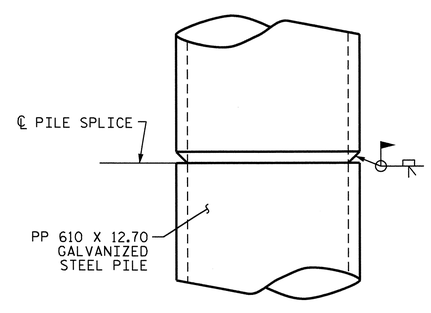

PIPE PILE SPLICE DETAIL

PROJECT NO. R-2554A

WAYNE COUNTY

STATION: 70+24.000 -L-

STATE OF NORTH CAROLINA
DEPARTMENT OF TRANSPORTATION
RALEIGH

STANDARD

610mm STEEL
PIPE PILE
(RIGHT LANE)

NORTH CAROLINA PROFESSIONAL SEAL 14045 ENGINEER TIMOTHY W. COSGRIFF
03/23/12

REVISIONS						SHEET NO.
NO.	BY:	DATE:	NO.	BY:	DATE:	S-184
1			3			TOTAL SHEETS
2			4			276

ASSEMBLED BY :	M.L. RORIE	DATE :	1-6-12
CHECKED BY :	A.M. LEE	DATE :	1-20-12
DRAWN BY : TLA 8/05	ADDED 10/1/05		
CHECKED BY : GM 9/05	REV. 5/1/06R MAA/KMM		

23-MAR-2012 12:30
Z:\TIPProjects-R\R2554A\Structures\FinalPlans\Str#4\r2554a_sd_b#_04.dgn
padkins

STR. #4 STD. NO. SPP4SM

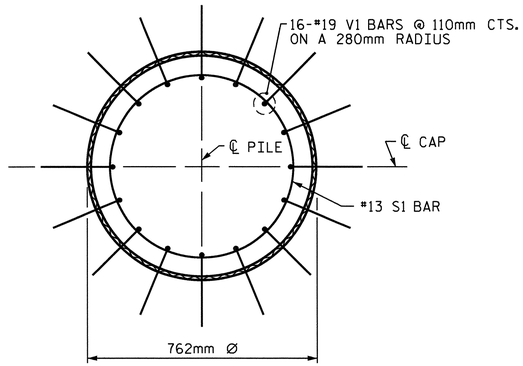

PLAN

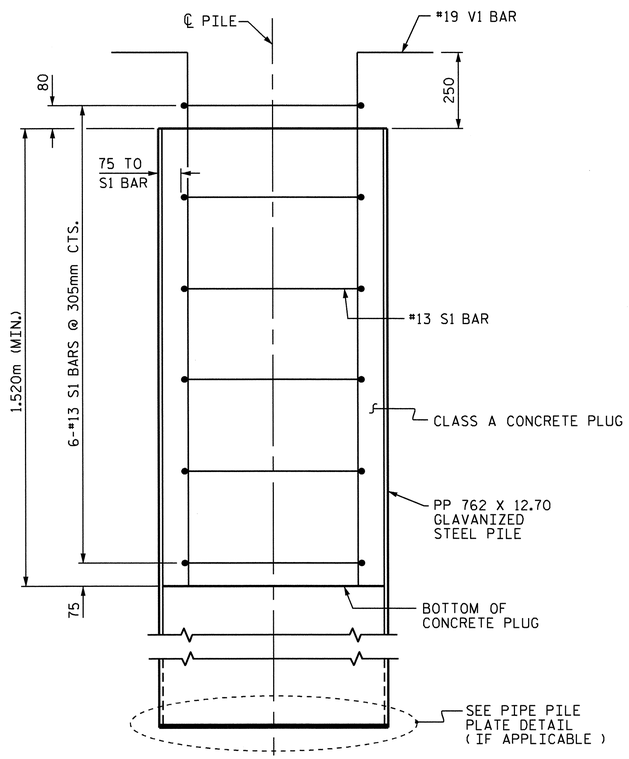

ELEVATION

PP 762 X 12.70 GALVANIZED STEEL PILE

(OPEN OR CLOSED END)

NOTES

PIPE PILES SHALL BE IN ACCORDANCE WITH SECTION 1084 OF THE STANDARD SPECIFICATIONS.

GALVANIZE STEEL PIPE PILES IN ACCORDANCE WITH SECTION 1076 OF THE STANDARD SPECIFICATIONS UNLESS METALLIZING IS REQUIRED. GALVANIZING OR METALLIZING PIPE PILE PLATES IS NOT REQUIRED.

PIPE PILE PLATES, IF REQUIRED, SHALL BE IN ACCORDANCE WITH SECTION 450 OF THE STANDARD SPECIFICATIONS.

REMOVE AND REPLACE OR REPAIR TO THE SATISFACTION OF THE ENGINEER PILES THAT ARE DAMAGED, DEFORMED OR COLLAPSED DURING INSTALLATION OR DRIVING.

PILE SPLICES SHALL BE IN ACCORDANCE WITH THE STANDARD SPECIFICATIONS AND AWS D1.1.

FOR CLOSED END PIPE PILES, REMOVE ALL SOIL AND WATER FROM INSIDE THE PILES JUST PRIOR TO PLACING REINFORCING STEEL AND CONCRETE FOR THE CONCRETE PLUG.

FOR OPEN END PIPE PILES, REMOVE ENOUGH SOIL AND WATER FROM INSIDE THE PILES TO CONSTRUCT THE CONCRETE PLUG WITHOUT FOULING THE CONCRETE.

FORM THE CONCRETE PLUG SUCH THAT THE REINFORCING STEEL OR CONCRETE DOES NOT MOVE AND THE CLEARANCE FROM THE REINFORCING STEEL TO THE INSIDE OF THE PILE IS MAINTAINED AFTER CONCRETE PLACEMENT. DO NOT PLACE CONCRETE IN THE BENT CAP UNTIL THE CONCRETE PLUG HAS ATTAINED A MINIMUM COMPRESSIVE STRENGTH OF 10.3 MPa.

THE REINFORCING STEEL, CLASS A CONCRETE, AND GALVANIZING ARE CONSIDERED INCIDENTAL TO THE CONTRACT UNIT PRICE BID PER METER FOR PP 762 X 12.70 GALVANIZED STEEL PILES.

BILL OF MATERIAL FOR ONE PP 762 X 12.70 GALVANIZED STEEL PILE

BAR	NO.	SIZE	TYPE	LENGTH	WEIGHT
S1	6	#13	1	2300	14
V1	16	#19	2	2020	74
REINFORCING STEEL =					88 kg

CLASS A CONCRETE

1.520m MINIMUM PLUG — 0.6 CU. METER

BAR TYPES

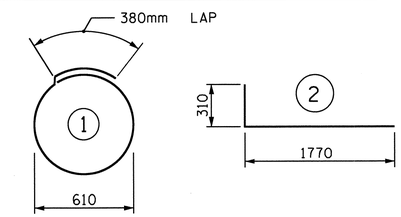

ALL BAR DIMENSIONS ARE OUT TO OUT.

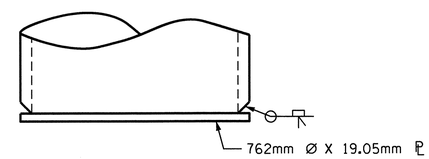

PIPE PILE PLATE DETAIL

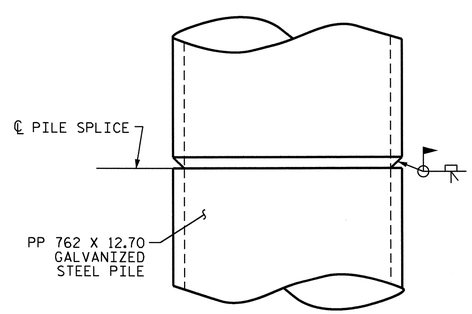

PIPE PILE SPLICE DETAIL

PROJECT NO. R-2554A
WAYNE COUNTY
STATION: 70+24.000 -L-

STATE OF NORTH CAROLINA
DEPARTMENT OF TRANSPORTATION
RALEIGH

STANDARD

762mm STEEL
PIPE PILE
(RIGHT LANE)

NORTH CAROLINA PROFESSIONAL SEAL 14045 ENGINEER TIMOTHY W. COSGRAVE
03/23/12

REVISIONS						SHEET NO.
NO.	BY:	DATE:	NO.	BY:	DATE:	5-185
1			3			TOTAL SHEETS
2			4			276

STR. #4 STD. NO. SPP5SM

ASSEMBLED BY : B. L. GREEN DATE : 1/17/12
CHECKED BY : O. PUIGCERVER DATE : 1/18/12

DRAWN BY : TLA 8/05
CHECKED BY : GM 9/05

ADDED 10/1/05
REV. 5/1/06R MAA/KMM
REV. 10/1/11 MAA/GM

23-MAR-2012 12:29
Z:\TIPProjects-R\R2554A\Structures\FinalPlans\Str#4\r2554a_sd_b#_04.dgn
padkins

NOTES:

STIRRUPS AND U2 BARS IN CAP MAY BE SHIFTED AS NECESSARY TO CLEAR ANCHOR BOLTS.

BACKWALL SHALL BE PLACED BEFORE APPLYING THE EPOXY PROTECTIVE COATING.

THE TOP SURFACE AREAS OF THE END BENT CAP SHALL BE CURED IN ACCORDANCE WITH THE STANDARD SPECIFICATIONS EXCEPT THE MEMBRANE CURING COMPOUND METHOD SHALL NOT BE USED.

THE TOP SURFACE OF THE END BENT CAP EXCEPT THE BRIDGE SEAT BUILDUPS SHALL BE SLOPED TRANSVERSELY FROM THE FILL FACE TO THE BACK FACE AT A RATE OF 2%.

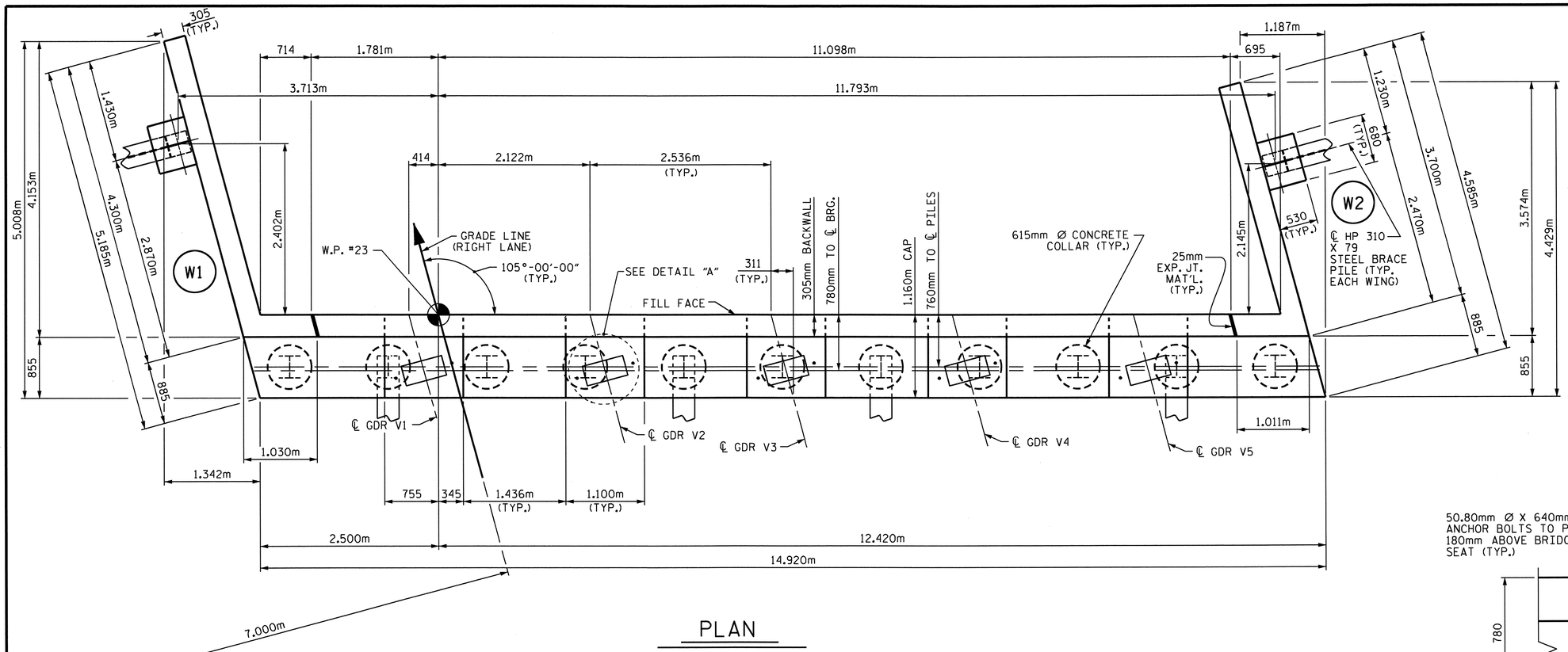

PLAN

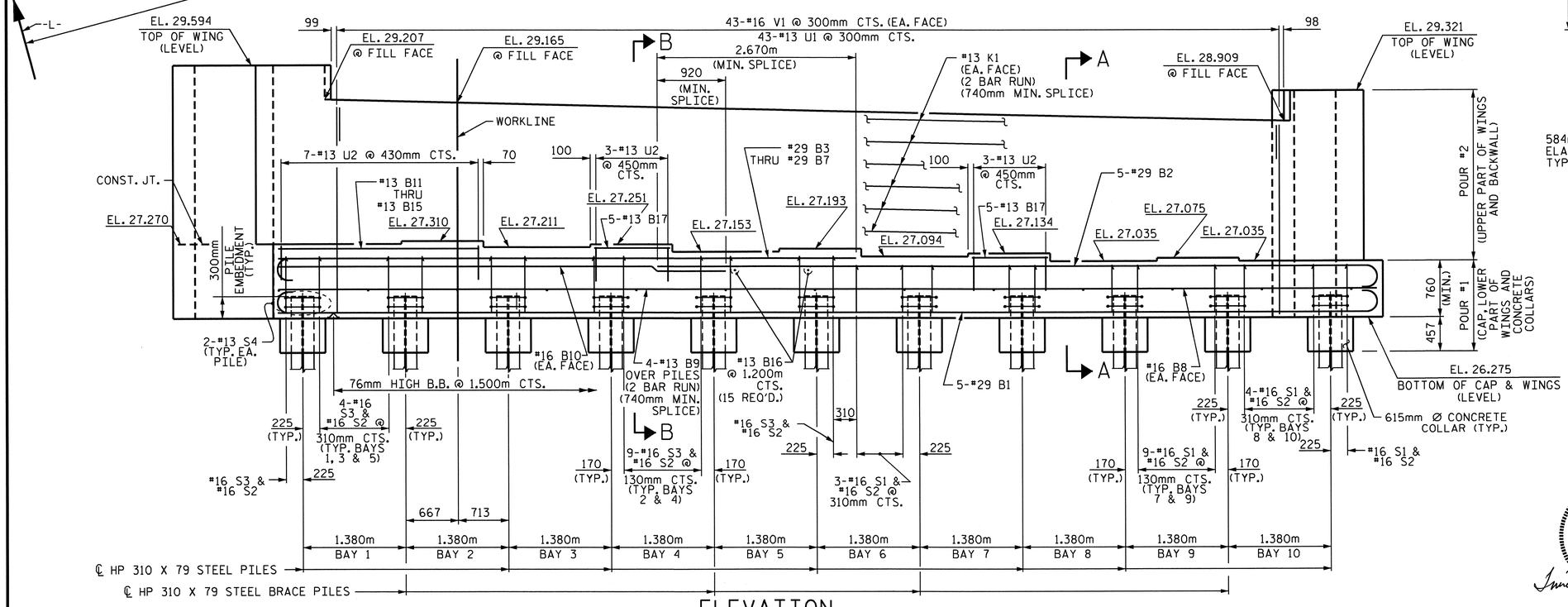

ELEVATION

WING BRACE PILES NOT SHOWN FOR CLARITY.

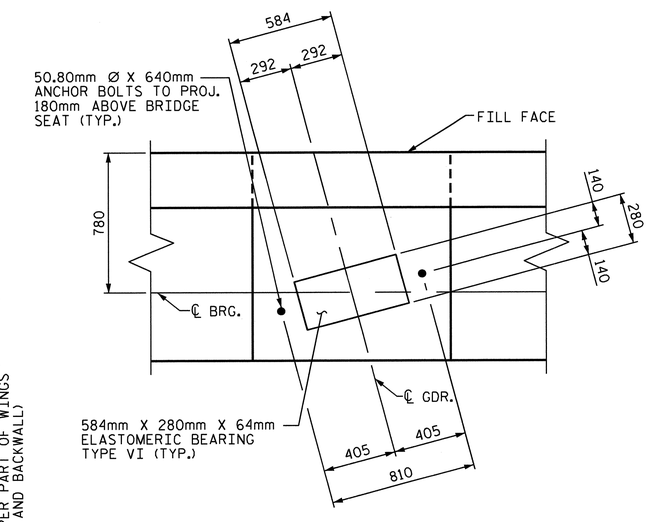

DETAIL "A"

(TYP. EACH GIRDER)

PROJECT NO. R-2554A

WAYNE COUNTY

STATION: 70+24.000 -L-

SHEET 1 OF 3

STATE OF NORTH CAROLINA
DEPARTMENT OF TRANSPORTATION
RALEIGH

SUBSTRUCTURE

END BENT #2

(RIGHT LANE)

NORTH CAROLINA PROFESSIONAL SEAL 14045 ENGINEER TIMOTHY W. COGGINS
03/23/12

REVISIONS								SHEET NO.
NO.	BY:	DATE:	NO.	BY:	DATE:			S-186
1			3					TOTAL SHEETS
2			4					276

DRAWN BY : PEGGY PARISI DATE : 11-30-11
CHECKED BY : B. GREEN DATE : 12-11-11

23-MAR-2012 11:35
Z:\TIPProjects-R\R2554A\Structures\FinalPlans\Str#4\r2554a_sd_e#_04.dgn
padkins

STR. #4

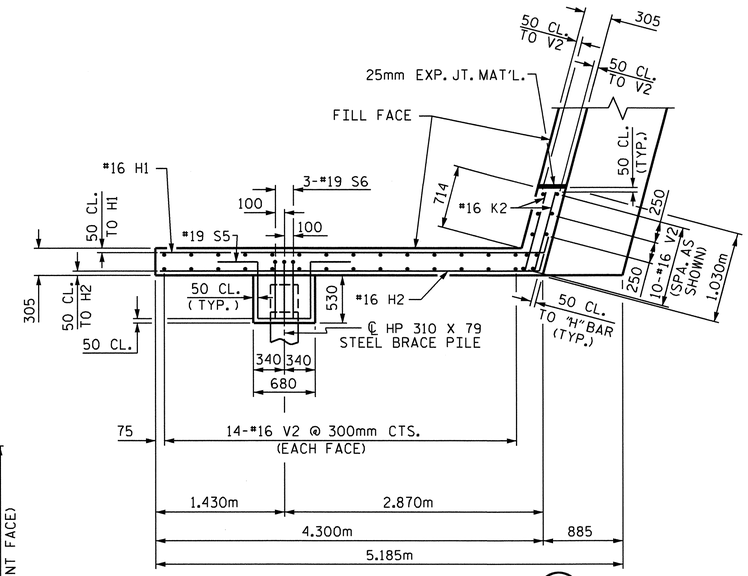

PLAN OF LEFT WING (W1)

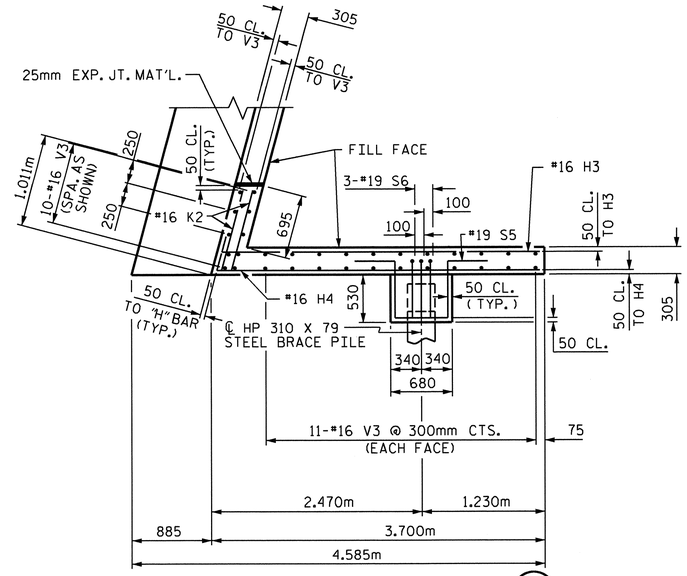

PLAN OF RIGHT WING (W2)

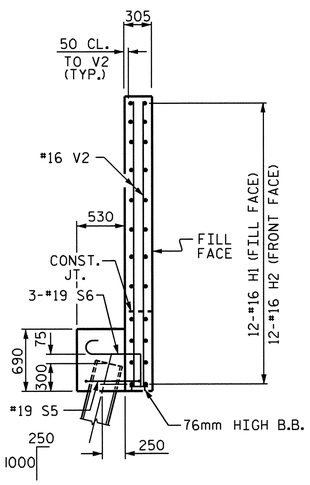

SECTION Y-Y

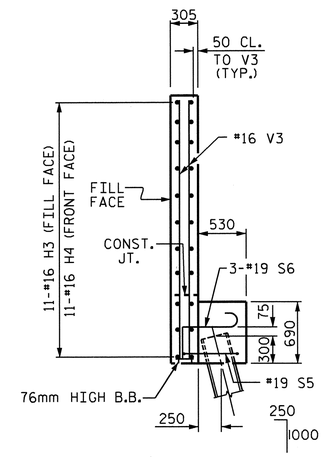

SECTION X-X

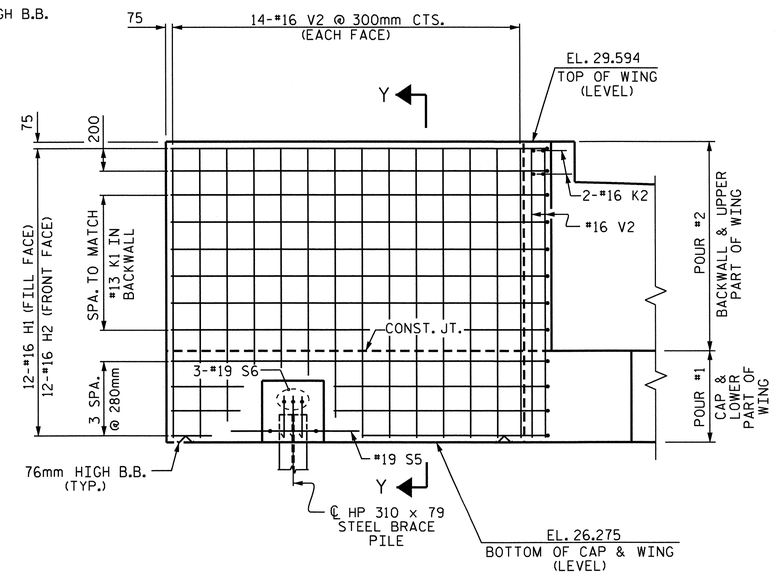

ELEVATION OF LEFT WING (W1)

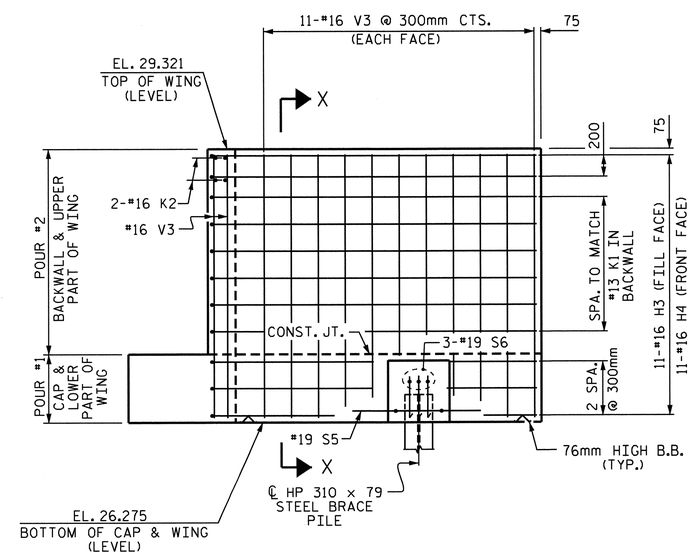

ELEVATION OF RIGHT WING (W2)

NORTH CAROLINA PROFESSIONAL SEAL 14045 ENGINEER TIMOTHY A. COBBINS
03/23/12

PROJECT NO. R-2554A
WAYNE COUNTY
STATION: 70+24.000 -L-

SHEET 2 OF 3

STATE OF NORTH CAROLINA
DEPARTMENT OF TRANSPORTATION
RALEIGH

SUBSTRUCTURE

END BENT #2

(RIGHT LANE)

REVISIONS						SHEET NO.
NO.	BY:	DATE:	NO.	BY:	DATE:	S-187
1			3			TOTAL SHEETS
2			4			276

DRAWN BY : PEGGY PARISI DATE : 12-1-11
CHECKED BY : B. GREEN DATE : 12-11-11

23-MAR-2012 11:35
Z:\TIPProjects-R\R2554A\Structures\FinalPlans\Str#4\r2554a_sd_e#_04.dgn
padkins

STR. #4

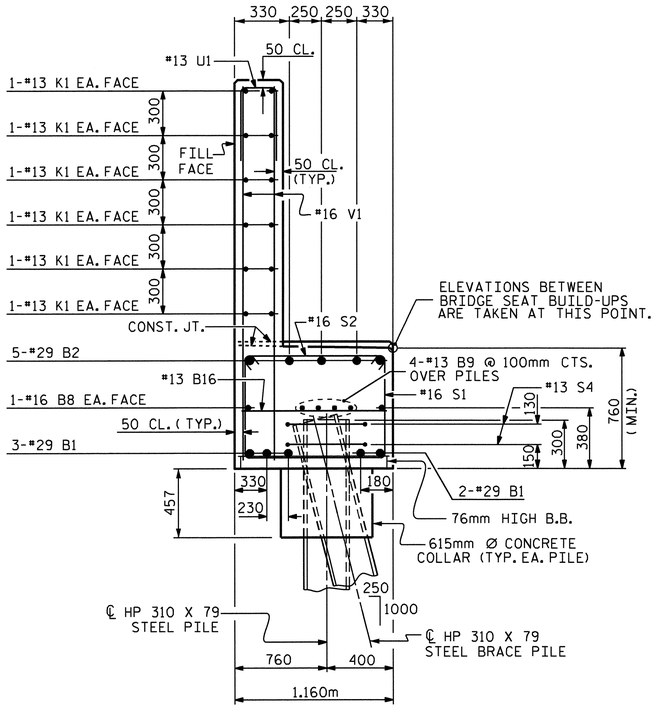

SECTION A-A

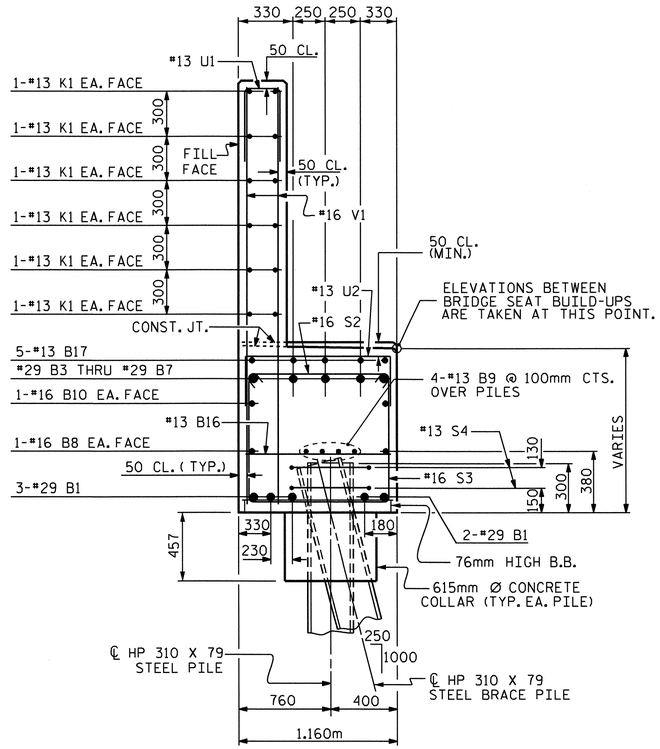

SECTION B-B

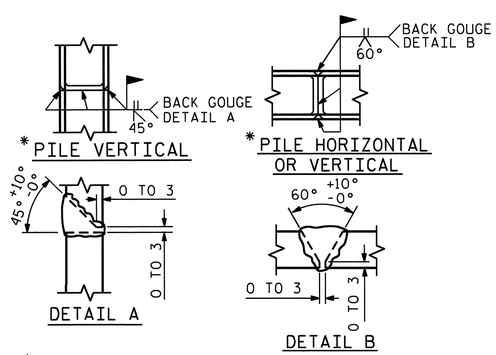

*POSITION OF PILE DURING WELDING.

PILE SPLICE DETAILS

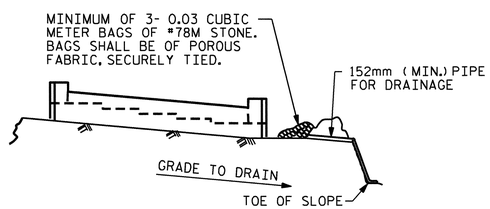

BAGGED STONE AND PIPE SHALL BE PLACED IMMEDIATELY AFTER COMPLETION OF END BENT EXCAVATION. PIPE MAY BE EITHER CONCRETE, CORRUGATED STEEL, CORRUGATED ALUMINUM ALLOY, OR CORRUGATED PLASTIC. PERFORATED PIPE WILL NOT BE ALLOWED.

BAGGED STONE SHALL REMAIN IN PLACE UNTIL THE ENGINEER DIRECTS THAT IT BE REMOVED. THE CONTRACTOR SHALL REMOVE AND DISPOSE OF SILT ACCUMULATIONS AT BAGGED STONE WHEN SO DIRECTED BY THE ENGINEER. BAGS SHALL BE REMOVED AND REPLACED WHENEVER THE ENGINEER DETERMINES THAT THEY HAVE DETERIORATED AND LOST THEIR EFFECTIVENESS.

NO SEPARATE PAYMENT WILL BE MADE FOR THIS WORK AND THE ENTIRE COST OF THIS WORK SHALL BE INCLUDED IN THE UNIT CONTRACT PRICE BID FOR THE SEVERAL PAY ITEMS.

TEMPORARY DRAINAGE AT END BENT

BAR TYPES

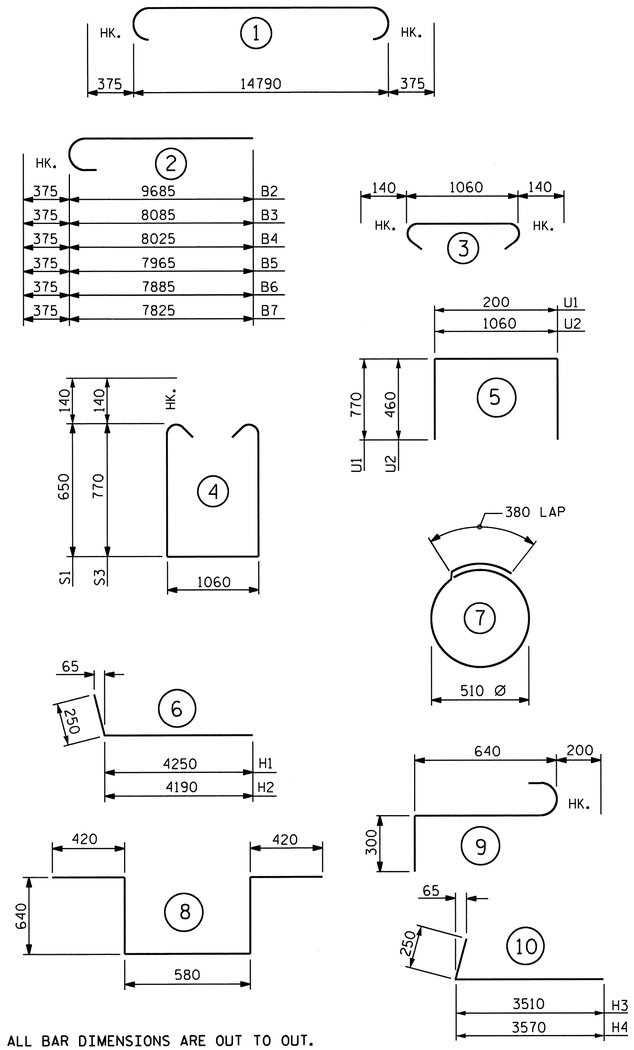

ALL BAR DIMENSIONS ARE OUT TO OUT.

BILL OF MATERIAL

END BENT #2

BAR	NO.	SIZE	TYPE	LENGTH	WEIGHT
B1	5	#29	1	15540	393
B2	5	#29	2	10060	255
B3	1	#29	2	8460	43
B4	1	#29	2	8400	43
B5	1	#29	2	8340	42
B6	1	#29	2	8260	42
B7	1	#29	2	8200	41
B8	2	#16	STR	14800	46
B9	8	#13	STR	7780	62
B10	2	#16	STR	6060	19
B11	1	#13	STR	3020	3
B12	1	#13	STR	2960	3
B13	1	#13	STR	2880	3
B14	1	#13	STR	2820	3
B15	1	#13	STR	2760	3
B16	15	#13	STR	1060	16
B17	10	#13	STR	1000	10
H1	12	#16	6	4500	84
H2	12	#16	6	4440	83
H3	11	#16	10	3760	64
H4	11	#16	10	3820	65
K1	24	#13	STR	7780	186
K2	8	#16	STR	900	11
S1	30	#16	4	2640	123
S2	62	#16	3	1340	129
S3	32	#16	4	2880	143
S4	22	#13	7	1980	43
S5	2	#19	8	2700	12
S6	6	#19	9	1140	15
U1	43	#13	5	1740	74
U2	13	#13	5	1980	26
V1	86	#16	STR	2520	336
V2	38	#16	STR	3200	189
V3	32	#16	STR	2940	146
REINFORCING STEEL				KG.	2756

CLASS A CONCRETE BREAKDOWN

POUR #1 (CAP, LOWER WINGS, WING BRACE PILE CAPS & CONCRETE COLLARS)	19.3 C.M.
POUR #2 (BACKWALL & UPPER WINGS)	14.1 C.M.
TOTAL CLASS A CONCRETE	33.4 C.M.

HP 310 X 79 STEEL PILES

NO. 13 197.6 METERS

PILE REDRIVES EACH 5

PROJECT NO. R-2554A

WAYNE COUNTY

STATION: 70+24.000 -L-

SHEET 3 OF 3

STATE OF NORTH CAROLINA
DEPARTMENT OF TRANSPORTATION
RALEIGH

SUBSTRUCTURE

END BENT #2

(RIGHT LANE)

NORTH CAROLINA PROFESSIONAL SEAL 14045 ENGINEER TIMOTHY C. CORCINS
03/23/12

REVISIONS								SHEET NO.
NO.	BY:	DATE:	NO.	BY:	DATE:			S-188
1			3					TOTAL SHEETS
2			4					276

DRAWN BY : PEGGY PARISI DATE : 12-1-11
CHECKED BY : B. GREEN DATE : 12-11-11

23-MAR-2012 11:35
Z:\TIPProjects-R\R2554A\Structures\FinalPlans\Str#4\r2554a_sd_e#_04.dgn
pdkins

STR. #4

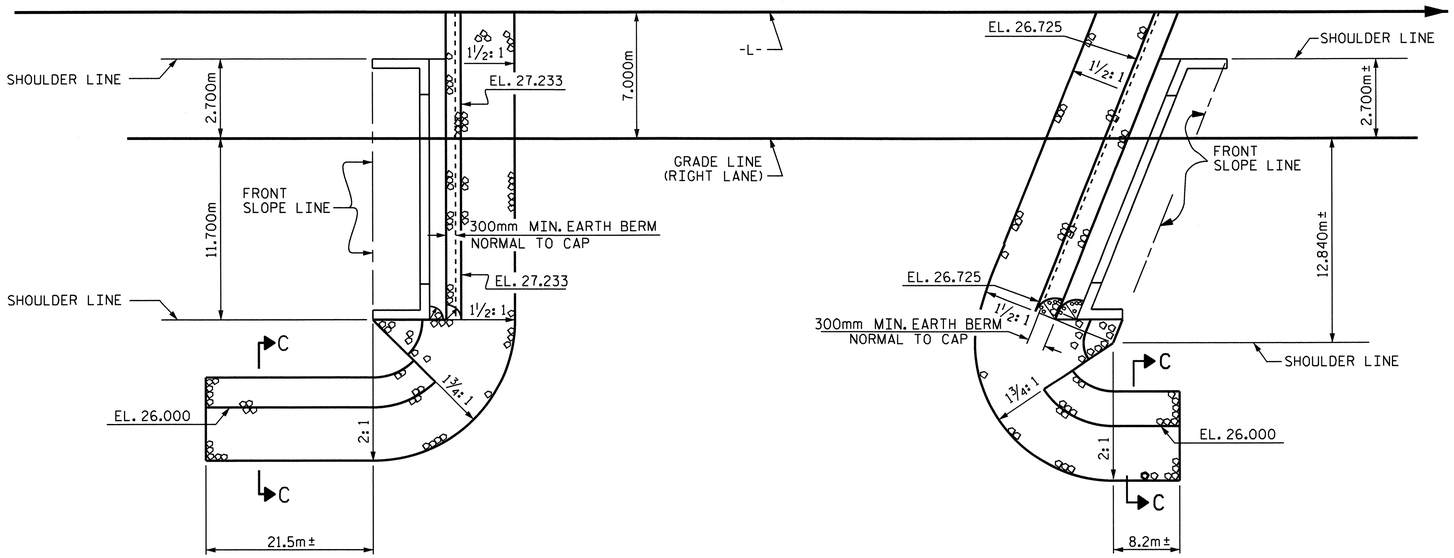

PLAN

ESTIMATED QUANTITIES		
BRIDGE @ STA. 70+24.000 -L- (RIGHT LANE)	RIP RAP CLASS II (600mm THICK)	FILTER FABRIC FOR DRAINAGE
	METRIC TON	SQUARE METERS
END BENT 1	277	282
END BENT 2	146	149

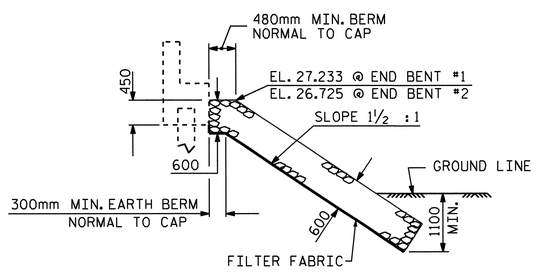

℄ SECTION

BERM RIP RAPPED

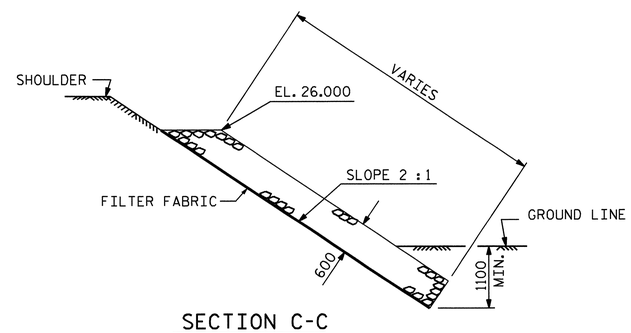

SECTION C-C

PROJECT NO. R-2554A

WAYNE COUNTY

STATION: 70+24.000 -L-

STATE OF NORTH CAROLINA
DEPARTMENT OF TRANSPORTATION
RALEIGH

STANDARD

RIP RAP DETAILS

(RIGHT LANE)

NORTH CAROLINA PROFESSIONAL SEAL 14045 ENGINEER TIMOTHY W. COGGINS
03/26/12

REVISIONS								SHEET NO.
NO.	BY:	DATE:	NO.	BY:	DATE:			S-189
1			3					TOTAL SHEETS
2			4					276

STR. #4

STD. NO. RR1SM

ASSEMBLED BY : J.B. WILSON	DATE : 8/15/11		
CHECKED BY : T.L. AVERETTE	DATE :12/05/11		
DRAWN BY : REK 1/84	REV. 10/17/00	RWW/LES	
CHECKED BY : RDU 1/84	REV. 5/1/06R	TLA/GM	
	REV. 10/1/11	MAA/GM	

26-MAR-2012 09:42
R:\TIPProjects-R\R2554A\Structures\FinalPlans\Str#4\r2554a_sd_rr_04.dgn
taverette

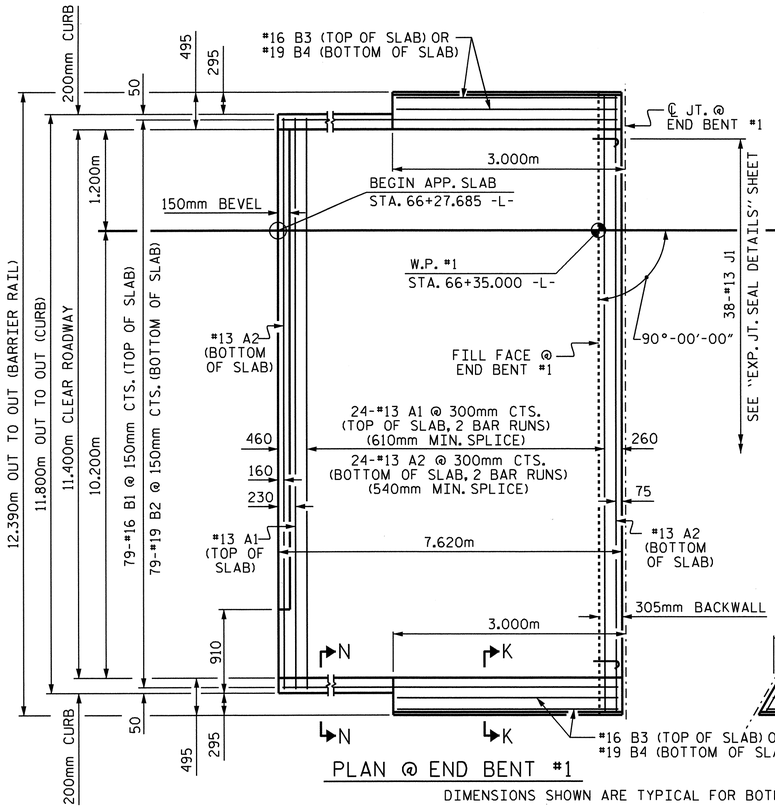

PLAN @ END BENT #1

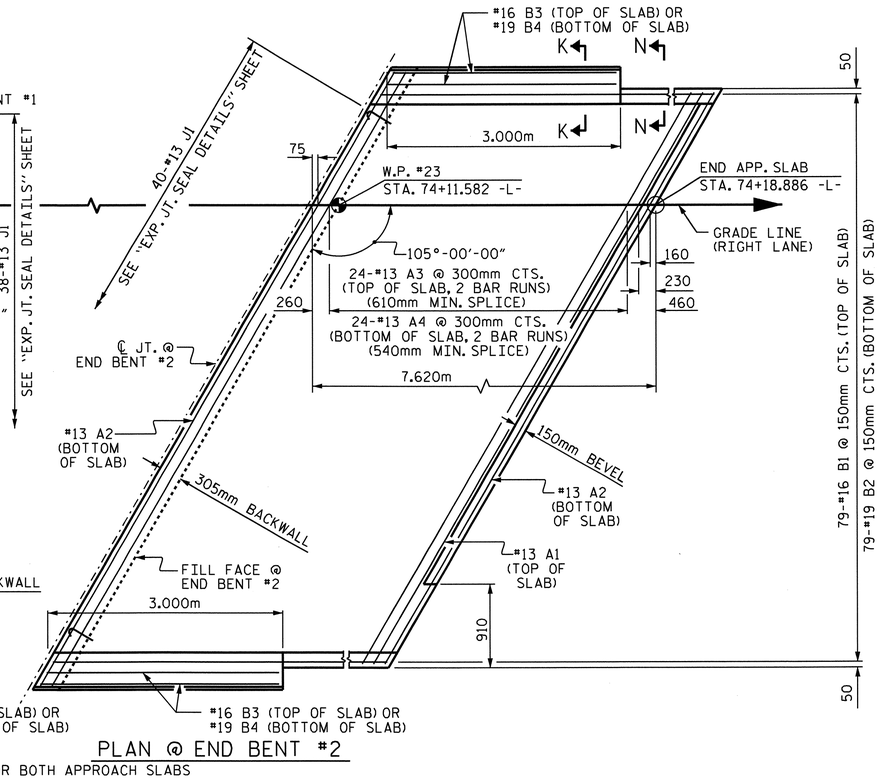

PLAN @ END BENT #2

DIMENSIONS SHOWN ARE TYPICAL FOR BOTH APPROACH SLABS

NOTES

APPROACH SLAB SHALL NOT BE CONSTRUCTED PRIOR TO COMPLETION OF THE BRIDGE DECK.

SUBDRAIN FINE AGGREGATE IS TO BE CONTINUOUS ALONG FILL FACE OF BACKWALL AND END BENT FROM OUTSIDE EDGE TO OUTSIDE EDGE OF APPROACH SLAB.

AREA BETWEEN THE WINGWALL AND APPROACH SLAB SHALL BE GRADED TO DRAIN THE WATER AWAY FROM THE FILL FACE OF THE BRIDGE AND SHALL BE PAVED. SEE ROADWAY PLANS.

FOR EXPANSION JOINT SEALS, SEE SPECIAL PROVISIONS.

BILL OF MATERIAL

APPROACH SLAB AT EB #1

BAR	NO.	SIZE	TYPE	LENGTH	WEIGHT
* A1	50	#13	STR	6460	321
A2	52	#13	STR	6420	332
* B1	79	#16	STR	7260	890
B2	79	#19	STR	7500	1324
* B3	4	#16	STR	2880	18
B4	4	#19	STR	2880	26
* J1	38	#13	1	440	17
REINFORCING STEEL				kg.	1682
* EPOXY COATED REINFORCING STEEL				** kg.	1246
CLASS AA CONCRETE				** C.M.	32.8

APPROACH SLAB AT EB #2

BAR	NO.	SIZE	TYPE	LENGTH	WEIGHT
* A3	50	#13	STR	6680	332
A4	52	#13	STR	6640	343
* B1	79	#16	STR	7260	890
B2	79	#19	STR	7500	1324
* B3	4	#16	STR	2880	18
B4	4	#19	STR	2880	26
* J1	40	#13	1	440	17
REINFORCING STEEL				kg.	1693
* EPOXY COATED REINFORCING STEEL				** kg.	1257
CLASS AA CONCRETE				** C.M.	32.8

BAR TYPE

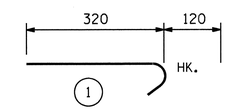

ALL BAR DIMENSIONS ARE OUT TO OUT

** QUANTITIES FOR BARRIER RAIL ARE NOT INCLUDED. SEE SHEET 2 OF 2.

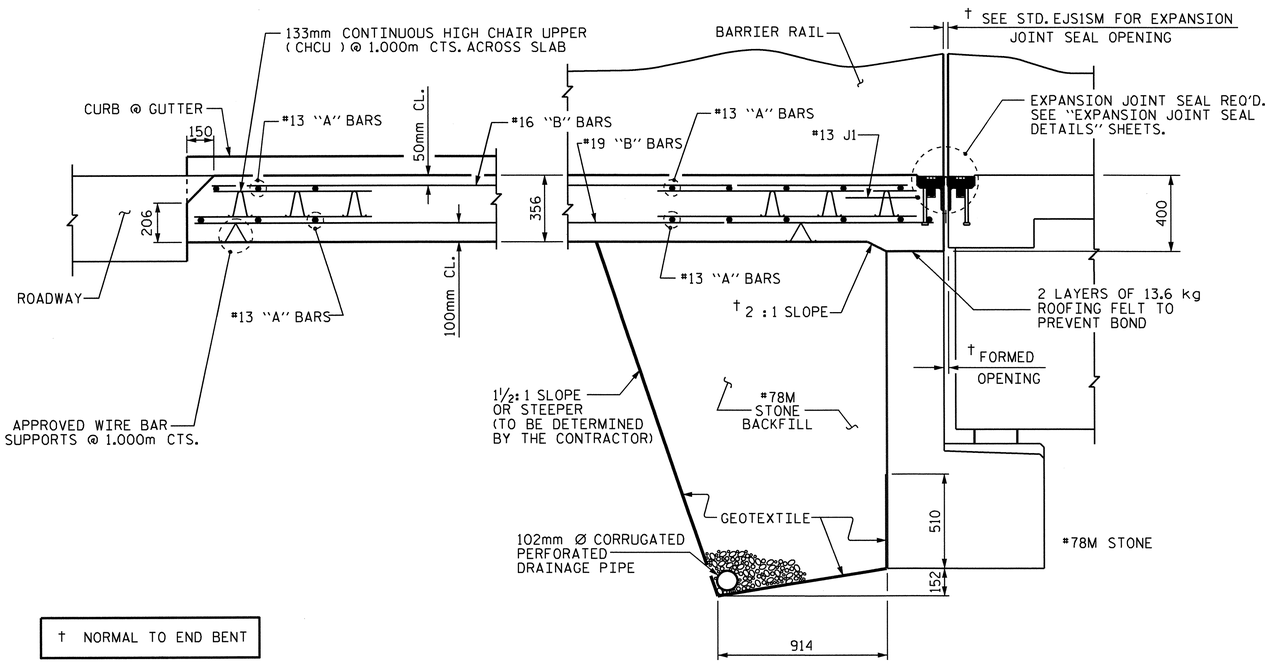

† NORMAL TO END BENT

SECTION THRU SLAB

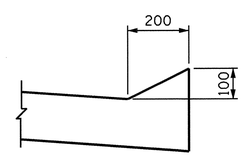

SECTION N-N

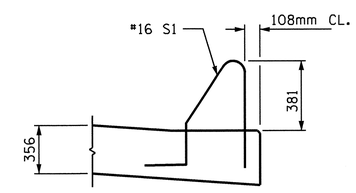

SECTION K-K

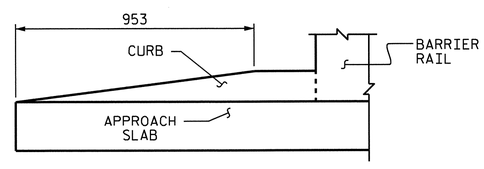

END OF CURB WITHOUT SHOULDER BERM GUTTER

CURB DETAILS

PROJECT NO. R-2554A

WAYNE COUNTY

STATION: 70+24.000 -L-

SHEET 1 OF 2

STATE OF NORTH CAROLINA
DEPARTMENT OF TRANSPORTATION
RALEIGH

STANDARD

BRIDGE APPROACH SLAB
FOR FLEXIBLE PAVEMENT

(RIGHT LANE)

NORTH CAROLINA PROFESSIONAL SEAL 14045 ENGINEER TIMOTHY V. COGGINS
03/23/12

REVISIONS						SHEET NO.
NO.	BY:	DATE:	NO.	BY:	DATE:	S-190
1			3			TOTAL SHEETS
2			4			276

STR #4 STD. NO. BAS2SM

ASSEMBLED BY : PEGGY PARISI DATE : 12-7-11
CHECKED BY : B. GREEN DATE : 12-28-11

DRAWN BY : RH 5/99
CHECKED BY : RDR 5/99

REV. 5/7/03R RWW/JTE
REV. 5/1/06RR KMM/GM

23-MAR-2012 11:32
Z:\TIPProjects-R\R2554A\Structures\FinalPlans\Str#4\r2554a_sd_as_04.dgn
padkins

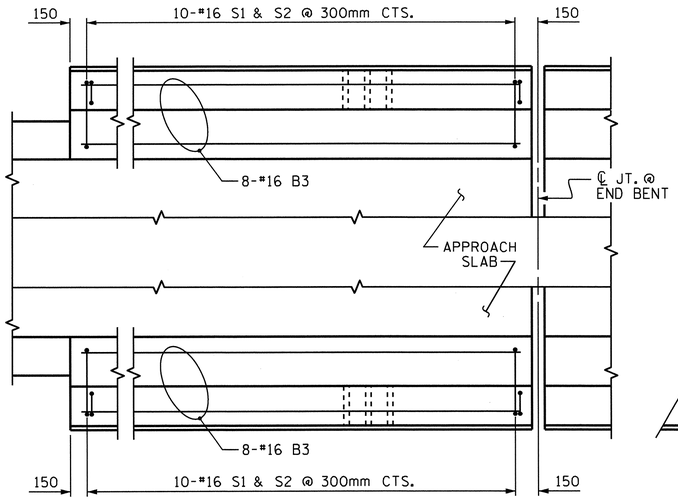

END BENT #1

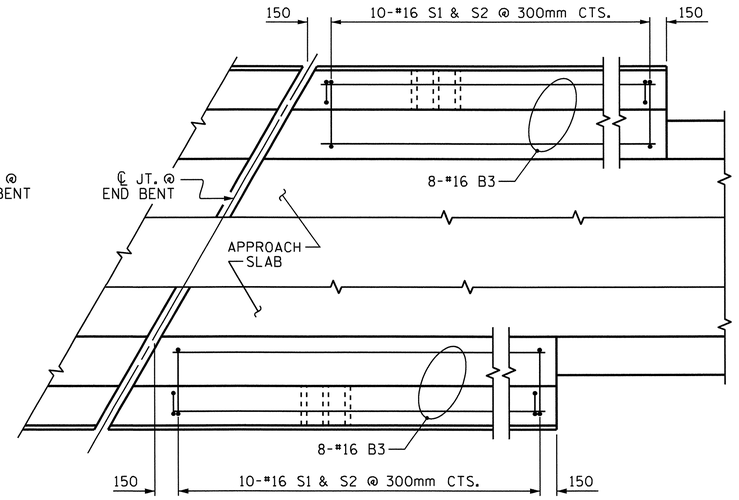

END BENT #2

PLAN OF BARRIER RAIL

NOTES

THE COST OF THE BARRIER RAIL ON THE APPROACH SLAB SHALL BE INCLUDED IN THE CONTRACT PRICE BID FOR "CONCRETE BARRIER RAIL".

THE BARRIER RAIL ON EACH APPROACH SLAB SHALL NOT BE CAST UNTIL ALL APPROACH SLAB CONCRETE HAS BEEN CAST AND HAS REACHED A MINIMUM COMPRESSIVE STRENGTH OF 20.7 MPa.

ALL REINFORCING STEEL IN BARRIER RAILS SHALL BE EPOXY COATED.

BAR TYPES

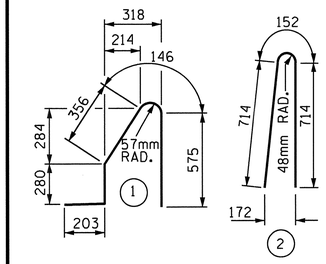

ALL BAR DIMENSIONS ARE OUT TO OUT

BILL OF MATERIAL

BARRIER RAIL ONLY

BAR	NO.	SIZE	TYPE	LENGTH	WEIGHT
* B3	32	#16	STR	2880	143
* S1	40	#16	1	1560	97
* S2	40	#16	2	1580	98
* EPOXY COATED REINFORCING STEEL					338 kg.
CLASS AA CONCRETE					3.0 CU. METER
CONCRETE BARRIER RAIL					12.122 METERS

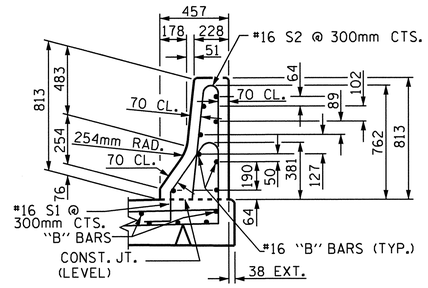

SECTION THRU RAIL

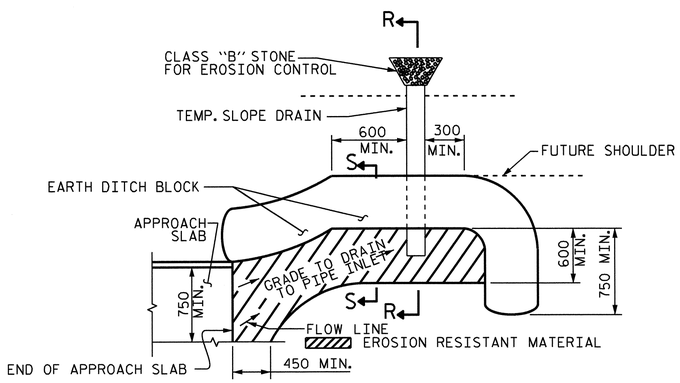

NOTE: IMMEDIATELY AFTER THE CONSTRUCTION OF THE APPROACH SLAB, THE CONTRACTOR SHALL PROVIDE TEMPORARY BERM AND SLOPE DRAIN. CONTRACTOR SHALL GRADE TO PIPE INLET AND PROVIDE EROSION RESISTANT MATERIAL AS SHOWN. THE EROSION RESISTANT MATERIAL SHALL BE EITHER 1) ASPHALT PLANT MIX, TYPE 1 OR TYPE 2, MIN. 50mm DEPTH, 2) EROSION CONTROL MAT, OR 3) CONCRETE, AS DIRECTED BY THE ENGINEER. THE SLOPE DRAIN SHALL CONSIST OF A NON-PERFORATED TEMPORARY DRAINAGE PIPE, 305mm IN DIAMETER.

PLAN VIEW

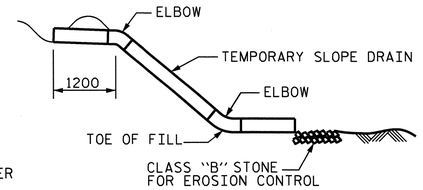

SECTION R-R

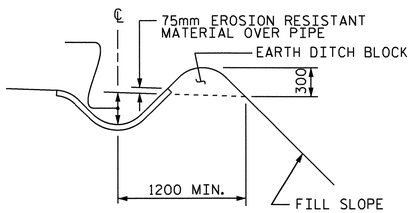

SECTION S-S

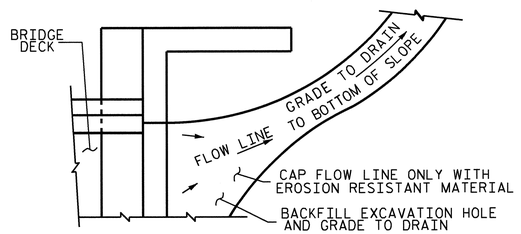

NOTE: IF THE APPROACH SLAB IS NOT CONSTRUCTED IMMEDIATELY AFTER THE BACKFILLING OF THE END BENT EXCAVATION, GRADE TO DRAIN TO THE BOTTOM OF THE SLOPE AND PROVIDE EROSION RESISTANT MATERIAL, SUCH AS FIBERGLASS ROVING OR AS DIRECTED BY THE ENGINEER TO PREVENT SOIL EROSION AND TO PROTECT THE AREA ADJACENT TO THE STRUCTURE. THE CONTRACTOR WILL BE REQUIRED TO REMOVE THESE MATERIALS PRIOR TO CONSTRUCTION OF THE APPROACH SLAB.

TEMPORARY DRAINAGE DETAIL

TEMPORARY BERM AND SLOPE DRAIN DETAILS

(TO BE USED WHEN SHOULDER BERM GUTTER IS REQUIRED)

PROJECT NO. R-2554A

WAYNE COUNTY

STATION: 70+24.000 -L-

SHEET 2 OF 2

STATE OF NORTH CAROLINA
DEPARTMENT OF TRANSPORTATION
RALEIGH

STANDARD

BRIDGE APPROACH SLAB DETAILS

(RIGHT LANE)

NORTH CAROLINA PROFESSIONAL SEAL 14045 ENGINEER TIMOTHY A. COGGINS
03/23/12

REVISIONS								SHEET NO.
NO.	BY:	DATE:	NO.	BY:	DATE:			S-191
1			3					TOTAL SHEETS
2			4					276

ASSEMBLED BY : PEGGY PARIS DATE : 12-7-11
CHECKED BY : B. GREEN DATE : 12-28-11
DRAWN BY : FCJ 11/88
CHECKED BY : ARB 11/88
REV. 5/7/03 RWW/JTE
REV. 5/1/06RRR MAA/KMM
REV. 10/1/11 MAA/GM

23-MAR-2012 11:31
Z:\TIPProjects-R\R2554A\Structures\FinalPlans\Str#4\r2554a_sd_as_04.dgn
pdkins

STR #4 STD. NO. BAS4SM