09/08/99

# TIP PROJECT: I-3819A

# CONTRACT: C202602

## STRUCTURES

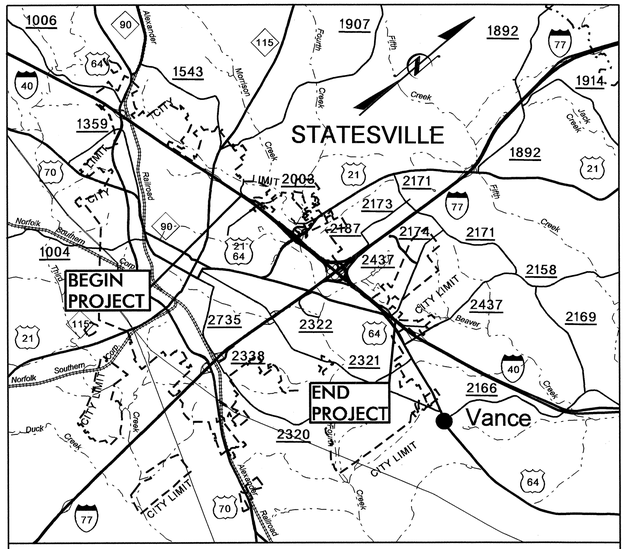


VICINITY MAP

STATE OF NORTH CAROLINA
DIVISION OF HIGHWAYS

# IREDELL COUNTY

| STATE | STATE PROJECT REFERENCE NO. | SHEET NO. | TOTAL SHEETS |
|---|---|---|---|
| N.C. | I-3819A | | |

| STATE PROJ. NO. | F. A. PROJ. NO. | DESCRIPTION |
|---|---|---|
| 34192.1.2 | IMS-40-2(124) | P.E. |
| 34192.2.1GV3 | IMF-040-2(145)152 | CONST. |

***LOCATION: I-40/I-77 INTERCHANGE INCLUDING I-40 FROM WEST OF SR 2003 (Radio Rd.) TO WEST OF SR 2158 (Old Mocksville Rd.) & I-77 FROM SOUTH OF I-40 TO SOUTH OF SR 2171 (Jane Sower Rd.)***

***TYPE OF WORK: GRADING, DRAINAGE, PAVING, STRUCTURES, CULVERTS, RETAINING WALLS, NOISE WALLS, AND TRAFFIC CONTROL***

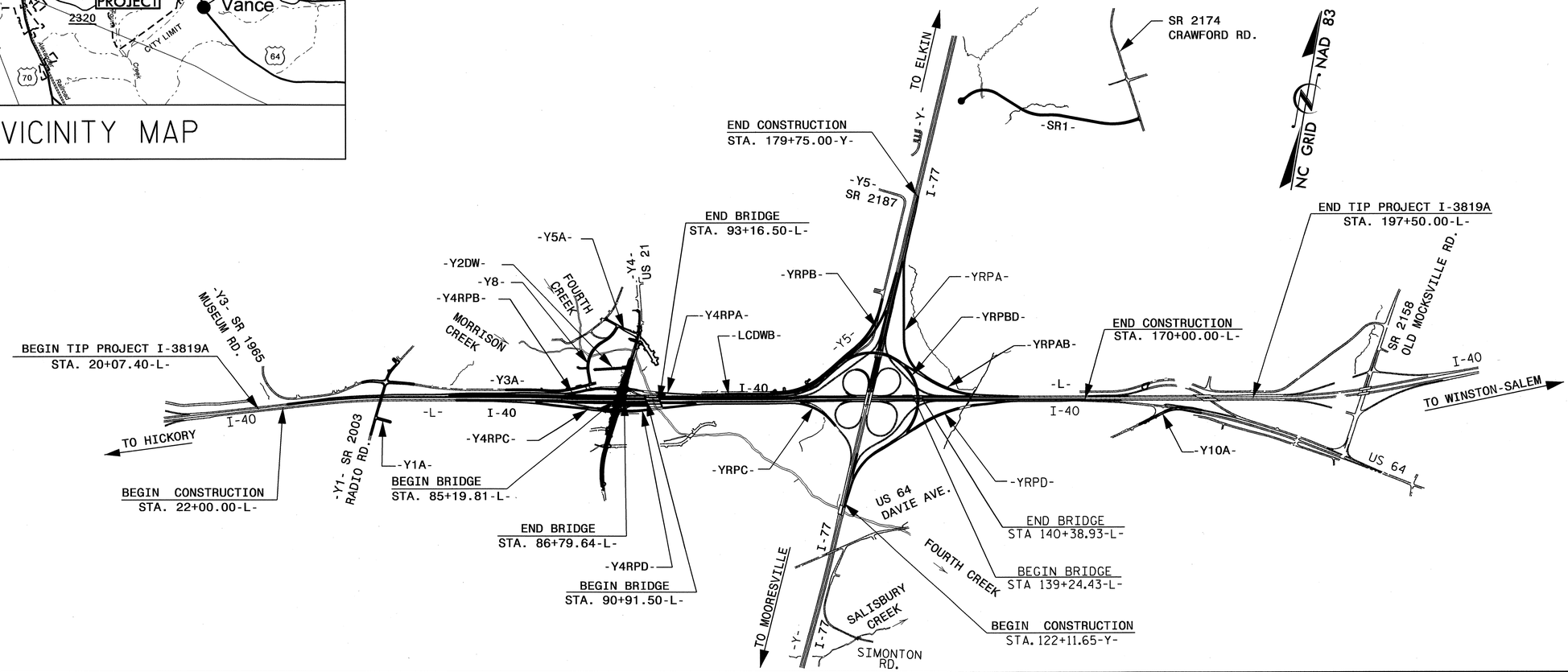


### DESIGN DATA

| | I-40 | I-77 |
|---|---|---|
| ADT 2010 = | 71,100 | 73,200 |
| ADT 2030 = | 99,420 | 109,040 |
| DHV = | 10 % | 9 % |
| D = | 60 % | 55 % |
| T = | 19 % * | 20 % ** |
| V = | 60 MPH | MPH60 |

* TTST 14 + DUAL 5 (I-40)
** TTST 15 + DUAL 5 (I-77)
CLASSIFICATION: INTERSTATE

### PROJECT LENGTH

| | | |
|---|---|---|
| LENGTH ROADWAY TIP PROJECT I-3819A | = | 3.265 |
| LENGTH STRUCTURES TIP PROJECT I-3819A | = | 0.095 |
| TOTAL LENGTH OF TIP PROJECT I-3819A | = | 3.360 |

Prepared in the Office of:
**DIVISION OF HIGHWAYS**
1000 Birch Ridge Dr., Raleigh NC, 27610

2012 STANDARD SPECIFICATIONS

LETTING DATE:
June 19, 2012

J. M. BAILEY, PE
PROJECT ENGINEER

B. D. KLAPPENBACH, PE
PROJECT DESIGN ENGINEER

**STRUCTURE MANAGEMENT UNIT**
1000 BIRCH RIDGE DR.
RALEIGH, N.C. 27610

**DIVISION OF HIGHWAYS**
**STATE OF NORTH CAROLINA**

P.E.
STATE DESIGN ENGINEER
DEPARTMENT OF TRANPORTATION
FEDERAL HIGHWAY ADMINISTRATION

APPROVED
ENGINEER DIVISION ADMINISTRATION DATE

13-JAN-2012 08:30
$$$$$$$$$$$$$$$$$$$$DGN$$$$$$$$$$$$$$$$$$$$
DKlappenbach

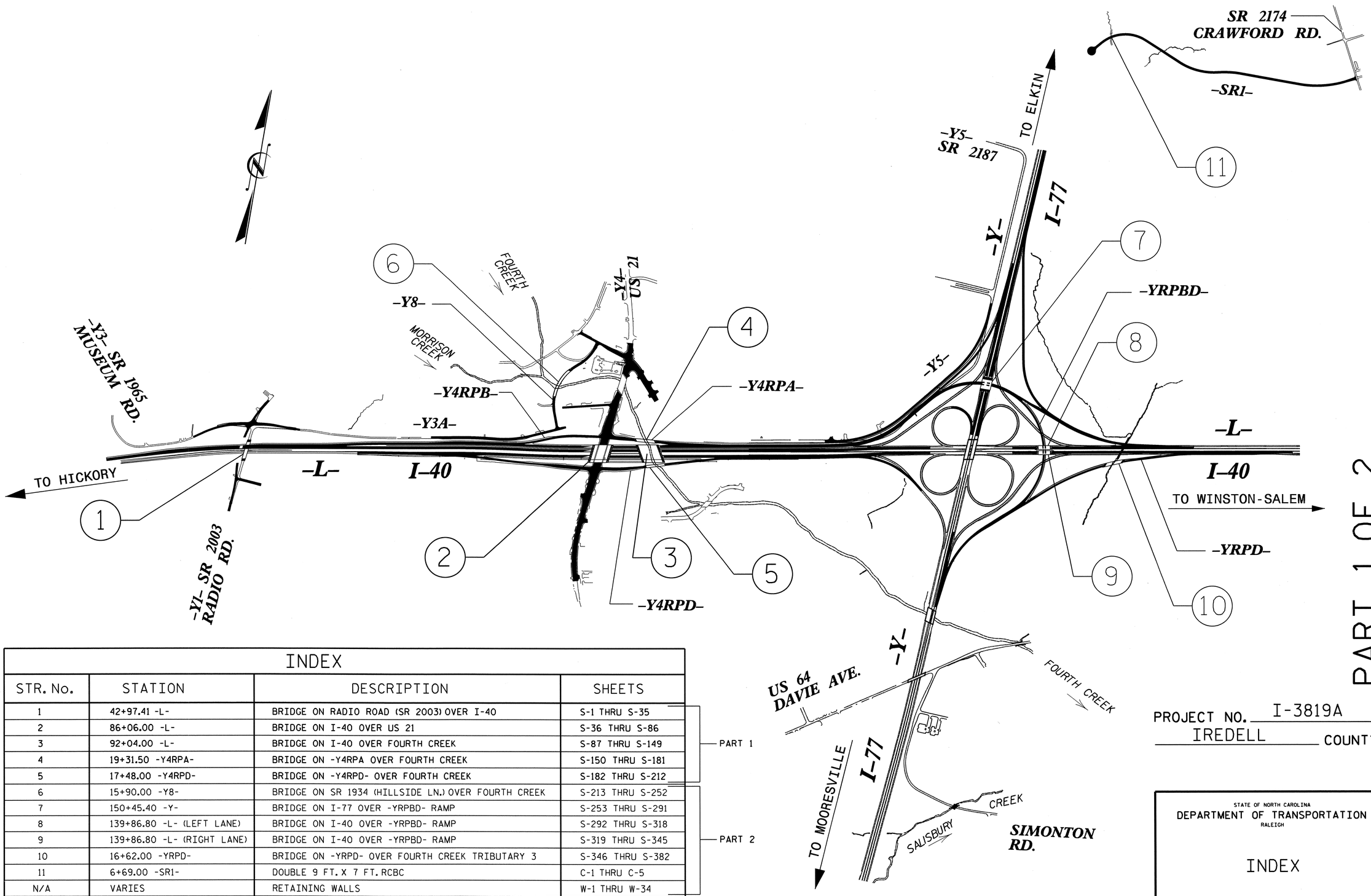


| INDEX | | | | |
|---|---|---|---|---|
| STR. No. | STATION | DESCRIPTION | SHEETS | |
| 1 | 42+97.41 -L- | BRIDGE ON RADIO ROAD (SR 2003) OVER I-40 | S-1 THRU S-35 | PART 1 |
| 2 | 86+06.00 -L- | BRIDGE ON I-40 OVER US 21 | S-36 THRU S-86 | |
| 3 | 92+04.00 -L- | BRIDGE ON I-40 OVER FOURTH CREEK | S-87 THRU S-149 | |
| 4 | 19+31.50 -Y4RPA- | BRIDGE ON -Y4RPA OVER FOURTH CREEK | S-150 THRU S-181 | |
| 5 | 17+48.00 -Y4RPD- | BRIDGE ON -Y4RPD- OVER FOURTH CREEK | S-182 THRU S-212 | |
| 6 | 15+90.00 -Y8- | BRIDGE ON SR 1934 (HILLSIDE LN.) OVER FOURTH CREEK | S-213 THRU S-252 | PART 2 |
| 7 | 150+45.40 -Y- | BRIDGE ON I-77 OVER -YRPBD- RAMP | S-253 THRU S-291 | |
| 8 | 139+86.80 -L- (LEFT LANE) | BRIDGE ON I-40 OVER -YRPBD- RAMP | S-292 THRU S-318 | |
| 9 | 139+86.80 -L- (RIGHT LANE) | BRIDGE ON I-40 OVER -YRPBD- RAMP | S-319 THRU S-345 | |
| 10 | 16+62.00 -YRPD- | BRIDGE ON -YRPD- OVER FOURTH CREEK TRIBUTARY 3 | S-346 THRU S-382 | |
| 11 | 6+69.00 -SR1- | DOUBLE 9 FT. X 7 FT. RCBC | C-1 THRU C-5 | |
| N/A | VARIES | RETAINING WALLS | W-1 THRU W-34 | |

PART 1 OF 2

PROJECT NO. I-3819A

IREDELL COUNTY

STATE OF NORTH CAROLINA
DEPARTMENT OF TRANSPORTATION
RALEIGH

INDEX

| REVISIONS | | | | | | |
|---|---|---|---|---|---|---|
| NO. | BY: | DATE: | NO. | BY: | DATE: | |
| 1 | | | 3 | | | |
| 2 | | | 4 | | | |

DRAWN BY : M. G. SHAIKH DATE : 08-16-10
CHECKED BY : B. D. KLAPPENBACH DATE : 11-11

10-JAN-2012 08:22
V:\Structures\BAILEY\FINAL PLANS\I-3819A_SD_IS.dgn
TBARBOUR

F.A.PROJECT: IMF-40-2(145)152

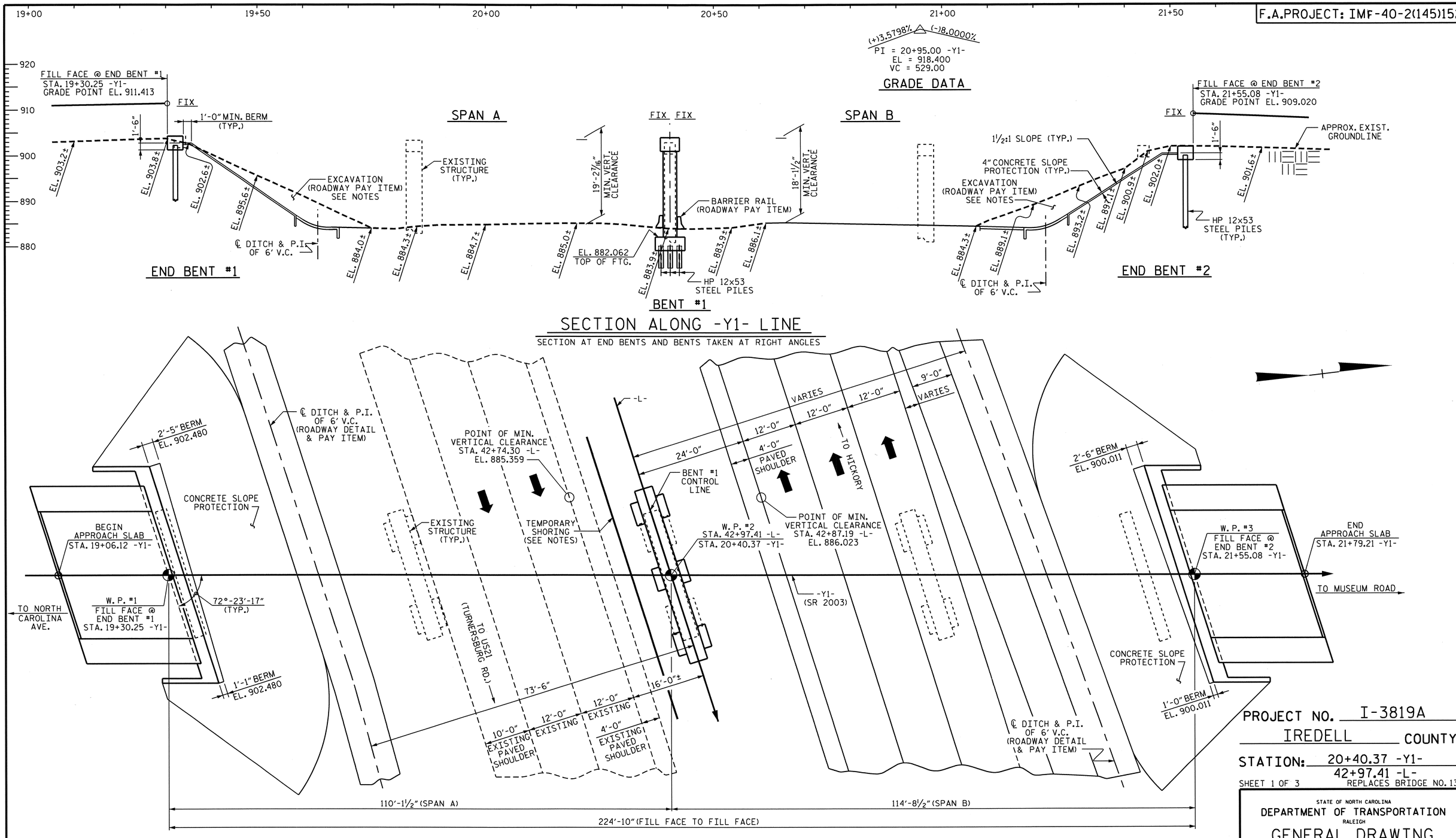


PLAN

(PILES NOT SHOWN FOR CLARITY)

PROJECT NO. I-3819A

IREDELL COUNTY

STATION: 20+40.37 -Y1-
42+97.41 -L-

SHEET 1 OF 3 REPLACES BRIDGE NO. 134

STATE OF NORTH CAROLINA
DEPARTMENT OF TRANSPORTATION
RALEIGH

GENERAL DRAWING
FOR BRIDGE ON
RADIO ROAD (SR 2003)
OVER I-40 BETWEEN
NORTH CAROLINA AVE.
AND MUSEUM ROAD

NORTH CAROLINA PROFESSIONAL SEAL 14081 ENGINEER BUCK CHARLES HUNT 1/10/12

NORTH CAROLINA PROFESSIONAL SEAL 23371 ENGINEER VIPUL A. PATEL 1/10/12

| REVISIONS | | | | | | SHEET NO. |
|---|---|---|---|---|---|---|
| NO. | BY: | DATE: | NO. | BY: | DATE: | S-1 |
| 1 | | | 3 | | | TOTAL SHEETS |
| 2 | | | 4 | | | 382 |

DRAWN BY : KEITH D. LAYNE DATE : 6/11/10
CHECKED BY : J. P. ADAMS DATE : 10/25/10

03-JAN-2012 09:16
R:\Structures\Hunt\str#1\Plans\I-3819A_sd_GD_01.dgn
hlocklear

STR. #1

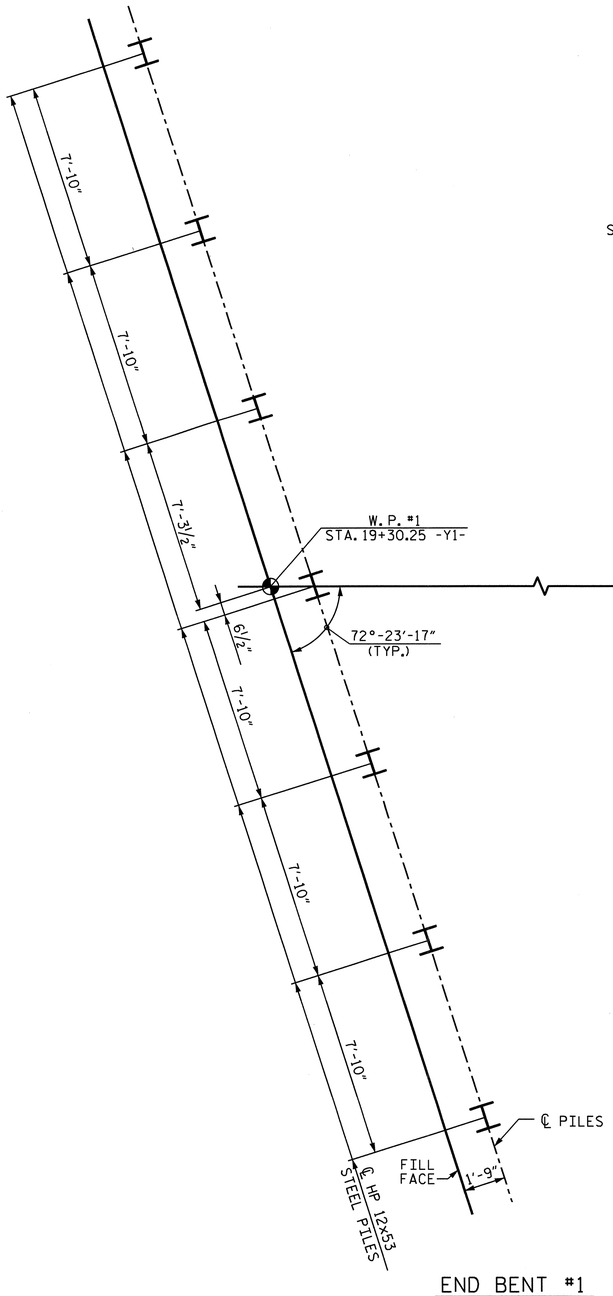


END BENT #1

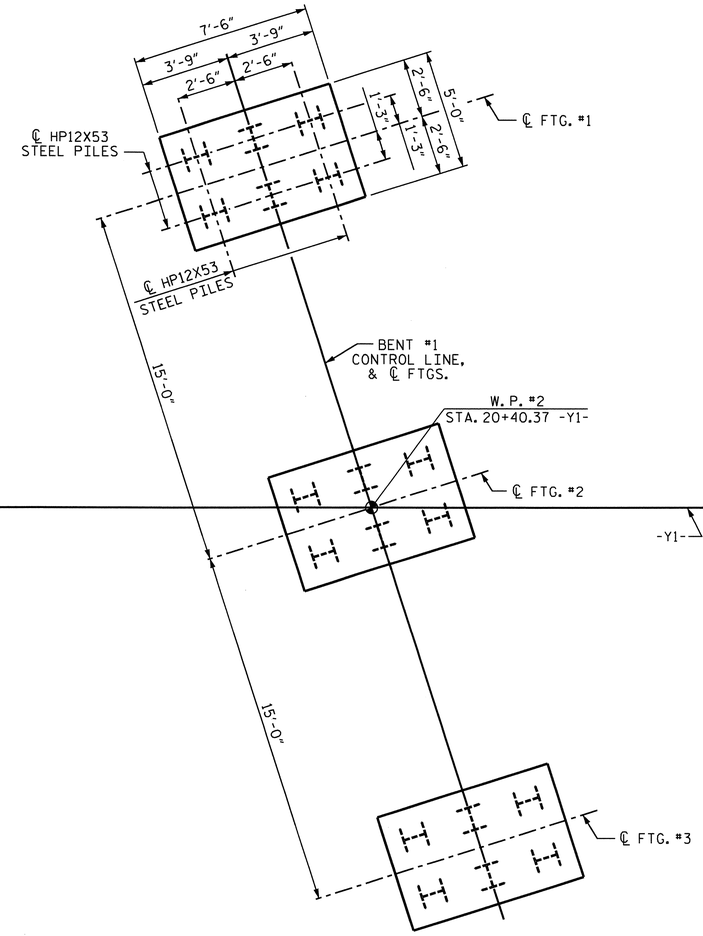


BENT #1

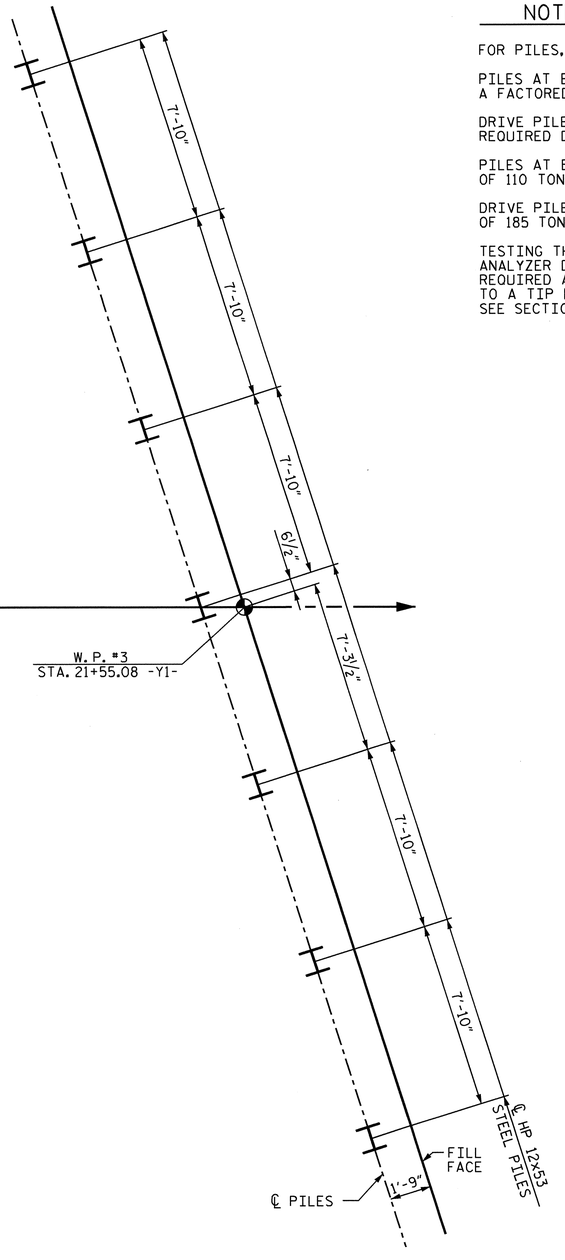


END BENT #2

## NOTES

FOR PILES, SEE SECTION 450 OF THE STANDARD SPECIFICATIONS.

PILES AT END BENT No.1 AND END BENT No.2 ARE DESIGNED FOR A FACTORED RESISTANCE OF 135 TONS PER PILE.

DRIVE PILES AT END BENT No.1 AND END BENT No.2 TO A REQUIRED DRIVING RESISTANCE OF 225 TONS PER PILE.

PILES AT BENT No.1 ARE DESIGNED FOR A FACTORED RESISTANCE OF 110 TONS PER PILE.

DRIVE PILES AT BENT No.1 TO A REQUIRED DRIVING RESISTANCE OF 185 TONS PER PILE.

TESTING THE FIRST PRODUCTION PILE WITH THE PILE DRIVING ANALYZER DURING DRIVING, RESTRIKING, OR REDRIVING IS REQUIRED AT END BENT No.1 OR END BENT No.2. DRIVE THE PILE TO A TIP ELEVATION OF 830.000. FOR PILE DRIVING ANALYZER, SEE SECTION 450 OF THE STANDARD SPECIFICATIONS.

## FOUNDATION LAYOUT

DIMENSIONS LOCATING PILES ARE SHOWN TO THE CENTERLINE OF PILES.

ALL COLUMN FOOTINGS AND PILE SPACINGS ARE IDENTICAL AT BENT

NORTH CAROLINA PROFESSIONAL SEAL 23371 ENGINEER PAUL A. PATEL

10/4/11

DRAWN BY : KEITH D. LAYNE DATE : 10/13/10
CHECKED BY : J. P. ADAMS DATE : 10/25/10

04-OCT-2011 12:08
R:\Structures\Hunt\str#1\Plans\I-3819A_sd_GD_01.dgn
chunt

PROJECT NO. I-3819A
IREDELL COUNTY
STATION: 20+40.37 -Y1-

SHEET 2 OF 3

STATE OF NORTH CAROLINA
DEPARTMENT OF TRANSPORTATION
RALEIGH

GENERAL DRAWING
FOR BRIDGE ON
RADIO ROAD (SR 2003)
OVER I-40 BETWEEN
NORTH CAROLINA AVE.
AND MUSEUM ROAD

| REVISIONS | | | | | | SHEET NO. |
|---|---|---|---|---|---|---|
| NO. | BY: | DATE: | NO. | BY: | DATE: | S-2 |
| 1 | | | 3 | | | TOTAL SHEETS |
| 2 | | | 4 | | | 382 |

STR. #1

BM#2: NCGS MONUMENT "GRAY" BY1 STA 18+30 18' RT. -Y1- STA 19+47.54 49.87' RT EL. 902.04

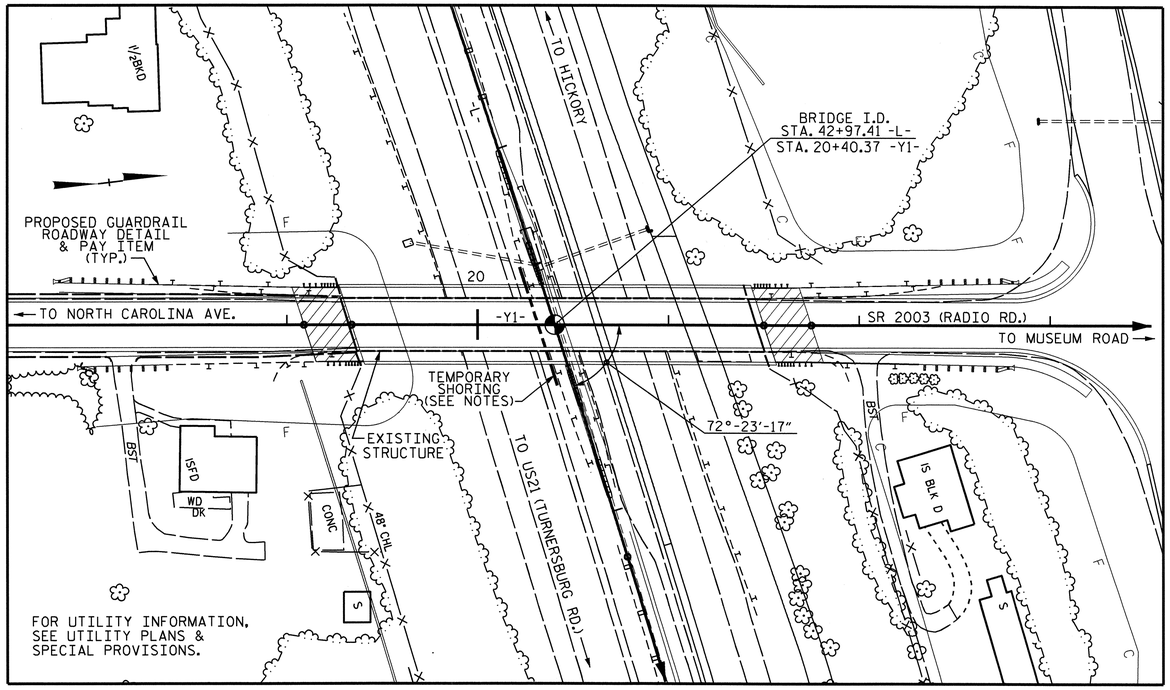


LOCATION SKETCH

## NOTES

ASSUMED LIVE LOAD = HL 93 OR ALTERNATE LOADING.

FOR OTHER DESIGN DATA AND GENERAL NOTES, SEE SHEET SN.

THIS BRIDGE HAS BEEN DESIGNED IN ACCORDANCE WITH THE AASHTO LRFD BRIDGE DESIGN SPECIFICATIONS.

PRESTRESSED CONCRETE DECK PANELS MAY BE USED IN LIEU OF METAL STAY-IN-PLACE FORMS IN ACCORDANCE WITH THE STANDARD SPECIFICATIONS.

THE EXISTING STRUCTURE CONSISTING OF 4 SPANS (1 @ 53.0', 2 @ 56.0' & 1 @ 49.0') WITH A REINFORCED CONCRETE DECK AND 4 LINES OF W36x160 STEEL I-BEAMS AND A CLEAR ROADWAY WIDTH OF 28.0', ON A SUBSTRUCTURE OF REINFORCED CONCRETE CAPS ON PRESTRESSED CONCRETE PILES AT END BENTS AND REINFORCED CONCRETE CAPS, CONCRETE COLUMNS, AND FOOTINGS ON PRESTRESSED CONCRETE PILES AT THE BENTS AND LOCATED AT PROPOSED STRUCTURE SITE SHALL BE REMOVED.

FOR MAINTENANCE AND PROTECTION OF TRAFFIC BENEATH PROPOSED STRUCTURE, SEE SPECIAL PROVISIONS.

THE SUBSTRUCTURE OF THE EXISTING BRIDGE INDICATED ON THE PLANS IS FROM THE BEST INFORMATION AVAILABLE. SINCE THIS INFORMATION IS SHOWN FOR THE CONVENIENCE OF THE CONTRACTOR, THE CONTRACTOR SHALL HAVE NO CLAIM WHATSOEVER AGAINST THE DEPARTMENT OF TRANSPORTATION FOR ANY DELAYS OR ADDITIONAL COST INCURRED BASED ON DIFFERENCES BETWEEN THE EXISTING BRIDGE SUBSTRUCTURE SHOWN ON THE PLANS AND THE ACTUAL CONDITIONS AT THE PROJECT SITE.

THE CONTRACTOR SHALL PROVIDE INDEPENDENT ASSURANCE SAMPLES OF REINFORCING STEEL AS FOLLOWS: FOR PROJECTS REQUIRING UP TO 400 TONS OF REINFORCING STEEL, ONE 30 INCH SAMPLE OF EACH SIZE BAR USED, AND FOR PROJECTS REQUIRING OVER 400 TONS OF REINFORCING STEEL, TWO 30 INCH SAMPLES OF EACH SIZE BAR USED. THE BARS FROM WHICH THE SAMPLES ARE TAKEN MUST THEN BE SPLICED WITH REPLACEMENT BARS OF THE SIZE AND LENGTH OF THE SAMPLE, PLUS A MINIMUM LAP SPLICE OF THIRTY BAR DIAMETERS. PAYMENT FOR THE SAMPLES OF REINFORCING STEEL SHALL BE CONSIDERED INCIDENTAL TO VARIOUS PAY ITEMS.

INASMUCH AS THE PAINT SYSTEM ON THE EXISTING STRUCTURAL STEEL CONTAINS LEAD, THE CONTRACTOR'S ATTENTION IS DIRECTED TO THE STANDARD SPECIFICATIONS. ANY COSTS RESULTING FROM COMPLIANCE WITH APPLICABLE STATE OR FEDERAL REGULATIONS PERTAINING TO HANDLING OF MATERIALS CONTAINING LEAD BASED PAINT SHALL BE INCLUDED IN THE BID PRICE FOR "REMOVAL OF EXISTING STRUCTURE AT STATION 20+40.37 -Y1-."

REMOVABLE FORMS MAY BE USED IN LIEU OF METAL STAY-IN-PLACE FORMS IN ACCORDANCE WITH THE STANDARD SPECIFICATIONS.

NEEDLE BEAMS WILL NOT BE ALLOWED UNLESS OTHERWISE CALLED FOR ON THE PLANS OR APPROVED BY THE ENGINEER.

FOR SUBMITTAL OF WORKING DRAWINGS, SEE SPECIAL PROVISIONS.

FOR FALSEWORK AND FORMWORK, SEE SPECIAL PROVISIONS.

FOR CRANE SAFETY, SEE SPECIAL PROVISIONS.

FOR GROUT FOR STRUCTURES, SEE SPECIAL PROVISIONS.

FOR LIMITS OF TEMPORARY SHORING FOR MAINTENANCE OF TRAFFIC, SEE TRAFFIC CONTROL PLANS. FOR PAY ITEM FOR TEMPORARY SHORING FOR MAINTENANCE OF TRAFFIC, SEE ROADWAY PLANS.

THE CLASS AA CONCRETE IN THE BRIDGE DECK SHALL CONTAIN FLY ASH OR GROUND GRANULATED BLAST FURNACE SLAG AT THE SUBSTITUTION RATE SPECIFIED IN ARTICLE 1024-1 AND IN ACCORDANCE WITH ARTICLES 1024-5 AND 1024-6 OF THE STANDARD SPECIFICATIONS. NO PAYMENT WILL BE MADE FOR THIS SUBSTITUTION AS IT IS CONSIDERED INCIDENTAL TO THE COST OF THE REINFORCED CONCRETE DECK SLAB.

WORK SHALL NOT BE STARTED ON THE SLOPE PROTECTION UNTIL ROADWAY SECTION HAS BEEN EXCAVATED.

## TOTAL BILL OF MATERIAL

| | REMOVAL OF EXISTING STRUCTURE | FOUNDATION EXCAVATION | PDA TESTING | REINFORCED CONCRETE DECK SLAB | GROOVING BRIDGE FLOORS | CLASS A CONCRETE | BRIDGE APPROACH SLABS | REINFORCING STEEL | SPIRAL COLUMN REINFORCING STEEL | MODIFIED 72" PRESTRESSED CONCRETE GIRDER | | HP12x53 STEEL PILES | | PILE REDRIVES | 3 BAR METAL RAIL | 4" SLOPE PROTECTION | ELASTOMERIC BEARINGS |
|---|---|---|---|---|---|---|---|---|---|---|---|---|---|---|---|---|---|
| | LUMP SUM | LUMP SUM | EACH | SQ. FT. | SQ. FT. | CU. YDS. | LUMP SUM | LBS. | LBS. | NO. | LIN. FT. | NO. | LIN. FT. | EACH | LIN. FT. | SQ. YDS. | LUMP SUM |
| SUPERSTRUCTURE | | | | 9,277 | 6,792 | | | | | 10 | 1,108.75 | | | | 430.46 | | LUMP SUM |
| END BENT #1 | | | | | | 26.3 | | 3,691 | | | | 7 | 490 | 7 | | 365 | |
| BENT #1 | | LUMP SUM | | | | 52.6 | | 8,425 | 1,257 | | | 18 | 1,080 | 18 | | | |
| END BENT #2 | | | | | | 26.4 | | 3,691 | | | | 7 | 490 | 7 | | 270 | |
| TOTAL | LUMP SUM | LUMP SUM | 1 | 9,277 | 6,792 | 105.3 | LUMP SUM | 15,807 | 1,257 | 10 | 1,108.75 | 32 | 2,060 | 32 | 430.46 | 635 | LUMP SUM |

PROJECT NO. I-3819A

IREDELL COUNTY

STATION: 20+40.37 -Y1-

SHEET 3 OF 3

STATE OF NORTH CAROLINA
DEPARTMENT OF TRANSPORTATION
RALEIGH

# GENERAL DRAWING

FOR BRIDGE ON RADIO ROAD (SR 2003) OVER I-40 BETWEEN NORTH CAROLINA AVE. AND MUSEUM ROAD

| REVISIONS | | | | | | SHEET NO. |
|---|---|---|---|---|---|---|
| NO. | BY: | DATE: | NO. | BY: | DATE: | S-3 |
| 1 | | | 3 | | | TOTAL SHEETS |
| 2 | | | 4 | | | 382 |

NORTH CAROLINA PROFESSIONAL SEAL 23371 ENGINEER VIMAL A. PATEL
1/10/12

DRAWN BY : KEITH D. LAYNE DATE : 6/11/10
CHECKED BY : J. P. ADAMS DATE : 10/25/10

03-JAN-2012 09:16
R:\Structures\Hunt\str#1\Plans\I-3819A_sd_GD_01.dgn
hlocklear

STR. #1

# LOAD AND RESISTANCE FACTOR RATING (LRFD) SUMMARY FOR PRESTRESSED CONCRETE GIRDERS

| LEVEL | | VEHICLE | WEIGHT (W) (TONS) | ⬢ CONTROLLING LOAD RATING | MINIMUM RATING FACTORS (RF) | TONS = W X RF | STRENGTH I LIMIT STATE | | | | | | | | | | SERVICE III LIMIT STATE | | | | | | COMMENT NUMBER |
|---|---|---|---|---|---|---|---|---|---|---|---|---|---|---|---|---|---|---|---|---|---|---|---|
| | | | | | | | | MOMENT | | | | | SHEAR | | | | | MOMENT | | | | | | |
| | | | | | | | LIVELOAD FACTORS | DISTRIBUTION FACTORS (DF) | RATING FACTOR | SPAN | GIRDER LOCATION | DISTANCE FROM LEFT END OF SPAN (ft) | DISTRIBUTION FACTORS (DF) | RATING FACTOR | SPAN | GIRDER LOCATION | DISTANCE FROM LEFT END OF SPAN (ft) | LIVELOAD FACTORS | DISTRIBUTION FACTORS (DF) | RATING FACTOR | SPAN | GIRDER LOCATION | DISTANCE FROM LEFT END OF SPAN (ft) | |
| DESIGN LOAD RATING | | HL-93(Inv) | N/A | 1 | 1.003 | -- | 1.75 | 0.847 | 1.41 | B | EL | 55.875 | 0.885 | 1.06 | A | I | 10.717 | 0.80 | 0.847 | 1.00 | B | EL | 55.875 | |
| | | HL-93(Opr) | N/A | -- | 1.369 | -- | 1.35 | 0.847 | 1.83 | B | EL | 55.875 | 0.885 | 1.37 | A | I | 10.717 | N/A | -- | -- | -- | -- | -- | |
| | | HS-20(Inv) | 36.000 | 2 | 1.438 | 51.785 | 1.75 | 0.847 | 2.02 | B | EL | 55.875 | 0.885 | 1.44 | A | I | 10.717 | 0.80 | 0.847 | 1.44 | B | EL | 55.875 | |
| | | HS-20(Opr) | 36.000 | -- | 1.872 | 67.407 | 1.35 | 0.847 | 2.62 | B | EL | 55.875 | 0.885 | 1.87 | A | I | 10.717 | N/A | -- | -- | -- | -- | -- | |
| LEGAL LOAD RATING | SV | SNSH | 13.500 | -- | 3.463 | 46.745 | 1.40 | 0.847 | 6.09 | B | EL | 55.875 | 0.885 | 4.47 | A | I | 10.717 | 0.80 | 0.847 | 3.46 | B | EL | 55.875 | |
| | | SNGARBS2 | 20.000 | -- | 2.486 | 49.715 | 1.40 | 0.847 | 4.37 | B | EL | 55.875 | 0.885 | 3.12 | A | I | 10.717 | 0.80 | 0.847 | 2.49 | B | EL | 55.875 | |
| | | SNAGRIS2 | 22.000 | -- | 2.316 | 50.961 | 1.40 | 0.847 | 4.07 | B | EL | 55.875 | 0.885 | 2.88 | A | I | 10.717 | 0.80 | 0.847 | 2.32 | B | EL | 55.875 | |
| | | SNCOTTS3 | 27.250 | -- | 1.72 | 46.878 | 1.40 | 0.847 | 3.02 | B | EL | 55.875 | 0.885 | 2.23 | A | I | 10.717 | 0.80 | 0.847 | 1.72 | B | EL | 55.875 | |
| | | SNAGGRS4 | 34.925 | -- | 1.401 | 48.932 | 1.40 | 0.847 | 2.46 | B | EL | 55.875 | 0.885 | 1.81 | A | I | 10.717 | 0.80 | 0.847 | 1.40 | B | EL | 55.875 | |
| | | SNS5A | 35.550 | -- | 1.373 | 48.793 | 1.40 | 0.847 | 2.41 | B | EL | 55.875 | 0.885 | 1.81 | A | I | 10.717 | 0.80 | 0.847 | 1.37 | B | EL | 55.875 | |
| | | SNS6A | 39.950 | -- | 1.245 | 49.718 | 1.40 | 0.847 | 2.19 | B | EL | 55.875 | 0.885 | 1.64 | A | I | 10.717 | 0.80 | 0.847 | 1.24 | B | EL | 55.875 | |
| | | SNS7B | 42.000 | -- | 1.185 | 49.754 | 1.40 | 0.847 | 2.08 | B | EL | 55.875 | 0.885 | 1.59 | A | I | 10.717 | 0.80 | 0.847 | 1.18 | B | EL | 55.875 | |
| | TTST | TNAGRIT3 | 33.000 | -- | 1.513 | 49.939 | 1.40 | 0.847 | 2.66 | B | EL | 55.875 | 0.885 | 1.96 | A | I | 10.717 | 0.80 | 0.847 | 1.51 | B | EL | 55.875 | |
| | | TNT4A | 33.075 | -- | 1.516 | 50.142 | 1.40 | 0.847 | 2.66 | B | EL | 55.875 | 0.885 | 1.93 | A | I | 10.717 | 0.80 | 0.847 | 1.52 | B | EL | 55.875 | |
| | | TNT6A | 41.600 | -- | 1.226 | 50.996 | 1.40 | 0.847 | 2.15 | B | EL | 55.875 | 0.885 | 1.66 | A | I | 10.717 | 0.80 | 0.847 | 1.23 | B | EL | 55.875 | |
| | | TNT7A | 42.000 | -- | 1.225 | 51.442 | 1.40 | 0.847 | 2.15 | B | EL | 55.875 | 0.885 | 1.63 | A | I | 10.717 | 0.80 | 0.847 | 1.22 | B | EL | 55.875 | |
| | | TNT7B | 42.000 | -- | 1.25 | 52.487 | 1.40 | 0.847 | 2.2 | B | EL | 55.875 | 0.885 | 1.57 | A | I | 10.717 | 0.80 | 0.847 | 1.25 | B | EL | 55.875 | |
| | | TNAGRIT4 | 43.000 | -- | 1.202 | 51.674 | 1.40 | 0.847 | 2.11 | B | EL | 55.875 | 0.885 | 1.52 | A | I | 10.717 | 0.80 | 0.847 | 1.20 | B | EL | 55.875 | |
| | | TNAGT5A | 45.000 | -- | 1.139 | 51.264 | 1.40 | 0.847 | 2.00 | B | EL | 55.875 | 0.885 | 1.49 | A | I | 10.717 | 0.80 | 0.847 | 1.14 | B | EL | 55.875 | |
| | | TNAGT5B | 45.000 | 3 | 1.131 | 50.891 | 1.40 | 0.847 | 1.99 | B | EL | 55.875 | 0.885 | 1.45 | A | I | 10.717 | 0.80 | 0.847 | 1.13 | B | EL | 55.875 | |

## LOAD FACTORS:

| DESIGN LOAD RATING FACTORS | LIMIT STATE | $\gamma_{DC}$ | $\gamma_{DW}$ |
|---|---|---|---|
| | STRENGTH I | 1.25 | 1.50 |
| | SERVICE III | 1.00 | 1.00 |

## NOTES:

MINIMUM RATING FACTORS ARE BASED ON THE STRENGTH I AND SERVICE III LIMIT STATES.

ALLOWABLE STRESSES FOR SERVICE III LIMIT STATE ARE AS REQUIRED FOR DESIGN.

## COMMENTS:

1.
2.
3.
4.

⬢ CONTROLLING LOAD RATING

1. DESIGN LOAD RATING (HL-93)
2. DESIGN LOAD RATING (HS-20)
3. LEGAL LOAD RATING **

** SEE CHART FOR VEHICLE TYPE

GIRDER LOCATION

I - INTERIOR GIRDER
EL - EXTERIOR LEFT GIRDER
ER - EXTERIOR RIGHT GIRDER

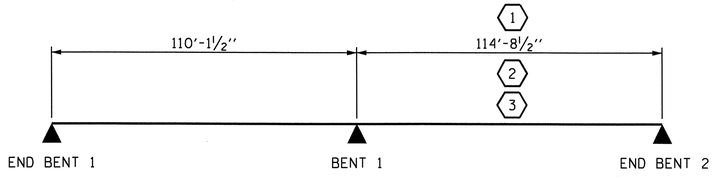


LRFR SUMMARY

PROJECT NO. I-3819A
IREDELL COUNTY
STATION: 20+40.37 -Y1-

STATE OF NORTH CAROLINA
DEPARTMENT OF TRANSPORTATION
RALEIGH

STANDARD

# LRFR SUMMARY FOR PRESTRESSED CONCRETE GIRDERS
(NON-INTERSTATE TRAFFIC)

NORTH CAROLINA PROFESSIONAL SEAL 23371 ENGINEER VIRUL A. PATEL
1/10/12

| REVISIONS | | | | | | SHEET NO. |
|---|---|---|---|---|---|---|
| NO. | BY: | DATE: | NO. | BY: | DATE: | 5-4 |
| 1 | | | 3 | | | TOTAL SHEETS |
| 2 | | | 4 | | | 382 |

STD. NO. LRFR1

| | |
|---|---|
| ASSEMBLED BY : B. L. GREEN | DATE : 11/10 |
| CHECKED BY : H. A. LOCKLEAR | DATE : 11/10 |
| DRAWN BY : MAA 1/08 | REV. 11/12/08R MAA/GM |
| CHECKED BY : GM/DI 2/08 | |

03-JAN-2012 09:18
R:\Structures\Hunt\str*1\Plans\I-3819A_sd_lr_01.dgn
hlocklear

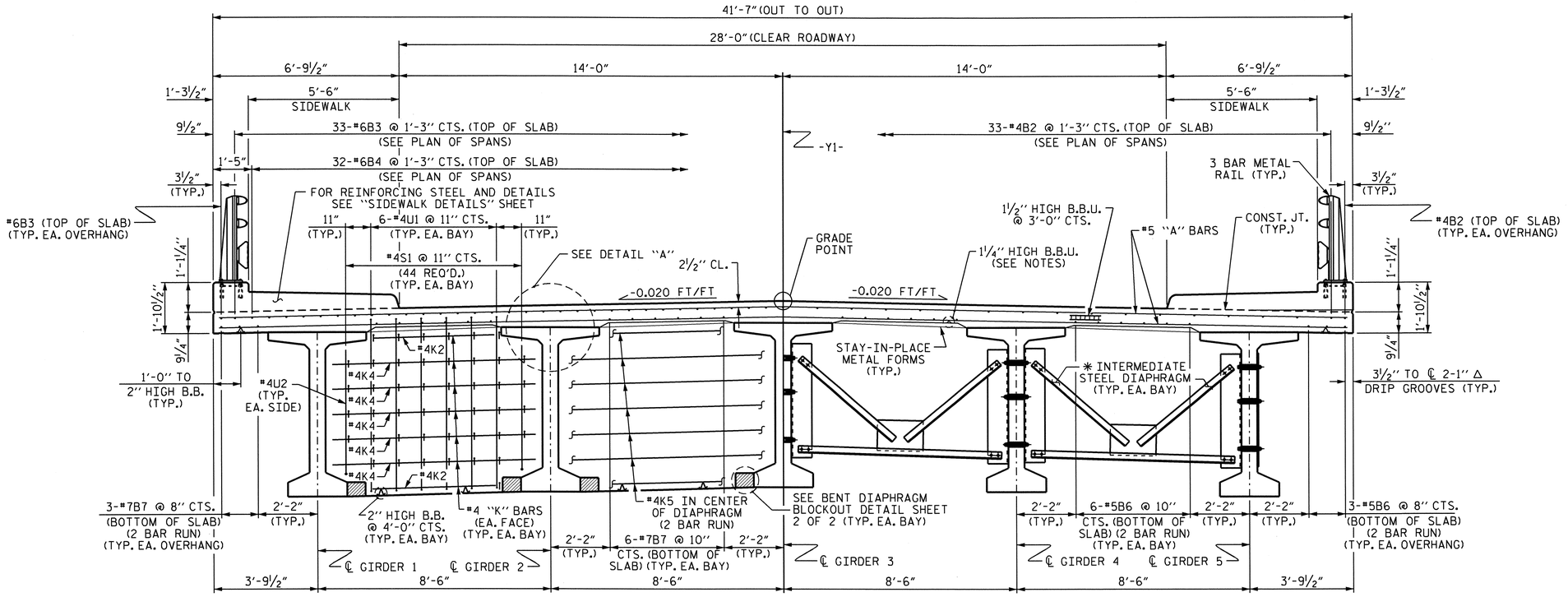


TYPICAL SECTION
(SHOWING BENT DIAPHRAGMS)

TYPICAL SECTION
(SHOWING INTERMEDIATE DIAPHRAGMS)

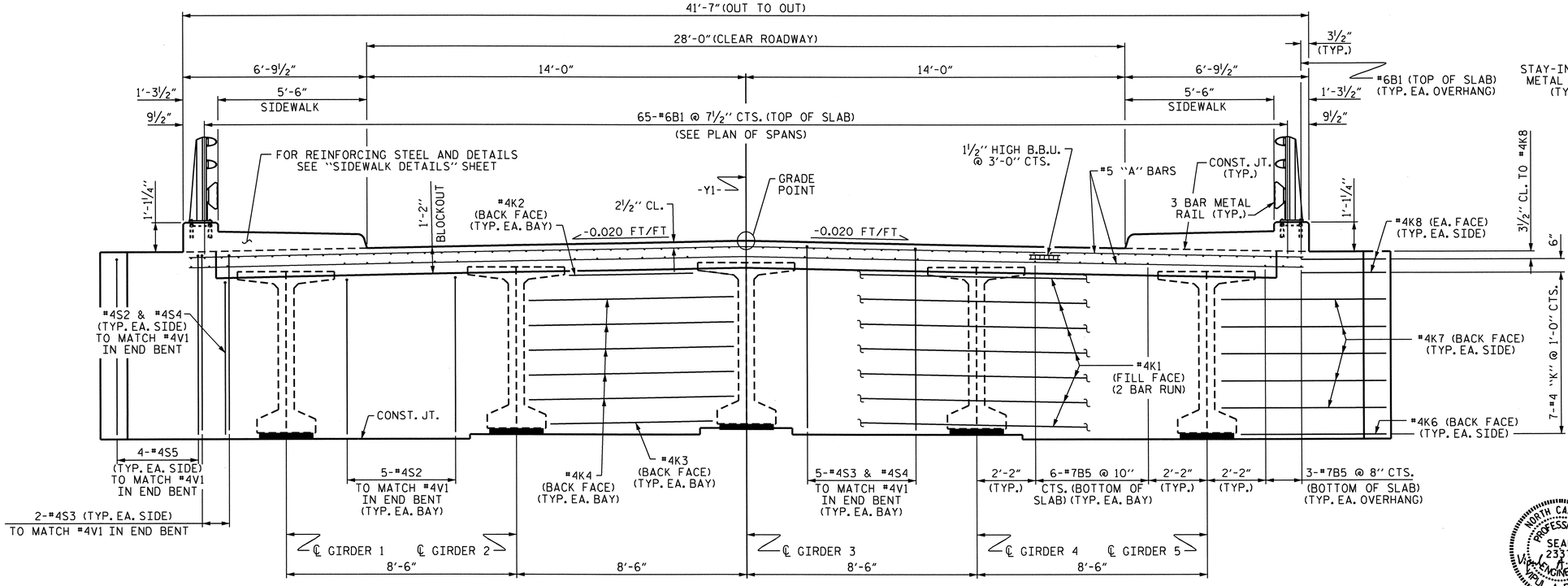


TYPICAL SECTION @ INTEGRAL END BENT

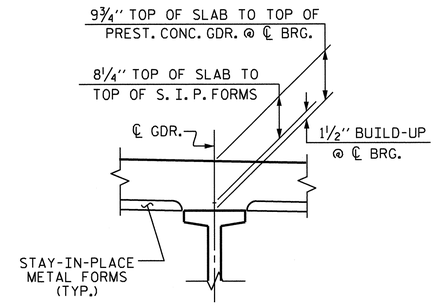


DETAIL "A"

## NOTES

PROVIDE 1¼" HIGH BEAM BOLSTERS UPPER AT 4'-0" CTS. ATOP THE METAL STAY-IN-PLACE FORMS TO SUPPORT THE BOTTOM MAT OF 'A' BARS. WHEN USING REMOVABLE FORMS, PROVIDE CONTINUOUS HIGH CHAIRS FOR METAL DECK (C.H.C.M.) @ 4'-0" CTS. WITH A HEIGHT TO SUPPORT THE BOTTOM MAT OF 'A' BARS A CLEAR DISTANCE OF 2½" ABOVE THE TOP OF THE REMOVABLE FORM.

LONGITUDINAL STEEL MAY BE SHIFTED SLIGHTLY, AS NECESSARY, TO AVOID INTERFERENCE WITH STIRRUPS IN PRESTRESSED CONCRETE GIRDERS.

PREVIOUSLY CAST CONCRETE IN A CONTINUOUS UNIT SHALL HAVE ATTAINED A MINIMUM COMPRESSIVE STRENGTH OF 3,000 PSI BEFORE ADDITIONAL CONCRETE IS CAST IN THE UNIT.

FOR WING ELEVATIONS AND DETAILS, SEE "PLAN OF SPAN DETAILS" SHEETS.

* FOR INTERMEDIATE STEEL DIAPHRAGM DETAILS, SEE "INTERMEDIATE STEEL DIAPHRAGMS FOR 72" MODIFIED BULB TEE PRESTRESSED CONCRETE GIRDERS" SHEET.

PROJECT NO. I-3819A
IREDELL COUNTY
STATION: 20+40.37 -Y1-

SHEET 1 OF 2

STATE OF NORTH CAROLINA
DEPARTMENT OF TRANSPORTATION
RALEIGH

SUPERSTRUCTURE

TYPICAL SECTION

| REVISIONS | | | | | | SHEET NO. |
|---|---|---|---|---|---|---|
| NO. | BY: | DATE: | NO. | BY: | DATE: | S-5 |
| 1 | | | 3 | | | TOTAL SHEETS |
| 2 | | | 4 | | | 382 |

NORTH CAROLINA PROFESSIONAL SEAL 23371 ENGINEER VIPUL A. PATEL
1/10/12

DRAWN BY : B. L. GREEN DATE : 7/10/10
CHECKED BY : M. K. BEARD DATE : 10/20/10

03-JAN-2012 09:35
R:\Structures\Hunt\str#1\Plans\I-3819A_sd_TS_01.dgn
hlocklear

STR. #1

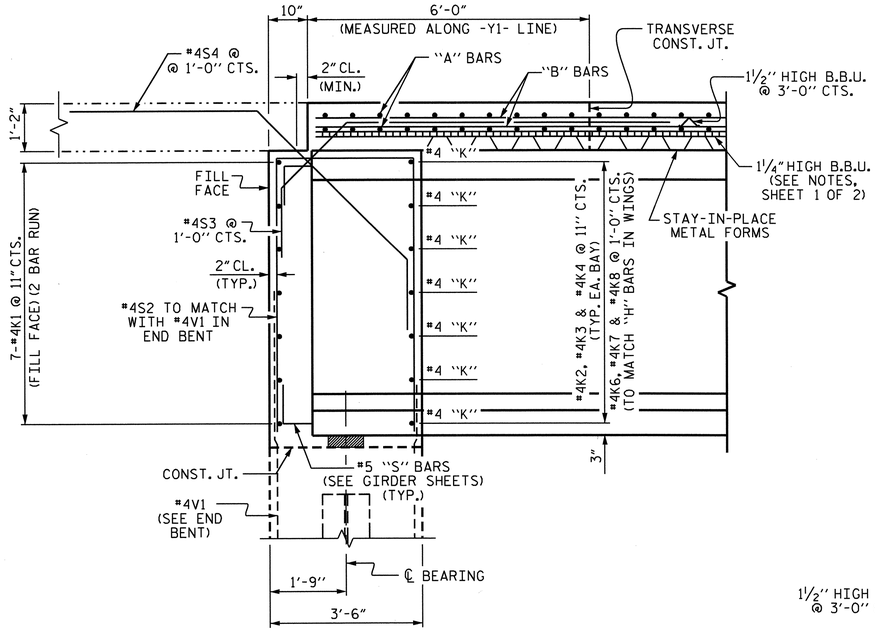


## SECTION THRU INTEGRAL END BENT

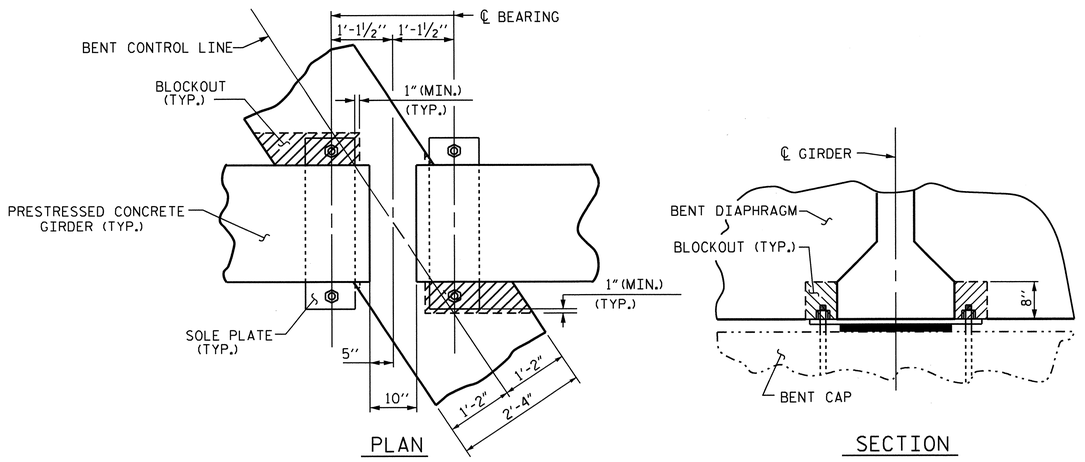


## BENT DIAPHRAGM BLOCK-OUT DETAIL

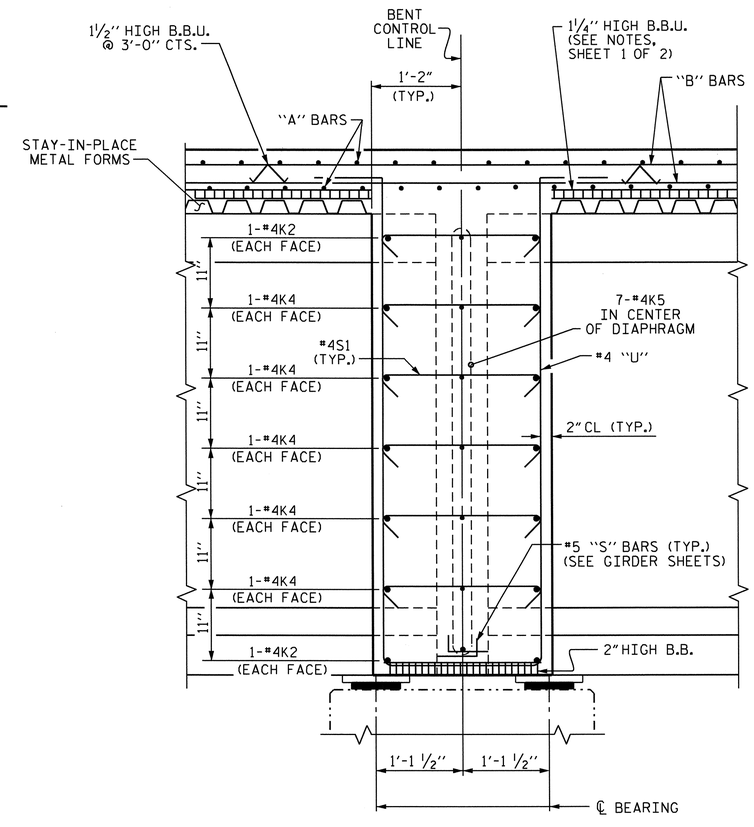


## SECTION THRU BENT DIAPHRAGM

PROJECT NO. I-3819A

IREDELL COUNTY

STATION: 20+40.37 -Y1-

SHEET 2 OF 2

STATE OF NORTH CAROLINA
DEPARTMENT OF TRANSPORTATION
RALEIGH

SUPERSTRUCTURE

TYPICAL SECTION

NORTH CAROLINA PROFESSIONAL SEAL 23371 ENGINEER VIPUL A. PATEL

10 | 3 | 11

| REVISIONS | | | | | | SHEET NO. |
|---|---|---|---|---|---|---|
| NO. | BY: | DATE: | NO. | BY: | DATE: | S-6 |
| 1 | | | 3 | | | TOTAL SHEETS |
| 2 | | | 4 | | | 382 |

DRAWN BY : B. L. GREEN DATE : 7/10/10
CHECKED BY : M. K. BEARD DATE : 10/20/10

03-OCT-2011 14:41
R:\Structures\Hunt\str#1\Plans\I-3819A_sd_TS_01.dgn
chunt

STR. #1

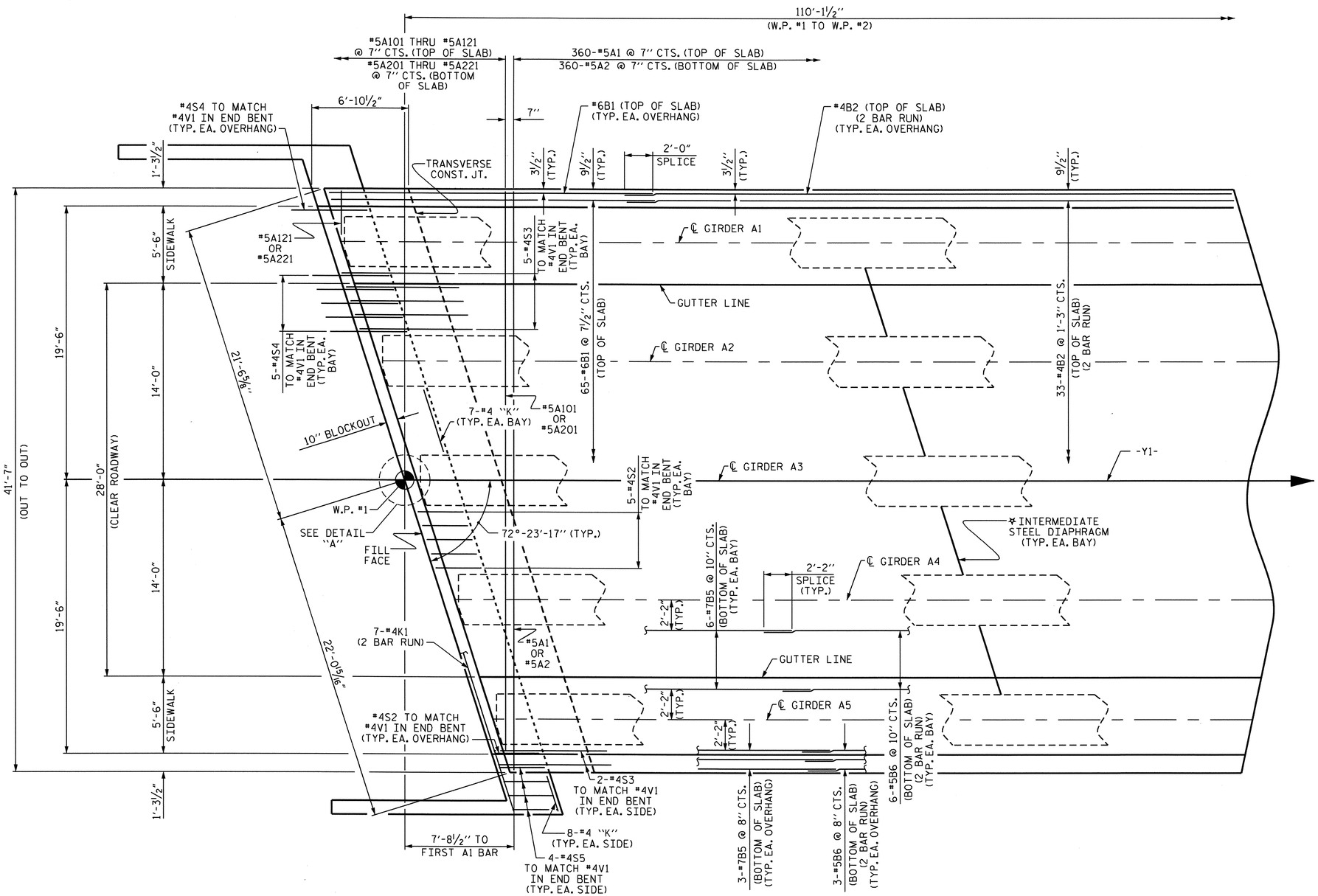


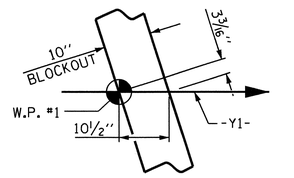


DETAIL "A"

## PARTIAL PLAN OF SPAN A

SEE PLAN OF SPAN DETAILS SHEET FOR ADDITIONAL REINFORCING STEEL IN WINGS

*FOR INTERMEDIATE STEEL DIAPHRAGM DETAILS, SEE "INTERMEDIATE STEEL DIAPHRAGMS FOR 72" MODIFIED BULB TEE PRESTRESSED CONCRETE GIRDERS" SHEET.

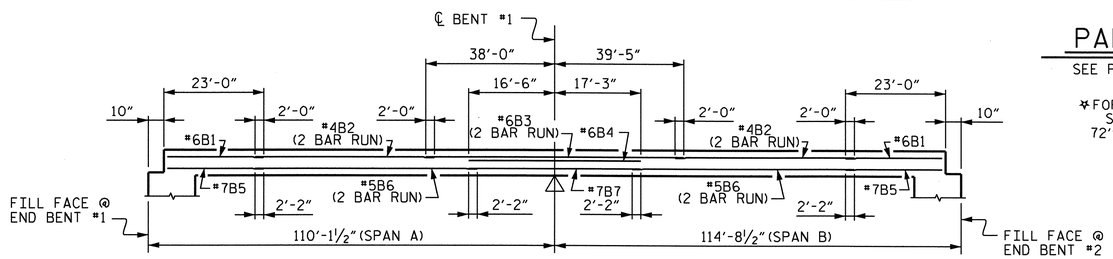


## SCHEMATIC DIAGRAM OF SPANS A & B

PROJECT NO. I-3819A

IREDELL COUNTY

STATION: 20+40.37 -Y1-

SHEET 1 OF 3

STATE OF NORTH CAROLINA
DEPARTMENT OF TRANSPORTATION
RALEIGH

SUPERSTRUCTURE

PLAN OF SPAN

PARTIAL PLAN SPAN A

| REVISIONS | | | | | | SHEET NO. |
|---|---|---|---|---|---|---|
| NO. | BY: | DATE: | NO. | BY: | DATE: | S-7 |
| 1 | | | 3 | | | TOTAL SHEETS |
| 2 | | | 4 | | | 382 |

NORTH CAROLINA PROFESSIONAL SEAL 23371 ENGINEER VIPUL A. PATEL
12/7/10

STR. #1

DRAWN BY : B. L. GREEN DATE : 9/15/10
CHECKED BY : M. K. BEARD DATE : 10/20/10

07-DEC-2010 09:31
R:\Structures\Hunt\str#1\Plans\I-3819A_sd_PS_01.dgn
jpadams

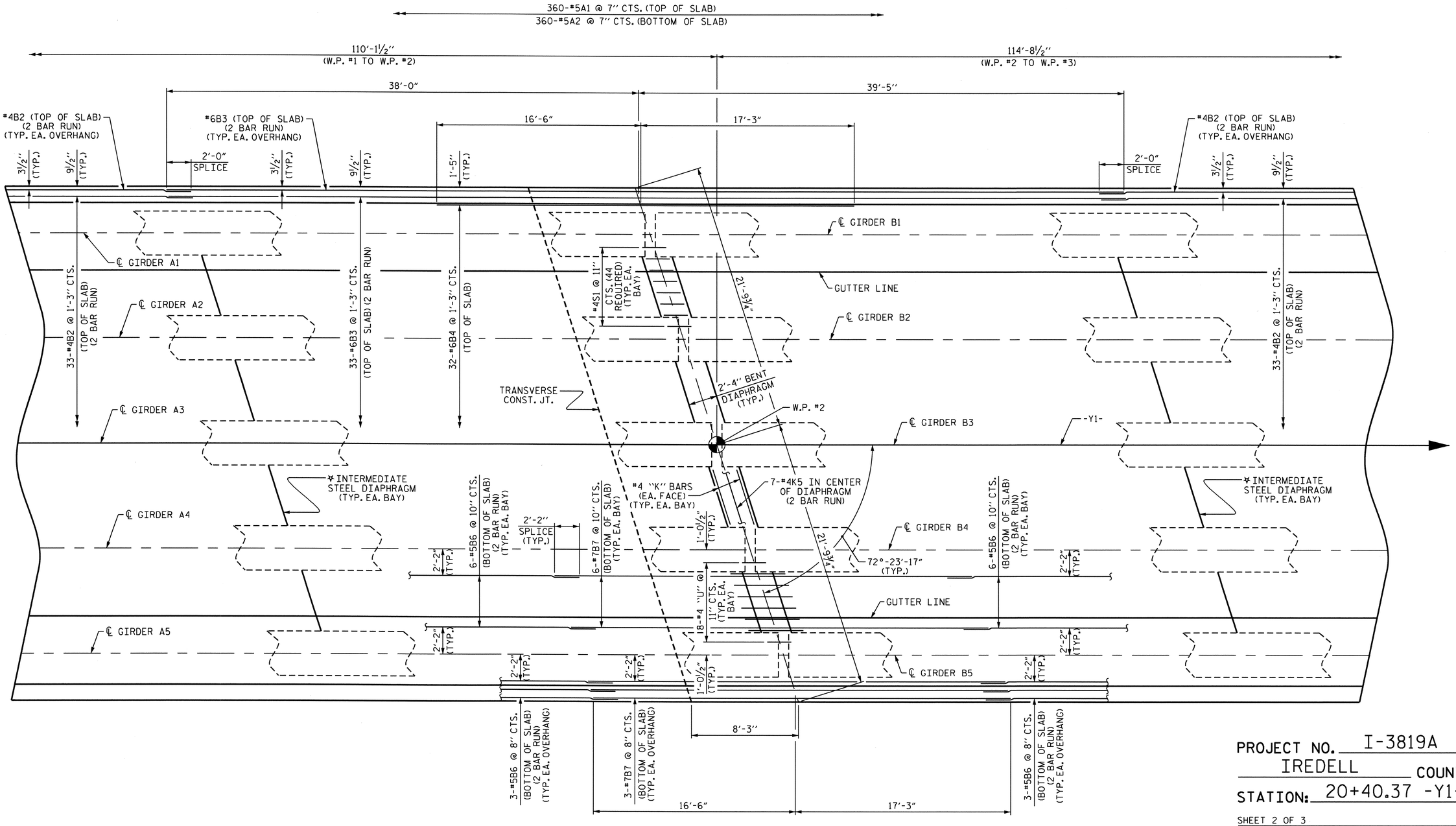


# PARTIAL PLAN OF SPAN A/SPAN B

SEE PLAN OF SPAN DETAILS SHEET FOR ADDITIONAL REINFORCING STEEL IN WINGS

✲FOR INTERMEDIATE STEEL DIAPHRAGM DETAILS, SEE "INTERMEDIATE STEEL DIAPHRAGMS FOR 72" MODIFIED BULB TEE PRESTRESSED CONCRETE GIRDERS" SHEET.

PROJECT NO. I-3819A

IREDELL COUNTY

STATION: 20+40.37 -Y1-

SHEET 2 OF 3

STATE OF NORTH CAROLINA
DEPARTMENT OF TRANSPORTATION
RALEIGH

SUPERSTRUCTURE

PLAN OF SPAN

PARTIAL PLAN SPAN A/SPAN B

| REVISIONS | | | | | | SHEET NO. |
|---|---|---|---|---|---|---|
| NO. | BY: | DATE: | NO. | BY: | DATE: | S-8 |
| 1 | | | 3 | | | TOTAL SHEETS |
| 2 | | | 4 | | | 382 |

NORTH CAROLINA PROFESSIONAL SEAL 23371 ENGINEER VIPUL A. PATEL
12/7/10

DRAWN BY : B. L. GREEN DATE : 9/15/10
CHECKED BY : M. K. BEARD DATE : 10/20/10

03-DEC-2010 11:17
O:\Structures\Hunt\str#1\Plans\I-3819A_sd_PS_01.dgn
bgreen

STR. #1

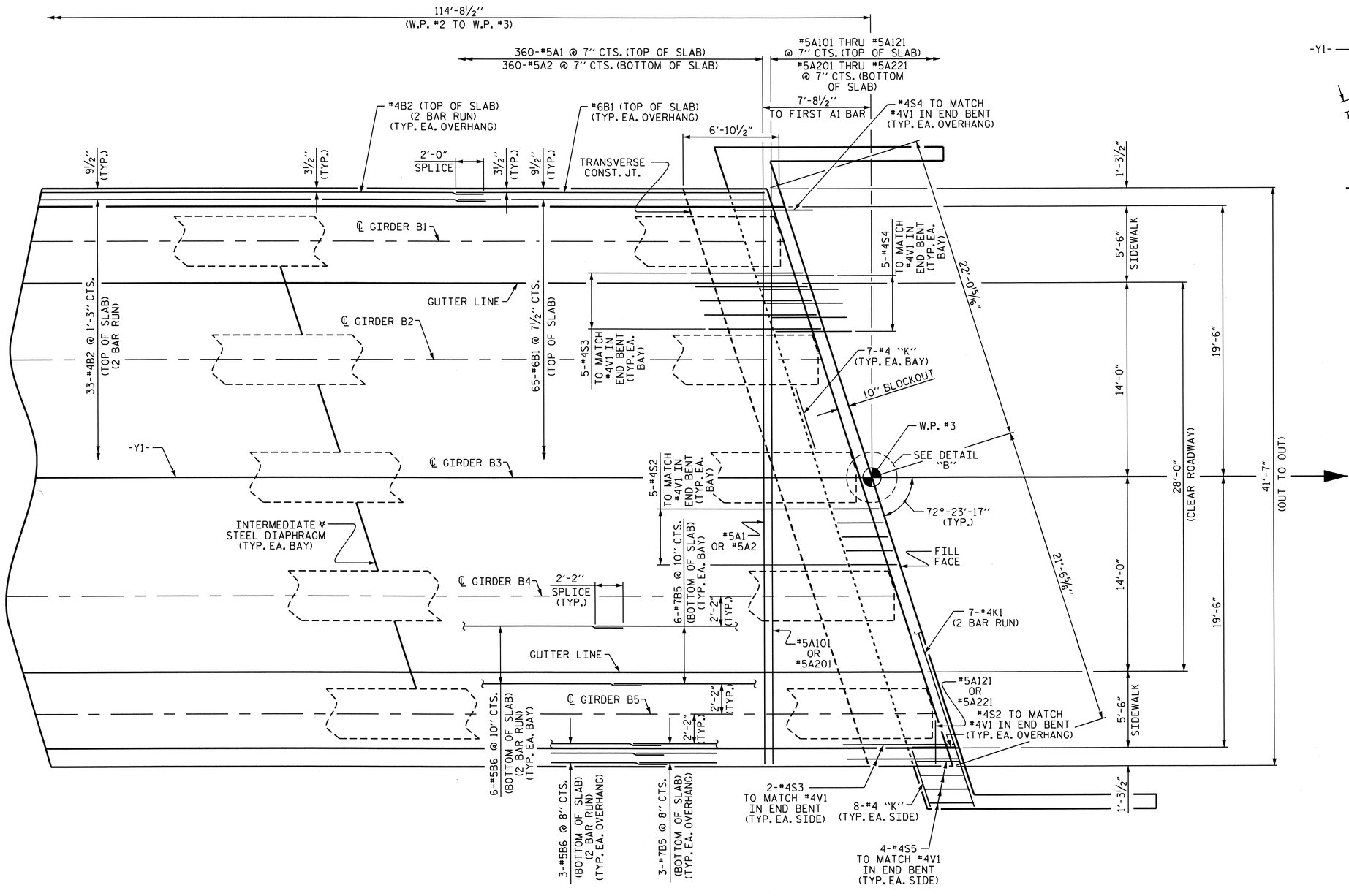


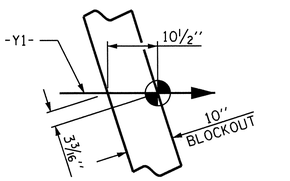


DETAIL "B"

## PARTIAL PLAN OF SPAN B

SEE PLAN OF SPAN DETAILS SHEET FOR ADDITIONAL REINFORCING STEEL IN WINGS

✲FOR INTERMEDIATE STEEL DIAPHRAGM DETAILS, SEE "INTERMEDIATE STEEL DIAPHRAGMS FOR 72" MODIFIED BULB TEE PRESTRESSED CONCRETE GIRDERS" SHEET.

PROJECT NO. I-3819A

IREDELL COUNTY

STATION: 20+40.37 -Y1-

SHEET 3 OF 3

STATE OF NORTH CAROLINA
DEPARTMENT OF TRANSPORTATION
RALEIGH

SUPERSTRUCTURE

PLAN OF SPAN

PARTIAL PLAN SPAN B

| REVISIONS | | | | | | SHEET NO. |
|---|---|---|---|---|---|---|
| NO. | BY: | DATE: | NO. | BY: | DATE: | S-9 |
| 1 | | | 3 | | | TOTAL SHEETS |
| 2 | | | 4 | | | 382 |

NORTH CAROLINA PROFESSIONAL SEAL 23371 ENGINEER VIRAL A. PATEL
1/10/12

DRAWN BY : B. L. GREEN DATE : 9/15/10
CHECKED BY : M. K. BEARD DATE : 10/20/10

03-JAN-2012 09:42
R:\Structures\Hunt\str#1\Plans\I-3819A_sd_PS_01.dgn
hlacklear

STR. #1

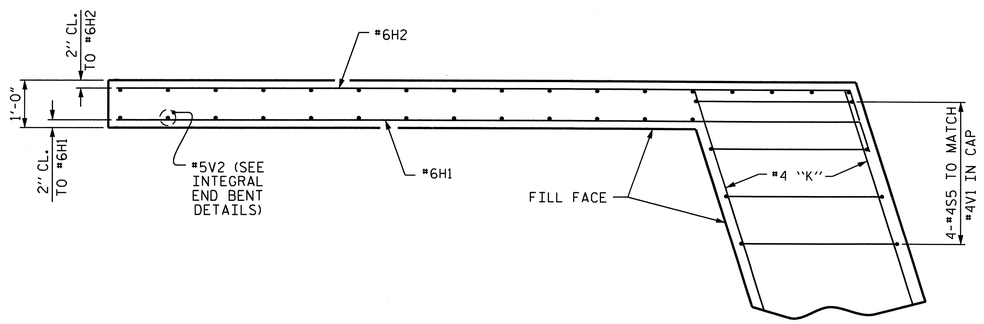


## PLAN OF LEFT WING
@ END BENT #1

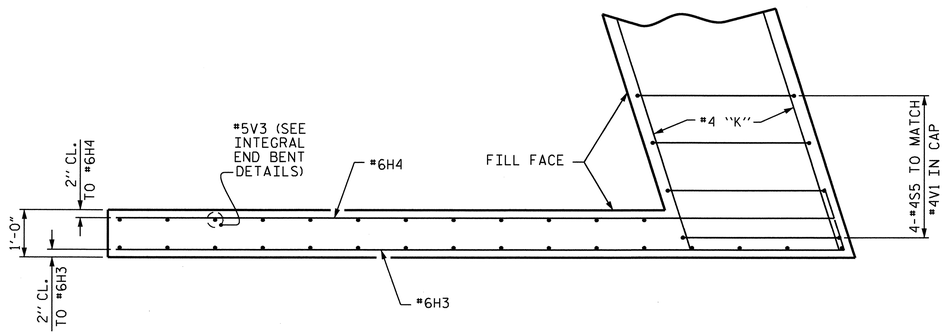


## PLAN OF RIGHT WING
@ END BENT #1

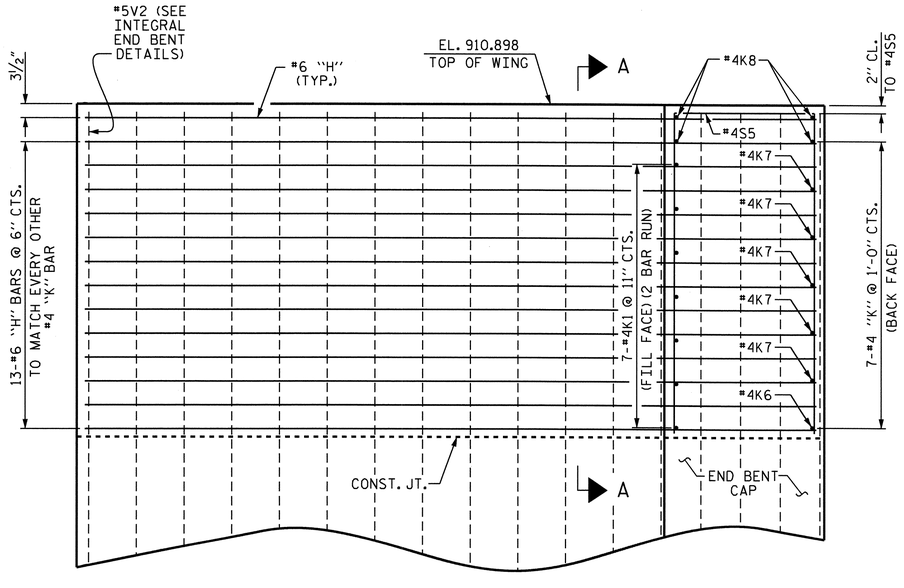


## ELEVATION OF LEFT WING
@ END BENT #1

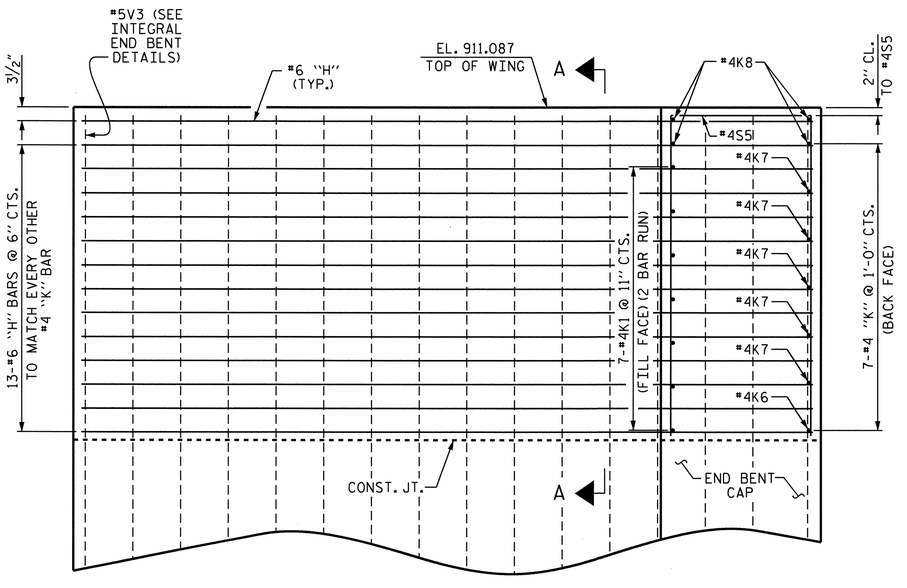


## ELEVATION OF RIGHT WING
@ END BENT #1

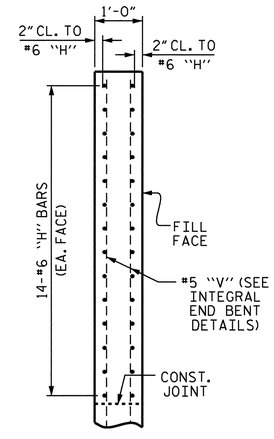


## SECTION A-A

PROJECT NO. I-3819A
IREDELL COUNTY
STATION: 20+40.37 -Y1-

STATE OF NORTH CAROLINA
**DEPARTMENT OF TRANSPORTATION**
RALEIGH

SUPERSTRUCTURE

# TOP OF WINGS @ END BENT 1

| REVISIONS | | | | | | SHEET NO. |
|---|---|---|---|---|---|---|
| NO. | BY: | DATE: | NO. | BY: | DATE: | S-10 |
| 1 | | | 3 | | | TOTAL SHEETS |
| 2 | | | 4 | | | 382 |

NORTH CAROLINA PROFESSIONAL SEAL 23371 ENGINEER VIPUL A PATEL
12/7/10

DRAWN BY : B. L. GREEN DATE : 9/20/10
CHECKED BY : M. K. BEARD DATE : 10/20/10

03-DEC-2010 11:17
O:\Structures\Hunt\str#1\Plans\I-3819A_sd_PS_01.dgn
bgreen

STR. #1

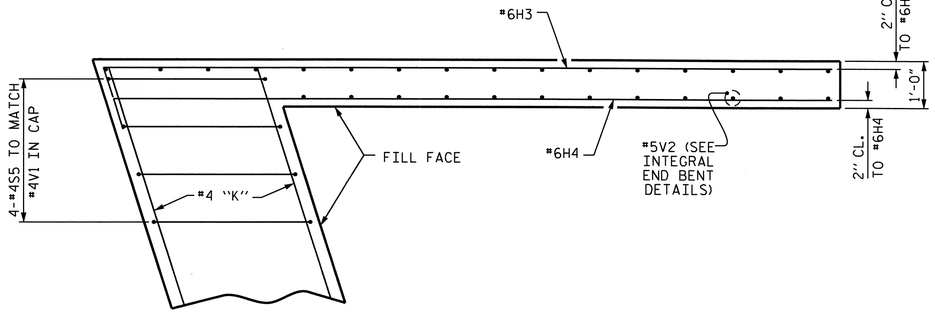


## PLAN OF LEFT WING
@ END BENT #2

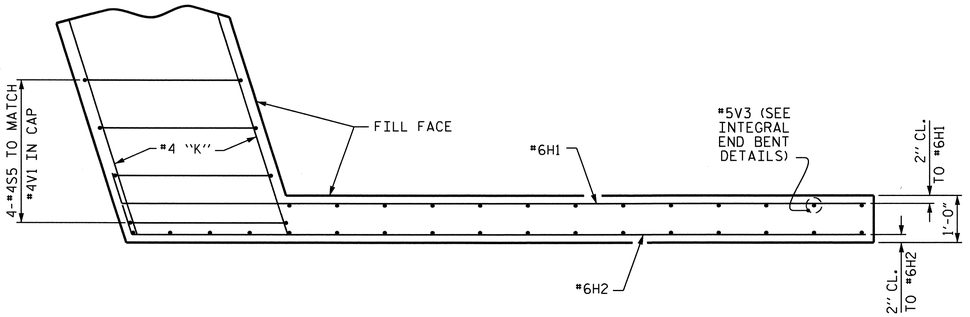


## PLAN OF RIGHT WING
@ END BENT #2

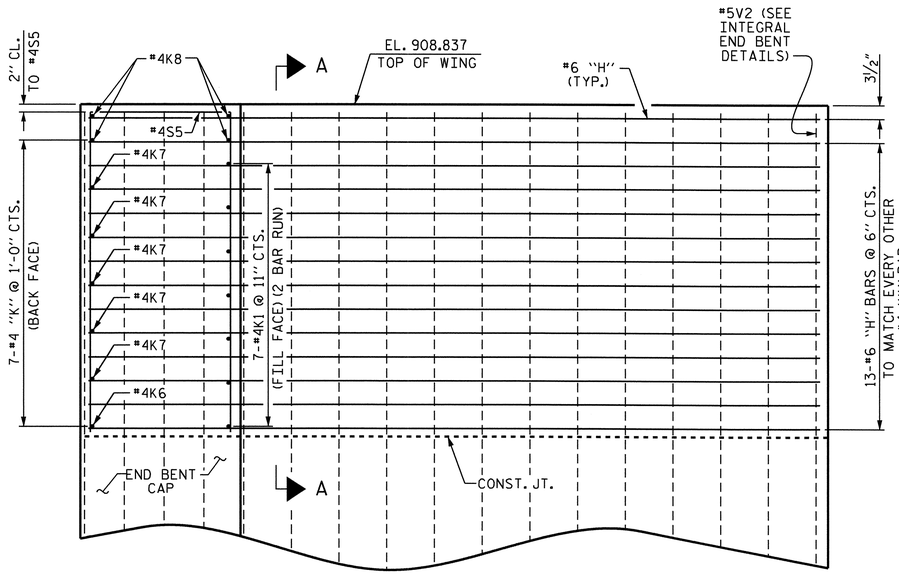


## ELEVATION OF LEFT WING
@ END BENT #2

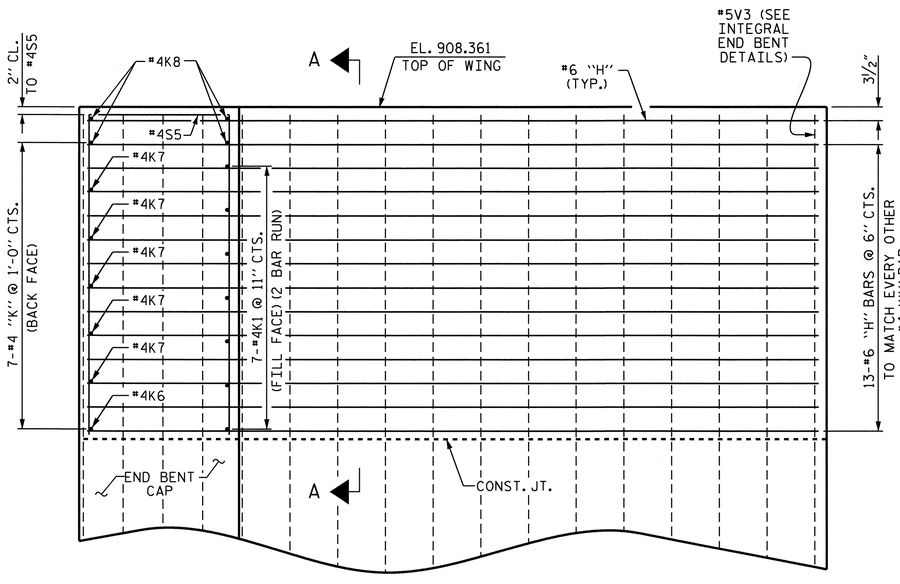


## ELEVATION OF RIGHT WING
@ END BENT #2

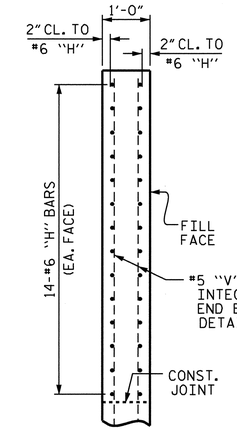


## SECTION A-A

PROJECT NO. I-3819A

IREDELL COUNTY

STATION: 20+40.37 -Y1-

STATE OF NORTH CAROLINA
DEPARTMENT OF TRANSPORTATION
RALEIGH

SUPERSTRUCTURE

# TOP OF WINGS @ END BENT 2

NORTH CAROLINA PROFESSIONAL SEAL 23371 ENGINEER VIRAL A. PATEL
12/7/10

| REVISIONS | | | | | | SHEET NO. |
|---|---|---|---|---|---|---|
| NO. | BY: | DATE: | NO. | BY: | DATE: | S-11 |
| 1 | | | 3 | | | TOTAL SHEETS |
| 2 | | | 4 | | | 382 |

DRAWN BY : B. L. GREEN DATE : 9/20/10
CHECKED BY : M. K. BEARD DATE : 10/20/10

03-DEC-2010 11:18
O:\Structures\Hunt\str*1\Plans\I-3819A_sd_PS_01.dgn
bgreen

STR. #1

FIX E6

FIX E6,P1

FIX E6,P2

FIX E6

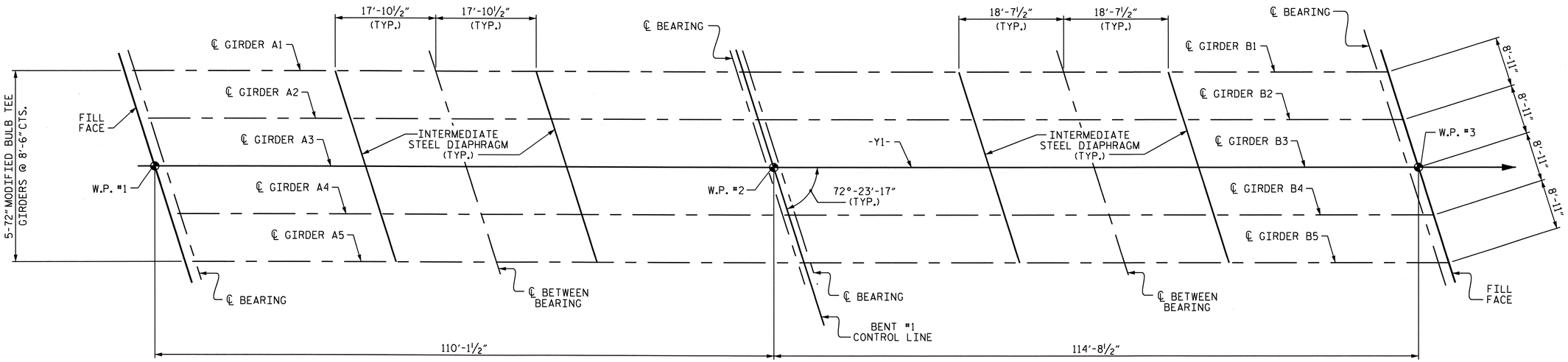


SPAN A

SPAN B

# GIRDER LAYOUT

PROJECT NO. I-3819A

IREDELL COUNTY

STATION: 20+40.37 -Y1-

STATE OF NORTH CAROLINA
DEPARTMENT OF TRANSPORTATION
RALEIGH

SUPERSTRUCTURE

GIRDER LAYOUT

NORTH CAROLINA PROFESSIONAL SEAL 23371 ENGINEER VIRAL A. PATEL
12/7/10

| REVISIONS | | | | | | SHEET NO. |
|---|---|---|---|---|---|---|
| NO. | BY: | DATE: | NO. | BY: | DATE: | S-12 |
| 1 | | | 3 | | | TOTAL SHEETS |
| 2 | | | 4 | | | 382 |

STR. #1

DRAWN BY : J.P. ADAMS DATE : 9/9/10
CHECKED BY : H.T. DIEU DATE : 10/7/10

03-DEC-2010 11:18
Q:\Structures\Hunt\str#1\Plans\I-3819A_sd_PCG_01.dgn
bgreen

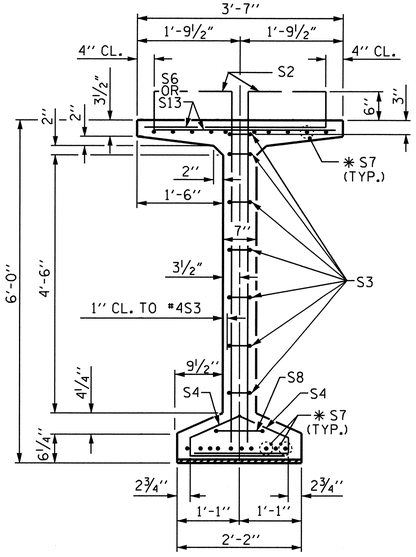


SECTION A-A

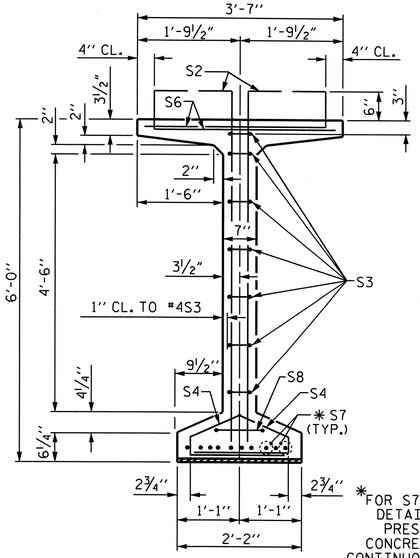


SECTION B-B

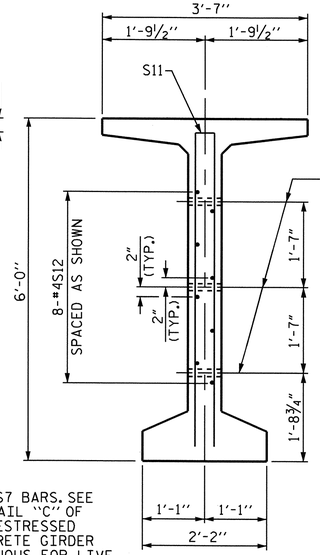


SECTION C-C

(S1, S6 AND S9 BARS NOT SHOWN)

* FOR S7 BARS, SEE DETAIL "C" OF PRESTRESSED CONCRETE GIRDER CONTINUOUS FOR LIVE LOAD DETAILS SHEET

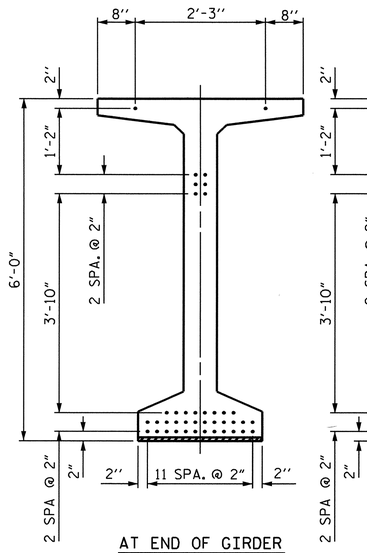


AT END OF GIRDER

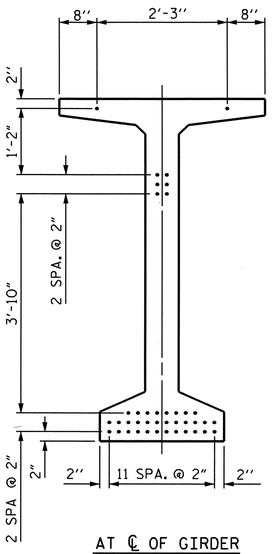


AT ℄ OF GIRDER

0.6" Ø LOW RELAXATION STRAND LAYOUT

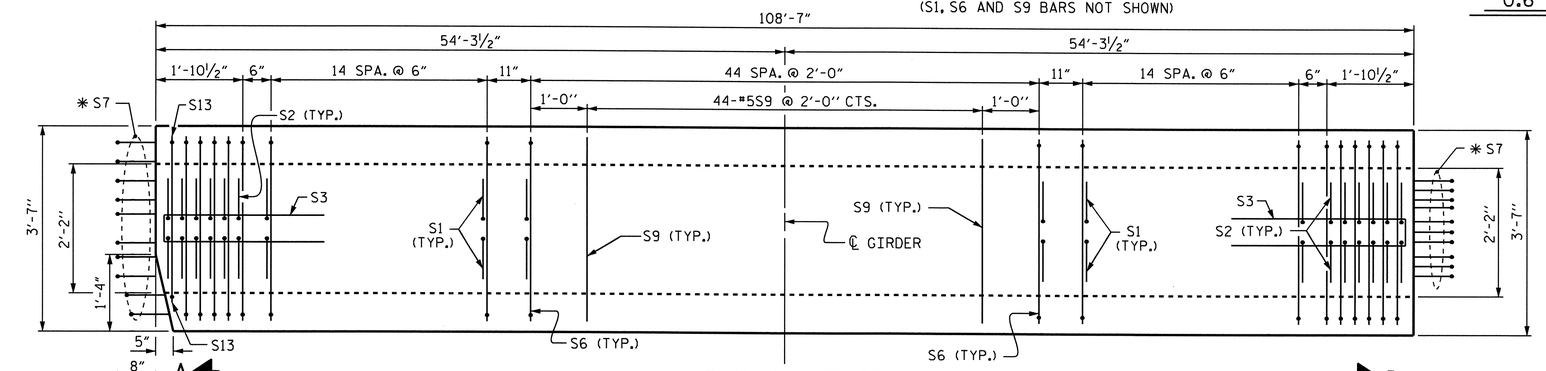


PLAN OF GIRDER

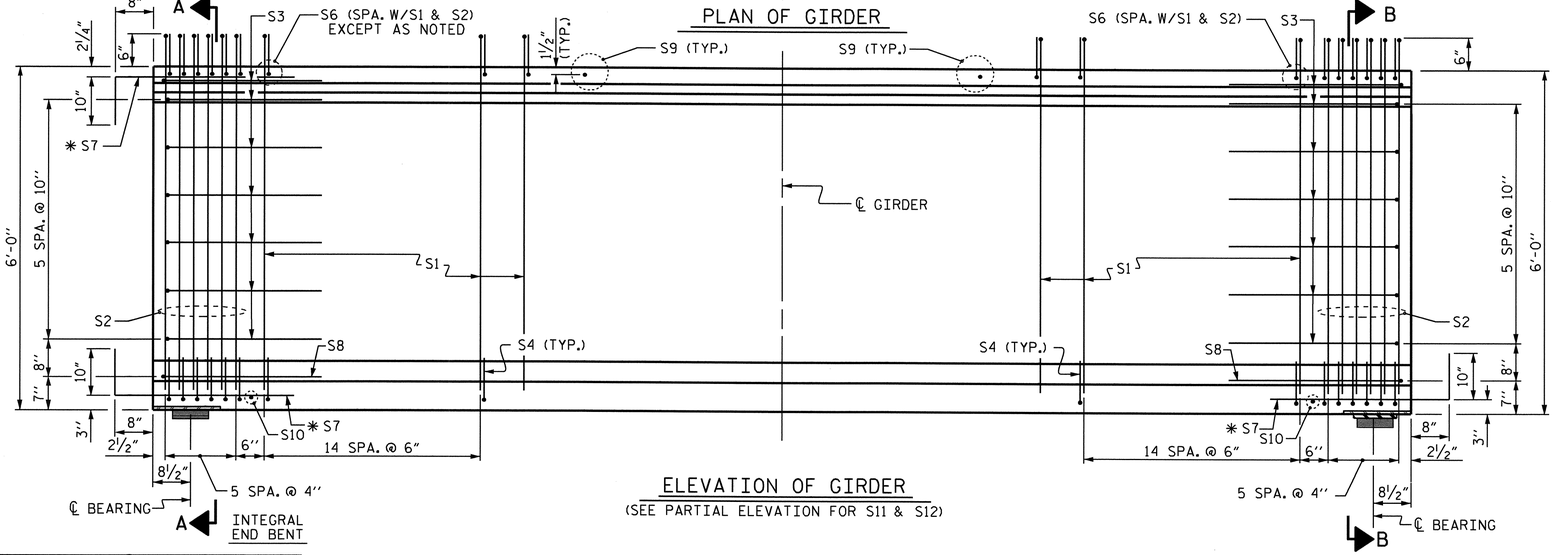


ELEVATION OF GIRDER

(SEE PARTIAL ELEVATION FOR S11 & S12)

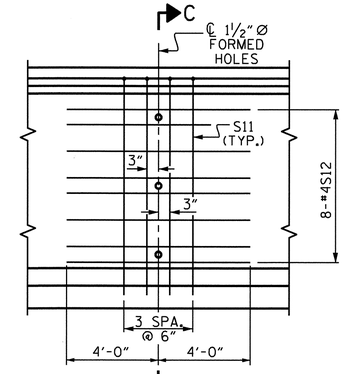


PARTIAL ELEVATION

SHOWING INTERMEDIATE STEEL DIAPHRAGM REINFORCING STEEL

## 0.6" Ø L. R. GRADE 270 STRANDS

| AREA (SQUARE INCHES) | ULTIMATE STRENGTH (LBS. PER STRAND) | APPLIED PRESTRESS (LBS. PER STRAND) |
|---|---|---|
| 0.217 | 58,600 | 43,950 |

## REINFORCING STEEL FOR ONE GDR

| BAR | NUMBER | SIZE | TYPE | LENGTH | WEIGHT |
|---|---|---|---|---|---|
| S1 | 150 | #4 | 1 | 6'-10" | 685 |
| S2 | 24 | #5 | 1 | 6'-10" | 171 |
| S3 | 14 | #4 | 2 | 8'-5" | 79 |
| S4 | 84 | #4 | 3 | 3'-0" | 168 |
| S6 | 172 | #5 | 4 | 4'-4" | 777 |
| * S7 | 30 | #5 | STR | 3'-8" | 115 |
| S8 | 2 | #5 | 2 | 9'-0" | 19 |
| S9 | 44 | #5 | STR | 3'-3" | 149 |
| S10 | 2 | #3 | STR | 1'-10" | 1 |
| S11 | 8 | #5 | 2 | 11'-8" | 97 |
| S12 | 16 | #4 | STR | 8'-0" | 86 |
| S13 | 2 | #5 | 4 | 3'-7" | 7 |

* NOTE: S7 BARS SHALL BE BENT BEFORE SHIPMENT. HEAT BENDING SHALL NOT BE ALLOWED.

## BAR TYPES

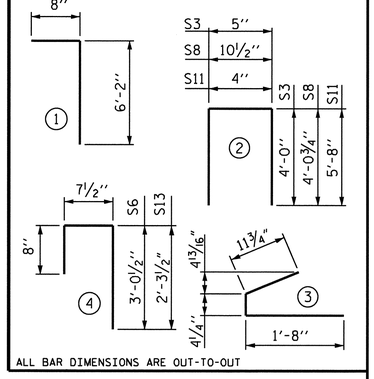


ALL BAR DIMENSIONS ARE OUT-TO-OUT

## QUANTITIES FOR ONE GIRDER

| | REINFORCING STEEL | 9000 PSI CONCRETE | 0.6" Ø L.R. STRANDS |
|---|---|---|---|
| | LB. | C.Y. | No. |
| SPAN A | 2354 | 23.3 | 40 |

## GIRDERS REQUIRED

| NUMBER | LENGTH | TOTAL LENGTH |
|---|---|---|
| 5 | 108'-7" | 542.92 |

PROJECT NO. I-3819A

IREDELL COUNTY

STATION: 20+40.37 -Y1-

SHEET 1 OF 3

STATE OF NORTH CAROLINA
DEPARTMENT OF TRANSPORTATION
RALEIGH

STANDARD

72" PRESTRESSED CONCRETE MODIFIED BULB TEE CONTINUOUS FOR LIVE LOAD

SPAN A

| REVISIONS | | | | | | SHEET NO. |
|---|---|---|---|---|---|---|
| NO. | BY: | DATE: | NO. | BY: | DATE: | S-13 |
| 1 | | | 3 | | | TOTAL SHEETS |
| 2 | | | 4 | | | 382 |

STR. #1

STD. NO. PCG10

| | | |
|---|---|---|
| ASSEMBLED BY : J.P. ADAMS | | DATE : 8/7/10 |
| CHECKED BY : H.T. DIEU | | DATE : 10/7/10 |
| DRAWN BY : EEM 2/6/97 | REV. 8/16/99 | RWW/LES |
| CHECKED BY : VAP 2/6/97 | REV. 10/17/00 | RWW/LES |
| | REV. 5/1/06R | TLA/GM |

NORTH CAROLINA PROFESSIONAL SEAL 23371 ENGINEER VIPUL A. PATEL

12/7/10

03-DEC-2010 11:18
O:\Structures\Hunt\str*1\Plans\I-3819A_sd_PCG_01.dgn
bgreen

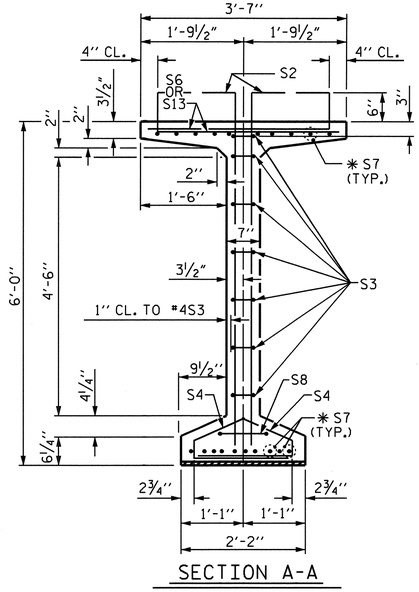


SECTION A-A

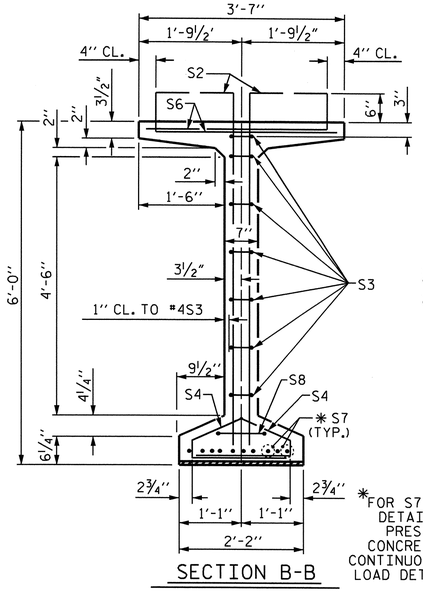


SECTION B-B

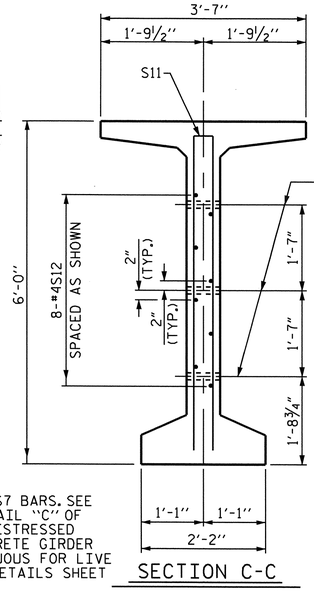


SECTION C-C

✱FOR S7 BARS, SEE DETAIL "C" OF PRESTRESSED CONCRETE GIRDER CONTINUOUS FOR LIVE LOAD DETAILS SHEET

(S1, S6 AND S9 BARS NOT SHOWN)

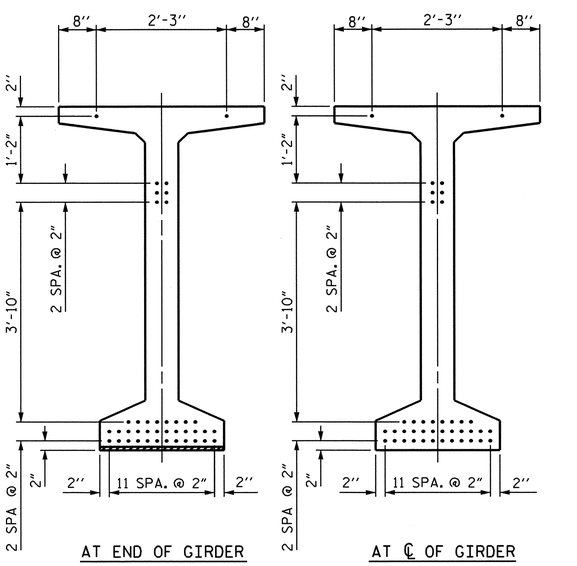


0.6" Ø LOW RELAXATION STRAND LAYOUT

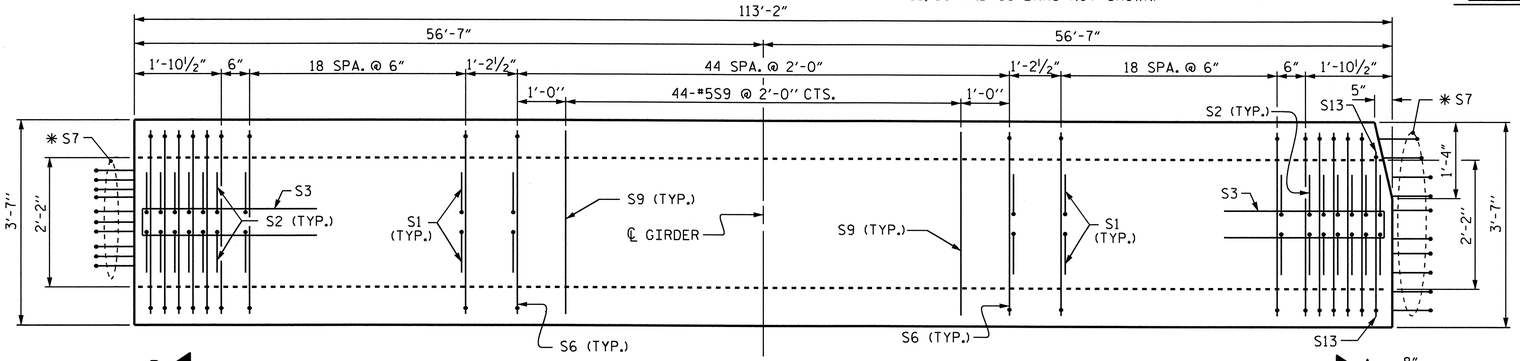


PLAN OF GIRDER

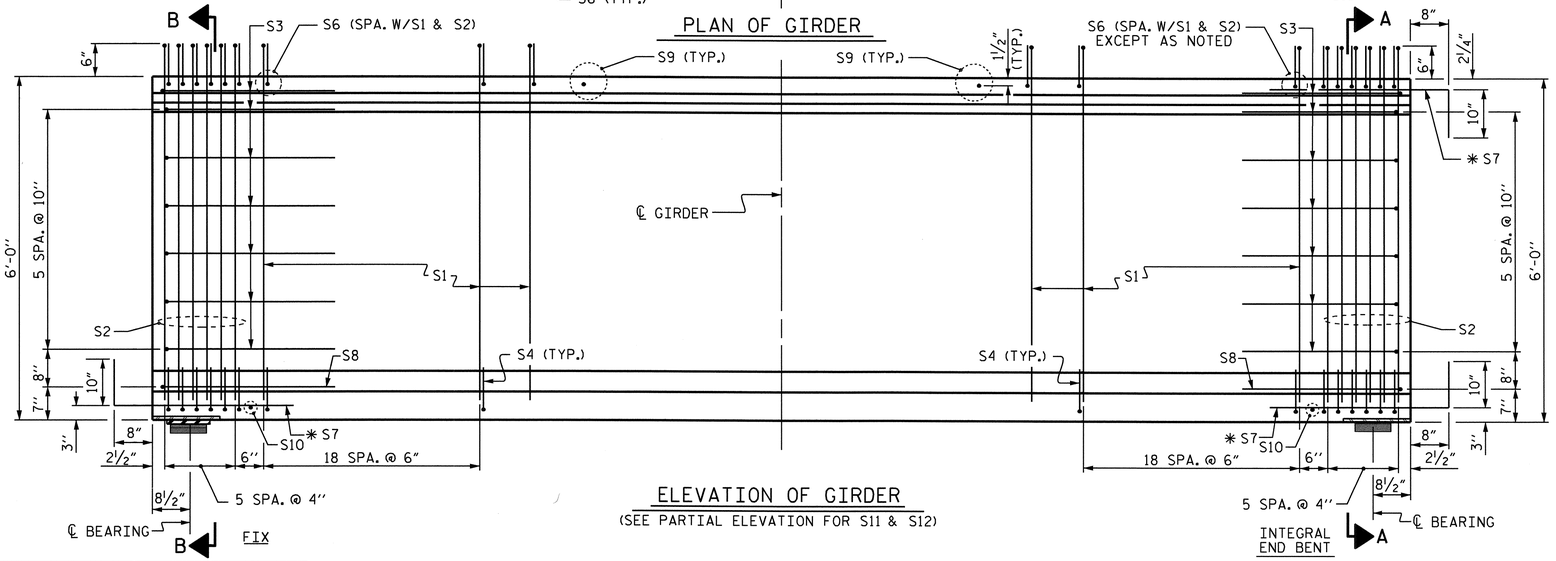


ELEVATION OF GIRDER

(SEE PARTIAL ELEVATION FOR S11 & S12)




PARTIAL ELEVATION

SHOWING INTERMEDIATE STEEL DIAPHRAGM REINFORCING STEEL

| 0.6" Ø L. R. GRADE 270 STRANDS | | |
|---|---|---|
| AREA (SQUARE INCHES) | ULTIMATE STRENGTH (LBS. PER STRAND) | APPLIED PRESTRESS (LBS. PER STRAND) |
| 0.217 | 58,600 | 43,950 |

REINFORCING STEEL FOR ONE GDR

| BAR | NUMBER | SIZE | TYPE | LENGTH | WEIGHT |
|---|---|---|---|---|---|
| S1 | 166 | #4 | 1 | 6'-10" | 758 |
| S2 | 24 | #5 | 1 | 6'-10" | 171 |
| S3 | 14 | #4 | 2 | 8'-5" | 79 |
| S4 | 100 | #4 | 3 | 3'-0" | 200 |
| S6 | 188 | #5 | 4 | 4'-4" | 850 |
| ✱S7 | 30 | #5 | STR | 3'-8" | 115 |
| S8 | 2 | #5 | 2 | 9'-0" | 19 |
| S9 | 44 | #5 | STR | 3'-3" | 149 |
| S10 | 2 | #3 | STR | 1'-10" | 1 |
| S11 | 8 | #5 | 2 | 11'-8" | 97 |
| S12 | 16 | #4 | STR | 8'-0" | 86 |
| S13 | 2 | #5 | 4 | 3'-7" | 7 |

✱NOTE: S7 BARS SHALL BE BENT BEFORE SHIPMENT. HEAT BENDING SHALL NOT BE ALLOWED.

BAR TYPES

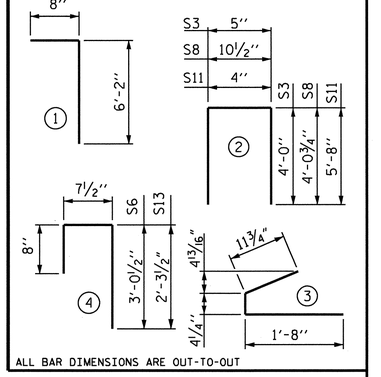


ALL BAR DIMENSIONS ARE OUT-TO-OUT

QUANTITIES FOR ONE GIRDER

| | REINFORCING STEEL | 9000 PSI CONCRETE | 0.6" Ø L.R. STRANDS |
|---|---|---|---|
| | LB. | C.Y. | No. |
| SPAN B | 2532 | 24.3 | 40 |

GIRDERS REQUIRED

| NUMBER | LENGTH | TOTAL LENGTH |
|---|---|---|
| 5 | 113'-2" | 565.83 |

PROJECT NO. I-3819A

IREDELL COUNTY

STATION: 20+40.37 -Y1-

SHEET 2 OF 3

STATE OF NORTH CAROLINA
DEPARTMENT OF TRANSPORTATION
RALEIGH

STANDARD

72" PRESTRESSED CONCRETE MODIFIED BULB TEE CONTINUOUS FOR LIVE LOAD

SPAN B

| REVISIONS | | | | | | SHEET NO. |
|---|---|---|---|---|---|---|
| NO. | BY: | DATE: | NO. | BY: | DATE: | S-14 |
| 1 | | | 3 | | | TOTAL SHEETS |
| 2 | | | 4 | | | 382 |

STR. #1

STD. NO. PCG10

NORTH CAROLINA PROFESSIONAL SEAL 23371 ENGINEER VIPUL A. PATEL
12/7/10

| ASSEMBLED BY : J.P. ADAMS | DATE : 8/7/10 |
|---|---|
| CHECKED BY : H.T. DIEU | DATE : 10/7/10 |
| DRAWN BY : EEM 2/6/97 | REV. 8/16/99 RWW/LES |
| CHECKED BY : VAP 2/6/97 | REV. 10/17/00 RWW/LES |
| | REV. 5/1/06R TLA/GM |

03-DEC-2010 11:18
O:\Structures\Hunt\str*1\Plans\I-3819A_sd_PCG_01.dgn
bgreen

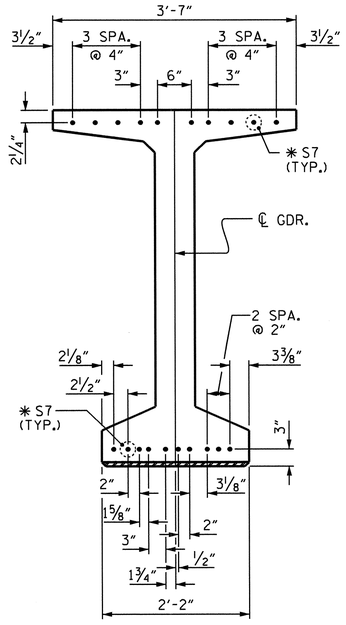


DETAIL "C"

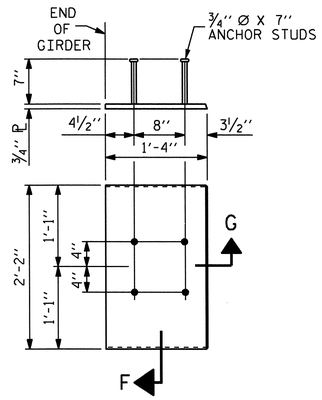


EMBEDDED PLATE "B-1" DETAILS FOR 72" MODIFIED BULB TEES

(2 REQ'D PER GIRDER)

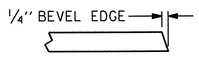


SECTION "G"

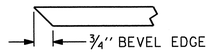


SECTION "F"

(SEE NOTES)

## NOTES

ALL PRESTRESSING STRANDS SHALL BE 7-WIRE LOW-RELAXATION GRADE 270 STRANDS AND SHALL CONFORM TO AASHTO M203 EXCEPT FOR SAMPLING REQUIREMENTS WHICH SHALL BE IN ACCORDANCE WITH THE STANDARD SPECIFICATIONS.

ALL REINFORCING STEEL SHALL BE GRADE 60.

EMBEDDED PLATE "B-1" SHALL BE GALVANIZED IN ACCORDANCE WITH THE STANDARD SPECIFICATIONS. BEVEL EDGES OF PLATE "B-1" TO GIVE CLOSE FIT BUT NOT TIGHT FIT TO STEEL CASTING FORM.

ANCHOR STUDS SHALL CONFORM TO AASHTO M169 GRADES 1010 THROUGH 1020 OR APPROVED EQUAL, AND SHALL MEET THE TYPE "B" REQUIREMENTS OF SUBSECTION 7.3 OF THE ANSI/AASHTO/AWS D1.5 BRIDGE WELDING CODE.

AT ENDS OF GIRDERS TO BE EMBEDDED IN CONCRETE DIAPHRAGMS OR END WALLS, PRESTRESSING STRANDS MAY EXTEND A MAXIMUM OF 2" BEYOND THE GIRDER ENDS. OTHERWISE, PRESTRESSING STRANDS SHALL BE CUT FLUSH WITH THE GIRDER ENDS.

THE TRANSFER OF LOAD FROM THE ANCHORAGES TO THE GIRDER SHALL BE DONE WHEN CONCRETE HAS REACHED A COMPRESSIVE STRENGTH OF NOT LESS THAN 6900 PSI.

DEPENDING ON THE TYPE OF SYSTEM USED TO SUPPORT THE DECK SLAB FORMS, PRESET ANCHORS MAY BE NECESSARY IN THE PRESTRESSED CONCRETE GIRDER.

THE TOP SURFACE OF THE GIRDER, EXCLUDING THE OUTSIDE 4", SHALL BE RAKED TO A DEPTH OF ¼".

A 2" x 2" CHAMFER IS ALLOWED AT THE INTERSECTION OF THE WEB AND THE BOTTOM FLANGE OF THE 72" MODIFIED BULB TEES.

THE CONTRACTOR HAS THE OPTION TO PROVIDE, AT NO ADDITIONAL COST TO THE DEPARTMENT, 2 ADDITIONAL STRANDS AT THE TOP OF THE GIRDER TO FACILITATE TYING OF THE REINFORCING STEEL. THESE STRANDS SHALL BE PULLED TO A LOAD OF 4500 lbs.

## DEAD LOAD DEFLECTION TABLE FOR GIRDERS

| 0.6" Ø LOW RELAXATION | SPAN A GIRDERS 1-5 | | | | | | | | | | | SPAN B GIRDERS 1-5 | | | | | | | | | | |
|---|---|---|---|---|---|---|---|---|---|---|---|---|---|---|---|---|---|---|---|---|---|---|
| TENTH POINTS | 0 | .1 | .2 | .3 | .4 | .5 | .6 | .7 | .8 | .9 | 0 | 0 | .1 | .2 | .3 | .4 | .5 | .6 | .7 | .8 | .9 | 0 |
| CAMBER (GIRDER ALONE IN PLACE) ↑ | 0 | 0.089 | 0.169 | 0.230 | 0.270 | 0.283 | 0.270 | 0.230 | 0.169 | 0.089 | 0 | 0 | 0.093 | 0.175 | 0.240 | 0.281 | 0.295 | 0.291 | 0.240 | 0.175 | 0.093 | 0 |
| ✱ DEFLECTION DUE TO SUPERIMPOSED D.L. ↓ | 0 | 0.032 | 0.060 | 0.082 | 0.096 | 0.101 | 0.096 | 0.082 | 0.060 | 0.032 | 0 | 0 | 0.037 | 0.071 | 0.097 | 0.113 | 0.119 | 0.113 | 0.097 | 0.071 | 0.037 | 0 |
| FINAL CAMBER ↑ | 0 | 11/16" | 1 5/16" | 1¾" | 2 1/16" | 2 3/16" | 2 1/16" | 1¾" | 1 5/16" | 11/16" | 0 | 0 | 11/16" | 1¼" | 1¾" | 2" | 2⅛" | 2" | 1¾" | 1¼" | 11/16" | 0 |

✱ INCLUDES FUTURE WEARING SURFACE
ALL VALUES ARE SHOWN IN FEET (DECIMAL FORM), EXCEPT "FINAL CAMBER", WHICH IS GIVEN IN INCHES (FRACTION FORM).

PROJECT NO. I-3819A

IREDELL COUNTY

STATION: 20+40.37 -Y1-

SHEET 3 OF 3

STATE OF NORTH CAROLINA
DEPARTMENT OF TRANSPORTATION
RALEIGH

STANDARD

PRESTRESSED CONCRETE GIRDER CONTINUOUS FOR LIVE LOAD DETAILS

NORTH CAROLINA PROFESSIONAL SEAL 23371 ENGINEER VIPUL A. PATEL
1/10/12

| REVISIONS | | | | | | SHEET NO. |
|---|---|---|---|---|---|---|
| NO. | BY: | DATE: | NO. | BY: | DATE: | S-15 |
| 1 | | | 3 | | | TOTAL SHEETS |
| 2 | | | 4 | | | 382 |

STR. #1

STD. NO. PCG11

| | |
|---|---|
| ASSEMBLED BY : J.P. ADAMS | DATE : 8/7/10 |
| CHECKED BY : H.T. DIEU | DATE : 10/7/10 |
| DRAWN BY : ELR 11/91 | REV. 10/17/00 RWW/LES |
| CHECKED BY : GRP 11/91 | REV. 7/10/01RR LES/RDR |
| | REV. 5/1/06 TLA/GM |

03-JAN-2012 09:44
R:\Structures\Hunt\str*1\Plans\I-3819A_sd_PCG_01.dgn
hlacklear

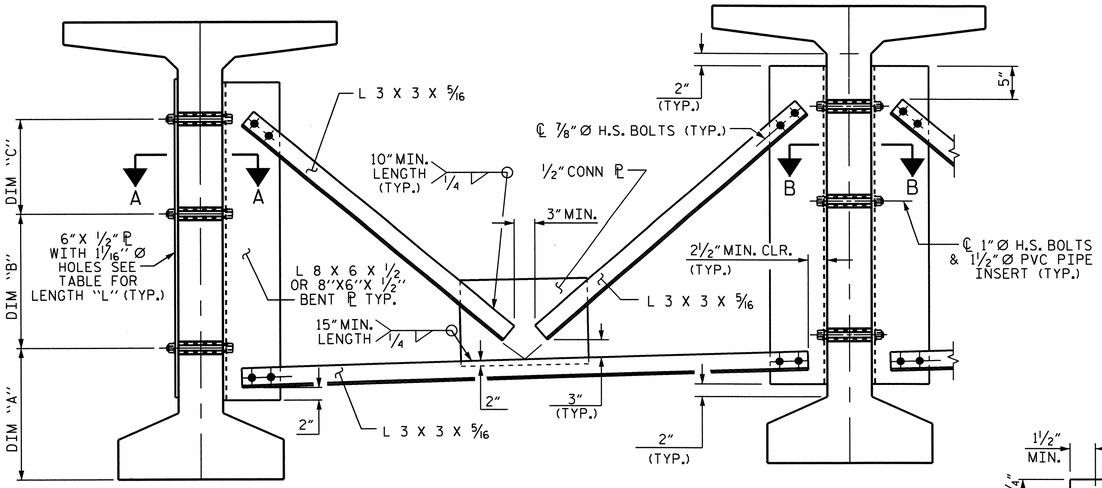


EXTERIOR GIRDER

INTERIOR GIRDER

## PART SECTION AT INTERMEDIATE DIAPHRAGM

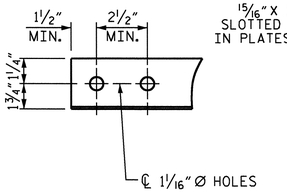


## ANGLE END
(L 3 X 3 X 5/16)

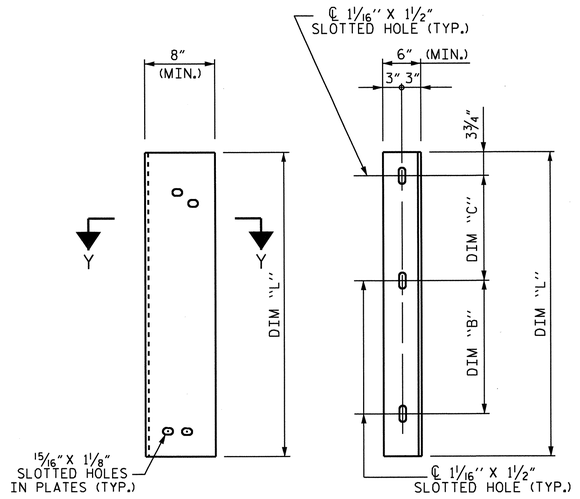


DIAPHRAGM FACE




WEB FACE

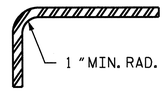


SECTION Y-Y

## STRUCTURAL STEEL NOTES

ALL INTERMEDIATE DIAPHRAGM STEEL AND CONNECTOR PLATES SHALL BE AASHTO M270 GRADE 50 OR APPROVED EQUAL.

TENSION ON THE ASTM A325 BOLTS THROUGH THE ANGLE MEMBER SHALL BE CALIBRATED USING DIRECT TENSION INDICATOR WASHERS IN ACCORDANCE WITH THE STANDARD SPECIFICATIONS.

TENSION ON THE ASTM A449 BOLTS THROUGH THE GIRDER WEB SHALL BE SNUG TIGHTENED FOLLOWED BY AN ADDITIONAL 1/4 TURN.

THE PLATES, BENT PLATES, AND ANGLES SHALL BE GALVANIZED OR METALLIZED IN ACCORDANCE WITH THE STANDARD SPECIFICATIONS. FOR THERMAL SPRAYED COATINGS (METALLIZATION), SEE SPECIAL PROVISIONS.

FOR METALLIZATION, APPLY AN 8 MIL THICK 99.99 PERCENT ZINC (W-Zn-1) THERMAL SPRAYED COATING WITH A 0.5 MIL THICK SEAL COAT TO ALL STEEL DIAPHRAGM SURFACES IN ACCORDANCE WITH THE THERMAL SPRAYED COATINGS SPECIAL PROVISION AND SECTION 442 OF THE STANDARD SPECIFICATIONS.

GALVANIZE THE HIGH STRENGTH BOLTS, NUTS, WASHERS AND DIRECT TENSION INDICATORS IN ACCORDANCE WITH THE STANDARD SPECIFICATIONS.

USE AN ASTM F436 HARDENED WASHER WITH STANDARD AND SLOTTED HOLES UNDER EACH BOLT HEAD AND NUT.

FOR BOLTS THROUGH THE GIRDER WEB, PROVIDE SUFFICIENT LENGTH OF THREADS ON ALL BOLTS TO ACCOMMODATE WASHERS AND THE THICKNESS OF CONNECTING MEMBER PLUS AT LEAST 1/4" PROJECTION BEYOND THE NUT.

INTERMEDIATE DIAPHRAGM ASSEMBLY SHALL COMPLY WITH SECTION 1072 OF THE STANDARD SPECIFICATIONS.

SUBMIT TWO SETS OF WORKING DRAWINGS FOR THE INTERMEDIATE DIAPHRAGM ASSEMBLY FOR REVIEW, COMMENTS AND ACCEPTANCE. AFTER REVIEW, COMMENTS, AND ACCEPTANCE, SUBMIT SEVEN SETS FOR DISTRIBUTION.

IN THE EXTERIOR BAYS, PLACE TEMPORARY STRUTS BETWEEN PRESTRESSED GIRDERS ADJACENT TO THE STEEL DIAPHRAGMS. STRUTS SHALL REMAIN IN PLACE 3 DAYS AFTER CONCRETE IS PLACED.

THE COST OF THE STEEL DIAPHRAGMS AND ASSEMBLIES SHALL BE INCLUDED IN THE UNIT PRICE BID FOR PRESTRESSED CONCRETE GIRDERS.

## CONNECTOR PLATE DETAILS

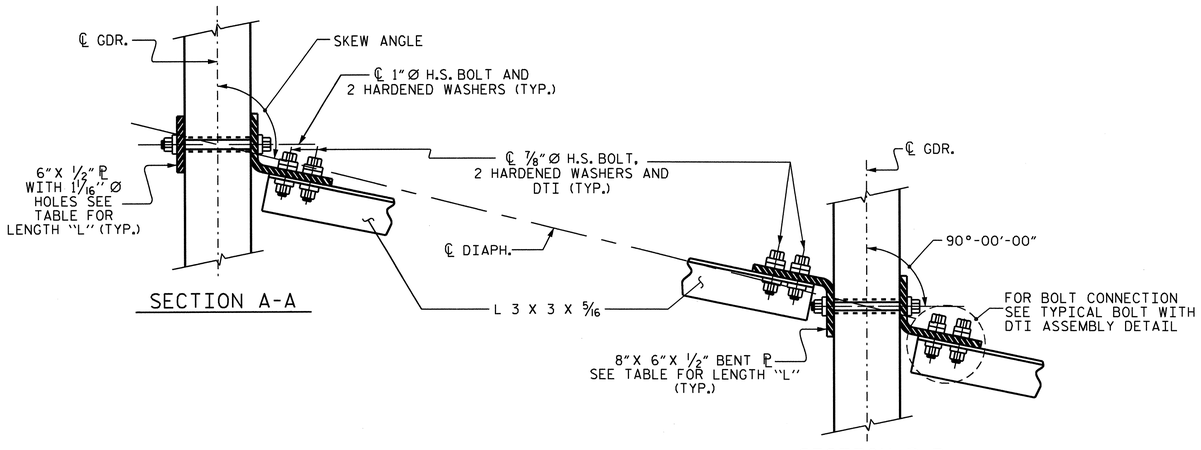


SECTION A-A

SECTION B-B

## CONNECTION DETAILS

## TABLE

| GIRDER TYPE | DIM "A" | DIM "B" | DIM "C" | DIM "L" |
|---|---|---|---|---|
| 72" BULB TEE | 1'-8 3/4" | 1'-7" | 1'-7" | 4'-2" |

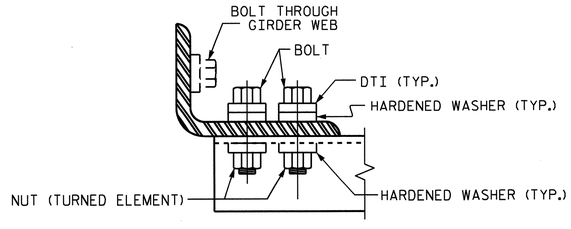


BOLT WITH DTI ASSEMBLY DETAIL

PROJECT NO. I-3819A

IREDELL COUNTY

STATION: 20+40.37 -Y1-

NORTH CAROLINA PROFESSIONAL SEAL 23371 ENGINEER VIPUL A. PATEL
1/10/12

STATE OF NORTH CAROLINA
DEPARTMENT OF TRANSPORTATION
RALEIGH

STANDARD

INTERMEDIATE STEEL DIAPHRAGMS FOR 72" MODIFIED BULB TEE PRESTRESSED CONCRETE GIRDERS

| REVISIONS | | | | | | SHEET NO. |
|---|---|---|---|---|---|---|
| NO. | BY: | DATE: | NO. | BY: | DATE: | S-16 |
| 1 | | | 3 | | | TOTAL SHEETS |
| 2 | | | 4 | | | 382 |

STR. #1 STD. NO. PCG13

| | |
|---|---|
| ASSEMBLED BY : J.P. ADAMS | DATE : 8/7/10 |
| CHECKED BY : H.T. DIEU | DATE : 10/7/10 |
| DRAWN BY : RWW 11/09 | ADDED 11/23/09 |
| CHECKED BY : GM 11/09 | |

03-JAN-2012 09:45
R:\Structures\Hunt\str*1\Plans\I-3819A_sd_PCG_01.dgn
hlocklear

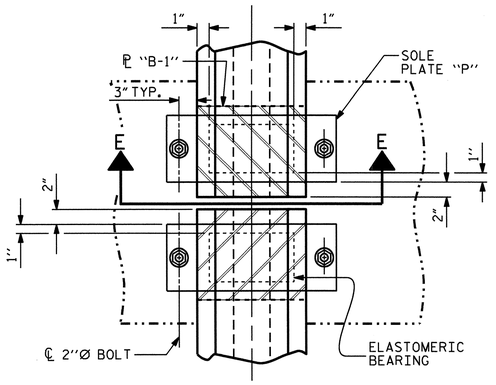


TYPICAL PLAN @ BENT

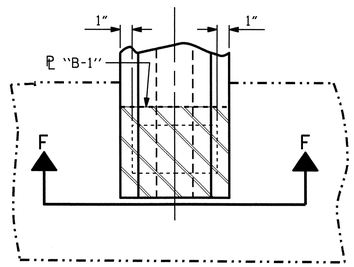


TYPICAL PLAN @ END BENT

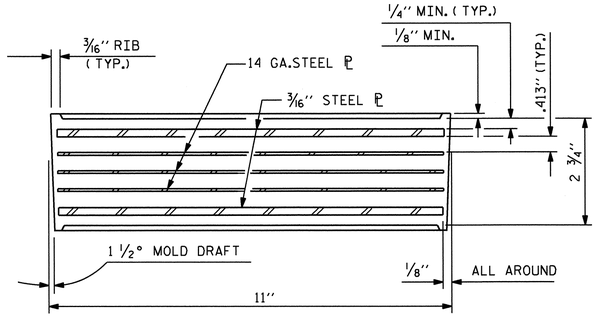


TYPICAL SECTION OF ELASTOMERIC BEARINGS

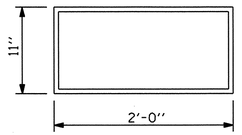


E6 ( 20 REQ'D )

PLAN VIEW OF ELASTOMERIC BEARING

TYPE VII

## NOTES

AT ALL FIXED POINTS OF SUPPORT, NUTS FOR ANCHOR BOLTS ARE TO BE TIGHTENED FINGER TIGHT AND THEN BACKED OFF 1/2 TURN. THE THREAD OF THE NUT AND BOLT SHALL THEN BE BURRED WITH A SHARP POINTED TOOL.

STEEL SOLE PLATES, ANCHOR BOLTS, NUTS, AND WASHERS SHALL BE GALVANIZED IN ACCORDANCE WITH THE STANDARD SPECIFICATIONS.

PRIOR TO WELDING, GRIND THE GALVANIZED SURFACE OF THE PORTION OF THE EMBEDDED PLATE AND SOLE PLATE THAT ARE TO BE WELDED. AFTER WELDING, DAMAGED GALVANIZED SURFACES SHALL BE REPAIRED IN ACCORDANCE WITH THE STANDARD SPECIFICATIONS.

WHEN WELDING THE SOLE PLATE TO THE EMBEDDED PLATE IN THE GIRDER, USE TEMPERATURE INDICATING WAX PENS, OR OTHER SUITABLE MEANS, TO ENSURE THAT THE TEMPERATURE OF THE SOLE PLATE DOES NOT EXCEED 300°F. TEMPERATURES ABOVE THIS MAY DAMAGE THE ELASTOMER.

SOLE PLATE "P", BOLTS, NUTS AND WASHERS SHALL BE INCLUDED IN THE PAY ITEM FOR PRESTRESSED CONCRETE GIRDERS.

ANCHOR BOLTS SHALL MEET THE REQUIREMENTS OF ASTM A449. NUTS SHALL MEET THE REQUIREMENTS OF AASHTO M291-DH OR AASHTO M292-2H. WASHERS SHALL MEET THE REQUIREMENTS OF AASHTO M293. SHOP DRAWINGS ARE NOT REQUIRED FOR ANCHOR BOLT, NUTS AND WASHERS. SHOP INSPECTION IS REQUIRED.

ALL SURFACES OF BEARING PLATES SHALL BE SMOOTH AND STRAIGHT.

| — LOAD RATING — | |
|---|---|
| | MAX.D.L.+L.L. |
| TYPE VII | 264 K |

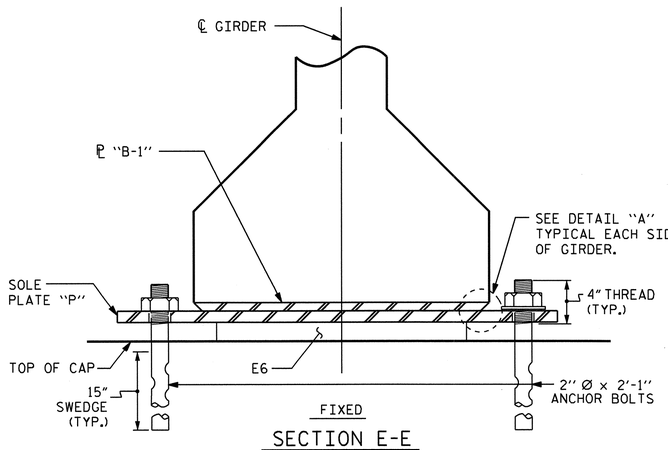


SECTION E-E

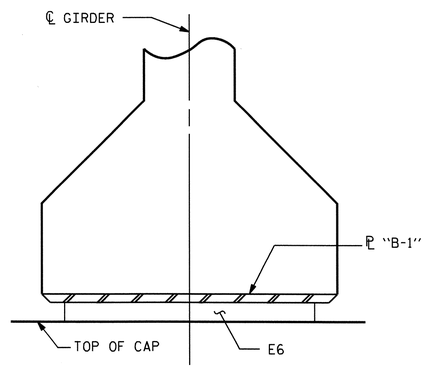


SECTION F-F

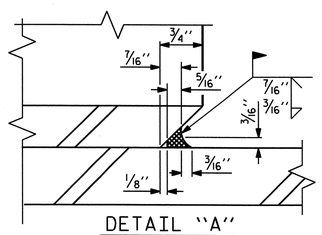


DETAIL "A"

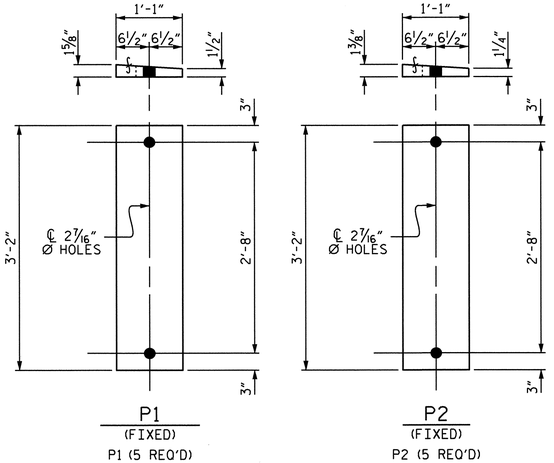


SOLE PLATE DETAILS ( "P" )

UP-STATION

PROJECT NO. I-3819A

IREDELL COUNTY

STATION: 20+40.37 -Y1-

STATE OF NORTH CAROLINA
DEPARTMENT OF TRANSPORTATION
RALEIGH

STANDARD

# ELASTOMERIC BEARING DETAILS

PRESTRESSED CONCRETE GIRDER SUPERSTRUCTURE

| REVISIONS | | | | | | SHEET NO. |
|---|---|---|---|---|---|---|
| NO. | BY: | DATE: | NO. | BY: | DATE: | S-17 |
| 1 | | | 3 | | | TOTAL SHEETS |
| 2 | | | 4 | | | 382 |

STR. #1

STD. NO. EB4

NORTH CAROLINA PROFESSIONAL SEAL 23371 ENGINEER VIPUL A. PATEL

1/10/12

| | | | |
|---|---|---|---|
| ASSEMBLED BY : J.P. ADAMS | | DATE : 9/1/10 | |
| CHECKED BY : H.T. DIEU | | DATE : 10/5/10 | |
| DRAWN BY : EEM 2/97 | REV. 8/16/99 | RWW/LES | |
| CHECKED BY : VAP 2/97 | REV. 10/17/00 | RWW/LES | |
| | REV. 5/1/06 | TLA/GM | |

03-JAN-2012 09:47
R:\Structures\Hunt\str#1\Plans\I-3819A_sd_BG_01.dgn
hlocklear

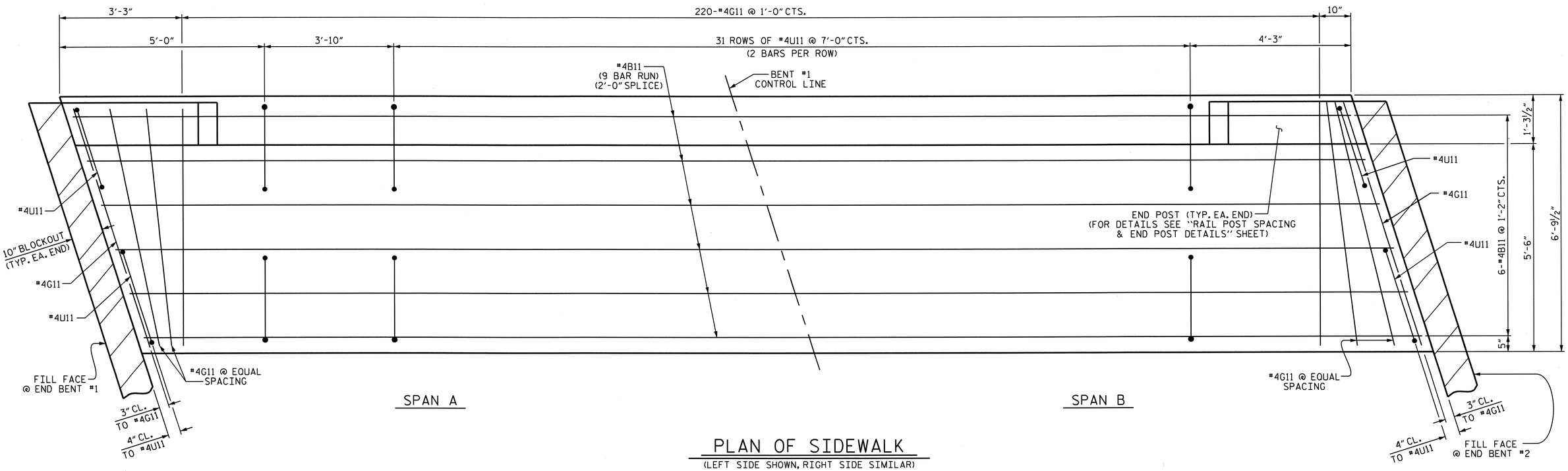


## PLAN OF SIDEWALK

(LEFT SIDE SHOWN, RIGHT SIDE SIMILAR)

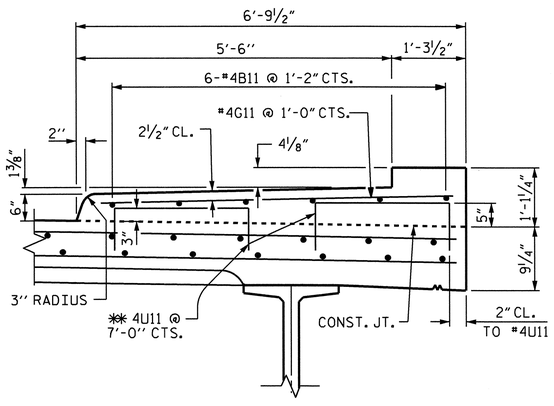


## SECTION THRU SIDEWALK

** #4U11 BARS MAY BE PUSHED INTO GREEN CONCRETE AFTER SPAN HAS BEEN SCREEDED OFF.

## NOTES

THE SIDEWALK IN A CONTINOUS UNIT SHALL NOT BE CAST UNTIL ALL SLAB CONCRETE IN THAT UNIT HAS BEEN CAST AND HAS REACHED A MINIMUM COMPRESSIVE STRENGTH OF 3,000 PSI.

GROOVED CONTRACTION JOINTS, ½" IN DEPTH, SHALL BE TOOLED IN ALL EXPOSED FACES OF THE SIDEWALK IN ACCORDANCE WITH THE STANDARD SPECIFICATIONS. THE CONTRACTION JOINTS SHALL BE LOCATED AT A SPACING OF 8 FEET TO 10 FEET BETWEEN EXPANSION JOINTS. NO CONTRACTION JOINTS WILL BE REQUIRED FOR SEGMENTS LESS THAN 10 FEET IN LENGTH.

PAYMENT FOR SIDEWALK SHALL BE INCLUDED IN UNIT PRICE FOR "REINFORCED CONCRETE DECK SLAB".

### BAR TYPE

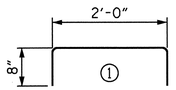


BAR DIMENSION IS OUT TO OUT

### BILL OF MATERIALS

SIDEWALK (BOTH SIDES)

| BAR | NO. | SIZE | TYPE | LENGTH | WEIGHT |
|---|---|---|---|---|---|
| * B11 | 108 | #4 | STR | 26'-7" | 1918 |
| | | | | | |
| * G11 | 452 | #4 | STR | 6'-4" | 1912 |
| | | | | | |
| * U11 | 136 | #4 | 1 | 3'-4" | 303 |
| | | | | | |
| * EPOXY COATED REINF. STEEL = 4133 LBS | | | | | |
| CLASS AA CONCRETE = 79.0 C.Y. | | | | | |

PROJECT NO. I-3819A

IREDELL COUNTY

STATION: 20+40.37 -Y1-

STATE OF NORTH CAROLINA
DEPARTMENT OF TRANSPORTATION
RALEIGH

SUPERSTRUCTURE

SIDEWALK DETAILS

| REVISIONS | | | | | | SHEET NO. |
|---|---|---|---|---|---|---|
| NO. | BY: | DATE: | NO. | BY: | DATE: | S-18 |
| 1 | | | 3 | | | TOTAL SHEETS |
| 2 | | | 4 | | | 382 |

NORTH CAROLINA PROFESSIONAL SEAL 23371 ENGINEER VIMAL A. PATEL
1/10/12

DRAWN BY : J.P. ADAMS DATE : 9/9/10
CHECKED BY : H.T. DIEU DATE : 10/5/10

03-JAN-2012 09:49
R:\Structures\Hunt\str#1\Plans\I-3819A_SD_SW_01.dgn
hlocklear

STR. #1

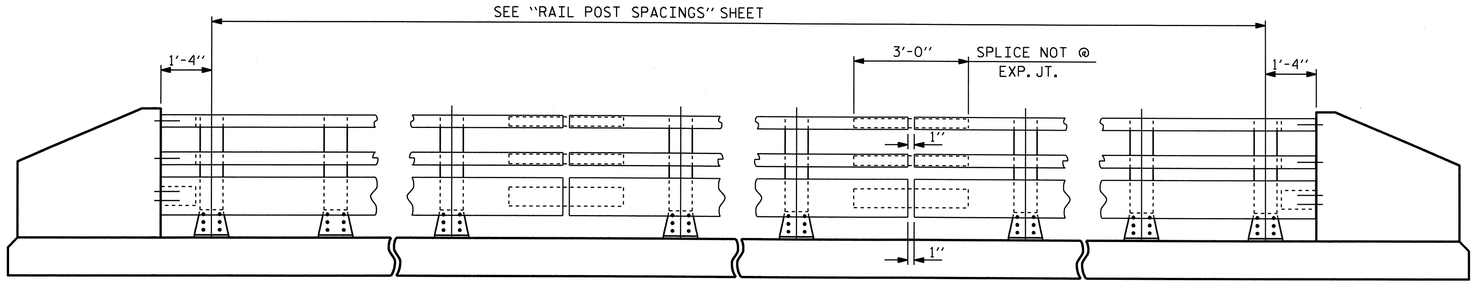


NOTE:
FOR ATTACHMENT OF METAL RAIL TO END POST, SEE STANDARD NO. BMR7.

## ELEVATION

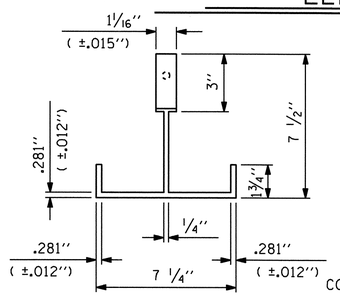


PLAN

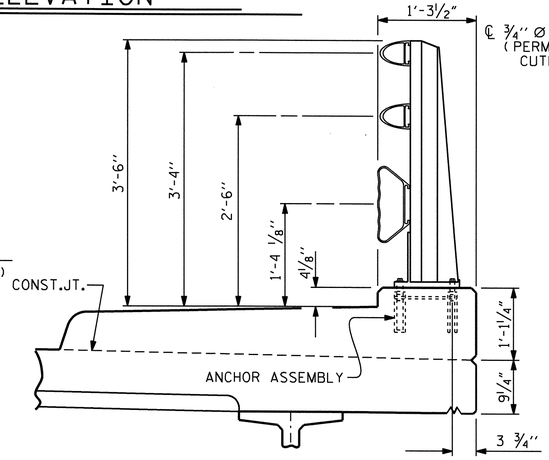


## SECTION THRU RAIL

FOR ANCHOR ASSEMBLY, SEE "3 BAR METAL RAIL" STD.No.BMR6

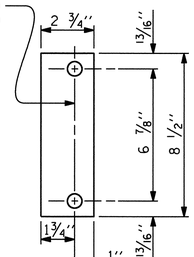


REAR PLATE

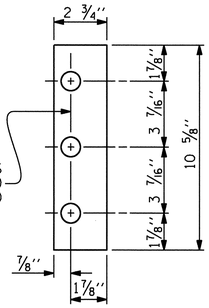


FRONT PLATE

## SHIM DETAILS

NOTE :
SHIMS MAY BE CUT ALONG PERMITTED CUTLINE OR SLOTTED TO EDGE OF PLATE TO FACILITATE PLACEMENT.

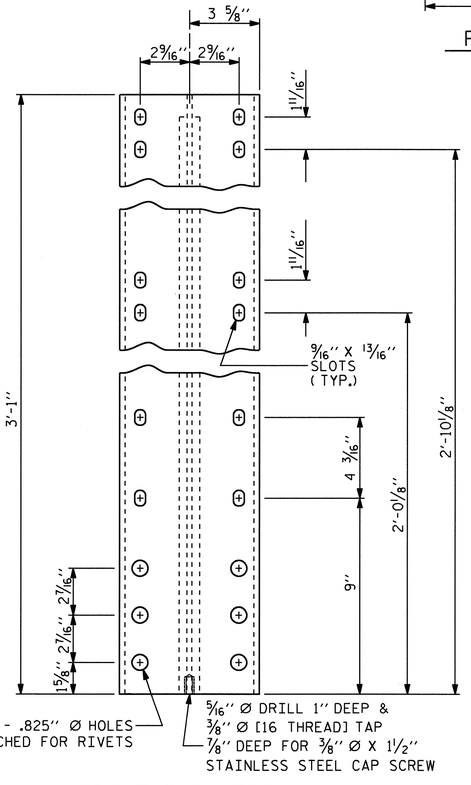


FRONT ELEVATION

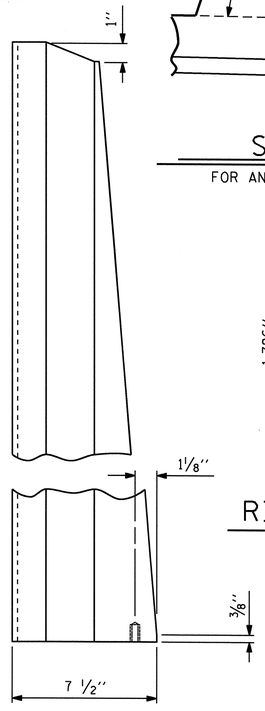


SIDE ELEVATION

## DETAILS OF POST

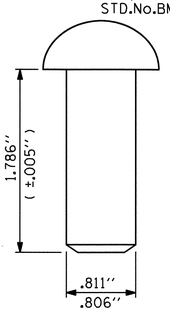


## RIVET DETAIL

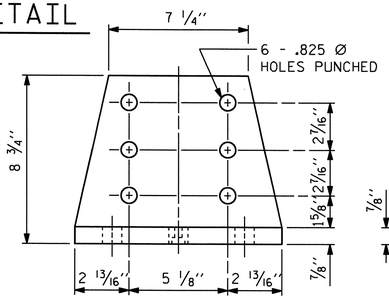


FRONT ELEVATION

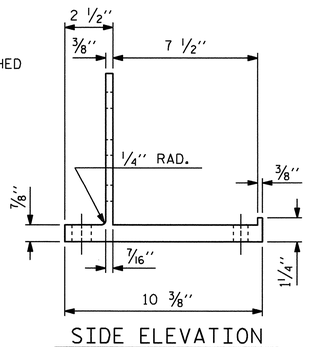


SIDE ELEVATION

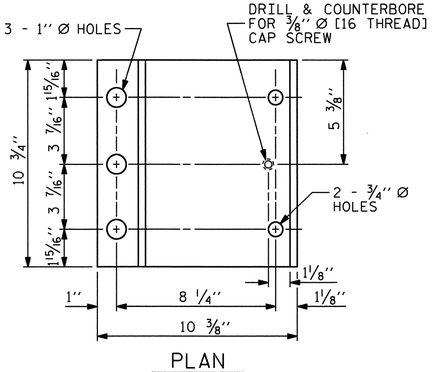


PLAN

## POST BASE DETAILS

# NOTES

AT THE CONTRACTOR'S OPTION, METAL RAIL MAY BE EITHER ALUMINUM OR GALVANIZED STEEL IN ACCORDANCE WITH THE REQUIREMENTS OF THE GENERAL NOTES AND THE FOLLOWING SPECIFICATIONS FOR THE ALTERNATE MATERIALS; HOWEVER, THE CONTRACTOR WILL BE REQUIRED TO USE THE SAME RAIL MATERIAL ON ALL STRUCTURES ON THE PROJECT FOR WHICH METAL RAIL IS DESIGNATED.

## ALUMINUM RAILS

MATERIAL FOR POSTS, BASES AND RAILS, EXPANSION BARS AND CLAMP BARS SHALL BE ASTM B221 ALLOY 6061-T6.

MATERIAL FOR RIVETS SHALL BE ASTM B316 ALLOY 6061-T6. RIVETS SHALL BE STANDARD BUTTON HEAD AND CONE POINT COLD DRIVEN AS PER DRAWING.

THE BASE OF RAIL POSTS, OR ANY OTHER ALUMINUM SURFACE IN CONTACT WITH CONCRETE SHALL BE THOROUGHLY COATED WITH AN ALUMINUM IMPREGNATED CAULKING COMPOUND OF APPROVED QUALITY.

MATERIAL FOR SHIMS TO BE ASTM B209 ALLOY 6061-T6.

## GALVANIZED STEEL RAILS

MATERIAL AND GALVANIZING ARE TO CONFORM TO THE FOLLOWING SPECIFICATIONS:

POST, POST BASES, RAILS, EXPANSION BARS AND CLAMP BARS : AASHTO M270 GRADE 36 STRUCTURAL STEEL - GALVANIZED TO AASHTO M111.

RIVETS: RIVETS SHALL MEET THE REQUIREMENTS OF ASTM A502 FOR GRADE 1 RIVETS.

THE CUT ENDS OF GALVANIZED STEEL RAILING, AFTER GRINDING SMOOTH SHALL BE GIVEN TWO COATS OF ZINC RICH PAINT MEETING THE REQUIREMENTS OF FEDERAL SPECIFICATION MIL-P-26915 USAF TYPE 1, OR OF FEDERAL SPECIFICATIONS TT-P-641.

SHIMS: SHIMS SHALL MEET THE REQUIREMENTS OF ASTM A570 FOR GRADE 33 OR A611 FOR GRADE C AND SHALL BE GALVANIZED IN ACCORDANCE WITH AASHTO M111.

RAIL CAPS: RAIL CAPS SHALL MEET THE REQUIREMENTS OF ASTM A570 FOR GRADE 33 OR A611 FOR GRADE C AND SHALL BE GALVANIZED IN ACCORDANCE WITH AASHTO M111.

## GENERAL NOTES

RAILING SHALL BE CONTINUOUS FROM END POST TO END POST OF BRIDGE. EACH JOINT IN RAIL LENGTH SHALL BE SPLICED AS DETAILED. PANEL LENGTHS OF RAIL SHALL BE ATTACHED TO A MINIMUM OF THREE POSTS. PLACE ONE JOINT SPLICE JUST BEYOND THE 3RD RAIL POST FROM EACH END, TYPICALLY 14' FROM THE END. PLACE OTHER JOINTS AS NEEDED.

FOR END OF RAIL TO CLEAR FACE OF CONCRETE END POST DIMENSION, SEE STANDARD NO. BMR7.

CAP SCREWS SHALL BE ASTM F593 ALLOY 305 STAINLESS STEEL. WASHERS FOR RAIL ATTACHMENT SHALL MEET THE REQUIREMENTS OF ASTM F844 EXCEPT THEY SHALL BE MADE FROM ALLOY 304 STAINLESS STEEL.

CERTIFIED MILL REPORTS ARE REQUIRED FOR RAILS AND POSTS. SHOP INSPECTION IS NOT REQUIRED.

METAL RAIL POSTS SHALL BE SET NORMAL TO CURB GRADE.

METHOD OF MEASUREMENT FOR METAL RAILS: FOR LENGTH OF METAL RAILS TO BE PAID FOR, SEE THE STANDARD SPECIFICATIONS.

CURVED RAIL USAGE: WHERE RAILS ARE TO BE USED ON BRIDGES ON HORIZONTAL AND/OR VERTICAL CURVATURE THE CONTRACTOR MAY, AT HIS OPTION, HAVE THE REQUIRED CURVATURE IN THE RAIL FORMED IN THE SHOP OR IN THE FIELD. IN EITHER EVENT, THE RAIL SHALL CONFORM WITHOUT BUCKLING OR KINKING TO THE REQUIRED CURVATURE IN A UNIFORM MANNER ACCEPTABLE TO THE ENGINEER.

TO INSURE FUTURE IDENTIFICATION OF THE FABRICATOR, A PERMANENT IDENTIFYING MARK SHALL BE PLACED ON EACH POST. THE METHOD OF MARKING AND LOCATION SHALL BE SUCH THAT IT DOES NOT DETRACT FROM THE APPEARANCE OF THE POST, BUT REMAIN VISIBLE AFTER RAIL PLACEMENT.

SHIMS SHALL BE USED AS NECESSARY FOR POST ALIGNMENT.

ALLOY 6351-T5 MAY BE SUBSTITUTED FOR ALLOY 6061-T6 WHERE APPLICABLE.

MINOR VARIATIONS IN DETAILS OF METAL RAIL WILL BE CONSIDERED. DETAILS OF SUCH VARIATIONS, IF DESIRED, SHALL BE SUBMITTED FOR APPROVAL.

PAY LENGTH = 430.46 LIN. FT.

NORTH CAROLINA PROFESSIONAL SEAL 23371 ENGINEER VIPUL A. PATEL
12/7/10

PROJECT NO. I-3819A

IREDELL COUNTY

STATION: 20+40.37 -Y1-

SHEET 1 OF 5

STATE OF NORTH CAROLINA
DEPARTMENT OF TRANSPORTATION
RALEIGH

STANDARD

# 3 BAR METAL RAIL

| REVISIONS | | | | | | SHEET NO. |
|---|---|---|---|---|---|---|
| NO. | BY: | DATE: | NO. | BY: | DATE: | S-19 |
| 1 | | | 3 | | | TOTAL SHEETS |
| 2 | | | 4 | | | 382 |

STR. #1

STD. NO. BMR5

| | | | |
|---|---|---|---|
| ASSEMBLED BY : J.P. ADAMS | | DATE : 9/1/10 | |
| CHECKED BY : H.T. DIEU | | DATE : 10/5/10 | |
| DRAWN BY : JMB 1/88 | REV. 10/17/00 | RWW/LES | |
| CHECKED BY : GGH 1/88 | REV. 5/7/03 | RWW/JTE | |
| | REV. 5/1/06 | TLA/GM | |

03-DEC-2010 11:18
O:\Structures\Hunt\str#1\Plans\I-3819A_sd_BR_01.dgn
bgreen

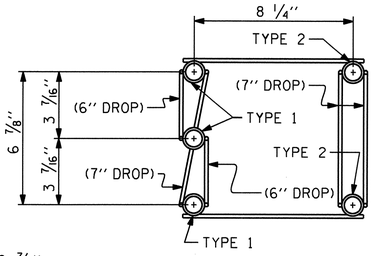


TYPE 1 FERRULE
THREADED STEEL FERRULES WITH CLOSED BOTTOM TO FIT 3/4" Ø BOLT WITH ROUND WASHER.

TYPE 2 FERRULE
THREADED STEEL FERRULES WITH CLOSED BOTTOM TO FIT 5/8" Ø BOLT WITH ROUND WASHER.

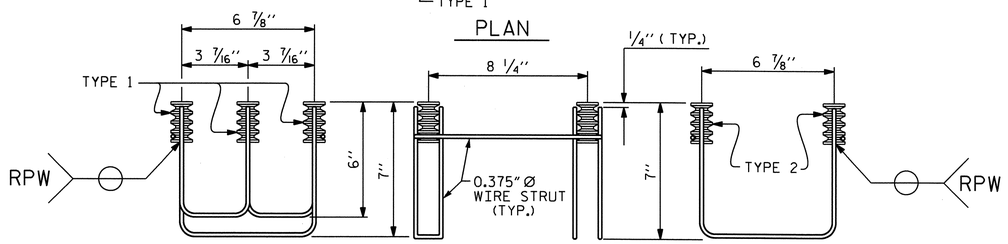


LEFT SIDE VIEW ELEVATION RIGHT SIDE VIEW

## 5-BOLT METAL RAIL ANCHOR ASSEMBLY

( 72 ASSEMBLIES REQUIRED )

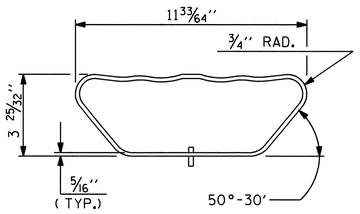


END VIEW

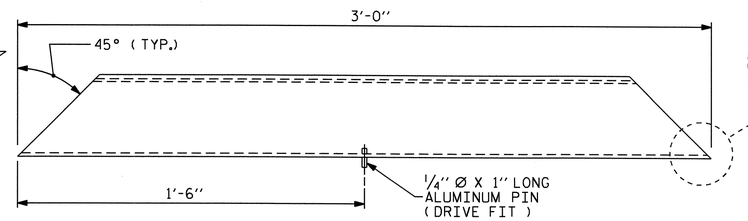


PLAN VIEW

## BOTTOM RAIL EXPANSION BAR

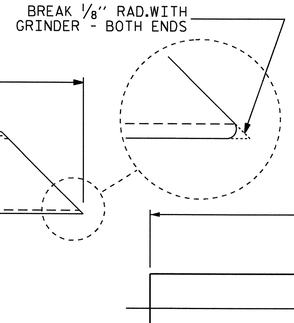


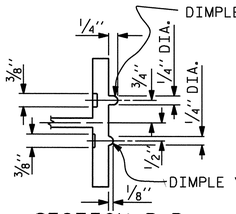


SECTION B-B

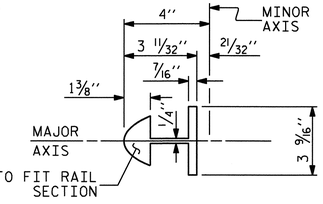


BAR SECTION

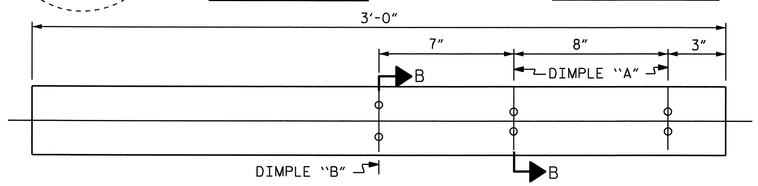


BACK ELEVATION

## TOP & MIDDLE RAIL EXPANSION BAR

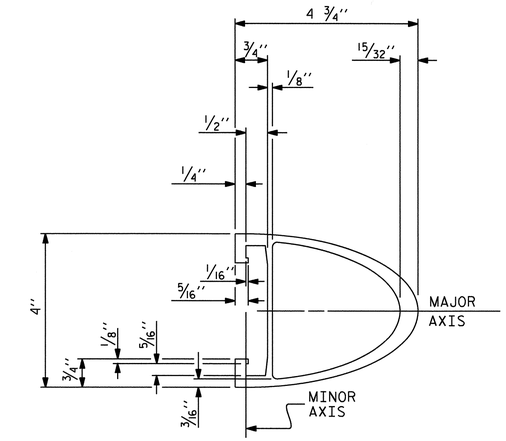


## TOP & MIDDLE RAIL SECTION

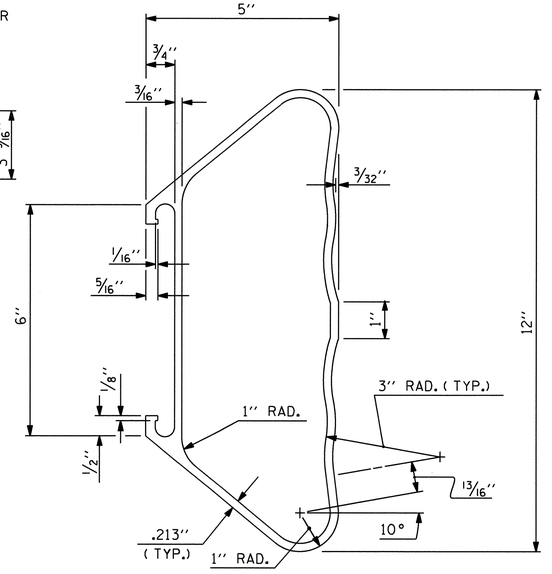


## BOTTOM RAIL SECTION

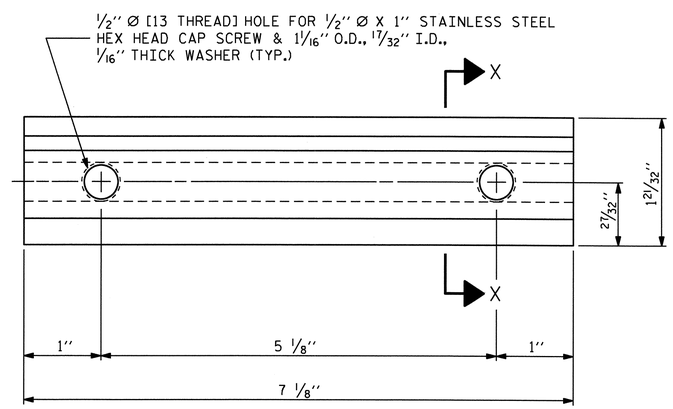


ELEVATION

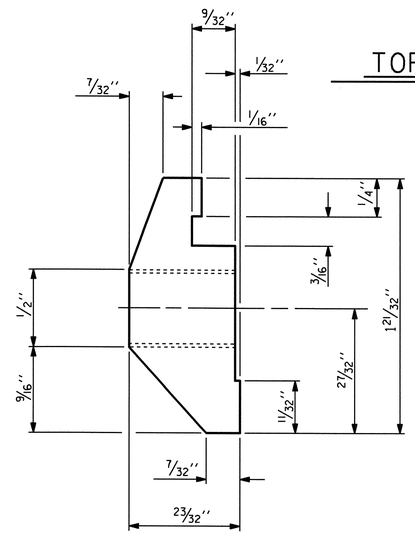


SECTION X-X

## CLAMP BAR DETAIL

( 6 REQUIRED PER POST )

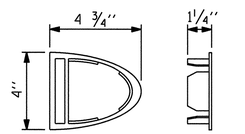


TOP & MIDDLE RAIL CAP

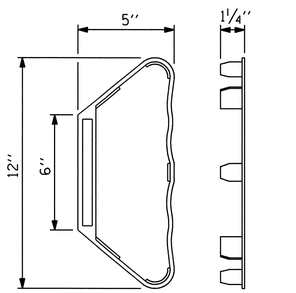


BOTTOM RAIL CAP

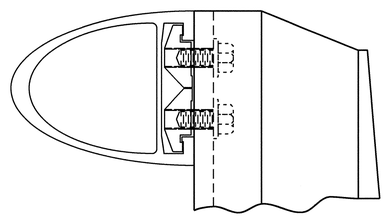

## CLAMP ASSEMBLY

TOP RAIL SHOWN
( MIDDLE & BOTTOM RAIL ARE SIMILAR )

NOTES

STRUCTURAL CONCRETE ANCHOR ASSEMBLY

THE STRUCTURAL CONCRETE ANCHOR ASSEMBLY SHALL CONSIST OF THE FOLLOWING COMPONENTS:

A. FERRULES SHALL BE MADE FROM STEEL MEETING THE REQUIREMENTS OF AASHTO M169, GRADE 12L14 AND SHALL HAVE A MINIMUM LENGTH OF THREADS OF 2" FOR 3/4" FERRULES AND 1 3/4" FOR 5/8" FERRULES.

B. 3 - 3/4" Ø X 2 1/2" BOLTS WITH WASHERS. BOLTS SHALL CONFORM TO THE REQUIREMENTS OF ASTM A307. BOLTS AND WASHERS SHALL BE GALVANIZED. AT THE CONTRACTOR'S OPTION, STAINLESS STEEL BOLTS AND WASHERS MAY BE USED AS AN ALTERNATE FOR THE 3/4" Ø X 2 1/2" GALVANIZED BOLTS AND WASHERS. THEY SHALL CONFORM TO OR EXCEED THE MECHANICAL REQUIREMENTS OF ASTM A307. THE USE OF THIS ALTERNATE SHALL BE APPROVED BY THE ENGINEER.

C. 2 - 5/8" Ø X 2 1/4" BOLTS WITH WASHERS. BOLTS SHALL CONFORM TO THE REQUIREMENTS OF ASTM A307. BOLTS AND WASHERS SHALL BE GALVANIZED. AT THE CONTRACTOR'S OPTION, STAINLESS STEEL BOLTS AND WASHERS MAY BE USED AS AN ALTERNATE FOR THE 5/8" Ø X 2 1/4" GALVANIZED BOLTS AND WASHERS. THEY SHALL CONFORM TO OR EXCEED THE MECHANICAL REQUIREMENTS OF ASTM A307. THE USE OF THIS ALTERNATE SHALL BE APPROVED BY THE ENGINEER.

D. WIRE STRUT SHOWN IN THE CONCRETE ANCHOR ASSEMBLY DETAIL IS THE MINIMUM ALLOWABLE SIZE AND SHALL HAVE A MINIMUM TENSILE STRENGTH OF 100,000 PSI. AS AN OPTION, A 7/16" Ø WIRE STRUT WITH A MINIMUM TENSILE STRENGTH OF 90,000 PSI IS ACCEPTABLE.

E. THE METAL RAIL ANCHOR ASSEMBLIES TO BE HOT DIPPED GALVANIZED TO CONFORM TO REQUIREMENTS OF AASHTO M111.

F. THE COST OF THE METAL RAIL ANCHOR ASSEMBLY WITH BOLTS AND WASHERS COMPLETE IN PLACE SHALL BE INCLUDED IN THE PRICE BID FOR LINEAR FEET OF METAL RAIL.

G. BOLTS TO BE TIGHTENED ONE-HALF TURN WITH A WRENCH FROM A FINGER-TIGHT POSITION.

PROJECT NO. I-3819A

IREDELL COUNTY

STATION: 20+40.37 -Y1-

SHEET 2 OF 5

STATE OF NORTH CAROLINA
DEPARTMENT OF TRANSPORTATION
RALEIGH

STANDARD

# 3 BAR METAL RAIL

| REVISIONS | | | | | | SHEET NO. |
|---|---|---|---|---|---|---|
| NO. | BY: | DATE: | NO. | BY: | DATE: | S-20 |
| 1 | | | 3 | | | TOTAL SHEETS |
| 2 | | | 4 | | | 382 |

STR. #1

STD. NO. BMR6

| | |
|---|---|
| ASSEMBLED BY : J.P. ADAMS | DATE : 9/1/10 |
| CHECKED BY : H.T. DIEU | DATE : 10/5/10 |
| DRAWN BY : JMB 1/88 | REV. 7/10/01 RWW/LES |
| CHECKED BY : GGH 1/88 | REV. 5/7/03 RWW/JTE |
| | REV. 5/1/06 TLA/GM |

NORTH CAROLINA PROFESSIONAL SEAL 23371 ENGINEER VIMAL A. PATEL 12/7/10

03-DEC-2010 11:18
O:\Structures\Hunt\str#1\Plans\I-3819A_sd_BR_01.dgn
bgreen

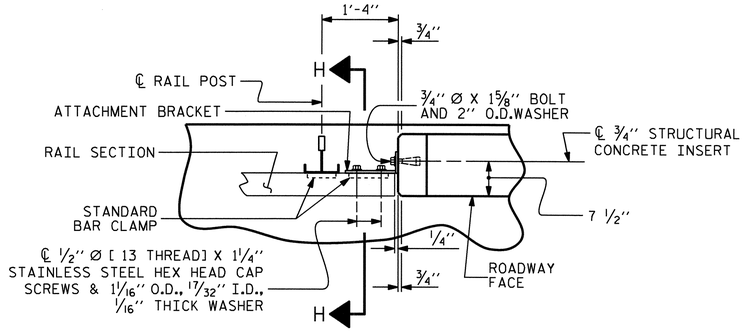


## PLAN OF RAIL AND END POST

( STIFFENER ON 1/2" ℙ NOT SHOWN FOR CLARITY )

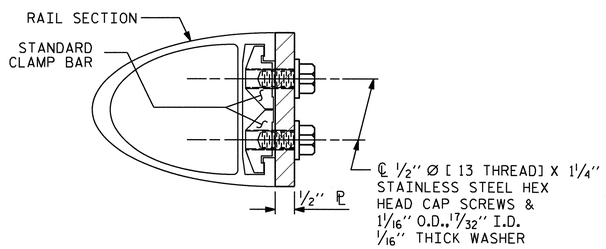


## SECTION H-H

( FOR TOP & MIDDLE RAIL )

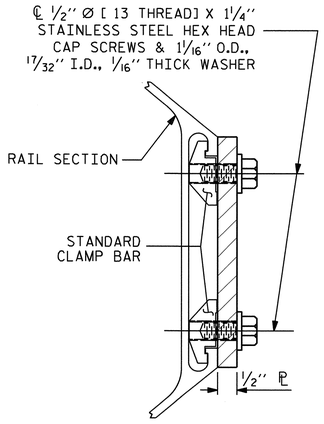


## SECTION H-H

( FOR BOTTOM RAIL )

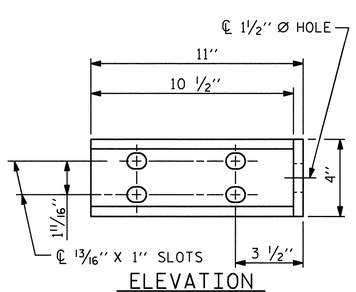


ELEVATION

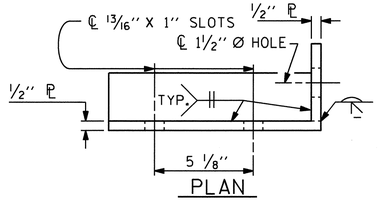


PLAN

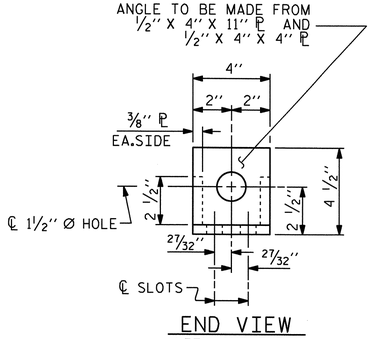


END VIEW

(FIX. AND EXP.)

## DETAILS FOR ATTACHMENT BRACKET

( TOP & MIDDLE RAIL ONLY )

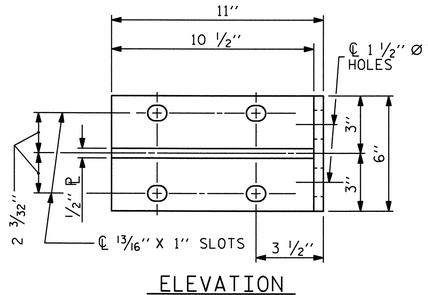


ELEVATION

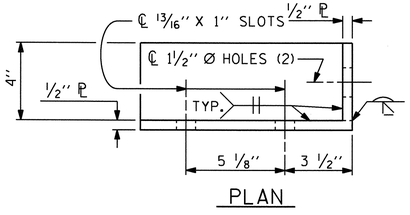


PLAN

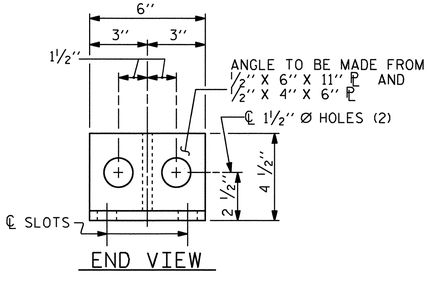


END VIEW

## DETAILS FOR ATTACHMENT BRACKET

( BOTTOM RAIL ONLY )

## NOTES

METAL RAIL TO END POST CONNECTION

THE METAL RAIL TO END POST CONNECTION SHALL CONSIST OF THE FOLLOWING COMPONENTS:

A. 1/2" PLATES SHALL CONFORM TO AASHTO M270 GRADE 36 AND SHALL BE GALVANIZED AFTER FABRICATION.

B. 3/4" STRUCTURAL CONCRETE INSERT SHALL HAVE A WORKING LOAD SHEAR CAPACITY OF 4800 LBS. THE FERRULES SHALL ENGAGE A 3/4" Ø X 1 5/8" BOLT WITH 2" O.D. WASHER IN PLACE. THE 3/4" Ø X 1 5/8" BOLT SHALL HAVE N. C. THREADS.

C. CAP SCREWS FOR RAIL ATTACHMENT TO ANGLE SHALL CONFORM TO THE REQUIREMENTS OF ASTM F593 ALLOY 305 STAINLESS STEEL. CAP SCREWS TO BE CENTERED IN SLOTS AT 60°F. WASHERS FOR RAIL ATTACHMENT SHALL MEET THE REQUIREMENTS OF ASTM F844 EXCEPT THEY SHALL BE MADE FROM ALLOY 304 STAINLESS STEEL.

D. STANDARD CLAMP BARS ( STD. No. BMR6 ).

THE COST OF THE STANDARD CLAMP BARS AND CAP SCREWS USED IN THE METAL RAIL TO END POST CONNECTION SHALL BE INCLUDED IN THE UNIT CONTRACT PRICE BID FOR LINEAR FEET OF 3 BAR METAL RAIL.

THE 3/4" STRUCTURAL CONCRETE INSERT WITH BOLT SHALL BE ASSEMBLED IN THE SHOP.

THE COST OF THE 3/4" STRUCTURAL CONCRETE INSERT ASSEMBLY, AND THE 1/2" PLATES COMPLETE IN PLACE SHALL BE INCLUDED IN THE VARIOUS PAY ITEMS.

THE CONTRACTOR, AT HIS OPTION, MAY USE AN ADHESIVE BONDING SYSTEM IN LIEU OF THE STRUCTURAL CONCRETE INSERT EMBEDDED IN THE END POST. IF THE ADHESIVE BONDING SYSTEM IS USED, THE 3/4" Ø X 1 5/8" BOLT WITH WASHER SHALL BE REPLACED WITH A 3/4" Ø X 6 1/2" BOLT AND 2" O.D. WASHER. ALL SPECIFICATIONS THAT APPLY TO THE 3/4" Ø X 1 5/8" BOLT SHALL APPLY TO THE 3/4" Ø X 6 1/2" BOLT. FIELD TESTING OF THE ADHESIVE BONDING SYSTEM IS NOT REQUIRED.

## NOTES

STRUCTURAL CONCRETE INSERT

THE STRUCTURAL CONCRETE INSERT ASSEMBLY SHALL CONSIST OF THE FOLLOWING COMPONENTS:

A. FERRULES SHALL BE MADE FROM STEEL MEETING THE REQUIREMENTS OF AASHTO M169, GRADE 12L14 AND SHALL HAVE A MINIMUM LENGTH OF THREADS OF 1 1/2".

B. 1 - 3/4" Ø X 1 5/8" BOLT WITH WASHER. BOLT SHALL CONFORM TO THE REQUIREMENTS OF ASTM A307. BOLT AND WASHER SHALL BE GALVANIZED. AT THE CONTRACTORS OPTION, STAINLESS STEEL BOLT AND WASHER MAY BE USED AS AN ALTERNATE FOR THE 3/4" Ø X 1 5/8" GALVANIZED BOLT AND WASHER. THEY SHALL CONFORM TO OR EXCEED THE MECHANICAL REQUIREMENTS OF ASTM A307. THE USE OF THIS ALTERNATE SHALL BE APPROVED BY THE ENGINEER.

C. WIRE STRUT SHOWN IN THE CONCRETE INSERT ASSEMBLY DETAIL IS THE MINIMUM ALLOWABLE SIZE AND SHALL HAVE A MINIMUM TENSILE STRENGTH OF 100,000 PSI. AS AN OPTION, A 7/16" Ø WIRE STRUT WITH A MINIMUM TENSILE STRENGTH OF 90,000 PSI IS ACCEPTABLE.

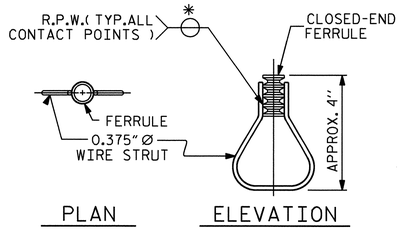


PLAN ELEVATION

## STRUCTURAL CONCRETE INSERT

* EACH WELDED ATTACHMENT OF WIRE TO FERRULE SHALL DEVELOP THE TENSILE STRENGTH OF THE WIRE.

PROJECT NO. I-3819A

IREDELL COUNTY

STATION: 20+40.37 -Y1-

SHEET 3 OF 5

STATE OF NORTH CAROLINA
DEPARTMENT OF TRANSPORTATION
RALEIGH

STANDARD

3 BAR METAL RAIL

NORTH CAROLINA PROFESSIONAL SEAL 23371 ENGINEER VIMAL A. PATEL

12/7/10

| ASSEMBLED BY : J.P. ADAMS | DATE : 9/1/10 |
|---|---|
| CHECKED BY : H.T. DIEU | DATE : 10/5/10 |

| DRAWN BY : JMB 1/88 | REV. 7/10/01 RWW/LES |
|---|---|
| CHECKED BY : GGH 1/88 | REV. 5/7/03 RWW/JTE |
| | REV. 5/1/06 TLA/GM |

| REVISIONS | | | | | | SHEET NO. |
|---|---|---|---|---|---|---|
| NO. | BY: | DATE: | NO. | BY: | DATE: | S-21 |
| 1 | | | 3 | | | TOTAL SHEETS |
| 2 | | | 4 | | | 382 |

STR. #1

STD. NO. BMR7

03-DEC-2010 11:18
O:\Structures\Hunt\str#1\Plans\I-3819A_sd_BR_01.dgn
bgreen

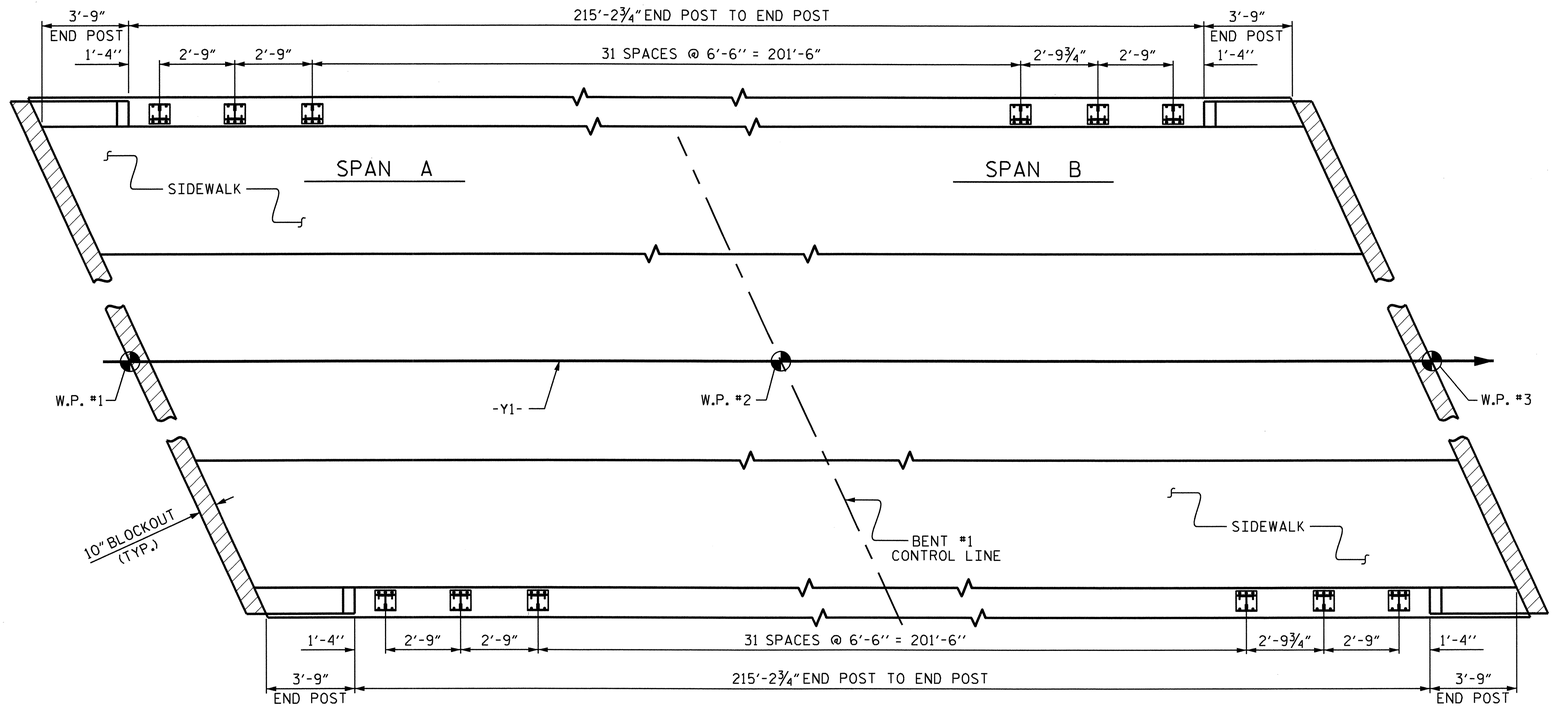


## PLAN OF RAIL POST SPACING

FOR SIDEWALK DETAILS & REINFORCING STEEL, SEE SIDEWALK DETAILS SHEET.

## NOTES

PAYMENT FOR END POSTS SHALL BE INCLUDED IN UNIT PRICE FOR "REINFORCED CONCRETE DECK SLAB".

### BAR TYPE

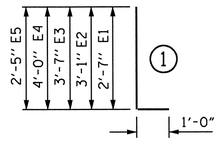


ALL BAR DIMENSIONS ARE OUT TO OUT

### BILL FOR END POSTS

| BAR | NO. | SIZE | TYPE | LENGTH | WEIGHT (LBS) |
|---|---|---|---|---|---|
| E1 | 8 | #7 | 1 | 3'-7" | 59 |
| E2 | 8 | #7 | 1 | 4'-1" | 67 |
| E3 | 8 | #7 | 1 | 4'-7" | 75 |
| E4 | 8 | #7 | 1 | 5'-0" | 82 |
| E5 | 4 | #7 | 1 | 3'-5" | 28 |
| | | | | | |
| F1 | 8 | #6 | STR | 3'-2" | 38 |
| F2 | 8 | #6 | STR | 3'-9" | 45 |
| F3 | 8 | #6 | STR | 3'-5" | 41 |
| F4 | 4 | #6 | STR | 3'-11" | 24 |
| F5 | 4 | #6 | STR | 3'-8" | 22 |
| EPOXY COATED REINFORCING STEEL | | | | | 481 LBS. |
| CLASS AA CONCRETE | | | | | 2.0 CU. YDS. |

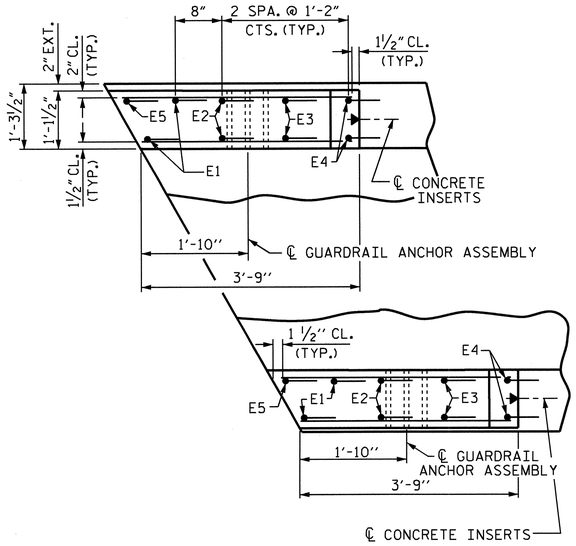


PLAN

END BENT #1 SHOWN, END BENT #2 SIMILAR.
10" BLOCKOUT NOT SHOWN FOR CLARITY.

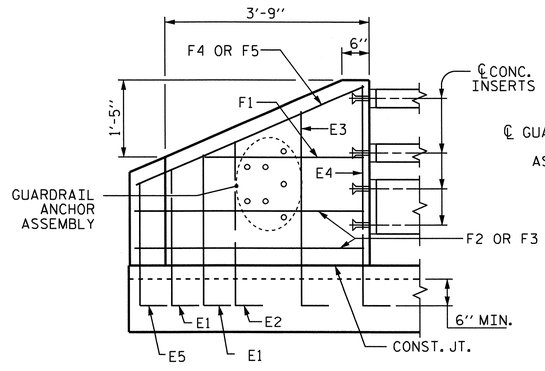


ELEVATION

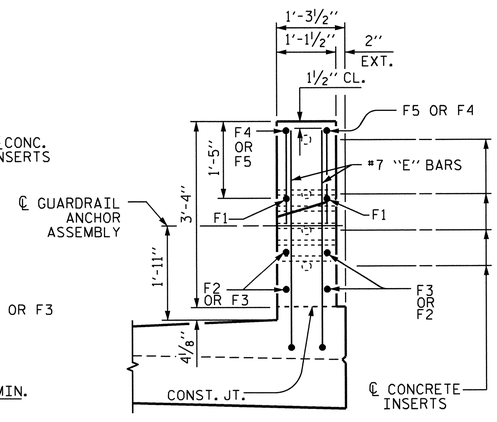


END VIEW

## END POST DETAILS

PROJECT NO. I-3819A
IREDELL COUNTY
STATION: 20+40.37 -Y1-

SHEET 4 OF 5

STATE OF NORTH CAROLINA
DEPARTMENT OF TRANSPORTATION
RALEIGH

SUPERSTRUCTURE
RAIL POST SPACING & END POST DETAILS

| REVISIONS | | | | | | SHEET NO. |
|---|---|---|---|---|---|---|
| NO. | BY: | DATE: | NO. | BY: | DATE: | S-22 |
| 1 | | | 3 | | | TOTAL SHEETS |
| 2 | | | 4 | | | 382 |

NORTH CAROLINA PROFESSIONAL SEAL 23371 ENGINEER VIRUL A. PATEL
1/10/12

DRAWN BY : J.P. ADAMS DATE : 9/1/10
CHECKED BY : H.T. DIEU DATE : 10/5/10

03-JAN-2012 09:55
R:\Structures\Hunt\str#1\Plans\I-3819A_sd_BR_01.dgn
hlocklear

STR. #1

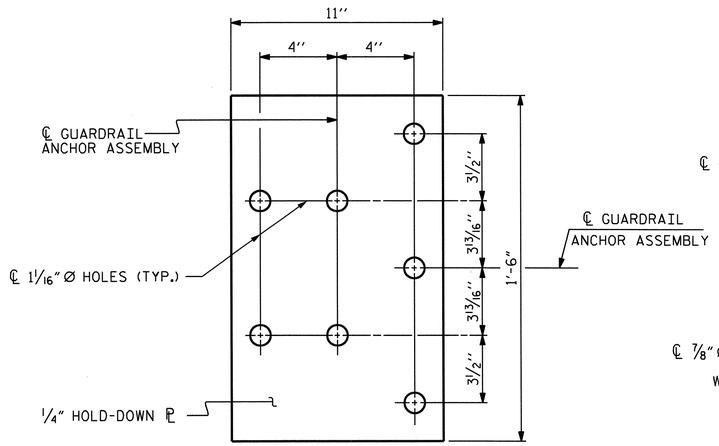


PLAN

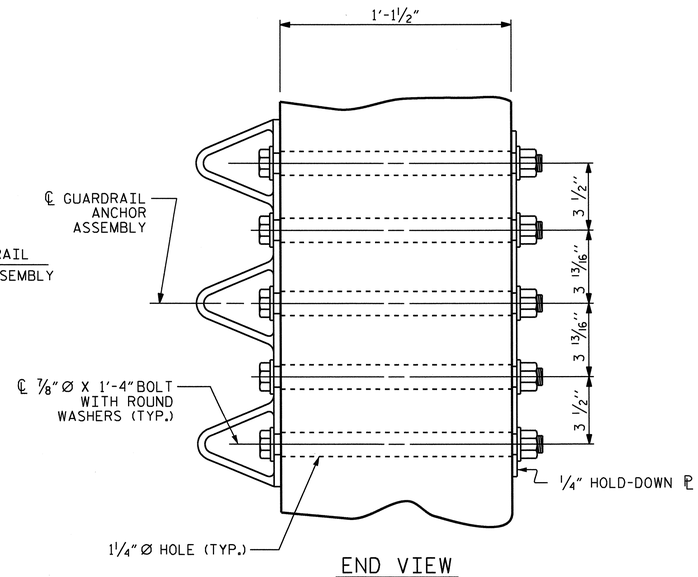


END VIEW

# GUARDRAIL ANCHOR ASSEMBLY DETAILS

## NOTES

THE GUARDRAIL ANCHOR ASSEMBLY SHALL CONSIST OF A 1/4'' HOLD DOWN PLATE AND 7 - 7/8'' Ø BOLTS WITH NUTS AND WASHERS.

THE HOLD-DOWN PLATE SHALL CONFORM TO AASHTO M270 GRADE 36. AFTER FABRICATION, THE HOLD-DOWN PLATE SHALL BE HOT-DIP GALVANIZED IN ACCORDANCE WITH AASHTO M111.

BOLTS SHALL CONFORM TO THE REQUIREMENTS OF ASTM A307 AND NUTS SHALL CONFORM TO THE REQUIREMENTS OF AASHTO M291. BOLTS, NUTS AND WASHERS SHALL BE GALVANIZED. AT THE CONTRACTOR'S OPTION, STAINLESS STEEL BOLTS, NUTS AND WASHERS MAY BE USED AS AN ALTERNATE FOR THE 7/8'' Ø GALVANIZED BOLTS, NUTS AND WASHERS. THEY SHALL CONFORM TO OR EXCEED THE MECHANICAL REQUIREMENTS OF ASTM A307. THE USE OF THIS ALTERNATE SHALL BE APPROVED BY THE ENGINEER.

THE GUARDRAIL ANCHOR ASSEMBLY IS REQUIRED AT ALL POINTS WHERE APPROACH GUARDRAIL IS TO BE ATTACHED TO THE END OF THE PARAPET. FOR POINTS OF ATTACHMENT, SEE SKETCH.

AFTER INSTALLATION, THE EXPOSED THREAD OF THE BOLT SHALL BE BURRED WITH A SHARP POINTED TOOL.

THE COST OF THE GUARDRAIL ANCHOR ASSEMBLIES WITH BOLTS, NUTS AND WASHERS COMPLETE IN PLACE, SHALL BE INCLUDED IN THE VARIOUS PAY ITEMS.

THE VERTICAL REINFORCING BARS MAY BE SHIFTED SLIGHTLY IN THE END POST TO CLEAR ASSEMBLY BOLTS.

THE 1 1/4'' Ø HOLES SHALL BE FORMED OR DRILLED WITH A CORE BIT. IMPACT TOOLS WILL NOT BE PERMITTED. ANY CONCRETE DAMAGED BY THIS WORK SHALL BE REPAIRED TO THE SATISFACTION OF THE ENGINEER.

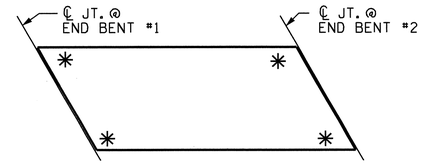


## SKETCH SHOWING POINTS OF ATTACHMENT

* LOCATION OF GUARDRAIL ATTACHMENT

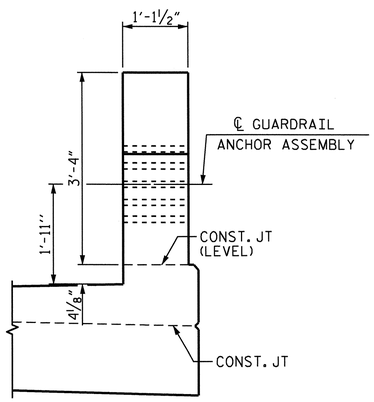


END VIEW

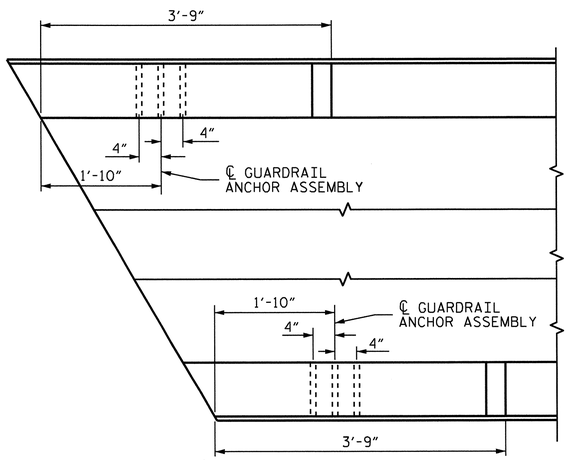


PLAN

# LOCATION OF GUARDRAIL ANCHOR AT END POST

END BENT #1 SHOWN, END BENT #2 SIMILAR.
10" BLOCKOUT NOT SHOWN FOR CLARITY.

| | |
|---|---|
| ASSEMBLED BY : J.P. ADAMS | DATE : 9/1/10 |
| CHECKED BY : H.T. DIEU | DATE : 10/5/10 |
| DRAWN BY : MAA 5/10 | ADDED 5/6/10 |
| CHECKED BY : GM 5/10 | |

03-OCT-2011 12:47
R:\Structures\Hunt\str#1\Plans\I-3819A_sd_BR_01.dgn
chunt

NORTH CAROLINA PROFESSIONAL SEAL 23371 ENGINEER VIPUL A. PATEL
10/3/11

PROJECT NO. I-3819A
IREDELL COUNTY
STATION: 20+40.37 -Y1-

SHEET 5 OF 5

STATE OF NORTH CAROLINA
DEPARTMENT OF TRANSPORTATION
RALEIGH

STANDARD
GUARDRAIL ANCHORAGE DETAILS FOR METAL RAILS

| REVISIONS | | | | | | SHEET NO. |
|---|---|---|---|---|---|---|
| NO. | BY: | DATE: | NO. | BY: | DATE: | S-23 |
| 1 | | | 3 | | | TOTAL SHEETS |
| 2 | | | 4 | | | 382 |

STR. #1 STD. NO. GRA3

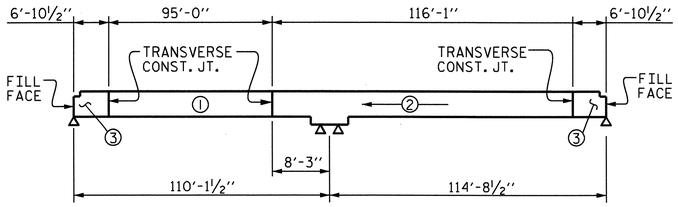


## POUR SEQUENCE

⟵(#)— = INDICATES POUR NUMBER AND DIRECTION OF POUR

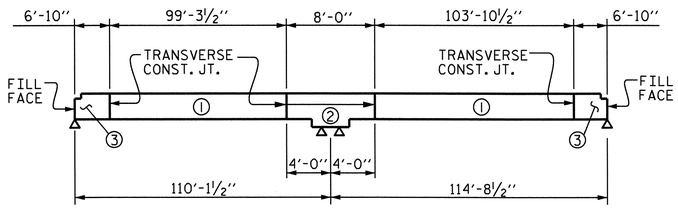


## OPTIONAL POUR SEQUENCE

POUR ② CAN NOT BE STARTED UNTIL BOTH ADJACENT ①POURS REACH A MINIMUM OF 3000 PSI.

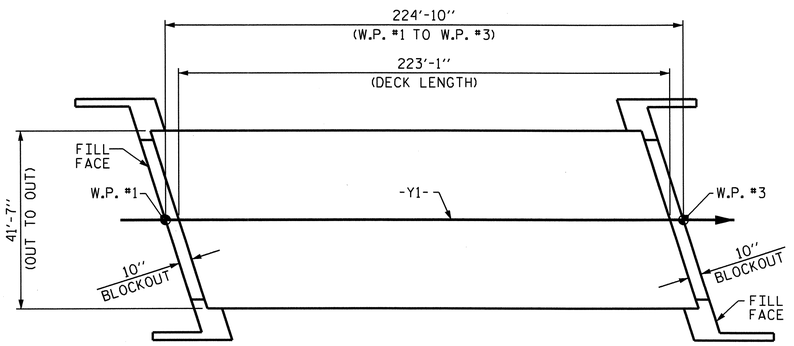


## LAYOUT FOR COMPUTING AREA REINFORCED CONCRETE DECK SLAB (SQ. FT. = 9349)

| GROOVING BRIDGE FLOORS | |
|---|---|
| APPROACH SLABS | 1215 SQ.FT. |
| BRIDGE DECK | 5577 SQ.FT. |
| TOTAL | 6792 SQ.FT. |

## REINFORCING BAR SCHEDULE

### SPANS A & B

| BAR | NO. | SIZE | TYPE | LENGTH | WEIGHT | BAR | NO. | SIZE | TYPE | LENGTH | WEIGHT |
|---|---|---|---|---|---|---|---|---|---|---|---|
| ✱ A1 | 360 | #5 | STR | 41'-3'' | 15489 | A216 | 2 | #5 | STR | 12'-4'' | 26 |
| A2 | 360 | #5 | STR | 41'-3'' | 15489 | A217 | 2 | #5 | STR | 10'-5'' | 22 |
| | | | | | | A218 | 2 | #5 | STR | 8'-7'' | 18 |
| ✱ A101 | 2 | #5 | STR | 39'-10'' | 83 | A219 | 2 | #5 | STR | 6'-9'' | 14 |
| ✱ A102 | 2 | #5 | STR | 38'-0'' | 79 | A220 | 2 | #5 | STR | 4'-11'' | 10 |
| ✱ A103 | 2 | #5 | STR | 36'-2'' | 75 | A221 | 2 | #5 | STR | 3'-1'' | 6 |
| ✱ A104 | 2 | #5 | STR | 34'-4'' | 72 | | | | | | |
| ✱ A105 | 2 | #5 | STR | 32'-6'' | 68 | ✱ B1 | 134 | #6 | STR | 23'-0'' | 4629 |
| ✱ A106 | 2 | #5 | STR | 30'-8'' | 64 | ✱ B2 | 140 | #4 | STR | 28'-9'' | 2689 |
| ✱ A107 | 2 | #5 | STR | 28'-10'' | 60 | ✱ B3 | 70 | #6 | STR | 40'-3'' | 4232 |
| ✱ A108 | 2 | #5 | STR | 27'-0'' | 56 | ✱ B4 | 32 | #6 | STR | 33'-9'' | 1622 |
| ✱ A109 | 2 | #5 | STR | 25'-2'' | 52 | B5 | 60 | #7 | STR | 23'-0'' | 2821 |
| ✱ A110 | 2 | #5 | STR | 23'-4'' | 49 | B6 | 120 | #5 | STR | 40'-0'' | 5006 |
| ✱ A111 | 2 | #5 | STR | 21'-6'' | 45 | B7 | 30 | #7 | STR | 33'-9'' | 2070 |
| ✱ A112 | 2 | #5 | STR | 19'-8'' | 41 | | | | | | |
| ✱ A113 | 2 | #5 | STR | 17'-10'' | 37 | H1 | 28 | #6 | 5 | 16'-3'' | 683 |
| ✱ A114 | 2 | #5 | STR | 16'-0'' | 33 | H2 | 28 | #6 | 5 | 16'-0'' | 673 |
| ✱ A115 | 2 | #5 | STR | 14'-2'' | 30 | H3 | 28 | #6 | 6 | 15'-11'' | 669 |
| ✱ A116 | 2 | #5 | STR | 12'-4'' | 26 | H4 | 28 | #6 | 6 | 15'-8'' | 659 |
| ✱ A117 | 2 | #5 | STR | 10'-5'' | 22 | | | | | | |
| ✱ A118 | 2 | #5 | STR | 8'-7'' | 18 | K1 | 28 | #4 | STR | 26'-0'' | 486 |
| ✱ A119 | 2 | #5 | STR | 6'-9'' | 14 | K2 | 24 | #4 | STR | 4'-9'' | 76 |
| ✱ A120 | 2 | #5 | STR | 4'-11'' | 10 | K3 | 8 | #4 | STR | 6'-3'' | 33 |
| ✱ A121 | 2 | #5 | STR | 3'-1'' | 6 | K4 | 80 | #4 | STR | 7'-10'' | 419 |
| | | | | | | K5 | 14 | #4 | STR | 18'-10'' | 176 |
| A201 | 2 | #5 | STR | 39'-10'' | 83 | K6 | 4 | #4 | STR | 5'-4'' | 14 |
| A202 | 2 | #5 | STR | 38'-0'' | 79 | K7 | 20 | #4 | STR | 6'-4'' | 85 |
| A203 | 2 | #5 | STR | 36'-2'' | 75 | K8 | 16 | #4 | STR | 4'-1'' | 44 |
| A204 | 2 | #5 | STR | 34'-4'' | 72 | | | | | | |
| A205 | 2 | #5 | STR | 32'-6'' | 68 | S1 | 176 | #4 | 2 | 2'-10'' | 333 |
| A206 | 2 | #5 | STR | 30'-8'' | 64 | ✱ S2 | 44 | #4 | 3 | 14'-10'' | 436 |
| A207 | 2 | #5 | STR | 28'-10'' | 60 | ✱ S3 | 48 | #4 | 4 | 11'-11'' | 382 |
| A208 | 2 | #5 | STR | 27'-0'' | 56 | ✱ S4 | 44 | #4 | 4 | 10'-4'' | 304 |
| A209 | 2 | #5 | STR | 25'-2'' | 52 | ✱ S5 | 16 | #4 | 3 | 16'-8'' | 178 |
| A210 | 2 | #5 | STR | 23'-4'' | 49 | | | | | | |
| A211 | 2 | #5 | STR | 21'-6'' | 45 | U1 | 24 | #4 | 1 | 18'-7'' | 298 |
| A212 | 2 | #5 | STR | 19'-8'' | 41 | U2 | 8 | #4 | 3 | 11'-1'' | 59 |
| A213 | 2 | #5 | STR | 17'-10'' | 37 | | | | | | |
| A214 | 2 | #5 | STR | 16'-0'' | 33 | | | | | | |
| A215 | 2 | #5 | STR | 14'-2'' | 30 | | | | | | |

| | |
|---|---|
| REINFORCING STEEL | 31033 LBS |
| ✱EPOXY COATED REINFORCING STEEL | 30901 LBS |

## BAR TYPES

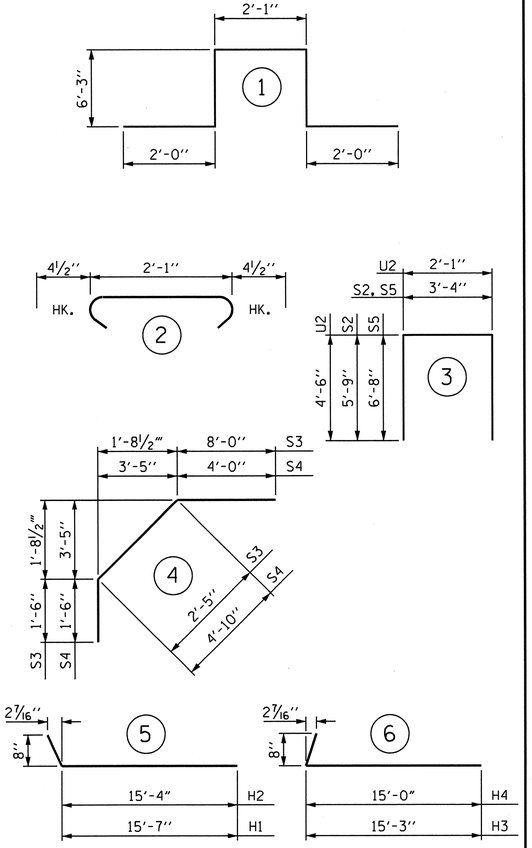


ALL BAR DIMENSIONS ARE OUT TO OUT

## SUPERSTRUCTURE BILL OF MATERIAL

| | CLASS AA CONCRETE | REINFORCING STEEL | EPOXY COATED REINFORCING STEEL |
|---|---|---|---|
| | (CU. YDS.) | (LBS.) | (LBS.) |
| TOTALS** | 380.0 | 31033 | 30901 |

**QUANTITIES FOR SIDEWALK, 3 BAR METAL RAIL AND END POST ARE NOT INCLUDED

## CLASS AA CONCRETE BREAKDOWN

| | |
|---|---|
| POUR #1 | 116.0 CU. YDS. |
| POUR #2 | 157.6 CU. YDS. |
| POUR #3 | 106.4 CU. YDS. |
| CLASS AA CONCRETE | 380.0 CU. YDS. |

## SUPERSTRUCTURE REINFORCING STEEL LENGTHS ARE BASED ON THE FOLLOWING MINIMUM SPLICE LENGTHS

| BAR SIZE | SUPERSTRUCTURE EXCEPT APPROACH SLABS, PARAPET, AND BARRIER RAIL | | APPROACH SLABS | | PARAPET AND BARRIER RAIL |
|---|---|---|---|---|---|
| | EPOXY COATED | UNCOATED | EPOXY COATED | UNCOATED | |
| #4 | 2'-0" | 1'-9" | 2'-0" | 1'-9" | 2'-9" |
| #5 | 2'-6" | 2'-2" | 2'-6" | 2'-2" | 3'-5" |
| #6 | 3'-0" | 2'-7" | 3'-10" | 2'-7" | 4'-4" |
| #7 | 5'-3" | 3'-6" | | | |
| #8 | 6'-10" | 4'-7" | | | |

PROJECT NO. I-3819A

IREDELL COUNTY

STATION: 20+40.37 -Y1-

STATE OF NORTH CAROLINA
DEPARTMENT OF TRANSPORTATION
RALEIGH

STANDARD

# SUPERSTRUCTURE BILL OF MATERIAL

| REVISIONS | | | | | | SHEET NO. |
|---|---|---|---|---|---|---|
| NO. | BY: | DATE: | NO. | BY: | DATE: | S-24 |
| 1 | | | 3 | | | TOTAL SHEETS |
| 2 | | | 4 | | | 382 |

| | | |
|---|---|---|
| ASSEMBLED BY : B. L. GREEN | DATE : 9/20/10 | |
| CHECKED BY : M. K. BEARD | DATE : 10/20/10 | |
| DRAWN BY : JMB 5/87 | REV. 6/1/94 | EEM/GRP |
| CHECKED BY : SJD 9/87 | REV. 8/16/99 | RWW/LES |
| | REV. 5/1/06 | TLA/GM |

03-JAN-2012 09:59
R:\Structures\Hunt\str#1\Plans\I-3819A_sd_BM_01.dgn
hlacklear

STR. #1 STD. NO. BOM2

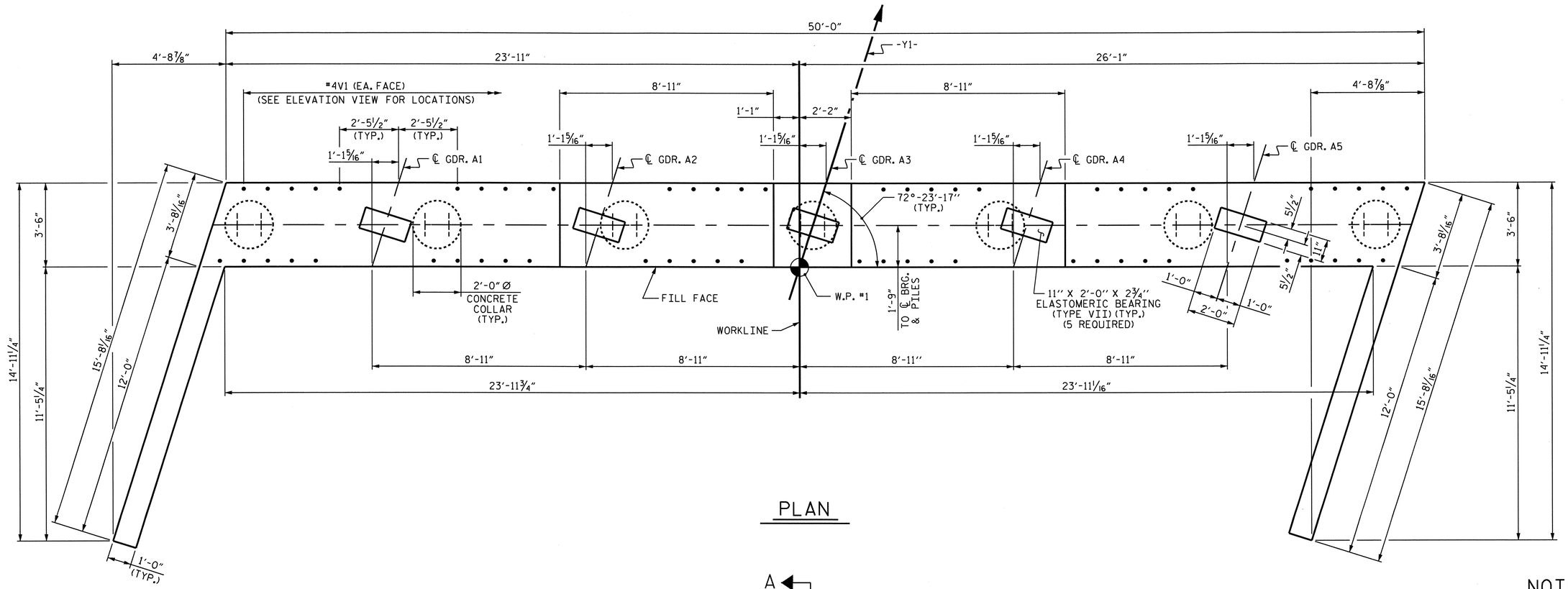


PLAN

A

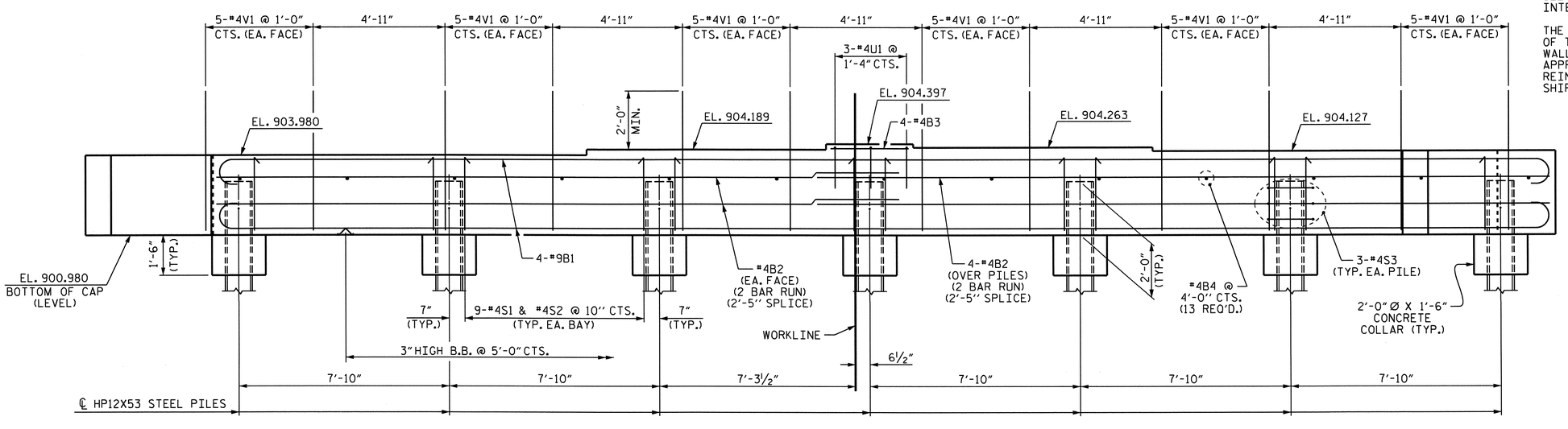


A

ELEVATION

## NOTES

SEE SUPERSTRUCTURE SHEETS FOR UPPER PART OF INTEGRAL END BENT DETAILS.

THE CONTRACTOR SHALL PROVIDE FOR INSTALLATION OF THE 4" DIAMETER DRAIN PIPE THROUGH THE WING WALL AS REQUIRED FOR REINFORCED BRIDGE APPROACH FILLS, SEE THE ROADWAY PLANS. REINFORCING STEEL IN THE WING WALL MAY BE SHIFTED AS NECESSARY TO CLEAR THE DRAIN PIPE.

PROJECT NO. I-3819A

IREDELL COUNTY

STATION: 20+40.37 -Y1-

SHEET 1 OF 3

STATE OF NORTH CAROLINA
DEPARTMENT OF TRANSPORTATION
RALEIGH

SUBSTRUCTURE

INTEGRAL END BENT #1

NORTH CAROLINA PROFESSIONAL SEAL 23371 ENGINEER VIPUL A. PATEL
1/10/12

| REVISIONS | | | | | | SHEET NO. |
|---|---|---|---|---|---|---|
| NO. | BY: | DATE: | NO. | BY: | DATE: | S-25 |
| 1 | | | 3 | | | TOTAL SHEETS |
| 2 | | | 4 | | | 382 |

STR. #1

DRAWN BY : M.K. BEARD DATE : 9/24/10
CHECKED BY : J.P. ADAMS DATE : 10/5/10

03-JAN-2012 10:01
R:\Structures\Hunt\str#1\Plans\I3819A_SD_Ebts_01.dgn
hlocklear

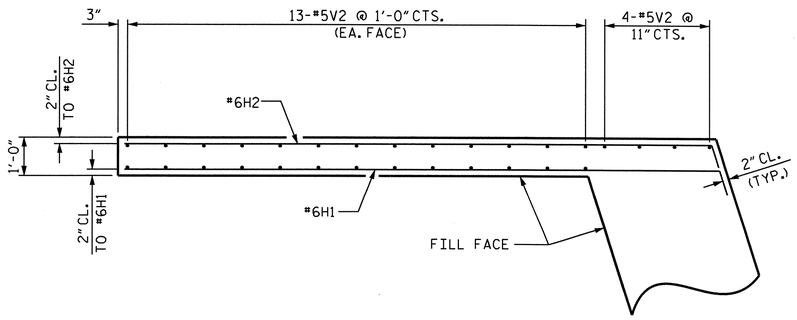


PLAN OF LEFT WING

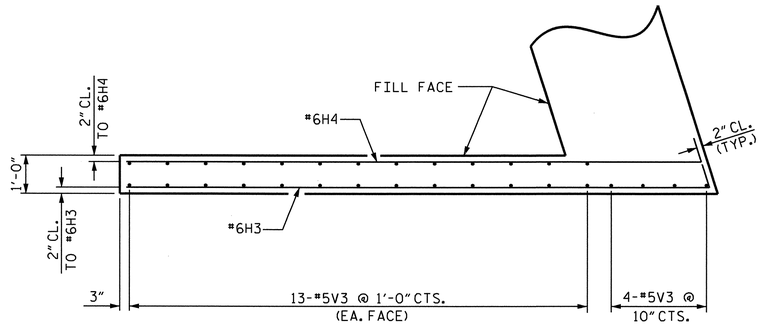


PLAN OF RIGHT WING

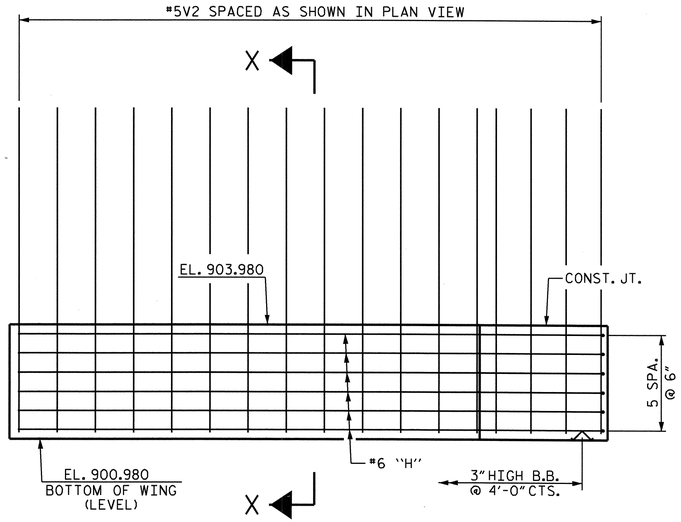


ELEVATION OF LEFT WING

SECTION X-X

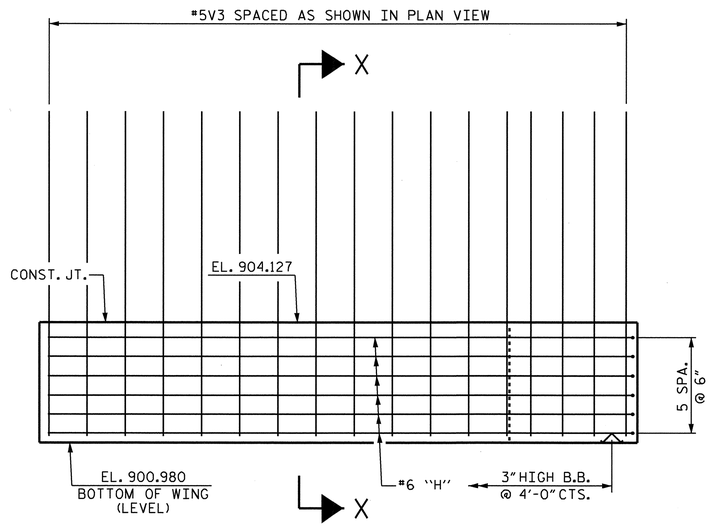


ELEVATION OF RIGHT WING

NOTE: THE UPPER PORTION OF THE WINGS SHALL BE POURED WITH THE SUPERSTRUCTURE. FOR DETAILS AND REINFORCING STEEL, SEE SUPERSTRUCTURE DETAILS.

NORTH CAROLINA PROFESSIONAL SEAL 23371 ENGINEER VIPUL A. PATEL

12/7/10

PROJECT NO. I-3819A

IREDELL COUNTY

STATION: 20+40.37 -Y1-

SHEET 2 OF 3

STATE OF NORTH CAROLINA
DEPARTMENT OF TRANSPORTATION
RALEIGH

SUBSTRUCTURE

# INTEGRAL END BENT #1

| REVISIONS | | | | | | SHEET NO. |
|---|---|---|---|---|---|---|
| NO. | BY: | DATE: | NO. | BY: | DATE: | S-26 |
| 1 | | | 3 | | | TOTAL SHEETS |
| 2 | | | 4 | | | 382 |

STR. #1

DRAWN BY : M.K. BEARD DATE : 9/28/10
CHECKED BY : J.P. ADAMS DATE : 10/5/10

03-DEC-2010 11:18
O:\Structures\Hunt\str#1\Plans\I3819A_SD_Ebts_01.dgn
bgreen

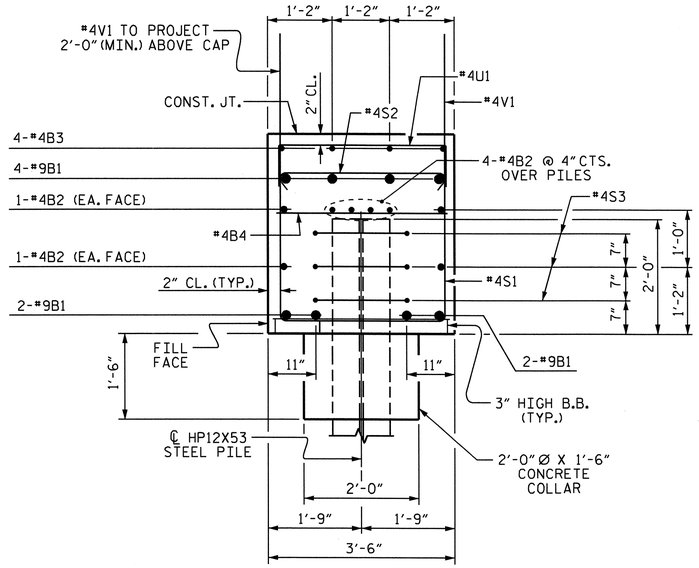


## SECTION A-A

## BAR TYPES

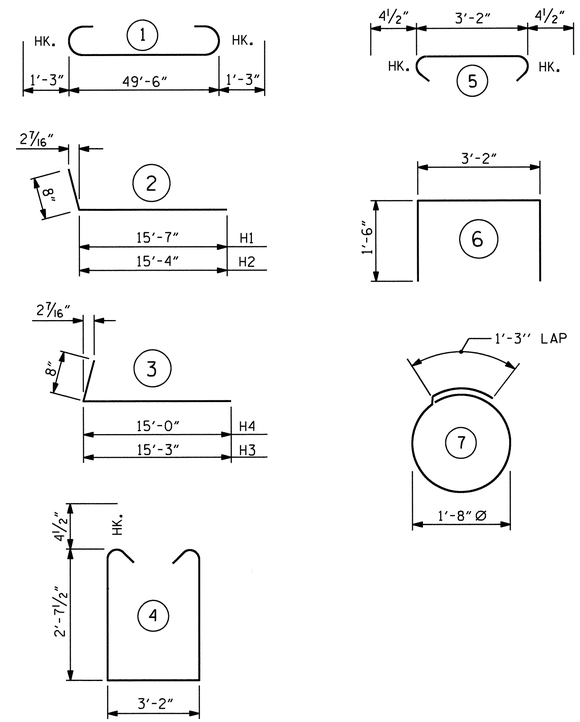


ALL BAR DIMENSIONS ARE OUT TO OUT.

## BILL OF MATERIAL
### INTEGRAL END BENT #1

| BAR | NO. | SIZE | TYPE | LENGTH | WEIGHT |
|---|---|---|---|---|---|
| B1 | 8 | #9 | 1 | 52'-0" | 1414 |
| B2 | 16 | #4 | STR | 26'-2" | 280 |
| B3 | 4 | #4 | STR | 2'-11" | 8 |
| B4 | 13 | #4 | STR | 3'-2" | 28 |
| | | | | | |
| H1 | 6 | #6 | 2 | 16'-3" | 146 |
| H2 | 6 | #6 | 2 | 16'-0" | 144 |
| H3 | 6 | #6 | 3 | 15'-11" | 143 |
| H4 | 6 | #6 | 3 | 15'-8" | 141 |
| | | | | | |
| S1 | 54 | #4 | 4 | 9'-2" | 331 |
| S2 | 54 | #4 | 5 | 3'-11" | 141 |
| S3 | 21 | #4 | 7 | 6'-6" | 91 |
| | | | | | |
| U1 | 3 | #4 | 6 | 6'-2" | 12 |
| | | | | | |
| V1 | 60 | #4 | STR | 5'-3" | 210 |
| V2 | 30 | #5 | STR | 9'-6" | 297 |
| V3 | 30 | #5 | STR | 9'-9" | 305 |
| | | | | | |
| REINFORCING STEEL | | | LBS | | 3691 |

CLASS 'A' CONCRETE
CAP, LOWER WINGS & COLLARS 26.3 C.Y.

HP12X53 STEEL PILES
NO. 7 490 LIN.FT.

PILE REDRIVES 7 EA.

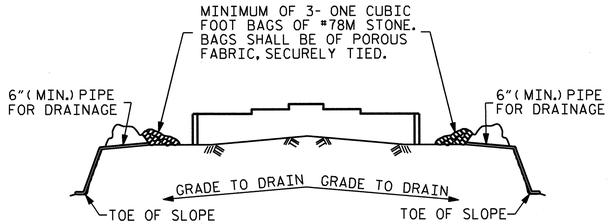


BAGGED STONE AND PIPE SHALL BE PLACED IMMEDIATELY AFTER COMPLETION OF END BENT EXCAVATION. PIPE MAY BE EITHER CONCRETE, CORRUGATED STEEL, CORRUGATED ALUMINUM ALLOY, OR CORRUGATED PLASTIC. PERFORATED PIPE WILL NOT BE ALLOWED.

BAGGED STONE SHALL REMAIN IN PLACE UNTIL THE ENGINEER DIRECTS THAT IT BE REMOVED. THE CONTRACTOR SHALL REMOVE AND DISPOSE OF SILT ACCUMULATIONS AT BAGGED STONE WHEN SO DIRECTED BY THE ENGINEER. BAGS SHALL BE REMOVED AND REPLACED WHENEVER THE ENGINEER DETERMINES THAT THEY HAVE DETERIORATED AND LOST THEIR EFFECTIVENESS.

NO SEPARATE PAYMENT WILL BE MADE FOR THIS WORK AND THE ENTIRE COST OF THIS WORK SHALL BE INCLUDED IN THE UNIT CONTRACT PRICE BID FOR THE SEVERAL PAY ITEMS.

## TEMPORARY DRAINAGE AT END BENT

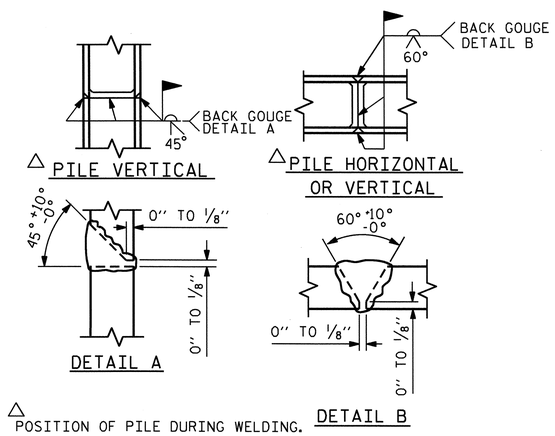


△ POSITION OF PILE DURING WELDING.

## PILE SPLICE DETAILS

PROJECT NO. I-3819A
IREDELL COUNTY
STATION: 20+40.37 -Y1-

SHEET 3 OF 3

STATE OF NORTH CAROLINA
DEPARTMENT OF TRANSPORTATION
RALEIGH

SUBSTRUCTURE

INTEGRAL END BENT #1

NORTH CAROLINA PROFESSIONAL SEAL 23371 ENGINEER VIRGIL A. PATEL
1/10/12

| REVISIONS | | | | | | SHEET NO. |
|---|---|---|---|---|---|---|
| NO. | BY: | DATE: | NO. | BY: | DATE: | S-27 |
| 1 | | | 3 | | | TOTAL SHEETS |
| 2 | | | 4 | | | 382 |

STR. #1

DRAWN BY : M.K. BEARD DATE : 9/28/10
CHECKED BY : J.P. ADAMS DATE : 10/5/10

03-JAN-2012 10:04
R:\Structures\Hunt\str#1\Plans\I3819A_SD_Ebts_01.dgn
hlocklear

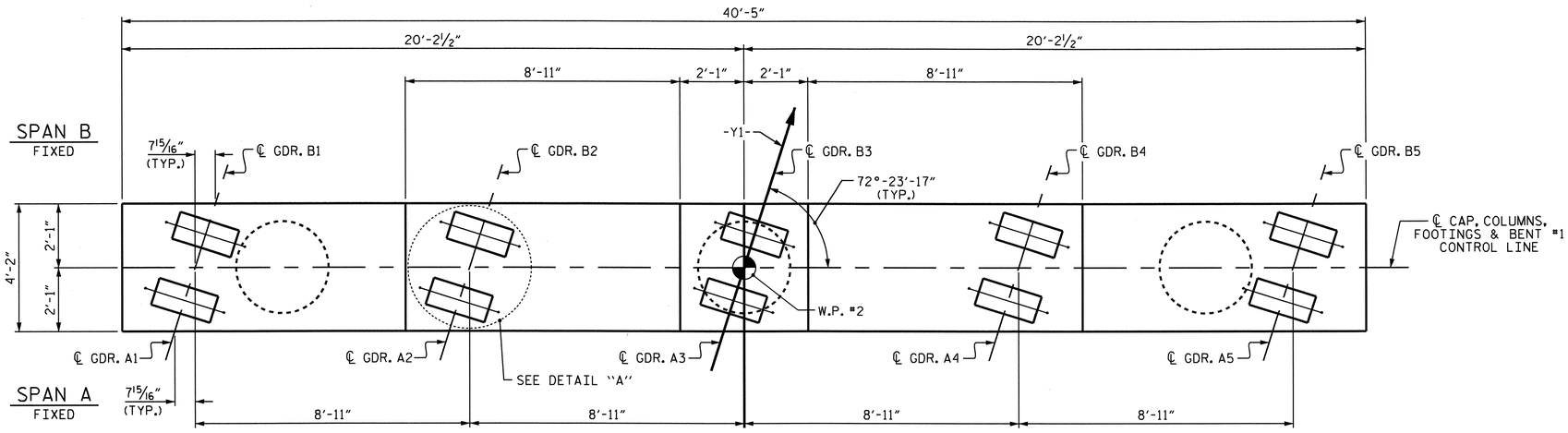


## PLAN

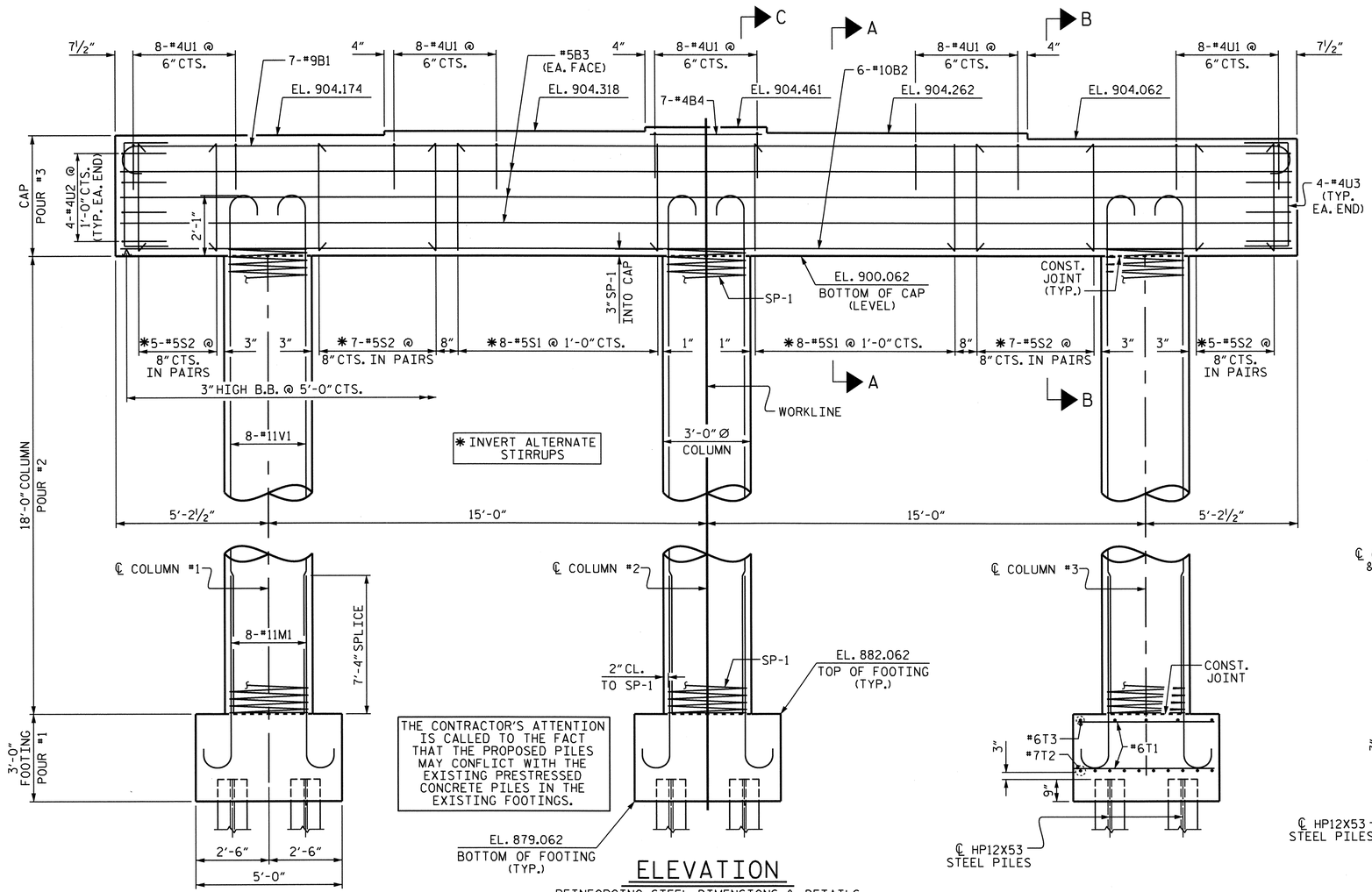


THE CONTRACTOR'S ATTENTION IS CALLED TO THE FACT THAT THE PROPOSED PILES MAY CONFLICT WITH THE EXISTING PRESTRESSED CONCRETE PILES IN THE EXISTING FOOTINGS.

## ELEVATION

REINFORCING STEEL, DIMENSIONS & DETAILS ARE TYPICAL FOR EACH COLUMN & FOOTING.

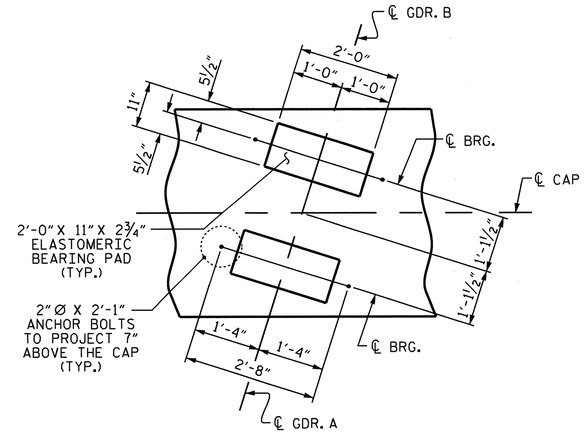


## DETAIL "A"

(TYP. EA. GIRDER)

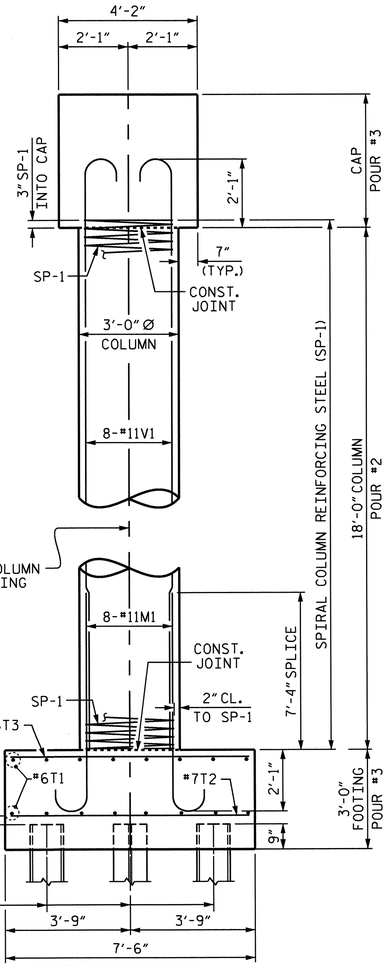


## END VIEW

## NOTES

STIRRUPS IN CAP MAY BE SHIFTED AS NECESSARY TO CLEAR ANCHOR BOLTS.

HOOKS ON "V" BARS MAY BE TURNED AS NECESSARY FOR PLACING REINFORCING STEEL.

NORTH CAROLINA PROFESSIONAL SEAL 23371 ENGINEER VIPUL A. PATEL
1/10/12

PROJECT NO. I-3819A

IREDELL COUNTY

STATION: 20+40.37 -Y1-

SHEET 1 OF 2

STATE OF NORTH CAROLINA
DEPARTMENT OF TRANSPORTATION
RALEIGH

SUBSTRUCTURE

BENT #1

| REVISIONS | | | | | | SHEET NO. |
|---|---|---|---|---|---|---|
| NO. | BY: | DATE: | NO. | BY: | DATE: | S-28 |
| 1 | | | 3 | | | TOTAL SHEETS |
| 2 | | | 4 | | | 382 |

DRAWN BY : J.P. ADAMS DATE : 9/16/10
CHECKED BY : M.K. BEARD DATE : 10/5/10

03-JAN-2012 10:05
R:\Structures\Hunt\str#1\Plans\I-3819A_SD_Bts_01.dgn
hlocklear

STR. #1

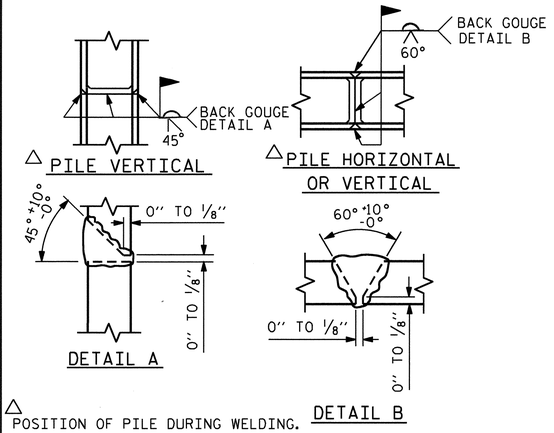


△ POSITION OF PILE DURING WELDING.

## PILE SPLICE DETAILS

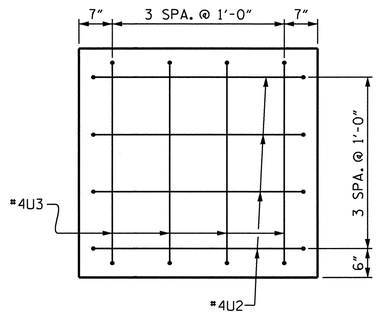


END VIEW
(TYP. EA. END)

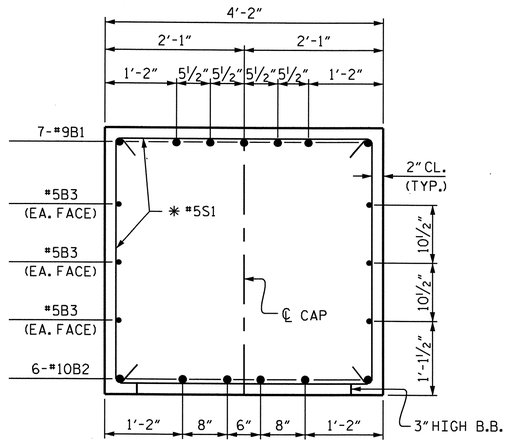


SECTION A-A
✱ INVERT ALTERNATE

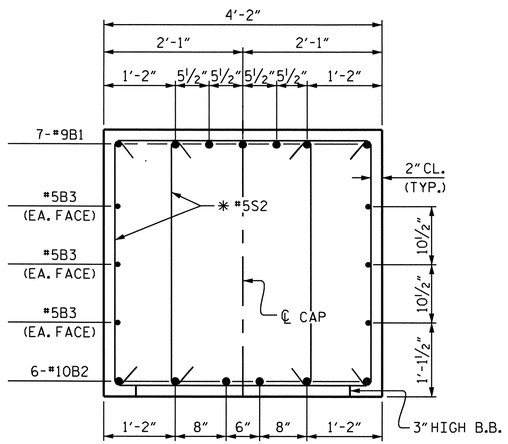


SECTION B-B
✱ INVERT ALTERNATE

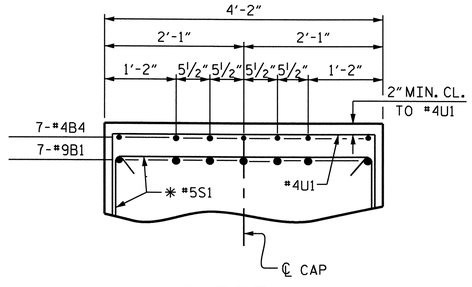


PARTIAL SECTION C
✱ INVERT ALTERNATE

THE CONTRACTOR'S ATTENTION IS CALLED TO THE FACT THAT THE PROPOSED PILES MAY CONFLICT WITH THE EXISTING PRESTRESSED CONCRETE PILES IN THE EXISTING FOOTINGS.

## BAR TYPES

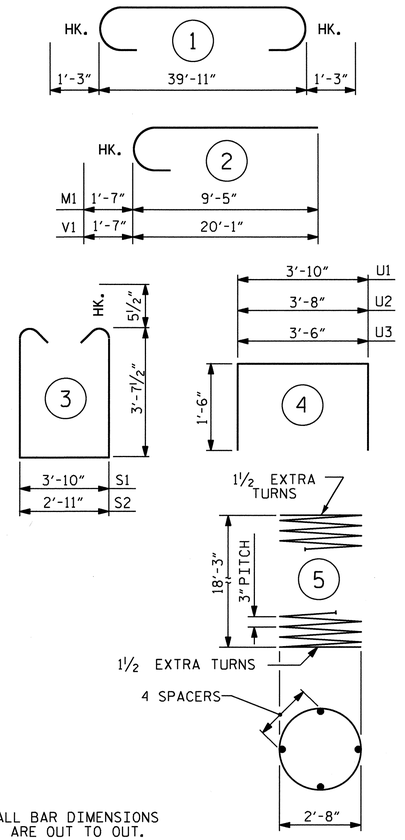


ALL BAR DIMENSIONS ARE OUT TO OUT.

## BILL OF MATERIAL

BENT #1

| BAR | NO. | SIZE | TYPE | LENGTH | WEIGHT |
|---|---|---|---|---|---|
| B1 | 7 | #9 | 1 | 42'-5" | 1010 |
| B2 | 6 | #10 | STR | 40'-1" | 1035 |
| B3 | 6 | #5 | STR | 40'-1" | 251 |
| B4 | 7 | #4 | STR | 3'-10" | 18 |
| M1 | 24 | #11 | 2 | 11'-0" | 1403 |
| S1 | 16 | #5 | 3 | 12'-0" | 200 |
| S2 | 48 | #5 | 3 | 11'-1" | 555 |
| T1 | 48 | #6 | STR | 4'-8" | 336 |
| T2 | 30 | #7 | STR | 7'-2" | 439 |
| T3 | 15 | #6 | STR | 7'-2" | 161 |
| U1 | 40 | #4 | 4 | 6'-10" | 183 |
| U2 | 8 | #4 | 4 | 6'-8" | 36 |
| U3 | 8 | #4 | 4 | 6'-6" | 35 |
| V1 | 24 | #11 | 2 | 21'-8" | 2763 |
| REINFORCING STEEL | | | | | 8425 LBS. |
| SP-1 | 3 | ✱✱ | 5 | 627'-1" | 1257 |

SPIRAL COLUMN REINFORCING STEEL = 1257 LBS

CLASS A CONCRETE BREAKDOWN:

| | |
|---|---|
| POUR #1 (FOOTINGS) | 12.5 C.Y. |
| POUR #2 (COLUMNS) | 14.1 C.Y. |
| POUR #3 (CAP) | 26.0 C.Y. |
| TOTAL CLASS A CONCRETE | 52.6 C.Y. |

HP12X53 STEEL PILES
No. 18 LIN. FT. 1080

PILE REDRIVES 18 EA.

FOUNDATION EXCAVATION LUMP SUM

✱✱ THE SP-1 SPIRAL REINFORCING STEEL SHALL BE W-20 OR D-20 COLD DRAWN WIRE OR #4 PLAIN OR DEFORMED BAR.

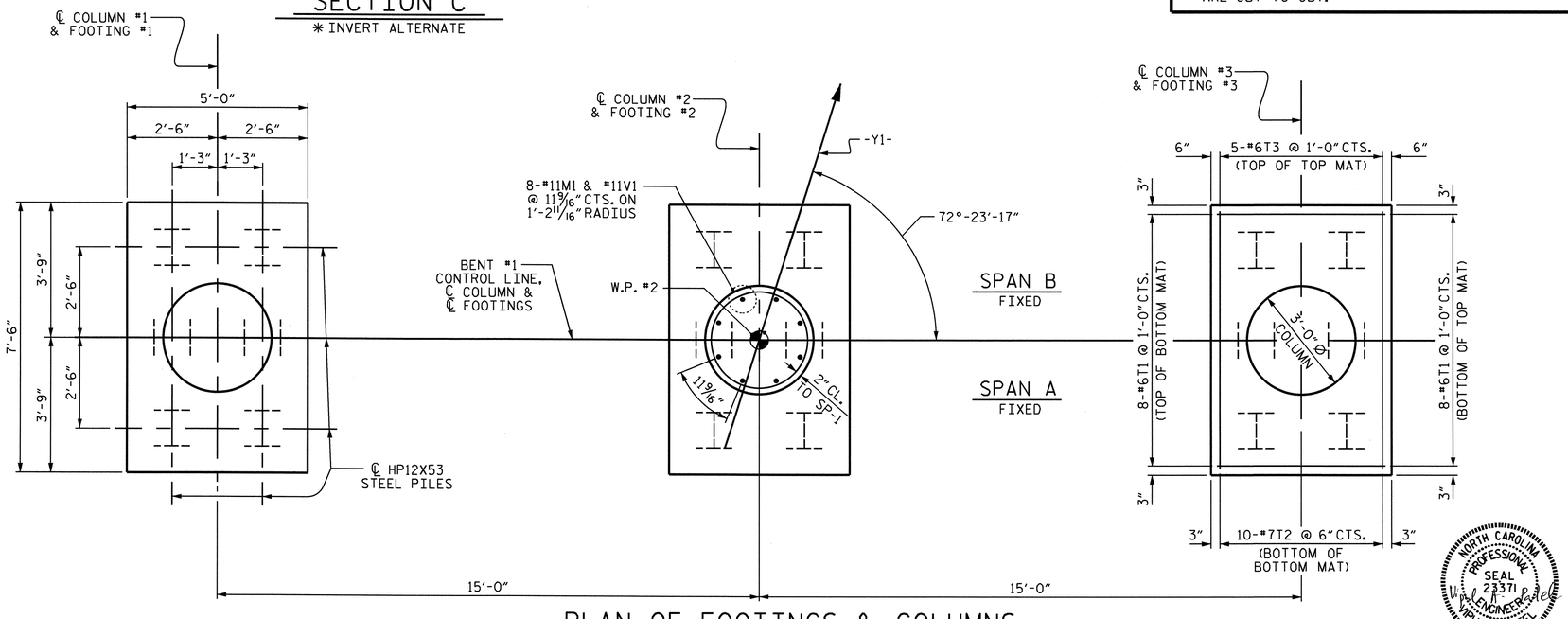


PLAN OF FOOTINGS & COLUMNS
REINFORCING STEEL, DIMENSIONS & DETAILS ARE TYPICAL FOR EACH COLUMN & FOOTING

NORTH CAROLINA PROFESSIONAL SEAL 23371 ENGINEER VIPUL A. PATEL
12/7/10

PROJECT NO. I-3819A
IREDELL COUNTY
STATION: 20+40.37 -Y1-

SHEET 2 OF 2

STATE OF NORTH CAROLINA
DEPARTMENT OF TRANSPORTATION
RALEIGH

SUBSTRUCTURE

BENT #1

| REVISIONS | | | | | | SHEET NO. |
|---|---|---|---|---|---|---|
| NO. | BY: | DATE: | NO. | BY: | DATE: | S-29 |
| 1 | | | 3 | | | TOTAL SHEETS |
| 2 | | | 4 | | | 382 |

STR. #1

DRAWN BY : J.P. ADAMS DATE : 9/16/10
CHECKED BY : M.K. BEARD DATE : 10/5/10

07-DEC-2010 09:29
R:\Structures\Hunt\str#1\Plans\I-3819A_SD_Bts_01.dgn
jpadams

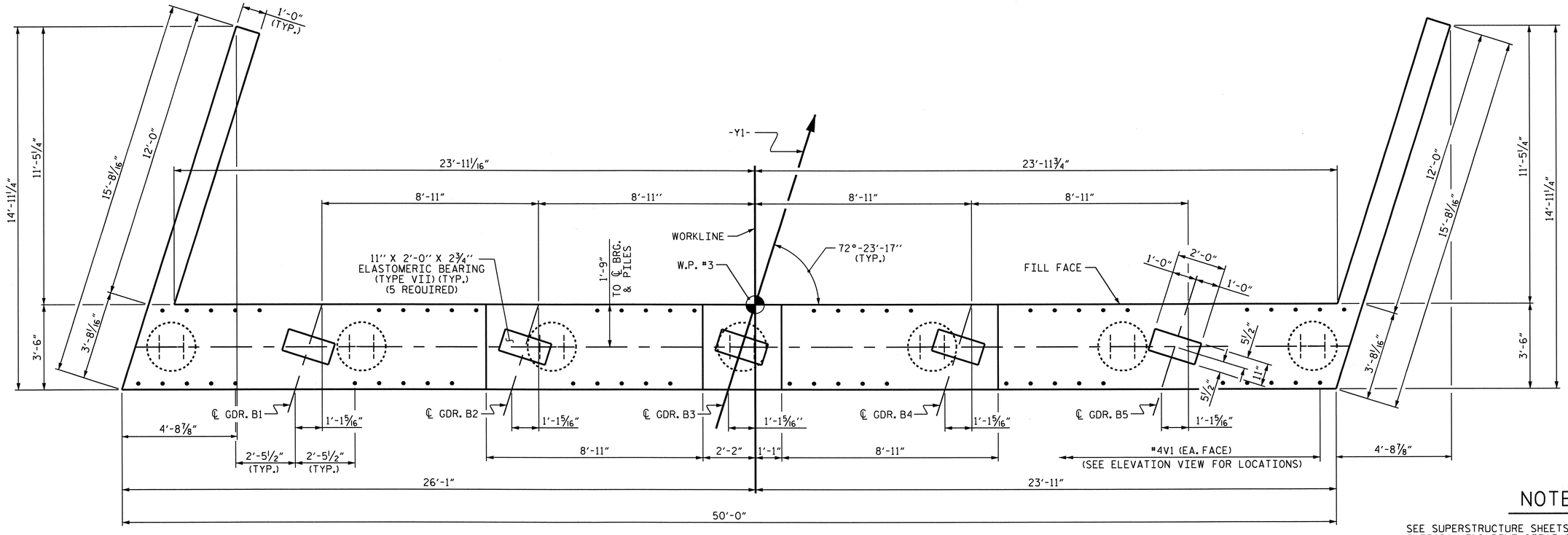


PLAN

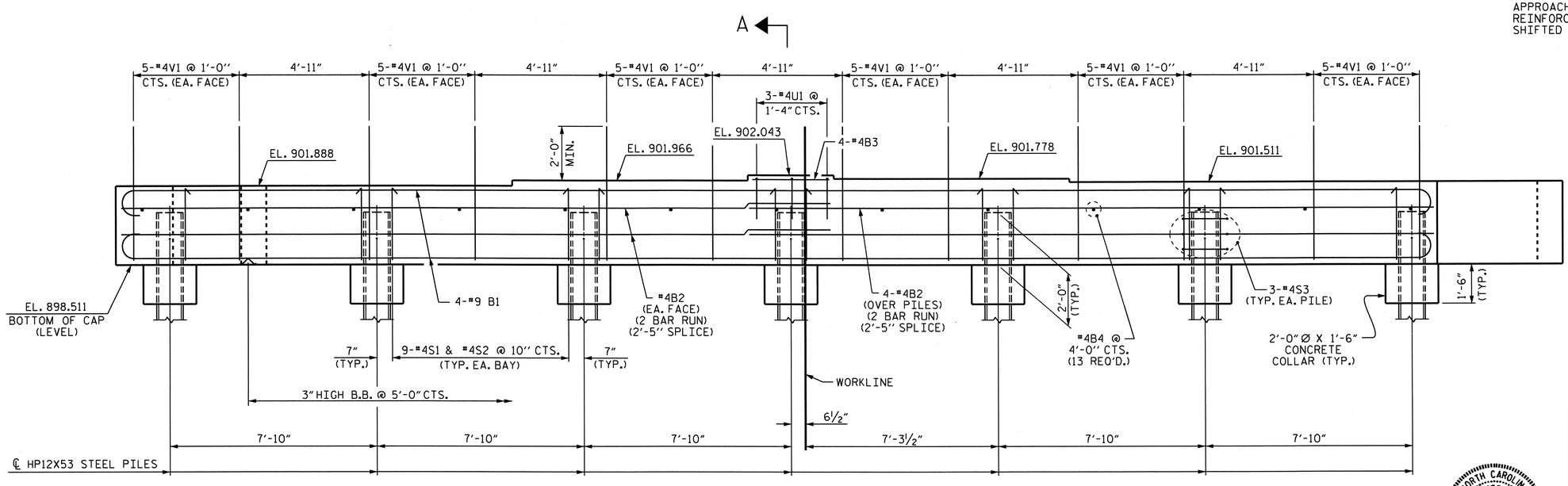


ELEVATION

## NOTES

SEE SUPERSTRUCTURE SHEETS FOR UPPER PART OF INTEGRAL END BENT DETAILS.

THE CONTRACTOR SHALL PROVIDE FOR INSTALLATION OF THE 4"DIAMETER DRAIN PIPE THROUGH THE WING WALL AS REQUIRED FOR REINFORCED BRIDGE APPROACH FILLS, SEE THE ROADWAY PLANS. REINFORCING STEEL IN THE WING WALL MAY BE SHIFTED AS NECESSARY TO CLEAR THE DRAIN PIPE.

PROJECT NO. I-3819A

IREDELL COUNTY

STATION: 20+40.37 -Y1-

SHEET 1 OF 3

STATE OF NORTH CAROLINA
DEPARTMENT OF TRANSPORTATION
RALEIGH

SUBSTRUCTURE

INTEGRAL END BENT #2

| REVISIONS | | | | | | SHEET NO. |
|---|---|---|---|---|---|---|
| NO. | BY: | DATE: | NO. | BY: | DATE: | S-30 |
| 1 | | | 3 | | | TOTAL SHEETS |
| 2 | | | 4 | | | 382 |

STR. #1

NORTH CAROLINA PROFESSIONAL SEAL 23371 ENGINEER VIMAL A. PATEL

1/10/12

DRAWN BY : M.K. BEARD DATE : 9/24/10
CHECKED BY : J.P. ADAMS DATE : 10/5/10

03-JAN-2012 10:05
R:\Structures\Hunt\str#1\Plans\I3819A_SD_Ebts_01.dgn
hlocklear

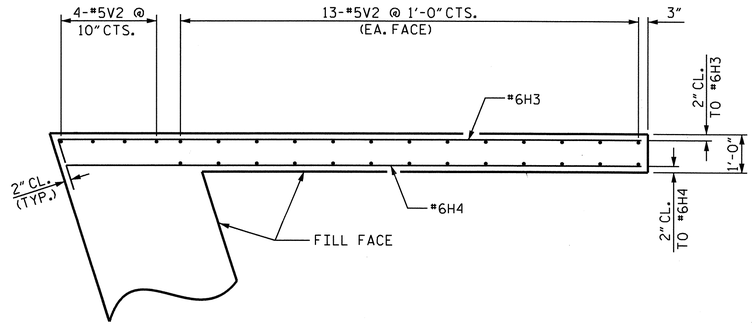


PLAN OF LEFT WING

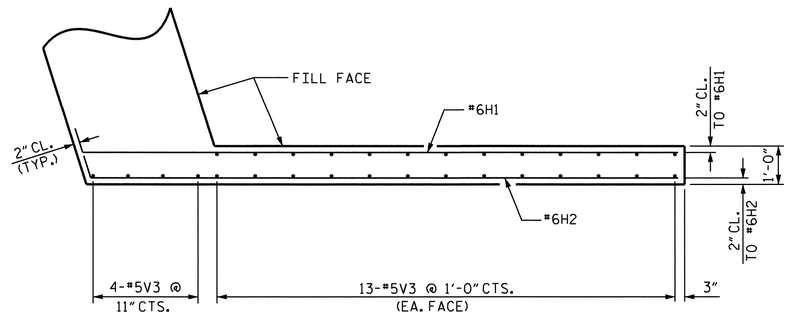


PLAN OF RIGHT WING

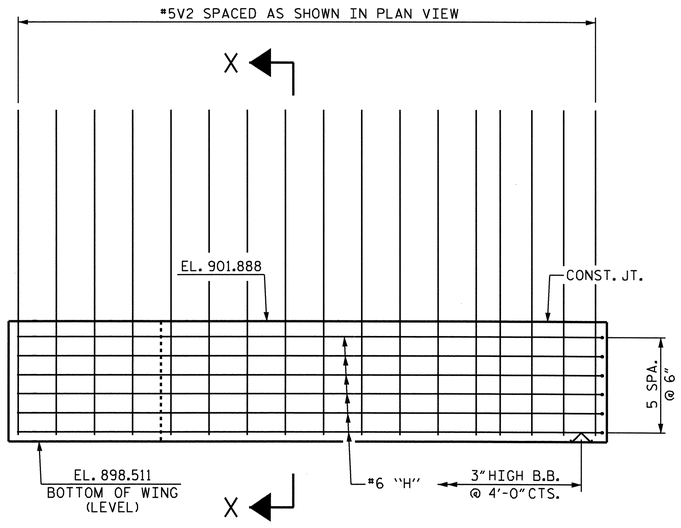


ELEVATION OF LEFT WING

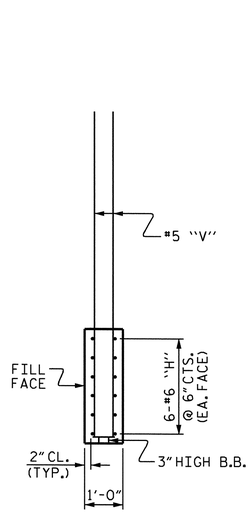


SECTION X-X

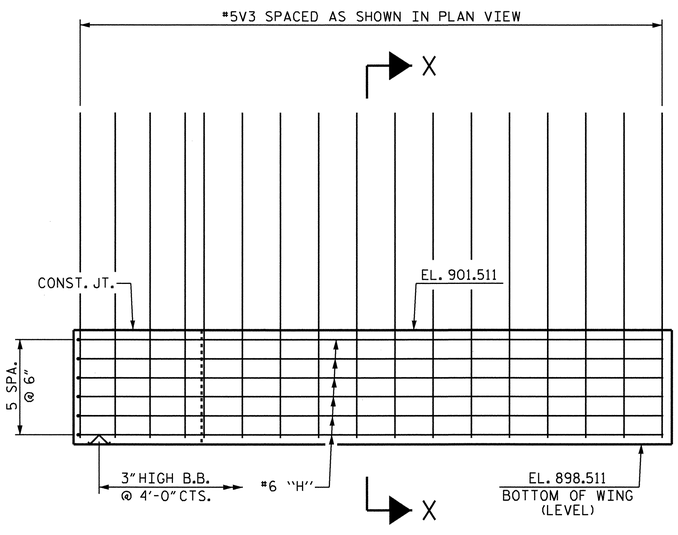


ELEVATION OF RIGHT WING

NOTE: THE UPPER PORTION OF THE WINGS SHALL BE POURED WITH THE SUPERSTRUCTURE. FOR DETAILS AND REINFORCING STEEL, SEE SUPERSTRUCTURE DETAILS.

NORTH CAROLINA PROFESSIONAL SEAL 23371 ENGINEER VIPUL A. PATEL
12/7/10

PROJECT NO. I-3819A
IREDELL COUNTY
STATION: 20+40.37 -Y1-

SHEET 2 OF 3

STATE OF NORTH CAROLINA
DEPARTMENT OF TRANSPORTATION
RALEIGH

SUBSTRUCTURE

# INTEGRAL END BENT #2

| REVISIONS | | | | | | SHEET NO. |
|---|---|---|---|---|---|---|
| NO. | BY: | DATE: | NO. | BY: | DATE: | S-31 |
| 1 | | | 3 | | | TOTAL SHEETS |
| 2 | | | 4 | | | 382 |

STR. #1

DRAWN BY : M.K. BEARD DATE : 9/28/10
CHECKED BY : J.P. ADAMS DATE : 10/5/10

03-DEC-2010 11:18
O:\Structures\Hunt\str#1\Plans\I3819A_SD_Ebts_01.dgn
bgreen

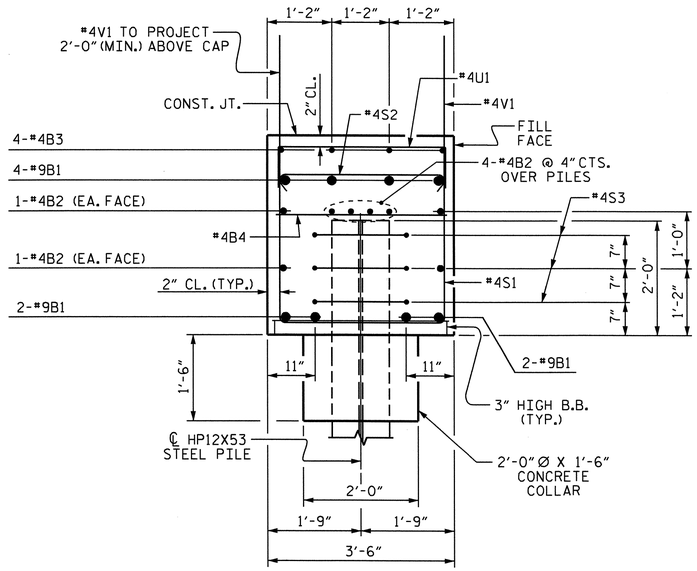


## SECTION A-A

## BAR TYPES

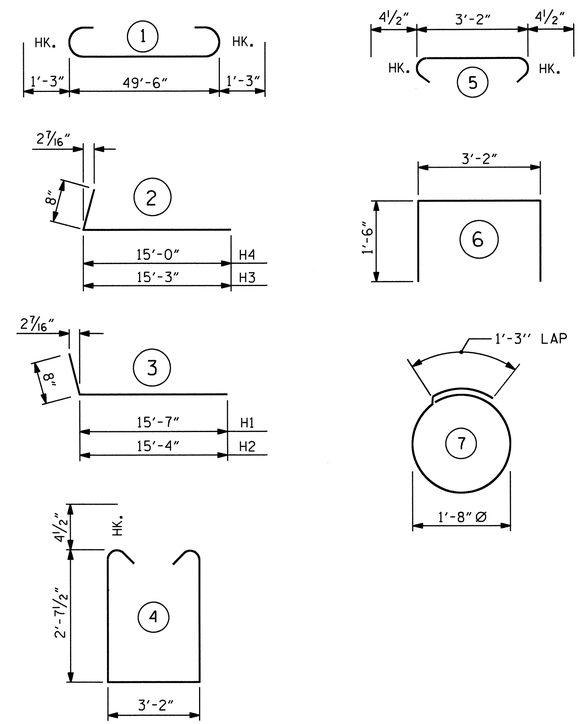


ALL BAR DIMENSIONS ARE OUT TO OUT.

## BILL OF MATERIAL
### INTEGRAL END BENT #2

| BAR | NO. | SIZE | TYPE | LENGTH | WEIGHT |
|---|---|---|---|---|---|
| B1 | 8 | #9 | 1 | 52'-0" | 1414 |
| B2 | 16 | #4 | STR | 26'-2" | 280 |
| B3 | 4 | #4 | STR | 2'-11" | 8 |
| B4 | 13 | #4 | STR | 3'-2" | 28 |
| | | | | | |
| H1 | 6 | #6 | 3 | 16'-3" | 146 |
| H2 | 6 | #6 | 3 | 16'-0" | 144 |
| H3 | 6 | #6 | 2 | 15'-11" | 143 |
| H4 | 6 | #6 | 2 | 15'-8" | 141 |
| | | | | | |
| S1 | 54 | #4 | 4 | 9'-2" | 331 |
| S2 | 54 | #4 | 5 | 3'-11" | 141 |
| S3 | 21 | #4 | 7 | 6'-6" | 91 |
| | | | | | |
| U1 | 3 | #4 | 6 | 6'-2" | 12 |
| | | | | | |
| V1 | 60 | #4 | STR | 5'-3" | 210 |
| V2 | 30 | #5 | STR | 9'-9" | 305 |
| V3 | 30 | #5 | STR | 9'-6" | 297 |
| | | | | | |
| REINFORCING STEEL | | | | LBS | 3691 |

CLASS 'A' CONCRETE
CAP, LOWER WINGS & COLLARS 26.4 C.Y.

HP12X53 STEEL PILES
NO. 7 490 LIN.FT.

PILE REDRIVES 7 EA.

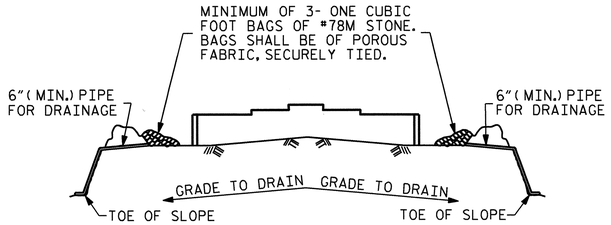


BAGGED STONE AND PIPE SHALL BE PLACED IMMEDIATELY AFTER COMPLETION OF END BENT EXCAVATION. PIPE MAY BE EITHER CONCRETE, CORRUGATED STEEL, CORRUGATED ALUMINUM ALLOY, OR CORRUGATED PLASTIC. PERFORATED PIPE WILL NOT BE ALLOWED.

BAGGED STONE SHALL REMAIN IN PLACE UNTIL THE ENGINEER DIRECTS THAT IT BE REMOVED. THE CONTRACTOR SHALL REMOVE AND DISPOSE OF SILT ACCUMULATIONS AT BAGGED STONE WHEN SO DIRECTED BY THE ENGINEER. BAGS SHALL BE REMOVED AND REPLACED WHENEVER THE ENGINEER DETERMINES THAT THEY HAVE DETERIORATED AND LOST THEIR EFFECTIVENESS.

NO SEPARATE PAYMENT WILL BE MADE FOR THIS WORK AND THE ENTIRE COST OF THIS WORK SHALL BE INCLUDED IN THE UNIT CONTRACT PRICE BID FOR THE SEVERAL PAY ITEMS.

## TEMPORARY DRAINAGE AT END BENT

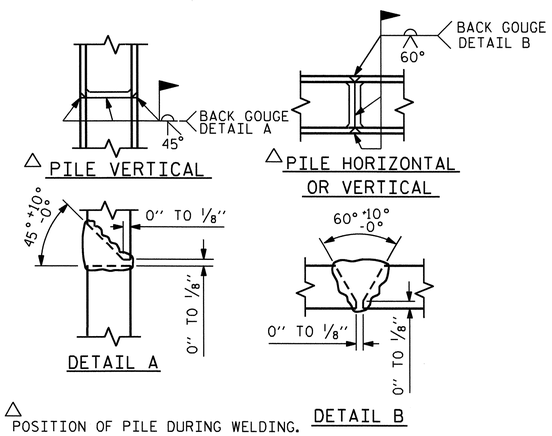


## PILE SPLICE DETAILS

PROJECT NO. I-3819A
IREDELL COUNTY
STATION: 20+40.37 -Y1-

SHEET 3 OF 3

STATE OF NORTH CAROLINA
DEPARTMENT OF TRANSPORTATION
RALEIGH

SUBSTRUCTURE

INTEGRAL END BENT #2

NORTH CAROLINA PROFESSIONAL SEAL 23371 ENGINEER VIRUL A. PATEL
1/10/12

| REVISIONS | | | | | | SHEET NO. |
|---|---|---|---|---|---|---|
| NO. | BY: | DATE: | NO. | BY: | DATE: | S-32 |
| 1 | | | 3 | | | TOTAL SHEETS |
| 2 | | | 4 | | | 382 |

STR. #1

DRAWN BY : M.K. BEARD DATE : 9/28/10
CHECKED BY : J.P. ADAMS DATE : 10/5/10

03-JAN-2012 10:06
R:\Structures\Hunt\str#1\Plans\I3819A_SD_Ebts_01.dgn
hlocklear

## NOTES

SLOPE PROTECTION SHALL BE PLACED UNDER THE ENDS OF THE BRIDGE AS SHOWN IN THE DETAILS. MEASUREMENT AND PAYMENT SHALL BE AS PRESCRIBED IN SECTION 462 OF THE STANDARD SPECIFICATIONS.

SLOPE PROTECTION SHALL CONSIST OF 4" POURED-IN-PLACE CONCRETE PAVING AS SHOWN IN THE DETAILS ON THIS SHEET. CONCRETE SHALL BE CLASS "B". THE CONCRETE SURFACE SHALL BE FLOATED WITH A WOODEN FLOAT AND FINISHED. WELDED WIRE FABRIC REINFORCING SHALL BE 6 X 6 - W1.4 X W1.4, 60" WIDE. SLOPE PROTECTION SHALL BE POURED IN 5' STRIPS AS SHOWN IN THE "POURING DETAIL" WITH 2'-0" LONG #4 BARS PLACED ALONG THE SLOPE BETWEEN STRIPS AT 1'-6" MAXIMUM SPACING. SLOPE PROTECTION MAY BE POURED IN ALTERNATE 4' AND 5' STRIPS AS SHOWN IN THE "OPTIONAL POURING DETAIL" WITH ADJACENT RUNS OF WELDED WIRE FABRIC LAPPING AT LEAST 6". THE COST OF THE WELDED WIRE FABRIC AND #4 BARS, IF USED, SHALL BE INCLUDED IN THE CONTRACT UNIT PRICE BID PER SQUARE YARD FOR SLOPE PROTECTION.

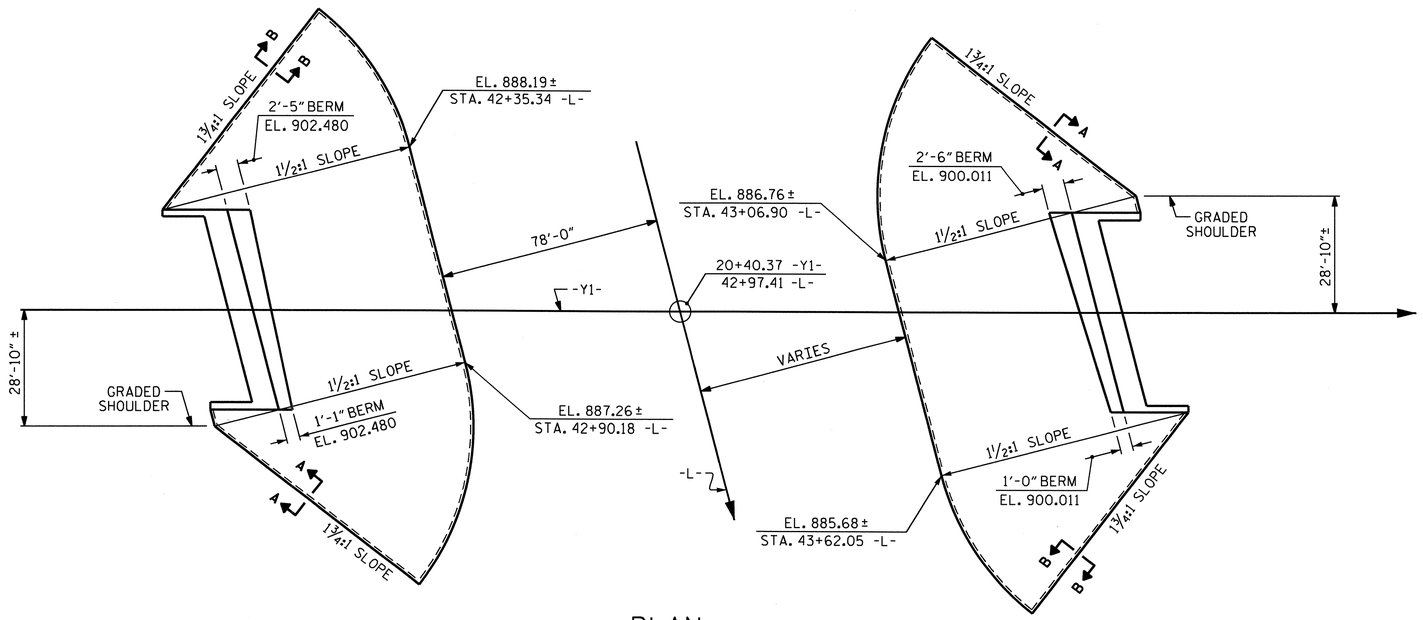


PLAN

| BRIDGE @ STA. 20+40.37 -Y1- | 4" SLOPE PROTECTION | * WELDED WIRE FABRIC 60 INCHES WIDE |
|---|---|---|
| | SQUARE YARDS | APPROX. L.F. |
| END BENT #1 | 365 | 730 |
| END BENT #2 | 270 | 540 |

* QUANTITY SHOWN IS BASED ON 5' POURS.

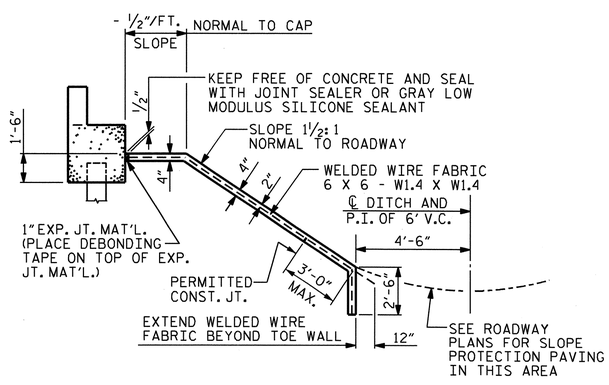


SECTION ALONG ℄ ROADWAY WHEN FILL CATCHES IN DITCH

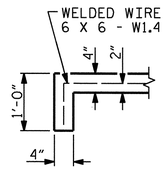


SECTION A-A

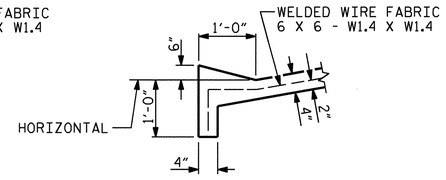


SECTION B-B

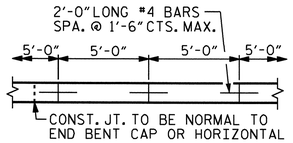


STRIP WIDTHS MAY VARY IN CURVED PORTION.

POURING DETAIL

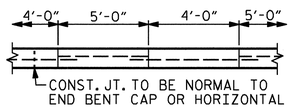


POUR A 4'-0" STRIP FIRST. STRIP WIDTHS MAY VARY IN CURVED PORTION.

OPTIONAL POURING DETAIL

NORTH CAROLINA PROFESSIONAL SEAL 23371 ENGINEER VIRUL A. PATEL
12/7/10

PROJECT NO. I-3819A
IREDELL COUNTY
STATION: 20+40.37 -Y1-

STATE OF NORTH CAROLINA
DEPARTMENT OF TRANSPORTATION
RALEIGH

STANDARD

# SLOPE PROTECTION DETAILS

| REVISIONS | | | | | | SHEET NO. |
|---|---|---|---|---|---|---|
| NO. | BY: | DATE: | NO. | BY: | DATE: | S-33 |
| 1 | | | 3 | | | TOTAL SHEETS |
| 2 | | | 4 | | | 382 |

| | | |
|---|---|---|
| ASSEMBLED BY : M.K. BEARD | | DATE : 9/7/10 |
| CHECKED BY : J.P. ADAMS | | DATE : 9/22/10 |
| DRAWN BY : ELR 5/92 | REV. 7/10/01 | LES/RDR |
| CHECKED BY : GRP 6/92 | REV. 5/7/03 | RWW/JTE |
| | REV. 5/1/06 | TLA/GM |

03-DEC-2010 11:18
O:\Structures\Hunt\str#1\Plans\I3819A_SD_SP_01.dgn
bgreen

STR. #1

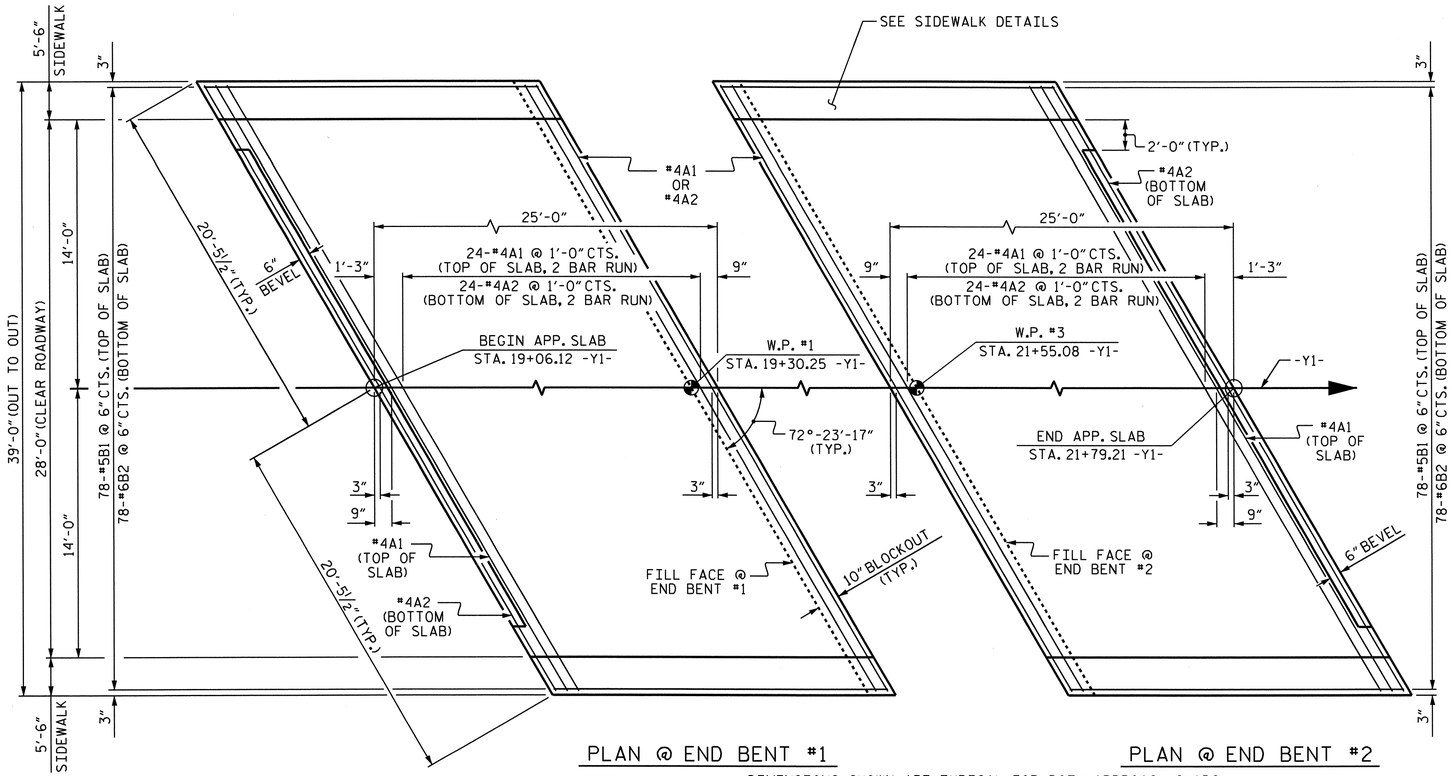


PLAN @ END BENT #1

PLAN @ END BENT #2

DIMENSIONS SHOWN ARE TYPICAL FOR BOTH APPROACH SLABS

## NOTES

APPROACH SLAB SHALL NOT BE CONSTRUCTED PRIOR TO COMPLETION OF THE BRIDGE DECK.

FOR REINFORCED BRIDGE APPROACH FILL FABRIC WALL INCLUDING GEOTEXTILE, IMPERMEABLE GEOMEMBRANE, 4" Ø DRAINAGE PIPE, #78M STONE, WELDED WIRE FORM, AND SELECT MATERIAL, SEE ROADWAY PLANS.

AREA BETWEEN THE WINGWALL AND APPROACH SLAB SHALL BE GRADED TO DRAIN THE WATER AWAY FROM THE FILL FACE OF THE BRIDGE AND SHALL BE PAVED. SEE ROADWAY PLANS.

THE JOINT OPENING AT THE APPROACH SLAB/DECK INTERFACE SHALL BE SAWED NO MORE THAN 12 HOURS AFTER THE APPROACH SLAB IS CAST. THE JOINT SHALL BE CLEANED OF ALL DEBRIS BEFORE THE SEALANT IS APPLIED. THE JOINT SEALER MATERIAL SHALL CONFORM TO THE REQUIREMENTS OF SECTION 1028-3 OF THE STANDARD SPECIFICATIONS.

## BILL OF MATERIAL

FOR ONE APPROACH SLAB (2 REQ'D)

| BAR | NO. | SIZE | TYPE | LENGTH | WEIGHT |
|---|---|---|---|---|---|
| * A1 | 52 | #4 | STR | 21'-4" | 741 |
| A2 | 52 | #4 | STR | 21'-2" | 735 |
| | | | | | |
| * B1 | 78 | #5 | STR | 24'-1" | 1959 |
| B2 | 78 | #6 | STR | 24'-7" | 2880 |
| * B3 | 8 | #4 | STR | 24'-8" | 132 |
| | | | | | |
| * G1 | 50 | #4 | STR | 5'-3" | 175 |
| | | | | | |
| * U1 | 16 | #4 | 1 | 3'-0" | 32 |

| | |
|---|---|
| REINFORCING STEEL | 3615 LBS. |
| * EPOXY COATED REINFORCING STEEL | 3039 LBS. |
| CLASS AA CONCRETE APP. SLAB & SIDEWALK | 48.2 C.Y. |

## BAR TYPE

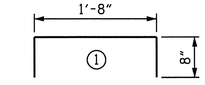


BAR DIMENSION IS OUT TO OUT

| SPLICE CHART | |
|---|---|
| #4A1 | 2'-0" |
| #4A2 | 1'-9" |

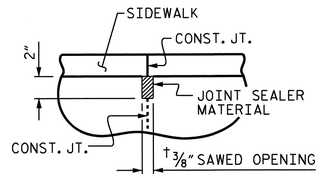


DETAIL "A"

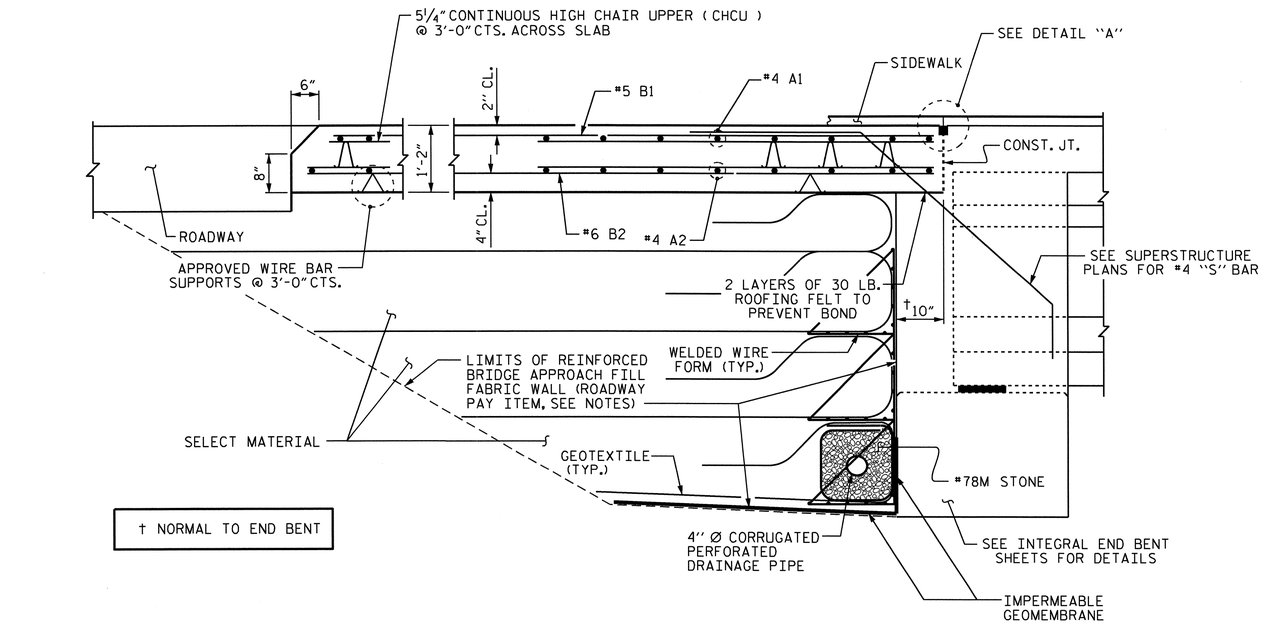


† NORMAL TO END BENT

SECTION THRU SLAB

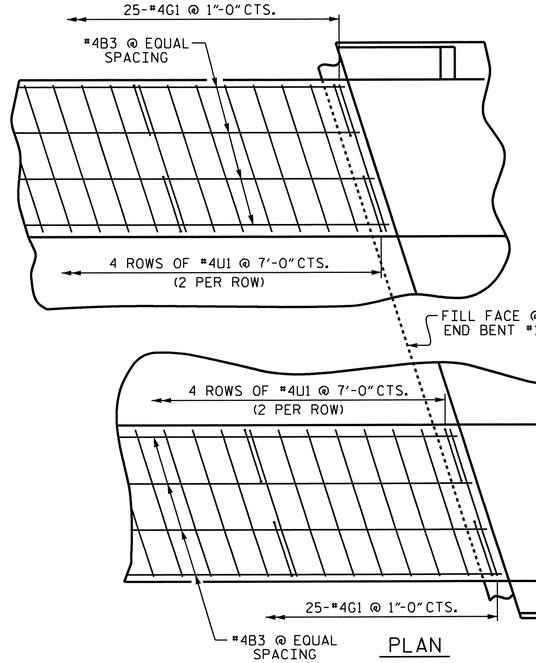


PLAN

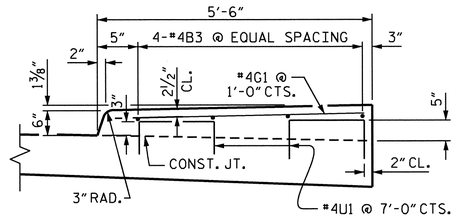


SECTION THRU SIDEWALK

## SIDEWALK DETAILS

#4U1 BARS ARE TO BE PLACED AFTER THE SAWING OF THE JOINT OPENING. HOLES SHALL BE DRILLED AND #4U1 BARS GROUTED INTO PLACE.

BEGIN APPROACH SLAB SHOWN, END APPROACH SIMILAR.

NORTH CAROLINA PROFESSIONAL SEAL 23371 ENGINEER VIPUL A. PATEL 1/10/12

PROJECT NO. I-3819A

IREDELL COUNTY

STATION: 20+40.37 -Y1-

SHEET 1 OF 2

STATE OF NORTH CAROLINA
DEPARTMENT OF TRANSPORTATION
RALEIGH

BRIDGE APPROACH SLAB FOR INTEGRAL ABUTMENT

| REVISIONS | | | | | | SHEET NO. |
|---|---|---|---|---|---|---|
| NO. | BY: | DATE: | NO. | BY: | DATE: | S-34 |
| 1 | | | 3 | | | TOTAL SHEETS |
| 2 | | | 4 | | | 382 |

STR. #1

DRAWN BY : J.P. ADAMS DATE : 8/25/10
CHECKED BY : M.K. BEARD DATE : 9/16/10

03-OCT-2011 15:28
R:\Structures\Hunt\str#1\Plans\I-3819A_SD_AS_01.dgn
vpatel

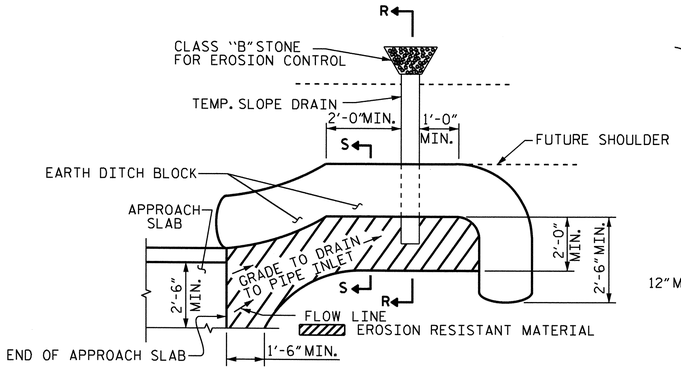


NOTE: IMMEDIATELY AFTER THE CONSTRUCTION OF THE APPROACH SLAB, THE CONTRACTOR SHALL PROVIDE TEMPORARY BERM AND SLOPE DRAIN. CONTRACTOR SHALL GRADE TO PIPE INLET AND PROVIDE EROSION RESISTANT MATERIAL AS SHOWN. THE EROSION RESISTANT MATERIAL SHALL BE EITHER 1) ASPHALT PLANT MIX, TYPE 1 OR TYPE 2, MIN. 2" DEPTH, 2) EROSION CONTROL MAT, OR 3) CONCRETE, AS DIRECTED BY THE ENGINEER. THE SLOPE DRAIN SHALL CONSIST OF A NON-PERFORATED TEMPORARY DRAINAGE PIPE, 12 INCHES IN DIAMETER.

PLAN VIEW

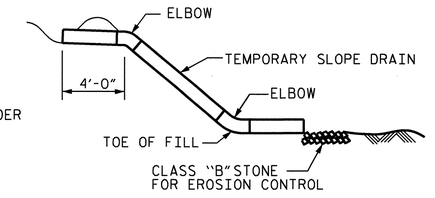


SECTION R-R

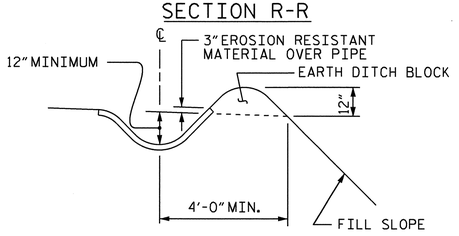


SECTION S-S

# TEMPORARY BERM AND SLOPE DRAIN DETAILS

(TO BE USED WHEN SHOULDER BERM GUTTER IS REQUIRED)

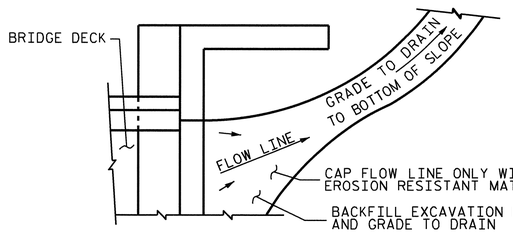


NOTE: IF THE APPROACH SLAB IS NOT CONSTRUCTED IMMEDIATELY AFTER THE BACKFILLING OF THE END BENT EXCAVATION, GRADE TO DRAIN TO THE BOTTOM OF THE SLOPE AND PROVIDE EROSION RESISTANT MATERIAL, SUCH AS FIBERGLASS ROVING OR AS DIRECTED BY THE ENGINEER TO PREVENT SOIL EROSION AND TO PROTECT THE AREA ADJACENT TO THE STRUCTURE. THE CONTRACTOR WILL BE REQUIRED TO REMOVE THESE MATERIALS PRIOR TO CONSTRUCTION OF THE APPROACH SLAB.

TEMPORARY DRAINAGE DETAIL

PROJECT NO. I-3819A

IREDELL COUNTY

STATION: 20+40.37 -Y1-

SHEET 2 OF 2

STATE OF NORTH CAROLINA
DEPARTMENT OF TRANSPORTATION
RALEIGH

STANDARD

BRIDGE APPROACH SLAB DETAILS

| REVISIONS | | | | | | SHEET NO. |
|---|---|---|---|---|---|---|
| NO. | BY: | DATE: | NO. | BY: | DATE: | S-35 |
| 1 | | | 3 | | | TOTAL SHEETS |
| 2 | | | 4 | | | 382 |

STR. #1 STD. NO. BAS10

NORTH CAROLINA PROFESSIONAL SEAL 23371 ENGINEER VIRUL A. PATEL
12/7/10

| | | | |
|---|---|---|---|
| ASSEMBLED BY : J.P. ADAMS | | DATE : 8/25/10 | |
| CHECKED BY : M.K. BEARD | | DATE : 9/16/10 | |
| DRAWN BY : FCJ | 11/88 | REV. 10/17/00 | RWW/LES |
| CHECKED BY : ARB | 11/88 | REV. 5/7/03 | RWW/JTE |
| | | REV. 5/1/06RR | MAA/KMM |

03-DEC-2010 11:18
O:\Structures\Hunt\str*1\Plans\I-3819A_SD_AS_01.dgn
bgreen

F. A. PROJECT NO. : IMF-40-2(145)152

85+00 | 85+50 | 86+00 | 86+50 | 87+00

(+)0.5014% △ (-)3.9990%

PI = 85+30.00
EL. = 836.48'
VC = 690'

## GRADE DATA

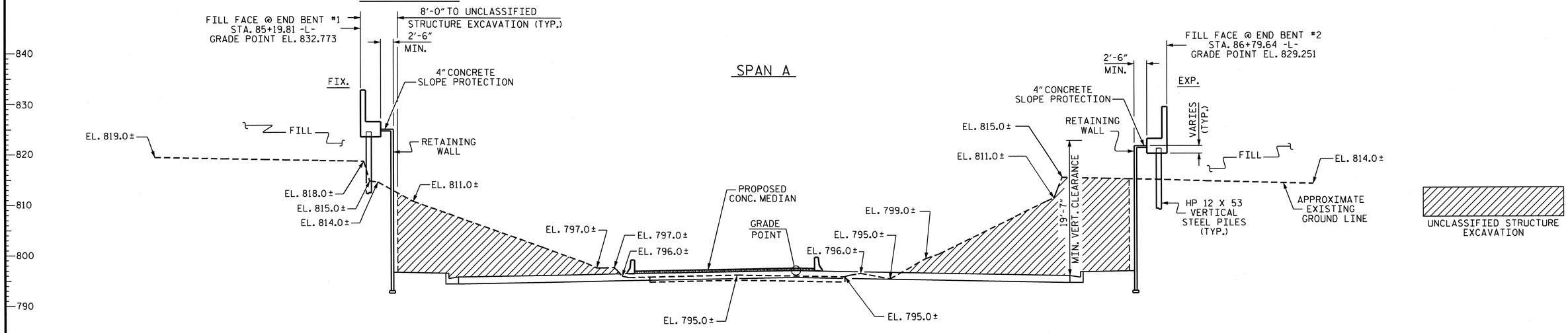


END BENT #1 | END BENT #2

## SECTION ALONG -L-

SECTION @ END BENTS ARE AT RIGHT ANGLES

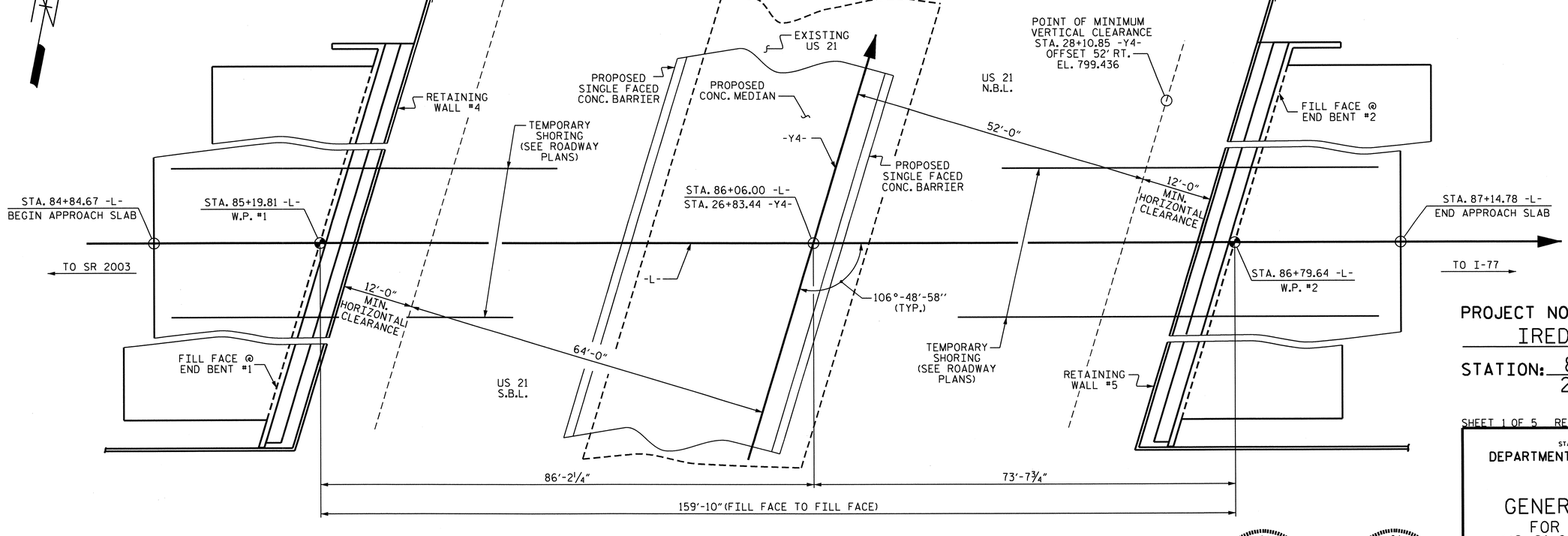


## PLAN

PILES ARE NOT SHOWN FOR CLARITY

PROJECT NO. I-3819A

IREDELL COUNTY

STATION: 86+06.00 -L-
26+83.44 -Y4-

BRIDGE NO. 563

SHEET 1 OF 5 REPLACES BRIDGES NO. 137 & 142

STATE OF NORTH CAROLINA
DEPARTMENT OF TRANSPORTATION
RALEIGH

# GENERAL DRAWING
FOR BRIDGE OVER
US 21 ON I-40 BETWEEN
SR 2003 AND I-77

NORTH CAROLINA PROFESSIONAL SEAL 13014 ENGINEER DUANG H. NGUYEN
Duang H. Nguyen 1-5-12

NORTH CAROLINA PROFESSIONAL SEAL 15779 ENGINEER JOHN R. DUGGINS, JR.
1/5/12

| REVISIONS | | | | | | SHEET NO. |
|---|---|---|---|---|---|---|
| NO. | BY: | DATE: | NO. | BY: | DATE: | S-36 |
| 1 | | | 3 | | | TOTAL SHEETS |
| 2 | | | 4 | | | 382 |

STR. #2

DRAWN BY : A. SORSENGINH DATE : 1/4/11
CHECKED BY : J. R. DUGGINS DATE : 01/11

04-JAN-2012 15:46
R:\Structures\NGUYEN\FINAL PLANS\I-3819A_SD_GD.dgn
dahodge

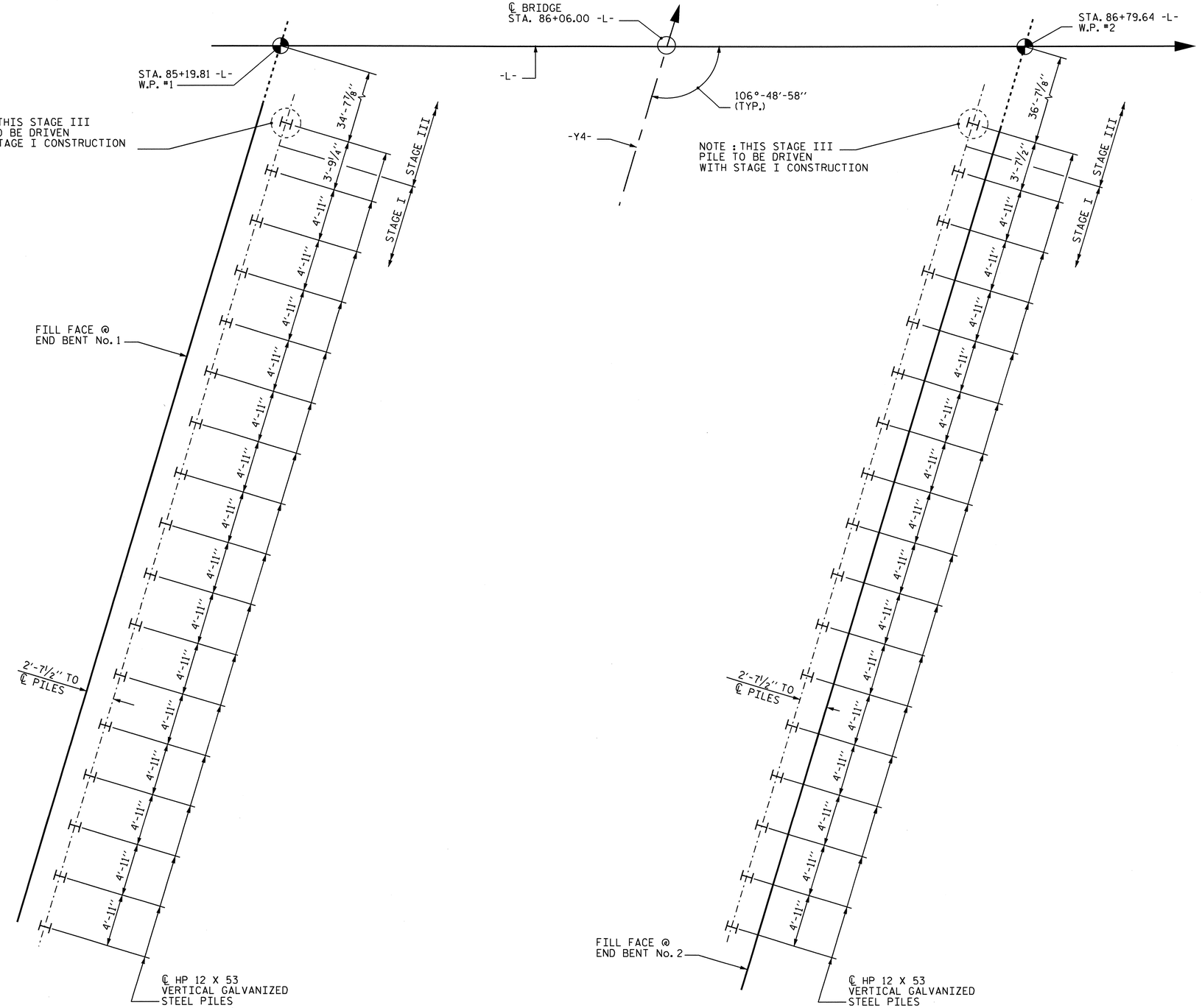


END BENT No. 1

END BENT No. 2

# FOUNDATION LAYOUT

## NOTES

FOR PILES, SEE SECTION 450 OF THE STANDARD SPECIFICATIONS.

PILES AT END BENT No. 1 AND END BENT No. 2 ARE DESIGNED FOR A FACTORED RESISTANCE OF 110 TONS PER PILE.

DRIVE PILES AT END BENT No. 1 AND END BENT No. 2 TO A REQUIRED DRIVING RESISTANCE OF 185 TONS PER PILE.

TESTING PILES WITH THE PILE DRIVING ANALYZER (PDA) DURING DRIVING, RESTRIKING OR REDRIVING MAY BE REQUIRED. THE ENGINEER WILL DETERMINE THE NEED FOR PDA TESTING. FOR PDA TESTING, SEE SECTION 450 OF THE STANDARD SPECIFICATIONS.

PROJECT NO. I-3819A

IREDELL COUNTY

STATION: 86+06.00 -L-

SHEET 2 OF 5

STATE OF NORTH CAROLINA
DEPARTMENT OF TRANSPORTATION
RALEIGH

GENERAL DRAWING
FOR BRIDGE OVER US 21
ON I-40 BETWEEN
SR 2003 AND I-77
STAGE I

| REVISIONS | | | | | | SHEET NO. |
|---|---|---|---|---|---|---|
| NO. | BY: | DATE: | NO. | BY: | DATE: | S-37 |
| 1 | | | 3 | | | TOTAL SHEETS |
| 2 | | | 4 | | | 382 |

NORTH CAROLINA PROFESSIONAL SEAL 15779 ENGINEER JOHN R. DUGGINS, JR.
1/5/12

DRAWN BY : M. POOLE DATE : 09/10
CHECKED BY : J. R. DUGGINS DATE : 11/10

20-OCT-2011 08:29
R:\Structures\NGUYEN\mpoole\I3819A_SD_FL_08.dgn
dahodge

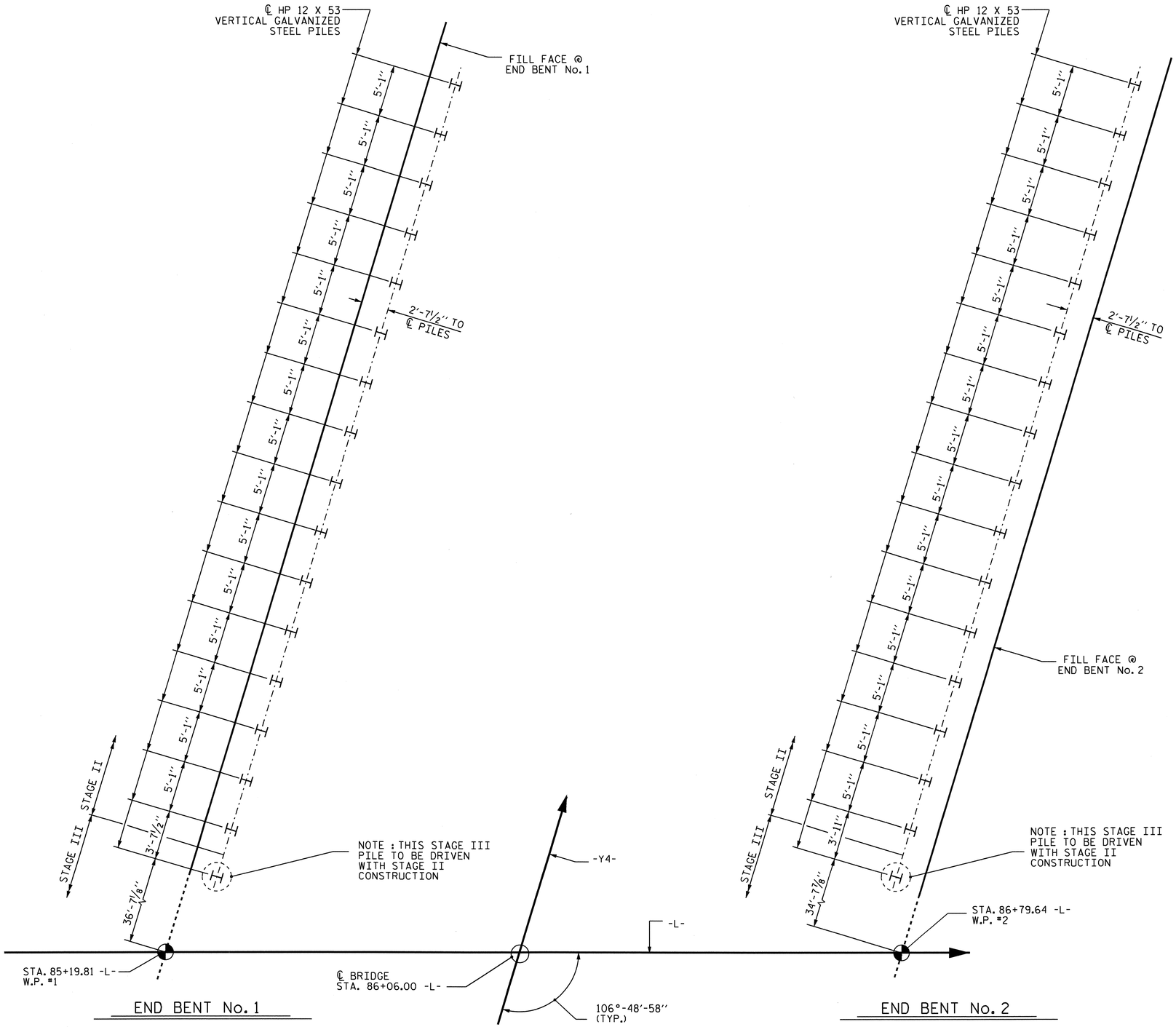


PROJECT NO. I-3819A

IREDELL COUNTY

STATION: 86+06.00 -L-

SHEET 3 OF 5

STATE OF NORTH CAROLINA
DEPARTMENT OF TRANSPORTATION
RALEIGH

# GENERAL DRAWING
FOR BRIDGE OVER US 21
ON I-40 BETWEEN
SR 2003 AND I-77
STAGE II

| REVISIONS | | | | | | SHEET NO. |
|---|---|---|---|---|---|---|
| NO. | BY: | DATE: | NO. | BY: | DATE: | S-38 |
| 1 | | | 3 | | | TOTAL SHEETS |
| 2 | | | 4 | | | 382 |

NORTH CAROLINA PROFESSIONAL SEAL 15779 ENGINEER JOHN R. DUGGINS, JR.
1/5/12

DRAWN BY : M. POOLE DATE : 09/10
CHECKED BY : J. R. DUGGINS DATE : 11/10

04-JAN-2012 15:45
R:\Structures\NGUYEN\FINAL PLANS\I3819A_SD_FL_08.dgn
dahodge

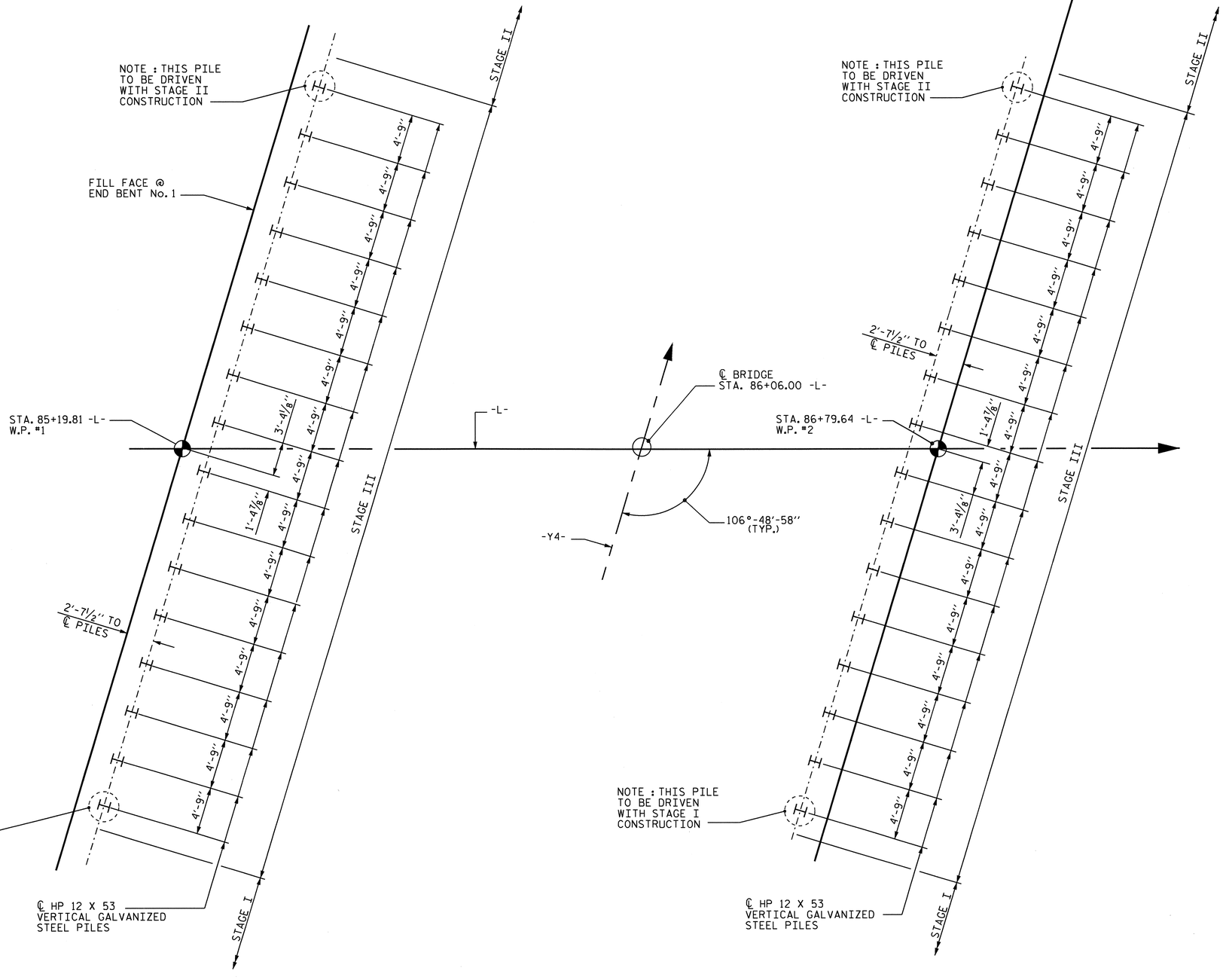


END BENT No. 1

END BENT No. 2

## FOUNDATION LAYOUT

PROJECT NO. I-3819A

IREDELL COUNTY

STATION: 86+06.00 -L-

SHEET 4 OF 5

STATE OF NORTH CAROLINA
DEPARTMENT OF TRANSPORTATION
RALEIGH

# GENERAL DRAWING
FOR BRIDGE OVER US 21
ON I-40 BETWEEN
SR 2003 AND I-77
STAGE III

| REVISIONS | | | | | | SHEET NO. |
|---|---|---|---|---|---|---|
| NO. | BY: | DATE: | NO. | BY: | DATE: | S-39 |
| 1 | | | 3 | | | TOTAL SHEETS |
| 2 | | | 4 | | | 382 |

NORTH CAROLINA PROFESSIONAL SEAL 15779 ENGINEER JOHN R. DUGGINS, JR.
1/5/12

DRAWN BY : M. POOLE DATE : 09/10
CHECKED BY : J. R. DUGGINS DATE : 11/10

20-OCT-2011 08:29
R:\Structures\NGUYEN\mpoole\I3819A_SD_FL_08.dgn
dahodge

BENCH MARK #5: CHISELED SQUARE IN SOUTH END OF SIGN -L- STA. 83+86.00, 309.00 FT. LEFT, EL. 824.70

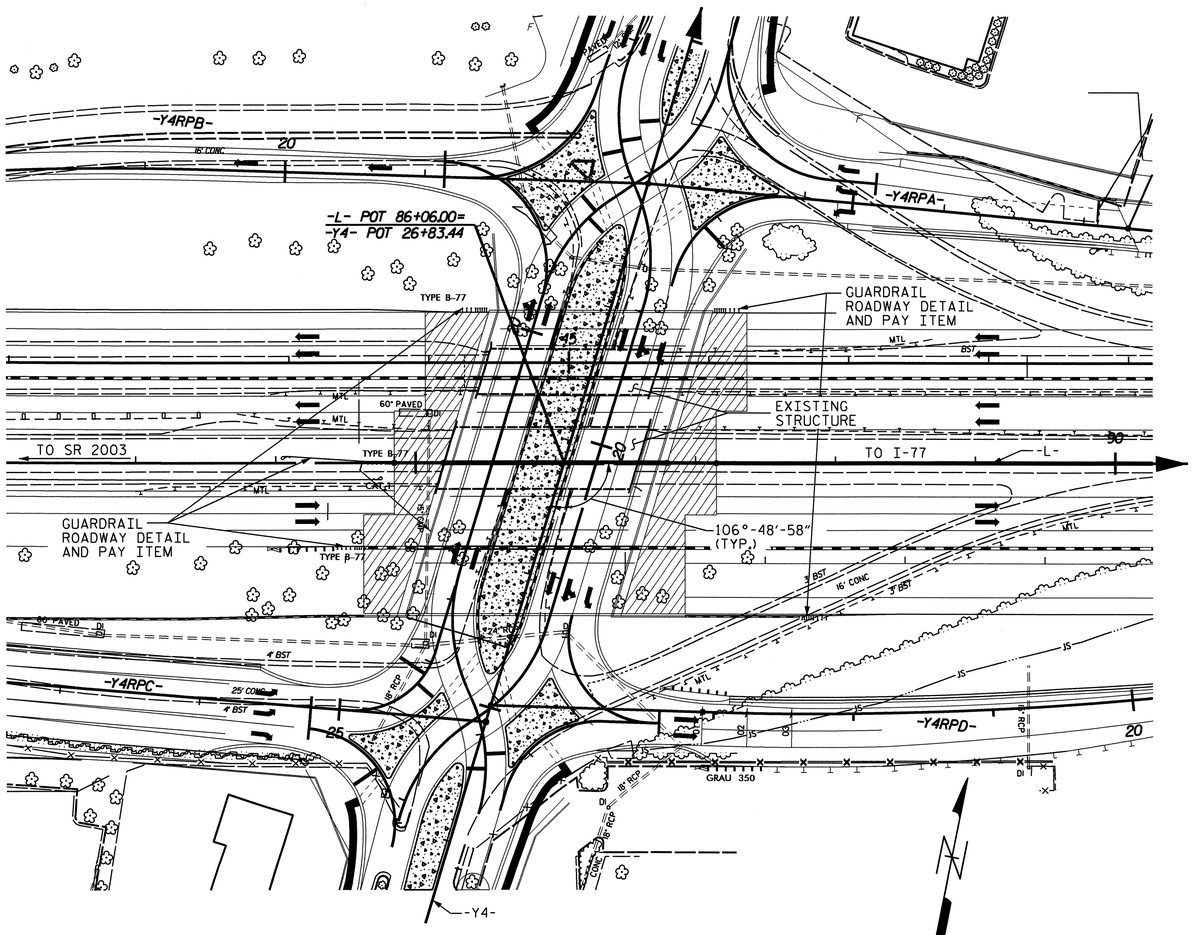


LOCATION SKETCH

NOTE: FOR UTILITY INFORMATION, SEE UTILITY PLANS AND SPECIAL PROVISIONS.

## NOTES

ASSUMED LIVE LOAD = HL 93 OR ALTERNATE LOADING.

FOR OTHER DESIGN DATA AND GENERAL NOTES, SEE SHEET SN.

THIS BRIDGE HAS BEEN DESIGNED IN ACCORDANCE WITH THE AASHTO LRFD BRIDGE DESIGN SPECIFICATIONS.

ALL STRUCTURAL STEEL SHALL BE AASHTO M270 GRADE 50 AND PAINTED IN ACCORDANCE WITH SYSTEM 1 OF ARTICLE 442 OF THE STANDARD SPECIFICATIONS UNLESS OTHERWISE NOTED ON THE PLANS.

REMOVABLE FORMS MAY BE USED IN LIEU OF METAL STAY-IN-PLACE FORMS IN ACCORDANCE WITH ARTICLE 420-3 OF THE STANDARD SPECIFICATIONS.

AFTER SERVING AS A TEMPORARY STRUCTURE THE EXISTING STRUCTURE (BRIDGE #137) CONSISTING OF 3-SPANS (1 @ 40'-0", 1 @ 49'-0", AND 1 @ 49'-6") WITH A REINFORCED DECK ON PRESTRESSED CONCRETE GIRDERS SUPERSTRUCTURE AND A CLEAR ROADWAY WIDTH OF 40'-0" ON A SUBSTRUCTURE CONSISTING OF REINFORCED CONCRETE CAP ON STEEL H-PILES END BENTS AND REINFORCED CONCRETE POST AND BEAM BENTS ON PILE FOOTINGS, LOCATED AT THE PROPOSED STRUCTURE SHALL BE REMOVED. THE EXISTING BRIDGE IS PRESENTLY NOT POSTED FOR LOAD LIMIT. SHOULD THE STRUCTURAL INTEGRITY OF THE BRIDGE DETERIORATE A LOAD LIMIT MAY BE POSTED AND MAY BE REDUCED AS FOUND NECESSARY DURING THE LIFE OF THE PROJECT.

AFTER SERVING AS A TEMPORARY STRUCTURE THE EXISTING STRUCTURE (BRIDGE #142) CONSISTING OF 3-SPANS (1 @ 42'-6", 1 @ 47'-6", AND 1 @ 35'-0") WITH A REINFORCED CONCRETE DECK GIRDERS SUPERSTRUCTURE AND A CLEAR ROADWAY WIDTH OF 28'-0" ON A SUBSTRUCTURE CONSISTING OF REINFORCED CONCRETE CAP ON STEEL H-PILES END BENTS AND REINFORCED CONCRETE POST AND BEAM BENTS ON PILE FOOTINGS, LOCATED AT THE PROPOSED STRUCTURE SHALL BE REMOVED. THE EXISTING BRIDGE IS PRESENTLY NOT POSTED FOR LOAD LIMIT. SHOULD THE STRUCTURAL INTEGRITY OF THE BRIDGE DETERIORATE A LOAD LIMIT MAY BE POSTED AND MAY BE REDUCED AS FOUND NECESSARY DURING THE LIFE OF THE PROJECT.

FOR MAINTENANCE AND PROTECTION OF TRAFFIC BENEATH PROPOSED STRUCTURE, SEE SPECIAL PROVISIONS.

THE MATERIAL SHOWN IN THE CROSS-HATCHED AREA SHALL BE EXCAVATED FOR A DISTANCE OF 120 FEET EACH SIDE OF CENTERLINE ROADWAY AS DIRECTED BY THE ENGINEER. THIS WORK WILL BE PAID FOR AT THE CONTRACT LUMP SUM PRICE FOR UNCLASSIFIED STRUCTURE EXCAVATION. SEE SECTION 412 OF THE STANDARD SPECIFICATIONS.

THE SUBSTRUCTURE OF THE EXISTING BRIDGE INDICATED ON THE PLANS IS FROM THE BEST INFORMATION AVAILABLE. SINCE THIS INFORMATION IS SHOWN FOR THE CONVENIENCE OF THE CONTRACTOR, THE CONTRACTOR SHALL HAVE NO CLAIM WHATSOEVER AGAINST THE DEPARTMENT OF TRANSPORTAION FOR ANY DELAYS OR ADDITIONAL COST INCURRED BASED ON DIFFERENCES BETWEEN THE EXISTING BRIDGE SUBSTRUCTURE SHOWN ON THE PLANS AND THE ACTUAL CONDITIONS AT THE PROJECT SITE.

THE CLASS AA CONCRETE IN THE BRIDGE DECK SHALL CONTAIN FLY ASH OR GROUND GRANULATED BLAST FURNACE SLAG AT THE SUBSTITUTION RATE SPECIFIED IN ARTICLE 1024-1 AND IN ACCORDANCE WITH ARTICLES 1024-5 AND 1024-6 OF THE STANDARD SPECIFICATIONS. NO PAYMENT WILL BE MADE FOR THIS SUBSTITUTION AS IT IS CONSIDERED INCIDENTAL TO THE COST OF THE REINFORCED CONCRETE DECK SLAB.

FOR LIMITS OF TEMPORARY SHORING FOR MAINTENANCE OF TRAFFIC, SEE TRAFFIC CONTROL PLANS. FOR PAY ITEM FOR TEMPORARY SHORING FOR MAINTENANCE OF TRAFFIC, SEE ROADWAY PLANS.

THE CONTRACTOR SHALL PROVIDE INDEPENDENT ASSURANCE SAMPLES OF REINFORCING STEEL AS FOLLOWS: FOR PROJECTS REQUIRING UP TO 400 TONS OF REINFORCING STEEL, ONE 30 INCH SAMPLE OF EACH SIZE BAR USED, AND FOR PROJECTS REQUIRING OVER 400 TONS OF REINFORCING STEEL, TWO 30 INCH SAMPLES OF EACH SIZE BAR USED. THE BARS FROM WHICH THE SAMPLES ARE TAKEN MUST THEN BE SPLICED WITH REPLACEMENT BARS OF THE SIZE AND LENGTH OF THE SAMPLE PLUS A MINIMUM LAP SPLICE OF THIRTY BAR DIAMETERS. PAYMENT FOR THE SAMPLES OF REINFORCING STEEL SHALL BE CONSIDERED INCIDENTAL TO VARIOUS PAY ITEMS.

NEEDLE BEAMS WILL NOT BE ALLOWED UNLESS OTHERWISE CALLED FOR ON THE PLANS OR APPROVED BY THE ENGINEER.

FOR SUBMITTAL OF WORKING DRAWINGS, SEE SPECIAL PROVISIONS.

FOR FALSEWORK AND FORMWORK, SEE SPECIAL PROVISIONS.

FOR CRANE SAFETY, SEE SPECIAL PROVISIONS.

FOR GROUT FOR STRUCTURES, SEE SPECIAL PROVISIONS.

GALVANIZE THE FULL LENGTH OF EACH END BENT PILE IN ACCORDANCE WITH SECTION 1076 OF THE STANDARD SPECIFICATIONS.

FOR ELASTOMERIC BEARINGS WITH TFE, SEE SPECIAL PROVISIONS.

FOR THERMAL SPRAYED COATINGS (METALLIZATION), SEE SPECIAL PROVISIONS.

FOR EXPANSION JOINT SEALS, SEE SPECIAL PROVISIONS.

## TOTAL BILL OF MATERIAL

| | REMOVAL OF EXISTING STRUCTURE | UNCLASSIFIED STRUCTURE EXCAVATION | PDA TESTING | REINFORCED CONCRETE DECK SLAB | GROOVING BRIDGE FLOORS | CLASS A CONCRETE | BRIDGE APPROACH SLABS | REINFORCING STEEL |
|---|---|---|---|---|---|---|---|---|
| | LUMP SUM | LUMP SUM | EACH | SQ. FT. | SQ. FT. | CU. YDS. | LUMP SUM | LBS. |
| SUPERSTRUCTURE | LUMP SUM | | | 34558 | 44872 | | LUMP SUM | |
| END BENT NO. 1 | | LUMP SUM | | | | 208.2 | | 26848 |
| END BENT NO. 2 | | LUMP SUM | | | | 220.2 | | 27649 |
| TOTAL | LUMP SUM | LUMP SUM | 1 | 34558 | 44872 | 428.4 | LUMP SUM | 54497 |

## TOTAL BILL OF MATERIAL

| | STRUCTURAL STEEL | HP 12 X 53 GALVANIZED STEEL PILES | | CONCRETE BARRIER RAIL | 4" SLOPE PROTECTION | ELASTOMERIC BEARINGS | EXPANSION JOINT SEALS | ELASTOMERIC BEARINGS WITH TFE | 2'-0" CONCRETE MEDIAN BARRIER | 2'-6" CONCRETE MEDIAN BARRIER |
|---|---|---|---|---|---|---|---|---|---|---|
| | LBS. | NO. | LIN. FT. | LIN. FT. | SQ. YDS. | LUMP SUM | LUMP SUM | LUMP SUM | LIN. FT. | LIN. FT. |
| SUPERSTRUCTURE | 1,704,000 | | | 407.47 | | LUMP SUM | LUMP SUM | LUMP SUM | 459.39 | 230.10 |
| END BENT NO. 1 | | 48 | 1920 | | 52 | | | | | |
| END BENT NO. 2 | | 48 | 1920 | | 52 | | | | | |
| TOTAL | 1,704,000 | 96 | 3840 | 407.47 | 104 | LUMP SUM | LUMP SUM | LUMP SUM | 459.39 | 230.10 |

PROJECT NO. I-3819A

IREDELL COUNTY

STATION: 86+06.00 -L-

SHEET 5 OF 5

STATE OF NORTH CAROLINA
DEPARTMENT OF TRANSPORTATION
RALEIGH

GENERAL DRAWING
FOR BRIDGE OVER
US 21 ON I-40 BETWEEN
SR 2003 AND I-77

NORTH CAROLINA PROFESSIONAL SEAL 15779 ENGINEER JOHN R. DUGGINS, JR.
4/4/12

| REVISIONS | | | | | | SHEET NO. |
|---|---|---|---|---|---|---|
| NO. | BY: | DATE: | NO. | BY: | DATE: | S-40 |
| 1 | | | 3 | | | TOTAL SHEETS |
| 2 | | | 4 | | | 382 |

DRAWN BY : A. SORSENGINH DATE : 1/4/11
CHECKED BY : J. R. DUGGINS DATE : 01/11

04-APR-2012 09:15
R:\Structures\NGUYEN\FINAL PLANS\I-3819A_SD_GD.dgn
jduggins

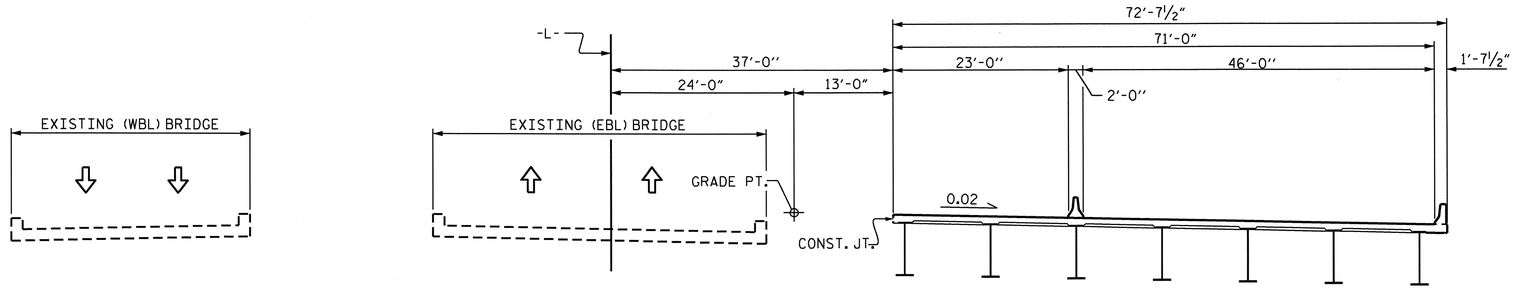


## STAGE I

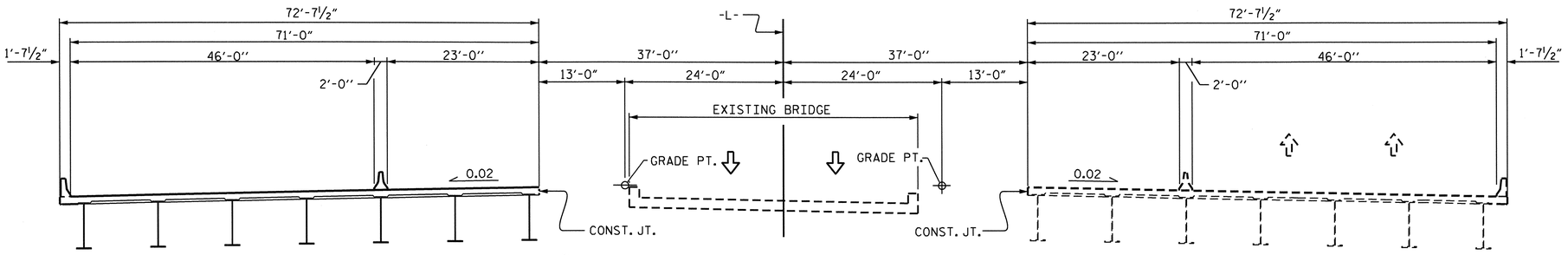


## STAGE II

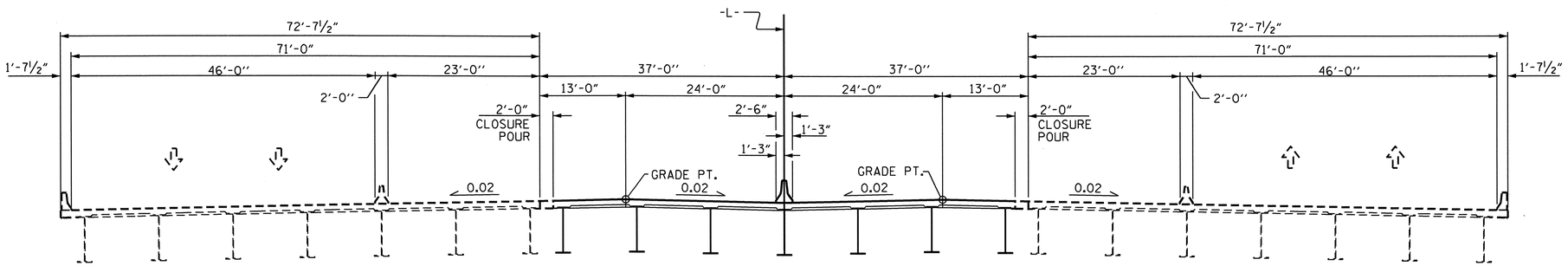


## STAGE III

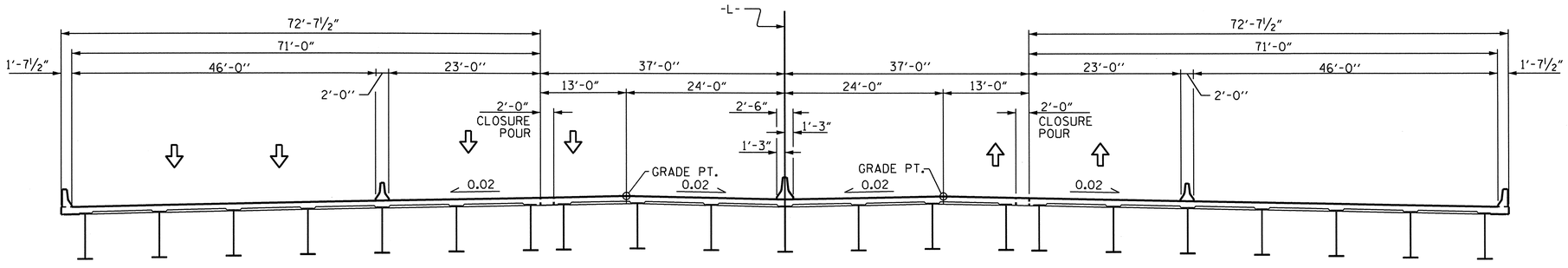


## FINAL TYPICAL SECTION

DRAWN BY : D. HODGE DATE : 12/10
CHECKED BY : J.R. DUGGINS DATE : 12/10

20-OCT-2011 08:26
R:\Structures\NGUYEN\dhodge\I-3819A_SD_staging.dgn
dahodge

NORTH CAROLINA PROFESSIONAL SEAL 15779 ENGINEER JOHN R. DUGGINS, JR.
1/5/12

PROJECT NO. I-3819A
IREDELL COUNTY
STATION: 86+06.00 -L-

STATE OF NORTH CAROLINA
DEPARTMENT OF TRANSPORTATION
RALEIGH

# CONSTRUCTION SEQUENCE

FOR BRIDGE OVER
US 21 ON I-40 BETWEEN
SR 2003 AND I-77

| REVISIONS | | | | | | SHEET NO. |
|---|---|---|---|---|---|---|
| NO. | BY: | DATE: | NO. | BY: | DATE: | S-41 |
| 1 | | | 3 | | | TOTAL SHEETS |
| 2 | | | 4 | | | 382 |

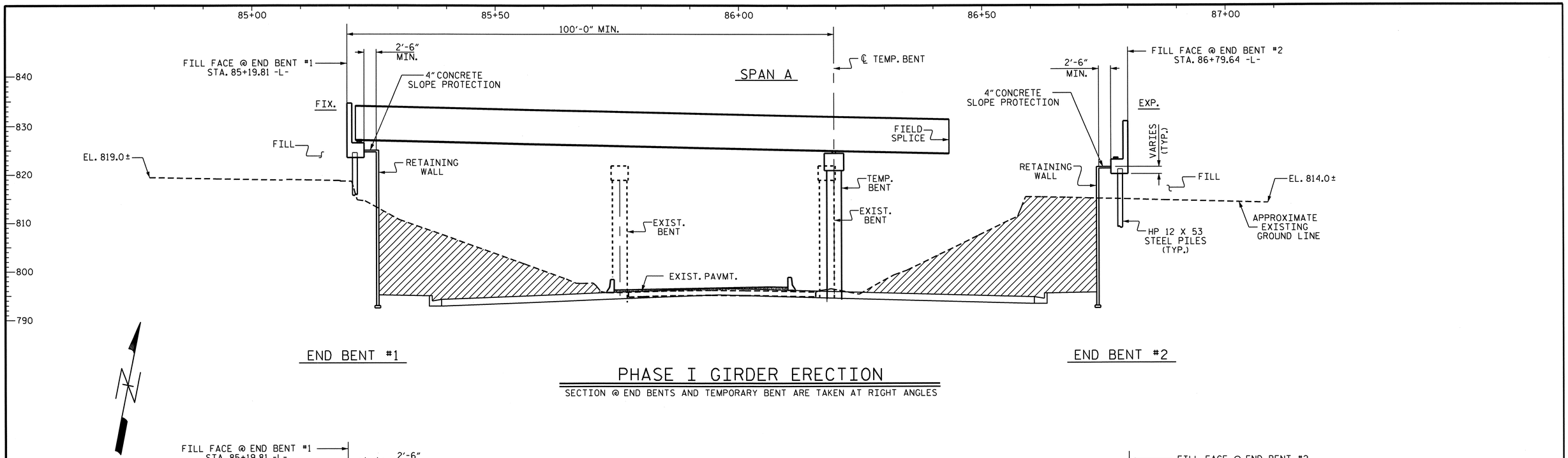


END BENT #1

## PHASE I GIRDER ERECTION

SECTION @ END BENTS AND TEMPORARY BENT ARE TAKEN AT RIGHT ANGLES

END BENT #2

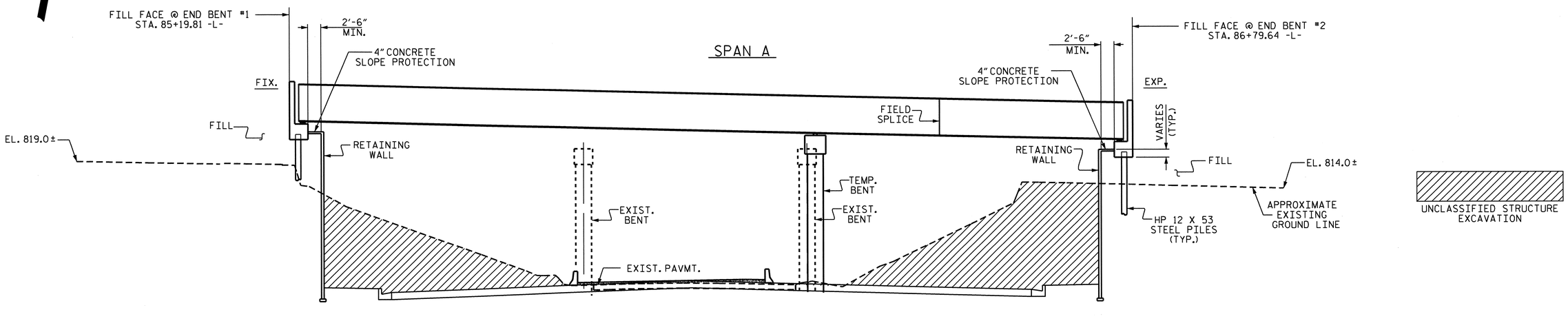


END BENT #1

## PHASE II GIRDER ERECTION

SECTION @ END BENTS AND TEMPORARY BENT ARE TAKEN AT RIGHT ANGLES

END BENT #2

## GIRDER ERECTION NOTES

PLACEMENT OF TEMPORARY BENTS SHALL BE COORDINATED WITH TRAFFIC PHASING REQUIREMENTS. SEE TRAFFIC CONTROL PLANS.

DURING THE GIRDER ERECTION PROCEDURE, THE CONTRACTOR IS RESPONSIBLE FOR PROVIDING TEMPORARY LATERAL BRACING AND OTHER MEANS OF SUPPORT, AS REQUIRED, TO ENSURE STABILITY OF THE GIRDERS, AVOID UPLIFT OF THE GIRDERS AT THE TEMPORARY BENT, AND ENSURE PLUMBNESS OF THE GIRDERS IN FINAL CONDITION.

THE CONTRACTOR MAY SUBMIT AN ALTERNATE ERECTION METHOD TO THE ENGINEER FOR REVIEW AND APPROVAL.

AFTER ERECTING END BENT#1 SECTION, THE END BENT#2 SECTION SHALL BE ERECTED.

FOR TEMPORARY BENTS, SEE SPECIAL PROVISIONS.

PROJECT NO. I-3819A

IREDELL COUNTY

STATION: 86+06.00 -L-

STATE OF NORTH CAROLINA
DEPARTMENT OF TRANSPORTATION
RALEIGH

# GIRDER ERECTION DETAILS

| REVISIONS | | | | | | SHEET NO. |
|---|---|---|---|---|---|---|
| NO. | BY: | DATE: | NO. | BY: | DATE: | S-42 |
| 1 | | | 3 | | | TOTAL SHEETS |
| 2 | | | 4 | | | 382 |

NORTH CAROLINA PROFESSIONAL SEAL 15779 ENGINEER JOHN R. DUGGINS, JR.
1/5/12

DRAWN BY : S.W. PEARCE DATE : 07/10
CHECKED BY : J.R. DUGGINS DATE : 07/10

04-JAN-2012 15:44
R:\Structures\NGUYEN\FINAL PLANS\13819a_sd_gderection.dgn
dahodge

# LOAD AND RESISTANCE FACTOR RATING (LRFR) SUMMARY FOR STEEL GIRDERS

| LEVEL | | VEHICLE | WEIGHT (W) (TONS) | (#) CONTROLLING LOAD RATING | MINIMUM RATING FACTORS (RF) | TONS = W × RF | STRENGTH I LIMIT STATE | | | | | | | | | | | SERVICE II LIMIT STATE | | | | | | COMMENT NUMBER |
|---|---|---|---|---|---|---|---|---|---|---|---|---|---|---|---|---|---|---|---|---|---|---|---|---|
| | | | | | | | | MOMENT | | | | | SHEAR | | | | | | MOMENT | | | | | | |
| | | | | | | | LIVE-LOAD FACTORS ($\gamma_{LL}$) | DISTRIBUTION FACTORS (DF) | RATING FACTOR | SPAN | GIRDER LOCATION | DISTANCE FROM LEFT END OF SPAN (ft) | DISTRIBUTION FACTORS (DF) | RATING FACTOR | SPAN | GIRDER LOCATION | DISTANCE FROM LEFT END OF SPAN (ft) | LIVE-LOAD FACTORS ($\gamma_{LL}$) | DISTRIBUTION FACTORS (DF) | RATING FACTOR | SPAN | GIRDER LOCATION | DISTANCE FROM LEFT END OF SPAN (ft) | |
| DESIGN LOAD RATING | | HL-93 (INVENTORY) | N/A | (1) | 1.22 | -- | 1.75 | 0.88 | 2.23 | A | EL | 77.26 | 1.08 | 1.22 | A | I | 0.00 | 1.30 | 0.88 | 2.13 | A | EL | 77.26 | |
| | | HL-93 (OPERATING) | N/A | | 1.59 | -- | 1.35 | 0.88 | 2.89 | A | EL | 77.26 | 1.08 | 1.59 | A | I | 0.00 | 1.00 | 0.88 | 2.77 | A | EL | 77.26 | |
| | | HS-20 (INVENTORY) | 36.000 | (2) | 1.82 | 65.54 | 1.75 | 0.88 | 3.51 | A | EL | 77.26 | 1.08 | 1.82 | A | I | 30.90 | 1.30 | 0.88 | 3.36 | A | EL | 77.26 | |
| | | HS-20 (OPERATING) | 36.000 | | 2.36 | 84.96 | 1.35 | 0.88 | 4.55 | A | EL | 77.26 | 1.08 | 2.36 | A | I | 30.90 | 1.00 | 0.88 | 4.37 | A | EL | 77.26 | |
| LEGAL LOAD RATING | SINGLE VEHICLE (SV) | SH | 12.500 | | 6.21 | 77.63 | 1.40 | 0.88 | 11.80 | A | EL | 77.26 | 1.08 | 6.21 | A | I | 30.90 | 1.30 | 0.88 | 9.02 | A | EL | 77.26 | |
| | | S3C | 21.500 | | 3.64 | 78.26 | 1.40 | 0.88 | 6.88 | A | EL | 77.26 | 1.08 | 3.64 | A | I | 123.62 | 1.30 | 0.88 | 5.26 | A | EL | 77.26 | |
| | | S3A | 22.750 | | 3.63 | 82.58 | 1.40 | 0.88 | 6.90 | A | EL | 77.26 | 1.08 | 3.63 | A | I | 30.90 | 1.30 | 0.88 | 5.28 | A | EL | 77.26 | |
| | | S4A | 26.750 | | 2.97 | 79.45 | 1.40 | 0.88 | 5.64 | A | EL | 77.26 | 1.08 | 2.97 | A | I | 30.90 | 1.30 | 0.88 | 4.32 | A | EL | 77.26 | |
| | | S5A | 30.500 | | 2.67 | 81.44 | 1.40 | 0.88 | 4.96 | A | EL | 77.26 | 1.08 | 2.67 | A | I | 30.90 | 1.30 | 0.88 | 3.80 | A | EL | 77.26 | |
| | | S6A | 34.500 | | 2.39 | 82.46 | 1.40 | 0.88 | 4.45 | A | EL | 77.26 | 1.08 | 2.39 | A | I | 30.90 | 1.30 | 0.88 | 3.40 | A | EL | 77.26 | |
| | | S7B | 38.500 | | 2.20 | 84.70 | 1.40 | 0.88 | 4.02 | A | EL | 77.26 | 1.08 | 2.20 | A | I | 30.90 | 1.30 | 0.88 | 3.08 | A | EL | 77.26 | |
| | | S7A | 40.000 | | 2.19 | 87.60 | 1.40 | 0.88 | 3.92 | A | EL | 77.26 | 1.08 | 2.19 | A | I | 30.90 | 1.30 | 0.88 | 3.00 | A | EL | 77.26 | |
| | TRUCK TRACTOR SEMI-TRAILER (TTST) | T4A | 28.250 | | 2.85 | 80.51 | 1.40 | 0.88 | 5.46 | A | EL | 77.26 | 1.08 | 2.85 | A | I | 30.90 | 1.30 | 0.88 | 4.17 | A | EL | 77.26 | |
| | | T5B | 32.000 | | 2.64 | 84.48 | 1.40 | 0.88 | 4.81 | A | EL | 77.26 | 1.08 | 2.64 | A | I | 30.90 | 1.30 | 0.88 | 3.68 | A | EL | 77.26 | |
| | | T6A | 36.000 | | 2.38 | 85.68 | 1.40 | 0.88 | 4.35 | A | EL | 77.26 | 1.08 | 2.38 | A | I | 30.90 | 1.30 | 0.88 | 3.32 | A | EL | 77.26 | |
| | | T7A | 40.000 | | 2.19 | 87.60 | 1.40 | 0.88 | 3.97 | A | EL | 77.26 | 1.08 | 2.19 | A | I | 30.90 | 1.30 | 0.88 | 3.03 | A | EL | 77.26 | |
| | | T7B | 40.000 | (3) | 2.11 | 84.40 | 1.40 | 0.88 | 4.10 | A | EL | 77.26 | 1.08 | 2.11 | A | I | 123.62 | 1.30 | 0.88 | 3.13 | A | EL | 77.26 | |
| FATIGUE | | HL-93 (INVENTORY) | $\gamma_{LL}$=0.75 | | | | | | | | | | | | | | | | | | | | | |

## LOAD FACTORS:

| DESIGN LOAD RATING FACTORS | LIMIT STATE | $\gamma_{DC}$ | $\gamma_{DW}$ |
|---|---|---|---|
| | STRENGTH I | 1.25 | 1.50 |
| | SERVICE II | 1.00 | 1.00 |

## NOTES:

MINIMUM RATING FACTORS ARE BASED ON THE STRENGTH I AND SERVICE II LIMIT STATES.

ALLOWABLE STRESS FOR SERVICE II LIMIT STATE ARE AS REQUIRED FOR DESIGN.

## COMMENTS:

1.
2.
3.
4.

(#) CONTROLLING LOAD RATING

(1) DESIGN LOAD RATING (HL-93)

(2) DESIGN LOAD RATING (HS-20)

(3) LEGAL LOAD RATING **

** SEE CHART FOR VEHICLE TYPE

### GIRDER LOCATION

I - INTERIOR GIRDER
EL - EXTERIOR LEFT GIRDER
ER - EXTERIOR RIGHT GIRDER

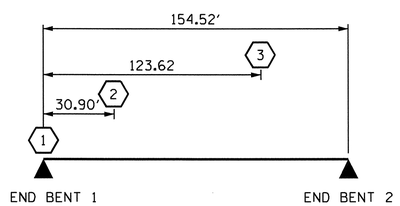


LRFR SUMMARY

PROJECT NO. I-3819A

IREDELL COUNTY

STATION: 86+06.00 -L-

STATE OF NORTH CAROLINA
DEPARTMENT OF TRANSPORTATION
RALEIGH

STANDARD

LRFR SUMMARY FOR STEEL GIRDERS
(INTERSTATE TRAFFIC)

NORTH CAROLINA PROFESSIONAL SEAL 15779 ENGINEER JOHN R. DIGGINS, JR.
1/5/12

| REVISIONS | | | | | | SHEET NO. |
|---|---|---|---|---|---|---|
| NO. | BY: | DATE: | NO. | BY: | DATE: | S-43 |
| 1 | | | 3 | | | TOTAL SHEETS |
| 2 | | | 4 | | | 382 |

STD. NO. LRFR4

| | | | |
|---|---|---|---|
| ASSEMBLED BY : A. SORSENGINH | | DATE : 9/30/10 | |
| CHECKED BY : H. KIM | | DATE : 10/10 | |
| DRAWN BY : MAA 1/08 | REV. 11/12/08RR MAA/GM | | |
| CHECKED BY : GM/DI 2/08 | | | |

20-OCT-2011 08:25
R:\Structures\NGUYEN\asorsenginh\Site8\Microstation\I3819A_sd_rating.dgn
dahodge

## NOTES

PROVIDE 1¼'' HIGH BEAM BOLSTERS UPPER AT 4'-0'' CTS. ATOP THE METAL STAY-IN-PLACE FORMS TO SUPPORT THE BOTTOM MAT OF ''A'' BARS. WHEN USING REMOVABLE FORMS, PROVIDE CONTINUOUS HIGH CHAIRS FOR METAL DECK (C.H.C.M.) @ 4'-0'' CTS. WITH A HEIGHT TO SUPPORT THE BOTTOM MAT OF ''A'' BARS A CLEAR DISTANCE OF 2½'' ABOVE THE TOP OF THE REMOVABLE FORM.

THE CONTRACTOR MAY, WHEN NECESSARY, PROPOSE A SCHEME FOR AVOIDING INTERFERENCE BETWEEN METAL STAY-IN-PLACE FORM SUPPORTS OR FORMS AND GIRDER STIFFENERS OR CONNECTOR PLATES. THE PROPOSAL SHALL BE INDICATED, AS APPROPRIATE, ON EITHER THE STEEL WORKING DRAWINGS OR THE METAL STAY-IN-PLACE FORM WORKING DRAWINGS.

DOWELS SHALL BE PLACED IN THE SAME HORIZONTAL PLANE AS THE MAIN SLAB REINFORCING STEEL.

DIRECTION OF CASTING DECK CONCRETE SHALL BE FROM THE FIXED BEARING END TOWARD THE EXPANSION BEARING END OF THE SPAN.

THE CONTRACTOR MAY USE ADHESIVELY ANCHORED DOWELS IN PLACE OF #6 D1 DOWELS. LEVEL 1 FIELD TESTING IS REQUIRED, AND THE YIELD LOAD OF THE DOWELS IS 26.4 KIPS.

FOR EXPANSION JOINT SEALS, SEE SPECIAL PROVISIONS.

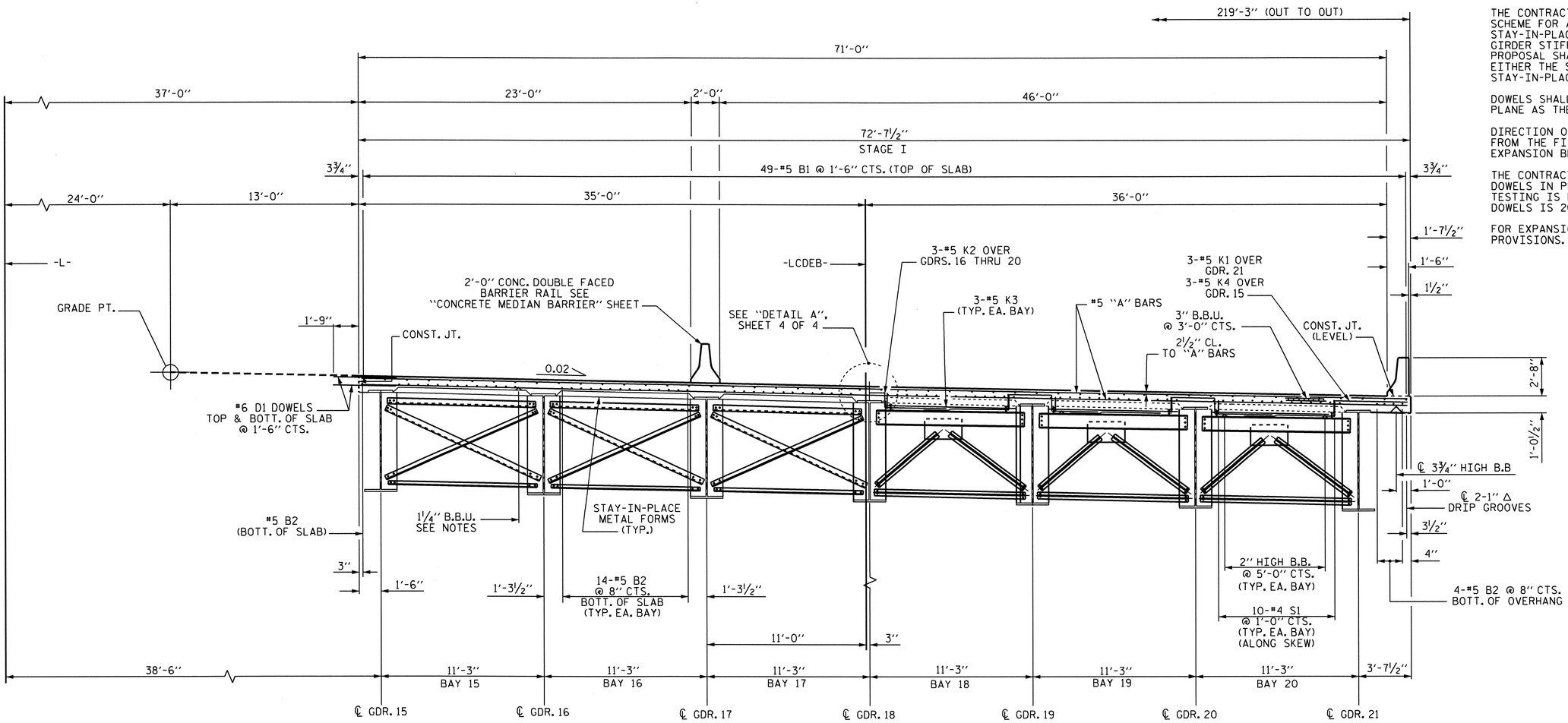


## HALF TYPICAL SECTION
SHOWING INTERMEDIATE DIAPHRAGMS

## HALF TYPICAL SECTION
SHOWING END BENT DIAPHRAGMS

PROJECT NO. I-3819A

IREDELL COUNTY

STATION: 86+06.00 -L-

SHEET 1 OF 4

STATE OF NORTH CAROLINA
DEPARTMENT OF TRANSPORTATION
RALEIGH

SUPERSTRUCTURE
TYPICAL SECTION
STAGE I

NORTH CAROLINA PROFESSIONAL SEAL 15779 ENGINEER JOHN R. DUGGINS, JR.
1/5/12

| REVISIONS | | | | | | SHEET NO. |
|---|---|---|---|---|---|---|
| NO. | BY: | DATE: | NO. | BY: | DATE: | S-44 |
| 1 | | | 3 | | | TOTAL SHEETS |
| 2 | | | 4 | | | 382 |

DRAWN BY : M. POOLE DATE : 01/10
CHECKED BY : D. HODGE DATE : 09/10

20-OCT-2011 08:11
R:\Structures\NGUYEN\mpoole\I3819A_SD_TS_08.dgn
dahodge

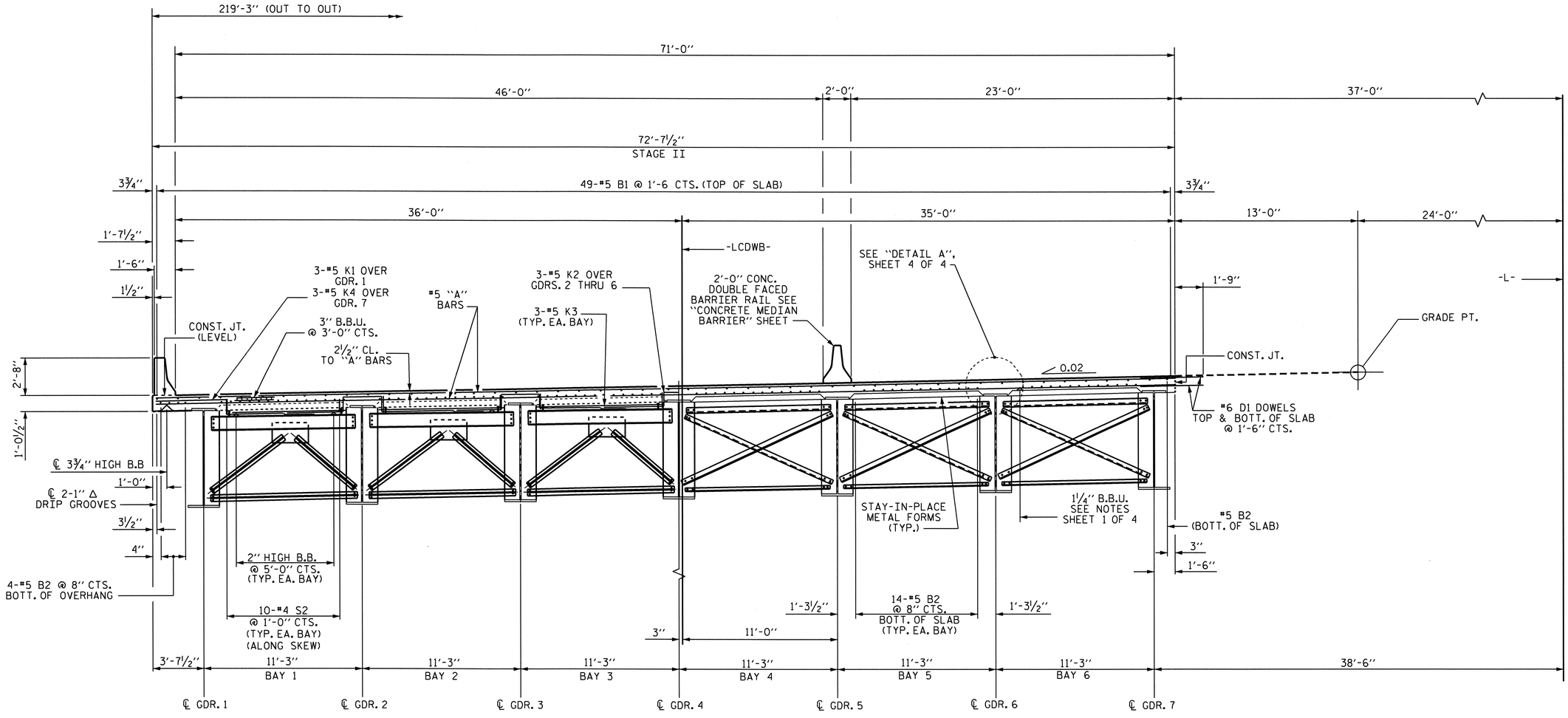


## HALF TYPICAL SECTION
SHOWING END BENT DIAPHRAGMS

## HALF TYPICAL SECTION
SHOWING INTERMEDIATE DIAPHRAGMS

PROJECT NO. I-3819A

IREDELL COUNTY

STATION: 86+06.00 -L-

SHEET 2 OF 4

STATE OF NORTH CAROLINA
DEPARTMENT OF TRANSPORTATION
RALEIGH

SUPERSTRUCTURE
TYPICAL SECTION
STAGE II

NORTH CAROLINA PROFESSIONAL SEAL 15779 ENGINEER JOHN R. DUGGINS, JR.
1/5/12

| REVISIONS | | | | | | SHEET NO. |
|---|---|---|---|---|---|---|
| NO. | BY: | DATE: | NO. | BY: | DATE: | S-45 |
| 1 | | | 3 | | | TOTAL SHEETS |
| 2 | | | 4 | | | 382 |

DRAWN BY : M. POOLE DATE : 01/10
CHECKED BY : D. HODGE DATE : 09/10

20-OCT-2011 08:11
R:\Structures\NGUYEN\mpoole\I3819A_SD_TS_08.dgn
dahodge

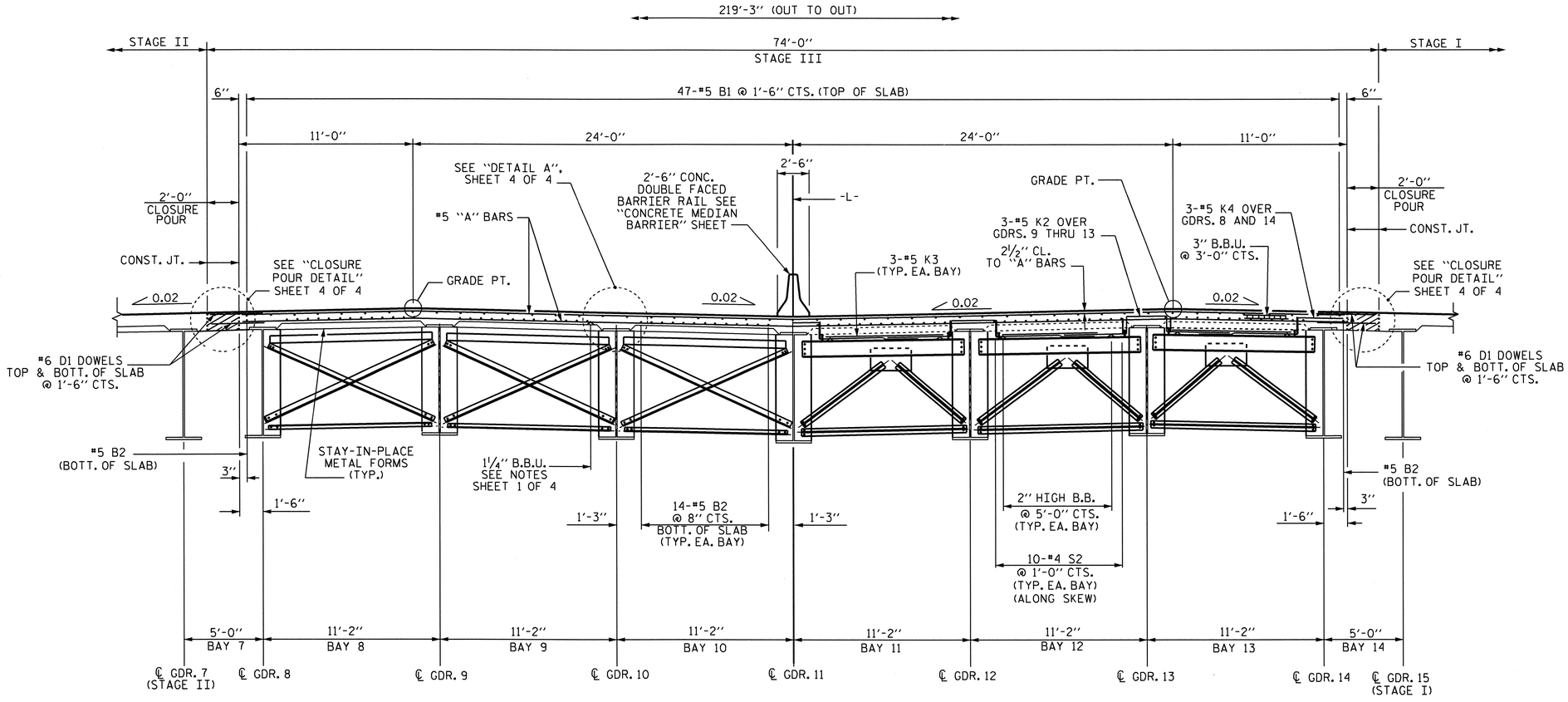


## HALF TYPICAL SECTION
SHOWING INTERMEDIATE DIAPHRAGMS

## HALF TYPICAL SECTION
SHOWING END BENT DIAPHRAGMS

PROJECT NO. I-3819A

IREDELL COUNTY

STATION: 86+06.00 -L-

SHEET 3 OF 4

STATE OF NORTH CAROLINA
DEPARTMENT OF TRANSPORTATION
RALEIGH

SUPERSTRUCTURE
TYPICAL SECTION
STAGE III

| REVISIONS | | | | | | SHEET NO. |
|---|---|---|---|---|---|---|
| NO. | BY: | DATE: | NO. | BY: | DATE: | S-46 |
| 1 | | | 3 | | | TOTAL SHEETS |
| 2 | | | 4 | | | 382 |

NORTH CAROLINA PROFESSIONAL SEAL 15779 ENGINEER JOHN R. DIGGINS, JR.
1/5/12

DRAWN BY : M. POOLE DATE : 01/10
CHECKED BY : D. HODGE DATE : 09/10

20-OCT-2011 08:11
R:\Structures\NGUYEN\mpoole\I3819A_SD_TS_08.dgn
dahodge

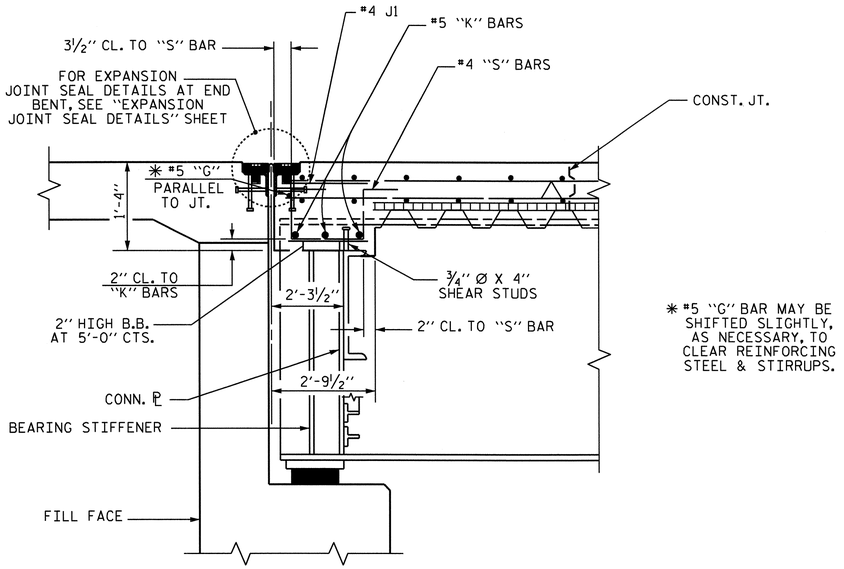


* #5 "G" BAR MAY BE SHIFTED SLIGHTLY, AS NECESSARY, TO CLEAR REINFORCING STEEL & STIRRUPS.

## END OF GIRDER DETAIL AT END BENT

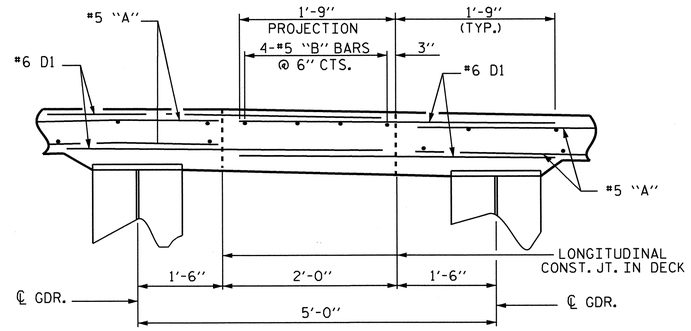


## CLOSURE POUR DETAILS

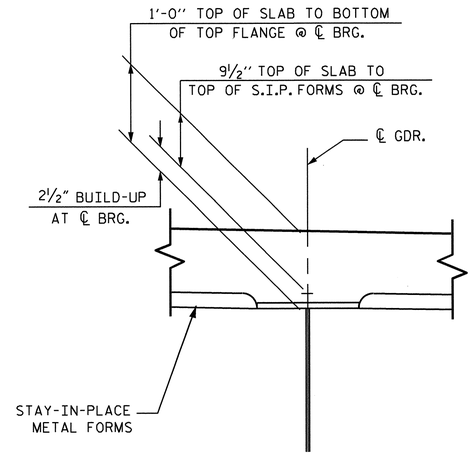


## DETAIL A

PROJECT NO. I-3819A

IREDELL COUNTY

STATION: 86+06.00 -L-

SHEET 4 OF 4

STATE OF NORTH CAROLINA
DEPARTMENT OF TRANSPORTATION
RALEIGH

SUPERSTRUCTURE
TYPICAL SECTION

| REVISIONS | | | | | | SHEET NO. |
|---|---|---|---|---|---|---|
| NO. | BY: | DATE: | NO. | BY: | DATE: | S-47 |
| 1 | | | 3 | | | TOTAL SHEETS |
| 2 | | | 4 | | | 382 |

NORTH CAROLINA PROFESSIONAL SEAL 15779 ENGINEER JOHN R. DUGGINS, JR.
1/5/12

DRAWN BY : M. POOLE DATE : 01/10
CHECKED BY : D. HODGE DATE : 09/10

04-JAN-2012 15:43
R:\Structures\NGUYEN\FINAL PLANS\I3819A_SD_TS_08.dgn
dahodge

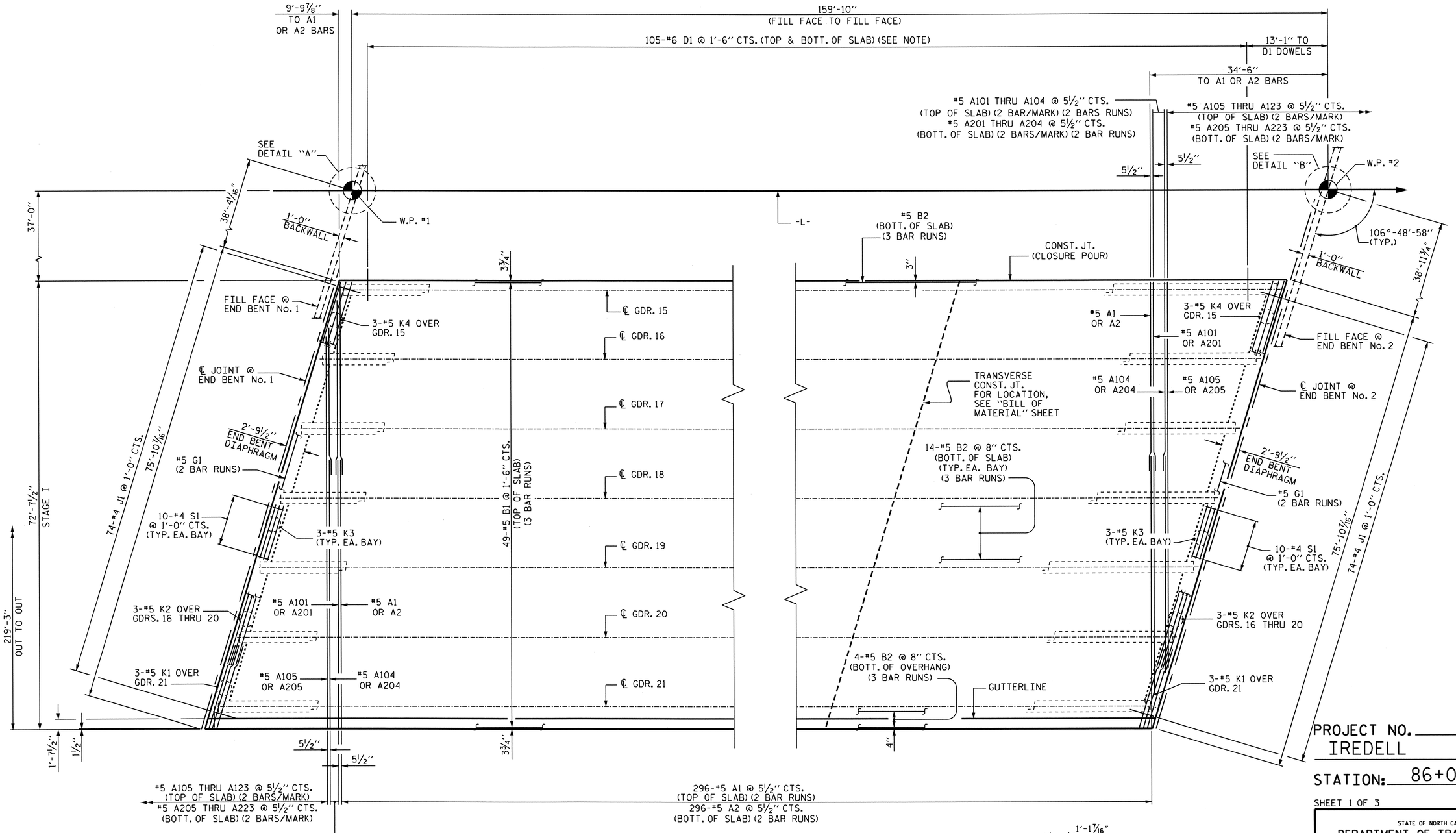


## PLAN OF SPAN A
### STAGE I

THE #6 D1 BARS SHALL BE PLACED IN THE SAME HORIZONTAL PLANE AS THE MAIN SLAB REINFORCING STEEL. THE #6 D1 BARS SHALL EXTEND 1'-9" INTO CLOSURE POUR.

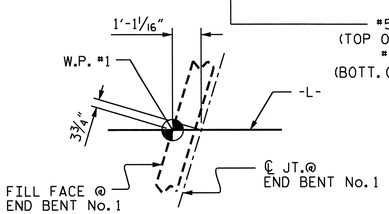


DETAIL "A"

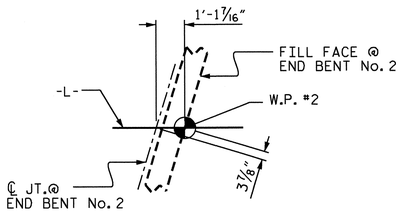


DETAIL "B"

PROJECT NO. I-3819A
IREDELL COUNTY
STATION: 86+06.00 -L-

SHEET 1 OF 3

STATE OF NORTH CAROLINA
DEPARTMENT OF TRANSPORTATION
RALEIGH

SUPERSTRUCTURE
PLAN OF SPAN A
STAGE I

NORTH CAROLINA PROFESSIONAL SEAL 15779 ENGINEER JOHN R. DUGGINS, JR.
1/5/12

| REVISIONS | | | | | | SHEET NO. |
|---|---|---|---|---|---|---|
| NO. | BY: | DATE: | NO. | BY: | DATE: | S-48 |
| 1 | | | 3 | | | TOTAL SHEETS |
| 2 | | | 4 | | | 382 |

DRAWN BY : M. POOLE DATE : 01/10
CHECKED BY : D. HODGE DATE : 09/10

20-OCT-2011 08:09
R:\Structures\NGUYEN\mpoole\I3819A_SD_S1_08.dgn
dahodge

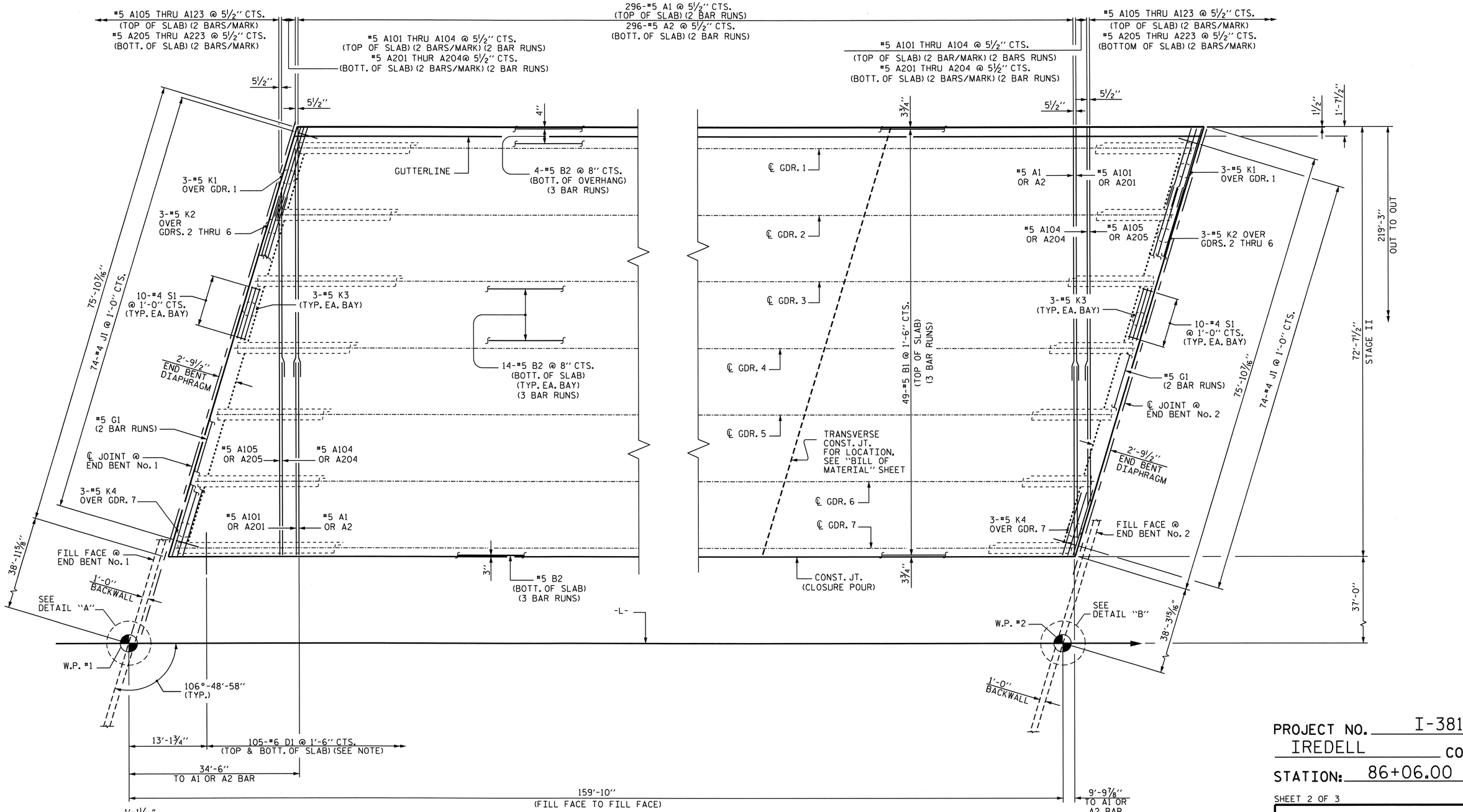


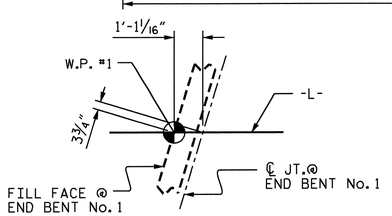


DETAIL "A"

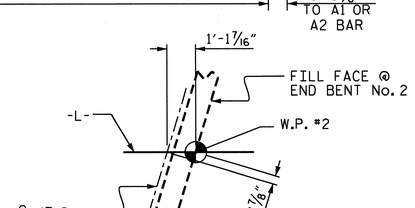


DETAIL "B"

## PLAN OF SPAN A

### STAGE II

THE #6 D1 BARS SHALL BE PLACED IN THE SAME HORIZONTAL PLANE AS THE MAIN SLAB REINFORCING STEEL. THE #6 D1 BARS SHALL EXTEND 1'-9" INTO CLOSURE POUR.

DRAWN BY : M. POOLE DATE : 01/10
CHECKED BY : D. HODGE DATE : 09/10

20-OCT-2011 08:09
R:\Structures\NGUYEN\mpoole\I3819A_SD_S1_08.dgn
dahodge

NORTH CAROLINA PROFESSIONAL SEAL 15779 ENGINEER JOHN R. DUGGINS, JR.
1/5/12

PROJECT NO. I-3819A
IREDELL COUNTY
STATION: 86+06.00 -L-

SHEET 2 OF 3

STATE OF NORTH CAROLINA
DEPARTMENT OF TRANSPORTATION
RALEIGH

SUPERSTRUCTURE
PLAN OF SPAN A
STAGE II

| REVISIONS | | | | | | SHEET NO. |
|---|---|---|---|---|---|---|
| NO. | BY: | DATE: | NO. | BY: | DATE: | S-49 |
| 1 | | | 3 | | | TOTAL SHEETS |
| 2 | | | 4 | | | 382 |

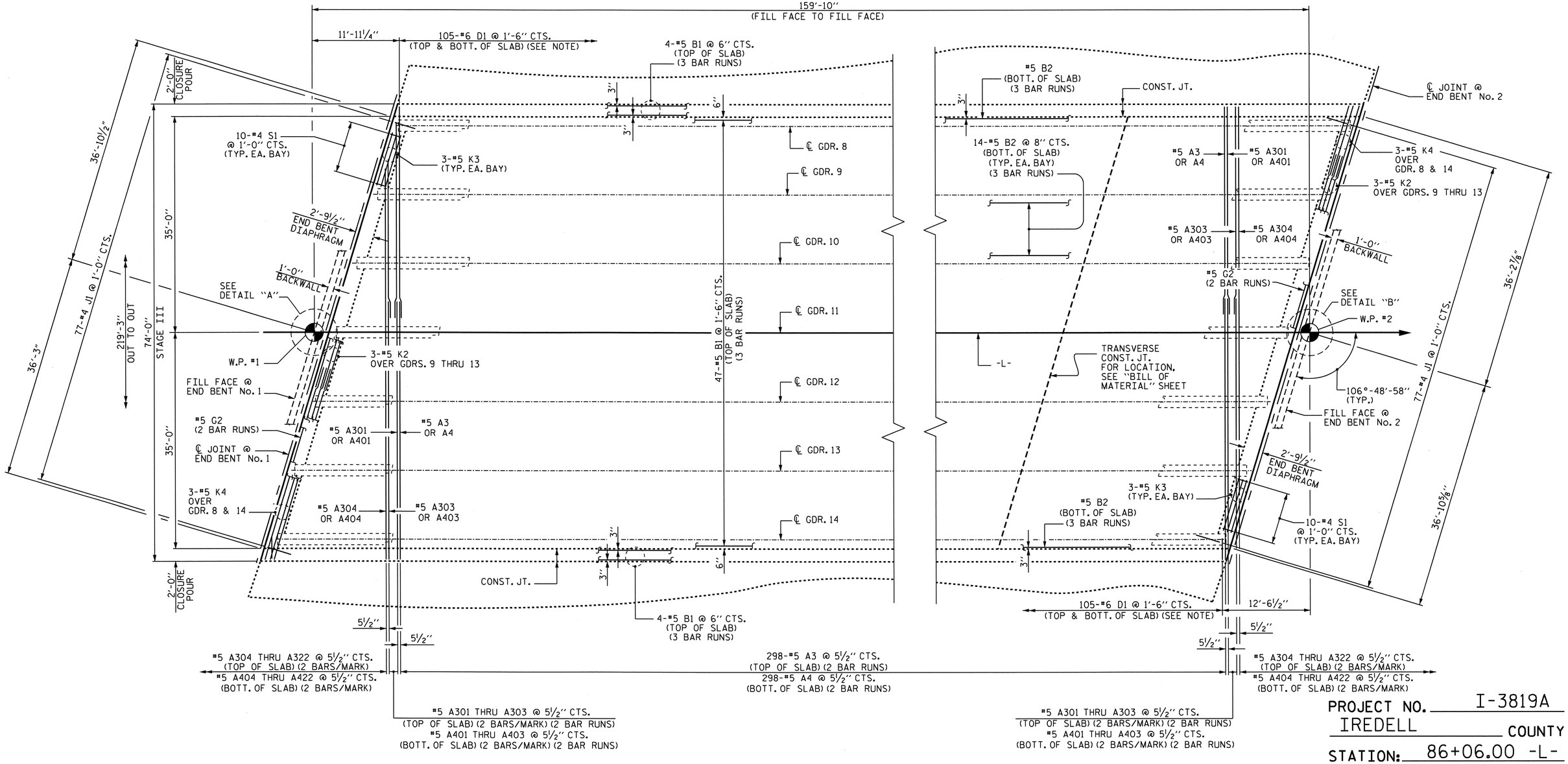


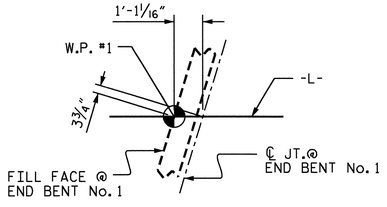


DETAIL "A"

## PLAN OF SPAN A
### STAGE III

THE #6 D1 BARS SHALL BE PLACED IN THE SAME HORIZONTAL PLANE AS THE MAIN SLAB REINFORCING STEEL. THE #6 D1 BARS SHALL EXTEND 1'-9" INTO CLOSURE POUR.

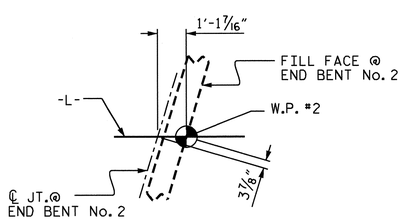


DETAIL "B"

NORTH CAROLINA PROFESSIONAL SEAL 15779 ENGINEER JOHN R. DUGGINS, JR.
1/5/12

DRAWN BY : M. POOLE DATE : 01/10
CHECKED BY : D. HODGE DATE : 09/10

20-OCT-2011 08:08
R:\Structures\NGUYEN\mpoole\I3819A_SD_S1_08.dgn
dahodge

PROJECT NO. I-3819A
IREDELL COUNTY
STATION: 86+06.00 -L-

SHEET 3 OF 3

STATE OF NORTH CAROLINA
DEPARTMENT OF TRANSPORTATION
RALEIGH

SUPERSTRUCTURE
PLAN OF SPAN A
STAGE III

| REVISIONS | | | | | | SHEET NO. |
|---|---|---|---|---|---|---|
| NO. | BY: | DATE: | NO. | BY: | DATE: | S-50 |
| 1 | | | 3 | | | TOTAL SHEETS |
| 2 | | | 4 | | | 382 |

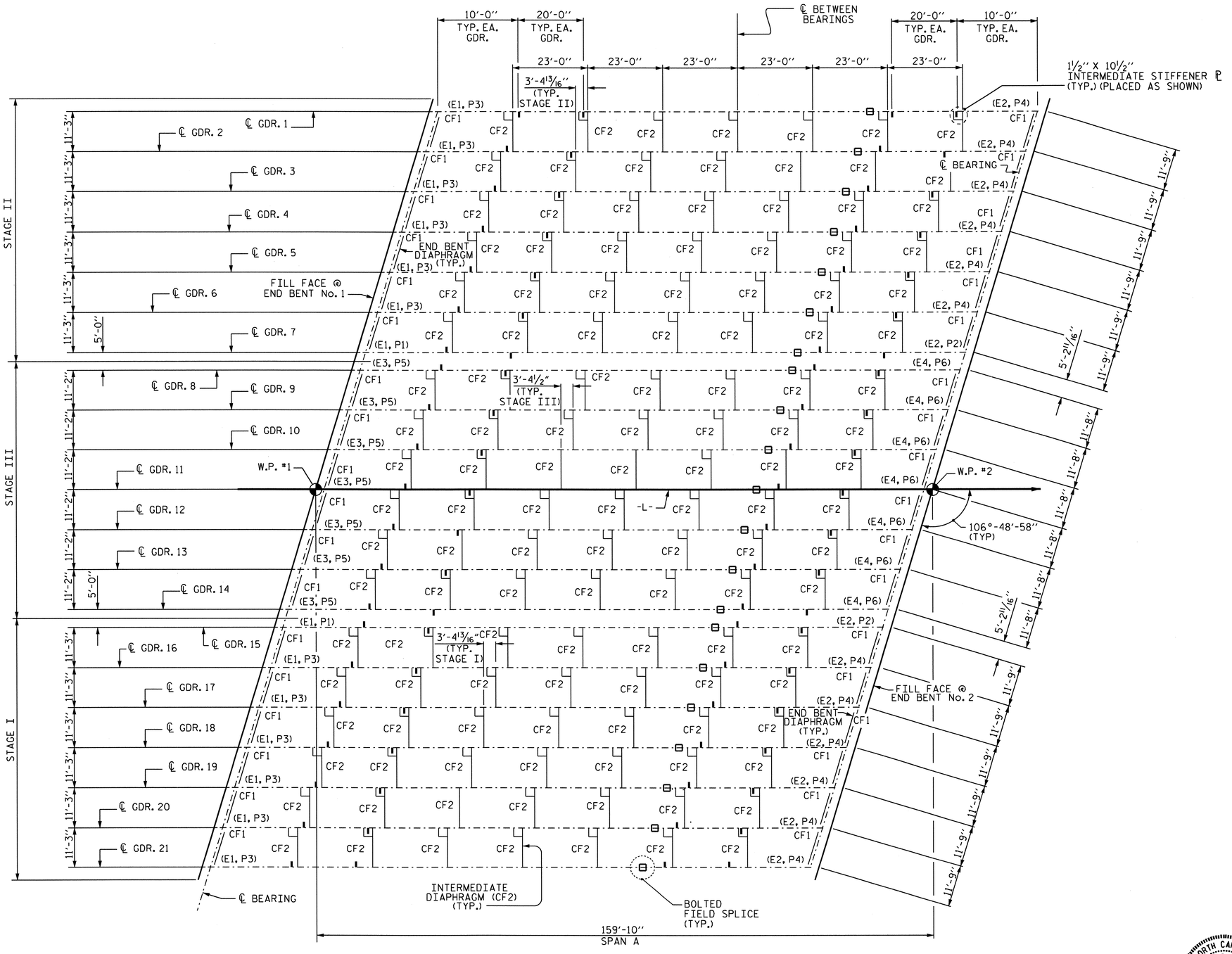


# FRAMING PLAN

PROJECT NO. I-3819A
IREDELL COUNTY
STATION: 86+06.00 -L-

STATE OF NORTH CAROLINA
DEPARTMENT OF TRANSPORTATION
RALEIGH

SUPERSTRUCTURE
FRAMING PLAN

NORTH CAROLINA PROFESSIONAL SEAL 15779 ENGINEER JOHN R. DUGGINS, JR.
1/5/12

| REVISIONS | | | | | | SHEET NO. |
|---|---|---|---|---|---|---|
| NO. | BY: | DATE: | NO. | BY: | DATE: | S-51 |
| 1 | | | 3 | | | TOTAL SHEETS |
| 2 | | | 4 | | | 382 |

DRAWN BY : M. POOLE DATE : 12/09
CHECKED BY : D. HODGE DATE : 10/10

04-JAN-2012 15:42
R:\Structures\NGUYEN\FINAL PLANS\I3819A_SD_FP_08.dgn
dahodge

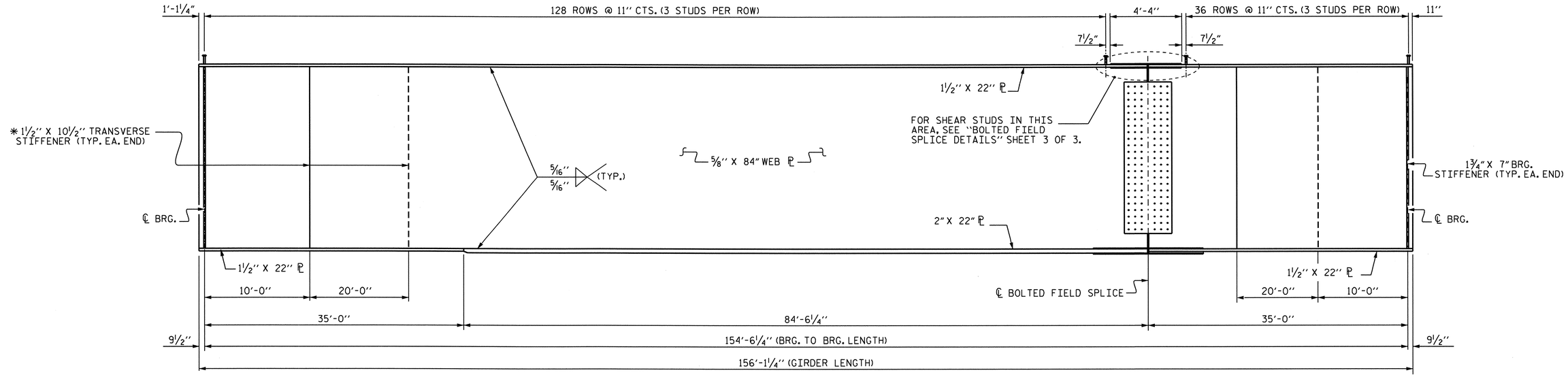


* NOTE:
TRANSVERSE STIFFENERS ARE TO BE PLACED ALTERNATING SIDES OF INTERIOR GIRDERS ONLY. TRANSVERSE STIFFENERS ARE NOT TO BE PLACED ON THE OUTSIDE OF EXTERIOR GIRDERS. (SEE FRAMING PLAN FOR LOCATION)

## GIRDER ELEVATION

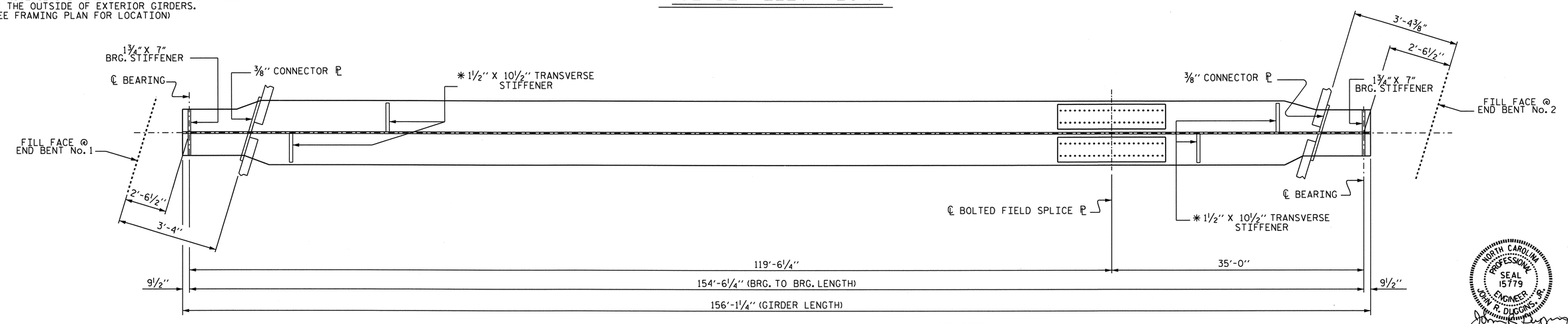


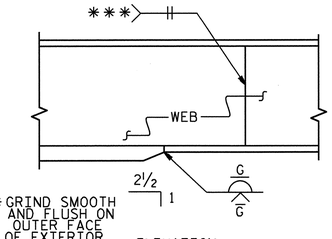


*** GRIND SMOOTH AND FLUSH ON OUTER FACE OF EXTERIOR GIRDERS

ELEVATION

## TYPICAL FLANGE AND WEB BUTT JOINT

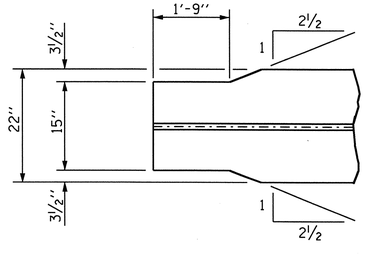


## END OF GIRDER DETAIL

(BOTTOM FLANGE ONLY)

## BOTTOM OF FLANGE DETAIL

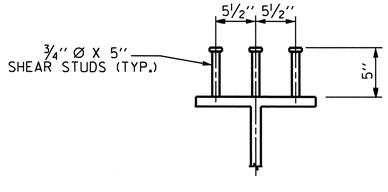


## SHEAR STUD DETAILS

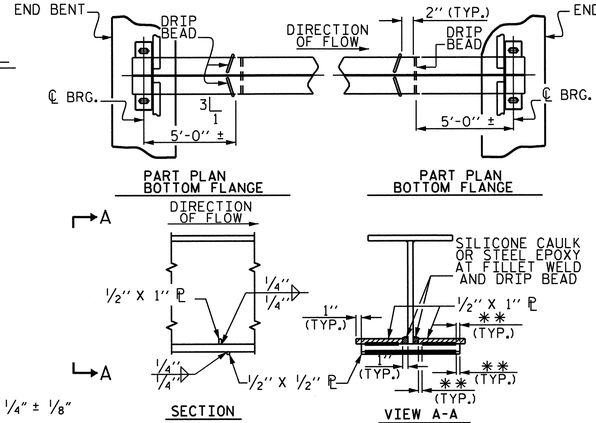


** ¼" ± ⅛"

## DRIP BEAD DETAILS

NORTH CAROLINA PROFESSIONAL SEAL 15779 ENGINEER JOHN R. DUGGINS, JR.
1/5/12

PROJECT NO. I-3819A
IREDELL COUNTY
STATION: 86+06.00 -L-

SHEET 1 OF 3

STATE OF NORTH CAROLINA
DEPARTMENT OF TRANSPORTATION
RALEIGH

SUPERSTRUCTURE
STRUCTURAL STEEL DETAILS

| REVISIONS | | | | | | SHEET NO. |
|---|---|---|---|---|---|---|
| NO. | BY: | DATE: | NO. | BY: | DATE: | S-52 |
| 1 | | | 3 | | | TOTAL SHEETS |
| 2 | | | 4 | | | 382 |

DRAWN BY : M. POOLE DATE : 12/09
CHECKED BY : D. HODGE DATE : 10/10

04-JAN-2012 15:42
R:\Structures\NGUYEN\FINAL PLANS\I3819A_SD_SS_08.dgn
dahodge

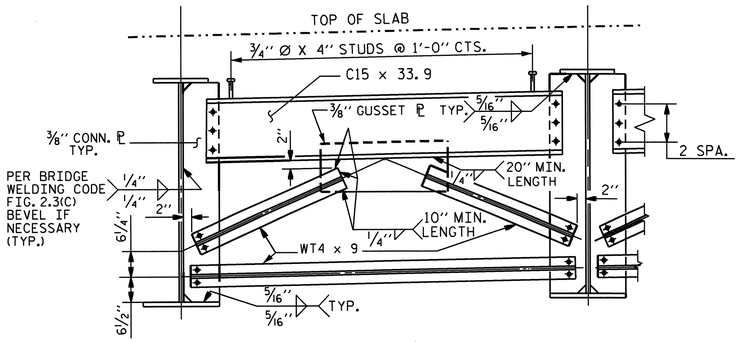


## TYPICAL END BENT CROSSFRAME
(CF1)

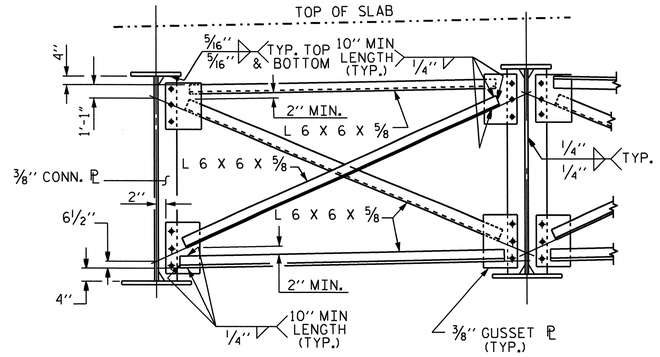


## TYPICAL OPTIONAL INTERMEDIATE CROSSFRAME
(CF2)

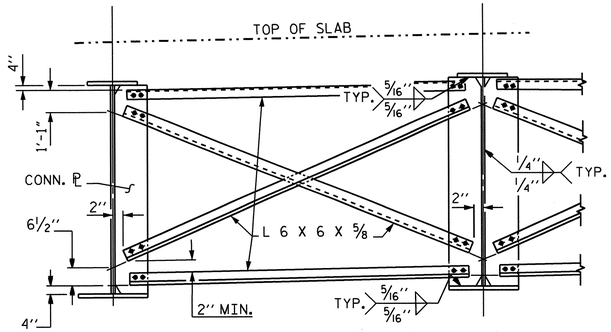


## TYPICAL INTERMEDIATE CROSSFRAME
(CF2)

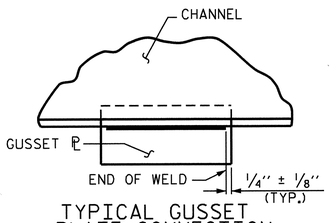


TYPICAL GUSSET PLATE CONNECTION

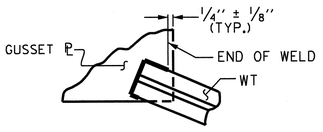


TYPICAL "TEE" TO GUSSET PLATE CONNECTION

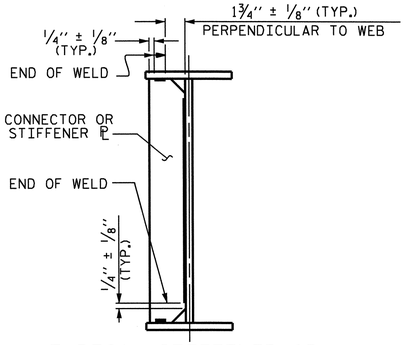


TYPICAL STIFFENER OR CONNECTOR PLATE CONNECTIONS

## WELD TERMINATION DETAILS

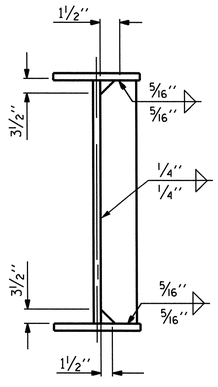


## CONNECTOR PLATE DETAIL

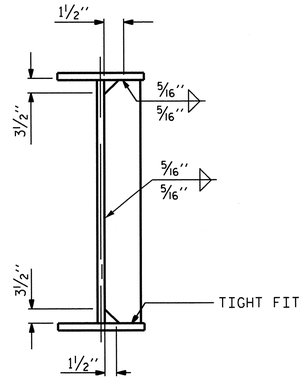


## INTERMEDIATE STIFFENER

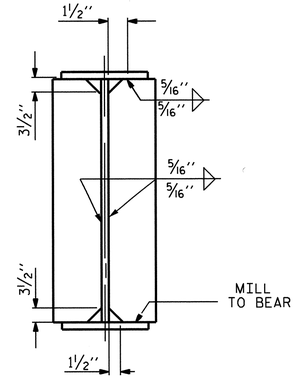


## BEARING STIFFENER

PROJECT NO. I-3819A
IREDELL COUNTY
STATION: 86+06.00 -L-

SHEET 2 OF 3

STATE OF NORTH CAROLINA
DEPARTMENT OF TRANSPORTATION
RALEIGH

SUPERSTUCTURE
STRUCTURAL STEEL DETAILS

NORTH CAROLINA PROFESSIONAL SEAL 15779 ENGINEER JOHN R. DIGGINS, JR.
11/5/12

| REVISIONS | | | | | | SHEET NO. |
|---|---|---|---|---|---|---|
| NO. | BY: | DATE: | NO. | BY: | DATE: | S-53 |
| 1 | | | 3 | | | TOTAL SHEETS |
| 2 | | | 4 | | | 382 |

DRAWN BY : M. POOLE DATE : 12/09
CHECKED BY : D. HODGE DATE : 10/10

20-OCT-2011 08:06
R:\Structures\NGUYEN\mpoole\I3819A_SD_SS_08.dgn
dahodge

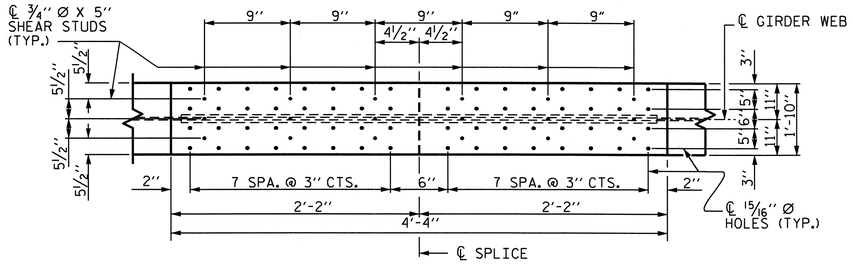


## PLAN (TOP OF TOP FLANGE)

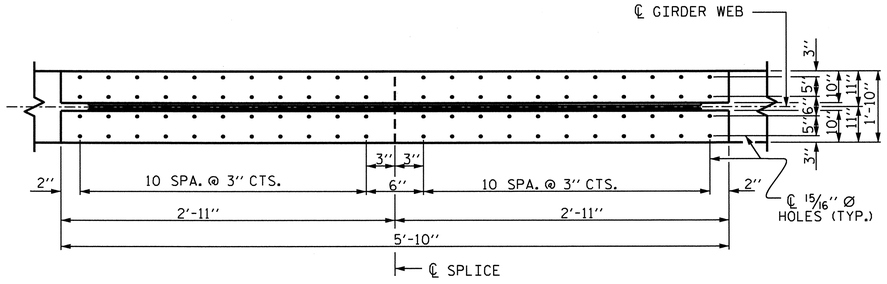


## PLAN (TOP OF BOTTOM FLANGE)

## NOTES

ALL DIMENSIONS SHOWN ARE HORIZONTAL OR VERTICAL, UNLESS OTHERWISE NOTED.

ALL FIELD CONNECTIONS TO BE 7/8" DIA. HIGH STRENGTH BOLTS UNLESS OTHERWISE NOTED.

BEARING STIFFENERS ARE TO BE PLACED NORMAL TO THE WEB OF THE GIRDER AND SHALL BE PLUMB.

ALL STRUCTURAL STEEL SHALL BE AASHTO M270 GRADE 50 AND PAINTED IN ACCORDANCE WITH SYSTEM 1 OF ARTICLE 442 OF THE STANDARD SPECIFICATIONS UNLESS OTHERWISE NOTED ON THE PLANS.

A CHARPY V-NOTCH TEST IS REQUIRED FOR WEB PLATES, BOTTOM FLANGE PLATES, BOTTOM FLANGE SPLICE PLATES AND WEB SPLICE PLATES FOR ALL GIRDERS AND IN ACCORDANCE WITH ARTICLE 1072-9 OF THE STANDARD SPECIFICATIONS.

SHOP SPLICES ARE PERMITTED TO LIMIT THE MAXIMUM REQUIRED FLANGE PIECE LENGTHS TO 60 FEET AND WEB PIECE LENGTHS TO 45 FEET. PERMITTED FLANGE AND WEB SHOP SPLICES SHALL NOT BE LOCATED WITHIN 15 FEET OF MAXIMUM DEAD LOAD DEFLECTION. KEEP 2 FEET MINIMUM BETWEEN WEB AND FLANGE SHOP SPLICES. KEEP 6" MINIMUM BETWEEN CONNECTOR PLATE OR TRANSVERSE STIFFENER WELDS AND WEB OR FLANGE SHOP SPLICES.

TENSION ON THE AASHTO M164 BOLTS SHALL BE CALIBRATED USING DIRECT TENSION INDICATOR WASHERS.

BEARING STIFFENER MAY REQUIRE COPING IF WIDER THAN BOTTOM FLANGE TO AVOID INTERFERENCE WITH THE ANCHOR BOLT.

STUDS ON GIRDERS MAY BE SHIFTED UP TO 1" IF NECESSARY TO CLEAR FLANGE SPLICE WELD.

END OF GIRDERS SHALL BE PLUMB.

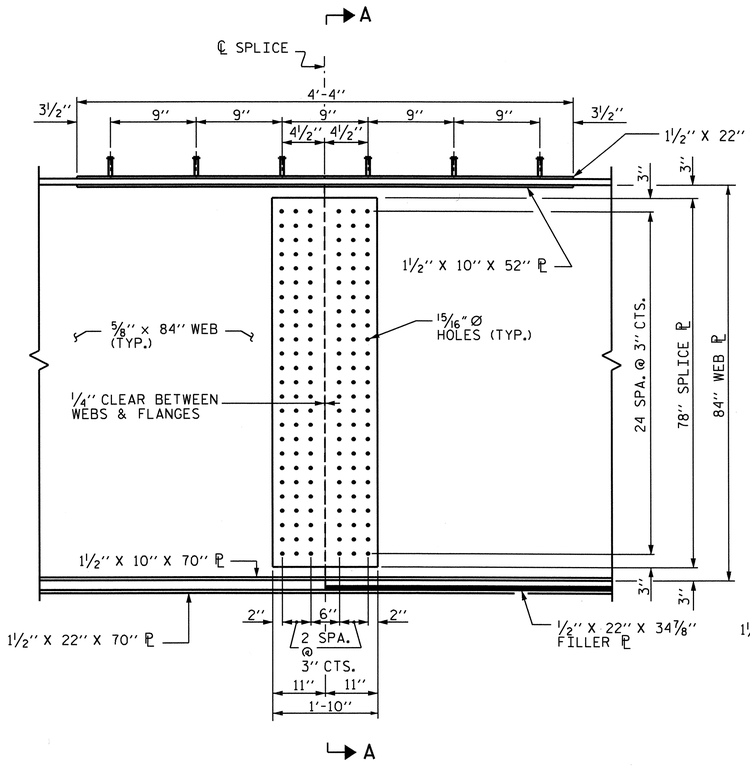


## ELEVATION

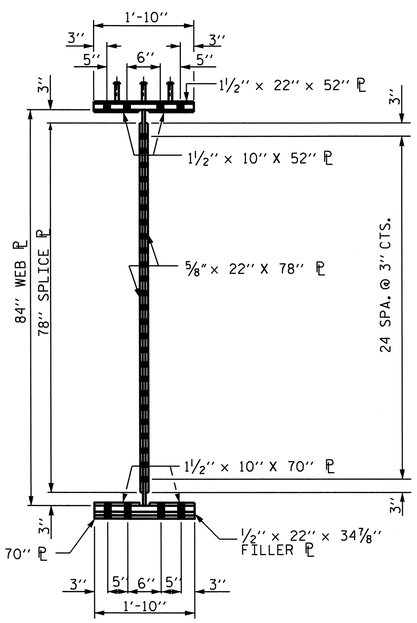


## SECTION A-A

## BOLTED FIELD SPLICE DETAILS

(TYPICAL EACH GIRDER)

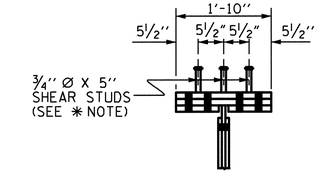


## SHEAR STUD DETAIL FOR TOP FLANGE SPLICE PLATE

*NOTE: SHEAR STUDS ARE TO BE SHOP WELDED ON TOP OF PLATE BEFORE FIELD ASSEMBLY.

PROJECT NO. I-3819A

IREDELL COUNTY

STATION: 86+06.00 -L-

SHEET 3 OF 3

STATE OF NORTH CAROLINA
DEPARTMENT OF TRANSPORTATION
RALEIGH

SUPERSTRUCTURE
STRUCTURAL STEEL DETAILS

NORTH CAROLINA PROFESSIONAL SEAL 15779 ENGINEER JOHN R. DIGGINS, JR.
1/5/12

| REVISIONS | | | | | | SHEET NO. |
|---|---|---|---|---|---|---|
| NO. | BY: | DATE: | NO. | BY: | DATE: | S-54 |
| 1 | | | 3 | | | TOTAL SHEETS |
| 2 | | | 4 | | | 382 |

DRAWN BY : M. POOLE DATE : 12/09
CHECKED BY : D. HODGE DATE : 10/10

04-JAN-2012 15:41
R:\Structures\NGUYEN\FINAL PLANS\I3819A_SD_SS_08.dgn
dahodge

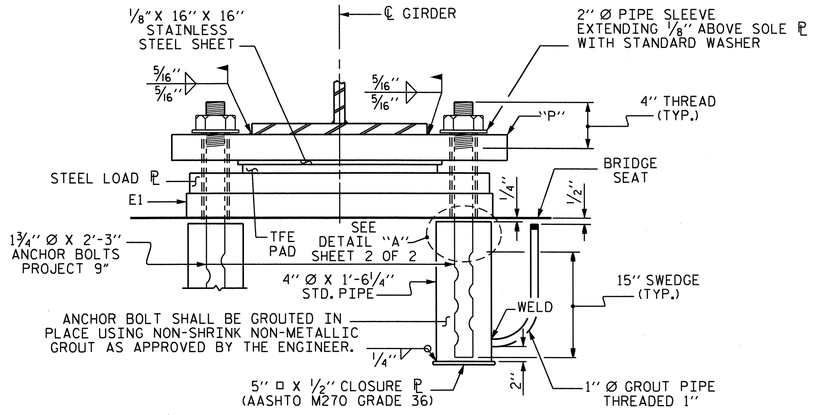


FIXED

END VIEW

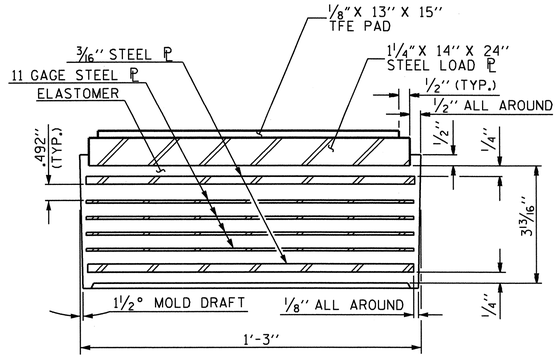


TYPICAL SECTION OF ELASTOMERIC BEARING

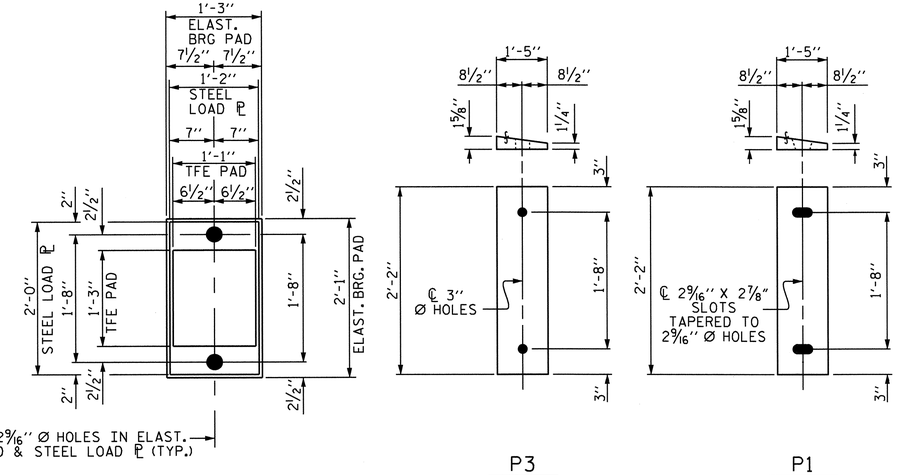


E1 (14 REQ'D)

PLAN VIEW OF ELASTOMERIC BEARING WITH TFE

USE 60 DUROMETER HARDNESS

P3 ( FIXED ) P3 (12 REQ'D )

P1 ( FIXED ) P1 (2 REQ'D )

SOLE PLATE DETAILS ("P")

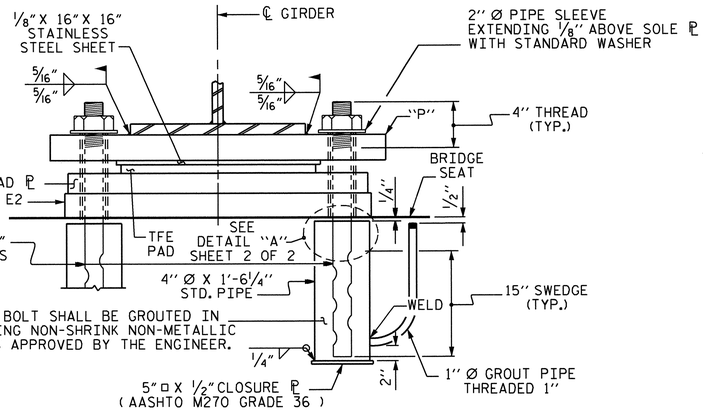


EXPANSION

END VIEW

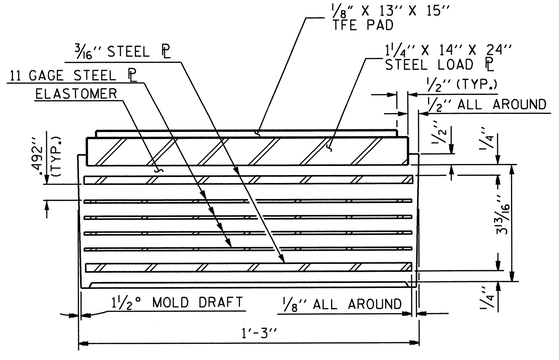


TYPICAL SECTION OF ELASTOMERIC BEARING

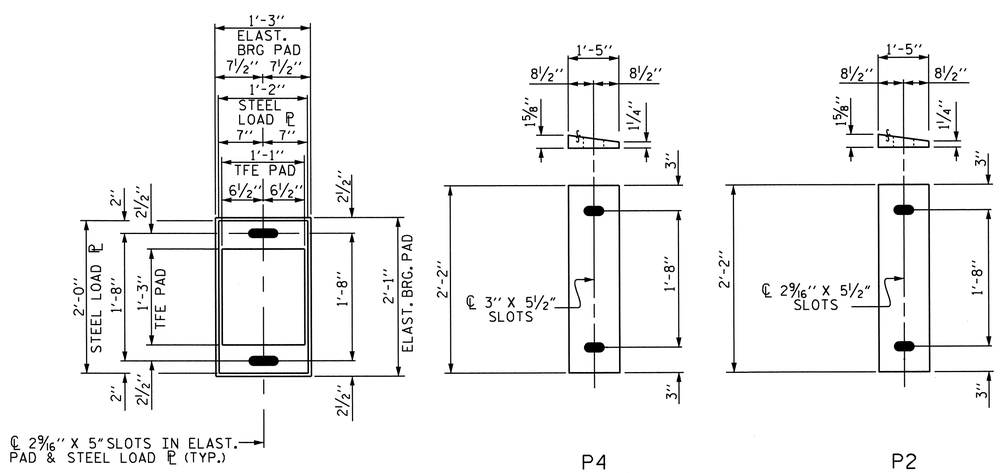


E2 (14 REQ'D)

PLAN VIEW OF ELASTOMERIC BEARING WITH TFE

USE 60 DUROMETER HARDNESS

P4 ( EXPANSION ) P4 (12 REQ'D )

P2 ( EXPANSION ) P2 (2 REQ'D )

SOLE PLATE DETAILS ("P")

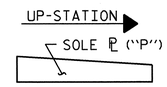


SOLE ℙ PLACEMENT DETAIL

NORTH CAROLINA PROFESSIONAL SEAL 15779 ENGINEER JOHN R. DUGGINS, JR.
1/5/12

PROJECT NO. I-3819A

IREDELL COUNTY

STATION: 86+06.00 -L-

SHEET 1 OF 2

STATE OF NORTH CAROLINA
DEPARTMENT OF TRANSPORTATION
RALEIGH

# ELASTOMERIC BEARING DETAILS

( STEEL SUPERSTRUCTURE )
( STAGES I & II )

| REVISIONS | | | | | | SHEET NO. |
|---|---|---|---|---|---|---|
| NO. | BY: | DATE: | NO. | BY: | DATE: | S-55 |
| 1 | | | 3 | | | TOTAL SHEETS |
| 2 | | | 4 | | | 382 |

DRAWN BY : M. POOLE DATE : 10/10
CHECKED BY : D. HODGE DATE : 10/10

04-JAN-2012 15:41
R:\Structures\NGUYEN\FINAL PLANS\I3819A_SD_BG_08.dgn
dahodge

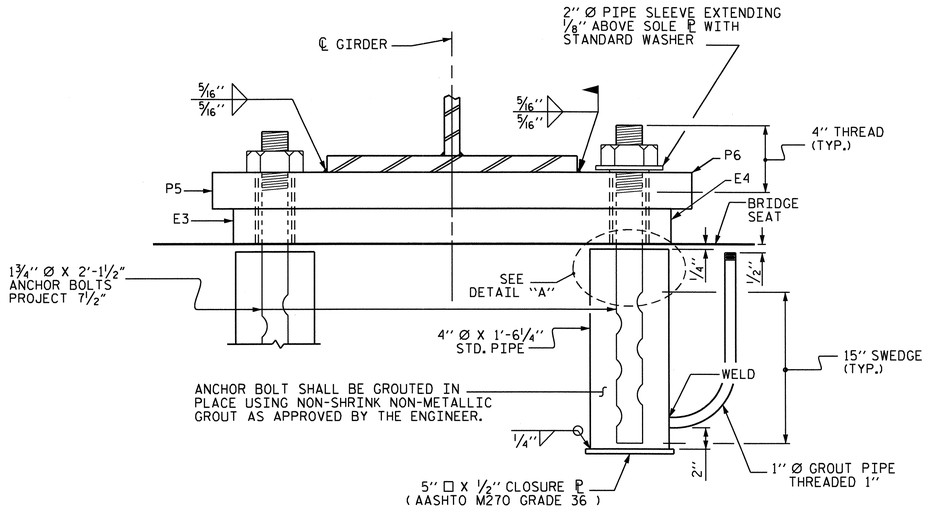


END VIEW

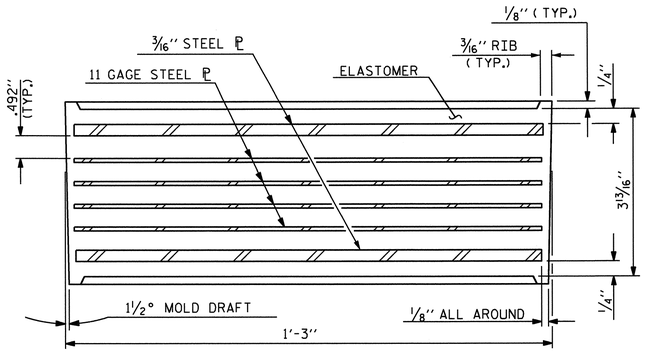


TYPICAL SECTION OF ELASTOMERIC BEARING

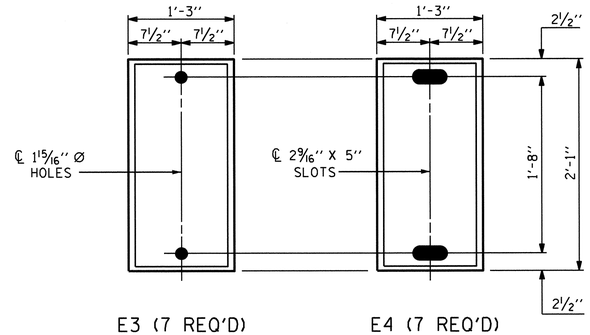


E3 (7 REQ'D) E4 (7 REQ'D)

PLAN VIEW OF ELASTOMERIC BEARING

TYPE VI

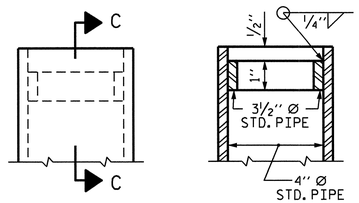


SECTION C-C

DETAIL "A"

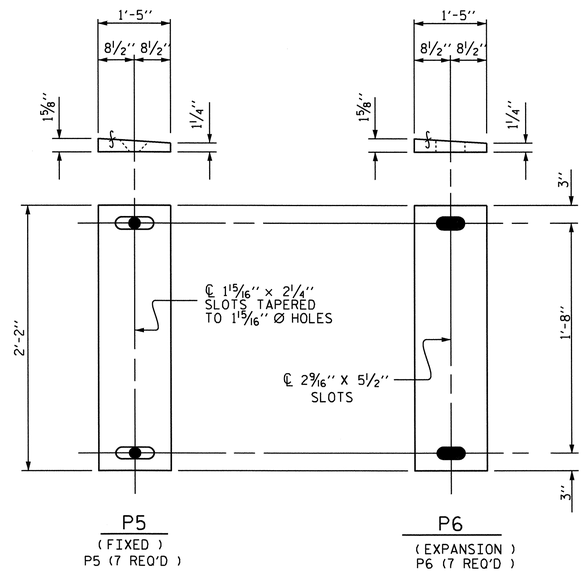


SOLE PLATE DETAILS ( "P" )

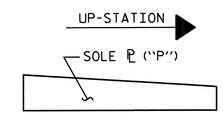


SOLE ℙ PLACEMENT DETAIL

## NOTES

AT ALL FIXED POINTS OF SUPPORT, NUTS FOR ANCHOR BOLTS ARE TO BE TIGHTENED FINGER TIGHT AND THEN BACKED OFF 1/2 TURN. THE THREAD OF THE NUT AND BOLT SHALL THEN BE BURRED WITH A SHARP POINTED TOOL.

THE 2" Ø PIPE SLEEVE SHALL BE CUT FROM SCHEDULE 40 PVC PLASTIC PIPE. THE PVC PLASTIC PIPE SHALL MEET THE REQUIREMENTS OF ASTM D1785.

THE PAYMENT FOR THE PIPE SLEEVES SHALL BE INCLUDED IN THE SEVERAL PAY ITEMS.

FOR AASHTO M270 GRADE 50 STRUCTURAL STEEL, SOLE PLATES SHALL BE AASHTO M270 GRADE 50 AND SHALL BE PAINTED. STEEL LOAD PLATES, ANCHOR BOLTS, NUTS AND WASHERS SHALL BE GALVANIZED IN ACCORDANCE WITH THE STANDARD SPECIFICATIONS.

ANCHOR BOLTS SHALL MEET THE REQUIREMENTS OF ASTM A449. NUTS SHALL MEET THE REQUIREMENTS OF AASHTO M291-DH OR AASHTO M292-2H. WASHERS SHALL MEET THE REQUIREMENTS OF AASHTO M293. SHOP DRAWINGS ARE NOT REQUIRED FOR ANCHOR BOLTS, NUTS AND WASHERS. SHOP INSPECTION IS REQUIRED.

WHEN FIELD WELDING THE SOLE PLATE TO THE GIRDER FLANGE, USE TEMPERATURE INDICATING WAX PENS, OR OTHER SUITABLE MEANS, TO ENSURE THAT THE TEMPERATURE OF THE SOLE PLATE DOES NOT EXCEED 300°F. TEMPERATURES ABOVE THIS MAY DAMAGE THE ELASTOMER.

ALL SURFACES OF BEARING PLATES SHALL BE SMOOTH AND STRAIGHT.

THE CLOSURE PLATE, GROUT PIPE AND STANDARD PIPE FOR THE EXPANSION ASSEMBLY NEED NOT BE GALVANIZED.

FOR ELASTOMERIC BEARINGS WITH TFE, SEE SPECIAL PROVISIONS.

THE CONTRACTOR'S ATTENTION IS CALLED TO THE FOLLOWING PROCEDURES TO ACCOMODATE GIRDER TRANSLATION AND END ROTATION:

1. ONCE THE DECK HAS CURED, THE GIRDERS SHALL BE JACKED AND THE ANCHOR BOLTS, SOLE PLATE, AND ELASTOMERIC BEARING SLOTS SHALL BE CENTERED AS NEARLY AS PRACTICAL ABOUT THE BEARING STIFFENER. THIS OPERATION SHALL BE PERFORMED AT APPROXIMATELY 60° F.
2. AFTER CENTERING THE SLOTS AND ANCHOR BOLTS, THE SOLE PLATES SHALL BE FIELD WELDED TO THE GIRDER FLANGES AND ANCHOR BOLTS GROUTED.

THE CONTRACTOR MAY PROPOSE ALTERNATE METHODS, PROVIDED DETAILS ARE SUBMITTED TO THE ENGINEER FOR REVIEW AND APPROVAL.

| -LOAD RATINGS- | |
|---|---|
| | MAX.D.L.+ L.L. |
| | |
| | |
| TYPE VI | 352 k |

60 DUROMETER HARDNESS

PROJECT NO. I-3819A

IREDELL COUNTY

STATION: 86+06.00 -L-

SHEET 2 OF 2

STATE OF NORTH CAROLINA
DEPARTMENT OF TRANSPORTATION
RALEIGH

# ELASTOMERIC BEARING DETAILS

( STEEL SUPERSTRUCTURE )
( STAGE III )

| REVISIONS | | | | | | SHEET NO. |
|---|---|---|---|---|---|---|
| NO. | BY: | DATE: | NO. | BY: | DATE: | S-56 |
| 1 | | | 3 | | | TOTAL SHEETS |
| 2 | | | 4 | | | 382 |

NORTH CAROLINA PROFESSIONAL SEAL 15779 ENGINEER JOHN R. DUGGINS, JR.
1/5/12

STD. NO. EB2

| | | | |
|---|---|---|---|
| ASSEMBLED BY : M. POOLE | DATE : 10/10 | | |
| CHECKED BY : D. HODGE | DATE : 10/10 | | |
| DRAWN BY : EEM 10/95 | REV. 10/17/00 | RWW/LES | |
| CHECKED BY : PEK 10/95 | REV. 7/10/01 | LES/RDR | |
| | REV. 5/1/06 | TLA/GM | |

04-JAN-2012 15:40
R:\Structures\NGUYEN\FINAL PLANS\I3819A_SD_BG_08.dgn
dahodge

## DEAD LOAD DEFLECTION TABLE FOR GIRDERS

| | SPAN A GIRDERS 1 & 21 | | | | | | | | | | | | | | | | | | | | |
|---|---|---|---|---|---|---|---|---|---|---|---|---|---|---|---|---|---|---|---|---|---|
| TWENTIETH POINTS | 0 | .05 | .10 | .15 | .20 | .25 | .30 | .35 | .40 | .45 | .50 | .55 | .60 | .65 | .70 | .75 | .80 | .85 | .90 | .95 | 0 |
| DEFLECTION DUE TO WEIGHT OF GIRDER | 0.000 | 0.017 | 0.034 | 0.050 | 0.064 | 0.077 | 0.087 | 0.096 | 0.102 | 0.106 | 0.107 | 0.106 | 0.102 | 0.096 | 0.087 | 0.077 | 0.064 | 0.050 | 0.034 | 0.017 | 0.000 |
| DEFLECTION DUE TO WEIGHT OF SLAB * | 0.000 | 0.040 | 0.090 | 0.137 | 0.180 | 0.217 | 0.249 | 0.274 | 0.293 | 0.304 | 0.308 | 0.304 | 0.293 | 0.274 | 0.249 | 0.217 | 0.180 | 0.137 | 0.090 | 0.040 | 0.000 |
| DEFLECTION DUE TO WEIGHT OF BARRIER RAIL | 0.000 | 0.003 | 0.006 | 0.009 | 0.012 | 0.014 | 0.016 | 0.017 | 0.019 | 0.019 | 0.019 | 0.019 | 0.019 | 0.017 | 0.016 | 0.014 | 0.012 | 0.009 | 0.006 | 0.003 | 0.000 |
| TOTAL DEAD LOAD DEFLECTION | 0.000 | 0.060 | 0.130 | 0.196 | 0.256 | 0.308 | 0.352 | 0.387 | 0.414 | 0.429 | 0.434 | 0.429 | 0.414 | 0.387 | 0.352 | 0.308 | 0.256 | 0.196 | 0.130 | 0.060 | 0.000 |
| VERTICAL CURVE ORDINATE | 0.000 | 0.037 | 0.070 | 0.099 | 0.125 | 0.146 | 0.164 | 0.177 | 0.187 | 0.193 | 0.195 | 0.193 | 0.187 | 0.177 | 0.164 | 0.146 | 0.125 | 0.099 | 0.070 | 0.037 | 0.000 |
| | | | | | | | | | | | | | | | | | | | | | |
| | | | | | | | | | | | | | | | | | | | | | |
| REQUIRED CAMBER | 0 | 1 3/16" | 2 3/8" | 3 9/16" | 4 9/16" | 5 7/16" | 6 3/16" | 6 3/4" | 7 3/16" | 7 7/16" | 7 9/16" | 7 7/16" | 7 3/16" | 6 3/4" | 6 3/16" | 5 7/16" | 4 9/16" | 3 9/16" | 2 3/8" | 1 3/16" | 0 |

* INCLUDES SLAB, BUILDUPS & STAY-IN-PLACE FORMS.
ALL VALUES ARE SHOWN IN FEET ( DECIMAL FORM ), EXCEPT " FINAL CAMBER ", WHICH IS GIVEN IN INCHES ( FRACTION FORM ).

## DEAD LOAD DEFLECTION TABLE FOR GIRDERS

| | SPAN A GIRDERS 2 & 20 | | | | | | | | | | | | | | | | | | | | |
|---|---|---|---|---|---|---|---|---|---|---|---|---|---|---|---|---|---|---|---|---|---|
| TWENTIETH POINTS | 0 | .05 | .10 | .15 | .20 | .25 | .30 | .35 | .40 | .45 | .50 | .55 | .60 | .65 | .70 | .75 | .80 | .85 | .90 | .95 | 0 |
| DEFLECTION DUE TO WEIGHT OF GIRDER | 0.000 | 0.017 | 0.034 | 0.050 | 0.064 | 0.077 | 0.087 | 0.096 | 0.102 | 0.106 | 0.107 | 0.106 | 0.102 | 0.096 | 0.087 | 0.077 | 0.064 | 0.050 | 0.034 | 0.017 | 0.000 |
| DEFLECTION DUE TO WEIGHT OF SLAB * | 0.000 | 0.034 | 0.084 | 0.131 | 0.174 | 0.211 | 0.243 | 0.269 | 0.287 | 0.298 | 0.302 | 0.298 | 0.287 | 0.269 | 0.243 | 0.211 | 0.174 | 0.131 | 0.084 | 0.034 | 0.000 |
| DEFLECTION DUE TO WEIGHT OF BARRIER RAIL | 0.000 | 0.003 | 0.006 | 0.009 | 0.011 | 0.013 | 0.015 | 0.017 | 0.018 | 0.018 | 0.018 | 0.018 | 0.018 | 0.017 | 0.015 | 0.013 | 0.011 | 0.009 | 0.006 | 0.003 | 0.000 |
| TOTAL DEAD LOAD DEFLECTION | 0.000 | 0.054 | 0.124 | 0.190 | 0.249 | 0.301 | 0.345 | 0.382 | 0.407 | 0.422 | 0.427 | 0.422 | 0.407 | 0.382 | 0.345 | 0.301 | 0.249 | 0.190 | 0.124 | 0.054 | 0.000 |
| VERTICAL CURVE ORDINATE | 0.000 | 0.037 | 0.070 | 0.099 | 0.125 | 0.146 | 0.164 | 0.177 | 0.187 | 0.193 | 0.195 | 0.193 | 0.187 | 0.177 | 0.164 | 0.146 | 0.125 | 0.099 | 0.070 | 0.037 | 0.000 |
| | | | | | | | | | | | | | | | | | | | | | |
| | | | | | | | | | | | | | | | | | | | | | |
| REQUIRED CAMBER | 0 | 1 1/16" | 2 5/16" | 3 7/16" | 4 1/2" | 5 3/8" | 6 1/8" | 6 11/16" | 7 1/8" | 7 3/8" | 7 7/16" | 7 3/8" | 7 1/8" | 6 11/16" | 6 1/8" | 5 3/8" | 4 1/2" | 3 7/16" | 2 5/16" | 1 1/16" | 0 |

* INCLUDES SLAB, BUILDUPS & STAY-IN-PLACE FORMS.
ALL VALUES ARE SHOWN IN FEET ( DECIMAL FORM ), EXCEPT " FINAL CAMBER ", WHICH IS GIVEN IN INCHES ( FRACTION FORM ).

## DEAD LOAD DEFLECTION TABLE FOR GIRDERS

| | SPAN A GIRDERS 3 & 19 | | | | | | | | | | | | | | | | | | | | |
|---|---|---|---|---|---|---|---|---|---|---|---|---|---|---|---|---|---|---|---|---|---|
| TWENTIETH POINTS | 0 | .05 | .10 | .15 | .20 | .25 | .30 | .35 | .40 | .45 | .50 | .55 | .60 | .65 | .70 | .75 | .80 | .85 | .90 | .95 | 0 |
| DEFLECTION DUE TO WEIGHT OF GIRDER | 0.000 | 0.017 | 0.034 | 0.050 | 0.064 | 0.077 | 0.087 | 0.096 | 0.102 | 0.106 | 0.107 | 0.106 | 0.102 | 0.096 | 0.087 | 0.077 | 0.064 | 0.050 | 0.034 | 0.017 | 0.000 |
| DEFLECTION DUE TO WEIGHT OF SLAB * | 0.000 | 0.028 | 0.078 | 0.125 | 0.168 | 0.206 | 0.237 | 0.263 | 0.281 | 0.293 | 0.296 | 0.293 | 0.281 | 0.263 | 0.237 | 0.206 | 0.168 | 0.125 | 0.078 | 0.028 | 0.000 |
| DEFLECTION DUE TO WEIGHT OF BARRIER RAIL | 0.000 | 0.005 | 0.010 | 0.014 | 0.018 | 0.021 | 0.024 | 0.027 | 0.028 | 0.029 | 0.030 | 0.029 | 0.028 | 0.027 | 0.024 | 0.021 | 0.018 | 0.014 | 0.010 | 0.005 | 0.000 |
| TOTAL DEAD LOAD DEFLECTION | 0.000 | 0.050 | 0.122 | 0.189 | 0.250 | 0.304 | 0.348 | 0.386 | 0.411 | 0.428 | 0.433 | 0.428 | 0.411 | 0.386 | 0.348 | 0.304 | 0.250 | 0.189 | 0.122 | 0.050 | 0.000 |
| VERTICAL CURVE ORDINATE | 0.000 | 0.037 | 0.070 | 0.099 | 0.125 | 0.146 | 0.164 | 0.177 | 0.187 | 0.193 | 0.195 | 0.193 | 0.187 | 0.177 | 0.164 | 0.146 | 0.125 | 0.099 | 0.070 | 0.037 | 0.000 |
| | | | | | | | | | | | | | | | | | | | | | |
| | | | | | | | | | | | | | | | | | | | | | |
| REQUIRED CAMBER | 0 | 1 1/16" | 2 5/16" | 3 7/16" | 4 1/2" | 5 3/8" | 6 1/8" | 6 3/4" | 7 3/16" | 7 7/16" | 7 9/16" | 7 7/16" | 7 3/16" | 6 3/4" | 6 1/8" | 5 3/8" | 4 1/2" | 3 7/16" | 2 5/16" | 1 1/16" | 0 |

* INCLUDES SLAB, BUILDUPS & STAY-IN-PLACE FORMS.
ALL VALUES ARE SHOWN IN FEET ( DECIMAL FORM ), EXCEPT " FINAL CAMBER ", WHICH IS GIVEN IN INCHES ( FRACTION FORM ).

PROJECT NO. I-3819A
IREDELL COUNTY
STATION: 86+06.00 -L-

SHEET 1 OF 4

STATE OF NORTH CAROLINA
DEPARTMENT OF TRANSPORTATION
RALEIGH

SUPERSTUCTURE

# DEAD LOAD DEFLECTION TABLES
STAGE I & II

NORTH CAROLINA PROFESSIONAL SEAL 15779 ENGINEER JOHN R. DUGGINS, JR.
1/5/12

| REVISIONS | | | | | | SHEET NO. |
|---|---|---|---|---|---|---|
| NO. | BY: | DATE: | NO. | BY: | DATE: | S-57 |
| 1 | | | 3 | | | TOTAL SHEETS |
| 2 | | | 4 | | | 382 |

DRAWN BY : M. POOLE DATE : 01/10
CHECKED BY : D. HODGE DATE : 10/10

04-JAN-2012 15:40
R:\Structures\NGUYEN\FINAL PLANS\I3819A_SD_DL_08.dgn
dahodge

## DEAD LOAD DEFLECTION TABLE FOR GIRDERS

| | SPAN A GIRDERS 4 & 18 | | | | | | | | | | | | | | | | | | | | |
|---|---|---|---|---|---|---|---|---|---|---|---|---|---|---|---|---|---|---|---|---|---|
| TWENTIETH POINTS | 0 | .05 | .10 | .15 | .20 | .25 | .30 | .35 | .40 | .45 | .50 | .55 | .60 | .65 | .70 | .75 | .80 | .85 | .90 | .95 | 0 |
| DEFLECTION DUE TO WEIGHT OF GIRDER | 0.000 | 0.017 | 0.034 | 0.050 | 0.064 | 0.077 | 0.087 | 0.096 | 0.102 | 0.106 | 0.107 | 0.106 | 0.102 | 0.096 | 0.087 | 0.077 | 0.064 | 0.050 | 0.034 | 0.017 | 0.000 |
| DEFLECTION DUE TO WEIGHT OF SLAB * | 0.000 | 0.021 | 0.072 | 0.119 | 0.162 | 0.200 | 0.232 | 0.257 | 0.276 | 0.287 | 0.291 | 0.287 | 0.276 | 0.257 | 0.232 | 0.200 | 0.162 | 0.119 | 0.072 | 0.021 | 0.000 |
| DEFLECTION DUE TO WEIGHT OF BARRIER RAIL | 0.000 | 0.002 | 0.004 | 0.005 | 0.007 | 0.008 | 0.009 | 0.010 | 0.011 | 0.011 | 0.011 | 0.011 | 0.011 | 0.010 | 0.009 | 0.008 | 0.007 | 0.005 | 0.004 | 0.002 | 0.000 |
| TOTAL DEAD LOAD DEFLECTION | 0.000 | 0.040 | 0.110 | 0.174 | 0.233 | 0.285 | 0.328 | 0.363 | 0.389 | 0.404 | 0.409 | 0.404 | 0.389 | 0.363 | 0.328 | 0.285 | 0.233 | 0.174 | 0.110 | 0.040 | 0.000 |
| VERTICAL CURVE ORDINATE | 0.000 | 0.037 | 0.070 | 0.099 | 0.125 | 0.146 | 0.164 | 0.177 | 0.187 | 0.193 | 0.195 | 0.193 | 0.187 | 0.177 | 0.164 | 0.146 | 0.125 | 0.099 | 0.070 | 0.037 | 0.000 |
| | | | | | | | | | | | | | | | | | | | | | |
| | | | | | | | | | | | | | | | | | | | | | |
| REQUIRED CAMBER | 0 | 15/16" | 2 3/16" | 3 1/4" | 4 5/16" | 5 3/16" | 5 7/8" | 6 1/2" | 6 15/16" | 7 3/16" | 7 1/4" | 7 3/16" | 6 15/16" | 6 1/2" | 5 7/8" | 5 3/16" | 4 5/16" | 3 1/4" | 2 3/16" | 15/16" | 0 |

* INCLUDES SLAB, BUILDUPS & STAY-IN-PLACE FORMS.
ALL VALUES ARE SHOWN IN FEET ( DECIMAL FORM ), EXCEPT " FINAL CAMBER ", WHICH IS GIVEN IN INCHES ( FRACTION FORM ).

## DEAD LOAD DEFLECTION TABLE FOR GIRDERS

| | SPAN A GIRDERS 5 & 17 | | | | | | | | | | | | | | | | | | | | |
|---|---|---|---|---|---|---|---|---|---|---|---|---|---|---|---|---|---|---|---|---|---|
| TWENTIETH POINTS | 0 | .05 | .10 | .15 | .20 | .25 | .30 | .35 | .40 | .45 | .50 | .55 | .60 | .65 | .70 | .75 | .80 | .85 | .90 | .95 | 0 |
| DEFLECTION DUE TO WEIGHT OF GIRDER | 0.000 | 0.017 | 0.034 | 0.050 | 0.064 | 0.077 | 0.087 | 0.096 | 0.102 | 0.106 | 0.107 | 0.106 | 0.102 | 0.096 | 0.087 | 0.077 | 0.064 | 0.050 | 0.034 | 0.017 | 0.000 |
| DEFLECTION DUE TO WEIGHT OF SLAB * | 0.000 | 0.015 | 0.066 | 0.113 | 0.156 | 0.194 | 0.226 | 0.252 | 0.270 | 0.281 | 0.285 | 0.281 | 0.270 | 0.252 | 0.226 | 0.194 | 0.156 | 0.113 | 0.066 | 0.015 | 0.000 |
| DEFLECTION DUE TO WEIGHT OF BARRIER RAIL | 0.000 | 0.002 | 0.004 | 0.005 | 0.007 | 0.008 | 0.009 | 0.010 | 0.011 | 0.011 | 0.011 | 0.011 | 0.011 | 0.010 | 0.009 | 0.008 | 0.007 | 0.005 | 0.004 | 0.002 | 0.000 |
| TOTAL DEAD LOAD DEFLECTION | 0.000 | 0.034 | 0.104 | 0.168 | 0.227 | 0.279 | 0.322 | 0.358 | 0.383 | 0.398 | 0.403 | 0.398 | 0.383 | 0.358 | 0.322 | 0.279 | 0.227 | 0.168 | 0.104 | 0.034 | 0.000 |
| VERTICAL CURVE ORDINATE | 0.000 | 0.037 | 0.070 | 0.099 | 0.125 | 0.146 | 0.164 | 0.177 | 0.187 | 0.193 | 0.195 | 0.193 | 0.187 | 0.177 | 0.164 | 0.146 | 0.125 | 0.099 | 0.070 | 0.037 | 0.000 |
| | | | | | | | | | | | | | | | | | | | | | |
| | | | | | | | | | | | | | | | | | | | | | |
| REQUIRED CAMBER | 0 | 7/8" | 2 1/16" | 3 3/16" | 4 1/4" | 5 1/8" | 5 13/16" | 6 7/16" | 6 13/16" | 7 1/16" | 7 3/16" | 7 1/16" | 6 13/16" | 6 7/16" | 5 13/16" | 5 1/8" | 4 1/4" | 3 3/16" | 2 1/16" | 7/8" | 0 |

* INCLUDES SLAB, BUILDUPS & STAY-IN-PLACE FORMS.
ALL VALUES ARE SHOWN IN FEET ( DECIMAL FORM ), EXCEPT " FINAL CAMBER", WHICH IS GIVEN IN INCHES ( FRACTION FORM ).

## DEAD LOAD DEFLECTION TABLE FOR GIRDERS

| | SPAN A GIRDERS 6 & 16 | | | | | | | | | | | | | | | | | | | | |
|---|---|---|---|---|---|---|---|---|---|---|---|---|---|---|---|---|---|---|---|---|---|
| TWENTIETH POINTS | 0 | .05 | .10 | .15 | .20 | .25 | .30 | .35 | .40 | .45 | .50 | .55 | .60 | .65 | .70 | .75 | .80 | .85 | .90 | .95 | 0 |
| DEFLECTION DUE TO WEIGHT OF GIRDER | 0.000 | 0.017 | 0.034 | 0.050 | 0.064 | 0.077 | 0.087 | 0.096 | 0.102 | 0.106 | 0.107 | 0.106 | 0.102 | 0.096 | 0.087 | 0.077 | 0.064 | 0.050 | 0.034 | 0.017 | 0.000 |
| DEFLECTION DUE TO WEIGHT OF SLAB * | 0.000 | 0.009 | 0.059 | 0.107 | 0.150 | 0.188 | 0.220 | 0.246 | 0.265 | 0.276 | 0.280 | 0.276 | 0.265 | 0.246 | 0.220 | 0.188 | 0.150 | 0.107 | 0.059 | 0.009 | 0.000 |
| DEFLECTION DUE TO WEIGHT OF BARRIER RAIL | 0.000 | 0.002 | 0.004 | 0.005 | 0.007 | 0.008 | 0.009 | 0.010 | 0.011 | 0.011 | 0.011 | 0.011 | 0.011 | 0.010 | 0.009 | 0.008 | 0.007 | 0.005 | 0.004 | 0.002 | 0.000 |
| TOTAL DEAD LOAD DEFLECTION | 0.000 | 0.028 | 0.097 | 0.162 | 0.221 | 0.273 | 0.316 | 0.352 | 0.378 | 0.393 | 0.398 | 0.393 | 0.378 | 0.352 | 0.316 | 0.273 | 0.221 | 0.162 | 0.097 | 0.028 | 0.000 |
| VERTICAL CURVE ORDINATE | 0.000 | 0.037 | 0.070 | 0.099 | 0.125 | 0.146 | 0.164 | 0.177 | 0.187 | 0.193 | 0.195 | 0.193 | 0.187 | 0.177 | 0.164 | 0.146 | 0.125 | 0.099 | 0.070 | 0.037 | 0.000 |
| | | | | | | | | | | | | | | | | | | | | | |
| | | | | | | | | | | | | | | | | | | | | | |
| REQUIRED CAMBER | 0 | 3/4" | 2" | 3 1/8" | 4 1/8" | 5" | 5 3/4" | 6 3/8" | 6 3/4" | 7 1/16" | 7 1/8" | 7 1/16" | 6 3/4" | 6 3/8" | 5 3/4" | 5" | 4 1/8" | 3 1/8" | 2" | 3/4" | 0 |

* INCLUDES SLAB, BUILDUPS & STAY-IN-PLACE FORMS.
ALL VALUES ARE SHOWN IN FEET ( DECIMAL FORM ), EXCEPT " FINAL CAMBER", WHICH IS GIVEN IN INCHES ( FRACTION FORM ).

PROJECT NO. I-3819A
IREDELL COUNTY
STATION: 86+06.00 -L-

SHEET 2 OF 4

STATE OF NORTH CAROLINA
DEPARTMENT OF TRANSPORTATION
RALEIGH

SUPERSTUCTURE

# DEAD LOAD DEFLECTION TABLES
STAGE I & II

NORTH CAROLINA PROFESSIONAL SEAL 15779 ENGINEER JOHN R. DUGGINS, JR.
1/5/12

| REVISIONS | | | | | | SHEET NO. |
|---|---|---|---|---|---|---|
| NO. | BY: | DATE: | NO. | BY: | DATE: | S-58 |
| 1 | | | 3 | | | TOTAL SHEETS |
| 2 | | | 4 | | | 382 |

DRAWN BY : M. POOLE DATE : 01/10
CHECKED BY : D. HODGE DATE : 10/10

04-JAN-2012 15:39
R:\Structures\NGUYEN\FINAL PLANS\I3819A_SD_DL_08.dgn
dahodge

## DEAD LOAD DEFLECTION TABLE FOR GIRDERS

| | SPAN A | | | | | | | | | | | | | | | | | | | | |
|---|---|---|---|---|---|---|---|---|---|---|---|---|---|---|---|---|---|---|---|---|---|
| | GIRDERS 7 & 15 | | | | | | | | | | | | | | | | | | | | |
| TWENTIETH POINTS | 0 | .05 | .10 | .15 | .20 | .25 | .30 | .35 | .40 | .45 | .50 | .55 | .60 | .65 | .70 | .75 | .80 | .85 | .90 | .95 | 0 |
| DEFLECTION DUE TO WEIGHT OF GIRDER | 0.000 | 0.017 | 0.034 | 0.050 | 0.064 | 0.077 | 0.087 | 0.096 | 0.102 | 0.106 | 0.107 | 0.106 | 0.102 | 0.096 | 0.087 | 0.077 | 0.064 | 0.050 | 0.034 | 0.017 | 0.000 |
| DEFLECTION DUE TO WEIGHT OF SLAB * | 0.000 | 0.002 | 0.053 | 0.101 | 0.144 | 0.182 | 0.214 | 0.240 | 0.259 | 0.270 | 0.274 | 0.270 | 0.259 | 0.240 | 0.214 | 0.182 | 0.144 | 0.101 | 0.053 | 0.002 | 0.000 |
| DEFLECTION DUE TO WEIGHT OF BARRIER RAIL | 0.000 | 0.005 | 0.011 | 0.016 | 0.020 | 0.024 | 0.027 | 0.030 | 0.032 | 0.033 | 0.033 | 0.033 | 0.032 | 0.030 | 0.027 | 0.024 | 0.020 | 0.016 | 0.011 | 0.005 | 0.000 |
| TOTAL DEAD LOAD DEFLECTION | 0.000 | 0.024 | 0.098 | 0.167 | 0.228 | 0.283 | 0.328 | 0.366 | 0.393 | 0.409 | 0.414 | 0.409 | 0.393 | 0.366 | 0.328 | 0.283 | 0.228 | 0.167 | 0.098 | 0.024 | 0.000 |
| VERTICAL CURVE ORDINATE | 0.000 | 0.037 | 0.070 | 0.099 | 0.125 | 0.146 | 0.164 | 0.177 | 0.187 | 0.193 | 0.195 | 0.193 | 0.187 | 0.177 | 0.164 | 0.146 | 0.125 | 0.099 | 0.070 | 0.037 | 0.000 |
| | | | | | | | | | | | | | | | | | | | | | |
| | | | | | | | | | | | | | | | | | | | | | |
| REQUIRED CAMBER | 0 | 3/4" | 2" | 3 3/16" | 4 1/4" | 5 1/8" | 5 7/8" | 6 1/2" | 6 15/16" | 7 1/4" | 7 5/16" | 7 1/4" | 6 15/16" | 6 1/2" | 5 7/8" | 5 1/8" | 4 1/4" | 3 3/16" | 2" | 3/4" | 0 |

* INCLUDES SLAB, BUILDUPS & STAY-IN-PLACE FORMS.
ALL VALUES ARE SHOWN IN FEET ( DECIMAL FORM ), EXCEPT " FINAL CAMBER ", WHICH IS GIVEN IN INCHES ( FRACTION FORM ).

PROJECT NO. I-3819A
IREDELL COUNTY
STATION: 86+06.00 -L-

SHEET 3 OF 4

STATE OF NORTH CAROLINA
DEPARTMENT OF TRANSPORTATION
RALEIGH

SUPERSTUCTURE

# DEAD LOAD DEFLECTION TABLES
STAGE I & II

NORTH CAROLINA PROFESSIONAL SEAL 15779 ENGINEER JOHN R. DUGGINS JR.
1/5/12

| REVISIONS | | | | | | SHEET NO. |
|---|---|---|---|---|---|---|
| NO. | BY: | DATE: | NO. | BY: | DATE: | S-59 |
| 1 | | | 3 | | | TOTAL SHEETS |
| 2 | | | 4 | | | 382 |

DRAWN BY : M. POOLE DATE : 01/10
CHECKED BY : D. HODGE DATE : 10/10

04-JAN-2012 15:39
R:\Structures\NGUYEN\FINAL PLANS\I3819A_SD_DL_08.dgn
dahodge

## DEAD LOAD DEFLECTION TABLE FOR GIRDERS

| | SPAN A | | | | | | | | | | | | | | | | | | | | |
|---|---|---|---|---|---|---|---|---|---|---|---|---|---|---|---|---|---|---|---|---|---|
| | GIRDERS 8 & 14 | | | | | | | | | | | | | | | | | | | | |
| TWENTIETH POINTS | 0 | .05 | .10 | .15 | .20 | .25 | .30 | .35 | .40 | .45 | .50 | .55 | .60 | .65 | .70 | .75 | .80 | .85 | .90 | .95 | 0 |
| DEFLECTION DUE TO WEIGHT OF GIRDER | 0.000 | 0.017 | 0.034 | 0.050 | 0.064 | 0.077 | 0.087 | 0.096 | 0.102 | 0.106 | 0.107 | 0.106 | 0.102 | 0.096 | 0.087 | 0.077 | 0.064 | 0.050 | 0.034 | 0.017 | 0.000 |
| DEFLECTION DUE TO WEIGHT OF SLAB * | 0.000 | 0.019 | 0.069 | 0.115 | 0.158 | 0.195 | 0.226 | 0.251 | 0.270 | 0.281 | 0.284 | 0.281 | 0.270 | 0.251 | 0.226 | 0.195 | 0.158 | 0.115 | 0.069 | 0.019 | 0.000 |
| DEFLECTION DUE TO WEIGHT OF BARRIER RAIL | 0.000 | 0.004 | 0.007 | 0.010 | 0.013 | 0.015 | 0.018 | 0.019 | 0.021 | 0.021 | 0.022 | 0.021 | 0.021 | 0.019 | 0.018 | 0.015 | 0.013 | 0.010 | 0.007 | 0.004 | 0.000 |
| TOTAL DEAD LOAD DEFLECTION | 0.000 | 0.040 | 0.110 | 0.175 | 0.235 | 0.287 | 0.331 | 0.366 | 0.393 | 0.408 | 0.413 | 0.408 | 0.393 | 0.366 | 0.331 | 0.287 | 0.235 | 0.175 | 0.110 | 0.040 | 0.000 |
| VERTICAL CURVE ORDINATE | 0.000 | 0.037 | 0.070 | 0.099 | 0.125 | 0.146 | 0.164 | 0.177 | 0.187 | 0.193 | 0.195 | 0.193 | 0.187 | 0.177 | 0.164 | 0.146 | 0.125 | 0.099 | 0.070 | 0.037 | 0.000 |
| | | | | | | | | | | | | | | | | | | | | | |
| | | | | | | | | | | | | | | | | | | | | | |
| REQUIRED CAMBER | 0 | 1 5/16" | 2 3/16" | 3 5/16" | 4 5/16" | 5 3/16" | 5 15/16" | 6 1/2" | 6 15/16" | 7 3/16" | 7 5/16" | 7 3/16" | 6 15/16" | 6 1/2" | 5 15/16" | 5 3/16" | 4 5/16" | 3 5/16" | 2 3/16" | 1 5/16" | 0 |

* INCLUDES SLAB, BUILDUPS & STAY-IN-PLACE FORMS.
ALL VALUES ARE SHOWN IN FEET ( DECIMAL FORM ), EXCEPT " FINAL CAMBER ", WHICH IS GIVEN IN INCHES ( FRACTION FORM ).

## DEAD LOAD DEFLECTION TABLE FOR GIRDERS

| | SPAN A | | | | | | | | | | | | | | | | | | | | |
|---|---|---|---|---|---|---|---|---|---|---|---|---|---|---|---|---|---|---|---|---|---|
| | GIRDERS 9 & 13 | | | | | | | | | | | | | | | | | | | | |
| TWENTIETH POINTS | 0 | .05 | .10 | .15 | .20 | .25 | .30 | .35 | .40 | .45 | .50 | .55 | .60 | .65 | .70 | .75 | .80 | .85 | .90 | .95 | 0 |
| DEFLECTION DUE TO WEIGHT OF GIRDER | 0.000 | 0.017 | 0.034 | 0.050 | 0.064 | 0.077 | 0.087 | 0.096 | 0.102 | 0.106 | 0.107 | 0.106 | 0.102 | 0.096 | 0.087 | 0.077 | 0.064 | 0.050 | 0.034 | 0.017 | 0.000 |
| DEFLECTION DUE TO WEIGHT OF SLAB * | 0.000 | 0.019 | 0.069 | 0.116 | 0.159 | 0.196 | 0.227 | 0.252 | 0.271 | 0.282 | 0.286 | 0.282 | 0.271 | 0.252 | 0.227 | 0.196 | 0.159 | 0.116 | 0.069 | 0.019 | 0.000 |
| DEFLECTION DUE TO WEIGHT OF BARRIER RAIL | 0.000 | 0.002 | 0.004 | 0.005 | 0.007 | 0.008 | 0.009 | 0.010 | 0.011 | 0.011 | 0.011 | 0.011 | 0.011 | 0.010 | 0.009 | 0.008 | 0.007 | 0.005 | 0.004 | 0.002 | 0.000 |
| TOTAL DEAD LOAD DEFLECTION | 0.000 | 0.038 | 0.107 | 0.171 | 0.230 | 0.281 | 0.323 | 0.358 | 0.384 | 0.399 | 0.404 | 0.399 | 0.384 | 0.358 | 0.323 | 0.281 | 0.230 | 0.171 | 0.107 | 0.038 | 0.000 |
| VERTICAL CURVE ORDINATE | 0.000 | 0.037 | 0.070 | 0.099 | 0.125 | 0.146 | 0.164 | 0.177 | 0.187 | 0.193 | 0.195 | 0.193 | 0.187 | 0.177 | 0.164 | 0.146 | 0.125 | 0.099 | 0.070 | 0.037 | 0.000 |
| | | | | | | | | | | | | | | | | | | | | | |
| | | | | | | | | | | | | | | | | | | | | | |
| REQUIRED CAMBER | 0 | 7/8" | 2 1/8" | 3 1/4" | 4 1/4" | 5 1/8" | 5 7/8" | 6 7/16" | 6 7/8" | 7 1/8" | 7 3/16" | 7 1/8" | 6 7/8" | 6 7/16" | 5 7/8" | 5 1/8" | 4 1/4" | 3 1/4" | 2 1/8" | 7/8" | 0 |

* INCLUDES SLAB, BUILDUPS & STAY-IN-PLACE FORMS.
ALL VALUES ARE SHOWN IN FEET ( DECIMAL FORM ), EXCEPT " FINAL CAMBER ", WHICH IS GIVEN IN INCHES ( FRACTION FORM ).

## DEAD LOAD DEFLECTION TABLE FOR GIRDERS

| | SPAN A | | | | | | | | | | | | | | | | | | | | |
|---|---|---|---|---|---|---|---|---|---|---|---|---|---|---|---|---|---|---|---|---|---|
| | GIRDERS 10, 11 & 12 | | | | | | | | | | | | | | | | | | | | |
| TWENTIETH POINTS | 0 | .05 | .10 | .15 | .20 | .25 | .30 | .35 | .40 | .45 | .50 | .55 | .60 | .65 | .70 | .75 | .80 | .85 | .90 | .95 | 0 |
| DEFLECTION DUE TO WEIGHT OF GIRDER | 0.000 | 0.017 | 0.034 | 0.050 | 0.064 | 0.077 | 0.087 | 0.096 | 0.102 | 0.106 | 0.107 | 0.106 | 0.102 | 0.096 | 0.087 | 0.077 | 0.064 | 0.050 | 0.034 | 0.017 | 0.000 |
| DEFLECTION DUE TO WEIGHT OF SLAB * | 0.000 | 0.020 | 0.070 | 0.117 | 0.159 | 0.197 | 0.229 | 0.254 | 0.272 | 0.284 | 0.287 | 0.284 | 0.272 | 0.254 | 0.229 | 0.197 | 0.159 | 0.117 | 0.070 | 0.020 | 0.000 |
| DEFLECTION DUE TO WEIGHT OF BARRIER RAIL | 0.000 | 0.002 | 0.004 | 0.005 | 0.007 | 0.008 | 0.009 | 0.010 | 0.011 | 0.011 | 0.011 | 0.011 | 0.011 | 0.010 | 0.009 | 0.008 | 0.007 | 0.005 | 0.004 | 0.002 | 0.000 |
| TOTAL DEAD LOAD DEFLECTION | 0.000 | 0.039 | 0.108 | 0.172 | 0.230 | 0.282 | 0.325 | 0.360 | 0.385 | 0.401 | 0.405 | 0.401 | 0.385 | 0.360 | 0.325 | 0.282 | 0.230 | 0.172 | 0.108 | 0.039 | 0.000 |
| VERTICAL CURVE ORDINATE | 0.000 | 0.037 | 0.070 | 0.099 | 0.125 | 0.146 | 0.164 | 0.177 | 0.187 | 0.193 | 0.195 | 0.193 | 0.187 | 0.177 | 0.164 | 0.146 | 0.125 | 0.099 | 0.070 | 0.037 | 0.000 |
| | | | | | | | | | | | | | | | | | | | | | |
| | | | | | | | | | | | | | | | | | | | | | |
| REQUIRED CAMBER | 0 | 1 5/16" | 2 1/8" | 3 1/4" | 4 1/4" | 5 1/8" | 5 7/8" | 6 7/16" | 6 7/8" | 7 1/8" | 7 3/16" | 7 1/8" | 6 7/8" | 6 7/16" | 5 7/8" | 5 1/8" | 4 1/4" | 3 1/4" | 2 1/8" | 1 5/16" | 0 |

* INCLUDES SLAB, BUILDUPS & STAY-IN-PLACE FORMS.
ALL VALUES ARE SHOWN IN FEET ( DECIMAL FORM ), EXCEPT " FINAL CAMBER ", WHICH IS GIVEN IN INCHES ( FRACTION FORM ).

PROJECT NO. I-3819A
IREDELL COUNTY
STATION: 86+06.00 -L-

SHEET 4 OF 4

STATE OF NORTH CAROLINA
DEPARTMENT OF TRANSPORTATION
RALEIGH

SUPERSTUCTURE

# DEAD LOAD DEFLECTION TABLES
STAGE III

NORTH CAROLINA PROFESSIONAL SEAL 15779 ENGINEER JOHN R. DUGGINS, JR.
1/5/12

| REVISIONS | | | | | | SHEET NO. |
|---|---|---|---|---|---|---|
| NO. | BY: | DATE: | NO. | BY: | DATE: | S-60 |
| 1 | | | 3 | | | TOTAL SHEETS |
| 2 | | | 4 | | | 38e |

DRAWN BY : M. POOLE DATE : 01/10
CHECKED BY : D. HODGE DATE : 10/10

04-JAN-2012 15:39
R:\Structures\NGUYEN\FINAL PLANS\I3819A_SD_DL_08.dgn
dahodge

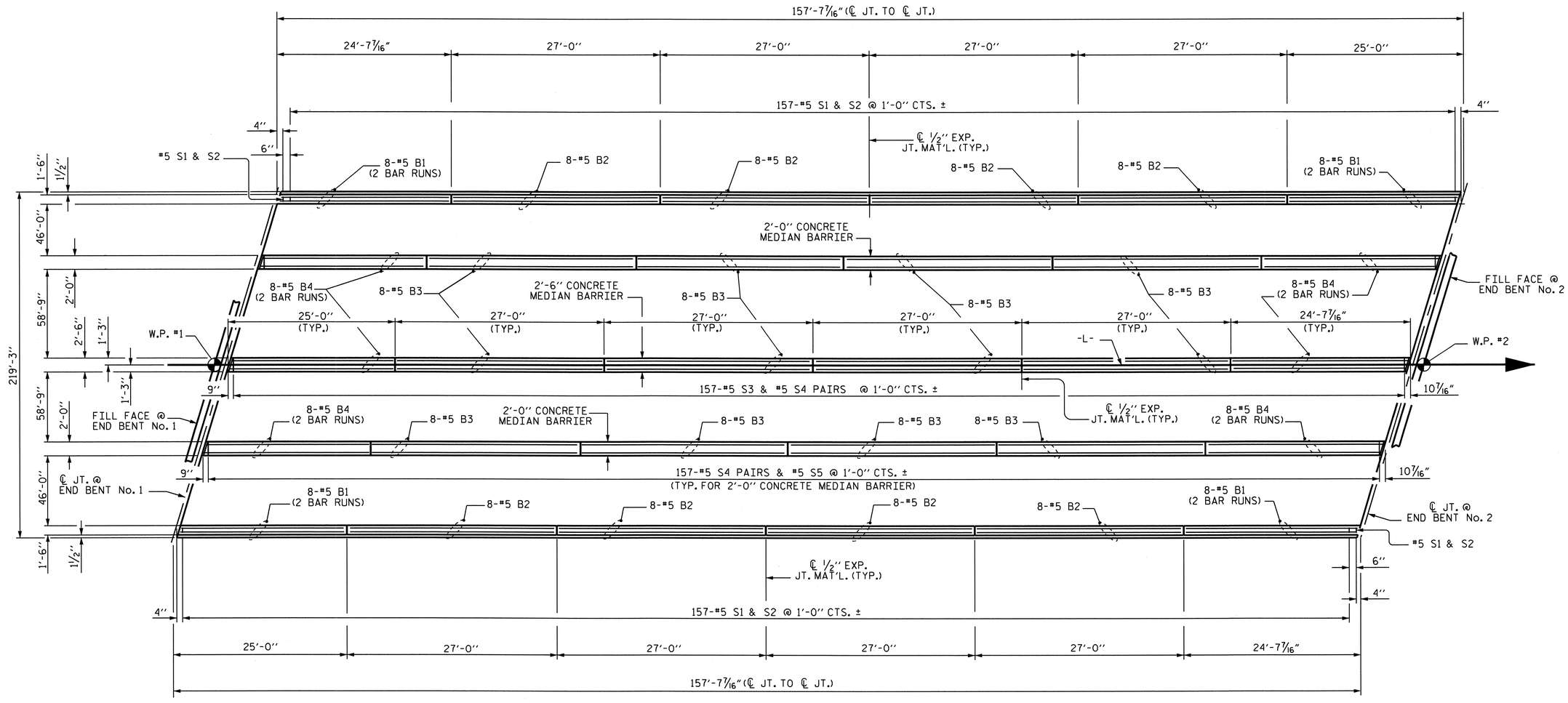


# PLAN OF BARRIER RAIL & MEDIAN BARRIER

(FOR SECTION VIEWS, SEE SHEET 2 OF 2)

PROJECT NO. I-3819A

IREDELL COUNTY

STATION: 86+06.00 -L-

SHEET 1 OF 2

STATE OF NORTH CAROLINA
DEPARTMENT OF TRANSPORTATION
RALEIGH

## CONCRETE BARRIER RAILS & CONCRETE MEDIAN BARRIERS

NORTH CAROLINA PROFESSIONAL SEAL 15779 ENGINEER JOHN R. DUGGINS, JR.
1/5/12

| REVISIONS | | | | | | SHEET NO. |
|---|---|---|---|---|---|---|
| NO. | BY: | DATE: | NO. | BY: | DATE: | S-61 |
| 1 | | | 3 | | | TOTAL SHEETS |
| 2 | | | 4 | | | 382 |

DRAWN BY : M. POOLE DATE : 01/10
CHECKED BY : D. HODGE DATE : 10/10

04-JAN-2012 15:38
R:\Structures\NGUYEN\FINAL PLANS\I3819A_SD_BR_08.dgn
dahodge

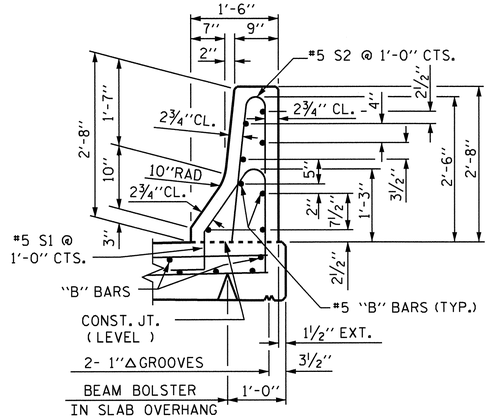


SECTION THRU RAIL

## BAR TYPES

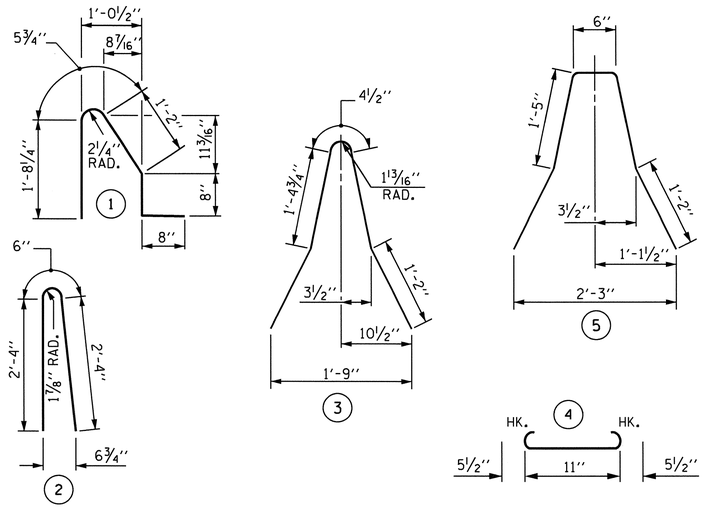


ALL BAR DIMENSIONS ARE OUT TO OUT

## BILL OF MATERIAL

### CONCRETE BARRIER RAIL

| BAR | NO. | SIZE | TYPE | LENGTH | WEIGHT |
|---|---|---|---|---|---|
| * B1 | 64 | #5 | STR | 14'-2" | 946 |
| * B2 | 64 | #5 | STR | 26'-7" | 1774 |
| * S1 | 316 | #5 | 1 | 4'-8" | 1538 |
| * S2 | 316 | #5 | 2 | 5'-2" | 1703 |

| | |
|---|---|
| * EPOXY COATED REINFORCING STEEL | 5,961 LBS. |
| CLASS AA CONCRETE | 30.4 CU. YDS. |
| CONCRETE BARRIER RAIL | 407.47 LIN. FT. |

### 2'-0" CONCRETE MEDIAN BARRIER

| BAR | NO. | SIZE | TYPE | LENGTH | WEIGHT |
|---|---|---|---|---|---|
| * B3 | 64 | #5 | STR | 26'-7" | 1774 |
| * B4 | 64 | #5 | STR | 14'-2" | 946 |
| * S4 | 628 | #5 | 4 | 1'-10" | 1201 |
| * S5 | 314 | #5 | 3 | 5'-6" | 1801 |

| | |
|---|---|
| * EPOXY COATED REINFORCING STEEL | 5,722 LBS. |
| CLASS AA CONCRETE | 29.8 CU. YDS. |
| 2'-0" CONCRETE MEDIAN BARRIER | 459.39 LIN. FT. |

### 2'-6" CONCRETE MEDIAN BARRIER

| BAR | NO. | SIZE | TYPE | LENGTH | WEIGHT |
|---|---|---|---|---|---|
| * B3 | 32 | #5 | STR | 26'-7" | 887 |
| * B4 | 32 | #5 | STR | 14'-2" | 473 |
| * S3 | 157 | #5 | 5 | 5'-8" | 928 |
| * S4 | 314 | #5 | 4 | 1'-10" | 600 |

| | |
|---|---|
| * EPOXY COATED REINFORCING STEEL | 2,888 LBS. |
| CLASS AA CONCRETE | 22.7 CU. YDS. |
| 2'-6" CONCRETE MEDIAN BARRIER | 230.10 LIN. FT. |

## NOTES

THE BARRIER RAIL AND MEDIAN BARRIER SHALL NOT BE CAST UNTIL ALL SLAB CONCRETE IN THAT SPAN HAS BEEN CAST AND HAS REACHED A MINIMUM COMPRESSIVE STRENGTH OF 3,000 PSI.

ALL REINFORCING STEEL IN BARRIER RAILS SHALL BE EPOXY COATED.

VERTICAL GROOVED CONTRACTION JOINTS, ½" IN DEPTH, SHALL BE TOOLED IN ALL EXPOSED FACES OF THE BARRIER RAIL AND IN ACCORDANCE WITH ARTICLE 825-10(B) OF THE STANDARD SPECIFICATIONS. THE CONTRACTION JOINT SHALL BE LOCATED AT EACH THIRD POINT BETWEEN BARRIER RAIL EXPANSION JOINTS. ONLY ONE CONTRACTION JOINT IS REQUIRED AT MIDPOINT OF BARRIER RAIL SEGMENTS LESS THAN 20 FEET IN LENGTH AND NO CONTRACTION JOINTS ARE REQUIRED FOR THOSE SEGMENTS LESS THAN 10 FEET IN LENGTH.

LINEAR FOOT QUANTITIES FOR BARRIER RAILS INCLUDE RAILS ON APPROACH SLABS. REINFORCING STEEL AND CONCRETE QUANTITIES FOR APPROACH SLAB BARRIER RAILS ARE INCLUDED IN BILL OF MATERIAL FOR THE APPROACH SLABS.




SECTION S-S
AT DAM IN OPEN JOINT
( THIS IS TO BE USED ONLY WHEN SLIP FORM IS USED )

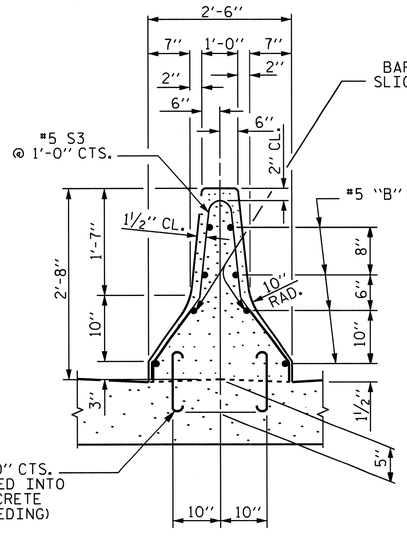


SECTION THRU 2'-6" MEDIAN BARRIER

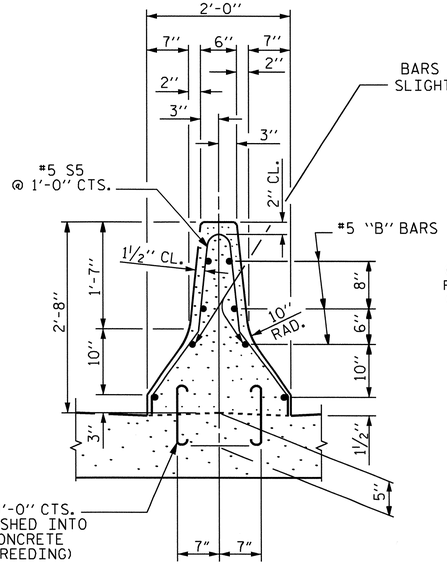


SECTION THRU 2'-0" MEDIAN BARRIER

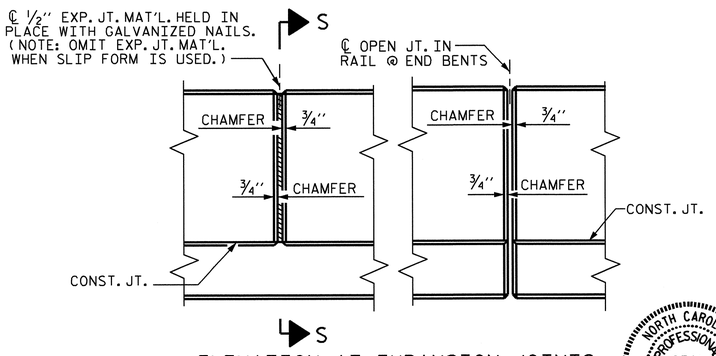


ELEVATION AT EXPANSION JOINTS
(TYP. FOR BARRIER RAIL AND MEDIAN BARRIERS)

## CONCRETE MEDIAN BARRIER

## BARRIER RAIL DETAILS

NORTH CAROLINA PROFESSIONAL SEAL 15779 ENGINEER JOHN R. DUGGINS, JR.
1/5/12

PROJECT NO. I-3819A
IREDELL COUNTY
STATION: 86+06.00 -L-

SHEET 2 OF 2

STATE OF NORTH CAROLINA
DEPARTMENT OF TRANSPORTATION
RALEIGH

| | |
|---|---|
| ASSEMBLED BY : | M. POOLE |
| CHECKED BY : | D. HODGE |
| DRAWN BY : | ARB 5/87 |
| CHECKED BY : | SJD 9/87 |

DATE : 01/10
DATE : 10/10

| | | |
|---|---|---|
| REV. 10/17/00 | RWW/LES |
| REV. 5/7/03R | RWW/JTE |
| REV. 5/1/06 | TLA/GM |

| REVISIONS | | | | | SHEET NO. |
|---|---|---|---|---|---|
| | DATE: | NO. | BY: | DATE: | S-62 |
| 1 | | 3 | | | TOTAL SHEETS |
| 2 | | 4 | | | 382 |

04-JAN-2012 15:37
R:\Structures\NGUYEN\FINAL PLANS\I3819A_SD_BR_08.dgn
dohodge

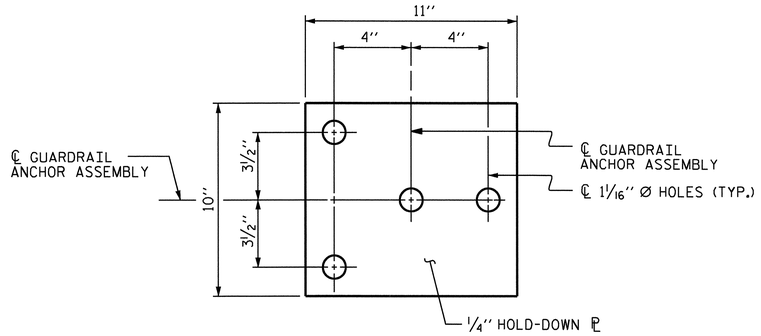


PLAN

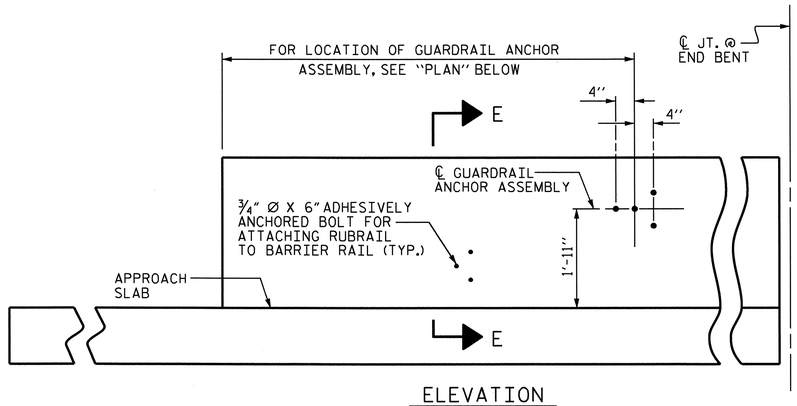


ELEVATION

FOR LOCATION OF RUBRAIL, SEE ROADWAY STD. 862.03

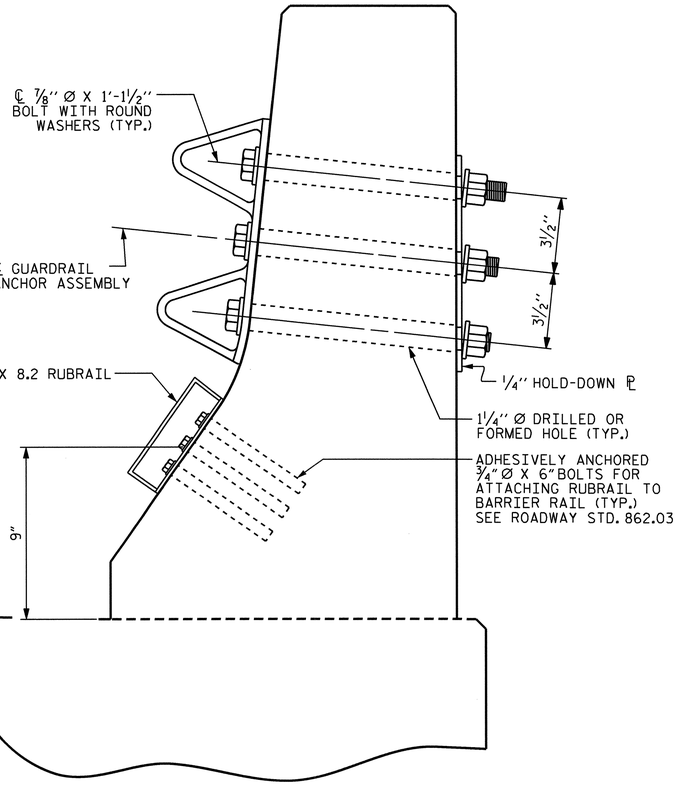


SECTION E-E

## GUARDRAIL ANCHOR ASSEMBLY DETAILS

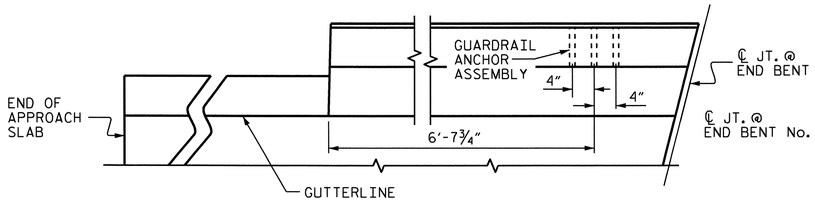


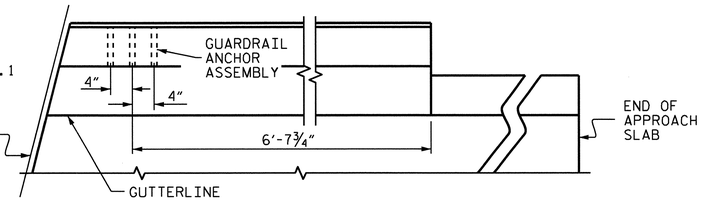


PLAN

## LOCATION OF ANCHORS FOR GUARDRAIL

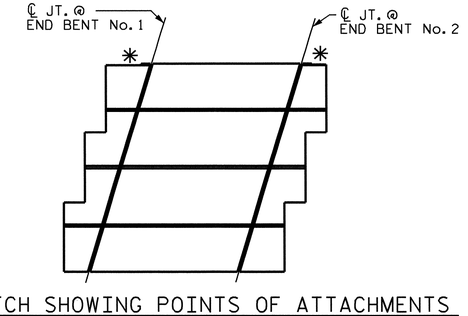


SKETCH SHOWING POINTS OF ATTACHMENTS

✳ DENOTES GUARDRAIL ANCHOR ASSEMBLY

## NOTES

THE GUARDRAIL ANCHOR ASSEMBLY SHALL CONSIST OF A ¼'' HOLD DOWN PLATE AND 4 - ⅞'' Ø BOLTS WITH NUTS AND WASHERS, RUBRAIL, AND ADHESIVELY ANCHORED BOLTS.

THE HOLD-DOWN PLATE SHALL CONFORM TO AASHTO M270 GRADE 36. AFTER FABRICATION, THE HOLD-DOWN PLATE SHALL BE HOT-DIP GALVANIZED IN ACCORDANCE WITH AASHTO M111.

BOLTS SHALL CONFORM TO THE REQUIREMENTS OF ASTM A307 AND NUTS SHALL CONFORM TO THE REQUIREMENTS OF AASHTO M291. BOLTS, NUTS AND WASHERS SHALL BE GALVANIZED. (AT THE CONTRACTOR'S OPTION, STAINLESS STEEL BOLTS, NUTS AND WASHERS MAY BE USED AS AN ALTERNATE FOR THE ⅞'' Ø GALVANIZED BOLTS, NUTS AND WASHERS. THEY SHALL CONFORM TO OR EXCEED THE MECHANICAL REQUIREMENTS OF ASTM A307. THE USE OF THIS ALTERNATE SHALL BE APPROVED BY THE ENGINEER.)

THE GUARDRAIL ANCHOR ASSEMBLY IS REQUIRED AT ALL POINTS WHERE APPROACH GUARDRAIL IS TO BE ATTACHED TO THE END OF BARRIER RAIL. FOR POINTS OF ATTACHMENT, SEE SKETCH.

AFTER INSTALLATION, THE EXPOSED THREAD OF THE BOLT SHALL BE BURRED WITH A SHARP POINTED TOOL.

THE COST OF THE GUARDRAIL ANCHOR ASSEMBLY SHALL BE INCLUDED IN THE UNIT CONTRACT PRICE BID FOR CONCRETE BARRIER RAIL.

THE 1 ¼'' Ø HOLES SHALL BE FORMED OR DRILLED WITH A CORE BIT. IMPACT TOOLS WILL NOT BE PERMITTED. ANY CONCRETE DAMAGED BY THIS WORK SHALL BE REPAIRED TO THE SATISFACTION OF THE ENGINEER.

THE C6 X 8.2 RUBRAIL IS TO BE ADHESIVELY ANCHORED TO THE RAIL USING THREE ¾" Ø X 6" BOLTS WITH WASHERS. LEVEL ONE FIELD TESTING IS REQUIRED, AND THE YIELD LOAD OF THE ¾" Ø BOLT IS 12 KIPS. SEE ROADWAY STANDARD 862.03 FOR DETAILS AND LOCATION OF THE RUBRAIL.

PROJECT NO. I-3819A

IREDELL COUNTY

STATION: 86+06.00 -L-

SHEET 1 OF 2

STATE OF NORTH CAROLINA
DEPARTMENT OF TRANSPORTATION
RALEIGH

STANDARD

GUARDRAIL ANCHORAGE FOR BARRIER RAIL

NORTH CAROLINA PROFESSIONAL SEAL 15779 ENGINEER JOHN R. OLSGAARD, JR.
1/6/12

| REVISIONS | | | | | | SHEET NO. |
|---|---|---|---|---|---|---|
| NO. | BY: | DATE: | NO. | BY: | DATE: | S-63 |
| 1 | | | 3 | | | TOTAL SHEETS |
| 2 | | | 4 | | | 382 |

| | | |
|---|---|---|
| ASSEMBLED BY : | M. POOLE | DATE : 01/10 |
| CHECKED BY : | D. HODGE | DATE : 10/10 |
| DRAWN BY : TLA 5/06 | ADDED 5/1/06R KMM/GM | |
| CHECKED BY : GM 5/06 | | |

20-OCT-2011 08:01
R:\Structures\NGUYEN\mpoole\I3819A_SD_GR_08.dgn
dahodge

STD. NO. GRA2

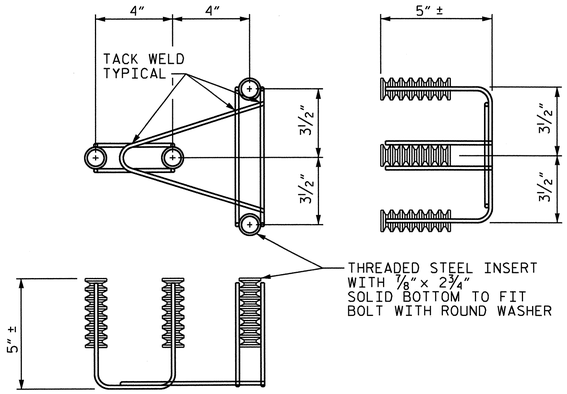


DETAIL "A"

4 BOLT INSERT ASSEMBLY

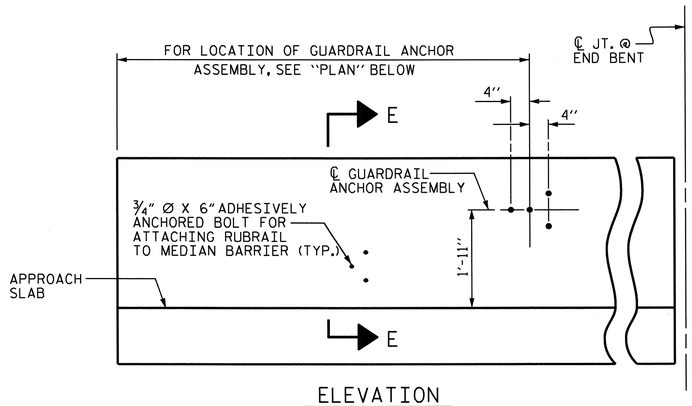


ELEVATION

FOR LOCATION OF RUBRAIL, SEE ROADWAY STD. 862.03

## NOTES

THE GUARDRAIL ANCHOR ASSEMBLY SHALL CONSIST OF THE FOLLOWING COMPONENTS:

A. FERRULES SHALL BE MADE FROM STEEL MEETING THE REQUIREMENTS OF ASTM A108, GRADE 12L14 AND SHALL HAVE A MINIMUM LENGHT OF THREADS OF 1½"

B. 4- ⅞" DIA. x 2¾" BOLTS WITH WASHERS FOR GUARDRAIL ANCHOR ASSEMBLY SHALL CONFORM TO THE REQUIREMENTS OF ASTM A307. BOLTS AND WASHERS SHALL BE GALVANIZED. (AT THE CONTRACTORS OPTION, STAINLESS STEEL BOLTS WITH WASHERS MAY BE USED AS AN ALTERNATE FOR THE ⅞" x 2¾" GALVANIZED BOLTS AND WASHERS. THEY SHALL CONFORM TO OR EXCEED THE MECHANICAL REQUIREMENTS OF ASTM A307. THE USE OF THIS ALTERNATE SHALL BE APPROVED BY THE ENGINEER.)

C. WIRE STRUTS SHOWN IN THE ANCHOR ASSEMBLY ARE THE MINIMUM ALLOWABLE SIZE AND SHALL HAVE A MINIMUM TENSILE STRENGHT OF 100 ksi.

THE GUARDRAIL ANCHOR ASSEMBLIES WITH BOLTS SHALL BE ASSEMBLED IN THE SHOP. BOLT THREADS MAY BE RECUT AS NECESSARY.

THE COST OF THE GUARDRAIL ANCHOR ASSEMBLIES WITH BOLTS AND WASHERS COMPLETE IN PLACE SHALL BE INCLUDED IN THE UNIT CONTRACT PRICE BID FOR CONCRETE BARRIER RAIL.

THE GUARDRAIL ANCHOR ASSEMBLY IS REQUIRED AT ALL POINTS WHERE APPROACH GUARDRAIL IS TO BE ATTACHED TO THE END OF DOUBLE FACED MEDIAN BARRIER. FOR POINTS OF ATTACHMENT, SEE SKETCH.

THE CONTRACTOR MAY, AT HIS OPTION, USE ADHESIVELY ANCHORED ANCHOR BOLTS IN PLACE OF GUARDRAIL ANCHOR ASSEMBLY. THE YIELD LOAD OF THE ⅞" DIA. BOLT IS 16.6 KIPS.

THE C6 X 8.2 RUBRAIL IS TO BE ADHESIVELY ANCHORED TO THE RAIL USING THREE ¾" Ø X 6" BOLTS WITH WASHERS. LEVEL ONE FIELD TESTING IS REQUIRED, AND THE YIELD LOAD OF THE ¾" Ø BOLT IS 12 KIPS. SEE ROADWAY STANDARD 862.03 FOR DETAILS AND LOCATION OF THE RUBRAIL.

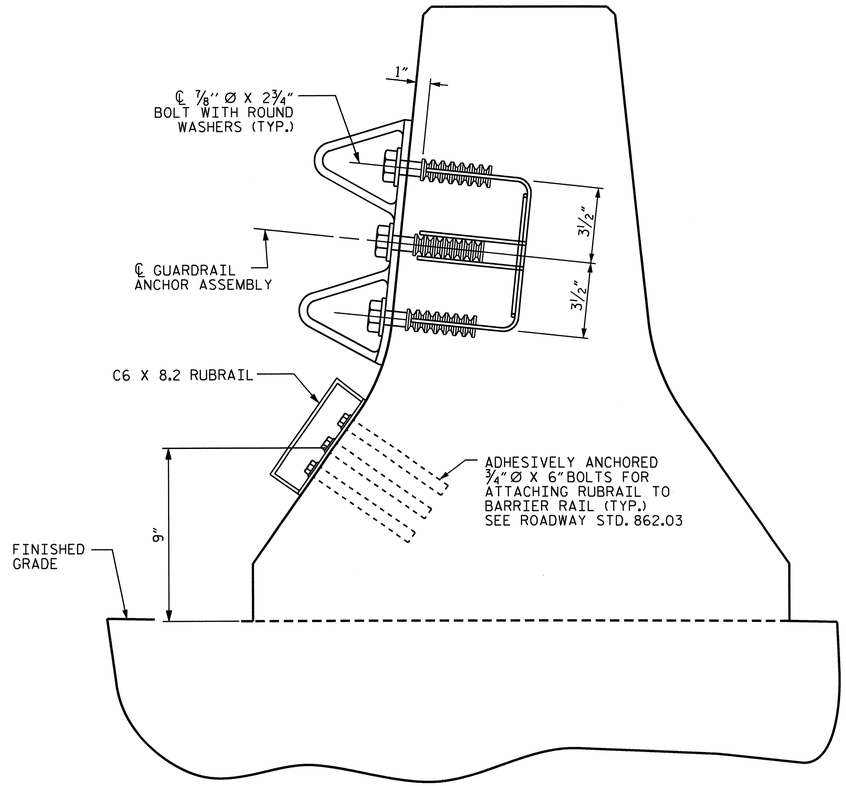


SECTION E-E

GUARDRAIL ANCHOR ASSEMBLY DETAILS

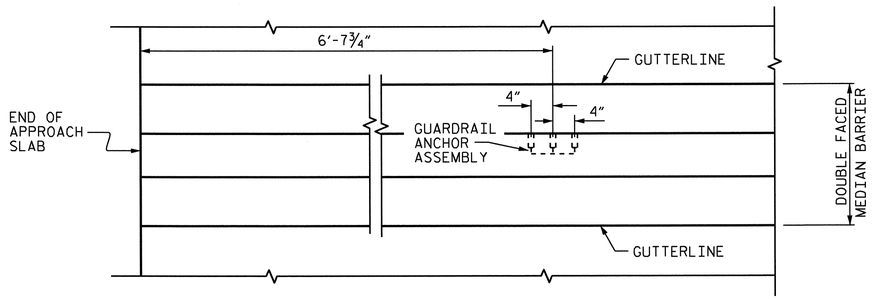


PLAN

LOCATION OF ANCHORS FOR GUARDRAIL

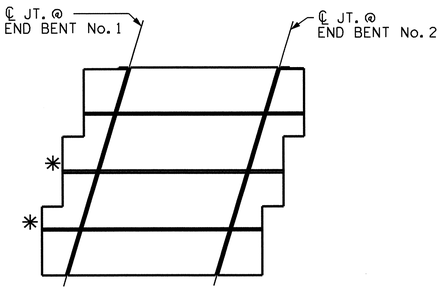


SKETCH SHOWING POINTS OF ATTACHMENTS

* DENOTES GUARDRAIL ANCHOR ASSEMBLY

PROJECT NO. I-3819A

IREDELL COUNTY

STATION: 86+06.00 -L-

SHEET 2 OF 2

STATE OF NORTH CAROLINA
DEPARTMENT OF TRANSPORTATION
RALEIGH

# GUARDRAIL ANCHORAGE FOR CONCRETE MEDIAN BARRIER

| REVISIONS | | | | | | SHEET NO. |
|---|---|---|---|---|---|---|
| NO. | BY: | DATE: | NO. | BY: | DATE: | S-64 |
| 1 | | | 3 | | | TOTAL SHEETS |
| 2 | | | 4 | | | 382 |

NORTH CAROLINA PROFESSIONAL SEAL 15779 ENGINEER JOHN R. DUGGINS, JR.
11/6/12

DRAWN BY : M. POOLE DATE : 01/10
CHECKED BY : D. HODGE DATE : 10/10

20-OCT-2011 08:01
R:\Structures\NGUYEN\mpoole\I3819A_SD_GR_08.dgn
dahodge

| MOVEMENT AND SETTING AT EXPANSION JOINT | | | | | |
|---|---|---|---|---|---|
| END BENT No. | SKEW ANGLE | TOTAL MOVEMENT (ALONG ℄ RDWY) | PERPENDICULAR JOINT OPENING AT 45° F | PERPENDICULAR JOINT OPENING AT 60° F | PERPENDICULAR JOINT OPENING AT 90° F |
| | | | | | |
| 1 | 106°-48'-58'' | 0 | 1" | 1" | 1" |
| 2 | 106°-48'-58'' | 1 9/16" | 2" | 1 3/4" | 1 5/16" |
| | | | | | |

TOTAL MOVEMENT IS CALCULATED ALONG THE CENTERLINE OF ROADWAY.
JOINT OPENINGS ARE MEASURED PERPENDICULAR TO THE JOINT.

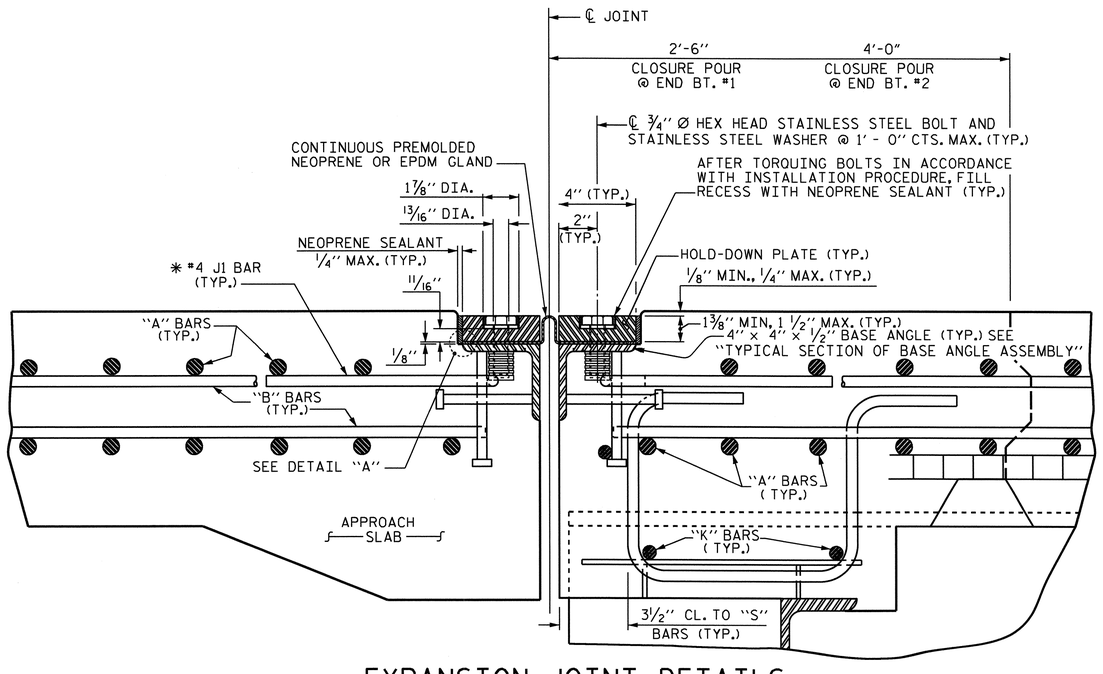


## EXPANSION JOINT DETAILS

SECTION NORMAL TO JOINT -- STEEL SUPERSTRUCTURE

* THE QUANTITY OF #4 J1 BARS ON THE BILL OF MATERIAL IS BASED ON 1'-0" CENTERS. J1 BARS SHALL BE PLACED AT EACH VERTICAL STUD ANCHOR BOLT. IN THE EVENT THAT THE NUMBER OF VERTICAL STUD ANCHORS EXCEEDS THE NUMBER OF J1 BARS SPECIFIED, ADDITIONAL J1 BARS WILL NOT BE REQUIRED.

### INSTALLATION PROCEDURE

1. A TEMPLATE OR OTHER SUITABLE DEVICE SHALL BE USED TO FORM THE TOP OF THE EXPANSION JOINT SEAL BLOCKOUT TO THE PROPER DEPTH AND WIDTH. THE TEMPLATE SHALL BE 4 1/8'' TO 4 1/4'' WIDE AND OF SUCH THICKNESS AS TO PROVIDE FOR CORRECT FINAL ELEVATION OF TOP OF HOLD-DOWN PLATES. THE TEMPLATE SHALL BE ATTACHED TO THE BASE ANGLE ASSEMBLY WITH THE 3/4'' Ø HEX HEAD BOLTS PROVIDED FOR THE HOLD-DOWN PLATES. A 1'' Ø HOLE SHALL BE PROVIDED IN THE TEMPLATE CENTERED OVER EACH WEEP HOLE IN THE 4"X 4"X 1/2" BASE ANGLE. OTHER METHODS OF INSURING DRAINAGE THROUGH WEEP HOLES MAY BE EMPLOYED SUBJECT TO ENGINEER'S APPROVAL.
2. AFTER THE CONCRETE HAS BEEN CAST ON BOTH SIDES OF THE JOINT, REMOVE THE TEMPLATE. THOROUGHLY CLEAN THE BOLT HOLES AND THE ANGLE PLATE. REMOVE ANY EXCESS CONCRETE THAT COMES OUT OF THE WEEP HOLES. ANY DAMAGED STEEL SHALL BE COATED WITH A MINIMUM THICKNESS OF 4 DRY MILS OF ZINC-RICH PAINT IN ACCORDANCE WITH THE STANDARD SPECIFICATIONS.
3. LAY THE GLAND ON THE BASE ANGLE AND FIELD MARK THE GLAND FOR THE BOLT HOLES. HOLES IN THE GLAND SHALL BE PUNCHED 7/8'' IN DIAMETER WITH A HAND PUNCH.
4. IN ORDER TO CHECK FOR PROPER ALIGNMENT, PLACE THE GLAND AND HOLD-DOWN PLATES ON THE BASE ANGLE. DO NOT APPLY NEOPRENE SEALANT. BOLT THE HOLD-DOWN PLATES TO THE BASE ANGLE BUT DO NOT TIGHTEN. THE ENGINEER SHALL INSPECT THE JOINT SEAL DEVICE FOR PROPER ALIGNMENT.
5. AFTER INSPECTION, REMOVE THE HOLD-DOWN PLATES AND GLAND. APPLY NEOPRENE SEALANT TO THE BASE ANGLE IN ACCORDANCE WITH THE ''INSTALLATION SKETCH''. PLACE GLAND AND HOLD-DOWN PLATES ON THE BASE ANGLE. BOLT THE HOLD-DOWN PLATES TO THE BASE ANGLE ASSEMBLY AND TORQUE THE BOLTS TO 88 FT-LBS WITH A TORQUE WRENCH. THE TORQUE WRENCH SHALL BE CALIBRATED IN ACCORDANCE WITH SECTION 440-10 (D) OF THE STANDARD SPECIFICATIONS. CHECK THE TORQUE AFTER THREE (3) HOURS AND, IF NECESSARY, RETIGHTEN TO 88 FT-LBS. A FINAL CHECK SHALL BE MADE AT SEVEN (7) DAYS. TORQUE SHALL NOT BE LESS THAN 80 FT-LBS AFTER SEVEN (7) DAYS.
6. AFTER PROPER TOROUING, CLEAN THE BOLT HOLE RECESSES AND THE RECESS BETWEEN THE JOINT SEAL DEVICE AND CONCRETE, COMPLETELY FILL THESE RECESSES WITH NEOPRENE SEALANT.

### GENERAL NOTES

1. FOR EXPANSION JOINT SEALS, SEE SPECIAL PROVISIONS.
2. ALL PLATES AND ANGLES SHALL CONFORM TO AASHTO M270 GRADE 36 STEEL OR APPROVED EQUAL. ALL HOLD-DOWN BOLTS SHALL CONFORM TO ASTM F593 ALLOY 304 STAINLESS STEEL AND WASHERS SHALL CONFORM TO ASTM F844 EXCEPT THEY SHALL BE MADE FROM ALLOY 304 STAINLESS STEEL. ALL STUD ANCHORS SHALL CONFORM TO AASHTO M169, GRADES 1010 THRU 1020 OR APPROVED EQUAL. ALL CONCRETE INSERTS SHALL BE CLOSED END AND SHALL CONFORM TO AASHTO M169, GRADE 12L14. TENSILE CAPACITY SHALL BE 3000 LBS. MIN.
3. A PREMOLDED CORRUGATED OR NON-CORRUGATED GLAND SHALL BE USED FOR JOINTS SKEWED BETWEEN 50° THRU 130°. FOR JOINTS SKEWED LESS THAN 50° OR MORE THAN 130°, ONLY A CORRUGATED GLAND SHALL BE USED.
4. CLOSED END FERRULES AND STUD ANCHORS SHALL BE SHOP WELDED AND ALL HOLES SHALL BE SHOP DRILLED AS SHOWN ON PLANS. STUD ANCHORS SHALL BE ELECTRIC ARC END WELDED WITH COMPLETE FUSION.
5. SURFACES COMING IN CONTACT WITH NEOPRENE SHALL BE GROUND SMOOTH PRIOR TO METALLIZING.
6. UPON COMPLETION OF SHOP FABRICATION, THE HOLD DOWN PLATE AND BASE ANGLE ASSEMBLY, AS SHOWN IN THE '' TYPICAL SECTION OF BASE ANGLE ASSEMBLY'', SHALL BE METALLIZED. SEE SPECIAL PROVISION FOR THERMAL SPRAYED COATINGS (METALLIZATION).
7. BASE ANGLE ASSEMBLY SHALL BE CONTINUOUS FOR THE LENGTH OF THE JOINT. AT CROWN BREAKS, THE ENDS OF THE BASE ANGLE ASSEMBLY SHALL BE CUT PARALLEL TO THE BRIDGE CENTERLINE FOR SKEWS LESS THAN 80° AND GREATER THAN 100°. FINISHED WELD SHALL BE GROUND SMOOTH AND COATED WITH A MINIMUM THICKNESS OF 4 DRY MILS OF ZINC-RICH PAINT IN ACCORDANCE WITH THE STANDARD SPECIFICATIONS.
8. FIELD SPLICES OF HOLD-DOWN PLATES SHALL BE KEPT TO A MINIMUM. CONTRACTOR SHALL FURNISH DETAILED PLANS SHOWING PROPOSED SPLICE LOCATIONS FOR APPROVAL. HOLD-DOWN PLATES SHALL NOT EXCEED 20' LENGTHS UNLESS APPROVED BY THE ENGINEER.
9. NO ALTERNATE JOINT DETAILS SHALL BE PERMITTED IN LIEU OF THOSE SHOWN ON THESE PLANS.
10. THE CONTRACTOR MAY, AT HIS OPTION, USE ADHESIVELY ANCHORED ANCHOR BOLTS IN PLACE OF CONCRETE INSERTS FOR COVER PLATES. THE YIELD LOAD OF THE 3/4'' Ø BOLT IS 10 KIPS. FIELD TESTING OF THE ADHESIVE BONDING SYSTEM IS NOT REQUIRED.

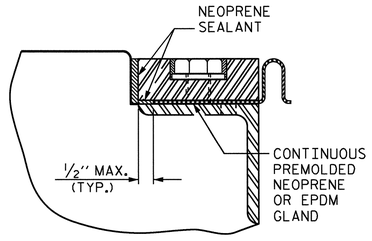


DETAIL ''A''

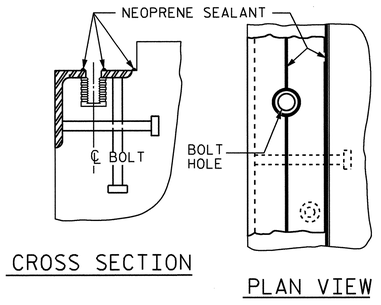


CROSS SECTION

PLAN VIEW

INSTALLATION SKETCH

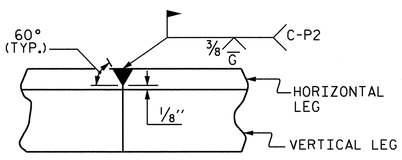


DETAIL- FIELD WELD SPLICE OF BASE ANGLE

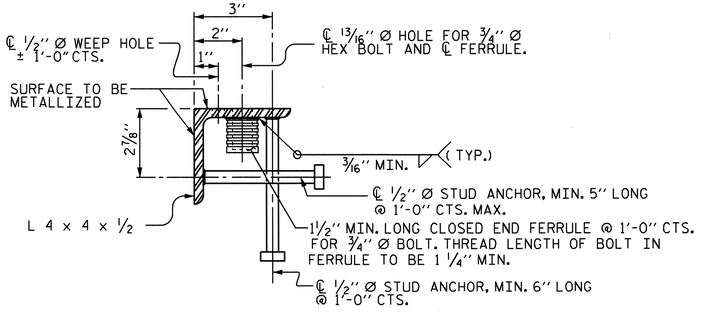


## TYPICAL SECTION OF BASE ANGLE ASSEMBLY

| | | | |
|---|---|---|---|
| ASSEMBLED BY : M. POOLE | DATE : 12/09 | | |
| CHECKED BY : D. HODGE | DATE : 10/10 | | |
| DRAWN BY : REK 9/87 | REV. 10/17/00 | RWW/LES | |
| CHECKED BY : CRK 10/87 | REV. 5/7/03R | RWW/JTE | |
| | REV. 5/1/06 | TLA/GM | |

20-OCT-2011 08:00
R:\Structures\NGUYEN\mpoole\13819a_sd_js_08.dgn
dahodge

PROJECT NO. I-3819A
IREDELL COUNTY
STATION: 86+06.00 -L-

SHEET 1 OF 3

STATE OF NORTH CAROLINA
DEPARTMENT OF TRANSPORTATION
RALEIGH
STANDARD
EXPANSION JOINT SEAL DETAILS

NORTH CAROLINA PROFESSIONAL SEAL 15779 ENGINEER JOHN R. DUGGINS, JR.
1/5/12

| REVISIONS | | | | | | SHEET NO. |
|---|---|---|---|---|---|---|
| NO. | BY: | DATE: | NO. | BY: | DATE: | S-65 |
| 1 | | | 3 | | | TOTAL SHEETS |
| 2 | | | 4 | | | 382 |

STD. NO. EJS1

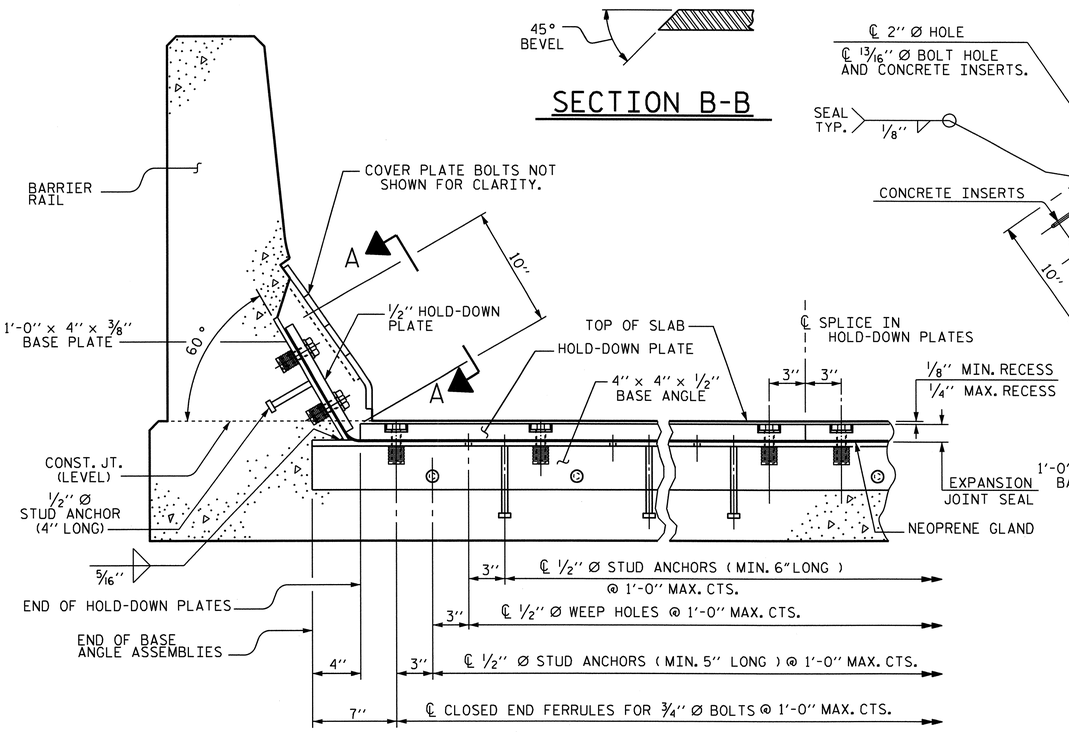


## SECTION THRU RAIL NORMAL TO JOINT

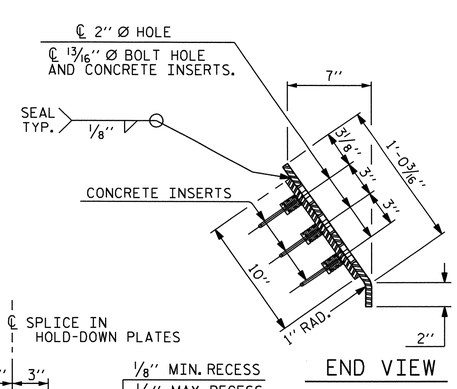


## END VIEW

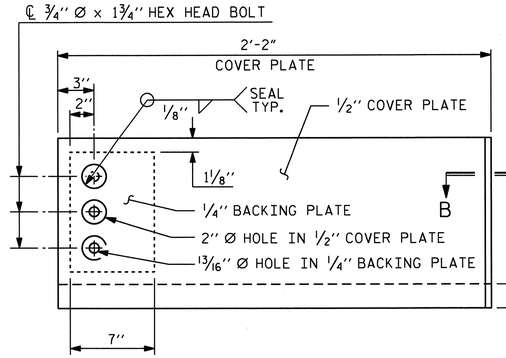


## TYPE I - ELEVATION VIEW

(8 REQUIRED)

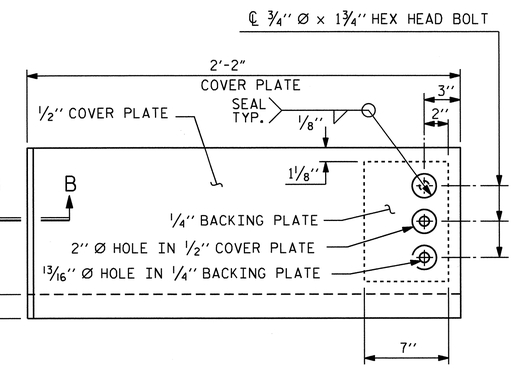


## TYPE II - ELEVATION VIEW

(8 REQUIRED)

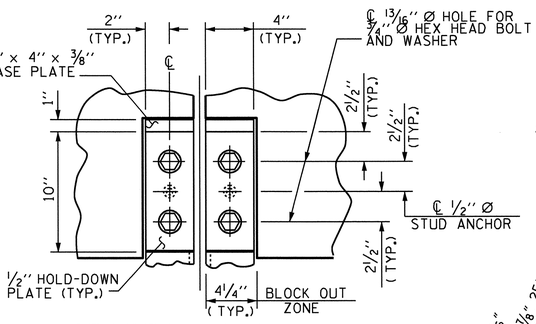


## SECTION A-A

## COVER PLATE DETAILS

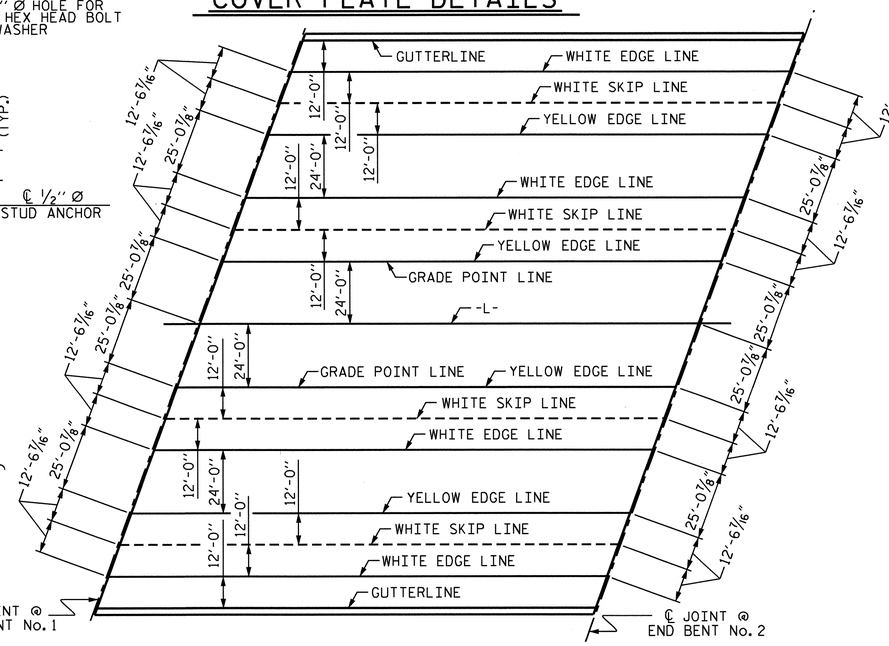


## PAVEMENT MARKING ALIGNMENT

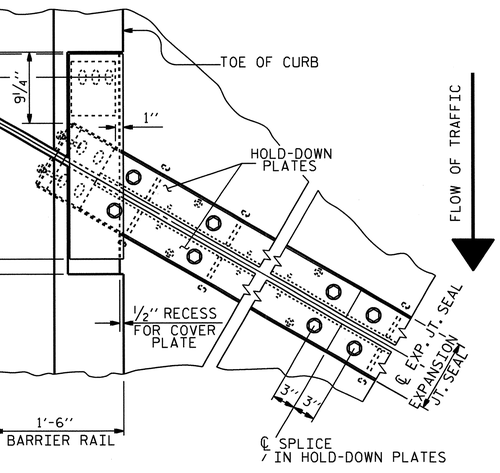


## PLAN OF EXPANSION JOINT SEAL

### LEFT SIDE

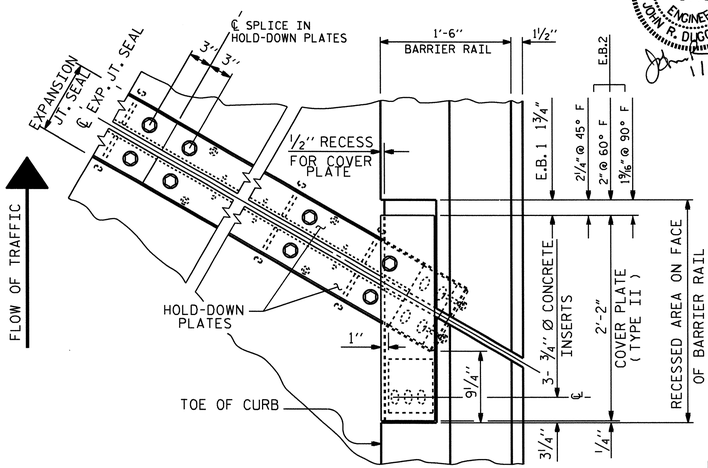


## PLAN OF EXPANSION JOINT SEAL

### RIGHT SIDE

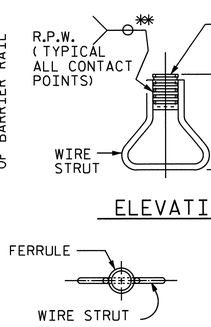


## ELEVATION




## PLAN

## CONCRETE INSERT

** EACH WELDED ATTACHMENT OF WIRE TO FERRULE SHALL DEVELOP THE TENSILE STRENGTH OF THE WIRE.

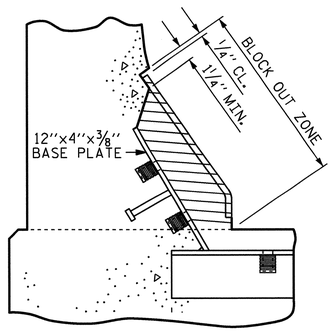


## BLOCK OUT DETAIL

SEE " SECTION A - A " FOR OTHER DETAILS.

NORTH CAROLINA PROFESSIONAL SEAL 15779 ENGINEER JOHN R. DUGGINS, JR.
11/5/12

PROJECT NO. I-3819A
IREDELL COUNTY
STATION: 86+06.00 -L-
SHEET 2 OF 3

STATE OF NORTH CAROLINA
DEPARTMENT OF TRANSPORTATION
RALEIGH
STANDARD

# EXPANSION JOINT SEAL DETAILS FOR BARRIER RAIL

| REVISIONS | | | | | | SHEET NO. |
|---|---|---|---|---|---|---|
| NO. | BY: | DATE: | NO. | BY: | DATE: | S-66 |
| 1 | | | 3 | | | TOTAL SHEETS |
| 2 | | | 4 | | | 382 |

STD. NO. EJS2

| | | |
|---|---|---|
| ASSEMBLED BY : M. POOLE | DATE : 12/10 | |
| CHECKED BY : D. HODGE | DATE : 1/11 | |
| DRAWN BY : REK 9/87 | REV. 7/17/98 | RWW/LES |
| CHECKED BY : CRK 10/87 | REV. 10/17/00 | RWW/LES |
| | REV. 5/1/06 | TLA/GM |

20-OCT-2011 08:00
R:\Structures\NGUYEN\mpoole\i3819a_sd_js_08.dgn
dahodge

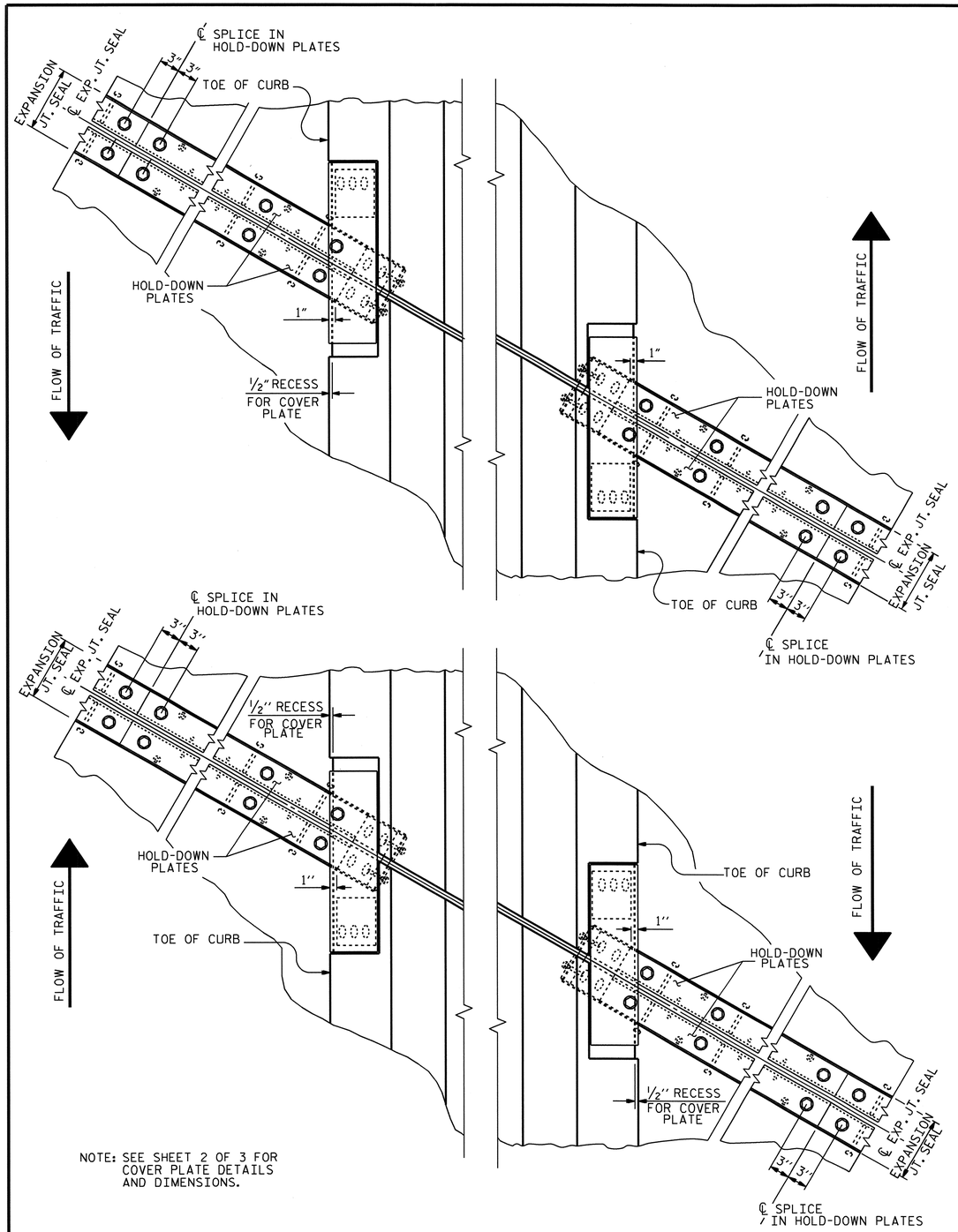


NOTE: SEE SHEET 2 OF 3 FOR COVER PLATE DETAILS AND DIMENSIONS.

## PLAN OF EXPANSION JOINT SEAL

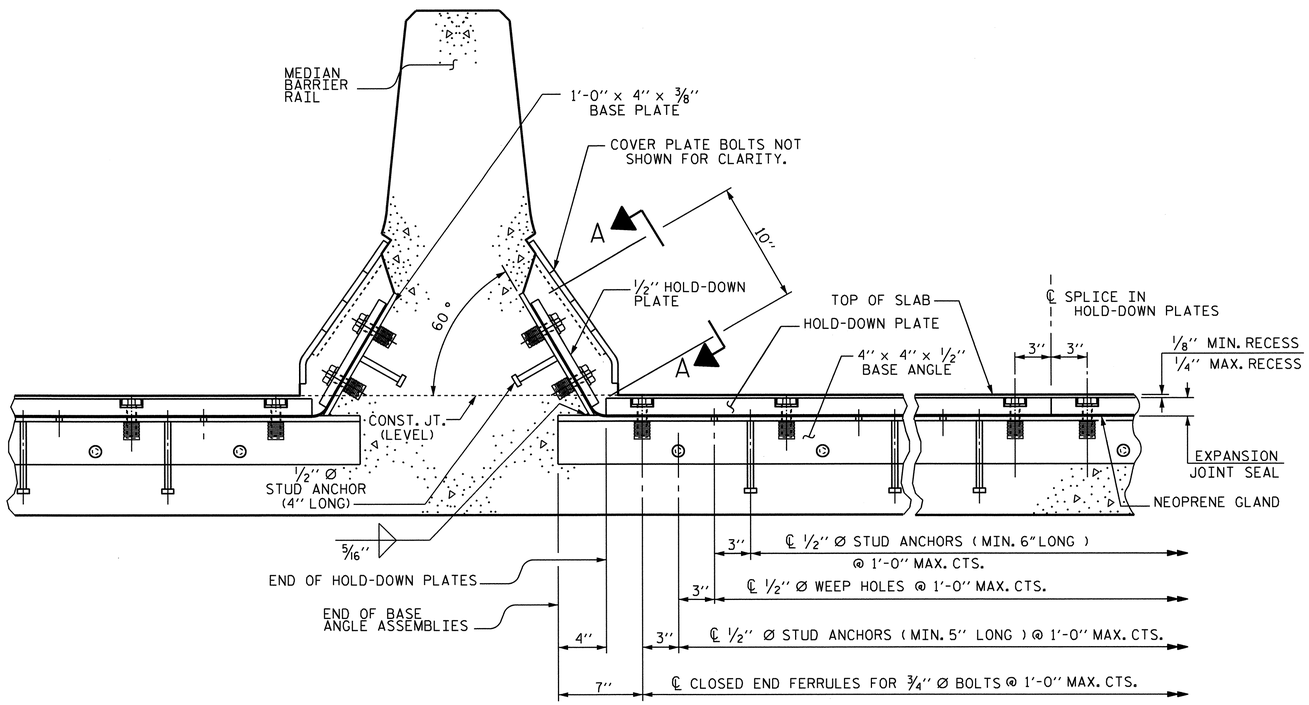


## SECTION THRU RAIL NORMAL TO JOINT

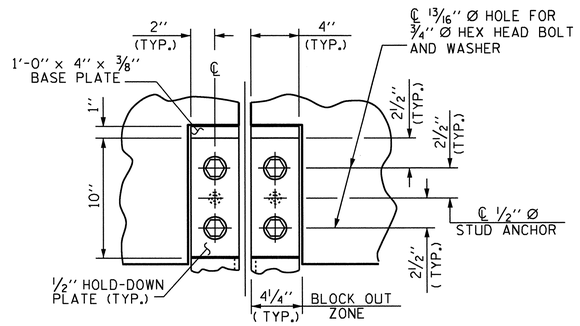


## SECTION A-A

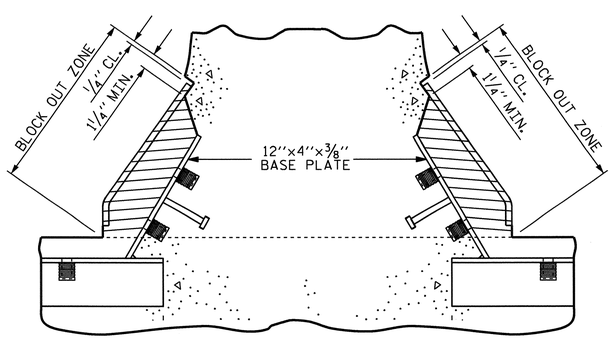


## BLOCK OUT DETAIL

SEE " SECTION A - A " FOR OTHER DETAILS.

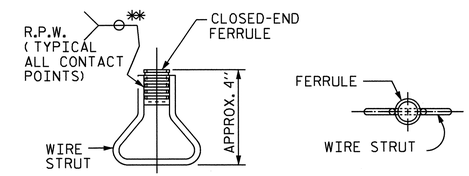


ELEVATION PLAN

## CONCRETE INSERT

** EACH WELDED ATTACHMENT OF WIRE TO FERRULE SHALL DEVELOP THE TENSILE STRENGTH OF THE WIRE.

PROJECT NO. I-3819A

IREDELL COUNTY

STATION: 86+06.00 -L-

SHEET 3 OF 3

STATE OF NORTH CAROLINA
DEPARTMENT OF TRANSPORTATION
RALEIGH

# EXPANSION JOINT SEAL DETAILS FOR MEDIAN BARRIER

| REVISIONS | | | | | | SHEET NO. |
|---|---|---|---|---|---|---|
| NO. | BY: | DATE: | NO. | BY: | DATE: | S-67 |
| 1 | | | 3 | | | TOTAL SHEETS |
| 2 | | | 4 | | | 382 |

NORTH CAROLINA PROFESSIONAL SEAL 15779 ENGINEER JOHN R. DUGGINS, JR.
1/5/12

DRAWN BY : D. HODGE DATE : 1/11
CHECKED BY : J.R. DUGGINS DATE : 2/11

20-OCT-2011 07:59
R:\Structures\NGUYEN\mpoole\I3819a_sd_Js_08.dgn
dahodge

## STAGE I

| BAR | NO. | SIZE | TYPE | LENGTH | WEIGHT |
|---|---|---|---|---|---|
| ✱ A1 | 592 | 5 | STR | 37′-5″ | 23103 |
| A2 | 592 | 5 | STR | 37′-3″ | 23000 |
| ✱A101 | 8 | 5 | STR | 36′-0″ | 300 |
| ✱A102 | 8 | 5 | STR | 34′-6″ | 288 |
| ✱A103 | 8 | 5 | STR | 33′-0″ | 275 |
| ✱A104 | 8 | 5 | STR | 31′-6″ | 263 |
| ✱A105 | 4 | 5 | STR | 57′-4″ | 239 |
| ✱A106 | 4 | 5 | STR | 54′-3″ | 226 |
| ✱A107 | 4 | 5 | STR | 51′-3″ | 214 |
| ✱A108 | 4 | 5 | STR | 48′-2″ | 201 |
| ✱A109 | 4 | 5 | STR | 45′-2″ | 188 |
| ✱A110 | 4 | 5 | STR | 42′-2″ | 176 |
| ✱A111 | 4 | 5 | STR | 39′-1″ | 163 |
| ✱A112 | 4 | 5 | STR | 36′-1″ | 151 |
| ✱A113 | 4 | 5 | STR | 33′-0″ | 138 |
| ✱A114 | 4 | 5 | STR | 30′-0″ | 125 |
| ✱A115 | 4 | 5 | STR | 27′-0″ | 113 |
| ✱A116 | 4 | 5 | STR | 23′-11″ | 100 |
| ✱A117 | 4 | 5 | STR | 20′-11″ | 87 |
| ✱A118 | 4 | 5 | STR | 17′-10″ | 74 |
| ✱A119 | 4 | 5 | STR | 14′-10″ | 62 |
| ✱A120 | 4 | 5 | STR | 11′-10″ | 49 |
| ✱A121 | 4 | 5 | STR | 8′-9″ | 37 |
| ✱A122 | 4 | 5 | STR | 5′-9″ | 24 |
| ✱A123 | 4 | 5 | STR | 2′-8″ | 11 |
| A201 | 8 | 5 | STR | 35′-10″ | 299 |
| A202 | 8 | 5 | STR | 34′-4″ | 286 |
| A203 | 8 | 5 | STR | 32′-10″ | 274 |
| A204 | 8 | 5 | STR | 31′-4″ | 261 |
| A205 | 4 | 5 | STR | 57′-4″ | 239 |
| A206 | 4 | 5 | STR | 54′-3″ | 226 |
| A207 | 4 | 5 | STR | 51′-3″ | 214 |
| A208 | 4 | 5 | STR | 48′-2″ | 201 |
| A209 | 4 | 5 | STR | 45′-2″ | 188 |
| A210 | 4 | 5 | STR | 42′-2″ | 176 |
| A211 | 4 | 5 | STR | 39′-1″ | 163 |
| A212 | 4 | 5 | STR | 36′-1″ | 151 |
| A213 | 4 | 5 | STR | 33′-0″ | 138 |
| A214 | 4 | 5 | STR | 30′-0″ | 125 |
| A215 | 4 | 5 | STR | 27′-0″ | 113 |
| A216 | 4 | 5 | STR | 23′-11″ | 100 |
| A217 | 4 | 5 | STR | 20′-11″ | 87 |
| A218 | 4 | 5 | STR | 17′-10″ | 74 |
| A219 | 4 | 5 | STR | 14′-10″ | 62 |
| A220 | 4 | 5 | STR | 11′-10″ | 49 |
| A221 | 4 | 5 | STR | 8′-9″ | 37 |
| A222 | 4 | 5 | STR | 5′-9″ | 24 |
| A223 | 4 | 5 | STR | 2′-8″ | 11 |
| ✱ B1 | 147 | 5 | STR | 54′-1″ | 8292 |
| B2 | 267 | 5 | STR | 53′-11″ | 15015 |
| ✱ D1 | 210 | 6 | STR | 3′-6″ | 1104 |
| ✱ G1 | 4 | 5 | STR | 39′-1″ | 163 |
| ✱ J1 | 148 | 4 | 4 | 1′-5″ | 140 |
| ✱ K1 | 6 | 5 | 1 | 8′-0″ | 50 |
| ✱ K2 | 30 | 5 | 2 | 8′-10″ | 276 |
| ✱ K3 | 36 | 5 | STR | 9′-11″ | 372 |
| ✱ K4 | 6 | 5 | 1 | 5′-9″ | 36 |
| ✱ S1 | 120 | 4 | 3 | 4′-9″ | 381 |

REINFORCING STEEL 41513 LBS.

✱EPOXY COATED REINFORCING STEEL 37421 LBS.

CLASS AA CONCRETE 367.6 CU. YDS.

## STAGE II

| BAR | NO. | SIZE | TYPE | LENGTH | WEIGHT |
|---|---|---|---|---|---|
| ✱ A1 | 592 | 5 | STR | 37′-5″ | 23103 |
| A2 | 592 | 5 | STR | 37′-3″ | 23000 |
| ✱A101 | 8 | 5 | STR | 36′-0″ | 300 |
| ✱A102 | 8 | 5 | STR | 34′-6″ | 288 |
| ✱A103 | 8 | 5 | STR | 33′-0″ | 275 |
| ✱A104 | 8 | 5 | STR | 31′-6″ | 263 |
| ✱A105 | 4 | 5 | STR | 57′-4″ | 239 |
| ✱A106 | 4 | 5 | STR | 54′-3″ | 226 |
| ✱A107 | 4 | 5 | STR | 51′-3″ | 214 |
| ✱A108 | 4 | 5 | STR | 48′-2″ | 201 |
| ✱A109 | 4 | 5 | STR | 45′-2″ | 188 |
| ✱A110 | 4 | 5 | STR | 42′-2″ | 176 |
| ✱A111 | 4 | 5 | STR | 39′-1″ | 163 |
| ✱A112 | 4 | 5 | STR | 36′-1″ | 151 |
| ✱A113 | 4 | 5 | STR | 33′-0″ | 138 |
| ✱A114 | 4 | 5 | STR | 30′-0″ | 125 |
| ✱A115 | 4 | 5 | STR | 27′-0″ | 113 |
| ✱A116 | 4 | 5 | STR | 23′-11″ | 100 |
| ✱A117 | 4 | 5 | STR | 20′-11″ | 87 |
| ✱A118 | 4 | 5 | STR | 17′-10″ | 74 |
| ✱A119 | 4 | 5 | STR | 14′-10″ | 62 |
| ✱A120 | 4 | 5 | STR | 11′-10″ | 49 |
| ✱A121 | 4 | 5 | STR | 8′-9″ | 37 |
| ✱A122 | 4 | 5 | STR | 5′-9″ | 24 |
| ✱A123 | 4 | 5 | STR | 2′-8″ | 11 |
| A201 | 8 | 5 | STR | 35′-10″ | 299 |
| A202 | 8 | 5 | STR | 34′-4″ | 286 |
| A203 | 8 | 5 | STR | 32′-10″ | 274 |
| A204 | 8 | 5 | STR | 31′-4″ | 261 |
| A205 | 4 | 5 | STR | 57′-4″ | 239 |
| A206 | 4 | 5 | STR | 54′-3″ | 226 |
| A207 | 4 | 5 | STR | 51′-3″ | 214 |
| A208 | 4 | 5 | STR | 48′-2″ | 201 |
| A209 | 4 | 5 | STR | 45′-2″ | 188 |
| A210 | 4 | 5 | STR | 42′-2″ | 176 |
| A211 | 4 | 5 | STR | 39′-1″ | 163 |
| A212 | 4 | 5 | STR | 36′-1″ | 151 |
| A213 | 4 | 5 | STR | 33′-0″ | 138 |
| A214 | 4 | 5 | STR | 30′-0″ | 125 |
| A215 | 4 | 5 | STR | 27′-0″ | 113 |
| A216 | 4 | 5 | STR | 23′-11″ | 100 |
| A217 | 4 | 5 | STR | 20′-11″ | 87 |
| A218 | 4 | 5 | STR | 17′-10″ | 74 |
| A219 | 4 | 5 | STR | 14′-10″ | 62 |
| A220 | 4 | 5 | STR | 11′-10″ | 49 |
| A221 | 4 | 5 | STR | 8′-9″ | 37 |
| A222 | 4 | 5 | STR | 5′-9″ | 24 |
| A223 | 4 | 5 | STR | 2′-8″ | 11 |
| ✱ B1 | 147 | 5 | STR | 54′-1″ | 8292 |
| B2 | 267 | 5 | STR | 53′-11″ | 15015 |
| ✱ D1 | 210 | 6 | STR | 3′-6″ | 1104 |
| ✱ G1 | 4 | 5 | STR | 39′-1″ | 163 |
| ✱ J1 | 148 | 4 | 4 | 1′-5″ | 140 |
| ✱ K1 | 6 | 5 | 1 | 8′-0″ | 50 |
| ✱ K2 | 30 | 5 | 2 | 8′-10″ | 276 |
| ✱ K3 | 36 | 5 | STR | 9′-11″ | 372 |
| ✱ K4 | 6 | 5 | 1 | 5′-9″ | 36 |
| ✱ S1 | 120 | 4 | 3 | 4′-9″ | 381 |

REINFORCING STEEL 41513 LBS.

✱EPOXY COATED REINFORCING STEEL 37421 LBS.

CLASS AA CONCRETE 367.6 CU. YDS.

## STAGE III

| BAR | NO. | SIZE | TYPE | LENGTH | WEIGHT |
|---|---|---|---|---|---|
| ✱A3 | 596 | 5 | STR | 36′-1″ | 22430 |
| A4 | 596 | 5 | STR | 35′-11″ | 22327 |
| ✱A301 | 8 | 5 | STR | 34′-8″ | 289 |
| ✱A302 | 8 | 5 | STR | 33′-2″ | 277 |
| ✱A303 | 8 | 5 | STR | 31′-8″ | 264 |
| ✱A304 | 4 | 5 | STR | 57′-8″ | 241 |
| ✱A305 | 4 | 5 | STR | 54′-8″ | 228 |
| ✱A306 | 4 | 5 | STR | 51′-8″ | 216 |
| ✱A307 | 4 | 5 | STR | 48′-7″ | 203 |
| ✱A308 | 4 | 5 | STR | 45′-7″ | 190 |
| ✱A309 | 4 | 5 | STR | 42′-6″ | 177 |
| ✱A310 | 4 | 5 | STR | 39′-6″ | 165 |
| ✱A311 | 4 | 5 | STR | 36′-6″ | 152 |
| ✱A312 | 4 | 5 | STR | 33′-5″ | 139 |
| ✱A313 | 4 | 5 | STR | 30′-5″ | 127 |
| ✱A314 | 4 | 5 | STR | 27′-4″ | 114 |
| ✱A315 | 4 | 5 | STR | 24′-4″ | 102 |
| ✱A316 | 4 | 5 | STR | 21′-4″ | 89 |
| ✱A317 | 4 | 5 | STR | 18′-3″ | 76 |
| ✱A318 | 4 | 5 | STR | 15′-3″ | 64 |
| ✱A319 | 4 | 5 | STR | 12′-2″ | 51 |
| ✱A320 | 4 | 5 | STR | 9′-2″ | 38 |
| ✱A321 | 4 | 5 | STR | 6′-2″ | 26 |
| ✱A322 | 4 | 5 | STR | 3′-1″ | 13 |
| A401 | 8 | 5 | STR | 34′-6″ | 288 |
| A402 | 8 | 5 | STR | 33′-0″ | 275 |
| A403 | 8 | 5 | STR | 31′-6″ | 263 |
| A404 | 4 | 5 | STR | 57′-8″ | 241 |
| A405 | 4 | 5 | STR | 54′-8″ | 228 |
| A406 | 4 | 5 | STR | 51′-8″ | 216 |
| A407 | 4 | 5 | STR | 48′-7″ | 203 |
| A408 | 4 | 5 | STR | 45′-7″ | 190 |
| A409 | 4 | 5 | STR | 42′-6″ | 177 |
| A410 | 4 | 5 | STR | 39′-6″ | 165 |
| A411 | 4 | 5 | STR | 36′-6″ | 152 |
| A412 | 4 | 5 | STR | 33′-5″ | 139 |
| A413 | 4 | 5 | STR | 30′-5″ | 127 |
| A414 | 4 | 5 | STR | 27′-4″ | 114 |
| A415 | 4 | 5 | STR | 24′-4″ | 102 |
| A416 | 4 | 5 | STR | 21′-4″ | 89 |
| A417 | 4 | 5 | STR | 18′-3″ | 76 |
| A418 | 4 | 5 | STR | 15′-3″ | 64 |
| A419 | 4 | 5 | STR | 12′-2″ | 51 |
| A420 | 4 | 5 | STR | 9′-2″ | 38 |
| A421 | 4 | 5 | STR | 6′-2″ | 26 |
| A422 | 4 | 5 | STR | 3′-1″ | 13 |
| ✱ B1 | 165 | 5 | STR | 54′-1″ | 9307 |
| B2 | 258 | 5 | STR | 53′-11″ | 14509 |
| ✱ D1 | 420 | 6 | STR | 3′-6″ | 2208 |
| ✱ G2 | 4 | 5 | STR | 37′-8″ | 157 |
| ✱ J1 | 154 | 4 | 4 | 1′-5″ | 146 |
| ✱ K2 | 30 | 5 | 2 | 8′-10″ | 276 |
| ✱ K3 | 36 | 5 | STR | 9′-11″ | 372 |
| ✱ K4 | 12 | 5 | 1 | 5′-9″ | 72 |
| ✱ S1 | 120 | 4 | 3 | 4′-9″ | 381 |

REINFORCING STEEL 40073 LBS.

✱EPOXY COATED REINFORCING STEEL 38590 LBS.

CLASS AA CONCRETE 379.4 CU. YDS.

### SUPERSTRUCTURE REINFORCING STEEL LENGTHS ARE BASED ON THE FOLLOWING MINIMUM SPLICE LENGTHS

| BAR SIZE | SUPERSTRUCTURE EXCEPT APPROACH SLABS, PARAPET, AND BARRIER RAIL | | APPROACH SLABS | | PARAPET AND BARRIER RAIL |
|---|---|---|---|---|---|
| | EPOXY COATED | UNCOATED | EPOXY COATED | UNCOATED | |
| #4 | 2′-0″ | 1′-9″ | 2′-0″ | 1′-9″ | 2′-9″ |
| #5 | 2′-6″ | 2′-2″ | 2′-6″ | 2′-2″ | 3′-5″ |
| #6 | 3′-0″ | 2′-7″ | 3′-10″ | 2′-7″ | 4′-4″ |
| #7 | 5′-3″ | 3′-6″ | | | |
| #8 | 6′-10″ | 4′-7″ | | | |

### SUPERSTRUCTURE BILL OF MATERIAL

| | | CLASS AA CONCRETE | REINFORCING STEEL | EPOXY COATED REINFORCING STEEL |
|---|---|---|---|---|
| | | (CU. YDS) | (LBS.) | (LBS.) |
| STAGE I | POUR 1 | 243.7 | 41513 | 37421 |
| | POUR 2 | 123.9 | | |
| STAGE II | POUR 1 | 243.7 | 41513 | 37421 |
| | POUR 2 | 123.9 | | |
| STAGE III ✱✱✱ | POUR 1 | 251.6 | 40073 | 38590 |
| | POUR 2 | 127.8 | | |
| TOTAL ✱✱ | | 1114.6 | 123099 | 113432 |

✱✱QUANTITIES FOR BARRIER RAIL & CONCRETE MEDIAN BARRIER ARE NOT INCLUDED

✱✱✱QUANTITIES FOR CLOSURE POUR ARE INCLUDED IN STAGE III

### BAR TYPES

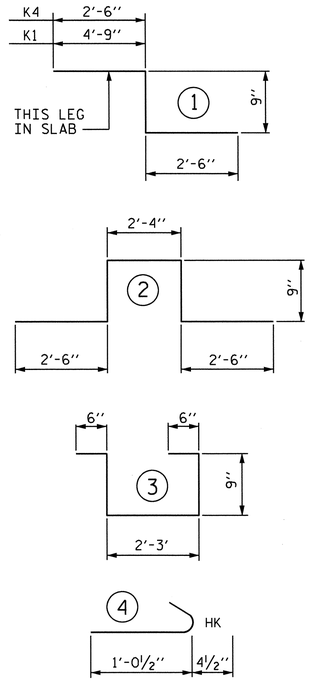


ALL BAR DIMENSIONS ARE OUT TO OUT

### GROOVING BRIDGE FLOORS

| | | |
|---|---|---|
| BRIDGE DECK | STAGE I | 10,087 SQ. FEET |
| | STAGE II | 10,087 SQ. FEET |
| | STAGE III | 10,713 SQ. FEET |
| APPROACH SLAB | STAGE I | 4,616 SQ. FEET |
| | STAGE II | 4,530 SQ. FEET |
| | STAGE III | 4,839 SQ. FEET |
| TOTAL = 44,872 SQ. FEET | | |

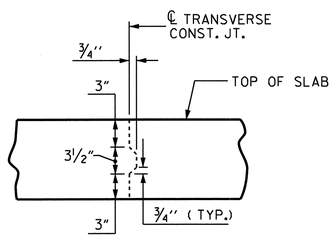


### TRANSVERSE CONSTRUCTION JOINT DETAIL

NOTE: REINFORCING STEEL IN SLAB NOT SHOWN. LONGITUDINAL REINFORCING STEEL SHALL BE CONTINUOUS THRU JOINT

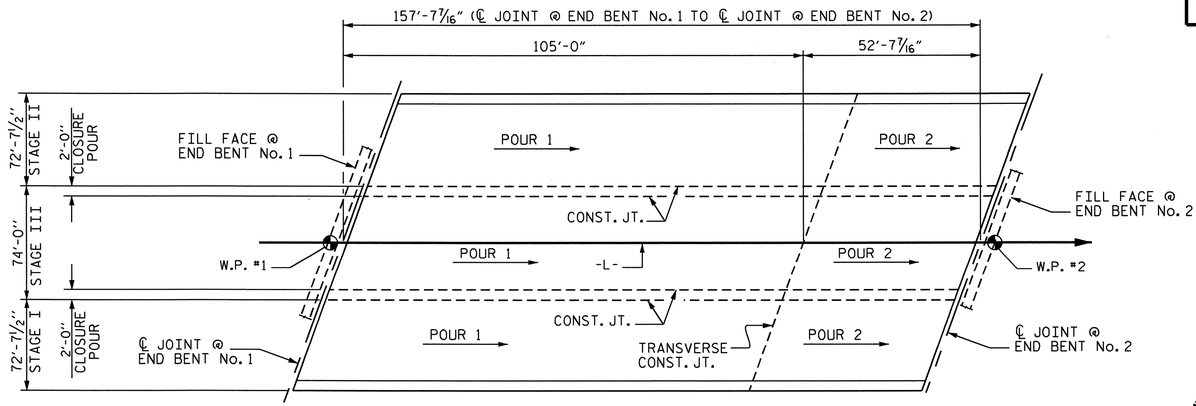


### LAYOUT FOR COMPUTING AREA OF REINFORCED CONCRETE DECK SLAB

STAGE I - SQ. FEET = 11447
STAGE II - SQ. FEET = 11447
STAGE III - SQ. FEET = 11664
TOTAL = 34558 SQ. FEET

PROJECT NO. I-3819A
IREDELL COUNTY
STATION: 86+06.00 -L-

STATE OF NORTH CAROLINA
DEPARTMENT OF TRANSPORTATION
RALEIGH

SUPERSTRUCTURE
BILL OF MATERIAL

NORTH CAROLINA PROFESSIONAL SEAL 15779 ENGINEER JOHN R. DUGGINS, JR.
1/6/12

| REVISIONS | | | | | | SHEET NO. |
|---|---|---|---|---|---|---|
| NO. | BY: | DATE: | NO. | BY: | DATE: | S-68 |
| 1 | | | 3 | | | TOTAL SHEETS |
| 2 | | | 4 | | | 382 |

DRAWN BY : M. POOLE DATE : 08/10
CHECKED BY : D. HODGE DATE : 12/10

20-OCT-2011 07:58
R:\Structures\NGUYEN\mpoole\13819a_SD_BM_08.dgn
dahodge

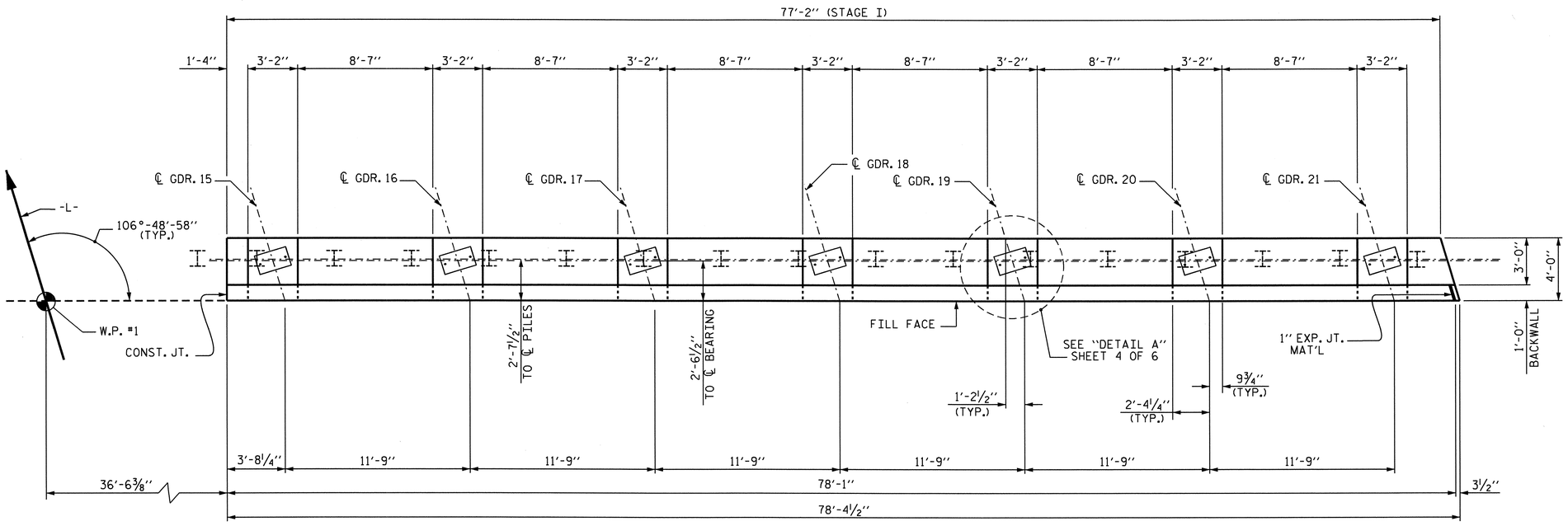


## PLAN

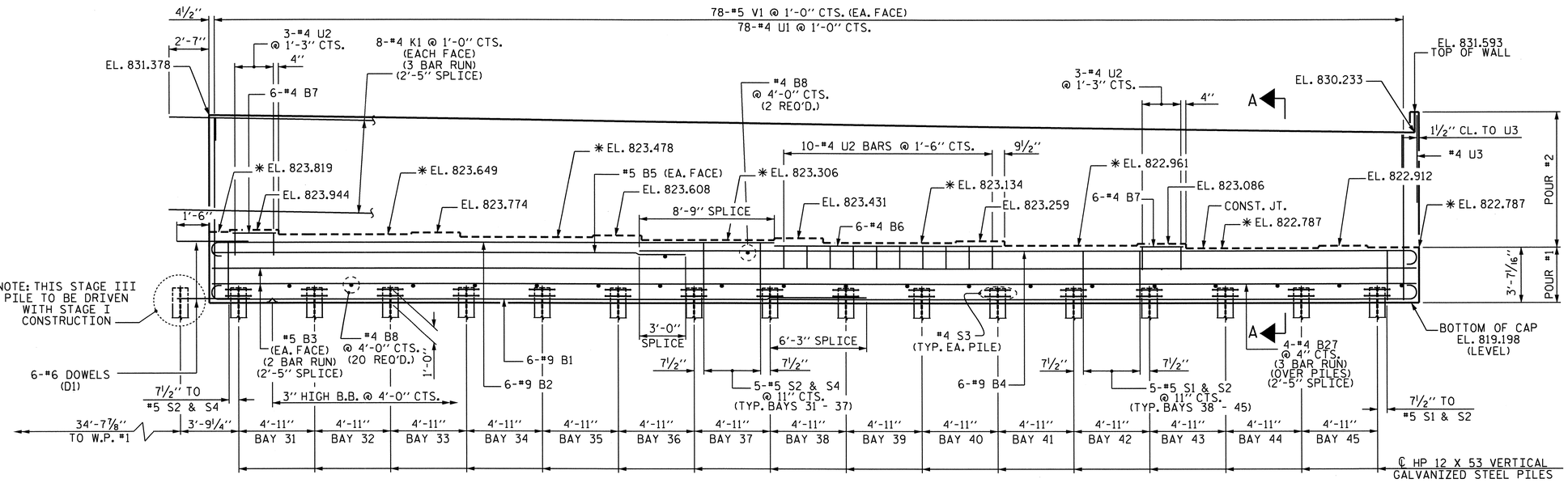


## ELEVATION

*FOR LOCATION OF ELEVATIONS BETWEEN BRIDGE SEAT BUILD-UPS, SEE SECTION A-A.

## NOTES

STIRRUPS IN CAP MAY BE SHIFTED AS NECESSARY TO CLEAR ANCHOR BOLTS.

FOR PILE SPLICE DETAILS, SEE SHEET 6 OF 6.

BACKWALL SHALL BE PLACED BEFORE APPLYING THE EPOXY PROTECTIVE COATING.

THE TOP SURFACE OF THE CAP EXCEPT THE BRIDGE SEAT BUILDUPS SHALL BE SLOPED TRANSVERSELY FROM THE FILL FACE TO THE BACK FACE AT THE RATE OF 2%.

THE CONCRETE IN THE SHADED AREA OF THE WING SHALL BE POURED AFTER THE BARRIER RAIL IS CAST IF SLIP FORMING IS USED.

THE TOP SURFACE AREAS OF THE END BENT CAPS SHALL BE CURED IN ACCORDANCE WITH THE STANDARD SPECIFICATIONS EXCEPT THE MEMBRANE CURING COMPOUND METHOD SHALL NOT BE USED.

PROJECT NO. I-3819A

IREDELL COUNTY

STATION: 86+06.00 -L-

SHEET 1 OF 6

STATE OF NORTH CAROLINA
DEPARTMENT OF TRANSPORTATION
RALEIGH

SUBSTRUCTURE
END BENT No. 1
STAGE I

| REVISIONS | | | | | | SHEET NO. |
|---|---|---|---|---|---|---|
| NO. | BY: | DATE: | NO. | BY: | DATE: | S-69 |
| 1 | | | 3 | | | TOTAL SHEETS |
| 2 | | | 4 | | | 382 |

NORTH CAROLINA PROFESSIONAL SEAL 15779 ENGINEER JOHN R. DUGGINS, JR.

1/5/12

DRAWN BY : M. POOLE DATE : 8/10
CHECKED BY : J.R. DUGGINS DATE : 11/10

04-JAN-2012 15:37
R:\Structures\NGUYEN\FINAL PLANS\I3819A_SD_E1_08.dgn
dahodge

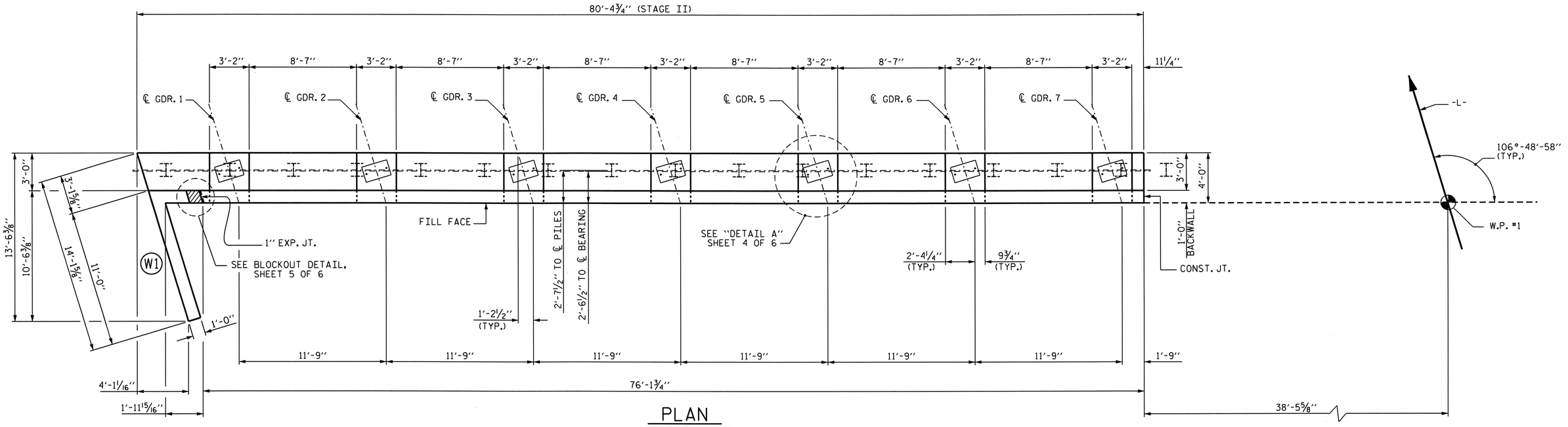


PLAN

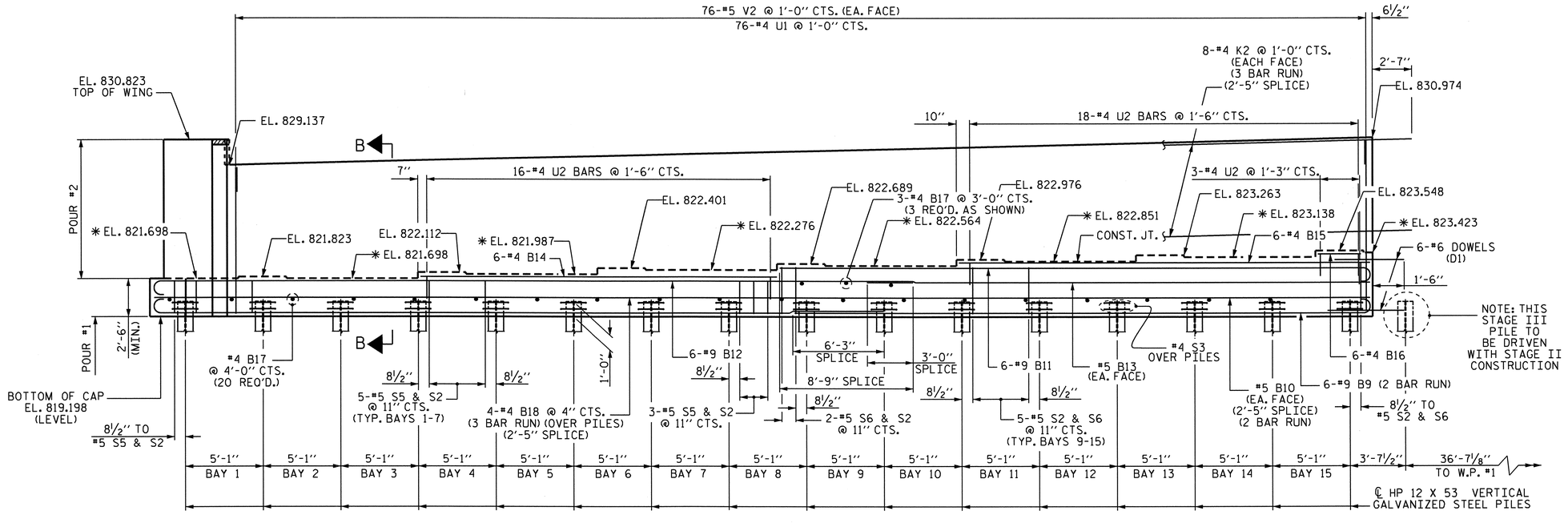


ELEVATION

* FOR LOCATION OF ELEVATIONS BETWEEN BRIDGE SEAT BUILD-UPS, SEE SECTION B-B.

NORTH CAROLINA PROFESSIONAL SEAL 15779 ENGINEER JOHN R. DUGGINS, JR.
1/5/12

PROJECT NO. I-3819A
IREDELL COUNTY
STATION: 86+06.00 -L-

SHEET 2 OF 6

STATE OF NORTH CAROLINA
DEPARTMENT OF TRANSPORTATION
RALEIGH

SUBSTRUCTURE
END BENT No. 1
STAGE II

| REVISIONS | | | | | | SHEET NO. |
|---|---|---|---|---|---|---|
| NO. | BY: | DATE: | NO. | BY: | DATE: | S-70 |
| 1 | | | 3 | | | TOTAL SHEETS |
| 2 | | | 4 | | | 382 |

DRAWN BY : M. POOLE DATE : 8/10
CHECKED BY : J.R. DUGGINS DATE : 11/10

04-JAN-2012 15:36
R:\Structures\NGUYEN\FINAL PLANS\I3819A_SD_E1_08.dgn
dahodge

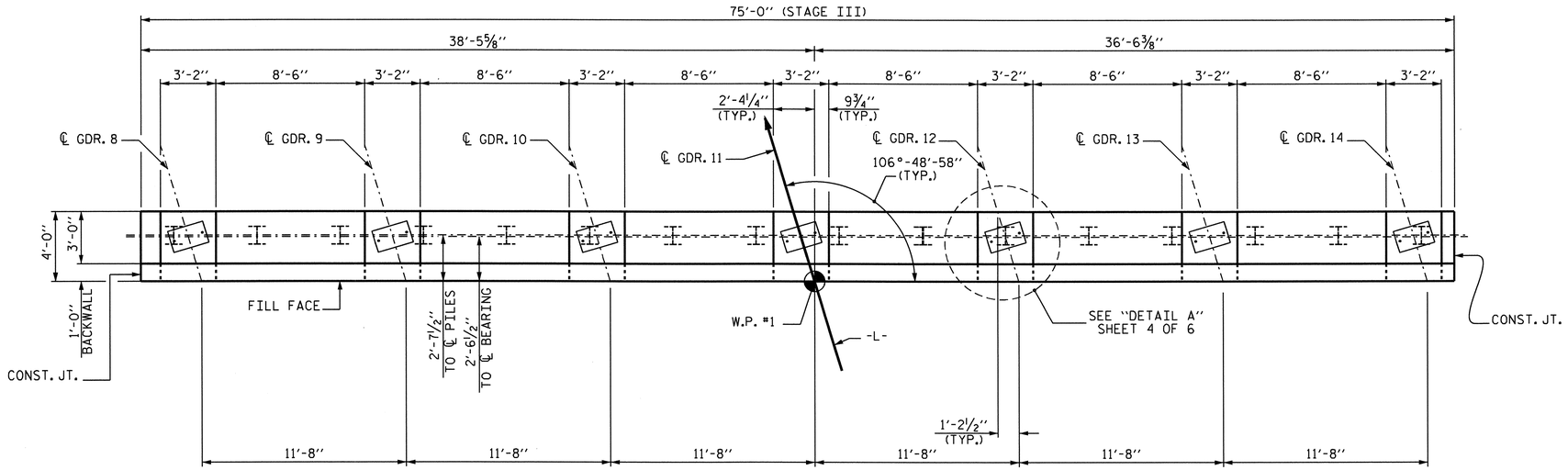


## PLAN

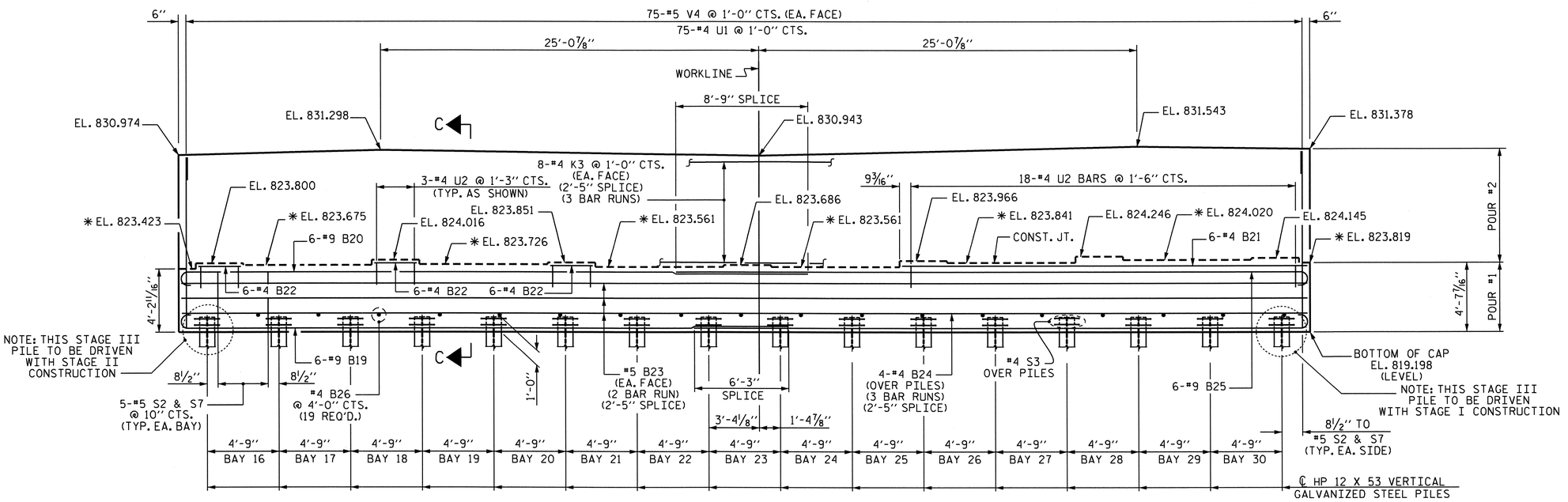


## ELEVATION

*FOR LOCATION OF ELEVATIONS BETWEEN BRIDGE SEAT BUILD-UPS, SEE SECTION C-C.

DRAWN BY : M. POOLE DATE : 8/10
CHECKED BY : J.R. DUGGINS DATE : 11/10

04-JAN-2012 15:36
R:\Structures\NGUYEN\FINAL PLANS\I3819A_SD_E1_08.dgn
dahodge

NORTH CAROLINA PROFESSIONAL SEAL 15779 ENGINEER JOHN R. DUGGINS, JR.
1/5/12

PROJECT NO. I-3819A
IREDELL COUNTY
STATION: 86+06.00 -L-
SHEET 3 OF 6

STATE OF NORTH CAROLINA
DEPARTMENT OF TRANSPORTATION
RALEIGH

SUBSTRUCTURE
END BENT No. 1
STAGE III

| REVISIONS | | | | | | SHEET NO. |
|---|---|---|---|---|---|---|
| NO. | BY: | DATE: | NO. | BY: | DATE: | S-71 |
| 1 | | | 3 | | | TOTAL SHEETS |
| 2 | | | 4 | | | 382 |

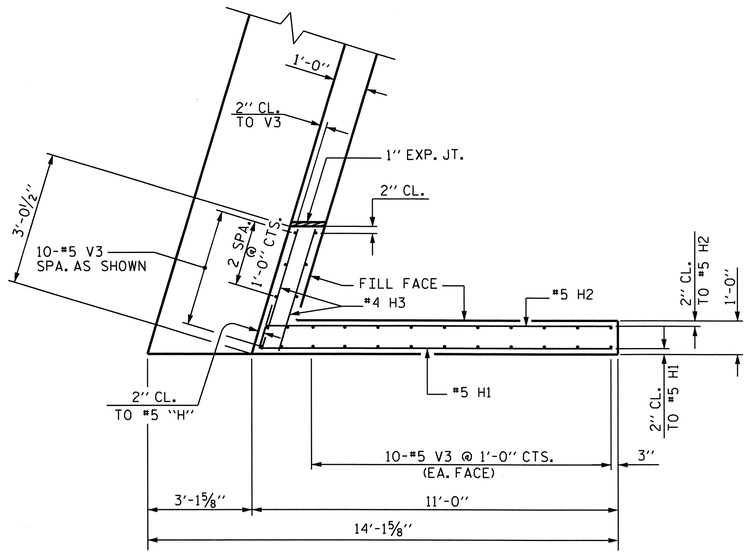


## PLAN OF LEFT WING - W1

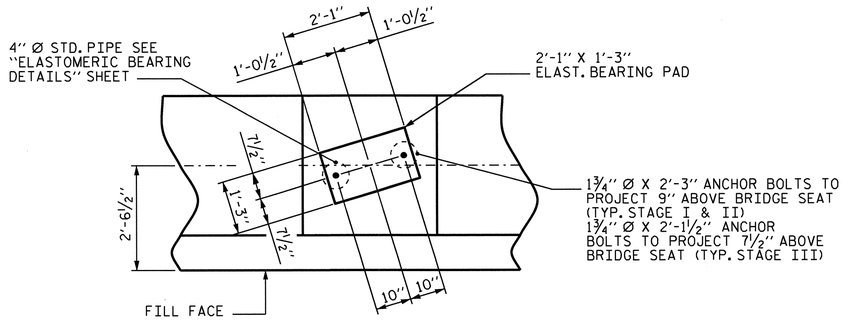


## DETAIL A

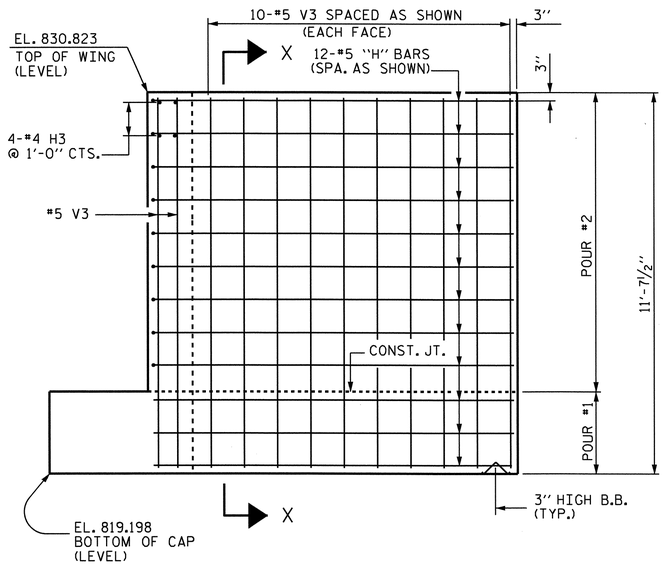


## ELEVATION OF LEFT WING - W1

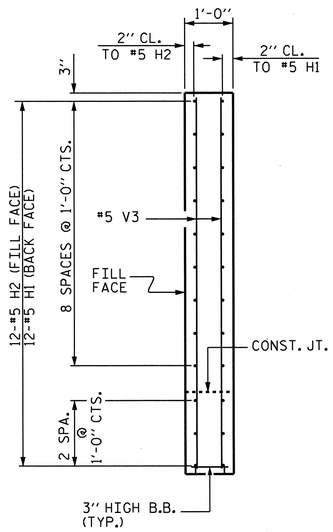


## SECTION X-X

DRAWN BY : M. POOLE DATE : 08/10
CHECKED BY : A. SORSENGINH DATE : 11/10

20-OCT-2011 07:56
R:\Structures\NGUYEN\mpoole\I3819A_SD_E1_08.dgn
dahodge

NORTH CAROLINA PROFESSIONAL SEAL 15779 ENGINEER JOHN R. DUGGINS, JR.
11/5/12

PROJECT NO. I-3819A
IREDELL COUNTY
STATION: 86+06.00 -L-

SHEET 4 OF 6

STATE OF NORTH CAROLINA
DEPARTMENT OF TRANSPORTATION
RALEIGH

SUBSTRUCTURE
END BENT No. 1

| REVISIONS | | | | | | SHEET NO. |
|---|---|---|---|---|---|---|
| NO. | BY: | DATE: | NO. | BY: | DATE: | S-12 |
| 1 | | | 3 | | | TOTAL SHEETS |
| 2 | | | 4 | | | 382 |

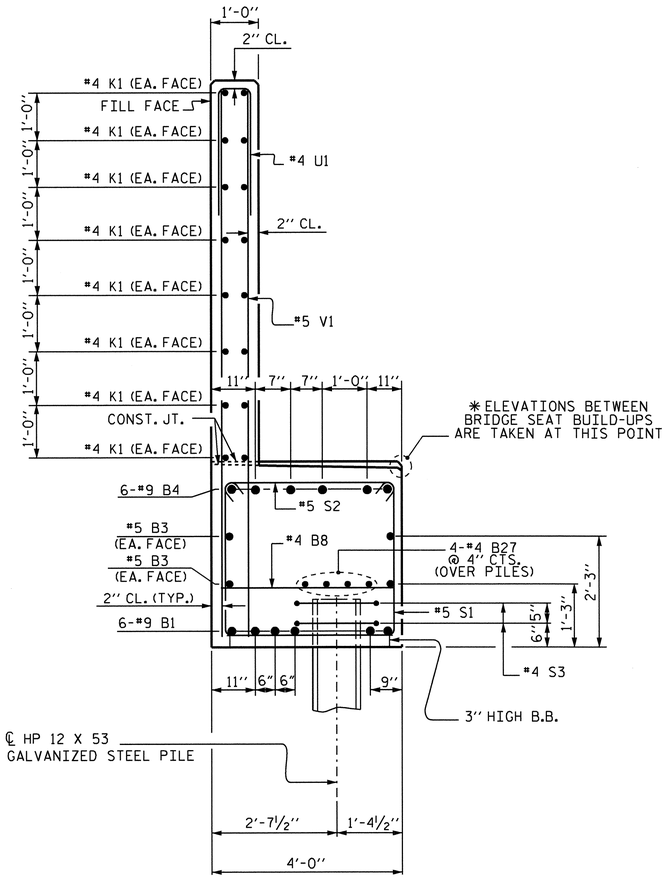


SECTION A-A

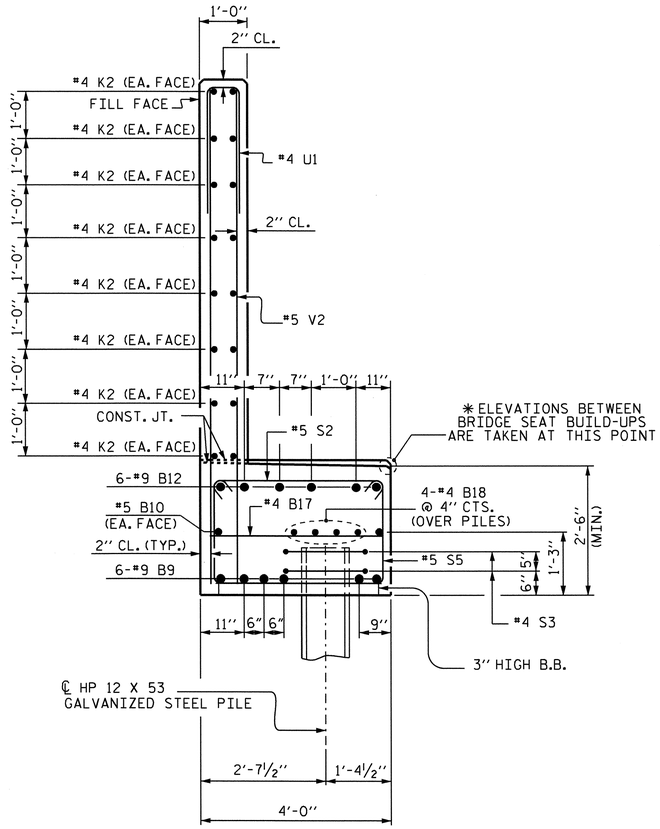


SECTION B-B

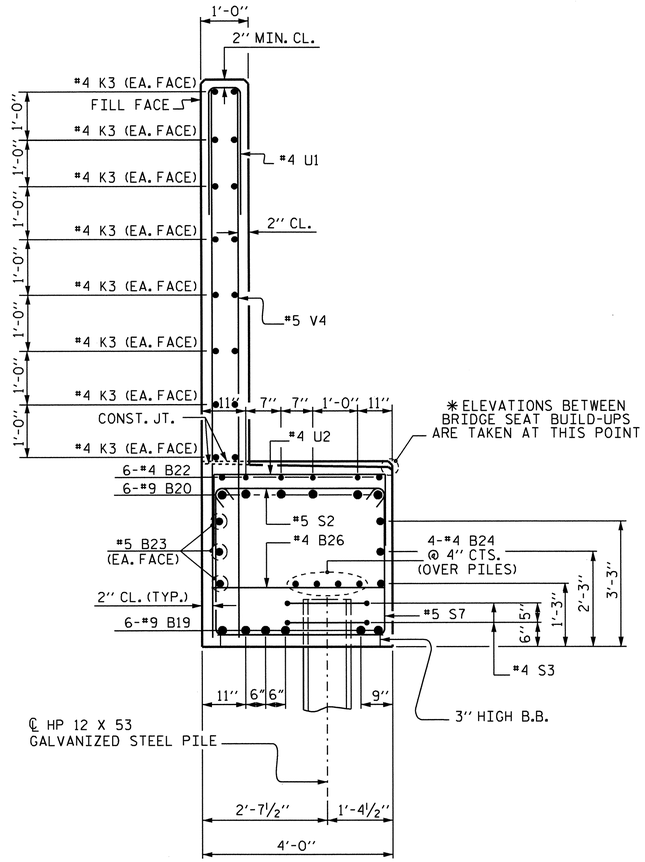


SECTION C-C

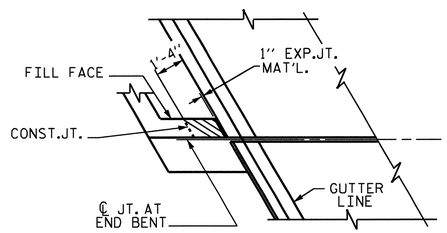


PLAN

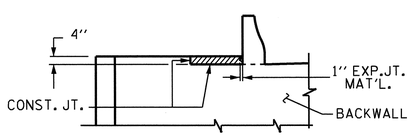


ELEVATION

## BLOCKOUT IN WING WALL

NOTE: THE CONCRETE IN THE SHADED AREA OF THE WING SHALL BE POURED AFTER THE BARRIER RAIL IS CAST IF SLIP FORMING IS USED.

DRAWN BY : M. POOLE DATE : 06/10
CHECKED BY : A. SORSENGINH DATE : 11/10

20-OCT-2011 07:56
R:\Structures\NGUYEN\mpoole\I3819A_SD_E1_08.dgn
dahodge

NORTH CAROLINA PROFESSIONAL SEAL 15779 ENGINEER JOHN R. DUGGINS, JR.
11/5/12

PROJECT NO. I-3819A
IREDELL COUNTY
STATION: 86+06.00 -L-

SHEET 5 OF 6

STATE OF NORTH CAROLINA
DEPARTMENT OF TRANSPORTATION
RALEIGH

SUBSTRUCTURE
END BENT No. 1

| REVISIONS | | | | | | SHEET NO. |
|---|---|---|---|---|---|---|
| NO. | BY: | DATE: | NO. | BY: | DATE: | S-13 |
| 1 | | | 3 | | | TOTAL SHEETS |
| 2 | | | 4 | | | 382 |

| TOTAL QUANTITIES | |
|---|---|
| REINFORCING STEEL | 26848 LBS. |
| CLASS A CONCRETE | 208.2 C.Y. |
| HP 12 X 53 GALVANIZED STEEL PILES No. 48 | 1920 LIN. FT. |

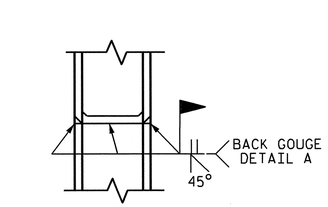


* PILE VERTICAL

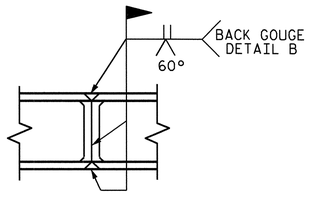


* PILE HORIZONTAL OR VERTICAL

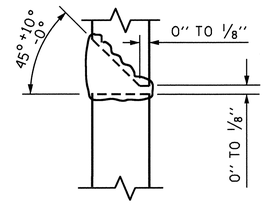


DETAIL A

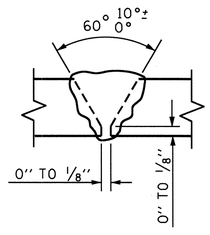


DETAIL B

* POSITION OF PILE DURING WELDING.

## PILE SPLICE DETAILS

## BAR TYPES

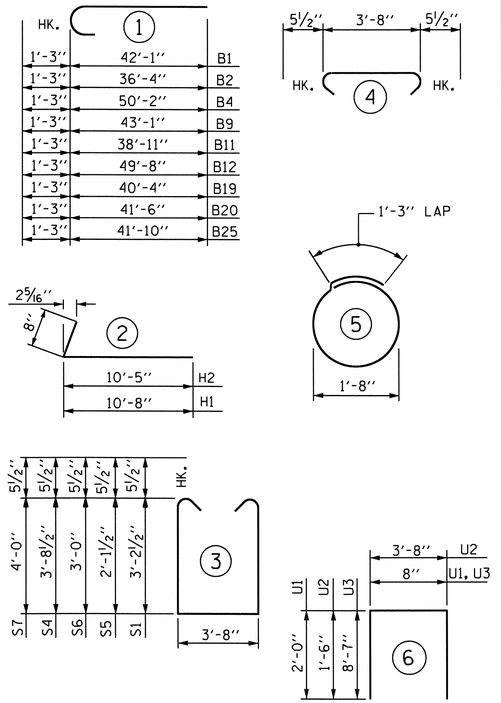


ALL BAR DIMENSIONS ARE OUT TO OUT.

## BILL OF MATERIAL

END BENT No. 1

### STAGE I

| BAR | NO. | SIZE | TYPE | LENGTH | WEIGHT |
|---|---|---|---|---|---|
| B1 | 12 | #9 | 1 | 43'-4" | 1768 |
| B2 | 6 | #9 | 1 | 37'-7" | 767 |
| B3 | 8 | #5 | STR | 40'-2" | 335 |
| B4 | 6 | #9 | 1 | 51'-5" | 1049 |
| B5 | 2 | #5 | STR | 30'-8" | 64 |
| B6 | 6 | #4 | STR | 14'-9" | 59 |
| B7 | 12 | #4 | STR | 2'-9" | 22 |
| B8 | 22 | #4 | STR | 3'-8" | 54 |
| B27 | 12 | #4 | STR | 27'-3" | 218 |
| D1 | 12 | #6 | STR | 3'-0" | 54 |
| K1 | 48 | #4 | STR | 28'-7" | 916 |
| S1 | 41 | #5 | 3 | 11'-0" | 470 |
| S2 | 77 | #5 | 4 | 4'-7" | 368 |
| S3 | 32 | #4 | 5 | 6'-6" | 139 |
| S4 | 36 | #5 | 3 | 12'-0" | 451 |
| U1 | 78 | #4 | 6 | 4'-8" | 243 |
| U2 | 16 | #4 | 6 | 6'-8" | 71 |
| U3 | 1 | #4 | 6 | 17'-10" | 12 |
| V1 | 156 | #5 | STR | 10'-8" | 1736 |

REINFORCING STEEL 8796 LBS.

CLASS A CONCRETE BREAKDOWN
POUR #1
(CAP) 47.6 C.Y.
POUR #2
(BACKWALL) 21.9 C.Y.
TOTAL 69.5 C.Y.

HP 12 x 53 GALVANIZED STEEL PILES
NO. 17 850 LIN FT.

### STAGE II

| BAR | NO. | SIZE | TYPE | LENGTH | WEIGHT |
|---|---|---|---|---|---|
| B9 | 12 | #9 | 1 | 44'-4" | 1809 |
| B10 | 4 | #5 | STR | 41'-3" | 172 |
| B11 | 6 | #9 | 1 | 40'-2" | 819 |
| B12 | 6 | #9 | 1 | 50'-11" | 1039 |
| B13 | 2 | #5 | STR | 33'-3" | 69 |
| B14 | 6 | #4 | STR | 23'-4" | 94 |
| B15 | 6 | #4 | STR | 27'-3" | 109 |
| B16 | 6 | #4 | STR | 2'-9" | 11 |
| B17 | 23 | #4 | STR | 3'-8" | 56 |
| B18 | 12 | #4 | STR | 28'-0" | 224 |
| D1 | 12 | #6 | STR | 3'-0" | 54 |
| H1 | 12 | #5 | 2 | 11'-4" | 142 |
| H2 | 12 | #5 | 2 | 11'-1" | 139 |
| H3 | 4 | #4 | STR | 2'-8" | 7 |
| K2 | 48 | #4 | STR | 28'-10" | 925 |
| S5 | 39 | #5 | 3 | 8'-10" | 359 |
| S2 | 77 | #5 | 4 | 4'-7" | 368 |
| S3 | 32 | #4 | 5 | 6'-6" | 139 |
| S6 | 38 | #5 | 3 | 10'-7" | 419 |
| U1 | 76 | #4 | 6 | 4'-8" | 237 |
| U2 | 37 | #4 | 6 | 6'-8" | 165 |
| V2 | 152 | #5 | STR | 9'-7" | 1519 |
| V3 | 30 | #5 | STR | 11'-3" | 352 |

REINFORCING STEEL 9227 LBS.

CLASS A CONCRETE BREAKDOWN
POUR #1
(CAP & LOWER WING) 40.7 C.Y.
POUR #2
(BACKWALL & UPPER WING) 25.7 C.Y.
TOTAL 66.4 C.Y.

HP 12 x 53 GALVANIZED STEEL PILES
NO. 17 510 LIN FT.

### STAGE III

| BAR | NO. | SIZE | TYPE | LENGTH | WEIGHT |
|---|---|---|---|---|---|
| B19 | 12 | #9 | 1 | 41'-7" | 1697 |
| B20 | 6 | #9 | 1 | 42'-9" | 872 |
| B21 | 6 | #4 | STR | 26'-9" | 107 |
| B22 | 18 | #4 | STR | 2'-9" | 33 |
| B23 | 12 | #5 | STR | 38'-8" | 484 |
| B24 | 12 | #4 | STR | 26'-6" | 212 |
| B25 | 6 | #9 | 1 | 43'-1" | 879 |
| B26 | 19 | #4 | STR | 3'-8" | 47 |
| K3 | 48 | #4 | STR | 26'-6" | 850 |
| S7 | 77 | #5 | 3 | 12'-7" | 1011 |
| S2 | 77 | #5 | 4 | 4'-7" | 368 |
| S3 | 32 | #4 | 5 | 6'-6" | 139 |
| U1 | 75 | #4 | 6 | 4'-8" | 233 |
| U2 | 27 | #4 | 6 | 6'-8" | 120 |
| V4 | 150 | #5 | STR | 11'-4" | 1773 |

REINFORCING STEEL 8825 LBS.

CLASS A CONCRETE BREAKDOWN
POUR #1
(CAP) 51.7 C.Y.
POUR #2
(BACKWALL) 20.6 C.Y.
TOTAL 72.3 C.Y.

HP 12 x 53 GALVANIZED STEEL PILES
NO. 14 560 LIN FT.

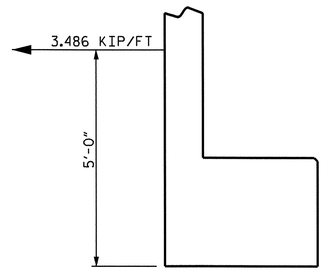


## MSE REINFORCING STRAP LOAD DETAIL

### MSE REINFORCING STRAP NOTES

DESIGN REINFORCEMENT CONNECTED TO END BENT CAPS FOR THE LOADING SHOWN AND CAST THE REINFORCEMENT CONNECTION HARDWARE INTO THE CAP BACKWALL. MAINTAIN A MINIMUM CLEARANCE OF 3" BETWEEN THE HARDWARE AND REINFORCING STEEL IN THE CAP.

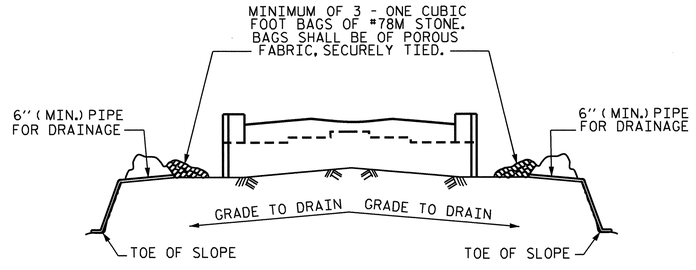


BAGGED STONE AND PIPE SHALL BE PLACED IMMEDIATELY AFTER COMPLETION OF END BENT EXCAVATION. PIPE MAY BE EITHER CONCRETE, CORRUGATED STEEL, CORRUGATED ALUMINUM ALLOY, OR CORRUGATED PLASTIC. PERFORATED PIPE WILL NOT BE ALLOWED.

BAGGED STONE SHALL REMAIN IN PLACE UNTIL THE ENGINEER DIRECTS THAT IT BE REMOVED. THE CONTRACTOR SHALL REMOVE AND DISPOSE OF SILT ACCUMULATIONS AT BAGGED STONE WHEN SO DIRECTED BY THE ENGINEER. BAGS SHALL BE REMOVED AND REPLACED WHENEVER THE ENGINEER DETERMINES THAT THEY HAVE DETERIORATED AND LOST THEIR EFFECTIVENESS.

NO SEPARATE PAYMENT WILL BE MADE FOR THIS WORK AND THE ENTIRE COST OF THIS WORK SHALL BE INCLUDED IN THE UNIT CONTRACT PRICE BID FOR THE SEVERAL PAY ITEMS.

## TEMPORARY DRAINAGE AT END BENT

NORTH CAROLINA PROFESSIONAL SEAL 15779 ENGINEER JOHN R. DUGGINS, JR.
11/5/12

PROJECT NO. I-3819A
IREDELL COUNTY
STATION: 86+06.00 -L-

SHEET 6 OF 6

STATE OF NORTH CAROLINA
DEPARTMENT OF TRANSPORTATION
RALEIGH

SUBSTRUCTURE
END BENT No. 1

| REVISIONS | | | | | | SHEET NO. |
|---|---|---|---|---|---|---|
| NO. | BY: | DATE: | NO. | BY: | DATE: | S-74 |
| 1 | | | 3 | | | TOTAL SHEETS |
| 2 | | | 4 | | | 382 |

DRAWN BY : M. POOLE DATE : 06/10
CHECKED BY : A. SORSENGINH DATE : 11/10

04-JAN-2012 15:36
R:\Structures\NGUYEN\FINAL PLANS\I3819A_SD_E1_08.dgn
dahodge

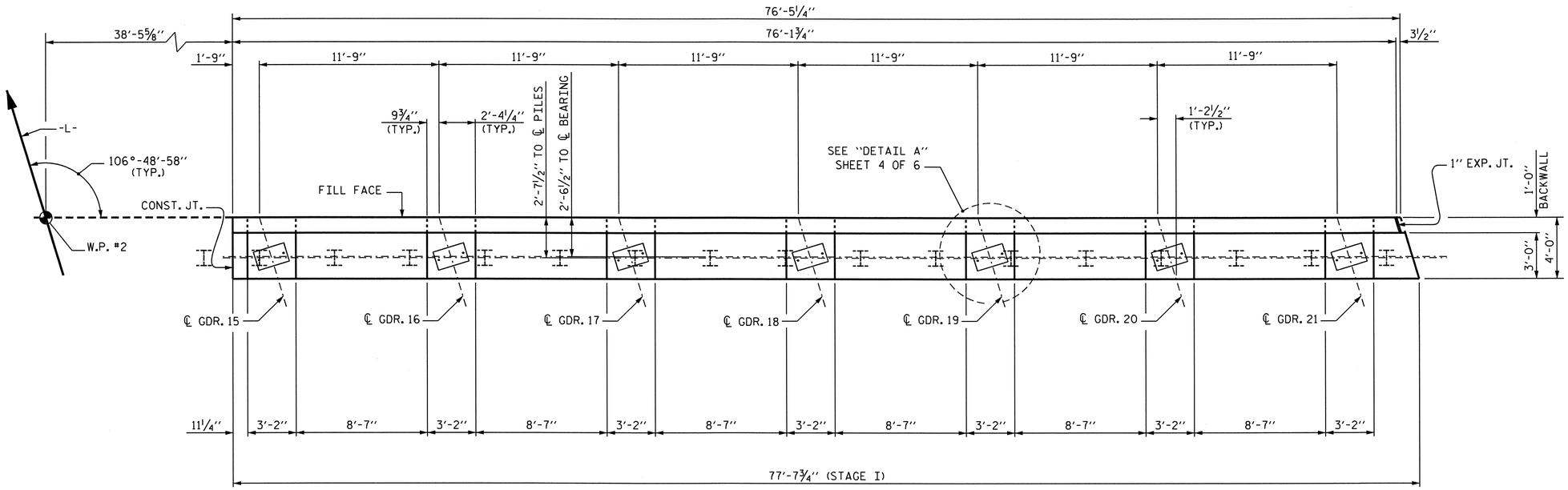


## PLAN

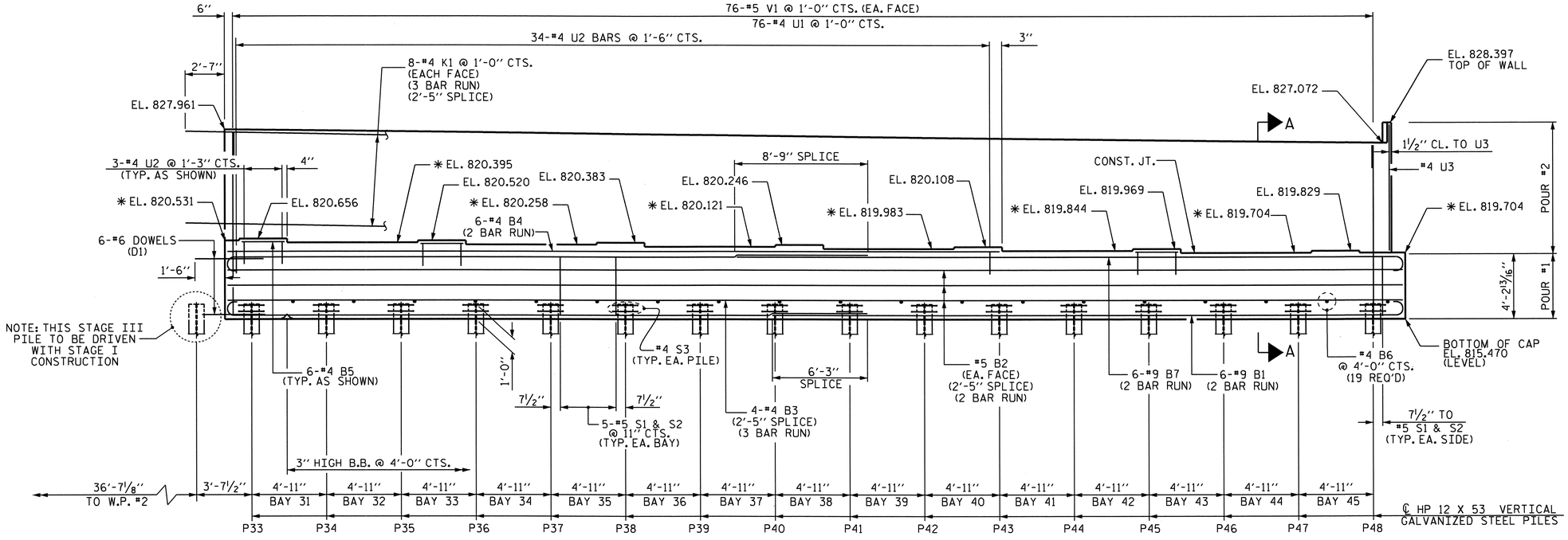


## ELEVATION

*FOR LOCATION OF ELEVATIONS BETWEEN BRIDGE SEAT BUILD-UPS, SEE SECTION A-A.

## NOTES

STIRRUPS IN CAP MAY BE SHIFTED AS NECESSARY TO CLEAR ANCHOR BOLTS.

FOR PILE SPLICE DETAILS, SEE SHEET 6 OF 6.

BACKWALL SHALL BE PLACED BEFORE APPLYING THE EPOXY PROTECTIVE COATING.

THE TOP SURFACE OF THE CAP EXCEPT THE BRIDGE SEAT BUILDUPS SHALL BE SLOPED TRANSVERSELY FROM THE FILL FACE TO THE BACK FACE AT THE RATE OF 2%.

THE CONCRETE IN THE SHADED AREA OF THE WING SHALL BE POURED AFTER THE BARRIER RAIL IS CAST IF SLIP FORMING IS USED.

THE TOP SURFACE AREAS OF THE END BENT CAPS SHALL BE CURED IN ACCORDANCE WITH THE STANDARD SPECIFICATIONS EXCEPT THE MEMBRANE CURING COMPOUND METHOD SHALL NOT BE USED.

PROJECT NO. I-3819A

IREDELL COUNTY

STATION: 86+06.00 -L-

SHEET 1 OF 6

STATE OF NORTH CAROLINA
DEPARTMENT OF TRANSPORTATION
RALEIGH

SUBSTRUCTURE
END BENT No. 2
STAGE I

| REVISIONS | | | | | | SHEET NO. |
|---|---|---|---|---|---|---|
| NO. | BY: | DATE: | NO. | BY: | DATE: | S-75 |
| 1 | | | 3 | | | TOTAL SHEETS |
| 2 | | | 4 | | | 382 |

DRAWN BY : M. POOLE DATE : 07/10
CHECKED BY : J. R. DUGGINS DATE : 11/10

NORTH CAROLINA PROFESSIONAL SEAL 15779 ENGINEER JOHN R. DUGGINS, JR.
11/5/12

04-JAN-2012 15:35
R:\Structures\NGUYEN\FINAL PLANS\I3819A_SD_E2_08.dgn
dahodge

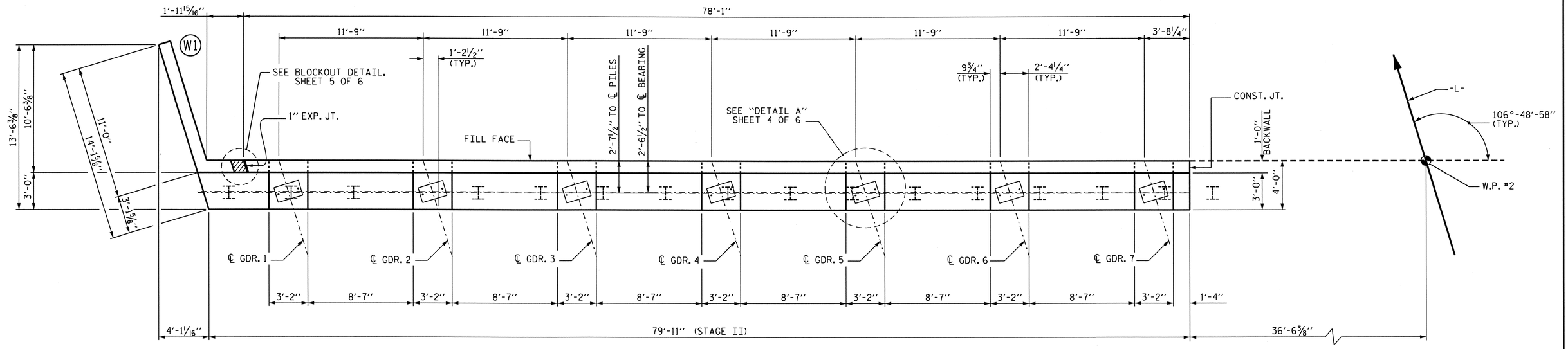


## PLAN

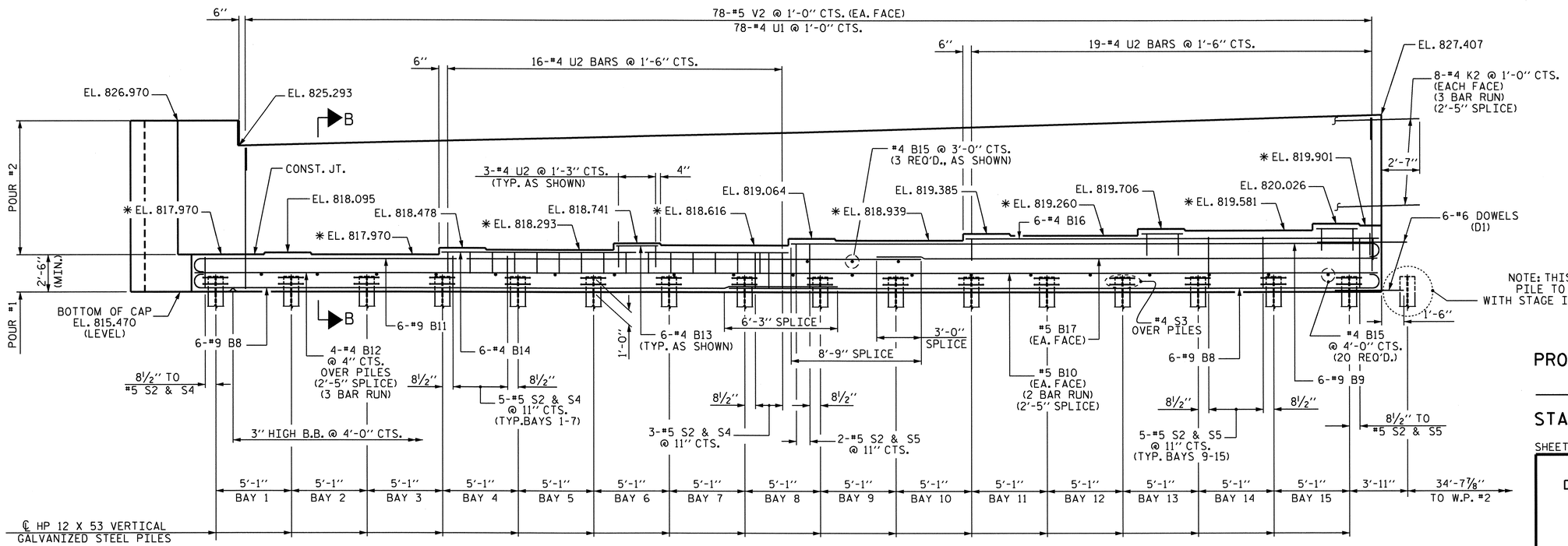


## ELEVATION

*FOR LOCATION OF ELEVATIONS BETWEEN BRIDGE SEAT BUILD-UPS, SEE SECTION B-B.

PROJECT NO. I-3819A

IREDELL COUNTY

STATION: 86+06.00 -L-

SHEET 2 OF 6

STATE OF NORTH CAROLINA
DEPARTMENT OF TRANSPORTATION
RALEIGH

SUBSTRUCTURE
END BENT No.2
STAGE II

NORTH CAROLINA PROFESSIONAL SEAL 15779 ENGINEER JOHN R. DUGGINS, JR.
1/5/12

| REVISIONS | | | | | | SHEET NO. |
|---|---|---|---|---|---|---|
| NO. | BY: | DATE: | NO. | BY: | DATE: | S-76 |
| 1 | | | 3 | | | TOTAL SHEETS |
| 2 | | | 4 | | | 382 |

DRAWN BY : M. POOLE DATE : 07/10
CHECKED BY : J.R. DUGGINS DATE : 11/10

04-JAN-2012 15:35
R:\Structures\NGUYEN\FINAL PLANS\I3819A_SD_E2_08.dgn
dahodge

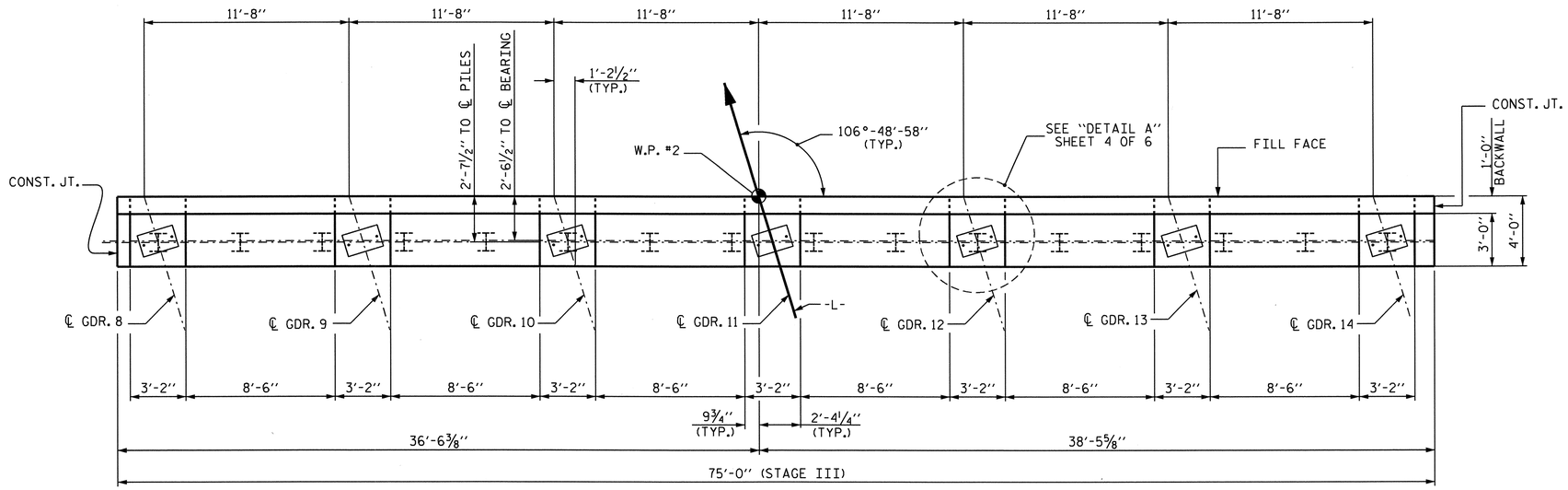


## PLAN

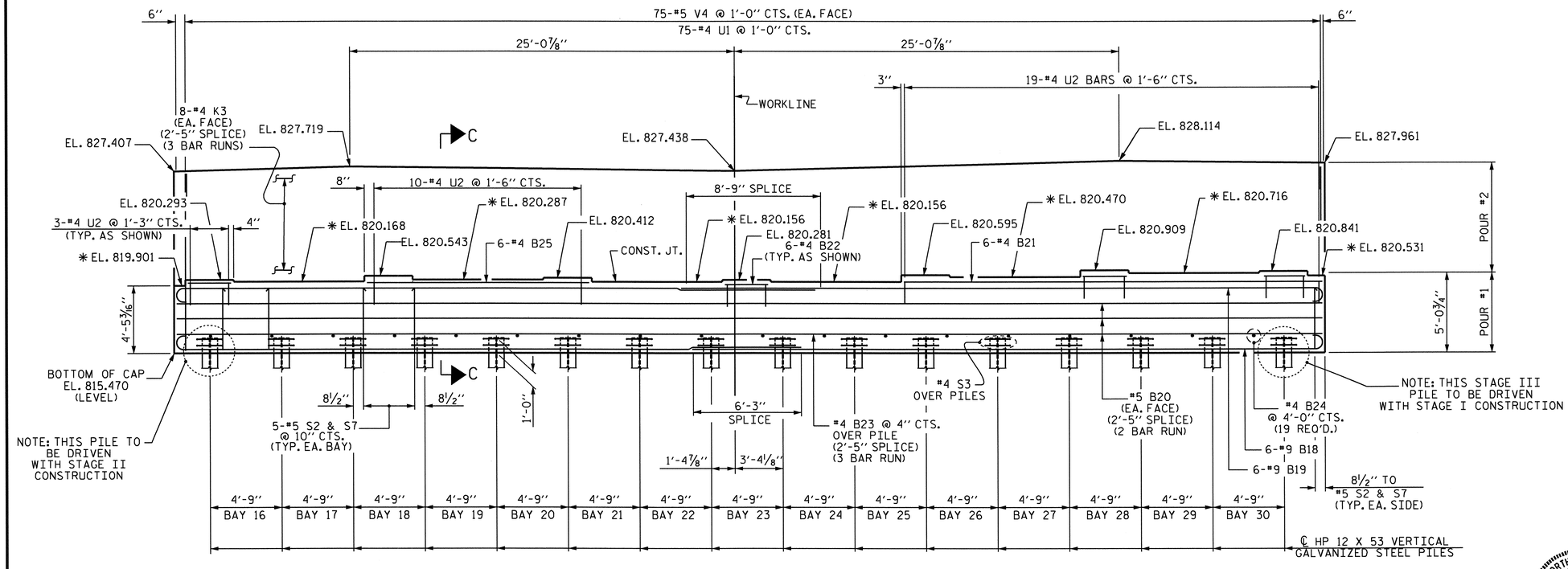


## ELEVATION

*FOR LOCATION OF ELEVATIONS BETWEEN BRIDGE SEAT BUILD-UPS, SEE SECTION C-C.

DRAWN BY : M. POOLE DATE : 07/10
CHECKED BY : J.R. DUGGINS DATE : 11/10

04-JAN-2012 15:35
R:\Structures\NGUYEN\FINAL PLANS\I3819A_SD_E2_08.dgn
dahodge

NORTH CAROLINA PROFESSIONAL SEAL 15779 ENGINEER JOHN R. DUGGINS, JR.
1/5/12

PROJECT NO. I-3819A
IREDELL COUNTY
STATION: 86+06.00 -L-

SHEET 3 OF 6

STATE OF NORTH CAROLINA
DEPARTMENT OF TRANSPORTATION
RALEIGH

SUBSTRUCTURE
END BENT No. 2
STAGE III

| REVISIONS | | | | | | SHEET NO. |
|---|---|---|---|---|---|---|
| NO. | BY: | DATE: | NO. | BY: | DATE: | S-77 |
| 1 | | | 3 | | | TOTAL SHEETS |
| 2 | | | 4 | | | 382 |

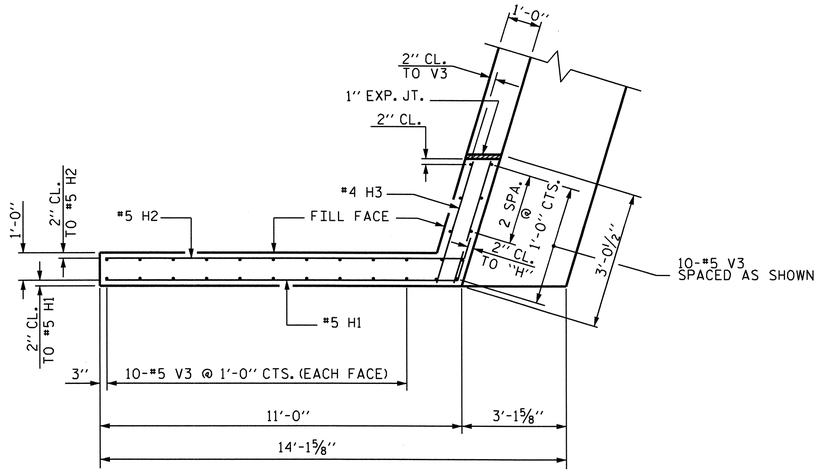


## PLAN OF LEFT WING - W1

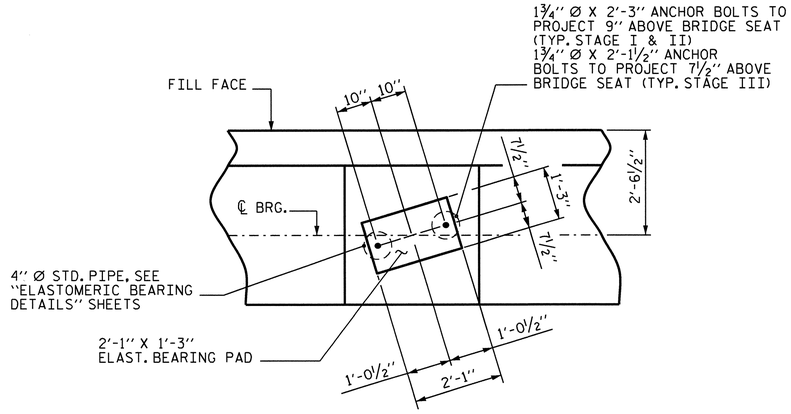


## DETAIL A

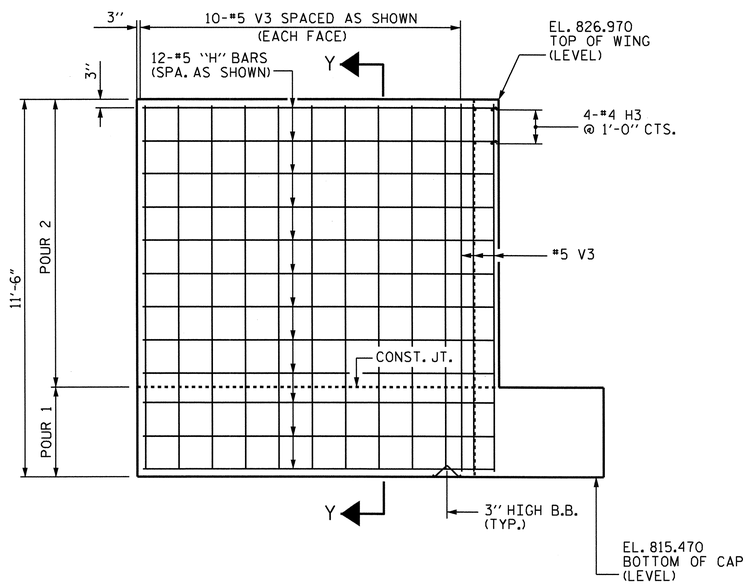


## ELEVATION OF LEFT WING - W1

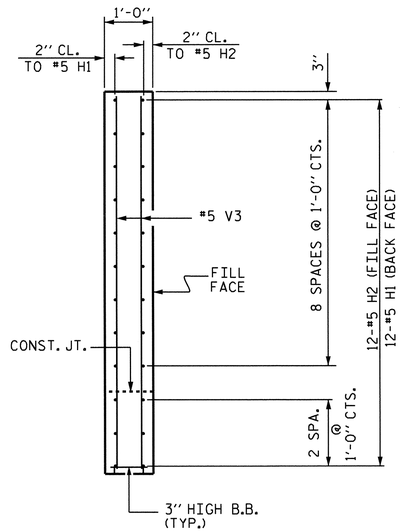


## SECTION Y-Y

PROJECT NO. I-3819A
IREDELL COUNTY
STATION: 86+06.00 -L-

SHEET 4 OF 6

STATE OF NORTH CAROLINA
DEPARTMENT OF TRANSPORTATION
RALEIGH

SUBSTRUCTURE
END BENT No. 2

| REVISIONS | | | | | | SHEET NO. |
|---|---|---|---|---|---|---|
| NO. | BY: | DATE: | NO. | BY: | DATE: | S-78 |
| 1 | | | 3 | | | TOTAL SHEETS |
| 2 | | | 4 | | | 382 |

NORTH CAROLINA PROFESSIONAL SEAL 15779 ENGINEER JOHN R. DUGGINS, JR.
1/5/12

DRAWN BY : M. POOLE DATE : 06/10
CHECKED BY : A. SORSENGINH DATE : 11/10

04-JAN-2012 15:12
R:\Structures\NGUYEN\FINAL PLANS\I3819A_SD_E2_08.dgn
dahodge

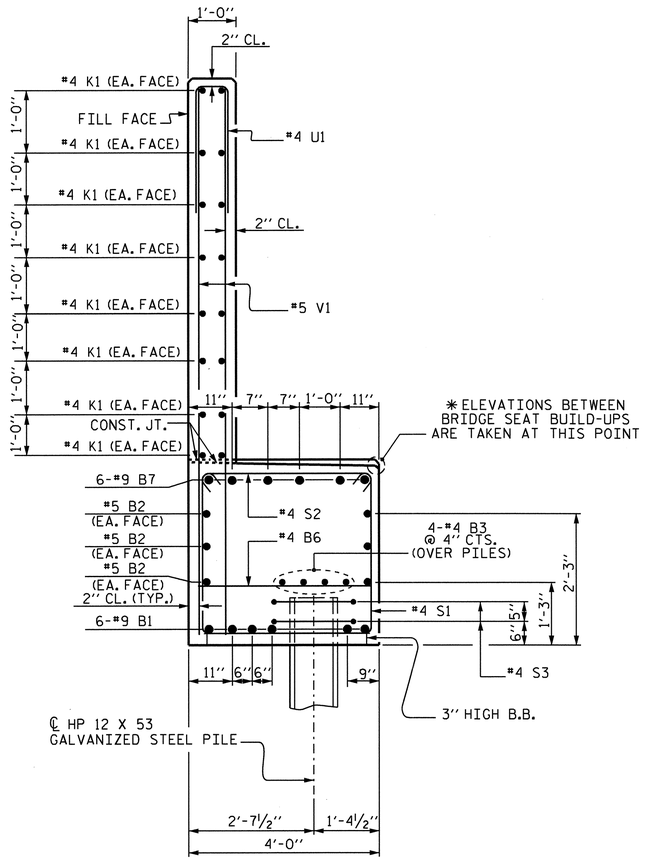


SECTION A-A

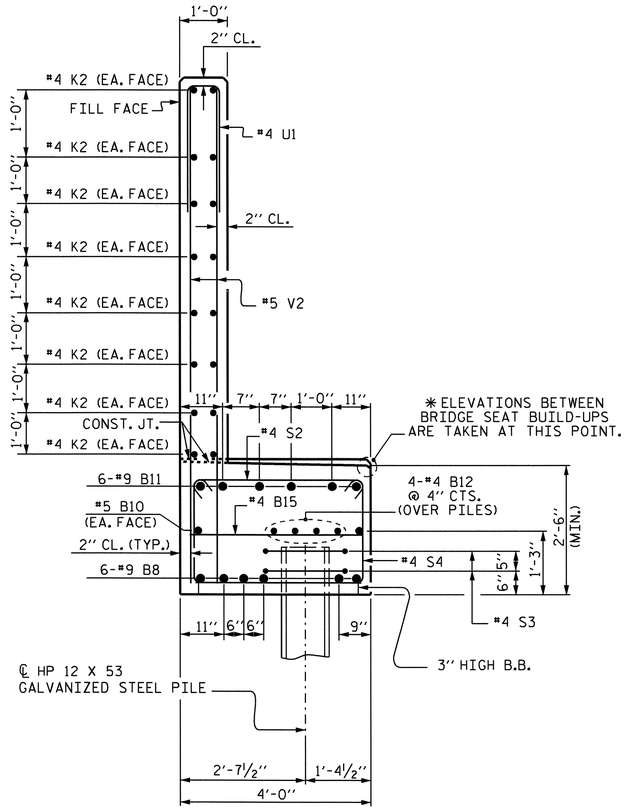


SECTION B-B

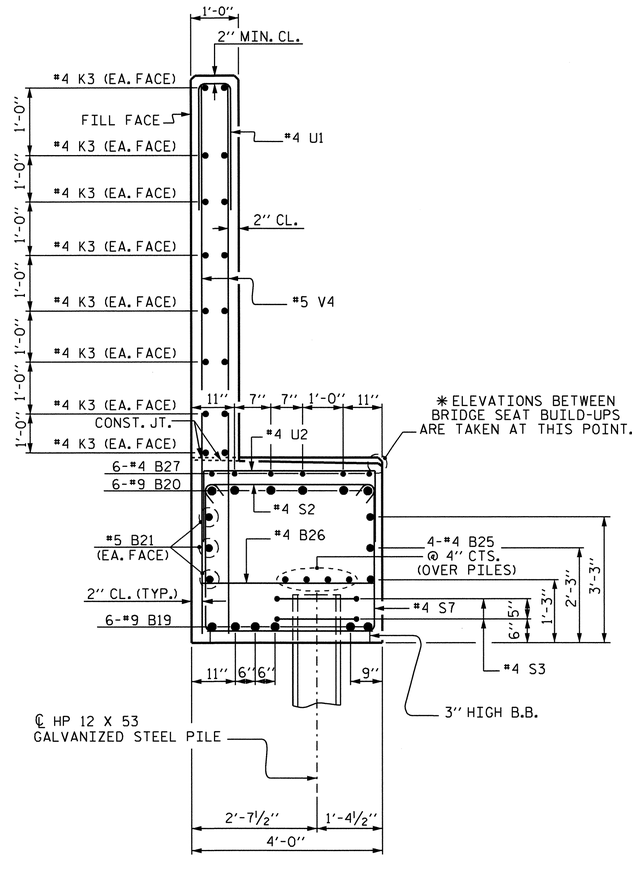


SECTION C-C

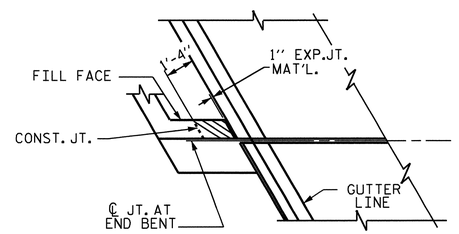


PLAN

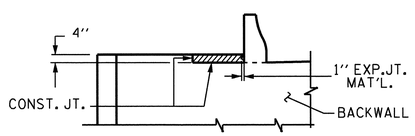


ELEVATION

## BLOCKOUT IN WING WALL

NOTE: THE CONCRETE IN THE SHADED AREA OF THE WING SHALL BE POURED AFTER THE BARRIER RAIL IS CAST IF SLIP FORMING IS USED.

PROJECT NO. I-3819A

IREDELL COUNTY

STATION: 86+06.00 -L-

SHEET 5 OF 6

STATE OF NORTH CAROLINA
DEPARTMENT OF TRANSPORTATION
RALEIGH

SUBSTRUCTURE
END BENT No. 2

| REVISIONS | | | | | | SHEET NO. |
|---|---|---|---|---|---|---|
| NO. | BY: | DATE: | NO. | BY: | DATE: | S-79 |
| 1 | | | 3 | | | TOTAL SHEETS |
| 2 | | | 4 | | | 382 |

NORTH CAROLINA PROFESSIONAL SEAL 15779 ENGINEER JOHN R. DUGGINS, JR.
1/5/12

DRAWN BY : M. POOLE DATE : 06/10
CHECKED BY : A. SORSENGINH DATE : 11/10

20-OCT-2011 07:53
R:\Structures\NGUYEN\mpoole\I3819A_SD_E2_08.dgn
dahodge

| TOTAL QUANTITIES | |
|---|---|
| REINFORCING STEEL | 27649 LBS. |
| CLASS A CONCRETE | 220.2 C.Y. |
| HP 12 X 53 STEEL PILES | |
| No. 48 | 1920 LIN. FT. |

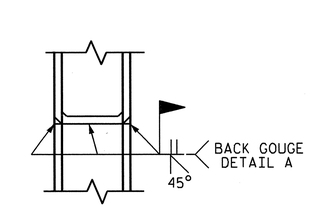


✳ PILE VERTICAL

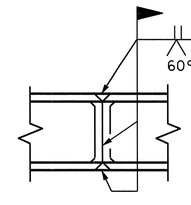


✳ PILE HORIZONTAL OR VERTICAL

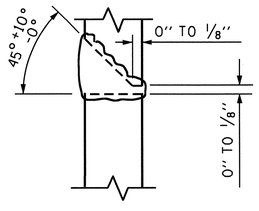


DETAIL A

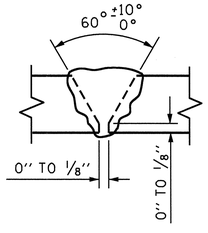


DETAIL B

✳ POSITION OF PILE DURING WELDING.

## PILE SPLICE DETAILS

## BAR TYPES

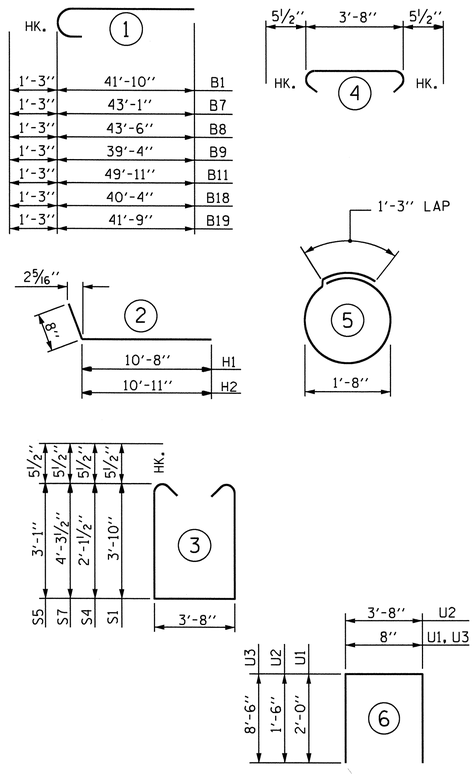


ALL BAR DIMENSIONS ARE OUT TO OUT.

## BILL OF MATERIAL

### END BENT No. 2

#### STAGE I

| BAR | NO. | SIZE | TYPE | LENGTH | WEIGHT |
|---|---|---|---|---|---|
| B1 | 12 | #9 | 1 | 43'-1" | 1758 |
| B2 | 12 | #5 | STR | 39'-10" | 499 |
| B3 | 12 | #4 | STR | 27'-4" | 219 |
| B4 | 12 | #4 | STR | 26'-8" | 214 |
| B5 | 18 | #4 | STR | 2'-9" | 33 |
| B6 | 19 | #4 | STR | 3'-8" | 47 |
| B7 | 12 | #9 | 1 | 44'-4" | 1809 |
| D1 | 12 | #6 | STR | 3'-0" | 54 |
| K1 | 48 | #4 | STR | 28'-0" | 898 |
| S1 | 77 | #5 | 3 | 12'-3" | 984 |
| S2 | 77 | #5 | 4 | 4'-7" | 368 |
| S3 | 32 | #4 | 5 | 6'-6" | 139 |
| U1 | 76 | #4 | 6 | 4'-8" | 237 |
| U2 | 43 | #4 | 6 | 6'-8" | 191 |
| U3 | 1 | #4 | 6 | 17'-8" | 12 |
| V1 | 152 | #5 | STR | 11'-3" | 1784 |

REINFORCING STEEL 9246 LBS.

CLASS A CONCRETE BREAKDOWN
POUR #1
(CAP) 53.4 C.Y.
POUR #2
(BACKWALL) 20.9 C.Y.
TOTAL 74.3 C.Y.

HP 12 x 53 GALVANIZED STEEL PILES
NO. 17 680 LIN FT.

#### STAGE II

| BAR | NO. | SIZE | TYPE | LENGTH | WEIGHT |
|---|---|---|---|---|---|
| B8 | 12 | #9 | 1 | 44'-9" | 1826 |
| B9 | 6 | #9 | 1 | 40'-7" | 828 |
| B10 | 4 | #5 | STR | 41'-5" | 173 |
| B11 | 6 | #9 | 1 | 51'-2" | 1044 |
| B12 | 12 | #4 | STR | 28'-6" | 228 |
| B13 | 18 | #4 | STR | 2'-9" | 33 |
| B14 | 6 | #4 | STR | 23'-5" | 94 |
| B15 | 23 | #4 | STR | 3'-8" | 56 |
| B16 | 6 | #4 | STR | 27'-9" | 111 |
| B17 | 2 | #5 | STR | 33'-8" | 70 |
| D1 | 12 | #6 | STR | 3'-0" | 54 |
| H1 | 12 | #5 | 2 | 11'-4" | 142 |
| H2 | 12 | #5 | 2 | 11'-7" | 145 |
| H3 | 4 | #4 | STR | 2'-8" | 7 |
| K2 | 48 | #4 | STR | 29'-6" | 946 |
| S4 | 39 | #5 | 3 | 8'-10" | 359 |
| S2 | 77 | #5 | 4 | 4'-7" | 368 |
| S3 | 32 | #4 | 5 | 6'-6" | 139 |
| S5 | 38 | #5 | 3 | 10'-9" | 426 |
| U1 | 78 | #4 | 6 | 4'-8" | 243 |
| U2 | 44 | #4 | 6 | 6'-8" | 196 |
| V2 | 156 | #5 | STR | 9'-5" | 1532 |
| V3 | 30 | #5 | STR | 11'-2" | 349 |

REINFORCING STEEL 9369 LBS.

CLASS A CONCRETE BREAKDOWN
POUR #1
(CAP & LOWER WING) 42.2 C.Y.
POUR #2
(BACKWALL & UPPER WING) 28.0 C.Y.
TOTAL 70.2 C.Y.

HP 12 x 53 GALVANIZED STEEL PILES
NO. 17 680 LIN FT.

#### STAGE III

| BAR | NO. | SIZE | TYPE | LENGTH | WEIGHT |
|---|---|---|---|---|---|
| B18 | 12 | #9 | 1 | 41'-7" | 1697 |
| B19 | 12 | #9 | 1 | 43'-0" | 1754 |
| B20 | 12 | #5 | STR | 38'-7" | 483 |
| B21 | 6 | #4 | STR | 27'-3" | 109 |
| B22 | 24 | #4 | STR | 2'-9" | 44 |
| B23 | 12 | #4 | STR | 26'-6" | 212 |
| B24 | 19 | #4 | STR | 3'-8" | 47 |
| B25 | 6 | #4 | STR | 14'-6" | 58 |
| K3 | 48 | #4 | STR | 26'-6" | 850 |
| S7 | 77 | #5 | 3 | 13'-2" | 1057 |
| S2 | 77 | #5 | 4 | 4'-7" | 368 |
| S3 | 32 | #4 | 5 | 6'-6" | 139 |
| U1 | 75 | #4 | 6 | 4'-8" | 234 |
| U2 | 41 | #4 | 6 | 6'-8" | 183 |
| V4 | 150 | #5 | STR | 11'-6" | 1799 |

REINFORCING STEEL 9034 LBS.

CLASS A CONCRETE BREAKDOWN
POUR #1
(CAP) 55.0 C.Y.
POUR #2
(BACKWALL) 20.7 C.Y.
TOTAL 75.7 C.Y.

HP 12 x 53 GALVANIZED STEEL PILES
NO. 14 560 LIN FT.

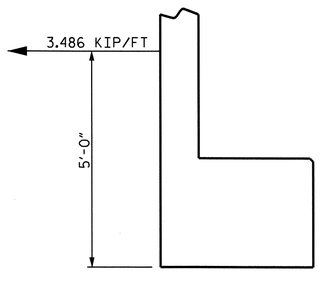


## MSE REINFORCING STRAP LOAD DETAIL

### MSE REINFORCING STRAP NOTES

DESIGN REINFORCEMENT CONNECTED TO END BENT CAPS FOR THE LOADING SHOWN AND CAST THE REINFORCEMENT CONNECTION HARDWARE INTO THE CAP BACKWALL. MAINTAIN A MINIMUM CLEARANCE OF 3" BETWEEN THE HARDWARE AND REINFORCING STEEL IN THE CAP.

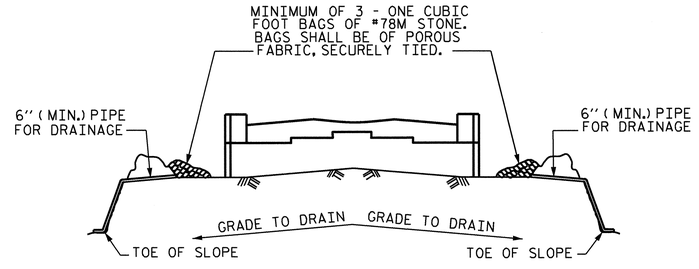


BAGGED STONE AND PIPE SHALL BE PLACED IMMEDIATELY AFTER COMPLETION OF END BENT EXCAVATION. PIPE MAY BE EITHER CONCRETE, CORRUGATED STEEL, CORRUGATED ALUMINUM ALLOY, OR CORRUGATED PLASTIC. PERFORATED PIPE WILL NOT BE ALLOWED.

BAGGED STONE SHALL REMAIN IN PLACE UNTIL THE ENGINEER DIRECTS THAT IT BE REMOVED. THE CONTRACTOR SHALL REMOVE AND DISPOSE OF SILT ACCUMULATIONS AT BAGGED STONE WHEN SO DIRECTED BY THE ENGINEER. BAGS SHALL BE REMOVED AND REPLACED WHENEVER THE ENGINEER DETERMINES THAT THEY HAVE DETERIORATED AND LOST THEIR EFFECTIVENESS.

NO SEPARATE PAYMENT WILL BE MADE FOR THIS WORK AND THE ENTIRE COST OF THIS WORK SHALL BE INCLUDED IN THE UNIT CONTRACT PRICE BID FOR THE SEVERAL PAY ITEMS.

## TEMPORARY DRAINAGE AT END BENT

NORTH CAROLINA PROFESSIONAL SEAL 15779 ENGINEER JOHN R. DUGGINS, JR.
1/5/12

PROJECT NO. I-3819A
IREDELL COUNTY
STATION: 86+06.00 -L-

SHEET 6 OF 6

STATE OF NORTH CAROLINA
DEPARTMENT OF TRANSPORTATION
RALEIGH

SUBSTRUCTURE
END BENT No. 2

| REVISIONS | | | | | | SHEET NO. |
|---|---|---|---|---|---|---|
| NO. | BY: | DATE: | NO. | BY: | DATE: | S-80 |
| 1 | | | 3 | | | TOTAL SHEETS |
| 2 | | | 4 | | | 382 |

DRAWN BY : M. POOLE DATE : 06/10
CHECKED BY : A. SORSENGINH DATE : 11/10

04-JAN-2012 15:12
R:\Structures\NGUYEN\FINAL PLANS\I3819A_SD_E2_08.dgn
dahadge

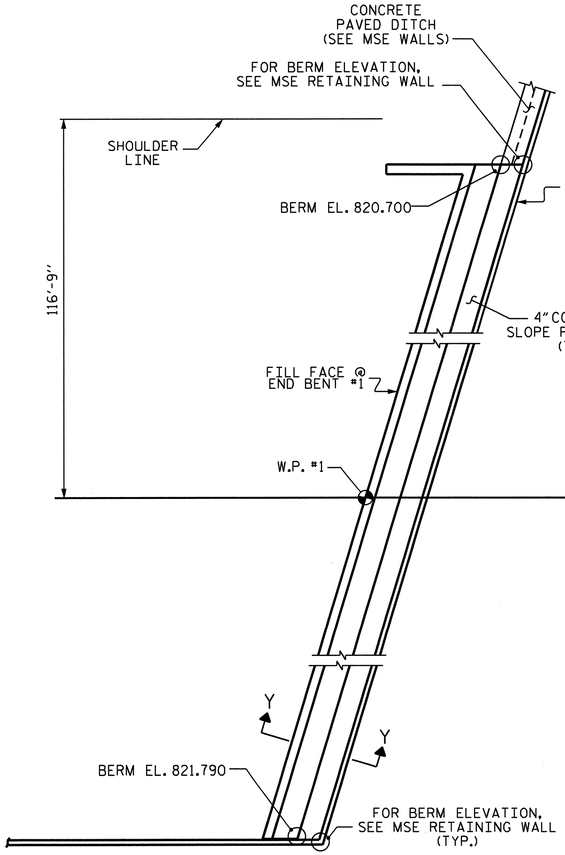


END BENT #1

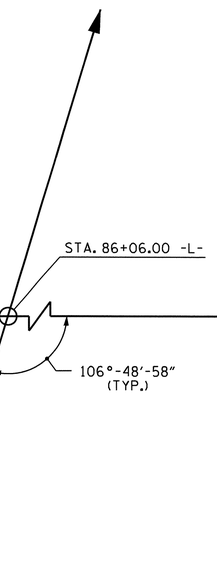


PLAN

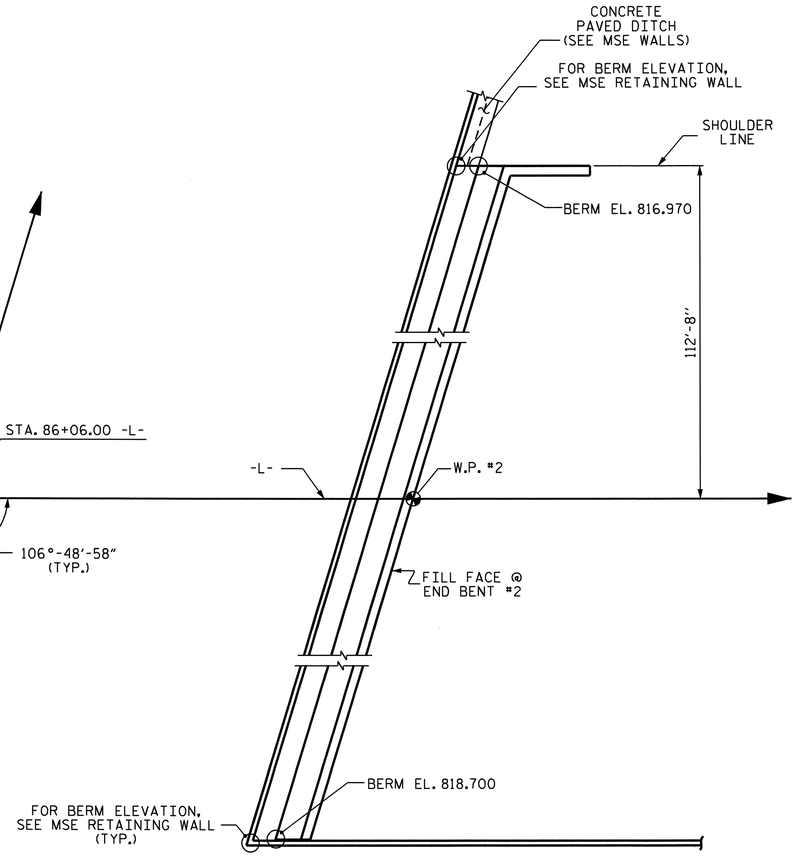


END BENT #2

## GENERAL NOTES

SLOPE PROTECTION SHALL BE PLACED UNDER THE ENDS OF THE BRIDGE AS SHOWN IN THE DETAILS. THE CONTRACTOR, AT HIS OPTION, MAY USE ALTERNATE "B" ONLY FOR HIGHWAY OVER HIGHWAY GRADE SEPARATIONS WITH 2:1 END BENT SLOPE IN RURAL, UNPOPULATED AREAS. STRAIGHT EDGING WILL NOT BE REQUIRED UNLESS, IN THE OPINION OF THE ENGINEER, VISUAL INSPECTION INDICATES A NEED FOR IT. MEASUREMENT AND PAYMENT SHALL BE AS PRESCRIBED IN SECTION 462 OF THE STANDARD SPECIFICATIONS. FOR BERM WIDTH, SEE GENERAL DRAWING.

## ALTERNATE "A"

ALTERNATE "A" SHALL CONSIST OF 4" POURED-IN-PLACE CONCRETE PAVING AS SHOWN IN THE DETAILS ON THIS SHEET. CONCRETE SHALL BE CLASS "B". THE CONCRETE SURFACE SHALL BE FLOATED WITH A WOODEN FLOAT AND FINISHED. WELDED WIRE FABRIC REINFORCING SHALL BE 6 X 6 - W1.4 X W1.4, 60" WIDE. SLOPE PROTECTION SHALL BE POURED IN 5' STRIPS AS SHOWN IN THE "POURING DETAIL" WITH 2'-0" LONG #4 BARS PLACED ALONG THE SLOPE BETWEEN STRIPS AT 1'-6" MAXIMUM SPACING. SLOPE PROTECTION MAY BE POURED IN ALTERNATE 4' AND 5' STRIPS AS SHOWN IN THE "OPTIONAL POURING DETAIL" WITH ADJACENT RUNS OF WELDED WIRE FABRIC LAPPING AT LEAST 6". THE COST OF THE WELDED WIRE FABRIC AND #4 BARS, IF USED, SHALL BE INCLUDED IN THE CONTRACT UNIT PRICE BID PER SQUARE YARD FOR SLOPE PROTECTION.

| BRIDGE @ STATION 86+06.00 -L- | 4" INCH SLOPE PROTECTION | * WELDED WIRE FABRIC 60 INCHES WIDE |
|---|---|---|
| | SQUARE YARDS | APPROX. L.F. |
| END BENT 1 | 52 | 104 |
| END BENT 2 | 52 | 104 |

* QUANTITY SHOWN IS BASED ON 5' POURS.

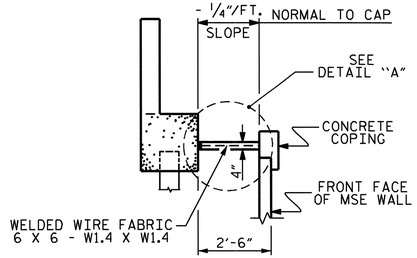


SECTION Y-Y

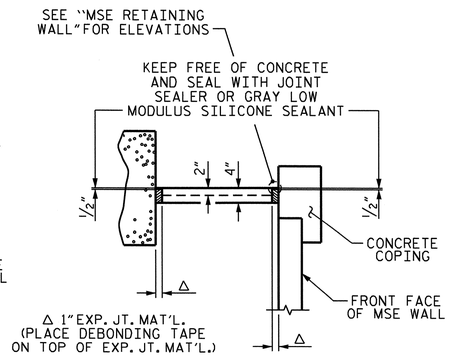


DETAIL A

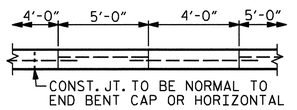


POUR A 4'-0" STRIP FIRST.

OPTIONAL POURING DETAIL

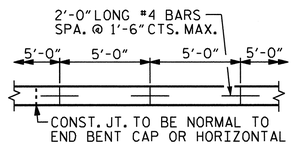


POURING DETAIL

PROJECT NO. I-3819A

IREDELL COUNTY

STATION: 86+06.00 -L-
26+83.44 -Y4-

STATE OF NORTH CAROLINA
DEPARTMENT OF TRANSPORTATION
RALEIGH

# SLOPE PROTECTION DETAILS

NORTH CAROLINA PROFESSIONAL SEAL 15779 ENGINEER JOHN R. DUGGINS, JR.
1/5/12

| REVISIONS | | | | | | SHEET NO. |
|---|---|---|---|---|---|---|
| NO. | BY: | DATE: | NO. | BY: | DATE: | S-81 |
| 1 | | | 3 | | | TOTAL SHEETS |
| 2 | | | 4 | | | 382 |

| | | |
|---|---|---|
| ASSEMBLED BY : Z. H. BROWN | DATE : 12/28/10 | |
| CHECKED BY : J. R. DUGGINS | DATE : 12/10 | |
| DRAWN BY : ELR 5/92 | REV. 7/10/01 | LES/RDR |
| CHECKED BY : GRP 6/92 | REV. 5/7/03 | RWW/JTE |
| | REV. 5/1/06 | TLA/GM |

20-OCT-2011 07:52
R:\Structures\NGUYEN\zhbrown\I-3819a_sd_SP.dgn
dahodge

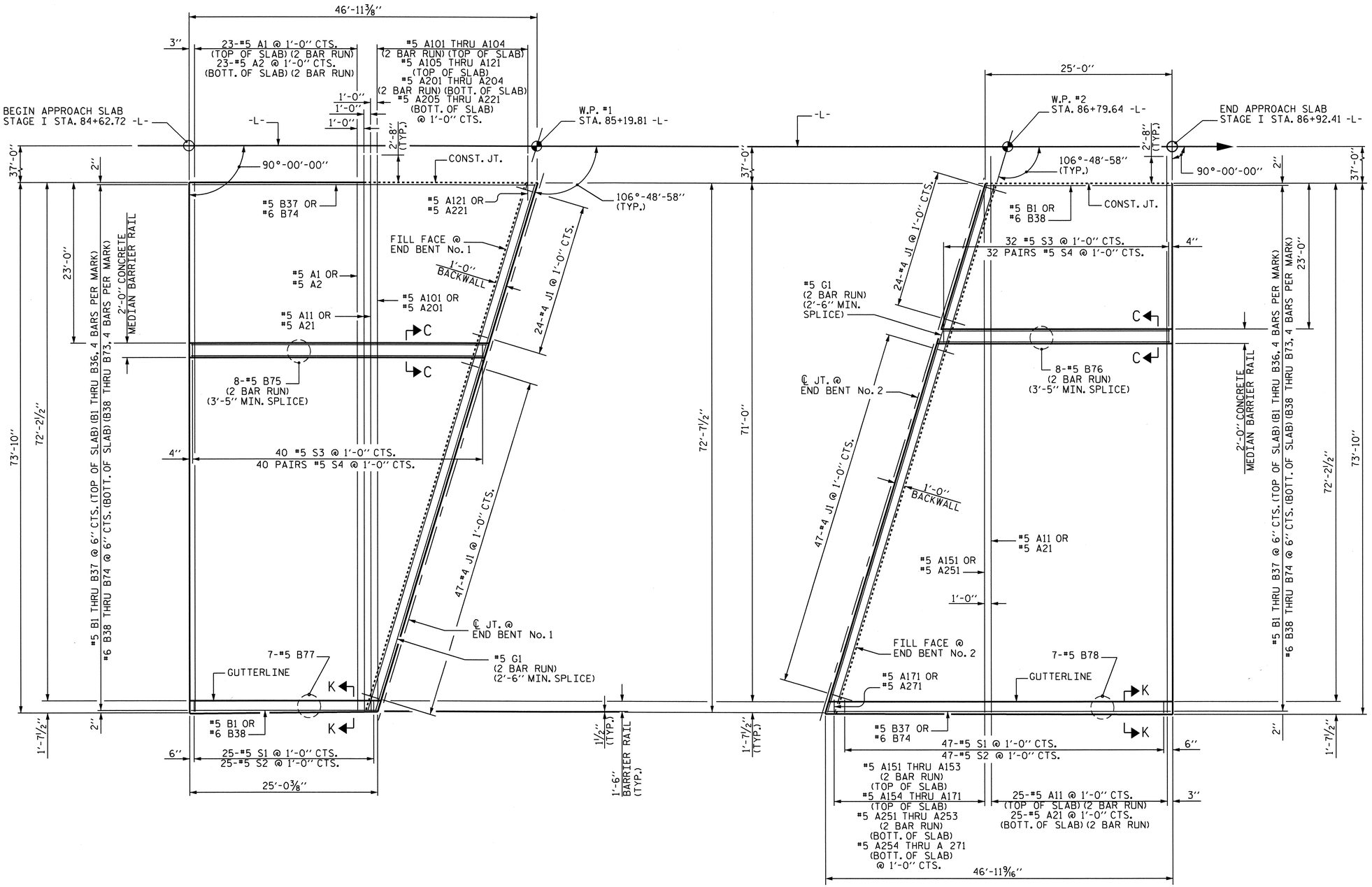


PLAN @ END BENT No. 1

PLAN @ END BENT No. 2

2'-6" MIN. SPLICE #5 "A" TOP BARS
2'-2" MIN. SPLICE #5 "A" BOTT. BARS

DRAWN BY : M. POOLE DATE : 9/10
CHECKED BY : J.R. DUGGINS DATE : 11/10

20-OCT-2011 07:51
R:\Structures\NGUYEN\mpoole\I3819A_SD_AS2_08.dgn
dahodge

NORTH CAROLINA PROFESSIONAL SEAL 15779 ENGINEER JOHN R. DUGGINS, JR.
1/5/12

PROJECT NO. I-3819A
IREDELL COUNTY
STATION: 86+06.00 -L-

SHEET 1 OF 5

STATE OF NORTH CAROLINA
DEPARTMENT OF TRANSPORTATION
RALEIGH

# BRIDGE APPROACH SLAB FOR RIGID PAVEMENT WITH BARRIER RAIL STAGE I

| REVISIONS | | | | | | SHEET NO. |
|---|---|---|---|---|---|---|
| NO. | BY: | DATE: | NO. | BY: | DATE: | S-82 |
| 1 | | | 3 | | | TOTAL SHEETS |
| 2 | | | 4 | | | 382 |

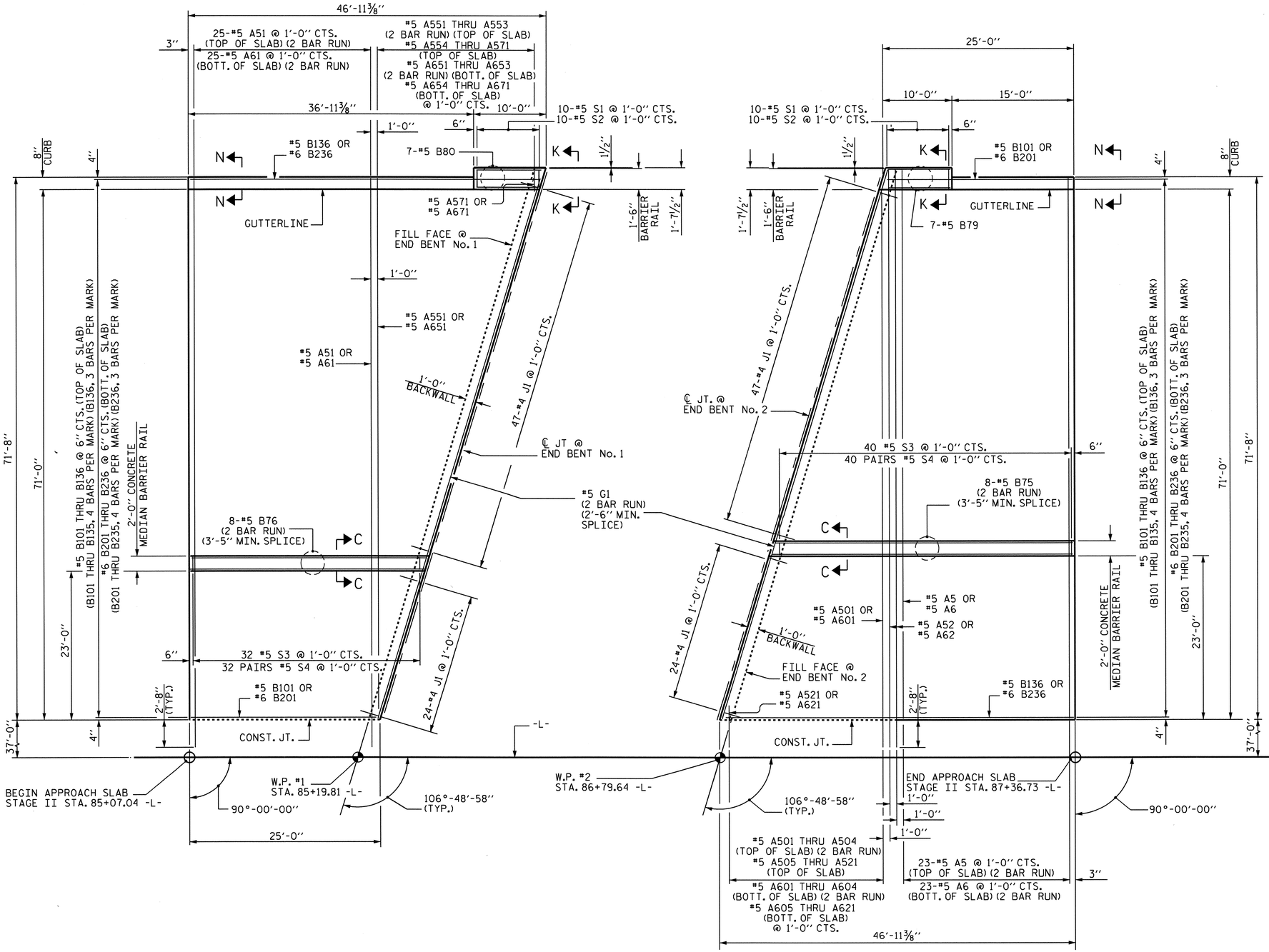


2'-6" MIN. SPLICE #5 "A" TOP BARS
2'-2" MIN. SPLICE #5 "A" BOTT. BARS

PLAN @ END BENT No. 1

PLAN @ END BENT No. 2

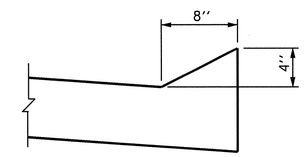


SECTION N-N

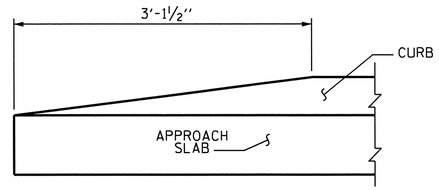


END OF CURB WITHOUT SHOULDER BERM GUTTER

# CURB DETAILS

PROJECT NO. I-3819A

IREDELL COUNTY

STATION: 86+06.00 -L-

SHEET 2 OF 5

STATE OF NORTH CAROLINA
DEPARTMENT OF TRANSPORTATION
RALEIGH

BRIDGE APPROACH SLAB FOR RIGID PAVEMENT WITH BARRIER RAIL STAGE II

| REVISIONS | | | | | | SHEET NO. |
|---|---|---|---|---|---|---|
| NO. | BY: | DATE: | NO. | BY: | DATE: | S-83 |
| 1 | | | 3 | | | TOTAL SHEETS |
| 2 | | | 4 | | | 382 |

NORTH CAROLINA PROFESSIONAL SEAL 15779 ENGINEER JOHN R. DUGGINS, JR.

11/5/12 John R. Duggins

DRAWN BY : M. POOLE DATE : 9/10
CHECKED BY : J.R. DUGGINS DATE : 11/10

20-OCT-2011 07:51
R:\Structures\NGUYEN\mpoole\I3819A_SD_AS2_08.dgn
dahodge

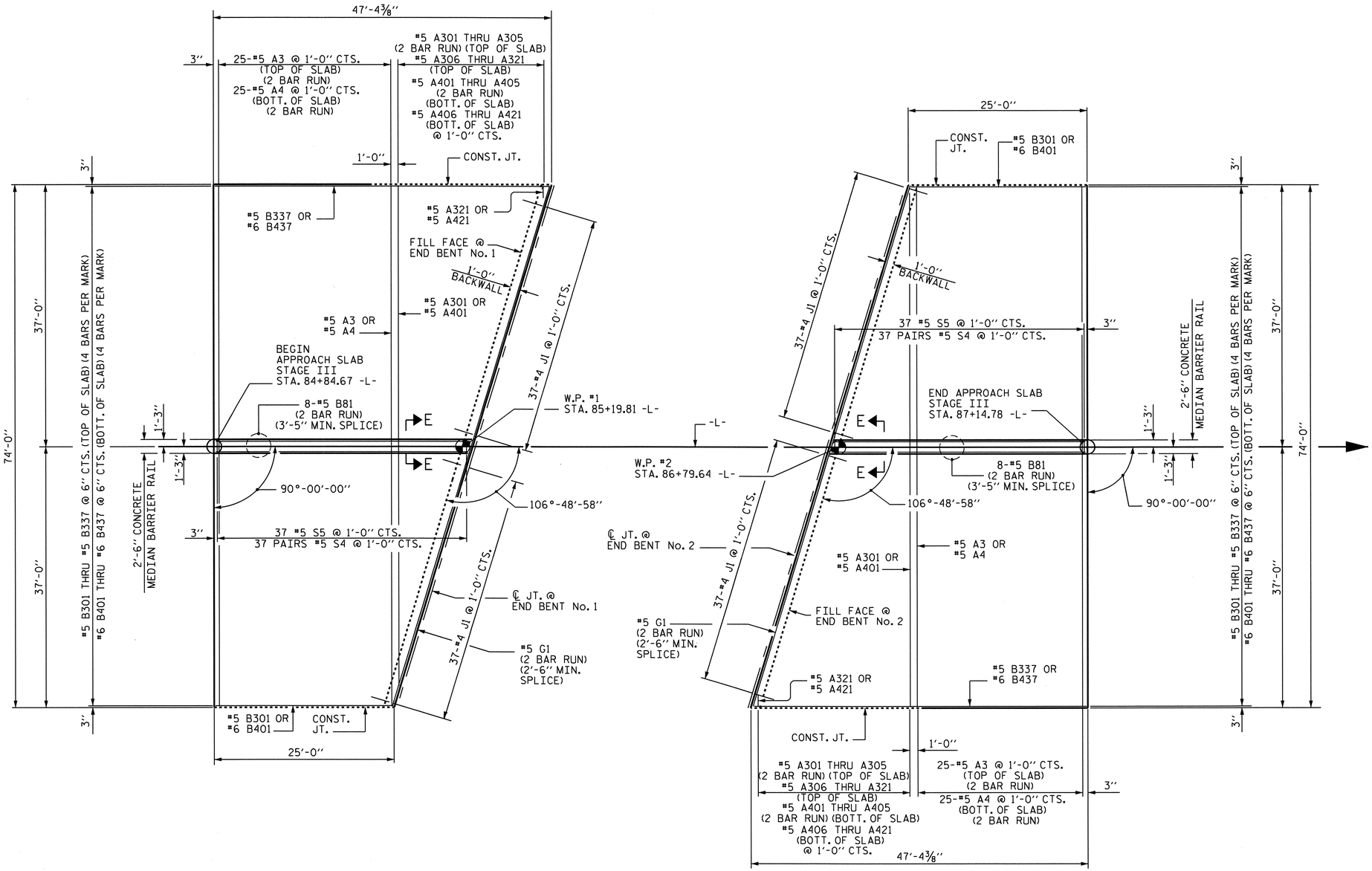


2'-6" MIN. SPLICE #5 "A" TOP BARS
2'-2" MIN. SPLICE #5 "A" BOTT. BARS

PLAN @ END BENT No. 1

PLAN @ END BENT No. 2

PROJECT NO. I-3819A

IREDELL COUNTY

STATION: 86+06.00 -L-

SHEET 3 OF 5

STATE OF NORTH CAROLINA
DEPARTMENT OF TRANSPORTATION
RALEIGH

# BRIDGE APPROACH SLAB FOR RIGID PAVEMENT WITH BARRIER RAIL STAGE III

| REVISIONS | | | | | | SHEET NO. |
|---|---|---|---|---|---|---|
| NO. | BY: | DATE: | NO. | BY: | DATE: | S-84 |
| 1 | | | 3 | | | TOTAL SHEETS |
| 2 | | | 4 | | | 382 |

NORTH CAROLINA PROFESSIONAL SEAL 15779 ENGINEER JOHN R. DUGGINS, JR.
11/5/12

DRAWN BY : M. POOLE DATE : 9/10
CHECKED BY : J.R. DUGGINS DATE : 11/10

20-OCT-2011 07:51
R:\Structures\NGUYEN\mpoole\I3819A_SD_AS2_08.dgn
dahodge

## NOTES

THE COST OF THE BARRIER RAILS AND CONCRETE MEDIAN BARRIERS ON THE APPROACH SLAB IS INCLUDED IN THE VARIOUS PAY ITEMS "CONCRETE BARRIER RAIL (LIN. FT.)", "2'-0" CONCRETE MEDIAN BARRIER (LIN. FT.)" AND "2'-6" CONCRETE MEDIAN BARRIER (LIN. FT.)" AND SHALL NOT BE INCLUDED IN THE LUMP SUM CONTRACT PRICE BID FOR BRIDGE APPROACH SLABS.

BRIDGE APPROACH SLABS SHALL NOT BE CONSTRUCTED PRIOR TO COMPLETION OF THE BRIDGE DECK.

AREA BETWEEN THE WINGWALL AND APPROACH SLAB SHALL BE GRADED TO DRAIN THE WATER AWAY FROM THE FILL FACE OF THE BRIDGE AND SHALL BE PAVED. SEE ROADWAY PLANS.

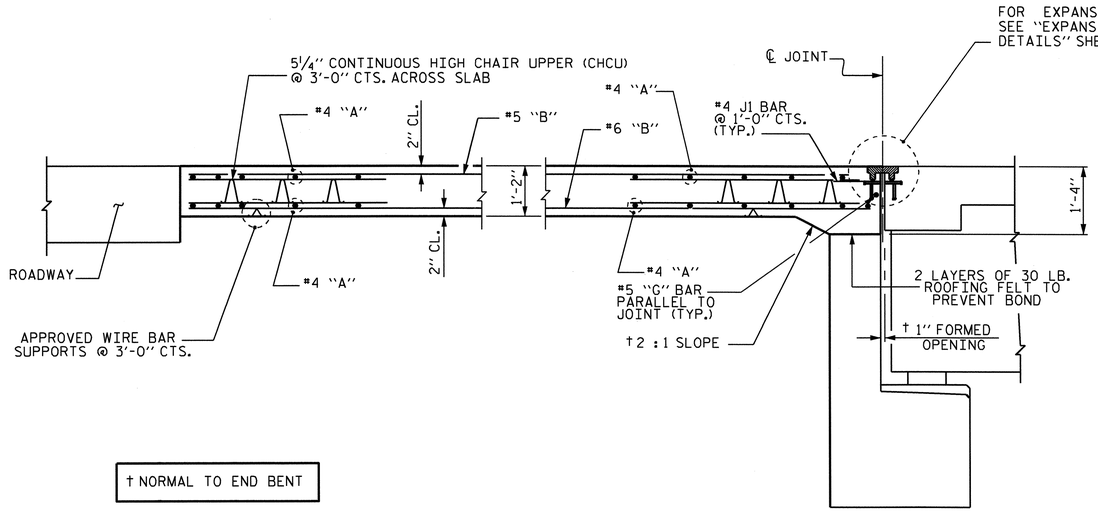


† NORMAL TO END BENT

## SECTION THRU SLAB

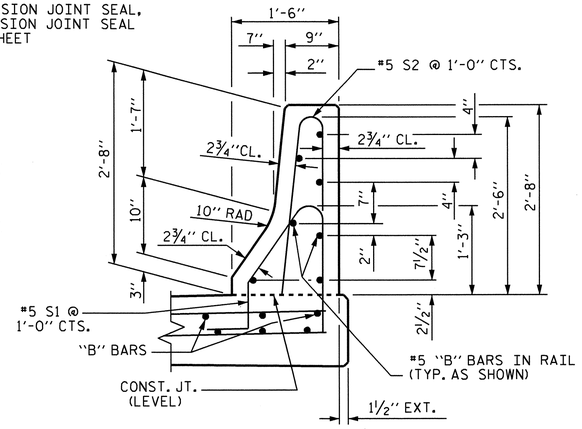


## SECTION K-K

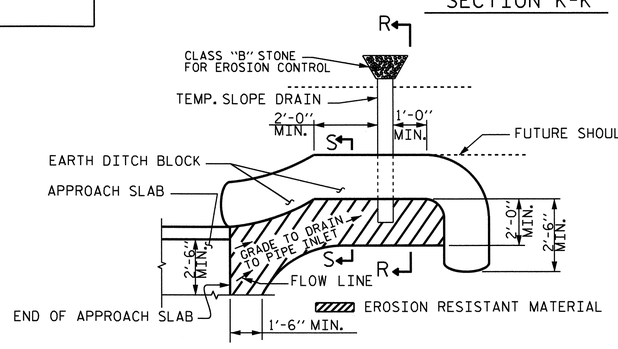


NOTE: IMMEDIATELY AFTER THE CONSTRUCTION OF THE APPROACH SLAB, THE CONTRACTOR SHALL PROVIDE TEMPORARY BERM AND SLOPE DRAIN. CONTRACTOR SHALL GRADE TO PIPE INLET AND PROVIDE EROSION RESISTANT MATERIAL AS SHOWN. THE EROSION RESISTANT MATERIAL SHALL BE EITHER 1) ASPHALT PLANT MIX, TYPE 1 OR TYPE 2, MIN. 2" DEPTH, 2) EROSION CONTROL MAT, OR 3) CONCRETE, AS DIRECTED BY THE ENGINEER. THE SLOPE DRAIN SHALL CONSIST OF A NON-PERFORATED TEMPORARY DRAINAGE PIPE, 12 INCHES IN DIAMETER.

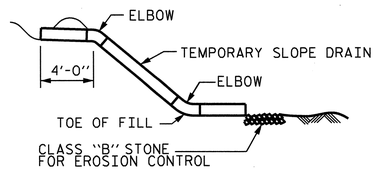


## SECTION R-R

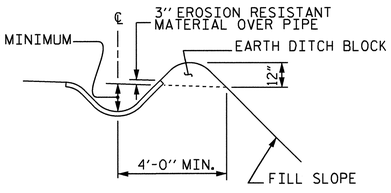


## SECTION S-S

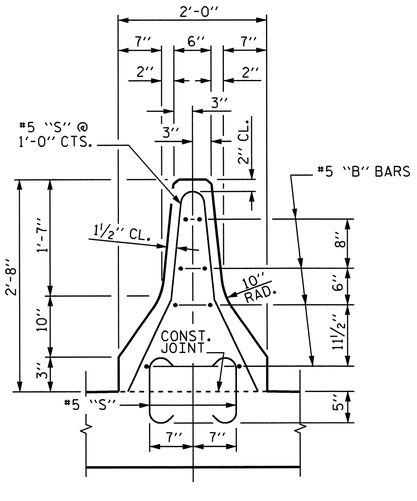


## SECTION C-C

#5 "S" MAY BE PUSHED INTO GREEN CONCRETE AFTER SCREEDING (FOR 2'-0" BARRIER)

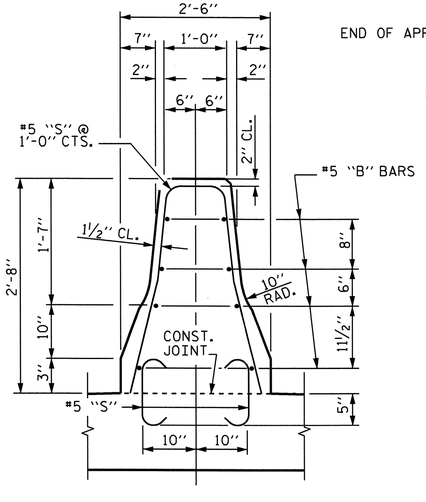


## SECTION E-E

#5 "S" MAY BE PUSHED INTO GREEN CONCRETE AFTER SCREEDING (FOR 2'-6" BARRIER)

PLAN VIEW

## TEMPORARY BERM AND SLOPE DRAIN DETAILS

(TO BE USED WHEN SHOULDER BERM GUTTER IS REQUIRED)

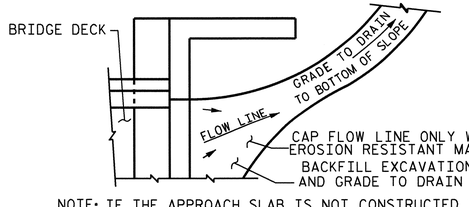


NOTE: IF THE APPROACH SLAB IS NOT CONSTRUCTED IMMEDIATELY AFTER THE BACKFILLING OF THE END BENT EXCAVATION, GRADE TO DRAIN TO THE BOTTOM OF THE SLOPE AND PROVIDE EROSION RESISTANT MATERIAL, SUCH AS FIBERGLASS ROVING OR AS DIRECTED BY THE ENGINEER TO PREVENT SOIL EROSION AND TO PROTECT THE AREA ADJACENT TO THE STRUCTURE. THE CONTRACTOR WILL BE REQUIRED TO REMOVE THESE MATERIALS PRIOR TO CONSTRUCTION OF THE APPROACH SLAB.

## TEMPORARY DRAINAGE DETAIL

NORTH CAROLINA PROFESSIONAL SEAL 15779 ENGINEER JOHN R. DUGGINS, JR.
11/5/12

PROJECT NO. I-3819A
IREDELL COUNTY
STATION: 86+06.00 -L-

SHEET 4 OF 5

STATE OF NORTH CAROLINA
DEPARTMENT OF TRANSPORTATION
RALEIGH

# BRIDGE APPROACH SLAB FOR RIGID PAVEMENT WITH BARRIER RAIL

| REVISIONS | | | | | | SHEET NO. |
|---|---|---|---|---|---|---|
| NO. | BY: | DATE: | NO. | BY: | DATE: | S-85 |
| 1 | | | 3 | | | TOTAL SHEETS |
| 2 | | | 4 | | | 382 |

DRAWN BY : M. POOLE DATE : 9/10
CHECKED BY : J.R. DUGGINS DATE : 11/10

04-JAN-2012 15:11
R:\Structures\NGUYEN\FINAL PLANS\I3819A_SD_AS2_08.dgn
dahodge

## APPROACH SLAB STAGE I

| BAR | NO. | SIZE | TYPE | LENGTH | WEIGHT |
|---|---|---|---|---|---|
| ✱A1 | 46 | 5 | STR | 38'-0" | 1823 |
| A2 | 46 | 5 | STR | 37'-10" | 1815 |
| ✱A11 | 50 | 5 | STR | 39'-5" | 2056 |
| A21 | 50 | 5 | STR | 39'-3" | 2047 |
| ✱A101 | 2 | 5 | STR | 37'-8" | 79 |
| ✱A102 | 2 | 5 | STR | 36'-0" | 75 |
| ✱A103 | 2 | 5 | STR | 34'-4" | 72 |
| ✱A104 | 2 | 5 | STR | 32'-8" | 68 |
| ✱A105 | 1 | 5 | STR | 59-'6" | 62 |
| ✱A106 | 1 | 5 | STR | 56'-2" | 59 |
| ✱A107 | 1 | 5 | STR | 52'-10" | 55 |
| ✱A108 | 1 | 5 | STR | 49'-7" | 52 |
| ✱A109 | 1 | 5 | STR | 46'-3" | 48 |
| ✱A110 | 1 | 5 | STR | 42'-11" | 45 |
| ✱A111 | 1 | 5 | STR | 39'-7" | 41 |
| ✱A112 | 1 | 5 | STR | 36'-4" | 38 |
| ✱A113 | 1 | 5 | STR | 33'-0" | 34 |
| ✱A114 | 1 | 5 | STR | 29'-8" | 31 |
| ✱A115 | 1 | 5 | STR | 26'-4" | 27 |
| ✱A116 | 1 | 5 | STR | 23'-1" | 24 |
| ✱A117 | 1 | 5 | STR | 19'-9" | 21 |
| ✱A118 | 1 | 5 | STR | 16'-5" | 17 |
| ✱A119 | 1 | 5 | STR | 13'-1" | 14 |
| ✱A120 | 1 | 5 | STR | 9'-10" | 10 |
| ✱A121 | 1 | 5 | STR | 6'-6" | 7 |
| ✱A151 | 2 | 5 | STR | 36'-3" | 76 |
| ✱A152 | 2 | 5 | STR | 34'-7" | 72 |
| ✱A153 | 2 | 5 | STR | 32'-11" | 69 |
| ✱A154 | 1 | 5 | STR | 60'-0" | 63 |
| ✱A155 | 1 | 5 | STR | 56'-8" | 59 |
| ✱A156 | 1 | 5 | STR | 53'-4" | 56 |
| ✱A157 | 1 | 5 | STR | 50'-0" | 52 |
| ✱A158 | 1 | 5 | STR | 46'-9" | 49 |
| ✱A159 | 1 | 5 | STR | 43'-5" | 45 |
| ✱A160 | 1 | 5 | STR | 40'-1" | 42 |
| ✱A161 | 1 | 5 | STR | 36'-9" | 38 |
| ✱A162 | 1 | 5 | STR | 33'-6" | 35 |
| ✱A163 | 1 | 5 | STR | 30'-2" | 31 |
| ✱A164 | 1 | 5 | STR | 26'-10" | 28 |
| ✱A165 | 1 | 5 | STR | 23'-6" | 25 |
| ✱A166 | 1 | 5 | STR | 20'-3" | 21 |
| ✱A167 | 1 | 5 | STR | 16'-11" | 18 |
| ✱A168 | 1 | 5 | STR | 13'-7" | 14 |
| ✱A169 | 1 | 5 | STR | 10'-3" | 11 |
| ✱A170 | 1 | 5 | STR | 7'-0" | 7 |
| ✱A171 | 1 | 5 | STR | 3'-8" | 4 |
| A201 | 2 | 5 | STR | 37'-8" | 79 |
| A202 | 2 | 5 | STR | 36'-0" | 75 |
| A203 | 2 | 5 | STR | 34'-4" | 72 |
| A204 | 2 | 5 | STR | 32'-8" | 68 |
| A205 | 1 | 5 | STR | 59-'6" | 62 |
| A206 | 1 | 5 | STR | 56'-2" | 59 |
| A207 | 1 | 5 | STR | 52'-10" | 55 |
| A208 | 1 | 5 | STR | 49'-7" | 52 |
| A209 | 1 | 5 | STR | 46'-3" | 48 |
| A210 | 1 | 5 | STR | 42'-11" | 45 |
| A211 | 1 | 5 | STR | 39'-7" | 41 |
| A212 | 1 | 5 | STR | 36'-4" | 38 |
| A213 | 1 | 5 | STR | 33'-0" | 34 |
| A214 | 1 | 5 | STR | 29'-8" | 31 |
| A215 | 1 | 5 | STR | 26'-4" | 27 |
| A216 | 1 | 5 | STR | 23'-1" | 24 |
| A217 | 1 | 5 | STR | 19'-9" | 21 |
| A218 | 1 | 5 | STR | 16'-5" | 17 |
| A219 | 1 | 5 | STR | 13'-1" | 14 |
| A220 | 1 | 5 | STR | 9'-10" | 10 |
| A221 | 1 | 5 | STR | 6'-6" | 7 |
| A251 | 2 | 5 | STR | 36'-3" | 76 |
| A252 | 2 | 5 | STR | 34'-7" | 72 |
| A253 | 2 | 5 | STR | 32'-11" | 69 |
| A254 | 1 | 5 | STR | 60'-0" | 63 |
| A255 | 1 | 5 | STR | 56'-8" | 59 |
| A256 | 1 | 5 | STR | 53'-4" | 56 |
| A257 | 1 | 5 | STR | 50'-0" | 52 |
| A258 | 1 | 5 | STR | 46'-9" | 49 |
| A259 | 1 | 5 | STR | 43'-5" | 45 |
| A260 | 1 | 5 | STR | 40'-1" | 42 |
| A261 | 1 | 5 | STR | 36'-9" | 38 |
| A262 | 1 | 5 | STR | 33'-6" | 35 |
| A263 | 1 | 5 | STR | 30'-2" | 31 |
| A264 | 1 | 5 | STR | 26'-10" | 28 |
| A265 | 1 | 5 | STR | 23'-6" | 25 |
| A266 | 1 | 5 | STR | 20'-3" | 21 |
| A267 | 1 | 5 | STR | 16'-11" | 18 |
| A268 | 1 | 5 | STR | 13'-7" | 14 |
| A269 | 1 | 5 | STR | 10'-3" | 11 |
| A270 | 1 | 5 | STR | 7'-0" | 7 |
| A271 | 1 | 5 | STR | 3'-8" | 4 |

| BAR | NO. | SIZE | TYPE | LENGTH | WEIGHT |
|---|---|---|---|---|---|
| ✱ B1 | 8 | 5 | STR | 24'-5" | 204 |
| ✱ B2 | 8 | 5 | STR | 25'-0" | 209 |
| ✱ B3 | 8 | 5 | STR | 25'-7" | 213 |
| ✱ B4 | 8 | 5 | STR | 26'-2" | 218 |
| ✱ B5 | 8 | 5 | STR | 26'-10" | 224 |
| ✱ B6 | 8 | 5 | STR | 27'-5" | 229 |
| ✱ B7 | 8 | 5 | STR | 28'-0" | 234 |
| ✱ B8 | 8 | 5 | STR | 28'-7" | 238 |
| ✱ B9 | 8 | 5 | STR | 29'-3" | 244 |
| ✱B10 | 8 | 5 | STR | 29'-10" | 249 |
| ✱B11 | 8 | 5 | STR | 30'-5" | 254 |
| ✱B12 | 8 | 5 | STR | 31'-0" | 259 |
| ✱B13 | 8 | 5 | STR | 31'-8" | 264 |
| ✱B14 | 8 | 5 | STR | 32'-3" | 269 |
| ✱B15 | 8 | 5 | STR | 32'-10" | 274 |
| ✱B16 | 8 | 5 | STR | 33'-5" | 279 |
| ✱B17 | 8 | 5 | STR | 34'-1" | 284 |
| ✱B18 | 8 | 5 | STR | 34'-8" | 289 |
| ✱B19 | 8 | 5 | STR | 35'-3" | 294 |
| ✱B20 | 8 | 5 | STR | 35'-10" | 299 |
| ✱B21 | 8 | 5 | STR | 36'-6" | 305 |
| ✱B22 | 8 | 5 | STR | 37'-1" | 309 |
| ✱B23 | 8 | 5 | STR | 37'-8" | 314 |
| ✱B24 | 8 | 5 | STR | 38'-3" | 319 |
| ✱B25 | 8 | 5 | STR | 38'-11" | 325 |
| ✱B26 | 8 | 5 | STR | 39'-6" | 330 |
| ✱B27 | 8 | 5 | STR | 40'-1" | 334 |
| ✱B28 | 8 | 5 | STR | 40'-8" | 339 |
| ✱B29 | 8 | 5 | STR | 41'-4" | 345 |
| ✱B30 | 8 | 5 | STR | 41'-11" | 350 |
| ✱B31 | 8 | 5 | STR | 42'-6" | 355 |
| ✱B32 | 8 | 5 | STR | 43'-1" | 359 |
| ✱B33 | 8 | 5 | STR | 43'-9" | 365 |
| ✱B34 | 8 | 5 | STR | 44'-4" | 370 |
| ✱B35 | 8 | 5 | STR | 44'-11" | 375 |
| ✱B36 | 8 | 5 | STR | 45'-6" | 380 |
| ✱B37 | 2 | 5 | STR | 46'-1" | 96 |
| B38 | 8 | 6 | STR | 24'-9" | 297 |
| B39 | 8 | 6 | STR | 25'-4" | 304 |
| B40 | 8 | 6 | STR | 25'-11" | 311 |
| B41 | 8 | 6 | STR | 26-'6" | 318 |
| B42 | 8 | 6 | STR | 27'-2" | 326 |
| B43 | 8 | 6 | STR | 27'-9" | 333 |
| B44 | 8 | 6 | STR | 28'-4" | 340 |
| B45 | 8 | 6 | STR | 28'-11" | 347 |
| B46 | 8 | 6 | STR | 29'-7" | 355 |
| B47 | 8 | 6 | STR | 30'-2" | 362 |
| B48 | 8 | 6 | STR | 30'-9" | 369 |
| B49 | 8 | 6 | STR | 31'-4" | 377 |
| B50 | 8 | 6 | STR | 32'-0" | 385 |
| B51 | 8 | 6 | STR | 32'-7" | 392 |
| B52 | 8 | 6 | STR | 33'-2" | 399 |
| B53 | 8 | 6 | STR | 33'-9" | 406 |
| B54 | 8 | 6 | STR | 34'-5" | 414 |
| B55 | 8 | 6 | STR | 35'-0" | 421 |
| B56 | 8 | 6 | STR | 35'-7" | 428 |
| B57 | 8 | 6 | STR | 36'-2" | 435 |
| B58 | 8 | 6 | STR | 36'-10" | 443 |
| B59 | 8 | 6 | STR | 37'-5" | 450 |
| B60 | 8 | 6 | STR | 38'-0" | 457 |
| B61 | 8 | 6 | STR | 38'-7" | 464 |
| B62 | 8 | 6 | STR | 39'-3" | 472 |
| B63 | 8 | 6 | STR | 39'-10" | 479 |
| B64 | 8 | 6 | STR | 40'-5" | 486 |
| B65 | 8 | 6 | STR | 41'-0" | 493 |
| B66 | 8 | 6 | STR | 41'-8" | 501 |
| B67 | 8 | 6 | STR | 42'-3" | 508 |
| B68 | 8 | 6 | STR | 42'-10" | 515 |
| B69 | 8 | 6 | STR | 43'-5" | 522 |
| B70 | 8 | 6 | STR | 44'-1" | 530 |
| B71 | 8 | 6 | STR | 44'-8" | 537 |
| B72 | 8 | 6 | STR | 45'-3" | 544 |
| B73 | 8 | 6 | STR | 45'-10" | 551 |
| B74 | 2 | 6 | STR | 46'-5" | 139 |
| ✱B75 | 16 | 5 | STR | 21'-6" | 359 |
| ✱B76 | 16 | 5 | STR | 17'-9" | 296 |
| ✱B77 | 7 | 5 | STR | 24'-9" | 181 |
| ✱B78 | 7 | 5 | STR | 46'-9" | 341 |
| ✱ G1 | 4 | 5 | STR | 39'-0" | 163 |
| ✱ J1 | 142 | 4 | 5 | 1'-5" | 134 |
| ✱ S1 | 72 | 5 | 1 | 4'-8" | 350 |
| ✱ S2 | 72 | 5 | 2 | 5'-2" | 388 |
| ✱ S3 | 72 | 5 | 4 | 5'-6" | 413 |
| ✱ S4 | 144 | 5 | 3 | 1'-10" | 275 |

REINFORCING STEEL LBS. 20966

✱EPOXY COATED STEEL LBS. 19070

CLASS AA CONCRETE BREAKDOWN
END BENT No. 1

| | |
|---|---|
| POUR 1 SLAB | 98.6 C.Y. |
| POUR 2 BARRIER RAIL & 2'-0" CONCRETE MEDIAN BARRIER | 6.5 C.Y. |
| CLASS AA CONCRETE | 105.1 C.Y. |

CLASS AA CONCRETE BREAKDOWN
END BENT No. 2

| | |
|---|---|
| POUR 1 SLAB | 98.9 C.Y. |
| POUR 2 BARRIER RAIL & 2'-0" CONCRETE MEDIAN BARRIER | 8.0 C.Y. |
| CLASS AA CONCRETE | 106.9 C.Y. |

## APPROACH SLAB STAGE II

| BAR | NO. | SIZE | TYPE | LENGTH | WEIGHT |
|---|---|---|---|---|---|
| ✱ A5 | 46 | 5 | STR | 37'-5" | 1795 |
| A6 | 46 | 5 | STR | 37'-3" | 1787 |
| ✱A51 | 50 | 5 | STR | 38'-4" | 1999 |
| A61 | 50 | 5 | STR | 38'-2" | 1990 |
| ✱A52 | 4 | 5 | STR | 38'-10" | 162 |
| A62 | 4 | 5 | STR | 38'-8" | 161 |
| ✱A501 | 2 | 5 | STR | 37'-2" | 78 |
| ✱A502 | 2 | 5 | STR | 35'-6" | 74 |
| ✱A503 | 2 | 5 | STR | 34'-10" | 73 |
| ✱A504 | 2 | 5 | STR | 32'-2" | 67 |
| ✱A505 | 1 | 5 | STR | 58'-6" | 61 |
| ✱A506 | 1 | 5 | STR | 55'-2" | 58 |
| ✱A507 | 1 | 5 | STR | 51'-10" | 54 |
| ✱A508 | 1 | 5 | STR | 48'-7" | 51 |
| ✱A509 | 1 | 5 | STR | 45'-3" | 47 |
| ✱A510 | 1 | 5 | STR | 41'-11" | 44 |
| ✱A511 | 1 | 5 | STR | 38'-7" | 40 |
| ✱A512 | 1 | 5 | STR | 35'-4" | 37 |
| ✱A513 | 1 | 5 | STR | 32'-0" | 33 |
| ✱A514 | 1 | 5 | STR | 28'-8" | 30 |
| ✱A515 | 1 | 5 | STR | 25'-4" | 26 |
| ✱A516 | 1 | 5 | STR | 21'-1" | 22 |
| ✱A517 | 1 | 5 | STR | 18'-9" | 20 |
| ✱A518 | 1 | 5 | STR | 15'-5" | 16 |
| ✱A519 | 1 | 5 | STR | 12'-1" | 13 |
| ✱A520 | 1 | 5 | STR | 8'-10" | 9 |
| ✱A521 | 1 | 5 | STR | 5'-6" | 6 |
| ✱A551 | 2 | 5 | STR | 35'-9" | 75 |
| ✱A552 | 2 | 5 | STR | 34'-1" | 71 |
| ✱A553 | 2 | 5 | STR | 32'-5" | 68 |
| ✱A554 | 1 | 5 | STR | 59'-0" | 62 |
| ✱A555 | 1 | 5 | STR | 55'-8" | 58 |
| ✱A556 | 1 | 5 | STR | 52'-4" | 55 |
| ✱A557 | 1 | 5 | STR | 49'-0" | 51 |
| ✱A558 | 1 | 5 | STR | 45'-9" | 48 |
| ✱A559 | 1 | 5 | STR | 42'-5" | 44 |
| ✱A560 | 1 | 5 | STR | 39'-1" | 41 |
| ✱A561 | 1 | 5 | STR | 35'-9" | 37 |
| ✱A562 | 1 | 5 | STR | 32'-6" | 34 |
| ✱A563 | 1 | 5 | STR | 30'-1" | 31 |
| ✱A564 | 1 | 5 | STR | 26'-9" | 28 |
| ✱A565 | 1 | 5 | STR | 23'-5" | 24 |
| ✱A566 | 1 | 5 | STR | 20'-2" | 21 |
| ✱A567 | 1 | 5 | STR | 16'-10" | 18 |
| ✱A568 | 1 | 5 | STR | 13'-6" | 14 |
| ✱A569 | 1 | 5 | STR | 10'-2" | 11 |
| ✱A570 | 1 | 5 | STR | 6'-11" | 7 |
| ✱A571 | 1 | 5 | STR | 3'-8" | 4 |
| A601 | 2 | 5 | STR | 37'-2" | 78 |
| A602 | 2 | 5 | STR | 35'-6" | 74 |
| A603 | 2 | 5 | STR | 34'-10" | 73 |
| A604 | 2 | 5 | STR | 32'-2" | 67 |
| A605 | 1 | 5 | STR | 58'-6" | 61 |
| A606 | 1 | 5 | STR | 55'-2" | 58 |
| A607 | 1 | 5 | STR | 51'-10" | 54 |
| A608 | 1 | 5 | STR | 48'-7" | 51 |
| A609 | 1 | 5 | STR | 45'-3" | 47 |
| A610 | 1 | 5 | STR | 41'-11" | 44 |
| A611 | 1 | 5 | STR | 38'-7" | 40 |
| A612 | 1 | 5 | STR | 35'-4" | 37 |
| A613 | 1 | 5 | STR | 32'-0" | 33 |
| A614 | 1 | 5 | STR | 28'-8" | 30 |
| A615 | 1 | 5 | STR | 25'-4" | 26 |
| A616 | 1 | 5 | STR | 21'-1" | 22 |
| A617 | 1 | 5 | STR | 18'-9" | 20 |
| A618 | 1 | 5 | STR | 15'-5" | 16 |
| A619 | 1 | 5 | STR | 12'-1" | 13 |
| A620 | 1 | 5 | STR | 8'-10" | 9 |
| A621 | 1 | 5 | STR | 5'-6" | 6 |
| A651 | 2 | 5 | STR | 35'-9" | 75 |
| A652 | 2 | 5 | STR | 34'-1" | 71 |
| A653 | 2 | 5 | STR | 32'-5" | 68 |
| A654 | 1 | 5 | STR | 59'-0" | 62 |
| A655 | 1 | 5 | STR | 55'-8" | 58 |
| A656 | 1 | 5 | STR | 52'-4" | 55 |
| A657 | 1 | 5 | STR | 49'-0" | 51 |
| A658 | 1 | 5 | STR | 45'-9" | 48 |
| A659 | 1 | 5 | STR | 42'-5" | 44 |
| A660 | 1 | 5 | STR | 39'-1" | 41 |
| A661 | 1 | 5 | STR | 35'-9" | 37 |
| A662 | 1 | 5 | STR | 32'-6" | 34 |
| A663 | 1 | 5 | STR | 30'-1" | 31 |
| A664 | 1 | 5 | STR | 26'-9" | 28 |
| A665 | 1 | 5 | STR | 23'-5" | 24 |
| A666 | 1 | 5 | STR | 20'-2" | 21 |
| A667 | 1 | 5 | STR | 16'-10" | 18 |
| A668 | 1 | 5 | STR | 13'-6" | 14 |
| A669 | 1 | 5 | STR | 10'-2" | 11 |
| A670 | 1 | 5 | STR | 6'-11" | 7 |
| A671 | 1 | 5 | STR | 3'-8" | 4 |
| ✱B101 | 8 | 5 | STR | 24'-5" | 204 |
| ✱B102 | 8 | 5 | STR | 25'-0" | 209 |
| ✱B103 | 8 | 5 | STR | 25'-7" | 213 |
| ✱B104 | 8 | 5 | STR | 26'-2" | 218 |
| ✱B105 | 8 | 5 | STR | 26'-10" | 224 |
| ✱B106 | 8 | 5 | STR | 27'-5" | 229 |

| BAR | NO. | SIZE | TYPE | LENGTH | WEIGHT |
|---|---|---|---|---|---|
| ✱B107 | 8 | 5 | STR | 28'-0" | 234 |
| ✱B108 | 8 | 5 | STR | 28'-7" | 238 |
| ✱B109 | 8 | 5 | STR | 29'-3" | 244 |
| ✱B110 | 8 | 5 | STR | 29'-10" | 249 |
| ✱B111 | 8 | 5 | STR | 30'-5" | 254 |
| ✱B112 | 8 | 5 | STR | 31'-0" | 259 |
| ✱B113 | 8 | 5 | STR | 31'-8" | 264 |
| ✱B114 | 8 | 5 | STR | 32'-3" | 269 |
| ✱B115 | 8 | 5 | STR | 32'-10" | 274 |
| ✱B116 | 8 | 5 | STR | 33'-5" | 279 |
| ✱B117 | 8 | 5 | STR | 34'-1" | 284 |
| ✱B118 | 8 | 5 | STR | 34'-8" | 289 |
| ✱B119 | 8 | 5 | STR | 35'-3" | 294 |
| ✱B120 | 8 | 5 | STR | 35'-10" | 299 |
| ✱B121 | 8 | 5 | STR | 36'-6" | 305 |
| ✱B122 | 8 | 5 | STR | 37'-1" | 309 |
| ✱B123 | 8 | 5 | STR | 37'-8" | 314 |
| ✱B124 | 8 | 5 | STR | 38'-3" | 319 |
| ✱B125 | 8 | 5 | STR | 38'-11" | 325 |
| ✱B126 | 8 | 5 | STR | 39'-6" | 330 |
| ✱B127 | 8 | 5 | STR | 40'-1" | 334 |
| ✱B128 | 8 | 5 | STR | 40'-8" | 339 |
| ✱B129 | 8 | 5 | STR | 41'-4" | 345 |
| ✱B130 | 8 | 5 | STR | 41'-11" | 350 |
| ✱B131 | 8 | 5 | STR | 42'-6" | 355 |
| ✱B132 | 8 | 5 | STR | 43'-1" | 359 |
| ✱B133 | 8 | 5 | STR | 43'-9" | 365 |
| ✱B134 | 8 | 5 | STR | 44'-4" | 370 |
| ✱B135 | 8 | 5 | STR | 44'-11" | 375 |
| ✱B136 | 6 | 5 | STR | 45'-6" | 285 |
| B201 | 8 | 6 | STR | 24'-9" | 297 |
| B202 | 8 | 6 | STR | 25'-4" | 304 |
| B203 | 8 | 6 | STR | 25'-11" | 311 |
| B204 | 8 | 6 | STR | 26'-6" | 318 |
| B205 | 8 | 6 | STR | 27'-2" | 326 |
| B206 | 8 | 6 | STR | 27'-9" | 333 |
| B207 | 8 | 6 | STR | 28'-4" | 340 |
| B208 | 8 | 6 | STR | 28-11" | 347 |
| B209 | 8 | 6 | STR | 29'-7" | 355 |
| B210 | 8 | 6 | STR | 30'-2" | 362 |
| B211 | 8 | 6 | STR | 30'-9" | 369 |
| B212 | 8 | 6 | STR | 31'-4" | 377 |
| B213 | 8 | 6 | STR | 32'-0" | 385 |
| B214 | 8 | 6 | STR | 32'-7" | 392 |
| B215 | 8 | 6 | STR | 33'-2" | 399 |
| B216 | 8 | 6 | STR | 33'-9" | 406 |
| B217 | 8 | 6 | STR | 34'-5" | 414 |
| B218 | 8 | 6 | STR | 35'-0" | 421 |
| B219 | 8 | 6 | STR | 35'-7" | 428 |
| B220 | 8 | 6 | STR | 36'-2" | 435 |
| B221 | 8 | 6 | STR | 36'-10" | 443 |
| B222 | 8 | 6 | STR | 37'-5" | 450 |
| B223 | 8 | 6 | STR | 38'-0" | 457 |
| B224 | 8 | 6 | STR | 38'-7" | 464 |
| B225 | 8 | 6 | STR | 39'-3" | 472 |
| B226 | 8 | 6 | STR | 39'-10" | 479 |
| B227 | 8 | 6 | STR | 40'-5" | 486 |
| B228 | 8 | 6 | STR | 41'-0" | 493 |
| B229 | 8 | 6 | STR | 41'-8" | 501 |
| B230 | 8 | 6 | STR | 42'-3" | 508 |
| B231 | 8 | 6 | STR | 42'-10" | 515 |
| B232 | 8 | 6 | STR | 43'-5" | 522 |
| B233 | 8 | 6 | STR | 44'-1" | 530 |
| B234 | 8 | 6 | STR | 44'-8" | 537 |
| B235 | 8 | 6 | STR | 45'-3" | 544 |
| B236 | 6 | 6 | STR | 45'-10" | 413 |
| ✱ B75 | 16 | 5 | STR | 21'-6" | 359 |
| ✱ B76 | 16 | 5 | STR | 17'-9" | 296 |
| ✱ B79 | 7 | 5 | STR | 9'-9" | 71 |
| ✱ B80 | 7 | 5 | STR | 9'-3" | 68 |
| ✱ G1 | 4 | 5 | STR | 39'-0" | 163 |
| ✱ J1 | 142 | 4 | 5 | 1'-5" | 134 |
| ✱ S1 | 10 | 5 | 1 | 4'-8" | 49 |
| ✱ S2 | 10 | 5 | 2 | 5'-2" | 54 |
| ✱ S3 | 72 | 5 | 4 | 5'-6" | 413 |
| ✱ S4 | 144 | 5 | 3 | 1'-10" | 275 |

REINFORCING STEEL LBS. 20732

✱EPOXY COATED STEEL LBS. 17905

CLASS AA CONCRETE BREAKDOWN
END BENT No. 1

| | |
|---|---|
| POUR 1 SLAB | 97.5 C.Y. |
| POUR 2 CURB, BARRIER RAIL & 2'-0" CONCRETE MEDIAN BARRIER | 4.5 C.Y. |
| CLASS AA CONCRETE | 102.0 C.Y. |

CLASS AA CONCRETE BREAKDOWN
END BENT No. 2

| | |
|---|---|
| POUR 1 SLAB | 97.5 C.Y. |
| POUR 2 CURB, BARRIER RAIL & 2'-0" CONCRETE MEDIAN BARRIER | 5.1 C.Y. |
| CLASS AA CONCRETE | 102.6 C.Y. |

## APPROACH SLAB STAGE III

| BAR | NO. | SIZE | TYPE | LENGTH | WEIGHT |
|---|---|---|---|---|---|
| ✱ A3 | 100 | 5 | STR | 38'-1" | 3972 |
| A4 | 100 | 5 | STR | 37'-11 | 3955 |
| ✱A301 | 4 | 5 | STR | 36'-11" | 154 |
| ✱A302 | 4 | 5 | STR | 35'-3" | 147 |
| ✱A303 | 4 | 5 | STR | 33'-7" | 140 |
| ✱A304 | 4 | 5 | STR | 31'-11" | 133 |
| ✱A305 | 4 | 5 | STR | 30'-3" | 126 |
| ✱A306 | 2 | 5 | STR | 54'-9" | 114 |
| ✱A307 | 2 | 5 | STR | 51'-5" | 107 |
| ✱A308 | 2 | 5 | STR | 48'-0" | 100 |
| ✱A309 | 2 | 5 | STR | 44'-9" | 93 |
| ✱A310 | 2 | 5 | STR | 41'-6" | 87 |
| ✱A311 | 2 | 5 | STR | 38'-2" | 80 |
| ✱A312 | 2 | 5 | STR | 34'-10" | 73 |
| ✱A313 | 2 | 5 | STR | 31'-7" | 66 |
| ✱A314 | 2 | 5 | STR | 28'-3" | 59 |
| ✱A315 | 2 | 5 | STR | 24'-11" | 52 |
| ✱A316 | 2 | 5 | STR | 21'-8" | 45 |
| ✱A317 | 2 | 5 | STR | 18'-4" | 38 |
| ✱A318 | 2 | 5 | STR | 15'-0" | 31 |
| ✱A319 | 2 | 5 | STR | 11'-8" | 24 |
| ✱A320 | 2 | 5 | STR | 8'-5" | 18 |
| ✱A321 | 2 | 5 | STR | 5'-1" | 11 |
| A401 | 4 | 5 | STR | 36'-11" | 154 |
| A402 | 4 | 5 | STR | 35'-3" | 147 |
| A403 | 4 | 5 | STR | 33'-7" | 140 |
| A404 | 4 | 5 | STR | 31'-11" | 133 |
| A405 | 4 | 5 | STR | 30'-3" | 126 |
| A406 | 2 | 5 | STR | 54'-9" | 114 |
| A407 | 2 | 5 | STR | 51'-5" | 107 |
| A408 | 2 | 5 | STR | 48'-0" | 100 |
| A409 | 2 | 5 | STR | 44'-9" | 93 |
| A410 | 2 | 5 | STR | 41'-6" | 87 |
| A411 | 2 | 5 | STR | 38'-2" | 80 |
| A412 | 2 | 5 | STR | 34'-10" | 73 |
| A413 | 2 | 5 | STR | 31'-7" | 66 |
| A414 | 2 | 5 | STR | 28'-3" | 59 |
| A415 | 2 | 5 | STR | 24'-11" | 52 |
| A416 | 2 | 5 | STR | 21'-8" | 45 |
| A417 | 2 | 5 | STR | 18'-4" | 38 |
| A418 | 2 | 5 | STR | 15'-0" | 31 |
| A419 | 2 | 5 | STR | 11'-8" | 24 |
| A420 | 2 | 5 | STR | 8'-5" | 18 |
| A421 | 2 | 5 | STR | 5'-1" | 11 |
| ✱B301 | 8 | 5 | STR | 24'-5" | 204 |
| ✱B302 | 8 | 5 | STR | 25'-0" | 209 |
| ✱B303 | 8 | 5 | STR | 25'-7" | 213 |
| ✱B304 | 8 | 5 | STR | 26'-2" | 218 |
| ✱B305 | 8 | 5 | STR | 26'-10" | 224 |
| ✱B306 | 8 | 5 | STR | 27'-5" | 229 |
| ✱B307 | 8 | 5 | STR | 28'-0" | 234 |
| ✱B308 | 8 | 5 | STR | 28'-7" | 238 |
| ✱B309 | 8 | 5 | STR | 29'-3" | 244 |
| ✱B310 | 8 | 5 | STR | 29'-10" | 249 |
| ✱ B311 | 8 | 5 | STR | 30'-5" | 254 |
| ✱B312 | 8 | 5 | STR | 31'-0" | 259 |
| ✱B313 | 8 | 5 | STR | 31'-8" | 264 |
| ✱B314 | 8 | 5 | STR | 32'-3" | 269 |
| ✱B315 | 8 | 5 | STR | 32'-10" | 274 |
| ✱B316 | 8 | 5 | STR | 33'-5" | 279 |
| ✱B317 | 8 | 5 | STR | 34'-1" | 284 |
| ✱B318 | 8 | 5 | STR | 34'-8" | 289 |
| ✱B319 | 8 | 5 | STR | 35'-3" | 294 |
| ✱B320 | 8 | 5 | STR | 35'-10" | 299 |
| ✱B321 | 8 | 5 | STR | 36'-6" | 305 |
| ✱B322 | 8 | 5 | STR | 37'-1" | 309 |
| ✱B323 | 8 | 5 | STR | 37'-8" | 314 |
| ✱B324 | 8 | 5 | STR | 38'-3" | 319 |
| ✱B325 | 8 | 5 | STR | 38'-11" | 325 |
| ✱B326 | 8 | 5 | STR | 39'-6" | 330 |
| ✱B327 | 8 | 5 | STR | 40'-1" | 334 |
| ✱B328 | 8 | 5 | STR | 40'-8" | 339 |
| ✱B329 | 8 | 5 | STR | 41'-4" | 345 |
| ✱B330 | 8 | 5 | STR | 41'-11" | 350 |
| ✱B331 | 8 | 5 | STR | 42'-10" | 357 |
| ✱B332 | 8 | 5 | STR | 43'-1" | 359 |
| ✱B333 | 8 | 5 | STR | 43'-9" | 365 |
| ✱B334 | 8 | 5 | STR | 44'-4" | 370 |
| ✱B335 | 8 | 5 | STR | 44'-11" | 375 |
| ✱B336 | 8 | 5 | STR | 45'-6" | 380 |
| ✱B337 | 8 | 5 | STR | 46'-1" | 385 |

| BAR | NO. | SIZE | TYPE | LENGTH | WEIGHT |
|---|---|---|---|---|---|
| B401 | 8 | 6 | STR | 24'-9" | 297 |
| B402 | 8 | 6 | STR | 25'-4" | 304 |
| B403 | 8 | 6 | STR | 25'-11" | 311 |
| B404 | 8 | 6 | STR | 26'-6" | 318 |
| B405 | 8 | 6 | STR | 27'-2" | 326 |
| B406 | 8 | 6 | STR | 27'-9" | 333 |
| B407 | 8 | 6 | STR | 28'-4" | 340 |
| B408 | 8 | 6 | STR | 28'-11" | 347 |
| B409 | 8 | 6 | STR | 29'-9" | 357 |
| B410 | 8 | 6 | STR | 30'-2" | 362 |
| B411 | 8 | 6 | STR | 30'-9" | 369 |
| B412 | 8 | 6 | STR | 31'-4" | 377 |
| B413 | 8 | 6 | STR | 32'-0" | 385 |
| B414 | 8 | 6 | STR | 32'-7" | 392 |
| B415 | 8 | 6 | STR | 33'-2" | 399 |
| B416 | 8 | 6 | STR | 33'-9" | 406 |
| B417 | 8 | 6 | STR | 34'-5" | 414 |
| B418 | 8 | 6 | STR | 35'-0" | 421 |
| B419 | 8 | 6 | STR | 35'-7" | 428 |
| B420 | 8 | 6 | STR | 36'-2" | 435 |
| B421 | 8 | 6 | STR | 36'-10" | 443 |
| B422 | 8 | 6 | STR | 37'-5" | 450 |
| B423 | 8 | 6 | STR | 38'-0" | 457 |
| B424 | 8 | 6 | STR | 38'-7" | 464 |
| B425 | 8 | 6 | STR | 39'-3" | 472 |
| B426 | 8 | 6 | STR | 39'-10" | 479 |
| B427 | 8 | 6 | STR | 40'-5" | 486 |
| B428 | 8 | 6 | STR | 41'-0" | 493 |
| B429 | 8 | 6 | STR | 41'-8" | 501 |
| B430 | 8 | 6 | STR | 42'-3" | 508 |
| B431 | 8 | 6 | STR | 42'-10" | 515 |
| B432 | 8 | 6 | STR | 43'-5" | 522 |
| B433 | 8 | 6 | STR | 44'-1" | 530 |
| B434 | 8 | 6 | STR | 44'-8" | 537 |
| B435 | 8 | 6 | STR | 45'-3" | 544 |
| B436 | 8 | 6 | STR | 45'-10" | 551 |
| B437 | 8 | 6 | STR | 46'-5" | 558 |
| ✱ B81 | 32 | 5 | STR | 19'-10" | 662 |
| ✱ G1 | 4 | 5 | STR | 39'-9" | 166 |
| ✱ J1 | 148 | 4 | 5 | 1'-5" | 140 |
| ✱ S4 | 148 | 5 | 3 | 1'-10" | 283 |
| ✱ S5 | 74 | 5 | 6 | 5'-8" | 437 |

REINFORCING STEEL LBS. 21484

✱EPOXY COATED STEEL LBS. 18246

CLASS AA CONCRETE BREAKDOWN
END BENT No. 1

| | |
|---|---|
| POUR 1 SLAB | 100.4 C.Y. |
| POUR 2 2'-6" CONCRETE MEDIAN BARRIER | 3.6 C.Y. |
| CLASS AA CONCRETE | 104.0 C.Y. |

CLASS AA CONCRETE BREAKDOWN
END BENT No. 2

| | |
|---|---|
| POUR 1 SLAB | 100.4 C.Y. |
| POUR 2 2'-6" CONCRETE MEDIAN BARRIER | 3.6 C.Y. |
| CLASS AA CONCRETE | 104.0 C.Y. |

## BAR TYPES

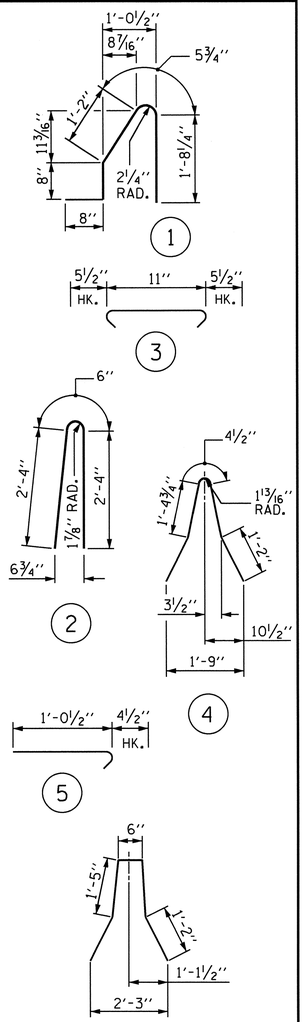


ALL BAR DIMENSIONS ARE OUT TO OUT

PROJECT NO. I-3819A

IREDELL COUNTY

STATION: 86+06.00 -L-

SHEET 5 OF 5

STATE OF NORTH CAROLINA
DEPARTMENT OF TRANSPORTATION
RALEIGH

# BRIDGE APPROACH SLAB FOR RIGID PAVEMENT WITH BARRIER RAIL

| REVISIONS | | | | | | SHEET NO. |
|---|---|---|---|---|---|---|
| NO. | BY: | DATE: | NO. | BY: | DATE: | S-86 |
| 1 | | | 3 | | | TOTAL SHEETS |
| 2 | | | 4 | | | 382 |

NORTH CAROLINA PROFESSIONAL SEAL 15779 ENGINEER JOHN R. DUGGINS, JR.

1/5/12

DRAWN BY : M. POOLE DATE : 12/10

CHECKED BY : J.R. DUGGINS DATE : 12/10

04-JAN-2012 15:10
R:\Structures\NGUYEN\FINAL PLANS\I3819A_SD_AS2_08.dgn
dahodge

F.A. PROJECT : IMF-40-2(145)152

90+50 91+00 91+50 92+00 92+50 93+00 93+50

SPAN A SPAN B SPAN C

820 810 800 790 780 770

FILL FACE @ END BENT 1
STA. 90+91.50 -L-
G. P. EL. 814.026

BEGIN FRONT SLOPE
STA. 90+76.97 -L-
G. P. EL. 814.607

1'-0" MIN. EARTH BERM (TYP.)

RIP RAP CLASS II (TYP.)

EL. 804.2±

EXP. FIX. FIX.

APPROX. GROUND LINE

1'-6" (TYP.)

1 1/2:1 SLOPE (TYP.)

EL. 785.0±

GRADE TO DRAIN (TYP.)

EL. 784.4±

EL. 793.4 (0100)

EL. 792.7 (050)

EL. 784.2±

NWS EL. 775.4 (8-15-07)

EL. 775.6±

EL. 773.7±

EXISTING STRUCTURE (TYP.)

EL. 784.4±

EL. 783.7±

EL. 784.6±

END BENT 1

BENT 1

BENT 2

END BENT 2

EL. 800.8±

FIX. FIX.

EXP.

EL. 785.0±

HP 14 X 73 GALVANIZED STEEL BRACED PILES (TYP.)

1'-7" BERM (TYP.)

FILL FACE @ END BENT 2
STA. 93+16.50 -L-
G. P. EL. 805.207

BEGIN FRONT SLOPE
STA. 93+28.99 -L-
G. P. EL. 804.775

EL. 798.0±

APPROX. GROUND LINE

HP 14 X 73 STEEL PILES (TYP.)

-3.9990% -0.5041%

PI STA. 94+95.00 -L-
EL. = 797.89'
VC. = 500'

GRADE DATA -L-

UNCLASSIFIED STRUCTURE EXCAVATION

## SECTION ALONG -L-

SECTIONS @ BENTS AND END BENTS ARE @ RIGHT ANGLES

* TOP OF EARTH BERM EL. VARIES

CLASS II RIP RAP

1'-0" MIN. EARTH BERM (TYP.)

BENT 1 CONTROL LINE

BENT 2 CONTROL LINE

* TOP OF EARTH BERM EL. VARIES

1'-7" BERM (TYP.)

STAGE II CONSTRUCTION

BEGIN APPROACH SLAB
STA. 90+28.01 -L-
OFFSET 72' LEFT

LCDWB

FOURTH CREEK

EXISTING BRIDGE #147

CLASS II RIP RAP

END APPROACH SLAB
STA. 93+22.97 -L-
OFFSET 72' LEFT

17'-5⅝"

CONST. JT.

CONST. JT.

TEMPORARY SHORING

CONST. JT.

TEMPORARY SHORING

TEMPORARY SHORING

22'-1"

72'-0"

48'-0" (TYP.)

W.P. #1
STA. 90+91.50 -L-

1½:1 SLOPE

W.P. #2
STA. 91+56.50 -L-

EXISTING BRIDGE #144

℄ BRIDGE
STA. 92+04.00 -L-

-L-

1½:1 SLOPE

W.P. #4
STA. 93+16.50 -L-

BEGIN FRONT SLOPE
STA. 93+28.99 -L-

END APPROACH SLAB
STA. 93+57.91 -L-

TO I-77

TO US 21

1'-3"

BEGIN APPROACH SLAB
STA. 90+50.09 -L-

17'-5⅝"

W.P. #3
STA. 92+61.50 -L-

70°-00'-00" (TYP.)

TEMPORARY SHORING

96'-0" STAGE III CONSTRUCTION

48'-0" (TYP.)

TEMPORARY SHORING

CONST. JT.

CONST. JT.

17'-5⅝"

TEMPORARY SHORING

22'-1"

CONST. JT.

CONST. JT.

STAGE I CONSTRUCTION

LCDEB

END APPROACH SLAB
STA. 93+79.99 -L-
OFFSET 72' RIGHT

BEGIN APPROACH SLAB
STA. 90+85.03 -L-
OFFSET 72' RIGHT

47'-6" 57'-6"

65'-0" 105'-0" 55'-0"

225'-0" (W.P. #1 TO W.P. #4)

## PLAN

FOR CLARITY, PILES ARE NOT SHOWN.

* FOR EARTH BERM EL., SEE RIP RAP SHEET.

I HEREBY CERTIFY THESE PLANS ARE THE AS-BUILT PLANS

NORTH CAROLINA PROFESSIONAL SEAL 16301 ENGINEER JING HSIUNG FANG

12/31/11

PROJECT NO. I-3819A

IREDELL COUNTY

STATION: 92+04.00 -L-

BRIDGE NO. 564

SHEET 1 OF 3 REPLACES BRIDGES NO. 144 & 147

STATE OF NORTH CAROLINA
DEPARTMENT OF TRANSPORTATION
RALEIGH

# GENERAL DRAWING

FOR BRIDGE ON I-40
OVER FOURTH CREEK
BETWEEN US 21 AND I-77

| REVISIONS | | | | | | SHEET NO. |
|---|---|---|---|---|---|---|
| NO. | BY: | DATE: | NO. | BY: | DATE: | S-87 |
| 1 | | | 3 | | | TOTAL SHEETS |
| 2 | | | 4 | | | 382 |

DRAWN BY : N.Q. TRAN DATE : 8/26/09
CHECKED BY : J.A. TILLMAN DATE : 9/21/09

30-DEC-2011 08:25
K:\TIPProjects-I\I3819A\Structures\Frye\str03\finalplans\I3819a_SD_GD_03.dgn
tfang

STR. 3

## NOTES:

FOR PILES, SEE SECTION 450 OF THE STANDARD PROVISIONS.

PILES AT END BENTS 1 AND 2 ARE DESIGNED FOR A FACTORED RESISTANCE OF 125 TONS PER PILE.

DRIVE PILES AT END BENTS 1 AND 2 TO A REQUIRED DRIVING RESISTANCE OF 210 TONS PER PILE.

PILES AT BENTS 1 AND 2 ARE DESIGNED FOR A FACTORED RESISTANCE OF 130 TONS PER PILE.

DRIVE PILES AT BENTS 1 AND 2 TO A REQUIRED DRIVING RESISTANCE OF 220 TONS PER PILE.

THE SCOUR CRITICAL ELEVATION FOR BENTS 1 AND 2 IS ELEVATION 778 FT. SCOUR CRITICAL ELEVATIONS ARE USED TO MONITOR POSSIBLE SCOUR PROBLEMS DURING THE LIFE OF THE STRUCTURE.

STEEL H PILE POINTS ARE REQUIRED FOR STEEL H PILES. FOR STEEL PILE POINTS, SEE SECTION 450 OF THE STANDARD SPECIFICATIONS.

FOR INTERIOR BENTS 1 & 2, ONLY PARTIAL GALVANIZING OF THE PILES IS REQUIRED. SEE INTERIOR BENT SHEETS FOR REQUIRED GALVANIZED LENGTHS. PAYMENT FOR PARTIALLY GALVANIZED PILES WILL BE MADE UNDER THE CONTRACT UNIT PRICE FOR GALVANIZED STEEL PILES.

DUE TO THE PROXIMITY OF THE POWER TRANSMISSION LINE, MULTIPLE SPLICES MAY BE REQUIRED TO INSTALL PILES AT END BENT 2.

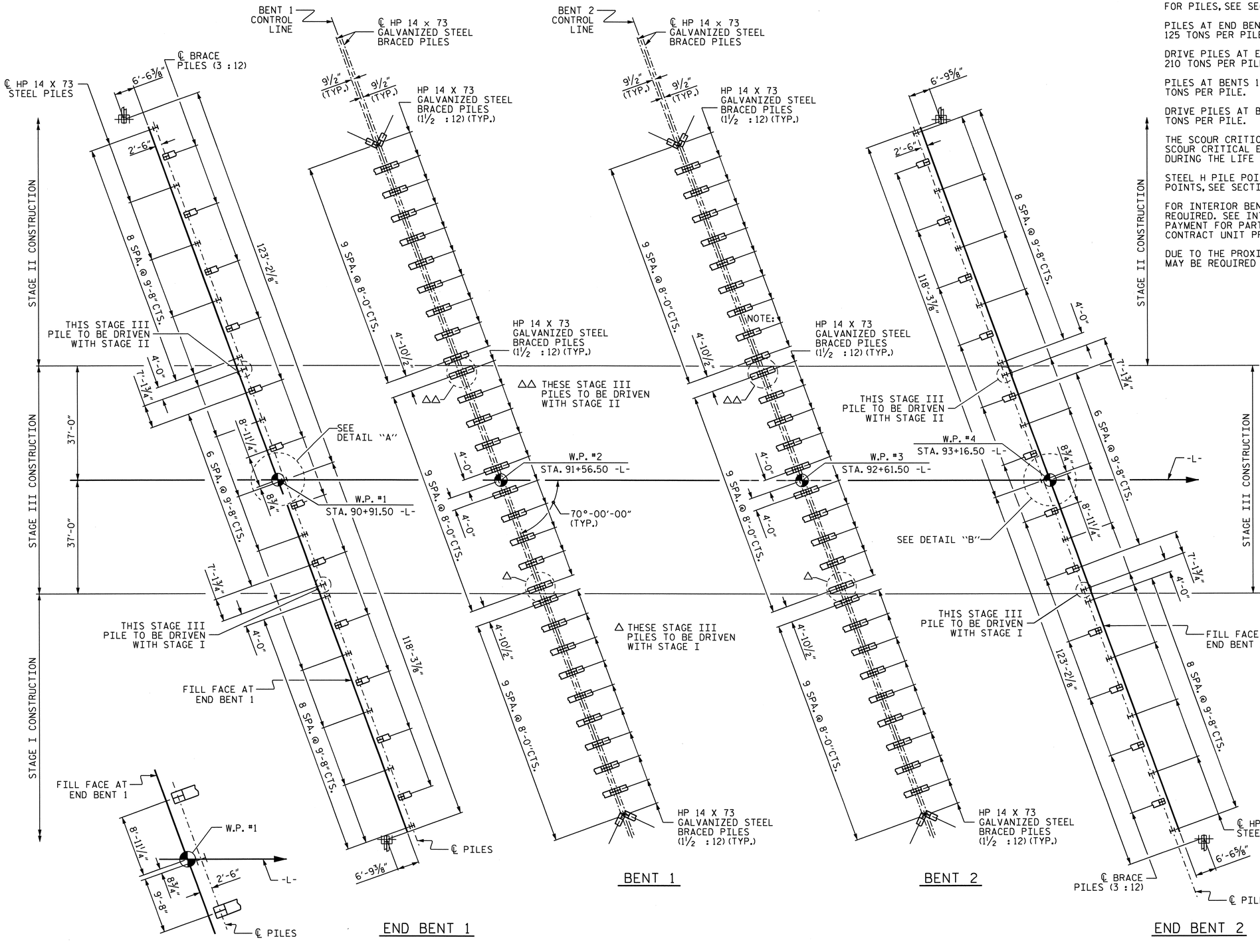





DETAIL "A"

END BENT 1

BENT 1

BENT 2

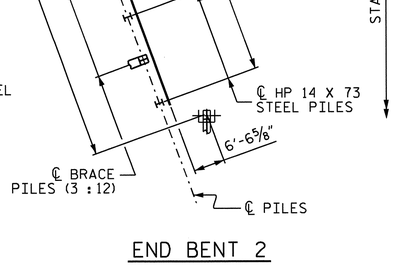


DETAIL "B"

END BENT 2

## FOUNDATION LAYOUT

DIMENSIONS LOCATING PILES ARE SHOWN TO PILE CENTERLINE AT THE BOTTOM OF THE CAP

NORTH CAROLINA PROFESSIONAL SEAL 16301 ENGINEER TING HSING FANG
1/4/12

PROJECT NO. I-3819A

IREDELL COUNTY

STATION: 92+04.00 -L-

SHEET 2 OF 3

STATE OF NORTH CAROLINA
DEPARTMENT OF TRANSPORTATION
RALEIGH

# GENERAL DRAWING

FOR BRIDGE ON I-40
OVER FOURTH CREEK
BETWEEN US 21 AND I-77

| REVISIONS | | | | | | SHEET NO. |
|---|---|---|---|---|---|---|
| NO. | BY: | DATE: | NO. | BY: | DATE: | S-88 |
| 1 | | | 3 | | | TOTAL SHEETS |
| 2 | | | 4 | | | 382 |

DRAWN BY : D.R. WITHROW DATE : 7/29/10
CHECKED BY : D.R. ANDERSON DATE : 11/22/10

04-JAN-2012 09:59
R:\Structures\Frye\str03\finalplans\13819a_SD_GD_03.dgn
swance

STR. 3

# TOTAL BILL OF MATERIAL

| | REMOVAL OF EXISTING STRUCTURES | UNCLASSIFIED STRUCTURE EXCAVATION | REINFORCED CONCRETE DECK SLAB | GROOVING BRIDGE FLOORS | CLASS A CONCRETE | BRIDGE APPROACH SLABS | REINFORCING STEEL | MODIFIED 63" PRESTRESSED CONCRETE GIRDERS | | HP 14 X 73 STEEL PILES | | HP 14 X 73 GALVANIZED STEEL PILES | | STEEL PILE POINTS | CONCRETE BARRIER RAIL | 2'-0" CONCRETE MEDIAN BARRIER | 2'-6" CONCRETE MEDIAN BARRIER | RIP RAP CLASS II (2'-0" THICK) | GEOTEXTILE FOR DRAINAGE | ELASTOMERIC BEARINGS | EXPANSION JOINT SEALS | ELASTOMERIC BEARINGS WITH TFE |
|---|---|---|---|---|---|---|---|---|---|---|---|---|---|---|---|---|---|---|---|---|---|---|
| | LUMP SUM | LUMP SUM | SQ. FT. | SQ. FT. | CU. YDS. | LUMP SUM | LBS. | NO. | LIN. FT. | NO. | LIN. FT. | NO. | LIN. FT. | EA. | LIN. FT. | LIN. FT. | LIN. FT. | TONS | SQ. YDS. | LUMP SUM | LUMP SUM | LUMP SUM |
| SUPERSTRUCTURE | | | 48,835 | 56,983 | | | | 72 | 5,255.50 | | | | | | 485.56 | 590.39 | 307.93 | | | LUMP SUM | LUMP SUM | LUMP SUM |
| END BENT 1 | | | | | 194.8 | | 25,808 | | | 29 | 1450 | | | 29 | | | | 1,000 | 1,110 | | | |
| BENT 1 | | | | | 119.4 | | 25,325 | | | | | 60 | 3,100 | 60 | | | | | | | | |
| BENT 2 | | | | | 119.4 | | 25,325 | | | | | 60 | 2,700 | 60 | | | | | | | | |
| END BENT 2 | | | | | 191.8 | | 25,827 | | | 29 | 1,380 | | | 29 | | | | 550 | 615 | | | |
| | | | | | | | | | | | | | | | | | | | | | | |
| TOTAL | LUMP SUM | LUMP SUM | 48,835 | 56,983 | 625.4 | LUMP SUM | 102,285 | 72 | 5,255.50 | 58 | 2,830 | 120 | 5,800 | 178 | 485.56 | 590.39 | 307.93 | 1,550 | 1,725 | LUMP SUM | LUMP SUM | LUMP SUM |

BENCH MARK #7: CHISELED SQUARE ON BACK OF CURB, -L- STA. 102+98.0, 383' LEFT, EL. 805.27

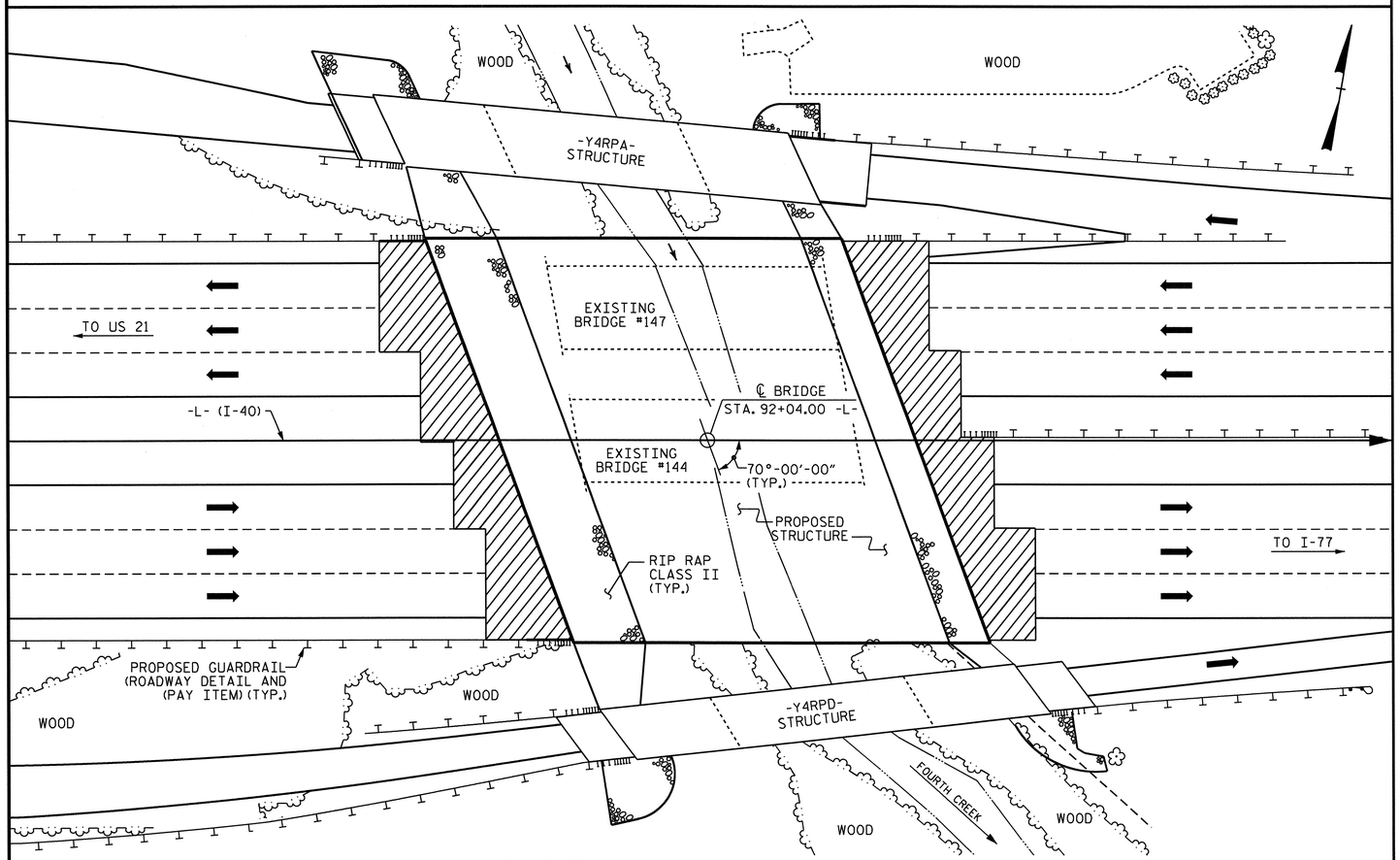


## HYDRAULIC DATA

DESIGN DISCHARGE_____6458 CFS.
FREQUENCY OF DESIGN FLOOD_____50 YEARS
DESIGN HIGH WATER ELEVATION_____792.7
DRAINAGE AREA_____27.70 SQ. MI.
BASE DISCHARGE(Q100)_____7137 CFS.
BASE HIGH WATER ELEVATION_____793.4

## OVERTOPPING FLOOD DATA

OVERTOPPING DISCHARGE_____8983± CFS.
FREQUENCY OF OVERTOPPING FLOOD___500 YRS.+
OVERTOPPING FLOOD ELEVATION_____795.3

FOR UTILITY INFORMATION, SEE UTILITY PLANS AND SPECIAL PROVISIONS.

## LOCATION SKETCH

THE CONTRACTOR'S ATTENTION IS CALLED TO THE FACT THAT DUE TO THE PROXIMITY OF THE OVERHEAD POWER TRANSMISSION LINES, MULTIPLE SPLICES MAY BE REQUIRED TO INSTALL END BENT 2 PILES.

DRAWN BY : D.R. WITHROW DATE : 9/30/10
CHECKED BY : S.L. WANCE DATE : 12/10

04-JAN-2012 15:57
R:\Structures\Frye\str03\finalplans\13819a_SD_GD_03.dgn
swance

## NOTES:

ASSUMED LIVE LOAD = HL-93 OR ALTERNATE LOADING.

THIS BRIDGE HAS BEEN DESIGNED IN ACCORDANCE WITH THE AASHTO LRFD BRIDGE DESIGN SPECIFICATIONS.

FOR OTHER DESIGN DATA AND GENERAL NOTES, SEE SHEET SN.

FOR EROSION CONTROL MEASURES, SEE EROSION CONTROL PLANS.

FOR FALSEWORK AND FORMWORK, SEE SPECIAL PROVISIONS.

REMOVABLE FORMS MAY BE USED IN LIEU OF METAL STAY-IN-PLACE FORMS IN ACCORDANCE WITH ARTICLE 420-3 OF THE STANDARD SPECIFICATIONS.

THE CONTRACTOR SHALL PROVIDE INDEPENDENT ASSURANCE SAMPLES OF REINFORCING STEEL AS FOLLOWS: FOR PROJECTS REQUIRING UP TO 400 TONS OF REINFORCING STEEL, ONE 30 INCH SAMPLE OF EACH SIZE BAR USED, AND FOR PROJECTS REQUIRING OVER 400 TONS OF REINFORCING STEEL, TWO 30 INCH SAMPLES OF EACH BAR USED. THE BARS FROM WHICH THE SAMPLES ARE TAKEN MUST THEN BE SPLICED WITH REPLACEMENT BARS OF THE SIZE AND LENGTH OF THE SAMPLE PLUS A MINIMUM LAP SPLICE OF THIRTY BAR DIAMETERS. PAYMENT FOR THE SAMPLES OF REINFORCING STEEL SHALL BE CONSIDERED INCIDENTAL TO VARIOUS PAY ITEMS.

THE CLASS AA CONCRETE IN THE BRIDGE DECK SHALL CONTAIN FLY ASH OR GROUND GRANULATED BLAST FURNACE SLAG AT THE SUBSTITUTION RATE SPECIFIED IN ARTICLE 1024-1 AND IN ACCORDANCE WITH ARTICLES 1024-5 AND 1024-6 OF THE STANDARD SPECIFICATIONS. NO PAYMENT WILL BE MADE FOR THIS SUBSTITUTION AS IT IS CONSIDERED INCIDENTAL TO THE COST OF THE REINFORCED CONCRETE DECK SLAB.

THE MATERIAL SHOWN IN THE CROSS-HATCHED AREA ON SHEET S-87 SHALL BE EXCAVATED FOR A DISTANCE OF 150' LEFT, 60' RIGHT AT END BENT 1 AND 125' LEFT, 60' RIGHT AT END BENT 2 EACH SIDE OF CENTERLINE ROADWAY AS DIRECTED BY THE ENGINEER. THIS WORK WILL BE MEASURED AND PAID FOR AT THE CONTRACT LUMP SUM PRICE FOR UNCLASSIFIED STRUCTURE EXCAVATION. SEE SECTION 412 OF THE STANDARD SPECIFICATIONS.

THIS STRUCTURE HAS BEEN DESIGNED IN ACCORDANCE WITH HEC 18 "EVALUATING SCOUR AT BRIDGES", MAY 2001.

AFTER SERVING AS A TEMPORARY STRUCTURE THE EXISTING BRIDGE #144 (EBL) CONSISTING OF 3-SPANS, 1 @ 50'-6", 1 @ 50'-0" AND 1 @ 50'-6" WITH A REINFORCED CONCRETE DECK ON P/S GIRDERS SUPERSTRUCTURE AND A CLEAR ROADWAY WIDTH OF 40'-1" ON A SUBSTRUCTURE CONSISTING OF REINFORCED CONCRETE CAP ON P/S CONCRETE PILES END BENTS AND REINFORCED CONCRETE POST AND BEAM BENTS AND LOCATED AT THE SITE OF PROPOSED STRUCTURE SHALL BE REMOVED. THE EXISTING BRIDGE IS PRESENTLY NOT POSTED FOR LOAD LIMIT. SHOULD THE STRUCTURAL INTEGRITY OF THE BRIDGE DETERIORATE A LOAD LIMIT MAY BE POSTED AND MAY BE REDUCED AS FOUND NECESSARY DURING THE LIFE OF THE PROJECT. SEE SPECIAL PROVISION FOR "REMOVAL OF EXISTING STRUCTURES AT STA. 92+04.00 -L-".

FOR INTERIOR BENTS 1 & 2, ONLY PARTIAL GALVANIZING OF THE PILES IS REQUIRED. SEE INTERIOR BENT SHEETS FOR REQUIRED GALVANIZED LENGTHS. PAYMENT FOR PARTIALLY GALVANIZED PILES WILL BE MADE UNDER THE CONTRACT UNIT PRICE FOR GALVANIZED STEEL PILES.

FOR PAY ITEM FOR TEMPORARY SHORING FOR MAINTENANCE OF TRAFFIC, SEE ROADWAY PLANS.

FOR LIMITS OF TEMPORARY SHORING FOR MAINTENANCE OF TRAFFIC, SEE TRAFFIC CONTROL PLANS.

AFTER SERVING AS A TEMPORARY STRUCTURE THE EXISTING BRIDGE #147 (WBL) CONSISTING OF 3-SPANS, 3 @ 50'-0" WITH REINFORCED CONCRETE DECK GIRDERS SUPERSTRUCTURE AND A CLEAR ROADWAY WIDTH OF 40'-0" ON A SUBSTRUCTURE CONSISTING OF REINFORCED CONCRETE CAP ON STEEL AND P/S CONCRETE PILES END BENTS AND REINFORCED CONCRETE POST AND BEAM ON PILE FOOTINGS BENTS AND LOCATED AT THE SITE OF PROPOSED STRUCTURE SHALL BE REMOVED. THE EXISTING BRIDGE IS PRESENTLY NOT POSTED FOR LOAD LIMIT. SHOULD THE STRUCTURAL INTEGRITY OF THE BRIDGE DETERIORATE A LOAD LIMIT MAY BE POSTED AND MAY BE REDUCED AS FOUND NECESSARY DURING THE LIFE OF THE PROJECT. SEE SPECIAL PROVISION FOR "REMOVAL OF EXISTING STRUCTURES AT STA. 92+04.00 -L-".

THE SUBSTRUCTURE OF THE EXISTING BRIDGES INDICATED ON THE PLANS IS FROM THE BEST INFORMATION AVAILABLE. SINCE THIS INFORMATION IS SHOWN FOR THE CONVENIENCE OF THE CONTRACTOR, THE CONTRACTOR SHALL HAVE NO CLAIM WHATSOEVER AGAINST THE DEPARTMENT OF TRANSPORTATION FOR ANY DELAYS OR ADDITIONAL COST INCURRED BASED ON DIFFERENCES BETWEEN THE EXISTING BRIDGE SUBSTRUCTURE SHOWN ON THE PLANS AND THE ACTUAL CONDITIONS AT THE PROJECT SITE.

REMOVAL OF THE EXISTING BRIDGES, SHALL BE PERFORMED SO AS NOT TO ALLOW DEBRIS TO FALL INTO THE WATER. THE CONTRACTOR SHALL REMOVE THE BRIDGES AND SUBMIT PLANS FOR DEMOLITION IN ACCORDANCE WITH ARTICLE 402-2 OF THE STANDARD SPECIFICATIONS.

FOR ELASTOMERIC BEARINGS WITH TFE, SEE SPECIAL PROVISIONS.

FOR EXPANSION JOINT SEALS, SEE SPECIAL PROVISIONS.

NEEDLE BEAMS WILL NOT BE ALLOWED UNLESS OTHERWISE CALLED FOR ON THE PLANS OR APPROVED BY THE ENGINEER.

FOR SUBMITTAL OF WORKING DRAWINGS, SEE SPECIAL PROVISIONS.

FOR CRANE SAFETY, SEE SPECIAL PROVISIONS.

FOR GROUT FOR STRUCTURES, SEE SPECIAL PROVISIONS.

NORTH CAROLINA PROFESSIONAL SEAL 16301 ENGINEER TING HSIUNG FANG 1/4/12

PROJECT NO. I-3819A
IREDELL COUNTY
STATION: 92+04.00 -L-

SHEET 3 OF 3

STATE OF NORTH CAROLINA
DEPARTMENT OF TRANSPORTATION
RALEIGH

# GENERAL DRAWING

FOR BRIDGE ON I-40
OVER FOURTH CREEK
BETWEEN US 21 AND I-77

| REVISIONS | | | | | | SHEET NO. |
|---|---|---|---|---|---|---|
| NO. | BY: | DATE: | NO. | BY: | DATE: | S-89 |
| 1 | | | 3 | | | TOTAL SHEETS |
| 2 | | | 4 | | | 382 |

## NOTES:

THE CONTRACTOR SHALL MAINTAIN A 15' MINIMUM CLEARANCE BETWEEN THE TRANSMISSION LINES AND ANY PART OF ANY CONSTRUCTION EQUIPMENT OR MATERIALS UNLESS THE LINES HAVE BEEN DE-ENERGIZED.

IT WAS PARTLY SUNNY AND 66° ON THE DAY THAT THE TRANSMISSION LINE ELEVATIONS WERE SURVEYED.

THE CONTRACTOR SHALL USE EXTREME CARE TO AVOID DAMAGING THE PROPOSED SEWER LINE WHEN DRIVING THE TEMPORARY SHORING AT END BENT 2. THE CONTRACTOR SHALL DETERMINE THE ELEVATION OF THE PROPOSED SEWER LINE PRIOR TO DRIVING THE TEMPORARY SHORING TO DETERMINE THE MAXIMUM DEPTH THAT THE SHORING MAY BE DRIVEN.

FOR UTILITY INFORMATION, SEE UTILITY PLANS AND SPECIAL PROVISIONS.

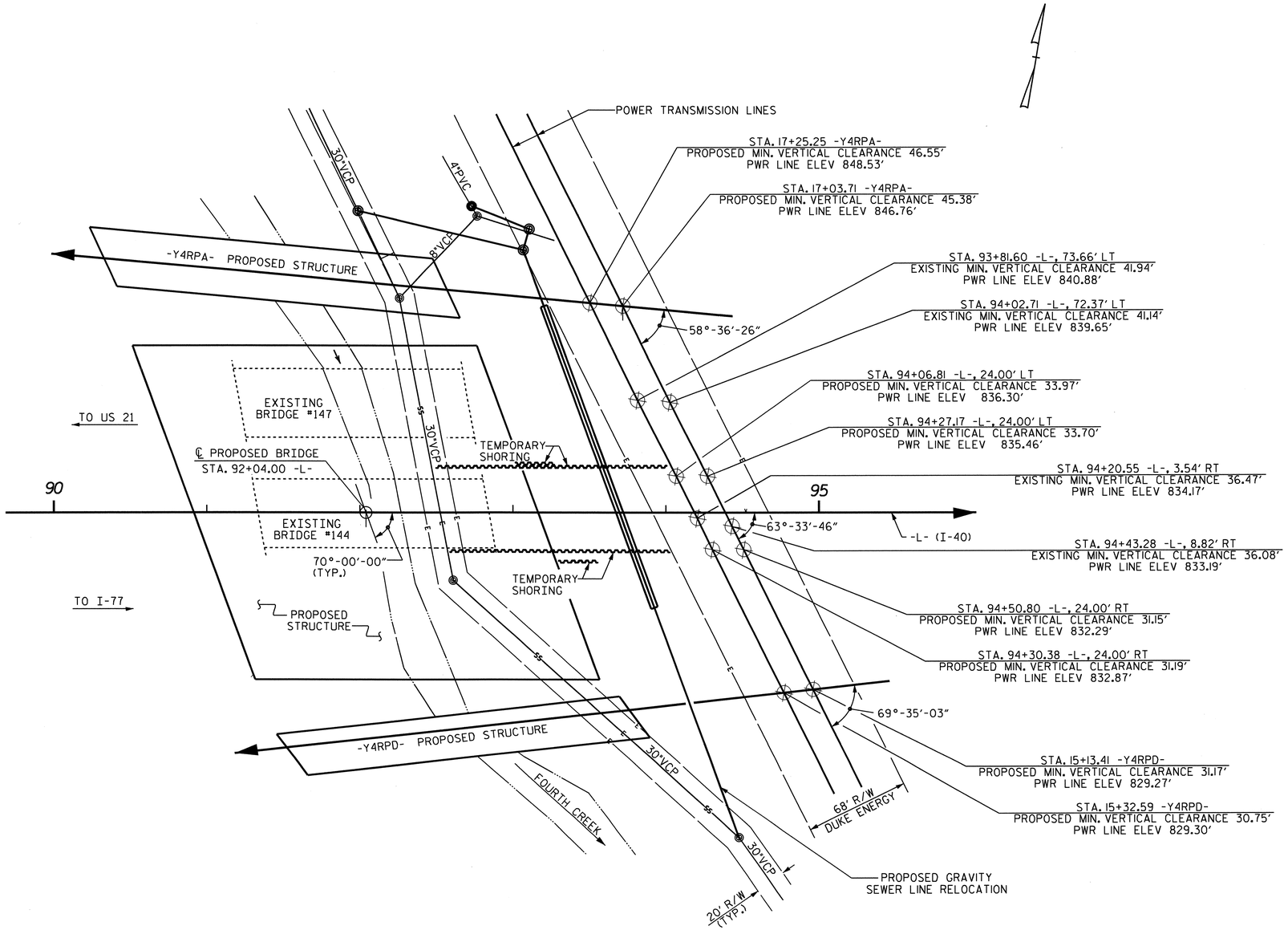


PROJECT NO. I-3819A

IREDELL COUNTY

STATION: 92+04.00 -L-

STATE OF NORTH CAROLINA
DEPARTMENT OF TRANSPORTATION
RALEIGH

# UTILITY DRAWING

FOR BRIDGE ON I-40
OVER FOURTH CREEK
BETWEEN US 21 AND I-77

NORTH CAROLINA PROFESSIONAL SEAL 21545 ENGINEER STEVEN L. WANCE

01/09/12

| REVISIONS | | | | | | SHEET NO. |
|---|---|---|---|---|---|---|
| NO. | BY: | DATE: | NO. | BY: | DATE: | S-89A |
| 1 | | | 3 | | | TOTAL SHEETS |
| 2 | | | 4 | | | 382 |

DRAWN BY : S. WANCE PE DATE : 01/12
CHECKED BY : J. M. BAILEY DATE : 01/12

09-JAN-2012 17:19
R:\Structures\Frye\str03\Swance\UtilityClearance\I3819A_Str3_powerlineclearance.dgn
swance

STR. 3

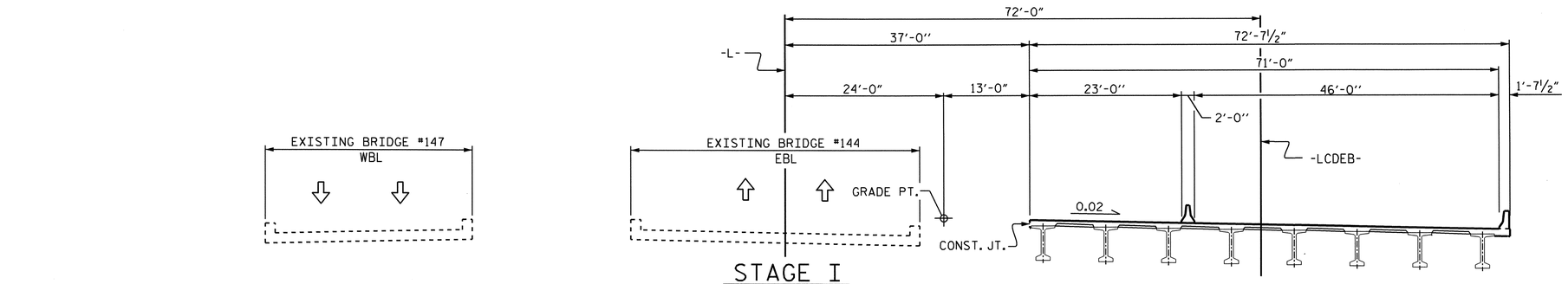


## STAGE I

CONSTRUCT RIGHT SIDE OF PROPOSED BRIDGE & MEDIAN BARRIER RAIL, MAINTAIN TRAFFIC ON EXISTING BRIDGES #147 & #144

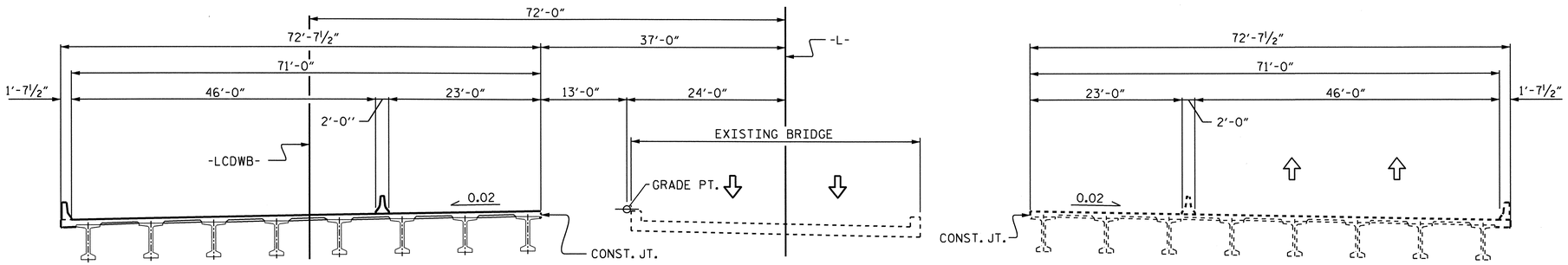


## STAGE II

MOVE EASTBOUND TRAFFIC ONTO NEW BRIDGE, REMOVE EXISTING BRIDGE #147, CONSTRUCT LEFT SIDE OF PROPOSED BRIDGE & MEDIAN BARRIER RAIL.

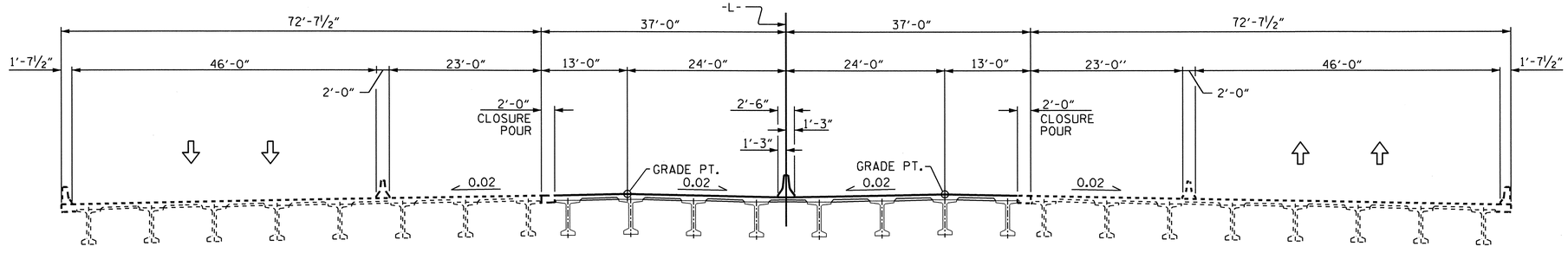


## STAGE III

MOVE TRAFFIC ONTO BOTH SIDE OF NEW BRIDGE, REMOVE EXISTING BRIDGE #144, CONSTRUCT MIDDLE PART OF PROPOSED BRIDGE.

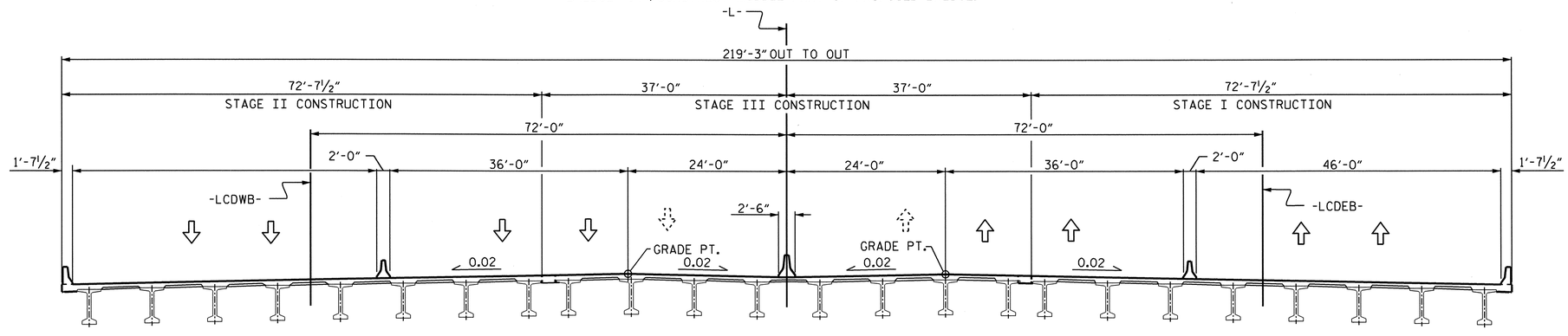


## FINAL TYPICAL SECTION

CONSTRUCT THE CLOSURE POURS & CONC. MEDIAN BARRIER RAIL OF BRIDGE.

**NOTE:**

FOR MAINTENANCE OF TRAFFIC, SEE TRAFFIC CONTROL PLANS.

NORTH CAROLINA PROFESSIONAL SEAL 16301 ENGINEER T. H. FANG
11/30/11

PROJECT NO. I-3819A

IREDELL COUNTY

STATION: 92+04.00 -L-

STATE OF NORTH CAROLINA
DEPARTMENT OF TRANSPORTATION
RALEIGH

# CONSTRUCTION SEQUENCE

FOR BRIDGE ON I-40 OVER FOURTH CREEK BETWEEN US 21 AND I-77

| REVISIONS | | | | | | SHEET NO. |
|---|---|---|---|---|---|---|
| NO. | BY: | DATE: | NO. | BY: | DATE: | S-90 |
| 1 | | | 3 | | | TOTAL SHEETS |
| 2 | | | 4 | | | 382 |

DRAWN BY : HARISH SHAH DATE : 1/12/11
CHECKED BY : T. H. FANG DATE : 11/01/11

30-NOV-2011 11:29
R:\Structures\Frye\str03\finalplans\I-3819A_SD_stg_03.dgn
sbwilliams

# LOAD AND RESISTANCE FACTOR RATING (LRFD) SUMMARY FOR PRESTRESSED CONCRETE GIRDERS

| LEVEL | | VEHICLE | WEIGHT (W) (TONS) | CONTROLLING LOAD RATING (#) | MINIMUM RATING FACTORS (RF) | TONS = W X RF | STRENGTH I LIMIT STATE | | | | | | | | | | SERVICE III LIMIT STATE | | | | | | | COMMENT NUMBER |
|---|---|---|---|---|---|---|---|---|---|---|---|---|---|---|---|---|---|---|---|---|---|---|---|---|
| | | | | | | | | MOMENT | | | | | SHEAR | | | | | | MOMENT | | | | | | |
| | | | | | | | LIVELOAD FACTORS | DISTRIBUTION FACTORS (DF) | RATING FACTOR | SPAN | GIRDER LOCATION | DISTANCE FROM LEFT END OF SPAN (ft) | DISTRIBUTION FACTORS (DF) | RATING FACTOR | SPAN | GIRDER LOCATION | DISTANCE FROM LEFT END OF SPAN (ft) | LIVELOAD FACTORS | DISTRIBUTION FACTORS (DF) | RATING FACTOR | SPAN | GIRDER LOCATION | DISTANCE FROM LEFT END OF SPAN (ft) | |
| DESIGN LOAD RATING | | HL-93(Inv) | N/A | 1 | 1.04 | -- | 1.75 | 0.884 | 1.06 | A | EL | 30.474 | 0.931 | 1.34 | B | EL | 30.825 | 0.80 | 0.884 | 1.04 | B | EL | 51.375 | |
| | | HL-93(Opr) | N/A | -- | 1.38 | -- | 1.35 | 0.884 | 1.38 | A | EL | 30.474 | 0.931 | 1.74 | B | EL | 30.825 | N/A | -- | -- | -- | -- | -- | |
| | | HS-20(Inv) | 36.000 | 2 | 1.35 | 48.6 | 1.75 | 0.884 | 1.35 | A | EL | 30.474 | 0.961 | 1.65 | C | I | 35.664 | 0.80 | 0.884 | 1.45 | B | EL | 51.375 | |
| | | HS-20(Opr) | 36.000 | -- | 1.75 | 63.0 | 1.35 | 0.884 | 1.75 | A | EL | 30.474 | 0.961 | 2.13 | C | I | 35.664 | N/A | -- | -- | -- | -- | -- | |
| LEGAL LOAD RATING | SV | SH | 12.500 | -- | 3.66 | 45.7 | 1.40 | 0.884 | 3.99 | A | EL | 30.474 | 0.961 | 4.75 | C | I | 35.664 | 0.80 | 0.884 | 3.66 | A | EL | 30.474 | |
| | | S3C | 21.500 | -- | 2.15 | 46.1 | 1.40 | 0.884 | 2.34 | A | EL | 30.474 | 0.961 | 2.82 | C | I | 35.664 | 0.80 | 0.884 | 2.15 | A | EL | 30.474 | |
| | | S3A | 22.750 | -- | 2.04 | 46.3 | 1.40 | 0.884 | 2.22 | A | EL | 30.474 | 0.961 | 2.69 | C | I | 35.664 | 0.80 | 0.884 | 2.04 | A | EL | 30.474 | |
| | | S4A | 26.750 | -- | 1.82 | 48.7 | 1.40 | 0.884 | 1.99 | A | EL | 30.474 | 0.961 | 2.43 | C | I | 35.664 | 0.80 | 0.884 | 1.82 | B | EL | 51.375 | |
| | | S5A | 30.500 | -- | 1.61 | 48.9 | 1.40 | 0.884 | 1.76 | A | EL | 30.474 | 0.961 | 2.37 | C | I | 35.664 | 0.80 | 0.884 | 1.61 | B | EL | 51.375 | |
| | | S6A | 34.500 | -- | 1.45 | 50.0 | 1.40 | 0.884 | 1.62 | A | EL | 30.474 | 0.963 | 2.19 | A | I | 48.759 | 0.80 | 0.884 | 1.45 | B | EL | 51.375 | |
| | | S7B | 38.500 | -- | 1.32 | 50.6 | 1.40 | 0.884 | 1.49 | A | EL | 30.474 | 0.963 | 2.11 | A | I | 48.759 | 0.80 | 0.884 | 1.32 | B | EL | 51.375 | |
| | | S7A | 40.000 | 3 | 1.29 | 51.7 | 1.40 | 0.884 | 1.49 | A | EL | 30.474 | 0.931 | 2.17 | B | EL | 30.825 | 0.80 | 0.884 | 1.29 | B | EL | 51.375 | |
| | TTST | T4A | 28.250 | -- | 1.78 | 50.3 | 1.40 | 0.884 | 2.00 | A | EL | 30.474 | 0.961 | 2.44 | C | I | 35.664 | 0.80 | 0.884 | 1.78 | B | EL | 51.375 | |
| | | T5B | 32.000 | -- | 1.57 | 50.1 | 1.40 | 0.884 | 1.75 | A | EL | 30.474 | 0.961 | 2.38 | C | I | 35.664 | 0.80 | 0.884 | 1.57 | B | EL | 51.375 | |
| | | T6A | 36.000 | -- | 1.43 | 51.4 | 1.40 | 0.884 | 1.63 | A | EL | 30.474 | 0.931 | 2.32 | B | EL | 30.825 | 0.80 | 0.884 | 1.43 | B | EL | 51.375 | |
| | | T7A | 40.000 | -- | 1.32 | 52.7 | 1.40 | 0.884 | 1.54 | A | EL | 30.474 | 0.931 | 2.17 | B | EL | 30.825 | 0.80 | 0.884 | 1.32 | B | EL | 51.375 | |
| | | T7B | 40.000 | -- | 1.39 | 55.5 | 1.40 | 0.884 | 1.71 | A | EL | 30.474 | 0.963 | 2.02 | A | I | 48.759 | 0.80 | 0.884 | 1.39 | B | EL | 51.375 | |

## LOAD FACTORS:

| DESIGN LOAD RATING FACTORS | LIMIT STATE | $\gamma_{DC}$ | $\gamma_{DW}$ |
|---|---|---|---|
| | STRENGTH I | 1.25 | 1.50 |
| | SERVICE III | 1.00 | 1.00 |

## NOTES:

MINIMUM RATING FACTORS ARE BASED ON THE STRENGTH I AND SERVICE III LIMIT STATES.

ALLOWABLE STRESSES FOR SERVICE III LIMIT STATE ARE AS REQUIRED FOR DESIGN.

## COMMENTS:

1.
2.
3.
4.

(#) CONTROLLING LOAD RATING

(1) DESIGN LOAD RATING (HL-93)

(2) DESIGN LOAD RATING (HS-20)

(3) LEGAL LOAD RATING **

** SEE CHART FOR VEHICLE TYPE

GIRDER LOCATION

I - INTERIOR GIRDER
EL - EXTERIOR LEFT GIRDER
ER - EXTERIOR RIGHTGIRDER

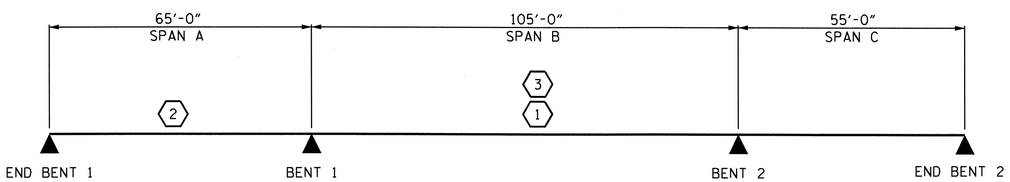


## LRFR SUMMARY

PROJECT NO. I-3819A

IREDELL COUNTY

STATION: 92+04.00 -L-

STATE OF NORTH CAROLINA
DEPARTMENT OF TRANSPORTATION
RALEIGH

STANDARD

LRFR SUMMARY FOR PRESTRESSED CONCRETE GIRDERS
(INTERSTATE TRAFFIC)

NORTH CAROLINA PROFESSIONAL SEAL 16301 ENGINEER TING FANG
11/30/11

| REVISIONS | | | | | | SHEET NO. |
|---|---|---|---|---|---|---|
| NO. | BY: | DATE: | NO. | BY: | DATE: | S-91 |
| 1 | | | 3 | | | TOTAL SHEETS |
| 2 | | | 4 | | | 382 |

STR. #3 STD. NO. LRFR2

ASSEMBLED BY : A.C. OUTLAW DATE : 9/29/11
CHECKED BY : T. H. FANG DATE : 10/28/11

DRAWN BY : MAA 1/08
CHECKED BY : GM/DI 2/08

30-NOV-2011 11:29
R:\Structures\Frye\str03\finalplans\I3819A_SD_LRFR_03.dgn
sbwilliams

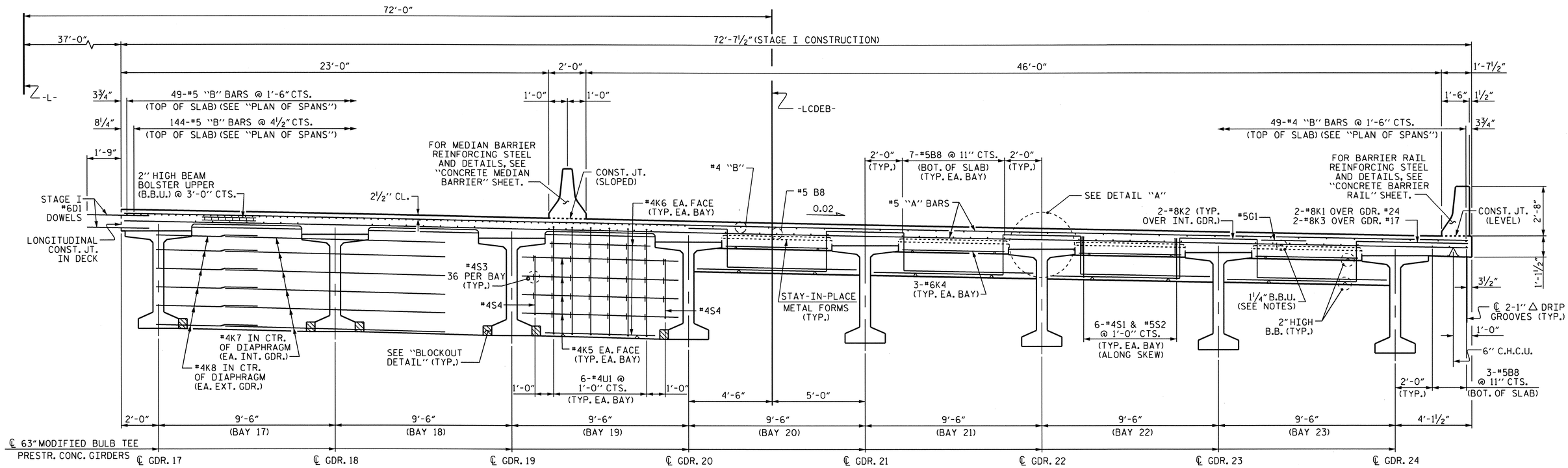


AT BENT DIAPHRAGMS

## TYPICAL SECTION
STAGE I

AT END BENT DIAPHRAGMS

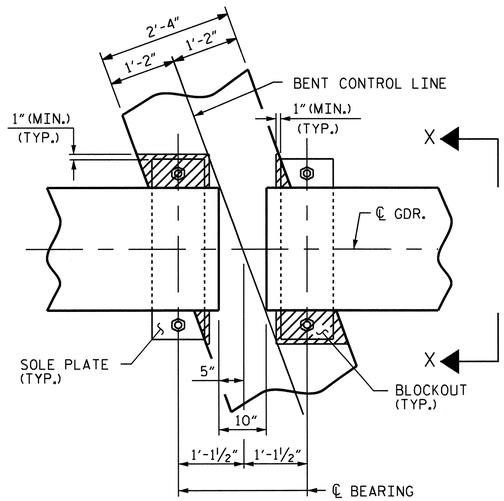


PLAN

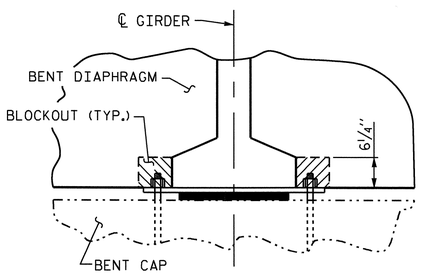


SECTION X-X

## BENT DIAPHRAGM BLOCKOUT DETAIL

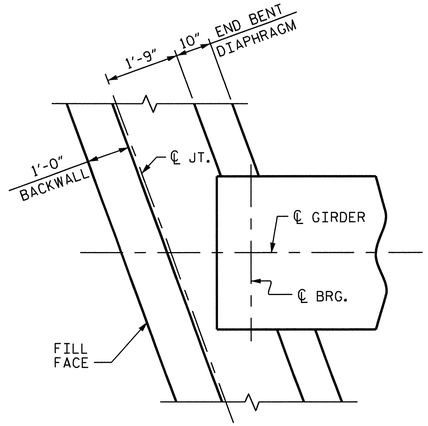


PLAN OF END BENT DIAPHRAGM
END BENT 1 SHOWN, END BENT 2 SIMILAR

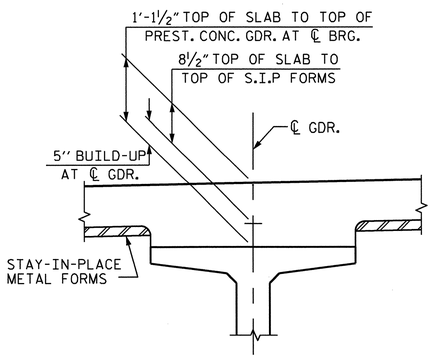


DETAIL "A"

NORTH CAROLINA PROFESSIONAL SEAL 16301 ENGINEER TING HSUING FANG
12/28/11

PROJECT NO. I-3819A
IREDELL COUNTY
STATION: 92+04.00 -L-

SHEET 1 OF 3

STATE OF NORTH CAROLINA
DEPARTMENT OF TRANSPORTATION
RALEIGH
SUPERSTRUCTURE

TYPICAL SECTION
STAGE I

| REVISIONS | | | | | | SHEET NO. |
|---|---|---|---|---|---|---|
| NO. | BY: | DATE: | NO. | BY: | DATE: | S-92 |
| 1 | | | 3 | | | TOTAL SHEETS |
| 2 | | | 4 | | | 382 |

DRAWN BY : KEITH D. LAYNE DATE : 7/6/10
CHECKED BY : S. B. WILLIAMS DATE : 10/10

28-DEC-2011 09:09
K:\TIPProjects-I\I3819A\Structures\Frye\str03\finalplans\I3819A_SD_TS_03.dgn
tfang

STR. #3

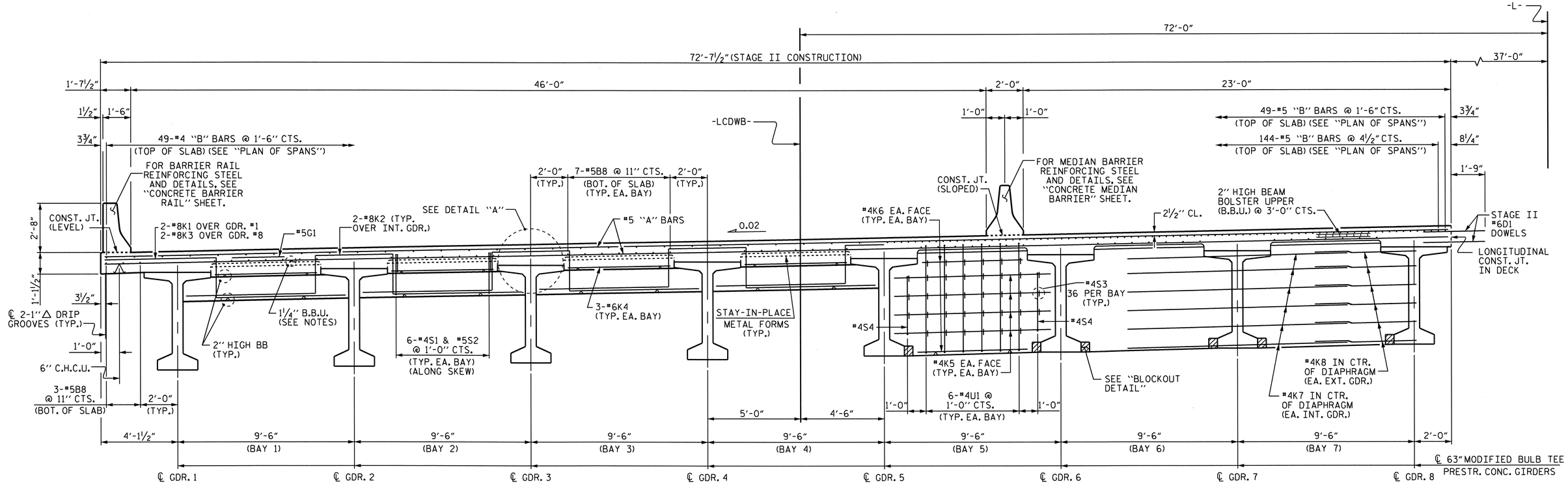


AT END BENT DIAPHRAGMS

AT BENT DIAPHRAGMS

# TYPICAL SECTION

STAGE II

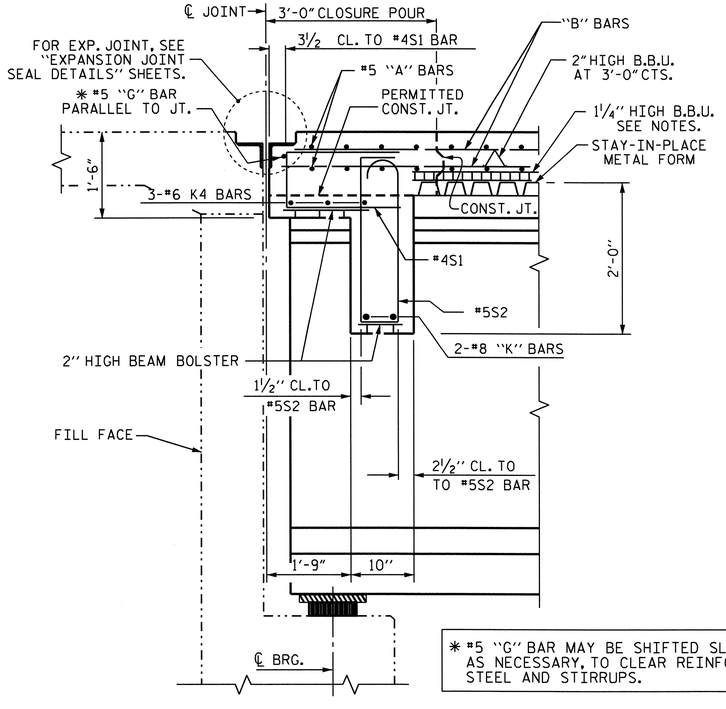


✱ #5 "G" BAR MAY BE SHIFTED SLIGHTLY, AS NECESSARY, TO CLEAR REINFORCING STEEL AND STIRRUPS.

## TYPICAL SECTION AT END BENT 1

(END BENT 1 SHOWN, END BENT 2 SIMILAR)

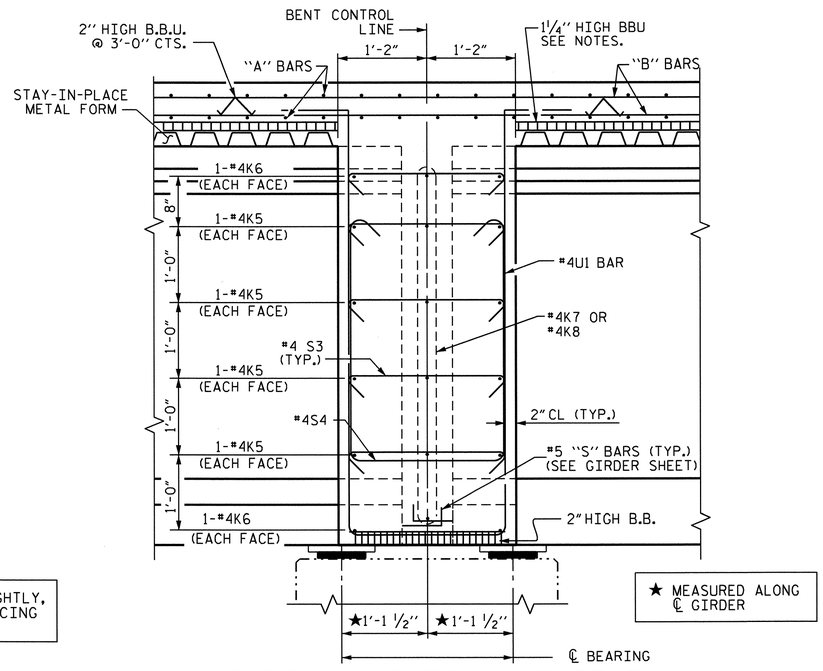


★ MEASURED ALONG ℄ GIRDER

## TYPICAL SECTION AT BENT

PROJECT NO. I-3819A

IREDELL COUNTY

STATION: 92+04.00 -L-

SHEET 2 OF 3

STATE OF NORTH CAROLINA
DEPARTMENT OF TRANSPORTATION
RALEIGH

SUPERSTRUCTURE

TYPICAL SECTION

STAGE II

| REVISIONS | | | | | | SHEET NO. |
|---|---|---|---|---|---|---|
| NO. | BY: | DATE: | NO. | BY: | DATE: | S-93 |
| 1 | | | 3 | | | TOTAL SHEETS |
| 2 | | | 4 | | | 382 |

STR. #3

DRAWN BY : KEITH D. LAYNE DATE : 7/6/10
CHECKED BY : S. B. WILLIAMS DATE : 10/10

30-NOV-2011 11:29
R:\Structures\Frye\str03\finalplans\I3819A_SD_TS_03.dgn
sbwilliams

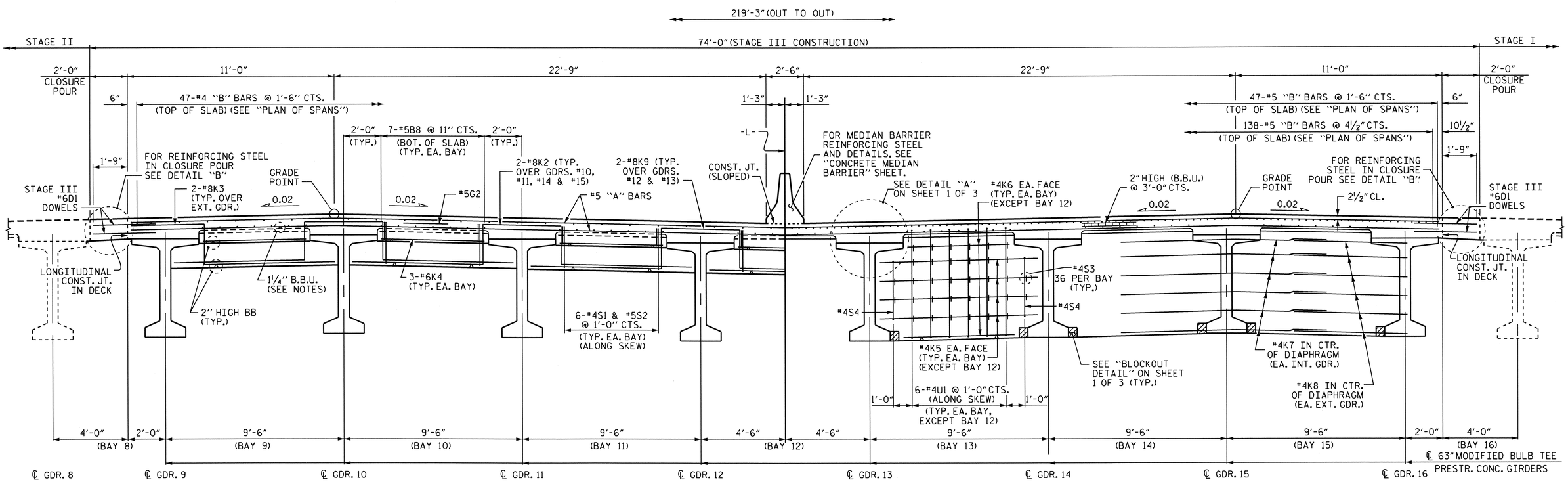


## AT END BENT DIAPHRAGMS

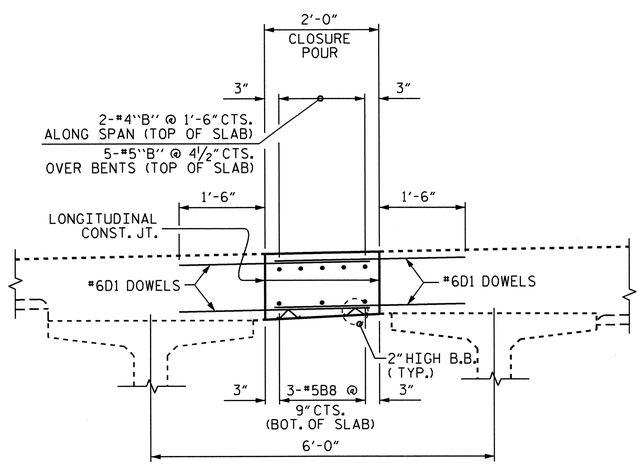


## DETAIL "B"

## TYPICAL SECTION

STAGE III

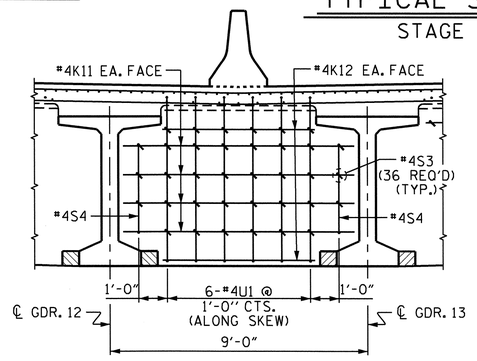


## AT BENT DIAPHRAGMS

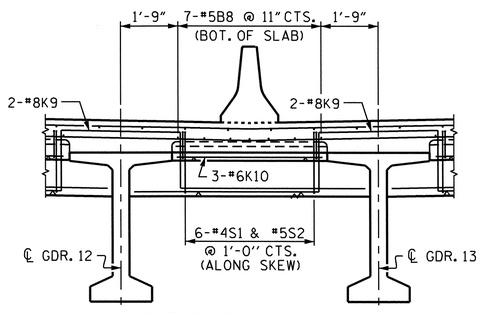


## AT END BENT DIAPHRAGMS

## TYPICAL SECTION

## AT BENT DIAPHRAGMS

### NOTES:

PROVIDE 1¼" HIGH BEAM BOLSTERS UPPER AT 4'-0" CTS. ATOP THE METAL STAY-IN-PLACE FORMS TO SUPPORT THE BOTTOM MAT OF "A" BARS. WHEN USING REMOVABLE FORMS, PROVIDE CONTINUOUS HIGH CHAIRS FOR METAL DECK (C.H.C.M.) @ 4'-0" CTS. WITH A HEIGHT TO SUPPORT THE BOTTOM MAT OF "A" BARS A CLEAR DISTANCE OF 2½" ABOVE THE TOP OF THE REMOVABLE FORM.

LONGITUDINAL STEEL MAY BE SHIFTED SLIGHTLY, AS NECESSARY, TO AVOID INTERFERENCE WITH STIRRUPS IN PRESTRESSED CONCRETE GIRDERS.

THE JOINT IN THE DECK SHALL BE FORMED PRIOR TO THE CASTING OF THE BARRIER RAIL AND MEDIAN BARRIER.

PREVIOUSLY CAST CONCRETE IN A CONTINUOUS UNIT SHALL HAVE ATTAINED A MINIMUM COMPRESSIVE STRENGTH OF 3,000 PSI BEFORE ADDITIONAL CONCRETE IS CAST IN THE UNIT.

BARRIER RAIL AND MEDIAN BARRIER IN A CONTINUOUS UNIT SHALL NOT BE CAST UNTIL ALL SLAB CONCRETE IN THE UNIT HAS BEEN CAST AND HAS REACHED A MINIMUM COMPRESSIVE STRENGTH OF 3,000 PSI.

FOR INTERMEDIATE DIAPHRAGM DETAILS, SEE "INTERMEDIATE STEEL DIAPHRAGMS FOR PRESTRESSED CONCRETE 63" MODIFIED BULB TEE GIRDERS" SHEET.

FOR EXPANSION JOINT SEALS, SEE SPECIAL PROVISIONS.

DOWELS SHALL BE PLACED IN THE SAME HORIZONAL PLANE AS THE MAIN SLAB REINFORCING STEEL.

THE CONTRACTOR MAY USE ADHESIVELY ANCHORED DOWELS IN PLACE OF #6 D1 DOWELS. LEVEL 1 FIELD TESTING IS REQUIRED, AND THE YIELD LOAD OF THE DOWELS IS 26.4 KIPS. FOR ADHESIVELY ANCHORED DOWELS, SEE STANDARD SPECIFICATIONS.

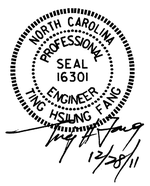


PROJECT NO. I-3819A

IREDELL COUNTY

STATION: 92+04.00 -L-

SHEET 3 OF 3

STATE OF NORTH CAROLINA
DEPARTMENT OF TRANSPORTATION
RALEIGH

SUPERSTRUCTURE

TYPICAL SECTION

STAGE III

| REVISIONS | | | | | | SHEET NO. |
|---|---|---|---|---|---|---|
| NO. | BY: | DATE: | NO. | BY: | DATE: | S-94 |
| 1 | | | 3 | | | TOTAL SHEETS |
| 2 | | | 4 | | | 382 |

DRAWN BY : KEITH D. LAYNE DATE : 7/6/10

CHECKED BY : S. B. WILLIAMS DATE : 10/10

28-DEC-2011 09:12
K:\TIPProjects-I\I3819A\Structures\Frye\str03\finalplans\I3819A_SD_TS_03.dgn
ttfang

STR. #3

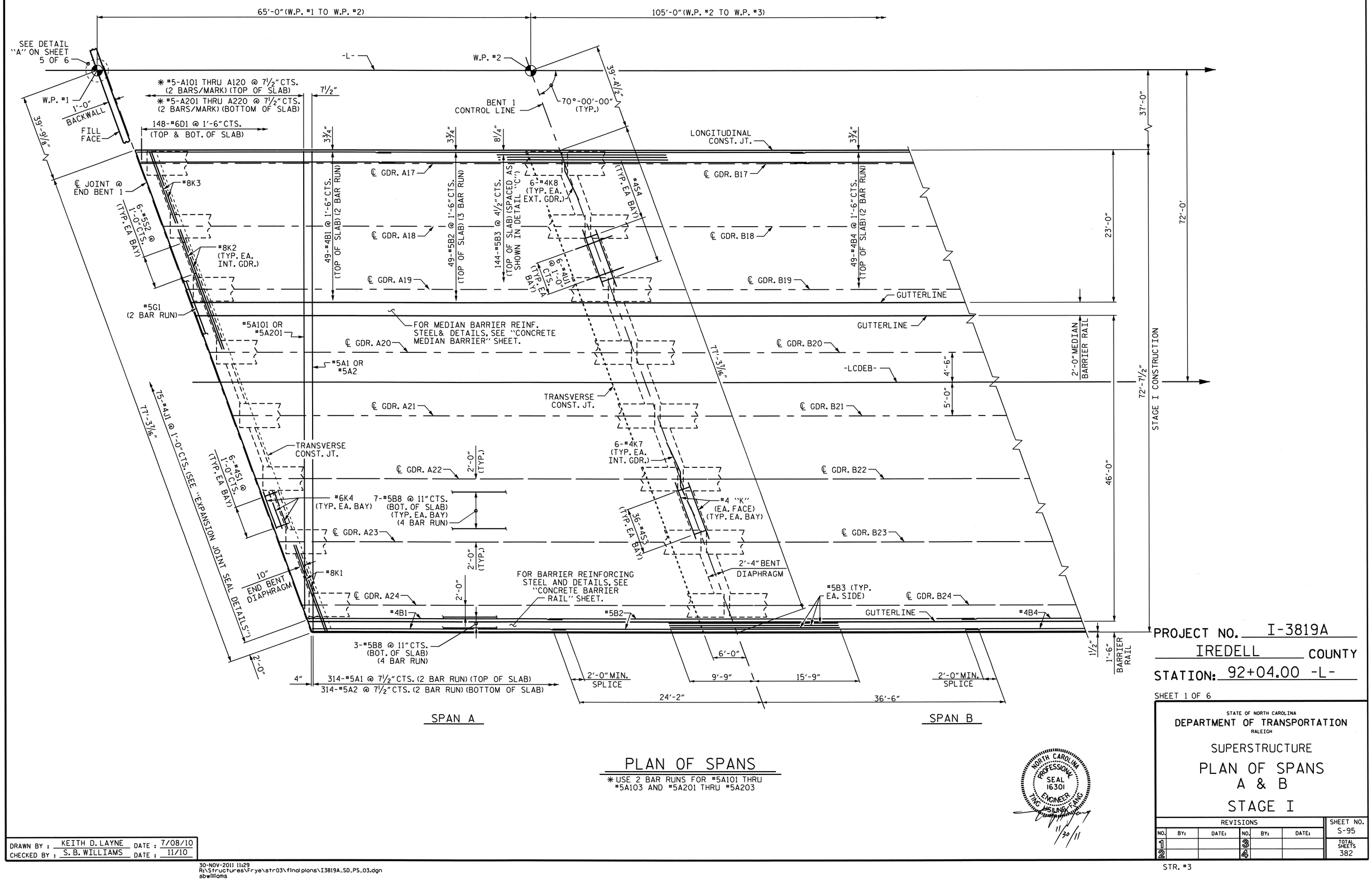


## PLAN OF SPANS

* USE 2 BAR RUNS FOR #5A101 THRU #5A103 AND #5A201 THRU #5A203

PROJECT NO. I-3819A

IREDELL COUNTY

STATION: 92+04.00 -L-

SHEET 1 OF 6

STATE OF NORTH CAROLINA
DEPARTMENT OF TRANSPORTATION
RALEIGH

SUPERSTRUCTURE

PLAN OF SPANS A & B

STAGE I

| REVISIONS | | | | | | SHEET NO. |
|---|---|---|---|---|---|---|
| NO. | BY: | DATE: | NO. | BY: | DATE: | S-95 |
| 1 | | | 3 | | | TOTAL SHEETS |
| 2 | | | 4 | | | 382 |

DRAWN BY : KEITH D. LAYNE DATE : 7/08/10
CHECKED BY : S. B. WILLIAMS DATE : 11/10

30-NOV-2011 11:29
R:\Structures\Frye\str03\finalplans\I3819A_SD_PS_03.dgn
sbwilliams

STR. #3

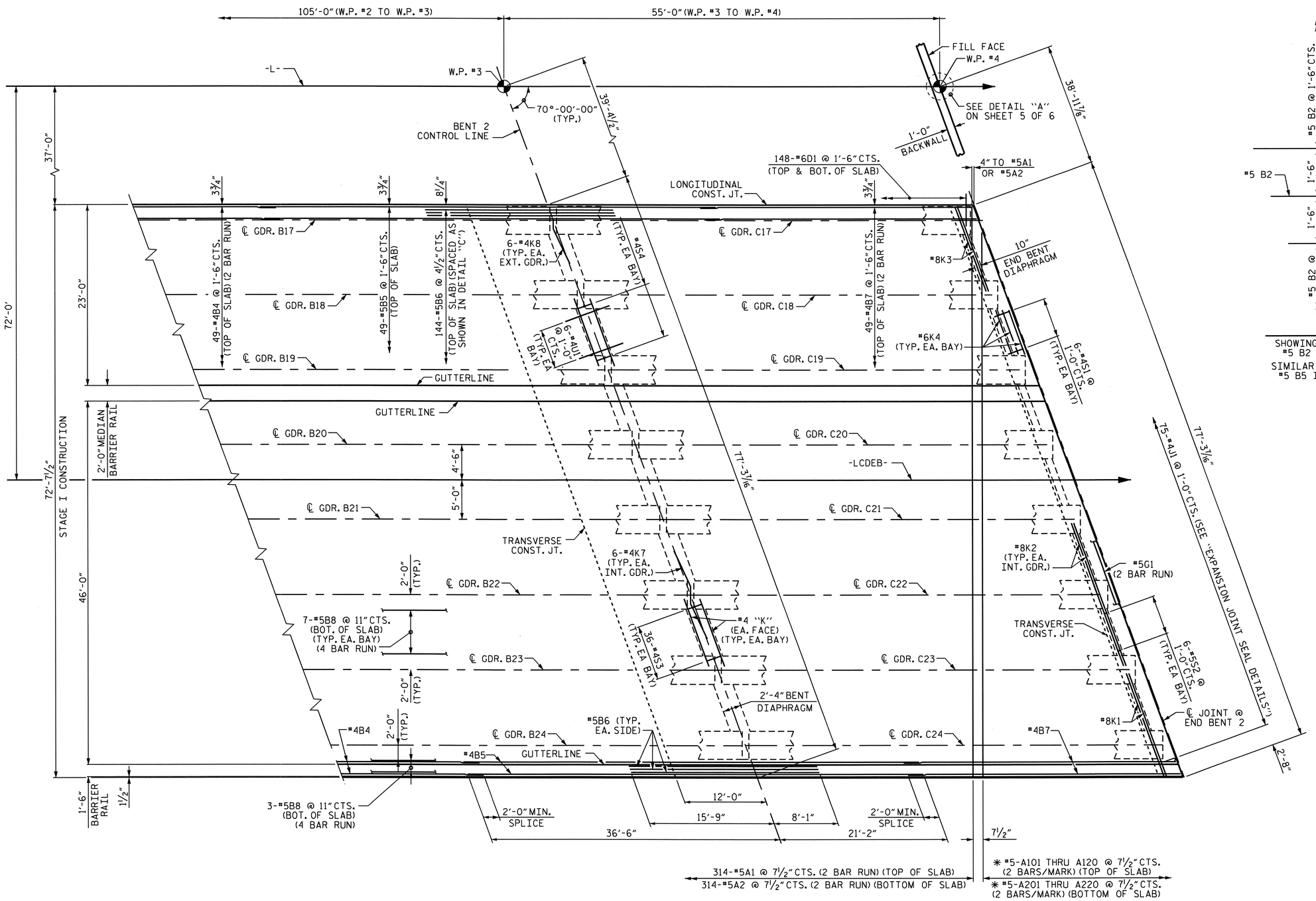


## PLAN OF SPANS

*USE 2 BAR RUNS FOR #5A101 THRU #5A103 AND #5A201 THRU #5A203

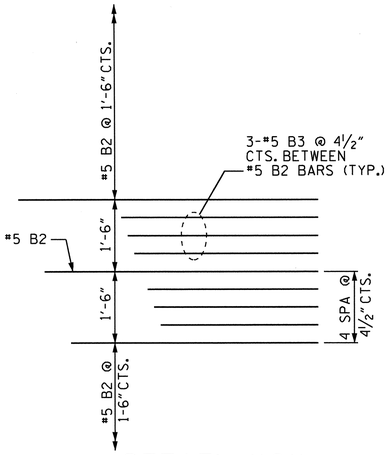


## DETAIL "C"

SHOWING PLACEMENT OF #5 B3 BETWEEN #5 B2 IN TOP OF SLAB OVER BENT 1
SIMILAR PLACEMENT OF #5 B6 BETWEEN #5 B5 IN TOP OF SLAB OVER BENT 2

NORTH CAROLINA PROFESSIONAL SEAL 16301 ENGINEER HSIUNG FANG
11/30/11

PROJECT NO. I-3819A
IREDELL COUNTY
STATION: 92+04.00 -L-

SHEET 2 OF 6

STATE OF NORTH CAROLINA
DEPARTMENT OF TRANSPORTATION
RALEIGH

SUPERSTRUCTURE

PLAN OF SPANS B & C

STAGE I

| REVISIONS | | | | | | SHEET NO. |
|---|---|---|---|---|---|---|
| NO. | BY: | DATE: | NO. | BY: | DATE: | S-96 |
| 1 | | | 3 | | | TOTAL SHEETS |
| 2 | | | 4 | | | 382 |

STR. #3

DRAWN BY : KEITH D. LAYNE DATE : 7/08/10
CHECKED BY : S. B. WILLIAMS DATE : 11/10

30-NOV-2011 11:29
R:\Structures\Frye\str03\finalplans\I3819A_SD_PS_03.dgn
sbwilliams

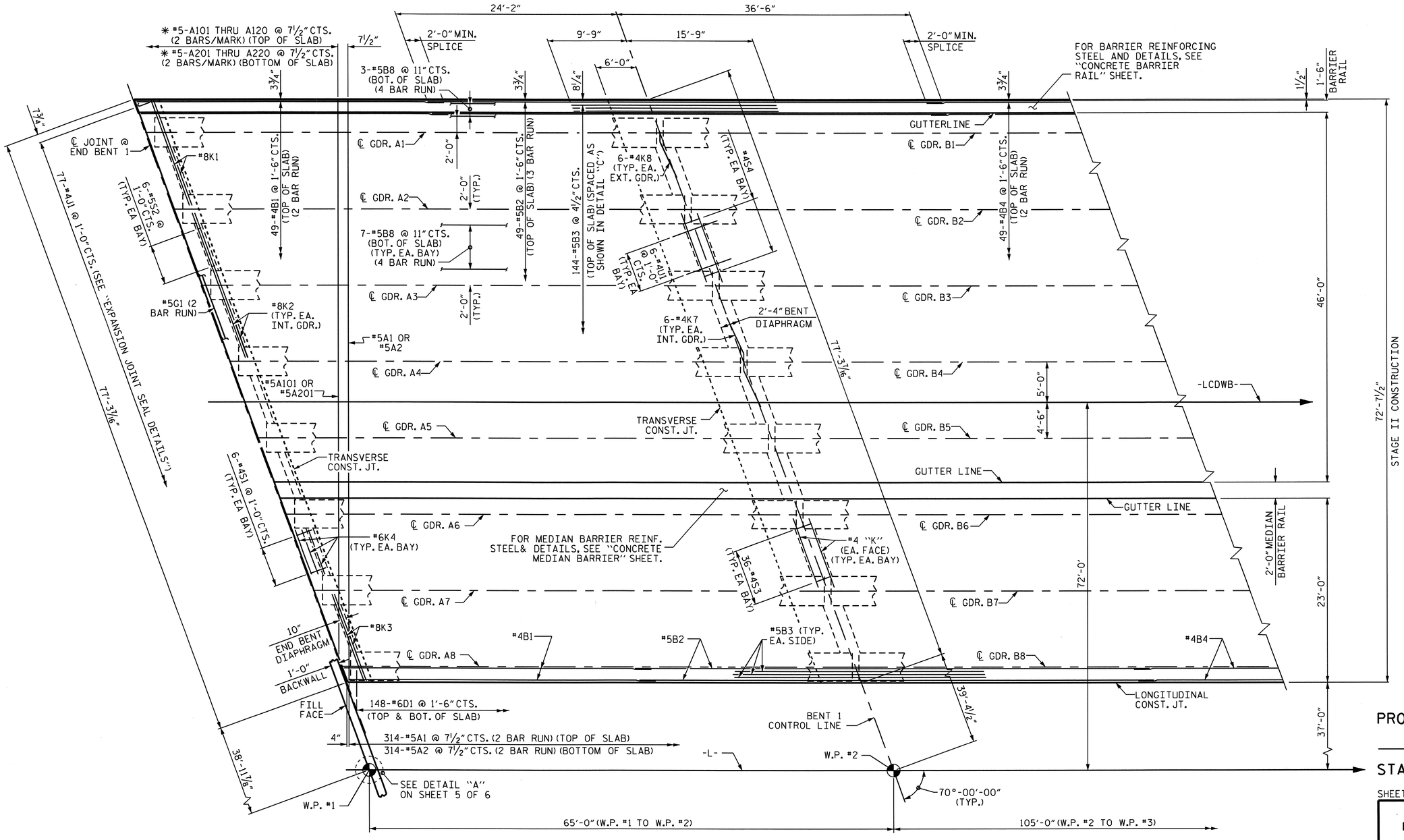


## PLAN OF SPANS

* USE 2 BAR RUNS FOR #5A101 THRU #5A103 AND #5A201 THRU #5A203

NORTH CAROLINA PROFESSIONAL SEAL 16301 ENGINEER TING HSIUNG FANG
12/28/11

PROJECT NO. I-3819A

IREDELL COUNTY

STATION: 92+04.00 -L-

SHEET 3 OF 6

STATE OF NORTH CAROLINA
DEPARTMENT OF TRANSPORTATION
RALEIGH

SUPERSTRUCTURE

PLAN OF SPANS A & B

STAGE II

| REVISIONS | | | | | | SHEET NO. |
|---|---|---|---|---|---|---|
| NO. | BY: | DATE: | NO. | BY: | DATE: | S-97 |
| 1 | | | 3 | | | TOTAL SHEETS |
| 2 | | | 4 | | | 382 |

DRAWN BY : KEITH D. LAYNE DATE : 7/08/10
CHECKED BY : S. B. WILLIAMS DATE : 11/10

28-DEC-2011 09:26
K:\TIPProjects-I\I3819A\Structures\Frye\str03\finalplans\I3819A_SD_PS_03.dgn
tfang

STR. #3

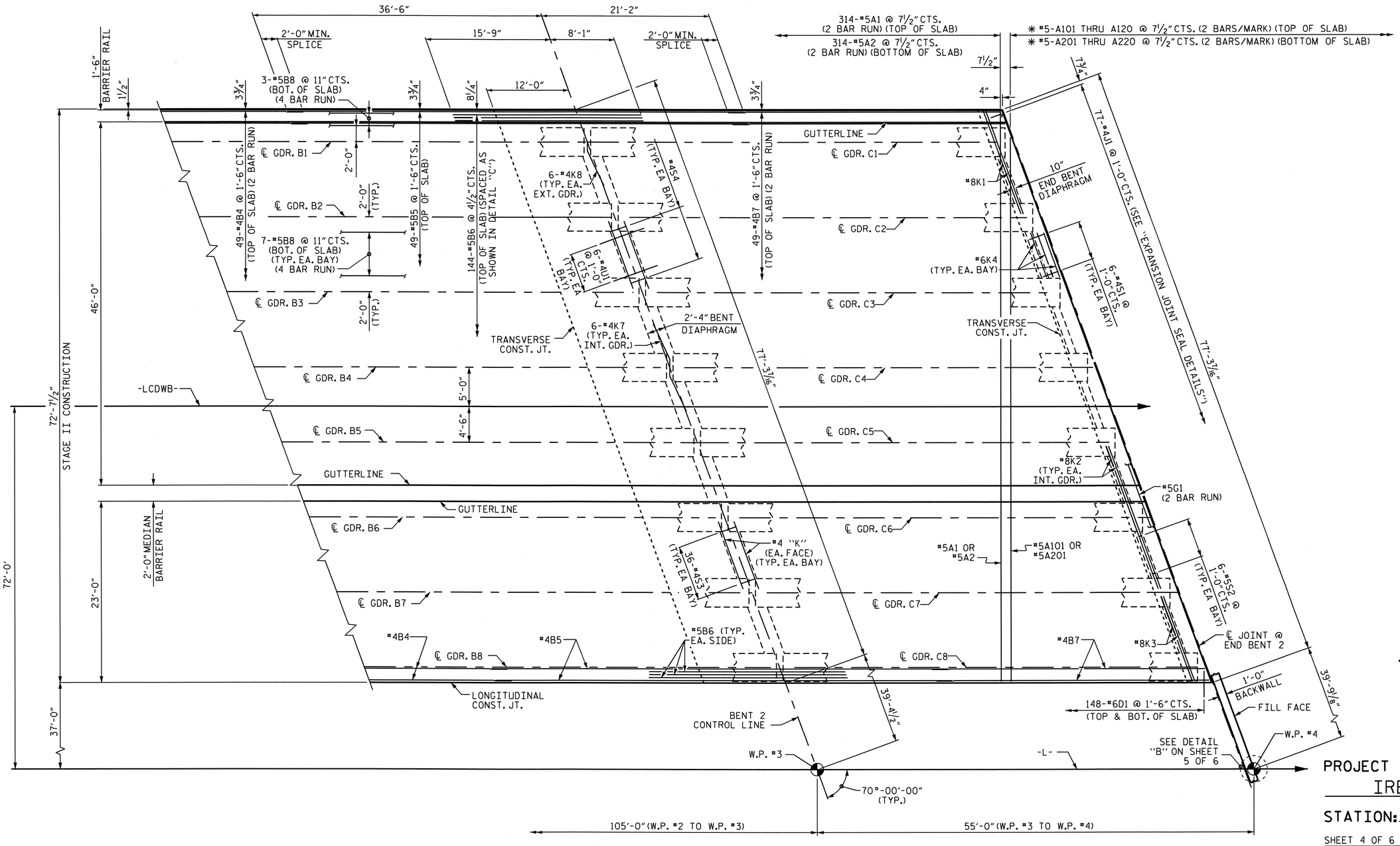


SPAN B

SPAN C

## PLAN OF SPANS

* USE 2 BAR RUNS FOR #5A101 THRU #5A103 AND #5A201 THRU #5A203

NORTH CAROLINA PROFESSIONAL SEAL 16301 ENGINEER TING HSING FANG
12/28/11

PROJECT NO. I-3819A

IREDELL COUNTY

STATION: 92+04.00 -L-

SHEET 4 OF 6

STATE OF NORTH CAROLINA
DEPARTMENT OF TRANSPORTATION
RALEIGH

SUPERSTRUCTURE

PLAN OF SPANS B & C

STAGE II

| REVISIONS | | | | | | SHEET NO. |
|---|---|---|---|---|---|---|
| NO. | BY: | DATE: | NO. | BY: | DATE: | S-98 |
| 1 | | | 3 | | | TOTAL SHEETS |
| 2 | | | 4 | | | 382 |

STR. #3

DRAWN BY : KEITH D. LAYNE DATE : 7/08/10
CHECKED BY : S. B. WILLIAMS DATE : 11/10

28-DEC-2011 10:22
K:\TIPProjects-I\I3819A\Structures\Frye\str03\finalplans\I3819A_SD_PS_03.dgn
ttfang

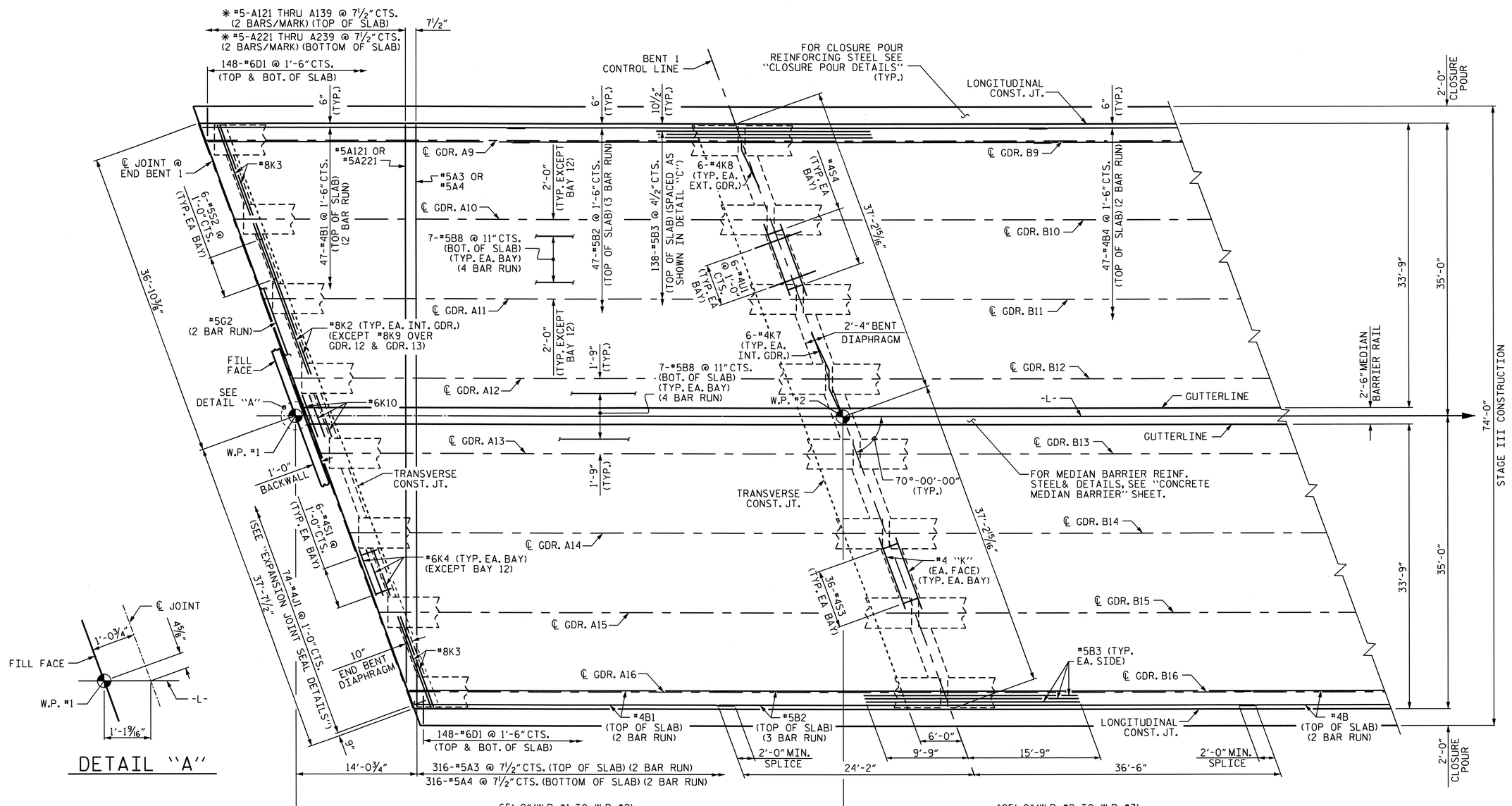





DETAIL "A"

## PLAN OF SPANS

* USE 2 BAR RUNS FOR #5A121 THRU #5A123 AND #5A221 THRU #5A223

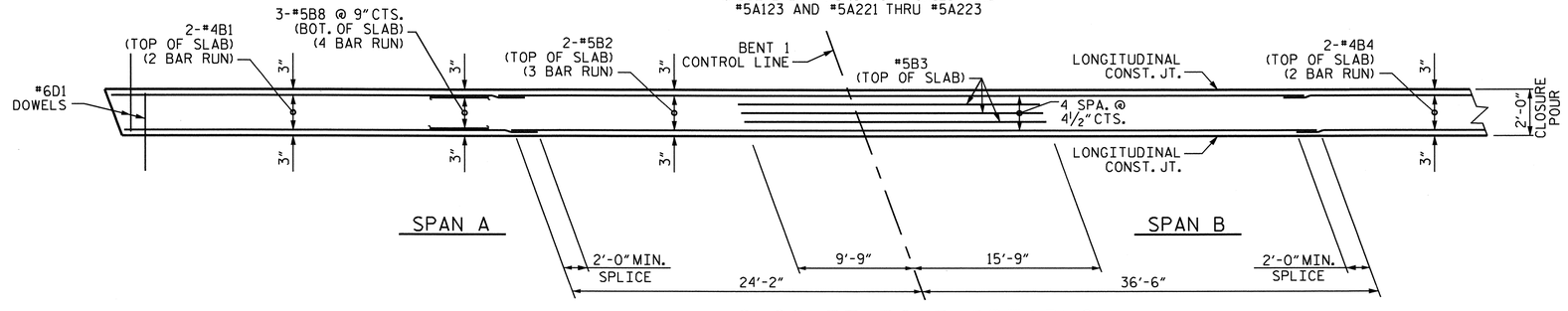


## CLOSURE POUR DETAILS

(TYP. EA. CLOSURE POUR)

PROJECT NO. I-3819A

IREDELL COUNTY

STATION: 92+04.00 -L-

SHEET 5 OF 6

STATE OF NORTH CAROLINA
DEPARTMENT OF TRANSPORTATION
RALEIGH

SUPERSTRUCTURE

PLAN OF SPANS A & B

STAGE III

| REVISIONS | | | | | | SHEET NO. |
|---|---|---|---|---|---|---|
| NO. | BY: | DATE: | NO. | BY: | DATE: | S-99 |
| 1 | | | 3 | | | TOTAL SHEETS |
| 2 | | | 4 | | | 382 |

DRAWN BY : KEITH D. LAYNE DATE : 7/08/10
CHECKED BY : S. B. WILLIAMS DATE : 11/10

30-NOV-2011 11:28
R:\Structures\Frye\str03\finalplans\I3819A_SD_PS_03.dgn
sbwilliams

STR. #3

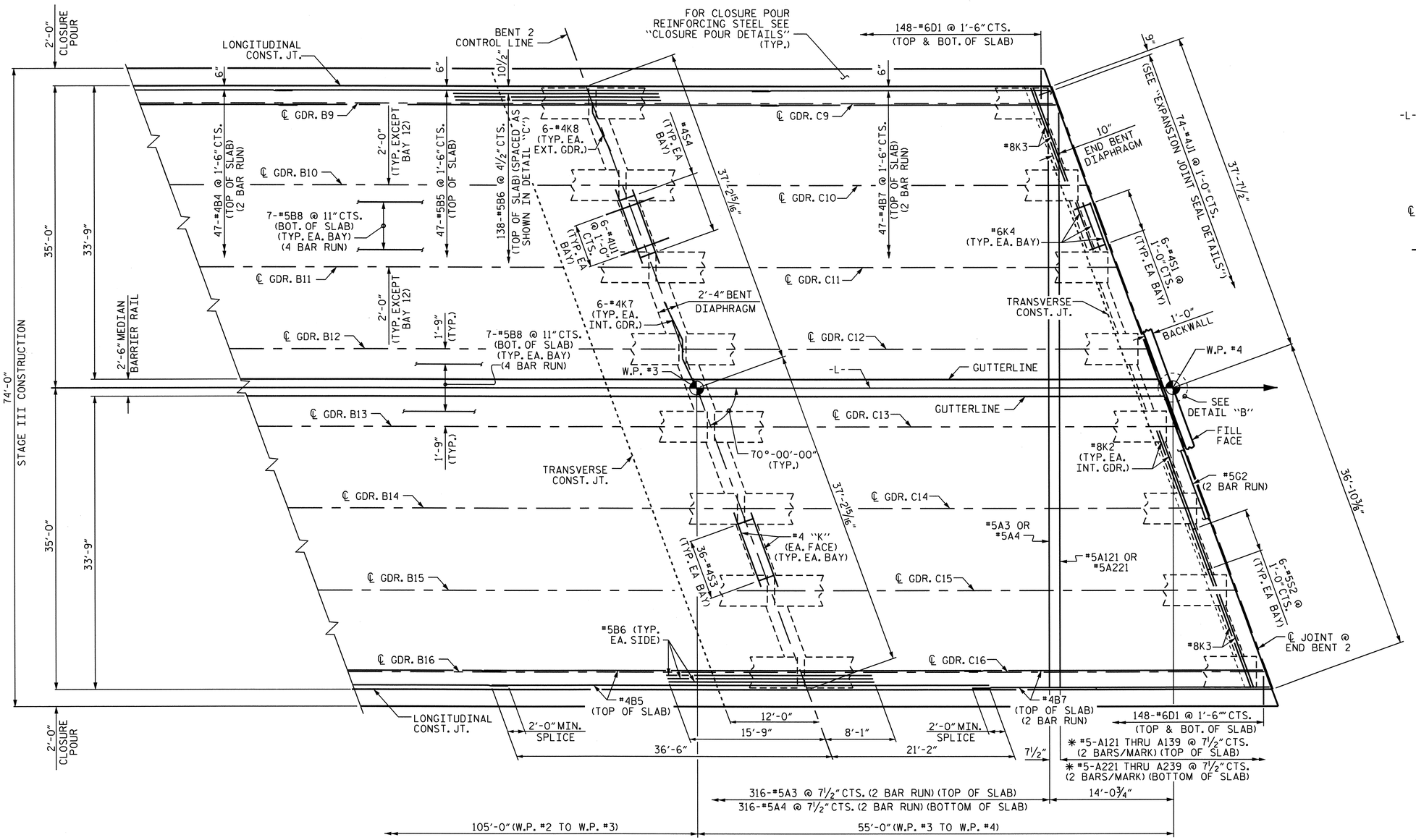


## PLAN OF SPANS

* USE 2 BAR RUNS FOR #5A121 THRU #5A123 AND #5A221 THRU #5A223

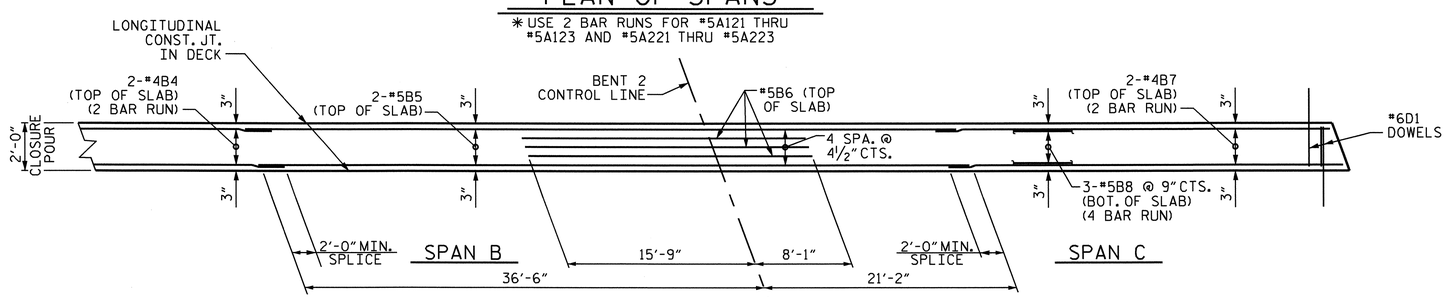


## CLOSURE POUR DETAILS

(TYP. EA. CLOSURE POUR)

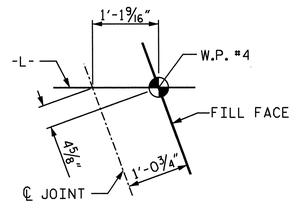


## DETAIL "B"

NORTH CAROLINA PROFESSIONAL SEAL 16301 ENGINEER TING-KUONG LEANG
11/30/11

PROJECT NO. I-3819A

IREDELL COUNTY

STATION: 92+04.00 -L-

SHEET 6 OF 6

STATE OF NORTH CAROLINA
DEPARTMENT OF TRANSPORTATION
RALEIGH

SUPERSTRUCTURE

PLAN OF SPANS B & C

STAGE III

| REVISIONS | | | | | | SHEET NO. |
|---|---|---|---|---|---|---|
| NO. | BY: | DATE: | NO. | BY: | DATE: | S-100 |
| 1 | | | 3 | | | TOTAL SHEETS |
| 2 | | | 4 | | | 382 |

DRAWN BY : KEITH D. LAYNE DATE : 7/08/10
CHECKED BY : S. B. WILLIAMS DATE : 11/10

30-NOV-2011 11:28
R:\Structures\Frye\str03\finalplans\I3819A_SD_PS_03.dgn
sbwilliams

STR. #3

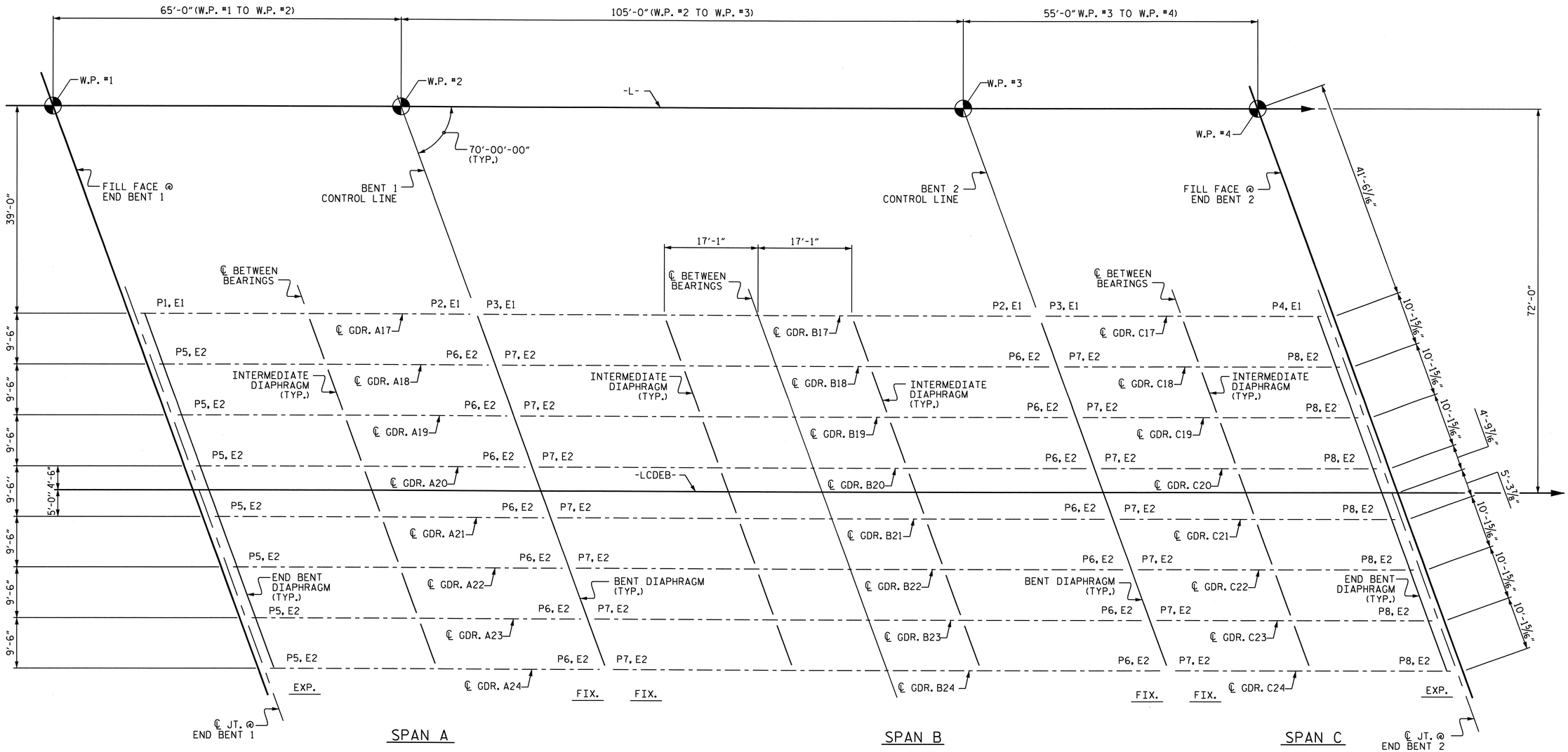


# FRAMING PLAN
STAGE I

PROJECT NO. I-3819A

IREDELL COUNTY

STATION: 92+04.00 -L-

SHEET 1 OF 3

STATE OF NORTH CAROLINA
DEPARTMENT OF TRANSPORTATION
RALEIGH

SUPERSTRUCTURE

FRAMING PLAN

STAGE I

| REVISIONS | | | | | | SHEET NO. |
|---|---|---|---|---|---|---|
| NO. | BY: | DATE: | NO. | BY: | DATE: | S-101 |
| 1 | | | 3 | | | TOTAL SHEETS |
| 2 | | | 4 | | | 382 |

STR. #3

NORTH CAROLINA PROFESSIONAL SEAL 16301 ENGINEER TING HSIUNG FANG 11/30/11

DRAWN BY : D.R. WITHROW DATE : 10/26/10
CHECKED BY : S.B. WILLIAMS DATE : 11/10

30-NOV-2011 11:28
R:\Structures\Frye\str03\finalplans\I3819A_SD_FP_03.dgn
sbwilliams

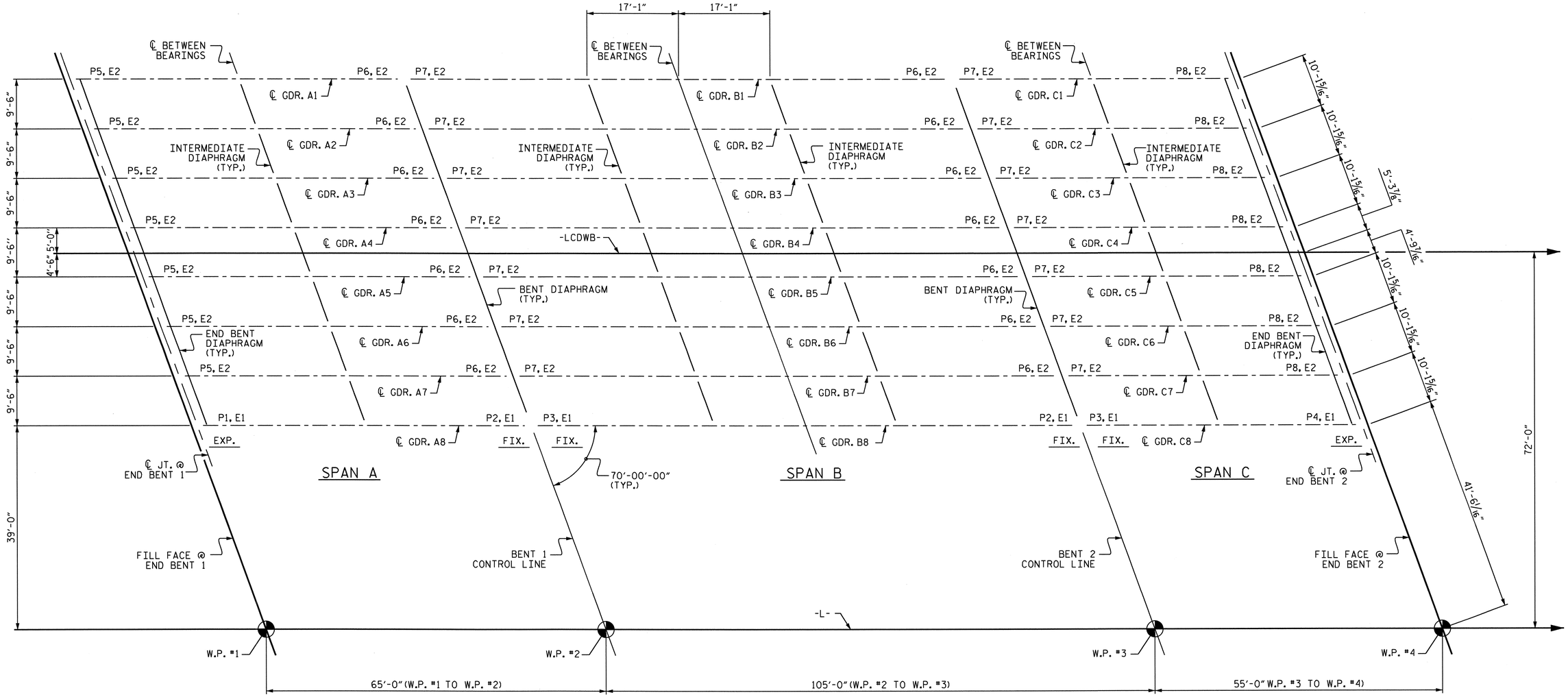


# FRAMING PLAN
## STAGE II

PROJECT NO. I-3819A

IREDELL COUNTY

STATION: 92+04.00 -L-

SHEET 2 OF 3

STATE OF NORTH CAROLINA
DEPARTMENT OF TRANSPORTATION
RALEIGH

SUPERSTRUCTURE

FRAMING PLAN

STAGE II

| REVISIONS | | | | | | SHEET NO. |
|---|---|---|---|---|---|---|
| NO. | BY: | DATE: | NO. | BY: | DATE: | S-102 |
| 1 | | | 3 | | | TOTAL SHEETS |
| 2 | | | 4 | | | 382 |

STR. #3

NORTH CAROLINA PROFESSIONAL SEAL 16301 ENGINEER TING-HSIUNG FANG
11/30/11

DRAWN BY : D.R. WITHROW DATE : 10/26/10
CHECKED BY : S.B. WILLIAMS DATE : 11/10

30-NOV-2011 11:28
R:\Structures\Frye\str03\finalplans\I3819A_SD_FP_03.dgn
sbwilliams

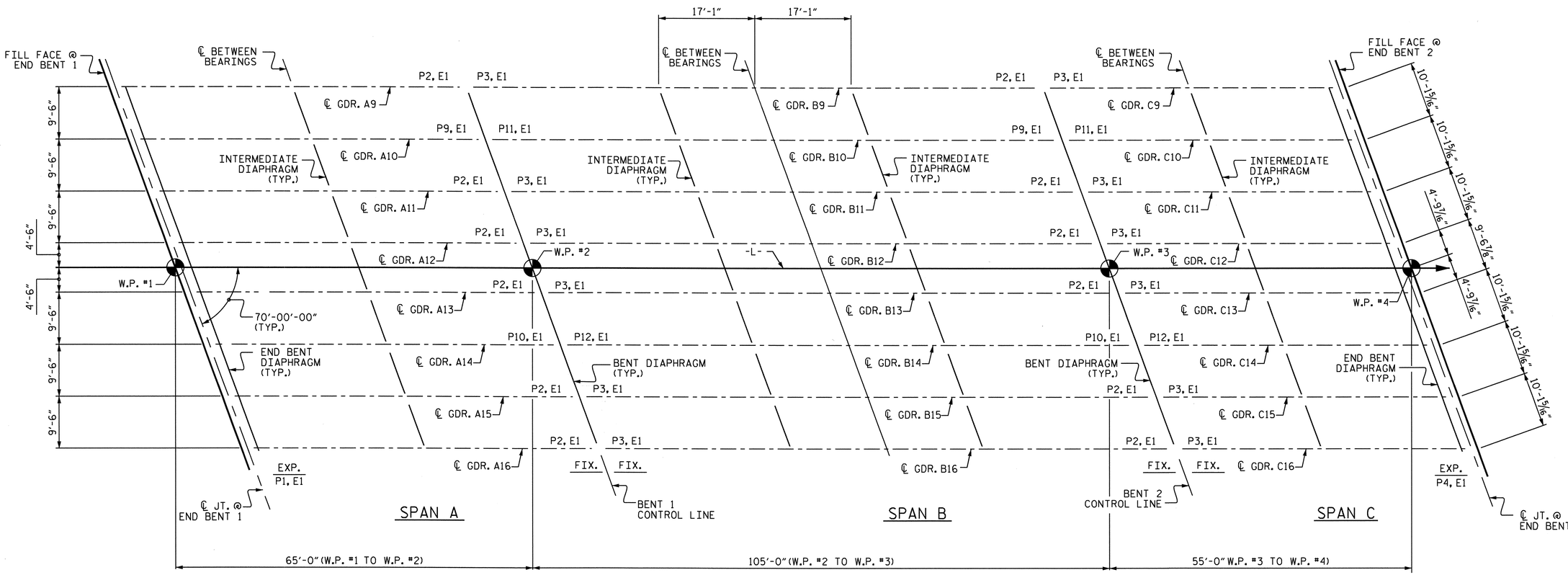


# FRAMING PLAN
STAGE III

PROJECT NO. I-3819A
IREDELL COUNTY
STATION: 92+04.00 -L-

SHEET 3 OF 3

STATE OF NORTH CAROLINA
DEPARTMENT OF TRANSPORTATION
RALEIGH
SUPERSTRUCTURE

FRAMING PLAN
STAGE III

| REVISIONS | | | | | | SHEET NO. |
|---|---|---|---|---|---|---|
| NO. | BY: | DATE: | NO. | BY: | DATE: | S-103 |
| 1 | | | 3 | | | TOTAL SHEETS |
| 2 | | | 4 | | | 382 |

STR. #3

NORTH CAROLINA PROFESSIONAL SEAL 16301 ENGINEER TING-HSIUNG FANG
11/30/11

DRAWN BY : D.R. WITHROW DATE : 10/26/10
CHECKED BY : S.B. WILLIAMS DATE : 11/10

30-NOV-2011 11:28
R:\Structures\Frye\str03\finalplans\I3819A_SD_FP_03.dgn
sbwilliams

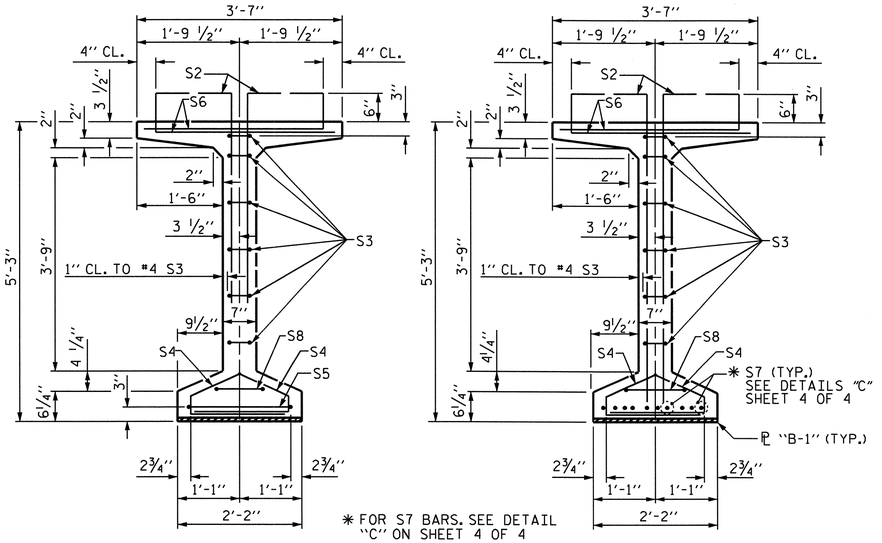


SECTION A-A




SECTION B-B

(FOR ℄ "B-1" DETAILS SEE SHEET 4 OF 4)

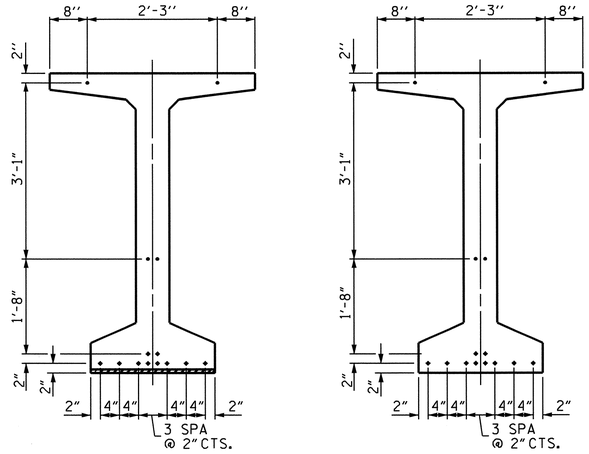


0.6" Ø LOW RELAXATION STRAND LAYOUT

(14 STRANDS, ALL FULLY BONDED)

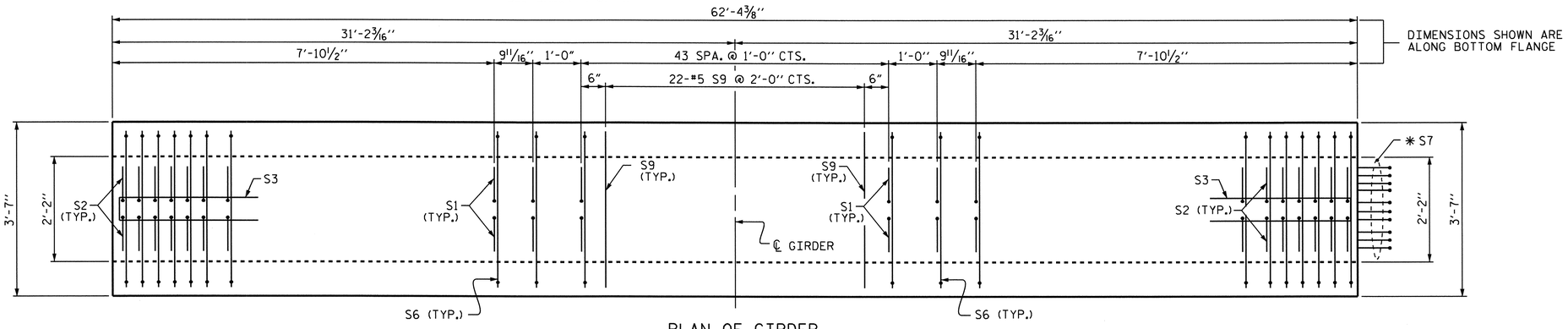


PLAN OF GIRDER

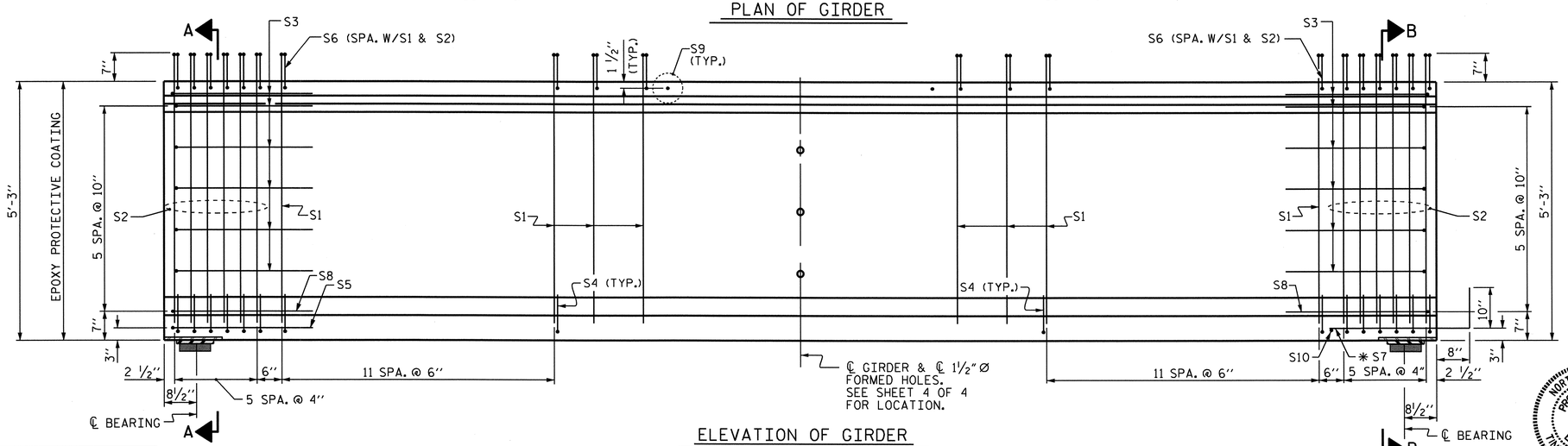


ELEVATION OF GIRDER

| 0.6" Ø L. R. GRADE 270 STRANDS | | |
|---|---|---|
| AREA (SQUARE INCHES) | ULTIMATE STRENGTH (LBS. PER STRAND) | APPLIED PRESTRESS (LBS. PER STRAND) |
| 0.217 | 58,600 | 43,950 |

REINFORCING STEEL FOR ONE GDR

| BAR | NUMBER | SIZE | TYPE | LENGTH | WEIGHT |
|---|---|---|---|---|---|
| S1 | 140 | #4 | 1 | 6'-1" | 569 |
| S2 | 24 | #5 | 1 | 6'-1" | 152 |
| S3 | 12 | #4 | 2 | 8'-5" | 67 |
| S4 | 72 | #4 | 3 | 3'-0" | 144 |
| S5 | 1 | #5 | 2 | 9'-10" | 10 |
| S6 | 164 | #5 | 4 | 4'-4" | 741 |
| * S7 | 10 | #5 | STR | 3'-8" | 38 |
| S8 | 2 | #5 | 2 | 9'-0" | 19 |
| S9 | 22 | #5 | STR | 3'-3" | 75 |
| S10 | 1 | #3 | STR | 1'-10" | 1 |
| S11 | 4 | #5 | 2 | 10'-2" | 42 |
| S12 | 8 | #4 | STR | 8'-0" | 43 |

* S7 BARS SHALL BE BENT BEFORE SHIPMENT. HEAT BENDING SHALL NOT BE ALLOWED.

BAR TYPES

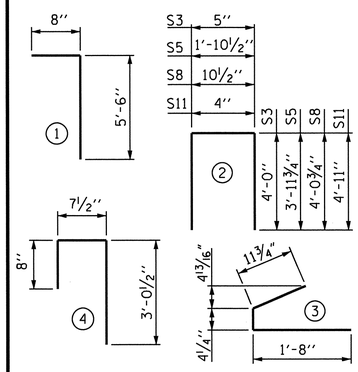


ALL BAR DIMENSIONS ARE OUT-TO-OUT.

QUANTITIES FOR ONE GIRDER

| | REINFORCING STEEL | 5000 PSI CONCRETE | 0.6" Ø L. R. STRANDS |
|---|---|---|---|
| | LB. | C.Y. | NO. |
| | 1,901 | 12.4 | 14 |

GIRDERS REQUIRED

| NUMBER | LENGTH | TOTAL LENGTH |
|---|---|---|
| 24 | 62'-4 3/8" | 1,496.75' |

PROJECT NO. I-3819A

IREDELL COUNTY

STATION: 92+04.00 -L-

SHEET 1 OF 4

STATE OF NORTH CAROLINA
DEPARTMENT OF TRANSPORTATION
RALEIGH

STANDARD

63" PRESTRESSED CONCRETE MODIFIED BULB TEE CONTINUOUS FOR LIVE LOAD SPAN A

| REVISIONS | | | | | | SHEET NO. |
|---|---|---|---|---|---|---|
| NO. | BY: | DATE: | NO. | BY: | DATE: | S-104 |
| 1 | | | 3 | | | TOTAL SHEETS |
| 2 | | | 4 | | | 382 |

NORTH CAROLINA PROFESSIONAL SEAL 16301 ENGINEER TING HSING FANG 11/30/11

| | | |
|---|---|---|
| ASSEMBLED BY : D.R. WITHROW | DATE : 10/28/10 | |
| CHECKED BY : S.B. WILLIAMS | DATE : 11/10 | |
| DRAWN BY : EEM 2/6/97 | REV. 8/16/99 | RWW/LES |
| CHECKED BY : VAP 2/6/97 | REV. 10/17/00 | RWW/LES |
| | REV. 5/1/06R | TLA/GM |

30-NOV-2011 11:28
R:\Structures\Frye\str03\finalplans\I3819a_sd_G*_03.dgn
sbwilliams

STR. 3

STD. NO. PCG9

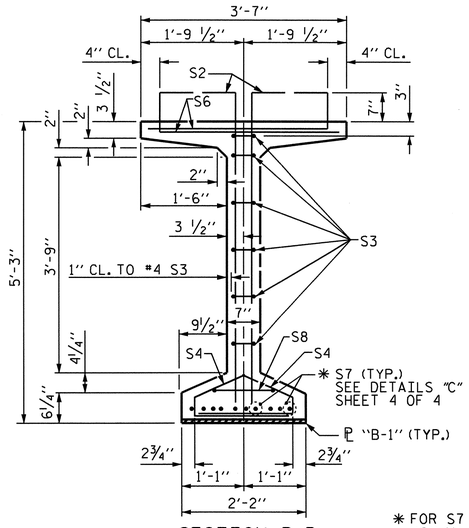


SECTION B-B

(FOR ℄ "B-1" DETAILS SEE SHEET 4 OF 4)

* FOR S7 BARS. SEE DETAIL "C" ON SHEET 4 OF 4

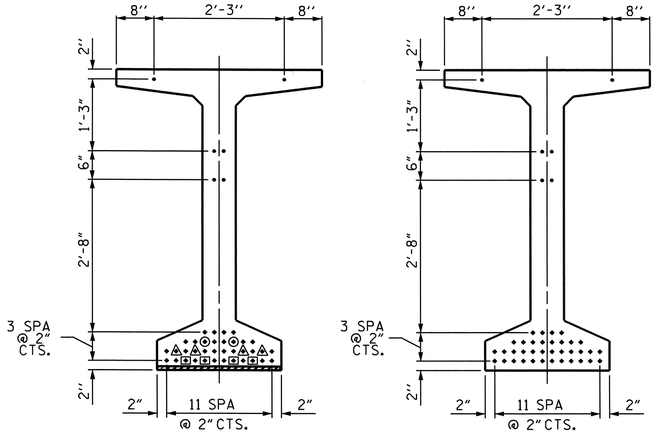


0.6" Ø LOW RELAXATION STRAND LAYOUT

(42 STRANDS, 10 STRAND PARTIALY DEBONDED)

DEBONDING LEGEND

- FULLY BONDED STRANDS
- STRANDS DEBONDED FOR 4'-0" FROM END OF GIRDER
- STRANDS DEBONDED FOR 8'-0" FROM END OF GIRDER
- STRANDS DEBONDED FOR 12'-0" FROM END OF GIRDER

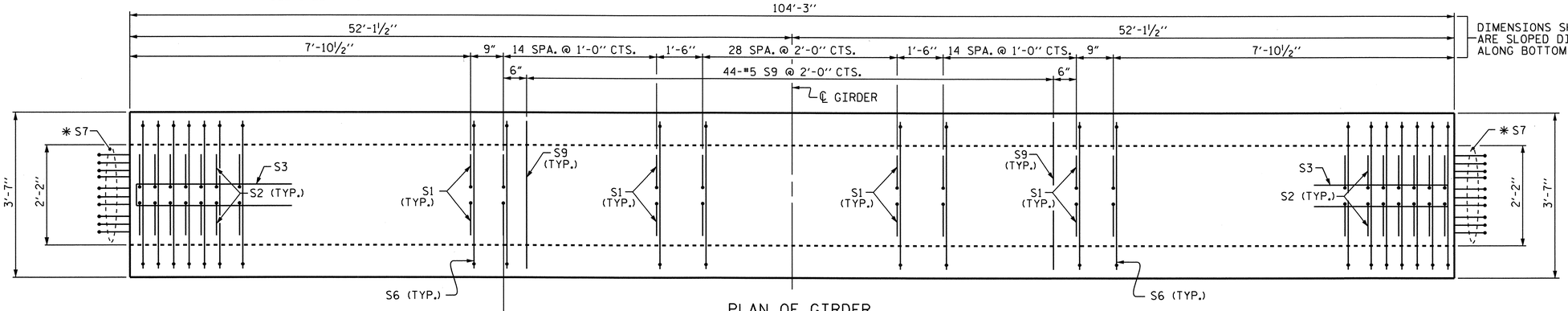


PLAN OF GIRDER

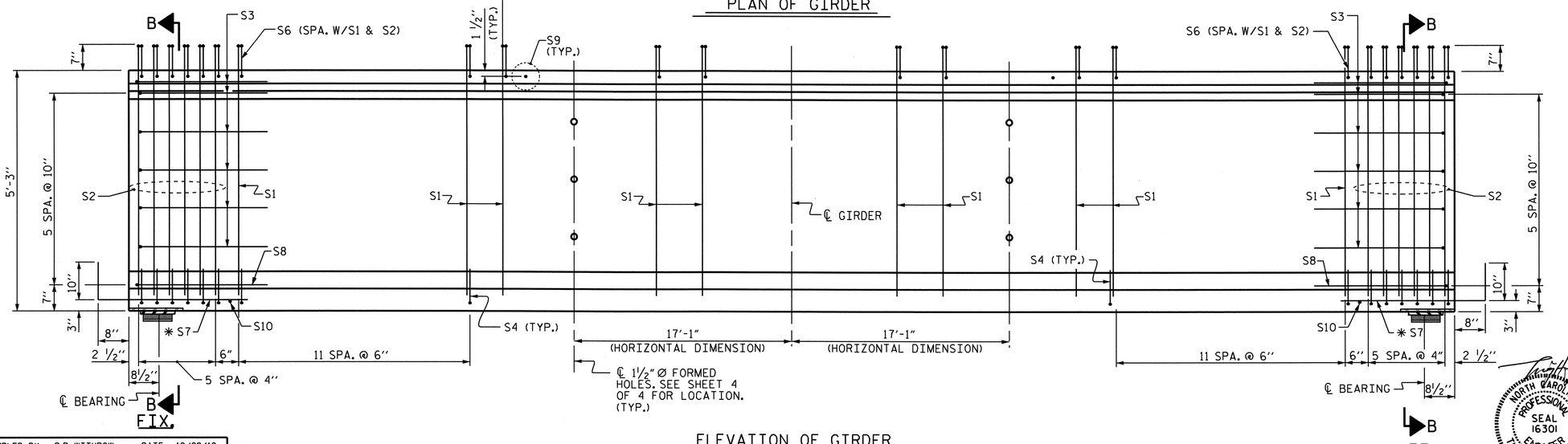


ELEVATION OF GIRDER

| 0.6" Ø L. R. GRADE 270 STRANDS | | |
|---|---|---|
| AREA (SQUARE INCHES) | ULTIMATE STRENGTH (LBS. PER STRAND) | APPLIED PRESTRESS (LBS. PER STRAND) |
| 0.217 | 58,600 | 43,950 |

REINFORCING STEEL FOR ONE GDR

| BAR | NUMBER | SIZE | TYPE | LENGTH | WEIGHT |
|---|---|---|---|---|---|
| S1 | 166 | #4 | 1 | 6'-1" | 675 |
| S2 | 24 | #5 | 1 | 6'-1" | 152 |
| S3 | 12 | #4 | 2 | 8'-5" | 67 |
| S4 | 72 | #4 | 3 | 3'-0" | 144 |
| S6 | 190 | #5 | 4 | 4'-4" | 859 |
| * S7 | 20 | #5 | STR | 3'-8" | 76 |
| S8 | 2 | #5 | 2 | 9'-0" | 19 |
| S9 | 44 | #5 | STR | 3'-3" | 149 |
| S10 | 2 | #3 | STR | 1'-10" | 1 |
| S11 | 8 | #5 | 2 | 10'-2" | 85 |
| S12 | 16 | #4 | STR | 8'-0" | 86 |

* S7 BARS SHALL BE BENT BEFORE SHIPMENT. HEAT BENDING SHALL NOT BE ALLOWED.

BAR TYPES

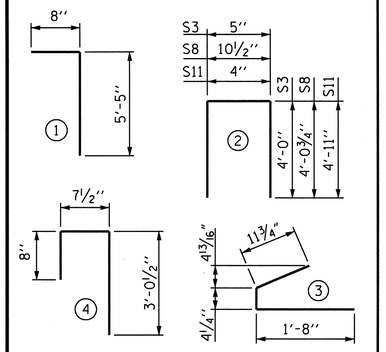


ALL BAR DIMENSIONS ARE OUT-TO-OUT.

QUANTITIES FOR ONE GIRDER

| | REINFORCING STEEL | 9500 PSI CONCRETE | 0.6" Ø L.R. STRANDS |
|---|---|---|---|
| | LB. | C.Y. | NO. |
| | 2,313 | 20.7 | 42 |

GIRDERS REQUIRED

| NUMBER | LENGTH | TOTAL LENGTH |
|---|---|---|
| 24 | 104'-3" | 2502.0' |

PROJECT NO. I-3819A

IREDELL COUNTY

STATION: 92+04.00 -L-

SHEET 2 OF 4

STATE OF NORTH CAROLINA
DEPARTMENT OF TRANSPORTATION
RALEIGH

STANDARD

63" PRESTRESSED CONCRETE MODIFIED BULB TEE CONTINUOUS FOR LIVE LOAD SPAN B

NORTH CAROLINA PROFESSIONAL SEAL 16301 ENGINEER TING HSIUNG FANG 12/28/11

| ASSEMBLED BY : D.R. WITHROW | DATE : 10/28/10 |
|---|---|
| CHECKED BY : S.B. WILLIAMS | DATE : 11/10 |
| DRAWN BY : EEM 2/6/97 | REV. 8/16/99 RWW/LES |
| CHECKED BY : VAP 2/6/97 | REV. 10/17/00 RWW/LES |
| | REV. 5/1/06R TLA/GM |

| REVISIONS | | | | | | SHEET NO. |
|---|---|---|---|---|---|---|
| NO. | BY: | DATE: | NO. | BY: | DATE: | S-105 |
| 1 | | | 3 | | | TOTAL SHEETS |
| 2 | | | 4 | | | 382 |

28-DEC-2011 09:45
K:\TIPProjects-I\I3819A\Structures\Frye\str03\finalplans\I3819a_sd_C*_03.dgn
tfang

STR. 3 STD. NO. PCG9

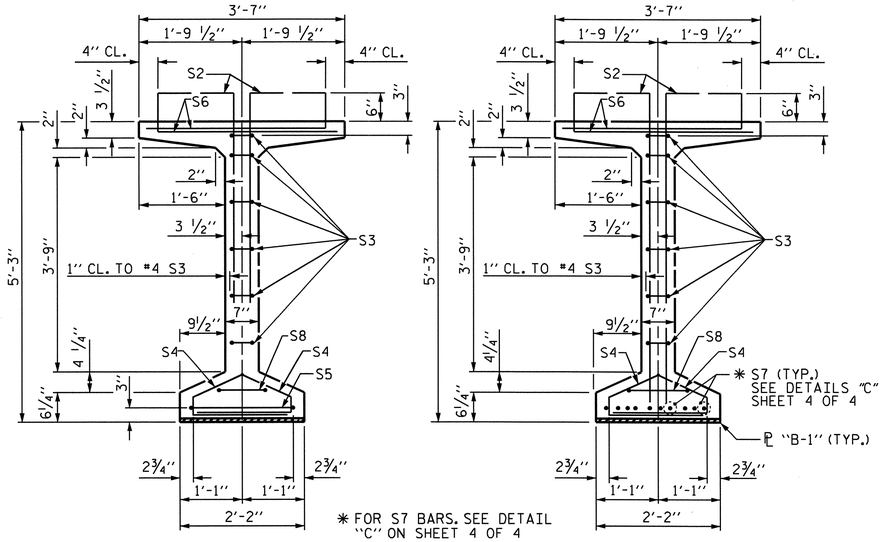


* FOR S7 BARS. SEE DETAIL "C" ON SHEET 4 OF 4

SECTION A-A




SECTION B-B

(FOR ℄ "B-1" DETAILS SEE SHEET 4 OF 4)

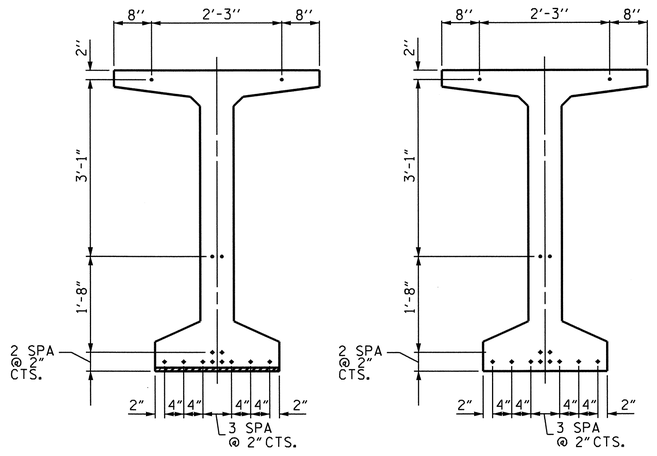


AT END OF GIRDER

AT ℄ OF GIRDER

0.6" Ø LOW RELAXATION STRAND LAYOUT

(14 STRANDS, ALL FULLY BONDED)

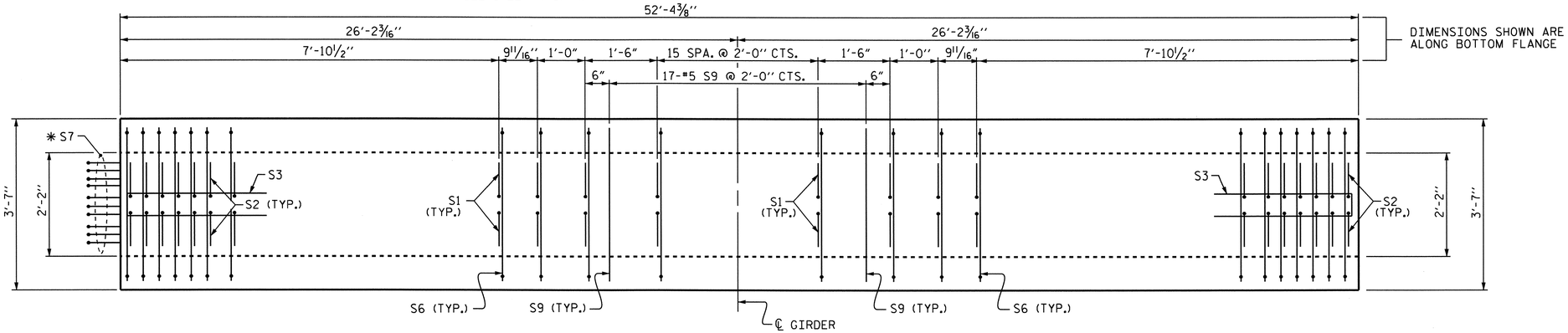


PLAN OF GIRDER

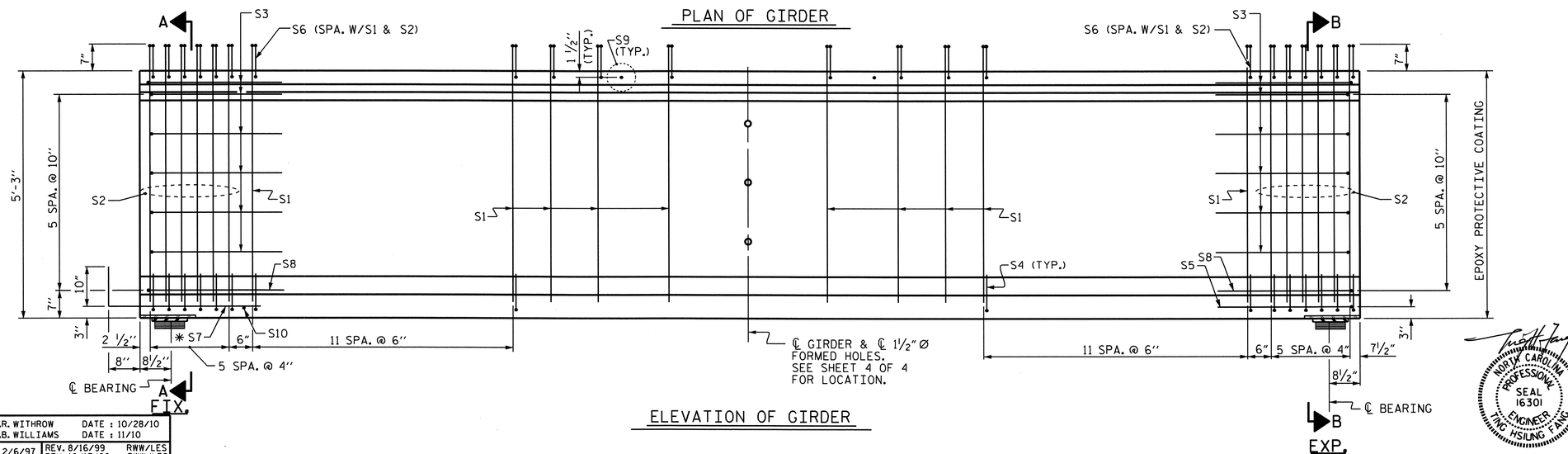


ELEVATION OF GIRDER

## 0.6" Ø L. R. GRADE 270 STRANDS

| AREA (SQUARE INCHES) | ULTIMATE STRENGTH (LBS. PER STRAND) | APPLIED PRESTRESS (LBS. PER STRAND) |
|---|---|---|
| 0.217 | 58,600 | 43,950 |

## REINFORCING STEEL FOR ONE GDR

| BAR | NUMBER | SIZE | TYPE | LENGTH | WEIGHT |
|---|---|---|---|---|---|
| S1 | 88 | #4 | 1 | 6'-1" | 358 |
| S2 | 24 | #5 | 1 | 6'-1" | 152 |
| S3 | 12 | #4 | 2 | 8'-5" | 67 |
| S4 | 72 | #4 | 3 | 3'-0" | 144 |
| S5 | 1 | #5 | 2 | 9'-10" | 10 |
| S6 | 112 | #5 | 4 | 4'-4" | 506 |
| * S7 | 10 | #5 | STR | 3'-8" | 38 |
| S8 | 2 | #5 | 2 | 9'-0" | 19 |
| S9 | 17 | #5 | STR | 3'-3" | 58 |
| S10 | 1 | #3 | STR | 1'-10" | 1 |
| S11 | 4 | #5 | 2 | 10'-2" | 42 |
| S12 | 8 | #4 | STR | 8'-0" | 43 |

* S7 BARS SHALL BE BENT BEFORE SHIPMENT. HEAT BENDING SHALL NOT BE ALLOWED.

## BAR TYPES

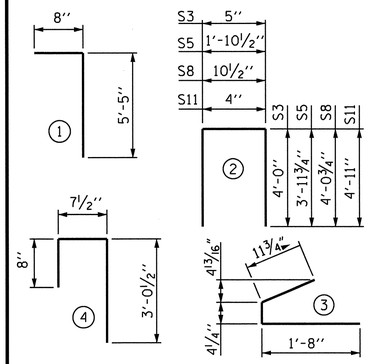


ALL BAR DIMENSIONS ARE OUT-TO-OUT.

## QUANTITIES FOR ONE GIRDER

| | REINFORCING STEEL | 5000 PSI CONCRETE | 0.6" Ø L. R. STRANDS |
|---|---|---|---|
| | LB. | C.Y. | NO. |
| | 1,438 | 10.4 | 14 |

## GIRDERS REQUIRED

| NUMBER | LENGTH | TOTAL LENGTH |
|---|---|---|
| 24 | 52'-4 3/8" | 1,256.75' |

PROJECT NO. I-3819A

IREDELL COUNTY

STATION: 92+04.00 -L-

SHEET 3 OF 4

STATE OF NORTH CAROLINA
DEPARTMENT OF TRANSPORTATION
RALEIGH

STANDARD

63" PRESTRESSED CONCRETE MODIFIED BULB TEE CONTINUOUS FOR LIVE LOAD SPAN C

NORTH CAROLINA PROFESSIONAL SEAL 16301 ENGINEER TING HSIUNG FANG

12/28/11

| ASSEMBLED BY : D.R. WITHROW | DATE : 10/28/10 |
|---|---|
| CHECKED BY : S.B. WILLIAMS | DATE : 11/10 |
| DRAWN BY : EEM 2/6/97 | REV. 8/16/99 RWW/LES |
| CHECKED BY : VAP 2/6/97 | REV. 10/17/00 RWW/LES |
| | REV. 5/1/06R TLA/GM |

| REVISIONS | | | | | | SHEET NO. |
|---|---|---|---|---|---|---|
| NO. | BY: | DATE: | NO. | BY: | DATE: | S-106 |
| 1 | | | 3 | | | TOTAL SHEETS |
| 2 | | | 4 | | | 382 |

28-DEC-2011 09:54
K:\TIPProjects-I\I3819A\Structures\Frye\str03\finalplans\I3819a_sd_G*_03.dgn
tfang

STR. 3

STD. NO. PCG9

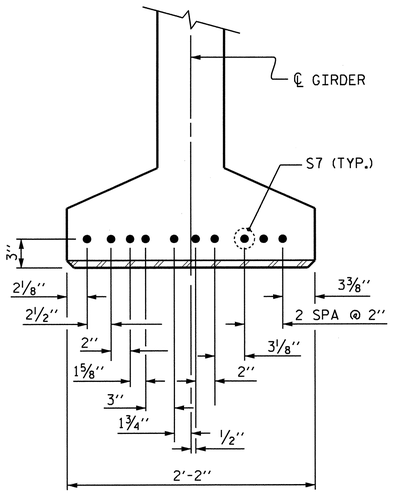


DETAIL "C"

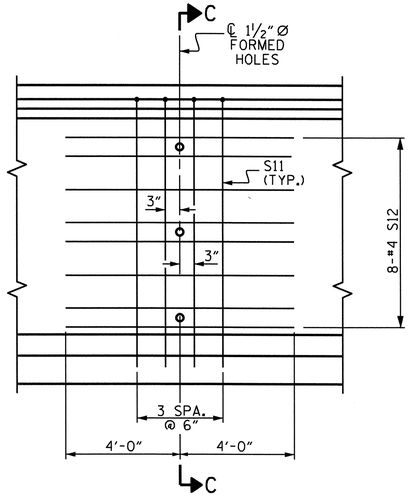


PARTIAL ELEVATION

SHOWING INTERMEDIATE STEEL DIAPHRAGM REINFORCING STEEL

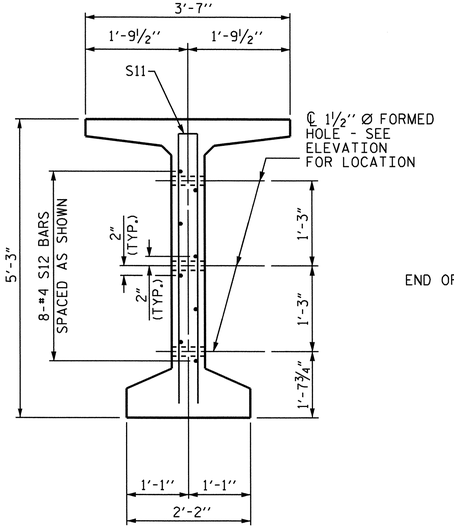


SECTION C-C

(S1, S6 AND S9 BARS NOT SHOWN)

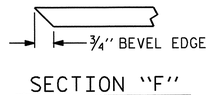


SECTION "F"

(SEE NOTES)

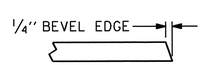


SECTION "G"

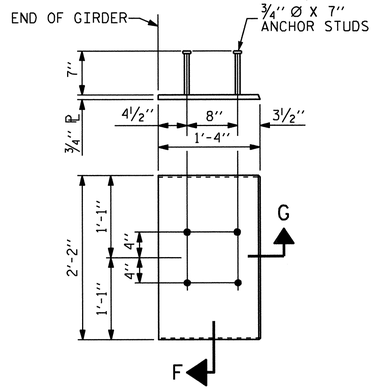


EMBEDDED PLATE "B-1" DETAILS

(2 REQ'D PER GIRDER)

## NOTES

ALL PRESTRESSING STRANDS SHALL BE 7-WIRE LOW-RELAXATION GRADE 270 STRANDS AND SHALL CONFORM TO AASHTO M203 EXCEPT FOR SAMPLING REQUIREMENTS WHICH SHALL BE IN ACCORDANCE WITH THE STANDARD SPECIFICATIONS.

ALL REINFORCING STEEL SHALL BE GRADE 60.

APPLY EPOXY PROTECTIVE COATING TO END OF GIRDER SURFACES INDICATED IN ELEVATION VIEW.

EMBEDDED PLATE "B-1" SHALL BE GALVANIZED IN ACCORDANCE WITH THE STANDARD SPECIFICATIONS. BEVEL EDGES OF PLATE "B-1" TO GIVE CLOSE FIT BUT NOT TIGHT FIT TO STEEL CASTING FORM.

ANCHOR STUDS SHALL CONFORM TO AASHTO M169 GRADES 1010 THROUGH 1020 OR APPROVED EQUAL, AND SHALL MEET THE TYPE "B" REQUIREMENTS OF SUBSECTION 7.3 OF THE ANSI/AASHTO/AWS D1.5 BRIDGE WELDING CODE.

AT ENDS OF GIRDERS TO BE EMBEDDED IN CONCRETE DIAPHRAGMS OR END WALLS, PRESTRESSING STRANDS MAY EXTEND A MAXIMUM OF 2" BEYOND THE GIRDER ENDS. OTHERWISE, PRESTRESSING STRANDS SHALL BE CUT FLUSH WITH THE GIRDER ENDS.

THE TRANSFER OF LOAD FROM THE ANCHORAGES TO THE GIRDER SHALL BE DONE WHEN CONCRETE HAS REACHED A COMPRESSIVE STRENGTH OF NOT LESS THAN 4000 PSI FOR SPAN A & SPAN C & 7500 PSI FOR SPAN B.

DEPENDING ON THE TYPE OF SYSTEM USED TO SUPPORT THE DECK SLAB FORMS, PRESET ANCHORS MAY BE NECESSARY IN THE PRESTRESSED CONCRETE GIRDER.

THE TOP SURFACE OF THE GIRDER, EXCLUDING THE OUTSIDE 4", SHALL BE RAKED TO A DEPTH OF 1/4".

WHEN DRAPED STRANDS ARE DETAILED, THE LONGITUDINAL LOCATION OF THE HOLD DOWN DEVICES SHALL BE WITHIN 6" OF THE LOCATION SHOWN AND THE CENTER OF GRAVITY OF THE GROUP OF DRAPED STRANDS SHALL BE LOCATED WITHIN 1/2" OF THE THEORETICAL LOCATION SHOWN.

A 2" x 2" CHAMFER IS ALLOWED AT THE INTERSECTION OF THE WEB AND THE BOTTOM FLANGE OF THE 63" AND 72" MODIFIED BULB TEES ONLY.

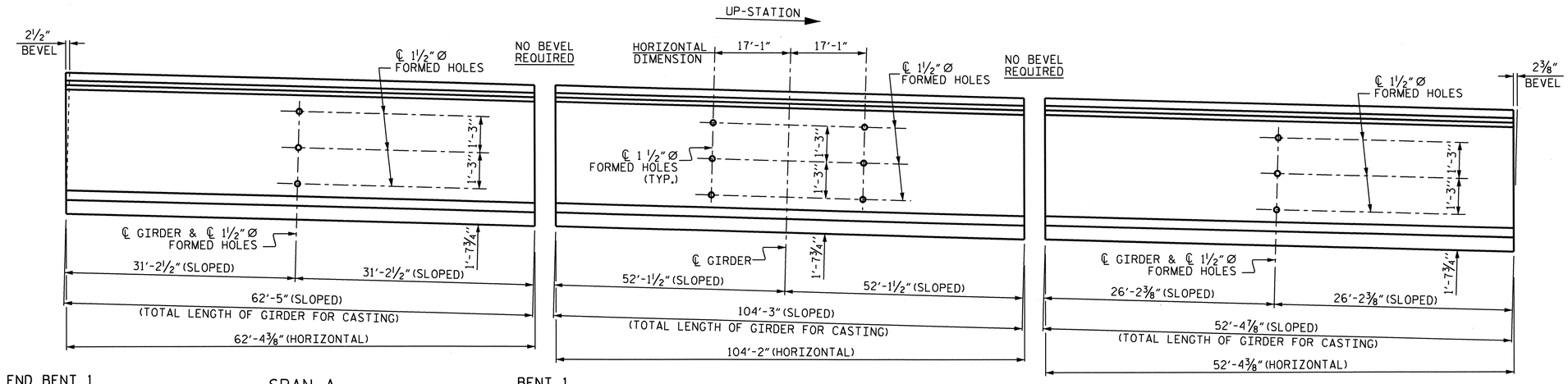


GIRDER ELEVATION

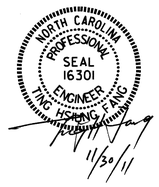


PROJECT NO. I-3819A

IREDELL COUNTY

STATION: 92+04.00 -L-

SHEET 4 OF 4

STATE OF NORTH CAROLINA
DEPARTMENT OF TRANSPORTATION
RALEIGH

STANDARD

PRESTRESSED CONCRETE GIRDER CONTINUOUS FOR LIVE LOAD DETAILS

| REVISIONS | | | | | | SHEET NO. |
|---|---|---|---|---|---|---|
| NO. | BY: | DATE: | NO. | BY: | DATE: | S-107 |
| 1 | | | 3 | | | TOTAL SHEETS |
| 2 | | | 4 | | | 382 |

| | | | |
|---|---|---|---|
| ASSEMBLED BY : | D.R. WITHROW | DATE : | 10/28/10 |
| CHECKED BY : | S.B. WILLIAMS | DATE : | 11/10 |
| DRAWN BY : ELR 11/91 | REV. 10/17/00 RWW/LES | | |
| CHECKED BY : GRP 11/91 | REV. 7/10/01RR LES/RDR | | |
| | REV. 5/1/06 TLA/GM | | |

30-NOV-2011 11:28
R:\Structures\Frye\str03\final plans\13819a_sd_G*_03.dgn
sbwilliams

STR. 3 STD. NO. PCG11 (Sht. 5)

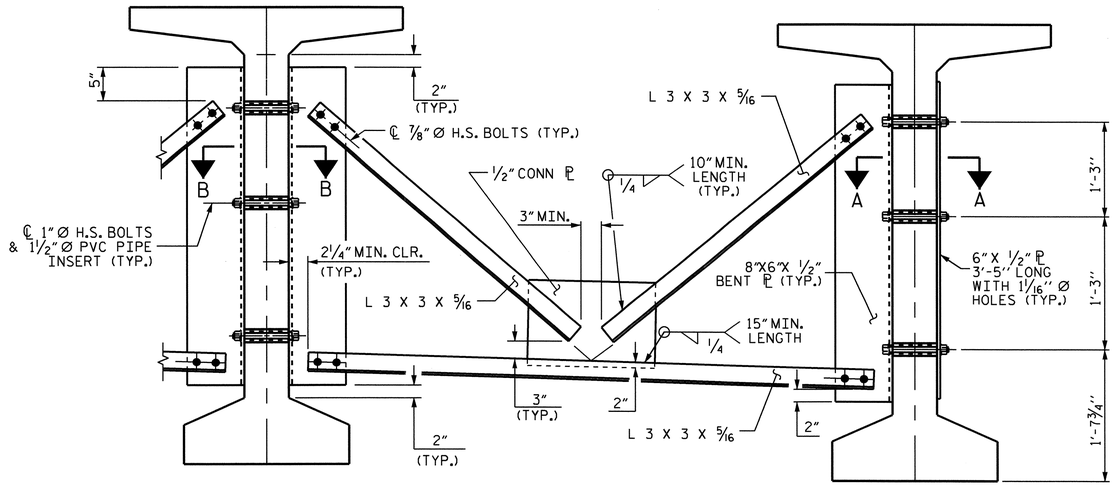


INTERIOR GIRDER

EXTERIOR GIRDER

## PART SECTION AT INTERMEDIATE DIAPHRAGM

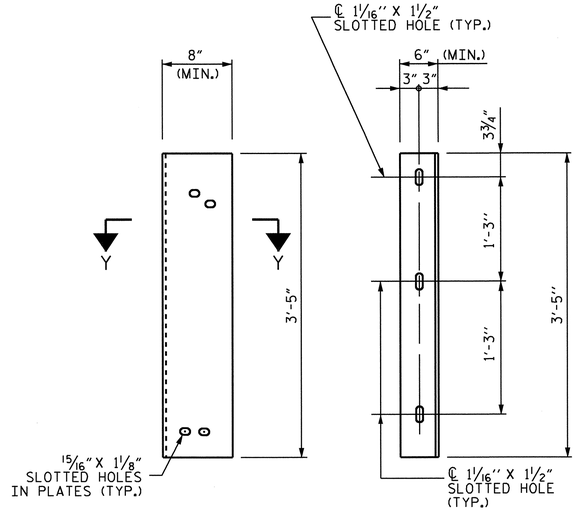


DIAPHRAGM FACE WEB FACE

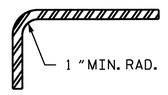


SECTION Y-Y

## CONNECTOR PLATE DETAILS

## STRUCTURAL STEEL NOTES

ALL INTERMEDIATE DIAPHRAGM STEEL AND CONNECTOR PLATES SHALL BE AASHTO M270 GRADE 50 OR APPROVED EQUAL.

TENSION ON THE ASTM A325 BOLTS THROUGH THE ANGLE MEMBER SHALL BE CALIBRATED USING DIRECT TENSION INDICATOR WASHERS IN ACCORDANCE WITH THE STANDARD SPECIFICATIONS.

TENSION ON THE ASTM A449 BOLTS THROUGH THE GIRDER WEB SHALL BE SNUG TIGHTENED FOLLOWED BY AN ADDITIONAL 1/4 TURN.

THE PLATES, BENT PLATES, AND ANGLES SHALL BE GALVANIZED OR METALLIZED IN ACCORDANCE WITH THE STANDARD SPECIFICATIONS. FOR THERMAL SPRAYED COATINGS (METALLIZATION), SEE SPECIAL PROVISIONS.

FOR METALLIZATION, APPLY AN 8 MIL THICK 99.99 PERCENT ZINC (W-Zn-1) THERMAL SPRAYED COATING WITH A 0.5 MIL THICK SEAL COAT TO ALL STEEL DIAPHRAGM SURFACES IN ACCORDANCE WITH THE THERMAL SPRAYED COATINGS SPECIAL PROVISION AND SECTION 442 OF THE STANDARD SPECIFICATIONS.

GALVANIZE THE HIGH STRENGTH BOLTS, NUTS, WASHERS AND DIRECT TENSION INDICATORS IN ACCORDANCE WITH THE STANDARD SPECIFICATIONS.

USE AN ASTM F436 HARDENED WASHER WITH STANDARD AND SLOTTED HOLES UNDER EACH BOLT HEAD AND NUT.

FOR BOLTS THROUGH THE GIRDER WEB, PROVIDE SUFFICIENT LENGTH OF THREADS ON ALL BOLTS TO ACCOMMODATE WASHERS AND THE THICKNESS OF CONNECTING MEMBER PLUS AT LEAST 1/4" PROJECTION BEYOND THE NUT.

INTERMEDIATE DIAPHRAGM ASSEMBLY SHALL COMPLY WITH SECTION 1072 OF THE STANDARD SPECIFICATIONS.

SUBMIT TWO SETS OF WORKING DRAWINGS FOR THE INTERMEDIATE DIAPHRAGM ASSEMBLY FOR REVIEW, COMMENTS AND ACCEPTANCE. AFTER REVIEW, COMMENTS, AND ACCEPTANCE, SUBMIT SEVEN SETS FOR DISTRIBUTION.

IN THE EXTERIOR BAYS, PLACE TEMPORARY STRUTS BETWEEN PRESTRESSED GIRDERS ADJACENT TO THE STEEL DIAPHRAGMS. STRUTS SHALL REMAIN IN PLACE 3 DAYS AFTER CONCRETE IS PLACED.

THE COST OF THE STEEL DIAPHRAGMS AND ASSEMBLIES SHALL BE INCLUDED IN THE UNIT PRICE BID FOR PRESTRESSED CONCRETE GIRDERS.

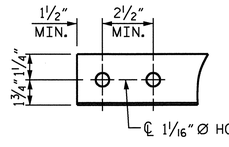


ANGLE END
(L 3 X 3 X 5/16)

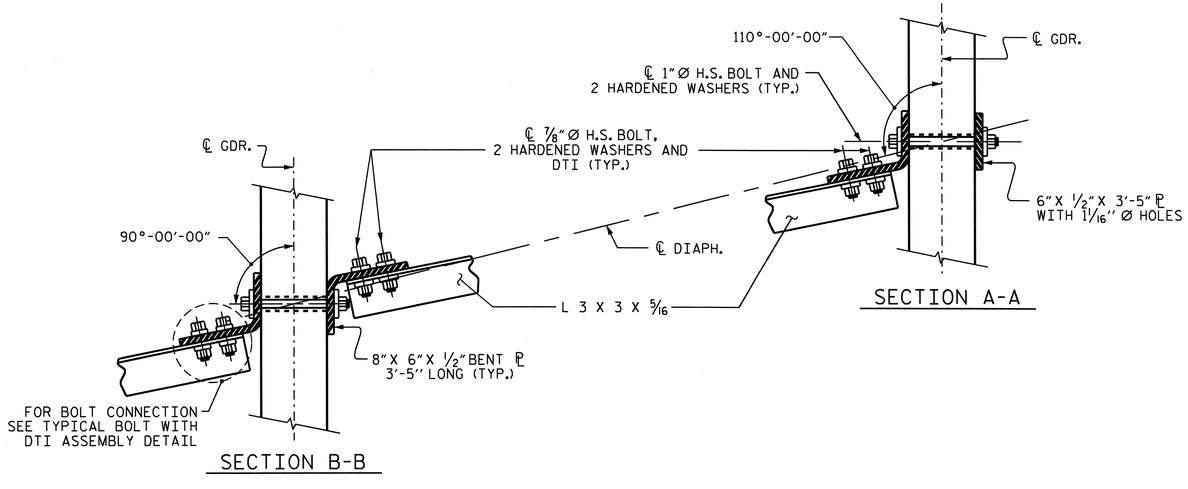


SECTION A-A

SECTION B-B

## CONNECTION DETAILS

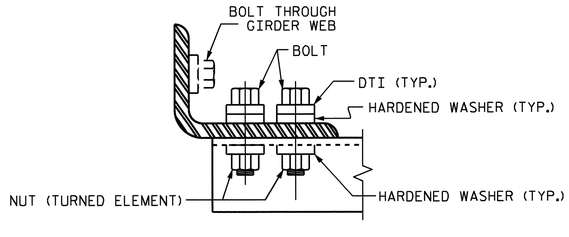


BOLT WITH DTI ASSEMBLY DETAIL

PROJECT NO. I-3819A

IREDELL COUNTY

STATION: 92+04.00 -L-

STATE OF NORTH CAROLINA
DEPARTMENT OF TRANSPORTATION
RALEIGH

STANDARD

INTERMEDIATE STEEL DIAPHRAGMS FOR 63" PRESTRESSED CONCRETE MODIFIED BULB TEE GIRDERS

| REVISIONS | | | | | | SHEET NO. |
|---|---|---|---|---|---|---|
| NO. | BY: | DATE: | NO. | BY: | DATE: | S-108 |
| 1 | | | 3 | | | TOTAL SHEETS |
| 2 | | | 4 | | | 382 |

STR. #3 STD. NO. PCG11

| | |
|---|---|
| ASSEMBLED BY : D.R. WITHROW DATE : 10/22/10 | |
| CHECKED BY : S.B. WILLIAMS DATE : 11/10 | |
| DRAWN BY : RWW 11/09 | ADDED 11/23/09 |
| CHECKED BY : GM 11/09 | |

30-NOV-2011 11:28
R:\Structures\Frye\str03\finalplans\I3819A_SD_DIA_03.dgn
sbwilliams

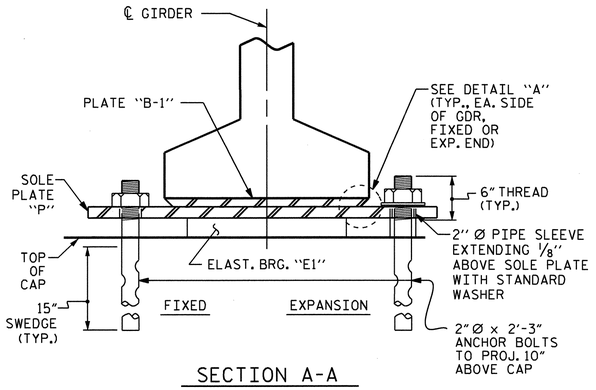


SECTION A-A

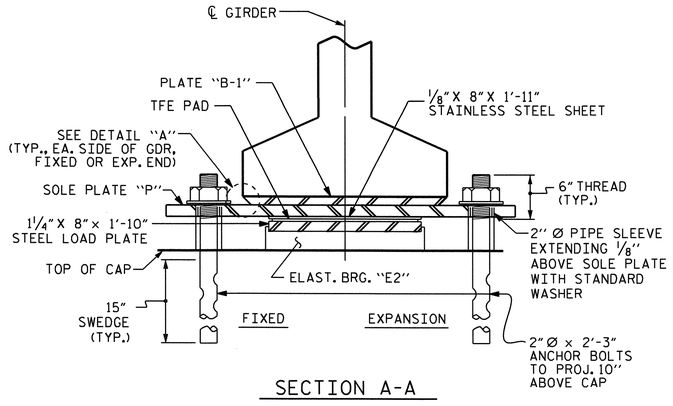


SECTION A-A

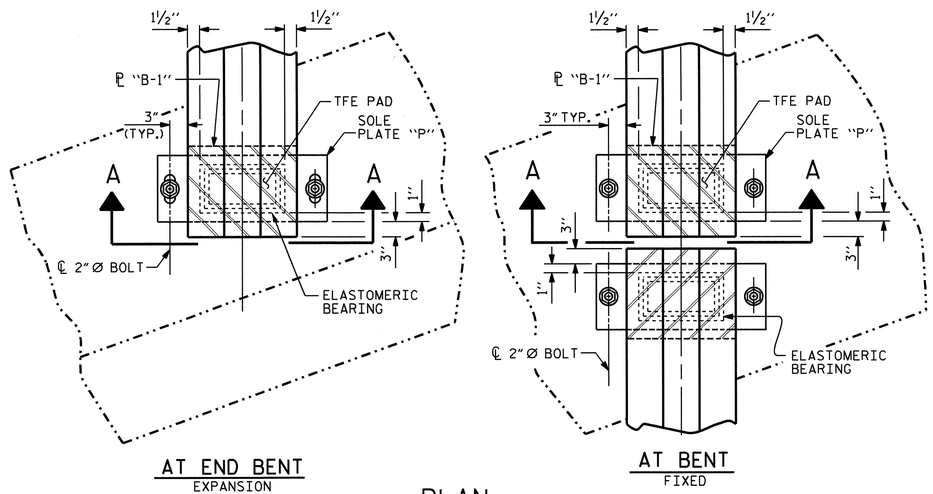


PLAN

MODIFIED TYPE V ELASTOMERIC BEARING SHOWN, TYPE V SIMILAR EXCEPT OMIT STEEL LOAD PLATE AND TFE PAD.

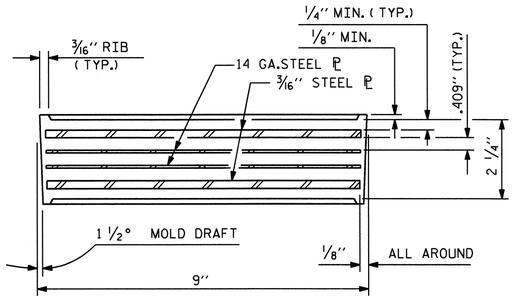


TYPICAL SECTION OF ELASTOMERIC BEARING

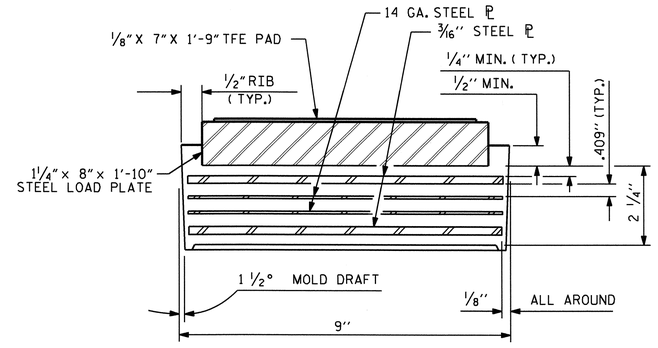


TYPICAL SECTION OF ELASTOMERIC BEARING WITH TFE

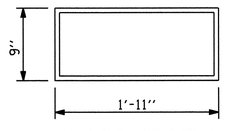


E1 ( 60 REQ'D )

PLAN VIEW OF ELASTOMERIC BEARING

TYPE V

FOR GIRDERS A8 THRU A17, B8 THRU B17 & C8 THRU C17. (SEE FRAMING PLAN FOR LOCATION)

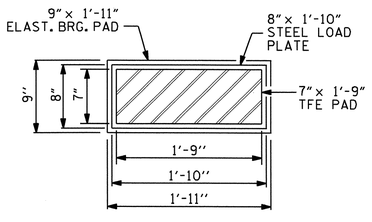


E2 ( 84 REQ'D )

PLAN VIEW OF ELASTOMERIC BEARING WITH TFE

MODIFIED TYPE V

OTHER GIRDERS NOT INCLUDED IN TYPE V BEARING. (SEE FRAMING PLAN FOR LOCATION)

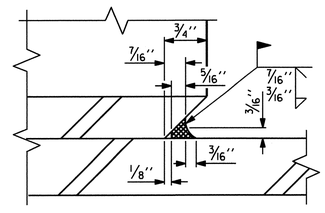


DETAIL "A"

| — LOAD RATINGS — | |
|---|---|
| | MAX.D.L.+ L.L. |
| MODIFIED TYPE V | 259 K |
| TYPE V | 259 K |

ELASTOMER IN ALL BEARINGS SHALL BE 60 DUROMETER HARDNESS

# ELASTOMERIC BEARING DETAILS

NORTH CAROLINA PROFESSIONAL SEAL 16301 ENGINEER TING HSIUNG FANG
12/30/11

PROJECT NO. I-3819A
IREDELL COUNTY
STATION: 92+04.00 -L-

SHEET 1 OF 2

STATE OF NORTH CAROLINA
DEPARTMENT OF TRANSPORTATION
RALEIGH
STANDARD
ELASTOMERIC BEARING DETAILS
PRESTRESSED CONCRETE GIRDER SUPERSTRUCTURE

| REVISIONS | | | | | | SHEET NO. |
|---|---|---|---|---|---|---|
| NO. | BY: | DATE: | NO. | BY: | DATE: | S-109 |
| 1 | | | 3 | | | TOTAL SHEETS |
| 2 | | | 4 | | | 382 |

STR. #3 STD. NO. EB4

| | | |
|---|---|---|
| ASSEMBLED BY : D.R. WITHROW | DATE : 10/26/10 | |
| CHECKED BY : S.B. WILLIAMS | DATE : 11/10 | |
| DRAWN BY : EEM 2/97 | REV. 8/16/99 | RWW/LES |
| CHECKED BY : VAP 2/97 | REV. 10/17/00 | RWW/LES |
| | REV. 5/1/06 | TLA/GM |

29-DEC-2011 10:24
K:\TIPProjects-I\I3819A\Structures\Frye\str03\finalplans\I3819A_SD_BG_03.dgn
ttfang

## NOTES

AT ALL FIXED POINTS OF SUPPORT, NUTS FOR ANCHOR BOLTS ARE TO BE TIGHTENED FINGER TIGHT AND THEN BACKED OFF 1/2 TURN. THE THREAD OF THE NUT AND BOLT SHALL THEN BE BURRED WITH A SHARP POINTED TOOL.

THE 2" Ø PIPE SLEEVE SHALL BE CUT FROM SCHEDULE 40 PVC PLASTIC PIPE. THE PVC PLASTIC PIPE SHALL MEET THE REQUIREMENTS OF ASTM D1785.

PAYMENT FOR THE PIPE SLEEVES SHALL BE INCLUDED IN THE SEVERAL PAY ITEMS.

STEEL SOLE PLATES, ANCHOR BOLTS, NUTS, AND WASHERS SHALL BE GALVANIZED IN ACCORDANCE WITH THE STANDARD SPECIFICATIONS.

PRIOR TO WELDING, GRIND THE GALVANIZED SURFACE OF THE PORTION OF THE EMBEDDED PLATE AND SOLE PLATE THAT ARE TO BE WELDED. AFTER WELDING, DAMAGED GALVANIZED SURFACES SHALL BE REPAIRED IN ACCORDANCE WITH THE STANDARD SPECIFICATIONS.

WHEN WELDING THE SOLE PLATE TO THE EMBEDDED PLATE IN THE GIRDER, USE TEMPERATURE INDICATING WAX PENS, OR OTHER SUITABLE MEANS, TO ENSURE THAT THE TEMPERATURE OF THE SOLE PLATE DOES NOT EXCEED 300°F. TEMPERATURES ABOVE THIS MAY DAMAGE THE ELASTOMER.

SOLE PLATE "P", BOLTS, NUTS, WASHERS, AND PIPE SLEEVE SHALL BE INCLUDED IN THE PAY ITEM FOR PRESTRESSED CONCRETE GIRDERS.

ANCHOR BOLTS SHALL MEET THE REQUIREMENTS OF ASTM A449. NUTS SHALL MEET THE REQUIREMENTS OF AASHTO M291-DH OR AASHTO M292-2H. WASHERS SHALL MEET THE REQUIREMENTS OF AASHTO M293. NO SHOP DRAWINGS ARE REQUIRED FOR ANCHOR BOLTS, NUTS AND WASHERS. SHOP INSPECTION IS REQUIRED.

ALL SURFACES OF BEARING PLATES SHALL BE SMOOTH AND STRAIGHT.

FOR ELASTOMERIC BEARINGS WITH TFE, SEE SPECIAL PROVISIONS.

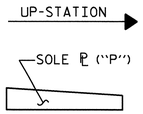


## SOLE ℄ PLACEMENT DETAIL

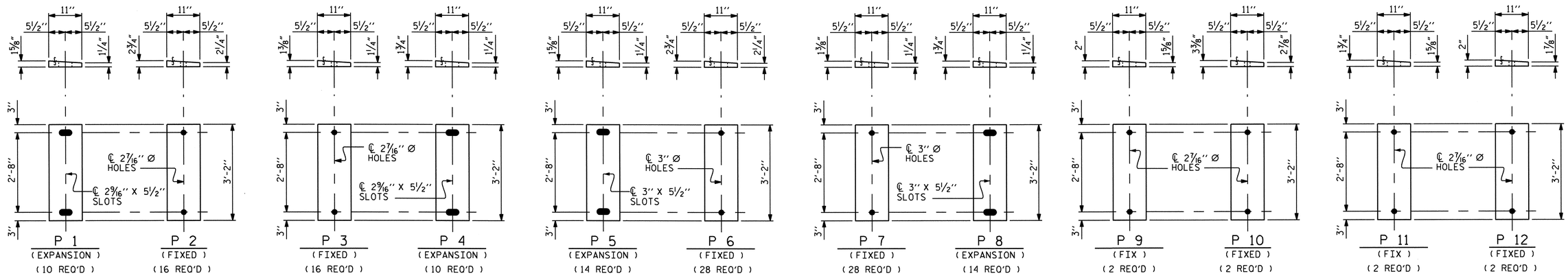


## SOLE PLATE DETAILS "P"

PROJECT NO. I-3819A

IREDELL COUNTY

STATION: 92+04.00 -L-

SHEET 2 OF 2

STATE OF NORTH CAROLINA
DEPARTMENT OF TRANSPORTATION
RALEIGH

STANDARD

# ELASTOMERIC BEARING DETAILS

PRESTRESSED CONCRETE GIRDER SUPERSTRUCTURE

NORTH CAROLINA PROFESSIONAL SEAL 16301 ENGINEER TING HSIUNG FANG
12/30/11

| REVISIONS | | | | | | SHEET NO. |
|---|---|---|---|---|---|---|
| NO. | BY: | DATE: | NO. | BY: | DATE: | S-110 |
| 1 | | | 3 | | | TOTAL SHEETS |
| 2 | | | 4 | | | 382 |

STR. #3 STD. NO. EB4

| | | |
|---|---|---|
| ASSEMBLED BY : D.R. WITHROW DATE : 10/26/10 | | |
| CHECKED BY : S.B. WILLIAMS DATE : 11/10 | | |
| DRAWN BY : EEM 2/97 | REV. 8/16/99 | RWW/LES |
| CHECKED BY : VAP 2/97 | REV. 10/17/00 | RWW/LES |
| | REV. 5/1/06 | TLA/GM |

29-DEC-2011 10:01
K:\TIPProjects-I\I3819A\Structures\Frye\str03\finalplans\I3819A_SD_BG_03.dgn
tfang

## DEAD LOAD DEFLECTION TABLE FOR GIRDERS

| 0.6"Ø LOW RELAXATION | SPAN A | | | | | | | | | | | | | | | | | | | | | | | | | | | | | | | | | |
|---|---|---|---|---|---|---|---|---|---|---|---|---|---|---|---|---|---|---|---|---|---|---|---|---|---|---|---|---|---|---|---|---|---|---|
| | GIRDERS 1, 2, 3, 5, 6, 7, 11, 12, 13, 14, 18, 19, 20, 22, 23, 24 | | | | | | | | | | | GIRDERS 4, 10, 15, 21 | | | | | | | | | | | GIRDERS 8, 9, 16, 17 | | | | | | | | | | |
| TENTH POINTS | BRG. | .1 | .2 | .3 | .4 | .5 | .6 | .7 | .8 | .9 | BRG. | BRG. | .1 | .2 | .3 | .4 | .5 | .6 | .7 | .8 | .9 | BRG. | BRG. | .1 | .2 | .3 | .4 | .5 | .6 | .7 | .8 | .9 | BRG. |
| CAMBER ( GIRDER ALONE IN PLACE ) ↑ | 0 | 0.017 | 0.031 | .043 | 0.050 | 0.052 | 0.050 | 0.043 | 0.031 | 0.017 | 0 | 0 | 0.017 | 0.031 | 0.043 | 0.050 | 0.052 | 0.050 | 0.043 | 0.031 | 0.017 | 0 | 0 | 0.017 | 0.031 | 0.043 | 0.050 | 0.052 | 0.050 | 0.043 | 0.031 | 0.017 | 0 |
| ✳ DEFLECTION DUE TO SUPERIMPOSED D.L. ↓ | 0 | 0.007 | 0.014 | 0.019 | 0.022 | 0.023 | 0.022 | 0.019 | 0.014 | 0.007 | 0 | 0 | 0.007 | 0.013 | 0.018 | 0.021 | 0.022 | 0.021 | 0.018 | 0.013 | 0.007 | 0 | 0 | 0.007 | 0.014 | 0.019 | 0.022 | 0.024 | 0.022 | 0.019 | 0.014 | 0.007 | 0 |
| FINAL CAMBER ↑ | 0 | 1/8" | 3/16" | 5/16" | 5/16" | 3/8" | 5/16" | 5/16" | 3/16" | 1/8" | 0 | 0 | 1/8" | 3/16" | 5/16" | 3/8" | 3/8" | 3/8" | 5/16" | 3/16" | 1/8" | 0 | 0 | 1/8" | 3/16" | 5/16" | 5/16" | 3/8" | 5/16" | 5/16" | 3/16" | 1/8" | 0 |

## DEAD LOAD DEFLECTION TABLE FOR GIRDERS

| 0.6"Ø LOW RELAXATION | SPAN B | | | | | | | | | | | | | | | | | | | | | | | | | | | | | | | | | |
|---|---|---|---|---|---|---|---|---|---|---|---|---|---|---|---|---|---|---|---|---|---|---|---|---|---|---|---|---|---|---|---|---|---|---|
| | GIRDERS 1, 22, 24 | | | | | | | | | | | GIRDERS 2, 3, 5, 6, 7, 18, 19, 20, 22, 23 | | | | | | | | | | | GIRDERS 4, 10, 15, 21 | | | | | | | | | | |
| TENTH POINTS | BRG. | .1 | .2 | .3 | .4 | .5 | .6 | .7 | .8 | .9 | BRG. | BRG. | .1 | .2 | .3 | .4 | .5 | .6 | .7 | .8 | .9 | BRG. | BRG. | .1 | .2 | .3 | .4 | .5 | .6 | .7 | .8 | .9 | BRG. |
| CAMBER ( GIRDER ALONE IN PLACE ) ↑ | 0 | 0.122 | 0.230 | .315 | 0.369 | 0.388 | 0.369 | 0.315 | 0.230 | 0.122 | 0 | 0 | 0.122 | 0.230 | 0.315 | 0.369 | 0.388 | 0.369 | 0.315 | 0.230 | 0.122 | 0 | 0 | 0.122 | 0.230 | 0.315 | 0.369 | 0.388 | 0.369 | 0.315 | 0.230 | 0.122 | 0 |
| ✳ DEFLECTION DUE TO SUPERIMPOSED D.L. ↓ | 0 | 0.043 | 0.081 | 0.111 | 0.130 | 0.136 | 0.130 | 0.111 | 0.081 | 0.043 | 0 | 0 | 0.042 | 0.080 | 0.110 | 0.129 | 0.135 | 0.129 | 0.110 | 0.080 | 0.042 | 0 | 0 | 0.041 | 0.080 | 0.110 | 0.129 | 0.136 | 0.129 | 0.110 | 0.080 | 0.041 | 0 |
| FINAL CAMBER ↑ | 0 | 15/16" | 1 13/16" | 2 7/16" | 2 7/8" | 3" | 2 7/8" | 2 7/16" | 1 13/16" | 15/16" | 0 | 0 | 15/16" | 1 13/16" | 2 7/16" | 2 7/8" | 3" | 2 7/8" | 2 7/16" | 1 13/16" | 15/16" | 0 | 0 | 1" | 1 13/16" | 2 7/16" | 2 7/8" | 3" | 2 7/8" | 2 7/16" | 1 13/16" | 1" | 0 |

| 0.6"Ø LOW RELAXATION | GIRDERS 8, 9, 16, 17 | | | | | | | | | | | GIRDERS 11, 12, 13, 14 | | | | | | | | | | |
|---|---|---|---|---|---|---|---|---|---|---|---|---|---|---|---|---|---|---|---|---|---|---|
| TENTH POINTS | BRG. | .1 | .2 | .3 | .4 | .5 | .6 | .7 | .8 | .9 | BRG. | BRG. | .1 | .2 | .3 | .4 | .5 | .6 | .7 | .8 | .9 | BRG. |
| CAMBER ( GIRDER ALONE IN PLACE ) ↑ | 0 | 0.122 | 0.230 | .315 | 0.369 | 0.388 | 0.369 | 0.315 | 0.230 | 0.122 | 0 | 0 | 0.122 | 0.230 | .315 | 0.369 | 0.388 | 0.369 | 0.315 | 0.230 | 0.122 | 0 |
| ✳ DEFLECTION DUE TO SUPERIMPOSED D.L. ↓ | 0 | 0.044 | 0.082 | 0.110 | 0.130 | 0.136 | 0.130 | 0.110 | 0.082 | 0.044 | 0 | 0 | 0.042 | 0.079 | 0.109 | 0.127 | 0.134 | 0.127 | 0.109 | 0.079 | 0.042 | 0 |
| FINAL CAMBER ↑ | 0 | 15/16" | 1 3/4" | 2 7/16" | 2 13/16" | 3" | 2 13/16" | 2 7/16" | 1 3/4" | 15/16" | 0 | 0 | 15/16" | 1 13/16" | 2 1/2" | 2 7/8" | 3 1/16" | 2 7/8" | 2 1/2" | 1 13/16" | 15/16" | 0 |

## DEAD LOAD DEFLECTION TABLE FOR GIRDERS

| 0.6"Ø LOW RELAXATION | SPAN C | | | | | | | | | | | | | | | | | | | | | | | | | | | | | | | | | |
|---|---|---|---|---|---|---|---|---|---|---|---|---|---|---|---|---|---|---|---|---|---|---|---|---|---|---|---|---|---|---|---|---|---|---|
| | GIRDERS 1, 2, 3, 5, 6, 7, 11, 12, 13, 14, 18, 19, 20, 22, 23, 24 | | | | | | | | | | | GIRDERS 4, 10, 15, 21 | | | | | | | | | | | GIRDERS 8, 9, 16, 17 | | | | | | | | | | |
| TENTH POINTS | BRG. | .1 | .2 | .3 | .4 | .5 | .6 | .7 | .8 | .9 | BRG. | BRG. | .1 | .2 | .3 | .4 | .5 | .6 | .7 | .8 | .9 | BRG. | BRG. | .1 | .2 | .3 | .4 | .5 | .6 | .7 | .8 | .9 | BRG. |
| CAMBER ( GIRDER ALONE IN PLACE ) ↑ | 0 | 0.013 | 0.025 | .034 | 0.040 | 0.042 | 0.040 | 0.034 | 0.025 | 0.013 | 0 | 0 | 0.013 | 0.025 | .034 | 0.040 | 0.042 | 0.040 | 0.034 | 0.025 | 0.013 | 0 | 0 | 0.013 | 0.025 | .034 | 0.040 | 0.042 | 0.040 | 0.034 | 0.025 | 0.013 | 0 |
| ✳ DEFLECTION DUE TO SUPERIMPOSED D.L. ↓ | 0 | 0.004 | 0.007 | 0.009 | 0.011 | 0.011 | 0.011 | 0.009 | 0.007 | 0.004 | 0 | 0 | 0.003 | 0.006 | 0.009 | 0.010 | 0.011 | 0.010 | 0.009 | 0.006 | 0.003 | 0 | 0 | 0.004 | 0.007 | 0.009 | 0.011 | 0.012 | 0.011 | 0.009 | 0.007 | 0.004 | 0 |
| FINAL CAMBER ↑ | 0 | 1/8" | 1/4" | 5/16" | 3/8" | 3/8" | 3/8" | 5/16" | 1/4" | 1/8" | 0 | 0 | 1/8" | 1/4" | 5/16" | 3/8" | 3/8" | 3/8" | 5/16" | 1/4" | 1/8" | 0 | 0 | 1/8" | 3/16" | 5/16" | 3/8" | 3/8" | 3/8" | 5/16" | 3/16" | 1/8" | 0 |

✳ INCLUDES FUTURE WEARING SURFACE
ALL VALUES ARE SHOWN IN FEET (DECIMAL FORM), EXCEPT "FINAL CAMBER", WHICH IS GIVEN IN INCHES (FRACTION FORM).

PROJECT NO. I-3819A

IREDELL COUNTY

STATION: 92+04.00 -L-

NORTH CAROLINA PROFESSIONAL SEAL 16301 ENGINEER TING HSIUNG FANG

11/30/11

STATE OF NORTH CAROLINA
DEPARTMENT OF TRANSPORTATION
RALEIGH

SUPERSTRUCTURE

# DEAD LOAD DEFLECTIONS

| REVISIONS | | | | | | SHEET NO. |
|---|---|---|---|---|---|---|
| NO. | BY: | DATE: | NO. | BY: | DATE: | S-111 |
| 1 | | | 3 | | | TOTAL SHEETS |
| 2 | | | 4 | | | 382 |

DRAWN BY : J.A. TILLMAN DATE : 11/10
CHECKED BY : S.B. WILLIAMS DATE : 11/10

30-NOV-2011 11:28
R:\Structures\Frye\str03\finalplans\I3819a_SD_DL_03.dgn
sbwilliams

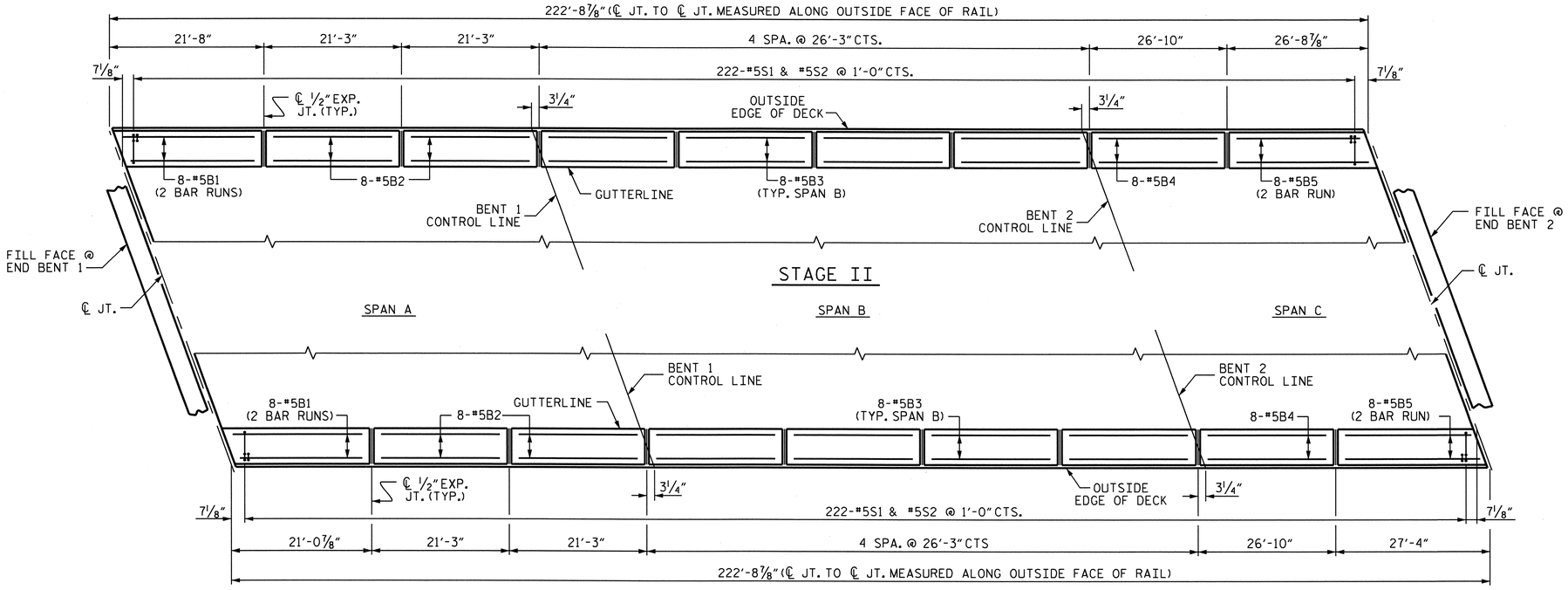


## PLAN

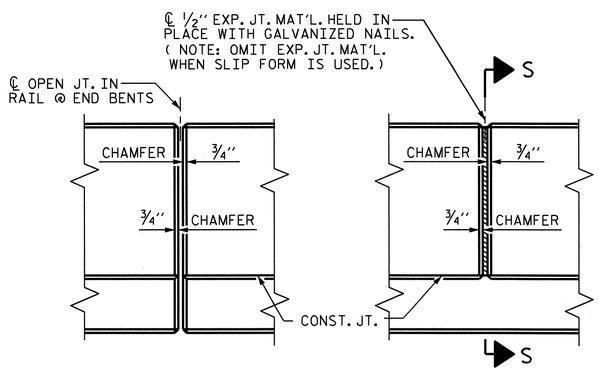


ELEVATION AT EXPANSION JOINTS

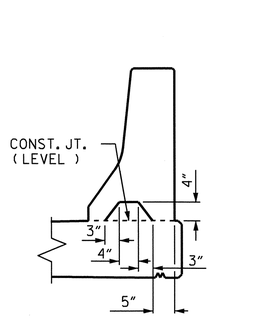


SECTION S-S
AT DAM IN OPEN JOINT
( THIS IS TO BE USED ONLY WHEN SLIP FORM IS USED )

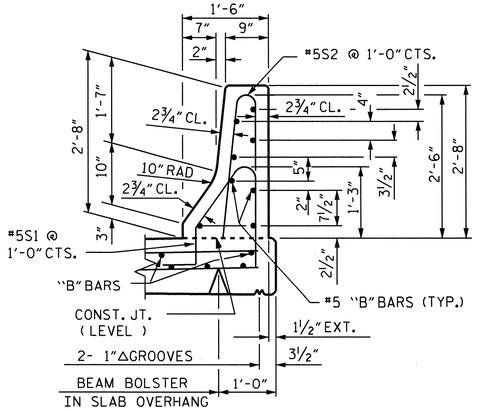


SECTION THRU RAIL

# BAR TYPES

ALL BAR DIMENSIONS ARE OUT TO OUT.

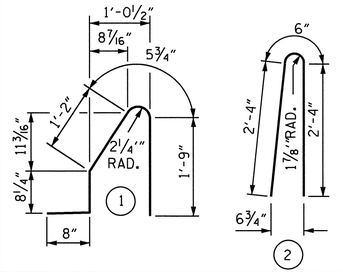


## BILL OF MATERIAL

### STAGE I

| BAR | NO. | SIZE | TYPE | LENGTH | WEIGHT |
|---|---|---|---|---|---|
| ✱ B1 | 16 | #5 | STR | 12'-4" | 206 |
| ✱ B2 | 16 | #5 | STR | 20'-10" | 348 |
| ✱ B3 | 32 | #5 | STR | 25'-10" | 862 |
| ✱ B4 | 8 | #5 | STR | 26'-5" | 220 |
| ✱ B5 | 16 | #5 | STR | 15'-2" | 253 |
| | | | | | |
| ✱ S1 | 222 | #5 | 1 | 4'-9" | 1100 |
| ✱ S2 | 222 | #5 | 2 | 5'-2" | 1196 |

| | |
|---|---|
| ✱ EPOXY COATED REINFORCING STEEL | LBS. 4,185 |
| CLASS AA CONCRETE | CU. YDS. 22.3 |
| CONCRETE BARRIER RAIL | LIN. FT. 242.78 |

### STAGE II

| BAR | NO. | SIZE | TYPE | LENGTH | WEIGHT |
|---|---|---|---|---|---|
| ✱ B1 | 16 | #5 | STR | 12'-4" | 206 |
| ✱ B2 | 16 | #5 | STR | 20'-10" | 348 |
| ✱ B3 | 32 | #5 | STR | 25'-10" | 862 |
| ✱ B4 | 8 | #5 | STR | 26'-5" | 220 |
| ✱ B5 | 16 | #5 | STR | 15'-2" | 253 |
| | | | | | |
| ✱ S1 | 222 | #5 | 1 | 4'-9" | 1100 |
| ✱ S2 | 222 | #5 | 2 | 5'-2" | 1196 |

| | |
|---|---|
| ✱ EPOXY COATED REINFORCING STEEL | LBS. 4,185 |
| CLASS AA CONCRETE | CU. YDS. 22.3 |
| CONCRETE BARRIER RAIL | LIN. FT. 242.78 |

PAYMENT FOR CONCRETE BARRIER RAIL INCLUDES IN THE LINEAR FT. QUANTITY ON "BRIDGE APPROACH SLAB" SHEET.

## NOTES

THE BARRIER RAILS IN A CONTINUOUS UNIT SHALL NOT BE CAST UNTIL ALL SLAB CONCRETE IN THAT UNIT HAS BEEN CAST AND HAS REACHED MINIMUM COMPRESSIVE STRENGTH OF 3,000 PSI

THE JOINT IN THE DECK SHALL BE FORMED PRIOR TO THE CASTING OF BARRIER RAIL.

ALL REINFORCING STEEL IN BARRIER RAIL SHALL BE EPOXY COATED.

GROOVED CONTRACTION JOINTS 1/2" IN DEPTH, SHALL BE TOOLED IN ALL EXPOSED FACES OF THE BARRIER RAIL AND IN ACCORDANCE WITH ARTICLE 825-10(B) OF THE STANDARD SPECIFICATIONS. THE CONTRACTION JOINT SHALL BE LOCATED AT EACH THIRD POINT BETWEEN BARRIER RAIL EXPANSION JOINTS. ONLY ONE CONTRACTION JOINT IS REQUIRED AT MIDPOINT OF BARRIER RAIL SEGMENTS LESS THAN 20 FEET IN LENGTH AND NO CONTRACTION JOINTS ARE REQUIRED FOR THOSE SEGMENTS LESS THAN 10 FEET IN LENGTH.

DIMENSIONS TAKEN ALONG OUTSIDE FACE OF BRIDGE.

FOR CONCRETE BARRIER RAIL ON APPROACH SLABS, SEE APPROACH SLAB SHEETS.

PROJECT NO. I-3819A

IREDELL COUNTY

STATION: 92+04.00 -L-

STATE OF NORTH CAROLINA
DEPARTMENT OF TRANSPORTATION
RALEIGH

STANDARD

# CONCRETE BARRIER RAIL

## STAGES I & II

NORTH CAROLINA PROFESSIONAL SEAL 16301 ENGINEER TING HSILING FANG
12/28/11

| REVISIONS | | | | | |
|---|---|---|---|---|---|
| NO. | BY: | DATE: | NO. | BY: | DATE: |
| 1 | | | 3 | | |
| 2 | | | 4 | | |

SHEET NO. S-112

TOTAL SHEETS 382

STR. #3 STD. NO. CBR1

# BARRIER RAIL DETAILS

| | | | |
|---|---|---|---|
| ASSEMBLED BY : KEITH D. LAYNE | DATE : 7/30/10 | | |
| CHECKED BY : S. B. WILLIAMS | DATE : 12/10 | | |
| DRAWN BY : ARB 5/87 | REV. 10/17/00 | RWW/LES | |
| CHECKED BY : SJD 9/87 | REV. 5/7/03R | RWW/JTE | |
| | REV. 5/1/06 | TLA/GM | |

28-DEC-2011 11:37
K:\TIPProjects-I\I3819A\Structures\Frye\str03\finalplans\I3819A_SD_BR_03.dgn
ttfang

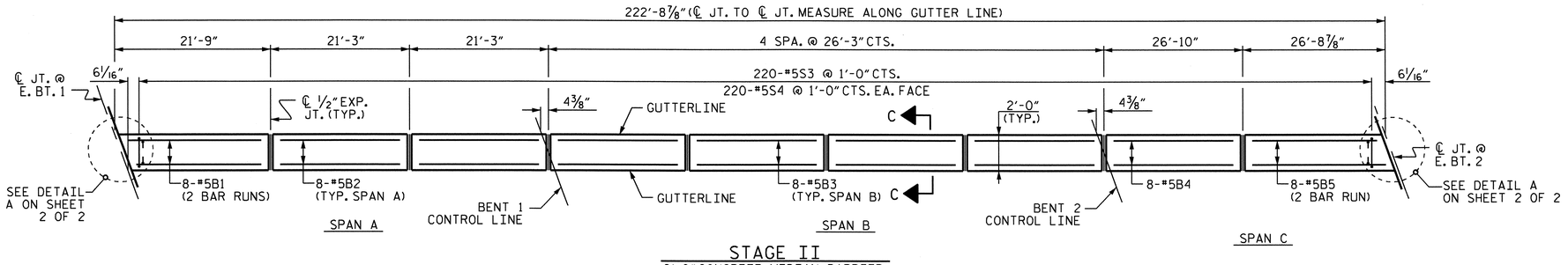


## STAGE II
2'-0" CONCRETE MEDIAN BARRIER

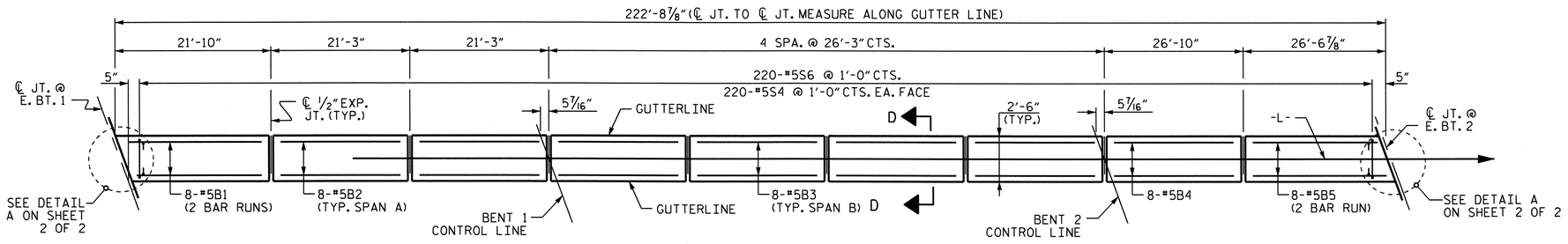


## STAGE III
2'-6" CONCRETE MEDIAN BARRIER

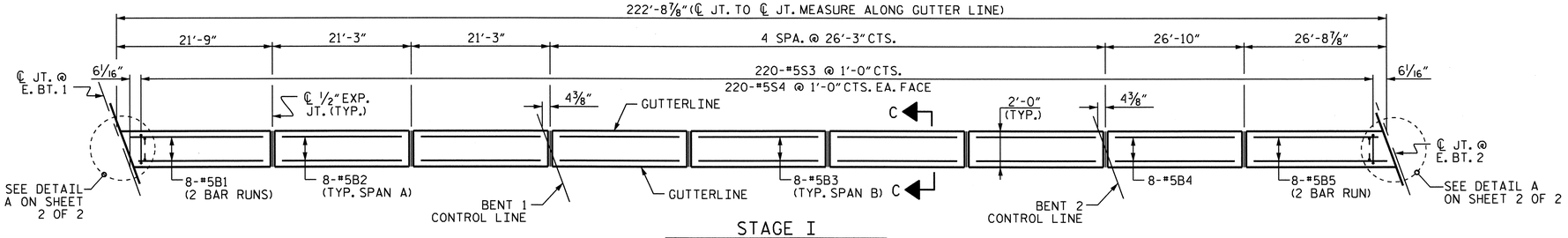


## STAGE I
2'-0" CONCRETE MEDIAN BARRIER

## PLAN

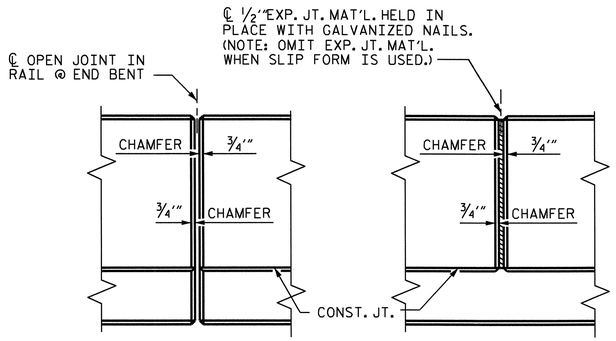


## ELEVATION AT EXPANSION JOINTS

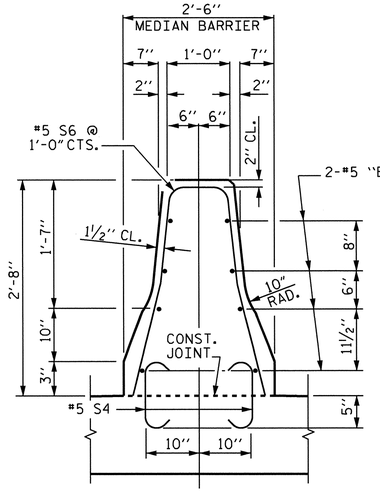


## SECTION D-D
#5 S4 MAY BE PUSHED INTO GREEN CONCRETE AFTER SCREEDING

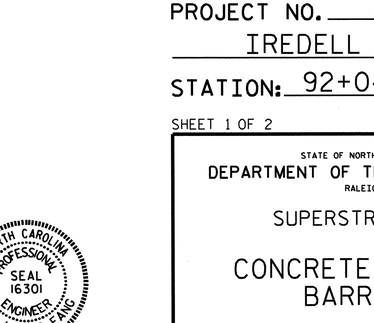


## SECTION C-C
#5 S4 MAY BE PUSHED INTO GREEN CONCRETE AFTER SCREEDING

# NOTES

THE MEDIAN BARRIER RAILS IN A CONTINUOUS UNIT SHALL NOT BE CAST UNTIL ALL SLAB CONCRETE IN THAT UNIT HAS BEEN CAST AND HAS REACHED MINIMUM COMPRESSIVE STRENGTH OF 3,000 PSI.

THE JOINT IN THE DECK SHALL BE FORMED PRIOR TO THE CASTING OF MEDIAN BARRIER RAIL.

ALL REINFORCING STEEL IN MEDIAN BARRIER RAIL SHALL BE EPOXY COATED.

VERTICAL GROOVED CONTRACTION JOINTS, ½" IN DEPTH, SHALL BE TOOLED IN ALL EXPOSED FACES OF THE MEDIAN BARRIER RAIL AND IN ACCORDANCE WITH ARTICLE 825-10(B) OF THE STANDARD SPECIFICATIONS. THE CONTRACTION JOINTS SHALL BE LOCATED AT A SPACING OF 8 FT. TO 10 FT. BETWEEN EXPANSION JOINTS. NO CONTRACTION JOINTS WILL BE REQUIRED FOR SEGMENTS LESS THAN 10 FEET IN LENGTH.

FOR MEDIAN BARRIER RAIL ON APPROACH SLABS, SEE APPROACH SLAB SHEETS.

#5 "S" BARS MAY BE SHIFTED SLIGHTLY IN ORDER TO MAINTAIN A 2" MINIMUM CLEARANCE TO EXPANSION JOINT SEALS AND TO THE ½" EXPANSION JOINT MATERIAL IN MEDIAN BARRIER RAIL.

PROJECT NO. I-3819A

IREDELL COUNTY

STATION: 92+04.00 -L-

SHEET 1 OF 2

STATE OF NORTH CAROLINA
DEPARTMENT OF TRANSPORTATION
RALEIGH

SUPERSTRUCTURE

# CONCRETE MEDIAN BARRIER

| REVISIONS | | | | | | SHEET NO. |
|---|---|---|---|---|---|---|
| NO. | BY: | DATE: | NO. | BY: | DATE: | S-113 |
| 1 | | | 3 | | | TOTAL SHEETS |
| 2 | | | 4 | | | 382 |

NORTH CAROLINA PROFESSIONAL SEAL 16301 ENGINEER TING-HSUING FANG

12/28/11

DRAWN BY : KEITH D. LAYNE DATE : 7/30/10
CHECKED BY : S. B. WILLIAMS DATE : 12/10

28-DEC-2011 11:58
K:\TIPProjects-I\I3819A\Structures\Frye\str03\finalplans\I3819A_SD_MBR_03.dgn
tfang

STR. #3

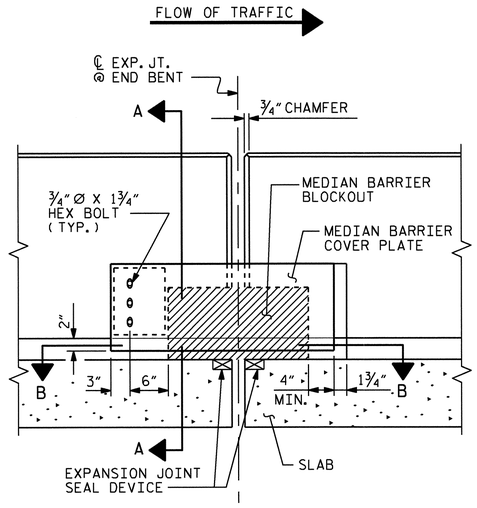


ELEVATION @ EXP. JT.

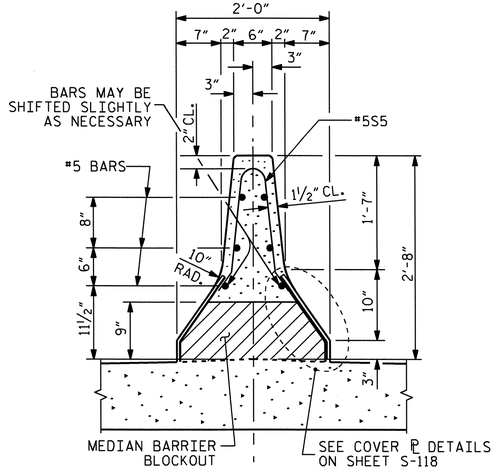


SECTION A-A
(STAGES I & II)

## BAR TYPES

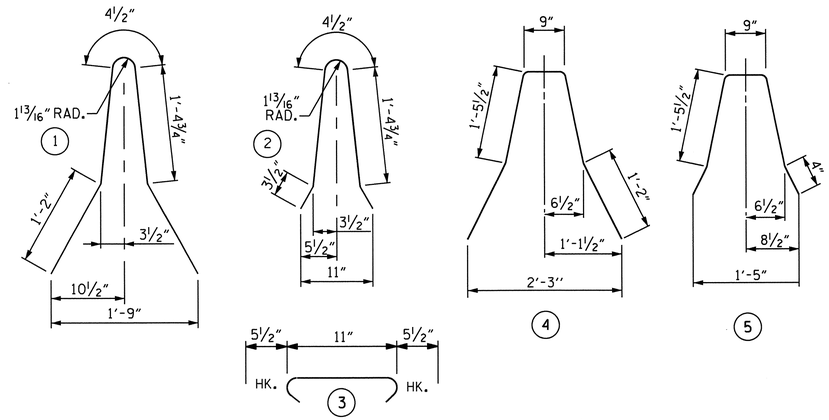


ALL BAR DIMENSIONS ARE OUT TO OUT.

## BILL OF MATERIAL

### STAGE I

| BAR | NO. | SIZE | TYPE | LENGTH | WEIGHT |
|---|---|---|---|---|---|
| ✱B1 | 16 | #5 | STR | 12'-5" | 207 |
| ✱B2 | 16 | #5 | STR | 20'-10" | 348 |
| ✱B3 | 32 | #5 | STR | 25'-10" | 862 |
| ✱B4 | 8 | #5 | STR | 26'-5" | 220 |
| ✱B5 | 16 | #5 | STR | 15'-3" | 254 |
| | | | | | |
| ✱S3 | 220 | #5 | 1 | 5'-6" | 1,262 |
| ✱S4 | 440 | #5 | 3 | 1'-10" | 841 |
| ✱S5 | 2 | #5 | 2 | 3'-9" | 8 |

| | |
|---|---|
| ✱EPOXY COATED REINFORCING STEEL | LBS. 4,002 |
| CLASS AA CONCRETE | CU. YDS. 22.8 |
| 2'-0" CONC. MEDIAN BARRIER | LIN. FT. 295.07 |

### STAGE II

| BAR | NO. | SIZE | TYPE | LENGTH | WEIGHT |
|---|---|---|---|---|---|
| ✱B1 | 16 | #5 | STR | 12'-5" | 207 |
| ✱B2 | 16 | #5 | STR | 20'-10" | 348 |
| ✱B3 | 32 | #5 | STR | 25'-10" | 862 |
| ✱B4 | 8 | #5 | STR | 26'-5" | 220 |
| ✱B5 | 16 | #5 | STR | 15'-3" | 254 |
| | | | | | |
| ✱S3 | 220 | #5 | 1 | 5'-6" | 1,262 |
| ✱S4 | 440 | #5 | 3 | 1'-10" | 841 |
| ✱S5 | 2 | #5 | 2 | 3'-9" | 8 |

| | |
|---|---|
| ✱EPOXY COATED REINFORCING STEEL | LBS. 4,002 |
| CLASS AA CONCRETE | CU. YDS. 22.8 |
| 2'-0" CONC. MEDIAN BARRIER | LIN. FT. 295.32 |

### STAGE III

| BAR | NO. | SIZE | TYPE | LENGTH | WEIGHT |
|---|---|---|---|---|---|
| ✱B1 | 16 | #5 | STR | 12'-5" | 207 |
| ✱B2 | 16 | #5 | STR | 20'-10" | 348 |
| ✱B3 | 32 | #5 | STR | 25'-10" | 862 |
| ✱B4 | 8 | #5 | STR | 26'-5" | 220 |
| ✱B5 | 16 | #5 | STR | 15'-3" | 254 |
| | | | | | |
| ✱S4 | 440 | #5 | 3 | 1'-10" | 841 |
| ✱S6 | 220 | #5 | 4 | 6'-0" | 1,377 |
| ✱S7 | 2 | #5 | 5 | 4'-4" | 9 |

| | |
|---|---|
| ✱EPOXY COATED REINFORCING STEEL | LBS. 4,117 |
| CLASS AA CONCRETE | CU. YDS. 33.8 |
| 2'-6" CONC. MEDIAN BARRIER | LIN. FT. 307.93 |

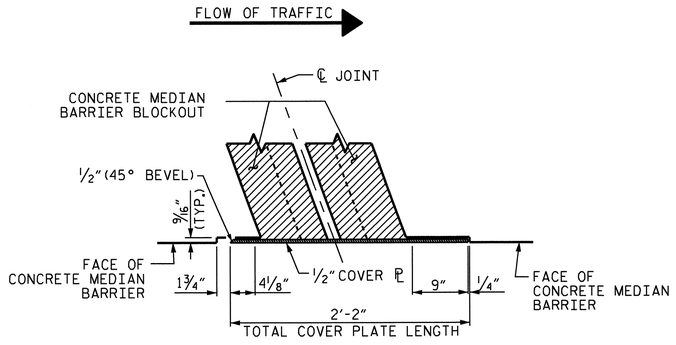


SECTION B-B
(LEFT SIDE SHOWN, RIGHT SIDE SIMILAR)
FOR COVER PLATE DETAILS, SEE SHEET NO. S-118

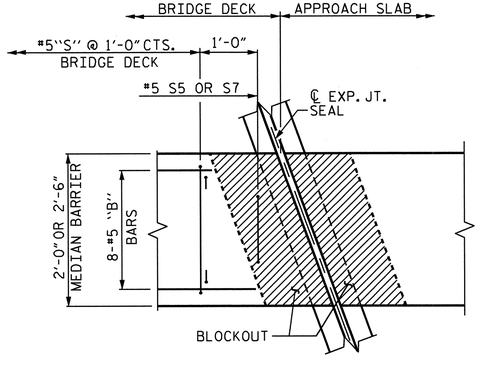


PLAN VIEW
END BENT 2 SHOWN, END BENT 1 SIMILAR
(REINFORCING STEELS IN APPROACH SLAB NOT SHOWN FOR CLARITY.)

DETAIL A
FOR STEEL COVER PLATE NOTES, SEE SHEET NO. S-118.

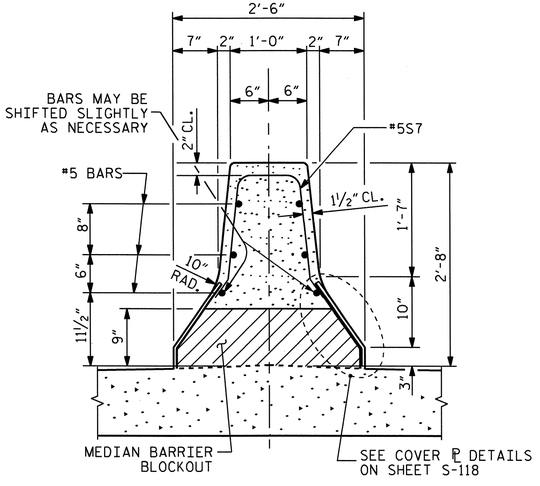


SECTION A-A
(STAGE III)

PROJECT NO. I-3819A
IREDELL COUNTY
STATION: 92+04.00 -L-

SHEET 2 OF 2

STATE OF NORTH CAROLINA
DEPARTMENT OF TRANSPORTATION
RALEIGH

SUPERSTRUCTURE

# CONCRETE MEDIAN BARRIER

| REVISIONS | | | | | | SHEET NO. |
|---|---|---|---|---|---|---|
| NO. | BY: | DATE: | NO. | BY: | DATE: | S-114 |
| 1 | | | 3 | | | TOTAL SHEETS |
| 2 | | | 4 | | | 382 |

NORTH CAROLINA PROFESSIONAL SEAL 16301 ENGINEER TING HSIUNG FANG
12/29/11

DRAWN BY : KEITH D. LAYNE DATE : 7/30/10
CHECKED BY : S. B. WILLIAMS DATE : 12/10

29-DEC-2011 16:31
K:\TIPProjects-I\I3819A\Structures\Frye\str03\finalplans\I3819A_SD_MBR_03.dgn
ttfang

STR. #3

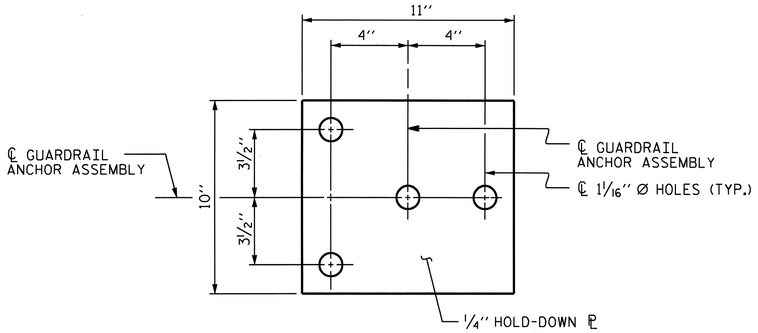


PLAN

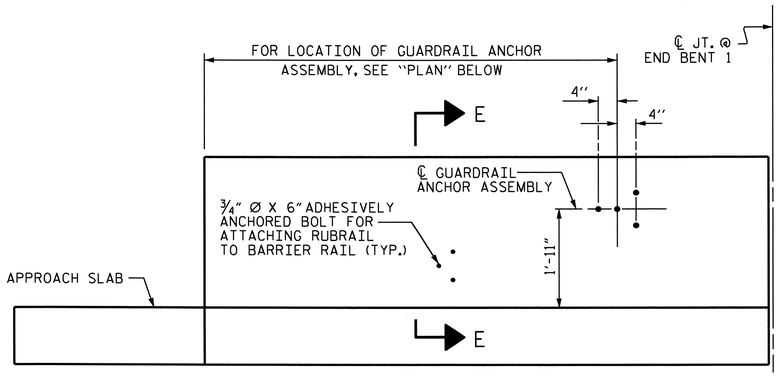


ELEVATION

FOR LOCATION OF RUBRAIL, SEE ROADWAY STD. 862.03

## NOTES

THE GUARDRAIL ANCHOR ASSEMBLY SHALL CONSIST OF A ¼'' HOLD DOWN PLATE AND 4 - ⅞'' Ø BOLTS WITH NUTS AND WASHERS, RUBRAIL, AND ADHESIVELY ANCHORED BOLTS.

THE HOLD-DOWN PLATE SHALL CONFORM TO AASHTO M270 GRADE 36. AFTER FABRICATION, THE HOLD-DOWN PLATE SHALL BE HOT-DIP GALVANIZED IN ACCORDANCE WITH AASHTO M111.

BOLTS SHALL CONFORM TO THE REQUIREMENTS OF ASTM A307 AND NUTS SHALL CONFORM TO THE REQUIREMENTS OF AASHTO M291. BOLTS, NUTS AND WASHERS SHALL BE GALVANIZED. (AT THE CONTRACTOR'S OPTION, STAINLESS STEEL BOLTS, NUTS AND WASHERS MAY BE USED AS AN ALTERNATE FOR THE ⅞'' Ø GALVANIZED BOLTS, NUTS AND WASHERS. THEY SHALL CONFORM TO OR EXCEED THE MECHANICAL REQUIREMENTS OF ASTM A307. THE USE OF THIS ALTERNATE SHALL BE APPROVED BY THE ENGINEER.)

THE GUARDRAIL ANCHOR ASSEMBLY IS REQUIRED AT ALL POINTS WHERE APPROACH GUARDRAIL IS TO BE ATTACHED TO THE END OF BARRIER RAIL. FOR POINTS OF ATTACHMENT, SEE SKETCH.

AFTER INSTALLATION, THE EXPOSED THREAD OF THE BOLT SHALL BE BURRED WITH A SHARP POINTED TOOL.

THE COST OF THE GUARDRAIL ANCHOR ASSEMBLY SHALL BE INCLUDED IN THE UNIT CONTRACT PRICE BID FOR CONCRETE BARRIER RAIL.

THE 1 ¼'' Ø HOLES SHALL BE FORMED OR DRILLED WITH A CORE BIT. IMPACT TOOLS WILL NOT BE PERMITTED. ANY CONCRETE DAMAGED BY THIS WORK SHALL BE REPAIRED TO THE SATISFACTION OF THE ENGINEER.

THE C6 X 8.2 RUBRAIL IS TO BE ADHESIVELY ANCHORED TO THE RAIL USING THREE ¾" Ø X 6" BOLTS WITH WASHERS. LEVEL ONE FIELD TESTING IS REQUIRED, AND THE YIELD LOAD OF THE ¾" Ø BOLT IS 12 KIPS. FOR ADHESIVELY ANCHORED ANCHOR BOLTS OR DOWELS, SEE STANDARD SPECIFICATIONS. SEE ROADWAY STANDARD 862.03 FOR DETAILS AND LOCATION OF THE RUBRAIL.

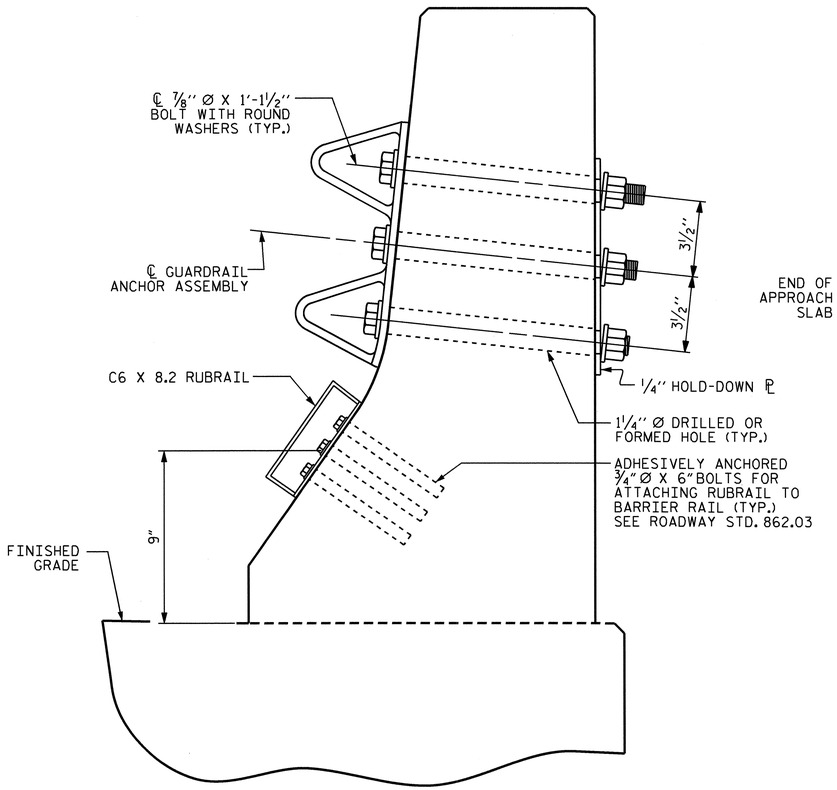


SECTION E-E

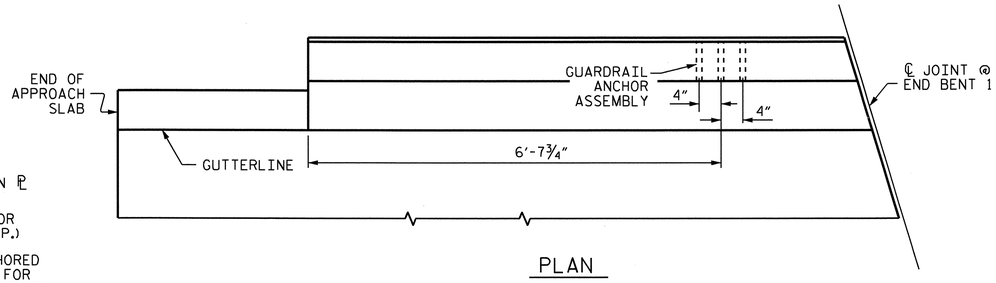


PLAN

## GUARDRAIL ANCHOR ASSEMBLY DETAILS

## LOCATION OF ANCHORS FOR GUARDRAIL

END BENT 1 SHOWN, END BENT 2 SIMILAR.

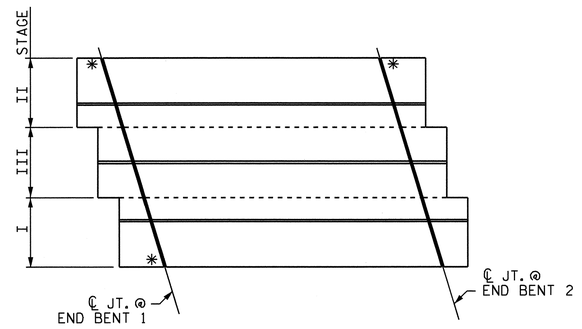


SKETCH SHOWING POINTS OF ATTACHMENTS

✳ DENOTES GUARDRAIL ANCHOR ASSEMBLY

PROJECT NO. I-3819A

IREDELL COUNTY

STATION: 92+04.00 -L-

NORTH CAROLINA PROFESSIONAL SEAL 16301 ENGINEER TING HSILING FANG

12/28/11

STATE OF NORTH CAROLINA
DEPARTMENT OF TRANSPORTATION
RALEIGH

STANDARD

# GUARDRAIL ANCHORAGE FOR BARRIER RAIL STAGES I & II

| REVISIONS | | | | | | SHEET NO. |
|---|---|---|---|---|---|---|
| NO. | BY: | DATE: | NO. | BY: | DATE: | S-115 |
| 1 | | | 3 | | | TOTAL SHEETS |
| 2 | | | 4 | | | 382 |

| | |
|---|---|
| ASSEMBLED BY : KEITH D. LAYNE | DATE : 8/03/10 |
| CHECKED BY : S. B. WILLIAMS | DATE : 12/14/10 |
| DRAWN BY : TLA 5/06 | ADDED 5/1/06R KMM/GM |
| CHECKED BY : GM 5/06 | |

28-DEC-2011 11:47
K:\TIPProjects-I\I3819A\Structures\Frye\str03\finalplans\I3819A_SD_BR_03.dgn
tfang

STR. #3

STD. NO. GRA2 (SHT 3)

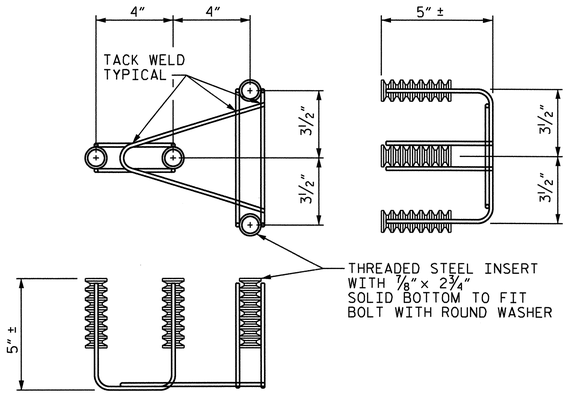


DETAIL "A"

4 BOLT INSERT ASSEMBLY

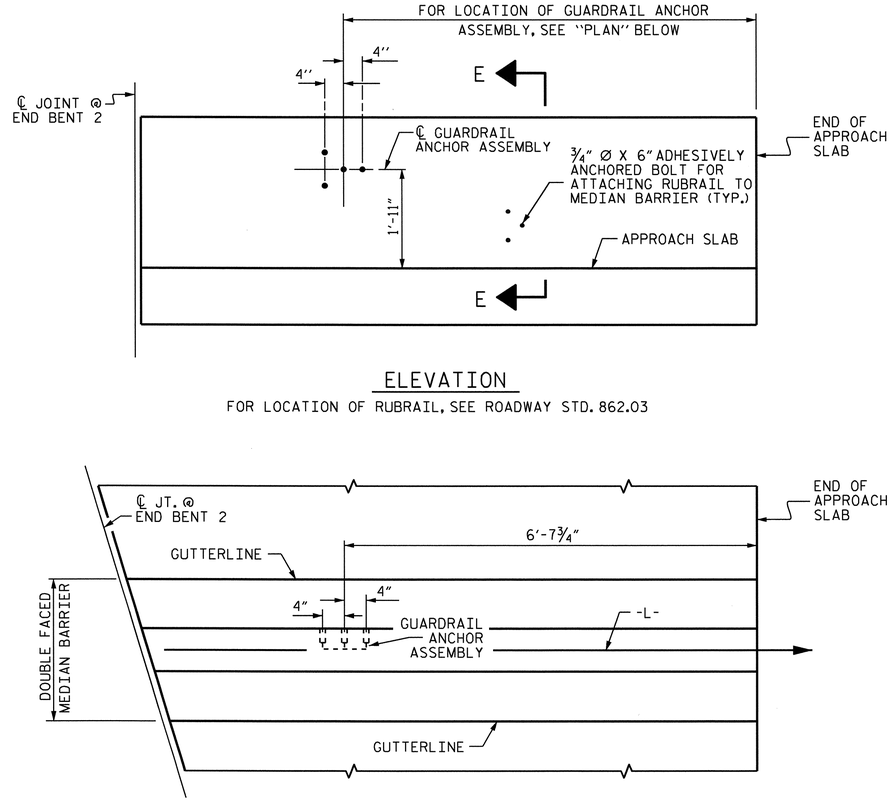


ELEVATION

FOR LOCATION OF RUBRAIL, SEE ROADWAY STD. 862.03

## NOTES

THE GUARDRAIL ANCHOR ASSEMBLY SHALL CONSIST OF THE FOLLOWING COMPONENTS:

A. FERRULES SHALL BE MADE FROM STEEL MEETING THE REQUIREMENTS OF ASTM A108, GRADE 12L14 AND SHALL HAVE A MINIMUM LENGTH OF THREADS OF 1½"

B. 4- ⅞" DIA. x 2¾" BOLTS WITH WASHERS FOR GUARDRAIL ANCHOR ASSEMBLY SHALL CONFORM TO THE REQUIREMENTS OF ASTM A307. BOLTS AND WASHERS SHALL BE GALVANIZED. (AT THE CONTRACTORS OPTION, STAINLESS STEEL BOLTS WITH WASHERS MAY BE USED AS AN ALTERNATE FOR THE ⅞" x 2¾" GALVANIZED BOLTS AND WASHERS. THEY SHALL CONFORM TO OR EXCEED THE MECHANICAL REQUIREMENTS OF ASTM A307. THE USE OF THIS ALTERNATE SHALL BE APPROVED BY THE ENGINEER.)

C. WIRE STRUTS SHOWN IN THE ANCHOR ASSEMBLY ARE THE MINIMUM ALLOWABLE SIZE AND SHALL HAVE A MINIMUM TENSILE STRENGTH OF 100 ksi.

THE GUARDRAIL ANCHOR ASSEMBLIES WITH BOLTS SHALL BE ASSEMBLED IN THE SHOP. BOLT THREADS MAY BE RECUT AS NECESSARY.

THE COST OF THE GUARDRAIL ANCHOR ASSEMBLIES WITH BOLTS AND WASHERS COMPLETE IN PLACE SHALL BE INCLUDED IN THE UNIT CONTRACT PRICE BID FOR CONCRETE MEDIAN BARRIER.

THE GUARDRAIL ANCHOR ASSEMBLY IS REQUIRED AT ALL POINTS WHERE APPROACH GUARDRAIL IS TO BE ATTACHED TO THE END OF DOUBLE FACED MEDIAN BARRIER. FOR POINTS OF ATTACHMENT, SEE SKETCH.

THE CONTRACTOR MAY, AT HIS OPTION, USE ADHESIVELY ANCHORED ANCHOR BOLTS IN PLACE OF GUARDRAIL ANCHOR ASSEMBLY. THE YIELD LOAD OF THE ⅞" DIA. BOLT IS 16.6 KIPS.

THE C6 X 8.2 RUBRAIL IS TO BE ADHESIVELY ANCHORED TO THE RAIL USING THREE 3#4" Ø X 6" BOLTS WITH WASHERS. LEVEL ONE FIELD TESTING IS REQUIRED, AND THE YIELD LOAD OF THE 3#4" Ø BOLT IS 12 KIPS. FOR ADHESIVELY ANCHORED ANCHOR BOLTS OR DOWELS, SEE STANDARD SPECIFICATIONS. SEE ROADWAY STANDARD 862.03 FOR DETAILS AND LOCATION OF THE RUBRAIL.

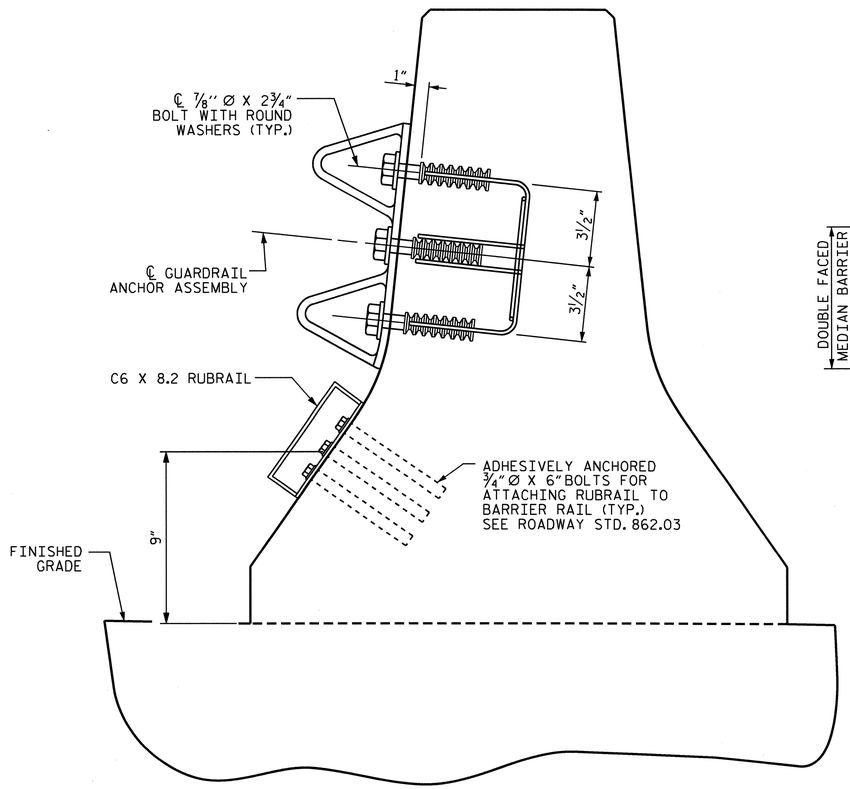


SECTION E-E




PLAN

LOCATION OF ANCHORS FOR GUARDRAIL

AT END BENT 2, STAGE III

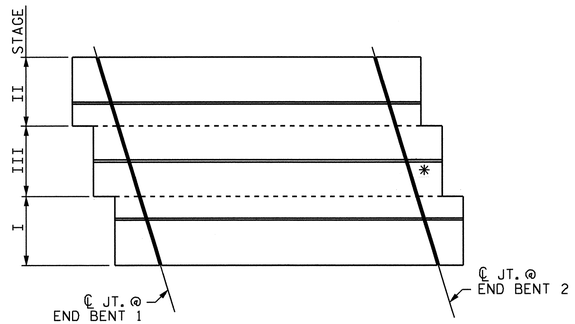


SKETCH SHOWING POINTS OF ATTACHMENTS

* DENOTES GUARDRAIL ANCHOR ASSEMBLY

PROJECT NO. I-3819A

IREDELL COUNTY

STATION: 92+04.00 -L-

SHEET 2 OF 2

STATE OF NORTH CAROLINA
DEPARTMENT OF TRANSPORTATION
RALEIGH

# GUARDRAIL ANCHORAGE FOR CONCRETE MEDIAN BARRIER STAGE III

| REVISIONS | | | | | | SHEET NO. |
|---|---|---|---|---|---|---|
| NO. | BY: | DATE: | NO. | BY: | DATE: | S-116 |
| 1 | | | 3 | | | TOTAL SHEETS |
| 2 | | | 4 | | | 382 |

NORTH CAROLINA PROFESSIONAL SEAL 16301 ENGINEER TING HSIUNG FANG

11/30/11

DRAWN BY : RAMAN PATEL DATE : 10/28/11
CHECKED BY : T. H. FANG DATE : 10/31/11

30-NOV-2011 11:28
R:\Structures\frye\str03\finalplans\I3819A_SD_BR_03.dgn
sbwilliams

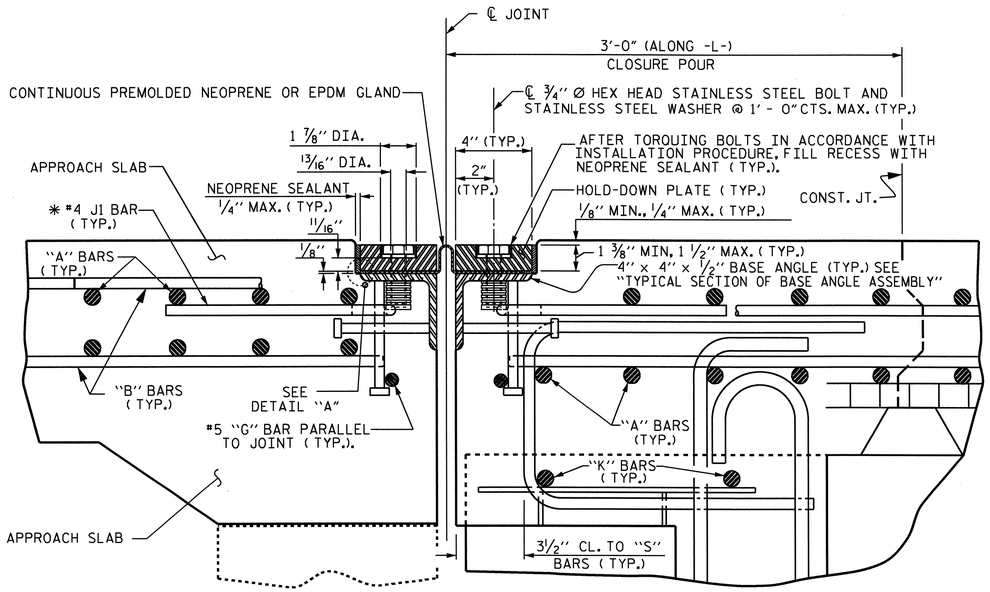


# EXPANSION JOINT DETAILS

SECTION NORMAL TO JOINT -- PRESTRESSED GIRDER SUPERSTRUCTURE

( END BENT 1 SHOWN, END BENT 2 SIMILAR )

* THE QUANTITY OF #4J1 BARS ON THE BILL OF MATERIAL IS BASED ON 1'-0" CENTERS. J1 BARS SHALL BE PLACED AT EACH VERTICAL STUD ANCHOR BOLT. IN THE EVENT THAT THE NUMBER OF VERTICAL STUD ANCHORS EXCEEDS THE NUMBER OF J1 BARS SPECIFIED, ADDITIONAL J1 BARS WILL NOT BE REQUIRED.

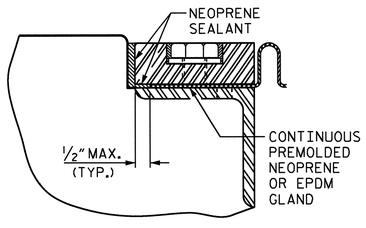


DETAIL "A"

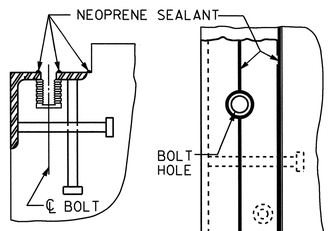


CROSS SECTION PLAN VIEW

INSTALLATION SKETCH

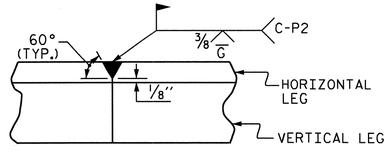


DETAIL- FIELD WELD SPLICE OF BASE ANGLE

## INSTALLATION PROCEDURE

1. A TEMPLATE OR OTHER SUITABLE DEVICE SHALL BE USED TO FORM THE TOP OF THE EXPANSION JOINT SEAL BLOCKOUT TO THE PROPER DEPTH AND WIDTH. THE TEMPLATE SHALL BE 4 1/8" TO 4 1/4" WIDE AND OF SUCH THICKNESS AS TO PROVIDE FOR CORRECT FINAL ELEVATION OF TOP OF HOLD-DOWN PLATES. THE TEMPLATE SHALL BE ATTACHED TO THE BASE ANGLE ASSEMBLY WITH THE 3/4" Ø HEX HEAD BOLTS PROVIDED FOR THE HOLD-DOWN PLATES. A 1" Ø HOLE SHALL BE PROVIDED IN THE TEMPLATE CENTERED OVER EACH WEEP HOLE IN THE 4" X 4" X 1/2" BASE ANGLE. OTHER METHODS OF INSURING DRAINAGE THROUGH WEEP HOLES MAY BE EMPLOYED SUBJECT TO ENGINEER'S APPROVAL.
2. AFTER THE CONCRETE HAS BEEN CAST ON BOTH SIDES OF THE JOINT, REMOVE THE TEMPLATE. THOROUGHLY CLEAN THE BOLT HOLES AND THE ANGLE PLATE. REMOVE ANY EXCESS CONCRETE THAT COMES OUT OF THE WEEP HOLES. ANY DAMAGED STEEL SHALL BE COATED WITH A MINIMUM THICKNESS OF 4 DRY MILS OF ZINC-RICH PAINT IN ACCORDANCE WITH THE STANDARD SPECIFICATIONS.
3. LAY THE GLAND ON THE BASE ANGLE AND FIELD MARK THE GLAND FOR THE BOLT HOLES. HOLES IN THE GLAND SHALL BE PUNCHED 7/8" IN DIAMETER WITH A HAND PUNCH.
4. IN ORDER TO CHECK FOR PROPER ALIGNMENT, PLACE THE GLAND AND HOLD-DOWN PLATES ON THE BASE ANGLE. DO NOT APPLY NEOPRENE SEALANT. BOLT THE HOLD-DOWN PLATES TO THE BASE ANGLE BUT DO NOT TIGHTEN. THE ENGINEER SHALL INSPECT THE JOINT SEAL DEVICE FOR PROPER ALIGNMENT.
5. AFTER INSPECTION, REMOVE THE HOLD-DOWN PLATES AND GLAND. APPLY NEOPRENE SEALANT TO THE BASE ANGLE IN ACCORDANCE WITH THE "INSTALLATION SKETCH". PLACE GLAND AND HOLD-DOWN PLATES ON THE BASE ANGLE. BOLT THE HOLD-DOWN PLATES TO THE BASE ANGLE ASSEMBLY AND TORQUE THE BOLTS TO 88 FT-LBS WITH A TORQUE WRENCH. THE TORQUE WRENCH SHALL BE CALIBRATED IN ACCORDANCE WITH SECTION 440-10 (D) OF THE STANDARD SPECIFICATIONS. CHECK THE TORQUE AFTER THREE (3) HOURS AND, IF NECESSARY, RETIGHTEN TO 88 FT-LBS. A FINAL CHECK SHALL BE MADE AT SEVEN (7) DAYS. TORQUE SHALL NOT BE LESS THAN 80 FT-LBS AFTER SEVEN (7) DAYS.
6. AFTER PROPER TOROUING, CLEAN THE BOLT HOLE RECESSES AND THE RECESS BETWEEN THE JOINT SEAL DEVICE AND CONCRETE, COMPLETELY FILL THESE RECESSES WITH NEOPRENE SEALANT.

## GENERAL NOTES

1. FOR EXPANSION JOINT SEALS, SEE SPECIAL PROVISIONS.
2. ALL PLATES AND ANGLES SHALL CONFORM TO AASHTO M270 GRADE 36 STEEL OR APPROVED EQUAL. ALL HOLD-DOWN BOLTS SHALL CONFORM TO ASTM F593 ALLOY 304 STAINLESS STEEL AND WASHERS SHALL CONFORM TO ASTM F844 EXCEPT THEY SHALL BE MADE FROM ALLOY 304 STAINLESS STEEL. ALL STUD ANCHORS SHALL CONFORM TO AASHTO M169, GRADES 1010 THRU 1020 OR APPROVED EQUAL. ALL CONCRETE INSERTS SHALL BE CLOSED END AND SHALL CONFORM TO AASHTO M169, GRADE 12L14. TENSILE CAPACITY SHALL BE 3000 LBS. MIN.
3. A PREMOLDED CORRUGATED OR NON-CORRUGATED GLAND SHALL BE USED FOR JOINTS SKEWED BETWEEN 50° THRU 130°. FOR JOINTS SKEWED LESS THAN 50° OR MORE THAN 130°, ONLY A CORRUGATED GLAND SHALL BE USED.
4. CLOSED END FERRULES AND STUD ANCHORS SHALL BE SHOP WELDED AND ALL HOLES SHALL BE SHOP DRILLED AS SHOWN ON PLANS. STUD ANCHORS SHALL BE ELECTRIC ARC END WELDED WITH COMPLETE FUSION.
5. SURFACES COMING IN CONTACT WITH NEOPRENE SHALL BE GROUND SMOOTH PRIOR TO METALLIZING.
6. UPON COMPLETION OF SHOP FABRICATION, THE HOLD DOWN PLATE AND BASE ANGLE ASSEMBLY, AS SHOWN IN THE "TYPICAL SECTION OF BASE ANGLE ASSEMBLY", SHALL BE METALLIZED. SEE SPECIAL PROVISION FOR THERMAL SPRAYED COATINGS (METALLIZATION).
7. BASE ANGLE ASSEMBLY SHALL BE CONTINUOUS FOR THE LENGTH OF THE JOINT. AT CROWN BREAKS, THE ENDS OF THE BASE ANGLE ASSEMBLY SHALL BE CUT PARALLEL TO THE BRIDGE CENTERLINE FOR SKEWS LESS THAN 80° AND GREATER THAN 100°. FINISHED WELD SHALL BE GROUND SMOOTH AND COATED WITH A MINIMUM THICKNESS OF 4 DRY MILS OF ZINC-RICH PAINT IN ACCORDANCE WITH THE STANDARD SPECIFICATIONS.
8. FIELD SPLICES OF HOLD-DOWN PLATES SHALL BE KEPT TO A MINIMUM. CONTRACTOR SHALL FURNISH DETAILED PLANS SHOWING PROPOSED SPLICE LOCATIONS FOR APPROVAL. HOLD-DOWN PLATES SHALL NOT EXCEED 20' LENGTHS UNLESS APPROVED BY THE ENGINEER.
9. NO ALTERNATE JOINT DETAILS SHALL BE PERMITTED IN LIEU OF THOSE SHOWN ON THESE PLANS.
10. THE CONTRACTOR MAY, AT HIS OPTION, USE ADHESIVELY ANCHORED ANCHOR BOLTS IN PLACE OF CONCRETE INSERTS FOR COVER PLATES. THE YIELD LOAD OF THE 3/4" Ø BOLT IS 10 KIPS. FIELD TESTING OF THE ADHESIVE BONDING SYSTEM IS NOT REQUIRED.

## STEEL COVER PLATE NOTES

THE STEEL PLATES SHALL CONFORM TO AASHTO M270 GRADE 36 OR APPROVED EQUAL. AFTER FABRICATION, THE PLATES SHALL BE COMMERCIALLY BLAST CLEANED AND COATED WITH A MINIMUM THICKNESS OF 4 MILS (DRY) OF ZINC- RICH PAINT, IN ACCORDANCE WITH THE SPECIFICATIONS. AT THE CONTRACTORS OPTION, GALVANIZED OR METALLIZED TO A MINIMUM THICKNESS OF 6 MILS IN ACCORDENCE WITH STANDARD SPECIFICATIONS, SEE SPECIAL PROVISIONS FOR THERMAL SPRAYED COATINGS (METALLIZATION), SEE SPECIAL PROVISIONS.

THE 3/4" Ø HEX HEAD BOLTS SHALL CONFORM TO ASTM F593 ALLOY TYPE 304 STAINLESS STEEL.

THE 3/4" CONCRETE INSERTS SHALL BE CLOSED-END FERRULES WITH LOOPED WIRE STRUTS ATTACHED TO THEM. THE INSERTS SHALL CONFORM TO AASHTO M169, GRADE 12L14, AND SHALL HAVE A TENSILE WORKING LOAD CAPACITY OF 3000 LBS.

NO SEPARATE PAYMENT WILL BE MADE FOR FURNISHING AND INSTALLING THE COVER PLATE. THE ENTIRE COST OF THIS WORK SHALL BE INCLUDED IN THE LUMP SUM PRICE FOR EXPANSION JOINT SEALS.

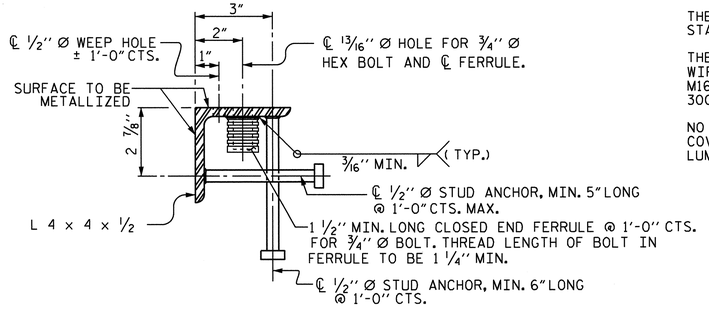


TYPICAL SECTION OF BASE ANGLE ASSEMBLY

| MOVEMENT AND SETTING AT JOINT | | | | | |
|---|---|---|---|---|---|
| END BENT | SKEW ANGLE | TOTAL MOVEMENT (ALONG ℄ RDWY) | PERPENDICULAR JOINT OPENING AT 45° F | PERPENDICULAR JOINT OPENING AT 60° F | PERPENDICULAR JOINT OPENING AT 90° F |
| | | | | | |
| 1 | 70°-00'-00" | 15/16" | 1 5/8" | 1 1/2" | 1 1/4" |
| 2 | 70°-00'-00" | 15/16" | 1 5/8" | 1 1/2" | 1 1/4" |
| | | | | | |

PROJECT NO. I-3819A

IREDELL COUNTY

STATION: 92+04.00 -L-

SHEET 1 OF 3

STATE OF NORTH CAROLINA
DEPARTMENT OF TRANSPORTATION
RALEIGH
STANDARD

EXPANSION JOINT SEAL DETAILS

| REVISIONS | | | | | | SHEET NO. |
|---|---|---|---|---|---|---|
| NO. | BY: | DATE: | NO. | BY: | DATE: | S-117 |
| 1 | | | 3 | | | TOTAL SHEETS |
| 2 | | | 4 | | | 382 |

| | | |
|---|---|---|
| ASSEMBLED BY : KEITH D. LAYNE | DATE : 12/08/10 | |
| CHECKED BY : S. B. WILLIAMS | DATE : 01/05/11 | |
| DRAWN BY : REK 9/87 | REV. 10/17/00 | RWW/LES |
| CHECKED BY : CRK 10/87 | REV. 5/1/03R | RWW/JTE |
| | REV. 5/1/06 | TLA/GM |

30-NOV-2011 11:28
R:\Structures\Frye\str03\finalplans\I3819A_SD_EJS_03.dgn
sbwilliams

STR. #3

STD. NO. EJS1

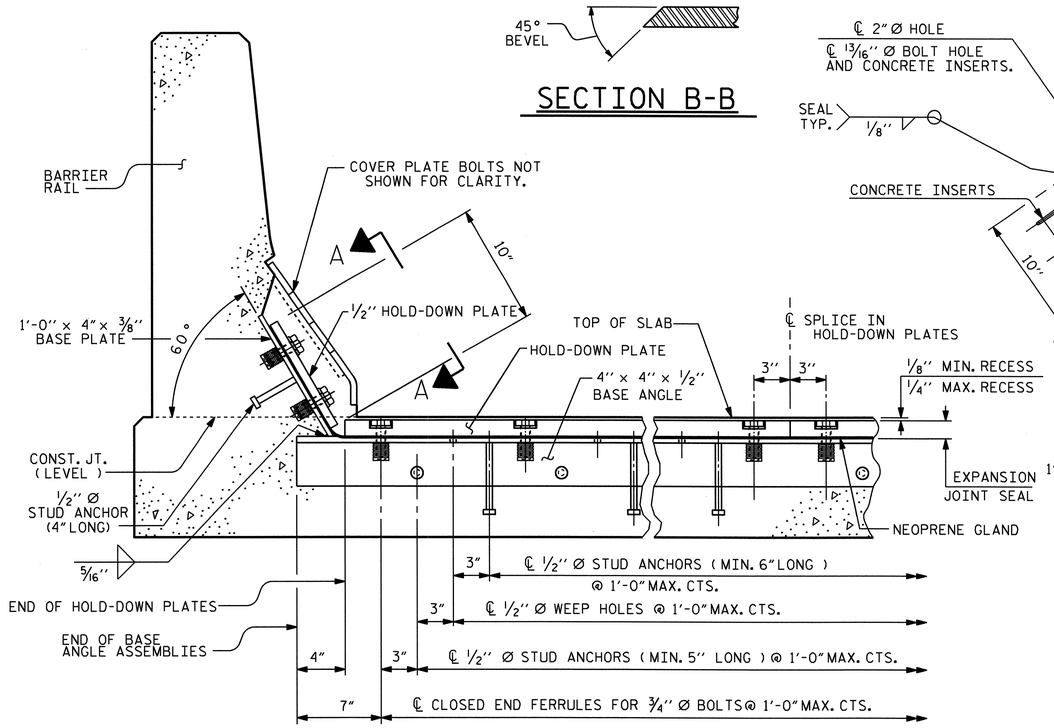


## SECTION B-B




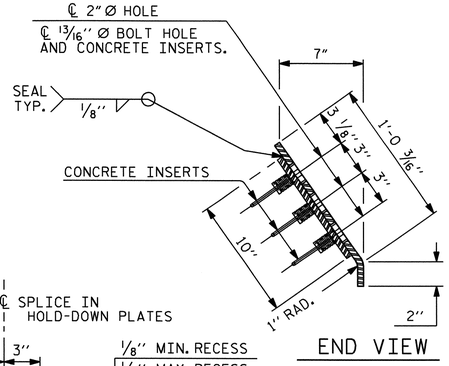


## END VIEW

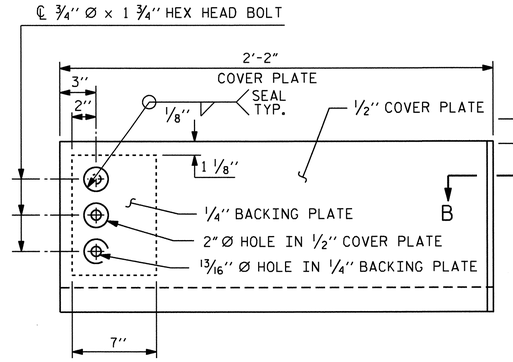


## TYPE I - ELEVATION VIEW

( 8 REQUIRED)

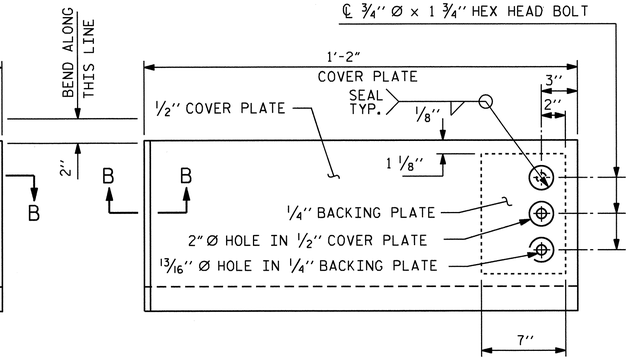


## TYPE II - ELEVATION VIEW

( 8 REQUIRED)

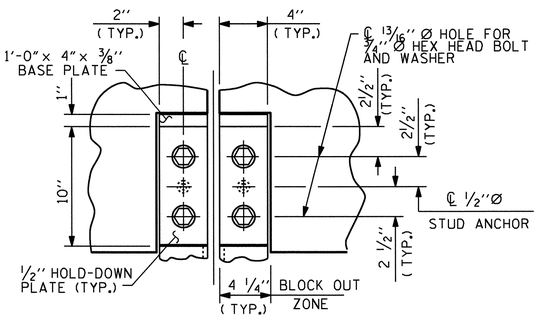


## SECTION A-A

## COVER PLATE DETAILS

FOR COVER PLATE NOTE, SEE SHEET 1 OF 3

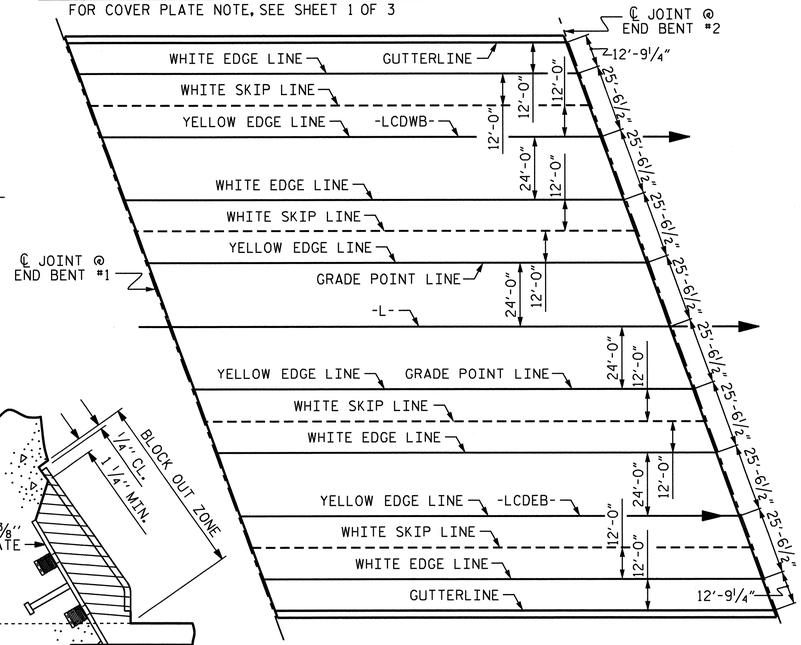


## PAVEMENT MARKING ALIGNMENT

## SECTION THRU RAIL NORMAL TO JOINT

(LEFT SIDE SHOWN, RIGHT SIDE SIMILAR)

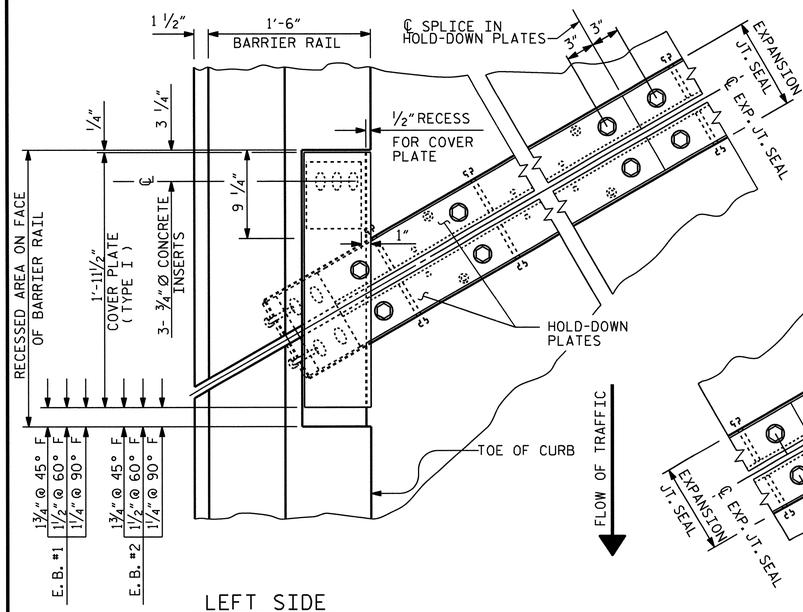


## LEFT SIDE

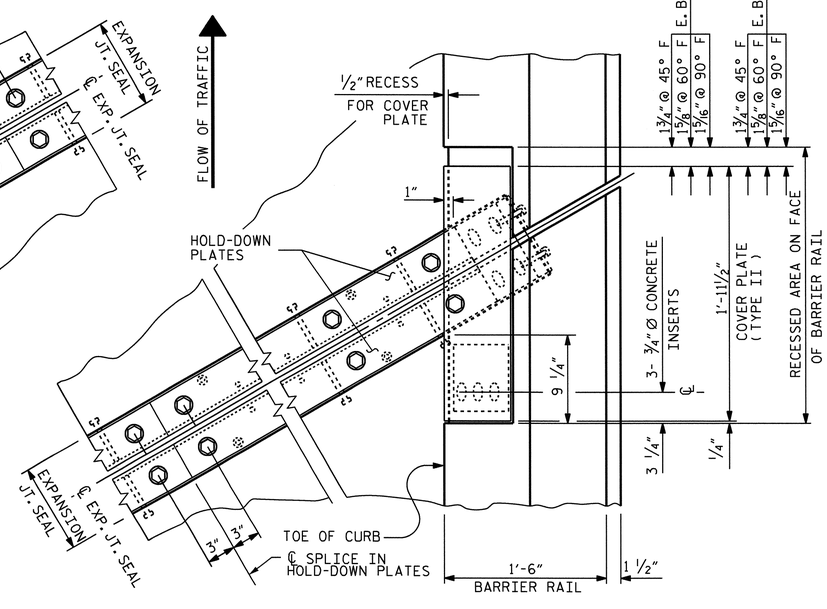


## RIGHT SIDE

## PLAN OF EXPANSION JOINT SEAL

END BENT 1 SHOWN, END BENT 2 SIMILAR

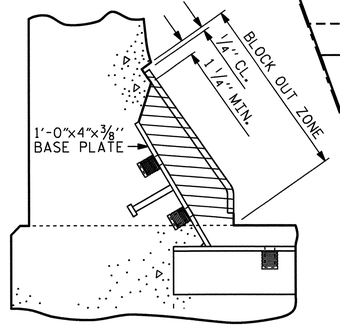


## BLOCK OUT DETAIL

SEE "SECTION A-A" FOR OTHER DETAILS.

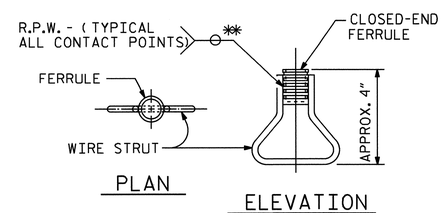


PLAN ELEVATION

## CONCRETE INSERT

** EACH WELDED ATTACHMENT OF WIRE TO FERRULE SHALL DEVELOP THE TENSILE STRENGTH OF THE WIRE.

PROJECT NO. I-3819A

IREDELL COUNTY

STATION: 92+04.00 -L-

SHEET 2 OF 3

STATE OF NORTH CAROLINA
DEPARTMENT OF TRANSPORTATION
RALEIGH

STANDARD

# EXPANSION JOINT SEAL DETAILS FOR BARRIER RAIL

| REVISIONS | | | | | | SHEET NO. |
|---|---|---|---|---|---|---|
| NO. | BY: | DATE: | NO. | BY: | DATE: | S-118 |
| 1 | | | 3 | | | TOTAL SHEETS |
| 2 | | | 4 | | | 382 |

STR. #3 STD. NO. EJS2

| | |
|---|---|
| ASSEMBLED BY : KEITH D. LAYNE | DATE : 12/08/10 |
| CHECKED BY : S. B. WILLIAMS | DATE : 01/06/11 |
| DRAWN BY : REK 9/87 | REV. 7/17/98 RWW/LES |
| CHECKED BY : CRK 10/87 | REV. 10/17/00 RWW/LES |
| | REV. 5/1/06 TLA/GM |

NORTH CAROLINA PROFESSIONAL SEAL 16301 ENGINEER TING HSIUNG FANG
11/30/11

30-NOV-2011 11:28
R:\Structures\Frye\str03\final plans\I3819A_SD_EJS_03.dgn
sbwilliams

NOTE:

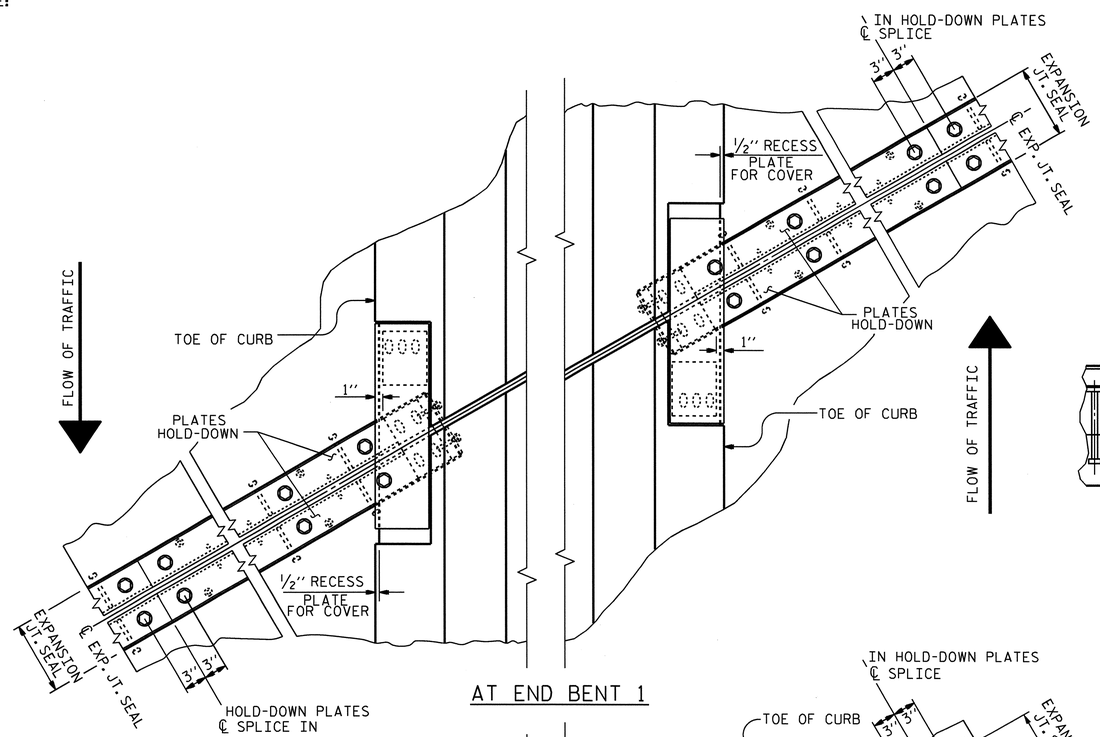


AT END BENT 1

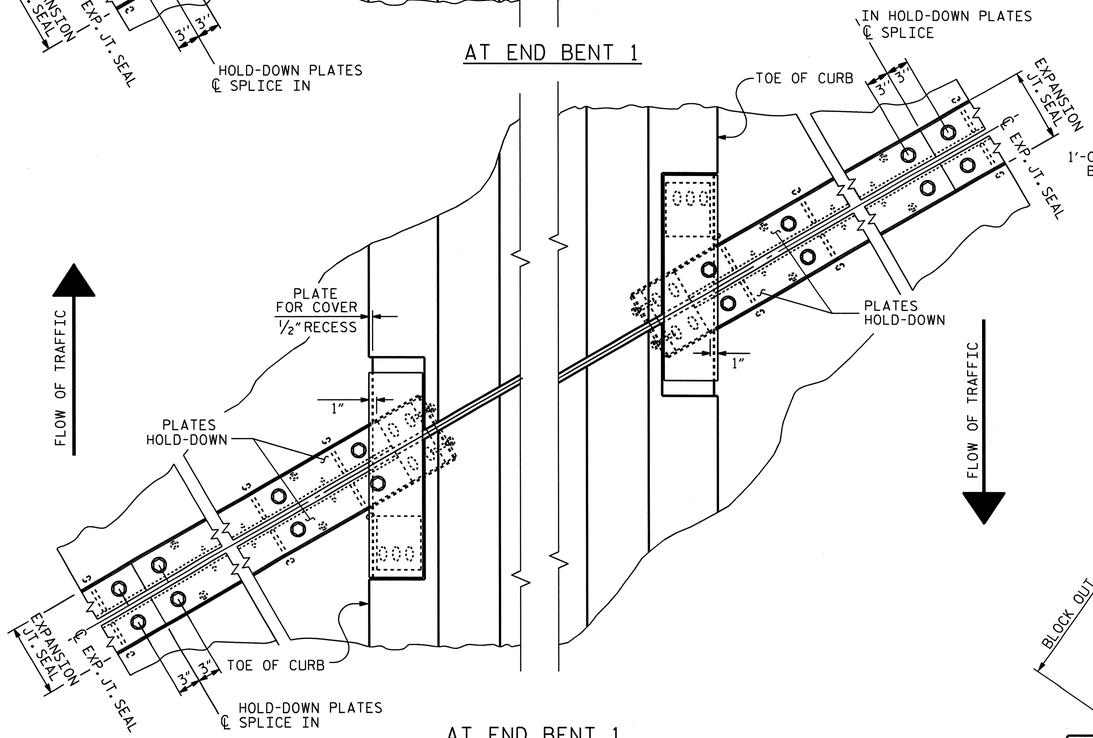


AT END BENT 1

## PLAN OF EXPANSION JOINT SEAL

SEE SHEET 2 OF 3 FOR COVER PLATE DETAILS AND DIMENSIONS.

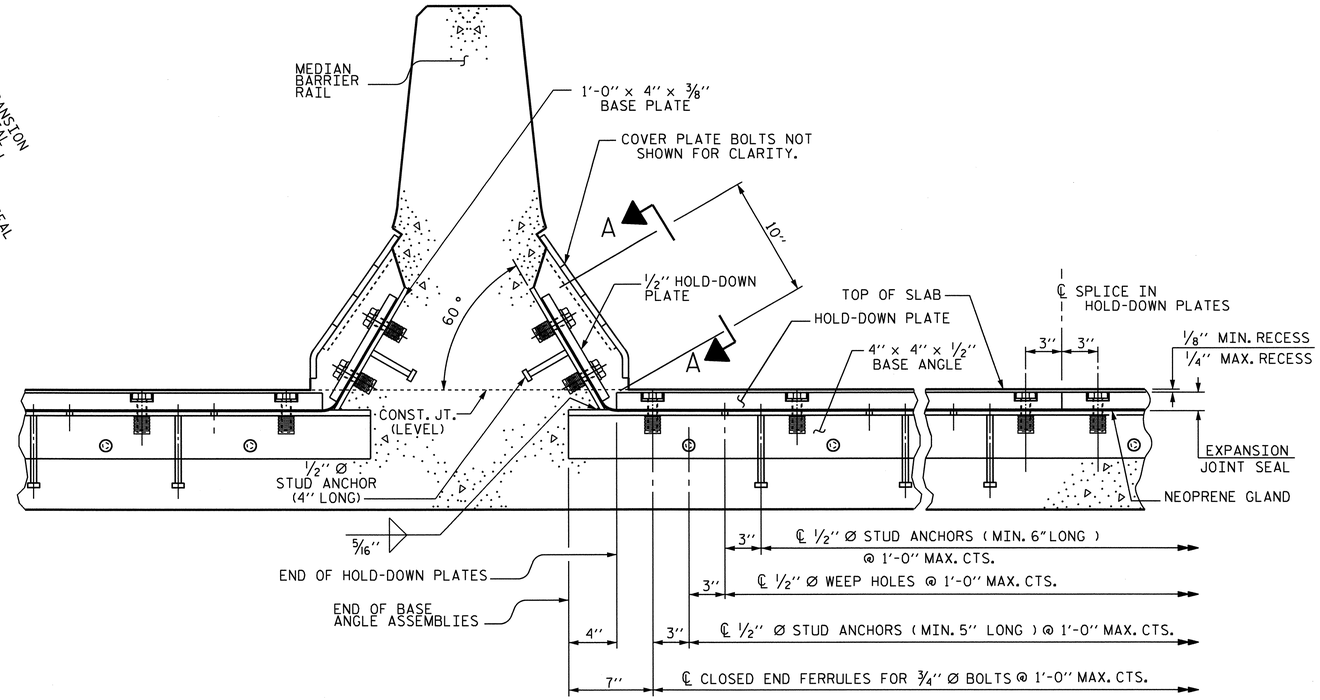


## SECTION THRU RAIL NORMAL TO JOINT

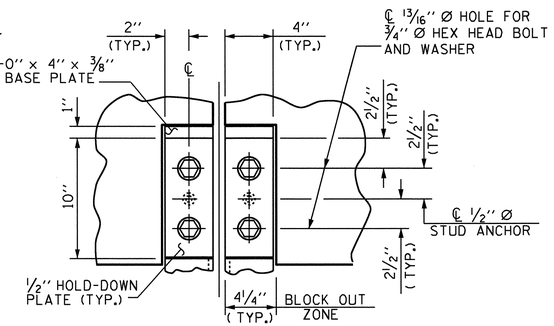


## SECTION A-A

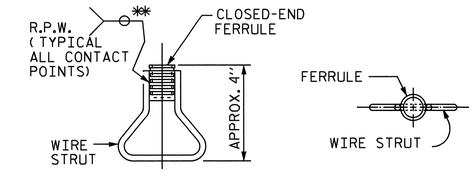


ELEVATION PLAN

## CONCRETE INSERT

** EACH WELDED ATTACHMENT OF WIRE TO FERRULE SHALL DEVELOP THE TENSILE STRENGTH OF THE WIRE.

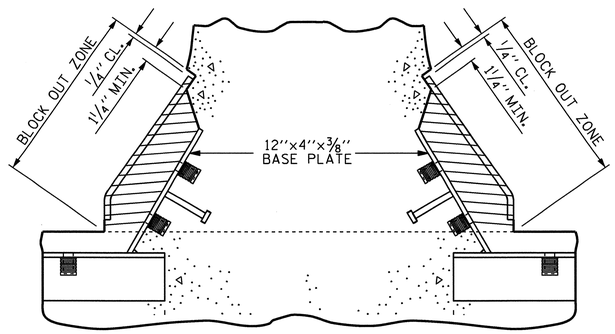


## BLOCK OUT DETAIL

SEE " SECTION A - A " FOR OTHER DETAILS.

PROJECT NO. I-3819A

IREDELL COUNTY

STATION: 92+04.00 -L-

SHEET 3 OF 3

STATE OF NORTH CAROLINA
DEPARTMENT OF TRANSPORTATION
RALEIGH

# EXPANSION JOINT SEAL DETAILS FOR MEDIAN BARRIER

| REVISIONS | | | | | | SHEET NO. |
|---|---|---|---|---|---|---|
| NO. | BY: | DATE: | NO. | BY: | DATE: | S-119 |
| 1 | | | 3 | | | TOTAL SHEETS |
| 2 | | | 4 | | | 382 |

NORTH CAROLINA PROFESSIONAL SEAL 16301 ENGINEER TING HSIUNG FANG
11/30/11

DRAWN BY : KEITH D. LAYNE DATE : 12-08-10
CHECKED BY : S. B. WILLIAMS DATE : 01-06-11

30-NOV-2011 11:28
R:\Structures\Frye\str03\finalplans\I3819A_SD_EJS_03.dgn
sbwilliams

| SUPERSTRUCTURE REINFORCING STEEL LENGTHS ARE BASED ON THE FOLLOWING MINIMUM SPLICE LENGTHS | | | | | |
|---|---|---|---|---|---|
| BAR SIZE | SUPERSTRUCTURE EXCEPT APPROACH SLABS, PARAPET, AND BARRIER RAIL | | APPROACH SLABS | | PARAPET AND BARRIER RAIL |
| | EPOXY COATED | UNCOATED | EPOXY COATED | UNCOATED | |
| #4 | 2'-0" | 1'-9" | 2'-0" | 1'-9" | 2'-9" |
| #5 | 2'-6" | 2'-2" | 2'-6" | 2'-2" | 3'-5" |
| #6 | 3'-0" | 2'-7" | 3'-10" | 2'-7" | 4'-4" |
| #7 | 5'-3" | 3'-6" | | | |
| #8 | 6'-10" | 4'-7" | | | |

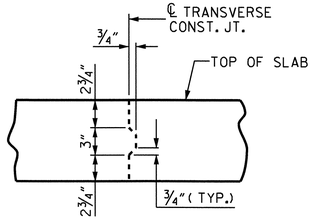


## TRANSVERSE CONSTRUCTION JOINT DETAIL

NOTE: REINFORCING STEEL IN SLAB NOT SHOWN. LONGITUDINAL REINFORCING STEEL SHALL BE CONTINUOUS THRU JOINT

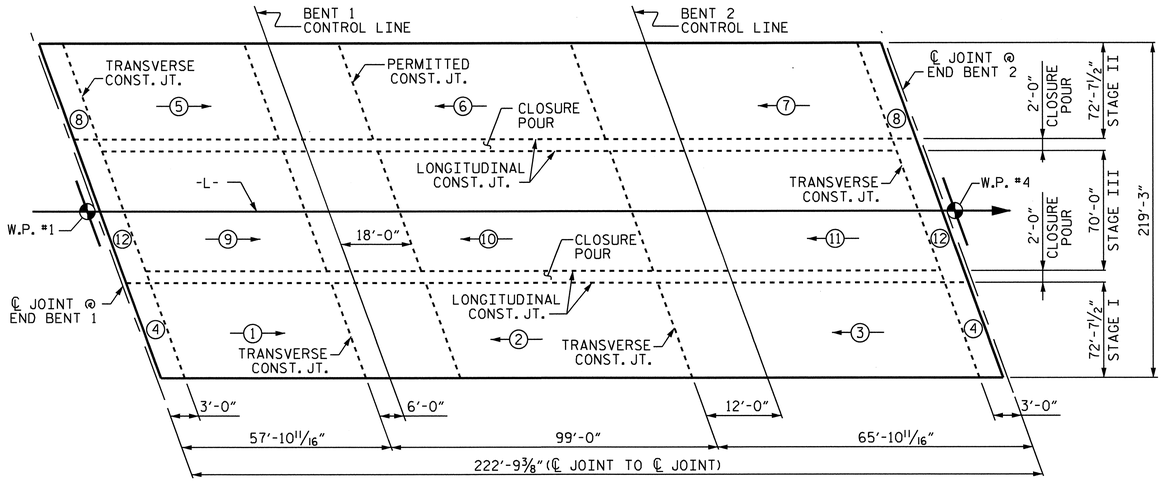


## POURING SEQUENCE

←○— INDICATES DIRECTION OF POUR

| GROOVING BRIDGE FLOORS | | |
|---|---|---|
| STAGE I | | |
| APPROACH SLABS | 3,799 | SQ.FT. |
| BRIDGE DECK | 14,278 | SQ.FT. |
| TOTAL | 18,077 | SQ.FT. |
| STAGE II | | |
| APPROACH SLABS | 3799 | SQ.FT. |
| BRIDGE DECK | 14,278 | SQ.FT. |
| TOTAL | 18,077 | SQ.FT. |
| STAGE III | | |
| APPROACH SLABS | 5,887 | SQ.FT. |
| BRIDGE DECK | 14,942 | SQ.FT. |
| TOTAL | 20,829 | SQ.FT. |
| TOTAL | | |
| APPROACH SLABS | 13,485 | SQ.FT. |
| BRIDGE DECK | 43,498 | SQ.FT. |
| TOTAL | 56,983 | SQ.FT. |

| SUPERSTRUCTURE BILL OF MATERIAL | | |
|---|---|---|
| | REINFORCING STEEL (LBS) | EPOXY COATED REINFORCING STEEL (LBS) |
| | | |
| STAGE I | 43,634 | 49,861 |
| STAGE II | 43,634 | 49,861 |
| STAGE III | 43,355 | 50,694 |
| | | |
| TOTALS | 130,623 | 150,416 |

| CONCRETE QUANTITIES (CU. YDS.) | | | | | |
|---|---|---|---|---|---|
| STAGE I | POUR 1 | POUR 2 | POUR 3 | POUR 4 | TOTAL |
| | 145.1 | 297.5 | 202.0 | 27.3 | 671.9 |
| | | | | | |
| STAGE II | POUR 5 | POUR 6 | POUR 7 | POUR 8 | |
| | 145.1 | 297.5 | 202.0 | 27.3 | 671.9 |
| | | | | | |
| STAGE III | POUR 9 | POUR 10 | POUR 11 | POUR 12 | |
| | 133.1 | 273.9 | 186.3 | 27.0 | 620.3 |
| | | | | | |
| CLOSURE POURS | | | | | 42.4 |
| | | | | | |
| TOTALS | | | | | 2006.5 |

** QUANTITIES FOR BARRIER RAILS AND MEDIAN BARRIER RAILS ARE NOT INCLUDED

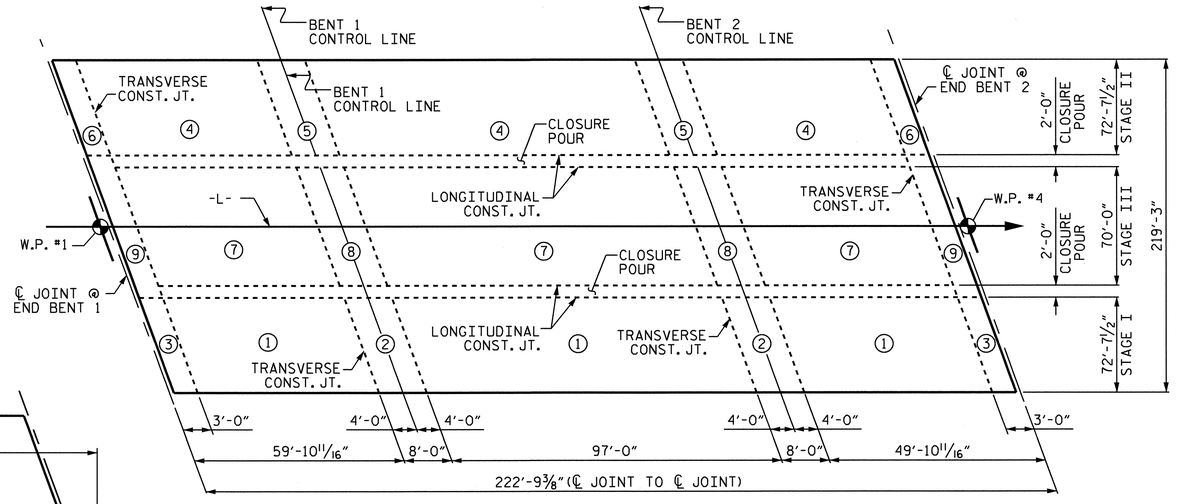


## OPTIONAL POURING SEQUENCE

POURS 2, 5 OR 8 CANNOT BE STARTED UNTIL POURS 1, 4 OR 7 HAVE REACH A MINIMUM OF 3000 PSI RESPECTIVELY.

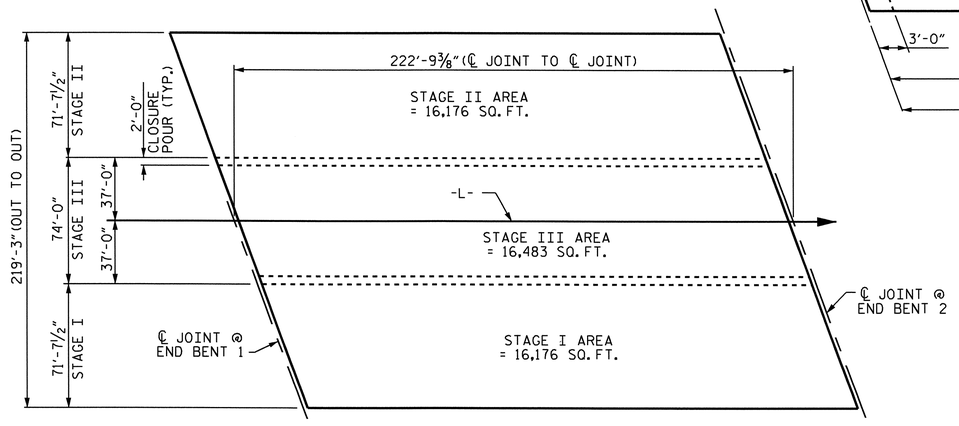


## LAYOUT FOR COMPUTING AREA REINFORCED CONCRETE DECK SLAB (SQ. FT. = 48,835)

PROJECT NO. I-3819A

IREDELL COUNTY

STATION: 92+04.00 -L-

SHEET 1 OF 2

STATE OF NORTH CAROLINA
DEPARTMENT OF TRANSPORTATION
RALEIGH

SUPERSTRUCTURE

BILL OF MATERIAL

NORTH CAROLINA PROFESSIONAL SEAL 16301 ENGINEER TING HSIUNG FANG

11/30/11

| REVISIONS | | | | | | SHEET NO. |
|---|---|---|---|---|---|---|
| NO. | BY: | DATE: | NO. | BY: | DATE: | S-120 |
| 1 | | | 3 | | | TOTAL SHEETS |
| 2 | | | 4 | | | 382 |

DRAWN BY : KEITH D. LAYNE DATE : 7/08/10
CHECKED BY : S. B. WILLIAMS DATE : 11/10

30-NOV-2011 11:28
R:\Structures\Frye\str03\finalplans\I3819A_SD_BM_03.dgn
sbwilliams

STR. #3

# BAR TYPES

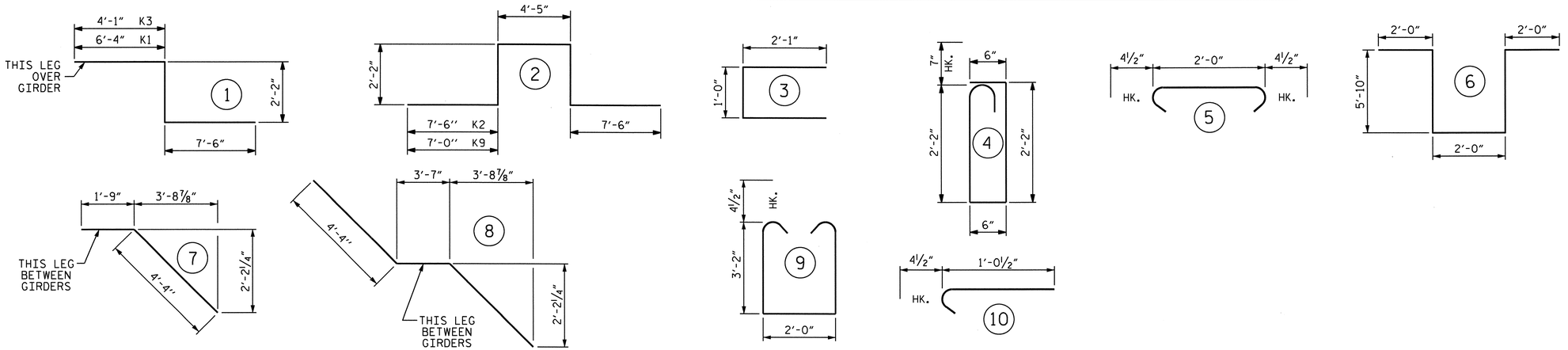


ALL BAR DIMENSIONS ARE OUT TO OUT

## REINFORCING BAR SCHEDULE

### STAGE II

| BAR | NO. | SIZE | TYPE | LENGTH | WEIGHT | BAR | NO. | SIZE | TYPE | LENGTH | WEIGHT |
|---|---|---|---|---|---|---|---|---|---|---|---|
| ✱ A1 | 628 | #5 | STR | 37'-5" | 24,508 | ✱ B1 | 98 | #4 | STR | 21'-10" | 1,429 |
| A2 | 628 | #5 | STR | 37'-3" | 24,399 | ✱ B2 | 147 | #5 | STR | 21'-11" | 3,360 |
| | | | | | | ✱ B3 | 144 | #5 | STR | 25'-6" | 3,830 |
| ✱ A101 | 8 | #5 | STR | 35'-4" | 295 | ✱ B4 | 98 | #4 | STR | 19'-0" | 1,244 |
| ✱ A102 | 8 | #5 | STR | 33'-7" | 280 | ✱ B5 | 49 | #5 | STR | 57'-8" | 2,947 |
| ✱ A103 | 8 | #5 | STR | 31'-11" | 266 | ✱ B6 | 144 | #5 | STR | 23'-10" | 3,580 |
| ✱ A104 | 4 | #5 | STR | 57'-9" | 241 | ✱ B7 | 98 | #4 | STR | 18'-3" | 1,195 |
| ✱ A105 | 4 | #5 | STR | 54'-4" | 227 | B8 | 208 | #5 | STR | 57'-3" | 12,420 |
| ✱ A106 | 4 | #5 | STR | 50'-11" | 212 | | | | | | |
| ✱ A107 | 4 | #5 | STR | 47'-5" | 198 | ✱ D1 | 296 | #6 | STR | 3'-3" | 1,445 |
| ✱ A108 | 4 | #5 | STR | 44'-1" | 184 | | | | | | |
| ✱ A109 | 4 | #5 | STR | 40'-8" | 170 | ✱ G1 | 4 | #5 | STR | 39'-9" | 166 |
| ✱ A110 | 4 | #5 | STR | 37'-3" | 155 | | | | | | |
| ✱ A111 | 4 | #5 | STR | 33'-9" | 141 | ✱ J1 | 150 | #4 | 10 | 1'-5" | 142 |
| ✱ A112 | 4 | #5 | STR | 30'-4" | 127 | | | | | | |
| ✱ A113 | 4 | #5 | STR | 26'-11" | 112 | ✱ K1 | 4 | #8 | 1 | 16'-0" | 171 |
| ✱ A114 | 4 | #5 | STR | 23'-6" | 98 | ✱ K2 | 24 | #8 | 2 | 23'-9" | 1,522 |
| ✱ A115 | 4 | #5 | STR | 20'-1" | 84 | ✱ K3 | 4 | #8 | 1 | 13'-9" | 147 |
| ✱ A116 | 4 | #5 | STR | 16'-8" | 70 | ✱ K4 | 42 | #6 | STR | 5'-11" | 373 |
| ✱ A117 | 4 | #5 | STR | 13'-3" | 55 | K5 | 112 | #4 | STR | 9'-1" | 680 |
| ✱ A118 | 4 | #5 | STR | 9'-9" | 41 | K6 | 56 | #4 | STR | 6'-2" | 231 |
| ✱ A119 | 4 | #5 | STR | 6'-4" | 26 | K7 | 72 | #4 | 8 | 12'-3" | 589 |
| ✱ A120 | 4 | #5 | STR | 2'-11" | 12 | K8 | 24 | #4 | 7 | 6'-1" | 98 |
| | | | | | | | | | | | |
| A201 | 8 | #5 | STR | 35'-9" | 298 | ✱ S1 | 84 | #4 | 3 | 5'-1" | 290 |
| A202 | 8 | #5 | STR | 34'-1" | 284 | ✱ S2 | 84 | #5 | 4 | 5'-11" | 518 |
| A203 | 8 | #5 | STR | 32'-4" | 270 | S3 | 504 | #4 | 5 | 2'-9" | 926 |
| A204 | 4 | #5 | STR | 59'-0" | 246 | S4 | 28 | #4 | 9 | 11'-1" | 207 |
| A205 | 4 | #5 | STR | 55'-7" | 232 | | | | | | |
| A206 | 4 | #5 | STR | 52'-2" | 218 | U1 | 84 | #4 | 6 | 17'-8" | 991 |
| A207 | 4 | #5 | STR | 48'-9" | 203 | | | | | | |
| A208 | 4 | #5 | STR | 45'-4" | 189 | | | | | | |
| A209 | 4 | #5 | STR | 41'-11" | 175 | | | | | | |
| A210 | 4 | #5 | STR | 38'-6" | 161 | | | | | | |
| A211 | 4 | #5 | STR | 35'-0" | 146 | | | | | | |
| A212 | 4 | #5 | STR | 31'-7" | 132 | | | | | | |
| A213 | 4 | #5 | STR | 28'-2" | 118 | | | | | | |
| A214 | 4 | #5 | STR | 24'-9" | 103 | | | | | | |
| A215 | 4 | #5 | STR | 21'-4" | 89 | | | | | | |
| A216 | 4 | #5 | STR | 17'-11" | 75 | | | | | | |
| A217 | 4 | #5 | STR | 14'-6" | 60 | | | | | | |
| A218 | 4 | #5 | STR | 11'-0" | 46 | | | | | | |
| A219 | 4 | #5 | STR | 7'-7" | 32 | REINFORCING STEEL | | | | 43,634 LBS | |
| A220 | 4 | #5 | STR | 4'-1" | 17 | ✱ EPOXY COATED | | | | | |
| | | | | | | REINFORCING STEEL | | | | 49,861 LBS | |

### STAGE III (INCLUDES CLOSURE POUR)

| BAR | NO. | SIZE | TYPE | LENGTH | WEIGHT | BAR | NO. | SIZE | TYPE | LENGTH | WEIGHT |
|---|---|---|---|---|---|---|---|---|---|---|---|
| ✱ A3 | 632 | #5 | STR | 36'-1" | 23,785 | ✱ B1 | 102 | #4 | STR | 21'-10" | 1,488 |
| A4 | 632 | #5 | STR | 35'-11" | 23,675 | ✱ B2 | 153 | #5 | STR | 21'-11" | 3,497 |
| | | | | | | ✱ B3 | 144 | #5 | STR | 25'-6" | 3,830 |
| ✱ A121 | 8 | #5 | STR | 33'-9" | 282 | ✱ B4 | 102 | #4 | STR | 19'-0" | 1,295 |
| ✱ A122 | 8 | #5 | STR | 32'-1" | 268 | ✱ B5 | 51 | #5 | STR | 57'-8" | 3,067 |
| ✱ A123 | 8 | #5 | STR | 30'-4" | 253 | ✱ B6 | 144 | #5 | STR | 23'-10" | 3,580 |
| ✱ A124 | 4 | #5 | STR | 54'-9" | 228 | ✱ B7 | 102 | #4 | STR | 18'-3" | 1,243 |
| ✱ A125 | 4 | #5 | STR | 51'-4" | 214 | B8 | 220 | #5 | STR | 57'-3" | 13,137 |
| ✱ A126 | 4 | #5 | STR | 47'-11" | 200 | | | | | | |
| ✱ A127 | 4 | #5 | STR | 44'-5" | 185 | ✱ D1 | 592 | #6 | STR | 3'-3" | 2,890 |
| ✱ A128 | 4 | #5 | STR | 41'-0" | 171 | | | | | | |
| ✱ A129 | 4 | #5 | STR | 37'-7" | 157 | ✱ G2 | 4 | #5 | STR | 38'-4" | 160 |
| ✱ A130 | 4 | #5 | STR | 34'-2" | 143 | | | | | | |
| ✱ A131 | 4 | #5 | STR | 30'-8" | 128 | ✱ J1 | 148 | #4 | 10 | 1'-5" | 140 |
| ✱ A132 | 4 | #5 | STR | 27'-3" | 114 | | | | | | |
| ✱ A133 | 4 | #5 | STR | 23'-10" | 99 | ✱ K2 | 16 | #8 | 2 | 23'-9" | 1,015 |
| ✱ A134 | 4 | #5 | STR | 20'-5" | 85 | ✱ K3 | 8 | #8 | 1 | 13'-9" | 294 |
| ✱ A135 | 4 | #5 | STR | 17'-0" | 71 | ✱ K4 | 36 | #6 | STR | 5'-11" | 320 |
| ✱ A136 | 4 | #5 | STR | 13'-6" | 56 | K5 | 96 | #4 | STR | 9'-1" | 582 |
| ✱ A137 | 4 | #5 | STR | 10'-1" | 42 | K6 | 48 | #4 | STR | 6'-2" | 198 |
| ✱ A138 | 4 | #5 | STR | 6'-8" | 28 | K7 | 72 | #4 | 8 | 12'-3" | 589 |
| ✱ A139 | 4 | #5 | STR | 3'-3" | 14 | K8 | 24 | #4 | 7 | 6'-1" | 98 |
| | | | | | | ✱ K9 | 8 | #8 | 2 | 23'-3" | 497 |
| A221 | 8 | #5 | STR | 34'-3" | 286 | ✱ K10 | 6 | #6 | STR | 5'-4" | 48 |
| A222 | 8 | #5 | STR | 32'-7" | 272 | K11 | 16 | #4 | STR. | 8'-7" | 92 |
| A223 | 8 | #5 | STR | 30'-10" | 257 | K12 | 8 | #4 | STR. | 5'-8" | 30 |
| A224 | 4 | #5 | STR | 56'-0" | 234 | | | | | | |
| A225 | 4 | #5 | STR | 52'-6" | 219 | ✱ S1 | 84 | #4 | 3 | 5'-2" | 290 |
| A226 | 4 | #5 | STR | 49'-1" | 205 | ✱ S2 | 84 | #5 | 4 | 5'-11" | 518 |
| A227 | 4 | #5 | STR | 45'-8" | 191 | S3 | 504 | #4 | 5 | 2'-9" | 926 |
| A228 | 4 | #5 | STR | 42'-3" | 176 | S4 | 28 | #4 | 9 | 11'-1" | 207 |
| A229 | 4 | #5 | STR | 38'-9" | 162 | | | | | | |
| A230 | 4 | #5 | STR | 35'-4" | 147 | U1 | 84 | #4 | 6 | 17'-8" | 991 |
| A231 | 4 | #5 | STR | 31'-10" | 133 | | | | | | |
| A232 | 4 | #5 | STR | 28'-5" | 119 | | | | | | |
| A233 | 4 | #5 | STR | 25'-0" | 104 | | | | | | |
| A234 | 4 | #5 | STR | 21'-7" | 90 | | | | | | |
| A235 | 4 | #5 | STR | 18'-2" | 76 | | | | | | |
| A236 | 4 | #5 | STR | 14'-9" | 62 | | | | | | |
| A237 | 4 | #5 | STR | 11'-4" | 47 | | | | | | |
| A238 | 4 | #5 | STR | 7'-10" | 33 | | | | | | |
| A239 | 4 | #5 | STR | 4'-5" | 18 | | | | | | |
| | | | | | | REINFORCING STEEL | | | | 43,355 LBS | |
| | | | | | | ✱ EPOXY COATED | | | | | |
| | | | | | | REINFORCING STEEL | | | | 50,694 LBS | |

### STAGE I

| BAR | NO. | SIZE | TYPE | LENGTH | WEIGHT | BAR | NO. | SIZE | TYPE | LENGTH | WEIGHT |
|---|---|---|---|---|---|---|---|---|---|---|---|
| ✱ A1 | 628 | #5 | STR | 37'-5" | 24,508 | ✱ B1 | 98 | #4 | STR | 21'-10" | 1,429 |
| A2 | 628 | #5 | STR | 37'-3" | 24,399 | ✱ B2 | 147 | #5 | STR | 21'-11" | 3,360 |
| | | | | | | ✱ B3 | 144 | #5 | STR | 25'-6" | 3,830 |
| ✱ A101 | 8 | #5 | STR | 35'-4" | 295 | ✱ B4 | 98 | #4 | STR | 19'-0" | 1,244 |
| ✱ A102 | 8 | #5 | STR | 33'-7" | 280 | ✱ B5 | 49 | #5 | STR | 57'-8" | 2,947 |
| ✱ A103 | 8 | #5 | STR | 31'-11" | 266 | ✱ B6 | 144 | #5 | STR | 23'-10" | 3,580 |
| ✱ A104 | 4 | #5 | STR | 57'-9" | 241 | ✱ B7 | 98 | #4 | STR | 18'-3" | 1,195 |
| ✱ A105 | 4 | #5 | STR | 54'-4" | 227 | B8 | 208 | #5 | STR | 57'-3" | 12,420 |
| ✱ A106 | 4 | #5 | STR | 50'-11" | 212 | | | | | | |
| ✱ A107 | 4 | #5 | STR | 47'-5" | 198 | ✱ D1 | 296 | #6 | STR | 3'-3" | 1,445 |
| ✱ A108 | 4 | #5 | STR | 44'-1" | 184 | | | | | | |
| ✱ A109 | 4 | #5 | STR | 40'-8" | 170 | ✱ G1 | 4 | #5 | STR | 39'-9" | 166 |
| ✱ A110 | 4 | #5 | STR | 37'-3" | 155 | | | | | | |
| ✱ A111 | 4 | #5 | STR | 33'-9" | 141 | ✱ J1 | 150 | #4 | 10 | 1'-5" | 142 |
| ✱ A112 | 4 | #5 | STR | 30'-4" | 127 | | | | | | |
| ✱ A113 | 4 | #5 | STR | 26'-11" | 112 | ✱ K1 | 4 | #8 | 1 | 16'-0" | 171 |
| ✱ A114 | 4 | #5 | STR | 23'-6" | 98 | ✱ K2 | 24 | #8 | 2 | 23'-9" | 1,522 |
| ✱ A115 | 4 | #5 | STR | 20'-1" | 84 | ✱ K3 | 4 | #8 | 1 | 13'-9" | 147 |
| ✱ A116 | 4 | #5 | STR | 16'-8" | 70 | ✱ K4 | 42 | #6 | STR | 5'-11" | 373 |
| ✱ A117 | 4 | #5 | STR | 13'-3" | 55 | K5 | 112 | #4 | STR | 9'-1" | 680 |
| ✱ A118 | 4 | #5 | STR | 9'-9" | 41 | K6 | 56 | #4 | STR | 6'-2" | 231 |
| ✱ A119 | 4 | #5 | STR | 6'-4" | 26 | K7 | 72 | #4 | 8 | 12'-3" | 589 |
| ✱ A120 | 4 | #5 | STR | 2'-11" | 12 | K8 | 24 | #4 | 7 | 6'-1" | 98 |
| | | | | | | | | | | | |
| A201 | 8 | #5 | STR | 35'-9" | 298 | ✱ S1 | 84 | #4 | 3 | 5'-1" | 290 |
| A202 | 8 | #5 | STR | 34'-1" | 284 | ✱ S2 | 84 | #5 | 4 | 5'-11" | 518 |
| A203 | 8 | #5 | STR | 32'-4" | 270 | S3 | 504 | #4 | 5 | 2'-9" | 926 |
| A204 | 4 | #5 | STR | 59'-0" | 246 | S4 | 28 | #4 | 9 | 11'-1" | 207 |
| A205 | 4 | #5 | STR | 55'-7" | 232 | | | | | | |
| A206 | 4 | #5 | STR | 52'-2" | 218 | U1 | 84 | #4 | 6 | 17'-8" | 991 |
| A207 | 4 | #5 | STR | 48'-9" | 203 | | | | | | |
| A208 | 4 | #5 | STR | 45'-4" | 189 | | | | | | |
| A209 | 4 | #5 | STR | 41'-11" | 175 | | | | | | |
| A210 | 4 | #5 | STR | 38'-6" | 161 | | | | | | |
| A211 | 4 | #5 | STR | 35'-0" | 146 | | | | | | |
| A212 | 4 | #5 | STR | 31'-7" | 132 | | | | | | |
| A213 | 4 | #5 | STR | 28'-2" | 118 | | | | | | |
| A214 | 4 | #5 | STR | 24'-9" | 103 | | | | | | |
| A215 | 4 | #5 | STR | 21'-4" | 89 | | | | | | |
| A216 | 4 | #5 | STR | 17'-11" | 75 | | | | | | |
| A217 | 4 | #5 | STR | 14'-6" | 60 | | | | | | |
| A218 | 4 | #5 | STR | 11'-0" | 46 | | | | | | |
| A219 | 4 | #5 | STR | 7'-7" | 32 | REINFORCING STEEL | | | | 43,634 LBS | |
| A220 | 4 | #5 | STR | 4'-1" | 17 | ✱ EPOXY COATED | | | | | |
| | | | | | | REINFORCING STEEL | | | | 49,861 LBS | |

DRAWN BY : KEITH D. LAYNE DATE : 7/08/10
CHECKED BY : S. B. WILLIAMS DATE : 11/10

30-NOV-2011 11:28
R:\Structures\Frye\str03\finalplans\I3819A_SD_BM_03.dgn
sbwilliams

NORTH CAROLINA PROFESSIONAL SEAL 16301 ENGINEER TING-HSIUNG FANG
11/30/11

PROJECT NO. I-3819A
IREDELL COUNTY
STATION: 92+04.00 -L-

SHEET 2 OF 2

STATE OF NORTH CAROLINA
DEPARTMENT OF TRANSPORTATION
RALEIGH
SUPERSTRUCTURE

# BILL OF MATERIAL

| REVISIONS | | | | | | SHEET NO. |
|---|---|---|---|---|---|---|
| NO. | BY: | DATE: | NO. | BY: | DATE: | S-121 |
| 1 | | | 3 | | | TOTAL SHEETS |
| 2 | | | 4 | | | 382 |

STR. #3

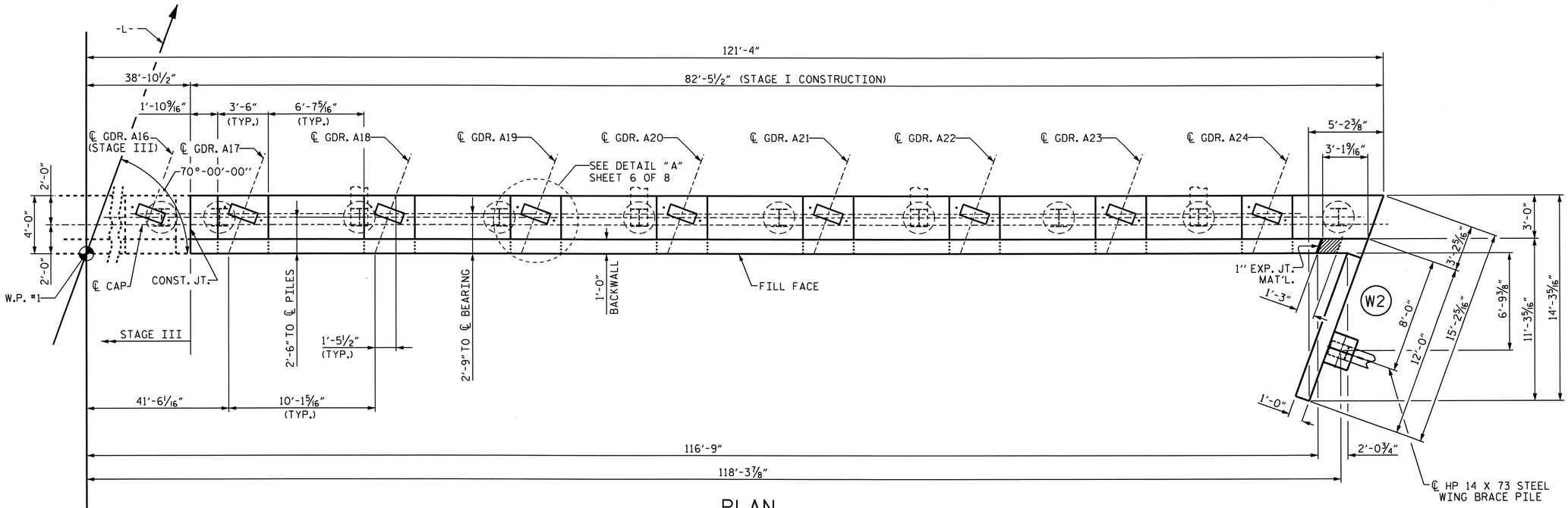


## PLAN

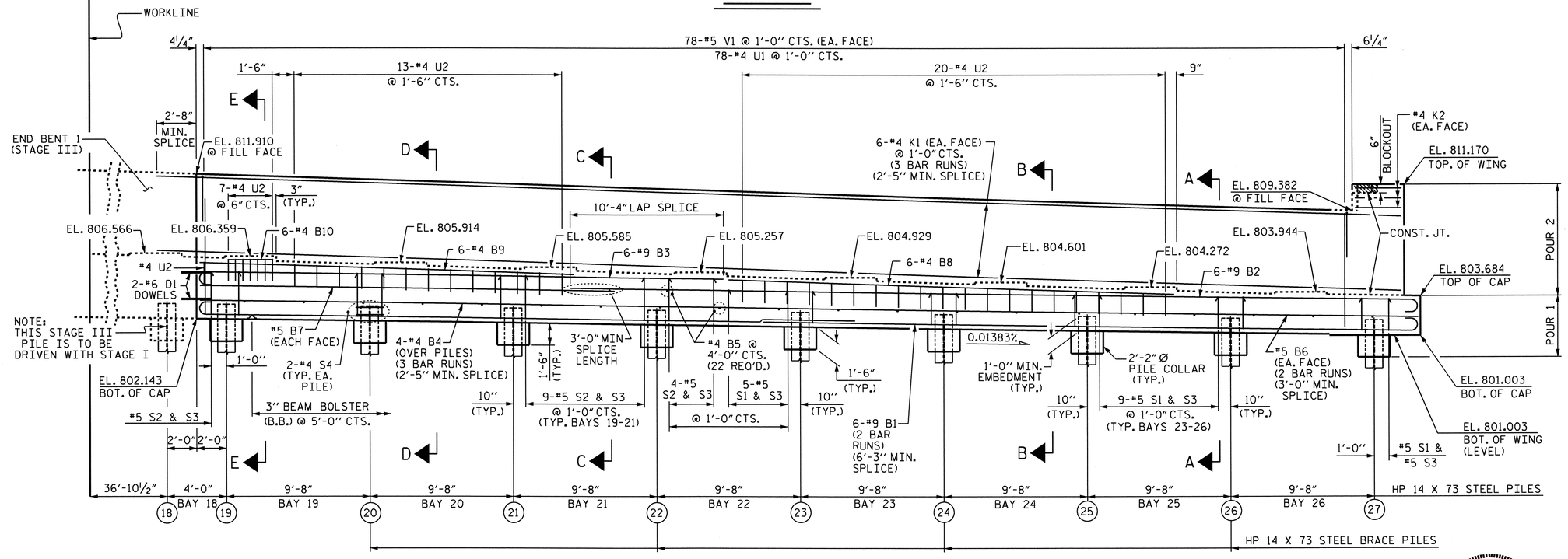


## ELEVATION

BRACE PILE IN WING WALL AND DETAILS OF WING WALL W2 NOT SHOWN FOR CLARITY.

| TOP OF PILE ELEVATIONS | |
|---|---|
| (18) | EL. 803.178 |
| (19) | EL. 803.123 |
| (20) | EL. 802.990 |
| (21) | EL. 802.855 |
| (22) | EL. 802.721 |
| (23) | EL. 802.588 |
| (24) | EL. 802.454 |
| (25) | EL. 802.320 |
| (26) | EL. 802.186 |
| (27) | EL. 802.053 |
| WING | EL. 802.003 |

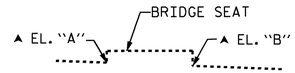


| ELEVATIONS BETWEEN BRIDGE SEATS | | |
|---|---|---|
| LOCATION | EL. A | EL. B |
| GDR. A17 | 806.234 | 806.000 |
| GDR. A18 | 805.789 | 805.669 |
| GDR. A19 | 805.460 | 805.345 |
| GDR. A20 | 805.132 | 805.017 |
| GDR. A21 | 804.804 | 804.689 |
| GDR. A22 | 804.476 | 804.361 |
| GDR. A23 | 804.147 | 804.032 |
| GDR. A24 | 803.819 | 803.772 |

▲ FOR LOCATION OF ELEVATIONS BETWEEN BRIDGE SEATS BUILDUPS, SEE SECTION A-A ON SHEET 5 OF 8

PROJECT NO. I-3819A

IREDELL COUNTY

STATION: 92+04.00 -L-

SHEET 1 OF 8

STATE OF NORTH CAROLINA
DEPARTMENT OF TRANSPORTATION
RALEIGH

SUBSTRUCTURE

END BENT 1

STAGE I

| REVISIONS | | | | | | SHEET NO. |
|---|---|---|---|---|---|---|
| NO. | BY: | DATE: | NO. | BY: | DATE: | S-122 |
| 1 | | | 3 | | | TOTAL SHEETS |
| 2 | | | 4 | | | 382 |

STR. #3

NORTH CAROLINA PROFESSIONAL SEAL 21545 ENGINEER STEVEN L. WANCE

01/03/12

DRAWN BY : S. WANCE DATE : 09/10
CHECKED BY : E. I. OMILE DATE : 12/10

03-JAN-2012 18:06
R:\Structures\Frye\str03\final plans\I3819A_sd_EBts_03.dgn
swance

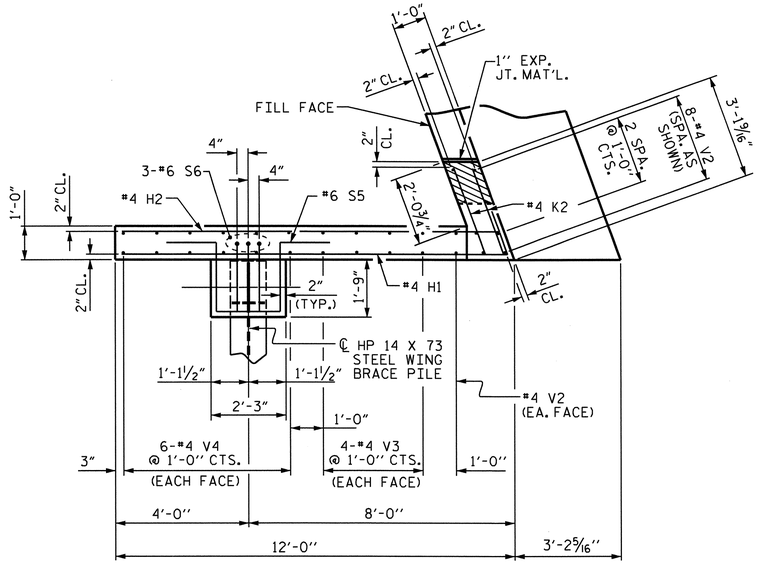


## PLAN OF WING (W2)

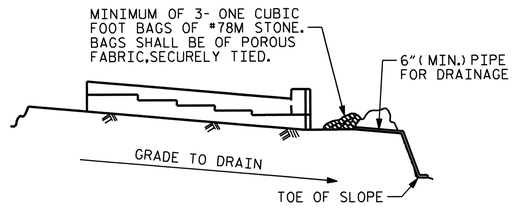


BAGGED STONE AND PIPE SHALL BE PLACED IMMEDIATELY AFTER COMPLETION OF END BENT EXCAVATION. PIPE MAY BE EITHER CONCRETE, CORRUGATED STEEL, CORRUGATED ALUMINUM ALLOY, OR CORRUGATED PLASTIC. PERFORATED PIPE WILL NOT BE ALLOWED.

BAGGED STONE SHALL REMAIN IN PLACE UNTIL THE ENGINEER DIRECTS THAT IT BE REMOVED. THE CONTRACTOR SHALL REMOVE AND DISPOSE OF SILT ACCUMULATIONS AT BAGGED STONE WHEN SO DIRECTED BY THE ENGINEER. BAGS SHALL BE REMOVED AND REPLACED WHENEVER THE ENGINEER DETERMINES THAT THEY HAVE DETERIORATED AND LOST THEIR EFFECTIVENESS.

NO SEPARATE PAYMENT WILL BE MADE FOR THIS WORK AND THE ENTIRE COST OF THIS WORK SHALL BE INCLUDED IN THE UNIT CONTRACT PRICE BID FOR THE SEVERAL PAY ITEMS.

## TEMPORARY DRAINAGE AT END BENT

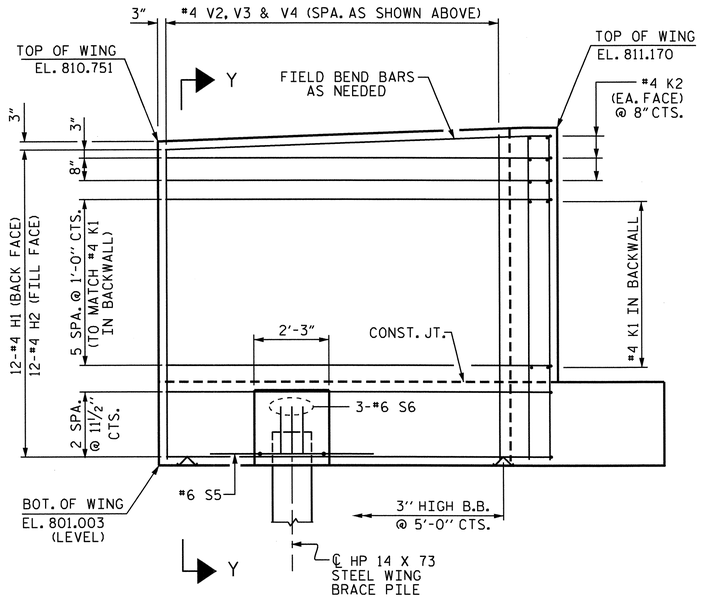


## ELEVATION OF WING (W2)

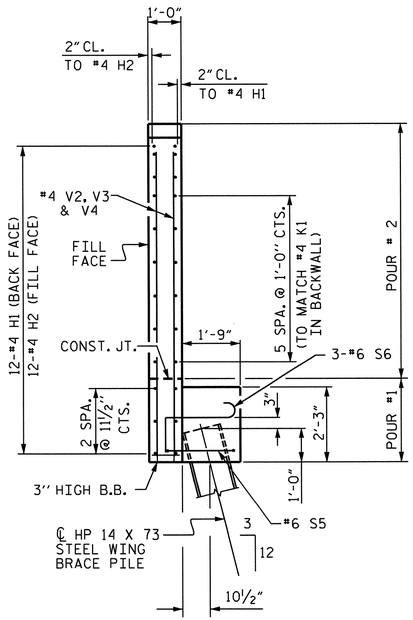


## SECTION Y-Y

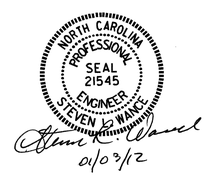


01/03/12

PROJECT NO. I-3819A

IREDELL COUNTY

STATION: 92+04.00 -L-

SHEET 2 OF 8

STATE OF NORTH CAROLINA
DEPARTMENT OF TRANSPORTATION
RALEIGH

SUBSTRUCTURE

END BENT 1

STAGE I WING

| REVISIONS | | | | | | SHEET NO. |
|---|---|---|---|---|---|---|
| NO. | BY: | DATE: | NO. | BY: | DATE: | S-123 |
| 1 | | | 3 | | | TOTAL SHEETS |
| 2 | | | 4 | | | 382 |

STR. #3

DRAWN BY : S.WANce PE DATE : 10/10
CHECKED BY : E. I. OMILE DATE : 12/10

03-JAN-2012 18:06
R:\Structures\Frye\str03\finalplans\I3819A_sd_EBts_03.dgn
swance

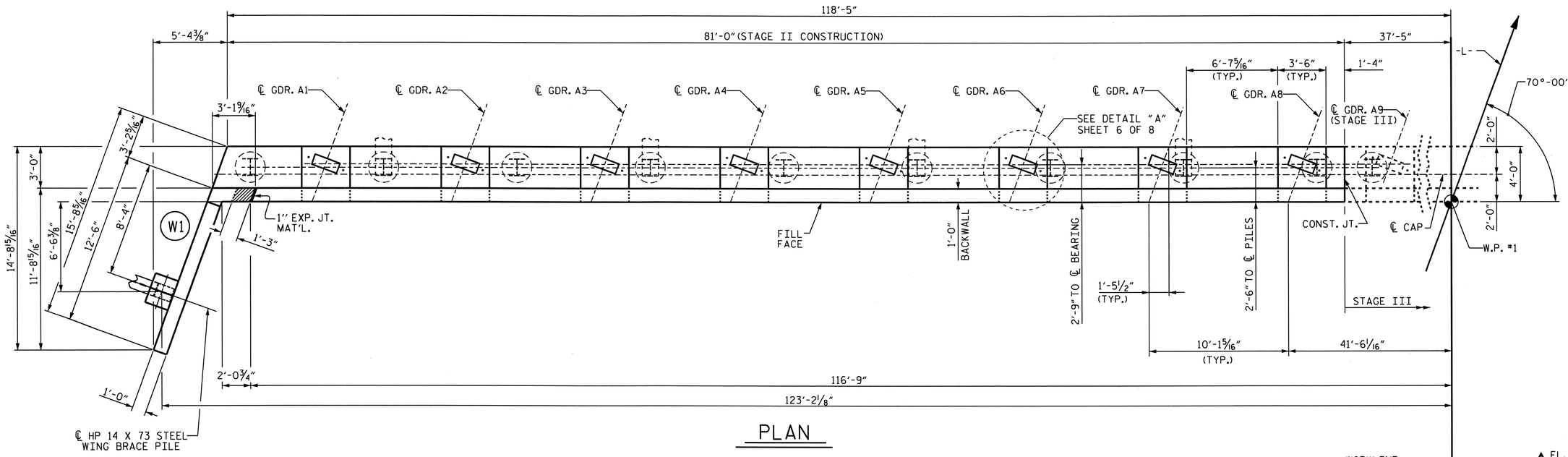


## PLAN

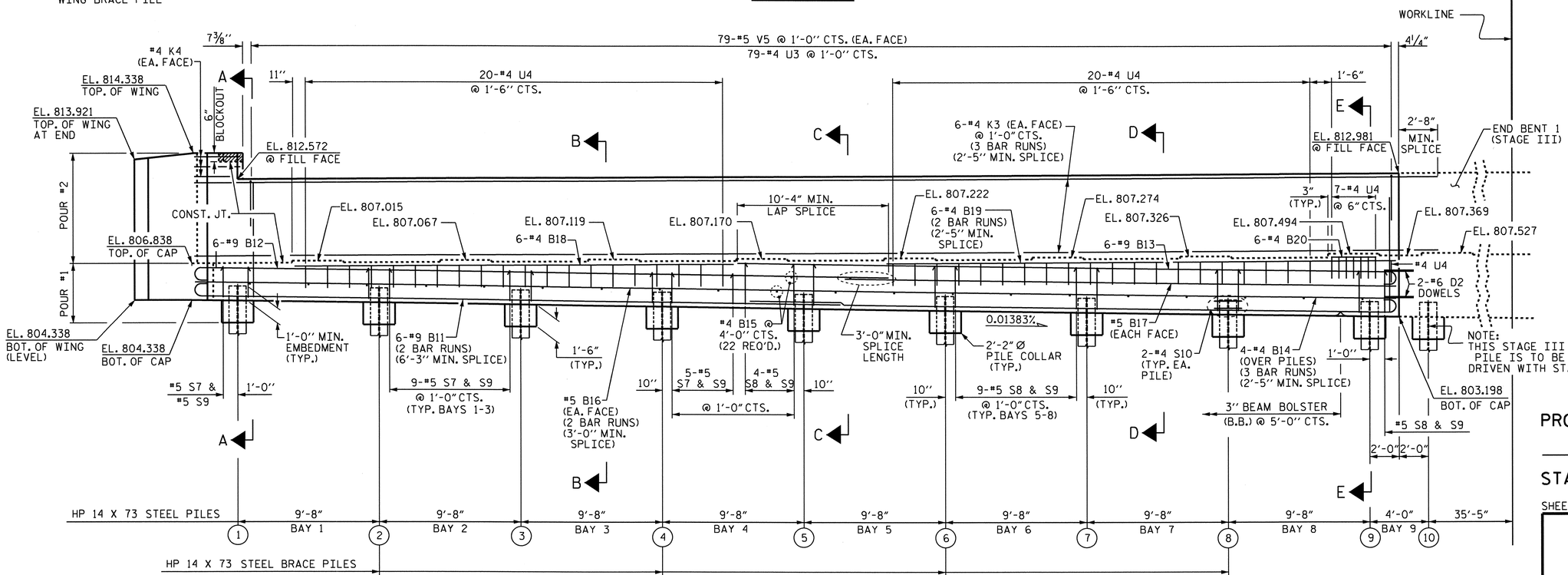


## ELEVATION

BRACE PILE AT WING WALL NOT SHOWN FOR CLARITY.

| TOP OF PILE ELEVATIONS | |
|---|---|
| WING | EL. 805.338 |
| 1 | EL. 805.302 |
| 2 | EL. 805.168 |
| 3 | EL. 805.035 |
| 4 | EL. 804.901 |
| 5 | EL. 804.767 |
| 6 | EL. 804.634 |
| 7 | EL. 804.500 |
| 8 | EL. 804.366 |
| 9 | EL. 804.233 |
| 10 | EL. 804.177 |

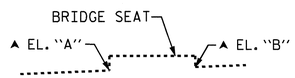


| ELEVATIONS BETWEEN BRIDGE SEATS | | |
|---|---|---|
| LOCATION | EL. A | EL. B |
| GDR. A1 | 806.874 | 806.890 |
| GDR. A2 | 806.926 | 806.942 |
| GDR. A3 | 806.973 | 806.994 |
| GDR. A4 | 807.029 | 807.045 |
| GDR. A5 | 807.081 | 807.097 |
| GDR. A6 | 807.128 | 807.149 |
| GDR A7 | 807.180 | 807.201 |
| GDR. A8 | 807.234 | 807.369 |

▲ FOR LOCATION OF ELEVATIONS BETWEEN BRIDGE SEATS BUILDUPS. SEE SECTION A-A ON SHEET 5 OF 8.

PROJECT NO. I-3819A

IREDELL COUNTY

STATION: 92+04.00 -L-

SHEET 3 OF 8

STATE OF NORTH CAROLINA
DEPARTMENT OF TRANSPORTATION
RALEIGH

SUBSTRUCTURE

END BENT 1

STAGE II

NORTH CAROLINA PROFESSIONAL SEAL 21545 ENGINEER STEVEN L. WANCE

01/03/12

| REVISIONS | | | | | | SHEET NO. |
|---|---|---|---|---|---|---|
| NO. | BY: | DATE: | NO. | BY: | DATE: | S-124 |
| 1 | | | 3 | | | TOTAL SHEETS |
| 2 | | | 4 | | | 382 |

STR. #3

DRAWN BY : S. WANCE DATE : 09/10

CHECKED BY : E. I. OMILE DATE : 12/10

03-JAN-2012 18:06
R:\Structures\frye\str03\finalplans\I3819A_sd_EBts_03.dgn
swance

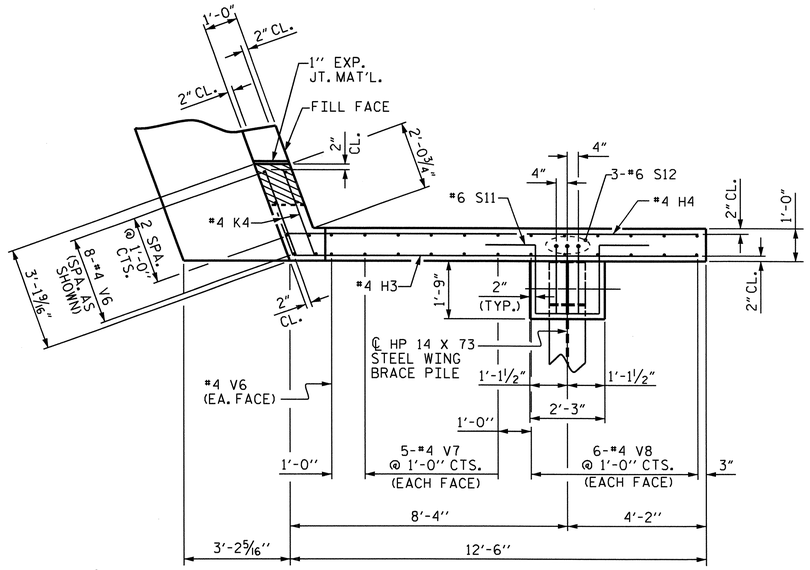


PLAN OF WING (W1)

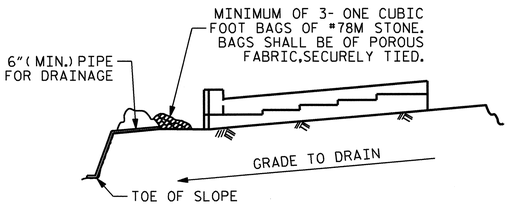


BAGGED STONE AND PIPE SHALL BE PLACED IMMEDIATELY AFTER COMPLETION OF END BENT EXCAVATION. PIPE MAY BE EITHER CONCRETE, CORRUGATED STEEL, CORRUGATED ALUMINUM ALLOY, OR CORRUGATED PLASTIC. PERFORATED PIPE WILL NOT BE ALLOWED.

BAGGED STONE SHALL REMAIN IN PLACE UNTIL THE ENGINEER DIRECTS THAT IT BE REMOVED. THE CONTRACTOR SHALL REMOVE AND DISPOSE OF SILT ACCUMULATIONS AT BAGGED STONE WHEN SO DIRECTED BY THE ENGINEER. BAGS SHALL BE REMOVED AND REPLACED WHENEVER THE ENGINEER DETERMINES THAT THEY HAVE DETERIORATED AND LOST THEIR EFFECTIVENESS.

NO SEPARATE PAYMENT WILL BE MADE FOR THIS WORK AND THE ENTIRE COST OF THIS WORK SHALL BE INCLUDED IN THE UNIT CONTRACT PRICE BID FOR THE SEVERAL PAY ITEMS.

TEMPORARY DRAINAGE AT END BENT

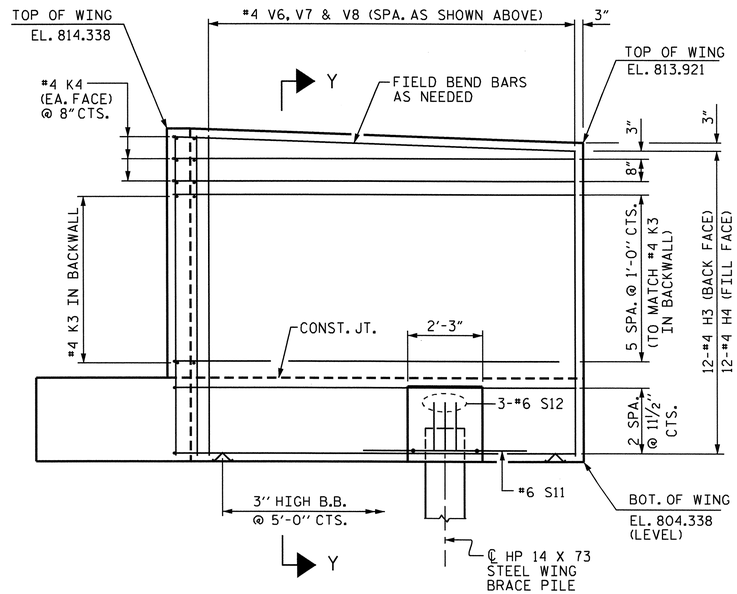


ELEVATION OF WING (W1)

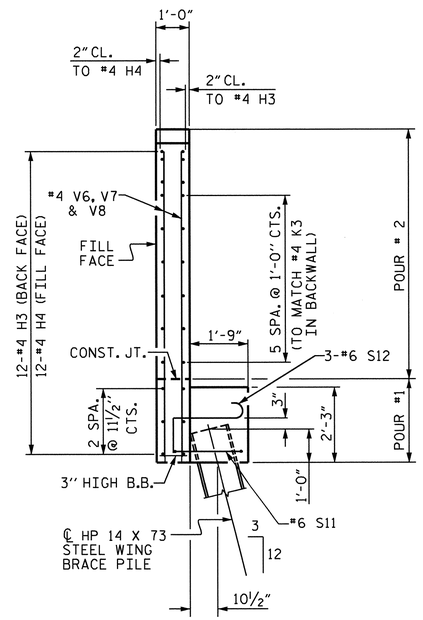


SECTION Y-Y

NORTH CAROLINA PROFESSIONAL SEAL 21545 ENGINEER STEVEN L. WANCE

01/03/12

PROJECT NO. I-3819A

IREDELL COUNTY

STATION: 92+04.00 -L-

SHEET 4 OF 8

STATE OF NORTH CAROLINA
DEPARTMENT OF TRANSPORTATION
RALEIGH

SUBSTRUCTURE

END BENT 1

STAGE II WING

| REVISIONS | | | | | | SHEET NO. |
|---|---|---|---|---|---|---|
| NO. | BY: | DATE: | NO. | BY: | DATE: | S-125 |
| 1 | | | 3 | | | TOTAL SHEETS |
| 2 | | | 4 | | | 382 |

STR. #3

DRAWN BY : S.WANce PE DATE : 10/10
CHECKED BY : E. I. OMILE DATE : 12/10

03-JAN-2012 18:06
R:\Structures\Frye\str03\finalplans\I3819A_sd_EBts_03.dgn
swance

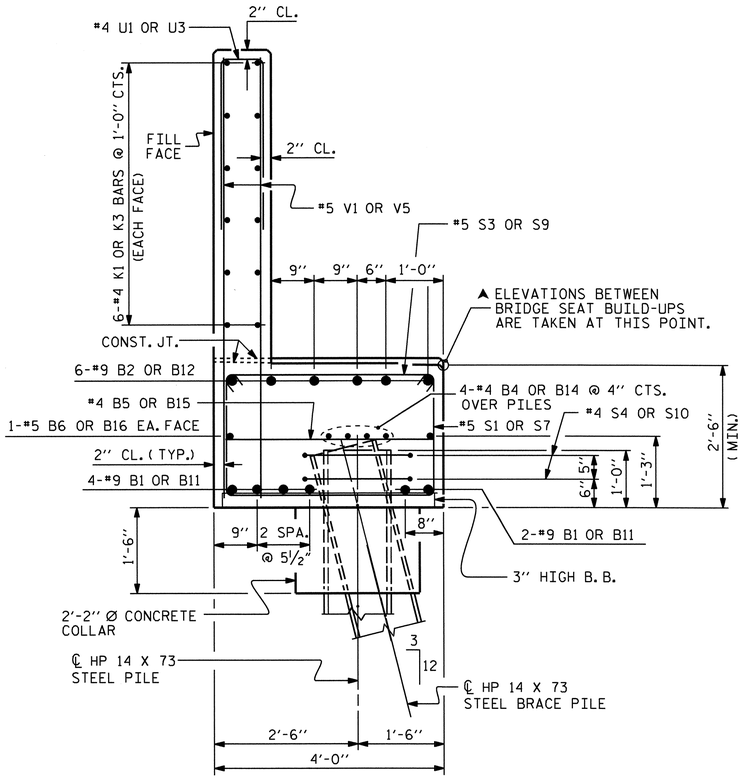


SECTION A-A

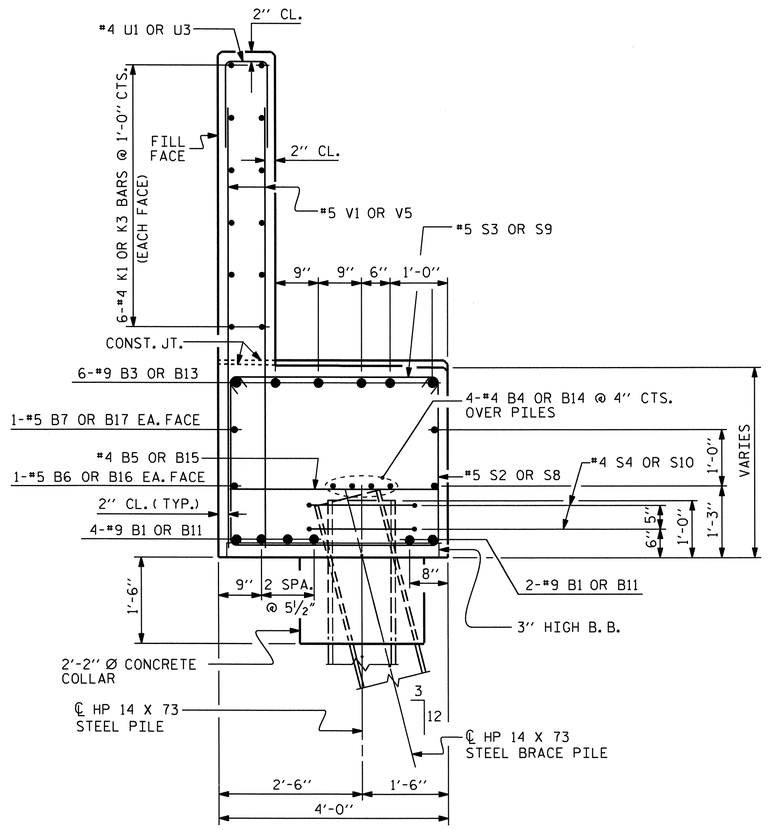


SECTION C-C

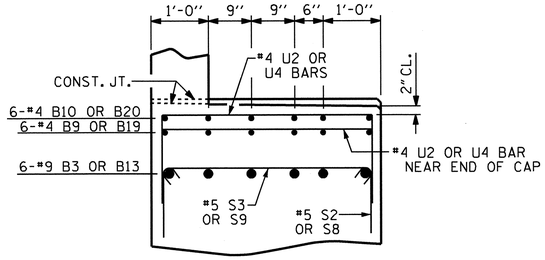


PARTIAL SECTION E-E
UNDER GIRDER A8 & A17

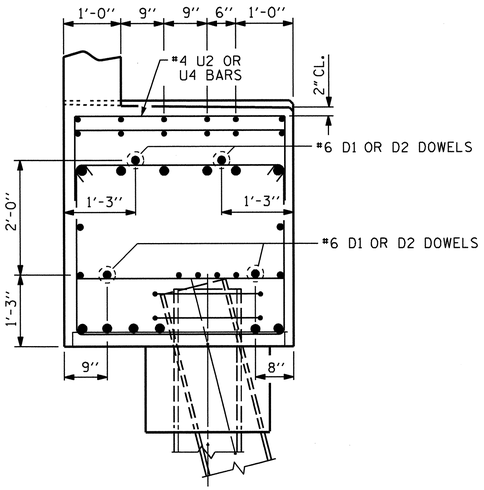


SECTION AT STAGED
CONSTRUCTION JOINT
SHOWING DOWELS

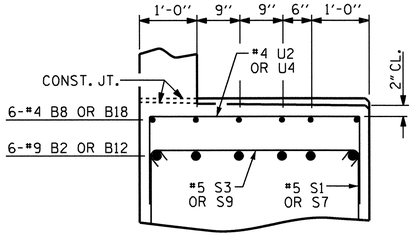


PARTIAL SECTION B-B

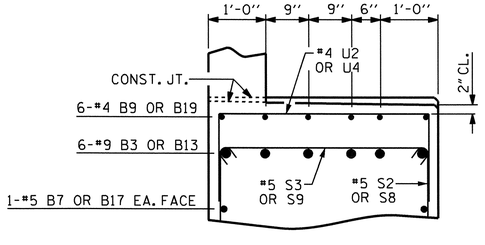


PARTIAL SECTION D-D

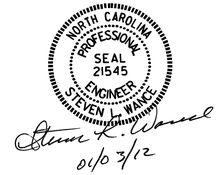


01/03/12

PROJECT NO. I-3819A
IREDELL COUNTY
STATION: 92+04.00 -L-

SHEET 5 OF 8

STATE OF NORTH CAROLINA
DEPARTMENT OF TRANSPORTATION
RALEIGH

SUBSTRUCTURE

END BENT 1

STAGE I & II
DETAILS

| REVISIONS | | | | | | SHEET NO. |
|---|---|---|---|---|---|---|
| NO. | BY: | DATE: | NO. | BY: | DATE: | S-126 |
| 1 | | | 3 | | | TOTAL SHEETS |
| 2 | | | 4 | | | 382 |

STR. #3

DRAWN BY : S. WANce PE DATE : 10/10
CHECKED BY : E. I. OMILE DATE : 12/10

03-JAN-2012 18:06
R:\Structures\Frye\str03\finalplans\I3819A_sd_EBts_03.dgn
swance

## BAR TYPES

ALL BAR DIMENSIONS ARE OUT TO OUT.

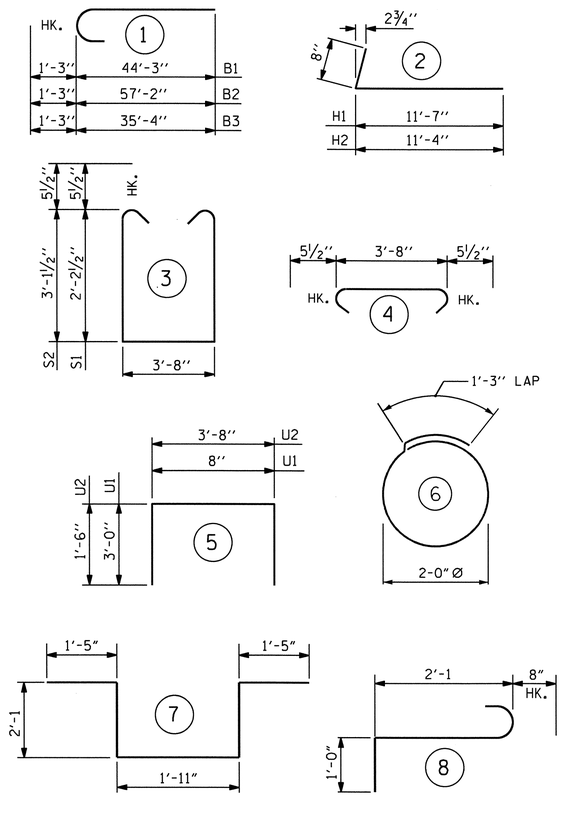


## BILL OF MATERIAL

### END BENT 1 - STAGE I

| BAR | NO. | SIZE | TYPE | LENGTH | WEIGHT |
|---|---|---|---|---|---|
| B1 | 12 | #9 | 1 | 45'-6" | 1856 |
| B2 | 6 | #9 | 1 | 58'-5" | 1192 |
| B3 | 6 | #9 | 1 | 36'-7" | 746 |
| B4 | 12 | #4 | STR | 29'-0" | 232 |
| B5 | 22 | #4 | STR | 3'-8" | 54 |
| B6 | 4 | #5 | STR | 42'-7" | 178 |
| B7 | 2 | #5 | STR | 28'-0" | 58 |
| B8 | 6 | #4 | STR | 30'-0" | 120 |
| B9 | 6 | #4 | STR | 25'-3" | 101 |
| B10 | 6 | #4 | STR | 3'-2" | 13 |
| | | | | | |
| D1 | 4 | #6 | STR | 2'-0" | 12 |
| | | | | | |
| H1 | 12 | #4 | 2 | 12'-3" | 98 |
| H2 | 12 | #4 | 2 | 12'-0" | 96 |
| | | | | | |
| K1 | 36 | #4 | STR | 29'-7" | 711 |
| K2 | 6 | #4 | STR | 2'-9" | 11 |
| | | | | | |
| S1 | 42 | #5 | 3 | 9'-0" | 394 |
| S2 | 32 | #5 | 3 | 10'-9" | 359 |
| S3 | 74 | #5 | 4 | 4'-7" | 354 |
| S4 | 18 | #4 | 6 | 7'-7" | 91 |
| S5 | 1 | #6 | 7 | 8'-11" | 13 |
| S6 | 3 | #6 | 8 | 3'-9" | 17 |
| | | | | | |
| | | | | | |
| U1 | 78 | #4 | 5 | 6'-8" | 347 |
| U2 | 41 | #4 | 5 | 6'-8" | 183 |
| | | | | | |
| V1 | 156 | #5 | STR | 7'-11" | 1288 |
| V2 | 10 | #4 | STR | 9'-9" | 65 |
| V3 | 8 | #4 | STR | 9'-6" | 51 |
| V4 | 12 | #4 | STR | 9'-4" | 75 |

| | | |
|---|---|---|
| REINFORCING STEEL | LBS. | 8715 |
| CLASS A CONCRETE BREAKDOWN : | | |
| POUR #1 - CAP, LOWER WING, & COLLARS | CU. YDS. | 44.1 |
| POUR #2 - BACKWALL & UPPER WING | CU. YDS. | 20.1 |
| TOTAL | CU. YDS. | 64.2 |
| HP 14 x 73 STEEL PILES | | |
| NO. = 11 | LIN. FT. | 550 |
| STEEL PILE POINTS | EA. | 11 |

## BAR TYPES

ALL BAR DIMENSIONS ARE OUT TO OUT.

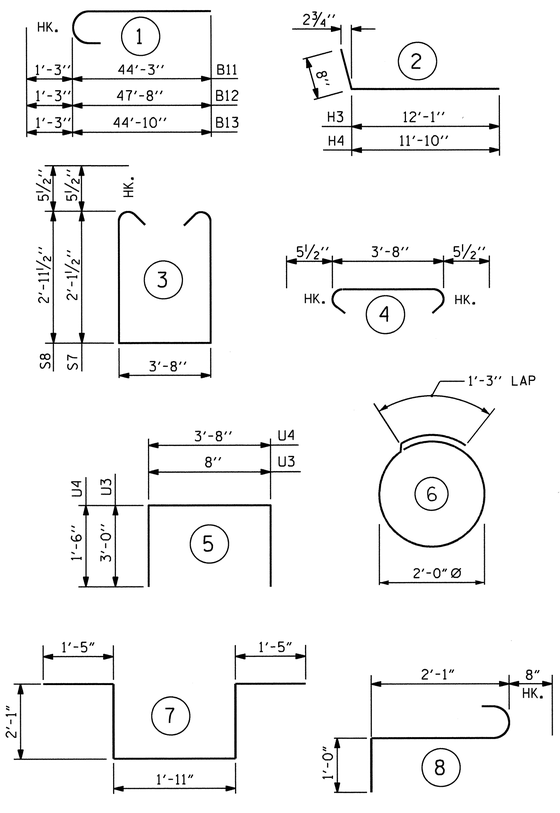


## BILL OF MATERIAL

### END BENT 1 - STAGE II

| BAR | NO. | SIZE | TYPE | LENGTH | WEIGHT |
|---|---|---|---|---|---|
| B11 | 12 | #9 | 1 | 45'-6" | 1856 |
| B12 | 6 | #9 | 1 | 48'-11" | 998 |
| B13 | 6 | #9 | 1 | 46'-1" | 940 |
| B14 | 12 | #4 | STR | 29'-0" | 232 |
| B15 | 22 | #4 | STR | 3'-8" | 54 |
| B16 | 4 | #5 | STR | 42'-7" | 178 |
| B17 | 2 | #5 | STR | 37'-10" | 79 |
| B18 | 6 | #4 | STR | 30'-0" | 120 |
| B19 | 12 | #4 | STR | 18'-8" | 150 |
| B20 | 6 | #4 | STR | 3'-2" | 13 |
| | | | | | |
| D2 | 4 | #6 | STR | 2'-0" | 12 |
| | | | | | |
| H3 | 12 | #4 | 2 | 12'-9" | 102 |
| H4 | 12 | #4 | 2 | 13'-0" | 104 |
| | | | | | |
| K3 | 36 | #4 | STR | 30'-0" | 721 |
| K4 | 6 | #4 | STR | 2'-9" | 11 |
| | | | | | |
| S7 | 33 | #5 | 3 | 8'-10" | 304 |
| S8 | 41 | #5 | 3 | 10'-6" | 449 |
| S9 | 74 | #5 | 4 | 4'-7" | 354 |
| S10 | 18 | #4 | 6 | 7'-7" | 91 |
| S11 | 1 | #6 | 7 | 8'-11" | 13 |
| S12 | 3 | #6 | 8 | 3'-9" | 17 |
| | | | | | |
| | | | | | |
| U3 | 79 | #4 | 5 | 6'-8" | 352 |
| U4 | 48 | #4 | 5 | 6'-8" | 214 |
| | | | | | |
| V5 | 158 | #5 | STR | 7'-11" | 1305 |
| V6 | 10 | #4 | STR | 9'-7" | 64 |
| V7 | 10 | #4 | STR | 9'-4" | 62 |
| V8 | 12 | #4 | STR | 9'-2" | 73 |

| | | |
|---|---|---|
| REINFORCING STEEL | LBS. | 8868 |
| CLASS A CONCRETE BREAKDOWN : | | |
| POUR #1 - CAP, LOWER WING, & COLLARS | CU. YDS. | 44.0 |
| POUR #2 - BACKWALL & UPPER WING | CU. YDS. | 20.7 |
| TOTAL | CU. YDS. | 64.7 |
| HP 14 x 73 STEEL PILES | | |
| NO. = 11 | LIN. FT. | 550 |
| STEEL PILE POINTS | EA. | 11 |

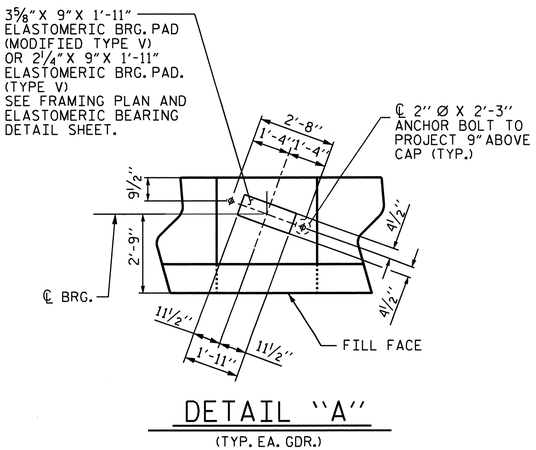


DETAIL "A"

(TYP. EA. GDR.)

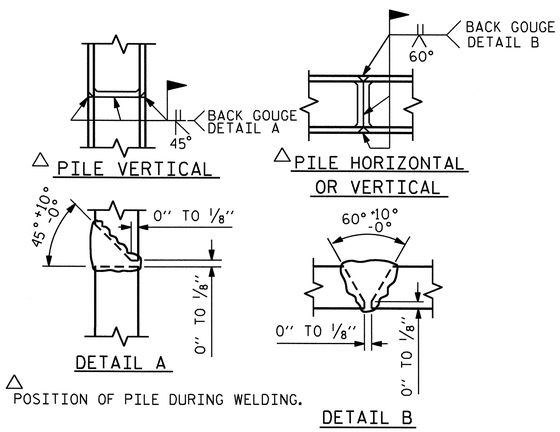


△ POSITION OF PILE DURING WELDING.

PILE SPLICE DETAILS

PROJECT NO. I-3819A

IREDELL COUNTY

STATION: 92+04.00 -L-

SHEET 6 OF 8

STATE OF NORTH CAROLINA
DEPARTMENT OF TRANSPORTATION
RALEIGH

SUBSTRUCTURE

END BENT 1

STAGE I & II

| REVISIONS | | | | | | SHEET NO. |
|---|---|---|---|---|---|---|
| NO. | BY: | DATE: | NO. | BY: | DATE: | S-127 |
| 1 | | | 3 | | | TOTAL SHEETS |
| 2 | | | 4 | | | 382 |

STR. #3

NORTH CAROLINA PROFESSIONAL SEAL 21545 ENGINEER STEVEN L. WANCE

01/03/12

DRAWN BY : S. WANce PE DATE : 10/10

CHECKED BY : E. I. OMILE DATE : 12/10

03-JAN-2012 18:06
R:\Structures\Frye\str03\final plans\I3819A_sd_EBts_03.dgn
swance

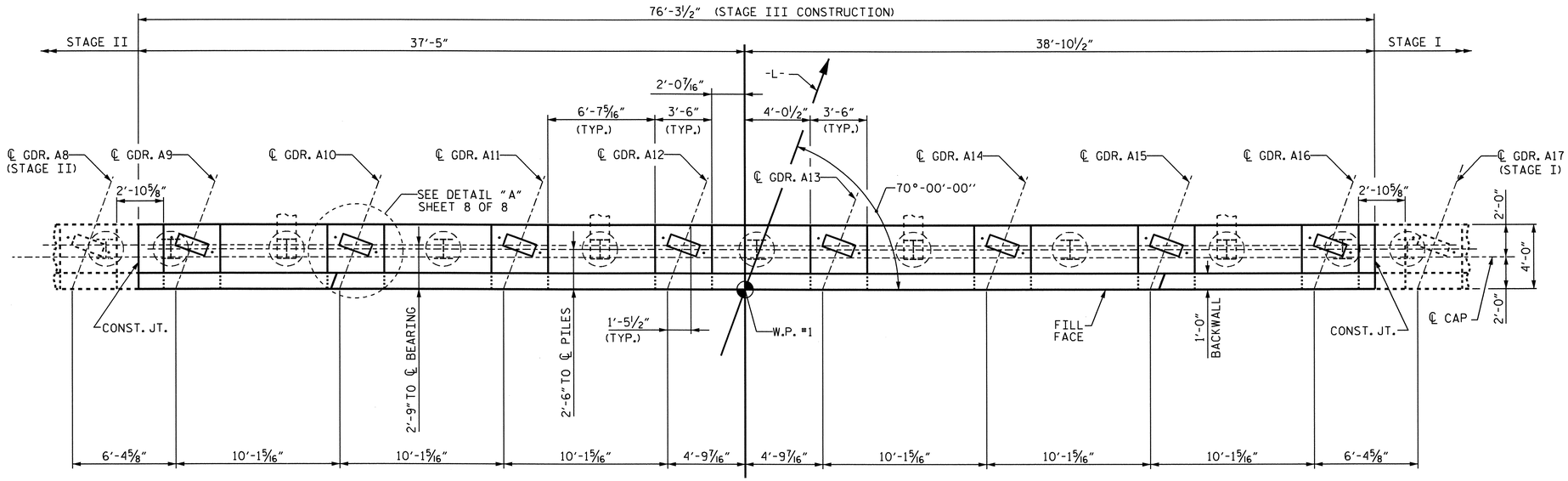


PLAN

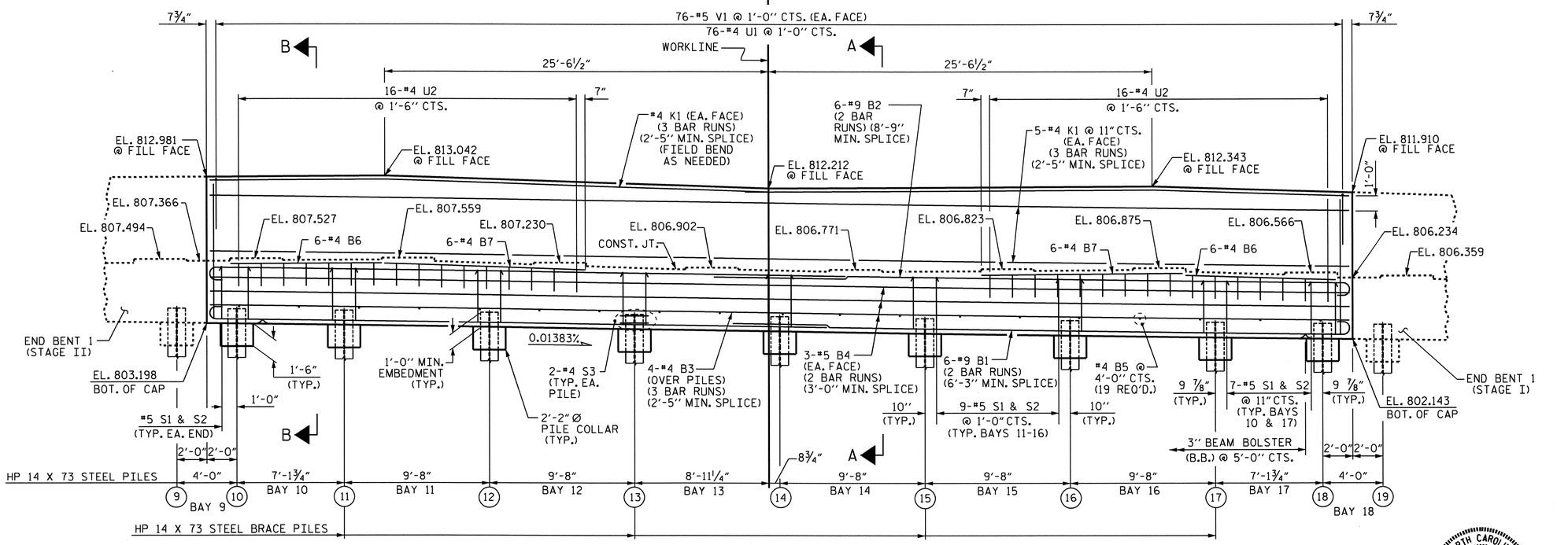


ELEVATION

| TOP OF PILE ELEVATIONS | |
|---|---|
| (10) | EL. 804.177 |
| (11) | EL. 804.078 |
| (12) | EL. 803.945 |
| (13) | EL. 803.811 |
| (14) | EL. 803.678 |
| (15) | EL. 803.544 |
| (16) | EL. 803.411 |
| (17) | EL. 803.277 |
| (18) | EL. 803.178 |

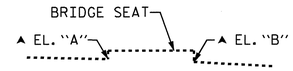


| ELEVATIONS BETWEEN BRIDGE SEATS | | |
|---|---|---|
| LOCATION | EL. A | EL. B |
| GDR. A9 | 807.366 | 807.402 |
| GDR. A10 | 807.434 | 807.319 |
| GDR. A11 | 807.105 | 806.990 |
| GDR. A12 | 806.777 | 806.777 |
| GDR. A13 | 806.646 | 806.646 |
| GDR. A14 | 806.682 | 806.698 |
| GDR. A15 | 806.750 | 806.641 |
| GDR. A16 | 806.441 | 806.234 |

▲ FOR LOCATION OF ELEVATIONS BETWEEN BRIDGE SEATS BUILDUPS, SEE SECTION A-A ON SHEET 8 OF 8

PROJECT NO. I-3819A

IREDELL COUNTY

STATION: 92+04.00 -L-

SHEET 7 OF 8

STATE OF NORTH CAROLINA
DEPARTMENT OF TRANSPORTATION
RALEIGH

SUBSTRUCTURE

END BENT 1

STAGE III

NORTH CAROLINA PROFESSIONAL SEAL 21545 ENGINEER STEVEN L. WANCE

01/03/12

| REVISIONS | | | | | | SHEET NO. |
|---|---|---|---|---|---|---|
| NO. | BY: | DATE: | NO. | BY: | DATE: | S-128 |
| 1 | | | 3 | | | TOTAL SHEETS |
| 2 | | | 4 | | | 382 |

STR. #3

DRAWN BY : S. WANCE DATE : 09/10
CHECKED BY : E. I. OMILE DATE : 12/10

03-JAN-2012 18:06
R:\Structures\Frye\str03\finalplans\I3819A_sd_EBts_03.dgn
swance

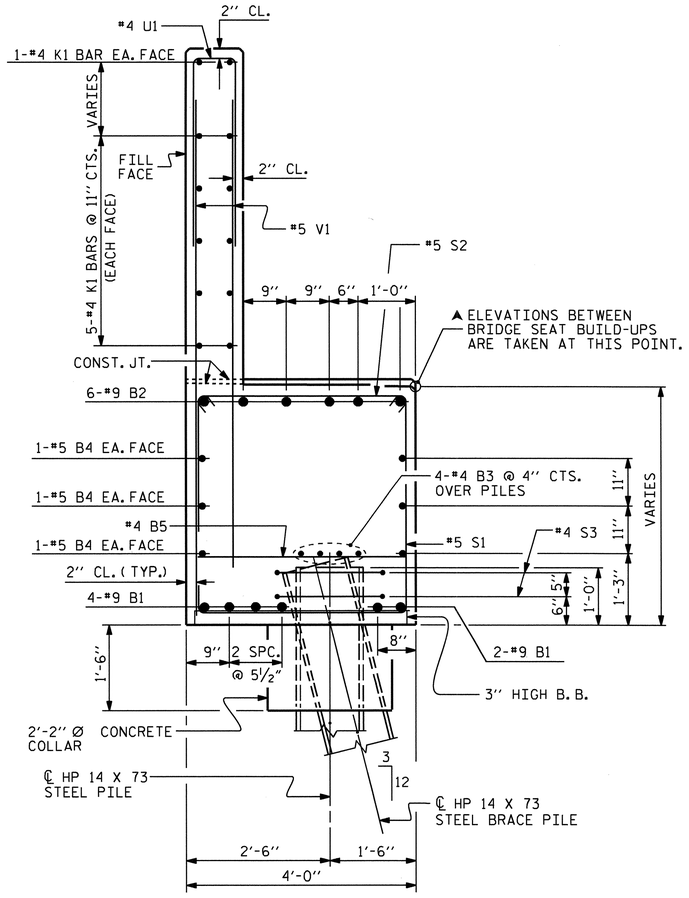


## SECTION A-A

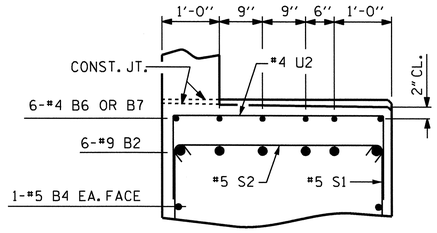


## PARTIAL SECTION B-B

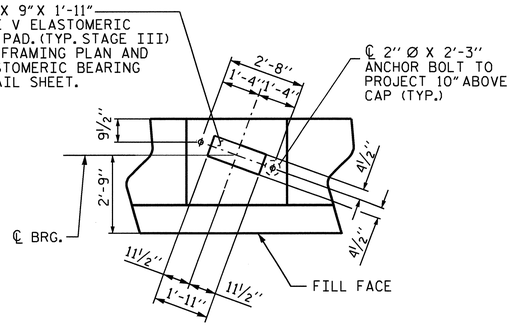


## DETAIL "A"

(TYP. EA. GDR.)

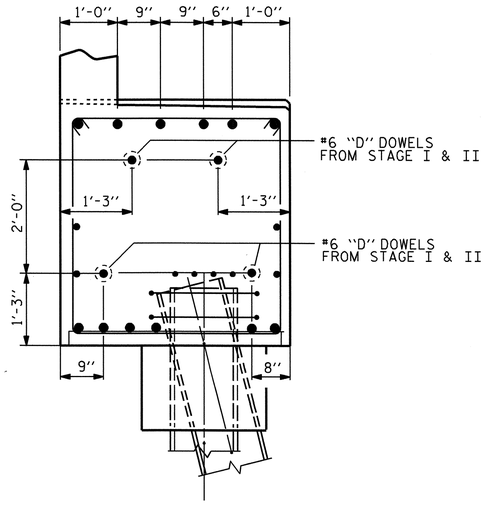


## SECTION AT STAGED CONSTRUCTION JOINTS SHOWING DOWELS

## BAR TYPES

ALL BAR DIMENSIONS ARE OUT TO OUT.

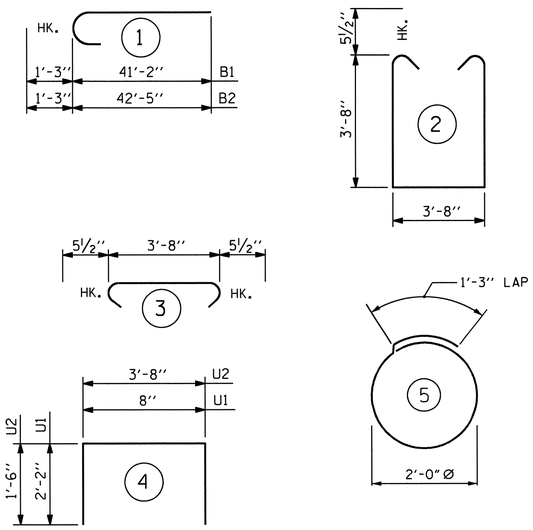


## BILL OF MATERIAL

### END BENT 1 - STAGE III

| BAR | NO. | SIZE | TYPE | LENGTH | WEIGHT |
|---|---|---|---|---|---|
| B1 | 12 | #9 | 1 | 42'-5" | 1731 |
| B2 | 12 | #9 | 1 | 43'-8" | 1782 |
| B3 | 12 | #4 | STR | 27'-0" | 216 |
| B4 | 12 | #5 | STR | 39'-6" | 494 |
| B5 | 19 | #4 | STR | 3'-8" | 47 |
| B6 | 12 | #4 | STR | 10'-0" | 80 |
| B7 | 12 | #4 | STR | 13'-3" | 106 |
| K1 | 36 | #4 | STR | 27'-0" | 649 |
| S1 | 70 | #5 | 2 | 11'-11" | 870 |
| S2 | 70 | #5 | 3 | 4'-7" | 335 |
| S3 | 18 | #4 | 5 | 7'-7" | 91 |
| U1 | 76 | #4 | 4 | 5'-0" | 254 |
| U2 | 32 | #4 | 4 | 6'-8" | 143 |
| V1 | 152 | #5 | STR | 9'-0" | 1427 |

| | | |
|---|---|---|
| REINFORCING STEEL | LBS. | 8225 |
| CLASS A CONCRETE BREAKDOWN : | | |
| POUR #1 - CAP & COLLARS | CU. YDS. | 50.2 |
| POUR #2 - BACKWALL | CU. YDS. | 15.7 |
| TOTAL | CU. YDS. | 65.9 |
| HP 14 x 73 STEEL PILES NO. = 7 | LIN. FT. | 350 |
| STEEL PILE POINTS | EA. | 7 |

## NOTES

STIRRUPS IN CAP MAY BE SHIFTED AS NECESSARY TO CLEAR ANCHOR BOLTS.

FOR PILE SPLICE DETAILS, SEE SHEET 6 OF 8.

FOR TEMPORARY DRAINAGE AT END BENT 1, SEE SHEETS 2 AND 4 OF 8.

BACKWALL SHALL BE PLACED BEFORE APPLYING THE EPOXY PROTECTIVE COATING.

THE TOP SURFACE AREAS OF THE END BENT CAPS SHALL BE CURED IN ACCORDANCE WITH THE STANDARD SPECIFICATIONS EXCEPT THE MEMBRANE CURING COMPOUND METHOD SHALL NOT BE USED.

THE TOP SURFACE OF THE CAP EXCEPT THE BRIDGE SEAT BUILDUPS SHALL BE SLOPED TRANSVERSELY FROM THE FILL FACE TO THE BACK FACE AT THE RATE OF 2%.

THE CONCRETE IN THE SHADED AREA OF THE WING SHALL BE POURED AFTER THE JOINT BETWEEN THE DECK AND THE APPROACH SLAB HAS BEEN FORMED AND THE BARRIER RAIL HAS BEEN CAST IF SLIP FORMING IS USED.

THE CONTRACTOR SHALL PROVIDE FOR INSTALLATION OF THE 4" DIAMETER DRAIN PIPE THROUGH THE WING WALL AS REQUIRED FOR REINFORCED BRIDGE APPROACH FILLS, SEE THE ROADWAY PLANS. REINFORCING STEEL IN THE WING WALL MAY BE SHIFTED AS NECESSARY TO CLEAR THE DRAIN PIPE.

THE #5 V1 AND V5 BARS SHALL BE PLACED 2" CLEAR FROM THE TOP OF THE BACKWALL.

STEEL H PILE POINTS ARE REQUIRED FOR ALL STEEL H PILES. FOR STEEL PILE POINTS, SEE SECTION 450 OF THE STANDARD SPECIFICATIONS.

NORTH CAROLINA PROFESSIONAL SEAL 21545 ENGINEER STEVEN L. WANCE

01/03/12

PROJECT NO. I-3819A

IREDELL COUNTY

STATION: 92+04.00 -L-

SHEET 8 OF 8

STATE OF NORTH CAROLINA
DEPARTMENT OF TRANSPORTATION
RALEIGH

SUBSTRUCTURE

END BENT 1

STAGE III DETAILS

| REVISIONS | | | | | | SHEET NO. |
|---|---|---|---|---|---|---|
| NO. | BY: | DATE: | NO. | BY: | DATE: | S-129 |
| 1 | | | 3 | | | TOTAL SHEETS |
| 2 | | | 4 | | | 382 |

STR. #3

DRAWN BY : S. WANce PE DATE : 10/10
CHECKED BY : E. I. OMILE DATE : 12/10

03-JAN-2012 18:06
R:\Structures\Frye\str03\finalplans\I3819A_sd_EBts_03.dgn
swance

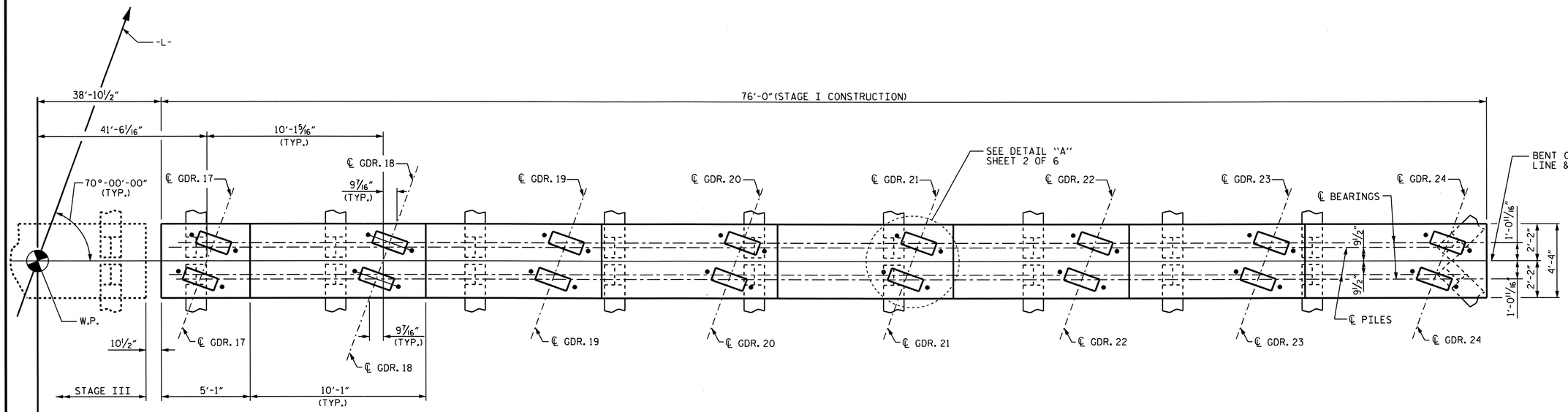


PLAN

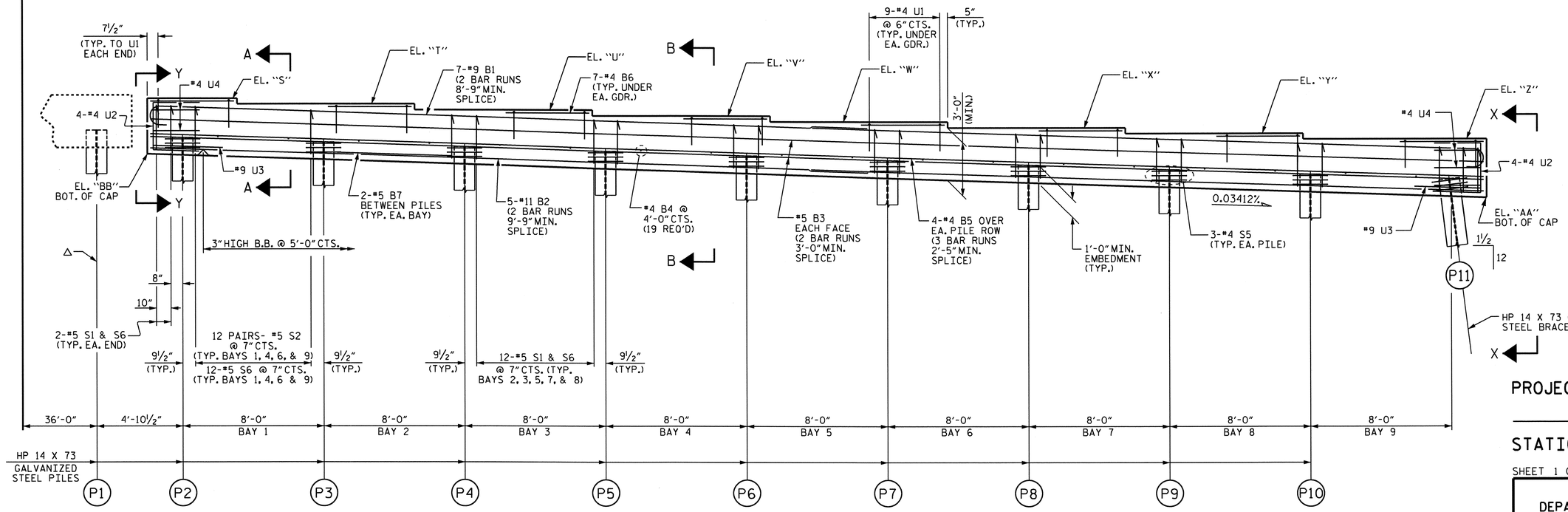


ELEVATION

△ NOTE:
THESE STAGE III PILES ARE TO BE DRIVEN WITH STAGE I

| CAP ELEVATIONS | | |
|---|---|---|
| ELEVATION | BENT 1 | BENT 2 |
| "S" | 803.832 | 799.664 |
| "T" | 803.386 | 799.227 |
| "U" | 803.058 | 798.907 |
| "V" | 802.730 | 798.588 |
| "W" | 802.402 | 798.269 |
| "X" | 802.073 | 797.952 |
| "Y" | 801.745 | 797.635 |
| "Z" | 801.417 | 797.320 |
| "AA" | 798.078 | 793.981 |
| "BB" | 800.671 | 796.503 |

| TOP OF PILE ELEVATION | | |
|---|---|---|
| PILE No. | BENT 1 | BENT 2 |
| P1 | 802.039 | 797.867 |
| P2 | 801.602 | 797.506 |
| P3 | 801.330 | 797.233 |
| P4 | 801.057 | 796.960 |
| P5 | 800.784 | 796.687 |
| P6 | 800.511 | 796.414 |
| P7 | 800.238 | 796.141 |
| P8 | 799.965 | 795.868 |
| P9 | 799.692 | 795.595 |
| P10 | 799.419 | 795.322 |
| P11 | 799.146 | 795.049 |

PROJECT NO. I-3819A

IREDELL COUNTY

STATION: 92+04.00 -L-

SHEET 1 OF 6

STATE OF NORTH CAROLINA
DEPARTMENT OF TRANSPORTATION
RALEIGH

SUBSTRUCTURE

BENTS 1 & 2

STAGE I

NORTH CAROLINA PROFESSIONAL SEAL 21545 ENGINEER STEVEN W. WANCE

01/03/12

| REVISIONS | | | | | | SHEET NO. |
|---|---|---|---|---|---|---|
| NO. | BY: | DATE: | NO. | BY: | DATE: | S-130 |
| 1 | | | 3 | | | TOTAL SHEETS |
| 2 | | | 4 | | | 382 |

STR. 3

DRAWN BY : QT NGUYEN DATE : 8-10
CHECKED BY : E.C. LOCKLEAR DATE : 9-23-10

03-JAN-2012 18:06
R:\Structures\Frye\str03\finalplans\I3819A_SD_B*_03.dgn
swance

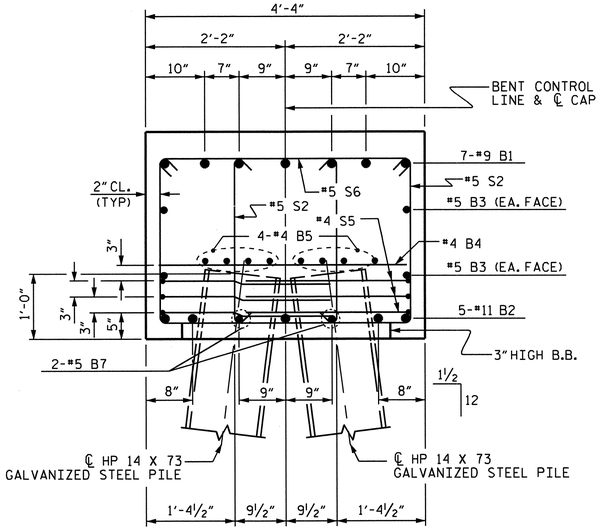


SECTION A-A

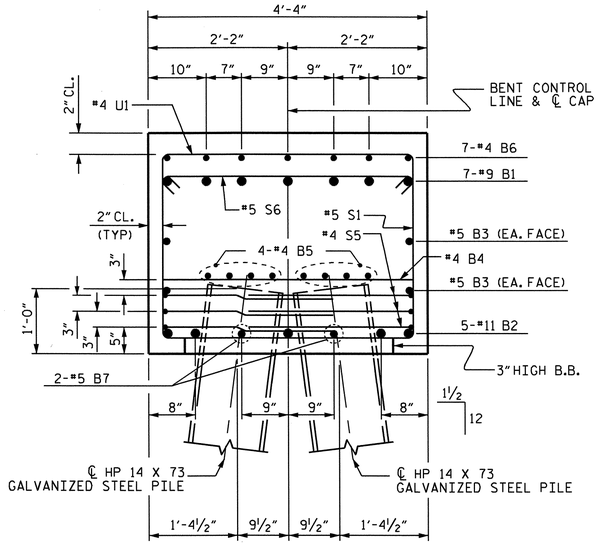


SECTION B-B

NOTES:

STIRRUPS IN CAP MAY BE SHIFTED AS NECESSARY TO CLEAR ANCHOR BOLTS.

FOR PILE SPLICE DETAILS, SEE SHEET 2 OF 6.

GALVANIZE THE TOP OF EACH INTERIOR BENT PILE A MINIMUM OF 36 FEET. GALVANIZE IN ACCORDANCE WITH SECTION 1076 OF THE STANDARD SPCIFICATIONS.

STEEL PILE POINTS ARE REQUIRED FOR ALL STEEL H PILES.

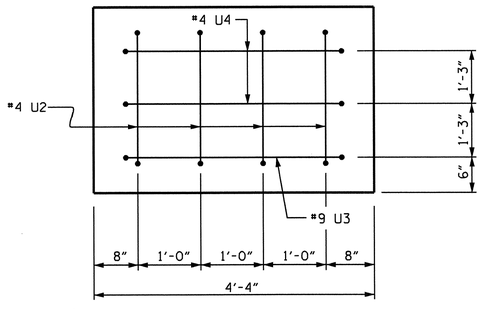


VIEW X-X

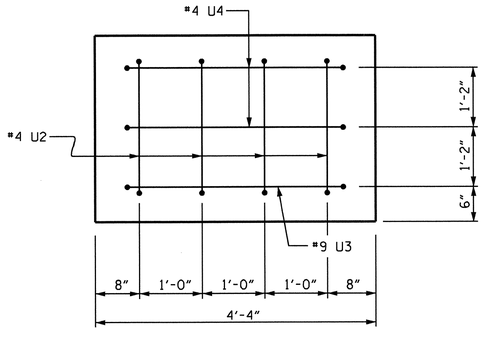


VIEW Y-Y

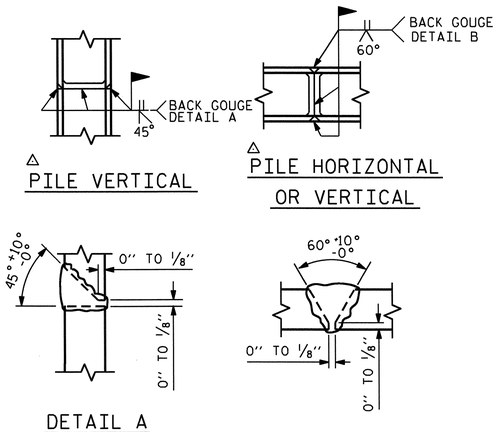


PILE SPLICE DETAILS

△ POSITION OF PILE DURING WELDING.

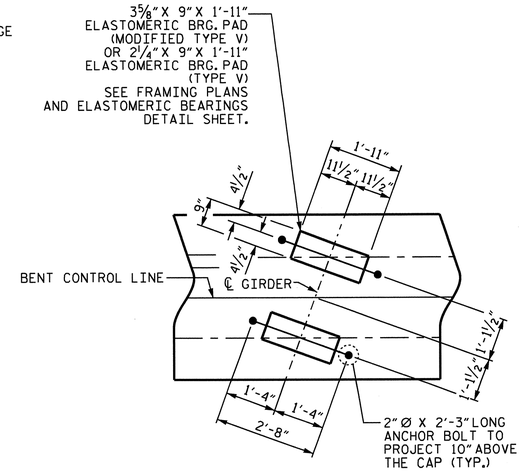


DETAIL "A"

(TYP. EA. GIRDER)

## BILL OF MATERIAL

### STAGE I

**BENT 1**

| BAR | NO. | SIZE | TYPE | LENGTH | WEIGHT |
|---|---|---|---|---|---|
| B1 | 14 | #9 | 1 | 43'-6" | 2071 |
| B2 | 10 | #11 | STR | 42'-9" | 2271 |
| B3 | 8 | #5 | STR | 39'-4" | 328 |
| B4 | 19 | #4 | STR | 4'-0" | 51 |
| B5 | 24 | #4 | STR | 26'-10" | 430 |
| B6 | 56 | #4 | STR | 4'-9" | 178 |
| B7 | 18 | #5 | STR | 6'-6" | 122 |
| | | | | | |
| S1 | 64 | #5 | 2 | 10'-2" | 679 |
| S2 | 96 | #5 | 2 | 9'-1" | 909 |
| S5 | 60 | #4 | 3 | 7'-0" | 281 |
| S6 | 112 | #5 | 4 | 4'-11" | 574 |
| | | | | | |
| U1 | 72 | #4 | 3 | 7'-0" | 337 |
| U2 | 8 | #4 | 3 | 5'-6" | 29 |
| U3 | 2 | #9 | 3 | 11'-2" | 76 |
| U4 | 4 | #4 | 3 | 6'-10" | 18 |

REINFORCING STEEL 8354 LBS.

CLASS A CONCRETE CAP 38.8 C.Y.

HP 14 X 73 GALVANIZED STEEL PILES NO. 22 1300 LIN. FT.

STEEL PILE POINTS 22 EA.

**BENT 2**

| BAR | NO. | SIZE | TYPE | LENGTH | WEIGHT |
|---|---|---|---|---|---|
| B1 | 14 | #9 | 1 | 43'-6" | 2071 |
| B2 | 10 | #11 | STR | 42'-9" | 2271 |
| B3 | 8 | #5 | STR | 39'-4" | 328 |
| B4 | 19 | #4 | STR | 4'-0" | 51 |
| B5 | 24 | #4 | STR | 26'-10" | 430 |
| B6 | 56 | #4 | STR | 4'-9" | 178 |
| B7 | 18 | #5 | STR | 6'-6" | 122 |
| | | | | | |
| S1 | 64 | #5 | 2 | 10'-2" | 679 |
| S2 | 96 | #5 | 2 | 9'-1" | 909 |
| S5 | 60 | #4 | 3 | 7'-0" | 281 |
| S6 | 112 | #5 | 4 | 4'-11" | 574 |
| | | | | | |
| U1 | 72 | #4 | 3 | 7'-0" | 337 |
| U2 | 8 | #4 | 3 | 5'-6" | 29 |
| U3 | 2 | #9 | 3 | 11'-2" | 76 |
| U4 | 4 | #4 | 3 | 6'-10" | 18 |

REINFORCING STEEL 8354 LBS.

CLASS A CONCRETE CAP 38.8 C.Y.

HP 14 X 73 GALVANIZED STEEL PILES NO. 22 990 LIN. FT.

STEEL PILE POINTS 22 EA.

## BAR TYPES

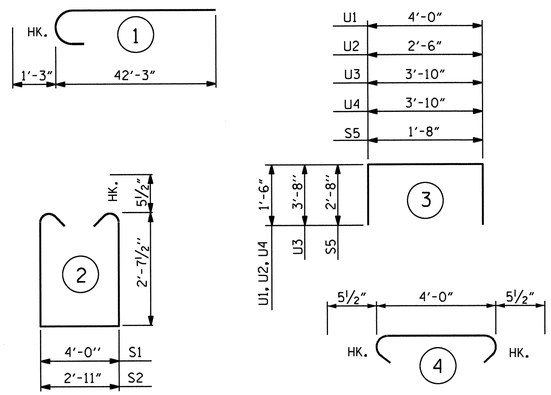


ALL BAR DIMENSIONS ARE OUT TO OUT.

PROJECT NO. I-3819A

IREDELL COUNTY

STATION: 92+04.00 -L-

SHEET 2 OF 6

NORTH CAROLINA PROFESSIONAL SEAL 21545 ENGINEER STEVEN L. WANCE

01/03/12

STATE OF NORTH CAROLINA
DEPARTMENT OF TRANSPORTATION
RALEIGH

SUBSTRUCTURE

BENTS 1 & 2

STAGE I

| REVISIONS | | | | | | SHEET NO. |
|---|---|---|---|---|---|---|
| NO. | BY: | DATE: | NO. | BY: | DATE: | S-131 |
| 1 | | | 3 | | | TOTAL SHEETS |
| 2 | | | 4 | | | 382 |

STR. 3

DRAWN BY : QT NGUYEN DATE : 8-10

CHECKED BY : E.C. LOCKLEAR DATE : 9-23-10

03-JAN-2012 18:06
R:\Structures\Frye\str03\finalplans\I3819A_SD_B*_03.dgn
swance

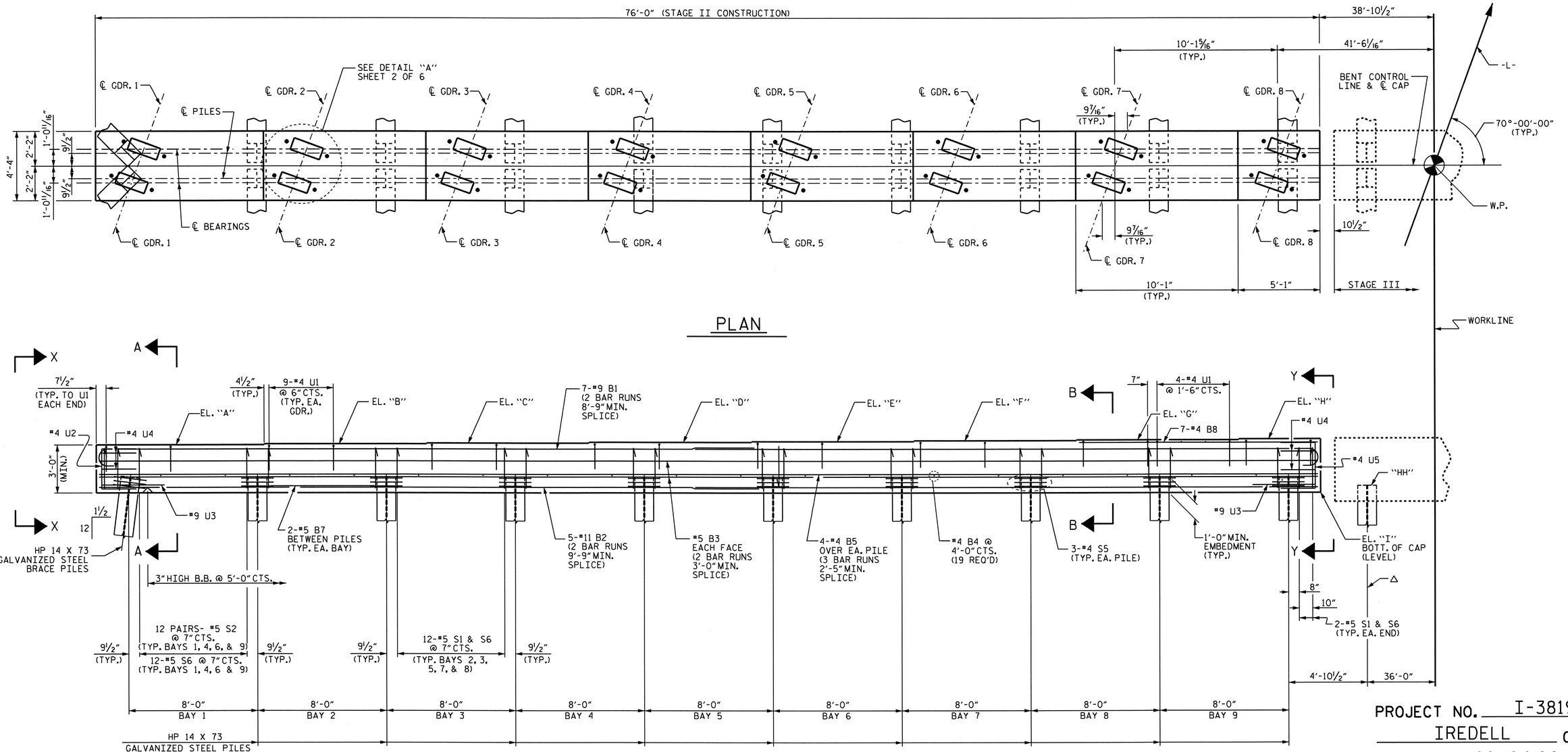


| CAP ELEVATIONS | | | |
|---|---|---|---|
| ELEVATION | BENT 1 | BENT 2 | |
| "A" | 804.488 | 800.289 | |
| "B" | 804.540 | 800.341 | |
| "C" | 804.591 | 800.392 | |
| "D" | 804.643 | 800.444 | |
| "E" | 804.695 | 800.496 | |
| "F" | 804.746 | 800.548 | |
| "G" | 804.798 | 800.599 | |
| "H" | 804.967 | 800.768 | |
| "I" | 801.488 | 797.289 | |
| "HH" | 802.039 | 797.867 | STAGE III PILES |

△ NOTE:
THESE STAGE III PILES ARE TO BE DRIVEN WITH STAGE II

NORTH CAROLINA PROFESSIONAL SEAL 21545 ENGINEER STEVEN L. WANCE
01/03/12

PROJECT NO. I-3819A
IREDELL COUNTY
STATION: 92+04.00 -L-
SHEET 3 OF 6

STATE OF NORTH CAROLINA
DEPARTMENT OF TRANSPORTATION
RALEIGH

SUBSTRUCTURE

BENTS 1 & 2

STAGE II

| REVISIONS | | | | | | SHEET NO. |
|---|---|---|---|---|---|---|
| NO. | BY: | DATE: | NO. | BY: | DATE: | S-132 |
| 1 | | | 3 | | | TOTAL SHEETS |
| 2 | | | 4 | | | 382 |

STR. 3

DRAWN BY : QT NGUYEN DATE : 8-10
CHECKED BY : E.C. LOCKLEAR DATE : 9-23-10

03-JAN-2012 18:06
R:\Structures\Frye\str03\final plans\I3819A_SD_B*_03.dgn
swance

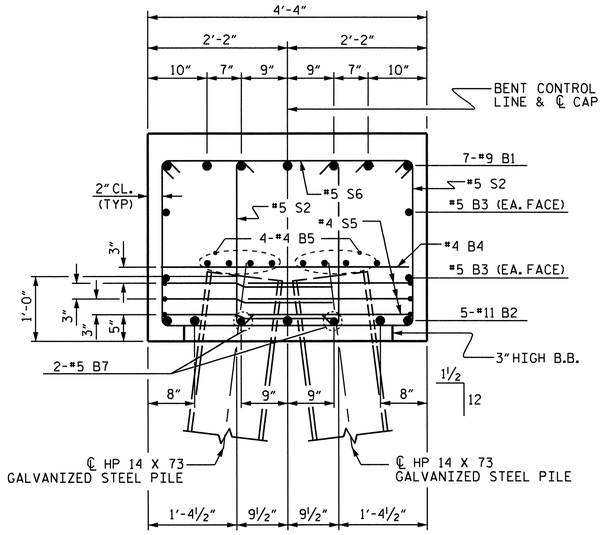


SECTION A-A

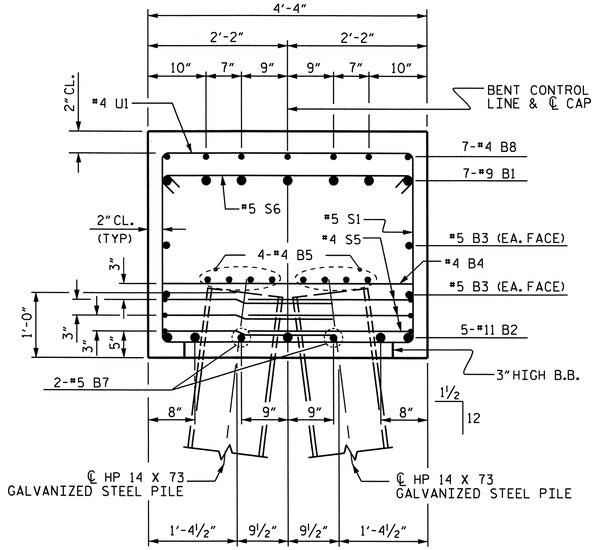


SECTION B-B

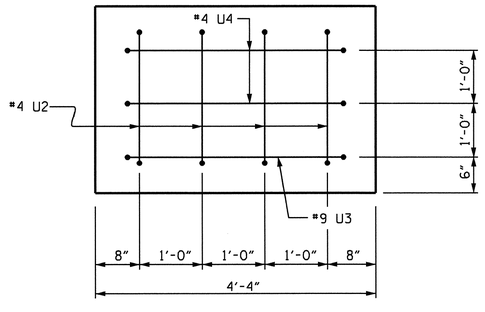


VIEW X-X

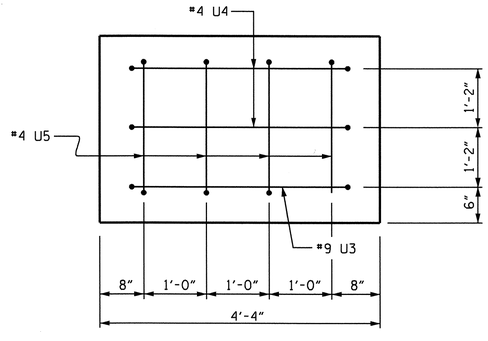


VIEW Y-Y

## NOTES:

STIRRUPS IN CAP MAY BE SHIFTED AS NECESSARY TO CLEAR ANCHOR BOLTS.

FOR PILE SPLICE DETAILS, SEE SHEET 2 OF 6.

GALVANIZE THE TOP OF EACH INTERIOR BENT PILE A MINIMUM OF 36 FEET. GALVANIZE IN ACCORDANCE WITH SECTION 1076 OF THE STANDARD SPCIFICATIONS.

STEEL PILE POINTS ARE REQUIRED FOR ALL STEEL H PILES.

## BILL OF MATERIAL

### STAGE II

#### BENT 1

| BAR | NO. | SIZE | TYPE | LENGTH | WEIGHT |
|---|---|---|---|---|---|
| B1 | 14 | #9 | 1 | 43'-6" | 2071 |
| B2 | 10 | #11 | STR | 42'-9" | 2271 |
| B3 | 8 | #5 | STR | 39'-4" | 328 |
| B4 | 19 | #4 | STR | 4'-0" | 51 |
| B5 | 24 | #4 | STR | 26'-10" | 430 |
| B7 | 18 | #5 | STR | 6'-6" | 122 |
| B8 | 7 | #4 | STR | 14'-10" | 69 |
| | | | | | |
| S1 | 64 | #5 | 2 | 10'-2" | 679 |
| S2 | 96 | #5 | 2 | 9'-1" | 909 |
| S5 | 60 | #4 | 3 | 7'-0" | 281 |
| S6 | 112 | #5 | 4 | 4'-11" | 574 |
| | | | | | |
| U1 | 76 | #4 | 3 | 7'-0" | 355 |
| U2 | 4 | #4 | 3 | 5'-6" | 15 |
| U3 | 2 | #9 | 3 | 11'-2" | 76 |
| U4 | 4 | #4 | 3 | 6'-10" | 18 |
| U5 | 4 | #4 | 3 | 5'-11" | 16 |

REINFORCING STEEL 8265 LBS.

CLASS A CONCRETE
CAP 38.8 C.Y.

HP 14 X 73 GALVANIZED STEEL PILES
NO. 22 1000 LIN. FT.
STEEL PILE POINTS 22 EA.

#### BENT 2

| BAR | NO. | SIZE | TYPE | LENGTH | WEIGHT |
|---|---|---|---|---|---|
| B1 | 14 | #9 | 1 | 43'-6" | 2071 |
| B2 | 10 | #11 | STR | 42'-9" | 2271 |
| B3 | 8 | #5 | STR | 39'-4" | 328 |
| B4 | 19 | #4 | STR | 4'-0" | 51 |
| B5 | 24 | #4 | STR | 26'-10" | 430 |
| B7 | 18 | #5 | STR | 6'-6" | 122 |
| B8 | 7 | #4 | STR | 14'-10" | 69 |
| | | | | | |
| S1 | 64 | #5 | 2 | 10'-2" | 679 |
| S2 | 96 | #5 | 2 | 9'-1" | 909 |
| S5 | 60 | #4 | 3 | 7'-0" | 281 |
| S6 | 112 | #5 | 4 | 4'-11" | 574 |
| | | | | | |
| U1 | 76 | #4 | 3 | 7'-0" | 355 |
| U2 | 4 | #4 | 3 | 5'-6" | 15 |
| U3 | 2 | #9 | 3 | 11'-2" | 76 |
| U4 | 4 | #4 | 3 | 6'-10" | 18 |
| U5 | 4 | #4 | 3 | 5'-11" | 16 |

REINFORCING STEEL 8265 LBS.

CLASS A CONCRETE
CAP 38.8 C.Y.

HP 14 X 73 GALVANIZED STEEL PILES
NO. 22 990 LIN. FT.
STEEL PILE POINTS 22 EA.

## BAR TYPES

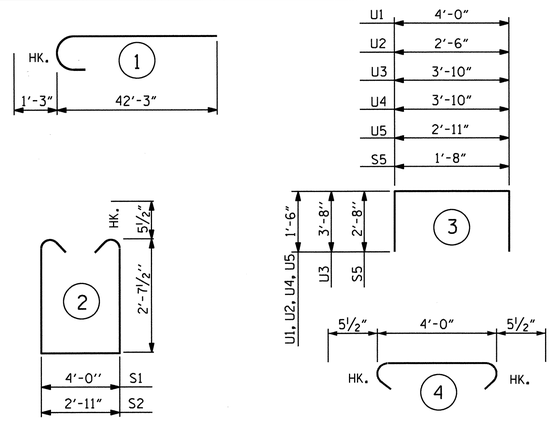


ALL BAR DIMENSIONS ARE OUT TO OUT.

PROJECT NO. I-3819A

IREDELL COUNTY

STATION: 92+04.00 -L-

SHEET 4 OF 6

NORTH CAROLINA PROFESSIONAL SEAL 21545 ENGINEER STEVEN L. WANCE

01/03/12

STATE OF NORTH CAROLINA
DEPARTMENT OF TRANSPORTATION
RALEIGH

SUBSTRUCTURE

BENTS 1 & 2

STAGE II

| REVISIONS | | | | | | SHEET NO. |
|---|---|---|---|---|---|---|
| NO. | BY: | DATE: | NO. | BY: | DATE: | S-133 |
| 1 | | | 3 | | | TOTAL SHEETS |
| 2 | | | 4 | | | 382 |

STR. 3

DRAWN BY : QT NGUYEN DATE : 8-10
CHECKED BY : E.C. LOCKLEAR DATE : 9-23-10

03-JAN-2012 18:06
R:\Structures\Frye\str03\final plans\I3819A_SD_B*_03.dgn
swance

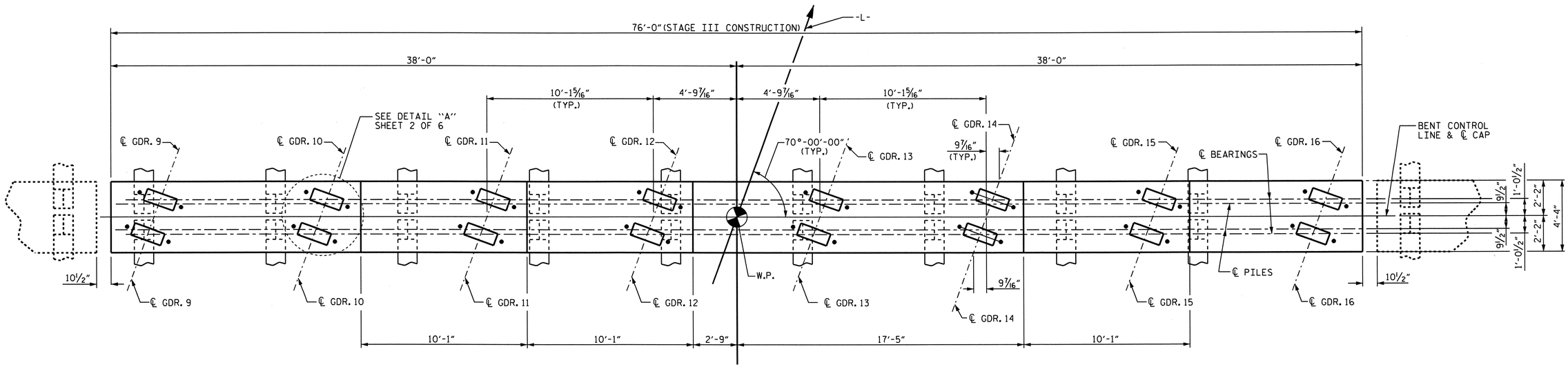


## PLAN

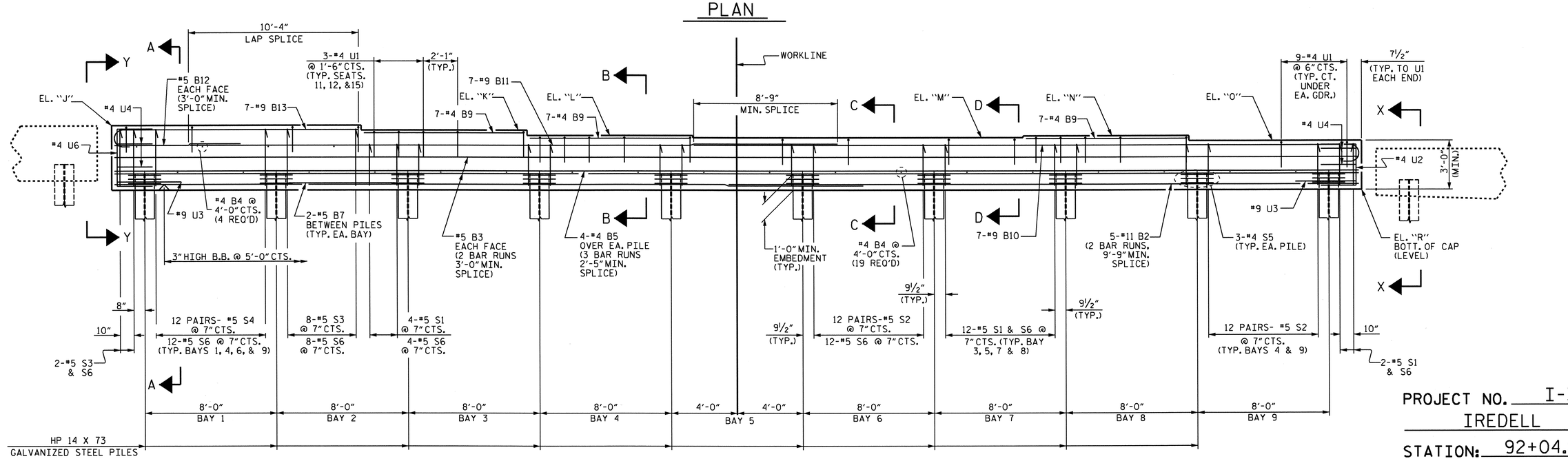


## ELEVATION

| CAP ELEVATIONS | | |
|---|---|---|
| ELEVATION | BENT 1 | BENT 2 |
| "J" | 805.000 | 800.802 |
| "K" | 804.703 | 800.509 |
| "L" | 804.375 | 800.185 |
| "M" | 804.244 | 800.056 |
| "N" | 804.347 | 800.169 |
| "O" | 804.039 | 799.867 |
| "R" | 801.039 | 796.867 |

NORTH CAROLINA PROFESSIONAL SEAL 21545 ENGINEER STEVEN L. WANCE

01/03/12

PROJECT NO. I-3819A

IREDELL COUNTY

STATION: 92+04.00 -L-

SHEET 5 OF 6

STATE OF NORTH CAROLINA
DEPARTMENT OF TRANSPORTATION
RALEIGH

SUBSTRUCTURE

BENTS 1 & 2

STAGE III

| REVISIONS | | | | | | SHEET NO. |
|---|---|---|---|---|---|---|
| NO. | BY: | DATE: | NO. | BY: | DATE: | S-134 |
| 1 | | | 3 | | | TOTAL SHEETS |
| 2 | | | 4 | | | 382 |

STR. 3

DRAWN BY : OT NGUYEN DATE : 8-10
CHECKED BY : E.C. LOCKLEAR DATE : 9-10

03-JAN-2012 18:06
R:\Structures\Frye\str03\finalplans\I3819A_SD_B*_03.dgn
swance

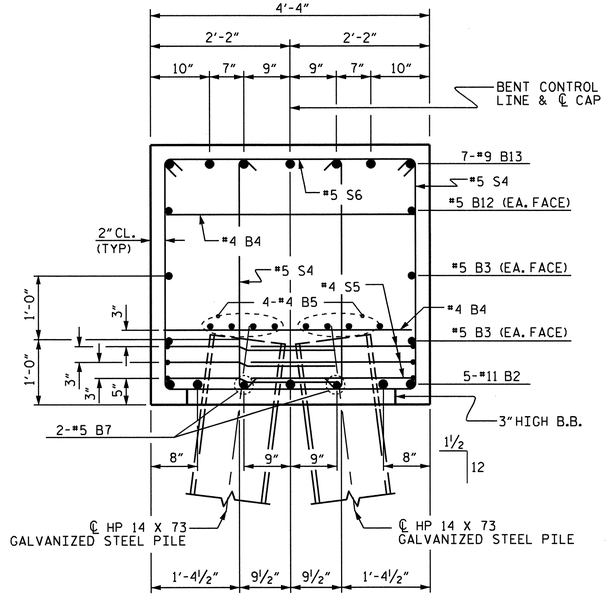


SECTION A-A

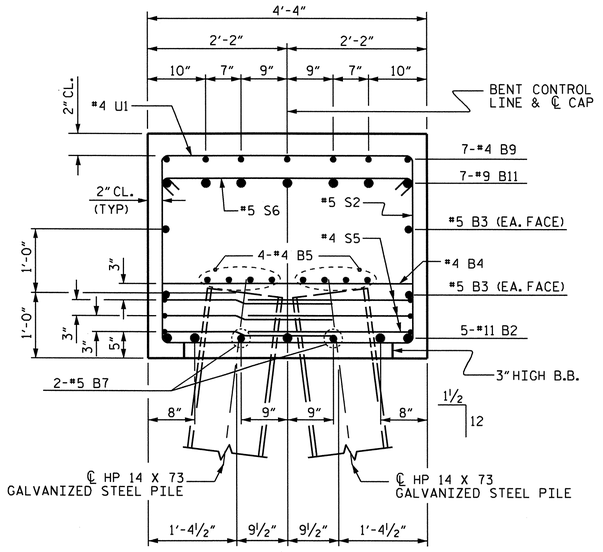


SECTION B-B

NOTES:

STIRRUPS IN CAP MAY BE SHIFTED AS NECESSARY TO CLEAR ANCHOR BOLTS.

FOR PILE SPLICE DETAILS, SEE SHEET 2 OF 6.

GALVANIZE THE TOP OF EACH INTERIOR BENT PILE A MINIMUM OF 36 FEET. GALVANIZE IN ACCORDANCE WITH SECTION 1076 OF THE STANDARD SPCIFICATIONS.

STEEL PILE POINTS ARE REQUIRED FOR ALL STEEL H PILES.

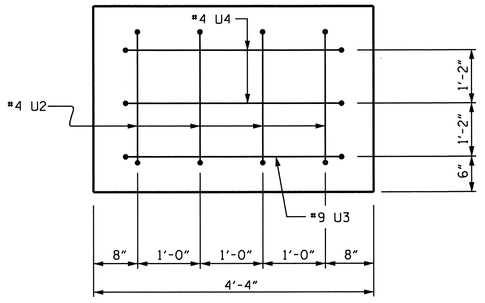


VIEW X-X

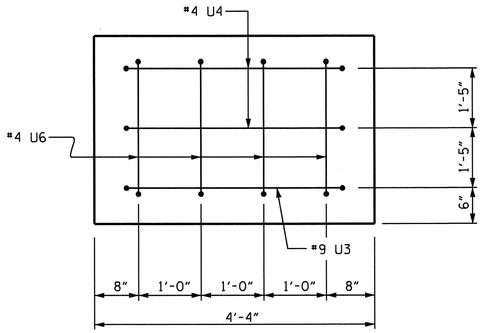


VIEW Y-Y

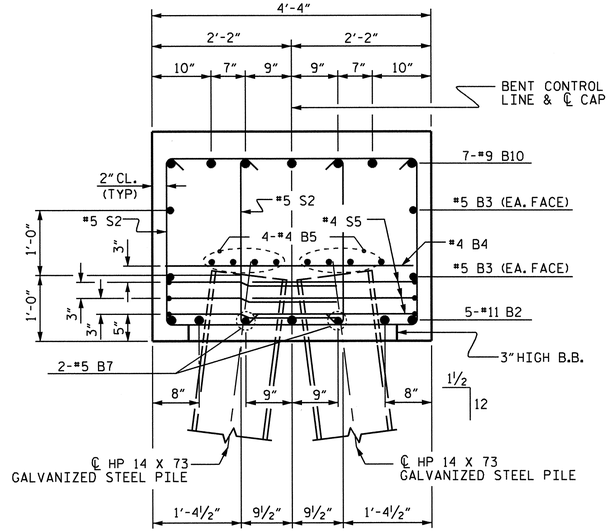


SECTION C-C

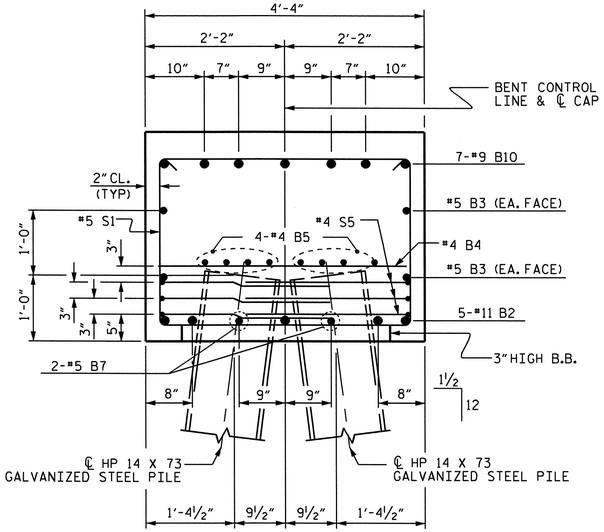


SECTION D-D

## BILL OF MATERIAL

### STAGE III

| BENT 1 | | | | | | BENT 2 | | | | | |
|---|---|---|---|---|---|---|---|---|---|---|---|
| BAR | NO. | SIZE | TYPE | LENGTH | WEIGHT | BAR | NO. | SIZE | TYPE | LENGTH | WEIGHT |
| B2 | 10 | #11 | STR | 42'-9" | 2271 | B2 | 10 | #11 | STR | 42'-9" | 2271 |
| B3 | 8 | #5 | STR | 39'-4" | 328 | B3 | 8 | #5 | STR | 39'-4" | 328 |
| B4 | 23 | #4 | STR | 4'-0" | 61 | B4 | 23 | #4 | STR | 4'-0" | 61 |
| B5 | 24 | #4 | STR | 26'-10" | 430 | B5 | 24 | #4 | STR | 26'-10" | 430 |
| B7 | 18 | #5 | STR | 6'-6" | 122 | B7 | 18 | #5 | STR | 6'-6" | 122 |
| B9 | 21 | #4 | STR | 9'-9" | 137 | B9 | 21 | #4 | STR | 9'-9" | 137 |
| B10 | 7 | #9 | 1 | 41'-9" | 994 | B10 | 7 | #9 | 1 | 41'-9" | 994 |
| B11 | 7 | #9 | STR | 39'-11" | 950 | B11 | 7 | #9 | STR | 39'-11" | 950 |
| B12 | 2 | #5 | STR | 7'-6" | 16 | B12 | 2 | #5 | STR | 7'-6" | 16 |
| B13 | 7 | #9 | 1 | 16'-0" | 381 | B13 | 7 | #9 | 1 | 16'-0" | 381 |
| | | | | | | | | | | | |
| S1 | 54 | #5 | 2 | 10'-2" | 573 | S1 | 54 | #5 | 2 | 10'-2" | 573 |
| S2 | 72 | #5 | 2 | 9'-1" | 682 | S2 | 72 | #5 | 2 | 9'-1" | 682 |
| S3 | 10 | #5 | 2 | 12'-1" | 126 | S3 | 10 | #5 | 2 | 12'-1" | 126 |
| S4 | 24 | #5 | 2 | 11'-0" | 275 | S4 | 24 | #5 | 2 | 11'-0" | 275 |
| S5 | 60 | #4 | 3 | 7'-0" | 281 | S5 | 60 | #4 | 3 | 7'-0" | 281 |
| S6 | 112 | #5 | 4 | 4'-11" | 574 | S6 | 112 | #5 | 4 | 4'-11" | 574 |
| | | | | | | | | | | | |
| U1 | 81 | #4 | 3 | 7'-0" | 379 | U1 | 81 | #4 | 3 | 7'-0" | 379 |
| U2 | 4 | #4 | 3 | 5'-6" | 15 | U2 | 4 | #4 | 3 | 5'-6" | 15 |
| U3 | 2 | #9 | 3 | 11'-2" | 76 | U3 | 2 | #9 | 3 | 11'-2" | 76 |
| U4 | 4 | #4 | 3 | 6'-10" | 18 | U4 | 4 | #4 | 3 | 6'-10" | 18 |
| U6 | 4 | #4 | 3 | 6'-5" | 17 | U6 | 4 | #4 | 3 | 6'-5" | 17 |
| REINFORCING STEEL 8706 LBS. | | | | | | REINFORCING STEEL 8706 LBS. | | | | | |
| CLASS A CONCRETE CAP 41.8 C.Y. | | | | | | CLASS A CONCRETE CAP 41.8 C.Y. | | | | | |
| HP 14 X 73 GALVANIZED STEEL PILES | | | | | | HP 14 X 73 GALVANIZED STEEL PILES | | | | | |
| NO. 16 800 LIN. FT. | | | | | | NO. 16 720 LIN. FT. | | | | | |
| STEEL PILE POINTS 16 EA. | | | | | | STEEL PILE POINTS 16 EA. | | | | | |

## BAR TYPES

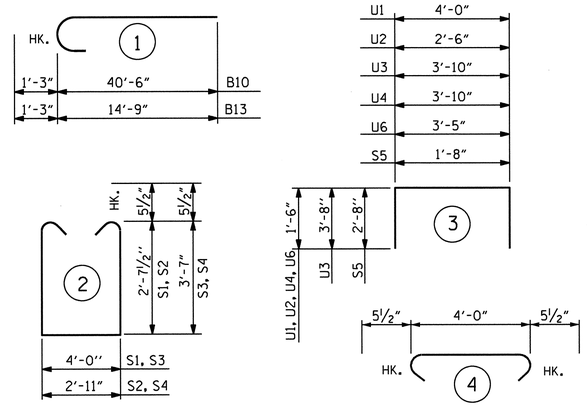


ALL BAR DIMENSIONS ARE OUT TO OUT.

PROJECT NO. I-3819A

IREDELL COUNTY

STATION: 92+04.00 -L-

SHEET 6 OF 6

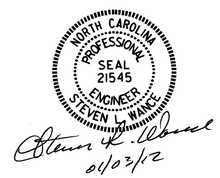


01/03/12

STATE OF NORTH CAROLINA
DEPARTMENT OF TRANSPORTATION
RALEIGH

SUBSTRUCTURE

BENTS 1 & 2

STAGE III

| REVISIONS | | | | | | SHEET NO. |
|---|---|---|---|---|---|---|
| NO. | BY: | DATE: | NO. | BY: | DATE: | S-135 |
| 1 | | | 3 | | | TOTAL SHEETS |
| 2 | | | 4 | | | 382 |

STR. 3

DRAWN BY : QT NGUYEN DATE : 8-10
CHECKED BY : E.C. LOCKLEAR DATE : 9-10

03-JAN-2012 18:06
R:\Structures\Frye\str03\final plans\I3819A_SD_B*_03.dgn
swance

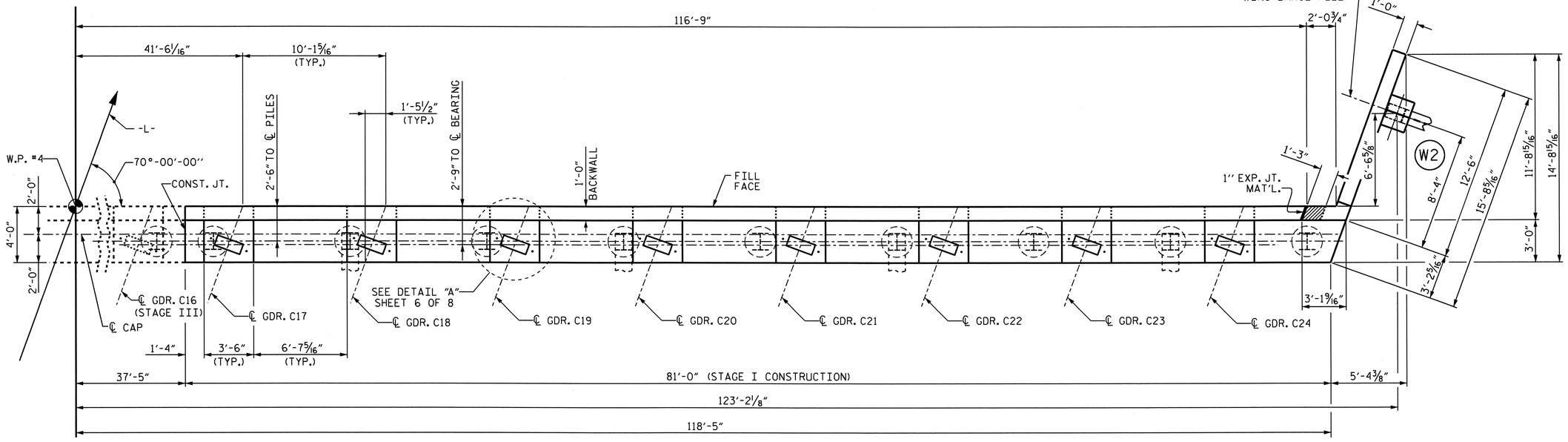


## PLAN

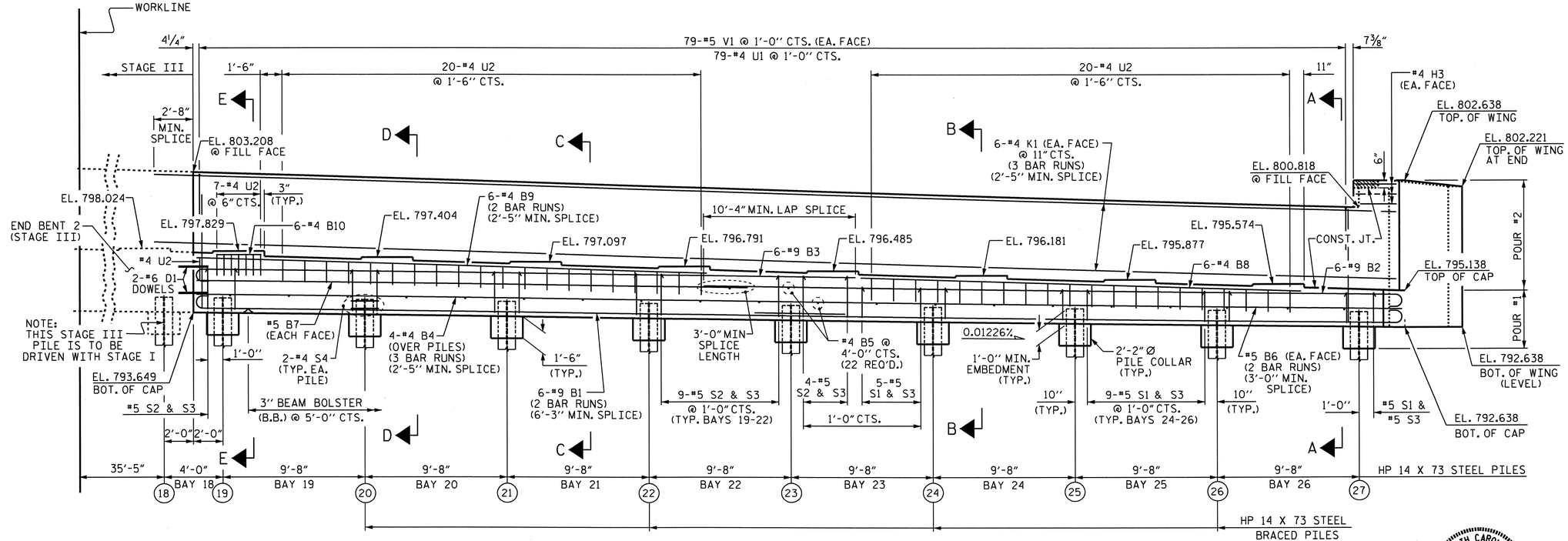


## ELEVATION

BRACE PILE AT WING WALL NOT SHOWN FOR CLARITY.

| TOP OF PILE ELEVATIONS | |
|---|---|
| (18) | EL. 794.750 |
| (19) | EL. 794.632 |
| (20) | EL. 794.513 |
| (21) | EL. 794.395 |
| (22) | EL. 794.276 |
| (23) | EL. 794.158 |
| (24) | EL. 794.039 |
| (25) | EL. 793.921 |
| (26) | EL. 793.802 |
| (27) | EL. 793.684 |
| WING | EL. 793.638 |

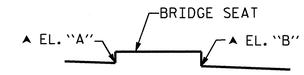


| ELEVATIONS BETWEEN BRIDGE SEATS | | |
|---|---|---|
| LOCATION | EL. A | EL. B |
| GDR. C17 | 797.704 | 797.480 |
| GDR. C18 | 797.279 | 797.175 |
| GDR. C19 | 796.972 | 796.873 |
| GDR. C20 | 796.667 | 796.567 |
| GDR. C21 | 796.360 | 796.261 |
| GDR. C22 | 796.056 | 795.957 |
| GDR. C23 | 795.752 | 795.648 |
| GDR. C24 | 795.449 | 795.345 |

▲ FOR LOCATION OF ELEVATIONS BETWEEN BRIDGE SEATS BUILDUPS, SEE SECTION A-A ON SHEET 5 OF 8

THE CONTRACTOR'S ATTENTION IS CALLED TO THE FACT, THAT DUE TO THE PROXIMITY OF THE POWER TRANSMISSION LINES, MULTIPLE SPLICES MAY BE REQUIRED TO INSTALL PILES.

NORTH CAROLINA PROFESSIONAL SEAL 21545 ENGINEER STEVEN L. WANCE
01/03/12

PROJECT NO. I-3819A
IREDELL COUNTY
STATION: 92+04.00 -L-

SHEET 1 OF 8

STATE OF NORTH CAROLINA
DEPARTMENT OF TRANSPORTATION
RALEIGH

SUBSTRUCTURE
END BENT 2
STAGE I

| REVISIONS | | | | | | SHEET NO. |
|---|---|---|---|---|---|---|
| NO. | BY: | DATE: | NO. | BY: | DATE: | S-136 |
| 1 | | | 3 | | | TOTAL SHEETS |
| 2 | | | 4 | | | 382 |

STR. #3

DRAWN BY : S. WANCE DATE : 09/10
CHECKED BY : E. I. OMILE DATE : 12/10

03-JAN-2012 18:06
R:\Structures\Frye\str03\finalplans\I3819A_sd_EBts_03.dgn
swance

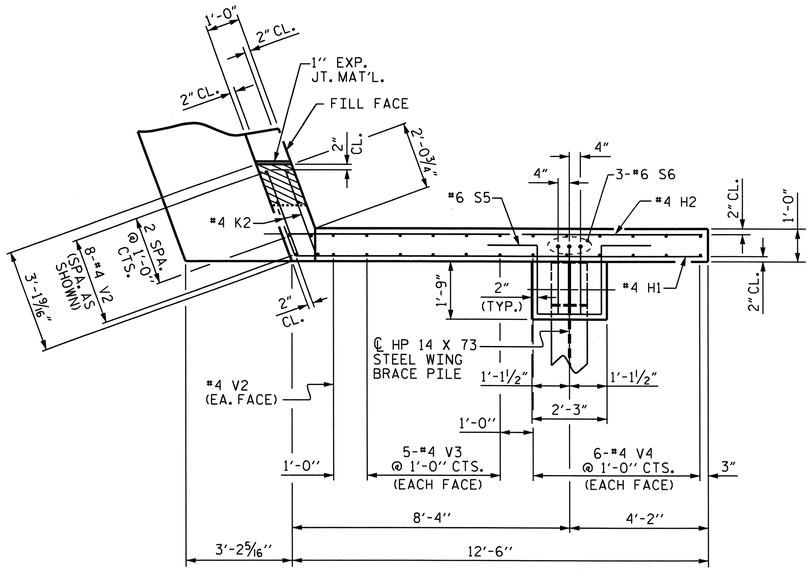


## PLAN OF WING (W2)

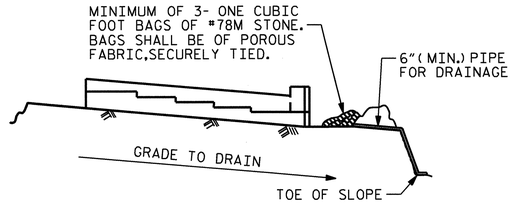


BAGGED STONE AND PIPE SHALL BE PLACED IMMEDIATELY AFTER COMPLETION OF END BENT EXCAVATION. PIPE MAY BE EITHER CONCRETE, CORRUGATED STEEL, CORRUGATED ALUMINUM ALLOY, OR CORRUGATED PLASTIC. PERFORATED PIPE WILL NOT BE ALLOWED.

BAGGED STONE SHALL REMAIN IN PLACE UNTIL THE ENGINEER DIRECTS THAT IT BE REMOVED. THE CONTRACTOR SHALL REMOVE AND DISPOSE OF SILT ACCUMULATIONS AT BAGGED STONE WHEN SO DIRECTED BY THE ENGINEER. BAGS SHALL BE REMOVED AND REPLACED WHENEVER THE ENGINEER DETERMINES THAT THEY HAVE DETERIORATED AND LOST THEIR EFFECTIVENESS.

NO SEPARATE PAYMENT WILL BE MADE FOR THIS WORK AND THE ENTIRE COST OF THIS WORK SHALL BE INCLUDED IN THE UNIT CONTRACT PRICE BID FOR THE SEVERAL PAY ITEMS.

## TEMPORARY DRAINAGE AT END BENT

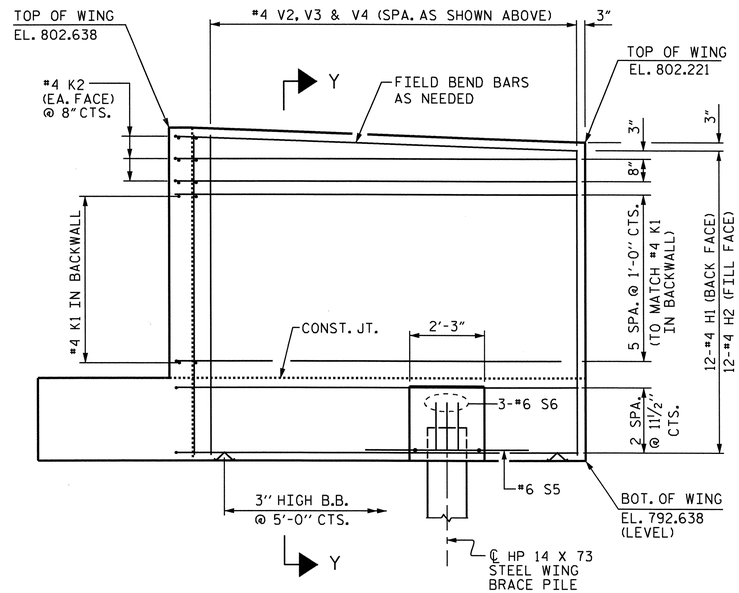


## ELEVATION OF WING (W2)

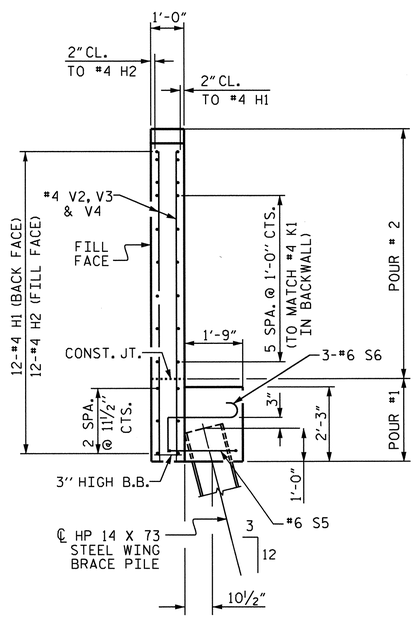


## SECTION Y-Y

NORTH CAROLINA PROFESSIONAL SEAL 21545 ENGINEER STEVEN L. WANCE

01/03/12

PROJECT NO. I-3819A

IREDELL COUNTY

STATION: 92+04.00 -L-

SHEET 2 OF 8

STATE OF NORTH CAROLINA
DEPARTMENT OF TRANSPORTATION
RALEIGH

SUBSTRUCTURE

END BENT 2

STAGE I WING

| REVISIONS | | | | | | SHEET NO. |
|---|---|---|---|---|---|---|
| NO. | BY: | DATE: | NO. | BY: | DATE: | S-137 |
| 1 | | | 3 | | | TOTAL SHEETS |
| 2 | | | 4 | | | 382 |

STR. #3

DRAWN BY : S.WANce PE DATE : 10/10
CHECKED BY : E. I. OMILE DATE : 12/10

03-JAN-2012 18:06
R:\Structures\Frye\str03\finalplans\I3819A_sd_EBts_03.dgn
swance

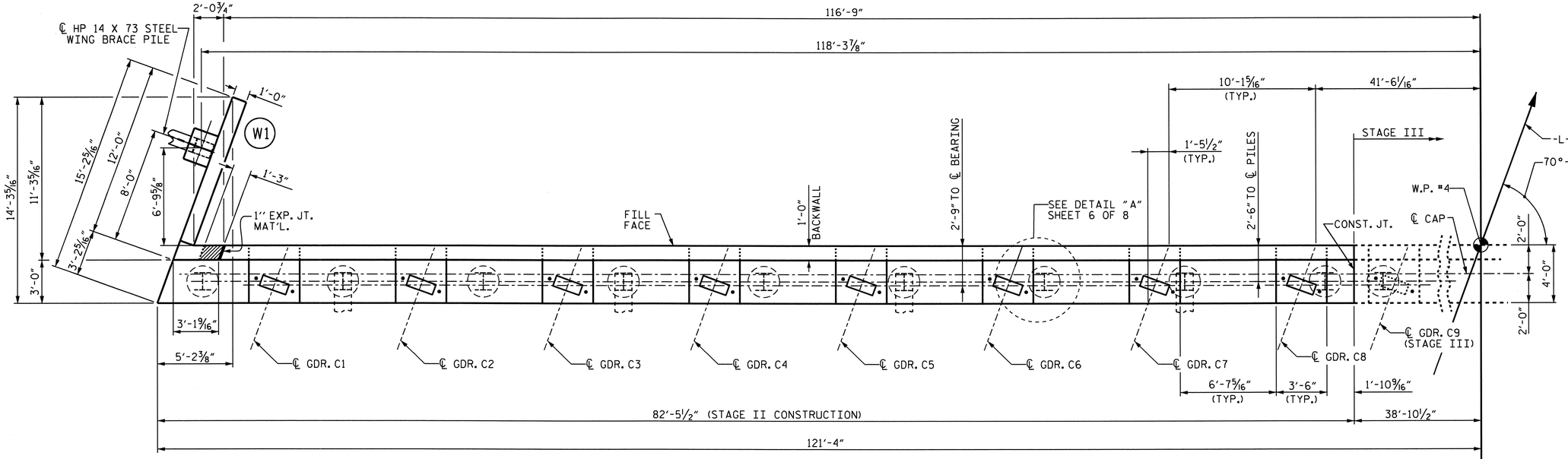


## PLAN

| TOP OF PILE ELEVATIONS | |
|---|---|
| WING | EL. 796.595 |
| ① | EL. 796.564 |
| ② | EL. 796.445 |
| ③ | EL. 796.327 |
| ④ | EL. 796.208 |
| ⑤ | EL. 796.090 |
| ⑥ | EL. 795.971 |
| ⑦ | EL. 795.853 |
| ⑧ | EL. 795.734 |
| ⑨ | EL. 795.616 |
| ⑩ | EL. 795.567 |

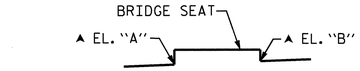


| ELEVATIONS BETWEEN BRIDGE SEATS | | |
|---|---|---|
| LOCATION | EL. A | EL. B |
| GDR. C1 | 797.944 | 798.152 |
| GDR. C2 | 798.004 | 798.212 |
| GDR. C3 | 798.064 | 798.272 |
| GDR. C4 | 798.125 | 798.333 |
| GDR. C5 | 798.187 | 798.395 |
| GDR. C6 | 798.250 | 798.458 |
| GDR. C7 | 798.313 | 798.521 |
| GDR. C8 | 798.562 | 798.703 |

▲ FOR LOCATION OF ELEVATIONS BETWEEN BRIDGE SEATS BUILDUPS, SEE SECTION A-A ON SHEET 5 OF 8.

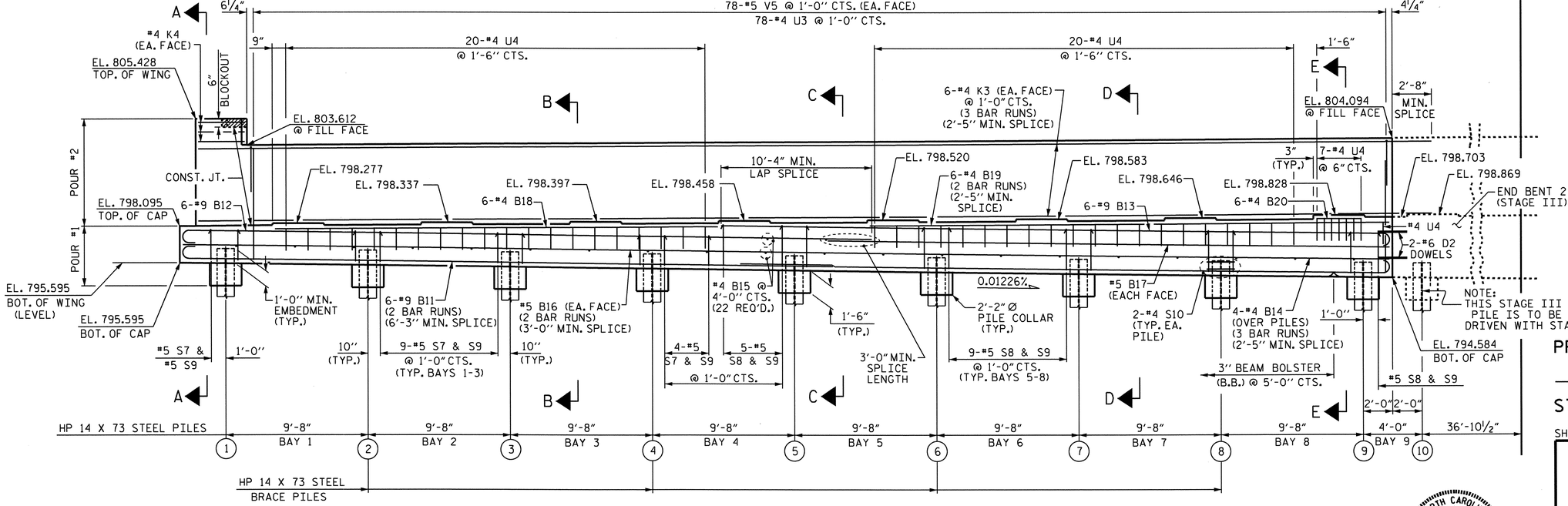


## ELEVATION

BRACE PILE IN WING WALL AND DETAILS OF WING WALL W2 NOT SHOWN FOR CLARITY.

THE CONTRACTOR'S ATTENTION IS CALLED TO THE FACT, THAT DUE TO THE PROXIMITY OF THE POWER TRANSMISSION LINES, MULTIPLE SPLICES MAY BE REQUIRED TO INSTALL PILES.

NORTH CAROLINA PROFESSIONAL SEAL 21545 ENGINEER STEVEN L. WANCE

01/03/12

PROJECT NO. I-3819A

IREDELL COUNTY

STATION: 92+04.00 -L-

SHEET 3 OF 8

STATE OF NORTH CAROLINA
DEPARTMENT OF TRANSPORTATION
RALEIGH

SUBSTRUCTURE

END BENT 2

STAGE II

| REVISIONS | | | | | | SHEET NO. |
|---|---|---|---|---|---|---|
| NO. | BY: | DATE: | NO. | BY: | DATE: | S-138 |
| 1 | | | 3 | | | TOTAL SHEETS |
| 2 | | | 4 | | | 382 |

STR. #3

DRAWN BY : S. WANCE DATE : 09/10
CHECKED BY : E. I. OMILE DATE : 12/10

03-JAN-2012 18:06
R:\Structures\Frye\str03\finalplans\I3819A_sd_EBts_03.dgn
swance

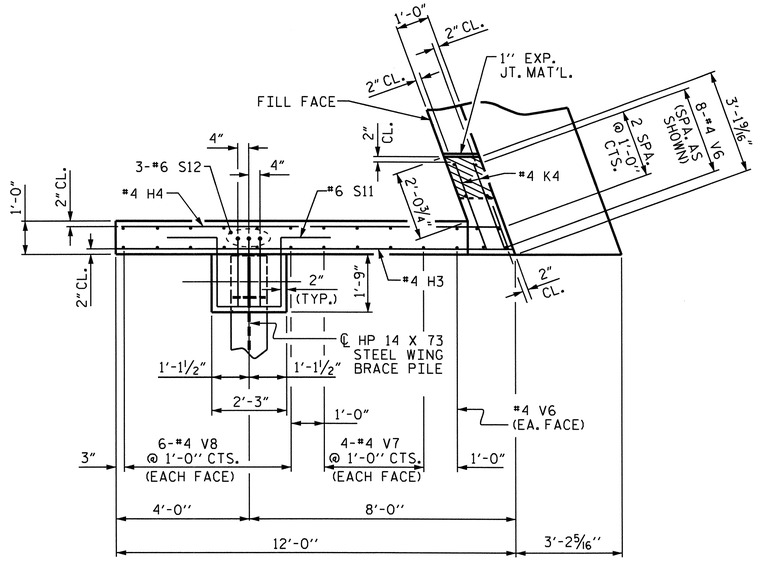


## PLAN OF WING (W1)

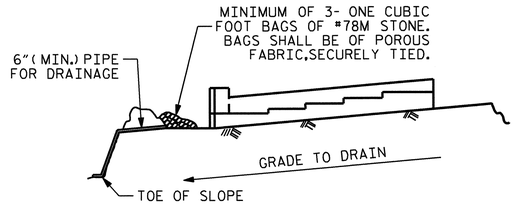


BAGGED STONE AND PIPE SHALL BE PLACED IMMEDIATELY AFTER COMPLETION OF END BENT EXCAVATION. PIPE MAY BE EITHER CONCRETE, CORRUGATED STEEL, CORRUGATED ALUMINUM ALLOY, OR CORRUGATED PLASTIC. PERFORATED PIPE WILL NOT BE ALLOWED.

BAGGED STONE SHALL REMAIN IN PLACE UNTIL THE ENGINEER DIRECTS THAT IT BE REMOVED. THE CONTRACTOR SHALL REMOVE AND DISPOSE OF SILT ACCUMULATIONS AT BAGGED STONE WHEN SO DIRECTED BY THE ENGINEER. BAGS SHALL BE REMOVED AND REPLACED WHENEVER THE ENGINEER DETERMINES THAT THEY HAVE DETERIORATED AND LOST THEIR EFFECTIVENESS.

NO SEPARATE PAYMENT WILL BE MADE FOR THIS WORK AND THE ENTIRE COST OF THIS WORK SHALL BE INCLUDED IN THE UNIT CONTRACT PRICE BID FOR THE SEVERAL PAY ITEMS.

## TEMPORARY DRAINAGE AT END BENT

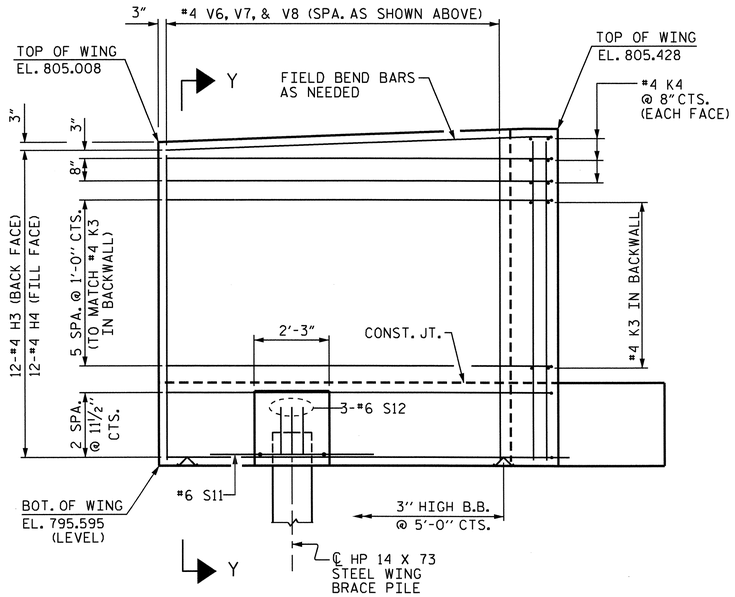


## ELEVATION OF WING (W1)

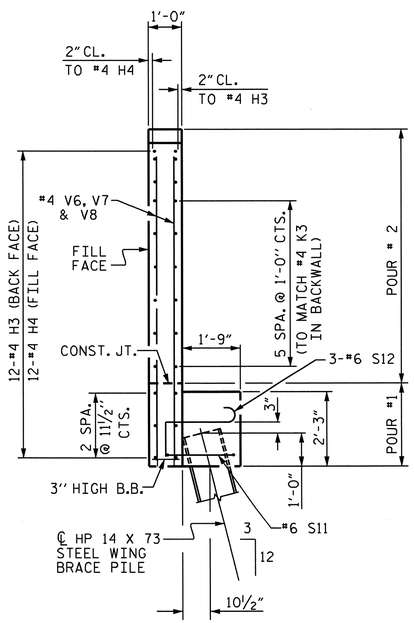


## SECTION Y-Y

STATE OF NORTH CAROLINA PROFESSIONAL SEAL 21545 ENGINEER STEVEN L. WANCE

01/03/12

PROJECT NO. I-3819A

IREDELL COUNTY

STATION: 92+04.00 -L-

SHEET 4 OF 8

STATE OF NORTH CAROLINA
DEPARTMENT OF TRANSPORTATION
RALEIGH

SUBSTRUCTURE

END BENT 2

STAGE II WING

| REVISIONS | | | | | | SHEET NO. |
|---|---|---|---|---|---|---|
| NO. | BY: | DATE: | NO. | BY: | DATE: | S-139 |
| 1 | | | 3 | | | TOTAL SHEETS |
| 2 | | | 4 | | | 382 |

STR. #3

DRAWN BY : S.WANce PE DATE : 10/10

CHECKED BY : E. I. OMILE DATE : 12/10

03-JAN-2012 18:06
R:\Structures\frye\str03\finalplans\I3819A_sd_EBts_03.dgn
swance

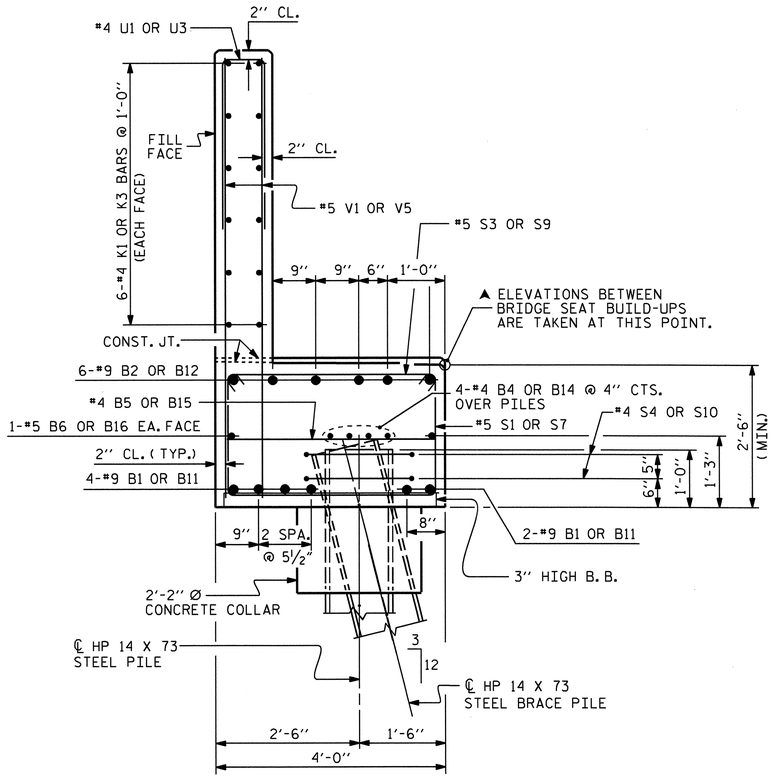


SECTION A-A

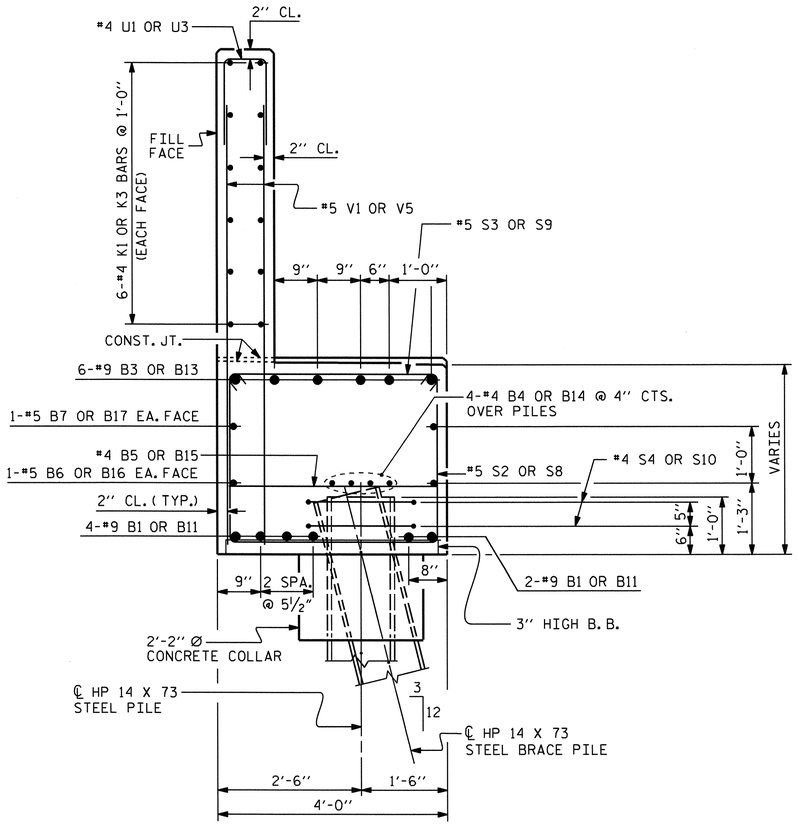


SECTION C-C

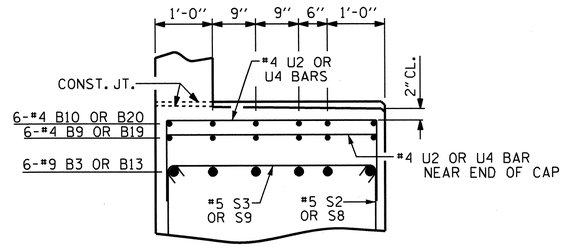


PARTIAL SECTION E-E
UNDER GIRDER C8 & C17

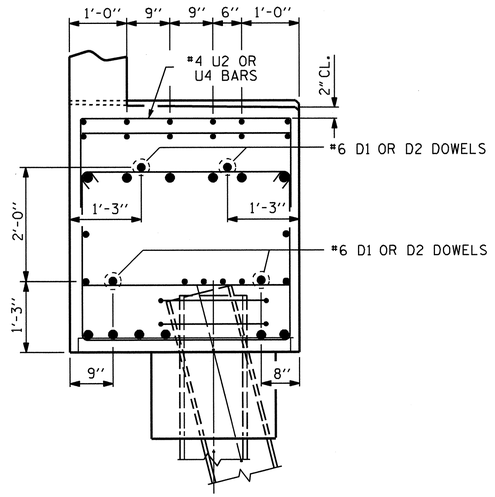


SECTION AT STAGED
CONSTRUCTION JOINTS
SHOWING DOWELS

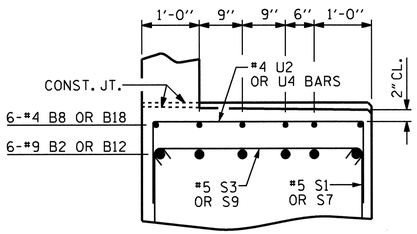


PARTIAL SECTION B-B

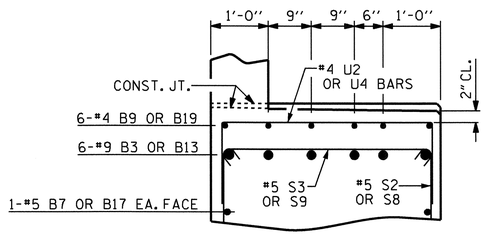


PARTIAL SECTION D-D

PROJECT NO. I-3819A
IREDELL COUNTY
STATION: 92+04.00 -L-

SHEET 5 OF 8

STATE OF NORTH CAROLINA
DEPARTMENT OF TRANSPORTATION
RALEIGH

SUBSTRUCTURE
END BENT 2
STAGE I & II
DETAILS

| REVISIONS | | | | | | SHEET NO. |
|---|---|---|---|---|---|---|
| NO. | BY: | DATE: | NO. | BY: | DATE: | S-140 |
| 1 | | | 3 | | | TOTAL SHEETS |
| 2 | | | 4 | | | 382 |

STR. #3

NORTH CAROLINA PROFESSIONAL SEAL 21545 ENGINEER STEVEN L. WANCE
01/03/12

DRAWN BY : S. WANce PE DATE : 10/10
CHECKED BY : E. I. OMILE DATE : 12/10

03-JAN-2012 18:06
R:\Structures\Frye\str03\finalplans\I3819A_sd_EBts_03.dgn
swance

## BAR TYPES

ALL BAR DIMENSIONS ARE OUT TO OUT.

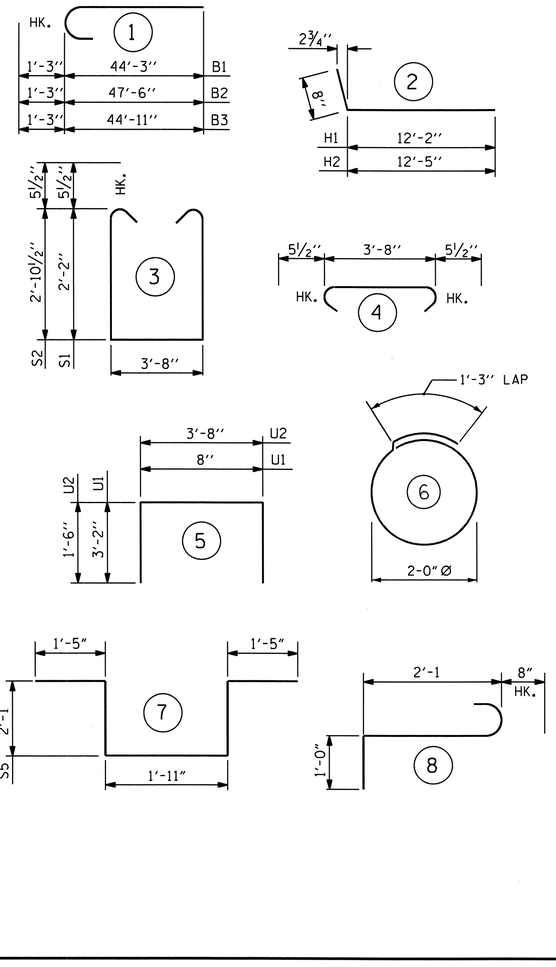


## BILL OF MATERIAL

### END BENT 2 - STAGE I

| BAR | NO. | SIZE | TYPE | LENGTH | WEIGHT |
|---|---|---|---|---|---|
| B1 | 12 | #9 | 1 | 45'-6" | 1856 |
| B2 | 6 | #9 | 1 | 48'-9" | 995 |
| B3 | 6 | #9 | 1 | 46'-2" | 942 |
| B4 | 12 | #4 | STR | 29'-0" | 232 |
| B5 | 22 | #4 | STR | 3'-8" | 54 |
| B6 | 4 | #5 | STR | 42'-7" | 178 |
| B7 | 2 | #5 | STR | 37'-7" | 78 |
| B8 | 6 | #4 | STR | 30'-0" | 120 |
| B9 | 12 | #4 | STR | 19'-0" | 152 |
| B10 | 6 | #4 | STR | 3'-2" | 13 |
| | | | | | |
| D1 | 4 | #6 | STR | 2'-0" | 12 |
| | | | | | |
| H1 | 12 | #4 | 2 | 12'-10" | 103 |
| H2 | 12 | #4 | 2 | 13'-1" | 105 |
| | | | | | |
| K1 | 36 | #4 | STR | 30'-0" | 721 |
| K2 | 6 | #4 | STR | 2'-9" | 11 |
| | | | | | |
| S1 | 33 | #5 | 3 | 8'-11" | 307 |
| S2 | 41 | #5 | 3 | 10'-4" | 442 |
| S3 | 74 | #5 | 4 | 4'-7" | 354 |
| S4 | 18 | #4 | 6 | 7'-7" | 91 |
| S5 | 1 | #6 | 7 | 8'-11" | 13 |
| S6 | 3 | #6 | 8 | 3'-9" | 17 |
| | | | | | |
| | | | | | |
| U1 | 79 | #4 | 5 | 7'-0" | 369 |
| U2 | 48 | #4 | 5 | 6'-8" | 214 |
| | | | | | |
| V1 | 158 | #5 | STR | 7'-9" | 1277 |
| V2 | 10 | #4 | STR | 9'-7" | 64 |
| V3 | 10 | #4 | STR | 9'-4" | 62 |
| V4 | 12 | #4 | STR | 9'-2" | 73 |

| | | |
|---|---|---|
| REINFORCING STEEL | LBS. | 8855 |
| CLASS A CONCRETE BREAKDOWN : | | |
| POUR #1 - CAP, LOWER WING, & COLLARS | CU. YDS. | 43.7 |
| POUR #2 - BACKWALL & UPPER WING | CU. YDS. | 20.3 |
| TOTAL | CU. YDS. | 64.0 |
| HP 14 x 73 STEEL PILES NO. = 11 | LIN. FT. | 715 |
| STEEL PILE POINTS | EA. | 11 |

## BAR TYPES

ALL BAR DIMENSIONS ARE OUT TO OUT.

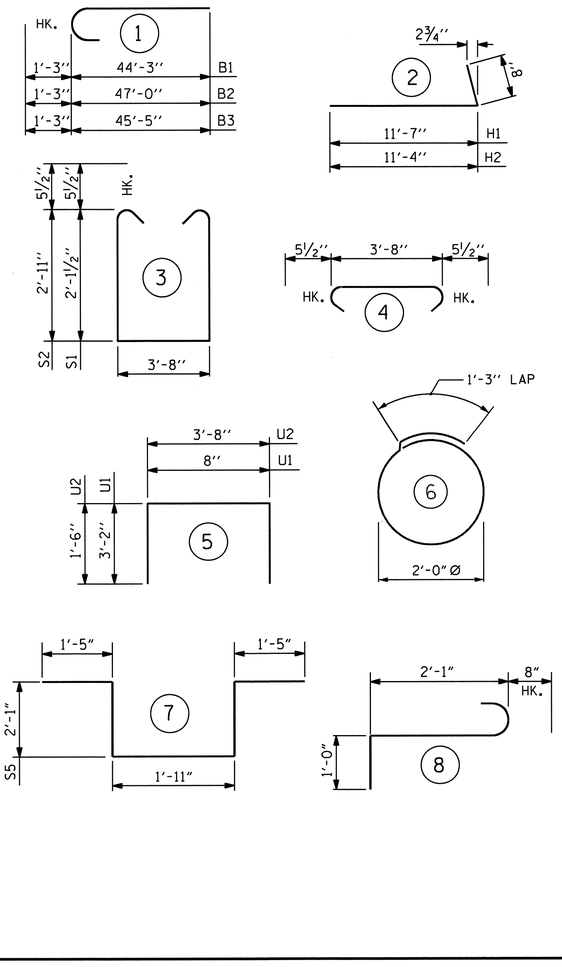


## BILL OF MATERIAL

### END BENT 2 - STAGE II

| BAR | NO. | SIZE | TYPE | LENGTH | WEIGHT |
|---|---|---|---|---|---|
| B11 | 12 | #9 | 1 | 45'-6" | 1856 |
| B12 | 6 | #9 | 1 | 48'-3" | 984 |
| B13 | 6 | #9 | 1 | 46'-8" | 952 |
| B14 | 12 | #4 | STR | 29'-0" | 232 |
| B15 | 22 | #4 | STR | 3'-8" | 54 |
| B16 | 4 | #5 | STR | 42'-7" | 178 |
| B17 | 2 | #5 | STR | 38'-4" | 80 |
| B18 | 6 | #4 | STR | 30'-0" | 120 |
| B19 | 12 | #4 | STR | 19'-0" | 152 |
| B20 | 6 | #4 | STR | 3'-2" | 13 |
| | | | | | |
| D2 | 4 | #6 | STR | 2'-0" | 12 |
| | | | | | |
| H3 | 12 | #4 | 2 | 12'-3" | 98 |
| H4 | 12 | #4 | 2 | 12'-0" | 96 |
| | | | | | |
| K3 | 36 | #4 | STR | 30'-0" | 721 |
| K4 | 6 | #4 | STR | 2'-9" | 11 |
| | | | | | |
| S7 | 32 | #5 | 3 | 8'-11" | 298 |
| S8 | 42 | #5 | 3 | 10'-4" | 442 |
| S9 | 74 | #5 | 4 | 4'-7" | 354 |
| S10 | 18 | #4 | 6 | 7'-7" | 91 |
| S11 | 1 | #6 | 7 | 8'-11" | 13 |
| S12 | 3 | #6 | 8 | 3'-9" | 17 |
| | | | | | |
| | | | | | |
| U3 | 78 | #4 | 5 | 7'-0" | 365 |
| U4 | 48 | #4 | 5 | 6'-8" | 214 |
| | | | | | |
| V5 | 156 | #5 | STR | 7'-8" | 1247 |
| V6 | 10 | #4 | STR | 9'-5" | 63 |
| V7 | 8 | #4 | STR | 9'-2" | 49 |
| V8 | 12 | #4 | STR | 9'-0" | 72 |

| | | |
|---|---|---|
| REINFORCING STEEL | LBS. | 8784 |
| CLASS A CONCRETE BREAKDOWN : | | |
| POUR #1 - CAP, LOWER WING, & COLLARS | CU. YDS. | 43.6 |
| POUR #2 - BACKWALL & UPPER WING | CU. YDS. | 19.4 |
| TOTAL | CU. YDS. | 63.0 |
| HP 14 x 73 STEEL PILES NO. = 11 | LIN. FT. | 385 |
| STEEL PILE POINTS | EA. | 11 |

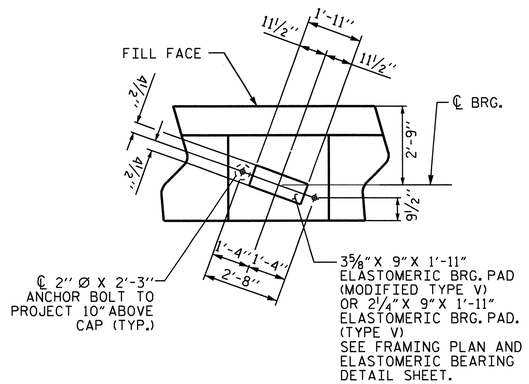


DETAIL "A"

(TYP. EA. GDR.)

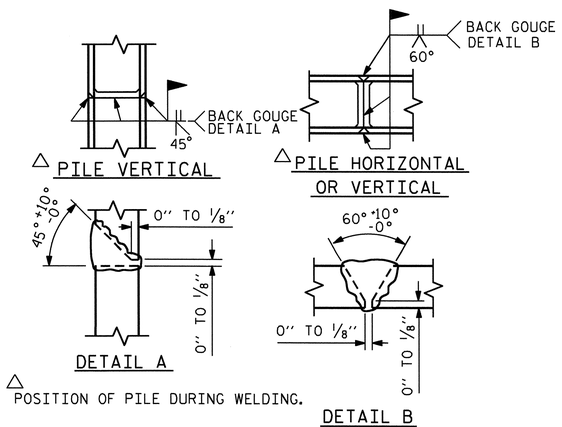


△ POSITION OF PILE DURING WELDING.

PILE SPLICE DETAILS

PROJECT NO. I-3819A

IREDELL COUNTY

STATION: 92+04.00 -L-

SHEET 6 OF 8

STATE OF NORTH CAROLINA
DEPARTMENT OF TRANSPORTATION
RALEIGH

SUBSTRUCTURE

END BENT 2

STAGE I & II

| REVISIONS | | | | | | SHEET NO. |
|---|---|---|---|---|---|---|
| NO. | BY: | DATE: | NO. | BY: | DATE: | S-141 |
| 1 | | | 3 | | | TOTAL SHEETS |
| 2 | | | 4 | | | 382 |

STR. #3

NORTH CAROLINA PROFESSIONAL SEAL 21545 ENGINEER STEVEN W. WANCE

01/03/12

DRAWN BY : S. WANce PE DATE : 10/10

CHECKED BY : E. I. OMILE DATE : 12/10

03-JAN-2012 18:06
R:\Structures\Frye\str03\finalplans\I3819A_sd_EBts_03.dgn
swance

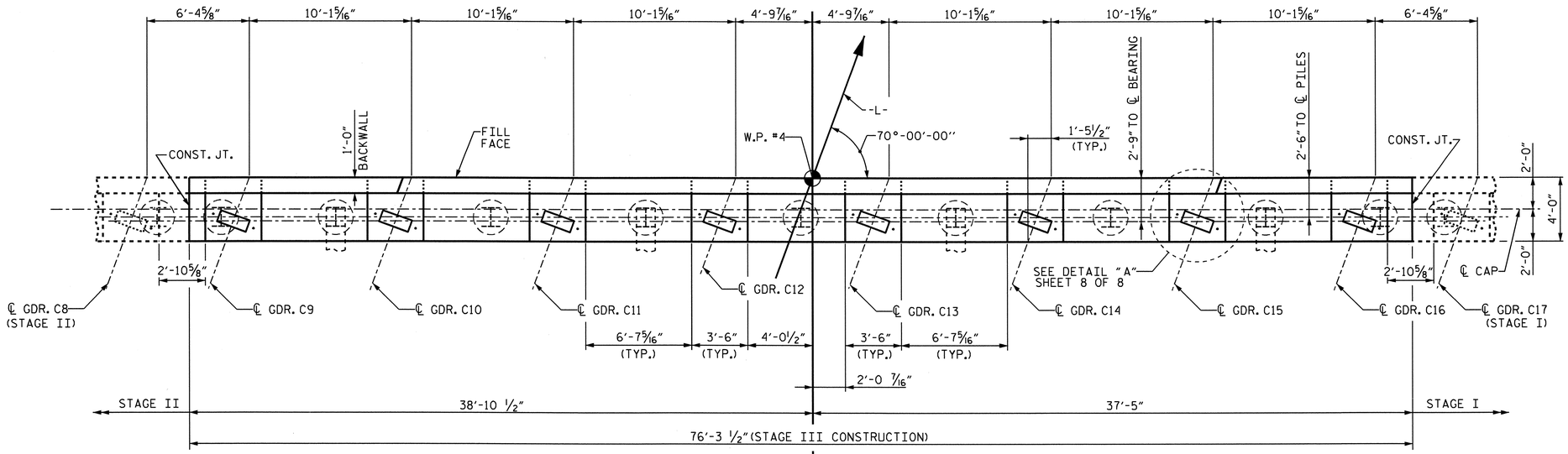


PLAN

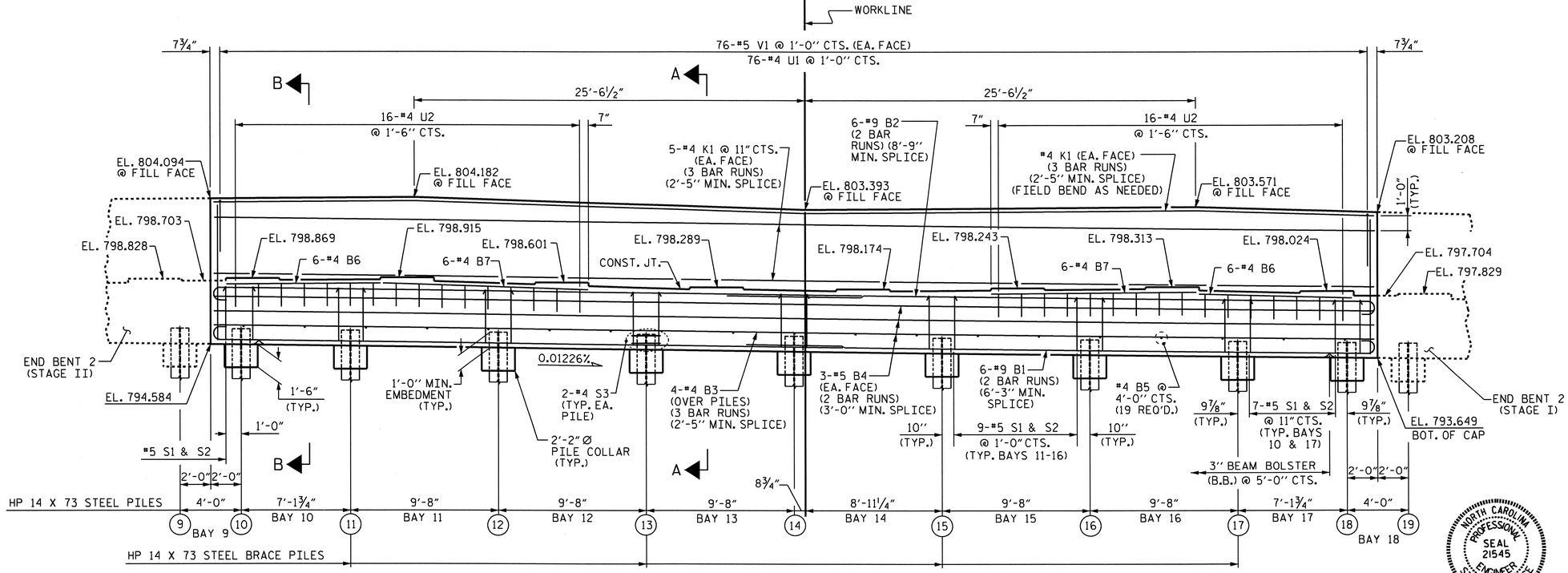


ELEVATION

THE CONTRACTOR'S ATTENTION IS CALLED TO THE FACT, THAT DUE TO THE PROXIMITY OF THE POWER TRANSMISSION LINES, MULTIPLE SPLICES MAY BE REQUIRED TO INSTALL PILES.

| TOP OF PILE ELEVATIONS | |
|---|---|
| (10) | EL. 795.598 |
| (11) | EL. 795.479 |
| (12) | EL. 795.361 |
| (13) | EL. 795.242 |
| (14) | EL. 795.124 |
| (15) | EL. 795.005 |
| (16) | EL. 794.887 |
| (17) | EL. 794.768 |
| (18) | EL. 794.681 |

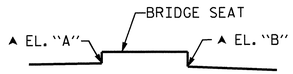


| ELEVATIONS BETWEEN BRIDGE SEATS | | |
|---|---|---|
| LOCATION | EL. A | EL. B |
| GDR. C9 | 798.703 | 798.744 |
| GDR. C10 | 798.790 | 798.681 |
| GDR. C11 | 798.476 | 798.367 |
| GDR. C12 | 798.164 | 798.164 |
| GDR. C13 | 798.049 | 798.049 |
| GDR. C14 | 798.102 | 798.118 |
| GDR. C15 | 798.188 | 798.089 |
| GDR. C16 | 797.899 | 797.704 |

▲ FOR LOCATION OF ELEVATIONS BETWEEN BRIDGE SEATS BUILDUPS, SEE SECTION A-A ON SHEET 8 OF 8

PROJECT NO. I-3819A

IREDELL COUNTY

STATION: 92+04.00 -L-

SHEET 7 OF 8

STATE OF NORTH CAROLINA
DEPARTMENT OF TRANSPORTATION
RALEIGH

SUBSTRUCTURE

END BENT 2

STAGE III

| REVISIONS | | | | | | SHEET NO. |
|---|---|---|---|---|---|---|
| NO. | BY: | DATE: | NO. | BY: | DATE: | S-142 |
| 1 | | | 3 | | | TOTAL SHEETS |
| 2 | | | 4 | | | 382 |

STR. #3

NORTH CAROLINA PROFESSIONAL SEAL 21545 ENGINEER STEVEN L. WANCE

01/03/12

DRAWN BY : S. WANCE DATE : 09/10
CHECKED BY : E. I. OMILE DATE : 12/10

03-JAN-2012 18:06
R:\Structures\Frye\str03\finalplans\I3819A_sd_EBts_03.dgn
swance

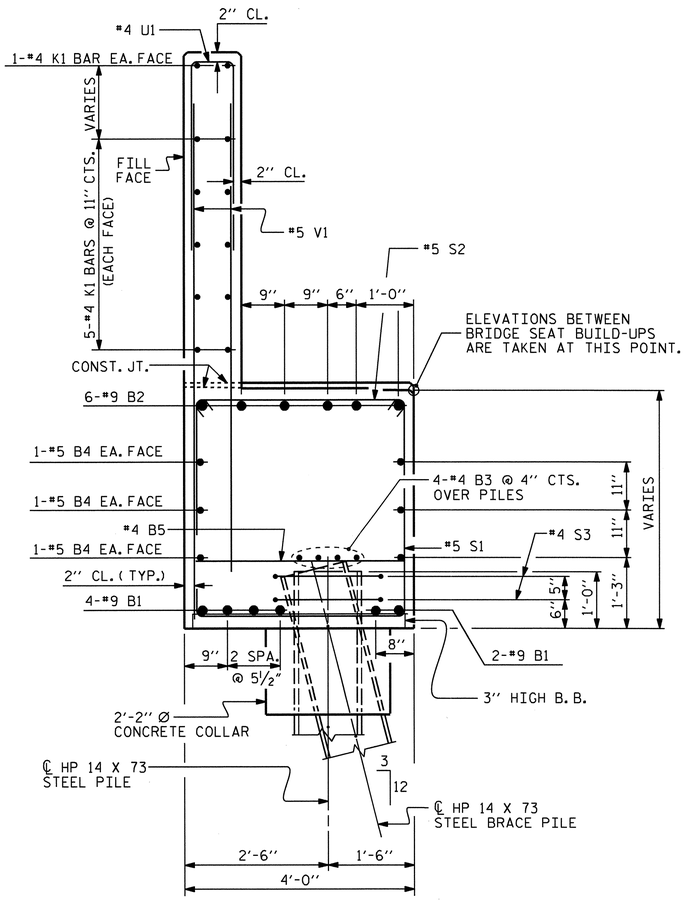


SECTION A-A

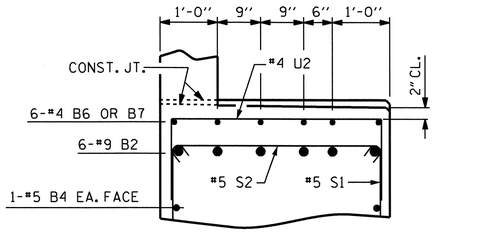


PARTIAL SECTION B-B

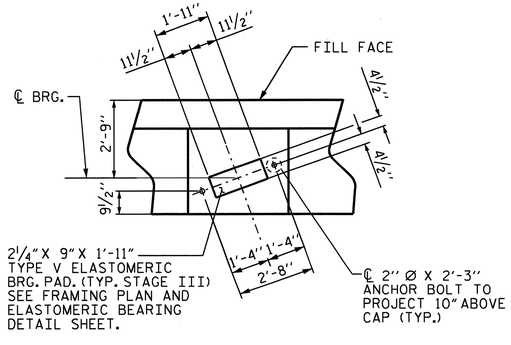


DETAIL "A"

(TYP. EA. GDR.)

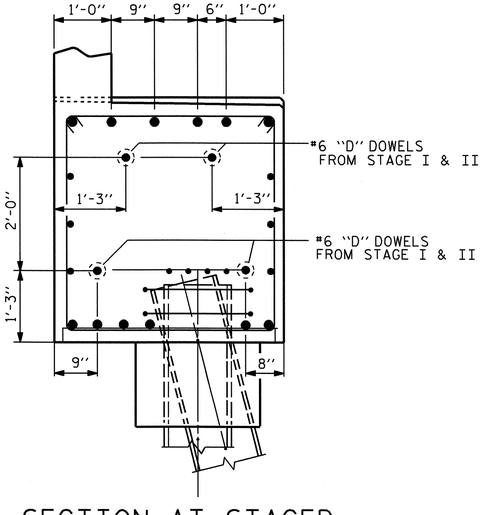


SECTION AT STAGED CONSTRUCTION JOINTS SHOWING DOWELS

## BAR TYPES

ALL BAR DIMENSIONS ARE OUT TO OUT.

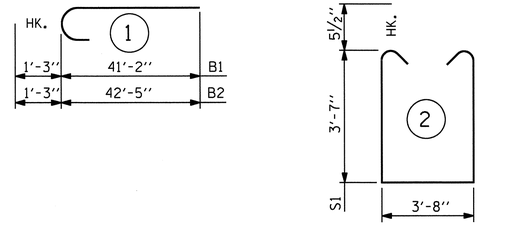


## BILL OF MATERIAL

### END BENT 2 - STAGE III

| BAR | NO. | SIZE | TYPE | LENGTH | WEIGHT |
|---|---|---|---|---|---|
| B1 | 12 | #9 | 1 | 42'-5" | 1731 |
| B2 | 12 | #9 | 1 | 43'-8" | 1782 |
| B3 | 12 | #4 | STR | 27'-0" | 216 |
| B4 | 12 | #5 | STR | 39'-6" | 494 |
| B5 | 19 | #4 | STR | 3'-8" | 47 |
| B6 | 12 | #4 | STR | 10'-0" | 80 |
| B7 | 12 | #4 | STR | 13'-5" | 108 |
| K1 | 36 | #4 | STR | 27'-0" | 649 |
| S1 | 70 | #5 | 2 | 11'-9" | 858 |
| S2 | 70 | #5 | 3 | 4'-7" | 335 |
| S3 | 18 | #4 | 5 | 7'-7" | 91 |
| U1 | 76 | #4 | 4 | 5'-0" | 254 |
| U2 | 32 | #4 | 4 | 6'-8" | 143 |
| V1 | 152 | #5 | STR | 8'-10" | 1400 |

| | | |
|---|---|---|
| REINFORCING STEEL | LBS. | 8188 |
| CLASS A CONCRETE BREAKDOWN : | | |
| POUR #1 - CAP & COLLARS | CU. YDS. | 49.5 |
| POUR #2 - BACKWALL | CU. YDS. | 15.3 |
| TOTAL | CU. YDS. | 64.8 |
| HP 14 x 73 STEEL PILES NO. = 7 | LIN. FT. | 280 |
| STEEL PILE POINTS | EA. | 7 |

## NOTES

STIRRUPS IN CAP MAY BE SHIFTED AS NECESSARY TO CLEAR ANCHOR BOLTS.

FOR PILE SPLICE DETAILS, SEE SHEET 6 OF 8.

FOR TEMPORARY DRAINAGE AT END BENT 2, SEE SHEETS 2 AND 4 OF 8.

BACKWALL SHALL BE PLACED BEFORE APPLYING THE EPOXY PROTECTIVE COATING.

THE TOP SURFACE AREAS OF THE END BENT CAPS SHALL BE CURED IN ACCORDANCE WITH THE STANDARD SPECIFICATIONS EXCEPT THE MEMBRANE CURING COMPOUND METHOD SHALL NOT BE USED.

THE TOP SURFACE OF THE CAP EXCEPT THE BRIDGE SEAT BUILDUPS SHALL BE SLOPED TRANSVERSELY FROM THE FILL FACE TO THE BACK FACE AT THE RATE OF 2%.

THE CONCRETE IN THE SHADED AREA OF THE WING SHALL BE POURED AFTER THE JOINT BETWEEN THE DECK AND THE APPROACH SLAB HAS BEEN FORMED AND THE BARRIER RAIL HAS BEEN CAST IF SLIP FORMING IS USED.

THE CONTRACTOR SHALL PROVIDE FOR INSTALLATION OF THE 4" DIAMETER DRAIN PIPE THROUGH THE WING WALL AS REQUIRED FOR REINFORCED BRIDGE APPROACH FILLS, SEE THE ROADWAY PLANS. REINFORCING STEEL IN THE WING WALL MAY BE SHIFTED AS NECESSARY TO CLEAR THE DRAIN PIPE.

THE #5 V1 AND V5 BARS SHALL BE PLACED 2" CLEAR FROM THE TOP OF THE BACKWALL.

STEEL H PILE POINTS ARE REQUIRED FOR ALL STEEL H PILES. FOR STEEL PILE POINTS, SEE SECTION 450 OF THE STANDARD SPECIFICATIONS.

NORTH CAROLINA PROFESSIONAL SEAL 21545 ENGINEER STEVEN K. WANCE

01/03/12

PROJECT NO. I-3819A

IREDELL COUNTY

STATION: 92+04.00 -L-

SHEET 8 OF 8

STATE OF NORTH CAROLINA
DEPARTMENT OF TRANSPORTATION
RALEIGH

SUBSTRUCTURE

END BENT 2

STAGE III DETAILS

| REVISIONS | | | | | | SHEET NO. |
|---|---|---|---|---|---|---|
| NO. | BY: | DATE: | NO. | BY: | DATE: | S-143 |
| 1 | | | 3 | | | TOTAL SHEETS |
| 2 | | | 4 | | | 382 |

STR. #3

DRAWN BY : S. WANce PE DATE : 10/10

CHECKED BY : E. I. OMILE DATE : 12/10

03-JAN-2012 18:06
R:\Structures\Frye\str03\finalplans\I3819A_sd_EBts_03.dgn
swance

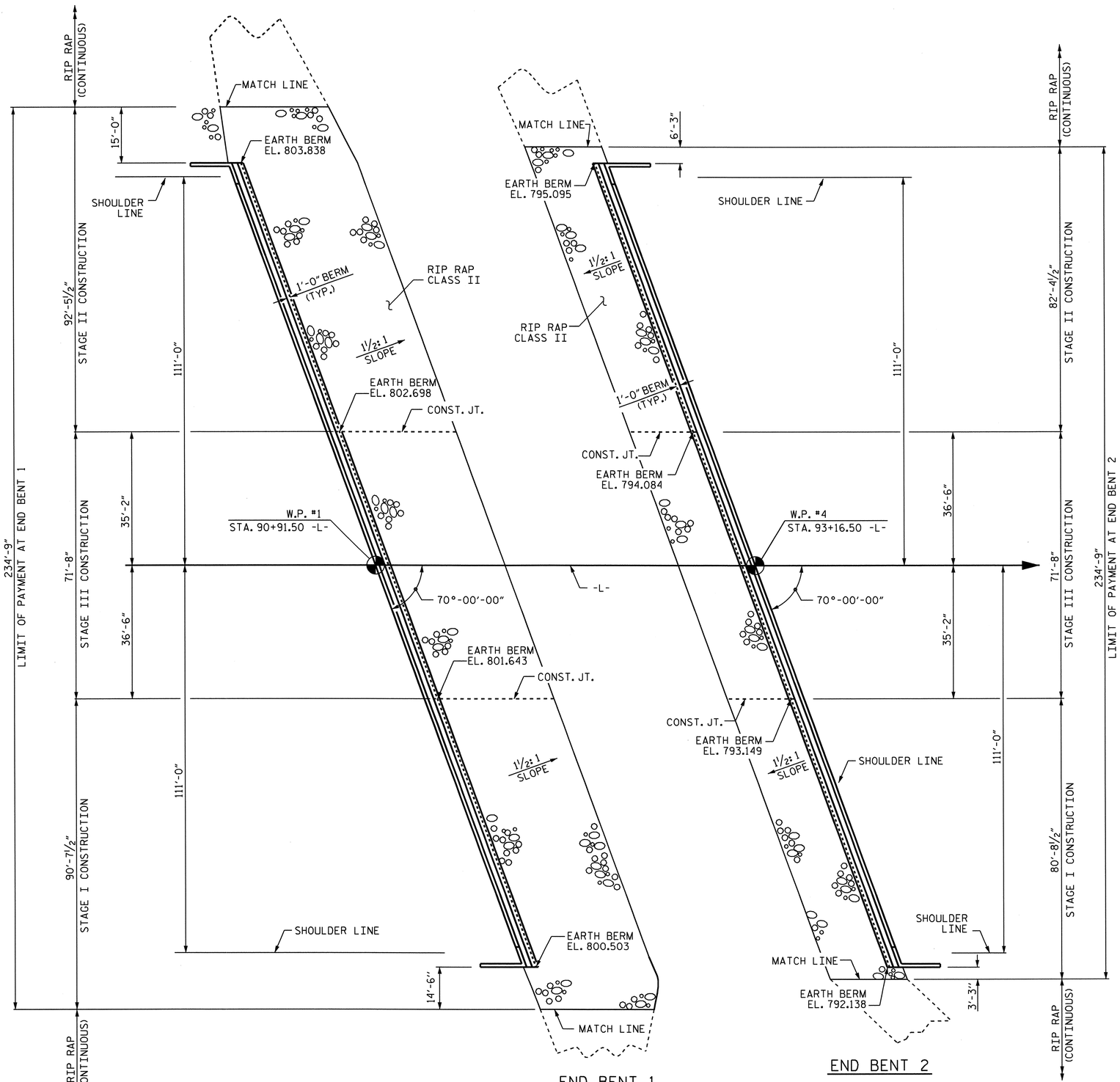


PLAN

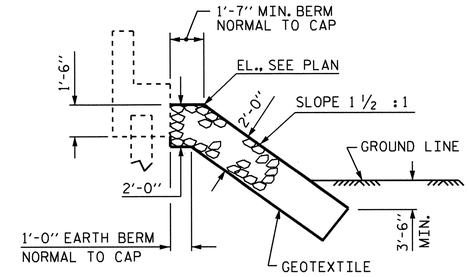


℄ SECTION
BERM RIP RAPPED

## ESTIMATED QUANTITIES

| BRIDGE @ STA. 92+04.00 -L- | RIP RAP CLASS II (TONS) | | | GEOTEXTILE FOR DRAINAGE (SQ. YARDS) | | |
|---|---|---|---|---|---|---|
| | END BENT 1 | END BENT 2 | TOTAL | END BENT 1 | END BENT 2 | TOTAL |
| STAGE I | 340 | 170 | 510 | 380 | 190 | 570 |
| STAGE II | 380 | 210 | 590 | 420 | 235 | 655 |
| STAGE III | 280 | 170 | 450 | 310 | 190 | 500 |
| TOTAL | 1,000 | 550 | 1,550 | 1,110 | 615 | 1,725 |

PROJECT NO. I-3819A

IREDELL COUNTY

STATION: 92+04.00 -L-

STATE OF NORTH CAROLINA
DEPARTMENT OF TRANSPORTATION
RALEIGH
STANDARD

# RIP RAP DETAILS

NORTH CAROLINA PROFESSIONAL SEAL 16301 ENGINEER TYNG HSIUNG FANG
12/29/11

| REVISIONS | | | | | | SHEET NO. |
|---|---|---|---|---|---|---|
| NO. | BY: | DATE: | NO. | BY: | DATE: | S-144 |
| 1 | | | 3 | | | TOTAL SHEETS |
| 2 | | | 4 | | | 382 |

DRAWN BY : D.R. WITHROW DATE : 9/16/09
CHECKED BY : T. H. FANG DATE : 11/18/11

29-DEC-2011 16:14
K:\TIPProjects-I\I3819A\Structures\Frye\str03\finalplans\I3819a-SD_RR_03.dgn
ttfang

STR. 3

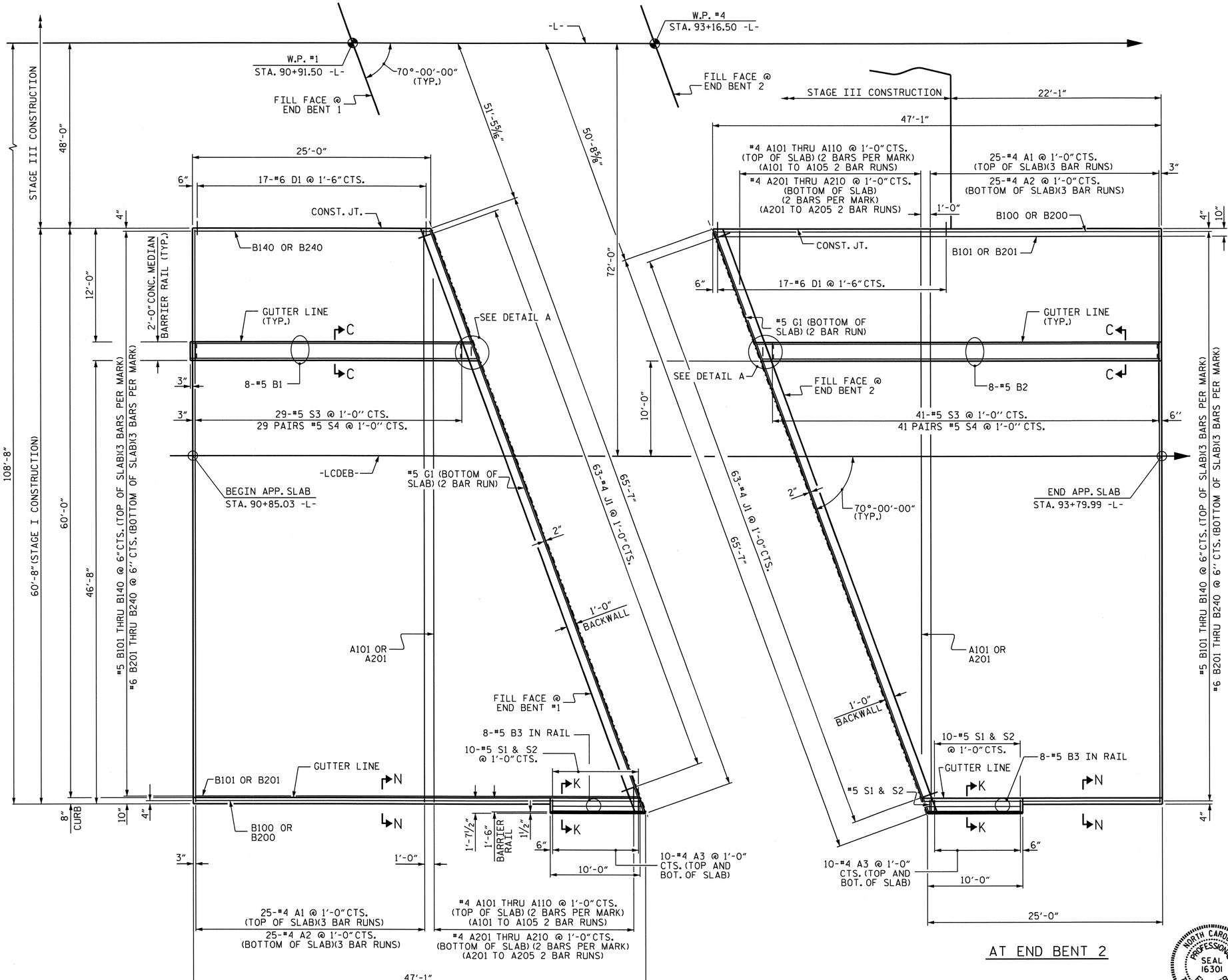


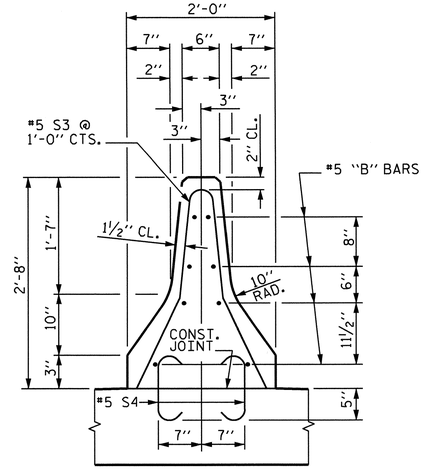


## SECTION C-C

#5 S4 MAY BE PUSHED INTO GREEN CONCRETE AFTER SCREEDING

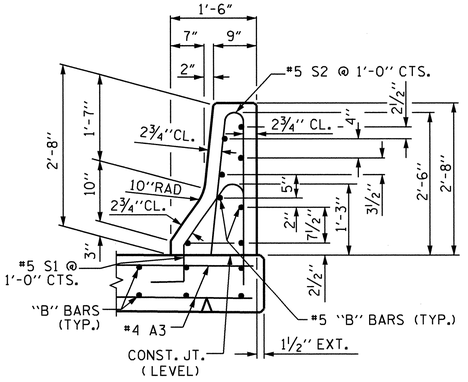


## SECTION K-K

PROJECT NO. I-3819A

IREDELL COUNTY

STATION: 92+04.00 -L-

SHEET 1 OF 5

STATE OF NORTH CAROLINA
DEPARTMENT OF TRANSPORTATION
RALEIGH

# BRIDGE APPROACH SLAB FOR RIGID PAVEMENT

STAGE I

| REVISIONS | | | | | | SHEET NO. |
|---|---|---|---|---|---|---|
| NO. | BY: | DATE: | NO. | BY: | DATE: | S-145 |
| 1 | | | 3 | | | TOTAL SHEETS |
| 2 | | | 4 | | | 382 |

NORTH CAROLINA PROFESSIONAL SEAL 16301 ENGINEER TING HSIANG FANG

12/30/11

DRAWN BY : A. SORSENGINH DATE : 7/14/10
CHECKED BY : T. H. FANG DATE : 11/21/11

30-DEC-2011 14:40
R:\Structures\Frye\str03\finalplans\I3819A_SD_AS_03.dgn
tfang

STR. #3

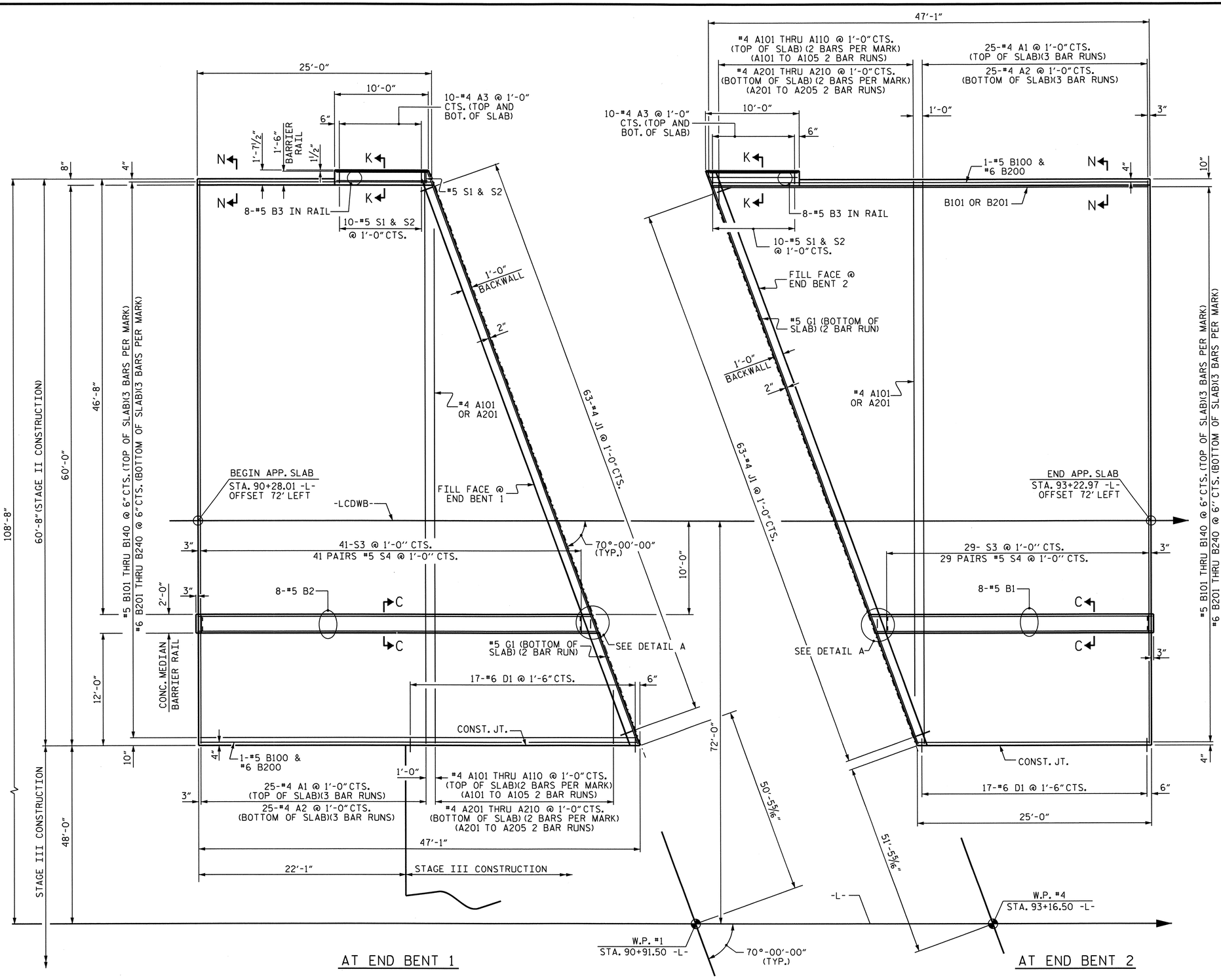


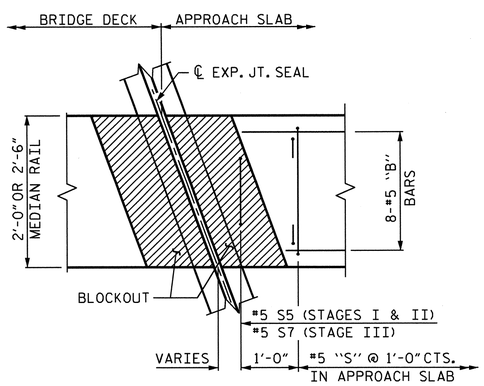


## DETAIL A

END BENT 2 SHOWN, END BENT 1 SIMILAR
(REINFORCING STEELS IN BRIDGE DECK SLAB NOT SHOWN FOR CLARITY.)

FOR STEEL COVER PLATE DETAILS, SEE SHEET NO. S-118.

## PLAN

DIMENSIONS SHOWN ARE TYPICAL FOR BOTH APPROACH SLABS

NORTH CAROLINA PROFESSIONAL SEAL 16301 ENGINEER TING HSIANG FANG
12/30/11

PROJECT NO. I-3819A
IREDELL COUNTY
STATION: 92+04.00 -L-

SHEET 2 OF 5

STATE OF NORTH CAROLINA
DEPARTMENT OF TRANSPORTATION
RALEIGH

# BRIDGE APPROACH SLAB FOR RIGID PAVEMENT

STAGE II

| REVISIONS | | | | | | SHEET NO. |
|---|---|---|---|---|---|---|
| NO. | BY: | DATE: | NO. | BY: | DATE: | S-146 |
| 1 | | | 3 | | | TOTAL SHEETS |
| 2 | | | 4 | | | 382 |

STR. #3

DRAWN BY : A. SORSENGINH DATE : 7/15/10
CHECKED BY : T. H. FANG DATE : 11/21/11

30-DEC-2011 14:40
R:\Structures\Frye\str03\finalplans\I3819A_SD_AS_03.dgn
tfang

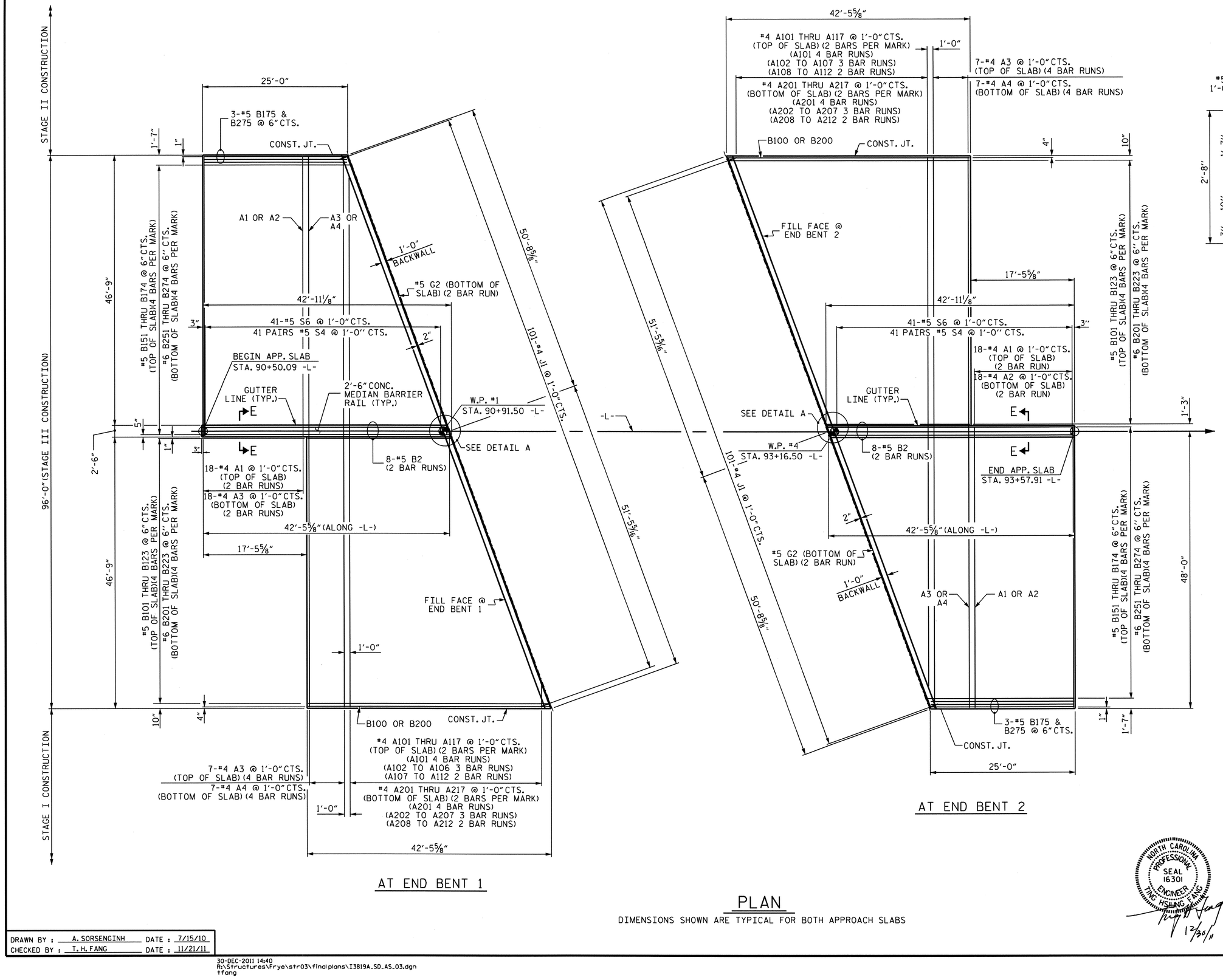


PLAN

DIMENSIONS SHOWN ARE TYPICAL FOR BOTH APPROACH SLABS

NORTH CAROLINA PROFESSIONAL SEAL 16301 ENGINEER TING HSIUNG FANG
12/30/11

DRAWN BY : A. SORSENGINH DATE : 7/15/10
CHECKED BY : T. H. FANG DATE : 11/21/11

30-DEC-2011 14:40
R:\Structures\Frye\str03\finalplans\I3819A_SD_AS_03.dgn
tfang

PROJECT NO. I-3819A
IREDELL COUNTY
STATION: 92+04.00 -L-

SHEET 3 OF 5

STATE OF NORTH CAROLINA
DEPARTMENT OF TRANSPORTATION
RALEIGH

BRIDGE APPROACH SLAB FOR RIGID PAVEMENT

STAGE III

| REVISIONS | | | | | | SHEET NO. |
|---|---|---|---|---|---|---|
| NO. | BY: | DATE: | NO. | BY: | DATE: | S-147 |
| 1 | | | 3 | | | TOTAL SHEETS |
| 2 | | | 4 | | | 382 |

STR. #3

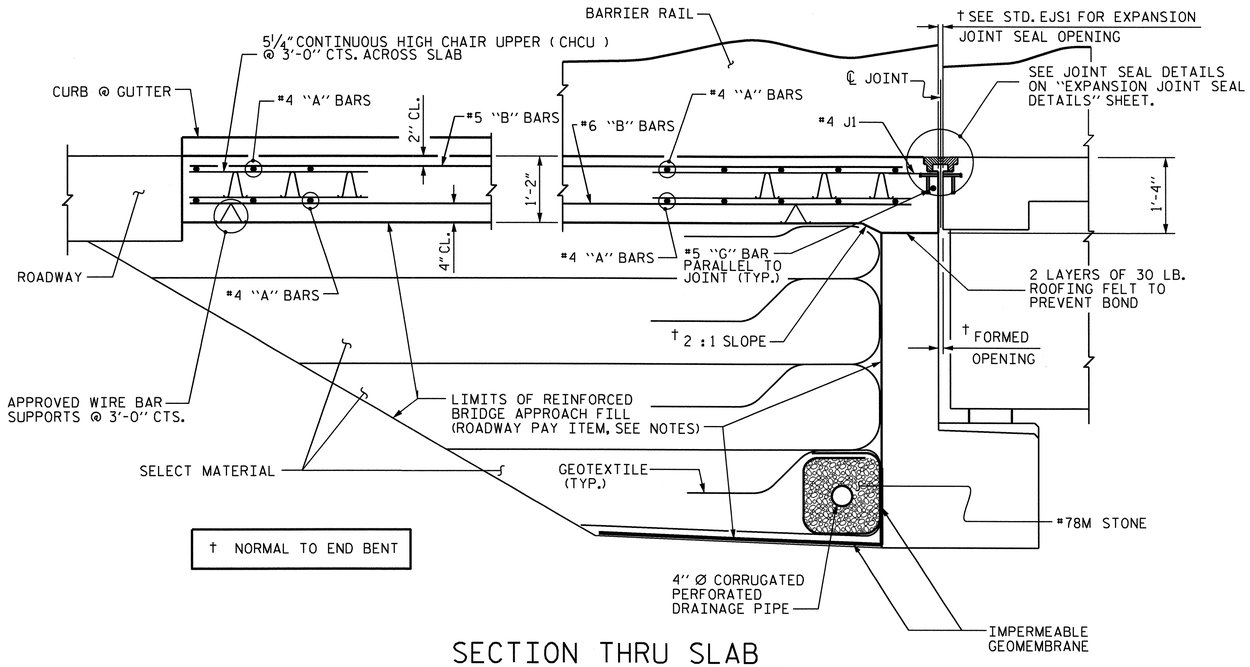


## SECTION THRU SLAB

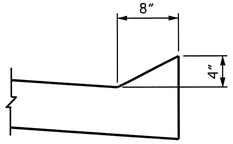


## SECTION N-N

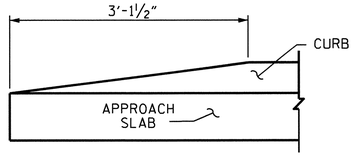


## END OF CURB WITHOUT SHOULDER BERM GUTTER

## CURB DETAILS

## NOTES

THE COST OF THE BARRIER RAILS AND CONCRETE MEDIAN BARRIERS ON THE APPROACH SLAB IS INCLUDED IN THE VARIOUS PAY ITEMS "CONCRETE BARRIER RAILS (LIN FT.)", "2'-0" CONCRETE MEDIAN BARRIER (LIN. FT.)" AND "2'-6" CONCRETE MEDIAN BARRIER (LIN. FT.)".

APPROACH SLAB SHALL NOT BE CONSTRUCTED PRIOR TO COMPLETION OF THE BRIDGE DECK.

FOR REINFORCED BRIDGE APPROACH FILL FABRIC WALL INCLUDING GEOTEXTILE, IMPERMEABLE GEOMEMBRANE, 4" Ø DRAINAGE PIPE, #78M STONE, WELDED WIRE FORM, AND SELECT MATERIAL, SEE ROADWAY PLANS.

AREA BETWEEN THE WINGWALL AND APPROACH SLAB SHALL BE GRADED TO DRAIN THE WATER AWAY FROM THE FILL FACE OF THE BRIDGE AND SHALL BE PAVED. SEE ROADWAY PLANS.

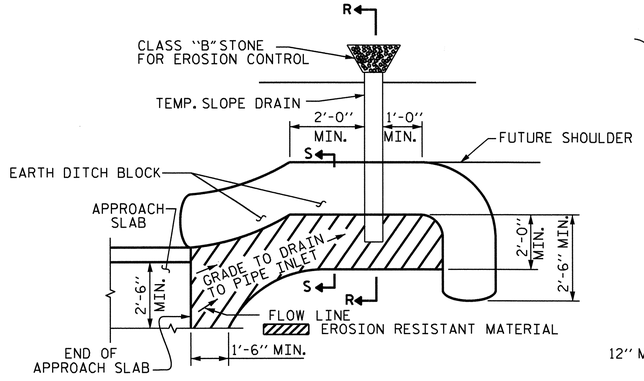


NOTE: IMMEDIATELY AFTER THE CONSTRUCTION OF THE APPROACH SLAB, THE CONTRACTOR SHALL PROVIDE TEMPORARY BERM AND SLOPE DRAIN. CONTRACTOR SHALL GRADE TO PIPE INLET AND PROVIDE EROSION RESISTANT MATERIAL AS SHOWN. THE EROSION RESISTANT MATERIAL SHALL BE EITHER 1) ASPHALT PLANT MIX, TYPE 1 OR TYPE 2, MIN. 2" DEPTH, 2) EROSION CONTROL MAT, OR 3) CONCRETE, AS DIRECTED BY THE ENGINEER. THE SLOPE DRAIN SHALL CONSIST OF A NON-PERFORATED TEMPORARY DRAINAGE PIPE, 12 INCHES IN DIAMETER.

## PLAN VIEW

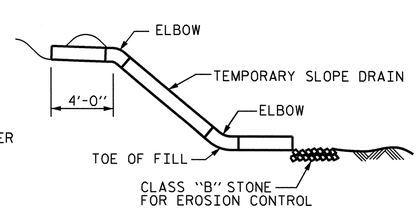


## SECTION R-R

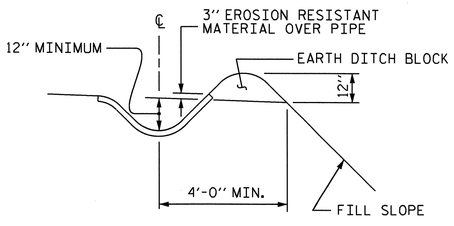


## SECTION S-S

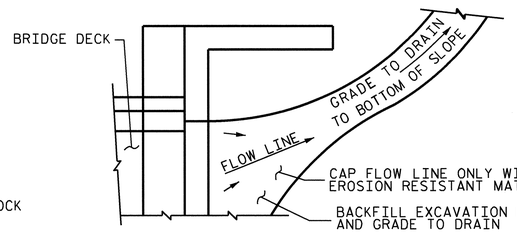


IF THE APPROACH SLAB IS NOT CONSTRUCTED IMMEDIATELY AFTER THE BACKFILLING OF THE END BENT EXCAVATION, GRADE TO DRAIN TO THE BOTTOM OF THE SLOPE AND PROVIDE EROSION RESISTANT MATERIAL, SUCH AS FIBERGLASS ROVING OR AS DIRECTED BY THE ENGINEER TO PREVENT SOIL EROSION AND TO PROTECT THE AREA ADJACENT TO THE STRUCTURE. THE CONTRACTOR WILL BE REQUIRED TO REMOVE THESE MATERIALS PRIOR TO CONSTRUCTION OF THE APPROACH SLAB.

## TEMPORARY DRAINAGE DETAIL

## TEMPORARY BERM AND SLOPE DRAIN DETAILS

| | |
|---|---|
| ASSEMBLED BY : A. SORSENGINH | DATE : 7/14/10 |
| CHECKED BY : T. H. FANG | DATE : 11/21/11 |
| DRAWN BY : RH 5/99 | REV. 7/10/01 LES/RDR |
| CHECKED BY : RDR 5/99 | REV. 5/7/03R RWW/JTE |
| | REV. 5/1/06R KMM/GM |

30-NOV-2011 11:27
R:\Structures\Frye\str03\finalplans\I3819A_SD_AS_03.dgn
sbwilliams

PROJECT NO. I-3819A

IREDELL COUNTY

STATION: 92+04.00 -L-

SHEET 4 OF 5

STATE OF NORTH CAROLINA
DEPARTMENT OF TRANSPORTATION
RALEIGH

# BRIDGE APPROACH SLAB FOR RIGID PAVEMENT

| REVISIONS | | | | | | SHEET NO. |
|---|---|---|---|---|---|---|
| NO. | BY: | DATE: | NO. | BY: | DATE: | S-148 |
| 1 | | | 3 | | | TOTAL SHEETS |
| 2 | | | 4 | | | 382 |

STR. #3

# BILL OF MATERIAL FOR STAGE I

| BAR | NO. | SIZE | TYPE | LENGTH | WEIGHT |
|---|---|---|---|---|---|
| ✱A1 | 150 | #4 | STR | 21'-6" | 2154 |
| A2 | 150 | #4 | STR | 21'-4" | 2138 |
| A3 | 40 | #4 | STR | 3'-0" | 80 |
| | | | | | |
| ✱A101 | 8 | #4 | STR | 28'-10" | 154 |
| ✱A102 | 8 | #4 | STR | 26'-1" | 139 |
| ✱A103 | 8 | #4 | STR | 23'-4" | 125 |
| ✱A104 | 8 | #4 | STR | 20'-7" | 110 |
| ✱A105 | 8 | #4 | STR | 17'-10" | 95 |
| ✱A106 | 4 | #4 | STR | 28'-1" | 75 |
| ✱A107 | 4 | #4 | STR | 22'-8" | 61 |
| ✱A108 | 4 | #4 | STR | 17'-2" | 46 |
| ✱A109 | 4 | #4 | STR | 11'-8" | 31 |
| ✱A110 | 4 | #4 | STR | 6'-2" | 16 |
| | | | | | |
| A201 | 8 | #4 | STR | 29'-2" | 156 |
| A202 | 8 | #4 | STR | 26'-5" | 141 |
| A203 | 8 | #4 | STR | 23'-8" | 126 |
| A204 | 8 | #4 | STR | 20'-11" | 112 |
| A205 | 8 | #4 | STR | 18'-5" | 99 |
| A206 | 4 | #4 | STR | 29'-1" | 78 |
| A207 | 4 | #4 | STR | 23'-7" | 63 |
| A208 | 4 | #4 | STR | 18'-1" | 48 |
| A209 | 4 | #4 | STR | 12'-7" | 34 |
| A210 | 4 | #4 | STR | 7'-2" | 19 |
| | | | | | |
| ✱B1 | 8 | #5 | STR | 29'-6" | 246 |
| ✱B2 | 8 | #5 | STR | 41'-11" | 350 |
| ✱B3 | 16 | #5 | STR | 9'-8" | 161 |
| | | | | | |
| ✱B100 | 2 | #5 | STR | 46'-3" | 96 |
| ✱B101 | 6 | #5 | STR | 45'-9" | 286 |
| ✱B102 | 6 | #5 | STR | 45'-2" | 283 |
| ✱B103 | 6 | #5 | STR | 44'-8" | 280 |
| ✱B104 | 6 | #5 | STR | 44'-1" | 276 |
| ✱B105 | 6 | #5 | STR | 43'-6" | 272 |
| ✱B106 | 6 | #5 | STR | 43'-0" | 269 |
| ✱B107 | 6 | #5 | STR | 42'-5" | 265 |
| ✱B108 | 6 | #5 | STR | 41'-11" | 262 |
| ✱B109 | 6 | #5 | STR | 41'-5" | 259 |
| ✱B110 | 6 | #5 | STR | 40'-10" | 256 |
| ✱B111 | 6 | #5 | STR | 40'-3" | 252 |
| ✱B112 | 6 | #5 | STR | 39'-8" | 248 |
| ✱B113 | 6 | #5 | STR | 39'-2" | 245 |
| ✱B114 | 6 | #5 | STR | 38'-7" | 241 |
| ✱B115 | 6 | #5 | STR | 38'-1" | 238 |
| ✱B116 | 6 | #5 | STR | 37'-6" | 235 |
| ✱B117 | 6 | #5 | STR | 37'-0" | 232 |
| ✱B118 | 6 | #5 | STR | 36'-5" | 228 |
| ✱B119 | 6 | #5 | STR | 35'-11" | 225 |
| ✱B120 | 6 | #5 | STR | 35'-4" | 221 |
| ✱B121 | 6 | #5 | STR | 34'-10" | 218 |
| ✱B122 | 6 | #5 | STR | 34'-3" | 214 |
| ✱B123 | 6 | #5 | STR | 33'-8" | 211 |
| ✱B124 | 6 | #5 | STR | 33'-2" | 208 |
| ✱B125 | 6 | #5 | STR | 32'-7" | 204 |
| ✱B126 | 6 | #5 | STR | 32'-1" | 201 |
| ✱B127 | 6 | #5 | STR | 31'-6" | 197 |
| ✱B128 | 6 | #5 | STR | 31'-0" | 194 |
| ✱B129 | 6 | #5 | STR | 30'-5" | 190 |
| ✱B130 | 6 | #5 | STR | 29'-11" | 187 |
| ✱B131 | 6 | #5 | STR | 26'-4" | 165 |
| ✱B132 | 6 | #5 | STR | 28'-10" | 180 |
| ✱B133 | 6 | #5 | STR | 28'-3" | 177 |
| ✱B134 | 6 | #5 | STR | 27'-8" | 173 |
| ✱B135 | 6 | #5 | STR | 27'-2" | 170 |
| ✱B136 | 6 | #5 | STR | 26'-7" | 166 |
| ✱B137 | 6 | #5 | STR | 26'-1" | 163 |
| ✱B138 | 6 | #5 | STR | 25'-6" | 160 |
| ✱B139 | 6 | #5 | STR | 25'-0" | 156 |
| ✱B140 | 6 | #5 | STR | 24'-5" | 153 |

| BAR | NO. | SIZE | TYPE | LENGTH | WEIGHT |
|---|---|---|---|---|---|
| B200 | 2 | #6 | STR | 46'-7" | 140 |
| B201 | 6 | #6 | STR | 46'-1" | 415 |
| B202 | 6 | #6 | STR | 45'-6" | 410 |
| B203 | 6 | #6 | STR | 45'-0" | 406 |
| B204 | 6 | #6 | STR | 44'-5" | 400 |
| B205 | 6 | #6 | STR | 43'-10" | 395 |
| B206 | 6 | #6 | STR | 43'-4" | 391 |
| B207 | 6 | #6 | STR | 42'-9" | 385 |
| B208 | 6 | #6 | STR | 42'-3" | 381 |
| B209 | 6 | #6 | STR | 41'-9" | 376 |
| B210 | 6 | #6 | STR | 41'-2" | 371 |
| B211 | 6 | #6 | STR | 40'-7" | 366 |
| B212 | 6 | #6 | STR | 40'-0" | 360 |
| B213 | 6 | #6 | STR | 39'-6" | 356 |
| B214 | 6 | #6 | STR | 38'-11" | 351 |
| B215 | 6 | #6 | STR | 38'-5" | 346 |
| B216 | 6 | #6 | STR | 37'-10" | 341 |
| B217 | 6 | #6 | STR | 37'-4" | 336 |
| B218 | 6 | #6 | STR | 36'-9" | 331 |
| B219 | 6 | #6 | STR | 36'-3" | 327 |
| B220 | 6 | #6 | STR | 35'-8" | 321 |
| B221 | 6 | #6 | STR | 35'-2" | 317 |
| B222 | 6 | #6 | STR | 34'-7" | 312 |
| B223 | 6 | #6 | STR | 34'-1" | 307 |
| B224 | 6 | #6 | STR | 33'-6" | 302 |
| B225 | 6 | #6 | STR | 32'-11" | 297 |
| B226 | 6 | #6 | STR | 32'-5" | 292 |
| B227 | 6 | #6 | STR | 31'-10" | 287 |
| B228 | 6 | #6 | STR | 31'-4" | 282 |
| B229 | 6 | #6 | STR | 30'-9" | 277 |
| B230 | 6 | #6 | STR | 30'-3" | 273 |
| B231 | 6 | #6 | STR | 26'-8" | 240 |
| B232 | 6 | #6 | STR | 29'-2" | 263 |
| B233 | 6 | #6 | STR | 28'-7" | 258 |
| B234 | 6 | #6 | STR | 28'-1" | 253 |
| B235 | 6 | #6 | STR | 27'-6" | 248 |
| B236 | 6 | #6 | STR | 26'-11" | 243 |
| B237 | 6 | #6 | STR | 26'-5" | 238 |
| B238 | 6 | #6 | STR | 25'-10" | 233 |
| B239 | 6 | #6 | STR | 25'-4" | 228 |
| B240 | 6 | #6 | STR | 24'-9" | 223 |
| | | | | | |
| D1 | 34 | #6 | STR | 1'-6" | 77 |
| | | | | | |
| ✱G1 | 4 | #5 | STR | 33'-4" | 139 |
| | | | | | |
| ✱J1 | 126 | #4 | 8 | 1'-5" | 119 |
| | | | | | |
| ✱S1 | 20 | #5 | 1 | 4'-9" | 99 |
| ✱S2 | 20 | #5 | 2 | 5'-2" | 108 |
| ✱S3 | 70 | #5 | 3 | 5'-6" | 402 |
| ✱S4 | 140 | #5 | 7 | 1'-10" | 268 |
| ✱S5 | 2 | #5 | 4 | 3'-9" | 8 |

REINFORCING STEEL LBS. 16,047

✱EPOXY COATED STEEL LBS. 13,764

CLASS AA CONCRETE BREAKDOWN

| | |
|---|---|
| APPROACH SLABS | 190.4 C. Y. |
| CURB | 0.2 C. Y. |
| N. J. BARRIER RAIL | 2.06 C. Y. |
| MEDIAN BARRIER RAIL | 7.39 C. Y. |
| CLASS AA CONCRETE | 200.05 C. Y. |

## SPLICE CHART

| BAR | SIZE | SPLICE |
|---|---|---|
| ✱"A" | #4 | 2'-0" |
| "A" | #4 | 1'-9" |
| ✱G1 | #5 | 2'-6" |

✱EPOXY COATED STEEL

ASSEMBLED BY : A. SORSENGINH DATE : 7/14/10
CHECKED BY : T. H. FANG DATE : 11/18/11

DRAWN BY : FCJ 11/88
CHECKED BY : ARB 11/88

REV. 8/16/99 MAB/LES
REV. 10/17/00 RWW/LES
REV. 5/7/03 RWW/JTE

# BILL OF MATERIAL FOR STAGE II

| BAR | NO. | SIZE | TYPE | LENGTH | WEIGHT |
|---|---|---|---|---|---|
| ✱A1 | 150 | #4 | STR | 21'-6" | 2154 |
| A2 | 150 | #4 | STR | 21'-4" | 2138 |
| A3 | 40 | #4 | STR | 3'-0" | 80 |
| | | | | | |
| ✱A101 | 8 | #4 | STR | 28'-10" | 154 |
| ✱A102 | 8 | #4 | STR | 26'-1" | 139 |
| ✱A103 | 8 | #4 | STR | 23'-4" | 125 |
| ✱A104 | 8 | #4 | STR | 20'-7" | 110 |
| ✱A105 | 8 | #4 | STR | 17'-10" | 95 |
| ✱A106 | 4 | #4 | STR | 28'-1" | 75 |
| ✱A107 | 4 | #4 | STR | 22'-8" | 61 |
| ✱A108 | 4 | #4 | STR | 17'-2" | 46 |
| ✱A109 | 4 | #4 | STR | 11'-8" | 31 |
| ✱A110 | 4 | #4 | STR | 6'-2" | 16 |
| | | | | | |
| A201 | 8 | #4 | STR | 29'-2" | 156 |
| A202 | 8 | #4 | STR | 26'-5" | 141 |
| A203 | 8 | #4 | STR | 23'-8" | 126 |
| A204 | 8 | #4 | STR | 20'-11" | 112 |
| A205 | 8 | #4 | STR | 18'-5" | 99 |
| A206 | 4 | #4 | STR | 29'-1" | 78 |
| A207 | 4 | #4 | STR | 23'-7" | 63 |
| A208 | 4 | #4 | STR | 18'-1" | 48 |
| A209 | 4 | #4 | STR | 12'-7" | 34 |
| A210 | 4 | #4 | STR | 7'-2" | 19 |
| | | | | | |
| ✱B1 | 8 | #5 | STR | 29'-6" | 246 |
| ✱B2 | 8 | #5 | STR | 42'-2" | 352 |
| ✱B3 | 16 | #5 | STR | 9'-8" | 161 |
| | | | | | |
| ✱B100 | 2 | #5 | STR | 46'-3" | 96 |
| ✱B101 | 6 | #5 | STR | 45'-9" | 286 |
| ✱B102 | 6 | #5 | STR | 45'-2" | 283 |
| ✱B103 | 6 | #5 | STR | 44'-8" | 280 |
| ✱B104 | 6 | #5 | STR | 44'-1" | 276 |
| ✱B105 | 6 | #5 | STR | 43'-6" | 272 |
| ✱B106 | 6 | #5 | STR | 43'-0" | 269 |
| ✱B107 | 6 | #5 | STR | 42'-5" | 265 |
| ✱B108 | 6 | #5 | STR | 41'-9" | 262 |
| ✱B109 | 6 | #5 | STR | 41'-5" | 259 |
| ✱B110 | 6 | #5 | STR | 40'-10" | 256 |
| ✱B111 | 6 | #5 | STR | 40'-3" | 252 |
| ✱B112 | 6 | #5 | STR | 39'-8" | 248 |
| ✱B113 | 6 | #5 | STR | 39'-2" | 245 |
| ✱B114 | 6 | #5 | STR | 38'-7" | 241 |
| ✱B115 | 6 | #5 | STR | 38'-1" | 238 |
| ✱B116 | 6 | #5 | STR | 37'-6" | 235 |
| ✱B117 | 6 | #5 | STR | 37'-0" | 232 |
| ✱B118 | 6 | #5 | STR | 36'-5" | 228 |
| ✱B119 | 6 | #5 | STR | 35'-11" | 225 |
| ✱B120 | 6 | #5 | STR | 35'-4" | 221 |
| ✱B121 | 6 | #5 | STR | 34'-10" | 218 |
| ✱B122 | 6 | #5 | STR | 34'-3" | 214 |
| ✱B123 | 6 | #5 | STR | 33'-8" | 211 |
| ✱B124 | 6 | #5 | STR | 33'-2" | 208 |
| ✱B125 | 6 | #5 | STR | 32'-7" | 204 |
| ✱B126 | 6 | #5 | STR | 32'-1" | 201 |
| ✱B127 | 6 | #5 | STR | 31'-6" | 197 |
| ✱B128 | 6 | #5 | STR | 31'-0" | 194 |
| ✱B129 | 6 | #5 | STR | 30'-5" | 190 |
| ✱B130 | 6 | #5 | STR | 29'-11" | 187 |
| ✱B131 | 6 | #5 | STR | 26'-4" | 165 |
| ✱B132 | 6 | #5 | STR | 28'-10" | 180 |
| ✱B133 | 6 | #5 | STR | 28'-3" | 177 |
| ✱B134 | 6 | #5 | STR | 27'-8" | 173 |
| ✱B135 | 6 | #5 | STR | 27'-2" | 170 |
| ✱B136 | 6 | #5 | STR | 26'-7" | 166 |
| ✱B137 | 6 | #5 | STR | 26'-1" | 163 |
| ✱B138 | 6 | #5 | STR | 25'-6" | 160 |
| ✱B139 | 6 | #5 | STR | 25'-0" | 156 |
| ✱B140 | 6 | #5 | STR | 24'-5" | 153 |

| BAR | NO. | SIZE | TYPE | LENGTH | WEIGHT |
|---|---|---|---|---|---|
| B200 | 2 | #6 | STR | 46'-7" | 140 |
| B201 | 6 | #6 | STR | 46'-1" | 415 |
| B202 | 6 | #6 | STR | 45'-6" | 410 |
| B203 | 6 | #6 | STR | 45'-0" | 406 |
| B204 | 6 | #6 | STR | 44'-5" | 400 |
| B205 | 6 | #6 | STR | 43'-10" | 395 |
| B206 | 6 | #6 | STR | 43'-4" | 391 |
| B207 | 6 | #6 | STR | 42'-9" | 385 |
| B208 | 6 | #6 | STR | 42'-3" | 381 |
| B209 | 6 | #6 | STR | 41'-9" | 376 |
| B210 | 6 | #6 | STR | 41'-2" | 371 |
| B211 | 6 | #6 | STR | 40'-7" | 366 |
| B212 | 6 | #6 | STR | 40'-0" | 360 |
| B213 | 6 | #6 | STR | 39'-6" | 356 |
| B214 | 6 | #6 | STR | 38'-11" | 351 |
| B215 | 6 | #6 | STR | 38'-5" | 346 |
| B216 | 6 | #6 | STR | 37'-10" | 341 |
| B217 | 6 | #6 | STR | 37'-4" | 336 |
| B218 | 6 | #6 | STR | 36'-9" | 331 |
| B219 | 6 | #6 | STR | 36'-3" | 327 |
| B220 | 6 | #6 | STR | 35'-8" | 321 |
| B221 | 6 | #6 | STR | 35'-2" | 317 |
| B222 | 6 | #6 | STR | 34'-7" | 312 |
| B223 | 6 | #6 | STR | 34'-1" | 307 |
| B224 | 6 | #6 | STR | 33'-6" | 302 |
| B225 | 6 | #6 | STR | 32'-11" | 297 |
| B226 | 6 | #6 | STR | 32'-5" | 292 |
| B227 | 6 | #6 | STR | 31'-10" | 287 |
| B228 | 6 | #6 | STR | 31'-4" | 282 |
| B229 | 6 | #6 | STR | 30'-9" | 277 |
| B230 | 6 | #6 | STR | 30'-3" | 273 |
| B231 | 6 | #6 | STR | 26'-8" | 240 |
| B232 | 6 | #6 | STR | 29'-2" | 263 |
| B233 | 6 | #6 | STR | 28'-7" | 258 |
| B234 | 6 | #6 | STR | 28'-1" | 253 |
| B235 | 6 | #6 | STR | 27'-6" | 248 |
| B236 | 6 | #6 | STR | 26'-11" | 243 |
| B237 | 6 | #6 | STR | 26'-5" | 238 |
| B238 | 6 | #6 | STR | 25'-10" | 233 |
| B239 | 6 | #6 | STR | 25'-4" | 228 |
| B240 | 6 | #6 | STR | 24'-9" | 223 |
| | | | | | |
| D1 | 34 | #6 | STR | 1'-6" | 77 |
| | | | | | |
| ✱G1 | 4 | #5 | STR | 33'-4" | 139 |
| | | | | | |
| ✱J1 | 126 | #4 | 8 | 1'-5" | 119 |
| | | | | | |
| ✱S1 | 20 | #5 | 1 | 4'-9" | 99 |
| ✱S2 | 20 | #5 | 2 | 5'-2" | 108 |
| ✱S3 | 70 | #5 | 3 | 5'-6" | 402 |
| ✱S4 | 140 | #5 | 7 | 1'-10" | 268 |
| ✱S5 | 2 | #5 | 4 | 3'-9" | 8 |

REINFORCING STEEL LBS. 16,047

✱EPOXY COATED STEEL LBS. 13,766

CLASS AA CONCRETE BREAKDOWN

| | |
|---|---|
| APPROACH SLABS | 190.4 C. Y. |
| CURB | 0.2 C. Y. |
| N. J. BARRIER RAIL | 2.06 C. Y. |
| MEDIAN BARRIER RAIL | 7.43 C. Y. |
| CLASS AA CONCRETE | 200.09 C. Y. |

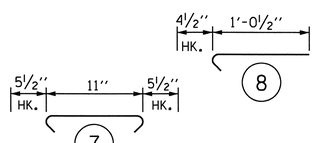


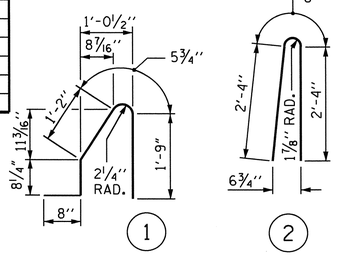


ALL BAR DIMENSIONS ARE OUT TO OUT

# BILL OF MATERIAL FOR STAGE III

## FOR ONE APPROACH SLAB (2 REQ'D)

| BAR | NO. | SIZE | TYPE | LENGTH | WEIGHT |
|---|---|---|---|---|---|
| ✱A1 | 36 | #4 | STR | 25'-6" | 613 |
| A2 | 36 | #4 | STR | 25'-4" | 609 |
| ✱A3 | 28 | #4 | STR | 25'-5" | 475 |
| A4 | 28 | #4 | STR | 25'-3" | 472 |
| | | | | | |
| ✱A101 | 8 | #4 | STR | 24'-3" | 130 |
| ✱A102 | 6 | #4 | STR | 29'-10" | 120 |
| ✱A103 | 6 | #4 | STR | 28'-0" | 112 |
| ✱A104 | 6 | #4 | STR | 26'-2" | 105 |
| ✱A105 | 6 | #4 | STR | 24'-3" | 98 |
| ✱A106 | 6 | #4 | STR | 22'-6" | 90 |
| ✱A107 | 4 | #4 | STR | 30'-0" | 80 |
| ✱A108 | 4 | #4 | STR | 27'-3" | 73 |
| ✱A109 | 4 | #4 | STR | 24'-6" | 65 |
| ✱A110 | 4 | #4 | STR | 21'-9" | 58 |
| ✱A111 | 4 | #4 | STR | 19'-0" | 51 |
| ✱A112 | 4 | #4 | STR | 16'-3" | 43 |
| ✱A113 | 2 | #4 | STR | 25'-0" | 33 |
| ✱A114 | 2 | #4 | STR | 19'-6" | 26 |
| ✱A115 | 2 | #4 | STR | 14'-0" | 19 |
| ✱A116 | 2 | #4 | STR | 8'-6" | 11 |
| ✱A117 | 2 | #4 | STR | 3'-0" | 4 |
| | | | | | |
| A201 | 8 | #4 | STR | 24'-4" | 130 |
| A202 | 6 | #4 | STR | 30'-0" | 120 |
| A203 | 6 | #4 | STR | 28'-2" | 113 |
| A204 | 6 | #4 | STR | 26'-4" | 106 |
| A205 | 6 | #4 | STR | 24'-6" | 98 |
| A206 | 6 | #4 | STR | 22'-8" | 91 |
| A207 | 6 | #4 | STR | 20'-10" | 83 |
| A208 | 4 | #4 | STR | 27'-8" | 74 |
| A209 | 4 | #4 | STR | 24'-11" | 67 |
| A210 | 4 | #4 | STR | 22'-2" | 59 |
| A211 | 4 | #4 | STR | 19'-4" | 52 |
| A212 | 4 | #4 | STR | 16'-8" | 45 |
| A213 | 2 | #4 | STR | 26'-0" | 35 |
| A214 | 2 | #4 | STR | 20'-6" | 27 |
| A215 | 2 | #4 | STR | 15'-0" | 20 |
| A216 | 2 | #4 | STR | 9'-6" | 13 |
| A217 | 2 | #4 | STR | 4'-0" | 5 |
| | | | | | |
| ✱B2 | 8 | #5 | STR | 42'-0" | 350 |
| | | | | | |
| ✱B100 | 1 | #5 | STR | 41'-8" | 43 |
| ✱B101 | 4 | #5 | STR | 40'-11" | 171 |
| ✱B102 | 4 | #5 | STR | 40'-2" | 168 |
| ✱B103 | 4 | #5 | STR | 39'-6" | 165 |
| ✱B104 | 4 | #5 | STR | 38'-9" | 162 |
| ✱B105 | 4 | #5 | STR | 38'-0" | 159 |
| ✱B106 | 4 | #5 | STR | 37'-4" | 156 |
| ✱B107 | 4 | #5 | STR | 36'-7" | 153 |
| ✱B108 | 4 | #5 | STR | 35'-10" | 149 |
| ✱B109 | 4 | #5 | STR | 35'-1" | 146 |

| BAR | NO. | SIZE | TYPE | LENGTH | WEIGHT |
|---|---|---|---|---|---|
| ✱B110 | 4 | #5 | STR | 34'-5" | 144 |
| ✱B111 | 4 | #5 | STR | 33'-8" | 140 |
| ✱B112 | 4 | #5 | STR | 32'-11" | 137 |
| ✱B113 | 4 | #5 | STR | 32'-2" | 134 |
| ✱B114 | 4 | #5 | STR | 31'-6" | 131 |
| ✱B115 | 4 | #5 | STR | 30'-9" | 128 |
| ✱B116 | 4 | #5 | STR | 30'-0" | 125 |
| ✱B117 | 4 | #5 | STR | 29'-4" | 122 |
| ✱B118 | 4 | #5 | STR | 28'-7" | 119 |
| ✱B119 | 4 | #5 | STR | 27'-10" | 116 |
| ✱B120 | 4 | #5 | STR | 27'-1" | 113 |
| ✱B121 | 4 | #5 | STR | 26'-4" | 110 |
| ✱B122 | 4 | #5 | STR | 25'-8" | 107 |
| ✱B123 | 4 | #5 | STR | 24'-11" | 104 |
| | | | | | |
| ✱B151 | 4 | #5 | STR | 41'-8" | 174 |
| ✱B152 | 4 | #5 | STR | 40'-11" | 171 |
| ✱B153 | 4 | #5 | STR | 40'-2" | 168 |
| ✱B154 | 4 | #5 | STR | 39'-6" | 165 |
| ✱B155 | 4 | #5 | STR | 38'-9" | 162 |
| ✱B156 | 4 | #5 | STR | 38'-0" | 159 |
| ✱B157 | 4 | #5 | STR | 37'-3" | 155 |
| ✱B158 | 4 | #5 | STR | 36'-6" | 152 |
| ✱B159 | 4 | #5 | STR | 35'-10" | 149 |
| ✱B160 | 4 | #5 | STR | 35'-1" | 146 |
| ✱B161 | 4 | #5 | STR | 34'-4" | 143 |
| ✱B162 | 4 | #5 | STR | 33'-8" | 140 |
| ✱B163 | 4 | #5 | STR | 32'-11" | 137 |
| ✱B164 | 4 | #5 | STR | 32'-2" | 134 |
| ✱B165 | 4 | #5 | STR | 31'-5" | 131 |
| ✱B166 | 4 | #5 | STR | 30'-9" | 128 |
| ✱B167 | 4 | #5 | STR | 30'-0" | 125 |
| ✱B168 | 4 | #5 | STR | 29'-3" | 122 |
| ✱B169 | 4 | #5 | STR | 28'-6" | 119 |
| ✱B170 | 4 | #5 | STR | 27'-10" | 116 |
| ✱B171 | 4 | #5 | STR | 27'-1" | 113 |
| ✱B172 | 4 | #5 | STR | 26'-4" | 110 |
| ✱B173 | 4 | #5 | STR | 25'-8" | 107 |
| ✱B174 | 4 | #5 | STR | 24'-11" | 104 |
| ✱B175 | 3 | #5 | STR | 24'-4" | 76 |
| | | | | | |
| B200 | 1 | #6 | STR | 42'-0" | 63 |
| B201 | 4 | #6 | STR | 41'-3" | 248 |
| B202 | 4 | #6 | STR | 40'-6" | 243 |
| B203 | 4 | #6 | STR | 39'-10" | 239 |
| B204 | 4 | #6 | STR | 39'-1" | 235 |
| B205 | 4 | #6 | STR | 38'-4" | 230 |
| B206 | 4 | #6 | STR | 37'-8" | 226 |
| B207 | 4 | #6 | STR | 36'-11" | 222 |
| B208 | 4 | #6 | STR | 36'-2" | 217 |
| B209 | 4 | #6 | STR | 35'-5" | 213 |
| B210 | 4 | #6 | STR | 34'-9" | 209 |
| B211 | 4 | #6 | STR | 34'-0" | 204 |

| BAR | NO. | SIZE | TYPE | LENGTH | WEIGHT |
|---|---|---|---|---|---|
| B212 | 4 | #6 | STR | 33'-3" | 200 |
| B213 | 4 | #6 | STR | 32'-6" | 195 |
| B214 | 4 | #6 | STR | 31'-10" | 191 |
| B215 | 4 | #6 | STR | 31'-1" | 187 |
| B216 | 4 | #6 | STR | 30'-4" | 182 |
| B217 | 4 | #6 | STR | 29'-8" | 178 |
| B218 | 4 | #6 | STR | 28'-11" | 174 |
| B219 | 4 | #6 | STR | 28'-2" | 169 |
| B220 | 4 | #6 | STR | 27'-5" | 165 |
| B221 | 4 | #6 | STR | 26'-8" | 160 |
| B222 | 4 | #6 | STR | 26'-0" | 156 |
| B223 | 4 | #6 | STR | 25'-3" | 152 |
| | | | | | |
| B251 | 4 | #6 | STR | 42'-0" | 252 |
| B252 | 4 | #6 | STR | 41'-3" | 248 |
| B253 | 4 | #6 | STR | 40'-6" | 243 |
| B254 | 4 | #6 | STR | 39'-10" | 239 |
| B255 | 4 | #6 | STR | 39'-1" | 235 |
| B256 | 4 | #6 | STR | 38'-4" | 230 |
| B257 | 4 | #6 | STR | 37'-7" | 226 |
| B258 | 4 | #6 | STR | 36'-10" | 221 |
| B259 | 4 | #6 | STR | 36'-2" | 217 |
| B260 | 4 | #6 | STR | 35'-5" | 213 |
| B261 | 4 | #6 | STR | 34'-8" | 208 |
| B262 | 4 | #6 | STR | 34'-0" | 204 |
| B263 | 4 | #6 | STR | 33'-3" | 200 |
| B264 | 4 | #6 | STR | 32'-6" | 195 |
| B265 | 4 | #6 | STR | 31'-9" | 191 |
| B266 | 4 | #6 | STR | 31'-1" | 197 |
| B267 | 4 | #6 | STR | 30'-4" | 182 |
| B268 | 4 | #6 | STR | 29'-7" | 178 |
| B269 | 4 | #6 | STR | 28'-10" | 173 |
| B270 | 4 | #6 | STR | 28'-2" | 169 |
| B271 | 4 | #6 | STR | 27'-5" | 165 |
| B272 | 3 | #6 | STR | 26'-8" | 160 |
| B273 | 4 | #6 | STR | 26'-0" | 156 |
| B274 | 4 | #6 | STR | 25'-3" | 152 |
| B275 | 3 | #6 | STR | 24'-8" | 111 |
| | | | | | |
| ✱G2 | 2 | #5 | STR | 52'-2" | 109 |
| | | | | | |
| ✱J1 | 101 | #4 | 8 | 1'-5" | 96 |
| | | | | | |
| ✱S4 | 82 | #5 | 7 | 1'-10" | 157 |
| ✱S6 | 41 | #5 | 5 | 6'-0" | 257 |
| ✱S7 | 1 | #5 | 6 | 4'-4" | 5 |

REINFORCING STEEL LBS. 11,835

✱EPOXY COATED STEEL LBS. 9,790

CLASS AA CONCRETE BREAKDOWN

| | |
|---|---|
| APPROACH SLABS | 141.6 C. Y. |
| MEDIAN BARRIER RAIL | 4.4 C. Y. |
| CLASS AA CONCRETE | 146.0 C. Y. |

## BAR TYPES

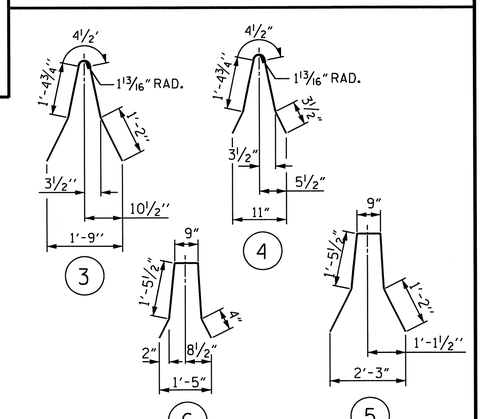


PROJECT NO. I-3819A

IREDELL COUNTY

STATION: 92+04.00 -L-

SHEET 5 OF 5

STATE OF NORTH CAROLINA
DEPARTMENT OF TRANSPORTATION
RALEIGH

# BRIDGE APPROACH SLAB DETAILS

| REVISIONS | | | | | | SHEET NO. |
|---|---|---|---|---|---|---|
| NO. | BY: | DATE: | NO. | BY: | DATE: | S-149 |
| 1 | | | 3 | | | TOTAL SHEETS |
| 2 | | | 4 | | | 382 |

STR. #3

30-DEC-2011 14:40
R:\Structures\Frye\str03\final plans\I3819A_SD_AS_03.dgn
tfang

F.A. PROJ. NO. IMF-040-2(145)152

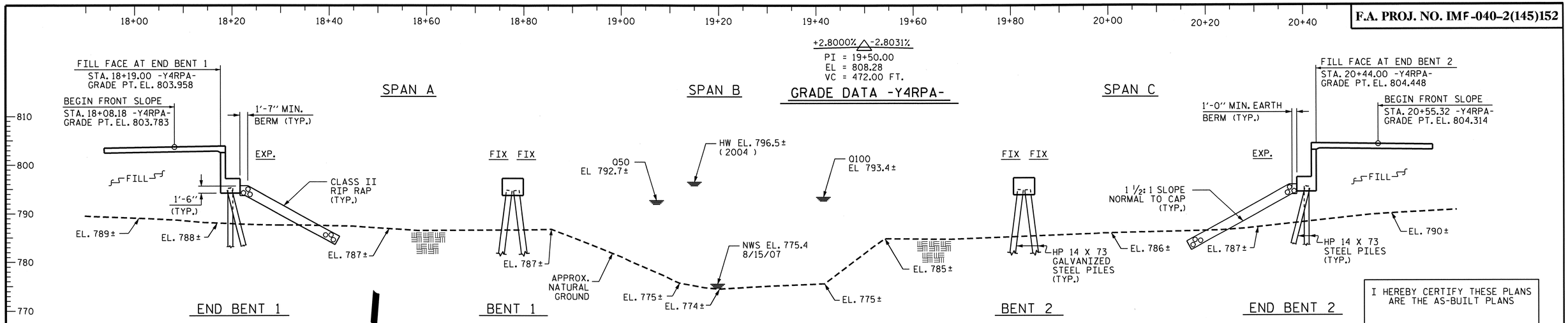


I HEREBY CERTIFY THESE PLANS ARE THE AS-BUILT PLANS

## SECTION ALONG -Y4RPA-

(SECTIONS AT END BENTS & BENTS ARE AT RIGHT ANGLES)

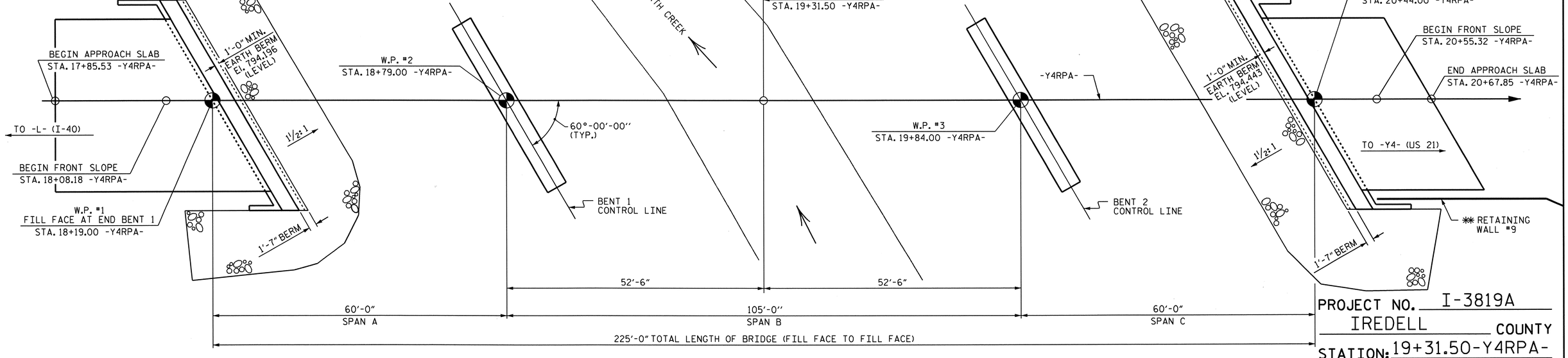


## PLAN

(FOR CLARITY, PILES ARE NOT SHOWN.)
** FOR DETAILS OF RETAINING WALL, SEE "RETAINING WALL" SHEET NO. W-13.

PROJECT NO. I-3819A
IREDELL COUNTY
STATION: 19+31.50-Y4RPA-

SHEET 1 OF 3 BRIDGE NO. 565

STATE OF NORTH CAROLINA
DEPARTMENT OF TRANSPORTATION
RALEIGH

# GENERAL DRAWING

FOR BRIDGE OVER
FOURTH CREEK
ON -Y4RPA- BETWEEN
-L- (I-40) AND -Y4- (US 21)

| REVISIONS | | | | | | SHEET NO. |
|---|---|---|---|---|---|---|
| NO. | BY: | DATE: | NO. | BY: | DATE: | S-150 |
| 1 | | | 3 | | | TOTAL SHEETS |
| 2 | | | 4 | | | 382 |

NORTH CAROLINA PROFESSIONAL SEAL 21638 ENGINEER LAURA E. SUTTON
1/3/12

STR. #4

DRAWN BY : K.H. COMPTON DATE : 11/30/10
CHECKED BY : L.E. SUTTON DATE : 1/10/11

28-DEC-2011 12:48
R:\Structures\Frye\str04\kcompton\I3819A_SD_GD_04.dgn
wparker

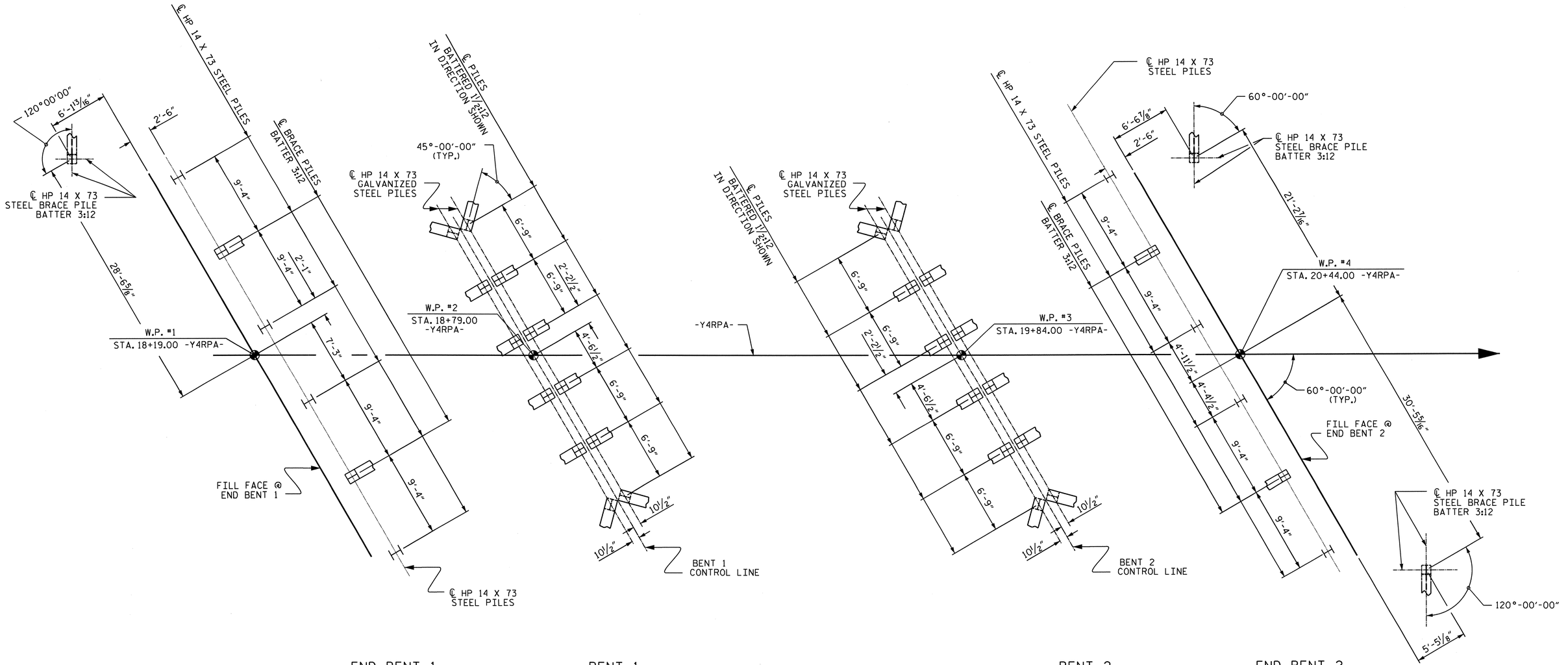


# FOUNDATION LAYOUT

(DIMENSIONS LOCATING PILES ARE SHOWN TO PILE CENTERLINE)

## NOTES:

FOR PILES, SEE SECTION 450 OF THE STANDARD SPECIFICATIONS.

PILES AT END BENTS 1 AND 2 ARE DESIGNED FOR A FACTORED RESISTANCE OF 95 TONS PER PILE.

DRIVE PILES AT END BENTS 1 AND 2 TO A REQUIRED DRIVING RESISTANCE OF 160 TONS PER PILE.

PILES AT BENTS 1 AND 2 ARE DESIGNED FOR A FACTORED RESISTANCE OF 125 TONS PER PILE.

DRIVE PILES AT BENTS 1 AND 2 TO A REQUIRED DRIVING RESISTANCE OF 210 TONS PER PILE.

THE SCOUR CRITICAL ELEVATIONS FOR BENTS 1 AND 2 ARE ELEVATIONS 776 FT. AND 778 FT. RESPECTIVELY. SCOUR CRITICAL ELEVATIONS ARE USED TO MONITOR POSSIBLE SCOUR PROBLEMS DURING THE LIFE OF THE STRUCTURE.

STEEL H PILE POINTS ARE REQUIRED FOR STEEL H PILES. FOR STEEL PILE POINTS, SEE SECTION 450 OF THE STANDARD SPECIFICATIONS.

THE CONTRACTOR'S ATTENTION IS CALLED TO THE FACT THAT DUE TO THE PROXIMITY OF THE OVERHEAD POWER TRANSMISSION LINES, MULTIPLE SPLICES MAY BE REQUIRED TO INSTALL END BENT 1 PILES.

NORTH CAROLINA PROFESSIONAL SEAL 21638 ENGINEER LAURA E. SUTTON
1/3/12

PROJECT NO. I-3819A
IREDELL COUNTY
STATION: 19+31.50-Y4RPA-

SHEET 2 OF 3

STATE OF NORTH CAROLINA
DEPARTMENT OF TRANSPORTATION
RALEIGH

GENERAL DRAWING
FOR BRDIGE OVER
FOURTH CREEK
ON -Y4RPA- BETWEEN
-L- (I-40) AND -Y4- (US 21)

| REVISIONS | | | | | | SHEET NO. |
|---|---|---|---|---|---|---|
| NO. | BY: | DATE: | NO. | BY: | DATE: | S-151 |
| 1 | | | 3 | | | TOTAL SHEETS |
| 2 | | | 4 | | | 382 |

DRAWN BY : K.H. COMPTON DATE : 12/2/10
CHECKED BY : L.E. SUTTON DATE : 1/10/11

28-DEC-2011 12:47
R:\Structures\Frye\str04\kcompton\I3819A_SD_GD_04.dgn
wparker

STR. #4

BM #5: CHISELED SQUARE IN SOUTH END OF SIGN, 318' RIGHT, STA. 24+07 -BY4-, EL. 824.70.

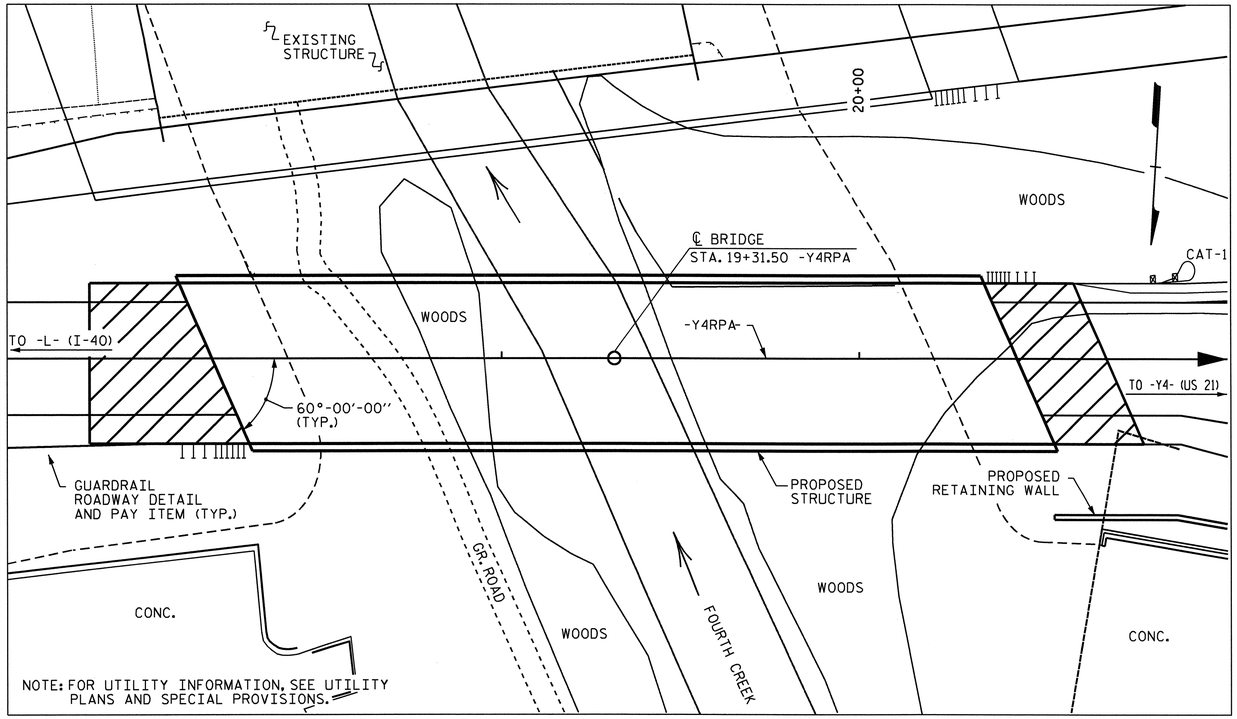


LOCATION SKETCH

## HYDRAULIC DATA

| | |
|---|---|
| DESIGN DISCHARGE | = 6458 CFS |
| FREQUENCY OF DESIGN FLOOD | = 50 YEARS |
| DESIGN HIGH WATER ELEVATION | = 792.7 |
| DRAINAGE AREA | = 27.7 SQ. MI. |
| BASE DISCHARGE (Q100) | = 7137 CFS |
| BASE HIGH WATER ELEVATION | = 793.4 |

## OVERTOPPING FLOOD DATA

| | |
|---|---|
| OVERTOPPING DISCHARGE | = +8983 CFS |
| FREQUENCY OF OVERTOPPING FLOOD | = +500 YEARS |
| OVERTOPPING FLOOD ELEVATION | = * 795.4 |

* STA. 14+00 -Y4RPA-

## TOTAL BILL OF MATERIAL

| | REINFORCED CONCRETE DECK SLAB | GROOVING BRIDGE FLOORS | CLASS A CONCRETE | BRIDGE APPROACH SLABS | REINFORCING STEEL | MODIFIED 63" PRESTRESSED CONCRETE GIRDERS | | HP 14 X 73 STEEL PILES | | HP 14 X 73 GALVANIZED STEEL PILES | | STEEL PILE POINTS | CONCRETE BARRIER RAIL | RIP RAP CLASS II (2'-0" THICK) | GEOTEXTILE FOR DRAINAGE | ELASTOMERIC BEARINGS | FOAM JOINT SEALS |
|---|---|---|---|---|---|---|---|---|---|---|---|---|---|---|---|---|---|
| | SQ. FT. | SQ. FT. | CU. YDS. | LUMP SUM | LBS. | NO. | LIN. FT. | NO. | LIN. FT. | NO. | LIN. FT. | EA. | LIN. FT. | TONS | SQ. YDS. | LUMP SUM | LUMP SUM |
| SUPERSTRUCTURE | 8,290 | 8,328 | | | | 12 | 873.59 | | | | | | 445.19 | | | LUMP SUM | LUMP SUM |
| END BENT 1 | | | 40.0 | | 5,182 | | | 7 | 245 | | | 7 | | 325 | 357 | | |
| BENT 1 | | | 19.8 | | 3,448 | | | | | 12 | 420 | 12 | | | | | |
| BENT 2 | | | 20.4 | | 3,448 | | | | | 12 | 360 | 12 | | | | | |
| END BENT 2 | | | 42.0 | | 5,356 | | | 8 | 160 | | | 8 | | 330 | 362 | | |
| TOTAL | 8,290 | 8,328 | 122.2 | LUMP SUM | 17,434 | 12 | 873.59 | 15 | 405 | 24 | 780 | 39 | 445.19 | 655 | 719 | LUMP SUM | LUMP SUM |

## NOTES

ASSUMED LIVE LOAD = HL- 93 OR ALTERNATE LOADING.

FOR OTHER DESIGN DATA AND GENERAL NOTES, SEE SHEET SN.

FOR EROSION CONTROL MEASURES, SEE EROSION CONTROL PLANS.

THIS BRIDGE HAS BEEN DESIGN IN ACCORDANCE WITH THE AASHTO LRFD BRIDGE DESIGN SPECIFICATIONS.

PRESTRESSED CONCRETE DECK PANELS MAY BE USED IN LIEU OF METAL STAY-IN-PLACE FORMS IN ACCORDANCE WITH ARTICLE 420-3 OF THE STANDARD SPECIFICATIONS.

REMOVABLE FORMS MAY BE USED IN LIEU OF METAL STAY-IN-PLACE FORMS IN ACCORDANCE WITH ARTICLE 420-3 OF THE STANDARD SPECIFICATIONS.

THIS STRUCTURE HAS BEEN DESIGNED IN ACCORDANCE WITH HEC 18, "EVALUATING SCOUR AT BRIDGES", MAY, 2001.

THE CONTRACTOR SHALL PROVIDE INDEPENDENT ASSURANCE SAMPLES OF REINFORCING STEEL AS FOLLOWS: FOR PROJECTS REQUIRING UP TO 400 TONS OF REINFORCING STEEL, ONE 30 INCH SAMPLE OF EACH SIZE BAR USED, AND FOR PROJECTS REQUIRING OVER 400 TONS OF REINFORCING STEEL, TWO 30 INCH SAMPLES OF EACH SIZE BAR USED. THE BARS FROM WHICH THE SAMPLES ARE TAKEN MUST THEN BE SPLICED WITH REPLACEMENT BARS OF THE SIZE AND LENGTH OF THE SAMPLE PLUS A MINIMUM LAP SPLICE OF THIRTY BAR DIAMETERS. PAYMENT FOR THE SAMPLES OF REINFORCING STEEL SHALL BE CONSIDERED INCIDENTAL TO VARIOUS PAY ITEMS.

NEEDLE BEAMS WILL NOT BE ALLOWED UNLESS OTHERWISE CALLED FOR ON THE PLANS OR APPROVED BY THE ENGINEER.

THE CLASS AA CONCRETE IN THE BRIDGE DECK SHALL CONTAIN FLY ASH OR GROUND GRANULATED BLAST FURNACE SLAG AT THE SUBSTITUTION RATE SPECIFIED IN ARTICLE 1024-1 AND IN ACCORDANCE WITH ARTICLES 1024-5 AND 1024-6 OF THE STANDARD SPECIFICATIONS. NO PAYMENT WILL BE MADE FOR THIS SUBSTITUTION AS IT IS CONSIDERED INCIDENTAL TO THE COST OF THE REINFORCED CONCRETE DECK SLAB.

FOR SUBMITTAL OF WORKING DRAWINGS, SEE SPECIAL PROVISIONS.

FOR FALSEWORK AND FORMWORK, SEE SPECIAL PROVISIONS.

FOR CRANE SAFETY, SEE SPECIAL PROVISIONS.

FOR GROUT FOR STRUCTURES, SEE SPECIAL PROVISIONS.

FOR FOAM JOINT SEALS, SEE SPECIAL PROVISIONS.

FOR ELASTOMERIC CONCRETE, SEE SPECIAL PROVISIONS.

PROJECT NO. I-3819A

IREDELL COUNTY

STATION: 19+31.50-Y4RPA-

SHEET 3 OF 3

STATE OF NORTH CAROLINA
DEPARTMENT OF TRANSPORTATION
RALEIGH

# GENERAL DRAWING

FOR BRIDGE OVER FOURTH CREEK ON -Y4RPA- BETWEEN -L- (I-40) AND -Y4- (US 21)

NORTH CAROLINA PROFESSIONAL SEAL 21838 ENGINEER LAURA E. SUTTON
1/3/12

| REVISIONS | | | | | | SHEET NO. |
|---|---|---|---|---|---|---|
| NO. | BY: | DATE: | NO. | BY: | DATE: | S-152 |
| 1 | | | 3 | | | TOTAL SHEETS |
| 2 | | | 4 | | | 382 |

STR. #4

DRAWN BY : K.H. COMPTON DATE : 12/2/10
CHECKED BY : L.E. SUTTON DATE : 1/10/11

28-DEC-2011 15:40
R:\Structures\Frye\str04\kcompton\I3819A_SD_GD_04.dgn
wparker

## NOTES:

THE CONTRACTOR SHALL MAINTAIN A 15' MINIMUM CLEARANCE BETWEEN THE TRANSMISSION LINES AND ANY PART OF ANY CONSTRUCTION EQUIPMENT OR MATERIALS UNLESS THE LINES HAVE BEEN DE-ENERGIZED.

IT WAS PARTLY SUNNY AND 66° ON THE DAY THAT THE TRANSMISSION LINE ELEVATIONS WERE SURVEYED.

THE CONTRACTOR SHALL USE EXTREME CARE TO AVOID DAMAGING THE PROPOSED SEWER LINE WHEN DRIVING THE TEMPORARY SHORING AT END BENT 2. THE CONTRACTOR SHALL DETERMINE THE ELEVATION OF THE PROPOSED SEWER LINE PRIOR TO DRIVING THE TEMPORARY SHORING TO DETERMINE THE MAXIMUM DEPTH THAT THE SHORING MAY BE DRIVEN.

FOR UTILITY INFORMATION, SEE UTILITY PLANS AND SPECIAL PROVISIONS.

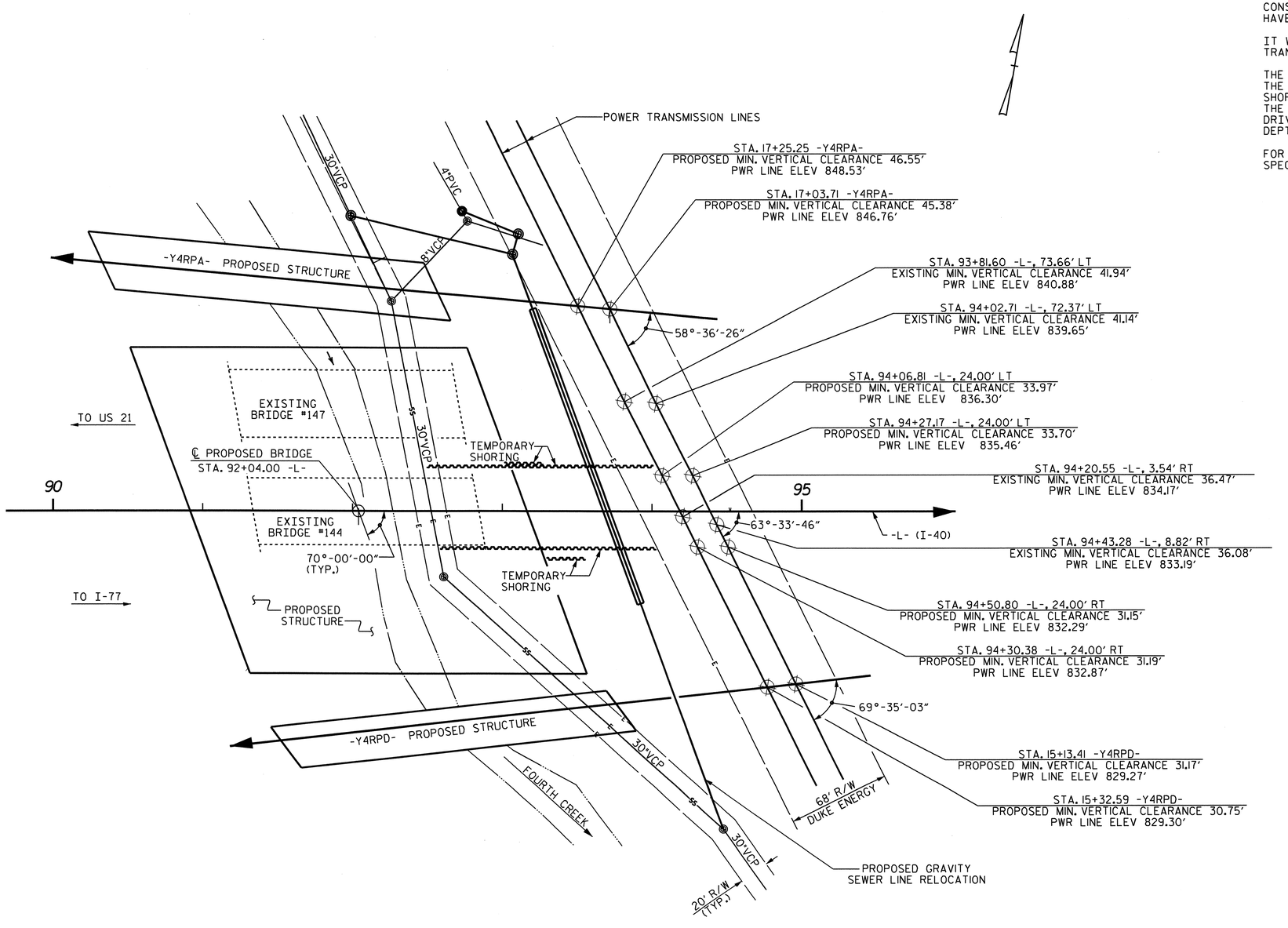


PROJECT NO. I-3819A

IREDELL COUNTY

STATION: 19+31.50 -Y4RPA-

NORTH CAROLINA PROFESSIONAL SEAL 21545 ENGINEER STEVEN L. WANCE

01/10/11

STATE OF NORTH CAROLINA
DEPARTMENT OF TRANSPORTATION
RALEIGH

# UTILITY DRAWING

FOR BRIDGE ON -Y4RPA- OVER FOURTH CREEK BETWEEN US 21 AND I-77

| REVISIONS | | | | | | SHEET NO. |
|---|---|---|---|---|---|---|
| NO. | BY: | DATE: | NO. | BY: | DATE: | S-152A |
| 1 | | | 3 | | | TOTAL SHEETS |
| 2 | | | 4 | | | 382 |

DRAWN BY : S. WANCE PE DATE : 01/12
CHECKED BY : J. M. BAILEY DATE : 01/12

09-JAN-2012 17:20
R:\Structures\Frye\str04\SWANcePE\UtilityClearance\I3819A_Str4_powerlineclearance.dgn
swance

STR. 4

# LOAD AND RESISTANCE FACTOR RATING (LRFR) SUMMARY FOR PRESTRESSED CONCRETE GIRDERS

| LEVEL | | VEHICLE | WEIGHT (W) (TONS) | CONTROLLING LOAD RATING (#) | MINIMUM RATING FACTORS (RF) | TONS = W x RF | STRENGTH I LIMIT STATE | | | | | | | | | | | SERVICE III LIMIT STATE | | | | | | COMMENT NUMBER |
|---|---|---|---|---|---|---|---|---|---|---|---|---|---|---|---|---|---|---|---|---|---|---|---|---|
| | | | | | | | | MOMENT | | | | | SHEAR | | | | | | MOMENT | | | | | | |
| | | | | | | | LIVE-LOAD FACTORS ($\gamma_{LL}$) | DISTRIBUTION FACTORS (DF) | RATING FACTOR | SPAN | GIRDER LOCATION | DISTANCE FROM LEFT END OF SPAN (ft) | DISTRIBUTION FACTORS (DF) | RATING FACTOR | SPAN | GIRDER LOCATION | DISTANCE FROM LEFT END OF SPAN (ft) | LIVE-LOAD FACTORS ($\gamma_{LL}$) | DISTRIBUTION FACTORS (DF) | RATING FACTOR | SPAN | GIRDER LOCATION | DISTANCE FROM LEFT END OF SPAN (ft) | |
| DESIGN LOAD RATING | | HL-93 (INVENTORY) | N/A | 1 | 1.06 | -- | 1.75 | 0.840 | 1.45 | A | I | 27.85 | 0.950 | 1.28 | B | EL | 30.825 | 0.80 | 0.838 | 1.06 | B | EL | 51.375 | |
| | | HL-93 (OPERATING) | N/A | | 1.66 | -- | 1.35 | 0.840 | 1.88 | A | I | 27.85 | 0.950 | 1.66 | B | EL | 30.825 | N/A | -- | -- | -- | -- | -- | |
| | | HS-20 (INVENTORY) | 36.000 | 2 | 1.49 | 53.7 | 1.75 | 0.840 | 1.83 | A | I | 27.85 | 0.950 | 1.64 | B | EL | 30.825 | 0.80 | 0.838 | 1.49 | B | EL | 51.375 | |
| | | HS-20 (OPERATING) | 36.000 | | 2.12 | 76.4 | 1.35 | 0.840 | 2.37 | A | I | 27.85 | 0.950 | 2.12 | B | EL | 30.825 | N/A | -- | -- | -- | -- | -- | |
| LEGAL LOAD RATING | SINGLE VEHICLE (SV) | SH | 12.500 | | 3.86 | 48.2 | 1.40 | 0.840 | 5.27 | A | I | 27.85 | 1.006 | 4.65 | A | I | 33.42 | 0.80 | 0.838 | 3.86 | B | EL | 51.375 | |
| | | S3C | 21.500 | | 2.25 | 48.4 | 1.40 | 0.840 | 3.09 | A | I | 27.85 | 1.006 | 2.77 | A | I | 33.42 | 0.80 | 0.838 | 2.25 | B | EL | 51.375 | |
| | | S3A | 22.750 | | 2.13 | 48.5 | 1.40 | 0.840 | 2.94 | A | I | 27.85 | 1.006 | 2.64 | A | I | 33.42 | 0.80 | 0.838 | 2.13 | B | EL | 51.375 | |
| | | S4A | 26.750 | | 1.87 | 49.9 | 1.40 | 0.840 | 2.64 | A | I | 27.85 | 1.006 | 2.40 | A | I | 33.42 | 0.80 | 0.838 | 1.87 | B | EL | 51.375 | |
| | | S5A | 30.500 | | 1.65 | 50.2 | 1.40 | 0.840 | 2.34 | A | I | 27.85 | 1.006 | 2.36 | A | I | 33.42 | 0.80 | 0.838 | 1.65 | B | EL | 51.375 | |
| | | S6A | 34.500 | | 1.49 | 51.3 | 1.40 | 0.840 | 2.16 | A | I | 27.85 | 0.950 | 2.16 | B | EL | 30.825 | 0.80 | 0.838 | 1.49 | B | EL | 51.375 | |
| | | S7B | 38.500 | | 1.35 | 51.9 | 1.40 | 0.840 | 1.99 | A | I | 27.85 | 0.950 | 2.02 | B | EL | 30.825 | 0.80 | 0.838 | 1.35 | B | EL | 51.375 | |
| | | S7A | 40.000 | 3 | 1.33 | 53.1 | 1.40 | 0.840 | 2.01 | A | I | 27.85 | 0.950 | 2.08 | B | EL | 30.825 | 0.80 | 0.838 | 1.33 | B | EL | 51.375 | |
| | TRUCK TRACTOR SEMI-TRAILER (TTST) | T4A | 28.250 | | 1.83 | 51.6 | 1.40 | 0.840 | 2.68 | A | I | 27.85 | 1.006 | 2.42 | A | I | 33.42 | 0.80 | 0.838 | 1.83 | B | EL | 51.375 | |
| | | T5B | 32.000 | | 1.61 | 51.4 | 1.40 | 0.840 | 2.34 | A | I | 27.85 | 0.950 | 2.41 | B | EL | 30.825 | 0.80 | 0.838 | 1.61 | B | EL | 51.375 | |
| | | T6A | 36.000 | | 1.47 | 52.7 | 1.40 | 0.840 | 2.20 | A | I | 27.85 | 0.950 | 2.22 | B | EL | 30.825 | 0.80 | 0.838 | 1.47 | B | EL | 51.375 | |
| | | T7A | 40.000 | | 1.35 | 54.0 | 1.40 | 0.840 | 2.08 | A | I | 27.85 | 0.950 | 2.07 | B | EL | 30.825 | 0.80 | 0.838 | 1.35 | B | EL | 51.375 | |
| | | T7B | 40.000 | | 1.42 | 56.9 | 1.40 | 0.840 | 2.33 | A | I | 27.85 | 0.950 | 1.94 | B | EL | 30.825 | 0.80 | 0.838 | 1.42 | B | EL | 51.375 | |

## LOAD FACTORS:

| DESIGN LOAD RATING FACTORS | LIMIT STATE | $\gamma_{DC}$ | $\gamma_{DW}$ |
|---|---|---|---|
| | STRENGTH I | 1.25 | 1.50 |
| | SERVICE III | 1.00 | 1.00 |

## NOTES:

MINIMUM RATING FACTORS ARE BASED ON THE STRENGTH I AND SERVICE III LIMIT STATES.

ALLOWABLE STRESSES FOR SERVICE III LIMIT STATE ARE AS REQUIRED FOR DESIGN.

(#) CONTROLLING LOAD RATING

(1) DESIGN LOAD RATING (HL-93)

(2) DESIGN LOAD RATING (HS-20)

(3) LEGAL LOAD RATING **

** SEE CHART FOR VEHICLE TYPE

GIRDER LOCATION

I - INTERIOR GIRDER
EL - EXTERIOR LEFT GIRDER
ER - EXTERIOR RIGHTGIRDER

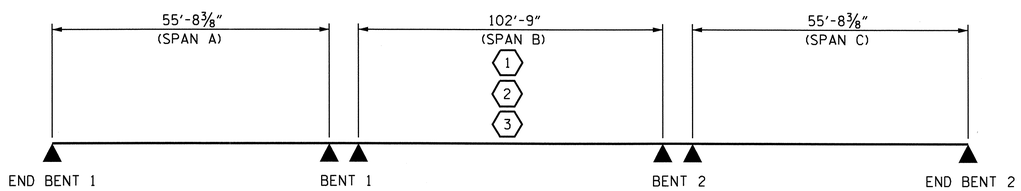


LRFR SUMMARY

PROJECT NO. I-3819A
IREDELL COUNTY
STATION: 19+31.50-Y4RPA-

STATE OF NORTH CAROLINA
DEPARTMENT OF TRANSPORTATION
RALEIGH

STANDARD

# LRFR SUMMARY FOR PRESTRESSED CONCRETE GIRDERS (INTERSTATE TRAFFIC)

| REVISIONS | | | | | | SHEET NO. |
|---|---|---|---|---|---|---|
| NO. | BY: | DATE: | NO. | BY: | DATE: | S-153 |
| 1 | | | 3 | | | TOTAL SHEETS |
| 2 | | | 4 | | | 382 |

ASSEMBLED BY : K.H. COMPTON DATE : 12/6/10
CHECKED BY : A.C. OUTLAW DATE : 12/10/10
DRAWN BY : MAA 1/08
CHECKED BY : GM/DI 2/08
REV. 11/12/08RR MAA/GM

28-DEC-2011 12:47
R:\Structures\Frye\str04\kcompton\I3819A_SD_GD_LRFR_04.dgn
wparker

STR. #4 STD. NO. LRFR2

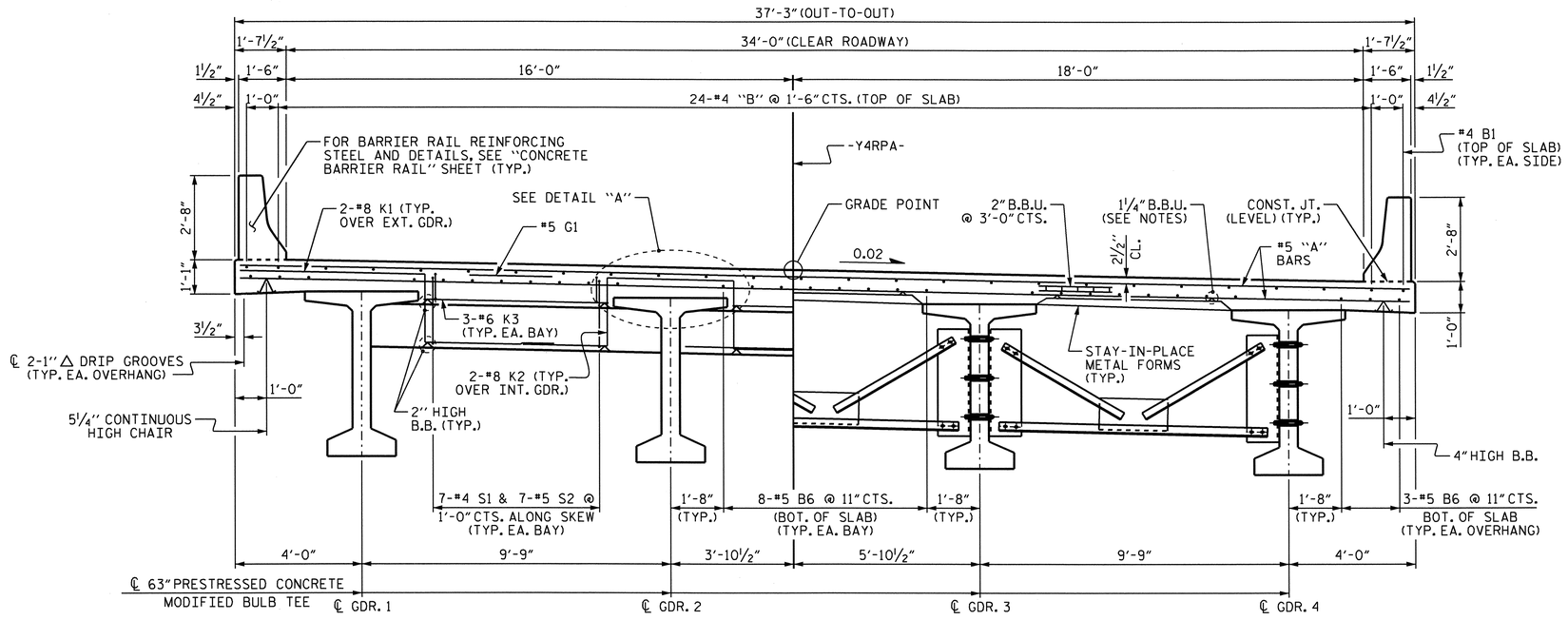


AT END BENT

AT MID-SPAN

## TYPICAL SECTION

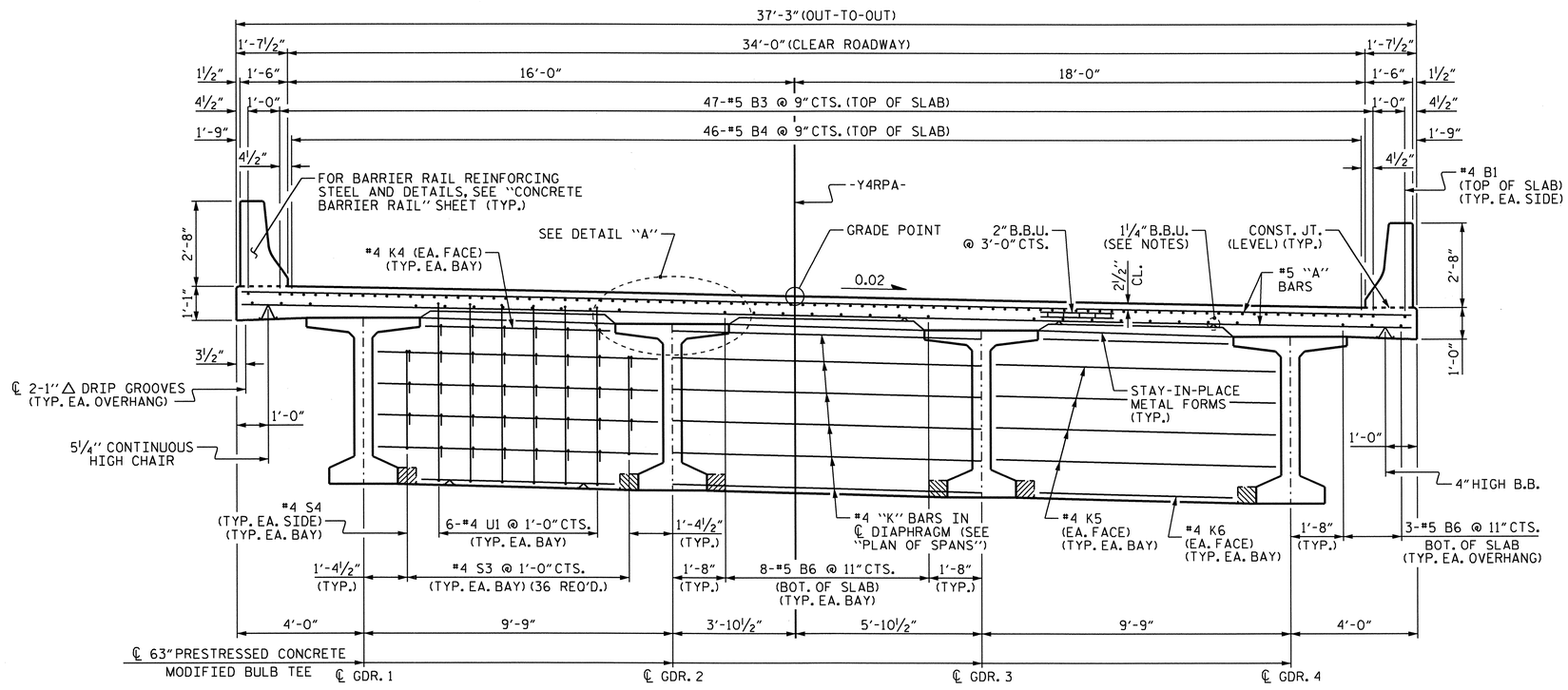


AT CONTINUOUS BENT DIAPHRAGMS

## TYPICAL SECTION

## NOTES

PROVIDE 1¼" HIGH BEAM BOLSTERS UPPER AT 4'-0" CTS. ATOP THE METAL STAY-IN-PLACE FORMS TO SUPPORT THE BOTTOM MAT OF "A" BARS. WHEN USING REMOVABLE FORMS, PROVIDE CONTINUOUS HIGH CHAIRS FOR METAL DECK (C.H.C.M.) @ 4'-0" CTS. WITH A HEIGHT TO SUPPORT THE BOTTOM MAT OF "A" BARS A CLEAR DISTANCE OF 2½" ABOVE THE TOP OF THE REMOVABLE FORM.

LONGITUDINAL STEEL MAY BE SHIFTED SLIGHTLY, AS NECESSARY, TO AVOID INTERFERENCE WITH STIRRUPS IN PRESTRESSED CONCRETE GIRDERS.

PREVIOUSLY CAST CONCRETE IN A CONTINUOUS UNIT SHALL HAVE ATTAINED A MINIMUM COMPRESSIVE STRENGTH OF 3,000 PSI BEFORE ADDITIONAL CONCRETE IS CAST IN THE UNIT.

BARRIER RAIL IN A CONTINUOUS UNIT SHALL NOT BE CAST UNTIL ALL SLAB CONCRETE IN THE UNIT HAS BEEN CAST AND HAS REACHED A MINIMUM COMPRESSIVE STRENGTH OF 3,000 PSI.

FOR INTERMEDIATE DIAPHRAGM DETAILS, SEE "INTERMEDIATE STEEL DIAPHRAGMS FOR 63" MODIFIED BULB TEE PRESTRESSED CONCRETE GIRDERS" SHEET.

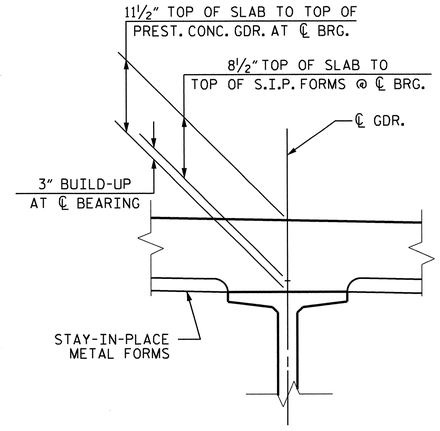


DETAIL "A"

PROJECT NO. I-3819A

IREDELL COUNTY

STATION: 19+31.50-Y4RPA-

SHEET 1 OF 2

STATE OF NORTH CAROLINA
DEPARTMENT OF TRANSPORTATION
RALEIGH

SUPERSTRUCTURE

TYPICAL SECTION

| REVISIONS | | | | | | SHEET NO. |
|---|---|---|---|---|---|---|
| NO. | BY: | DATE: | NO. | BY: | DATE: | S-154 |
| 1 | | | 3 | | | TOTAL SHEETS |
| 2 | | | 4 | | | 382 |

NORTH CAROLINA PROFESSIONAL SEAL 21638 ENGINEER LAURA E. SUTTON
1/3/12

DRAWN BY : B.N. BARODAWALA DATE : 8/2/10
CHECKED BY : L.E. SUTTON DATE : 11/4/10

28-DEC-2011 12:47
R:\Structures\Frye\str04\elocklear\Microstation\I3819A_SD_TS_04.dgn
wparker

STR. #4

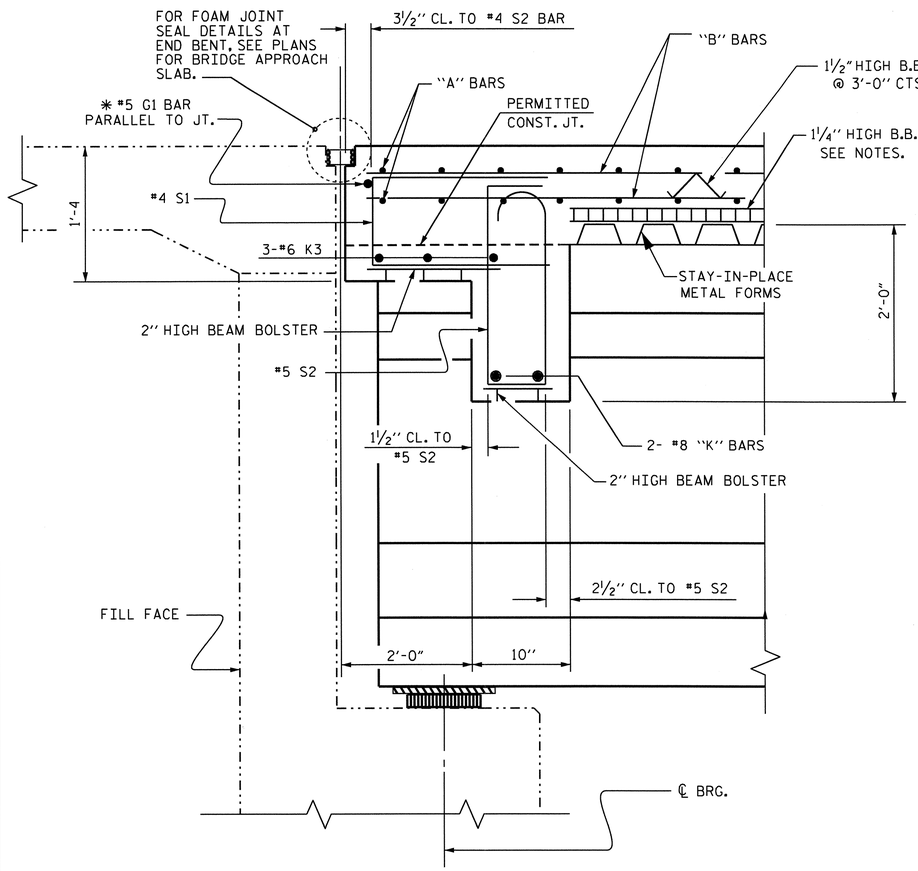


* #5G BAR MAY BE SHIFTED SLIGHTLY, AS NECESSARY, TO CLEAR REINFORCING STEEL AND STIRRUPS.

## SECTION A-A

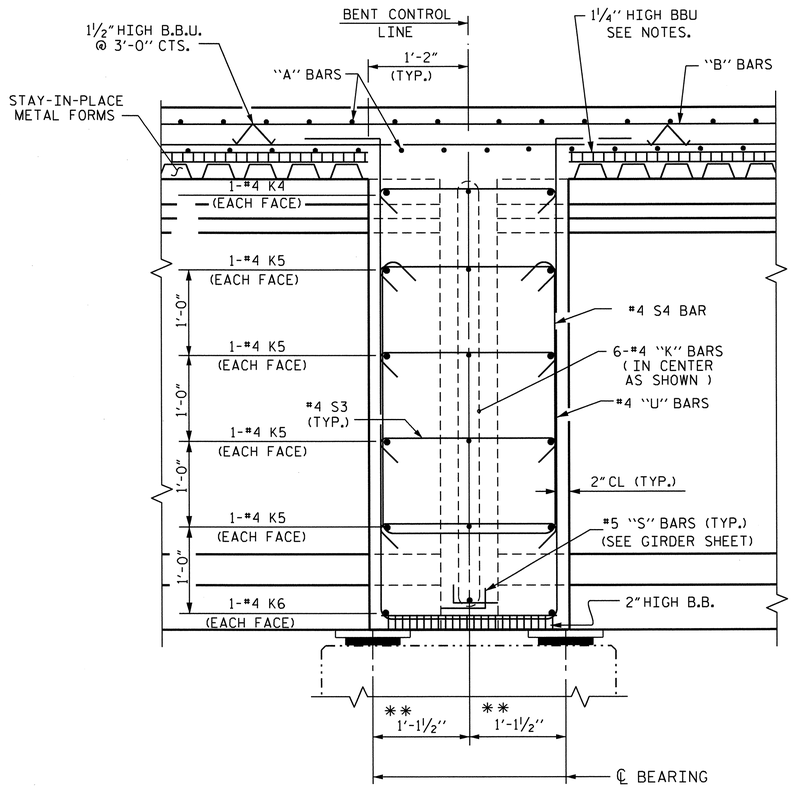


## SECTION B-B

** MEASURED ALONG ℄ GDR.

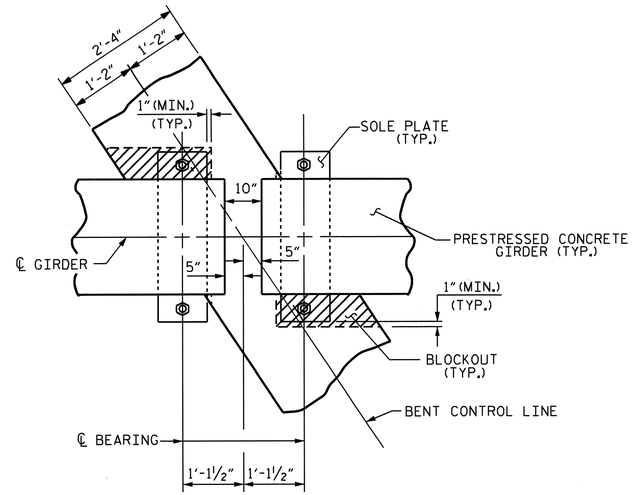


## PLAN

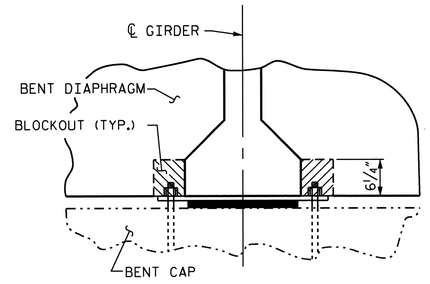


## SECTION

## BENT DIAPHRAGM BLOCKOUT DETAIL

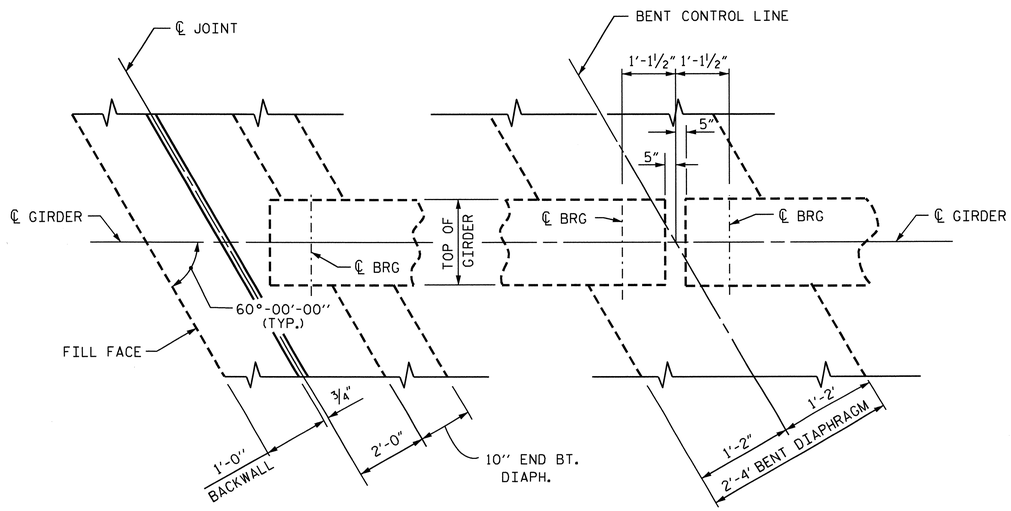


END BENT DIAPHRAGM — BENT DIAPHRAGM

## PLAN

DRAWN BY : B.N.BARODAWALA DATE : 8-2-10
CHECKED BY : L. E. SUTTON DATE : 11-4-10

28-DEC-2011 14:36
R:\Structures\Frye\str04\elocklear\Microstation\I3819A_SD_TS_04.dgn
wparker

PROJECT NO. I-3819A
IREDELL COUNTY
STATION: 19+31.50-Y4RPA-

SHEET 2 OF 2

STATE OF NORTH CAROLINA
DEPARTMENT OF TRANSPORTATION
RALEIGH

SUPERSTRUCTURE

# TYPICAL SECTION DETAILS

| REVISIONS | | | | | | SHEET NO. |
|---|---|---|---|---|---|---|
| NO. | BY: | DATE: | NO. | BY: | DATE: | S-155 |
| 1 | | | 3 | | | TOTAL SHEETS |
| 2 | | | 4 | | | 382 |

NORTH CAROLINA PROFESSIONAL SEAL 21638 ENGINEER LAURA E. SUTTON 1/3/12

STR. #4

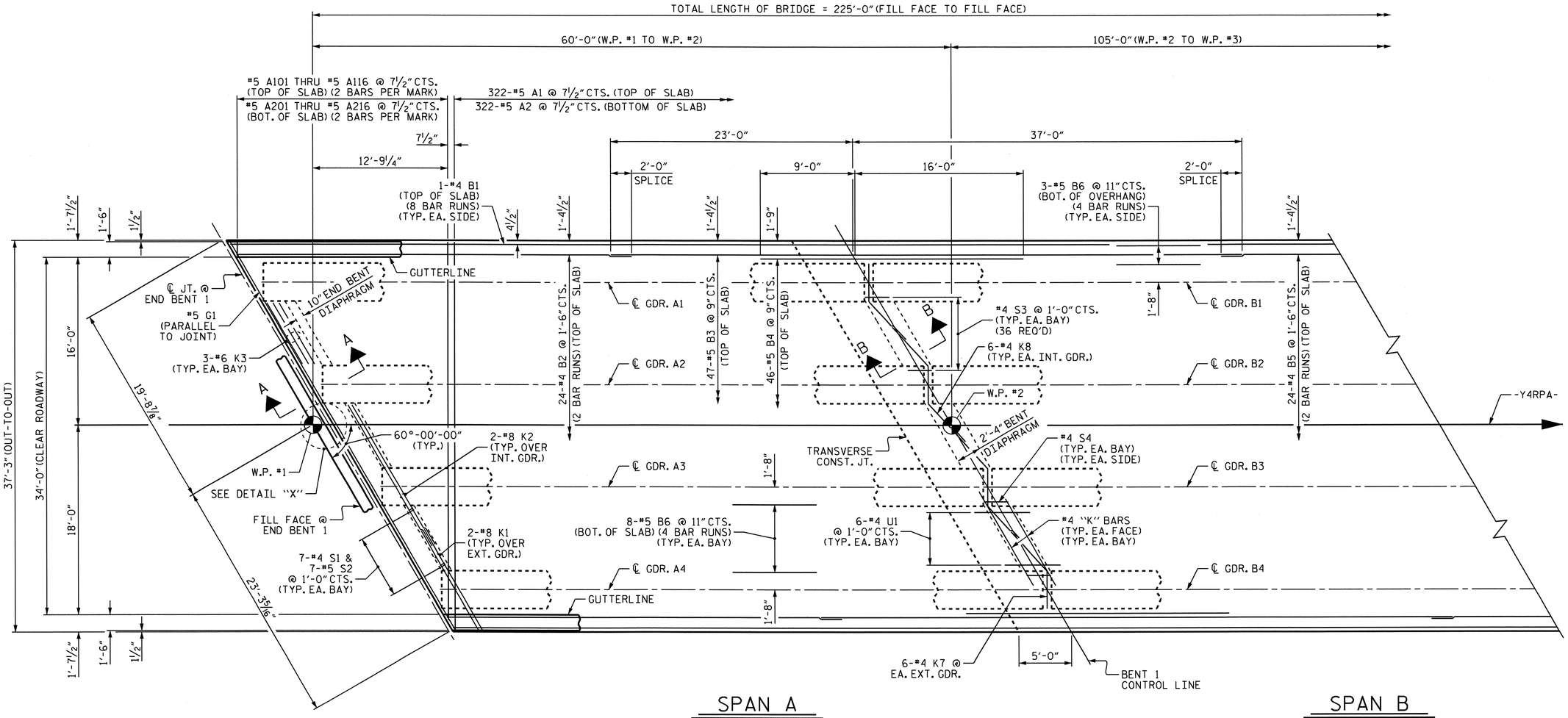


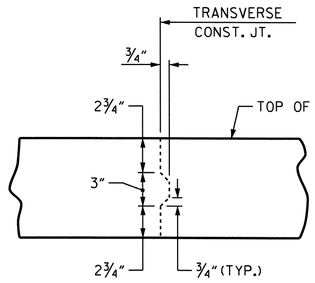


## TRANSVERSE CONSTRUCTION JOINT DETAIL

NOTE: REINFORCING STEEL IN SLAB NOT SHOWN. LONGITUDINAL REINFORCING STEEL SHALL BE CONTINUOUS THRU JOINT.

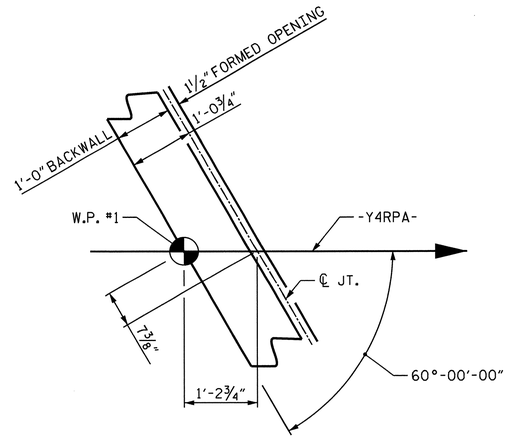


## DETAIL "X"

PROJECT NO. I-3819A

IREDELL COUNTY

STATION: 19+31.50-Y4RPA-

SHEET 1 OF 2

STATE OF NORTH CAROLINA
DEPARTMENT OF TRANSPORTATION
RALEIGH

SUPERSTRUCTURE

PLAN OF SPANS

| REVISIONS | | | | | | SHEET NO. |
|---|---|---|---|---|---|---|
| NO. | BY: | DATE: | NO. | BY: | DATE: | S-156 |
| 1 | | | 3 | | | TOTAL SHEETS |
| 2 | | | 4 | | | 382 |

NORTH CAROLINA PROFESSIONAL SEAL 21638 ENGINEER LAURA E. SUTTON
1/3/12

STR. #4

DRAWN BY : E.C. LOCKLEAR DATE : 12-07-10
CHECKED BY : L.E. SUTTON DATE : 1-10-11

28-DEC-2011 12:47
R:\Structures\Frye\str04\elocklear\Microstation\I3819A_SD_S*_04.dgn
wparker

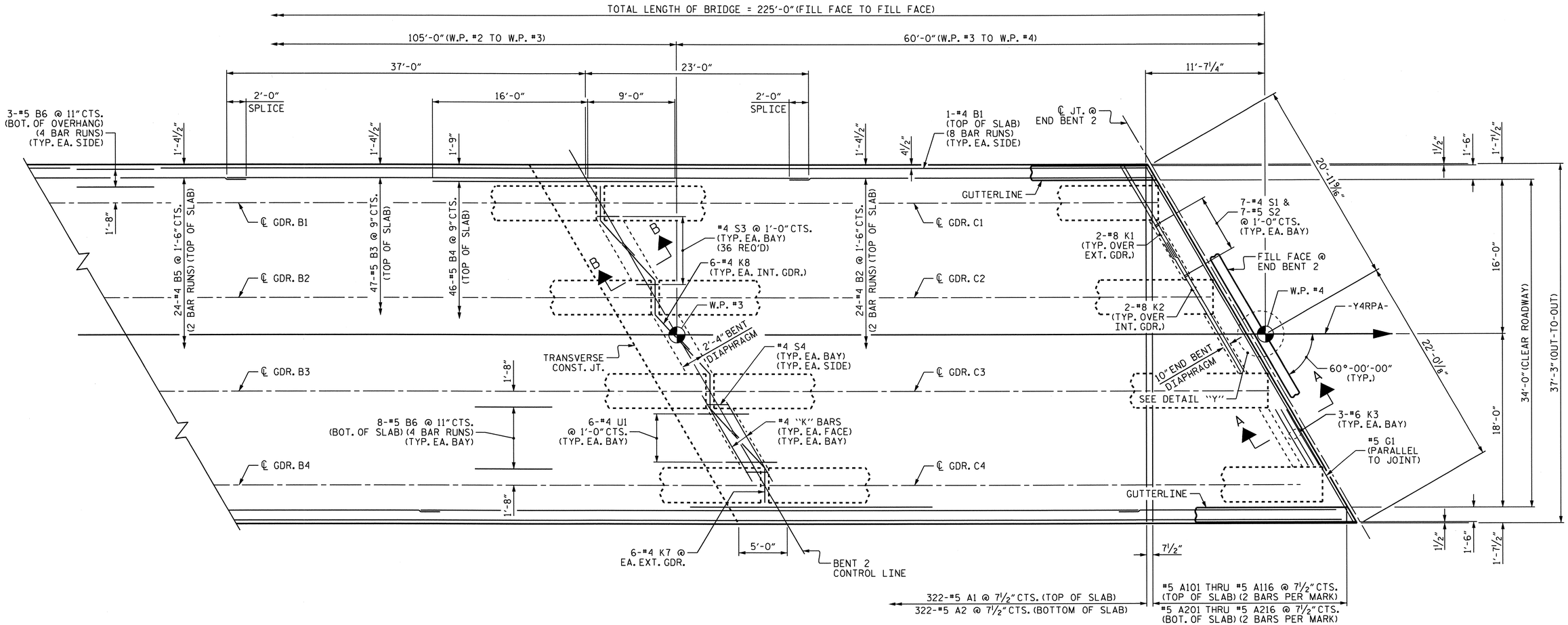


SPAN B

SPAN C

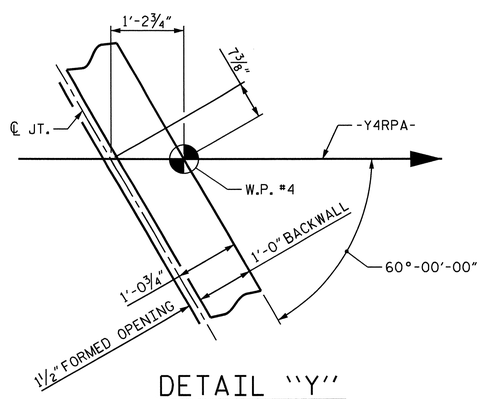


DETAIL "Y"

PROJECT NO. I-3819A

IREDELL COUNTY

STATION: 17+48.00-Y4RPA-

SHEET 2 OF 2

STATE OF NORTH CAROLINA
DEPARTMENT OF TRANSPORTATION
RALEIGH

SUPERSTRUCTURE

PLAN OF SPANS

| REVISIONS | | | | | | SHEET NO. |
|---|---|---|---|---|---|---|
| NO. | BY: | DATE: | NO. | BY: | DATE: | S-157 |
| 1 | | | 3 | | | TOTAL SHEETS |
| 2 | | | 4 | | | 382 |

NORTH CAROLINA PROFESSIONAL SEAL 21638 ENGINEER LAURA E. SUTTON
1/3/12

STR. #4

DRAWN BY : E.C. LOCKLEAR DATE : 12-07-10
CHECKED BY : L.E. SUTTON DATE : 1-10-11

28-DEC-2011 12:47
R:\Structures\Frye\str04\elocklear\Microstation\I3819A_SD_S*_04.dgn
wparker

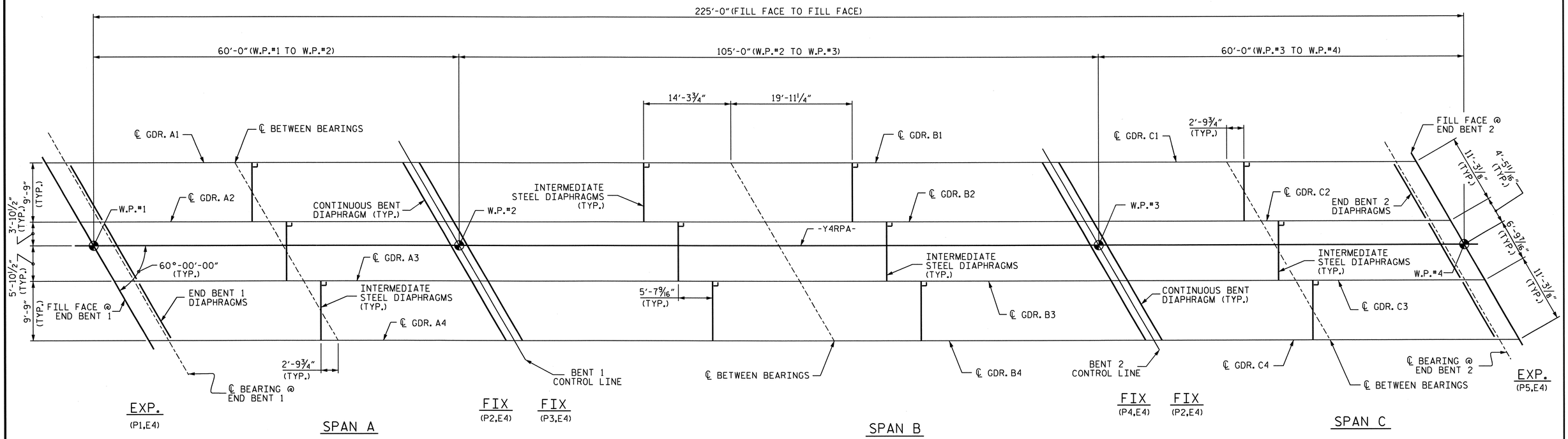


# GIRDER LAYOUT

PROJECT NO. I-3819A

IREDELL COUNTY

STATION: 19+31.50-Y4RPA-

STATE OF NORTH CAROLINA
DEPARTMENT OF TRANSPORTATION
RALEIGH

SUPERSTRUCTURE

GIRDER LAYOUT

NORTH CAROLINA PROFESSIONAL SEAL 21638 ENGINEER LAURA E. SUTTON
1/3/12

| REVISIONS | | | | | | SHEET NO. |
|---|---|---|---|---|---|---|
| NO. | BY: | DATE: | NO. | BY: | DATE: | S-158 |
| 1 | | | 3 | | | TOTAL SHEETS |
| 2 | | | 4 | | | 382 |

DRAWN BY : B.N.BARODAWALA DATE : 8-10-10
CHECKED BY : L. E. SUTTON DATE : 8-16-10

28-DEC-2011 12:47
R:\Structures\Frye\str04\bbarodawala\Microstation\I3819A_sd_FP_04.dgn
wparker

STR. #4

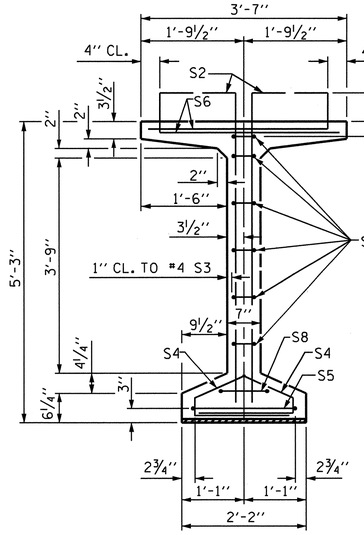


SECTION A-A

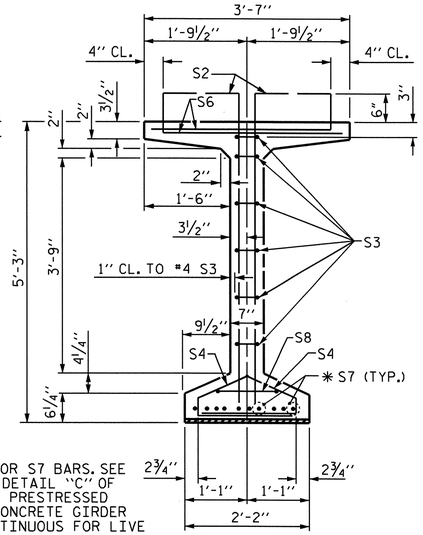


* FOR S7 BARS. SEE DETAIL "C" OF PRESTRESSED CONCRETE GIRDER CONTINUOUS FOR LIVE LOAD DETAILS SHEET

SECTION B-B

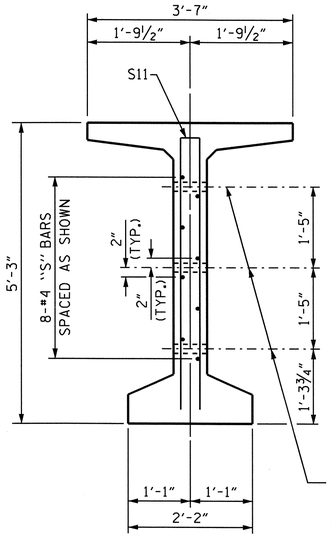


SECTION C-C

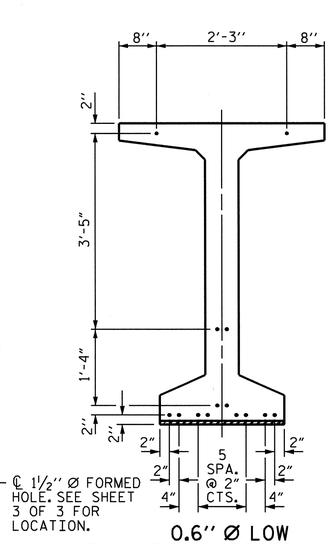


℄ 1½" Ø FORMED HOLE. SEE SHEET 3 OF 3 FOR LOCATION.

0.6" Ø LOW RELAXATION STRAND LAYOUT

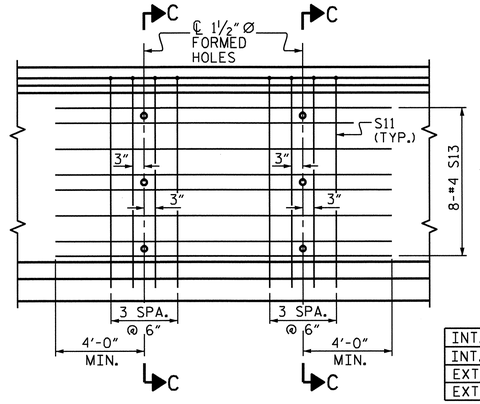


## PARTIAL ELEVATION

SHOWING INTERMEDIATE DIAPHRAGM
REINFORCING STEEL FOR INTERIOR GIRDERS

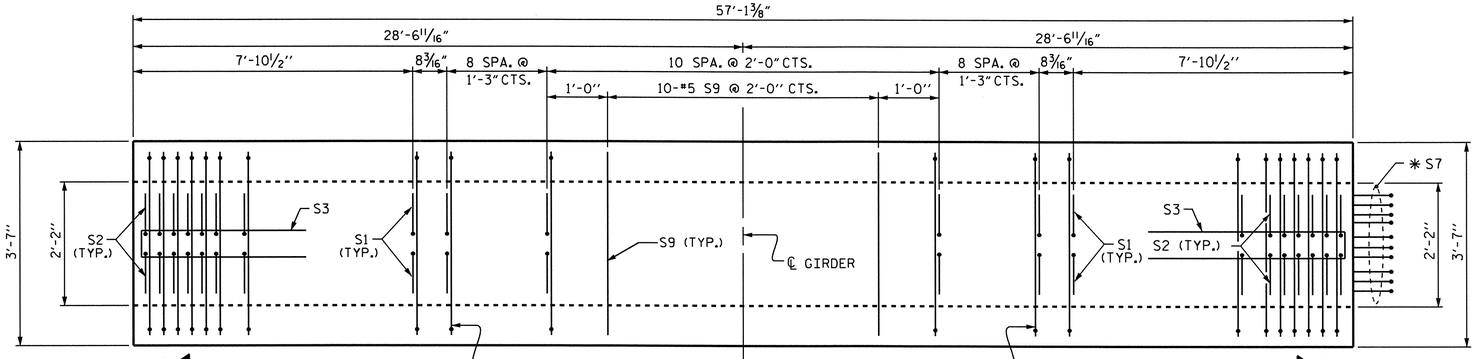


## PLAN OF GIRDER

## ELEVATION OF GIRDER

SEE SHEET 3 OF 3 FOR FORMED HOLE LOCATIONS.

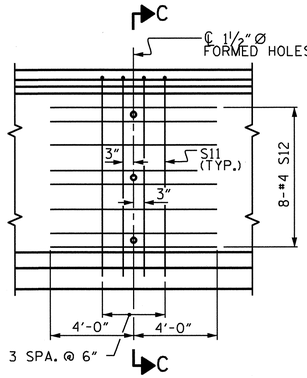


## PARTIAL ELEVATION

SHOWING INTERMEDIATE DIAPHRAGM
REINFORCING STEEL FOR EXTERIOR GIRDERS

## 0.6" Ø L. R. GRADE 270 STRANDS

| AREA (SQUARE INCHES) | ULTIMATE STRENGTH (LBS. PER STRAND) | APPLIED PRESTRESS (LBS. PER STRAND) |
|---|---|---|
| 0.217 | 58,600 | 43,950 |

## REINFORCING STEEL FOR ONE GDR

| BAR | NUMBER | SIZE | TYPE | LENGTH | WEIGHT | |
|---|---|---|---|---|---|---|
| S1 | 102 | #4 | 1 | 6'-1" | 414 | |
| S2 | 24 | #5 | 1 | 6'-1" | 152 | |
| S3 | 12 | #4 | 2 | 8'-5" | 67 | |
| S4 | 72 | #4 | 3 | 3'-0" | 144 | |
| S5 | 1 | #5 | 2 | 9'-10" | 10 | |
| S6 | 126 | #5 | 4 | 4'-4" | 569 | |
| * S7 | 10 | #5 | STR | 3'-8" | 38 | |
| S8 | 2 | #5 | 2 | 9'-0" | 19 | |
| S9 | 10 | #5 | STR | 3'-3" | 34 | |
| S10 | 1 | #3 | STR | 1'-10" | 1 | |
| S11 | 8 | #5 | 2 | 10'-2" | 85 | INT. GDR. |
| S12 | 8 | #4 | STR | 11'-4" | 61 | INT. GDR. |
| S11 | 4 | #5 | 2 | 10'-2" | 42 | EXT. GDR. |
| S13 | 8 | #4 | STR | 8'-0" | 43 | EXT. GDR. |

* NOTE: S7 BARS SHALL BE BENT BEFORE SHIPMENT. HEAT BENDING SHALL NOT BE ALLOWED.

## BAR TYPES

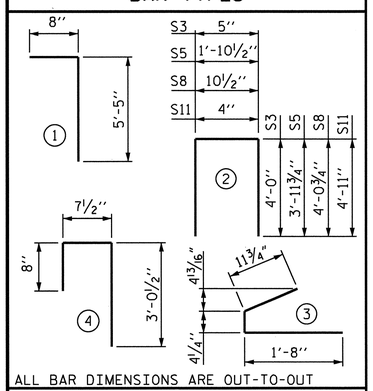


ALL BAR DIMENSIONS ARE OUT-TO-OUT

## QUANTITIES FOR ONE GIRDER

| | REINFORCING STEEL (LB.) | 5000 PSI CONCRETE (C.Y.) | 0.6" Ø L.R. STRANDS (No.) |
|---|---|---|---|
| INT. GDR. | 1594 | 11.3 | 14 |
| EXT. GDR. | 1533 | 11.3 | 14 |

## GIRDERS REQUIRED

| NUMBER | LENGTH | TOTAL LENGTH |
|---|---|---|
| 8 | 57'-1⅜" | 456.92' |
| | | |

PROJECT NO. I-3819A
IREDELL COUNTY
STATION: 19+31.50-Y4RPA-

SHEET 1 OF 3

STATE OF NORTH CAROLINA
DEPARTMENT OF TRANSPORTATION
RALEIGH

STANDARD

63" PRESTRESSED CONCRETE MODIFIED BULB TEE CONTINUOUS FOR LIVE LOAD

SPANS A & C

| REVISIONS | | | | | | SHEET NO. |
|---|---|---|---|---|---|---|
| NO. | BY: | DATE: | NO. | BY: | DATE: | S-159 |
| 1 | | | 3 | | | TOTAL SHEETS |
| 2 | | | 4 | | | 382 |

STR. #4

STD. NO. PCG9

NORTH CAROLINA PROFESSIONAL SEAL 21638 ENGINEER LAURA E. SUTTON
1/9/12

| | | |
|---|---|---|
| ASSEMBLED BY : B.N.BARODAWALA | DATE : 8-17-10 | |
| CHECKED BY : L.E. SUTTON | DATE : 11-4-10 | |
| DRAWN BY : EEM 2/6/97 | REV. 8/16/99 | RWW/LES |
| CHECKED BY : VAP 2/6/97 | REV. 10/17/00 | RWW/LES |
| | REV. 5/1/06R | TLA/GM |

28-DEC-2011 12:47
R:\Structures\Frye\str04\bbarodawala\Microstation\I3819A_sd_G*_04.dgn
wparker

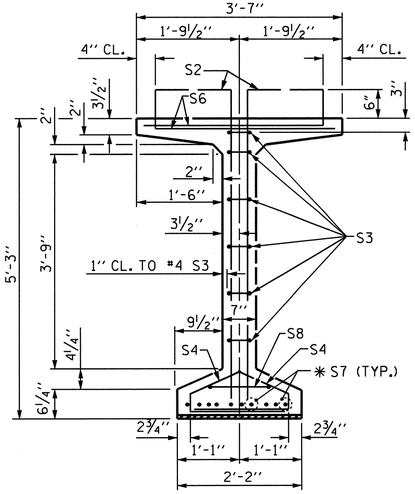


## SECTION B-B

* FOR S7 BARS. SEE DETAIL "C" OF PRESTRESSED CONCRETE GIRDER CONTINUOUS FOR LIVE LOAD DETAILS SHEET

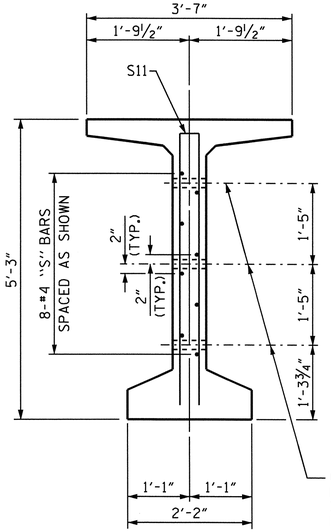


## SECTION C-C

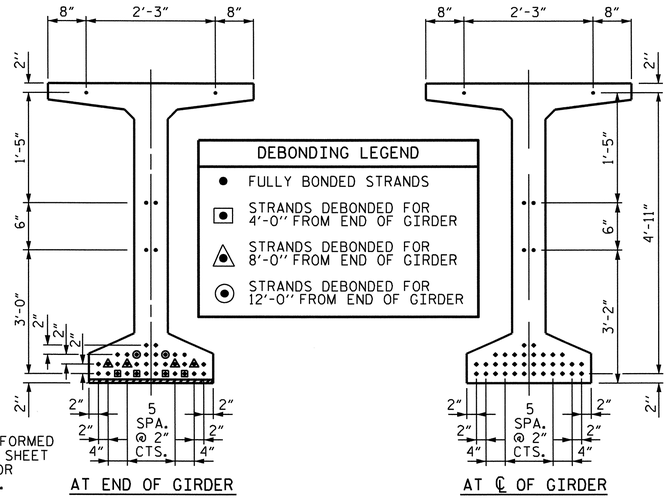


## 0.6" Ø LOW RELAXATION STRAND LAYOUT

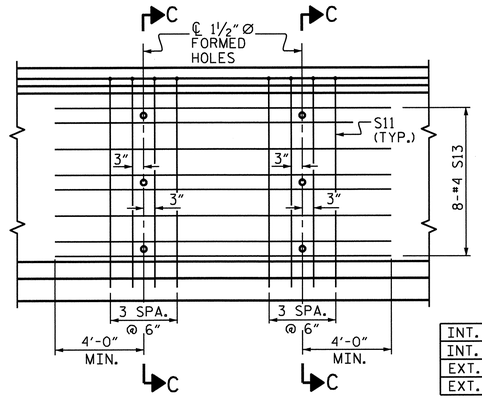


## PARTIAL ELEVATION

SHOWING INTERMEDIATE DIAPHRAGM REINFORCING STEEL FOR INTERIOR GIRDERS

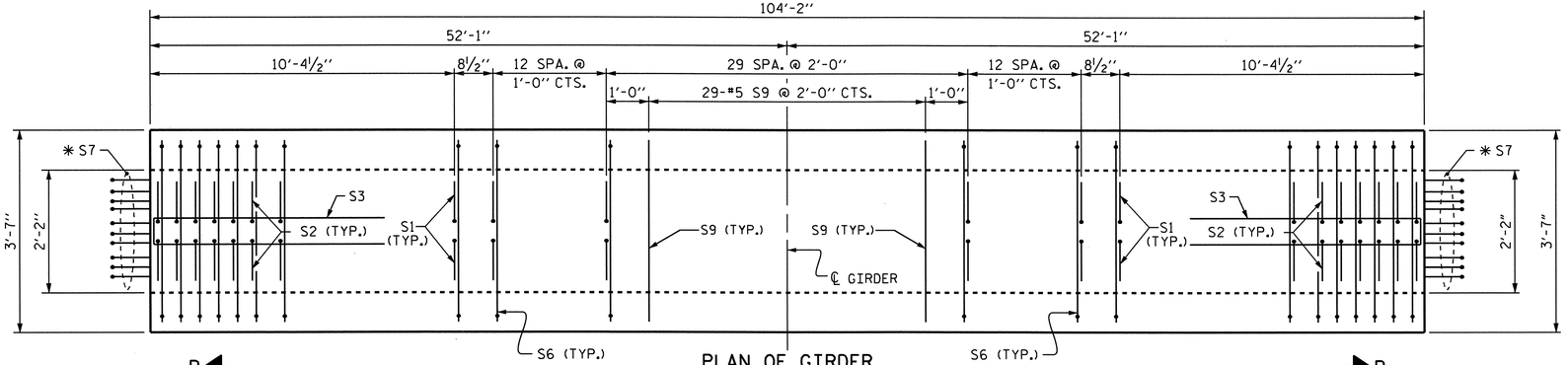


## PLAN OF GIRDER

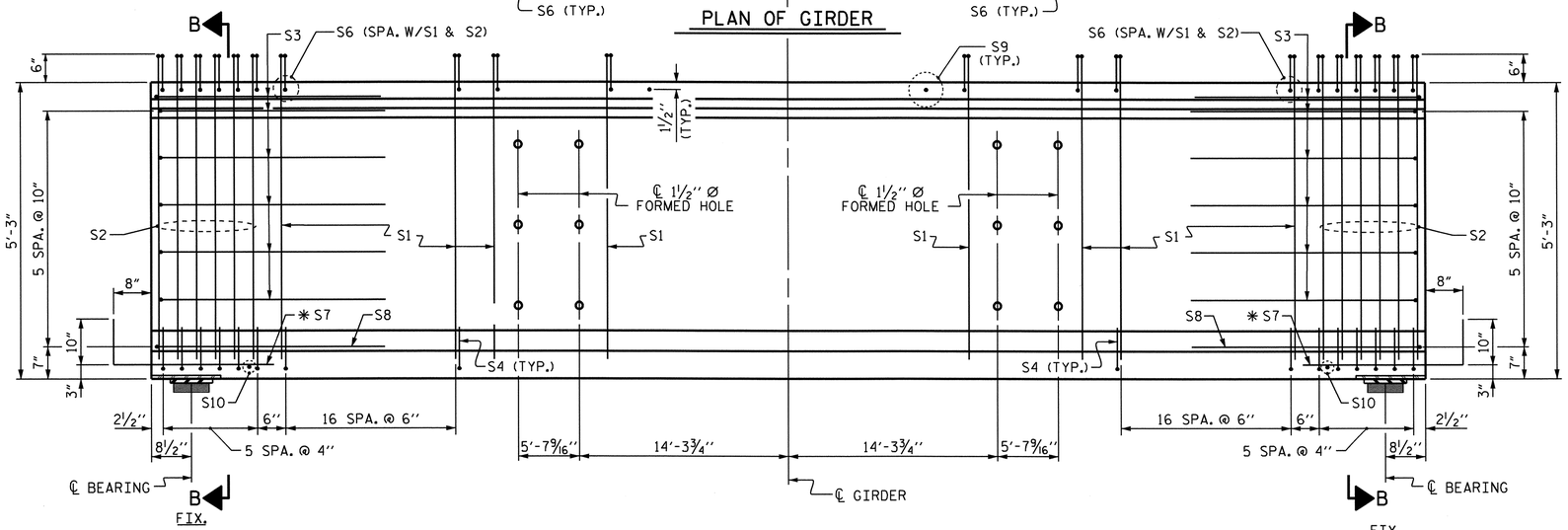


## ELEVATION OF GIRDER

SEE SHEET 3 OF 3 FOR FORMED HOLE LOCATIONS.

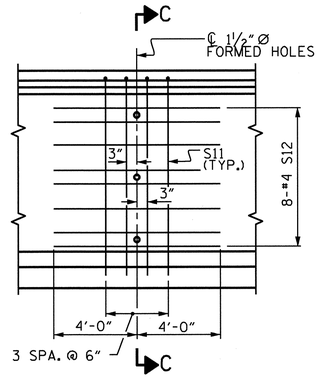


## PARTIAL ELEVATION

SHOWING INTERMEDIATE DIAPHRAGM REINFORCING STEEL FOR EXTERIOR GIRDERS

| 0.6" Ø L. R. GRADE 270 STRANDS | | |
|---|---|---|
| AREA (SQUARE INCHES) | ULTIMATE STRENGTH (LBS. PER STRAND) | APPLIED PRESTRESS (LBS. PER STRAND) |
| 0.217 | 58,600 | 43,950 |

### REINFORCING STEEL FOR ONE GDR

| | BAR | NUMBER | SIZE | TYPE | LENGTH | WEIGHT |
|---|---|---|---|---|---|---|
| | S1 | 176 | #4 | 1 | 6'-1" | 715 |
| | S2 | 24 | #6 | 1 | 6'-1" | 219 |
| | S3 | 12 | #4 | 2 | 8'-5" | 67 |
| | S4 | 72 | #4 | 3 | 3'-0" | 144 |
| | S6 | 200 | #5 | 4 | 4'-4" | 904 |
| | * S7 | 20 | #5 | STR | 3'-8" | 76 |
| | S8 | 2 | #5 | 2 | 9'-0" | 19 |
| | S9 | 29 | #5 | STR | 3'-3" | 98 |
| | S10 | 2 | #3 | STR | 1'-10" | 1 |
| INT. GDR. | S11 | 16 | #5 | 2 | 10'-2" | 170 |
| INT. GDR. | S12 | 16 | #4 | STR | 11'-4" | 121 |
| EXT. GDR. | S11 | 8 | #5 | 2 | 10'-2" | 85 |
| EXT. GDR. | S13 | 16 | #4 | STR | 8'-0" | 86 |

* NOTE: S7 BARS SHALL BE BENT BEFORE SHIPMENT. HEAT BENDING SHALL NOT BE ALLOWED.

### BAR TYPES

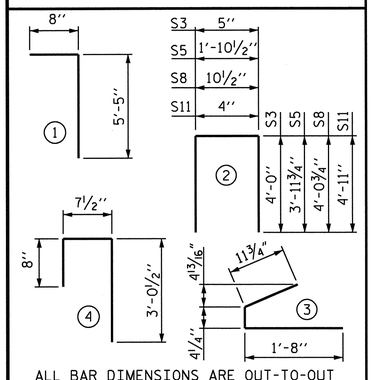


ALL BAR DIMENSIONS ARE OUT-TO-OUT

### QUANTITIES FOR ONE GIRDER

| | REINFORCING STEEL LB. | 9500 PSI CONCRETE C.Y. | 0.6" Ø L.R. STRANDS No. |
|---|---|---|---|
| INT. GDR. | 2534 | 20.6 | 40 |
| EXT. GDR. | 2414 | 20.6 | 40 |

### GIRDERS REQUIRED

| NUMBER | LENGTH | TOTAL LENGTH |
|---|---|---|
| 4 | 104'-2" | 416.67 |

PROJECT NO. I-3819A

IREDELL COUNTY

STATION: 19+31.50-Y4RPA-

SHEET 2 OF 3

STATE OF NORTH CAROLINA
DEPARTMENT OF TRANSPORTATION
RALEIGH

# STANDARD
# 63" PRESTRESSED CONCRETE MODIFIED BULB TEE CONTINUOUS FOR LIVE LOAD
# SPAN B

| REVISIONS | | | | | | SHEET NO. |
|---|---|---|---|---|---|---|
| NO. | BY: | DATE: | NO. | BY: | DATE: | S-160 |
| 1 | | | 3 | | | TOTAL SHEETS |
| 2 | | | 4 | | | 382 |

STR. #4

STD. NO. PCG9

| | | |
|---|---|---|
| ASSEMBLED BY : B.N.BARODAWALA | DATE : 8-17-10 | |
| CHECKED BY : L.E. SUTTON | DATE : 11-4-10 | |
| DRAWN BY : EEM 2/6/97 | REV. 8/16/99 | RWW/LES |
| CHECKED BY : VAP 2/6/97 | REV. 10/17/00 | RWW/LES |
| | REV. 5/1/06R | TLA/GM |

NORTH CAROLINA PROFESSIONAL SEAL 21538 ENGINEER LAURA E. SUTTON
1/3/12

28-DEC-2011 12:47
R:\Structures\Frye\str04\bbarodawala\Microstation\I3819A_sd_G*_04.dgn
wparker

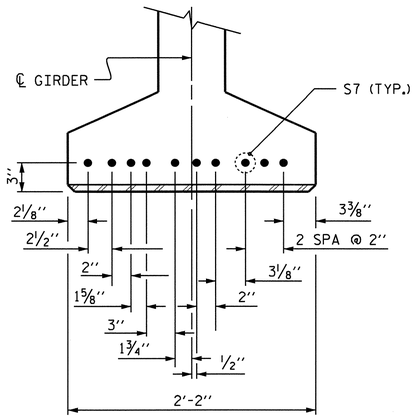


## DETAIL "C"

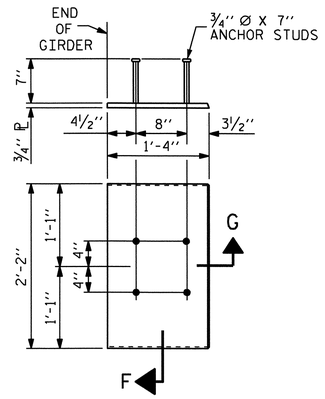


## EMBEDDED PLATE "B-1" DETAILS

(2 REQ'D PER GIRDER)

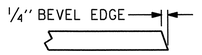


## SECTION "G"

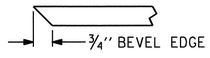


## SECTION "F"

(SEE NOTES)

## NOTES

ALL PRESTRESSING STRANDS SHALL BE 7-WIRE LOW-RELAXATION GRADE 270 STRANDS AND SHALL CONFORM TO AASHTO M203 EXCEPT FOR SAMPLING REQUIREMENTS WHICH SHALL BE IN ACCORDANCE WITH THE STANDARD SPECIFICATIONS.

ALL REINFORCING STEEL SHALL BE GRADE 60.

APPLY EPOXY PROTECTIVE COATING TO END OF GIRDER SURFACES INDICATED IN ELEVATION VIEW.

EMBEDDED PLATE "B-1" SHALL BE GALVANIZED IN ACCORDANCE WITH THE STANDARD SPECIFICATIONS. BEVEL EDGES OF PLATE "B-1" TO GIVE CLOSE FIT BUT NOT TIGHT FIT TO STEEL CASTING FORM.

ANCHOR STUDS SHALL CONFORM TO AASHTO M169 GRADES 1010 THROUGH 1020 OR APPROVED EQUAL, AND SHALL MEET THE TYPE "B" REQUIREMENTS OF SUBSECTION 7.3 OF THE ANSI/AASHTO/AWS D1.5 BRIDGE WELDING CODE.

AT ENDS OF GIRDERS TO BE EMBEDDED IN CONCRETE DIAPHRAGMS OR END WALLS, PRESTRESSING STRANDS MAY EXTEND A MAXIMUM OF 2" BEYOND THE GIRDER ENDS. OTHERWISE, PRESTRESSING STRANDS SHALL BE CUT FLUSH WITH THE GIRDER ENDS.

THE TRANSFER OF LOAD FROM THE ANCHORAGES TO THE GIRDER SHALL BE DONE WHEN CONCRETE HAS REACHED A COMPRESSIVE STRENGTH OF NOT LESS THAN 4000 PSI FOR GIRDERS IN SPANS A AND C AND 7200 PSI FOR GIRDERS IN SPAN B.

DEPENDING ON THE TYPE OF SYSTEM USED TO SUPPORT THE DECK SLAB FORMS, PRESET ANCHORS MAY BE NECESSARY IN THE PRESTRESSED CONCRETE GIRDER.

THE TOP SURFACE OF THE GIRDER, EXCLUDING THE OUTSIDE 4", SHALL BE RAKED TO A DEPTH OF ¼".

A 2" x 2" CHAMFER IS ALLOWED AT THE INTERSECTION OF THE WEB AND THE BOTTOM FLANGE OF THE 63" MODIFIED BULB TEE.

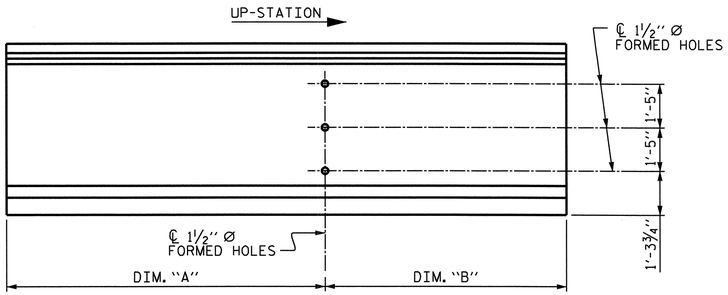


## ELEVATION OF EXTERIOR GIRDER

SPANS A & C, GIRDERS 1 & 4

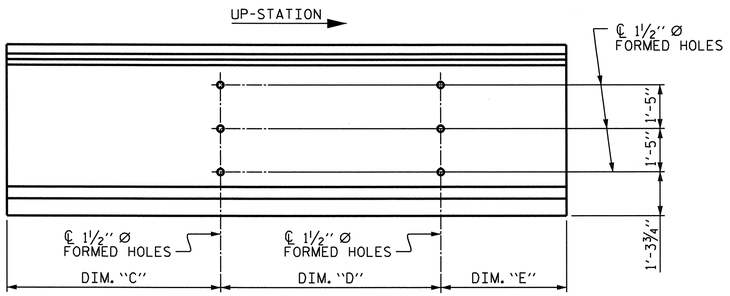


## ELEVATION OF EXTERIOR GIRDER

SPAN B, GIRDERS 1 & 4

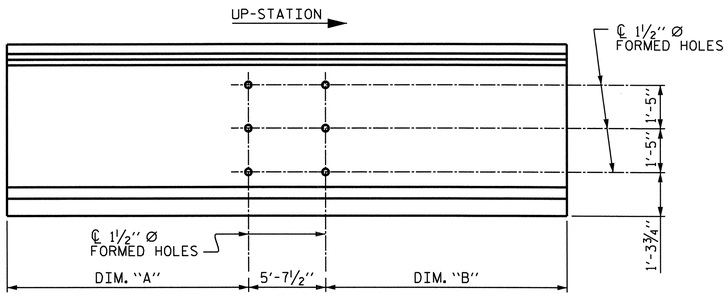


## ELEVATION OF INTERIOR GIRDER

SPANS A & C, GIRDERS 2 & 3

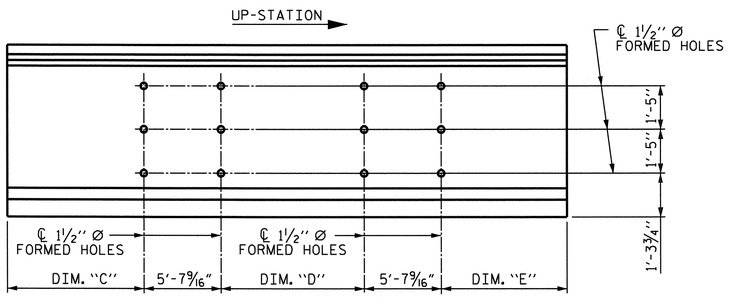


## ELEVATION OF INTERIOR GIRDER

SPAN B, GIRDERS 2 & 3

## FORMED HOLE LOCATIONS

| GIRDER NO. | SPANS A & C | | SPAN B | | |
|---|---|---|---|---|---|
| | DIM. "A" | DIM. "B" | DIM. "C" | DIM. "D" | DIM. "E" |
| 1 | 31'-4 7/16" | 25'-8 5/16" | 37'-9¼" | 34'-3" | 32'-1¾" |
| 2 & 3 | 25'-8 5/16" | 25'-8 5/16" | 32'-1 11/16" | 28'-7½" | 32'-1 11/16" |
| 4 | 25'-8 5/16" | 31'-4 7/16" | 32'-1¾" | 34'-3" | 37'-9¼" |

PROJECT NO. I-3819A

IREDELL COUNTY

STATION: 19+31.50-Y4RPA-

SHEET 3 OF 3

STATE OF NORTH CAROLINA
DEPARTMENT OF TRANSPORTATION
RALEIGH

STANDARD

PRESTRESSED CONCRETE GIRDER CONTINUOUS FOR LIVE LOAD DETAILS

| REVISIONS | | | | | | SHEET NO. |
|---|---|---|---|---|---|---|
| NO. | BY: | DATE: | NO. | BY: | DATE: | S-161 |
| 1 | | | 3 | | | TOTAL SHEETS |
| 2 | | | 4 | | | 382 |

NORTH CAROLINA PROFESSIONAL SEAL 21638 ENGINEER LAURA E. SUTTON
1/3/12

STR. #4

STD. NO. PCG11

| | |
|---|---|
| ASSEMBLED BY : B.N.BARODAWALA | DATE : 8-17-10 |
| CHECKED BY : L. E. SUTTON | DATE : 11-4-10 |
| DRAWN BY : ELR 11/91 | REV. 10/17/00 RWW/LES |
| CHECKED BY : GRP 11/91 | REV. 7/10/01RR LES/RDR |
| | REV. 5/1/06 TLA/GM |

28-DEC-2011 12:47
R:\Structures\Frye\str04\bbarodawala\Microstation\I3819A_sd_G*_04.dgn
wparker

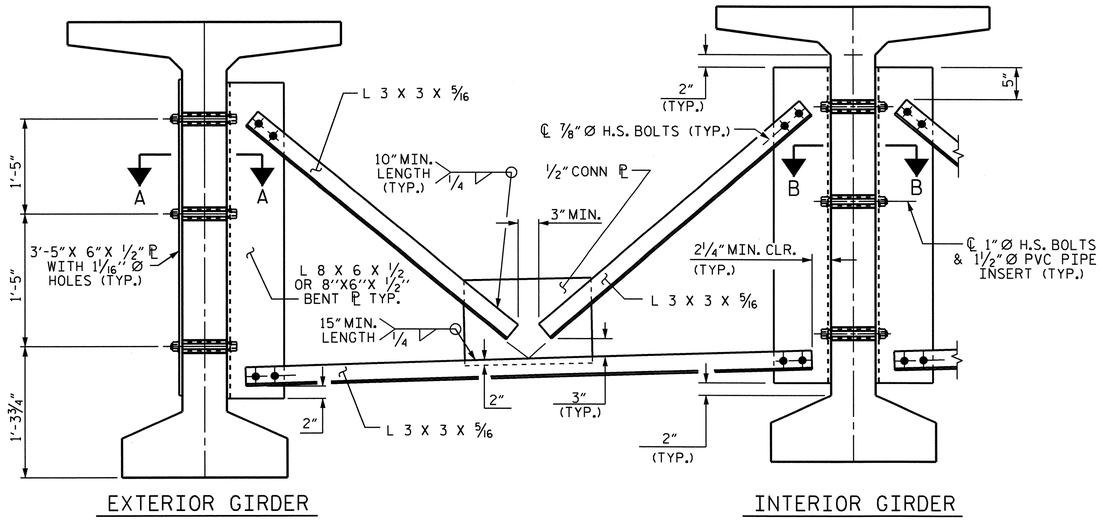


## PART SECTION AT INTERMEDIATE DIAPHRAGM

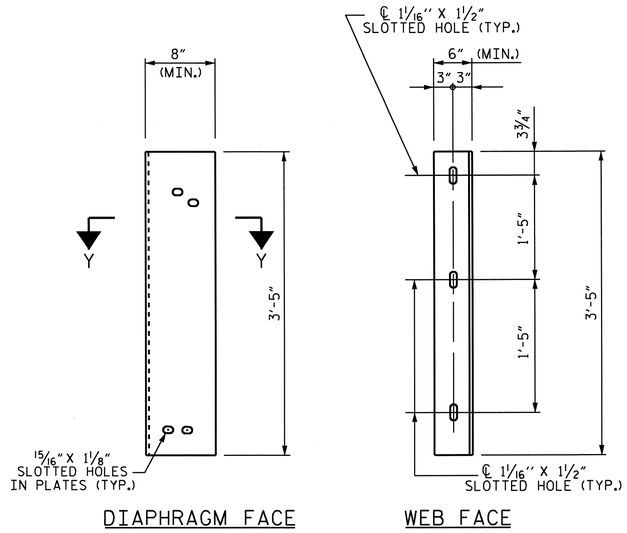


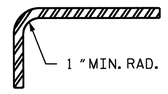


SECTION Y-Y

## STRUCTURAL STEEL NOTES

ALL INTERMEDIATE DIAPHRAGM STEEL AND CONNECTOR PLATES SHALL BE AASHTO M270 GRADE 50 OR APPROVED EQUAL.

TENSION ON THE ASTM A325 BOLTS THROUGH THE ANGLE MEMBER SHALL BE CALIBRATED USING DIRECT TENSION INDICATOR WASHERS IN ACCORDANCE WITH THE STANDARD SPECIFICATIONS.

TENSION ON THE ASTM A449 BOLTS THROUGH THE GIRDER WEB SHALL BE SNUG TIGHTENED FOLLOWED BY AN ADDITIONAL 1/4 TURN.

THE PLATES, BENT PLATES, AND ANGLES SHALL BE GALVANIZED OR METALLIZED IN ACCORDANCE WITH THE STANDARD SPECIFICATIONS. FOR THERMAL SPRAYED COATINGS (METALLIZATION), SEE SPECIAL PROVISIONS.

FOR METALLIZATION, APPLY AN 8 MIL THICK 99.99 PERCENT ZINC (W-Zn-1) THERMAL SPRAYED COATING WITH A 0.5 MIL THICK SEAL COAT TO ALL STEEL DIAPHRAGM SURFACES IN ACCORDANCE WITH THE THERMAL SPRAYED COATINGS SPECIAL PROVISION AND SECTION 442 OF THE STANDARD SPECIFICATIONS.

GALVANIZE THE HIGH STRENGTH BOLTS, NUTS, WASHERS AND DIRECT TENSION INDICATORS IN ACCORDANCE WITH THE STANDARD SPECIFICATIONS.

USE AN ASTM F436 HARDENED WASHER WITH STANDARD AND SLOTTED HOLES UNDER EACH BOLT HEAD AND NUT.

FOR BOLTS THROUGH THE GIRDER WEB, PROVIDE SUFFICIENT LENGTH OF THREADS ON ALL BOLTS TO ACCOMMODATE WASHERS AND THE THICKNESS OF CONNECTING MEMBER PLUS AT LEAST 1/4" PROJECTION BEYOND THE NUT.

INTERMEDIATE DIAPHRAGM ASSEMBLY SHALL COMPLY WITH SECTION 1072 OF THE STANDARD SPECIFICATIONS.

SUBMIT TWO SETS OF WORKING DRAWINGS FOR THE INTERMEDIATE DIAPHRAGM ASSEMBLY FOR REVIEW, COMMENTS AND ACCEPTANCE. AFTER REVIEW, COMMENTS, AND ACCEPTANCE, SUBMIT SEVEN SETS FOR DISTRIBUTION.

IN THE EXTERIOR BAYS, PLACE TEMPORARY STRUTS BETWEEN PRESTRESSED GIRDERS ADJACENT TO THE STEEL DIAPHRAGMS. STRUTS SHALL REMAIN IN PLACE 3 DAYS AFTER CONCRETE IS PLACED.

THE COST OF THE STEEL DIAPHRAGMS AND ASSEMBLIES SHALL BE INCLUDED IN THE UNIT PRICE BID FOR PRESTRESSED CONCRETE GIRDERS.

## CONNECTOR PLATE DETAIL

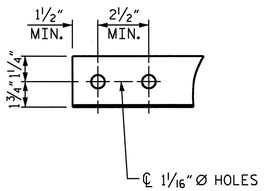


ANGLE END
(L 3 X 3 X 5/16)

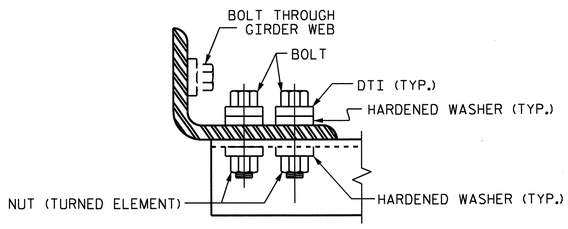


BOLT WITH DTI ASSEMBLY DETAIL

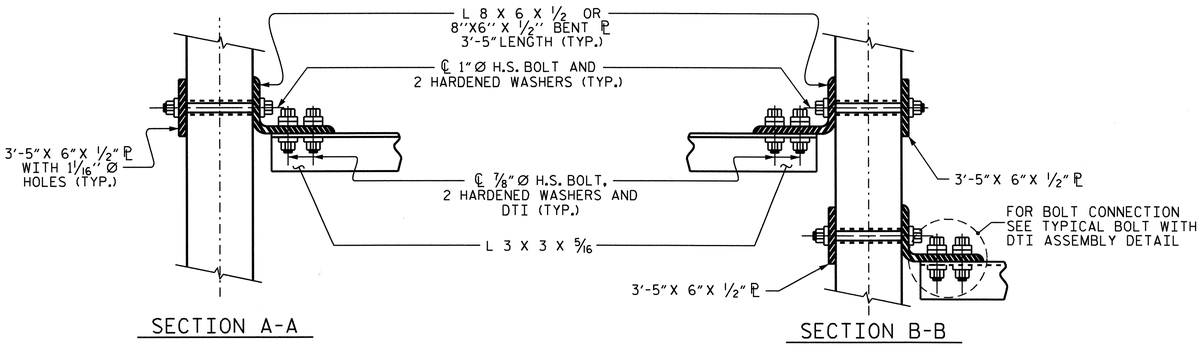


## CONNECTION DETAILS

PROJECT NO. I-3819A
IREDELL COUNTY
STATION: 19+31.50-Y4RPA-

STATE OF NORTH CAROLINA
DEPARTMENT OF TRANSPORTATION
RALEIGH

# STANDARD INTERMEDIATE STEEL DIAPHRAGMS FOR 63" & 72" MODIFIED BULB TEE PRESTRESSED CONCRETE GIRDERS

| REVISIONS | | | | | | SHEET NO. |
|---|---|---|---|---|---|---|
| NO. | BY: | DATE: | NO. | BY: | DATE: | S-162 |
| 1 | | | 3 | | | TOTAL SHEETS |
| 2 | | | 4 | | | 382 |

NORTH CAROLINA PROFESSIONAL SEAL 21638 ENGINEER LAURA E. SUTTON
1/3/12

STR. #4 STD. NO. PCG11

| | |
|---|---|
| ASSEMBLED BY : B.N.BARODAWALA | DATE : 7/26/10 |
| CHECKED BY : L. E. SUTTON | DATE : 9/3/10 |
| DRAWN BY : RWW 11/09 | ADDED 11/23/09R |
| CHECKED BY : GM 11/09 | REV. 10/1/11 MAA/GM |

28-DEC-2011 12:47
R:\Structures\Frye\str04\bbarodawala\Microstation\I3819A_sd_ID_04.dgn
wparker

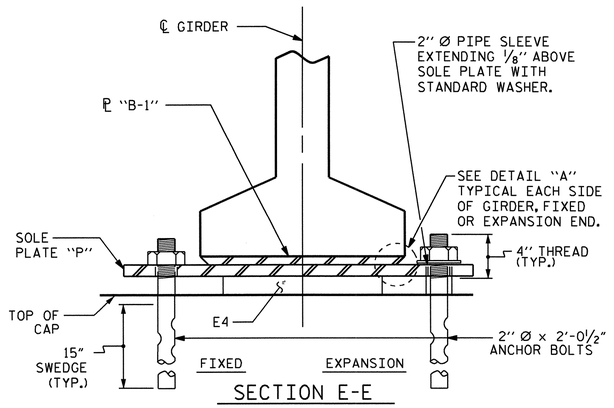


SECTION E-E

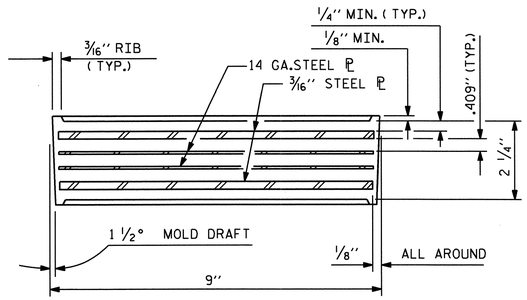


TYPICAL SECTION OF ELASTOMERIC BEARINGS

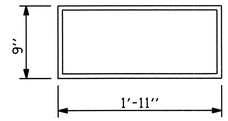


E4 ( 24 REQ'D )

PLAN VIEW OF ELASTOMERIC BEARING

TYPE V

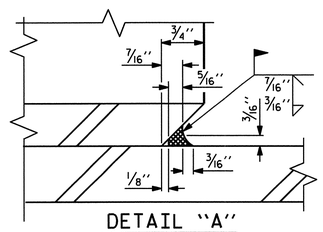


DETAIL "A"

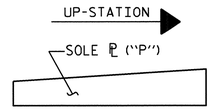


SOLE ℄ PLACEMENT DETAIL

60 DUROMETER

| — LOAD RATINGS — | |
|---|---|
| | MAX.D.L.+ L.L. |
| TYPE V | 259 k |
| | |

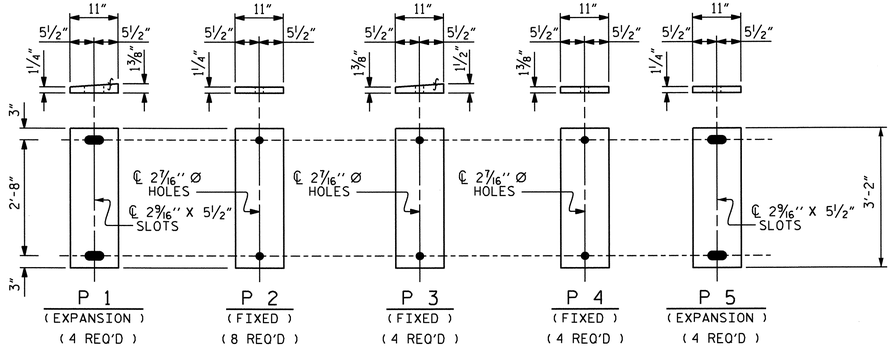


SOLE PLATE DETAILS ( "P" )

## NOTES

AT ALL FIXED POINTS OF SUPPORT, NUTS FOR ANCHOR BOLTS ARE TO BE TIGHTENED FINGER TIGHT AND THEN BACKED OFF 1/2 TURN. THE THREAD OF THE NUT AND BOLT SHALL THEN BE BURRED WITH A SHARP POINTED TOOL.

THE 2" Ø PIPE SLEEVE SHALL BE CUT FROM SCHEDULE 40 PVC PLASTIC PIPE. THE PVC PLASTIC PIPE SHALL MEET THE REQUIREMENTS OF ASTM D1785.

STEEL SOLE PLATES, ANCHOR BOLTS, NUTS, AND WASHERS SHALL BE GALVANIZED IN ACCORDANCE WITH THE STANDARD SPECIFICATIONS.

PRIOR TO WELDING, GRIND THE GALVANIZED SURFACE OF THE PORTION OF THE EMBEDDED PLATE AND SOLE PLATE THAT ARE TO BE WELDED. AFTER WELDING, DAMAGED GALVANIZED SURFACES SHALL BE REPAIRED IN ACCORDANCE WITH THE STANDARD SPECIFICATIONS.

WHEN WELDING THE SOLE PLATE TO THE EMBEDDED PLATE IN THE GIRDER, USE TEMPERATURE INDICATING WAX PENS, OR OTHER SUITABLE MEANS, TO ENSURE THAT THE TEMPERATURE OF THE SOLE PLATE DOES NOT EXCEED 300°F. TEMPERATURES ABOVE THIS MAY DAMAGE THE ELASTOMER.

SOLE PLATE "P", BOLTS, NUTS, WASHERS, AND PIPE SLEEVE SHALL BE INCLUDED IN THE PAY ITEM FOR PRESTRESSED CONCRETE GIRDERS.

ANCHOR BOLTS SHALL MEET THE REQUIREMENTS OF ASTM A449. NUTS SHALL MEET THE REQUIREMENTS OF AASHTO M291-DH OR AASHTO M292-2H. WASHERS SHALL MEET THE REQUIREMENTS OF AASHTO M293. NO SHOP DRAWINGS ARE REQUIRED FOR ANCHOR BOLTS, NUTS AND WASHERS. SHOP INSPECTION IS REQUIRED.

ALL SURFACES OF BEARING PLATES SHALL BE SMOOTH AND STRAIGHT.

ELASTOMER IN ALL BEARINGS SHALL BE 60 DUROMETER HARDNESS.

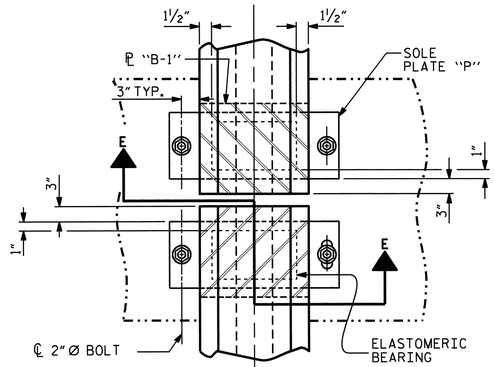


TYPICAL HALF-PLAN (SHOWING CONTINUOUS BENT)

TYPICAL HALF-PLAN (SHOWING SIMPLE SPAN BENT)

PROJECT NO. I-3819A

IREDELL COUNTY

STATION: 19+31.50-Y4RPA-

STATE OF NORTH CAROLINA
DEPARTMENT OF TRANSPORTATION
RALEIGH

# ELASTOMERIC BEARING DETAILS

PRESTRESSED CONCRETE GIRDER SUPERSTRUCTURE

NORTH CAROLINA PROFESSIONAL SEAL 21638 ENGINEER LAURA E. SUTTON
1/5/12

| REVISIONS | | | | | | SHEET NO. |
|---|---|---|---|---|---|---|
| NO. | BY: | DATE: | NO. | BY: | DATE: | S-163 |
| 1 | | | 3 | | | TOTAL SHEETS |
| 2 | | | 4 | | | 382 |

ASSEMBLED BY : B.N.BARODAWALA DATE : 8-10-10
CHECKED BY : L.E. SUTTON DATE : 10-21-10

28-DEC-2011 12:47
R:\Structures\Frye\str04\bbarodawala\Microstation\I3819A_sd_BG_04.dgn
wparker

STR. #4

## DEAD LOAD DEFLECTION TABLE FOR GIRDERS

| 0.6"Ø LOW RELAXATION | SPANS A & C | | | | | | | | | | | | | | | | | | | | | | | | | | | | | | | | | | |
|---|---|---|---|---|---|---|---|---|---|---|---|---|---|---|---|---|---|---|---|---|---|---|---|---|---|---|---|---|---|---|---|---|---|---|---|
| | GIRDER 1 | | | | | | | | | | | GIRDERS 2 & 3 | | | | | | | | | | | GIRDER 4 | | | | | | | | | | | |
| TENTH POINTS | BRG. | 0.1 | 0.2 | 0.3 | 0.4 | 0.5 | 0.6 | 0.7 | 0.8 | 0.9 | BRG. | BRG. | 0.1 | 0.2 | 0.3 | 0.4 | 0.5 | 0.6 | 0.7 | 0.8 | 0.9 | BRG. | BRG. | 0.1 | 0.2 | 0.3 | 0.4 | 0.5 | 0.6 | 0.7 | 0.8 | 0.9 | BRG. |
| CAMBER ( GIRDER ALONE IN PLACE ) ↑ | 0 | 0.016 | 0.029 | 0.040 | 0.047 | 0.049 | 0.047 | 0.040 | 0.029 | 0.016 | 0 | 0 | 0.016 | 0.029 | 0.040 | 0.047 | 0.049 | 0.047 | 0.040 | 0.029 | 0.016 | 0 | 0 | 0.016 | 0.029 | 0.040 | 0.047 | 0.049 | 0.047 | 0.040 | 0.029 | 0.016 | 0 |
| ✱DEFLECTION DUE TO SUPERIMPOSED D.L. ↓ | 0 | 0.005 | 0.009 | 0.012 | 0.014 | 0.015 | 0.014 | 0.012 | 0.009 | 0.005 | 0 | 0 | 0.005 | 0.009 | 0.013 | 0.015 | 0.016 | 0.015 | 0.013 | 0.009 | 0.005 | 0 | 0 | 0.005 | 0.009 | 0.012 | 0.014 | 0.015 | 0.014 | 0.012 | 0.009 | 0.005 | 0 |
| FINAL CAMBER ↑ | 0 | 1/8" | 1/4" | 5/16" | 3/8" | 7/16" | 3/8" | 5/16" | 1/4" | 1/8" | 0 | 0 | 1/8" | 1/4" | 5/16" | 3/8" | 3/8" | 3/8" | 5/16" | 1/4" | 1/8" | 0 | 0 | 1/8" | 1/4" | 5/16" | 3/8" | 7/16" | 3/8" | 5/16" | 1/4" | 1/8" | 0 |

✱ INCLUDES FUTURE WEARING SURFACE
ALL VALUES ARE SHOWN IN FEET (DECIMAL FORM), EXCEPT " FINAL CAMBER ", WHICH IS GIVEN IN INCHES (FRACTION FORM).

## DEAD LOAD DEFLECTION TABLE FOR GIRDERS

| 0.6"Ø LOW RELAXATION | SPAN B | | | | | | | | | | | | | | | | | | | | | | | | | | | | | | | | | | |
|---|---|---|---|---|---|---|---|---|---|---|---|---|---|---|---|---|---|---|---|---|---|---|---|---|---|---|---|---|---|---|---|---|---|---|---|
| | GIRDER 1 | | | | | | | | | | | GIRDERS 2 & 3 | | | | | | | | | | | GIRDER 4 | | | | | | | | | | | |
| TENTH POINTS | BRG. | 0.1 | 0.2 | 0.3 | 0.4 | 0.5 | 0.6 | 0.7 | 0.8 | 0.9 | BRG. | BRG. | 0.1 | 0.2 | 0.3 | 0.4 | 0.5 | 0.6 | 0.7 | 0.8 | 0.9 | BRG. | BRG. | 0.1 | 0.2 | 0.3 | 0.4 | 0.5 | 0.6 | 0.7 | 0.8 | 0.9 | BRG. |
| CAMBER ( GIRDER ALONE IN PLACE ) ↑ | 0 | 0.115 | 0.217 | 0.297 | 0.347 | 0.365 | 0.347 | 0.297 | 0.217 | 0.115 | 0 | 0 | 0.115 | 0.217 | 0.297 | 0.347 | 0.365 | 0.347 | 0.297 | 0.217 | 0.115 | 0 | 0 | 0.115 | 0.217 | 0.297 | 0.347 | 0.365 | 0.347 | 0.297 | 0.217 | 0.115 | 0 |
| ✱DEFLECTION DUE TO SUPERIMPOSED D.L. ↓ | 0 | 0.041 | 0.077 | 0.105 | 0.123 | 0.129 | 0.123 | 0.105 | 0.077 | 0.041 | 0 | 0 | 0.042 | 0.078 | 0.107 | 0.126 | 0.132 | 0.126 | 0.107 | 0.078 | 0.042 | 0 | 0 | 0.039 | 0.075 | 0.102 | 0.120 | 0.126 | 0.120 | 0.102 | 0.075 | 0.039 | 0 |
| FINAL CAMBER ↑ | 0 | 7/8" | 1 11/16" | 2 5/16" | 2 11/16" | 2 13/16" | 2 11/16" | 2 5/16" | 1 11/16" | 7/8" | 0 | 0 | 7/8" | 1 11/16" | 2 1/4" | 2 11/16" | 2 13/16" | 2 11/16" | 2 1/4" | 1 11/16" | 7/8" | 0 | 0 | 7/8" | 1 11/16" | 2 5/16" | 2 3/4" | 2 7/8" | 2 3/4" | 2 5/16" | 1 11/16" | 7/8" | 0 |

✱ INCLUDES FUTURE WEARING SURFACE
ALL VALUES ARE SHOWN IN FEET (DECIMAL FORM), EXCEPT " FINAL CAMBER ", WHICH IS GIVEN IN INCHES (FRACTION FORM).

PROJECT NO. I-3819A
IREDELL COUNTY
STATION: 19+31.50-Y4RPA-

STATE OF NORTH CAROLINA
DEPARTMENT OF TRANSPORTATION
RALEIGH

SUPERSTRUCTURE

# DEAD LOAD DEFLECTIONS

NORTH CAROLINA PROFESSIONAL SEAL 21638 ENGINEER LAURA E. SUTTON
1/3/12

| REVISIONS | | | | | | SHEET NO. |
|---|---|---|---|---|---|---|
| NO. | BY: | DATE: | NO. | BY: | DATE: | S-164 |
| 1 | | | 3 | | | TOTAL SHEETS |
| 2 | | | 4 | | | 382 |

DRAWN BY : HARISH SHAH DATE : 12/10
CHECKED BY : L.E. SUTTON DATE : 1-10-11

28-DEC-2011 12:47
R:\Structures\Frye\str04\harish\Microstation\I3819A_SD_DL_04.dgn
wparker

STR. #4

## NOTES

THE BARRIER RAIL IN A CONTINUOUS UNIT SHALL NOT BE CAST UNTIL ALL SLAB CONCRETE IN THE UNIT HAS BEEN CAST AND HAS REACHED A MINIMUM COMPRESSIVE STRENGTH OF 3,000 PSI.

THE JOINT IN THE DECK SHALL BE SAWED PRIOR TO THE CASTING OF THE BARRIER RAIL.

ALL REINFORCING STEEL IN BARRIER RAILS SHALL BE EPOXY COATED.

THE #5 S3 AND #5 S4 BARS SHALL BE INSTALLED, USING AN ADHESIVE ANCHORING SYSTEM, AFTER SAWING THE JOINT. THE YIELD LOAD FOR THE #5 S3 AND #5 S4 BARS IS 18.6 KIPS. FIELD TESTING FOR THE ADHESIVE BONDING SYSTEM IS NOT REQUIRED.

GROOVED CONTRACTION JOINTS, 1/2" IN DEPTH, SHALL BE TOOLED IN ALL EXPOSED FACES OF THE BARRIER RAIL AND IN ACCORDANCE WITH ARTICLE 825-10(B) OF THE STANDARD SPECIFICATIONS. THE CONTRACTION JOINT SHALL BE LOCATED AT EACH THIRD POINT BETWEEN BARRIER RAIL EXPANSION JOINTS. ONLY ONE CONTRACTION JOINT IS REQUIRED AT MIDPOINT OF BARRIER RAIL SEGMENTS LESS THAN 20 FEET IN LENGTH AND NO CONTRACTION JOINTS ARE REQUIRED FOR THOSE SEGMENTS LESS THAN 10 FEET IN LENGTH.

THE #5 S1 AND #5 S2 BARS MAY BE SHIFTED SLIGHTLY, AS NECESSARY, IN ORDER TO MAINTAIN 2" MIN. CLEARANCE TO THE 1/2" EXPANSION JOINT MATERIAL.

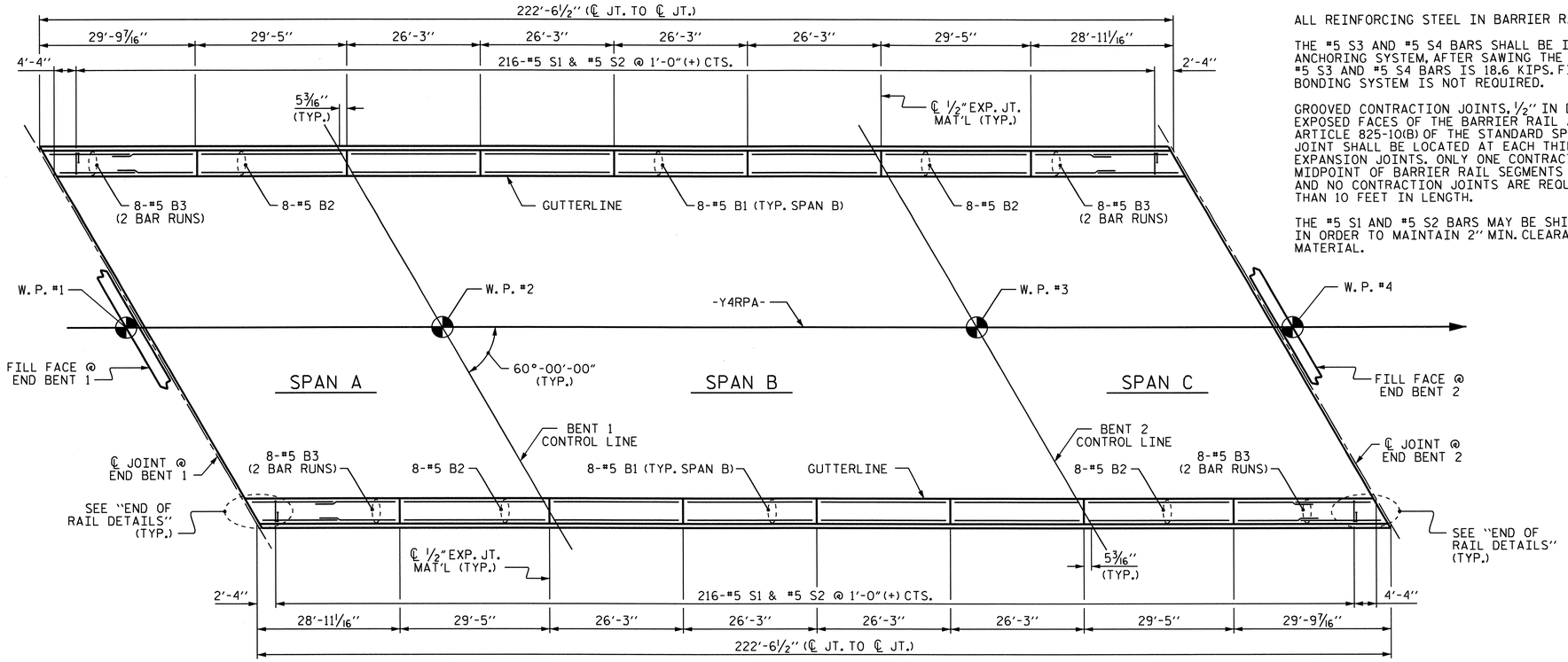


## PLAN

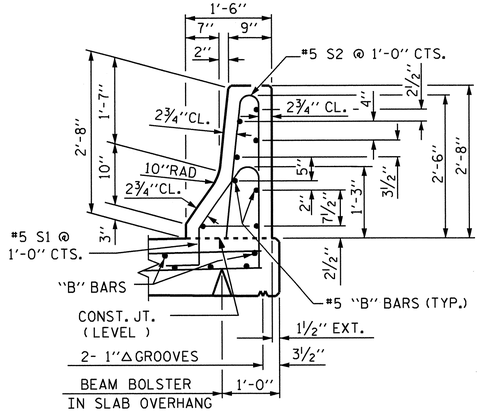


SECTION THRU RAIL

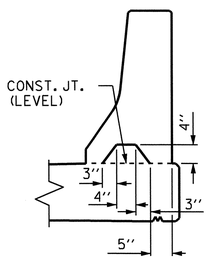


SECTION S-S

AT DAM IN OPEN JOINT
(THIS IS TO BE USED ONLY WHEN SLIP FORM IS USED)

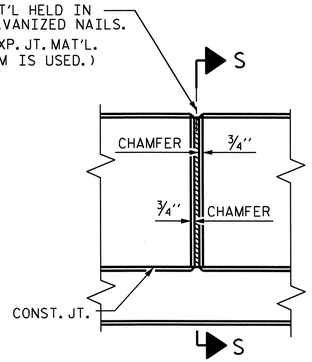


ELEVATION AT EXPANSION JOINTS

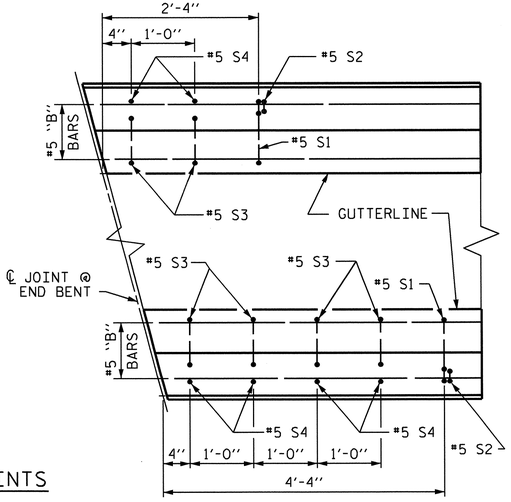


PLAN

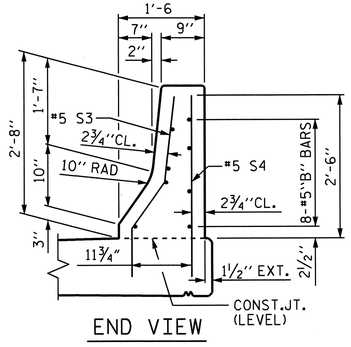


END VIEW

## BAR TYPES

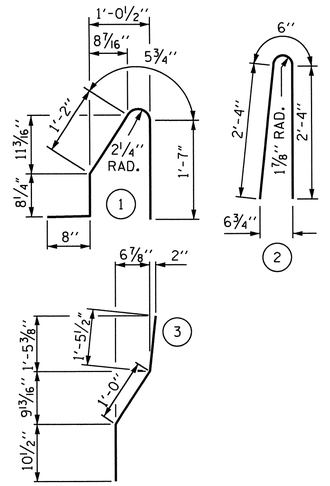


ALL BAR DIMENSIONS ARE OUT TO OUT.

## BILL OF MATERIAL

FOR CONCRETE BARRIER RAIL ONLY

| BAR | NO. | SIZE | TYPE | LENGTH | WEIGHT |
|---|---|---|---|---|---|
| * B1 | 64 | #5 | STR | 25'-10" | 1724 |
| * B2 | 32 | #5 | STR | 29'-0" | 968 |
| * B3 | 64 | #5 | STR | 16'-4" | 1090 |
| | | | | | |
| * S1 | 432 | #5 | 1 | 4'-7" | 2065 |
| * S2 | 432 | #5 | 2 | 5'-2" | 2328 |
| * S3 | 12 | #5 | 3 | 3'-4" | 42 |
| * S4 | 12 | #5 | STR | 3'-2" | 40 |
| | | | | | |
| * EPOXY COATED REINFORCING STEEL | | | | LBS. | 8,257 |
| CLASS AA CONCRETE | | | | CU. YDS. | 44.6 |
| CONCRETE BARRIER RAIL | | | | LIN. FT. | 445.19 |

PROJECT NO. I-3819A

IREDELL COUNTY

STATION: 19+31.50-Y4RPA-

STATE OF NORTH CAROLINA
DEPARTMENT OF TRANSPORTATION
RALEIGH

STANDARD

# CONCRETE BARRIER RAIL

| REVISIONS | | | | | | SHEET NO. |
|---|---|---|---|---|---|---|
| NO. | BY: | DATE: | NO. | BY: | DATE: | S-165 |
| 1 | | | 3 | | | TOTAL SHEETS |
| 2 | | | 4 | | | 382 |

STR. #4

STD. NO. CBR1

ASSEMBLED BY : B.N.BARODAWALA DATE : 8/09/10
CHECKED BY : L.E. SUTTON DATE : 8/12/10

DRAWN BY : ARB 5/87
CHECKED BY : SJD 9/87

| REV. 10/17/00 | RWW/LES |
|---|---|
| REV. 5/7/03R | RWW/JTE |
| REV. 5/1/06R | TLA/GM |

# BARRIER RAIL DETAILS

# END OF RAIL DETAILS

FOR ADHESIVE ANCHORING AT SAWED JOINTS

NORTH CAROLINA PROFESSIONAL SEAL 21638 ENGINEER LAURA E. SUTTON
1/8/12

28-DEC-2011 12:47
R:\Structures\Frye\str04\bbarodawala\Microstation\I3819A_sd_BR_04.dgn
wparker

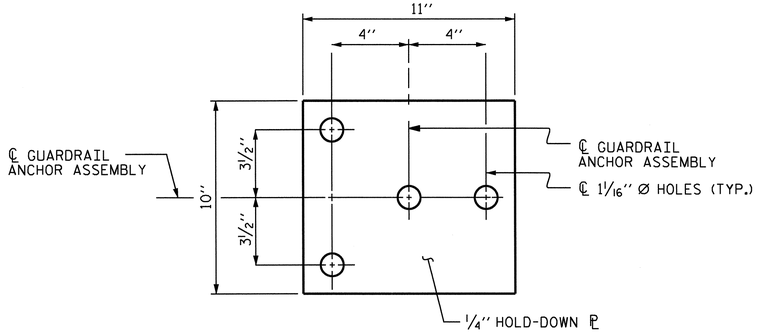


PLAN

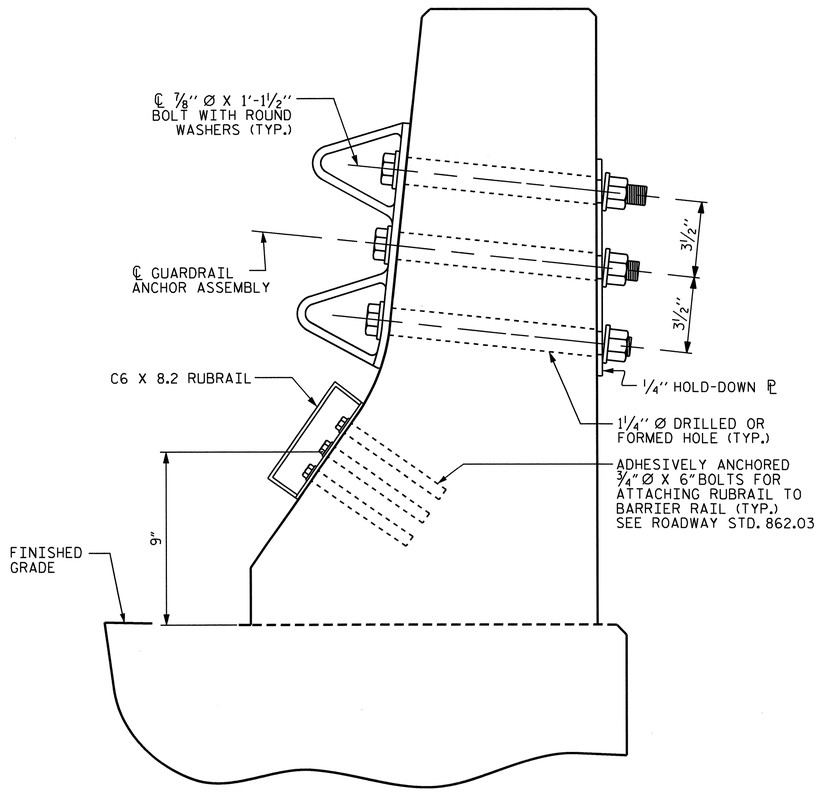


SECTION E-E

## GUARDRAIL ANCHOR ASSEMBLY DETAILS

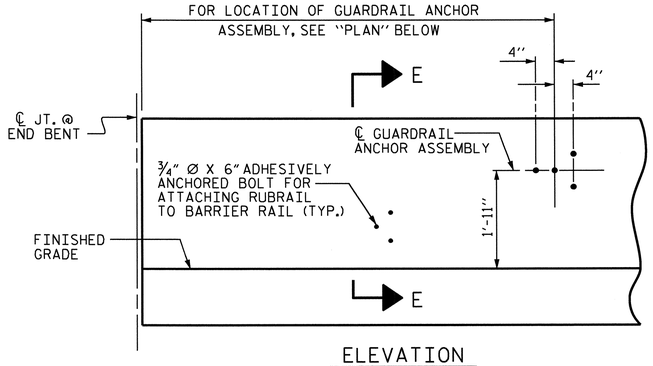


ELEVATION

FOR LOCATION OF RUBRAIL, SEE ROADWAY STD. 862.03

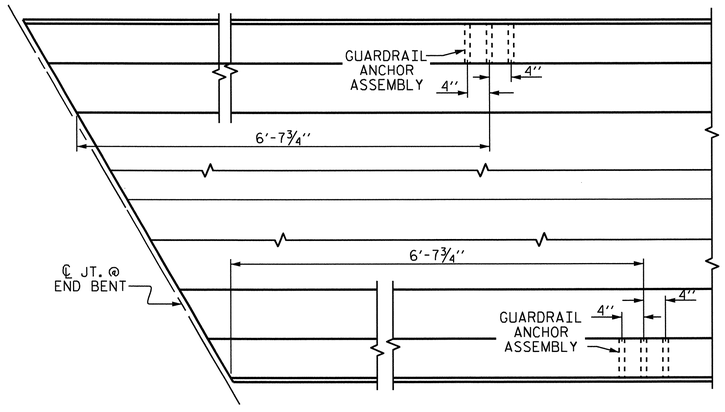


PLAN

## LOCATION OF ANCHORS FOR GUARDRAIL

END BENT 1 SHOWN. END BENT 2 SIMILAR.

## NOTES

THE GUARDRAIL ANCHOR ASSEMBLY SHALL CONSIST OF A 1/4'' HOLD DOWN PLATE AND 4 - 7/8'' Ø BOLTS WITH NUTS AND WASHERS, RUBRAIL, AND ADHESIVELY ANCHORED BOLTS.

THE HOLD-DOWN PLATE SHALL CONFORM TO AASHTO M270 GRADE 36. AFTER FABRICATION, THE HOLD-DOWN PLATE SHALL BE HOT-DIP GALVANIZED IN ACCORDANCE WITH AASHTO M111.

BOLTS SHALL CONFORM TO THE REQUIREMENTS OF ASTM A307 AND NUTS SHALL CONFORM TO THE REQUIREMENTS OF AASHTO M291. BOLTS, NUTS AND WASHERS SHALL BE GALVANIZED. (AT THE CONTRACTOR'S OPTION, STAINLESS STEEL BOLTS, NUTS AND WASHERS MAY BE USED AS AN ALTERNATE FOR THE 7/8'' Ø GALVANIZED BOLTS, NUTS AND WASHERS. THEY SHALL CONFORM TO OR EXCEED THE MECHANICAL REQUIREMENTS OF ASTM A307. THE USE OF THIS ALTERNATE SHALL BE APPROVED BY THE ENGINEER.)

THE GUARDRAIL ANCHOR ASSEMBLY IS REQUIRED AT ALL POINTS WHERE APPROACH GUARDRAIL IS TO BE ATTACHED TO THE END OF BARRIER RAIL. FOR POINTS OF ATTACHMENT, SEE SKETCH.

AFTER INSTALLATION, THE EXPOSED THREAD OF THE BOLT SHALL BE BURRED WITH A SHARP POINTED TOOL.

THE COST OF THE GUARDRAIL ANCHOR ASSEMBLY SHALL BE INCLUDED IN THE UNIT CONTRACT PRICE BID FOR CONCRETE BARRIER RAIL.

THE 1 1/4'' Ø HOLES SHALL BE FORMED OR DRILLED WITH A CORE BIT. IMPACT TOOLS WILL NOT BE PERMITTED. ANY CONCRETE DAMAGED BY THIS WORK SHALL BE REPAIRED TO THE SATISFACTION OF THE ENGINEER.

THE C6 X 8.2 RUBRAIL IS TO BE ADHESIVELY ANCHORED TO THE RAIL USING THREE 3/4" Ø X 6" BOLTS WITH WASHERS. LEVEL ONE FIELD TESTING IS REQUIRED, AND THE YIELD LOAD OF THE 3/4" Ø BOLT IS 12 KIPS. FOR ADHESIVELY ANCHORED ANCHOR BOLTS OR DOWELS, SEE STANDARD SPECIFICATIONS. SEE ROADWAY STANDARD 862.03 FOR DETAILS AND LOCATION OF THE RUBRAIL.

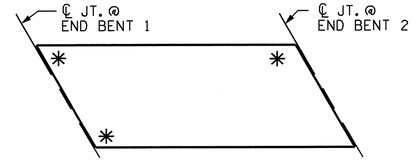


SKETCH SHOWING POINTS OF ATTACHMENTS

✳ DENOTES GUARDRAIL ANCHOR ASSEMBLY

PROJECT NO. I-3819A

IREDELL COUNTY

STATION: 19+31.50-Y4RPA-

STATE OF NORTH CAROLINA
DEPARTMENT OF TRANSPORTATION
RALEIGH

STANDARD

# GUARDRAIL ANCHORAGE FOR BARRIER RAIL

| REVISIONS | | | | | | SHEET NO. |
|---|---|---|---|---|---|---|
| NO. | BY: | DATE: | NO. | BY: | DATE: | S-166 |
| 1 | | | 3 | | | TOTAL SHEETS |
| 2 | | | 4 | | | 382 |

STR. #4

STD. NO. GRA2

NORTH CAROLINA PROFESSIONAL SEAL 21638 ENGINEER LAURA E. SUTTON 1/3/12

| | |
|---|---|
| ASSEMBLED BY : B.N.BARODAWALA DATE : 8/09/10 | |
| CHECKED BY : L.E. SUTTON DATE : 8/16/10 | |
| DRAWN BY : TLA 5/06 | ADDED 5/1/06R KMM/GM |
| CHECKED BY : GM 5/06 | |

28-DEC-2011 12:47
R:\Structures\Frye\str04\bbarodawala\Microstation\I3819A_sd_GR_04.dgn
wparker

| SUPERSTRUCTURE REINFORCING STEEL LENGTHS ARE BASED ON THE FOLLOWING MINIMUM SPLICE LENGTHS | | | | | |
|---|---|---|---|---|---|
| BAR SIZE | SUPERSTRUCTURE EXCEPT APPROACH SLABS, PARAPET, AND BARRIER RAIL | | APPROACH SLABS | | PARAPET AND BARRIER RAIL |
| | EPOXY COATED | UNCOATED | EPOXY COATED | UNCOATED | |
| #4 | 2′-0″ | 1′-9″ | 2′-0″ | 1′-9″ | 2′-9″ |
| #5 | 2′-6″ | 2′-2″ | 2′-6″ | 2′-2″ | 3′-5″ |
| #6 | 3′-0″ | 2′-7″ | 3′-10″ | 2′-7″ | 4′-4″ |
| #7 | 5′-3″ | 3′-6″ | | | |
| #8 | 6′-10″ | 4′-7″ | | | |

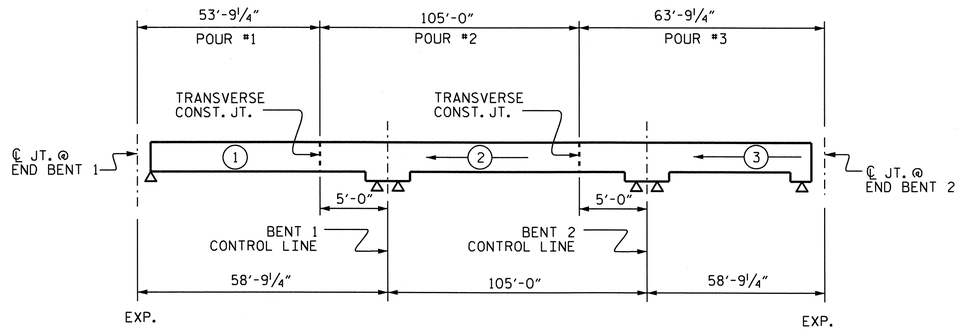


## POURING SEQUENCE

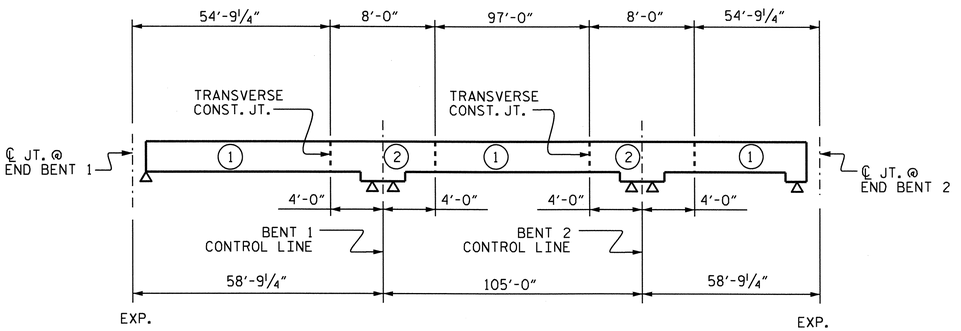


## OPTIONAL POURING SEQUENCE

POUR 2 CANNOT BE STARTED UNTIL BOTH ADJACENT 1 POURS REACH A MINIMUM OF 3000 PSI.

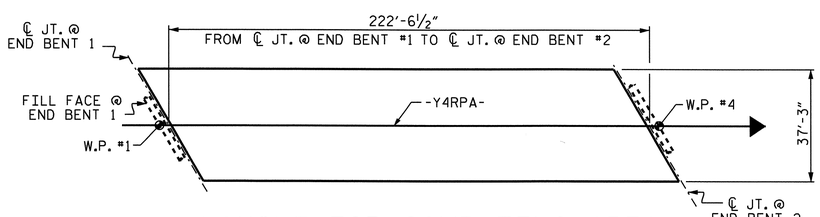


## LAYOUT FOR COMPUTING AREA REINFORCED CONCRETE DECK SLAB

( SQ. FT. = 8,290 )

## BILL OF MATERIAL

| BAR | NO. | SIZE | TYPE | LENGTH | WEIGHT |
|---|---|---|---|---|---|
| ✳ A1 | 322 | #5 | STR | 36′-11″ | 12398 |
| A2 | 322 | #5 | STR | 36′-11″ | 12398 |
| | | | | | |
| ✳ A101 | 4 | #5 | STR | 34′-5″ | 144 |
| ✳ A102 | 4 | #5 | STR | 32′-4″ | 135 |
| ✳ A103 | 4 | #5 | STR | 30′-2″ | 126 |
| ✳ A104 | 4 | #5 | STR | 28′-3″ | 118 |
| ✳ A105 | 4 | #5 | STR | 26′-2″ | 109 |
| ✳ A106 | 4 | #5 | STR | 23′-8″ | 98 |
| ✳ A107 | 4 | #5 | STR | 21′-6″ | 90 |
| ✳ A108 | 4 | #5 | STR | 19′-4″ | 81 |
| ✳ A109 | 4 | #5 | STR | 17′-2″ | 72 |
| ✳ A110 | 4 | #5 | STR | 15′-0″ | 63 |
| ✳ A111 | 4 | #5 | STR | 12′-8″ | 54 |
| ✳ A112 | 4 | #5 | STR | 10′-8″ | 45 |
| ✳ A113 | 4 | #5 | STR | 8′-6″ | 35 |
| ✳ A114 | 4 | #5 | STR | 6′-4″ | 26 |
| ✳ A115 | 4 | #5 | STR | 4′-2″ | 17 |
| ✳ A116 | 4 | #5 | STR | 2′-0″ | 8 |
| | | | | | |
| A201 | 4 | #5 | STR | 34′-5″ | 144 |
| A202 | 4 | #5 | STR | 32′-4″ | 135 |
| A203 | 4 | #5 | STR | 30′-2″ | 126 |
| A204 | 4 | #5 | STR | 28′-3″ | 118 |
| A205 | 4 | #5 | STR | 26′-2″ | 109 |
| A206 | 4 | #5 | STR | 23′-8″ | 98 |
| A207 | 4 | #5 | STR | 21′-6″ | 90 |
| A208 | 4 | #5 | STR | 19′-4″ | 81 |
| A209 | 4 | #5 | STR | 17′-2″ | 72 |
| A210 | 4 | #5 | STR | 15′-0″ | 63 |
| A211 | 4 | #5 | STR | 12′-8″ | 54 |
| A212 | 4 | #5 | STR | 10′-8″ | 45 |
| A213 | 4 | #5 | STR | 8′-6″ | 35 |
| A214 | 4 | #5 | STR | 6′-4″ | 26 |
| A215 | 4 | #5 | STR | 4′-2″ | 17 |
| A216 | 4 | #5 | STR | 2′-0″ | 8 |
| | | | | | |
| ✳ B1 | 16 | #4 | STR | 29′-7″ | 316 |
| ✳ B2 | 96 | #4 | STR | 19′-10″ | 1272 |
| ✳ B3 | 94 | #5 | STR | 60′-0″ | 5883 |
| ✳ B4 | 92 | #5 | STR | 25′-0″ | 2399 |
| B5 | 48 | #4 | STR | 18′-6″ | 593 |
| B6 | 120 | #5 | STR | 57′-5″ | 7186 |
| | | | | | |
| ✳ G1 | 2 | #5 | STR | 42′-7″ | 89 |
| | | | | | |
| ✳ K1 | 8 | #8 | 1 | 17′-1″ | 365 |
| ✳ K2 | 8 | #8 | 2 | 25′-7″ | 546 |
| K3 | 18 | #6 | STR | 6′-9″ | 182 |
| K4 | 12 | #4 | STR | 6′-9″ | 54 |
| K5 | 48 | #4 | STR | 10′-2″ | 326 |
| K6 | 12 | #4 | STR | 7′-0″ | 56 |
| K7 | 24 | #4 | 8 | 6′-10″ | 110 |
| K8 | 24 | #4 | 9 | 13′-8″ | 219 |
| | | | | | |
| ✳ S1 | 42 | #4 | 7 | 5′-2″ | 145 |
| ✳ S2 | 42 | #5 | 3 | 5′-2″ | 73 |
| S3 | 216 | #4 | 5 | 2′-9″ | 397 |
| S4 | 12 | #4 | 6 | 9′-1″ | 73 |
| | | | | | |
| ✳ U1 | 36 | #4 | 4 | 16′-0″ | 385 |

REINFORCING STEEL = 22815 LBS.

✳ EPOXY COATED REINFORCING STEEL = 25092 LBS.

## BAR TYPES

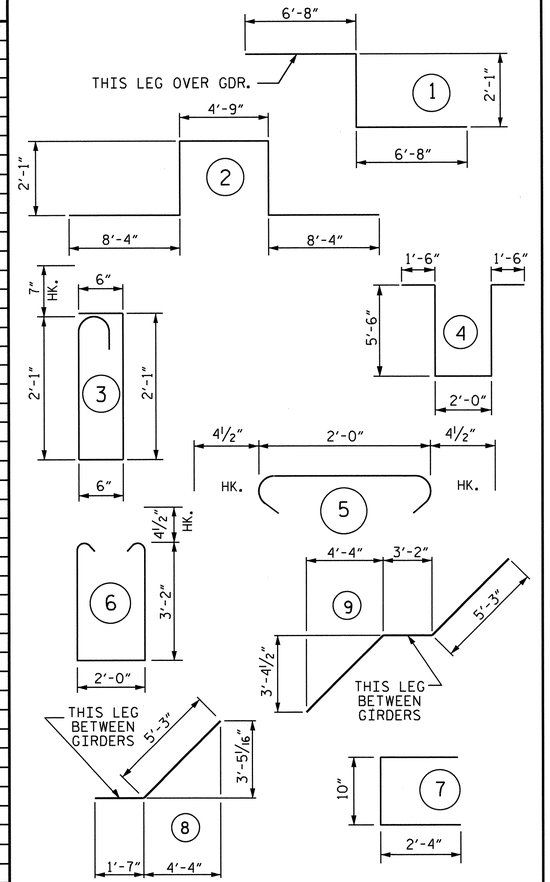


ALL BAR DIMENSIONS ARE OUT TO OUT

## SUPERSTRUCTURE BILL OF MATERIAL

| | CLASS AA CONCRETE | REINFORCING STEEL | ✳ EPOXY COATED REINFORCING STEEL |
|---|---|---|---|
| | ( CU. YDS. ) | ( LBS. ) | ( LBS. ) |
| POUR #1 | 75.4 | —— | —— |
| POUR #2 | 144.2 | —— | —— |
| POUR #3 | 75.4 | —— | —— |
| | | —— | —— |
| TOTALS✳✳ | 295.0 | 22815 | 25092 |

QUANTITIES FOR BARRIER RAIL ARE NOT INCLUDED

PROJECT NO. I-3819A

IREDELL COUNTY

STATION: 19+31.50-Y4RPA-

| GROOVING BRIDGE FLOORS | | |
|---|---|---|
| APPROACH SLABS | 1,469 | SQ.FT. |
| BRIDGE DECK | 6,859 | SQ.FT. |
| TOTAL | 8,328 | SQ.FT. |

STATE OF NORTH CAROLINA
DEPARTMENT OF TRANSPORTATION
RALEIGH

STANDARD
SUPERSTRUCTURE BILL OF MATERIAL

| REVISIONS | | | | | | SHEET NO. |
|---|---|---|---|---|---|---|
| NO. | BY: | DATE: | NO. | BY: | DATE: | S-167 |
| 1 | | | 3 | | | TOTAL SHEETS |
| 2 | | | 4 | | | 382 |

STR. #4 STD. NO. BOM2

NORTH CAROLINA PROFESSIONAL SEAL 21638 ENGINEER LAUNA E. SUTTON
1/3/12

ASSEMBLED BY : B.N.BARODAWALA DATE : 7-28-10
CHECKED BY : L. E. SUTTON DATE : 8-16-10

DRAWN BY : JMB 5/87
CHECKED BY : SJD 9/87

REV. 6/1/94 EEM/GRP
REV. 8/16/99 RWW/LES
REV. 5/1/06 TLA/GM

28-DEC-2011 12:47
R:\Structures\Frye\str04\bbarodawala\Microstation\I3819A_sd_BM_04.dgn
wparker

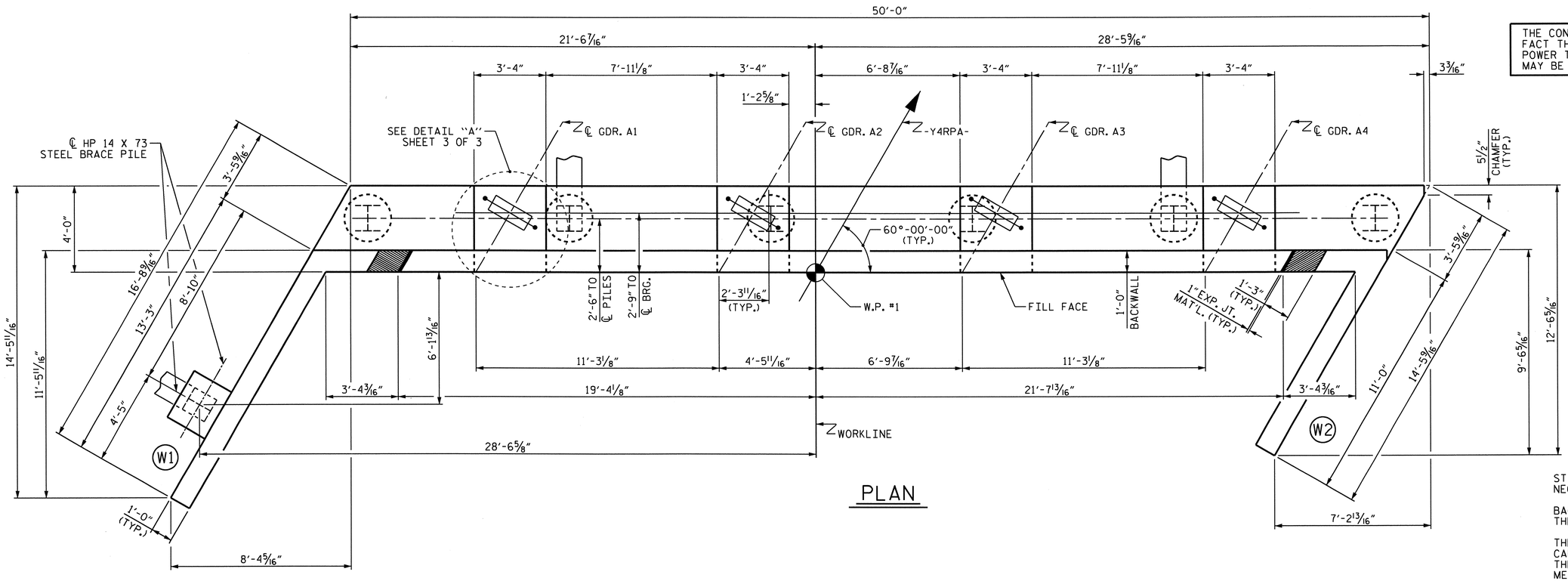


## PLAN

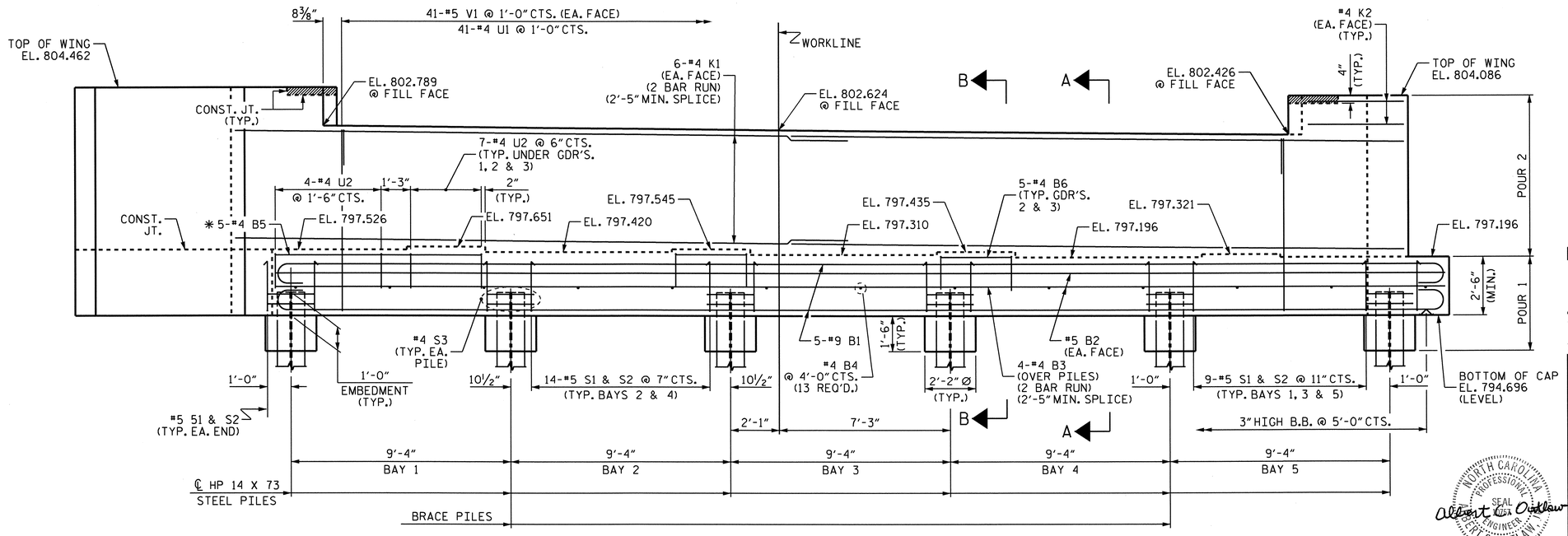


## ELEVATION

(WING BRACE PILE & RT. WING NOT SHOWN FOR CLARITY)

* BAR MAY BE CUT TO FIT ALONG SKEW.

THE CONTRACTOR'S ATTENTION IS CALLED TO THE FACT THAT DUE TO THE PROXIMITY OF OVERHEAD POWER TRANSMISSION LINES, MULTIPLE SPLICES MAY BE REQUIRED TO INSTALL PILES.

## NOTES

STIRRUPS IN CAP MAY BE SHIFTED AS NECESSARY TO CLEAR ANCHOR BOLTS.

BACKWALL SHALL BE PLACED BEFORE APPLYING THE EPOXY PROTECTIVE COATING.

THE TOP SURFACE AREAS OF THE END BENT CAPS SHALL BE CURED IN ACCORDANCE WITH THE STANDARD SPECIFICATIONS EXCEPT THE MEMBRANE CURING COMPOUND METHOD SHALL NOT BE USED.

THE TOP SURFACE OF THE END BENT CAP EXCEPT THE BRIDGE SEAT BUILDUPS SHALL BE SLOPED TRANSVERSELY FROM THE FILL FACE TO THE BACK FACE AT THE RATE OF 2%.

THE #5 V1 BARS SHALL BE PLACED 2" CLEAR FROM TOP OF BACKWALL.

THE CONCRETE IN THE SHADED AREA OF THE WING SHALL BE POURED AFTER THE JOINT BETWEEN THE DECK AND THE APPROACH SLAB HAS BEEN SAWED AND THE BARRIER RAIL IS CAST IF SLIP FORMING IS USED.

THE CONTRACTOR SHALL PROVIDE FOR INSTALLATION OF THE 4" DIAMETER DRAIN PIPE THROUGH THE WING WALL AS REQUIRED FOR REINFORCED BRIDGE APPROACH FILLS, SEE THE ROADWAY PLANS. REINFORCING STEEL IN THE WING WALL MAY BE SHIFTED AS NECESSARY TO CLEAR THE DRAIN PIPE.

PROJECT NO. I-3819A

IREDELL COUNTY

STATION: 19+31.50-Y4RPA-

SHEET 1 OF 3

STATE OF NORTH CAROLINA
DEPARTMENT OF TRANSPORTATION
RALEIGH

SUBSTRUCTURE

END BENT 1

NORTH CAROLINA PROFESSIONAL SEAL ENGINEER E. C. OUTLAW

Albert Eller Outlaw, Jr.

1/3/12

| REVISIONS | | | | | | SHEET NO. |
|---|---|---|---|---|---|---|
| NO. | BY: | DATE: | NO. | BY: | DATE: | S-168 |
| 1 | | | 3 | | | TOTAL SHEETS |
| 2 | | | 4 | | | 382 |

DRAWN BY : E.C. LOCKLEAR DATE : 10-28-10
CHECKED BY : A.C. OUTLAW DATE : 12-08-10

28-DEC-2011 12:47
R:\Structures\Frye\str04\elocklear\Microstation\I3819A_SD_E*_04.dgn
wparker

STR. #4

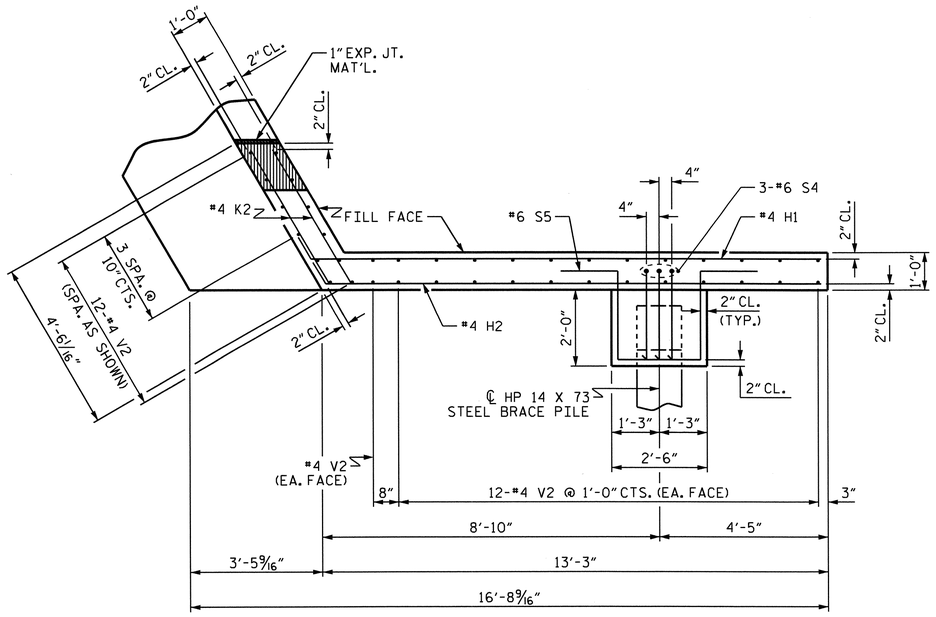


PLAN OF WING (W1)

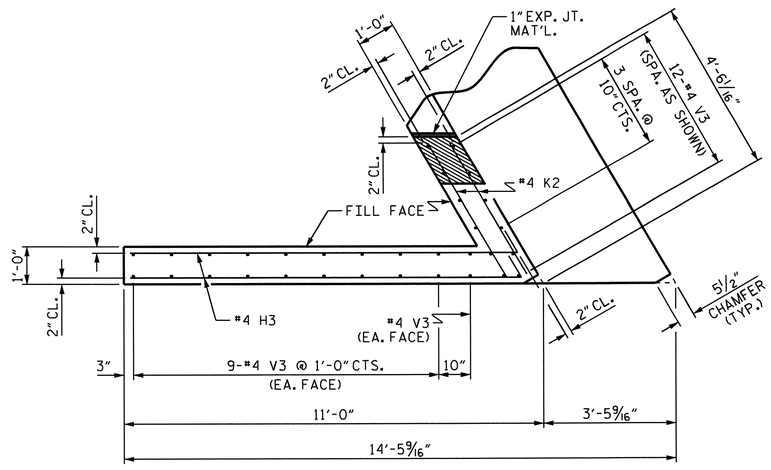


PLAN OF WING (W2)

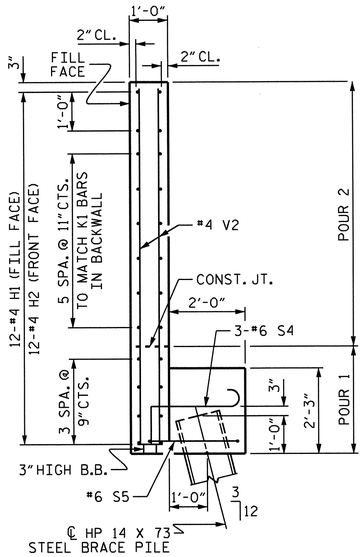


SECTION X-X

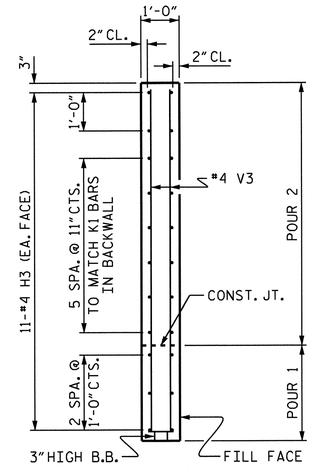


SECTION Y-Y

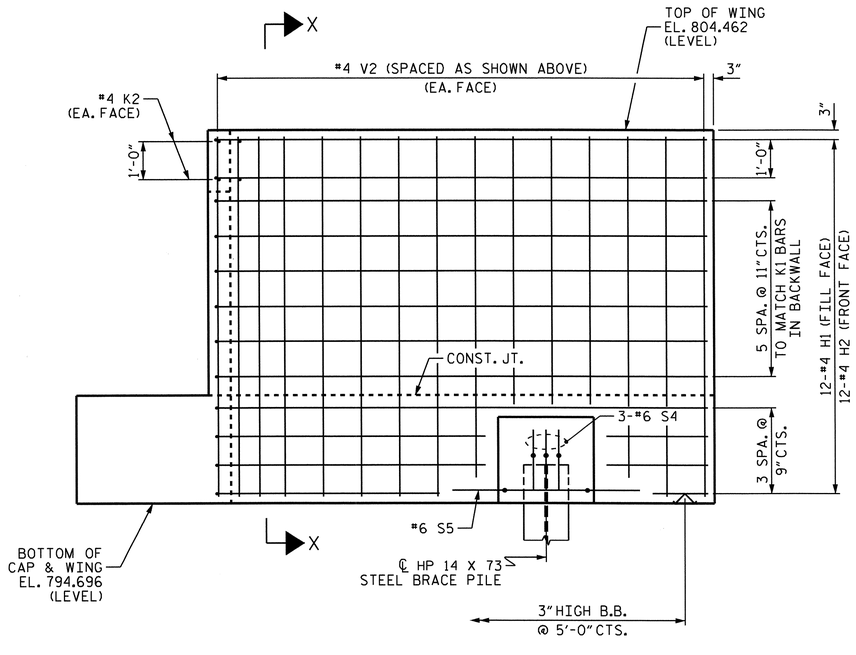


ELEVATION OF WING (W1)

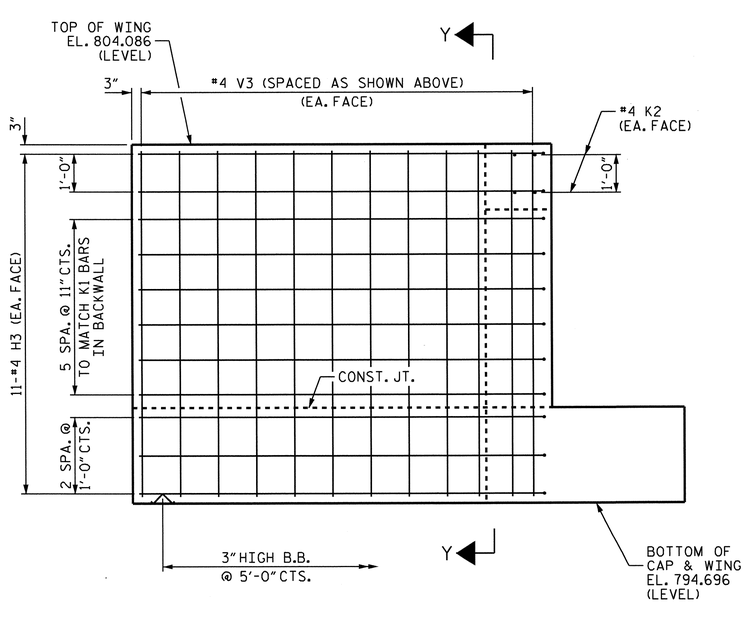


ELEVATION OF WING (W2)

PROJECT NO. I-3819A

IREDELL COUNTY

STATION: 19+31.50-Y4RPA-

SHEET 2 OF 3

STATE OF NORTH CAROLINA
DEPARTMENT OF TRANSPORTATION
RALEIGH

SUBSTRUCTURE

END BENT 1

NORTH CAROLINA PROFESSIONAL SEAL 20757 ENGINEER ALBERT C. OUTLAW, JR.

Albert C. Outlaw, Jr.

1/3/12

| REVISIONS | | | | | | SHEET NO. |
|---|---|---|---|---|---|---|
| NO. | BY: | DATE: | NO. | BY: | DATE: | S-169 |
| 1 | | | 3 | | | TOTAL SHEETS |
| 2 | | | 4 | | | 382 |

STR. #4

DRAWN BY : E.C. LOCKLEAR DATE : 10-28-10
CHECKED BY : A.C. OUTLAW DATE : 12-08-10

28-DEC-2011 12:47
R:\Structures\Frye\str04\elocklear\Microstation\I3819A_SD_E*_04.dgn
wparker

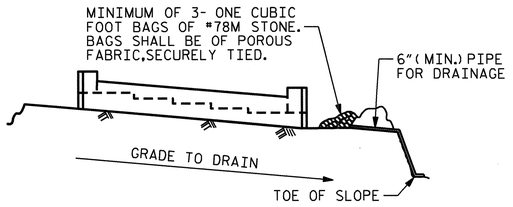


BAGGED STONE AND PIPE SHALL BE PLACED IMMEDIATELY AFTER COMPLETION OF END BENT EXCAVATION. PIPE MAY BE EITHER CONCRETE, CORRUGATED STEEL, CORRUGATED ALUMINUM ALLOY, OR CORRUGATED PLASTIC. PERFORATED PIPE WILL NOT BE ALLOWED.

BAGGED STONE SHALL REMAIN IN PLACE UNTIL THE ENGINEER DIRECTS THAT IT BE REMOVED. THE CONTRACTOR SHALL REMOVE AND DISPOSE OF SILT ACCUMULATIONS AT BAGGED STONE WHEN SO DIRECTED BY THE ENGINEER. BAGS SHALL BE REMOVED AND REPLACED WHENEVER THE ENGINEER DETERMINES THAT THEY HAVE DETERIORATED AND LOST THEIR EFFECTIVENESS.

NO SEPARATE PAYMENT WILL BE MADE FOR THIS WORK AND THE ENTIRE COST OF THIS WORK SHALL BE INCLUDED IN THE UNIT CONTRACT PRICE BID FOR THE SEVERAL PAY ITEMS.

## TEMPORARY DRAINAGE AT END BENT

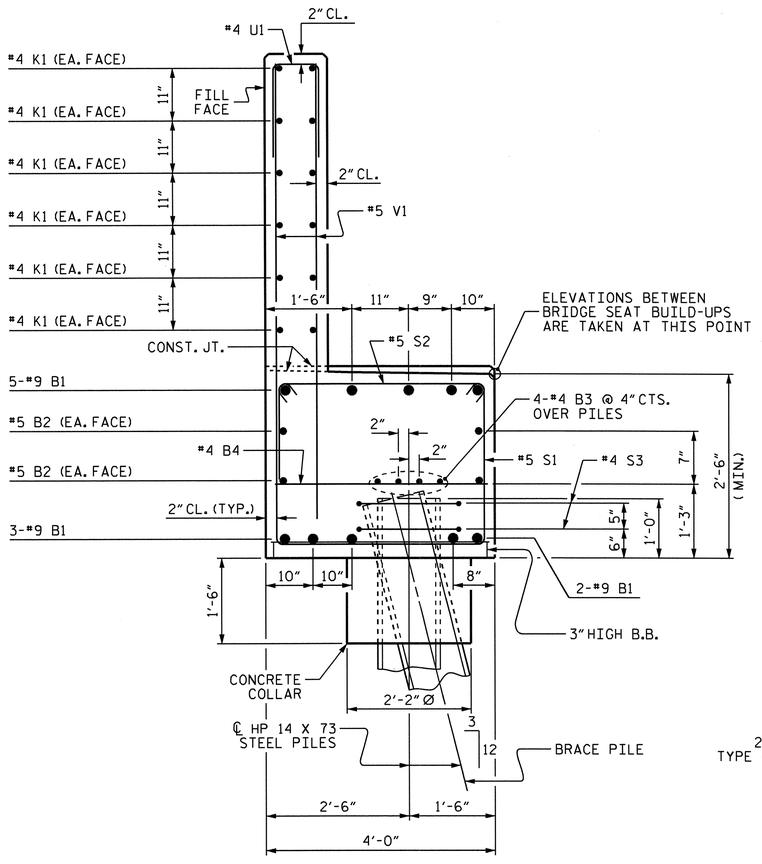


## SECTION A-A

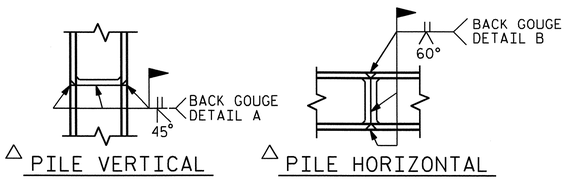


△ POSITION OF PILE DURING WELDING.

## PILE SPLICE DETAILS

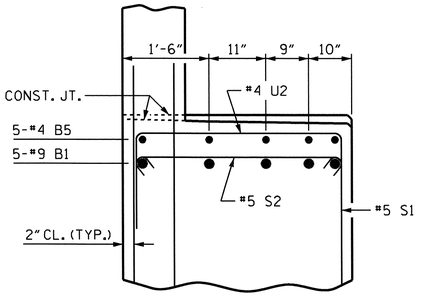


## PARTIAL SECTION B-B

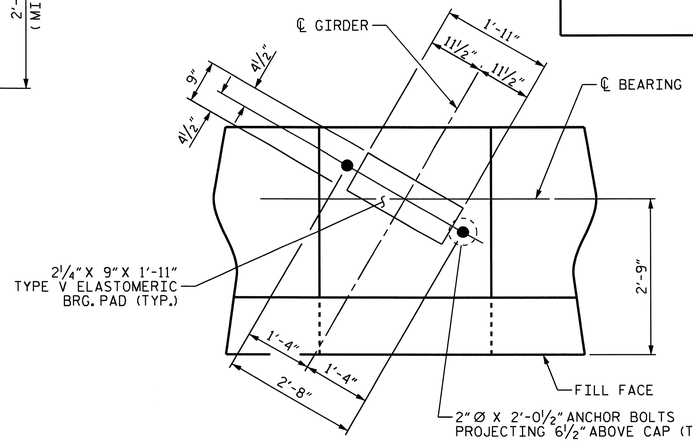


## DETAIL "A"

## BAR TYPES

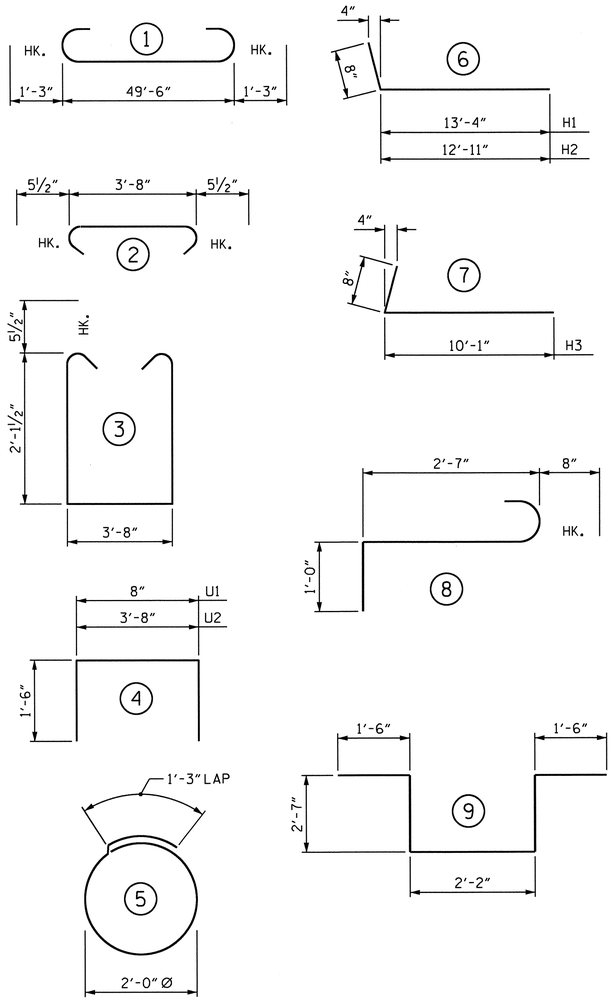


ALL BAR DIMENSIONS ARE OUT TO OUT.

## BILL OF MATERIAL

### END BENT 1

| BAR | NO. | SIZE | TYPE | LENGTH | WEIGHT |
|---|---|---|---|---|---|
| B1 | 10 | #9 | 1 | 52'-0" | 1768 |
| B2 | 4 | #5 | STR | 49'-8" | 207 |
| B3 | 8 | #4 | STR | 26'-1" | 139 |
| B4 | 13 | #4 | STR | 3'-8" | 32 |
| B5 | 5 | #4 | STR | 11'-0" | 37 |
| B6 | 10 | #4 | STR | 3'-0" | 20 |
| | | | | | |
| H1 | 12 | #4 | 6 | 14'-0" | 112 |
| H2 | 12 | #4 | 6 | 13'-7" | 109 |
| H3 | 22 | #4 | 7 | 10'-9" | 158 |
| | | | | | |
| K1 | 24 | #4 | STR | 26'-1" | 418 |
| K2 | 8 | #4 | STR | 4'-1" | 22 |
| | | | | | |
| S1 | 57 | #5 | 3 | 8'-10" | 525 |
| S2 | 57 | #5 | 2 | 4'-7" | 272 |
| S3 | 12 | #4 | 5 | 7'-7" | 61 |
| S4 | 3 | #6 | 8 | 4'-3" | 19 |
| S5 | 1 | #6 | 9 | 10'-4" | 16 |
| | | | | | |
| U1 | 41 | #4 | 4 | 3'-8" | 100 |
| U2 | 25 | #4 | 4 | 6'-8" | 111 |
| | | | | | |
| V1 | 82 | #5 | STR | 7'-4" | 627 |
| V2 | 38 | #4 | STR | 9'-4" | 237 |
| V3 | 32 | #4 | STR | 9'-0" | 192 |

REINFORCING STEEL 5,182 LBS

CLASS A CONCRETE

| | |
|---|---|
| POUR 1 (CAP, LOWER WINGS & CONCRETE COLLARS) | 23.6 C.Y. |
| POUR 2 (BACKWALL & UPPER WINGS) | 16.4 C.Y. |
| TOTAL | 40.0 C.Y. |

HP 14 X 73 STEEL PILES

NO. = 7 LIN. FT. = 245.0

STEEL PILE POINTS

NO. = 7 EA.

PROJECT NO. I-3819A

IREDELL COUNTY

STATION: 19+31.50-Y4RPA-

SHEET 3 OF 3

STATE OF NORTH CAROLINA
DEPARTMENT OF TRANSPORTATION
RALEIGH

SUBSTRUCTURE

END BENT 1

NORTH CAROLINA PROFESSIONAL SEAL 030 ENGINEER ALBERT C. OUTLAW JR.

Albert C. Outlaw Jr.

1/3/12

| REVISIONS | | | | | | SHEET NO. |
|---|---|---|---|---|---|---|
| NO. | BY: | DATE: | NO. | BY: | DATE: | S-170 |
| 1 | | | 3 | | | TOTAL SHEETS |
| 2 | | | 4 | | | 382 |

STR. #4

DRAWN BY : E.C. LOCKLEAR DATE : 10-28-10
CHECKED BY : A.C. OUTLAW DATE : 12-08-10

28-DEC-2011 12:47
R:\Structures\Frye\str04\elocklear\Microstation\I3819A_SD_E*_04.dgn
wparker

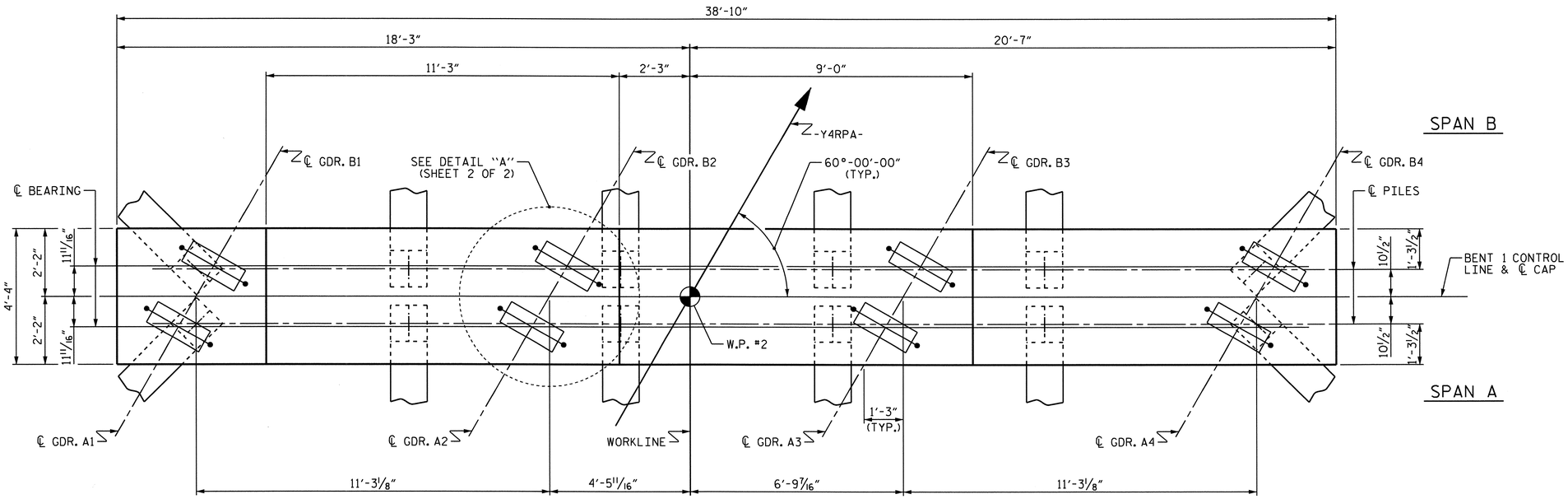


PLAN

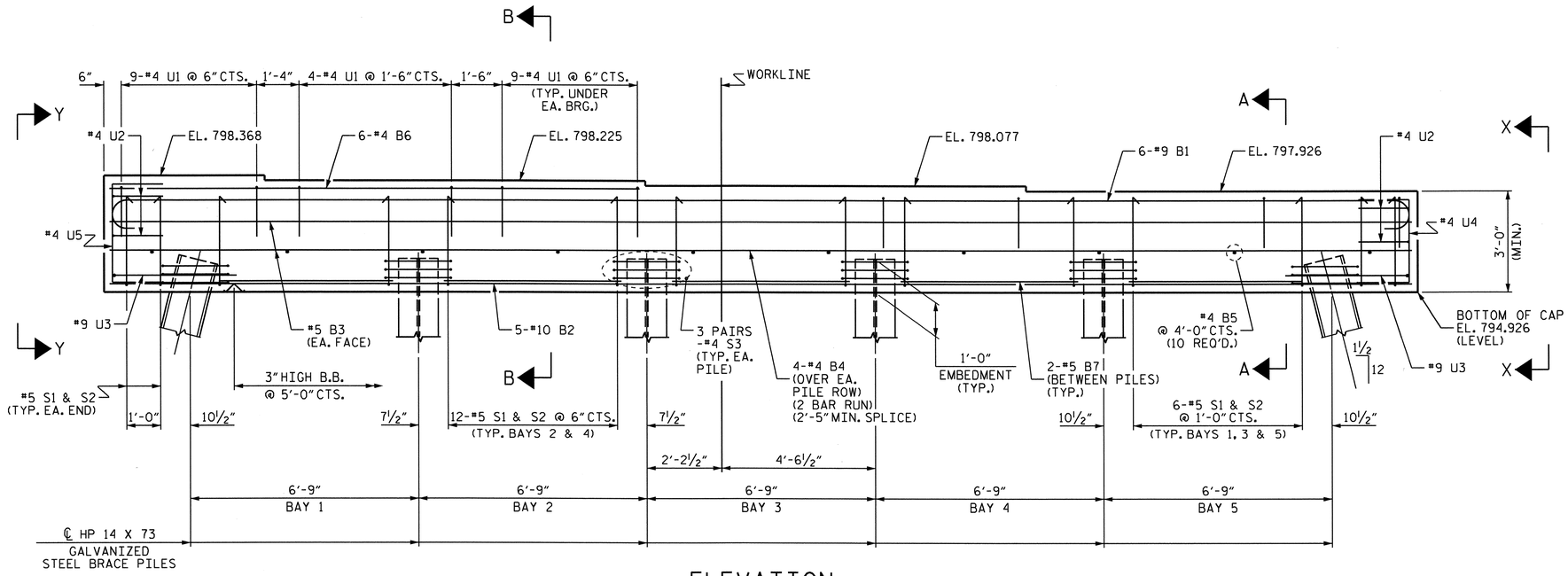


ELEVATION

## NOTES

STIRRUPS IN CAP MAY BE SHIFTED AS NECESSARY TO CLEAR ANCHOR BOLTS.

FOR PILE SPLICE DETAILS, SEE END BENT 1.

GALVANIZE THE FULL LENGTH OF EACH INTERIOR BENT PILE IN ACCORDANCE WITH SECTION 1076 OF THE STANDARD SPECIFICATIONS.

PROJECT NO. I-3819A

IREDELL COUNTY

STATION: 19+31.50-Y4RPA-

SHEET 1 OF 2

STATE OF NORTH CAROLINA
DEPARTMENT OF TRANSPORTATION
RALEIGH

SUBSTRUCTURE

BENT 1

NORTH CAROLINA PROFESSIONAL SEAL 10647 ENGINEER ALBERT C. OUTLAW, JR.

Albert C. Outlaw Jr.

1/3/12

| REVISIONS | | | | | | SHEET NO. |
|---|---|---|---|---|---|---|
| NO. | BY: | DATE: | NO. | BY: | DATE: | S-171 |
| 1 | | | 3 | | | TOTAL SHEETS |
| 2 | | | 4 | | | 382 |

DRAWN BY : E.C. LOCKLEAR DATE : 11-05-10
CHECKED BY : K.H. COMPTON DATE : 11-10-10

28-DEC-2011 15:40
R:\Structures\Frye\str04\elocklear\Microstation\I3819A_SD_B*_04.dgn
wparker

STR. #4

NCDOT

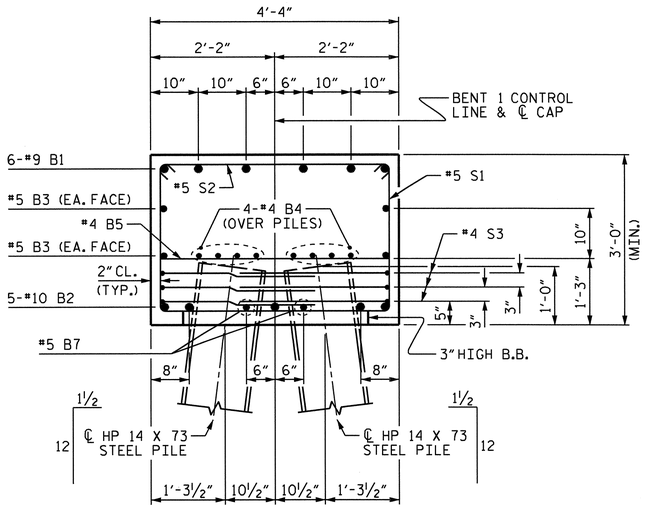


## SECTION A-A

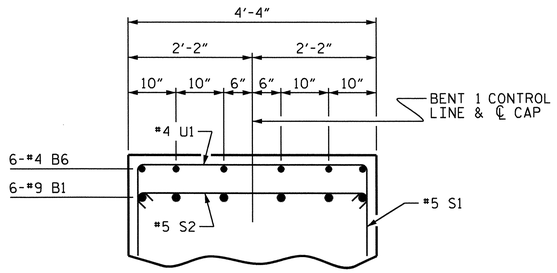


## PARTIAL SECTION B-B

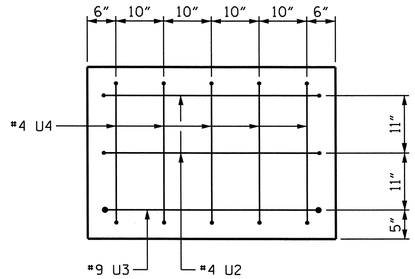


## VIEW X-X

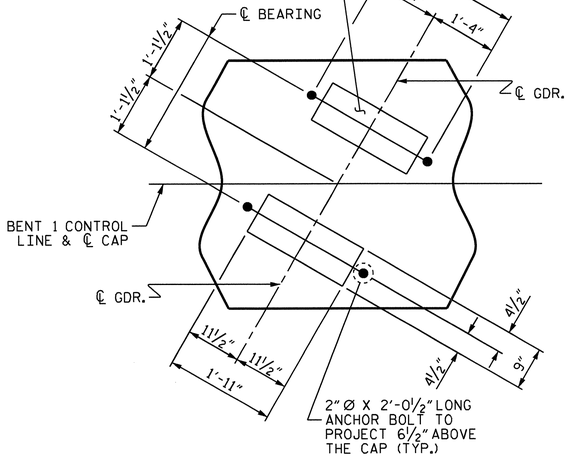


## DETAIL "A"

(TYP. EA. GIRDER)

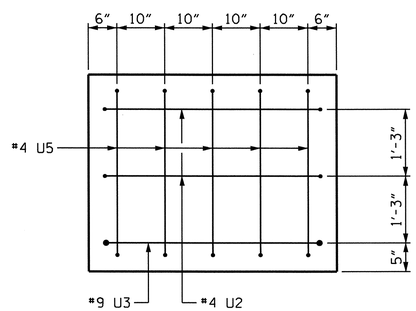


## VIEW Y-Y

## BAR TYPES

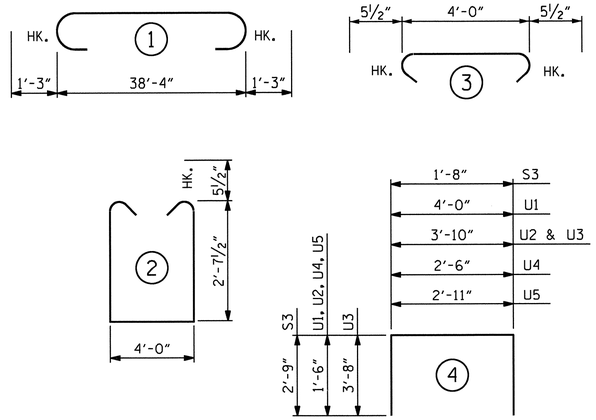


ALL BAR DIMENSIONS ARE OUT TO OUT.

## BILL OF MATERIAL

### BENT 1

| BAR | NO. | SIZE | TYPE | LENGTH | WEIGHT |
|---|---|---|---|---|---|
| B1 | 6 | #9 | 1 | 40'-10" | 833 |
| B2 | 5 | #10 | STR | 38'-6" | 828 |
| B3 | 4 | #5 | STR | 38'-6" | 161 |
| B4 | 16 | #4 | STR | 20'-6" | 219 |
| B5 | 10 | #4 | STR | 4'-0" | 27 |
| B6 | 6 | #4 | STR | 15'-8" | 63 |
| B7 | 10 | #5 | STR | 5'-3" | 55 |
| | | | | | |
| S1 | 49 | #5 | 2 | 10'-2" | 520 |
| S2 | 49 | #5 | 3 | 4'-11" | 251 |
| S3 | 36 | #4 | 4 | 7'-2" | 172 |
| | | | | | |
| U1 | 40 | #4 | 4 | 7'-0" | 187 |
| U2 | 4 | #4 | 4 | 6'-10" | 18 |
| U3 | 2 | #9 | 4 | 11'-2" | 76 |
| U4 | 5 | #4 | 4 | 5'-6" | 18 |
| U5 | 5 | #4 | 4 | 5'-11" | 20 |

REINFORCING STEEL 3448 LBS.

CLASS A CONCRETE
CAP 19.8 C.Y.

HP 14 X 73 GALVANIZED STEEL PILES
NO. 12 420 LIN. FT.

STEEL PILE POINTS
NO. = 12 EA.

PROJECT NO. I-3819A
IREDELL COUNTY
STATION: 19+31.50-Y4RPA-

SHEET 2 OF 2

STATE OF NORTH CAROLINA
DEPARTMENT OF TRANSPORTATION
RALEIGH

SUBSTRUCTURE

BENT 1

| REVISIONS | | | | | | SHEET NO. |
|---|---|---|---|---|---|---|
| NO. | BY: | DATE: | NO. | BY: | DATE: | S-172 |
| 1 | | | 3 | | | TOTAL SHEETS |
| 2 | | | 4 | | | 382 |

DRAWN BY : E.C. LOCKLEAR DATE : 11-05-10
CHECKED BY : K.H. COMPTON DATE : 11-10-10

28-DEC-2011 15:40
R:\Structures\Frye\str04\elocklear\Microstation\I3819A_SD_B*_04.dgn
wparker

STR. #4

NC005

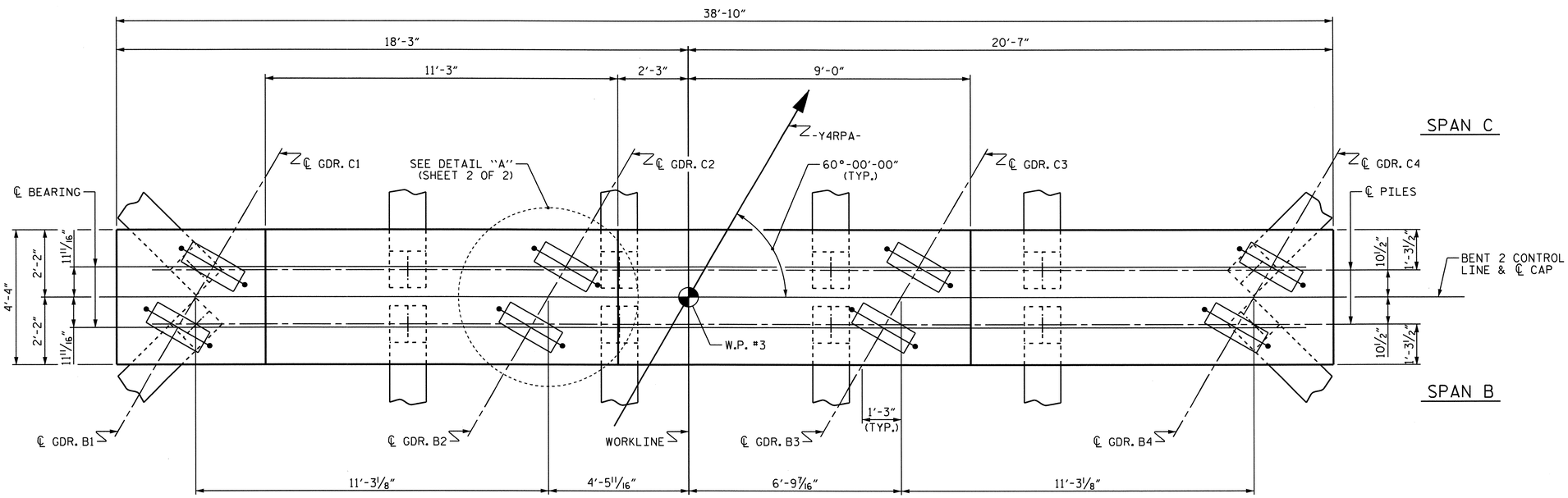


PLAN

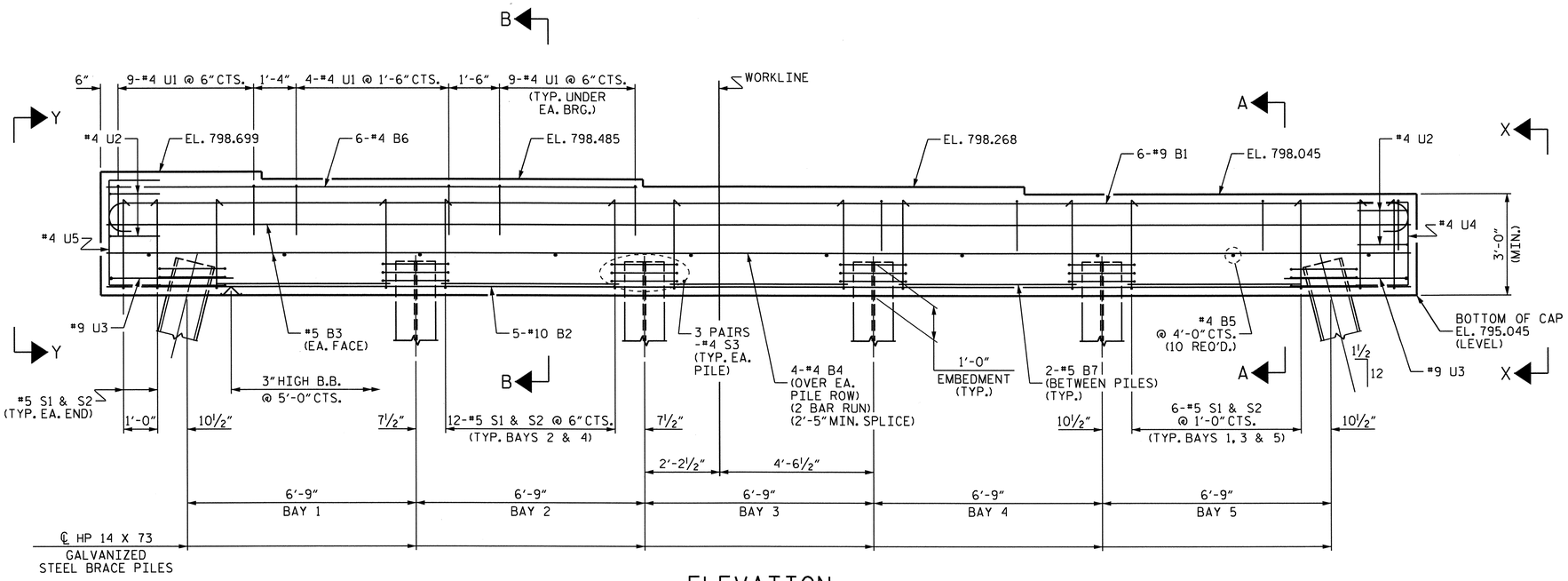


ELEVATION

## NOTES

STIRRUPS IN CAP MAY BE SHIFTED AS NECESSARY TO CLEAR ANCHOR BOLTS.

FOR PILE SPLICE DETAILS, SEE END BENT 1.

GALVANIZE THE FULL LENGTH OF EACH INTERIOR BENT PILE IN ACCORDANCE WITH SECTION 1076 OF THE STANDARD SPECIFICATIONS.

PROJECT NO. I-3819A

IREDELL COUNTY

STATION: 19+31.50-Y4RPA-

SHEET 1 OF 2

STATE OF NORTH CAROLINA
DEPARTMENT OF TRANSPORTATION
RALEIGH

SUBSTRUCTURE

BENT 2

NORTH CAROLINA PROFESSIONAL SEAL 10?? ENGINEER ALBERT C. OUTLAW, JR.

Albert C. Outlaw, Jr.

1/3/12

| REVISIONS | | | | | | SHEET NO. |
|---|---|---|---|---|---|---|
| NO. | BY: | DATE: | NO. | BY: | DATE: | S-173 |
| 1 | | | 3 | | | TOTAL SHEETS |
| 2 | | | 4 | | | 382 |

DRAWN BY : E.C. LOCKLEAR DATE : 11-05-10
CHECKED BY : K.H. COMPTON DATE : 11-10-10

28-DEC-2011 15:39
R:\Structures\Frye\str04\elocklear\Microstation\I3819A_SD_B*_04.dgn
wparker

STR. #4

NCBDS

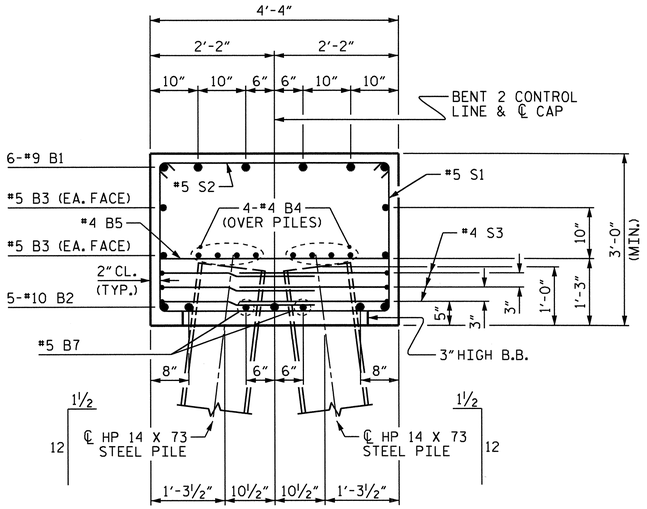


SECTION A-A

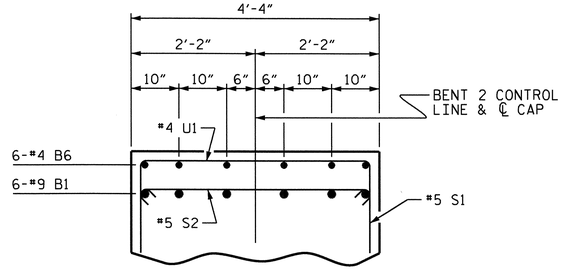


PARTIAL SECTION B-B

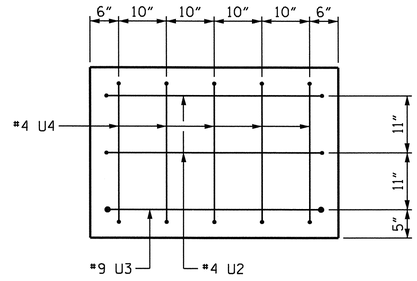


VIEW X-X

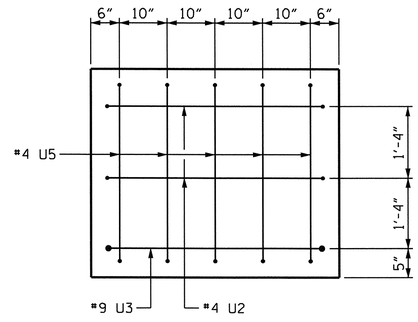


VIEW Y-Y

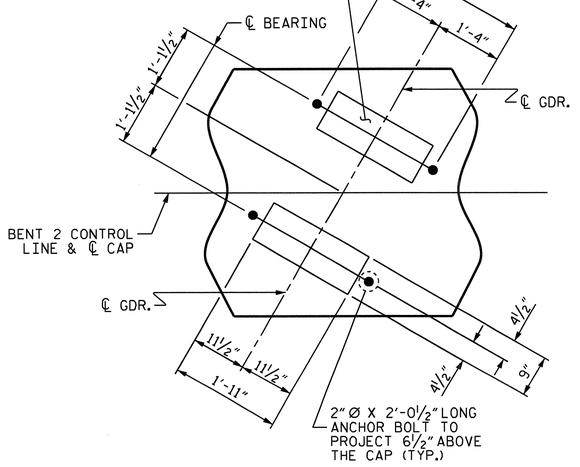


DETAIL "A"
(TYP. EA. GIRDER)

## BAR TYPES

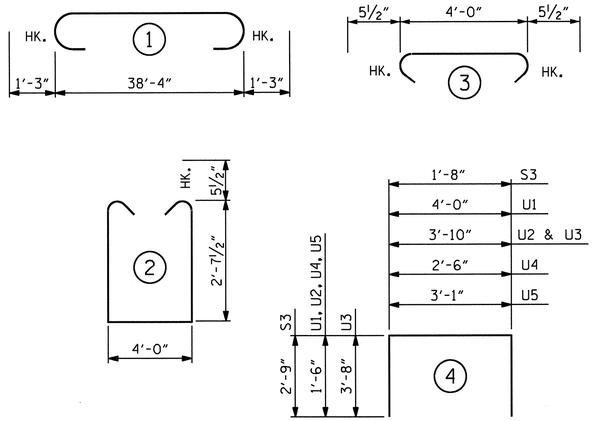


ALL BAR DIMENSIONS ARE OUT TO OUT.

## BILL OF MATERIAL
### BENT 2

| BAR | NO. | SIZE | TYPE | LENGTH | WEIGHT |
|---|---|---|---|---|---|
| B1 | 6 | #9 | 1 | 40'-10" | 833 |
| B2 | 5 | #10 | STR | 38'-6" | 828 |
| B3 | 4 | #5 | STR | 38'-6" | 161 |
| B4 | 16 | #4 | STR | 20'-6" | 219 |
| B5 | 10 | #4 | STR | 4'-0" | 27 |
| B6 | 6 | #4 | STR | 15'-8" | 63 |
| B7 | 10 | #5 | STR | 5'-3" | 55 |
| | | | | | |
| S1 | 49 | #5 | 2 | 10'-2" | 520 |
| S2 | 49 | #5 | 3 | 4'-11" | 251 |
| S3 | 36 | #4 | 4 | 7'-2" | 172 |
| | | | | | |
| U1 | 40 | #4 | 4 | 7'-0" | 187 |
| U2 | 4 | #4 | 4 | 6'-10" | 18 |
| U3 | 2 | #9 | 4 | 11'-2" | 76 |
| U4 | 5 | #4 | 4 | 5'-6" | 18 |
| U5 | 5 | #4 | 4 | 6'-1" | 20 |

REINFORCING STEEL 3448 LBS.

CLASS A CONCRETE
CAP 20.4 C.Y.

HP 14 X 73 GALVANIZED STEEL PILES
NO. 12 360 LIN. FT.

STEEL PILE POINTS
NO. = 12 EA.

PROJECT NO. I-3819A
IREDELL COUNTY
STATION: 19+31.50-Y4RPA-

SHEET 2 OF 2

STATE OF NORTH CAROLINA
DEPARTMENT OF TRANSPORTATION
RALEIGH

SUBSTRUCTURE

BENT 2

NORTH CAROLINA PROFESSIONAL SEAL 037487 ENGINEER TERRY C. OUTLAW
1/3/12

| REVISIONS | | | | | | SHEET NO. |
|---|---|---|---|---|---|---|
| NO. | BY: | DATE: | NO. | BY: | DATE: | S-174 |
| 1 | | | 3 | | | TOTAL SHEETS |
| 2 | | | 4 | | | 382 |

DRAWN BY : E.C. LOCKLEAR DATE : 11-05-10
CHECKED BY : K.H. COMPTON DATE : 11-10-10

28-DEC-2011 15:39
R:\Structures\Frye\str04\elocklear\Microstation\I3819A_SD_B*_04.dgn
wparker

STR. #4

NCDOT

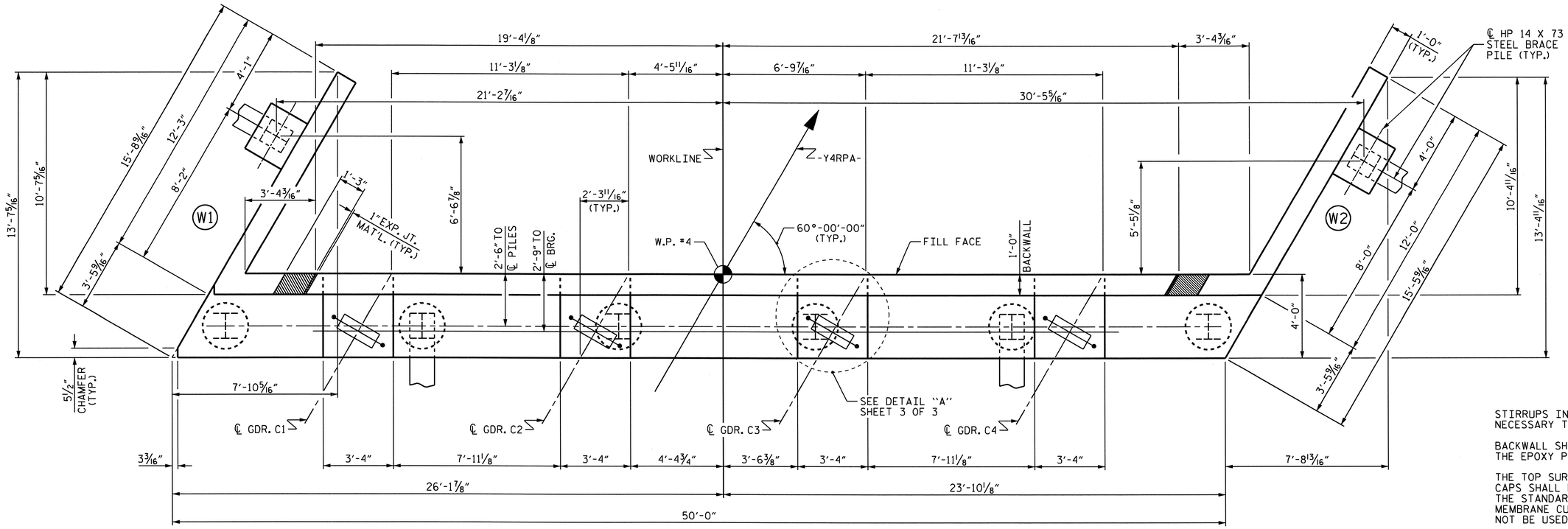


## PLAN

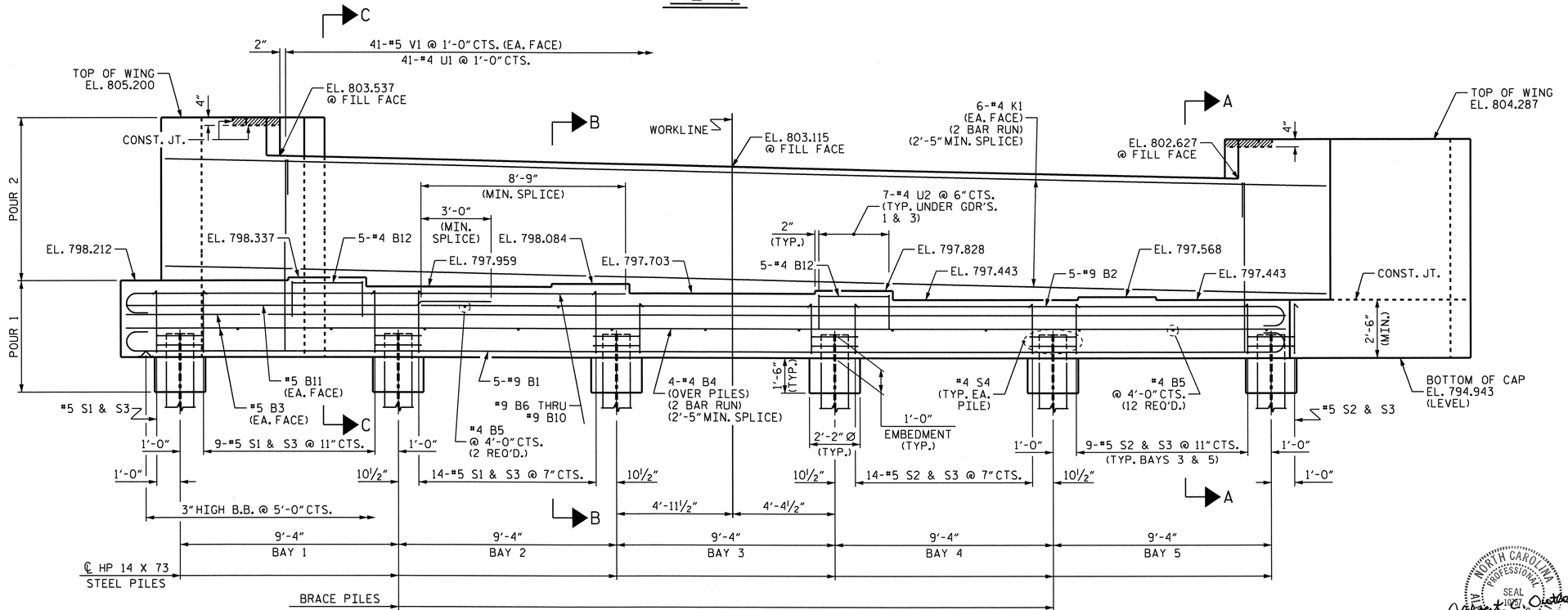


## ELEVATION

(WING BRACE PILES NOT SHOWN FOR CLARITY)

## NOTES

STIRRUPS IN CAP MAY BE SHIFTED AS NECESSARY TO CLEAR ANCHOR BOLTS.

BACKWALL SHALL BE PLACED BEFORE APPLYING THE EPOXY PROTECTIVE COATING.

THE TOP SURFACE AREAS OF THE END BENT CAPS SHALL BE CURED IN ACCORDANCE WITH THE STANDARD SPECIFICATIONS EXCEPT THE MEMBRANE CURING COMPOUND METHOD SHALL NOT BE USED.

THE TOP SURFACE OF THE END BENT CAP EXCEPT THE BRIDGE SEAT BUILDUPS SHALL BE SLOPED TRANSVERSELY FROM THE FILL FACE TO THE BACK FACE AT THE RATE OF 2%.

THE #5 V1 BARS SHALL BE PLACED 2" CLEAR FROM TOP OF BACKWALL.

THE CONCRETE IN THE SHADED AREA OF THE WING SHALL BE POURED AFTER THE JOINT BETWEEN THE DECK AND THE APPROACH SLAB HAS BEEN SAWED AND THE BARRIER RAIL IS CAST IF SLIP FORMING IS USED.

THE CONTRACTOR SHALL PROVIDE FOR INSTALLATION OF THE 4" DIAMETER DRAIN PIPE THROUGH THE WING WALL AS REQUIRED FOR REINFORCED BRIDGE APPROACH FILLS, SEE THE ROADWAY PLANS. REINFORCING STEEL IN THE WING WALL MAY BE SHIFTED AS NECESSARY TO CLEAR THE DRAIN PIPE.

PROJECT NO. I-3819A

IREDELL COUNTY

STATION: 19+31.50-Y4RPA-

SHEET 1 OF 3

STATE OF NORTH CAROLINA
DEPARTMENT OF TRANSPORTATION
RALEIGH

SUBSTRUCTURE

END BENT 2

NORTH CAROLINA PROFESSIONAL SEAL 16021 ENGINEER ALBERT C. OUTLAW, JR.

Albert C. Outlaw, Jr. 1/9/12

| REVISIONS | | | | | | SHEET NO. |
|---|---|---|---|---|---|---|
| NO. | BY: | DATE: | NO. | BY: | DATE: | S-175 |
| 1 | | | 3 | | | TOTAL SHEETS |
| 2 | | | 4 | | | 382 |

DRAWN BY : E.C. LOCKLEAR DATE : 10-28-10
CHECKED BY : A.C. OUTLAW DATE : 12-08-10

28-DEC-2011 12:47
R:\Structures\Frye\str04\elocklear\Microstation\I3819A_SD_E*_04.dgn
wparker

STR. #4

NCDOT

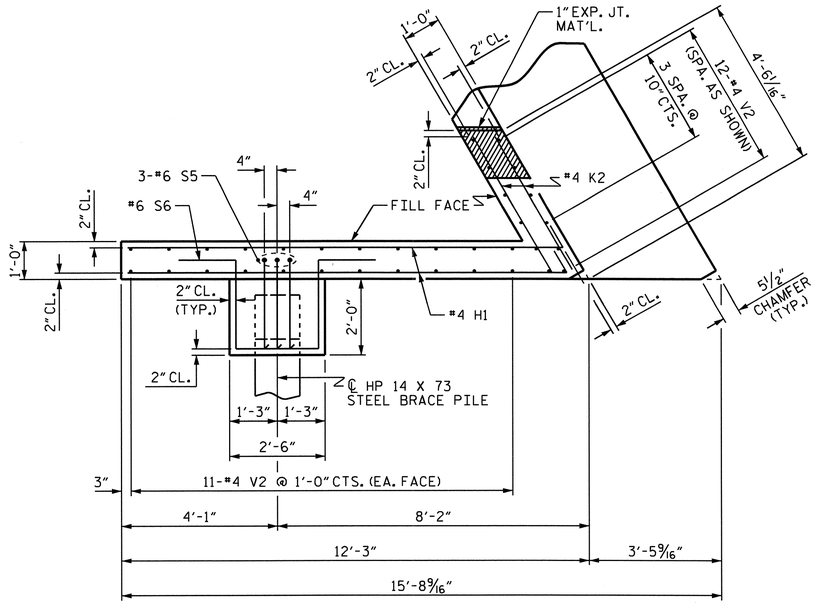


## PLAN OF WING (W1)

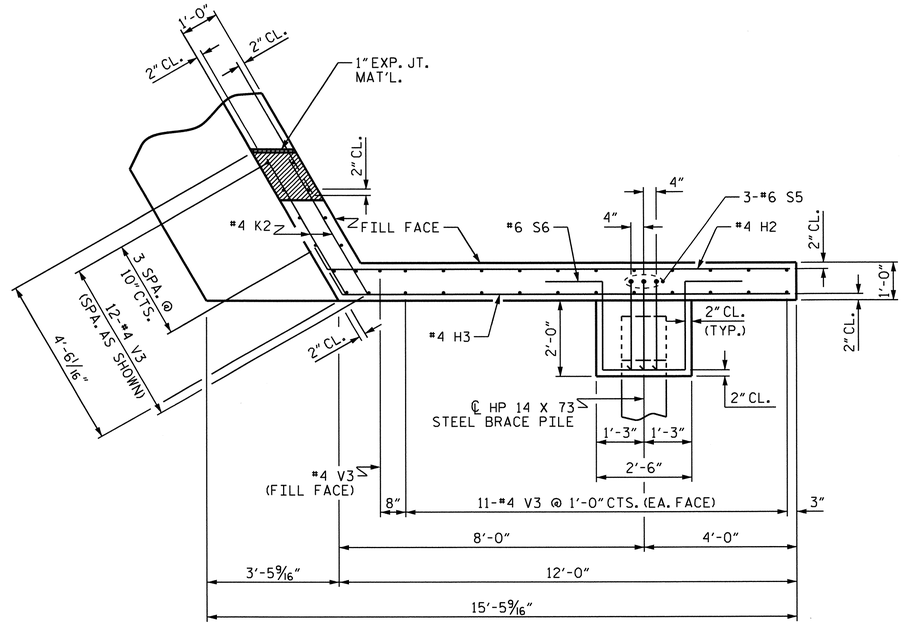


## PLAN OF WING (W2)

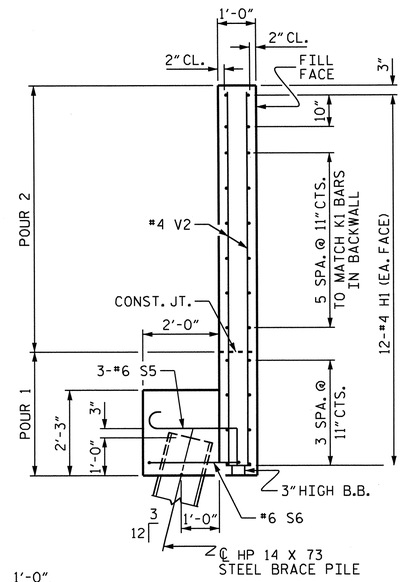


## SECTION X-X

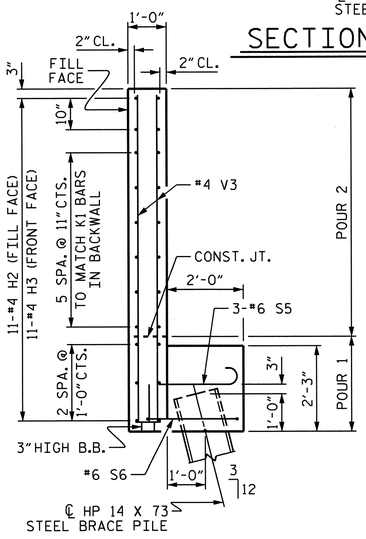


## SECTION Y-Y

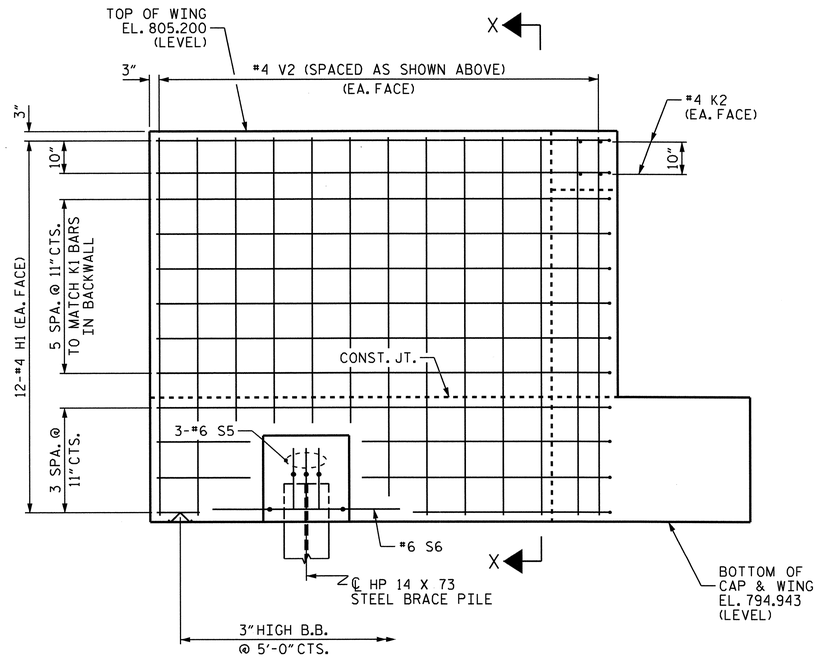


## ELEVATION OF WING (W1)

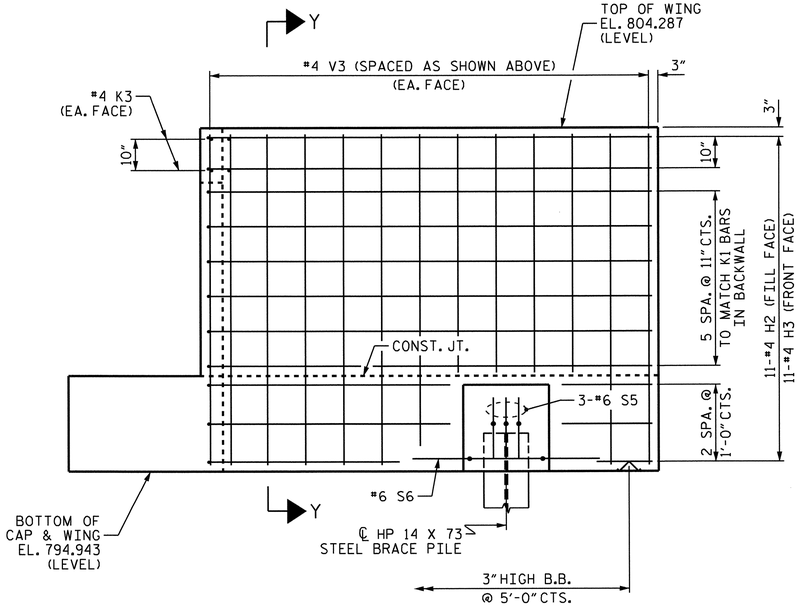


## ELEVATION OF WING (W2)

PROJECT NO. I-3819A

IREDELL COUNTY

STATION: 19+31.50-Y4RPA-

SHEET 2 OF 3

STATE OF NORTH CAROLINA
DEPARTMENT OF TRANSPORTATION
RALEIGH

SUBSTRUCTURE

END BENT 2

| REVISIONS | | | | | | SHEET NO. |
|---|---|---|---|---|---|---|
| NO. | BY: | DATE: | NO. | BY: | DATE: | S-176 |
| 1 | | | 3 | | | TOTAL SHEETS |
| 2 | | | 4 | | | 382 |

NORTH CAROLINA PROFESSIONAL SEAL 15757 ENGINEER VERT C. OUTLAW, JR.
1/3/12

DRAWN BY : E.C. LOCKLEAR DATE : 11-10-10
CHECKED BY : A.C. OUTLAW DATE : 12-08-10

28-DEC-2011 12:47
R:\Structures\Frye\str04\elocklear\Microstation\I3819A_SD_E*_04.dgn
wparker

STR. #4

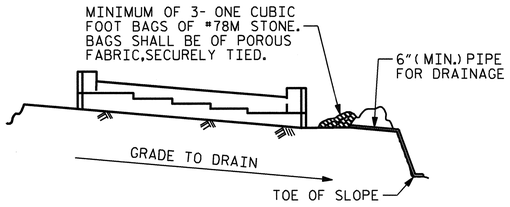


BAGGED STONE AND PIPE SHALL BE PLACED IMMEDIATELY AFTER COMPLETION OF END BENT EXCAVATION. PIPE MAY BE EITHER CONCRETE, CORRUGATED STEEL, CORRUGATED ALUMINUM ALLOY, OR CORRUGATED PLASTIC. PERFORATED PIPE WILL NOT BE ALLOWED.

BAGGED STONE SHALL REMAIN IN PLACE UNTIL THE ENGINEER DIRECTS THAT IT BE REMOVED. THE CONTRACTOR SHALL REMOVE AND DISPOSE OF SILT ACCUMULATIONS AT BAGGED STONE WHEN SO DIRECTED BY THE ENGINEER. BAGS SHALL BE REMOVED AND REPLACED WHENEVER THE ENGINEER DETERMINES THAT THEY HAVE DETERIORATED AND LOST THEIR EFFECTIVENESS.

NO SEPARATE PAYMENT WILL BE MADE FOR THIS WORK AND THE ENTIRE COST OF THIS WORK SHALL BE INCLUDED IN THE UNIT CONTRACT PRICE BID FOR THE SEVERAL PAY ITEMS.

## TEMPORARY DRAINAGE AT END BENT

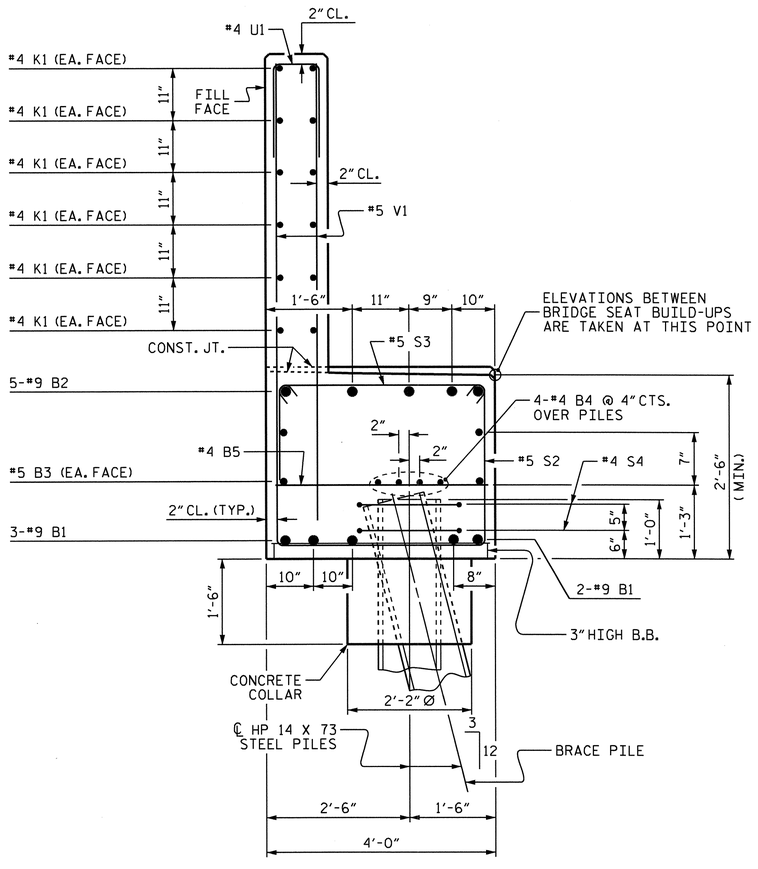


## SECTION A-A

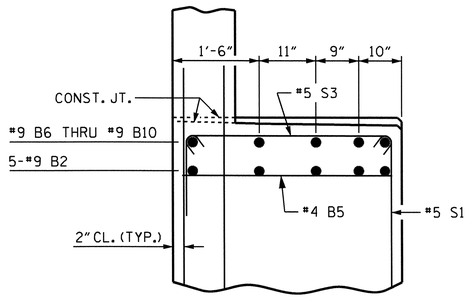


## PARTIAL SECTION B-B

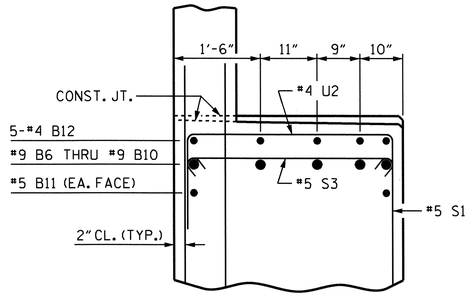


## PARTIAL SECTION C-C

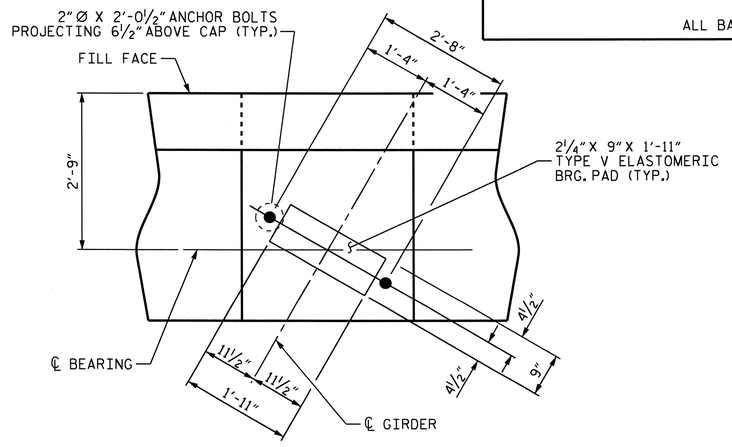


## DETAIL "A"

## BAR TYPES

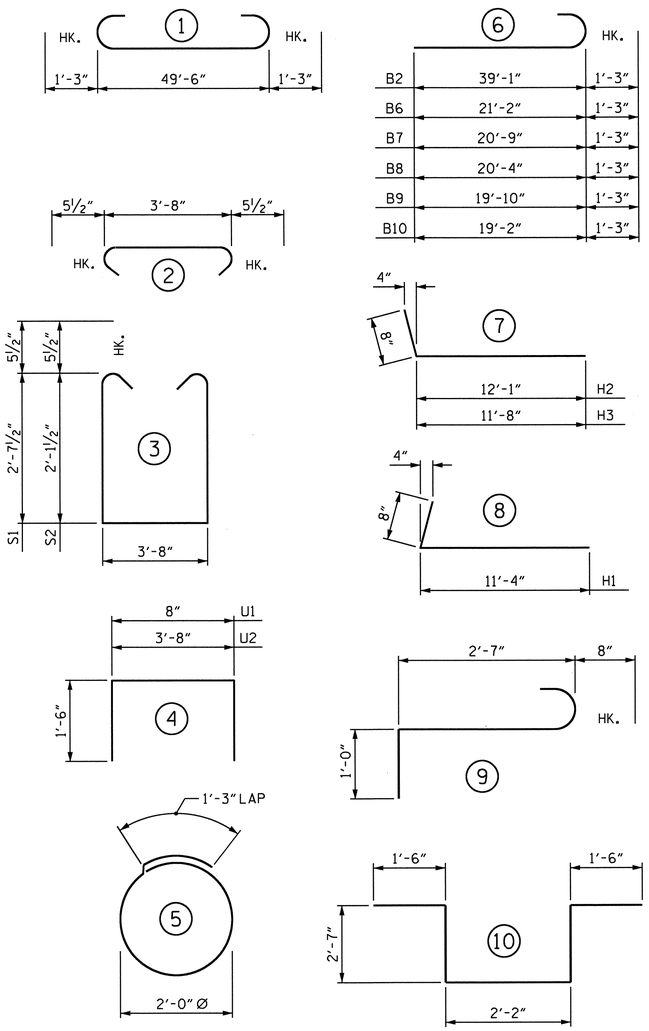


ALL BAR DIMENSIONS ARE OUT TO OUT.

## BILL OF MATERIAL

### END BENT 2

| BAR | NO. | SIZE | TYPE | LENGTH | WEIGHT |
|---|---|---|---|---|---|
| B1 | 5 | #9 | 1 | 52'-0" | 884 |
| B2 | 5 | #9 | 6 | 40'-4" | 686 |
| B3 | 4 | #5 | STR | 49'-8" | 207 |
| B4 | 8 | #4 | STR | 26'-1" | 139 |
| B5 | 14 | #4 | STR | 3'-8" | 34 |
| B6 | 1 | #9 | 6 | 22'-5" | 76 |
| B7 | 1 | #9 | 6 | 22'-0" | 75 |
| B8 | 1 | #9 | 6 | 21'-7" | 73 |
| B9 | 1 | #9 | 6 | 21'-1" | 72 |
| B10 | 1 | #9 | 6 | 20'-5" | 69 |
| B11 | 2 | #5 | STR | 13'-5" | 28 |
| B12 | 10 | #4 | STR | 3'-0" | 20 |
| | | | | | |
| H1 | 24 | #4 | 8 | 12'-0" | 192 |
| H2 | 11 | #4 | 7 | 12'-9" | 94 |
| H3 | 11 | #4 | 7 | 12'-4" | 91 |
| | | | | | |
| K1 | 24 | #4 | STR | 26'-1" | 418 |
| K2 | 8 | #4 | STR | 4'-1" | 22 |
| | | | | | |
| | | | | | |
| S1 | 24 | #5 | 3 | 9'-10" | 246 |
| S2 | 33 | #5 | 3 | 8'-10" | 304 |
| S3 | 57 | #5 | 2 | 4'-7" | 272 |
| S4 | 12 | #4 | 5 | 7'-7" | 61 |
| S5 | 6 | #6 | 9 | 4'-3" | 38 |
| S6 | 2 | #6 | 10 | 10'-4" | 31 |
| | | | | | |
| U1 | 41 | #4 | 4 | 3'-8" | 100 |
| U2 | 14 | #4 | 4 | 6'-8" | 62 |
| | | | | | |
| V1 | 82 | #5 | STR | 7'-4" | 627 |
| V2 | 34 | #4 | STR | 9'-11" | 225 |
| V3 | 35 | #4 | STR | 9'-0" | 210 |

REINFORCING STEEL 5,356 LBS

CLASS A CONCRETE

| | |
|---|---|
| POUR 1 (CAP, LOWER WINGS & CONCRETE COLLARS) | 25.6 C.Y. |
| POUR 2 (BACKWALL & UPPER WINGS) | 16.4 C.Y. |
| TOTAL | 42.0 C.Y. |

HP 14 X 73 STEEL PILES

NUMBER = 8 LIN. FT. = 160.0

STEEL PILE POINTS

NUMBER = 8 EA.

PROJECT NO. I-3819A

IREDELL COUNTY

STATION: 19+31.50-Y4RPA-

SHEET 3 OF 3

STATE OF NORTH CAROLINA
DEPARTMENT OF TRANSPORTATION
RALEIGH

SUBSTRUCTURE

END BENT 2

DRAWN BY : E.C. LOCKLEAR DATE : 10-28-10
CHECKED BY : A.C. OUTLAW DATE : 12-08-10

NORTH CAROLINA PROFESSIONAL ENGINEER SEAL 10757 ALBERT C. OUTLAW, JR.
1/3/12

| REVISIONS | | | | | | SHEET NO. |
|---|---|---|---|---|---|---|
| NO. | BY: | DATE: | NO. | BY: | DATE: | S-177 |
| 1 | | | 3 | | | TOTAL SHEETS |
| 2 | | | 4 | | | 382 |

28-DEC-2011 12:47
R:\Structures\Frye\str04\eloclear\Microstation\I3819A_SD_E*_04.dgn
wparker

STR. #4

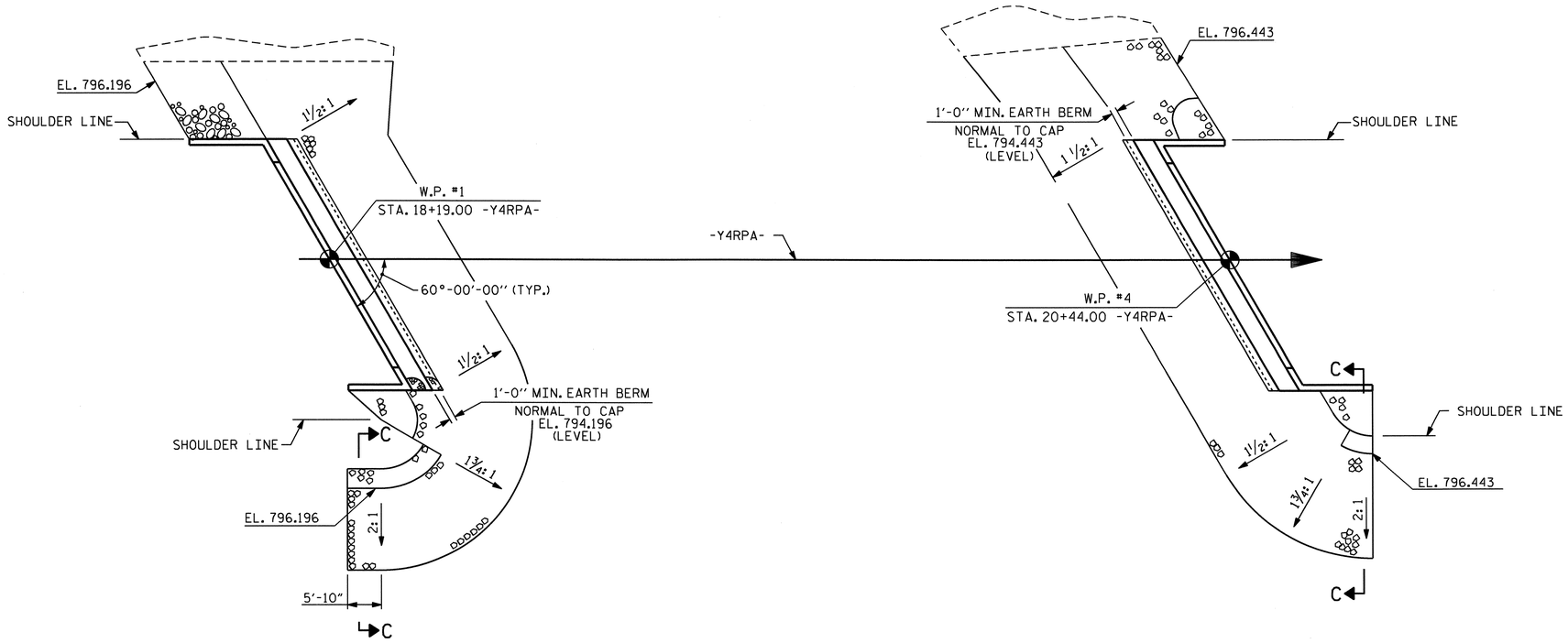


END BENT 1

END BENT 2

| ESTIMATED QUANTITIES | | |
|---|---|---|
| BRIDGE @ STA. 19+31.50 -Y4RPA- | RIP RAP CLASS II | GEOTEXTILE FOR DRAINAGE |
| | TONS | SQUARE YARDS |
| END BENT 1 | 325 | 357 |
| END BENT 2 | 330 | 362 |

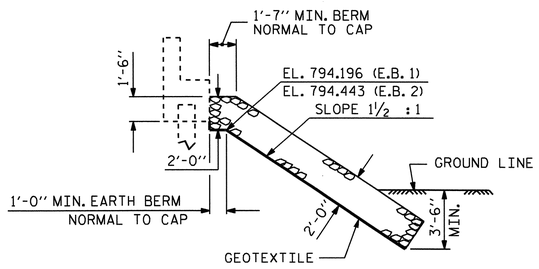


℄ SECTION

BERM RIP RAPPED

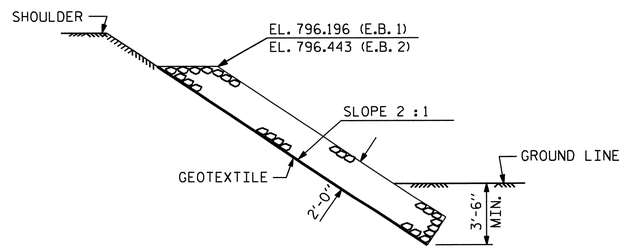


SECTION C-C

PROJECT NO. I-3819A

IREDELL COUNTY

STATION: 19+31.50-Y4RPA-

STATE OF NORTH CAROLINA

DEPARTMENT OF TRANSPORTATION

RALEIGH

STANDARD

# RIP RAP DETAILS

NORTH CAROLINA PROFESSIONAL SEAL 29048 ENGINEER RAJAN P. PATEL 1/31/12

| REVISIONS | | | | | | SHEET NO. |
|---|---|---|---|---|---|---|
| NO. | BY: | DATE: | NO. | BY: | DATE: | S-178 |
| 1 | | | 3 | | | TOTAL SHEETS |
| 2 | | | 4 | | | 382 |

| | | |
|---|---|---|
| ASSEMBLED BY : D.R. WITHROW | | DATE : 12/04/09 |
| CHECKED BY : R.P. PATEL | | DATE : 04/26/10 |
| DRAWN BY : REK 1/84 | REV. 8/16/99 | RWW/LES |
| CHECKED BY : RDU 1/84 | REV. 10/17/00 | RWW/LES |
| | REV. 5/1/06 | TLA/GM |

28-DEC-2011 12:47
R:\Structures\Frye\str04\rwithrow\Microstation\13819a_SD_RR_04.dgn
wparker

STR. #4

STD. NO. RR1

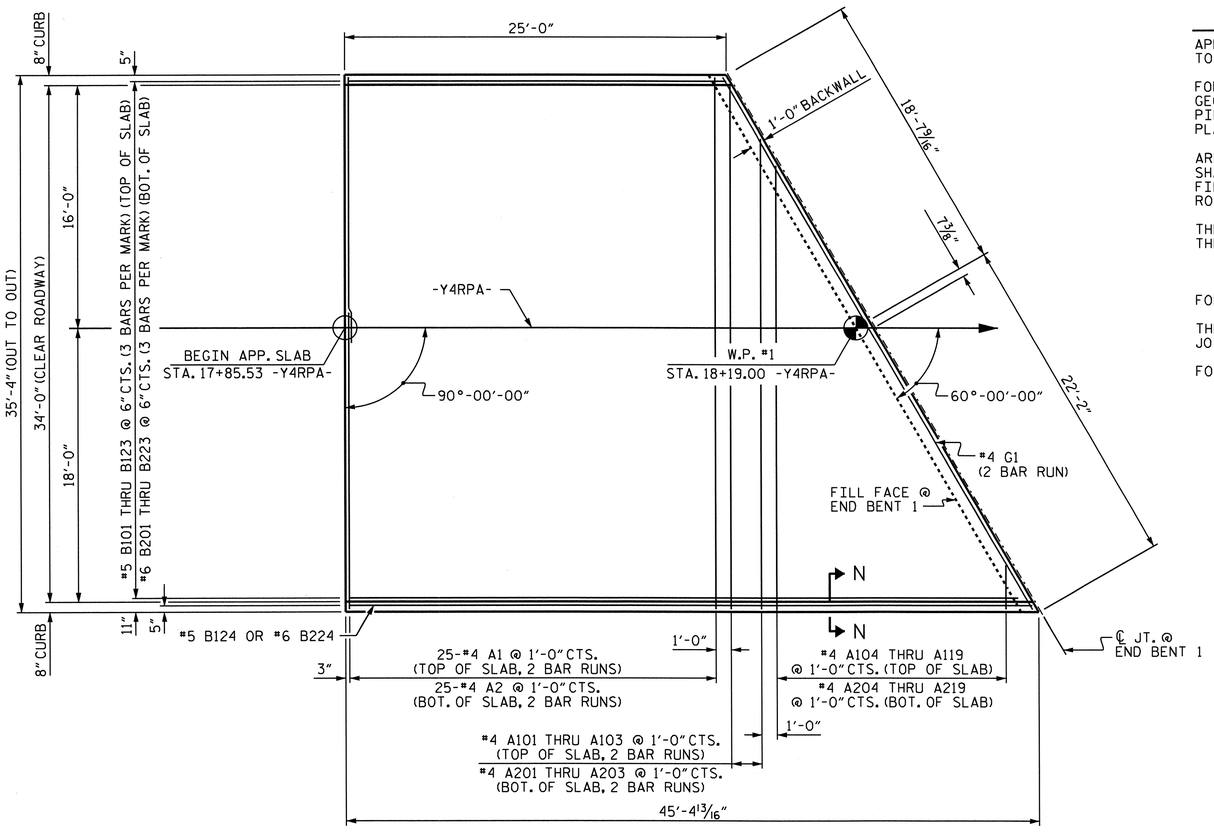


PLAN @ END BENT 1

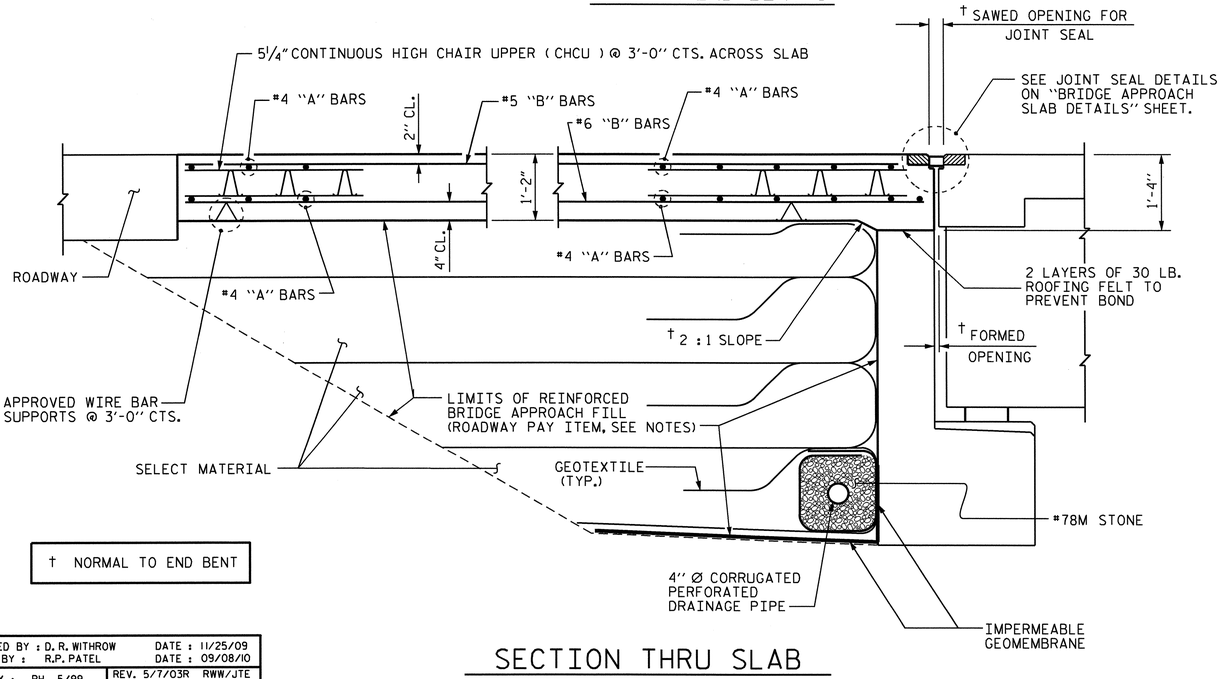


SECTION THRU SLAB

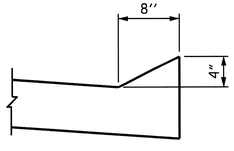


SECTION N-N

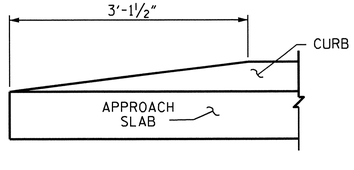


END OF CURB WITHOUT
SHOULDER BERM GUTTER

CURB DETAILS

## NOTES

APPROACH SLAB SHALL NOT BE CONSTRUCTED PRIOR TO COMPLETION OF THE BRIDGE DECK.

FOR REINFORCED BRIDGE APPROACH FILL INCLUDING GEOTEXTILE, IMPERMEABLE GEOMEMBRANE, 4" Ø DRAINAGE PIPE, #78M STONE, AND SELECT MATERIAL, SEE ROADWAY PLANS.

AREA BETWEEN THE WINGWALL AND APPROACH SLAB SHALL BE GRADED TO DRAIN THE WATER AWAY FROM THE FILL FACE OF THE BRIDGE AND SHALL BE PAVED. SEE ROADWAY PLANS.

THE JOINT SHALL BE SAWED PRIOR TO THE CASTING OF THE BARRIER RAIL.

WITH FOAM JOINT SEAL

FOR FOAM JOINT SEALS, SEE SPECIAL PROVISIONS.

THE NOMINAL UNCOMPRESSED SEAL WIDTH OF THE FOAM JOINT SEAL SHALL BE 2 1/2".

FOR ELASTOMERIC CONCRETE, SEE SPECIAL PROVISIONS.

## BILL OF MATERIAL

### FOR APPROACH SLAB AT END BENT 1

| BAR | NO. | SIZE | TYPE | LENGTH | WEIGHT | BAR | NO. | SIZE | TYPE | LENGTH | WEIGHT |
|---|---|---|---|---|---|---|---|---|---|---|---|
| * A1 | 50 | #4 | STR | 18'-6" | 618 | * B101 | 3 | #5 | STR | 24'-3" | 76 |
| A2 | 50 | #4 | STR | 18'-5" | 615 | * B102 | 3 | #5 | STR | 25'-1" | 78 |
| * G1 | 2 | #4 | STR | 21'-1" | 28 | * B103 | 3 | #5 | STR | 25'-11" | 81 |
| | | | | | | * B104 | 3 | #5 | STR | 26'-10" | 84 |
| * A101 | 2 | #4 | STR | 18'-3" | 24 | * B105 | 3 | #5 | STR | 27'-8" | 87 |
| * A102 | 2 | #4 | STR | 17'-4" | 23 | * B106 | 3 | #5 | STR | 28'-7" | 89 |
| * A103 | 2 | #4 | STR | 16'-6" | 22 | * B107 | 3 | #5 | STR | 29'-5" | 92 |
| * A104 | 1 | #4 | STR | 29'-2" | 19 | * B108 | 3 | #5 | STR | 30'-3" | 95 |
| * A105 | 1 | #4 | STR | 27'-5" | 18 | * B109 | 3 | #5 | STR | 31'-2" | 98 |
| * A106 | 1 | #4 | STR | 25'-9" | 17 | * B110 | 3 | #5 | STR | 32'-0" | 100 |
| * A107 | 1 | #4 | STR | 24'-0" | 16 | * B111 | 3 | #5 | STR | 32'-11" | 103 |
| * A108 | 1 | #4 | STR | 22'-3" | 15 | * B112 | 3 | #5 | STR | 33'-9" | 106 |
| * A109 | 1 | #4 | STR | 20'-6" | 14 | * B113 | 3 | #5 | STR | 34'-7" | 108 |
| * A110 | 1 | #4 | STR | 18'-9" | 13 | * B114 | 3 | #5 | STR | 35'-6" | 111 |
| * A111 | 1 | #4 | STR | 17'-1" | 11 | * B115 | 3 | #5 | STR | 36'-4" | 114 |
| * A112 | 1 | #4 | STR | 15'-4" | 10 | * B116 | 3 | #5 | STR | 37'-3" | 117 |
| * A113 | 1 | #4 | STR | 13'-7" | 9 | * B117 | 3 | #5 | STR | 38'-1" | 119 |
| * A114 | 1 | #4 | STR | 11'-10" | 8 | * B118 | 3 | #5 | STR | 38'-11" | 122 |
| * A115 | 1 | #4 | STR | 10'-1" | 7 | * B119 | 3 | #5 | STR | 39'-10" | 125 |
| * A116 | 1 | #4 | STR | 8'-5" | 6 | * B120 | 3 | #5 | STR | 40'-8" | 127 |
| * A117 | 1 | #4 | STR | 6'-8" | 4 | * B121 | 3 | #5 | STR | 41'-6" | 130 |
| * A118 | 1 | #4 | STR | 4'-11" | 3 | * B122 | 3 | #5 | STR | 42'-5" | 133 |
| * A119 | 1 | #4 | STR | 3'-2" | 2 | * B123 | 3 | #5 | STR | 43'-3" | 135 |
| | | | | | | * B124 | 1 | #5 | STR | 44'-2" | 46 |
| A201 | 2 | #4 | STR | 18'-1" | 24 | | | | | | |
| A202 | 2 | #4 | STR | 17'-3" | 23 | B201 | 3 | #6 | STR | 24'-9" | 112 |
| A203 | 2 | #4 | STR | 16'-5" | 22 | B202 | 3 | #6 | STR | 25'-7" | 115 |
| A204 | 1 | #4 | STR | 29'-2" | 19 | B203 | 3 | #6 | STR | 26'-5" | 119 |
| A205 | 1 | #4 | STR | 27'-5" | 18 | B204 | 3 | #6 | STR | 27'-4" | 123 |
| A206 | 1 | #4 | STR | 25'-9" | 17 | B205 | 3 | #6 | STR | 28'-2" | 127 |
| A207 | 1 | #4 | STR | 24'-0" | 16 | B206 | 3 | #6 | STR | 29'-1" | 131 |
| A208 | 1 | #4 | STR | 22'-3" | 15 | B207 | 3 | #6 | STR | 29'-11" | 135 |
| A209 | 1 | #4 | STR | 20'-6" | 14 | B208 | 3 | #6 | STR | 30'-9" | 139 |
| A210 | 1 | #4 | STR | 18'-9" | 13 | B209 | 3 | #6 | STR | 31'-8" | 143 |
| A211 | 1 | #4 | STR | 17'-1" | 11 | B210 | 3 | #6 | STR | 32'-6" | 146 |
| A212 | 1 | #4 | STR | 15'-4" | 10 | B211 | 3 | #6 | STR | 33'-5" | 151 |
| A213 | 1 | #4 | STR | 13'-7" | 9 | B212 | 3 | #6 | STR | 34'-3" | 154 |
| A214 | 1 | #4 | STR | 11'-10" | 8 | B213 | 3 | #6 | STR | 35'-1" | 158 |
| A215 | 1 | #4 | STR | 10'-1" | 7 | B214 | 3 | #6 | STR | 36'-0" | 162 |
| A216 | 1 | #4 | STR | 8'-5" | 6 | B215 | 3 | #6 | STR | 36'-10" | 166 |
| A217 | 1 | #4 | STR | 6'-8" | 4 | B216 | 3 | #6 | STR | 37'-9" | 170 |
| A218 | 1 | #4 | STR | 4'-11" | 3 | B217 | 3 | #6 | STR | 38'-7" | 174 |
| A219 | 1 | #4 | STR | 3'-2" | 2 | B218 | 3 | #6 | STR | 39'-5" | 178 |
| | | | | | | B219 | 3 | #6 | STR | 40'-4" | 182 |
| | | | | | | B220 | 3 | #6 | STR | 41'-2" | 185 |
| | | | | | | B221 | 3 | #6 | STR | 42'-0" | 189 |
| | | | | | | B222 | 3 | #6 | STR | 42'-11" | 193 |
| | | | | | | B223 | 3 | #6 | STR | 43'-9" | 197 |
| | | | | | | B224 | 1 | #6 | STR | 44'-8" | 67 |

| | | |
|---|---|---|
| CLASS AA CONCRETE | C.Y. | 54.2 |

| | | |
|---|---|---|
| REINFORCING STEEL | LBS. | 4500 |
| * EPOXY COATED REINFORCING STEEL | LBS. | 3335 |

PROJECT NO. I-3819A

IREDELL COUNTY

STATION: 19+31.50-Y4RPA-

SHEET 1 OF 3

STATE OF NORTH CAROLINA
DEPARTMENT OF TRANSPORTATION
RALEIGH

STANDARD

# BRIDGE APPROACH SLAB FOR RIGID PAVEMENT AT END BENT 1

| REVISIONS | | | | | | SHEET NO. |
|---|---|---|---|---|---|---|
| NO. | BY: | DATE: | NO. | BY: | DATE: | S-179 |
| 1 | | | 3 | | | TOTAL SHEETS |
| 2 | | | 4 | | | 382 |

NORTH CAROLINA PROFESSIONAL SEAL 28048 ENGINEER RAMAN P. PATEL
1/3/12

STR. #4 STD. NO. BAS1

| | |
|---|---|
| ASSEMBLED BY : D. R. WITHROW | DATE : 11/25/09 |
| CHECKED BY : R.P. PATEL | DATE : 09/08/10 |
| DRAWN BY : RH 5/99 | REV. 5/7/03R RWW/JTE |
| CHECKED BY : RDR 5/99 | REV. 5/1/06RR KMM/GM |
| | REV. 10/1/11 MAA/GM |

28-DEC-2011 12:47
R:\Structures\Frye\str04\rwithrow\Microstation\13819a_SD_AS.dgn
wparker

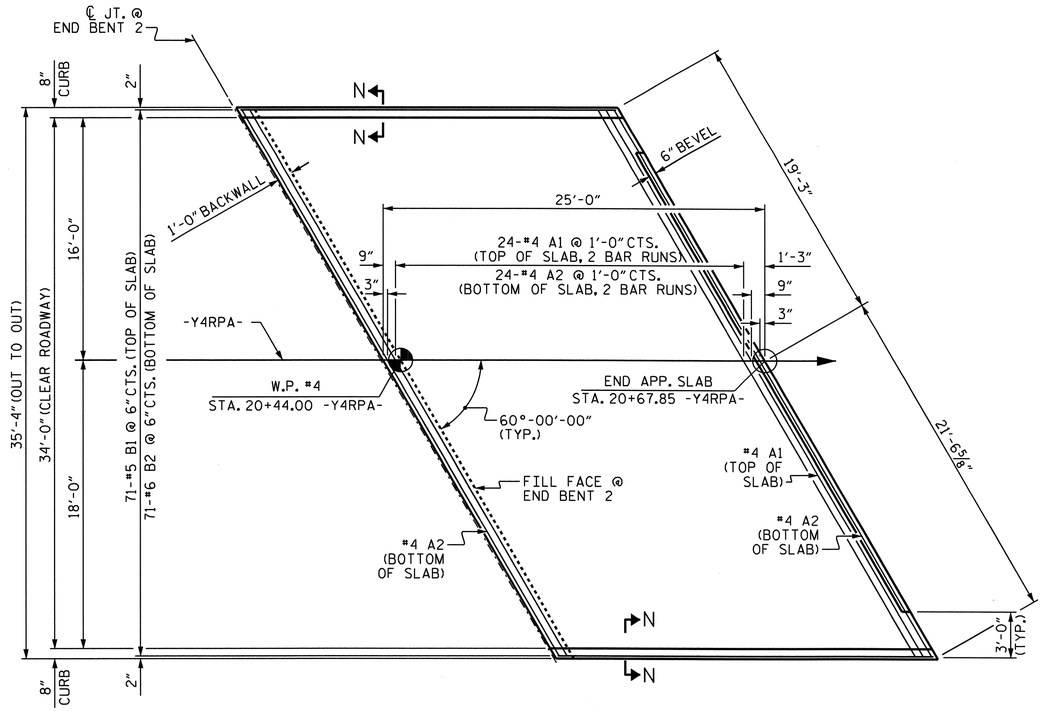


PLAN @ END BENT 2

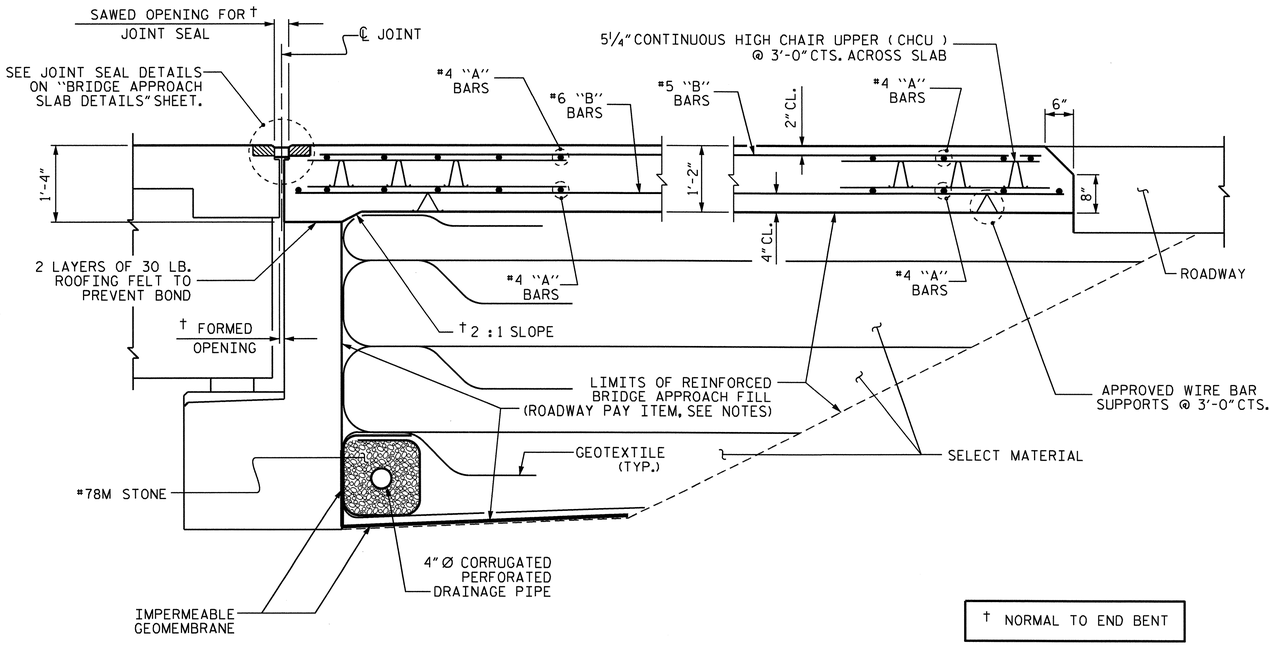


† NORMAL TO END BENT

SECTION THRU SLAB

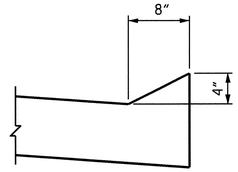


SECTION N-N

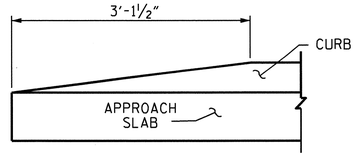


END OF CURB WITHOUT SHOULDER BERM GUTTER

## NOTES

APPROACH SLAB SHALL NOT BE CONSTRUCTED PRIOR TO COMPLETION OF THE BRIDGE DECK.

FOR REINFORCED BRIDGE APPROACH FILL INCLUDING GEOTEXTILE, IMPERMEABLE GEOMEMBRANE, 4" Ø DRAINAGE PIPE, #78M STONE, AND SELECT MATERIAL, SEE ROADWAY PLANS.

AREA BETWEEN THE WINGWALL AND APPROACH SLAB SHALL BE GRADED TO DRAIN THE WATER AWAY FROM THE FILL FACE OF THE BRIDGE AND SHALL BE PAVED. SEE ROADWAY PLANS.

THE JOINT SHALL BE SAWED PRIOR TO THE CASTING OF THE BARRIER RAIL.

WITH FOAM JOINT SEAL

FOR FOAM JOINT SEALS, SEE SPECIAL PROVISIONS.

THE NOMINAL UNCOMPRESSED SEAL WIDTH OF THE FOAM JOINT SEAL SHALL BE 2½".

FOR ELASTOMERIC CONCRETE, SEE SPECIAL PROVISIONS.

## BILL OF MATERIAL

APPROACH SLAB @ END BENT 2

| BAR | NO. | SIZE | TYPE | LENGTH | WEIGHT |
|---|---|---|---|---|---|
| * A1 | 50 | #4 | STR | 21'-6" | 718 |
| A2 | 52 | #4 | STR | 21'-1" | 732 |
| | | | | | |
| * B1 | 71 | #5 | STR | 23'-9" | 1759 |
| B2 | 71 | #6 | STR | 24'-7" | 2622 |
| | | | | | |
| REINFORCING STEEL | | | | LBS. | 3354 |
| * EPOXY COATED REINFORCING STEEL | | | | LBS. | 2477 |
| | | | | | |
| CLASS AA CONCRETE | | | | CU. YDS. | 38.5 |

## SPLICE LENGTHS

| BAR SIZE | EPOXY COATED | UNCOATED |
|---|---|---|
| #4 | 2'-0" | 1'-9" |
| #5 | 2'-6" | 2'-2" |
| #6 | 3'-10" | 2'-7" |

| | | | |
|---|---|---|---|
| ASSEMBLED BY : D. R. WITHROW | DATE : 11/25/09 | | |
| CHECKED BY : R.P. PATEL | DATE : 09/08/10 | | |
| DRAWN BY : EEM 3/95 | REV. 5/7/03R | RWW/JTE | |
| CHECKED BY : VAP 3/95 | REV. 5/1/06RR | KMM/GM | |
| | REV. 10/1/11 | MAA/GM | |

28-DEC-2011 12:47
R:\Structures\Frye\str04\rwithrow\Microstation\I3819a_SD_AS.dgn
wparker

PROJECT NO. I-3819A

IREDELL COUNTY

STATION: 19+31.50-Y4RPA-

SHEET 2 OF 3

STATE OF NORTH CAROLINA
DEPARTMENT OF TRANSPORTATION
RALEIGH

STANDARD

# BRIDGE APPROACH SLAB FOR FLEXIBLE PAVEMENT AT END BENT 2

NORTH CAROLINA PROFESSIONAL SEAL 29048 ENGINEER RAMAN P. PATEL 1/3/12

| REVISIONS | | | | | | SHEET NO. |
|---|---|---|---|---|---|---|
| NO. | BY: | DATE: | NO. | BY: | DATE: | S-180 |
| 1 | | | 3 | | | TOTAL SHEETS |
| 2 | | | 4 | | | 382 |

STR. #4

STD. NO. BAS2

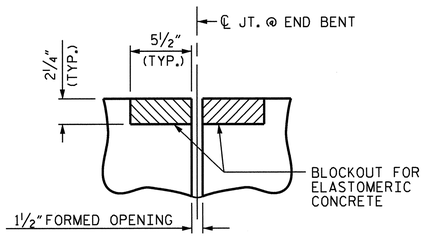


SECTION C-C

FOAM JOINT SEAL
(PRE-SAWED ELASTOMERIC CONCRETE DIMENSIONS)

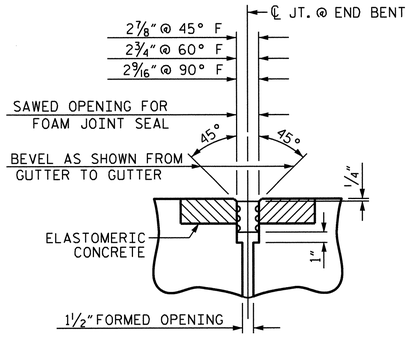


SECTION C-C

FOAM JOINT SEAL
( EXPANSION )

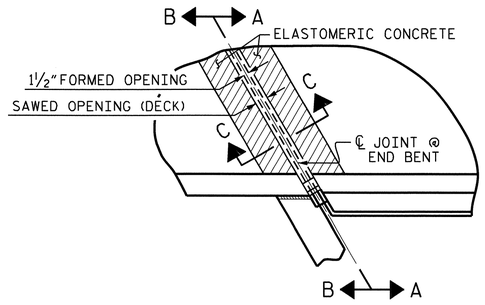


PLAN

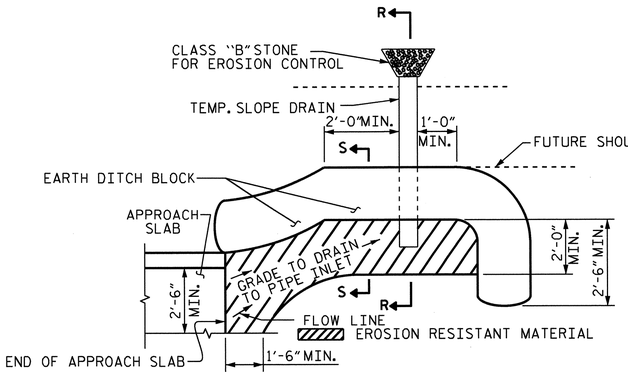


NOTE: IMMEDIATELY AFTER THE CONSTRUCTION OF THE APPROACH SLAB, THE CONTRACTOR SHALL PROVIDE TEMPORARY BERM AND SLOPE DRAIN. CONTRACTOR SHALL GRADE TO PIPE INLET AND PROVIDE EROSION RESISTANT MATERIAL AS SHOWN. THE EROSION RESISTANT MATERIAL SHALL BE EITHER 1) ASPHALT PLANT MIX, TYPE 1 OR TYPE 2, MIN. 2" DEPTH, 2) EROSION CONTROL MAT, OR 3) CONCRETE, AS DIRECTED BY THE ENGINEER. THE SLOPE DRAIN SHALL CONSIST OF A NON-PERFORATED TEMPORARY DRAINAGE PIPE, 12 INCHES IN DIAMETER.

PLAN VIEW

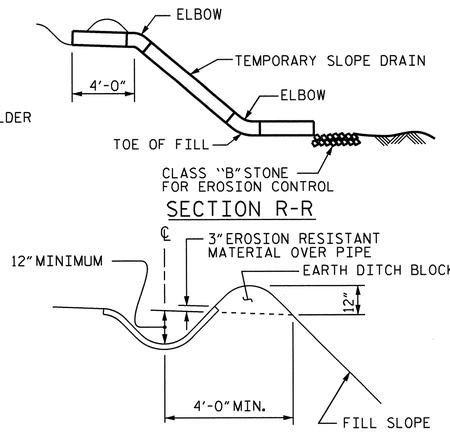


SECTION R-R

SECTION S-S

# TEMPORARY BERM AND SLOPE DRAIN DETAILS

(TO BE USED WHEN SHOULDER BERM GUTTER IS REQUIRED)

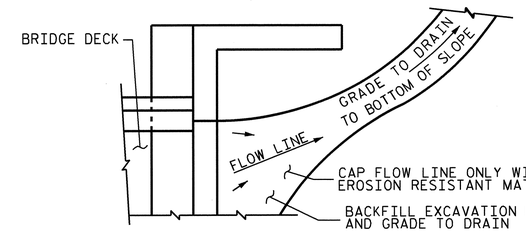


NOTE: IF THE APPROACH SLAB IS NOT CONSTRUCTED IMMEDIATELY AFTER THE BACKFILLING OF THE END BENT EXCAVATION, GRADE TO DRAIN TO THE BOTTOM OF THE SLOPE AND PROVIDE EROSION RESISTANT MATERIAL, SUCH AS FIBERGLASS ROVING OR AS DIRECTED BY THE ENGINEER TO PREVENT SOIL EROSION AND TO PROTECT THE AREA ADJACENT TO THE STRUCTURE. THE CONTRACTOR WILL BE REQUIRED TO REMOVE THESE MATERIALS PRIOR TO CONSTRUCTION OF THE APPROACH SLAB.

TEMPORARY DRAINAGE DETAIL

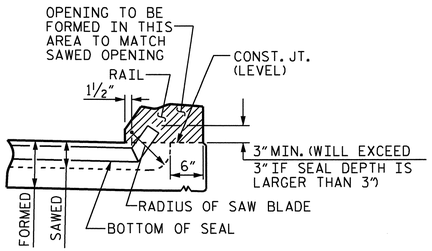


SECTION A-A

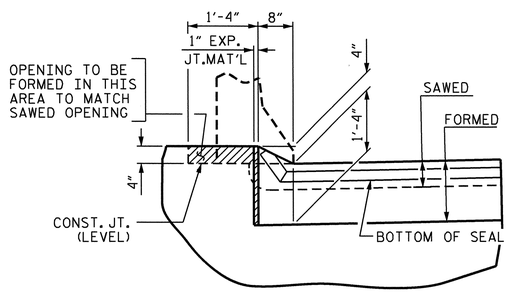


SECTION B-B

| ELASTOMERIC CONCRETE | |
|---|---|
| END BENT | ELASTOMERIC CONCRETE * (CU. FT.) |
| 1 | 7.2 |
| 2 | 7.2 |
| TOTAL | 14.4 |

* BASED ON THE MINIMUM BLOCKOUT SHOWN.

# JOINT SEAL DETAILS @ END BENT

FOAM JOINT SEAL TO BE CUT, HEAT WELDED AND TURNED UP PARALLEL TO SLOPED FACE OF THE BARRIER RAIL.

THE JOINT SHALL BE SAWED PRIOR TO THE CASTING OF THE BARRIER RAIL.

| | | | |
|---|---|---|---|
| ASSEMBLED BY : D.R. WITHROW | | DATE : 11/08/10 | |
| CHECKED BY : R. P. PATEL | | DATE : 3/15/10 | |
| DRAWN BY : FCJ 11/88 | REV. 5/7/03 | RWW/JTE | |
| CHECKED BY : ARB 11/88 | REV. 5/1/06RRR | MAA/KMM | |
| | REV. 10/1/11 | MAA/GM | |

28-DEC-2011 12:47
R:\Structures\Frye\str04\rwithrow\Microstation\I3819a_SD_AS.dgn
wparker

PROJECT NO. I-3819A

IREDELL COUNTY

STATION: 19+31.50-Y4RPA-

SHEET 3 OF 3

STATE OF NORTH CAROLINA
DEPARTMENT OF TRANSPORTATION
RALEIGH

STANDARD

# BRIDGE APPROACH SLAB DETAILS

NORTH CAROLINA PROFESSIONAL SEAL 29048 ENGINEER RAMAN P. PATEL
1/3/12

| REVISIONS | | | | | | SHEET NO. |
|---|---|---|---|---|---|---|
| NO. | BY: | DATE: | NO. | BY: | DATE: | S-181 |
| 1 | | | 3 | | | TOTAL SHEETS |
| 2 | | | 4 | | | 382 |

STR. #4 STD. NO. BAS4

**F.A. PROJ. NO. IMF-040-2(145)152**

16+20 16+40 16+60 16+80 17+00 17+20 17+40 17+60 17+80 18+00 18+20 18+40 18+60

+2.3533% -4.2682%

PI = 19+36.00
EL = 808.040
VC = 580.00'

## GRADE DATA -Y4RPD-

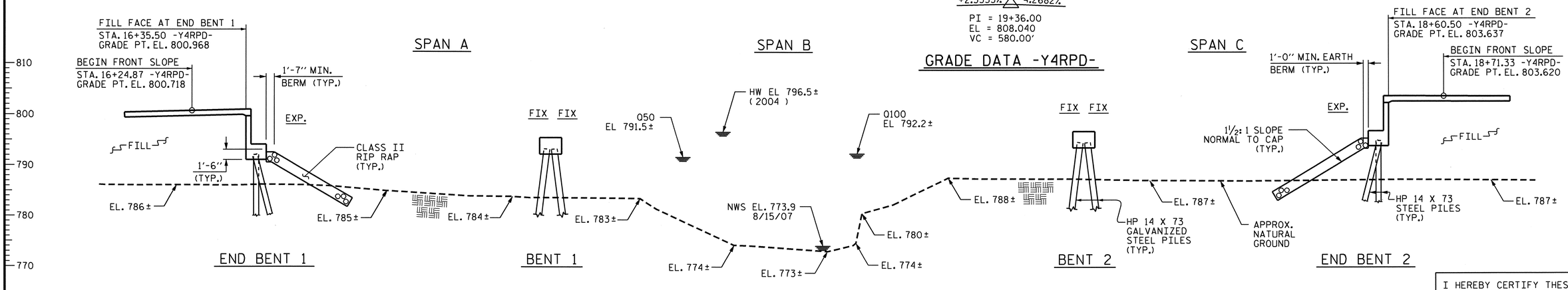


I HEREBY CERTIFY THESE PLANS ARE THE AS-BUILT PLANS

## SECTION ALONG -Y4RPD-

(SECTIONS AT END BENTS & BENTS ARE AT RIGHT ANGLES)

## PLAN

(FOR CLARITY, PILES ARE NOT SHOWN.)

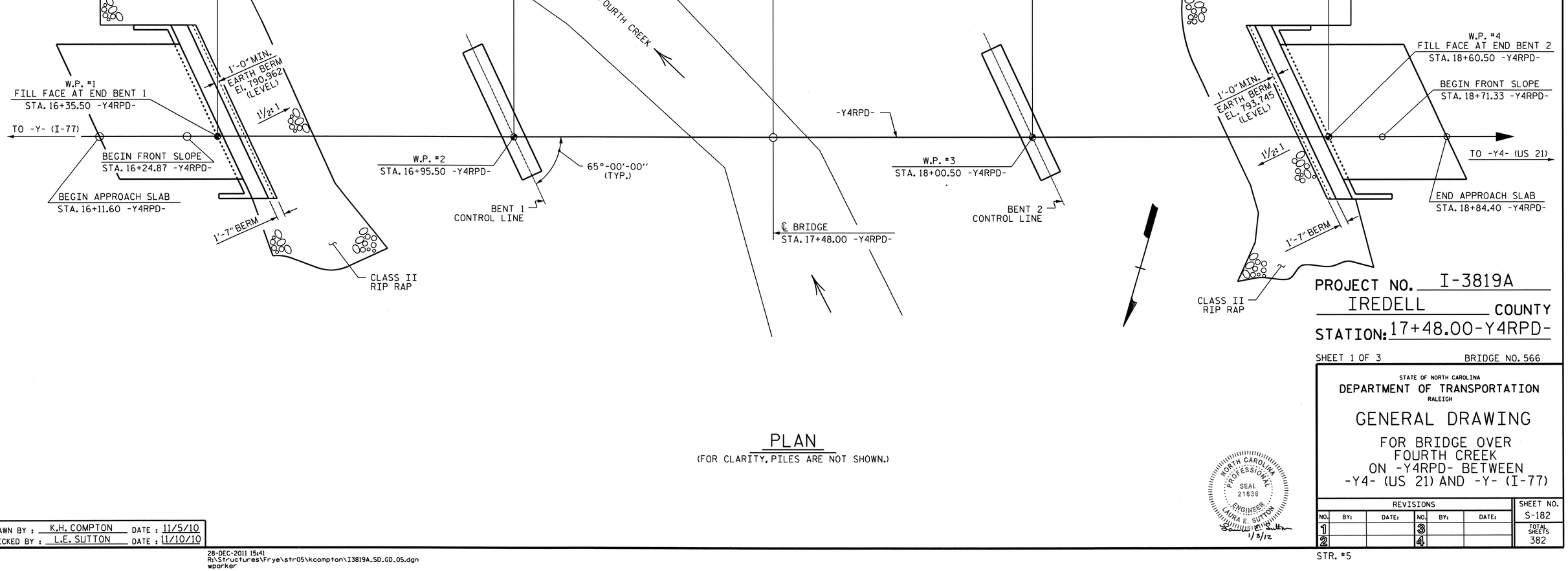


PROJECT NO. I-3819A

IREDELL COUNTY

STATION: 17+48.00-Y4RPD-

SHEET 1 OF 3 BRIDGE NO. 566

STATE OF NORTH CAROLINA
**DEPARTMENT OF TRANSPORTATION**
RALEIGH

# GENERAL DRAWING

FOR BRIDGE OVER
FOURTH CREEK
ON -Y4RPD- BETWEEN
-Y4- (US 21) AND -Y- (I-77)

| REVISIONS | | | | | | SHEET NO. |
|---|---|---|---|---|---|---|
| NO. | BY: | DATE: | NO. | BY: | DATE: | S-182 |
| 1 | | | 3 | | | TOTAL SHEETS |
| 2 | | | 4 | | | 382 |

STR. #5

NORTH CAROLINA PROFESSIONAL SEAL 21638 ENGINEER LAURA E. SUTTON
1/3/12

DRAWN BY : K.H. COMPTON DATE : 11/5/10
CHECKED BY : L.E. SUTTON DATE : 11/10/10

28-DEC-2011 15:41
R:\Structures\Frye\str05\kcompton\I3819A_SD_GD_05.dgn
wparker

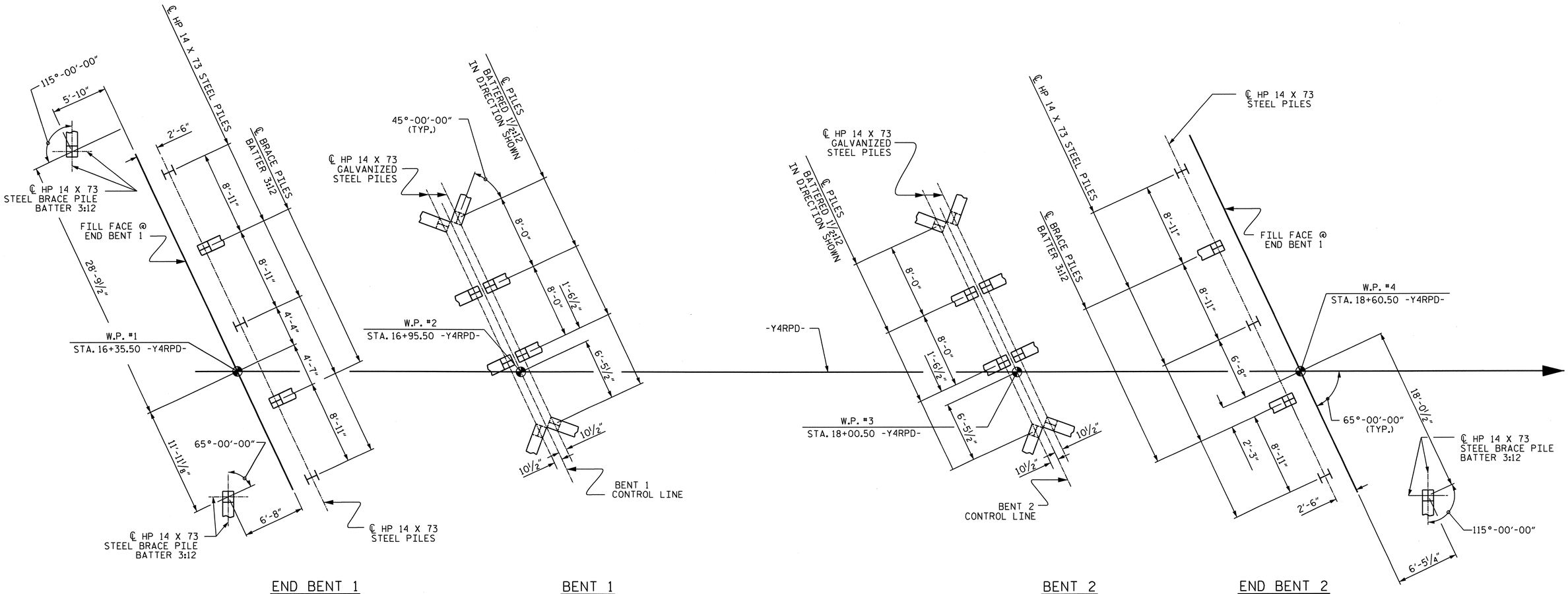


# FOUNDATION LAYOUT

(DIMENSIONS LOCATING PILES ARE SHOWN TO PILE CENTERLINE)

## NOTES:

FOR PILES, SEE SECTION 450 OF THE STANDARD SPECIFICATIONS.

PILES AT END BENTS 1 AND 2 ARE DESIGNED FOR A FACTORED RESISTANCE OF 95 TONS PER PILE.

DRIVE PILES AT END BENTS 1 AND 2 TO A REQUIRED DRIVING RESISTANCE OF 160 TONS PER PILE.

PILES AT BENTS 1 AND 2 ARE DESIGNED FOR A FACTORED RESISTANCE OF 120 TONS PER PILE.

DRIVE PILES AT BENTS 1 AND 2 TO A REQUIRED DRIVING RESISTANCE OF 200 TONS PER PILE.

THE SCOUR CRITICAL ELEVATIONS FOR BENTS 1 AND 2 ARE ELEVATIONS 777 FT. AND 778 FT. RESPECTIVELY. SCOUR CRITICAL ELEVATIONS ARE USED TO MONITOR POSSIBLE SCOUR PROBLEMS DURING THE LIFE OF THE STRUCTURE.

THE CONTRACTOR'S ATTENTION IS CALLED TO THE FACT THAT DUE TO THE PROXIMITY OF OVERHEAD POWER TRANSMISSION LINES, MULTIPLE SPLICES MAY BE REQUIRED TO INSTALL PILES AT END BENT 1.

NORTH CAROLINA PROFESSIONAL SEAL 21638 ENGINEER LAURA E. SUTTON
1/3/12

PROJECT NO. I-3819A
IREDELL COUNTY
STATION: 17+48.00-Y4RPD-

SHEET 2 OF 3

STATE OF NORTH CAROLINA
DEPARTMENT OF TRANSPORTATION
RALEIGH

GENERAL DRAWING
FOR BRDIGE OVER
FOURTH CREEK
ON -Y4RPD- BETWEEN
-Y4- (US 21) AND -Y- (I-77)

| REVISIONS | | | | | | SHEET NO. |
|---|---|---|---|---|---|---|
| NO. | BY: | DATE: | NO. | BY: | DATE: | S-183 |
| 1 | | | 3 | | | TOTAL SHEETS |
| 2 | | | 4 | | | 382 |

DRAWN BY : K.H. COMPTON DATE : 11/2/10
CHECKED BY : L.E. SUTTON DATE : 11/10/10

28-DEC-2011 15:41
R:\Structures\Frye\str05\kcompton\I3819A_SD_GD_05.dgn
wparker

STR. #5

BM #5: CHISELED SQUARE IN SOUTH END OF SIGN, 318' RIGHT, STA. 24+07 -BY4-, EL. 824.70.

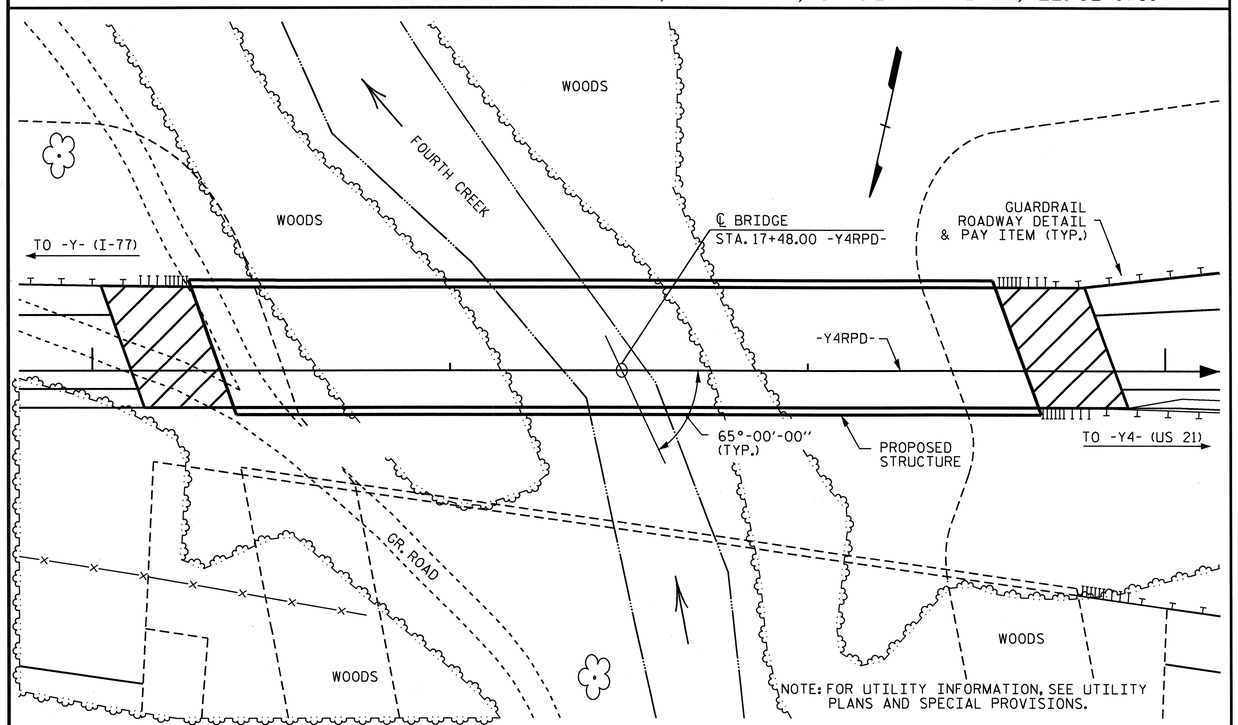


LOCATION SKETCH

## HYDRAULIC DATA

| | |
|---|---|
| DESIGN DISCHARGE | = 6458 CFS |
| FREQUENCY OF DESIGN FLOOD | = 50 YEARS |
| DESIGN HIGH WATER ELEVATION | = 791.5 |
| DRAINAGE AREA | = 27.7 SQ. MI. |
| BASE DISCHARGE (Q100) | = 7137 CFS |
| BASE HIGH WATER ELEVATION | = 792.2 |

## OVERTOPPING FLOOD DATA

| | |
|---|---|
| OVERTOPPING DISCHARGE | = +7137 CFS |
| FREQUENCY OF OVERTOPPING FLOOD | = +100 YEARS |
| OVERTOPPING FLOOD ELEVATION | = ✱ 792.5 |

✱ STA. 23+72 -Y4RPD-

## NOTES

ASSUMED LIVE LOAD = HL- 93 OR ALTERNATE LOADING.

FOR OTHER DESIGN DATA AND GENERAL NOTES, SEE SHEET SN.

FOR EROSION CONTROL MEASURES, SEE EROSION CONTROL PLANS.

THIS BRIDGE HAS BEEN DESIGNED IN ACCORDANCE WITH THE AASHTO LRFD BRIDGE DESIGN SPECIFICATIONS.

PRESTRESSED CONCRETE DECK PANELS MAY BE USED IN LIEU OF METAL STAY-IN-PLACE FORMS IN ACCORDANCE WITH ARTICLE 420-3 OF THE STANDARD SPECIFICATIONS.

REMOVABLE FORMS MAY BE USED IN LIEU OF METAL STAY-IN-PLACE FORMS IN ACCORDANCE WITH ARTICLE 420-3 OF THE STANDARD SPECIFICATIONS.

THE STRUCTURE HAS BEEN DESIGNED IN ACCORDANCE WITH HEC 18, "EVALUATING SCOUR AT BRIDGES", MAY, 2001.

THE CONTRACTOR SHALL PROVIDE INDEPENDENT ASSURANCE SAMPLES OF REINFORCING STEEL AS FOLLOWS: FOR PROJECTS REQUIRING UP TO 400 TONS OF REINFORCING STEEL, ONE 30 INCH SAMPLE OF EACH SIZE BAR USED, AND FOR PROJECTS REQUIRING OVER 400 TONS OF REINFORCING STEEL, TWO 30 INCH SAMPLES OF EACH SIZE BAR USED. THE BARS FROM WHICH THE SAMPLES ARE TAKEN MUST THEN BE SPLICED WITH REPLACEMENT BARS OF THE SIZE AND LENGTH OF THE SAMPLE PLUS A MINIMUM LAP SPLICE OF THIRTY BAR DIAMETERS. PAYMENT FOR THE SAMPLES OF REINFORCING STEEL SHALL BE CONSIDERED INCIDENTAL TO VARIOUS PAY ITEMS.

NEEDLE BEAMS WILL NOT BE ALLOWED UNLESS OTHERWISE CALLED FORON THE PLANS OR APPROVED BY THE ENGINEER.

FOR INTERIOR BENTS 1 & 2, ONLY PARTIAL GALVANIZING OF THE PILES IS REQUIRED. SEE INTERIOR BENT SHEET(S) FOR REQUIRED GALVANIZED LENGTHS. PAYMENT FOR PARTIALLY GALVANIZED PILES WILL BE UNDER THE CONTRACT UNIT PRICE FOR GALVANIZED STEEL PILES.

THE CLASS AA CONCRETE IN THE BRIDGE DECK SHALL CONTAIN FLY ASH OR GROUND GRANULATED BLAST FURNACE SLAG AT THE SUBSTITUTION RATE SPECIFIED IN ARTICLE 1024-1 AND IN ACCORDANCE WITH ARTICLES 1024-5 AND 1024-6 OF THE STANDARD SPECIFICATIONS. NO PAYMENT WILL BE MADE FOR THIS SUBSTITUTION AS IT IS CONSIDERED INCIDENTAL TO THE COST OF THE REINFORCED CONCRETE DECK SLAB.

FOR SUBMITTAL OF WORKING DRAWINGS, SEE SPECIAL PROVISIONS.

FOR FALSEWORK AND FORMWORK, SEE SPECIAL PROVISIONS.

FOR CRANE SAFETY, SEE SPECIAL PROVISIONS.

FOR GROUT FOR STRUCTURES, SEE SPECIAL PROVISIONS.

FOR FOAM JOINT SEALS, SEE SPECIAL PROVISIONS.

FOR ELASTOMERIC CONCRETE, SEE SPECIAL PROVISIONS.

## TOTAL BILL OF MATERIAL

| | REINFORCED CONCRETE DECK SLAB | GROOVING BRIDGE FLOORS | CLASS A CONCRETE | BRIDGE APPROACH SLABS | REINFORCING STEEL | MODIFIED 63" PRESTRESSED CONCRETE GIRDERS | | HP 14 X 73 STEEL PILES | | HP 14 X 73 GALVANIZED STEEL PILES | | CONCRETE BARRIER RAIL | RIP RAP CLASS II (2'-0" THICK) | GEOTEXTILE FOR DRAINAGE | ELASTOMERIC BEARINGS | FOAM JOINT SEALS |
|---|---|---|---|---|---|---|---|---|---|---|---|---|---|---|---|---|
| | SQ. FT. | SQ. FT. | CU. YDS. | LUMP SUM | LBS. | NO. | LIN. FT. | NO. | LIN. FT. | NO. | LIN. FT. | LIN. FT. | TONS | SQ. YDS. | LUMP SUM | LUMP SUM |
| SUPERSTRUCTURE | 6,513 | 6,172 | | | | 12 | 874.75 | | | | | 445.40 | | | LUMP SUM | LUMP SUM |
| END BENT 1 | | | 34.6 | | 4,112 | | | 7 | 455 | | | | 235 | 260 | | |
| BENT 1 | | | 14.9 | | 2,395 | | | | | 8 | 560 | | | | | |
| BENT 2 | | | 14.7 | | 2,395 | | | | | 8 | 480 | | | | | |
| END BENT 2 | | | 33.7 | | 4,064 | | | 6 | 330 | | | | 310 | 345 | | |
| TOTAL | 6,513 | 6,172 | 97.9 | LUMP SUM | 12,966 | 12 | 874.75 | 13 | 785 | 16 | 1040 | 445.40 | 545 | 605 | LUMP SUM | LUMP SUM |

PROJECT NO. I-3819A

IREDELL COUNTY

STATION: 17+48.00-Y4RPD-

SHEET 3 OF 3

STATE OF NORTH CAROLINA
DEPARTMENT OF TRANSPORTATION
RALEIGH

# GENERAL DRAWING

FOR BRIDGE OVER
FOURTH CREEK
ON -Y4RPD- BETWEEN
-Y4- (US 21) AND -Y- (I-77)

| REVISIONS | | | | | | SHEET NO. |
|---|---|---|---|---|---|---|
| NO. | BY: | DATE: | NO. | BY: | DATE: | S-184 |
| 1 | | | 3 | | | TOTAL SHEETS |
| 2 | | | 4 | | | 382 |

NORTH CAROLINA PROFESSIONAL SEAL 21638 ENGINEER LAURA E. SUTTON
1/12/12

DRAWN BY : K.H. COMPTON DATE : 11/4/10
CHECKED BY : L.E. SUTTON DATE : 11/10/10

10-JAN-2012 12:47
R:\Structures\Frye\str05\kcompton\I3819A_SD_GD_05.dgn
wparker

STR. #5

## NOTES:

THE CONTRACTOR SHALL MAINTAIN A 15' MINIMUM CLEARANCE BETWEEN THE TRANSMISSION LINES AND ANY PART OF ANY CONSTRUCTION EQUIPMENT OR MATERIALS UNLESS THE LINES HAVE BEEN DE-ENERGIZED.

IT WAS PARTLY SUNNY AND 66° ON THE DAY THAT THE TRANSMISSION LINE ELEVATIONS WERE SURVEYED.

THE CONTRACTOR SHALL USE EXTREME CARE TO AVOID DAMAGING THE PROPOSED SEWER LINE WHEN DRIVING THE TEMPORARY SHORING AT END BENT 2. THE CONTRACTOR SHALL DETERMINE THE ELEVATION OF THE PROPOSED SEWER LINE PRIOR TO DRIVING THE TEMPORARY SHORING TO DETERMINE THE MAXIMUM DEPTH THAT THE SHORING MAY BE DRIVEN.

FOR UTILITY INFORMATION, SEE UTILITY PLANS AND SPECIAL PROVISIONS.

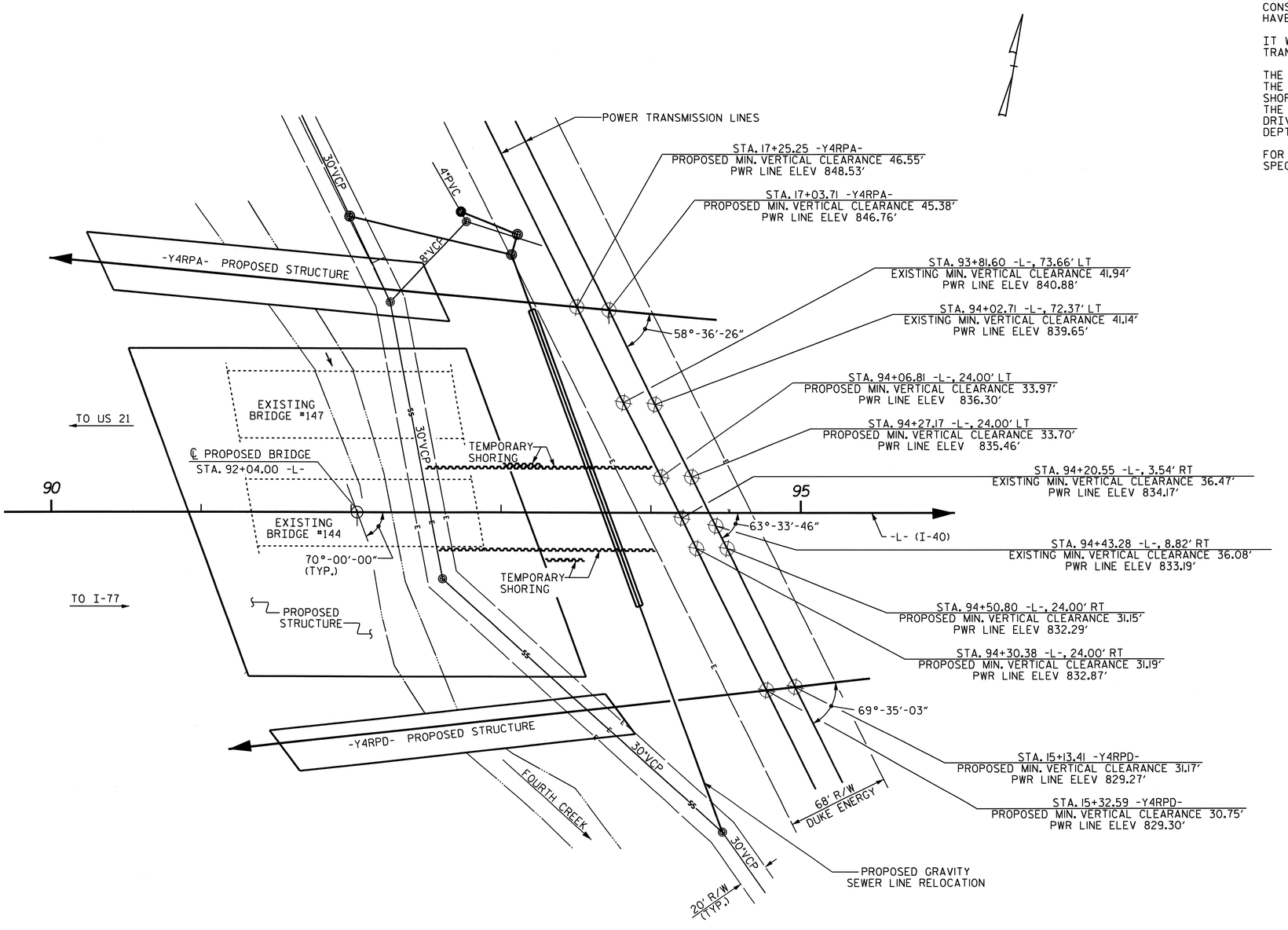


PROJECT NO. I-3819A

IREDELL COUNTY

STATION: 17+48.00 -Y4RPD-

NORTH CAROLINA PROFESSIONAL SEAL 21545 ENGINEER STEVEN L. WANCE

01/09/12

STATE OF NORTH CAROLINA
DEPARTMENT OF TRANSPORTATION
RALEIGH

# UTILITY DRAWING

FOR BRIDGE ON -Y4RPD- OVER FOURTH CREEK BETWEEN US 21 AND I-77

| REVISIONS | | | | | | SHEET NO. |
|---|---|---|---|---|---|---|
| NO. | BY: | DATE: | NO. | BY: | DATE: | S-184A |
| 1 | | | 3 | | | TOTAL SHEETS |
| 2 | | | 4 | | | 382 |

DRAWN BY : S. WANCE PE DATE : 01/12
CHECKED BY : J. M. BAILEY DATE : 01/12

09-JAN-2012 17:21
R:\Structures\Frye\str05\SWANcePE\UtilityClearance\I3819A_Str5_powerlineclearance.dgn
swance

STR. 5

# LOAD AND RESISTANCE FACTOR RATING (LRFR) SUMMARY FOR PRESTRESSED CONCRETE GIRDERS

| LEVEL | | VEHICLE | WEIGHT (W) (TONS) | CONTROLLING LOAD RATING (#) | MINIMUM RATING FACTORS (RF) | TONS = W x RF | STRENGTH I LIMIT STATE | | | | | | | | | | SERVICE III LIMIT STATE | | | | | | COMMENT NUMBER |
|---|---|---|---|---|---|---|---|---|---|---|---|---|---|---|---|---|---|---|---|---|---|---|---|
| | | | | | | | LIVE-LOAD FACTORS ($\gamma_{LL}$) | MOMENT | | | | | SHEAR | | | | | LIVE-LOAD FACTORS ($\gamma_{LL}$) | MOMENT | | | | | |
| | | | | | | | | DISTRIBUTION FACTORS (DF) | RATING FACTOR | SPAN | GIRDER LOCATION | DISTANCE FROM LEFT END OF SPAN (ft) | DISTRIBUTION FACTORS (DF) | RATING FACTOR | SPAN | GIRDER LOCATION | DISTANCE FROM LEFT END OF SPAN (ft) | | DISTRIBUTION FACTORS (DF) | RATING FACTOR | SPAN | GIRDER LOCATION | DISTANCE FROM LEFT END OF SPAN (ft) | |
| DESIGN LOAD RATING | | HL-93 (INVENTORY) | N/A | 1 | 1.11 | -- | 1.75 | 0.755 | 1.50 | B | ER | 51.375 | 0.805 | 1.15 | B | ER | 10.275 | 0.80 | 0.755 | 1.11 | B | ER | 51.375 | |
| | | HL-93 (OPERATING) | N/A | | 1.48 | -- | 1.35 | 0.755 | 1.94 | B | ER | 51.375 | 0.805 | 1.49 | B | ER | 10.275 | N/A | -- | -- | -- | -- | -- | |
| | | HS-20 (INVENTORY) | 36.000 | 2 | 1.54 | 55.4 | 1.75 | 0.755 | 2.09 | A | ER | 27.92 | 0.805 | 1.54 | B | ER | 10.275 | 0.80 | 0.755 | 1.56 | B | ER | 51.375 | |
| | | HS-20 (OPERATING) | 36.000 | | 2.00 | 71.8 | 1.35 | 0.755 | 2.71 | A | ER | 27.92 | 0.805 | 2.00 | B | ER | 10.275 | N/A | -- | -- | -- | -- | -- | |
| LEGAL LOAD RATING | SINGLE VEHICLE (SV) | SH | 12.500 | | 4.03 | 50.4 | 1.40 | 0.755 | 6.05 | A | ER | 27.92 | 0.805 | 5.14 | B | ER | 10.275 | 0.80 | 0.755 | 4.03 | B | ER | 51.375 | |
| | | S3C | 21.500 | | 2.36 | 50.6 | 1.40 | 0.755 | 3.55 | A | ER | 27.92 | 0.805 | 3.01 | B | ER | 10.275 | 0.80 | 0.755 | 2.36 | B | ER | 51.375 | |
| | | S3A | 22.750 | | 2.23 | 50.8 | 1.40 | 0.755 | 3.37 | A | ER | 27.92 | 0.805 | 2.86 | B | ER | 10.275 | 0.80 | 0.755 | 2.23 | B | ER | 51.375 | |
| | | S4A | 26.750 | | 1.95 | 52.2 | 1.40 | 0.755 | 3.03 | A | ER | 27.92 | 0.805 | 2.48 | B | ER | 10.275 | 0.80 | 0.755 | 1.95 | B | ER | 51.375 | |
| | | S5A | 30.500 | | 1.72 | 52.5 | 1.40 | 0.755 | 2.69 | A | ER | 27.92 | 0.805 | 2.25 | B | ER | 10.275 | 0.80 | 0.755 | 1.72 | B | ER | 51.375 | |
| | | S6A | 34.500 | | 1.55 | 53.6 | 1.40 | 0.755 | 2.48 | A | ER | 27.92 | 0.805 | 2.02 | B | ER | 10.275 | 0.80 | 0.755 | 1.56 | B | ER | 51.375 | |
| | | S7B | 38.500 | | 1.41 | 54.3 | 1.40 | 0.755 | 2.28 | A | ER | 27.92 | 0.805 | 1.88 | B | ER | 10.275 | 0.80 | 0.755 | 1.41 | B | ER | 51.375 | |
| | | S7A | 40.000 | 3 | 1.39 | 55.5 | 1.40 | 0.755 | 2.30 | A | ER | 27.92 | 0.805 | 1.89 | B | ER | 10.275 | 0.80 | 0.755 | 1.39 | B | ER | 51.375 | |
| | TRUCK TRACTOR SEMI-TRAILER (TTST) | T4A | 28.250 | | 1.91 | 54.0 | 1.40 | 0.755 | 3.07 | A | ER | 27.92 | 0.805 | 2.40 | B | ER | 10.275 | 0.80 | 0.755 | 1.91 | B | ER | 51.375 | |
| | | T5B | 32.000 | | 1.68 | 53.8 | 1.40 | 0.755 | 2.69 | A | ER | 27.92 | 0.805 | 2.24 | B | ER | 10.275 | 0.80 | 0.755 | 1.68 | B | ER | 51.375 | |
| | | T6A | 36.000 | | 1.53 | 55.2 | 1.40 | 0.755 | 2.52 | A | ER | 27.92 | 0.805 | 2.04 | B | ER | 10.275 | 0.80 | 0.755 | 1.53 | B | ER | 51.375 | |
| | | T7A | 40.000 | | 1.41 | 56.5 | 1.40 | 0.755 | 2.39 | B | ER | 51.375 | 0.805 | 1.89 | B | ER | 10.275 | 0.80 | 0.755 | 1.41 | B | ER | 51.375 | |
| | | T7B | 40.000 | | 1.49 | 59.6 | 1.40 | 0.755 | 2.51 | B | ER | 51.375 | 0.805 | 1.80 | B | ER | 10.275 | 0.80 | 0.755 | 1.49 | B | ER | 51.375 | |

## LOAD FACTORS:

| DESIGN LOAD RATING FACTORS | LIMIT STATE | $\gamma_{DC}$ | $\gamma_{DW}$ |
|---|---|---|---|
| | STRENGTH I | 1.25 | 1.50 |
| | SERVICE III | 1.00 | 1.00 |

## NOTES:

MINIMUM RATING FACTORS ARE BASED ON THE STRENGTH I AND SERVICE III LIMIT STATES.

ALLOWABLE STRESSES FOR SERVICE III LIMIT STATE ARE AS REQUIRED FOR DESIGN.

(#) CONTROLLING LOAD RATING

(1) DESIGN LOAD RATING (HL-93)

(2) DESIGN LOAD RATING (HS-20)

(3) LEGAL LOAD RATING **

** SEE CHART FOR VEHICLE TYPE

GIRDER LOCATION

I - INTERIOR GIRDER
EL - EXTERIOR LEFT GIRDER
ER - EXTERIOR RIGHTGIRDER

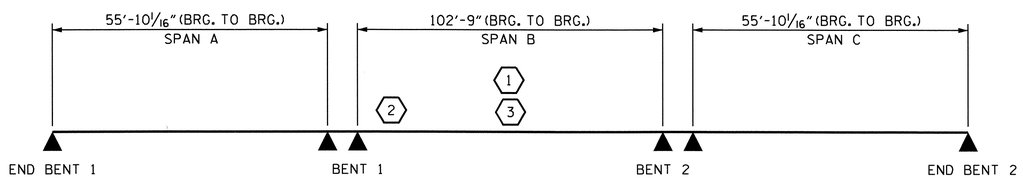


## LRFR SUMMARY

PROJECT NO. I-3819A

IREDELL COUNTY

STATION: 17+48.00-Y4RPD-

STATE OF NORTH CAROLINA
DEPARTMENT OF TRANSPORTATION
RALEIGH

STANDARD

LRFR SUMMARY FOR PRESTRESSED CONCRETE GIRDERS
(INTERSTATE TRAFFIC)

| REVISIONS | | | | | | SHEET NO. |
|---|---|---|---|---|---|---|
| NO. | BY: | DATE: | NO. | BY: | DATE: | S-185 |
| 1 | | | 3 | | | TOTAL SHEETS |
| 2 | | | 4 | | | 382 |

STR. #5 STD. NO. LRFR2

ASSEMBLED BY : K.H. COMPTON DATE : 11/4/10
CHECKED BY : A.C. OUTLAW DATE : 11/10/10
DRAWN BY : MAA 1/08
CHECKED BY : GM/DI 2/08
REV. 11/12/08RR MAA/GM

28-DEC-2011 15:41
R:\Structures\Frye\str05\kcompton\I3819A_SD_GD_LRFR_05.dgn
wparker

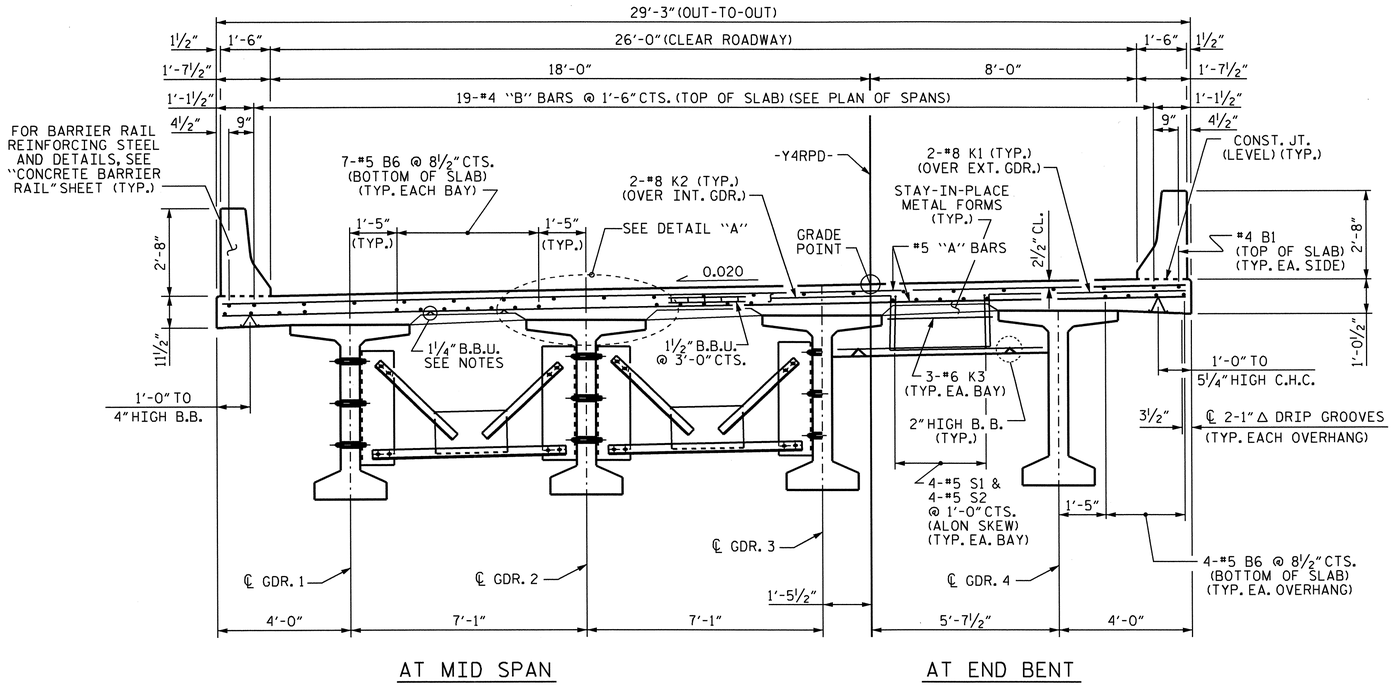


AT MID SPAN AT END BENT

## TYPICAL SECTION

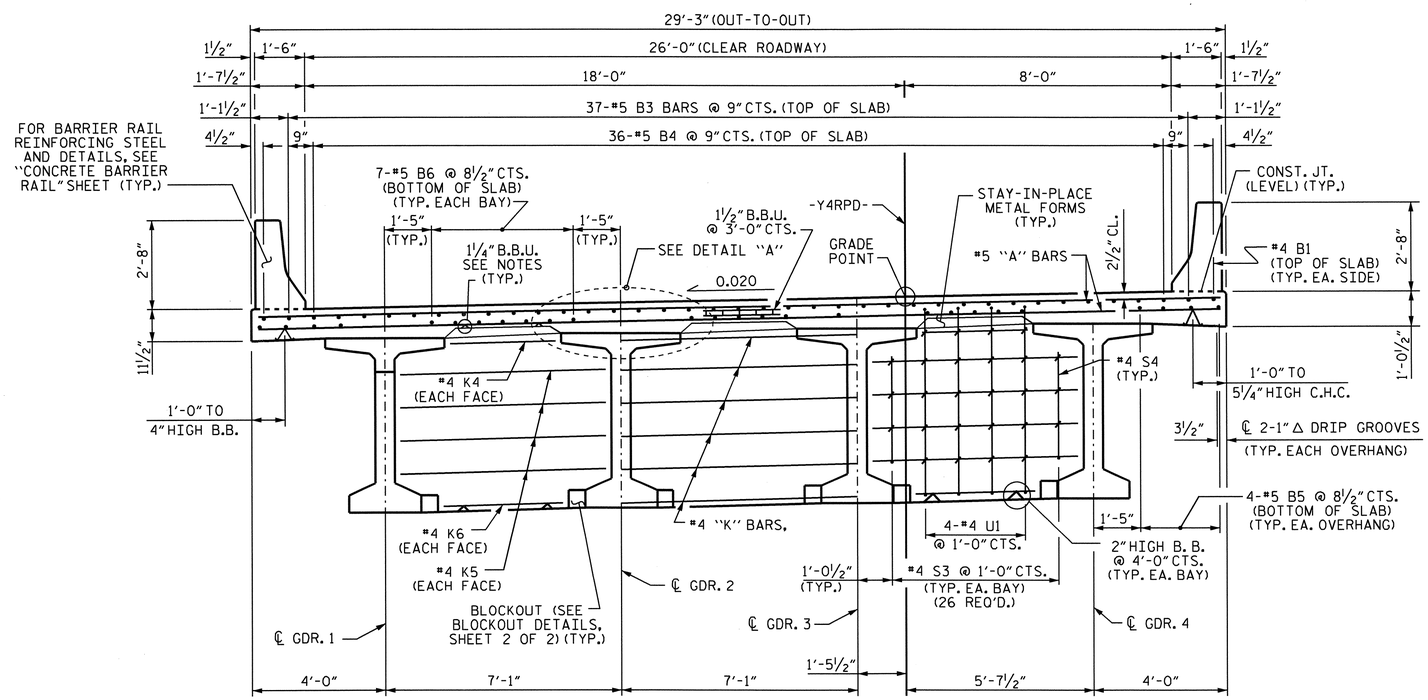


## TYPICAL SECTION
(SHOWING CONTINUOUS BENT DIAPHRAGM)

## NOTES

PROVIDE 1¼" HIGH BEAM BOLSTERS UPPER AT 4'-0" CTS. ATOP THE METAL STAY-IN-PLACE FORMS TO SUPPORT THE BOTTOM MAT OF 'A' BARS. WHEN USING REMOVABLE FORMS, PROVIDE CONTINUOUS HIGH CHAIRS FOR METAL DECK (C.H.C.M.) @ 4'-0" CTS. WITH A HEIGHT TO SUPPORT THE BOTTOM MAT OF 'A' BARS A CLEAR DISTANCE OF 2½" ABOVE THE TOP OF THE REMOVABLE FORM.

LONGITUDINAL STEEL MAY BE SHIFTED SLIGHTLY, AS NECESSARY, TO AVOID INTERFERENCE WITH STIRRUPS IN PRESTRESSED CONCRETE GIRDERS.

BARRIER RAIL IN A CONTINUOUS UNIT SHALL NOT BE CAST UNTIL ALL SLAB CONCRETE IN THE UNIT HAS BEEN CAST AND HAS REACHED A MINIMUM COMPRESSIVE STRENGTH OF 3,000 PSI.

FOR INTERMEDIATE STEEL DIAPHRAGMS, SEE " INTERMEDIATE STEEL DIAPHRAGMS" SHEET.

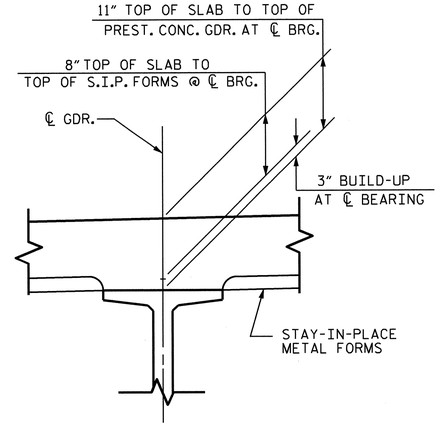


## DETAIL "A"

PROJECT NO. I-3819A
IREDELL COUNTY
STATION: 17+48.00-Y4RPD-

SHEET 1 OF 2

STATE OF NORTH CAROLINA
DEPARTMENT OF TRANSPORTATION
RALEIGH

SUPERSTRUCTURE

TYPICAL SECTION

| REVISIONS | | | | | | SHEET NO. |
|---|---|---|---|---|---|---|
| NO. | BY: | DATE: | NO. | BY: | DATE: | S-186 |
| 1 | | | 3 | | | TOTAL SHEETS |
| 2 | | | 4 | | | 382 |

STR. #5

NORTH CAROLINA PROFESSIONAL SEAL 21638 ENGINEER LAURA E. SUTTON
1/6/12

DRAWN BY : B.N.BARODAWALA DATE : 8-2-10
CHECKED BY : L. E. SUTTON DATE : 11-4-10

28-DEC-2011 15:41
R:\Structures\Frye\str05\bbarodawala\Microstation\I3819A_sd_TS_05.dgn
wparker

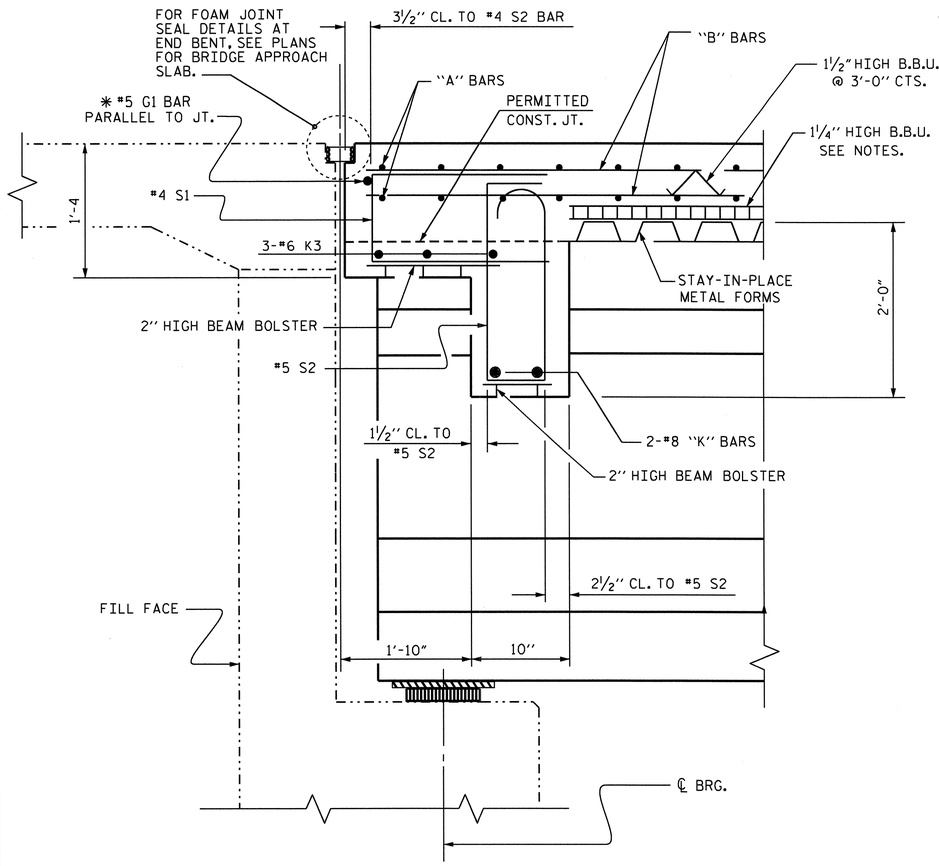


* #5G BAR MAY BE SHIFTED SLIGHTLY, AS NECESSARY, TO CLEAR REINFORCING STEEL AND STIRRUPS.

## SECTION A-A

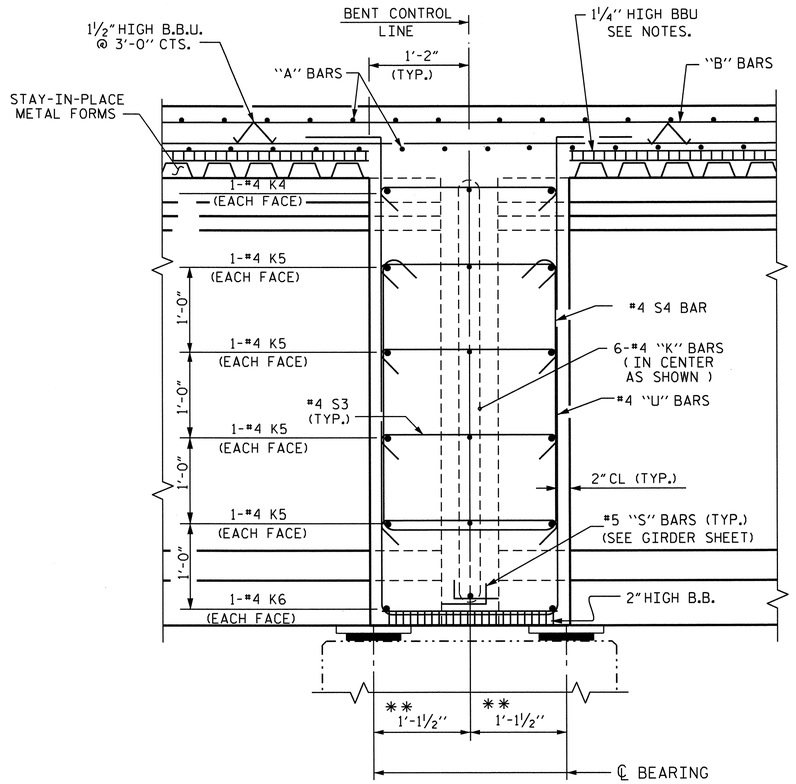


## SECTION B-B

** MEASURED ALONG ℄ GDR.

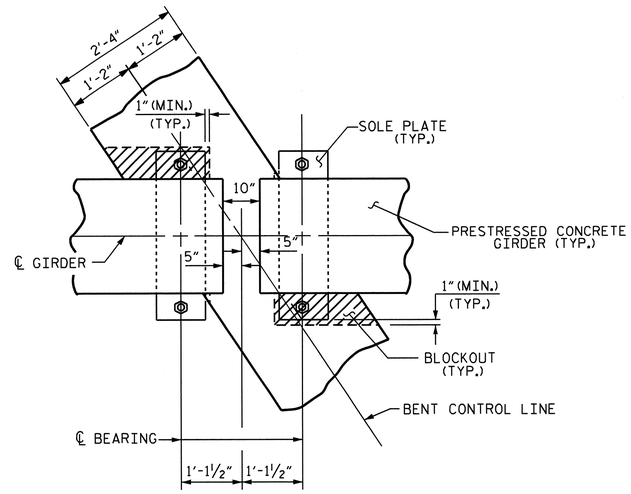


## PLAN

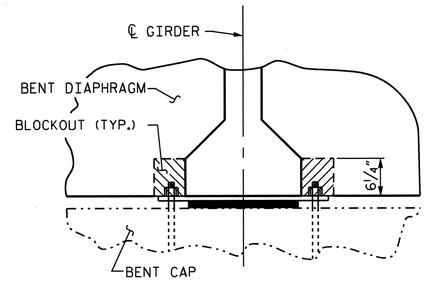


## SECTION

## BENT DIAPHRAGM BLOCKOUT DETAIL

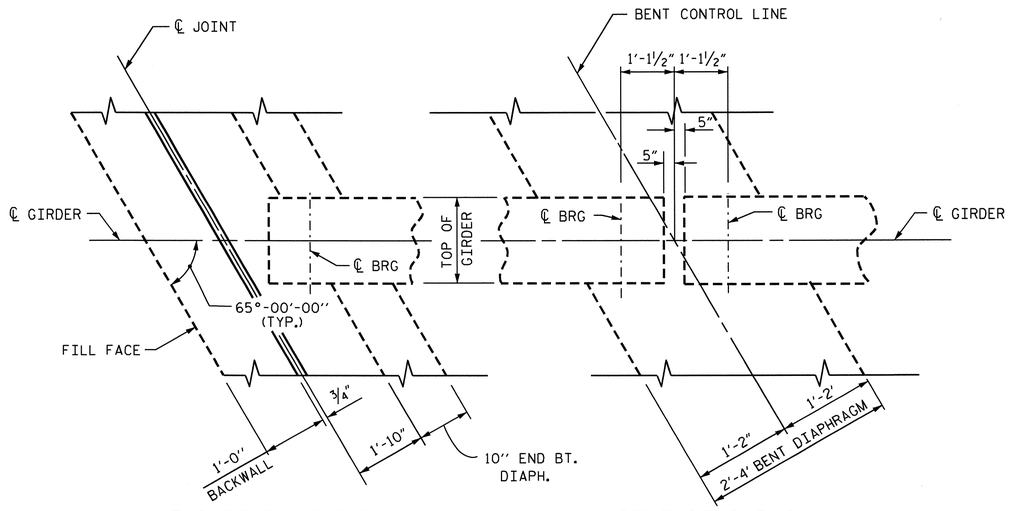


END BENT DIAPHRAGM — BENT DIAPHRAGM

## PLAN

DRAWN BY : B.N.BARODAWALA DATE : 8-2-10
CHECKED BY : L. E. SUTTON DATE : 11-4-10

10-JAN-2012 12:47
R:\Structures\Frye\str05\bbarodawala\Microstation\I3819A_sd_TS_05.dgn
wparker

PROJECT NO. I-3819A
IREDELL COUNTY
STATION: 17+48.00-Y4RPD-

SHEET 2 OF 2

STATE OF NORTH CAROLINA
DEPARTMENT OF TRANSPORTATION
RALEIGH

SUPERSTRUCTURE

# TYPICAL SECTION DETAILS

NORTH CAROLINA PROFESSIONAL SEAL 21638 ENGINEER LAURA E. SUTTON
1/12/12

| REVISIONS | | | | | | SHEET NO. |
|---|---|---|---|---|---|---|
| NO. | BY: | DATE: | NO. | BY: | DATE: | S-187 |
| 1 | | | 3 | | | TOTAL SHEETS |
| 2 | | | 4 | | | 382 |

STR. #5

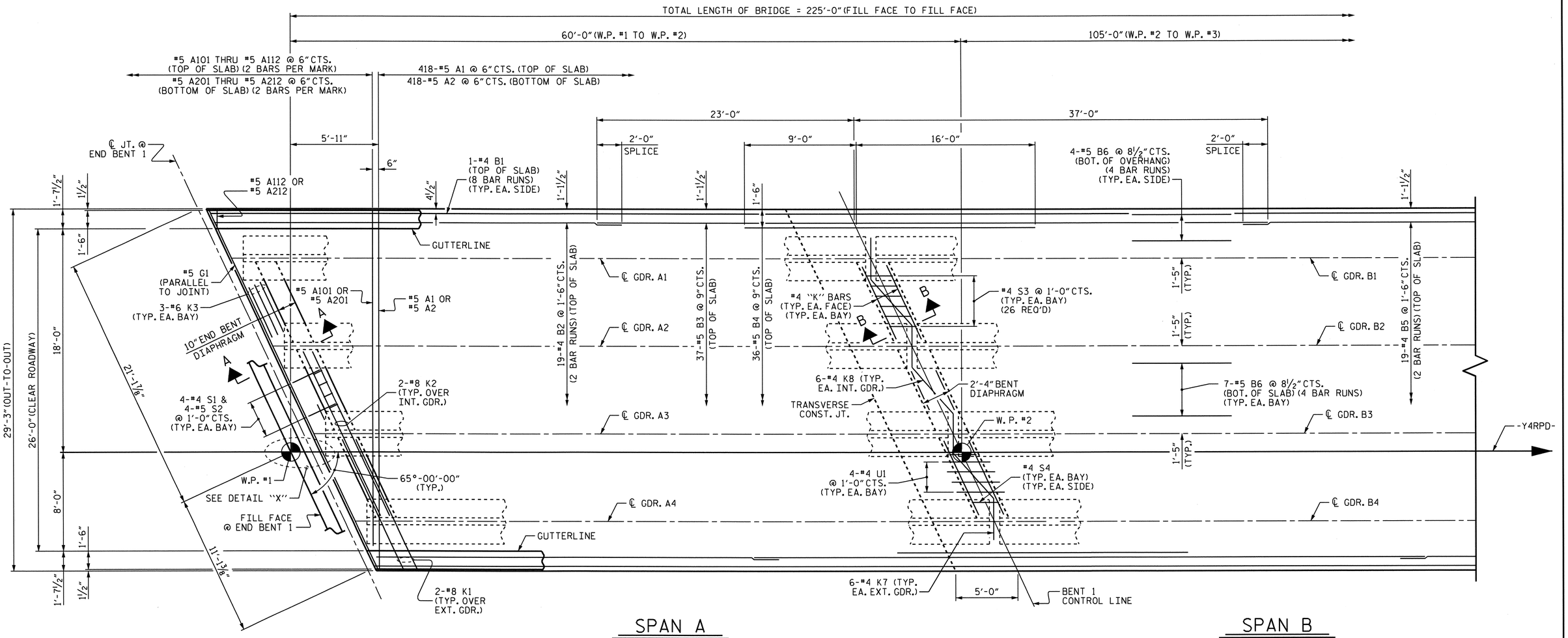


SPAN A

SPAN B

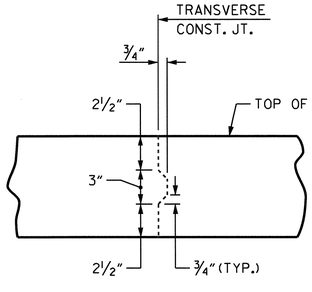


## TRANSVERSE CONSTRUCTION JOINT DETAIL

NOTE: REINFORCING STEEL IN SLAB NOT SHOWN. LONGITUDINAL REINFORCING STEEL SHALL BE CONTINUOUS THROUGH JOINT.

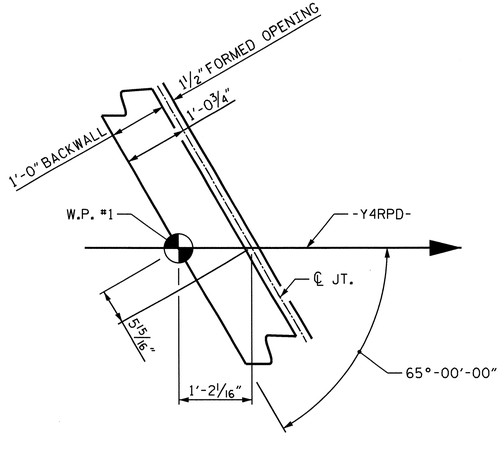


## DETAIL "X"

PROJECT NO. I-3819A

IREDELL COUNTY

STATION: 17+48.00-Y4RPD-

SHEET 1 OF 2

STATE OF NORTH CAROLINA
DEPARTMENT OF TRANSPORTATION
RALEIGH

SUPERSTRUCTURE

# PLAN OF SPANS

| REVISIONS | | | | | | SHEET NO. |
|---|---|---|---|---|---|---|
| NO. | BY: | DATE: | NO. | BY: | DATE: | S-188 |
| 1 | | | 3 | | | TOTAL SHEETS |
| 2 | | | 4 | | | 382 |

NORTH CAROLINA PROFESSIONAL SEAL 21638 ENGINEER LAURA E. SUTTON
1/3/12

DRAWN BY : B. N. BARODAWALA DATE : 8-4-10
CHECKED BY : L. E. SUTTON DATE : 11-5-10

28-DEC-2011 15:41
R:\Structures\Frye\str05\elocklear\Microstation\I3819A_SD_S*_05.dgn
wparker

STR. #5

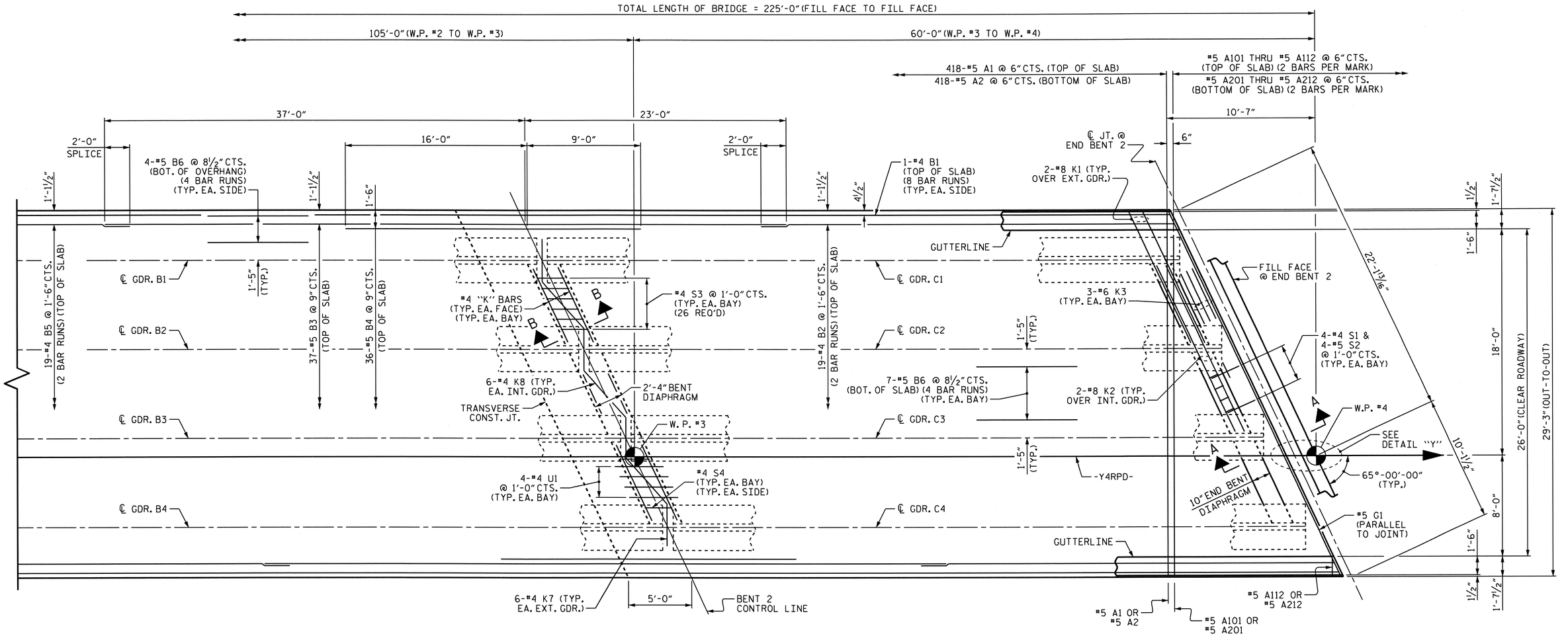


SPAN B

SPAN C

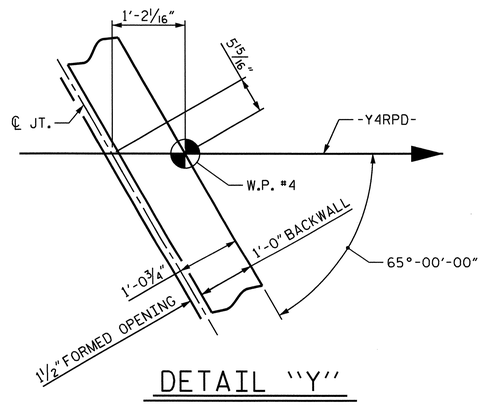


DETAIL "Y"

PROJECT NO. I-3819A

IREDELL COUNTY

STATION: 17+48.00-Y4RPD-

SHEET 2 OF 2

STATE OF NORTH CAROLINA
DEPARTMENT OF TRANSPORTATION
RALEIGH

SUPERSTRUCTURE

PLAN OF SPANS

| REVISIONS | | | | | | SHEET NO. |
|---|---|---|---|---|---|---|
| NO. | BY: | DATE: | NO. | BY: | DATE: | S-189 |
| 1 | | | 3 | | | TOTAL SHEETS |
| 2 | | | 4 | | | 382 |

NORTH CAROLINA PROFESSIONAL SEAL 21638 ENGINEER LAURA E. SUTTON
1/3/12

DRAWN BY : B. N. BARODAWALA DATE : 8-4-10
CHECKED BY : L. E. SUTTON DATE : 11-5-10

28-DEC-2011 15:41
R:\Structures\Frye\str05\elocklear\Microstation\I3819A_SD_S*_05.dgn
wparker

STR. #5

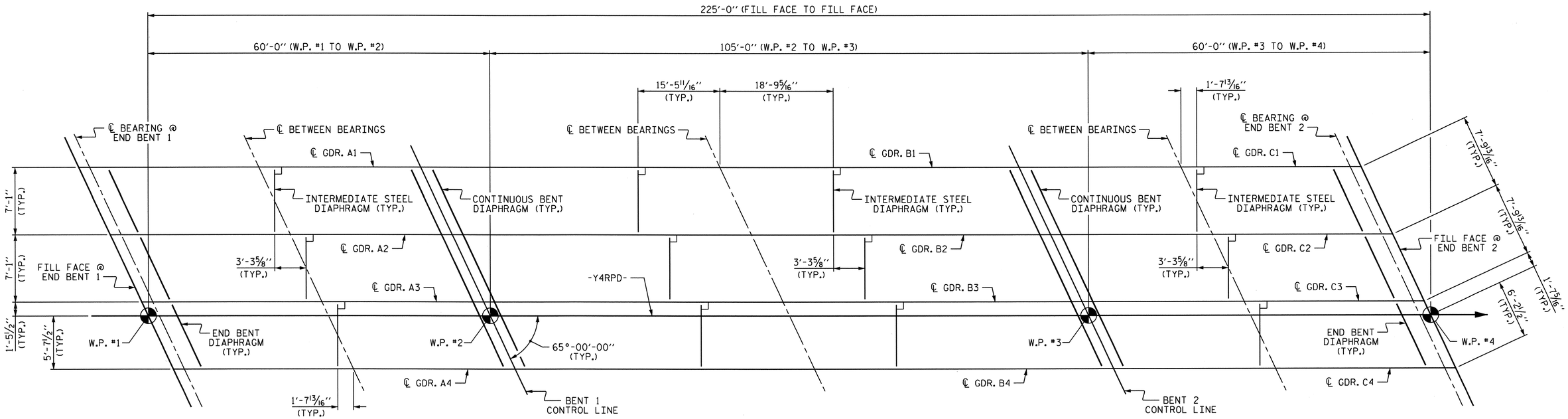


EXP. P1, E4 | FIX. P2, E4 | FIX. P3, E4 | FIX. P4, E4 | FIX. P5, E4 | EXP. P6, E4

SPAN A | SPAN B | SPAN C

# GIRDER LAYOUT

PROJECT NO. I-3819A

IREDELL COUNTY

STATION: 17+48.00-Y4RPD-

STATE OF NORTH CAROLINA
DEPARTMENT OF TRANSPORTATION
RALEIGH

SUPERSTRUCTURE

GIRDER LAYOUT

NORTH CAROLINA PROFESSIONAL SEAL 21638 ENGINEER LAURA E. SUTTON
1/3/12

| REVISIONS | | | | | | SHEET NO. |
|---|---|---|---|---|---|---|
| NO. | BY: | DATE: | NO. | BY: | DATE: | S-190 |
| 1 | | | 3 | | | TOTAL SHEETS |
| 2 | | | 4 | | | 382 |

STR. #5

DRAWN BY : B.N. BARODAWALA DATE : 8/10/10
CHECKED BY : L.E. SUTTON DATE : 9/21/10

28-DEC-2011 15:41
R:\Structures\Frye\str05\bbarodawala\Microstation\I3819A_sd_FP_05.dgn
wparker

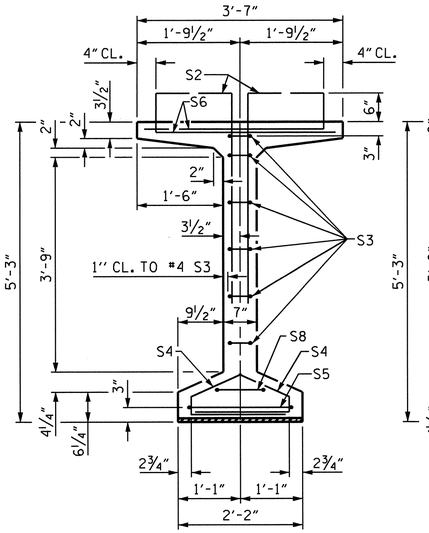


SECTION A-A

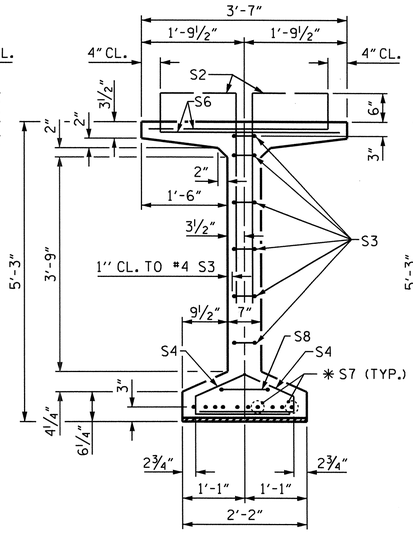


SECTION B-B

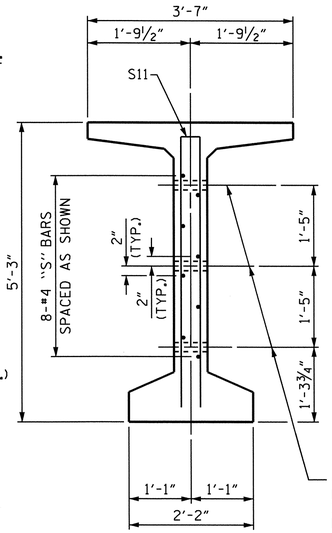


SECTION C-C

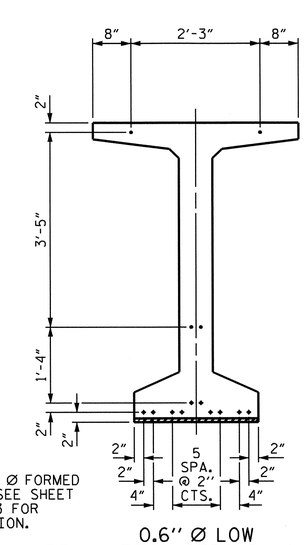


0.6" Ø LOW RELAXATION STRAND LAYOUT

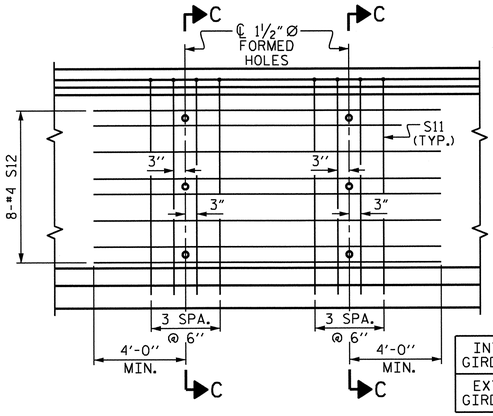


PARTIAL ELEVATION

SHOWING INTERMEDIATE STEEL DIAPHRAGM REINFORCING STEEL FOR INTERIOR GIRDERS

✱ FOR S7 BARS, SEE DETAIL "C" ON "PRESTRESSED CONCRETE GIRDER CONTINUOUS FOR LIVE LOAD DETAILS" SHEET

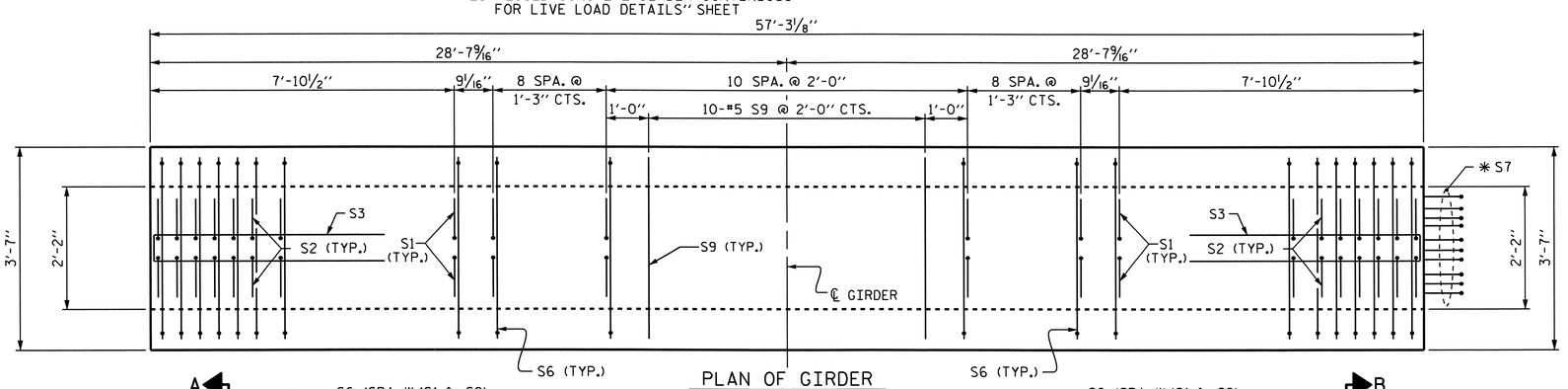


PLAN OF GIRDER

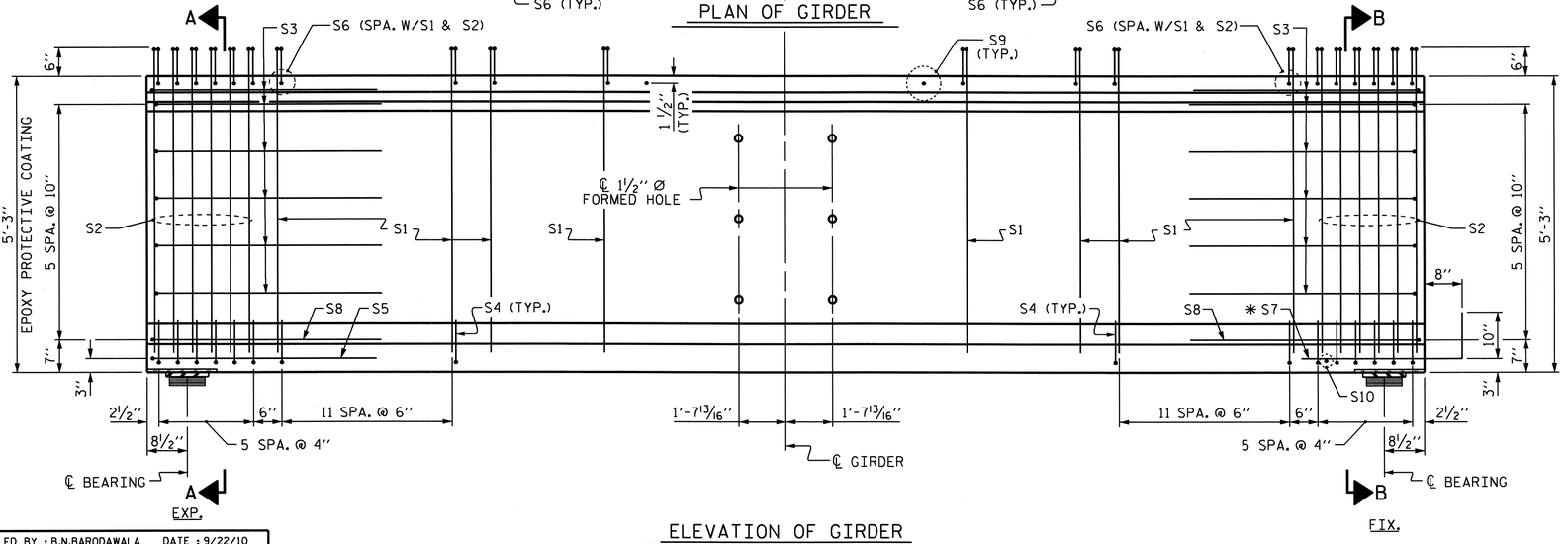


ELEVATION OF GIRDER

SEE SHEET 3 OF 3 FOR FORMED HOLE LOCATIONS.

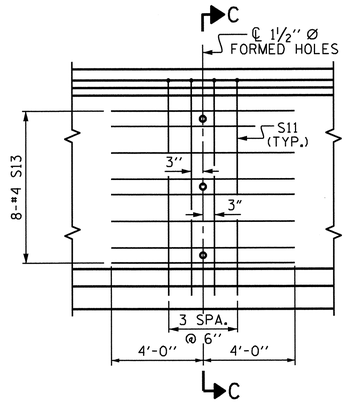


PARTIAL ELEVATION

SHOWING INTERMEDIATE STEEL DIAPHRAGM REINFORCING STEEL FOR EXTERIOR GIRDERS

## 0.6" Ø L. R. GRADE 270 STRANDS

| AREA (SQUARE INCHES) | ULTIMATE STRENGTH (LBS. PER STRAND) | APPLIED PRESTRESS (LBS. PER STRAND) |
|---|---|---|
| 0.217 | 58,600 | 43,950 |

## REINFORCING STEEL FOR ONE GDR

| | BAR | NUMBER | SIZE | TYPE | LENGTH | WEIGHT |
|---|---|---|---|---|---|---|
| INT. GIRDER | S1 | 102 | #4 | 1 | 6'-1" | 414 |
| | S2 | 24 | #5 | 1 | 6'-1" | 152 |
| | S3 | 12 | #4 | 2 | 8'-5" | 67 |
| | S4 | 72 | #4 | 3 | 3'-0" | 144 |
| | S5 | 1 | #5 | 2 | 9'-10" | 10 |
| | S6 | 126 | #5 | 4 | 4'-4" | 569 |
| | ✱S7 | 10 | #5 | STR | 3'-8" | 38 |
| | S8 | 2 | #5 | 2 | 9'-0" | 19 |
| | S9 | 10 | #5 | STR | 3'-3" | 34 |
| | S10 | 1 | #3 | STR | 1'-10" | 1 |
| | S11 | 8 | #5 | 2 | 10'-2" | 85 |
| | S12 | 8 | #4 | STR | 11'-4" | 61 |
| EXT. GIRDER | S11 | 4 | #5 | 2 | 10'-2" | 42 |
| | S13 | 8 | #4 | STR | 8'-0" | 43 |

✱ NOTE: S7 BARS SHALL BE BENT BEFORE SHIPMENT. HEAT BENDING SHALL NOT BE ALLOWED.

## BAR TYPES

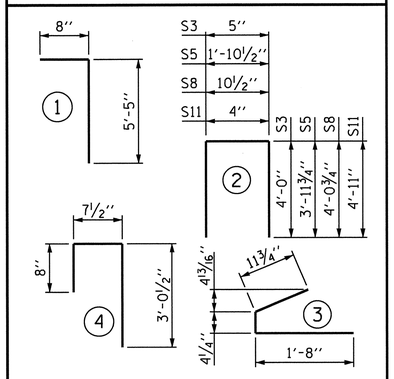


ALL BAR DIMENSIONS ARE OUT-TO-OUT.

## QUANTITIES FOR ONE GIRDER

| | REINFORCING STEEL LB. | 5000 PSI CONCRETE C.Y. | 0.6" Ø L.R. STRANDS NUMBER |
|---|---|---|---|
| INT. GDR. | 1,594 | 11.3 | 14 |
| EXT. GDR. | 1,533 | 11.3 | 14 |

## GIRDERS REQUIRED

| NUMBER | LENGTH | TOTAL LENGTH |
|---|---|---|
| 8 | 57'-3⅛" | 458.08' |

PROJECT NO. I-3819A

IREDELL COUNTY

STATION: 17+48.00-Y4RPD-

SHEET 1 OF 3

STATE OF NORTH CAROLINA
DEPARTMENT OF TRANSPORTATION
RALEIGH

STANDARD

# 63" PRESTRESSED CONCRETE MODIFIED BULB TEE GIRDERS CONTINUOUS FOR LIVE LOAD

SPANS A & C

| REVISIONS | | | | | | SHEET NO. |
|---|---|---|---|---|---|---|
| NO. | BY: | DATE: | NO. | BY: | DATE: | S-191 |
| 1 | | | 3 | | | TOTAL SHEETS |
| 2 | | | 4 | | | 382 |

STR. #5

STD. NO. PCG9

| | | |
|---|---|---|
| ASSEMBLED BY : B.N.BARODAWALA | DATE : 9/22/10 | |
| CHECKED BY : L.E. SUTTON | DATE : 12/10/10 | |
| DRAWN BY : EEM 2/6/97 | REV. 8/16/99 | RWW/LES |
| CHECKED BY : VAP 2/6/97 | REV. 10/17/00 | RWW/LES |
| | REV. 5/1/06R | TLA/GM |

NORTH CAROLINA PROFESSIONAL SEAL 21638 ENGINEER LAURA E. SUTTON
1/8/12

28-DEC-2011 15:41
R:\Structures\Frye\str05\bbarodawala\Microstation\I3819A_sd_G*_05.dgn
wparker

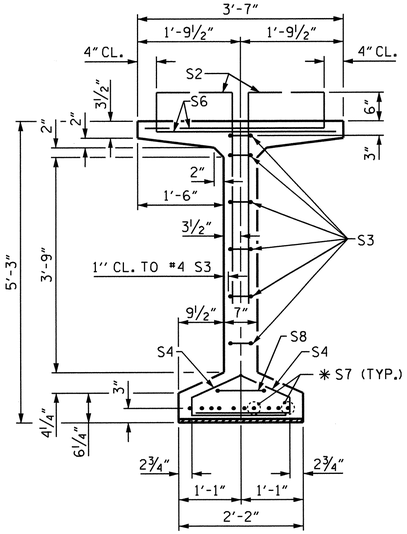


SECTION B-B

* FOR S7 BARS, SEE DETAIL "C" ON "PRESTRESSED CONCRETE GIRDER CONTINUOUS FOR LIVE LOAD DETAILS" SHEET

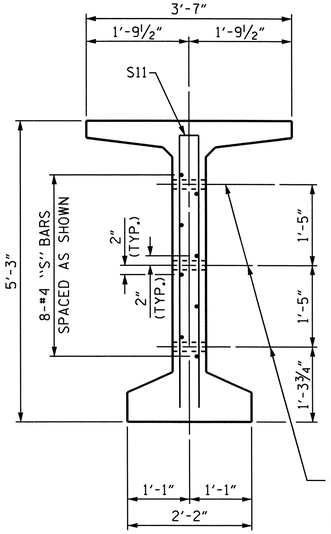


SECTION C-C

℄ 1½" Ø FORMED HOLE. SEE SHEET 3 OF 3 FOR LOCATION.

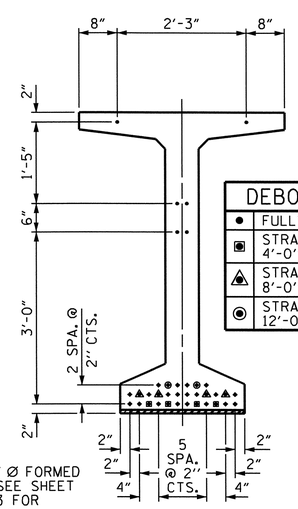


AT END OF GIRDER

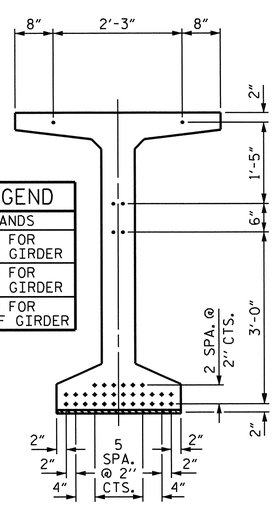


AT ℄ OF GIRDER

| DEBONDING LEGEND | |
|---|---|
| ● | FULLY BONDED STRANDS |
| ▣ | STRANDS DEBONDED FOR 4'-0" FROM END OF GIRDER |
| ▲ | STRANDS DEBONDED FOR 8'-0" FROM END OF GIRDER |
| ◉ | STRANDS DEBONDED FOR 12'-0" FROM END OF GIRDER |

0.6" Ø LOW RELAXATION STRAND LAYOUT

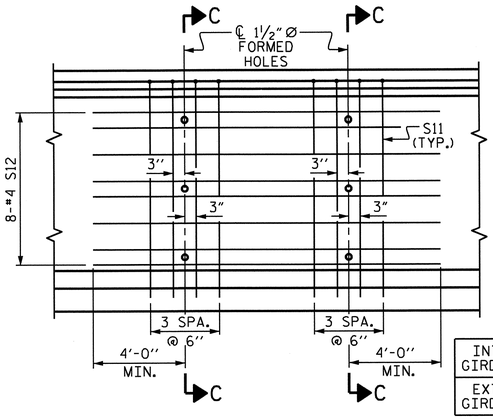


PARTIAL ELEVATION

SHOWING INTERMEDIATE STEEL DIAPHRAGM REINFORCING STEEL FOR INTERIOR GIRDERS

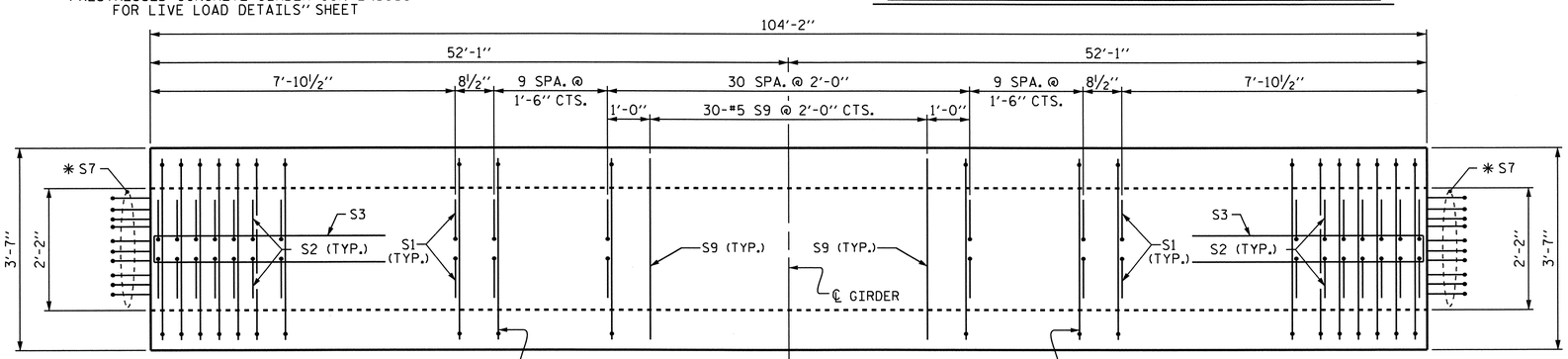


PLAN OF GIRDER

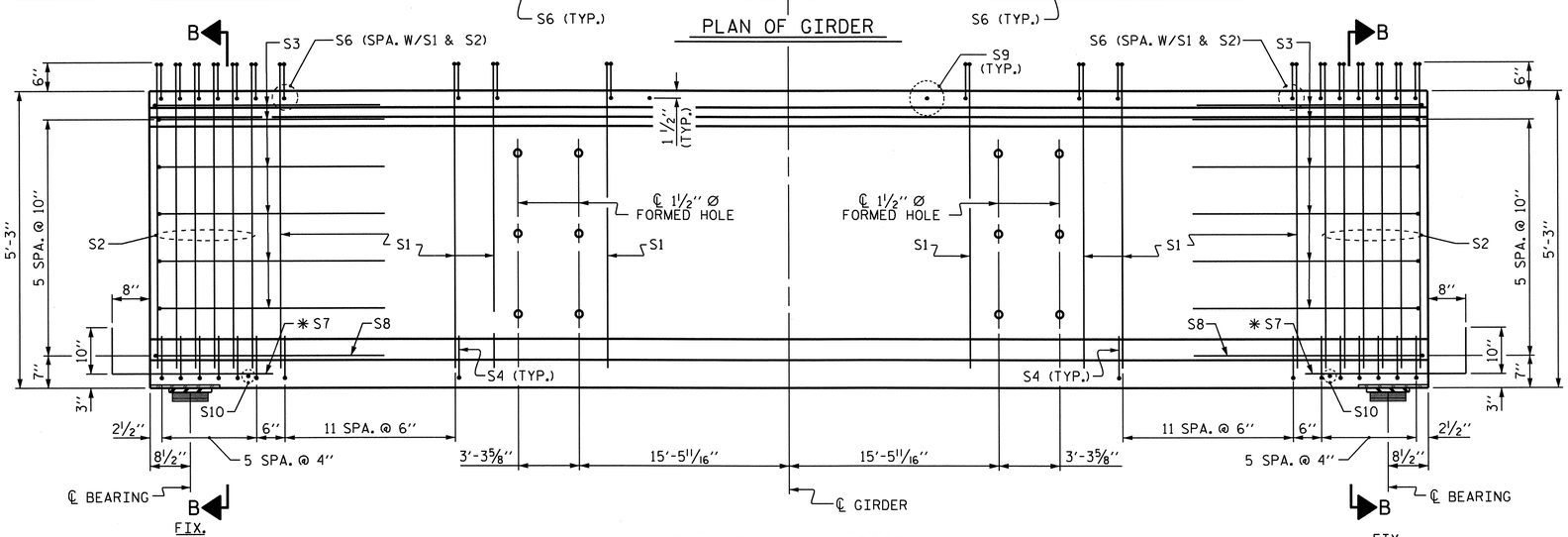


ELEVATION OF GIRDER

SEE SHEET 3 OF 3 FOR FORMED HOLE LOCATIONS.

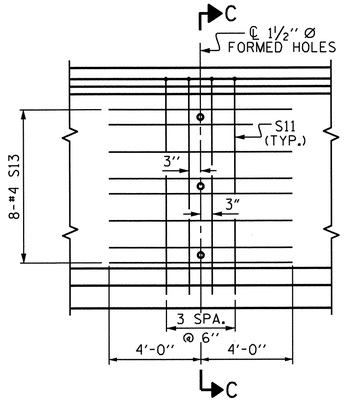


PARTIAL ELEVATION

SHOWING INTERMEDIATE STEEL DIAPHRAGM REINFORCING STEEL FOR EXTERIOR GIRDERS

## 0.6" Ø L. R. GRADE 270 STRANDS

| AREA (SQUARE INCHES) | ULTIMATE STRENGTH (LBS. PER STRAND) | APPLIED PRESTRESS (LBS. PER STRAND) |
|---|---|---|
| 0.217 | 58,600 | 43,950 |

## REINFORCING STEEL FOR ONE GDR

| | BAR | NUMBER | SIZE | TYPE | LENGTH | WEIGHT |
|---|---|---|---|---|---|---|
| | S1 | 146 | #4 | 1 | 6'-1" | 593 |
| | S2 | 24 | #5 | 1 | 6'-1" | 152 |
| | S3 | 12 | #4 | 2 | 8'-5" | 67 |
| | S4 | 72 | #4 | 3 | 3'-0" | 144 |
| | S6 | 170 | #5 | 4 | 4'-4" | 768 |
| | * S7 | 20 | #5 | STR | 3'-8" | 76 |
| | S8 | 2 | #5 | 2 | 9'-0" | 19 |
| | S9 | 30 | #5 | STR | 3'-3" | 102 |
| | S10 | 2 | #3 | STR | 1'-10" | 1 |
| | | | | | | |
| INT. GIRDER | S11 | 16 | #5 | 2 | 10'-2" | 170 |
| | S12 | 16 | #4 | STR | 11'-4" | 121 |
| EXT. GIRDER | S11 | 8 | #5 | 2 | 10'-2" | 85 |
| | S13 | 16 | #4 | STR | 8'-0" | 86 |

* NOTE: S7 BARS SHALL BE BENT BEFORE SHIPMENT. HEAT BENDING SHALL NOT BE ALLOWED.

## BAR TYPES

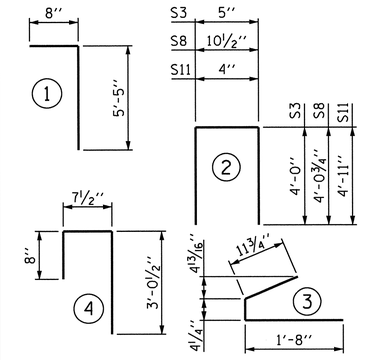


ALL BAR DIMENSIONS ARE OUT-TO-OUT.

## QUANTITIES FOR ONE GIRDER

| | REINFORCING STEEL LB. | 8000 PSI CONCRETE C.Y. | 0.6" Ø L.R. STRANDS NUMBER |
|---|---|---|---|
| INT. GDR. | 2,213 | 20.6 | 36 |
| EXT. GDR. | 2,093 | 20.6 | 36 |

## GIRDERS REQUIRED

| NUMBER | LENGTH | TOTAL LENGTH |
|---|---|---|
| 4 | 104'-2" | 416.67' |

PROJECT NO. I-3819A

IREDELL COUNTY

STATION: 17+48.00-Y4RPD-

SHEET 2 OF 3

STATE OF NORTH CAROLINA
DEPARTMENT OF TRANSPORTATION
RALEIGH

STANDARD

# 63" PRESTRESSED CONCRETE MODIFIED BULB TEE GIRDERS CONTINUOUS FOR LIVE LOAD

SPAN B

| ASSEMBLED BY : B.N.BARODAWALA | DATE : 9/22/10 |
|---|---|
| CHECKED BY : L.E. SUTTON | DATE : 12/10/10 |
| DRAWN BY : EEM 2/6/97 | REV. 8/16/99 RWW/LES |
| CHECKED BY : VAP 2/6/97 | REV. 10/17/00 RWW/LES |
| | REV. 5/1/06R TLA/GM |

NORTH CAROLINA PROFESSIONAL SEAL 21638 ENGINEER LAURA E. SUTTON
1/8/12

| REVISIONS | | | | | | SHEET NO. |
|---|---|---|---|---|---|---|
| NO. | BY: | DATE: | NO. | BY: | DATE: | S-192 |
| 1 | | | 3 | | | TOTAL SHEETS |
| 2 | | | 4 | | | 382 |

STR. #5

STD. NO. PCG9

28-DEC-2011 15:41
R:\Structures\Frye\str05\bbarodawala\Microstation\I3819A_sd_G*_05.dgn
wparker

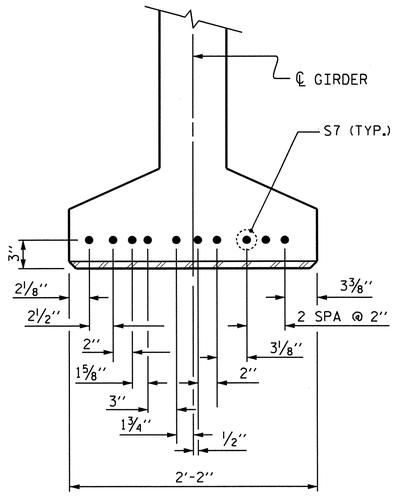


## DETAIL "C"
(FOR 63"& 72"MODIFIED BULB TEES)

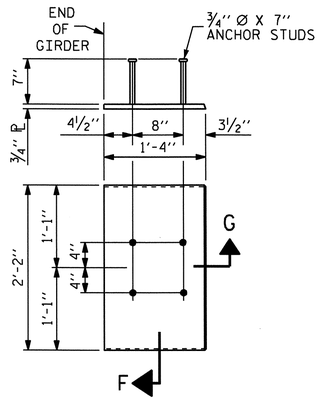


## EMBEDDED PLATE "B-1" DETAILS
(2 REQ'D PER GIRDER)

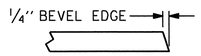


## SECTION "G"

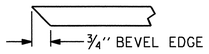


## SECTION "F"
(SEE NOTES)

## NOTES

ALL PRESTRESSING STRANDS SHALL BE 7-WIRE LOW-RELAXATION GRADE 270 STRANDS AND SHALL CONFORM TO AASHTO M203 EXCEPT FOR SAMPLING REQUIREMENTS WHICH SHALL BE IN ACCORDANCE WITH THE STANDARD SPECIFICATIONS.

ALL REINFORCING STEEL SHALL BE GRADE 60.

APPLY EPOXY PROTECTIVE COATING TO END OF GIRDER SURFACES INDICATED IN ELEVATION VIEW.

EMBEDDED PLATE "B-1" SHALL BE GALVANIZED IN ACCORDANCE WITH THE STANDARD SPECIFICATIONS. BEVEL EDGES OF PLATE "B-1" TO GIVE CLOSE FIT BUT NOT TIGHT FIT TO STEEL CASTING FORM.

ANCHOR STUDS SHALL CONFORM TO AASHTO M169 GRADES 1010 THROUGH 1020 OR APPROVED EQUAL, AND SHALL MEET THE TYPE "B" REQUIREMENTS OF SUBSECTION 7.3 OF THE ANSI/AASHTO/AWS D1.5 BRIDGE WELDING CODE.

AT ENDS OF GIRDERS TO BE EMBEDDED IN CONCRETE DIAPHRAGMS OR END WALLS, PRESTRESSING STRANDS MAY EXTEND A MAXIMUM OF 2" BEYOND THE GIRDER ENDS. OTHERWISE, PRESTRESSING STRANDS SHALL BE CUT FLUSH WITH THE GIRDER ENDS.

THE TRANSFER OF LOAD FROM THE ANCHORAGES TO THE GIRDER SHALL BE DONE WHEN CONCRETE HAS REACHED A COMPRESSIVE STRENGTH OF NOT LESS THAN 4000 PSI FOR SPANS A AND C AND 6300 PSI FOR SPAN B.

DEPENDING ON THE TYPE OF SYSTEM USED TO SUPPORT THE DECK SLAB FORMS, PRESET ANCHORS MAY BE NECESSARY IN THE PRESTRESSED CONCRETE GIRDER.

THE TOP SURFACE OF THE GIRDER, EXCLUDING THE OUTSIDE 4", SHALL BE RAKED TO A DEPTH OF ¼".

WHEN DRAPED STRANDS ARE DETAILED, THE LONGITUDINAL LOCATION OF THE HOLD DOWN DEVICES SHALL BE WITHIN 6" OF THE LOCATION SHOWN AND THE CENTER OF GRAVITY OF THE GROUP OF DRAPED STRANDS SHALL BE LOCATED WITHIN ½" OF THE THEORETICAL LOCATION SHOWN.

A 2" x 2" CHAMFER IS ALLOWED AT THE INTERSECTION OF THE WEB AND THE BOTTOM FLANGE OF THE 63" AND 72" MODIFIED BULB TEES ONLY.

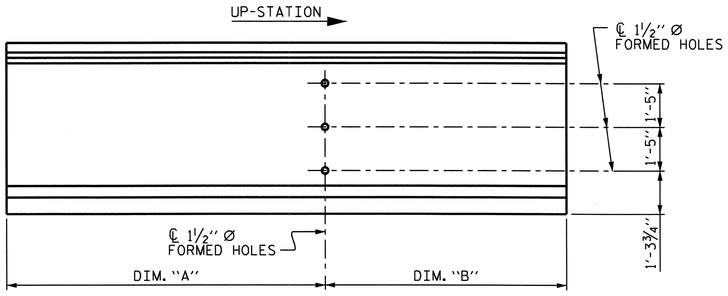


## ELEVATION OF EXTERIOR GIRDER
SPANS A & C, GIRDERS 1 & 4

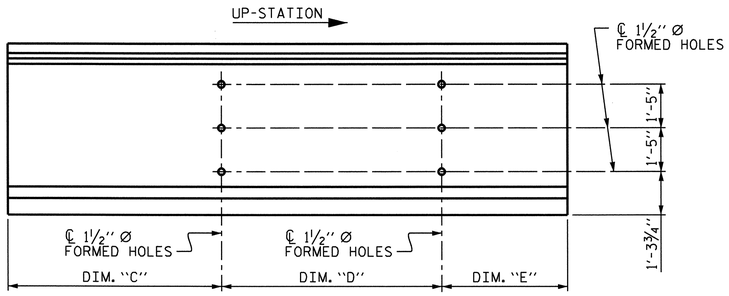


## ELEVATION OF EXTERIOR GIRDER
SPAN B, GIRDERS 1 & 4

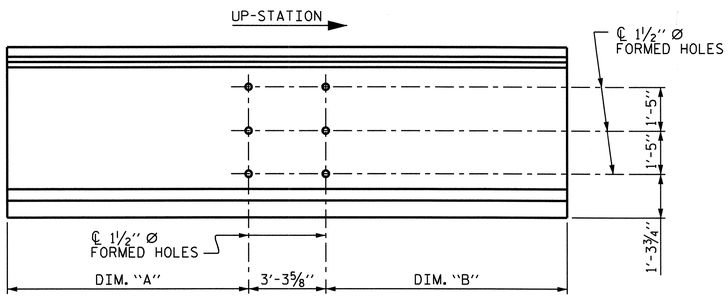


## ELEVATION OF INTERIOR GIRDER
SPANS A & C, GIRDERS 2 & 3

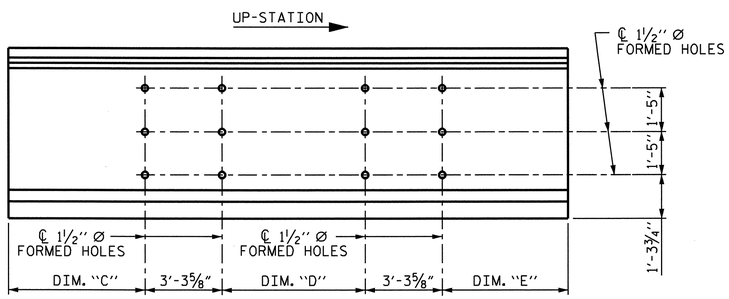


## ELEVATION OF INTERIOR GIRDER
SPAN B, GIRDERS 2 & 3

## FORMED HOLE LOCATIONS

| GIRDER NO. | SPANS A & C | | SPAN B | | |
|---|---|---|---|---|---|
| | DIM. "A" | DIM. "B" | DIM. "C" | DIM. "D" | DIM. "E" |
| 1 | 30'-3⅜" | 26'-11¾" | 36'-7 5/16" | 34'-3" | 33'-3 11/16" |
| 2 & 3 | 26'-11¾" | 26'-11¾" | 33'-3 11/16" | 30'-11⅜" | 33'-3 11/16" |
| 4 | 26'-11¾" | 30'-3⅜" | 33'-3 11/16" | 34'-3" | 36'-7 5/16" |

ASSEMBLED BY : B.N.BARODAWALA DATE : 8/17/10
CHECKED BY : L.E. SUTTON DATE : 12/10/10

DRAWN BY : ELR 11/91
CHECKED BY : GRP 11/91

REV. 10/17/00 RWW/LES
REV. 7/10/01RR LES/RDR
REV. 5/1/06 TLA/GM

10-JAN-2012 12:47
R:\Structures\Frye\str05\bbarodawala\Microstation\I3819A_sd_C*_05.dgn
wparker

NORTH CAROLINA PROFESSIONAL SEAL 21638 ENGINEER LAURA E. SUTTON
1/12/12

PROJECT NO. I-3819A
IREDELL COUNTY
STATION: 17+48.00-Y4RPD-

SHEET 3 OF 3

STATE OF NORTH CAROLINA
DEPARTMENT OF TRANSPORTATION
RALEIGH

STANDARD

PRESTRESSED CONCRETE GIRDER CONTINUOUS FOR LIVE LOAD DETAILS

| REVISIONS | | | | | | SHEET NO. |
|---|---|---|---|---|---|---|
| NO. | BY: | DATE: | NO. | BY: | DATE: | S-193 |
| 1 | | | 3 | | | TOTAL SHEETS |
| 2 | | | 4 | | | 382 |

STR. #5

STD. NO. PCG11

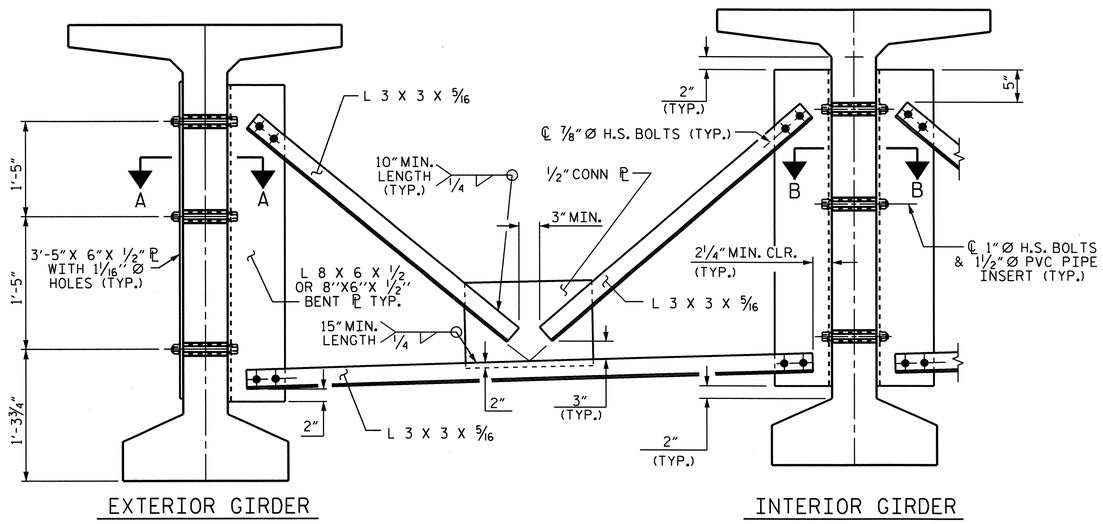


EXTERIOR GIRDER

INTERIOR GIRDER

## PART SECTION AT INTERMEDIATE DIAPHRAGM

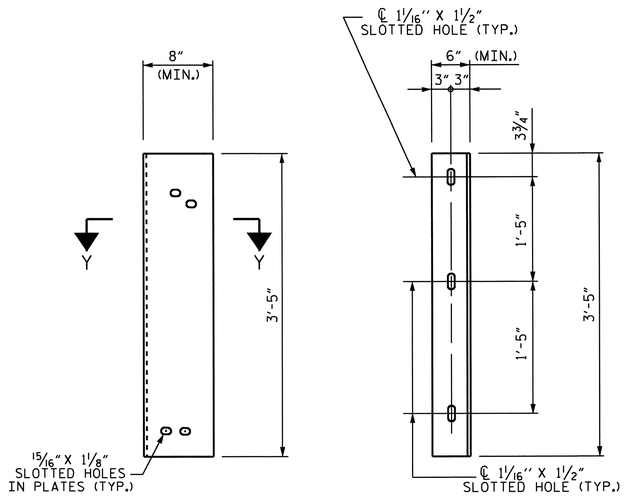


DIAPHRAGM FACE

WEB FACE

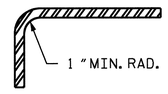


SECTION Y-Y

## STRUCTURAL STEEL NOTES

ALL INTERMEDIATE DIAPHRAGM STEEL AND CONNECTOR PLATES SHALL BE AASHTO M270 GRADE 50 OR APPROVED EQUAL.

TENSION ON THE ASTM A325 BOLTS THROUGH THE ANGLE MEMBER SHALL BE CALIBRATED USING DIRECT TENSION INDICATOR WASHERS IN ACCORDANCE WITH THE STANDARD SPECIFICATIONS.

TENSION ON THE ASTM A449 BOLTS THROUGH THE GIRDER WEB SHALL BE SNUG TIGHTENED FOLLOWED BY AN ADDITIONAL 1/4 TURN.

THE PLATES, BENT PLATES, AND ANGLES SHALL BE GALVANIZED OR METALLIZED IN ACCORDANCE WITH THE STANDARD SPECIFICATIONS. FOR THERMAL SPRAYED COATINGS (METALLIZATION), SEE SPECIAL PROVISIONS.

FOR METALLIZATION, APPLY AN 8 MIL THICK 99.99 PERCENT ZINC (W-Zn-1) THERMAL SPRAYED COATING WITH A 0.5 MIL THICK SEAL COAT TO ALL STEEL DIAPHRAGM SURFACES IN ACCORDANCE WITH THE THERMAL SPRAYED COATINGS SPECIAL PROVISION AND SECTION 442 OF THE STANDARD SPECIFICATIONS.

GALVANIZE THE HIGH STRENGTH BOLTS, NUTS, WASHERS AND DIRECT TENSION INDICATORS IN ACCORDANCE WITH THE STANDARD SPECIFICATIONS.

USE AN ASTM F436 HARDENED WASHER WITH STANDARD AND SLOTTED HOLES UNDER EACH BOLT HEAD AND NUT.

FOR BOLTS THROUGH THE GIRDER WEB, PROVIDE SUFFICIENT LENGTH OF THREADS ON ALL BOLTS TO ACCOMMODATE WASHERS AND THE THICKNESS OF CONNECTING MEMBER PLUS AT LEAST 1/4" PROJECTION BEYOND THE NUT.

INTERMEDIATE DIAPHRAGM ASSEMBLY SHALL COMPLY WITH SECTION 1072 OF THE STANDARD SPECIFICATIONS.

SUBMIT TWO SETS OF WORKING DRAWINGS FOR THE INTERMEDIATE DIAPHRAGM ASSEMBLY FOR REVIEW, COMMENTS AND ACCEPTANCE. AFTER REVIEW, COMMENTS, AND ACCEPTANCE, SUBMIT SEVEN SETS FOR DISTRIBUTION.

IN THE EXTERIOR BAYS, PLACE TEMPORARY STRUTS BETWEEN PRESTRESSED GIRDERS ADJACENT TO THE STEEL DIAPHRAGMS. STRUTS SHALL REMAIN IN PLACE 3 DAYS AFTER CONCRETE IS PLACED.

THE COST OF THE STEEL DIAPHRAGMS AND ASSEMBLIES SHALL BE INCLUDED IN THE UNIT PRICE BID FOR PRESTRESSED CONCRETE GIRDERS.

## CONNECTOR PLATE DETAIL

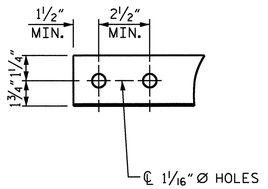


ANGLE END

(L 3 X 3 X 5/16)

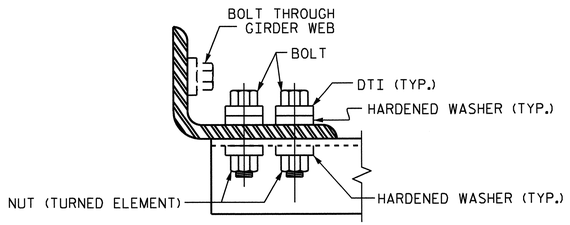


BOLT WITH DTI ASSEMBLY DETAIL

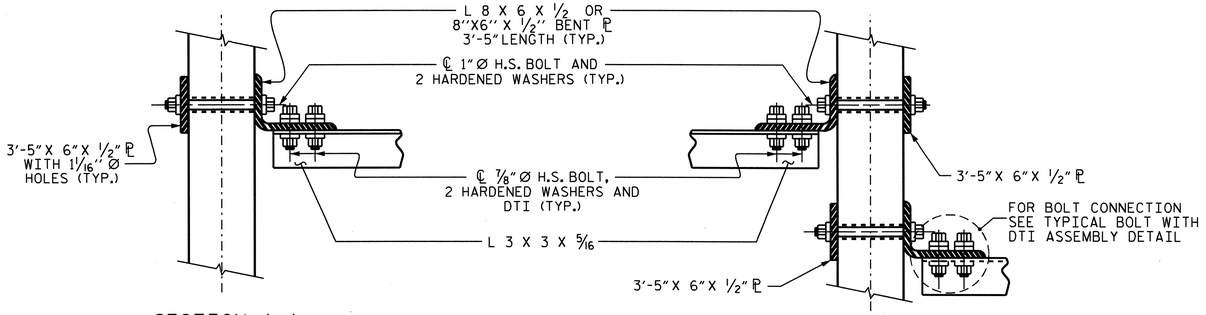


SECTION A-A

SECTION B-B

## CONNECTION DETAILS

PROJECT NO. I-3819A

IREDELL COUNTY

STATION: 17+48.00-Y4RPD-

STATE OF NORTH CAROLINA
DEPARTMENT OF TRANSPORTATION
RALEIGH

# STANDARD INTERMEDIATE STEEL DIAPHRAGMS FOR 63" & 72" MODIFIED BULB TEE PRESTRESSED CONCRETE GIRDERS

| REVISIONS | | | | | | SHEET NO. |
|---|---|---|---|---|---|---|
| NO. | BY: | DATE: | NO. | BY: | DATE: | S-194 |
| 1 | | | 3 | | | TOTAL SHEETS |
| 2 | | | 4 | | | 382 |

STR. #5

STD. NO. PCG11

NORTH CAROLINA PROFESSIONAL SEAL 21638 ENGINEER LAURA E. SUTTON
1/5/12

| | |
|---|---|
| ASSEMBLED BY : B.N.BARODAWALA DATE : 7/26/10 | |
| CHECKED BY : L. E. SUTTON DATE : 9/3/10 | |
| DRAWN BY : RWW 11/09 | ADDED 11/23/09R |
| CHECKED BY : GM 11/09 | REV. 10/1/11 MAA/GM |

28-DEC-2011 15:41
R:\Structures\Frye\str05\bbarodawala\Microstation\13819A_sd_G*_05.dgn
wparker

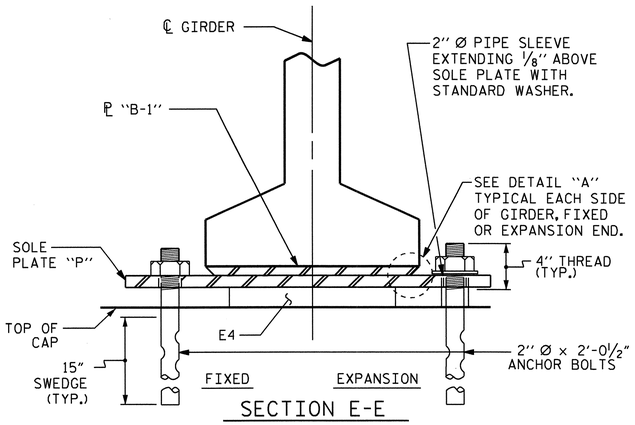


SECTION E-E

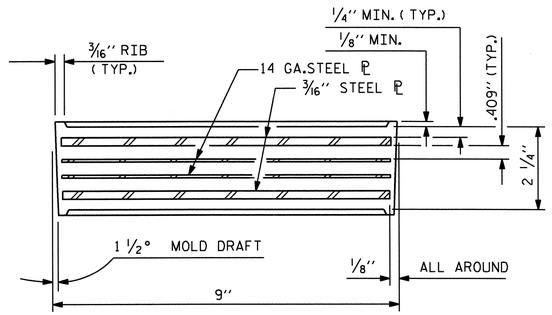


TYPICAL SECTION OF ELASTOMERIC BEARINGS

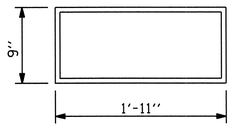


E4 ( 24 REQ'D )

PLAN VIEW OF ELASTOMERIC BEARING

TYPE V

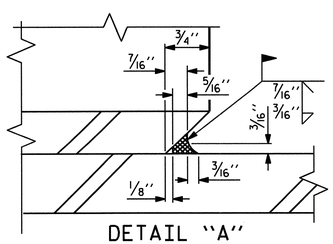


DETAIL "A"

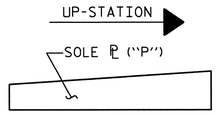


SOLE ℄ PLACEMENT DETAIL

| LOAD RATINGS | |
|---|---|
| | MAX.D.L.+ L.L. |
| TYPE V | 225 K |
| | |

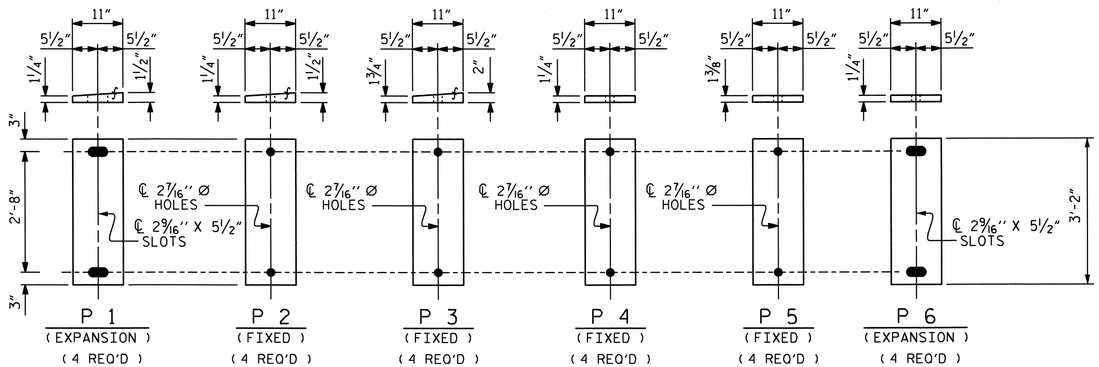


SOLE PLATE DETAILS ( "P" )

## NOTES

AT ALL FIXED POINTS OF SUPPORT, NUTS FOR ANCHOR BOLTS ARE TO BE TIGHTENED FINGER TIGHT AND THEN BACKED OFF 1/2 TURN. THE THREAD OF THE NUT AND BOLT SHALL THEN BE BURRED WITH A SHARP POINTED TOOL.

THE 2" Ø PIPE SLEEVE SHALL BE CUT FROM SCHEDULE 40 PVC PLASTIC PIPE. THE PVC PLASTIC PIPE SHALL MEET THE REQUIREMENTS OF ASTM D1785.

STEEL SOLE PLATES, ANCHOR BOLTS, NUTS, AND WASHERS SHALL BE GALVANIZED IN ACCORDANCE WITH THE STANDARD SPECIFICATIONS.

PRIOR TO WELDING, GRIND THE GALVANIZED SURFACE OF THE PORTION OF THE EMBEDDED PLATE AND SOLE PLATE THAT ARE TO BE WELDED. AFTER WELDING, DAMAGED GALVANIZED SURFACES SHALL BE REPAIRED IN ACCORDANCE WITH THE STANDARD SPECIFICATIONS.

WHEN WELDING THE SOLE PLATE TO THE EMBEDDED PLATE IN THE GIRDER, USE TEMPERATURE INDICATING WAX PENS, OR OTHER SUITABLE MEANS, TO ENSURE THAT THE TEMPERATURE OF THE SOLE PLATE DOES NOT EXCEED 300°F. TEMPERATURES ABOVE THIS MAY DAMAGE THE ELASTOMER.

SOLE PLATE "P", BOLTS, NUTS, WASHERS, AND PIPE SLEEVE SHALL BE INCLUDED IN THE PAY ITEM FOR PRESTRESSED CONCRETE GIRDERS.

ANCHOR BOLTS SHALL MEET THE REQUIREMENTS OF ASTM A449. NUTS SHALL MEET THE REQUIREMENTS OF AASHTO M291-DH OR AASHTO M292-2H. WASHERS SHALL MEET THE REQUIREMENTS OF AASHTO M293. NO SHOP DRAWINGS ARE REQUIRED FOR ANCHOR BOLTS, NUTS AND WASHERS. SHOP INSPECTION IS REQUIRED.

ALL SURFACES OF BEARING PLATES SHALL BE SMOOTH AND STRAIGHT.

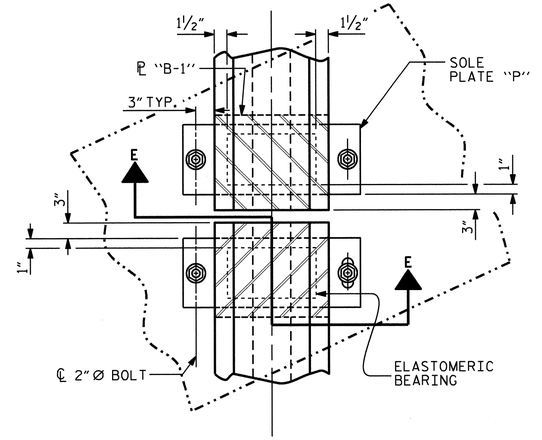


TYPICAL HALF-PLAN (SHOWING CONTINUOUS BENT)

TYPICAL HALF-PLAN (SHOWING SIMPLE SPAN BENT)

PROJECT NO. I-3819A

IREDELL COUNTY

STATION: 17+48.00-Y4RPD-

STATE OF NORTH CAROLINA
DEPARTMENT OF TRANSPORTATION
RALEIGH

# ELASTOMERIC BEARING DETAILS

PRESTRESSED CONCRETE GIRDER SUPERSTRUCTURE

| REVISIONS | | | | | | SHEET NO. |
|---|---|---|---|---|---|---|
| NO. | BY: | DATE: | NO. | BY: | DATE: | S-195 |
| 1 | | | 3 | | | TOTAL SHEETS |
| 2 | | | 4 | | | 382 |

NORTH CAROLINA PROFESSIONAL SEAL 21638 ENGINEER LAURA E. SUTTON
1/8/12

DRAWN BY : B.N.BARODAWALA DATE : 8-10-10
CHECKED BY : L. E. SUTTON DATE : 9-21-10

28-DEC-2011 15:41
N:\Structures\Frye\str05\bbarodawala\Microstation\I3819A_sd_BG_05.dgn
wparker

STR. #5

## DEAD LOAD DEFLECTION TABLE FOR GIRDERS

| 0.6"Ø LOW RELAXATION | SPANS A & C | | | | | | | | | | | | | | | | | | | | | | | | | | | | |
|---|---|---|---|---|---|---|---|---|---|---|---|---|---|---|---|---|---|---|---|---|---|---|---|---|---|---|---|---|---|
| | GIRDER 1 | | | | | | | | | | | GIRDERS 2 & 3 | | | | | | | | | | | GIRDER 4 | | | | | | | | | | |
| TENTH POINTS | BRG. | 0.1 | 0.2 | 0.3 | 0.4 | 0.5 | 0.6 | 0.7 | 0.8 | 0.9 | BRG. | BRG. | 0.1 | 0.2 | 0.3 | 0.4 | 0.5 | 0.6 | 0.7 | 0.8 | 0.9 | BRG. | BRG. | 0.1 | 0.2 | 0.3 | 0.4 | 0.5 | 0.6 | 0.7 | 0.8 | 0.9 | BRG. |
| CAMBER (GIRDER ALONE IN PLACE) ↑ | 0 | 0.016 | 0.029 | 0.040 | 0.047 | 0.050 | 0.047 | 0.040 | 0.029 | 0.016 | 0 | 0 | 0.016 | 0.029 | 0.040 | 0.047 | 0.050 | 0.047 | 0.040 | 0.029 | 0.016 | 0 | 0 | 0.016 | 0.029 | 0.040 | 0.047 | 0.050 | 0.047 | 0.040 | 0.029 | 0.016 | 0 |
| * DEFLECTION DUE TO SUPERIMPOSED D.L. ↓ | 0 | 0.004 | 0.007 | 0.010 | 0.012 | 0.013 | 0.012 | 0.010 | 0.007 | 0.004 | 0 | 0 | 0.004 | 0.007 | 0.010 | 0.011 | 0.012 | 0.011 | 0.010 | 0.007 | 0.004 | 0 | 0 | 0.004 | 0.008 | 0.010 | 0.012 | 0.013 | 0.012 | 0.010 | 0.008 | 0.004 | 0 |
| FINAL CAMBER ↑ | 0 | 1/8" | 1/4" | 3/8" | 7/16" | 7/16" | 7/16" | 3/8" | 1/4" | 1/8" | 0 | 0 | 1/8" | 1/4" | 3/8" | 7/16" | 7/16" | 7/16" | 3/8" | 1/4" | 1/8" | 0 | 0 | 1/8" | 1/4" | 3/8" | 7/16" | 7/16" | 7/16" | 3/8" | 1/4" | 1/8" | 0 |

* INCLUDES FUTURE WEARING SURFACE
ALL VALUES ARE SHOWN IN FEET (DECIMAL FORM), EXCEPT "FINAL CAMBER", WHICH IS GIVEN IN INCHES (FRACTION FORM).

## DEAD LOAD DEFLECTION TABLE FOR GIRDERS

| 0.6"Ø LOW RELAXATION | SPAN B | | | | | | | | | | | | | | | | | | | | | | | | | | | | |
|---|---|---|---|---|---|---|---|---|---|---|---|---|---|---|---|---|---|---|---|---|---|---|---|---|---|---|---|---|---|
| | GIRDER 1 | | | | | | | | | | | GIRDERS 2 & 3 | | | | | | | | | | | GIRDER 4 | | | | | | | | | | |
| TENTH POINTS | BRG. | 0.1 | 0.2 | 0.3 | 0.4 | 0.5 | 0.6 | 0.7 | 0.8 | 0.9 | BRG. | BRG. | 0.1 | 0.2 | 0.3 | 0.4 | 0.5 | 0.6 | 0.7 | 0.8 | 0.9 | BRG. | BRG. | 0.1 | 0.2 | 0.3 | 0.4 | 0.5 | 0.6 | 0.7 | 0.8 | 0.9 | BRG. |
| CAMBER (GIRDER ALONE IN PLACE) ↑ | 0 | 0.105 | 0.199 | 0.272 | 0.319 | 0.335 | 0.319 | 0.272 | 0.199 | 0.105 | 0 | 0 | 0.105 | 0.199 | 0.272 | 0.319 | 0.335 | 0.319 | 0.272 | 0.199 | 0.105 | 0 | 0 | 0.105 | 0.199 | 0.272 | 0.319 | 0.335 | 0.319 | 0.272 | 0.199 | 0.105 | 0 |
| * DEFLECTION DUE TO SUPERIMPOSED D.L. ↓ | 0 | 0.036 | 0.068 | 0.093 | 0.109 | 0.114 | 0.109 | 0.093 | 0.068 | 0.036 | 0 | 0 | 0.034 | 0.063 | 0.087 | 0.102 | 0.107 | 0.102 | 0.087 | 0.063 | 0.034 | 0 | 0 | 0.037 | 0.070 | 0.096 | 0.113 | 0.118 | 0.113 | 0.096 | 0.070 | 0.037 | 0 |
| FINAL CAMBER ↑ | 0 | 13/16" | 1 9/16" | 2 1/8" | 2 1/2" | 2 5/8" | 2 1/2" | 2 1/8" | 1 9/16" | 13/16" | 0 | 0 | 7/8" | 1 5/8" | 2 1/4" | 2 5/8" | 2 3/4" | 2 5/8" | 2 1/4" | 1 5/8" | 7/8" | 0 | 0 | 13/16" | 1 9/16" | 2 1/8" | 2 1/2" | 2 5/8" | 2 1/2" | 2 1/8" | 1 9/16" | 13/16" | 0 |

* INCLUDES FUTURE WEARING SURFACE
ALL VALUES ARE SHOWN IN FEET (DECIMAL FORM), EXCEPT "FINAL CAMBER", WHICH IS GIVEN IN INCHES (FRACTION FORM).

PROJECT NO. I-3819A
IREDELL COUNTY
STATION: 17+48.00-Y4RPD-

STATE OF NORTH CAROLINA
DEPARTMENT OF TRANSPORTATION
RALEIGH

SUPERSTRUCTURE

# DEAD LOAD DEFLECTIONS

NORTH CAROLINA PROFESSIONAL SEAL 21638 ENGINEER LAURA E. SUTTON
1/5/12

| REVISIONS | | | | | | SHEET NO. |
|---|---|---|---|---|---|---|
| NO. | BY: | DATE: | NO. | BY: | DATE: | S-196 |
| 1 | | | 3 | | | TOTAL SHEETS |
| 2 | | | 4 | | | 382 |

DRAWN BY : B.N.BARODAWALA DATE : 11/19/10
CHECKED BY : L.E. SUTTON DATE : 1/10/10

28-DEC-2011 15:41
R:\Structures\Frye\str05\bbarodawala\Microstation\I3819A_sd_DL_05.dgn
wparker

STR. #5

## NOTES

THE BARRIER RAIL IN A CONTINUOUS UNIT SHALL NOT BE CAST UNTIL ALL SLAB CONCRETE IN THE UNIT HAS BEEN CAST AND HAS REACHED A MINIMUM COMPRESSIVE STRENGTH OF 3,000 PSI.

THE JOINT IN THE DECK SHALL BE SAWED PRIOR TO THE CASTING OF THE BARRIER RAIL.

ALL REINFORCING STEEL IN BARRIER RAILS SHALL BE EPOXY COATED.

THE #5 S3 AND #5 S4 BARS SHALL BE INSTALLED, USING AN ADHESIVE ANCHORING SYSTEM, AFTER SAWING THE JOINT. THE YIELD LOAD FOR THE #5 S3 AND #5 S4 BARS IS 18.6 KIPS. FIELD TESTING FOR THE ADHESIVE BONDING SYSTEM IS NOT REQUIRED.

GROOVED CONTRACTION JOINTS, 1/2" IN DEPTH, SHALL BE TOOLED IN ALL EXPOSED FACES OF THE BARRIER RAIL AND IN ACCORDANCE WITH ARTICLE 825-10(B) OF THE STANDARD SPECIFICATIONS. THE CONTRACTION JOINT SHALL BE LOCATED AT EACH THIRD POINT BETWEEN BARRIER RAIL EXPANSION JOINTS. ONLY ONE CONTRACTION JOINT IS REQUIRED AT MIDPOINT OF BARRIER RAIL SEGMENTS LESS THAN 20 FEET IN LENGTH AND NO CONTRACTION JOINTS ARE REQUIRED FOR THOSE SEGMENTS LESS THAN 10 FEET IN LENGTH.

THE #5 S1 AND #5 S2 BARS MAY BE SHIFTED SLIGHTLY, AS NECESSARY, IN ORDER TO MAINTAIN 2" MIN. CLEARANCE TO THE 1/2" EXPANSION JOINT MATERIAL.

## BAR TYPES

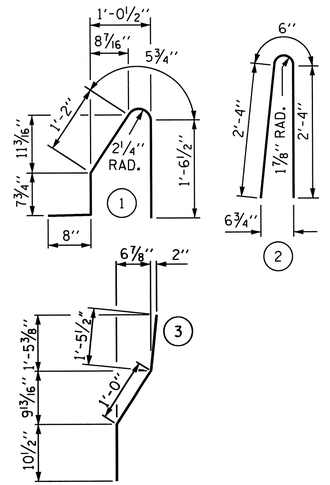


ALL BAR DIMENSIONS ARE OUT TO OUT.

## BILL OF MATERIAL

FOR CONCRETE BARRIER RAIL ONLY

| BAR | NO. | SIZE | TYPE | LENGTH | WEIGHT |
|---|---|---|---|---|---|
| * B1 | 64 | #5 | STR | 25'-10" | 1724 |
| * B2 | 32 | #5 | STR | 29'-0" | 968 |
| * B3 | 64 | #5 | STR | 16'-4" | 1090 |
| | | | | | |
| * S1 | 432 | #5 | 1 | 4'-6" | 2028 |
| * S2 | 432 | #5 | 2 | 5'-2" | 2328 |
| * S3 | 12 | #5 | 3 | 3'-4" | 42 |
| * S4 | 12 | #5 | STR | 3'-2" | 40 |
| | | | | | |

| | | |
|---|---|---|
| * EPOXY COATED REINFORCING STEEL | LBS. | 8,220 |
| CLASS AA CONCRETE | CU. YDS. | 44.7 |
| CONCRETE BARRIER RAIL | LIN. FT. | 445.40 |

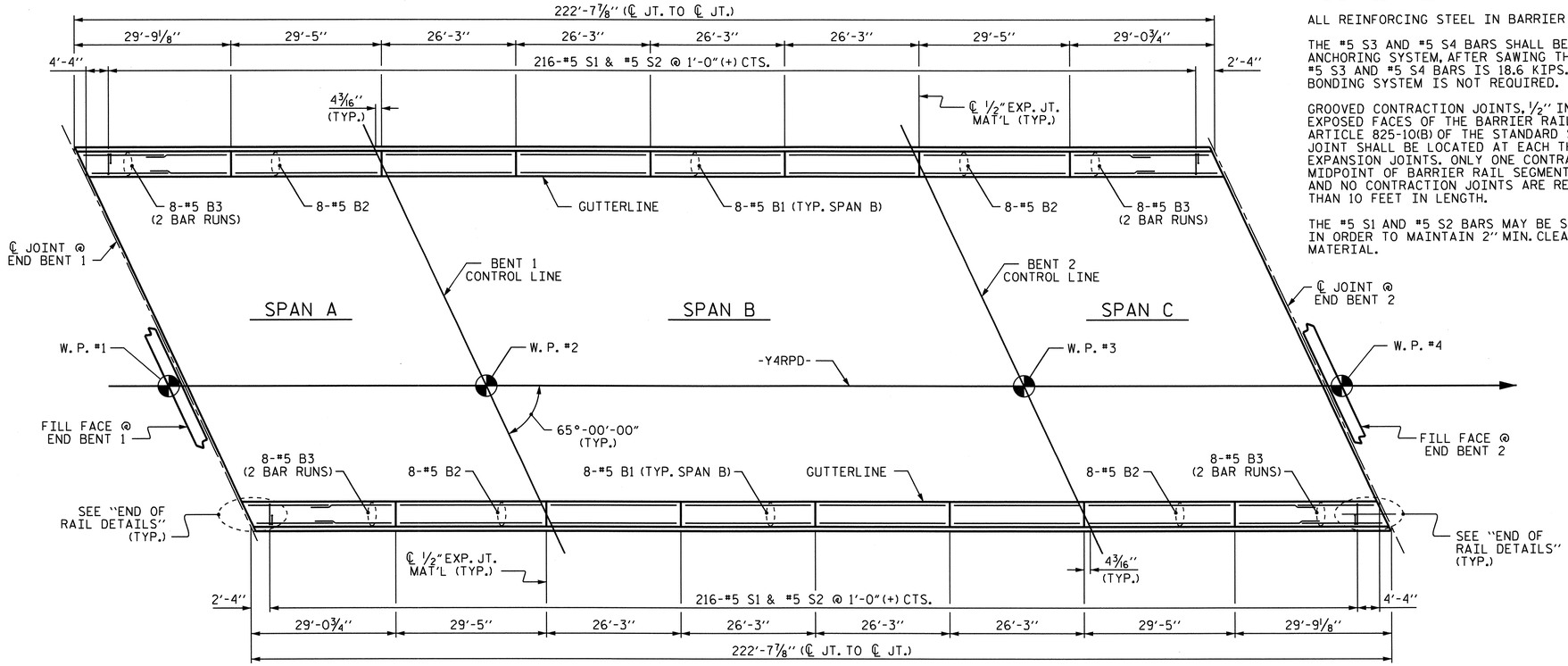


## PLAN

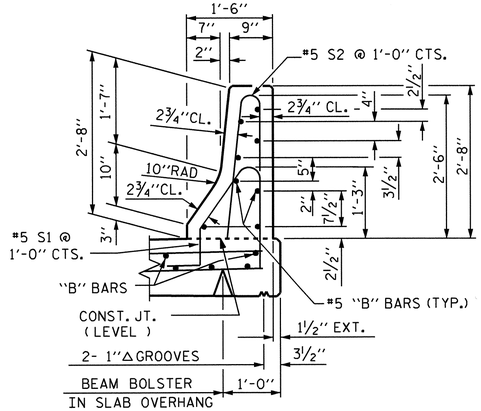


SECTION THRU RAIL

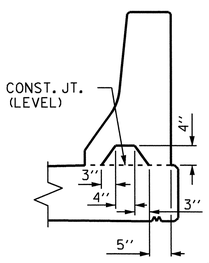


SECTION S-S

AT DAM IN OPEN JOINT
(THIS IS TO BE USED ONLY WHEN SLIP FORM IS USED)

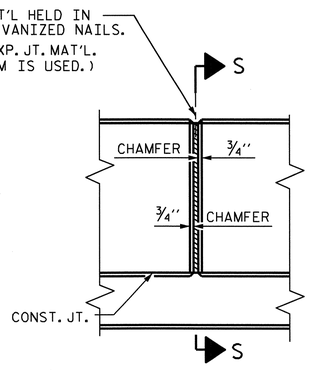


ELEVATION AT EXPANSION JOINTS

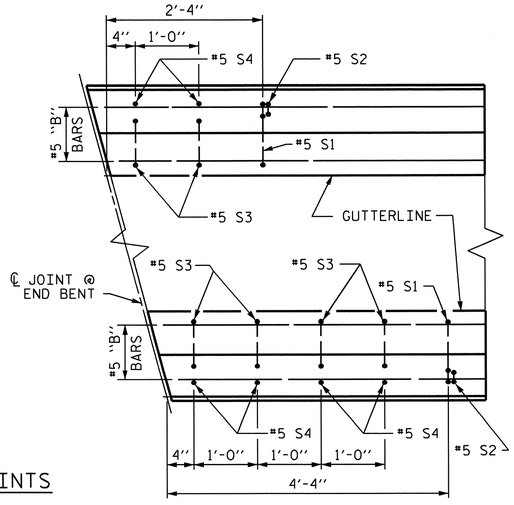


PLAN

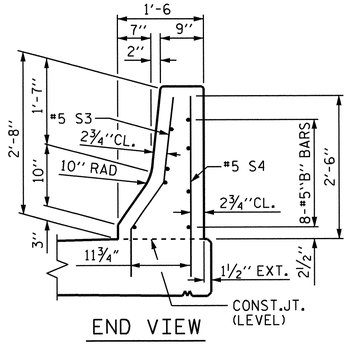


END VIEW

## BARRIER RAIL DETAILS

## END OF RAIL DETAILS

FOR ADHESIVE ANCHORING AT SAWED JOINTS

| | | | |
|---|---|---|---|
| ASSEMBLED BY : B.N.BARODAWALA | DATE : 8/09/10 | | |
| CHECKED BY : L.E. SUTTON | DATE : 8/13/10 | | |
| DRAWN BY : ARB 5/87 | REV. 10/17/00 | RWW/LES | |
| CHECKED BY : SJD 9/87 | REV. 5/7/03R | RWW/JTE | |
| | REV. 5/1/06R | TLA/GM | |

28-DEC-2011 15:41
R:\Structures\Frye\str05\bbarodawala\Microstation\I3819A_sd_BR_05.dgn
wparker

NORTH CAROLINA PROFESSIONAL SEAL 21638 ENGINEER LAURA E. SUTTON
1/3/12

PROJECT NO. I-3819A
IREDELL COUNTY
STATION: 17+48.00-Y4RPD-

STATE OF NORTH CAROLINA
DEPARTMENT OF TRANSPORTATION
RALEIGH

STANDARD
# CONCRETE BARRIER RAIL

| REVISIONS | | | | | | SHEET NO. |
|---|---|---|---|---|---|---|
| NO. | BY: | DATE: | NO. | BY: | DATE: | S-197 |
| 1 | | | 3 | | | TOTAL SHEETS |
| 2 | | | 4 | | | 382 |

STR. #5

STD. NO. CBR1

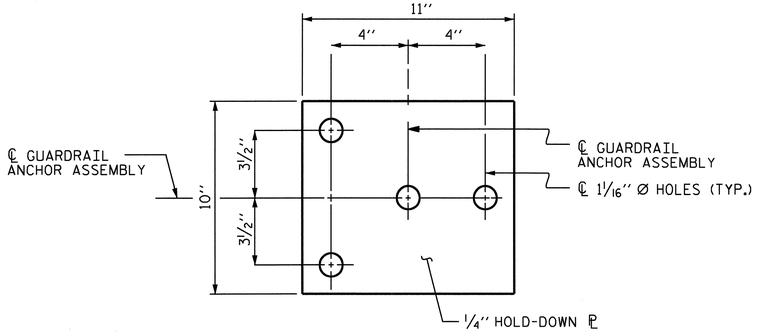


PLAN

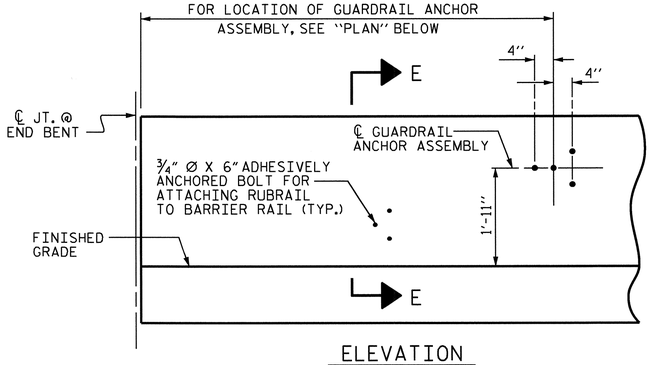


ELEVATION

FOR LOCATION OF RUBRAIL, SEE ROADWAY STD. 862.03

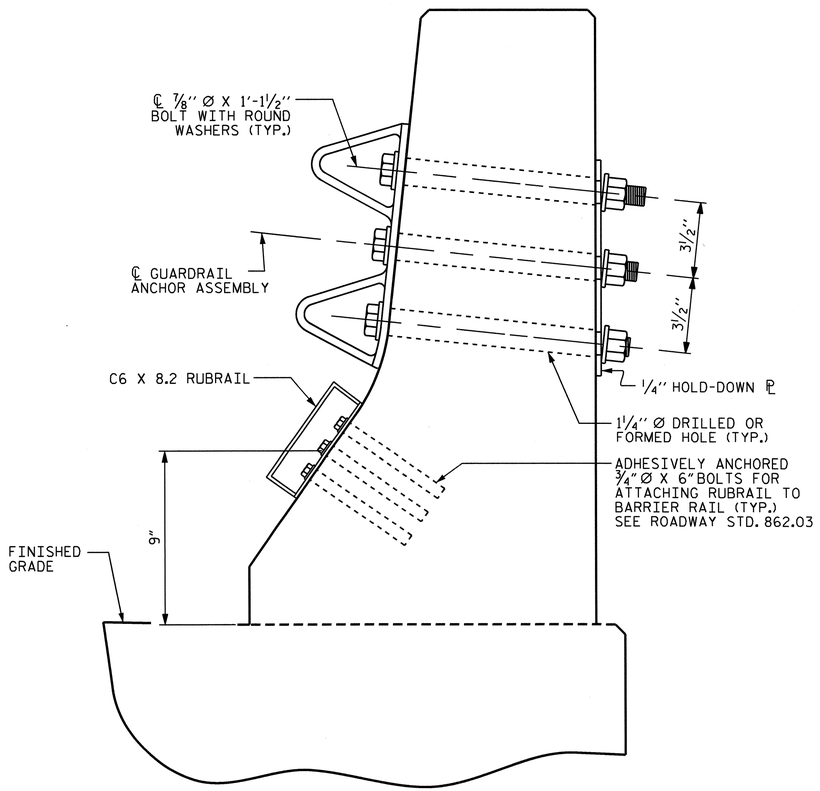


SECTION E-E

# GUARDRAIL ANCHOR ASSEMBLY DETAILS

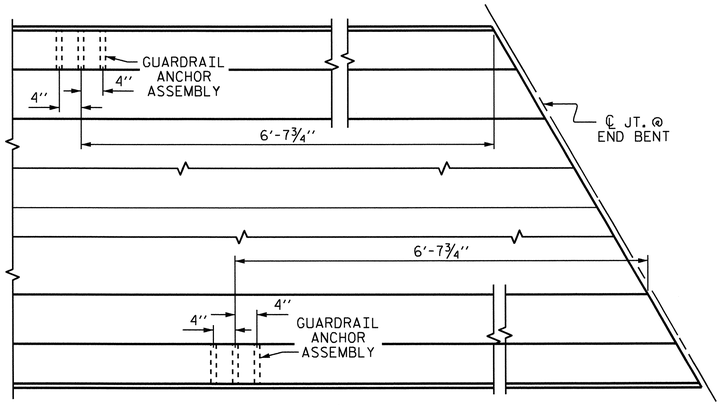


PLAN

# LOCATION OF ANCHORS FOR GUARDRAIL

END BENT 2 SHOWN, END BENT 1 SIMILAR.

## NOTES

THE GUARDRAIL ANCHOR ASSEMBLY SHALL CONSIST OF A ¼'' HOLD DOWN PLATE AND 4 - ⅞'' Ø BOLTS WITH NUTS AND WASHERS, RUBRAIL, AND ADHESIVELY ANCHORED BOLTS.

THE HOLD-DOWN PLATE SHALL CONFORM TO AASHTO M270 GRADE 36. AFTER FABRICATION, THE HOLD-DOWN PLATE SHALL BE HOT-DIP GALVANIZED IN ACCORDANCE WITH AASHTO M111.

BOLTS SHALL CONFORM TO THE REQUIREMENTS OF ASTM A307 AND NUTS SHALL CONFORM TO THE REQUIREMENTS OF AASHTO M291. BOLTS, NUTS AND WASHERS SHALL BE GALVANIZED. (AT THE CONTRACTOR'S OPTION, STAINLESS STEEL BOLTS, NUTS AND WASHERS MAY BE USED AS AN ALTERNATE FOR THE ⅞'' Ø GALVANIZED BOLTS, NUTS AND WASHERS. THEY SHALL CONFORM TO OR EXCEED THE MECHANICAL REQUIREMENTS OF ASTM A307. THE USE OF THIS ALTERNATE SHALL BE APPROVED BY THE ENGINEER.)

THE GUARDRAIL ANCHOR ASSEMBLY IS REQUIRED AT ALL POINTS WHERE APPROACH GUARDRAIL IS TO BE ATTACHED TO THE END OF BARRIER RAIL. FOR POINTS OF ATTACHMENT, SEE SKETCH.

AFTER INSTALLATION, THE EXPOSED THREAD OF THE BOLT SHALL BE BURRED WITH A SHARP POINTED TOOL.

THE COST OF THE GUARDRAIL ANCHOR ASSEMBLY SHALL BE INCLUDED IN THE UNIT CONTRACT PRICE BID FOR CONCRETE BARRIER RAIL.

THE 1 ¼'' Ø HOLES SHALL BE FORMED OR DRILLED WITH A CORE BIT. IMPACT TOOLS WILL NOT BE PERMITTED. ANY CONCRETE DAMAGED BY THIS WORK SHALL BE REPAIRED TO THE SATISFACTION OF THE ENGINEER.

THE C6 X 8.2 RUBRAIL IS TO BE ADHESIVELY ANCHORED TO THE RAIL USING THREE ¾" Ø X 6" BOLTS WITH WASHERS. LEVEL ONE FIELD TESTING IS REQUIRED, AND THE YIELD LOAD OF THE ¾" Ø BOLT IS 12 KIPS. FOR ADHESIVELY ANCHORED ANCHOR BOLTS OR DOWELS, SEE STANDARD SPECIFICATIONS. SEE ROADWAY STANDARD 862.03 FOR DETAILS AND LOCATION OF THE RUBRAIL.

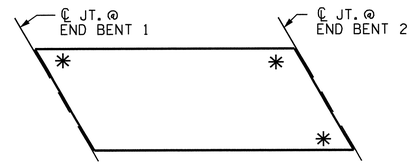


SKETCH SHOWING POINTS OF ATTACHMENTS

✳ DENOTES GUARDRAIL ANCHOR ASSEMBLY

PROJECT NO. I-3819A

IREDELL COUNTY

STATION: 17+48.00-Y4RPD-

STATE OF NORTH CAROLINA
DEPARTMENT OF TRANSPORTATION
RALEIGH

STANDARD

# GUARDRAIL ANCHORAGE FOR BARRIER RAIL

| REVISIONS | | | | | | SHEET NO. |
|---|---|---|---|---|---|---|
| NO. | BY: | DATE: | NO. | BY: | DATE: | S-198 |
| 1 | | | 3 | | | TOTAL SHEETS |
| 2 | | | 4 | | | 382 |

NORTH CAROLINA PROFESSIONAL SEAL 21638 ENGINEER LAURA E. SUTTON
1/3/12

STR. #5

STD. NO. GRA2

| | |
|---|---|
| ASSEMBLED BY : B.N.BARODAWALA | DATE : 8/09/10 |
| CHECKED BY : L. E. SUTTON | DATE : 8/16/10 |
| DRAWN BY : TLA 5/06 | ADDED 5/1/06R KMM/GM |
| CHECKED BY : GM 5/06 | |

28-DEC-2011 15:41
R:\Structures\Frye\str05\bbarodawala\Microstation\I3819A_sd_GR_05.dgn
wparker

## SUPERSTRUCTURE REINFORCING STEEL LENGTHS ARE BASED ON THE FOLLOWING MINIMUM SPLICE LENGTHS

| BAR SIZE | SUPERSTRUCTURE EXCEPT APPROACH SLABS, PARAPET, AND BARRIER RAIL | | APPROACH SLABS | | PARAPET AND BARRIER RAIL |
|---|---|---|---|---|---|
| | EPOXY COATED | UNCOATED | EPOXY COATED | UNCOATED | |
| #4 | 2′-0″ | 1′-9″ | 2′-0″ | 1′-9″ | 2′-9″ |
| #5 | 2′-6″ | 2′-2″ | 2′-6″ | 2′-2″ | 3′-5″ |
| #6 | 3′-0″ | 2′-7″ | 3′-10″ | 2′-7″ | 4′-4″ |
| #7 | 5′-3″ | 3′-6″ | | | |
| #8 | 6′-10″ | 4′-7″ | | | |

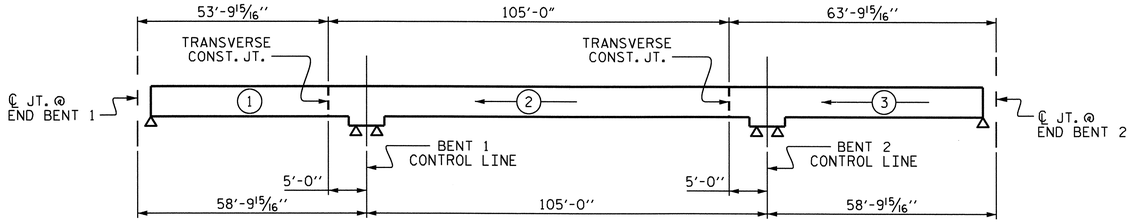


## POURING SEQUENCE

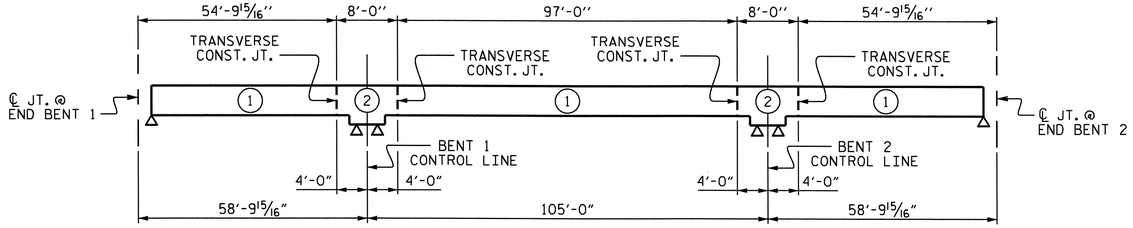


## OPTIONAL POURING SEQUENCE

POUR ② CANNOT BE STARTED UNTIL BOTH ADJACENT ① POURS REACH A MINIMUM OF 3000 PSI.

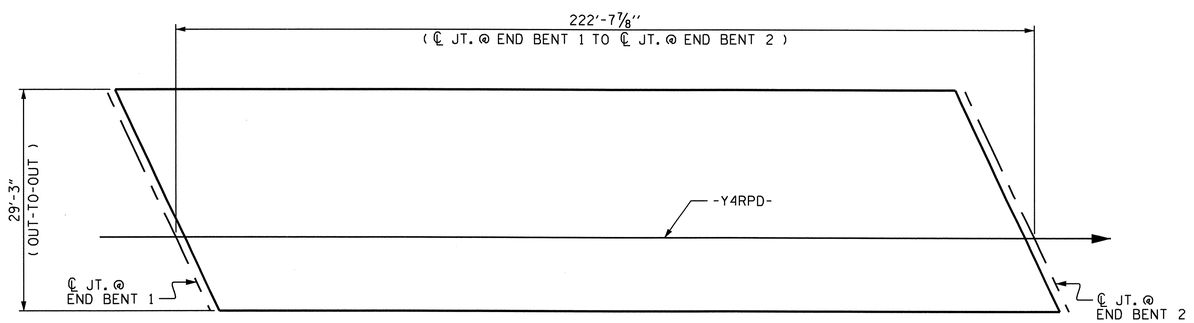


## LAYOUT FOR COMPUTING AREA REINFORCED CONCRETE DECK SLAB ( SQ. FT. = 6,513 )

## BILL OF MATERIAL

| BAR | NO. | SIZE | TYPE | LENGTH | WEIGHT |
|---|---|---|---|---|---|
| ✱A1 | 418 | #5 | STR | 28′-11″ | 12607 |
| A2 | 418 | #5 | STR | 28′-11″ | 12607 |
| ✱A101 | 4 | #5 | STR | 26′-11″ | 112 |
| ✱A102 | 4 | #5 | STR | 24′-10″ | 104 |
| ✱A103 | 4 | #5 | STR | 22′-8″ | 95 |
| ✱A104 | 4 | #5 | STR | 20′-6″ | 86 |
| ✱A105 | 4 | #5 | STR | 18′-4″ | 76 |
| ✱A106 | 4 | #5 | STR | 16′-3″ | 68 |
| ✱A107 | 4 | #5 | STR | 14′-1″ | 59 |
| ✱A108 | 4 | #5 | STR | 11′-11″ | 50 |
| ✱A109 | 4 | #5 | STR | 9′-10″ | 41 |
| ✱A110 | 4 | #5 | STR | 7′-8″ | 32 |
| ✱A111 | 4 | #5 | STR | 5′-6″ | 23 |
| ✱A112 | 4 | #5 | STR | 3′-4″ | 14 |
| A201 | 4 | #5 | STR | 26′-11″ | 112 |
| A202 | 4 | #5 | STR | 24′-10″ | 104 |
| A203 | 4 | #5 | STR | 22′-8″ | 95 |
| A204 | 4 | #5 | STR | 20′-6″ | 86 |
| A205 | 4 | #5 | STR | 18′-4″ | 76 |
| A206 | 4 | #5 | STR | 16′-3″ | 68 |
| A207 | 4 | #5 | STR | 14′-1″ | 59 |
| A208 | 4 | #5 | STR | 11′-11″ | 50 |
| A209 | 4 | #5 | STR | 9′-10″ | 41 |
| A210 | 4 | #5 | STR | 7′-8″ | 32 |
| A211 | 4 | #5 | STR | 5′-6″ | 23 |
| A212 | 4 | #5 | STR | 3′-4″ | 14 |
| ✱B1 | 16 | #4 | STR | 29′-7″ | 316 |
| ✱B2 | 76 | #4 | STR | 19′-10″ | 1007 |
| ✱B3 | 74 | #5 | STR | 60′-0″ | 4631 |
| ✱B4 | 72 | #5 | STR | 25′-0″ | 1877 |
| ✱B5 | 38 | #4 | STR | 18′-6″ | 470 |
| B6 | 116 | #5 | STR | 57′-3″ | 6927 |
| ✱G1 | 2 | #5 | STR | 31′-10″ | 66 |
| ✱K1 | 8 | #8 | 1 | 13′-8″ | 292 |
| ✱K2 | 8 | #8 | 2 | 18′-11″ | 404 |
| ✱K3 | 18 | #6 | STR | 3′-6″ | 95 |
| K4 | 12 | #4 | STR | 3′-6″ | 28 |
| K5 | 48 | #4 | STR | 6′-9″ | 216 |
| K6 | 12 | #4 | STR | 3′-9″ | 30 |
| K7 | 24 | #4 | 3 | 5′-3″ | 84 |
| K8 | 24 | #4 | 4 | 10′-3″ | 164 |
| ✱S1 | 24 | #4 | 5 | 5′-2″ | 83 |
| ✱S2 | 24 | #5 | 6 | 5′-11″ | 148 |
| S3 | 156 | #4 | 7 | 2′-11″ | 304 |
| S4 | 12 | #4 | 8 | 9′-3″ | 74 |
| U1 | 24 | #4 | 2 | 16′-6″ | 265 |
| REINFORCING STEEL | | | | LBS. | 21,459 |
| ✱EPOXY COATED REINFORCING STEEL | | | | LBS. | 22,756 |

## BAR TYPES

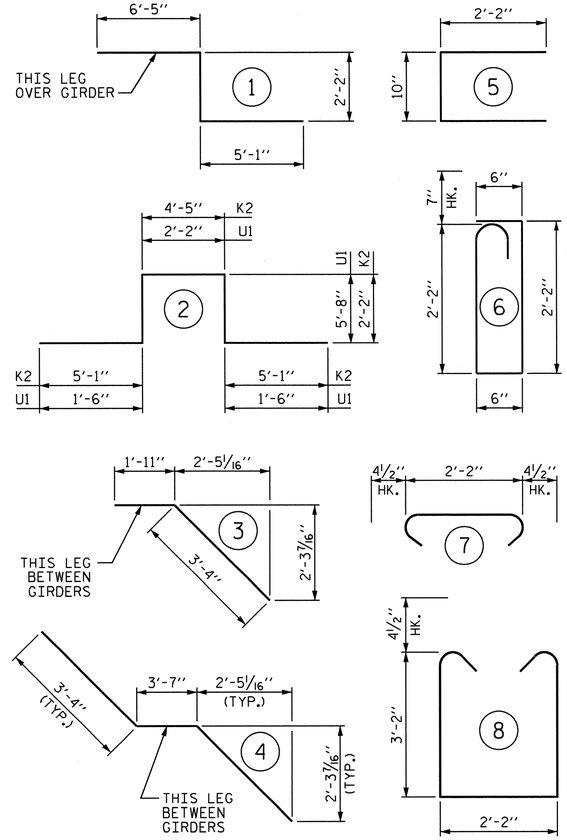


ALL BAR DIMENSIONS ARE OUT TO OUT.

## SUPERSTRUCTURE BILL OF MATERIAL

| | CLASS AA CONCRETE | REINFORCING STEEL | ✱ EPOXY COATED REINFORCING STEEL |
|---|---|---|---|
| | ( CU.YDS. ) | ( LBS. ) | ( LBS. ) |
| POUR 1 | 52.4 | —— | —— |
| POUR 2 | 108.3 | —— | —— |
| POUR 3 | 71.5 | —— | —— |
| TOTALS▲ | 232.2 | 21,459 | 22,756 |

▲QUANTITIES FOR BARRIER RAIL ARE NOT INCLUDED.

## GROOVING BRIDGE FLOORS

| | |
|---|---|
| APPROACH SLABS | 1,084 SQ.FT. |
| BRIDGE DECK | 5,088 SQ.FT. |
| TOTAL | 6,172 SQ.FT. |

PROJECT NO. I-3819A

IREDELL COUNTY

STATION: 17+48.00-Y4RPD-

STATE OF NORTH CAROLINA
DEPARTMENT OF TRANSPORTATION
RALEIGH

STANDARD
SUPERSTRUCTURE BILL OF MATERIAL

| REVISIONS | | | | | | SHEET NO. |
|---|---|---|---|---|---|---|
| NO. | BY: | DATE: | NO. | BY: | DATE: | S-199 |
| 1 | | | 3 | | | TOTAL SHEETS |
| 2 | | | 4 | | | 382 |

NORTH CAROLINA PROFESSIONAL SEAL 21638 ENGINEER LAURA E. SUTTON
1/12/12

| | | |
|---|---|---|
| ASSEMBLED BY : B.N.BARODAWALA | DATE : 08/6/10 | |
| CHECKED BY : L. E. SUTTON | DATE : 11/15/10 | |
| DRAWN BY : JMB 5/87 | REV. 6/1/94 | EEM/GRP |
| CHECKED BY : SJD 9/87 | REV. 8/16/99 | RWW/LES |
| | REV. 5/1/06 | TLA/GM |

10-JAN-2012 12:47
R:\Structures\Frye\str05\bbarodawala\Microstation\I3819A_sd_BM_05.dgn
wparker

STR. #5

STD. NO. BOM2

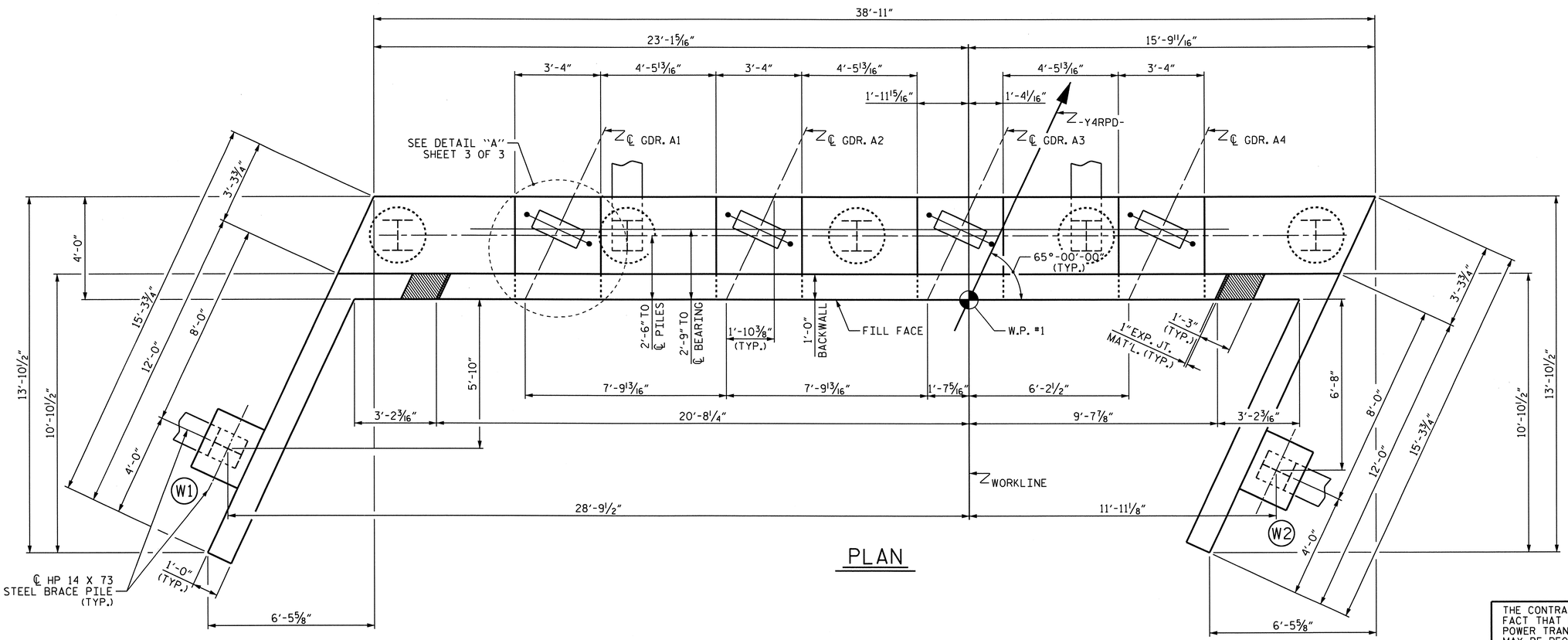


PLAN

## NOTES

STIRRUPS IN CAP MAY BE SHIFTED AS NECESSARY TO CLEAR ANCHOR BOLTS.

BACKWALL SHALL BE PLACED BEFORE APPLYING THE EPOXY PROTECTIVE COATING.

THE TOP SURFACE AREAS OF THE END BENT CAPS SHALL BE CURED IN ACCORDANCE WITH THE STANDARD SPECIFICATIONS EXCEPT THE MEMBRANE CURING COMPOUND METHOD SHALL NOT BE USED.

THE TOP SURFACE OF THE END BENT CAP EXCEPT THE BRIDGE SEAT BUILDUPS SHALL BE SLOPED TRANSVERSELY FROM THE FILL FACE TO THE BACK FACE AT THE RATE OF 2%.

THE #5 V1 BARS SHALL BE PLACED 2" CLEAR FROM TOP OF BACKWALL.

THE CONCRETE IN THE SHADED AREA OF THE WING SHALL BE POURED AFTER THE JOINT BETWEEN THE DECK AND THE APPROACH SLAB HAS BEEN SAWED AND THE BARRIER RAIL IS CAST IF SLIP FORMING IS USED.

THE CONTRACTOR SHALL PROVIDE FOR INSTALLATION OF THE 4" DIAMETER DRAIN PIPE THROUGH THE WING WALL AS REQUIRED FOR REINFORCED BRIDGE APPROACH FILLS. SEE THE ROADWAY PLANS. REINFORCING STEEL IN THE WING WALL MAY BE SHIFTED AS NECESSARY TO CLEAR THE DRAIN PIPE.

THE CONTRACTOR'S ATTENTION IS CALLED TO THE FACT THAT DUE TO THE PROXIMITY OF OVERHEAD POWER TRANSMISSION LINES, MULTIPLE SPLICES MAY BE REQUIRED TO INSTALL PILES.

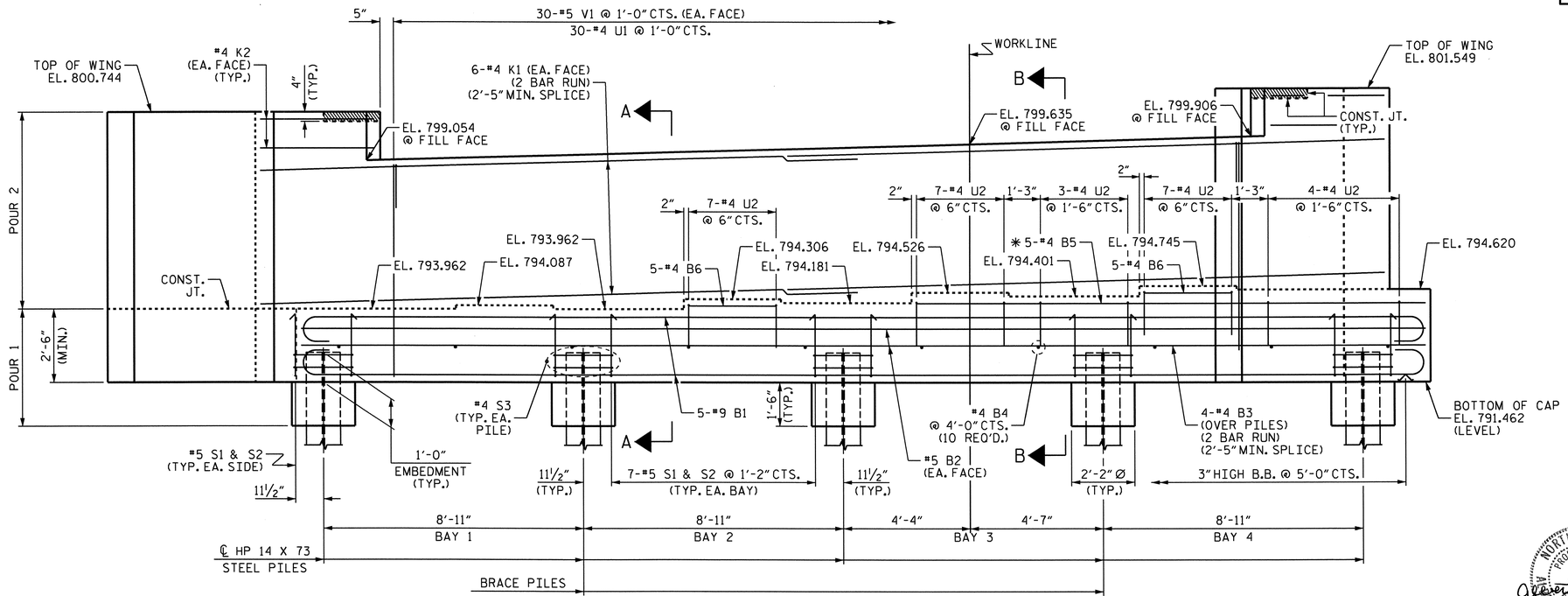


ELEVATION

(WING BRACE PILES NOT SHOWN FOR CLARITY)

* BAR MAY BE CUT TO FIT ALONG SKEW.

DRAWN BY : E.C. LOCKLEAR DATE : 11-04-10
CHECKED BY : O.T. NGUYEN DATE : 11-08-10

28-DEC-2011 15:41
R:\Structures\Frye\str05\elocklear\Microstation\I3819A_SD_E*_05.dgn
wparker

PROJECT NO. I-3819A
IREDELL COUNTY
STATION: 17+48.00-Y4RPD-

SHEET 1 OF 3

STATE OF NORTH CAROLINA
DEPARTMENT OF TRANSPORTATION
RALEIGH

SUBSTRUCTURE

END BENT 1

NORTH CAROLINA PROFESSIONAL SEAL ENGINEER ALBERTO C. OUTLAW

1/3/12

| REVISIONS | | | | | | SHEET NO. |
|---|---|---|---|---|---|---|
| NO. | BY: | DATE: | NO. | BY: | DATE: | S-200 |
| 1 | | | 3 | | | TOTAL SHEETS |
| 2 | | | 4 | | | 382 |

STR. #5

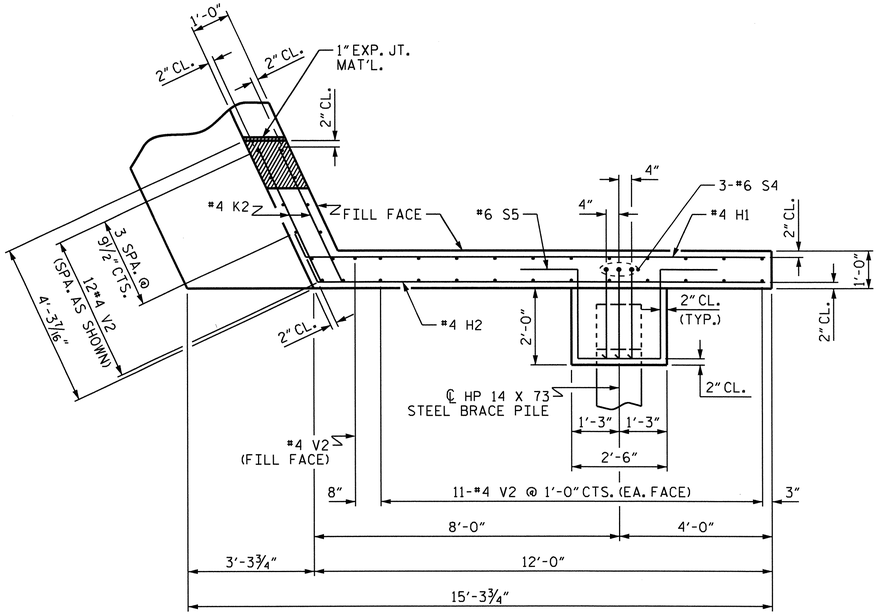


PLAN OF WING (W1)

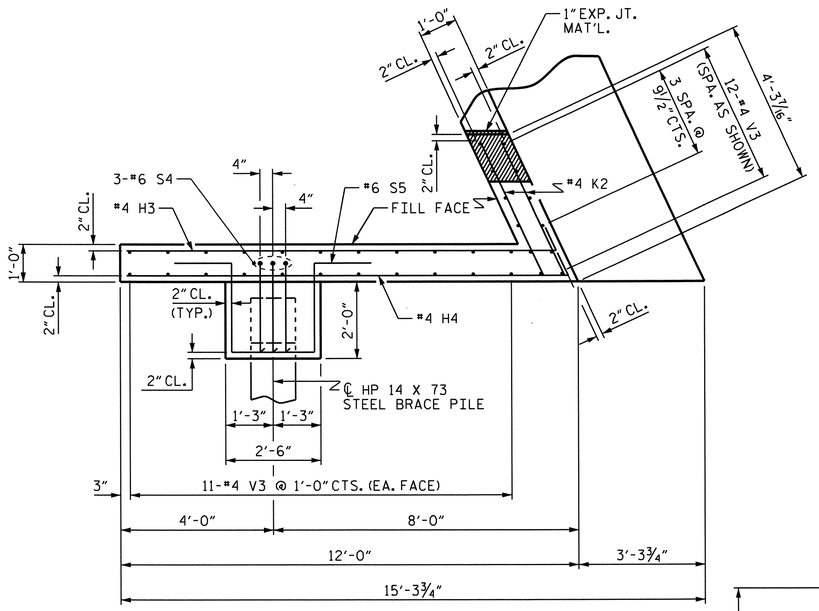


PLAN OF WING (W2)

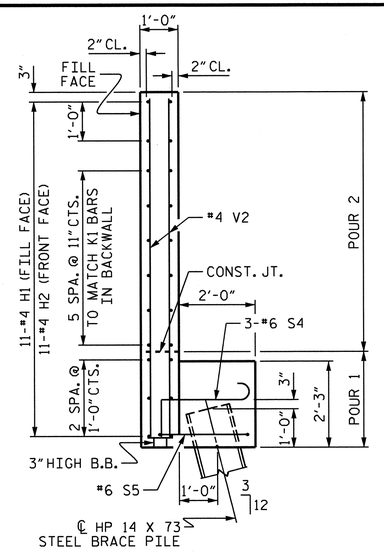


SECTION X-X

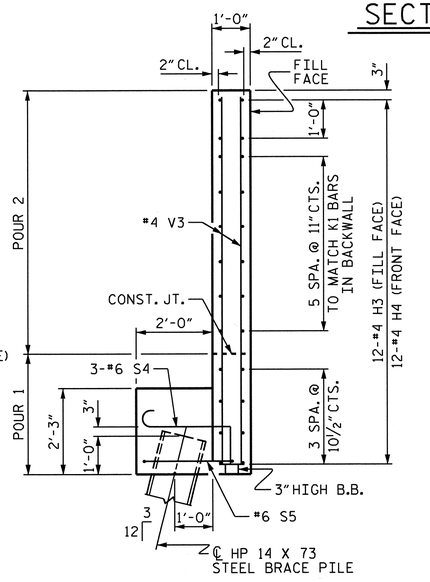


SECTION Y-Y

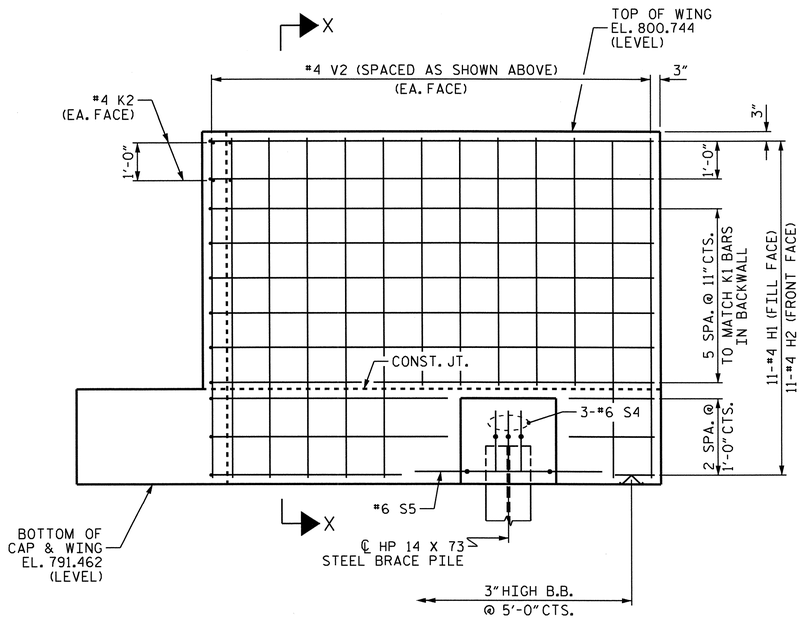


ELEVATION OF WING (W1)

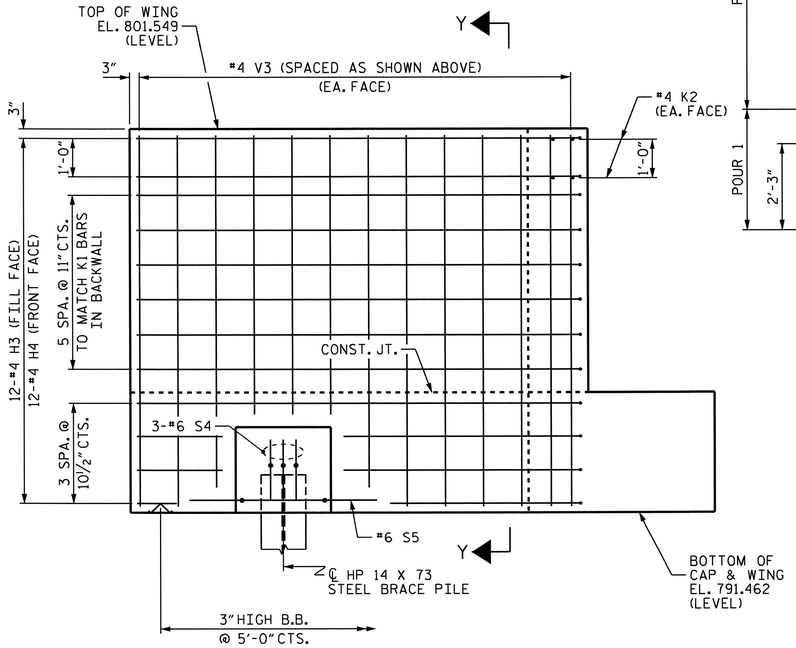


ELEVATION OF WING (W2)

PROJECT NO. I-3819A

IREDELL COUNTY

STATION: 17+48.00-Y4RPD-

SHEET 2 OF 3

STATE OF NORTH CAROLINA
DEPARTMENT OF TRANSPORTATION
RALEIGH

SUBSTRUCTURE

END BENT 1

NORTH CAROLINA PROFESSIONAL SEAL ENGINEER ALBERT C. OUTLAW, JR.

Albert C. Outlaw, Jr.

1/3/12

| REVISIONS | | | | | | SHEET NO. |
|---|---|---|---|---|---|---|
| NO. | BY: | DATE: | NO. | BY: | DATE: | S-201 |
| 1 | | | 3 | | | TOTAL SHEETS |
| 2 | | | 4 | | | 382 |

STR. #5

DRAWN BY : E.C. LOCKLEAR DATE : 11-04-10
CHECKED BY : O.T. NGUYEN DATE : 11-08-10

28-DEC-2011 15:41
R:\Structures\Frye\str05\elocklear\Microstation\I3819A_SD_E*_05.dgn
wparker

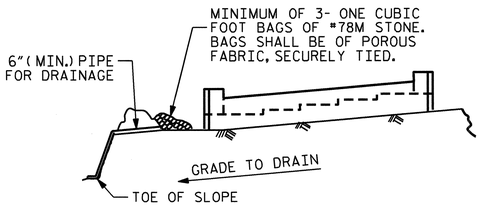


BAGGED STONE AND PIPE SHALL BE PLACED IMMEDIATELY AFTER COMPLETION OF END BENT EXCAVATION. PIPE MAY BE EITHER CONCRETE, CORRUGATED STEEL, CORRUGATED ALUMINUM ALLOY, OR CORRUGATED PLASTIC. PERFORATED PIPE WILL NOT BE ALLOWED.

BAGGED STONE SHALL REMAIN IN PLACE UNTIL THE ENGINEER DIRECTS THAT IT BE REMOVED. THE CONTRACTOR SHALL REMOVE AND DISPOSE OF SILT ACCUMULATIONS AT BAGGED STONE WHEN SO DIRECTED BY THE ENGINEER. BAGS SHALL BE REMOVED AND REPLACED WHENEVER THE ENGINEER DETERMINES THAT THEY HAVE DETERIORATED AND LOST THEIR EFFECTIVENESS.

NO SEPARATE PAYMENT WILL BE MADE FOR THIS WORK AND THE ENTIRE COST OF THIS WORK SHALL BE INCLUDED IN THE UNIT CONTRACT PRICE BID FOR THE SEVERAL PAY ITEMS.

## TEMPORARY DRAINAGE AT END BENT

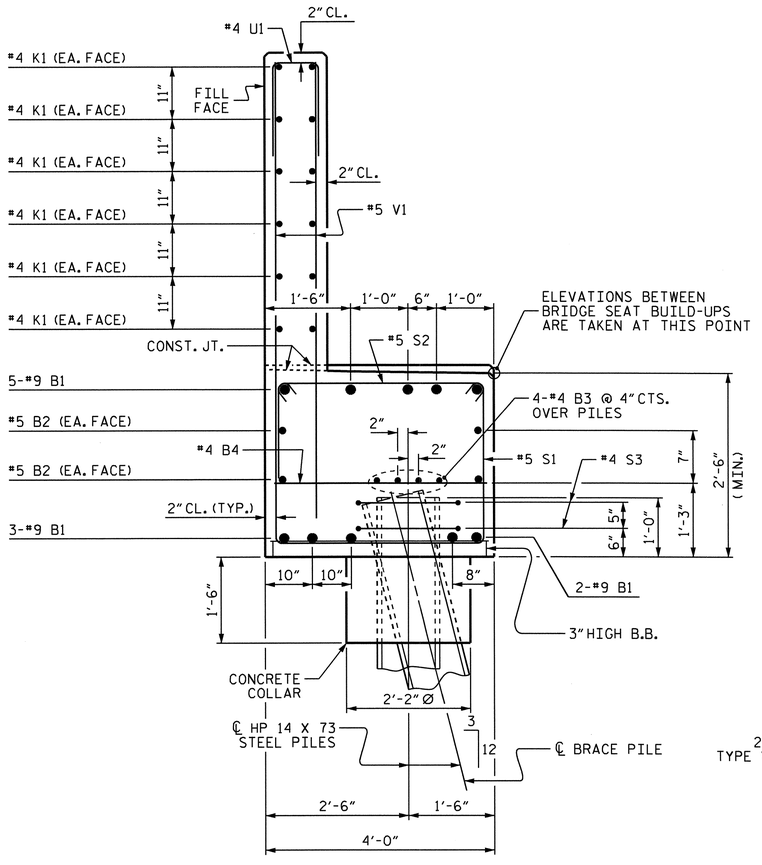


## SECTION A-A

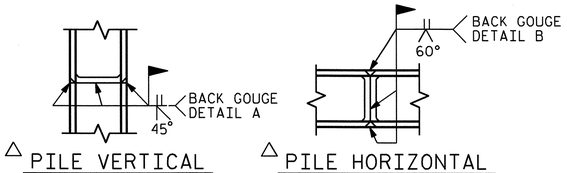


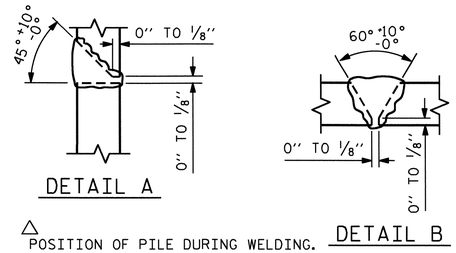


△ POSITION OF PILE DURING WELDING.

## PILE SPLICE DETAILS

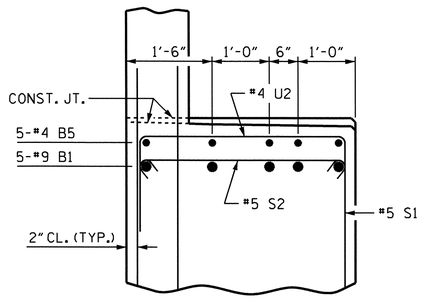


## PARTIAL SECTION B-B

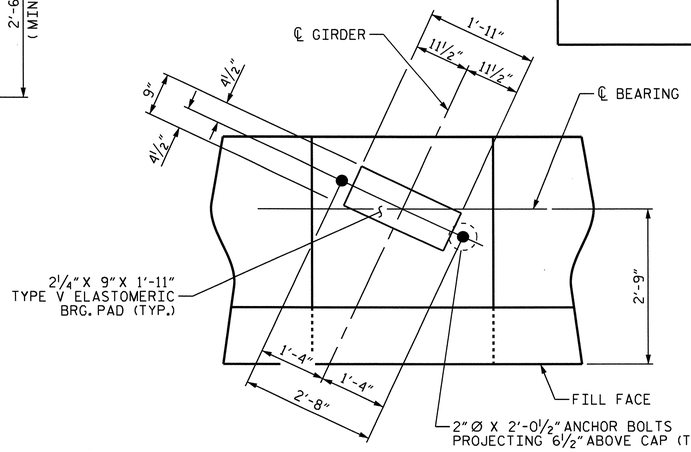


## DETAIL "A"

(TYP. EA. GDR.)

## BAR TYPES

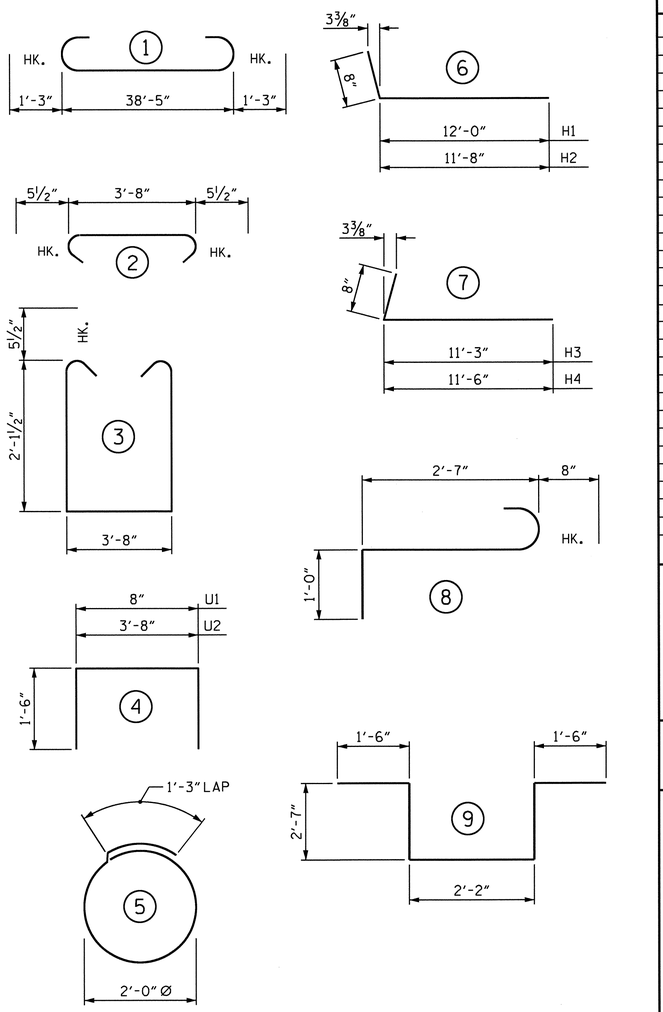


ALL BAR DIMENSIONS ARE OUT TO OUT.

## BILL OF MATERIAL

### END BENT 1

| BAR | NO. | SIZE | TYPE | LENGTH | WEIGHT |
|---|---|---|---|---|---|
| B1 | 10 | #9 | 1 | 40'-11" | 1391 |
| B2 | 4 | #5 | STR | 38'-7" | 161 |
| B3 | 8 | #4 | STR | 20'-6" | 110 |
| B4 | 10 | #4 | STR | 3'-8" | 24 |
| B5 | 5 | #4 | STR | 17'-5" | 58 |
| B6 | 10 | #4 | STR | 3'-0" | 20 |
| | | | | | |
| H1 | 11 | #4 | 6 | 12'-8" | 93 |
| H2 | 11 | #4 | 6 | 12'-4" | 91 |
| H3 | 12 | #4 | 7 | 11'-11" | 96 |
| H4 | 12 | #4 | 7 | 12'-2" | 98 |
| | | | | | |
| K1 | 24 | #4 | STR | 20'-6" | 329 |
| K2 | 8 | #4 | STR | 3'-11" | 21 |
| | | | | | |
| S1 | 30 | #5 | 3 | 8'-10" | 276 |
| S2 | 30 | #5 | 2 | 4'-7" | 143 |
| S3 | 10 | #4 | 5 | 7'-7" | 51 |
| S4 | 6 | #6 | 8 | 4'-3" | 38 |
| S5 | 2 | #6 | 9 | 10'-4" | 31 |
| | | | | | |
| U1 | 30 | #4 | 4 | 3'-8" | 73 |
| U2 | 28 | #4 | 4 | 6'-8" | 125 |
| | | | | | |
| V1 | 60 | #5 | STR | 7'-3" | 454 |
| V2 | 35 | #4 | STR | 8'-11" | 208 |
| V3 | 34 | #4 | STR | 9'-9" | 221 |
| | | | | | |

REINFORCING STEEL 4,112 LBS

CLASS A CONCRETE

| | |
|---|---|
| POUR 1 (CAP, LOWER WINGS & CONCRETE COLLARS) | 20.5 C.Y. |
| POUR 2 (BACKWALL & UPPER WINGS) | 14.1 C.Y. |
| TOTAL | 34.6 C.Y. |

HP 14 X 73 STEEL PILES

NUMBER = 7 LIN. FT. = 455.0

PROJECT NO. I-3819A

IREDELL COUNTY

STATION: 17+48.00-Y4RPD-

SHEET 3 OF 3

STATE OF NORTH CAROLINA
DEPARTMENT OF TRANSPORTATION
RALEIGH

SUBSTRUCTURE

END BENT 1

DRAWN BY : E.C. LOCKLEAR DATE : 11-04-10
CHECKED BY : O.T. NGUYEN DATE : 11-08-10

28-DEC-2011 15:41
R:\Structures\Frye\str05\elocklear\Microstation\I3819A_SD_E*_05.dgn
wparker

NORTH CAROLINA PROFESSIONAL ENGINEER SEAL 40751 OLIVER T. OUTLAW, JR.
Oliver T. Outlaw, Jr.
1/3/12

| REVISIONS | | | | | | SHEET NO. |
|---|---|---|---|---|---|---|
| NO. | BY: | DATE: | NO. | BY: | DATE: | S-202 |
| 1 | | | 3 | | | TOTAL SHEETS |
| 2 | | | 4 | | | 382 |

STR. #5

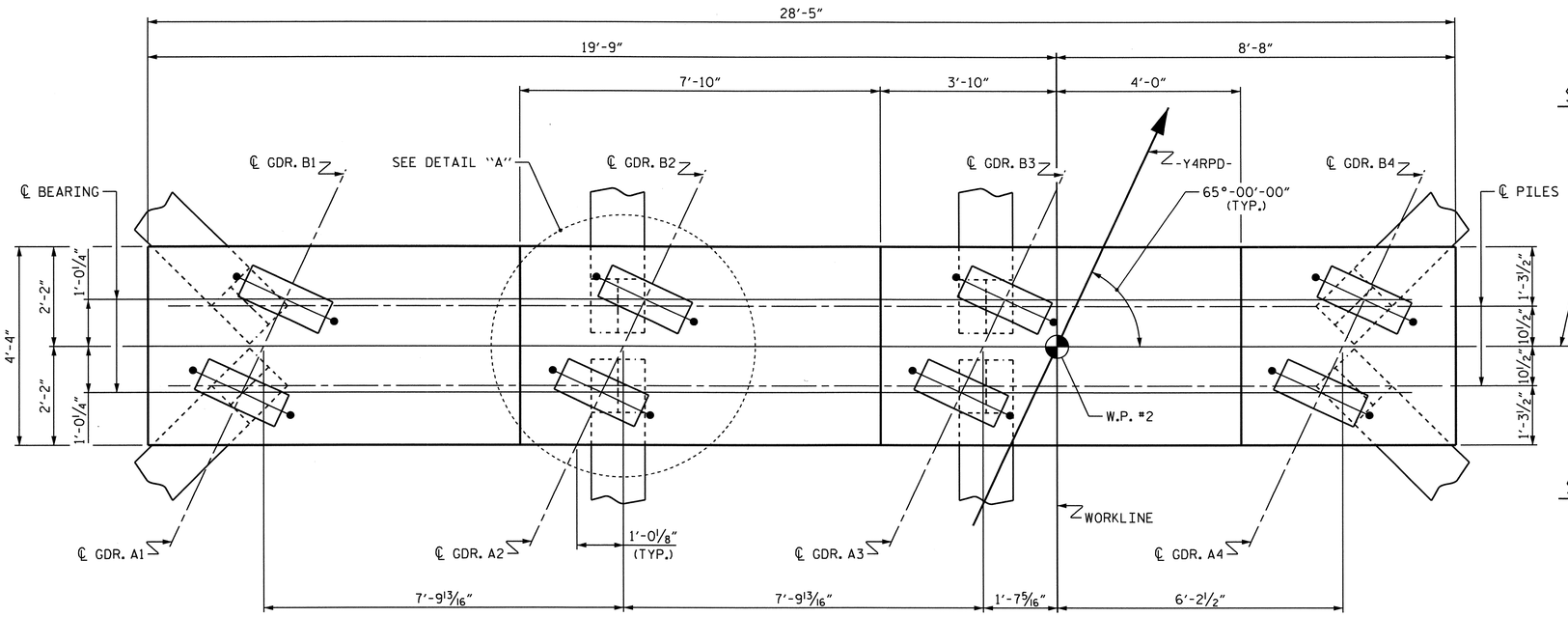


PLAN

SPAN B

SPAN A

## NOTES

STIRRUPS IN CAP MAY BE SHIFTED AS NECESSARY TO CLEAR ANCHOR BOLTS.

FOR PILE SPLICE DETAILS, SEE END BENT 1.

GALVANIZE THE TOP 30 FEET OF EACH INTERIOR BENT PILE IN ACCORDANCE WITH SECTION 1076 OF THE STANDARD SPECIFICATIONS.

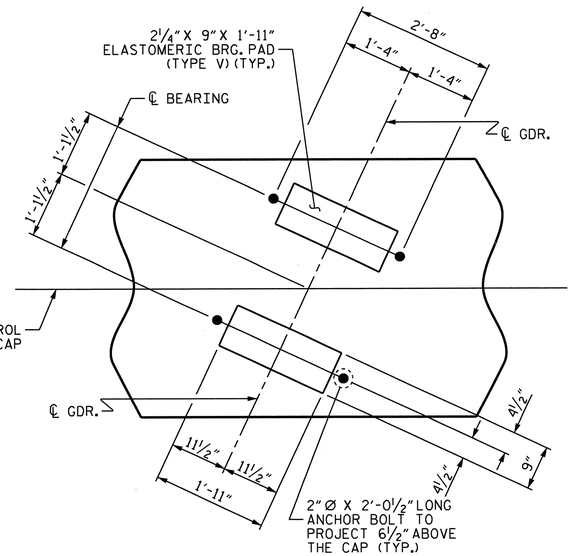


DETAIL "A"
(TYP. EA. GIRDER)

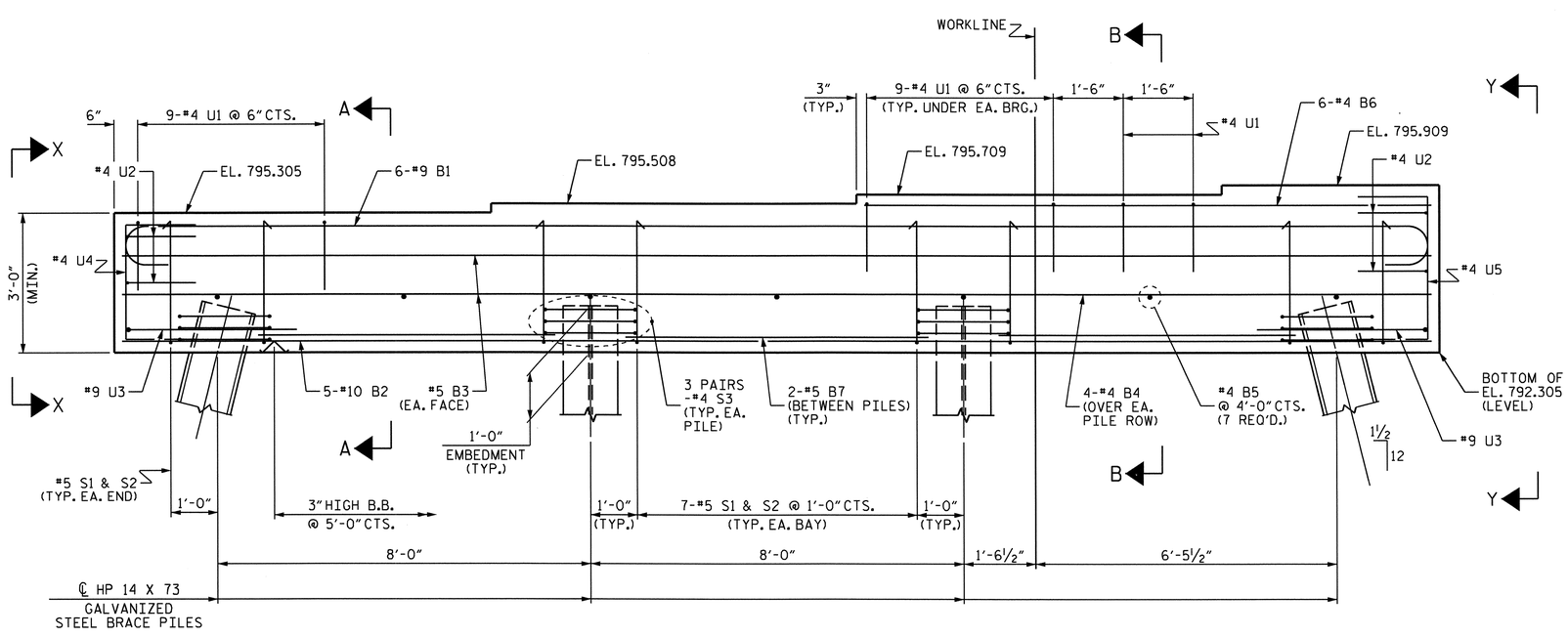


ELEVATION

PROJECT NO. I-3819A

IREDELL COUNTY

STATION: 17+48.00-Y4RPD-

SHEET 1 OF 2

STATE OF NORTH CAROLINA
DEPARTMENT OF TRANSPORTATION
RALEIGH

SUBSTRUCTURE

BENT 1

| REVISIONS | | | | | | SHEET NO. |
|---|---|---|---|---|---|---|
| NO. | BY: | DATE: | NO. | BY: | DATE: | S-203 |
| 1 | | | 3 | | | TOTAL SHEETS |
| 2 | | | 4 | | | 382 |

NORTH CAROLINA PROFESSIONAL SEAL 030766 ENGINEER ARTHUR C. OUTLAW JR.

Arthur C. Outlaw, Jr.

1/3/12

DRAWN BY : E.C. LOCKLEAR DATE : 11-16-10
CHECKED BY : A.C. OUTLAW DATE : 12-08-10

28-DEC-2011 15:41
R:\Structures\Frye\str05\elocklear\Microstation\I3819A_SD_B*_05.dgn
wparker

STR. #5

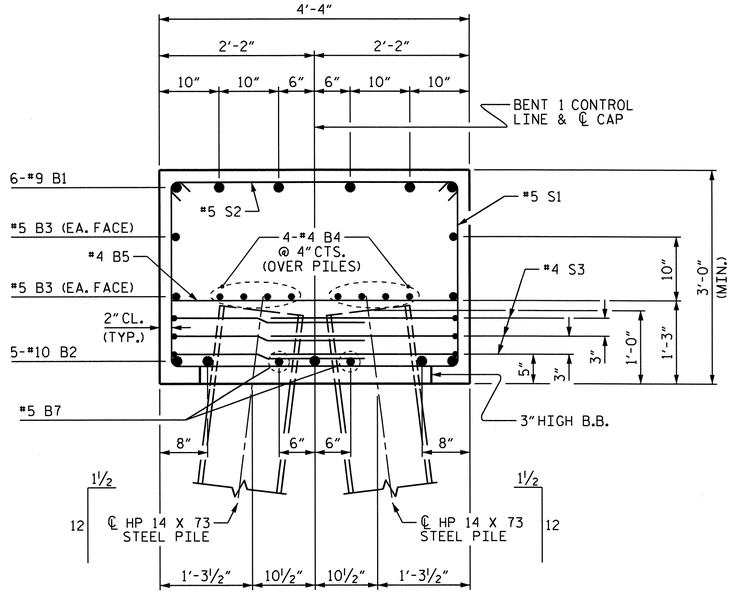


SECTION A-A

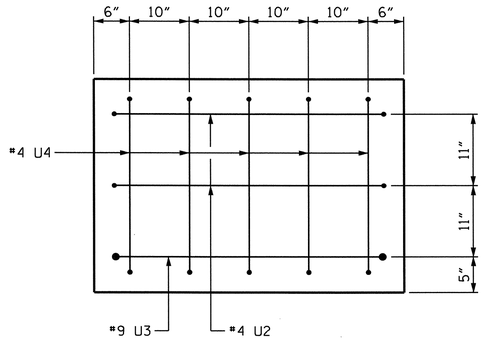


VIEW X-X

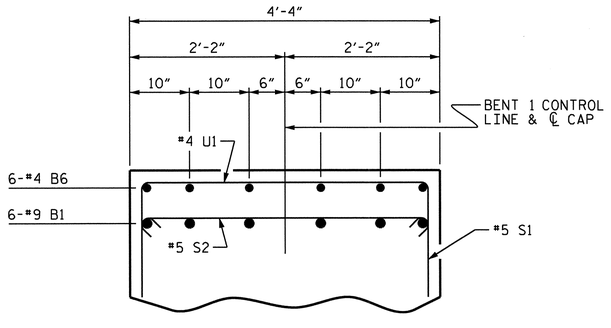


PARTIAL SECTION B-B

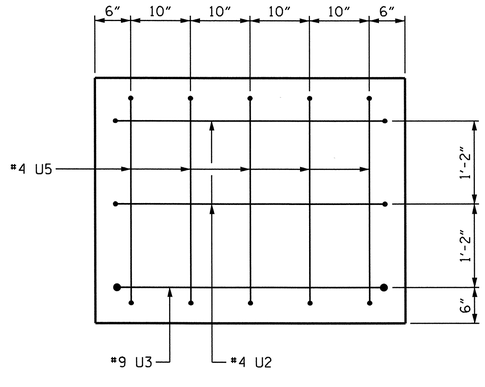


VIEW Y-Y

## BAR TYPES

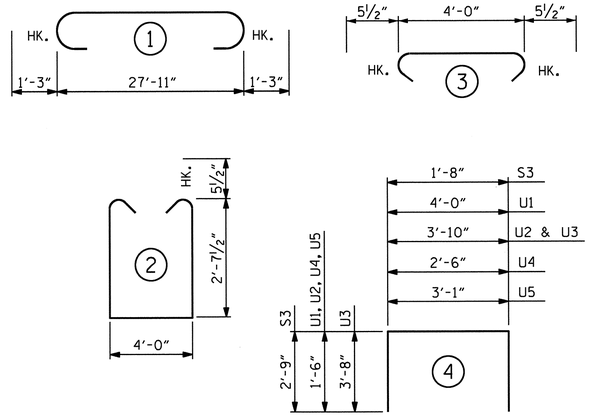


ALL BAR DIMENSIONS ARE OUT TO OUT.

## BILL OF MATERIAL

### BENT 1

| BAR | NO. | SIZE | TYPE | LENGTH | WEIGHT |
|---|---|---|---|---|---|
| B1 | 6 | #9 | 1 | 30'-5" | 621 |
| B2 | 5 | #10 | STR | 28'-1" | 604 |
| B3 | 4 | #5 | STR | 28'-1" | 117 |
| B4 | 8 | #4 | STR | 28'-1" | 150 |
| B5 | 7 | #4 | STR | 4'-0" | 19 |
| B6 | 6 | #4 | STR | 12'-2" | 49 |
| B7 | 6 | #5 | STR | 7'-8" | 48 |
| | | | | | |
| S1 | 23 | #5 | 2 | 10'-2" | 244 |
| S2 | 23 | #5 | 3 | 4'-11" | 118 |
| S3 | 24 | #4 | 4 | 7'-2" | 115 |
| | | | | | |
| U1 | 38 | #4 | 4 | 7'-0" | 178 |
| U2 | 4 | #4 | 4 | 6'-10" | 18 |
| U3 | 2 | #9 | 4 | 11'-2" | 76 |
| U4 | 5 | #4 | 4 | 5'-6" | 18 |
| U5 | 5 | #4 | 4 | 6'-1" | 20 |

REINFORCING STEEL 2395 LBS.

CLASS A CONCRETE
CAP 14.9 C.Y.

HP 14 X 73 GALVANIZED STEEL PILES
NO. 8 560 LIN. FT.

PROJECT NO. I-3819A
IREDELL COUNTY
STATION: 17+48.00-Y4RPD-

SHEET 2 OF 2

STATE OF NORTH CAROLINA
DEPARTMENT OF TRANSPORTATION
RALEIGH

SUBSTRUCTURE

BENT 1

NORTH CAROLINA PROFESSIONAL SEAL 3057 ENGINEER ALBERT C. OUTLAW, JR.

Albert C. Outlaw, Jr.
1/3/12

| REVISIONS | | | | | | SHEET NO. |
|---|---|---|---|---|---|---|
| NO. | BY: | DATE: | NO. | BY: | DATE: | S-204 |
| 1 | | | 3 | | | TOTAL SHEETS |
| 2 | | | 4 | | | 382 |

DRAWN BY : E.C. LOCKLEAR DATE : 11-16-10
CHECKED BY : A.C. OUTLAW DATE : 12-08-10

28-DEC-2011 15:41
R:\Structures\Frye\str05\elocklear\Microstation\I3819A_SD_B*_05.dgn
wparker

STR. #5

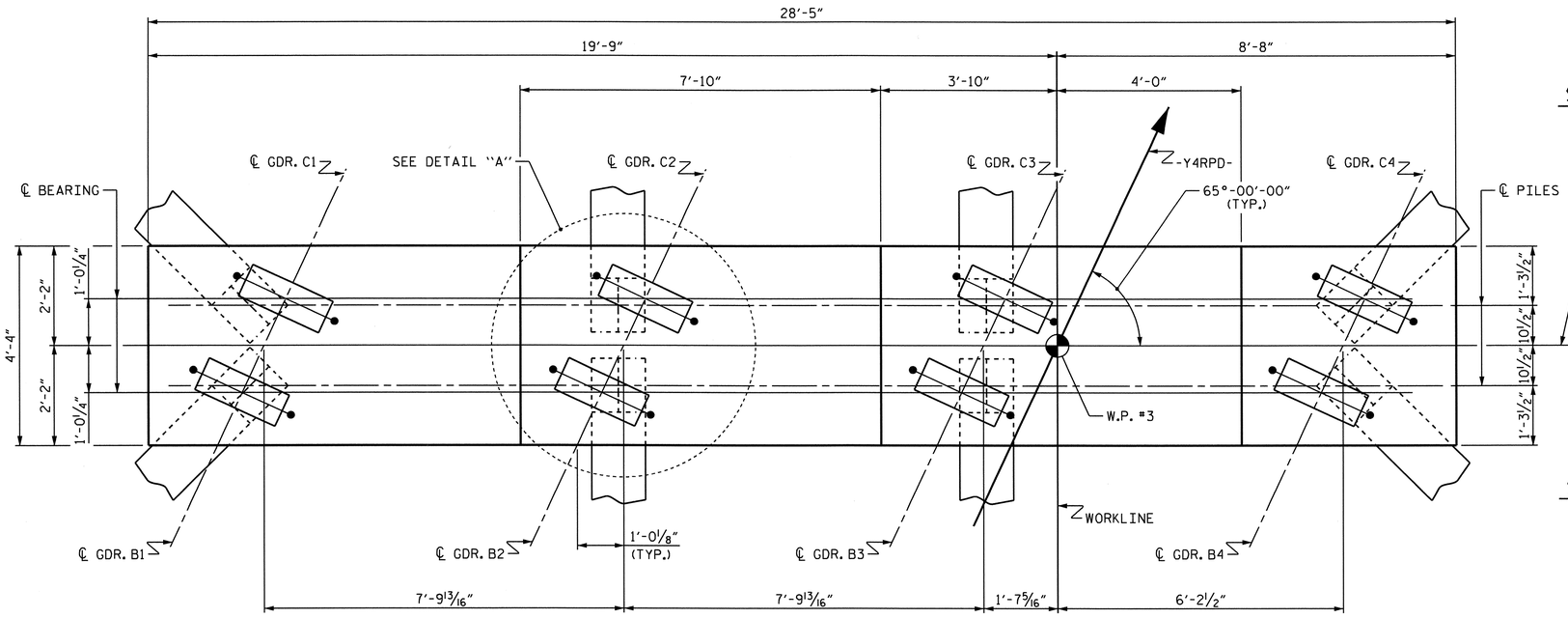


PLAN

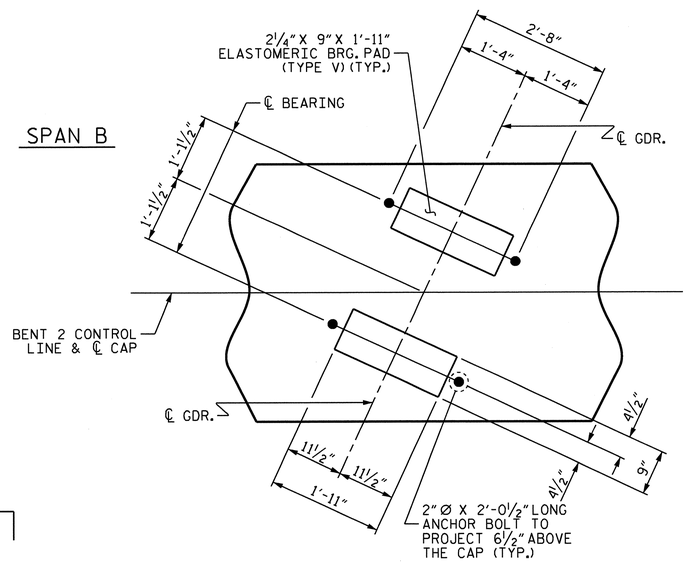


DETAIL "A"
(TYP. EA. GIRDER)

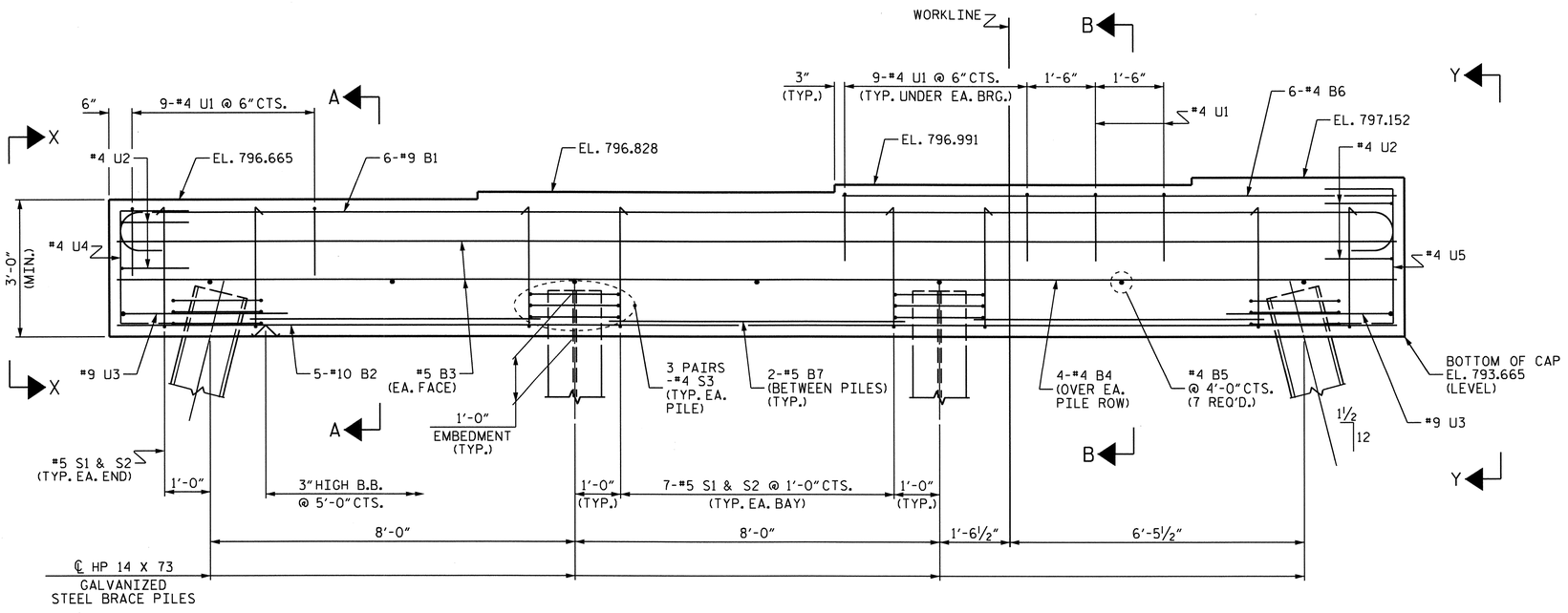


ELEVATION

## NOTES

STIRRUPS IN CAP MAY BE SHIFTED AS NECESSARY TO CLEAR ANCHOR BOLTS.

FOR PILE SPLICE DETAILS, SEE END BENT 1.

GALVANIZE THE TOP 25 FEET OF EACH INTERIOR BENT PILE IN ACCORDANCE WITH SECTION 1076 OF THE STANDARD SPECIFICATIONS.

PROJECT NO. I-3819A
IREDELL COUNTY
STATION: 17+48.00-Y4RPD-

SHEET 1 OF 2

STATE OF NORTH CAROLINA
DEPARTMENT OF TRANSPORTATION
RALEIGH

SUBSTRUCTURE

BENT 2

NORTH CAROLINA PROFESSIONAL SEAL ENGINEER ALBERT C. OUTLAW JR.
1/3/12

| REVISIONS | | | | | | SHEET NO. |
|---|---|---|---|---|---|---|
| NO. | BY: | DATE: | NO. | BY: | DATE: | S-205 |
| 1 | | | 3 | | | TOTAL SHEETS |
| 2 | | | 4 | | | 382 |

DRAWN BY : E.C. LOCKLEAR DATE : 11-17-10
CHECKED BY : A.C. OUTLAW DATE : 12-08-10

28-DEC-2011 15:41
R:\Structures\Frye\str05\elocklear\Microstation\I3819A_SD_B*_05.dgn
wparker

STR. #5

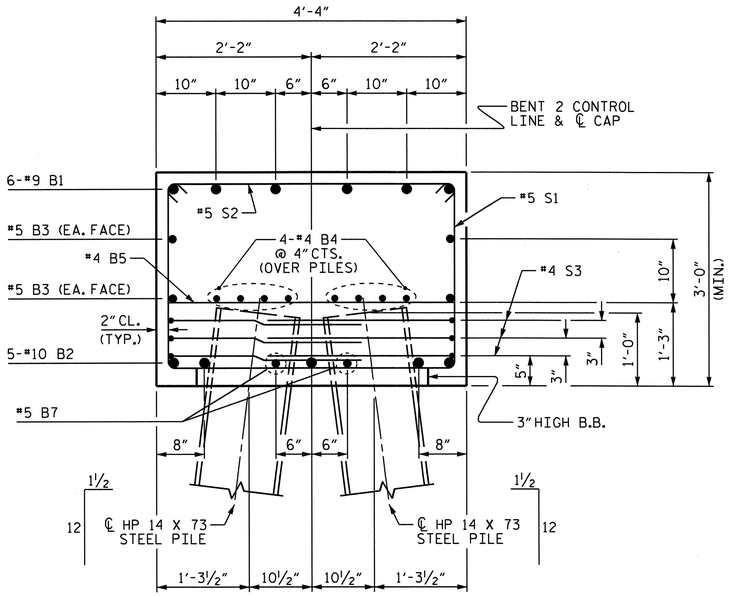


SECTION A-A

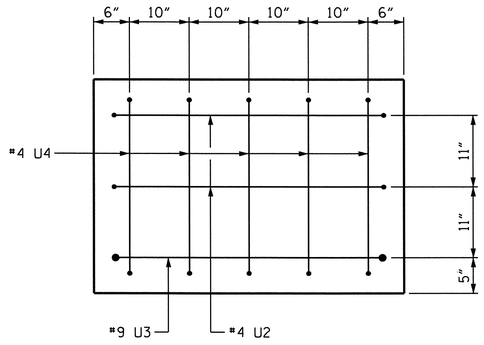


VIEW X-X

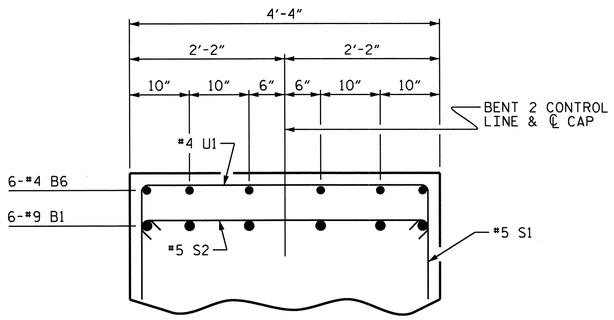


PARTIAL SECTION B-B

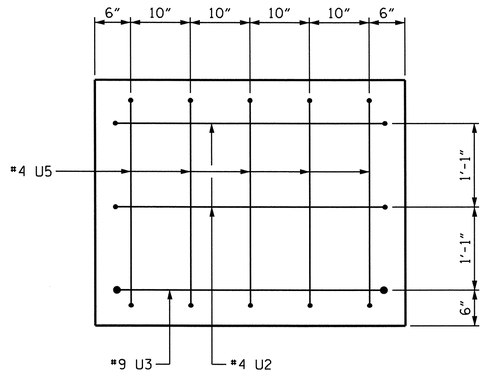


VIEW Y-Y

## BAR TYPES

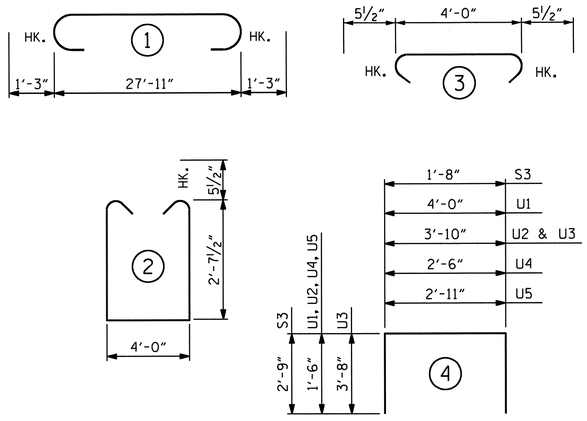


ALL BAR DIMENSIONS ARE OUT TO OUT.

## BILL OF MATERIAL

### BENT 2

| BAR | NO. | SIZE | TYPE | LENGTH | WEIGHT |
|---|---|---|---|---|---|
| B1 | 6 | #9 | 1 | 30'-5" | 621 |
| B2 | 5 | #10 | STR | 28'-1" | 604 |
| B3 | 4 | #5 | STR | 28'-1" | 117 |
| B4 | 8 | #4 | STR | 28'-1" | 150 |
| B5 | 7 | #4 | STR | 4'-0" | 19 |
| B6 | 6 | #4 | STR | 12'-2" | 49 |
| B7 | 6 | #5 | STR | 7'-8" | 48 |
| | | | | | |
| S1 | 23 | #5 | 2 | 10'-2" | 244 |
| S2 | 23 | #5 | 3 | 4'-11" | 118 |
| S3 | 24 | #4 | 4 | 7'-2" | 115 |
| | | | | | |
| U1 | 38 | #4 | 4 | 7'-0" | 178 |
| U2 | 4 | #4 | 4 | 6'-10" | 18 |
| U3 | 2 | #9 | 4 | 11'-2" | 76 |
| U4 | 5 | #4 | 4 | 5'-6" | 18 |
| U5 | 5 | #4 | 4 | 5'-11" | 20 |

REINFORCING STEEL 2395 LBS.

CLASS A CONCRETE
CAP 14.7 C.Y.

HP 14 X 73 GALVANIZED STEEL PILES
NO. 8 480 LIN. FT.

PROJECT NO. I-3819A
IREDELL COUNTY
STATION: 17+48.00-Y4RPD-

SHEET 2 OF 2

STATE OF NORTH CAROLINA
DEPARTMENT OF TRANSPORTATION
RALEIGH

SUBSTRUCTURE

BENT 2

NORTH CAROLINA PROFESSIONAL SEAL 030182 ENGINEER ALBERT C. OUTLAW
Albert C. Outlaw Jr.
1/3/12

| REVISIONS | | | | | | SHEET NO. |
|---|---|---|---|---|---|---|
| NO. | BY: | DATE: | NO. | BY: | DATE: | S-206 |
| 1 | | | 3 | | | TOTAL SHEETS |
| 2 | | | 4 | | | 382 |

STR. #5

DRAWN BY : E.C. LOCKLEAR DATE : 11-17-10
CHECKED BY : A.C. OUTLAW DATE : 12-08-10

28-DEC-2011 15:41
R:\Structures\Frye\str05\elocklear\Microstation\I3819A_SD_B*_05.dgn
wparker

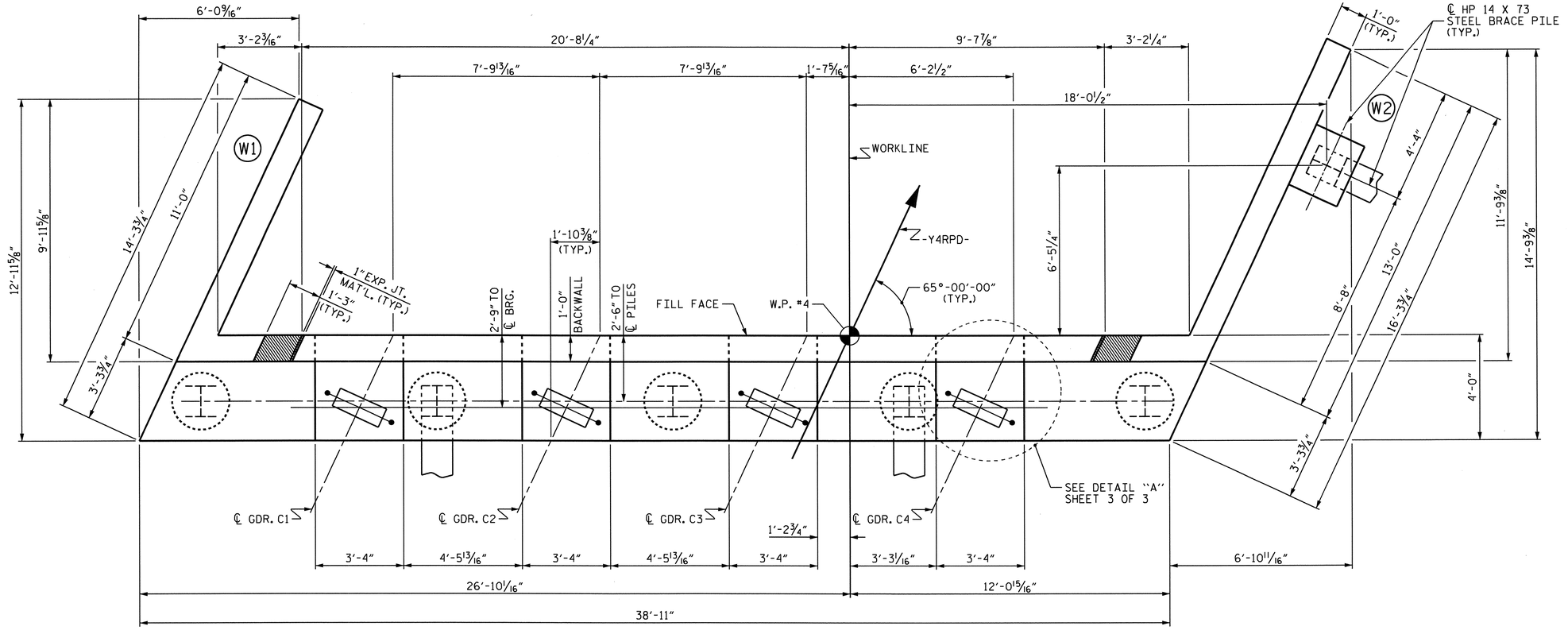


## PLAN

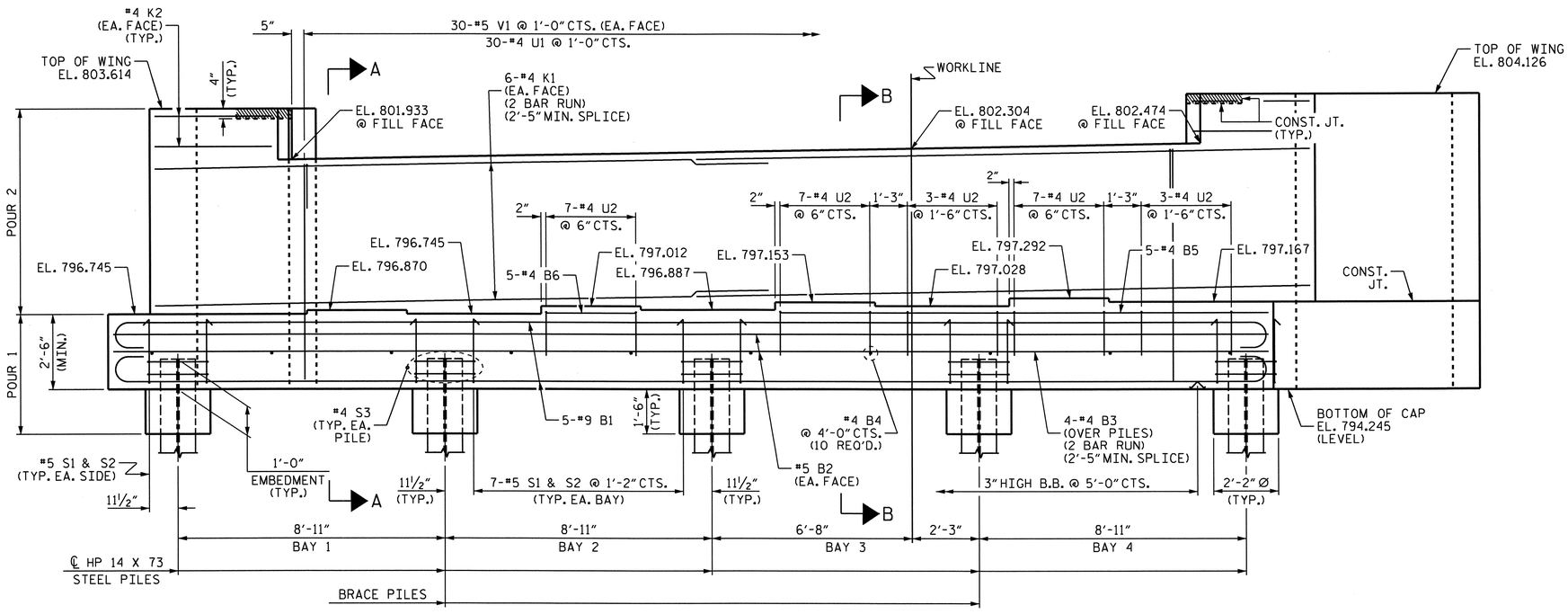


## ELEVATION

(WING BRACE PILE NOT SHOWN FOR CLARITY)

## NOTES

STIRRUPS IN CAP MAY BE SHIFTED AS NECESSARY TO CLEAR ANCHOR BOLTS.

BACKWALL SHALL BE PLACED BEFORE APPLYING THE EPOXY PROTECTIVE COATING.

THE TOP SURFACE AREAS OF THE END BENT CAPS SHALL BE CURED IN ACCORDANCE WITH THE STANDARD SPECIFICATIONS EXCEPT THE MEMBRANE CURING COMPOUND METHOD SHALL NOT BE USED.

THE TOP SURFACE OF THE END BENT CAP EXCEPT THE BRIDGE SEAT BUILDUPS SHALL BE SLOPED TRANSVERSELY FROM THE FILL FACE TO THE BACK FACE AT THE RATE OF 2%.

THE #5 V1 BARS SHALL BE PLACED 2" CLEAR FROM TOP OF BACKWALL.

THE CONCRETE IN THE SHADED AREA OF THE WING SHALL BE POURED AFTER THE JOINT BETWEEN THE DECK AND THE APPROACH SLAB HAS BEEN SAWED AND THE BARRIER RAIL IS CAST IF SLIP FORMING IS USED.

THE CONTRACTOR SHALL PROVIDE FOR INSTALLATION OF THE 4" DIAMETER DRAIN PIPE THROUGH THE WING WALL AS REQUIRED FOR REINFORCED BRIDGE APPROACH FILLS. SEE THE ROADWAY PLANS. REINFORCING STEEL IN THE WING WALL MAY BE SHIFTED AS NECESSARY TO CLEAR THE DRAIN PIPE.

PROJECT NO. I-3819A

IREDELL COUNTY

STATION: 17+48.00-Y4RPD-

SHEET 1 OF 3

STATE OF NORTH CAROLINA
DEPARTMENT OF TRANSPORTATION
RALEIGH

SUBSTRUCTURE

END BENT 2

NORTH CAROLINA PROFESSIONAL SEAL ENGINEER ALBERT C. OUTLAW

1/3/12

| REVISIONS | | | | | | SHEET NO. |
|---|---|---|---|---|---|---|
| NO. | BY: | DATE: | NO. | BY: | DATE: | S-207 |
| 1 | | | 3 | | | TOTAL SHEETS |
| 2 | | | 4 | | | 382 |

DRAWN BY : E.C. LOCKLEAR DATE : 11-19-10
CHECKED BY : A. C. OUTLAW DATE : 12-09-10

28-DEC-2011 15:40
R:\Structures\Frye\str05\elocklear\Microstation\I3819A_SD_E*_05.dgn
wparker

STR. #5

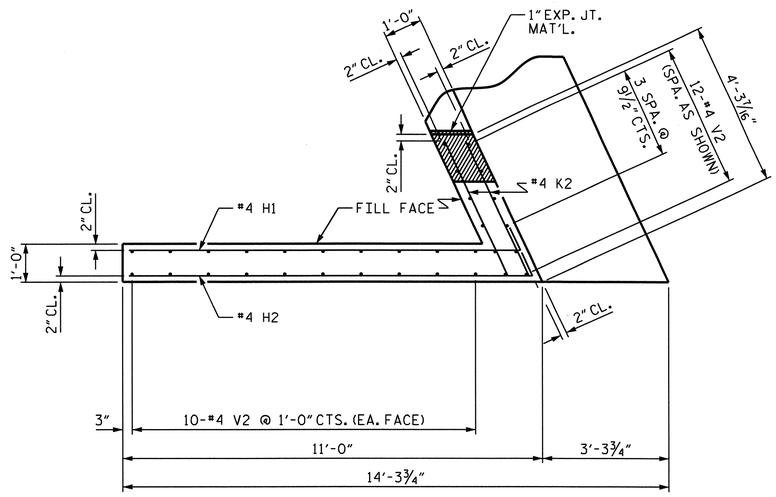


PLAN OF WING (W1)

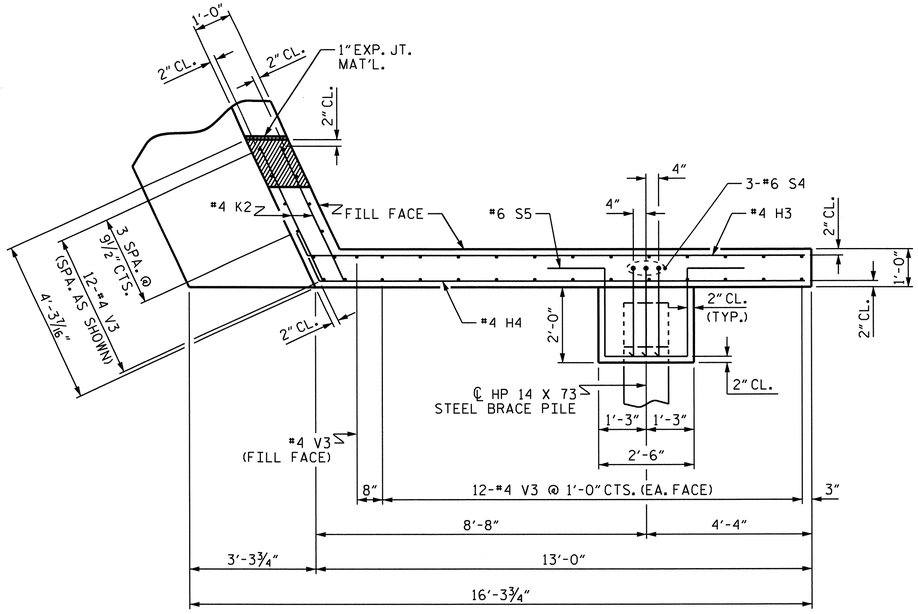


PLAN OF WING (W2)

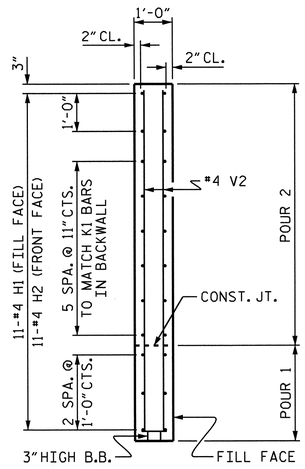


SECTION X-X

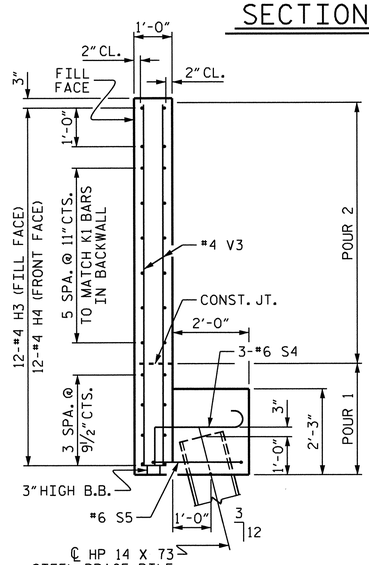


SECTION Y-Y

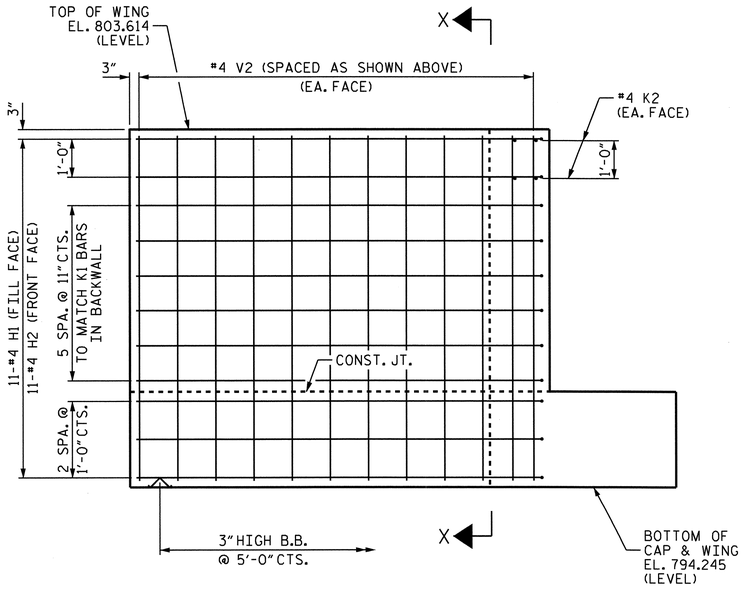


ELEVATION OF WING (W1)

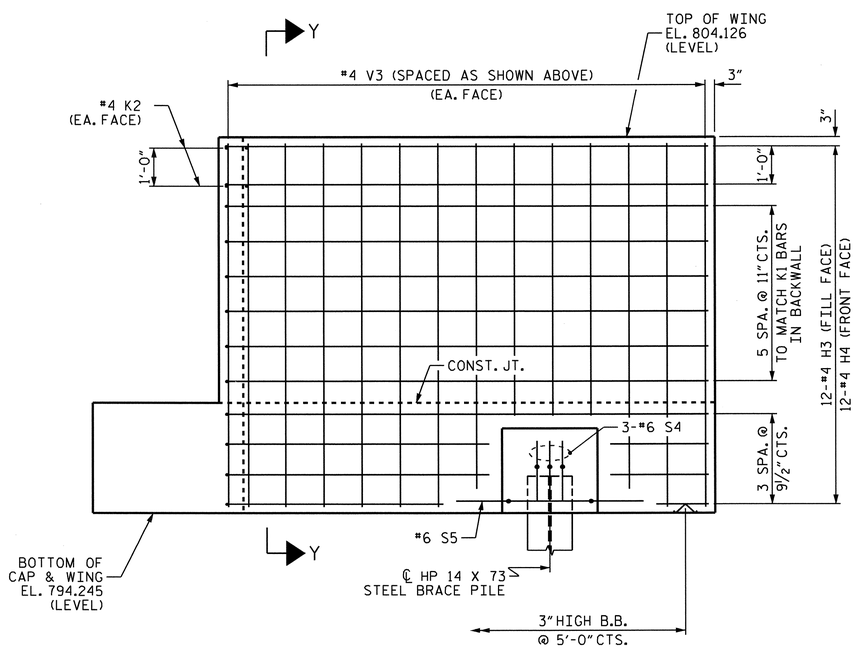


ELEVATION OF WING (W2)

PROJECT NO. I-3819A

IREDELL COUNTY

STATION: 17+48.00-Y4RPD-

SHEET 2 OF 3

STATE OF NORTH CAROLINA
DEPARTMENT OF TRANSPORTATION
RALEIGH

SUBSTRUCTURE

END BENT 2

| REVISIONS | | | | | | SHEET NO. |
|---|---|---|---|---|---|---|
| NO. | BY: | DATE: | NO. | BY: | DATE: | S-208 |
| 1 | | | 3 | | | TOTAL SHEETS |
| 2 | | | 4 | | | 382 |

DRAWN BY : E.C. LOCKLEAR DATE : 11-19-10
CHECKED BY : A. C. OUTLAW DATE : 12-09-10

NORTH CAROLINA PROFESSIONAL SEAL ENGINEER ALBERT C. OUTLAW, JR.
1/3/12

28-DEC-2011 15:40
R:\Structures\Frye\str05\elocklear\Microstation\I3819A_SD_E*_05.dgn
wparker

STR. #5

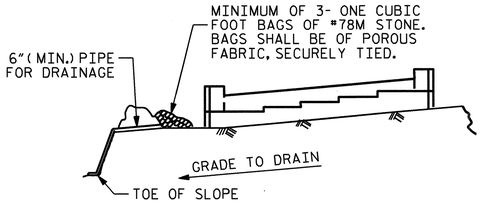


BAGGED STONE AND PIPE SHALL BE PLACED IMMEDIATELY AFTER COMPLETION OF END BENT EXCAVATION. PIPE MAY BE EITHER CONCRETE, CORRUGATED STEEL, CORRUGATED ALUMINUM ALLOY, OR CORRUGATED PLASTIC. PERFORATED PIPE WILL NOT BE ALLOWED.

BAGGED STONE SHALL REMAIN IN PLACE UNTIL THE ENGINEER DIRECTS THAT IT BE REMOVED. THE CONTRACTOR SHALL REMOVE AND DISPOSE OF SILT ACCUMULATIONS AT BAGGED STONE WHEN SO DIRECTED BY THE ENGINEER. BAGS SHALL BE REMOVED AND REPLACED WHENEVER THE ENGINEER DETERMINES THAT THEY HAVE DETERIORATED AND LOST THEIR EFFECTIVENESS.

NO SEPARATE PAYMENT WILL BE MADE FOR THIS WORK AND THE ENTIRE COST OF THIS WORK SHALL BE INCLUDED IN THE UNIT CONTRACT PRICE BID FOR THE SEVERAL PAY ITEMS.

## TEMPORARY DRAINAGE AT END BENT

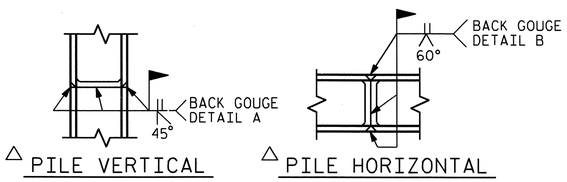


△ POSITION OF PILE DURING WELDING.

## PILE SPLICE DETAILS

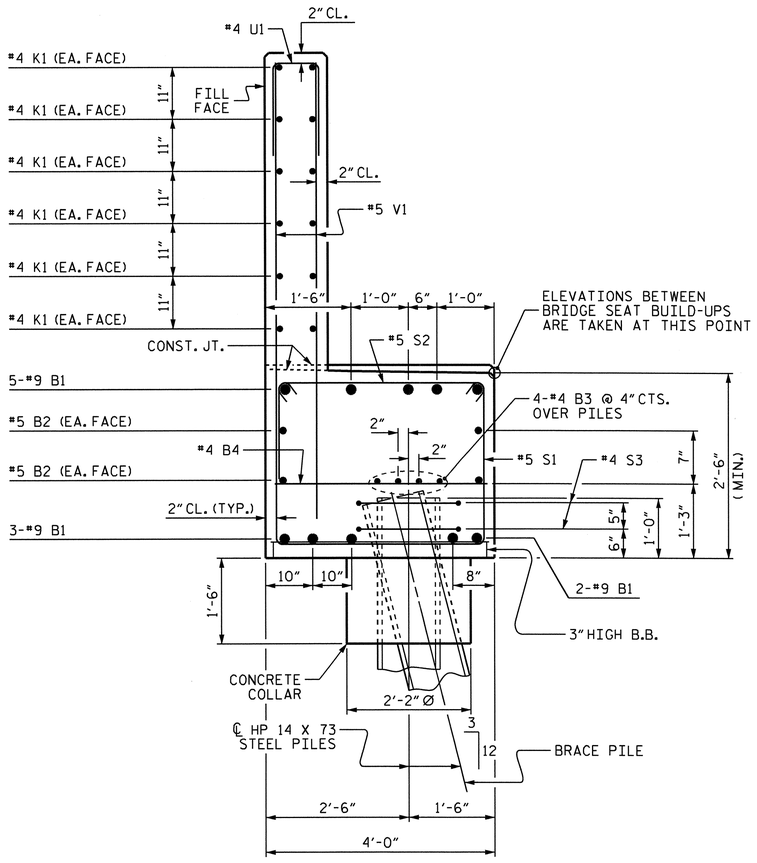


## SECTION A-A

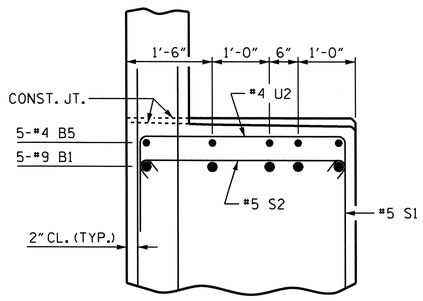


## PARTIAL SECTION B-B

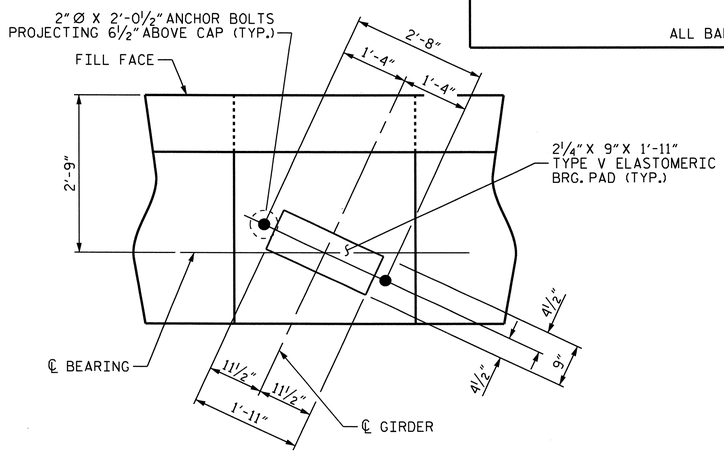


## DETAIL "A"

(TYP. EA. GDR.)

## BAR TYPES

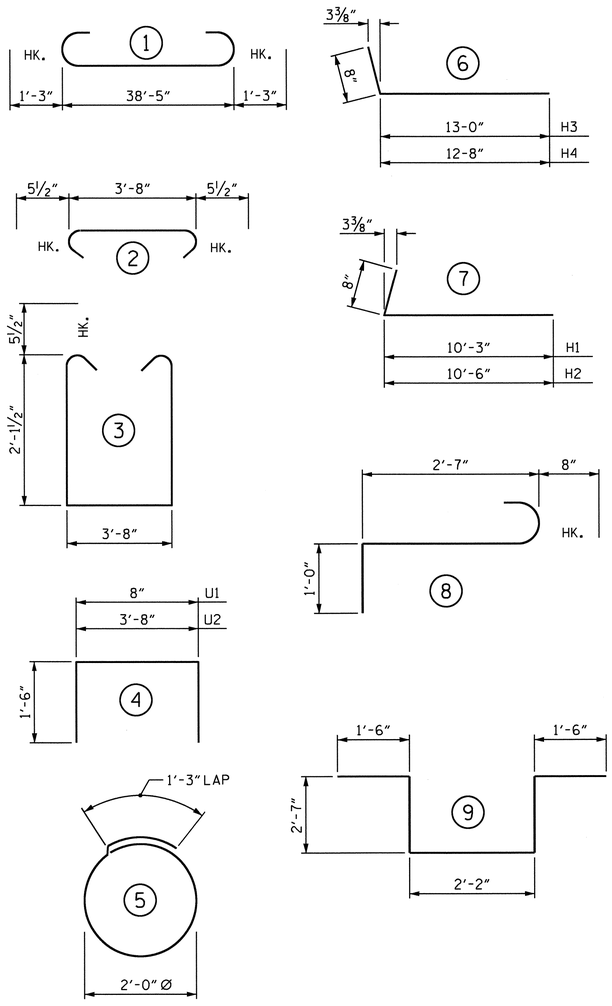


ALL BAR DIMENSIONS ARE OUT TO OUT.

## BILL OF MATERIAL

### END BENT 2

| BAR | NO. | SIZE | TYPE | LENGTH | WEIGHT |
|---|---|---|---|---|---|
| B1 | 10 | #9 | 1 | 40'-11" | 1391 |
| B2 | 4 | #5 | STR | 38'-7" | 161 |
| B3 | 8 | #4 | STR | 20'-6" | 110 |
| B4 | 10 | #4 | STR | 3'-8" | 24 |
| B5 | 5 | #4 | STR | 18'-0" | 60 |
| B6 | 5 | #4 | STR | 3'-0" | 10 |
| | | | | | |
| H1 | 11 | #4 | 7 | 10'-11" | 80 |
| H2 | 11 | #4 | 7 | 11'-2" | 82 |
| H3 | 12 | #4 | 6 | 13'-8" | 110 |
| H4 | 12 | #4 | 6 | 13'-4" | 107 |
| | | | | | |
| K1 | 24 | #4 | STR | 20'-6" | 329 |
| K2 | 8 | #4 | STR | 3'-11" | 21 |
| | | | | | |
| S1 | 30 | #5 | 3 | 8'-10" | 276 |
| S2 | 30 | #5 | 2 | 4'-7" | 143 |
| S3 | 10 | #4 | 5 | 7'-7" | 51 |
| S4 | 3 | #6 | 8 | 4'-3" | 19 |
| S5 | 1 | #6 | 9 | 10'-4" | 16 |
| | | | | | |
| U1 | 30 | #4 | 4 | 3'-8" | 73 |
| U2 | 27 | #4 | 4 | 6'-8" | 120 |
| | | | | | |
| V1 | 60 | #5 | STR | 7'-3" | 454 |
| V2 | 32 | #4 | STR | 9'-0" | 192 |
| V3 | 37 | #4 | STR | 9'-6" | 235 |
| | | | | | |

REINFORCING STEEL 4,064 LBS

CLASS A CONCRETE

| | |
|---|---|
| POUR 1 (CAP, LOWER WINGS & CONCRETE COLLARS) | 19.3 C.Y. |
| POUR 2 (BACKWALL & UPPER WINGS) | 14.4 C.Y. |
| TOTAL | 33.7 C.Y. |

HP 14 X 73 STEEL PILES

NUMBER = 6 LIN. FT. = 330.0

PROJECT NO. I-3819A

IREDELL COUNTY

STATION: 17+48.00-Y4RPD-

SHEET 3 OF 3

STATE OF NORTH CAROLINA
DEPARTMENT OF TRANSPORTATION
RALEIGH

SUBSTRUCTURE

END BENT 2

| REVISIONS | | | | | | SHEET NO. |
|---|---|---|---|---|---|---|
| NO. | BY: | DATE: | NO. | BY: | DATE: | S-209 |
| 1 | | | 3 | | | TOTAL SHEETS |
| 2 | | | 4 | | | 382 |

NORTH CAROLINA PROFESSIONAL SEAL 030326 ENGINEER ALBERT C. OUTLAW, JR.

Albert C. Outlaw, Jr.

1/3/12

DRAWN BY : E.C. LOCKLEAR DATE : 11-04-10
CHECKED BY : A. C. OUTLAW DATE : 12-09-10

28-DEC-2011 15:40
R:\Structures\Frye\str05\elocklear\Microstation\I3819A_SD_E*_05.dgn
wparker

STR. #5

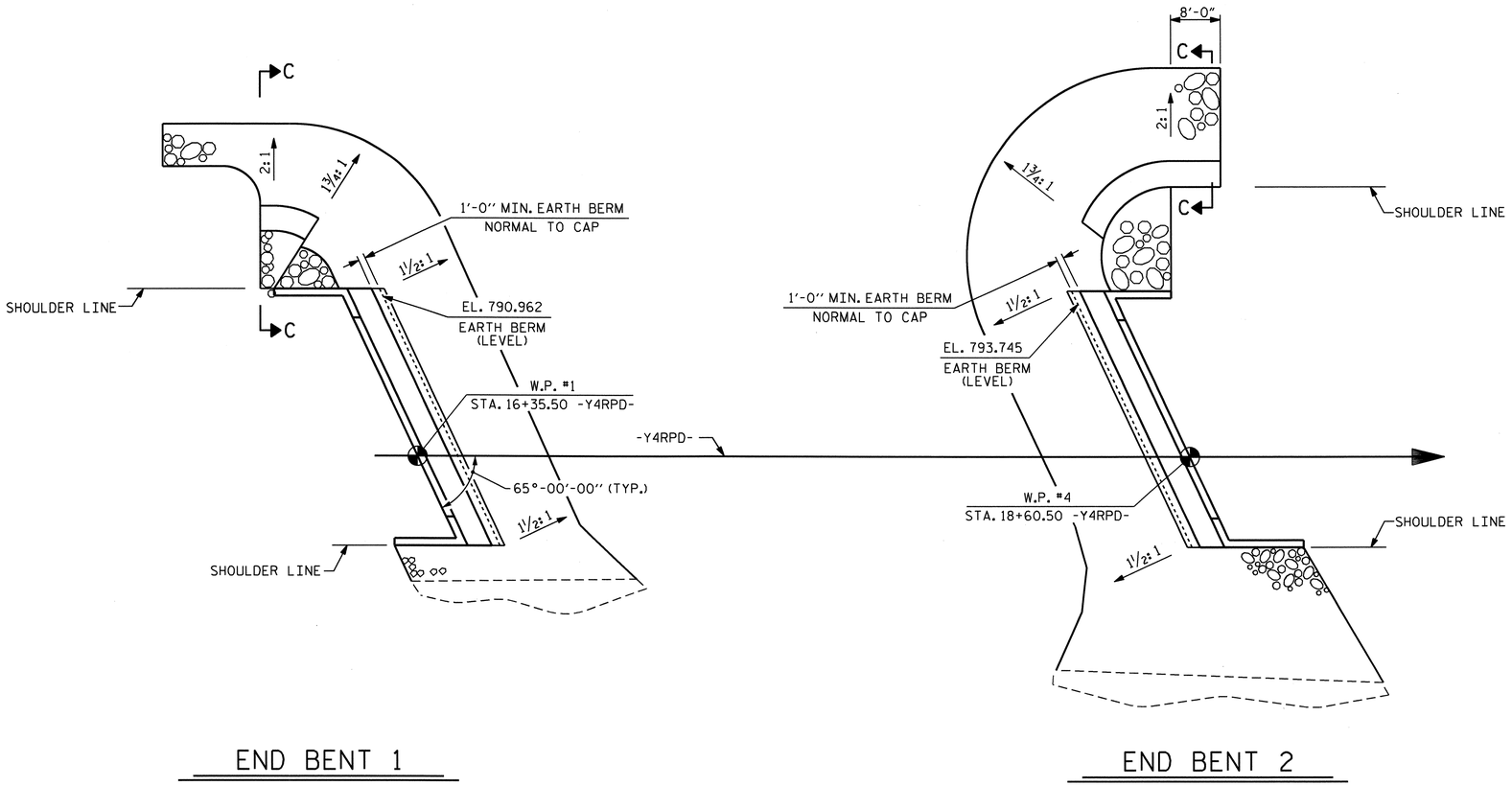


END BENT 1




END BENT 2

| ESTIMATED QUANTITIES | | |
|---|---|---|
| BRIDGE @ STA. 17+48.00 -Y4RPD- | RIP RAP CLASS II | GEOTEXTILE FOR DRAINAGE |
| | TONS | SQUARE YARDS |
| END BENT 1 | 235 | 260 |
| END BENT 2 | 310 | 345 |

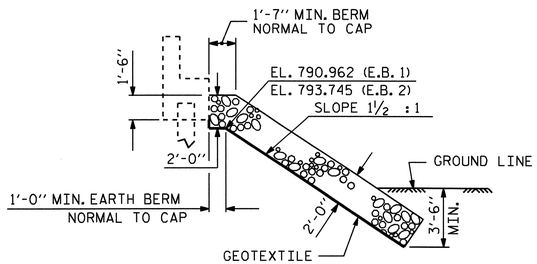


℄ SECTION
BERM RIP RAPPED

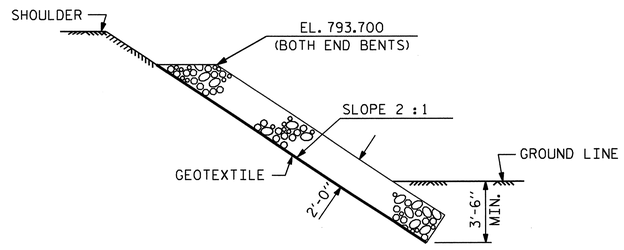


SECTION C-C

PROJECT NO. I-3819A
IREDELL COUNTY
STATION: 17+48.00-Y4RPD-

STATE OF NORTH CAROLINA
DEPARTMENT OF TRANSPORTATION
RALEIGH
STANDARD
RIP RAP DETAILS

NORTH CAROLINA PROFESSIONAL SEAL 29048 ENGINEER RAMAN P. PATEL
1/3/12

| REVISIONS | | | | | | SHEET NO. |
|---|---|---|---|---|---|---|
| NO. | BY: | DATE: | NO. | BY: | DATE: | S-210 |
| 1 | | | 3 | | | TOTAL SHEETS |
| 2 | | | 4 | | | 382 |

| | | |
|---|---|---|
| ASSEMBLED BY : D.R. WITHROW | | DATE : 12/04/09 |
| CHECKED BY : S.M. RASHIDI | | DATE : 04/26/10 |
| DRAWN BY : REK 1/84 | REV. 8/16/99 | RWW/LES |
| CHECKED BY : RDU 1/84 | REV. 10/17/00 | RWW/LES |
| | REV. 5/1/06 | TLA/GM |

28-DEC-2011 15:40
R:\Structures\Frye\str05\rwithrow\Microstation\I3819a_SD_RR_05.dgn
wparker

STR. #5

STD. NO. RR1

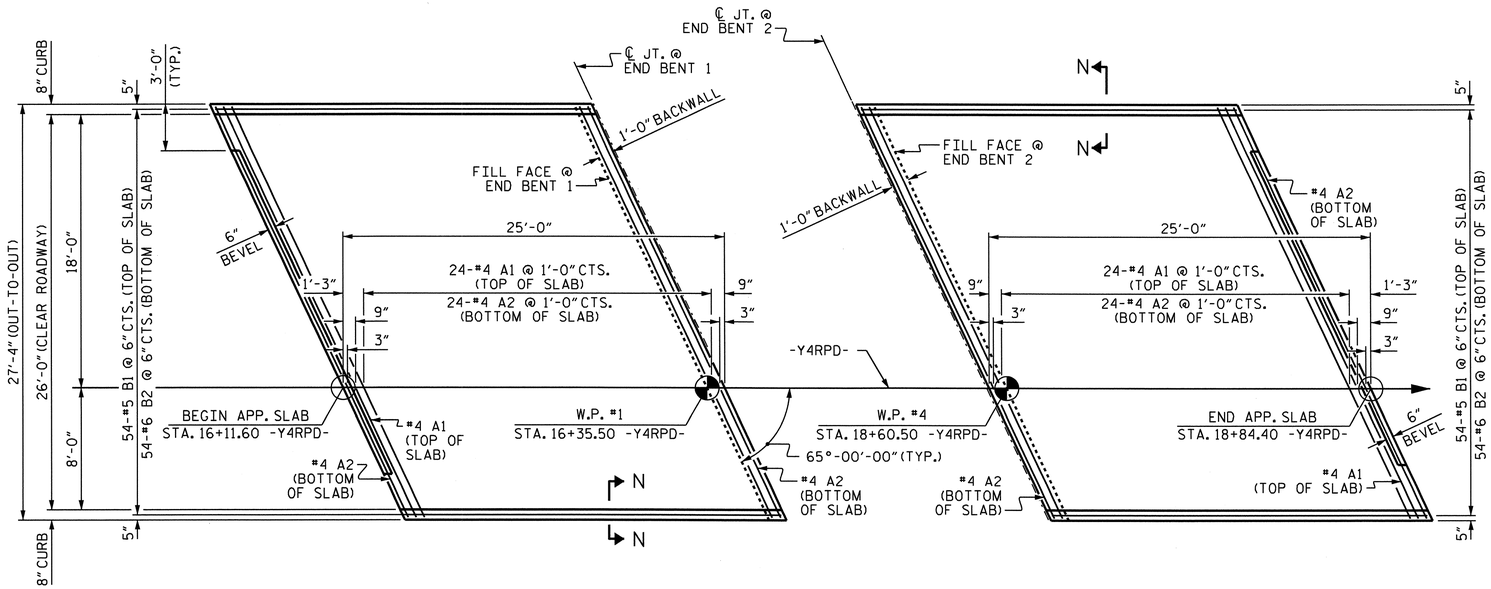


PLAN @ END BENT 1

PLAN @ END BENT 2

DIMENSIONS SHOWN ARE TYPICAL FOR BOTH APPROACH SLABS

## NOTES

APPROACH SLAB SHALL NOT BE CONSTRUCTED PRIOR TO COMPLETION OF THE BRIDGE DECK.

FOR REINFORCED BRIDGE APPROACH FILL INCLUDING GEOTEXTILE, IMPERMEABLEGEOMEMBRANE, 4" Ø DRAINAGE PIPE, #78M STONE, AND SELECT MATERIAL, SEE ROADWAY PLANS.

AREA BETWEEN THE WINGWALL AND APPROACH SLAB SHALL BE GRADED TO DRAIN THE WATER AWAY FROM THE FILL FACE OF THE BRIDGE AND SHALL BE PAVED. SEE ROADWAY PLANS.

THE JOINT SHALL BE SAWED PRIOR TO THE CASTING OF THE BARRIER RAIL.

WITH FOAM JOINT SEAL

FOR FOAM JOINT SEALS, SEE SPECIAL PROVISIONS.

THE NOMINAL UNCOMPRESSED SEAL WIDTH OF THE FOAM JOINT SEAL SHALL BE 2½".

FOR ELASTOMERIC CONCRETE, SEE SPECIAL PROVISIONS.

## BILL OF MATERIAL

FOR ONE APPROACH SLAB (2 REQ'D)

| BAR | NO. | SIZE | TYPE | LENGTH | WEIGHT |
|---|---|---|---|---|---|
| ✱A1 | 25 | #4 | STR | 29'-9" | 497 |
| A2 | 26 | #4 | STR | 29'-9" | 517 |
| | | | | | |
| ✱B1 | 54 | #5 | STR | 23'-9" | 1338 |
| B2 | 54 | #6 | STR | 24'-7" | 1994 |
| | | | | | |
| REINFORCING STEEL | | | | LBS. | 2511 |
| ✱EPOXY COATED REINFORCING STEEL | | | | LBS. | 1835 |
| | | | | | |
| CLASS AA CONCRETE | | | | C.Y. | 29.8 |

## SPLICE LENGTHS

| BAR SIZE | EPOXY COATED | UNCOATED |
|---|---|---|
| #4 | 2'-0" | 1'-9" |
| #5 | 2'-6" | 2'-2" |
| #6 | 3'-10" | 2'-7" |

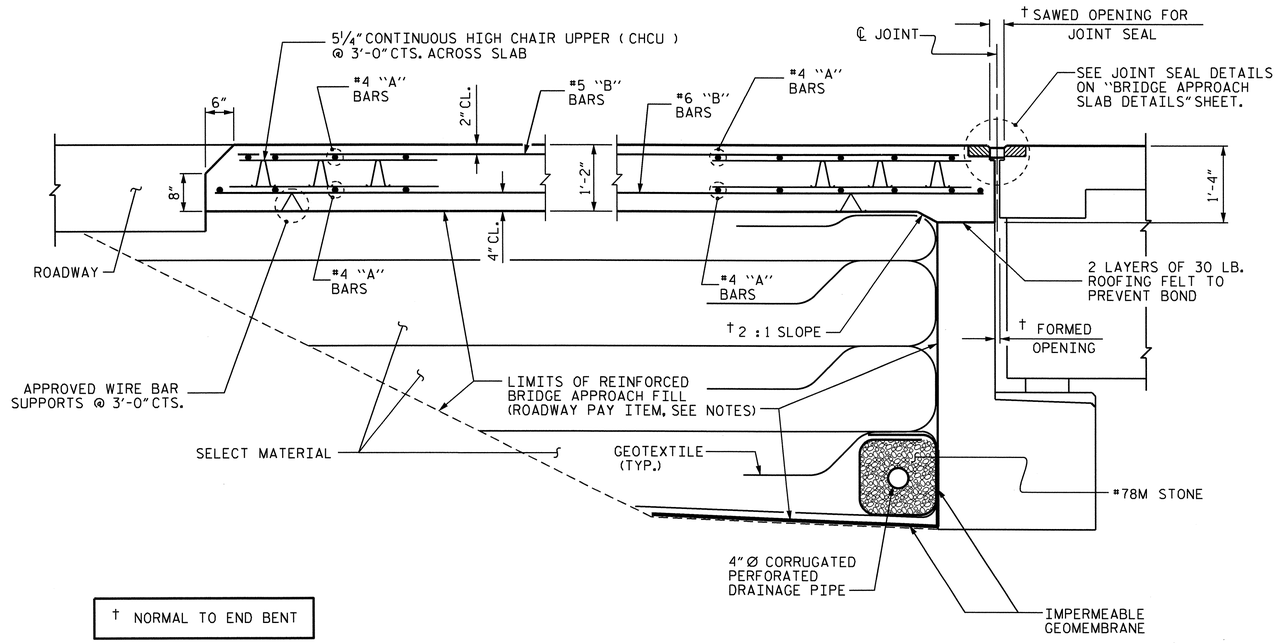


† NORMAL TO END BENT

SECTION THRU SLAB

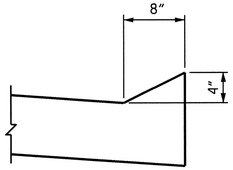


SECTION N-N

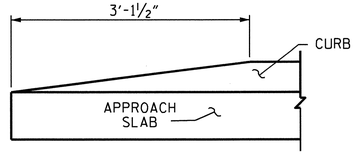


END OF CURB WITHOUT SHOULDER BERM GUTTER

CURB DETAILS

PROJECT NO. I-3819A

IREDELL COUNTY

STATION: 17+48.00-Y4RPD-

SHEET 1 OF 2

STATE OF NORTH CAROLINA
DEPARTMENT OF TRANSPORTATION
RALEIGH

STANDARD

# BRIDGE APPROACH SLAB FOR FLEXIBLE PAVEMENT

NORTH CAROLINA PROFESSIONAL SEAL 29048 ENGINEER RAMAN P. PATEL
R.P.Patel 1/3/12

| REVISIONS | | | | | | SHEET NO. |
|---|---|---|---|---|---|---|
| NO. | BY: | DATE: | NO. | BY: | DATE: | S-211 |
| 1 | | | 3 | | | TOTAL SHEETS |
| 2 | | | 4 | | | 382 |

STR. #5

STD. NO. BAS2

| | | |
|---|---|---|
| ASSEMBLED BY : D. R. WITHROW | DATE : 11/30/09 | |
| CHECKED BY : R. P. PATEL | DATE : 3/15/10 | |
| DRAWN BY : EEM 3/95 | REV. 5/7/03R | RWW/JTE |
| CHECKED BY : VAP 3/95 | REV. 5/1/06RR | KMM/GM |
| | REV. 10/1/11 | MAA/GM |

28-DEC-2011 15:40
R:\Structures\Frye\str05\rwithrow\Microstation\I3819a_SD_AS_05.dgn
wparker

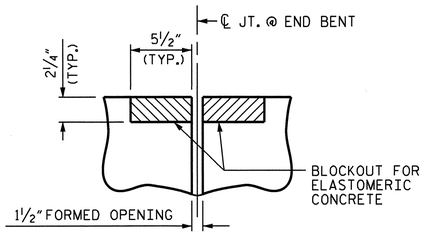


SECTION C-C

FOAM JOINT SEAL
(PRE-SAWED ELASTOMERIC
CONCRETE DIMENSIONS)

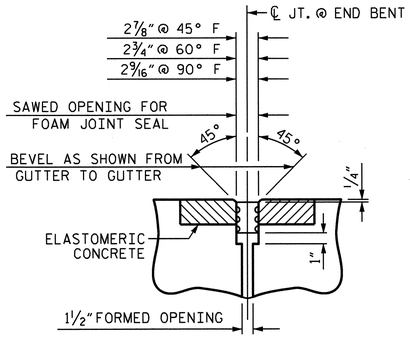


SECTION C-C

FOAM JOINT SEAL
( EXPANSION )

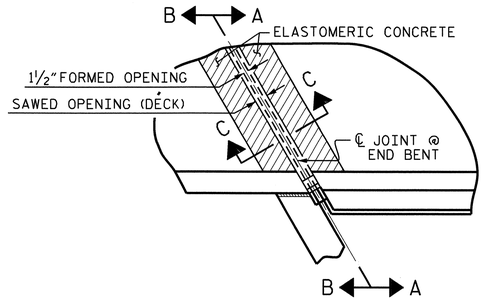


PLAN

| ELASTOMERIC CONCRETE | |
|---|---|
| END BENT | ELASTOMERIC CONCRETE * (CU. FT.) |
| 1 | 5.2 |
| 2 | 5.2 |
| TOTAL | 10.4 |

* BASED ON THE MINIMUM BLOCKOUT SHOWN.

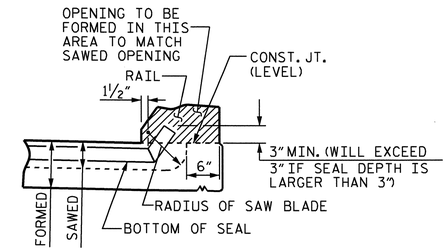


SECTION A-A

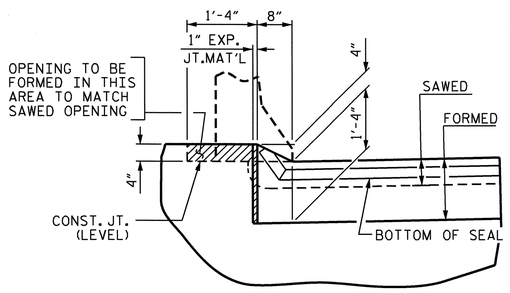


SECTION B-B

# JOINT SEAL DETAILS @ END BENT

FOAM JOINT SEAL TO BE CUT, HEAT WELDED AND TURNED UP PARALLEL TO SLOPED FACE OF THE BARRIER RAIL.

THE JOINT SHALL BE SAWED PRIOR TO THE CASTING OF THE BARRIER RAIL.

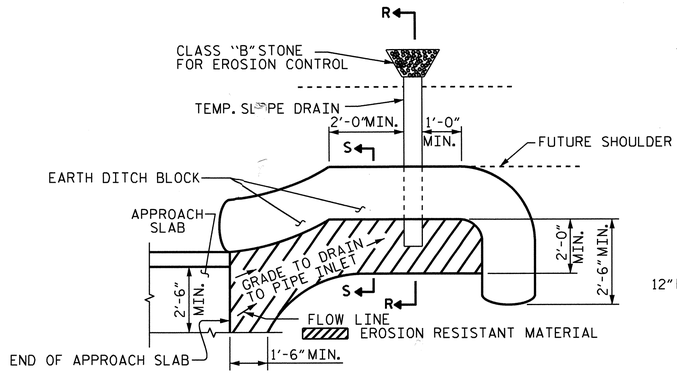


NOTE: IMMEDIATELY AFTER THE CONSTRUCTION OF THE APPROACH SLAB, THE CONTRACTOR SHALL PROVIDE TEMPORARY BERM AND SLOPE DRAIN. CONTRACTOR SHALL GRADE TO PIPE INLET AND PROVIDE EROSION RESISTANT MATERIAL AS SHOWN. THE EROSION RESISTANT MATERIAL SHALL BE EITHER 1) ASPHALT PLANT MIX, TYPE 1 OR TYPE 2, MIN. 2" DEPTH, 2) EROSION CONTROL MAT, OR 3) CONCRETE, AS DIRECTED BY THE ENGINEER. THE SLOPE DRAIN SHALL CONSIST OF A NON-PERFORATED TEMPORARY DRAINAGE PIPE, 12 INCHES IN DIAMETER.

PLAN VIEW

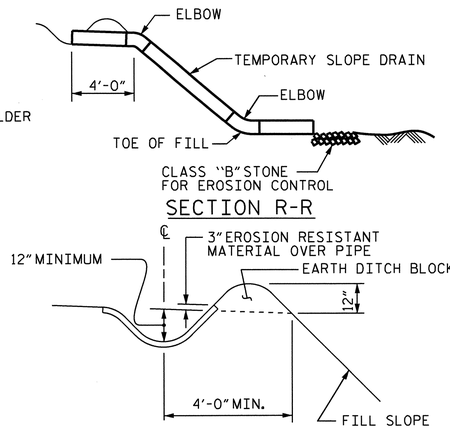


SECTION R-R

SECTION S-S

# TEMPORARY BERM AND SLOPE DRAIN DETAILS

(TO BE USED WHEN SHOULDER BERM GUTTER IS REQUIRED)

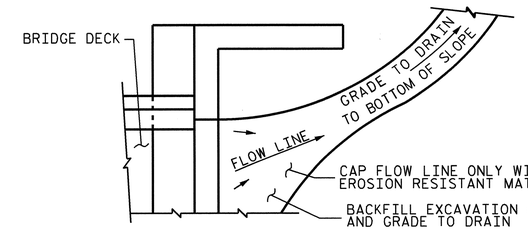


NOTE: IF THE APPROACH SLAB IS NOT CONSTRUCTED IMMEDIATELY AFTER THE BACKFILLING OF THE END BENT EXCAVATION, GRADE TO DRAIN TO THE BOTTOM OF THE SLOPE AND PROVIDE EROSION RESISTANT MATERIAL, SUCH AS FIBERGLASS ROVING OR AS DIRECTED BY THE ENGINEER TO PREVENT SOIL EROSION AND TO PROTECT THE AREA ADJACENT TO THE STRUCTURE. THE CONTRACTOR WILL BE REQUIRED TO REMOVE THESE MATERIALS PRIOR TO CONSTRUCTION OF THE APPROACH SLAB.

TEMPORARY DRAINAGE DETAIL

PROJECT NO. I-3819A

IREDELL COUNTY

STATION: 17+48.00-Y4RPD-

SHEET 2 OF 2

STATE OF NORTH CAROLINA
DEPARTMENT OF TRANSPORTATION
RALEIGH

STANDARD

BRIDGE APPROACH SLAB DETAILS

NORTH CAROLINA PROFESSIONAL ENGINEER SEAL 29048 RAMAN P. PATEL 1/3/12

| REVISIONS | | | | | | SHEET NO. |
|---|---|---|---|---|---|---|
| NO. | BY: | DATE: | NO. | BY: | DATE: | S-212 |
| 1 | | | 3 | | | TOTAL SHEETS |
| 2 | | | 4 | | | 382 |

| | | | |
|---|---|---|---|
| ASSEMBLED BY : D.R. WITHROW | | DATE : 11/30/09 | |
| CHECKED BY : R. P. PATEL | | DATE : 3/15/10 | |
| DRAWN BY : FCJ 11/88 | REV. 5/7/03 | RWW/JTE | |
| CHECKED BY : ARB 11/88 | REV. 5/1/06RRR | MAA/KMM | |
| | REV. 10/1/11 | MAA/GM | |

28-DEC-2011 15:40
R:\Structures\Frye\str05\rwithrow\Microstation\13819a_SD_AS_05.dgn
wparker

STR. #5 STD. NO. BAS4