09/03/99

TIP PROJECT: U-4422

CONTRACT: C202825

See Sheet 1-A For Index of Sheets
See Sheet 1-B For Conventional Symbols

STATE OF NORTH CAROLINA
DIVISION OF HIGHWAYS

CUMBERLAND COUNTY

STATE	STATE PROJECT REFERENCE NO.	SHEET NO.	TOTAL SHEETS
N.C.	U-4422	1	

STATE PROJ. NO.	F. A. PROJ. NO.	DESCRIPTION
35024.1.1	STP-1592(2)	PE
35024.2.3	STP-1596(3)	ROW & UTILITIES
35024.3.3	STP-1596(4)	CONST.

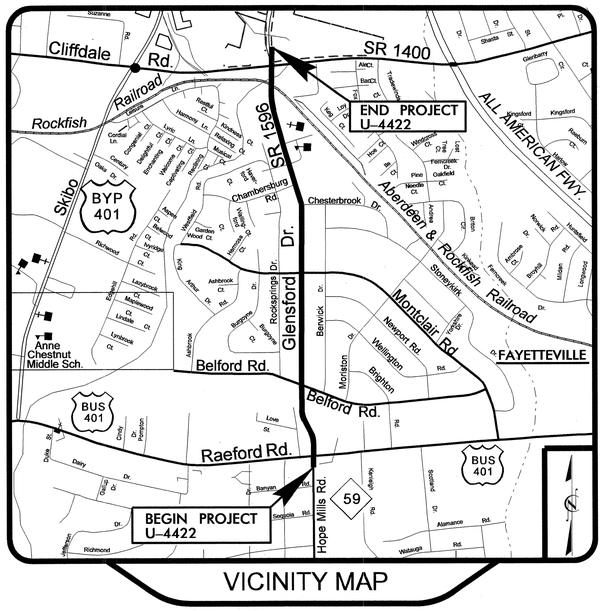

VICINITY MAP

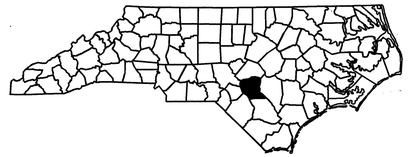

LOCATION: *FAYETTEVILLE – SR 1596 (GLENSFORD DRIVE) FROM US 401 BUSINESS (RAEFORD ROAD) TO SR 1400 (CLIFFDALE ROAD)*

TYPE OF WORK: *GRADING, DRAINAGE, PAVING AND SIGNALS*

NAD 83/95

FAYETTEVILLE

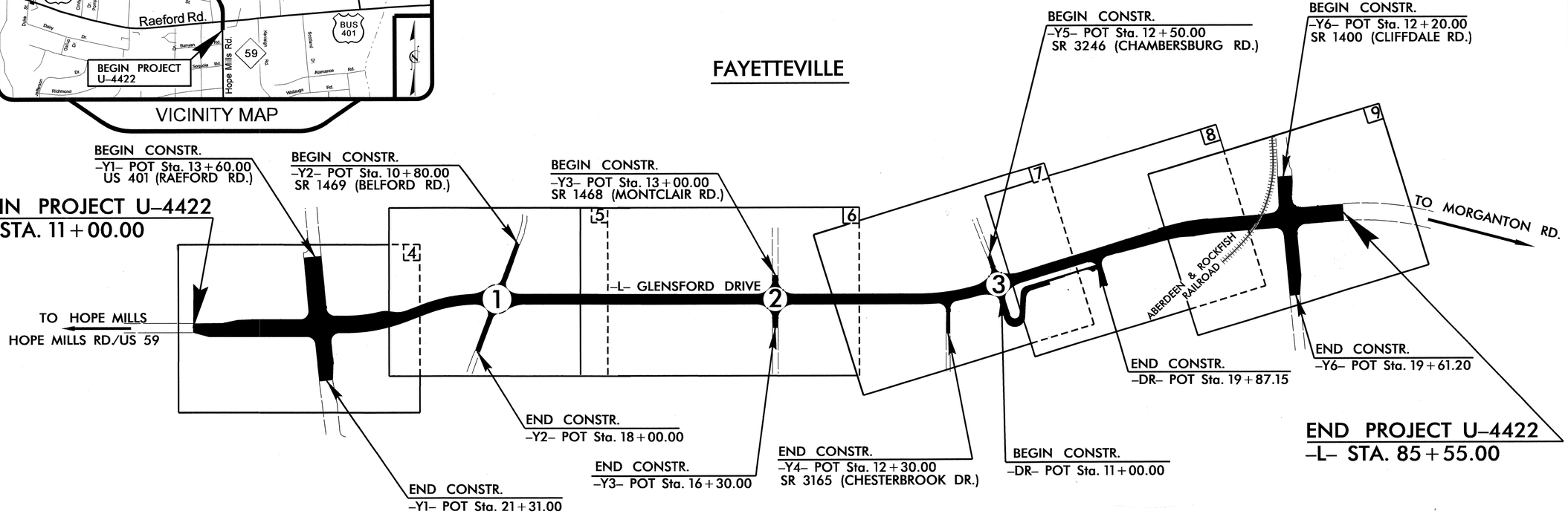

GRAPHIC SCALES

PLANS: 50 25 0 50 100

PROFILE (HORIZONTAL): 50 25 0 50 100

PROFILE (VERTICAL): 10 5 0 10 20

DESIGN DATA

ADT 2012 = 22,100
ADT 2035 = 33,000
DHV = 10 %
D = 60 %
T = 3 % *
V = 40 MPH
* DUAL 2% TTST 1%
FUNC CLASS = URBAN COLLECTOR
SUB-REGIONAL TIER

PROJECT LENGTH

LENGTH ROADWAY TIP PROJECT U-4422 = 1.412 MILES
TOTAL LENGTH TIP PROJECT U-4422 = 1.412 MILES

Prepared In the Office of:
DIVISION OF HIGHWAYS
1000 Birch Ridge Dr., Raleigh NC, 27610

2012 STANDARD SPECIFICATIONS

RIGHT OF WAY DATE: MARCH 25, 2009

LETTING DATE: JUNE 19, 2012

REKHA PATEL, PE
PROJECT ENGINEER

BRIAN P. ROBINSON
PROJECT DESIGN ENGINEER

HYDRAULICS ENGINEER
NORTH CAROLINA PROFESSIONAL SEAL 022000 ENGINEER W. GALEN CAIL
W. Galen Cail 4/2/12
SIGNATURE:

ROADWAY DESIGN ENGINEER
NORTH CAROLINA PROFESSIONAL SEAL 16378 ENGINEER REKHA V. PATEL
Rekha V. Patel 4/3/12 P.E.
SIGNATURE:

STATE OF NORTH CAROLINA DEPARTMENT OF TRANSPORTATION

30-MAR-2012 07:43
R:\Roadway\Proj\u4422_rdy_tsh.dgn
$$$$USERNAME$$$$

8/17/98

STATE OF NORTH CAROLINA
DIVISION OF HIGHWAYS

PROJECT REFERENCE NO.	SHEET NO.
U-4422	1-A

ROADWAY DESIGN ENGINEER

NORTH CAROLINA PROFESSIONAL SEAL 16378 ENGINEER REKHA V. PATEL

4/12/12

Rekha V. Patel

INDEX OF SHEETS

SHEET NUMBER	SHEET
1	TITLE SHEET
1-A	INDEX OF SHEETS, GENERAL NOTES, AND LIST OF STANDARDS
1-B	CONVENTIONAL SYMBOLS
1-C & 1-D	SURVEY CONTROL SHEETS
2 THRU 2-D	TYPICAL SECTIONS, PAVEMENT SCHEDULE, AND WEDGING DETAILS
2-E THRU 2-G	ROUNDABOUT DETAILS
2-H	DETAIL OF SPECIAL CATCH BASIN
2-I	DETAIL OF REINFORCED CONCRETE ENDWALL FOR 72" DIAMETER RCP - 45° SKEW
2-J	DETAIL OF TRANSITION FROM 2'-6" CURB & GUTTER TO VALLEY GUTTER
2-K	DETAIL OF 2'-9" CURB & GUTTER TO 2'-6" CURB & GUTTER TRANSITION SECTION
2-L	DETAIL OF CURB RAMPS AT MEDIAN ISLANDS
3	SUMMARY OF QUANTITIES
3-A THRU 3-K	SUMMARY OF PIPES 48" AND UNDER & SUMMARY OF PIPES 54" AND OVER
3-L	SUMMARY OF EARTHWORK
3-M	SUMMARY OF EXISTING ASPHALT PAVEMENT REMOVAL & SUMMARY OF 60" VINYL COATED CHAIN LINK FENCE
3-N	PARCEL INDEX SHEET
4 THRU 9	PLAN SHEETS
10 THRU 16	PROFILE SHEETS
TMP-1 THRU TMP-21	TRANSPORTATION MANAGEMENT PLANS
PMP-1 THRU PMP-7	PAVEMENT MARKING PLANS
EC-1 THRU EC-15	EROSION CONTROL PLANS
SIGN-1 THRU SIGN-9	SIGNING PLANS
SIG-1 THRU SIG-38	SIGNAL PLANS
UC-1 THRU UC-15	UTILITY CONSTRUCTION PLANS
UO-1 THRU UO-7	UTILITIES BY OTHERS PLANS
X-0	CROSS SECTION INDEX SHEET
X-1A & X-1B	CROSS SECTION SUMMARY SHEETS
X-1 THRU X-43	CROSS-SECTIONS

GENERAL NOTES:

2012 SPECIFICATIONS
EFFECTIVE: 01-17-12
REVISED: 11/01/11

GRADING AND SURFACING OR RESURFACING AND WIDENING:

THE GRADE LINES SHOWN DENOTE THE FINISHED ELEVATION OF THE PROPOSED SURFACING AT GRADE POINTS SHOWN ON THE TYPICAL SECTIONS. WHERE NO GRADE LINES ARE SHOWN, THE PROFILES SHOWN DENOTE THE TOP ELEVATION OF THE EXISTING PAVEMENT ALONG THE CENTER LINE OF SURVEY ON WHICH THE PROPOSED RESURFACING WILL BE PLACED. GRADE LINES MAY BE ADJUSTED BY THE ENGINEER IN ORDER TO SECURE A PROPER TIE-IN.

CLEARING:

CLEARING ON THIS PROJECT SHALL BE PERFORMED TO THE LIMITS ESTABLISHED BY METHOD III.

SUPERELEVATION:

ALL CURVES ON THIS PROJECT SHALL BE SUPERELEVATED IN ACCORDANCE WITH STD. NO. 225.04 USING THE RATE OF SUPERELEVATION AND RUNOFF SHOWN ON THE PLANS. SUPERELEVATION IS TO BE REVOLVED ABOUT THE GRADE POINTS SHOWN ON THE TYPICAL SECTIONS.

SIDE ROADS:

THE CONTRACTOR WILL BE REQUIRED TO DO ALL NECESSARY WORK TO PROVIDE SUITABLE CONNECTIONS WITH ALL ROADS, STREETS, AND DRIVES ENTERING THIS PROJECT. THIS WORK WILL BE PAID FOR AT THE CONTRACT UNIT PRICE FOR THE PARTICULAR ITEMS INVOLVED.

BERM DITCHES:

BERM DITCHES SHALL BE CONSTRUCTED IN ACCORDANCE WITH STD. NO. 240.01 AT LOCATIONS SHOWN ON THE PLANS OR AS DIRECTED BY THE ENGINEER.

DRIVEWAYS:

DRIVEWAYS SHALL BE CONSTRUCTED IN ACCORDANCE WITH STD. 848.03 AT LOCATIONS SHOWN ON PLANS OR AS DIRECTED BY THE ENGINEER.

STREET TURNOUT:

STREET RETURNS SHALL BE CONSTRUCTED IN ACCORDANCE WITH STD. NO. 848.04 USING THE RADII NOTED ON PLANS.

TEMPORARY SHORING:

SHORING REQUIRED FOR THE MAINTENANCE OF TRAFFIC WILL BE PAID FOR AS "EXTRA WORK" IN ACCORDANCE WITH SECTION 104-7.

UTILITIES:

UTILITY OWNERS ON THIS PROJECT ARE Fayetteville PWC-Power, Century Link-Telephone,

Time Warner-CATV, and Piedmont Natural Gas.

ANY RELOCATION OF EXISTING UTILITIES WILL BE ACCOMPLISHED BY OTHERS, EXCEPT AS SHOWN ON THE PLANS.

RIGHT-OF-WAY MARKERS:

ALL RIGHT-OF-WAY MARKERS ON THIS PROJECT SHALL BE PLACED BY OTHERS.

CURB RAMPS

CURB RAMPS ARE SHOWN ON THE PLANS AT APPROXIMATE LOCATIONS. CONSTRUCT ALL CURB RAMPS ACCORDANCE WITH STD. 848.05 and/or 848.06

EFF. 01-17-12

2012 ROADWAY ENGLISH STANDARD DRAWINGS

The following Roadway Standards as appear in "Roadway Standard Drawings" Highway Design Branch - N. C. Department of Transportation - Raleigh, N. C., Dated January, 2012 are applicable to this project and by reference hereby are considered a part of these plans:

STD.NO.	TITLE
DIVISION 2 - EARTHWORK	
200.03	Method of Clearing - Method III
225.02	Guide for Grading Subgrade - Secondary and Local
225.04	Method of Obtaining Superelevation - Two Lane Pavement
240.01	Guide for Berm Ditch Construction
DIVISION 3 - PIPE CULVERTS	
300.01	Method of Pipe Installation
DIVISION 6 - ASPHALT BASES AND PAVEMENTS	
654.01	Pavement Repairs
DIVISION 8 - INCIDENTALS	
840.00	Concrete Base Pad for Drainage Structures
840.01	Brick Catch Basin - 12" thru 54" Pipe
840.02	Concrete Catch Basin - 12" thru 54" Pipe
840.03	Frame, Grates and Hood - for Use on Standard Catch Basin
840.14	Concrete Drop Inlet - 12" thru 30" Pipe
840.15	Brick Drop Inlet - 12" thru 30" Pipe
840.16	Drop Inlet Frame and Grates - for use with Std. Dwg 840.14 and 840.15
840.17	Concrete Grated Drop Inlet Type 'A' - 12" thru 72" Pipe
840.18	Concrete Grated Drop Inlet Type 'B' - 12" thru 36" Pipe
840.24	Frames and Narrow Slot Sag Grates
840.25	Anchorage for Frames - Brick or Concrete or Precast
840.26	Brick Grated Drop Inlet Type 'A' - 12" thru 72" Pipe
840.27	Brick Grated Drop Inlet Type 'B' - 12" thru 36" Pipe
840.29	Frames and Narrow Slot Flat Grates
840.31	Concrete Junction Box - 12" thru 66" Pipe
840.32	Brick Junction Box - 12" thru 66" Pipe
840.34	Traffic Bearing Junction Box - for Use with Pipes 42" and Under
840.45	Precast Drainage Structure
840.46	Traffic Bearing Precast Drainage Structure
840.54	Manhole Frame and Cover
840.66	Drainage Structure Steps
840.71	Concrete and Brick Pipe Plug
840.72	Pipe Collar
846.01	Concrete Curb, Gutter and Curb & Gutter
848.01	Concrete Sidewalk
848.03	Driveway Turnout - Drop Curb Type
848.04	Street Turnout
848.05	Curb Ramp - Proposed Curb & Gutter
848.06	Curb Ramp - Existing Curb & Gutter
852.01	Concrete Islands
852.04	Method for Placement of Drop Inlets in Grassed Median - Using 1'-6" Curb and Gutter
852.06	Method for Placement of Drop Inlets in Concrete Islands
852.10	Median Construction - with Curb and Gutter
866.01	Chain Link Fence - 4', 5' and 6' High Fence
876.02	Guide for Rip Rap at Pipe Outlets

04-APR-2012 07:59
C:\Projects\4422_1a\4422_1a.dgn.dgn
$$$$USERNAME$$$$

04/16/11

PROJECT REFERENCE NO.	SHEET NO.
U-4422	1-B

Note: Not to Scale

****S.U.E. = Subsurface Utility Engineering***

STATE OF NORTH CAROLINA
DIVISION OF HIGHWAYS

CONVENTIONAL PLAN SHEET SYMBOLS

BOUNDARIES AND PROPERTY:

- State Line
- County Line
- Township Line
- City Line
- Reservation Line
- Property Line
- Existing Iron Pin — EIP
- Property Corner
- Property Monument — ECM
- Parcel/Sequence Number — 123
- Existing Fence Line
- Proposed Woven Wire Fence
- Proposed Chain Link Fence
- Proposed Barbed Wire Fence
- Existing Wetland Boundary — WLB
- Proposed Wetland Boundary — WLB
- Existing Endangered Animal Boundary — EAB
- Existing Endangered Plant Boundary — EPB
- Known Soil Contamination: Area or Site
- Potential Soil Contamination: Area or Site

BUILDINGS AND OTHER CULTURE:

- Gas Pump Vent or U/G Tank Cap
- Sign — S
- Well — W
- Small Mine
- Foundation
- Area Outline
- Cemetery
- Building
- School
- Church
- Dam

HYDROLOGY:

- Stream or Body of Water
- Hydro, Pool or Reservoir
- Jurisdictional Stream — JS
- Buffer Zone 1 — BZ 1
- Buffer Zone 2 — BZ 2
- Flow Arrow
- Disappearing Stream
- Spring
- Wetland
- Proposed Lateral, Tail, Head Ditch — FLOW
- False Sump

RAILROADS:

- Standard Gauge — CSX TRANSPORTATION
- RR Signal Milepost — MILEPOST 35
- Switch — SWITCH
- RR Abandoned
- RR Dismantled

RIGHT OF WAY:

- Baseline Control Point
- Existing Right of Way Marker
- Existing Right of Way Line
- Proposed Right of Way Line — RW
- Proposed Right of Way Line with Iron Pin and Cap Marker — RW
- Proposed Right of Way Line with Concrete or Granite R/W Marker — RW
- Proposed Control of Access Line with Concrete C/A Marker — CA
- Existing Control of Access — CA
- Proposed Control of Access — CA
- Existing Easement Line — E
- Proposed Temporary Construction Easement — E
- Proposed Temporary Drainage Easement — TDE
- Proposed Permanent Drainage Easement — PDE
- Proposed Permanent Drainage / Utility Easement — DUE
- Proposed Permanent Utility Easement — PUE
- Proposed Temporary Utility Easement — TUE
- Proposed Aerial Utility Easement — AUE
- Proposed Permanent Easement with Iron Pin and Cap Marker

ROADS AND RELATED FEATURES:

- Existing Edge of Pavement
- Existing Curb
- Proposed Slope Stakes Cut — C
- Proposed Slope Stakes Fill — F
- Proposed Curb Ramp — CR
- Existing Metal Guardrail
- Proposed Guardrail
- Existing Cable Guiderail
- Proposed Cable Guiderail
- Equality Symbol
- Pavement Removal

VEGETATION:

- Single Tree
- Single Shrub
- Hedge
- Woods Line

- Orchard
- Vineyard — Vineyard

EXISTING STRUCTURES:

MAJOR:

- Bridge, Tunnel or Box Culvert — CONC
- Bridge Wing Wall, Head Wall and End Wall — CONC WW

MINOR:

- Head and End Wall — CONC HW
- Pipe Culvert
- Footbridge
- Drainage Box: Catch Basin, DI or JB — CB
- Paved Ditch Gutter
- Storm Sewer Manhole — S
- Storm Sewer — S

UTILITIES:

POWER:

- Existing Power Pole
- Proposed Power Pole
- Existing Joint Use Pole
- Proposed Joint Use Pole
- Power Manhole — P
- Power Line Tower
- Power Transformer
- U/G Power Cable Hand Hole
- H-Frame Pole
- Recorded U/G Power Line — P
- Designated U/G Power Line (S.U.E.*) — P

TELEPHONE:

- Existing Telephone Pole
- Proposed Telephone Pole
- Telephone Manhole — T
- Telephone Booth
- Telephone Pedestal — T
- Telephone Cell Tower
- U/G Telephone Cable Hand Hole — HH
- Recorded U/G Telephone Cable — T
- Designated U/G Telephone Cable (S.U.E.*) — T
- Recorded U/G Telephone Conduit — TC
- Designated U/G Telephone Conduit (S.U.E.*) — TC
- Recorded U/G Fiber Optics Cable — T FO
- Designated U/G Fiber Optics Cable (S.U.E.*) — T FO

WATER:

- Water Manhole — W
- Water Meter
- Water Valve
- Water Hydrant
- Recorded U/G Water Line — W
- Designated U/G Water Line (S.U.E.*) — W
- Above Ground Water Line — A/G Water

TV:

- TV Satellite Dish
- TV Pedestal — C
- TV Tower
- U/G TV Cable Hand Hole — HH
- Recorded U/G TV Cable — TV
- Designated U/G TV Cable (S.U.E.*) — TV
- Recorded U/G Fiber Optic Cable — TV FO
- Designated U/G Fiber Optic Cable (S.U.E.*) — TV FO

GAS:

- Gas Valve
- Gas Meter
- Recorded U/G Gas Line — G
- Designated U/G Gas Line (S.U.E.*) — G
- Above Ground Gas Line — A/G Gas

SANITARY SEWER:

- Sanitary Sewer Manhole
- Sanitary Sewer Cleanout
- U/G Sanitary Sewer Line — SS
- Above Ground Sanitary Sewer — A/G Sanitary Sewer
- Recorded SS Forced Main Line — FSS
- Designated SS Forced Main Line (S.U.E.*) — FSS

MISCELLANEOUS:

- Utility Pole
- Utility Pole with Base
- Utility Located Object
- Utility Traffic Signal Box — S
- Utility Unknown U/G Line — ?UTL
- U/G Tank; Water, Gas, Oil
- Underground Storage Tank, Approx. Loc. — UST
- A/G Tank; Water, Gas, Oil
- Geoenvironmental Boring
- U/G Test Hole (S.U.E.*)
- Abandoned According to Utility Records — AATUR
- End of Information — E.O.I.

6/2/99

PROJECT REFERENCE NO.	SHEET NO.
U-4422	1C
Location and Surveys	

SURVEY CONTROL SHEET U-4422

BL

POINT	DESC.	NORTH	EAST	ELEVATION	L STATION	OFFSET
102	U4422-2 (GPS)	468727.5927	2011653.9032	212.03	OUTSIDE PROJECT LIMITS	
1	U4422 BL-1	469664.4222	2011656.9717	214.56	11+34.44	33.11 LT
2	U4422 BL-2	470565.7146	2011626.7672	210.90	20+35.73	63.51 LT
3	U4422 BL-3	471132.5935	2011550.8554	213.91	26+30.09	32.87 LT
18	U4422 BY1-18	471595.2859	2011510.4610	194.79	30+89.88	0.70 LT
4	U4422 BL-4	471819.4841	2011490.8672	190.89	33+14.25	20.64 LT
5	U4422 BL-5	472564.6603	2011534.5719	201.42	40+59.49	21.90 RT
6	U4422-6 (GPS)	473311.4812	2011539.2053	215.92	48+06.32	25.37 RT
7	U4422 BL-7	473909.5292	2011538.6056	217.62	54+04.36	23.84 RT
8	U4422 BL-8	474450.0063	2011518.1895	216.19	59+42.60	19.70 RT
26	U4422 BY4-26	474735.0809	2011432.6966	215.93	62+38.07	7.97 RT
9	U4422 BL-9	475237.3597	2011282.0520	216.79	67+62.44	11.16 RT
10	U4422 BL-10	475899.3962	2011094.3705	220.66	74+52.34	17.95 RT
11	U4422 BL-11	476484.4886	2011060.2793	219.49	80+41.13	43.90 RT
12	U4422-3 (GPS)	477062.9180	2010976.3290	222.87	86+24.19	5.20 LT

BY

POINT	DESC.	NORTH	EAST	ELEVATION	Y1 STATION	OFFSET
14	U4422 BY-14	470446.3791	2011433.1859	210.29	15+36.71	61.30 RT
15	U4422 BL-2	470565.7146	2011626.7672	210.90	17+39.78	41.04 LT
16	U4422 BY-16	470544.8941	2012371.0976	209.19	24+79.61	43.35 RT

BY1

POINT	DESC.	NORTH	EAST	ELEVATION	Y2 STATION	OFFSET
17	U4422 BY1-17	471737.7765	2011138.4042	187.86	10+58.63	17.73 RT
18	U4422 BY1-18	471595.2859	2011510.4610	194.79	14+57.09	21.05 RT
19	U4422 BY1-19	471460.0014	2011871.5948	211.93	18+42.67	21.07 RT

BY2

POINT	DESC.	NORTH	EAST	ELEVATION	Y3 STATION	OFFSET
20	U4422 BY2-20	473377.7459	2011197.5303	216.20	11+33.60	32.39 LT
21	U4422-6 (GPS)	473311.4812	2011539.2053	215.92	14+75.36	33.47 RT
22	U4422 BY2-22	473386.2898	2011850.8745	215.42	17+86.94	41.71 LT

BY3

POINT	DESC.	NORTH	EAST	ELEVATION	Y4 STATION	OFFSET
23	U4422 BL-8	474450.0063	2011518.1895	216.19	10+15.31	31.39 LT
24	U4422 BY3-24	474437.2796	2011865.9992	216.15	13+63.11	18.40 LT

BY4

POINT	DESC.	NORTH	EAST	ELEVATION	Y5 STATION	OFFSET
25	U4422 BY4-25	474658.2553	2011126.6492	213.09	11+28.82	31.72 LT
26	U4422 BY4-26	474735.0809	2011432.6966	215.93	OUTSIDE PROJECT LIMITS	

BY5

POINT	DESC.	NORTH	EAST	ELEVATION	Y6 STATION	OFFSET
27	U4422 BY5-27	476427.8104	2010146.5109	221.70	OUTSIDE PROJECT LIMITS	
28	U4422 BL-11	476484.4886	2011060.2793	219.49	15+15.04	42.92 RT
29	U4422 BY5-29	476557.1105	2011742.1075	221.18	22+00.70	36.82 RT

```
**************************************
BM80       ELEVATION = 214.07
N 470942      E 2011504
L STATION 24+62 143 LEFT
RR SPIKE IN BASE OF 20 INCH PINE
**************************************
**************************************
BM81       ELEVATION = 218.49
N 474598      E 2011547
L STATION 60+77 79 RIGHT
RR SPIKE IN BASE OF 18 INCH PINE
**************************************
**************************************
BM82       ELEVATION = 219.79
N 476716      E 2011121
L STATION 82+67 122 RIGHT
RR SPIKE IN BASE OF 22 INCH PINE
**************************************
```

NAD 83/95

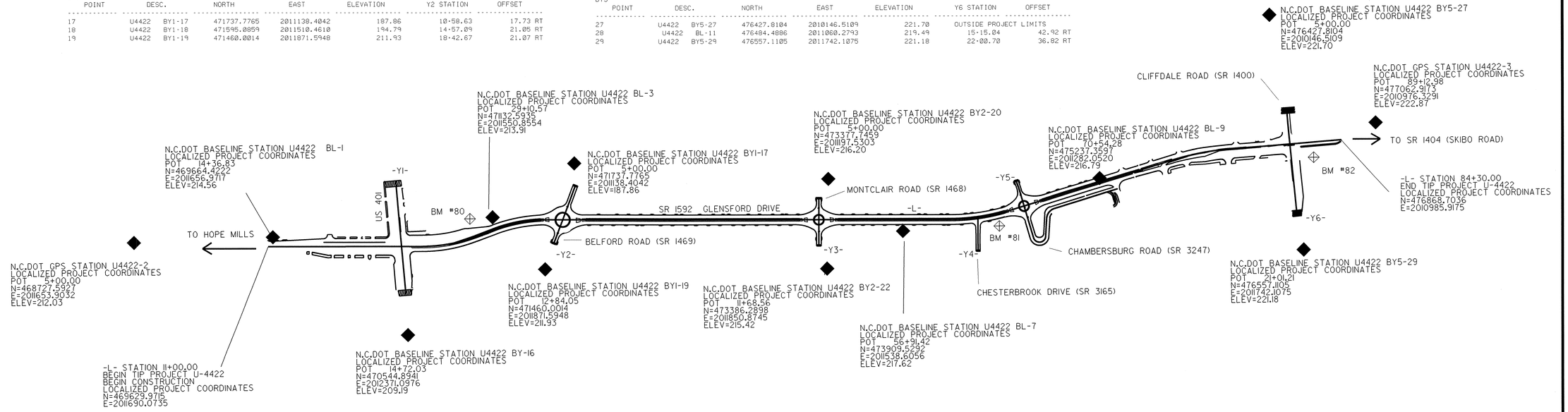

DATUM DESCRIPTION

THE LOCALIZED COORDINATE SYSTEM DEVELOPED FOR THIS PROJECT IS BASED ON THE STATE PLANE COORDINATES ESTABLISHED BY NCGS FOR MONUMENT "ACACIA"
WITH NAD 1983/95 STATE PLANE GRID COORDINATES OF
NORTHING: 466066.2792(ft) EASTING: 1984258.8792(ft)
THE AVERAGE COMBINED GRID FACTOR USED ON THIS PROJECT (GROUND TO GRID) IS: 0.999873785
THE N.C. LAMBERT GRID BEARING AND LOCALIZED HORIZONTAL GROUND DISTANCE FROM "ACACIA" TO -L- STATION IS 11+00.00
N 82°35'53" E 27661.7122'
ALL LINEAR DIMENSIONS ARE LOCALIZED HORIZONTAL DISTANCES
VERTICAL DATUM USED IS NAVD 88

NOTE: DRAWING NOT TO SCALE

NOTES:

1. *THE CONTROL DATA FOR THIS PROJECT CAN BE FOUND ELECTRONICALLY BY SELECTING PROJECT CONTROL DATA AT:*
   HTTP://WWW.NCDOT.ORG/DOH/PRECONSTRUCT/HIGHWAY/LOCATION/PROJECT/

   THE FILES TO BE FOUND ARE AS FOLLOWS:
   U4422_LS_CONTROL_080915.TXT

   SITE CALIBRATION INFORMATION HAS NOT BEEN PROVIDED FOR THIS PROJECT. IF FURTHER INFORMATION IS NEEDED, PLEASE CONTACT THE LOCATION AND SURVEYS UNIT.

◎ *INDICATES GEODETIC CONTROL MONUMENTS USED OR SET FOR HORIZONTAL PROJECT CONTROL BY THE NCDOT LOCATION AND SURVEYS UNIT.*
PROJECT CONTROL ESTABLISHED USING GLOBAL POSITIONING SYSTEM.
NETWORK ESTABLISHED FROM EXISTING HARN MONUMENTATION
SEE GPS CALIBRATION SHEET FOR HORIZONTAL AND VERTICAL COORDINATE VALUES.

01-MAR-2012 13:48
R:\Roadway\Proj\u4422_ls_lc.dgn
$$$$USERNAME$$$$

PROJECT REFERENCE NO.	SHEET NO.
U-4422	1-D
Location and Surveys	

SURVEY CONTROL SHEET U-4422

ROW MARKER IRON PIN AND CAP-E

ALIGN	STATION	OFFSET	NORTH	EAST
L	46+95.00	50.00	473200.1246	2011563.6597
L	33+11.00	50.00	471816.1263	2011561.5012
L	49+80.00	50.00	473485.1243	2011564.1067
L	46+93.00	-50.00	473198.2807	2011463.6567
L	49+75.00	-50.00	473480.2803	2011464.0969
L	76+95.00	80.00	476142.2774	2011123.5039
L	13+74.00	50.00	469903.9604	2011740.1344
L	19+26.94	75.00	470456.8982	2011765.2552
L	11+16.52	-59.10	469646.5043	2011630.9739
L	18+66.00	-65.50	470395.9860	2011624.7417
L	26+47.58	-50.00	471142.9117	2011528.6507
L	29+30.00	-50.00	471431.3677	2011464.2557
L	21+08.00	50.00	470637.9604	2011740.2955
L	21+43.56	50.00	470673.5210	2011740.3055
L	25+04.63	50.00	471044.4744	2011672.6815
L	26+47.58	50.00	471178.2204	2011622.2098
L	29+75.00	50.00	471481.8821	2011561.5609
L	57+28.92	-50.00	474234.1957	2011465.2739
L	60+94.00	50.00	474608.1254	2011514.9756
L	61+68.68	79.16	474689.6012	2011521.1021
L	63+95.00	50.00	474897.4361	2011426.8831
L	70+00.00	50.00	475475.8648	2011249.5551
L	72+83.63	61.00	475750.2621	2011176.9388
L	73+98.00	65.00	475857.7873	2011151.8187
L	75+00.00	80.00	475956.6662	2011146.5168
L	32+45.00	-50.00	471750.2825	2011461.3962
L	58+58.00	50.00	474367.7095	2011559.0875
L	59+60.00	49.75	474472.5023	2011544.9397
L	61+50.00	-65.00	474629.4894	2011388.7444
L	60+62.00	-50.01	474551.7569	2011426.3924
L	63+55.27	-51.02	474829.8398	2011341.9475
L	15+65.39	-65.50	470095.3795	2011624.6748
L	14+75.00	-73.65	470004.9879	2011616.5038
L	78+02.37	80.00	476249.3114	2011115.0556
L	78+95.97	80.00	476342.6289	2011107.6879
L	79+73.00	80.00	476419.4148	2011101.6271
L	61+83.10	124.35	474716.6367	2011560.0775
L	62+73.09	125.50	474803.0131	2011534.7967
L	32+00.00	78.00	471705.0827	2011589.3279
L	63+07.00	69.00	474818.8694	2011470.8398
L	13+24.00	50.00	469853.9604	2011740.1212
L	13+24.00	42.65	469853.9620	2011732.7725
L	15+10.00	75.00	470039.9548	2011765.1625
L	76+25.00	80.00	476074.8755	2011129.5520
L	22+00.00	-107.00	470723.9298	2011581.8927
L	25+95.00	-73.00	471085.5974	2011525.6962
L	22+00.00	-123.00	470723.0308	2011565.9179
L	23+50.00	-127.00	470852.5087	2011544.8088
L	25+95.00	-104.00	471074.6524	2011496.6947
L	24+85.00	-127.00	470965.8901	2011512.9754
L	57+28.92	50.00	474234.0402	2011565.2758

ROW MARKER IRON PIN AND CAP-E

ALIGN	STATION	OFFSET	NORTH	EAST
Y1	17+00.00	82.50	470439.2228	2011597.6921
Y1	16+70.00	-51.00	470569.6686	2011556.3867
Y1	17+03.81	-83.55	470604.9944	2011587.2881
Y1	20+33.00	-67.00	470616.6494	2011916.6891
Y1	18+91.00	-67.00	470604.5073	2011775.2091
Y1	21+31.00	-51.01	470609.0956	2012015.6997
Y1	15+83.26	-51.00	470562.2517	2011469.9644
Y1	13+65.71	82.50	470410.6384	2011264.6264

ROW MARKER IRON PIN AND CAP-E

ALIGN	STATION	OFFSET	NORTH	EAST
Y2	12+48.00	-29.65	471715.8155	2011332.3747
Y2	13+14.00	30.27	471636.5752	2011373.2019
Y2	15+86.00	-29.81	471597.5732	2011649.0156
Y2	13+50.00	-60.00	471708.5160	2011438.5448
Y2	16+52.00	30.26	471518.1849	2011689.7895
Y2	15+70.00	50.00	471528.4201	2011606.0724

ROW MARKER IRON PIN AND CAP-E

ALIGN	STATION	OFFSET	NORTH	EAST
Y3	15+21.98	62.80	473282.0902	2011585.7898
Y3	13+72.98	49.75	473295.3227	2011436.8081
Y3	13+70.02	-65.25	473410.3273	2011433.9898
Y3	12+85.00	-30.33	473375.5118	2011348.9243
Y3	13+20.00	29.78	473315.3526	2011383.8501
Y3	15+70.00	-29.92	473374.7622	2011633.9215
Y3	15+94.00	29.68	473315.1282	2011657.8522
Y3	15+94.00	40.00	473304.8085	2011657.8398
Y3	15+40.02	-60.19	473405.0619	2011603.9817

ROW MARKER IRON PIN AND CAP-E

ALIGN	STATION	OFFSET	NORTH	EAST
Y4	10+85.00	30.17	474388.5060	2011587.9202
Y4	10+70.00	-30.08	474448.7427	2011572.8758

ROW MARKER IRON PIN AND CAP-E

ALIGN	STATION	OFFSET	NORTH	EAST
Y5	13+50.00	44.00	474663.8127	2011358.2174
Y5	13+45.00	-55.00	474757.4236	2011325.6141
Y5	13+14.00	-24.56	474719.2226	2011304.0535
Y5	13+14.00	25.03	474671.8721	2011318.7969
Y5	12+68.00	-25.13	474704.8897	2011259.2970

ROW MARKER IRON PIN AND CAP-E

ALIGN	STATION	OFFSET	NORTH	EAST
Y6	15+81.61	-71.00	476604.3345	2011115.4782
Y6	18+35.00	-71.00	476628.9275	2011367.6697
Y6	19+61.20	-53.01	476623.2666	2011495.0204
Y6	16+17.00	48.03	476489.2997	2011162.2517

ROW MARKER PERMANENT EASEMENT-E

ALIGN	STATION	OFFSET	NORTH	EAST
Y4	10+54.66	-43.29	474461.9390	2011557.5280
Y4	10+65.55	44.17	474374.4855	2011568.4836

ROW MARKER PERMANENT EASEMENT-E

ALIGN	STATION	OFFSET	NORTH	EAST
Y6	17+44.00	-85.00	476634.0293	2011275.7405
Y6	17+44.00	-71.00	476620.0954	2011277.0993
Y6	17+64.00	-71.00	476622.0365	2011297.0049
Y6	17+64.00	-85.00	476635.9704	2011295.6461

ROW MARKER PERMANENT EASEMENT-E

ALIGN	STATION	OFFSET	NORTH	EAST
Y1	18+76.21	75.81	470460.9532	2011772.6904
Y1	21+31.00	-61.00	470619.0511	2012014.8453
Y1	13+62.11	92.50	470400.3673	2011261.8976
Y1	15+78.00	92.00	470419.3257	2011476.9544

ROW MARKER PERMANENT EASEMENT-E

ALIGN	STATION	OFFSET	NORTH	EAST
Y2	12+00.00	30.43	471676.3567	2011266.3702
Y2	12+00.00	40.00	471667.3970	2011263.0193
Y2	13+23.53	40.00	471624.1275	2011378.7272

ROW MARKER PERMANENT EASEMENT-E

ALIGN	STATION	OFFSET	NORTH	EAST
Y3	13+60.00	44.86	473300.2306	2011423.8342

ROW MARKER PERMANENT EASEMENT-E

ALIGN	STATION	OFFSET	NORTH	EAST
L	72+13.00	-65.00	475645.8030	2011077.1746
L	76+95.00	90.00	476143.0643	2011133.4729
L	75+00.00	90.00	475958.4296	2011156.3601
L	73+98.00	75.00	475860.1060	2011161.5484
L	72+83.63	71.00	475753.1931	2011186.4997
L	70+00.00	60.00	475478.7958	2011259.1159
L	63+00.00	80.66	474815.5963	2011484.0455
L	61+73.12	91.22	474697.3845	2011531.3287
L	57+28.92	60.00	474234.0277	2011575.2758
L	47+32.27	60.00	473237.3817	2011573.7199
L	32+00.00	88.00	471705.0671	2011599.3279
L	29+85.00	59.57	471491.6024	2011570.8590
L	26+47.58	60.00	471181.7510	2011631.5678
L	25+04.63	60.00	471048.0050	2011682.0396
L	20+98.42	60.00	470628.3808	2011750.2965
L	15+10.00	85.00	470039.9526	2011775.1646
L	13+74.00	60.00	469903.9582	2011750.1344
L	21+43.56	60.00	470673.5181	2011750.3055
L	17+10.00	82.00	470239.9533	2011772.2101
L	32+28.80	-60.00	471734.0958	2011451.3730
L	46+93.00	-60.00	473198.2963	2011453.6588
L	49+84.00	-60.00	473489.2960	2011454.1141
L	57+28.92	-60.00	474234.2151	2011455.2760
L	60+62.00	-60.00	474549.3326	2011416.7024
L	63+60.00	-60.00	474831.7318	2011331.9729
L	76+95.00	-53.00	476131.8131	2010990.9160
L	79+84.85	92.03	476432.1709	2011112.6942
L	20+83.83	76.09	470613.7866	2011766.3855
L	11+10.00	-66.90	469639.9864	2011623.1729
L	13+48.00	-80.00	469877.9893	2011610.1286
L	14+85.00	-83.03	470014.9899	2011607.1294
L	15+55.34	-75.00	470085.3243	2011615.1747
L	18+66.00	-75.00	470395.9882	2011615.2438
L	18+99.77	-91.74	470429.7576	2011598.5065
L	70+67.00	-60.00	475507.6817	2011124.7479
L	77+92.00	90.48	476239.8012	2011126.3174
L	78+87.00	91.04	476334.5511	2011119.4062
L	79+04.00	-56.63	476339.8787	2010970.8556
L	11+90.00	-75.00	469719.9892	2011615.0935
L	17+35.00	-75.00	470264.9882	2011615.2157
L	14+37.00	72.00	469966.9555	2011762.1495
L	33+11.09	60.00	471816.2039	2011571.5013
L	36+31.00	60.00	472136.1092	2011572.0007
L	37+91.00	60.00	472296.1101	2011572.2505
L	34+16.00	-60.00	471921.2968	2011451.6652
L	36+55.00	-60.00	472160.2966	2011452.0383
L	51+44.00	-60.00	473649.2958	2011454.3639
L	38+71.00	60.00	472376.1100	2011572.3754
L	42+70.94	60.00	472776.0485	2011572.9998
L	49+85.00	60.00	473490.1087	2011574.1155
L	51+43.92	60.00	473649.0310	2011574.3627
L	52+24.00	60.00	473729.1084	2011574.4876
L	53+04.00	60.00	473809.1083	2011574.6125
L	53+84.38	60.00	473889.4907	2011574.7390
L	55+44.39	60.00	474049.4967	2011574.9888
L	56+24.39	60.00	474129.4969	2011575.1136
L	57+02.00	60.00	474207.1078	2011575.2338
L	57+83.07	60.00	474290.5749	2011574.2249
L	55+40.00	-60.00	474045.2953	2011454.9821
L	61+24.00	-70.00	474603.5854	2011391.4299
L	65+10.00	-60.00	474975.1439	2011288.0073
L	65+87.00	-60.00	475048.7631	2011265.4379
L	60+00.00	55.00	474514.3113	2011542.4825
L	60+82.00	60.00	474598.6851	2011527.8949
L	68+98.00	60.00	475381.2756	2011289.0125
L	75+94.00	92.00	476046.9511	2011144.9005
L	75+45.00	-55.00	475978.6075	2011006.0258
L	74+15.00	-58.00	475846.3660	2011028.1837
L	37+11.00	60.00	472216.1092	2011572.1256
L	32+32.00	78.00	471737.0816	2011589.3778
L	63+95.00	60.00	474900.3671	2011436.4439

L

TYPE	STATION	NORTH	EAST
POT	10+00.00	469529.9715	2011690.0513
PC	21+43.56	470673.5321	2011690.3055
PT	25+04.63	471026.8210	2011625.9037
PC	26+47.58	471160.5670	2011575.4320
PT	30+09.99	471515.1948	2011511.0313
PC	57+28.92	474234.1182	2011515.2759
PT	61+32.61	474631.9163	2011455.9862
PC	72+83.63	475732.3783	2011118.6193
PT	76+77.29	476118.3306	2011045.1452
PC	84+35.07	476873.7603	2010985.5184
PT	87+05.07	477143.4539	2010986.4700

Y1

TYPE	STATION	NORTH	EAST
POT	10+00.00	470461.5652	2010893.2036
POT	26+00.00	470598.3777	2012487.3436

Y2

TYPE	STATION	NORTH	EAST
POT	10+00.00	471774.9222	2011089.7036
POT	19+50.00	471442.1386	2011979.5098

Y3

TYPE	STATION	NORTH	EAST
POT	10+00.00	473345.5203	2011063.8882
POT	19+00.00	473344.4418	2011963.8875

Y4

TYPE	STATION	NORTH	EAST
POT	10+00.00	474418.6100	2011502.9000
POT	14+45.30	474418.9377	2011948.2006

Y5

TYPE	STATION	NORTH	EAST
POT	10+00.00	474584.5291	2011017.8623
PC	10+44.73	474599.1480	2011060.1406
PT	11+38.62	474632.7122	2011147.7985
PC	12+03.31	474657.8121	2011207.4229
PT	13+33.65	474701.4491	2011330.1668
POT	14+33.57	474729.5145	2011426.0657

Y6

TYPE	STATION	NORTH	EAST
PC	10+00.00	476487.4034	2010542.6544
PT	14+83.94	476524.1904	2011025.1625
POT	22+97.36	476603.1382	2011834.7398

DATUM DESCRIPTION

THE LOCALIZED COORDINATE SYSTEM DEVELOPED FOR THIS PROJECT IS BASED ON THE STATE PLANE COORDINATES ESTABLISHED BY NCGS FOR MONUMENT "ACACIA"
WITH NAD 1983/95 STATE PLANE GRID COORDINATES OF
NORTHING: 466066.2792(ft) EASTING: 1984258.8792(ft)
THE AVERAGE COMBINED GRID FACTOR USED ON THIS PROJECT (GROUND TO GRID) IS: 0.999873785
THE N.C. LAMBERT GRID BEARING AND LOCALIZED HORIZONTAL GROUND DISTANCE FROM "ACACIA" TO -L- STATION IS 11+00.00
N 82°35′53″ E 27661.7122′
ALL LINEAR DIMENSIONS ARE LOCALIZED HORIZONTAL DISTANCES
VERTICAL DATUM USED IS NAVD 88

NOTE: DRAWING NOT TO SCALE

NOTES:

1. *THE CONTROL DATA FOR THIS PROJECT CAN BE FOUND ELECTRONICALLY BY SELECTING PROJECT CONTROL DATA AT:*
HTTP://WWW.NCDOT.ORG/DOH/PRECONSTRUCT/HIGHWAY/LOCATION/PROJECT/

   THE FILES TO BE FOUND ARE AS FOLLOWS:
   U4422_LS_CONTROL_080915.TXT

   SITE CALIBRATION INFORMATION HAS NOT BEEN PROVIDED FOR THIS PROJECT. IF FURTHER INFORMATION IS NEEDED, PLEASE CONTACT THE LOCATION AND SURVEYS UNIT.

⊚ *INDICATES GEODETIC CONTROL MONUMENTS USED OR SET FOR HORIZONTAL PROJECT CONTROL BY THE NCDOT LOCATION AND SURVEYS UNIT.*
PROJECT CONTROL ESTABLISHED USING GLOBAL POSITIONING SYSTEM.
NETWORK ESTABLISHED FROM EXISTING HARN MONUMENTATION
SEE GPS CALIBRATION SHEET FOR HORIZONTAL AND VERTICAL COORDINATE VALUES.

6/2/99
01-MAR-2012 13:48
R:\Roadway\Proj\u4422_ls_1d.dgn
$$$$USERNAME$$$$

PROJECT REFERENCE NO.	SHEET NO.
U-4422	2

ROADWAY DESIGN ENGINEER: NORTH CAROLINA PROFESSIONAL SEAL 16378 ENGINEER REKHA V. PATEL

PAVEMENT DESIGN ENGINEER: NORTH CAROLINA PROFESSIONAL SEAL 13368 ENGINEER DON-CHI CHEN 03/30/12

FINAL PAVEMENT SCHEDULE

A	8" JOINTED PORTLAND CEMENT CONCRETE PAVEMENT.	E3	PROP. APPROX. 5½" ASPHALT CONCRETE BASE COURSE, TYPE B25.0B, AT AN AVERAGE RATE OF 627 LBS. PER SQ. YD.	R4	2'-9" CONCRETE CURB AND GUTTER.
C1	PROP. APPROX. 3" ASPHALT CONCRETE SURFACE COURSE, TYPE S9.5B AT AN AVERAGE RATE OF 168 LBS. PER SQ. YD.IN EACH OF TWO LAYERS.	E4	PROP. VAR. DEPTH ASPHALT CONCRETE BASE COURSE, TYPE B25.0B, AT AN AVERAGE RATE OF 114 LBS. PER SQ. YD. PER 1" DEPTH, TO BE PLACED IN LAYERS NOT LESS THAN 3" IN DEPTH OR GREATER THAN 5½" IN DEPTH.	R5	5" MONOLITHIC CONCRETE ISLAND. (KEYED IN)
C2	PROP. VAR. DEPTH ASPHALT CONCRETE SURFACE COURSE, TYPE S9.5B, AT AN AVERAGE RATE OF 112 LBS. PER SQ. YD. PER 1" DEPTH TO BE PLACED IN LAYERS NOT LESS THAN 1½" OR GREATER THAN 2" IN DEPTH.	J1	PROP. 4" AGGREGATE BASE COURSE.	S	4" CONCRETE SIDEWALK.
D1	PROP. APPROX. 4" ASPHALT CONCRETE INTERMEDIATE COURSE, TYPE I19.0B, AT AN AVERAGE RATE OF 456 LBS. PER SQ. YD.	J2	PROP. 8" AGGREGATE BASE COURSE.	T	EARTH MATERIAL.
D2	PROP. VAR. DEPTH ASPHALT CONCRETE INTERMEDIATE COURSE, TYPE I19.0B, AT AN AVERAGE RATE OF 114 LBS. PER SQ. YD. PER 1" DEPTH, TO BE PLACED IN LAYERS NOT LESS THAN 2½" IN DEPTH OR GREATER THAN 4" IN DEPTH.	R1	2'-6" CONCRETE CURB AND GUTTER.	U	EXISTING PAVEMENT.
E1	PROP. APPROX. 4" ASPHALT CONCRETE BASE COURSE, TYPE B25.0B, AT AN AVERAGE RATE OF 456 LBS. PER SQ. YD.	R2	2' VALLEY CURB AND GUTTER.	W	VARIABLE DEPTH ASPHALT PAVEMENT (SEE WEDGING DETAIL).
E2	PROP. APPROX. 4½" ASPHALT CONCRETE BASE COURSE, TYPE B25.0B, AT AN AVERAGE RATE OF 513 LBS. PER SQ. YD.	R3	1'-6" CONCRETE CURB AND GUTTER.		

NOTE: PAVEMENT EDGE SLOPES ARE 1:1 UNLESS SHOWN OTHERWISE.

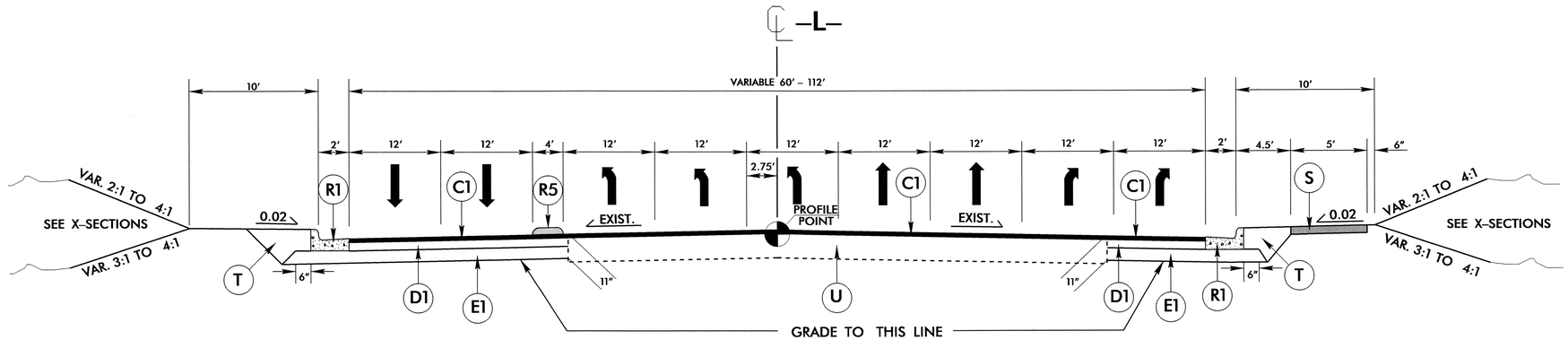

TYPICAL SECTION NO. 1

-L- STA 11+00.00 TO 19+00.00

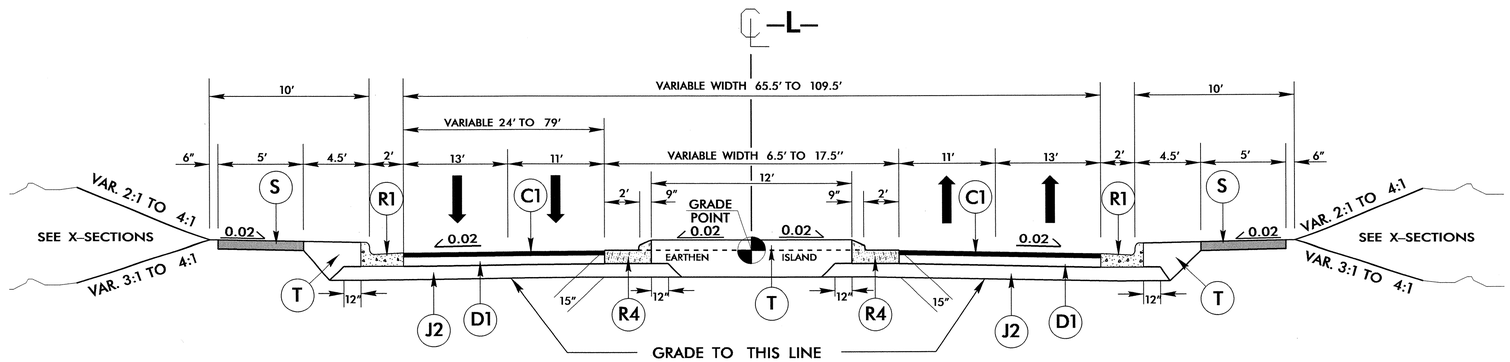

TYPICAL SECTION NO. 2

-L- STA 20+80.00 TO 30+22.08

NOTE: FOR ASPHALT PAVEMENT REMOVAL SEE SUMMARY SHEET "3-M"

6/2/99
28-MAR-2012 14:19
R:\Roadway\Proj\u4422_rdy_typ.dgn
$$$$USERNAME$$$$

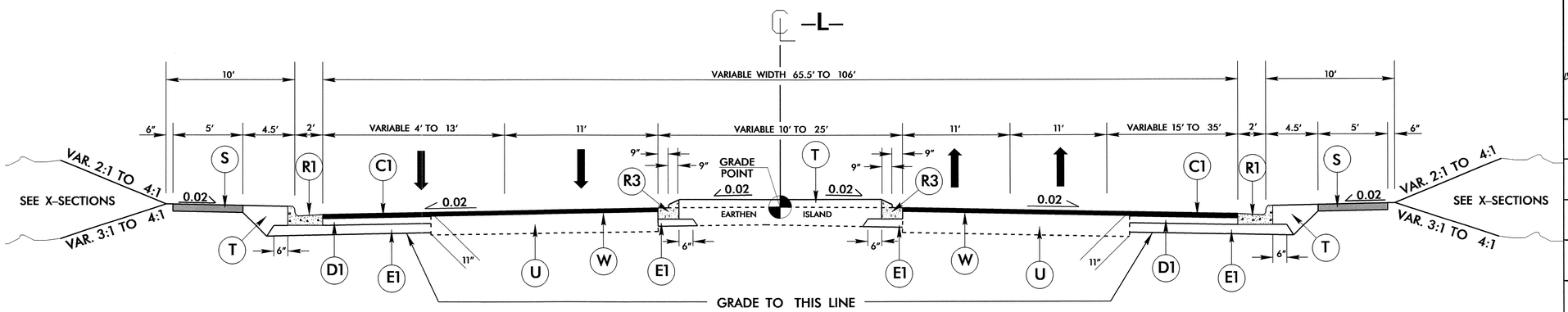

TYPICAL SECTION NO. 3

–L– STA 32+02.08 TO 47+64.98
–L– STA 49+14.98 TO 61+59.69
–L– STA 63+09.69 TO 80+53.00

NOTE: FOR ASPHALT PAVEMENT REMOVAL SEE SUMMARY SHEET "3-M"

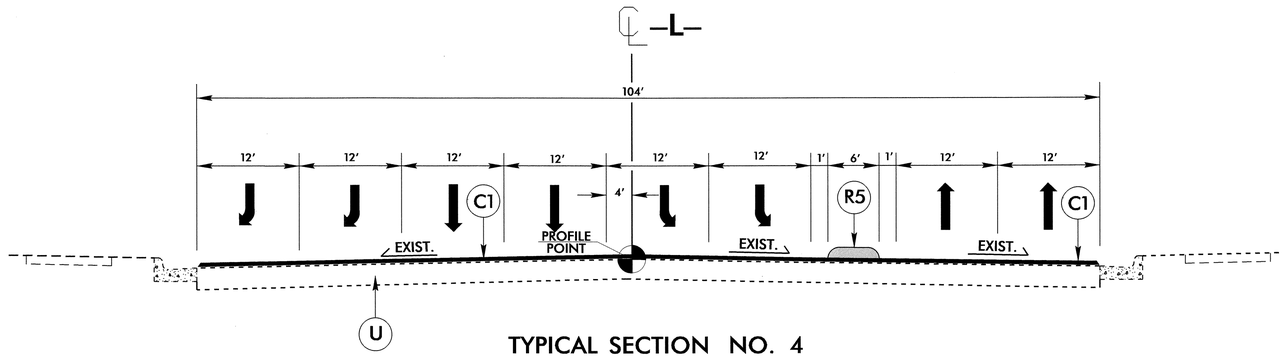

TYPICAL SECTION NO. 4

–L– STA 81+40.00 TO 85+55.00

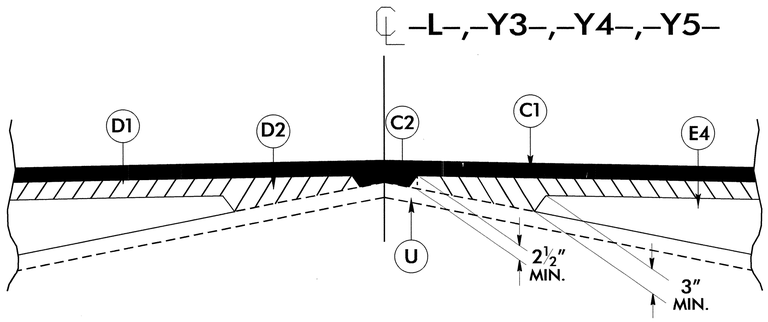

DETAIL SHOWING METHOD OF WEDGING

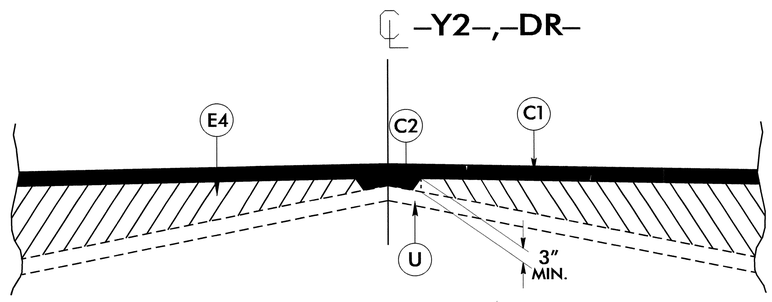

DETAIL SHOWING METHOD OF WEDGING

PROJECT REFERENCE NO.	SHEET NO.
U-4422	2-A

ROADWAY DESIGN ENGINEER

NORTH CAROLINA PROFESSIONAL SEAL 16378 ENGINEER REKHA V. PATEL

PAVEMENT DESIGN ENGINEER

NORTH CAROLINA PROFESSIONAL SEAL 13368 ENGINEER DONG-CHI CHEN

05/30/12

PAVEMENT SCHEDULE

C1	3" TYPE S9.5B
C2	VARIABLE S9.5B
D1	4" TYPE I19.0B
D2	VARIABLE I19.0B
E1	4" TYPE B25.0B
E4	VARIABLE B25.0B
R1	2'-6" CONCRETE CURB AND GUTTER
R3	1'-6" CONCRETE CURB AND GUTTER
R5	5" MONO. CONCRETE ISLAND (KEYED IN)
S	4" CONCRETE SIDEWALK
T	EARTH MATERIAL
U	EXISTING PAVEMENT
W	WEDGING

28-MAR-2012 14:19
R:\Roadway\Proj\u4422_rdy_typ.dgn
$$$$USERNAME$$$$

6/2/99

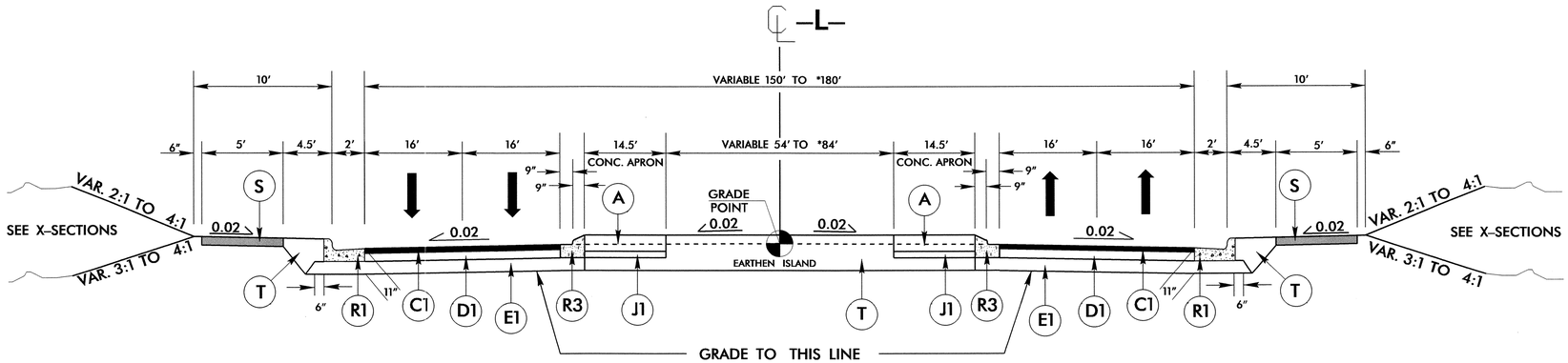

TYPICAL SECTION NO. 5 WITH ROUNDABOUTS "1, 2 & 3"

* –ROUNDABOUT "1"– STA 30+22.08 TO 32+02.08
–ROUNDABOUT "2"– STA 47+64.98 TO 49+14.98
–ROUNDABOUT "3"– STA 61+59.69 TO 63+09.69
NOTE: FOR ASPHALT PAVEMENT REMOVAL SEE SUMMARY SHEET "3–M"

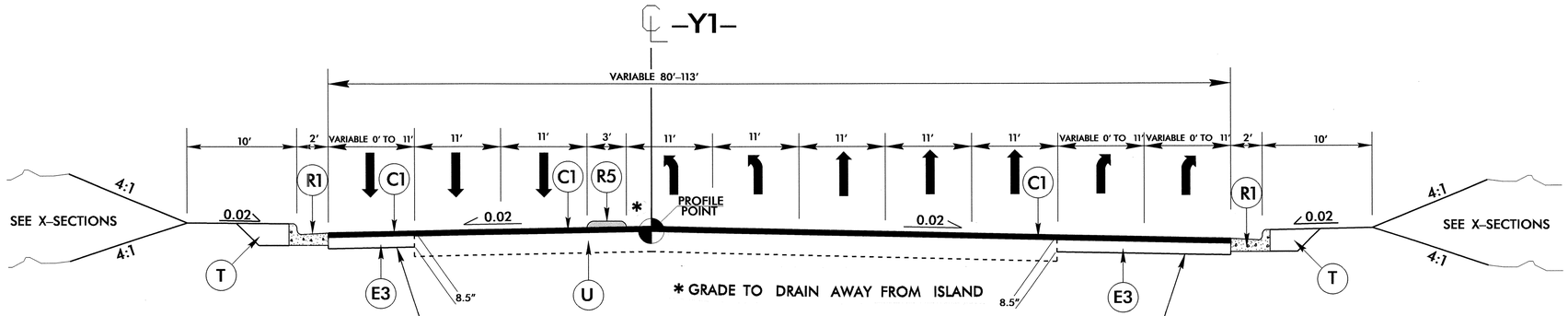

TYPICAL SECTION NO. 6

–Y1– STA 13+52.00 TO 21+53.00

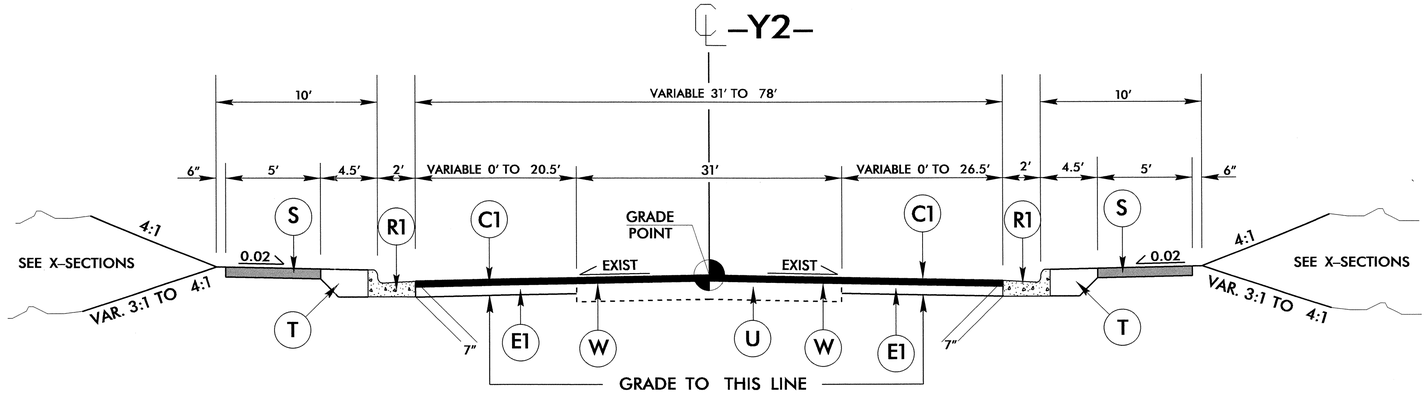

TYPICAL SECTION NO. 7

–Y2– STA 12+00.00 TO 13+60.00

NOTE: OVERLAY EXISTING PAVEMENT WITH (C1)
–Y2– STA 10+80.00 TO 12+00.00

PROJECT REFERENCE NO.	SHEET NO.
U–4422	2–B

ROADWAY DESIGN ENGINEER

NORTH CAROLINA PROFESSIONAL SEAL 16378 ENGINEER REKHA V. PATEL
4/30/12

PAVEMENT DESIGN ENGINEER

NORTH CAROLINA PROFESSIONAL SEAL 13368 ENGINEER JOHN CHI CHEN
05/30/12

PAVEMENT SCHEDULE

A	8" JOINTED CONCRETE PAVEMENT
C1	3" TYPE S9.5B
D1	4" TYPE I19.0B
E1	4" TYPE B25.0B
E3	5½" TYPE B25.0B
J1	PROP. 4" AGGREGATE BASE COURSE
R1	2'-6" CONCRETE CURB AND GUTTER
R3	1'-6" CONCRETE CURB AND GUTTER
R5	5" MONO. CONCRETE ISLAND (KEYED IN)
S	4" CONCRETE SIDEWALK
T	EARTH MATERIAL
U	EXISTING PAVEMENT
W	WEDGING

28-MAR-2012 14:19
R:\Roadway\Proj\u4422_rdy_typ.dgn
$$$$USERNAME$$$$

6/2/99

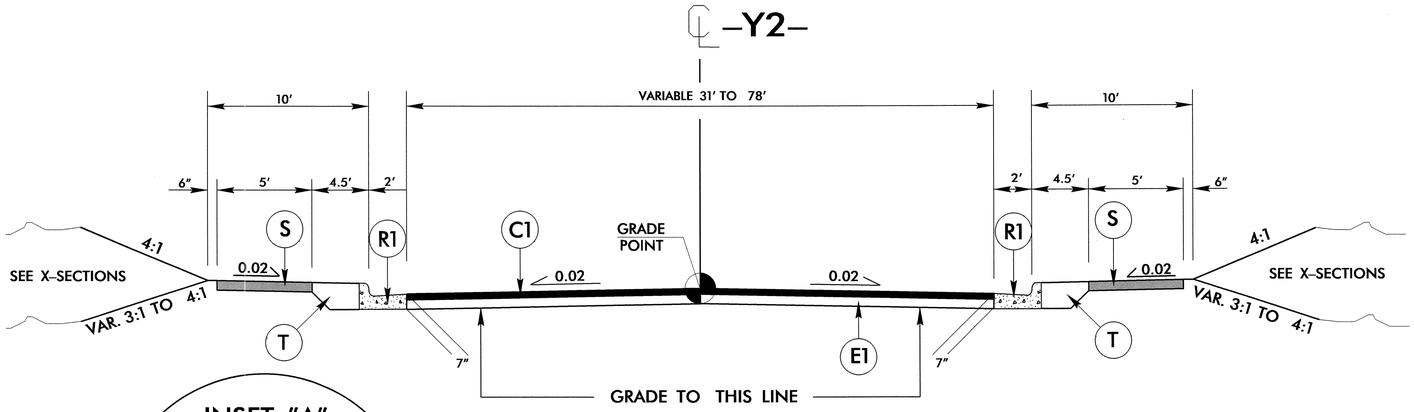

TYPICAL SECTION NO. 8

–Y2– STA 15+40.00 TO 18+00.00

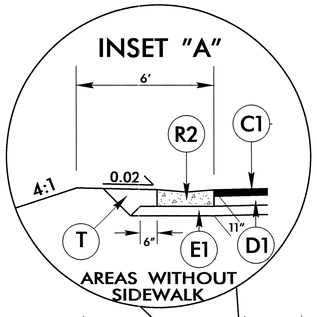

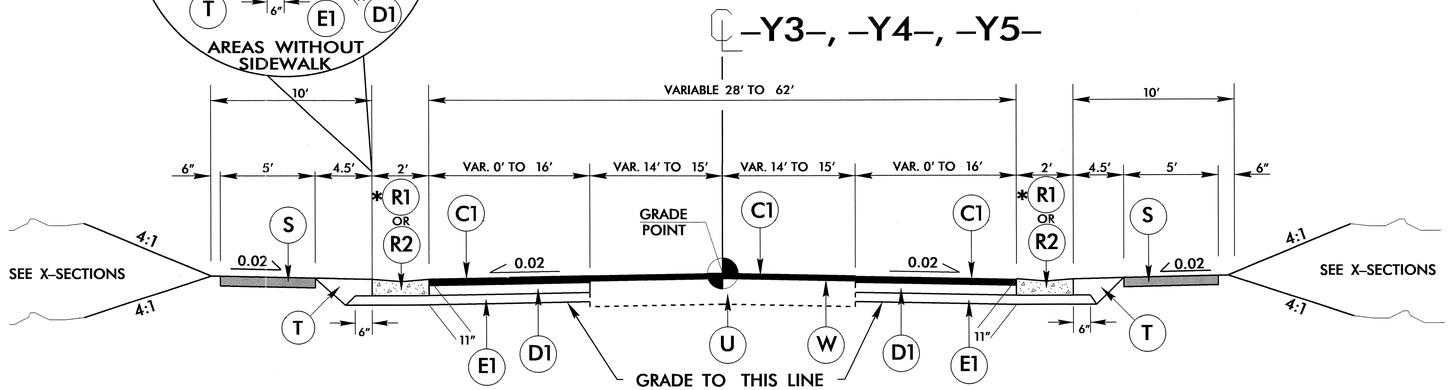

TYPICAL SECTION NO. 9

* –Y3– STA 13+00.00 TO 13+75.00
* –Y3– STA 15+25.00 TO 15+70.00
–Y3– STA 15+70.00 TO 16+00.00
* –Y4– STA 10+33.04 TO 11+60.00
–Y4– STA 11+60.00 TO 12+30.00
–Y5– STA 12+50.00 TO 13+00.00
* –Y5– STA 13+00.00 TO 13+58.57

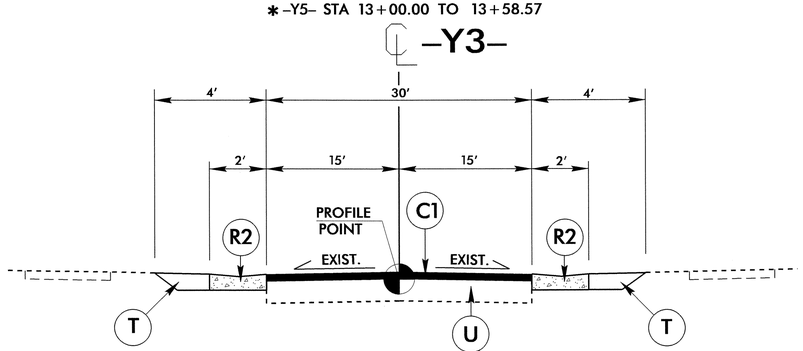

TYPICAL SECTION NO. 10

–Y3– STA 11+45.00 TO 13+00.00
–Y3– STA 16+00.00 TO 16+80.00

PROJECT REFERENCE NO.	SHEET NO.
U–4422	2–C

ROADWAY DESIGN ENGINEER

NORTH CAROLINA PROFESSIONAL SEAL 16378 ENGINEER REKHA V. PATEL

PAVEMENT DESIGN ENGINEER

NORTH CAROLINA PROFESSIONAL SEAL 13369 ENGINEER DONG-CHI CHEN 03/30/12

PAVEMENT SCHEDULE

C1	3" TYPE S9.5B
D1	4" TYPE I19.0B
E1	4" TYPE B25.0B
R1	2'-6" CONCRETE CURB AND GUTTER
R2	2' VALLEY GUTTER
S	4" CONCRETE SIDEWALK
T	EARTH MATERIAL
U	EXISTING PAVEMENT
W	WEDGING

28-MAR-2012 14:19
R:\Roadway Pro\u4422_rdy_typ.dgn
$$$$USERNAME$$$$

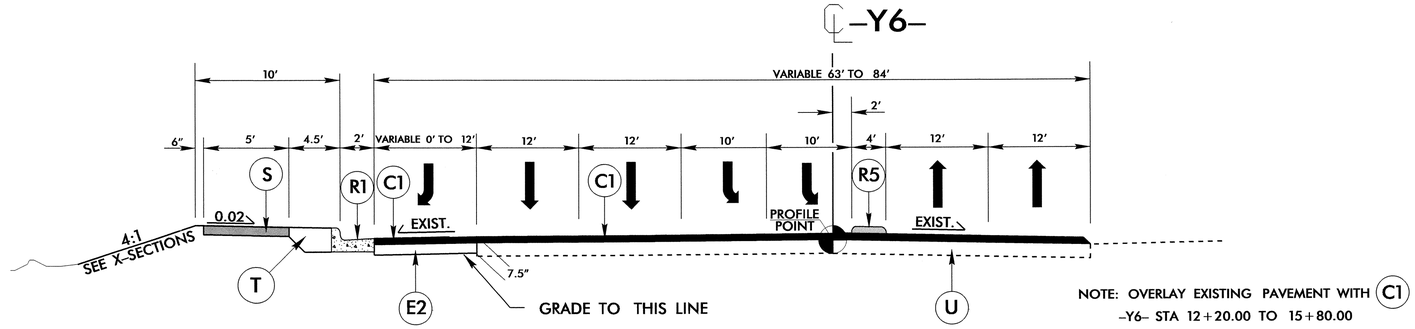

NOTE: OVERLAY EXISTING PAVEMENT WITH (C1)
–Y6– STA 12+20.00 TO 15+80.00

TYPICAL SECTION NO. 11

–Y6– STA 15+80.00 TO 19+61.20

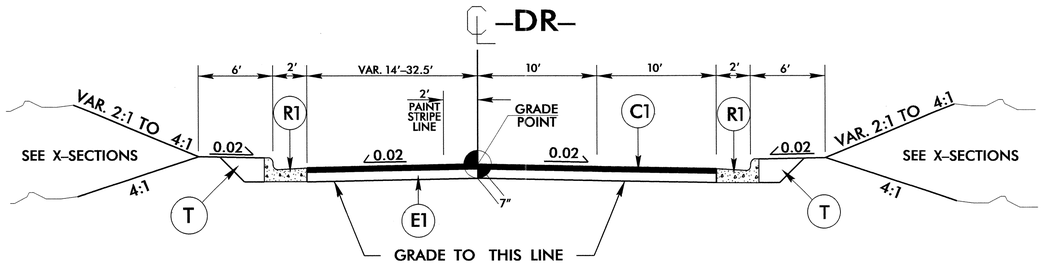

TYPICAL SECTION NO. 12

–DR– STA 10+75.00 TO 15+25.00

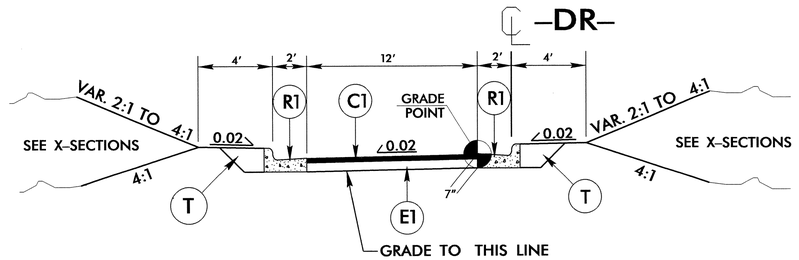

TYPICAL SECTION NO. 14

–DR– STA 16+73.00 TO 19+87.15

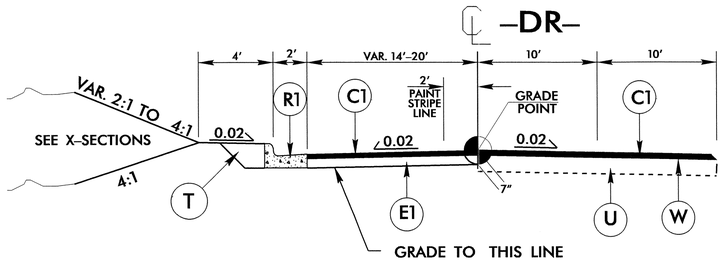

TYPICAL SECTION NO. 13

–DR– STA 15+25.00 TO 16+73.00

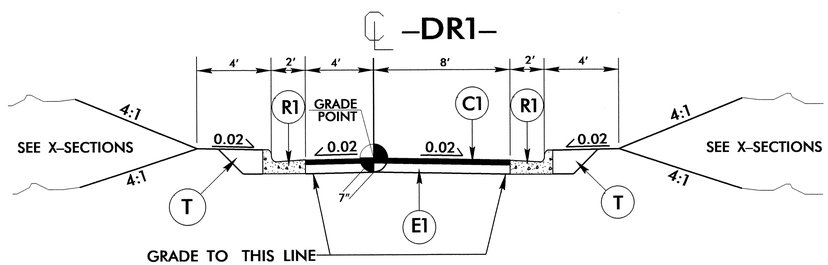

TYPICAL SECTION NO. 15

–DR1– STA 10+00.00 TO 11+18.79

PROJECT REFERENCE NO.	SHEET NO.
U-4422	2-D

ROADWAY DESIGN ENGINEER	PAVEMENT DESIGN ENGINEER
NORTH CAROLINA PROFESSIONAL SEAL 16378 ENGINEER REKHA V. PATEL	NORTH CAROLINA PROFESSIONAL SEAL 13368 ENGINEER JOHN CHI CHEN 05/30/12

PAVEMENT SCHEDULE

C1	3" TYPE S9.5B
E1	4" TYPE B25.0B
E2	4 ½" TYPE B25.0B
R1	2'-6" CONCRETE CURB AND GUTTER
R5	5" MONO. CONCRETE ISLAND (KEYED IN)
S	4" CONCRETE SIDEWALK
T	EARTH MATERIAL
U	EXISTING PAVEMENT
W	WEDGING

28-MAR-2012 14:19
R:\...\u4422_rdy_typ.dgn
$$$$ICFRAME $$$$

8/17/99

REVISIONS

ROUNDABOUT #1

NOTE: (1) DRIVEWAYS ARE 20 FEET IN WIDTH UNLESS INDICATED ON PLAN SHEET.

(2) SEE PAVEMENT MARKING PLANS FOR ACTUAL LOCATIONS OF CURB RAMPS.

PROJECT REFERENCE NO.	SHEET NO.
U-4422	2-E

ROADWAY DESIGN ENGINEER

NORTH CAROLINA PROFESSIONAL SEAL 16378 ENGINEER REKHA V. PATEL

4/13/12

NOTE : SEE SHEET NO. 5 FOR PLAN VIEW

*SEE DETAIL SHEET 2-L FOR CURB RAMPS AT MEDIAN ISLAND WITH CUT THROUGH

NAD 83/95

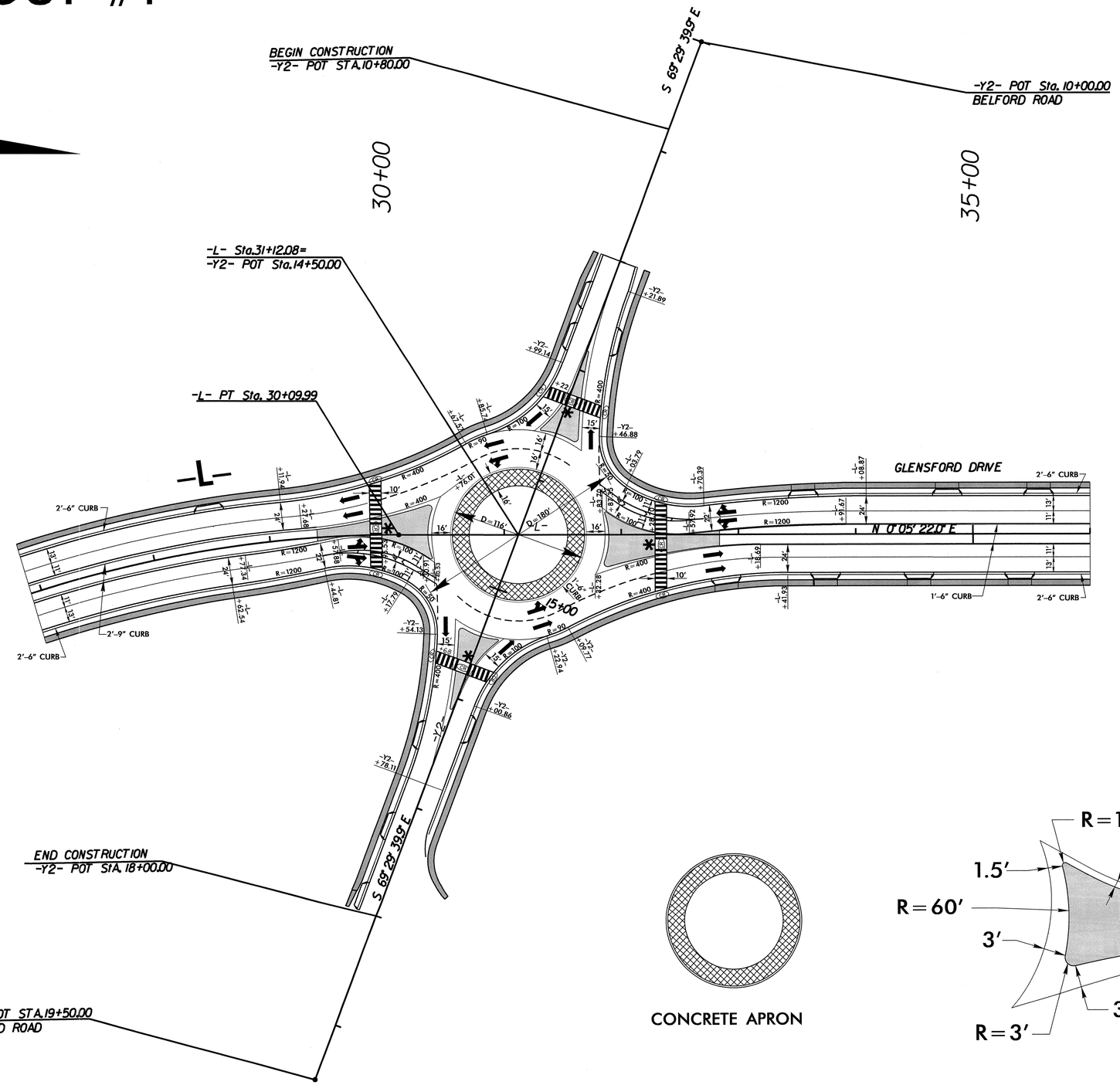

CONCRETE APRON

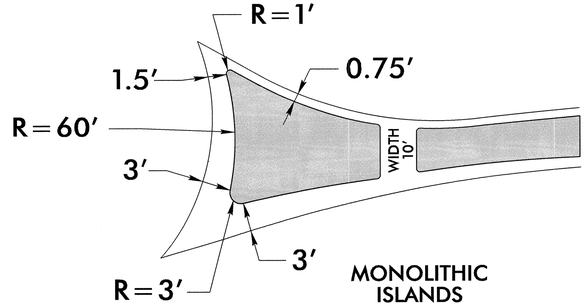

MONOLITHIC ISLANDS

28-MAR-2012 15:05
R:\Roadway Projects\rdabout_1_dsn.dgn
$$$$USERNAME$$$$

8/17/99

REVISIONS

ROUNDABOUT #2

NOTE: (1) DRIVEWAYS ARE 20 FEET IN WIDTH UNLESS INDICATED ON PLAN SHEET.

(2) SEE PAVEMENT MARKING PLANS FOR ACTUAL LOCATIONS OF CURB RAMPS.

PROJECT REFERENCE NO.	SHEET NO.
U-4422	2-F

ROADWAY DESIGN ENGINEER
NORTH CAROLINA PROFESSIONAL SEAL 16378 ENGINEER HEMA V. PATEL

NOTE : SEE SHEET NO. 6 FOR PLAN VIEW

*SEE DETAIL SHEET 2-L FOR CURB RAMPS AT MEDIAN ISLAND WITH CUT THROUGH

NAD 83/95

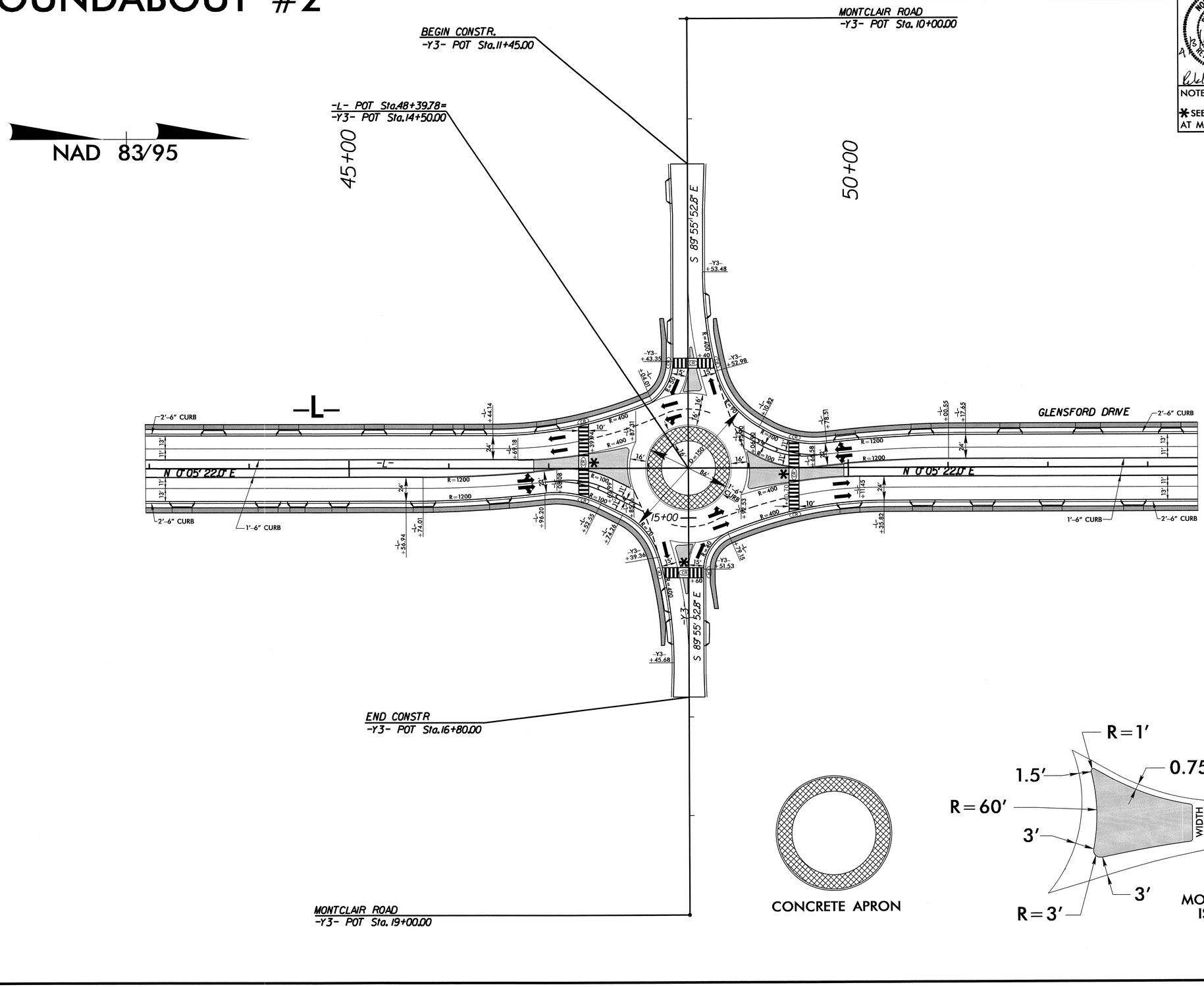

CONCRETE APRON

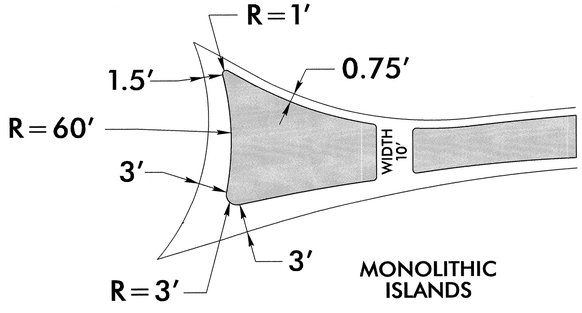

MONOLITHIC ISLANDS

28-MAR-2012 15:04
R:\Roadway\Proj\roundabout_2_dsn.dgn
$$$$USERNAME$$$$

ROUNDABOUT #3

NOTE: (1) DRIVEWAYS ARE 20 FEET IN WIDTH UNLESS INDICATED ON PLAN SHEET.

(2) SEE PAVEMENT MARKING PLANS FOR ACTUAL LOCATIONS OF CURB RAMPS.

PROJECT REFERENCE NO.	SHEET NO.
U-4422	2-G

ROADWAY DESIGN ENGINEER

NORTH CAROLINA PROFESSIONAL SEAL 16378 ENGINEER REKHA V. PATEL

4/12

NOTE : SEE SHEET NO. 7 FOR PLAN VIEW

✱SEE DETAIL SHEET 2-L FOR CURB RAMPS AT MEDIAN ISLAND WITH CUT THROUGH

NAD 83/95

55+00

60+00

65+00

-Y5- POT Sta. 10+00.00
CHAMBERSBERG ROAD

N 70° 55' 32.8" E

BEGIN CONSTR.
-Y5- POT Sta.12+50.00

-Y5- PC Sta. 10+44.73

-Y5- PT Sta. 11+38.62

N 67° 10' 13.9" E

-Y5- PC Sta. 12+30.31

HIGH VISIBILITY CROSSWALK

-Y5- PT Sta. 13+33.65

-L- PC Sta. 57+28.92

-L- PT Sta. 61+32.61

-L- POC Sta.59+13.97=
-Y4- POT Sta. 10+00.00
CHESTERBROOK DR.

2'-6" CURB

1'-6" CURB

GLENSFORD DRIVE

N 17° 02' 38.0" W

-DR- POT Sta. 10+00.00=
-L- POT Sta.62+34.69

N 73° 41' 15.2" E

N 89° 57' 28.2" E

END CONSTR.
-Y4- POT Sta.12+30.00

CONCRETE APRON

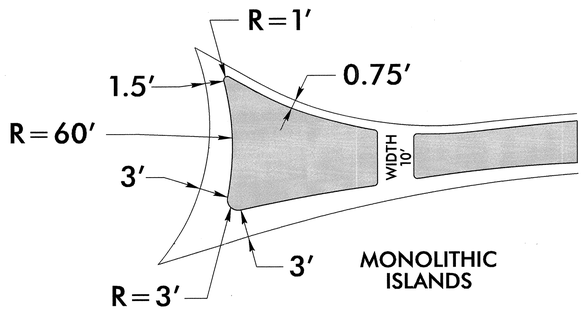

MONOLITHIC ISLANDS

REVISIONS

8/17/99

28-MAR-2012 15:03
R:\Roadway Projects\rdabout_3.dsn,dgn
$$$$USERNAME$$$$

PROJECT REFERENCE NO.	SHEET NO.
U-4422	2-H

NOTES:

USE CLASS "B" CONCRETE THROUGHOUT.

ALL REINFORCING STEEL SHOULD BE ASTMA615-GRADE 60.

ALL REINFORCING STEEL SHOULD BE DEFORMED BARS. WHERE SPLICING OF REINFORCMENT IS NECESSARY, BARS ARE TO BE LAPPED 45 DIAMETERS. ALL DIMENSIONS RELATIVE TO REINFORCEMENT ARE TO CENTERS OF BARS.

REINFORCING STEEL TO BE CUT, BENT OR RELOCATED TO POSITION CATCH BASIN AS DIRECTED BY THE ENGINEER.

ALL EXPOSED CORNERS ARE TO BE CHAMFERED 1".

ALL MATERIAL AND WORKMANSHIP AS PER N.C.DEPARTMENT OF TRANSPORTATION STANDARD SPECIFICATIONS.

OPTIONAL CONSTRUCTION, MONOLITHIC POUR, 2" KEYWAY, OR #4 BAR DOWELS AT 12" CENTERS AS DIRECTED BY THE ENGINEER.

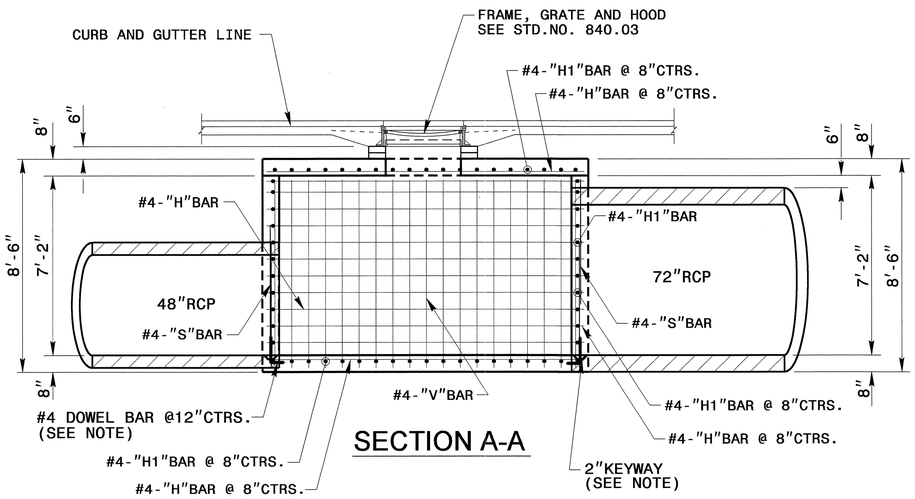

SECTION A-A

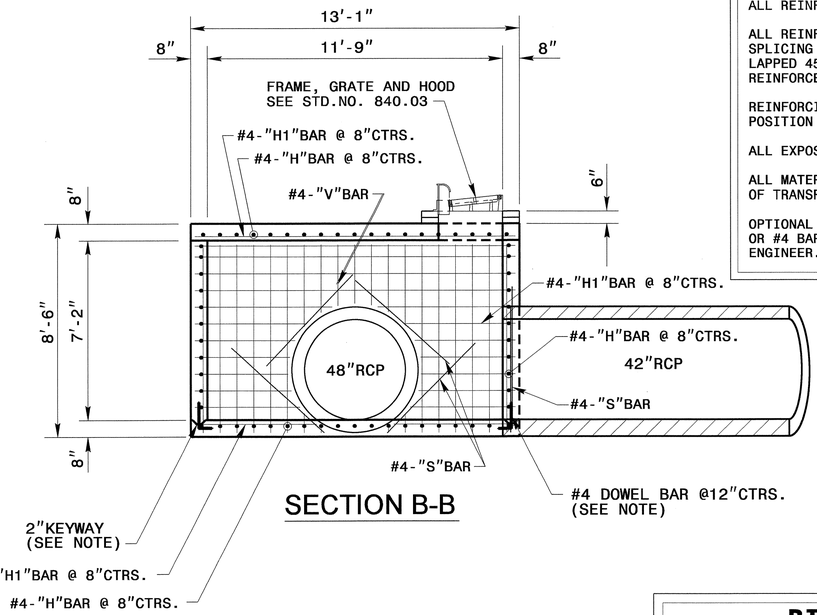

SECTION B-B

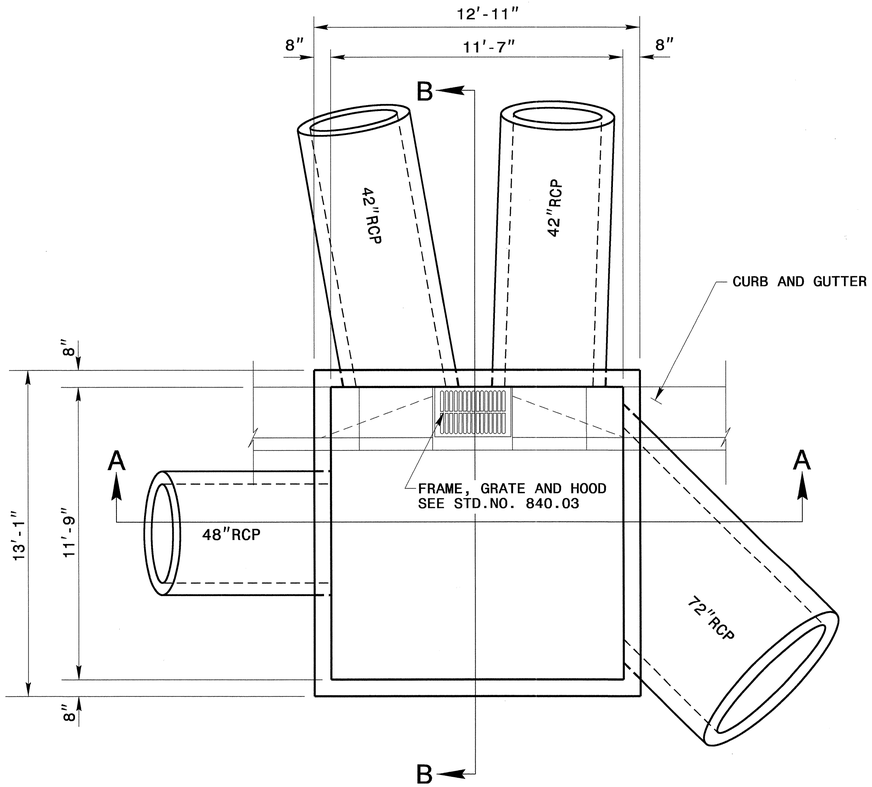

PLAN

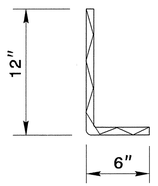

DOWEL

BILL OF MATERIAL

REINFORCING STEEL

BAR	SIZE	LENGTH	NO.	WEIGHT
H	#4	12'-7"	60	505
H1	#4	12'-9"	60	511
S	#4	5'-0"	22	74
V	#4	7'-6"	74	371
DOWEL (OPTION)			48	
REINF. STEEL LBS.				1461
TOTAL CON./R.C. CU. YDS.				17
DEDUCTION FOR 2-42" RCP'S				-0.6
DEDUCTION FOR 1-48" RCP				-0.4
DEDUCTION FOR 1-72" RCP				-1.5
CON./R.C. CU. YDS.				14.5

NORTH CAROLINA PROFESSIONAL SEAL 022966 ENGINEER JOHN S. HOMEYER 4/10/12

STR. NO. 0910

CONTRACT SERVICES & DEVELOPMENT UNIT
STANDARDS AND SPECIAL DESIGN
Office 919-707-6950 FAX 919-250-4119

DETAIL OF SPECIAL CATCH BASIN

ORIGINAL BY:		DATE:
MODIFIED BY:	rnbritt	DATE: 01-26-12
CHECKED BY:		DATE: 1/30/12
FILE SPEC.:	/details\rnbritt\english\urban\u4422 72cb.dgn	

$$$$SYSTIME$$$$
$$$$USERNAME$$$$

PROJECT REFERENCE NO.	SHEET NO.
U-4422	2-I

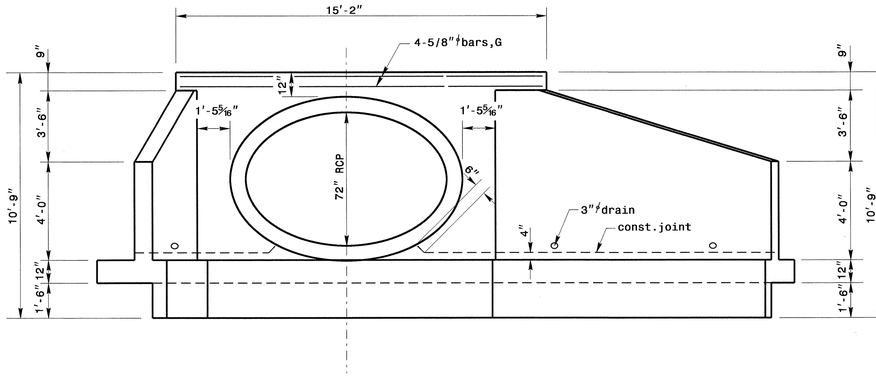

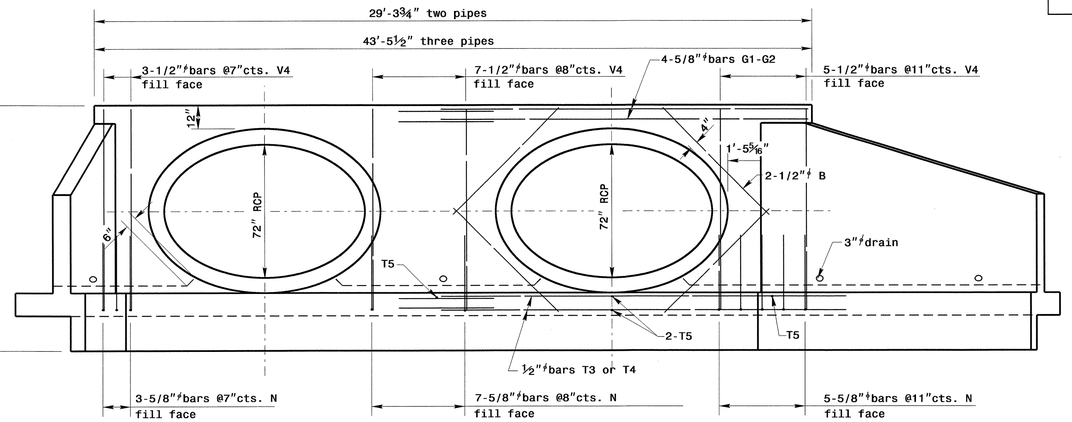

END ELEVATION

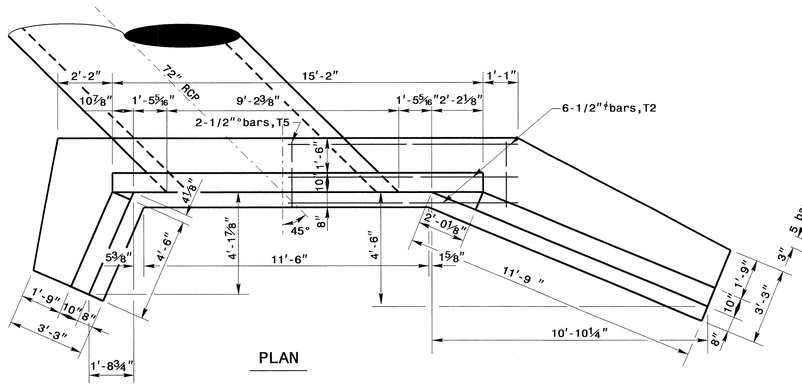

PLAN

END ELEVATION

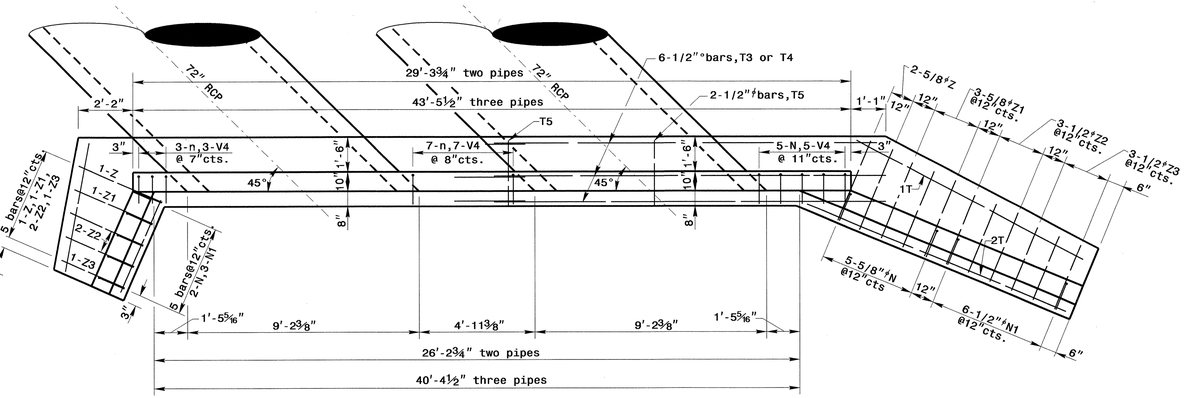

PLAN

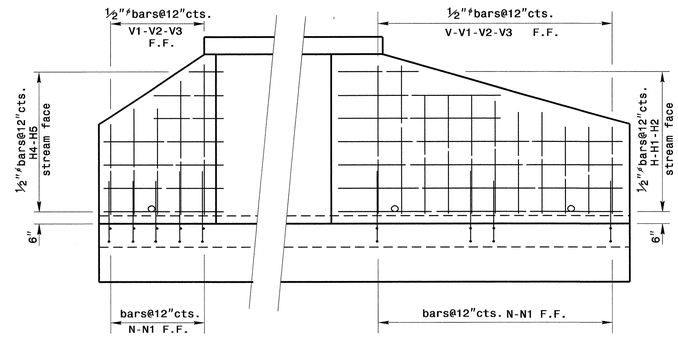

ELEVATION OF WINGS

SHOWING REINFORCEMENT

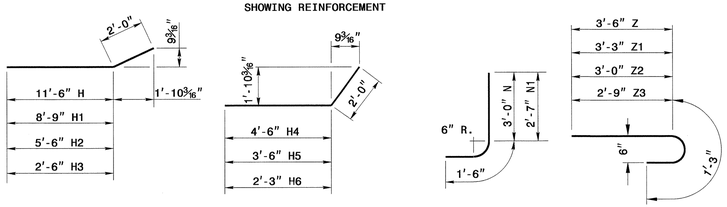

"H" BARS "H" BARS "N" BARS "Z" BARS

"H", "N", & "Z" BAR DIMENSIONS ARE OUT TO OUT.

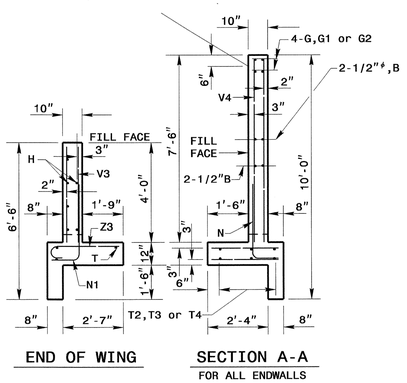

END OF WING

SECTION A-A

FOR ALL ENDWALLS

DESIGN DATA

Specifications	A.A.S.H.T.O.
Steel in tension	18,000 LBS. PER SQ.IN.
Concrete in compression	1,000 LBS. PER SQ.IN.
Shear Class "A" Concrete	90 LBS. PER SQ. IN.
Equiv. fluid pressure of earth	30 LBS.PER CU. FT.

BILL OF MATERIAL FOR ENDWALL

REINF. STEEL			1 PIPES		2 PIPES		3 PIPES	
BAR	SIZE	LENGTH	NO.	WEIGHT	NO.	WEIGHT	NO.	WEIGHT
B	#4	5'-6"	8	29	16	59	24	88
G	#5	14'-10"	4	62	-	-	-	-
G1	#5	16'-0"	-	-	8	134	-	-
G2	#5	23'-0"	-	-	-	-	8	192
H	#4	13'-6"	6	54	6	54	6	54
H1	#4	10'-9"	1	7	1	7	1	7
H2	#4	7'-6"	2	10	2	10	2	10
H3	#4	4'-6"	1	3	1	3	1	3
H4	#4	6'-6"	6	26	6	26	6	26
H5	#4	5'-6"	1	4	1	4	1	4
H6	#4	4'-3"	2	6	2	6	2	6
N	#5	4'-6"	15	70	22	103	29	136
N1	#4	4'-1"	9	25	9	25	9	25
T	#4	9'-9"	3	20	3	20	3	20
T1	#4	5'-3"	3	11	3	11	3	11
T2	#4	18'-0"	6	72	-	-	-	-
T3	#4	17'-3"	-	-	12	138	-	-
T4	#4	24'-6"	-	-	-	-	12	196
T5	#4	2'-9"	4	7	7	13	10	18
V	#4	6'-0"	5	20	5	20	5	20
V1	#4	5'-3"	6	21	6	21	6	21
V2	#4	4'-6"	5	15	5	15	5	15
V3	#4	3'-6"	6	14	6	14	6	14
V4	#4	7'-0"	8	37	15	70	22	103
Z	#5	4'-9"	3	15	3	15	3	15
Z1	#5	4'-6"	4	19	4	19	4	19
Z2	#4	4'-3"	5	14	5	14	5	14
Z3	#4	4'-0"	4	11	4	11	4	11
⅝"ϕ X 12" HOOK BOLTS				8		16		24
REINF. STEEL LBS.				572		812		1028
CON./R.C. CU. YDS.				9.5		13.4		17.3

NOTES:

ALL CONCRETE TO BE CLASS "A".

ALL REINFORCING STEEL SHALL BE ASTMA615-GRADE 60.

ALL REINFORCING STEEL SHALL BE DEFORMED BARS. WHERE SPLICING OF REINFORCEMENT IS NECESSARY, BARS ARE TO BE LAPPED 45 DIAMETERS. ALL DIMENSIONS RELATIVE TO REINFORCEMENT ARE TO CENTERS OF BARS.

THE FOOTING, CURTAIN WALL AND 4" OF WALL ARE TO BE POURED IN ONE OPERATION ALLOWING NO TIME FOR INITIAL SET TO TAKE PLACE BETWEEN THEM. THE REMAINING WALL SHALL THEN BE POURED IN ONE OPERATION.

ALL EXPOSED CORNERS ARE TO BE CHAMFERED 1".

3" DIAMETER DRAINS SHALL BE PLACED IN WALL AS SHOWN AND BE 6" ABOVE NORMAL FLOW LINE.

ALL MATERIAL AND WORKMANSHIP AS PER N.C.DEPARTMENT OF TRANSPORTATION STANDARD SPECIFICATIONS.

THE EXTRA BARS ARE PROVIDED FOR HOLDING REINFORCING STEEL IN CORRECT POSITION IN WING.

NORTH CAROLINA PROFESSIONAL SEAL 022966 ENGINEER JOHN S. [illegible] 4/10/12

STR.NO. 0915

CONTRACT STANDARDS AND DEVELOPMENT UNIT

Office 919-707-6950 FAX 919-250-4119

DETAIL OF REINFORCED CONCRETE ENDWALL FOR 72" DIAMETER RCP-45°SKEW

ORIGINAL BY: rnbritt DATE: 06/22/05
MODIFIED BY: kakempf DATE: 04/16/08
CHECKED BY: [signature] DATE: 1/24/12
FILE SPEC.: c:\projects\details\nbritt\english\hydro\78endwall45sk.dgn

24-JAN-2012 09:33
S:\Contracts\Projects\Special Details\kkempf\english\72 endwall 45sk.dgn
$$$$USERNAME$$$$

PROJECT REFERENCE NO.	SHEET NO.
U-4422	2-J

*NOTE: SEE STD. DWG. 846.01
FOR GENERAL NOTES

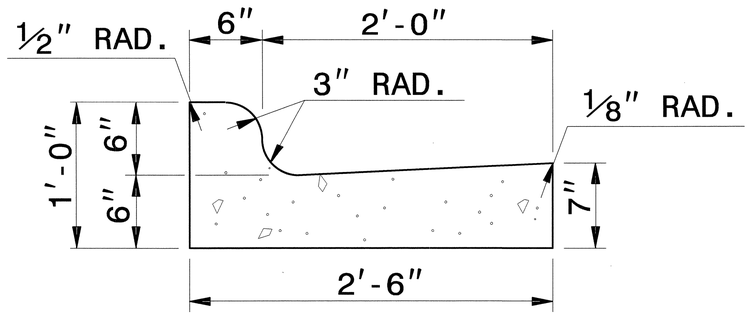

2'-6" CURB AND GUTTER

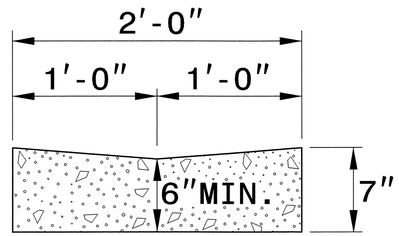

VALLEY GUTTER

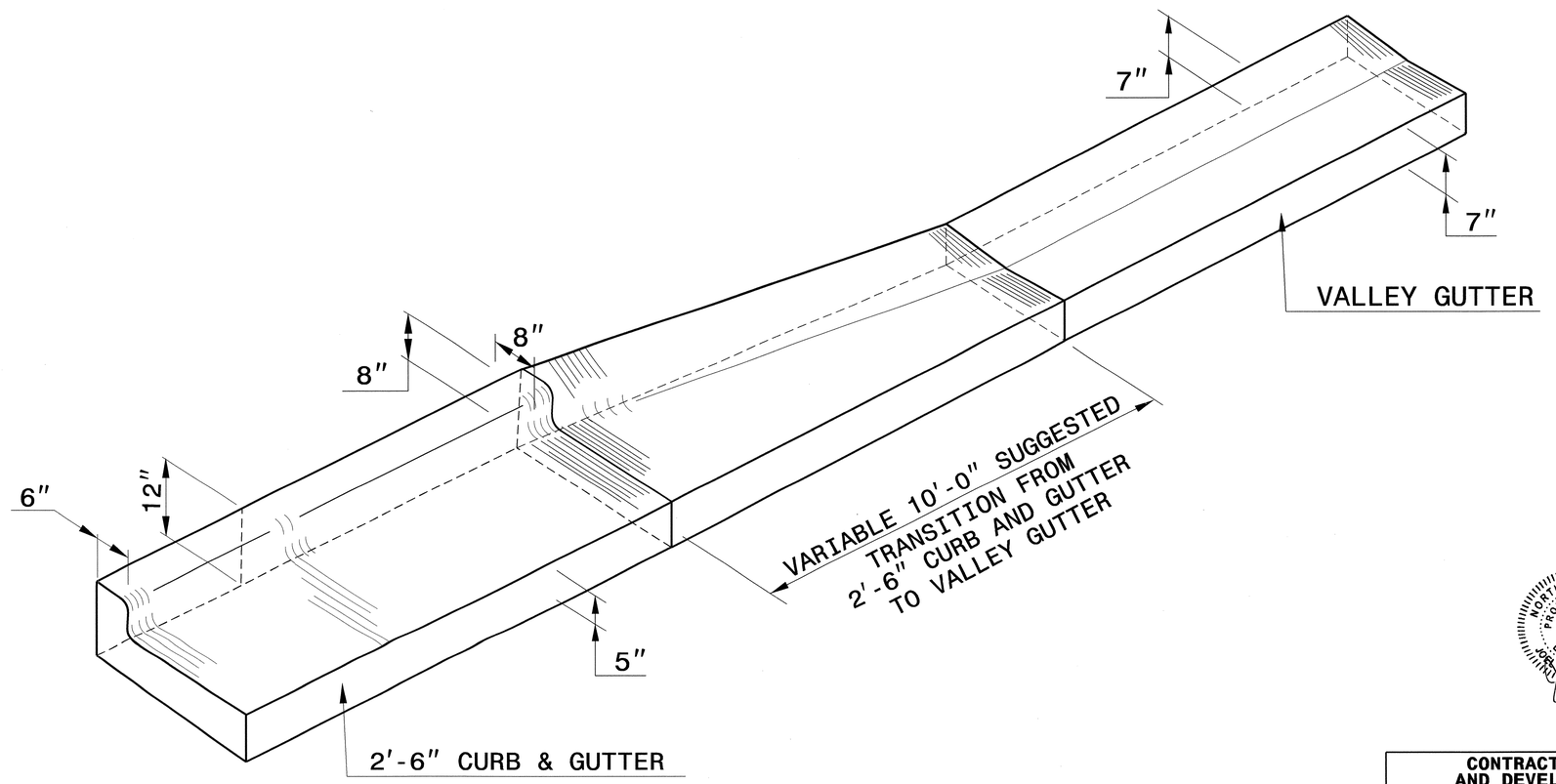

ISOMETRIC VIEW OF TRANSITION

NORTH CAROLINA PROFESSIONAL SEAL 022966 ENGINEER JOEL S. HOWERTON
4/10/12

CONTRACT STANDARDS AND DEVELOPMENT UNIT
Office 919-707-6950 FAX 919-250-4119

TRANSITION FROM 2'-6" CURB AND GUTTER TO VALLEY GUTTER

ORIGINAL BY: T.S.SPELL DATE: FEB.4,2009
MODIFIED BY: DATE:
CHECKED BY: DATE: 1/24/12
FILE SPEC.: w:\usr/details/stand/cgtransit.dgn

24-JAN-2012 09:25
c:\projects\Contracts\Special Details\erickward\usr\details\stand\c&g transition sections.dgn
$$$$USERNAME$$$$

PROJECT REFERENCE NO.	SHEET NO.
U-4422	2-K

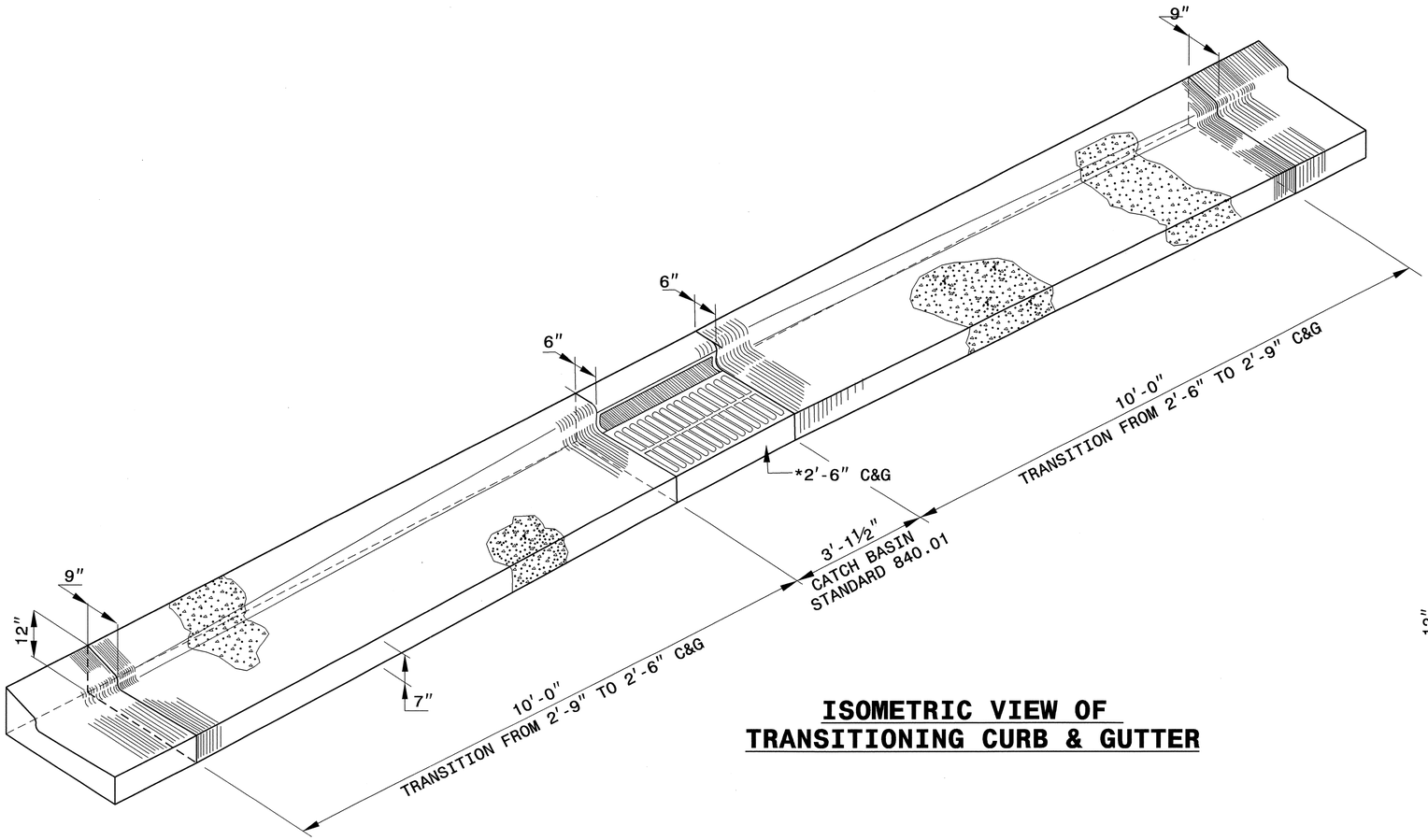

ISOMETRIC VIEW OF TRANSITIONING CURB & GUTTER

*NOTE: SEE STD.DWG. 846.01 FOR 2'-6" CURB AND GUTTER INFORMATION.

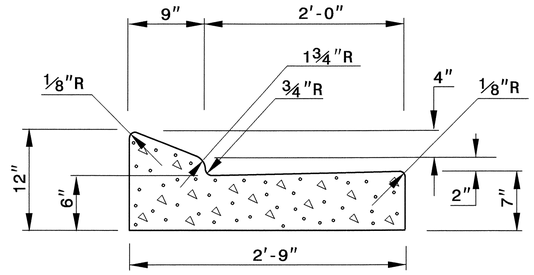

PROPOSED 2'-9" CURB & GUTTER

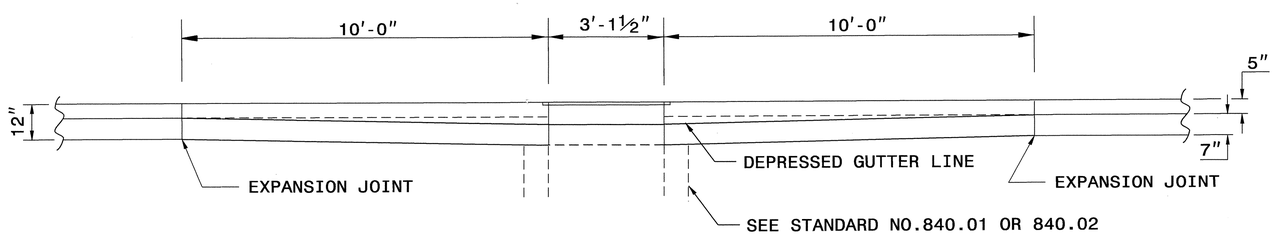

ELEVATION

NORTH CAROLINA PROFESSIONAL SEAL 022966 ENGINEER JOHN S. HOMEWAY
4/10/12

CONTRACT STANDARDS AND DEVELOPMENT UNIT
Office 919-707-6950 FAX 919-250-4119

DETAIL OF 2'-9" TO 2'-6" CURB & GUTTER TRANSITION SECTION

ORIGINAL BY:		DATE:	
MODIFIED BY:	tspell	DATE:	july 14,2009
CHECKED BY:		DATE:	2/22/12
FILE SPEC.:	s:eric/usr/details/stand/cgtranst.dgn		

22-FEB-2012 14:07
S:\Contracts\Contracts\Special Details\ericward\usr\details\stand\c&g transition sections.dgn
$$$$USERNAME$$$$

PROJECT REFERENCE NO.	SHEET NO.
U-4422	2-L

PAY LIMITS FOR 1 CURB RAMP

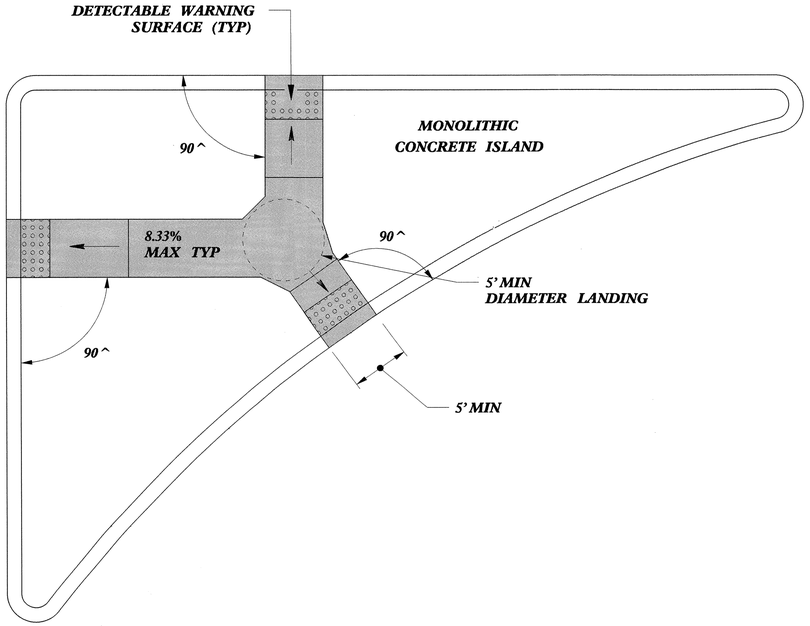

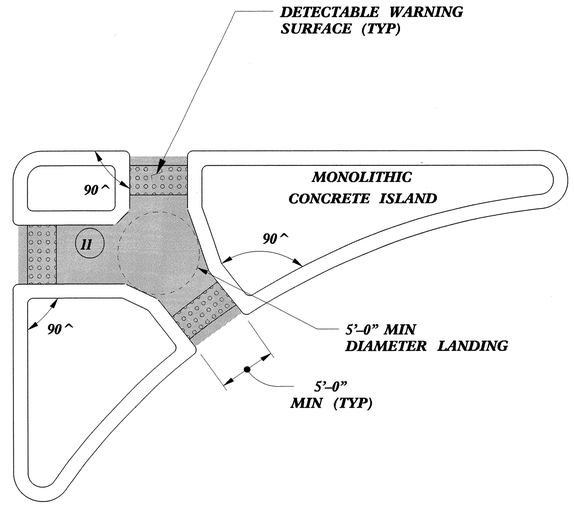

SMALL ISLAND WITH CUT THROUGH

LARGE ISLAND CURB RAMPS

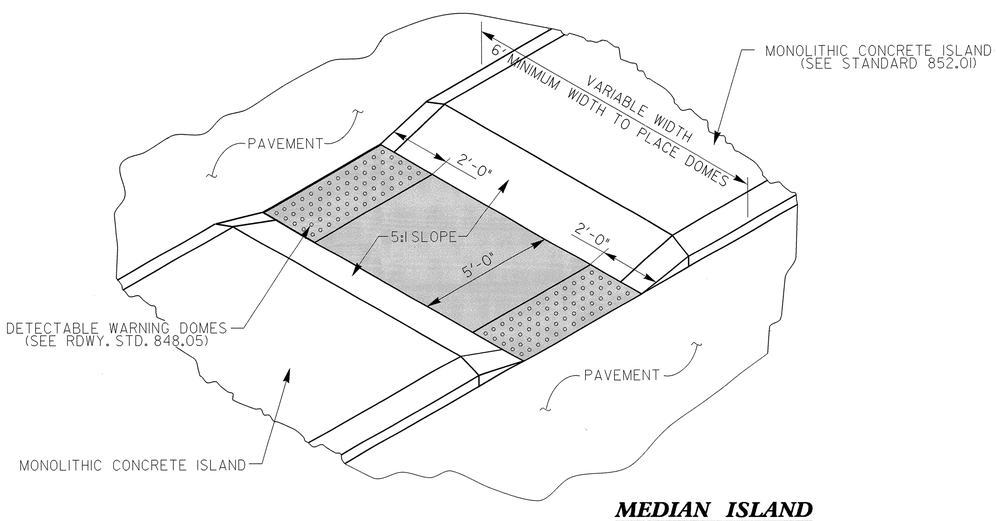

MEDIAN ISLAND WITH CUT THROUGH

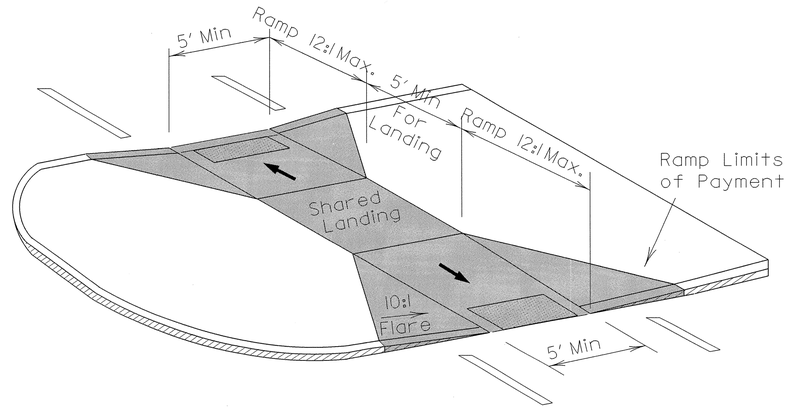

MEDIAN ISLAND CURB RAMPS

NORTH CAROLINA PROFESSIONAL SEAL 022966 ENGINEER JOEL S. HOWERTON
4/10/12

CONTRACT STANDARDS AND DEVELOPMENT UNIT
Office 919-707-6950 FAX 919-250-4119

CURB RAMPS

Median or Turn Lane Islands

ORIGINAL BY: J.S. HOWERTON DATE: 7/7/11
MODIFIED BY: DATE:
CHECKED BY: DATE: 3/27/12
FILE SPEC.: stds/2012CurbRamp/CurbRampDetails.dgn

5/14/99

27-MAR-2012 07:35
S:\Contracts\Contracts\Special Details\jhowerton\Standard Drawings\2012 Standard Drawings\2012 Curb Ramp Special Details\Curb Ramp Details.dgn
jhowerton

5/9/06

STATE OF NORTH CAROLINA
DIVISION OF HIGHWAYS
ROADWAY SUMMARY OF QUANTITIES FOR CONTRACT - C202825

DIVISION OF HIGHWAYS
STATE OF NORTH CAROLINA
SUMMARY OF QUANTITIES

ItemNumber	Sec #	Quantity	Unit	Description
0000100000-N	800	Lump Sum		MOBILIZATION
0000400000-N	801	Lump Sum		CONSTRUCTION SURVEYING
0015000000-N	205	3	EA	SEALING ABANDONED WELLS
0022000000-E	225	48,000	CY	UNCLASSIFIED EXCAVATION
0050000000-E	226	1	ACR	SUPPLEMENTARY CLEARING & GRUB-BING
0057000000-E	226	1,600	CY	UNDERCUT EXCAVATION
0063000000-N	SP	Lump Sum		GRADING
0141000000-E	240	360	LF	BERM DITCH CONSTRUCTION
0195000000-E	265	1,400	CY	SELECT GRANULAR MATERIAL
0196000000-E	270	6,000	SY	GEOTEXTILE FOR SOIL STABILIZA-TION
0318000000-E	300	1,470	TON	FOUNDATION CONDITIONING MATE-RIAL, MINOR STRUCTURES
0320000000-E	300	4,610	SY	FOUNDATION CONDITIONING GEO-TEXTILE
0335200000-E	305	1,616	LF	15" DRAINAGE PIPE
0335300000-E	305	168	LF	18" DRAINAGE PIPE
0335600000-E	305	208	LF	36" DRAINAGE PIPE
0335700000-E	305	24	LF	42" DRAINAGE PIPE
0335800000-E	305	72	LF	48" DRAINAGE PIPE
0366000000-E	310	52	LF	15" RC PIPE CULVERTS, CLASS III
0448000000-E	310	88	LF	****" RC PIPE CULVERTS, CLASS IV (48")
0448000000-E	310	72	LF	****" RC PIPE CULVERTS, CLASS IV (72")
0448200000-E	310	7,144	LF	15" RC PIPE CULVERTS, CLASS IV
0448300000-E	310	1,876	LF	18" RC PIPE CULVERTS, CLASS IV
0448400000-E	310	1,324	LF	24" RC PIPE CULVERTS, CLASS IV
0448500000-E	310	528	LF	30" RC PIPE CULVERTS, CLASS IV
0448600000-E	310	624	LF	36" RC PIPE CULVERTS, CLASS IV
0448700000-E	310	12	LF	42" RC PIPE CULVERTS, CLASS IV
0995000000-E	340	2,516	LF	PIPE REMOVAL
1099500000-E	505	1,500	CY	SHALLOW UNDERCUT
1099700000-E	505	3,000	TON	CLASS IV SUBGRADE STABILIZA-TION
1110000000-E	510	5,000	TON	STABILIZER AGGREGATE
1121000000-E	520	4,700	TON	AGGREGATE BASE COURSE
1220000000-E	545	500	TON	INCIDENTAL STONE BASE
1489000000-E	610	10,600	TON	ASPHALT CONC BASE COURSE, TYPE B25.0B
1498000000-E	610	9,100	TON	ASPHALT CONC INTERMEDIATE COURSE, TYPE I19.0B
1519000000-E	610	14,600	TON	ASPHALT CONC SURFACE COURSE, TYPE S9.5B
1575000000-E	620	1,780	TON	ASPHALT BINDER FOR PLANT MIX
1693000000-E	654	540	TON	ASPHALT PLANT MIX, PAVEMENT REPAIR
1869000000-E	710	1,200	SY	*****" PORT CEM CONC PAVEMENT, MISCELLANEOUS (WITHOUT DOWELS) (8")
2220000000-E	838	9.5	CY	REINFORCED ENDWALLS
2253000000-E	840	5.75	CY	PIPE COLLARS
2264000000-E	840	0.22	CY	PIPE PLUGS
2275000000-E	SP	5.5	CY	FLOWABLE FILL
2286000000-N	840	219	EA	MASONRY DRAINAGE STRUCTURES
2297000000-E	840	14.5	CY	MASONRY DRAINAGE STRUCTURES
2308000000-E	840	60	LF	MASONRY DRAINAGE STRUCTURES
2364000000-N	840	67	EA	FRAME WITH TWO GRATES, STD 840.16
2366000000-N	840	9	EA	FRAME WITH TWO GRATES, STD 840.24
2367000000-N	840	2	EA	FRAME WITH TWO GRATES, STD 840.29
2374000000-N	840	18	EA	FRAME WITH GRATE & HOOD, STD 840.03, TYPE ** (E)

ItemNumber	Sec #	Quantity	Unit	Description
2374000000-N	840	54	EA	FRAME WITH GRATE & HOOD, STD 840.03, TYPE ** (F)
2374000000-N	840	62	EA	FRAME WITH GRATE & HOOD, STD 840.03, TYPE ** (G)
2396000000-N	840	8	EA	FRAME WITH COVER, STD 840.54
2440000000-N	852	6	EA	CONCRETE TRANSITIONAL SECTION FOR CATCH BASIN
2451000000-N	852	11	EA	CONCRETE TRANSITIONAL SECTION FOR DROP INLET
2535000000-E	846	1,300	LF	**"X **" CONCRETE CURB (8" X 12")
2538000000-E	846	1,050	LF	**'-**" CONCRETE CURB & GUTTER (2'-9")
2542000000-E	846	8,925	LF	1'-6" CONCRETE CURB & GUTTER
2549000000-E	846	15,575	LF	2'-6" CONCRETE CURB & GUTTER
2580000000-E	846	525	LF	CONCRETE VALLEY GUTTER
2591000000-E	848	6,850	SY	4" CONCRETE SIDEWALK
2600000000-N	SP	4	EA	RETROFIT EXISTING CURB RAMP
2605000000-N	848	88	EA	CONCRETE CURB RAMP
2612000000-E	848	1,250	SY	6" CONCRETE DRIVEWAY
2627000000-E	852	135	SY	4" CONCRETE ISLAND COVER
2655000000-E	852	2,400	SY	5" MONOLITHIC CONCRETE ISLANDS (KEYED IN)
2800000000-N	858	3	EA	ADJUSTMENT OF CATCH BASINS
2830000000-N	858	4	EA	ADJUSTMENT OF MANHOLES
2850000000-N	858	1	EA	GENERIC DRAINAGE ITEM ADJ JUNCTION BOX
3524000000-E	SP	140	LF	VINYL COATED CHAIN LINK FENCE, **" FABRIC (60")
3539000000-E	866	12	EA	METAL LINE POSTS FOR **" CHAIN LINK FENCE (60")
3545000000-E	866	6	EA	METAL TERMINAL POSTS FOR **" CHAIN LINK FENCE (60")

ItemNumber	Sec #	Quantity	Unit	Description
3649000000-E	876	2	TON	RIP RAP, CLASS B
3656000000-E	876	1,137	SY	GEOTEXTILE FOR DRAINAGE
4072000000-E	903	2,461	LF	SUPPORTS, 3-LB STEEL U-CHANNEL
4096000000-N	904	7	EA	SIGN ERECTION, TYPE D
4102000000-N	904	148	EA	SIGN ERECTION, TYPE E
4108000000-N	904	12	EA	SIGN ERECTION, TYPE F
4155000000-N	907	58	EA	DISPOSAL OF SIGN SYSTEM, U-CHANNEL
4158000000-N	907	2	EA	DISPOSAL OF SIGN SYSTEM, WOOD
4400000000-E	1110	693	SF	WORK ZONE SIGNS (STATIONARY)
4405000000-E	1110	768	SF	WORK ZONE SIGNS (PORTABLE)
4410000000-E	1110	212	SF	WORK ZONE SIGNS (BARRICADE MOUNTED)
4415000000-N	1115	2	EA	FLASHING ARROW BOARD
4420000000-N	1120	5	EA	PORTABLE CHANGEABLE MESSAGE SIGN
4430000000-N	1130	514	EA	DRUMS
4435000000-N	1135	110	EA	CONES
4445000000-E	1145	312	LF	BARRICADES (TYPE III)
4450000000-N	1150	14,400	HR	FLAGGER
4480000000-N	1165	3	EA	TMA
4507000000-E	1170	1,240	LF	WATER FILLED BARRIER
4510000000-N	SP	1,800	HR	LAW ENFORCEMENT
4516000000-N	1180	605	EA	SKINNY DRUM
4520000000-N	1266	69	EA	TUBULAR MARKERS (FIXED)
4650000000-N	1251	299	EA	TEMPORARY RAISED PAVEMENT MARKERS
4685000000-E	1205	2,890	LF	THERMOPLASTIC PAVEMENT MARKING LINES (4", 90 MILS)
4686000000-E	1205	18,658	LF	THERMOPLASTIC PAVEMENT MARKING LINES (4", 120 MILS)
4695000000-E	1205	1,635	LF	THERMOPLASTIC PAVEMENT MARKING LINES (8", 90 MILS)
4697000000-E	1205	750	LF	THERMOPLASTIC PAVEMENT MARKING LINES (8", 120 MILS)
4702000000-E	1205	750	LF	THERMOPLASTIC PAVEMENT MARKING LINES (12", 120 MILS)
4705000000-E	1205	350	LF	THERMOPLASTIC PAVEMENT MARKING LINES (16", 120 MILS)
4710000000-E	1205	4,531	LF	THERMOPLASTIC PAVEMENT MARKING LINES (24", 120 MILS)
4721000000-E	1205	16	EA	THERMOPLASTIC PAVEMENT MARKING CHARACTER (120 MILS)
4725000000-E	1205	200	EA	THERMOPLASTIC PAVEMENT MARKING SYMBOL (90 MILS)
4770000000-E	1205	737	LF	COLD APPLIED PLASTIC PAVEMENT MARKING LINES, TYPE ** (4") (IV)
4805000000-N	1205	5	EA	COLD APPLIED PLASTIC PAVEMENT MARKING SYMBOL, TYPE ** (IV)
4810000000-E	1205	78,655	LF	PAINT PAVEMENT MARKING LINES (4")
4820000000-E	1205	7,676	LF	PAINT PAVEMENT MARKING LINES (8")
4835000000-E	1205	1,438	LF	PAINT PAVEMENT MARKING LINES (24")
4840000000-N	1205	76	EA	PAINT PAVEMENT MARKING CHARAC-TER
4845000000-N	1205	346	EA	PAINT PAVEMENT MARKING SYMBOL
4850000000-E	1205	9,000	LF	REMOVAL OF PAVEMENT MARKING LINES (4")
4900000000-N	1251	184	EA	PERMANENT RAISED PAVEMENT MARKERS
5325200000-E	1510	25	LF	2" WATER LINE
5325600000-E	1510	80	LF	6" WATER LINE
5325800000-E	1510	5,450	LF	8" WATER LINE
5546000000-E	1515	11	EA	8" VALVE
5571000000-E	1515	1	EA	**" TAPPING VALVE (2")
5571600000-E	1515	1	EA	6" TAPPING VALVE
5571800000-E	1515	10	EA	8" TAPPING VALVE

PROJECT REFERENCE No.	SHEET No.
U-4422	3(2 of 2)

STATE OF NORTH CAROLINA
SUMMARY OF QUANTITIES

ItemNumber	Sec #	Quantity	Unit	Description
5589800000-E	1515	1	EA	8" AIR RELEASE VALVE
5648000000-N	1515	5	EA	RELOCATE WATER METER
5666000000-E	1515	11	EA	FIRE HYDRANT
5768000000-N	1520	65	EA	SANITARY SEWER CLEAN-OUT
5800000000-E	1530	80	LF	ABANDON 6" UTILITY PIPE
5801000000-E	1530	3,119	LF	ABANDON 8" UTILITY PIPE
5804000000-E	1530	1,059	LF	ABANDON 12" UTILITY PIPE
5815000000-N	1530	83	EA	REMOVE WATER METER
5815500000-N	1530	6	EA	REMOVE FIRE HYDRANT
5835700000-E	1540	220	LF	16" ENCASEMENT PIPE
5882000000-N	SP	79	EA	GENERIC UTILITY ITEM 1" WATER SERVICE
5882000000-N	SP	1	EA	GENERIC UTILITY ITEM 2" WATER SERVICE
5882000000-N	SP	1	EA	GENERIC UTILITY ITEM 4" WATER SERVICE
5888000000-E	SP	4,764	LF	GENERIC UTILITY ITEM 8" RESTRAINED JOINT DUCTILE IRON WATER LINE
6000000000-E	1605	7,450	LF	TEMPORARY SILT FENCE
6006000000-E	1610	590	TON	STONE FOR EROSION CONTROL, CLASS A
6009000000-E	1610	530	TON	STONE FOR EROSION CONTROL, CLASS B
6012000000-E	1610	1,750	TON	SEDIMENT CONTROL STONE
6015000000-E	1615	10.5	ACR	TEMPORARY MULCHING
6018000000-E	1620	350	LB	SEED FOR TEMPORARY SEEDING
6021000000-E	1620	1.5	TON	FERTILIZER FOR TEMPORARY SEEDING
6024000000-E	1622	100	LF	TEMPORARY SLOPE DRAINS
6029000000-E	SP	200	LF	SAFETY FENCE
6030000000-E	1630	710	CY	SILT EXCAVATION
6036000000-E	1631	15,000	SY	MATTING FOR EROSION CONTROL
6037000000-E	SP	10	SY	COIR FIBER MAT
6042000000-E	1632	7,500	LF	1/4" HARDWARE CLOTH
6071010000-E	SP	80	LF	WATTLE
6071020000-E	SP	10	LB	POLYACRYLAMIDE (PAM)
6071030000-E	1640	200	LF	COIR FIBER BAFFLE
6084000000-E	1660	9	ACR	SEEDING & MULCHING
6087000000-E	1660	6	ACR	MOWING
6090000000-E	1661	150	LB	SEED FOR REPAIR SEEDING
6093000000-E	1661	0.25	TON	FERTILIZER FOR REPAIR SEEDING
6096000000-E	1662	300	LB	SEED FOR SUPPLEMENTAL SEEDING
6108000000-E	1665	9	TON	FERTILIZER TOPDRESSING
6114500000-N	1667	40	MHR	SPECIALIZED HAND MOWING
6117000000-N	SP	25	EA	RESPONSE FOR EROSION CONTROL
7048500000-E	1705	8	EA	PEDESTRIAN SIGNAL HEAD (16", 1 SECTION W/COUNTDOWN)
7060000000-E	1705	9,670	LF	SIGNAL CABLE
7120000000-E	1705	62	EA	VEHICLE SIGNAL HEAD (12", 3 SECTION)
7132000000-E	1705	3	EA	VEHICLE SIGNAL HEAD (12", 4 SECTION)
7144000000-E	1705	6	EA	VEHICLE SIGNAL HEAD (12", 5 SECTION)
7252000000-E	1710	1,100	LF	MESSENGER CABLE (1/4")
7264000000-E	1710	2,426	LF	MESSENGER CABLE (3/8")
7300000000-E	1715	1,485	LF	UNPAVED TRENCHING (**********) (1, 2")
7300000000-E	1715	20	LF	UNPAVED TRENCHING (**********) (2, 2")
7300000000-E	1715	16	LF	UNPAVED TRENCHING (**********) (3, 2")
7300100000-E	1715	218	LF	UNPAVED TRENCHING FOR TEMPORARY LEAD-IN
7301000000-E	1715	91	LF	DIRECTIONAL DRILL (**********) (1, 2")
7324000000-N	1716	16	EA	JUNCTION BOX (STANDARD SIZE)
7348000000-N	1716	3	EA	JUNCTION BOX (OVER-SIZED, HEAVY DUTY)
7360000000-N	1720	7	EA	WOOD POLE
7372000000-N	1721	12	EA	GUY ASSEMBLY
7408000000-E	1722	1	EA	1" RISER WITH WEATHERHEAD
7420000000-E	1722	6	EA	2" RISER WITH WEATHERHEAD
7432000000-E	1722	1	EA	2" RISER WITH HEAT SHRINK TUBING
7444000000-E	1725	6,950	LF	INDUCTIVE LOOP SAWCUT
7456000000-E	1726	20,120	LF	LEAD-IN CABLE (**********) (14-2)
7528000000-E	1730	250	LF	DROP CABLE
7541000000-N	1731	1	EA	MODIFY SPLICE ENCLOSURE
7552000000-N	1731	1	EA	INTERCONNECT CENTER
7575180000-N	1735	4	EA	CABLE TRANSFER
7576000000-N	SP	8	EA	METAL STRAIN SIGNAL POLE
7613000000-N	SP	8	EA	SOIL TEST
7614100000-E	SP	56	CY	DRILLED PIER FOUNDATION
7630000000-N	SP	1	EA	METAL STRAIN POLE DESIGN
7636000000-N	1745	1	EA	SIGN FOR SIGNALS
7642100000-N	1743	7	EA	TYPE I POST WITH FOUNDATION
7642200000-N	1743	1	EA	TYPE II PEDESTAL WITH FOUNDATION
7675000000-N	1747	2	EA	LED BLANKOUT SIGN
7684000000-N	1750	1	EA	SIGNAL CABINET FOUNDATION
7756000000-N	1751	1	EA	CONTROLLER WITH CABINET (TYPE 2070L, BASE MOUNTED)
7780000000-N	1751	17	EA	DETECTOR CARD (TYPE 2070L)
7901000000-N	1753	1	EA	CABINET BASE EXTENDER
7960000000-N	SP	2	EA	METAL POLE FOUNDATION REMOVAL
7972000000-N	SP	2	EA	METAL POLE REMOVAL
7980000000-N	SP	1	EA	GENERIC SIGNAL ITEM RELOCATE CCTV ASSEMBLY

COMPUTED BY: JBJ	DATE: 9-30-2011
CHECKED BY: SKR	DATE: 2-17-2012

PROJECT REFERENCE NO.	SHEET NO.
U-4422	3-A

NOTE: Invert Elevations are for Bid Purposes only and shall not be used for project construction stakeout. See "Standard Specifications For Roads and Structures, Section 300-5".

STATE OF NORTH CAROLINA
DIVISION OF HIGHWAYS
SUB-REGIONAL & REGIONAL
LIST OF PIPES, ENDWALLS, ETC. (FOR PIPES 48" & UNDER)

STATION	LOCATION (LT,RT, OR CL)	STRUCTURE NO. FROM	STRUCTURE NO. TO	TOP ELEVATION	INVERT ELEVATION	INVERT ELEVATION	SLOPE CRITICAL	DRAINAGE PIPE (RCP, CSP, CAAP, HDPE, or PVC) 12"	15"	18"	24"	30"	36"	42"	48"	DO NOT USE RCP	DO NOT USE CSP	DO NOT USE CAAP	DO NOT USE HDPE	C.S. PIPE 12" .064	15" .064	18" .064	24" .064	36" .079	42" .109	48" .109
-L- 11+90	LT	0401		214.0	211.0																					
-L- 11+90	LT	0401	0402		211.0	209.4																				
-L- 13+50	LT	0402		213.4	209.4																					
-L- 13+50	LT	0402	0403		209.4	209.5			24								X	X								
-L- 13+50	LT	0402	0408		209.4	209.0																				
-L- 13+50	LT	0403		211.7	209.5																					
-L- 14+10	RT	0404		213.4	210.4																					
-L- 14+10	RT	0404	0405		210.4	210.7			16								X	X								
-L- 14+10	RT	0404	0406		210.4	210.7																				
-L- 14+10	RT	0404	0409		210.4	209.6																				
-L- 14+06	RT	0405		213.9	210.7																					
-L- 14+10	RT	0406		214.2	210.7																					
NOT USED		0407																								
-L- 14+75	LT	0408		212.9	209.0																					
-L- 14+75	LT	0408	0412		209.0	208.3																				
-L- 15+15	RT	0409		212.8	209.6																					
-L- 15+15	RT	0409	0410		209.6	209.0																				
-L- 16+48	RT	0410		212.2	209.0																					
-L- 16+48	RT	0410	0411		209.0	211.0			12								X	X								
-L- 16+48	RT	0410	0414		209.0	208.4																				
-L- 16+48	RT	0411		214.2	211.0																					
-L- 16+90	LT	0412		212.2	208.3																					
-L- 16+90	LT	0412	0413		208.3	209.6																				
-L- 16+90	LT	0412	0415		208.3	207.3																				
-L- 16+90	LT	0413		212.8	209.6																					
-L- 17+85	RT	0414		211.6	208.4																					
-L- 17+85	RT	0414	0422		208.4	206.8																				
-L- 18+84	LT	0415		210.5	207.3																					
-L- 18+84	LT	0415	0416		207.3	208.1																				
-L- 18+84	LT	0415	0417		207.3	207.2																				
-L- 18+69	LT	0416		211.3	208.1																					
-L- 18+84	LT	0417		211.7	207.2																					
-L- 18+84	LT	0417	0418		207.2	206.7																				
-L- 19+34	LT	0418		210.7	206.7																					
-Y1- 14+95	RT	0419		209.2	206.2																					
-Y1- 14+95	RT	0419	0420		206.2	205.79																				
-Y1- 13+95	RT	0420		208.8	205.8																					
-Y1- 13+95	RT	0420	0421		205.8																					
-Y1- 13+95	RT	0421																								
-L- 19+20	RT	0422		210.0	206.8																					
-L- 19+20	RT	0422	0423		206.8	207.2			16								X	X								
-L- 19+20	RT	0422	0424		206.8	206.4																				
-L- 19+15	RT	0423		210.4	207.2																					
-L- 19+54	RT	0424		209.7	206.4																					
SHEET TOTAL									68																	

STATION	STRUCTURE NO. FROM	STRUCTURE NO. TO	R.C. PIPE (CLASS III) 15"	18"	24"	30"	36"	42"	48"	R.C. PIPE (CLASS IV) 12"	15"	18"	24"	30"	36"	42"	48"	**" R. C. PIPE (CLASS V)	**" R. C. PIPE CULVERTS, CONTRACTOR DESIGN PIPE	**" R. C. PIPE CULVERTS, CONTRACTOR DESIGN PIPE	15" SIDE DRAIN PIPE	18" SIDE DRAIN PIPE	ENDWALLS STD. 838.01, STD. 838.11 OR STD. 838.80 (UNLESS NOTED OTHERWISE) CU. YDS. R.C.P.	C.S.P.	QUANTITIES FOR DRAINAGE STRUCTURES PER EACH (0' THRU 5.0')	* TOTAL L.F. FOR PAY QUANTITY SHALL BE COL. 'A' + (1.3 X COL.'B') LIN. *FT. A 5.0' THRU 10.0'	B 10.0' AND ABOVE	C.B. STD. 840.01 OR STD. 840.02	FRAME, GRATES AND HOOD STANDARD 840.03 TYPE OF GRATE E	F	G
-L- 11+90	0401																								1			1			1
-L- 11+90	0401	0402									160																				
-L- 13+50	0402																								1			1			1
-L- 13+50	0402	0403																													
-L- 13+50	0402	0408									124																				
-L- 13+50	0403																								1						
-L- 14+10	0404																								1			1		1	
-L- 14+10	0404	0405																													
-L- 14+10	0404	0406										8																			
-L- 14+10	0404	0409										104																			
-L- 14+06	0405																								1						
-L- 14+10	0406																								1						
NOT USED	0407																														
-L- 14+75	0408																								1			1		1	
-L- 14+75	0408	0412									216																				
-L- 15+15	0409																								1			1		1	
-L- 15+15	0409	0410										132																			
-L- 16+48	0410																								1			1		1	
-L- 16+48	0410	0411																													
-L- 16+48	0410	0414										136																			
-L- 16+48	0411																								1						
-L- 16+90	0412																								1			1		1	
-L- 16+90	0412	0413									28																				
-L- 16+90	0412	0415									192																				
-L- 16+90	0413																								1						
-L- 17+85	0414																								1			1		1	
-L- 17+85	0414	0422										132																			
-L- 18+84	0415																								1			1		1	
-L- 18+84	0415	0416									20																				
-L- 18+84	0415	0417										28																			
-L- 18+69	0416																								1						
-L- 18+84	0417																								1						
-L- 18+84	0417	0418										48																			
-L- 19+34	0418																														
-Y1- 14+95	0419																								1			1			1
-Y1- 14+95	0419	0420									100																				
-Y1- 13+95	0420																								1			1			1
-Y1- 13+95	0420	0421									20																				
-Y1- 13+95	0421																														
-L- 19+20	0422																								1			1		1	
-L- 19+20	0422	0423																													
-L- 19+20	0422	0424										36																			
-L- 19+15	0423																								1						
-L- 19+54	0424																								1						
SHEET TOTAL											860	624													21			12		8	4

STATION	STRUCTURE NO. FROM	STRUCTURE NO. TO	CONCRETE TRANSITIONAL SECTION CATCH BASIN	CATCH BASIN (SEE DETAIL 2-K)	DROP INLET	D.I. STD. 840.14 OR STD. 840.15	D.I. FRAME & GRATE STD. 840.16	G.D.I. TYPE "A" STD. 840.17 OR 840.26	G.D.I. TYPE "B" STD. 840.18 OR 840.27	G.D.I. (N.S.) FRAME WITH TWO GRATES STD. 840.24	G.D.I. (N.S.) FRAME WITH TWO GRATES STD. 840.29	J.B. STD. 840.31 OR 840.32	T.B.J.B. STD. 840.34	T.B.D.I. STD. 840.35	M.H. FRAME & COVER STD. 840.54	ADJUSTMENT OF CB	ADJUSTMENT OF MANHOLE	ADJUSTMENT OF JB W /MH	CONC. COLLARS CL. "B" C.Y. STD 840.72	FLOWABLE FILL (PIPE) C.Y.	CONC. & BRICK PIPE PLUG, C.Y. STD. 840.71	PIPE REMOVAL LIN.FT.	REMARKS
-L- 11+90	0401																						
-L- 11+90	0401	0402																					
-L- 13+50	0402																						
-L- 13+50	0402	0403																					
-L- 13+50	0402	0408																					
-L- 13+50	0403					1	1																
-L- 14+10	0404																						
-L- 14+10	0404	0405																					
-L- 14+10	0404	0406																					
-L- 14+10	0404	0409																					
-L- 14+06	0405					1	1																
-L- 14+10	0406												1		1							14	REM. DI & CB
NOT USED	0407																						
-L- 14+75	0408																						
-L- 14+75	0408	0412																					
-L- 15+15	0409																						
-L- 15+15	0409	0410																				255	REMOVE CB
-L- 16+48	0410																						
-L- 16+48	0410	0411																					
-L- 16+48	0410	0414																				93	REMOVE CB
-L- 16+48	0411					1	1																
-L- 16+90	0412																						
-L- 16+90	0412	0413																					
-L- 16+90	0412	0415																					
-L- 16+90	0413				1	1	1																
-L- 17+85	0414																						
-L- 17+85	0414	0422																				145	REMOVE CB
-L- 18+84	0415																						
-L- 18+84	0415	0416																					
-L- 18+84	0415	0417																					
-L- 18+69	0416					1	1																
-L- 18+84	0417				1	1	1																
-L- 18+84	0417	0418																				46	REMOVE CB & DI
-L- 19+34	0418																1			3.86	0.09		2 PLUGS & FLOWABLE FILL
-Y1- 14+95	0419																						
-Y1- 14+95	0419	0420																					
-Y1- 13+95	0420																						
-Y1- 13+95	0420	0421																					
-Y1- 13+95	0421																		0.399				REMOVE CB
-L- 19+20	0422																						
-L- 19+20	0422	0423																					
-L- 19+20	0422	0424																				40	
-L- 19+15	0423					1	1																
-L- 19+54	0424												1		1								REMOVE CB
SHEET TOTAL					2	7	7						2		2		1		0.399	3.86	0.09	593	

ABBREVIATIONS

C.B.	CATCH BASIN
N.D.I.	NARROW DROP INLET
D.I.	DROP INLET
G.D.I.	GRATED DROP INLET
G.D.I. (N.S.)	GRATED DROP INLET (NARROW SLOT)
J.B.	JUNCTION BOX
M.H.	MANHOLE
T.B.D.I.	TRAFFIC BEARING D.I.
T.B.J.B.	TRAFFIC BEARING J.B.

4/04/06
04-APR-2012 08:43
R:\Roadway\Proj\u4422_rdy_sum.dgn
$$$$USERNAME$$$$

COMPUTED BY: JBJ DATE: 9-30-2011
CHECKED BY: SKR DATE: 2-17-2012

PROJECT REFERENCE NO.	SHEET NO.
U-4422	3-B

STATE OF NORTH CAROLINA
DIVISION OF HIGHWAYS

NOTE: Invert Elevations are for Bid Purposes only and shall not be used for project construction stakeout.
See "Standard Specifications For Roads and Structures, Section 300-5".

SUB-REGIONAL & REGIONAL
LIST OF PIPES, ENDWALLS, ETC. (FOR PIPES 48" & UNDER)

STATION / SIZE / THICKNESS OR GAUGE	LOCATION (LT,RT, OR CL)	STRUCTURE NO. FROM	STRUCTURE NO. TO	TOP ELEVATION	INVERT ELEVATION	INVERT ELEVATION	SLOPE CRITICAL	DRAINAGE PIPE (RCP, CSP, CAAP, HDPE, or PVC) 12"	15"	18"	24"	30"	36"	42"	48"	DO NOT USE RCP	DO NOT USE CSP	DO NOT USE CAAP	DO NOT USE HDPE	C.S. PIPE 12" .064	15" .064	18" .064	24" .064	36" .079	42" .109	48" .109	R.C. PIPE (CLASS III) 15"	18"	24"	30"	36"	42"	48"	R.C. PIPE (CLASS IV) 12"	15"	18"	24"	30"	36"	42"	48"	**" R. C. PIPE (CLASS V)	**" R. C. PIPE CULVERTS, CONTRACTOR DESIGN PIPE	**" R. C. PIPE CULVERTS, CONTRACTOR DESIGN PIPE	15" SIDE DRAIN PIPE	18" SIDE DRAIN PIPE	ENDWALLS STD. 838.01, STD. 838.11 OR STD. 838.80 (UNLESS NOTED OTHERWISE) CU. YDS. R.C.P.	C.S.P.	QUANTITIES FOR DRAINAGE STRUCTURES PER EACH (0' THRU 5.0')	* TOTAL L.F. FOR PAY QUANTITY SHALL BE COL. 'A' + (1.3 X COL.'B') LIN. *FT. A 5.0' THRU 10.0'	B 10.0' AND ABOVE	C.B. STD. 840.01 OR STD. 840.02	FRAME, GRATES AND HOOD STANDARD 840.03 TYPE OF GRATE E	F	G	CONCRETE TRANSITIONAL SECTION CATCH BASIN	CATCH BASIN (SEE DETAIL 2-K)	DROP INLET	D.I. STD. 840.14 OR STD. 840.15	D.I. FRAME & GRATE STD. 840.16	G.D.I. TYPE "A" STD. 840.17 OR 840.26	G.D.I. TYPE "B" STD. 840.18 OR 840.27	G.D.I. (N.S.) FRAME WITH TWO GRATES STD. 840.24	G.D.I. (N.S.) FRAME WITH TWO GRATES STD. 840.29	J.B. STD. 840.31 OR 840.32	T.B.J.B. STD. 840.34	T.B.D.I. STD. 840.35	M.H. FRAME & COVER STD. 840.54	ADJUSTMENT OF CB	ADJUSTMENT OF MANHOLE	ADJUSTMENT OF JB W /MH	CONC. COLLARS CL. "B" C.Y. STD 840.72	FLOWABLE FILL (PIPE) C.Y.	CONC. & BRICK PIPE PLUG, C.Y. STD. 840.71	PIPE REMOVAL LIN.FT.	REMARKS
-Y1- 14+33	LT	0425		209.0	205.2																																												1			1		1																						REMOVE CB
-Y1- 14+33	LT	0425	0426		205.2																														4																																									
-Y1- 14+33	LT	0425	0427		205.2	206.1																													76																																									
-Y1- 14+31	LT	0426																																																																					.399				
-Y1- 15+15	LT	0427		209.1	206.1																																												1			1		1																						
-Y1- 17+04	LT	0428		210.6	207.6																																												1										1	1																	
-Y1- 17+04	LT	0428	0429		207.6	204.8																													52																																									
-L- 20+65	LT	0429		207.8	204.8																																												1			1			1																				21	REMOVE CB & DI
-L- 20+65	LT	0429	0433		204.8	202.4																													136																																									
-Y1- 20+25	LT	0430		208.7																																													1			1			1																					
-Y1- 20+25	LT	0430	0431		206.9	206.7																													100																																									
-Y1- 21+25	LT	0431		208.8	206.7																																												1			1			1																					
-Y1- 21+25	LT	0431	0432		206.7	206.3																													180																																									
-Y1- 23+07	LT	0432		208.4	206.3																																																																	1							
-L- 22+05	LT	0433		205.4	202.4																																												1			1			1																					
-L- 22+05	LT	0433	0434		202.4	200.9																													88																																									
-L- 23+00	LT	0434		204.2	200.9																																												1			1			1																					
-L- 23+00	LT	0434	0435		200.9	203.2			32									X	X																																																										
-L- 23+00	LT	0434	0439		200.9	200.2																														64																																								
-L- 23+00	LT	0435		208.2	203.2																																												1													1	1														
-L- 22+36	RT	0436		207.7	204.5																																												1										1	1	1																	
-L- 22+36	RT	0436	0437		204.5	203.7																													72																																									
-L- 23+10	RT	0437		206.9	203.7																																												1										1	1	1																	
-L- 23+10	RT	0437	0438		203.7	204.7																													40																																									
-L- 23+10	RT	0437	0443		203.7	202.6																													88																																									
-L- 23+10	RT	0438		207.9	204.7																																												1										1	1																	
-L- 23+72	LT	0439		203.4	200.2																																												1			1			1																					
-L- 23+72	LT	0439	0440		200.2	199.2																														64																																								
-L- 24+45	LT	0440		202.9	199.2																																												1			1			1																					
-L- 24+45	LT	0440	0501		199.2	199.0																															64																																						
NOT USED		0441																																																																										
NOT USED		0442																																																																										
-L- 24+00	RT	0443		205.6	202.6																																												1			1			1		1																				
-L- 24+00	RT	0443	0444		202.6	201.7																													68																																									
-L- 24+68	RT	0444		204.7	201.7																																												1			1		1			1																				
-L- 24+68	RT	0444	0503		201.7	198.6																													100																																									
-L- 14+08	LT	0445		214.4	211.5																																												1										1	1																4	REMOVE CB
-L- 16+00	LT	0446		213.7	210.5																																												1										1	1																	
-L- 16+00	LT	0446	0413		210.5	209.6																													92																																									
-L- 25+12	LT	0501		203.1	199.0																																												1			1			1																					
-L- 25+12	LT	0501	0502		199.0	198.8																															56																																						
-L- 25+68	LT	0502		203.2	198.8																																												1			1			1																					
-L- 25+68	CL	0502	0503		198.8	198.6																															56																																						
-L- 25+67	RT	0503		203.2	198.6																																												1			1			1		1																				
-L- 25+67	CL	0503	0505		198.6	197.9																															108																																						
-L- 26+75	LT	0505		202.4	197.9																																												1			1			1		1																				
-L- 26+75	RT	0505	0504		197.9	198.1																													40																																									
SHEET TOTAL									32																										1136	128	284												22			15		3	12		4	2	6	6		1	1						1			0.399			25	

ABBREVIATIONS

C.B.	CATCH BASIN
N.D.I.	NARROW DROP INLET
D.I.	DROP INLET
G.D.I.	GRATED DROP INLET
G.D.I. (N.S.)	GRATED DROP INLET (NARROW SLOT)
J.B.	JUNCTION BOX
M.H.	MANHOLE
T.B.D.I.	TRAFFIC BEARING D.I.
T.B.J.B.	TRAFFIC BEARING J.B.

4/04/06
04-APR-2012 08:42
R:\Roadway\Proj\u4422_rdy_sum.dgn
$$$$USERNAME$$$$

4/04/06

COMPUTED BY: JBJ	DATE: 9-30-2011
CHECKED BY: SKR	DATE: 2-17-2012

PROJECT REFERENCE NO.	SHEET NO.
U-4422	3-C

NOTE: Invert Elevations are for Bid Purposes only and shall not be used for project construction stakeout.
See "Standard Specifications For Roads and Structures, Section 300-5".

STATE OF NORTH CAROLINA
DIVISION OF HIGHWAYS

SUB-REGIONAL & REGIONAL
LIST OF PIPES, ENDWALLS, ETC. (FOR PIPES 48" & UNDER)

STATION	LOCATION (LT,RT, OR CL)	STRUCTURE NO. FROM	STRUCTURE NO. TO	TOP ELEVATION	INVERT ELEVATION	INVERT ELEVATION	SLOPE CRITICAL	DRAINAGE PIPE (RCP, CSP, CAAP, HDPE, or PVC) 12"	15"	18"	24"	30"	36"	42"	48"	DO NOT USE RCP	DO NOT USE CSP	DO NOT USE CAAP	DO NOT USE HDPE
-L- 26+75	RT	0504		201.1	198.1														
-L- 26+75	LT	0505	0506		197.9	196.2													
-L- 28+15	LT	0506		200.7	196.2														
-L- 28+15	LT	0506	0507		196.2	196.4													
-L- 28+15	LT	0506	0508		196.2	195.2													
-L- 28+15	RT	0507		199.4	196.4														
-L- 29+25	LT	0508		199.1	195.2														
-L- 29+25	LT	0508	0509		195.2	195.4													
-L- 29+25	LT	0508	0510		195.2	195.0													
-L- 29+25	RT	0509		198.4	195.4														
-L- 29+50	LT	0510		198.7	195.0														
-L- 29+50	LT	0510	0511		195.0	190.3													
-L- 30+63	LT	0511		194.0	190.3														
-L- 30+63	LT	0511	0512		190.3	187.8													
-Y2- 13+38	RT	0512		191.5	187.8														
-Y2- 13+38	RT	0512	0513		187.8	187.2													
-Y2- 12+95	RT	0513		191.2	187.2														
-Y2- 12+95	RT	0513	0514		187.2	187.3			12								X	X	
-Y2- 12+95	RT	0513	0515		187.2	185.3													
-Y2- 12+95	RT	0514		190.5	187.3														
-Y2- 12+13	RT	0515		189.1	185.3														
-Y2- 12+13	RT	0515	0516		185.3	186.7			16								X	X	
-Y2- 12+13	RT	0515	0517		185.3	182.2													
-Y2- 12+13	RT	0516		189.0	186.7														
-Y2- 10+92	RT	0517		187.9	182.2														
-Y2- 13+24	LT	0518		191.2															
-Y2- 13+24	LT	0518	0519		183.4	187.0													
-Y2- 13+65	LT	0519		191.6	187.0														
-Y2- 13+65	LT	0519	0520		187.0	187.6													
-L- 32+73	LT	0520		191.4	187.6														
-L- 32+73	CL	0520	0538		187.6	188.1													
-L- 32+73	LT	0520	0521		187.6	189.1													
-L- 33+75	LT	0521		192.1	189.1														
-L- 33+75	LT	0521	0522		189.1	191.5													
-L- 34+95	LT	0522		194.5	191.5														
-L- 34+95	LT	0522	0523		191.5	192.5			12								X	X	
-L- 34+95	LT	0523		194.8	192.5														
-L- 34+95	LT	0523	0524		192.5	194.0			72								X	X	
-L- 35+70	LT	0524		196.3	194.0														
-L- 36+58	LT	0525		196.2	189.2														
-L- 36+58	LT	0525	0526		189.2	189.1									16		X	X	
-L- 36+58	LT	0525	0534		189.2	189.9													
SHEET TOTAL									112						16				

SIZE / THICKNESS OR GAUGE

STATION	C.S. PIPE 12" (.064)	15" (.064)	18" (.064)	24" (.064)	36" (.079)	42" (.109)	48" (.109)	R.C. PIPE (CLASS III) 15"	18"	24"	30"	36"	42"	48"	R.C. PIPE (CLASS IV) 12"	15"	18"	24"	30"	36"	42"	48"
-L- 26+75																						
-L- 26+75																		140				
-L- 28+15																						
-L- 28+15																40						
-L- 28+15																		108				
-L- 28+15																						
-L- 29+25																						
-L- 29+25																36						
-L- 29+25																		40				
-L- 29+25																						
-L- 29+50																						
-L- 29+50																		124				
-L- 30+63																						
-L- 30+63																		76				
-Y2- 13+38																						
-Y2- 13+38																		40				
-Y2- 12+95																						
-Y2- 12+95																						
-Y2- 12+95																		80				
-Y2- 12+95																						
-Y2- 12+13																						
-Y2- 12+13																						
-Y2- 12+13																		120				
-Y2- 12+13																						
-Y2- 10+92																						
-Y2- 13+24																						
-Y2- 13+24																	56					
-Y2- 13+65																						
-Y2- 13+65																	92					
-L- 32+73																						
-L- 32+73																	68					
-L- 32+73																100						
-L- 33+75																						
-L- 33+75																120						
-L- 34+95																						
-L- 34+95																						
-L- 34+95																						
-L- 34+95																						
-L- 35+70																						
-L- 36+58																						
-L- 36+58																						
-L- 36+58																						88
SHEET TOTAL																296	216	728				88

STATION	**" R. C. PIPE (CLASS V)	**" R. C. PIPE CULVERTS, CONTRACTOR DESIGN PIPE	**" R. C. PIPE CULVERTS, CONTRACTOR DESIGN PIPE	15" SIDE DRAIN PIPE	18" SIDE DRAIN PIPE	ENDWALLS STD. 838.01, STD. 838.11 OR STD. 838.80 (UNLESS NOTED OTHERWISE) CU. YDS. R.C.P.	C.S.P.	QUANTITIES FOR DRAINAGE STRUCTURES PER EACH (0' THRU 5.0')	* TOTAL L.F. FOR PAY QUANTITY SHALL BE COL. 'A' + (1.3 X COL.'B') LIN. *FT. A: 5.0' THRU 10.0'	B: 10.0' AND ABOVE	C.B. STD. 840.01 OR STD. 840.02	FRAME, GRATES AND HOOD STANDARD 840.03 TYPE OF GRATE E	F	G	CONCRETE TRANSITIONAL SECTION CATCH BASIN	CATCH BASIN (SEE DETAIL 2-K)	DROP INLET	D.I. STD. 840.14 OR STD. 840.15	D.I. FRAME & GRATE STD. 840.16	G.D.I. TYPE "A" STD. 840.17 OR 840.26	G.D.I. TYPE "B" STD. 840.18 OR 840.27	G.D.I. (N.S.) FRAME WITH TWO GRATES STD. 840.24	G.D.I. (N.S.) FRAME WITH TWO GRATES STD. 840.29	J.B. STD. 840.31 OR 840.32	T.B.J.B. STD. 840.34	T.B.D.I. STD. 840.35	M.H. FRAME & COVER STD. 840.54	ADJUSTMENT OF CB	ADJUSTMENT OF MANHOLE	ADJUSTMENT OF JB W /MH	CONC. COLLARS CL. "B" C.Y. STD 840.72	FLOWABLE FILL (PIPE) C.Y.	CONC. & BRICK PIPE PLUG, C.Y. STD. 840.71	PIPE REMOVAL LIN.FT.	REMARKS
-L- 26+75								1			1		1																					
-L- 26+75																																		
-L- 28+15								1			1		1			1																		
-L- 28+15																																		
-L- 28+15																																		
-L- 28+15								1			1		1																					
-L- 29+25								1			1		1			1																		
-L- 29+25																																		
-L- 29+25																																		
-L- 29+25								1			1		1																					
-L- 29+50								1			1			1																				
-L- 29+50																																		
-L- 30+63								1			1			1																				
-L- 30+63																																		
-Y2- 13+38								1			1			1																				
-Y2- 13+38																																		
-Y2- 12+95								1			1			1																				
-Y2- 12+95																																		
-Y2- 12+95																																		
-Y2- 12+95								1										1	1															
-Y2- 12+13								1			1			1																				
-Y2- 12+13																																		
-Y2- 12+13																																		
-Y2- 12+13								1										1	1															
-Y2- 10+92																													1						
-Y2- 13+24																													1						
-Y2- 13+24																																		
-Y2- 13+65								1			1		1																					
-Y2- 13+65																																	159	REMOVE 2 CB'S
-L- 32+73								1			1	1																						
-L- 32+73																																		
-L- 32+73																																		
-L- 33+75								1			1		1																					
-L- 33+75																																		
-L- 34+95								1			1		1																					
-L- 34+95																																		
-L- 34+95								1										1	1															
-L- 34+95																																		
-L- 35+70								1										1	1															
-L- 36+58								1	2.0		1		1																					EXTRA DEPTH
-L- 36+58																																		
-L- 36+58																																	140	REM. 3 PIPES, REM. 2 CB'S & REM. 2 SAN/MANHOLES
SHEET TOTAL								19	2.0		15	1	9	5		2		4	4										2					299	

ABBREVIATIONS

C.B.	CATCH BASIN
N.D.I.	NARROW DROP INLET
D.I.	DROP INLET
G.D.I.	GRATED DROP INLET
G.D.I. (N.S.)	GRATED DROP INLET (NARROW SLOT)
J.B.	JUNCTION BOX
M.H.	MANHOLE
T.B.D.I.	TRAFFIC BEARING D.I.
T.B.J.B.	TRAFFIC BEARING J.B.

04-APR-2012 08:42
R:\Roadway\Proj\u4422_rdy_sum.dgn
$$$$USERNAME$$$$

COMPUTED BY: JBJ DATE: 9-30-2011
CHECKED BY: SKR DATE: 2-17-2012

4/04/06

PROJECT REFERENCE NO.	SHEET NO.
U-4422	3-D

STATE OF NORTH CAROLINA
DIVISION OF HIGHWAYS

SUB-REGIONAL & REGIONAL
LIST OF PIPES, ENDWALLS, ETC. (FOR PIPES 48" & UNDER)

NOTE: Invert Elevations are for Bid Purposes only and shall not be used for project construction stakeout.
See "Standard Specifications For Roads and Structures, Section 300-5".

Station	Location (LT, RT, or CL)	Structure No. From	Structure No. To	Top Elevation	Invert Elevation	Invert Elevation	Slope Critical	Drainage Pipe (RCP, CSP, CAAP, HDPE, or PVC) 12"	15"	18"	24"	30"	36"	42"	48"	Do Not Use RCP	Do Not Use CSP	Do Not Use CAAP	Do Not Use HDPE
-L- 36+58	LT	0525	0527		192.0	193.9													
-L- 36+50	LT	0526		196.9	189.1														
-L- 37+32	LT	0527		196.9	193.9														
-L- 37+32	LT	0527	0528		193.9	197.0													
-L- 39+00	LT	0528		200.0	197.0														
-L- 39+00	LT	0528	0601		197.0	198.0													
-L- 38+75	RT	0529		199.6	197.3														
-L- 38+75	RT	0530		199.6	195.3														
-L- 38+75	RT	0530	0529		196.6	197.3			12								X	X	
-L- 38+75	RT	0530	0602		195.3	196.6													
-L- 37+92	RT	0531		197.8	193.5														
-L- 37+92	RT	0531	0532		193.5	196.1			12								X	X	
-L- 37+92	RT	0531	0530		193.5	195.3													
-L- 37+92	RT	0532		198.4	196.1														
-L- 37+11	RT	0533		197.9	190.0														
-L- 37+11	RT	0534		196.7	189.9														
-L- 37+11	RT	0534	0533		189.9	190.0									12		X	X	
-L- 37+11	RT	0534	0531		189.9	193.5													
-L- 35+95	RT	0535		195.7	192.7														
-L- 34+70	RT	0536		193.9	190.9														
-L- 34+70	RT	0536	0535		190.9	192.7													
-L- 33+55	RT	0537		191.9	188.9														
-L- 33+55	RT	0537	0536		188.9	190.9													
-L- 32+73	RT	0538		191.4	188.1														
-L- 32+73	RT	0538	0539		188.1	189.4			24								X	X	
-L- 32+73	RT	0538	0537		188.1	188.9													
-L- 32+55	RT	0539		191.7	189.4														
-L- 32+16	RT	0540		191.5	188.4														
-L- 32+16	RT	0540	0538		188.4	188.1													
-L- 31+50	RT	0541		191.6	188.6														
-L- 31+50	RT	0541	0540		188.6	188.4													
-Y2- 14+90	RT	0542		194.6	189.6														
-Y2- 15+36	RT	0542	0543		189.6	191.6													
-Y2- 15+36	RT	0543		194.6	191.6														
-Y2- 15+36	RT	0543	0544	191.6	190.3														
-Y2- 15+82	RT	0544		193.7	190.3														
-Y2- 15+82	RT	0544	0546		190.3	193.0													
-Y2- 15+82	RT	0544	0545		190.3	190.7													
-Y2- 15+82	LT	0545		193.7	190.7														
-Y2- 16+30	RT	0546		196.0	193.0														
-L- 40+00	LT	0601		201.0	198.0														
-L- 40+00	LT	0601	0604		198.0	198.8													
-L- 39+80	RT	0602		200.9	196.6														
SHEET TOTAL									48						12				

Station	C.S. Pipe 12" .064	15" .064	18" .064	24" .064	36" .079	42" .109	48" .109	R.C. Pipe (Class III) 15"	18"	24"	30"	36"	42"	48"	R.C. Pipe (Class IV) 12"	15"	18"	24"	30"	36"	42"	48"
-L- 36+58																72						
-L- 36+50																						
-L- 37+32																						
-L- 37+32																168						
-L- 39+00																						
-L- 39+00																100						
-L- 38+75																						
-L- 38+75																						
-L- 38+75																						
-L- 38+75																			104			
-L- 37+92																						
-L- 37+92																						
-L- 37+92																			84			
-L- 37+92																						
-L- 37+11																						
-L- 37+11																						
-L- 37+11																						
-L- 37+11																			80			
-L- 35+95																						
-L- 34+70																						
-L- 34+70																124						
-L- 33+55																						
-L- 33+55																112						
-L- 32+73																						
-L- 32+73																						
-L- 32+73																80						
-L- 32+55																						
-L- 32+16																						
-L- 32+16																56						
-L- 31+50																						
-L- 31+50																72						
-Y2- 14+90																						
-Y2- 15+36																60						
-Y2- 15+36																						
-Y2- 15+36																48						
-Y2- 15+82																						
-Y2- 15+82																44						
-Y2- 15+82																48						
-Y2- 15+82																						
-Y2- 16+30																						
-L- 40+00																						
-L- 40+00																100						
-L- 39+80																						
SHEET TOTAL																1084			268			

Station	**" R. C. Pipe (Class V)	**" R. C. Pipe Culverts, Contractor Design Pipe	**" R. C. Pipe Culverts, Contractor Design Pipe	15" Side Drain Pipe	18" Side Drain Pipe	Endwalls Std. 838.01, Std. 838.11 or Std. 838.80 (Unless Noted Otherwise) Cu. Yds. R.C.P.	C.S.P.	Quantities for Drainage Structures Per Each (0' thru 5.0')	* Total L.F. for Pay Quantity shall be Col. 'A' + (1.3 X Col. 'B') Lin. *Ft. A 5.0' thru 10.0'	B 10.0' and Above	C.B. Std. 840.01 or Std. 840.02	Frame, Grates and Hood Standard 840.03 Type of Grate E	F	G	Concrete Transitional Section Catch Basin	Catch Basin (See Detail 2-K)	Drop Inlet
-L- 36+58																	
-L- 36+50								1	2.8								
-L- 37+32								1			1		1				
-L- 37+32																	
-L- 39+00								1			1		1				
-L- 39+00																	
-L- 38+75								1									
-L- 38+75								1			1			1			
-L- 38+75																	
-L- 38+75																	
-L- 37+92								1			1			1			
-L- 37+92																	
-L- 37+92																	
-L- 37+92								1									
-L- 37+11								1	2.9								
-L- 37+11								1	1.8		1			1			
-L- 37+11																	
-L- 37+11																	
-L- 35+95								1			1			1			
-L- 34+70								1			1			1			
-L- 34+70																	
-L- 33+55								1			1			1			
-L- 33+55																	
-L- 32+73								1			1	1					
-L- 32+73																	
-L- 32+73																	
-L- 32+55								1									
-L- 32+16								1			1		1				
-L- 32+16																	
-L- 31+50								1			1		1				
-L- 31+50																	
-Y2- 14+90								1									
-Y2- 15+36																	
-Y2- 15+36								1			1		1				
-Y2- 15+36																	
-Y2- 15+82								1			1			1			
-Y2- 15+82																	
-Y2- 15+82																	
-Y2- 15+82								1			1		1				
-Y2- 16+30								1			1			1			
-L- 40+00								1			1		1				
-L- 40+00																	
-L- 39+80								1			1			1			
SHEET TOTAL								23	7.5		17	1	7	9			

Station	D.I. Std. 840.14 or Std. 840.15	D.I. Frame & Grate Std. 840.16	G.D.I. Type "A" Std. 840.17 or 840.26	G.D.I. Type "B" Std. 840.18 or 840.27	G.D.I. (N.S.) Frame with Two Grates Std. 840.24	G.D.I. (N.S.) Frame with Two Grates Std. 840.29	J.B. Std. 840.31 or 840.32	T.B.J.B. Std. 840.34	T.B.D.I. Std. 840.35	M.H. Frame & Cover Std. 840.54	Adjustment of CB	Adjustment of Manhole	Adjustment of JB W /MH	Conc. Collars Cl. "B" C.Y. Std 840.72	Flowable Fill (Pipe) C.Y.	Conc. & Brick Pipe Plug, C.Y. Std. 840.71	Pipe Removal Lin.Ft.	Remarks
-L- 36+58																		
-L- 36+50			1		1													2GI, EXTRA DEPTH
-L- 37+32																		
-L- 37+32																		
-L- 39+00																		
-L- 39+00																		
-L- 38+75	1	1																
-L- 38+75																		
-L- 38+75																		
-L- 38+75																		
-L- 37+92																		
-L- 37+92																		
-L- 37+92																		
-L- 37+92	1	1																
-L- 37+11			1		1													2GI, EXTRA DEPTH
-L- 37+11																		EXTRA DEPTH
-L- 37+11																		
-L- 37+11																	718	
-L- 35+95																		
-L- 34+70																		
-L- 34+70																		
-L- 33+55																		
-L- 33+55																		
-L- 32+73																		
-L- 32+73																		
-L- 32+73																		
-L- 32+55	1	1																
-L- 32+16																		
-L- 32+16																		
-L- 31+50																		
-L- 31+50																		
-Y2- 14+90								1		1								
-Y2- 15+36																	43	REMOVE CB
-Y2- 15+36																		
-Y2- 15+36																		
-Y2- 15+82																		
-Y2- 15+82																		
-Y2- 15+82																		
-Y2- 15+82																		
-Y2- 16+30																		
-L- 40+00																		
-L- 40+00																		
-L- 39+80																		
SHEET TOTAL	3	3	2		2			1		1							761	

ABBREVIATIONS

C.B.	CATCH BASIN
N.D.I.	NARROW DROP INLET
D.I.	DROP INLET
G.D.I.	GRATED DROP INLET
G.D.I. (N.S.)	GRATED DROP INLET (NARROW SLOT)
J.B.	JUNCTION BOX
M.H.	MANHOLE
T.B.D.I.	TRAFFIC BEARING D.I.
T.B.J.B.	TRAFFIC BEARING J.B.

04-APR-2012 08:42
R:\Roadway\Proj\u4422_rdy_sum.dgn
$$$$USERNAME$$$$

4/04/06

COMPUTED BY: JBJ DATE: 9-30-2011
CHECKED BY: SKR DATE: 2-17-2012

PROJECT REFERENCE NO.	SHEET NO.
U-4422	3-E

NOTE: Invert Elevations are for Bid Purposes only and shall not be used for project construction stakeout.
See "Standard Specifications For Roads and Structures, Section 300-5".

STATE OF NORTH CAROLINA
DIVISION OF HIGHWAYS
SUB-REGIONAL & REGIONAL
LIST OF PIPES, ENDWALLS, ETC. (FOR PIPES 48" & UNDER)

Station / Size / Thickness or Gauge	Location (LT,RT, or CL)	Structure No. From	Structure No. To	Top Elevation	Invert Elevation	Invert Elevation	Slope Critical	Drainage Pipe (RCP, CSP, CAAP, HDPE, or PVC) 12"	15"	18"	24"	30"	36"	42"	48"	Do Not Use RCP	Do Not Use CSP	Do Not Use CAAP	Do Not Use HDPE
-L- 39+80	RT	0602	0605		196.6	197.7													
-L- 39+80	RT	0602	0603		196.6	198.5			12								X	X	
-L- 39+80	RT	0603		200.8	198.5														
-L- 41+00	LT	0604		201.8	198.8														
-L- 41+12	RT	0605		202.0	197.7														
-L- 41+12	RT	0605	0606		197.7	199.7			12								X	X	
-L- 41+12	RT	0605	0608		197.7	199.3													
-L- 41+12	RT	0606		202.0	199.7														
-L- 42+50	LT	0607		203.7	200.0														
-L- 42+50	LT	0607	0608		200.0	199.3													
-L- 42+50	LT	0607	0610		200.0	203.6													
-L- 42+45	RT	0608		203.6	199.3														
-L- 42+45	RT	0608	0609		199.3	201.7			16								X	X	
-L- 42+45	RT	0608	0611		199.3	200.0													
-L- 42+48	RT	0609		204.0	201.7														
-L- 44+20	LT	0610		206.6	203.6														
-L- 44+20	LT	0610	0612		203.6	206.5													
-L- 44+30	RT	0611		206.8	200.0														
-L- 44+30	RT	0611	0613		200.0	206.5													
-L- 45+50	LT	0612		209.5	206.5														
-L- 45+50	RT	0613		209.5	206.5														
-Y3- 15+65	RT	0614		214.9	211.8														
-Y3- 15+65	RT	0614	0615		211.8	211.9													
-Y3- 15+65	RT	0614	0616		211.8	209.6													
-Y3- 15+63	LT	0615		214.9	211.9														
-Y3- 16+65	RT	0616		213.3	209.6														
-Y3- 13+30	RT	0617		215.8	212.7														
-Y3- 13+30	RT	0617	0618		212.7	210.4													
-Y3- 13+30	RT	0617	0619		212.7	212.8													
-Y3- 11+53	RT	0618		214.7	210.4														
-Y3- 13+30	LT	0619		215.8	212.8														
-L- 50+10	LT	0620		217.6	215.4														
-L- 50+10	LT	0620	0622		215.4	215.1			80								X	X	
-L- 50+08	RT	0621		217.3	215.1														
-L- 50+08	RT	0621	0623		215.1	214.7			112								X	X	
-L- 50+90	LT	0622		218.0	215.1														
-L- 50+90	LT	0622	0624		215.1	215.0			56								X	X	
-L- 51+25	RT	0623		217.8	214.7														
-L- 51+25	RT	0623	0626		214.7	214.5			60								X	X	
-L- 51+45	LT	0624		217.9	215.0														
-L- 51+45	LT	0624	0625		215.0	214.9			12								X	X	
SHEET TOTAL									360										

Station	C.S. Pipe 12" (.064)	15" (.064)	18" (.064)	24" (.064)	36" (.079)	42" (.109)	48" (.109)	R.C. Pipe (Class III) 15"	18"	24"	30"	36"	42"	48"	R.C. Pipe (Class IV) 12"	15"	18"	24"	30"	36"	42"	48"	**" R. C. Pipe (Class V)	**" R. C. Pipe Culverts, Contractor Design Pipe	**" R. C. Pipe Culverts, Contractor Design Pipe	15" Side Drain Pipe	18" Side Drain Pipe	Endwalls Std. 838.01, Std. 838.11 or Std. 838.80 (Unless Noted Otherwise) Cu. Yds. R.C.P.	C.S.P.
-L- 39+80																			128										
-L- 39+80																													
-L- 39+80																													
-L- 41+00																													
-L- 41+12																													
-L- 41+12																													
-L- 41+12																			132										
-L- 41+12																													
-L- 42+50																													
-L- 42+50																		68											
-L- 42+50																168													
-L- 42+45																													
-L- 42+45																													
-L- 42+45																		184											
-L- 42+48																													
-L- 44+20																													
-L- 44+20																128													
-L- 44+30																													
-L- 44+30																120													
-L- 45+50																													
-L- 45+50																													
-Y3- 15+65																													
-Y3- 15+65																40													
-Y3- 15+65																100													
-Y3- 15+63																													
-Y3- 16+65																													
-Y3- 13+30																													
-Y3- 13+30																172													
-Y3- 13+30																40													
-Y3- 11+53																													
-Y3- 13+30																													
-L- 50+10																													
-L- 50+10																													
-L- 50+08																													
-L- 50+08																													
-L- 50+90																													
-L- 50+90																													
-L- 51+25																													
-L- 51+25																													
-L- 51+45																													
-L- 51+45																													
SHEET TOTAL																768		252	260										

Station	Quantities for Drainage Structures: Per Each (0' thru 5.0')	*Lin. Ft. A: 5.0' thru 10.0'	*Lin. Ft. B: 10.0' and above	C.B. Std. 840.01 or Std. 840.02	Frame, Grates and Hood Standard 840.03, Type of Grate E	F	G	Concrete Transitional Section: Catch Basin	Catch Basin (See Detail 2-K)	Drop Inlet	D.I. Std. 840.14 or Std. 840.15	D.I. Frame & Grate Std. 840.16	G.D.I. Type "A" Std. 840.17 or 840.26	G.D.I. Type "B" Std. 840.18 or 840.27	G.D.I. (N.S.) Frame with Two Grates Std. 840.24	G.D.I. (N.S.) Frame with Two Grates Std. 840.29	J.B. Std. 840.31 or 840.32	T.B.J.B. Std. 840.34	T.B.D.I. Std. 840.35	M.H. Frame & Cover Std. 840.54	Adjustment of CB	Adjustment of Manhole	Adjustment of JB W /MH	Conc. Collars Cl. "B" C.Y. Std 840.72	Flowable Fill (Pipe) C.Y.	Conc. & Brick Pipe Plug, C.Y. Std. 840.71	Pipe Removal Lin.Ft.	Remarks
-L- 39+80																												
-L- 39+80																												
-L- 39+80	1										1	1																
-L- 41+00	1			1		1																						
-L- 41+12	1			1			1																					
-L- 41+12																												
-L- 41+12																												
-L- 41+12	1										1	1																
-L- 42+50	1			1		1																						
-L- 42+50																												
-L- 42+50																												
-L- 42+45	1			1			1																					
-L- 42+45																												
-L- 42+45																												
-L- 42+48	1										1	1																
-L- 44+20	1			1		1																						
-L- 44+20																												
-L- 44+30	1	1.8		1			1																		1.64	0.13	22	REMOVE 2 CB'S & SAN/MANHOLE
-L- 44+30																												
-L- 45+50	1			1		1																						
-L- 45+50	1			1			1																					
-Y3- 15+65	1			1			1																					
-Y3- 15+65																												
-Y3- 15+65																												
-Y3- 15+63	1			1			1																					
-Y3- 16+65																						1						
-Y3- 13+30	1			1			1																					
-Y3- 13+30																												
-Y3- 13+30																												
-Y3- 11+53																					1							
-Y3- 13+30	1			1			1																					
-L- 50+10	1										1	1																
-L- 50+10																												
-L- 50+08	1										1	1																
-L- 50+08																												
-L- 50+90	1										1	1																
-L- 50+90																												
-L- 51+25	1										1	1																
-L- 51+25																												
-L- 51+45	1										1	1																
-L- 51+45																												
SHEET TOTAL	20	1.8		12		4	8				8	8									1	1			1.64	0.13	22	

* TOTAL L.F. FOR PAY QUANTITY SHALL BE COL. 'A' + (1.3 X COL. 'B')

ABBREVIATIONS

C.B.	CATCH BASIN
N.D.I.	NARROW DROP INLET
D.I.	DROP INLET
G.D.I.	GRATED DROP INLET
G.D.I. (N.S.)	GRATED DROP INLET (NARROW SLOT)
J.B.	JUNCTION BOX
M.H.	MANHOLE
T.B.D.I.	TRAFFIC BEARING D.I.
T.B.J.B.	TRAFFIC BEARING J.B.

04-APR-2012 08:42
R:\Roadway\Proj\u4422_rdy_sum.dgn
$$$$USERNAME$$$$

COMPUTED BY: JBJ	DATE: 9-30-2011
CHECKED BY: SKR	DATE: 2-17-2012

PROJECT REFERENCE NO.	SHEET NO.
U-4422	3-F

NOTE: Invert Elevations are for Bid Purposes only and shall not be used for project construction stakeout. See "Standard Specifications For Roads and Structures, Section 300-5".

STATE OF NORTH CAROLINA
DIVISION OF HIGHWAYS
SUB-REGIONAL & REGIONAL
LIST OF PIPES, ENDWALLS, ETC. (FOR PIPES 48" & UNDER)

STATION / SIZE / THICKNESS OR GAUGE	LOCATION (LT,RT, OR CL)	STRUCTURE NO. FROM	STRUCTURE NO. TO	TOP ELEVATION	INVERT ELEVATION	INVERT ELEVATION	SLOPE CRITICAL	DRAINAGE PIPE (RCP, CSP, CAAP, HDPE, or PVC) 12"	15"	18"	24"	30"	36"	42"	48"	DO NOT USE RCP	DO NOT USE CSP	DO NOT USE CAAP	DO NOT USE HDPE
-L- 51+45	LT	0625		218.1	214.9														
-L- 51+45	LT	0625	0630		214.9	214.6													
-L- 51+85	RT	0626		217.6	214.5														
-L- 51+85	RT	0626	0627		214.5	214.4			12								X	X	
-L- 51+85	RT	0627		218.0	214.4														
-L- 51+85	RT	0627	0631		214.4	214.0													
-L- 52+35	RT	0628		217.5	215.3														
-L- 52+35	RT	0628	0632		215.3	215.1			64								X	X	
-L- 52+60	LT	0629		217.5	215.3														
-L- 52+60	LT	0629	0630		215.3	214.6			12								X	X	
-L- 52+60	LT	0630		217.7	214.4														
-L- 52+60	LT	0630	0702		214.4	213.5													
-L- 53+00	RT	0631		217.5	214.0														
-L- 53+00	RT	0631	0632		214.0	215.1			16								X	X	
-L- 53+00	RT	0631	0703		214.0	213.7													
-L- 53+00	RT	0632		217.4	215.1														
-Y3- 16+64	RT	0633		213.3	209.6														
-L- 53+83	LT	0701		217.7	208.0														
-L- 53+83	LT	0701	0702		208.0	208.1							12				X	X	
-L- 53+83	LT	0702		217.2	208.1														
-L- 53+83	LT	0702	0703		208.1	208.4													
-L- 53+83	LT	0702	0708		214.2	214.5													
-L- 53+83	RT	0703		217.2	208.4														
-L- 53+83	RT	0703	0704		208.4	208.5							12				X	X	
-L- 53+83	RT	0703	0705		213.7	214.5													
-L- 53+83	RT	0704		217.5	208.5														
-L- 54+60	RT	0705		217.5	214.5														
-L- 54+60	RT	0705	0706		214.5	215.0			16								X	X	
-L- 54+60	RT	0706		217.2	215.0														
-L- 54+60	RT	0706	0707		215.0	215.3			80								X	X	
-L- 55+40	RT	0707		217.5	215.3														
-L- 54+65	LT	0708		217.5	214.5														
-L- 54+65	LT	0708	0709		214.5	215.3			112								X	X	
-L- 55+78	LT	0709		217.5	215.3														
-L- 56+50	LT	0710		217.3	215.1														
-L- 56+50	LT	0710	0711		215.1	214.9			36								X	X	
-L- 56+90	LT	0711		217.2	214.9														
-L- 56+90	LT	0711	0712		214.9	214.3			16								X	X	
-L- 56+90	LT	0712		217.3	214.3														
-L- 56+90	LT	0712	0713		214.3	215.1													
-L- 56+90	LT	0712	0726		214.3	213.4													
-L- 56+65	RT	0713		218.1	215.1														
-L- 56+65	RT	0713	0714		215.1	215.2			20								X	X	
SHEET TOTAL									384				24						

STATION	C.S. PIPE 12" (.064)	15" (.064)	18" (.064)	24" (.064)	36" (.079)	42" (.109)	48" (.109)	R.C. PIPE (CLASS III) 15"	18"	24"	30"	36"	42"	48"	R.C. PIPE (CLASS IV) 12"	15"	18"	24"	30"	36"	42"	48"	**" R. C. PIPE (CLASS V)	**" R. C. PIPE CULVERTS, CONTRACTOR DESIGN PIPE	**" R. C. PIPE CULVERTS, CONTRACTOR DESIGN PIPE	15" SIDE DRAIN PIPE	18" SIDE DRAIN PIPE
-L- 51+45																											
-L- 51+45																112											
-L- 51+85																											
-L- 51+85																											
-L- 51+85																											
-L- 51+85																112											
-L- 52+35																											
-L- 52+35																											
-L- 52+60																											
-L- 52+60																											
-L- 52+60																											
-L- 52+60																	124										
-L- 53+00																											
-L- 53+00																											
-L- 53+00																84											
-L- 53+00																											
-Y3- 16+64																											
-L- 53+83																											
-L- 53+83																											
-L- 53+83																											
-L- 53+83																					68						
-L- 53+83																80											
-L- 53+83																											
-L- 53+83																											
-L- 53+83																76											
-L- 53+83																											
-L- 54+60																											
-L- 54+60																											
-L- 54+60																											
-L- 54+60																											
-L- 55+40																											
-L- 54+65																											
-L- 54+65																											
-L- 55+78																											
-L- 56+50																											
-L- 56+50																											
-L- 56+90																											
-L- 56+90																											
-L- 56+90																											
-L- 56+90																72											
-L- 56+90																164											
-L- 56+65																											
-L- 56+65																											
SHEET TOTAL																700	124				68						

STATION	ENDWALLS STD. 838.01, STD. 838.11 OR STD. 838.80 (UNLESS NOTED OTHERWISE) CU. YDS. R.C.P.	C.S.P.	QUANTITIES FOR DRAINAGE STRUCTURES PER EACH (0' THRU 5.0')	* TOTAL L.F. FOR PAY QUANTITY SHALL BE COL. 'A' + (1.3 X COL.'B') LIN. *FT. A 5.0' THRU 10.0'	B 10.0' AND ABOVE	C.B. STD. 840.01 OR STD. 840.02	FRAME, GRATES AND HOOD STANDARD 840.03 TYPE OF GRATE E	F	G	CONCRETE TRANSITIONAL SECTION CATCH BASIN	CATCH BASIN (SEE DETAIL 2-K)	DROP INLET	D.I. STD. 840.14 OR STD. 840.15	D.I. FRAME & GRATE STD. 840.16	G.D.I. TYPE "A" STD. 840.17 OR 840.26	G.D.I. TYPE "B" STD. 840.18 OR 840.27	G.D.I. (N.S.) FRAME WITH TWO GRATES STD. 840.24	G.D.I. (N.S.) FRAME WITH TWO GRATES STD. 840.29	J.B. STD. 840.31 OR 840.32	T.B.J.B. STD. 840.34	T.B.D.I. STD. 840.35	M.H. FRAME & COVER STD. 840.54	ADJUSTMENT OF CB	ADJUSTMENT OF MANHOLE	ADJUSTMENT OF JB W /MH	CONC. COLLARS CL. "B" C.Y. STD 840.72	FLOWABLE FILL (PIPE) C.Y.	CONC. & BRICK PIPE PLUG, C.Y. STD. 840.71	PIPE REMOVAL LIN.FT.	REMARKS
-L- 51+45			1			1			1																					
-L- 51+45																														
-L- 51+85			1										1	1																
-L- 51+85																														
-L- 51+85			1			1		1																						
-L- 51+85																														
-L- 52+35			1										1	1																
-L- 52+35																														
-L- 52+60			1										1	1																
-L- 52+60																														
-L- 52+60			1			1			1																					
-L- 52+60																														
-L- 53+00			1			1		1																						
-L- 53+00																														
-L- 53+00																														
-L- 53+00			1										1	1																
-Y3- 16+64																							1							
-L- 53+83			1	4.7												1	1													2 GI, EXTRA DEPTH
-L- 53+83																														REM. 30" PIPE, REM. CB
-L- 53+83			1	4.1		1	1																							EXTRA DEPTH
-L- 53+83																														REMOVE 24" PIPE
-L- 53+83																														
-L- 53+83			1	3.8		1	1																							EXTRA DEPTH
-L- 53+83																														REM. 24" PIPE, REM. CB
-L- 53+83																														
-L- 53+83			1	4.0												1	1													2GI, EXTRA DEPTH
-L- 54+60			1			1			1																					
-L- 54+60																														
-L- 54+60			1										1	1																
-L- 54+60																														
-L- 55+40			1										1	1																
-L- 54+65			1			1		1																						
-L- 54+65																														
-L- 55+78			1										1	1																
-L- 56+50			1										1	1																
-L- 56+50																														
-L- 56+90			1										1	1																
-L- 56+90																														
-L- 56+90			1			1			1																					
-L- 56+90																														
-L- 56+90																														
-L- 56+65			1			1		1																						
-L- 56+65																														
SHEET TOTAL			21	16.6		10	2	4	4				9	9		2	2						1							

ABBREVIATIONS

C.B.	CATCH BASIN
N.D.I.	NARROW DROP INLET
D.I.	DROP INLET
G.D.I.	GRATED DROP INLET
G.D.I. (N.S.)	GRATED DROP INLET (NARROW SLOT)
J.B.	JUNCTION BOX
M.H.	MANHOLE
T.B.D.I.	TRAFFIC BEARING D.I.
T.B.J.B.	TRAFFIC BEARING J.B.

4/04/06

04-APR-2012 08:42
R:\Roadway\Proj\u4422_rdy_sum.dgn
$$$$USERNAME$$$$

COMPUTED BY: JBJ	DATE: 9-30-2011
CHECKED BY: SKR	DATE: 2-17-2012

PROJECT REFERENCE NO.	SHEET NO.
U-4422	3-G

STATE OF NORTH CAROLINA
DIVISION OF HIGHWAYS

SUB-REGIONAL & REGIONAL
LIST OF PIPES, ENDWALLS, ETC. (FOR PIPES 48" & UNDER)

NOTE: Invert Elevations are for Bid Purposes only and shall not be used for project construction stakeout. See "Standard Specifications For Roads and Structures, Section 300-5".

ABBREVIATIONS

- C.B. CATCH BASIN
- N.D.I. NARROW DROP INLET
- D.I. DROP INLET
- G.D.I. GRATED DROP INLET
- G.D.I. (N.S.) GRATED DROP INLET (NARROW SLOT)
- J.B. JUNCTION BOX
- M.H. MANHOLE
- T.B.D.I. TRAFFIC BEARING D.I.
- T.B.J.B. TRAFFIC BEARING J.B.

STATION / SIZE / THICKNESS OR GAUGE	LOCATION (LT,RT, OR CL)	STRUCTURE NO. FROM	STRUCTURE NO. TO	TOP ELEVATION	INVERT ELEVATION	INVERT ELEVATION	SLOPE CRITICAL	DRAINAGE PIPE (RCP, CSP, CAAP, HDPE, or PVC) 12"	15"	18"	24"	30"	36"	42"	48"	DO NOT USE RCP	DO NOT USE CSP	DO NOT USE CAAP	DO NOT USE HDPE
-L- 56+70	RT	0714		217.4	215.2														
-L- 57+90	RT	0715		217.8	215.6														
-L- 57+90	RT	0715	0719		215.6	213.4													
-Y4- 11+55	RT	0716		216.0	213.0														
-Y4- 11+55	RT	0716	0717		213.0	212.9													
-Y4- 11+55	LT	0717		216.0	212.9														
-Y4- 11+55	LT	0717	0719		212.9	211.3													
-Y4- 10+54	LT	0718		216.3	214.1														
-Y4- 10+54	LT	0718	0719		214.1	213.4			20								X	X	
-Y4- 10+50	LT	0719		217.5	211.0														
-Y4- 10+50	LT	0719	0724		211.0	210.8													
-L- 58+15	LT	0720		216.4	214.2														
-L- 58+15	LT	0720	0721		214.2	213.9			40								X	X	
-L- 58+60	LT	0721		216.1	213.9														
-L- 58+60	LT	0721	0726		213.9	213.4			12								X	X	
-L- 59+20	LT	0722		216.0	213.8														
-L- 59+20	LT	0722	0723		213.8	212.9			16								X	X	
-L- 59+30	LT	0723		215.9	210.7														
-L- 59+30	LT	0723	0724		210.7	210.8													
-L- 59+30	LT	0723	0726		210.7	213.4													
-L- 59+30	LT	0723	0727		210.7	210.5													
-L- 59+25	RT	0724		217.2	210.8														
-L- 60+00	LT	0725		215.6	213.4														
-L- 60+00	LT	0725	0727		213.4	212.3			12								X	X	
-L- 60+00	LT	0726		216.4	213.4														
-L- 60+00	LT	0727		215.4	210.5														
-L- 60+00	LT	0727	0730	210.5	210.8														
-L- 60+80	LT	0728		214.8	212.6														
-L- 60+80	LT	0728	0729		212.6	212.5			36								X	X	
-L- 61+21	LT	0729		214.7	212.5														
-L- 61+21	LT	0729	0730		212.5	212.2			16								X	X	
-L- 61+21	LT	0730		215.2	210.2														
-L- 61+21	LT	0730	0745		210.2	209.2													
-L- 60+50	RT	0731		216.5	213.3														
-L- 60+50	CL	0731	0732		213.3	213.0													
-L- 61+50	CL	0732		216.9	210.5														
-L- 61+50	CL	0732	0736		210.5	210.6													
-L- 60+25	RT	0733		216.7	214.5														
-L- 60+25	RT	0733	0734		214.5	214.1			72								X	X	
-L- 60+97	RT	0734		216.5	214.1														
-L- 60+97	RT	0734	0736		214.1	212.3			48								X	X	
-L- 61+45	RT	0735		216.5	210.7														
SHEET TOTAL									272										

STATION	C.S. PIPE 12" .064	15" .064	18" .064	24" .064	36" .079	42" .109	48" .109	R.C. PIPE (CLASS III) 15"	18"	24"	30"	36"	42"	48"	R.C. PIPE (CLASS IV) 12"	15"	18"	24"	30"	36"	42"	48"	**" R. C. PIPE (CLASS V)	**" R. C. PIPE CULVERTS, CONTRACTOR DESIGN PIPE	**" R. C. PIPE CULVERTS, CONTRACTOR DESIGN PIPE	15" SIDE DRAIN PIPE	18" SIDE DRAIN PIPE
-L- 56+70																											
-L- 57+90																											
-L- 57+90																136											
-Y4- 11+55																											
-Y4- 11+55																28											
-Y4- 11+55																											
-Y4- 11+55																				100							
-Y4- 10+54																											
-Y4- 10+54																											
-Y4- 10+50																											
-Y4- 10+50																				44							
-L- 58+15																											
-L- 58+15																											
-L- 58+60																											
-L- 58+60																											
-L- 59+20																											
-L- 59+20																											
-L- 59+30																											
-L- 59+30																				40							
-L- 59+30																68											
-L- 59+30																				64							
-L- 59+25																											
-L- 60+00																											
-L- 60+00																											
-L- 60+00																											
-L- 60+00																											
-L- 60+00																											
-L- 60+80																											
-L- 60+80																											
-L- 61+21																											
-L- 61+21																											
-L- 61+21																											
-L- 61+21																				36							
-L- 60+50																											
-L- 60+50																100											
-L- 61+50																											
-L- 61+50																				32							
-L- 60+25																											
-L- 60+25																											
-L- 60+97																											
-L- 60+97																											
-L- 61+45																											
SHEET TOTAL																332				316							

STATION	ENDWALLS STD. 838.01, STD. 838.11 OR STD. 838.80 (UNLESS NOTED OTHERWISE) CU. YDS. R.C.P.	C.S.P.	QUANTITIES FOR DRAINAGE STRUCTURES PER EACH (0' THRU 5.0')	* TOTAL L.F. FOR PAY QUANTITY SHALL BE COL. 'A' + (1.3 X COL.'B') LIN. *FT. A 5.0' THRU 10.0'	B 10.0' AND ABOVE	C.B. STD. 840.01 OR STD. 840.02	FRAME, GRATES AND HOOD STANDARD 840.03 TYPE OF GRATE E	F	G	CONCRETE TRANSITIONAL SECTION CATCH BASIN	CATCH BASIN (SEE DETAIL 2-K)	DROP INLET	D.I. STD. 840.14 OR STD. 840.15	D.I. FRAME & GRATE STD. 840.16	G.D.I. TYPE "A" STD. 840.17 OR 840.26	G.D.I. TYPE "B" STD. 840.18 OR 840.27	G.D.I. (N.S.) FRAME WITH TWO GRATES STD. 840.24	G.D.I. (N.S.) FRAME WITH TWO GRATES STD. 840.29	J.B. STD. 840.31 OR 840.32	T.B.J.B. STD. 840.34	T.B.D.I. STD. 840.35	M.H. FRAME & COVER STD. 840.54	ADJUSTMENT OF CB	ADJUSTMENT OF MANHOLE	ADJUSTMENT OF JB W /MH	CONC. COLLARS CL. "B" C.Y. STD 840.72	FLOWABLE FILL (PIPE) C.Y.	CONC. & BRICK PIPE PLUG, C.Y. STD. 840.71	PIPE REMOVAL LIN.FT.	REMARKS
-L- 56+70			1										1	1																
-L- 57+90			1										1	1																
-L- 57+90																														
-Y4- 11+55			1			1	1																							
-Y4- 11+55																														
-Y4- 11+55			1			1	1																							
-Y4- 11+55																														REMOVE 24" PIPE
-Y4- 10+54			1										1	1																
-Y4- 10+54																														
-Y4- 10+50			1	1.5																1		1							26	EXTRA DEPTH, REM. 2 CB'S
-Y4- 10+50																														REMOVE 24" PIPE
-L- 58+15			1										1	1																
-L- 58+15																														
-L- 58+60			1										1	1																
-L- 58+60																														
-L- 59+20			1										1	1																
-L- 59+20																														
-L- 59+30			1	0.2		1			1																					EXTRA DEPTH
-L- 59+30																														
-L- 59+30																														
-L- 59+30																													308	REMOVE DI
-L- 59+25			1	1.4								1				1		1												2GI EXTRA DEPTH
-L- 60+00			1										1	1																
-L- 60+00																														
-L- 60+00			1			1			1																					
-L- 60+00			1			1	1																							
-L- 60+00																														
-L- 60+80			1										1	1																
-L- 60+80																														
-L- 61+21			1										1	1																
-L- 61+21																														
-L- 61+21			1			1			1																				64	REMOVE DI
-L- 61+21																														
-L- 60+50			1									1	1	1																
-L- 60+50																														
-L- 61+50			1	1.4															1			1								EXTRA DEPTH
-L- 61+50																														
-L- 60+25			1										1	1																
-L- 60+25																														
-L- 60+97			1										1	1																
-L- 60+97																													47	REMOVE DI
-L- 61+45			1	0.8												1	1													2GI, EXTRA DEPTH
SHEET TOTAL			22	5.3		6	3		3			2	12	12		2	1	1	1	1		2							445	

4/04/06

04-APR-2012 08:41
R:\Roadway\Proj\u4422_rdy_sum.dgn
$$$$USERNAME$$$$

4/04/06

COMPUTED BY: JBJ DATE: 9-30-2011
CHECKED BY: SKR DATE: 2-17-2012

PROJECT REFERENCE NO.	SHEET NO.
U-4422	3-H

STATE OF NORTH CAROLINA
DIVISION OF HIGHWAYS

SUB-REGIONAL & REGIONAL
LIST OF PIPES, ENDWALLS, ETC. (FOR PIPES 48" & UNDER)

NOTE: Invert Elevations are for Bid Purposes only and shall not be used for project construction stakeout. See "Standard Specifications For Roads and Structures, Section 300-5".

STATION / SIZE / THICKNESS OR GAUGE	LOCATION (LT,RT, OR CL)	STRUCTURE NO. FROM	STRUCTURE NO. TO	TOP ELEVATION	INVERT ELEVATION	INVERT ELEVATION	SLOPE CRITICAL	DRAINAGE PIPE (RCP, CSP, CAAP, HDPE, or PVC)												C.S. PIPE						
								12"	15"	18"	24"	30"	36"	42"	48"	DO NOT USE RCP	DO NOT USE CSP	DO NOT USE CAAP	DO NOT USE HDPE	12" .064	15" .064	18" .064	24" .064	36" .079	42" .109	48" .109
-L- 61+45	RT	0736		215.3	210.6																					
-L- 61+45	RT	0736	0735		210.6	210.7							28				X	X								
-L- 61+45	RT	0736	0737		210.6	211.1																				
-DR- 10+90	RT	0737		214.5	211.1																					
-DR- 10+90	RT	0737	0743		211.5	211.7																				
-DR- 11+35	RT	0739		214.7	209.8																					
-DR- 11+35	RT	0739	0738		209.8	209.6																				
-DR- 11+35	RT	0739	0740		209.8	211.6																				
-DR- 11+35	LT	0740		214.9	211.6																					
-DR- 11+35	LT	0740	0741		211.6	212.7																				
-DR- 11+35	LT	0740	0754		211.6	213.6																				
-DR- 12+77	RT	0741		215.7	212.7																					
-DR- 12+08	RT	0742		216.0	212.3																					
-DR- 10+88	LT	0743		214.7	211.5																					
-DR- 10+88	LT	0743	0744		211.7	213.1																				
-L- 63+00	RT	0744		216.1	213.1																					
-L- 63+00	RT	0744	0753		213.1	213.7																				
-L- 61+57	LT	0745		215.1	209.2																					
-L- 61+57	LT	0745	0732		209.2	210.5																				
-L- 61+57	RT	0745	0746		209.2	208.4																				
-Y5- 13+17	LT	0746		214.3	208.4																					
-Y5- 13+17	LT	0746	0747		208.4	210.9																				
-Y5- 13+17	LT	0747		214.1	210.9																					
-Y5- 13+17	LT	0747	0749		210.9	212.8				84							X	X								
-L- 63+48	LT	0748		215.5	213.3																					
-L- 63+00	LT	0749		216.1	212.8																					
-L- 63+00	LT	0749	0748		213.1	213.3			48								X	X								
-L- 63+00	LT	0749	0750		212.8	213.7				84							X	X								
-L- 63+85	LT	0750		217.0	213.7																					
-L- 63+85	LT	0750	0753		213.7	213.9																				
-L- 63+85	LT	0750	0751		214.0	214.5			56								X	X								
-L- 64+35	LT	0751		216.7	214.5																					
-L- 64+35	LT	0751	0752		214.5	215.4			64								X	X								
-L- 65+00	LT	0752		217.6	215.4																					
-L- 63+68	RT	0753		216.9	213.7																					
-DR- 14+50	LT	0754		217.3	213.6																					
-DR- 14+50	LT	0754	0757		213.6	213.7																				
-DR- 14+50	LT	0754	0755		213.6	215.3																				
-DR- 14+66	RT	0755		217.5	215.3																					
NOT USED		0756																								
-DR- 14+88	LT	0757		218.3	211.8																					
-DR- 14+88	LT	0757	0758		213.5	214.0																				
-DR- 15+35	LT	0758		218.0	214.0																					
-DR- 15+35	LT	0758	0759		214.0	214.1																				
-DR- 15+74	LT	0759		218.4	214.1																					
-DR- 15+74	LT	0759	0834		214.1	214.9																				
-L- 66+30	LT	0801		217.7	215.4																					
-L- 66+30	LT	0801	0802		215.4	215.3			36								X	X								
SHEET TOTAL									204	168			28													

STATION	FROM	TO	R.C. PIPE (CLASS III)							R.C. PIPE (CLASS IV)								**" R. C. PIPE (CLASS V)	**" R. C. PIPE CULVERTS, CONTRACTOR DESIGN PIPE	**" R. C. PIPE CULVERTS, CONTRACTOR DESIGN PIPE	15" SIDE DRAIN PIPE	18" SIDE DRAIN PIPE	ENDWALLS STD. 838.01, STD. 838.11 OR STD. 838.80 (UNLESS NOTED OTHERWISE) CU. YDS.	
			15"	18"	24"	30"	36"	42"	48"	12"	15"	18"	24"	30"	36"	42"	48"						R.C.P.	C.S.P.
-L- 61+45	0736																							
-L- 61+45	0736	0735																						
-L- 61+45	0736	0737										76												
-DR- 10+90	0737																							
-DR- 10+90	0737	0743									56													
-DR- 11+35	0739																							
-DR- 11+35	0739	0738										52												
-DR- 11+35	0739	0740										36												
-DR- 11+35	0740																							
-DR- 11+35	0740	0741									148													
-DR- 11+35	0740	0754										88												
-DR- 12+77	0741																							
-DR- 12+08	0742																							
-DR- 10+88	0743																							
-DR- 10+88	0743	0744									56													
-L- 63+00	0744																							
-L- 63+00	0744	0753									68													
-L- 61+57	0745																							
-L- 61+57	0745	0732													52									
-L- 61+57	0745	0746													108									
-Y5- 13+17	0746																							
-Y5- 13+17	0746	0747										12												
-Y5- 13+17	0747																							
-Y5- 13+17	0747	0749																						
-L- 63+48	0748																							
-L- 63+00	0749																							
-L- 63+00	0749	0748																						
-L- 63+00	0749	0750																						
-L- 63+85	0750																							
-L- 63+85	0750	0753										64												
-L- 63+85	0750	0751																						
-L- 64+35	0751																							
-L- 64+35	0751	0752																						
-L- 65+00	0752																							
-L- 63+68	0753																							
-DR- 14+50	0754																							
-DR- 14+50	0754	0757										40												
-DR- 14+50	0754	0755	52																					
-DR- 14+66	0755																							
NOT USED	0756																							
-DR- 14+88	0757																							
-DR- 14+88	0757	0758										56												
-DR- 15+35	0758																							
-DR- 15+35	0758	0759										40												
-DR- 15+74	0759																							
-DR- 15+74	0759	0834									264													
-L- 66+30	0801																							
-L- 66+30	0801	0802																						
SHEET TOTAL			52								592	464			160									

STATION	FROM	TO	QUANTITIES FOR DRAINAGE STRUCTURES PER EACH (0' THRU 5.0')	* TOTAL L.F. FOR PAY QUANTITY SHALL BE COL. 'A' + (1.3 X COL.'B') LIN. *FT. A 5.0' THRU 10.0'	B 10.0' AND ABOVE	C.B. STD. 840.01 OR STD. 840.02	FRAME, GRATES AND HOOD STANDARD 840.03 TYPE OF GRATE E	F	G	CONCRETE TRANSITIONAL SECTION CATCH BASIN	CATCH BASIN (SEE DETAIL 2-K)	DROP INLET	D.I. STD. 840.14 OR STD. 840.15	D.I. FRAME & GRATE STD. 840.16	G.D.I. TYPE "A" STD. 840.17 OR 840.26	G.D.I. TYPE "B" STD. 840.18 OR 840.27	G.D.I. (N.S.) FRAME WITH TWO GRATES STD. 840.24	G.D.I. (N.S.) FRAME WITH TWO GRATES STD. 840.29	J.B. STD. 840.31 OR 840.32	T.B.J.B. STD. 840.34	T.B.D.I. STD. 840.35	M.H. FRAME & COVER STD. 840.54	ADJUSTMENT OF CB	ADJUSTMENT OF MANHOLE	ADJUSTMENT OF JB W /MH	CONC. COLLARS CL. "B" C.Y. STD 840.72	FLOWABLE FILL (PIPE) C.Y.	CONC. & BRICK PIPE PLUG, C.Y. STD. 840.71	PIPE REMOVAL LIN.FT.	REMARKS
-L- 61+45	0736		1			1		1																						
-L- 61+45	0736	0735																												
-L- 61+45	0736	0737																												
-DR- 10+90	0737		1			1	1																						91	REMOVE DI
-DR- 10+90	0737	0743																												
-DR- 11+35	0739		1			1		1																						
-DR- 11+35	0739	0738																												
-DR- 11+35	0739	0740																												
-DR- 11+35	0740		1			1		1																						
-DR- 11+35	0740	0741																												
-DR- 11+35	0740	0754																												
-DR- 12+77	0741		1			1			1																					
-DR- 12+08	0742		1																	1										USE SLAB LID, REMOVE DI
-DR- 10+88	0743		1			1	1																							
-DR- 10+88	0743	0744																												
-L- 63+00	0744		1			1			1																					
-L- 63+00	0744	0753																												
-L- 61+57	0745		1	0.9		1			1																					EXTRA DEPTH
-L- 61+57	0745	0732																												
-L- 61+57	0745	0746																												
-Y5- 13+17	0746		1	0.9																1		1								EXTRA DEPTH
-Y5- 13+17	0746	0747																												
-Y5- 13+17	0747		1			1		1																						
-Y5- 13+17	0747	0749																											70	
-L- 63+48	0748		1										1	1																
-L- 63+00	0749		1			1		1																					34	REMOVE 2 STORM SEWERS
-L- 63+00	0749	0748																												
-L- 63+00	0749	0750																												
-L- 63+85	0750		1			1		1																						
-L- 63+85	0750	0753																												
-L- 63+85	0750	0751																												
-L- 64+35	0751		1										1	1																
-L- 64+35	0751	0752																												
-L- 65+00	0752		1										1	1																
-L- 63+68	0753		1			1			1																					
-DR- 14+50	0754		1			1		1																						
-DR- 14+50	0754	0757																												
-DR- 14+50	0754	0755																												
-DR- 14+66	0755		1										1	1																
NOT USED	0756																													
-DR- 14+88	0757		1	1.5		1		1																						EXTRA DEPTH
-DR- 14+88	0757	0758																												
-DR- 15+35	0758		1			1		1																						
-DR- 15+35	0758	0759																												
-DR- 15+74	0759		1			1		1																						
-DR- 15+74	0759	0834																												
-L- 66+30	0801		1										1	1																
-L- 66+30	0801	0802																												
SHEET TOTAL			23	3.3		16	2	10	4				5	5						2		1							195	

ABBREVIATIONS

C.B.	CATCH BASIN
N.D.I.	NARROW DROP INLET
D.I.	DROP INLET
G.D.I.	GRATED DROP INLET
G.D.I. (N.S.)	GRATED DROP INLET (NARROW SLOT)
J.B.	JUNCTION BOX
M.H.	MANHOLE
T.B.D.I.	TRAFFIC BEARING D.I.
T.B.J.B.	TRAFFIC BEARING J.B.

04-APR-2012 08:41
R:\Roadway\Proj\u4422_rdy_sum.dgn
$$$$USERNAME$$$$

4/04/06

COMPUTED BY: JBJ DATE: 9-30-2011
CHECKED BY: SKR DATE: 2-17-2012

PROJECT REFERENCE NO.	SHEET NO.
U-4422	3-I

NOTE: Invert Elevations are for Bid Purposes only and shall not be used for project construction stakeout.
See "Standard Specifications For Roads and Structures, Section 300-5".

STATE OF NORTH CAROLINA
DIVISION OF HIGHWAYS

SUB-REGIONAL & REGIONAL
LIST OF PIPES, ENDWALLS, ETC. (FOR PIPES 48" & UNDER)

STATION	LOCATION (LT,RT, OR CL)	STRUCTURE NO. FROM	STRUCTURE NO. TO	TOP ELEVATION	INVERT ELEVATION	INVERT ELEVATION	SLOPE CRITICAL	DRAINAGE PIPE (RCP, CSP, CAAP, HDPE, or PVC) 12"	15"	18"	24"	30"	36"	42"	48"	DO NOT USE RCP	DO NOT USE CSP	DO NOT USE CAAP	DO NOT USE HDPE
-L- 66+69	LT	0802		217.7	215.3														
-L- 66+69	LT	0802	0804		215.3	214.3			76								X	X	
-L- 67+45	LT	0803		216.8	214.5														
-L- 67+45	LT	0803	0804		214.5	214.3			16								X	X	
-L- 67+42	LT	0804		217.3	214.3														
-L- 67+42	LT	0804	0805		214.3	214.0													
-L- 68+05	LT	0805		217.0	214.0														
-L- 68+05	LT	0805	0807		214.0	213.8													
-L- 68+50	LT	0806		216.4	214.1														
-L- 68+50	LT	0807		217.2	213.8														
-L- 68+50	LT	0807	0806		213.8	214.1			16								X	X	
-L- 68+50	LT	0807	0808		213.8	211.8													
-L- 70+25	LT	0808		218.6	211.8														
-L- 70+25	LT	0808	0809		211.8	211.5							16				X	X	
-L- 70+25	LT	0808	0811		211.8	216.0													
-L- 70+27	LT	0809		216.0	211.5														
-L- 70+27	LT	0809	0810		211.5	209.5							132				X	X	
-L- 70+27	LT	0810		218.4	209.5														
-L- 70+69	LT	0811		219.0	216.0														
-L- 70+69	LT	0811	0812		216.0	217.0													
-L- 72+02	LT	0812		220.1	217.0														
-L- 72+02	LT	0812	0813		217.0	217.1			28								X	X	
-L- 72+02	LT	0812	0814		217.0	217.6													
-L- 72+14	LT	0813		219.4	217.1														
-L- 73+00	LT	0814		220.6	217.6														
-L- 67+50	RT	0815		217.2	214.2														
-L- 67+50	RT	0815	0816		214.2	214.0													
-L- 68+06	RT	0816		217.0	214.0														
-L- 68+06	RT	0816	0818		214.0	212.2													
-L- 69+70	RT	0817		217.5	212.3														
-L- 69+70	RT	0817	0818		212.3	212.2													
-L- 69+70	RT	0818		218.1	212.2														
-L- 69+70	RT	0818	0819		212.2	212.0													
-L- 70+15	RT	0819		218.5	212.0														
-L- 70+15	RT	0819	0808		212.0	211.8													
-L- 70+15	RT	0819	0820		212.0	216.4													
-L- 71+60	RT	0820		219.7	216.4														
-L- 71+60	RT	0820	0821		216.4	217.1													
-L- 71+60	RT	0820	0824		216.4	217.2													
-L- 71+82	RT	0821		219.4	217.1														
-L- 72+60	RT	0822		220.3	218.0														
-L- 72+60	RT	0823		220.9	217.7														
-L- 72+60	RT	0823	0824		217.7	217.2													
-L- 72+60	RT	0824		220.2	217.2														
-L- 72+60	RT	0824	0822		217.2	218.0													
-DR- 19+25	RT	0825		219.1	216.1														
-DR- 19+25	RT	0825	0832		216.1	215.2													
-DR1- 10+74	RT	0826		219.2	216.2														
SHEET TOTAL									136				148						

STATION	C.S. PIPE 12" .064	15" .064	18" .064	24" .064	36" .079	42" .109	48" .109	R.C. PIPE (CLASS III) 15"	18"	24"	30"	36"	42"	48"	R.C. PIPE (CLASS IV) 12"	15"	18"	24"	30"	36"	42"	48"	**" R. C. PIPE (CLASS V)	**" R. C. PIPE CULVERTS, CONTRACTOR DESIGN PIPE	**" R. C. PIPE CULVERTS, CONTRACTOR DESIGN PIPE	15" SIDE DRAIN PIPE	18" SIDE DRAIN PIPE	ENDWALLS STD. 838.01, STD. 838.11 OR STD. 838.80 (UNLESS NOTED OTHERWISE) CU. YDS. R.C.P.	C.S.P.
-L- 66+69																													
-L- 66+69																													
-L- 67+45																													
-L- 67+45																													
-L- 67+42																													
-L- 67+42																64													
-L- 68+05																													
-L- 68+05																44													
-L- 68+50																													
-L- 68+50																													
-L- 68+50																													
-L- 68+50																	176												
-L- 70+25																													
-L- 70+25																													
-L- 70+25																44													
-L- 70+27																													
-L- 70+27																													
-L- 70+27																													
-L- 70+69																													
-L- 70+69																132													
-L- 72+02																													
-L- 72+02																													
-L- 72+02																96													
-L- 72+14																													
-L- 73+00																													
-L- 67+50																													
-L- 67+50																56													
-L- 68+06																													
-L- 68+06																164													
-L- 69+70																													
-L- 69+70																		16											
-L- 69+70																													
-L- 69+70																		44											
-L- 70+15																													
-L- 70+15																				68									
-L- 70+15																	144												
-L- 71+60																													
-L- 71+60																28													
-L- 71+60																100													
-L- 71+82																													
-L- 72+60																													
-L- 72+60																													
-L- 72+60																36													
-L- 72+60																													
-L- 72+60																16													
-DR- 19+25																													
-DR- 19+25																20													
-DR1- 10+74																													
SHEET TOTAL																800	320	60		68									

STATION	QUANTITIES FOR DRAINAGE STRUCTURES PER EACH (0' THRU 5.0')	* TOTAL L.F. FOR PAY QUANTITY SHALL BE COL. 'A' + (1.3 X COL.'B') LIN. *FT. A 5.0' THRU 10.0'	B 10.0' AND ABOVE	C.B. STD. 840.01 OR STD. 840.02	FRAME, GRATES AND HOOD STANDARD 840.03 TYPE OF GRATE E	F	G	CONCRETE TRANSITIONAL SECTION CATCH BASIN	CATCH BASIN (SEE DETAIL 2-K)	DROP INLET	D.I. STD. 840.14 OR STD. 840.15	D.I. FRAME & GRATE STD. 840.16	G.D.I. TYPE "A" STD. 840.17 OR 840.26	G.D.I. TYPE "B" STD. 840.18 OR 840.27	G.D.I. (N.S.) FRAME WITH TWO GRATES STD. 840.24	G.D.I. (N.S.) FRAME WITH TWO GRATES STD. 840.29	J.B. STD. 840.31 OR 840.32	T.B.J.B. STD. 840.34	T.B.D.I. STD. 840.35	M.H. FRAME & COVER STD. 840.54	ADJUSTMENT OF CB	ADJUSTMENT OF MANHOLE	ADJUSTMENT OF JB W /MH	CONC. COLLARS CL. "B" C.Y. STD 840.72	FLOWABLE FILL (PIPE) C.Y.	CONC. & BRICK PIPE PLUG, C.Y. STD. 840.71	PIPE REMOVAL LIN.FT.	REMARKS
-L- 66+69	1										1	1																
-L- 66+69																												
-L- 67+45	1										1	1																
-L- 67+45																												
-L- 67+42	1			1			1																					
-L- 67+42																												
-L- 68+05	1			1	1																							
-L- 68+05																												
-L- 68+50	1										1	1																
-L- 68+50	1			1			1																					
-L- 68+50																												
-L- 68+50																												
-L- 70+25	1	1.8		1		1																						EXTRA DEPTH
-L- 70+25																												2GI, REM. STORM SEWER &
-L- 70+25																												
-L- 70+27	1													1	1													REMOVE 4' OF EX. 24" RCP
-L- 70+27																												REM. 128' OF EXIST. 24" RCP
-L- 70+27	1	3.9														1			1									EXTRA DEPTH
-L- 70+69	1			1		1																						
-L- 70+69																												
-L- 72+02	1			1		1																						
-L- 72+02																												
-L- 72+02																												
-L- 72+14	1										1	1																
-L- 73+00	1			1		1																						
-L- 67+50	1			1		1																						
-L- 67+50																												
-L- 68+06	1			1	1																							
-L- 68+06																												
-L- 69+70	1	0.2									1	1																EXTRA DEPTH
-L- 69+70																												
-L- 69+70	1	0.9		1			1																					EXTRA DEPTH
-L- 69+70																											48	
-L- 70+15	1	1.5		1			1																				42	EXTRA DEPTH, REM. EX. DI
-L- 70+15																												REMOVE EXIST. 24" RCP
-L- 70+15																												
-L- 71+60	1			1			1																					
-L- 71+60																												
-L- 71+60																												
-L- 71+82	1										1	1																
-L- 72+60	1										1	1																
-L- 72+60	1										1	1																
-L- 72+60																												
-L- 72+60	1			1			1																					
-L- 72+60																												
-DR- 19+25	1			1	1																							
-DR- 19+25																												
-DR1- 10+74	1			1			1																					
SHEET TOTAL	25	8.3		15	3	5	7				8	8		1	1	1			1								90	

ABBREVIATIONS

C.B.	CATCH BASIN
N.D.I.	NARROW DROP INLET
D.I.	DROP INLET
G.D.I.	GRATED DROP INLET
G.D.I. (N.S.)	GRATED DROP INLET (NARROW SLOT)
J.B.	JUNCTION BOX
M.H.	MANHOLE
T.B.D.I.	TRAFFIC BEARING D.I.
T.B.J.B.	TRAFFIC BEARING J.B.

04-APR-2012 08:41
R:\Roadway\Proj\u4422_rdy_sum.dgn
$$$$USERNAME$$$$

4/04/06

COMPUTED BY: JBJ DATE: 9-30-2011
CHECKED BY: SKR DATE: 2-17-2012

NOTE: Invert Elevations are for Bid Purposes only and shall not be used for project construction stakeout.
See "Standard Specifications For Roads and Structures, Section 300-5".

STATE OF NORTH CAROLINA
DIVISION OF HIGHWAYS

PROJECT REFERENCE NO.	SHEET NO.
U-4422	3-J

SUB-REGIONAL & REGIONAL
LIST OF PIPES, ENDWALLS, ETC. (FOR PIPES 48" & UNDER)

STATION	LOCATION (LT,RT, OR CL)	STRUCTURE NO. FROM	STRUCTURE NO. TO	TOP ELEVATION	INVERT ELEVATION	INVERT ELEVATION	SLOPE CRITICAL	DRAINAGE PIPE (RCP, CSP, CAAP, HDPE, or PVC) 12"	15"	18"	24"	30"	36"	42"	48"	DO NOT USE RCP	DO NOT USE CSP	DO NOT USE CAAP	DO NOT USE HDPE	C.S. PIPE 12" .064	15" .064	18" .064	24" .064	36" .079	42" .109	48" .109
-DR1- 10+74	RT	0826	0827		216.2	215.8																				
-DR1- 10+52	LT	0827		218.8	215.8																					
-DR1- 10+52	LT	0827	0828		215.8	215.7																				
-DR1- 10+52	LT	0828		218.7	215.7																					
-DR1- 10+52	LT	0828	0830		215.7	214.6																				
-L- 68+50	RT	0829		217.8	214.8																					
-L- 68+85	RT	0829	0830		214.8	214.6																				
-L- 68+50	RT	0829	0832		214.8	215.1																				
-L- 68+85	RT	0830		217.6	214.6																					
-L- 68+85	RT	0830	0831		214.6	212.6																				
-L- 69+07	RT	0831		218.0	212.6																					
-L- 67+94	RT	0832		218.2	215.2																					
-DR- 18+41	RT	0833		220.1	217.1																					
-DR- 18+41	RT	0833	0834		217.1	214.9																				
-DR- 18+41	LT	0834		218.8	214.9																					
-L- 78+00	RT	0901		217.0	214.0																					
-L- 78+00	RT	0901	0903		214.0	213.2																				
-L- 78+55	RT	0902		217.8	212.4																					
-L- 78+30	RT	0903		216.2	213.2																					
-L- 78+30	RT	0903	0902		213.2	212.4																				
-L- 78+30	RT	0903	0904		213.2	214.4																				
-L- 78+22	RT	0904		217.2	214.4																					
-L- 78+68	RT	0905		217.0	214.2																					
-L- 78+90	RT	0906		216.2	213.2																					
-L- 78+90	RT	0906	0905		213.2	214.2																				
-L- 78+90	RT	0906	0908		213.2	209.5																				
-L- 79+24	RT	0907																								
-L- 79+28	RT	0908		217.5	209.5																					
-L- 79+28	RT	0908	0907		209.5								8				X	X								
-L- 79+28	RT	0908	0910		209.5	209.4									44		X	X								
-L- 79+75	RT	0909																								
-L- 79+75	RT	0909	0910			209.4								12			X	X								
SEE 54" & OVER		0910																								
-L- 79+72	RT	0910	0928		209.4									12			X	X								
NOT USED		0911																								
-L- 78+45	LT	0912		216.7	213.7																					
-L- 78+45	LT	0912	0913		213.7	210.4																				
-L- 78+90	LT	0913		217.0	210.4																					
-L- 79+75	LT	0914		218.0	209.0																					
SEE 54" & OVER		0915																								
NOT USED		0916																								
NOT USED		0917																								
NOT USED		0918																								
NOT USED		0919																								
-Y6- 17+33	LT	0920																								
-Y6- 17+38	LT	0921		218.1	211.9																					
-Y6- 17+38	LT	0921	0920		211.9																					
-Y6- 17+59	LT	0922	0929		212.1																					
SHEET TOTAL													8	24	44											

STATION	STRUCTURE NO. FROM	STRUCTURE NO. TO	R.C. PIPE (CLASS III) 15"	18"	24"	30"	36"	42"	48"	R.C. PIPE (CLASS IV) 12"	15"	18"	24"	30"	36"	42"	48"	**" R. C. PIPE (CLASS V)	**" R. C. PIPE CULVERTS, CONTRACTOR DESIGN PIPE	**" R. C. PIPE CULVERTS, CONTRACTOR DESIGN PIPE	15" SIDE DRAIN PIPE	18" SIDE DRAIN PIPE	ENDWALLS STD. 838.01, STD. 838.11 OR STD. 838.80 (UNLESS NOTED OTHERWISE) CU. YDS. R.C.P.	C.S.P.
-DR1- 10+74	0826	0827									32													
-DR1- 10+52	0827																							
-DR1- 10+52	0827	0828									28													
-DR1- 10+52	0828																							
-DR1- 10+52	0828	0830									44													
-L- 68+50	0829																							
-L- 68+85	0829	0830									36													
-L- 68+50	0829	0832									48													
-L- 68+85	0830																							
-L- 68+85	0830	0831									20													
-L- 69+07	0831																							
-L- 67+94	0832																							
-DR- 18+41	0833																							
-DR- 18+41	0833	0834									20													
-DR- 18+41	0834																							
-L- 78+00	0901																							
-L- 78+00	0901	0903									28													
-L- 78+55	0902																							
-L- 78+30	0903																							
-L- 78+30	0903	0902									32													
-L- 78+30	0903	0904									24													
-L- 78+22	0904																							
-L- 78+68	0905																							
-L- 78+90	0906																							
-L- 78+90	0906	0905									28													
-L- 78+90	0906	0908									36													
-L- 79+24	0907																							
-L- 79+28	0908																							
-L- 79+28	0908	0907																						
-L- 79+28	0908	0910																						
-L- 79+75	0909																							
-L- 79+75	0909	0910																						
SEE 54" & OVER	0910																							
-L- 79+72	0910	0928																						
NOT USED	0911																							
-L- 78+45	0912																							
-L- 78+45	0912	0913									44													
-L- 78+90	0913																							
-L- 79+75	0914																							
SEE 54" & OVER	0915																							
NOT USED	0916																							
NOT USED	0917																							
NOT USED	0918																							
NOT USED	0919																							
-Y6- 17+33	0920																							
-Y6- 17+38	0921																							
-Y6- 17+38	0921	0920															12								
-Y6- 17+59	0922	0929														12									
SHEET TOTAL											420					12	12								

STATION	STRUCTURE NO. FROM	STRUCTURE NO. TO	QUANTITIES FOR DRAINAGE STRUCTURES PER EACH (0' THRU 5.0')	* TOTAL L.F. FOR PAY QUANTITY SHALL BE COL. 'A' + (1.3 X COL.'B') LIN. *FT. A 5.0' THRU 10.0'	B 10.0' AND ABOVE	C.B. STD. 840.01 OR STD. 840.02	FRAME, GRATES AND HOOD STANDARD 840.03 TYPE OF GRATE E	F	G	CONCRETE TRANSITIONAL SECTION CATCH BASIN	CATCH BASIN (SEE DETAIL 2-K)	DROP INLET	D.I. STD. 840.14 OR STD. 840.15	D.I. FRAME & GRATE STD. 840.16	G.D.I. TYPE "A" STD. 840.17 OR 840.26	G.D.I. TYPE "B" STD. 840.18 OR 840.27	G.D.I. (N.S.) FRAME WITH TWO GRATES STD. 840.24	G.D.I. (N.S.) FRAME WITH TWO GRATES STD. 840.29	J.B. STD. 840.31 OR 840.32	T.B.J.B. STD. 840.34	T.B.D.I. STD. 840.35	M.H. FRAME & COVER STD. 840.54	ADJUSTMENT OF CB	ADJUSTMENT OF MANHOLE	ADJUSTMENT OF JB W /MH	CONC. COLLARS CL. "B" C.Y. STD 840.72	FLOWABLE FILL (PIPE) C.Y.	CONC. & BRICK PIPE PLUG, C.Y. STD. 840.71	PIPE REMOVAL LIN.FT.	REMARKS
-DR1- 10+74	0826	0827																												
-DR1- 10+52	0827		1			1			1																					
-DR1- 10+52	0827	0828																												
-DR1- 10+52	0828		1			1		1																						
-DR1- 10+52	0828	0830																												
-L- 68+50	0829		1			1			1																					
-L- 68+85	0829	0830																												
-L- 68+50	0829	0832																												
-L- 68+85	0830		1			1		1																						
-L- 68+85	0830	0831																												
-L- 69+07	0831																					1			1					
-L- 67+94	0832		1			1			1																					
-DR- 18+41	0833		1			1	1																							
-DR- 18+41	0833	0834																												
-DR- 18+41	0834		1			1	1																							
-L- 78+00	0901		1			1		1																						
-L- 78+00	0901	0903																												
-L- 78+55	0902		1	0.4																1		1								EXTRA DEPTH, REMOVE DI
-L- 78+30	0903		1			1		1																						
-L- 78+30	0903	0902																												
-L- 78+30	0903	0904																												
-L- 78+22	0904		1													1	1													2GI
-L- 78+68	0905		1													1	1													2GI
-L- 78+90	0906		1			1			1																					
-L- 78+90	0906	0905																												
-L- 78+90	0906	0908																												
-L- 79+24	0907																									.764				
-L- 79+28	0908		1	3.0		1			1																					EXTRA DEPTH
-L- 79+28	0908	0907																												COLLAR & EXTEND 36"
-L- 79+28	0908	0910																												
-L- 79+75	0909																									.886				
-L- 79+75	0909	0910																												COLLAR & EXTEND 42"
SEE 54" & OVER	0910																													
-L- 79+72	0910	0928																												COLLAR & EXTEND 42"
NOT USED	0911																													
-L- 78+45	0912		1			1	1																							
-L- 78+45	0912	0913																												
-L- 78+90	0913		1	1.6		1	1																							EXTRA DEPTH
-L- 79+75	0914		1	4.0		1	1																							EXTRA DEPTH, REMOVE JB
SEE 54" & OVER	0915																													
NOT USED	0916																													
NOT USED	0917																													
NOT USED	0918																													
NOT USED	0919																													
-Y6- 17+33	0920																									.886				
-Y6- 17+38	0921		1	1.2		1	1																							EXTRA DEPTH
-Y6- 17+38	0921	0920																												REM. SECTION OF 36" PIPE COLLAR & EXTEND 42"
-Y6- 17+59	0922	0929																								.764				COLLAR & EXTEND 36"
SHEET TOTAL			18	10.2		15	6	4	5							2	2			1		2			1	3.30				

ABBREVIATIONS

C.B.	CATCH BASIN
N.D.I.	NARROW DROP INLET
D.I.	DROP INLET
G.D.I.	GRATED DROP INLET
G.D.I. (N.S.)	GRATED DROP INLET (NARROW SLOT)
J.B.	JUNCTION BOX
M.H.	MANHOLE
T.B.D.I.	TRAFFIC BEARING D.I.
T.B.J.B.	TRAFFIC BEARING J.B.

04-APR-2012 08:41
R:\Roadway\Proj\u4422_rdy_sum.dgn
$$$$USERNAME$$$$

4/04/06

COMPUTED BY: JBJ DATE: 9-30-2011
CHECKED BY: SKR DATE: 2-17-2012

PROJECT REFERENCE NO.	SHEET NO.
U-4422	3-K

STATE OF NORTH CAROLINA
DIVISION OF HIGHWAYS

NOTE: Invert Elevations are for Bid Purposes only and shall not be used for project construction stakeout. See "Standard Specifications For Roads and Structures, Section 300-5".

SUB-REGIONAL & REGIONAL

LIST OF PIPES, ENDWALLS, ETC. (FOR PIPES 48" & UNDER)

STATION	LOCATION (LT,RT, OR CL)	STRUCTURE NO. FROM	STRUCTURE NO. TO	TOP ELEVATION	INVERT ELEVATION	INVERT ELEVATION	SLOPE CRITICAL	DRAINAGE PIPE (RCP, CSP, CAAP, HDPE, or PVC) SIZE	12"	15"	18"	24"	30"	36"	42"	48"	DO NOT USE RCP	DO NOT USE CSP	DO NOT USE CAAP	DO NOT USE HDPE
								THICKNESS OR GAUGE												
-L- 81+67	RT	0923		220.2	217.0															
-L- 81+67	RT	0923	0924		217.0	212.9														
-L- 82+00	RT	0924		220.3	212.9															
-L- 82+00	RT	0924	0925		212.9	217.3														
-L- 82+52	RT	0925		220.5	217.3															
-L- 82+52	RT	0925	0926		217.3	217.5														
-L- 83+25	RT	0926		220.7	217.5															
-L- 84+02	RT	0927		220.8	213.6															
-L- 79+69	RT	0928																		
-Y6- 17+52	LT	0929																		
SHEET TOTAL																				
FROM 54" & OVER																				
GRAND TOTAL										1616	168			208	24	72				

STATION	C.S. PIPE SIZE	12"	15"	18"	24"	36"	42"	48"
	THICKNESS OR GAUGE		.064	.064	.064	.079	.109	.109
-L- 81+67								
-L- 81+67								
-L- 82+00								
-L- 82+00								
-L- 82+52								
-L- 82+52								
-L- 83+25								
-L- 84+02								
-L- 79+69								
-Y6- 17+52								
SHEET TOTAL								
FROM 54" & OVER								
GRAND TOTAL								

STATION	R.C. PIPE (CLASS III) SIZE	15"	18"	24"	30"	36"	42"	48"
-L- 81+67								
-L- 81+67								
-L- 82+00								
-L- 82+00								
-L- 82+52								
-L- 82+52								
-L- 83+25								
-L- 84+02								
-L- 79+69								
-Y6- 17+52								
SHEET TOTAL								
FROM 54" & OVER								
GRAND TOTAL		52						

STATION	R.C. PIPE (CLASS IV) SIZE	12"	15"	18"	24"	30"	36"	42"	48"
-L- 81+67									
-L- 81+67			32						
-L- 82+00									
-L- 82+00			52						
-L- 82+52									
-L- 82+52			72						
-L- 83+25									
-L- 84+02									
-L- 79+69									
-Y6- 17+52									
SHEET TOTAL			156						
FROM 54" & OVER									
GRAND TOTAL			7144	1876	1324	528	624	12	88

STATION	*** R. C. PIPE (CLASS V)	*** R. C. PIPE CULVERTS, CONTRACTOR DESIGN PIPE	*** R. C. PIPE CULVERTS, CONTRACTOR DESIGN PIPE	15" SIDE DRAIN PIPE	18" SIDE DRAIN PIPE	ENDWALLS STD. 838.01, STD. 838.11 OR STD. 838.80 (UNLESS NOTED OTHERWISE) CU. YDS. R.C.P.	CU. YDS. C.S.P.
-L- 81+67							
-L- 81+67							
-L- 82+00							
-L- 82+00							
-L- 82+52							
-L- 82+52							
-L- 83+25							
-L- 84+02							
-L- 79+69							
-Y6- 17+52							
SHEET TOTAL							
FROM 54" & OVER							
GRAND TOTAL							

STATION	QUANTITIES FOR DRAINAGE STRUCTURES * TOTAL L.F. FOR PAY QUANTITY SHALL BE COL. 'A' + (1.3 X COL. 'B') LIN. FT. PER EACH (0' THRU 5.0')	LIN. FT. 5.0' THRU 10.0' A	LIN. FT. 10.0' AND ABOVE B	C.B. STD. 840.01 OR STD. 840.02	FRAME, GRATES AND HOOD STANDARD 840.03 TYPE OF GRATE E	F	G
-L- 81+67	1						
-L- 81+67							
-L- 82+00	1	2.4					
-L- 82+00							
-L- 82+52	1						
-L- 82+52							
-L- 83+25	1						
-L- 84+02	1	2.2					
-L- 79+69							
-Y6- 17+52							
SHEET TOTAL	5	4.6					
FROM 54" & OVER							1
GRAND TOTAL	219	59.6		133	18	54	62
		SAY 60					

STATION	CONCRETE TRANSITIONAL SECTION CATCH BASIN	CATCH BASIN (SEE DETAIL 2-K)	DROP INLET	D.I. STD. 840.14 OR STD. 840.15	D.I. FRAME & GRATE STD. 840.16	G.D.I. TYPE "A" STD. 840.17 OR 840.26	G.D.I. TYPE "B" STD. 840.18 OR 840.27	G.D.I. (N.S.) FRAME WITH TWO GRATES STD. 840.24	G.D.I. (N.S.) FRAME WITH TWO GRATES STD. 840.29	J.B. STD. 840.31 OR 840.32	T.B.J.B. STD. 840.34	T.B.D.I. STD. 840.35	M.H. FRAME & COVER STD. 840.54	ADJUSTMENT OF CB	ADJUSTMENT OF MANHOLE	ADJUSTMENT OF JB W /MH	CONC. COLLARS CL. "B" C.Y. STD 840.72	FLOWABLE FILL (PIPE) C.Y.	CONC. & BRICK PIPE PLUG, C.Y. STD. 840.71	PIPE REMOVAL LIN.FT.	REMARKS
-L- 81+67			1	1	1															
-L- 81+67																				
-L- 82+00			1	1	1														16	EXTRA DEPTH, REMOVE CB
-L- 82+00																			54	REMOVE CB
-L- 82+52			1	1	1															
-L- 82+52																				
-L- 83+25			1	1	1															
-L- 84+02			1	1	1														16	EXTRA DEPTH, REMOVE CB
-L- 79+69																	.886				
-Y6- 17+52																	.764				
SHEET TOTAL			5	5	5												1.65		86	
FROM 54" & OVER																				
GRAND TOTAL			11	67	67	2	8	9	2	1	7	1	8	3	4	1	5.748	5.5	0.22	2516	
			SAY 6														SAY 5.75				

ABBREVIATIONS

C.B.	CATCH BASIN
N.D.I.	NARROW DROP INLET
D.I.	DROP INLET
G.D.I.	GRATED DROP INLET
G.D.I. (N.S.)	GRATED DROP INLET (NARROW SLOT)
J.B.	JUNCTION BOX
M.H.	MANHOLE
T.B.D.I.	TRAFFIC BEARING D.I.
T.B.J.B.	TRAFFIC BEARING J.B.

LIST OF PIPES, ENDWALLS, ETC. (FOR PIPES 54" & OVER)

STATION	LOCATION (LT,RT, OR CL)	STRUCTURE NO. FROM	STRUCTURE NO. TO	TOP ELEVATION	INVERT ELEVATION	INVERT ELEVATION	SLOPE CRITICAL	CLASS III R.C. PIPE (UNLESS NOTED OTHERWISE) SIZE	54"	60"	66"	72"	78"	84"
								THICKNESS OR GAUGE				CLASS IV		
-L- 79+72	RT	0910		218.0	209.4							1		
-L- 79+72	RT	0910	0915		209.4	209.8						72		
-Y6- 15+86	RT	0915												
GRAND TOTAL												72		

STATION	BITUMINOUS COATED C.S. PIPE TYPE B SIZE	54"	SHOP ELONGATED	60"	66"	72"
	THICKNESS OR GAUGE	.109	.138 .168	.138 .168	.138 .168	.138 .168
-L- 79+72						
-L- 79+72						
-Y6- 15+86						
GRAND TOTAL						

STATION	STRUCTURAL PLATE PIPE SIZE	60"	66"	72"
	THICKNESS OR GAUGE	12 10	12 10	12 10
-L- 79+72				
-L- 79+72				
-Y6- 15+86				
GRAND TOTAL				

STATION	REINFORCED ENDWALLS WITH R.C. - C.Y.	WITH C.S. - C.Y.	MASONRY DRAINAGE STRUCTURES CUBIC YARDS	C.B. STD. 840.01 OR STD. 840.02	FRAME, GRATES AND HOOD STANDARD 840.03 TYPE OF GRATE E	F	G
-L- 79+72			14.5				1
-L- 79+72							
-Y6- 15+86	9.5						
GRAND TOTAL	9.5		14.5				1

STATION	CONCRETE TRANSITIONAL SECTION CATCH BASIN	CATCH BASIN (SEE DETAIL 2-K)	DROP INLET	C.B. (SEE DETAIL 2-H)	REINF. CONC. FLARED END SECTIONS NO. & SIZE	CORR. STEEL FLARED END SECTIONS NO. & SIZE	REINF. CONC. ELBOWS NO. & SIZE	CORR. STEEL ELBOWS NO. & SIZE	CONC. COLLARS CL. "B" C.Y. STD 840.72	PIPE REMOVAL LIN.FT.	REMARKS
-L- 79+72				1							
-L- 79+72											
-Y6- 15+86											SEE DETAIL 2-I
GRAND TOTAL				1							

ABBREVIATIONS

C.B.	CATCH BASIN
N.D.I.	NARROW DROP INLET
D.I.	DROP INLET
G.D.I.	GRATED DROP INLET
G.D.I. (N.S.)	GRATED DROP INLET (NARROW SLOT)
J.B.	JUNCTION BOX
M.H.	MANHOLE
T.B.D.I.	TRAFFIC BEARING DROP INLET
T.B.J.B.	TRAFFIC BEARING JUNCTION BOX

04-APR-2012 08:41
C:\projects\U4422_rdy_sum.dgn
USERNAME = ...

5/9/06

COMPUTED BY: SKR DATE: 2-20-2012
CHECKED BY: JBJ DATE: 3-8-2012

PROJECT REFERENCE NO.	SHEET NO.
U-4422	3-L

DIVISION OF HIGHWAYS
STATE OF NORTH CAROLINA

SUMMARY OF EARTHWORK

IN CUBIC YARDS

NOTE: Earthwork quantities are calculated by the Roadway Design Unit. These earthwork quantities are based in part on subsurface data provided by the Geotechnical Engineering Unit.

LOCATION	UNCLASSIFIED EXCAVATION	UNDERCUT	EMBT + %	BORROW	WASTE
–L– LT.					
11 + 00.00 to 19 + 50.00	824		432		392
–Y1–					
13 + 52.00 to 17 + 00.00	574				574
SUBTOTAL	1398		432		966
–L– RT.					
13 + 64.00 to 19 + 50.00	950		35		915
–Y1–					
18 + 50.00 to 21 + 53.00	326		23		303
SUBTOTAL	1276		58		1218
–L–					
20 + 50.00 to 32 + 02.08	31834		399		31435
–Y2–					
12 + 00.00 to 13 + 60.00	77		70		7
15 + 40.00 to 18 + 00.00	2894		5		2889
SUBTOTAL	34805		474		34331
–L– LT.					
32 + 02.08 to 62 + 00.00	2428		1298		1130
–Y3–					
11 + 45.00 to 13 + 75.00	107		5		102
SUBTOTAL	2535		1303		1232
–L– RT.					
32 + 02.08 to 62 + 00.00	2740		1827		913
–Y3–					
15 + 25.00 to 16 + 80.00	44		8		36
–Y4–					
10 + 33.04 to 12 + 30.00	9		294	285	
SUBTOTAL	2793		2129	285	949

LOCATION	UNCLASSIFIED EXCAVATION	UNDERCUT	EMBT + %	BORROW	WASTE
–L– LT.					
62 + 00.00 to 80 + 50.00	556		1587	1031	
–Y5–					
12 + 50.00 to 13 + 58.57	39		5		34
–Y6–					
13 + 50.00 to 14 + 20.00	9		99	90	
SUBTOTAL	604		1691	1121	34
–L– RT.					
62 + 00.00 to 80 + 50.00	2164		1772		392
–DR–					
10 + 75.00 to 19 + 87.15	2873		320		2553
–DR1–					
10 + 00.00 to 11 + 18.79	98		15		83
–Y6–					
15 + 80.00 to 19 + 61.20	180		82		98
SUBTOTAL	5315		2189		3126
TOTAL	48726		8276	1406	41856
LOSS DUE TO CLEARING & GRUBBING	–1500				–1500
WASTE IN LIEU OF BORROW				–1405	–1405
PROJECT TOTAL	47226		8276	0	38950
SAY	48000				

EST. UNDERCUT EXCAVATION = 1600 CY
EST. SHALLOW UNDERCUT = 1500 CY
EST. CL. IV SUBGRADE STABILIZATION = 3000 TONS
–L–, –Y2–, –DR– PAVEMENT STR. VOLUME = 13500 CY

NOTE: Approximate quantities only. Fine grading, clearing and grubbing, and removal of existing pavement will be paid for at the lump sum price for "Grading".

20-MAR-2012 07:37
R:\Roadway Projects\u4422_rdy_sum.dgn
$$$$USERNAME$$$$

COMPUTED BY: SKR DATE: 2/28/2012
CHECKED BY: JBJ DATE: 3/1/2012

PROJECT REFERENCE NO.	SHEET NO.
U-4422	3-M

DIVISION OF HIGHWAYS
STATE OF NORTH CAROLINA

SUMMARY OF EXISTING ASPHALT PAVEMENT REMOVAL

IN SQUARE YARDS

LINE	STATION	LOCATION	SQUARE YARDS
-L-	20+33.8 TO 21+90.00	LT	776.35
-Y2-	13+60.00 TO 17+50.00	LT/RT	1824.19
-L-	32+84.00 TO 46+85.00	LT/RT	2686.01
-L-	47+65.00 TO 49+15.00	LT/RT	1157.53
-L-	49+95.70 TO 60+80.00	LT/RT	1999.11
-L-	61+60.00 TO 63+10.00	LT/RT	856.78
-L-	63+91.00 TO 71+80.00	LT/RT	1437.39
-L-	72+47.00 TO 77+89.00	LT/RT	586.68
-L-	79+32.00 TO 79+50.00	LT/RT	18.62
		TOTAL	11342.67
		SAY	11400

NOTE: Approximate quantities only. Fine grading, clearing and grubbing, and removal of existing pavement will be paid for at the lump sum price for "Grading".

SUMMARY OF 60" VINYL COATED CHAIN LINK FENCE

LINE	STATION	LOCATION	FABRIC L.F.	LINE POSTS	TERMINAL POSTS
-L-	69+95.00 TO 70+50.00	LT.	69	6	3
-L-	70+07.00 TO 70+62.00	RT.	69.5	6	3
TOTAL			137.25	12	6
SAY			140	12	6

5/9/06

30-MAR-2012 07:36
R:\Roadway\Proj\u4422_rdy_sum.dgn
$$$$USERNAME$$$$

RD248592,2/23/2012,R:\Roadway\Proj\u4422_rowparcels.xls

PROJ. REFERENCE NO.	SHEET NO.
U-4422	3-N

STATE OF NORTH CAROLINA
DIVISION OF HIGHWAYS

PARCEL INDEX SHEET

PARCEL No.	SHEET No.	PROPERTY OWNER NAME
1	4	MICHAEL A. COLE, et al
2	4	SAINT MATTHEWS UNITED METHODIST CHURCH TRUSTEES
3	4	AUTO ZONE DEVELOPMENT CORP.
4	4	LI'L THRIFT FOOD MARTS INC
5	4	PEARL FAIRCLOTH
6	4	PAUL INVESTMENTS, LLC
10	4	MARY B. JOHNSON
12	4	JUDITH BUNCE, et al
14	4	MARY JOHNSON, et al
15	4	CVS 4293 NC, LLC
17	4	ETHEL C. DAVIDSON
18	4 & 5	BENJAMIN OWEN
19	4	W.J. FUQUA
21	5	ALFRED J. BOST
21Z	5	ALFRED J. BOST
22	5	BETTY J. BREWINGTON
23	5	CHARLES NORRIS
24	5	ROY R. ARMES
25	5	CARMON VINCENT
25Z	5	CARMON VINCENT
26	5	MATTHEW BITTINGER
27	5	JEANNE WRIGHT
28	5	JOHN CANADY
29	5	DOROTHY J. DEAN
30	5	PEGGY EDWARDS
31	5	DANNY AYERS
32	5	VERNON UNRUH
33	5	THURSTON ROBINSON
34	5	RONALD B. SMOCK
35	5	CARLOS JARAMILLO TRUSTEES OF THE JARAMILLO FAMILY TRUST
36	5	JOHN SYKES
37	5	JONATHAN ANDREWS
38	5	DAVID GILMORE
39	5	WINNIE LEAVY HEIRS
40	5	MATTHEW S. PEFFER
41	5	ERIC FITCH
42	5	MARIA SALGADO
43	5	LINDA BRYANT
44	5	DEBRA SMITH PARHAM, et al
45	5	GREGORY HAWLEY
46	5	MARILYN MURRAY
47	5	CHARLES RUTKA
48	5	PAUL W. TAYLOR, JR.
49	6	BRUCE BOWSTRING
50	6	KAB SAENG KANG
51	6	MARGIE B. BROWN, TRUSTEE
52	6	TERESA TRAIL
53	6	LORENZIA WRIGHT
54	6	JAMES CHURCH
55	6	DERRICK BUTLER
56	6	FLORENCE M. ZEIBER
57	6	MARIE R. RUDDY
58	6	STACY HARRIS
59	6	MICHAEL F. HANCOCK, et al
60	6	PAUL W. TAYLOR, JR.
61	6	REIKO C. MCCALLA
62	6	FLORENCIA THORPE
63	6	MAEKO I. SLATTERY
64	6	STEVEN AVERITTE
65	6	LESLIE MORTENSON

PARCEL No.	SHEET No.	PROPERTY OWNER NAME
66	6	SHELBY P. ANDERSON
67	6	ZINA B. LYNCH, et al.
68	6	RUTH HART
69	6	JOE ANN ROBINSON
70	6	EVELYN BRYANT
71	6	TOMMY HERNANDEZ
72	6	DEBORAH LYNN HOOPES, et al.
73	6	DANIEL A. BAY
74	6	JOSEPHINE GURGANUS
75	6	MARIA LOWRY
75A	6	FRANCES BARKER
77	6	BRADLEY SIMPSON
77Z	6	BRADLEY SIMPSON
78	6	PAUL W. TAYLOR
79	6	JAMES A. STEWART
80	6	CARY MELVIN
81	6	JENNIFER ADAM FOUT REVOCABLE TRUST
82	7	THOMAS BELL
83	7	OSITA OKONKWO
84	7	LEOPOLDO GAUNDIQUE
85	7	AVIS D. BULLARD
86	7	WALTER LABRIE
87	7	JOSEPH KANANOWICZ
88	7	ANTONIO DECASTRO
89	7	SUN HAK MCGOWAN
90	7	SILAS L. STROTHER
91	7 & 8	CUMBERLAND COUNTY BOARD OF EDUCATION
92	7	DONALD GARNER
93	7	ROBERT LUCAS
94	7	CLYDE GRADY
95	7	MARK WATKINS
96	7	FAYETTEVILLE METROPOLITAN
97	7	RICHARD SYLES
98	7	MARIA SEIDEL
99	7	RAY SANCHEZ
100	7	BERNADETTE ALEXANDER
101	7	CHARLES LERNER
101Z	7	CHARLES LERNER
102	7	TOMMY SMITH
102Z	7	TOMMY SMITH
103	7	HAROLD MORRISON
104	7	DORIS G. BROWN
105	7	WILLIAM STARLING
106	7	PAUL W. TAYLOR, JR.
107	7 & 8	GARY LANGDON
108	8	PERI ANEST
109	8	THOMAS WRENN
110	8 & 9	BEREAN BAPTIST CHURCH
112	9	MANNA CHURCH
116	9	JOSEPH P. RIDDLE III
117	9	BEREAN BAPTIST CHURCH

PROJECT REFERENCE NO.	SHEET NO.
U-4422	4
R/W SHEET NO.	
ROADWAY DESIGN ENGINEER	HYDRAULICS ENGINEER

NORTH CAROLINA PROFESSIONAL SEAL 16378 ENGINEER REKHA V. PATEL

NORTH CAROLINA PROFESSIONAL SEAL 022000 ENGINEER W. GALEN CAIL

SEE SHEET 10 FOR -L- PROFILE
SEE SHEET 13 FOR -Y1- PROFILE
SEE SHEET 2-K
FOR PROPOSED 2'-9" CURB & GUTTER AND MEDIAN CURB FOR CATCH BASIN TRANSITION SECTION DETAIL

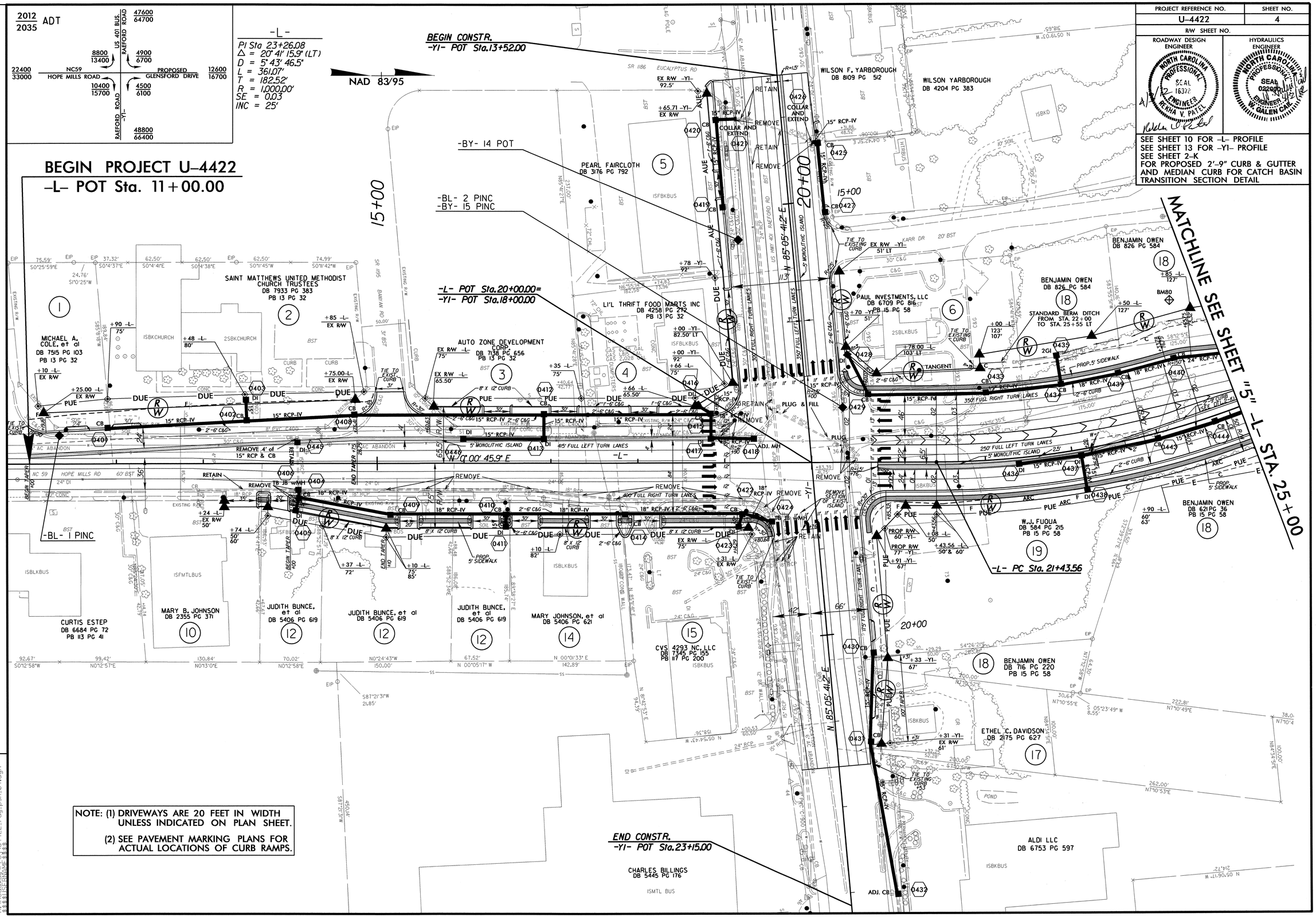

NOTE: (1) DRIVEWAYS ARE 20 FEET IN WIDTH UNLESS INDICATED ON PLAN SHEET.

(2) SEE PAVEMENT MARKING PLANS FOR ACTUAL LOCATIONS OF CURB RAMPS.

REVISIONS

02-APR-2012 14:46
R:\Roadway\Proj\u4422_rdy_psh_04.dgn
$$$$USERNAME$$$$

PROJECT REFERENCE NO.	SHEET NO.
U-4422	5
R/W SHEET NO.	
ROADWAY DESIGN ENGINEER	HYDRAULICS ENGINEER

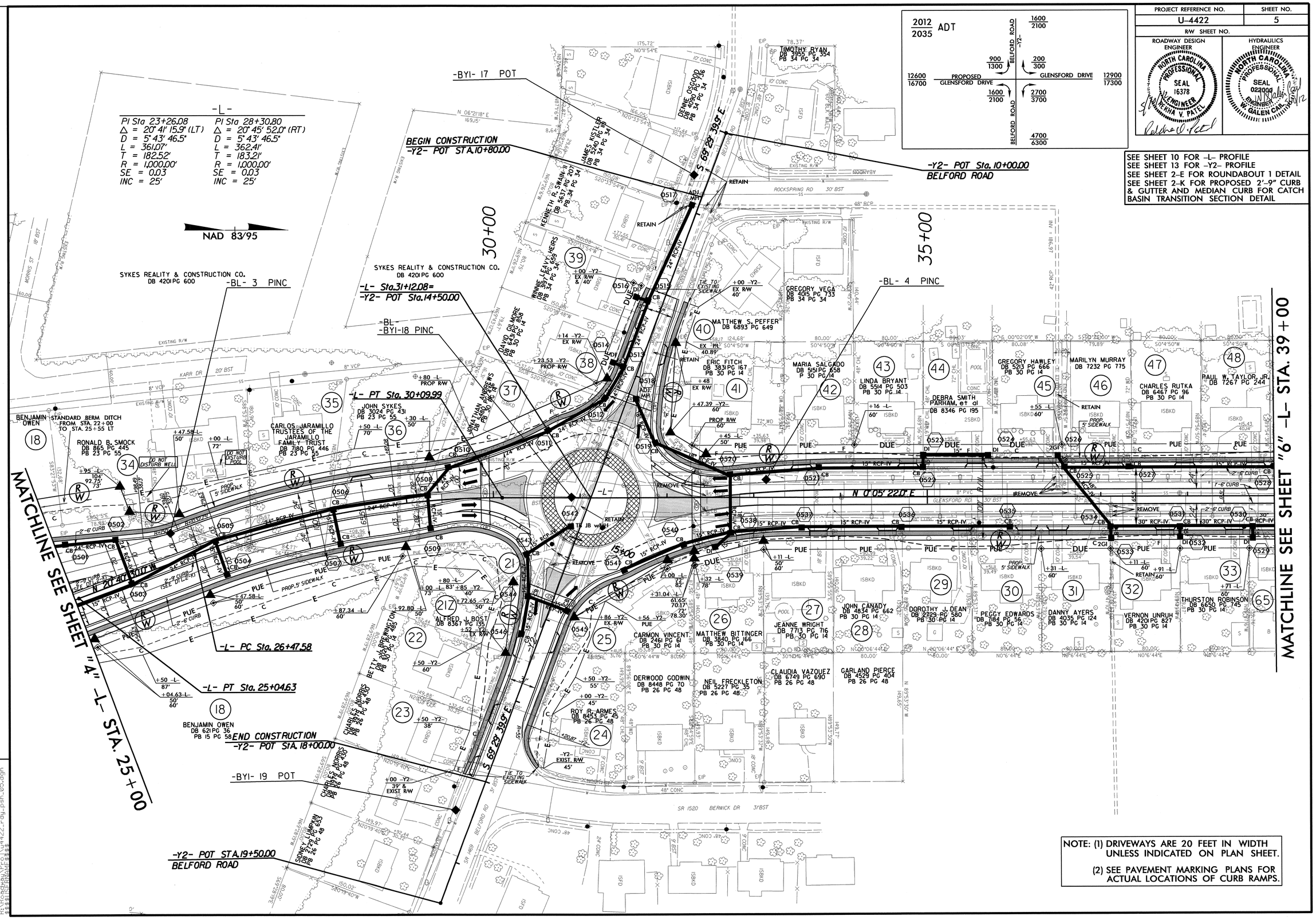

SEE SHEET 10 FOR -L- PROFILE
SEE SHEET 13 FOR -Y2- PROFILE
SEE SHEET 2-E FOR ROUNDABOUT 1 DETAIL
SEE SHEET 2-K FOR PROPOSED 2'-9" CURB & GUTTER AND MEDIAN CURB FOR CATCH BASIN TRANSITION SECTION DETAIL

NOTE: (1) DRIVEWAYS ARE 20 FEET IN WIDTH UNLESS INDICATED ON PLAN SHEET.

(2) SEE PAVEMENT MARKING PLANS FOR ACTUAL LOCATIONS OF CURB RAMPS.

REVISIONS

10-MAY-2012 08:11
R:\Roadway\Proj\u4422_rdy_psh_05.dgn
$$$$USERNAME$$$$

PROJECT REFERENCE NO.	SHEET NO.
U-4422	6
R/W SHEET NO.	
ROADWAY DESIGN ENGINEER	HYDRAULICS ENGINEER

NORTH CAROLINA PROFESSIONAL SEAL 16378 ENGINEER REKHA V. PATEL

NORTH CAROLINA PROFESSIONAL SEAL 022000 ENGINEER W. GALEN CAIN

SEE SHEET 11 FOR -L- PROFILE
SEE SHEET 14 FOR -Y3- PROFILE
SEE SHEET 2-F FOR ROUNDABOUT 2 DETAIL

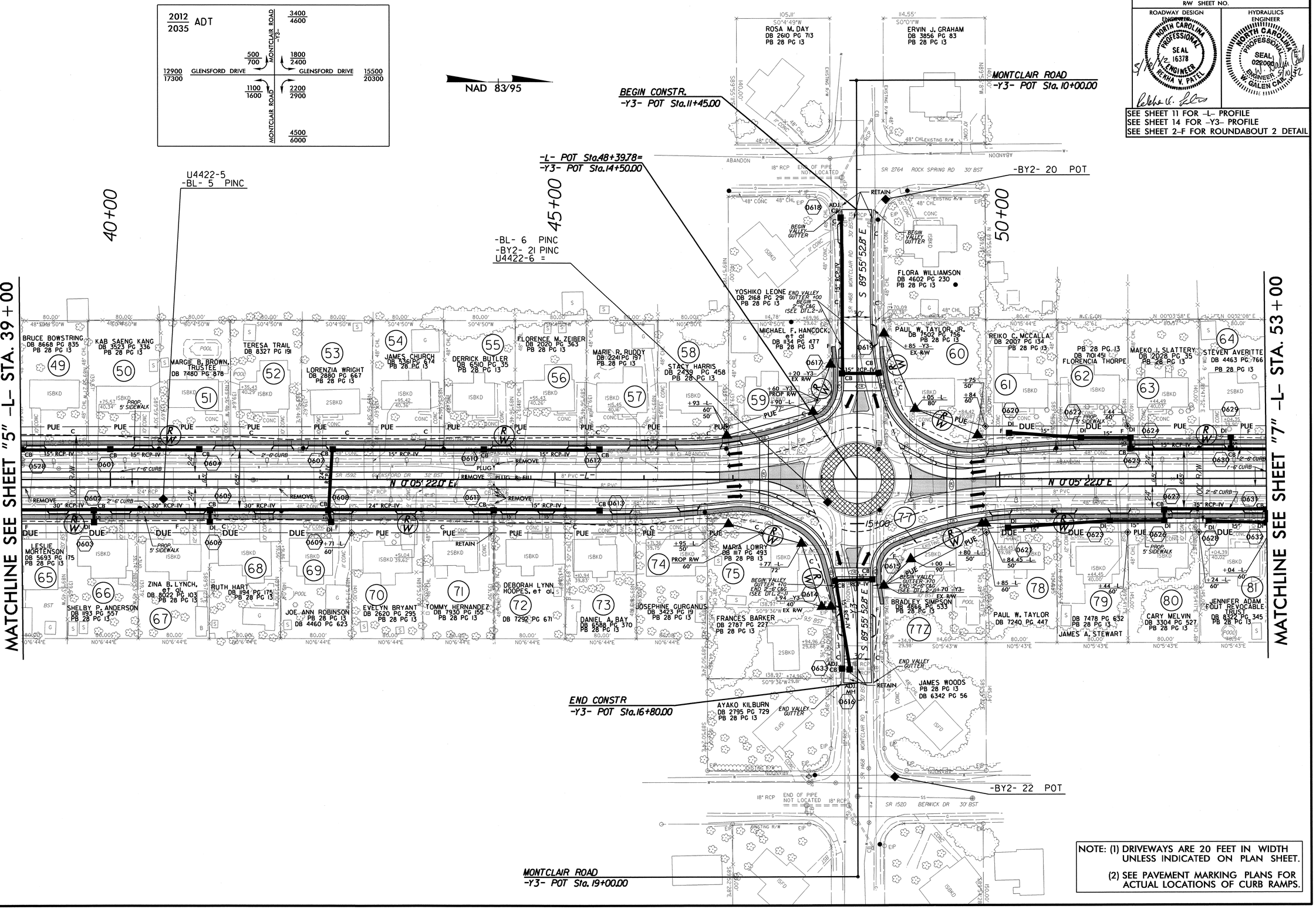

NOTE: (1) DRIVEWAYS ARE 20 FEET IN WIDTH UNLESS INDICATED ON PLAN SHEET.

(2) SEE PAVEMENT MARKING PLANS FOR ACTUAL LOCATIONS OF CURB RAMPS.

REVISIONS

10-MAY-2012 08:12
R:\Roadway\Proj\u4422_rdy_psh_06.dgn
$$$$USERNAME$$$$

PROJECT REFERENCE NO.	SHEET NO.
U-4422	7
RW SHEET NO.	

ROADWAY DESIGN ENGINEER: NORTH CAROLINA PROFESSIONAL SEAL 16378 ENGINEER REKHA V PATEL

HYDRAULICS ENGINEER: NORTH CAROLINA PROFESSIONAL SEAL 022006 ENGINEER M GALEN CAIN

REVISIONS

-L-
PI Sta 59+32.28
Δ = 17° 08' 00.0" (LT)
D = 4° 14' 38.9"
L = 403.69'
T = 203.37'
R = 1,350.00'
SE = 0.03
INC = 25'

-Y5-
PI Sta 10+91.69
Δ = 3° 45' 18.9" (LT)
D = 4° 00' 00.0"
L = 93.88'
T = 46.96'
R = 1,432.39'

PI Sta 12+68.55
Δ = 6° 31' 01.2" (RT)
D = 5° 00' 00.0"
L = 130.34'
T = 65.24'
R = 1,145.92'
SE = NC

-DR-
PI Sta 14+66.81
Δ = 160° 14' 40.6" (LT)
D = 136° 25' 06.7"
L = 117.47'
T = 241.20'
R = 42.00'
SE = NC

PI Sta 15+17.17
Δ = 69° 30' 47.5" (RT)
D = 81° 51' 04.0"
L = 84.93'
T = 48.57'
R = 70.00'
SE = NC

2012 / 2035 ADT

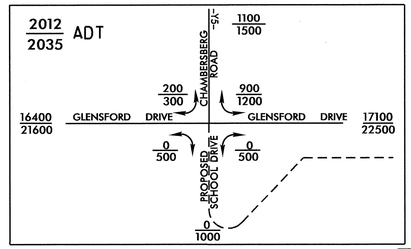

SEE SHEET 11 FOR -L- PROFILE
SEE SHEET 14 FOR -Y4- PROFILE
SEE SHEET 15 FOR -Y5- PROFILE
SEE SHEET 16 FOR -DR- PROFILE
SEE SHEET 2-G FOR ROUNDABOUT 3 DETAIL

NAD 83/95

-Y5- POT Sta. 10+00.00
CHAMBERSBERG ROAD

N 70° 55' 32.8" E

BEGIN CONSTR.
-Y5- POT Sta.12+50.00

-Y5- PC Sta. 10+44.73

-BY4- 25 POT

-BL- 8 PINC
-BY3- 23 POT

-L- PC Sta. 57+28.92

-L- PT Sta. 61+32.61

-L- POC Sta.59+13.97=
-Y4- POT Sta. 10+00.00

-Y5- PT Sta. 11+38.62

-Y5- PC Sta. 12+30.31

-Y5- PT Sta. 13+33.65

HIGH VISIBILITY CROSSWALK

55+00

60+00

65+00

MATCHLINE SEE SHEET "6" -L- STA. 53+00

MATCHLINE SEE SHEET "8" -L- STA. 66+00

N 67° 10' 13.9" E

N 0° 05' 22.0" E

N 17° 02' 38.0" W

N 7° 34' 41.1" E

N 86° 33' 25.5" W

N 69° 57' 28.2" E

-BL- 7 PINC

-BY4- 26 POT

-BY3- 24 POT

-Y4- POT Sta. 14+45.30

-DR- POT Sta. 10+00.00=
-L- POT Sta.62+34.69

-DR- PC Sta. 12+25.61

-DR- PT Sta. 13+43.07

END CONSTR.
-Y4- POT Sta.12+30.00

-DR- PC Sta. 14+68.59

-DR- PT Sta. 15+53.52

2012 / 2035 ADT

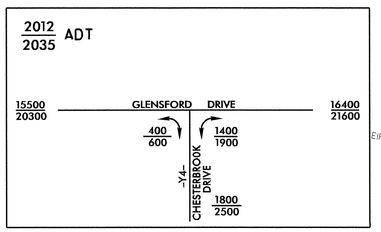

NOTE: (1) DRIVEWAYS ARE 20 FEET IN WIDTH UNLESS INDICATED ON PLAN SHEET.

(2) SEE PAVEMENT MARKING PLANS FOR ACTUAL LOCATIONS OF CURB RAMPS.

ROBERT LUCAS DB 5204 PG 870 PB 28 PG 13
DONALD CARNER DB 5732 PG 366 PB 28 PG 13
CLYDE GRADY DB 7597 PG 123 PB 42 PG 74
MARK WATKINS DB 6429 PG 303 PB 42 PG 74
FAYETTEVILLE METROPOLITAN DB 2750 PG 449 PB 42 PG 74
RICHARD SYLES DB 2550 PG 494 PB 42 PG 74
MARIA SEIDEL DB 2729 PG 833 PB 42 PG 74
RAY SANCHEZ DB 3385 PG 807 PB 42 PG 74
BERNADETTE ALEXANDER PB 42 PG 74 DB 4959 PG 233
CHARLES LERNER DB 4350 PG 354 PB 42 PG 74
TOMMY SMITH DB 3020 PG 785 PB 42 PG 74
JOHNNIE DEBOSE DB 4776 PG 836 PB 42 PG 74
JUANITA C. BETHEA DB 4059 PG 562 PB 42 PG 74
HAROLD MORRISON DB 3732 PG 427 PB 42 PG 74
DORIS G. BROWN DB 7819 PG 672 PB 52 PG 25
WILLIAM STARLING DB 5436 PG 267 PB 52 PG 25
PAUL W. TAYLOR JR. DB 7510 PG 730
THOMAS BELL PB 28 PG 13
DB 3443 PG 398 OSITA OKONKWO PB 28 PG 13 DB 4485 PG 78
LEOPOLDO GAUNDIOUE DB 7790 PG 748 PB 40 PG 47
AVIS D. BULLARD DB 3315 PG 345 PB 40 PG 47
WALTER LABRIE DB 2465 PG 511 PB 40 PG 47
JOSEPH KANANOWICZ DB 3941 PG 44 PB 40 PG 47
ANTONIO DECASTRO DB 4758 PG 879 PB 40 PG 47
FLORENCE MCEACHERN DB 3097 PG 392 PB 40 PG 47
GIZELA KILMAN DB 2747 PG 492 PB 40 PG 47
DALAS L. STROTHER DB 3581 PG 452 PB 40 PG 47
SUN HAK MCGOWAN DB 2454 PG 589 PB 40 PG 47
ALLEN W. RAY DB 3581 PG 70 PB 40 PG 47
FRED SYLVAIN II DB 6279 PG 90 PB 40 PG 47
STUART BURNETTE DB 5483 PG 550 PB 40 PG 47
CUMBERLAND COUNTY BOARD OF EDUCATION DB 1081 PG 264

IS BK SCHOOL

SR 2764 WESTFIELD RD 28' BST
SR 2764 ROCK SPRING RD 28' BST
SR 1520 FAIRWICK DR 30' BST
CHAMBERSBERG RD 28' BST
GLENSFORD DR 30' BST

03-APR-2012 08:09
C:\projects\4422_rdy_psh_07.dgn
$$USERNAME$$

PROJECT REFERENCE NO.	SHEET NO.
U-4422	8
RW SHEET NO.	

ROADWAY DESIGN ENGINEER
NORTH CAROLINA PROFESSIONAL SEAL 16378 ENGINEER REKHA V. PATEL
Rekha V. Patel

HYDRAULICS ENGINEER
NORTH CAROLINA PROFESSIONAL SEAL 022091 ENGINEER W. GALEN CAIN
W. Galen Cain 12/21/11

SEE SHEET 12 FOR -L- PROFILE
SEE SHEET 16 FOR -DR- PROFILE
SEE SHEET 16 FOR -DRI- PROFILE

-DR-
PI Sta 15+17.17
Δ = 69° 30' 47.5" (RT)
D = 81° 51' 04.0"
L = 84.93'
T = 48.57'
R = 70.00'
SE = NC

-DRI-
PI Sta 10+26.92
Δ = 48° 19' 30.4" (RT)
D = 95° 29' 34.7"
L = 50.61'
T = 26.92'
R = 60.00'
SE = NC

-DRI-
PI Sta 11+04.52
Δ = 90° 17' 44.1" (RT)
D = 229° 10' 59.2"
L = 39.40'
T = 25.13'
R = 25.00'
SE = NC

-L-
PI Sta 74+81.25
Δ = 12° 31' 51.0" (RT)
D = 3° 10' 59.2"
L = 393.67'
T = 197.62'
R = 1,800.00'
SE = NC

NAD 83/95

MATCHLINE SEE SHEET "7" -L- STA. 66+00

MATCHLINE SEE SHEET "9" -L- STA. 75+00

-BL- 9 PINC

-BL- 10 PINC

70+00

HIGH VISIBILITY CROSSWALK SEE DETAIL BELOW

-L- PC Sta. 72+83.63

THOMAS WRENN DB 4523 PG 665 PB 52 PG 25

GARY LANGDON DB 6412 PG 307 PB 52 PG 25

PERI ANEST DB 3828 PG 488 PB 52 PG 25

BEREAN BAPTIST CHURCH DB 8228 PG 456

CUMBERLAND COUNTY BOARD OF EDUCATION DB 1081 PG 264

IS BK SCHOOL

2SBK SCH

2SBK CHURCH

CANOPY

STONE

-DR- POT Sta. 20+00.84

END CONSTR. -DR- POT STA.19+87.15

-DRI- POC / POT Sta. 10+00.00= -DR- POT Sta.19+42.36

-DRI- PT Sta. 10+50.61

-DRI- PC Sta. 10+79.39

END CONSTR. -DRI- PT Sta. 11+18.79

HIGH VISIBILITY CROSSWALK

HIGH VISIBILITY CROSSWALK DETAIL

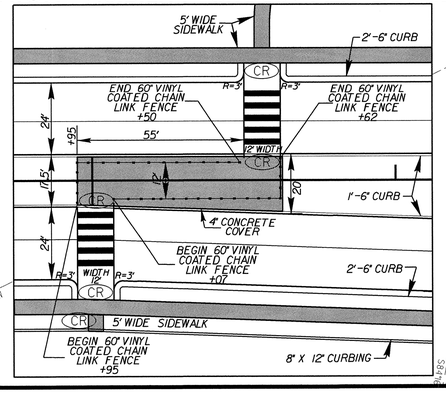

NOTE: (1) DRIVEWAYS ARE 20 FEET IN WIDTH UNLESS INDICATED ON PLAN SHEET.

(2) SEE PAVEMENT MARKING PLANS FOR ACTUAL LOCATIONS OF CURB RAMPS.

REVISIONS

8/17/99

02-APR-2012 14:45
C:\Projects\4422_rdy_psh_08.dgn
$$$$USERNAME$$$$

PROJECT REFERENCE NO.	SHEET NO.
U-4422	9
R/W SHEET NO.	
ROADWAY DESIGN ENGINEER	HYDRAULICS ENGINEER

NORTH CAROLINA PROFESSIONAL SEAL 16378 ENGINEER REKHA V. PATEL

NORTH CAROLINA PROFESSIONAL SEAL 022000 ENGINEER W. GALEN CAIL

SEE SHEET 12 FOR -L- PROFILE
SEE SHEET 15 FOR -Y6- PROFILE

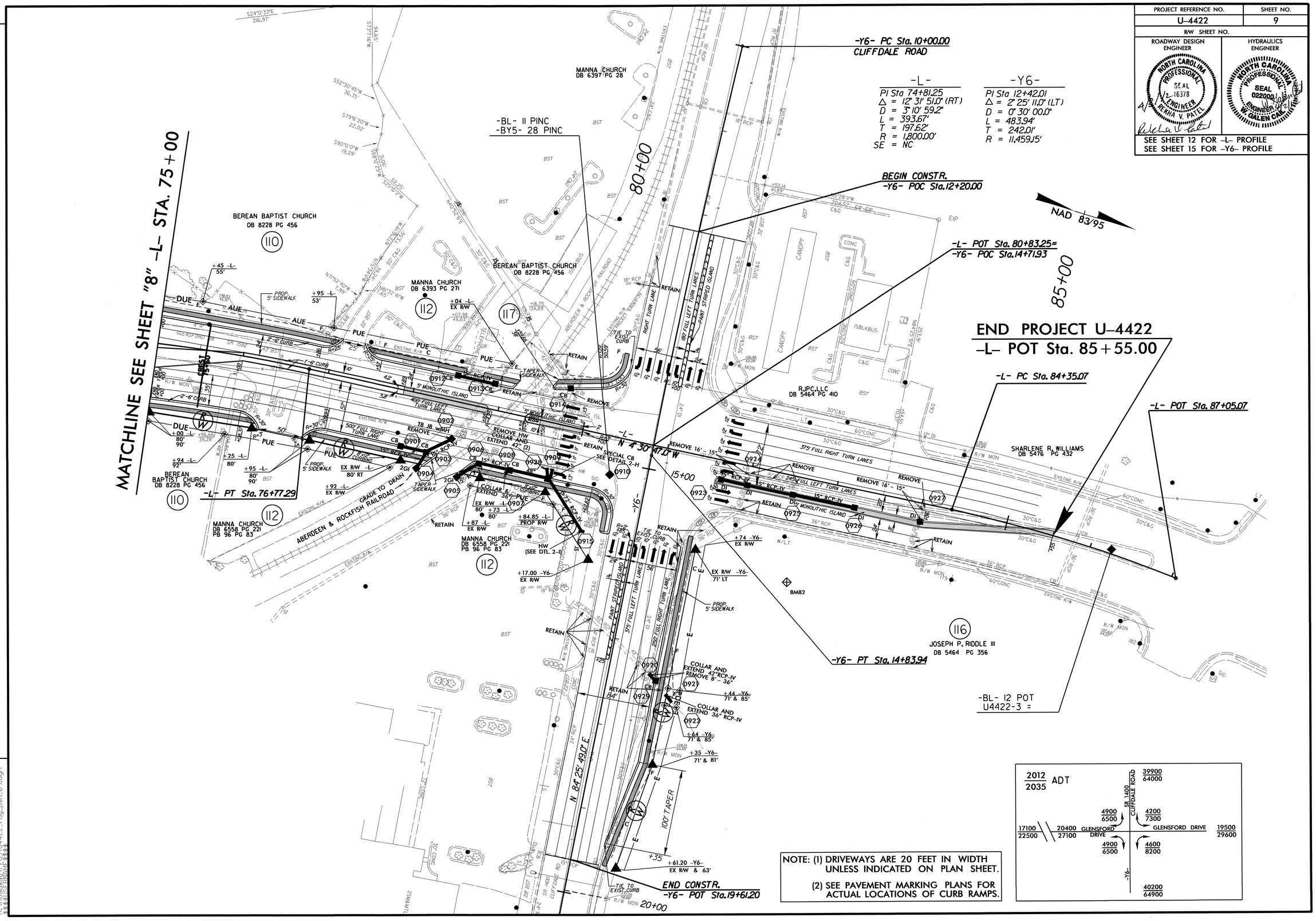

NOTE: (1) DRIVEWAYS ARE 20 FEET IN WIDTH UNLESS INDICATED ON PLAN SHEET.

(2) SEE PAVEMENT MARKING PLANS FOR ACTUAL LOCATIONS OF CURB RAMPS.

REVISIONS

02-APR-2012 14:45
R:\Roadway\Proj\u4422_rdy_psh_09.dgn
$$$$USERNAME$$$$

5/28/99

PROJECT REFERENCE NO.	SHEET NO.
U-4422	10

ROADWAY DESIGN ENGINEER

NORTH CAROLINA PROFESSIONAL SEAL 16378 ENGINEER REKHA V. PATEL

-L-

BEGIN PROJECT
BEGIN RESURFACING & WIDENING
STA. 11+00.00

END RESURFACING
BEGIN GRADE
STA 20+35.84
EL=210.00'

(-)11.949%

BM #80
RR SPIKE IN BASE OF 20" PINE
ELEV.=214.07'
-BL- STA. 27+27.83 71.87' LT
-L- STA. 24+62.19 143.37' LT

NOTE: SEE SHEET NO. 4 FOR PLAN VIEW

230 220 210 200 190 180 170

11+00 12 13 14 15 16 17 18 19 20 21 22 23 24 25

-L-

PI = 29+30.00
EL = 199.32'
VC = 120'
K = 72

180' ROUNDABOUT #1

STA. 32+02.08
EL=192.83'

STA. 30+22.08
EL=196.68'

(-)11.949%

(-)12.8684%

PI = 32+60.00
EL = 189.85'
VC = 398'
K = 76

(+)2.3889%

PI = 35+30.00
EL = 196.30'
VC = 120'
K = 66

(+)0.5641%

PI = 37+25.00
EL = 197.40'
VC = 120'
K = 81

(+)2.0503%

PI = 39+00.00
EL = 200.99'
VC = 120'
K = 97

NOTE: SEE SHEET NO. 5 FOR PLAN VIEW

230 220 210 200 190 180 170

25+00 26 27 28 29 30 31 32 33 34 35 36 37 38 39

03-APR-2012 07:23
C:\Projects\4422_rdy_pf1.dgn
$$$$USERNAME$$$$

5/28/99

PROJECT REFERENCE NO.	SHEET NO.
U-4422	11

ROADWAY DESIGN ENGINEER

NORTH CAROLINA PROFESSIONAL SEAL 12-16378 ENGINEER HEMANT V. PATEL

Hemant V. Patel

-L-

PI = 39+00.00
EL = 200.99'
VC = 120'
K = 97

PI = 41+70.00
EL = 203.20'
VC = 120'
K = 146

PI = 44+50.00
EL = 207.80'
VC = 120'
K = 115

STA. 47+64.98
EL = 216.26'

150' ROUNDABOUT #2

PI = 49+00.00
EL = 219.90'
VC = 300'
K = 97

STA. 49+14.98
EL = 218.90'

(+)0.8193%
(+)1.6429%
(+)2.6889%
(-)0.4000%
(-)0.4000%

NOTE: SEE SHEET NO. 6 FOR PLAN VIEW

230 220 210 200 190 180 170

39+00 40 41 42 43 44 45 46 47 48 49 50 51 52 53

-L-

BM #81
RR SPIKE IN BASE OF 18" PINE
ELEV. = 218.49'
-BL- STA. 63+65.77 70.48' RT
-L- STA. 60+76.75 78.67' RT

PI = 53+75.00
EL = 218.00'
VC = 120'
K = 171

PI = 56+30.00
EL = 218.76'
VC = 120'
K = 139

PI = 61+20.00
EL = 216.00'
VC = 120'
K = 97

150' ROUNDABOUT #3

STA. 61+58.51
EL = 216.28'

STA. 63+08.51
EL = 217.26'

PI = 66+00.00
EL = 219.20'
VC = 120'
K = 78

(-)0.4000%
(+)0.3000%
(-)0.5643%
(+)0.6667%

NOTE: SEE SHEET NO. 7 FOR PLAN VIEW

230 220 210 200 190 180 170

53+00 54 55 56 57 58 59 60 61 62 63 64 65 66

03-APR-2012 07:23
C:\Projects\4422_rdy_pf1.dgn
$$$$USERNAME$$$$

PROJECT REFERENCE NO.	SHEET NO.
U-4422	12

ROADWAY DESIGN ENGINEER

NORTH CAROLINA PROFESSIONAL ENGINEER 16374 REKHA V. PATEL

4/8/12

Rekha V. Patel

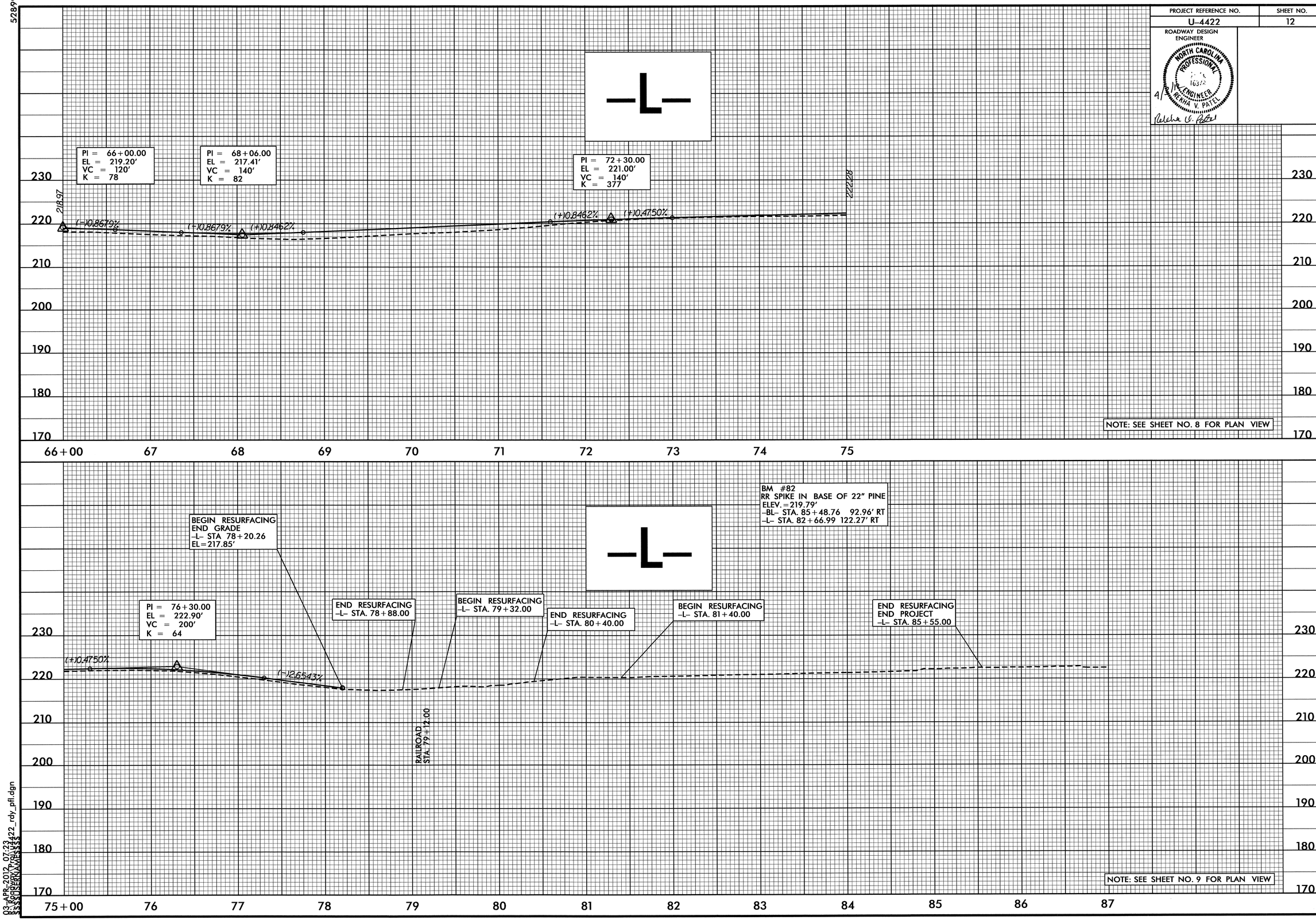

52899

03-APR-2012 07:23
R:\Roadway\Proj\U4422_rdy_pfl.dgn
$$$$USERNAME$$$$

PROJECT REFERENCE NO.	SHEET NO.
U-4422	13

ROADWAY DESIGN ENGINEER

NORTH CAROLINA PROFESSIONAL SEAL 16378 ENGINEER REKHA V. PATEL

Rekha V. Patel

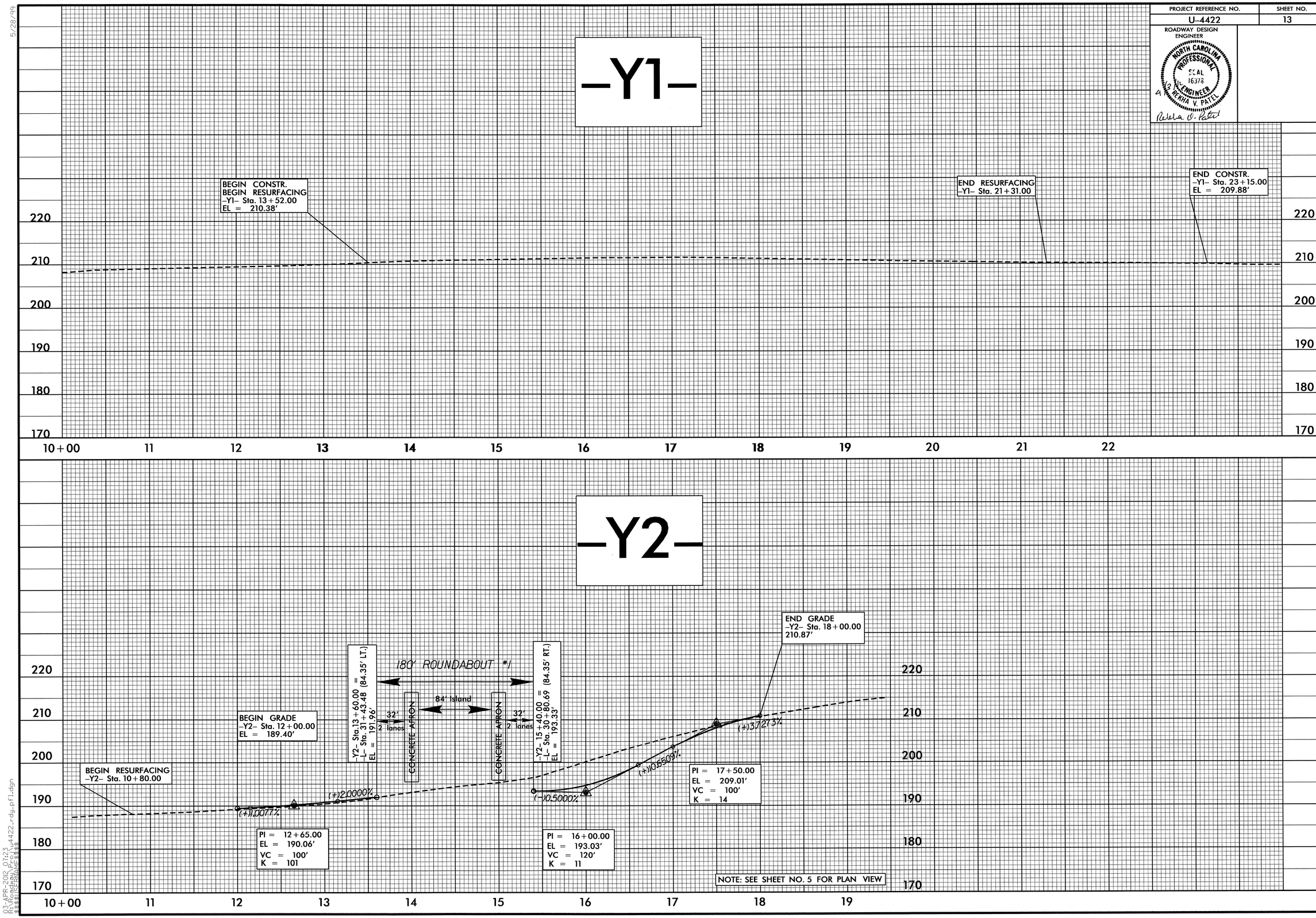

5/28/99

03-APR-2012 07:23
R:\Roadway\Proj\u4422_rdy_pfl.dgn
$$$$USERNAME$$$$

PROJECT REFERENCE NO.	SHEET NO.
U-4422	14

ROADWAY DESIGN ENGINEER

NORTH CAROLINA PROFESSIONAL SEAL 16378 ENGINEER REKHA V. PATEL

Rekha V. Patel

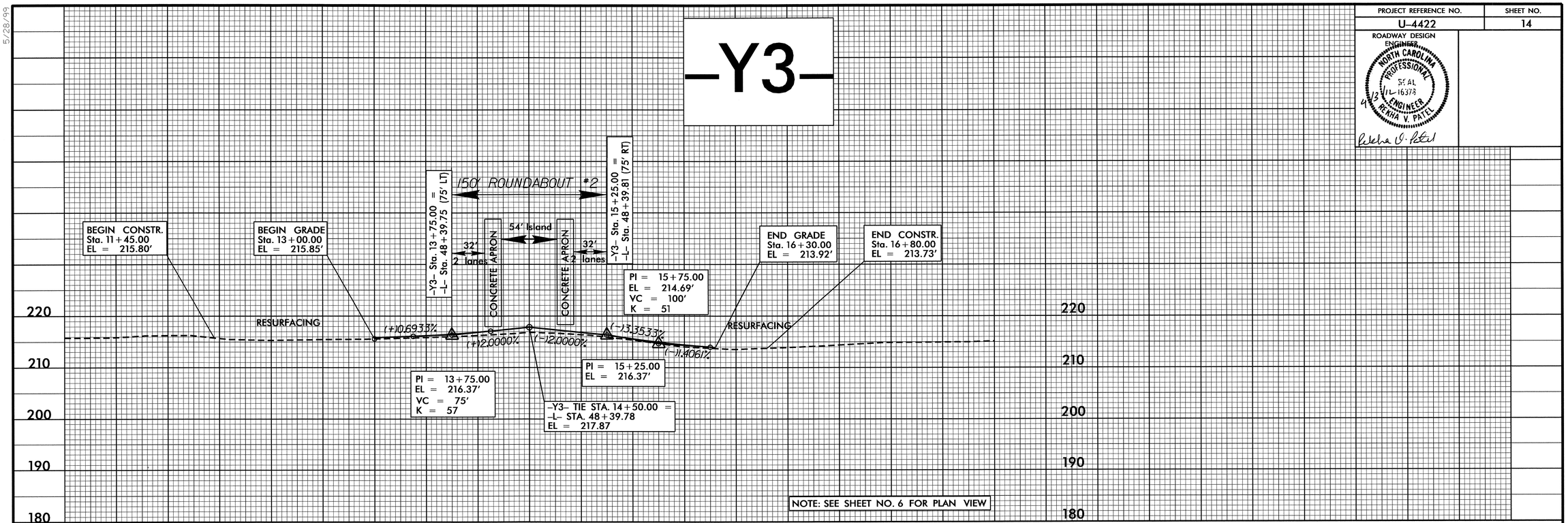

5/28/99

03-APR-2012 07:23
R:\Roadway\Proj\u4422_rdy_pfl.dgn
$$$$USERNAME$$$$

PROJECT REFERENCE NO.	SHEET NO.
U-4422	15

ROADWAY DESIGN ENGINEER

NORTH CAROLINA PROFESSIONAL ENGINEER 16372 REKHA V. PATEL

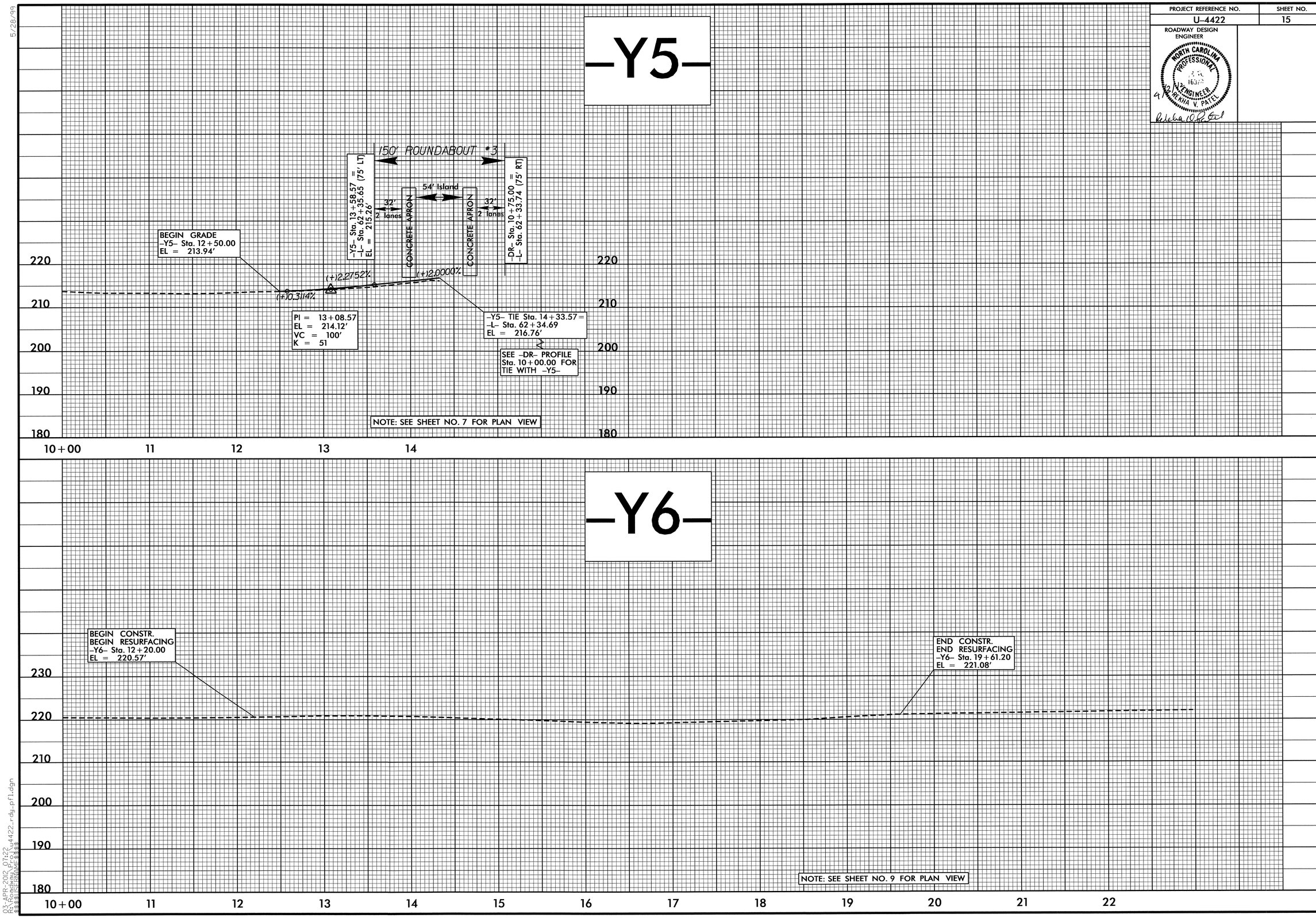

5/28/99

03-APR-2012 07:22
R:\Roadway\Proj\u4422_rdy_pfl.dgn
$$$$USERNAME$$$$

PROJECT REFERENCE NO.	SHEET NO.
U-4422	16

ROADWAY DESIGN ENGINEER

NORTH CAROLINA PROFESSIONAL SEAL 16378 ENGINEER REKHA V. PATEL

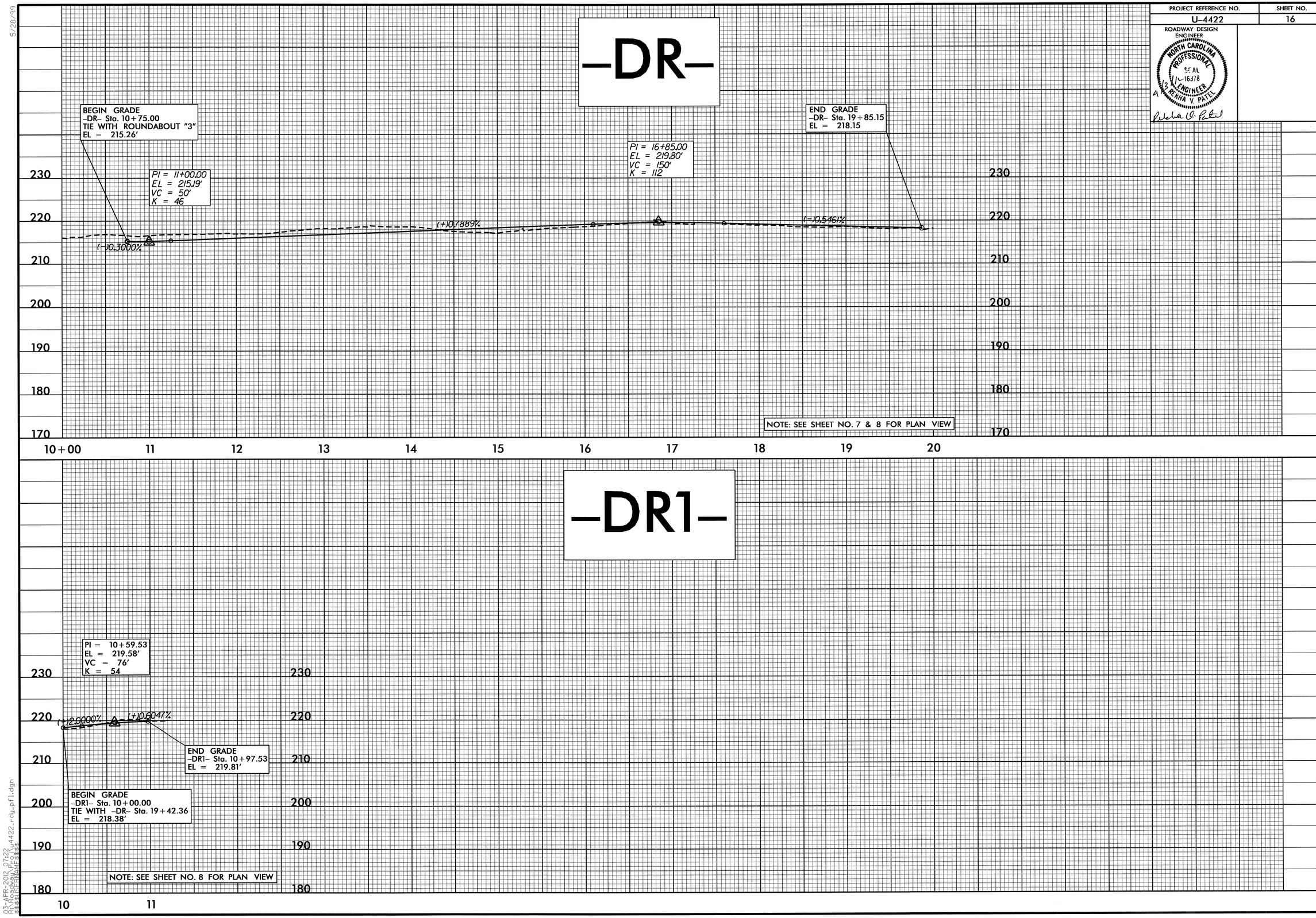

5/28/99

03-APR-2012 07:22
R:\Roadway\Proj\u4422_rdy_pfl.dgn
$$$$USERNAME$$$$