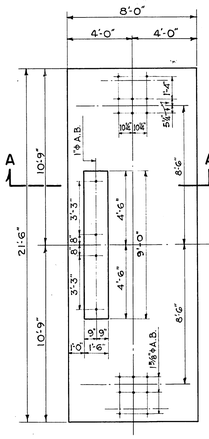

TOE PIER
SCALE - 1/4" = 1'-0"

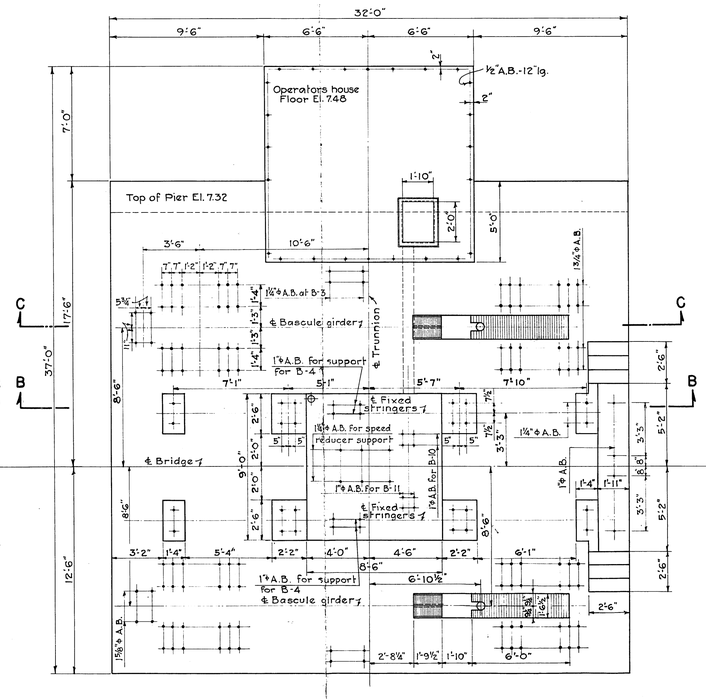

BASCULE PIER
SCALE - 1/4" = 1'-0"

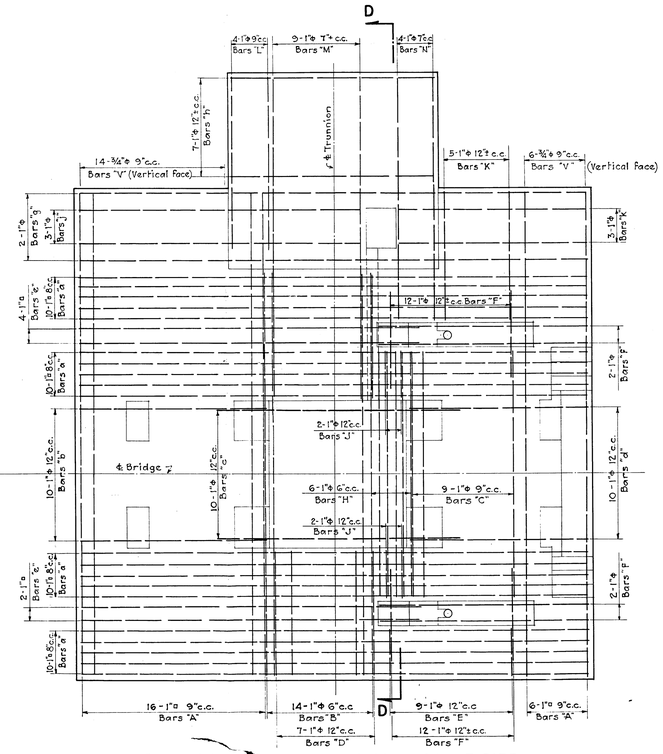

PLAN OF TOP REINFORCING OF BASCULE PIER
SCALE - 1/4" = 1'-0"

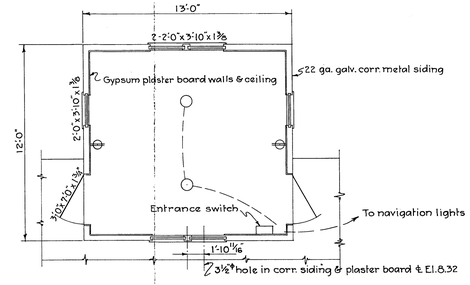

PLAN

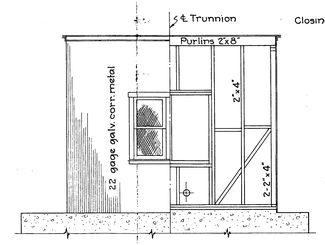

SOUTH ELEVATION AND FRAMING

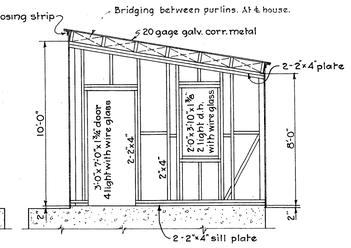

END FRAMING

DETAILS OF OPERATORS HOUSE
SCALE - 1/4" = 1'-0"

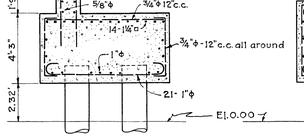

SECTION A-A
SCALE - 1/4" = 1'-0"

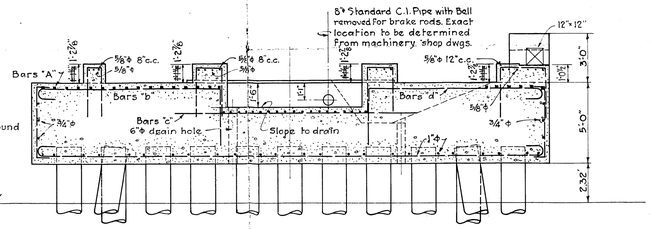

SECTION B-B
SCALE - 1/4" = 1'-0"

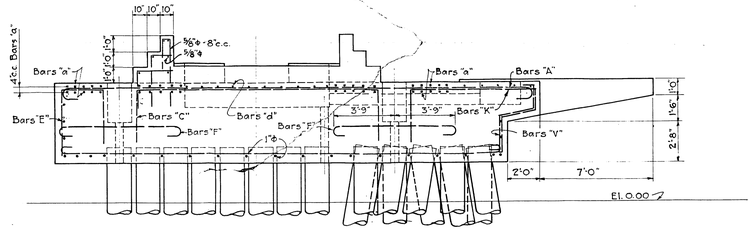

REAR ELEVATION
SCALE - 1/4" = 1'-0"

NOTE:-
Anchor bolts are not shown in Sections "A-A", "B-B", "C-C", "D-D" and "Rear Elevation. See Drawings No. C-513-4, -6 and -8 for details of anchor bolts.

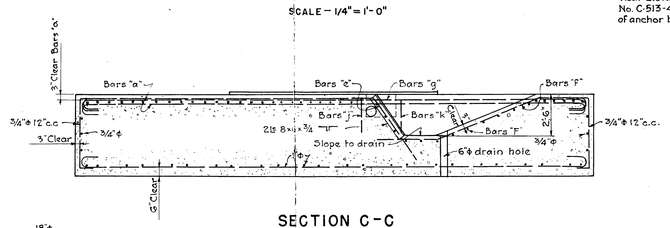

SECTION C-C
SCALE - 1/4" = 1'-0"

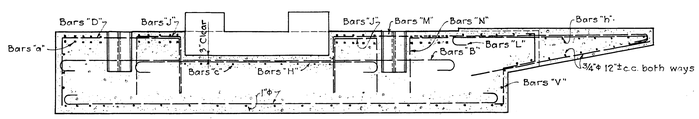

SECTION D-D
SCALE - 1/4" = 1'-0"

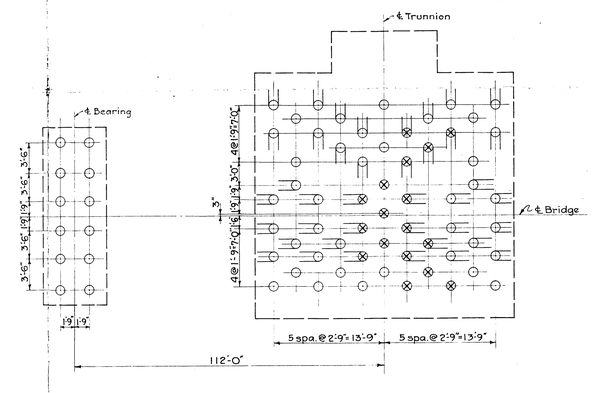

TOE PIER BASCULE PIER

PILE LAYOUT
SCALE - 1/8" = 1'-0"

NOTE:
- Plumb pile Type "A"
- Plumb pile Type "B"
- Batter pile Type "A"
- Batter pile Type "B"

Batter of piles 1:6

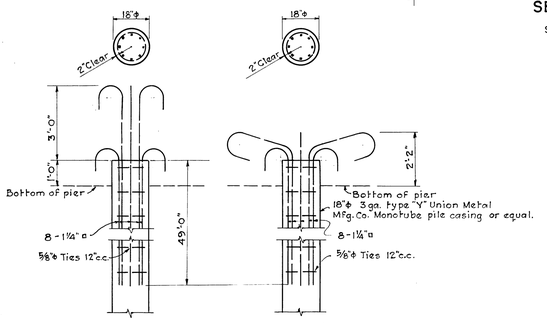

TYPE "A" TYPE "B"

PILE DETAILS
SCALE - 3/8" = 1'-0"

NOTES:-
For "General Notes" see Drawing No. C-513-1.
Length of pile casings to be furnished 75'.
Min. bearing capacity of piles 45 tons.
Min. penetration of pile point to be to El. -62.
See Drawing No. C-513-4 for anchorages embedded in bascule pier.
Cost of 8" C.I. Pipe and Drains are to be included in the Unit Price for Concrete.

Revised: March 29, 1950 by H.A.
Dimension to top of concrete pads changed

SUBMITTED
CARR AND J. E. GREINER COMPANY
BY _____
DATE — March 5, 1948

APPROVED
BEAUFORT MOREHEAD RAILROAD COMPANY
BY _____
LESSEE
DATE _____

APPROVED
U.S. ENGINEER OFFICE,
WILMINGTON, NORTH CAROLINA
BY _____
DISTRICT ENGINEER
DATE _____

BEAUFORT MOREHEAD RAILROAD COMPANY
A. T. LEARY, LESSEE
BEAUFORT, NORTH CAROLINA

ALTERATIONS - NEWPORT RIVER BRIDGE SUBSTRUCTURE AND OPERATORS HOUSE

CARR AND J. E. GREINER COMPANY — ENGINEERS
DURHAM, N.C. BALTIMORE, MD.

IN CHARGE B. W. Le Sueur DESIGNED BY M. M^S Cord
DRAWN BY E. G. Ruark CHECKED BY B. W. Le Sueur

SCALES AS NOTED

MARCH 5, 1948
Revised: April 1, 1948

DRAWING NO. C-513-3

FRAMING PLAN
TEMPORARY SPAN AT TOE PIER

FRAMING PLAN
TEMPORARY SPAN AT BASCULE PIER

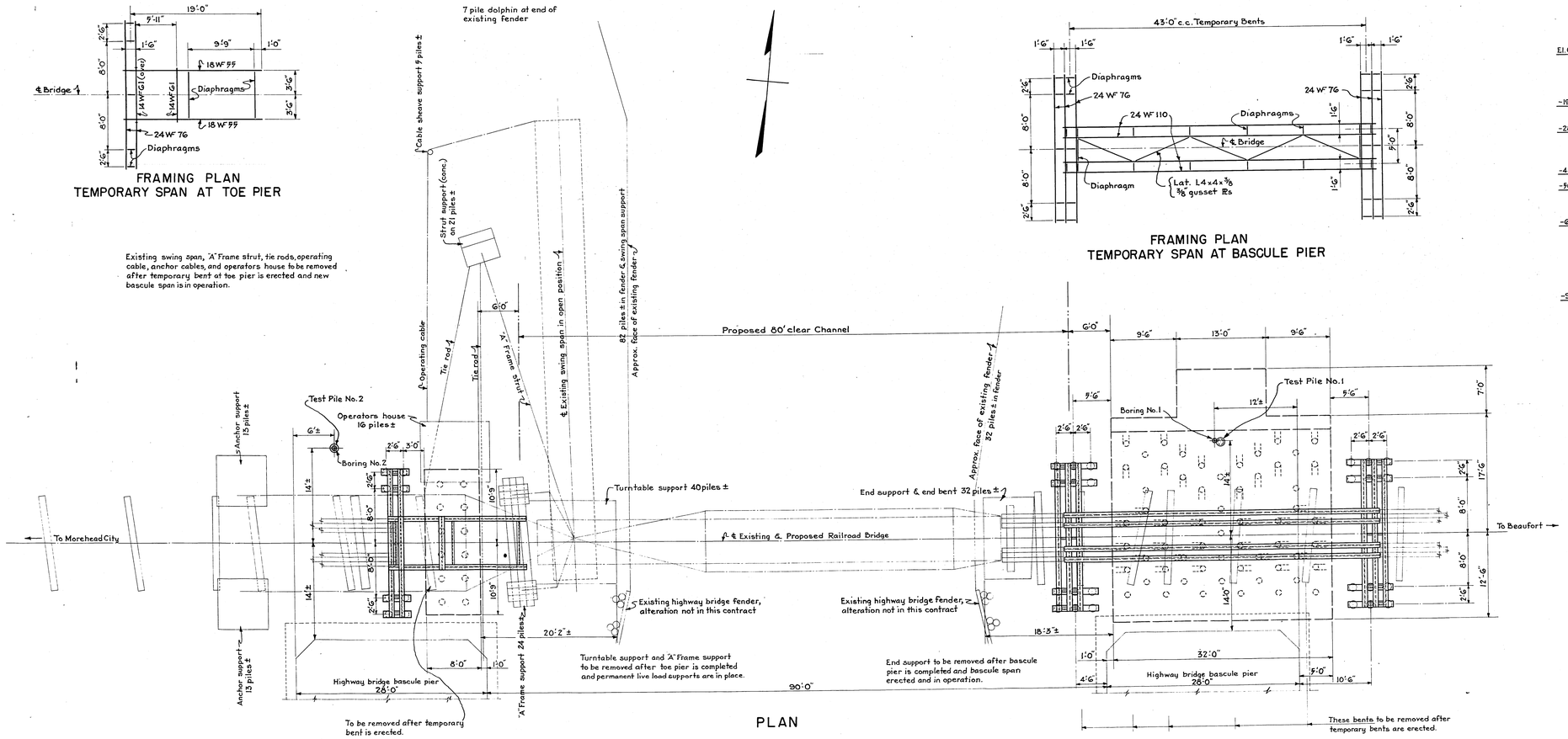

PLAN

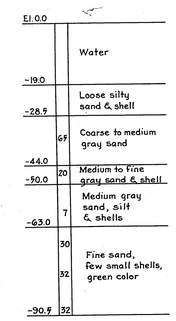

BORING NO. 2

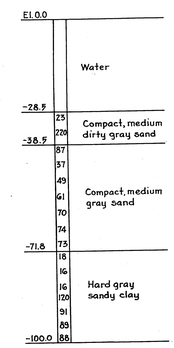

BORING NO. 1

Note:-
Figures in center column indicate number of blows required to drive sampling pipe one foot using 140 lb. weight falling 30 inches.
Borings made Feb. 7, 1948

TEST BORINGS
NO SCALE

NOTES -

For "General Notes" see Drawing No. C-513-1.

Temporary Timber Piles for temporary bents to be driven to a bearing capacity of 20 Tons. Piles to be furnished in lengths ranging from 50' to 60'.

Shimming and Aligning - The existing timber approach trestle shall be shimmed and aligned for a distance of 50 feet minimum beyond the new construction at both ends of the proposed new span so that the track on the existing trestle shall conform to the line and grade of the track on the proposed new bascule span.

Removal of Existing Structures - All existing structures within the limits of the new construction are to be removed. This includes timber bents, timber trestle, end support and end bent, turntable support, "A" Frame support, fenders, operator's house, swing span with operating cable, support and anchor cables, "A" Frame, strut support, cable sheave support, tie rods, and all piles incident thereto. See specifications.

Stages of Construction -
Stage 1 - Erect temporary bents and temporary removable section of track to span proposed bascule pier.
Stage 2 - Construct proposed bascule pier. Place new permanent stringers and track on bascule pier. Reframe approach trestle to meet permanent track on bascule pier. Erect new bascule span in erection position as shown on Drawing No. C-513-1.
Stage 3 - Erect temporary bent and temporary structure to span proposed toe pier. Remove existing swing span and construct temporary live load support for new bascule span on existing turntable support and "A" Frame support. Construct proposed toe pier. Reframe approach trestle to rest permanently on new toe pier. Remove temporary live load support and place permanent support on new toe pier. Remove remainder of all existing structures designated to be removed.
See specifications for further details of construction procedure.

Railroad traffic is to be maintained throughout construction period.

Precautions should be taken by the Contractor to insure that existing conditions of the river bottom in the vicinity of the highway bridge bascule piers remain unchanged by operations under this contract.

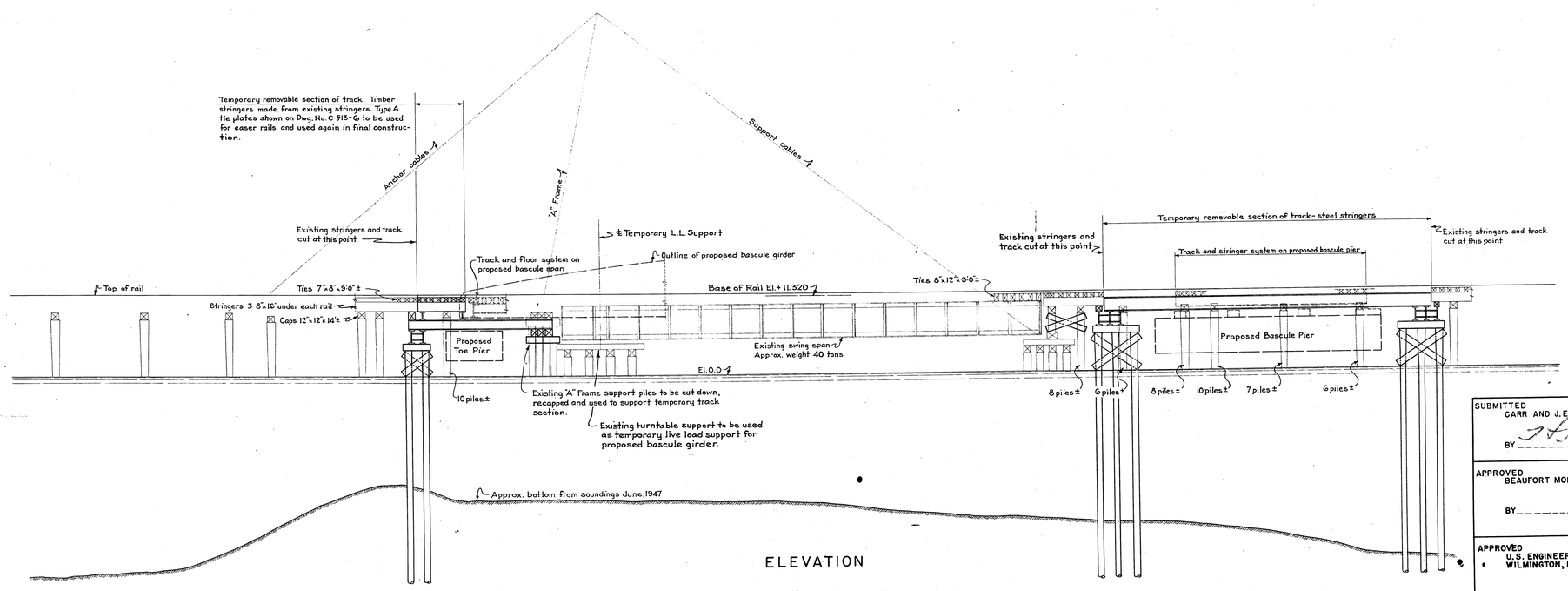

ELEVATION

SUBMITTED
CARR AND J. E. GREINER COMPANY
BY _____ DATE — March 5, 1948

APPROVED
BEAUFORT MOREHEAD RAILROAD COMPANY
BY _____
LESSEE
DATE —

APPROVED
U.S. ENGINEER OFFICE,
WILMINGTON, NORTH CAROLINA
_____
DISTRICT ENGINEER
DATE —

BEAUFORT MOREHEAD RAILROAD COMPANY
A. T. LEARY, LESSEE
BEAUFORT, NORTH CAROLINA

ALTERATIONS - NEWPORT RIVER BRIDGE
EXIST. CONDITIONS & CONSTRUCTION PROCEDURE

CARR AND J. E. GREINER COMPANY - ENGINEERS
DURHAM, N. C. BALTIMORE, MD.

IN CHARGE B. W. LeSueur DESIGNED BY M. McCord
DRAWN BY E. H. Burghardt CHECKED BY C. S. Meisterlin

SCALE - 1/8" = 1'-0"

MARCH 5, 1948
Revised - April 1, 1948

DRAWING NO. C-513-2

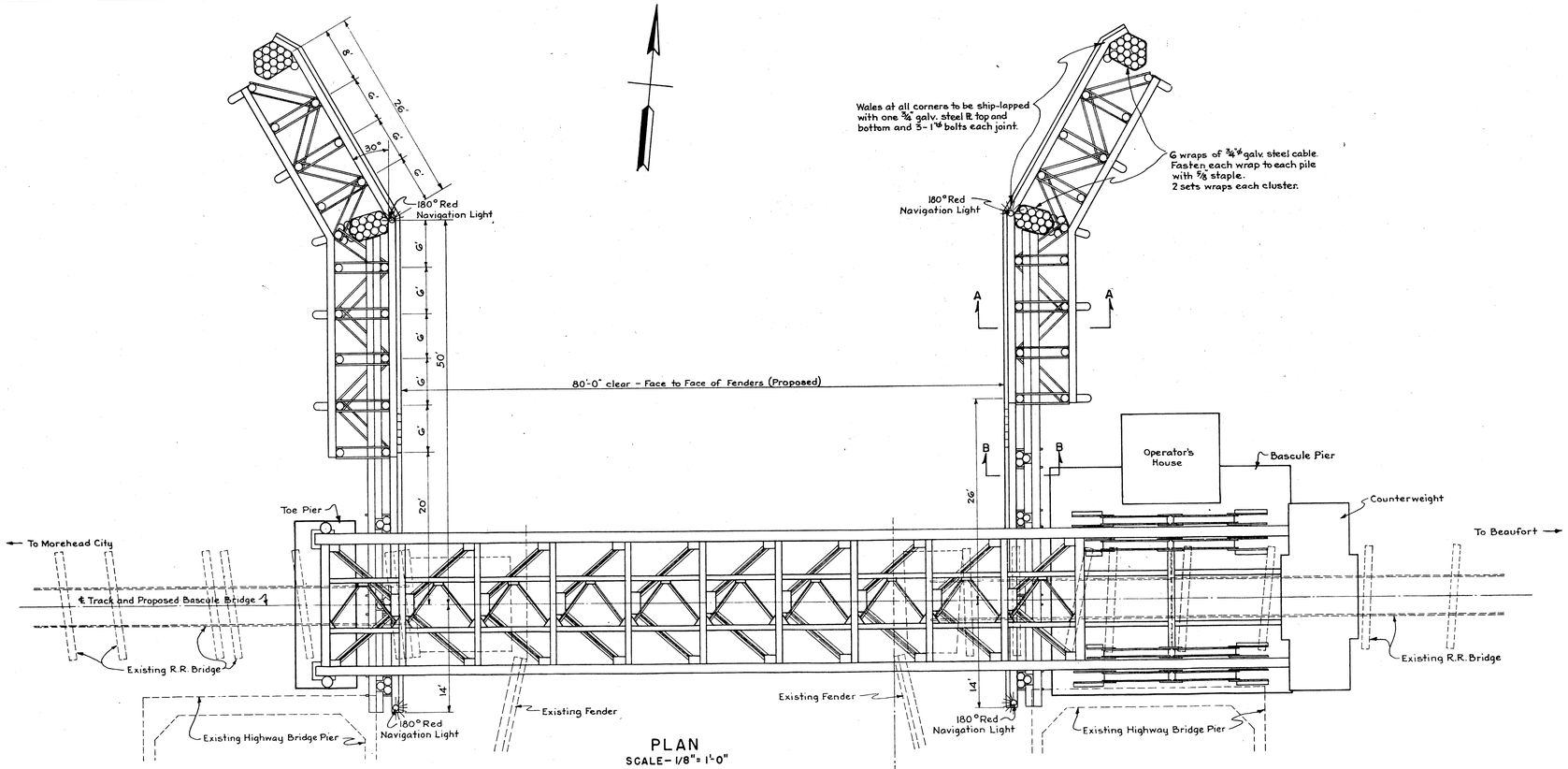

PLAN
SCALE - 1/8" = 1'-0"

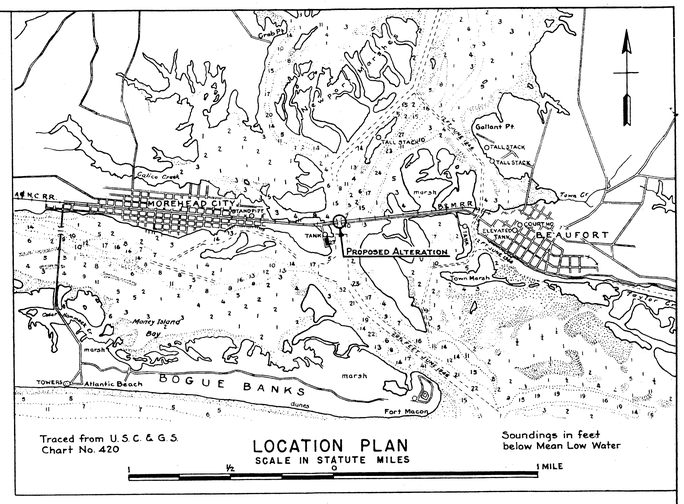

LOCATION PLAN
SCALE IN STATUTE MILES

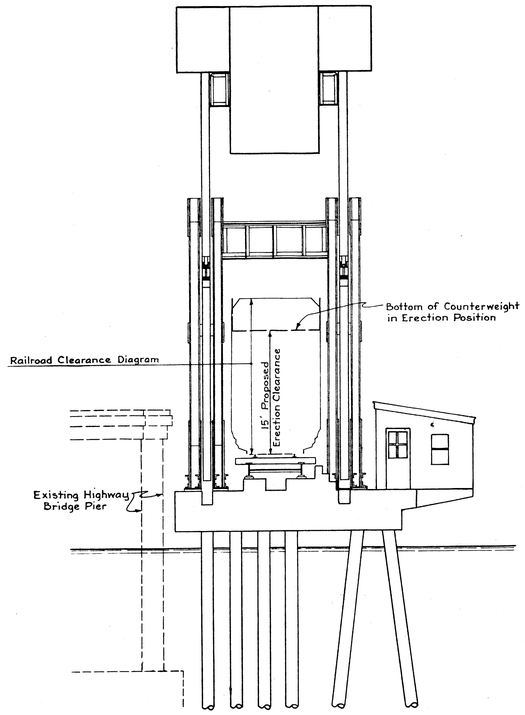

END ELEVATION
SCALE - 1/8" = 1'-0"

NOTE:-
All Fender piles and timbers to be treated.
All piles, including individual piles in pile clusters, to be covered with 16 oz. copper caps.
Fender piles 50 to 55 ft. long.

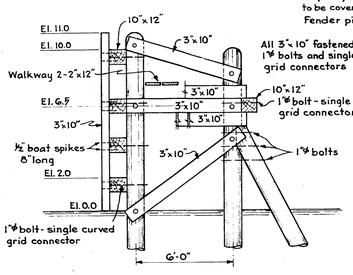

SECTION A-A

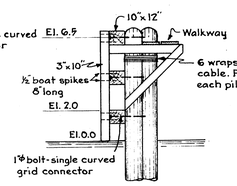

SECTION B-B

FENDER SECTIONS
SCALE - 1/4" = 1'-0"

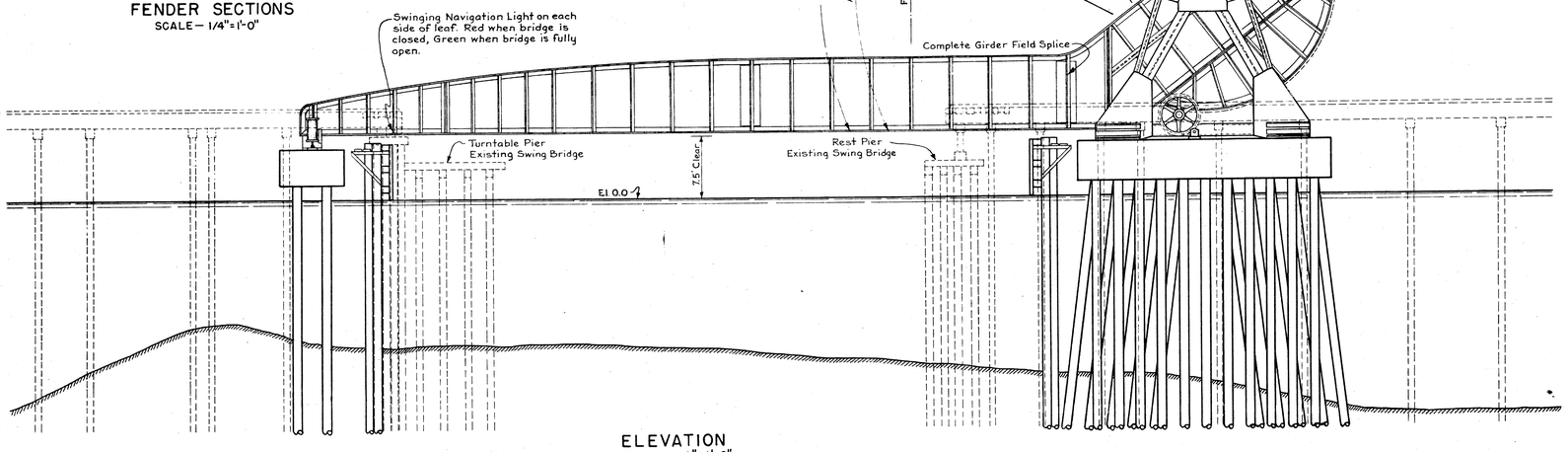

ELEVATION
SCALE - 1/8" = 1'-0"

GENERAL NOTES-
Specifications - A.R.E.A., March 20, 1947.
Loading - Cooper's E40.
Elevations shown refer to U.S.E.D. Datum. Bench Mark - disk set in bridge seat, south side of west abutment, highway bridge, El. +6.39.
Variation between M.L.W. and M.H.W. is 2.7'

SUBMITTED
CARR AND J.E. GREINER COMPANY
BY T.H. Allen
DATE - March 5, 1948

APPROVED
BEAUFORT MOREHEAD RAILROAD COMPANY
BY _____ LESSEE
DATE -

APPROVED
U.S. ENGINEER OFFICE, WILMINGTON, NORTH CAROLINA
DISTRICT ENGINEER
DATE -

BEAUFORT MOREHEAD RAILROAD COMPANY
A. T. LEARY, LESSEE
BEAUFORT, NORTH CAROLINA

ALTERATIONS - NEWPORT RIVER BRIDGE
GENERAL PLAN & ELEVATIONS

CARR AND J. E. GREINER COMPANY - ENGINEERS
DURHAM, N.C. BALTIMORE, MD.

IN CHARGE B.W. LeSueur DESIGNED BY M. McCord
DRAWN BY E.H. Burghardt CHECKED BY C.S. Meisterlin

SCALES AS NOTED

MARCH 5, 1948
Revised: April 1, 1948

DRAWING NO. C-513-1

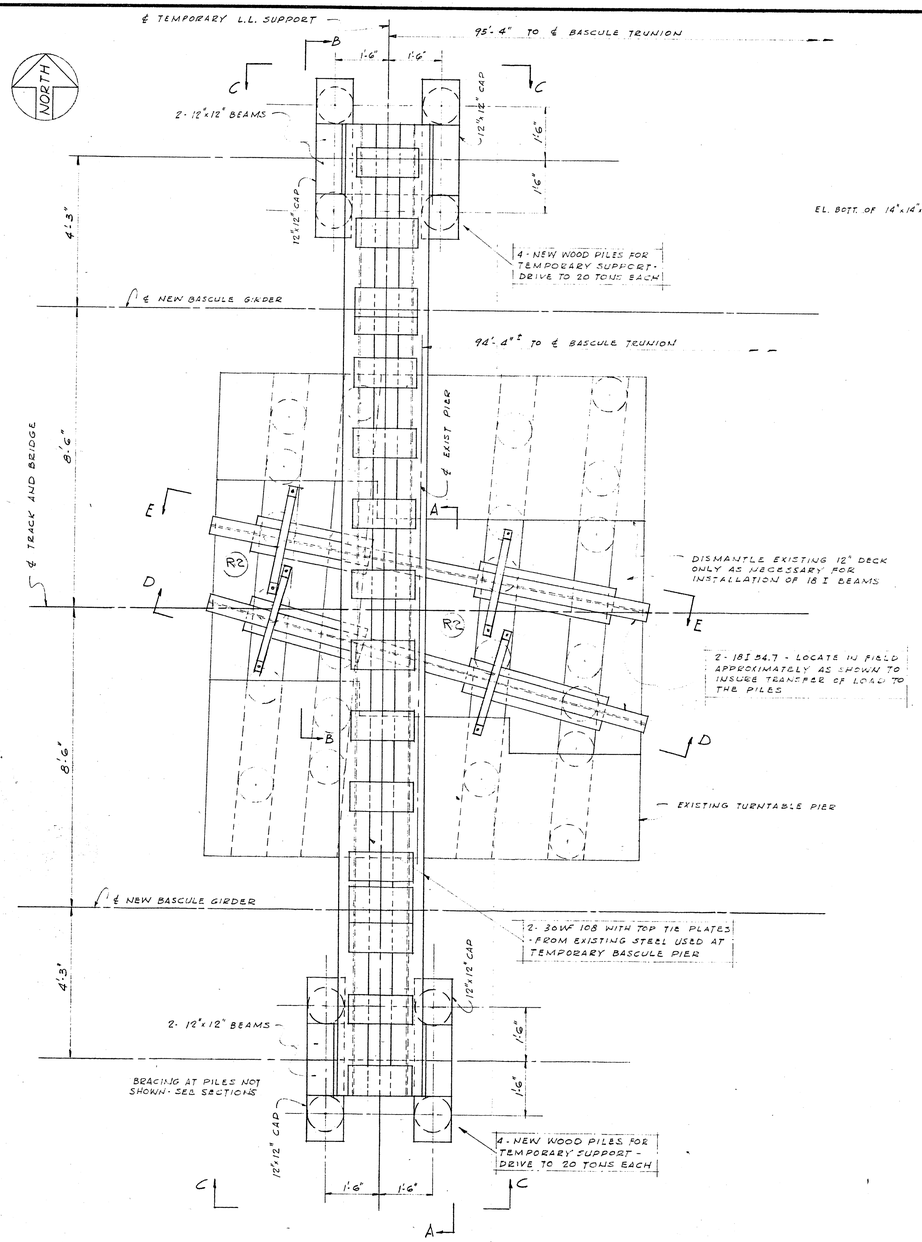

PLAN
½" = 1'-0"

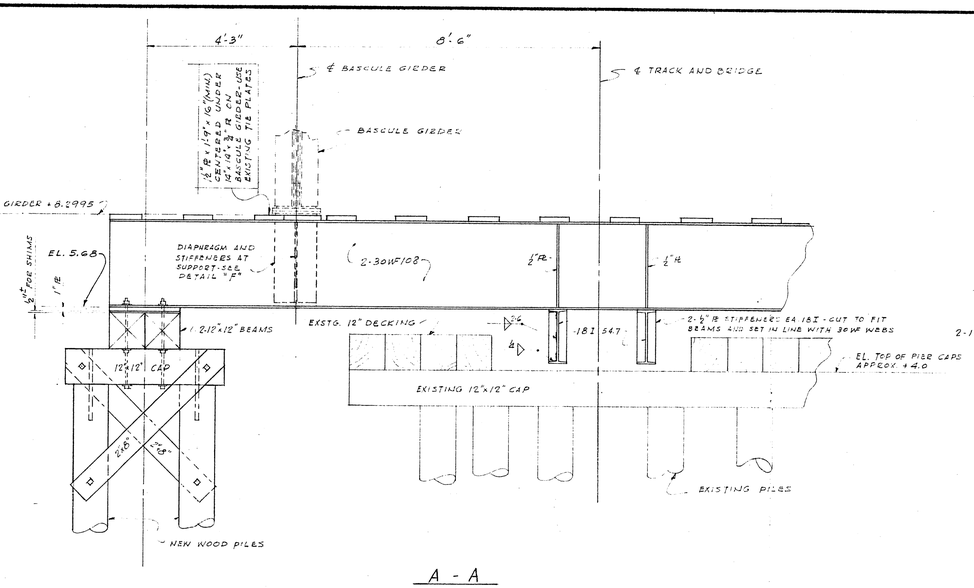

A - A
B - B
½" = 1'-0"

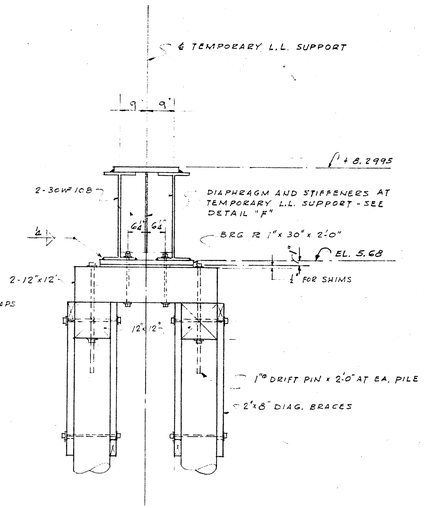

C - C
½" = 1'-0"

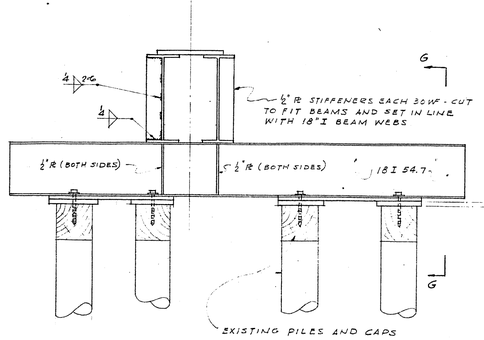

D - D
E - E
½" = 1'-0"

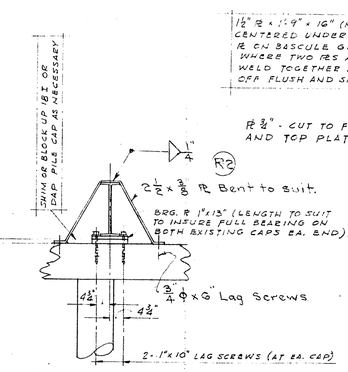

G-G

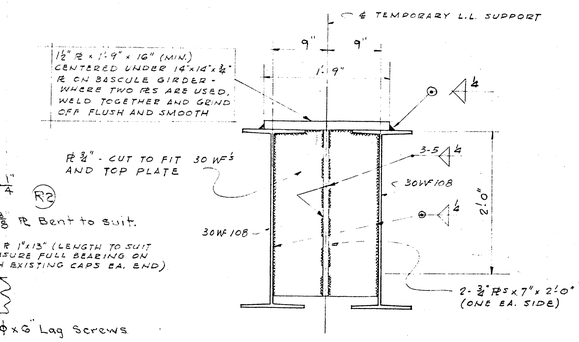

DETAIL "F"
DIAPHRAGM AND STIFFENERS AT TEMPORARY L.L. SUPPORT
1" = 1'-0"

NOTES
ALL BOLTS 1" ϕ M.B. WITH HEX. HEADS AND SQ. NUTS AND 2 - STD CUT WASHERS EA. BOLT.

REV.	DATE	BY	REMARKS
1	7-15-50	OAW	REDRAWN - GENERAL REVISION
2	8-4-50	HL	Added 18I brace straps.

BEAUFORT - MOREHEAD RAILROAD CO.
BEAUFORT, N.C.

ALTERATIONS TO NEWPORT R.R. BRIDGE
TEMPORARY SUPPORT FOR BASCULE L.L.

TIDEWATER CONSTRUCTION CORPORATION
ENGINEERS AND CONTRACTORS
NORFOLK, VIRGINIA

			SCALE	JOB NO.	DWG. NO.	REV.
DRAWN	OAW	6-6-50				
CHECKED	RPW		AS SHOWN	452	B-452-4	2
APPROVED						

Make (5) Print 8/4/50

Eugene Dietzgen Co., Inc., New York, N. Y. No. 1924 Extra Trading Vellum

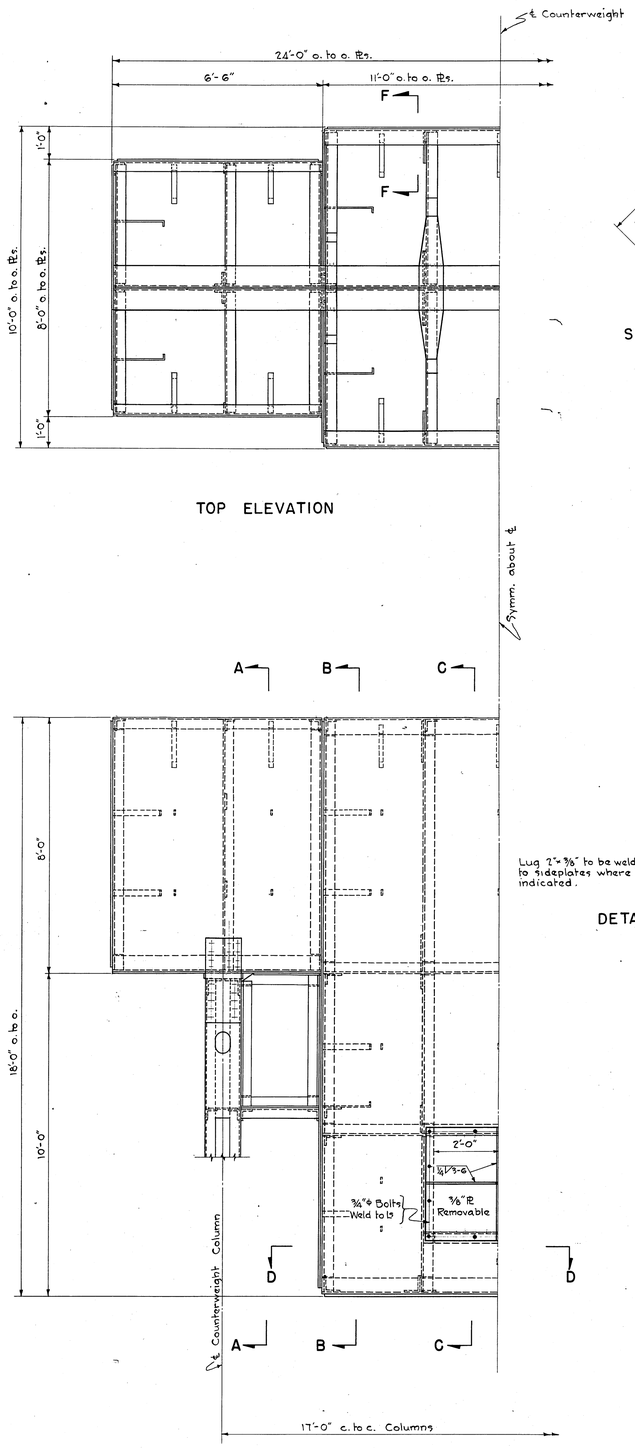

TOP ELEVATION

FRONT ELEVATION

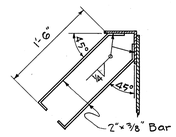

SECTION F-F

Scale: 1"=1'-0"

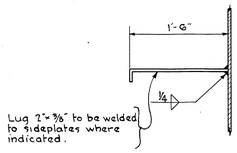

Lug 2"×⅜" to be welded to sideplates where indicated.

DETAIL OF LUGS

Scale: 1"=1'-0"

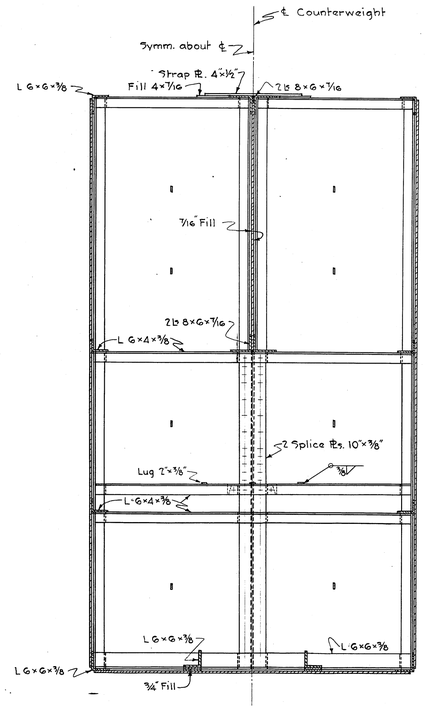

SECTION B-B

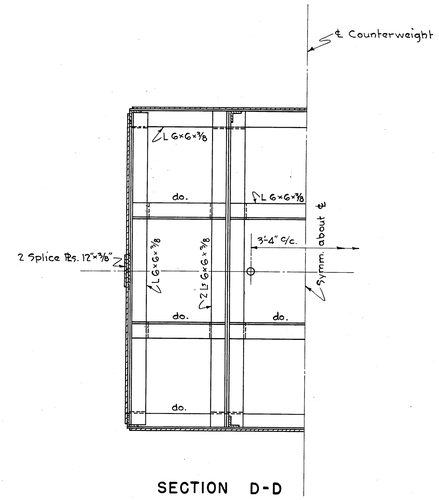

SECTION D-D

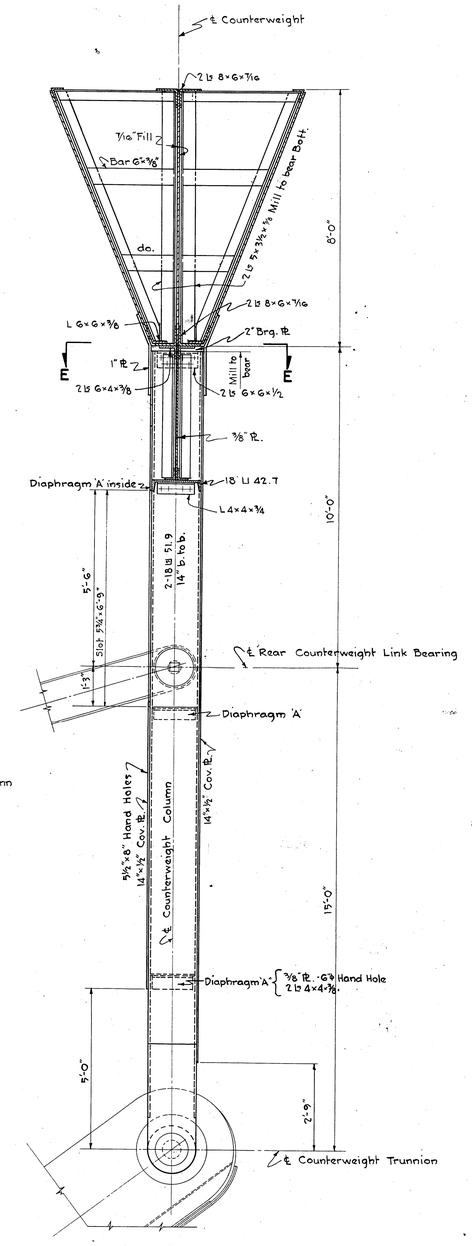

SECTION A-A

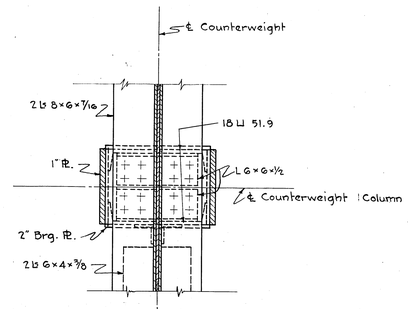

SECTION E-E

Scale: 1"=1'-0"

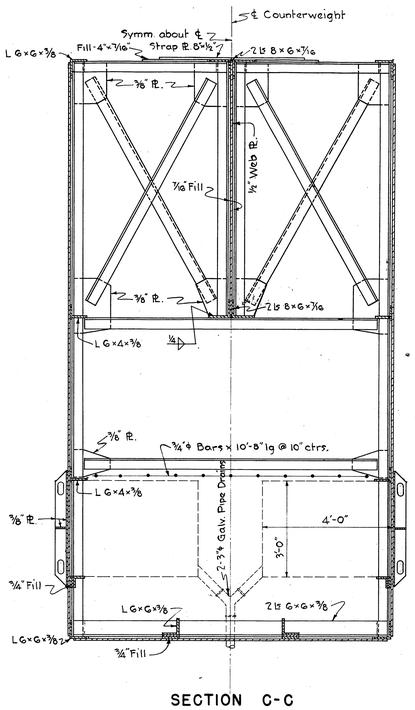

SECTION C-C

Notes:-
For "General Notes" see Drawing No. C-513-1.
Rivets - ⅞"ϕ
Weight of Counterweight Concrete - 220 Lbs/cu. ft.
C.I. Adjusting blocks are to be provided in accordance with Specifications.
All Ls 4×4×⅜ unless otherwise noted.
All Pls. ½" " " " .
All Fills ⅜" " " " .
The rate of pour of the Counterweight Concrete must be such that the fluid head is never in excess of four feet (4').

SUBMITTED CARR AND J.E. GREINER COMPANY BY F. H. Allen DATE - March 5, 1948	BEAUFORT MOREHEAD RAILROAD COMPANY A. T. LEARY, LESSEE BEAUFORT, NORTH CAROLINA
APPROVED BEAUFORT MOREHEAD RAILROAD COMPANY BY _____ LESSEE DATE —	ALTERATIONS - NEWPORT RIVER BRIDGE COUNTERWEIGHT
APPROVED U.S. ENGINEER OFFICE, WILMINGTON, NORTH CAROLINA BY _____ DISTRICT ENGINEER DATE —	CARR AND J. E. GREINER COMPANY - ENGINEERS DURHAM, N.C. BALTIMORE, MD. IN CHARGE B.W. Le Sueur DESIGNED BY M. Mc. Cord DRAWN BY C. Bayne CHECKED BY C. S. Meisterlin SCALE: ½"=1'-0" OR AS NOTED
MARCH 5, 1948 Revised: April 1, 1948	DRAWING NO. C-513-5

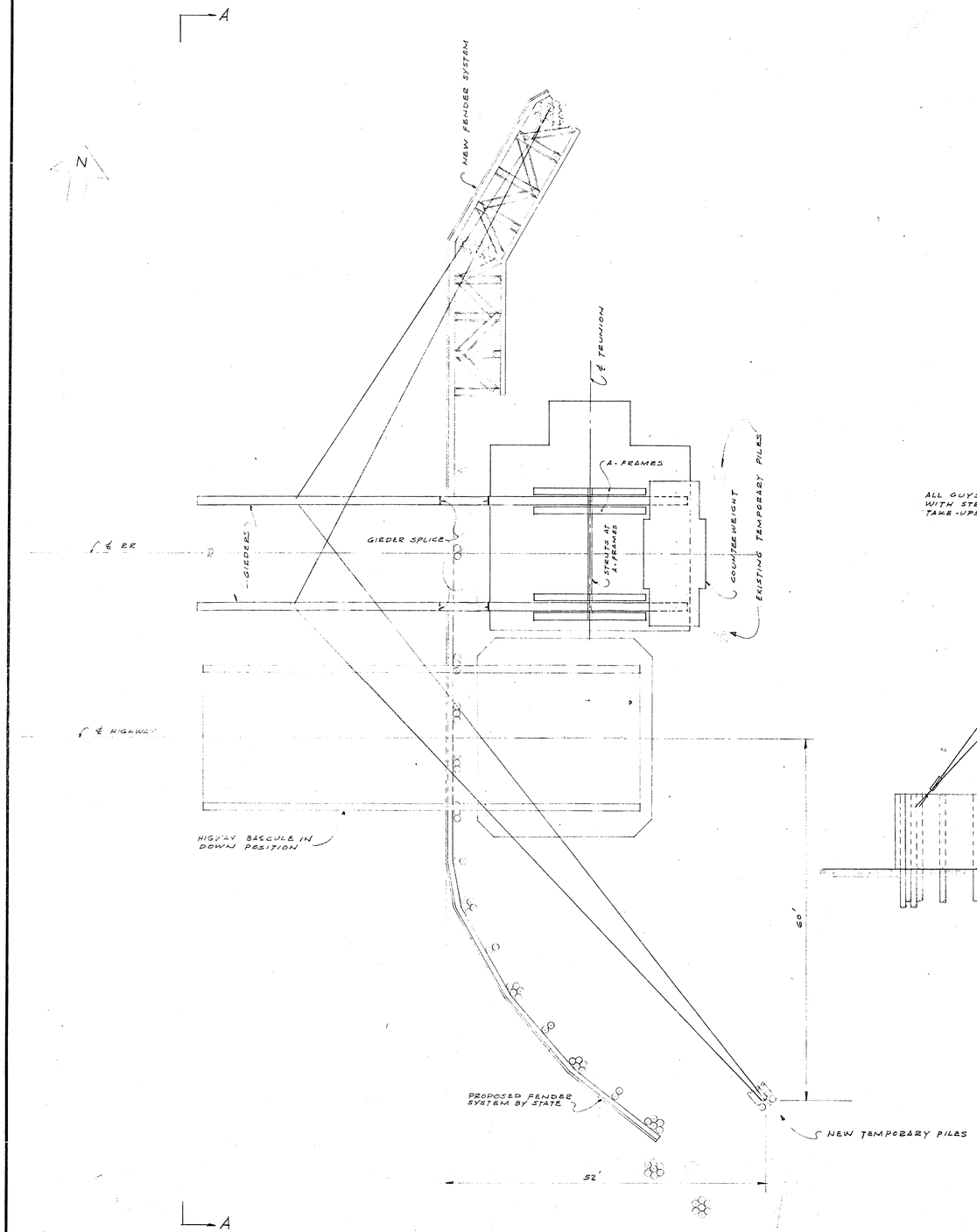

PLAN

1"=10'

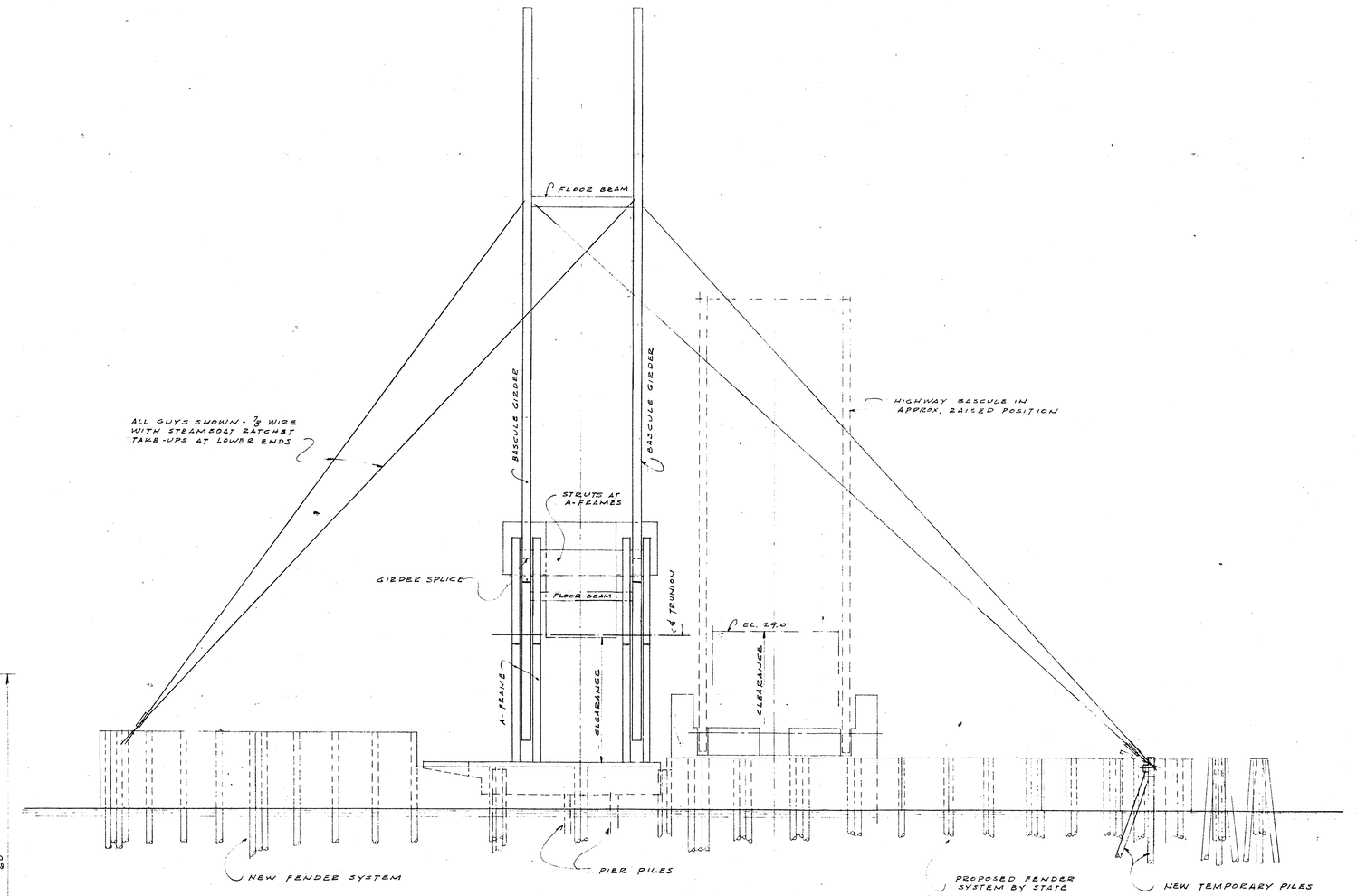

A-A

1"=10'

SEE DWG 452-6

OFFICE COPY

REV.	DATE	BY	REMARKS

BEAUFORT-MOREHEAD RAILROAD COMPANY
BEAUFORT, N.C.

ALTERATIONS TO NEWPORT R.R. BRIDGE

BASCULE ERECTION

SHEET 1 OF 2

TIDEWATER CONSTRUCTION CORPORATION
ENGINEERS AND CONTRACTORS
NORFOLK, VIRGINIA

			SCALE	JOB NO.	DWG. NO.	REV.
DRAWN	DAW	8-9-50				
CHECKED			AS SHOWN	452	B-452-5	
APPROVED						

Keuffel & Esser Co., Inc. New York, N.Y. No 1806 Klerfil Tracing Vellum.

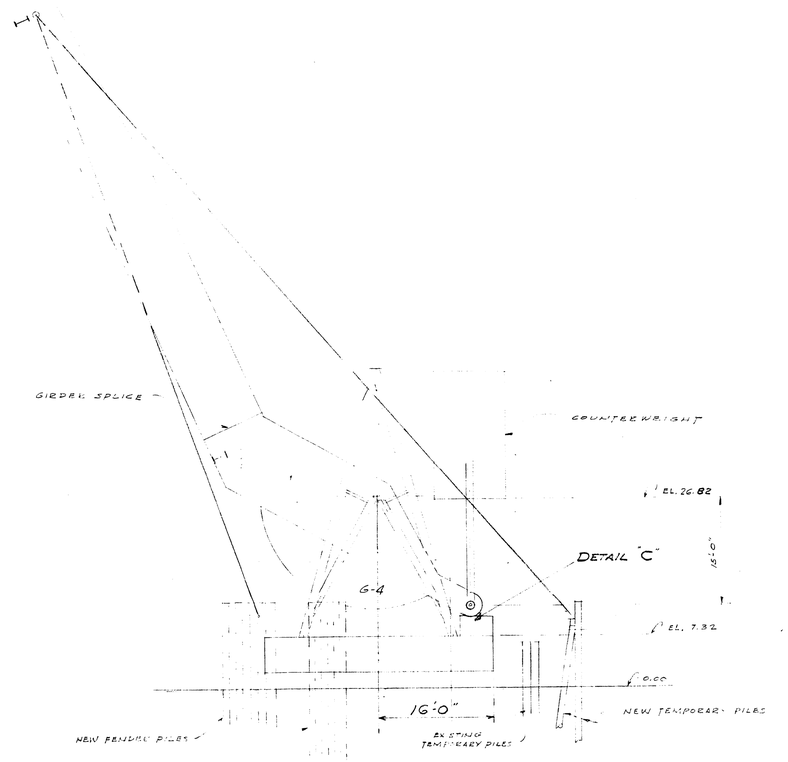

B - B (SEE LOCATION ON 452-5)

1" = 10'

(HIGHWAY BRIDGE NOT SHOWN)

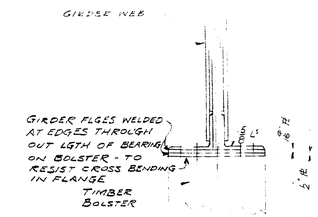

1'-4" WIDTH OF BOLSTER AT POSITION BETWEEN A-FRAME BASES

SECTION D-D

SCALE 1" = 1'-0"

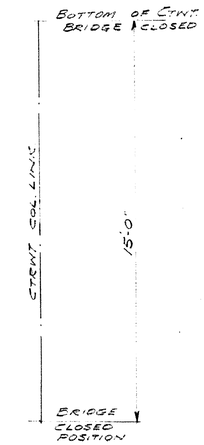

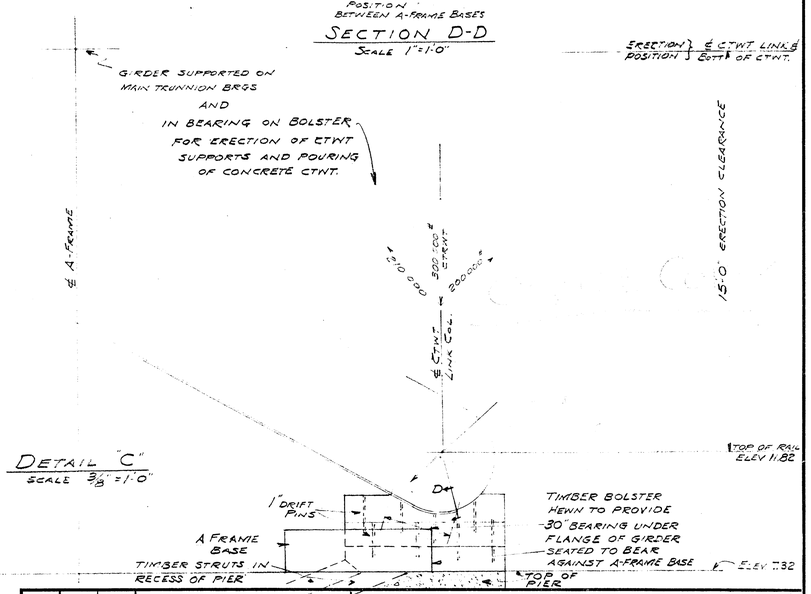

DETAIL "C"

SCALE 3/8" = 1'-0"

REV.	DATE	BY	REMARKS

BEAUFORT-MOREHEAD RAILROAD COMPANY

BEAUFORT, N.C.

ALTERATIONS TO NEWPORT R.R. BRIDGE

BASCULE ERECTION

SHEET 2 OF 2

TIDEWATER CONSTRUCTION CORPORATION

ENGINEERS AND CONTRACTORS

NORFOLK, VIRGINIA

DRAWN	CAW	3-9-50	SCALE	JOB NO.	DWG. NO.	REV.
CHECKED			AS SHOWN	452	B-452-6	
APPROVED						

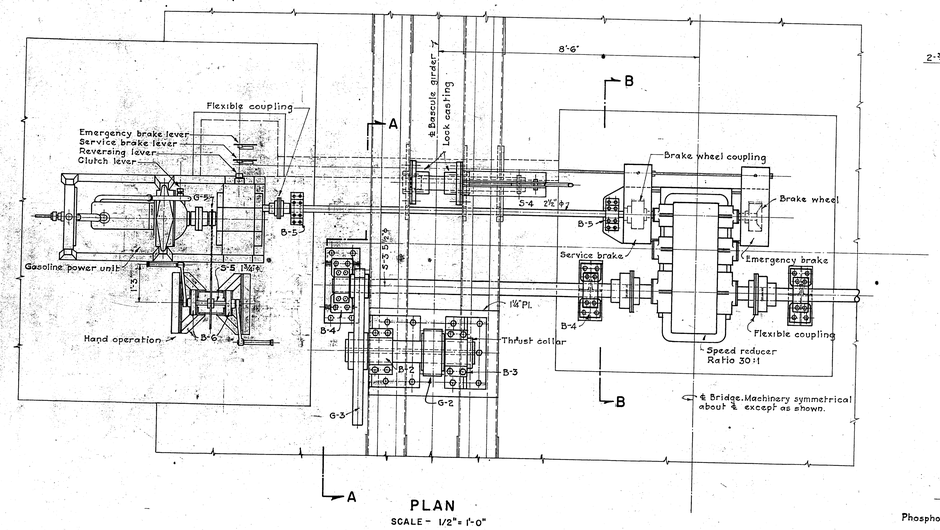

PLAN
SCALE - 1/2" = 1'-0"

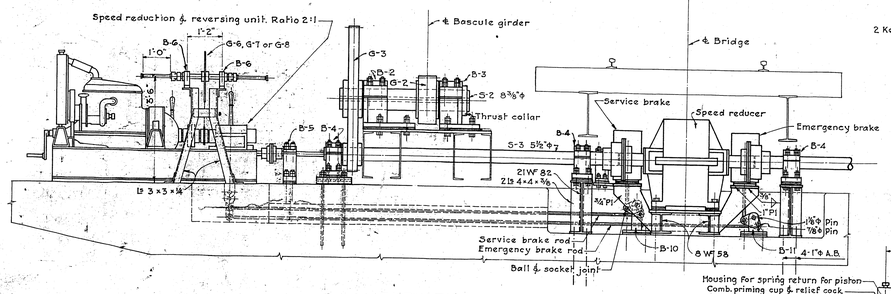

ELEVATION
SCALE - 1/2" = 1'-0"

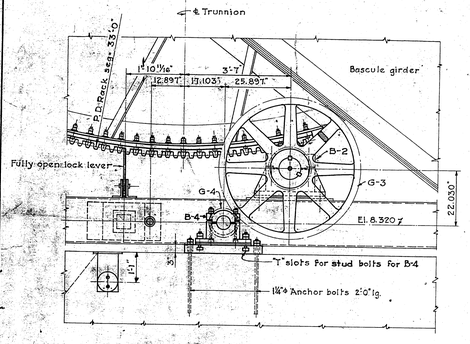

SECTION A - A
SCALE - 1/2" = 1'-0"

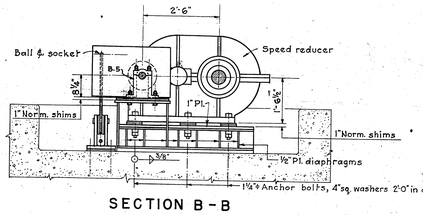

SECTION B - B
SCALE - 1/2" = 1'-0"

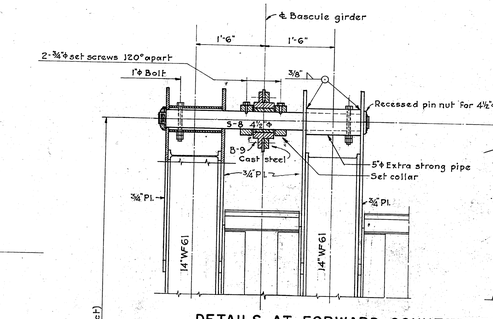

DETAILS AT FORWARD COUNTERWEIGHT LINK BEARINGS
SCALE - 3/4" = 1'-0"

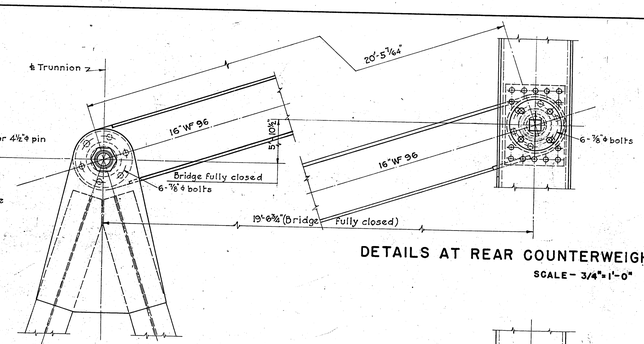

DETAILS AT REAR COUNTERWEIGHT LINK BEARINGS
SCALE - 3/4" = 1'-0"

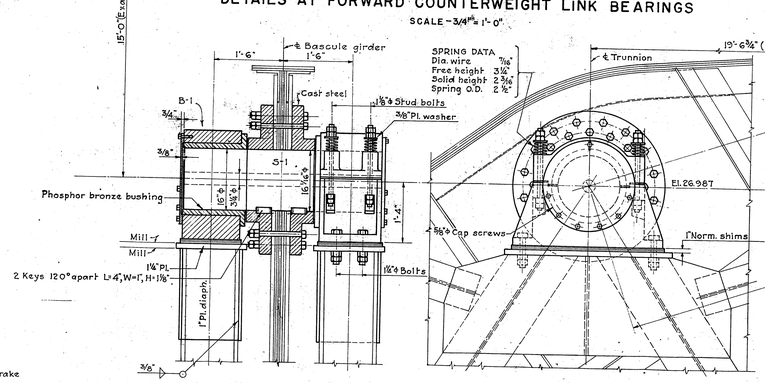

DETAILS AT MAIN TRUNNIONS
SCALE - 3/4" = 1'-0"

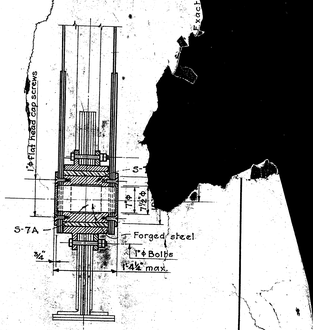

DETAILS AT COUNTERWEIGHT TRUNNIONS
SCALE - 3/4" = 1'-0"

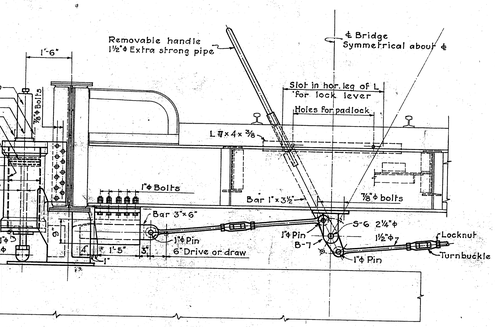

END LOCK MECHANISM AND AIR BUFFERS
SCALE - 1/2" = 1'-0"

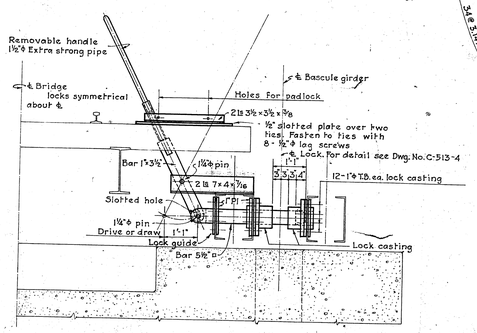

FULLY OPEN LOCK MECHANISM
SCALE - 1/2" = 1'-0"

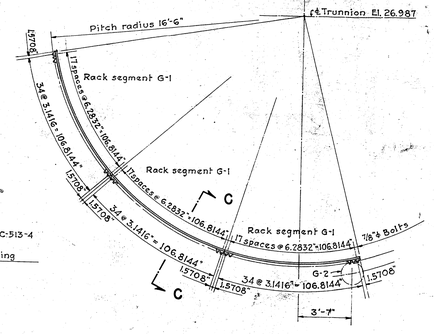

ELEVATION OF RACK
SCALE - 1/4" = 1'-0"

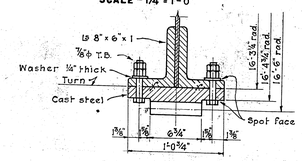

SECTION C - C
SCALE - 1 1/2" = 1'-0"

NOTES:-
For General Notes see Dwg. No. C-513-1.
For details of trunnion towers, links and fully open lock see Dwg. No. C-513-4
Normal Time Of Operation:
Normal time of operation 2 minutes after opening of locks.
Gasoline Power Unit:
40 Horsepower at 900 R.P.M. with disc clutch, reversing gear, and gear reduction of 5:1
Speed Reducer:
Double reduction, ratio 30:1, rated 50 H.P. at 600 R.P.M. with differential in the low speed shaft.
Brakes:
Both the emergency and service brakes shall be of the shoe type held in the set position by sufficient spring pressure to overcome 400 Ft. lb. torque.
The contractor shall furnish and place a satisfactory 3/16" steel plate enclosure around G-3 and G-4, properly braced and removable for inspection and lubrication. The cost of this enclosure is to be included in the contract unit price per pound for "Machinery."

GEAR DATA

MARK	NO. REQD.	TYPE	MATERIAL	TOOTH FORM	P	P.D.	NO. TEETH	FACE	HUB LENGTH	BORE	KEYS NO.	KEYS SIZE	KEYS LENGTH
G-1	6	Rack seg.	Cast steel	20° stub	1 D.P.	396"	35	6 3/4"	None	None	None		
G-2	2	Pinion	Forged steel	"	1 D.P.	17"	17	7 1/2"	10"	8 3/8"	2	2"x1 1/2"x 8 3/8"	8 3/8"
G-3	2	Gear	Cast steel	"	1 1/2 D.P.	56.66	85	5 1/2"	8 7/8"	8 3/8"	2	2"x1 1/2"x 8 3/8"	8"
G-4	2	Pinion	Forged steel	"	1 1/2 D.P.	11.33	17	3 3/4"	8 7/8"	5 1/2"	2	1 1/2"x 1 1/2"x 8 3/8"	8"
G-5	1	R.C. sprocket	Steel	"	R.C.	3/4" C.P.	5.03	21	1/2"	As reqd.	As reqd.	As required	
G-6	1	"	"	"	"	3/4" C.P.	15.06	63	1/2"	2 1/2"	1 3/4"	1	3/4"x 3/8"	2 1/2"
G-7	1	"	"	"	"	"	17.67	74	1/2"	2 1/2"	1 3/4"	1	1/2"x 3/8"	2 1/2"
G-8	1	"	"	"	"	"	20.07	84	1/2"	2 1/2"	1 3/4"	1	1/2"x 3/8"	2 1/2"

BEARING DATA

MARK	NO. REQD.	TYPE	HOUSING MATERIAL	BUSHING	BORE	LENGTH	BASE BOLTS	CAP BOLTS
B-1	4	Trunnion brg.	Cast steel.	Phosphor bronze	7/16"	16"	4-1 1/4"	4-1 1/8"
B-2	2	Split block	" "	" "	8 3/8"	9"	5-1 1/4"	4-1 1/8"
B-3	2	Split block	" "	" "	8 3/8"	9"	5-1 1/4"	4-1 1/8"
B-4	4	Split block	" "	" "	5 1/2"	6"	4-1"	4-1"
B-5	2	Split block	" "	" "	2 1/2"	5"	4-3/4"	4-3/4"
B-6	2	Block	Steel	" "	1 3/4"	2 1/2"	2-3/4"	None
B-7	1	Block	"	" "	2 1/4"	2@2 1/4"	4-7/8"	"
B-8	2	Collar	Cast steel	" "	12"	12"	8-1"	"
B-9	4	Collar	" "	" "	4 1/2"	5 1/2"	6-7/8"	"
B-10	1	Block	Steel	" "	1 1/8"	2@3/4"	4-1"	"
B-11	1	Block	Steel	" "	1 1/8"	2@3/4"	4-1"	"

SUBMITTED
CARR AND J. E. GREINER COMPANY
BY H. H. Allen
DATE March 5, 1948

APPROVED
BEAUFORT MOREHEAD RAILROAD COMPANY
BY _____
LESSEE
DATE _____

APPROVED
U.S. ENGINEER OFFICE,
WILMINGTON, NORTH CAROLINA
_____
DISTRICT ENGINEER
DATE _____

BEAUFORT MOREHEAD RAILROAD COMPANY
A. T. LEARY, LESSEE
BEAUFORT, NORTH CAROLINA

ALTERATIONS - NEWPORT RIVER BRIDGE MACHINERY

CARR AND J. E. GREINER COMPANY - ENGINEERS
DURHAM, N. C. BALTIMORE, MD.

IN CHARGE B.W. LeSueur DESIGNED BY E.G. Ruark
DRAWN BY E.G. Ruark CHECKED BY W.J. McClain

SCALES AS NOTED

MARCH 5, 1948
Revised: April 1, 1948

DRAWING C-513-8

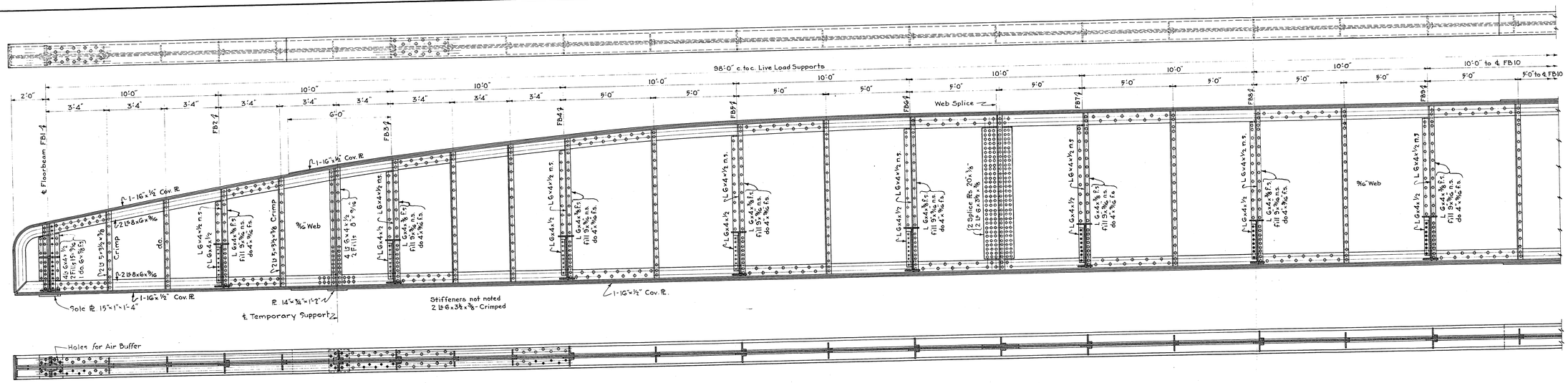

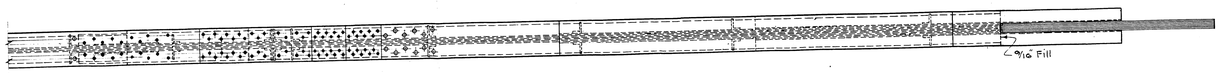

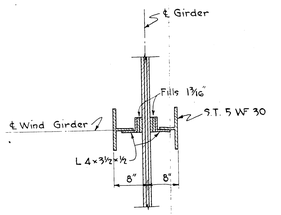

SECTION D-D

3/4" = 1'-0"

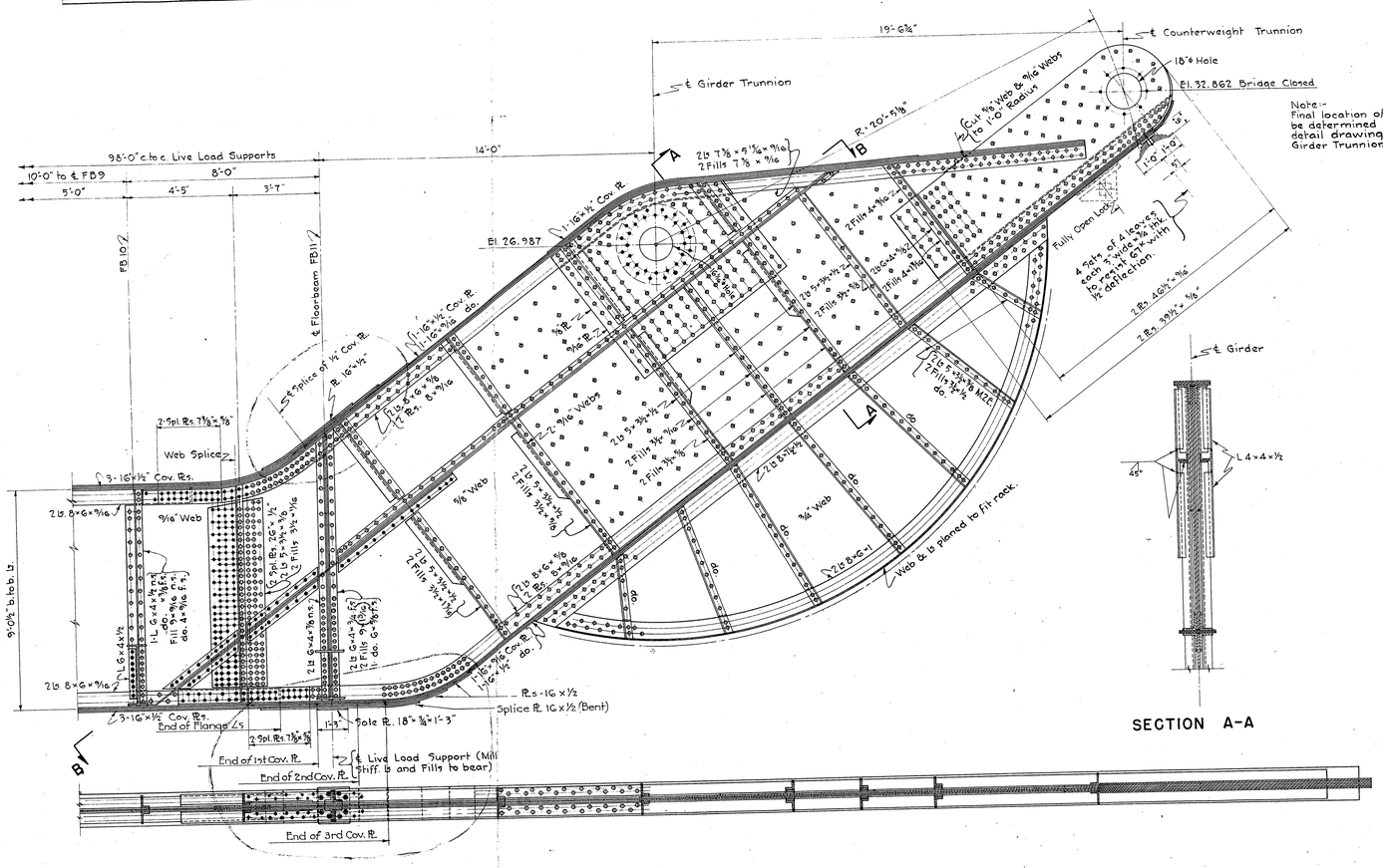

Note:-
Final location of Counterweight Trunnion shall be determined from calculations based on shop detail drawings, holding Radius distance from Girder Trunnion. Weight of Ties assumed 50#/cu.ft.

SECTION A-A

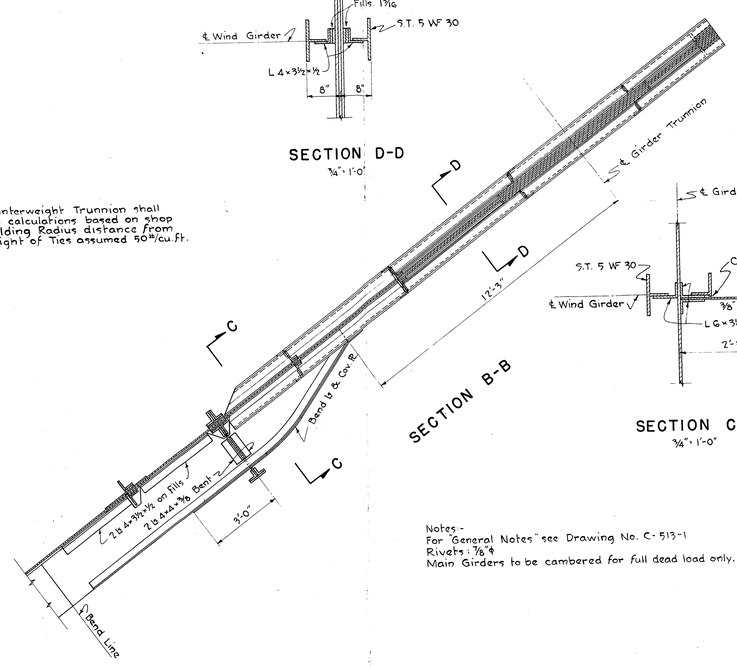

SECTION B-B

SECTION C-C

3/4" = 1'-0"

Notes:-
For "General Notes" see Drawing No. C-513-1
Rivets: ⅞" ϕ
Main Girders to be cambered for full dead load only.

SUBMITTED CARR AND J. E. GREINER COMPANY BY J. E. Greiner DATE — March 5, 1948	BEAUFORT MOREHEAD RAILROAD COMPANY A. T. LEARY, LESSEE BEAUFORT, NORTH CAROLINA
APPROVED BEAUFORT MOREHEAD RAILROAD COMPANY BY _____ LESSEE DATE — _____	**ALTERATIONS - NEWPORT RIVER BRIDGE** **MAIN GIRDERS**
APPROVED U.S. ENGINEER OFFICE, WILMINGTON, NORTH CAROLINA BY _____ DISTRICT ENGINEER DATE — _____	CARR AND J. E. GREINER COMPANY — ENGINEERS DURHAM, N. C. BALTIMORE, MD. IN CHARGE B. W. Le Sueur DESIGNED BY M. McCord DRAWN BY E. H. Burghardt & C. Bayne CHECKED BY C. S. Meisterlin SCALE: 3/8" = 1'-0" MARCH 5, 1948 DRAWING NO. C-513-7 Revised: April 1, 1948, Nov. 1, 1949

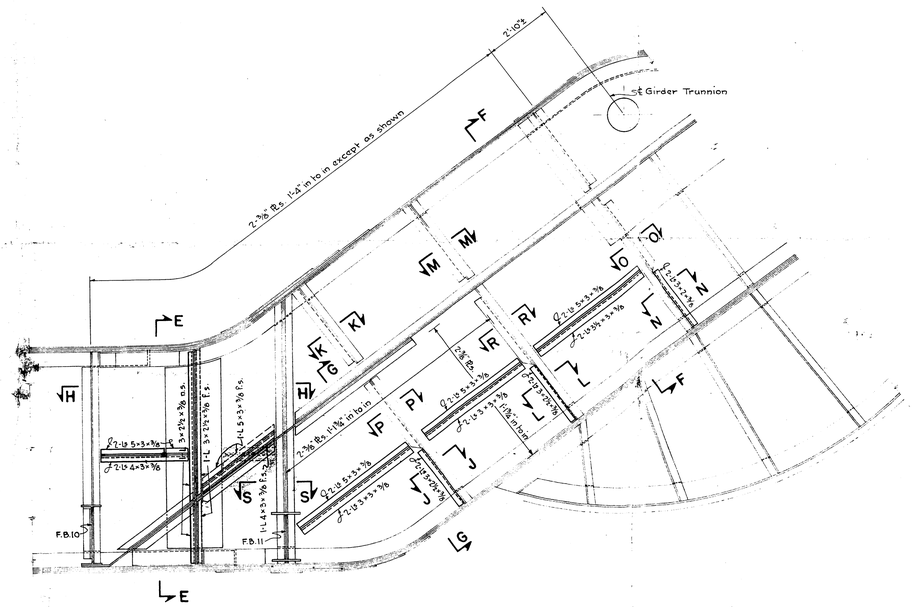

ELEVATION

(⅜" Side Rs. not shown)

North Girder Shown - South Girder Similar

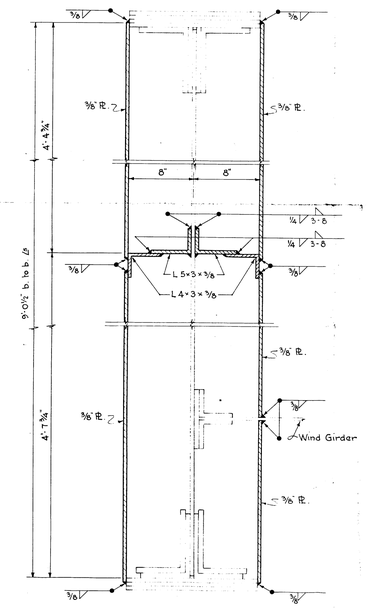

E-E

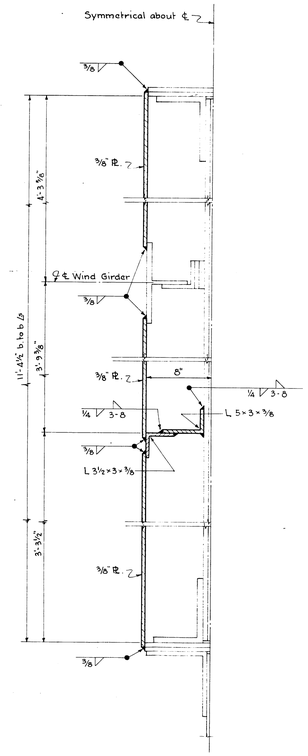

F-F

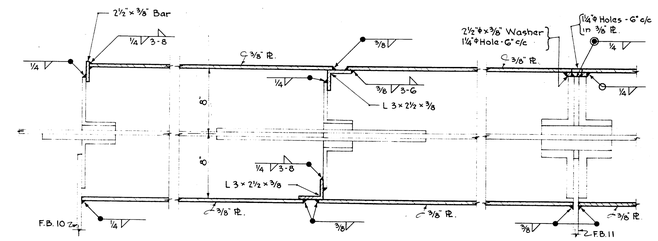

H-H

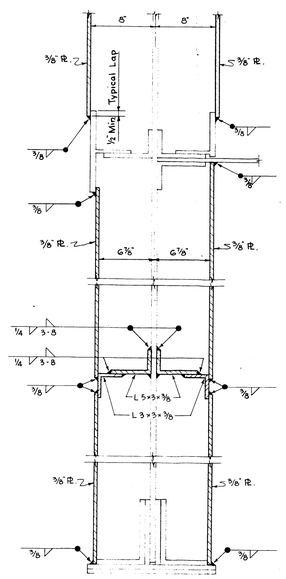

G-G

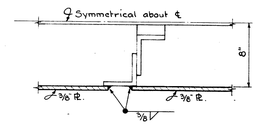

K-K

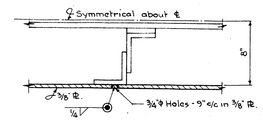

M-M

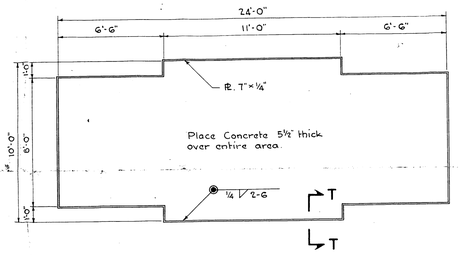

COUNTERWEIGHT - TOP PLAN

¼"=1'-0"

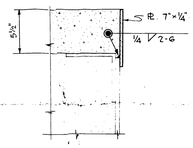

T

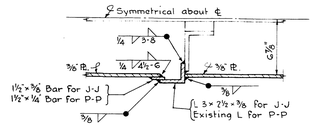

J-J
P-P

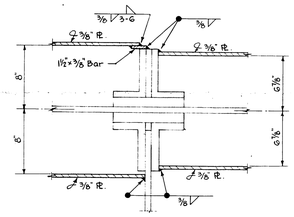

S-S

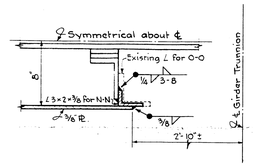

N-N
O-O

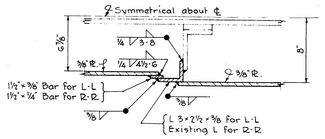

L-L
R-R

SCOPE OF WORK

The work under this contract consists of the fabrication, furnishing, erection and painting of the alterations shown hereon, and the proper balancing of the span by placing additional counterweights.

SPECIFICATIONS

A.R.E.A., March 20, 1947 and the Specifications for Welding Highway and Railway Bridges of The American Welding Society.

QUANTITIES

Structural Steel ····· 19,000 lbs. (incl. counterweight forms)
Counterweights ····· 3.5 C.Y. Concrete @ 3,900#/C.Y.

NOTES -

All continuous welds to be made intermittently so that internal stresses will be relieved.

Work to be performed in calm weather (not over 5 M.P.H. Wind). The bridge shall be operated 2 full cycles, and deflection of the toe measured in the near closed position (just clear of the toe pier guides) and in the open position. The permanent deflection thus determined shall be taken out with the girders in the open position, tail locks not driven, using cables attached to the fender system. With the bridge pulled over, both tail locks will be driven and the work performed.

Provide ¾"φ access holes in ⅜" Rs. near center of all pockets.

Provide 2"φ drain holes in ⅜" Rs. where required.

SUBMITTED
CARR AND J. E. GREINER COMPANY
BY F. M. Allen
DATE -

APPROVED
BEAUFORT MOREHEAD RAILROAD COMPANY
BY
LESSEE
DATE -

APPROVED
U.S. ENGINEER OFFICE,
WILMINGTON, NORTH CAROLINA
BY
DISTRICT ENGINEER
DATE -

BEAUFORT MOREHEAD RAILROAD COMPANY
A. T. LEARY, LESSEE
BEAUFORT, NORTH CAROLINA

PROPOSED ALTERATIONS-NEWPORT RIVER BRIDGE
MAIN GIRDERS

CARR AND J. E. GREINER COMPANY - ENGINEERS
DURHAM, N.C. BALTIMORE, MD.

IN CHARGE B. W. Le Sueur DESIGNED BY C. S. Maisterlin
DRAWN BY C. Bayne CHECKED BY F. Gloersen

SCALE: ⅜" & 1½" = 1'-0"

MAY 1951 DRAWING NO. C-513-7A

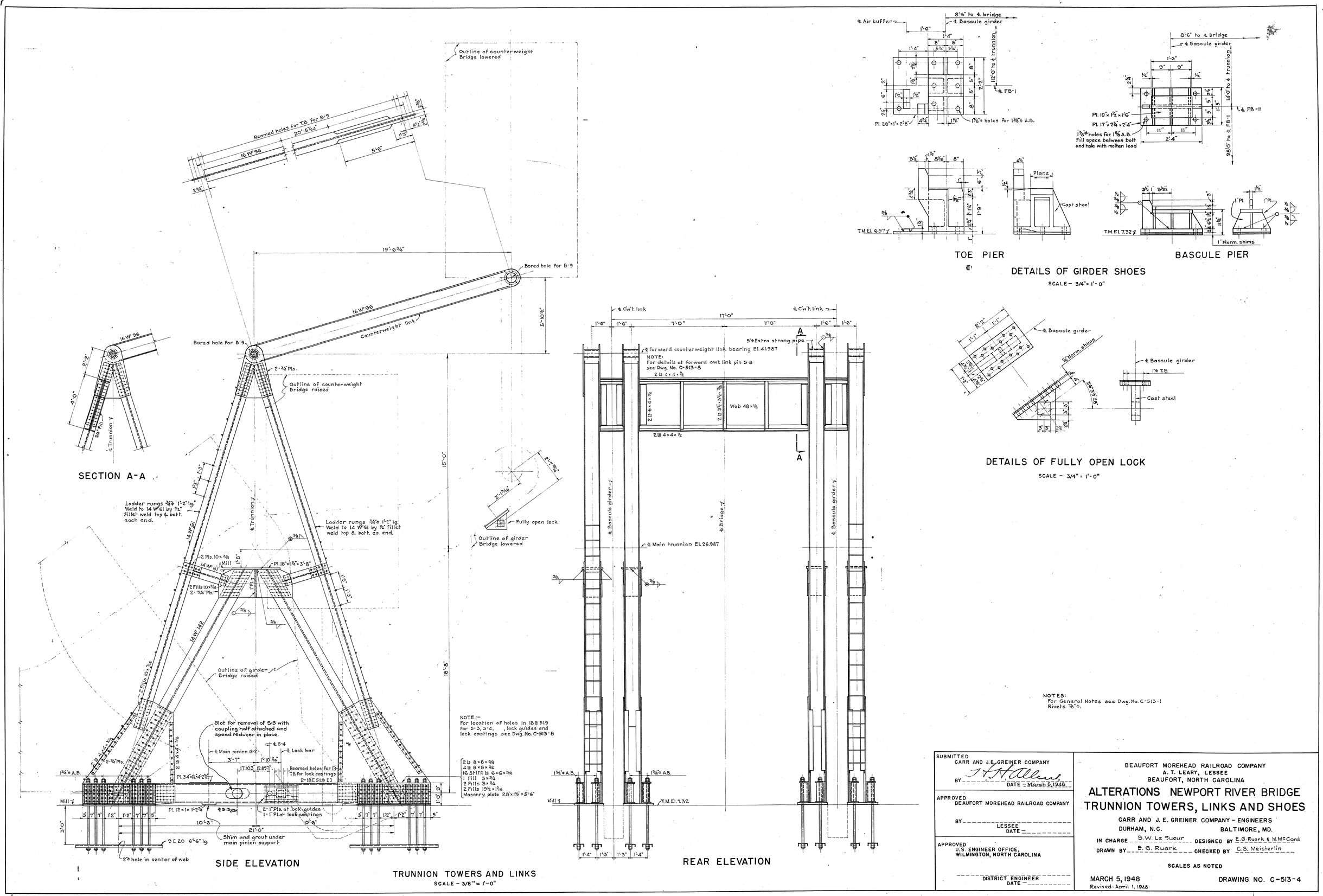

SUBMITTED
CARR AND J. E. GREINER COMPANY
BY _____ DATE - March 5, 1948

APPROVED
BEAUFORT MOREHEAD RAILROAD COMPANY
BY _____ LESSEE
DATE _____

APPROVED
U.S. ENGINEER OFFICE, WILMINGTON, NORTH CAROLINA
_____ DISTRICT ENGINEER
DATE _____

BEAUFORT MOREHEAD RAILROAD COMPANY
A. T. LEARY, LESSEE
BEAUFORT, NORTH CAROLINA

ALTERATIONS NEWPORT RIVER BRIDGE
TRUNNION TOWERS, LINKS AND SHOES

CARR AND J. E. GREINER COMPANY - ENGINEERS
DURHAM, N.C. BALTIMORE, MD.

IN CHARGE B.W. Le Sueur DESIGNED BY E.G. Ruark & M. McCord
DRAWN BY E. G. Ruark CHECKED BY C.S. Meisterlin

SCALES AS NOTED

MARCH 5, 1948 DRAWING NO. C-513-4
Revised: April 1, 1948

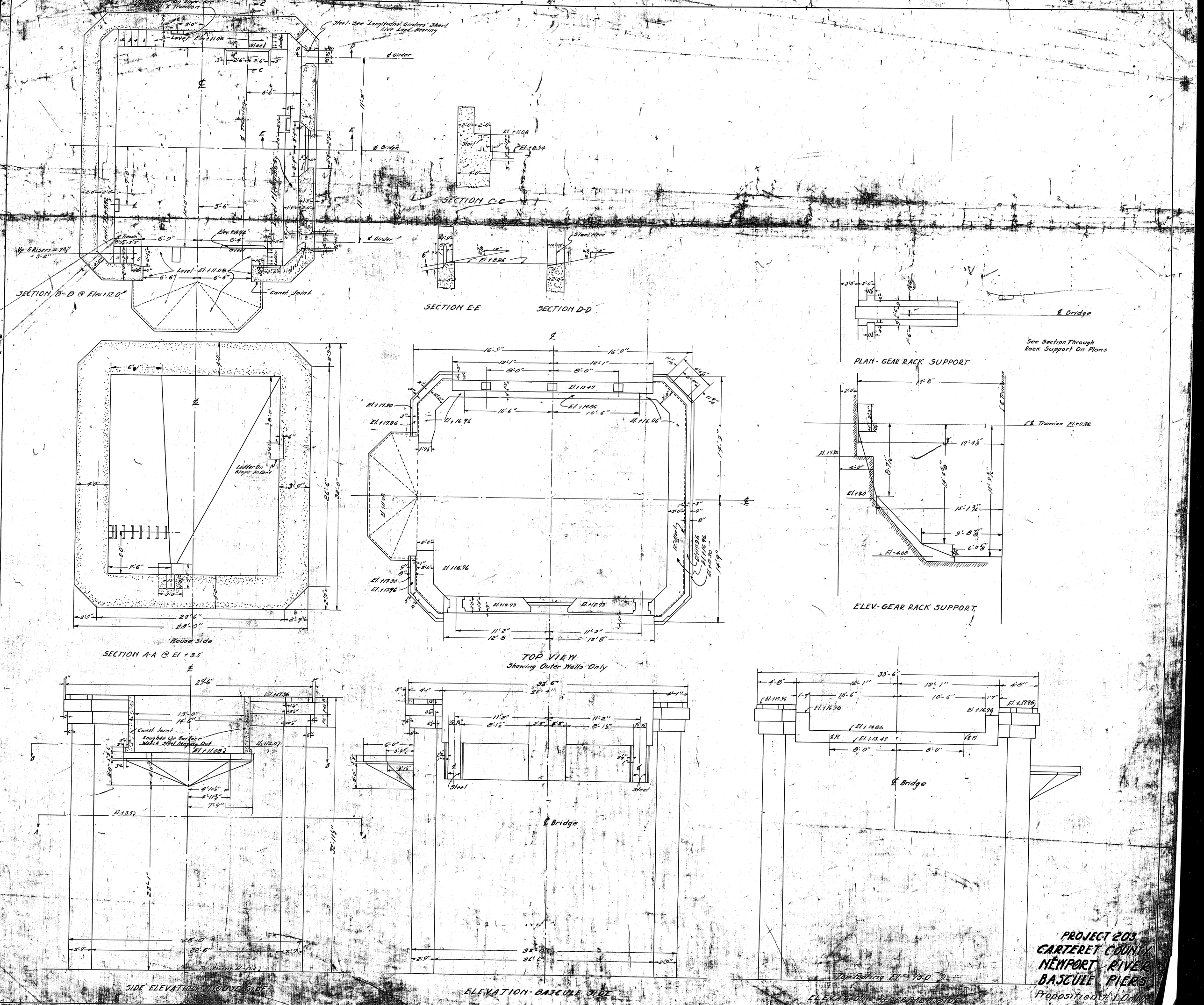
SECTION B-B @ Elev +12.0
SECTION C-C
SECTION E-E
SECTION D-D
PLAN - GEAR RACK SUPPORT
See Section Through Rack Support On Plans
ELEV - GEAR RACK SUPPORT
SECTION A-A @ El +3.5
TOP VIEW
Showing Outer Walls Only
SIDE ELEVATION - HOUSE SIDE
ELEVATION - BASCULE SIDE
ELEVATION - APPROACH SIDE
House Side
Const. Joint
Steel - See "Longitudinal Girders" Sheet. Live Load Bearing
Steel Here
Ladder On Slope In Cone
Roughen Up Surface Watch Steel Hanging Out
Top Bearing El +15.0
PROJECT 203
CARTERET COUNTY
NEWPORT RIVER
BASCULE PIERS
Proposition #1 Only

4M—12-48

BEAM SHEET

VIRGINIA BRIDGE COMPANY

DETAILS OF BUMPER ANGLES
FOR 1-80' SINGLE LEAF BASCULE BRIDGE
SHOP PAINT 1 CT. DUPONT DULUX BRIDGE PRIMER #800
RIVETS 7/8"ø HOLES 15/16"ø CONTRACT V 1173

ROANOKE, VA. 4-28-50
MADE BY A.W.C.
CHECKED BY L.F.B.
FABRICATED AT ROANOKE

Item No.	CUTTING LIST No.	Feet	Ins.	ORDERED No.	Feet	Ins.	No. Pcs.	DESCRIPTION	LENGTH Feet	Ins.	REMARKS	WEIGHT
							2	Bumper Angles			BA1	
	cut	8x	8x3/8		Stk			4-Ls 8x6x3/8	3	0½		411
								12-Brs 2x5/16	1	0	na (Bent)	26
											R+S	437
											W+1	6
												443#

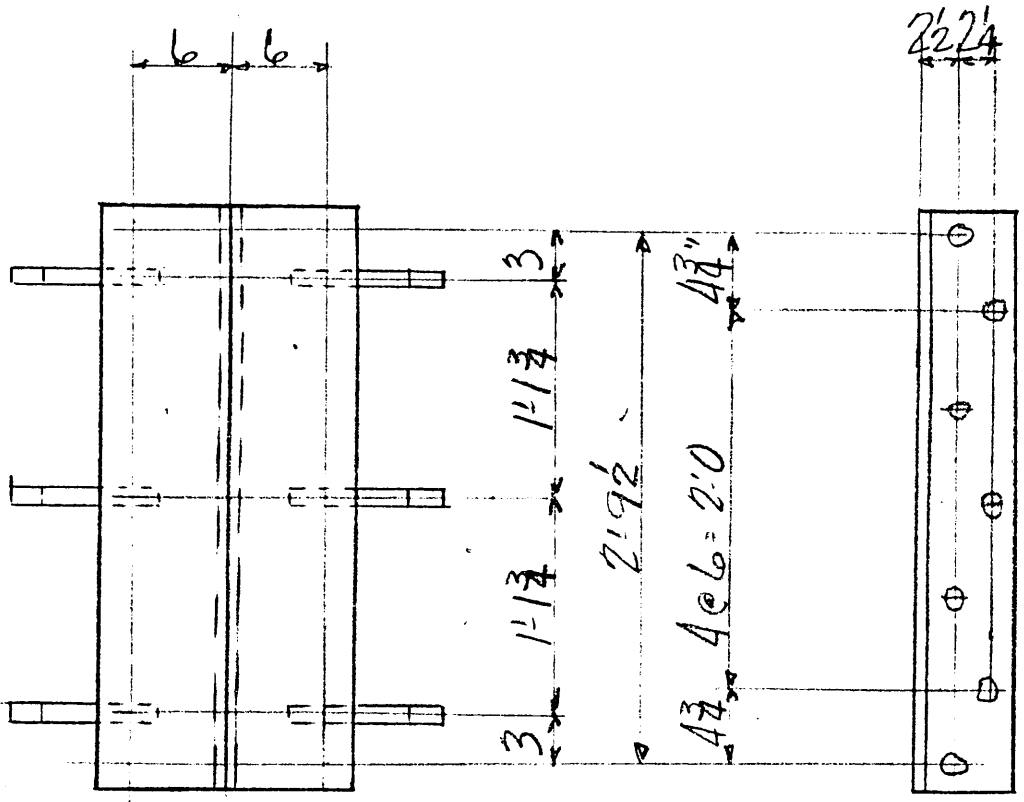

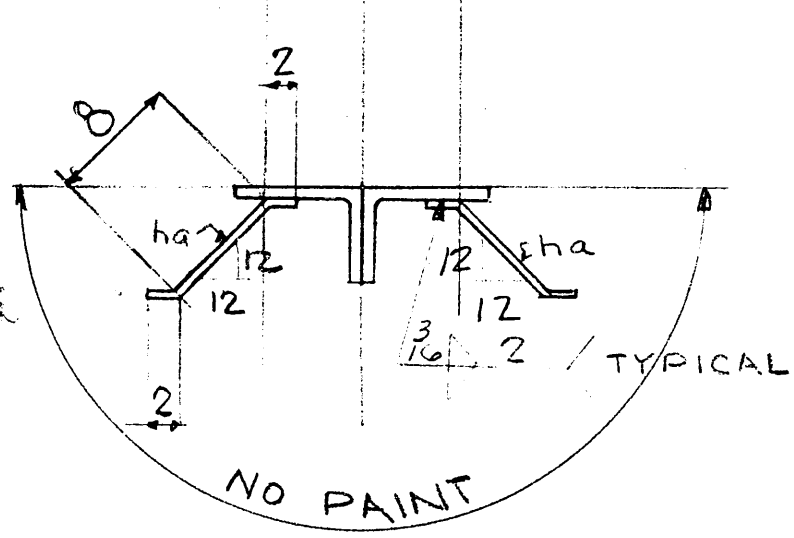

ADVANCE SHIPMENT

VIRGINIA BRIDGE COMPANY

DETAILS OF BUMPER ANGLES
FOR 1-80' SINGLE LEAF BASCULE BRIDGE
SHOP PAINT 1 CT. DUPONT DULUX BRIDGE PRIMER #800
RIVETS 7/8" ø HOLES 15/16" ø CONTRACT V 7173

ROANOKE, VA. 4-28-50
MADE BY A.W.C.
CHECKED BY L.F.B.
FABRICATED AT ROANOKE

Item No.	CUTTING LIST No.	CUTTING LIST Feet	CUTTING LIST Ins.	ORDERED No.	ORDERED Feet	ORDERED Ins.	No. Pcs.	DESCRIPTION	LENGTH Feet	LENGTH Ins.	REMARKS	WEIGHT
							2	Bumper Angles			BA1	
7	cut	8x8x3/4			Stk			4-Ls 8x6x3/4	3	0½		411
								12-Brs. 2x5/16	1	0	na (Bent)	26
											R+S	437
											W+1	6
												443#

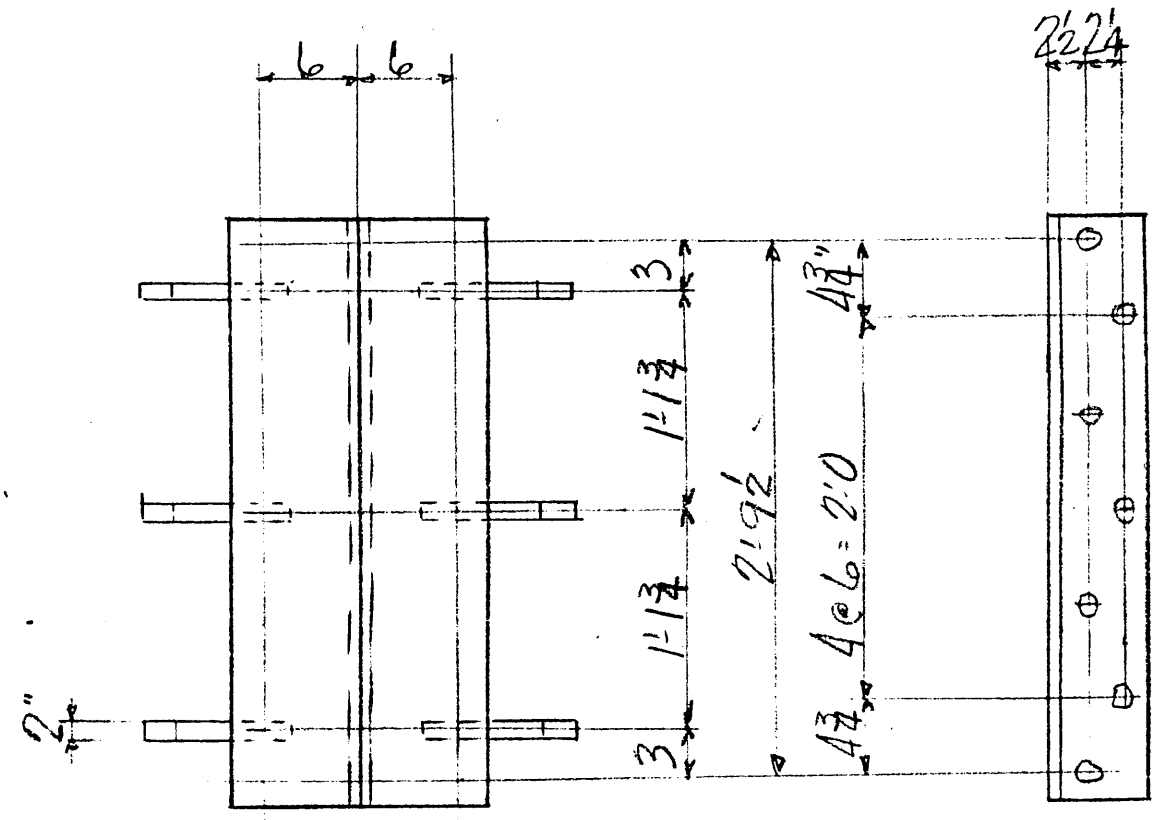

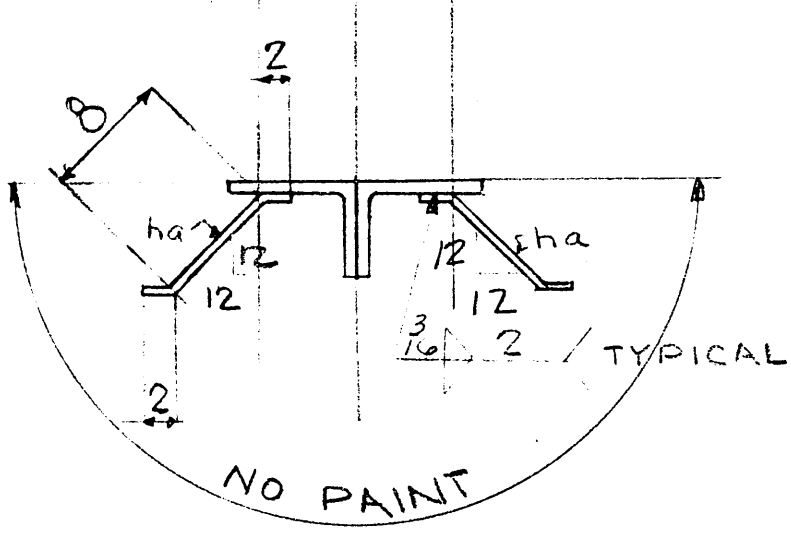

ADVANCE SHIPMENT

In charge Scott

2-48

BEAM SHEET

VIRGINIA BRIDGE COMPANY

DETAILS OF BUMPER ANGLES
FOR 1-80' SINGLE LEAF BASCULE BRIDGE
SHOP PAINT 1 CT. DUPONT DULUX BRIDGE PRIMER #800
RIVETS 7/8" ø HOLES 15/16" ø CONTRACT V 113

ROANOKE, VA. 4-28-50
MADE BY AWC.
CHECKED BY
FABRICATED AT R[illegible]KE

Item No.	CUTTING LIST No.	Feet	Ins.	ORDERED No.	Feet	Ins.	No. Pcs.	DESCRIPTION	LENGTH Feet	Ins.	REMARKS	WEIGHT
							2	Bumper Angles			BA1	
	cut 8x8x¾				STK			4-Ls 8x6x¾	3	0½		
								12-Brs. 2x⅝	1	0	na (Bent)	
											R+S	
											W+1	
												44

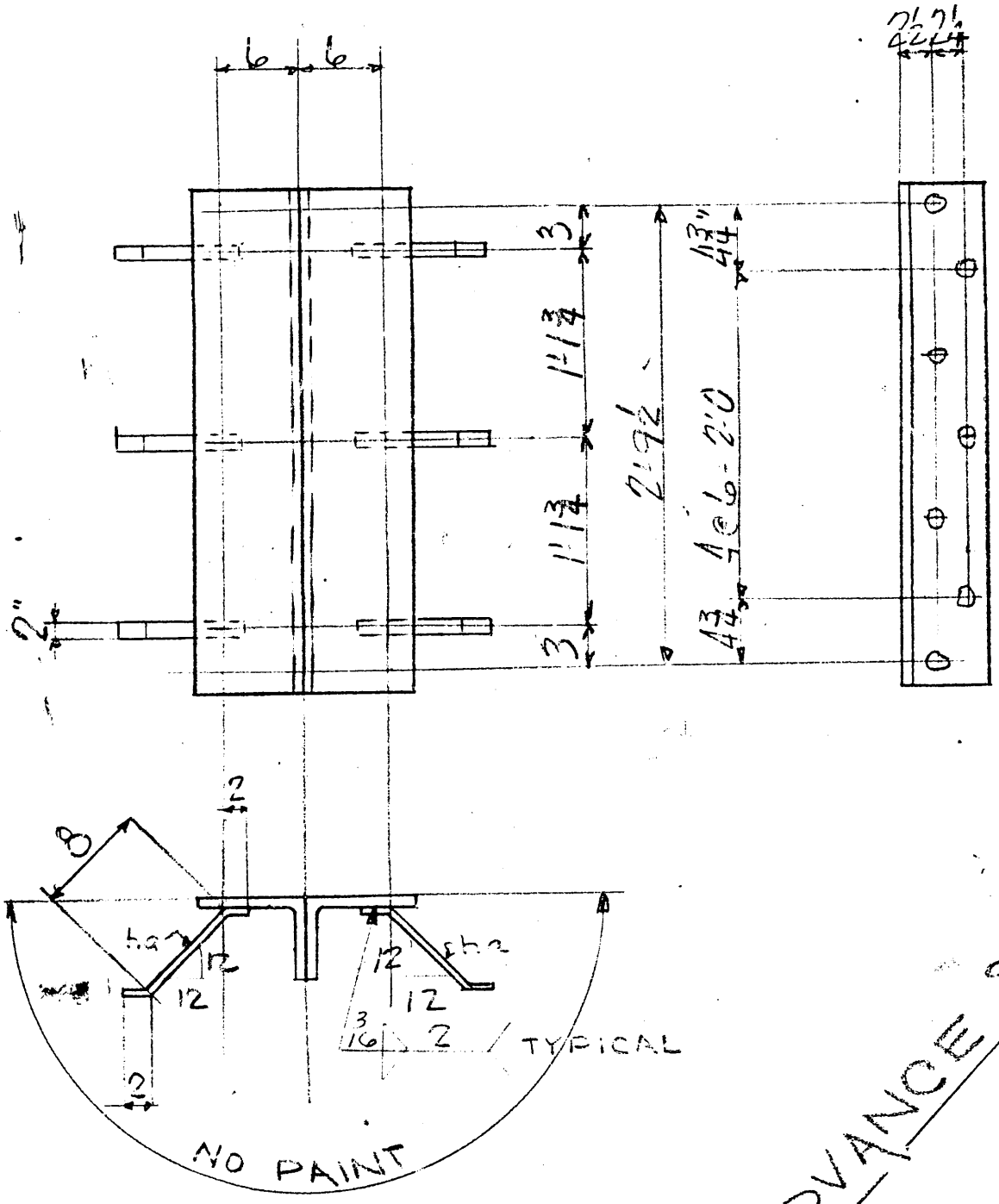

ADVANCE SHIPMENT

CHECKED FOR
AS BUILT

OFFICE COPY
1ST SUBMISSION

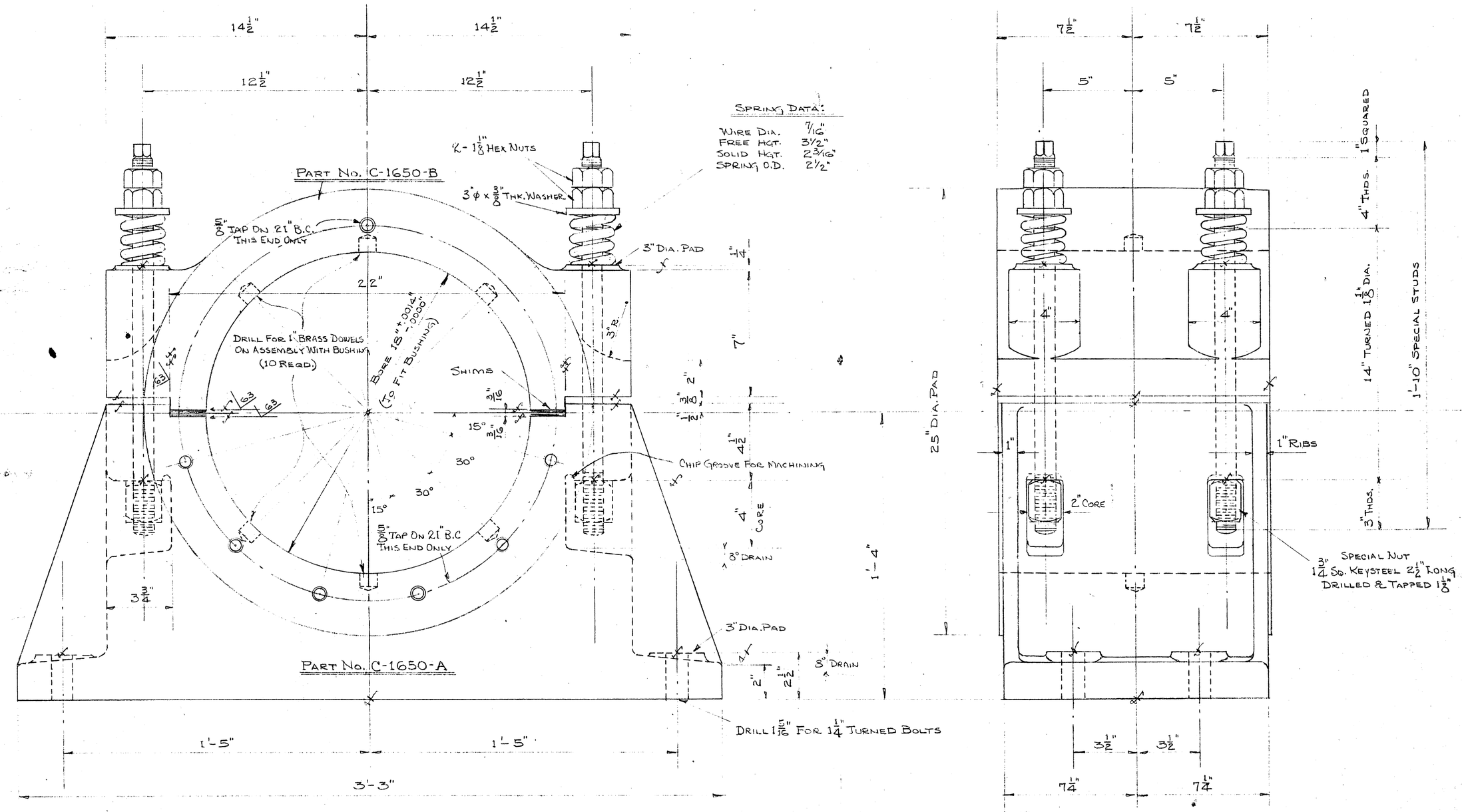

SPRING DATA:

WIRE DIA.	7/16"
FREE HGT.	3½"
SOLID HGT.	2 3/16"
SPRING O.D.	2½"

4 REQD.

MATL. CAST STEEL A.S.T.M. A-27-46T GRADE 65-35

SEE DWG. C-1651 FOR BUSHING & END PLATE

REF: CARR & GREINER DWG. # C-513-8

SHOP ORDER B-6499

CALDWELL FOUNDRY & MACHINE CO. INC.
BIRMINGHAM, ALA.

CAST STEEL TRUNNION BEARINGS FOR NEWPORT RIVER BRIDGE BEAUFORT, NO. CAROLINA

SCALE	3" = 1'-0"	JAN. 25, 1950
DRAWN-TR'C'D.	LEMON	C-1650
CHECKED	REVISED MARCH 9, 1950	
APP'V'D.	APRIL 26, 1950	

"ALBANENE" No. 1981L K&E CO., N.Y. 8 TRADE MARK REG. U.S. PAT. OFF.

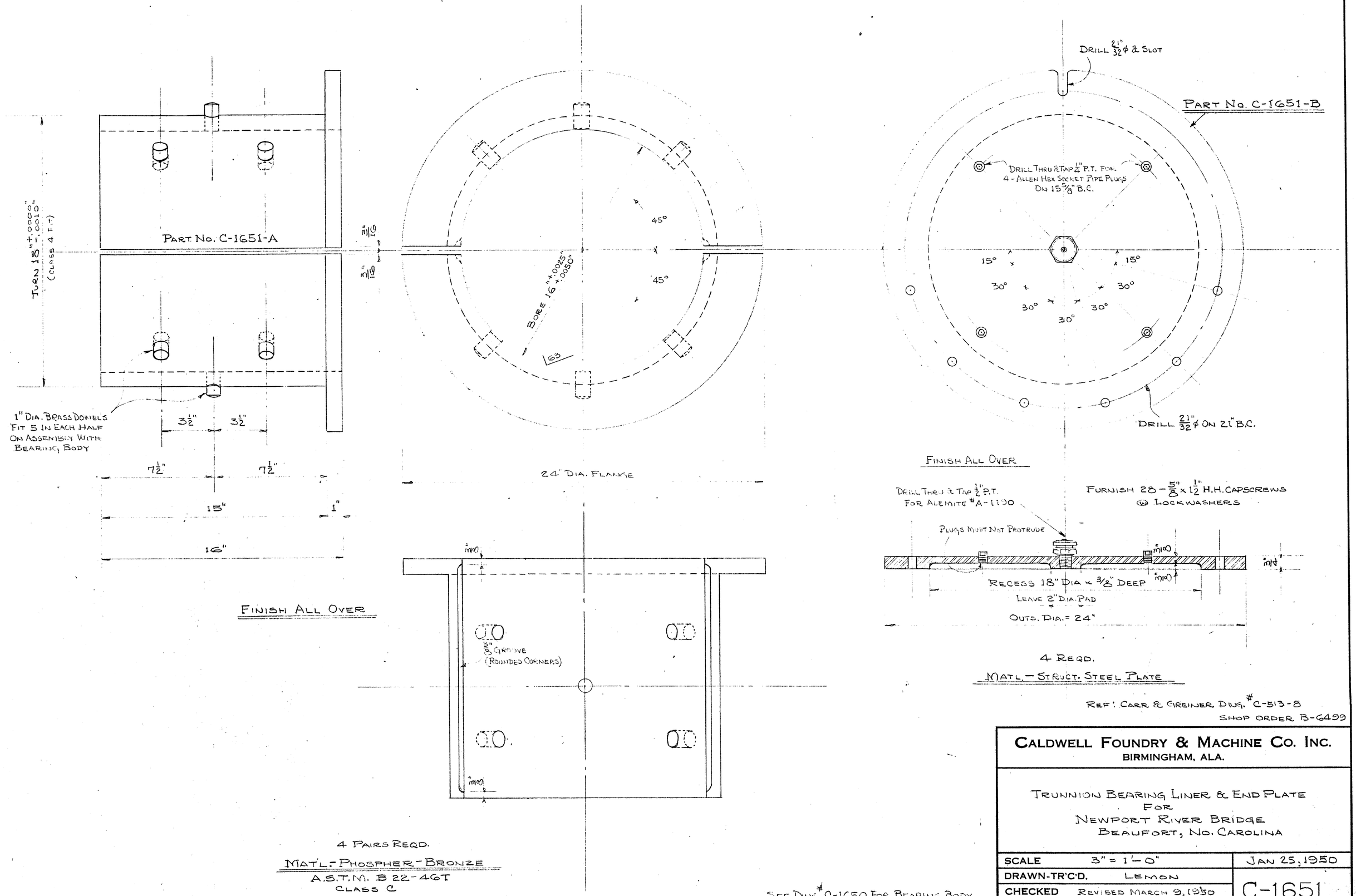

REF: CARR & GREINER DWG. #C-513-8
SHOP ORDER B-6499

CALDWELL FOUNDRY & MACHINE CO. INC.
BIRMINGHAM, ALA.

TRUNNION BEARING LINER & END PLATE
FOR
NEWPORT RIVER BRIDGE
BEAUFORT, NO. CAROLINA

SCALE	3" = 1'-0"	JAN 25, 1950
DRAWN-TR'C'D.	LEMON	C-1651
CHECKED	REVISED MARCH 9, 1950	
APP'V'D.	APRIL 26, 1950	

"ALBANENE" No. 1981 K&E CO., N.Y.

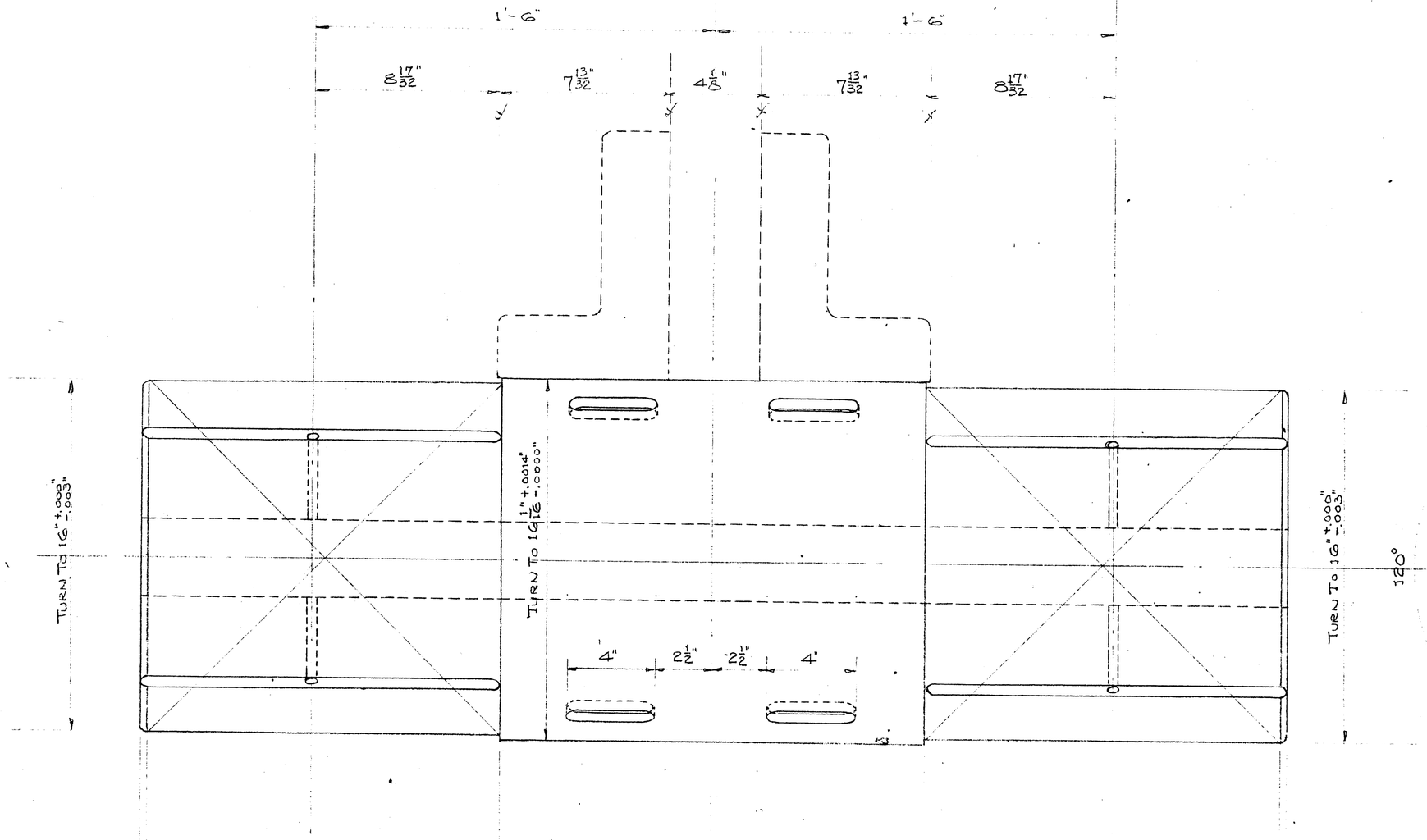

2 REQD.

MAT'L.—FORGED STEEL

A.S.T.M. A235-46 CLASS C-1

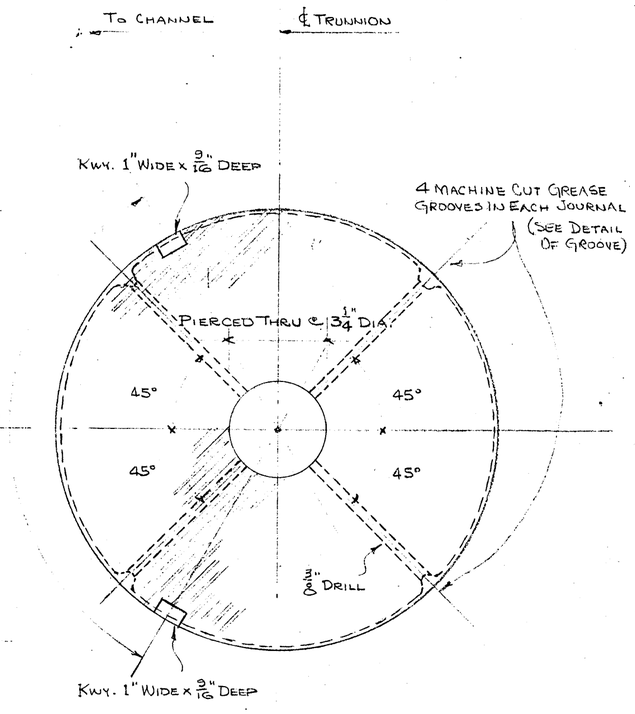

SECTION AT KWYS.

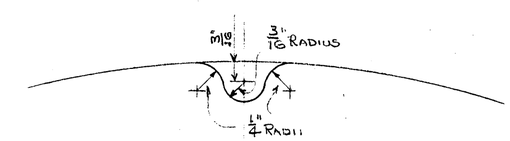

GREASE GROOVE DETAIL

REF: CARR & GREINER DWG.# C-513-8

SHOP NO. B-6499

CALDWELL FOUNDRY & MACHINE CO. INC.
BIRMINGHAM, ALA.

TRUNNION SHAFT
FOR
NEWPORT RIVER BRIDGE
BEAUFORT, NO. CAROLINA

SCALE	3" = 1'-0"	JAN. 25, 1950
DRAWN-TR'C'D.	LEMON	C-1652
CHECKED	REVISED MARCH 9, 1950	
APP'V'D.	APRIL 26, 1950	

"ALBANENE" NO. 1995L K&E CO., N.Y. 8 Reg. U.S. PAT. OFF.

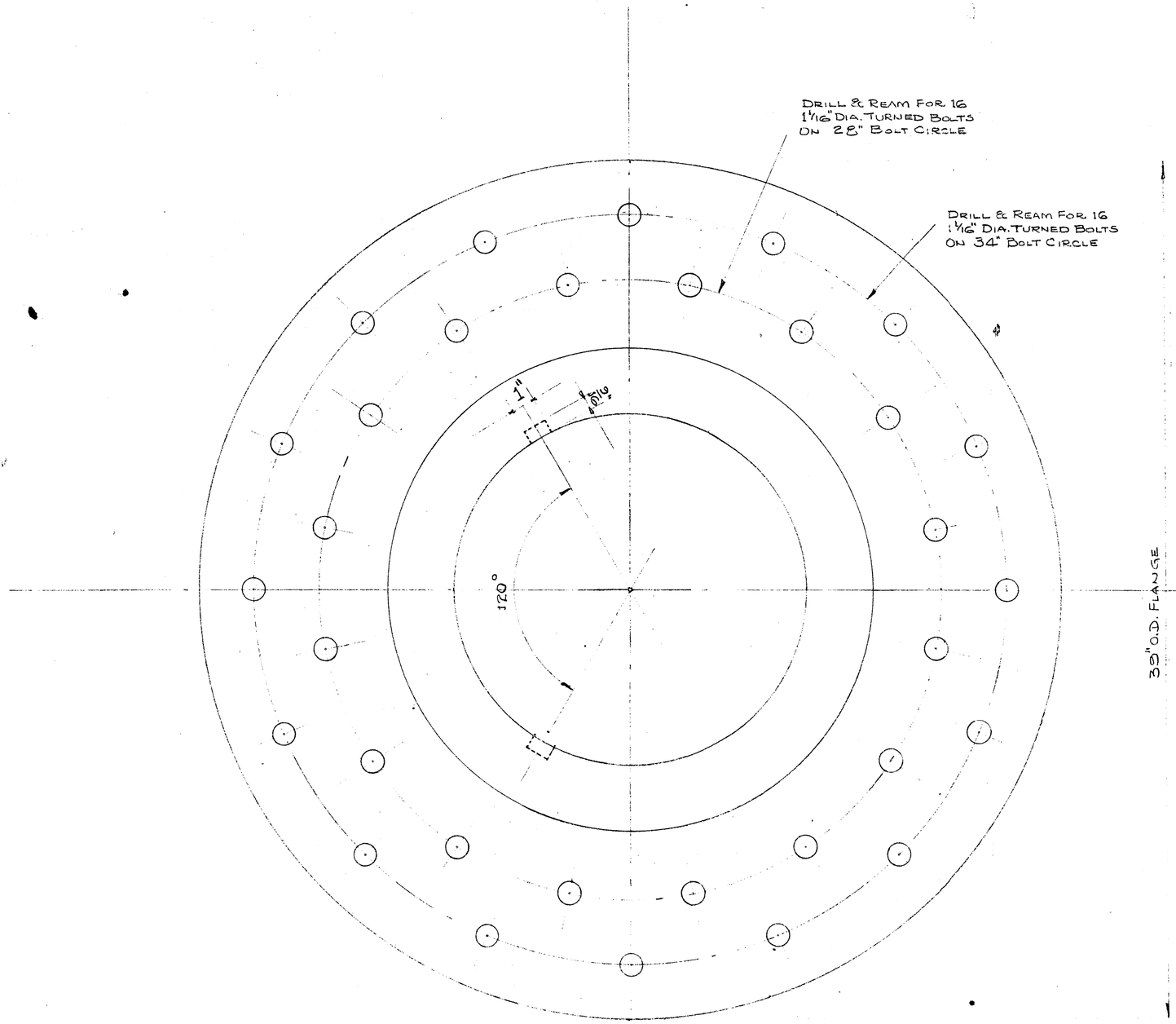

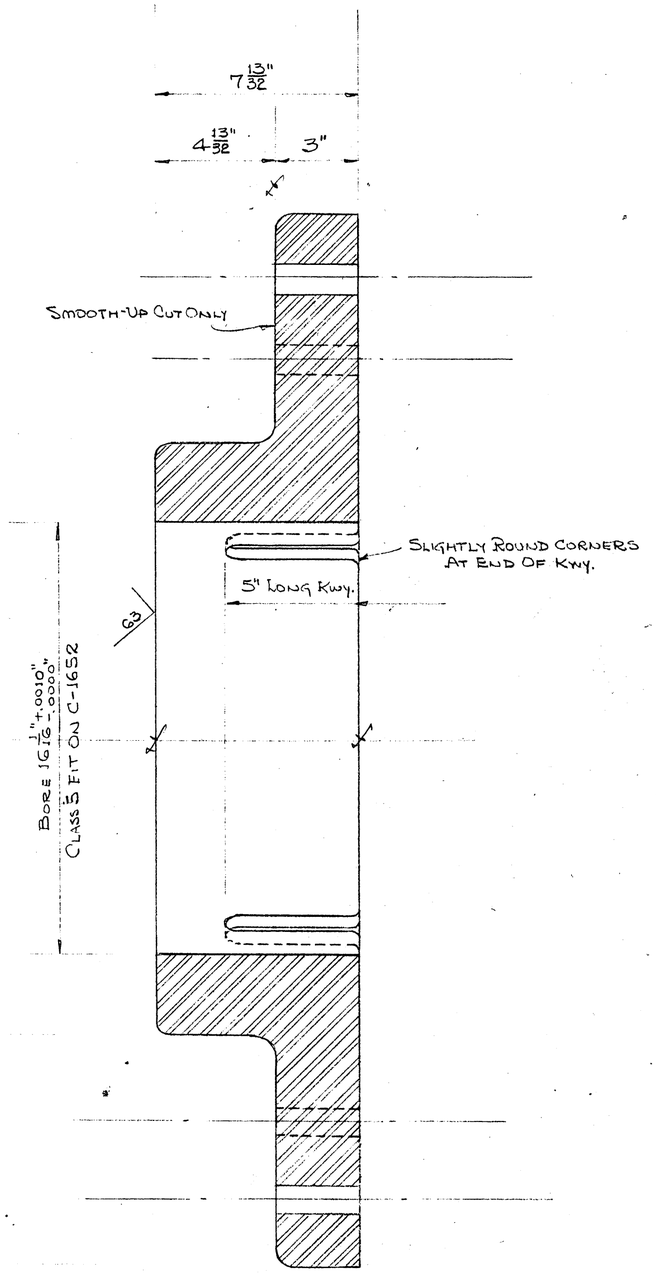

4 REQD.

MAT'L.- CAST STEEL

A.S.T.M. A27-46T GRADE 65-35

REF: CARR & GREINER DWG. #C-513-8

SHOP NO. B-6499

CALDWELL FOUNDRY & MACHINE CO. INC.
BIRMINGHAM, ALA.

TRUNNION FLANGES
FOR
NEWPORT RIVER BRIDGE
BEAUFORT, NO. CAROLINA

SCALE	3" = 1'-0"	JAN. 26, 1950
DRAWN-TR'C'D.	LEMON	C-1653
CHECKED	REVISED MARCH 9, 1950	
APP'V'D.	APRIL 26, 1950	

"ALBANENE" No. 1081 K&E CO., N.Y. 8
REG. U.S. PAT. OFF.

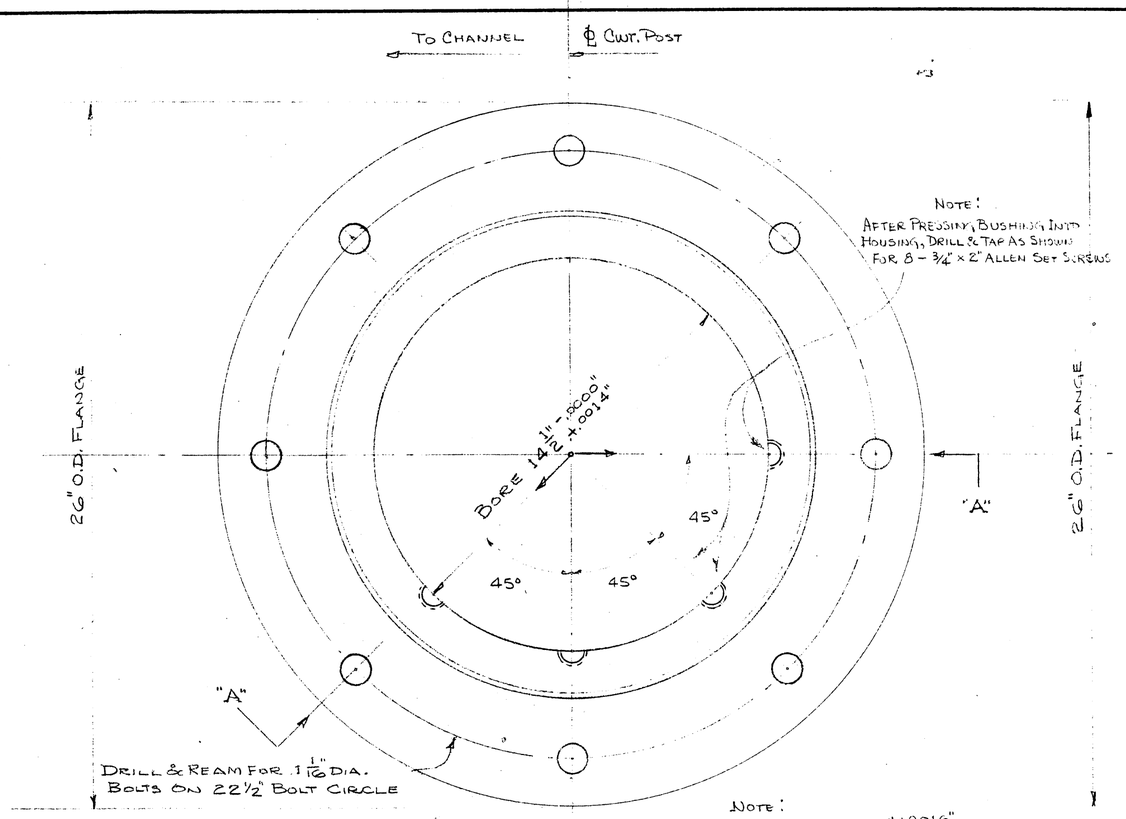

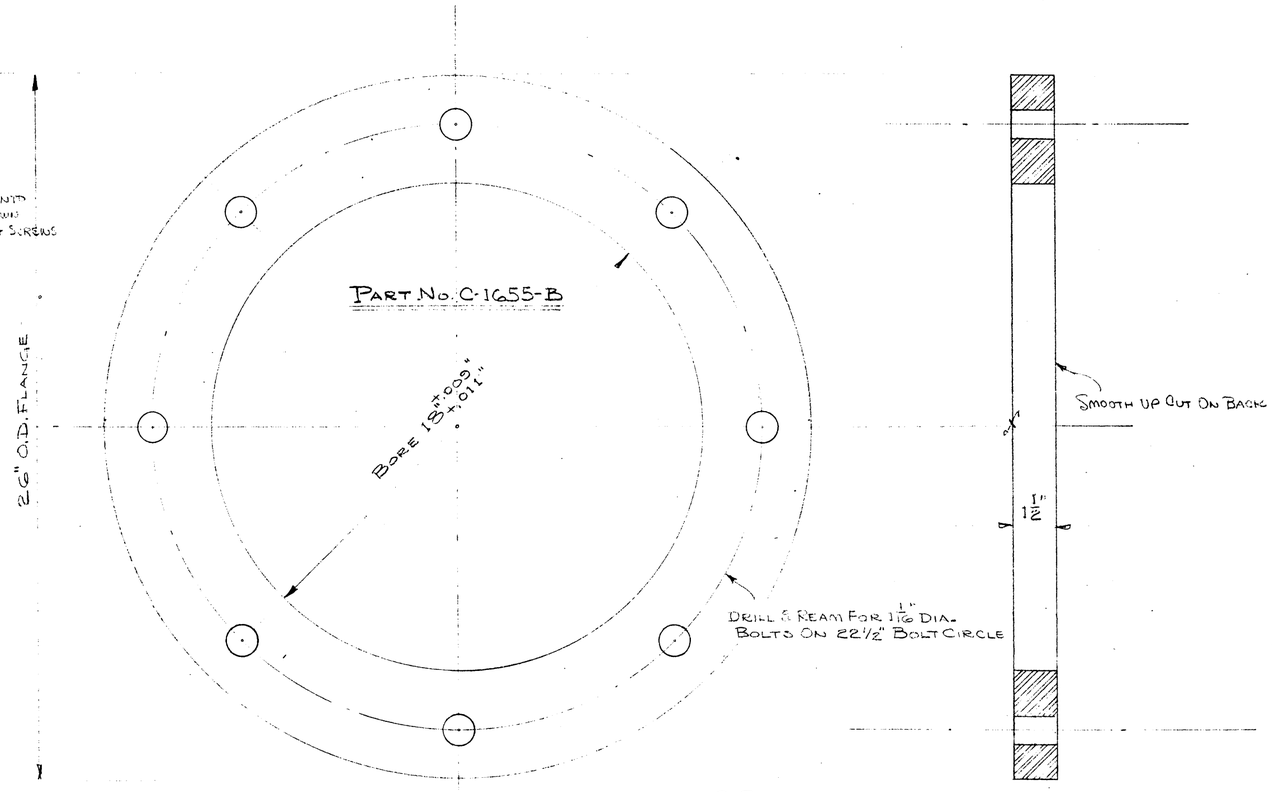

2 Reqd.

Matl. Cast Steel

A.S.T.M. A 27-46T. Grade 65-35

Note:
Hole In Girder Should Be: 18" +.0016" -.000"

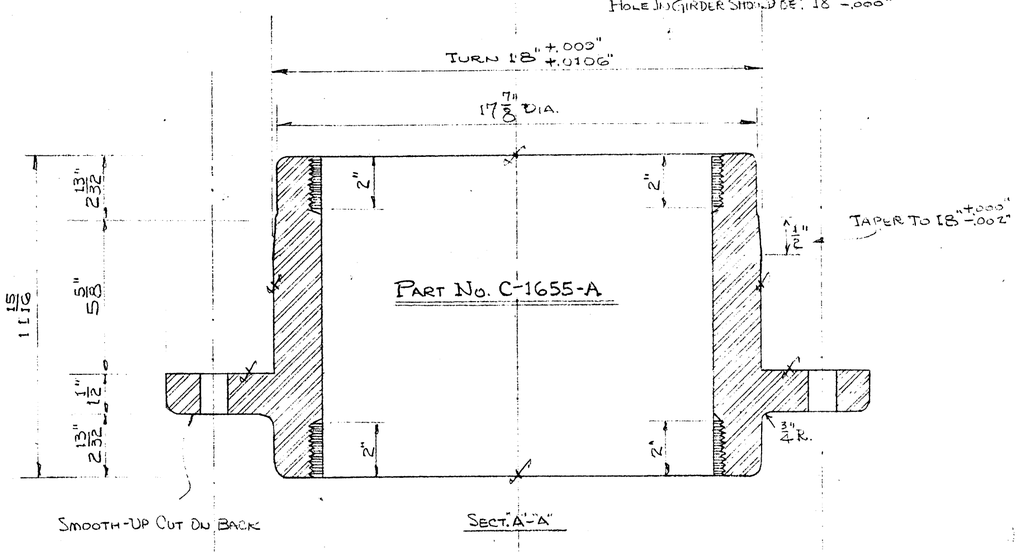

2 Reqd.

Mat'l. Cast Steel

A.S.T.M. A 27-46T Grade 65-35

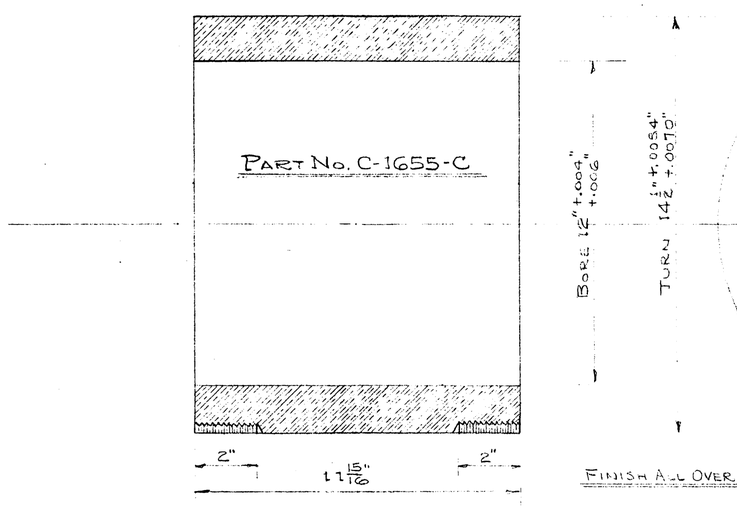

2 Reqd.

Mat'l. Phosphor Bronze

A.S.T.M. B 22-46T Class C

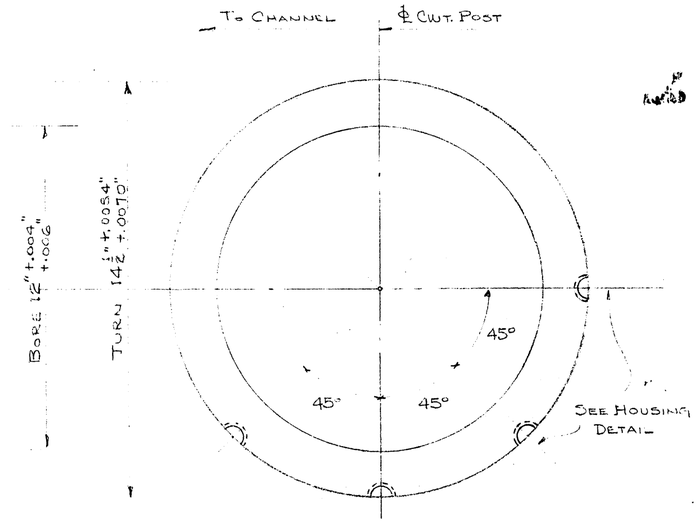

Finish All Over.

Ref: Carr & Greiner Dwg. # C-513-8

Shop No. B-6499

Caldwell Foundry & Machine Co. Inc.
Birmingham, Ala.

Main Cwt. Trunnion Flgs. & Bushing
For
Newport River Bridge
Beaufort, No. Carolina

Scale	3" = 1'-0"	Jan. 27, 1950
Drawn-Tr'c'd.	Lemon	C-1655
Checked	Revised March 9, 1950	
App'v'd.	April 26, 1950	

"Albanene" No. 195L K&E Co., N.Y. & Pa. U.S. Pat. Off.

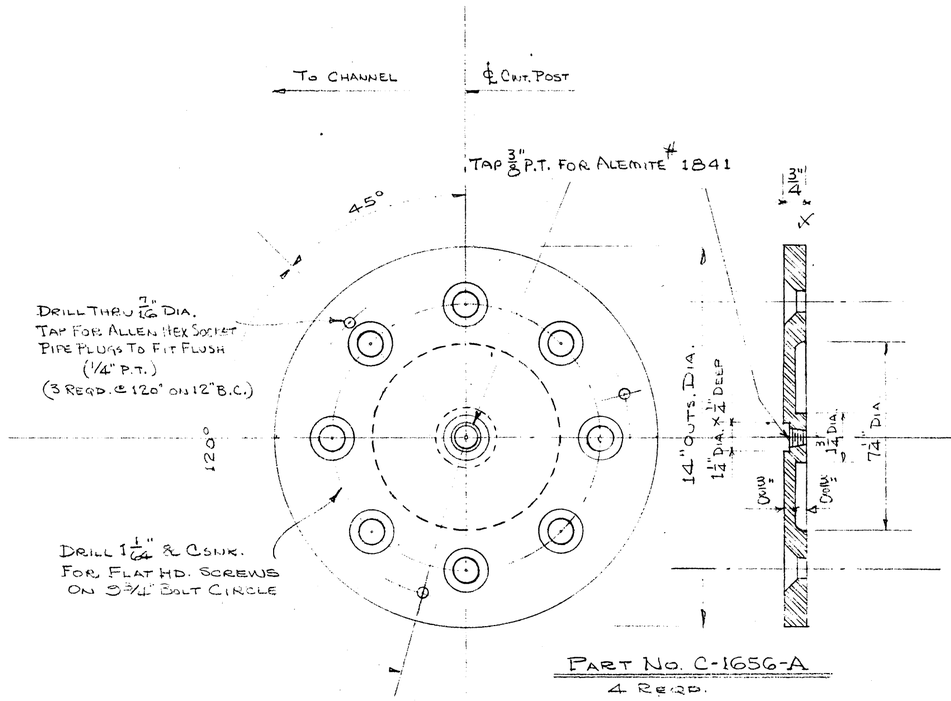

Part No. C-1656-A
4 Reqd.
Mat'l. Struct. Stl. Plate

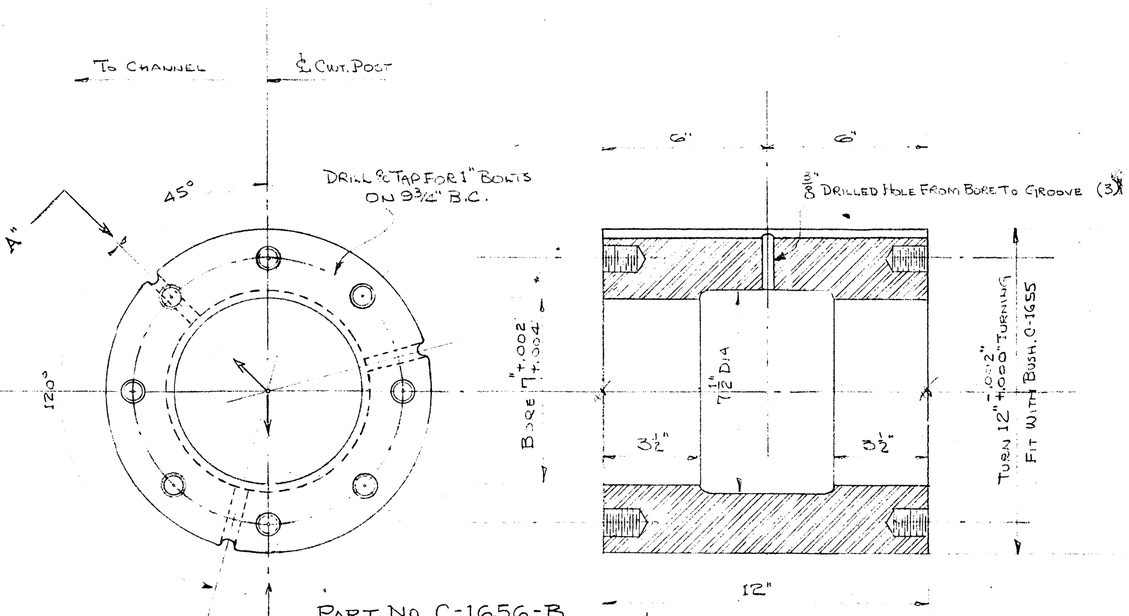

Part No. C-1656-B
2 Reqd.
Mat'l. - Forged Steel
A.S.T.M. A 235-46 Class C-1

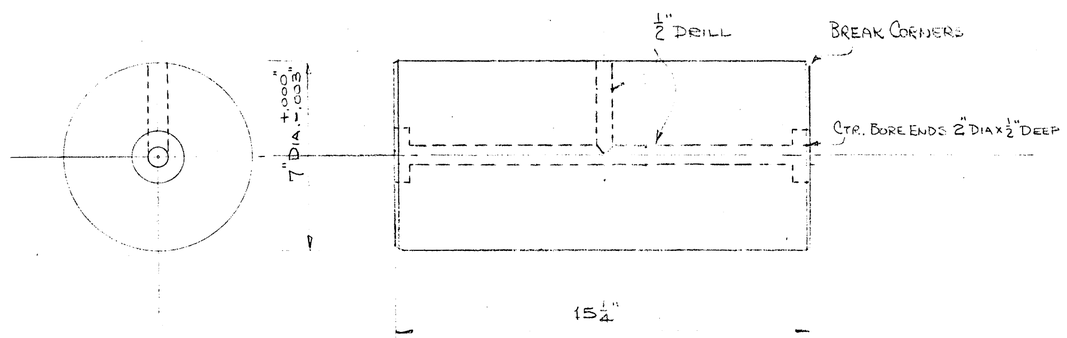

Part No. C-1656-C
2 Reqd.
Mat'l. Forged Steel
A.S.T.M. A 235-46 Class C-1

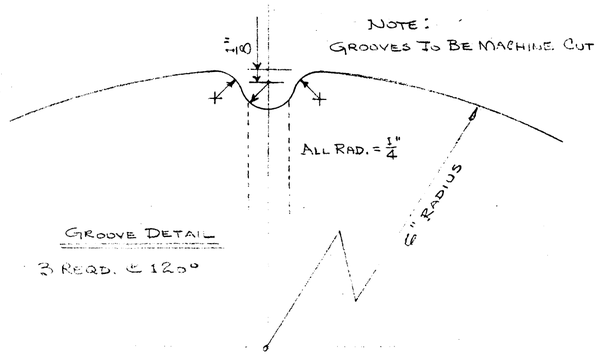

Groove Detail
3 Reqd. @ 120°

Ref: Carr & Greiner Dwg. # C-513-8
Shop No. B-6499

Caldwell Foundry & Machine Co. Inc.
Birmingham, Ala.

Main Cwt. Trunnion Pin, Shell & Cover Pl.
For
Newport River Bridge
Beaufort, No. Carolina

Scale	3" = 1'-0"	Jan. 27, 1950
Drawn-Tr'c'd.	Lemon	C-1656
Checked	Revised March 9, 1950	
App'v'd.	April 26, 1950	

"Albanene" No. 1981 K&E Co., N.Y. 8
Vis. U.S. Pat. Off.

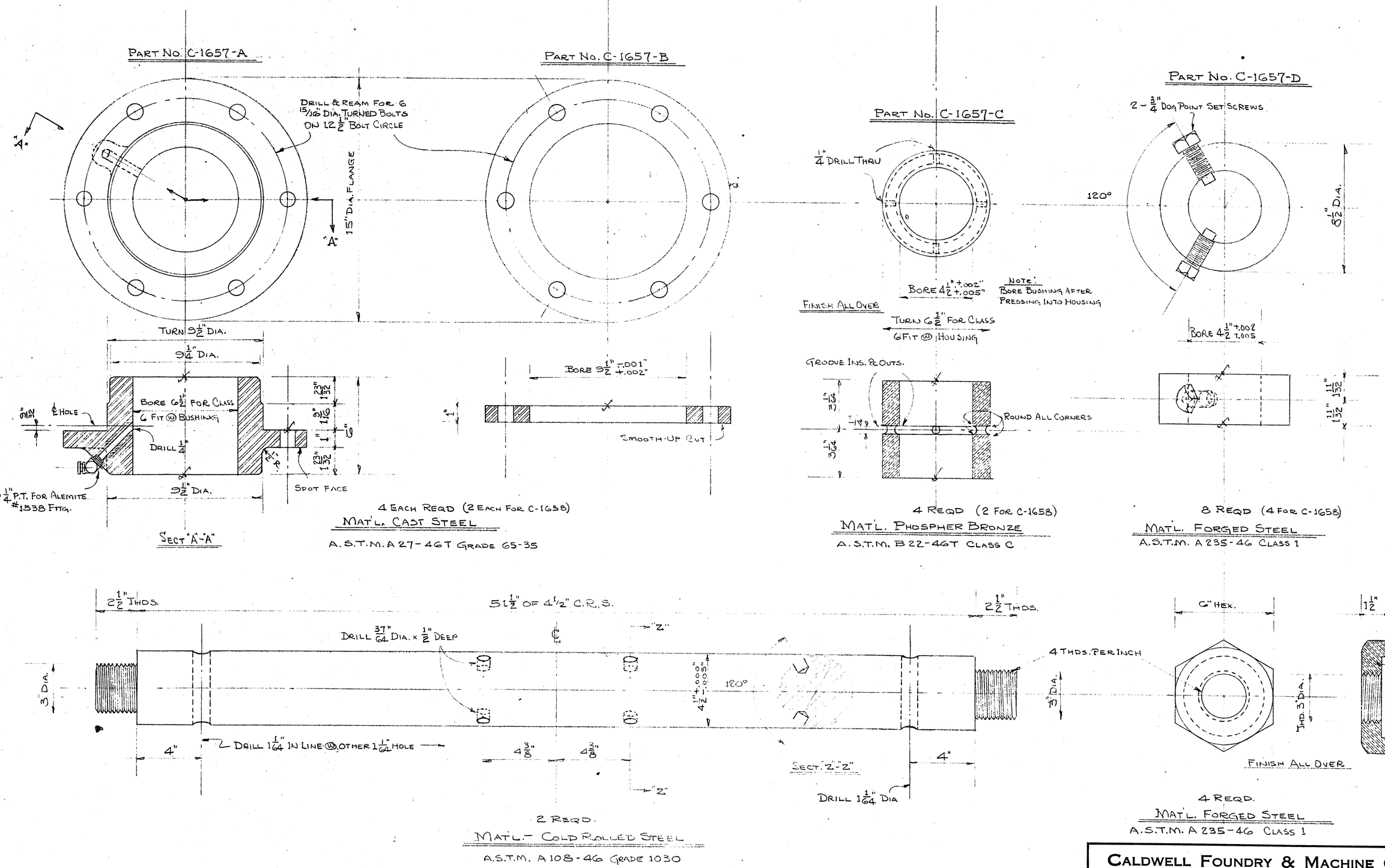

REF: CARR & GREINER DWG. # C-513-8

SHOP NO. B-6499

CALDWELL FOUNDRY & MACHINE CO. INC.
BIRMINGHAM, ALA.

PARTS FOR FORWARD CWT. LINK BEARINGS
FOR
NEWPORT RIVER BRIDGE
BEAUFORT, NO. CAROLINA

SCALE	3" = 1'-0"	JAN. 30, 1950
DRAWN-TR'C'D.	LEMON	C-1657
CHECKED	REVISED MARCH 9, 1950	
APP'V'D.	APRIL 26, 1950	

"ALBANENE" NO. 1981 K&E CO., N.Y. PAT. U.S. PAT. OFF.

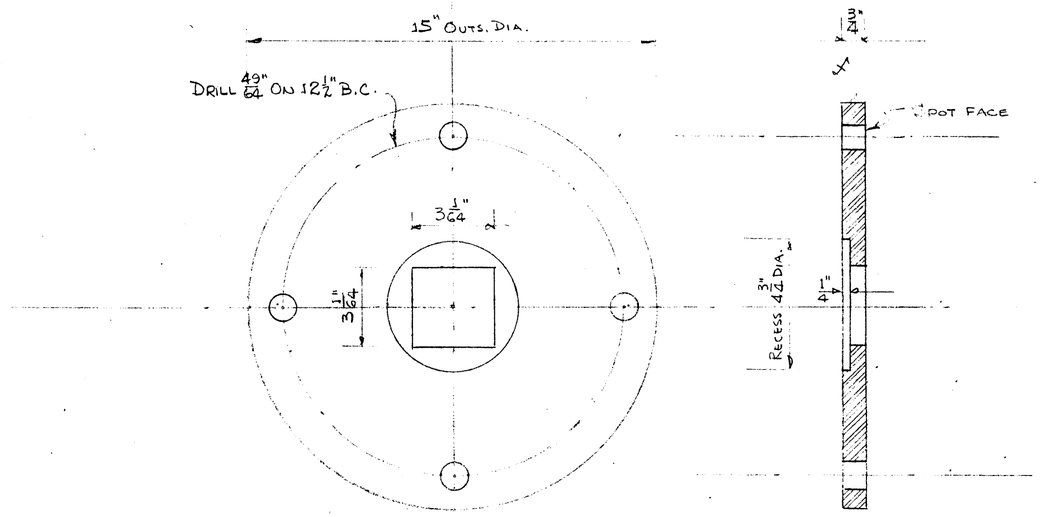

4 REQD.

MAT'L: STRUCT. STEEL PLATE

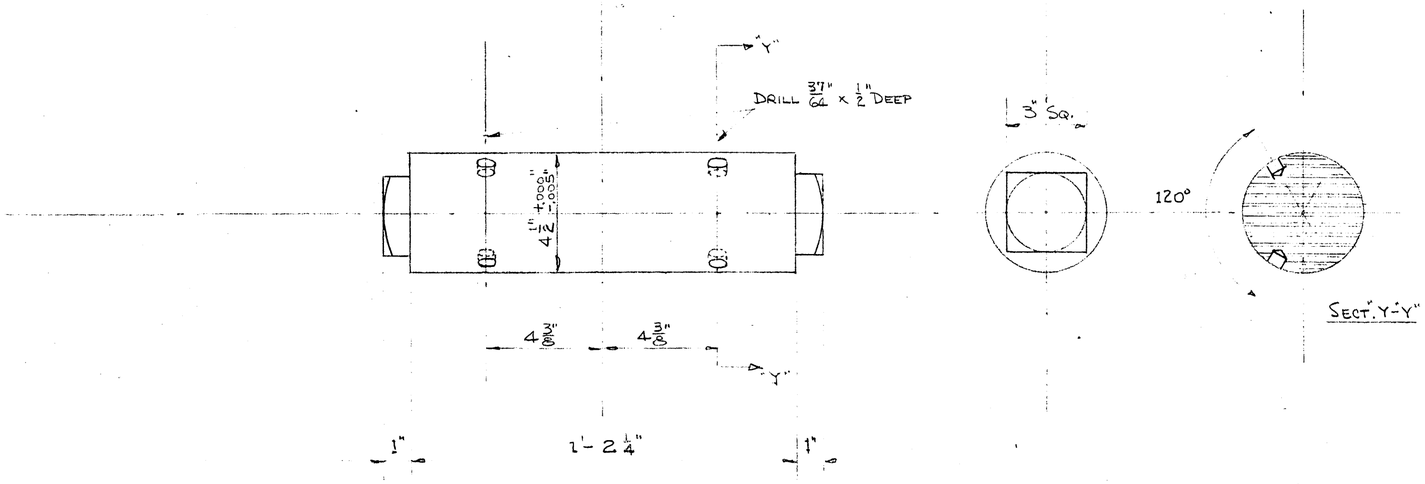

2 REQD

MAT'L. COLD ROLLED STEEL

A.S.T.M. A 108-46 GRADE 1030

REF: CARR & GREINER DWG # C-513-8

SHOP NO. B-6499

PARTS NOT SHOWN ARE ON DWG. C-1657

CALDWELL FOUNDRY & MACHINE CO. INC.
BIRMINGHAM, ALA.

PARTS FOR REAR CWT. LINK BEARINGS
FOR
NEWPORT RIVER BRIDGE
BEAUFORT, NO. CAROLINA

SCALE	3" = 1'-0"	JAN. 30, 1950
DRAWN-TR'C'D.	LEMON	C-1658
CHECKED	REVISED MARCH 9, 1950	
APP'V'D.	APRIL 26, 1950	

"ALBANENE" NO. 1981 K&E CO., N.Y. 8
Via U.S. PAT. OFF.

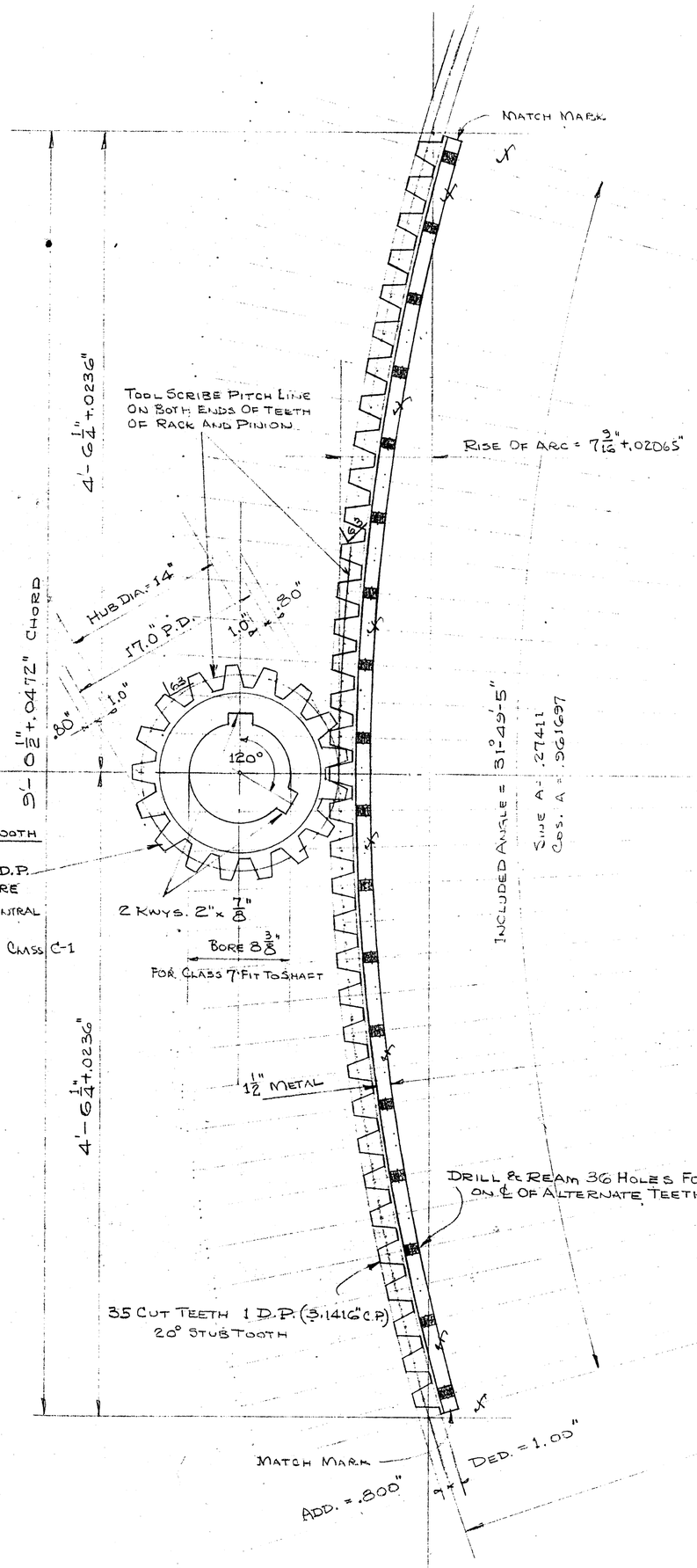

2 REQD.

FORGED STL. CUT TOOTH PINION

17 CUT TEETH 1 D.P.
7 1/2" FACE 8 3/8" BORE
HUB LENGTH 10" CENTRAL

A.S.T.M. A 235-46 CMSS C-1

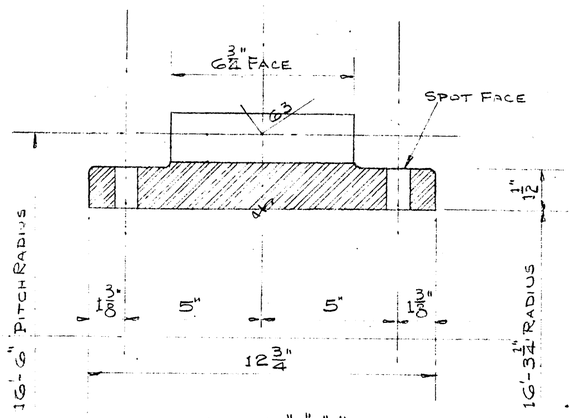

SECT. AT "A"-"A"

16'-3 1/4" INS. RAD.

PITCH RADIUS = 16'-6"

6 REQD.

CAST STEEL CUT TOOTH RACK SEGMENTS

A.S.T.M. A27-46T GRADE 65-35

REF. CARR & GREINER DWG. #C-513-8

SHOP NO. B-6499

CALDWELL FOUNDRY & MACHINE CO. INC.
BIRMINGHAM, ALA.

BASCULE RACK SEGMENTS & PINIONS
FOR
NEWPORT RIVER BRIDGE
BEAUFORT, NO. CAROLINA

SCALES	1 1/2" = 1'-0" & 3" = 1'-0"	FEB. 2, 1950
DRAWN-TR'C'D.	LEMON	C-1659
CHECKED	REVISED MARCH 9, 1950	
APP'V'D.	APRIL 26, 1950	

"ALBANENE" NO. 1995L K&E CO., N.Y. & PA. U.S. PAT. OFF.

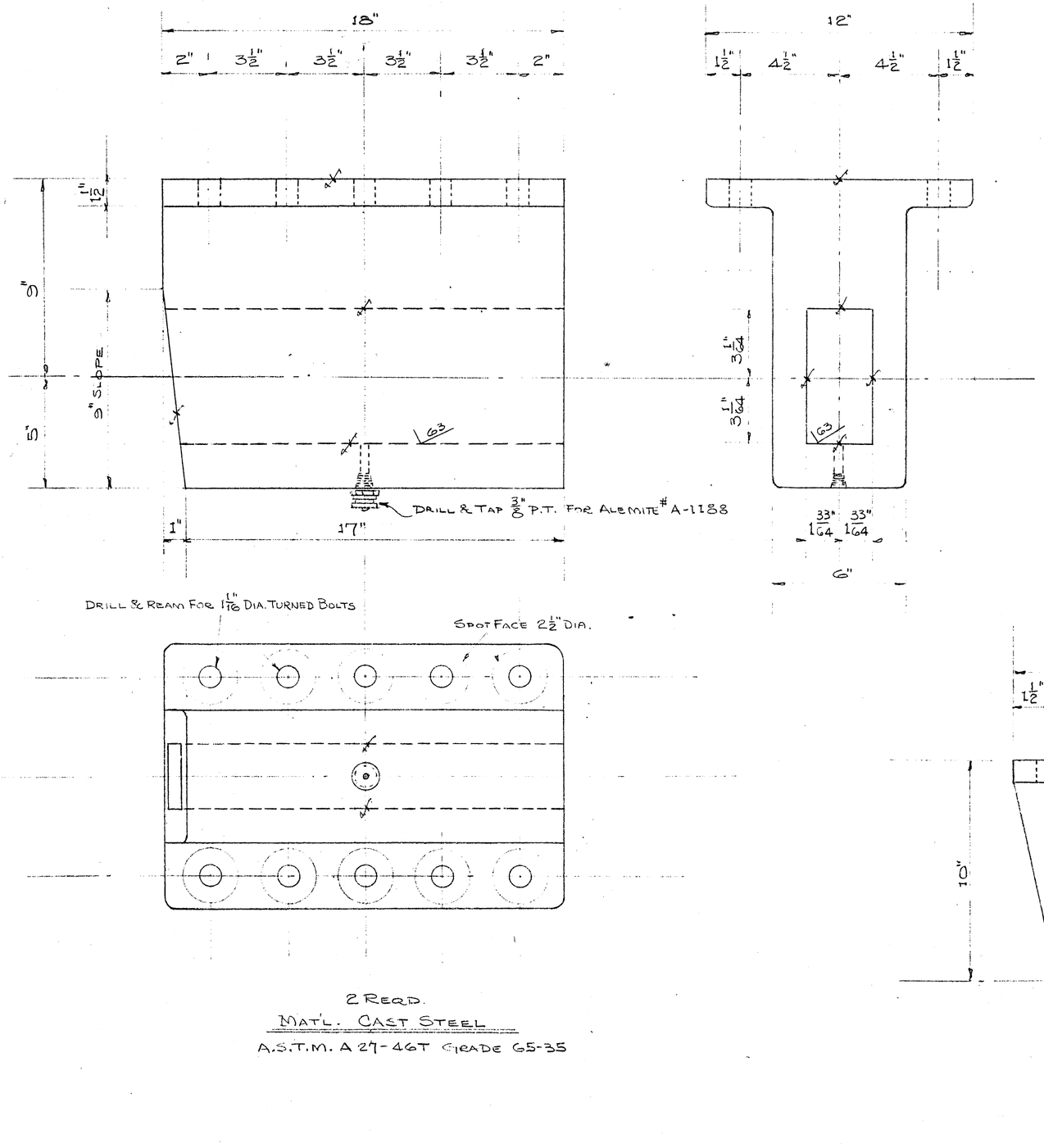

2 REQD.
MAT'L. CAST STEEL
A.S.T.M. A 27-46T GRADE 65-35

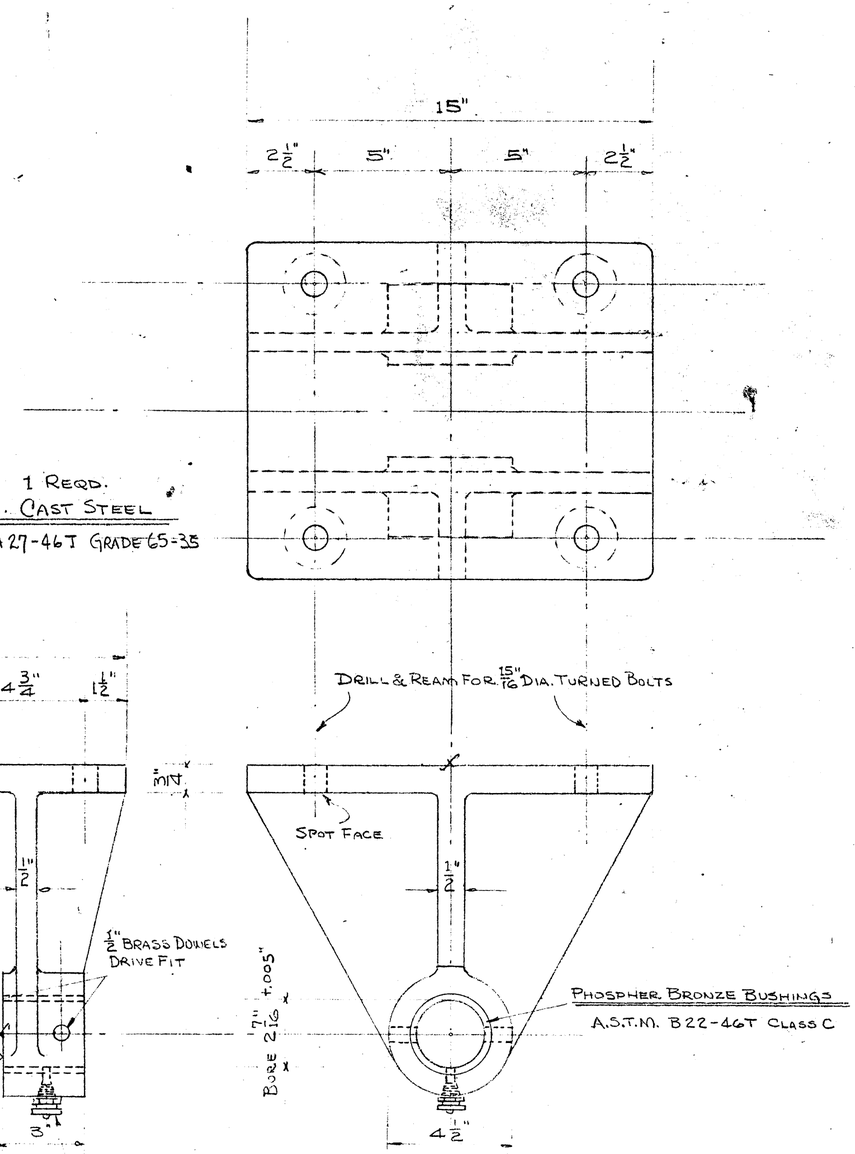

1 REQD.
MAT'L. CAST STEEL
A.S.T.M. A 27-46T GRADE 65-35

REF: CARR & GREINER DWG. # C-513-8
SHOP NO. B-6499

CALDWELL FOUNDRY & MACHINE CO. INC.
BIRMINGHAM, ALA.

END LOCK CASTINGS
FOR
NEWPORT RIVER BRIDGE
BEAUFORT, NO. CAROLINA

SCALE	3" = 1'-0"	FEB. 3, 1950
DRAWN-TR'C'D.	LEMON	C-1660
CHECKED	REVISED MARCH 9, 1950	
APP'V'D.	APRIL 26, 1950	

"ALBANENE" NO. 1095L K&E CO., N.Y. 8

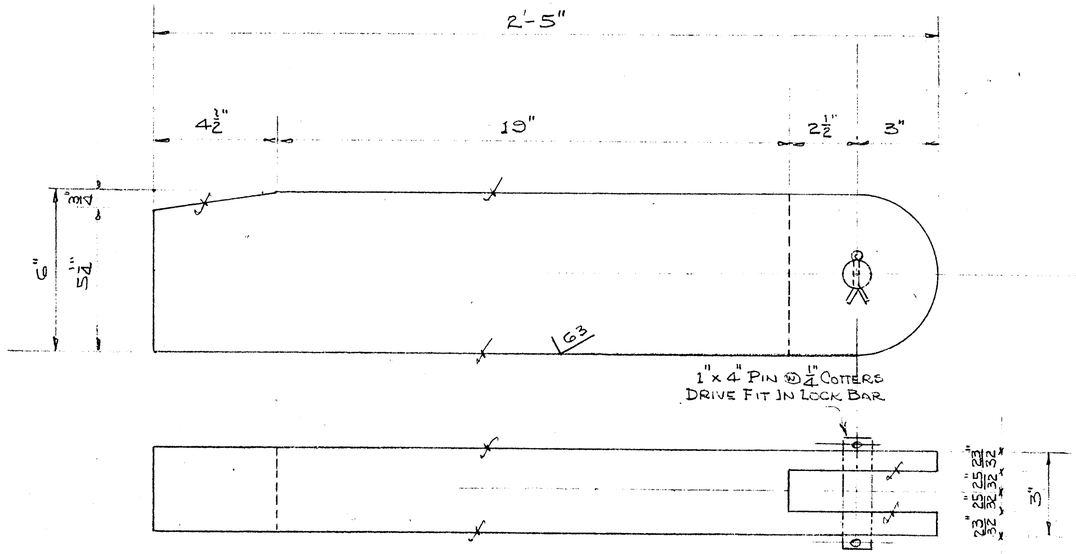

2 REQD.
MAT'L. STRUCT. PLATE STEEL
A.S.T.M. A7-46

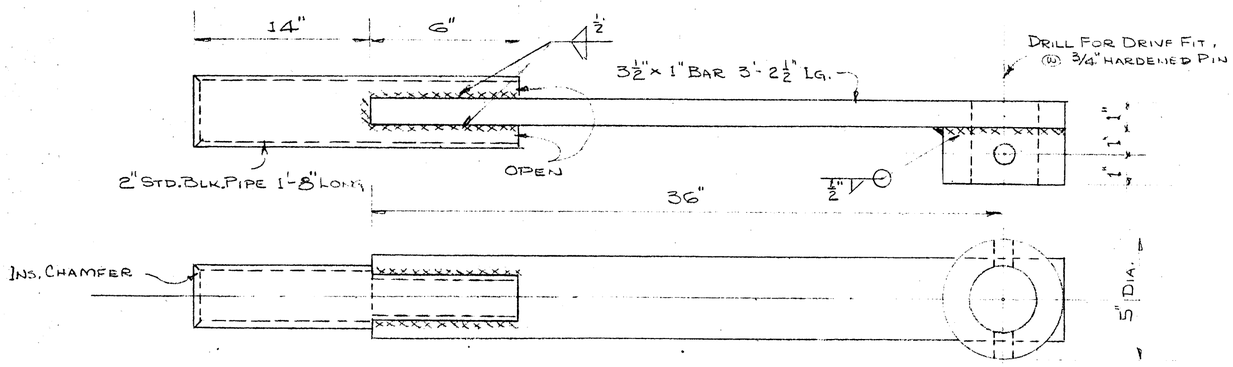

1 REQD.
MAT'L. STRUCT. STEEL
A.S.T.M. A7-46

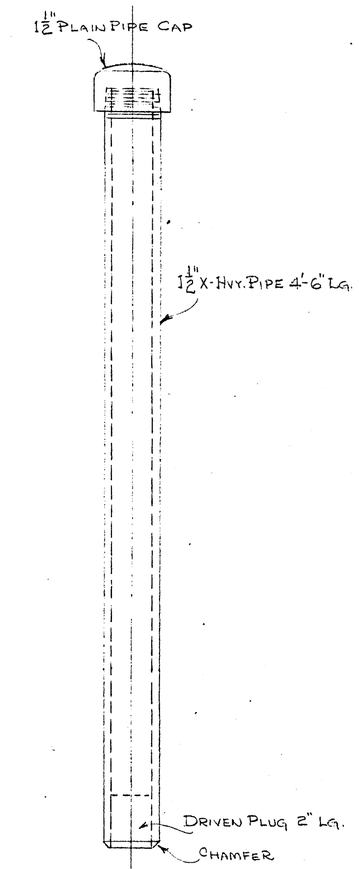

1 REQD
MAT'L. GALVANIZED PIPE

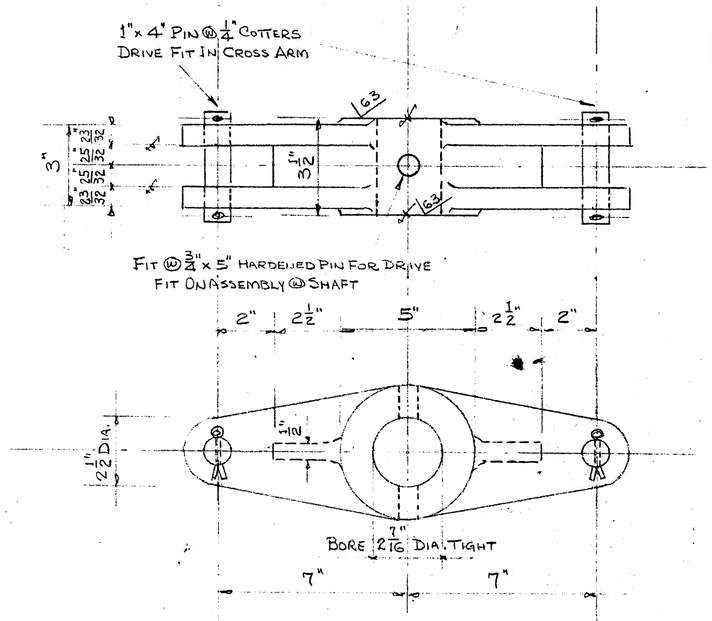

1 REQD.
MAT'L. CAST STEEL
A.S.T.M. A27-46T GRADE 65-35

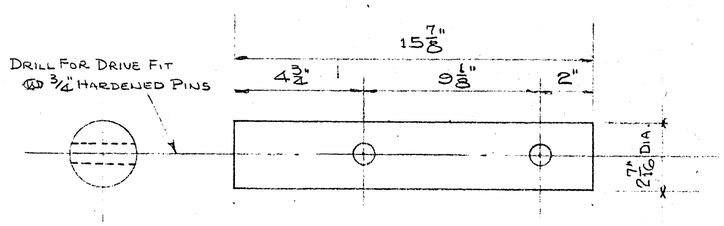

1 REQD.
MAT'L. COLD ROLLED STEEL
A.S.T.M. A108-46 GRADE 1030

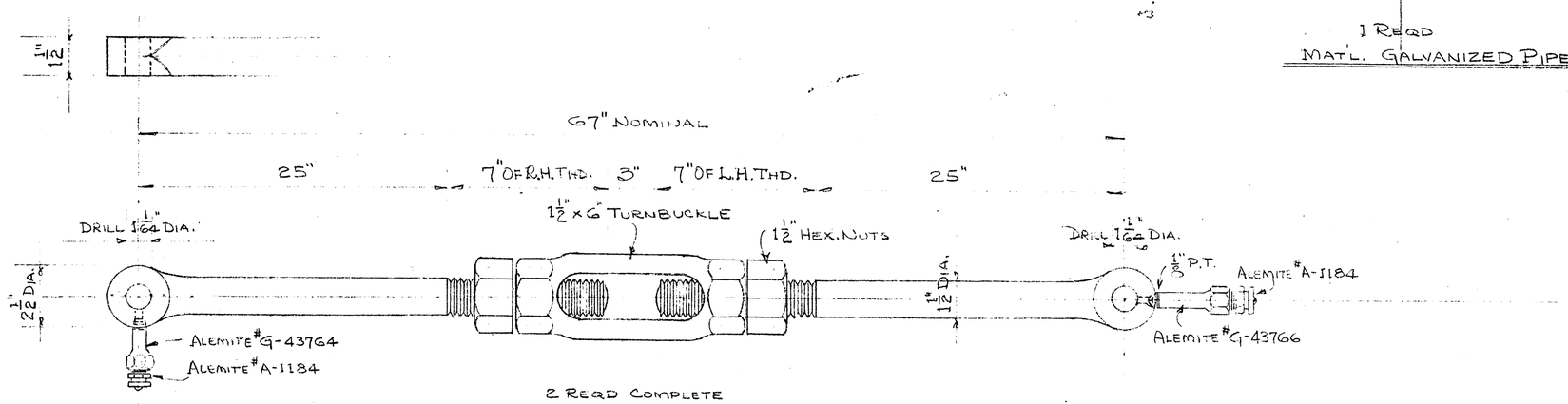

2 REQD COMPLETE
MAT'L. HOT ROLLED STEEL
A.S.T.M. A7-46

REF. CARR & GREINER DWG #C-513-8

SHOP NO. B-6499

CALDWELL FOUNDRY & MACHINE CO. INC.
BIRMINGHAM, ALA.

MISC. END LOCK PARTS
FOR
NEWPORT RIVER BRIDGE
BEAUFORT, NO. CAROLINA

SCALE	3" = 1'-0"	FEB. 3, 1950
DRAWN-TR'C'D.	LEMON	C-1661
CHECKED	REVISED MARCH 9, 1950	
APP'V'D.	APRIL 26, 1950	

"ALBANENE" No. 1961 K&E CO., N.Y. 8 Reg. U.S. PAT. OFF.

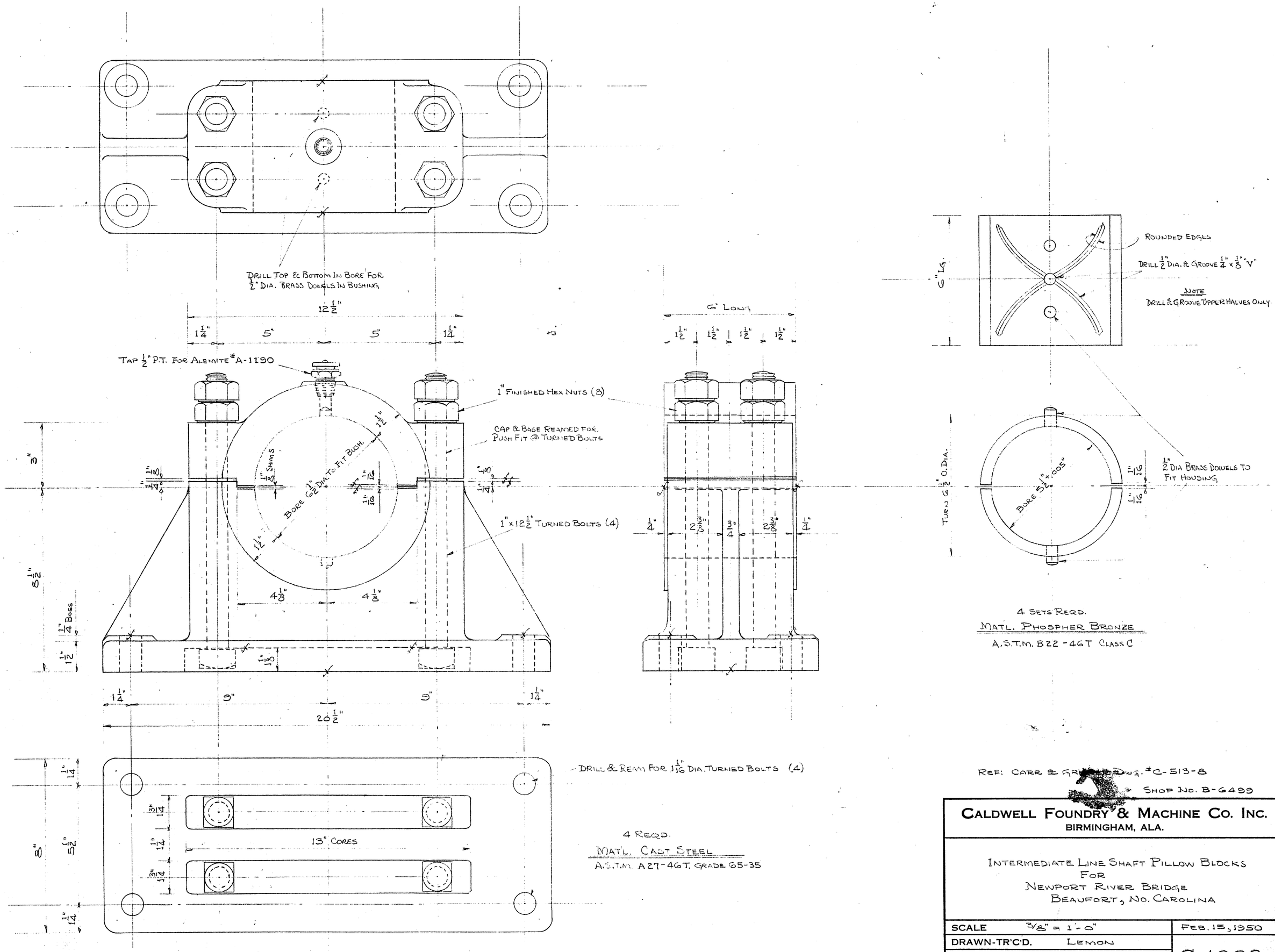

REF: CARR & GR[illegible] DWG. #C-513-8

SHOP NO. B-6499

CALDWELL FOUNDRY & MACHINE CO. INC.
BIRMINGHAM, ALA.

INTERMEDIATE LINE SHAFT PILLOW BLOCKS
FOR
NEWPORT RIVER BRIDGE
BEAUFORT, NO. CAROLINA

SCALE	3/8" = 1'-0"	FEB. 15, 1950
DRAWN-TR'C'D.	LEMON	C-1662
CHECKED	REVISED MARCH 9, 1950	
APP'V'D.	APRIL 26, 1950	

"ALBANENE" NO. 1981L K&E CO., N.Y. 8 PB. U.S. PAT. OFF.

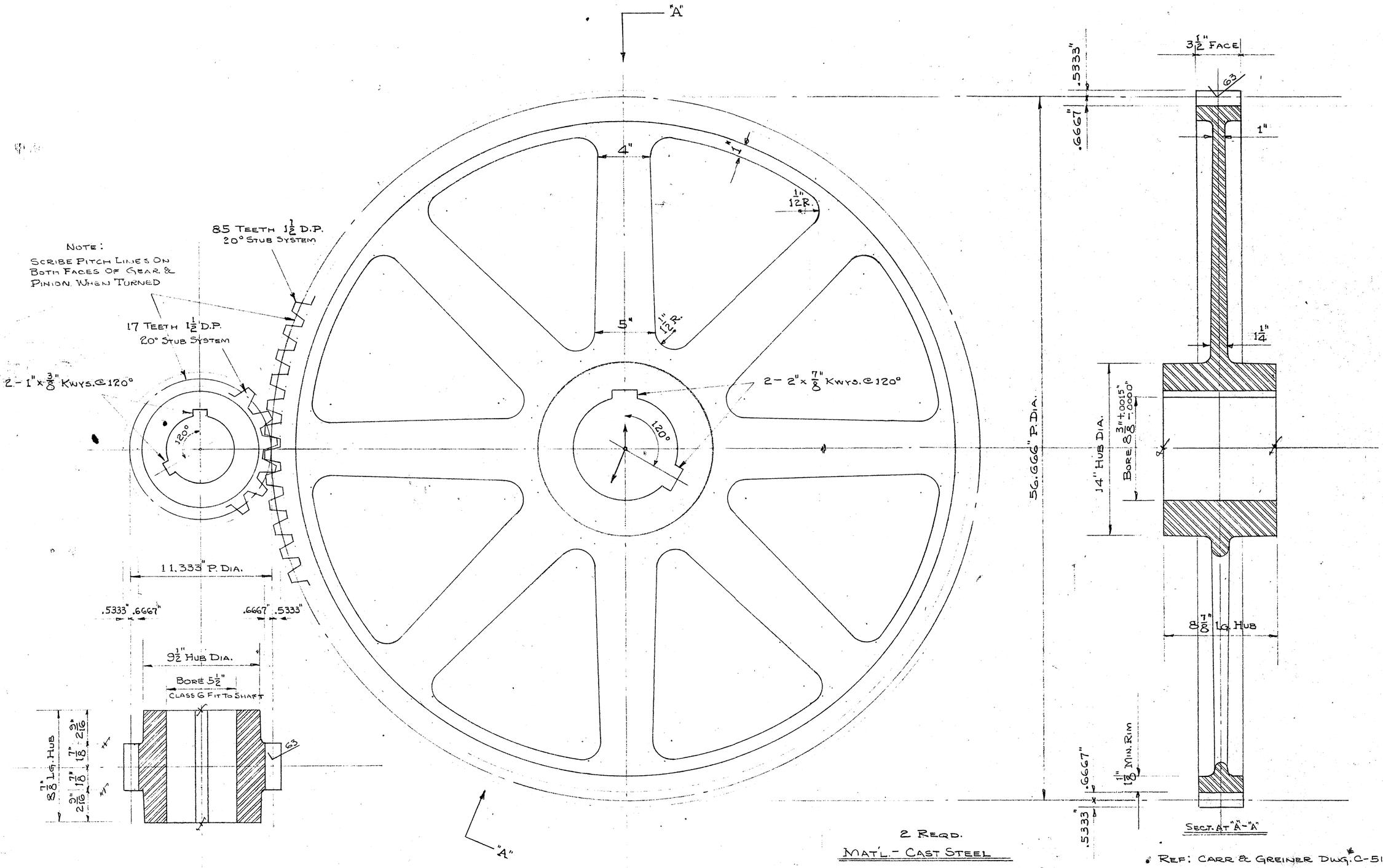

2 Reqd.

Mat'l. - Forged Steel

A.S.T.M. A235-46 Class C-1

Teeth Machine Cut & Indexed

2 Reqd.

Mat'l. - Cast Steel

A.S.T.M. A27-46T Grade 65-35

* Ref: Carr & Greiner Dwg. C-513-8

Shop Order B-6499

Caldwell Foundry & Machine Co. Inc.
Birmingham, Ala.

Countershaft Gear & Pinion
For
Newport River Bridge
Beaufort, No. Carolina

Scale	3/16" = 1'-0"	Feb. 17, 1950
Drawn-Tr'c'd.	Lemon	
Checked	Revised March 9, 1950	C-1663
App'v'd.	April 26, 1950	

"ALBANENE" No. 1981 K&E CO., N.Y. 8
ESH U.S. PAT. OFF.

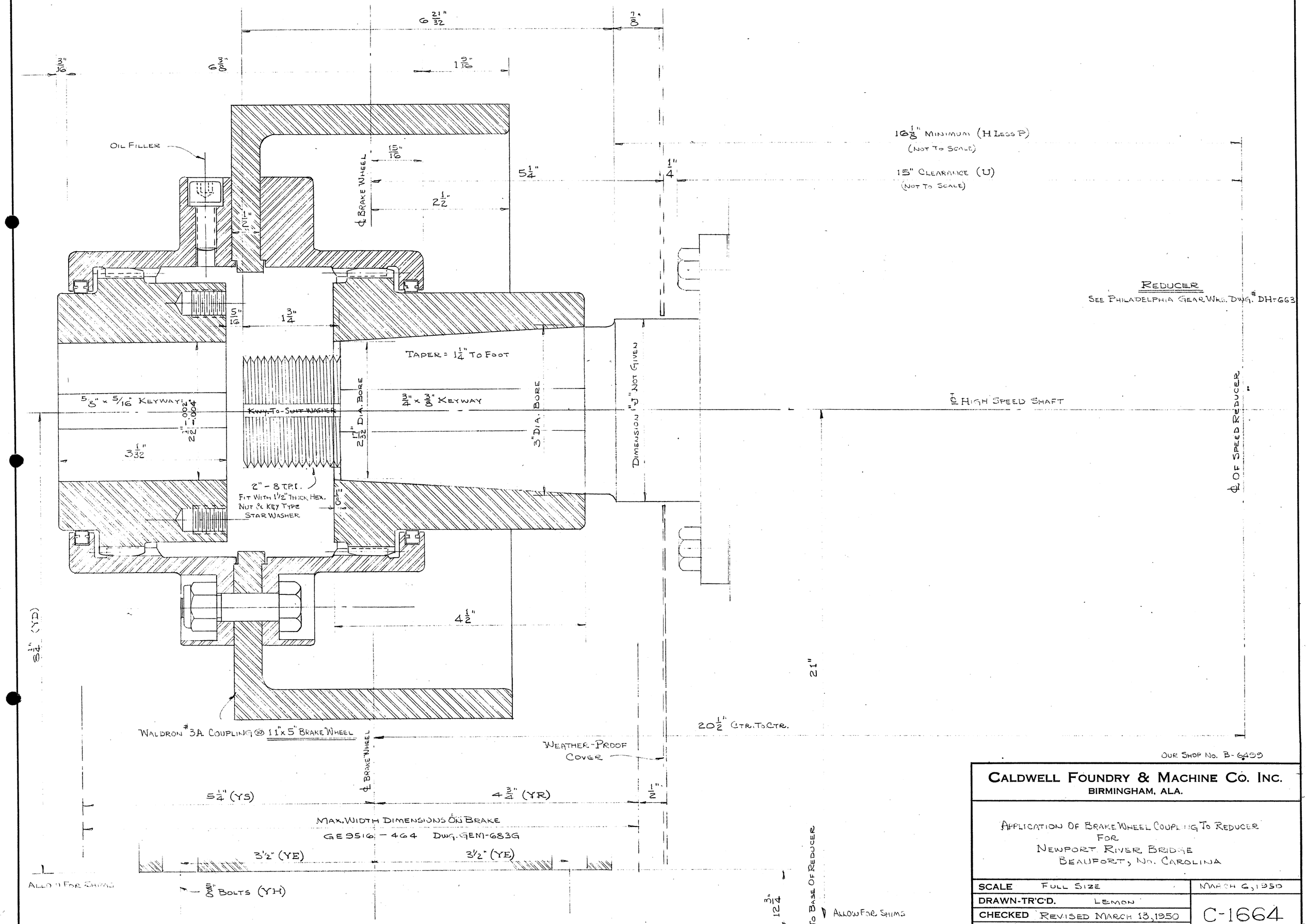

OUR SHOP No. B-6499

CALDWELL FOUNDRY & MACHINE CO. INC.
BIRMINGHAM, ALA.

APPLICATION OF BRAKE WHEEL COUPLING TO REDUCER
FOR
NEWPORT RIVER BRIDGE
BEAUFORT, NO. CAROLINA

SCALE	FULL SIZE	MARCH 6, 1950
DRAWN-TR'C'D.	LEMON	
CHECKED	REVISED MARCH 13, 1950	C-1664
APP'V'D.	APRIL 26, 1950	

"ALBANENE" No. 1981 K&E CO., N.Y.

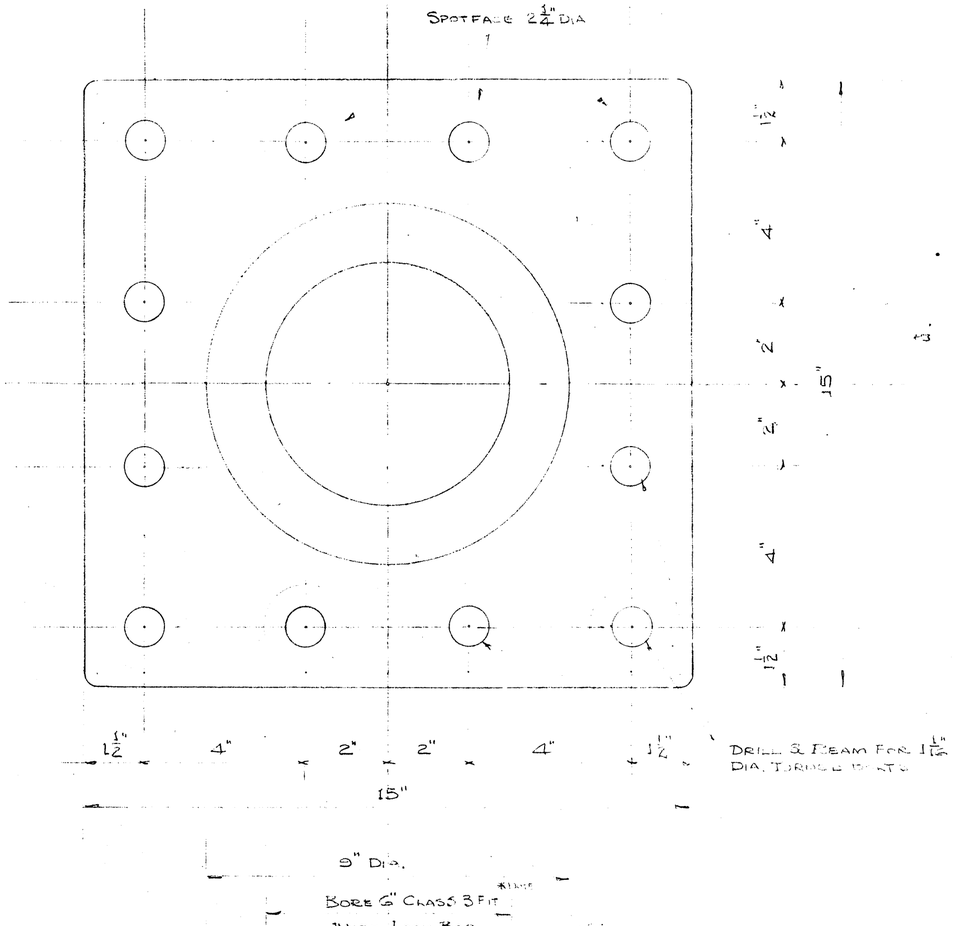

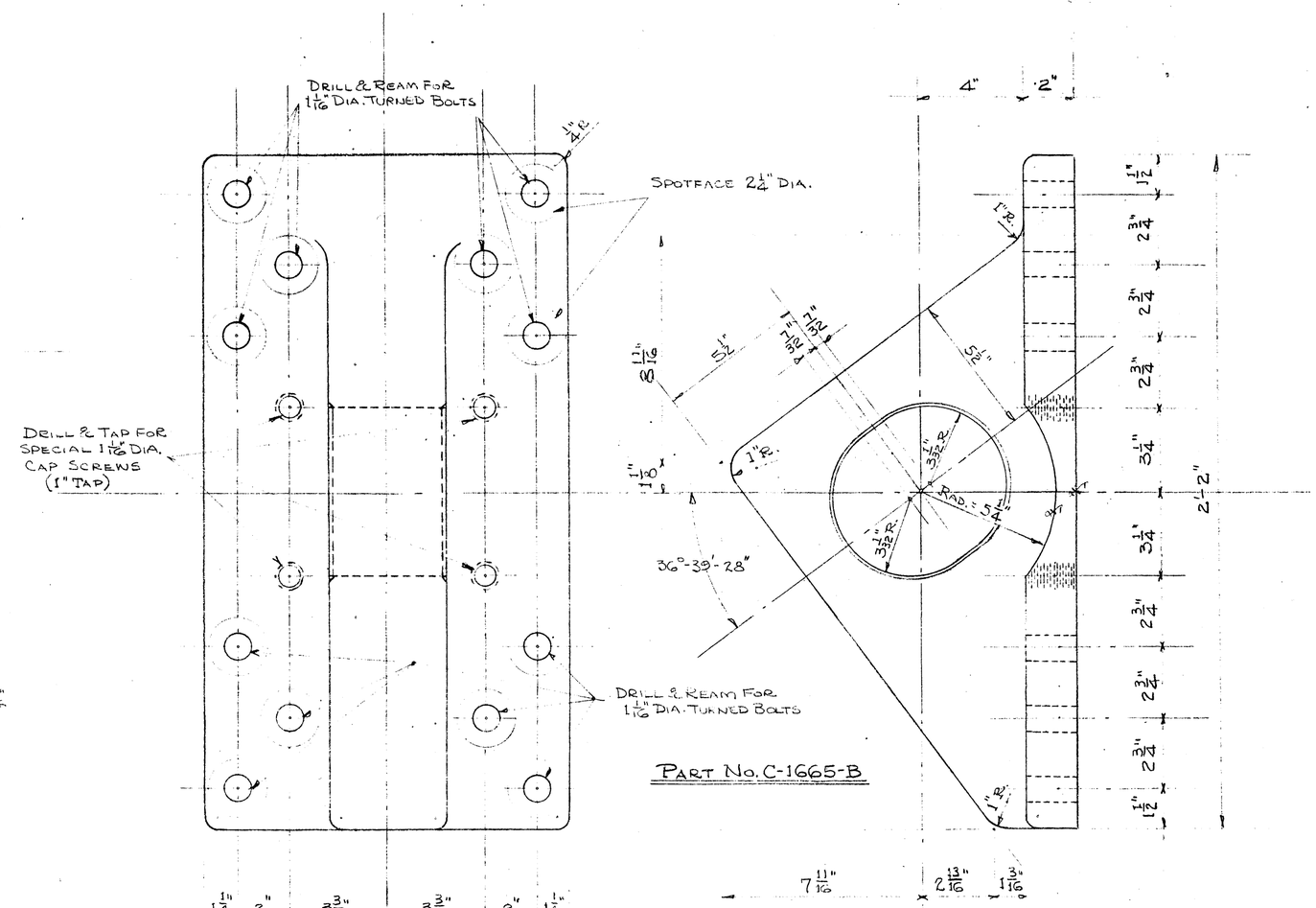

PART No. C-1665-B

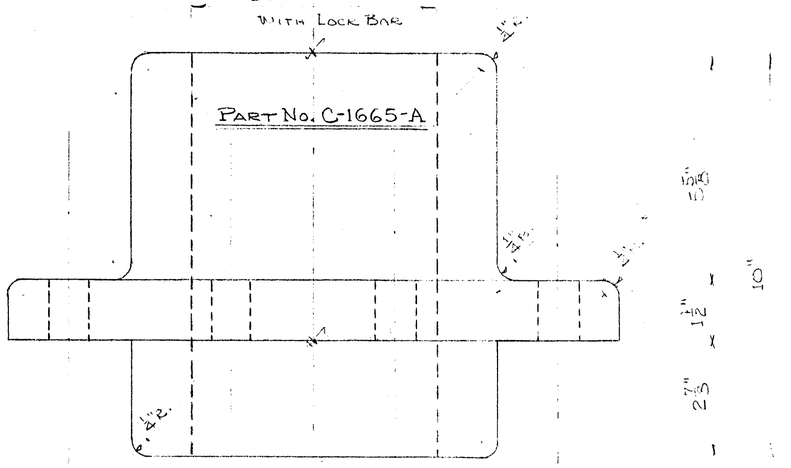

4 REQD.

CAST STEEL OPEN LOCK GUIDE

A.S.T.M. A27-46T GRADE 65-35

Note:
.002" Loose Fit
.006" Loose Fit

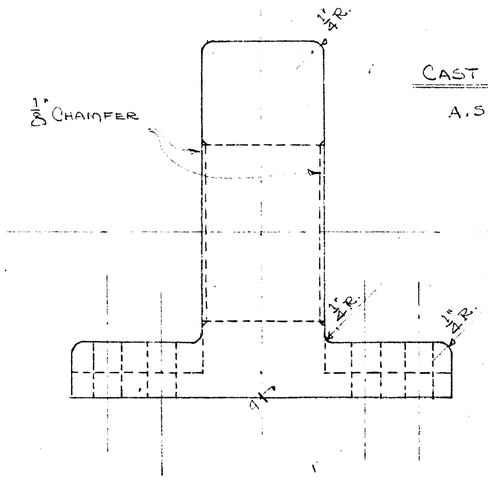

2 REQD.

CAST STEEL OPEN LOCK TONGUE

A.S.T.M. A27-46T GRADE 65-35

REF: CARR & GREINER DWG. # C-513-SK1

SHOP No. B-6499

CALDWELL FOUNDRY & MACHINE CO. INC.
BIRMINGHAM, ALA.

FULLY OPEN LOCK DETAILS
FOR
NEWPORT RIVER BRIDGE
BEAUFORT, NO. CAROLINA

SCALES	3/8" = 1'-0" 3" = 1'-0"	MARCH 15, 1950
DRAWN-TR'C'D.	LEMON	C-1665
CHECKED	REVISED APRIL 14, 1950	
APP'V'D.	APRIL 26, 1950	

NOTE:
STEEL SPRING HOUSING, COMP. SPRING AND SPRING GUIDE TO BE PROPORTIONED TO KEEP COMPRESSION SPACE AT A MINIMUM.
(TO PREVENT EXCESSIVE LOSS OF EFFECTIVE COMPRESSION)

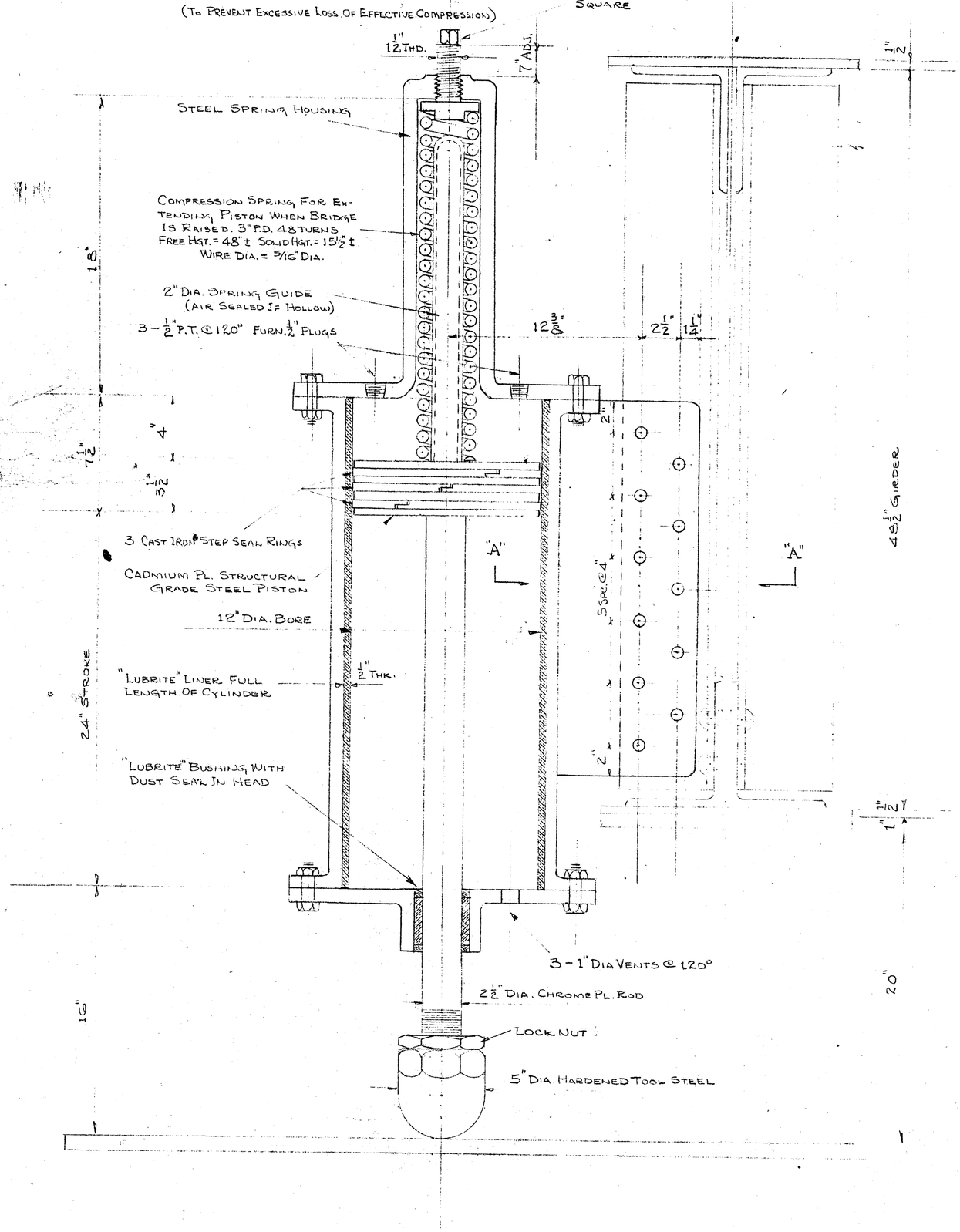

WORKING PRESSURE 300#

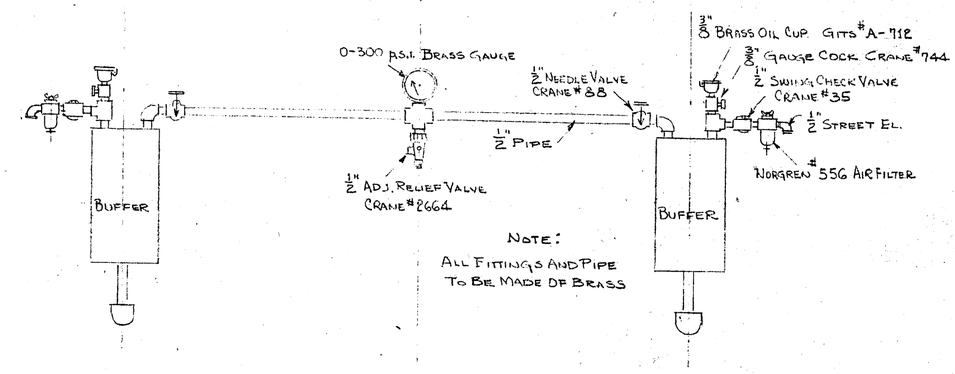

NOTE:
ALL FITTINGS AND PIPE TO BE MADE OF BRASS

PIPING DIAGRAM

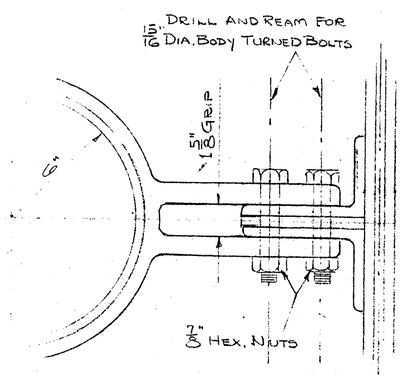

SECT. AT "A"-"A"

REF. CARR & GREINER DWG. # C-513-B

SHOP No. B-6499

CALDWELL FOUNDRY & MACHINE CO. INC.
BIRMINGHAM, ALA.

DESIGN DRAWING OF AIR BUFFERS
FOR:
NEWPORT RIVER BRIDGE
BEAUFORT, NO. CAROLINA

SCALE	3/16" = 1'-0"	MARCH 24, 1950
DRAWN-TR'C'D.	LEMON	C-1666
CHECKED	REVISED APRIL 14, 1950	
APP'V'D.	APRIL 26, 1950	

"ALBANENE" No. 1001 KAEDU., N.Y. U.S. PAT. OFF.

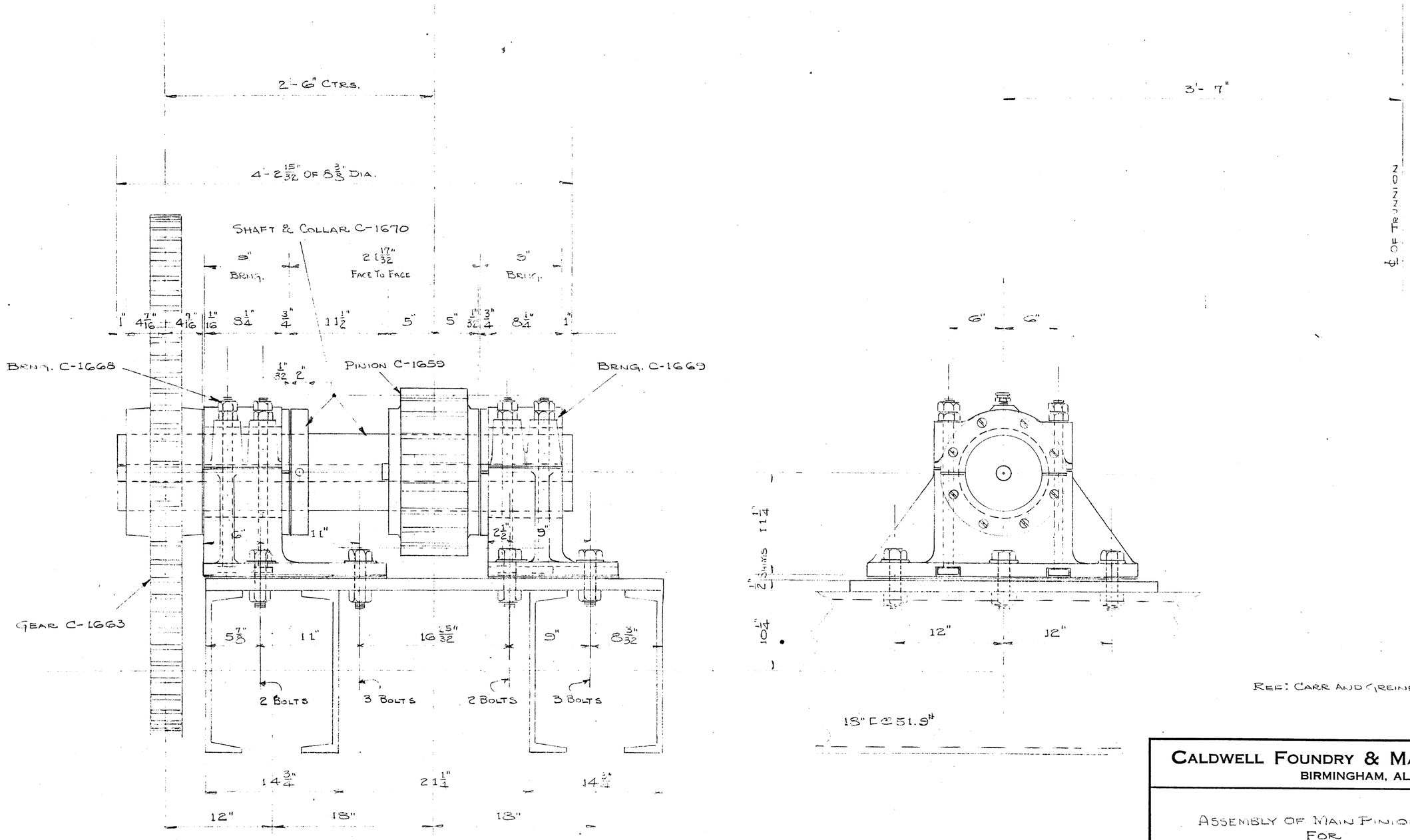

REF: CARR AND GREINER DWG. # C-513-8

SHOP NO. B-6499

CALDWELL FOUNDRY & MACHINE CO. INC.
BIRMINGHAM, ALA.

ASSEMBLY OF MAIN PINION SHAFT
FOR
NEWPORT RIVER BRIDGE
BEAUFORT, NO. CAROLINA

SCALE	1 1/2" = 1'-0"	MARCH 31, 1950
DRAWN-TR'C'D.	LEMON	C-1667
CHECKED		
APP'V'D.	APRIL 26, 1950	

"ALBANENE" No. 1981 K&E CO., N.Y. 8 No. U.S. PAT. OFF.

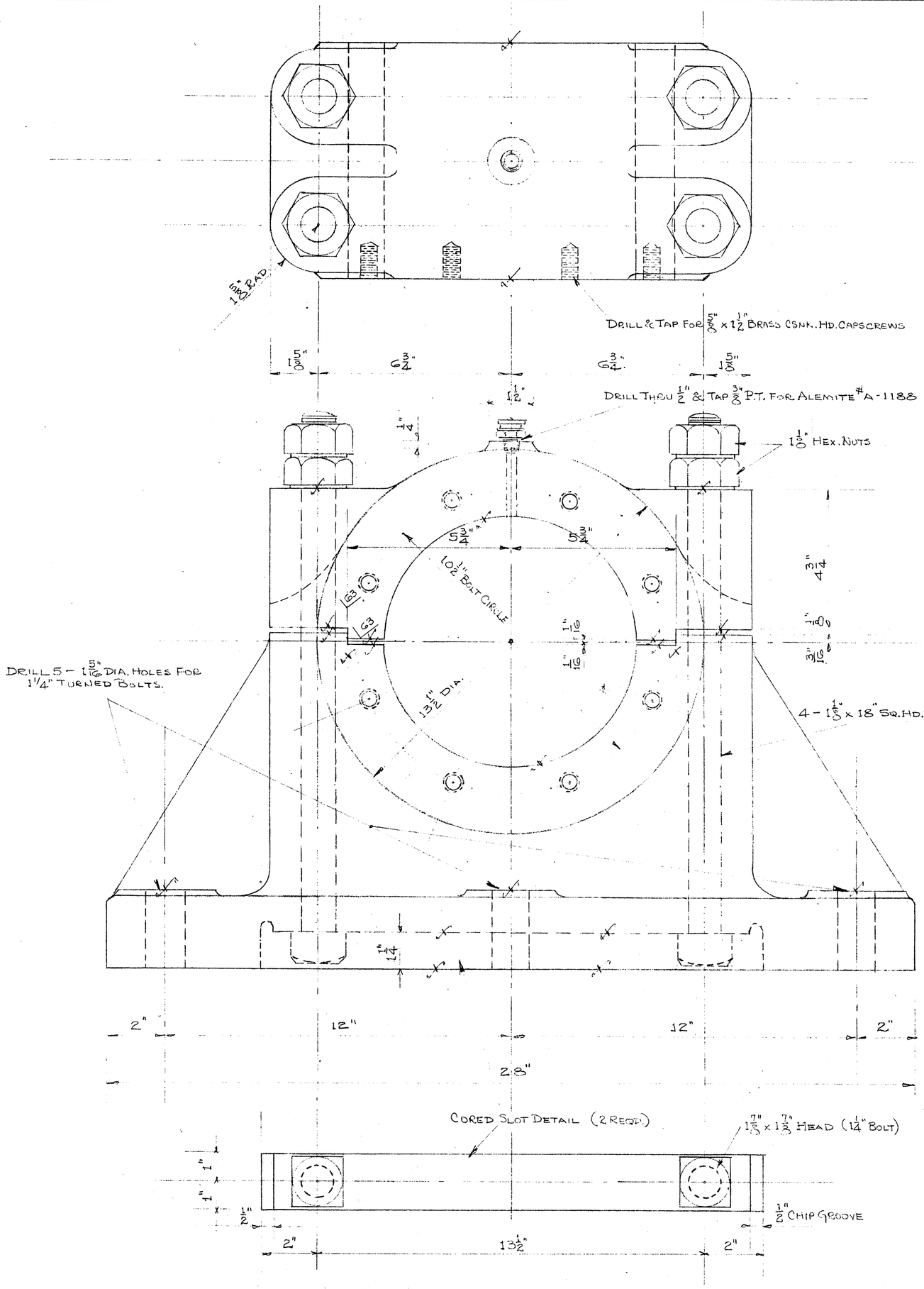

NOTE:
SEE BRONZE LINER ON DWG. #C-1669

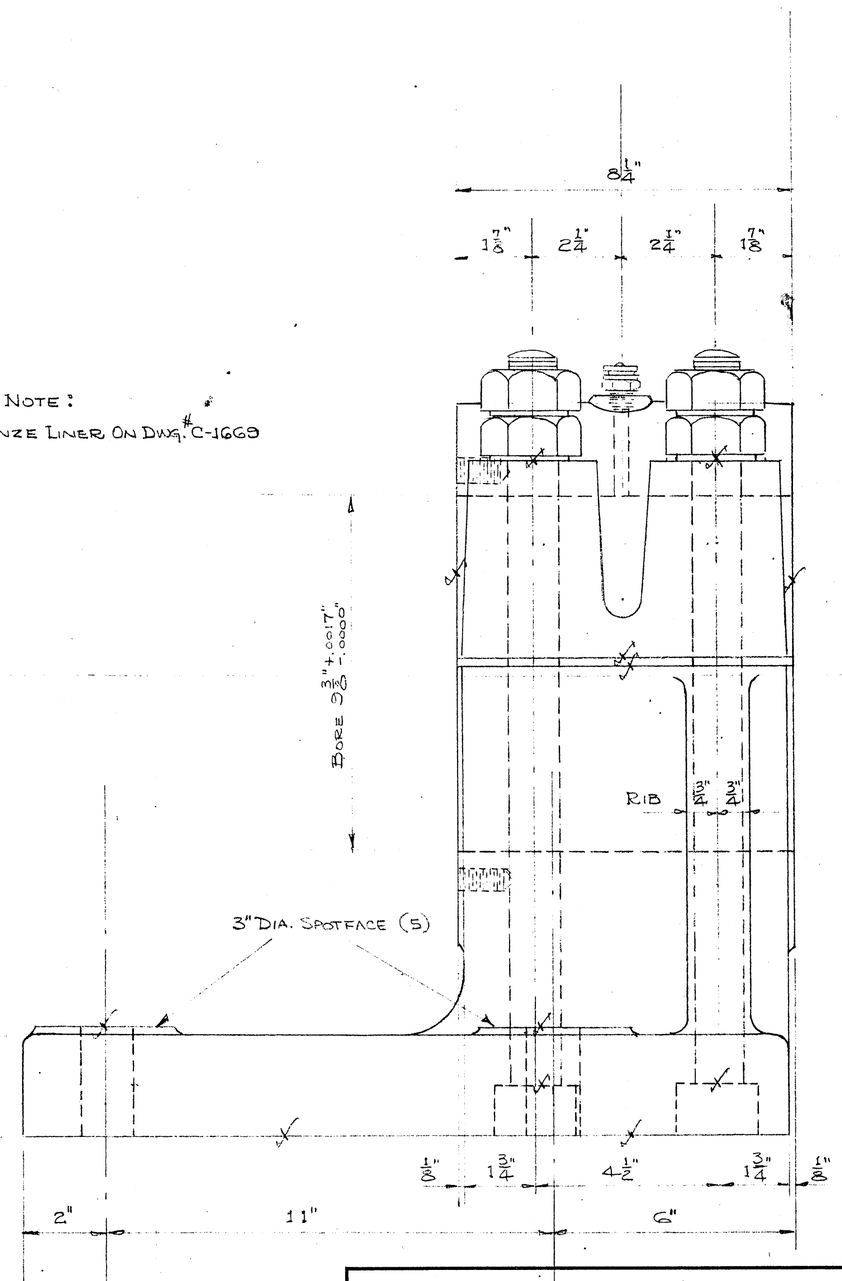

SHOP ORD. B-6499

CAST STEEL BRNG. BASES (2 REQD)

CAST STEEL BRNG CAPS (4 REQD)

A.S.T.M. A27-46T GRADE 65-35

NOTE:
WORK THIS DRAWING WITH DWG. #1669

CALDWELL FOUNDRY & MACHINE CO. INC.
BIRMINGHAM, ALA.

OUTER BEARING FOR MAIN PINION SHAFT
FOR
NEWPORT RIVER BRIDGE
BEAUFORT, NO. CAROLINA

SCALE	3/8" = 1"	MAY 18, 1950
DRAWN-TR'C'D.	LEMON	C-1668
CHECKED		
APP'V'D.	MAY 24, 1950	

"ALBANENE" No. 1061 K&E CO., N.Y. 8 RD. U.S. PAT. OFF.

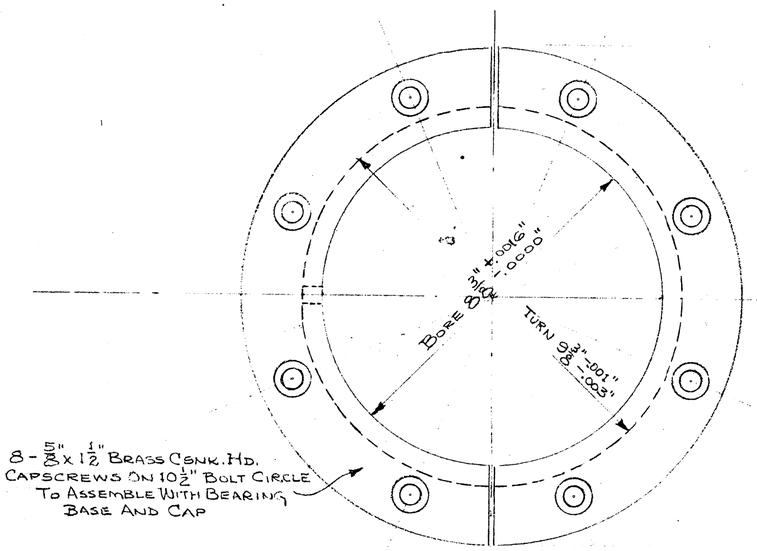

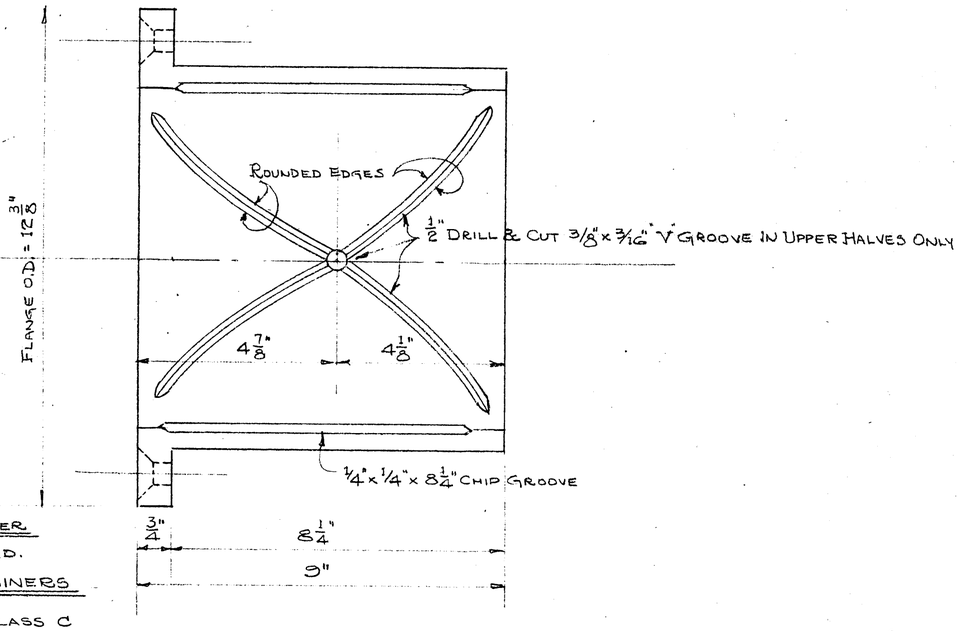

FINISH ALL OVER

4 PAIR REQD.

PHOSPHOR BRONZE LINERS

A.S.T.M. B22-46T CLASS C

NOTE:

SEE BRNG. CAP ON DWG. C-1668

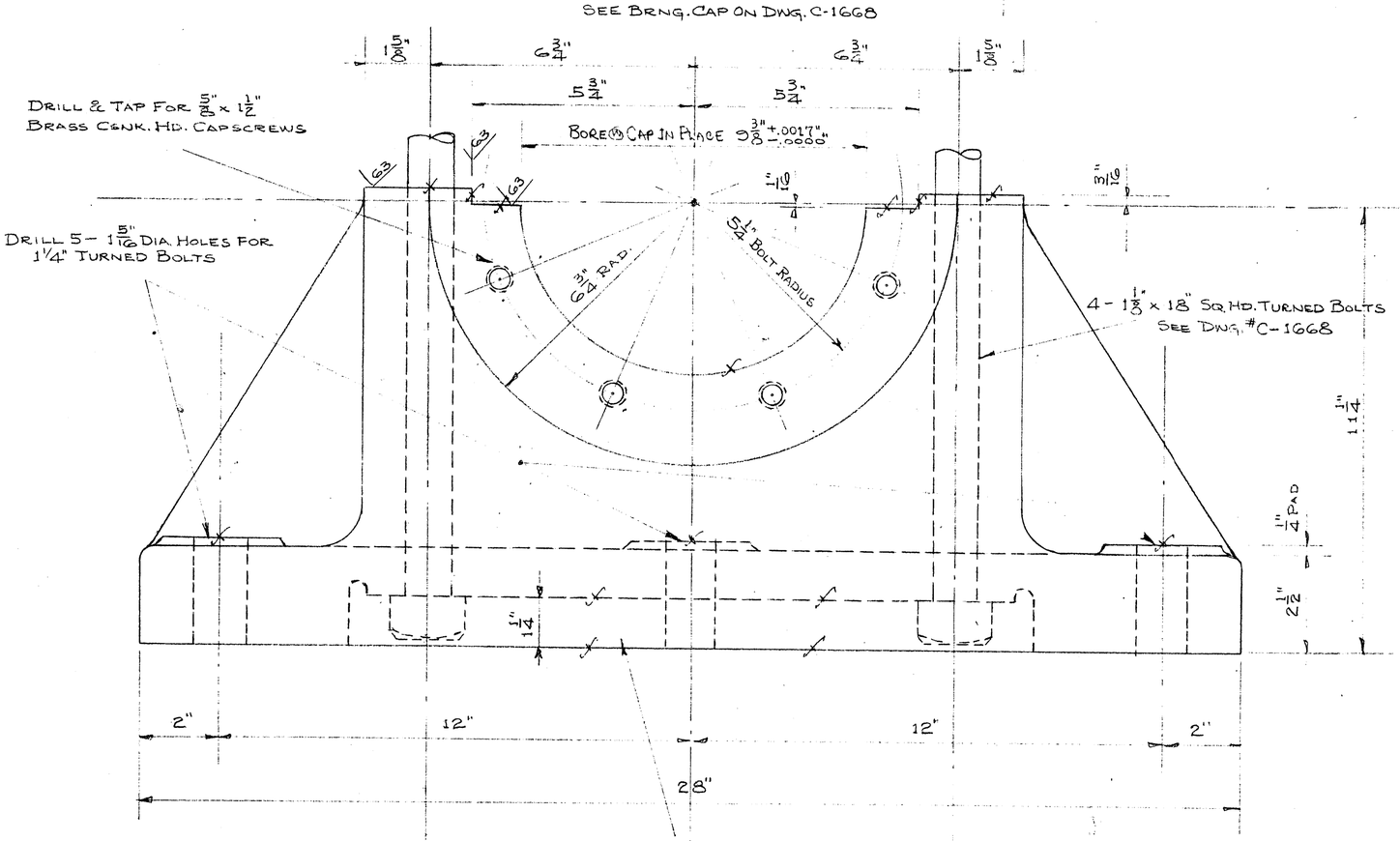

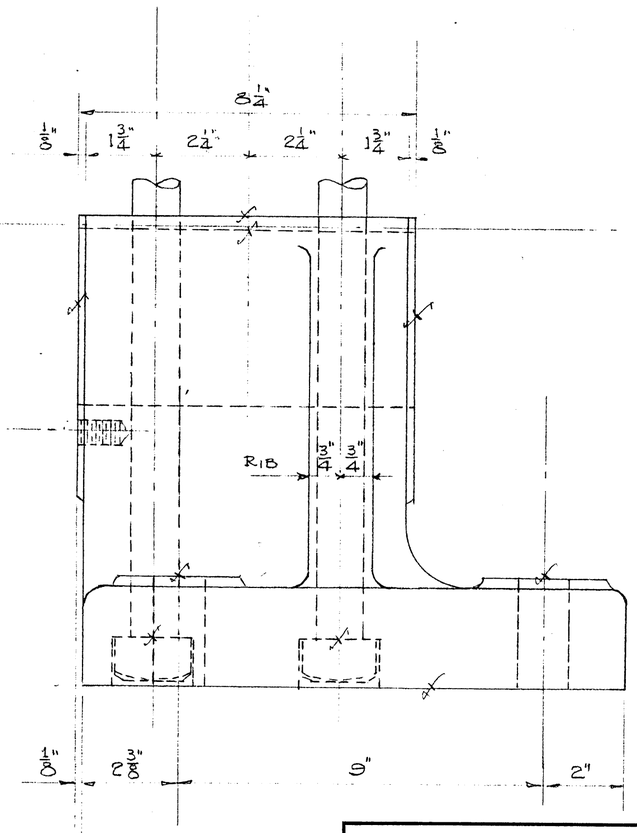

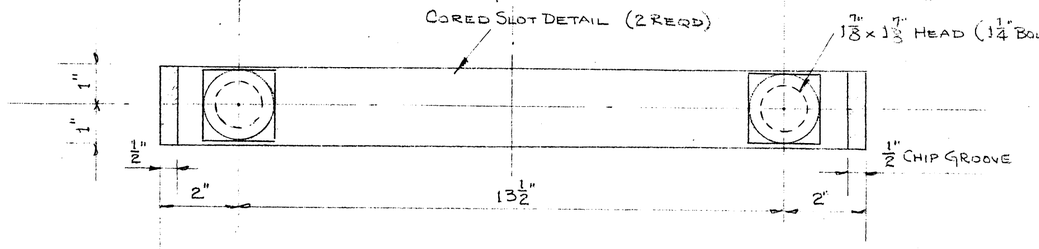

CAST STEEL BRNG. BASES (2 REQD.)

A.S.T.M. A27-46T GRADE 65-35

NOTE:

WORK THIS DRAWING WITH DWG. # 1668

SHOP ORD. B-6499

CALDWELL FOUNDRY & MACHINE CO. INC.
BIRMINGHAM, ALA.

INNER BEARING FOR MAIN PINION SHAFT
FOR
NEWPORT RIVER BRIDGE
BEAUFORT, NO. CAROLINA

SCALE	3/8" = 1"	MAY 18, 1950
DRAWN-TR'C'D.	LEMON	C-1669
CHECKED	REVISED JUNE 2, 1950	
APP'V'D.		

"ALBANENE" NO. 196L K&E CO., N.Y. 9 PAT. U.S. PAT. OFF.

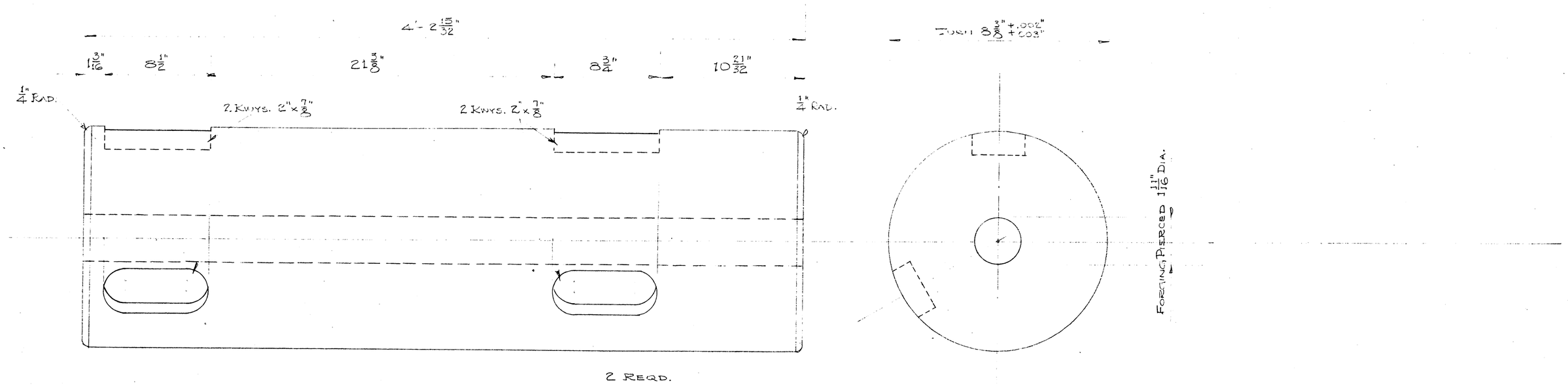

2 REQD.

FORGED STEEL MAIN PINION SHAFT

A.S.T.M. A 235-46 CLASS C-1

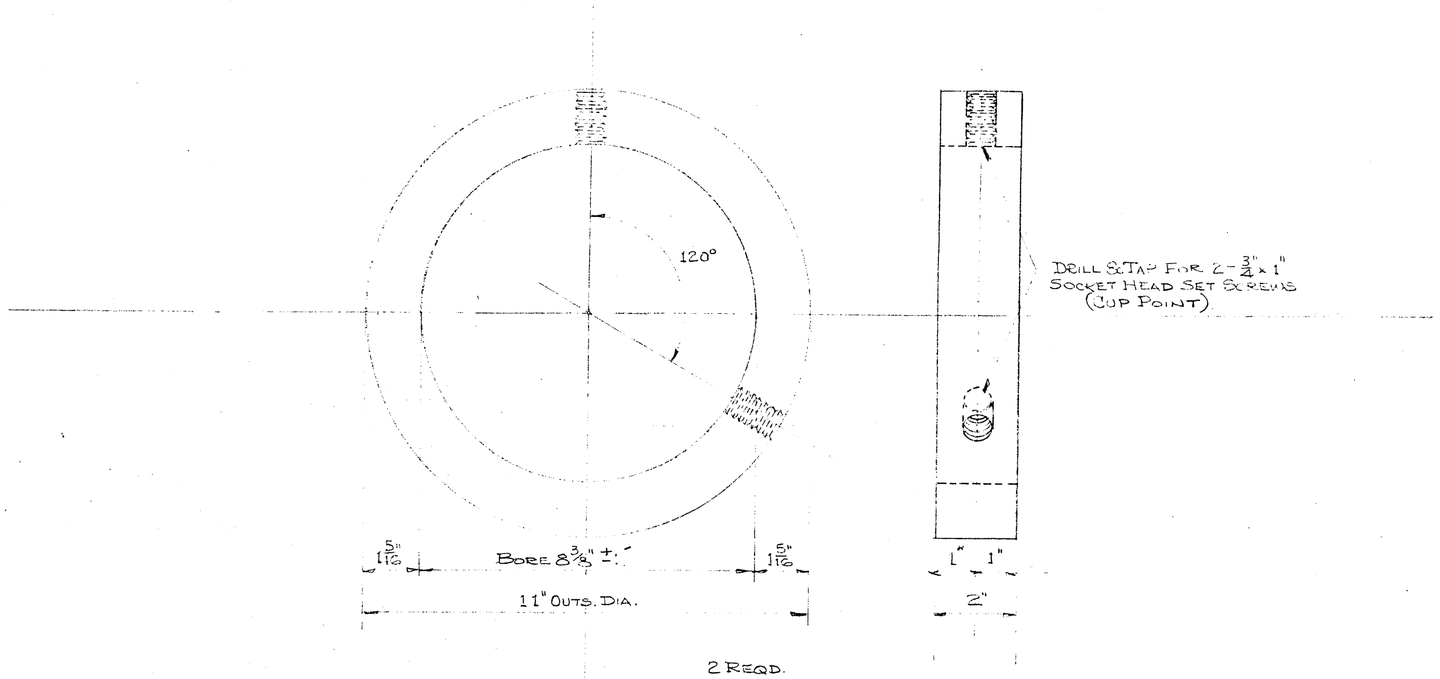

2 REQD.

STEEL SAFETY SET COLLAR

MATL. — STRUCTURAL GRADE PLATE

REF: CARR & GREINER DWG. C-513-8

B-6499

CALDWELL FOUNDRY & MACHINE CO. INC.
BIRMINGHAM, ALA.

MAIN PINION SHAFT & SET COLLAR
FOR
NEWPORT RIVER BRIDGE
BEAUFORT, NO. CAROLINA

SCALE	3/8" = 1"	MAY 2, 1950
DRAWN-TR'C'D.	LEMON	C-1670
CHECKED		
APP'V'D.		

"ALBANENE" No. 196L K&E CO., N.Y. 8
PAT. U.S. PAT. OFF.

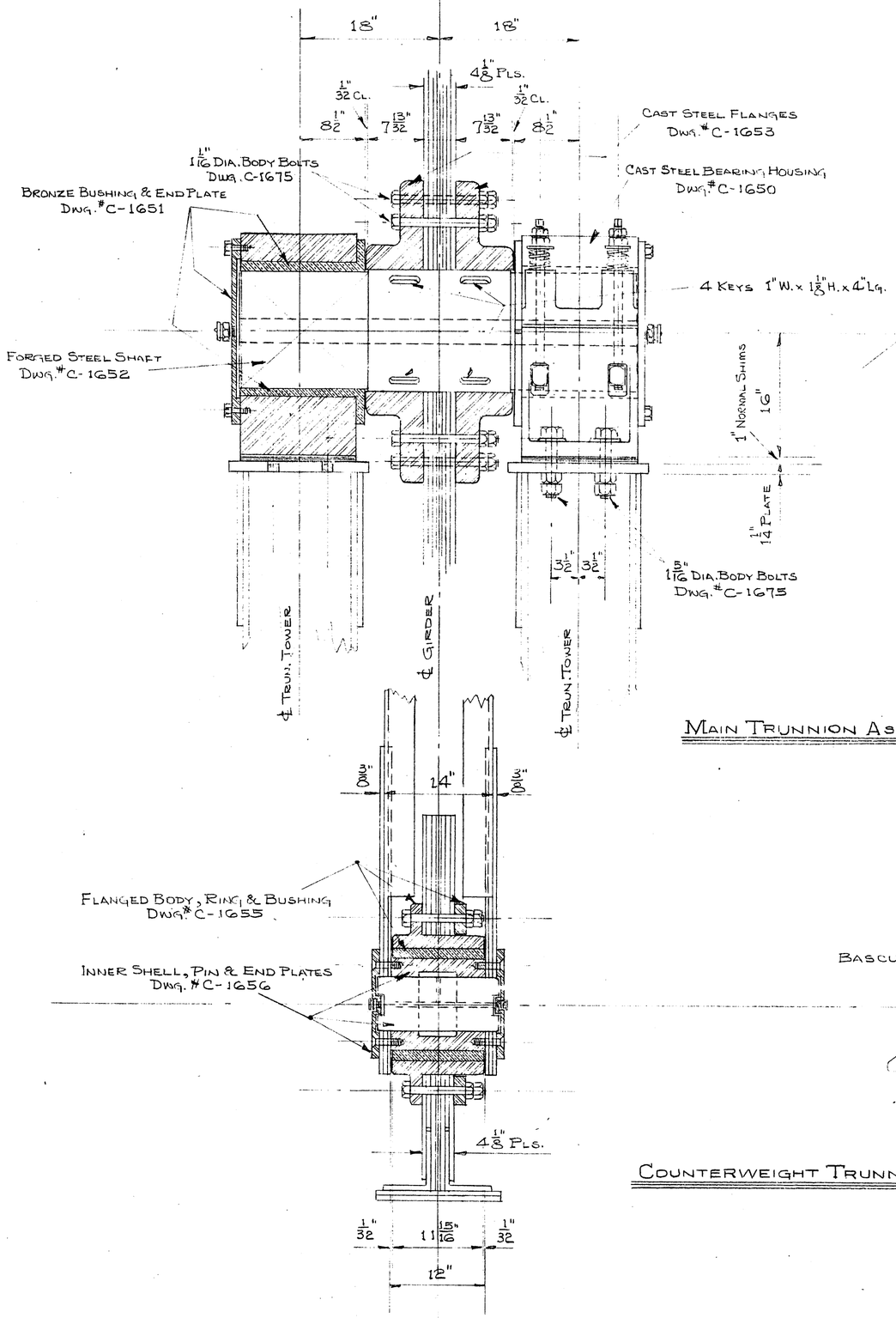

MAIN TRUNNION ASSEMBLY

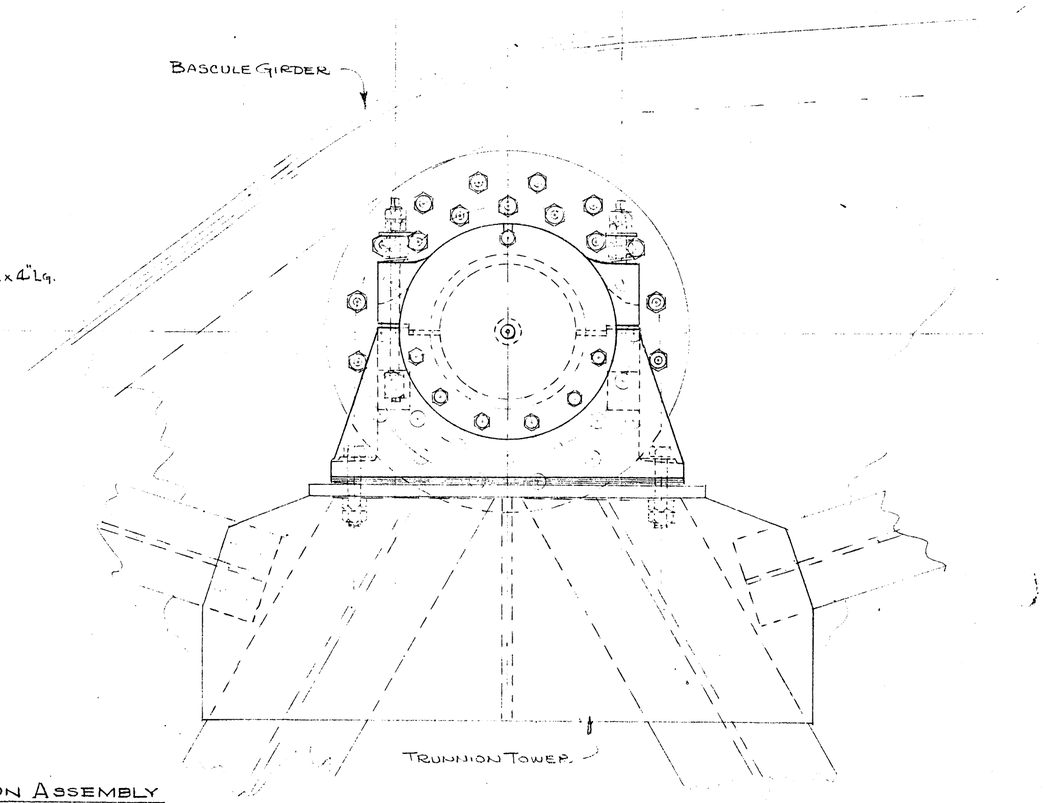

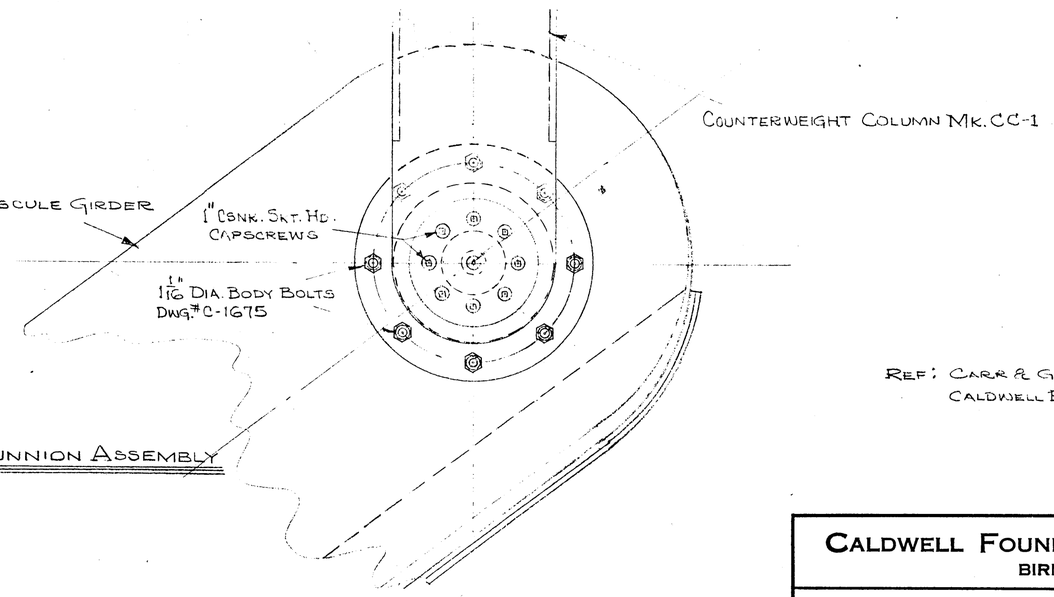

COUNTERWEIGHT TRUNNION ASSEMBLY

REF: CARR & GREINER DWG. # C-31[illegible]-8
CALDWELL F. & M. CO. DWGS. C-1651, [illegible]
& DWGS. C-1655 & C-1656

CALDWELL FOUNDRY & MACHINE CO. INC.
BIRMINGHAM, ALA.

ASSEMBLY OF MAIN & COUNTERWEIGHT TRUNNIONS
FOR
NEWPORT RIVER BRIDGE
BEAUFORT, NO. CAROLINA

SCALE	1" = 1'-0"	MAY 24, 1950
DRAWN-TR'C'D.	LEMON	C-1671
CHECKED		
APP'V'D.	MAY 31, 1950	

"ALBANENE" NO. 1001 K&E CO., N.Y. 8
PAT. PEND.

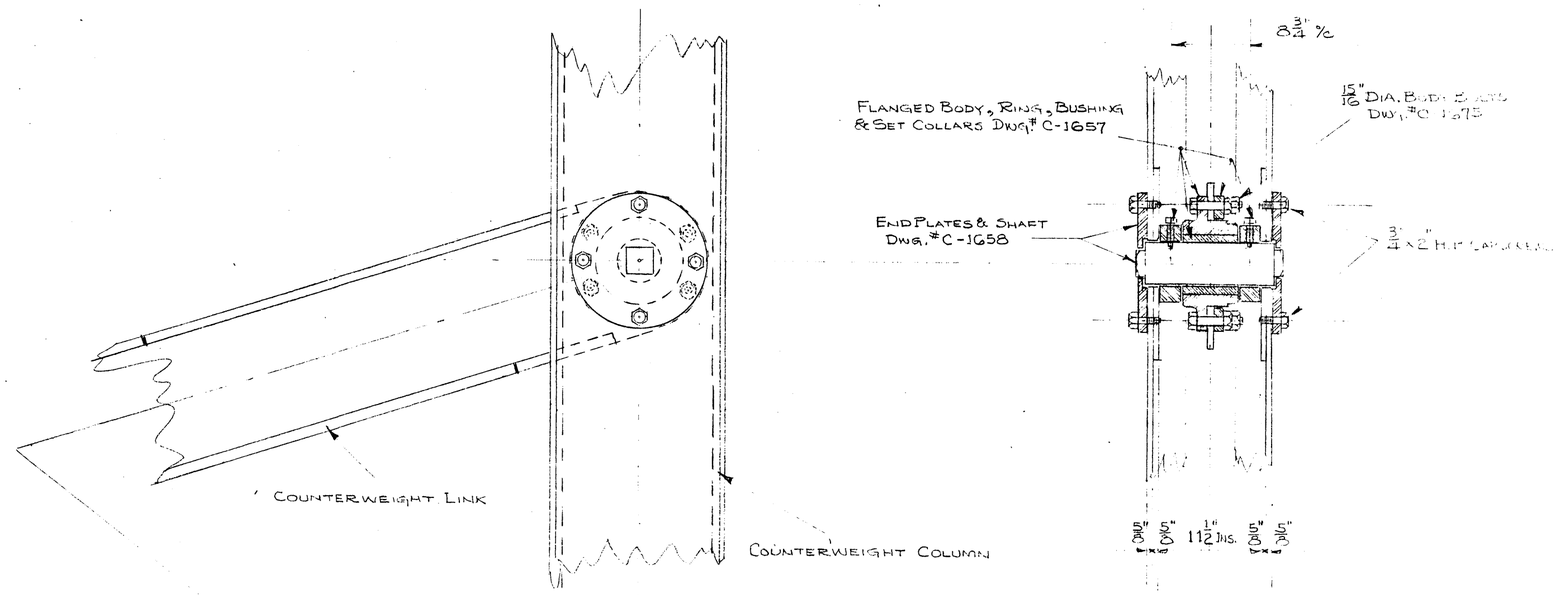

REAR COUNTERWEIGHT LINK BEARING ASSEMBLY

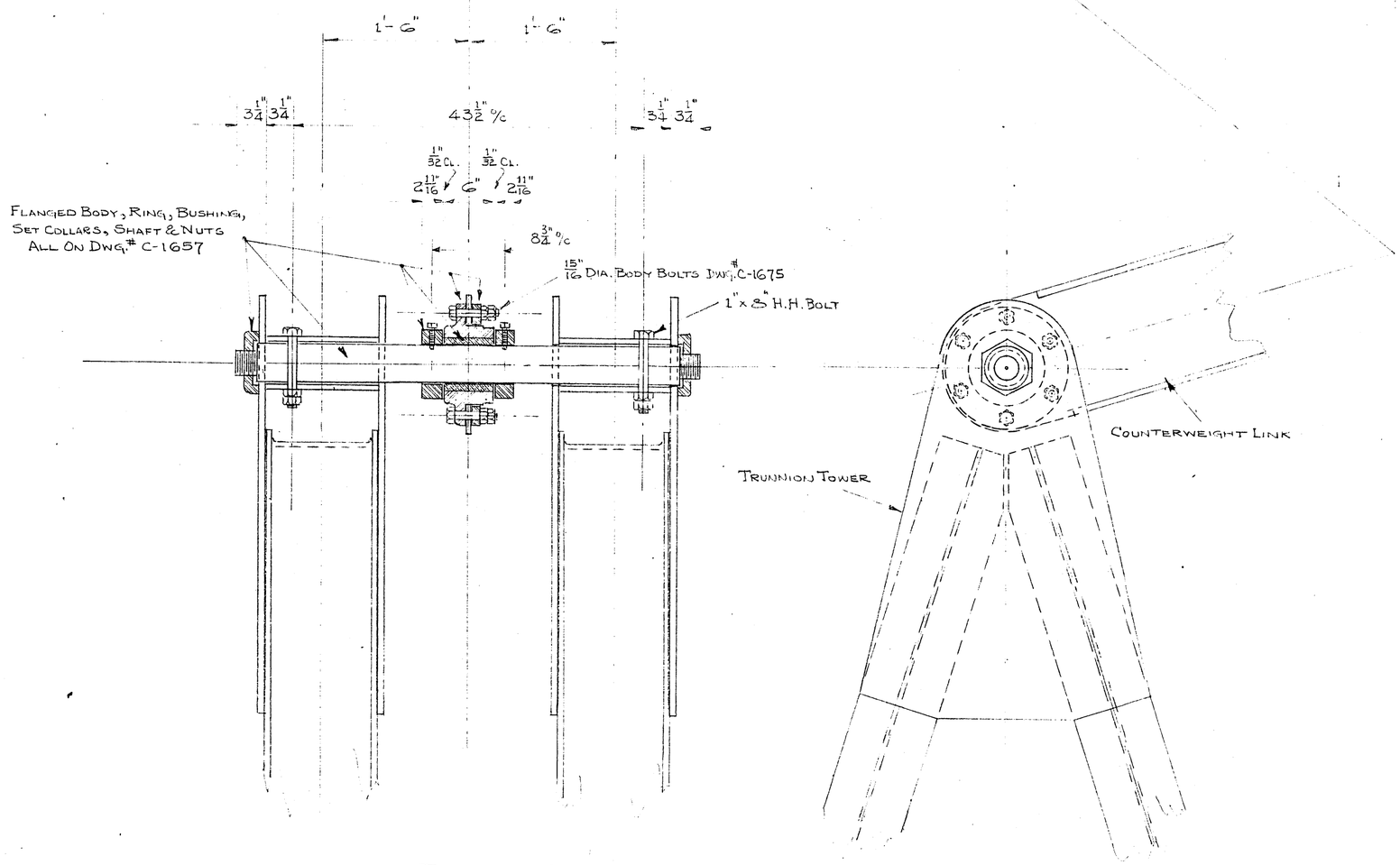

FORWARD COUNTERWEIGHT LINK BEARING ASSEMBLY

REF: CARR & GREINER DWG. C-513-S
CALDWELL F. & M. DWGS. C-1657
C-1658 & C-1675

CALDWELL FOUNDRY & MACHINE CO. INC.
BIRMINGHAM, ALA.

COUNTERWEIGHT LINK BEARING ASSEMBLIES
FOR
NEWPORT RIVER BRIDGE
BEAUFORT, NO. CAROLINA

SCALE	1" = 1'-0"	MAY 25, 1950
DRAWN-TR'C'D.	LEMON	C-1672
CHECKED		
APP'V'D.	MAY 31, 1950	

"ALBANENE" NO. 1061 K&E CO., N.Y. PAT. OFF.

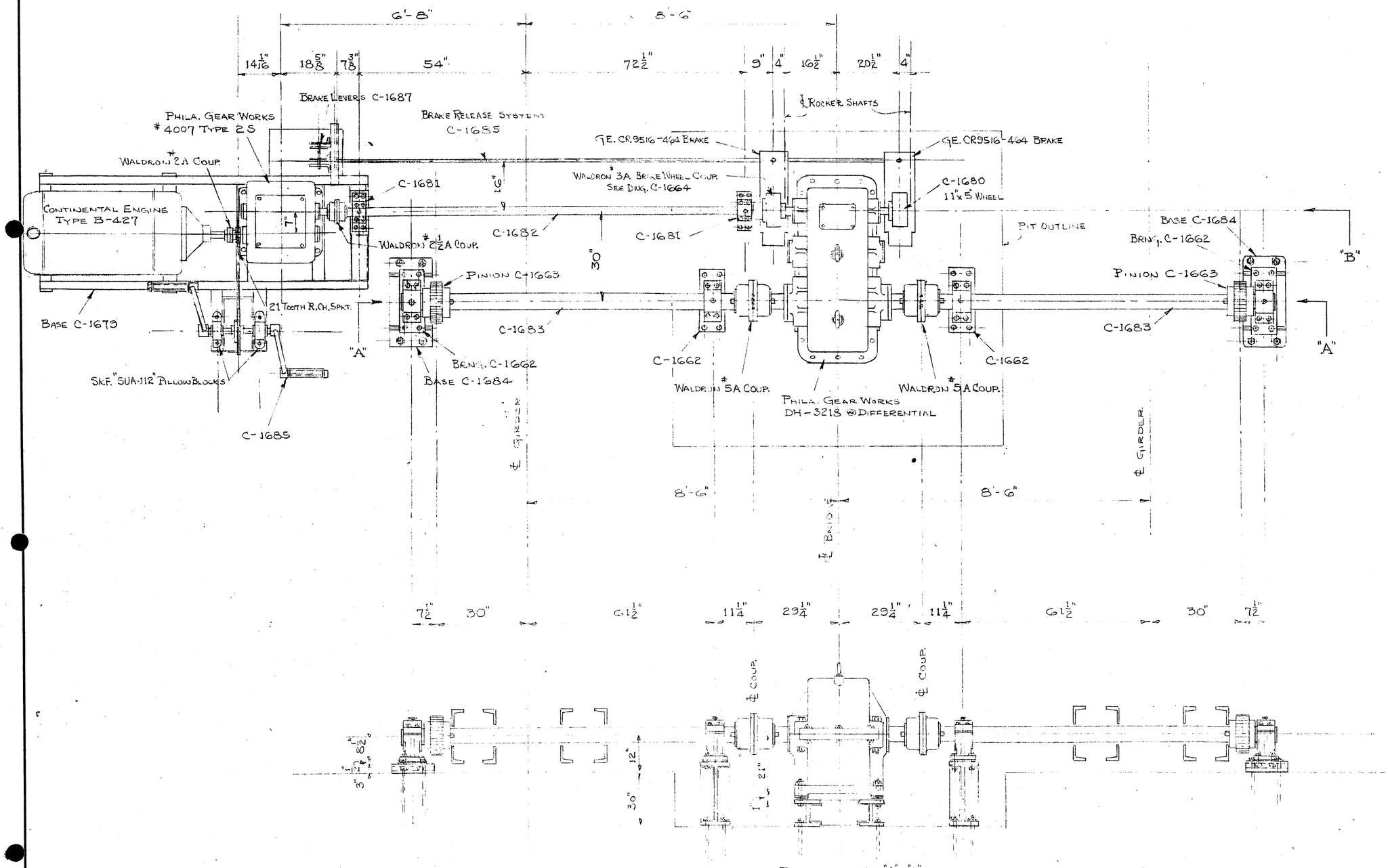

Ref: Carr & Greiner Dwg. C-513-8

E-6499

Caldwell Foundry & Machine Co. Inc.
Birmingham, Ala.

Assembly Drawing Of Operating Machinery
For
Newport River Bridge
Beaufort, No. Carolina

Scale	1/2" = 1'-0"	April 26, 1950
Drawn-Tr'c'd.	Lemon	C-1673
Checked	Revised May 4, 1950	
App'v'd.		

"Albanene" No. 1981 K&E Co., N.Y. 8

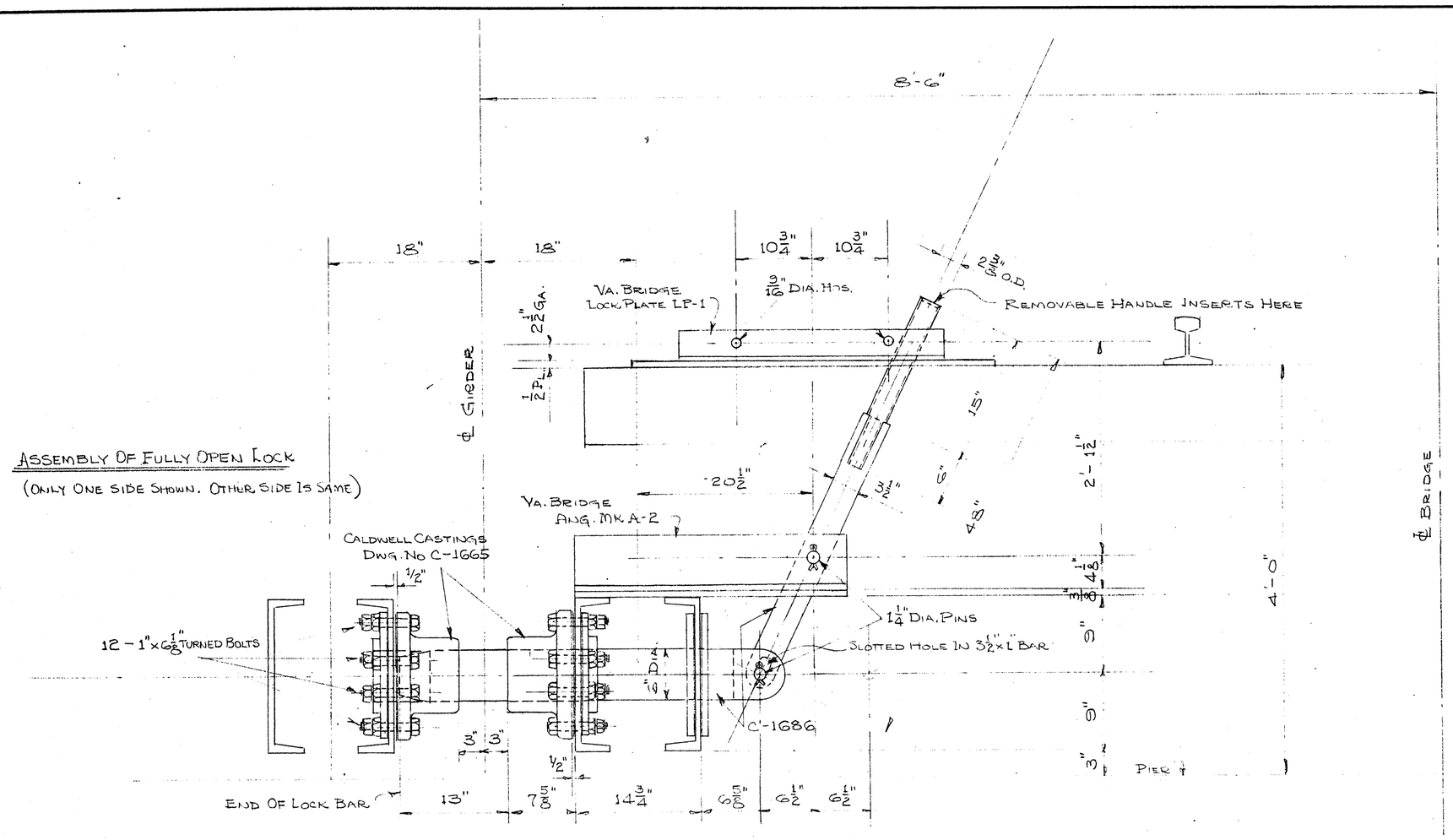

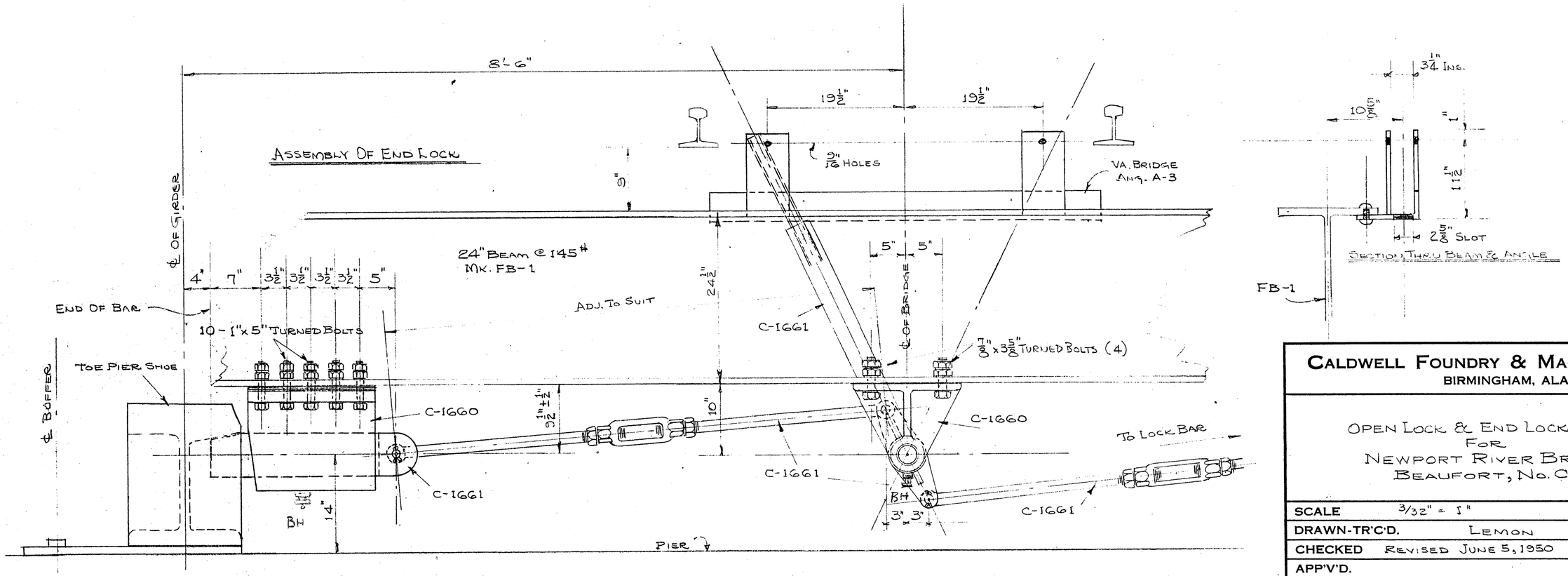

CALDWELL FOUNDRY & MACHINE CO. INC.
BIRMINGHAM, ALA.

OPEN LOCK & END LOCK ASSEMBLY
FOR
NEWPORT RIVER BRIDGE
BEAUFORT, NO. CAROLINA

SCALE	3/32" = 1"	MAY 19, 1950
DRAWN-TR'C'D.	LEMON	C-1674
CHECKED	REVISED JUNE 5, 1950	
APP'V'D.		

"ALBANENE" NO. 1981 K&E CO., N.Y. 8
PAT. U.S. PAT. OFF.

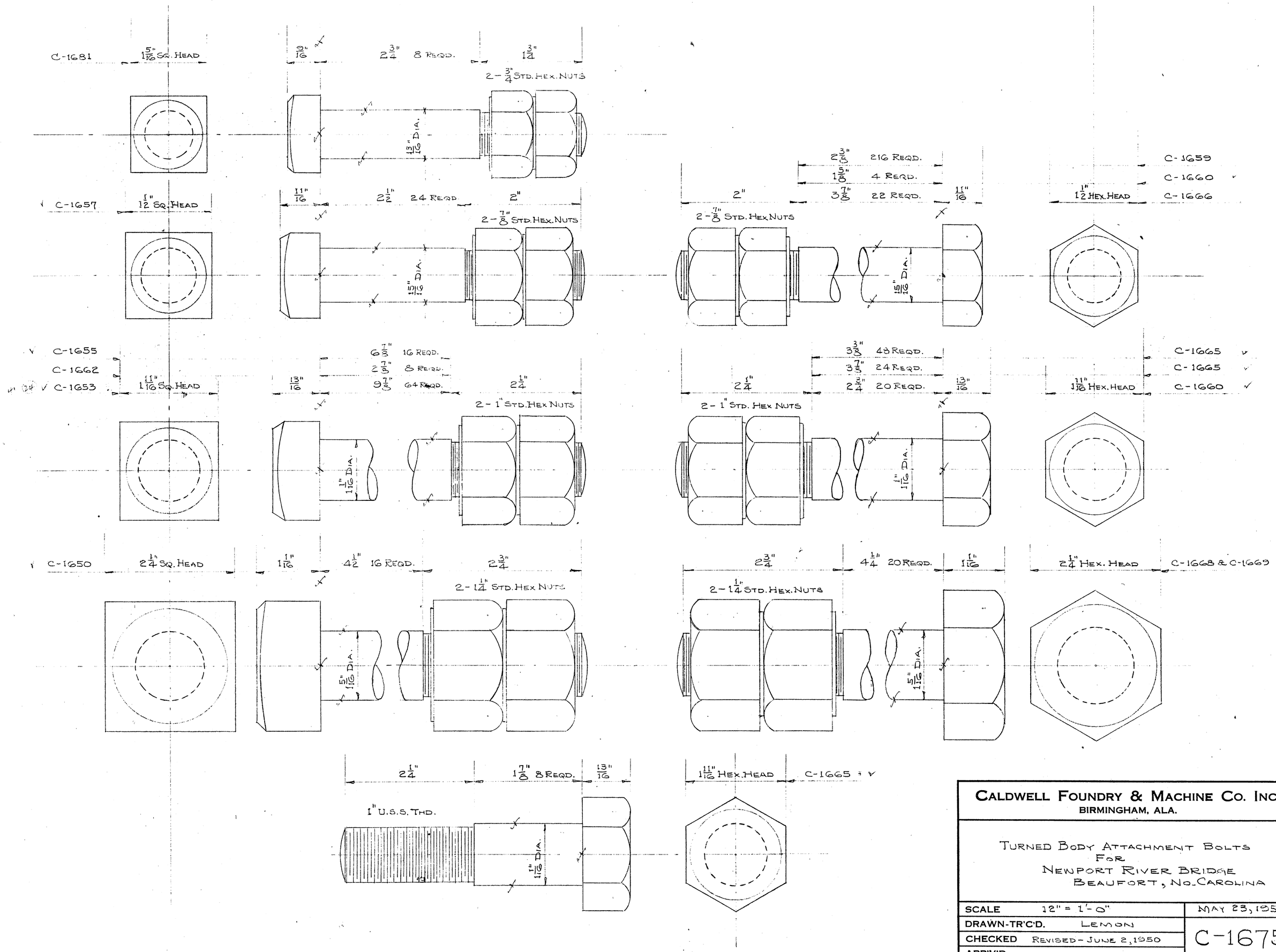

CALDWELL FOUNDRY & MACHINE CO. INC.
BIRMINGHAM, ALA.

TURNED BODY ATTACHMENT BOLTS
FOR
NEWPORT RIVER BRIDGE
BEAUFORT, NO. CAROLINA

SCALE	12" = 1'-0"	MAY 23, 1950
DRAWN-TR'C'D.	LEMON	C-1675
CHECKED	REVISED - JUNE 2, 1950	
APP'V'D.		

"ALBANENE" NO. 195L K&E CO., N.Y. PAT. OFF.

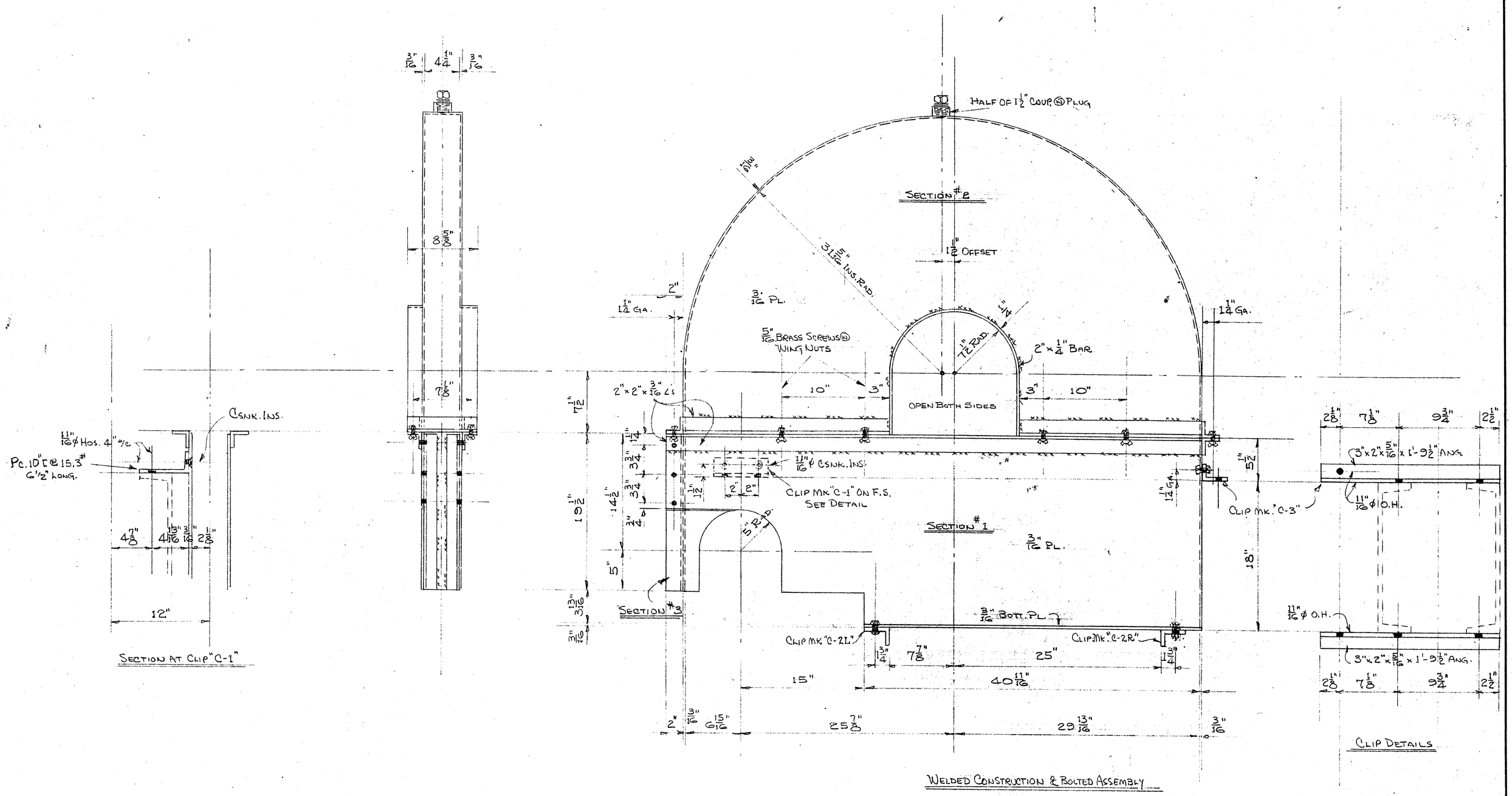

Make One Guard As Shown
Make One Guard Opp. Shown

B-6499

CALDWELL FOUNDRY & MACHINE CO. INC.
BIRMINGHAM, ALA.

COUNTERSHAFT GEAR GUARDS
FOR
NEWPORT RIVER BRIDGE
BEAUFORT, NO. CAROLINA

SCALE	1½" = 1'-0"	JUNE 13, 1950
DRAWN-TR'C'D.	LEMON	C-1676
CHECKED		
APP'V'D.		

"ALBANENE" NO. 195L K&E CO., N.Y. PAT. OFF.

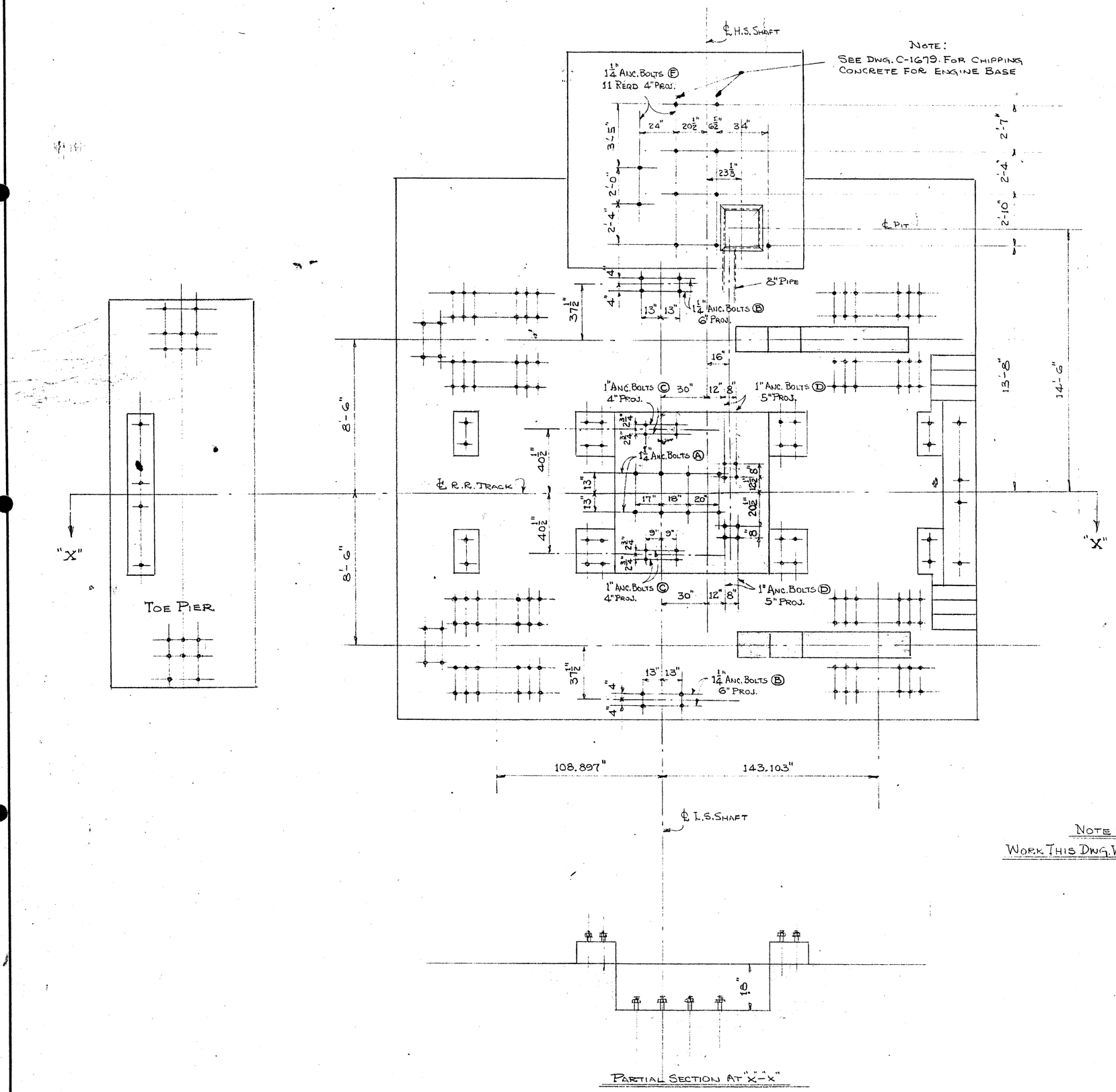

PARTIAL SECTION AT "X-X"

NOTE:
WORK THIS DWG. WITH VA. BRIDGE DWG. V-7173-E2

REF. CARR & GREINER DWG. # C-513-3

B-6499

CALDWELL FOUNDRY & MACHINE CO. INC.
BIRMINGHAM, ALA.

ANCHOR BOLT PLAN FOR MACHINERY
ON
NEWPORT RIVER BRIDGE
BEAUFORT, NO. CAROLINA

SCALE	1/4" = 1'-0"	APRIL 19, 1950
DRAWN-TR'C'D.	LEMON	C-1677
CHECKED	REVISED MAY 4, 1950	
APP'V'D.		

"ALBANENE" NO. 1061 K&E CO., N.Y.

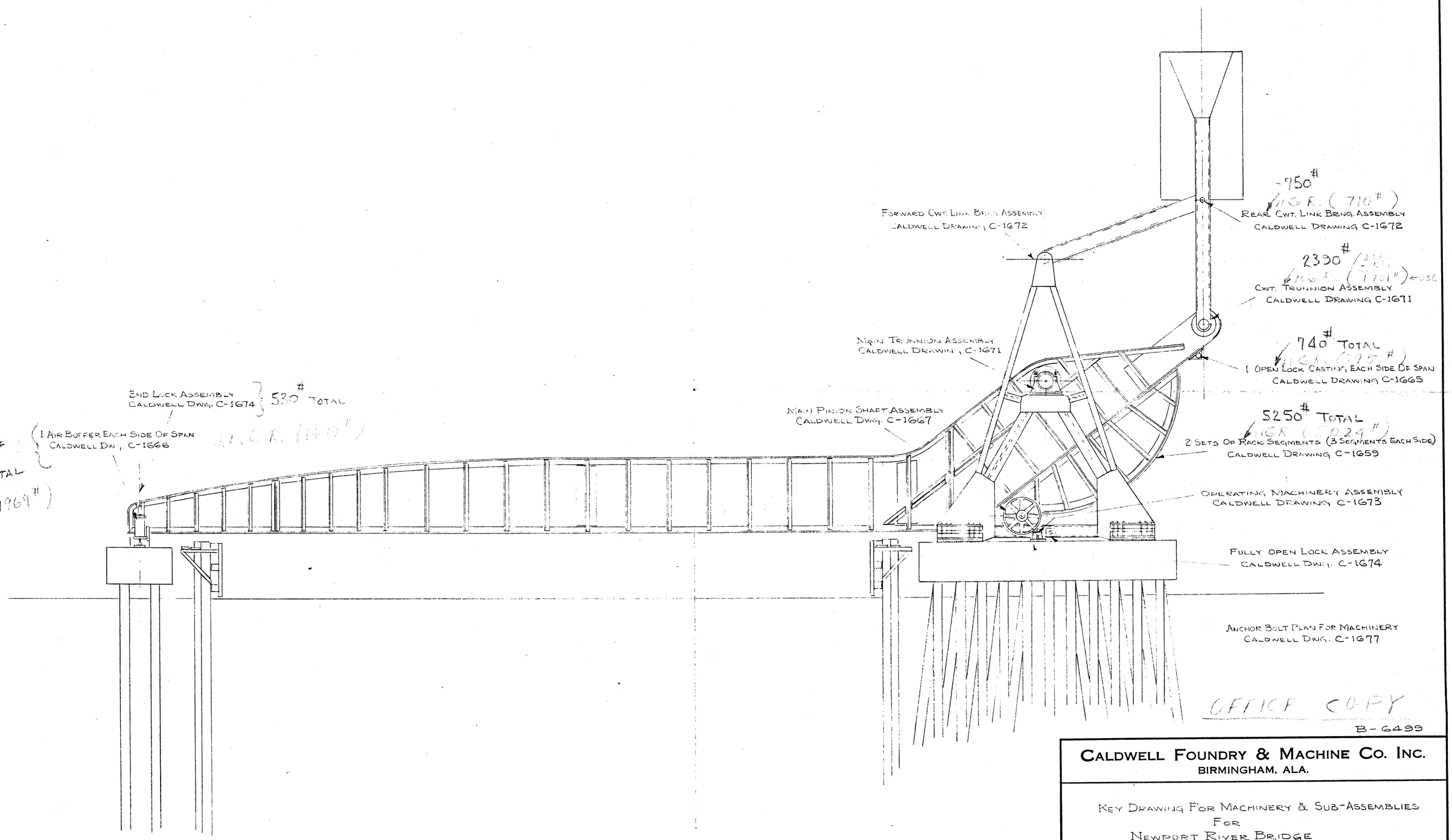

OFFICE COPY

B-6499

ESTIMATED WEIGHTS
FOR
CALCULATING COUNTERWEIGHT
BY CALDWELL

CALDWELL FOUNDRY & MACHINE CO. INC.
BIRMINGHAM, ALA.

KEY DRAWING FOR MACHINERY & SUB-ASSEMBLIES
FOR
NEWPORT RIVER BRIDGE
BEAUFORT, NO. CAROLINA

SCALE	1/8" = 1'-0"	APRIL 20, 1950
DRAWN-TR'C'D.	LEMON	C-1678
CHECKED		
APP'V'D.	APRIL 26, 1950	

"ALBANENE" No. 1085L K&E CO., N.Y. 8
RE-V-S-PAT-OFF

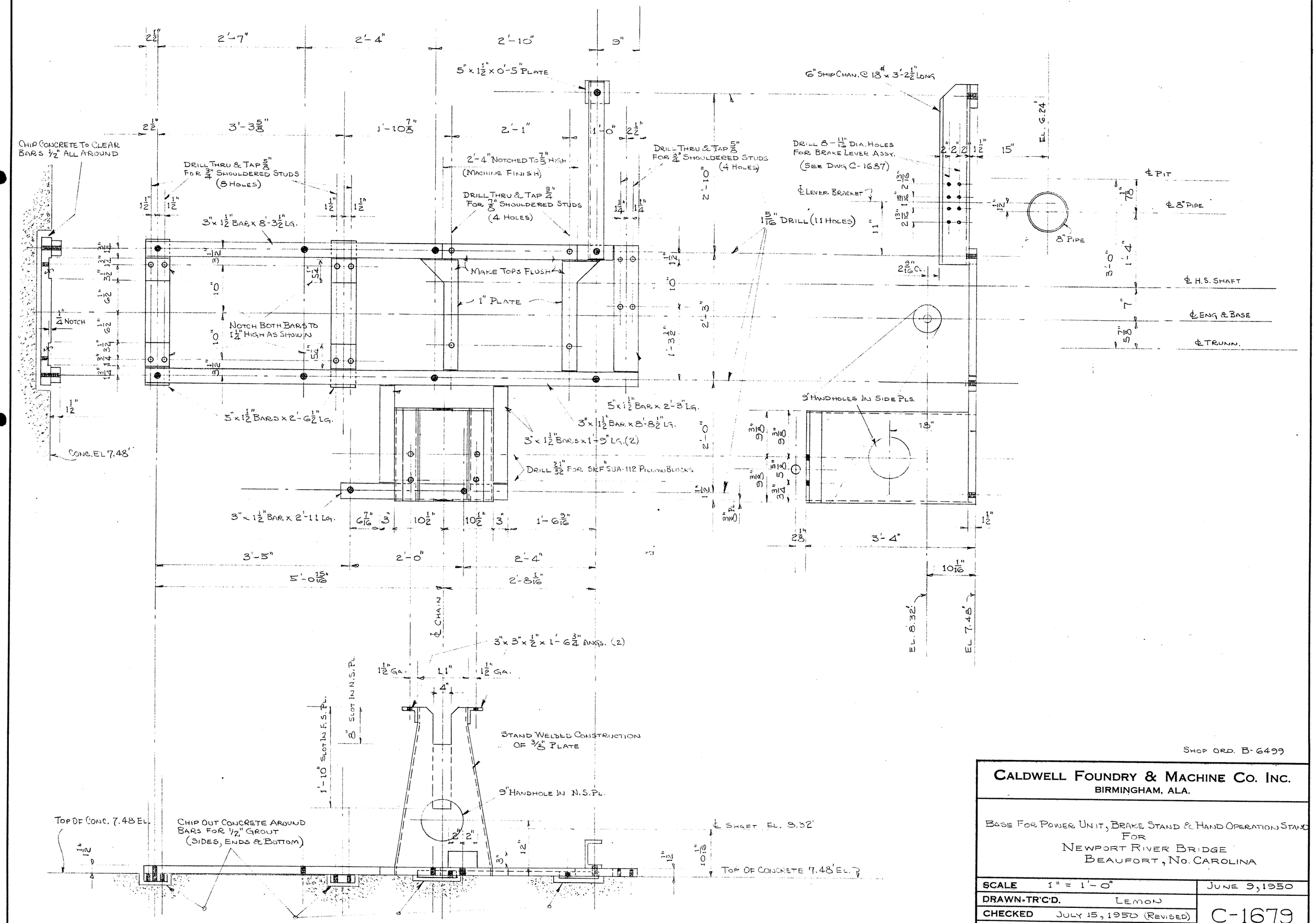

SHOP ORD. B-6499

CALDWELL FOUNDRY & MACHINE CO. INC.
BIRMINGHAM, ALA.

BASE FOR POWER UNIT, BRAKE STAND & HAND OPERATION STAND
FOR
NEWPORT RIVER BRIDGE
BEAUFORT, NO. CAROLINA

SCALE	1" = 1'-0"	JUNE 9, 1950
DRAWN-TR'C'D.	LEMON	C-1679
CHECKED	JULY 15, 1950 (REVISED)	
APP'V'D.		

"ALBANENE" NO. 1951 K&E CO., N.Y. U.S. PAT. OFF.

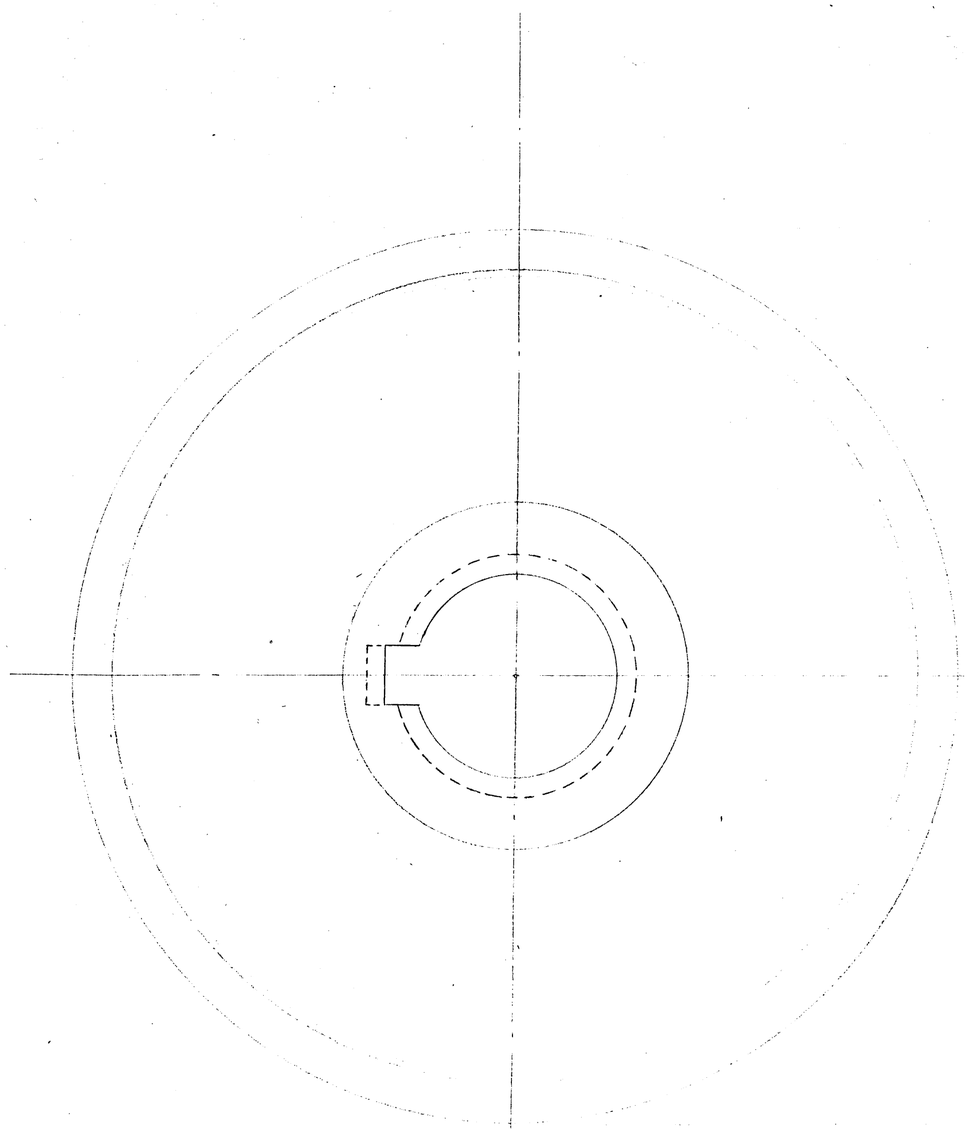

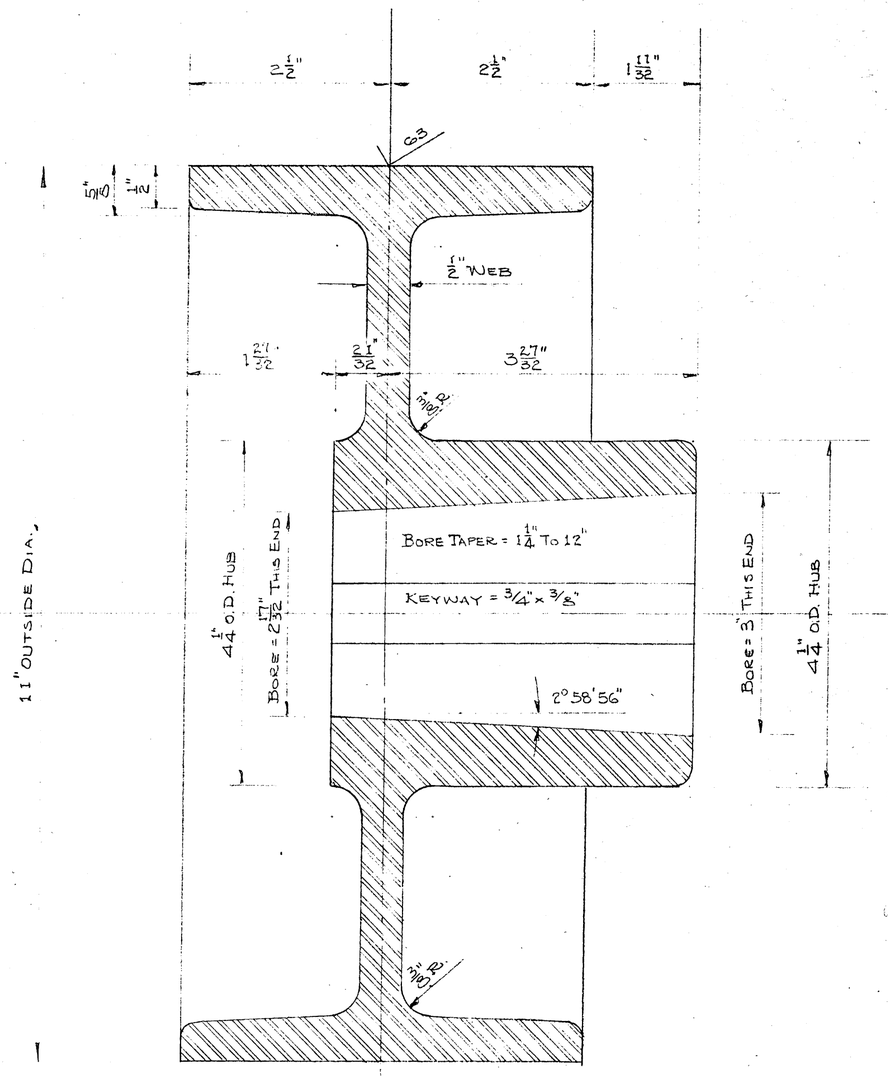

FINISH ALL OVER

1 REQD.

CAST STEEL EMERGENCY BRAKE WHEEL

A.S.T.M. A27-46T GRADE 65-35

REF: CALDWELL FDY. DWG. # C-1664

B-6499

CALDWELL FOUNDRY & MACHINE CO. INC.
BIRMINGHAM, ALA.

WHEEL FOR EMERGENCY BRAKE
FOR
NEWPORT RIVER BRIDGE
BEAUFORT, NO. CAROLINA

SCALE	3/4 FULL SIZE	APRIL 27, 1950
DRAWN-TR'C'D.	LEMON	C-1680
CHECKED		
APP'V'D.		

"ALBANENE" No. 198L K&E CO., N.Y. & PA. U.S. PAT. OFF.

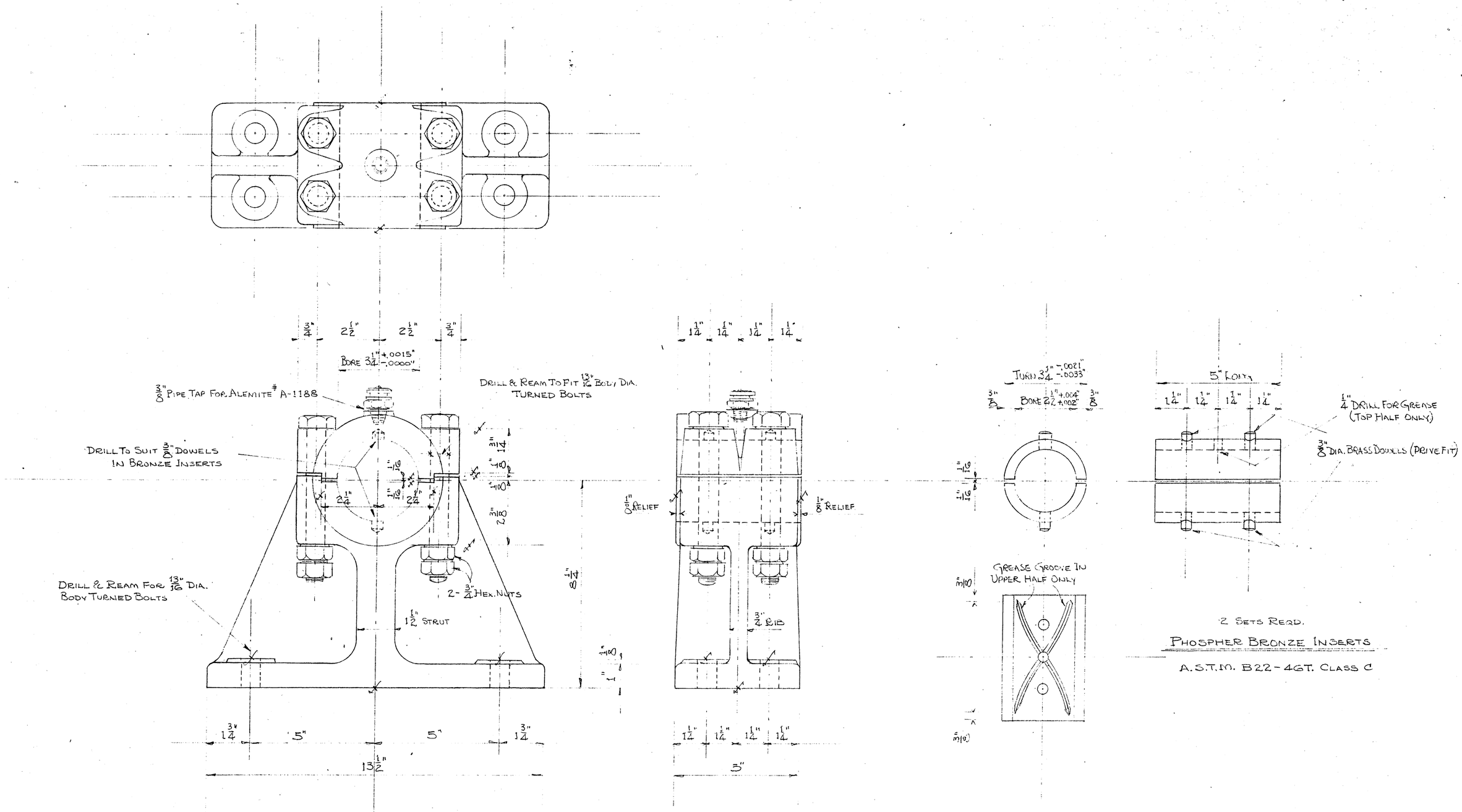

2 REQD.

CAST STEEL LINE SHAFT BEARING

A.S.T.M. A27-46T GRADE 65-35

2 SETS REQD.

PHOSPHER BRONZE INSERTS

A.S.T.M. B22-46T. CLASS C

REF: CARR & GREINER DWG. # C-513-8

SHOP No. B-6499

CALDWELL FOUNDRY & MACHINE CO. INC.
BIRMINGHAM, ALA.

HIGH SPEED SHAFT PILLOW BLOCK
FOR
NEWPORT RIVER BRIDGE
BEAUFORT, NO. CAROLINA

SCALE 3/8" = 1"		APRIL 28, 1950
DRAWN-TR'C'D.	LEMON	C-1681
CHECKED		
APP'V'D.		

"ALBANENE" No. 196L K&E CO., N.Y. PAT. OFF.

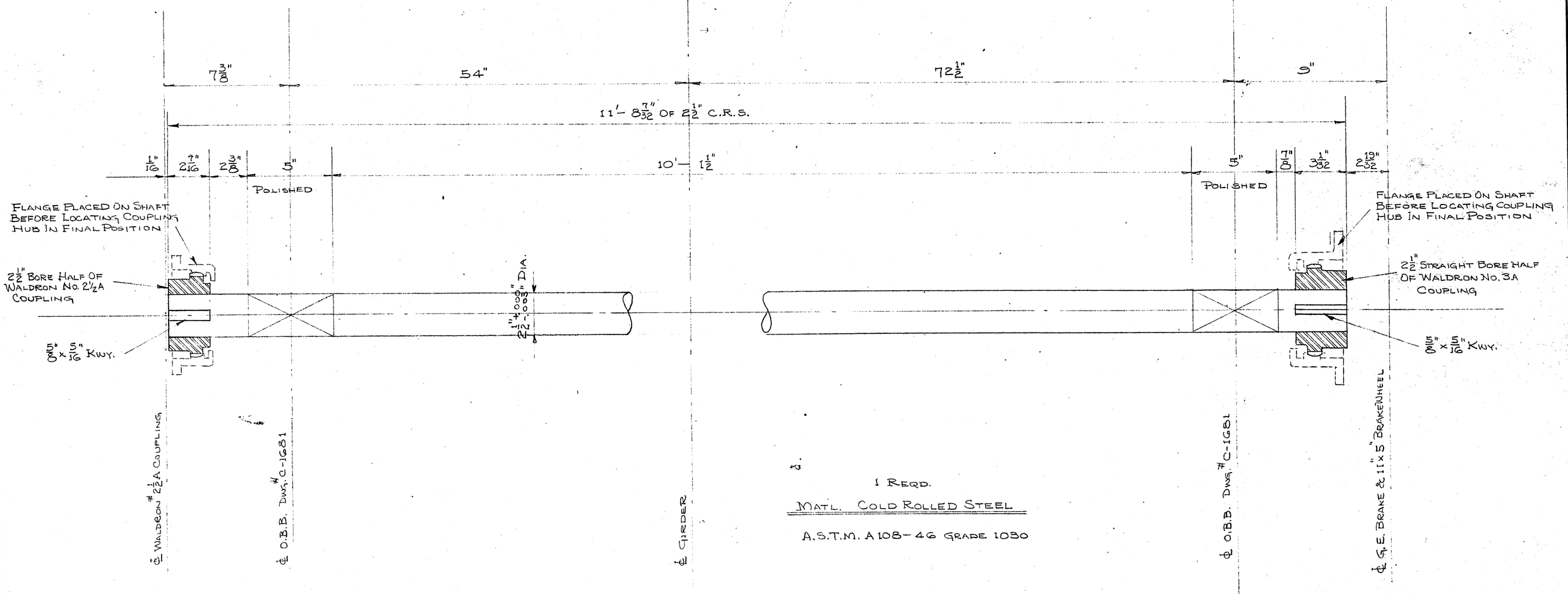

1 REQD.

MATL. COLD ROLLED STEEL

A.S.T.M. A 108-46 GRADE 1030

REF: CARR & GREINER DWG. #C-513-8
CALDWELL F. & M. CO. DWGS. #C-1664 & C-1673

SHOP ORD. B-6499

CALDWELL FOUNDRY & MACHINE CO. INC.
BIRMINGHAM, ALA.

HIGH SPEED DRIVE SHAFT
FOR
NEWPORT RIVER BRIDGE
BEAUFORT, NO. CAROLINA

SCALE	3" = 1'-0"	MAY 18, 1950
DRAWN-TR'C'D.	LEMON	C-1682
CHECKED		
APP'V'D.	MAY 24, 1950	

"ALBANENE" NO. 1981 K&E CO., N.Y. 8
PAT. U.S. PAT. OFF.

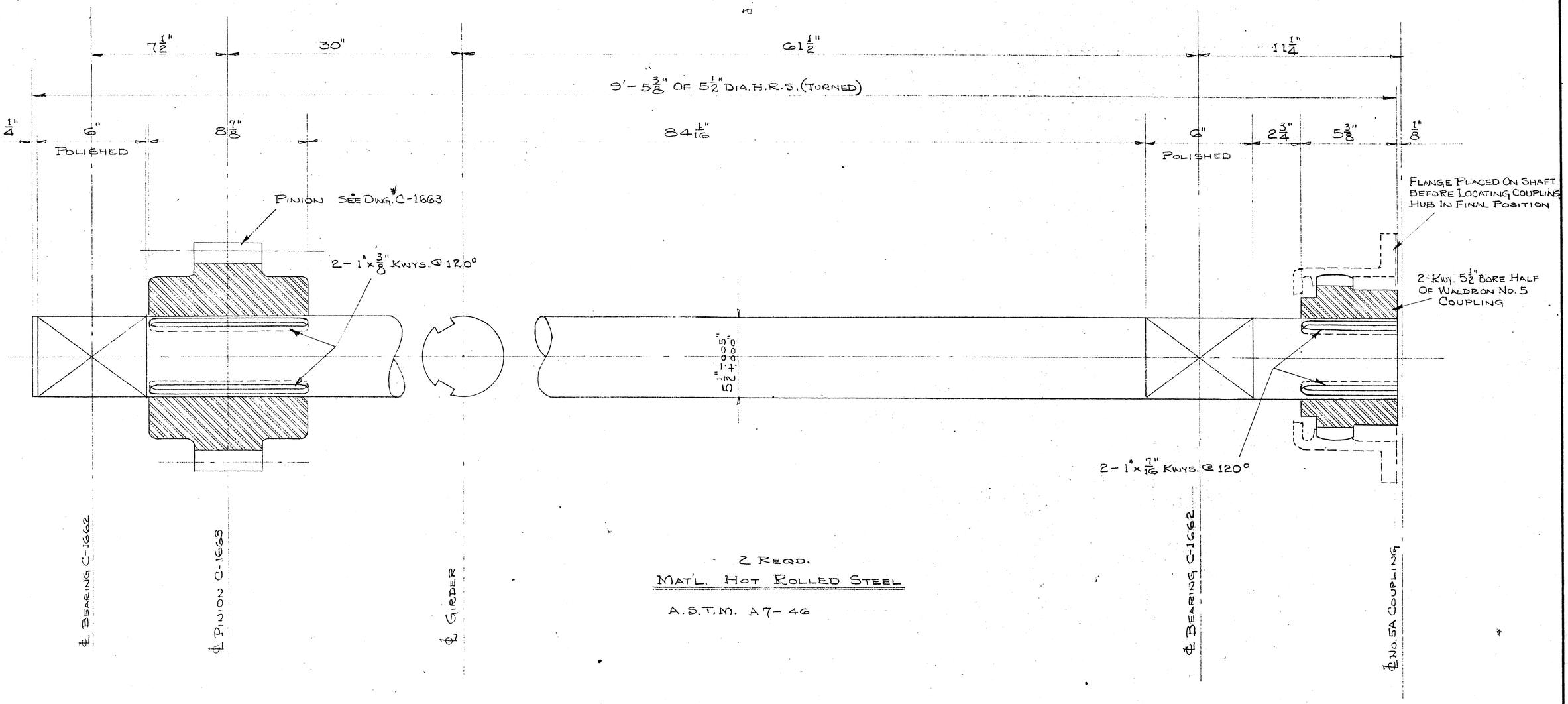

2 REQD.

MAT'L. HOT ROLLED STEEL

A.S.T.M. A7-46

REF: CARR & GREINER DWG. #C-513-8
CALDWELL F. & M. CO. DWGS. C-1663 & C-1673

SHOP ORD. B-6499

CALDWELL FOUNDRY & MACHINE CO. INC.
BIRMINGHAM, ALA.

SLOW SPEED DRIVE SHAFT
FOR
NEWPORT RIVER BRIDGE
BEAUFORT, NO. CAROLINA

SCALE		MAY 19, 1950
DRAWN-TR'C'D.	LEMON	C-1683
CHECKED		
APP'V'D.	MAY 24, 1950	

"ALBANENE" No. 196L K&E CO., N.Y. Pat. U.S. PAT. OFF.

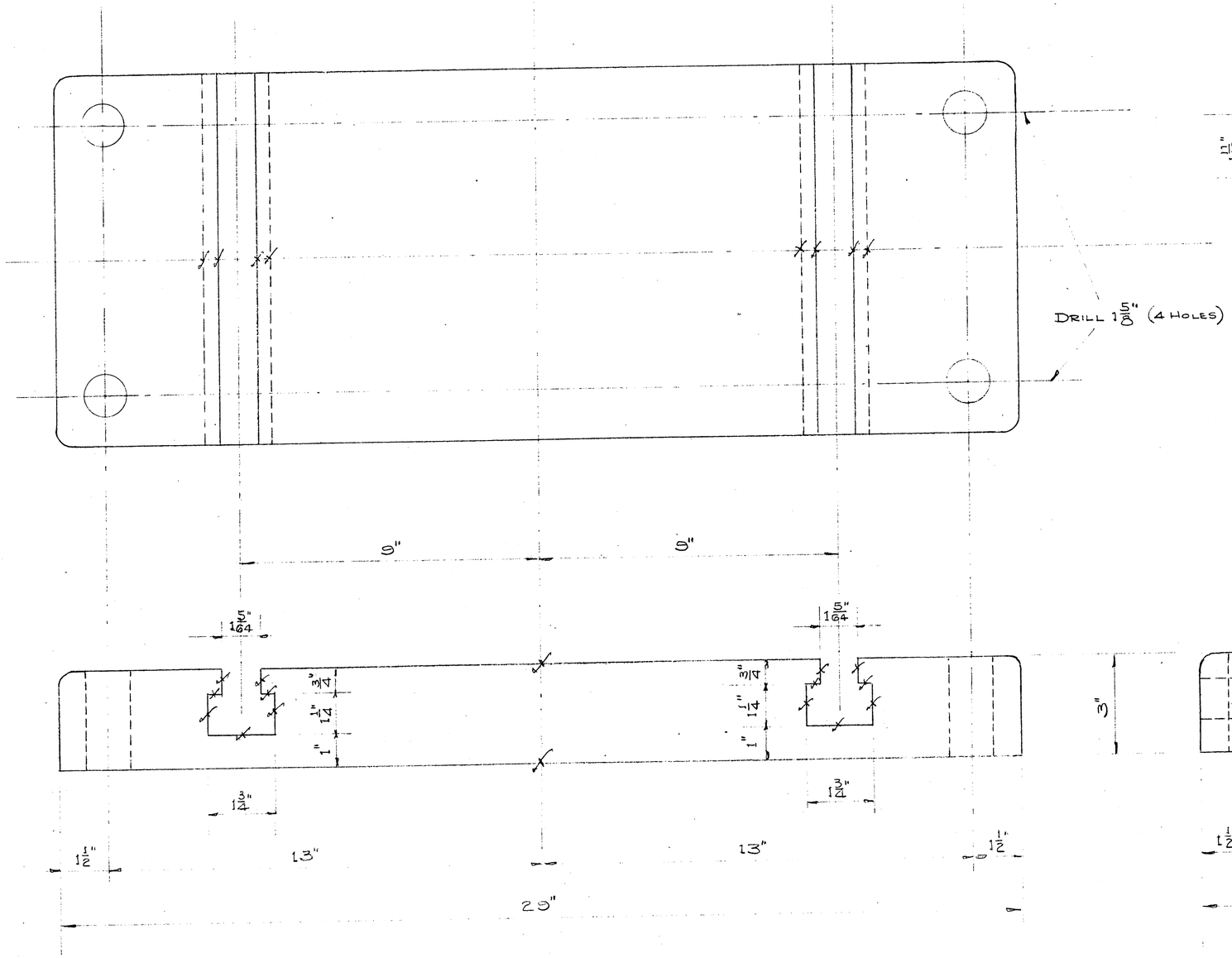

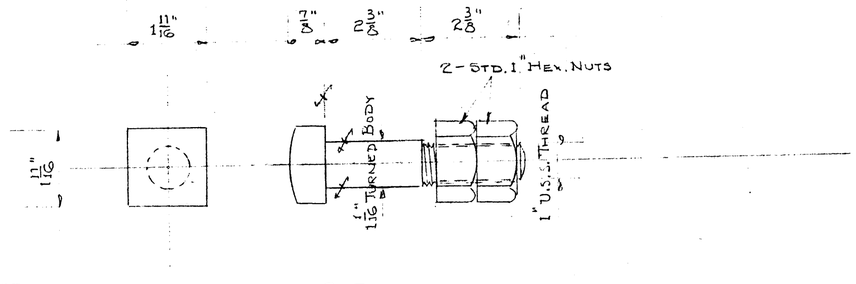

8 REQD.

SQ. HEAD TURNED BOLTS

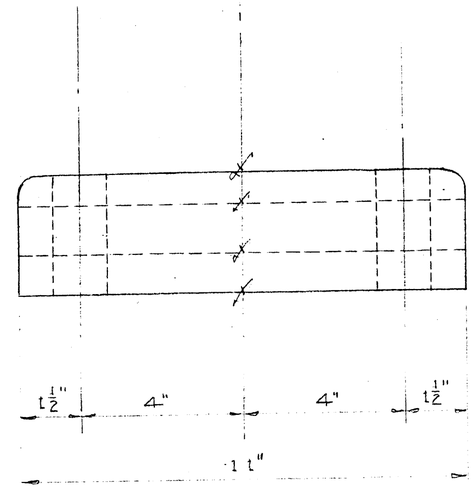

REF: CARR & GREINER DWG. C-513-8

B-6499

2 REQD.

CAST STEEL SOLE PLATE FOR C-1662

A.S.T.M. A27-46T GRADE 65-35

CALDWELL FOUNDRY & MACHINE CO. INC.
BIRMINGHAM, ALA.

SOLE PLATE FOR INTERMEDIATE PILLOW BLOCK
FOR
NEWPORT RIVER BRIDGE
BEAUFORT, NO. CAROLINA

SCALE	3/8" = 1"	APRIL 27, 1950
DRAWN-TR'C'D.	LEMON	C-1684
CHECKED		
APP'V'D.		

"ALBANENE" NO. 195L K&E CO., N.Y. 8
FOLD U.S. PAT. OFF.

63 Tooth	74 Tooth	84 Tooth
15.477"	18.105"	20.494"
15.046"	17.672"	20.058"
14.577"	17.203"	19.589"

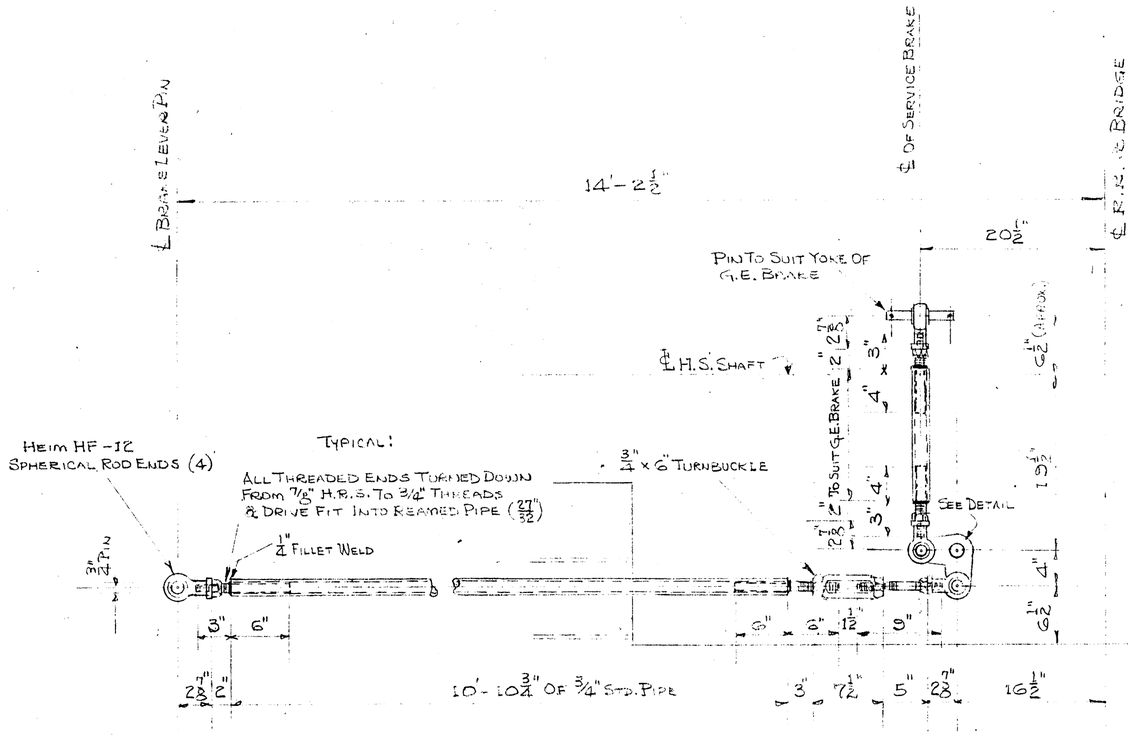

Service Brake Linkage

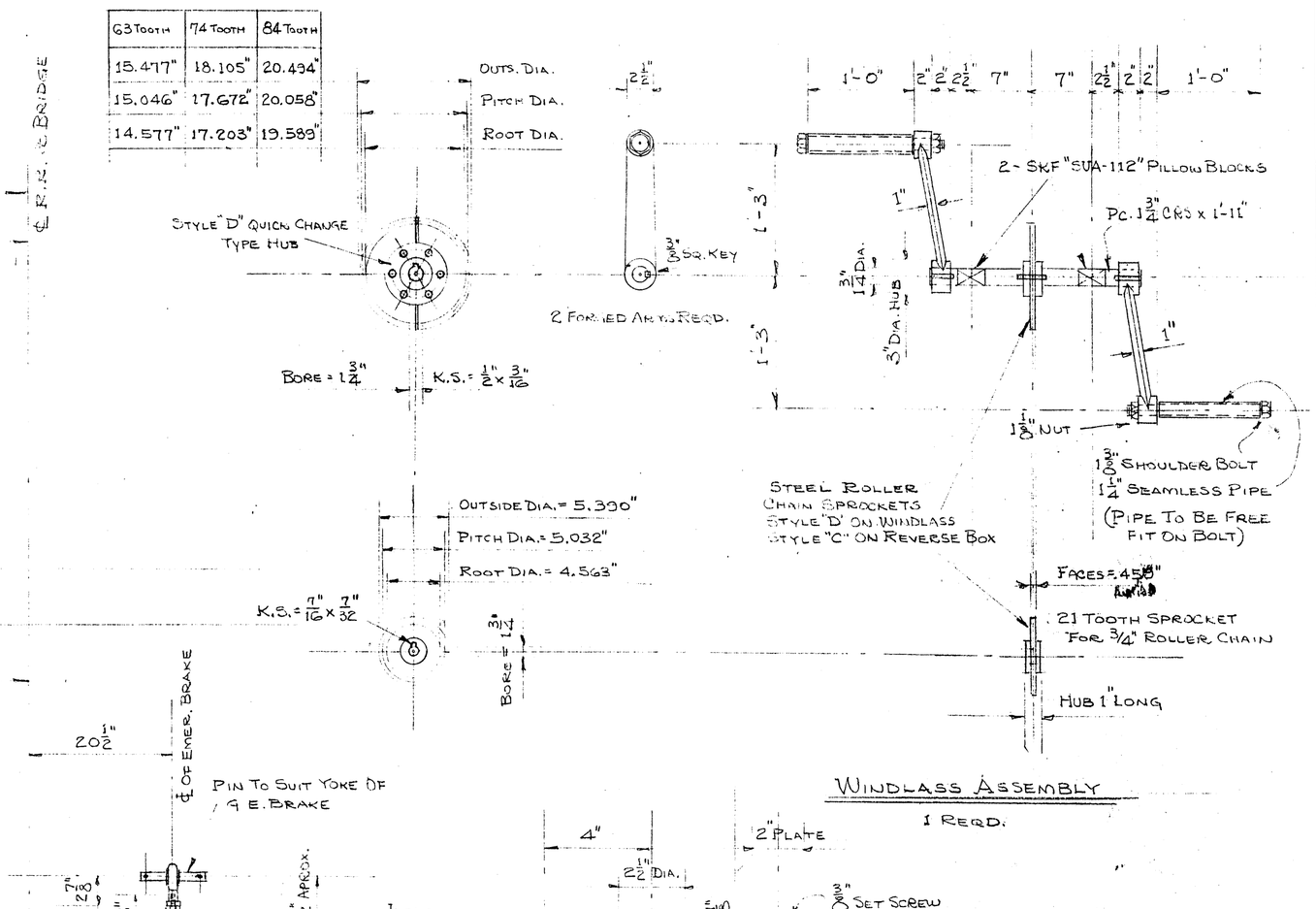

Windlass Assembly

1 Reqd.

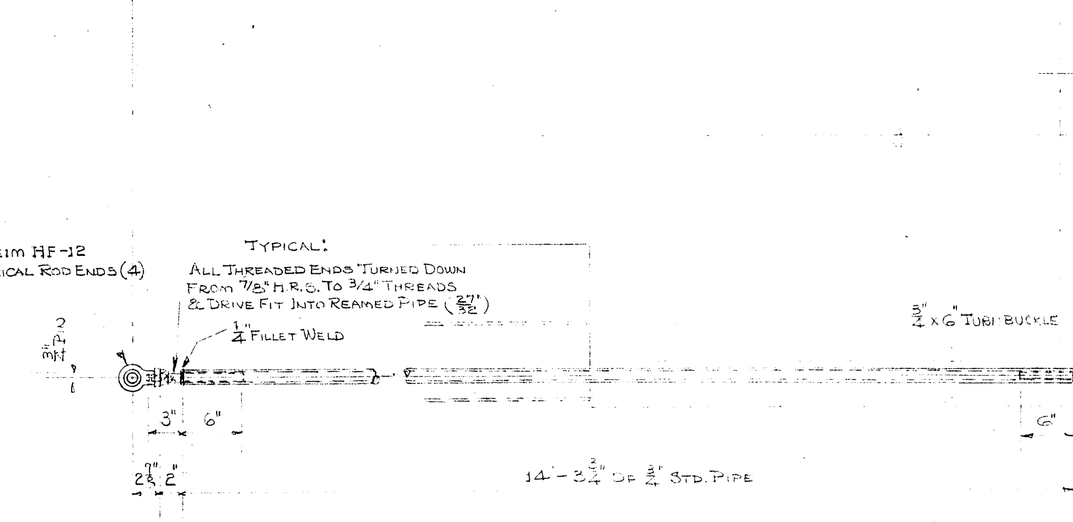

Emergency Brake Linkage

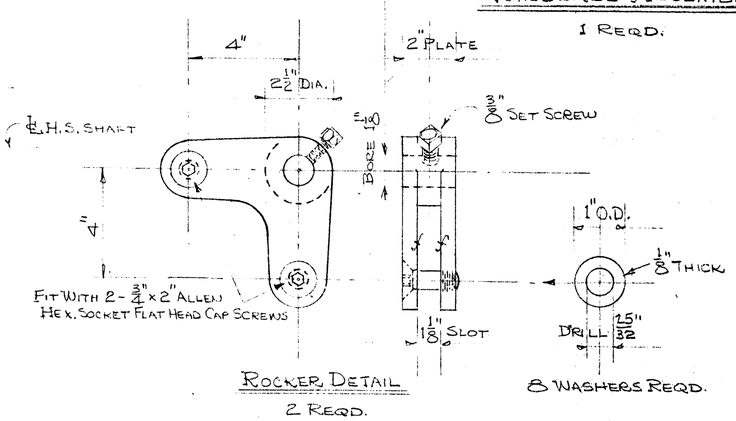

Rocker Detail

2 Reqd.

8 Washers Reqd.

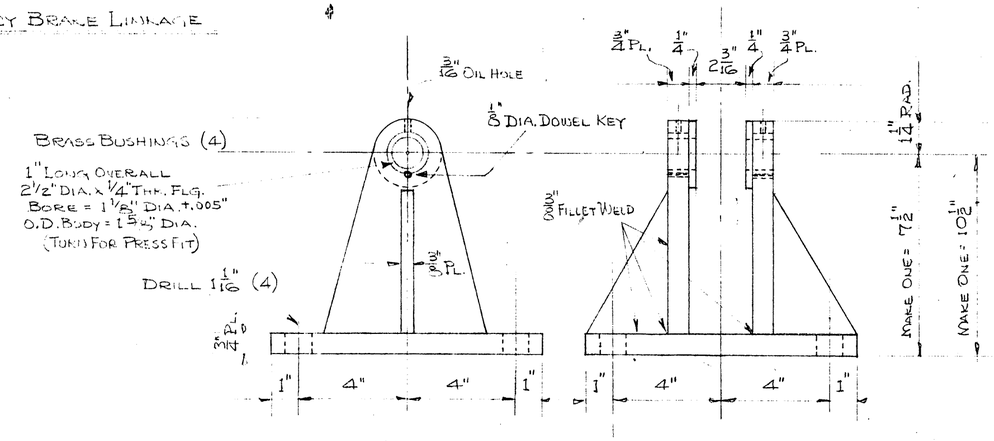

B-6499

Caldwell Foundry & Machine Co. Inc.
Birmingham, Ala.

Hand Operation Windlass & Brake Rod Details
For
Newport River Bridge
Beaufort, No. Carolina

Scale	1" = 1'-0"	June 12, 1950
Drawn-Tr'c'd.	Lemon	C-1685
Checked	Revised June 29, 1950	
App'v'd.		

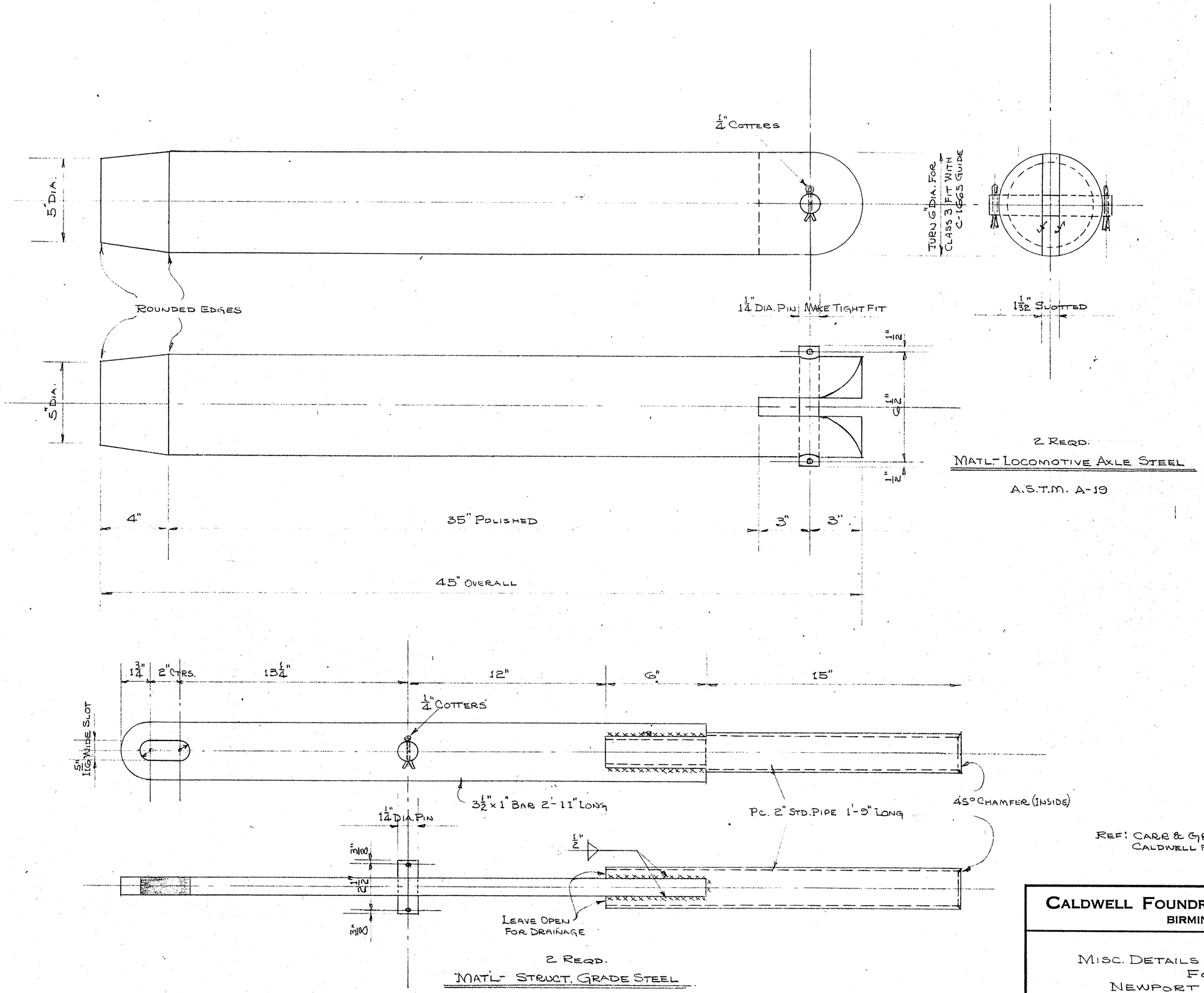

REF: CARR & GREINER DWG. #C-513-8
CALDWELL F. & M. CO. DWG. #C-1674

SHOP ORD. B-6499

CALDWELL FOUNDRY & MACHINE CO. INC.
BIRMINGHAM, ALA.

MISC. DETAILS OF FULLY OPEN LOCK
FOR
NEWPORT RIVER BRIDGE
BEAUFORT, NO. CAROLINA

SCALE	3" = 1'-0"	MAY 22, 1950
DRAWN-TR'C'D.	LEMON	C-1686
CHECKED		
APP'V'D.		

"ALBANENE" NO. 1881. K&E CO., N.Y. 8
REG. U.S. PAT. OFF.

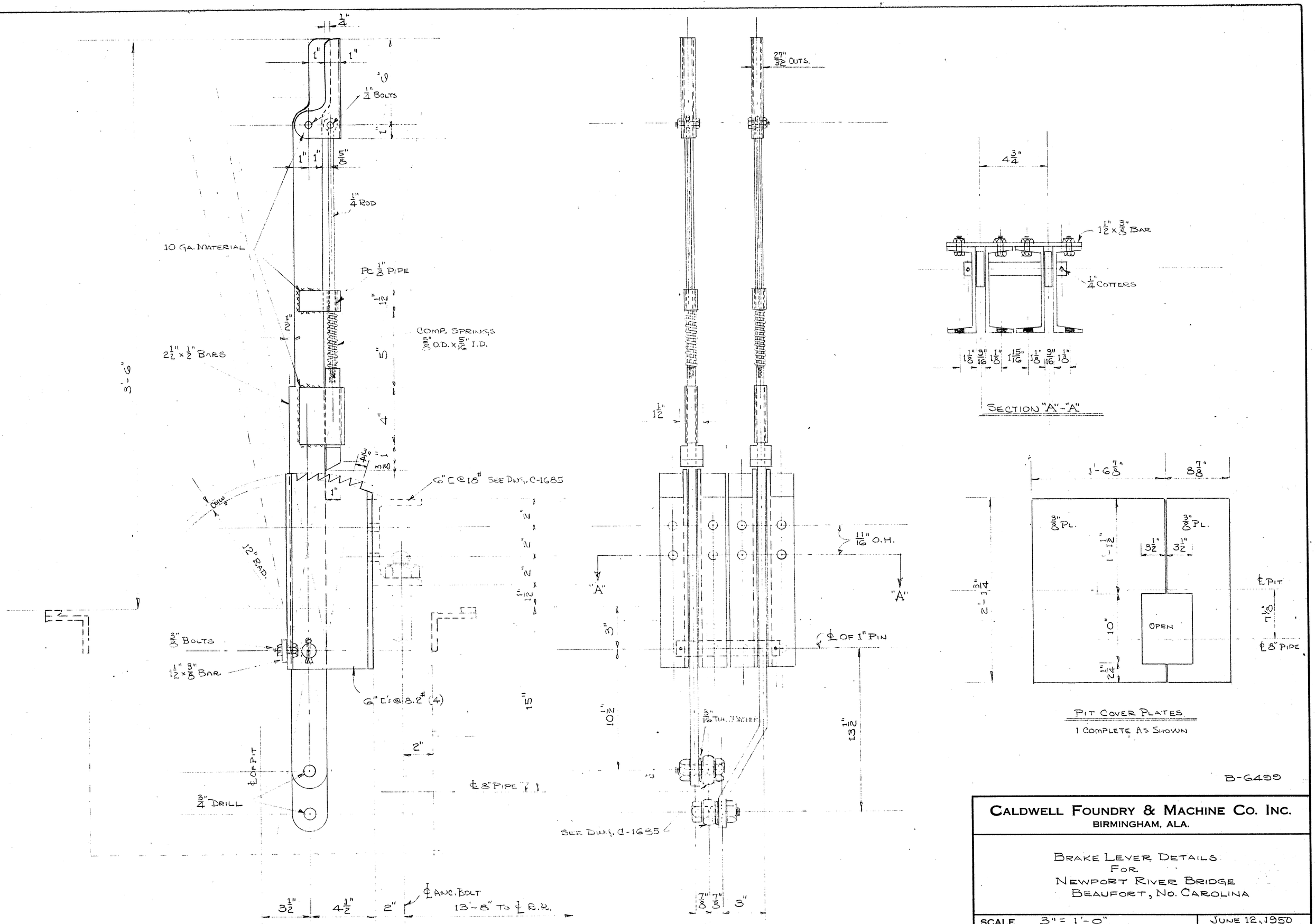

CALDWELL FOUNDRY & MACHINE CO. INC.
BIRMINGHAM, ALA.

BRAKE LEVER DETAILS
FOR
NEWPORT RIVER BRIDGE
BEAUFORT, NO. CAROLINA

SCALE 3" = 1'-0"	JUNE 12, 1950
DRAWN-TR'C'D. LEMON	C-1687
CHECKED REVISED JUNE 29, 1950	
APP'V'D.	

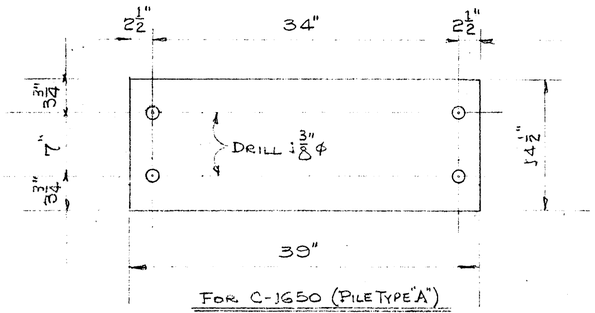

FOR C-1650 (PILE TYPE "A")
4 REQD.

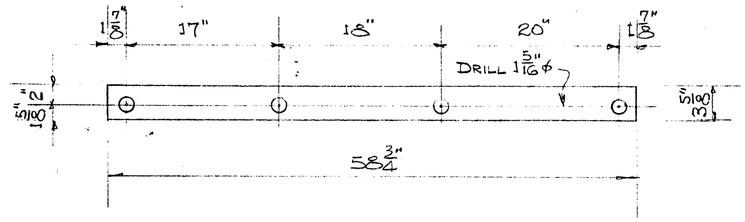

FOR MAIN SPEED REDUCER (PILE TYPE "A")
2 REQD.

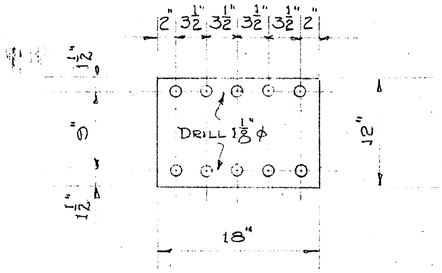

FOR C-1660 (PILE TYPE "B")
2 REQD.

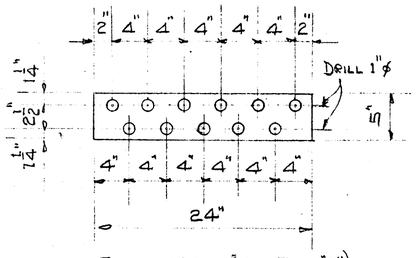

FOR C-1666 (PILE TYPE "C")
2 REQD.

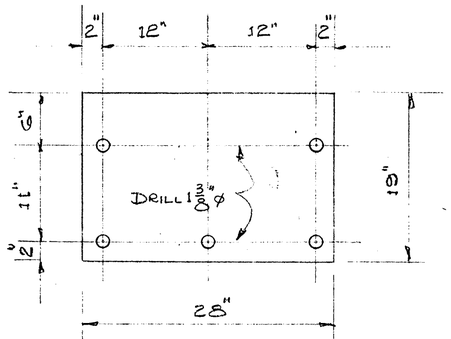

FOR C-1668 (PILE TYPE "D")
2 REQD.

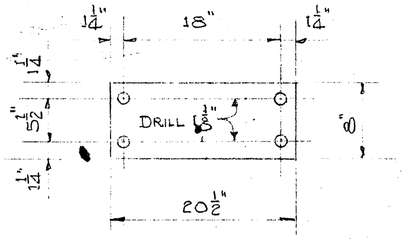

FOR C-1662 (PILE TYPE "B")
4 REQD.

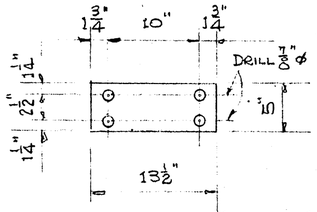

FOR C-1681 (PILE TYPE "D")
2 REQD.

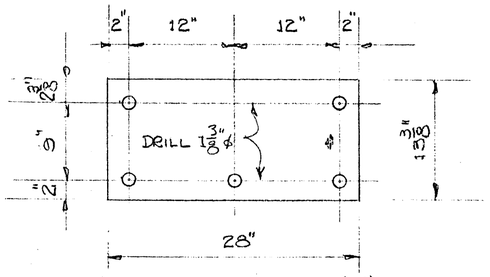

FOR C-1669 (PILE TYPE "D")
2 REQD.

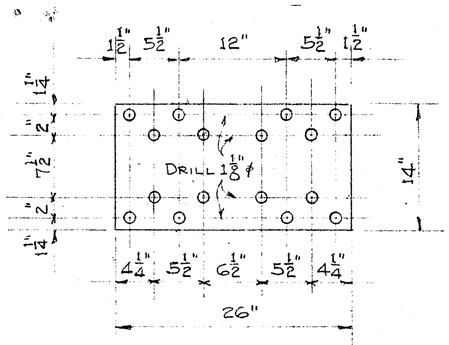

FOR C-1665-B (PILE TYPE "B")
2 REQD.

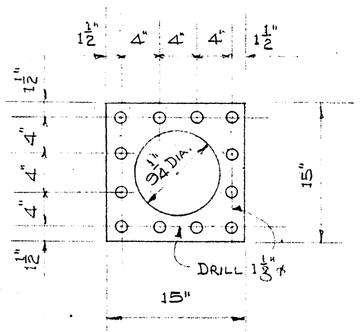

FOR C-1665-A (PILE TYPE "B")
4 REQD

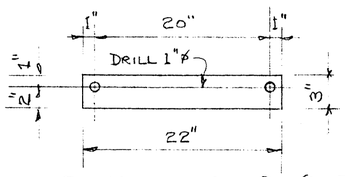

FOR REVERSE GEAR BOX (PILE TYPE "D")
2 REQD.

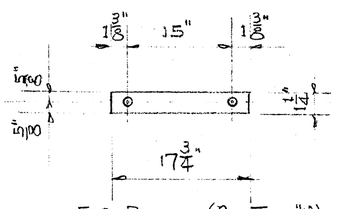

FOR BRAKES (PILE TYPE "A")
4 REQD.

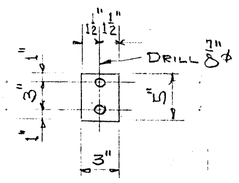

FOR CONTINENTAL ENGINE (PILE TYPE "D")
4 REQD.

ORD. No. B-6459

BILL MATERIAL FOR PILE THICKNESSES

TYPE "A"		TYPE "B"		TYPE "C"		TYPE "D"	
1 PL. 5/16"	.3125	1 PL. 1/4"	.250	1 PL. 24 GA.	.022	1 PL. 10 GA.	.134
1 PL. 3/16"	.1875	1 PL. 10 GA.	.134	1 PL. 26 GA.	.018	1 PL. 12 GA.	.109
1 PL. 10 GA.	.134	1 PL. 12 GA.	.109	1 PL. 28 GA.	.014	1 PL. 14 GA.	.083
1 PL. 12 GA.	.109	1 PL. 14 GA.	.083	1 PL. 30 GA.	.012	1 PL. 16 GA.	.065
1 PL. 14 GA.	.083	1 PL. 16 GA.	.065	TOTAL	.066"	1 PL. 18 GA.	.049
1 PL. 16 GA.	.065	1 PL. 18 GA.	.049			1 PL. 22 GA.	.028
1 PL. 18 GA.	.049	1 PL. 22 GA.	.028			1 PL. 24 GA.	.022
1 PL. 22 GA.	.028	1 PL. 24 GA.	.022			1 PL. 26 GA.	.018
1 PL. 24 GA.	.022	1 PL. 26 GA.	.018			1 PL. 30 GA.	.012
1 PL. 26 GA.	.018	1 PL. 30 GA.	.012			TOTAL	.520"
1 PL. 30 GA.	.012	TOTAL	.770"				
TOTAL	1.020"						

CALDWELL FOUNDRY & MACHINE CO. INC.
BIRMINGHAM, ALA.

STEEL SHIM LIST FOR OPERATING MACHINERY
FOR
NEWPORT RIVER BRIDGE
BEAUFORT, NO. CAROLINA

SCALE	NONE	JUNE 30, 1950
DRAWN-TR'C'D.	LEMON	C-1688
CHECKED	REV. JULY 15, 1950	
APP'V'D.		

"ALBANENE" NO. 1981 K&E CO., N.Y. 8
SEL-U.S. PAT. OFF.

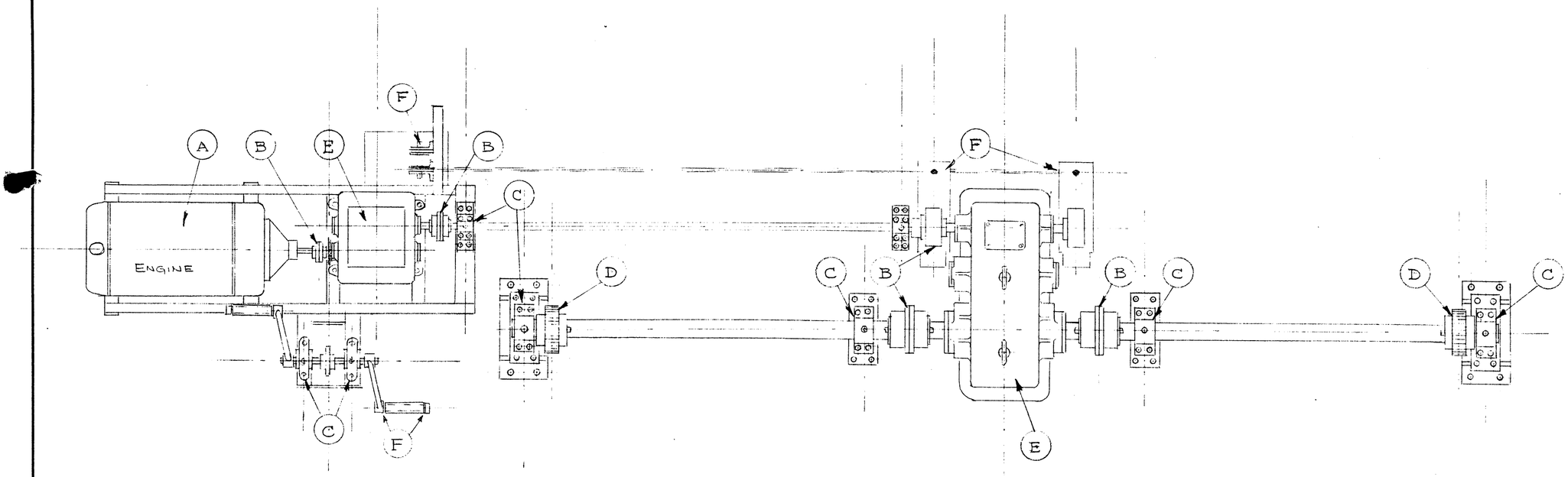

PRODUCTS IDENTIFICATION		
A	ESSOLUBE SAE 30 MOTOR OIL	
B	CYLESSO GRADE T-140	
C	SOCONY-VACUUM SOVAREX No. 1	
D	SURETT No. 2500	
E	ESSOLUBE	SAE 20 MOTOR OIL IN WINTER SAE 40 MOTOR OIL IN SUMMER
F	ESSOLUBE SAE 40 (USE OIL CAN)	

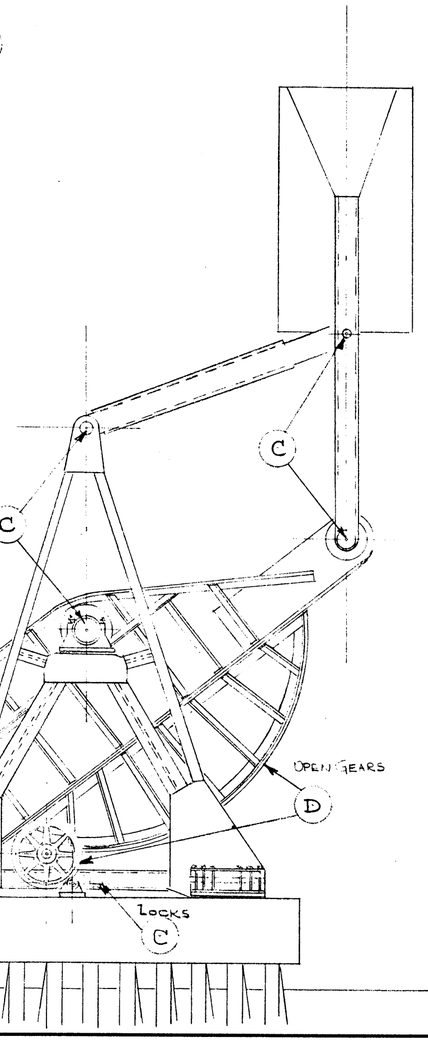

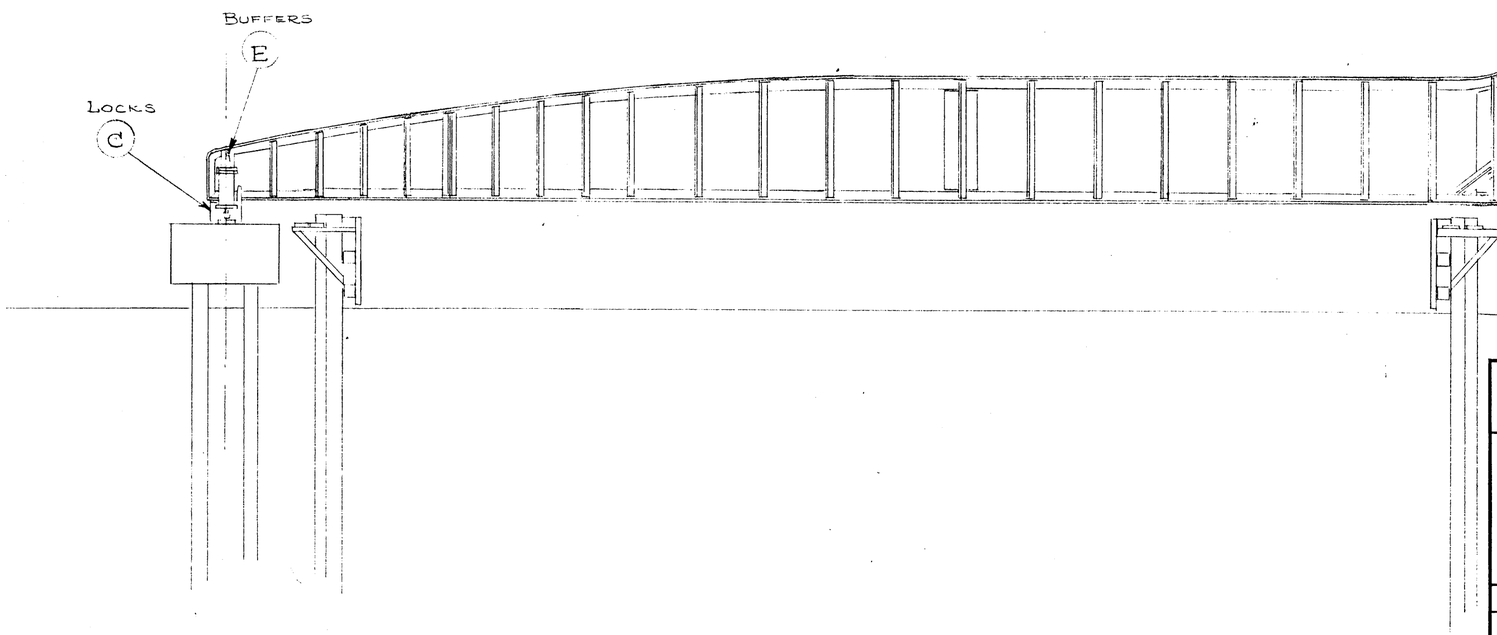

CALDWELL FOUNDRY & MACHINE CO. INC.
BIRMINGHAM, ALA.

LUBRICATION CHART
FOR
NEWPORT RIVER BRIDGE
BEAUFORT, NO. CAROLINA

SCALE	AUG 3, 1950
DRAWN-TR'C'D. LEMON	C-1689
CHECKED	
APP'V'D.	

"ALBANENE" NO. 1961 K&E CO., N.Y. 8
1961 U.S. PAT. OFF.

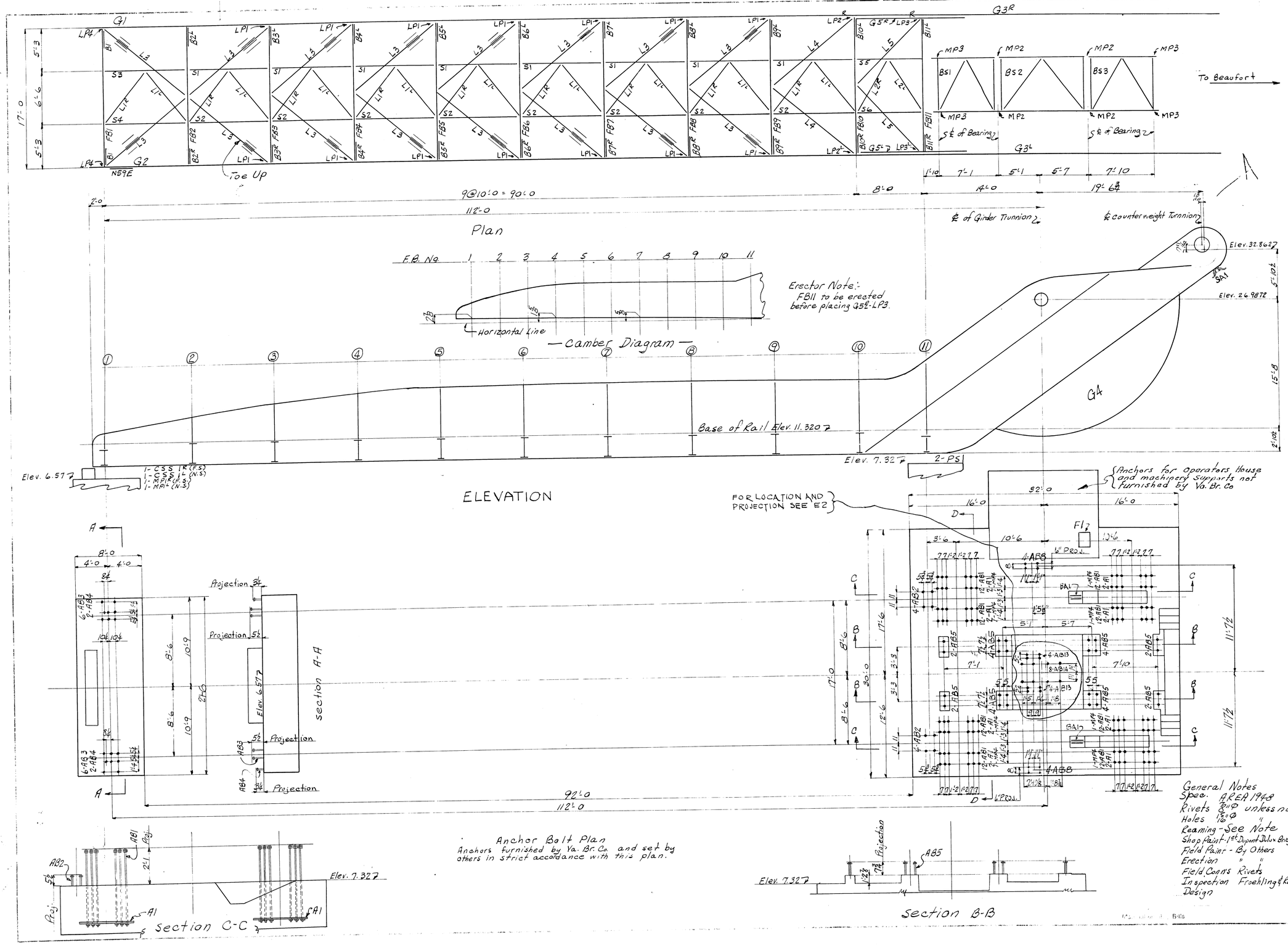

Reaming Note:-
Holes may be punched 15/16" Φ in material not over 3/8" thick used for laterals and longitudinals, except that holes through assembled material shall not consist of both reamed holes and holes punched full size.
If there are more than three thickness of main material, or any thickness over 3/8" the holes in all thicknesses shall be subpunched 1/16" Φ and reamed to 15/16" Φ with all parts assembled, except main material over 3/4" thick shall be subdrilled and reamed to 15/16" Φ with all parts assembled. All holes for floor beam and stringer connections to be subpunched 1/16" Φ and reamed to 15/16" Φ to a metal templet 1" thick.

Note:-
Piles and accessories, rails and accessories, tie plates, reinforcing steel, bolts or anchors for wood or other trades, non-ferrous metals, or timber, operating machinery, gasoline power unit or speed reducers not furnished by Va. Br. Co.

Shop Paint Note:-
Loose scale, rust and dirt shall be removed by flame cleaning process using suitable torches, and thoroughly brushed with power agitated wire brushes before application of the shop coat.

Note:-
For Erection Plan of Trunnion Towers and Counterweight see sheet E3.

Erector Note:-
Members shall be erected so that the erection marks painted on left-hand ends are in the positions shown on this drawing.

Machinery Note:-
Refer to detail dwgs. for machinery connections which are to be sub-punched and reamed in shop to match machinery castings and those to be reamed in field.

General Notes
Spec. AREA 1948
Rivets 3/4" Φ unless noted
Holes 15/16" " "
Reaming - See Note
Shop Paint - 1st Dupont Dulux Bridge Primer (see Note)
Field Paint - By Others
Erection " "
Field Conn's Rivets
Inspection Froehling & Robertson
Design

CONTRACT V-7173

Details of Erection Plan of Bascule Span & Anchor Bolt Plan
1-80' Single Leaf Bascule Bridge
For Newport River Bridge
Location Morehead City, Carteret Co., N.C.
Owner Tidewater Construction Corp.

VIRGINIA BRIDGE COMPANY
ROANOKE, VIRGINIA

To be erected at Roanoke plant
Made by R.S.S. 11/15/49 Traced by C.B.M. 1950
In charge of Scott Checked by
Revised 1-7-3-50
Scale in. = 1 ft. Sheet No. E1 of

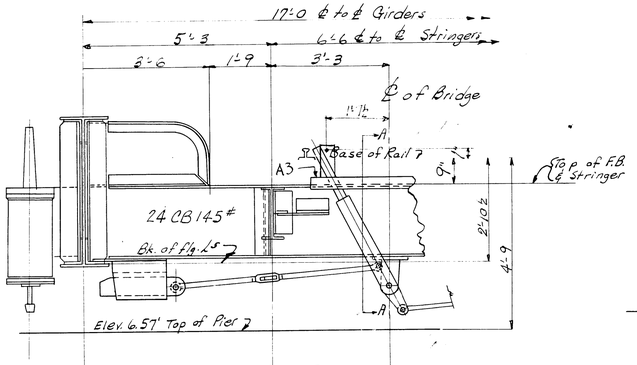

section @ FB1

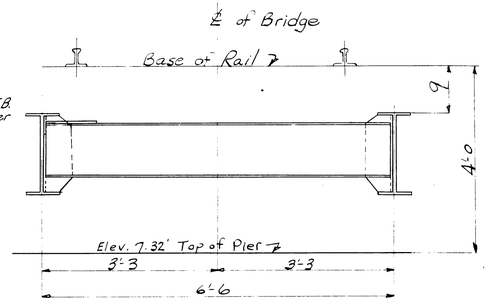

section at Fixed stringers on Bascule Pier

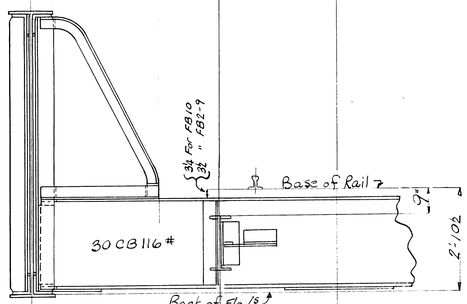

section at intermediate Floor Beams

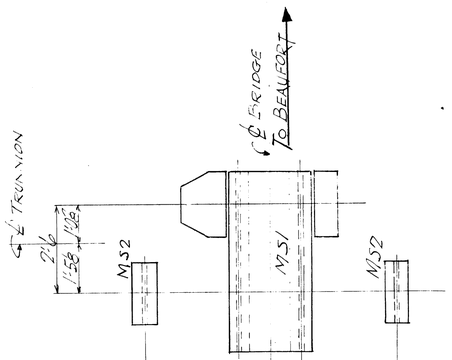

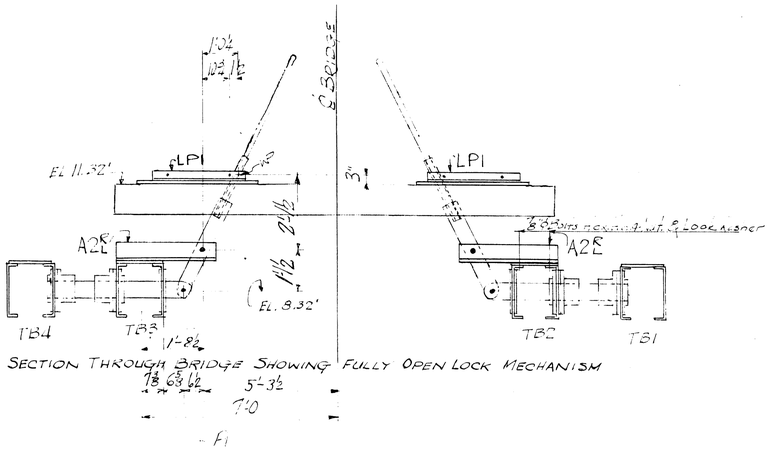

SECTION THROUGH BRIDGE SHOWING FULLY OPEN LOCK MECHANISM

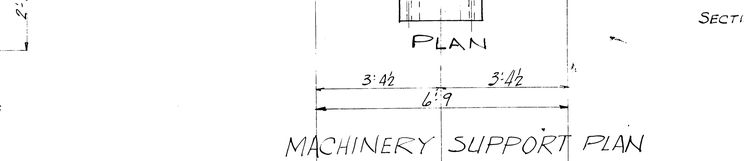

MACHINERY SUPPORT PLAN

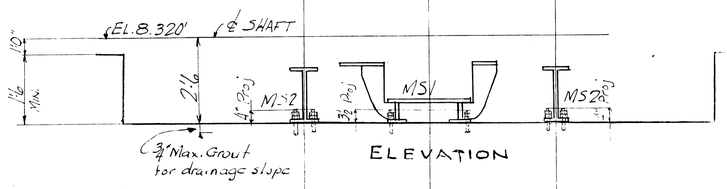

ELEVATION

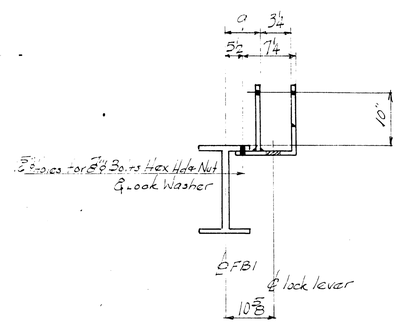

SECTION "A"

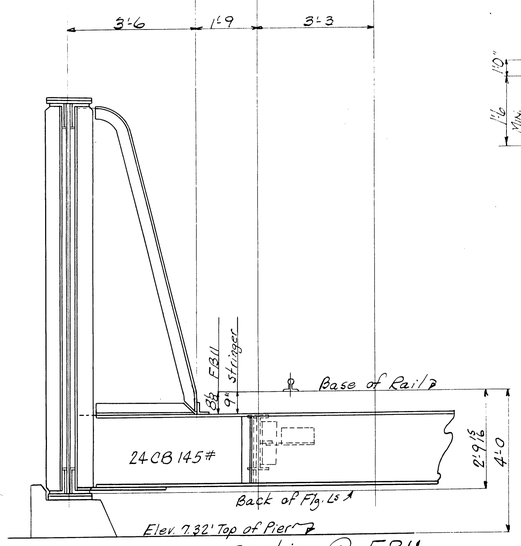

section @ FB11

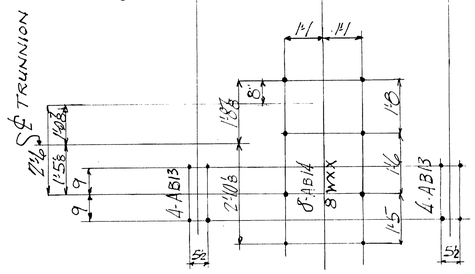

ANCHOR BOLT PLAN

GENERAL NOTES

Material O.H. Str'l Steel
Specifications AREA-1948
Rivets ¾ ϕ
Holes 15/16 ϕ
Drawings
Shop Paint
Field Paint
Erection
Field Coat
Inspection
Design

Material or Shop Bills

See Dwg E1

OFFICE COPY
5TH SUBMISSION

CONTRACT V-7173

Details of Erection Plan for Machinery & Typical Sections
180' Single Leaf Bascule Bridge
For Newport River Bridge
Location Morehead City, Cataret Co., N.C.
Owner Tide water Construction Corp.

VIRGINIA BRIDGE COMPANY
ROANOKE, VIRGINIA

To be fabricated at Roanoke
Made by R.S.S. Traced by CBM 1950
In charge of Scott Checked by
Revised
Scale Sheet No. E2

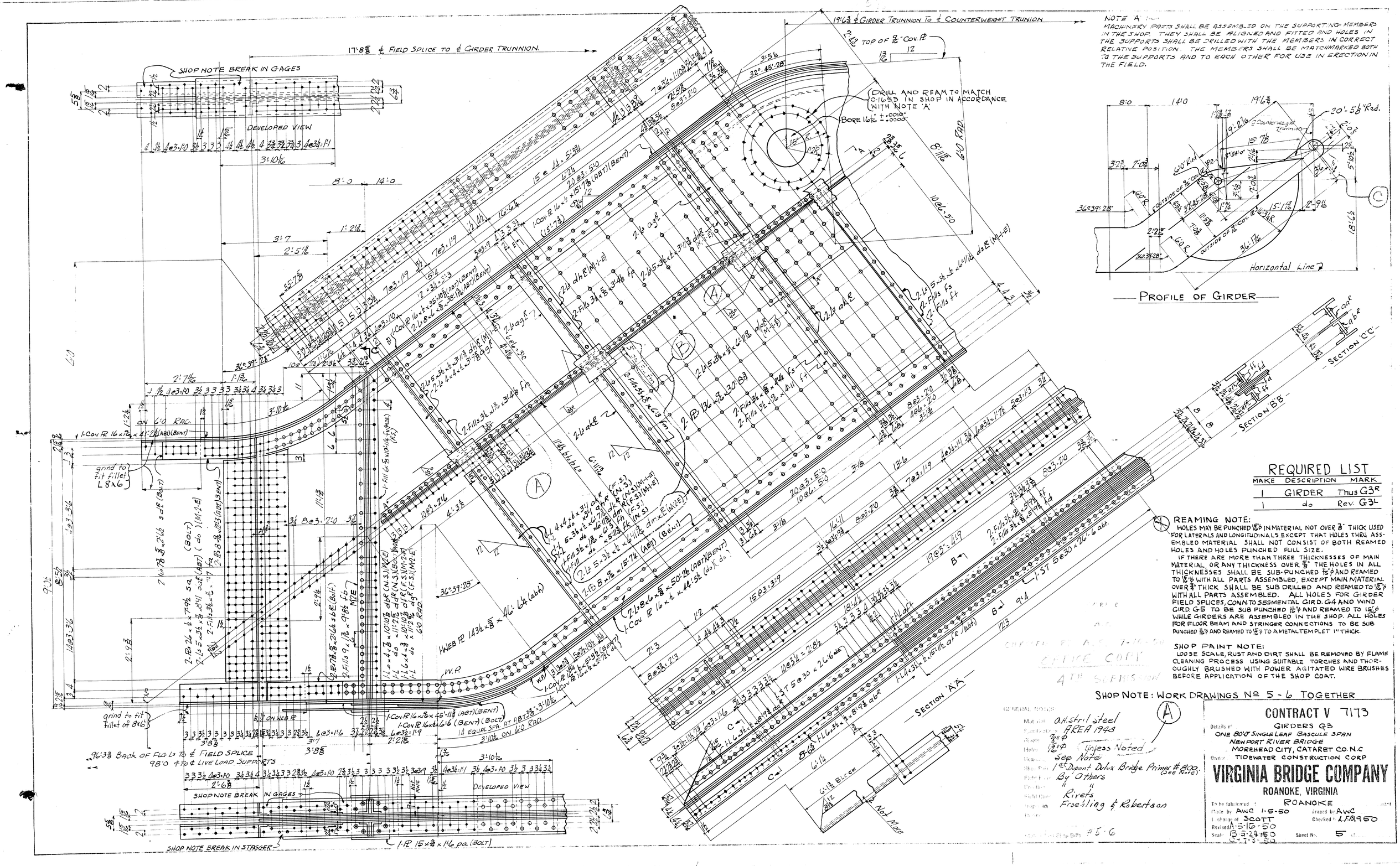

NOTE A :-
MACHINERY PARTS SHALL BE ASSEMBLED ON THE SUPPORTING MEMBERS IN THE SHOP. THEY SHALL BE ALIGNED AND FITTED AND HOLES IN THE SUPPORTS SHALL BE DRILLED WITH THE MEMBERS IN CORRECT RELATIVE POSITION. THE MEMBERS SHALL BE MATCHMARKED BOTH TO THE SUPPORTS AND TO EACH OTHER FOR USE IN ERECTION IN THE FIELD.

REQUIRED LIST

MAKE	DESCRIPTION	MARK
1	GIRDER	Thus G3R
1	do	Rev. G3L

REAMING NOTE:
HOLES MAY BE PUNCHED 15/16" ϕ IN MATERIAL NOT OVER 3/8" THICK USED FOR LATERALS AND LONGITUDINALS EXCEPT THAT HOLES THRU ASSEMBLED MATERIAL SHALL NOT CONSIST OF BOTH REAMED HOLES AND HOLES PUNCHED FULL SIZE.
IF THERE ARE MORE THAN THREE THICKNESSES OF MAIN MATERIAL OR ANY THICKNESS OVER 5/8" THE HOLES IN ALL THICKNESSES SHALL BE SUB-PUNCHED 15/16" ϕ AND REAMED TO 15/16" ϕ WITH ALL PARTS ASSEMBLED, EXCEPT MAIN MATERIAL OVER 3/4" THICK SHALL BE SUB DRILLED AND REAMED TO 15/16" ϕ WITH ALL PARTS ASSEMBLED. ALL HOLES FOR GIRDER FIELD SPLICES, CONN. TO SEGMENTAL GIRD. G4 AND WIND GIRD. G5 TO BE SUB PUNCHED 15/16" ϕ AND REAMED TO 15/16" ϕ WHILE GIRDERS ARE ASSEMBLED IN THE SHOP. ALL HOLES FOR FLOOR BEAM AND STRINGER CONNECTIONS TO BE SUB PUNCHED 15/16" ϕ AND REAMED TO 15/16" ϕ TO A METAL TEMPLET 1" THICK.

SHOP PAINT NOTE:
LOOSE SCALE, RUST AND DIRT SHALL BE REMOVED BY FLAME CLEANING PROCESS USING SUITABLE TORCHES AND THOROUGHLY BRUSHED WITH POWER AGITATED WIRE BRUSHES BEFORE APPLICATION OF THE SHOP COAT.

SHOP NOTE: WORK DRAWINGS № 5 - 6 TOGETHER

(A)

GENERAL NOTES
Material: O.H. Stril Steel
Specification: AREA 1948
Rivets: 7/8" ϕ
Holes: 15/16" ϕ (unless Noted)
Drilling: See Note
Shop Paint: 1st Dupont Dulux Bridge Primer #800 (See Note)
Field Paint: By Others
Erection: " "
Field Connection: Rivets
Inspection: Froehling & Robertson
Remarks:
Contract Shop Bills: 5-6

CONTRACT V 7173
GIRDERS G3
ONE 80'-0" SINGLE LEAF BASCULE SPAN
NEWPORT RIVER BRIDGE
MOREHEAD CITY, CATARET CO. N.C.
Owner: TIDEWATER CONSTRUCTION CORP

VIRGINIA BRIDGE COMPANY
ROANOKE, VIRGINIA
ROANOKE

To be fabricated
Made by AWC 1-5-50
In charge of SCOTT
Revised A-5-16-50
Scale B-5-24-50 C-7-3-50
Traced by AWC
Checked by L.F.B. 1950
Sheet No. 5

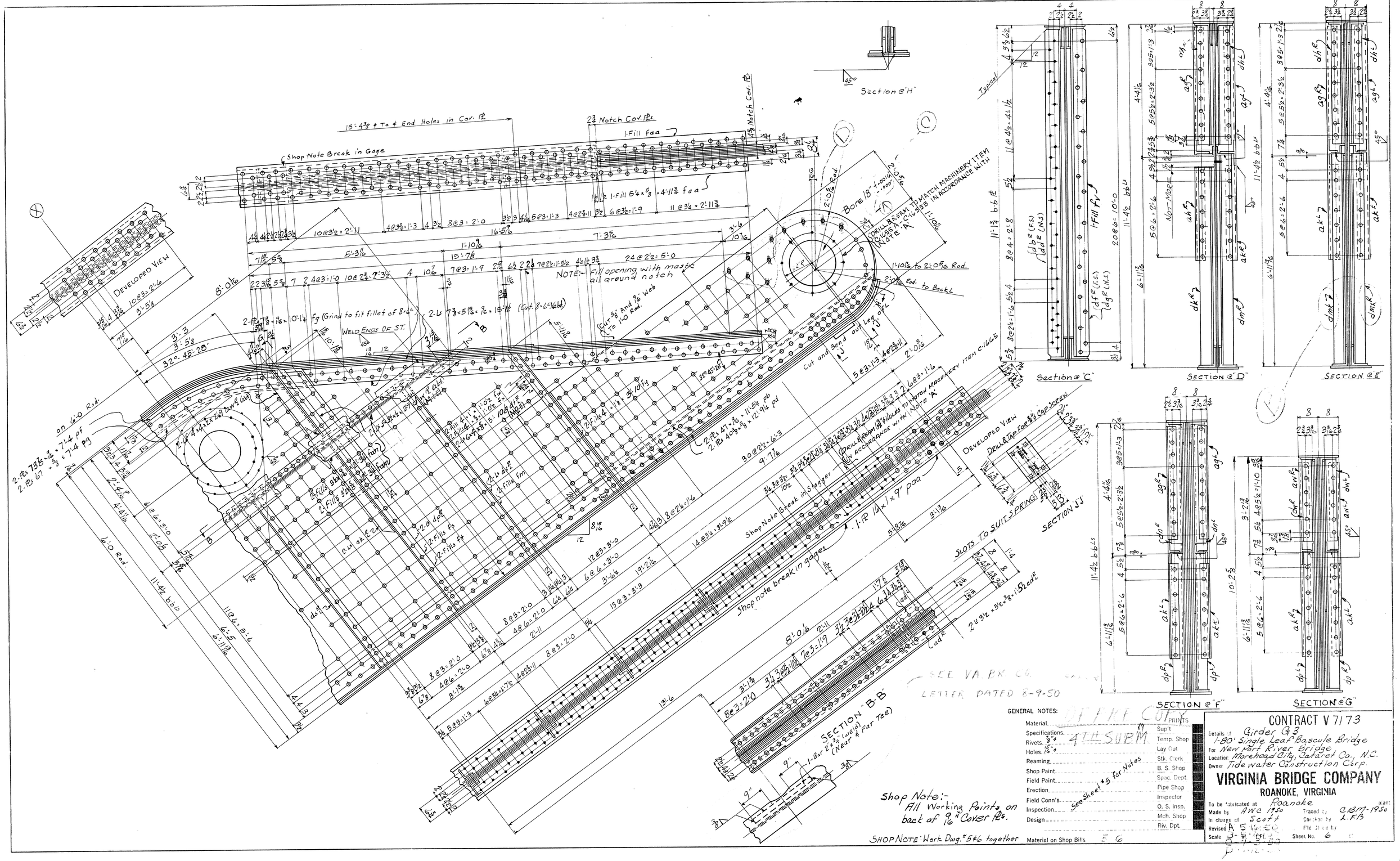

GENERAL NOTES:

		PRINTS
Material		Sup't
Specifications		Temp. Shop
Rivets 3/4"		Lay Out
Holes 13/16"		Stk. Clerk
Reaming		B. S. Shop
Shop Paint		Spec. Dept.
Field Paint		Pipe Shop
Erection	See Sheet #5 for Notes	Inspector
Field Conn's		O. S. Insp.
Inspection		Mch. Shop
Design		Riv. Dept.

Material on Shop Bills 5 6

Details of Girder G3
1-80' Single Leaf Bascule Bridge
For New Port River Bridge
Location Morehead City, Cataret Co., N.C.
Owner Tide water Construction Corp.

VIRGINIA BRIDGE COMPANY
ROANOKE, VIRGINIA

To be fabricated at Roanoke
Made by AWC 1950 Traced by CBM-1950
In charge of Scott Checked by L.F.B.
Revised Checked by
Scale 3" = 1 ft. Sheet No. 6

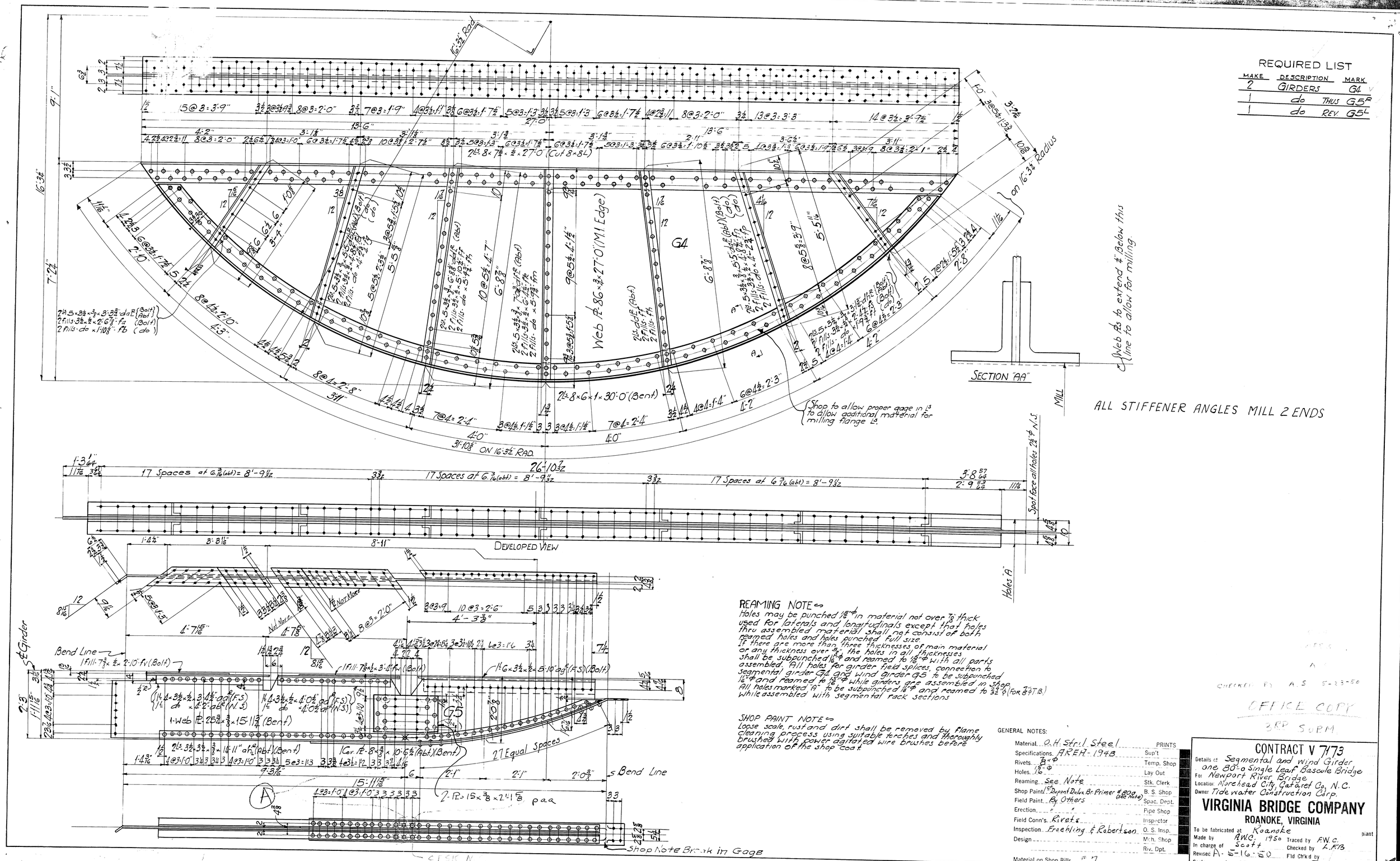
REQUIRED LIST
MAKE | DESCRIPTION | MARK
2 | GIRDERS | G4
1 | do THUS | G5R
1 | do REV. | G5L
G4
Web PL 86-3/4"×27'-0" (M1 Edge)
G5
SECTION "AA"
Web AS to extend 4" below this line to allow for milling
ALL STIFFENER ANGLES MILL 2 ENDS
Shop to allow proper gage in Ls to allow additional material for milling flange Ls
3'-10 7/8" ON 16'-3 1/2" RAD.
26'-10 7/32
17 Spaces at 6 3/16 (abt) = 8'-9 1/32
DEVELOPED VIEW
Spot face all holes 2 3/8" N.S.
Holes "A"
Bend Line
27 Equal Spaces
Shop Note Break in Gage
REAMING NOTE ⇔
Holes may be punched 15/16" in material not over 7/8" thick used for laterals and longitudinals except that holes thru assembled material shall not consist of both reamed holes and holes punched full size.
If there are more than three thicknesses of main material or any thickness over 3/4" the holes in all thicknesses shall be subpunched 15/16" and reamed to 15/16" with all parts assembled. All holes for girder field splices, connection to segmental girder G4 and wind girder G5 to be subpunched 1 1/16" and reamed to 15/16" while girders are assembled in shop. All holes marked "A" to be subpunched 1 1/16" and reamed to 33/32" (For 7/8" T.B.) while assembled with segmental rack sections
SHOP PAINT NOTE ⇔
Loose scale, rust and dirt shall be removed by flame cleaning process using suitable torches and thoroughly brushed with power agitated wire brushes before application of the shop coat.
GENERAL NOTES:
Material O.H. Stru'l Steel
Specifications AREA-1948
Rivets 7/8" Φ
Holes 15/16" Φ
Reaming See Note
Shop Paint Dupont Delux Br. Primer #80a (see Note)
Field Paint By Others
Erection
Field Conn's. Rivets
Inspection Froehling & Robertson
Design
Material on Shop Bills #7
PRINTS: Sup't, Temp. Shop, Lay Out, Stk. Clerk, B. S. Shop, Spac. Dept., Pipe Shop, Inspector, O. S. Insp., Mch. Shop, Riv. Dpt.
CONTRACT V 7173
Details of Segmental and Wind Girder one 80'-0 Single Leaf Bascule Bridge
For Newport River Bridge
Location Morehead City, Carteret Co. N.C.
Owner Tidewater Construction Corp.
VIRGINIA BRIDGE COMPANY
ROANOKE, VIRGINIA
To be fabricated at Roanoke plant
Made by AWC, 1950 Traced by F.W.C.
In charge of Scott Checked by K.F.B.
Revised A. 5-16-50 Fld Ch'k'd by
Scale in. = 1 Ft. Sheet No. 7 of
CHECKED BY A.S. 5-23-50
OFFICE COPY
3RD SUBM.

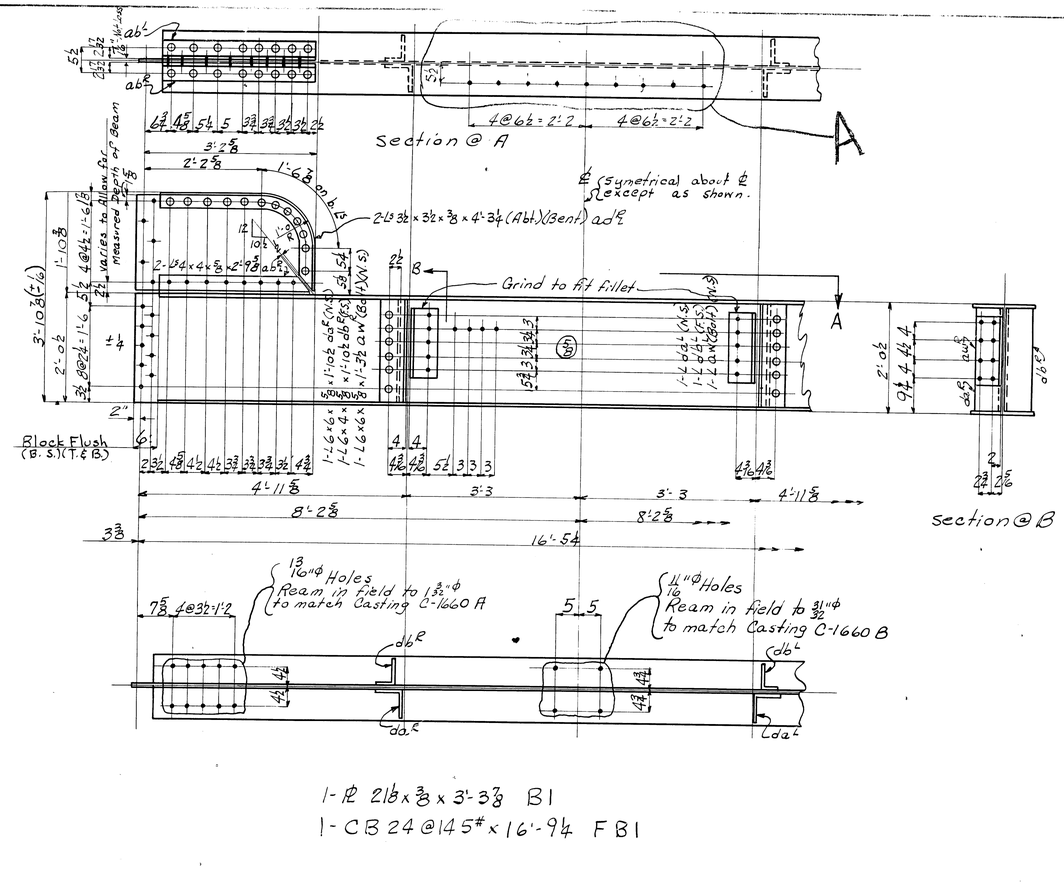

1-PL 21⅛ x ⅜ x 3'-3⅞ B1
1-CB 24 @ 145# x 16'-9¼ FB1

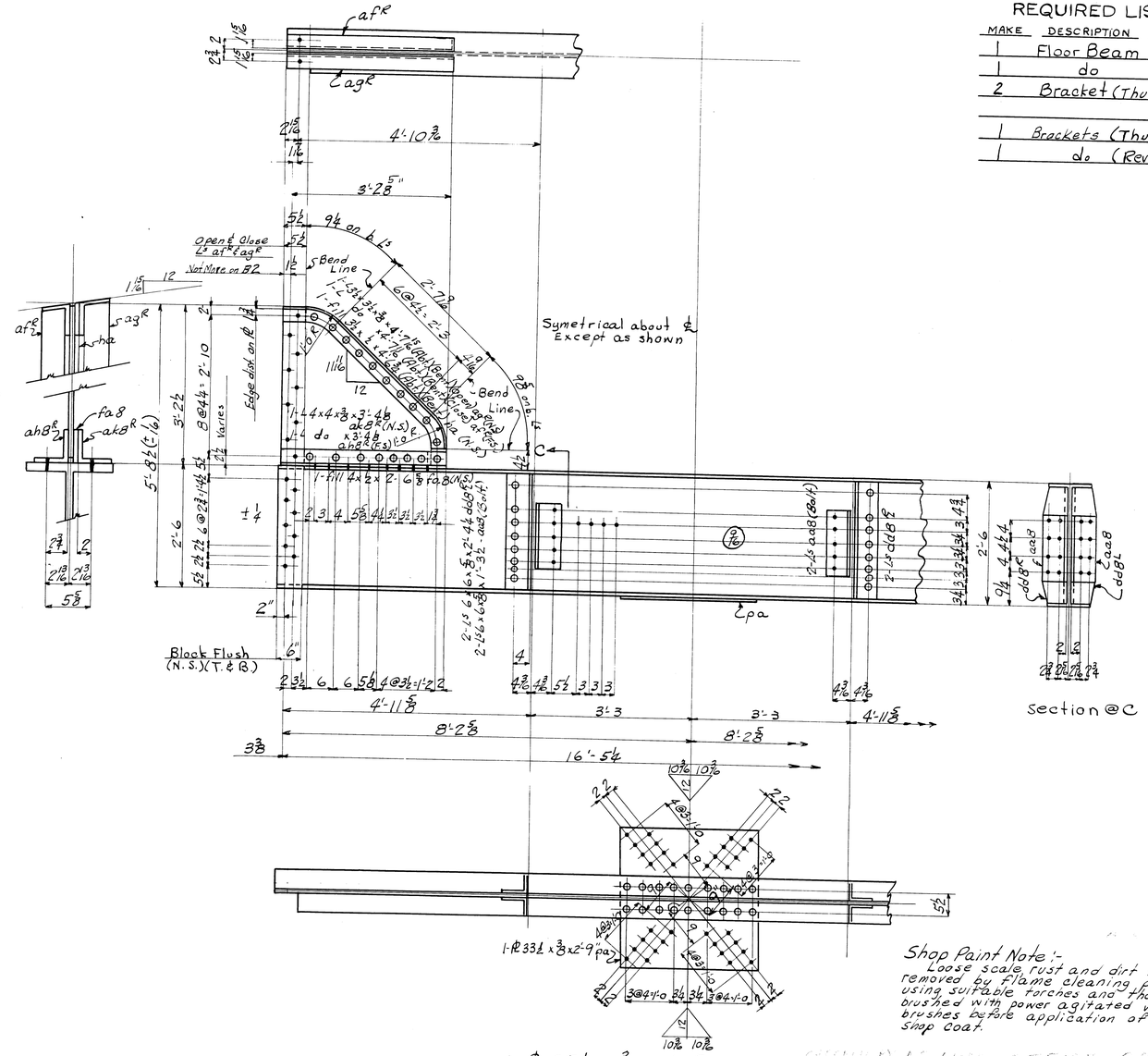

1-PL 37¼ x ⅜ x 3'-3⅞ B2
1-CB 30 @ 116# x 16'-9¼ FB2

REQUIRED LIST

MAKE	DESCRIPTION	MARK
1	Floor Beam	FB1
1	do	FB2
2	Bracket (Thus)	B1
1	Brackets (Thus)	B2 R
1	do (Rev)	B2 L

Reaming Note:
All holes for floor beams, floor beam brackets and stringer field connections are to be subpunched 11/16" ϕ and reamed to 15/16" ϕ to a metal templet 1" thick.

Shop Note:
Paint erection marks on the left-hand end of all members as shown on details

GENERAL NOTES
Material: O.H. Stril Steel
Specifications: AREA 1948
Rivets: 7/8" ϕ
Bolts: 7/8" ϕ
Paint: See Note
Shop Paint: 1 ct. Du Pont Dulux Bridge Primer #Bo (Red Oxide)
Field Paint: By Others
Erection Marks: By Others
Shop Rivets: Rivets
Detailed: Froehling & Robertson
Checked:
Material on Shop Bills

CONTRACT V - 7173
Details of Floor Beams & Brackets
1-80' Single Leaf Bascule Bridge
For New Port River Bridge
Location Morehead City, Cataret Co., N.C.
Owner Tidewater Construction Corp.

VIRGINIA BRIDGE COMPANY
ROANOKE, VIRGINIA

Detailed at Roanoke
R.S.S. 1950
Scott
A 5-22-50
Checked 1950
L.F.B.
8

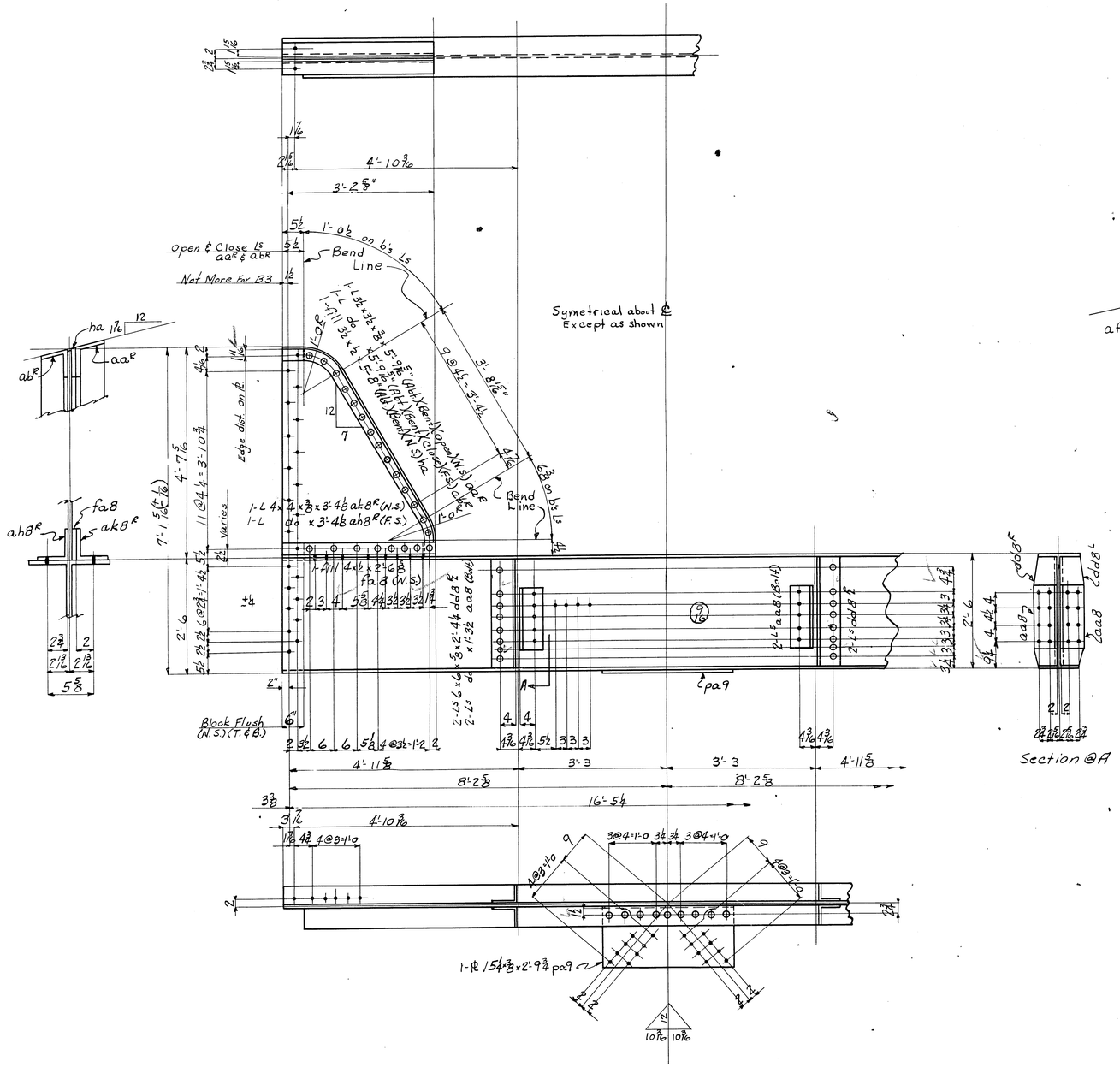

1-PL 39⅞ x ⅜ x 4'-6 B3
1-CB 30 @ 116# x 16'-9¼ FB3

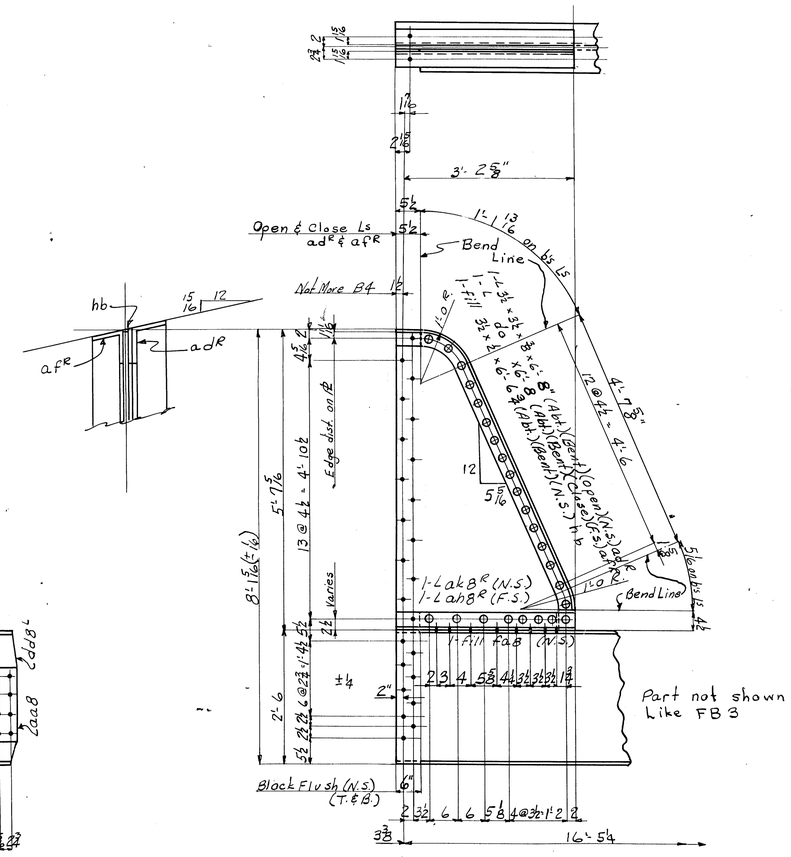

1-PL 39⅞ x ⅜ x 5'-6 B4
1-CB 30 @ 116# x 16'-9¼ FB4

REQUIRED LIST

MAKE	DESCRIPTION	MARK
1	Floor Beam	FB3
1	do	FB4
1	Bracket (Thus)	B3^R
1	do (Rev.)	B3^L
1	do (Thus)	B4^R
1	do (Rev.)	B4^L

OFFICE COPY

Shop Paint Note:- Loose scale, rust and dirt shall be removed by flame cleaning process using suitable torches and thoroughly brushed with power agitated wire brushes before application of the shop coat.

Reaming Note: All holes for floor beams, floor beam brackets and stringer field connections are to be subpunched 1/16" ϕ and reamed to 15/16" ϕ to a metal templet 1" thick.

Shop Note: Paint erection marks on the left-hand end of all members as shown on details.

GENERAL NOTES:

Material	O.H. Stru'l Steel
Specifications	AREA-1948
Rivets	⅞" ϕ
Holes	15/16" ϕ
Reaming	See Note
Shop Paint	1st. Du Pont Dulux Bridge Primer #800
Field Paint	By Others
Erection	" "
Field Conn's	Rivets
Inspection	Froehling & Robertson
Design	
Material on Shop Bills	#9

CONTRACT V-7173

Details of Floor Beams & Brackets
1-80' single Leaf Bascule Bridge
For New Port River Bridge
Location Morehead City, Carteret Co. N.C.
Owner Tide water Construction Corp.

VIRGINIA BRIDGE COMPANY
ROANOKE, VIRGINIA

To be fabricated at Roanoke plant
Made by RSS 1950 Traced by CBM
In charge of Scott Checked by L.F.B.
Revised
Scale in. = 1 Ft. Sheet No. 9 of

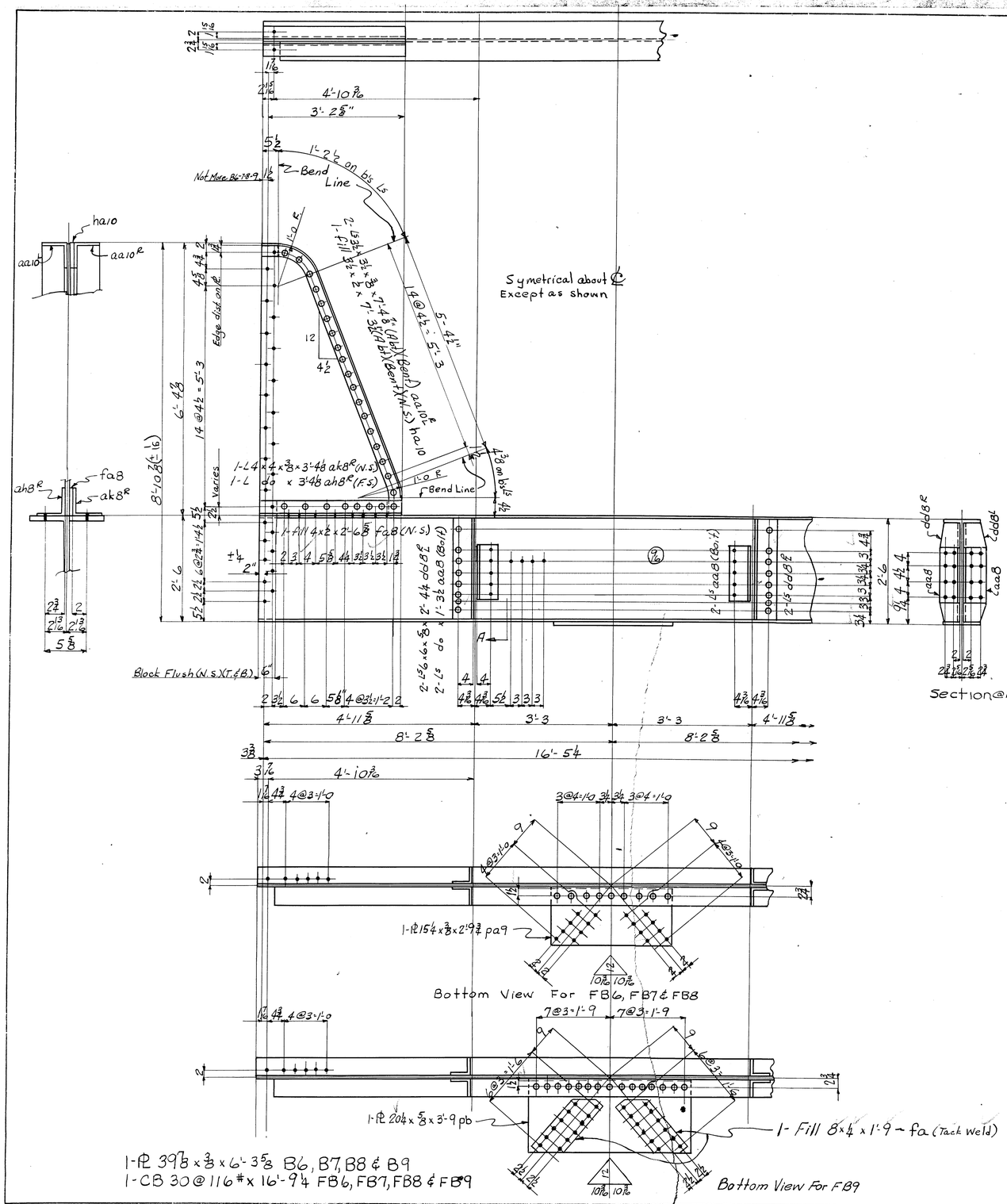

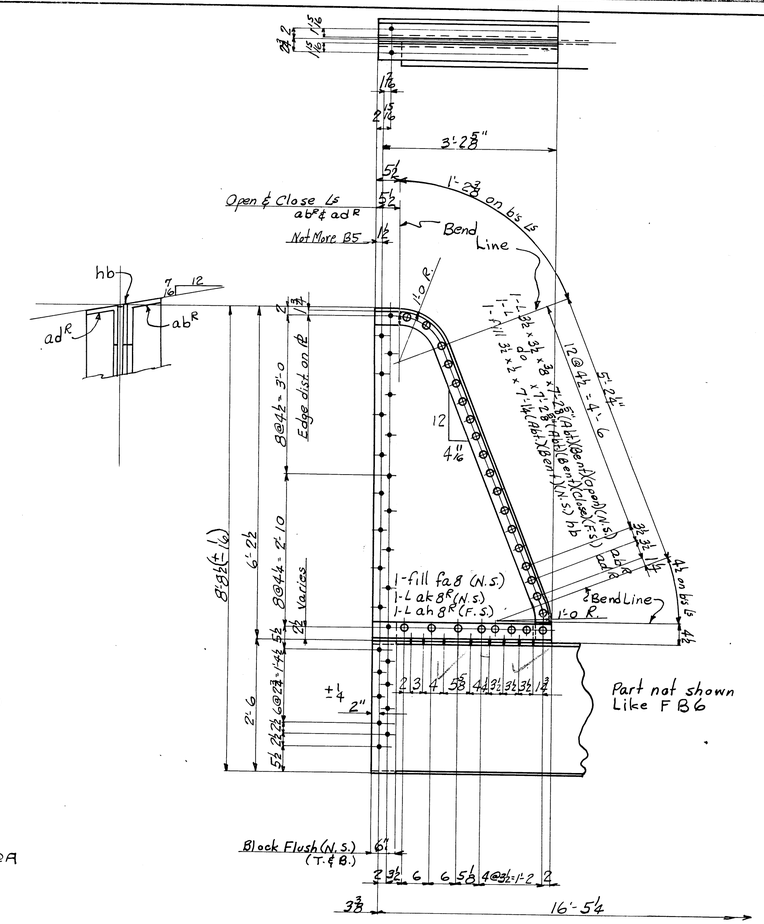

1-PL 39⅞ x ⅜ x 6'-14 B5
1-CB 30 @ 116# x 16'-9¼ FB5

REQUIRED LIST

MAKE	DESCRIPTION	MARK
1	Floor Beam	FB5
1	do	FB6
1	do	FB7
1	do	FB8
1	do	FB9
1	Bracket (Thus)	B5R
1	do (Rev)	B5L
1	do (Thus)	B6R
1	do (Rev)	B6L
1	do (Thus)	B7R
1	do (Rev.)	B7L
1	do (Thus)	B8R
1	do (Rev.)	B8L
1	do (Thus)	B9R
1	do (Rev)	B9L

Shop Paint Note:-
Loose scale, rust and dirt shall be removed by flame cleaning process using suitable torches and thoroughly brushed with power agitated wire brushes before application of the shop coat.

OFFICE COPY
2nd Sum 4/11-50 AS/MA

Reaming Note:
All holes for floor beams, floor beam brackets and stringer field connections are to be subpunched 11/16"ϕ and reamed to 15/16"ϕ to a metal templet 1" thick.

Shop Note:
Paint erection marks on the left-hand end of all members as shown on details.

GENERAL NOTES:

Material O.H. Str'l Steel
Specifications ASEA-1948
Pivets ⅞"ϕ
Holes 15/16"
Reaming See Note
Shop Paint / St. Dupont Dulux Bridge Primer #800 (see Note)
Field Paint By Others
Erection " "
Field Conn's Rivets
Inspection Froehling & Robertson
Design
Material on Shop Bills # 10

CONTRACT V-7173

Details of Floor Beams & Brackets
1-80' Single Leaf Bascule Bridge
For Newport River Bridge
Location Morehead City, Cataret Co., N.C.
Owner Tidewater Construction Corp.

VIRGINIA BRIDGE COMPANY
ROANOKE, VIRGINIA

To be fabricated at Roanoke plant
Made by RSS 1950 Traced by O.G.M. 1950
In charge of Scott Checker L.F.B.
Revised
Scale ½ in = 1 Ft. Sheet No. 10 of

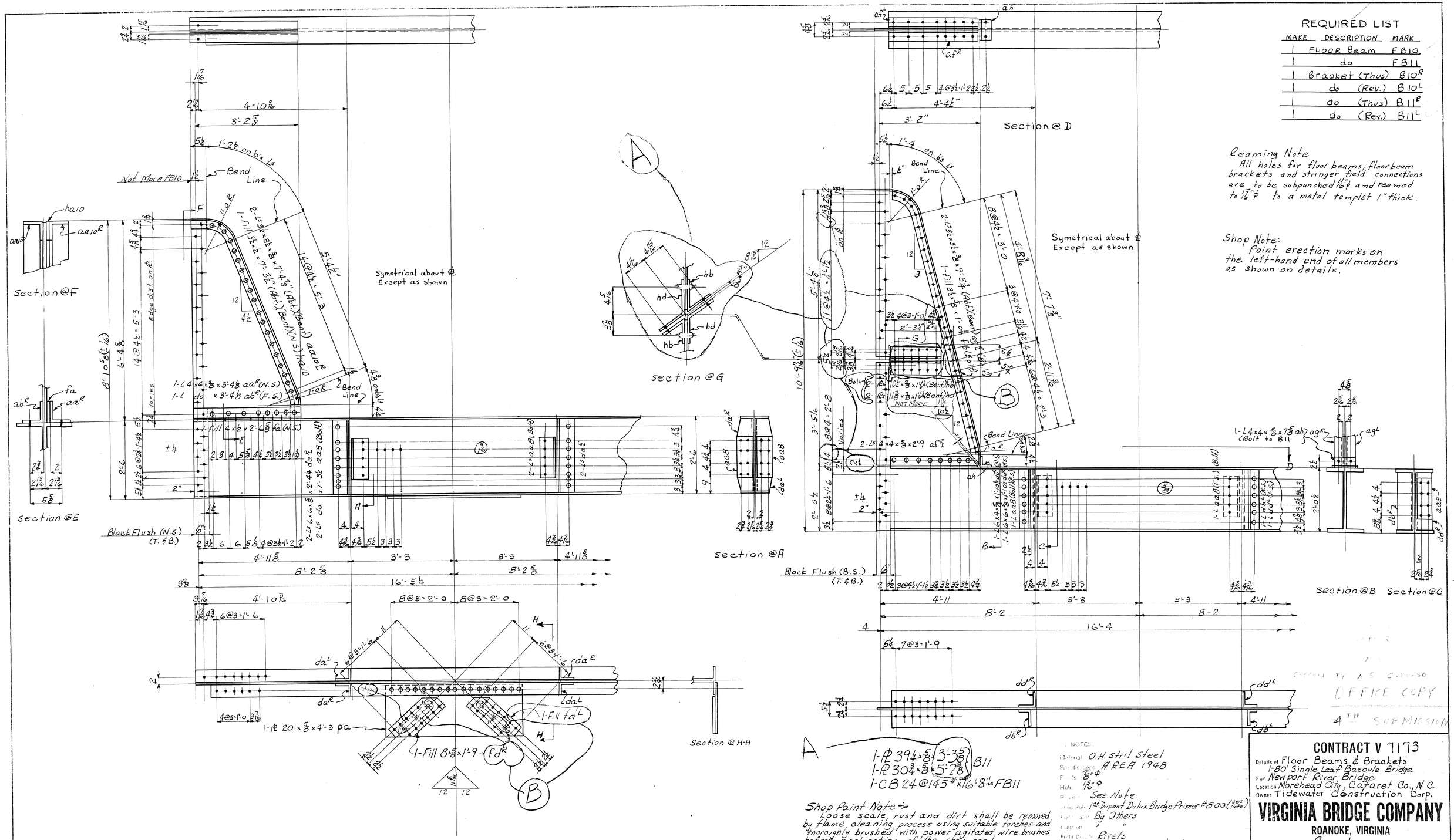

REQUIRED LIST

MAKE	DESCRIPTION	MARK
1	FLOOR Beam	FB10
1	do	FB11
1	Bracket (Thus)	B10^R
1	do (Rev.)	B10^L
1	do (Thus)	B11^R
1	do (Rev.)	B11^L

Reaming Note
All holes for floor beams, floor beam brackets and stringer field connections are to be subpunched 1/16" ϕ and reamed to 15/16" ϕ to a metal templet 1" thick.

Shop Note:
Point erection marks on the left-hand end of all members as shown on details.

Shop Paint Note:
Loose scale, rust and dirt shall be removed by flame cleaning process using suitable torches and thoroughly brushed with power agitated wire brushes before application of the shop coat.

NOTES:
Material O.H. stril steel
Specifications AREA 1948
Rivets 7/8" ϕ
Holes 15/16" ϕ
Bolts See Note
Shop Paint 1st Dupont Dulux Bridge Primer #800 (see note)
Erection By Others
Erection "
Field Connections Rivets
Inspection Froehling & Robertson
Design
Total Number Shop Bills 11

OFFICE COPY
4TH SUBMISSION

CONTRACT V 7173
Details of Floor Beams & Brackets
1-80' Single Leaf Bascule Bridge
For Newport River Bridge
Location Morehead City, Cataret Co., N.C.
Owner Tidewater Construction Corp.

VIRGINIA BRIDGE COMPANY
ROANOKE, VIRGINIA

To be fabricated at Roanoke
Made by RSS 1/10/50 Traced by CBM
In charge of Scott Checked by 19 L.F.B.
Revised 4-16-50
Scale 5-15-50 Sheet No. 11 of

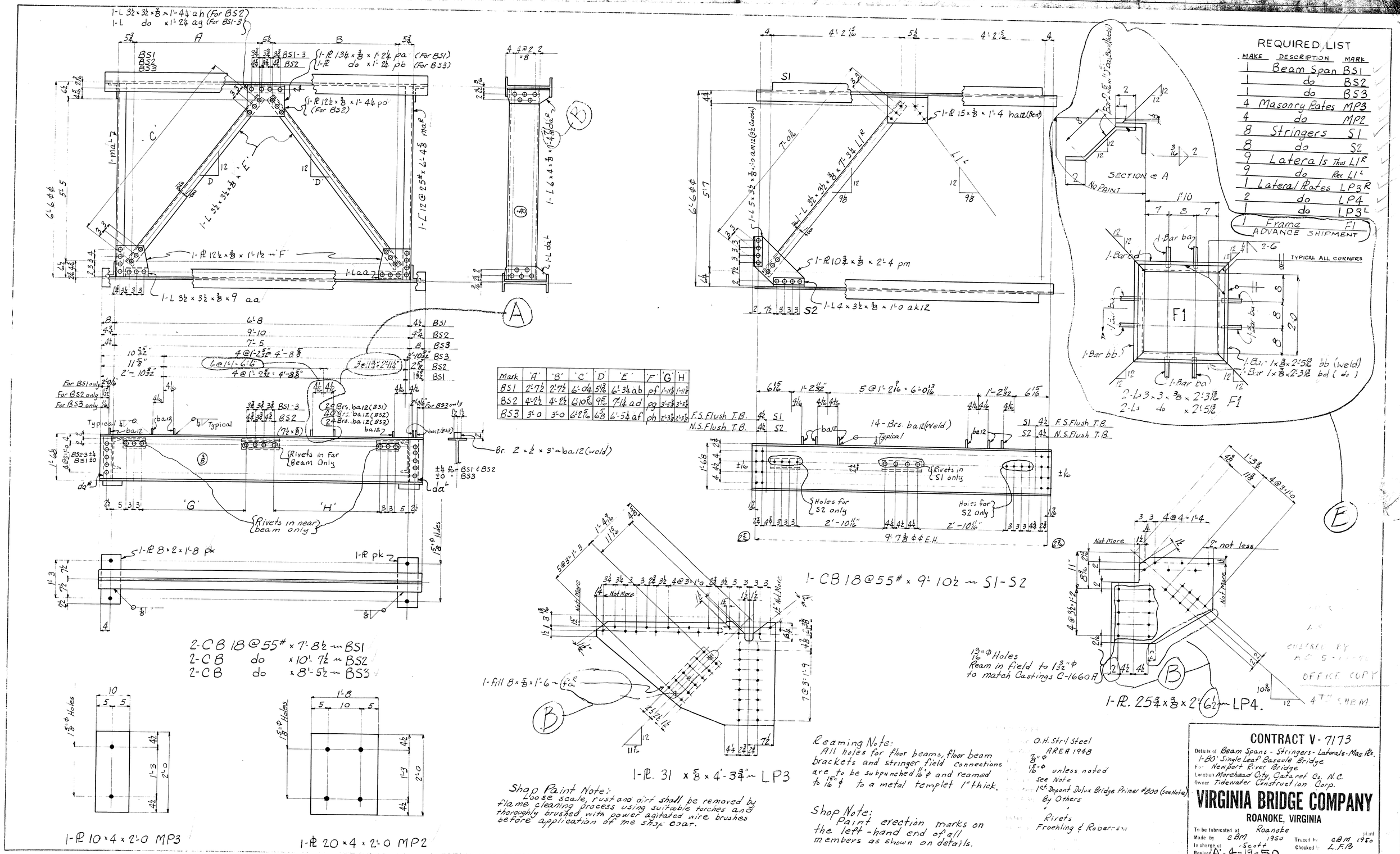

Mark	'A'	'B'	'C'	'D'	'E'	'F'	'G'	'H'
BS1	2'-7½	2'-7½	6'-0¼	5 1/16	6'-3¼ ab	pf	1'-11⅜	1'-11⅜
BS2	4'-2½	4'-2½	6'-10 9/16	9⅝	7'-1¼ ad	pg	3'-5⅜	3'-5⅜
BS3	3'-0	3'-0	6'-2 5/16	6⅝	6'-5¼ af	ph	2'-3⅜	2'-3⅜

REQUIRED LIST

MAKE	DESCRIPTION	MARK
1	Beam Span	BS1
1	do	BS2
1	do	BS3
4	Masonry Plates	MP3
4	do	MP2
8	Stringers	S1
8	do	S2
9	Laterals Thus	$L1^R$
9	do Rev.	$L1^L$
1	Lateral Plates	LP3R
2	do	LP4
2	do	$LP3^L$
1	Frame	F1

ADVANCE SHIPMENT

Shop Paint Note:
Loose scale, rust and dirt shall be removed by flame cleaning process using suitable torches and thoroughly brushed with power agitated wire brushes before application of the shop coat.

Reaming Note:
All holes for floor beams, floor beam brackets and stringer field connections are to be subpunched 11/16" Φ and reamed to 15/16" Φ to a metal templet 1" thick.

Shop Note:
Paint erection marks on the left-hand end of all members as shown on details.

O.H. Stril Steel
AREA 1948
⅜" Φ
15/16" Φ unless noted
see Note
1st Dupont Dulux Bridge Primer #800 (See Note)
By Others
"
Rivets
Froehling & Robertson

CONTRACT V-7173

Details of Beam Spans - Stringers - Laterals - Mas. Pls.
1-80' Single Leaf Bascule Bridge
For Newport River Bridge
Location Morehead City, Carteret Co. N.C.
Owner Tidewater Construction Corp.

VIRGINIA BRIDGE COMPANY
ROANOKE, VIRGINIA

To be fabricated at Roanoke
Made by C.B.M. 1950 Traced by C.B.M. 1950
In charge of Scott Checked L.F.B.
Revised A-4-19-50.
Scale B in 5 TAC-50 Sheet No. 12

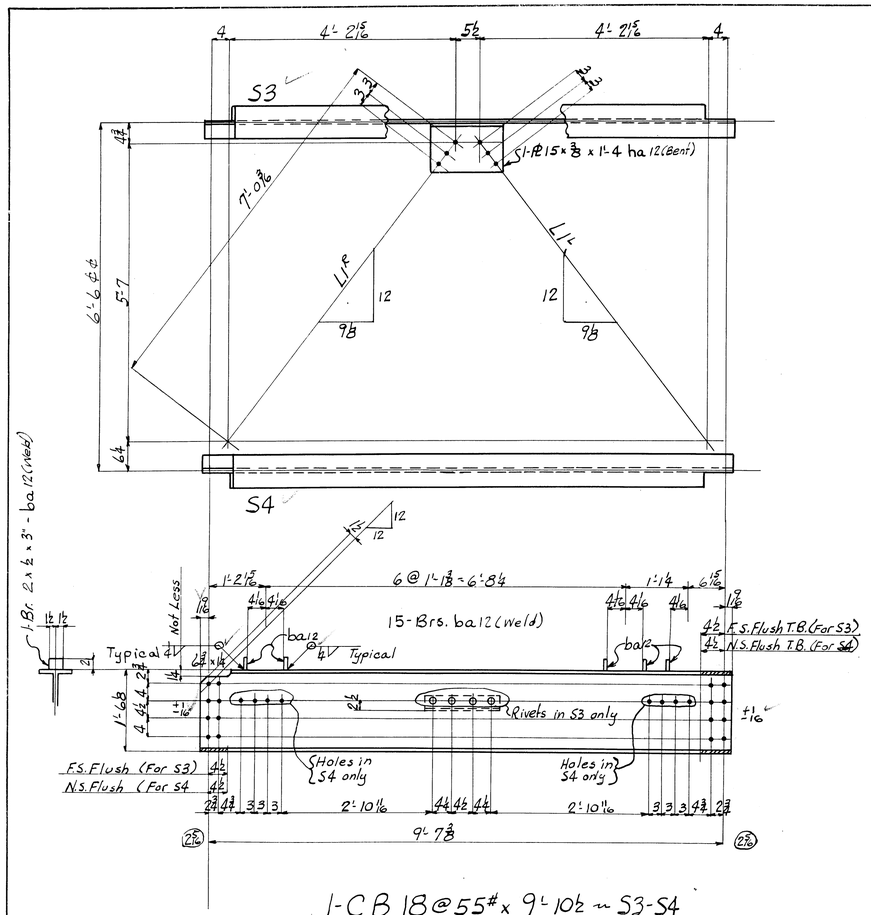

1-CB 18 @ 55# x 9'-10 1/2 ~ S3-S4

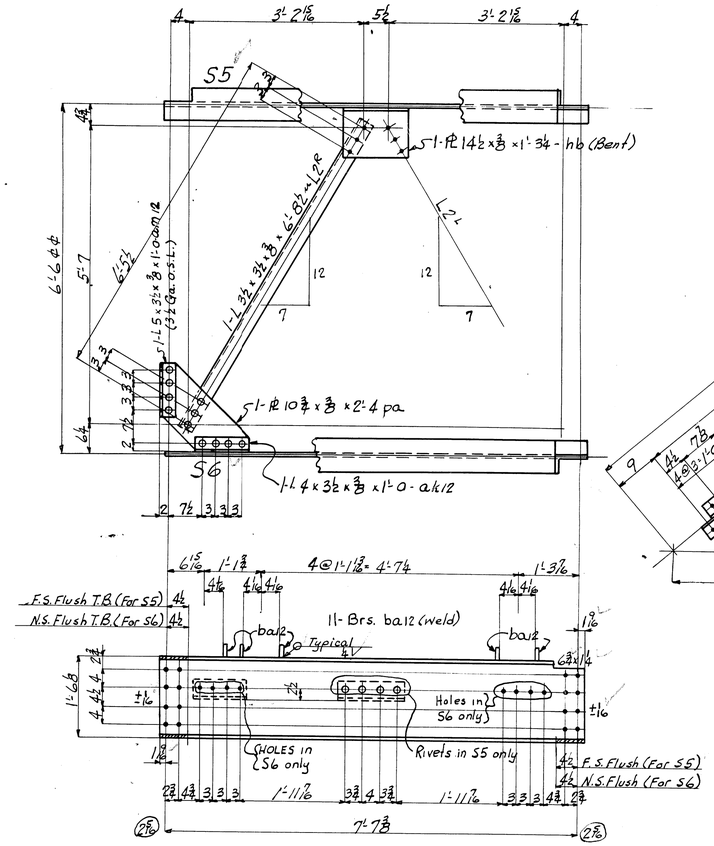

1-CB 18 @ 55# x 7'-10 1/2 ~ S5-S6

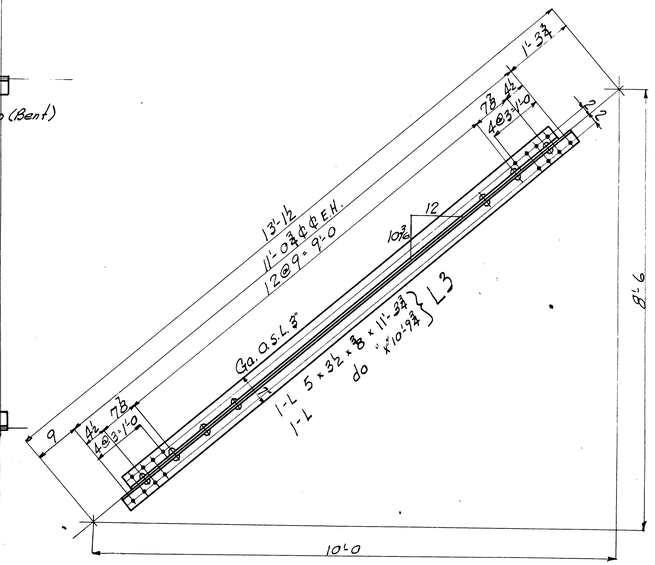

REQUIRED LIST

MAKE	DESCRIPTION	MARK
1	Stringer	S3
1	do	S4
1	do	S5
1	do	S6
1	Lateral Thus	L2R
1	do Rev.	L2L
16	do Thus	L3
2	do Thus	L4
2	do "	L5
14	Lateral Plates	LP1
1	do (Thus)	LP2R
1	do (Rev.)	LP2L

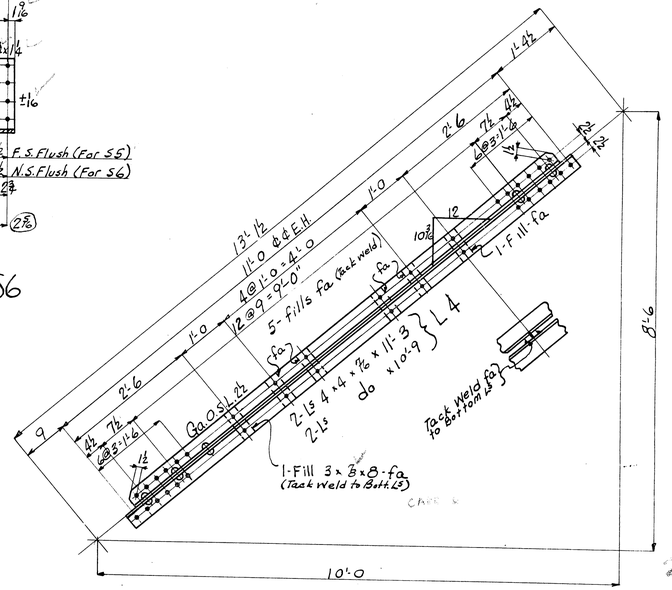

Shop Paint Note:-
Loose scale, rust and dirt shall be removed by flame cleaning process using suitable torches and thoroughly brushed with power agitated wire brushes before application of the shop coat.

OFFICE COPY
2nd Sub. 4/11/50 A.O./MA

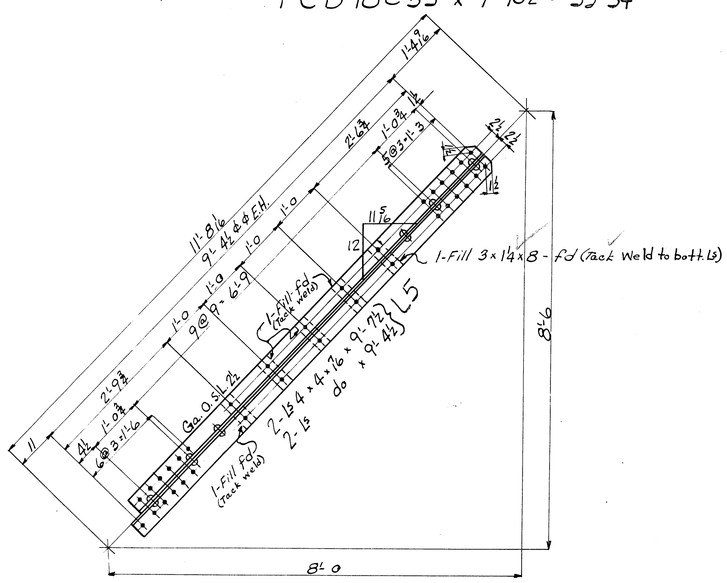

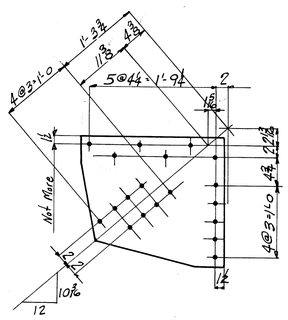

1-PL 22 x 3/8 x 2'-0 1/4 ~ LP1

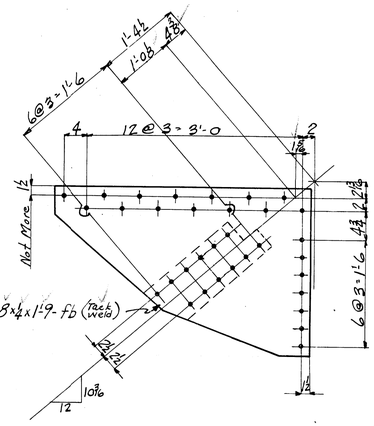

1-PL 27 3/4 x 5/8 x 3'-7 ~ LP2

Reaming Note:-
Holes for stringer field connections to be 1/4" small and reamed to size to a metal templet 1" thick.

Shop Note:-
Paint erection marks on the left-hand end of all members as shown on details.

GENERAL NOTES:

Material: O.H. Stril Steel
Specifications: AREA 1948
Rivets: 7/8" φ
Holes: 15/16" φ
Reaming: See Note
Shop Paint: 1st Dupont Dulux Bridge Primer #800 (See Note)
Field Paint: By Others
Erection: " "
Field Conn's: Rivets
Inspection: Froehling & Robertson
Design:

Material on Shop Bills # 14 & 15

CONTRACT V - 7173

Details of Stringers - Laterals

For 1-80' Single Leaf Bascule Bridge
Location Morehead City, Carteret Co., N.C.
Owner Tidewater Construction Corp.

VIRGINIA BRIDGE COMPANY
ROANOKE, VIRGINIA

To be fabricated at Roanoke plant
Made by CdM 1950 Traced by CBM
In charge of Scott Checked by L.F.B.
Revised
Scale in. = 1 Ft. Sheet No. 13 of

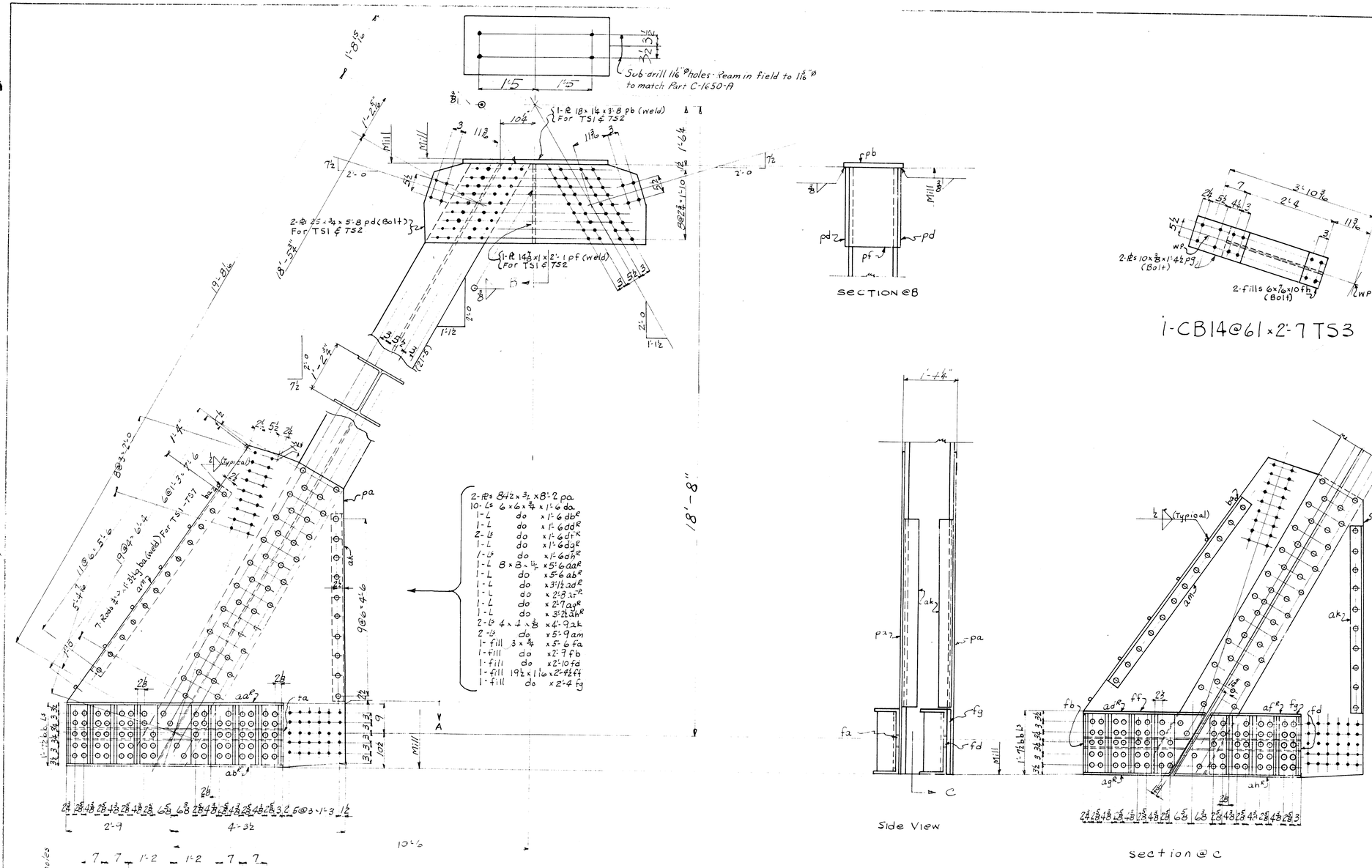

REQUIRED LIST

MAKE	DESCRIPTION	MARK
2	TRUNNION SUPPORTS (Thus)	TS1
2	do	(Rev) TS7
2	do	(Thus) TS2
2	do	(Rev) TS8
8	do	TS3

Reaming Note:-
All holes for Trunnion Tower field connections to be sub-punched 4" small and reamed to size while tower is completely assembled in the shop. and match marked.

Shop Note:
Paint erection marks on the left hand [illegible] Numbers as shown on [illegible]

Shop Paint Note:-
Loose scale, rust and dirt shall be removed by flame cleaning process using suitable torches and thoroughly brushed with power agitated wire brushes before application of the shop coat.

OFFICE COPY

REVISED A ONLY 2ND S F MISSION

Dir. Strl Steel
AREA 1948
3/8 ⊙
5/8 ⊙
See Note
1st Quart Dwgs Stage [illegible] (Note)
Sy [illegible]

CONTRACT V-7173
Trunnion Supports
1-200' Single leaf Bascule Bridge
Newport River Bridge
Morehead City, Carteret Co. N.C.
[illegible]
VIRGINIA BRIDGE COMPANY
ROANOKE, VIRGINIA
[illegible]
[illegible]
L.F.B.

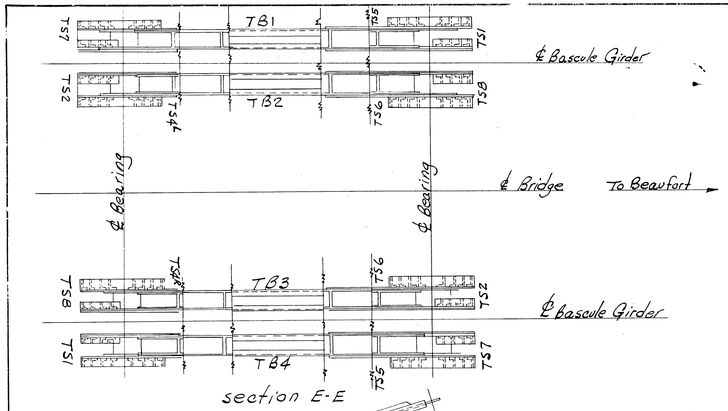

section E-E

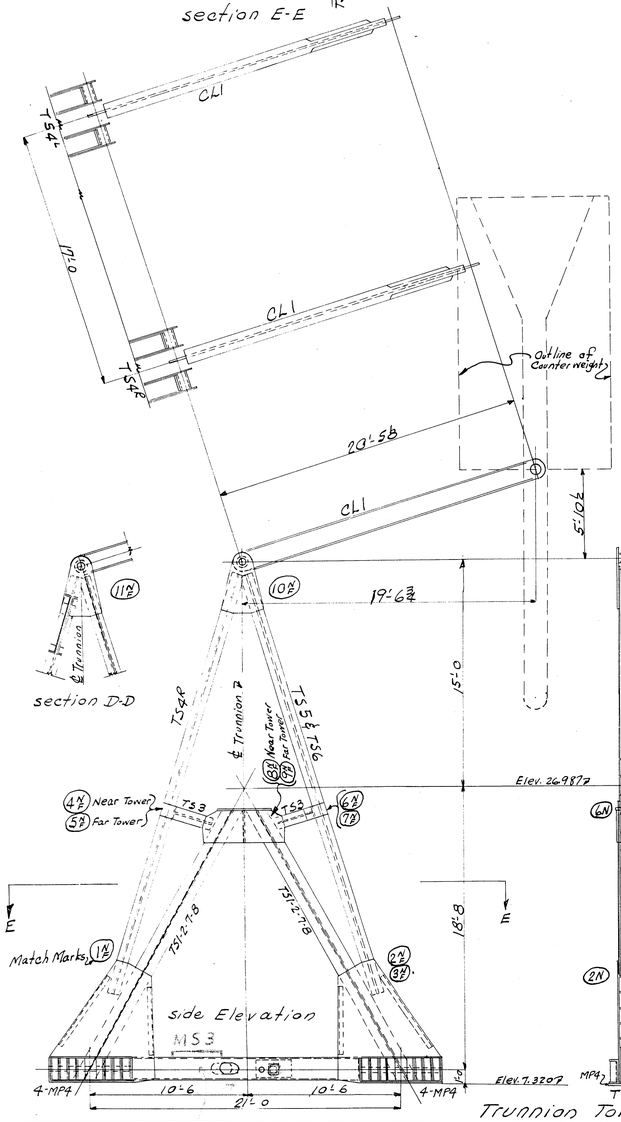

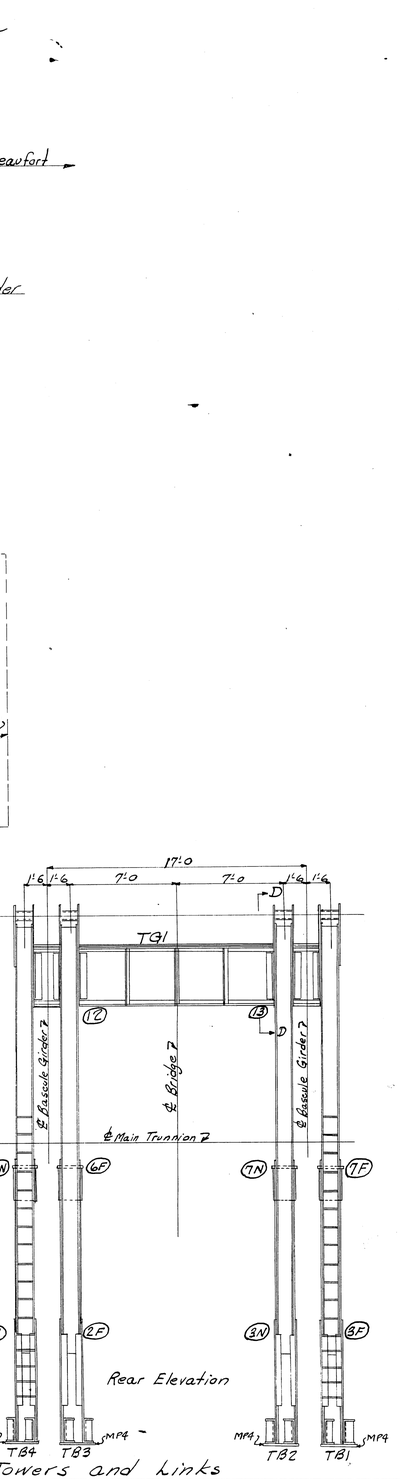

Trunnion Towers and Links

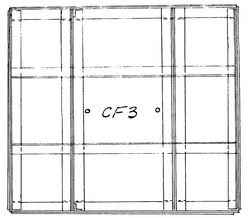

section AA

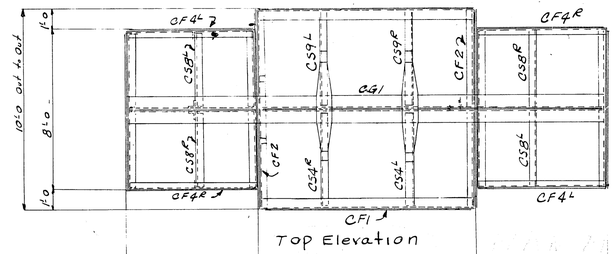

Top Elevation

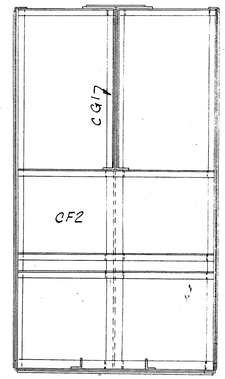

section B-B

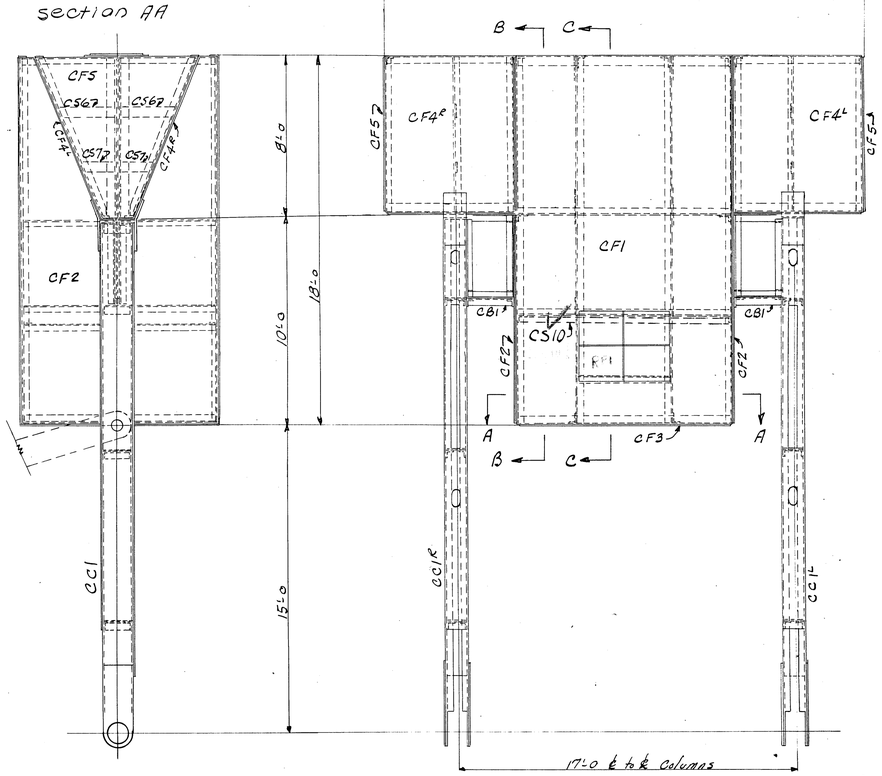

side Elevation

Front Elevation

Counter Weight

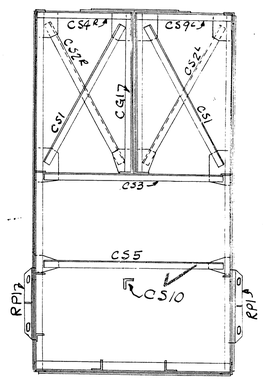

section C-C

Reaming Note:-
All holes for Trunnion Tower field connections to be sub-punched 4" small and reamed to size while towers are completely assembled in the Shop and match marked.

Erector Note:-
Trunnion Towers to be erected and riveted complete before Bascule Girders are in place.

Note:-
Counterweight Frame to be completely assembled in the Shop.

GENERAL NOTES:

Material
Specifications
Rivets
Holes
Reaming
Shop Paint
Field Paint
Erection
Field Conn's
Inspection
Design

Material on Shop Bills

See Dwg E1

OFFICE COPY
2nd Subm. 4/11-50 H.A.

CONTRACT V - 7173

Details of Erection Plan for Trunnion Towers & Counter weight
1-80' Single Leaf Bascule Bridge
For Newport River Bridge
Location Morehead City, Carteret Co., N.C.
Owner Tidewater Construction Corp.

VIRGINIA BRIDGE COMPANY
ROANOKE, VIRGINIA

To be fabricated at Roanoke
Made by RSS 11/17/49 Traced by CBM 1950
In charge of Scott Checked by
Revised
Scale in. = 1 Ft. Sheet No. E3

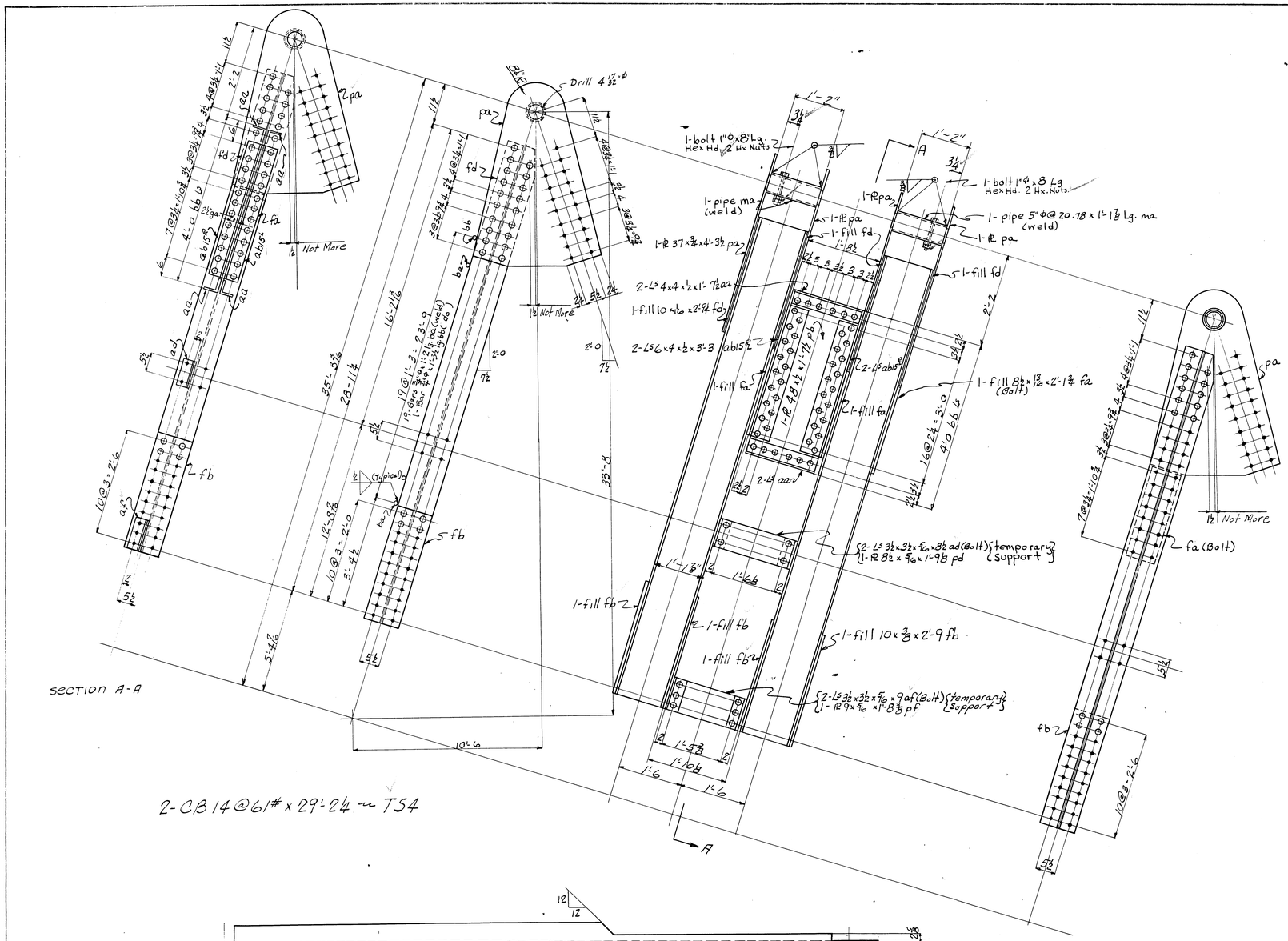

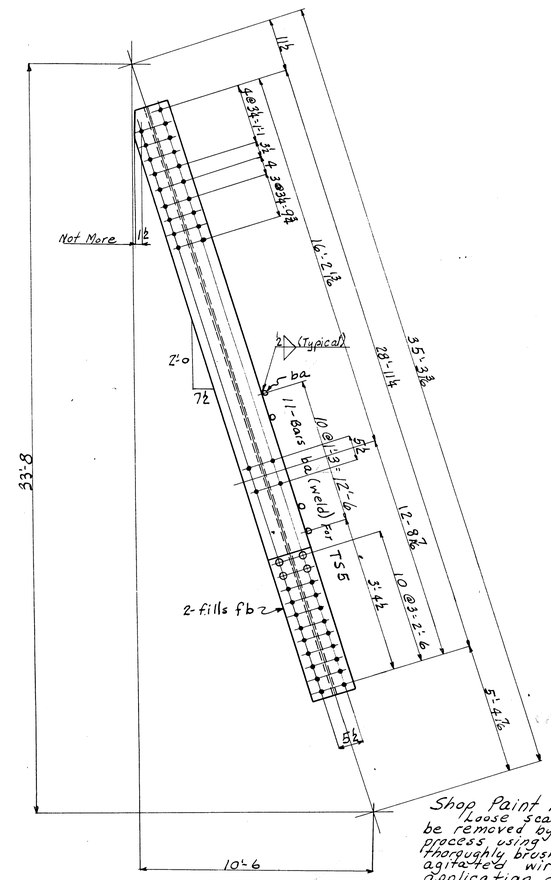

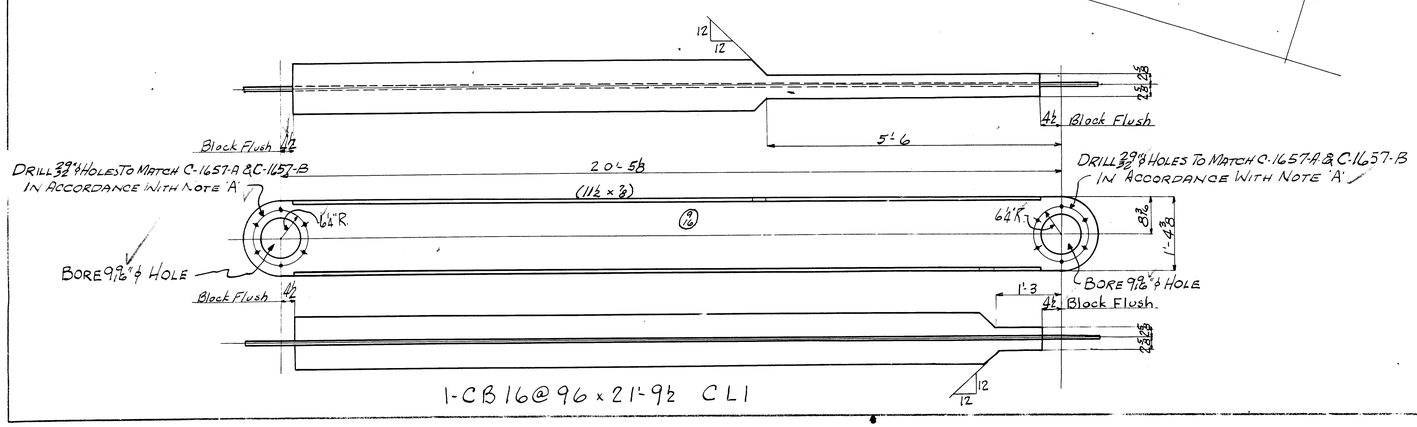

NOTE 'A'

MACHINERY PARTS SHALL BE ASSEMBLED ON THE SUPPORTING MEMBERS IN THE SHOP. THEY SHALL BE ALIGNED AND FITTED, AND HOLES IN THE SUPPORTS SHALL BE DRILLED WITH THE MEMBERS IN CORRECT RELATIVE POSITION. THE MEMBERS SHALL BE MATCHMARKED BOTH TO THE SUPPORTS AND TO EACH OTHER FOR USE FOR ERECTION IN THE FIELD.

REQUIRED LIST

MAKE	DESCRIPTION	MARK
1	Trunnion Support (Thus)	TS4 R
1	do (Rev.)	TS4 L
2	do	TS5
2	do	TS6
2	Counterweight Links	CL1

Shop Paint Note:-
Loose scale, rust and dirt shall be removed by flame cleaning process using suitable torches and thoroughly brushed with power agitated wire brushes before application of the shop coat.

Reaming Note:-
All holes for Trunnion Tower field connections to be sub-punched ¼" small and reamed to size while tower is completely assembled in the shop and match marked.

Shop Note:
Paint erection marks on the left-hand end of all members as shown on details.

GENERAL NOTES:
Material O.H. Stru'l Steel
Specifications AREA 1948
Rivets ¾" Φ
Holes 16 unless noted
Fitting See Note
Shop Paint 1 coat Dupont Dulux Bridge Primer #800 (see note)
Field Paint By Others
Erection " "
Field Conn's Rivets
Inspection Froehling & Robertson
Design

Material on Shop Bills # 17

CONTRACT V-7173

Details of Trunnion Supports & Counterweight Link
1-80' Single Leaf Bascule Bridge
For Newport River Bridge
Location Morehead City, Carteret Co., N.C.
Owner Tidewater Construction Corp.

VIRGINIA BRIDGE COMPANY
ROANOKE, VIRGINIA

To be fabricated at Roanoke plant
Made by RSS 11/20/49 Traced by CBM
In charge of Scott Checked by 1949 L.F.B.
Revised
Scale in. = 1 Ft. Sheet No. 15

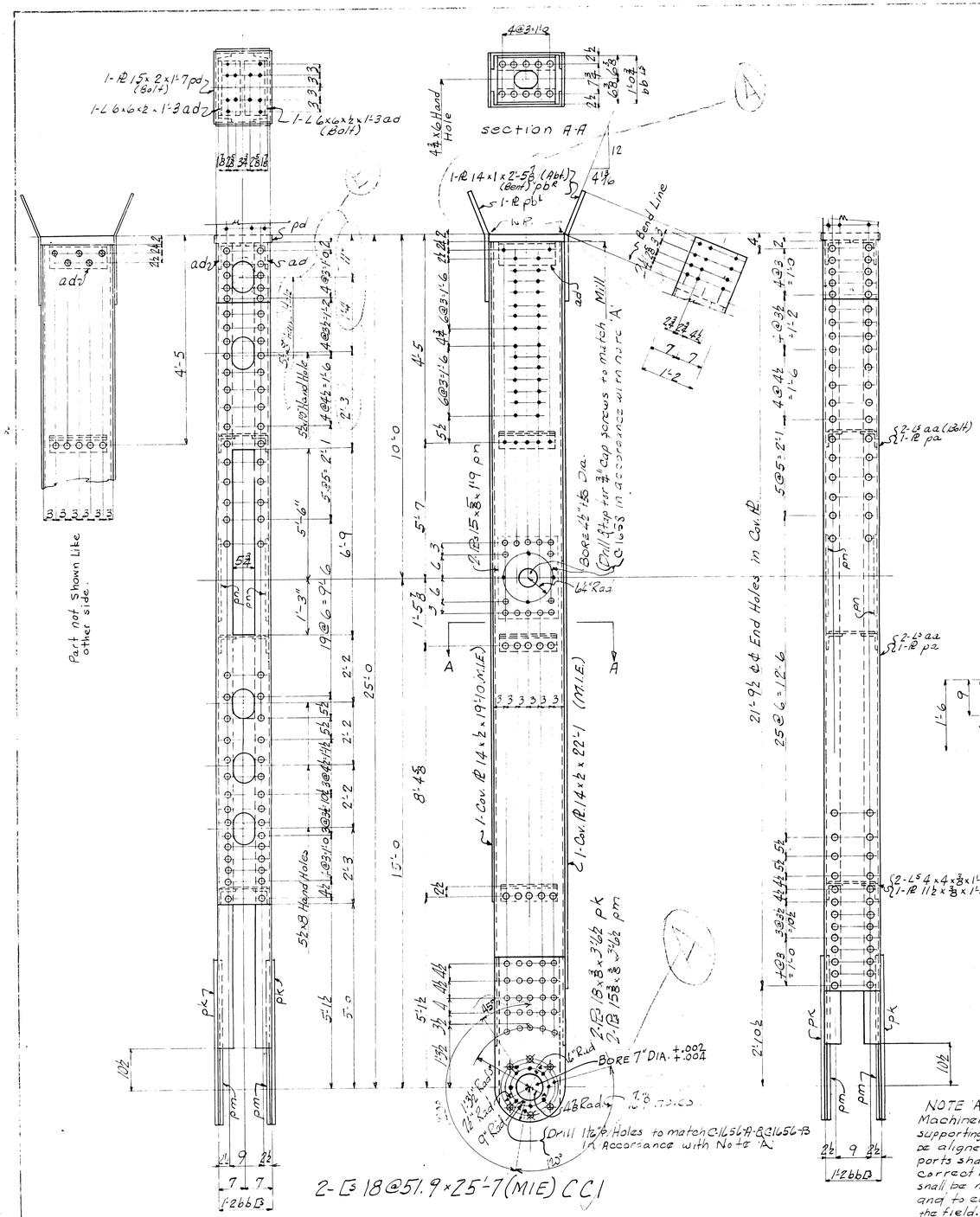

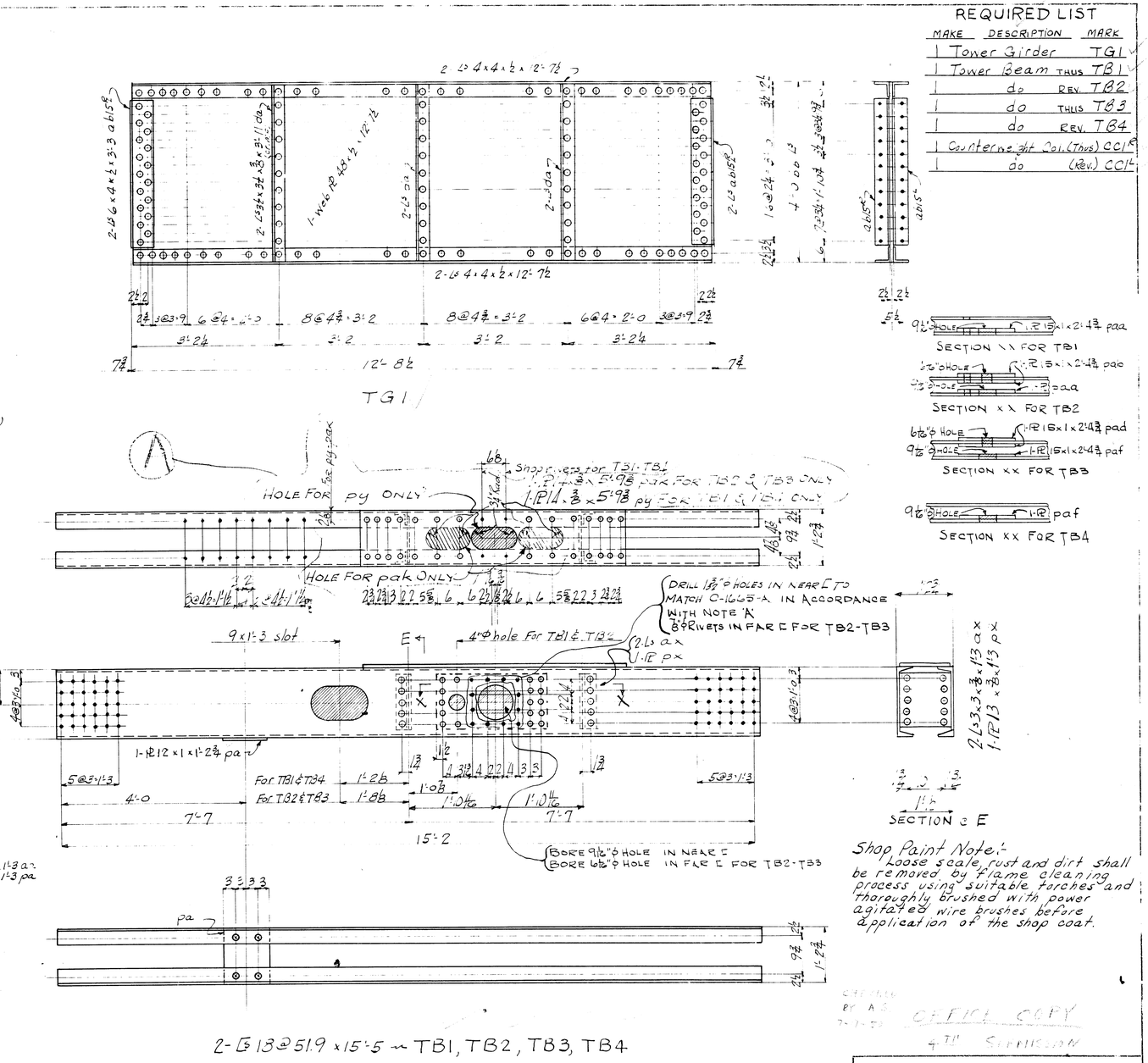

REQUIRED LIST

MAKE	DESCRIPTION	MARK
1	Tower Girder	TG1
1	Tower Beam THUS	TB1
1	do REV.	TB2
1	do THUS	TB3
1	do REV.	TB4
1	Counterweight Col. (Thus)	CC1R
1	do (Rev.)	CC1L

Shop Paint Note:-
Loose scale, rust and dirt shall be removed by flame cleaning process using suitable torches and thoroughly brushed with power agitated wire brushes before application of the shop coat.

OFFICIAL COPY
4TH SUBMISSION

NOTE 'A'
Machinery parts shall be assembled on the supporting members in the shop. They shall be aligned and fitted and holes in the supports shall be drilled with the members in correct relative position. The members shall be match marked both to the supports and to each other for use in erection in the field.

Reaming Note:
All field holes for members TG1, TB1, TB2, TB3 and TB4 to be sub-punched ¼" small and reamed to size while Trunnion Tower is completely assembled in shop and match marked.

Shop Note:
Paint erection marks on the left-hand end of all members as shown on details.

Material	O.H. Struc. Steel
Specs.	AREA 1948
Rivets	⅞"φ
Holes	15/16"φ unless noted
Paint	See Note
Shop Coat	1st Dupont Dulux Bridge Primer #800 (see Note)
Field Coat	By Others
" "	" "
Field Rivets	Rivets
Erection	Frechling & Robertson

CONTRACT V-7173

Details of Tower Girder-Tower Beams & Counterweight Column
1-80' Single Leaf Bascule Bridge
For Newport River Bridge
Location: Morehead City, Cataret Co. N.C.
Owner: Tidewater Construction Corp.

VIRGINIA BRIDGE COMPANY
ROANOKE, VIRGINIA

To be fabricated at: Roanoke
Made by: KSS 12/5/49 Traced by: CBM 1950
In charge of: Scott Checked by: L.F.B.
Re: Sent: Sheet No. 16 of

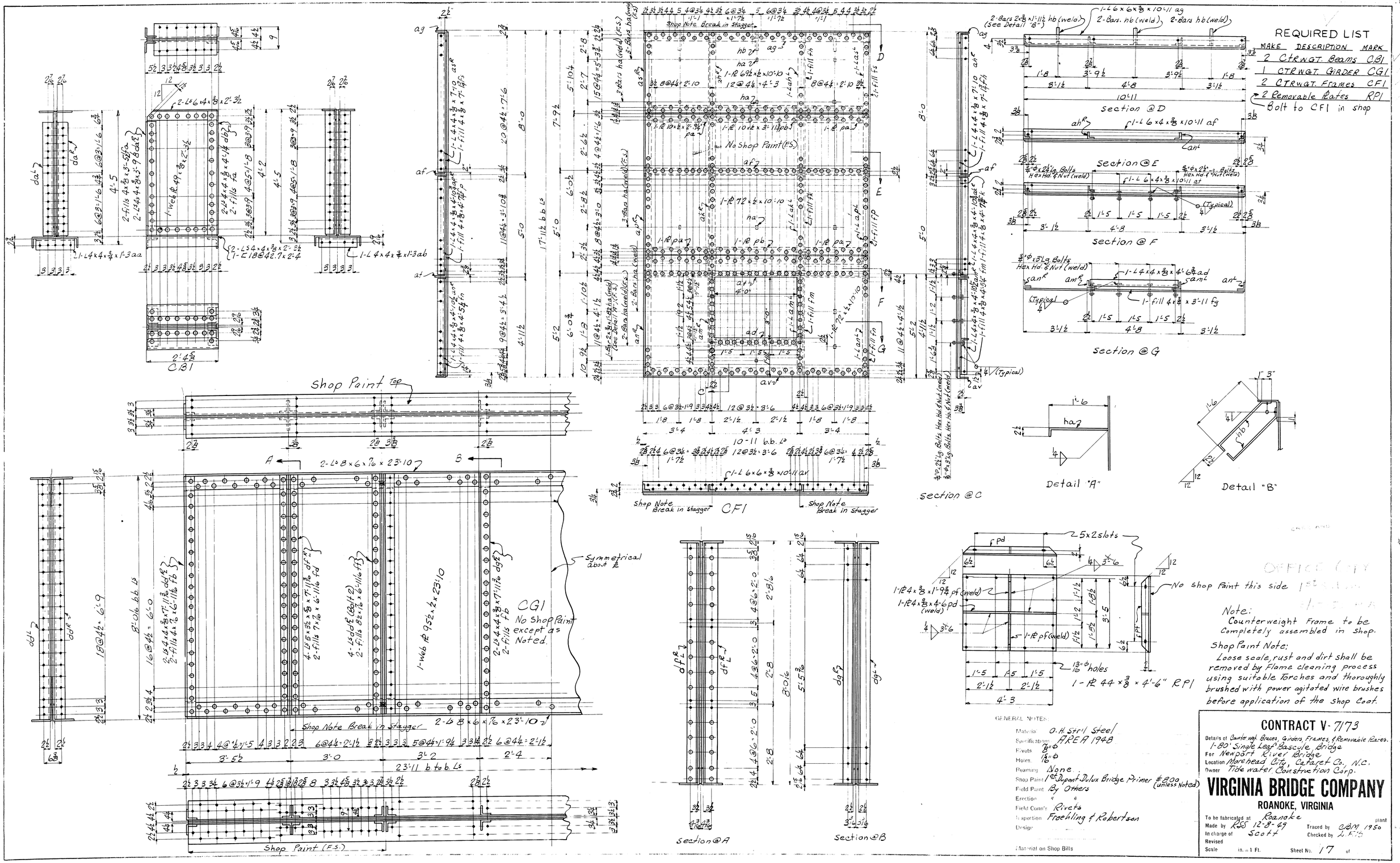
REQUIRED LIST
MAKE DESCRIPTION MARK
2 CTRWGT. Beams CB1
1 CTRWGT. GIRDER CG1
2 CTRWGT. Frames CF1
2 Removable Plates RP1
Bolt to CF1 in shop
CB1
CG1
CF1
RP1
Shop Paint Top
Shop Paint (F.S.)
No Shop Paint (F.S.)
Shop Note Break in stagger
Symmetrical about ℄
No Shop Paint except as Noted.
Section @ A
Section @ B
Section @ C
Section @ D
Section @ E
Section @ F
Section @ G
Detail "A"
Detail "B"
No shop Paint this side
Note:
Counterweight Frame to be Completely assembled in shop.
Shop Paint Note:
Loose scale, rust and dirt shall be removed by Flame cleaning process using suitable Torches and thoroughly brushed with power agitated wire brushes before application of the shop Coat.
GENERAL NOTES:
Material: O.H. Str'l Steel
Specifications: AREA 1948
Rivets: 7/8" ϕ
Holes: 13/16" ϕ
Reaming: None
Shop Paint: 1st Dupont Dulux Bridge Primer #800 (unless Noted)
Field Paint: By Others
Erection: " "
Field Conn's: Rivets
Inspection: Froehling & Robertson
Design:
Material on Shop Bills
CONTRACT V-7173
Details of Counter wgt. Braces, Girders, Frames, & Removable Plates.
1-80' Single Leaf Bascule Bridge
For Newport River Bridge
Location Morehead City, Cataret Co., N.C.
Owner Tide water Construction Corp.
VIRGINIA BRIDGE COMPANY
ROANOKE, VIRGINIA
To be fabricated at Roanoke plant
Made by RSS 12-8-49
In charge of Scott
Revised
Scale in. = 1 Ft.
Traced by CBM 1950
Checked by
Sheet No. 17 of

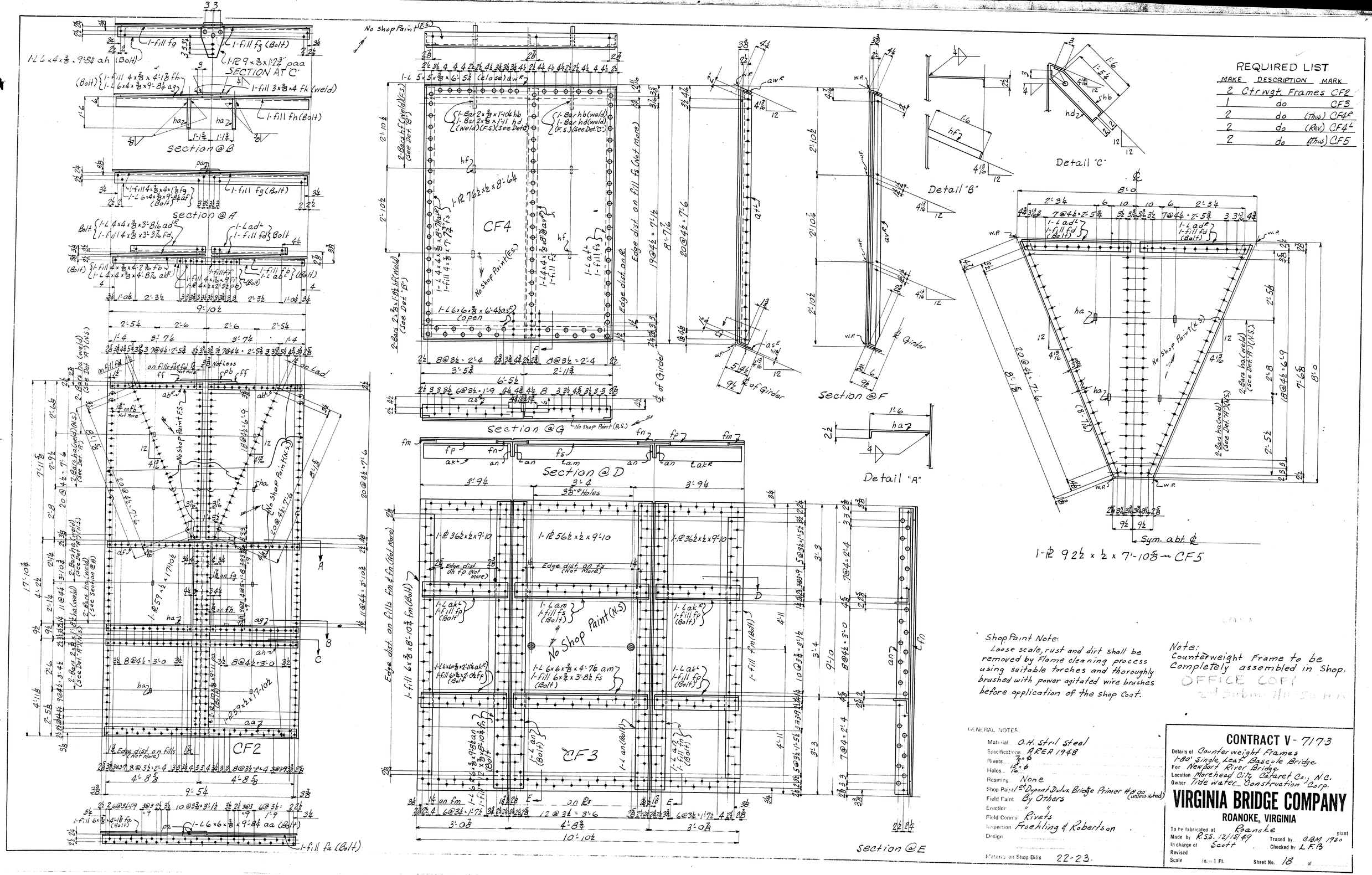

REQUIRED LIST

MAKE	DESCRIPTION	MARK
2	Ctrwgt Frames	CF2
1	do	CF3
2	do (Thus)	CF4R
2	do (Rev.)	CF4L
2	do (Thus)	CF5

Shop Paint Note:
Loose scale, rust and dirt shall be removed by flame cleaning process using suitable torches and thoroughly brushed with power agitated wire brushes before application of the shop coat.

Note:
Counterweight Frame to be Completely assembled in Shop.

OFFICE COPY

GENERAL NOTES

Material O.H. Strl Steel
Specifications AREA 1948
Rivets 7/8" ϕ
Holes 13/16" ϕ
Reaming None
Shop Paint/1st Dupont Dulux Bridge Primer #8.00 (unless noted)
Field Paint By Others
Erection " "
Field Conn's Rivets
Inspection Froehling & Robertson
Design

Material on Shop Bills 22-23

CONTRACT V-7173

Details of Counterweight Frames
1-80' Single Leaf Bascule Bridge
For Newport River Bridge
Location Morehead City, Carteret Co., N.C.
Owner Tide water Construction Corp.

VIRGINIA BRIDGE COMPANY
ROANOKE, VIRGINIA

To be fabricated at Roanoke plant
Made by R.S.S. 12/15/49 Traced by CAM 1950
In charge of Scott Checked by L.F.B.
Revised
Scale in. = 1 Ft. Sheet No. 18 of

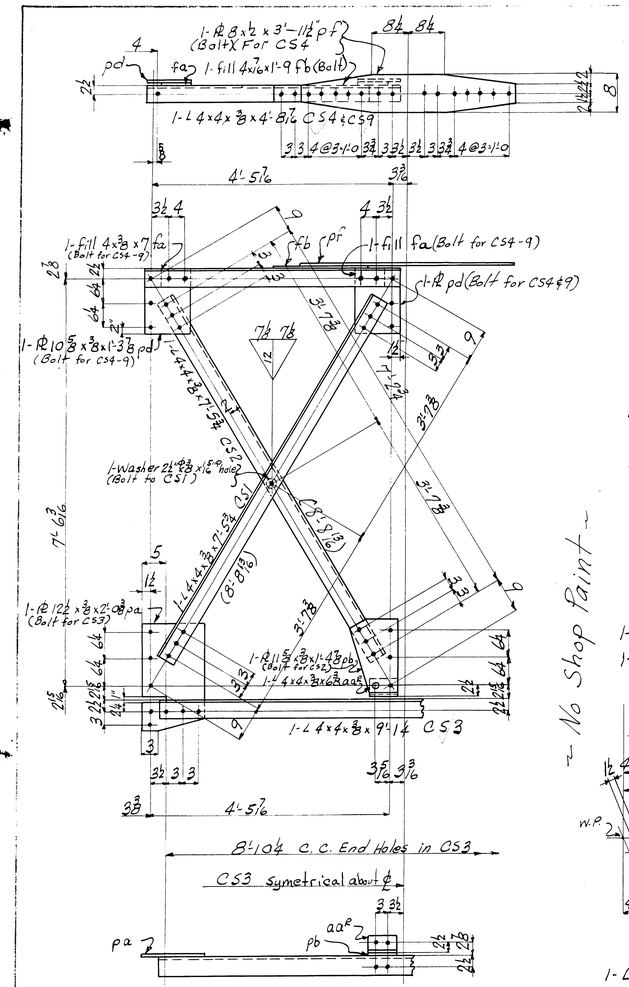

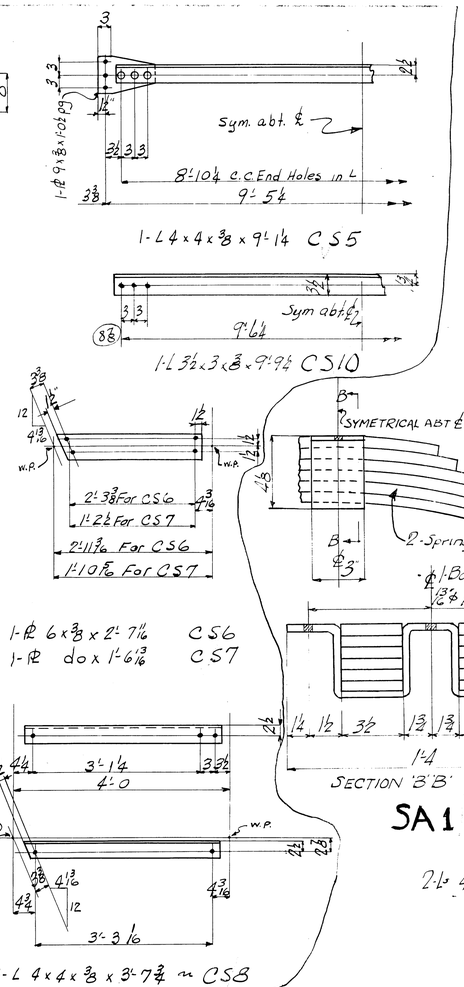

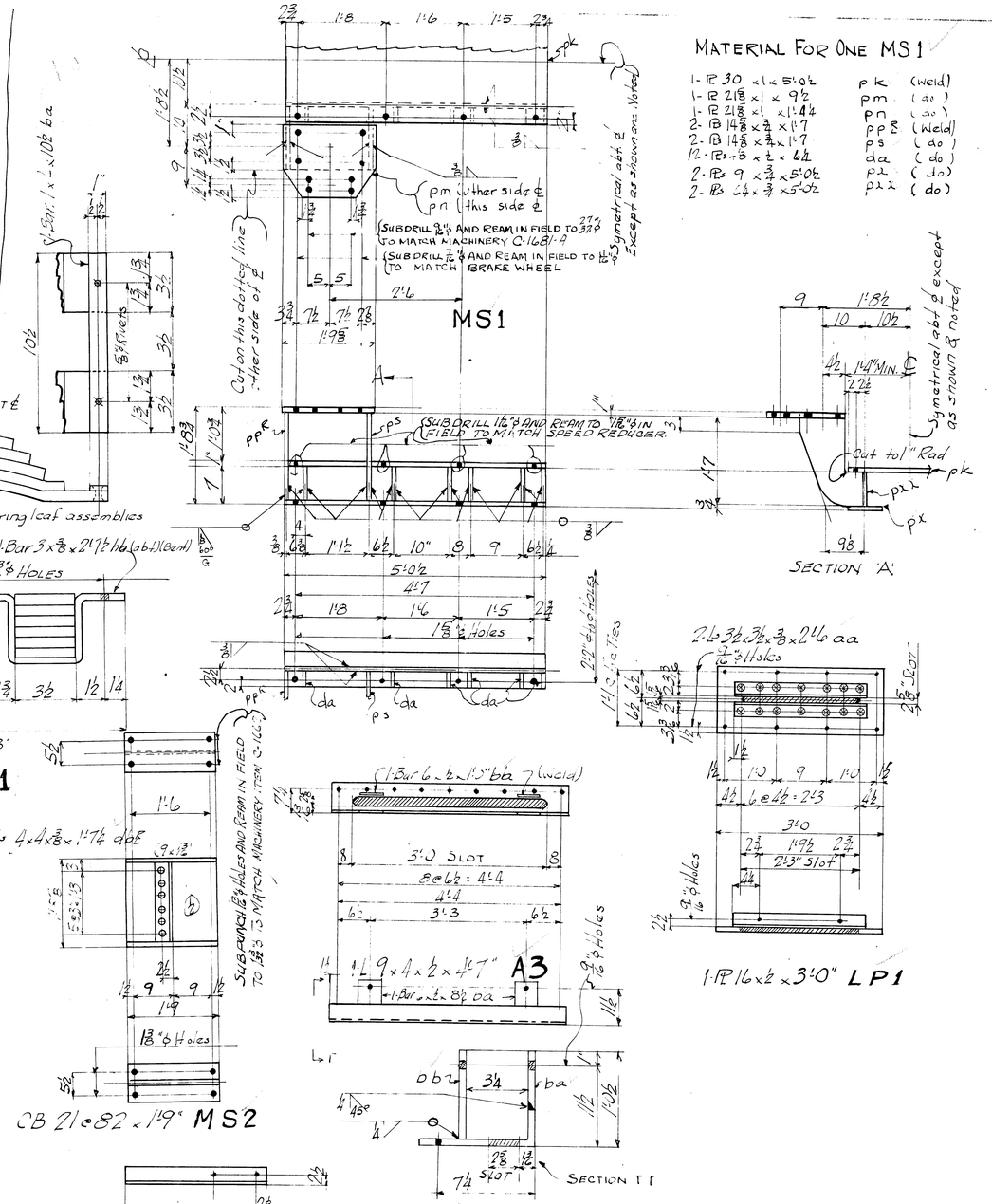

MATERIAL FOR ONE MS1

1-PL 30 x 1/2 x 5'-0 1/2	pk	(weld)
1-PL 21 3/8 x 1/2 x 9 1/2	pm	(do)
1-PL 21 3/8 x 1/2 x 1'-4 1/4	pn	(do)
2-PL 14 5/8 x 3/4 x 1'-7	pp	(weld)
2-PL 14 5/8 x 3/4 x 1'-7	ps	(do)
12-PL 3 x 1/2 x 6 1/4	da	(do)
2-PL 9 x 3/4 x 5'-0 1/2	px	(do)
2-PL 6 1/4 x 3/4 x 5'-0 1/2	pxx	(do)

REQUIRED LIST

MAKE	DESCRIPTION	MARK
4	Ctr wgt. Struts (Thus)	CS1
2	Ctr. Wgt. Struts (Thus)	CS2R
2	do (Rev.)	CS2L
2	do	CS3
1	do (Thus)	CS4R
1	do (Rev.)	CS4L
2	do	CS5
4	do	CS6
4	do	CS7
2	do (Thus)	CS8R
2	do (Rev.)	CS8L
1	do (thus)	CS9R
1	do (Rev)	CS9L
8	Masonery Plates	MP4
1	Ctr Wgt. Strut	CS10
1	Machinery Support	MS1
2	do	MS2
2	do	MS3
1	ANGLE	A3
2	LOCK PLATES	LP1
2	SPRING ASSEMBLIES	SA1
2	ANGLES THUS	A2R
2	do REV	A2L

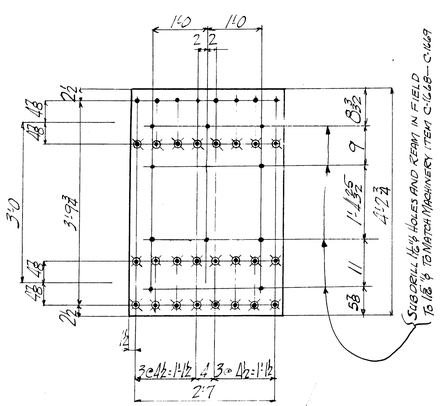

1-PL 34 x 1/4 x 4'-2 3/4 MS3

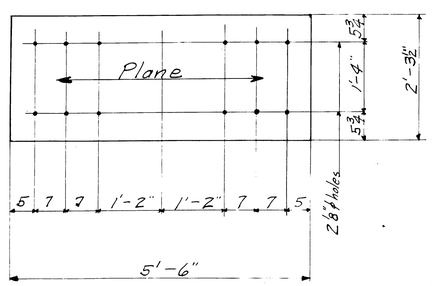

1-PL 27 1/2 x 1/2 x 5'-6" MP4 ~ (Plane 1 5/8" PL)

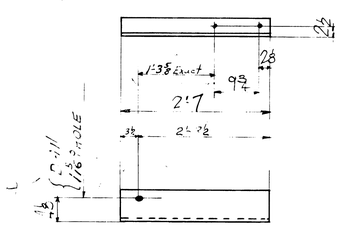

1 L 7 x 4 x 7/16 x 2'-7 A2

Shop Paint Note:
Loose scale, rust and dirt shall be removed by flame cleaning process using suitable torches and thoroughly brushed with power agitated wire brushes before application of the shop coat.

GENERAL NOTES:
Material: O.H. Stril Steel
Specifications: AREA 1948
Rivets: 7/8" ϕ
Pins: 1 1/16" ϕ
Finishing: None
Shop Paint: 1st Dupont Delux Bridge Primer #800 (unless Noted)
Field Paint: By Others
Erection: " "
Field Rivets: Rivets
Erector: Froehling & Robertson
Shipping: [illegible]
Refer to Shop Bills: [illegible]

CHECKED BY A.S. 6-16-50
OFFICE COPY
4TH SUBMISSION

Note:
Counterweight Frame to be completely assembled in Shop.

CONTRACT V-7173

Details of Counterweight Struts
1-80' Single Leaf Bascule Bridge
For Newport River Bridge
Location Morehead City, Cataret Co., N.C.
Owner Tidewater Construction Corp.

VIRGINIA BRIDGE COMPANY
ROANOKE, VIRGINIA

To be fabricated at Roanoke plant
Made by R.S.S. 1950 Traced by CBM 1950
In charge of Scott Checked by [illegible]
Revised A-6-12-50
Scale in. = 1 Ft. Sheet No. 19 of

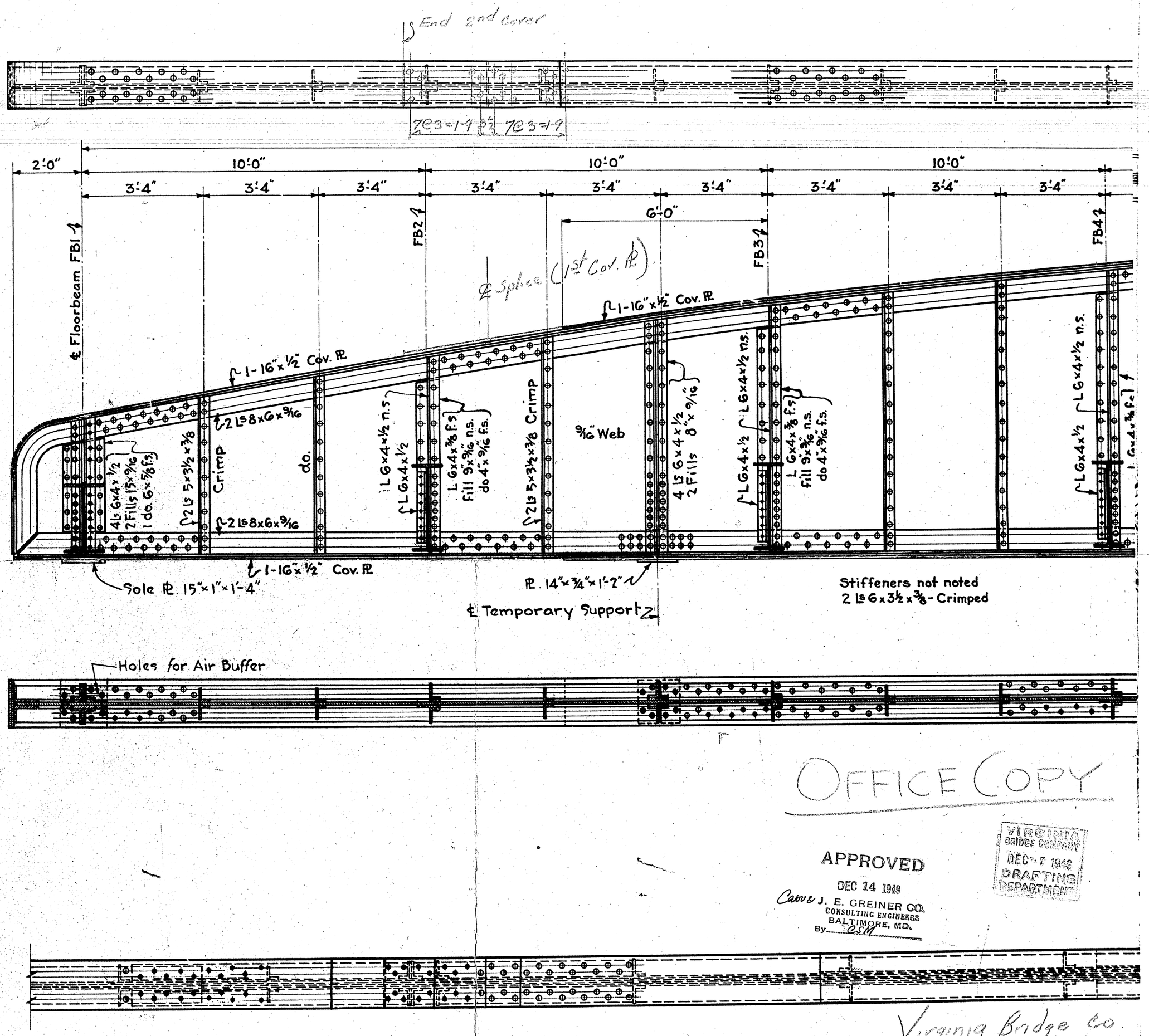

OFFICE COPY

APPROVED
DEC 14 1949
Carr & J. E. GREINER CO.
CONSULTING ENGINEERS
BALTIMORE, MD.
By CSM

VIRGINIA BRIDGE COMPANY
DEC 7 1949
DRAFTING DEPARTMENT

Virginia Bridge Co.
Contract - V7173

2-BASCULE GIRDERS

Pieces	Weight W	X	Y	+WX	-WX	+WY	-WY
2-Web Pls 108×9/16×56'-10	19930	+80.0	-14.66	1,594,400			292,175
2- " " " " ×39'-4¾	16920	+37.4	-14.02	632810			237,220
4 L 8×6×7/8×97'-11⅞	10020	+68.27	-10.98	684065			110020
4 L 8×6×7/8×97'-9	10030	+65.06	-18.33	652550			183850
2 Top Cov Pl 16×½×16'-11 & 86'-4	5795	+66.08	-10.70	382935			62005
2 " " 16×½×94'-9⅜	5290	+55.29	-9.64	292485			50995
2 " " " ×18'-4½	1023	+19.19	-8.62	19630			8820
2-Spl Pls sax	255	+14.57	-7.63	3715			1945
2-Bott. Cov Pl 16×½×99'-4	5500	+64.33	-18.56	353815			102080
2 " " " 85'-2	4715	+52.37	-18.60	246925			87700
2 " " " 16'-4½	907	+19.98	-18.64	18120			16905
4-fa, 2-da, 2-db, 2-dd, 2-df	826	+111.99	-16.51	92505			13635
4-Fills fn	15	+112.00	-17.58	1680			265
4-Ls dg^E	194	+108.79	-16.20	21105			3145
4-" dh^E	219	+105.45	-15.88	23095			3480
2-fb, 2-fd	224	+101.94	-15.62	22835			3500
2-dk, 2-dm, 2-aa2	395	+101.88	-13.33	40245			5265
4-dn^E	264	+98.71	-15.36	26060			4055
4-ff, 4-dp, 4-ds	1210	+95.33	-15.13	115350			18305
2-fg, 2-fh	294	+91.94	-14.92	27030			4385
2-dt, 2-dv, 2-aa2	475	+91.88	-15.20	43645			7220
4-dw	356	+88.76	-14.72	31600			5240
4-dx	371	+85.43	-14.56	31695			5400
2-fk, 2-fm	343	+81.94	-14.41	28105			4945
2-dy, 2-daa, 2-aa2	539	+81.90	-14.74	44145			7945
2-dab	402	+77.06	-14.25	30980			5730
2-pa, 2-pb	222	+107.93	-18.61	23960			4130
2-fp, 2-fs, 2-aa2	435	+71.96	-14.55	31305			6330
2-dad, 2-daf	500	+71.83	-14.11	35915			7055
4-dag	420	+67.10	-14.04	28180			5895
10-aa2, 10-ft3, 10-fr3	2233	+44.22	-14.47	98745			32310
10-dah3, 10-dak3	2551	+42.10	-14.02	107395			35765
4-dam	416	+57.10	-14.02	23755			5830
4-sa	800	+57.16	-14.02	45730			11215
12-dan3	1260	+37.10	-14.02	46745			17665
2-fx	82	+112.0	-16.52	9185			1355
Rivet Heads ...	2400	+64.43	-14.40	154630			34560
2-Webs 143½×⅝×46'-6¾ / 4 " 136×9/16×30'-8¾	43751	-2.764	-3.268		120930		142980
4-Pls 73⅜×⅞×7'-4 pf	3777	-0.31	-0.98		1170		3700
4-Pls 67×⅝×7'-4 pg	3753	-0.66	-1.16		2475		4355
4-Pls 47×⅞×11'-5¾ pb	3805	-16.81	+3.67		63960	13965	
4-Pls 40⅜×⅝×12'-9¼ pd	4090	-15.70	+3.36		64215	13740	
4-Pls 26×½×7'-9½ sa	1370	+17.70	-13.87	24250			19000
4-Pl 7½×⅝×2'-6½ sd	159	+19.75	-9.91	3140			1575
4-Flg Ls 8×6×⅝×50'-2½	5670	-1.10	-4.43		6235		25120
4-" " do ×33'-1⅞	4340	+4.08	-0.70	17705			3040
4 Pls 8×⅞×15'-3 (Bent)	760	+14.14	-7.60	10745			3775
4-Pl do ×15'-7¼ (")	950	+8.93	-16.52	8485			15695
4-L 7⅝×5½×⅞×15'-1½	1440	-10.37	+3.12		14935	4495	
2-Cov. Pl 16×⅞×41'-2½	2498	+1.96	+1.00	4895		2500	
2-" " 16×½×35'-10⅝	1917	-0.04	+0.30		75	575	
2-" do ×15'-7⅞	864	-2.65	+2.52		2290	2175	
2-" do ×44'-5½	2461	-4.19	-7.87		10310		19370
2-" 16×⅞×45'-11½	2863	-3.58	-8.15		10250		23335
2-" 16×½×5'-3½	293	+10.61	-18.64	3110			5460
2-" do ×2'-7½	145	+10.45	-18.52	1515			2685
2-" do ×6'-6	360	+13.58	-18.68	4890			6725
4-STs 5×30×26'-6	2980	+3.03	-1.92	9030			5720
4-da, 4-fa	620	+17.62	-14.02	10930			8690
2-ab, 2-ac, 2-dg, 2-dd, 4-fb	3635	+14.00	-12.97	50890			47145
8-dh, 4-dn, 4-fn, 4-fp	939	+8.39	-5.98	7880			5615
12 Ls aq, 4-aw, 4-dw	875	+4.21	-2.92	3685			2555
2-ah, 14-ak, 2-lk, 6-dm	1364	+4.92	-9.00	6710			12275
8-dp, 8-fs, 4-dt	1980	-5.93	-2.49		11740		4930
2-ab, 2-aa, 4-af, 4-ad	1340	+3.90	-5.26	5225			7050
2-Pls pa, 2-paa	198	-0.31	-9.35		60		1850
4-fd, 4-ff	327	+4.25	-5.37	1390			1755
2-sb	159	+16.31	-18.13	2595			2885
2-fv, 2-fh, 2-fk, 8-fm	997	+6.29	-10.00	6270			9970
12-fs, 12-ft, 4-fy, 4-fw, 4-fx	1119	-6.03	-3.29		6750		3680
4-fq, 4-fam, 4-fan, 4-faa	900	-9.24	+2.86		8315	2575	
2 Girders G4	19830	-7.36	-9.89		145950		196120
2-" G5	2910	+15.15	-13.75	44085			40015
Rivet Heads	[illegible]	-1.94	-4.78		3685		9050
Paint	670	+26.0	-8.40	17420			[illegible]
2-Spring Assem	290	-20.73	+3.67		6010	1065	
Total 2 Girders	231158			6468695	479355	41090	2100120
2-Open Lock Castings	1665	-19.00	+1.39		31635	2315	
6-Gear Rack Segments	5250	-8.51	-11.43		44680		60010
2-Cwt. Main Brgs	1656	-19.56	+5.875		32390	9730	
2-Closed Locks	530	+112.00	-19.00	59360			10070
2-Buffers	1752	+112.00	-17.50	196225			30660
Total 2-Girders	242011			6724280	558060	53135	2102860

OTHER STEEL

Pieces	Weight W	X	Y	+WX	-WX	+WY	-WY
1-FB1, 2-B1	2980	+112.0	-16.88	333760			50300
1-FB2, 2-B2	3140	+102.0	-16.72	320280			52530
1-FB3, 2-B3	3100	+92.0	-16.40	285200			50840
1-FB4, 2-B4	3220	+82.0	-16.22	264040			52230
1-FB5-6-7-8-9	11770	+52.0	-17.21	612040			202560
2-B5	965	+72.0	-13.70	69480			13220
2-B6, 2-B7, 2-B8, 2-B9	3960	+47.0	-13.80	186120			54650
1-FB10, 2-B10	3575	+22.0	-13.54	78650			48405
1-FB11, 2-B11	4330	+14.0	-15.71	60620			68025
8-S1, 8-S2	9150	+62.0	-17.17	567300			157105
18-L1^E	1990	+67.0	-17.29	133330			34405
2-LP3^E	560	+15.33	-18.46	8585			10340
2-LP4	145	+111.00	-18.46	16095			2675
1-S3, 1-S4	1110	+107.00	-17.17	118770			19060
1-S5, 1-S6	880	+18.00	-17.17	15840			15110
2-L2	220	+18.00	-17.29	3960			3805
16-L3	3860	+72.06	-18.32	278150			70715
2-L4	1100	+27.12	-18.31	29830			20140
2-L5	960	+18.08	-18.31	17355			17580
14-LP1	770	+63.00	-18.46	48510			14215
2-LP2^E	305	+23.25	-18.46	7090			5630
Paint	1500	+59.47	-15.90	89205			23850
Total	59590			3544210			987390

DECK MATERIALS

Pieces	Weight W	X	Y	+WX	-WX	+WY	-WY
201'-4 of 60.5# ASCE Rail	4054	+62.83	-15.50	254715			62835
Splice Bars & Bolts	155	+62.83	-15.50	9740			2405
344 R.R. Spikes @ .77#	264	+63.00	-15.88	16630			4190
200'-0 of 2½×½ spacer bar	850	+63.00	-15.64	53550			13295
84-Tie Clamps 3×⅜×6"	80	+63.00	-16.62	5040			1330
84-" " Bolts ¾φ×1'-1½	178	+63.00	-16.20	11215			2885
2-Tie Pls "B"	61	+112.00	-15.69	6830			955
2-" " "C"	58	+14.00	-15.69	810			910
82-¾φ×6 Lag Screws	66	+63.00	-15.85	4160			1045
4-Easer Rails & Bolts	488	+67.83	-15.49	33100			7560
82-Ties 8×10×10'-0 @ 50#	22710	+63.00	-16.08	1430730			365170
Total	28964			1826520			462585

COUNTERWEIGHT STEEL

Pieces	Weight
4-CS1, 4-CS2, 2-CS3	1045
2-CS4, 2-CS9, 2-CS5	728
4-CS6, 4-CS7, 4-CS8	293
1-CS10, 2-CE1, 2-CG1	13627
2-CF1	12696
2-RP1	585
2-CF2	9850
1-CF3	4430
4-CF4^E	7100
2-CF5	1850
2-CC1^E	9360
1-CL1	1800
Paint	300
Rear Link Brgs & Bolts	750
Total Steel of CW't	60919

NET CONCRETE IN CWT

Cu. Ft.	Weight
2375.43 Gross	
94.43 Displaced	
2281 Net @ 220#	501820

223.07 508,820

TOTAL COUNTERWEIGHT

Material	Weight
Steel	60919
Concrete @ 220#	501820
Total	562739

567739

Composition of Concrete Conglomerate

1811.5	Cu. ft. of Net Concrete @ 150# =	271,736#
469.5	" " " Steel Punchings @ 490# =	230,084#
2281.0	" " @ 220# =	501,820#
Each cu ft contains - Concrete		119.13#
" " " Punchings		100.87#
Total		220.00#

223.07

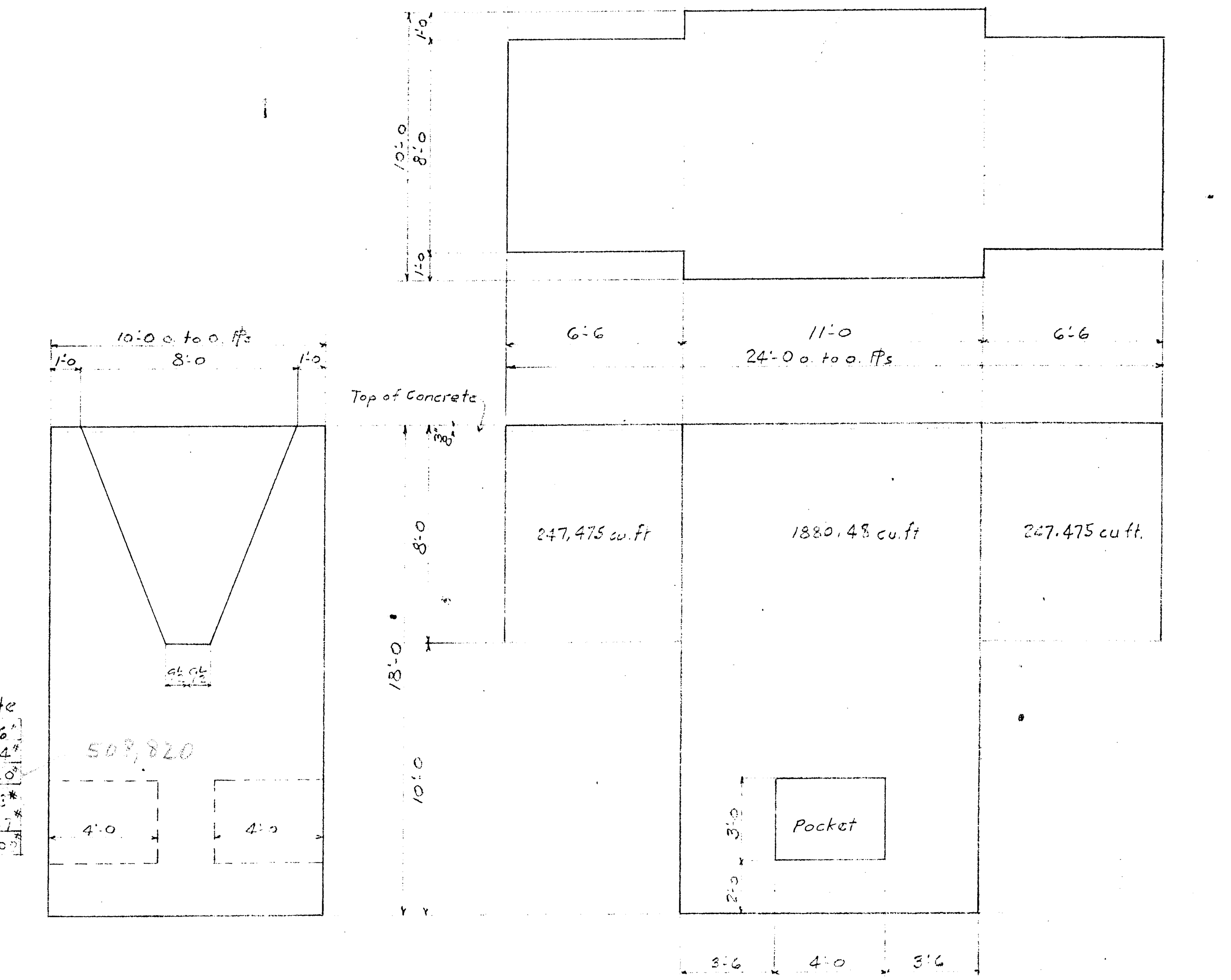

OUTLINE OF COUNTERWEIGHT

SUMMARY OF MOMENTS ABOUT TRUNNION

Table	Weight W	+WX	-WX	+WY	-WY
2-Girders	242011	6724280	588060	53135	2202860
Other Steel	59590	3544210			987390
Deck Material	28964	1826520			462585
Total Counterw't	562739		10967780	3430995	
Adjusting Blocks	27664		539170	168705	
Total	920968	12095010	12095010	3652835	3652835

REQ'D WT. OF CWT. = 590,40_ #
3½% ADJ. BLOCKS = -20,664
569,737
WT. OF STEEL → -60,919
NET CONCRETE = 508,820 #

508,820/2281 CU FT = 223.07 #/CU FT CONCRETE REQ'D.

PROVIDE 5% ADJ. BLOCKS = 29,520 #

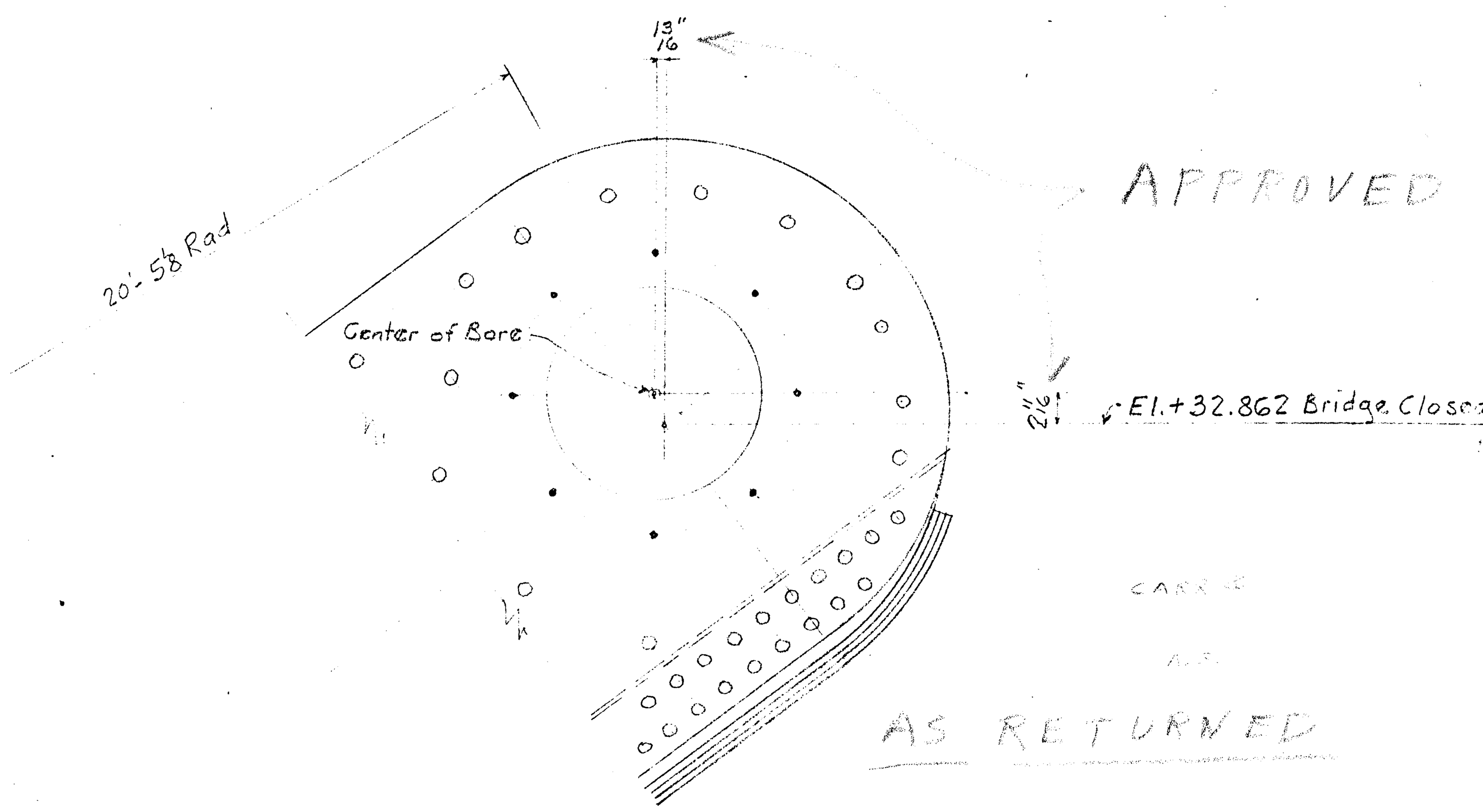

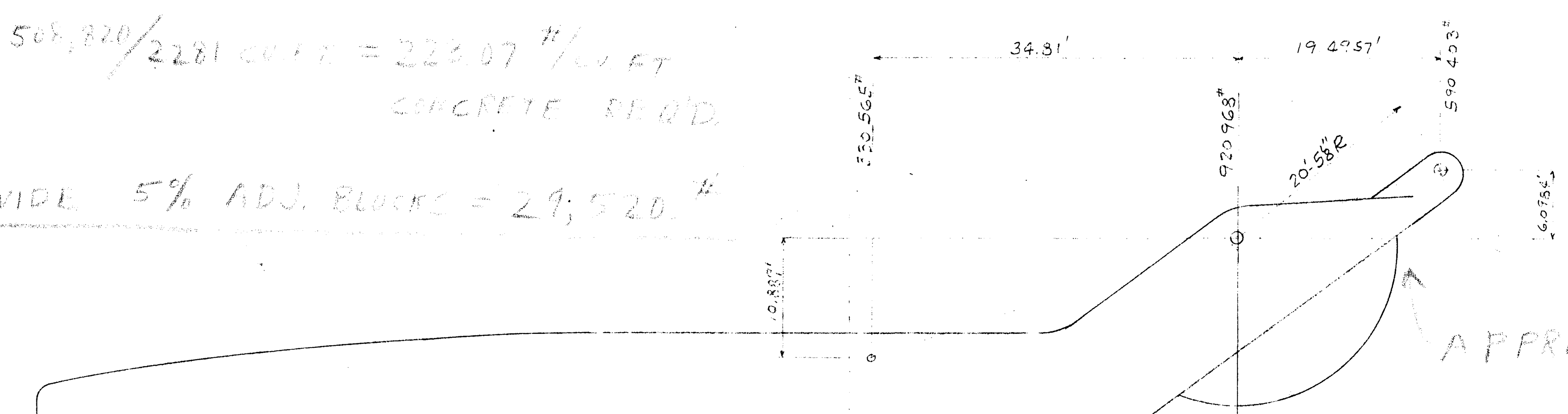

APPROVED

APPROVED

AS RETURNED

OFFICE COPY

1ST SUBMISSION

REVISION						
DATE						

Shop Paint

Shop Contact Surfaces not Painted

Inspection

Rivets ... Unless Noted

Holes ... " "

Special Notes:

Mat'l on Shop Bill

CONTRACT V 7173

Details of Counterweight Computations
1-80' Single Leaf Bascule Bridge
For New Port River Bridge
Location Morehead City, Cataret Co., N.C.
Owner Tidewater Construction Corp.

VIRGINIA BRIDGE COMPANY
ROANOKE, VIRGINIA

To be fabricated at At Site plant
Made by W.C.B. 5-12-50 Checked by
In charge of Scott Date
Revised
Scale ... in. = 1 Ft. Sheet No. E4 of E4

2-Bascule Girders

Pieces	Weight W	X	Y	+WX	-WX	+WY	-WY
[illegible]	[illegible]	[illegible]	[illegible]	[illegible]	[illegible]	[illegible]	[illegible]

+WX 4,784,446 · W 80,301 · -WY 1,152,602

Total 1,027,069 · 15,986 · 234,762

	Weight W	+WX	-WX	+WY	-WY
Total 2-Girders	242,011	6,724,281	538,060	53,135	2,202,560
Greiner	236,254	6,886,362	705,420	87,142	2,251,954

Other Steel

Pieces	Weight W	X	Y	+WX	-WX	+WY	-WY
1-FB1 2-B1	2999	+112.0	-16.38	335760			50300
1-FB2 2-B2	3140	+102.0	-16.73	320280			52530
1-FB3 2-B3	3100	+92.0	-16.40	285200			50840
1-FB4 2-B4	3220	+82.0	-16.22	264040			52230
1-FB5-6-7-8-9	11770	+52.0	-17.21	612040			202560
2-B5	965	+72.0	-13.70	69480			13230
2-B6, 2-B7, 2-B8, 2-B9	3960	+47.0	-13.80	186120			54650
1-FB10, 2-B10	3575	+22.0	-13.54	78650			48405
1-FB11 2-B11	4330	+14.0	-15.71	60620			68025
2-S1 8-S2	9150	+62.0	-17.17	567300			157105
12-L1	[illegible]	+67	-17.29	133330			34405
2-L2	560	+15.33	-18.46	8585			10340
2-LP2	145	+111.00	-18.46	16095			2675
1-S3, 1-S4	1110	+107.00	-17.17	118770			19060
1-S5 1-S6	880	+18.00	-17.17	15840			15110
2-L2	220	+18.00	-17.29	3960			3805
2-L3	3860	+72.06	-18.32	278150			70715
2-L4	1100	+27.12	-18.31	29830			20140
2-L5	960	+18.08	-18.31	17355			17580
2-LP1	770	+63.00	-18.46	48510			14215
[illegible]	303	+23.25	-15.50	7090			5630
Paint	150	[illegible]	-15.90	87205			2385
5830 Riv. Hds.							
Total	59590	+59.48	-16.57	3544710			987390
Greiner	59596	55.57	-16.[illegible]	[illegible]			[illegible]

Deck Materials

Pieces	Weight W	X	Y	+WX	-WX	+WY	-WY
30' 4 of 60.5# ASCE Rail	4054	+62.83	-15.50	254715			62835
Splice Bars # 12 Its	155	+62.83	-15.50	9740			2405
344 R.R. Spikes × 77#	264	+63.00	-15.88	16630			4190
200 l.f. of 2½×⅝ spacer bar	850	+63.00	-15.64	53550			13295
84-Tie Clamps 3×⅜×6"	80	+63.00	-16.22	5040			1330
84 Bolts ⅝×1½	178	+63.00	-16.20	11215			2880
2-Tie Its 'B'	61	+112.00	-15.69	6850			955
2- " " 'C'	58	+14.00	-15.69	810			910
32-⅜×6 Lag Screws	66	+63.00	-15.85	4160			1045
4 Easer Rails & Bolts	486	+67.93	-15.44	33100			7500
80-Ties 8×10×16 @ 50"	22710	+63.00	-16.08	1430730			365170
Total	28964			1826520			462585
Greiner	28959			1810585			461310

Counterweight Steel

Pieces	Weight
4-CS1, 4-CS2, 2-CS3	1045
2-CS4, 2-CS9, 2-CS5	728
4-CS6, 4-CS7, 4-CS8	293
1-CS10, 2-CR1, 2-CG1	10677
2-CF1	12696
2-RP1	585
2-CF2	9850
1-CF3	4030
4-CF4	7000
2-CF5	1850
2-CC1	9260
1-CL1	1910
Paint	300
Rear Link Brgs & Bolts	750
Total Steel of CW't	60919

60,727

Net Concrete in CWT

Cu. Ft.	Weight
2375.43 Gross	
94.43 Displaced	
2281 Net @ 220#	501,820

Total Counterweight

Material	Weight
Steel	60919
Concrete @ 220#	501820
Total	562739

Composition of Concrete Conglomerate

1811.5	cu. ft. of Net Concrete @ 150# =	271,736#
469.5	" " " Steel Punchings 490#	230,084#
2281.0	" " @ 220# =	501,820#
Each cu ft contains - Concrete		119.13#
" " Punchings		100.87#
Total		220.00#

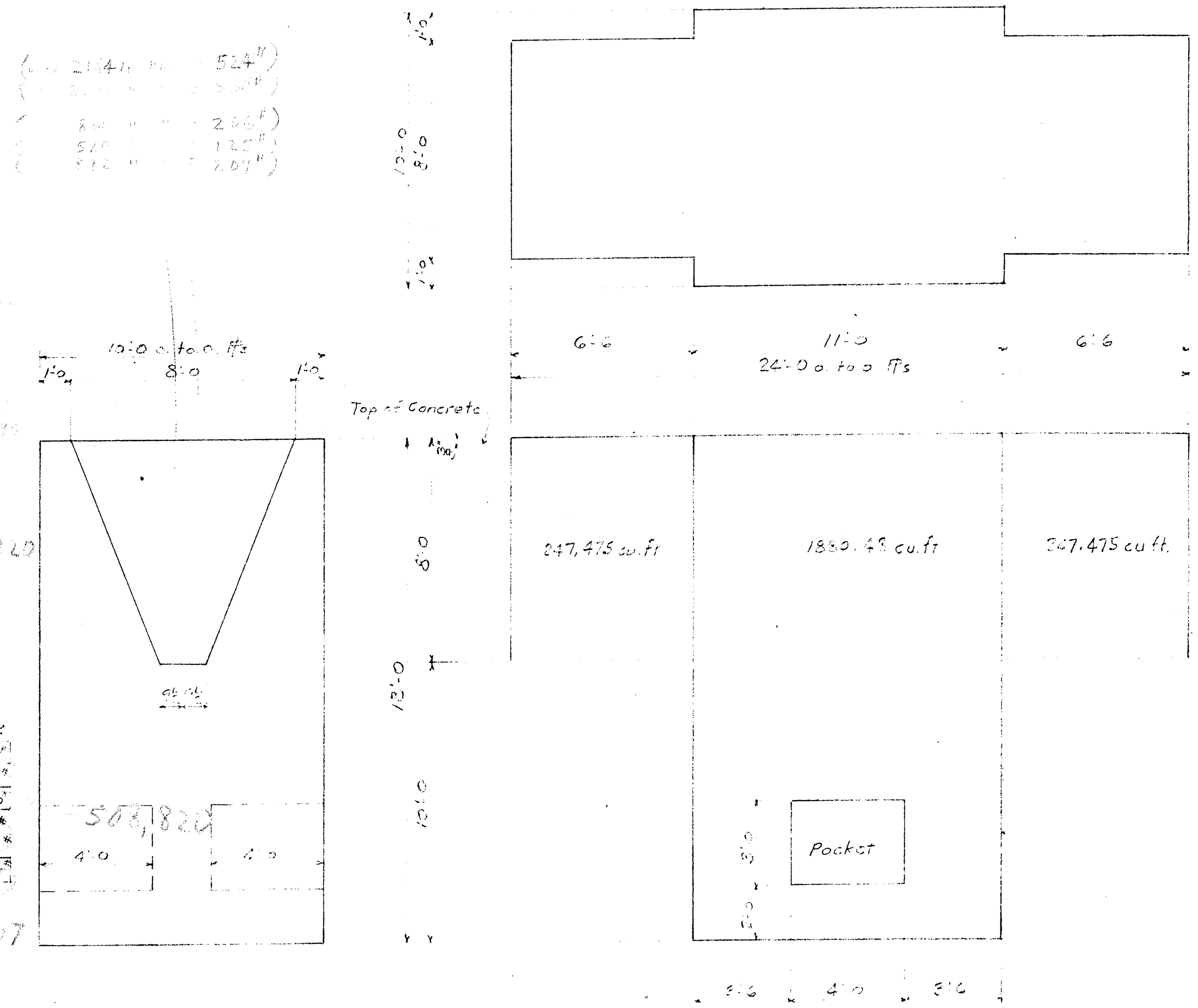

Summary of Moments about Trunnion

Table	Weight W	+WX	-WX	+WY	-WY
2-Girders	242011	6724280	588060	53135	2202860
Other Steel	59590	3544710	[illegible]		987390
Deck Material	28964	1826520	[illegible]		462585
Total Counterw't	562739	-562739	10967780	3430915	[illegible]
Adjusting Blocks	27660	-20664	539170	168705	[illegible]
Total	920964	12095010	12095010	3652835	3652835
2-Girders	236274	[illegible]	705420	[illegible]	[illegible]
Other Steel	59596	[illegible]			[illegible]
Deck Mat.	28949	1810585	—	—	459310
Total Strs.	324639	12227126	705420	[illegible]	3,712,[illegible]
Total CT'W.	562,739	—	10,[illegible]	[illegible]	—
Adj. Blocks	[illegible]	—	550,715	172,268	—
Total	[illegible],626	12,227,126	12,227,126	[illegible]	3,712,503

34.31'

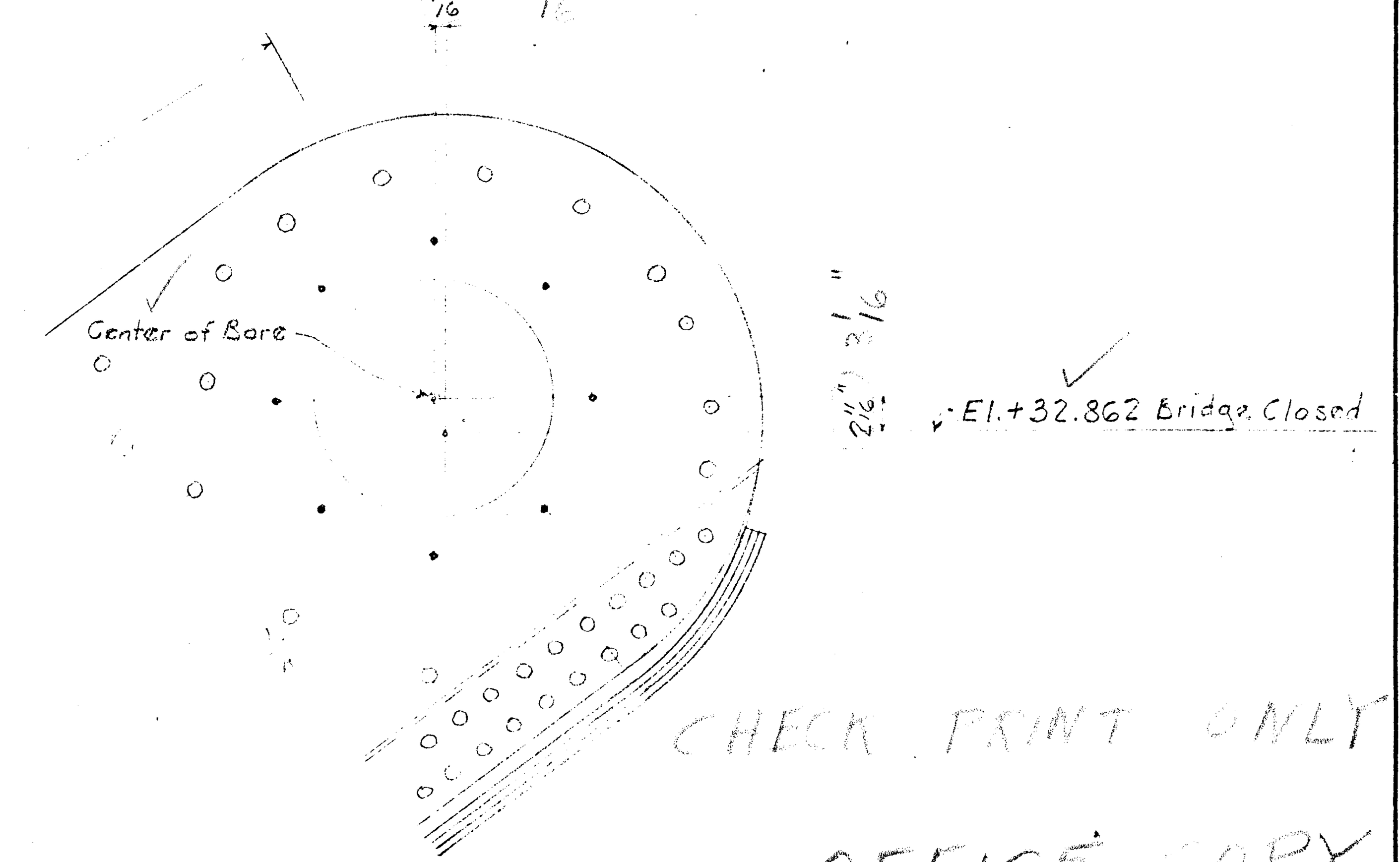

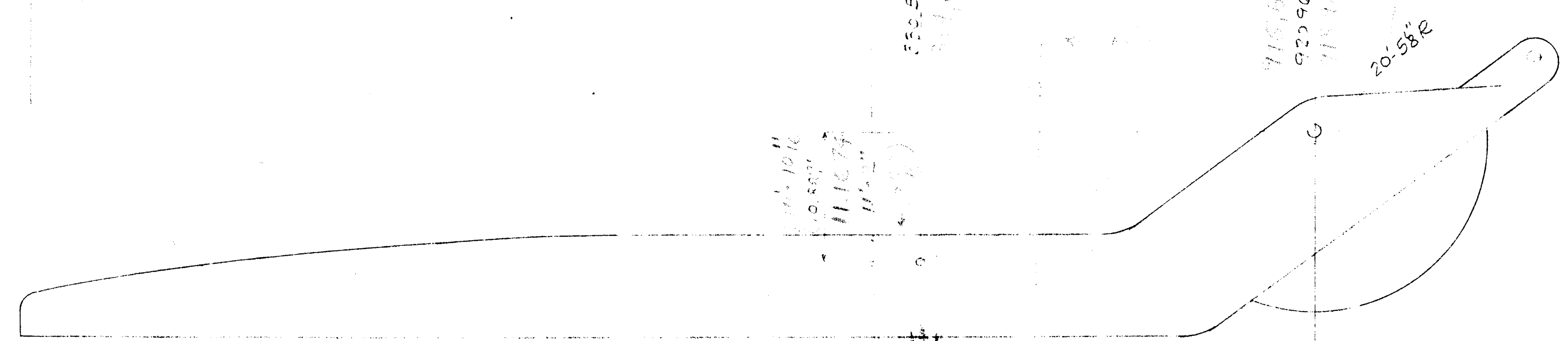

REQ'D. WT. OF CWT = 590,403

3½% ADJ. BLOCKS = - 20,664

569,739

WT OF STEEL = - 60,919

508,820 ÷ 2281 CU FT = 223.07#/CU FT CONCRETE

PROVIDE ADJ BLOCKS

PROVIDE 5% ADJ BLOCKS = 29,520#

CHECK PRINT ONLY

OFFICE COPY

1ST SUBMISSION

CHECKED BY A.S. 7-6-50

REVISION						

DATE

Shop Paint

Shop Contact Surfaces not Painted

Inspection

Rivets ... Unless Noted

Holes ... " "

Special Notes:

Mat'l on Shop Bill

CONTRACT V 7173

Details of Counterweight Computations

1-80' Single Leaf Bascule Bridge

For New Port River Bridge

Location Morehead City, Cataret Co. N.C.

Owner Tidewater Construction Corp.

VIRGINIA BRIDGE COMPANY

ROANOKE, VIRGINIA

To be fabricated at At Site plant

Made by W.C.B. 5-12-50 Checked by

In charge of Scott Date

Revised

Scale ... in. = 1 Ft. Sheet No. E4 of E[illegible]

2-BASCULE GIRDERS

Pieces	Weight W	X	Y	+WX	-WX	+WY	-WY
2 Web Pls 108×⅜·56·10	19930	+8[illegible]	-14.66	1,594,400			292,175
2- " " " " ×39'4¾	16[illegible]20	+37.4	-14.02	63[illegible]810			237220
4 L 8×6×½ ×97 11¾	[illegible]	+6[illegible]	-10.98	684065			110020
4 L 8 ... 97 9	10030	+65.[illegible]	-18.33	652550			183850
2 Top Cov Pl 16×½×114 86·4	5795	+6[illegible]	-10.70	382935			62005
2 " " 16×½·94·9⅜	5290	+55.9	-9.64	292485			50995
2 " " " ×18'4½	1023	+19.19	-8.62	19630			8820
2-Spl Pls Sax	255	+14.57	-7.63	3715			1945
2-Bott Cov Pl 16×½·99'4	5500	+64.33	-18.56	353815			102080
2 " " " 85·2	4715	+52.37	-18.60	246925			87700
2 " " 16'4½	[illegible]07	+19.98	-18.64	18120			16905
4-fa, 2-dc 2-dL 2-da 2-df	[illegible]	+111.99	-16.51	92505			13635
4-Fills fn	15	+112.00	-17.58	1680			265
4-Ls dg	194	+108.79	-16.20	21105			3145
4-" dh	219	+105.45	-15.88	23095			3480
2-fb, 2-fd	224	+101.94	-15.62	22835			3500
2-dk, 2-dm, 2-aa2	395	+101.85	-13.33	40245			5265
4-an	264	+98.71	-15.36	26060			4055
4-ff, 4-dp, 4 ds	1210	+95.33	-15.13	115350			18305
2-fa, 2-fh	294	+91.94	-14.92	27030			4385
2-dt, 2-dr, 2 aa2	475	+91.88	-15.20	43645			7220
4-dw	356	+88.76	-14.72	31600			5240
4-ax	371	+85.43	-14.56	31695			5400
2-fk, 2-fm	343	+81.94	-14.41	28105			4945
2-d., 2-daa, 2-aa3	539	+81.90	-14.74	44145			7945
2-fax	402	+77.06	-14.25	30980			5730
2 pa, 2-pb	222	+107.93	-18.61	23960			4130
2-fp, 2-fs, 2aa2	435	+71.96	-14.55	31305			6330
2-dad 2-dat	500	+71.83	-14.11	35915			7055
4-dao	420	+67.10	-14.04	28180			5895
10-aa2, 10 ff3, 10-ff3	2233	+44.22	-14.47	98745			32310
10-dah3, 10 dak3	2551	+42.10	-14.02	107395			35765
4-dam	416	+57.10	-14.02	23755			5830
4-sa	800	+57.16	-14.02	45730			11215
12-dan3	1260	+37.10	-14.02	46745			17665
2-fx	82	+112.0	-16.52	9185			1355
Rivet heads [illegible]	2400	+64.43	-14.40	154630			34560
2-Webs 143½·⅝×46 6½ / 4 " 136×9/16×30·8¾	43751	-2.76	-3.268		120930		142980
4-Pls 73⅝·⅞·7'4 pf	3777	-0.31	-0.98		1170		3700
4-Pls 67×⅝·7'4 pa	3753	-0.66	-1.16		2475		4355
4-Pls 47×⅞·11'5¾ pb	38[illegible]5	-16.81	+3.57		63960	13965	
4 Pls 40⅜·⅝×12·9¼ pd	4090	-15.70	+3.36		64215	13740	
4-Pls 26×⅝·7·9½ sa	1370	+17.70	-13.87	24250			19000
4-Pl 7⅞·⅝·2·6½ sd	159	+19.75	-9.91	3140			1575
4-Fill Ls 8·6·⅝·50 2½	[illegible]	-1.10	-4.43		6235		25120
4 " " do ×33 1½	4340	+4.08	-0.70	17705			3040
4-Pls 8×⅞·15'3 [illegible]	760	+14.14	-7.60	10745			3775
4-Pl do ×15 [illegible]	950	+8.93	-16.52	8485			15695
4-L 7⅝·5½·⅞·15 [illegible]	1440	-10.37	+3.12		14935	4495	
2 Cov Pl 16×⅞·41'2¾	2498	+1.96	+1.00	4895		2500	
2- " 16·½·35·10⅝	1917	-0.04	+0.30		75	575	
2- " do ·15 7⅞	864	-2.65	+2.52		2290	2175	
2- [illegible] 44 5⅝	2461	-4.19	-7.87		10310		19370
2- " 16·⅞·43 [illegible]	[illegible]	-3.58	-8.15		10250		23335
2- " 16·½·5'3½	293	+10.61	-18.64	3110			5460
2 " do ×2'7½	145	+10.45	-18.52	1515			2685
2 " do ×6'6	360	+13.58	-18.68	4890			6725
4-STs [illegible]	2980	+3.03	-1.92	9030			5720
4-fa, 4 fa	620	+17.63	-14.02	10930			8690
2 [illegible] 2-dd [illegible]	3635	+14.00	-12.97	50890			47145
8-dh, 4-dn, 4 fn, 4 fo	939	+8.39	-5.95	7880			5615
12 Ls aq, 4-aw 4 ax	875	+4.21	-2.92	3685			2555
2-ah, 14-ak, 2-lk, 6-am	1364	+4.92	-9.00	6710			12275
8-du, 8-ts, 4-dt	1980	-5.93	-2.49		11740		4930
2-ab, 2-aa 4-af, 4-ad	1340	+3.90	-5.26	5225			7050
2-Fs pa, 2-paa	198	-0.31	-9.35		60		1850
4-fa, 4-fi	327	+4.25	-5.37	1390			1755
2-sb	159	+16.31	-18.13	2595			2885
2-fv, 2-fh 2-fk, 8-fm	997	+6.29	-10.00	6270			9970
12-fs, 12-ft, 4-fy, 4-fw, 4-fx	1119	-6.03	-3.29		6750		3680
4-fq, 4 fam, 4 fai 4-faa	900	-9.24	+2.86		8315	2575	
2 Girders G4	19830	-7.36	-9.89		145950		196120
2 " G5	2910	+15.15	-13.75	44085			40015
[illegible]	[illegible]	-1.94	-4.78		3685		9050
Paint	[illegible]	+2[illegible]	-8.40	174[illegible]			[illegible]
2-Spring Assem	290	-20.73	+3.67		6010	1065	
Total 2 Girders	23[illegible]58			6468695	479355	41090	2102120
2-Open Lock Castings	1665	-19.00	+1.39		31635	2315	
6-Gear Rack Segments	5150	-8.51	-11.43		44680		60010
2-Cwt. Main Brgs	1655	-19.56	+5.875		32390	9730	
2-Closed Locks	520	+112.00	-19.00	59360			10070
2-Buffers	1752	+112.00	-17.50	196225			30660
Total 2-Girders	242011			6724280	588060	53135	2202860

OTHER STEEL

Pieces	Weight W	X	Y	+WX	-WX	+WY	-WY
1-FB1, 2-B1	2980	+112.0	-16.88	333760			50300
1-FB2, 2-B2	3140	+102.0	-16.73	320280			52530
1-FB3, 2-B3	3100	+92.0	-16.40	285200			50840
1-FB4, 2-B4	3220	+82.0	-16.22	264040			52230
1-FB5-6-7-8-9	11770	+52.0	-17.21	612040			202560
2-B5	965	+72.0	-13.70	69480			13220
2-B6, 2-B7, 2-B8, 2-B9	3960	+47.0	-13.80	186120			54650
1-FB10, 2-B10	3575	+22.0	-13.54	78650			48405
1-FB11, 2-B11	4330	+14.0	-15.71	60620			68025
8-S1, 8-S2	9150	+62.0	-17.17	567300			157105
18-L1	1990	+67.[illegible]	-17.29	133330			34405
2-LP3	560	+15.33	-18.46	8585			10340
2-LP4	145	+111.00	-18.46	16095			2675
1-S3, 1-S4	1110	+107.00	-17.17	118770			19060
1-S5, 1-S6	880	+18.00	-17.17	15840			15110
2-L2	220	+18.00	-17.29	3960			3805
16-L3	3860	+72.06	-18.32	278150			70715
2-L4	1100	+27.12	-18.31	29830			20140
2-L5	960	+18.08	-18.31	17355			17580
14-LP1	770	+63.00	-18.46	48510			14215
2-LP2	305	+23.25	-18.46	7090			5630
Paint	1500	+59.47	-15.90	89205			23850
Total	59590			3544210			987390

DECK MATERIALS

Pieces	Weight W	X	Y	+WX	-WX	+WY	-WY
201' 4 of 60.5# ASCE Rail	4054	+62.83	-15.50	254715			62835
Splice Bars & Bolts	155	+62.83	-15.50	9740			2405
264 R.R. Spikes ⅝ 7/7"	264	+63.00	-15.88	16630			4190
200'-0 of 2½×½ spacer bar	850	+63.00	-15.64	53550			13295
84 Tie Clamps 3×⅜×6"	80	+63.00	-16.62	5040			1330
84 " " Bolts ¾ϕ×1-1½	178	+63.00	-16.20	11215			2885
2-Tie Pls "B"	61	+112.00	-15.69	68[illegible]			955
2- " " "C"	58	+14.00	-15.69	810			910
82-¾ϕ×6 Lag Screws	66	+63.00	-15.85	4160			1045
4-Easer Rails & Bolts	488	+67.83	-15.49	33100			7560
82-Ties 8×10×10'-0 @ 50#	22710	+63.00	-16.08	1430730			365175
Total	28964			1826520			462585

SUMMARY OF MOMENTS ABOUT TRUNNION

Table	Weight W	+WX	-WX	+WY	-WY
2 Girders	242011	6,724,280	588060	53135	2202860
Other Steel	59590	3544210			987390
Deck Material	28964	1826520			462585
Total Counterw't	569739		11,104210	3473685	
Adjusting Blocks	20664		402740	126015	
Total	920968	12095010	12095010	3652835	3652835

COUNTERWEIGHT STEEL

Pieces	Weight
4-CS1, 4-CS2, 2-CS3	1045
2-CS4, 2-CS9, 2-CS5	728
4-CS6, 4-CS7, 4-CS8	293
1-CS10, 2-CB1, 2-CG1	10627
2-CF1	12696
2-RP1	585
2-CF2	9850
1-CF3	4630
4-CF4	7000
2-CF5	1850
2-CC1	9260
1-CL1	1805
Paint	300
Rear Link Brgs & Bolts	750
Total Steel of C'W't	60919

NET CONCRETE IN CWT. INCLUDING PUNCHINGS

Cu. Ft.	Weight
2375.43 Gross	
94.43 Displaced	
2281 Net @ 223.07	508820

A

TOTAL COUNTERWEIGHT WITHOUT ADJ. BLOCKS

Material	Weight
Steel	60919
Concrete @ 223.07	508820
Total	569739

Composition of Concrete Conglomerate

1790.8	cu. ft. of Net Concrete @ 150# =	268620#
490.2	" " " Steel Punchings @ 490# =	240200#
2281.0	" " @ 223.07# =	508820#
Each cu. ft. contains -	Concrete	117.78#
" "	Punchings	105.29#
Total		223.07#

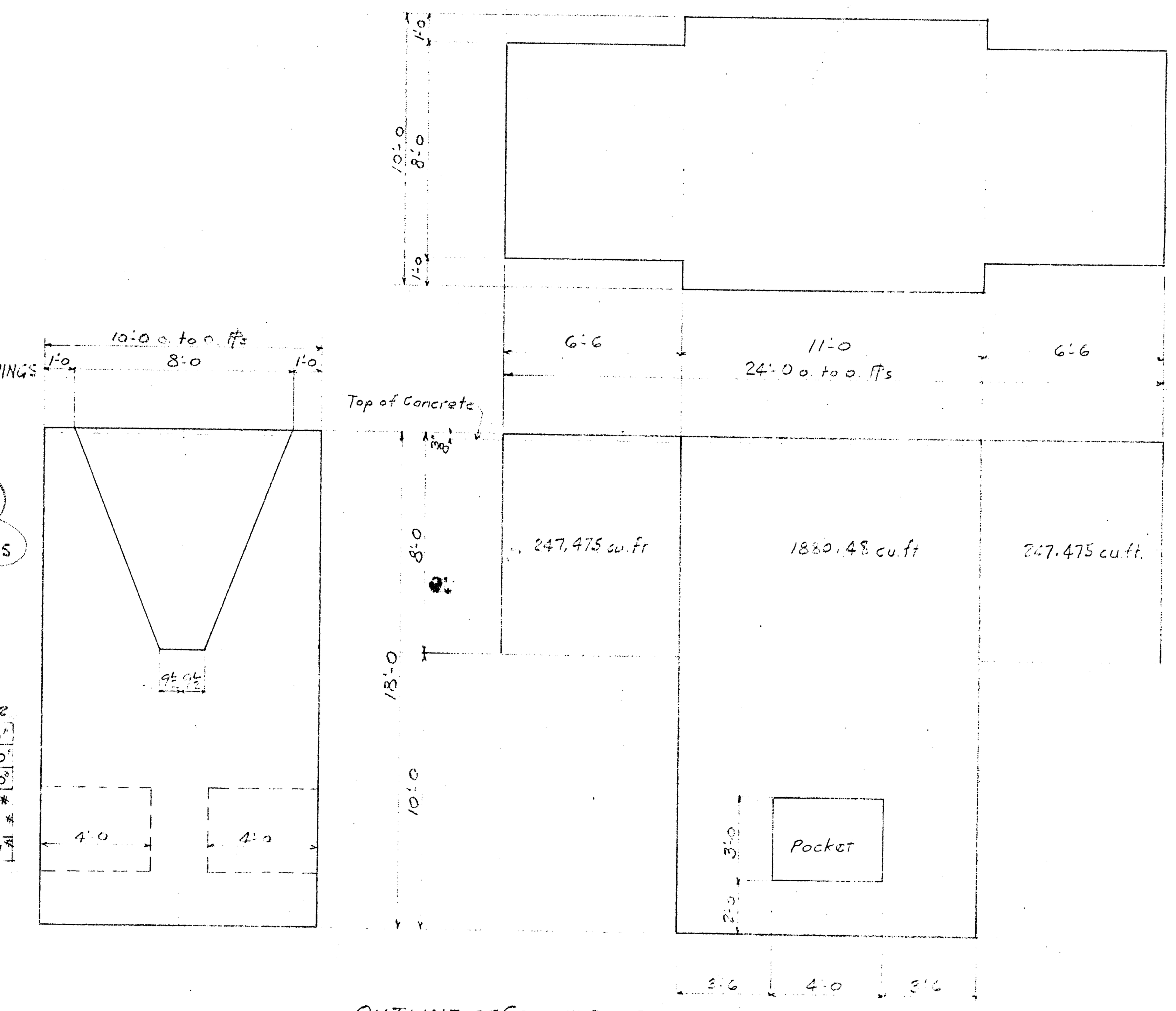

OUTLINE OF COUNTERWEIGHT

NOTE:- ADJUSTING BLOCKS FURNISHED BY OTHERS.

A

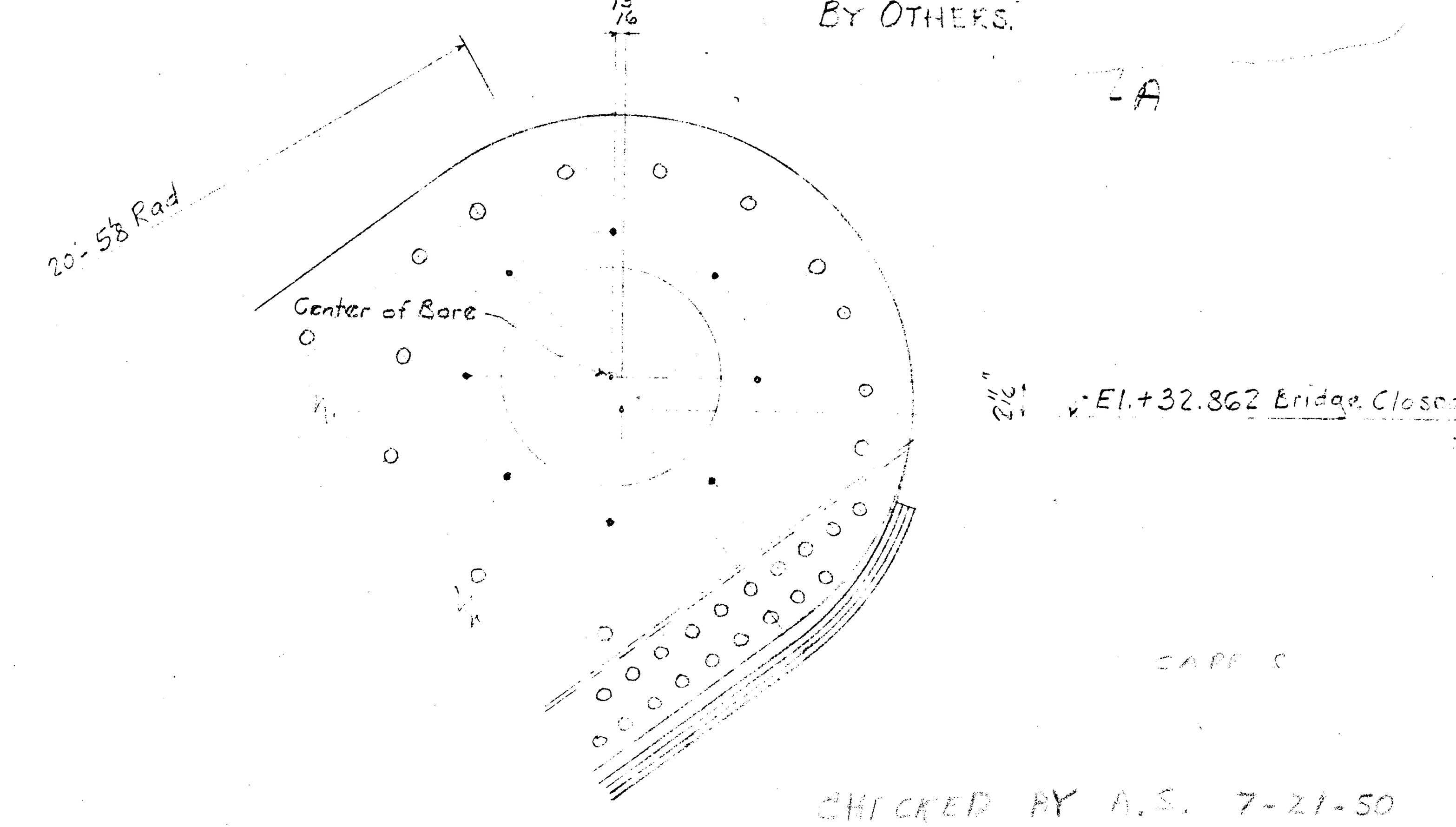

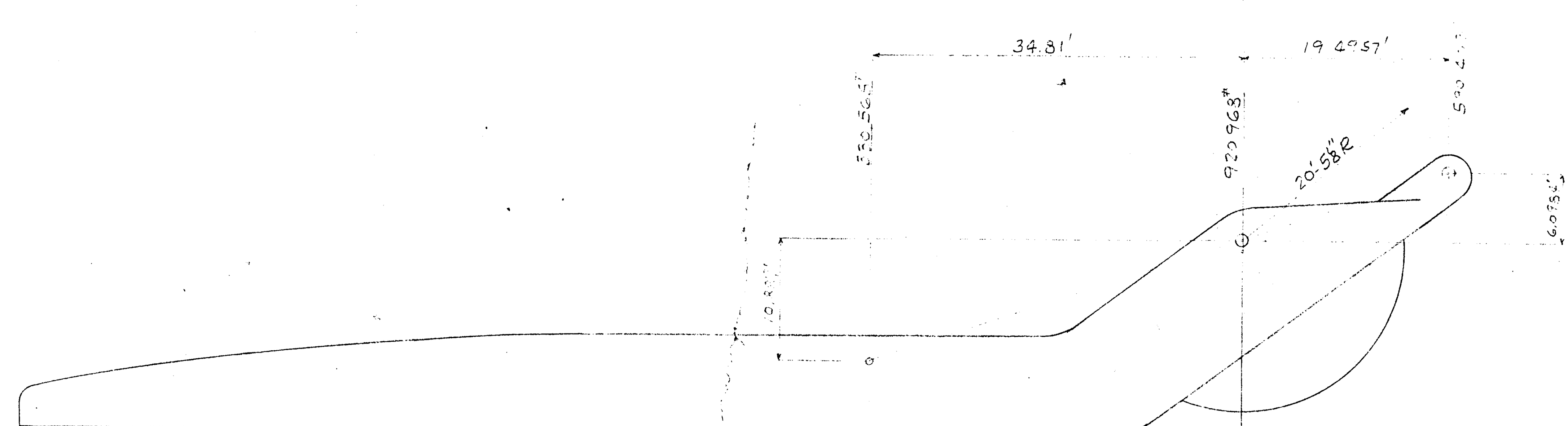

CHECKED BY A.S. 7-21-50

OFFICE COPY

2ND SUBMISSION

REVISION						
A						
7/17						

DATE

Shop Paint
Shop Contact Surfaces not Painted
Inspection
Rivets .... Unless Noted
Holes .... " "
Special Notes:
Mat'l on Shop Bill

CONTRACT V 7173

Details of Counterweight Computations
1- 50' Single Leaf Bascule Bridge
For New Port River Bridge
Location Morehead City, Cateret Co. N.C.
Owner [illegible] Construction Corp

VIRGINIA BRIDGE COMPANY

ROANOKE, VIRGINIA

To be fabricated at At Site plant
Made by W.C.B. 5-2-50 Checked by
In charge of Scott Date
Revised
Scale .... in. = 1 Ft. Sheet No. E4 of E4

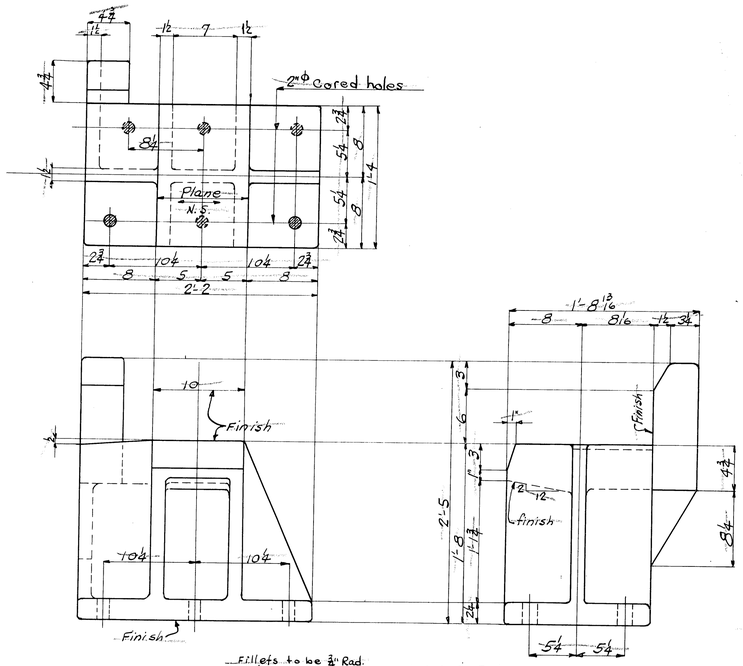

Fillets to be ¾" Rad.
Outer edges to be rounded to ⅜" Rad.

Cast Steel Shoe CSS1

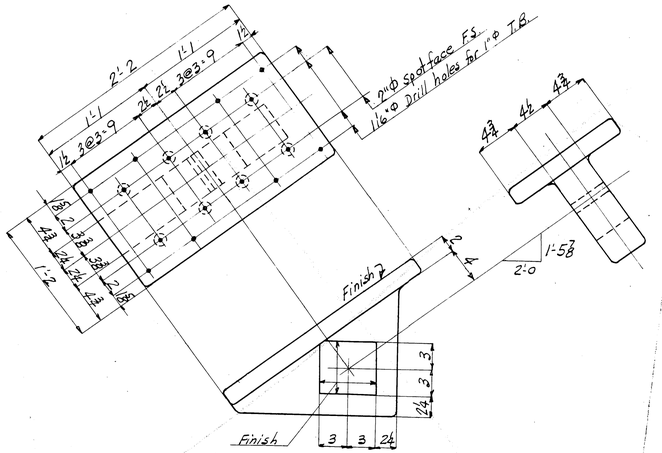

Fillets to be 1" Rad
Outer edges to be rounded to ½" Rad.

Cast Steel Lock CSL1

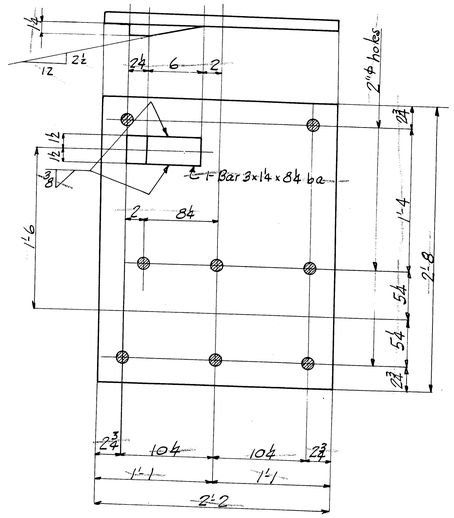

1-Pl 26 x 1 x 2'-8 ~ MP1

REQUIRED LIST

MARK	DESCRIPTION	MARK
1	Cast Steel Shoe (Thus)	CSS1R
1	do (Rev.)	CSS1L
16	Channels	A1
96	Anchor Bolts	AB1
8	do	AB2
12	do	AB3
4	do	AB4
24	do	AB5
2	Shoes	PS1
1	Masonry Pl. (Thus)	MP1R
1	do (Rev.)	MP1L

Advance Shipment

General Note For Steel Casting:

Spec. For Cast Steel - ASTM-A27-46T Grade 65-35

Foundry Note: Foundry to allow proper excess metal for all surfaces to be finished.

Paint Note: All finished surfaces to be given 1st of white lead and tallow.

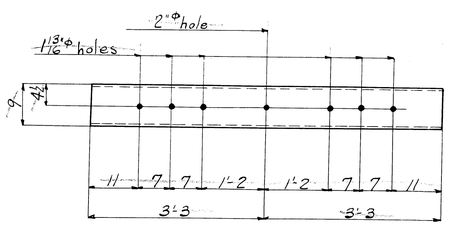

1-E9@20# x 6'-6 ~ A1 (No Paint)

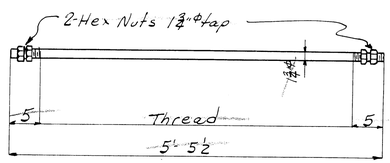

1-Rod 1¾" Φ x 5'-5½ ~ AB1 (No Paint)

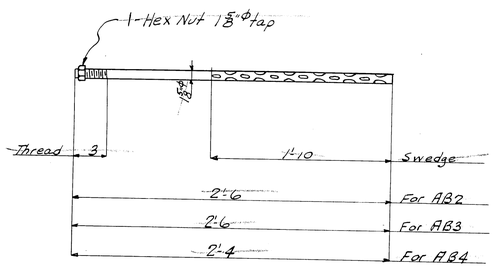

1-Rod 1⅝" Φ x 2'-6 AB2
1-Rod do x 2'-6 AB3
1-Rod do x 2'-4 AB4
} No Paint

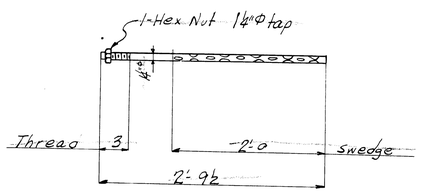

1-Rod 1¼" Φ x 2'-9½ ~ AB5 (No Paint)

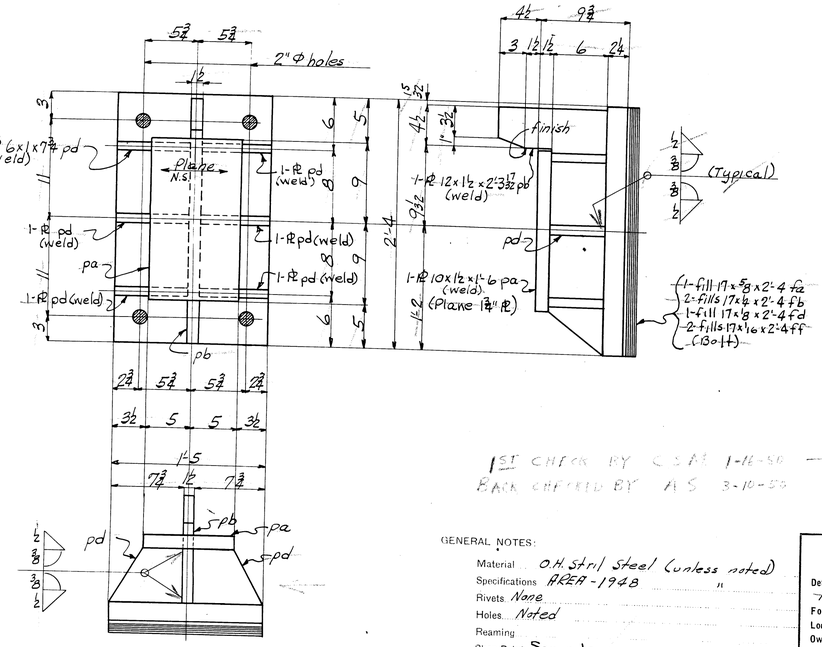

1-Pl 17 x 2¼ x 2'-4 ~ PS1

1ST CHECK BY C.A.M. 1-16-50
BACK CHECKED BY A.S. 3-10-50

OFFICE COPY
2ND SUBMISSION

GENERAL NOTES:

Material O.H. Stril Steel (unless noted)
Specifications AREA-1948 "
Rivets None
Holes Noted
Reaming
Shop Paint See note
Field Paint By Others
Erection " "
Field Conn's Rivets
Inspection Froehling & Robertson
Design

Material on Shop Bills

CONTRACT V-7173

Details of Shoes, Castings, Anchors, Etc.
1-80' Single Leaf Bascule Bridge
For Newport River Bridge
Location Morehead City, Cataret Co., N.C.
Owner Tidewater Construction Corp.

VIRGINIA BRIDGE COMPANY
ROANOKE, VIRGINIA

To be fabricated at Roanoke plant
Made by R.S.S. 1/6/50
Traced by C.A.M. - 1950
In charge of Scott
Checked by
Revised
Scale in. = 1 Ft.
Sheet No. 1 of

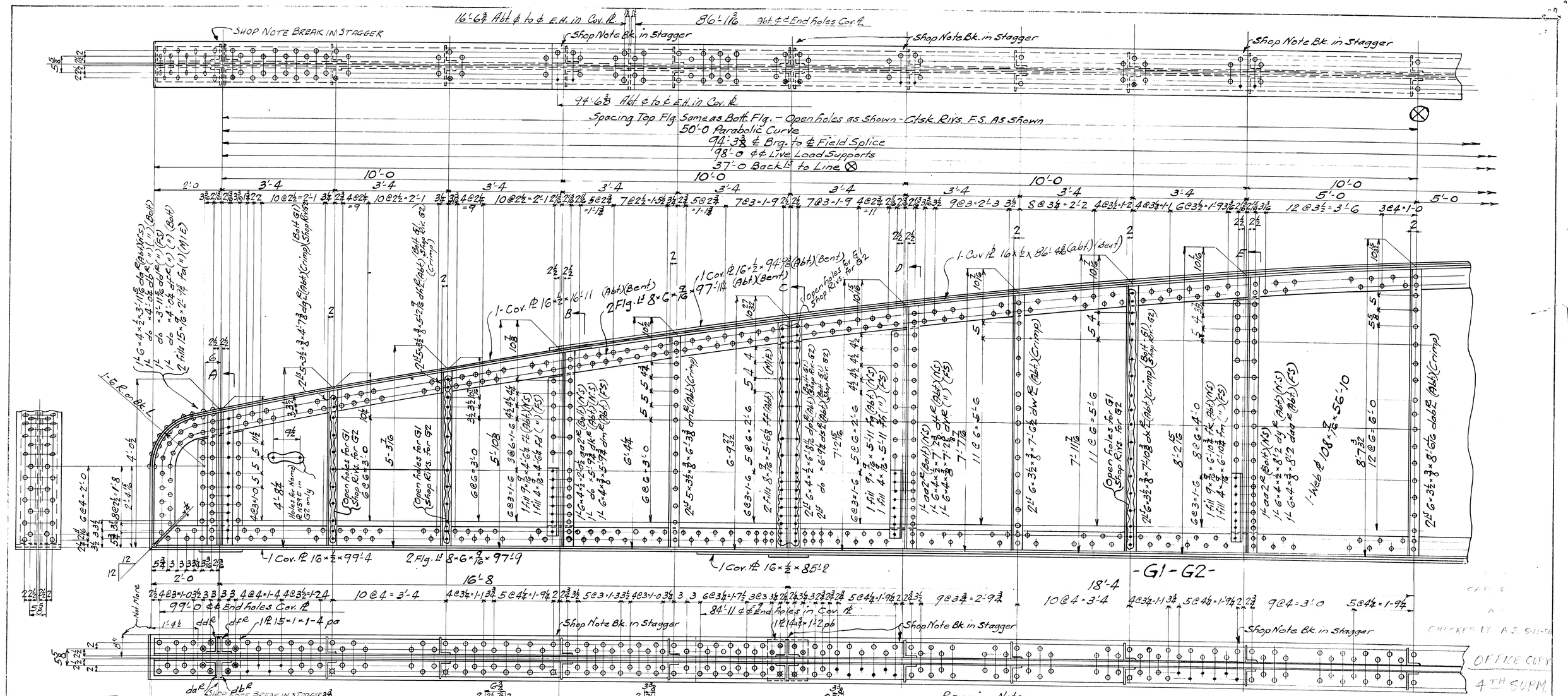

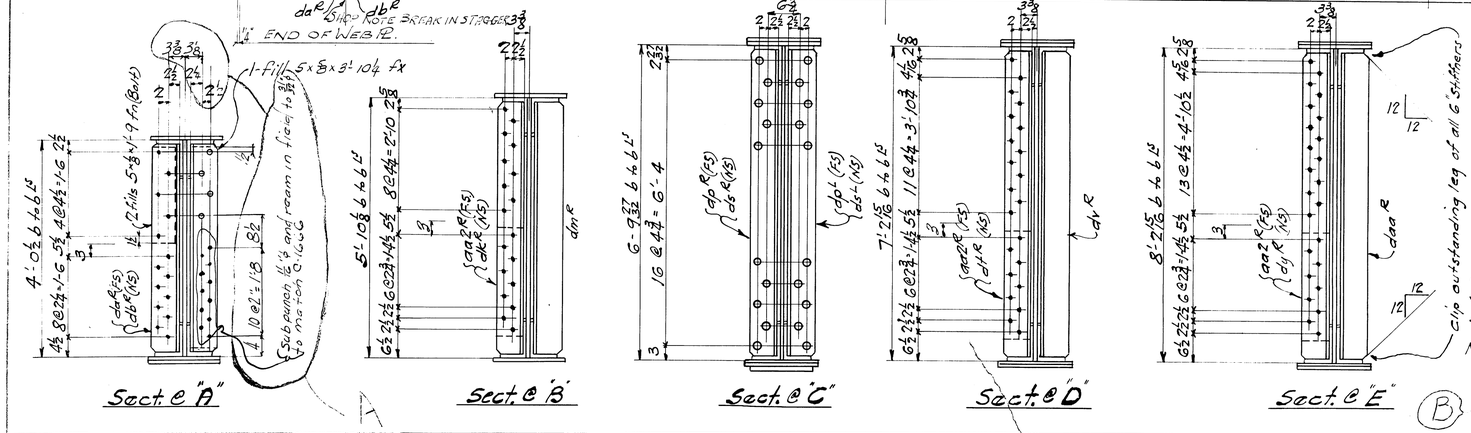

Reaming Note:-

Holes may be punched 15/16 ϕ in material not over 7/8 thk. used for laterals and longitudinals except that holes thru assembled material shall not consist of both reamed holes & holes punched full size.

If there are more than three thicknesses of main material, or any thickness over 3/4, the holes in all thicknesses shall be sub-punched 13/16 ϕ and reamed to 15/16 ϕ with all parts assembled, except main material over 3/4 thk. shall be sub-drilled and reamed to 15/16 ϕ with all parts assembled. All holes for Girder, field Splices, Conns. to Segmental Gdr. G4 and Wind Gdr. G5 to be sub-punched 13/16 ϕ and reamed to 15/16 ϕ while girders are assembled in the shop. All holes for floor beam and stringer Conns. to be sub-punched 13/16 ϕ and reamed to 15/16 ϕ to a metal templet 1" thick.

Shop Paint Note:-

Loose scale, rust and dirt shall be removed by flame cleaning process using suitable torches and thoroughly brushed with power agitated wire brushes before application of the Shop Coat.

NOTE:- SEE SHEET No. 3 FOR CAMBER DIAGRAM. SHOP TO ADD CAMBER. ALL STIFFENERS FILL 2 ENDS

Clip outstanding leg of all G Stiffners

U.H. Struc. Steel
AREA 1948
7/8 ϕ
13/16 ϕ
See Note
1st Du Pont Dulux Bridge Primer #800 (See Note)
By Others
"
Rivets
Froehling & Robertson

REQ'D LIST

Make	Description	Mark
1	Girder Thru	G1
1	do Rev.	G2
1	Name Plate	N59E
	Bolt to G2	

Shop Note:- Work Dwgs. 2-3-4 Inclusive

CONTRACT V-7173

Details of Girders G1-2 Name Pl.
1-80' Simple Leaf Bascule Bridge
For Newfalt River Bridge
Location Morehead City, Carteret Co., N.C.
Owner Tidewater Construction Corp.

VIRGINIA BRIDGE COMPANY
ROANOKE, VIRGINIA

To be fabricated at Roanoke plant
Made by H.W.C. 1950 Traced by CDM
Discharged Scott Checked by L.F.B.
Revised
Scale B-3 1/16-50 Sheet No. 2 of

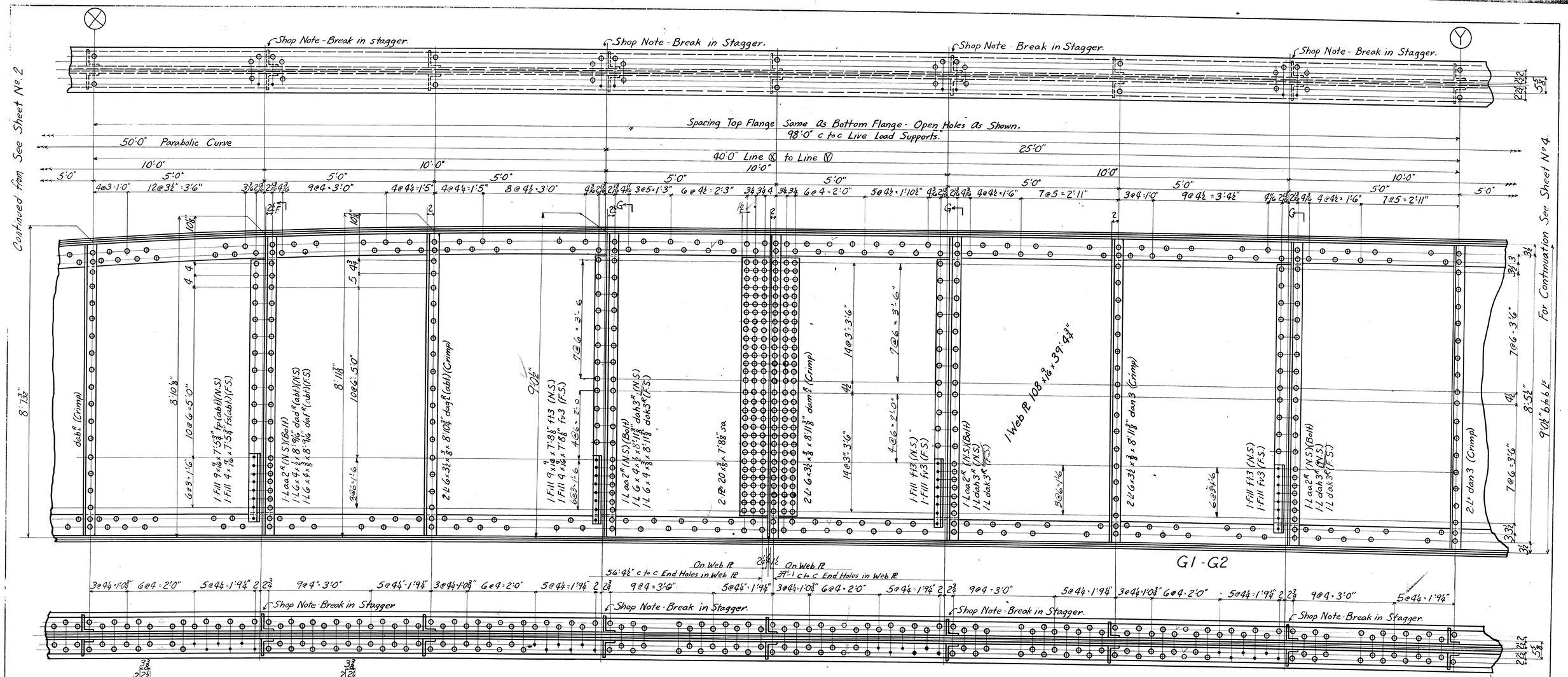

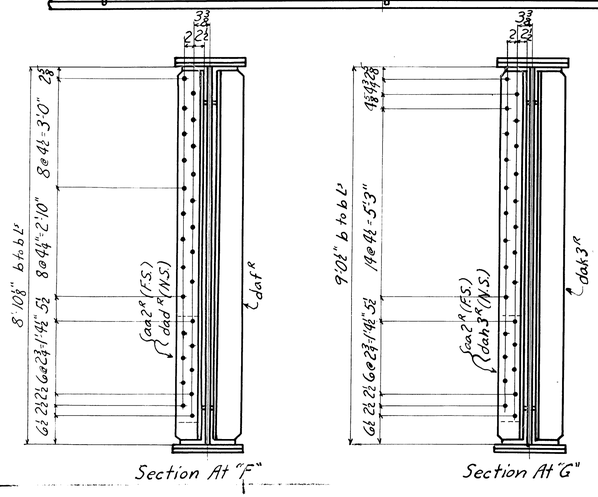

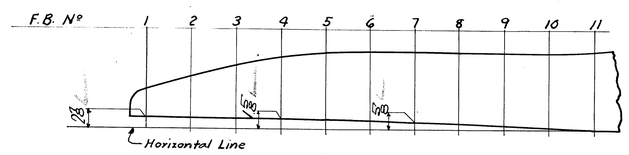

Camber Diagram

Shop Note - Work Sheets No. 2-3-4 Together

OFFICE COPY
2nd Sub. 4/1/50
AD/HA

GENERAL NOTES:

Material
Specifications
Rivets ⅞"φ
Holes ⅞"φ
Reaming See Note
Shop Paint 1st DuPont Dulux Bridge Primer #800 (See Note)
Field Paint
Erection
Field Conn's
Inspection Froehling & Robertson
Design

Material on Shop Bills #3 & 4

CONTRACT V 7173

Details of Girders G1-G2
1-80' Single Leaf Bascule Span
For Newport River Bridge
Location Morehead City, Cataret Co., N.C.
Owner Tidewater Construction Corp.

VIRGINIA BRIDGE COMPANY
ROANOKE, VIRGINIA

To be fabricated at Roanoke plant
Made by A.W.C. 12.2.49 Traced by
In charge of Scott Checked by L.F.B.
Revised
Scale in. = 1 Ft. Sheet No. 3 of

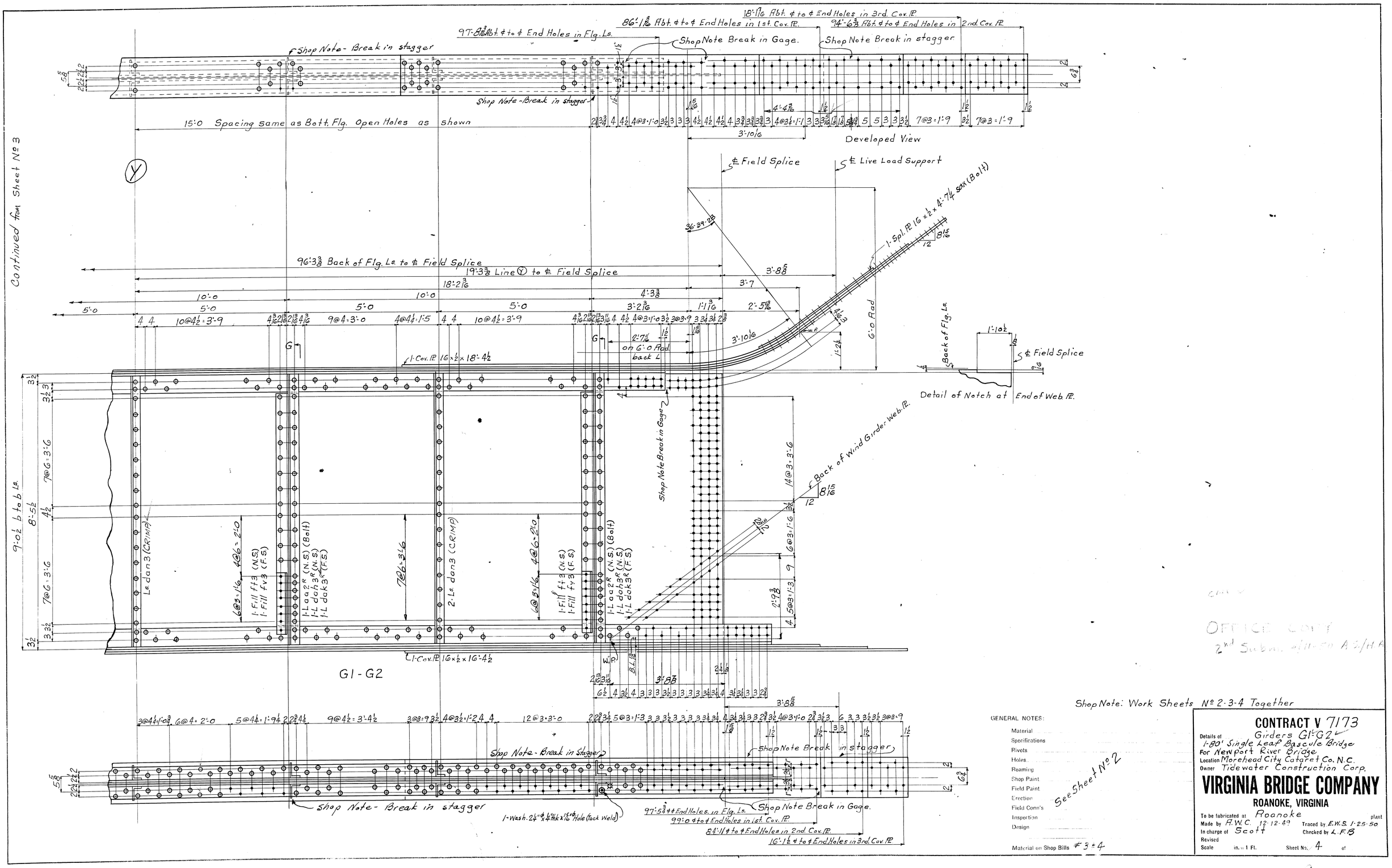
Continued from Sheet No 3
Shop Note - Break in stagger
97'-8 3/8 Abt. ℄ to ℄ End Holes in Flg. Ls.
86'-1 3/16 Abt. ℄ to ℄ End Holes in 1st. Cov. Pl.
18'-1 7/16 Abt. ℄ to ℄ End Holes in 3rd. Cov. Pl.
94'-6 3/8 Abt. ℄ to ℄ End Holes in 2nd. Cov. Pl.
Shop Note Break in Gage.
Shop Note Break in stagger
15'-0 Spacing same as Bott. Flg. Open Holes as shown
Developed View
℄ Field Splice
℄ Live Load Support
1-Spl. Pl. 16 x 1/2 x 4'-7 1/4 Sax (Bolt)
96'-3 3/8 Back of Flg. Ls. to ℄ Field Splice
19'-3 3/8 Line Ⓨ to ℄ Field Splice
18'-2 7/16
10'-0
5'-0
4'-3 3/8
3'-8 5/8
3'-7
3'-2 3/16
1'-11 3/16
2'-5 7/16
3'-10 1/16
6'-0 Rad
1-Cov. Pl. 16 x 1/2 x 18'-4 1/2
Back of Flg. Ls.
1'-10 1/2
℄ Field Splice
Detail of Notch at End of Web Pl.
Back of Wind Girder Web. Pl.
Shop Note Break in Gage
9'-0 1/2 b to b Ls.
8'-5 1/2
7@6'-3'-6
1-Fill f t 3 (N.S.)
1-Fill f v 3 (F.S.)
1-L da h 3R (N.S.)
1-L da k 3R (F.S.)
1-L aa 2R (N.S.) (Bolt)
1-Ls da n 3 (CRIMP)
2-Ls da n 3 (CRIMP)
7@6-3 1/16
4@6-2'-0
6@3-1/16
14@3'-3'-6
6@3'-1'-6
5@3'-1'-3
1-Cov. Pl. 16 x 1/2 x 16'-4 1/2
G1 - G2
3'-8 5/8
Shop Note: Work Sheets No 2-3-4 Together
Shop Note - Break in stagger
1-Wash. 2 1/4" ⌀ x 1/16" thk x 15/16" Hole (Tack Weld)
97'-5 3/4 ℄ to ℄ End Holes in Flg. Ls.
99'-0 ℄ to ℄ End Holes in 1st. Cov. Pl.
84'-1 1/4 ℄ to ℄ End Holes in 2nd. Cov. Pl.
16'-1 1/2 ℄ to ℄ End Holes in 3rd. Cov. Pl.
See Sheet No 2
GENERAL NOTES:
Material
Specifications
Rivets
Holes
Reaming
Shop Paint
Field Paint
Erection
Field Conn's
Inspection
Design
Material on Shop Bills #3 & 4
CONTRACT V 7173
Details of Girders G1 & G2
1-80' Single Leaf Bascule Bridge
For Newport River Bridge
Location Morehead City Cataret Co. N.C.
Owner Tidewater Construction Corp.
VIRGINIA BRIDGE COMPANY
ROANOKE, VIRGINIA
To be fabricated at Roanoke plant
Made by A.W.C. 12-12-49
Traced by E.W.S. 1-25-50
In charge of Scott
Checked by L.F.B.
Revised
Scale in. = 1 Ft.
Sheet No. 4 of
OFFICE COPY
2nd Subm. 4/11/50 A.S./H.A.

FOR LOCATION OF BOXES IN COUNTERWEIGHT SEE CARR & GREINER CO.'S DRAWING NO. C-513-5

NOTE: DIMENSIONS BETWEEN BLOCKS WILL VARY DUE TO IRREGULARITIES CAUSED DURING CASTING.

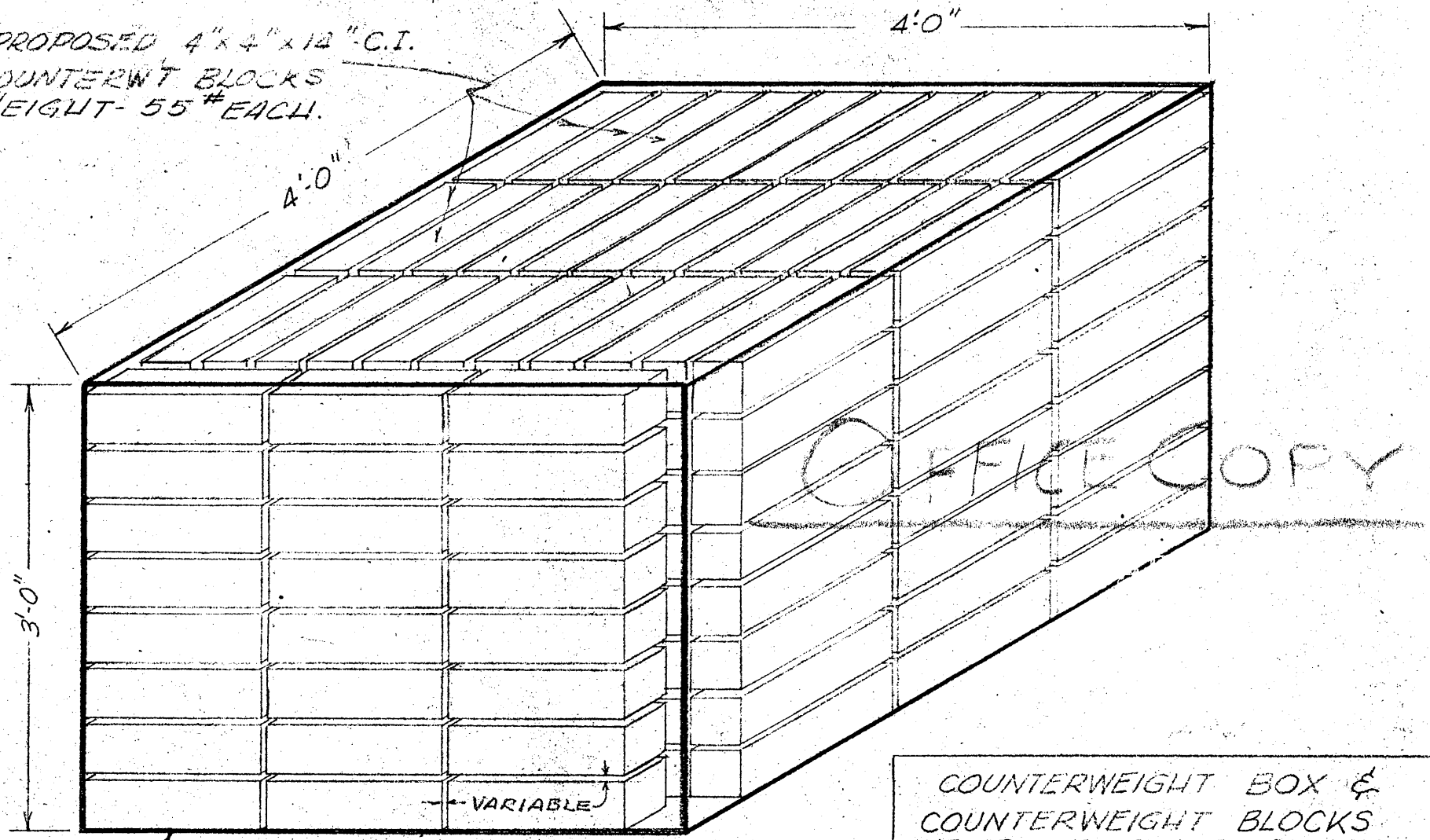

OUTLINE OF COUNTERWEIGHT BOX - 2 REQ'D.

NOTE - THE TOTAL NUMBER OF COUNTERWEIGHT BLOCKS TO BE PAID FOR WILL BE DETERMINED FROM CALCULATIONS OF WEIGHTS BASED ON SHOP DETAILS.

COUNTERWEIGHT BOX & COUNTERWEIGHT BLOCKS
NEWPORT RIVER BRIDGE
BEAUFORT MOREHEAD RAILROAD CO.

TIDEWATER CONSTRUCTION CORP.
NORFOLK, VIRGINIA

SK. 452-1(2) A.C.R. 10-11-49

NEWPORT RIVER BRIDGE

ADJUSTING BLOCKS FOR CTWT.

PROVIDE 5% ADJ. BLOCKS = 29,520#

$\frac{4'' \times 4'' \times 14''}{1728} \times 450 = 58.$ lbs. per block

$29{,}520 / 58 = 509.$ BLOCKS REQ'D.

OR $509/2 = 255.$ BLOCKS per box.

TIDEWATER WT. = 55# per block

$29{,}520 / 55 = 537$ blocks

OR $537/2 = 269$ BLOCKS PER BOX

3 Rows = 3 x 8 x 11 = 264
+ 5
269.

FOR LOCATION OF BOXES IN COUNTERWEIGHT SEE CARR & GREINER CO.'S DRAWING NO. C-513-5

NOTE: DIMENSIONS BETWEEN BLOCKS WILL VARY DUE TO IRREGULARITIES CAUSED DURING CASTING.

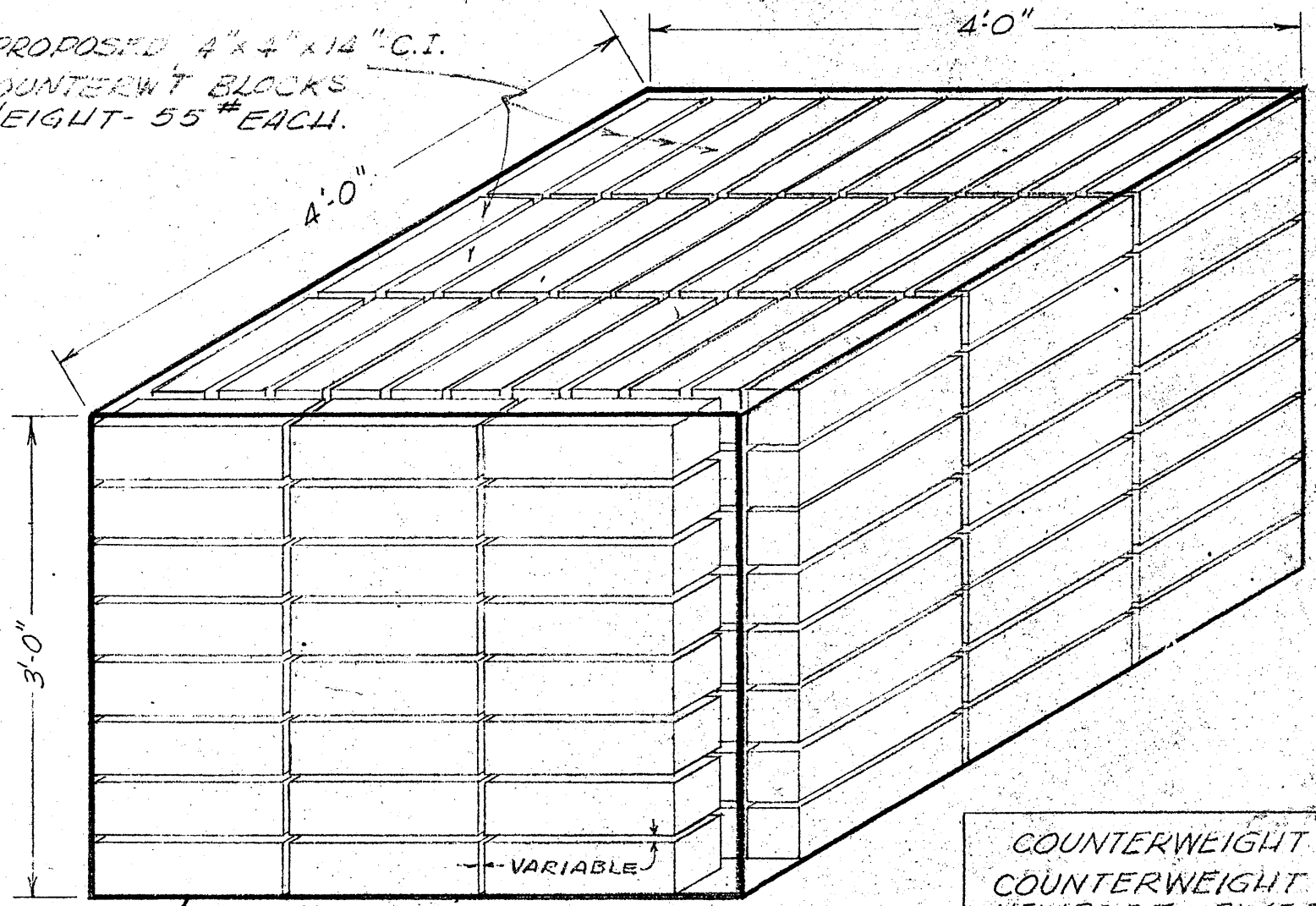

OUTLINE OF COUNTERWEIGHT BOX - 2 REQ'D

NOTE - THE TOTAL NUMBER OF COUNTERWEIGHT BLOCKS TO BE PAID FOR WILL BE DETERMINED FROM CALCULATIONS OF WEIGHTS BASED ON SHOP DETAILS.

COUNTERWEIGHT BOX & COUNTERWEIGHT BLOCKS
NEWPORT RIVER BRIDGE
BEAUFORT MOREHEAD RAILROAD CO.

TIDEWATER CONSTRUCTION CORP.
NORFOLK, VIRGINIA

SK. 452-1(2) A.C.R. 10-11-49

PRINTS - 11/3/49

9

FOR LOCATION OF BOXES IN COUNTERWEIGHT SEE CARR & GREINER CO.'S DRAWING NO. C-513-5

NOTE: DIMENSIONS BETWEEN BLOCKS WILL VARY DUE TO IRREGULARITIES CAUSED DURING CASTING.

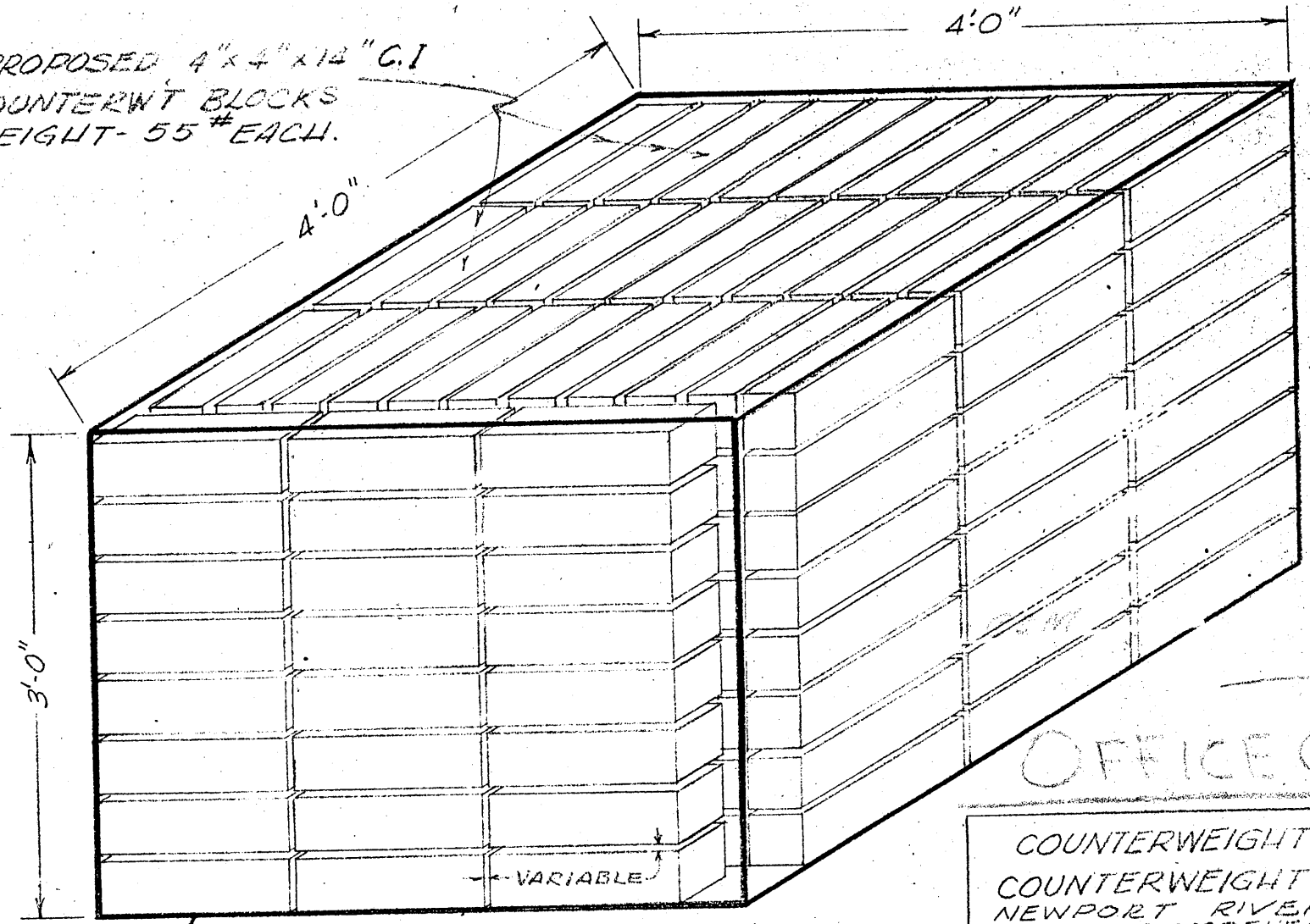

OUTLINE OF COUNTERWEIGHT BOX
2 REQ'D AS SHOWN. CAPACITY = 288 BLKS EA.

OFFICE COPY

COUNTERWEIGHT BOX & COUNTERWEIGHT BLOCKS
NEWPORT RIVER BRIDGE,
BEAUFORT MOREHEAD RAILROAD CO.

TIDEWATER CONSTRUCTION CORP.
NORFOLK, VIRGINIA

SK. 452-1 A.C.R. 10-11-49

PRINTS

6

TOTALS : 2 - BASCULE GIRDERS

A.S. 6-28-50 C-513

		x	y	W #	No. Rivet Heads	@ 24#/100 = R #	$W_1 = (W+R)$	$+W_1 x$	$-W_1 x$	$+W_1 y$	$-W_1 y$
	SHT. 1			9 33 99	1 20 24	28 88	9 62 87	602 15 15	—	—	138 73 04
	" 2			3 49 34	37 72	9 06	3 58 40	16 94 11	12 45 21	2 14 62	23 37 74
	" 3			6 78 27	38 06	9 13	6 87 40	20 51 63	34 29 69	5 26 28	26 97 47
	" 4 : G5			26 40	11 44	2 75	29 15	4 39 87	—	—	3 97 31
	" 4 : G4			1 94 37	10 64	2 55	1 96 92	—	14 12 84	—	18 98 44
	" 4 : SPRING ASS.			2 91	—	—	2 91	—	60 42	10 68	—
	" 4 : PAINT			15 00	—	—	15 00	3 90 45	—	—	1 37 10
GREINER	TOTAL : WITHOUT MACHINERY	+ 26.03 (1 7/16")	− 9.14 (2 5/8")	22 00 28	2 18 10	52 37	22 52 65	647 91 21	61 48 16	7 51 58	213 41 10
VA. BR. CO.	" " "	+ 25.91	− 8.92			43 00	23 11 58	646 86 95	47 93 55	4 10 90	210 21 20
	SHT. 5 : MACHINERY			1 10 29	—	—	1 10 29	38 72 41	9 06 04	1 19 84	11 78 44
GREINER	TOTAL : WITH MACHINERY			23 10 57	2 18 10	52 37	23 62 94	686 63 62	70 54 20	8 71 42	225 19 54
VA. BR. CO.	" " "						24 20 11	672 42 80	58 80 60	5 31 35	220 28 60
	SHTS. 6 & 7 : FLOOR BMS, ETC.			5 81 80	58 80	14 16	5 95 96	355 01 79	—	—	100 12 39
	SHT. 8 : DECK MAT.			2 87 49	—	—	2 87 49	181 05 85	—	—	45 93 10
GREINER	TOTAL : 2 - GIRDERS	+ 35'-5 7/8"	− 11'-2"	31 79 86	2 76 90	66 53	32 46 39	1222 71 26	70 54 20	8 71 42	371 25 03
VA. BR. CO.	" "	+ 34'-9 3/4	− 10'-10 11/16				33 05 65	1209 50 10	58 80 60	5 31 35	365 28 35

L. TAN $\left(\frac{11'-2}{35'-5\frac{7}{8}}\right)$ = 9.49 782
L. SIN " = 9.47 732
RAD = 20'-5 1/8

20'-5 1/8	1.31021	417.27
SIN	+9.47732	− 37.58
	0.78753	379.69
	6'-1 9/16	19'-5 13/16

DECK MATERIALS

A.S. 6-26-50 C-513

	ITEM		x	y	L	w	W #	+Wx	-Wx	+Wy	-Wy
	60.5 # ASCE RAIL: 2×(1'-2+98'-0+1'-6) = 201'-4" (100'-8)		+ 62.83	− 15.50	201.33	60.5/3 = 20.17	4060	255090	—	—	62930
AISC P. 131	SPLICE BARS & BOLTS: (32.4+3.3) (35.7)		+ 62.83	− 15.50	No. 4	35.7	143	8985	—	—	2217
	R.R. SPIKES (78×4)+(4×8)		+ 63.00	− 15.88	No. 344	0.77#	265	16695	—	—	4208
	SPACER BAR: 2½×½		+ 63.00	− 15.65	200'	4.25	850	53550	—	—	13303
	TIE CLAMPS: 3×3/16×6" (1.91/2)		+ 63.00	− 16.62	No. 84	0.96	81	5103	—	—	1346
AISC P. 166-7	" " BOLTS & 2 NUTS: ¾"φ×1'-1½ (1.99+.12) = 2.11		+ 63.00	− 16.20	No. 84	2.11	178	11214	—	—	2884
	2-TIE PLS "B": "C"+1×½ (1.70)		+ 112.00	− 15.69	2.0'	+ 1.70	3 +60 63	7056	—	—	989
	2- " " "C": 10½×⅝ (22.3)		+ 14.00	− 15.69	1'-4 = 1.33	44.6	60	840	—	—	942
	LAG SCREWS: ¾"φ×6"		+ 63.00	− 15.85	No. 82	.75	62	3906	—	—	983
	2- EASER RAILS & BOLTS 4¼×1½ 2×34 1"φ BOLTS×5"		+ 62.83	− 15.49	×4 4.0' 2.0'	21.73 5.10 1.81	86.92 10.20 7.24 ×2 = 209	13132	—	—	3238
	TIES: 82×8/12×10/12×10' = 456 FT.³		+ 63.00	− 16.08	456. FT.³	50 #/FT.³	22778	1435014	—	—	366270
	TOTAL: DECK MATERIALS						28749	1810585	—	—	459310
	VA. BR. CO. " "						28964	1826520	—	—	462585

FLOOR BEAMS, ETC. VA. BR. CO. SHTS. 11, 12 & 13

A.S. 6-23-50 C-513

			PAINT AREA □'	x	y	L	w #/'	W #	No. RIV. HDS.	@ 24#/100 = R #	W_1 = (W+R)	+ W_1 x	− W_1 x	+ W_1 y	− W_1 y
FB11	ag	4 ∠s 3½ x 3½ x ⅜ (8.5)		+ 14.00	− 11.75	9'-5¾ = 9.48	34.0	322	100	24	346	4844	—	—	4066
"	fb	2 FILL 3½ x ⅝ (7.44)		+ 14.00	− 13.00	1'-0¼ = 1.02	14.88		—	—	15	210	—	—	195
"	hb, hd	4 PL (10½+11⅜) x ⅜ (28.0)		+ 14.00	− 13.00	1'-6¼ = 1.52	1.12	170	48	12	182	2548	—	—	2366
"	af, ah	4 ∠s 4 x 4 x ⅝ (15.7)		+ 14.00	− 16.24	3'-1 = 3.08	62.8	194	112	27	221	3094	—	—	3589
"	B11	2-PL 39¼ x ⅝ x 8'-6 : (2x3.27x8.5) − (2x8) = 39.6 □' (55.6 − 16)	100	+ 14.00	− 13.42	39.6 □'	25.5 #/□'	1010	—	—	1010	14140	—	—	13554
S1, S2, S3, S4		18 - 18 WF 55	990	+ 67.00	− 17.17	9'-10½ = 9.88	9.90	9781	216	52	9833	658811	—	—	168833
"	L1	18 - ∠ 3½ x 3½ x ⅜ (8.5)	200	+ 67.00	− 17.30	7'-3¼ = 7.27	1.53	1112	—	—	1112	74504	—	—	19238
"	pm	18 - PL 10¾ x ⅜ x 2'-4 : (18x.90x1.83) = 29.6 □'		+ 67.00	− 17.20	29.6 □'	15.3 #/□'	453	396	95	548	36716	—	—	9426
"	ha	9 - PL 7½ x ⅜ x 1'-4 (9.56)		+ 67.00	− 17.20	1'-4 = 1.33'	86.04	115	108	26	141	9447	—	—	2425
"	"	9 - ∠ 4 x 3½ x ⅜ (9.1)		+ 67.00	− 17.08	1'-4 = 1.33'	81.9	109	—	—	109	7303	—	—	1862
"	ak	18 - ∠ " (9.1)		+ 67.00	− 17.08	1.0'	163.8	164	—	—	164	10988	—	—	2801
"	am	18 - ∠ 5 x 3½ x ⅜ (10.4)		+ 67.00	− 17.05	1.0'	187.2	187	—	—	187	12529	—	—	3188
"	ba	224 - BAR 2 x ½ x 3"		+ 62.00	− 16.33	56.0'	3.40	190	—	—	190	11780	—	—	3103
S3, S4	ba	30 - " "		+ 107.00	− 16.33	7.5'	3.40	26	—	—	26	2782	—	—	425
S5, S6	ba	22 - " "		+ 18.00	− 16.33	5.5'	3.40	19	—	—	19	342	—	—	310
S5, S6		2 - 18 WF 55	90	+ 18.00	− 17.17	7'-10½ = 7.88	1.10	867	24	6	873	15714	—	—	14989
"	L2	2 - ∠ 3½ x 3½ x ⅜ (8.5)	20	+ 18.00	− 17.30	6'-8½ = 6.71	17.0	114	—	—	114	2052	—	—	1972
"	pa	2 - PL 10¾ x ⅜ x 2'-4 : (2x.90x1.83) = 3.3 □'		+ 18.00	− 17.20	3.3 □'	15.3 #/□'	51	44	11	62	1116	—	—	1066
"	hb	1 - PL 7 x ⅜ x 1'-3¼		+ 18.00	− 17.20	1'-3¼ = 1.27	8.93	11	12	3	14	252	—	—	241
"	"	1 - ∠ 4 x 3½ x ⅜ (9.1)		+ 18.00	− 17.08	1.27	9.1	12	—	—	12	216	—	—	205
"	ak	2 - ∠ " (9.1)		+ 18.00	− 17.08	1.0'	18.2	18	—	—	18	324	—	—	307
"	am	2 - ∠ 5 x 3½ x ⅜ (10.4)		+ 18.00	− 17.05	1.0'	20.8	21	—	—	21	378	—	—	358
L3		4 - ∠ 5 x 3½ x ⅜ (10.4)	88	+ 102.00	− 18.32	22'-1½ = 22.13	41.6	921	120	29	950	96900	—	—	17404
L3		12 - ∠ " "	264	+ 62.22	− 18.32	22.13	124.8	2762	360	86	2848	177203	—	—	52175
L4		2 - ∠ 4 x 4 x 7/16 (11.3)	66	+ 27.25	− 18.47	44.0'	22.6	994	120	29	1023	27877	—	—	18895
"	fa	14 - FILL 3 x ⅜ x 8"		+ 27.25	− 18.47	10.0'	8.93	89	56	13	102	2780	—	—	1884
L5		2 - ∠ 4 x 4 x 7/16 (11.3)	57	+ 18.16	− 18.44	38.0'	22.6	859	96	23	882	16017	—	—	16264
"	fd	10 - FILL 3 x 1¼ x 8"		+ 18.16	− 18.44	7.0'	12.75	89	40	10	99	1798	—	—	1826
LP1		14 - PL 22 x ⅜ x 2'-0¼ : (14x1.83x2.02) − (7x1.58x.58) = 45.4 □' (51.9 − 6.4)		+ 63.00	− 18.47	45.4 □'	15.3 #/□'	695	364	87	782	49266	—	—	14444
LP2		2 - PL 27¾ x ⅝ x 3'-7 : (2x2.31x3.58) − (1.75x2.83) = 11.5 □' (16.5 − 5.0)		+ 23.25	− 18.48	11.5 □'	25.5 #/□'	293	28	7	300	6975	—	—	5544
"	fb	2 - FILL 8 x ¼ (6.80)		+ 23.50	− 18.45	1'-9 = 1.75'	13.6	24	48	12	36	846	—	—	664
LP3		2 - PL 31 x ⅝ x 4'-3¾ : (2x2.58x4.31) − (3.2x2.1) = 15.5 □' (22.2 − 6.7)		+ 15.25	− 18.46	15.5 □'	25.5 #/□'	395	64	15	410	6253	—	—	7569
"	fa	2 - FILL 8 x ⅝ (17.0)		+ 15.42	− 18.41	1.5'	3.40	51	48	12	63	971	—	—	1160
LP4		2 - PL 25¾ x ⅜ x 2'-6½ : (2x2.19x2.54) − (2.5x.83) = 9.0 □' (11.1 − 2.1)		+ 111.25	− 18.47	9.0 □'	15.3 #/□'	138	32	8	146	16243	—	—	2697
		PAINT AREA SHT. 7	1875												
		" " " 6	2339								22858	1273229			395045
			4214	+ 59.57	− 16.80	$\frac{4214}{500}$ x 20 x 4 =		675	—	—	675	40210			11340
		TOTALS: SHT. 7						22946	2436	587	23533	1313439	—	—	406385
		" " 6						35234	3444	829	36063	2236740	—	—	594854
		FLOOR BEAMS, ETC. TOTALS		+ 59.57	− 16.80			58180	5880	1416	59596	3550179	—	—	1001239
		VA. BR. CO.		+ 59.48	− 16.57						59590	3544210	—	—	987390

FLOOR BEAMS, ETC. VA. BR. CO. SHTS. 8, 9, 10, 11

A.S. 6-23-50 C-513

			PAINT AREA □'	x	y	L	w	W #	No. RIVET HEADS	@ 24#/100 = R#	W₁ = (W+R)	+W₁x	−W₁x	+W₁y	−W₁y
	FB1	24 WF 145				16'-9¼ = 16.77	145	2432							
	da	2 ∠ 6x6x⅝ (24.2)				1'-10½ = 1.88	48.4	91	—						
	db	2 ∠ 6x4x⅝ (20.0)				1.88	40.0	75							
	aw	2 ∠ 6x6x⅝ (24.2)				1'-3½ = 1.29	48.4	62							
		FB1 TOTAL:	160	+112.00	−17.44	—	—	2660	84	20	2680	300160	—	—	46739
	FB2	30 WF 116				16.77'	116	1945							
	dd8	4 ∠s 6x6x⅝ (24.2)				2'-4¼ = 2.35	96.8	227							
	aa8	" "				1.29	96.8	125							
		FB2 TOTAL:	(154)			—	—	2297	(124)	(30)	(2327)				
		FB2-10 INC. TOTAL: (x9)	1386	+6200'	−17.21	—	—	20673	1116	270	20943	12984 66	—	—	36042 9
	FB11	24 WF 145				16'-8 = 16.67	145	2417							
	db	2 ∠ 6x6x⅝ (24.2)				1.88	48.4	91							
	dd	2 ∠ 6x4x⅝ (20.0)				1.88	40.0	75							
	aa8	2 ∠ 6x6x⅝ (24.2)				1.29	48.4	62							
		FB11 TOTAL:	160	+14.00'	−17.36			2645	84	20	2665	37310	—	—	46264
FB1	ab	4 ∠s 4x4x⅝ (15.7)		+112.00	−16.31	2'-9⅝ = 2.80	62.8	176	96	23	199	22288	—	—	3246
"	ad	4 ∠s 3½x3½x⅜ (8.5)		+112.00	−14.64	4'-3¼ = 4.27	34.0	145	48	12	157	17584	—	—	2298
"	B1	2-PL 21⅛x⅜ (27.0)	35	+112.00	−15.45	3'-3⅞ = 3.32	54.0	179	—	—	179	20048	—	—	2766
FB2-10	ah,ak	36-∠s 4x4x⅜ (9.8)		+62.00	−15.86	3'-4⅛ = 3.34	352.8	1178	—	—	1178	73036	—	—	18683
"	fa	18-FILLS 4x½ (6.8)		+62.00	−15.79	2'-6⅝ = 2.55	122.4	312	864	207	519	32178	—	—	8195
FB2	pa	1-PL 33½x⅜x2'-9 : 2.79x2.75 = 7.67□'		+102.00	−18.47	7.67□'	153#/□'	117	100	24	141	14382	—	—	2604
FB3-8	pa9	6-PL 15¼x⅜ (19.45)		+66.26	−18.47	2'-9¾ = 2.81'	116.7	328	300	72	400	26504	—	—	7388
FB9	pb	1-PL 20¼x⅝		+31.05	−18.47	3'-9 = 3.75'	43.1	162	78	19	181	5620	—	—	3343
"	fa	2-FILLS 8x¼ (6.8)		+31.05	−18.47	1'-9 = 1.75'	13.6	24	—	—	24	745	—	—	443
FB10	pa	1-PL 20x⅝		+21.06	−18.47	4'-3 = 4.25	42.5	181	82	20	201	4233	—	—	3712
"	fd	2-FILL 8x⅝ (17.0)		+21.06	−18.47	1.75	34.0	60	—	—	60	1264	—	—	1108
FB2	af,ag	4-∠ 3½x3½x⅜ (8.5)		+102.00	−14.04	4'-7 15/16 = 4.66	34.0	158	40	10	168	17136	—	—	2359
"	ha	2-FILL 3½x½ (5.95)		+102.00	−14.04	4'-6¾ = 4.56	11.9	54	—	—	54	5508	—	—	758
"	B2	2-PL 37¼x⅜x3'-3⅞ : (2x3.10x3.32) − (2.5x2.33) = 14.8□' (20.6 − 5.8)	40	+102.00	−14.88	14.8□'	15.3#/□'	226	—	—	226	23052	—	—	3363
FB3	aa,al	4-∠ 3½x3½x⅜ (8.5)		+92.00	−13.21	5'-9 5/16 = 5.78	34.0	197	56	14	211	19412	—	—	2787
"	ha	2-FILL 3½x½ (5.95)		+92.00	−13.21	5'-8 = 5.67	11.9	68	—	—	68	6256	—	—	898
"	B3	2-PL 39⅞x⅜x4'-6 : (2x3.32x4.5) − (2.25x4.0) = 20.9□' (29.9 − 9.0)	54	+92.00	−14.42	20.9□'	15.3#/□'	320	—	—	320	29440	—	—	4614
FB4	adaf	4-∠s 3½x3½x⅜ (8.5)		+82.00	−12.75	6'-8 = 6.67	34.0	227	64	15	242	19844	—	—	3086
"	hb	2-FILL 3½x½ (5.95)		+82.00	−12.75	6'-6¾ = 6.56	11.9	78	—	—	78	6396	—	—	995
"	B4	2-PL 39⅞x⅜x5'-6 : (2x3.32x5.5) − (2.25x5.0) = 25.2□' (36.5 − 11.3)	64	+82.00	−14.08	25.2□'	15.3#/□'	386	—	—	386	31652	—	—	5435
FB5	ab,ad	4-∠s 3½x3½x⅜ (8.5)		+72.00	−12.50	7'-2⅝ = 7.22	34.0	246	72	17	263	18936	—	—	3288
"	hb	2-FILL 3½x½ (5.95)		+72.00	−12.50	7'-1¼ = 7.10	11.9	85	—	—	85	6120	—	—	1063
"	B5	2-PL 39⅞x⅜x6'-1¼ : (2x3.32x6.10) − (2.25x5.5) = 28.1□' (40.5 − 12.4)	70	+72.00	−13.88	28.1□'	15.3#/□'	430	—	—	430	30960	—	—	5968
FB6-10	aa	20-∠s 3½x3½x⅜ (8.5)		+42.00	−12.50	7'-4⅞ = 7.41	170.0	1260	360	86	1346	56532	—	—	16825
"	ha	10-FILLS 3½x½ (5.95)		+42.00	−12.50	7'-3½ = 7.29	59.5	434	—	—	434	18228	—	—	5425
"	B6-10	10-PL 39⅞x⅜x6'-3⅞ : (10x3.32x6.30) − (5x2.25x5.67) = 145.4□' (209.2 − 63.8)	370	+42.00	−13.83	145.4□'	15.3#/□'	2225	—	—	2225	93450	—	—	30772
		TOTAL: SHT. 6	2339					352 34	3444	829	3063	223674 0	—	—	59485 4

MACHINERY ON GIRDERS

A.S. 6-28-50 C-513

		SECTION	DEPTH	x	y	L	w/FT./GIRDER	w×L×2=W#	No. Bolt H.&N.	R#	W₁=(W+R)	+W₁x	−W₁x	+W₁y	−W₁y
GEAR RACK C-1659		$12\frac{3}{4}\times1\frac{1}{2}$" 16'-3¾ + 1'-4½ = 16'-4½				27'-1½ = 27.12	65.0 #/'	3526							
		$6\frac{3}{4}\times\frac{1}{4}$: 5.74 ; $6\frac{3}{4}\times\frac{7}{8}$: 20.1 ; c.g.: $\frac{2r}{\alpha}\times\sin\frac{\alpha}{2} = \frac{57.3\times32.75\times.8}{112.137} = 16.77$ = 13'-10⅝				27.12	25.9 "	1405							
		TOTAL :	—	− 8.29	− 11.14		—	4931	H. 7¼ 2/16 ; N. 8¾ 2/16	@ .25 = 54 ; @ .18 = 39	5024	—	41649	—	55967
CAULDWELL		SHELL: $2\pi r = 6.28\times6 = 37.7$" $\times1\frac{1}{2}$"		+ 112.00	− 17.69	2'-7½ = 2.62'	193	1012			1012	11334	—	—	17902
		SUPPORT: 2-$8\frac{3}{4}\times1$" (29.8)		+ 112.00	− 17.38	2.0'	59.6	238	H. 1"φ 22 ; N. 1"φ 22	@ .36 = 9 ; @ .28 = 6	253	28336	—	—	4397
2-AIR BUFFERS C-1666		PISTON: $\pi r^2 = 3.14\times6^2 = 113$ □" ($\times3\frac{1}{2}$" = 396 in.³)		+ 112.00	− 16.85	in.³ 396	0.2833 #/in.³	224			224	25088	—	—	3775
		ROD : " = $3.14\times(1.25)^2 = 4.9$ ($\times36$" = 177.")		+ 112.00	− 17.87	" 177	"	100			100	11200	—	—	1787
		ROD END: " = $3.14\times(2.5)^2 = 19.6$ ($\times5$" = 98.")		+ 112.00	− 18.79	" 98	"	56			56	6272	—	—	1052
		TOP ROD & SPRING: " = $3.14\times(1.25)^2 = 4.9$ ($\times22$" = 108.")		+ 112.00	− 15.79	" 108	"	62			62	6944	—	—	979
		SPRING HOUSING: $2\pi r = 6.28\times2.5 = 15.7$" $\times1$"		+ 112.00	− 15.62	1'-6 = 1.5'	54 #	162			162	18144	—	—	2530
		PIPE, FITTINGS & GAGES		+ 112.00	− 16.00	—	—	100		ASSUME:	100	11200	—	—	1600
	C-1660	$12\times1\frac{1}{2}$		+ 112.00	− 18.52	1.5'	61.2	184	H. 1"φ 20 ; N. 1"φ 40	@ .36 7 ; @ .28 11	202	22624	—	—	3741
	"	$6\times4\frac{1}{2}$		"	− 18.77	"	91.8	275			275	30800	—	—	5162
	"	6×2		"	− 19.54	"	40.8	122			122	13664	—	—	2384
	"	6×3		"	− 19.21	"	61.2	184			184	20608	—	—	3535
	"	$12\frac{1}{2}\times\frac{3}{4}$		"	− 18.49	1'-3 = 1.25'	31.9	w×L 40	H. 1"φ 4 ; N. 1"φ 8	@ .36 2 ; @ .28 2	44	4928	—	—	814
2-CLOSED LOCKS	"	$11\frac{1}{2}\times\frac{1}{2}$		"	− 18.85	1.25'	19.6	" 25			25	2800	—	—	471
	"	$5\frac{1}{2}\times\frac{1}{2}$		"	− 18.77	7" = 0.58'	9.35	" 6			6	672	—	—	113
	"	$2\pi r = 6.28\times2.25 = 14.1$" $\times1$"		"	− 19.29	6" = 0.5'	48.0	" 24			24	2688	—	—	463
	C-166	6×3		+ 112.00	− 19.21	2'-3 = 2.25'	61.2	275			275	30800	—	—	5283
	"	$3\frac{1}{2}\times1$		+ 111.11	− 17.29	5.0'	11.9	w×L 60			60	6667	—	—	1037
	"	$1\frac{1}{2}$"φ		+ 112.00	− 19.04	7.0'	6.0	84			84	9408	—	—	1599
	"	5×2		+ 112.00	− 19.29	1.0'	34.0	w×L 34			34	3808	—	—	656
	"	$\pi r^2 = 3.14\times(1.25)^2 = 4.9$ □" ($\times16$" = 78 in.³)		+ 111.73	− 19.29	in.³ 78	0.2833 #/in.³	w×L 22			22	2458	—	—	424
	SHT.19	VA.BR.CO. ∠9×4×½		+ 111.21	− 16.48	4'-7 = 4.58	21.3	w×L 98			98	10899	—	—	1615
	"	" 2-⊏ 6×½		+ 111.27	− 16.00	1.0'	10.2	20			20	2225	—	—	320
	"	" 2-⊏ 6×½		+ 110.96	− 15.85	8½" = 0.71	10.2	15			15	1664	—	—	238
2-OPEN LOCKS	C-1665	$14\times2\frac{9}{16}$		− 18.41	+ 2.24	2'-2 = 2.17'	12.2	529			529	—	9739	1185	—
	"	$23\times4\frac{1}{2}$		—	—	1½" = 0.96'	35.2	338			—	—	—	—	—
	"	$\pi r^2 = 3.14\times3^2 = 28.3$ □" ($\times9$" = 255 in.³)		− 18.67	+ 1.89	in.³ 255	0.2833 #/in.³	w×L − 72			266	—	4966	503	—
2-CWT. MAIN BRGS.	C-1655	$\pi r^2 = 3.14\times9^2 = 254.3$ □"×($12\frac{7}{8}-4\frac{1}{8}$) = 2003. in.³		—	—	" 2003	"	1135	H. 1"φ 16 ; N. 1"φ 32	@ .36 6 ; @ .28 9	—	—	—	—	—
	"	$3.14\times(13^{3}/_{8}-9^2) = 276.3$ □"($\times1\frac{1}{2}\times2$) = 828.9 in.³		—	—	" 828.9	"	470			—	—	—	—	—
	C-1656	$3.14\times7^2 = 153.9$ □"($\times\frac{3}{4}\times2$) = 231. "		− 19.56	+ 5.88	" 231.	"	131			1751	—	34250	10296	—
		TOTAL: MACHINERY		+ 26.90	− 9.60	—	—	10884	—	145	11029	387241	90604	11984	117844
		VA. BR. CO. "		+ 13.53	− 8.17	—	—	—	—	—	10853	255585	108705	12045	100740

GIRDERS : VA. BR. CO. SHT. 7

A.S. 6-20-50 C-513

		SECTION	DEPTH	x	y	L	w/FT./GIRDER	w×L×2 = W#	No. RIVET HEADS	@ 24#/100 = R#	W₁ = (W+R)	+ W₁x	− W₁x	+ W₁y	− W₁y
		1-WEB PL 25¾ × ⅜ × 15'-11¾				15'-11¾ = 15.98'	32.9	1051	10.73						
	aa	1-∠ 4 × 3½ × ½ × 3'-4½				3.38	11.9	80	✓						
	ab	1-∠ " × 4'-2				4.17	11.9	99	✓						
	af, ad	2-∠s " × 4'-0½ (11.9)				4.04	23.8	192	✓						
	ag	1-∠ 6 × 3½ × ½ × 5'-10				5.83	15.3	178	✓						
	ah	2-∠s 3½ × 3½ × ⅜ × 14'-11 (8.5)				14.92	17.0	507	✓						
		1-COV. PL 8 × ⅜ × 10'-6½				10.54	10.2	215	✓						
	paa	2-PL 15 × ⅜ × 2'-1⅝ (19.1)				2.14	38.2	163	✓						
	fv	1-FILL 7⅜ × ½ × 2'-10				2.83	12.6	71	✓						
	fw	1- " " × 3'-4				3.33	12.6	84	✓						
G5		TOTAL: (C.G. ASSUMED CENTER 16' LENGTH) + (7'-1⅞ ABOVE COV PL)		+ 15.09	− 13.63	—	—	2640		11.44	275	2915	43987	—	—	39731
		1-WEB 86 × ¾ × 27' (112.137° (112°08'-13")) 259.04 − 122.58 = 136.46□"	c.g. = 0.4 × 7'-2½ = 2'-10½ + 9'-1 = 11'-11½			27.0'	30.6 #/□'	wxAx2 8351								
	da-dh	2 ∠s 5 × 3½ × ⅜ (10.4)				37'-8½ = 37.71'	20.8 #/'	1569								
	fa-ft	2 FILLS 3½ × ½ (5.95)				61'-1¼ = 61.10	11.9 #/'	1454								
		TOTAL: WEB & STIFFENERS		− 7.14	− 9.59	—	—	11374		2252	60	11434	—	81639	—	109652
		2 ∠s 3 × 7½ × ½ (26.4 − .85 = 25.55)	(2/π × sin α/2) 2.19"	− 5.53	− 7.43	27.0'	51.1 #/'	2759		424	102	2861	—	15821	—	21257
		2 ∠s 8 × 6 × 1 (44.2) arc: 57.3 × 32.1' × .8297 / 112.137 = 13'-7 5/16	2.65"	− 8.12	− 10.92	30.0'	88.4 #/'	5304		388	93	5397	—	43824	—	58935
G4		TOTAL	—	—	—	—	—	19437		1064	255	19692	—	141284	—	189844
SHT. 19		1-BAR 3 × ⅜ (3.83)				2'-7½ = 2.63'	3.83 #/'	20								
		2- " 1 × ¼ (0.85)				10½" = 0.88'	1.70 "	3								
		12- " 3½ × ⅝ (7.44)				1'-6 AV. = 1.50'	89.28 "	268								
SPRING		ASSEMBLY: TOTAL	c.g. 3" FROM 1" PL	− 20.70	+ 3.67	—	—	291		—	—	291	—	6024	1068	—
		PAINT AREA				A □'										
		WEB: 96.28' × (9.21 + 2.67 = 11.88')				1144										
		STIFF. 22 - 1' × 9'				198										
		WEB: 1.70 + 8.42 + 7.18 + 35.76 + 11.52 =				65										
		" 16.26' × 11.47' =				187										
		" 10.29 + 8.21 + 31.81 + 12.78 + 75.12 =				143										
		G4: WEB				137										
		" : BOT. FLG. 32' × 1.33' =				43										
		" : STIFF. 1' × 38' =				38										
		G5: WEB: 16' × 2.25' =				36										
		STIFF. 9 - 1' × 11' =				99										
		TOP FLG. 40' × 1.33' =				53										
		BOT. " 47' × 1.33' =				63										
		WIND ST 26' × 3.0' =	c.g. FROM GIRDER			78										
PAINT		TOTAL		+ 26.03	− 9.14	2284 □' ONE SIDE		500	2284 × 2 × 2 × 20 × 4 = 1460# SAY			1500	39045	—	—	13710
		20#/gal./500□': 4 COATS														

GIRDERS : VA. BR. CO. SHTS. 5 & 6

A.S. 6-16-50 C-513

		SECTION	DEPTH	x	y	L LENGTH-SECTION	W/FT./GIRDER	W×A×2 = W#	No. RIVET HEADS	@ 24#/100 = R#	W1 = (W+R)	+ W1 x	− W1 x	+ W1 y	− W1 y
143½×5/8 × 46'-6¼ −(16'-3 1/16)	TOP	5/8" WEB: 1.26/2 × 2.70 = 1.70 □'	1'-3⅛ = 1.26'	+ 15.92	− 9.02	2'-8⅜ = 2.70'	25.5 #/□'	87	—	—	87	13.85	—	—	7.85
	"	" 3.12 × 2.70 = 8.42 □'	3'-1½ = 3.12'	+ 16.37	− 10.98	2.70	"	4.29	—	—	4.29	70.23	—	—	47.10
	"	" 4.39/2 × 3.27 = 7.18 □'	4'-4⅝ = 4.39'	+ 13.93	− 11.08	3'-3 3/16 = 3.27	"	3.66	—	—	3.66	50.98	—	—	40.55
	BOT	" 6.0 × 5.96 = 35.76 □'	6'-0 = 6.00'	+ 14.74	− 15.54	5'-11 9/16 = 5.96	"	18.24	—	—	18.24	268.86	—	—	283.45
	"	" 3.1416 × 6² × 36.658/360 = 11.52 □'	6' RAD.	+ 10.50	− 16.34	3'-10 1/16 = 3.84	"	5.88	—	—	5.88	61.74	—	—	96.08
136×9/16 × 30'-8¾ −(8'-10¼)	TOP	5/8" WEB + 2-9/16" WEBS: 3.1416 × 6² × 32.76/360 = 10.29 □'	6' RAD.	− 0.22'	+ 0.49'	3'-5⅞ = 3.43	71.5 #/□'	14.71	—	—	14.71	—	3.24	7.21	—
	"	25.5 + 2×23.0 = 71.5 ; (5.05/2) × 3.25 = 8.21 □'	5'-0 9/16 = 5.05	− 2.33	− 0.62	3'-3 = 3.25	"	11.74	1.12	27	12.01	—	27.98	—	7.45
	"	(6.42/2) × 9.91 = 31.81	6'-5 = 6.42	− 6.40	+ 1.27	9'-10 15/16 = 9.91	"	45.49	1.68	40	45.89	—	293.70	58.28	—
	BOT	5.47 × 3.25 = 17.78	5'-5⅜ = 5.47	− 4.54	− 4.48	3'-3 = 3.25	"	25.43	1.00	24	25.67	—	116.54	—	115.00
	"	4.03 × 18.64 = 75.12	4'-0⅜ = 4.03	− 13.70	+ 1.53	18'-7 1/16 = 18.64	"	107.42	5.04	121	108.63	—	1488.23	1666.20	—
		2-9/16" WEBS 136 × 9/16 (260)	11'-4½	+ 2.11	− 5.69'	8'-10 1/16 = 8.84	5.20 #/'	91.94	5.08	122	93.16	196.57	—	—	530.08
pf & pg	TOP	2-PL 7⅜ × 9/16 × 7'-4 : 2×23.0 = 46.0 (276) 10.29 □'	6' RAD.	− 0.22'	+ 0.49'	3'-5⅞ = 3.43	97.0 #/□'	19.96	—	—	19.96	—	4.39	9.78	—
	"	2-PL 6 7/8 × 5/8 × 7'-4 : 2×25.5 = 51.0 8.21 □'	5'-0 9/16 = 5.05	− 2.33	− 0.62	3'-3 = 3.25	"	15.93	—	—	15.93	—	37.12	—	9.88
	"	" 6.34 × 3.01 = 19.08 □'	6'-4 1/16 = 6.34	+ 1.30	− 1.89	3'-0 1/16 = 3.01	"	37.02	—	—	37.02	48.13	—	—	69.97
	"	" 0.34 × 4.33 = 1.47 □'	4 1/16 = 0.34	− 3.44	− 2.10	4'-3 15/16 = 4.33	"	2.85	—	—	2.85	—	9.80	—	5.99
	"	" 5.05 × 1.08 = 5.45 □'	5'-0 9/16 = 5.05	− 3.14	+ 1.02	1'-0 15/16 = 1.08	"	10.57	—	—	10.57	—	33.19	10.78	—
pb	BOT	2-PL 47 × 9/16 × 11'-5¼ 2×89.9 = 179.8	47"	− 16.57	+ 3.72	11'-5¼ = 11.44	179.8 #/'	41.14	—	—	41.14	—	681.69	1530.4	—
pd	"	2-PL 40⅜ × 5/8 × 12'-9¼ 2×85.8 = 171.6	40⅜"	− 15.86	+ 3.55	12'-9¼ = 12.77	171.6 #/'	43.83	—	—	43.83	—	695.14	1556.0	—
		2-ST 5@30 (7'-1 7/16 ABOVE BOT. 9/16" cov. PL)	—	+ 3.12	− 4.72	26'-6 = 26.5'	60.0 #/'	31.80	6.38	153	33.33	103.99	—	—	157.32
aa & ab		2-LS 6 × 3½ × ½ (15.3) "	—	+ 10.04	− 9.86	8'-9¾ = 8.81	30.6 #/'	5.39	—	—	5.39	54.12	—	—	53.15
ad^R, af^R		2-LS 4 × 3½ × ½ (11.9) "	—	− 0.34	− 2.14	17.0	23.8 #/'	8.09	—	—	8.09	—	2.75	—	17.31
fd & ff		2-FILLS 3½ × 5/8 (7.44) & 2-FILLS 3½ × 9/16 (6.69)	—	+ 4.15	− 5.48	5'-9½ = 5.79	28.26 #/'	3.27	—	—	3.27	13.57	—	—	17.92
SUBTRACT		7 PL = 4⅛" THICK AT CTW. TRUNNION 8-6.3 = 1.7 □'	—	− 20.95	+ 6.91	—	168.3 #/□'	(− 5.72)	—	—	(− 5.72)	—	(−119.83)	(− 39.53)	—
fa n, fa m		2-FILLS 3½ × (5/8 + 9/16 = 13/16) 2×(7.44+6.69) = 28.26	—	− 5.02	+ 1.34	2'-3¼ = 2.27	28.26 #/'	1.28	—	—	1.28	—	6.43	1.72	—
1-dk, 3-dm, 4-dp, 4-ds, 2-dt		: ∠5×3½×½ (dt: ∠6×4×5/8 @ 20 #/')	c.g. 1-2½ LEFT; 3-7 UP	− 2.29	− 5.10	83.16' ; 11.68'	13.6 #/' ; 20.0 #/'	27.30	—	—	27.30	—	62.52	—	139.23
1-ah, 7-ak		∠4×4×½	c.g. 6'-1½ LEFT; 5'-1 7/8 UP	+ 2.59	− 6.78	24.67'	12.8 #/'	6.32	2.24	54	6.86	17.77	—	—	46.51
6-fs, 6-ft,		2-fy, 2-fw, 2-fx	c.g. 2'-4 11/16 RIGHT; 2'-9 UP	− 5.68	− 3.62	—	—	11.16	—	—	11.16	—	63.39	—	40.40
1-fh, 1-fk		1-FILL 3½ × 1 3/16 (14.1 #/')	c.g. 14'-8¼ LEFT; 3'-10 9/16 UP	+ 8.70	− 12.91	12.23'	14.1 #/'	3.45	—	—	3.45	30.02	—	—	44.54
4-fm		1- " 3½ × 5/8 (7.44)	c.g. 1'-7 9/16 LEFT; 3'-10 9/16 UP	− 1.77	− 5.12	25.0'	7.44 #/'	3.72	—	—	3.72	—	6.58	—	19.05
4-dh, 2-dn, 2-dw		∠5×3½×½	c.g. 6'-0 7/8 LEFT; 9'-4 7/16 UP	+ 5.06	− 3.34	29.38'	13.6 #/'	7.99	—	—	7.99	40.43	—	—	26.69
6-ag, 2-aw		∠4×4×½	c.g. 6'-1½ LEFT; 9'-5 5/16 UP	+ 5.15	− 3.33	28.30'	12.8 #/'	7.25	2.64	63	7.88	40.58	—	—	26.24
2-fn		1-FILL 3½ × 1 3/16 (14.1)	c.g. 14'-8¼ LEFT; 9'-0½ UP	+ 11.78	− 8.77	6.68'	14.1 #/'	1.88	—	—	1.88	22.15	—	—	16.49
2-fp		1- " 3½ × 5/8 (7.44)	c.g. 9'-4 7/16 LEFT; 9'-0½ UP	+ 7.51	− 5.59	6.68'	7.44 #/'	1.00	—	—	1.00	7.51	—	—	5.59
1-fv		1- " 6 × 5/8	—	+ 14.0	− 12.97	10'-11¼ = 10.94'	12.8 #/'	2.80	—	—	2.80	39.20	—	—	36.32
1-paa		1- PL 9 × 1	—	− 20.52	+ 3.90	1'-4 = 1.33'	30.6 #/'	82	—	—	82	—	16.83	3.20	—
2-sa		2-PL 26 × ½ (44.2)	—	+ 17.75	− 13.96	7'-9½ = 7.79'	88.4 #/'	13.77	8.56	205	15.82	280.81	—	—	220.85
2-sd		2-PL 7 3/8 × 5/8 (15.65)	—	+ 19.60	− 9.91	2'-6½ = 2.54'	31.3 #/'	1.59	—	—	1.59	31.16	—	—	15.76
2-da		2-fa	—	+ 17.87	− 14.02	—	—	6.20	—	—	6.20	110.79	—	—	86.92
db, df, dg, dd, 2-fb			—	+ 14.00	− 12.97	—	—	36.35	4.32	104	37.39	523.46	—	—	484.95
2-sb		2-PL 7 3/8 × 5/8 (15.65)	—	+ 16.17	− 18.13	2.54'	31.3 #/'	1.59	—	—	1.59	25.71	—	—	28.83
		TOTAL : SHT. 3						678.27	38.06	913	687.40	2051.63	3429.69	526.28	2697.4

GIRDERS : VA. BR. CO. SHTS. 5 & 6

A.S. 6-6-50 C-513

		SECTION	DEPTH AT ℄	℄	y	LENGTH-SECTION	W/FT/GIRDER	w×L×2 = W #	No. RIVET HEADS	@ 24#/100 = R #	W₁ = (W+R)	+ W₁ ℄	− W₁ ℄	+ W₁ y	− W₁ y
—		114.0 61.2 54.4 290 4 ∠s 8x6x 5/8; 2 ⊥ 16x 9/16; 2 ⊥ 16x 1/2; WEB 136x 5/8	11'-4 1/2	+ 5.08	− 7.90	16'-3 1/16 = 16.26'	519.6	16,897.	1268	304	17201	87,381	—	—	135,888
Top		-28.5 2 ∠s 8x6x 5/8	2.52"	+ 20.20	− 9.75	2'-9 3/16 = 2.77'	57.0	316	—	—	316	6383	—	—	3081
"		"	"	+ 16.85	− 9.45	4'-1 1/4 = 4.10	57.0	467	—	—	467	7869	—	—	4413
38'-1 3/16 "		"	"	+ 0.39	+ 2.13	3'-5 1/8 = 3.43	"	391	52	13	404	158	—	861	—
-(16'-3 1/16) "		"	"	− 6.98	+ 2.86	11'-6 13/16 = 11.57	"	1319	—	—	1319	—	9207	3772	—
Top		15.3 2 ⊥ 8 x 9/16	4"	+ 19.20	− 9.88	9 3/16 = 0.77'	30.6	47	24	6	53	1018	—	—	524
12'-3 "		"	"	+ 16.82	− 9.56	3'-10 1/16 = 3.84	"	235	120	29	264	4440	—	—	2524
"		"	"	+ 11.94	− 6.34	7'-7 11/16 = 7.64	"	468	—	—	468	5588	—	—	2967
"		1 - cov. ⊥ 16 x 9/16	9/32"	+ 19.20	− 9.52	9 3/16 = 0.77'	30.6	47	—	—	47	902	—	—	447
41'-2 1/16 "		"	"	+ 16.92	− 9.22	3'-10 1/16 = 3.84	"	235	—	—	235	3976	—	—	2167
-(16'-3 1/16) "		"	"	+ 0.47	+ 2.34	3'-5 1/8 = 3.43	"	210	112	27	237	111	—	555	—
"		"	"	− 9.47	+ 3.26	16'-7 1/16 = 16.59	"	1015	480	115	1130	—	10701	3684	—
35'-10 5/8 "		1 - cov. ⊥ 16 x 1/2	1/4"	+ 0.48	+ 2.39	3'-5 1/8 = 3.43	27.2	187	—	—	187	90	—	447	—
-(16'-3 1/16) "		"	"	− 9.47	+ 3.31	16'-7 1/16 = 16.59	"	902	—	—	902	—	8542	2986	—
"		1 - cov. ⊥ 16 x 1/2	1/4"	+ 3.29	+ 0.66	3'-1 5/16 = 3.11	"	169	—	—	169	556	—	112	—
15'-7 3/8 "		"	"	+ 0.50	+ 2.43	3'-5 1/8 = 3.43	"	187	—	—	187	94	—	454	—
"		"	"	− 5.71	+ 3.09	9'-0 3/4 = 9.06	"	493	—	—	493	—	2815	1523	—
"		11.2 faa 2-FILL 5 1/4 x 5/8 x 4'-11 3/4	5/16"	− 15.27	+ 3.61	4'-11 3/4 = 4.98	22.4	223	—	—	223	—	3405	805	—
"		2 - ∠s 7 3/8 x 5 15/16 x 9/16 x 15'-1 1/2 (25.7-1.3 = 24.4#)	2.50"	− 10.24	+ 3.03	15'-1 1/2 = 15.13	48.8	1477	296	71	1548	—	15852	4690	—
"		fg 2 - FILL 7 3/8 x 9/16 x 10'-1 1/4 (14.1)	3 11/16"	− 7.74	+ 2.76	10'-1 1/4 = 10.10	28.2	570	—	—	570	—	4412	1573	—
Bot.		2 ∠s 8 x 6 x 5/8 (28.5#)	2.52"	+ 16.07	− 18.29	8'-7 7/16 = 8.62	57.0	983	—	—	983	15797	—	—	17979
50'-2 1/2 "		"	"	+ 9.95	− 18.00	3'-10 1/16 = 3.84	"	438	—	—	438	4358	—	—	7884
-(16'-3 1/16) "		"	"	− 13.34	− 1.03	21'-5 7/8 = 21.49	"	2450	404	97	2547	—	33977	—	2623
"		2 ⊥ 8 x 9/16 (15.3)	4"	+ 13.95	− 18.16	4'-4 11/16 = 4.39	30.6	269	120	29	298	4157	—	—	5412
15'-7 1/4 "		"	"	+ 9.99	− 17.88	3'-10 1/16 = 3.84	"	235	120	29	264	2637	—	—	4720
"		"	"	+ 5.44	− 14.84	7'-4 1/2 = 7.38	"	452	—	—	452	2459	—	—	6708
45'-11 3/4		1 cov. ⊥ 16 x 9/16	9/32"	+ 13.95	− 18.52	4'-4 11/16 = 4.39	30.6	269	—	—	269	3753	—	—	4982
-(16'-3 1/16) "		"	"	+ 9.88	− 18.22	3'-10 1/16 = 3.84	"	235	120	29	264	2608	—	—	4810
"		"	"	− 13.47	− 1.21	21'-5 7/8 = 21.49	"	1315	656	157	1472	—	19828	—	1781
44'-5 1/2 "		1 cov. ⊥ 16 x 1/2	1/4"	+ 13.19	− 18.56	2'-10 7/16 = 2.87	27.2	156	—	—	156	2058	—	—	2895
-(16'-3 1/16) "		"	"	+ 9.86	− 18.26	3'-10 1/16 = 3.84	"	209	—	—	209	2061	—	—	3816
"		"	"	− 13.50	− 1.25	21'-5 7/8 = 21.49	"	1169	—	—	1169	—	15782	—	1461
5'-3 1/2 "		1 cov. ⊥ 16 x 1/2	"	+ 12.42	− 18.60	1'-3 15/16 = 1.33	"	72	—	—	72	894	—	—	1339
"		"	"	+ 9.85	− 18.30	3'-11 9/16 = 3.96	"	215	—	—	215	2118	—	—	3935
2'-7 1/2 "		1 cov. ⊥ 16 x 1/2	"	+ 10.46	− 18.51	2'-7 1/2 = 2.63	"	143	—	—	143	1496	—	—	2647
6'-6 "		1 cov. ⊥ 16 x 1/2	"	+ 13.67	− 18.69	6'-6 = 6.50	"	354	—	—	354	4839	—	—	6616
1'-6 "		pa 1 - ⊥ 15 x 3/4	3/8"	+ 14.00	− 18.74	1'-6 = 1.50	38.3	115	—	—	115	1610	—	—	2155
		TOTAL : SHT. 2						34934	3772	906	35840	169411	124521	21462	233774

GIRDERS: VA. BR. CO. SHTS. 2, 3 & 4 — A.S. 5-31-50 — C-513

SECTION	DEPTH AT x	+ x	− y	LENGTH-SECTION L	w/ft./girder	w×L×2 = W #	No. RIVET HEADS	AT 24#/100 = R #	W₁ = (W+R)	+ W₁x	− W₁y
4 Ls 8×6×9/16 (102.8); 4 Pl 16×½ (108.8); WEB 9/16×108 (207)	9'-0½	42.00	14.02	40'	418.6	33 488	2 848	684	34 172	1,435,224	479,091
" " " × 107 (205)	8'-11½	66.98	14.06	10'	416.6	8 332	704	169	8 501	569,397	119,524
" " " × 102 (195)	8'-6½	76.96	14.27	10'	406.6	8 132	752	180	8 312	639,692	118,612
" " " × 93 (178)	7'-9½	86.94	14.65	10'	389.6	7 792	808	194	7 986	694,303	116,995
" " " × 78 (149)	6'-6½	96.92	15.27	10'	360.6	7 212	936	225	7 437	720,794	113,563
1-Cov. Pl 16×½	—	100.14	18.60	3'-8½ = 3.71'	27.2	(− 202)	—	—	(− 202)	(− 20,228)	(+ 3,757)
4 Ls 8×6×9/16 (102.8); 2 Pl 16×½ (54.4); WEB 9/16×48 (91.8)	4'-11½	106.87	16.05	10'	249.0	4980 } 5401	896	215	5 616	600,182	90,137
½ WEB 22×9/16 = ½×42.1 = 21.05	—	4980 − 107.00; 421 − 105.33	3144 − 16.06; 1836 − 16.52; 421 − 13.89	10'	21.05	421 }	—	—	—	—	—
4 Ls 8×6×9/16; 2 Pl 16×½; WEB 9/16×46 (88.0)	3'-10	112.90	16.62	2'	245.2	981	300	72	1 053	118,884	17,501
2 Ls 8×6×9/16	2'-6	113.79	17.29	—	51.4	258	—	—	258	29,358	4,461
1-Cov. Pl 16×½	2'-6	114.02	17.29	—	27.2	136	—	—	136	15,507	2,351
WEB 9/16 × 108	9'-0½	19.86	14.02	4'-3¼ = 4.27	207	1 768	—	—	1 768	35,112	24,787
BOTTOM 2 Ls 8×6×9/16	—	19.10	18.33	5'-9¾ = 5.81	51.4	597	116	28	625	11,938	11,456
" 1-Cov. Pl 16×½	—	18.33	18.56	7'-4 = 7.33	27.2	399	—	—	399	7,314	7,405
" " "	—	17.56	18.60	8'-10½ = 8.88	27.2	483	—	—	483	8,481	8,984
" SPLICE 16×½	—	19.98	18.64	16'-4½ = 16.38	27.2	891	304	73	964	19,261	17,969
TOP 2 Ls 8×6×9/16	—	20.81	9.71	2'-4½ = 2.38	51.4	245	56	13	258	5,369	2,505
" 1 Cov. Pl 16×½	—	25.08	9.40	6'-2 = 6.17	27.2	336	—	—	336	8,427	3,158
" 3 " "	—	20.41	9.44	3'-2 3/16 = 3.18	81.6	519	88	21	540	11,021	5,098
" 3 " "	—	16.96	9.20	3'-10 1/16 = 3.84	81.6	627	104	25	652	11,058	5,998
" 1 " "	—	15.91	8.63	1'-5½ = 1.46	27.2	79	—	—	79	1,257	682
" 3 " "	—	14.04	7.29	3'-1 1/16 = 3.14	81.6	512	80	19	531	7,455	3,871
" 2 " "	—	11.95	5.75	2'-0½ = 2.04	54.4	222	64	15	237	2,832	1,363
" 1 " "	—	10.30	4.55	2'-0½ = 2.04	27.2	111	64	15	126	1,298	573
" 1 " "	—	15.00	8.10	7½" = 0.63'	27.2	34	—	—	34	510	275
WEBS, FLG Ls & COVER Pls						78,353.	8,120	1,948.	80,301	4,934,446	1,152,602
STIFF. Ls & FILLS (SEE SHT. E4)						15 046.	3 904	940	15 986	1,087,069	234,702
TOTALS				GREINER		93,399.	12,024	2888	96,287	6,021,515	1,387,304
										$\bar{x}$ = 62.537	$\bar{y}$ = 14.408
WEBS, FLG Ls & COVER Pl						80,385				4,881,450	1,153,715
STIFF. Ls & FILLS						15,046				1,030,990	220,065
RIVET HEADS							10,000	2400		154,630	34,560
TOTALS				VA. BR. CO.		95,431	10,000	2400	97,831	6,067,070	1,408,340
										$\bar{x}$ = 62.016	$\bar{y}$ = 14.396

F.B. 162—5M—6-45

ERECTOR'S LIST OF FIELD RIVETS AND BOLTS

VIRGINIA BRIDGE COMPANY

Roanoke PLANT CONTRACT No. V-7173 PAGE No. 1 of 4

DESCRIPTION 1-85'-0" Single Leaf Bascule Span Morehead City, N.C.

FOR Tidewater Construction Corp.

Number Required	Description	Diam.	Grip	Length	Shape of Head	PIECES CONNECTED AND REMARKS		
194	Rivet	3/8	1 9/16	3/4	Button	G3	to	G1-2
148			1 5/8	3/4				
68			3/4	5 5/8				
34			2 15/16	4 3/8				
40			4 3/16	6 1/4				
4			3	4 3/8				
40			4 1/2	6 1/4				
152			2 11/16	4 1/2				
144			3 3/16	5 1/8				
32			2 3/16	4				
16			3 15/16	5 1/4				(Drive Sask)
20			1 9/16	3 1/4		G5		
16			2 1/16	3 3/8				
12			2 1/8	3 3/8				G3
36			1 5/8	3 1/4				
44			1 3/8	2 5/8				
44			1 13/16	3 1/2				
8			1 1/16	2 5/8				
210			2 3/16	4		G4		
28			1 5/8	3 1/4		FB1-B1		G1-G2
24			2 11/16	4 1/2		db-dt		
18			1 9/16	3 1/4		FB2		
14			3/8	2 3/8		B2		
7			1 5/8	3 1/4				
16			1 5/16	2 3/8		dg-dh		
8			2 7/16	4 1/4		"		
42			1 5/8	3 1/4		aa2		
6			2 3/16	4		"		
38			2 11/16	4 1/2		dp-ds		
36			1 9/16	3 1/4		FB3-4		
48			3/8	2 3/8		B3-4		
8			1 5/8	3 1/4		"		
14			1 5/16	2 3/8		dk		
7			2 7/16	4 1/4				
108			1 9/16	3 1/4		FB5-6-7-8-9		
180			3/8	2 3/8		B5-6-7-8-9		
24			1 5/8	3 1/4		"		
84			1 5/8	3 1/4		aa2		
12			2 3/16	4				
66			2 3/8	4 1/8		FB11-B11		G3
62			4 3/4	6 1/2		db-dd		
18			1/2	2 1/8		A3		FB1
6	Cap Screw	3/4		1 1/2	Hex	SA1		G3
6	Lock Washers for 3/4 - bolts							

MADE BY [illegible] DATE 6-8-1950

CHECKED BY DATE 19

LENGTH {Distance from under head to end for ordinary rivets and bolts. Distance out to out for ctsk. rivets and bolts.

IN CHARGE OF Scott

ERECTOR'S LIST OF FIELD RIVETS AND BOLTS

VIRGINIA BRIDGE COMPANY

Roake PLANT CONTRACT No. V-7173 PAGE No. 2

DESCRIPTION

FOR

Number Required	Description	Diam.	Grip	Length	Shape of Head	PIECES CONNECTED AND REMARKS	
24	Rivets	7/8	1 5/8	3 5/8	Butt	B11 to	G5
24			1 3/8	2 7/8		hb-hd	B11
50			1 1/2	2 3/8		aq	
16			1 5/8	3 1/4		B1	FB1
288			1 1/4	2 3/4		B2 to 10	FB2 to 10
36			1 5/8	3 1/4		B11	FB11
4			1	2 1/2		ah	B11
32			1 15/16	3 3/8		B2 to 9	G1-2
4			2 7/16	4 1/4		B10	
8			1 1/16	3 1/8		LP4	
4			2 7/16	3 1/2			(Drive Ctsk)
70			1 15/16	3 3/8		LP1	
14			2 7/16	4 1/4		FB3 to 9	
26			2 11/16	4 1/2		LP2	
2			3 9/16	5 1/2		FB10	
6			3 5/16	5 1/4		LP3	G3
18			3 13/16	5 3/4			
8			4 9/16	6			(Dr. Ctsk)
32			1 5/8	3 1/4			FB11
14			1 1/2	3 1/8		LP2	FB10
12			1 1/4	2 3/4		G5	
2			2 11/16	4 1/2			G1-2
70			1 1/4	2 3/4		LP1	FB3 to 9
320			1 5/8	3 1/4		S1-2-3-4-5-6	Fl. Beams
10			1 1/4	2 3/4		aw	FB1
90			1 13/16	3 5/8		aa8	FB2 to 10
10			1 1/4	2 3/4			FB11
140			3/4	2 1/4		L1-2	S1-2-3-4-5-6
4			1	2 1/2			FB1
32			1 9/16	3 1/4		-2	FB2 to 10
4			1	2 1/2		L2	FB11
256			3/4	2 1/4		L3	LP4 LP1-FB2 to 8
76			1 3/4	3 1/2		L4	LP2-FB9
68			2 1/8	3 7/8		L5	LP3-FB10
288			1 13/16	3 5/8		pd	TS1-2-7-8
288			1 3/4	3 1/2		TS4-5-6	do
152			1 3/8	2 7/8		TS5-6	TS4
16			1 5/8	3 5/8		TG1	
32			1 15/16	3 3/4			
64			1 13/16	3 5/8		TS3	TS1-2
128			1	2 1/2		"	TS4-5-6
16	Lag Screws	1/2		3	Sq	LP1	Timber

MADE BY F DATE 6/8/19 50

CHECKED BY DATE 19

LENGTH {Distance from under head to end for ordinary rivets and bolts. Distance out to out for ctsk. rivets and bolts.

IN CHARGE OF Scott

V. B. 162—5M—6-45

ERECTOR'S LIST OF FIELD RIVETS AND BOLTS

VIRGINIA BRIDGE COMPANY

Roke PLANT CONTRACT No. V-7173 PAGE No. 3

DESCRIPTION

FOR

Number Required	Description	Diam.	Grip	Length	Shape of Head	PIECES CONNECTED AND REMARKS		
480	Rivets	7/8	1 3/8	2 7/8	Butt	TB1-2-3-4	to	TS1-2-7-8
16			1 3/8	3 5/8		MS3		TB1-2-3-4
48			1 3/8	2 3/4		"		" (Drive ctsk)
52			1	2 1/2		CB1		CC1
4			1 1/2	3 1/2				
4			1 1/8	2 5/8				
10			1 3/4	3 1/2				
16			1 3/4	3 1/2		CF4		
16			2 1/8	3 7/8				
16			2 1/2	4 1/4				
8			3 5/16	5 1/4		CG1		
16			2 15/16	4 7/8				CF4
40			13/16	2 3/8				
88			7/8	2 3/8		CF2		
4			1 1/4	2 3/4				CG1
84			1 1/4	2 3/4				
4			2	3 3/4				
42			2 1/8	3 7/8		dd		
28			1 3/16	2 3/4		CB1-CF4		
20			13/16	2 3/8		CF2		
16			1 3/16	2 3/4				CF2
4			2	3 3/4		CB1		
48			1 5/8	3 1/4				
8			2 3/8	4 1/8				
172			7/8	2 3/8		CF1		
20			1 1/4	2 3/4				
54			1 1/4	2 3/4		CF3		
8			1 5/8	3 1/4				CF1
24			1 1/4	2 3/4				
54			7/8	2 3/8				CG1-CF4
172			7/8	2 3/8		CF5		
44			1 1/4	2 3/4				CF2
44			2	3 3/4		ab		
242			1 1/4	2 3/4		aa af-ag-ik-pa		
8			1 5/8	3 1/4		aa-af-pa		CF3
108			1 1/4	2 3/4		ik		
70			1 5/8	3 1/4		ik-ip		CF4
24			3/4	2 1/4		CS6-8		CG1
20			1 5/8	3 1/4				
16			13/16	2 3/8		CS8-CF5		
16			3/4	2 1/4		CS2-4-9		
16			7/8	2 3/8		do		
28			15/16	2 7/8		CS4-9		CS4-9
8			7/8	2 3/8		fb		

MADE BY H DATE 6/8/1950

CHECKED BY DATE 19

LENGTH {Distance from under head to end for ordinary rivets and bolts. Distance out to out for ctsk. rivets and bolts.

IN CHARGE OF Scott

V. B. 182—5M—8-45

ERECTOR'S LIST OF FIELD RIVETS AND BOLTS

VIRGINIA BRIDGE COMPANY

Roke PLANT CONTRACT No. V-7173 PAGE No. 4 of 4

DESCRIPTION

FOR

Number Required	Description	Diam.	Grip	Length	Shape of Head	PIECES CONNECTED AND REMARKS		
16	Rivets	7/8	1 3/16	2 3/4	Butt	CS2-3	to	CG1
40			3/4	2 1/4		CS3-4-5-9		CF1
12			1 1/8	2 5/8		CS4-9		
4			3/4	2 1/4				CS3-4-9
60			3/4	2 1/4		CS1-2		CS1
4			1 1/8	2 5/8		CS2		CF2
10			3/4	2 1/4		CS10		
20			3/4	2 1/4		CF1		
4			3/4	2 1/4		CF4		TB2-3
8	Bolts	7/8	1 5/8	2 3/4		A2		
8	Lock washers for 7/8" bolts							
8	Bev. "	1 3/4"						

Summary - Actual Number Required.
Add 10% to Rivets for shipment.

62	Rivets	7/8	6 3/8	Butt	90	
31			6 1/4		100	
8			6		20	
18			5 3/4		30	
68			5 5/8		85	
2			5 1/2		10	
30			5 1/4		45	
144			5 1/8		170	
54			4 7/8		70	
242			4		275	
46			4 1/4		60	
74			4 1/2		90	
260			4		300	
252			3 7/8		200	
84			3 3/4		100	
448			3 5/8		560	5 1/2"
438			3 1/2		490	
948			3 1/4		1110	
44			3 1/8		60	
704			2 7/8		850	
1128			2 3/4		1250	
88			2 5/8		105	
192			2 1/2		220	
812			2 3/8		905	
916			2 1/4		1010	
8	Bolts		2 3/4	Hex. nut	10	
6	Cap Screws	3/4	1 1/2	" "	6	
16	Bolts	1	3	Sq	16	
6	Lock washers for 3/4" bolts				6	
8	"		8		10	
8	Bev.	1 3/4"			10	

LENGTH {Distance from under head to end for ordinary rivets and bolts. Distance out to out for ctsk. rivets and bolts.

MADE BY [illegible] DATE 6-8 1950

CHECKED BY DATE 19

IN CHARGE OF [illegible]

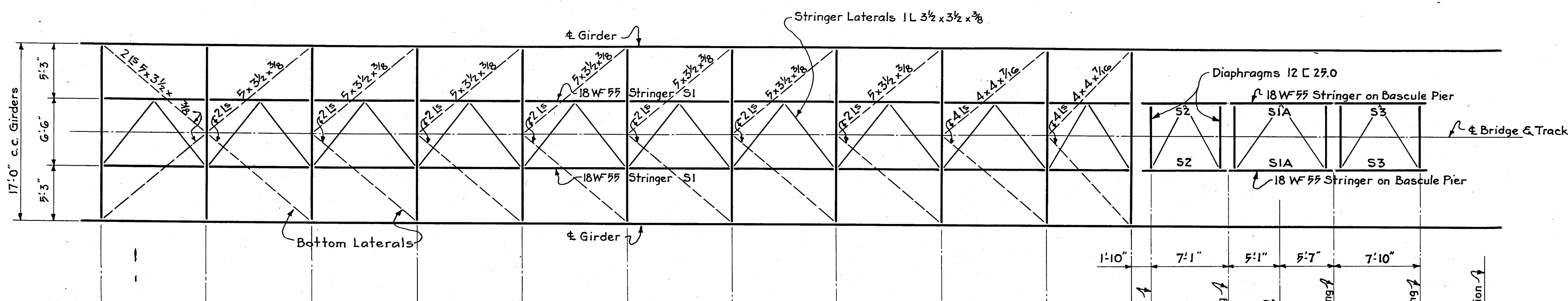

FRAMING PLAN

SCALE - 1/8" = 1'-0"

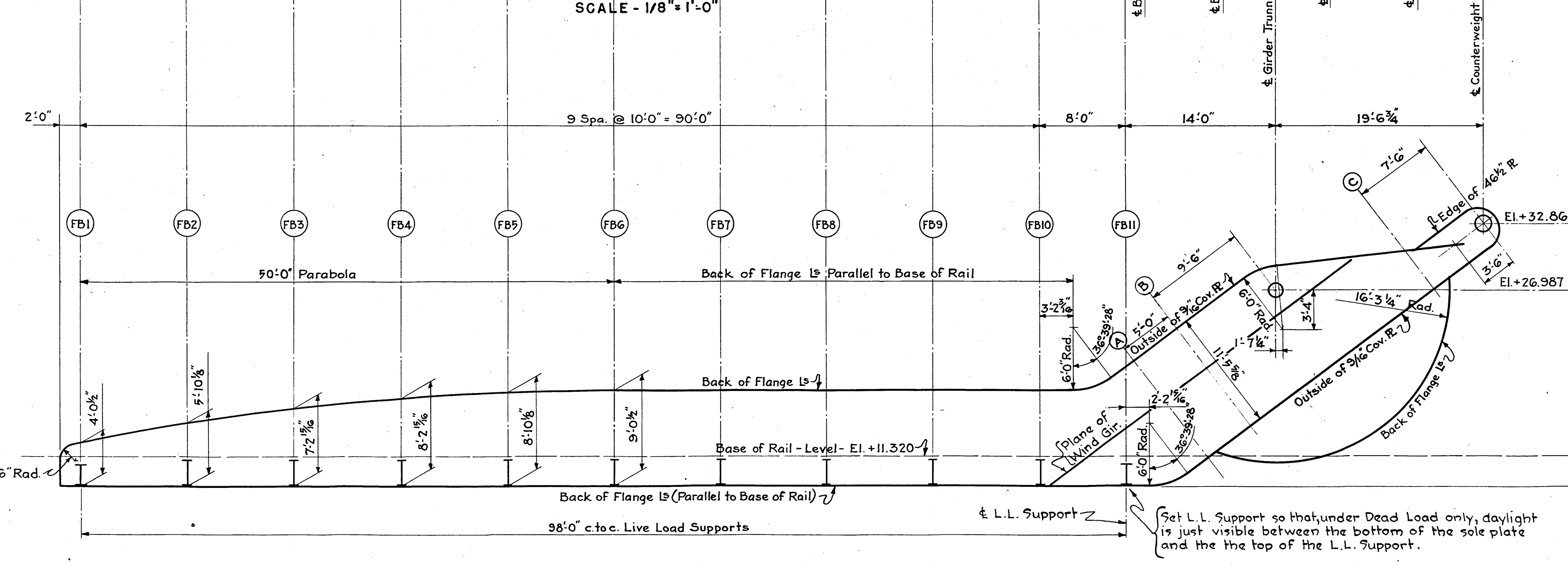

GEOMETRICAL LAYOUT

SCALE - 1/8" = 1'-0"

Location	Shear in Kips D.L.	Shear L.L.	Shear Imp.	Shear Design*	Area Web Req'd. Sq. In. @ 11k	Web Furn. Sq. In.	Moment in Foot Kips D.L.	Moment L.L.	Moment Imp.	Moment Design*	Allow. Unit Stress-Kips Ten.	Allow. Comp.	S.M. Req'd. Ten.	S.M. Req'd. Comp.	Section	I of Net Sect. in.4	S.M. Furn. Ten.	S.M. Furn. Comp.	Unit Stress Kips/Sq. In. Ten.	Unit Stress Comp.
BASCULE GIRDERS																				
FB 1	-6	+163	+62	+223	20.3	27.0	–	–	–	–	–	–	–	–	Web ℞ 48 x 9/16 ; 4 Ls 8 x 6 x 9/16 ; 2 C.℞ 16 x ½	–	–	–	–	–
FB 2	-14	+137	+52	+184	16.7	39.1	-78	+1398	+531	+1898	18.0	17.7	1265	1287	Web ℞ 69 x 9/16 ; 4 Ls 8 x 6 x 9/16 ; 2 C.℞ 16 x ½	52605	1490	1890	15.3	12.1
FB 3	-22	+113	+43	+147	13.4	48.6	-239	+2453	+932	+3290	18.0	17.7	2193	2231	Web ℞ 86 x 9/16 ; 4 Ls 8 x 6 x 9/16 ; 4 C.℞ 16 x ½	114401	2590	3230	15.2	12.2
FB 4	-30	+91	+35	+113	10.3	55.4	-487	+3251	+1235	+4290	18.0	17.7	2860	2908	Web ℞ 98 x 9/16 ; 4 Ls 8 x 6 x 9/16 ; 4 C.℞ 16 x ½	152440	3040	3770	16.9	13.6
FB 5	-39	+64	+24	+72	6.6	59.3	-825	+3765	+1431	+4865	18.0	17.7	3243	3298	Web ℞ 105 x 9/16 ; 4 Ls 8 x 6 x 9/16 ; 4 C.℞ 16 x ½	178011	3310	4115	17.6	14.2
FB 6	-48	+54	+20	-63	5.7	60.7	-1252	+3867	+1469	+4832	18.0	17.7	3221	3276	Web ℞ 108 x 9/16 ; 4 Ls 8 x 6 x 9/16 ; 4 C.℞ 16 x ½	190603	3445	4280	16.8	13.5
FB 7	-57	-84	-32	-173	15.7	60.7	-1769	+3920	+1490	+4703	18.0	17.7	3135	3188	do do do	190603	"	"	16.4	13.2
FB 8	-66	-106	-40	-212	19.3	60.7	-2376	+3722	+1414	+4184	18.0	17.7	2789	2837	do do do	190603	"	"	14.6	11.7
FB 9	-75	-130	-50	-255	23.2	60.7	-3086	-762	-289	-4137	18.0	17.7	2758	2805	do do do	190603	"	"	14.4	11.6
FB 10	-83	-157	-60	-300	27.3	60.7	-3888	-1942	-740	-6570	18.0	17.7	4380	4454	do do 6 C.℞ 16 x ½	237406	4250	5120	18.5	15.4
FB 11	-92	-180	-68	-340	30.9	80.5	-4606	-3163	-1200	-8969	18.0	17.7	7450	6081	Web ℞ 129 x ⅝ ; 4 Ls 8 x 6 x ⅝ ; 6 C.℞ 16 x ½, 2 C.℞ 16 x 9/16, 4 ℞ 8 x 9/16	488000	7325	8900	18.3	12.1
(A)	-98	-129	-49	-276	25.1	85.0	-5028	-2145	-815	-7988	18.0	14.5	5325	6610	Web ℞ 136 x ⅝ ; 4 Ls 8 x 6 x ⅝ ; 2 C.℞ 16 x ½, 2 C.℞ 16 x 9/16, 4 ℞ 8 x 9/16	402700	5800	7380	16.6	13.0
(B)	-107	-129	-49	-276	25.1	85.0	-5426	-1277	-482	-7185	18.0	14.5	4785	5950	Web ℞ 136 x ⅝, 2 Web ℞ 136 x 9/16 ; do ; 2 C.℞ 16 x ½, 2 C.℞ 16 x 9/16	347007	5010	6300	17.2	13.7
℄ Trunnion	-118 / +328	-129 / 0	-49 / +66	-196 / +394	17.8 / 35.8	401.2	-5396	—	-1079	-6475	10.5	13.0	7400	5977	Web ℞ 134 x ⅝, 2 Web ℞ 134 x 9/16 ; 2 side ℞ 74 x 9/16, 2 side ℞ 66 x ⅝, 4 Ls 8 x 6 x ⅝ ; 4 C.℞ 16 x ½, 2 C.℞ 16 x 9/16	686400	10840	10890	7.0	7.7
(C)	+300		+60	+360	32.7	191.8	-2222	—	-444	-2666	18.0	13.0	1772	1843	Web ℞ 52 x ⅝, 2 Web ℞ 52 x 9/16 ; 2 side ℞ 46½ x 9/16, 2 side ℞ 39½ x ⅝, 2 Ls 7⅜ x 5 15/16 x ⅝ (T) ; 2 Ls 8 x 6 x ⅝ (B), 1 C.℞ 16 x ½ (B), 1 C.℞ 16 x 9/16 (B)	76120	2755	3510	10.3	8.2
FLOOR SYSTEM																				
FB 1	3.7	32.5	67.5	103.7	9.4	14.8	17	171	354	542	18.0	17.8	361	365	24 W⁼ 145	4407	359	373	18.0	17.4
FB 2	3.7	40.0	37.0	80.7	7.4	16.9	19	210	194	423	18.0	17.7	282	287	30 W⁼ 116	4558	304	328	16.7	15.5
FB 3	"	"	"	"	"	"	"	"	"	"	"	"	"	"	"	"	"	"	"	"
FB 4	"	"	"	"	"	"	"	"	"	"	"	"	"	"	"	"	"	"	"	"
FB 5	"	"	"	"	"	"	"	"	"	"	"	"	"	"	"	"	"	"	"	"
FB 6	"	"	"	"	"	"	"	"	"	"	"	"	"	"	"	"	"	"	"	"
FB 7	"	"	"	"	"	"	"	"	"	"	"	"	"	"	"	"	"	"	"	"
FB 8	"	"	"	"	"	"	"	"	"	"	"	"	"	"	"	"	"	"	"	"
FB 9	"	"	"	"	"	"	"	"	"	"	"	"	"	"	"	"	"	"	"	"
FB 10	"	"	"	"	"	"	"	"	"	"	"	"	"	"	"	"	"	"	"	"
FB 11	3.4	28.1	63.5	95.0	8.6	14.8	16	148	334	498	18.0	17.8	332	336	24 W⁼ 145	4407	359	373	16.7	16.0
S1, S1A	1.4	32.6	33.0	67.0	6.1	6.6	3	63	63	129	18.0	16.7	86.0	92.4	18 W⁼ 55	890	98.2	98.2	15.8	15.8
S2, S3	1.1	27.8	28.5	57.4	5.2	7.0	2	51	53	106	18.0	17.2	70.7	74.1	18 W⁼ 55	890	98.2	98.2	13.0	13.0

* Par. 215, A.R.E.A. Specifications for Steel Railway Bridges (1947) and Par. 302, A.R.E.A. Specifications for Movable Railway Bridges (1941)

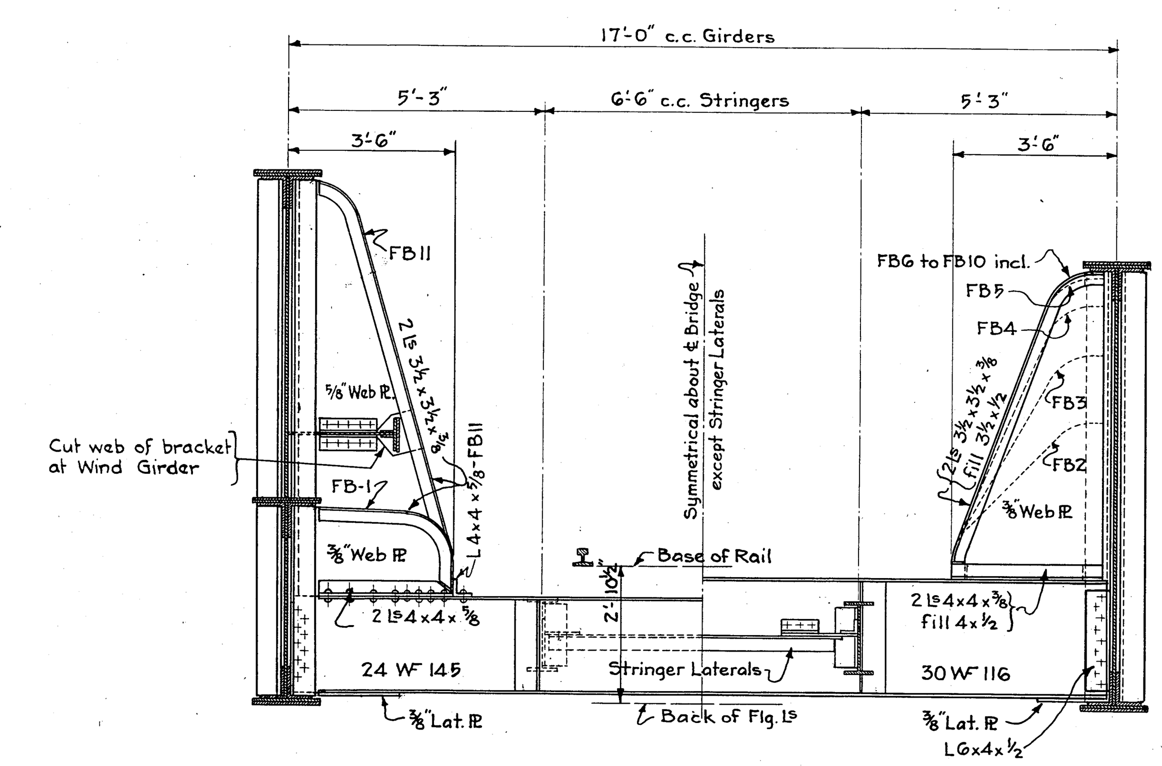

HALF CROSS SECTION END FLOORBEAMS — HALF CROSS SECTION INTERMEDIATE FLOORBEAMS

SCALE - 3/8" = 1'-0"

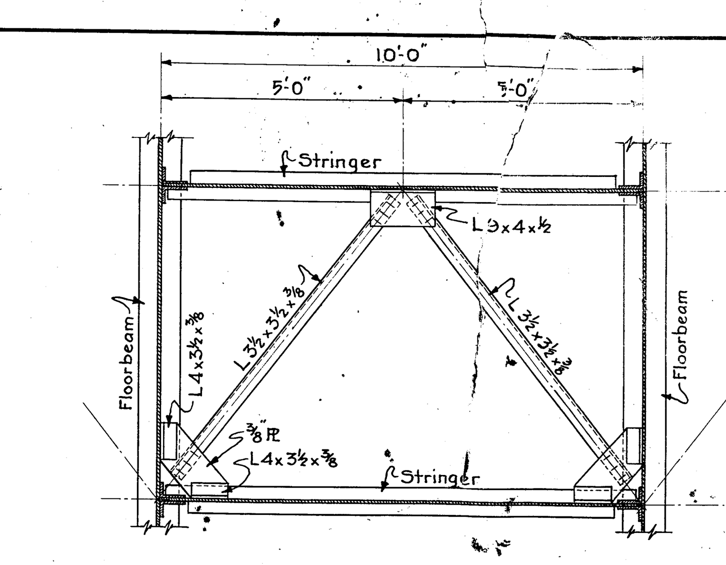

TYPICAL STRINGER LATERAL CONNECTIONS

SCALE - 3/8" = 1'-0"

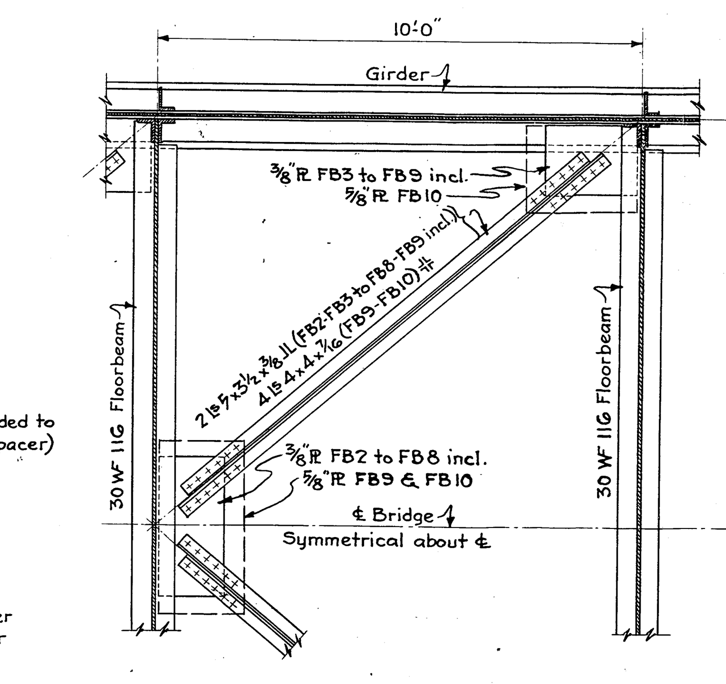

TYPICAL BOTTOM LATERAL CONNECTIONS

SCALE - 3/8" = 1'-0"

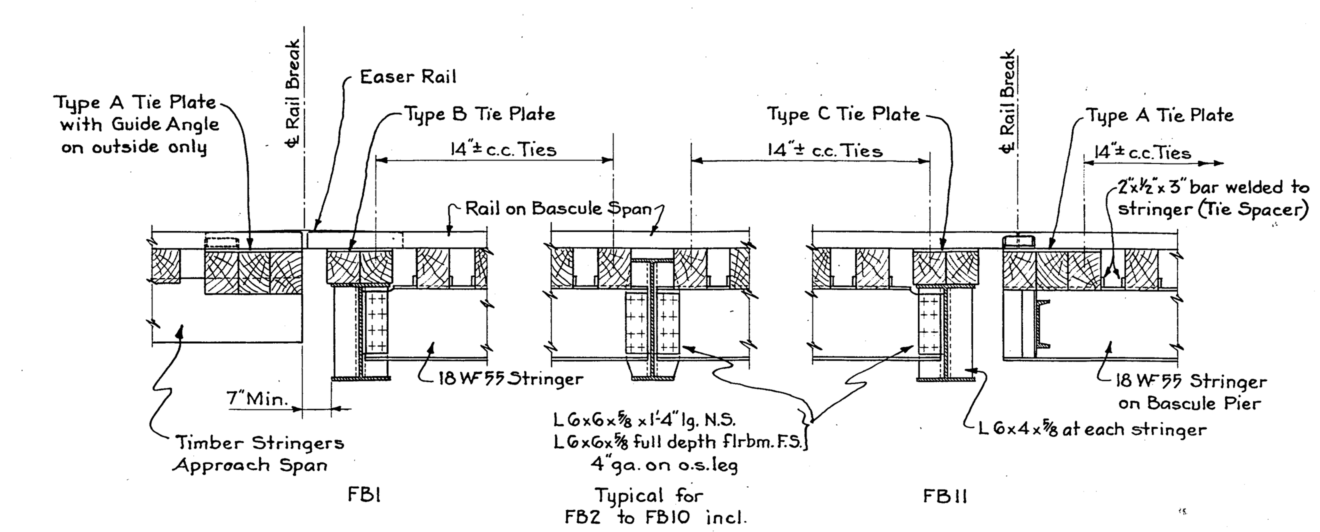

DETAILS OF STRINGER CONNECTIONS AND RAIL BREAKS

SCALE - 3/8" = 1'-0"

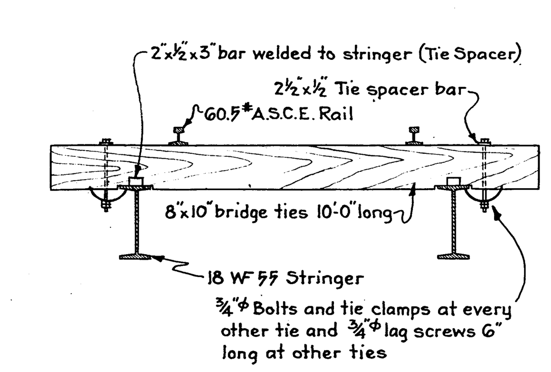

TRACK DETAILS

SCALE - 3/8" = 1'-0"

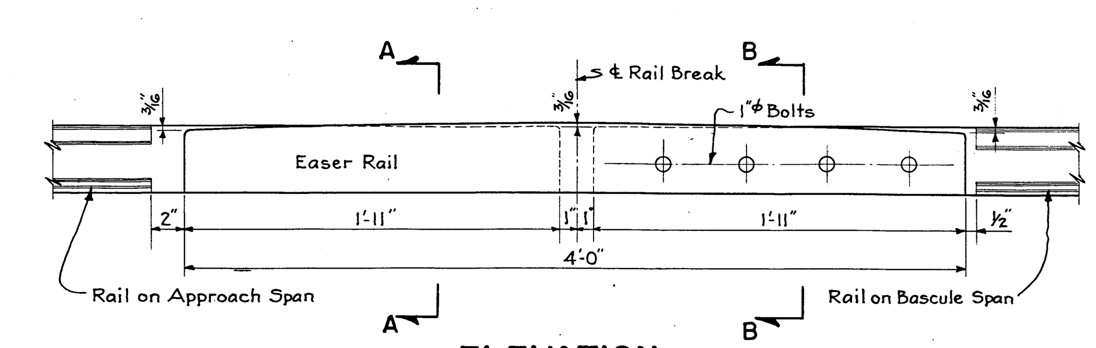

ELEVATION

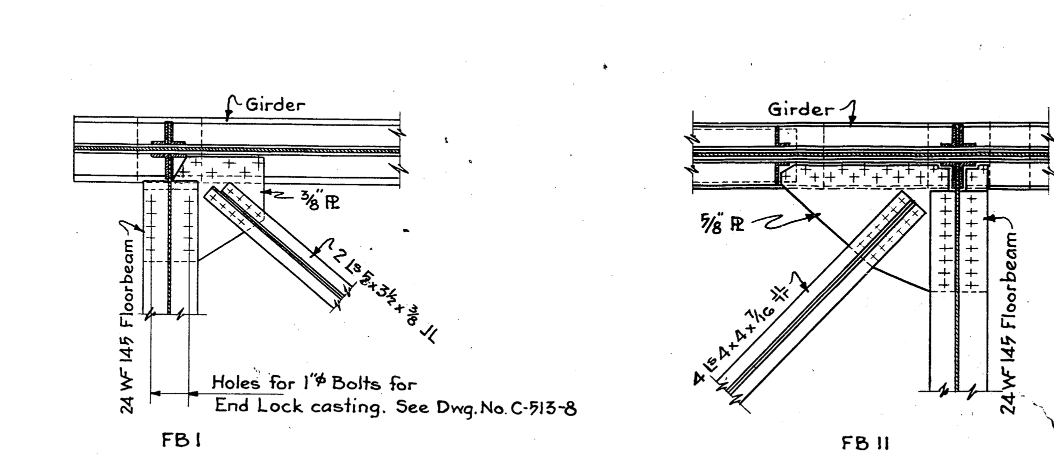

BOTTOM LATERAL CONNECTIONS AT END FLOORBEAMS

SCALE - 3/8" = 1'-0"

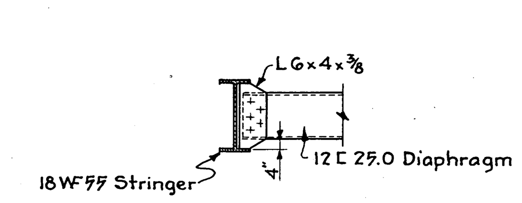

DIAPHRAGM CONNECTION

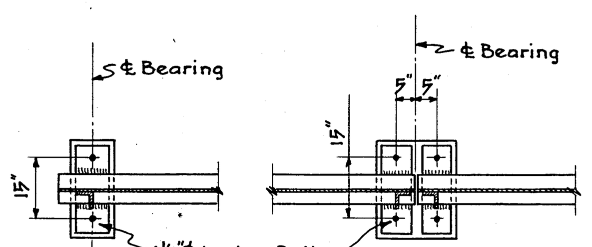

PLAN

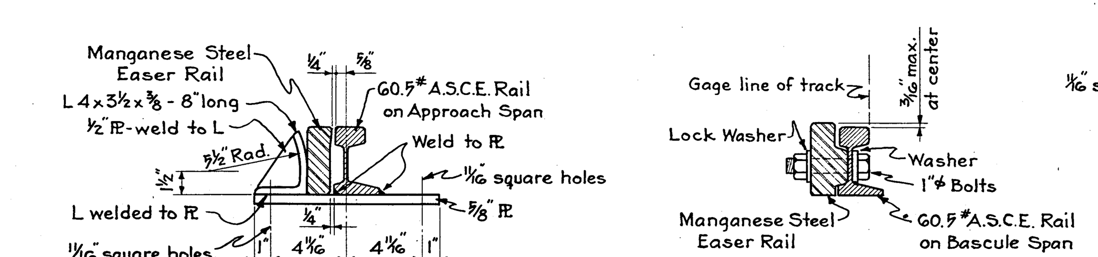

SECTION A-A — SECTION B-B

EASER RAIL DETAILS

SCALE - 1 1/2" = 1'-0"

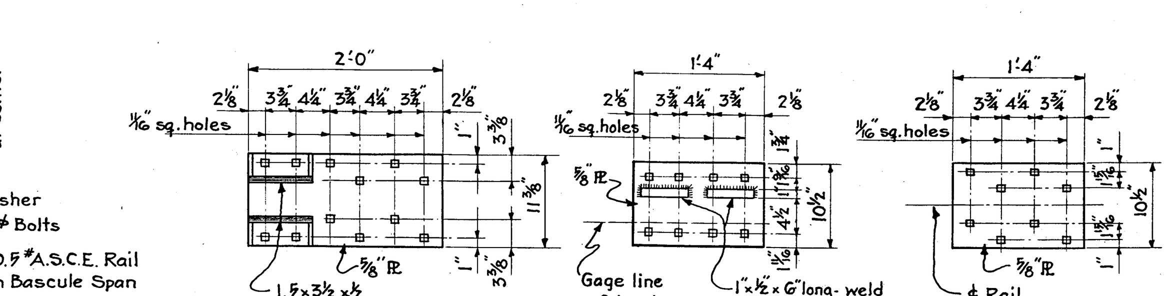

TYPE A — TYPE B — TYPE C

TIE PLATE & RAIL GUIDE DETAILS

SCALE - 3/4" = 1'-0"

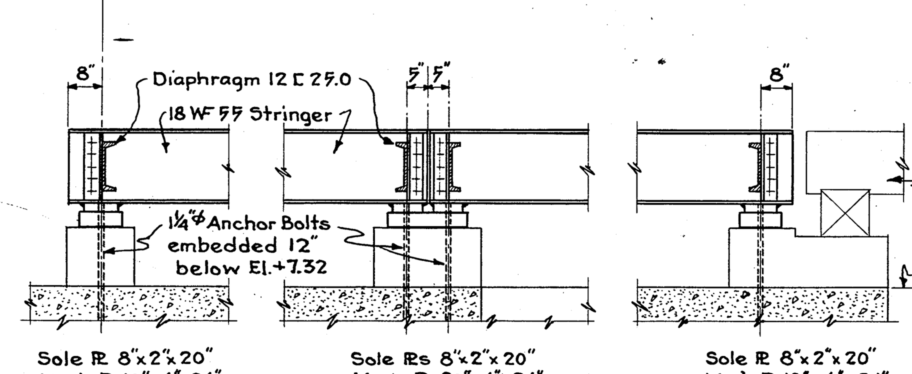

End Bearing — Intermediate Bearings — End Bearing

ELEVATION

DETAILS OF FIXED STRINGERS ON BASCULE PIER

SCALE - 3/8" = 1'-0"

NOTES -
For "General Notes" see Drawing No. C-513-1.
Rivets - ⅞" ϕ

SUBMITTED CARR AND J.E. GREINER COMPANY BY [signature] DATE - March 5, 1948	BEAUFORT MOREHEAD RAILROAD COMPANY A. T. LEARY, LESSEE BEAUFORT, NORTH CAROLINA **ALTERATIONS - NEWPORT RIVER BRIDGE** **FRAMING PLAN & STRESS SHEET** CARR AND J. E. GREINER COMPANY - ENGINEERS DURHAM, N. C. BALTIMORE, MD.
APPROVED BEAUFORT MOREHEAD RAILROAD COMPANY BY ____ LESSEE DATE - ____	IN CHARGE B.W. LeSueur — DESIGNED BY M. McCord DRAWN BY E.H. Burghardt — CHECKED BY C.S. Meisterlin SCALES AS NOTED
APPROVED U.S. ENGINEER OFFICE, WILMINGTON, NORTH CAROLINA ____ DISTRICT ENGINEER DATE - ____	MARCH 5, 1948 Revised: April 1, 1948 DRAWING NO. C-513-6

FB. 295-B—1M—12-41—S

ROD SHEET NEWPORT RIVER BR.

VIRGINIA BRIDGE COMPANY TIDEWATER CONSTRUCTION CO.

Description ANCHOR BOLTS FOR MACHINERY SUPPORTS

Contract No. V 7113 Fabricated at ROANOKE Shop Paint NONE

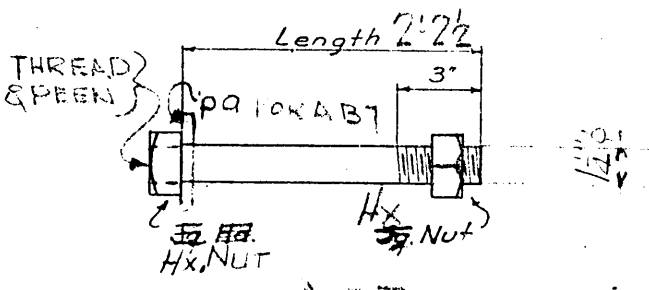

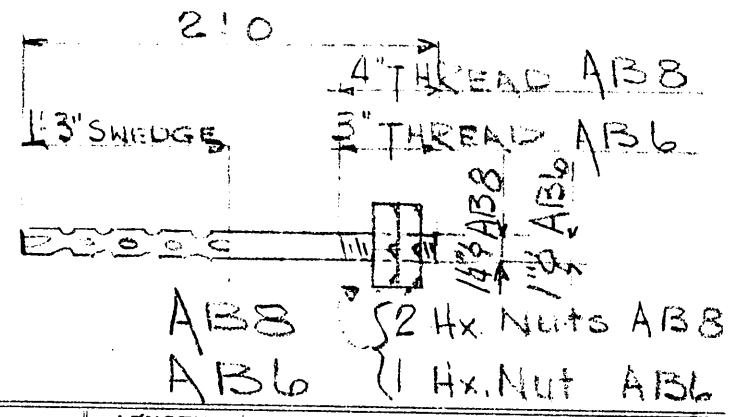

Item No.	CUTTING LIST No.	CUTTING LIST Feet	CUTTING LIST In.	ORDERED No.	ORDERED Feet	ORDERED In.	No. P'c's	DESCRIPTION	LENGTH Feet	LENGTH In.	REMARKS	WEIGHT
1				SK				8 ANCHOR BOLTS 8 RODS 1"φ 8 HX. NUTS 1"φ TAP	2	0	AB6 (SWEDGE)	43 2 45#
1								6 ANCHOR BOLTS 6 RODS 1¼"φ 12 HX NUTS 1¼"φ TAP 6 PL 4 × ⅜	2 0	3¾ 4	AB7 pa S-1	58 6 12 74 1 73#
								8 ANCHOR BOLTS 8 RODS 1¼"φ 16 Hex Nuts 1¼"φ TAP	2	0	AB8 (SWEDGE)	67 1 72#

ADVANCE SHIPMENT

SLOT

OFFICE COPY

In Charge of SCOTT Made by AWC 4-13-50 Checked by [illegible] Page 1 of

ROD SHEET

NEWPORT RIVER BRIDGE

V.B. 295-B—1M—12-41—S

VIRGINIA BRIDGE COMPANY TIDEWATER CONS. CO.

Description ANCHOR BOLTS FOR MACHINERY SUPPORTS

Contract No. V7173 Fabricated at ROANOKE Shop Paint NONE

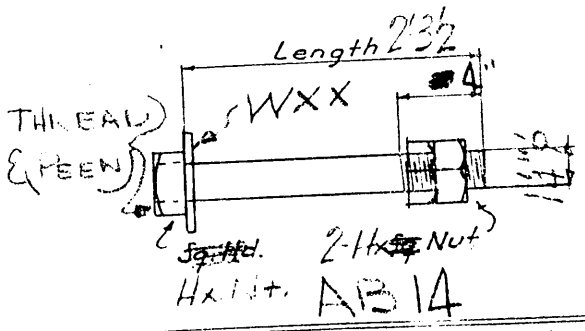

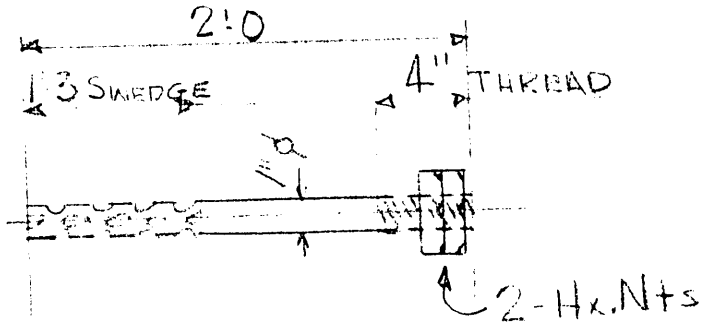

Item No.	CUTTING LIST No.	CUTTING LIST Feet	CUTTING LIST In.	ORDERED No.	ORDERED Feet	ORDERED In.	No. P'c's	DESCRIPTION	LENGTH Feet	LENGTH In.	REMARKS	WEIGHT
								8 ANCHOR BOLTS 8 Rods 1" ø 16 Hx Nts. 1" ø Tap	2	0	AB13 Swedge	
								8 ANCHOR BOLTS 8 Rods 1'4" ø 24 Hx Nuts 1'4" ø Tap	2	4½	AB14	
								8 PL 4 x ⅜	0	4	WXX	

ADVANCE SHIPMENT

In Charge of Scott Made by AWC Checked by [illegible] Page 2 of 2

ROD SHEET NEWPORT RIVER BRIDGE

V.B. 295-B—1M—12-41—S

VIRGINIA BRIDGE COMPANY TIDEWATER CONSTRUCTION CO.

Description ANCHOR BOLTS FOR MACHINERY SUPPORTS

Contract No. V 7173 Fabricated at ROANOKE Shop Paint NONE

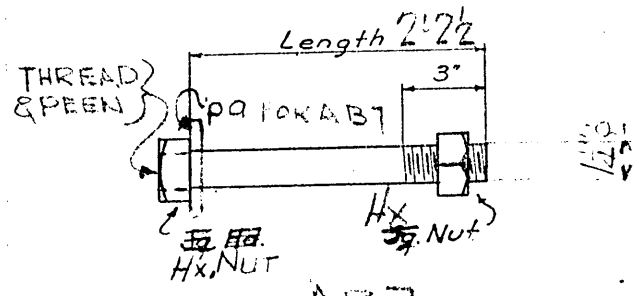

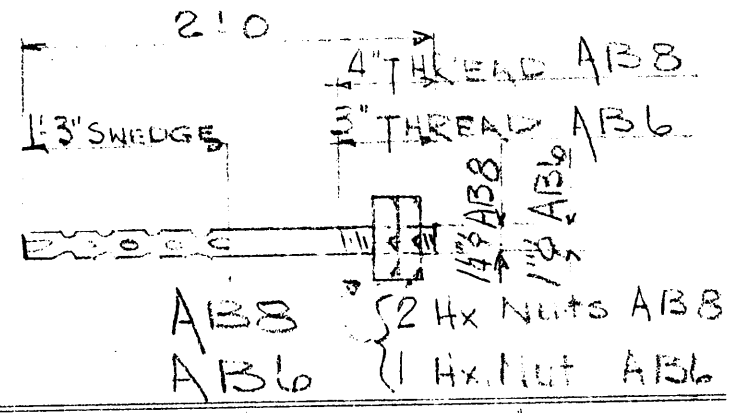

Item No.	CUTTING LIST No.	CUTTING LIST Feet	CUTTING LIST In.	ORDERED No.	ORDERED Feet	ORDERED In.	No. P'c's	DESCRIPTION	LENGTH Feet	LENGTH In.	REMARKS	WEIGHT
1								8 ANCHOR BOLTS 8 Rods 1" ø 8 Hx. Nuts 1" ø TAP	2	0	AB6 (SWEDGE)	
								6 ANCHOR BOLTS 6 Rods 1¼" ø 12 Hx Nuts 1¼" ø TAP 6 E 4 x ⅜	2 0	3¾ 4 pa	AB7	
								8 ANCHOR BOLTS 8 Rods 1¼" ø 16 Hex Nuts 1¼" ø TAP	2	0	AB8 (SWEDGE)	

ADVANCE SHIPMENT

In Charge of [illegible] Made by [illegible] 4-15-50 Checked by [illegible] Page 1 of 2

V.B. 295-B—1M—12-41—S

ROD SHEET

NEWPORT RIVER BRIDGE

VIRGINIA BRIDGE COMPANY

TIDEWATER CONS. CO.

Description ANCHOR BOLTS FOR MACHINERY SUPPORTS

Contract No. V7173 Fabricated at ROANOKE Shop Paint NONE

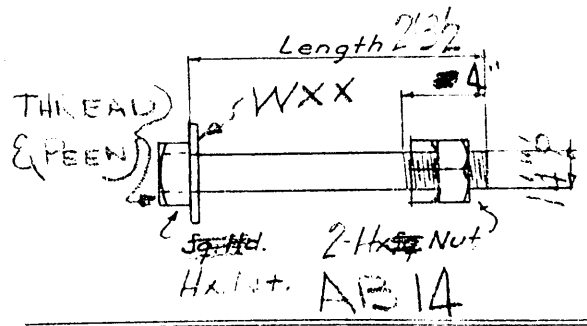

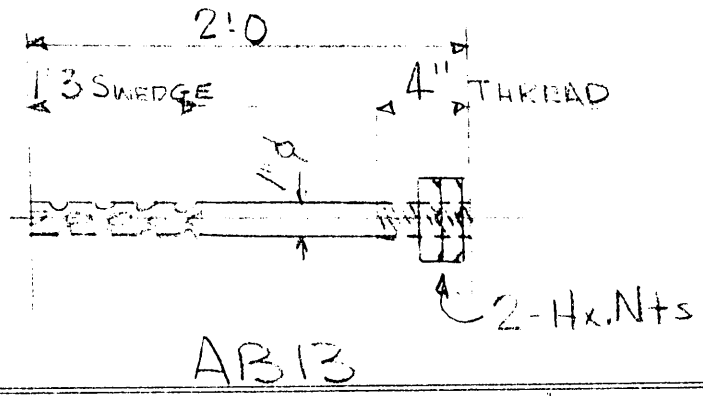

Item No.	CUTTING LIST No.	CUTTING LIST Feet	CUTTING LIST In.	ORDERED No.	ORDERED Feet	ORDERED In.	No. P'c's	DESCRIPTION	LENGTH Feet	LENGTH In.	REMARKS	WEIGHT
								8 ANCHOR BOLTS			AB13	
7								8 Rods 1" ø	2	0	Swedge	43
								16 Hx Nts. 1" ø Tap				4
												47 #
								8 ANCHOR BOLTS			AB14	
								8 Rods 1'4" ø	2	4½		80
								24 Hx Nuts 1'4" ø Tap				12
												93
								8 PL 4 x ⅜	0	4	WXX	14
												5 1
												13

ADVANCE SHIPMENT

In Charge of Scott Made by [illegible] Checked by [illegible] Page 2 of 2

V.B. 295-B—1M—12-41—S

ROD SHEET NEWPORT RIVER BRIDGE

VIRGINIA BRIDGE COMPANY TIDEWATER CONSTRUCTION CO.

Description ANCHOR BOLTS FOR MACHINERY SUPPORTS

Contract No. V7113 Fabricated at ROANOKE Shop Paint NONE

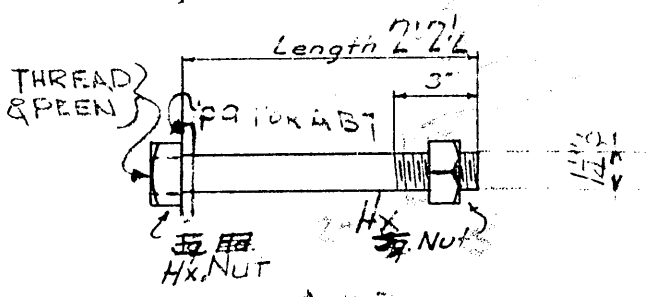

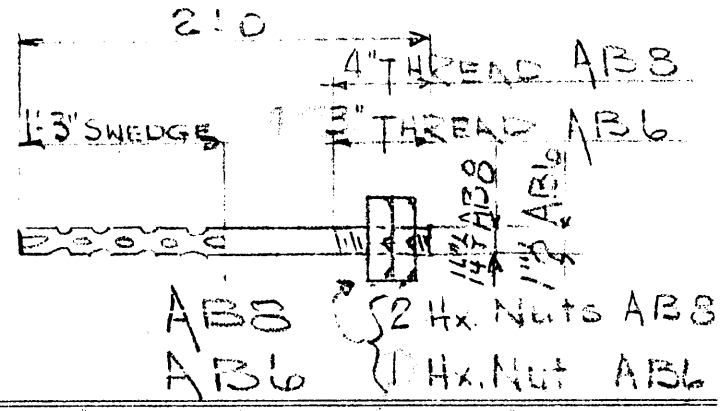

Item No.	CUTTING LIST No.	Feet	In.	ORDERED No.	Feet	In.	No. P'c's	DESCRIPTION	LENGTH Feet	In.	REMARKS	WEIGHT
							8	ANCHOR BOLTS 8 RODS 1½"ϕ 8 HX. NUTS 1½"ϕ TAP	2	0	AB6 (SWEDGE)	43 2 45#
							6	ANCHOR BOLTS 6 RODS 1¼"ϕ 12 HX NUTS 1¼"ϕ TAP 6 PL 4 × ⅜	2 0	3¾ 4	AB7 PA	58 6 10 74 1 73#
							8	ANCHOR BOLTS 8 RODS 1¼"ϕ 16 HEX NUTS 1¼"ϕ TAP	2	0	AB8 (SWEDGE)	67 9 76#

REVISED
5-15-50
A.S.

ADVANCE SHIPMENT

(SLOK)

OFFICE COPY

In Charge of SCOTT Made by AWC 4-13-50 Checked by LFB Page 1 of 1

ROD SHEET

NEWPORT RIVER BRIDGE

V.B. 295-B—1M—12-41—S

VIRGINIA BRIDGE COMPANY TIDEWATER CONS. CO.

Description ANCHOR BOLTS FOR MACHINERY SUPPORTS

Contract No. V7173 Fabricated at ROANOKE Shop Paint NONE

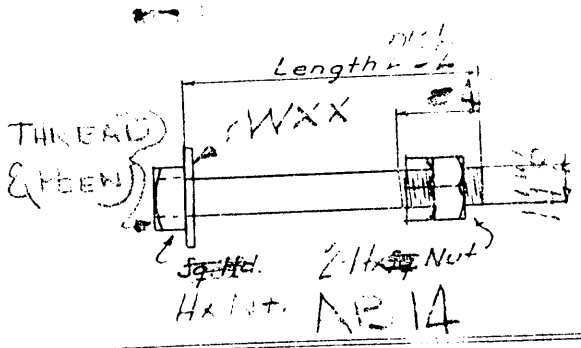

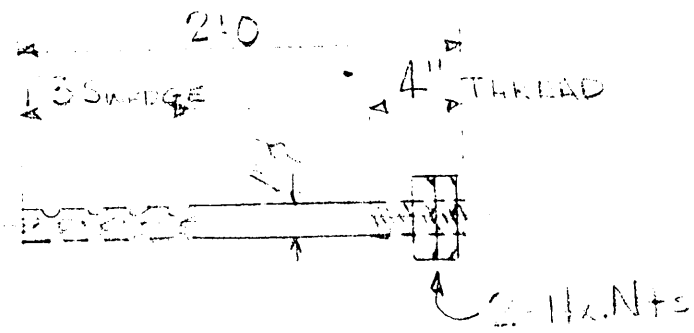

Item No.	CUTTING LIST No.	CUTTING LIST Feet	CUTTING LIST In.	ORDERED No.	ORDERED Feet	ORDERED In.	No. P'c's	DESCRIPTION	LENGTH Feet	LENGTH In.	REMARKS	WEIGHT
								8 ANCHOR BOLTS 8 Rods 1 2 16 Hx Nts 1" Tap	2 0		AB13 Swedge	
								8 ANCHOR BOLTS 8 Rods 1 4 1 24 Hx Nuts 1 4" Tap			AB14	
								8 Rods 1 4 WXX				

ADVANCE SHIPMENT

In Charge of Scott Made by [illegible] Checked by [illegible] Page 2 of 2

V.B. 295-B—1M—12-41—S

ROD SHEET NEWPORT RIVER BRIDGE

VIRGINIA BRIDGE COMPANY TIDEWATER CONSTRUCTION CO.

Description ANCHOR BOLTS FOR MACHINERY SUPPORTS

Contract No. V7173 Fabricated at ROANOKE Shop Paint NONE

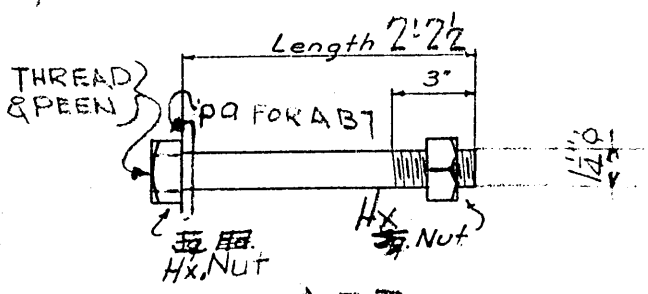

AB7

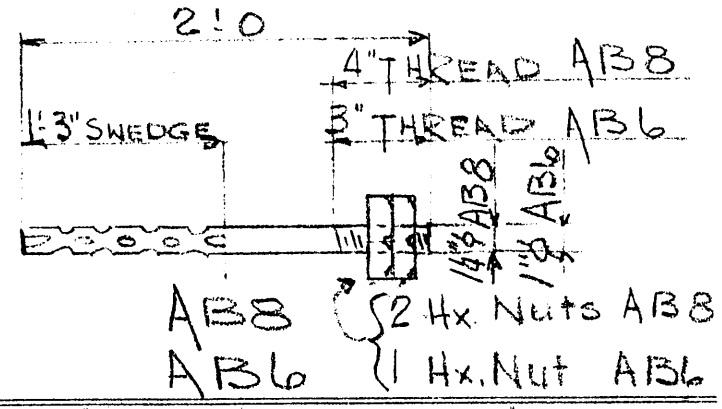

Item No.	CUTTING LIST No.	Feet	In.	ORDERED No.	Feet	In.	No. P'c's	DESCRIPTION	LENGTH Feet	In.	REMARKS	WEIGHT
							8	ANCHOR BOLTS			AB6	
				SLK				8 RODS 1"φ	2	0	(SWEDGE)	2 27 43
								8 Hx. NUTS 1"φ TAP				2
												45#
							6	ANCHOR BOLTS			AB7	
								6 RODS 1¼"φ	2	3¾		4 17 58
								12 Hx NUTS 1¼"φ TAP				51 6
								6 PL 4 x ⅜	0	4	pa	5 1 10
											S-1	74
												1
												73#
							8	ANCHOR BOLTS			AB8	
								8 RODS 1¼"φ	2	0	(SWEDGE)	24 67
								16 Hex NUTS 1¼"φ TAP				SH 9
												76#

ADVANCE SHIPMENT

SLOK

In Charge of SCOTT Made by AWC 4-13-50 Checked by LFB Page 1 of 1

V. B. 295-B—1M—12-41—S

ROD SHEET

NEWPORT RIVER BRIDGE

VIRGINIA BRIDGE COMPANY

TIDEWATER CONS. CO.

Description ANCHOR BOLTS FOR MACHINERY SUPPORTS

Contract No. V7173 Fabricated at ROANOKE Shop Paint NONE

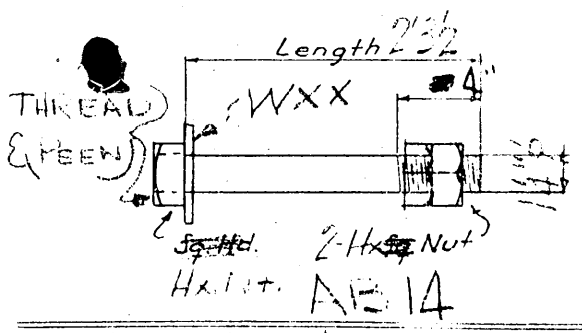

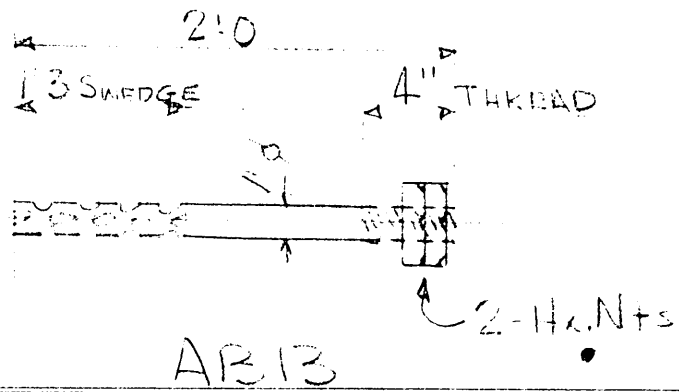

Item No.	CUTTING LIST No.	CUTTING LIST Feet	CUTTING LIST In.	ORDERED No.	ORDERED Feet	ORDERED In.	No. P'c's	DESCRIPTION	LENGTH Feet	LENGTH In.	REMARKS	WEIGHT
								8 ANCHOR BOLTS			AB13	
								8 Rods 1 ø	2	0	Swedge	
								16 Hx Nts 1" ø Tap				
								8 ANCHOR BOLTS			AB14	
								8 Rods 1 4" ø	2	4		
								24 Hx Nuts 1 4" ø Tap				
								8 1 4 x 3/8	0	4	WXX	

ADVANCE SHIPMENT

In Charge of Scott Made by R. C. Checked by Page 2 of 2

15-Tooth Spaces @ 1-3½" = 19-4½"
2L 8×6×⅝×21-11"
2-Pls. 14×⅝×21-11" (After planing)
Web Pl. 59½×⅜×21-11" (After planing)
Sym. abt. this line except as shown
2L 6×6×⅝×22-3"
1-Cov. Pl. 14×⅝×16-0"
Ship these Pl. bolted
⅞" Rivets 15/16 Open Holes
2-Bearing Pls. 2BP1R As Shown
2-Bearing Pls. 2BP1L Left of
1-Bearing Pl. 2BP2
2-Bolsters-2B1R As Shown
2- -do- 2B1L Left of
No Paint
3-Anchor Bolts-2AB1
8- do 2AB2
8- do 2AB3
8- do 2AB4
2- do 2AB5
2-Anchor Bolts-2AB6
No Paint
2-C.S. Guides-2GS1
2-C.S. Pedestals-2CS2
8-Turned Bolts For CS1-2
Verona Lock Nut
Sec. A-A
Sec. B-B
Sec. C-C
Sec. D-D
Sec. E-E
Sec. F-F
1-Track Girder-2G1 As Shown + noted
1- -do- 2G2 Left of
Track Girder
The top flanges of the track girders shall be bolted up with the webs and side plates projecting at least ¼ inch outside the flange angles at all points and the rivet holes then reamed or drilled in the solid.
After riveting the top of the track girders shall be planed so that the cast steel track plates shall have a perfect bearing on the webs, side plates and angles. The web plates shall be planed flush with the bottom flange angles for bearing on the cover plates over bolsters. Fillers under joints in track plates shall be finished to bear at the top and those over bolsters to bear at both top and bottom. Stiffener angles throughout shall be finished to bear at top and bottom. C.S. track plates shall be assembled on the track girders in the shop and the connecting holes drilled in place and filled with shop rivets.
Photographs shall be taken while track girder is being planed in shop showing clearly the method used. Size of photographs to be not less than 5×7 inches.
Shop Paint
Dutch Boy Red Lead & Linseed Oil
Except Noted
PENN BRIDGE CO., BEAVER FALLS, PA.
Contract No. 5703 Sheet No. 2 of
For Norfolk Southern R.R.
Over Beaufort Channel
Subject Track Girders, Bolsters, etc.
Made by H.R.L. Date Apr. 17-1916
Traced by -do- " 19- "
Checked by Brandt " May 22 1916
Rivets ⅞ unless noted Scale 1"=1'-0"
Holes 15/16
Revised
5703

Sec. C-C

Sec. D-D (For Girder)

Sec. A-A

Sec. B-B

Sec. E-E

Sec. F-F

Track Girder

The top flanges of the track girders shall be bolted up with the web and seat plates projecting at least 4 inch outside the flange angles after paint and the rivet holes then reamed and filled in the solid. After reaming the top of the track girders shall be planed so that the east steel track plates shall have a perfect bearing on the web and seat plates and angles. The web plates shall be planed flush with the bottom flange angles for bearing on the cover plates over bolsters. Fillers under joints in track plates shall be planed to fit at the top and the cover bolsters to clear at the top and bottom. Fillers under angles throughout shall be flushed to clear at top and bottom. GS track plates shall be assembled on the track girders in the shop and the connecting holes drilled in place and filled with shop rivets.

Photographs shall be taken while track girder is being planed in shop showing clearly the method used. Size of photographs to be not less than 3x4 inches

APPROVED JUL 29 1916

THE SCHERZER ROLLING LIFT BRIDGE CO

The Scherzer Rolling Lift Bridge Company
1010 Monadnock Block, Chicago.
Contract No. 5703 Drawing No. 10
Received JUL 29 1916 Prints
Time Sent No.

APPROVED
CHIEF ENGINEER
July 31 1916

Shop Paint
Dutch Boy Red Lead & Linseed Oil

PENN BRIDGE CO., BEAVER FALLS, PA.	Date Jul 25 1916
Contract No. 5703 Ship No. 2	
For Norfolk Southern R.R. Over Pequot Channel	
Subject Track Girders, Bolsters, etc.	
Made by H.E.L. Date Apr 17 16	
Traced by " "	
Checked by Brandt May 26 1916	
Rivets 3/4 Unless noted Scale 1" = 1'0"	
Holes 13/16	

5703

Revised Sheets for Pier Moved 1 ft

7/31/16

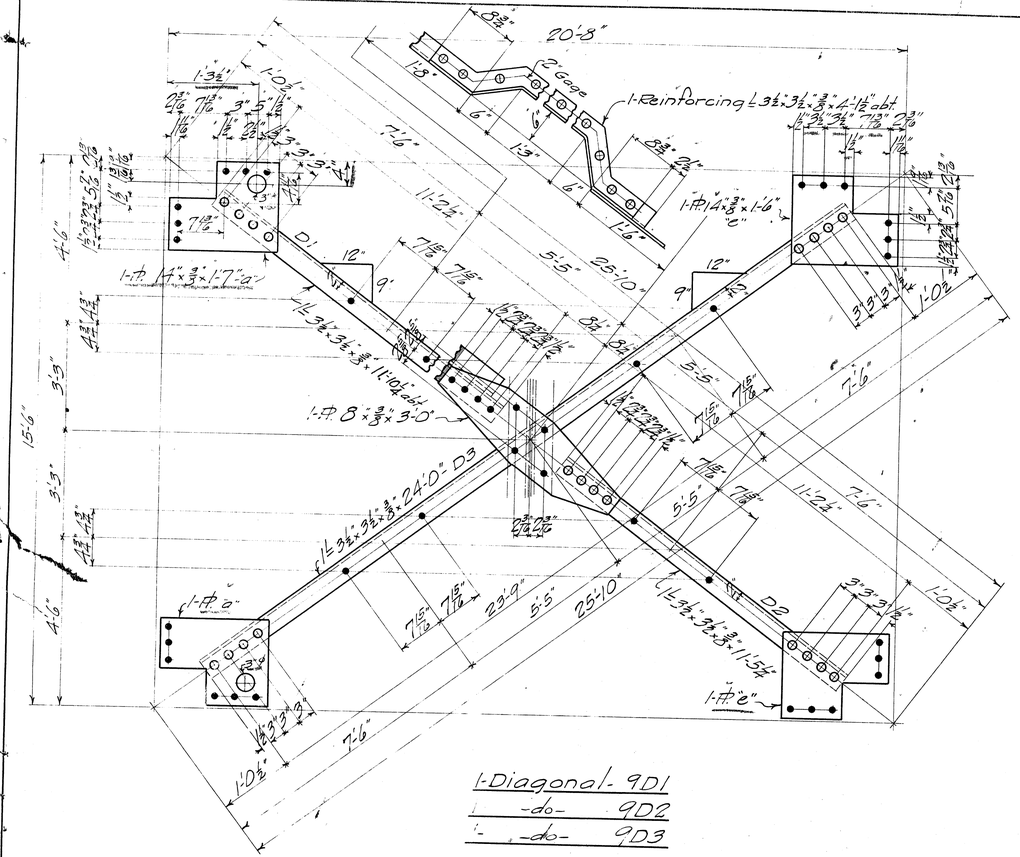

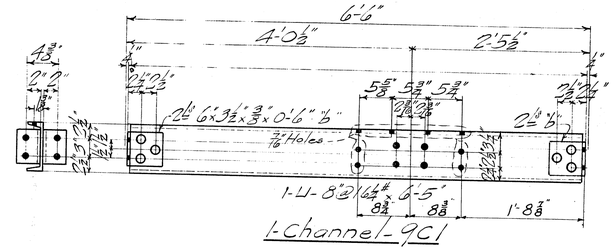

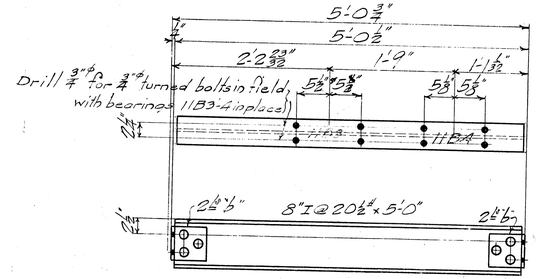

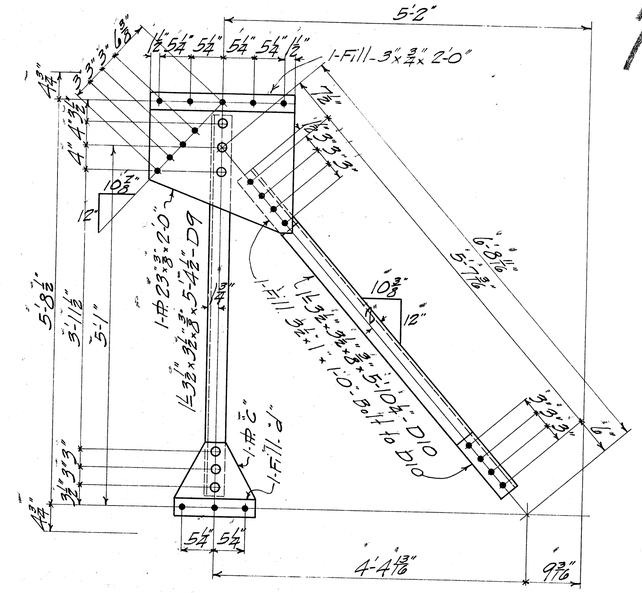

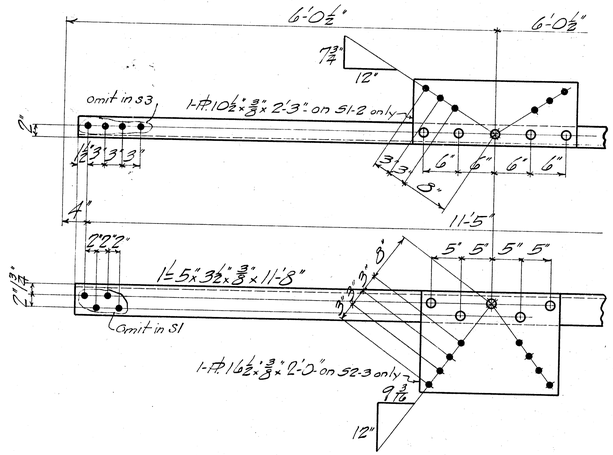

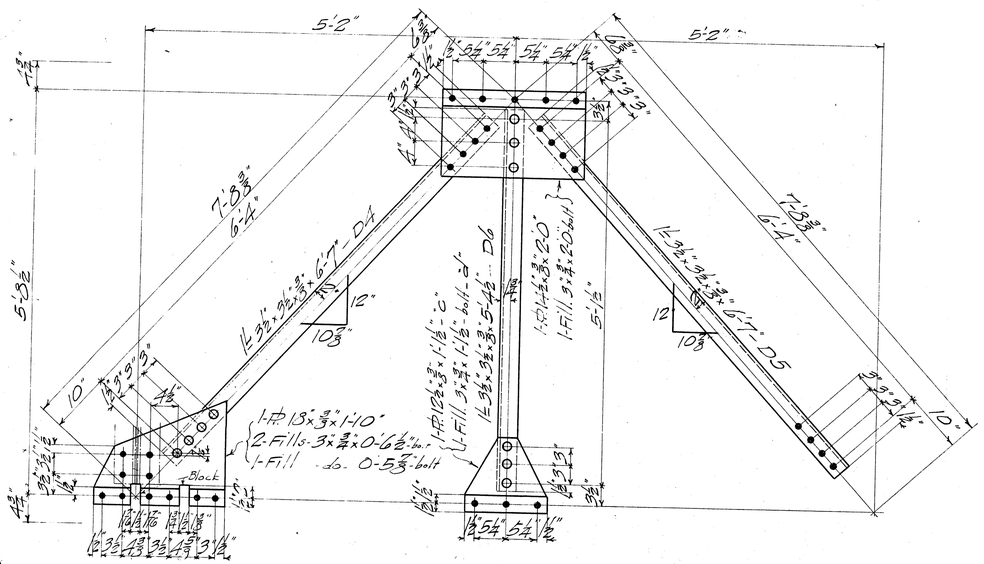

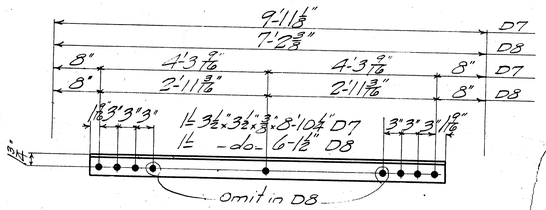

Reaming

Paint 1-Coat Dutch Boy Red Lead and Linseed Oil

Approved by

Date

PENN BRIDGE CO., BEAVER FALLS, PA.

Contract No. 5703 Sheet No. 9 of

For Norfolk Southern R.R. Over Beaufort Channel

Subject Bracing

Made by H.E.L. Date May 6-1916

Traced by -do- " "

Checked by Brandt " " 25-1916

Rivets 3/4 Holes 13/16 unless noted

Scale 1"=3/4"=1'-0"

Revised:- July 28 1916

5703

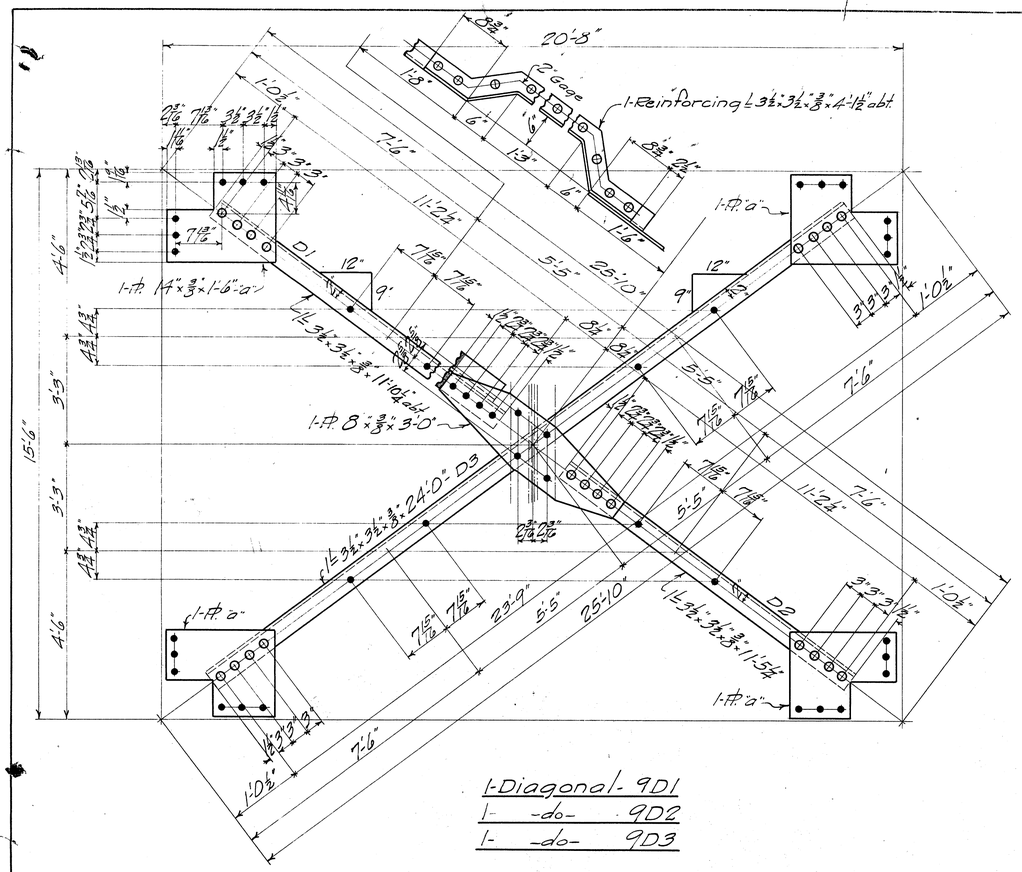

1-Diagonal- 9D1
1- -do- 9D2
1- -do- 9D3

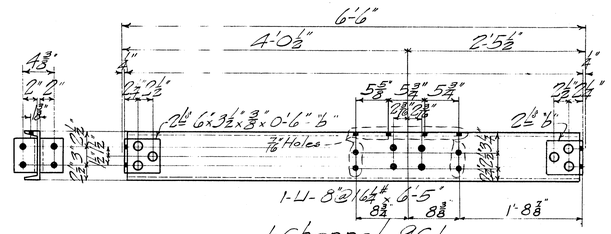

1-Channel- 9C1

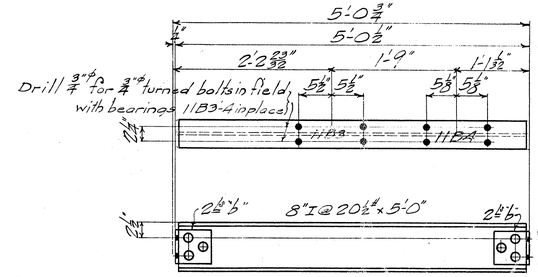

1-Beam- 9B1

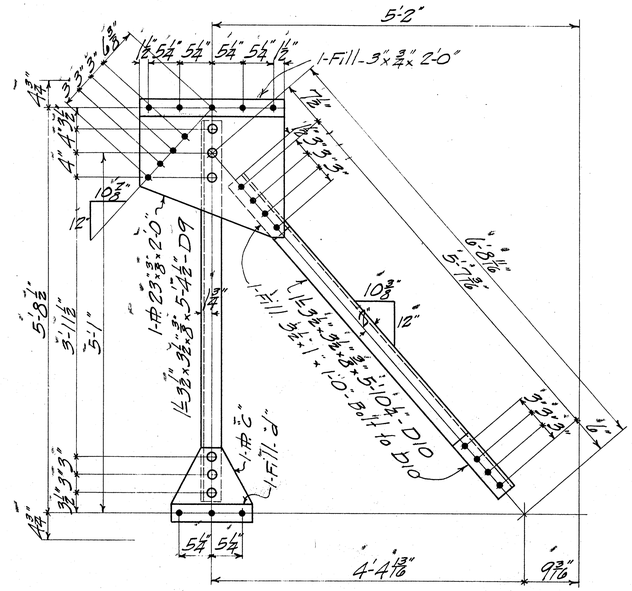

1-Diagonal- 9D9
1- -do- 9D10

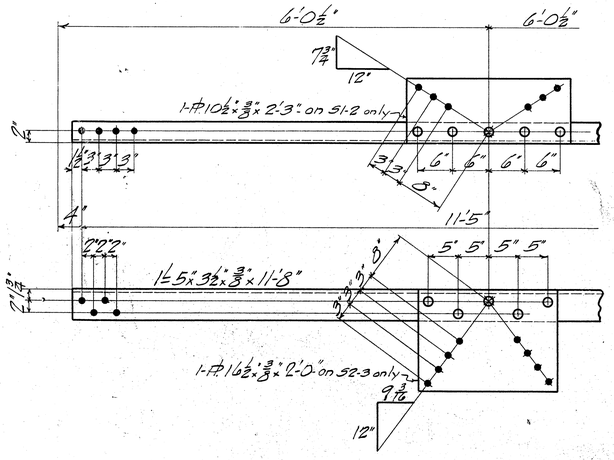

1-Strut- 9S1
1- -do- 9S2
1- -do- 9S3
} For Counter Weight

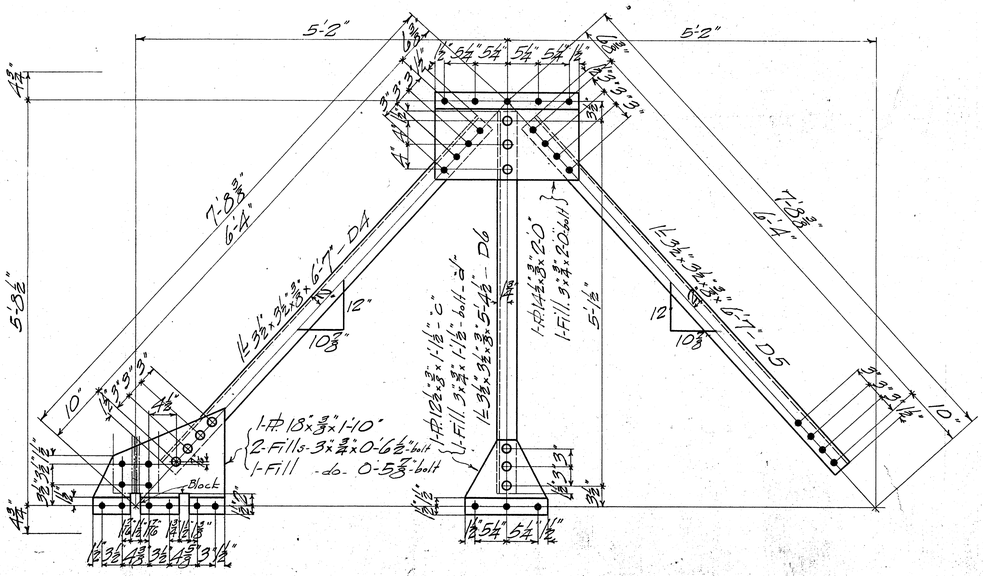

1-Diagonal- 9D4E As Shown
1- -do- 9D4L Left of "
1- -do- 9D5
1- -do- 9D6

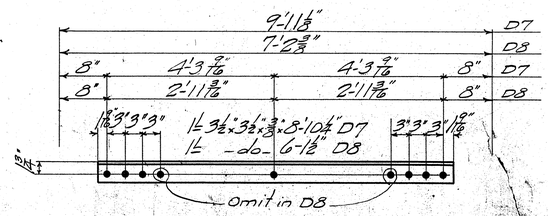

4-Diagonals- 9D7
4- -do- 9D8
} For Counter Weight

Reaming
Paint 1-Coat Dutch Boy Red Lead and Linseed Oil
Approved by
Date

PENN BRIDGE CO., BEAVER FALLS, PA.
Contract No. 5703 Sheet No. 9 of
For Norfolk Southern R.R. Over Beaufort Channel
Subject Bracing
Made by H.R.L. Date May 6-1916
Traced by do.
Checked by Brandt " 25-1916
Rivets ⅞ unless noted Scale 1"=1'-0"
Holes 7/16 "

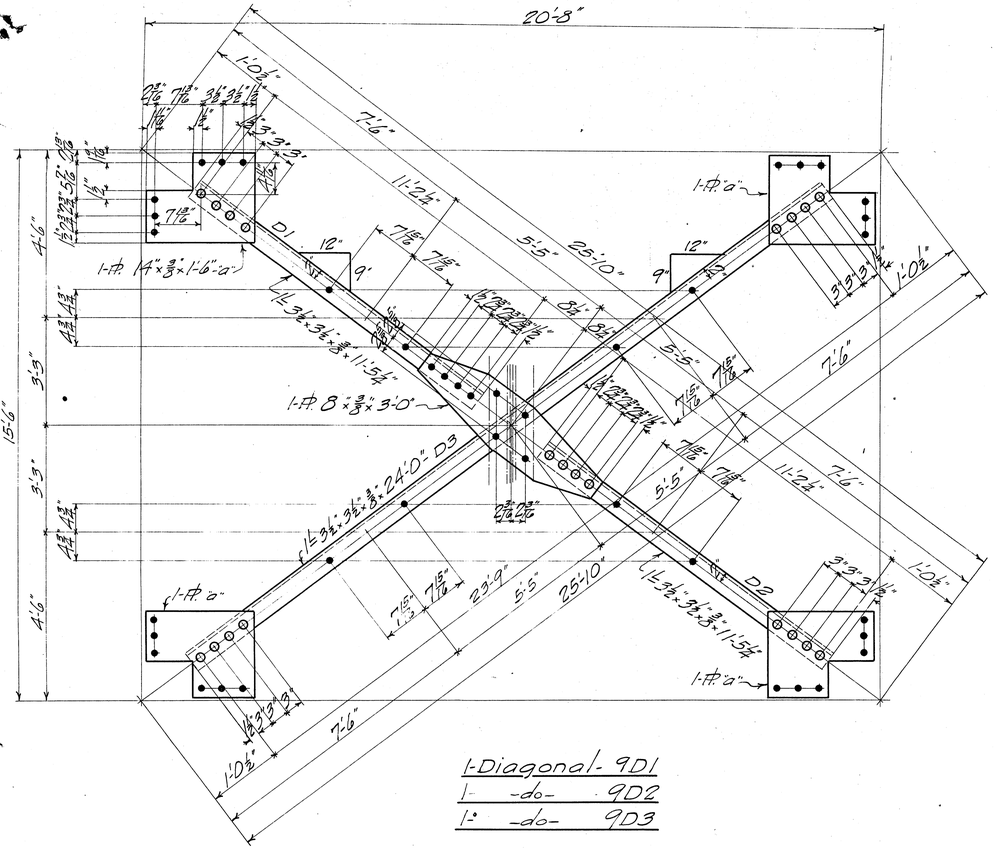

1-Diagonal- 9D1
1- -do- 9D2
1- -do- 9D3

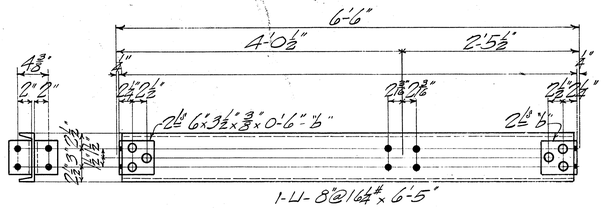

1-Channel- 9C1

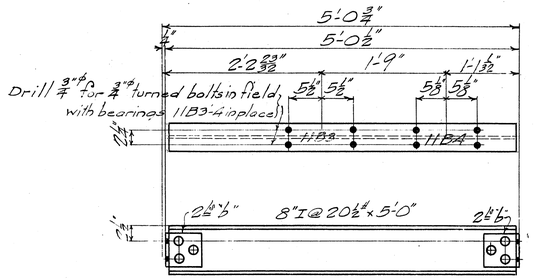

1-Beam- 9B1

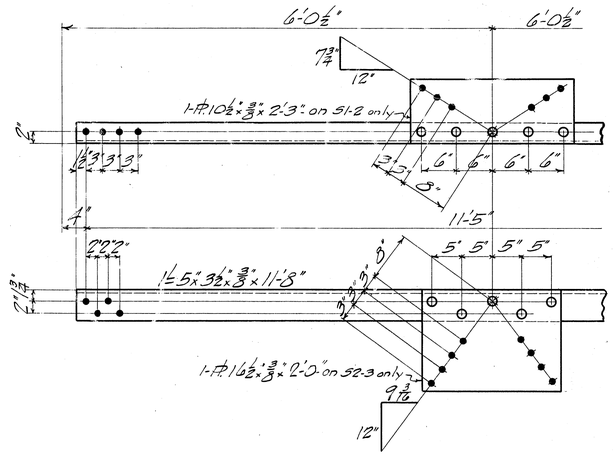

1-Strut- 9S1
1- -do- 9S2
1- -do- 9S3
} For Counter Weight

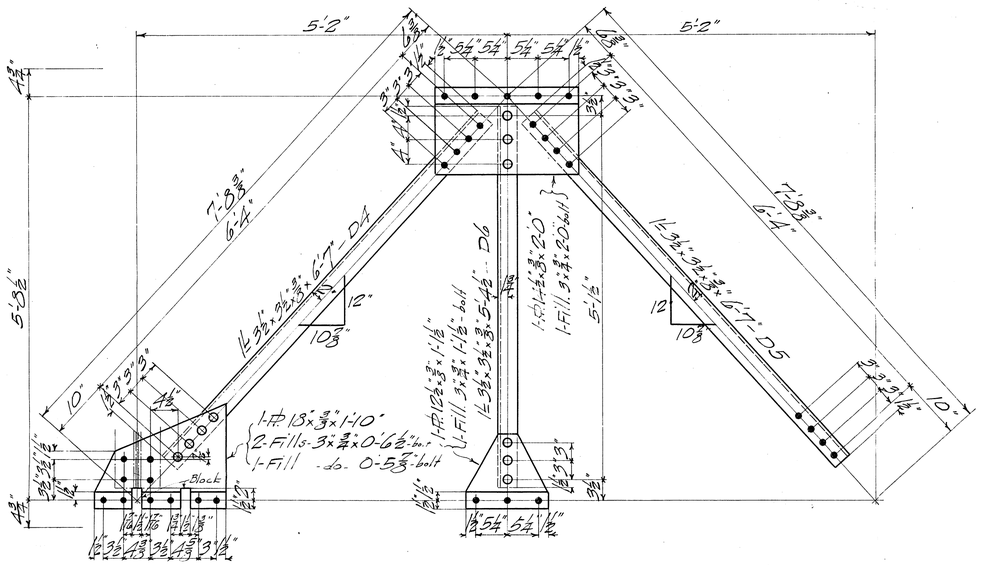

1-Diagonal- 9D4R As Shown
1- -do- 9D4L Left of "
2- -do- 9D5
2- -do- 9D6

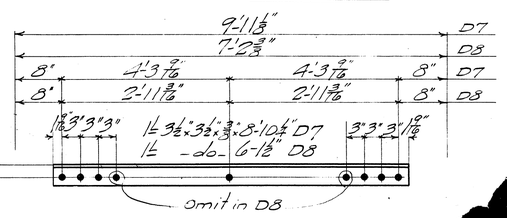

4-Diagonals- 9D7
4- -do- 9D8
} For Counter

Reaming

Paint 1-Coat Dutch Box Red Lead and Linseed Oil

Approved by

Revised

PENN BRIDGE CO., BEAVER FALLS, PA.

Contract No. 5703 Sheet No. 9 of
For Norfolk Southern R.R. Over Beaufort Channel
Subject Bracing
Made by H.R.L. Date May 5-1916
Traced by -do- " "
Checked by Brandt " 25-1916
Rivets 3/4" unless noted Scale 1/4" = 1'-0"
Holes 13/16" " "

5703

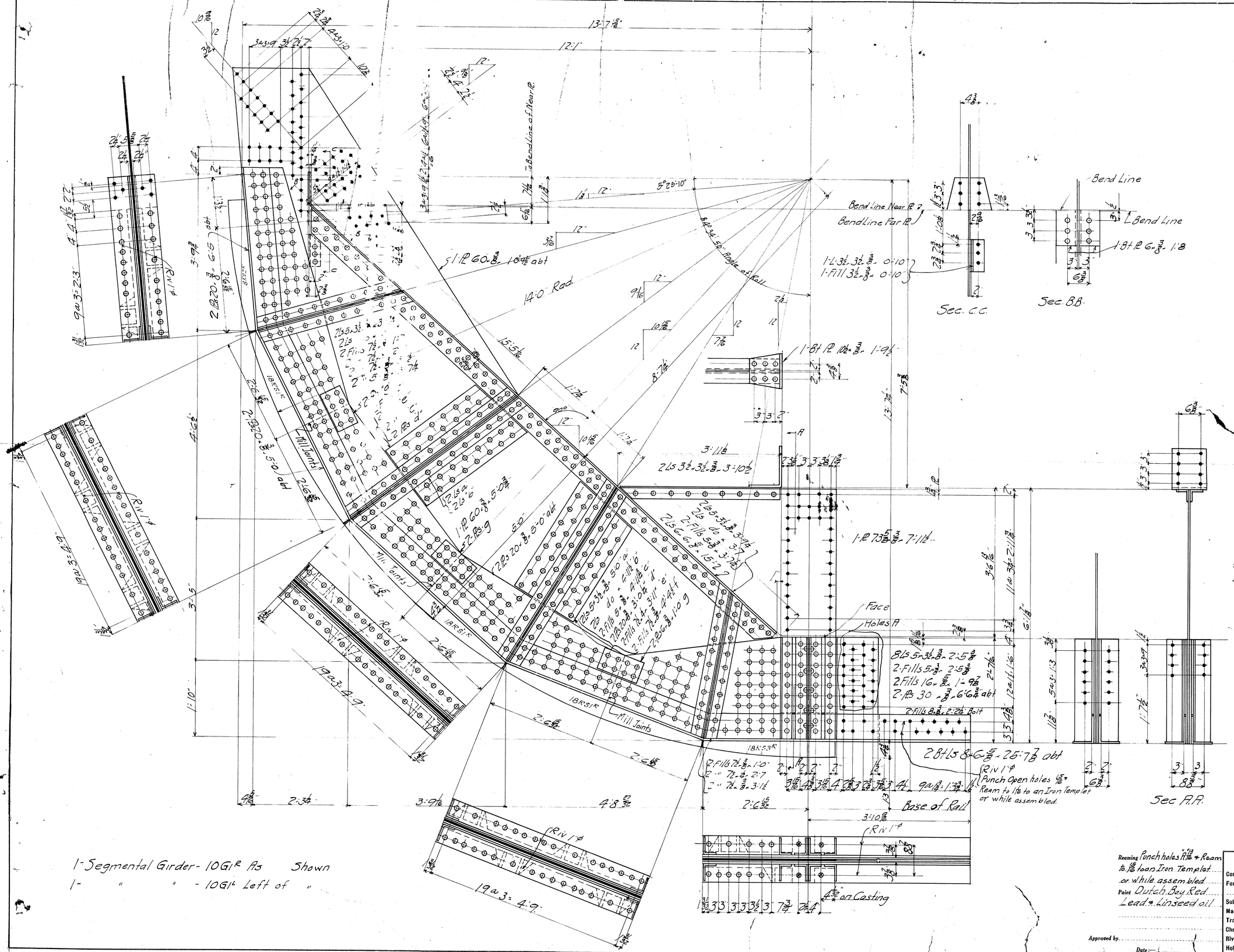

Note:- The bottom flang
segmental girders sha
the web and side plates
¼" outside the flang angles
the rivet holes then reamed
solid. After rivetting the bot
segmental girders shall be
track castings shall hav
on the web, side plates
All stiffeners and fill
to bear at the botto
shall be planed tru
on the plans. They
on the segmental girder
and the connecting holes drilled
Photographs shall be taken while
segmental girder is being planed in
shop, showing clearly the methodused.
Size of photographs to be not less than
5x7 inches

Reaming Punch holes 15/16" + Ream to 1 1/16 to an Iron Templet or while assembled
Paint Dutch Bay Red Lead & Linseed oil

Approved by
Date:

PENN BRIDGE CO., BEAVER FALLS, PA.

Contract No. 5703 Sheet No. 10 of
For Norfolk Southern R.R.
Over Beaufort Channel
Subject Girders
Made by J.B. Date 5-9-16
Traced by " "
Checked by Brandt " June 3-1916
Rivets ⅞ unless noted Scale 1"=10"
Holes 15/16 " "

Revised:—

5703

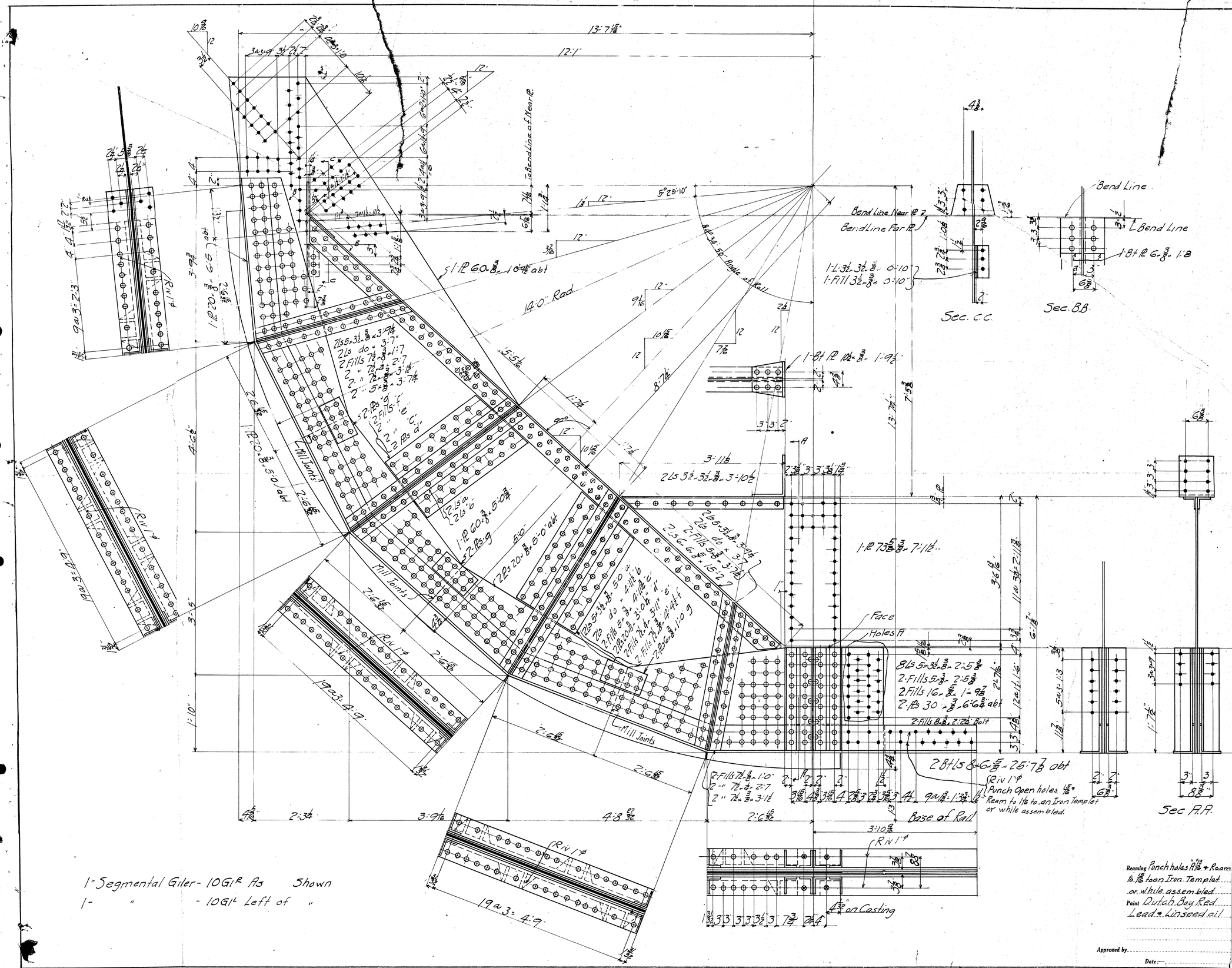

Note: The bottom flanges of the segmental girders shall be bolted up with the web and side plates projecting at least ¼" outside the flang angles at all points and the rivet holes then reamed or drilled in the solid. After riveting the bottom of the segmental girders shall be planed so that the track castings shall have a perfect bearing on the web, side plates, and angles. All stiffeners and fillers shall be finished to bear at the bottom. The track castings shall be planed true to dimensions shown on the plans. They shall be assembled on the segmental girder in the shop and the connecting holes drilled in place. Photographs shall be taken while segmental girder is being planed in shop, showing clearly the method used. Size of photographs to be not less than 5x7 inches.

1- Segmental Giler - 10GI℞ As Shown
1- " - 10GI℞ Left of "

Reaming Punch holes 15/16" + Ream to 1 1/16" to an Iron Templet or while assembled
Paint Dutch Bay Red Lead & Linseed oil

Approved by
Date:

Revised:

PENN BRIDGE CO., BEAVER FALLS, PA.

Contract No. 5703 Sheet No. 10 of
For Norfolk Southern R.R. Over Beaufort Channel
Subject Girders
Made by P.B. Date 5-9-16
Traced by " " "
Checked by Brandt " June 3-1916
Rivets ⅞ unless noted
Holes 15/16 " "
Scale 1"=1'-0"

5703

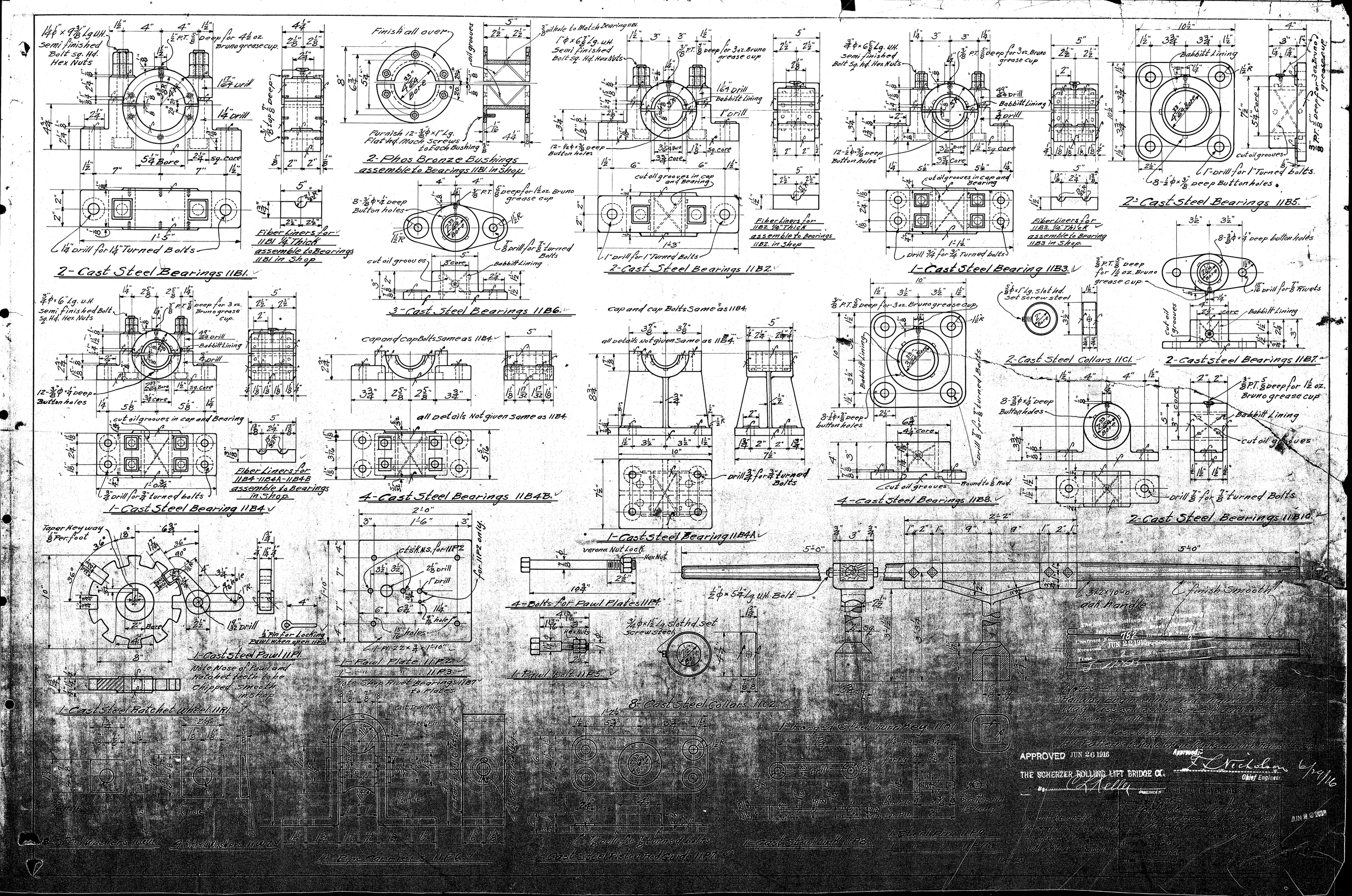
2-Cast Steel Bearings 11B1.
Fiber Liners for 11B1 1/4" Thick assemble to Bearings 11B1 in Shop
2-Phos Bronze Bushings assemble to Bearings 11B1 in Shop
2-Cast Steel Bearings 11B2.
Fiber Liners for 11B2 1/4" Thick assemble to Bearings 11B2 in Shop
1-Cast Steel Bearing 11B3.
Fiber Liners for 11B3 1/4" Thick assemble to Bearing 11B3 in Shop.
2-Cast Steel Bearings 11B5.
3-Cast Steel Bearings 11B6.
1-Cast Steel Bearing 11B4
Fiber Liners for 11B4-11B4A-11B4B assemble to Bearings in Shop.
4-Cast Steel Bearings 11B4B.
1-Cast Steel Bearing 11B4A
4-Bolts for Pawl Plates 11P4.
1-Pawl Bolt 11P5.
1-Cast Steel Pawl 11P1.
Note Nose of Pawl and Ratchet teeth to be Chipped Smooth in Shop
1-Cast Steel Ratchet Wheel 11R1.
1-Pawl Plate 11P2
Note Shop Rivet Bearings 11B7 to Plates
4-Pipe Carriers 11P6
8-Cast Steel Collars 11C4.
1-Forged Steel Turnbuckle 11R1
1-Cast Steel Link 11P8
1-Steel Pin 11P9
1-Steel Pin 11P10
1-Cast Steel Piston Rod Guide 11P7.
2-Cast Steel Collars 11C1.
2-Cast Steel Bearings 11B7.
4-Cast Steel Bearings 11B8.
2-Cast Steel Bearings 11B10.
5'-0" oak handle
finish smooth
APPROVED JUN 26 1916
THE SCHERZER ROLLING LIFT BRIDGE CO.
Approved: F. C. Nicholson 6/29/16
Chief Engineer
JUN 22 1916

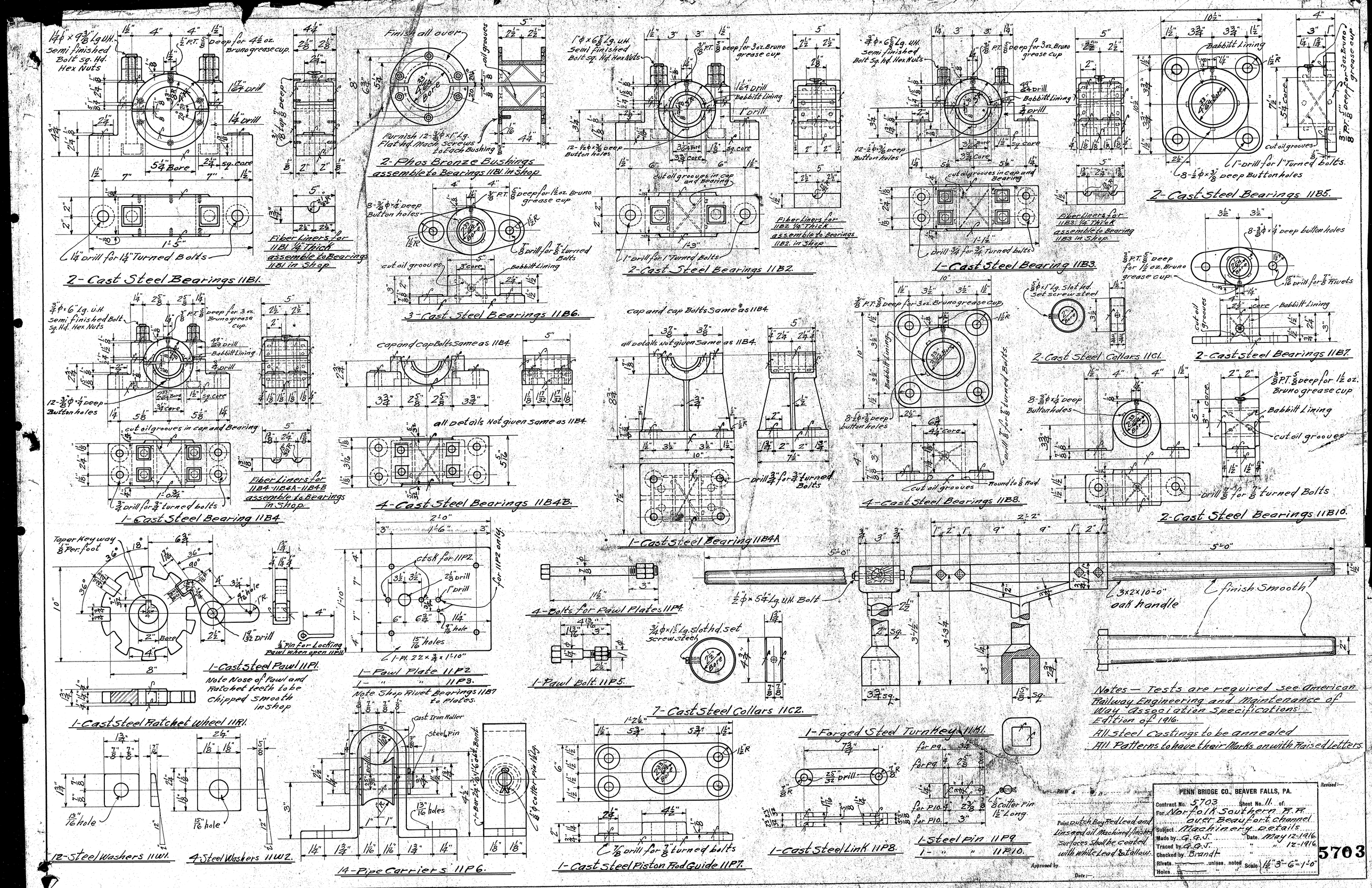
2-Cast Steel Bearings 11B1.
Fiber Liners for 11B1 1/4" Thick assemble to Bearings 11B1 in Shop
2-Phos Bronze Bushings assemble to Bearings 11B1. in Shop
3-Cast Steel Bearings 11B6.
2-Cast Steel Bearings 11B2.
Fiber Liners for 11B2 1/4" Thick assemble to Bearings 11B2. in Shop
1-Cast Steel Bearing 11B3.
Fiber Liners for 11B3 1/4" Thick assemble to Bearing 11B3 in Shop.
2-Cast Steel Bearings 11B5.
1-Cast Steel Bearing 11B4
Fiber Liners for 11B4-11B4A-11B4B assemble to Bearings in Shop.
4-Cast Steel Bearings 11B4B.
1-Cast Steel Bearing 11B4A
4-Cast Steel Bearings 11B8.
2-Cast Steel Bearings 11B10.
2-Cast Steel Collars 11C1.
2-Cast steel Bearings 11B7.
1-Cast Steel Pawl 11P1.
Note Nose of Pawl and Ratchet teeth to be chipped smooth in shop
1-Pawl Plate 11P2
1-" " 11P3.
Note Shop Rivet Bearings 11B7 to Plates.
4-Bolts for Pawl Plates 11P4.
1-Pawl Bolt 11P5.
7-Cast Steel Collars 11C2.
1-Forged Steel Turnkey 11M1.
1-Cast Steel Link 11P8.
1-Steel Pin 11P9
1-" " 11P10.
1-Cast Steel Piston Rod Guide 11P7.
14-Pipe Carriers 11P6.
12-Steel Washers 11W1.
4-Steel Washers 11W2.
Notes— Tests are required see American Railway Engineering and Maintenance of Way Association Specifications Edition of 1916.
All Steel Castings to be annealed
All Patterns to have their Marks on with Raised Letters.
PENN BRIDGE CO., BEAVER FALLS, PA.
Contract No. 5703 Sheet No. 11 of
For Norfolk Southern R.R. over Beaufort channel
Subject Machinery details.
Made by G.G.J. Date May 12-1916
Traced by G.G.J. " " 12-1916
Checked by Brandt
Rivets unless noted
Holes
Scale 1/2" = 3"-6"-1'-0"
Revised
Approved by
Date
5703

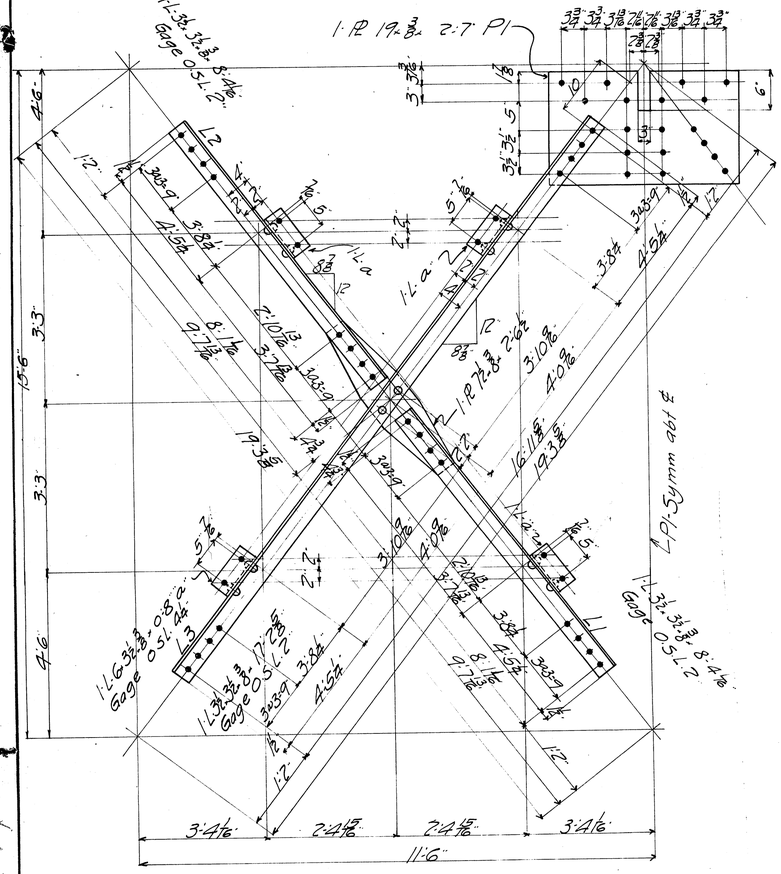

4-Laterals 12L1
4- " 12L2
4- " 12L3
6- " Plates-12P1

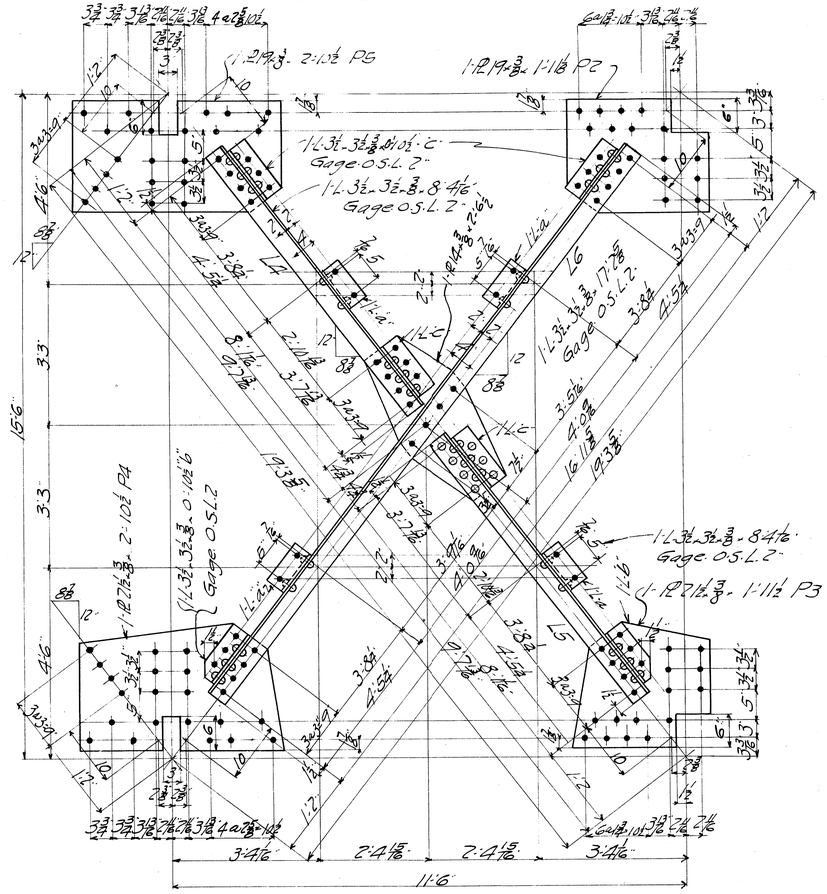

2-Laterals 12L4
2- " 12L5
2 " 12L6
2 " Plates-12P2
2 " " 12P3
2 " " 12P4
2 " " 12P5

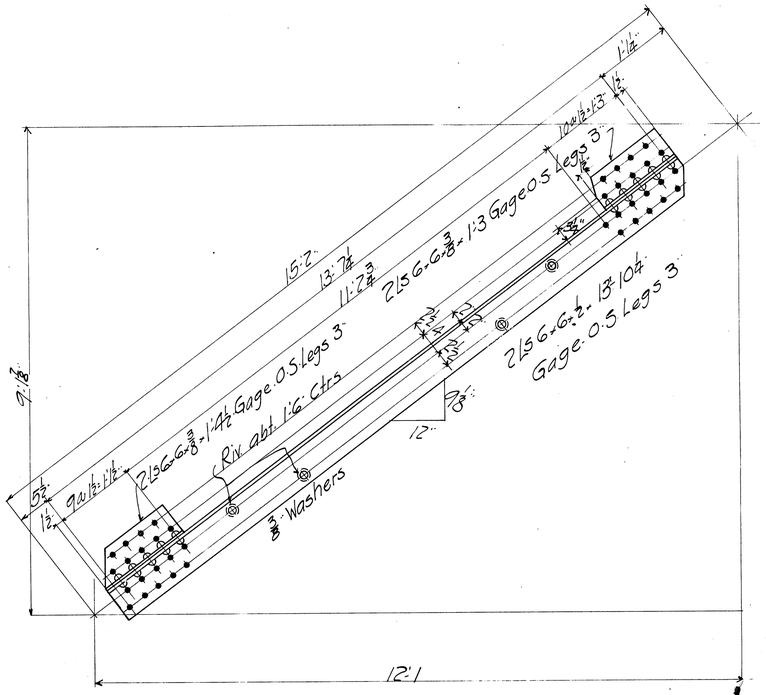

2-Braces-12B1

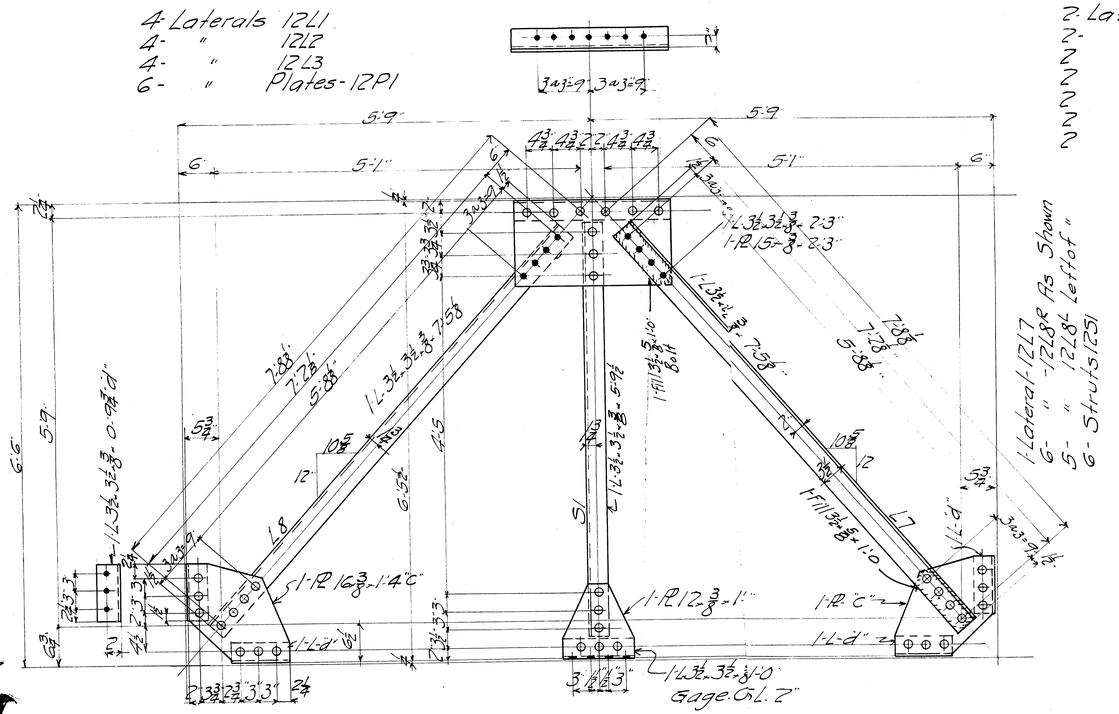

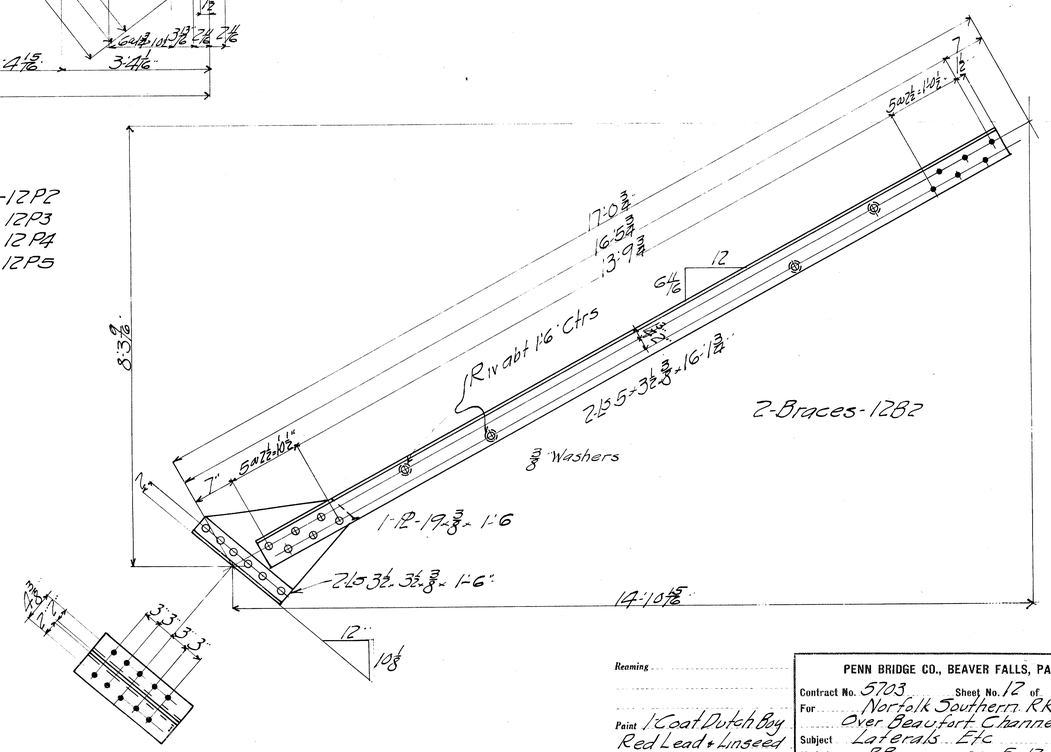

2-Braces-12B2

Reaming

Paint 1 Coat Dutch Boy Red Lead + Linseed oil.

Approved by

Date:

Revised:

PENN BRIDGE CO., BEAVER FALLS, PA.

Contract No. 5703 Sheet No. 12 of

For Norfolk Southern R.R. Over Beaufort Channel

Subject Laterals Etc

Made by P.B. Date 5-12-18

Traced by " "

Checked by Brandt " June 3 1916

Rivets 3/8 unless noted

Holes 15/16 " " "

Scale

5703

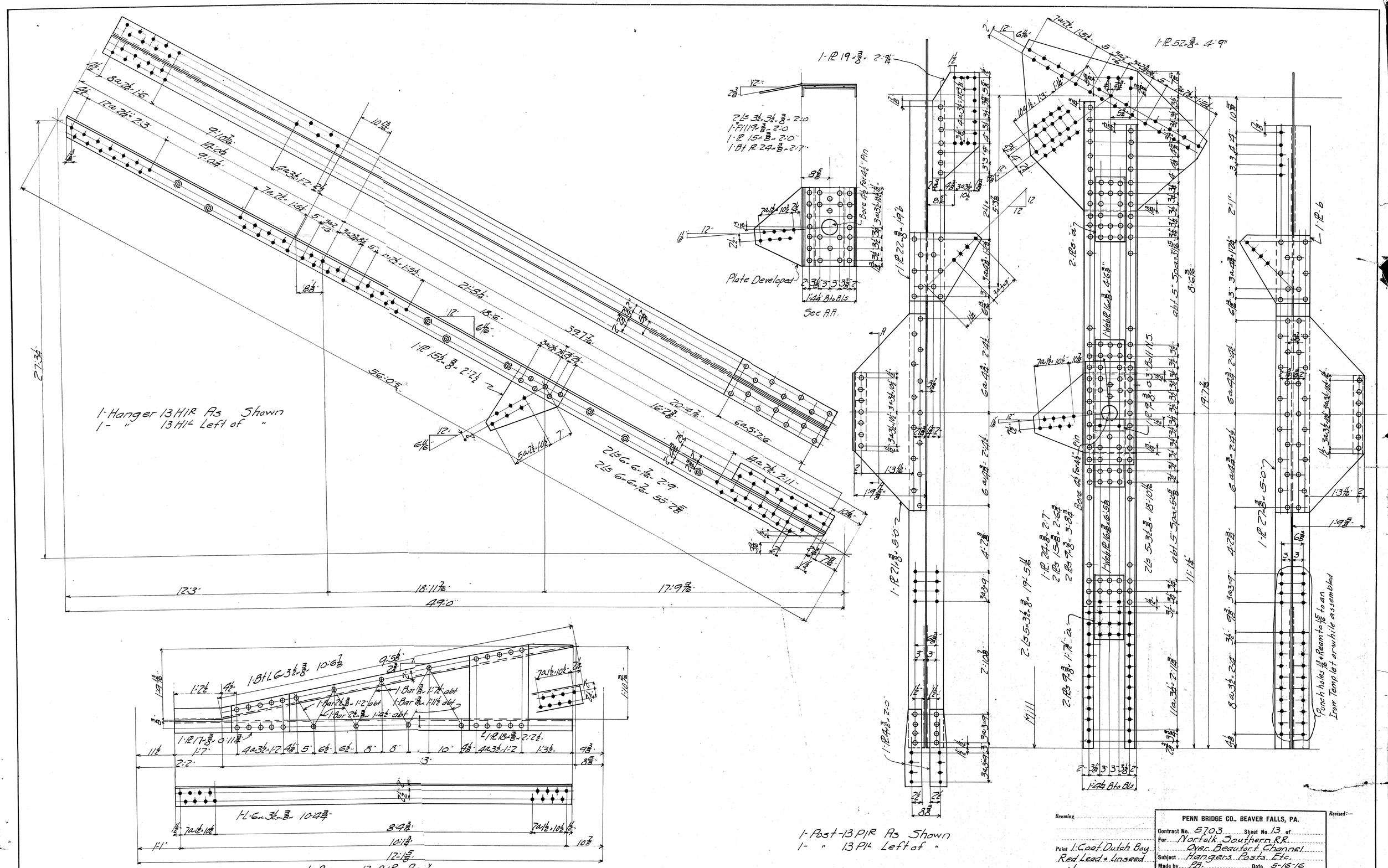
1-Hanger 13H1R As Shown
1- " 13H1L Left of "
Plate Developed
Sec AA
1-Post-13P1R As Shown
1- " 13P1L Left of "
1-Brace 13-B1R As Shown
1- " 13B1L Left "
Punch holes 13/16 & Ream to 15/16 to an Iron Templet or while assembled
Ream
Paint 1 Coat Dutch Bay Red Lead & Linseed oil.
Approved by
Date:—
Revised:—
PENN BRIDGE CO., BEAVER FALLS, PA.
Contract No. 5703 Sheet No. 13 of
For Norfolk Southern R.R.
Over Beaufort Channel
Subject Hangers Posts Etc.
Made by PB Date 5-16-16
Traced by " " "
Checked by Brandt " June 3-1916
Rivets 3/4" unless noted
Holes 15/16" " "
Scale
5703

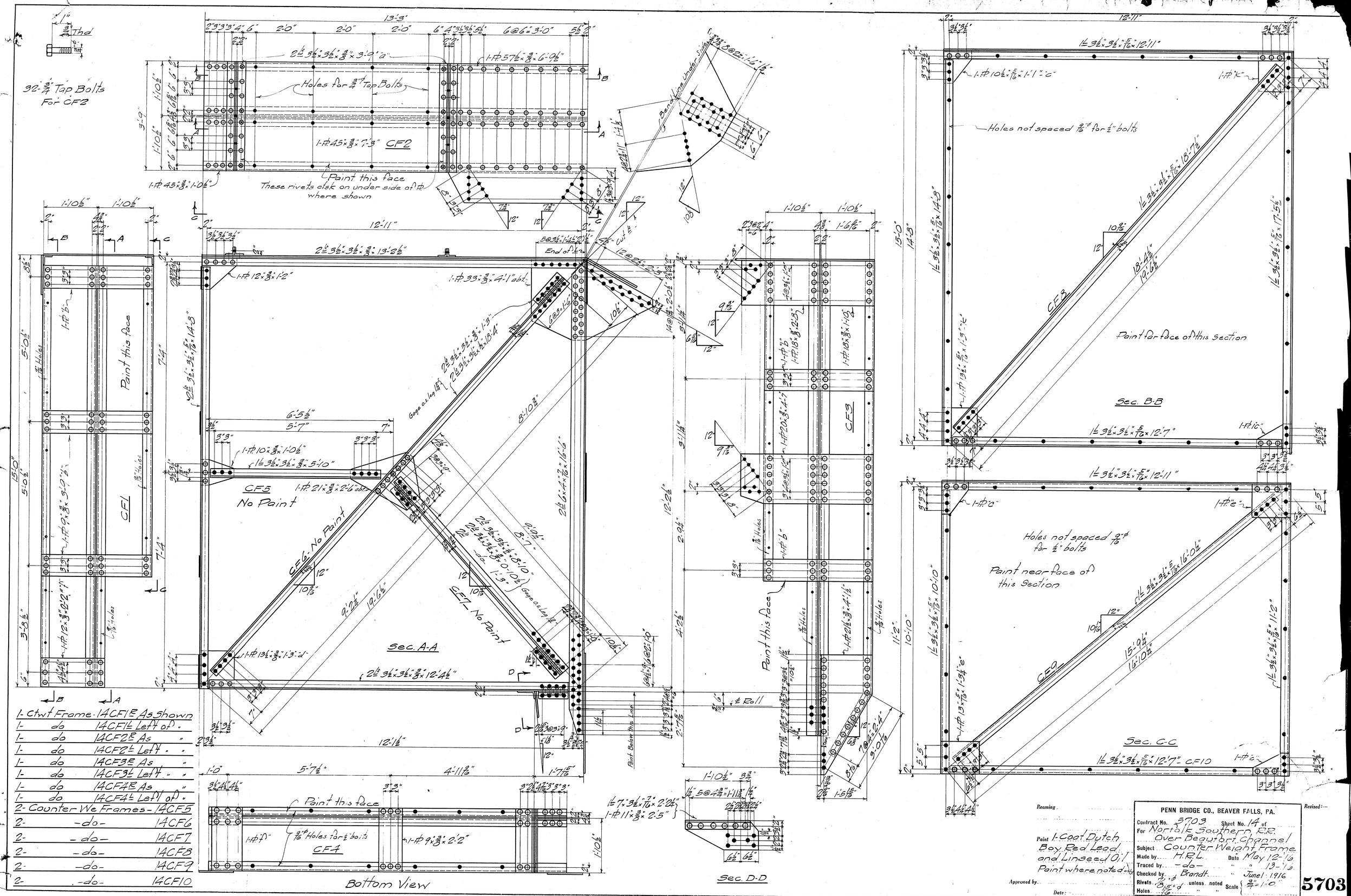

1-	Ctwt Frame	14CF1R As Shown
1-	do	14CF1L Left of "
1-	do	14CF2R As "
1-	do	14CF2L Left " "
1-	do	14CF3R As "
1-	do	14CF3L Left " "
1-	do	14CF4R As "
1-	do	14CF4L Left of "
2-	Counter We Frames	14CF5
2-	-do-	14CF6
2-	-do-	14CF7
2-	-do-	14CF8
2-	-do-	14CF9
2-	-do-	14CF10

Reaming

Paint 1-Coat Dutch Boy Red Lead and Linseed Oil Paint where noted

Approved by

Date:

PENN BRIDGE CO., BEAVER FALLS, PA.

Revised:—

Contract No. 5703 Sheet No. 14 of

For Norfolk Southern R.R. Over Beaufort Channel

Subject Counter Weight Frame

Made by H.R.L. Date May 12-'16

Traced by -do- " " 13-'16

Checked by Brandt " June 1-1916

Rivets 3/4" d unless noted Scale 3/4"=1'-0"

Holes 9/16" d " "

5703

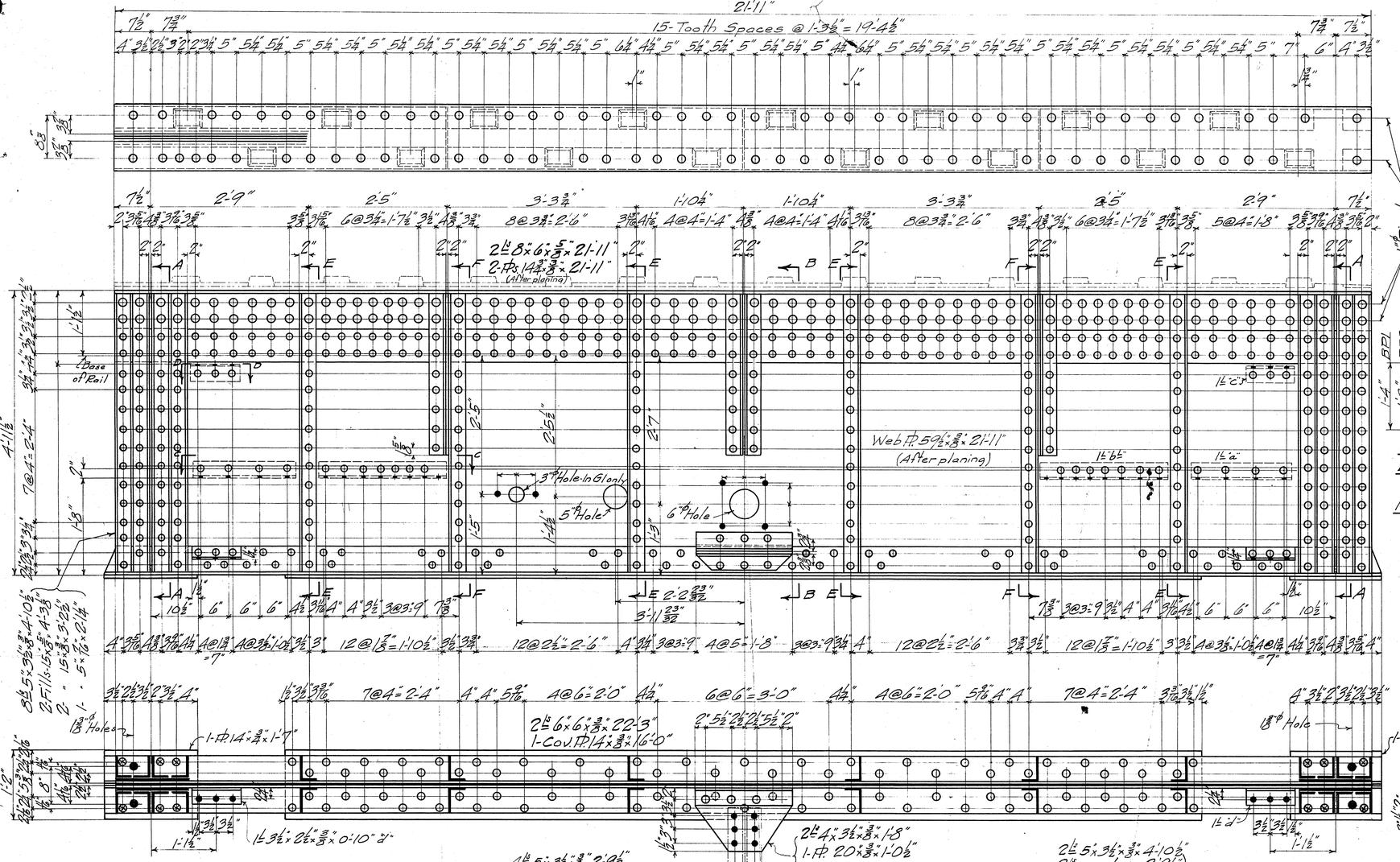

1-Track Girder-2G1 As Shown
1- -do- 2G2 Left of "

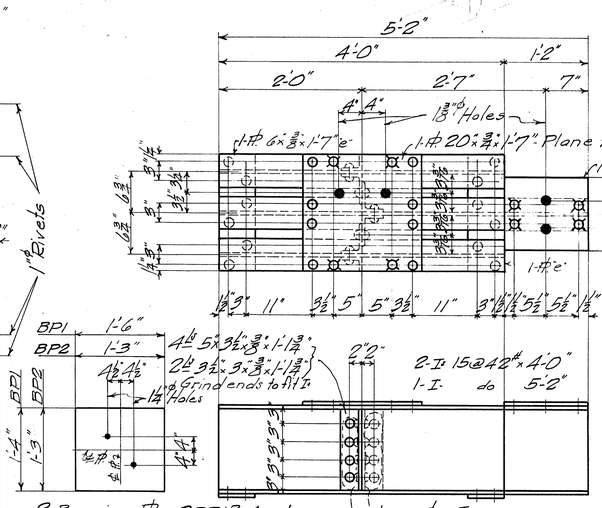

2-Bearing Pls. 2BP1 As Shown
2-Bearing Pls. 2BP1 Left of "
16"×3/8"×1'-6" Plane fr. 3/8" Pl.-one side
1-Bearing Pl. 2BP2
15"×3/8"×1'-3"

2-Bolsters-2B1 As Shown
2- -do- 2B1 Left of "
} No Paint

8-Anchor Bolts-2AB1		6'-0"	1"φ×6'-0"
8-	do	2AB2	4'-0"	1"φ×4'-0"
8-	do	2AB3	1'-6"	1"φ×1'-6"
8-	do	2AB4	2'-0"	1"φ×2'-0"
2-	do	2AB5	4'-6"	1"φ×4'-6"

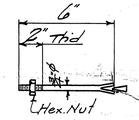

2-Anchor Bolts-2AB6
No Paint

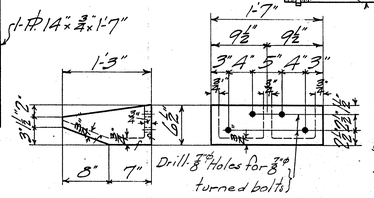

2-C.S. Guides-2GS1

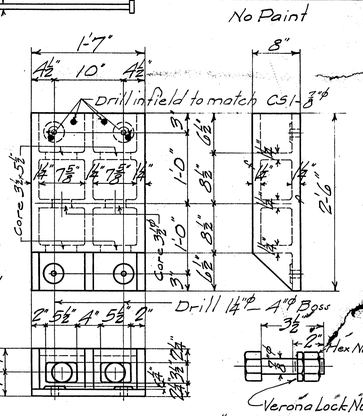

8-Turned Bolts-2TB1
For CS1-2

2-C.S. Pedestals-2CS2

Track Girder

The top flanges of the track girders shall be bolted up with the webs and side plates projecting at least ¼ inch outside the flange angles at all points and the rivet holes then reamed or drilled in the solid.

After riveting the top of the track girders shall be planed so that the cast steel track plates shall have a perfect bearing on the webs, side plates and angles. The web plates shall be planed flush with the bottom flange angles for bearing on the cover plates over bolsters. Fillers under joints in track plates shall be finished to bear at the top and those over bolsters to bear at both top and bottom. Stiffener angles throughout shall be finished to bear at top and bottom. C.S. track plates shall be assembled on the track girders in the shop and the connecting holes drilled in place and filled with shop rivets.

Photographs shall be taken while track girder is being planed in shop, showing clearly the method used. Size of photographs to be not less than 5×7 inches

Shop Paint
Dutch Boy Red Lead & Linseed Oil
Except Noted

PENN BRIDGE CO., BEAVER FALLS, PA.

Contract No. 5703 Sheet No. 2 of
For Norfolk Southern R.R.
Over Beaufort Channel
Subject Track Girders, Bolsters, etc.
Made by H.R.L. Date Apr. 17, 1916
Traced by -do- " " 19-
Checked by P.W.D. "
Rivets 3/8" unless noted
Holes 15/16" " "
Scale 1"=1'-0"
Revised:

5703

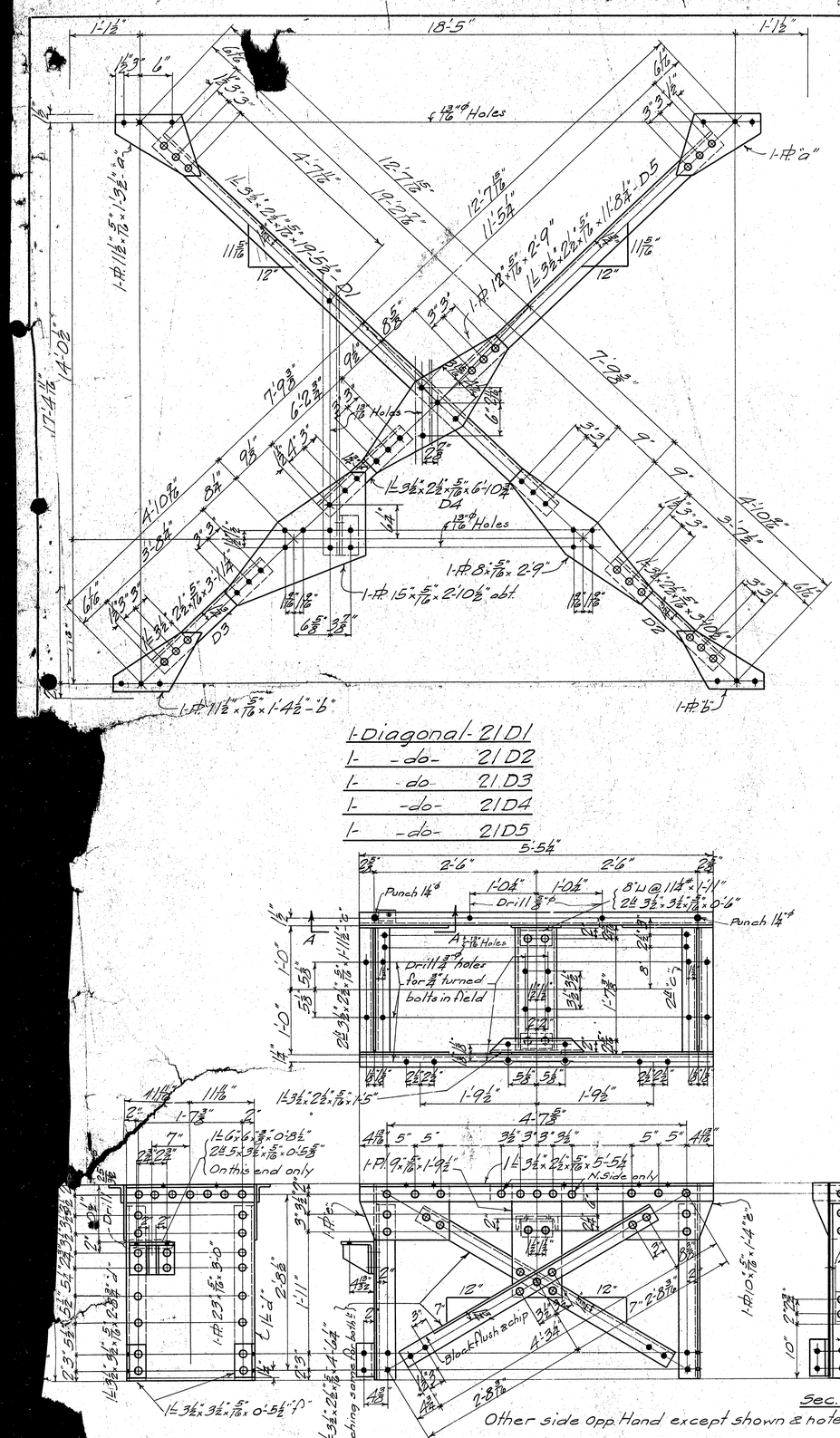
1-Diagonal-21D1
1- -do- 21D2
1- -do- 21D3
1- -do- 21D4
1- -do- 21D5
Blocking same as bolts
Block flush w/ chip
Sec. A-A
Other side opp. Hand except shown & noted

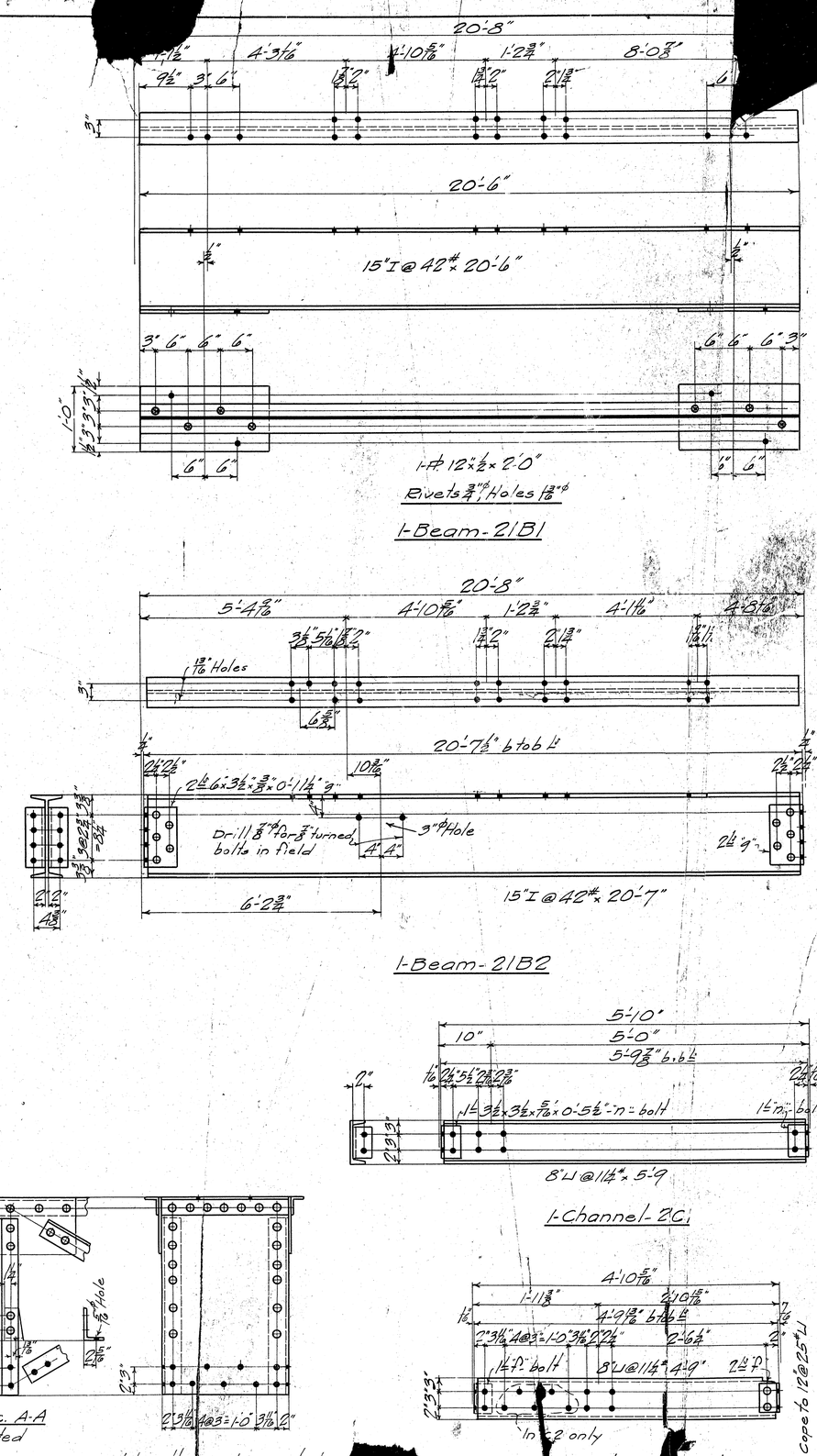
1-Beam-21B1
Rivets 3/4"φ; Holes 13/16"φ
1-Beam-21B2
15"I @ 42# × 20'-7"
1-Channel-21C
8"U @ 11¼# × 5'-9
1-Channel-21C1
Cope to 12"@25#

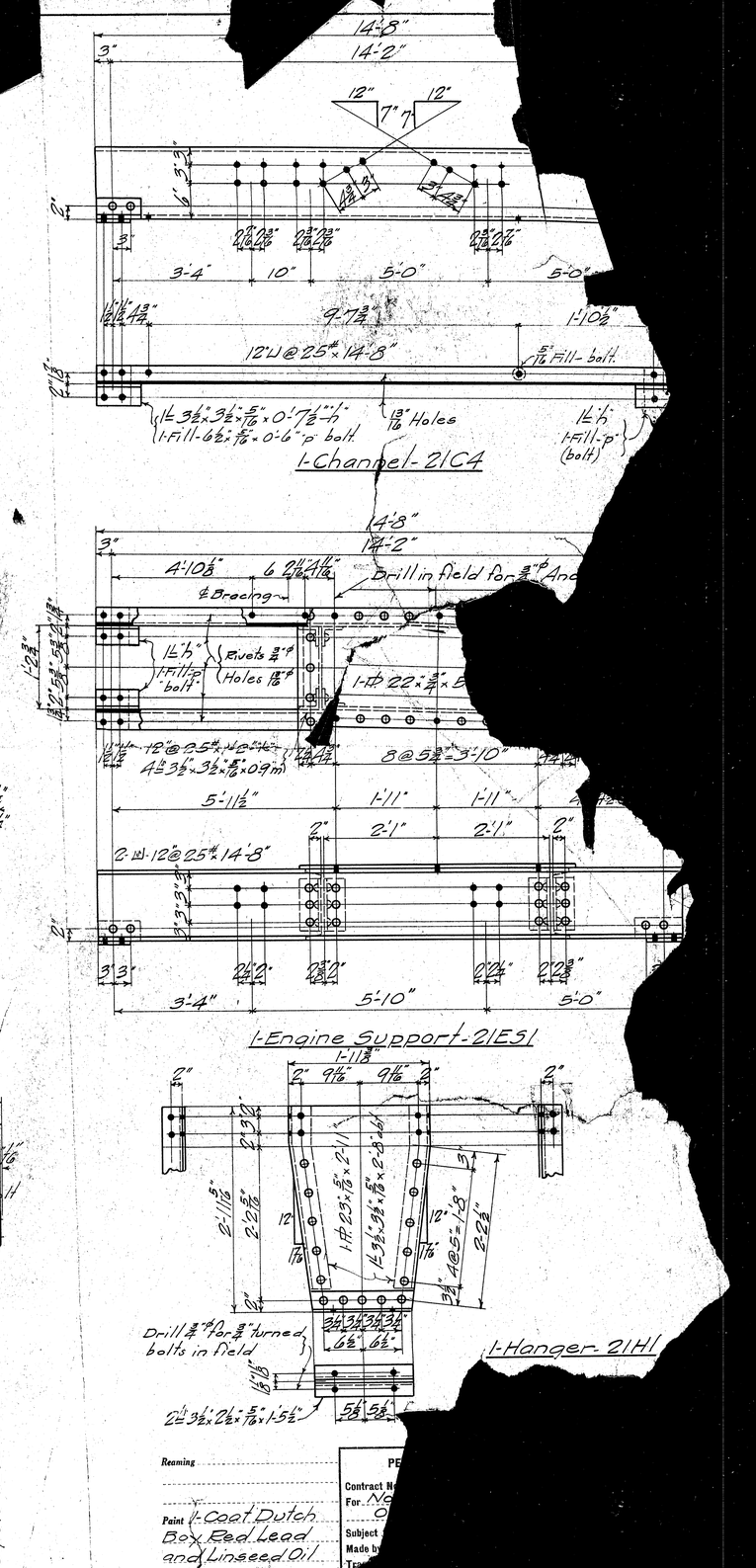
1-Channel-21C4
12"U @ 25# × 14'-8"
1-Engine Support-21ES1
1-Hanger-21H1
Drill 3/4"φ for 3/4" turned bolts in field
Paint 1-Coat Dutch Box Red Lead and Linseed Oil
Reaming
Contract No.
For
Subject
Made by

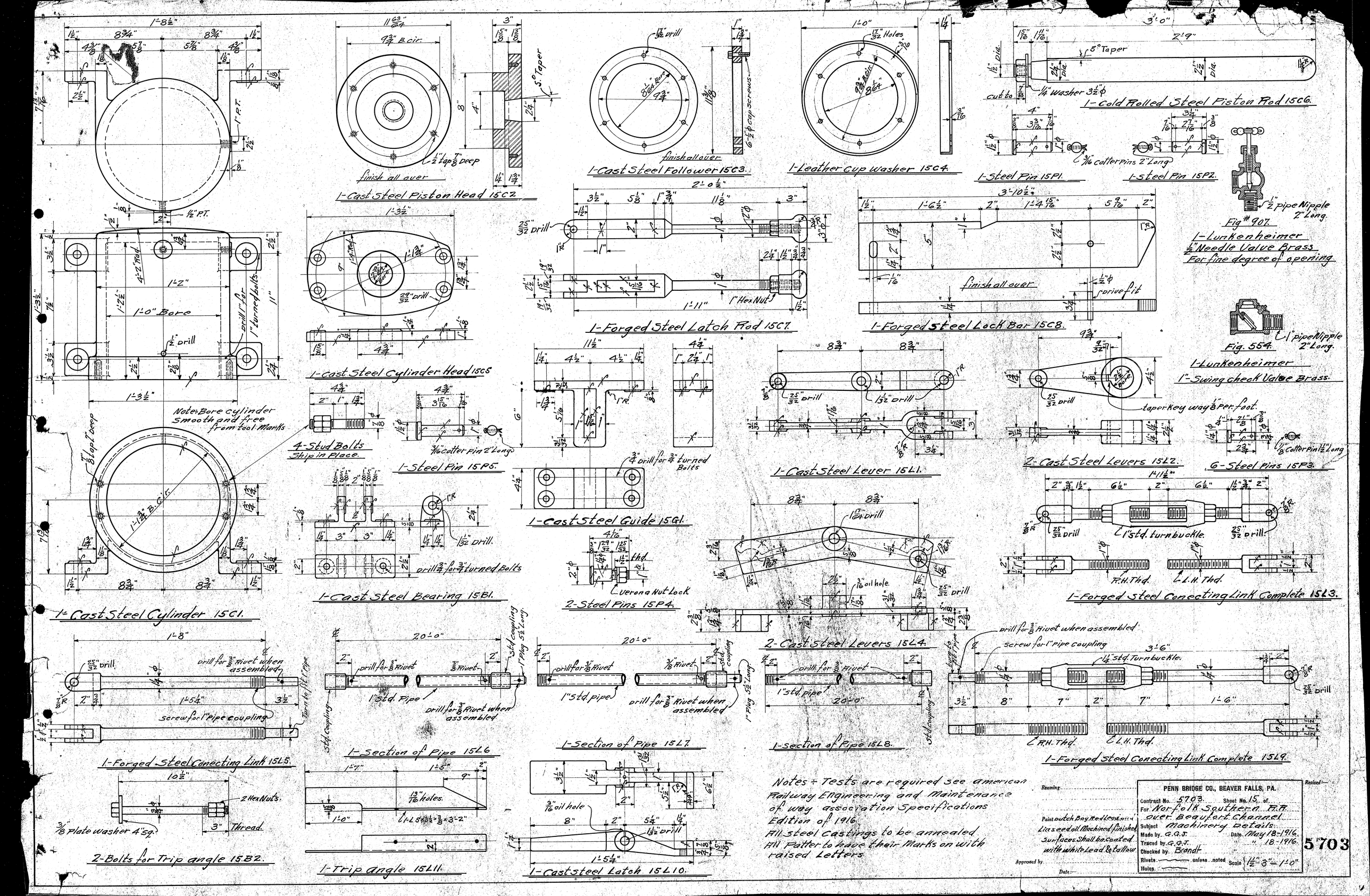
1-Cast Steel Cylinder 15C1.
1-Cast Steel Piston Head 15C2.
finish all over
1-Cast Steel Follower 15C3.
1-Leather Cup Washer 15C4.
1-Cold Rolled Steel Piston Rod 15C6.
5° Taper
1-Steel Pin 15P1.
1-Steel Pin 15P2.
Fig # 907.
1-Lunkenheimer 1/2" Needle Valve Brass For fine degree of opening.
1-Forged Steel Latch Rod 15C7.
1-Forged Steel Lock Bar 15C8.
finish all over
drive fit
Fig. 554.
1-Lunkenheimer 1" Swing check Valve Brass.
1-Cast Steel Cylinder Head 15C5
Note: Bore cylinder smooth and free from tool Marks
4-Stud Bolts Ship in Place.
1-Steel Pin 15P5.
1-Cast Steel Lever 15L1.
2-Cast Steel Levers 15L2.
6-Steel Pins 15P3.
1-Cast Steel Guide 15G1.
1-Cast Steel Bearing 15B1.
2-Steel Pins 15P4.
1-Forged Steel Conecting Link Complete 15L3.
2-Cast Steel Levers 15L4.
1-Forged Steel Conecting Link 15L5.
1-Section of Pipe 15L6
1-Section of Pipe 15L7.
1-Section of Pipe 15L8.
1-Forged Steel Conecting Link Complete 15L9.
2-Bolts for Trip angle 15B2.
1-Trip angle 15L11.
1-Cast Steel Latch 15L10.
Notes + Tests are required see american Railway Engineering and Maintenance of way association Specifications Edition of 1916
All Steel Castings to be annealed.
All Patter to have their Marks on with raised Letters
Reaming
Paint outside Bay Red Lead and Linseed oil Machined finished surfaces shall be coated with White Lead & tallow
Approved by
Date
Received
PENN BRIDGE CO., BEAVER FALLS, PA.
Contract No. 5703 Sheet No. 15 of
For Norfolk Southern R.R. over Beaufort Channel
Subject Machinery Details
Made by G.G.J. Date May 18-1916
Traced by G.G.J. " 18-1916
Checked by Brandt
Rivets unless noted
Holes
Scale 1/2" = 3" = 1'-0"
5703

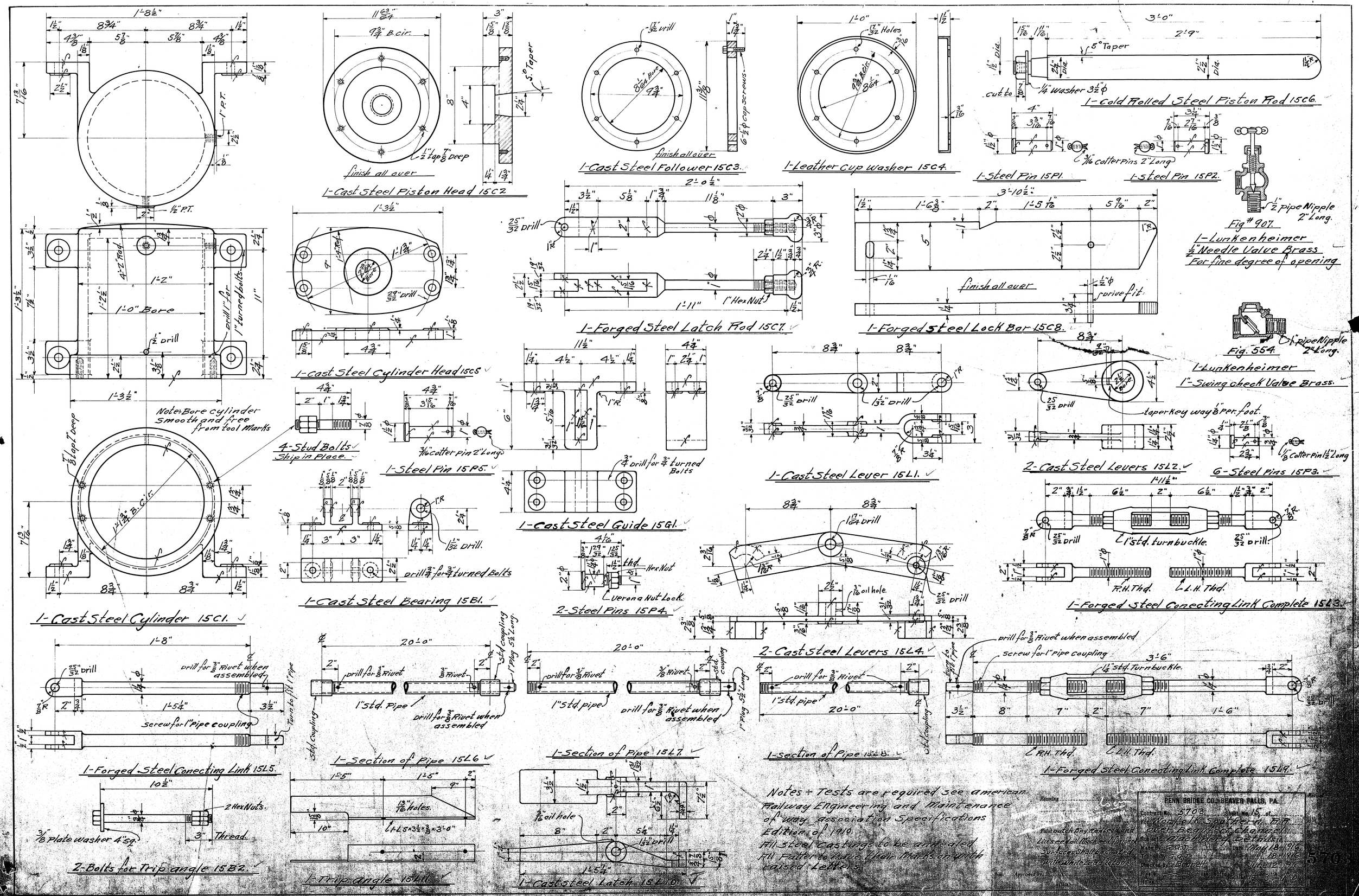
1-Cast Steel Cylinder 15C1.
1-Cast Steel Piston Head 15C2
finish all over
1-Cast Steel Follower 15C3.
finish all over
1-Leather Cup Washer 15C4.
1-Cold Rolled Steel Piston Rod 15C6.
5° Taper
1-Steel Pin 15P1.
1-Steel Pin 15P2.
Fig # 907.
1-Lunkenheimer
1/2" Needle Valve Brass
For fine degree of opening
1-Forged Steel Latch Rod 15C7.
1-Forged Steel Lock Bar 15C8.
finish all over
drive fit
Fig. 554.
1-Lunkenheimer
1" Swing check Valve Brass.
1-Cast Steel Cylinder Head 15C5
Note: Bore cylinder smooth and free from tool marks
4-Stud Bolts
Ship in Place.
1-Steel Pin 15P5.
1-Cast Steel Lever 15L1.
2-Cast Steel Levers 15L2.
taper key way 1/8" per foot.
6-Steel Pins 15P3.
1-Cast Steel Guide 15G1.
1-Cast Steel Bearing 15B1.
drill 3/4" for 3/4" turned Bolts
2-Steel Pins 15P4.
Verona Nut Lock.
1-Forged Steel Conecting Link Complete 15L3.
1-std. turnbuckle.
R.H. Thd.
L.H. Thd.
2-Cast Steel Levers 15L4.
1-Forged Steel Conecting Link 15L5.
screw for 1" pipe coupling
drill for 3/8" Rivet when assembled
1-Forged Steel Conecting Link Complete 15L9.
1-Section of Pipe 15L6
1-Section of Pipe 15L7.
1-Section of Pipe 15L8.
2-Bolts for Trip angle 15B2.
1-Trip angle 15L11.
1-Cast Steel Latch 15L10.
Notes + Tests are required see American Railway Engineering and Maintenance of way association Specifications Edition of 1910.
All Steel Castings to be annealed
All Patterns have their Marks on with raised Letters.
PENN BRIDGE CO. BEAVER FALLS, PA.
Contract No. 5703
Sheet No. 15 of
For Norfolk Southern R.R.
Over Beaver Channel
Subject Miscellaneous Details
Made by C.G.T.
Date May 18, 1916
Traced by C.G.T.
Date May 18, 1916
Checked by Brandt
Date June 12, 1916
Rivets
Bolts
Reaming
Paint Dutch Boy Red Lead and Linseed Oil Mixed, Finished Surfaces Shall be coated with White Lead & Tallow
Approved by
5703

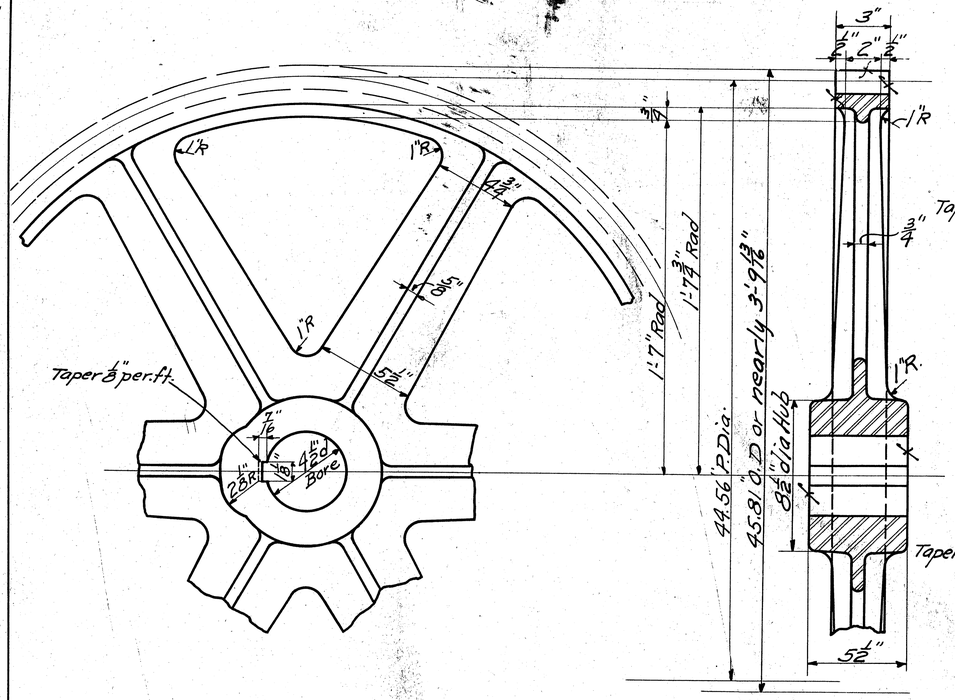

2-Cast Steel Gears 16B

70 Cut Teeth 2" C.P. 15° Involute Std.

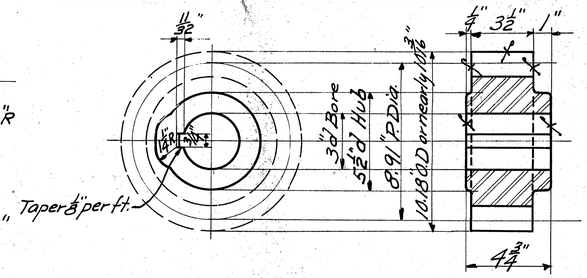

2 Cast Steel Pinions 16C

14 Cut Teeth 2" C.P. 15° Involute Std.

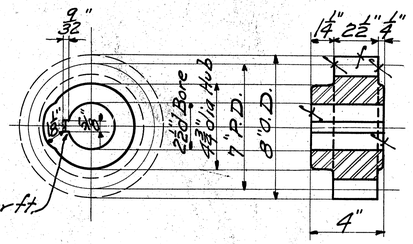

1 Cast Steel Pinion 16E

14 Cut Teeth 2 D.P. 15° Involute Std.

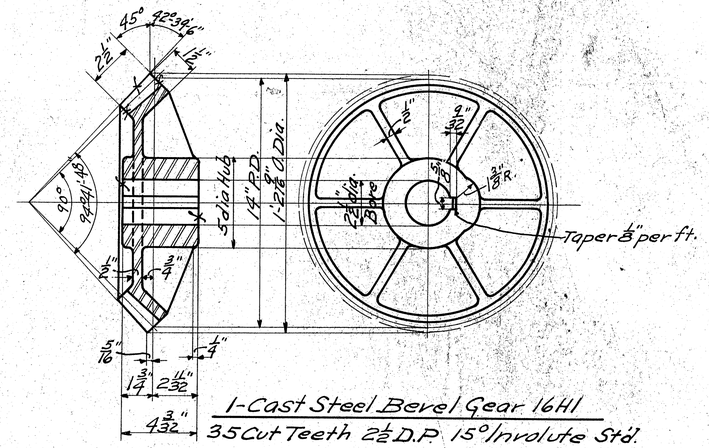

1-Cast Steel Bevel Gear 16H1

35 Cut Teeth 2 1/2 D.P. 15° Involute Std.

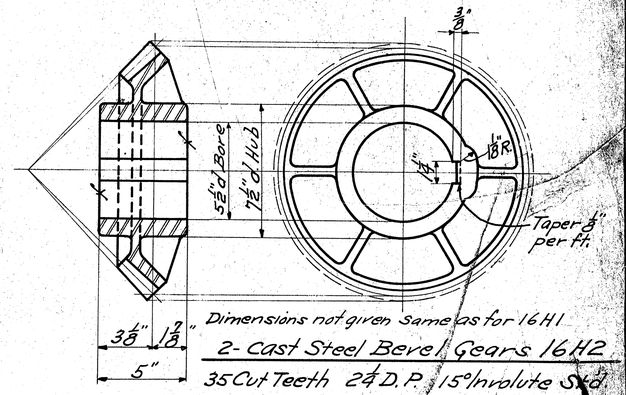

Dimensions not given same as for 16H1

2- Cast Steel Bevel Gears 16H2

35 Cut Teeth 2 1/2 D.P. 15° Involute Std.

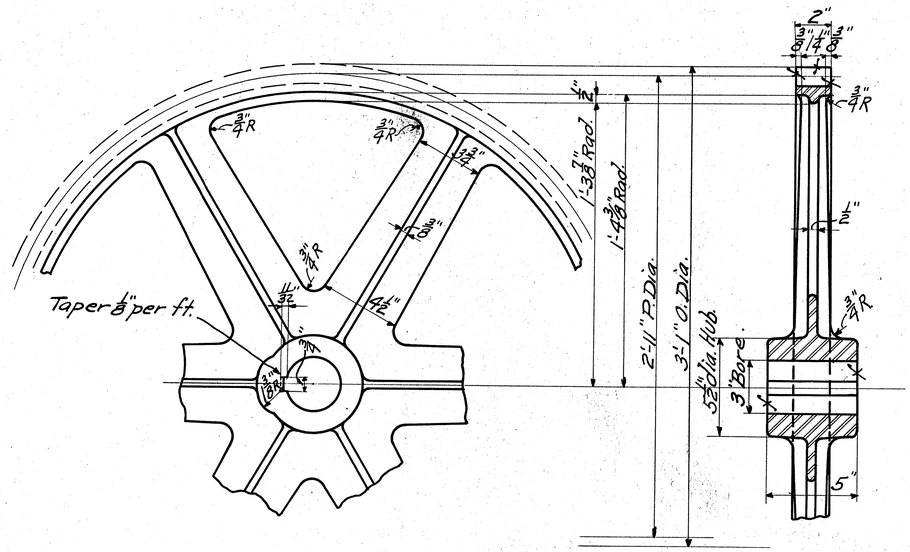

1-Cast Steel Gear 16D

70 Cut Teeth 2 D.P. 15° Involute Std.

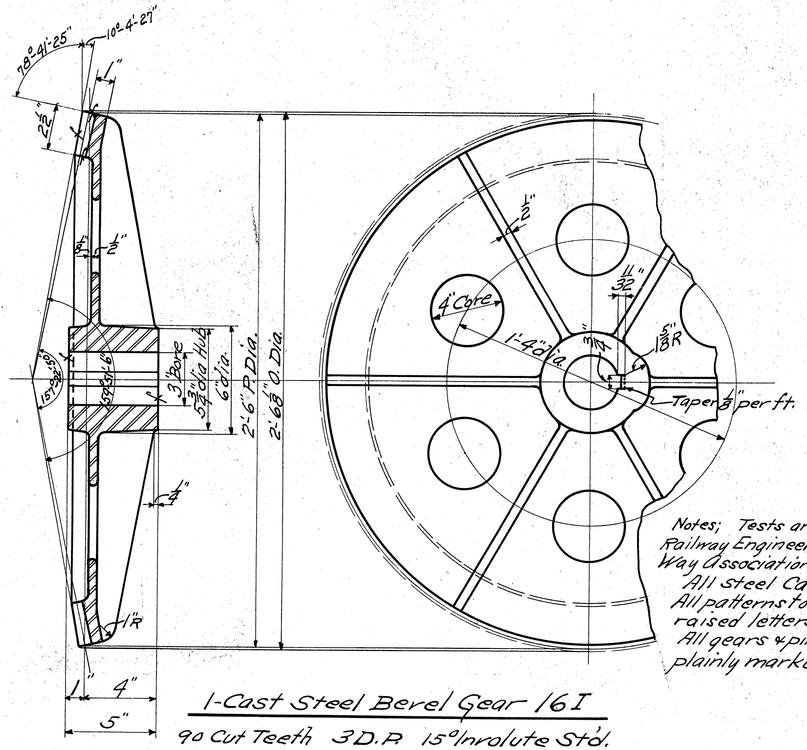

1-Cast Steel Bevel Gear 16I

90 Cut Teeth 3 D.P. 15° Involute Std.

Notes; Tests are required, see American Railway Engineering and Maintenance of Way Association Specifications, Edition of 1916
All steel Castings to be annealed
All patterns to have their marks on with raised letters.
All gears & pinions to have their pitch lines plainly marked on both sides.

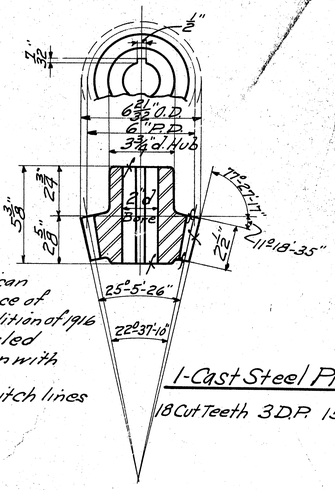

1-Cast Steel Pinion 16J

18 Cut Teeth 3 D.P. 15° Involute Std.

Reaming
Paint 1 Coat Dutch Boy Red Lead and Linseed oil
Machine finished surfaces shall be coated with white Lead & Tallow
Approved by

PENN BRIDGE CO., BEAVER FALLS, PA.
Contract No. 5703 Sheet No. 16 of
For Norfolk Southern R.R.
Over Beaufort Channel
Subject Gears & Pinions
Made by P.G. Grine Date 5-20-16
Traced by P.G. Grine " 5-20-16
Checked by Brandt "
Rivets unless noted
Holes "
Scale 3" = 1'-0"
Revised:

570

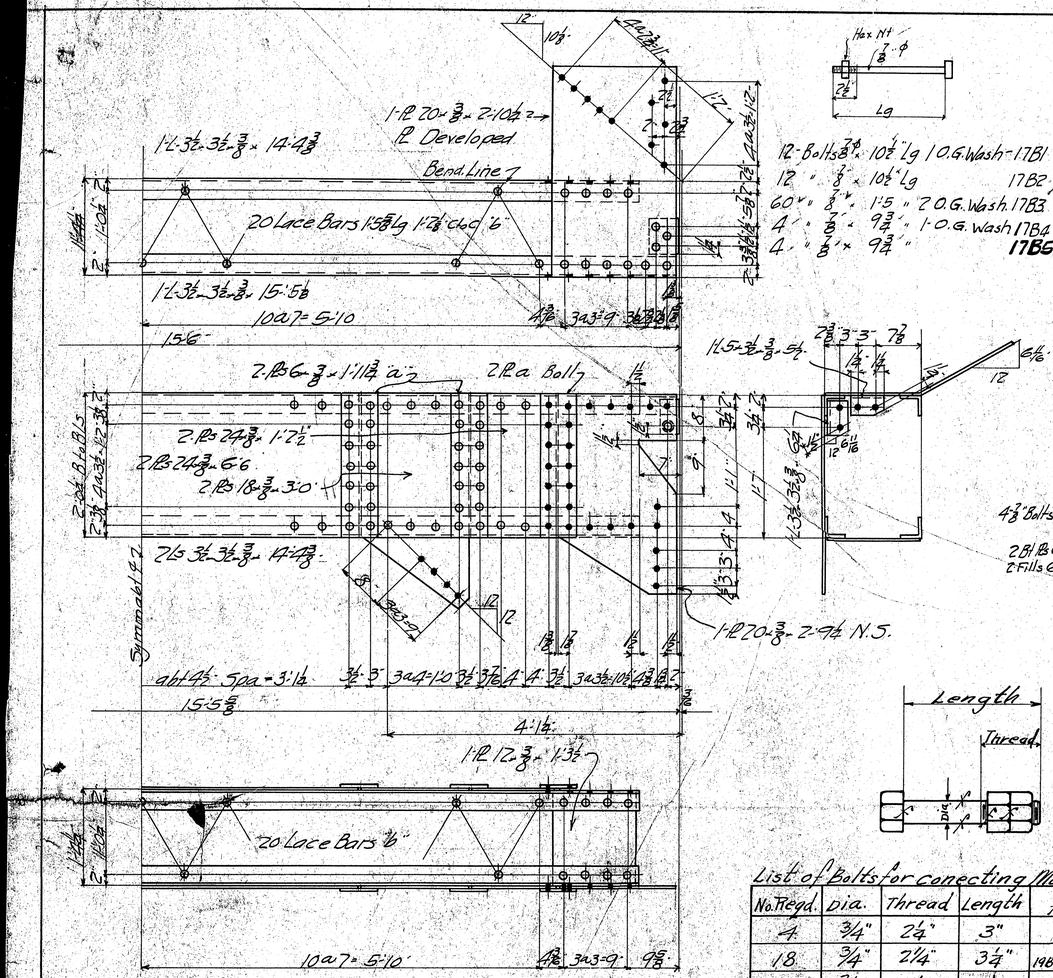

1-Strut-17S1

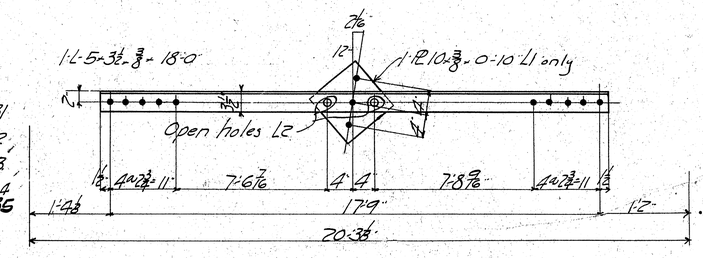

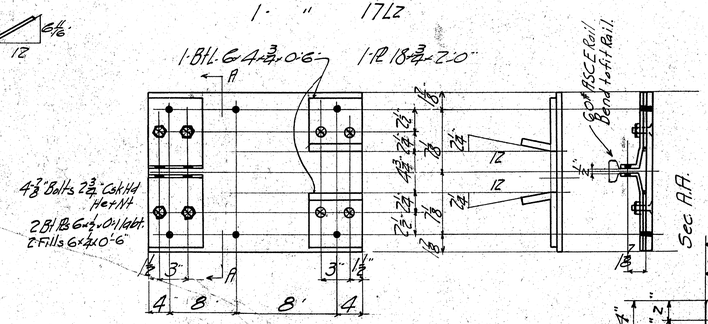

4-Rail Guides-17R1

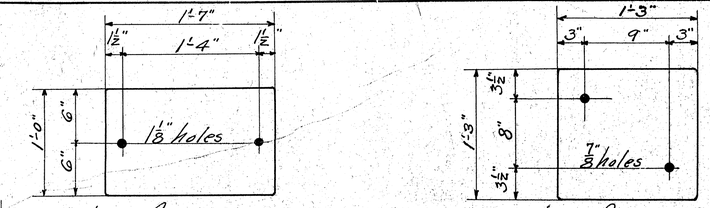

Shims for 18G1.
2-Pls 12 × 3/8 × 1'-7"
2- " 12 × 1/16 × 1'-7"
4 " 12 × 1/16 × 1'-7"
Bolt together MK. 17M1.

Shims for 2BP2.
2-Pls 15 × 3/8 × 1'-3"
2- " 15 × 1/16 × 1'-3"
4- " 15 × 1/16 × 1'-3"
Bolt together MK. 17M2.

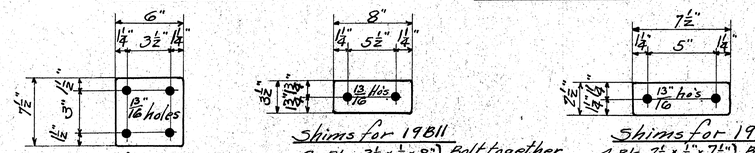

Shims for 19B1
4-Pls 6 × 3/8 × 7½"
8-Pls. 6 × 1/16 × 7½"
Bolt together MK. 17M3.

Shims for 19B11
2-Pls. 3½ × 3/8 × 8"
4- " 3½ × 1/16 × 8"
Bolt together MK. 17M4.

Shims for 19B3.
4 Pls. 2½ × 3/8 × 7½"
8- " 2½ × 1/16 × 7½"
Bolt together MK. 17M5.

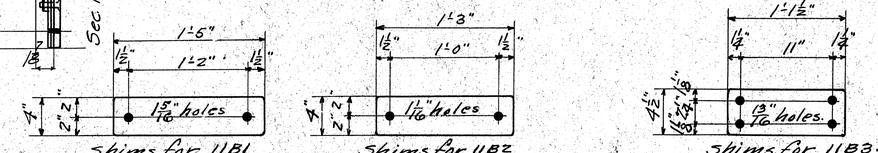

Shims for 11B1
4-Pls. 4 × 3/8 × 1'-5"
8- " 4 × 1/16 × 1'-5"
Bolt together MK. 17M6.

Shims for 11B2
4-Pls. 4 × 3/8 × 1'-3"
8- " 4 × 1/16 × 1'-3"
Bolt together MK. 17M7.

Shims for 11B3.
2-Pls 4½ × 3/8 × 1'-1½"
4- " 4½ × 1/16 × 1'-1½"
Bolt together MK. 17M8.

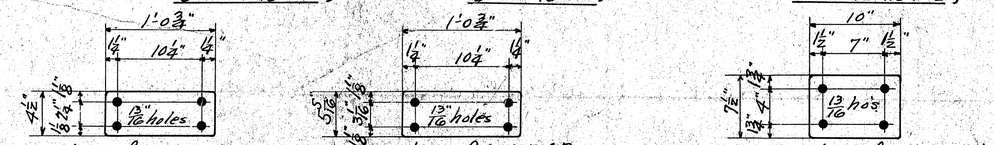

Shims for 11B4.
2-Pls 4½ × 3/8 × 1'-0¾"
4- " 4½ 1/16 × 1'-0¾"
Bolt together MK. 17M9.

Shims for 11B4B.
8-Pls 5 5/16 × 3/8 × 1'-0¾"
16- " 5 5/16 1/16 1'-0¾"
Bolt together MK. 17M10.

Shims for 11B4A
2-Pls. 7½ × 3/8 × 10"
4- " 7½ × 1/16 × 10"
Bolt together MK. 17M11.

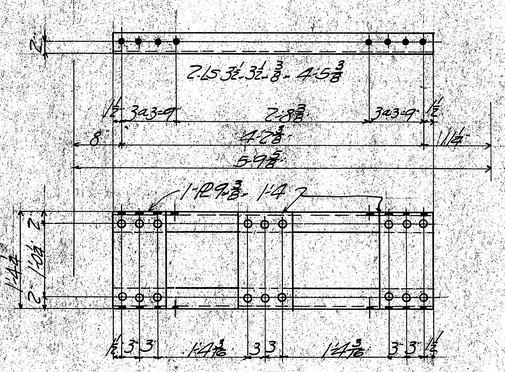

2-Knee Braces 17K1

List of Bolts for conecting Machinery.

No. Reqd.	Dia.	Thread	Length	for
4.	3/4"	2¼"	3"	19B3.
18.	3/4"	2¼"	3¼"	19B1-11B4A-20C2.
2.	3/4"	2¼"	3⅛"	19B11
4.	3/4"	2¼"	2½"	19B8.
4.	3/4"	2¼"	2⅜"	19B9.
4.	1"	2¾"	4¾"	15C1
4.	3/4"	2¼"	3¾"	15G1.
2.	3/4"	2¼"	2⅞"	15B1.
4.	1¼"	3¼"	5¾"	11B1.
4.	1"	2¾"	4⅞"	11B2.
4.	3/4"	2¼"	4¾"	11B3.
4.	3/4	2¼	4⅝"	11B4
16.	3/4"	2¼"	4⅛"	11B4B.
8.	1"	2¾"	3¾"	11B5
6.	7/8"	2½"	3⅜"	11B6.
16.	7/8"	2½"	3¾"	11B8.
4.	7/8"	2½"	4½"	11B10.
4.	7/8"	2½"	3¼"	11P7.
6.	5/8"	2"	3"	20C1.
16.	3/4"	2¼"	3⅝"	20TB.

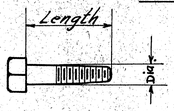

List of Lag Screws

No. Reqd.	Dia.	Length	for
2.	3/4"	2"	19B2.
28.	3/4"	3½"	11P6.
4.	3/4"	2½"	20B2.
4.	3/4"	2¼"	20B3.

1.- Engineers oiling set
Consisting of 3-Cans on
Round Tray Copper Plated.

List of Bruno compression grease cups

15-3 oz. for 11B2.-3.-4.-4A.-4B.-5.-8.
2-4½ oz. for 11B1.
9-1½ oz. for 11B6.-7-10.-19B1.

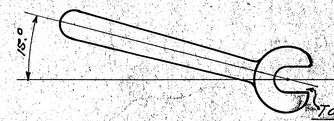

To fit U.S. Std. Hex Nuts.

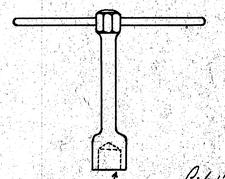

To fit 1½" Hex Nut U.S. Std.

1-Socket wrench

List of wrenches

1- for ½" Nut.
1- " 5/8" "
1- " ¾" "
1- " 7/8" "
1- " 1" "
1- " 1¼" "

Reaming
Paint Koal Dutch Boy Red Lead & Linseed oil
Machined surfaces white lead & tallow.
Approved by
Date

PENN BRIDGE CO., BEAVER FALLS, PA.
Contract No. 5703 Sheet No. 17 of
For Norfolk Southern R.R. Over Beaufort Channel
Subject Struts Laterals Etc.
Made by P.B.-G.G.J. Date
Traced by " " "
Checked by Brandt "
Rivets 3/4 unless noted
Holes 1 1/16 " Scale
Revised

5703

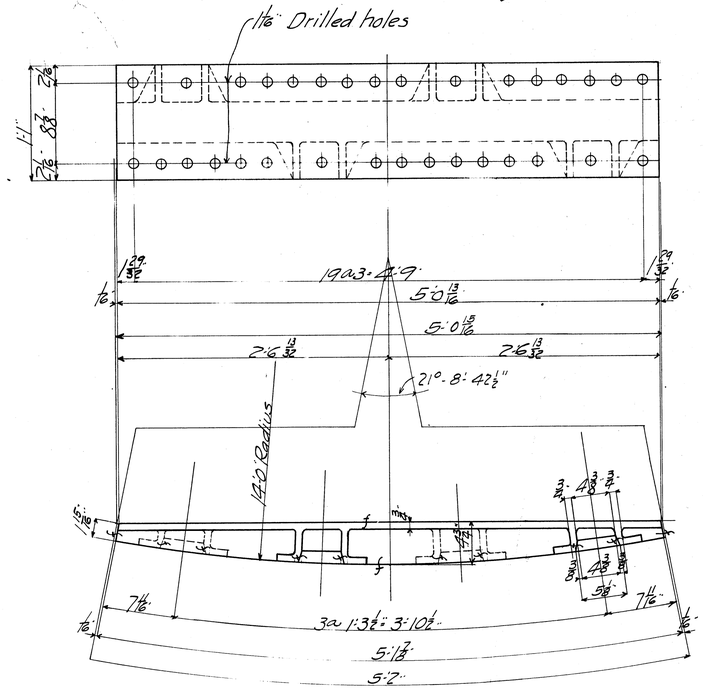

6- Cast Steel Rack Sections-18RS1

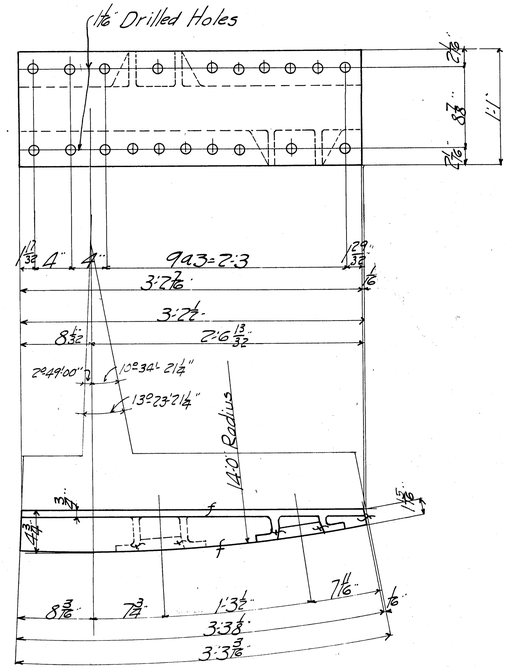

1-Cast Steel Rack Section 18RS2R As Shown
1- " " " " 18RS2L Left of "

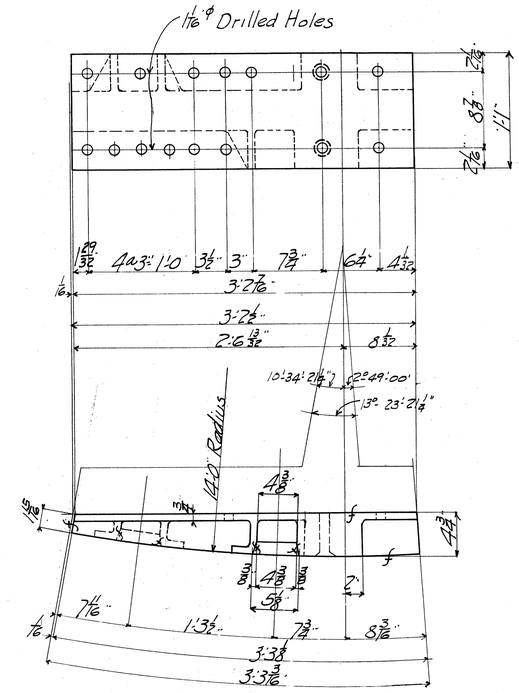

1-Cast Steel Rack Section 18RS3R As Shown
1- " " " " 18RS3L Left of "

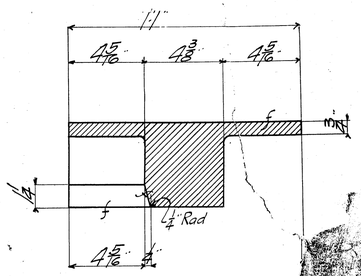

Sec A A

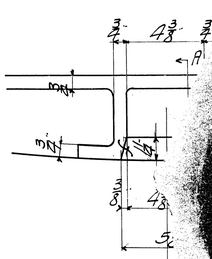

Enlarged D... for Ra...

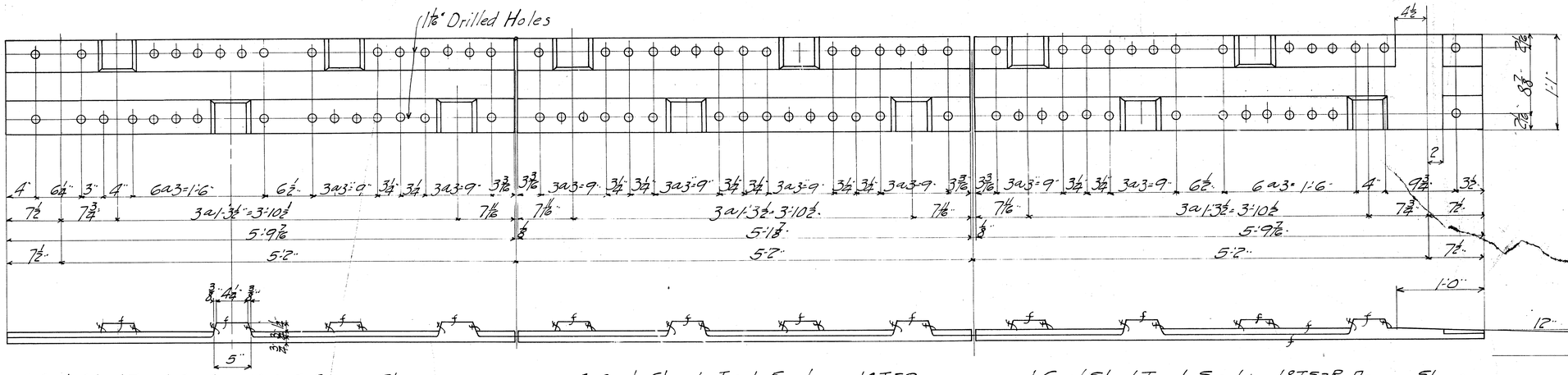

1-Cast Steel Track Section 18TS1R As Shown
1 " " " " 18TS1L Left of "

4-Cast Steel Track Sections-18TS2

1-Cast Steel Track Section 18TS3R As Shown
1- " " " " 18TS3L Left of "

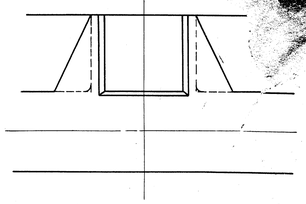

Bottom View Teeth

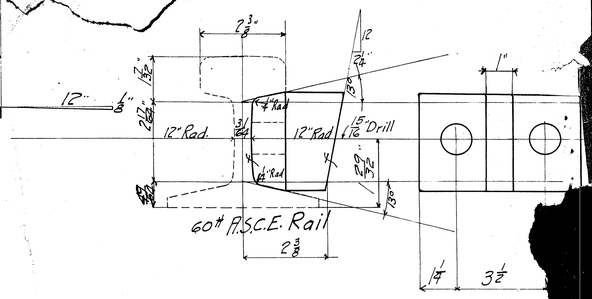

8-Cast Steel Rail Guides-18RG1

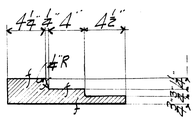

Section Thru Teeth in Track Casting.

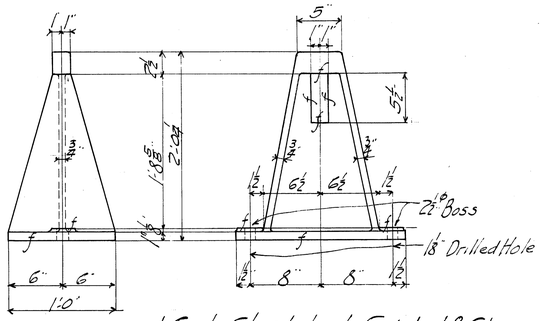

1-Cast Steel Lock Guide-18G1

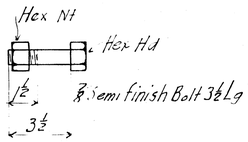

8-Bolts 1831
For Rail Guide 18RG1

Reaming

Paint 1 Coat Dutch Bay Red Lead & Linseed oil finished Surfaces one Coat white Lead & Tallow

Approved by

Date:—

Revised:—

PENN BRIDGE CO., BEAVER FALLS, PA.

Contract No. 5703 Sheet No. 18 of

For Norfolk Southern RR. Over Beaufort Channel

Subject Rack Sections

Made by P.B. Date 5-19-16

Traced by " " "

Checked by Brandt " June 3-1916

Rivets unless noted

Holes " "

Scale

5703

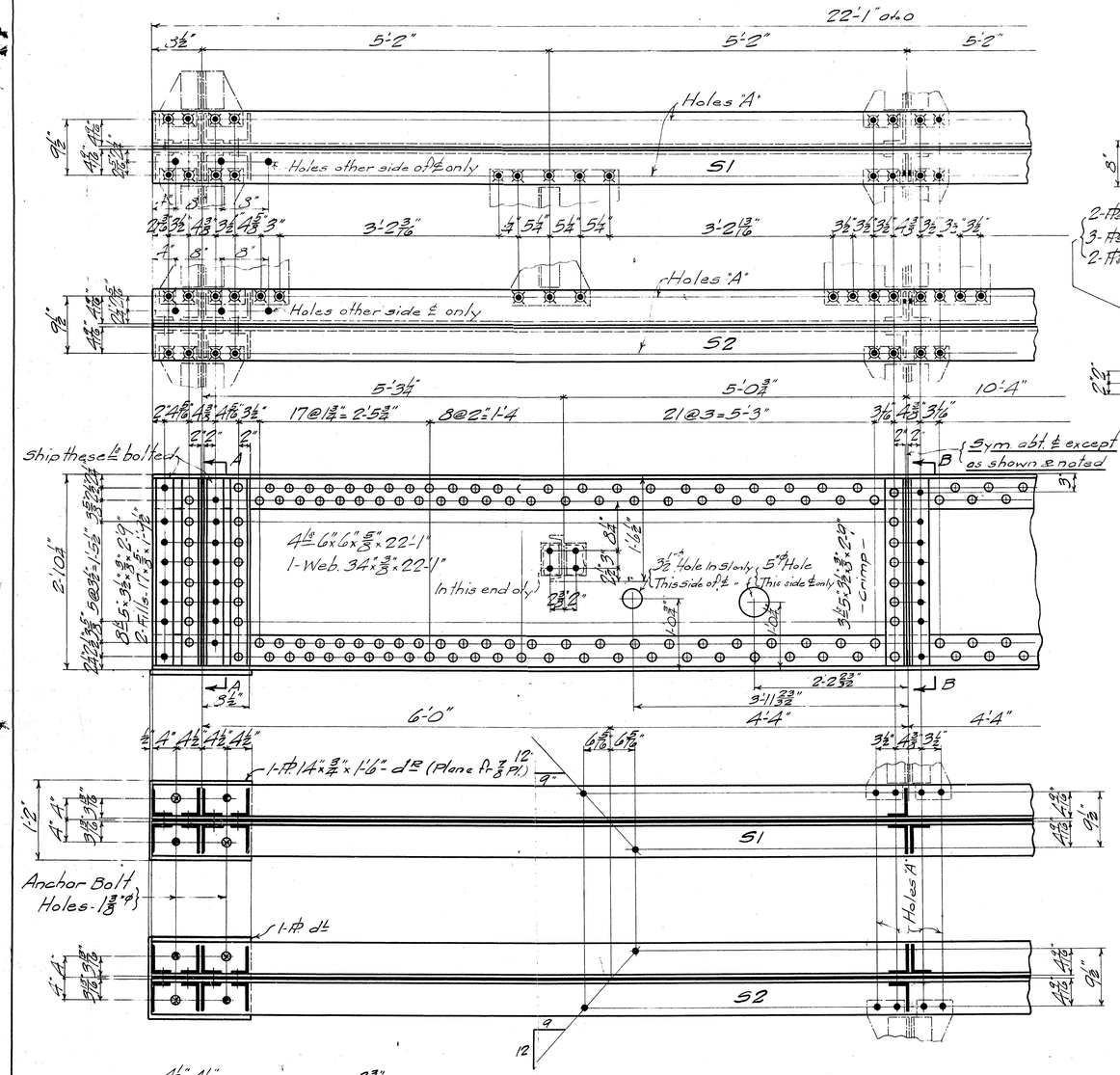

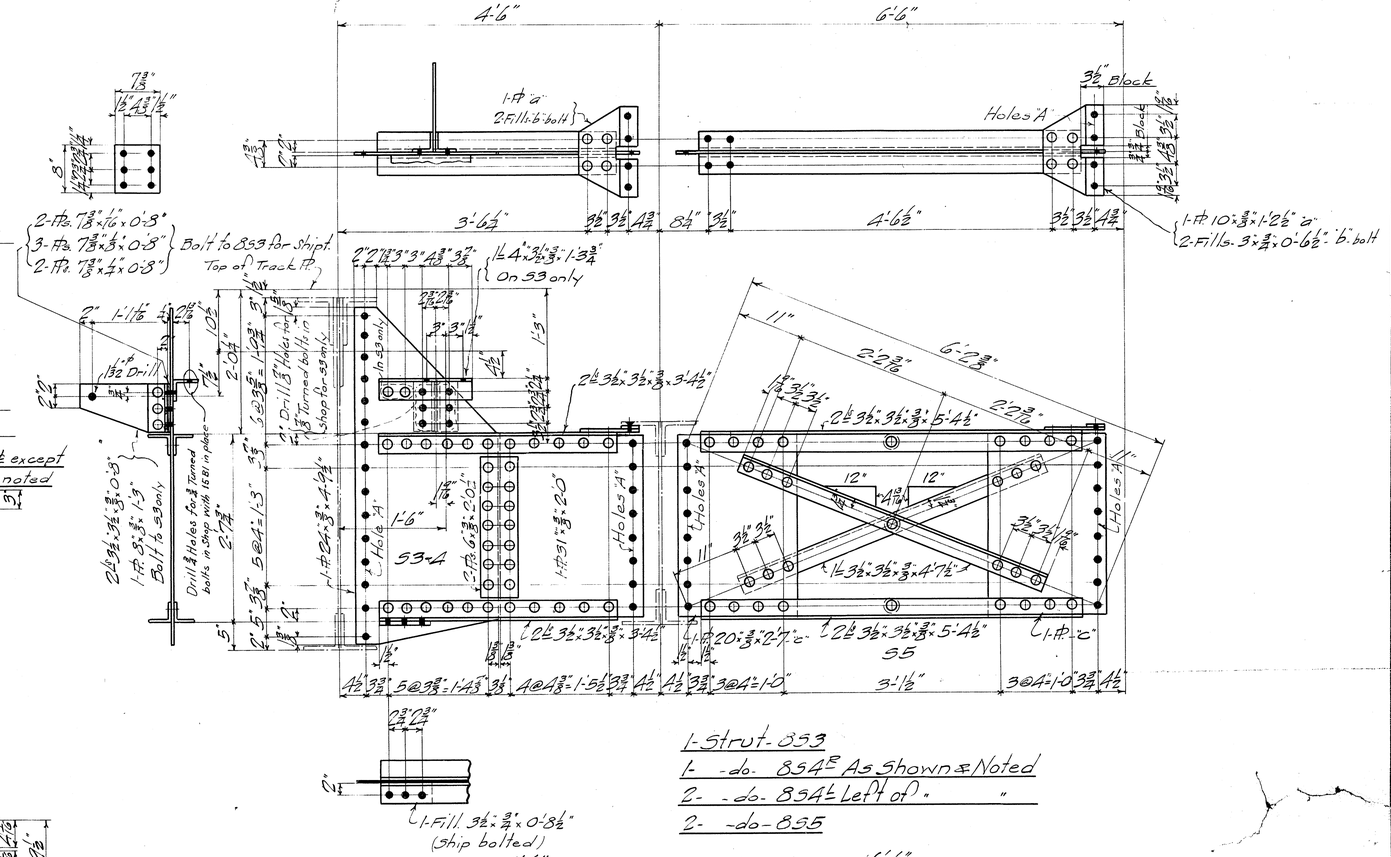

1-Strut-853
1- -do- 854R As Shown & Noted
2- -do- 854L Left of " "
2- -do- 855

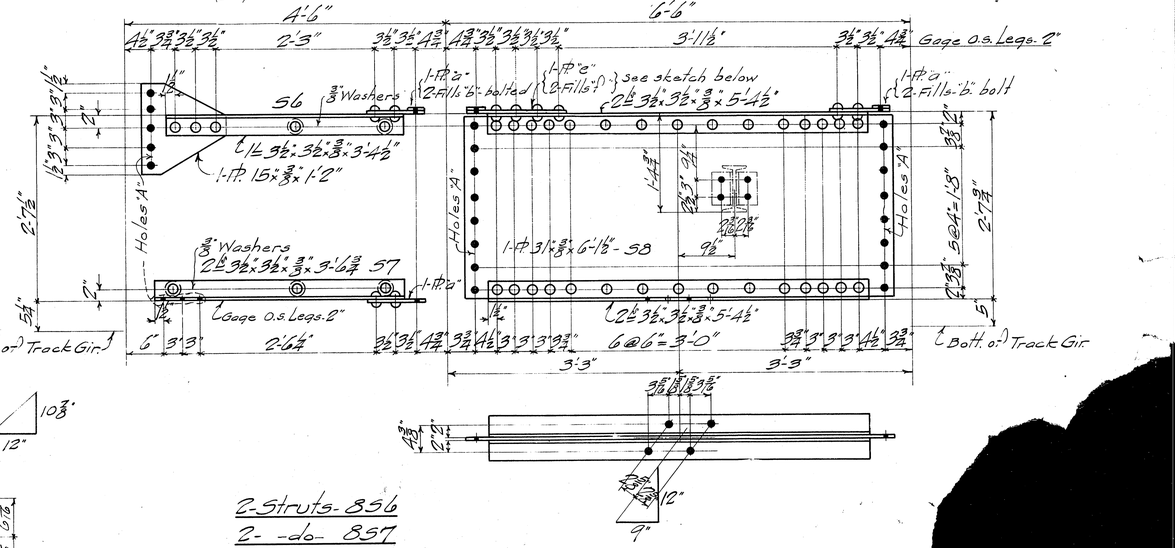

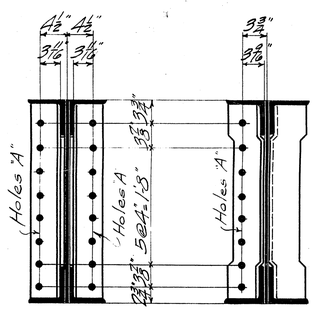

Sec. A-A

Sec. B-B
As shown for 51
Left of " " 52

1-Stringer 851
1- -do- 852

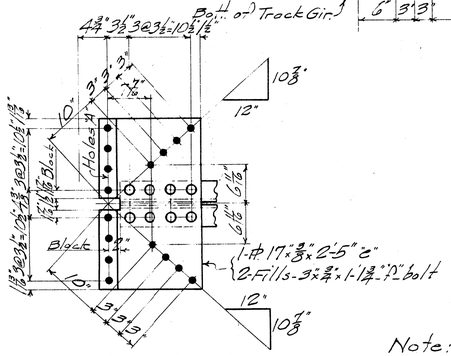

Part top view for 58

Note:- Holes "A" to be subpunched 3/8" smaller than req'd size and reamed to req'd size, to an Iron Templet or while assembled.

Reaming

Paint 1-Coat Dutch Boy Red Lead and Linseed Oil

Approved by

Date:—

PENN BRIDGE CO., BE

Contract No. 5703 S

For Norfolk South

over Beaufo

Subject Struts

Made by H.R.L

Traced by do

Checked by Bran

Rivets 3/4"-ø

Holes 13/16"-ø

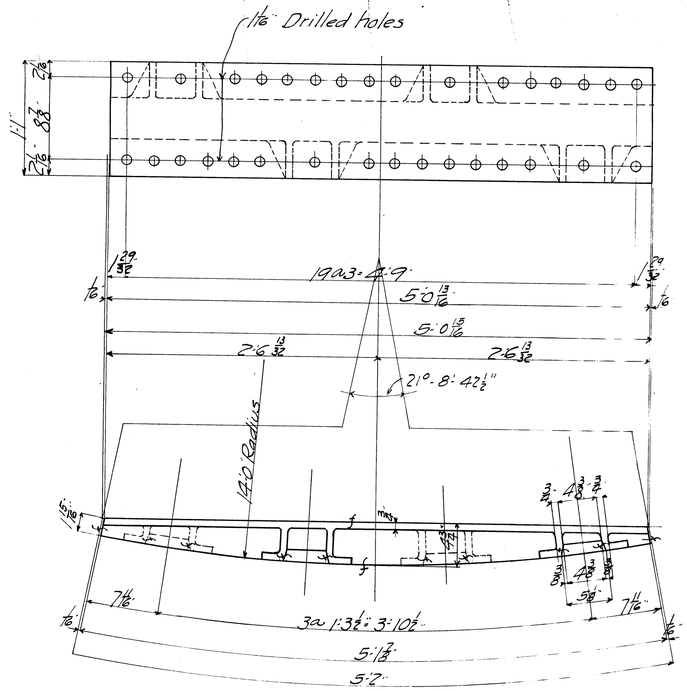

3 - Cast Steel Rack Sections - 18R51R As Shown
3 - " " " " 18R51L Left of "

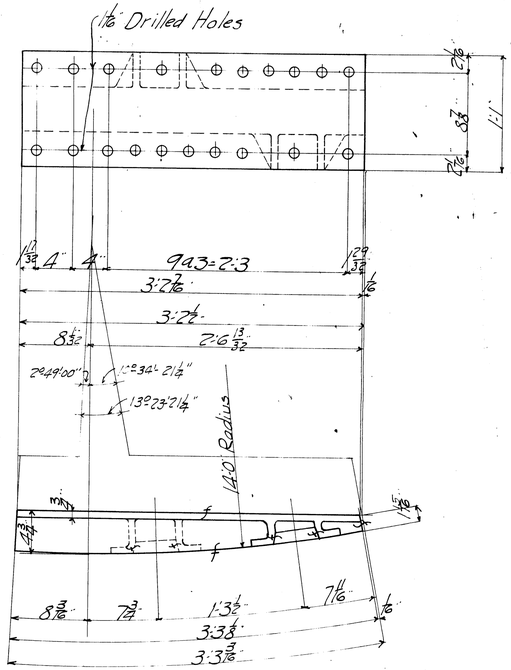

1 - Cast Steel Rack Section 18R52R As Shown
1 - " " " " 18R52L Left of "

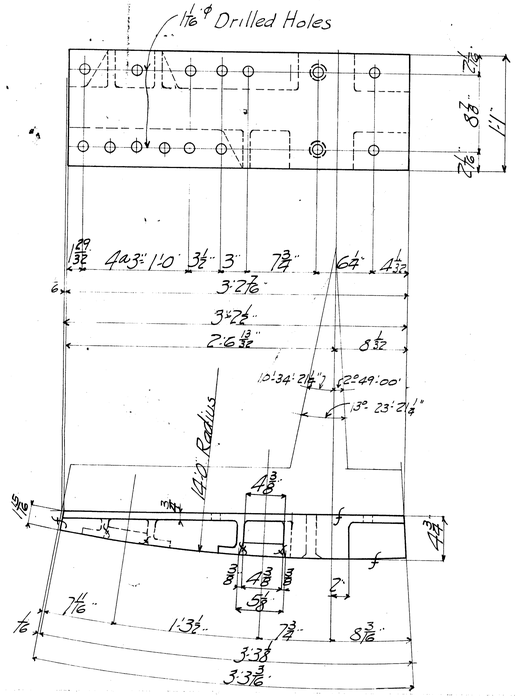

1 - Cast Steel Rack Section 18R53R As Shown
1 - " " " " 18R53L Left of "

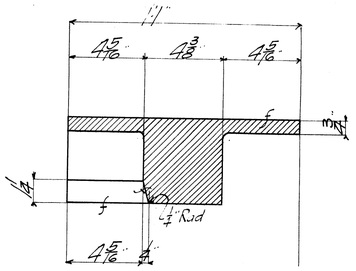

Sec A A

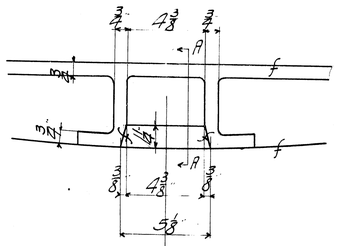

Enlarged Detail of teeth for Rack Sections

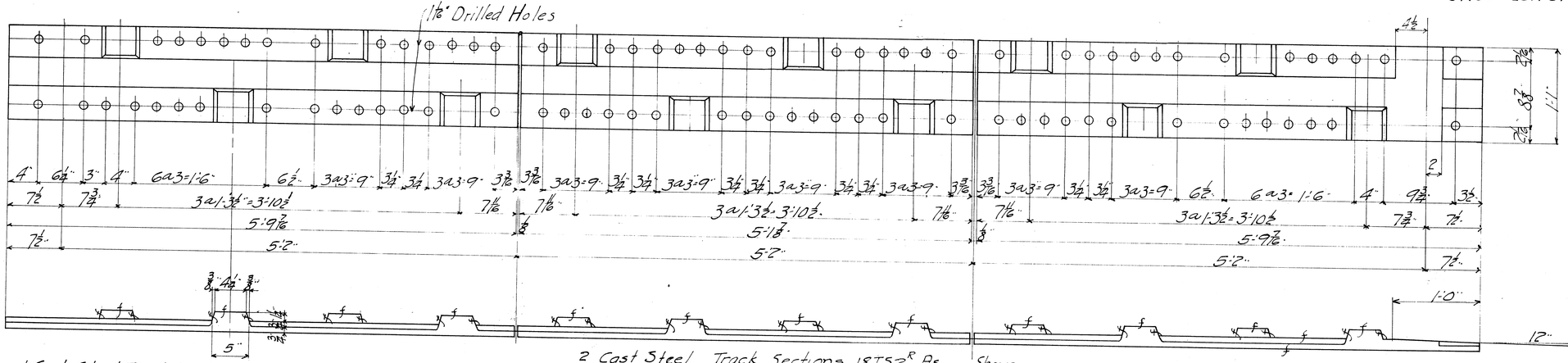

1 - Cast Steel Track Section 18T51R As Shown
1 " " " " 18T51L Left of "

2 Cast Steel Track Sections 18T52R As Shown
2 - Cast Steel Track Sections - 18T52L Left of "

1 - Cast Steel Track Section 18T53R As Shown
1 - " " " " 18T53L Left of "

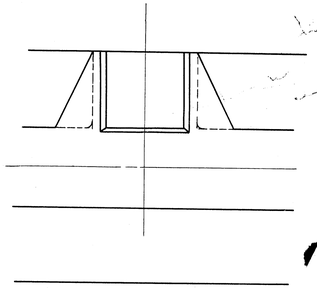

Bottom View Teeth

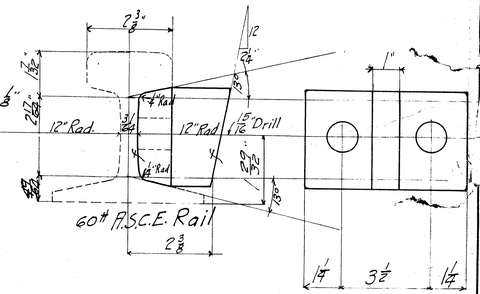

8 - Cast Steel Rail Guides - 18RG1

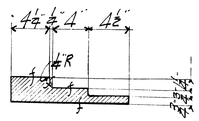

Section Thru Teeth in Track Casting.

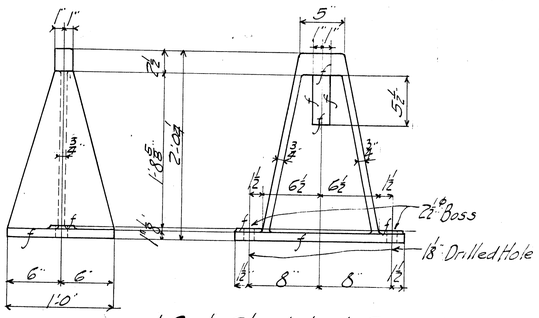

1 - Cast Steel Lock Guide - 18G1

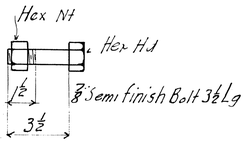

8 - Bolts 18B1
For Rail Guide 18RG1

Reaming .....

Paint 1 Coat Dutch Bay
Red Lead & Linseed oil
finished Surfaces
one Coat white Lead & Tallow

Approved by .....
Date: —

Revised: —

PENN BRIDGE CO., BEAVER FALLS, PA.

Contract No. 5703 Sheet No. 18 of .....
For Norfolk Southern R.R.
Over Beaufort Channel
Subject Rack Sections
Made by P.B. Date 5-19-16
Traced by " " "
Checked by Brandt " June 3-1916
Rivets ..... unless noted
Holes ..... " "
Scale

5703

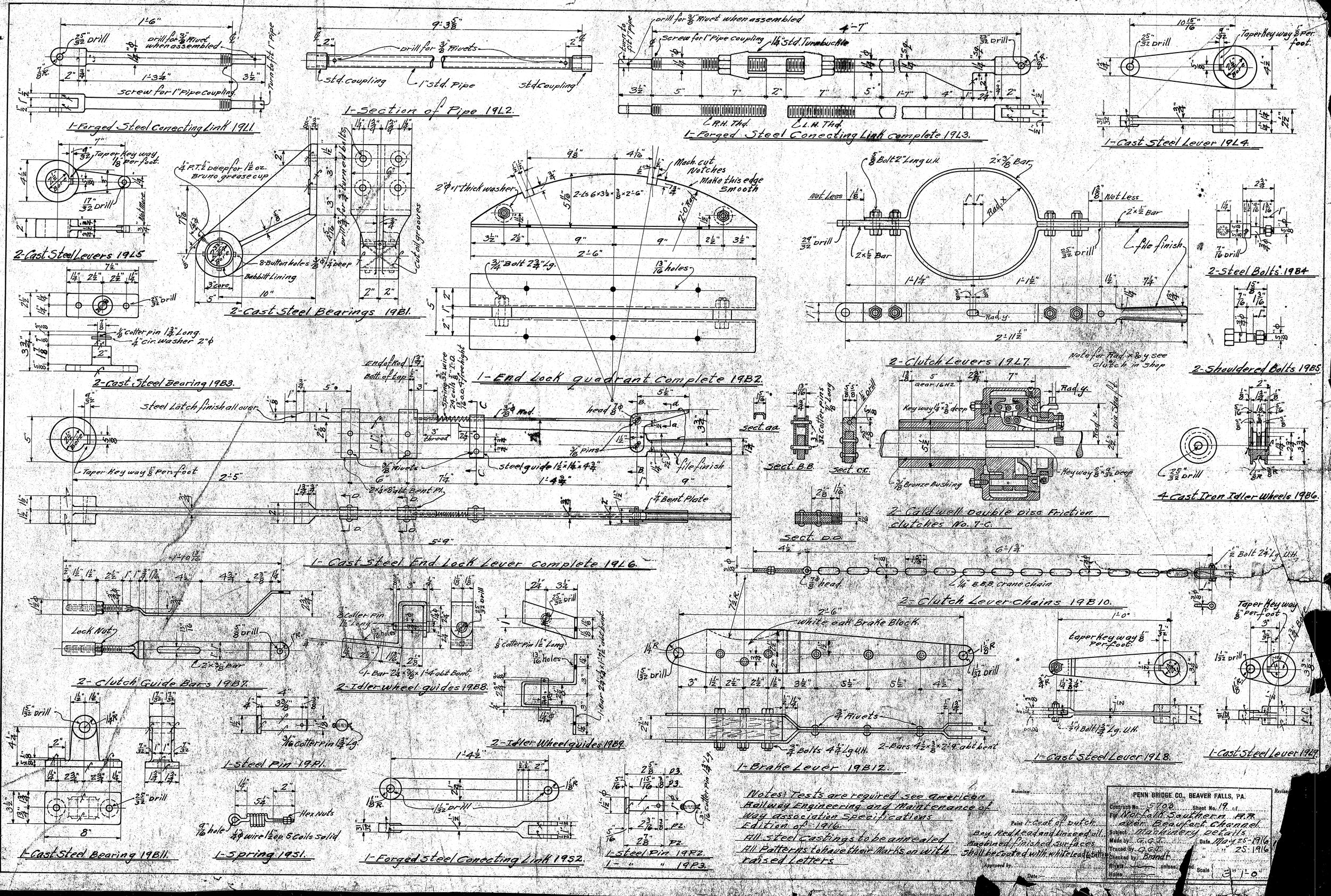
1-Forged Steel Conecting Link 1911.
1-Section of Pipe 1912.
1-Forged Steel Conecting Link complete 1913.
1-Cast Steel Lever 1914.
2-Cast Steel Levers 1915
2-Cast Steel Bearings 1981.
1-End Lock quadrant Complete 1982.
2-Clutch Levers 1917.
2-Steel Bolts 1984
2-Shouldered Bolts 1985
2-Cast Steel Bearing 1983.
1-Cast Steel End Lock Lever complete 1916.
4-Cast Iron Idler Wheels 1986.
2-Caldwell Double disc Friction clutches No. 7-6.
2-Clutch Lever Chains 1910.
2-Clutch Guide Bars 1987.
2-Idler wheel guides 1988.
2-Idler Wheel guides 1989.
1-Brake Lever 1912.
1-Cast Steel Lever 1918.
1-Cast Steel Lever 1919.
1-Steel Pin 1991.
1-Cast Steel Bearing 1911.
1-Spring 1951.
1-Forged Steel Conecting Link 1952.
1-Steel Pin 1992.
1-" " 1993.
Notes: Tests are required see American Railway Engineering and Maintenance of way association Specifications Edition of 1916.
All steel Castings to be annealed
All Patterns to have their Marks on with raised Letters
PENN BRIDGE CO., BEAVER FALLS, PA.
Contract No. 5708 Sheet No. 19
For Norfolk Southern R.R. over Beaufort Channel
Subject Machinery details
Made by G.G.T.
Traced by G.G.T.
Checked by Brandt
Date May 25-1916
Scale 3" = 1'-0"

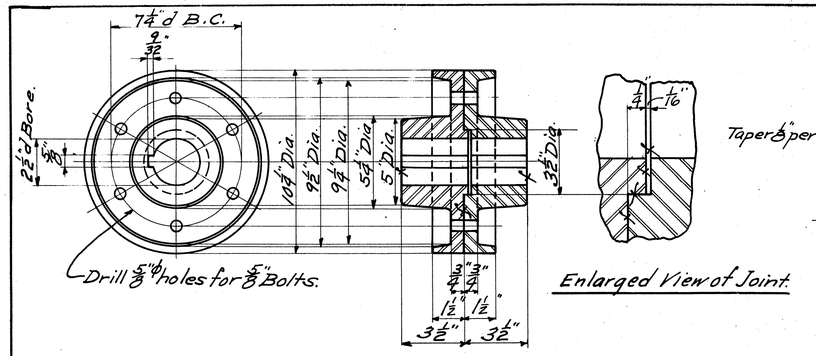

1 Pair Cast Steel Couplings 20C1

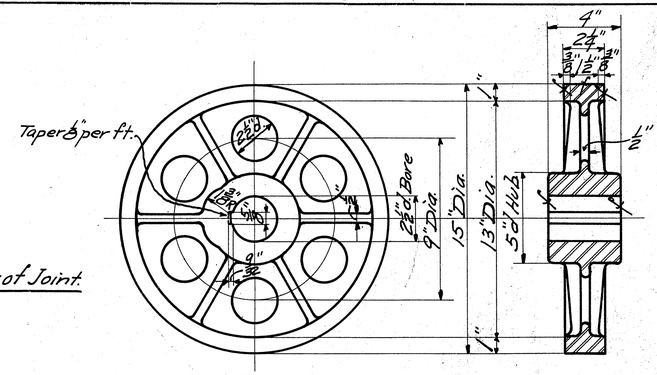

1 Cast Steel Brake Wheel 20B1

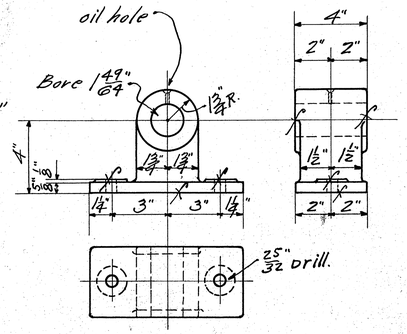

2 Cast Steel Bearings 20B2.

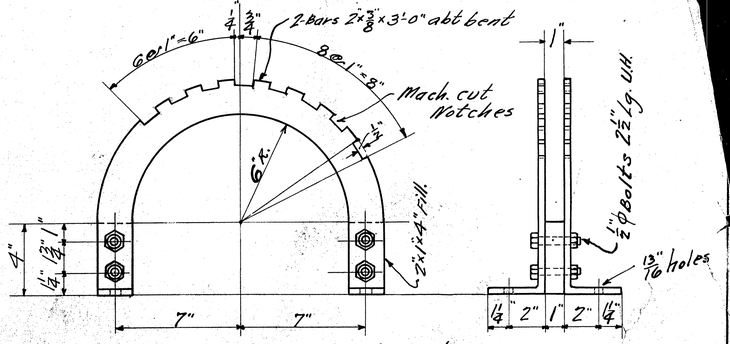

1- Brake quadrant 20B3.

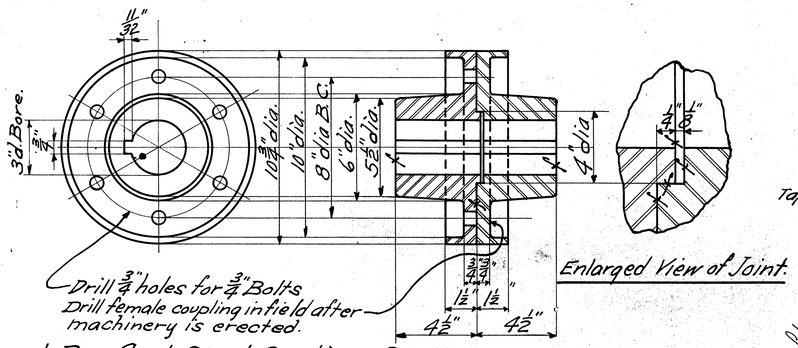

1 Pair Cast Steel Couplings 20C2

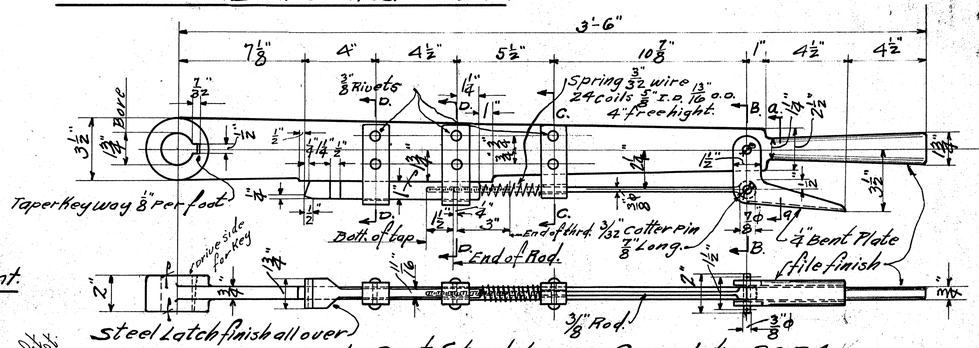

1- Cast Steel Lever Complete 20B4.

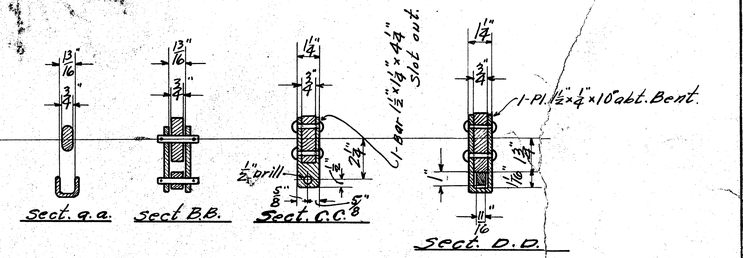

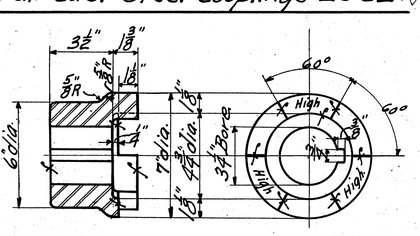

1 Cast Steel Half Clutch Coupling 20C3

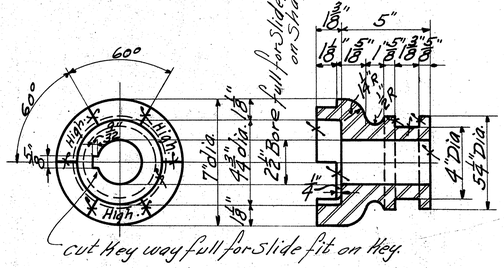

1 Cast Steel Half Clutch Coupling 20C4

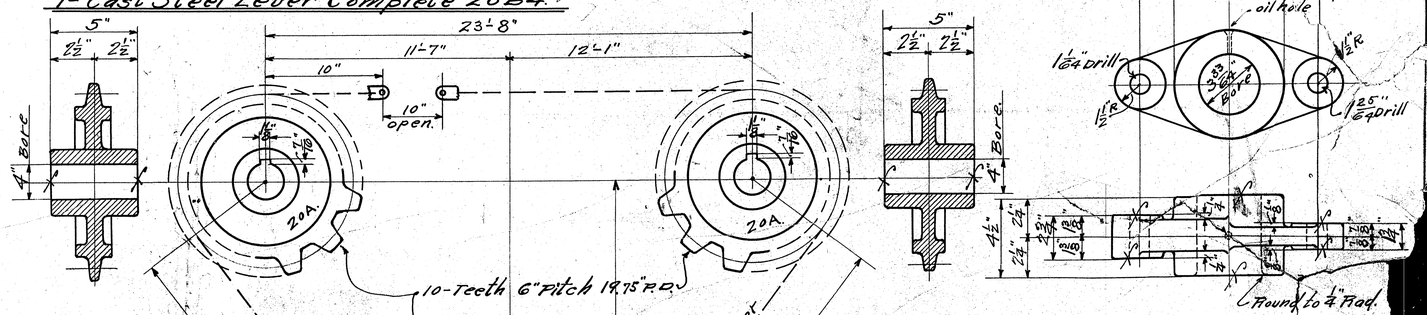

1- Cast Steel Chain Conecting Link 20B5A
1- " " " " 20B5B

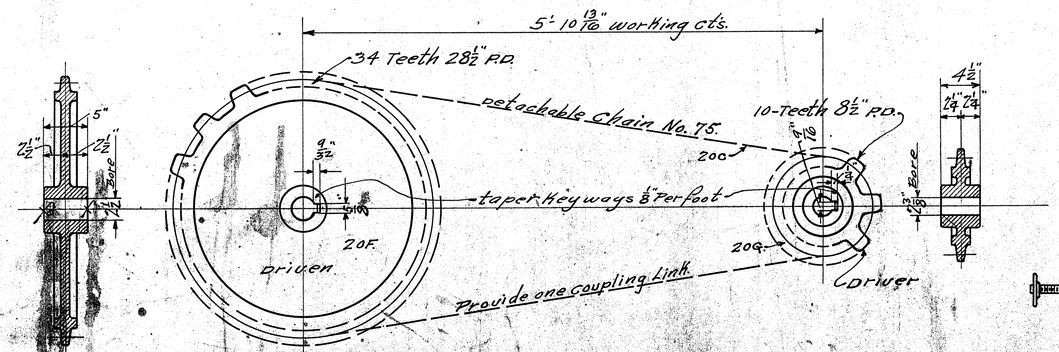

1- Detachable Chain No. 75. 20C
1- sprocket 28½" P.D. 34 teeth 20F } as per Sketch
1- " 8½" P.D. 10 teeth 20G

Bought out Side from Jeffrey Mfg. Co.

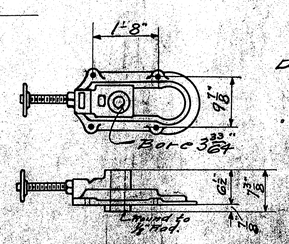

4- adjustable Take up Boxes
Short adjustment 20TB
Bought out side from Jeffrey Mfg. Co.

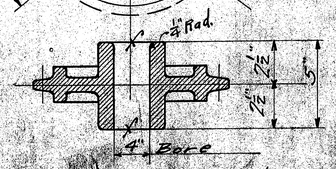

2- Chains No. 262. Reqd.
4- Sprockets 20A. } as per Sketch
2- " 20A1. "
Bought out side from Jeffrey Mfg. Co.

Notes; Tests are required, see American Railway Engineering and Maintenance of Way Association Specifications, Edition of 1910. All Steel Castings to be annealed. All patterns to have their marks on with raised letters.

Painting: First Coat Dutch Boiled Lead and Linseed oil. Machine finished surfaces shall be coated with white lead & tallow.

Tracing No.	
Checked by	
Rivets	
Bolts	
Remarks	

PENN BRIDGE CO., BEAVER FALLS, PA.

Contract No. 5703	Sheet No. 20 of
For Norfolk Southern R.R. Over Beaufort Channel	
Subject Machinery Details	
Made by P.G. Grine	Date 5-23-16
Traced by P.G. Grine	5-23-16
Checked by Brandt	June 12, 1916
Scale 1" = 1 foot	

Revised

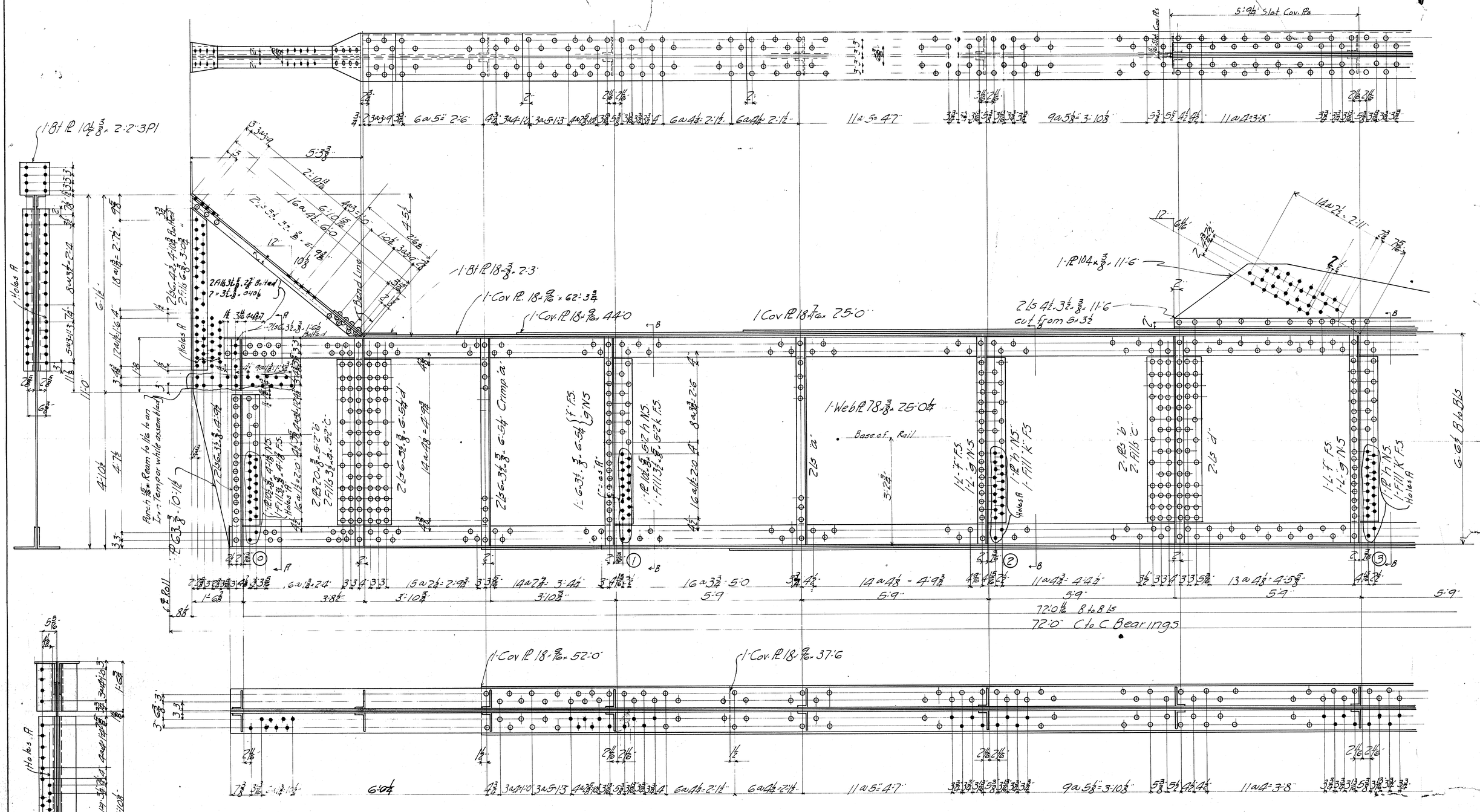

1-Girder 3 G1R As Shown
1- " 3 G1L Left of "
2- Plates 3 Pl

Note: For Balance of Girder + Sec B B See Dwg #4

Reaming Punch Holes 13/16" & 15/16" and Ream to 15/16" to an Iron templet or while assembled.
Paint Dutch Bay Red Lead + Linseed oil

Approved by
Date:

PENN BRIDGE CO., BEAVER FALLS, PA.		
Contract No. 5703	Sheet No. 3 of	Revised:
For Norfolk Southern R.R. Over Beaufort Channel		
Subject Girders		
Made by P.B.	Date 4-15-16	
Traced by "	" "	
Checked by Brandt	" June 3-1916	
Rivets 3/4 unless noted	Scale 3/4" = 1'-0"	
Holes 15/16 " "		

5703

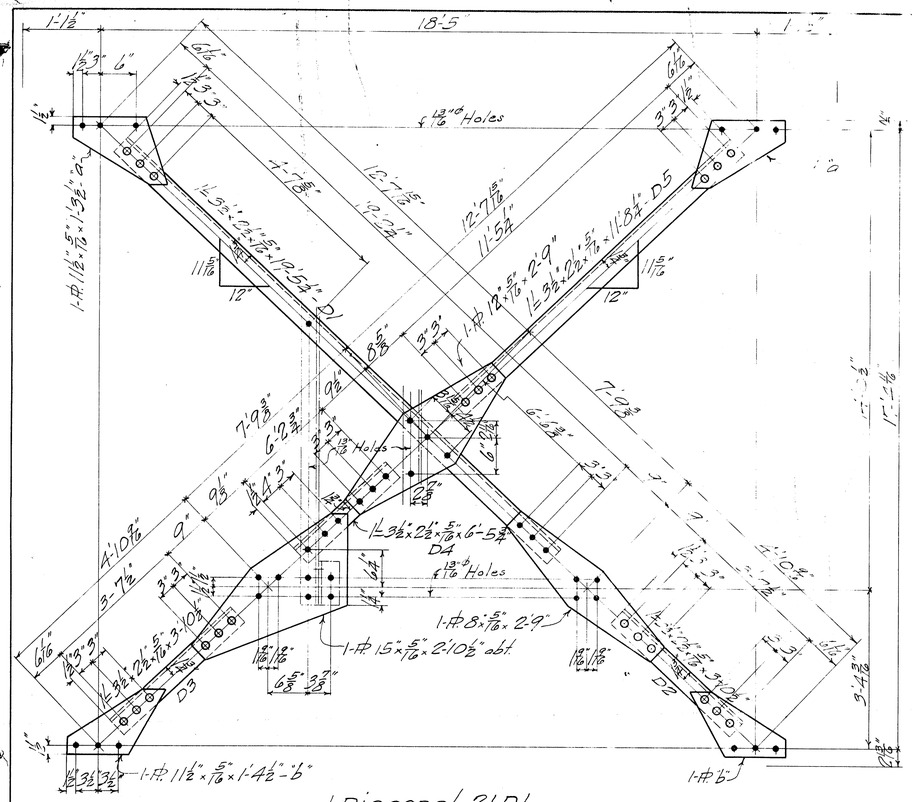

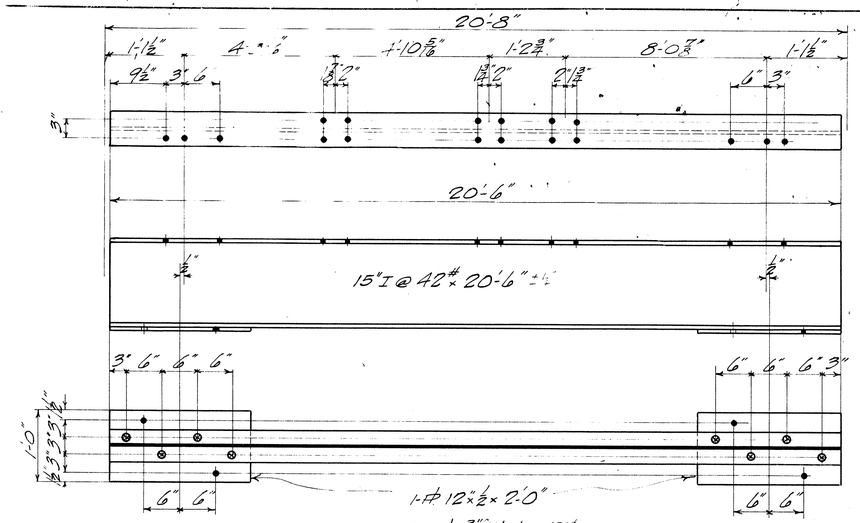

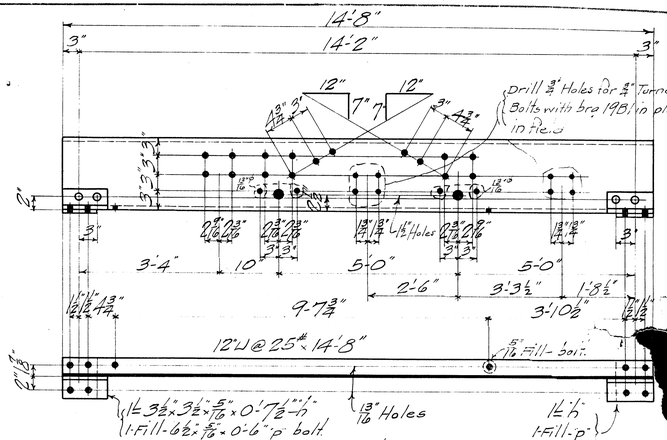

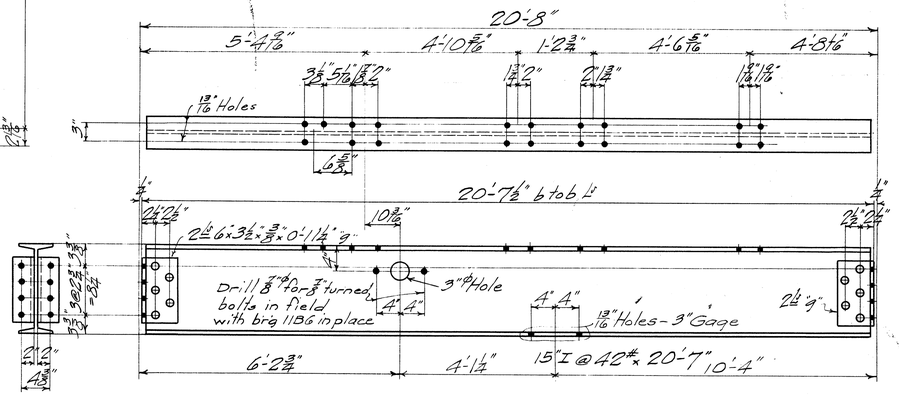

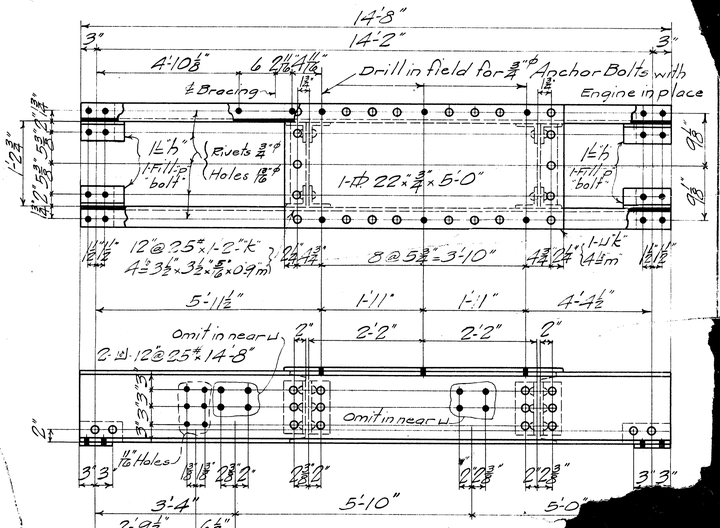

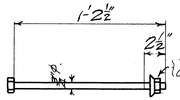

4-Bolts 3/4" Pl × 1'-2 1/2" 21B
(To anchor 21B1)

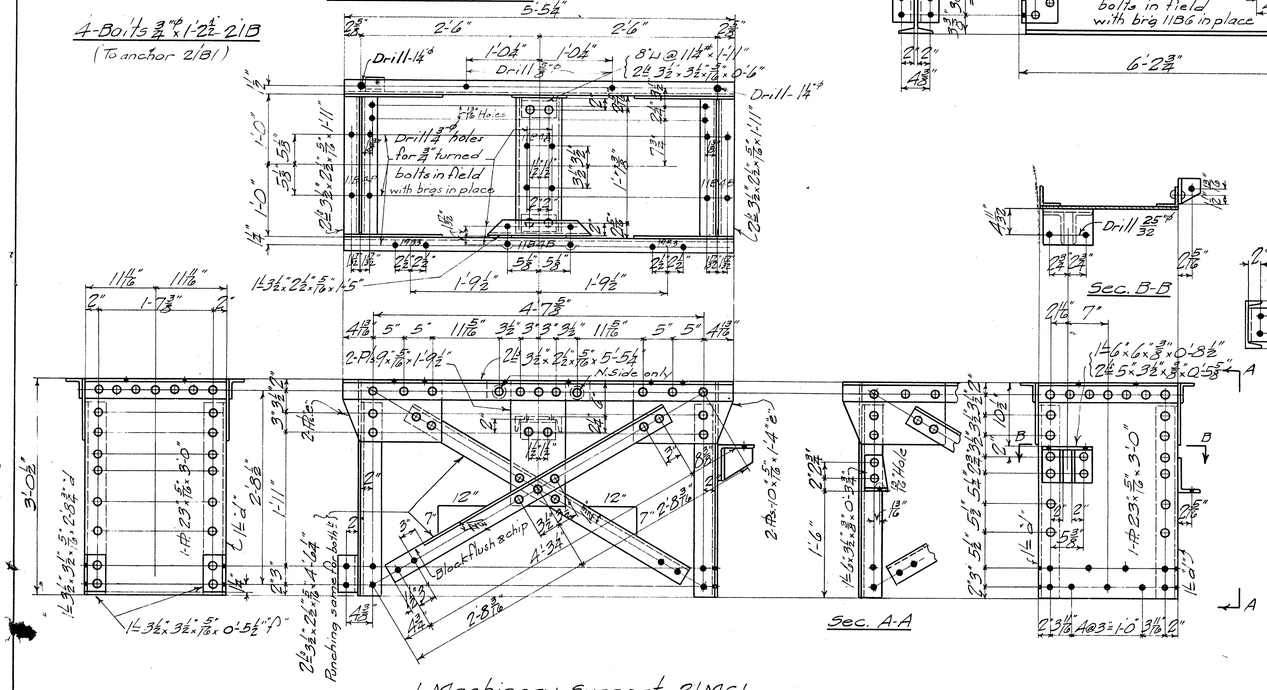

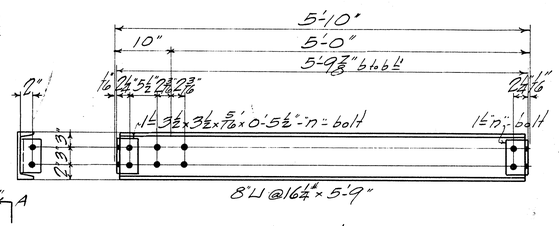

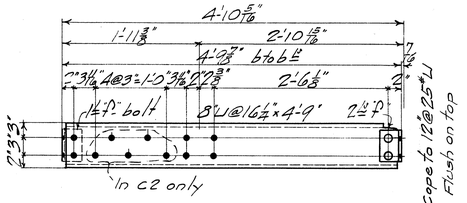

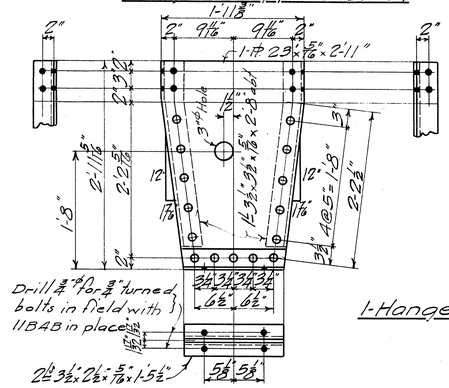

Reaming

Paint 1-Coat Dutch Boy Red Lead and Linseed Oil

Approved by

Date:

Revised:

PENN BRIDGE CO., BEAVER FALLS, PA.

Contract No. 5703 Sheet No. 21 of

For Norfolk Southern R.R. Over Beaufort Channel

Subject Machinery Supports

Made by H.R.L. Date May 18-'16

Traced by -do- " 20-

Checked by Brandt " June 16-'16

Rivets 3/4" unless noted

Holes 13/16" " Scale 1" = 1'-0"

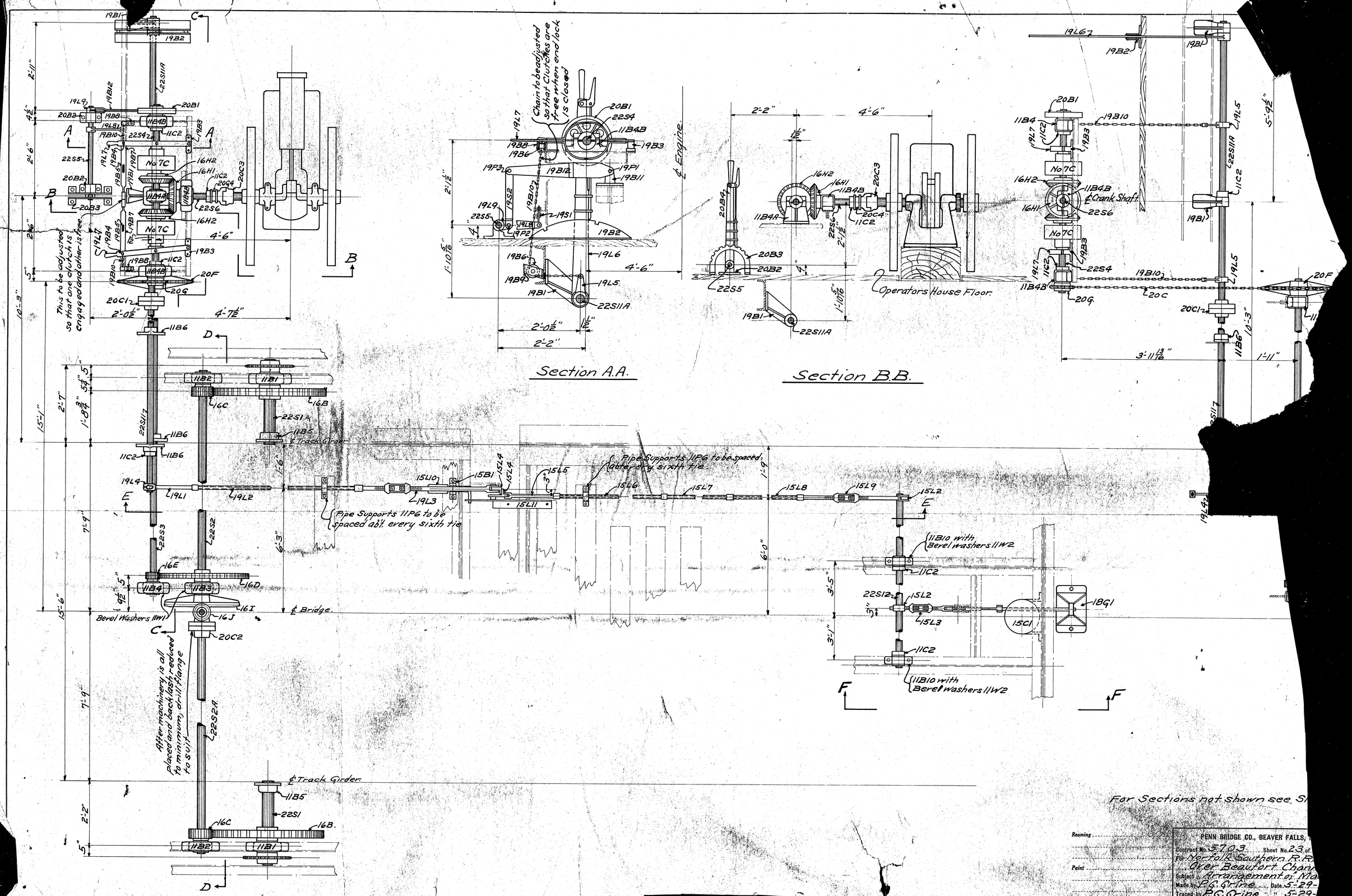
Section A.A.
Section B.B.
Chain to be adjusted so that Clutches are free when end lock is closed
℄ Engine
Operators House Floor.
This to be adjusted so that one clutch is engaged and other is free
No 7C
℄ Crank Shaft
℄ Track Girder
℄ Bridge
Pipe Supports 11P6 to be spaced ab't every sixth tie
Berel Washers 11W1
Berel washers 11W2
11B10 with Berel washers 11W2
After machinery is all placed and backlash reduced to minimum, drill flange to suit
For Sections not shown see Sl
PENN BRIDGE CO., BEAVER FALLS,
Contract No. 5703 Sheet No. 23 of
For Norfolk Southern R.R.
Over Beaufort Chan
Subject Arrangement of Ma
Made by P.G. Grine Date 5-29-
Traced by P.G. Grine " 5-29-
Reaming
Paint

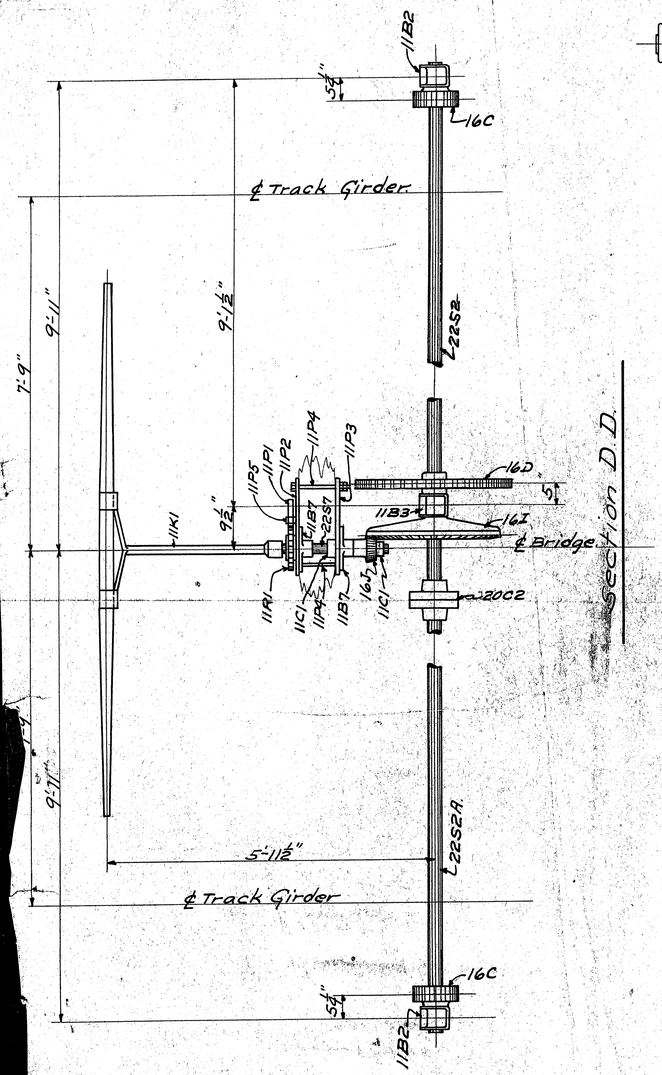

Section D.D.

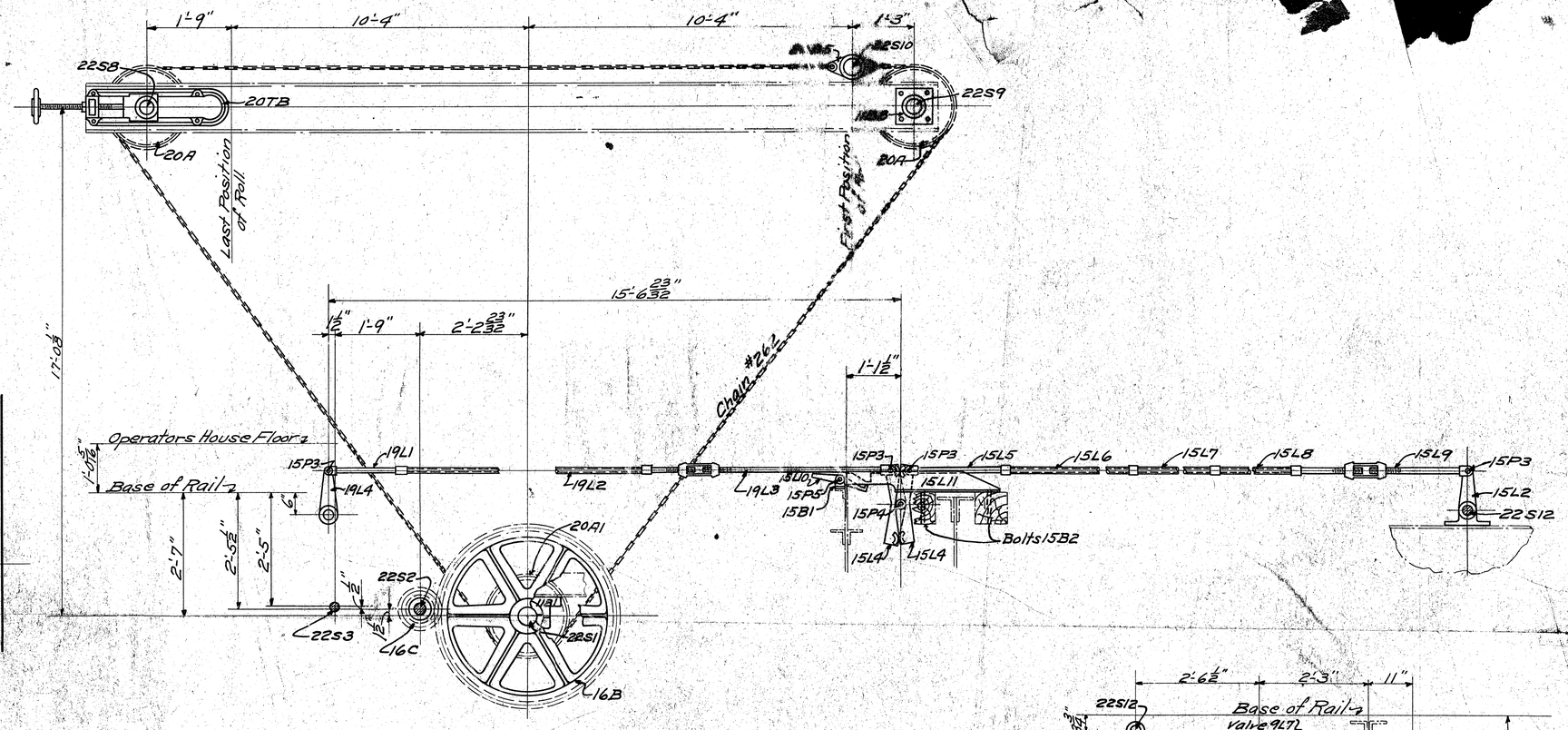

Section E E

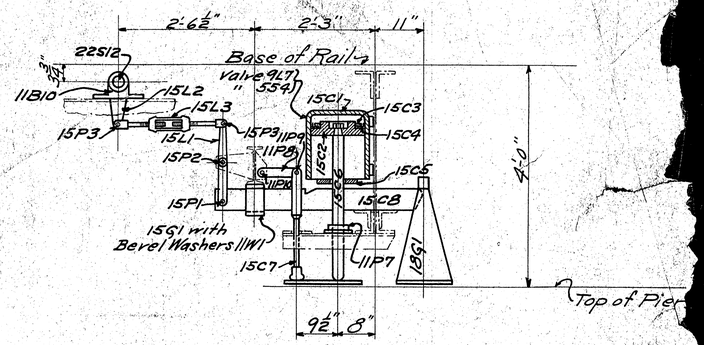

Section F F

For Location of sections see sheet #23

Reaming

Point

Approved by

Date

PENN BRIDGE CO., BEAVER FALLS, PA.

Contract No. 5703 Sheet No. 24 of

For Norfolk Southern R.R.

Over Beaufort Channel

Subject Arrangement at Mack.

Made by P.G. Grine Date 6-1-16

Traced by P.G. Grine " 6-

Checked by Brandt

Rivets unless

Holes

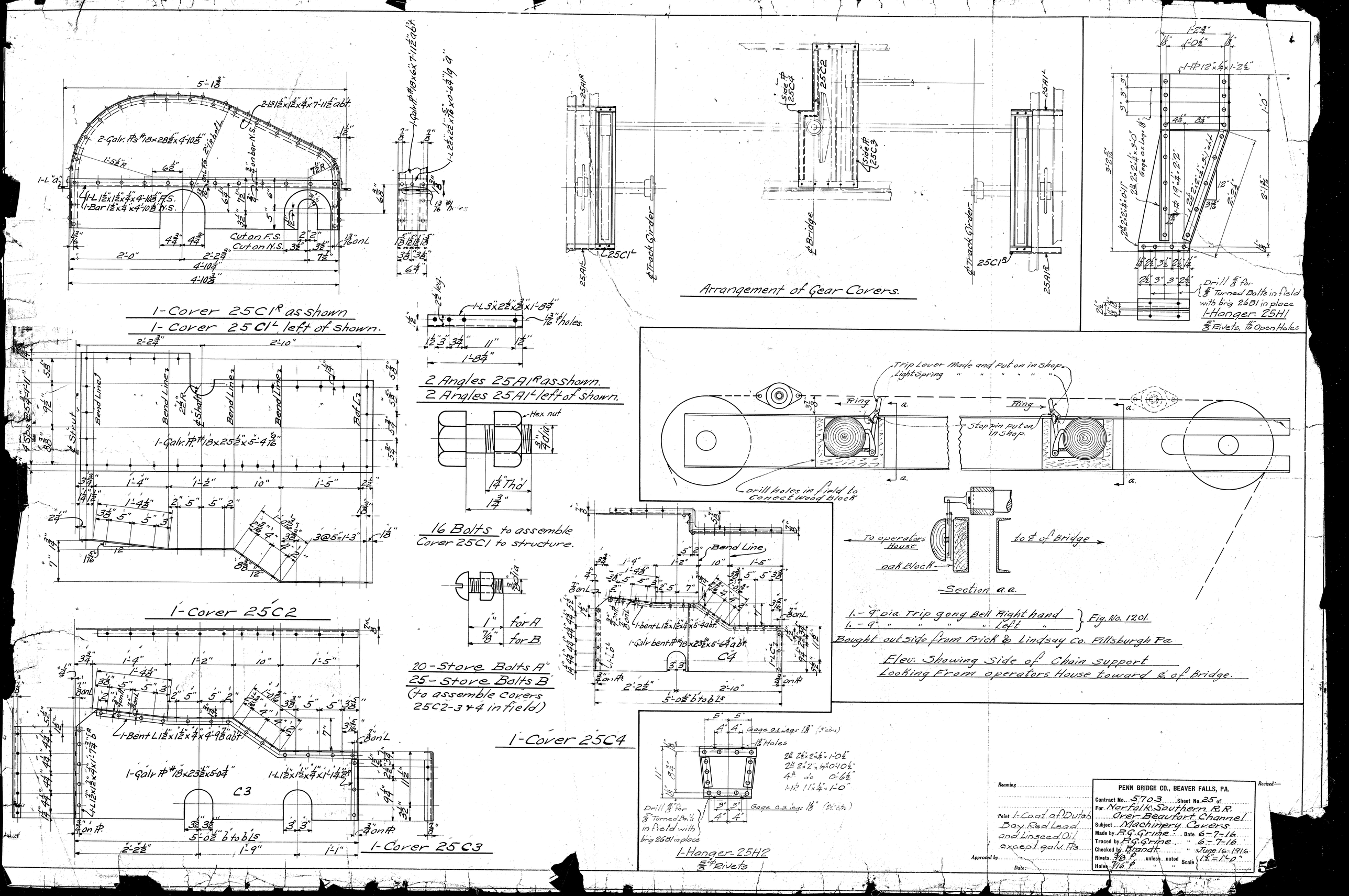
1-Cover 25C1R as shown
1-Cover 25C1L left of shown.
2 Angles 25A1R as shown.
2 Angles 25A1L left of shown.
16 Bolts to assemble Cover 25C1 to structure.
1-Cover 25C2
20-Stove Bolts A
25-Stove Bolts B
(to assemble Covers 25C2-3 + 4 in field)
1-Cover 25C4
1-Cover 25C3
Arrangement of Gear Covers.
1-Hanger 25H1
Drill 5/8" for 5/8" Turned Bolts in field with brg 26B1 in place
5/8" Rivets, 17/16" Open Holes
Trip Lever Made and put on in shop.
Light Spring " " " " " "
Ring
Stop pin put on in shop.
Drill holes in field to Conect Wood Block
To operators House
oak Block
to ℄ of Bridge
Section a.a.
1.- 9" dia. Trip gong Bell Right hand
1.- 9" " " " Left "
Fig. No. 1201.
Bought out side from Frick & Lindsay Co. Pittsburgh Pa.
Elev. Showing Side of Chain support
Looking From operators House toward ℄ of Bridge.
1-Hanger 25H2
5/8" Rivets
Drill 5/8" for 5/8" Turned Bolts in field with brg 26B1 in place
PENN BRIDGE CO., BEAVER FALLS, PA.
Contract No. 5703 Sheet No. 25 of
For Norfolk Southern R.R.
Over Beaufort Channel
Subject Machinery Covers
Made by P.G. Grine Date 6-7-16
Traced by P.G. Grine " 6-7-16
Checked by Brandt " June 16-1916
Rivets 5/8" unless noted
Holes 17/16" " "
Scale 1/2" = 1'-0"
Reaming
Paint 1-Coat of Dutch Boy Red Lead and Linseed Oil except galv. Its
Approved by
Date:
Revised:-

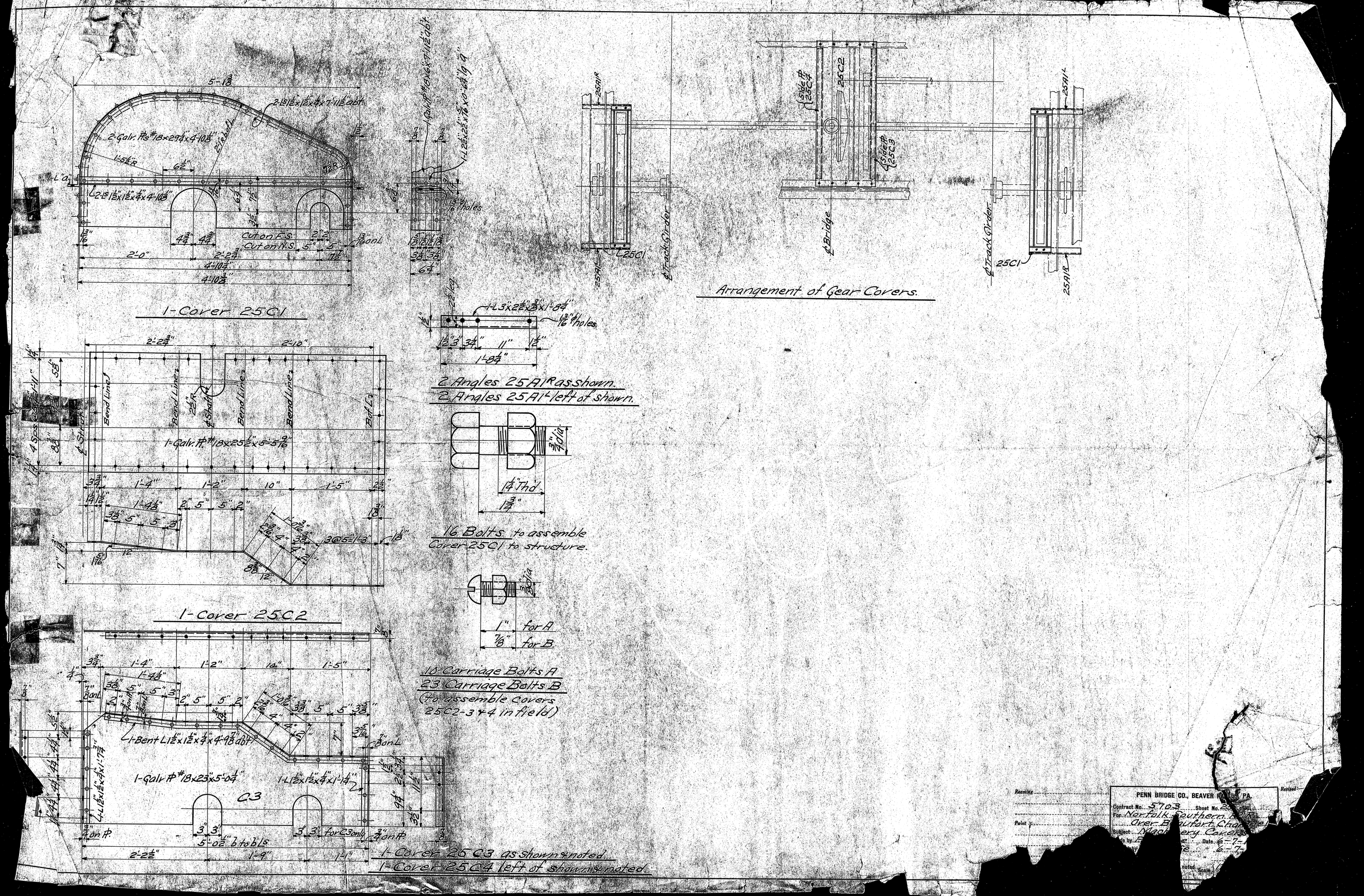
1-Cover 25C1
Arrangement of Gear Covers.
2 Angles 25A1R as shown.
2 Angles 25A1L left of shown.
16 Bolts to assemble Cover 25C1 to structure.
1-Cover 25C2
10 Carriage Bolts A
23 Carriage Bolts B
(to assemble Covers 25C2-3+4 in field)
1-Cover 25C3 as shown & noted.
1-Cover 25C4 left of shown & noted.
PENN BRIDGE CO., BEAVER FALLS, PA.
Contract No. 5703
Sheet No.
For Norfolk Southern
Over Beaufort Channel
Subject Machinery Cover
Made by
Date 6-7-
Revised
Scale

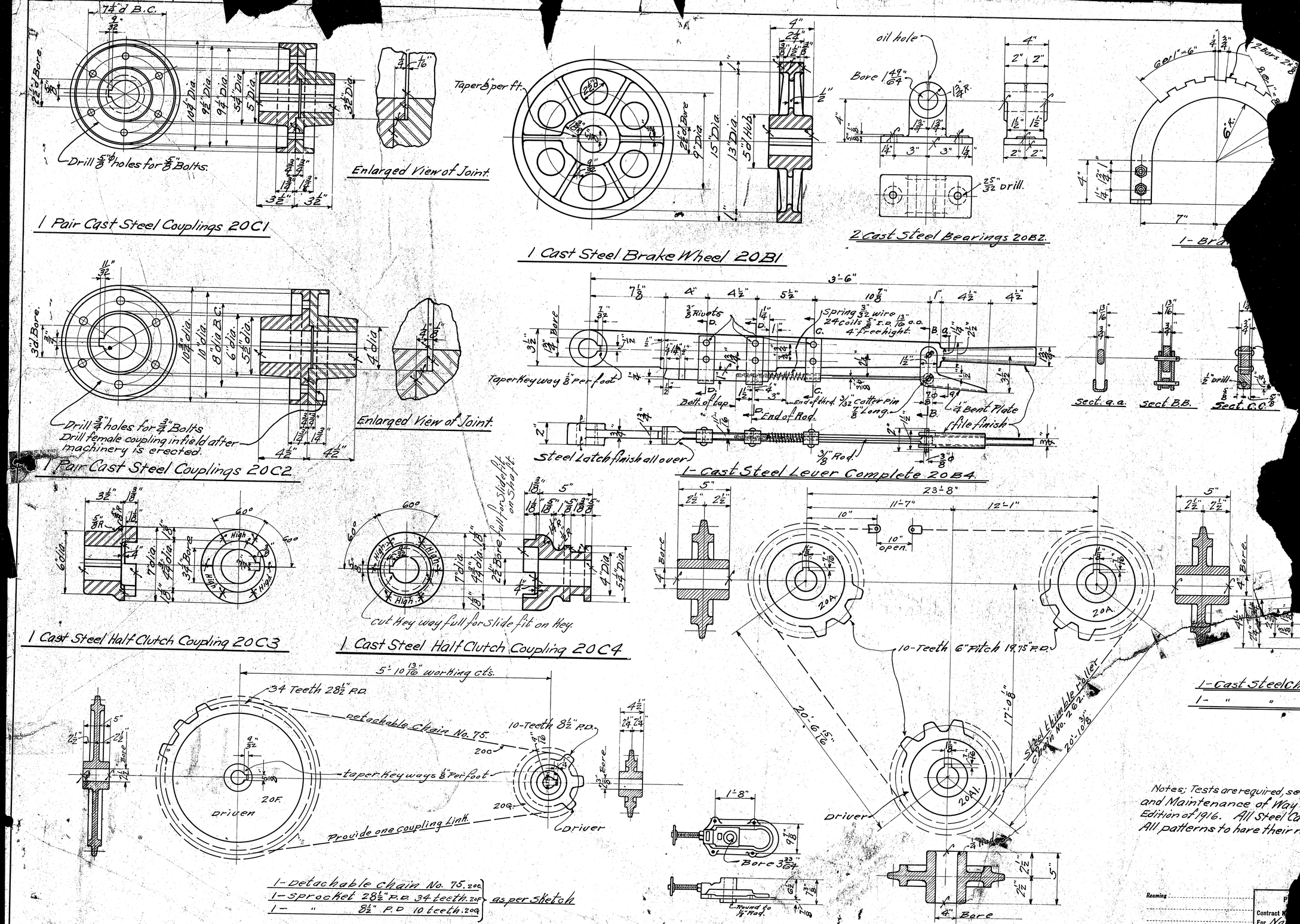
Drill 5/8" φ holes for 5/8" Bolts.
Enlarged View of Joint.
1 Pair Cast Steel Couplings 20C1
Taper 3/8" per ft.
1 Cast Steel Brake Wheel 20B1
oil hole
Bore 1 49/64"
2 Cast Steel Bearings 20B2.
25/32 drill.
6 Bars 1"-6"
2 Bars 2"-8"
1- Bra
Drill 3/4" holes for 3/4" Bolts
Drill female coupling in field after machinery is erected.
Enlarged View of Joint.
1 Pair Cast Steel Couplings 20C2
3/8" Rivets
Spring 3/32" wire 24 coils 5/16" I.D. 13/16" O.D. 4" free hight.
Taper Keyway 1/8" per foot
Belt of Cap
End of Rod.
End of third 3/32" Cotter Pin 7/8" Long.
4" Bent Plate file finish
Steel Latch finish all over
3/8" Rod.
1- Cast Steel Lever Complete 20B4.
Sect. a.a.
Sect. B.B.
Sect. C.C.
1 Cast Steel Half Clutch Coupling 20C3
Slide fit for Slide fit on Shaft
cut Key way full for Slide fit on Key.
1 Cast Steel Half Clutch Coupling 20C4
10-Teeth 6" Pitch 19.75" P.D.
20A.
20A1.
Steel thimble roller chain No. 2 G2.
1- Cast Steel chain Co
1- " " "
5' 10 13/16" working cts.
34 Teeth 28 1/2" P.D.
detachable Chain No. 75.
10-Teeth 8 1/2" P.D.
taper Keyways 1/8" per foot
20F.
driven
20G.
Provide one coupling link.
Driver
1-detachable chain No. 75. 20C
1-sprocket 28 1/2" P.D. 34 teeth. 20F
1- " 8 1/2" P.D. 10 teeth. 20G
as per Sketch
Bought out Side from Jeffrey Mfg. Co.
4-adjustable Take up Boxes
Short adjustment 20TB.
Bought out side from Jeffrey Mfg. Co.
2-Chains No. 2G2. Reqd
4-Sprockets 20A. "
2- " 20A1. "
as per Sketch
Bought out side from Jeffrey Mfg. Co.
Bore 3 33/64"
Round to 1/4" Rad.
Driver
Bore
Notes; Tests are required, see Am
and Maintenance of Way Asso
Edition of 1916. All Steel Castin
All patterns to have their mar
Reaming
Paint 1 Coat Dutch Bay Red Lead and Linseed oil.
Machine finished surfaces shall be coated with white Lead & Tallow.
Approved by
Contract N
For Na
Subject
Made by
Traced by
Checked by
Rivets
Holes

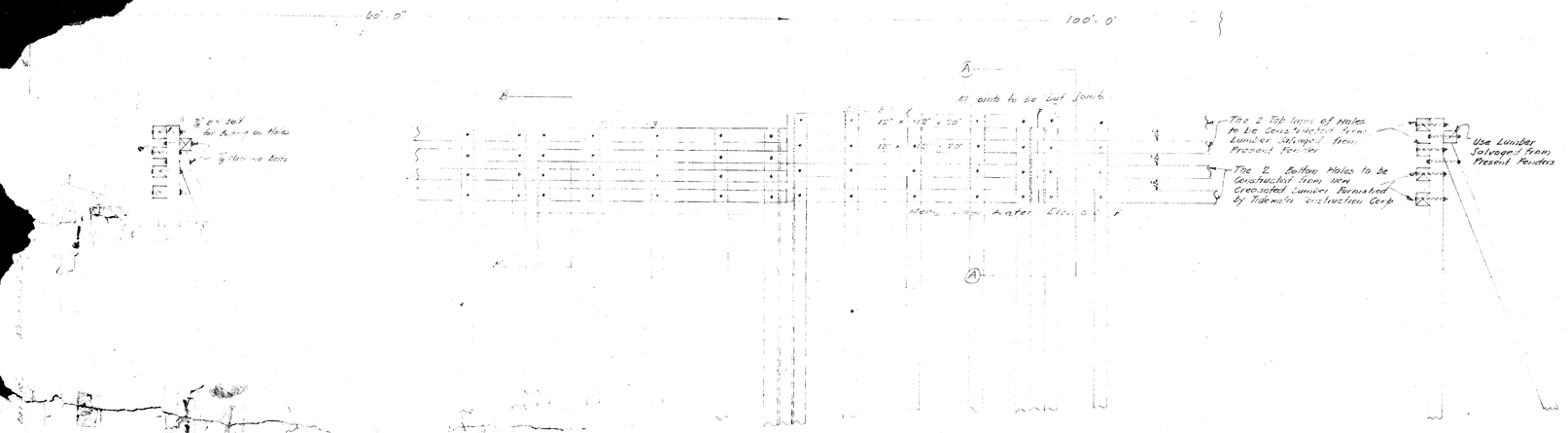

FRONT ELEVATION
Scale 1/4"=1'

SECTION A-A

NOTE :-
MATERIALS FURNISHED BY TIDEWATER CONSTRUCTION CORPORATION
37 Pcs Creosoted Piles, Lengths 51' to 55' (Whatever is Available from Creosoting Plant Stock)

20 Pcs Creosoted Lumber 12" x 12" x 20'

All Hardware including Cable

MATERIAL FURNISHED BY B.&M.R.R.
All Salvaged Cypress Lumber from Existing Fender.

60 Pcs Creosoted Piles 60' long

Freight on Piles, Lumber, and Hardware Furnished by Tidewater Construction Corp. from Point of Shipment to Beaufort N.C.

SPECIFICATIONS FOR MATERIAL FURNISHED BY TIDEWATER CONSTRUCTION CORP.

Piles in accordance with Navy Dept. Specifications 39 P 1.2a Type A Class 2 and Treated with #1 Creosote Oil by the Full cell process. Retention of Oil per Cu. Ft. of Wood shall be 22# in accordance with Standard Specifications of the American Wood Preservers Association

Lumber to be No. 1 Common S.L.S.I.P. or Douglas Fir No. 1 Common Treated with #1 Creosote Oil by the Full cell Process. Retention of Oil per Cu. Ft. of Wood shall be 22# in accordance with Standard Specifications of the American Wood Preservers Association

Hardware to Be Black, American Standard of a good Commercial Grade

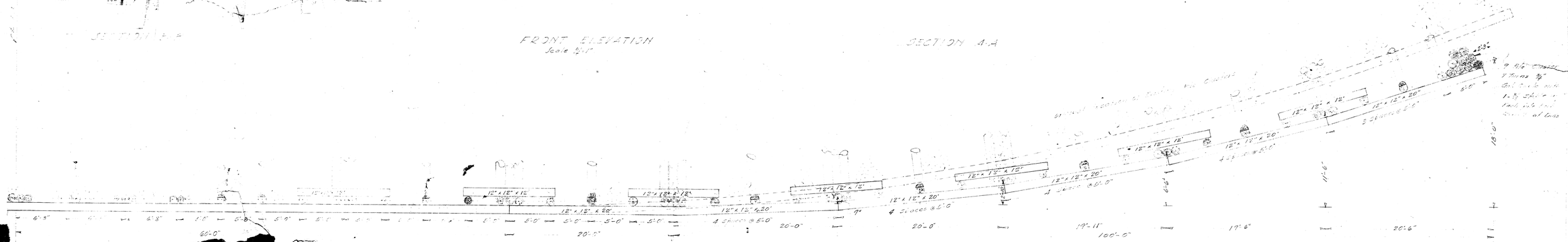

PLAN
Scale 1/4"=1'

TIDEWATER CONSTRUCTION CORPORATION
NORFOLK, VIRGINIA

REPAIRS TO B.&M.R.R. DRAW BRIDGE FENDER STRUCTURE
OVER INLAND WATERWAY
MOREHEAD CITY

APRIL 10, 1944

SHEET #1

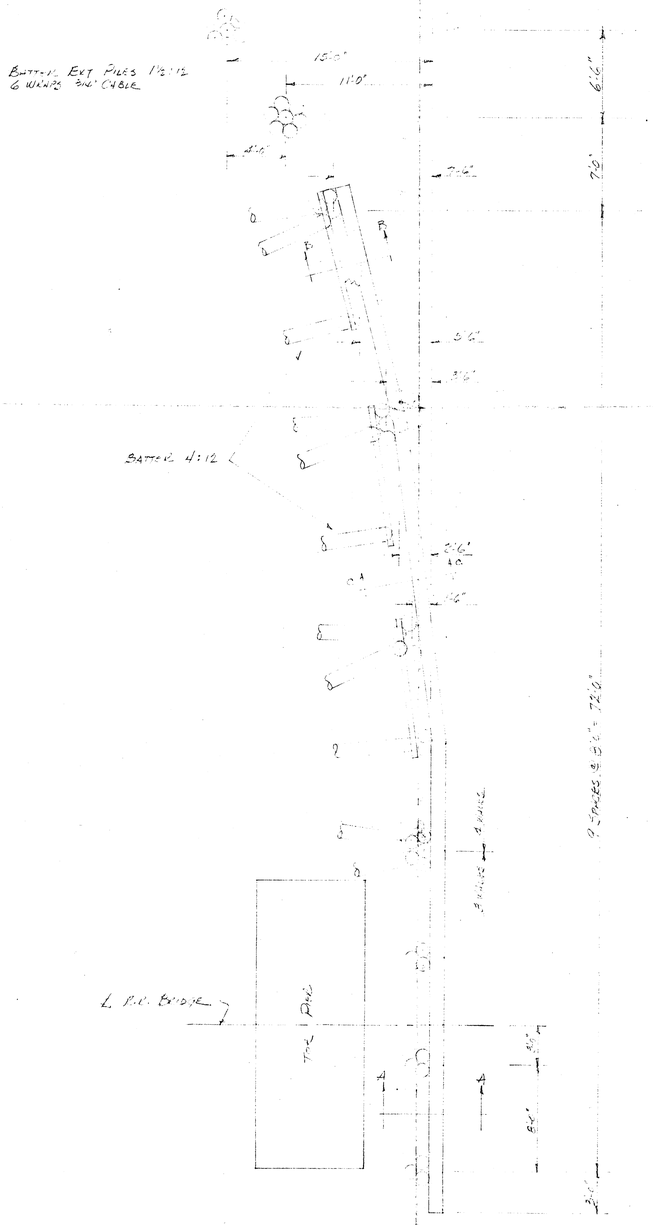

PLAN OF FENDER SYSTEM
SCALE: 3/16" = 1'-0"

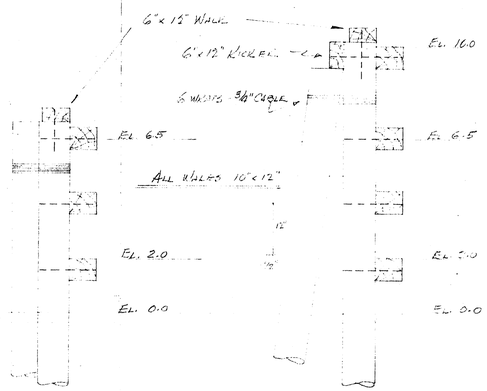

SECTION A-A
3 PILE CLUSTER

SECTION B-B
3 PILE CLUSTER

SCALE: 3/8" = 1'-0"

SECTION C-C
2 PILE CLUSTER

PILES - 14" 3-S" x 56' - 70% CREOSOTE
TIMBER - OUTER STRUT - 3" x 12" & 2" x 10" - 16% CREOSOTE EXCEPT BOT WALE - 20%
BOLTS - 1" & 3/4" W/ O.C. WASHERS - GALVANIZED
TREAT ALL CUT SURFACES & PILE HEADS WITH CREO & 10% N

REV.	DATE	BY	REMARKS

BEAUFORT - MOREHEAD RAILROAD CO.

PROPOSED NEW WEST FENDER FOR
NEWPORT RIVER BRIDGE

TIDEWATER CONSTRUCTION CORPORATION
ENGINEERS AND CONTRACTORS
NORFOLK, VIRGINIA

			SCALE	JOB NO.	DWG. NO.	REV.
DRAWN	J.B.H.	10-12-58				
CHECKED			AS NOTED		JK-1	
APPROVED						

Eugene Dietzgen Co., Inc., New York, N. Y. No. 1911 Ideal Tracing Vellum

B-452-2 REV. 4

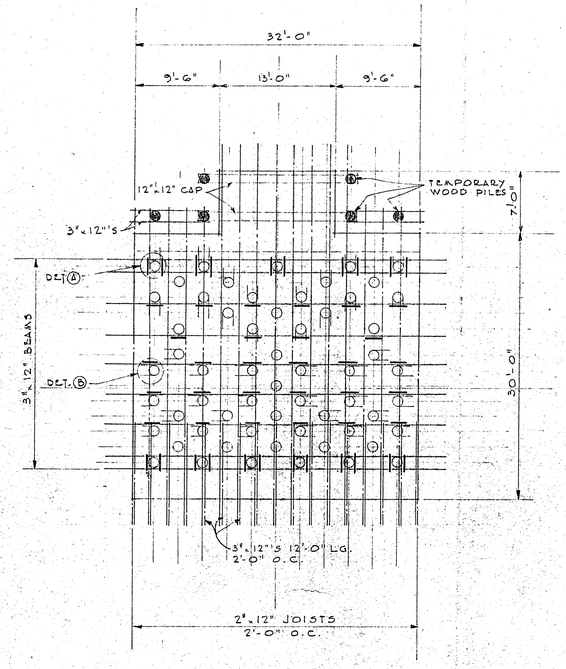

FORM FRAMING FOR BASCULE PIER

SCALE 6" = 1'-0"

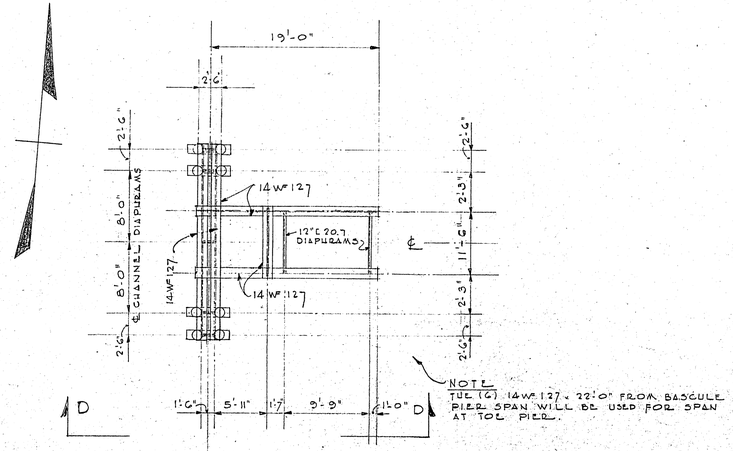

FRAMING PLAN
TEMPORARY SPAN AT TOE PIER

SCALE 6" = 1'-0"

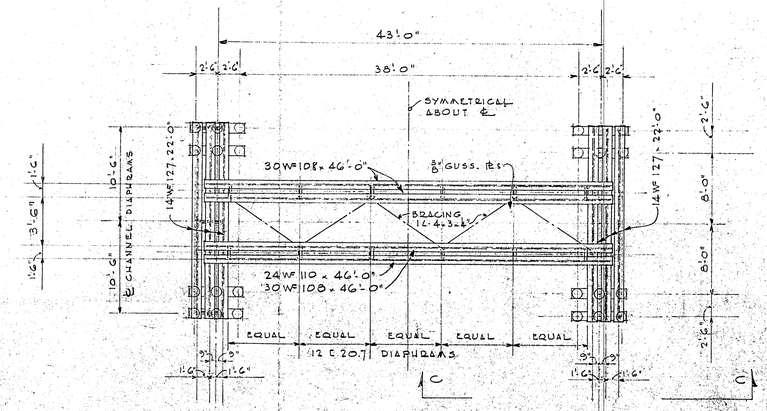

FRAMING PLAN
TEMPORARY SPAN AT BASCULE PIER

SCALE 6" = 1'-0"

HOLD

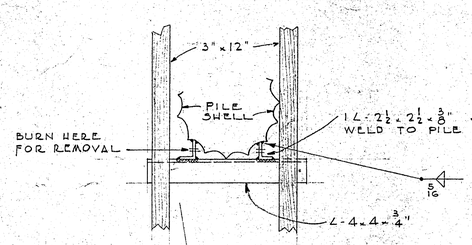

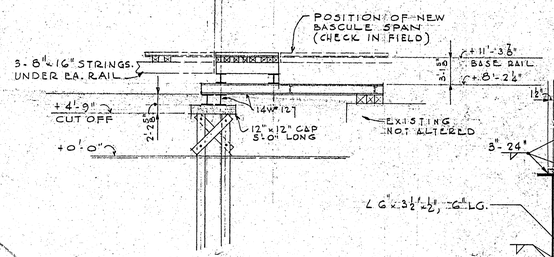

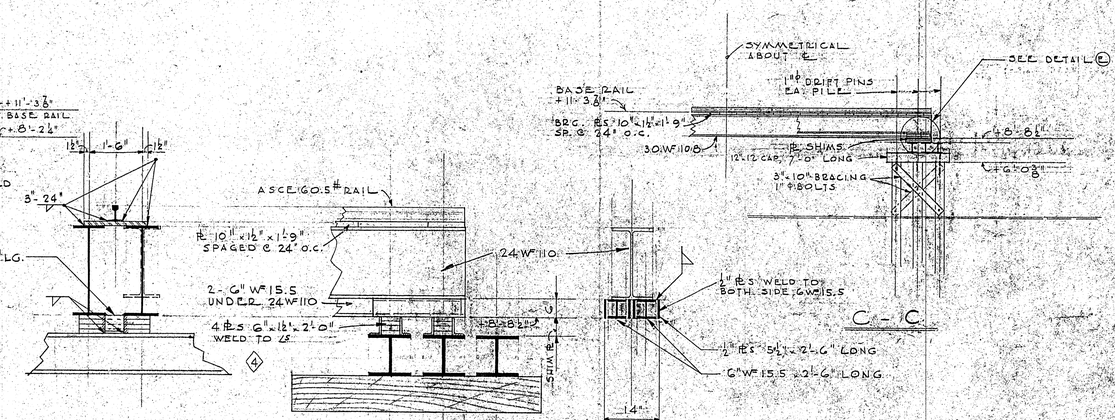

DETAIL (E)

SCALE 1/2" = 1'-0"

OFFICE COPY
Approved for Framing of Temporary Supports.
Corr & J.E. Greiner Co.
April 4-1950
CSM.

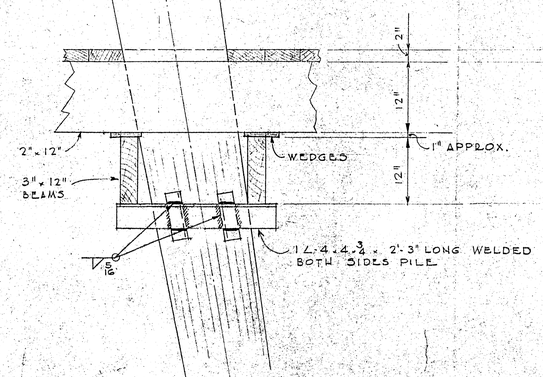

DETAIL (A)

SCALE 1" = 1'-0"

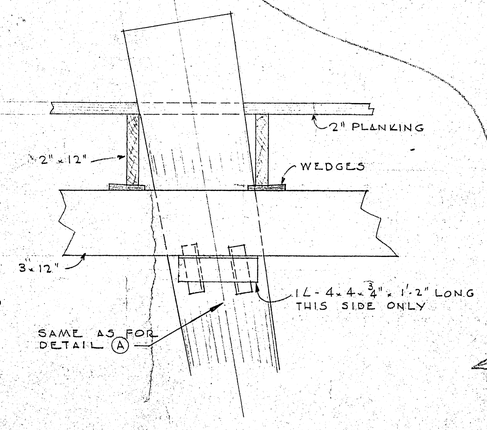

DETAIL (B)

SCALE 1" = 1'-0"

HOLD

NOTE
ANGLE SUPPORTS ON OUTSIDE ROW OF PILES SHALL BE REMOVED AFTER COMPLETION OF THE BASCULE PIER.

REV.	DATE	BY	REMARKS
1	10/17	E.L.P.	Coping of pile eliminated on Detail "A" and Detail "B"
2	11/2/49	S.J.L.	2½"x2½"x3/8" ∠s AND WEDGES ADDED TO DETAILS A & B. NOTE ADDED
3	3/27/50	S.J.L.	DIM. OF TEMP. SPAN REVISED NOTE ADDED.
4	3/29/50	S.J.L.	BEARING PLS REV., DWG. NO. REV.

BEAUFORT - MOREHEAD RAILROAD CO.
BEAUFORT, N.C.

ALTERATIONS TO NEWPORT R. BRIDGE
CHANGES TO TEMPORARY FRAMING

TIDEWATER CONSTRUCTION CORPORATION
ENGINEERS AND CONTRACTORS
NORFOLK, VIRGINIA

4

DRAWN	S.J.L.	10/7/49	SCALE	JOB NO.	DWG. NO.	REV.
CHECKED			NOTED	452	B-452-2	4
APPROVED						

B-452-1 REV.

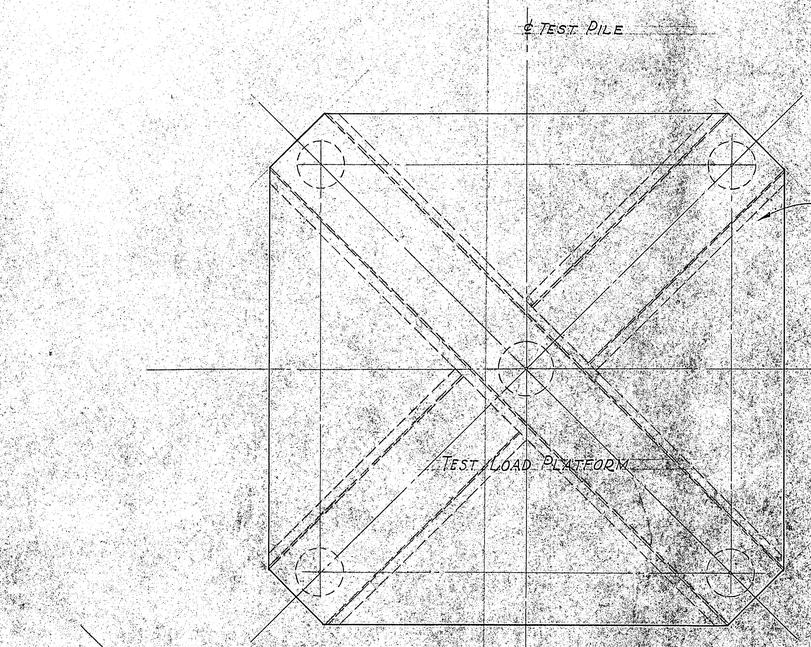

PLAN
(Batter piles omitted)

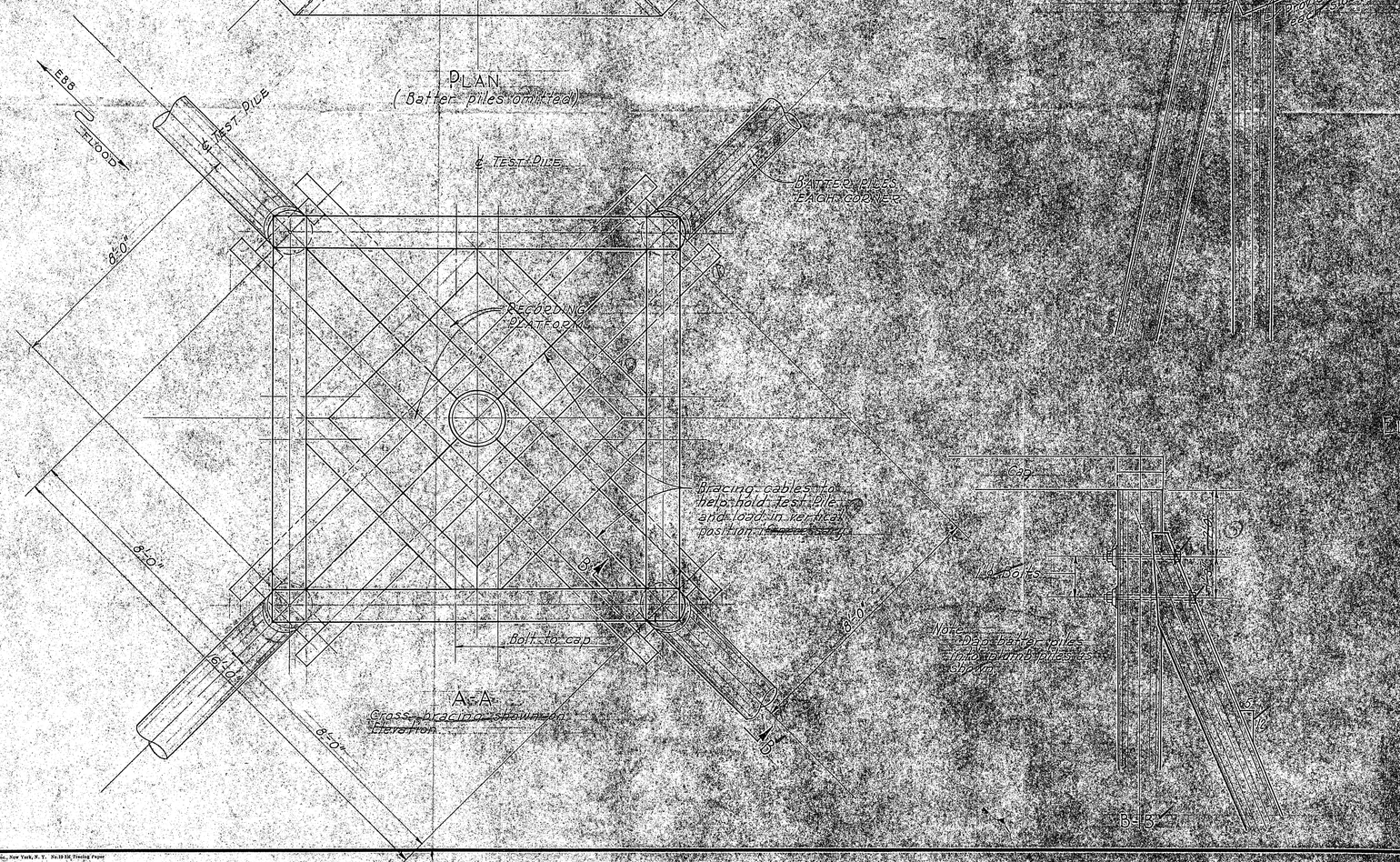

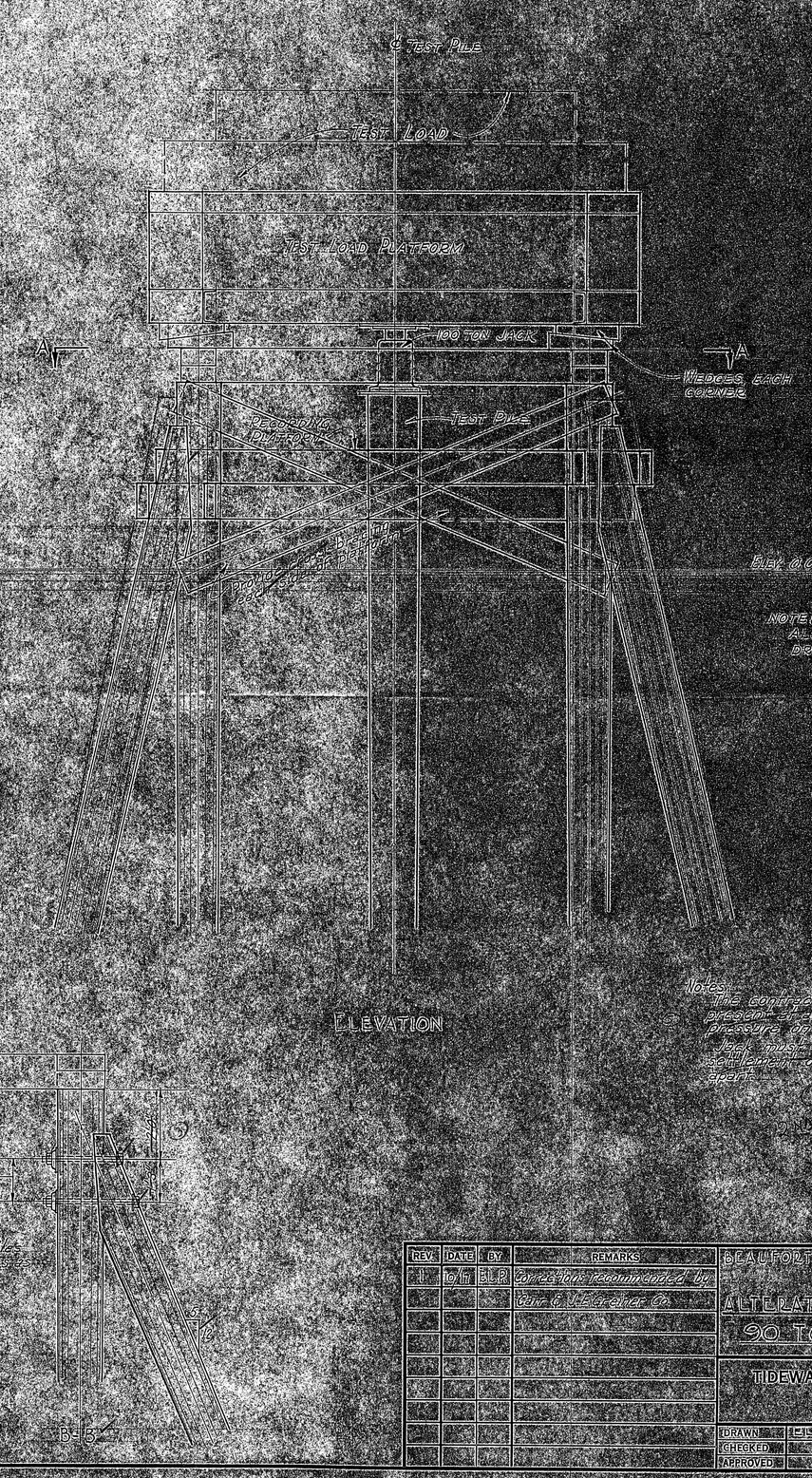

ELEVATION

NOTE:
ALL BATTER PILES TO BE DRIVEN 5 ON 12 SLOPE

Notes:
The contractor will provide competent observer present at all times to keep required test load pressure on pile.
Jack must have sufficient cycle length to take settlement of previous load test and not come apart.

OFFICE COPY
2ND SUBMISSION

APPROVED
OCT. 20 1949
E. F. GREENBERG CO.
CONSULTING ENGINEERS
BALTIMORE, MD.

REV.	DATE	BY	REMARKS
1	6/7	E.L.P.	Corrections recommended by Gow & J.E. Greiner Co.

BEAUFORT & MOREHEAD RAILROAD COMPANY
BEAUFORT, N.C.
ALTERATIONS NEWPORT RIVER BRIDGE
90 TON PILE TEST LOAD

TIDEWATER CONSTRUCTION CORPORATION
ENGINEERS AND CONTRACTORS
NORFOLK, VIRGINIA

DRAWN	E.L.P.	2/27/49	SCALE	JOB NO.	DWG. NO.	REV.
CHECKED			1" = 1'-0"	452	B-452-1	1
APPROVED						

B-5

Eugene Dietzgen Co., Inc., New York, N.Y. No.10 SK Tracing Paper

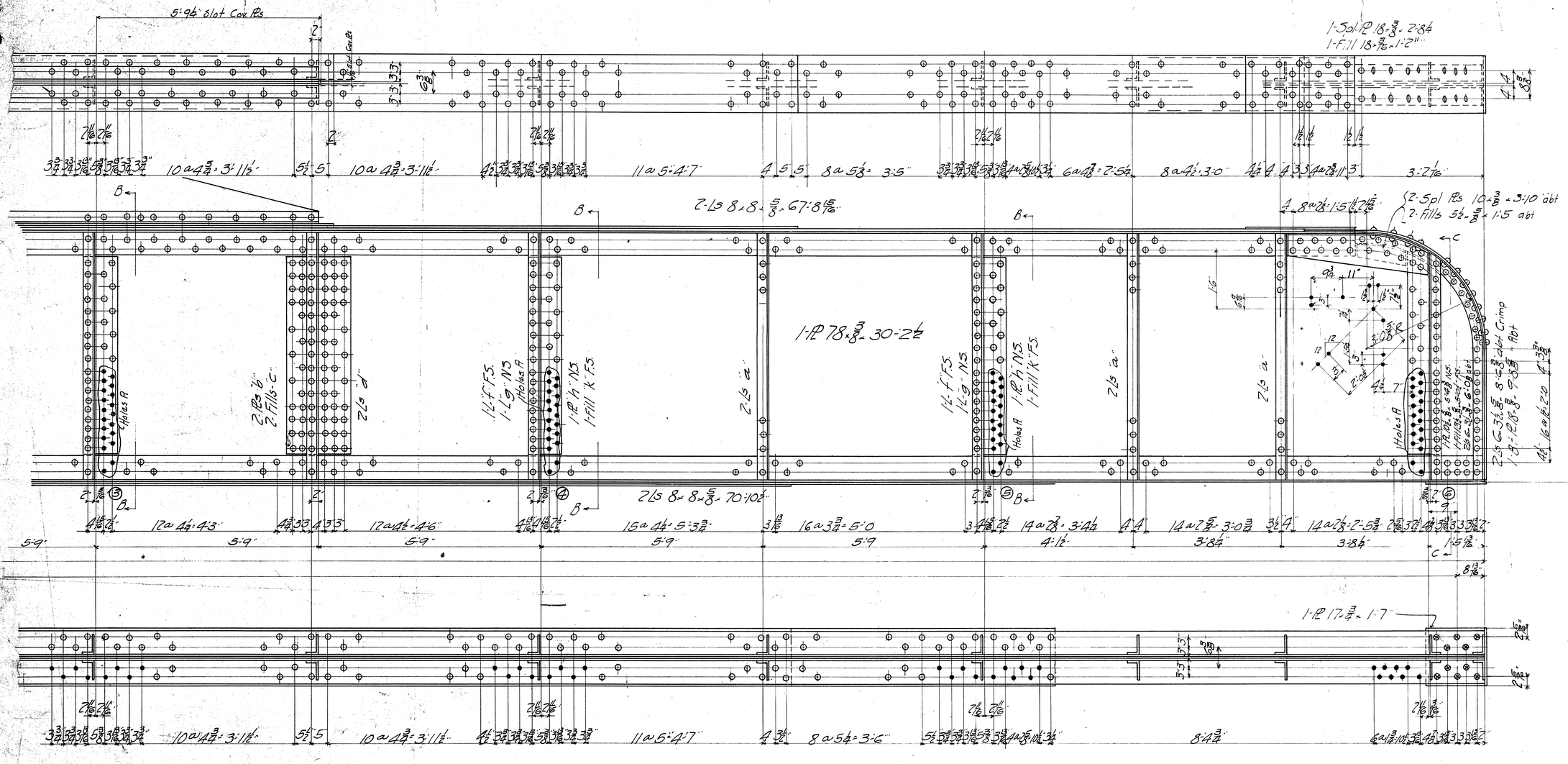

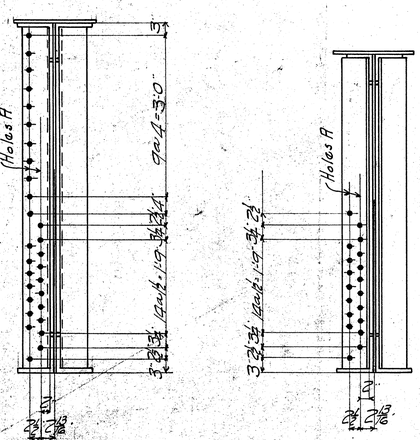

Sec. B-B.

Sec. C-C.

Note for Balance of Girder - See Dwg #3

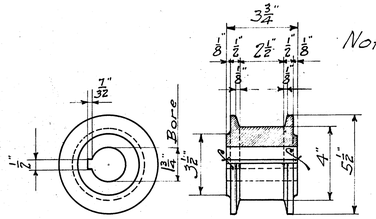

1-Cast Iron Idler 4R1.

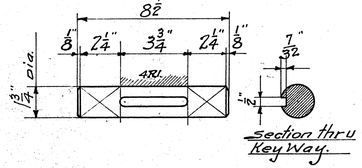

1-Cold Rolled Steel Shaft 4S1.

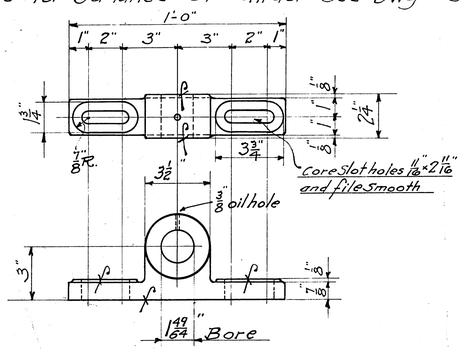

2-Cast Iron Bearings 4B1.

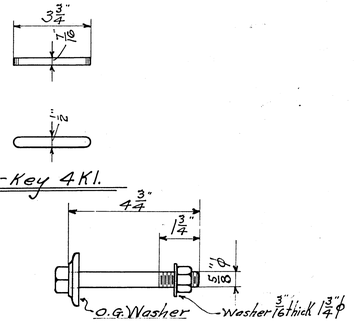

1-Key 4K1.

4-Bolts 4B2.

Note-Assemble 4R1. and 4K1. to Shaft 4S1. in Shop.

Reaming Punch Holes 9/16" and Ream to fit to an Iron Templet or while assembled.
Paint Dutch Boy Red Lead & Linseed Oil
Machine finished Surfaces white Lead and Tallow

Approved by _____ Date:—

PENN BRIDGE CO., BEAVER FALLS, PA.	
Contract No. 5703	Sheet No. 4 of
For Norfolk Southern R.R. Over Beaufort Channel	
Subject Girders	
Made by P.B. G.G.S.	Date 4-20-16
Traced by " G.G.J.	" "
Checked by Brandt	" June 3-1916
Rivets 3/4 unless noted	Scale 3/4" = 1'-0"
Holes 13/16 "	

Revised:- May 16-1916 addital as per K.

5703

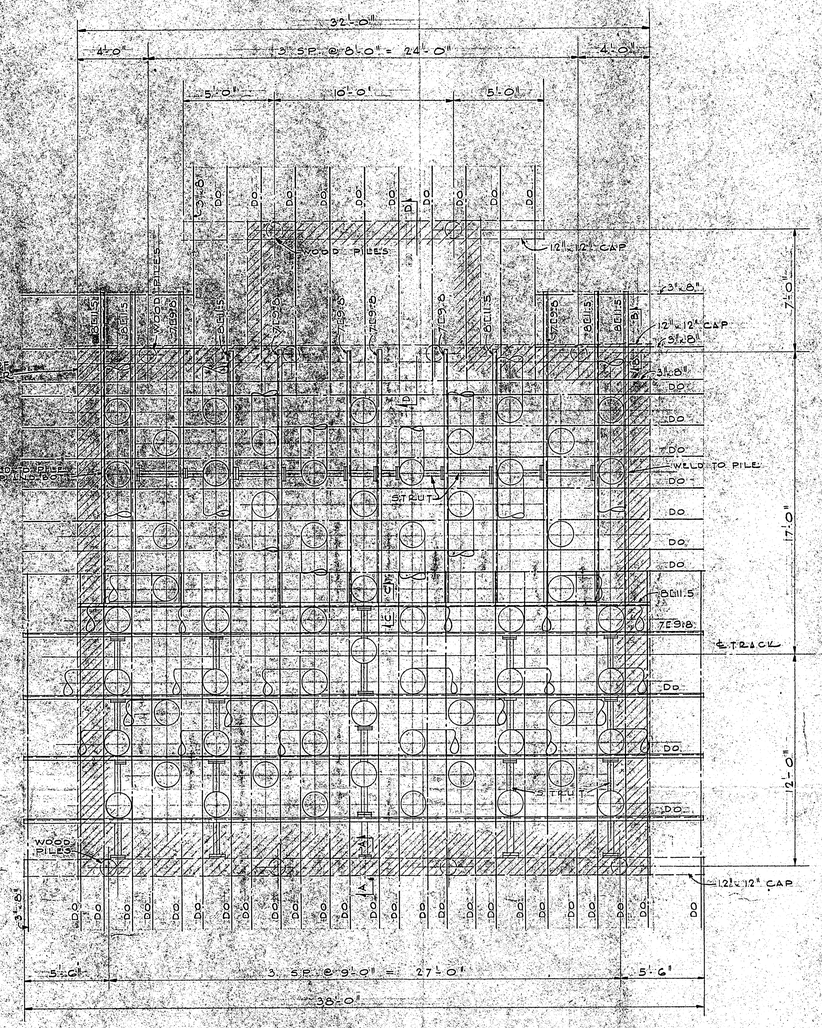

FRAMING PLAN
SCALE 1"=1'-0"

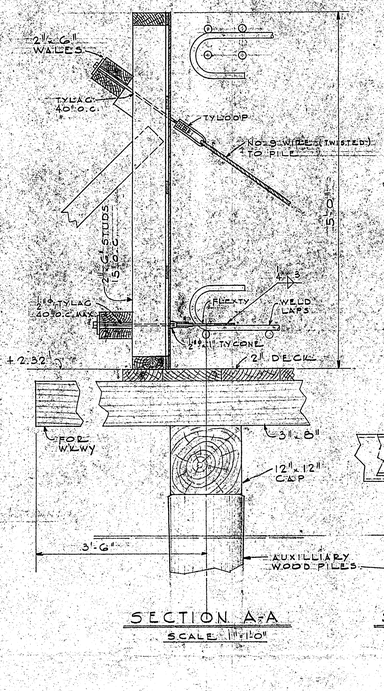

SECTION A-A
SCALE 1"=1'-0"

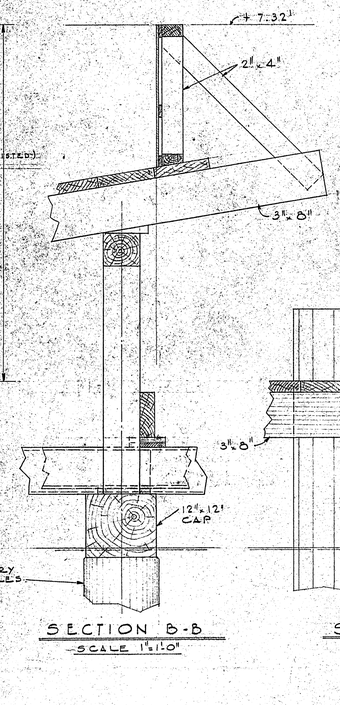

SECTION B-B
SCALE 1"=1'-0"

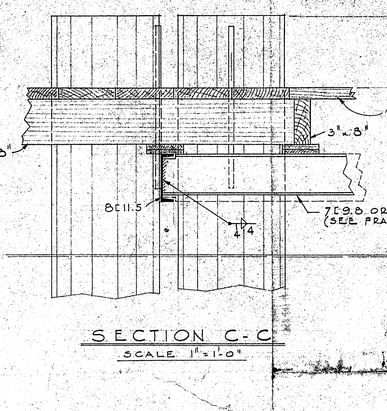

SECTION C-C
SCALE 1"=1'-0"

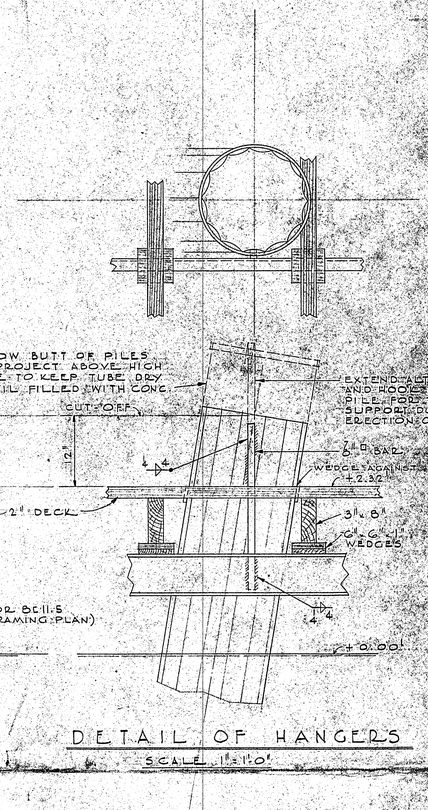

DETAIL OF HANGERS
SCALE 1"=1'-0"

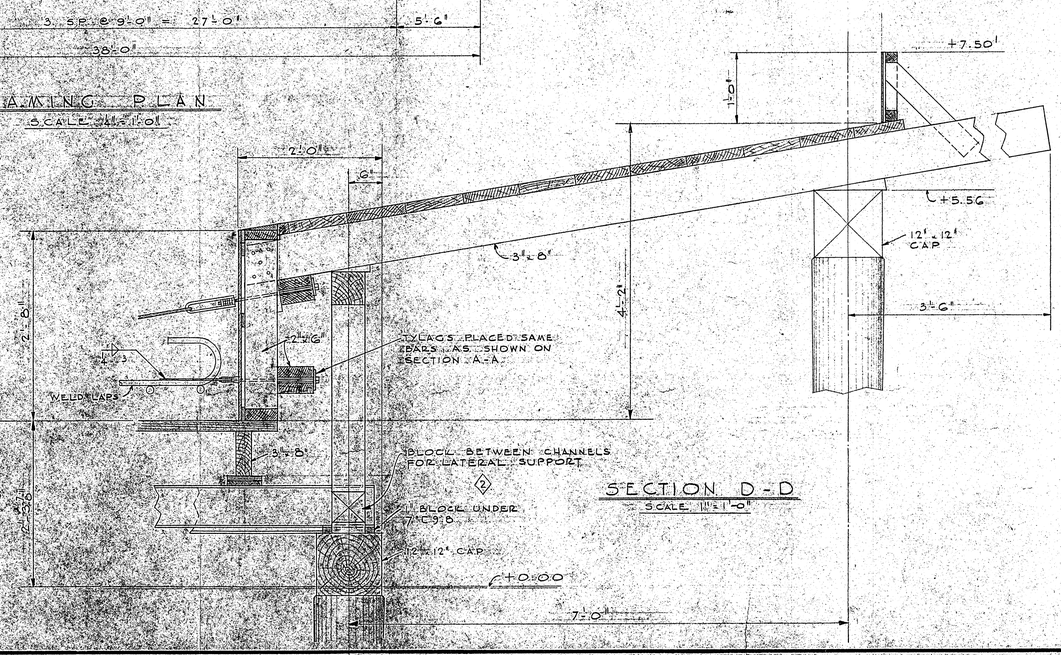

SECTION D-D
SCALE 1"=1'-0"

REV.	DATE	BY	REMARKS
1	4/20/50	SJL	DETAIL SECT. D-D REVISED
2	4/27/50	SJL	DETAIL OF BLOCKING ADDED

BEAUFORT MOOREHEAD R.R.
BEAUFORT, N.C.
ALTERATIONS TO NEWPORT R. BRIDGE
FORM DETAILS FOR BASCULE PIER

TIDEWATER CONSTRUCTION CORPORATION
ENGINEERS AND CONTRACTORS
NORFOLK, VIRGINIA

DRAWN	SJL	4/18/50	SCALE	JOB NO.	DWG. NO.	REV.
CHECKED			NOTED	452	B-452-3	2
APPROVED						

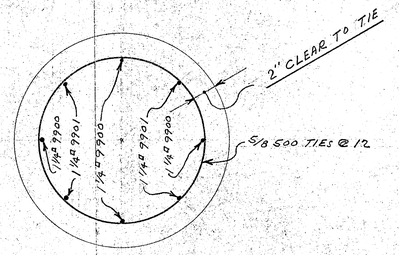

SECTION "A-A"

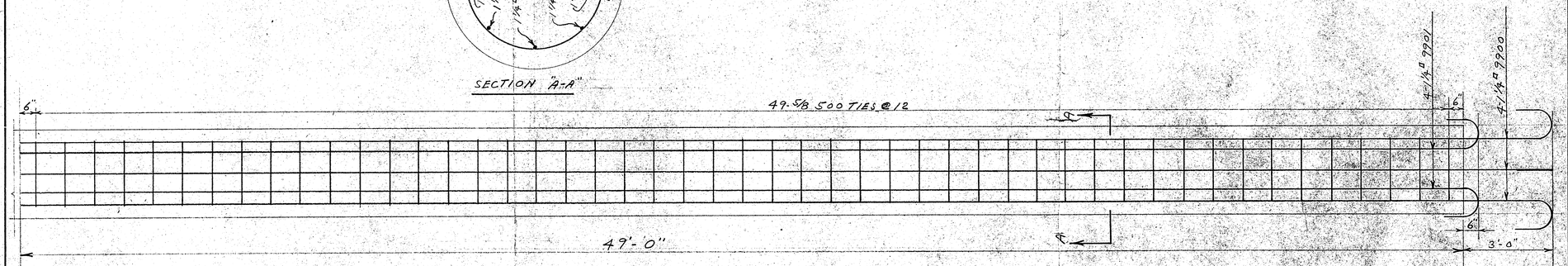

DETAIL OF TYPE "A" PILE
55 REQ'D. THUS - 26 PLUMB & 29 BATTER

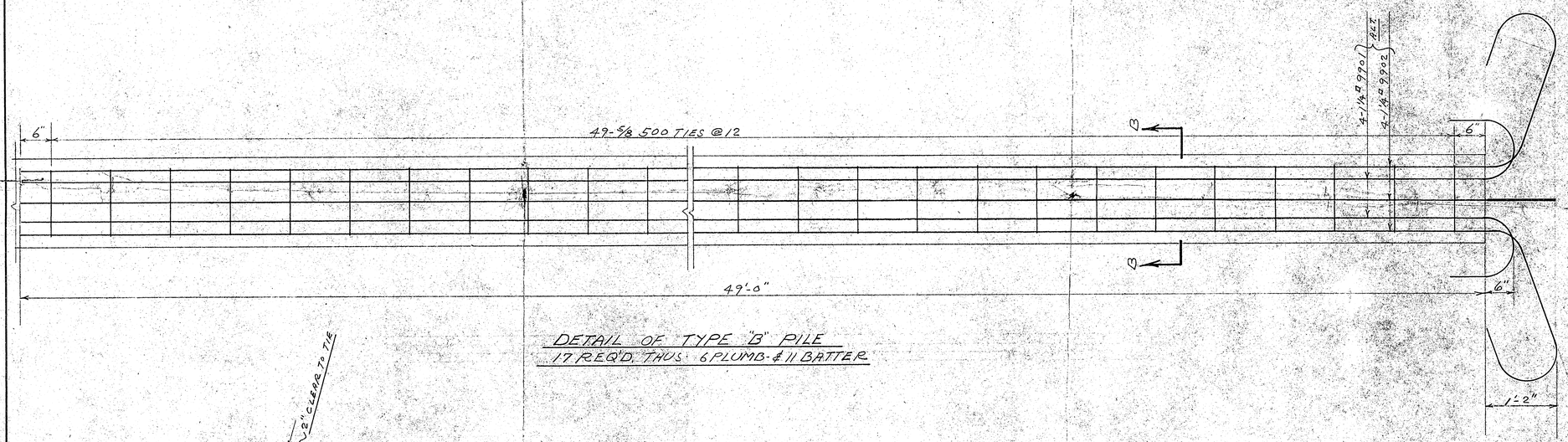

DETAIL OF TYPE "B" PILE
17 REQ'D. THUS - 6 PLUMB - & 11 BATTER

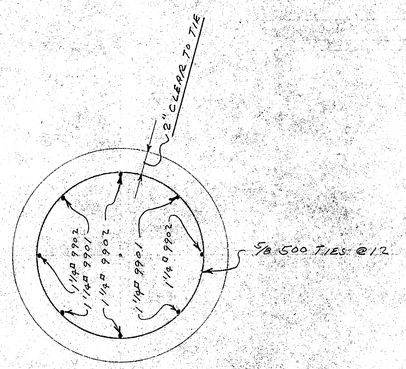

SECTION "B-B"

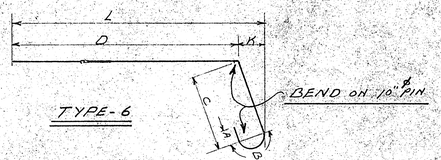

TYPE-6

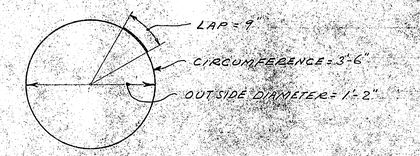

DETAIL OF BAR 500

REINFORCING SCHEDULE

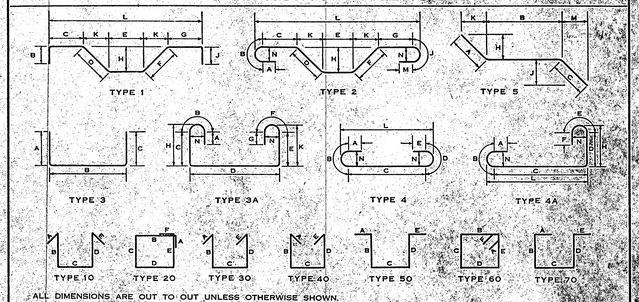

ALL DIMENSIONS ARE OUT TO OUT UNLESS OTHERWISE SHOWN.
DIMENSIONS OMITTED ARE ZERO.

MARK	NO.	SIZE	LGTH.	TYPE	A	B	C	D	E	F	G	J	M	H	K	PIN BEND	L
9900	220	1¼	53-6	4	7"	1-5	51-6	0	0							7/64	5320
9901	288	1¼	51-0	4	7"	1-5	49-0	0	0							7/64	4976
9902	68	1¼	53-6	6	7"	1-5	2-0	47-6							8"	1/32	5032
500	3628	5/8	4-3	SEE DETAIL													

STRAIGHT BARS

MK.	NO.	SIZE	LGTH.	MK.	NO.	SIZE	LGTH.	MK.	NO.	SIZE	LGTH.	MK.	NO.	SIZE	LGTH.	MK.	NO.	SIZE	LGTH.

Cont.

LSM

HALL-HODGES CO., INC.
NORFOLK, VIRGINIA

DRAWN BY	K	11-14-49
CHECKED BY		
REVISED BY		
REVISED BY		
REVISED BY		
REVISED BY		

STRUCTURE: NEWPORT RIVER BRIDGE - ALTERATIONS
LOCATION: BEAUFORT, N.C.
ARCHITECT: CARR & J.E. GREINER CO.
CONTRACTOR: TIDEWATER CONST. CO.

PILE DETAILS

DRAWING NO. R-7471

Eugene Dietzgen Co., Inc., New York, N. Y.

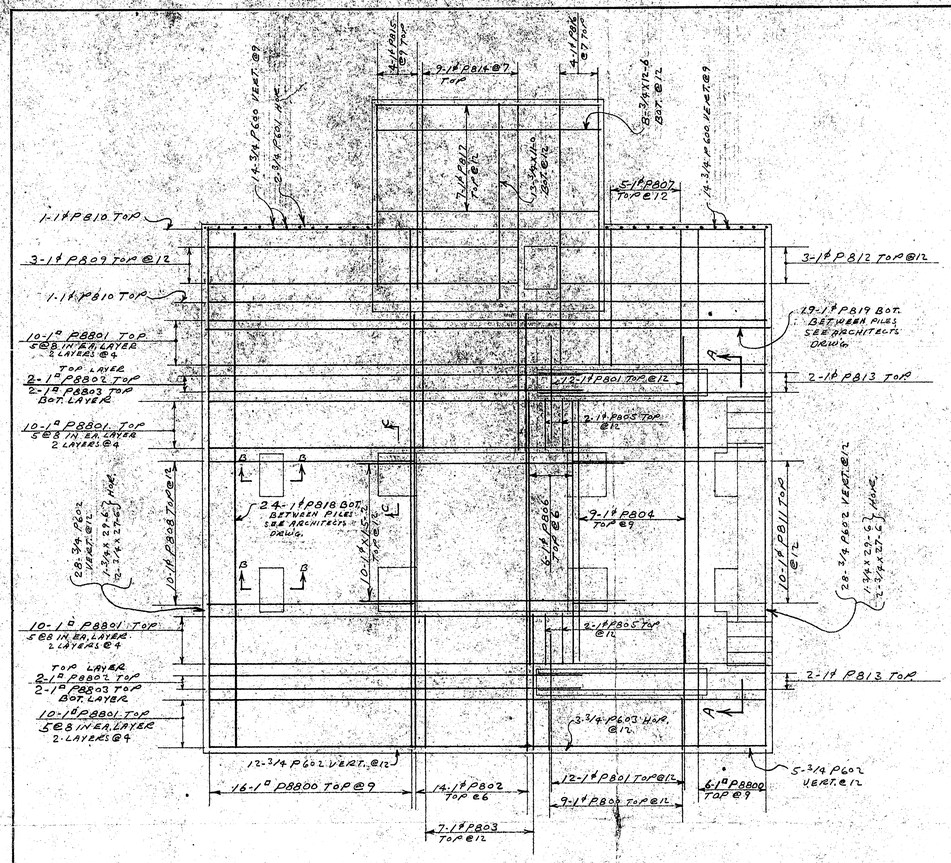

PLAN OF BASCULE PIER

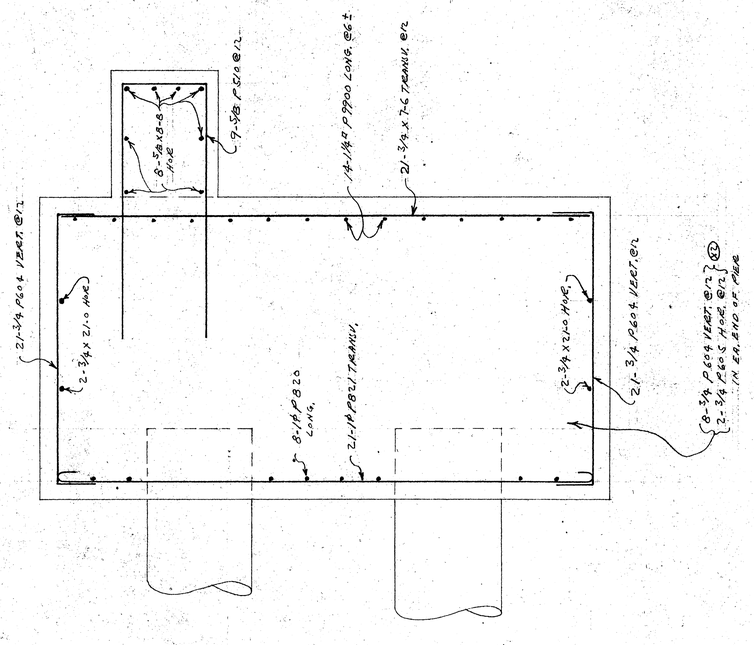

TRANSVERSE SECTION THRU TOE PIER

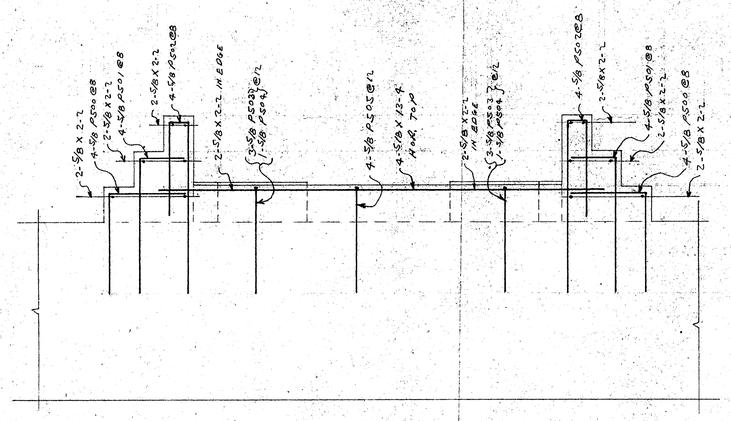

SECTION "A-A"

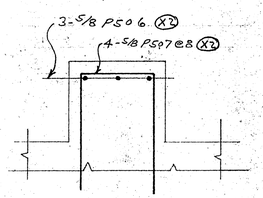

SECTION "B-B"

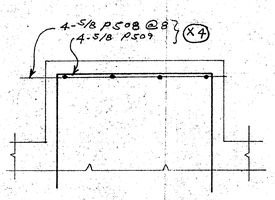

SECTION "C-C"

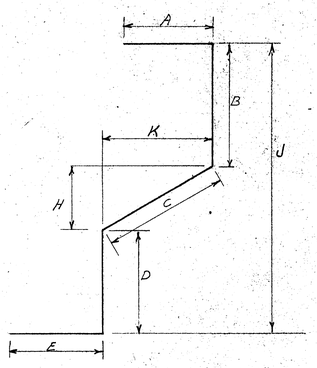

TYPE-8

REINFORCING SCHEDULE

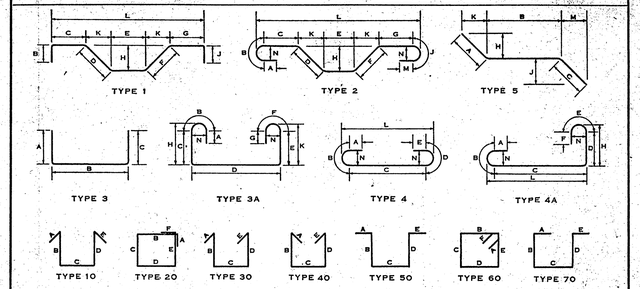

ALL DIMENSIONS ARE OUT TO OUT UNLESS OTHERWISE SHOWN.
DIMENSIONS OMITTED ARE ZERO.

MARK	NO.	SIZE	LGTH.	TYPE	A	B	C	D	E	F	G	J	M	H	K	PIN N	L
P9700	14	1¼"	23-6	4	4"	1-5	20-0	1-5	4"							10"	21-0
P8800	22	1□	31-4	4	4"	11"	28-10	11"	4"							6"	29-6
P8801	40	1□	33-4	4	4"	11"	30-10	11"	4"							6"	31-6
P8802	4	1□	23-8	2	4"	11"	17-10	4-7	0	0	0	0	0	3-9	2-8	6"	
P8803	4	1□	19-3	4	4"	11"	16-9	11"	4"							6"	17-5
P800	9	1#	10-6	3	4-3	2-9	3-6										
P801	24		9-9	4	4"	11"	6-10	11"	4"							6"	7-6
P802	14		26-4	4	4"	11"	23-10	11"	4"							6"	29-6
P803	7		15-3	3	4-3	7-6	3-6										
P804	9		22-0	3	3-6	15-0	3-6										
P805	4		9-9	3	3-6	2-9	3-6										
P806	6		16-10	4	4"	11"	14-9	11"	4"							6"	15-0
P807	5		12-2	4A	4"	11"	7-5	3-6	0	0						6"	7-9
P808	10		15-11	4A	4"	11"	11-2	3-6	0	0						6"	11-6
P809	3		21-11	4A	4"	11"	17-2	3-6	0	0						6"	17-6
P810	2		33-4	4	4"	11"	30-10	11"	4"							6"	31-6
P811	10		15-5	4A	4"	11"	10-8	3-6	0	0						6"	11-0
P812	3		15-11	4A	4"	11"	11-2	3-6	0	0						6"	11-6
P813	4		14-7	2	4"	11"	2-10	6-6	4-0	0	0	0	0	2-6	6-0	6"	
P814	9		23-11	4A	4"	11"	17-2	3-6	0	0						6"	17-6
P815	4		13-10	4	4"	11"	11-9	11"	4"							6"	12-0
P816	9		17-1	4A	4"	11"	14-9	3-6	0	0						6"	14-8
P817	7		14-9	4	4"	11"	11-10	11"	4"							6"	12-6
P818	24		27-9	4	4"	11"	26-10	11"	4"							6"	27-6
P819	19		33-9	4	4"	11"	30-10	11"	4"							6"	31-6
P820	8		22-10	4	4"	11"	20-9	11"	4"							6"	21-0
P821	21	1#	9-9	4	4"	11"	6-10	11"	4"							6"	7-6
P600	28	3/4	7-0	8	6"	1-6	2-1	2-5	6"			4-3		4"	2-0		
P601	2		36-6	3	2-6	31-6	2-6										
P602	73		5-3	3	6"	4-3	6"										
P603	3		36-6	3	2-6	31-6	2-6										
P604	58		4-6	3	6"	3-6	6"										
P605			12-6		2-6	7-6	2-6										
P500	8	5/8	5-0	3	2-10	2-2	0										
P501	8		5-2	3	3-10	1-9	0										
P502	8		7-9	3	4-10	6"	2-0										
P503	6		8-7	3	2-10	2-11	2-10										
P504	2		7-10	3	2-10	2-2	2-10										
P505	4		7-3	3	2-10	1-7	2-10										
P506	6		8-2	3	3-0	2-2	3-0										
P507	8		7-0	3	3-0	1-0	3-0										
P508	16		7-10	3	3-0	1-10	3-0										
P509	16		8-2	3	3-0	2-2	3-0										
P510	9	5/8	8-6	3	3-8	1-2	3-8										

STRAIGHT BARS

MK.	NO.	SIZE	LGTH.	MK.	NO.	SIZE	LGTH.	MK.	NO.	SIZE	LGTH.	MK.	NO.	SIZE	LGTH.	MK.	NO.	SIZE	LGTH.
	10	1#	15-2																
	2	3/4	29-6																
	4	3/4	27-6																
	4	3/4	21-0																
	8	3/4	12-6																
	13	3/4	11-0																
	21	3/4	7-6																
	4	5/8	13-9																
	8	5/8	8-8																
	16	5/8	2-2																

HALL-HODGES CO., INC.
NORFOLK, VIRGINIA

DRAWN BY	K	2-8-50
CHECKED BY		
REVISED BY	K	2-20-50
REVISED BY		
REVISED BY		
REVISED BY		

STRUCTURE: NEWPORT RIVER BRIDGE ALTERATIONS
LOCATION: BEAUFORT, N.C.
ARCHITECT: CARR & J.E. GREINER CO.
CONTRACTOR: TIDEWATER CONST. CORP.

PIER DETAILS

DRAWING NO. R747-2

Eugene Dietzgen Co., Inc., New York, N. Y.

FED. ROAD DIST. NO.	STATE	PROJECT NO.	SHEET NO.	TOTAL SHEETS
10	N. C.	203 64A Rev.	2	16

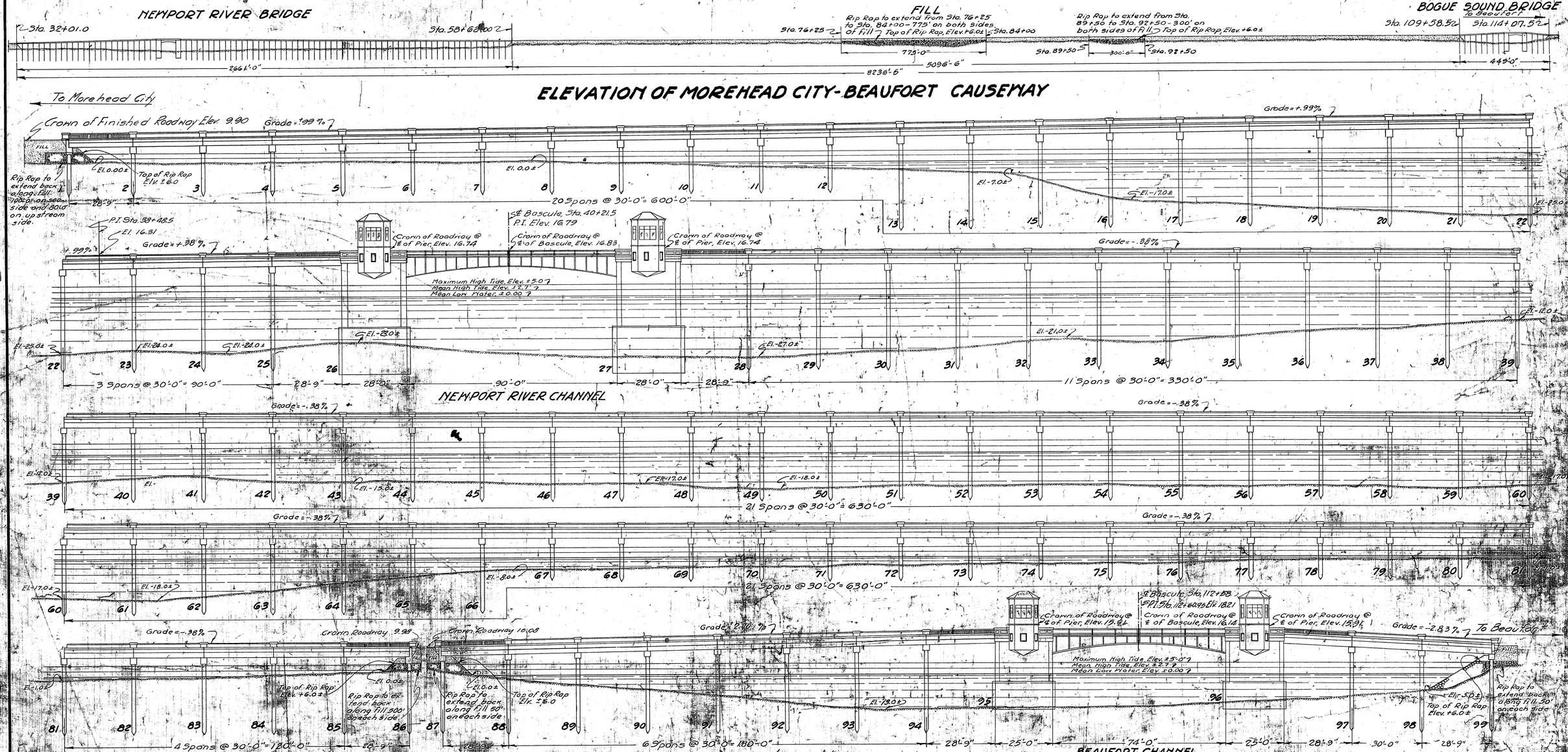

ELEVATIONS OF BRIDGE SEATS

BENT No.	ELEV.	BENT No.	ELEV.	BENT No.	ELEV.	BENT No.	ELEV.	BENT No.	ELEV.	BENT No.	ELEV.
1	6.66	19	11.99	39	12.09	57	10.04	75	8.09	93	11.50
2	6.94	20	12.26	40	11.96	58	9.92	76	7.87	94	12.15
3	7.21	21	12.54	41	11.86	59	9.81	77	7.76	97	12.13
4	7.54	22	12.78	42	11.76	60	9.79	78	7.64	98	11.94
5	7.84	23	12.99	43	11.68	61	9.58	79	7.58	99	10.78
6	8.13	24	13.17	44	11.52	62	9.47	80	7.42		
7	8.43	25	13.33	45	11.41	63	9.35	81	7.30		
8	8.73	26	13.34	46	11.29	64	9.24	82	7.19		
9	9.02	29	13.28	47	11.18	65	9.13	83	7.07		
10	9.32	30	13.12	48	11.06	66	9.01	84	6.96		
11	9.62	31	13.00	49	10.95	67	8.90	85	6.85		
12	9.91	32	12.89	50	10.84	68	8.78	86	6.74		
13	10.21	33	12.77	51	10.72	69	8.67	87	6.84		
14	10.51	34	12.66	52	10.61	70	8.56	88	7.58		
15	10.81	35	12.55	53	10.49	71	8.44	89	8.39		
16	11.10	36	12.43	54	10.38	72	8.33	90	9.20		
17	11.40	37	12.32	55	10.27	73	8.21	91	10.01		
18	11.70	38	12.20	56	10.15	74	8.10	92	10.82		

Note: Revised for grades, bridge seat elevations and ground line elevations. Jan. 20, 1926 - G.H.E. Checked by B.R.R.

Note: revised for grades by T.P.M. Jr. ck'd by B.R.R. & Sumner 3-19-26

SPECIAL

DESIGNED BY
DRAWN BY T.P.M. Jr. DATE Dec. 26
TRACED BY DATE Dec. 26
CHECKED BY B.R.R. - T.P.M. - W.F.H. DATE Dec. 8, 1925

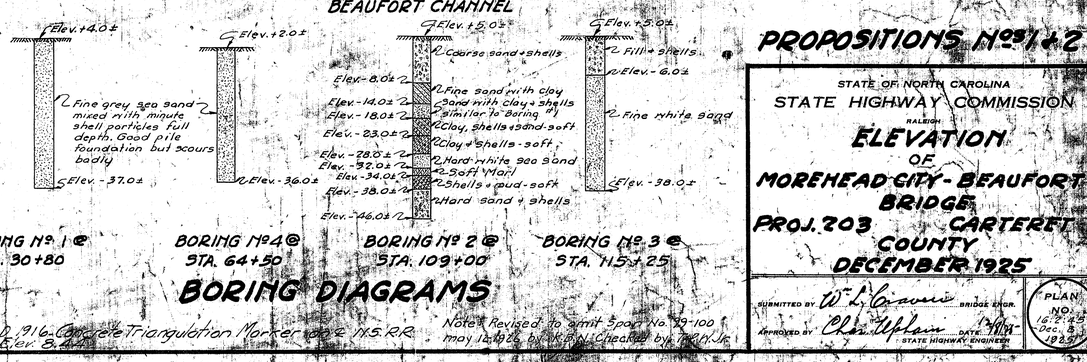

BORING No. 1 @ STA. 30+80

BORING No. 4 @ STA. 64+50

BORING No. 2 @ STA. 109+00

BORING No. 3 @ STA. 115+25

BORING DIAGRAMS

8"x8" Top 3' USE 0.916 - Concrete Triangulation Marker No. 2 N.S.R.R. 30' Lt. Sta. 30+00 Elev. 8.4

Note: Revised to omit Span No. 99-100 may 12, 1926 by W.F.H. Checked by T.P.M. Jr.

PROPOSITIONS No. 1 & 2

STATE OF NORTH CAROLINA
STATE HIGHWAY COMMISSION
RALEIGH

ELEVATION OF MOREHEAD CITY - BEAUFORT BRIDGE

PROJ. 203 CARTERET COUNTY
DECEMBER 1925

SUBMITTED BY W. L. Crowell BRIDGE ENGR.
APPROVED BY Chas. Upchurch DATE 1/4/26 STATE HIGHWAY ENGINEER

PLAN No. 16-2-43 Dec. 8, 1925

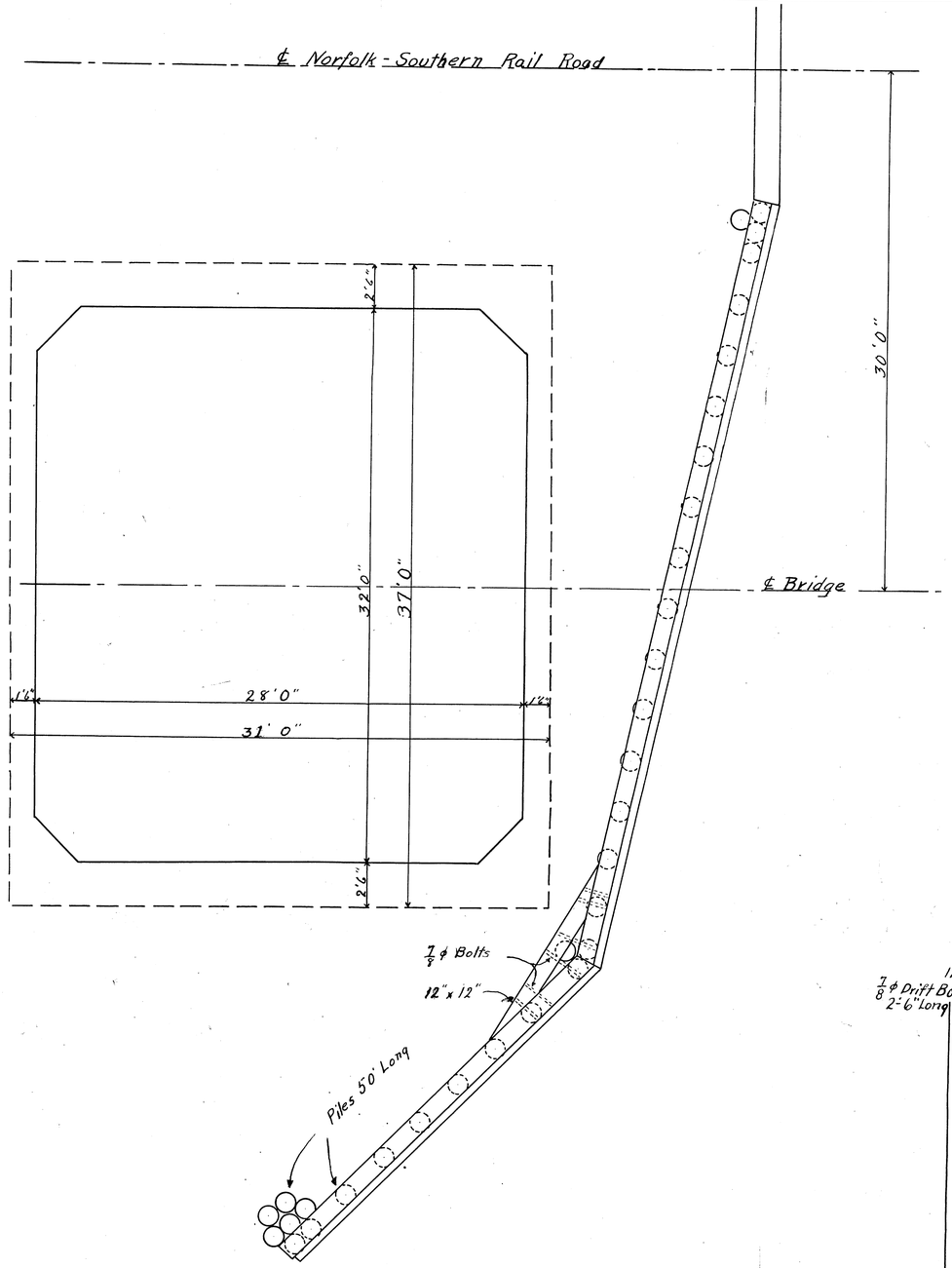

NEWPORT RIVER CHANNEL
2 Fenders as Shown

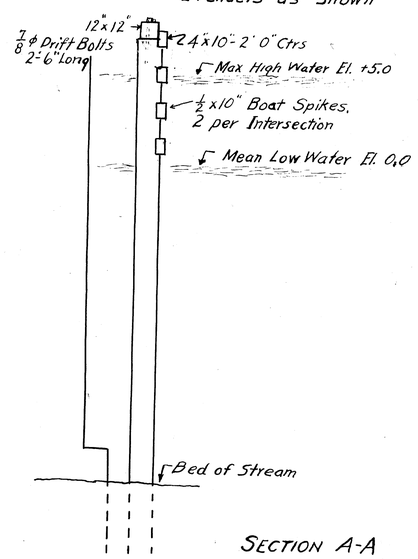

SECTION A-A

By F.M. Edgerton,
Res. Engr.

STATE OF NORTH CAROLINA
STATE HIGHWAY COMMISSION
RALEIGH

NEWPORT RIVER CHANNEL FENDER

SCALE 1/4" IN. = 1 FT.

PLAN NO. B13½

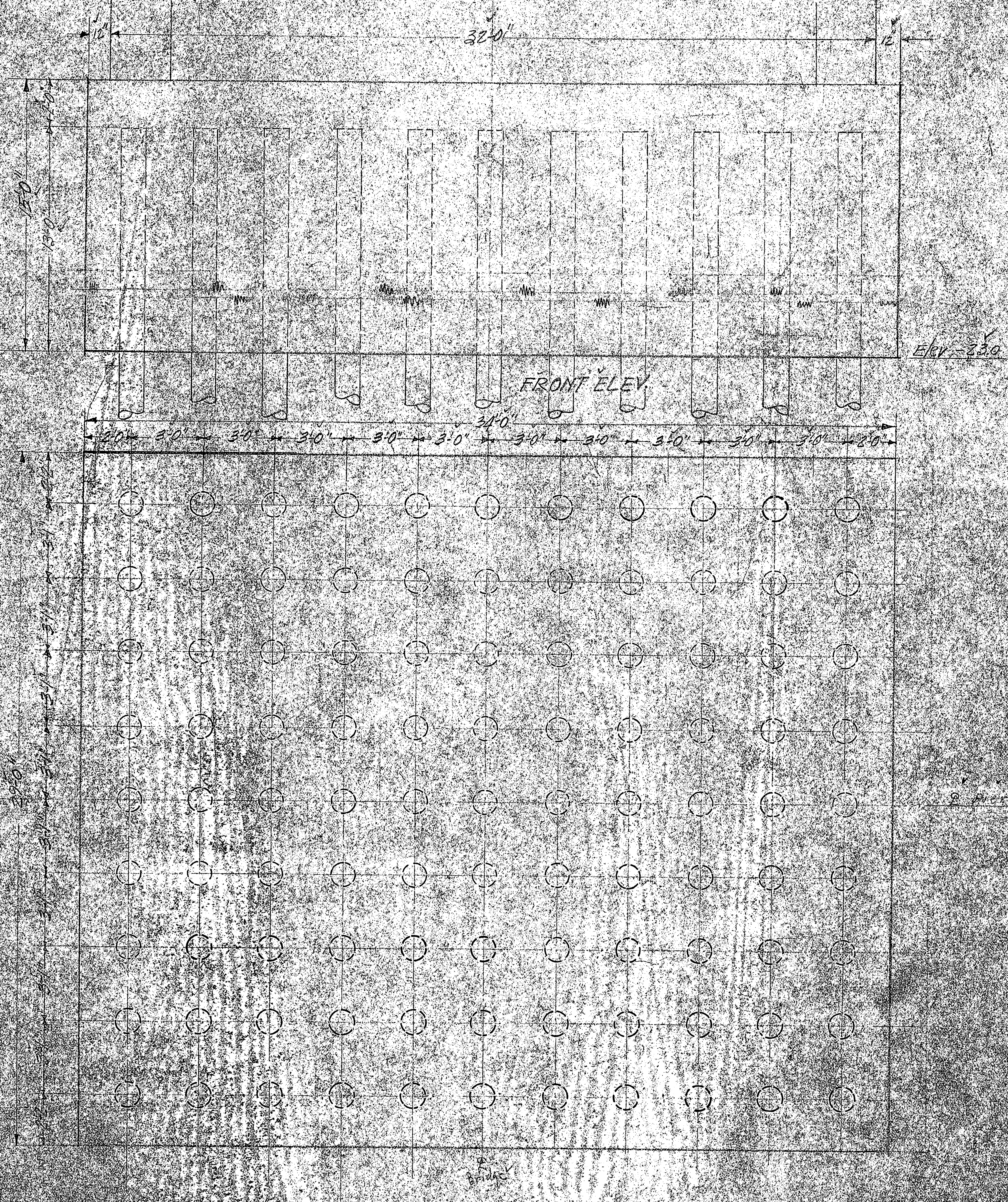

PLAN OF PIER FOOTING SHOWING PILE SPACING
PIER # 95 ONLY

PROJECT NO. 203
CARTERET COUNTY
WEST BASCULE PIER
PIER # 95

STATE OF NORTH CAROLINA
STATE HIGHWAY COMMISSION
RALEIGH
REVISED
FOOTING & PILE LAYOUT
PIER NO. 95
BEAUFORT CHANNEL
Aug. 1926

Submitted by ______ Bridge Engr.
Approved by ______ State H. Engr.
PLAN NO. B2A

Special ... checked by E.H.R.

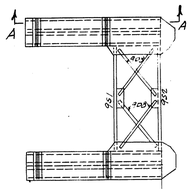

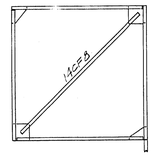

Sec. A-A

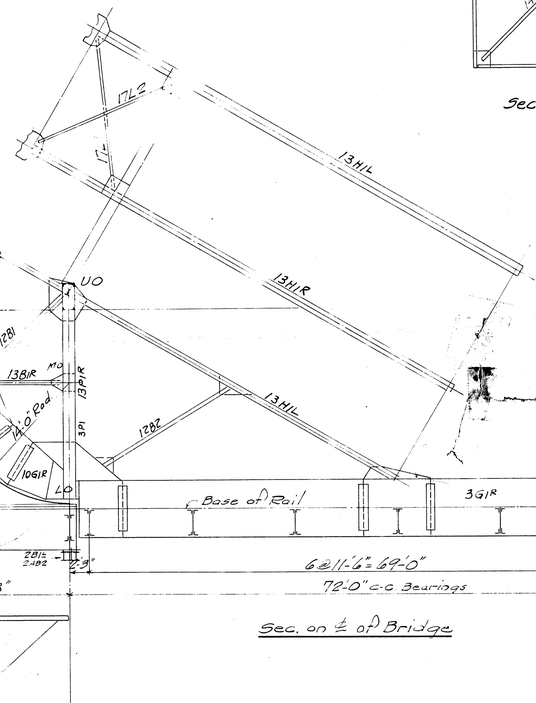

Sec. on ℄ of Bridge

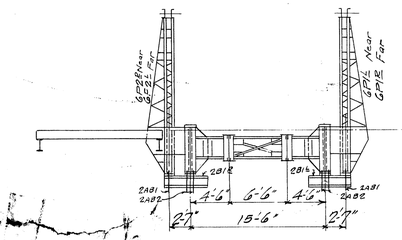

End View
Fixed Part

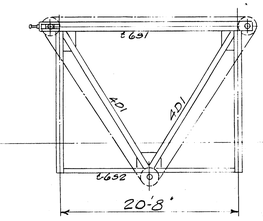

Chain Supports

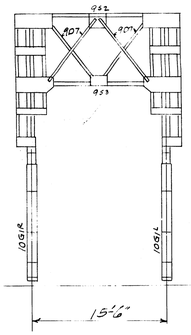

End View
Moving Part

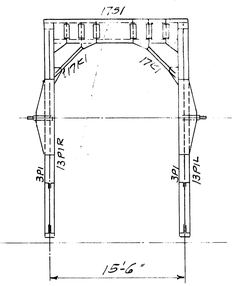

Sec. UO-LO

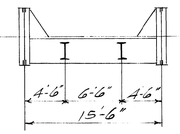

Cross Sec.

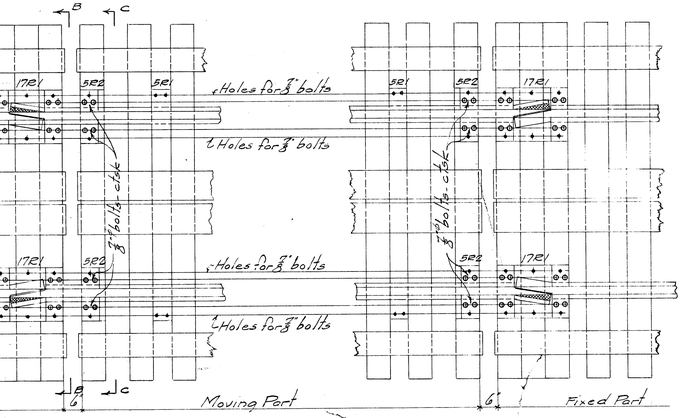

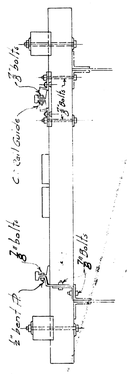

Half Sec. A-A
Half Sec. B-B

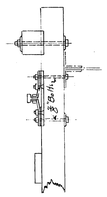

Half Sec. CC

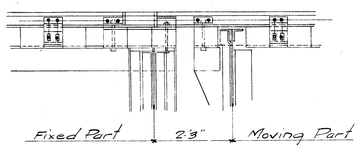

Notes:- All ties & deck timber furnished by R.R. Co. & framed a
R.R. Rails furnished and placed by R.R. Co.
Operators House furnished and placed by P.B
Shown on general drawings #782-C-14 of S
Counterweight furnished and placed by P

Reaming

PENN BRIDGE

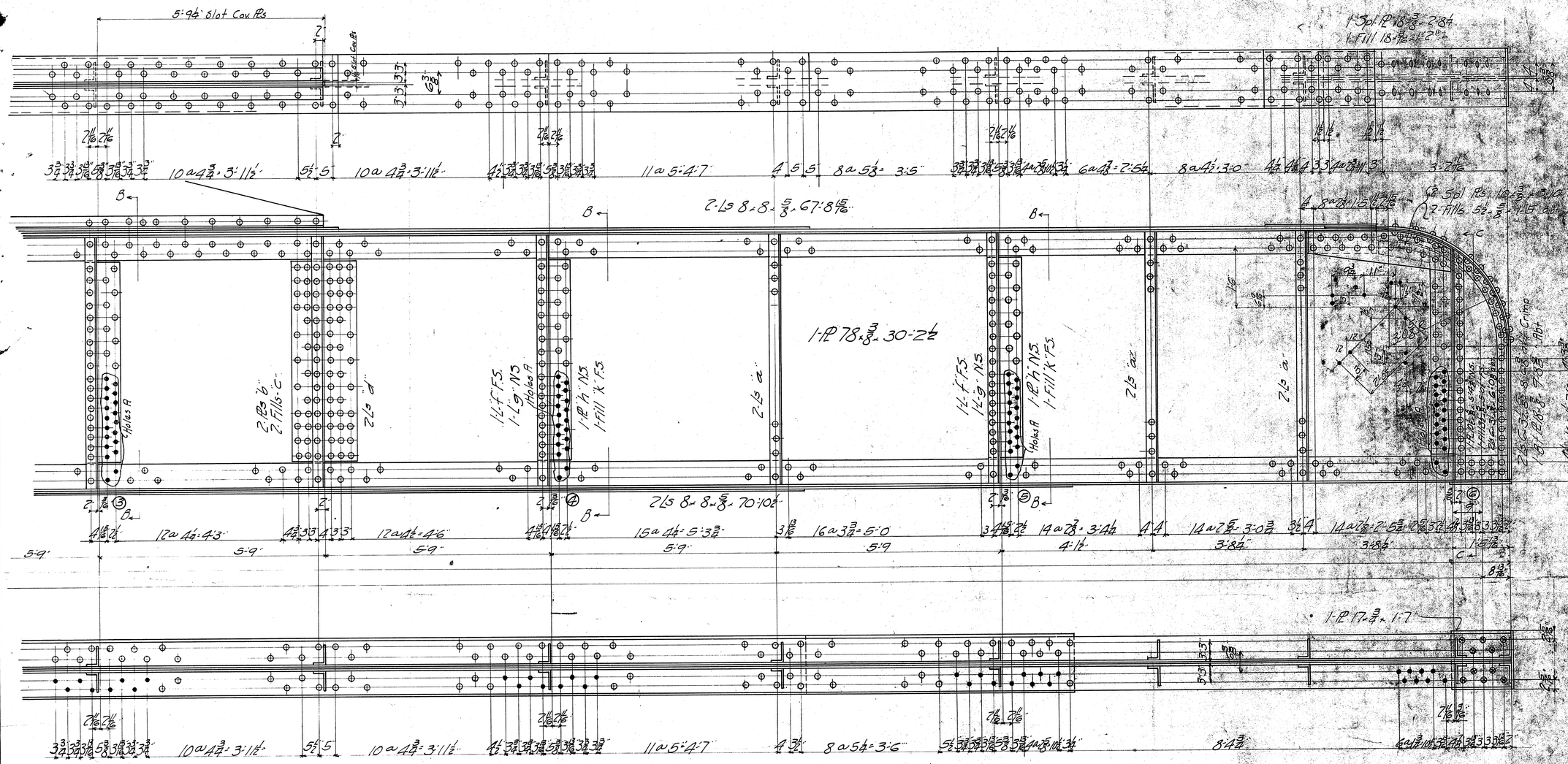

Note for Balance of Girder - See Dwg #3

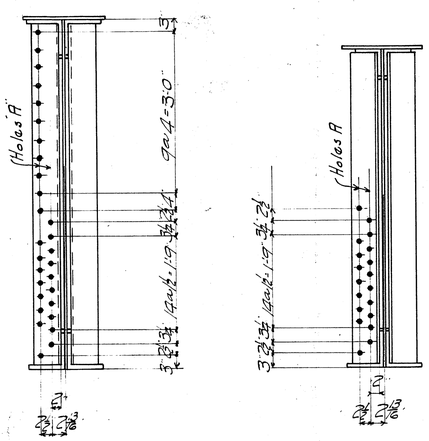

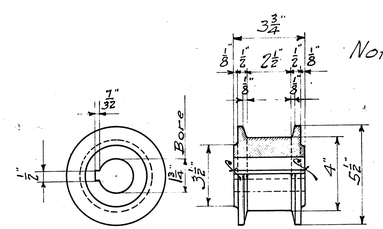

1-Cast Iron Idler 4R1.

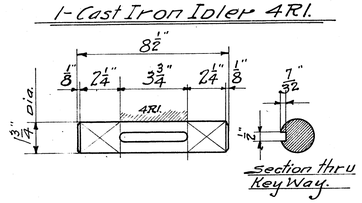

1-Cold Rolled Steel Shaft 4S1.

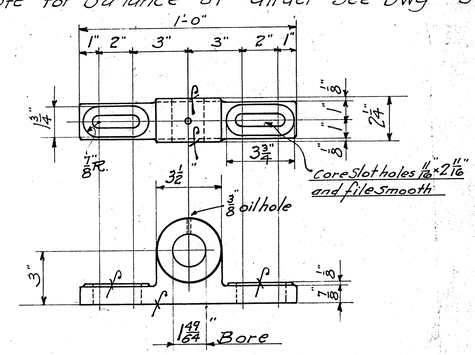

2-Cast Iron Bearings 4B1.

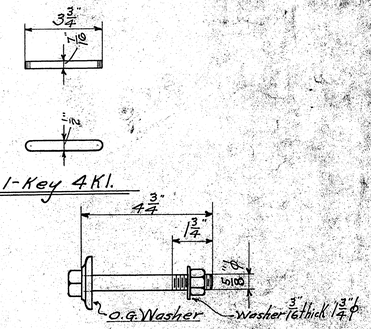

4-Bolts 4B2.

Note-Assemble 4R1. and 4K1. to Shaft 4S1. in Shop.

Reaming Punch holes 13/16" and Ream to 1" in assembled assembled.
Paint Dutch Boy Red Lead & Linseed oil.
Machine finished surfaces white Lead and Tallow.
Approved by
Date

PENN BRIDGE CO., BEAVER FALLS, PA.
Contract No. 6125 Sheet No. 4
Name Vertical Stiffener & Cover Plate
Scale 1" = 1'-0"
Made by B. Date 2-2-1914
Checked by Date June 8, 1914
Rivets Rivets
Holes Holes
MAY 1 1914
3703

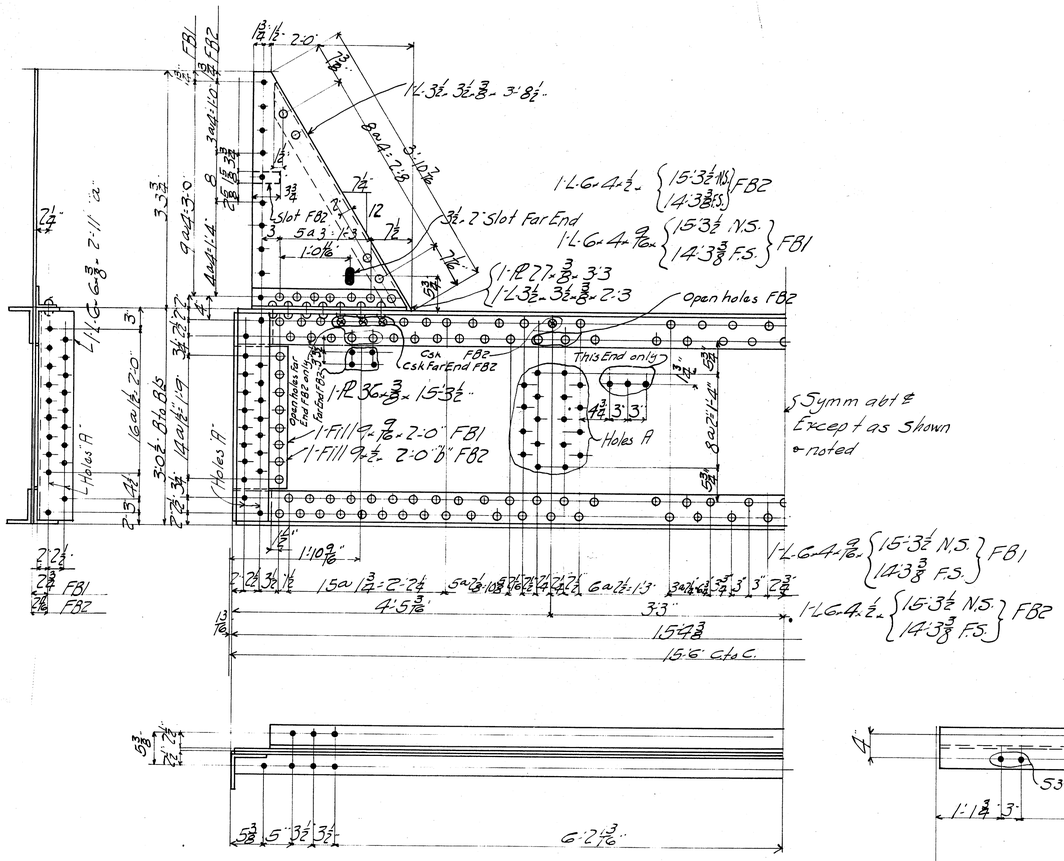

5-Floor Beams -5FB1
1- " " -5FB2

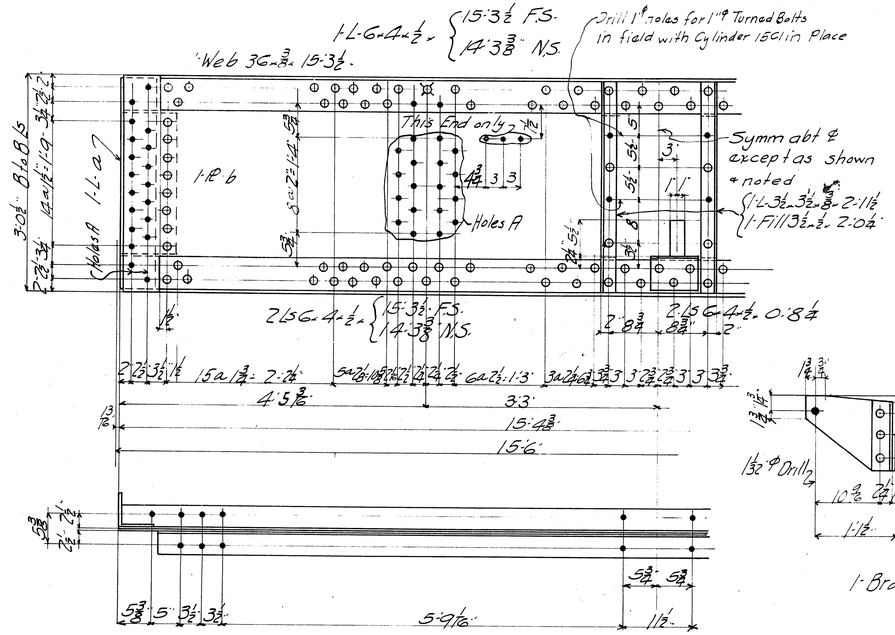

1-Floor Beam-5FB3

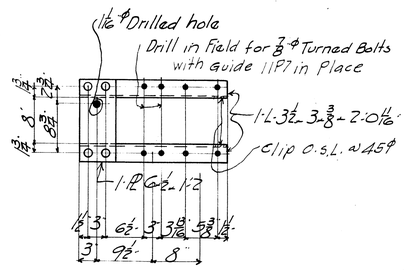

1-Guide-5G1

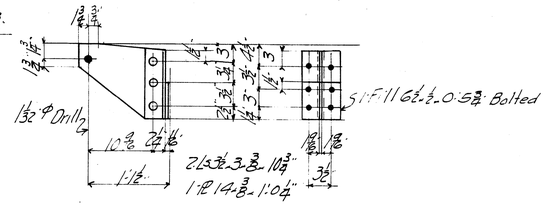

1-Bracket-5B1

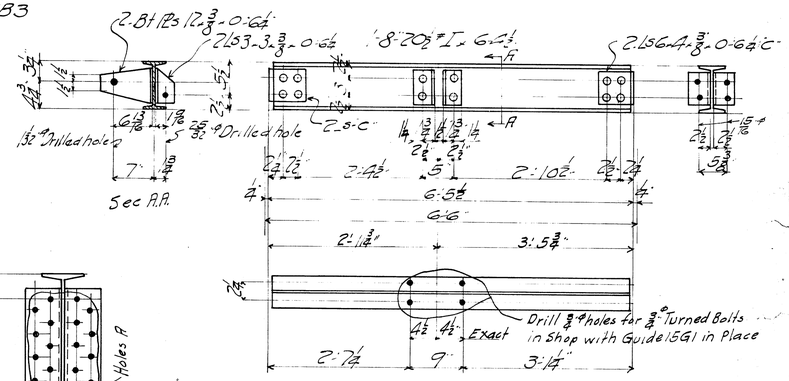

1-Beam 5B3 { Rivets 3/4" ϕ; Holes 13/16" ϕ unless noted.

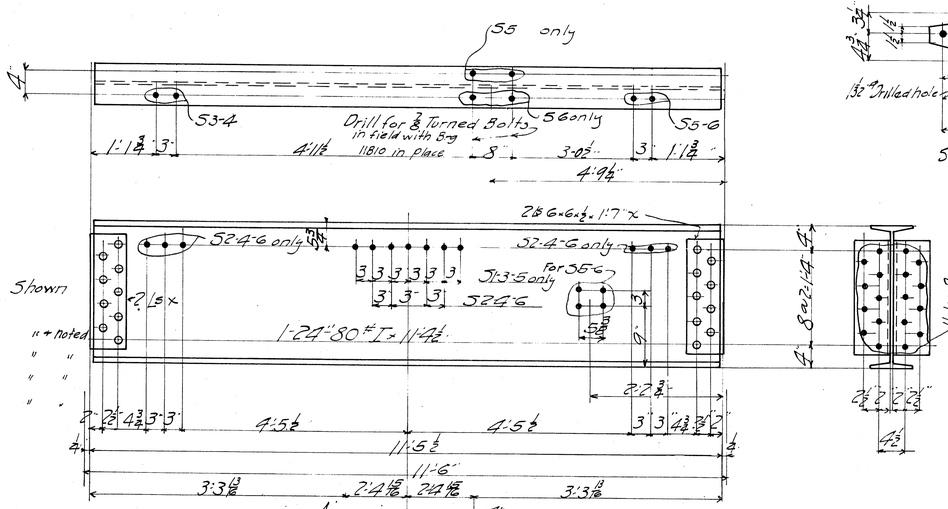

4-Stringers-S5 1 As Shown
4 " S5 2
1 " S5 3 As " + noted
1 " S5 4 Left of " "
1 " S5 5 As " "
1 " S5 6 Left of " "

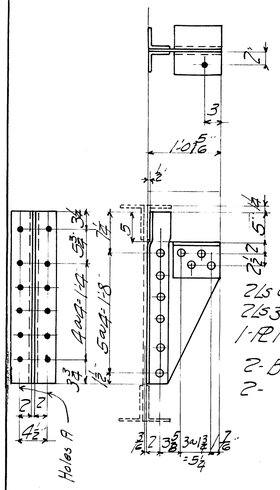

2 Ls 6 x 4 x 3/8 x 0'-8"
2 Ls 3 1/2 x 3 1/2 x 3/8 x 2'-4 3/4" Crimp
1 PL 12 x 1/2 x 1'-11 1/2"

2-Brackets 5B2R As Shown
2- " 5B2L Left of "

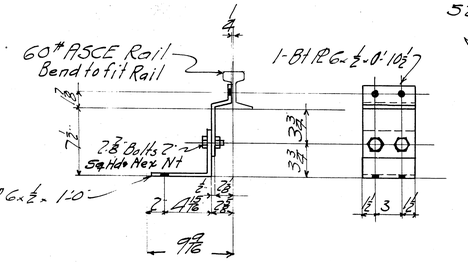

8-Antirail Creepers -5R1

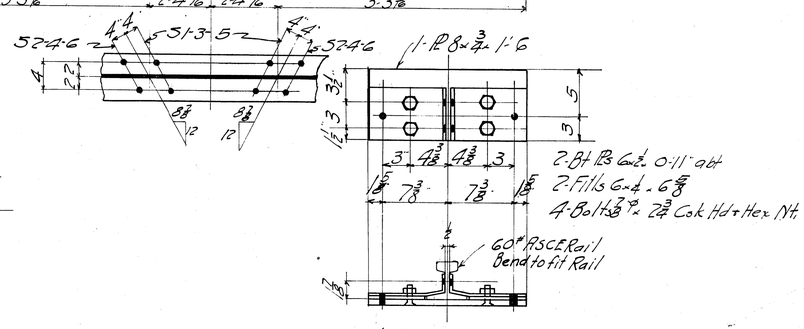

4 Antirail Creepers-5R2

Reaming Punch Holes 13/16" and Ream to 3/4" ϕ in an Iron Templat or while assembled.
Paint Dutch Boy Red Lead + Linseed oil

Approved by
Date:—

Revised:—

PENN BRIDGE CO., BEAVER FALLS, PA.	
Contract No. 5703	Sheet No. 5 of
For Norfolk Southern R.R. Over Beaufort Channel	
Subject Floor Beams + Stringers	
Made by PB	Date 5-1-16
Traced by	" "
Checked by Brandt	" June 3-1916
Rivets 3/4" unless noted	Scale
Holes 13/16" " "	

5703

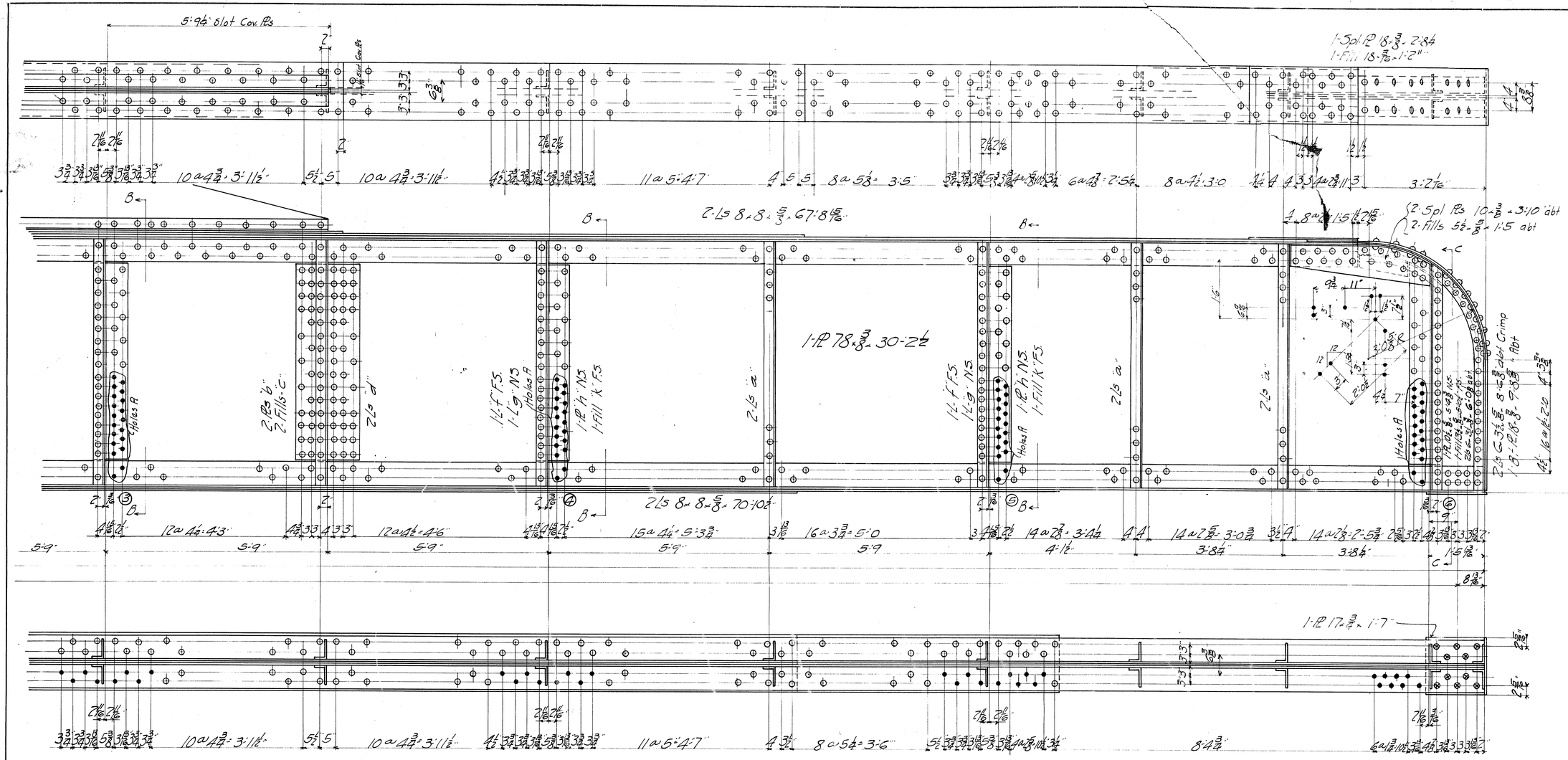

Note for Balance of Girder - See Dwg #3

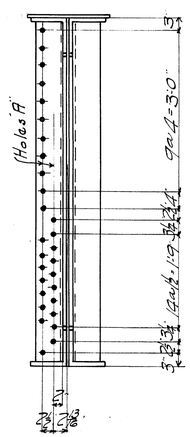

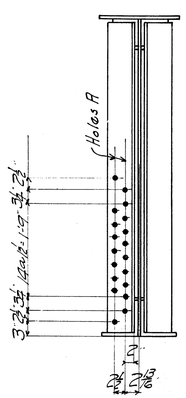

Reaming Punch Holes P. 3/8" and Ream to 13/16" to an Iron Templet or while assembled.
Paint Dutch Boy Red Lead & Linseed oil.

Approved by ..... Date:—

Revised:

PENN BRIDGE CO., BEAVER FALLS, PA.	
Contract No. 5703	Sheet No. 4 of
For Norfolk Southern R.R. Over Beaufort Channel	
Subject Girders	
Made by PB	Date 4-20-16
Traced by "	" "
Checked by Brandt	" June 3-1916
Rivets 7/8 unless noted	Scale 3/4" = 1'-0
Holes 15/16 " "	

5703

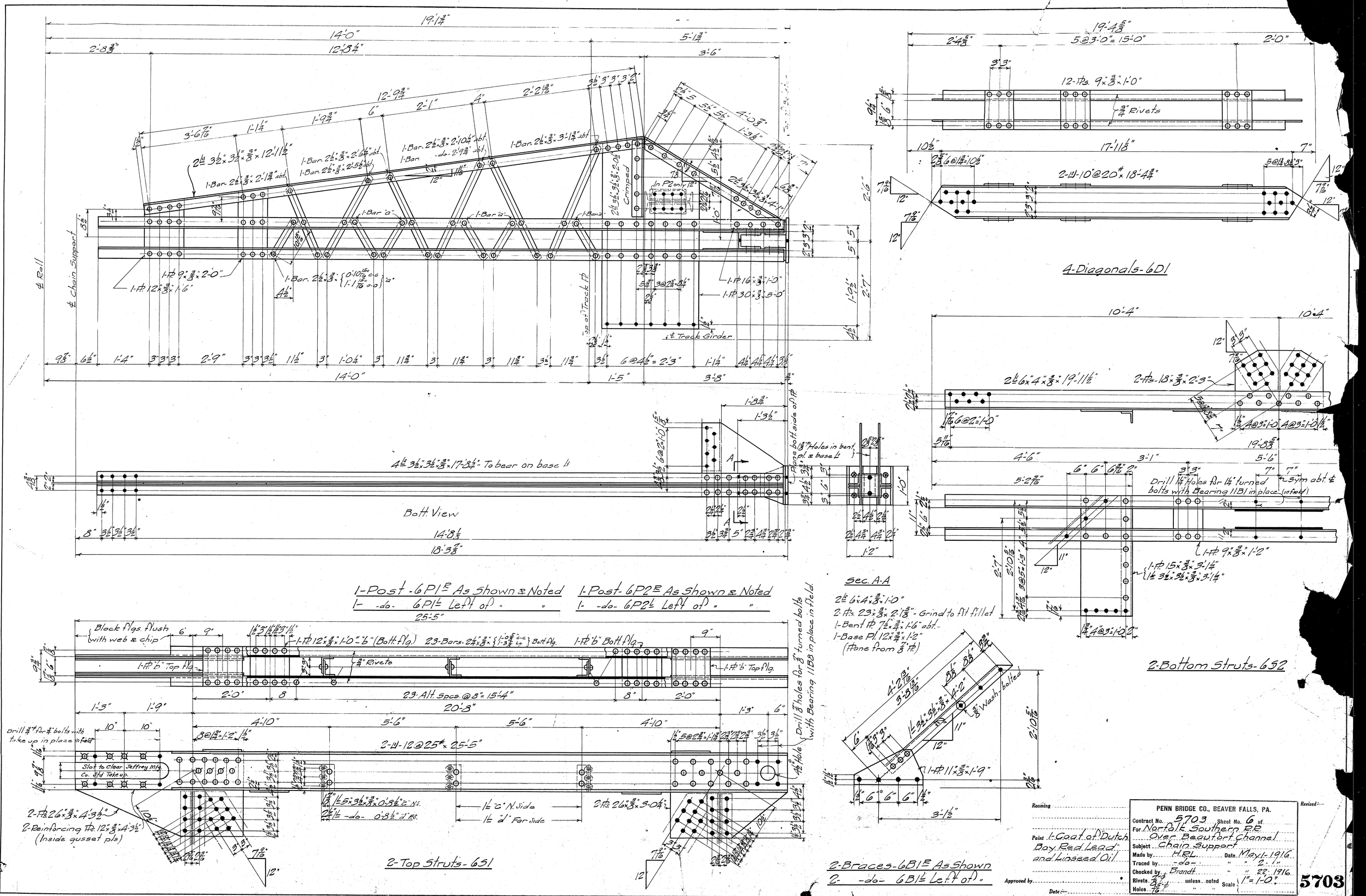
1-Post-6P1E As Shown & Noted
1- -do- 6P1E Left of " "
1-Post-6P2E As Shown & Noted
1- -do- 6P2E Left of " "
2-Top Struts-651
2-Bottom Struts-652
4-Diagonals-6D1
2-Braces-6B1E As Shown
2- -do- 6B1E Left of "
Sec. A-A
Bott. View
℄ Roll
℄ Chain Support
℄ Track Girder
Drill 1¼" Holes for 1¼" turned bolts with Bearing 11B1 in place (in field)
Drill ⅞" holes for ⅞" turned bolts with Bearing 11B8 in place in field.
Slot to clear Jeffrey Mfg. Co. std Take up.
Block flgs. flush with web & chip
Reaming
Paint 1-Coat of Dutch Boy Red Lead and Linseed Oil
Approved by
Date
PENN BRIDGE CO., BEAVER FALLS, PA.
Contract No. 5703 Sheet No. 6 of
For Norfolk Southern R.R.
Over Beaufort Channel
Subject Chain Support
Made by H.R.L. Date May 1-1916
Traced by -do- " " 2-1-
Checked by Brandt " " 22-1916
Rivets ¾"φ unless noted
Holes 25/16"φ " "
Scale 1"=1'-0"
Revised
5703

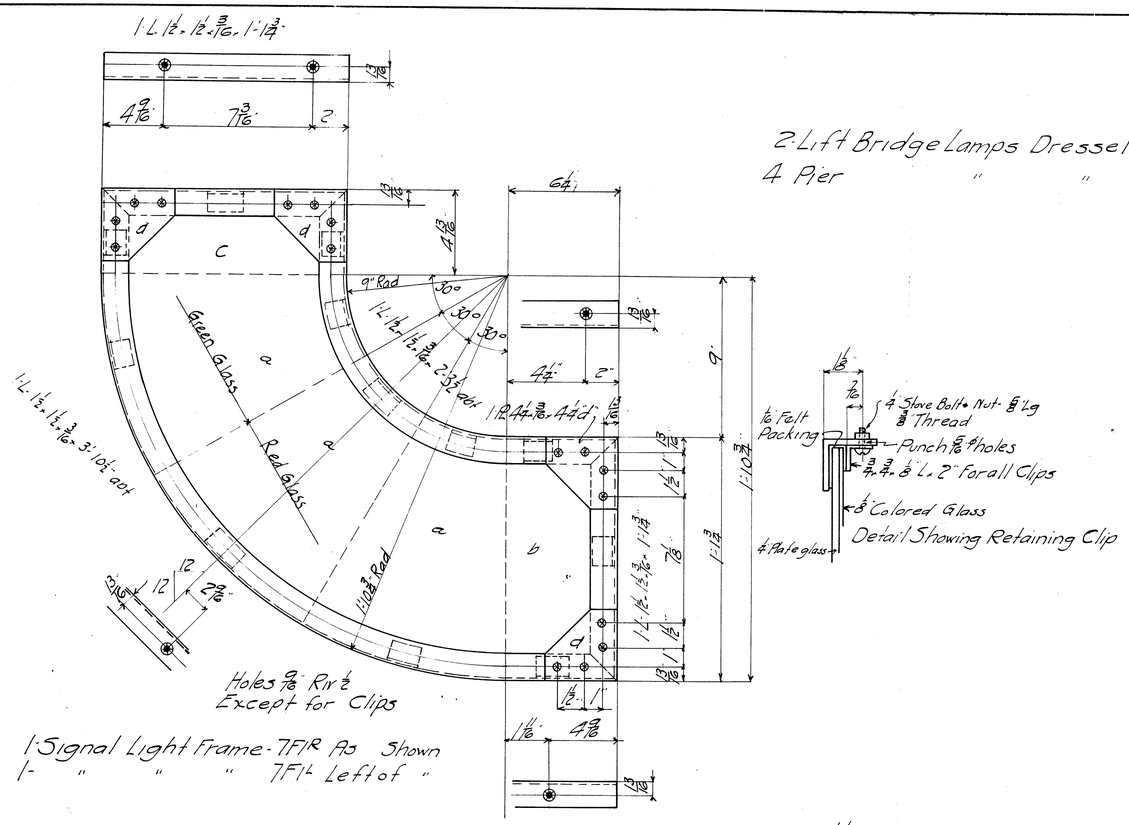

2 Lift Bridge Lamps Dressel No 406
4 Pier " " " 403

Detail Showing Retaining Clip

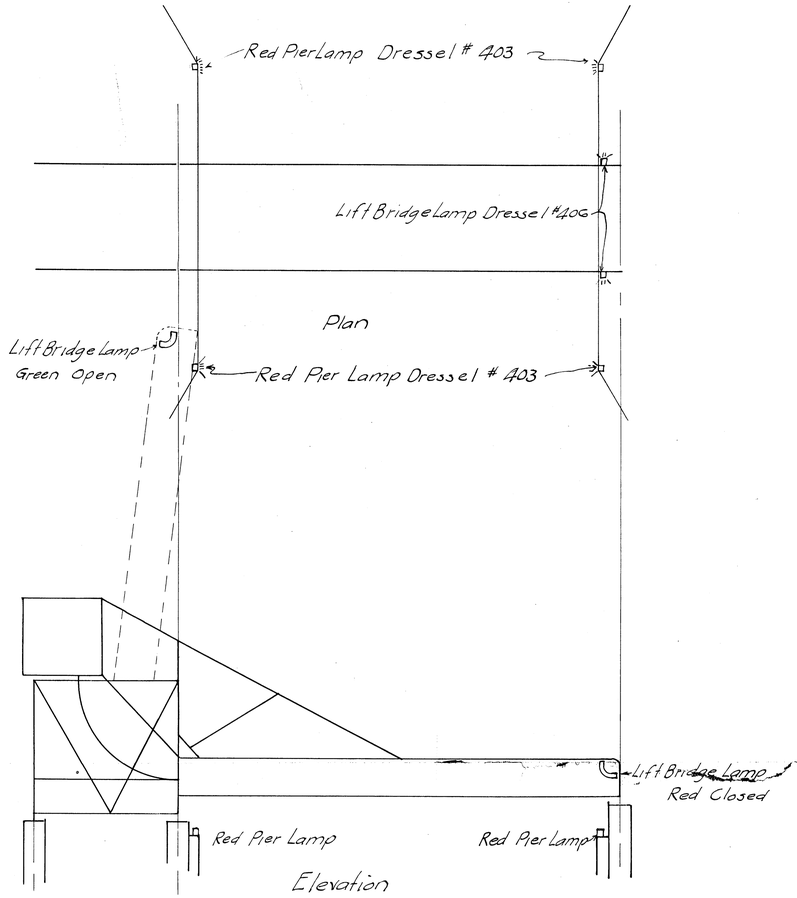

Elevation

Erector:-
Provide Std. fastenings for Pier Lamps.

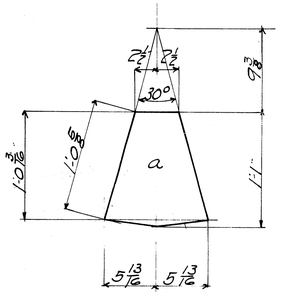

4 - Panes of Glass Red 3/8" Thick
2 - " " " Green 3/8" "
6 - " " " Clear ¼" "

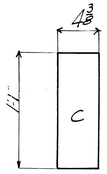

2 - Panes of Glass Red 3/8" Thick
2 - " " " Clear ¼" "

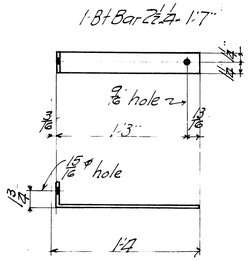

4 - Connecting Bars - 7B1

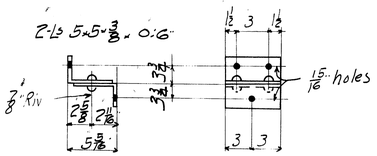

2 - Lamp Hangers - 7H2

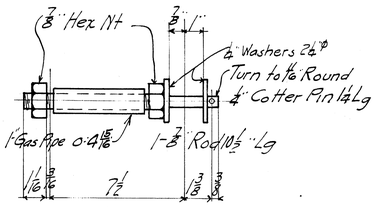

2 - Lamp Hangers - 7H1

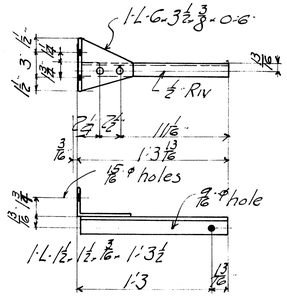

3 - Connecting Angles 7A1R as shown
3 - " " 7A1L Left of "

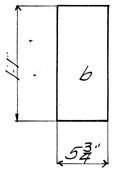

2 - Panes of Glass Red 3/8" Thick
2 - " " " Clear ¼" "

Reaming .....

Paint Dutch Boy Red Lead + Linseed oil

Approved by .....

Date:- .....

PENN BRIDGE CO., BEAVER FALLS, PA.

Contract No. 5703 Sheet No. 7 of

For Norfolk Southern R.R. Over Beaufort Channel

Subject Bridge Lamps

Made by P.B. Date 5-3

Traced by " " 5-3

Checked by Brandt " June

Rivets As noted unless noted

Holes " " " "

Scale