17BP.4.P.2

CONTRACT: C202994

STATE	STATE PROJECT REFERENCE NO.	SHEET NO.	TOTAL SHEETS
N.C.	17BP.4.P.2	1	

STATE PROJ. NO.	F.A. PROJ. NO.	DESCRIPTION
17BP.4.P.2		P.E.
17BP.4.P.2		CONST.

STATE OF NORTH CAROLINA
DIVISION OF HIGHWAYS

HALIFAX, NASH & NORTHAMPTON COUNTIES

LOCATION: BRIDGE NO. 222 & NO. 223 ON I-95 OVER SWIFT CREEK, BRIDGE NO. 64 ON NC561 OVER I-95, BRIDGE NO. 107 ON NC903 OVER I-95, BRIDGE NO. 49 ON NC481 OVER I-95, BRIDGE NO. 67 ON SR1002 OVER I-95, BRIDGE NO. 12 & NO. 13 ON I-95 OVER FISHING CREEK, BRIDGE NO. 88 ON SR1210 OVER I-95, BRIDGE NO. 105 ON SR1600 OVER I-95, BRIDGE NO. 139 & NO. 141 ON I-95 OVER ROANOKE RIVER, BRIDGE NO. 11 & NO. 9 ON I-95 OVER ROANOKE RIVER, BRIDGE NO. 41 ON NC46 OVER I-95, BRIDGE NO. 43 ON NC48 OVER I-95, & BRIDGE NO. 55 ON SR1202 OVER I-95

TYPE OF WORK: BRIDGE PRESERVATION: HYDRODEMOLITION, LMC OVERLAY, EPOXY OVERYLAY, BRIDGE DECK CRACK SEALER & SUBSTRUCTURE REPAIRS

STRUCTURES

DESIGN DATA

PROJECT LENGTH

LENGTH ROADWAY OF PROJECT = 0.15 MILES
LENGTH STRUCTURE OF PROJECT = 1.33 MILES
TOTAL LENGTH OF STATE PROJECT = 1.48 MILES

Prepared in the Office of:
HDR Engineering, Inc. of the Carolinas
3733 National Drive, Suite 207 Raleigh, N.C. 27612
N.C.B.E.L.S. License Number: F-0116

2012 STANDARD SPECIFICATIONS

LETTING DATE :
April 17, 2012

MATTHEW MOYER, P.E.
PROJECT ENGINEER

STRUCTURES MANAGMENT UNIT
1000 BIRCH RIDGE DR.
RALEIGH, N.C. 27610

NORTH CAROLINA PROFESSIONAL SEAL 20208 ENGINEER ERIC B. NELSON, JR.
2/16/12

NORTH CAROLINA PROFESSIONAL SEAL 032129 ENGINEER MATTHEW J. MOYER
2-14-12

MATTHEW MOYER, P.E.
BRIDGE DESIGN ENGINEER

PLOT DRIVER: NCDOT_pdf_mono_600_50.plt PENTABLE: Division 4_pen_Austin.tbl
USER: msoss DATE: 2/14/2012 TIME: 3:41:36 PM SCALE: 1:12500
FILE: North Carolina_Dept_of_Transportation\NCDOT_C_2011_STRDSN_DC_TO_2\13.00_CAD\17BP-4-P-2_DIVISION 4_STR_TSK.dgn

17BP.4.P.2

CONTRACT: C202994

STATE	STATE PROJECT REFERENCE NO.	SHEET NO.	TOTAL SHEETS
N.C.	17BP.4.P.2	1A	

STATE PROJ. NO.	F.A. PROJ. NO.	DESCRIPTION
17BP.4.P.2		P.E.
17BP.4.P.2		CONST.

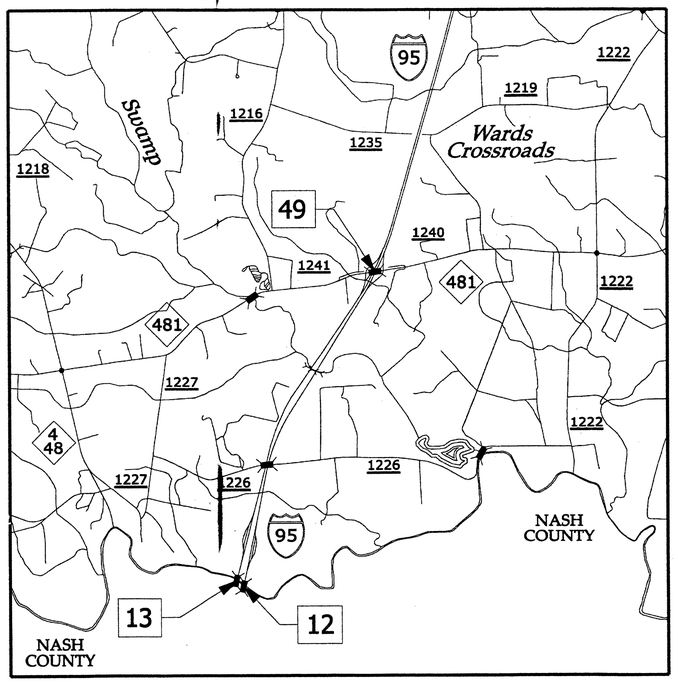

HALIFAX COUNTY - BRIDGE NOs. 12, 13 & 49

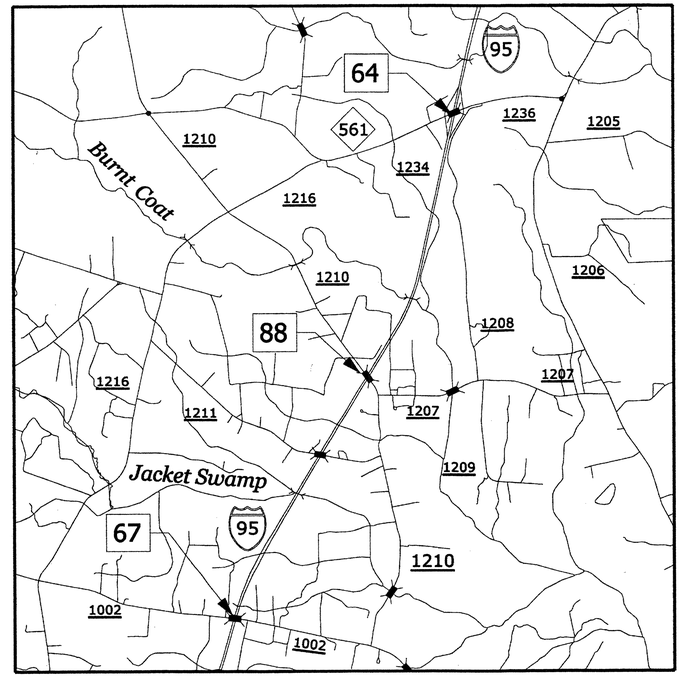

HALIFAX COUNTY - BRIDGE NOs. 64, 67 & 88

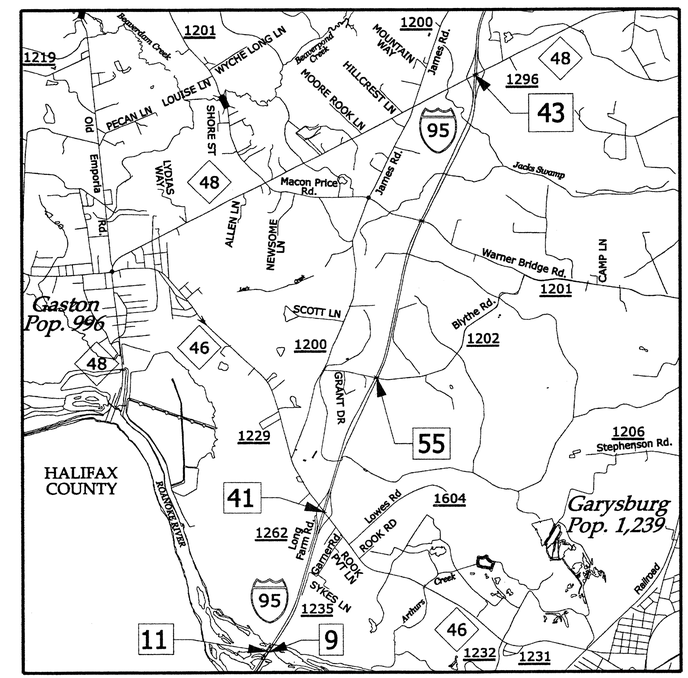

NORTH HAMPTON COUNTY - BRIDGE NOs. 09, 11, 41, 43 & 55

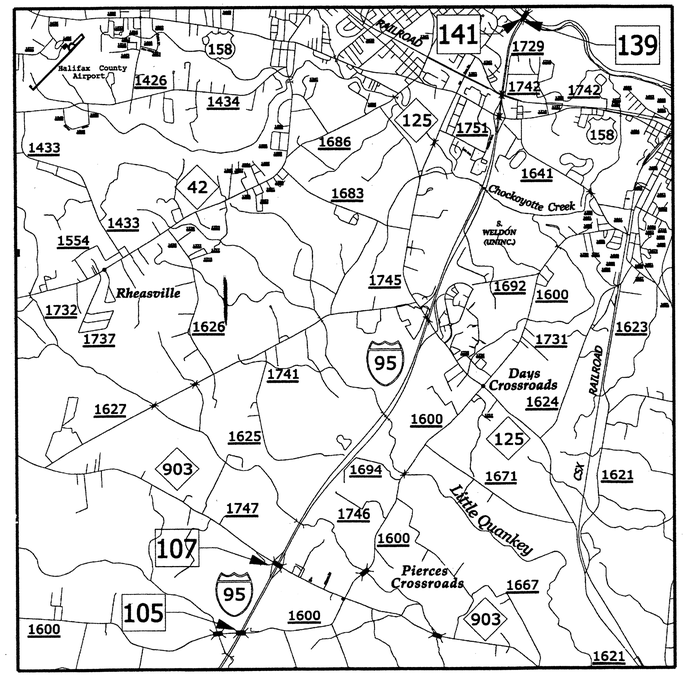

HALIFAX COUNTY - BRIDGE NOs. 105, 107, 139 & 141

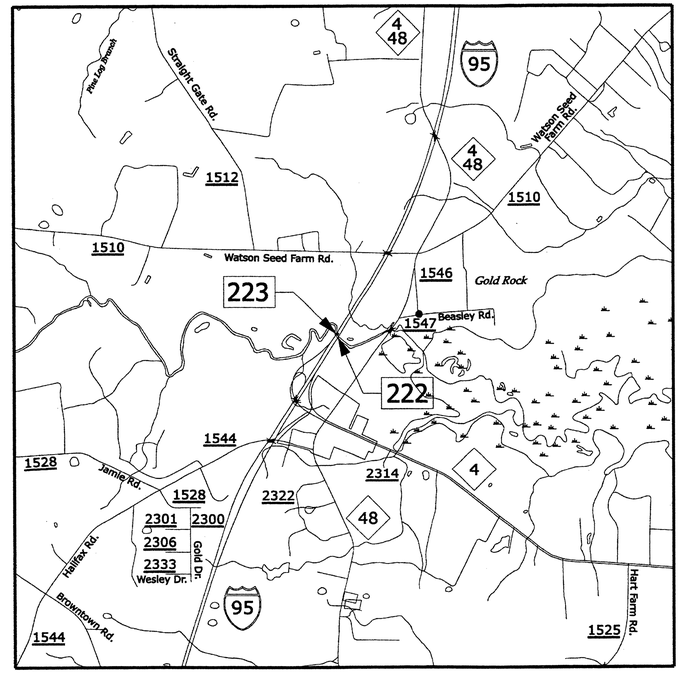

NASH COUNTY - BRIDGE NOs. 222 & 223

NORTH CAROLINA PROFESSIONAL SEAL 032129 ENGINEER MATTHEW J. MOYER

2-14-12

MATTHEW MOYER, P.E.
BRIDGE DESIGN ENGINEER

PLOT DRIVER: NCDOT_pdf_mono_eng_50.plt
USER: msells
PENTABLE: Division 4_pen_Austin.tbl
DATE: 2/14/2012
TIME: 4:32:53 PM
FILE: North Carolina_Dept_of_Transportation\NCDOT_C_2011_STRDSN_OC_TO_2\13.00_CAD\17BP-4-P-2_DIVISION 4_STR_VIC-MAPS.dgn

17BP.4.P.2

CONTRACT: C202994

STATE	STATE PROJECT REFERENCE NO.	SHEET NO.	TOTAL SHEETS
N.C.	17BP.4.P.2	1B	

STATE PROJ. NO.	F.A. PROJ. NO.	DESCRIPTION
17BP.4.P.2		P.E.
17BP.4.P.2		CONST.

STATE OF NORTH CAROLINA
DIVISION OF HIGHWAYS

HALIFAX, NASH & NORTHAMPTON COUNTIES

LOCATION: BRIDGE NO. 222 & NO. 223 ON I-95 OVER SWIFT CREEK, BRIDGE NO. 64 ON NC561 OVER I-95, BRIDGE NO. 107 ON NC903 OVER I-95, BRIDGE NO. 49 ON NC481 OVER I-95, BRIDGE NO. 67 ON SR1002 OVER I-95, BRIDGE NO. 12 & NO. 13 ON I-95 OVER FISHING CREEK, BRIDGE NO. 88 ON SR1210 OVER I-95, BRIDGE NO. 105 ON SR1600 OVER I-95, BRIDGE NO. 139 & NO. 141 ON I-95 OVER ROANOKE RIVER, BRIDGE NO. 11 & NO. 9 ON I-95 OVER ROANOKE RIVER, BRIDGE NO. 41 ON NC46 OVER I-95, BRIDGE NO. 43 ON NC48 OVER I-95, & BRIDGE NO. 55 ON SR1202 OVER I-95

TYPE OF WORK: BRIDGE PRESERVATION: HYDRODEMOLITION, LMC OVERLAY, EPOXY OVERYLAY, BRIDGE DECK CRACK SEALER & SUBSTRUCTURE REPAIRS

INDEX OF SHEETS

DWG. #	DESCRIPTION
1	TITLE SHEET
1A	VICINITY MAPS
1B	INDEX OF SHEETS
2	SUMMARY OF QUANTITIES
S1 THRU S84	STRUCTURE PLANS
TMP-1 THRU TMP-19	TRAFFIC MANAGEMENT PLANS

STRUCTURES

STATE OF NORTH CAROLINA DEPARTMENT OF TRANSPORTATION

Prepared In the Office of:

HDR Engineering, Inc. of the Carolinas
3733 National Drive, Suite 207 Raleigh, N.C. 27612
N.C.B.E.L.S. License Number: F-0116

2012 STANDARD SPECIFICATIONS

LETTING DATE :

April 17, 2012

MATTHEW MOYER, P.E.
PROJECT ENGINEER

NORTH CAROLINA PROFESSIONAL SEAL 032129 ENGINEER MATTHEW J. MOYER

2-14-12

MATTHEW MOYER, P.E.
BRIDGE DESIGN ENGINEER

PLOT DRIVER: NCDOT_pdf_mono_eng_50.plt PENTABLE: Division 4_pen_Austin.tbl
USER: msells DATE: 2/14/2012 TIME: 3:41:54 PM SCALE: 1:12500
FILE: North Carolina_Dept_of_Transportation\NCDOT_C_2011_STRDSN_OC_TO_2\13.00_CAD\17BP-4-P-2_DIVISION 4_STR_INDEX.dgn

PROJECT REFERENCE NO.	SHEET NO.
WBS 17BP.4.P.2	2

STATE OF NORTH CAROLINA
DIVISION OF HIGHWAYS

SUMMARY OF QUANTITIES

STATE OF NORTH CAROLINA
DIVISION OF HIGHWAYS
ROADWAY SUMMARY OF QUANTITIES FOR CONTRACT - C202994

ItemNumber	Sec #	Quantity	Unit	Description
0000100000-N	800	Lump Sum		MOBILIZATION
1330000000-E	607	2,298	SY	INCIDENTAL MILLING
1489000000-E	610	88	TON	ASPHALT CONC BASE COURSE, TYPE B25.0B
1519000000-E	610	96	TON	ASPHALT CONC SURFACE COURSE, TYPE S9.5B
1525000000-E	610	217	TON	ASPHALT CONC SURFACE COURSE, TYPE SF9.5A
1575000000-E	620	25	TON	ASPHALT BINDER FOR PLANT MIX
4400000000-E	1110	400	SF	WORK ZONE SIGNS (STATIONARY)
4405000000-E	1110	532	SF	WORK ZONE SIGNS (PORTABLE)
4410000000-E	1110	10	SF	WORK ZONE SIGNS (BARRICADE MOUNTED)
4415000000-N	1115	4	EA	FLASHING ARROW BOARD
4420000000-N	1120	3	EA	PORTABLE CHANGEABLE MESSAGE SIGN
4430000000-N	1130	320	EA	DRUMS
4435000000-N	1135	50	EA	CONES
4445000000-E	1145	24	LF	BARRICADES (TYPE III)
4455000000-N	1150	80	DAY	FLAGGER
4480000000-N	1165	3	EA	TMA
4510000000-N	SP	60	HR	LAW ENFORCEMENT
4516000000-N	1180	320	EA	SKINNY DRUM
4810000000-E	1205	14,160	LF	PAINT PAVEMENT MARKING LINES (4")
4815000000-E	1205	2,972	LF	PAINT PAVEMENT MARKING LINES (6")
4847000000-E	1205	8,840	LF	POLYUREA PAVEMENT MARKING LINES (4", **********) HIGHLY REFLECTIVE ELEMENTS
4847100000-E	1205	2,972	LF	POLYUREA PAVEMENT MARKING LINES (6", **********) HIGHLY REFLECTIVE ELEMENTS
4900000000-N	1251	60	EA	PERMANENT RAISED PAVEMENT MARKERS
8161000000-E	420	69,687	SF	GROOVING BRIDGE FLOORS

ItemNumber	Sec #	Quantity	Unit	Description
8217000000-E	425	180	LB	REINFORCING STEEL (BRIDGE)
8660000000-E	SP	8	CF	CONCRETE REPAIRS
8664000000-E	SP	134.5	CF	SHOTCRETE REPAIRS
8678000000-E	SP	709	LF	EPOXY RESIN INJECTION
8692000000-N	SP	Lump Sum		FOAM JOINT SEALS
8860000000-N	SP	Lump Sum		GENERIC STRUCTURE ITEM BRIDGE JACKING
8881000000-E	SP	350	CY	GENERIC STRUCTURE ITEM LATEX MOD CONC OVERLAY - VERY EARLY STRENGTH
8892000000-E	SP	3,350	SF	GENERIC STRUCTURE ITEM CLASS II CONCRETE DECK REPAIR FOR EPOXY/ASPHALT OVERLAY
8892000000-E	SP	163,008	SF	GENERIC STRUCTURE ITEM PLACEMENT OF CRACK/DECK SEALER
8892000000-E	SP	31,834	SF	GENERIC STRUCTURE ITEM PLACEMENT OF EPOXY OVERLAY
8893000000-E	SP	8,612	SY	GENERIC STRUCTURE ITEM HYDRO-DEMOLITION OF BRIDGE DECK
8893000000-E	SP	8,612	SY	GENERIC STRUCTURE ITEM PLACING & FINISHING LATEX MOD CONC OVERLAY - VERY EARLY STRENGTH
8893000000-E	SP	8,612	SY	GENERIC STRUCTURE ITEM SCARIFYING BRIDGE DECK

PLOT DRIVER: NCDOT_pdf_mono_eng_50.plt + PENTABLE: Division 4_pen_Austin.tbl
USER: msellis DATE: 2/14/2012 TIME: 3:42:06 PM
FILE: North Carolina_Dept_of_Transportation\NCDOT_C_2011_STRDSN_OC_TO_2\13.00_CAD\DIV4_PROJ1_BORDER_SUMMARYOFQUANTITIES.dgn

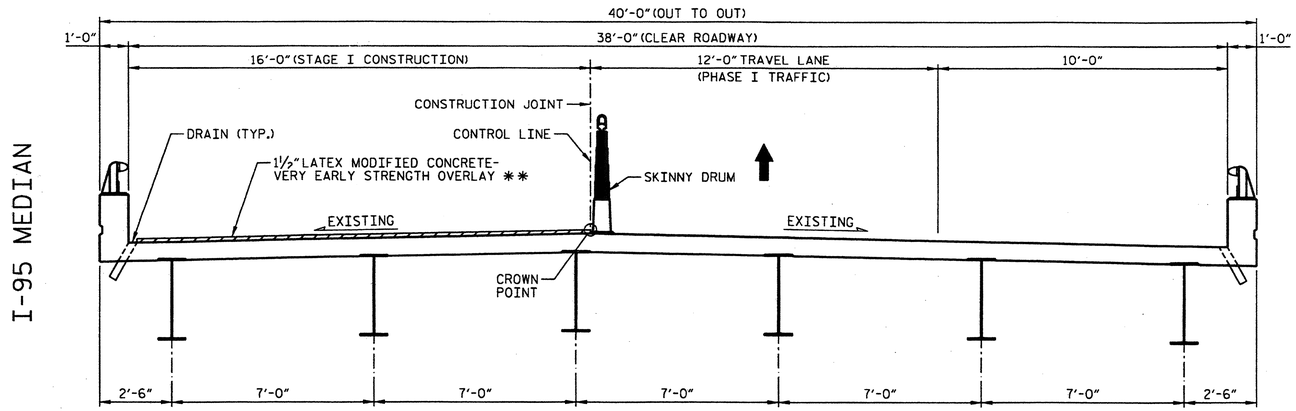

TYPICAL SECTION - STAGE I

** THE FINISHED SURFACE OF THE LATEX MODIFIED CONCRETE-VERY EARLY STRENGTH OVERLAY SHALL BE ½" ABOVE THE ORIGINAL DECK SURFACE.

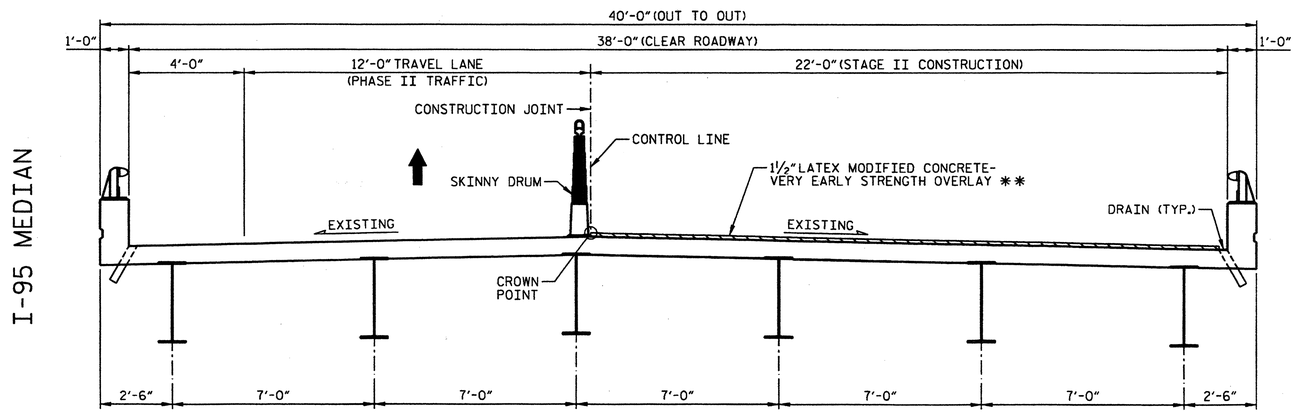

TYPICAL SECTION - STAGE II

** THE FINISHED SURFACE OF THE LATEX MODIFIED CONCRETE-VERY EARLY STRENGTH OVERLAY SHALL BE ½" ABOVE THE ORIGINAL DECK SURFACE.

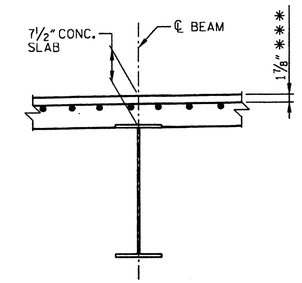

EXISTING SLAB SECTION

BOTTOM MAT OF REINFORCING NOT SHOWN FOR CLARITY.
*** CONCRETE COVER PER "AS-BUILT PLANS"

NOTES

FOR "HYDRO-DEMOLITION OF BRIDGE DECK", SEE SPECIAL PROVISIONS.

THE CONTRACTOR MUST COLLECT, TREAT AND DISPOSE OF RUN-OFF WATER FROM THE HYDRO-DEMOLITION PROCESS. SEE "MANAGING HYDRO-DEMOLITION WATER" SPECIAL PROVISIONS.

THE BOUNDARIES OF AREAS IDENTIFIED FOR CLASS III SURFACE PREPARATION ARE APPROXIMATE. IF ANY CLASS III LOCATIONS ARE ENCOUNTERED PRIOR TO OR DURING HYDRO-DEMOLITION, SEE "TYPICAL "BLOW THRU" CONTAINMENT AND FORMWORK" DETAIL. THE CONTRACTOR SHALL PROVIDE A METHOD OF HANDLING UNEXPECTED BLOW THROUGH WORK OF THE DECK.

THE NOMINAL UNCOMPRESSED SEAL WIDTH OF THE FOAM JOINT SEAL SHALL BE 2½" AT BENTS. FOR "FOAM JOINT SEALS", SEE SPECIAL PROVISIONS.

FOR "ELASTOMETRIC CONCRETE", SEE SPECIAL PROVISIONS.

LATEX MODIFIED CONCRETE SHALL BE LATEX MODIFIED CONCRETE-VERY EARLY STRENGTH.

FOR "LATEX MODIFIED CONCRETE-VERY EARLY STRENGTH", SEE SPECIAL PROVISIONS.

FOR GROOVING BRIDGE FLOORS INFORMATION, SEE "LATEX MODIFIED CONCRETE-VERY EARLY STRENGTH" SPECIAL PROVISIONS.

FOR SUBMITTAL OF WORKING DRAWINGS, SEE SPECIAL PROVISIONS.

FOR FALSEWORK AND FORMWORK, SEE SPECIAL PROVISIONS.

EXISTING JOINTS AND BRIDGE DECK DRAINS SHALL BE SEALED PRIOR TO BEGINNING SURFACE PREPARATION OF BRIDGE DECK.

EXISTING DIMENSIONS AND BRIDGE CONDITION ARE FROM THE BEST INFORMATION AVAILABLE. THE CONTRACTOR SHALL VERIFY THE INFORMATION SHOWN ON THE PLANS AND NOTIFY THE ENGINEER IF ACTUAL DIMENSIONS AND CONDITIONS DIFFER.

FOR SCARIFYING BRIDGE DECK, SEE SPECIAL PROVISIONS.

PROJECT NO. 17BP.4.P.2
NASH COUNTY
BRIDGE NO.: 222

TOTAL BILL OF MATERIAL

SCARIFYING BRIDGE DECK	* CLASS I SURFACE PREPARATION	* CLASS II SURFACE PREPARATION	* CLASS III SURFACE PREPARATION	* CLASS AA CONCRETE	HYDRO-DEMOLITION OF BRIDGE DECK	LATEX MODIFIED CONCRETE-VERY EARLY STRENGTH OVERLAY	PLACING & FINISHING LATEX MODIFIED CONCRETE-VERY EARLY STRENGTH OVERLAY	FOAM JOINT SEALS	GROOVING BRIDGE FLOORS	ASPHALT CONCRETE SURFACE COURSE TYPE S9.5B	INCIDENTAL MILLING
SQ. YDS.	SQ. YDS.	SQ. YDS.	SQ. YDS.	CU. YDS.	SQ. YDS.	CU. YDS.	SQ. YDS.	LUMP SUM	SQ. FT.	TONS	SQ. YDS.
1101	6	0	0	0	1101	46	1101	LUMP SUM	9016	6	51

* QUANTITY SHOWN IS FOR INFORMATION ONLY.

DRAWN BY : R. FRITZ DATE : 01/2012
CHECKED BY : C. ROKICKI DATE : 01/2012

NORTH CAROLINA PROFESSIONAL SEAL 032129 ENGINEER MATTHEW J. MOYER
2-16-12

HDR Engineering, Inc. of the Carolinas
3733 National Drive, Suite 207 Raleigh, N.C. 27612
N.C.B.E.L.S. License Number: F-0176

STATE OF NORTH CAROLINA
DEPARTMENT OF TRANSPORTATION
RALEIGH

TYPICAL SECTION FOR BRIDGE NO. 222

(I-95 NBL OVER SWIFT CREEK)

REVISIONS						
NO.	BY:	DATE:	NO.	BY:	DATE:	
1			3			
2			4			

SHEET NO. S-1
TOTAL SHEETS 84

PLOT DRIVER: NCDOT_pdf_mono_eng_50.plt PENTABLE: Division 4_pen_Austin.tbl
USER: bpatters DATE: 2/16/2012 TIME: 12:42:03 PM
FILE: North Carolina_Dept_of_Transportation\NCDOT_C_2011_STRDSN_OC_TO_2\13.00_CAD\Nash 222\Drawings\DIV4.1_SD_NASH222_01.dgn

NOTE:
FOR SECTIONS A-A, B-B, AND C-C, SEE SHEET "JOINT DETAILS FOR BRIDGE NO. 222".

ELASTOMERIC CONCRETE	
BENT NO.	ELASTOMERIC CONCRETE ✱ (CU. FT.)
BENT 1	6.9
BENT 2	6.9
BENT 3	6.9
TOTAL	20.7

✱ BASED ON THE MINIMUM BLOCKOUT SHOWN

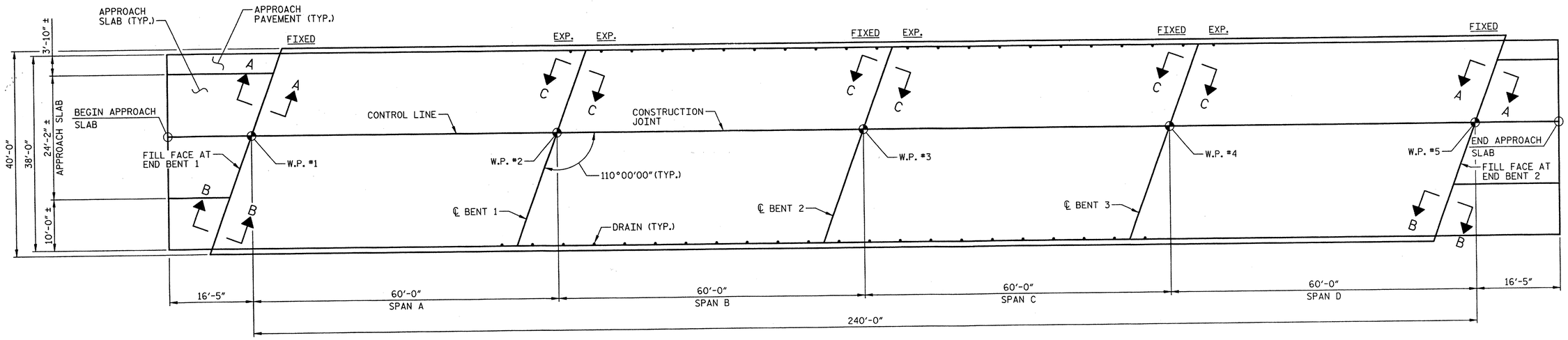

PLAN VIEW

PROJECT NO. 17BP.4.P.2

NASH COUNTY

BRIDGE NO.: 222

STATE OF NORTH CAROLINA
DEPARTMENT OF TRANSPORTATION
RALEIGH

PLAN VIEW
FOR BRIDGE NO. 222

NORTH CAROLINA PROFESSIONAL ENGINEER SEAL 032129 MATTHEW J. MOTTER

1-13-2012

REVISIONS							
NO.	BY:	DATE:	NO.	BY:	DATE:		
1			3				
2			4				

SHEET NO. S-2
TOTAL SHEETS 84

HDR Engineering, Inc. of the Carolinas
3733 National Drive, Suite 207 Raleigh, N.C. 27612
N.C.B.E.L.S. License Number: F-0116

DRAWN BY : R. FRITZ DATE : 01/2012
CHECKED BY : C. ROKICKI DATE : 01/2012

PENTABLE: Division 4_pen_Austin.tbl
TIME: 8:45:27 PM
PLOT DRIVER: NCDOT_pdf_mono_eng_50.plt
USER: paulhone DATE: 1/12/2012
FILE: \

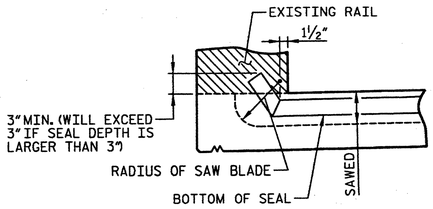

JOINT DETAIL AT RAIL

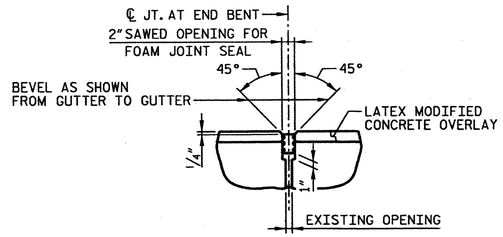

PROPOSED JOINT AT END BENTS

FOAM JOINT SEAL EXPANSION

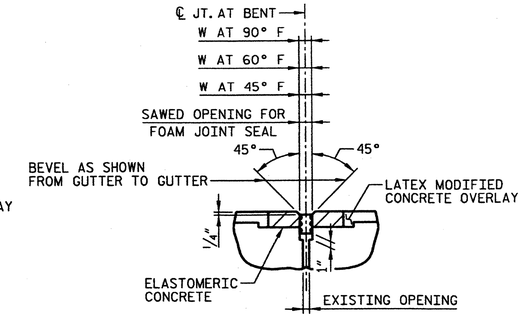

PROPOSED JOINT AT BENTS

FOAM JOINT SEAL EXPANSION

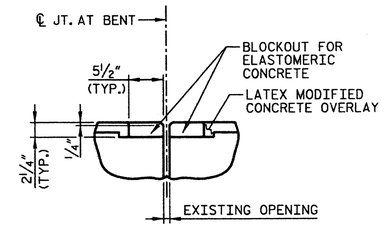

FOAM JOINT SEAL AT BENTS

PRE-SAWED ELASTOMERIC CONCRETE DIMENSIONS

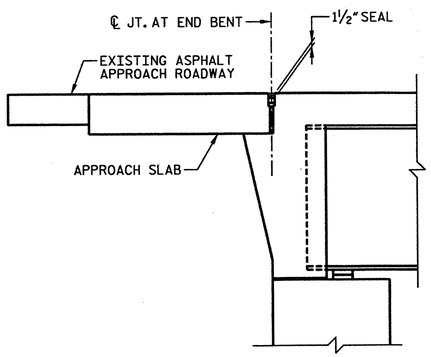

EXISTING SECTION AT END BENT

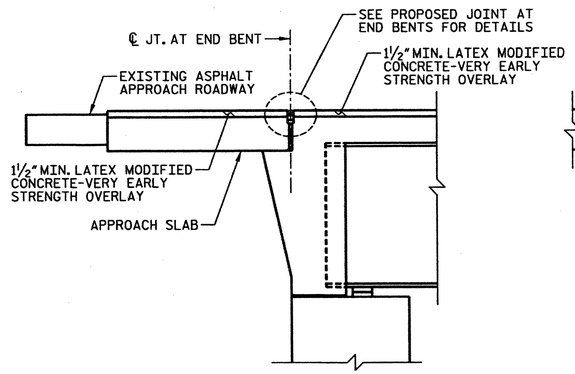

PROPOSED SECTION AT END BENT

SECTION A-A

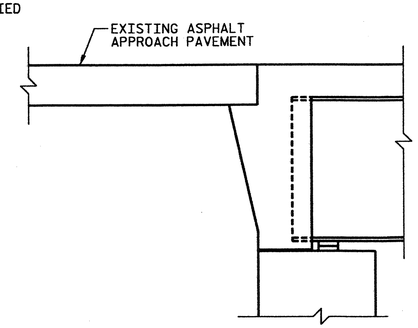

EXISTING SECTION AT END BENT

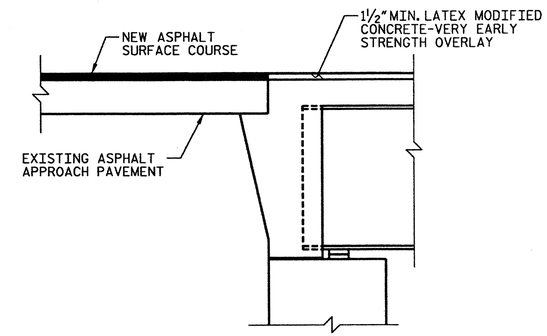

PROPOSED SECTION AT END BENT

SECTION B-B

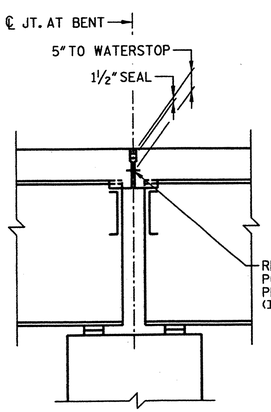

EXISTING JOINT AT BENTS

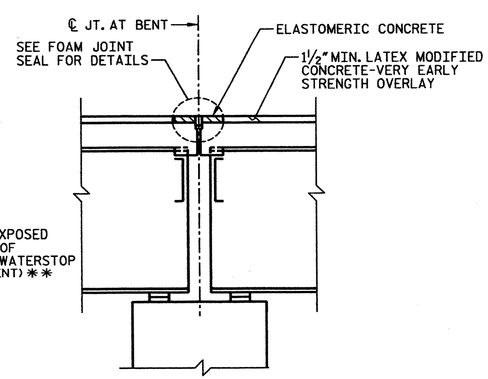

PROPOSED JOINT AT BENTS

SECTION C-C

SAWED OPENING FOR FOAM JOINT			
BENT NO.	W AT 90° F	W AT 60° F	W AT 45° F
BENT 1	1½"	1⅞"	2 1/16"
BENT 2	1 11/16"	1⅞"	1 15/16"
BENT 3	1 11/16"	1⅞"	1 15/16"

PROJECT NO. 17BP.4.P.2

NASH COUNTY

BRIDGE NO.: 222

** ALL LOOSE AND UNSOUND CONCRETE SHALL BE REMOVED. IF THE EMBEDDED PORTION OF THE EXISTING PLASTIC WATERSTOP IS EXPOSED DURING REMOVAL OF UNSOUND CONCRETE, THE ENTIRE WATERSTOP SHALL BE REMOVED. OTHERWISE, TRIM WATERSTOP FLUSH WITH EXISTING CONCRETE SURFACE.

NORTH CAROLINA PROFESSIONAL SEAL 032129 ENGINEER MATTHEW J. MOTER

1-13-2012

HDR Engineering, Inc. of the Carolinas
3733 National Drive, Suite 207 Raleigh, N.C. 27612
N.C.B.E.L.S. License Number: F-0116

STATE OF NORTH CAROLINA
DEPARTMENT OF TRANSPORTATION
RALEIGH

JOINT DETAILS FOR BRIDGE NO. 222

REVISIONS						
NO.	BY:	DATE:	NO.	BY:	DATE:	SHEET NO. S-3
1			3			TOTAL SHEETS 84
2			4			

DRAWN BY : R. FRITZ DATE : 01/2012
CHECKED BY : C. ROKICKI DATE : 01/2012

PLOT DRIVER: NCDOT_pdf_mono_eng_50.plt
USER: paulnone DATE: 1/12/2012
FILE: \
PENTABLE: Division 4_pen_austin.tbl
TIME: 8:45:33 PM

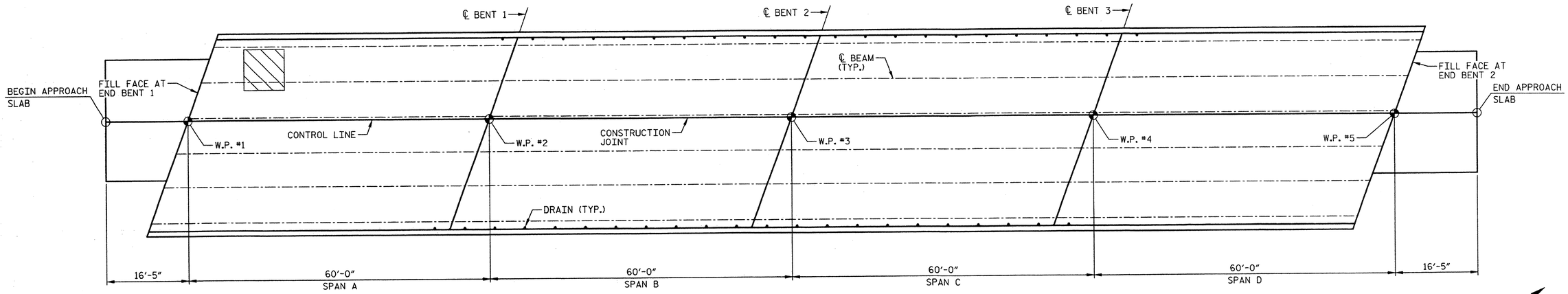

PLAN OF SPANS - DECK REPAIRS

APPROX. AREA: CLASS I REPAIR

APPROX. AREA: CLASS II REPAIR

APPROX. AREA: CLASS III REPAIR

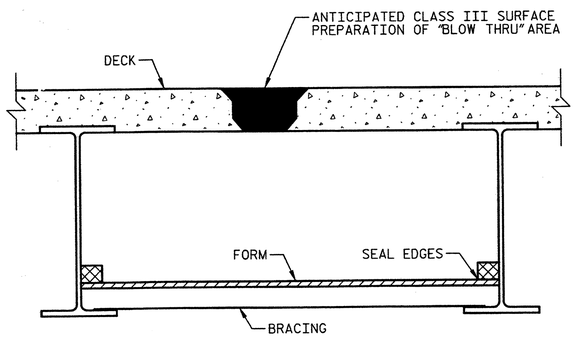

TYPICAL "BLOW THRU" CONTAINMENT AND FORMWORK

A METHOD TO CAPTURE WATER AND DEBRIS FROM BLOW THRU DURING HYDRO-DEMOLITION SHALL BE INSTALLED IN AREAS INDICATED AS CLASS III SURFACE PREPARATION.

SUBMIT DETAILS OF PROPOSED FORMWORK FOR APPROVAL PRIOR TO BEGINNING WORK.

COST FOR INSTALLING AND REMOVING FORMWORK SHALL BE INCIDENTAL TO THE PRICE PER SQ. YARD OF HYDRO-DEMOLITION.

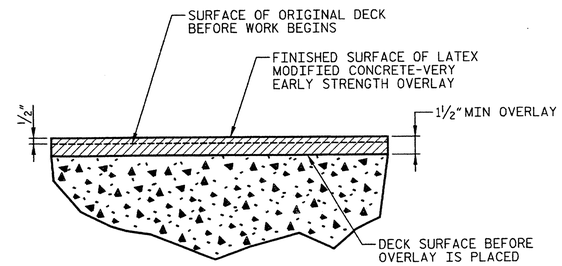

DETAIL FOR LATEX MODIFIED CONCRETE OVERLAY

PROJECT NO. 17BP.4.P.2

NASH COUNTY

BRIDGE NO.: 222

NORTH CAROLINA PROFESSIONAL SEAL 032129 ENGINEER MATTHEW J. MOYER

1-13-2012

HDR Engineering, Inc. of the Carolinas
3733 National Drive, Suite 207 Raleigh, N.C. 27612
N.C.B.E.L.S. License Number: F-0116

STATE OF NORTH CAROLINA
DEPARTMENT OF TRANSPORTATION
RALEIGH

DECK REPAIR DETAILS FOR BRIDGE NO. 222

REVISIONS						
NO.	BY:	DATE:	NO.	BY:	DATE:	
1			3			
2			4			

SHEET NO. S-4

TOTAL SHEETS 84

DRAWN BY : R. FRITZ DATE : 01/2012

CHECKED BY : C. ROKICKI DATE : 01/2012

PLOT DRIVER: NCDOT_pdf_mono_eng_50.plt
USER: pqulnone DATE: 1/12/2012
FILE: \
PENTABLE: Division 4_pen_austin.tbl
TIME: 8:45:39 PM

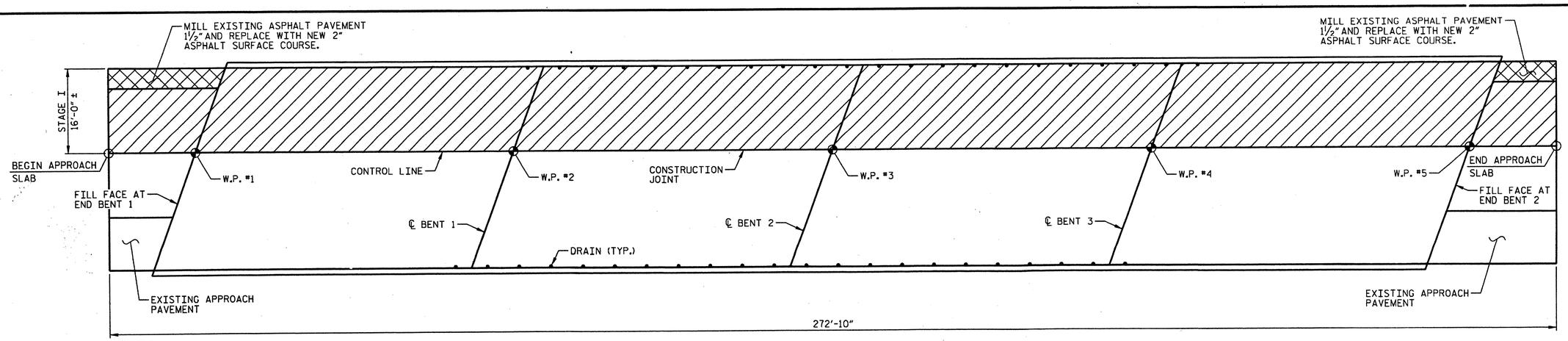

PLAN-STAGE I CONSTRUCTION

DECK SCARIFICATION AND HYDRO-DEMOLITION

PARTIAL DEPTH MILLING

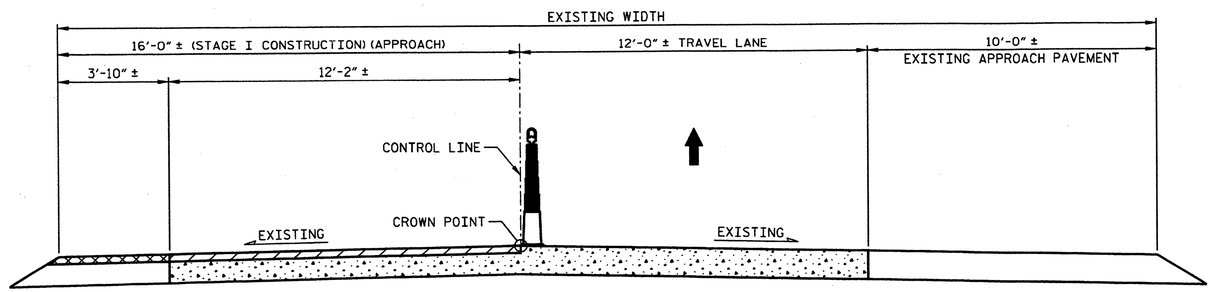

TYPICAL SECTION: APPROACH SLAB SCARIFICATION AND APPROACH PAVEMENT MILLING - STAGE I

APPROACH SLAB SCARIFICATION AND HYDRO-DEMOLITION

PARTIAL DEPTH MILLING

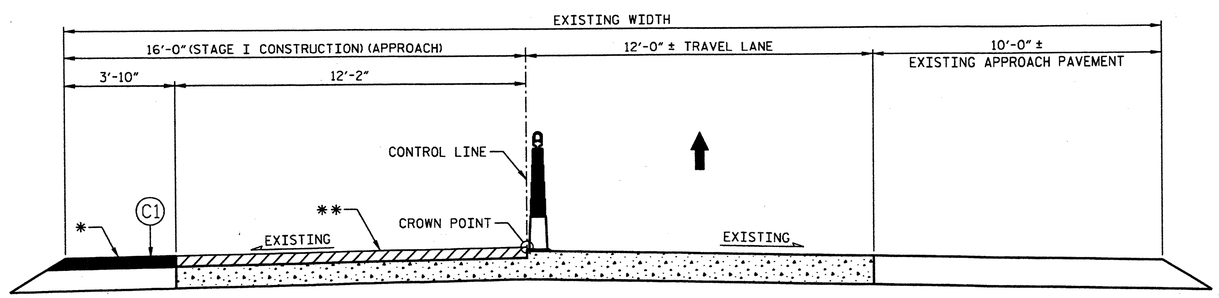

TYPICAL APPROACH SECTION - STAGE I

1½" LATEX MODIFIED CONCRETE-VERY EARLY STRENGTH OVERLAY

* THE FINISHED SURFACE OF THE PROPOSED ASPHALT SHALL BE ½" ABOVE THE ORIGINAL APPROACH PAVEMENT SURFACE.

** THE FINISHED SURFACE OF THE LATEX MODIFIED CONCRETE - VERY EARLY STRENGTH OVERLAY SHALL BE ½" ABOVE THE ORIGINAL APPROACH SLAB SURFACE.

C1	PROPOSED VARIABLE DEPTH ASPHALT CONCRETE SURFACE COURSE, TYPE S9.5B AT AN AVERAGE RATE OF 112 LBS PER SQ. YD. PER 1" DEPTH.

PROJECT NO. 17BP.4.P.2

NASH COUNTY

BRIDGE NO.: 222

STATE OF NORTH CAROLINA
DEPARTMENT OF TRANSPORTATION
RALEIGH

TYPICAL SECTION & DECK SCARIFICATION FOR BRIDGE NO. 222 (STAGE I)

NORTH CAROLINA PROFESSIONAL ENGINEER SEAL 032129 MATTHEW J. MOYER
2-17-12

HDR Engineering, Inc. of the Carolinas
3723 National Drive, Suite 207 Raleigh, N.C. 27612
N.C.B.E.L.S. License Number: F-0116

REVISIONS								SHEET NO. S-5
NO.	BY:	DATE:	NO.	BY:	DATE:			TOTAL SHEETS 84
1			3					
2			4					

DRAWN BY : R. FRITZ DATE : 01/2012
CHECKED BY : C. ROKICKI DATE : 01/2012

PLOT DRIVER: NCDOT_pdf_mono_eng_50.plt + PENTABLE: Division 4_pen_Austin.tbl
USER: lpatters DATE: 2/17/2012 TIME: 12:38:07 PM
FILE: North Carolina_Dept_of_Transportation\NCDOT_C_2011_STROSN_OC_TO_2\13.00_CAD\Nash 222\Drawings\DIV4.1_SD_NASH222_05.dgn

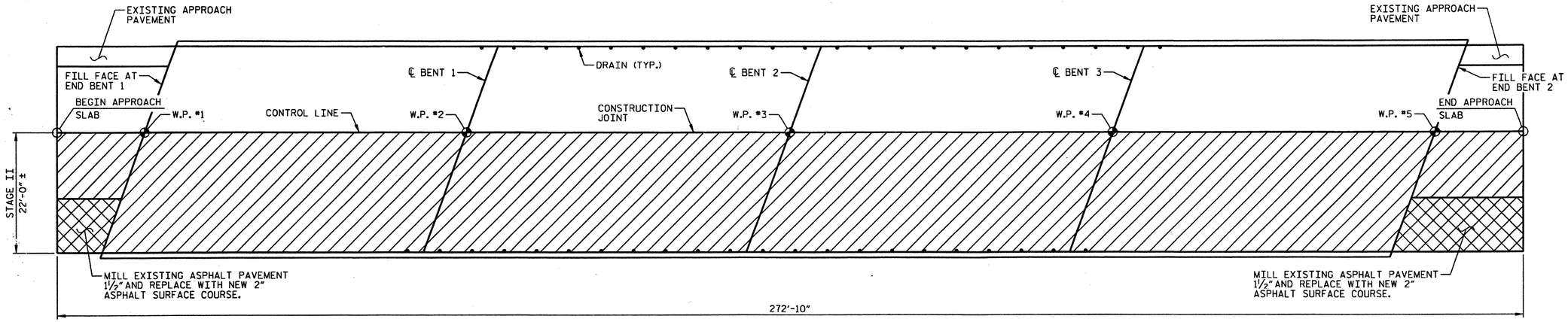

PLAN-STAGE II CONSTRUCTION

DECK SCARIFICATION AND HYDRO-DEMOLITION

PARTIAL DEPTH MILLING

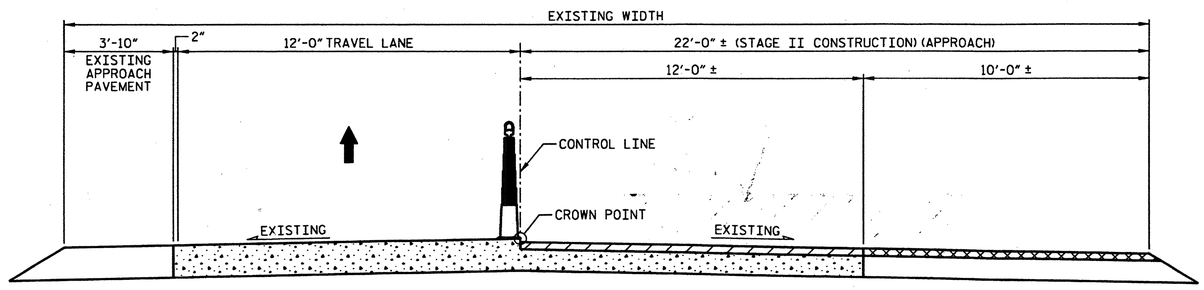

TYPICAL SECTION: APPROACH SLAB SCARIFICATION AND APPROACH PAVEMENT MILLING - STAGE II

APPROACH SLAB SCARIFICATION AND HYDRO-DEMOLITION

PARTIAL DEPTH MILLING

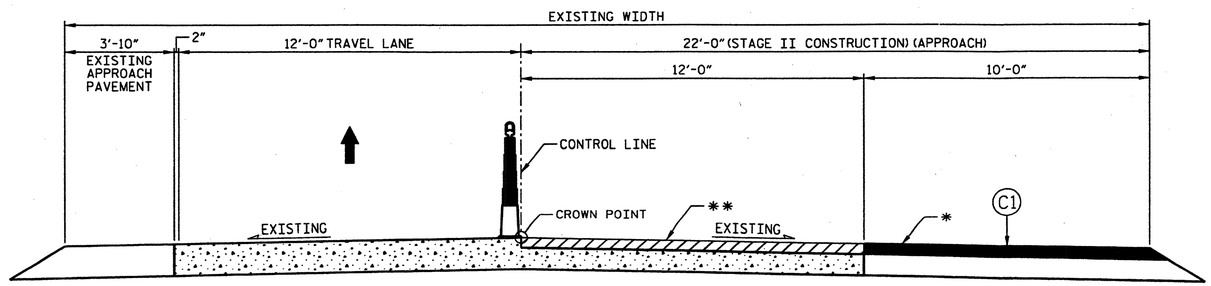

TYPICAL APPROACH SECTION - STAGE II

1½" LATEX MODIFIED CONCRETE-VERY EARLY STRENGTH OVERLAY

* THE FINISHED SURFACE OF THE PROPOSED ASPHALT SHALL BE ½" ABOVE THE ORIGINAL APPROACH PAVEMENT SURFACE.

** THE FINISHED SURFACE OF THE LATEX MODIFIED CONCRETE - VERY EARLY STRENGTH OVERLAY SHALL BE ½" ABOVE THE ORIGINAL APPROACH SLAB SURFACE.

C1	PROPOSED VARIABLE DEPTH ASPHALT CONCRETE SURFACE COURSE, TYPE S9.5B AT AN AVERAGE RATE OF 112 LBS PER SQ. YD. PER 1" DEPTH.

PROJECT NO. 17BP.4.P.2

NASH COUNTY

BRIDGE NO.: 222

NORTH CAROLINA PROFESSIONAL SEAL 032129 ENGINEER MATTHEW J. MOYER

3-2-12

STATE OF NORTH CAROLINA
DEPARTMENT OF TRANSPORTATION
RALEIGH

TYPICAL SECTION & DECK SCARIFICATION FOR BRIDGE NO. 222 (STAGE II)

REVISIONS								SHEET NO.
NO.	BY:	DATE:	NO.	BY:	DATE:			5-6
1			3					TOTAL SHEETS
2			4					84

HDR Engineering, Inc. of the Carolinas
3733 National Drive, Suite 207 Raleigh, N.C. 27612
N.C.B.E.L.S. License Number: F-0116

DRAWN BY : R. FRITZ DATE : 01/2012
CHECKED BY : C. ROKICKI DATE : 01/2012

PLOT DRIVER: NCDOT_pdf_mono_eng_50.plt + PENTABLE: Division 4_pen_Austin.tbl
USER: lpatters DATE: 3/2/2012 TIME: 7:29:11 AM
FILE: North Carolina_Dept_of_Transportation\NCDOT_C_2011_STROSN_OC_TO_2\13.00_CAD\Nash 222\Drawings\DIV4.1_SD_NASH222_06.dgn

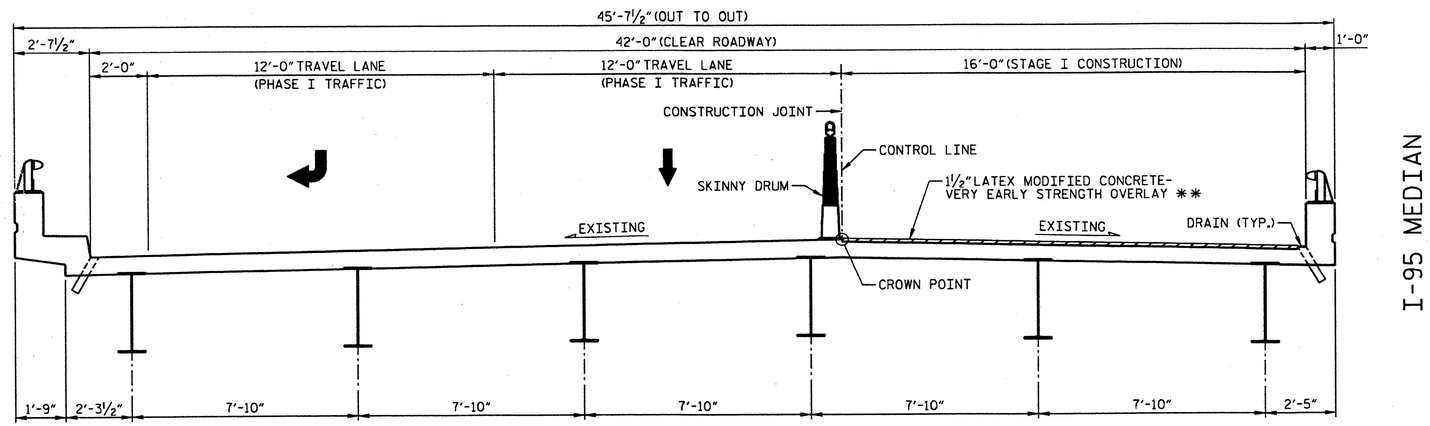

I-95 MEDIAN

TYPICAL SECTION - STAGE I

** THE FINISHED SURFACE OF THE LATEX MODIFIED CONCRETE-VERY EARLY STRENGTH OVERLAY SHALL BE ½" ABOVE THE ORIGINAL DECK SURFACE.

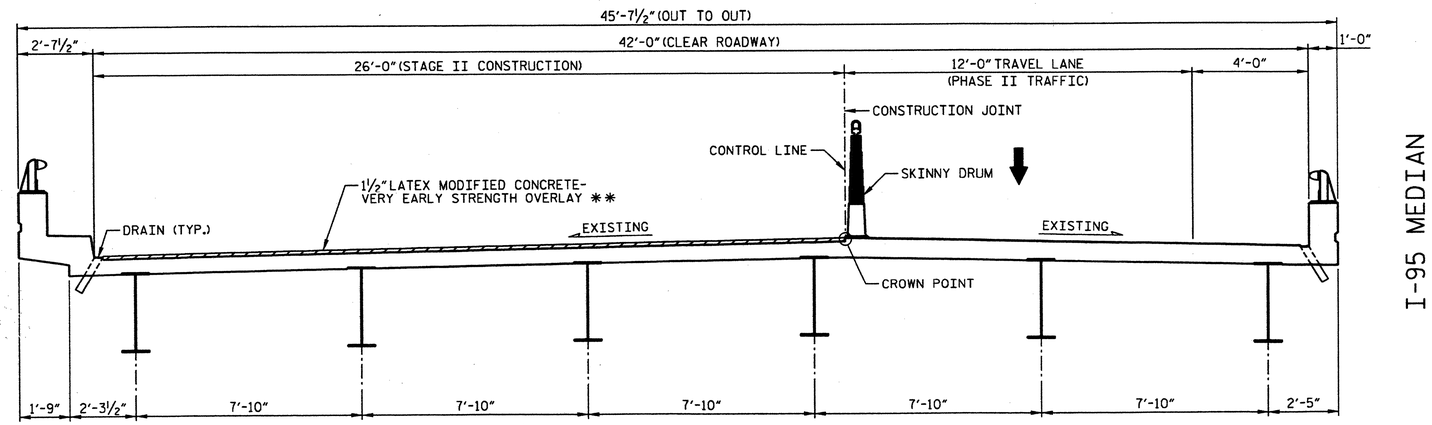

I-95 MEDIAN

TYPICAL SECTION - STAGE II

** THE FINISHED SURFACE OF THE LATEX MODIFIED CONCRETE-VERY EARLY STRENGTH OVERLAY SHALL BE ½" ABOVE THE ORIGINAL DECK SURFACE.

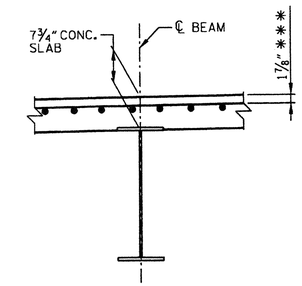

EXISTING SLAB SECTION

BOTTOM MAT OF REINFORCING NOT SHOWN FOR CLARITY.
*** CONCRETE COVER PER "AS-BUILT PLANS"

NOTES

FOR "HYDRO-DEMOLITION OF BRIDGE DECK", SEE SPECIAL PROVISIONS.

THE CONTRACTOR MUST COLLECT, TREAT AND DISPOSE OF RUN-OFF WATER FROM THE HYDRO-DEMOLITION PROCESS. SEE "MANAGING HYDRO-DEMOLITION WATER" SPECIAL PROVISIONS.

THE BOUNDARIES OF AREAS IDENTIFIED FOR CLASS III SURFACE PREPARATION ARE APPROXIMATE. IF ANY CLASS III LOCATIONS ARE ENCOUNTERED PRIOR TO OR DURING HYDRO-DEMOLITION, SEE "TYPICAL "BLOW THRU" CONTAINMENT AND FORMWORK" DETAIL. THE CONTRACTOR SHALL PROVIDE A METHOD OF HANDLING UNEXPECTED BLOW THROUGH WORK OF THE DECK.

THE NOMINAL UNCOMPRESSED SEAL WIDTH OF THE FOAM JOINT SEAL SHALL BE 2½" AT BENTS. FOR "FOAM JOINT SEALS", SEE SPECIAL PROVISIONS.

FOR "ELASTOMETRIC CONCRETE", SEE SPECIAL PROVISIONS.

LATEX MODIFIED CONCRETE SHALL BE LATEX MODIFIED CONCRETE-VERY EARLY STRENGTH.

FOR "LATEX MODIFIED CONCRETE-VERY EARLY STRENGTH", SEE SPECIAL PROVISIONS.

FOR GROOVING BRIDGE FLOORS INFORMATION, SEE "LATEX MODIFIED CONCRETE-VERY EARLY STRENGTH" SPECIAL PROVISIONS.

FOR SUBMITTAL OF WORKING DRAWINGS, SEE SPECIAL PROVISIONS.

FOR FALSEWORK AND FORMWORK, SEE SPECIAL PROVISIONS.

EXISTING JOINTS AND BRIDGE DECK DRAINS SHALL BE SEALED PRIOR TO BEGINNING SURFACE PREPARATION OF BRIDGE DECK.

EXISTING DIMENSIONS AND BRIDGE CONDITION ARE FROM THE BEST INFORMATION AVAILABLE. THE CONTRACTOR SHALL VERIFY THE INFORMATION SHOWN ON THE PLANS AND NOTIFY THE ENGINEER IF ACTUAL DIMENSIONS AND CONDITIONS DIFFER.

FOR SCARIFYING BRIDGE DECK, SEE SPECIAL PROVISIONS.

PROJECT NO. 17BP.4.P.2
NASH COUNTY
BRIDGE NO.: 223

TOTAL BILL OF MATERIAL

SCARIFYING BRIDGE DECK	*CLASS I SURFACE PREPARATION	*CLASS II SURFACE PREPARATION	*CLASS III SURFACE PREPARATION	*CLASS AA CONCRETE	HYDRO-DEMOLITION OF BRIDGE DECK	LATEX MODIFIED CONCRETE-VERY EARLY STRENGTH OVERLAY	PLACING & FINISHING LATEX MODIFIED CONCRETE-VERY EARLY STRENGTH OVERLAY	FOAM JOINT SEALS	GROOVING BRIDGE FLOORS	ASPHALT CONCRETE SURFACE COURSE TYPE S9.5B	INCIDENTAL MILLING
SQ. YDS.	SQ. YDS.	SQ. YDS.	SQ. YDS.	CU. YDS.	SQ. YDS.	CU. YDS.	SQ. YDS.	LUMP SUM	SQ. FT.	TONS	SQ. YDS.
1300	1	0	0	0	1300	55	1300	LUMP SUM	10705	4	34

*QUANTITY SHOWN IS FOR INFORMATION ONLY.

DRAWN BY : R. FRITZ DATE : 01/2012
CHECKED BY : C. ROKICKI DATE : 01/2012

NORTH CAROLINA PROFESSIONAL ENGINEER SEAL 032129 MATTHEW J. MOYER
2-16-12

HDR Engineering, Inc. of the Carolinas
3733 National Drive, Suite 207 Raleigh, N.C. 27612
N.C.B.E.L.S. License Number: F-0116

STATE OF NORTH CAROLINA
DEPARTMENT OF TRANSPORTATION
RALEIGH

TYPICAL SECTION
FOR BRIDGE NO. 223
(I-95 SBL OVER SWIFT CREEK)

REVISIONS						SHEET NO.
NO.	BY:	DATE:	NO.	BY:	DATE:	S-7
1			3			TOTAL SHEETS
2			4			84

PLOT DRIVER: NCDOT_pdf_mono_eng_50.plt
USER: lpatters
FILE: North Carolina_Dept_of_Transportation\NCDOT_C_2011_STRDSN_OC_TO_2\13.00_CAD\Nash 223\Drawings\DIV41_SD_NASH223_01.dgn
PENTABLE: Division 4_pen_Austin.tbl
DATE: 2/16/2012
TIME: 11:54:36 AM

NOTE:
FOR SECTIONS A-A, B-B, AND C-C, SEE SHEET "JOINT DETAILS FOR BRIDGE NO. 223".

ELASTOMERIC CONCRETE	
BENT NO.	ELASTOMERIC CONCRETE ✱ (CU. FT.)
BENT 1	8.3
BENT 2	8.3
BENT 3	8.3
TOTAL	24.9

✱ BASED ON THE MINIMUM BLOCKOUT SHOWN

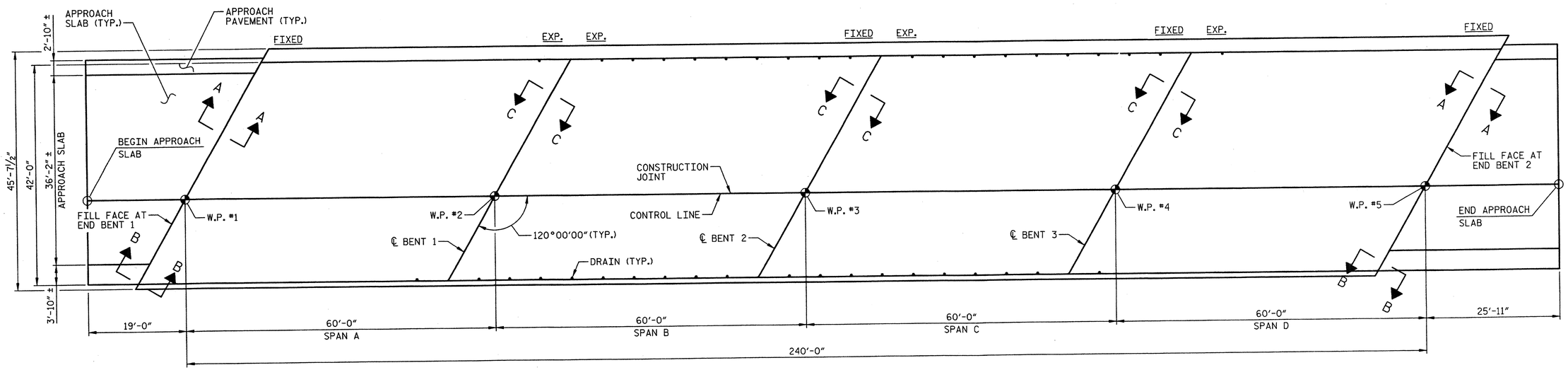

PLAN VIEW

PROJECT NO. 17BP.4.P.2

NASH COUNTY

BRIDGE NO.: 223

STATE OF NORTH CAROLINA
DEPARTMENT OF TRANSPORTATION
RALEIGH

PLAN VIEW
FOR BRIDGE NO. 223

NORTH CAROLINA PROFESSIONAL SEAL 032129 ENGINEER MATTHEW J. MOYER

1-13-2012

HDR Engineering, Inc. of the Carolinas
3733 National Drive, Suite 207 Raleigh, N.C. 27612
N.C.B.E.L.S. License Number: F-0116

REVISIONS						
NO.	BY:	DATE:	NO.	BY:	DATE:	SHEET NO. S-8
1			3			TOTAL SHEETS 84
2			4			

DRAWN BY : R. FRITZ DATE : 01/2012
CHECKED BY : C. ROKICKI DATE : 01/2012

PLOT DRIVER: NCDOT_pdf_mono_eng_50.plt
USER: paulnone DATE: 1/12/2012
FILE: \
PENTABLE: Division 4.pen_Austin.tbl
TIME: 8:46:05 PM

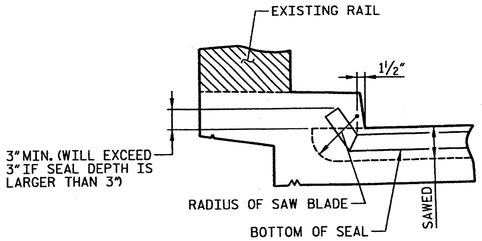

JOINT DETAIL AT WEST RAIL

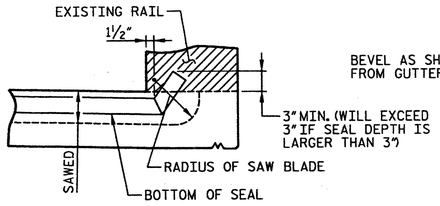

JOINT DETAIL AT EAST RAIL

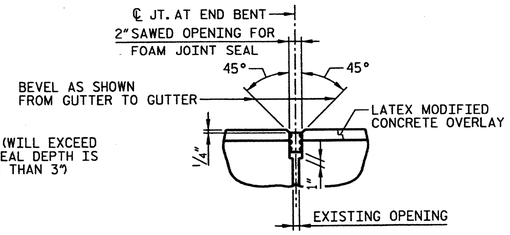

PROPOSED JOINT AT END BENTS

FOAM JOINT SEAL EXPANSION

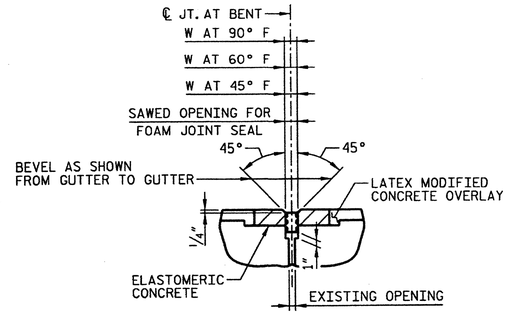

PROPOSED JOINT AT BENTS

FOAM JOINT SEAL EXPANSION

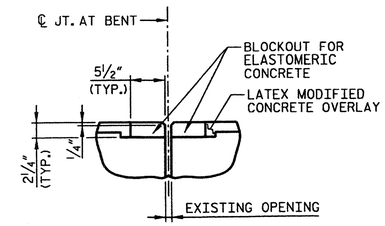

FOAM JOINT SEAL AT BENTS

PRE-SAWED ELASTOMERIC CONCRETE DIMENSIONS

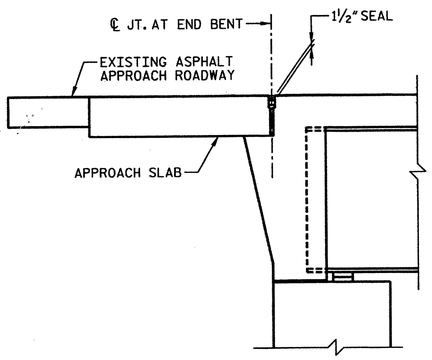

EXISTING SECTION AT END BENT

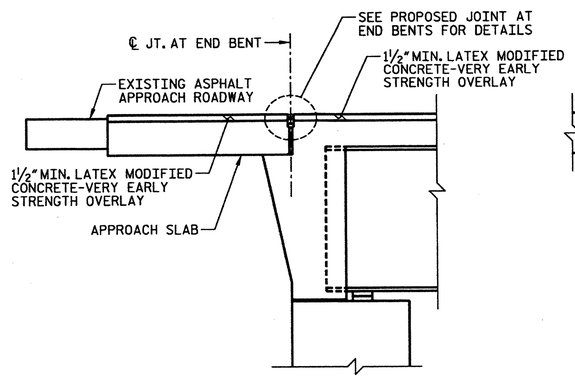

PROPOSED SECTION AT END BENT

SECTION A-A

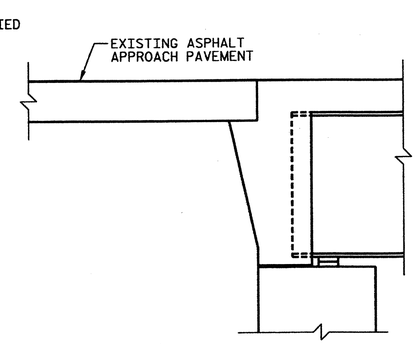

EXISTING SECTION AT END BENT

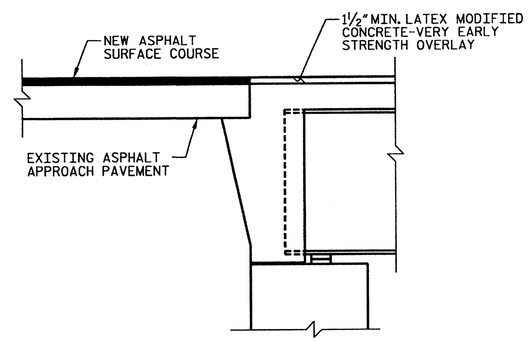

PROPOSED SECTION AT END BENT

SECTION B-B

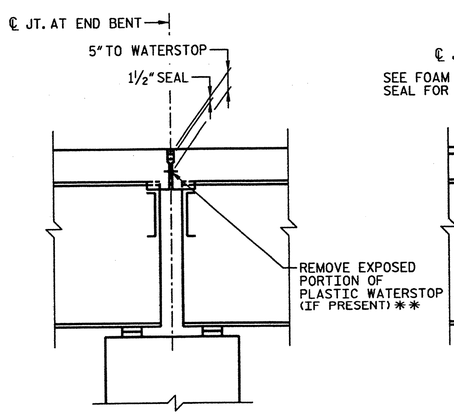

EXISTING JOINT AT BENTS

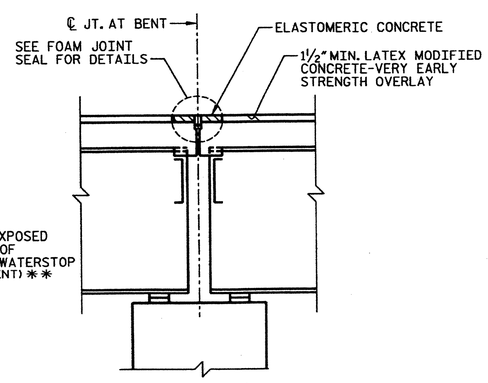

PROPOSED JOINT AT BENTS

SECTION C-C

SAWED OPENING FOR FOAM JOINT			
BENT NO.	W AT 90° F	W AT 60° F	W AT 45° F
BENT 1	1½"	1⅞"	2 1/16"
BENT 2	1 11/16"	1⅞"	1 15/16"
BENT 3	1 11/16"	1⅞"	1 15/16"

PROJECT NO. 17BP.4.P.2

NASH COUNTY

BRIDGE NO.: 223

** ALL LOOSE AND UNSOUND CONCRETE SHALL BE REMOVED. IF THE EMBEDDED PORTION OF THE EXISTING PLASTIC WATERSTOP IS EXPOSED DURING REMOVAL OF UNSOUND CONCRETE, THE ENTIRE WATERSTOP SHALL BE REMOVED. OTHERWISE, TRIM WATERSTOP FLUSH WITH EXISTING CONCRETE SURFACE.

NORTH CAROLINA PROFESSIONAL SEAL 032129 ENGINEER MATTHEW J. MOYER

1-13-2012

STATE OF NORTH CAROLINA
DEPARTMENT OF TRANSPORTATION
RALEIGH

JOINT DETAILS FOR BRIDGE NO. 223

HDR Engineering, Inc. of the Carolinas
3733 National Drive, Suite 207 Raleigh, N.C. 27612
N.C.B.E.L.S. License Number: F-0116

REVISIONS						
NO.	BY:	DATE:	NO.	BY:	DATE:	
1			3			
2			4			

SHEET NO. S-9

TOTAL SHEETS 84

DRAWN BY :	R. FRITZ	DATE :	01/2012
CHECKED BY :	C. ROKICKI	DATE :	01/2012

PLOT DRIVER: NCDOT1.pdf_mono_eng_bw.pltr
USER: pquinone DATE: 1/12/2012
FILE: \
TIME: 8:46:11 PM

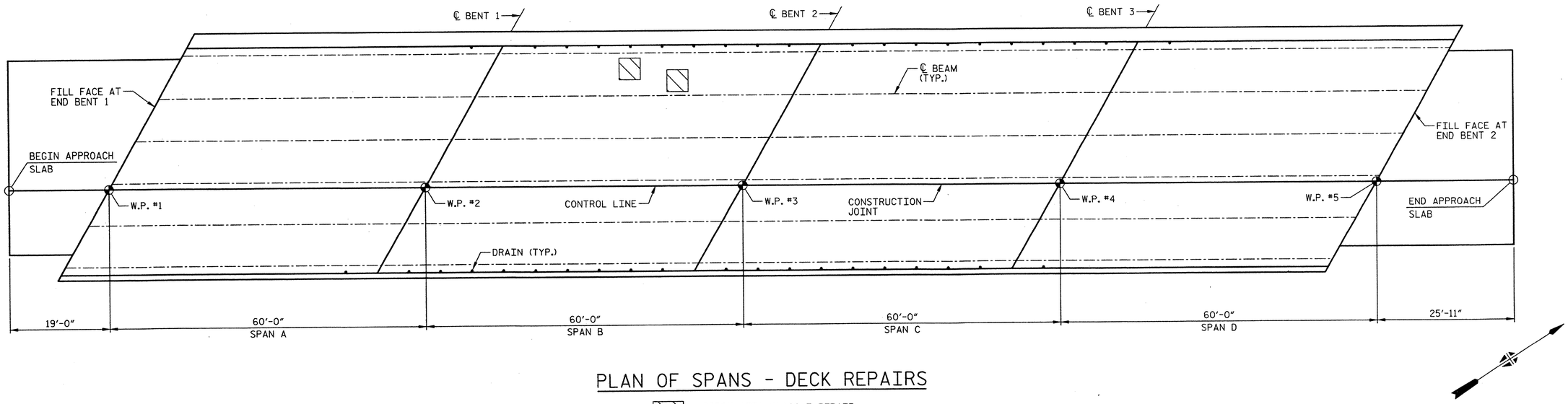

PLAN OF SPANS - DECK REPAIRS

APPROX. AREA: CLASS I REPAIR

APPROX. AREA: CLASS II REPAIR

APPROX. AREA: CLASS III REPAIR

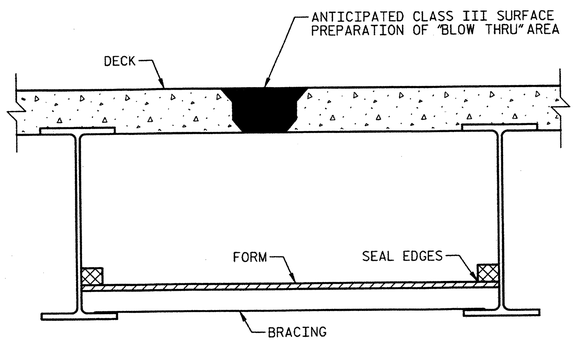

TYPICAL "BLOW THRU" CONTAINMENT AND FORMWORK

A METHOD TO CAPTURE WATER AND DEBRIS FROM BLOW THRU DURING HYDRO-DEMOLITION SHALL BE INSTALLED IN AREAS INDICATED AS CLASS III SURFACE PREPARATION.

SUBMIT DETAILS OF PROPOSED FORMWORK FOR APPROVAL PRIOR TO BEGINNING WORK.

COST FOR INSTALLING AND REMOVING FORMWORK SHALL BE INCIDENTAL TO THE PRICE PER SQ. YARD OF HYDRO-DEMOLITION.

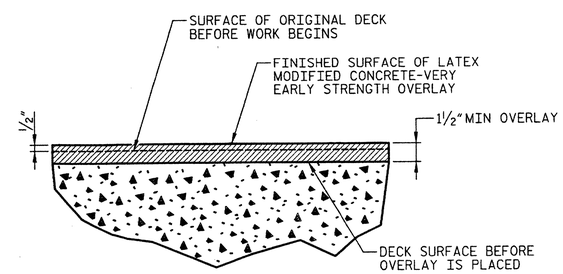

DETAIL FOR LATEX MODIFIED CONCRETE OVERLAY

PROJECT NO. 17BP.4.P.2

NASH COUNTY

BRIDGE NO.: 223

NORTH CAROLINA PROFESSIONAL SEAL 032129 ENGINEER MATTHEW J. MOYER

1-13-2012

STATE OF NORTH CAROLINA
DEPARTMENT OF TRANSPORTATION
RALEIGH

DECK REPAIR DETAILS FOR BRIDGE NO. 223

REVISIONS						SHEET NO. S-10
NO.	BY:	DATE:	NO.	BY:	DATE:	TOTAL SHEETS 84
1			3			
2			4			

HDR Engineering, Inc. of the Carolinas
3733 National Drive, Suite 207 Raleigh, N.C. 27612
N.C.B.E.L.S. License Number: F-0116

DRAWN BY : R. FRITZ DATE : 01/2012
CHECKED BY : C. ROKICKI DATE : 01/2012

PLOT DRIVER: NCDOT_pdf_mono_eng_50.prt
USER: paulmone DATE: 1/12/2012
PENTABLE: Division 4_pen_Austin.tbl
TIME: 8:46:17 PM
FILE:

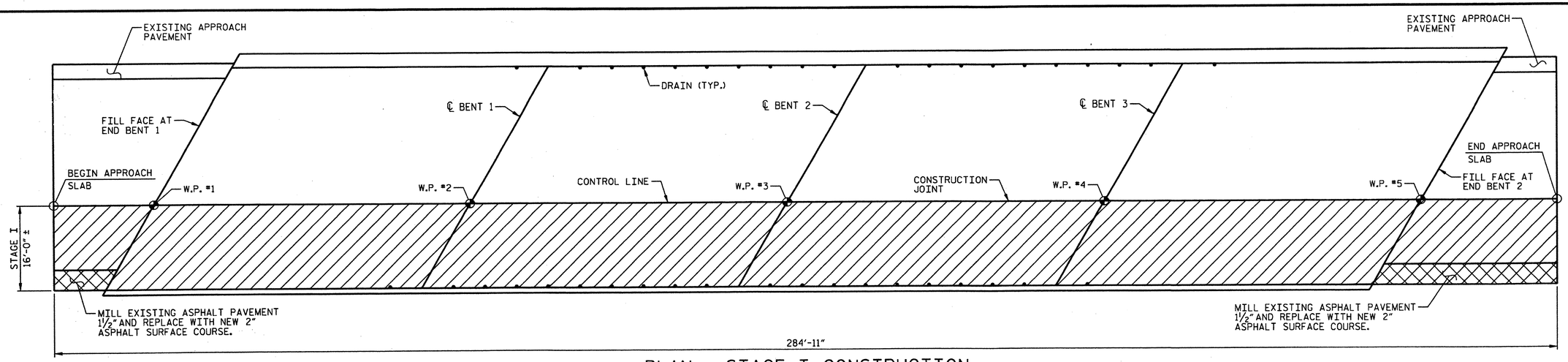

PLAN - STAGE I CONSTRUCTION

DECK SCARIFICATION AND HYDRO-DEMOLITION

PARTIAL DEPTH MILLING

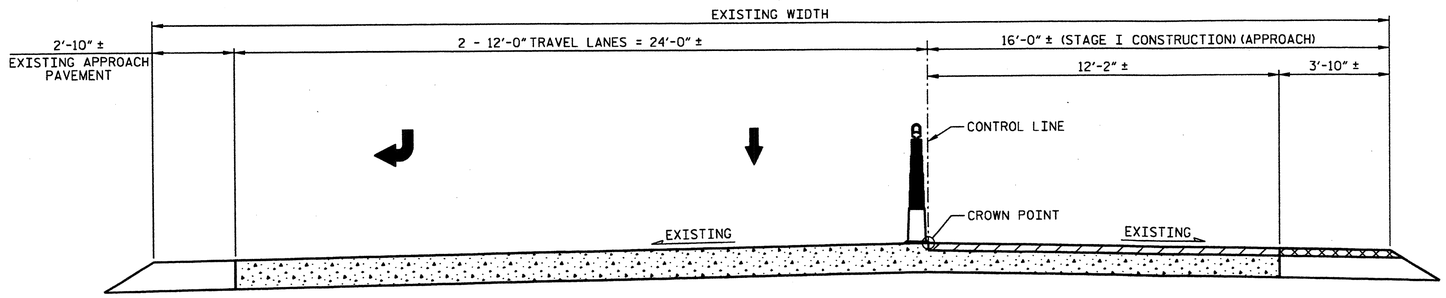

TYPICAL SECTION: APPROACH SLAB SCARIFICATION AND APPROACH PAVEMENT MILLING - STAGE I

APPROACH SLAB SCARIFICATION AND HYDRO-DEMOLITION

PARTIAL DEPTH MILLING

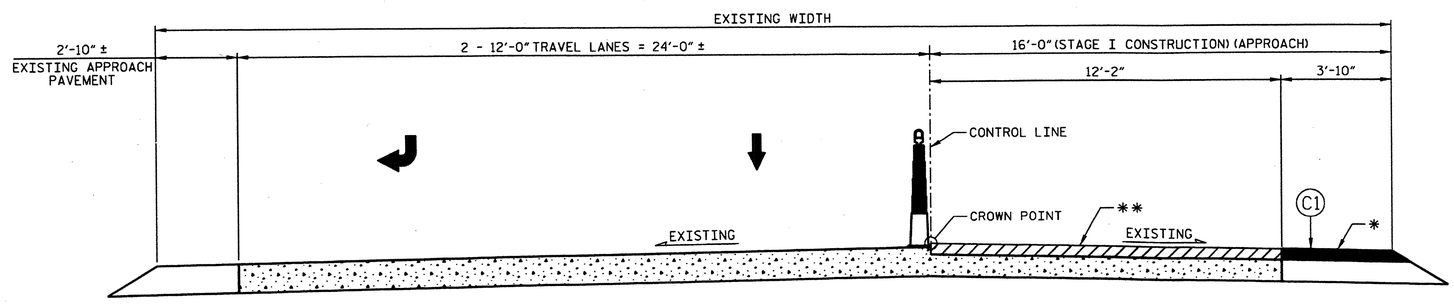

TYPICAL APPROACH SECTION - STAGE I

1½" LATEX MODIFIED CONCRETE-VERY EARLY STRENGTH OVERLAY

* THE FINISHED SURFACE OF THE PROPOSED ASPHALT SHALL BE ½" ABOVE THE ORIGINAL APPROACH PAVEMENT SURFACE.

** THE FINISHED SURFACE OF THE LATEX MODIFIED CONCRETE - VERY EARLY STRENGTH OVERLAY SHALL BE ½" ABOVE THE ORIGINAL APPROACH SLAB SURFACE.

C1	PROPOSED VARIABLE DEPTH ASPHALT CONCRETE SURFACE COURSE, TYPE S9.5B AT AN AVERAGE RATE OF 112 LBS PER SQ. YD. PER 1" DEPTH.

PROJECT NO. 17BP.4.P.2

NASH COUNTY

BRIDGE NO.: 223

NORTH CAROLINA ENGINEERING 032129 ENGINEER MATTHEW J. MOYER

2-17-2

STATE OF NORTH CAROLINA
DEPARTMENT OF TRANSPORTATION
RALEIGH

TYPICAL SECTION & DECK SCARIFICATION FOR BRIDGE NO. 223 (STAGE I)

REVISIONS								SHEET NO. S-11
NO.	BY:	DATE:	NO.	BY:	DATE:			TOTAL SHEETS 84
1			3					
2			4					

HDR Engineering, Inc. of the Carolinas
3733 National Drive, Suite 207 Raleigh, N.C. 27612
N.C.B.E.L.S. License Number: F-0116

DRAWN BY : R. FRITZ DATE : 01/2012
CHECKED BY : C. ROKICKI DATE : 01/2012

PLOT DRIVER: NCDOT_pdf_mono_eng_50.plt
USER: lpatters DATE: 2/17/2012
FILE: North Carolina_Dept_of_Transportation\NCDOT_C_2011_STRDSN_OC_TO_2\13.00_CAD\Nash 223\Drawings\DIV4.1_SD_NASH223_05.dgn
PENTABLE: Division 4_pen_Austin.tbl
TIME: 12:38:36 PM

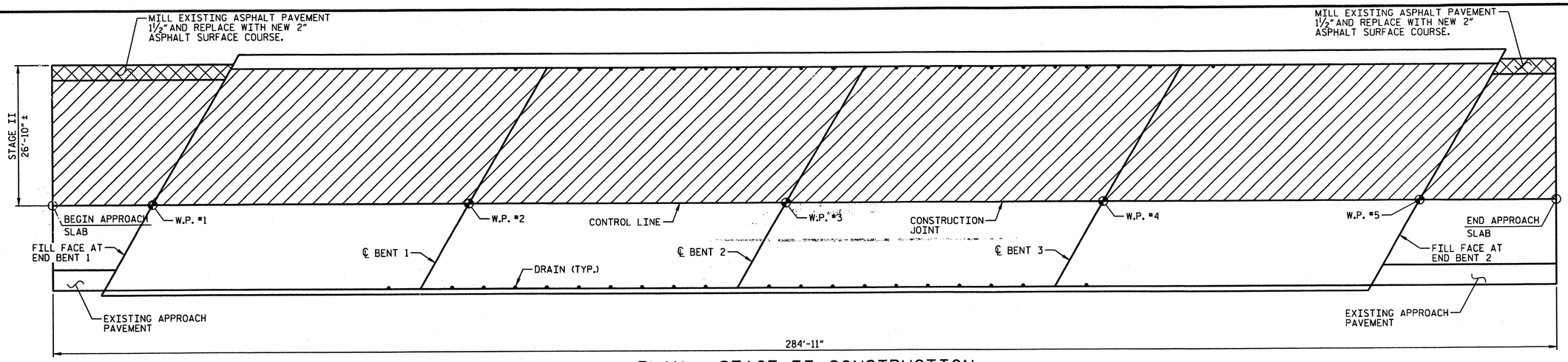

PLAN - STAGE II CONSTRUCTION

DECK SCARIFICATION AND HYDRO-DEMOLITION

PARTIAL DEPTH MILLING

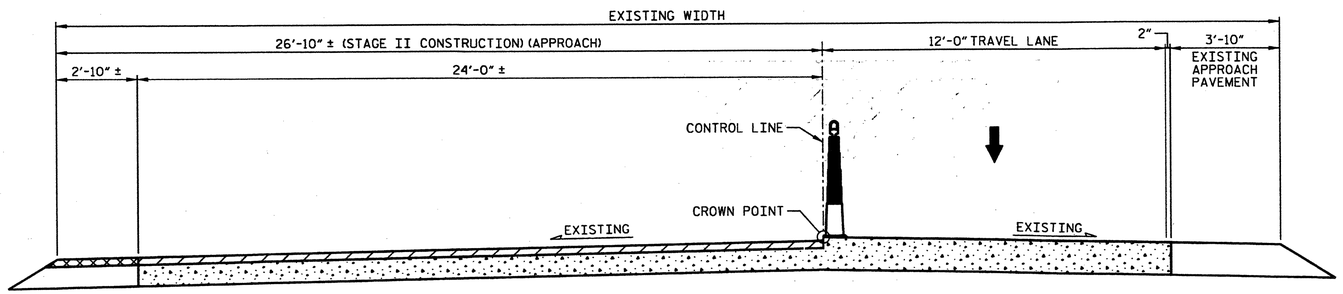

TYPICAL SECTION: APPROACH SLAB SCARIFICATION AND APPROACH PAVEMENT MILLING - STAGE II

APPROACH SLAB SCARIFICATION AND HYDRO-DEMOLITION

PARTIAL DEPTH MILLING

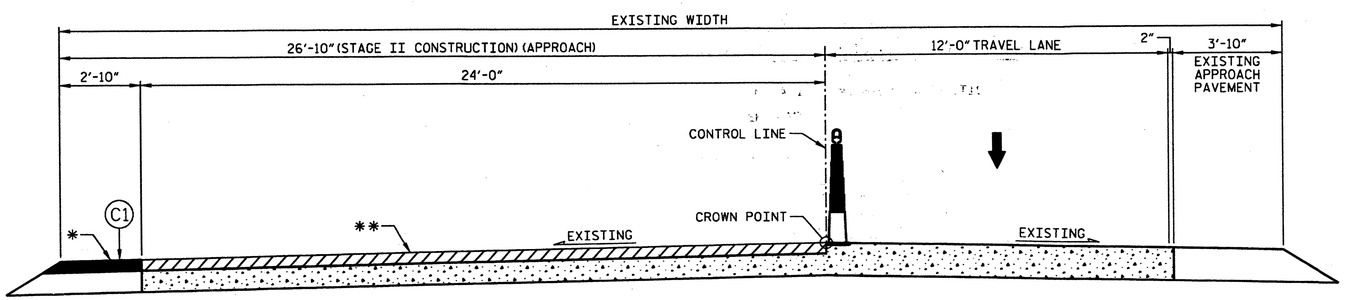

TYPICAL APPROACH SECTION - STAGE II

1½" LATEX MODIFIED CONCRETE-VERY EARLY STRENGTH OVERLAY

* THE FINISHED SURFACE OF THE PROPOSED ASPHALT SHALL BE ½" ABOVE THE ORIGINAL APPROACH PAVEMENT SURFACE.

** THE FINISHED SURFACE OF THE LATEX MODIFIED CONCRETE - VERY EARLY STRENGTH OVERLAY SHALL BE ½" ABOVE THE ORIGINAL APPROACH SLAB SURFACE.

C1	PROPOSED VARIABLE DEPTH ASPHALT CONCRETE SURFACE COURSE, TYPE S9.5B AT AN AVERAGE RATE OF 112 LBS PER SQ. YD. PER 1" DEPTH.

PROJECT NO. 17BP.4.P.2

NASH COUNTY

BRIDGE NO.: 223

NORTH CAROLINA PROFESSIONAL SEAL 032129 ENGINEER MATTHEW J. MOYER

3-2-12

STATE OF NORTH CAROLINA
DEPARTMENT OF TRANSPORTATION
RALEIGH

TYPICAL SECTION & DECK SCARIFICATION FOR BRIDGE NO. 223 (STAGE II)

REVISIONS						SHEET NO.
NO.	BY:	DATE:	NO.	BY:	DATE:	S-12
1			3			TOTAL SHEETS
2			4			84

HDR Engineering, Inc. of the Carolinas
3733 National Drive, Suite 207 Raleigh, N.C. 27612
N.C.B.E.L.S. License Number: F-0116

DRAWN BY : R. FRITZ DATE : 01/2012
CHECKED BY : C. ROKICKI DATE : 01/2012

PLOT DRIVER: NCDOT_pdf_mono_eng_50.plt + PENTABLE: Division 4_pen_Austin.tbl
USER: lpatters DATE: 3/2/2012 TIME: 1:29:24 AM
FILE: North Carolina_Dept_of_Transportation\NCDOT_C_2011_STRDSN_OC_TO_2\13.00_CAD\Nash 223\Drawings\DIV4.1_SD_NASH223_06.dgn

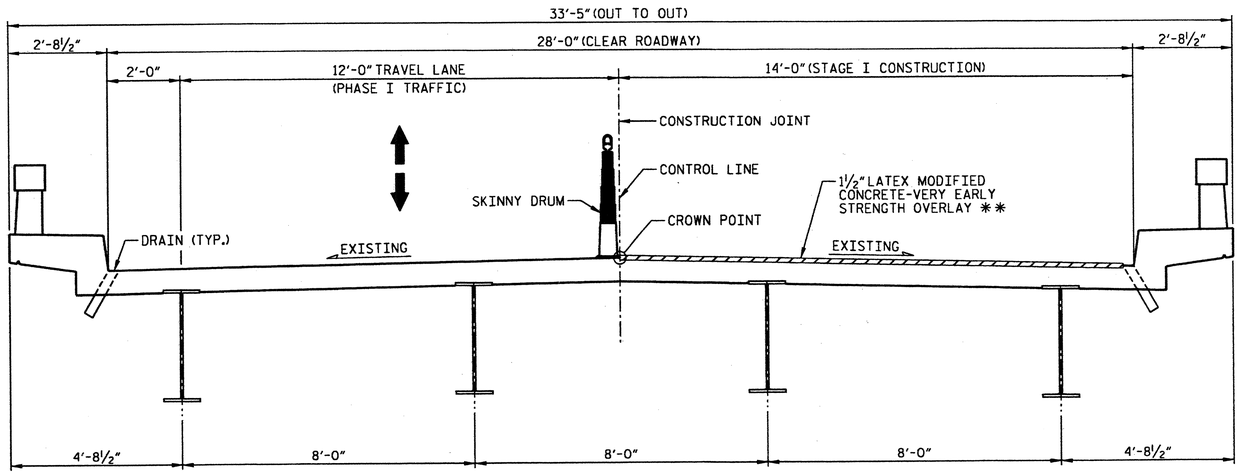

TYPICAL SECTION - STAGE I

** THE FINISHED SURFACE OF THE LATEX MODIFIED CONCRETE-VERY EARLY STRENGTH OVERLAY SHALL BE ½" ABOVE THE ORIGINAL DECK SURFACE.

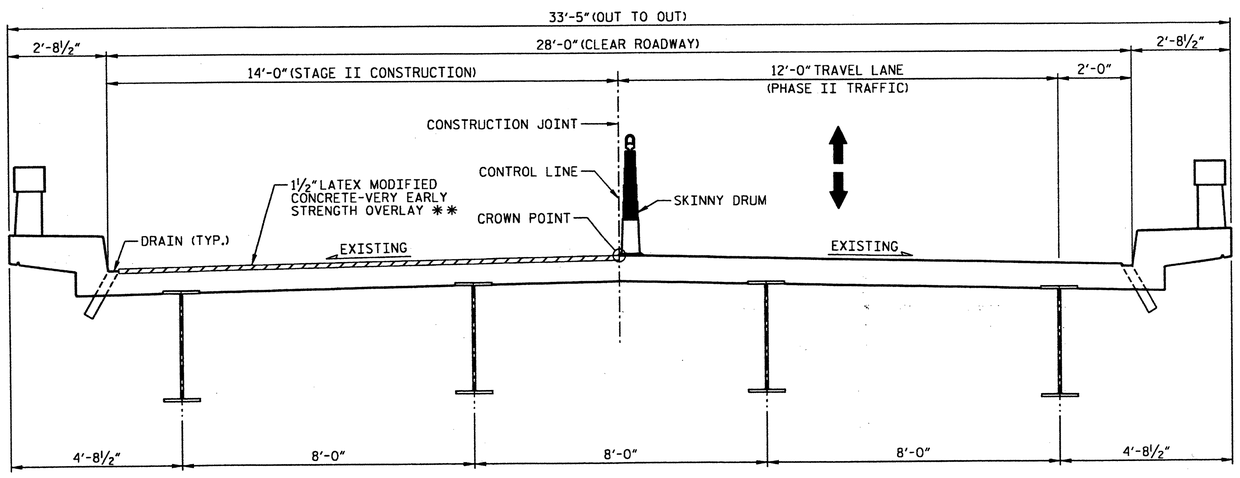

TYPICAL SECTION - STAGE II

** THE FINISHED SURFACE OF THE LATEX MODIFIED CONCRETE-VERY EARLY STRENGTH OVERLAY SHALL BE ½" ABOVE THE ORIGINAL DECK SURFACE.

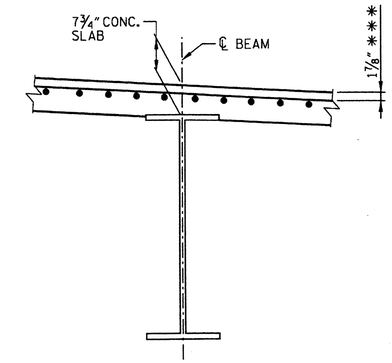

EXISTING SLAB SECTION

BOTTOM MAT OF REINFORCING NOT SHOWN FOR CLARITY.
*** CONCRETE COVER PER "AS-BUILT PLANS"

NOTES

FOR "HYDRO-DEMOLITION OF BRIDGE DECK", SEE SPECIAL PROVISIONS.

THE CONTRACTOR MUST COLLECT, TREAT AND DISPOSE OF RUN-OFF WATER FROM THE HYDRO-DEMOLITION PROCESS. SEE "MANAGING HYDRO-DEMOLITION WATER" SPECIAL PROVISIONS.

THE BOUNDARIES OF AREAS IDENTIFIED FOR CLASS III SURFACE PREPARATION ARE APPROXIMATE. IF ANY CLASS III LOCATIONS ARE ENCOUNTERED PRIOR TO OR DURING HYDRO-DEMOLITION, SEE "TYPICAL "BLOW THRU" CONTAINMENT AND FORMWORK" DETAIL. THE CONTRACTOR SHALL PROVIDE A METHOD OF HANDLING UNEXPECTED BLOW THROUGH WORK OF THE DECK.

THE NOMINAL UNCOMPRESSED SEAL WIDTH OF THE FOAM JOINT SEAL SHALL BE 2½" AT BENTS. FOR "FOAM JOINT SEALS", SEE SPECIAL PROVISIONS.

FOR "ELASTOMETRIC CONCRETE", SEE SPECIAL PROVISIONS.

LATEX MODIFIED CONCRETE SHALL BE LATEX MODIFIED CONCRETE-VERY EARLY STRENGTH.

FOR "LATEX MODIFIED CONCRETE-VERY EARLY STRENGTH", SEE SPECIAL PROVISIONS.

FOR GROOVING BRIDGE FLOORS INFORMATION, SEE "LATEX MODIFIED CONCRETE-VERY EARLY STRENGTH" SPECIAL PROVISIONS.

FOR SUBMITTAL OF WORKING DRAWINGS, SEE SPECIAL PROVISIONS.

FOR FALSEWORK AND FORMWORK, SEE SPECIAL PROVISIONS.

EXISTING JOINTS AND BRIDGE DECK DRAINS SHALL BE SEALED PRIOR TO BEGINNING SURFACE PREPARATION OF BRIDGE DECK.

EXISTING DIMENSIONS AND BRIDGE CONDITION ARE FROM THE BEST INFORMATION AVAILABLE. THE CONTRACTOR SHALL VERIFY THE INFORMATION SHOWN ON THE PLANS AND NOTIFY THE ENGINEER IF ACTUAL DIMENSIONS AND CONDITIONS DIFFER.

FOR SCARIFYING BRIDGE DECK, SEE SPECIAL PROVISIONS.

TOTAL BILL OF MATERIAL

SCARIFYING BRIDGE DECK	* CLASS I SURFACE PREPARATION	* CLASS II SURFACE PREPARATION	* CLASS III SURFACE PREPARATION	CONCRETE REPAIRS	* CLASS AA CONCRETE	HYDRO-DEMOLITION OF BRIDGE DECK	LATEX MODIFIED CONCRETE-VERY EARLY STRENGTH OVERLAY	PLACING & FINISHING LATEX MODIFIED CONCRETE-VERY EARLY STRENGTH OVERLAY	FOAM JOINT SEALS	GROOVING BRIDGE FLOORS	EPOXY RESIN INJECTION	SHOTCRETE REPAIRS	REINFORCING STEEL	ASPHALT CONCRETE SURFACE COURSE TYPE SF9.5A	ASPHALT CONCRETE BASE COURSE TYPE B25.0B	INCIDENTAL MILLING
SQ. YDS.	SQ. YDS.	SQ. YDS.	SQ. YDS.	CU. FT.	CU. YDS.	SQ. YDS.	CU. YDS.	SQ. YDS.	LUMP SUM	SQ. FT.	LIN. FT.	CU. FT.	LBS	TONS	TONS	SQ. YDS.
974	1	0	0	0	0	974	41	974	LUMP SUM	7686	240	9.5	0	78	45	489

* QUANTITY SHOWN IS FOR INFORMATION ONLY.

PROJECT NO. 17BP.4.P.2
HALIFAX COUNTY
BRIDGE NO.: 64

NORTH CAROLINA PROFESSIONAL SEAL 032129 ENGINEER MATTHEW J. MOYER
2-14-12

STATE OF NORTH CAROLINA
DEPARTMENT OF TRANSPORTATION
RALEIGH

TYPICAL SECTION FOR BRIDGE NO. 64

(NC561 OVER I-95)

REVISIONS								SHEET NO. S-13
NO.	BY:	DATE:	NO.	BY:	DATE:			
1			3					TOTAL SHEETS 84
2			4					

HDR Engineering, Inc. of the Carolinas
3733 National Drive, Suite 207 Raleigh, N.C. 27612
N.C.B.E.L.S. License Number: F-0116

DRAWN BY : J. ELLIOTT DATE : 01/2012
CHECKED BY : C. ROKICKI DATE : 01/2012

PLOT DRIVER: NCDOT_pdf_mono_eng.50.plt PENTABLE: Division 4_pen_Austin.tbl
USER: msells DATE: 2/14/2012 TIME: 3:43:00 PM
FILE: North Carolina_Dept_of_Transportation\NCDOT_C_2011_STRDSN_OC_TO_2\13.00_CAD\Halifax 064\Drawings\DIV4_1_SD_HALIFAX64_01.dgn

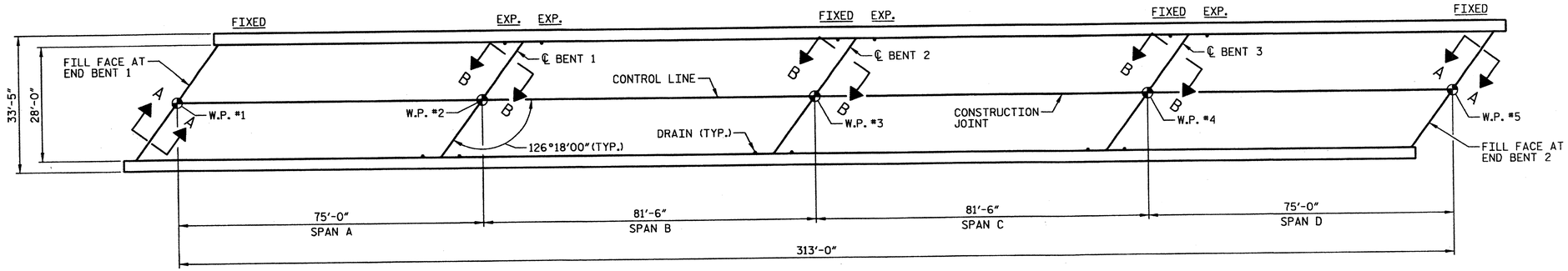

PLAN VIEW

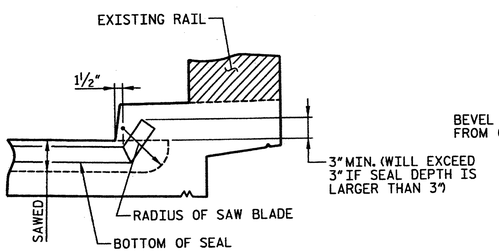

JOINT DETAIL AT RAIL

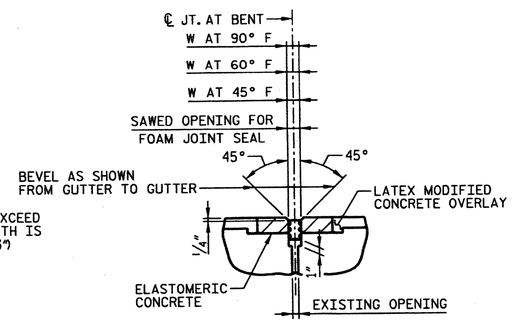

PROPOSED JOINT AT BENTS

FOAM JOINT SEAL EXPANSION

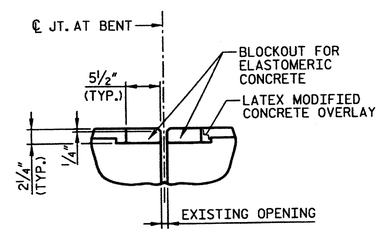

FOAM JOINT SEAL AT BENTS

PRE-SAWED ELASTOMERIC CONCRETE DIMENSIONS

SAWED OPENING FOR FOAM JOINT			
BENT NO.	W AT 90° F	W AT 60° F	W AT 45° F
BENT 1	1½"	1⅞"	2 1/16"
BENT 2	1 11/16"	1⅞"	2"
BENT 3	1 11/16"	1⅞"	1 15/16"

ELASTOMERIC CONCRETE	
BENT NO.	ELASTOMERIC CONCRETE ✱ (CU. FT.)
BENT 1	6.0
BENT 2	6.0
BENT 3	6.0
TOTAL	18.0

✱ BASED ON THE MINIMUM BLOCKOUT SHOWN

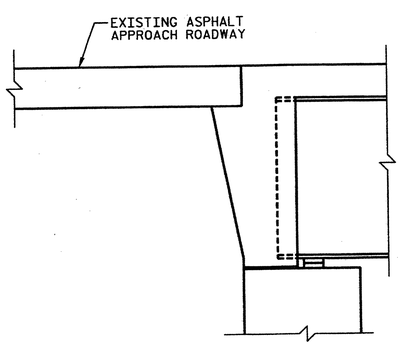

EXISTING SECTION AT END BENT

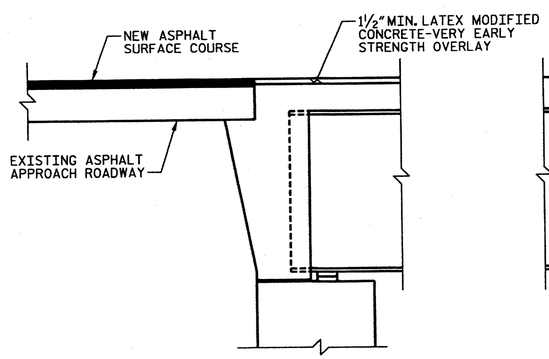

PROPOSED SECTION AT END BENT

SECTION A-A

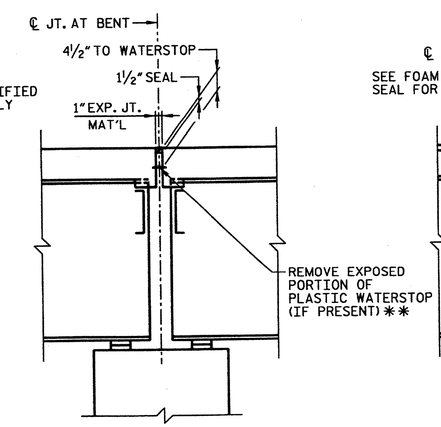

EXISTING JOINT AT BENTS

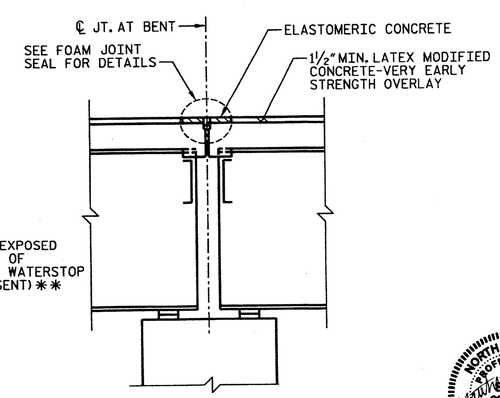

PROPOSED JOINT AT BENTS

SECTION B-B

✱✱ ALL LOOSE AND UNSOUND CONCRETE SHALL BE REMOVED. IF THE EMBEDDED PORTION OF THE EXISTING PLASTIC WATERSTOP IS EXPOSED DURING REMOVAL OF UNSOUND CONCRETE, THE ENTIRE WATERSTOP SHALL BE REMOVED. OTHERWISE, TRIM WATERSTOP FLUSH WITH EXISTING CONCRETE SURFACE.

NORTH CAROLINA PROFESSIONAL SEAL 032129 ENGINEER MATTHEW J. MOTKER
1-13-2012

PROJECT NO. 17BP.4.P.2
HALIFAX COUNTY
BRIDGE NO.: 64

STATE OF NORTH CAROLINA
DEPARTMENT OF TRANSPORTATION
RALEIGH

PLAN VIEW AND JOINT DETAILS FOR BRIDGE NO. 64

REVISIONS						
NO.	BY:	DATE:	NO.	BY:	DATE:	
1			3			
2			4			

SHEET NO. S-14
TOTAL SHEETS 84

HDR Engineering, Inc. of the Carolinas
3733 National Drive, Suite 207 Raleigh, N.C. 27612
N.C.B.E.L.S. License Number: F-0116

DRAWN BY: K. BERGER DATE: 01/2012
CHECKED BY: C. ROKICKI DATE: 01/2012

PLOT DRIVER: NCDOT_pdf_mono_eng_50.plt
USER: paulnone DATE: 1/12/2012
FILE: \
PENTABLE: DIVISION_TEMPLATE.TBL
TIME: 8:46:41 PM

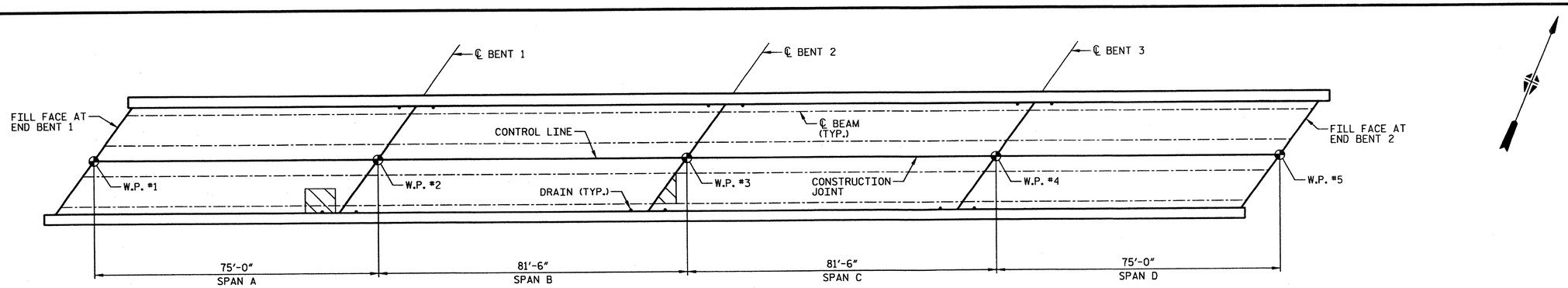

PLAN OF SPANS - DECK REPAIRS

APPROX. AREA: CLASS I REPAIR

APPROX. AREA: CLASS II REPAIR

APPROX. AREA: CLASS III REPAIR

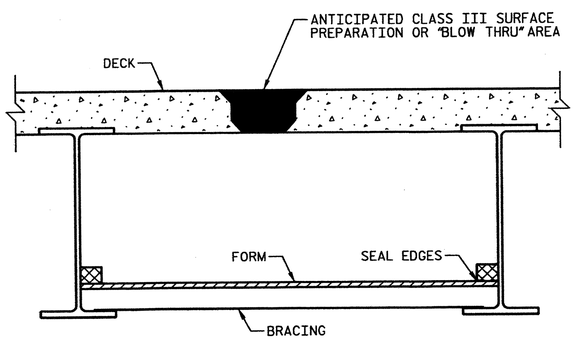

TYPICAL "BLOW THRU" CONTAINMENT AND FORMWORK

A METHOD TO CAPTURE WATER AND DEBRIS FROM BLOW THRU DURING HYDRO-DEMOLITION SHALL BE INSTALLED IN AREAS INDICATED AS CLASS III SURFACE PREPARATION.

SUBMIT DETAILS OF PROPOSED FORMWORK FOR APPROVAL PRIOR TO BEGINNING WORK.

COST FOR INSTALLING AND REMOVING FORMWORK SHALL BE INCIDENTAL TO THE PRICE PER SQ. YARD OF HYDRO-DEMOLITION.

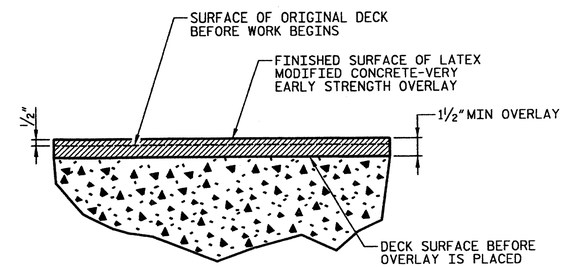

DETAIL FOR LATEX MODIFIED CONCRETE OVERLAY

PROJECT NO. 17BP.4.P.2

HALIFAX COUNTY

BRIDGE NO.: 64

NORTH CAROLINA PROFESSIONAL SEAL 032129 ENGINEER MATTHEW J. MOYER

1-13-2012

STATE OF NORTH CAROLINA
DEPARTMENT OF TRANSPORTATION
RALEIGH

DECK REPAIR DETAILS FOR BRIDGE NO. 64

REVISIONS						SHEET NO. S-15
NO.	BY:	DATE:	NO.	BY:	DATE:	TOTAL SHEETS 84
1			3			
2			4			

HDR Engineering, Inc. of the Carolinas
3733 National Drive, Suite 207 Raleigh, N.C. 27612
N.C.B.E.L.S. License Number: F-0116

DRAWN BY :	K. BERGER	DATE :	01/2012
CHECKED BY :	C. ROKICKI	DATE :	01/2012

TIME: 8:46:47 PM
USER: paulmore DATE: 1/12/2012
FILE: \

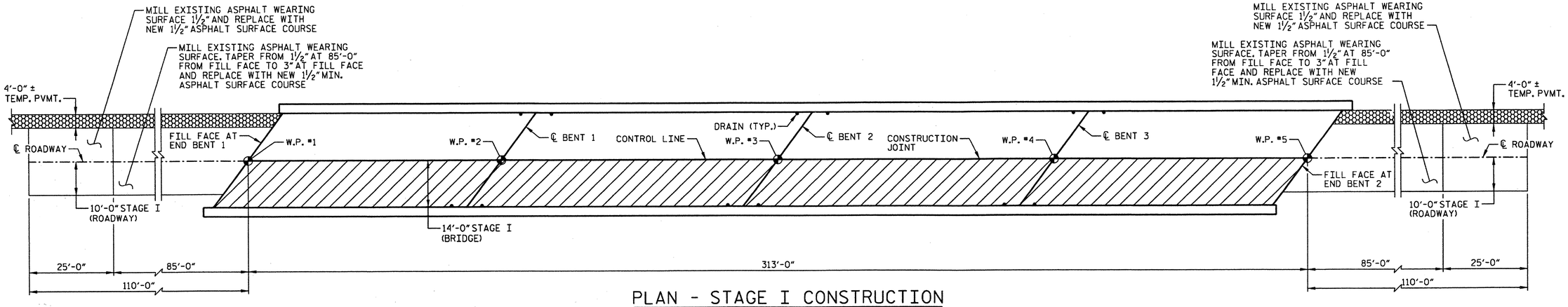

PLAN - STAGE I CONSTRUCTION

DECK SCARIFICATION AND HYDRO-DEMOLITION

TEMPORARY PAVEMENT, SEE TRAFFIC CONTROL PLANS

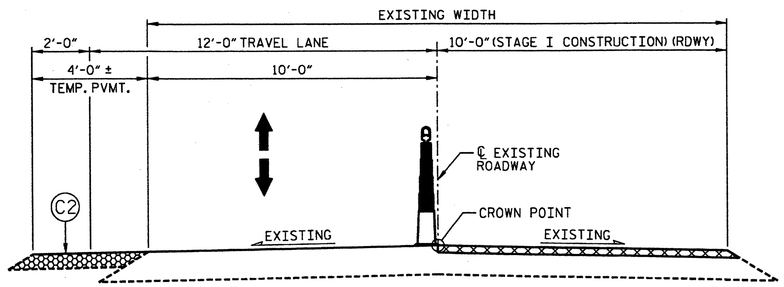

TYPICAL ROADWAY MILLING SECTION - STAGE I

(MILLING DEPTH VARIES, SEE PLAN)

ASPHALT MILLING

TEMPORARY PAVEMENT, SEE TRAFFIC CONTROL PLANS

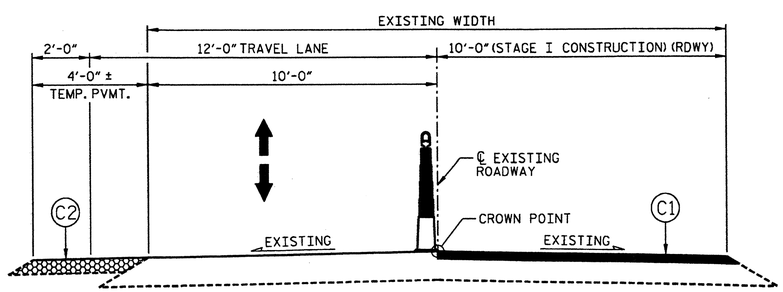

TYPICAL ROADWAY SECTION - STAGE I

TEMPORARY PAVEMENT, SEE TRAFFIC CONTROL PLANS

C1	PROPOSED VARIABLE DEPTH ASPHALT CONCRETE SURFACE COURSE, TYPE SF9.5A AT AN AVERAGE RATE OF 110 LBS PER SQ. YD. PER 1" DEPTH.
C2	PROPOSED TEMPORARY PAVING 2" ASPHALT CONCRETE SURFACE COURSE, TYPE SF9.5A, 4" ASPHALT CONCRETE BASE COURSE, TYPE B25.0B.

NOTES

TEMPORARY PAVEMENT SHALL REMAIN IN PLACE UNLESS OTHERWISE DIRECTED BY THE ENGINEER.

PROJECT NO. 17BP.4.P.2

HALIFAX COUNTY

BRIDGE NO.: 64

NORTH CAROLINA PROFESSIONAL ENGINEER SEAL 032129 MATTHEW J. MOTES

2-16-12

STATE OF NORTH CAROLINA
DEPARTMENT OF TRANSPORTATION
RALEIGH

TYPICAL SECTION, DECK SCARIFICATION & MILLING DETAILS FOR BRIDGE NO. 64 (STAGE I)

REVISIONS						SHEET NO. S-16
NO.	BY:	DATE:	NO.	BY:	DATE:	TOTAL SHEETS 84
1			3			
2			4			

HDR Engineering, Inc. of the Carolinas
3733 National Drive, Suite 207 Raleigh, N.C. 27612
N.C.B.E.L.S. License Number: F-0116

DRAWN BY :	K. BERGER	DATE :	01/2012
CHECKED BY :	C. ROKICKI	DATE :	01/2012

PLOT DRIVER: NCDOT_pdf_mono_eng_50.plt + PENTABLE: Division 4_pen_Austin.tbl
USER: lpatters DATE: 2/16/2012 TIME: 12:42:20 PM
FILE: North Carolina_Dept_of_Transportation\NCDOT_C_2011_STRDSN_OC_TO_2\13.00_CAD\Halifax 064\Drawings\DIV4_1_SD_HALIFAX64_04.dgn

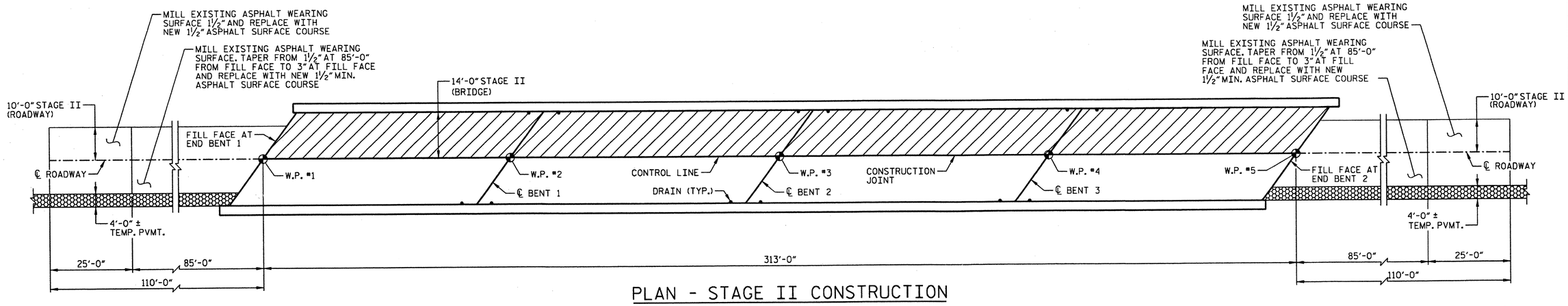

PLAN - STAGE II CONSTRUCTION

DECK SCARIFICATION AND HYDRO-DEMOLITION

TEMPORARY PAVEMENT, SEE TRAFFIC CONTROL PLANS

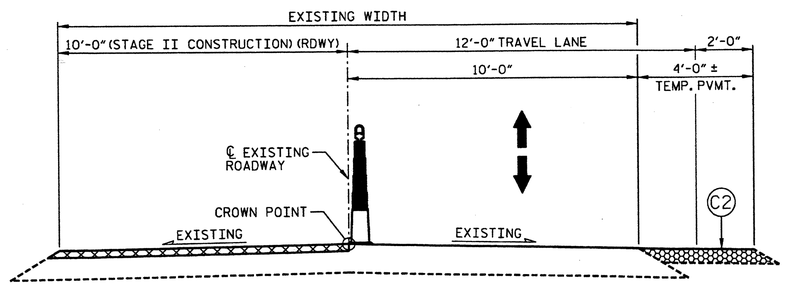

TYPICAL ROADWAY MILLING SECTION - STAGE II

(MILLING DEPTH VARIES, SEE PLAN)

ASPHALT MILLING

TEMPORARY PAVEMENT, SEE TRAFFIC CONTROL PLANS

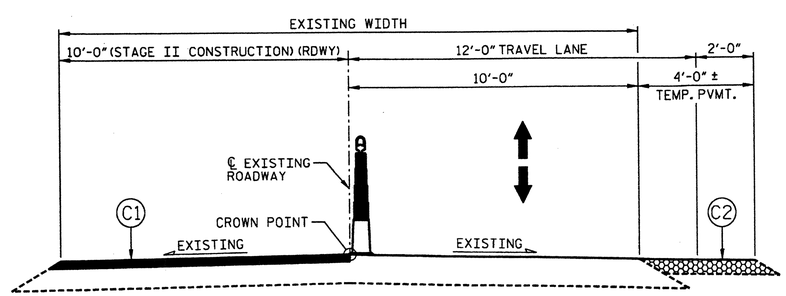

TYPICAL ROADWAY SECTION - STAGE II

TEMPORARY PAVEMENT, SEE TRAFFIC CONTROL PLANS

C1	PROPOSED VARIABLE DEPTH ASPHALT CONCRETE SURFACE COURSE, TYPE SF9.5A AT AN AVERAGE RATE OF 110 LBS PER SQ. YD. PER 1" DEPTH.
C2	PROPOSED TEMPORARY PAVING 2" ASPHALT CONCRETE SURFACE COURSE, TYPE SF9.5A, 4" ASPHALT CONCRETE BASE COURSE, TYPE B25.0B.

NOTES

TEMPORARY PAVEMENT SHALL REMAIN IN PLACE UNLESS OTHERWISE DIRECTED BY THE ENGINEER.

PROJECT NO. 17BP.4.P.2

HALIFAX COUNTY

BRIDGE NO.: 64

NORTH CAROLINA PROFESSIONAL SEAL 032129 ENGINEER MATTHEW J. MOYER

2-16-12

STATE OF NORTH CAROLINA
DEPARTMENT OF TRANSPORTATION
RALEIGH

TYPICAL SECTION, DECK SCARIFICATION & MILLING DETAILS FOR BRIDGE NO. 64 (STAGE II)

REVISIONS						SHEET NO.
NO.	BY:	DATE:	NO.	BY:	DATE:	S-17
1			3			TOTAL SHEETS
2			4			84

HDR Engineering, Inc. of the Carolinas
3733 National Drive, Suite 207 Raleigh, N.C. 27612
N.C.B.E.L.S. License Number: F-0116

DRAWN BY :	K. BERGER	DATE :	01/2012
CHECKED BY :	C. ROKICKI	DATE :	01/2012

PLOT DRIVER: NCDOT_pdf_mono_eng_50.plt + PENTABLE: Division 4_pen_Austin.tbl
USER: lpatters DATE: 2/16/2012 TIME: 11:55:33 AM
FILE: North Carolina_Dept_of_Transportation\NCDOT_C_2011_STROSN_OC_TO_2\13.00_CAD\Halifax 064\Drawings\DIV41_SD_HALIFAX64_05.dgn

BILL OF MATERIAL		
SHOTCRETE REPAIRS SPAN A	CF	0.0
SHOTCRETE REPAIRS SPAN B	CF	0.0
SHOTCRETE REPAIRS SPAN C	CF	0.5
SHOTCRETE REPAIRS SPAN D	CF	0.0

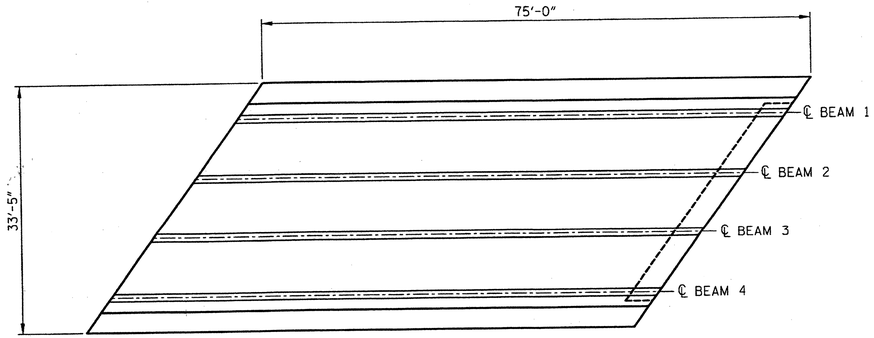

END BENT 1

BENT 1

SPAN A - UNDERSIDE

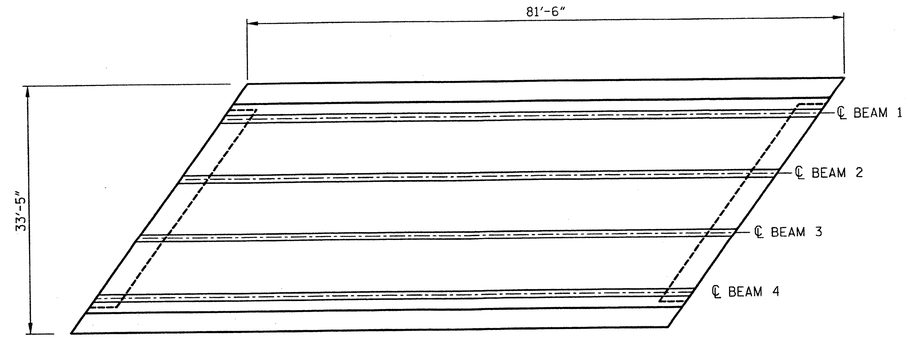

BENT 2

SPAN B - UNDERSIDE

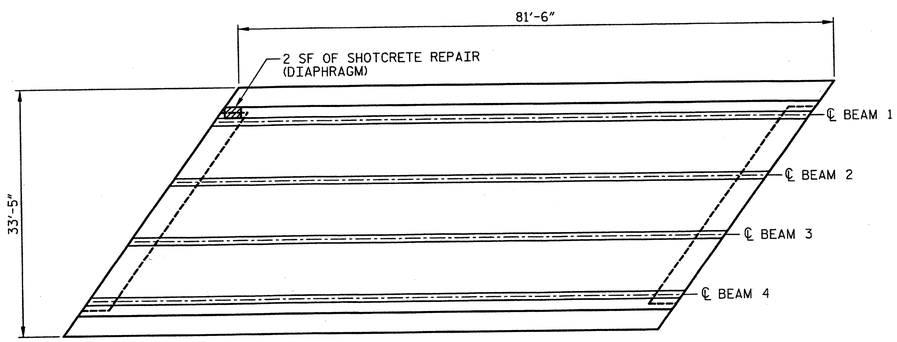

BENT 2

BENT 3

SPAN C - UNDERSIDE

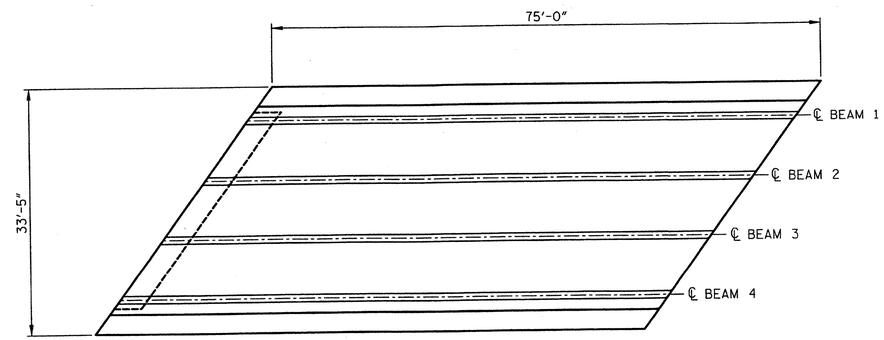

END BENT 2

SPAN D - UNDERSIDE

NOTES

THE LOCATION AND EXTENT OF REPAIRS SHOWN ON THE PLANS ARE GENERAL IN NATURE. THE ENGINEER WILL DETERMINE THE EXACT EXTENT OF REMOVAL IN THE FIELD BASED ON AN EVALUATION OF THE CONDITION OF THE EXPOSED SURFACES.

CONSTRUCTION METHODS, PROCEDURES AND SEQUENCES ARE THE CONTRACTOR'S RESPONSIBILITY AND THE CONTRACTOR SHALL TAKE ALL THE NECESSARY MEANS TO MAINTAIN AND PROTECT THE STRUCTURAL INTEGRITY OF ALL CONSTRUCTION AT ALL STAGES.

ANY DISCREPANCIES BETWEEN THE CONSTRUCTION DOCUMENTS AND THE ACTUAL FIELD CONDITIONS SHALL BE REPORTED TO THE ENGINEER.

THE MANUFACTURER'S CERTIFIED DRAWINGS AND SPECIFICATIONS FOR EQUIPMENT ANCHORAGE AND DETAILS SHALL BE SUBMITTED FOR APPROVAL.

FOR CONCRETE REPAIR, SEE SPECIAL PROVISION.

FOR FALSEWORK AND FORMWORK, SEE SPECIAL PROVISION.

FOR CRANE SAFETY, SEE SPECIAL PROVISIONS.

FOR SHOTCRETE REPAIRS, SEE SPECIAL PROVISIONS.

FOR EPOXY RESIN INJECTIONS, SEE SPECIAL PROVISIONS.

FIELD TESTING OF THE ADHESIVELY ANCHORED DOWELS IS NOT REQUIRED.

REPAIR AREAS INACCESSIBLE BY POWER TOOL SHALL BE CLEANED WITH HAND TOOLS.

THE CONTRACTOR SHALL PROTECT THE BEARING FROM SHOTCRETE OVERSPRAY WHEN PERFORMING SHOTCRETE REPAIRS NEAR THE BEAM ENDS.

FOR DIAPHRAGM REPAIR, SEE "DIAPHRAGM REPAIR DETAIL".

CONCRETE REPAIR

SHOTCRETE REPAIR

EPOXY RESIN INJECTION OF CRACKS

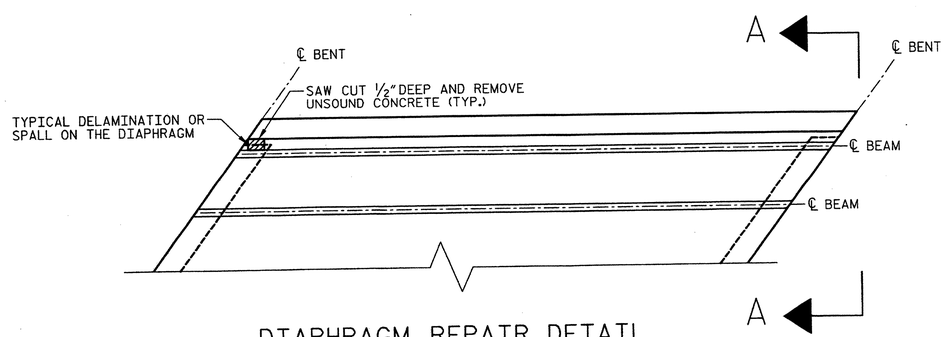

DIAPHRAGM REPAIR DETAIL

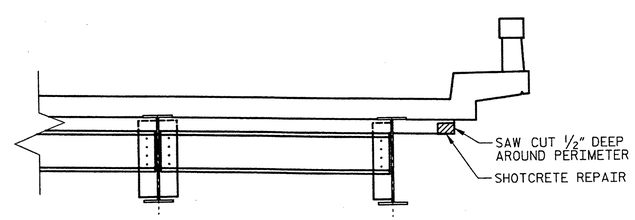

SECTION A-A

PROJECT NO. 17BP.4.P.2

HALIFAX COUNTY

BRIDGE NO.: 64

NORTH CAROLINA PROFESSIONAL SEAL 032129 ENGINEER MATTHEW J. MOYER

1-13-2012

STATE OF NORTH CAROLINA
DEPARTMENT OF TRANSPORTATION
RALEIGH

DIAPHRAGM REPAIR LOCATIONS FOR BRIDGE NO. 64

REVISIONS						
NO.	BY:	DATE:	NO.	BY:	DATE:	
1			3			
2			4			

SHEET NO. S-18

TOTAL SHEETS 84

HDR Engineering, Inc. of the Carolinas
3733 National Drive, Suite 207 Raleigh, N.C. 27612
N.C.B.E.L.S. License Number: F-0116

DRAWN BY : K. BERGER DATE : 01/2012
CHECKED BY : R. FRITZ DATE : 01/2012

PLOT DRIVER: NCDOT_pdf_mono_eng_50.plt PENTABLE: Division 4_pen_Austin.tbl
USER: pqulnone DATE: 1/12/2012 TIME: 8:47:07 PM
FILE:

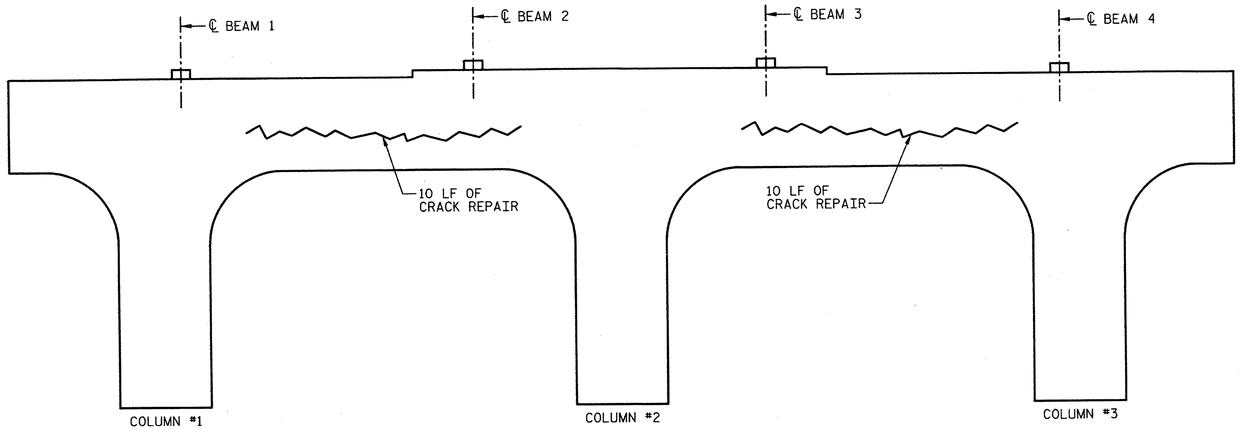

WEST ELEVATION

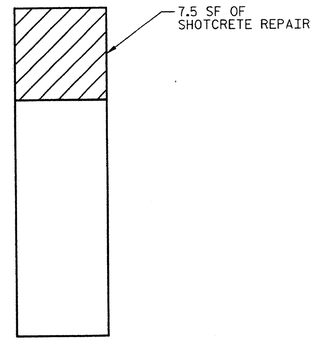

SOUTH END ELEVATION

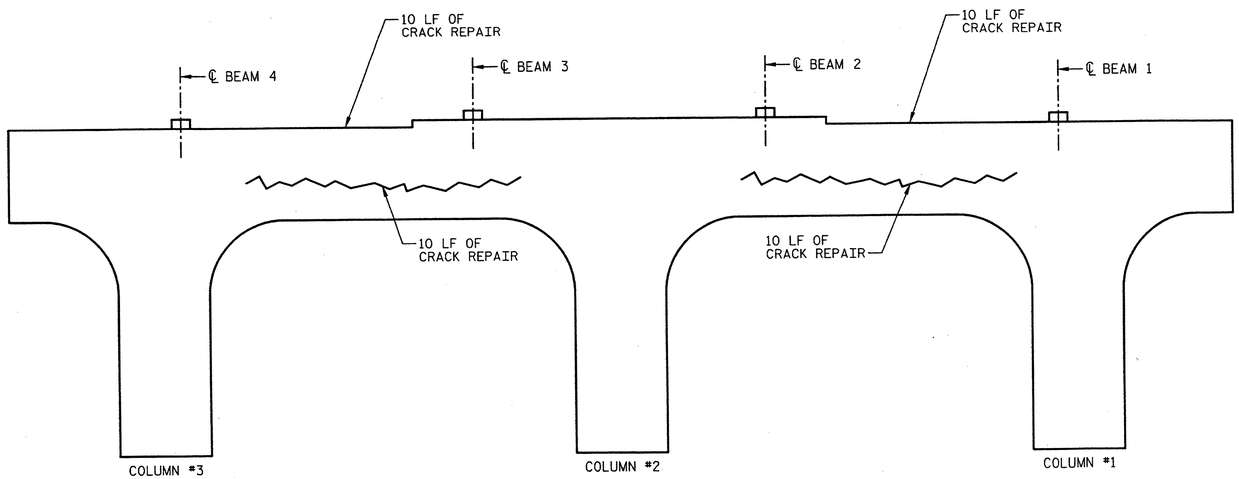

EAST ELEVATION

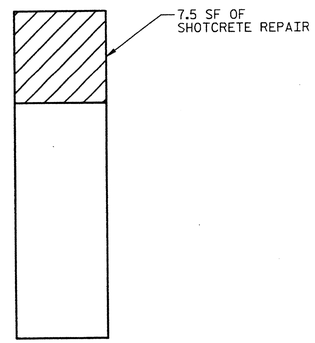

NORTH END ELEVATION

BILL OF MATERIAL

BENT 1

BAR	NO.	SIZE	TYPE	LENGTH
S1	VAR.	#4	1	VARIES
S2	VAR.	#5	2	VARIES
CONCRETE REPAIRS			CF	0
SHOTCRETE REPAIRS			CF	4
EPOXY RESIN INJECTION			LF	60
REINFORCING STEEL			LBS	0

BAR TYPE

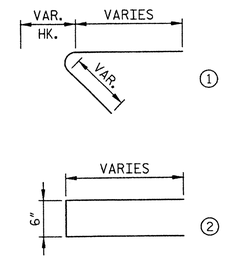

(BAR DIMENSIONS ARE OUT TO OUT)

NOTES

FOR NOTES, SEE DRAWING "DIAPHRAGM REPAIR LOCATIONS FOR BRIDGE NO. 64".

CONCRETE REPAIR

SHOTCRETE REPAIR

EPOXY RESIN INJECTION OF CRACKS

PROJECT NO. 17BP.4.P.2

HALIFAX COUNTY

BRIDGE NO.: 64

NORTH CAROLINA PROFESSIONAL SEAL 032129 ENGINEER MATTHEW J. MOYER

1-13-2012

STATE OF NORTH CAROLINA
DEPARTMENT OF TRANSPORTATION
RALEIGH

BENT 1
BRIDGE NO. 64

REVISIONS						
NO.	BY:	DATE:	NO.	BY:	DATE:	
1			3			
2			4			

SHEET NO. S-19

TOTAL SHEETS 84

HDR Engineering, Inc. of the Carolinas
3733 National Drive, Suite 207 Raleigh, N.C. 27612
N.C.B.E.L.S. License Number: F-0116

DRAWN BY : K. BERGER DATE : 01/2012
CHECKED BY : C. ROKICKI DATE : 01/2012

PLOT DRIVER: NCDOT_pdf_mono_eng_50.plt
USER: paulmone DATE: 1/12/2012
PENTABLE: Division 4_pen_austin.tbl
TIME: 8:47:12 PM
FILE: \

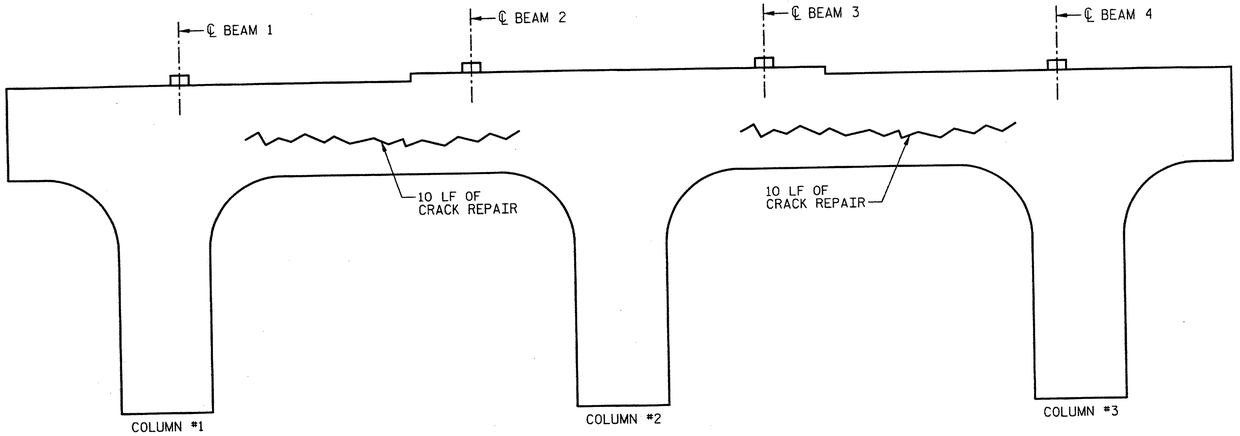

WEST ELEVATION

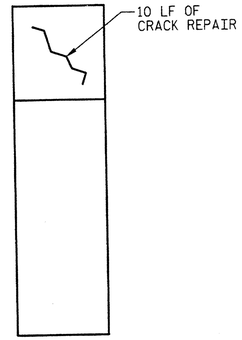

SOUTH END ELEVATION

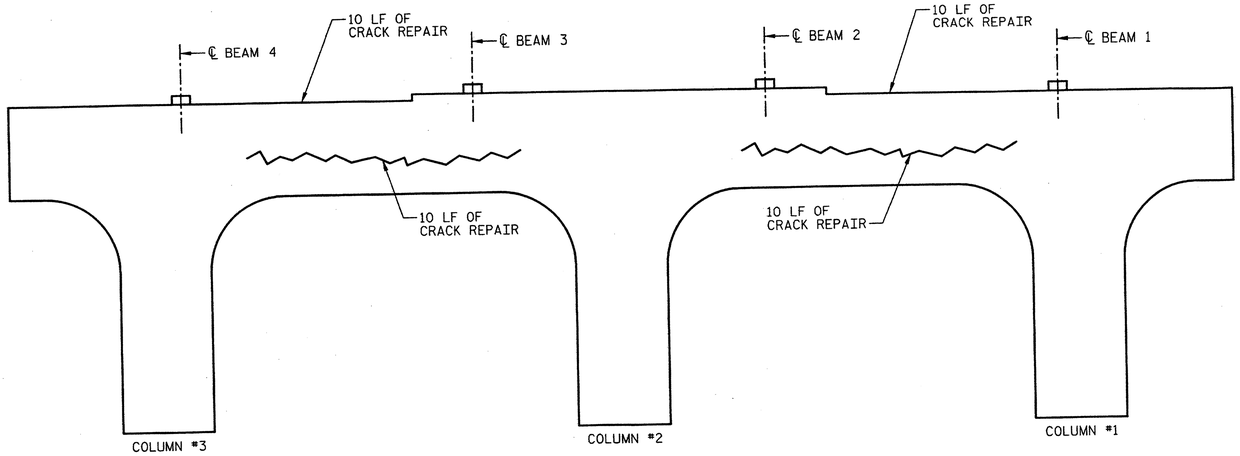

EAST ELEVATION

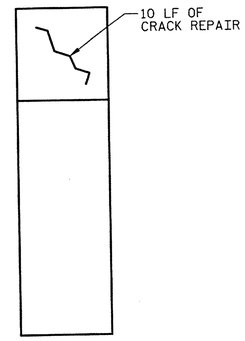

NORTH END ELEVATION

BILL OF MATERIAL

BENT 2

BAR	NO.	SIZE	TYPE	LENGTH
S1	VAR.	#4	1	VARIES
S2	VAR.	#5	2	VARIES
CONCRETE REPAIRS			CF	0
SHOTCRETE REPAIRS			CF	0
EPOXY RESIN INJECTION			LF	80
REINFORCING STEEL			LBS	0

BAR TYPE

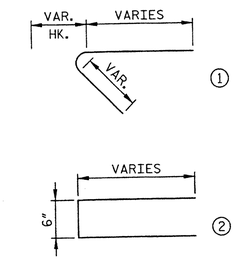

(BAR DIMENSIONS ARE OUT TO OUT)

NOTES

FOR NOTES, SEE DRAWING "DIAPHRAGM REPAIR LOCATIONS FOR BRIDGE NO. 64".

CONCRETE REPAIR

SHOTCRETE REPAIR

EPOXY RESIN INJECTION OF CRACKS

PROJECT NO. 17BP.4.P.2

HALIFAX COUNTY

BRIDGE NO.: 64

NORTH CAROLINA PROFESSIONAL SEAL 032129 ENGINEER MATTHEW J. MOTER

1-13-2012

STATE OF NORTH CAROLINA
DEPARTMENT OF TRANSPORTATION
RALEIGH

BENT 2
BRIDGE NO. 64

REVISIONS						
NO.	BY:	DATE:	NO.	BY:	DATE:	
1			3			
2			4			

SHEET NO. S-20

TOTAL SHEETS 84

HDR Engineering, Inc. of the Carolinas
3733 National Drive, Suite 207 Raleigh, N.C. 27612
N.C.B.E.L.S. License Number: F-0116

DRAWN BY : K. BERGER DATE : 01/2012
CHECKED BY : C. ROKICKI DATE : 01/2012

PLOT DRIVER: NCDOT_pdf_mono_eng_50.plt PENTABLE: Division 4_pen_Austin.tbl
USER: paulnone DATE: 1/12/2012 TIME: 8:47:18 PM
FILE: \

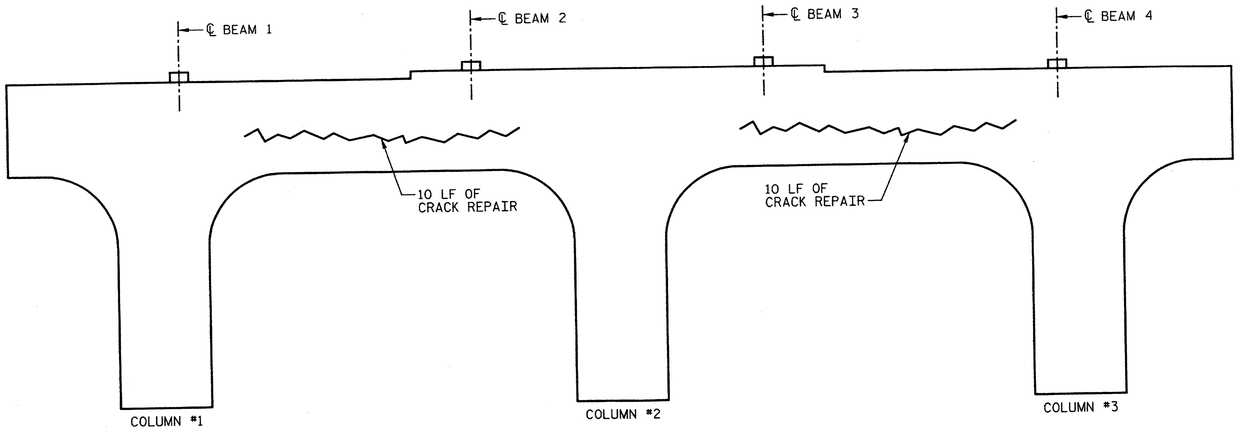

WEST ELEVATION

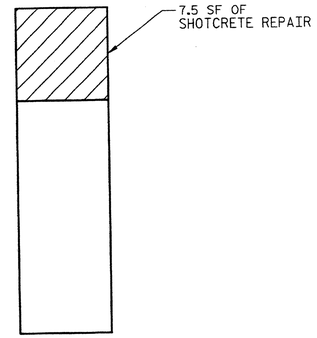

SOUTH END ELEVATION

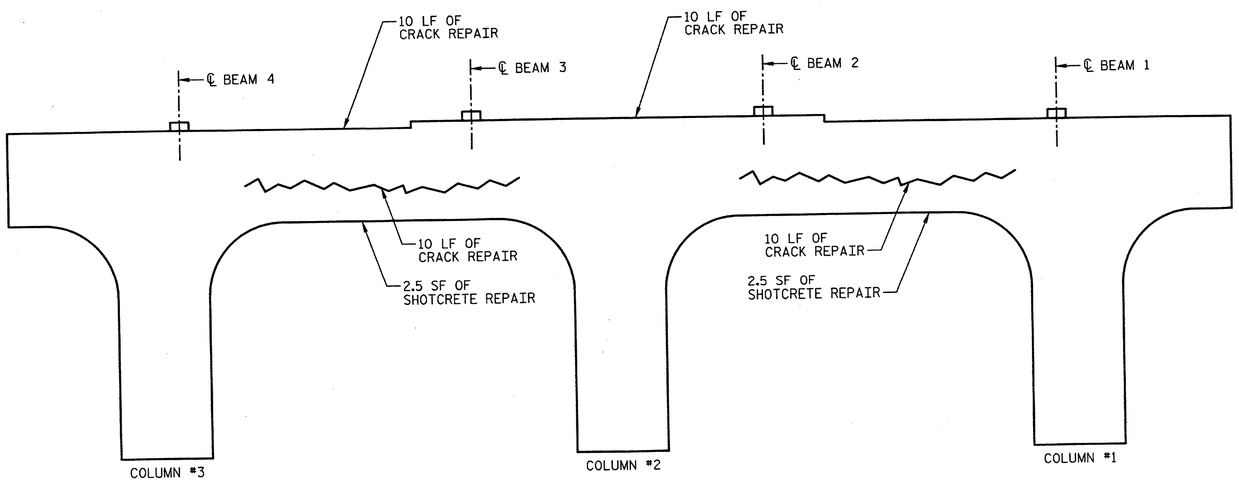

EAST ELEVATION

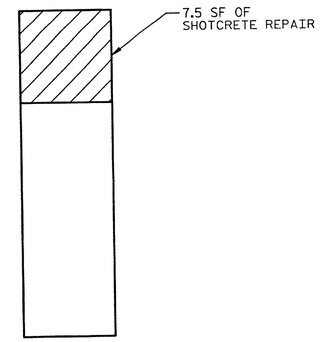

NORTH END ELEVATION

BILL OF MATERIAL

BENT 3

BAR	NO.	SIZE	TYPE	LENGTH
S1	VAR.	#4	1	VARIES
S2	VAR.	#5	2	VARIES
CONCRETE REPAIRS			CF	0
SHOTCRETE REPAIRS			CF	5
EPOXY RESIN INJECTION			LF	60
REINFORCING STEEL			LBS	0

BAR TYPE

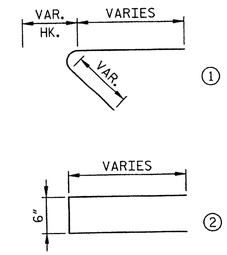

(BAR DIMENSIONS ARE OUT TO OUT)

NOTES

FOR NOTES, SEE DRAWING "DIAPHRAGM REPAIR LOCATIONS FOR BRIDGE NO. 64".

CONCRETE REPAIR

SHOTCRETE REPAIR

EPOXY RESIN INJECTION OF CRACKS

PROJECT NO. 17BP.4.P.2

HALIFAX COUNTY

BRIDGE NO.: 64

NORTH CAROLINA PROFESSIONAL SEAL 032129 ENGINEER MATTHEW J. MOTKER

1-13-2012

STATE OF NORTH CAROLINA
DEPARTMENT OF TRANSPORTATION
RALEIGH

BENT 3
BRIDGE NO. 64

REVISIONS						
NO.	BY:	DATE:	NO.	BY:	DATE:	
1			3			
2			4			

SHEET NO. S-21

TOTAL SHEETS 84

HDR Engineering, Inc. of the Carolinas
2733 National Drive, Suite 207 Raleigh, N.C. 27612
N.C.B.E.L.S. License Number: F-0116

DRAWN BY : K. BERGER DATE : 01/2012
CHECKED BY : C. ROKICKI DATE : 01/2012

PLOT DRIVER: NCDOT_pdf_mono_eng_50.plt
USER: paulnone DATE: 1/12/2012
FILE: \
PENTABLE: Division 4_pen_Austin.tbl
TIME: 8:47:25 PM

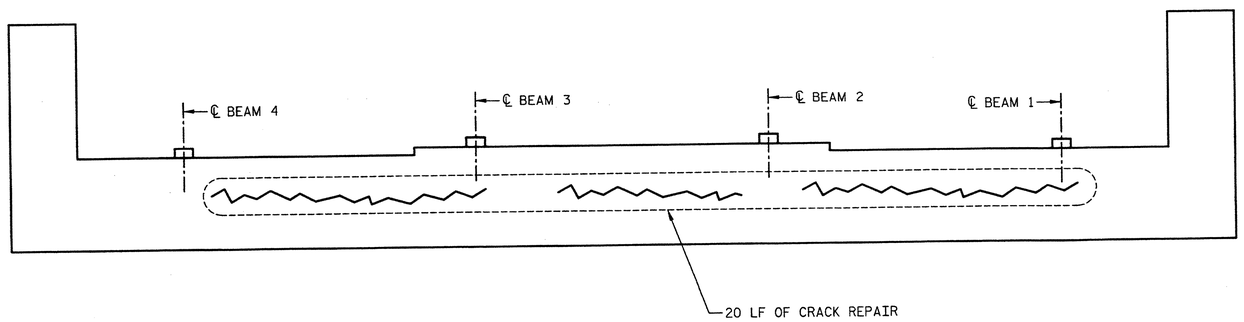

EAST ELEVATION

BILL OF MATERIAL

END BENT 1

BAR	NO.	SIZE	TYPE	LENGTH
S1	VAR.	#4	1	VARIES
S2	VAR.	#5	2	VARIES

CONCRETE REPAIRS	CF	0
SHOTCRETE REPAIRS	CF	0
EPOXY RESIN INJECTION	LF	20
REINFORCING STEEL	LBS	0

BAR TYPE

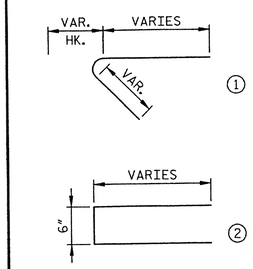

(BAR DIMENSIONS ARE OUT TO OUT)

NOTES

FOR NOTES, SEE DRAWING "DIAPHRAGM REPAIR LOCATIONS FOR BRIDGE NO. 64".

CONCRETE REPAIR

SHOTCRETE REPAIR

EPOXY RESIN INJECTION OF CRACKS

PROJECT NO. 17BP.4.P.2

HALIFAX COUNTY

BRIDGE NO.: 64

NORTH CAROLINA PROFESSIONAL SEAL 032129 ENGINEER MATTHEW J. MOYER

1-13-2012

STATE OF NORTH CAROLINA
DEPARTMENT OF TRANSPORTATION
RALEIGH

END BENT 1
BRIDGE NO. 64

REVISIONS						
NO.	BY:	DATE:	NO.	BY:	DATE:	SHEET NO. S-22
1			3			TOTAL SHEETS 84
2			4			

HDR Engineering, Inc. of the Carolinas
3733 National Drive, Suite 207 Raleigh, N.C. 27612
N.C.B.E.L.S. License Number: F-0116

DRAWN BY : K. BERGER DATE : 01/2012
CHECKED BY : C. ROKICKI DATE : 01/2012

PLOT DRIVER: NCDOT_pdf_mono_eng-50.plt
USER: paulnone DATE: 1/12/2012
FILE: \
PENTABLE: Division 4_pen_Austin.tbl
TIME: 8:47:30 PM

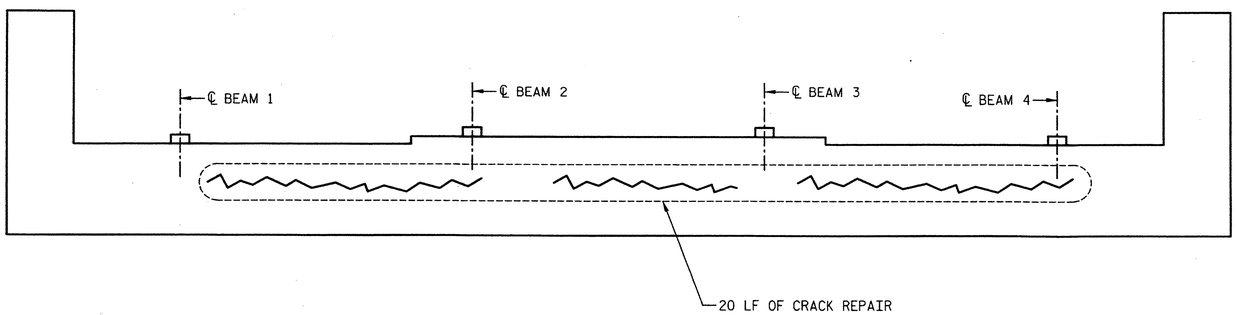

WEST ELEVATION

BILL OF MATERIAL

END BENT 2

BAR	NO.	SIZE	TYPE	LENGTH
S1	VAR.	#4	1	VARIES
S2	VAR.	#5	2	VARIES
CONCRETE REPAIRS			CF	0
SHOTCRETE REPAIRS			CF	0
EPOXY RESIN INJECTION			LF	20
REINFORCING STEEL			LBS	0

BAR TYPE

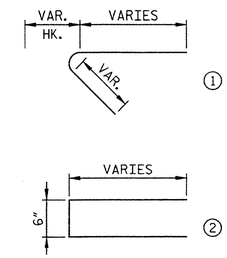

(BAR DIMENSIONS ARE OUT TO OUT)

NOTES

FOR NOTES, SEE DRAWING "DIAPHRAGM REPAIR LOCATIONS FOR BRIDGE NO. 64".

CONCRETE REPAIR

SHOTCRETE REPAIR

EPOXY RESIN INJECTION OF CRACKS

PROJECT NO. 17BP.4.P.2

HALIFAX COUNTY

BRIDGE NO.: 64

STATE OF NORTH CAROLINA
DEPARTMENT OF TRANSPORTATION
RALEIGH

END BENT 2
BRIDGE NO. 64

NORTH CAROLINA PROFESSIONAL SEAL 032129 ENGINEER MATTHEW J. MOYER

1-13-2012

HDR Engineering, Inc. of the Carolinas
3733 National Drive, Suite 207 Raleigh, N.C. 27612
N.C.B.E.L.S. License Number: F-0116

REVISIONS						
NO.	BY:	DATE:	NO.	BY:	DATE:	SHEET NO. S-23
1			3			TOTAL SHEETS 84
2			4			

DRAWN BY : K. BERGER DATE : 01/2012
CHECKED BY : C. ROKICKI DATE : 01/2012

USER: pquinone DATE: 1/12/2012
FILE: \
TIME: 8:47:36 PM

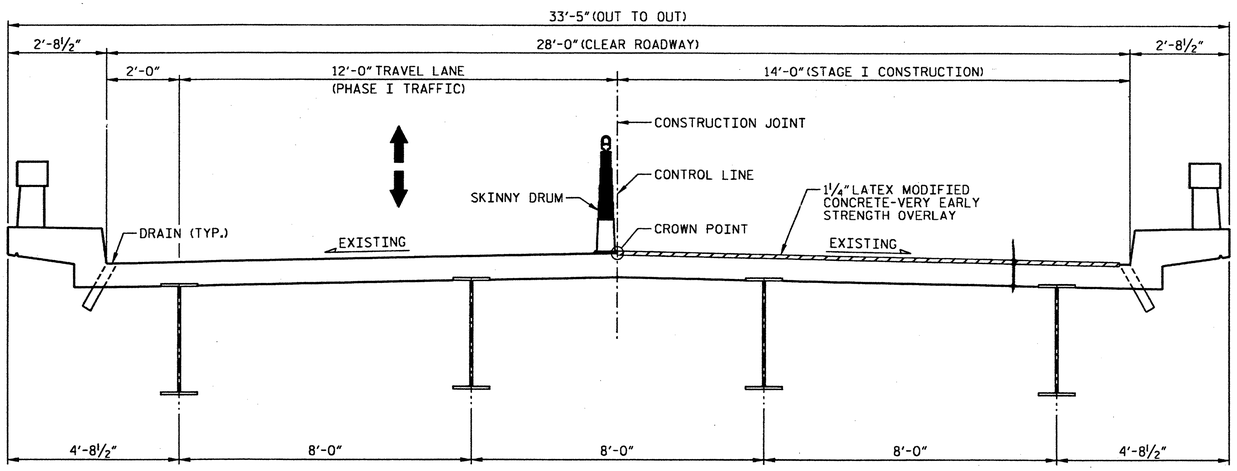

TYPICAL SECTION - STAGE I

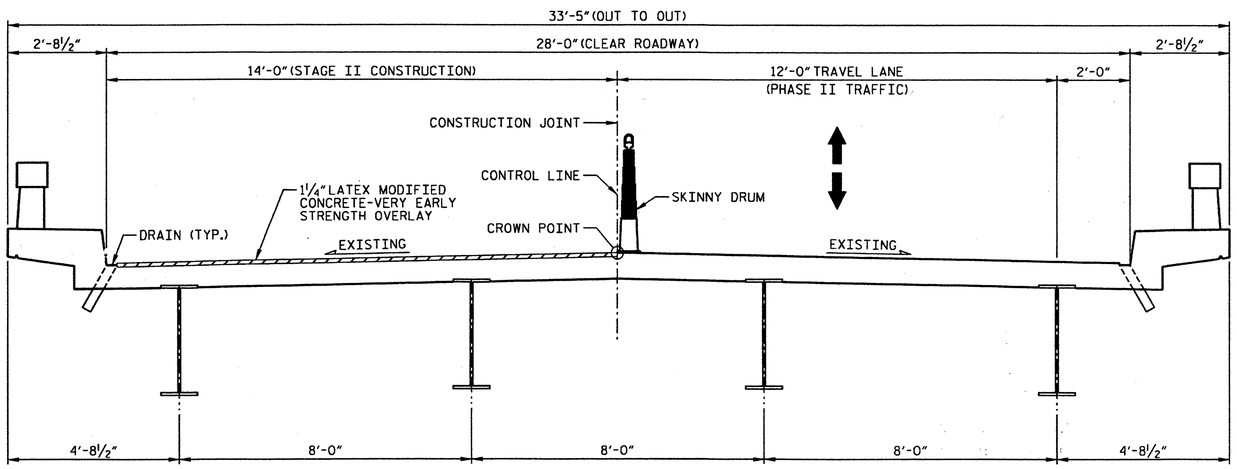

TYPICAL SECTION - STAGE II

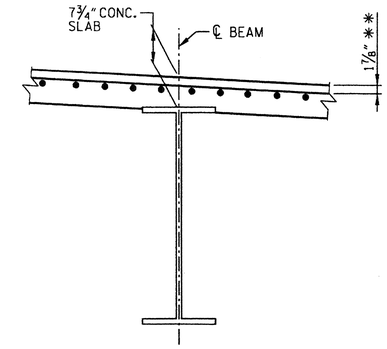

EXISTING SLAB SECTION

BOTTOM MAT OF REINFORCING NOT SHOWN FOR CLARITY.
** CONCRETE COVER PER "AS-BUILT PLANS"

NOTES

FOR "HYDRO-DEMOLITION OF BRIDGE DECK", SEE SPECIAL PROVISIONS.

THE CONTRACTOR MUST COLLECT, TREAT AND DISPOSE OF RUN-OFF WATER FROM THE HYDRO-DEMOLITION PROCESS. SEE "MANAGING HYDRO-DEMOLITION WATER" SPECIAL PROVISIONS.

THE BOUNDARIES OF AREAS IDENTIFIED FOR CLASS III SURFACE PREPARATION ARE APPROXIMATE. IF ANY CLASS III LOCATIONS ARE ENCOUNTERED PRIOR TO OR DURING HYDRO-DEMOLITION, SEE "TYPICAL "BLOW THRU" CONTAINMENT AND FORMWORK" DETAIL. THE CONTRACTOR SHALL PROVIDE A METHOD OF HANDLING UNEXPECTED BLOW THROUGH WORK OF THE DECK.

THE NOMINAL UNCOMPRESSED SEAL WIDTH OF THE FOAM JOINT SEAL SHALL BE 2½" AT END BENTS, BENT 1, AND BENT 3, AND 2 13/16" AT BENT 2. FOR "FOAM JOINT SEALS", SEE SPECIAL PROVISIONS.

FOR "ELASTOMETRIC CONCRETE", SEE SPECIAL PROVISIONS.

LATEX MODIFIED CONCRETE SHALL BE LATEX MODIFIED CONCRETE-VERY EARLY STRENGTH.

FOR "LATEX MODIFIED CONCRETE-VERY EARLY STRENGTH", SEE SPECIAL PROVISIONS.

FOR GROOVING BRIDGE FLOORS INFORMATION, SEE "LATEX MODIFIED CONCRETE-VERY EARLY STRENGTH" SPECIAL PROVISIONS.

FOR SUBMITTAL OF WORKING DRAWINGS, SEE SPECIAL PROVISIONS.

FOR FALSEWORK AND FORMWORK, SEE SPECIAL PROVISIONS.

EXISTING JOINTS AND BRIDGE DECK DRAINS SHALL BE SEALED PRIOR TO BEGINNING SURFACE PREPARATION OF BRIDGE DECK.

EXISTING DIMENSIONS AND BRIDGE CONDITION ARE FROM THE BEST INFORMATION AVAILABLE. THE CONTRACTOR SHALL VERIFY THE INFORMATION SHOWN ON THE PLANS AND NOTIFY THE ENGINEER IF ACTUAL DIMENSIONS AND CONDITIONS DIFFER.

FOR SCARIFYING BRIDGE DECK, SEE SPECIAL PROVISIONS.

PROJECT NO. 17BP.4.P.2
HALIFAX COUNTY
BRIDGE NO.: 107

NORTH CAROLINA PROFESSIONAL SEAL 032129 ENGINEER MATTHEW J. MOYER
2-14-12

TOTAL BILL OF MATERIAL

SCARIFYING BRIDGE DECK	* CLASS I SURFACE PREPARATION	* CLASS II SURFACE PREPARATION	* CLASS III SURFACE PREPARATION	CONCRETE REPAIRS	* CLASS AA CONCRETE	HYDRO-DEMOLITION OF BRIDGE DECK	LATEX MODIFIED CONCRETE-VERY EARLY STRENGTH OVERLAY	PLACING & FINISHING LATEX MODIFIED CONCRETE-VERY EARLY STRENGTH OVERLAY	FOAM JOINT SEALS	GROOVING BRIDGE FLOORS	EPOXY RESIN INJECTION	SHOTCRETE REPAIRS	REINFORCING STEEL	ASPHALT CONCRETE SURFACE COURSE TYPE SF9.5A	ASPHALT CONCRETE BASE COURSE TYPE B25.0B	INCIDENTAL MILLING
SQ. YDS.	SQ. YDS.	SQ. YDS.	SQ. YDS.	CU. FT.	CU. YDS.	SQ. YDS.	CU. YDS.	SQ. YDS.	LUMP SUM	SQ. FT.	LIN. FT.	CU. FT.	LBS	TONS	TONS	SQ. YDS.
784	13	0	0	0	0	784	28	784	LUMP SUM	6182	93	79	0	14	10	111

* QUANTITY SHOWN IS FOR INFORMATION ONLY.

DRAWN BY : A. LICON DATE : 01/2012
CHECKED BY : C. ROKICKI DATE : 01/2012

HDR Engineering, Inc. of the Carolinas
3733 National Drive, Suite 207 Raleigh, N.C. 27612
N.C.B.E.L.S. License Number: F-0116

STATE OF NORTH CAROLINA
DEPARTMENT OF TRANSPORTATION
RALEIGH

TYPICAL SECTION FOR BRIDGE NO. 107

(NC903 OVER I-95)

REVISIONS						SHEET NO. S-24
NO.	BY:	DATE:	NO.	BY:	DATE:	TOTAL SHEETS 84
1			3			
2			4			

PLOT DRIVER: NCDOT_pdf_mono_eng_50.plt PENTABLE: Division 4_pen_Austin.tbl
USER: msells TIME: 3:43:50 PM DATE: 2/14/2012
FILE: North Carolina_Dept_of_Transportation\NCDOT_C_2011_STRDSN_OC_TO_2\13.00_CAD\Halifax 107\Drawings\DIV4.1_SD_HALIFAX107_01.dgn

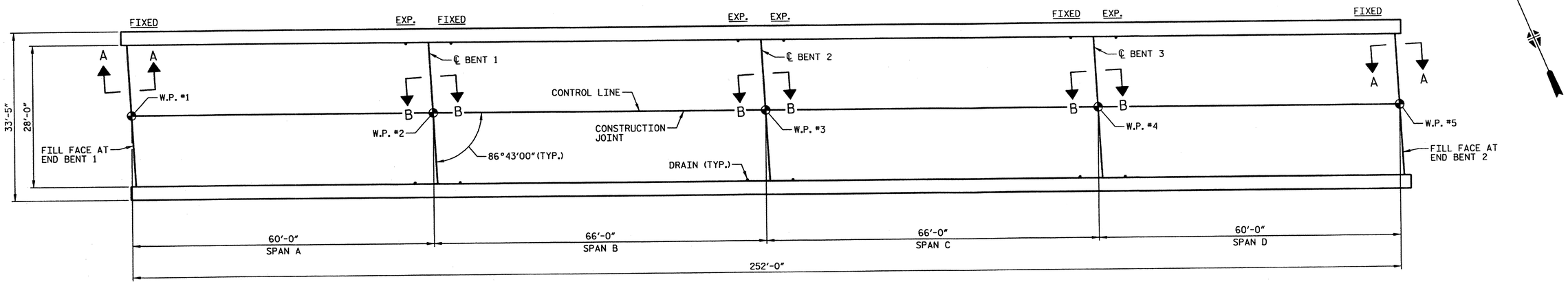

PLAN VIEW

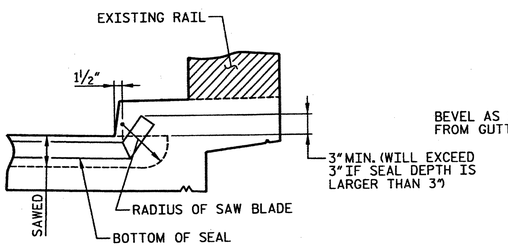

JOINT DETAIL AT RAIL

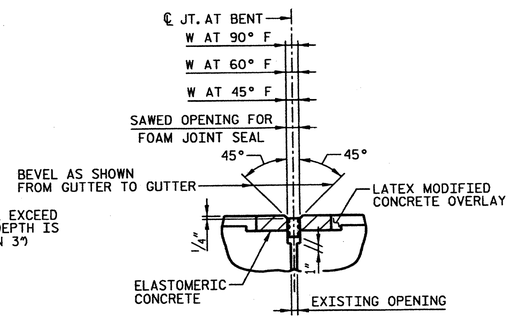

PROPOSED JOINT AT BENTS

FOAM JOINT SEAL EXPANSION

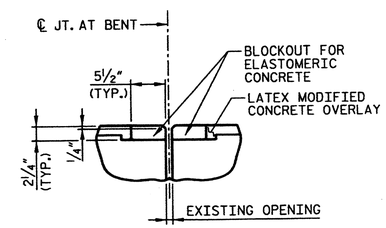

FOAM JOINT SEAL AT BENTS

PRE-SAWED ELASTOMERIC CONCRETE DIMENSIONS

SAWED OPENING FOR FOAM JOINT			
BENT NO.	W AT 90° F	W AT 60° F	W AT 45° F
BENT 1	1 11/16"	1 7/8"	1 15/16"
BENT 2	1 3/4"	2 1/8"	2 5/16"
BENT 3	1 11/16"	1 7/8"	1 15/16"

ELASTOMERIC CONCRETE	
BENT NO.	ELASTOMERIC CONCRETE ✱ (CU. FT.)
BENT 1	4.8
BENT 2	4.8
BENT 3	4.8
TOTAL	14.4

✱ BASED ON THE MINIMUM BLOCKOUT SHOWN

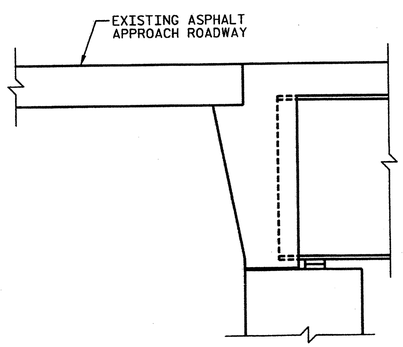

EXISTING SECTION AT END BENT

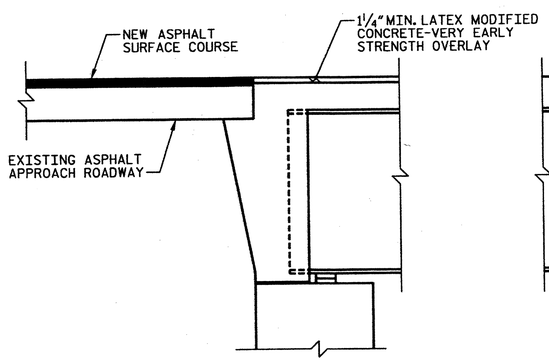

PROPOSED SECTION AT END BENT

SECTION A-A

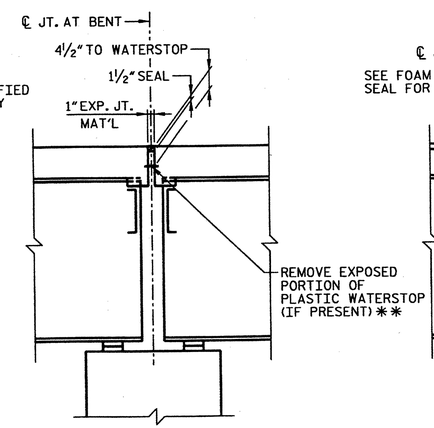

EXISTING JOINT AT BENTS

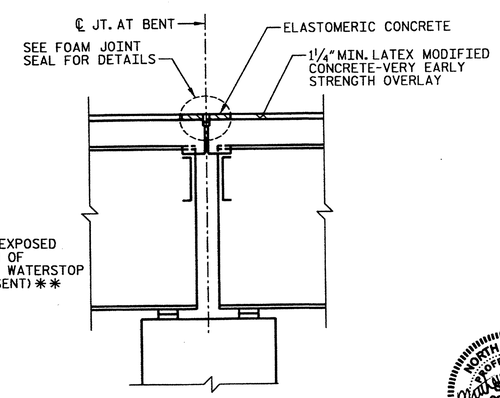

PROPOSED JOINT AT BENTS

SECTION B-B

✱✱ ALL LOOSE AND UNSOUND CONCRETE SHALL BE REMOVED. IF THE EMBEDDED PORTION OF THE EXISTING PLASTIC WATERSTOP IS EXPOSED DURING REMOVAL OF UNSOUND CONCRETE, THE ENTIRE WATERSTOP SHALL BE REMOVED. OTHERWISE, TRIM WATERSTOP FLUSH WITH EXISTING CONCRETE SURFACE.

PROJECT NO. 17BP.4.P.2

HALIFAX COUNTY

BRIDGE NO.: 107

NORTH CAROLINA PROFESSIONAL SEAL 032129 ENGINEER MATTHEW J. MOTER

1-13-2012

STATE OF NORTH CAROLINA
DEPARTMENT OF TRANSPORTATION
RALEIGH

PLAN VIEW AND JOINT DETAILS FOR BRIDGE NO. 107

REVISIONS						
NO.	BY:	DATE:	NO.	BY:	DATE:	SHEET NO. S-25
1			3			TOTAL SHEETS 84
2			4			

HDR Engineering, Inc. of the Carolinas
3733 National Drive, Suite 207 Raleigh, N.C. 27612
N.C.B.E.L.S. License Number: F-0116

DRAWN BY : K. BERGER DATE : 01/2012
CHECKED BY : C. ROKICKI DATE : 01/2012

PLOT UNITS: NCDOT_pdf_mono.eng.pltcfg
USER: paulnone DATE: 1/12/2012
FILE: \
TIME: 8:47:49 PM

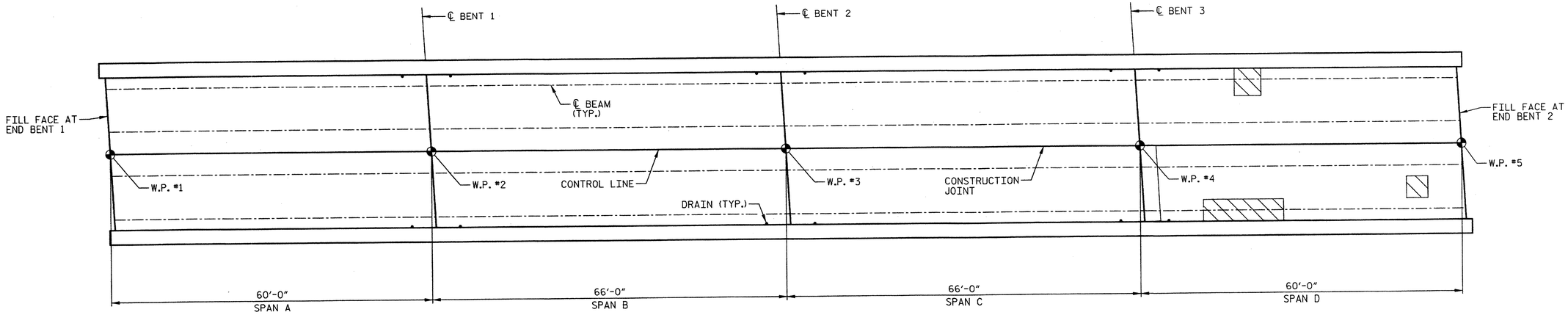

PLAN OF SPANS - DECK REPAIRS

APPROX. AREA: CLASS I REPAIR

APPROX. AREA: CLASS II REPAIR

APPROX. AREA: CLASS III REPAIR

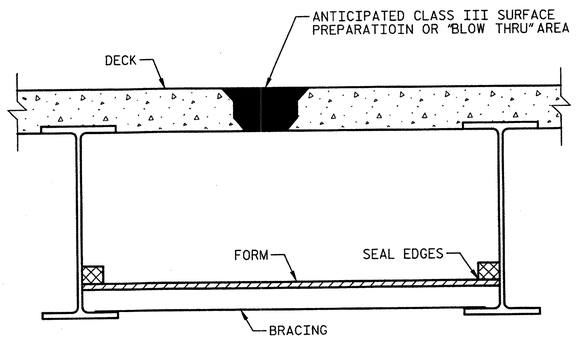

TYPICAL "BLOW THRU" CONTAINMENT AND FORMWORK

A METHOD TO CAPTURE WATER AND DEBRIS FROM BLOW THRU DURING HYDRO-DEMOLITION SHALL BE INSTALLED IN AREAS INDICATED AS CLASS III SURFACE PREPARATION.

SUBMIT DETAILS OF PROPOSED FORMWORK FOR APPROVAL PRIOR TO BEGINNING WORK.

COST FOR INSTALLING AND REMOVING FORMWORK SHALL BE INCIDENTAL TO THE PRICE PER SQ. YARD OF HYDRO-DEMOLITION.

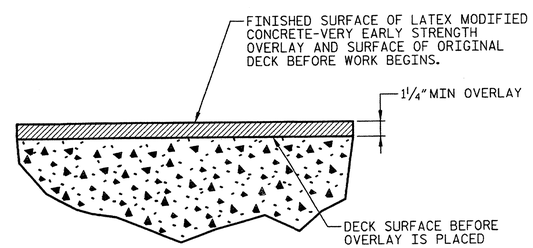

DETAIL FOR LATEX MODIFIED CONCRETE OVERLAY

PROJECT NO. 17BP.4.P.2

HALIFAX COUNTY

BRIDGE NO.: 107

NORTH CAROLINA PROFESSIONAL SEAL 032129 ENGINEER MATTHEW J. MOYER

1-13-2012

STATE OF NORTH CAROLINA
DEPARTMENT OF TRANSPORTATION
RALEIGH

DECK REPAIR DETAILS FOR BRIDGE NO. 107

REVISIONS						
NO.	BY:	DATE:	NO.	BY:	DATE:	
1			3			
2			4			

SHEET NO. 5-26

TOTAL SHEETS 84

HDR Engineering, Inc. of the Carolinas
3733 National Drive, Suite 207 Raleigh, N.C. 27612
N.C.B.E.L.S. License Number: F-0116

DRAWN BY : K. BERGER DATE : 01/2012
CHECKED BY : C. ROKICKI DATE : 01/2012

PENTABLE: Division 4_pen_Austin.tbl
TIME: 8:47:56 PM

PLOT DRIVER: NCDOT_pdf_mono_eng_50.plt
USER: paulnone DATE: 1/12/2012
FILE: \

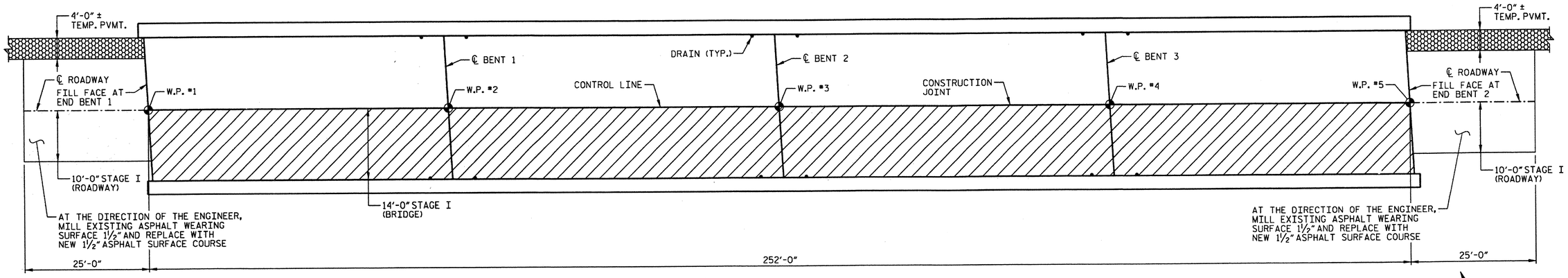

PLAN - STAGE I CONSTRUCTION

DECK SCARIFICATION AND HYDRO-DEMOLITION

TEMPORARY PAVEMENT, SEE TRAFFIC CONTROL PLANS

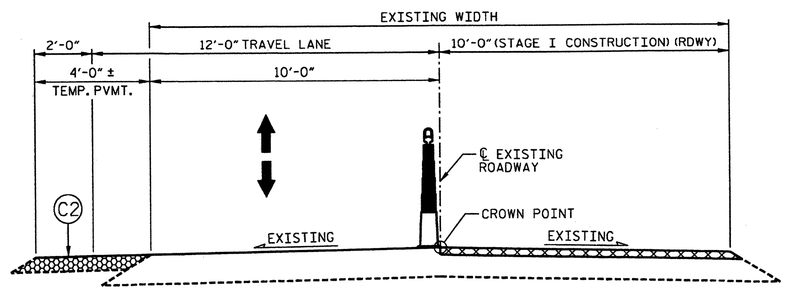

TYPICAL ROADWAY MILLING SECTION - STAGE I

ASPHALT MILLING

TEMPORARY PAVEMENT, SEE TRAFFIC CONTROL PLANS

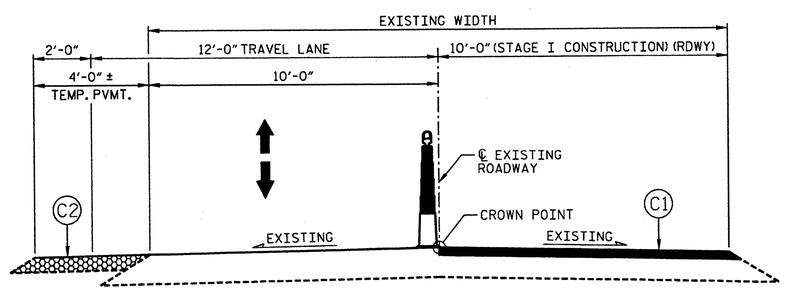

TYPICAL ROADWAY SECTION - STAGE I

TEMPORARY PAVEMENT, SEE TRAFFIC CONTROL PLANS

C1	PROPOSED VARIABLE DEPTH ASPHALT CONCRETE SURFACE COURSE, TYPE SF9.5A AT AN AVERAGE RATE OF 110 LBS PER SQ. YD. PER 1" DEPTH.
C2	PROPOSED TEMPORARY PAVING 2" ASPHALT CONCRETE SURFACE COURSE, TYPE SF9.5A, 4" ASPHALT CONCRETE BASE COURSE, TYPE B25.0B.

NOTES

TEMPORARY PAVEMENT SHALL REMAIN IN PLACE UNLESS OTHERWISE DIRECTED BY THE ENGINEER.

PROJECT NO. 17BP.4.P.2

HALIFAX COUNTY

BRIDGE NO.: 107

NORTH CAROLINA PROFESSIONAL SEAL 032129 ENGINEER MATTHEW J. MOYER

2-16-12

STATE OF NORTH CAROLINA
DEPARTMENT OF TRANSPORTATION
RALEIGH

TYPICAL SECTION, DECK SCARIFICATION & MILLING DETAILS FOR BRIDGE NO. 107 (STAGE I)

REVISIONS						SHEET NO. S-27
NO.	BY:	DATE:	NO.	BY:	DATE:	TOTAL SHEETS 84
1			3			
2			4			

HDR Engineering, Inc. of the Carolinas
3733 National Drive, Suite 207 Raleigh, N.C. 27612
N.C.B.E.L.S. License Number: F-0116

DRAWN BY :	K. BERGER	DATE :	01/2012
CHECKED BY :	C. ROKICKI	DATE :	01/2012

PLOT DRIVER: NCDOT_pdf_mono_eng_50.plt + PENTABLE: Division 4.pen_Austin.tbl
USER: lpatters DATE: 2/16/2012 TIME: 11:55:46 AM
FILE: North Carolina_Dept_of_Transportation\NCDOT_C_2011_STRDSN_OC_TO_2\13.00_CAD\Halifax 107\Drawings\DIV4.1_SD_HALIFAX107_04.dgn

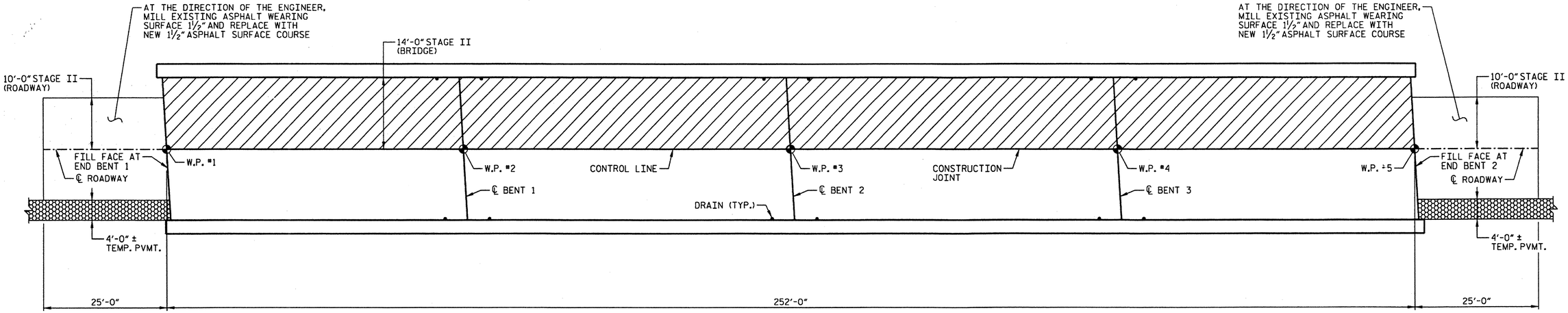

PLAN - STAGE II CONSTRUCTION

DECK SCARIFICATION AND HYDRO-DEMOLITION

TEMPORARY PAVEMENT, SEE TRAFFIC CONTROL PLANS

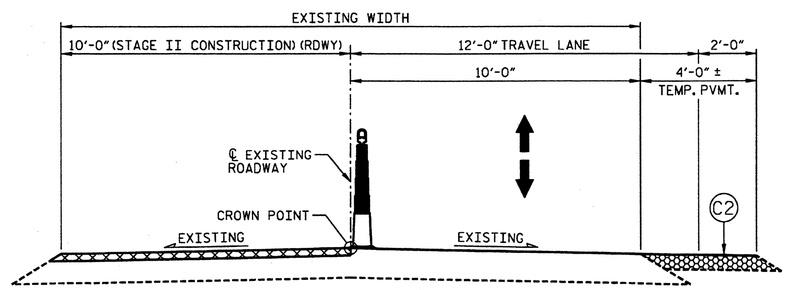

TYPICAL ROADWAY MILLING SECTION - STAGE II

ASPHALT MILLING

TEMPORARY PAVEMENT, SEE TRAFFIC CONTROL PLANS

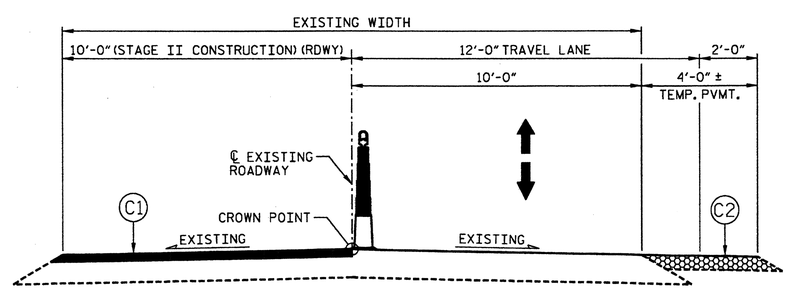

TYPICAL ROADWAY SECTION - STAGE II

TEMPORARY PAVEMENT, SEE TRAFFIC CONTROL PLANS

C1	PROPOSED VARIABLE DEPTH ASPHALT CONCRETE SURFACE COURSE, TYPE SF9.5A AT AN AVERAGE RATE OF 110 LBS PER SQ. YD. PER 1" DEPTH.
C2	PROPOSED TEMPORARY PAVING 2" ASPHALT CONCRETE SURFACE COURSE, TYPE SF9.5A, 4" ASPHALT CONCRETE BASE COURSE, TYPE B25.0B.

NOTES

TEMPORARY PAVEMENT SHALL REMAIN IN PLACE UNLESS OTHERWISE DIRECTED BY THE ENGINEER.

PROJECT NO. 17BP.4.P.2

HALIFAX COUNTY

BRIDGE NO.: 107

NORTH CAROLINA PROFESSIONAL SEAL 032129 ENGINEER MATTHEW J. MOYER

2-16-12

STATE OF NORTH CAROLINA
DEPARTMENT OF TRANSPORTATION
RALEIGH

TYPICAL SECTION, DECK SCARIFICATION & MILLING DETAILS FOR BRIDGE NO. 107 (STAGE II)

REVISIONS						SHEET NO. S-28
NO.	BY:	DATE:	NO.	BY:	DATE:	TOTAL SHEETS 84
1			3			
2			4			

HDR Engineering, Inc. of the Carolinas
3733 National Drive, Suite 207 Raleigh, N.C. 27612
N.C.B.E.L.S. License Number: F-0116

DRAWN BY : K. BERGER DATE : 01/2012
CHECKED BY : C. ROKICKI DATE : 01/2012

PLOT DRIVER: NCDOT_pdf_mono_eng_50.plt + PENTABLE: Division 4_pen_Austin.tbl
USER: lpotters DATE: 2/16/2012 TIME: 11:56:00 AM
FILE: North Carolina_Dept_of_Transportation\NCDOT_C_2011_STRDSN_OC_T0_2\13.00_CAD\Halifax 107\Drawings\DIV4.1_SD_HALIFAX107_05.dgn

BILL OF MATERIAL		
SHOTCRETE REPAIRS SPAN A	CF	5.0
SHOTCRETE REPAIRS SPAN B	CF	1.0
SHOTCRETE REPAIRS SPAN C	CF	0.5
SHOTCRETE REPAIRS SPAN D	CF	4.5

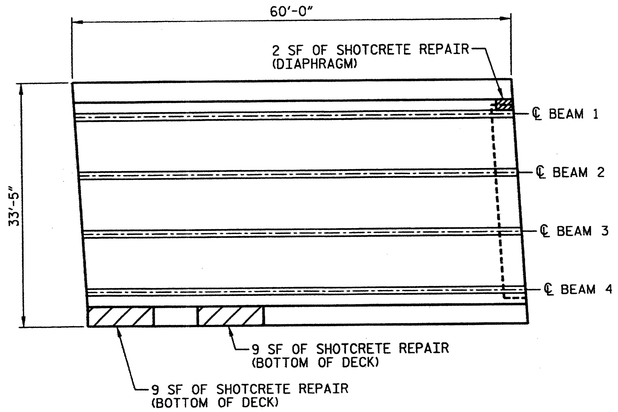

END BENT 1

BENT 1

SPAN A - UNDERSIDE

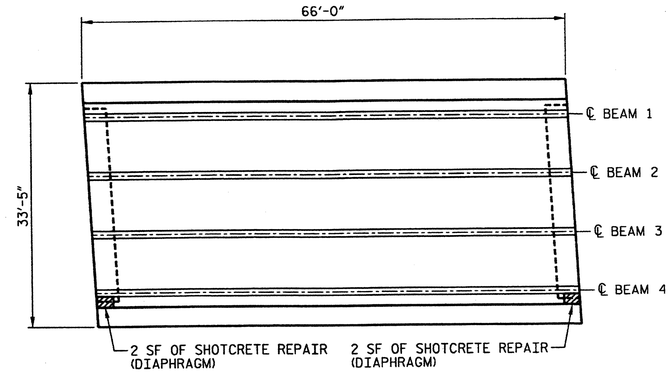

BENT 2

SPAN B - UNDERSIDE

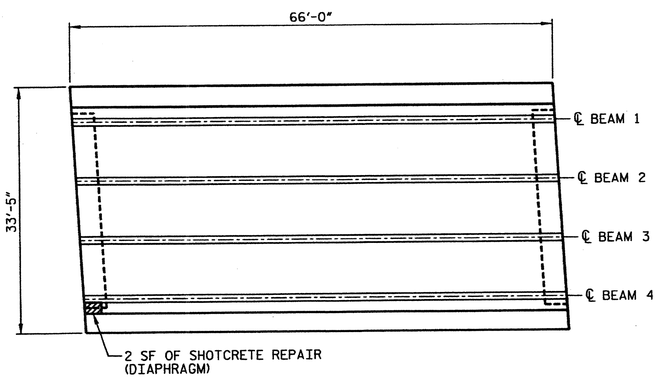

BENT 2

BENT 3

SPAN C - UNDERSIDE

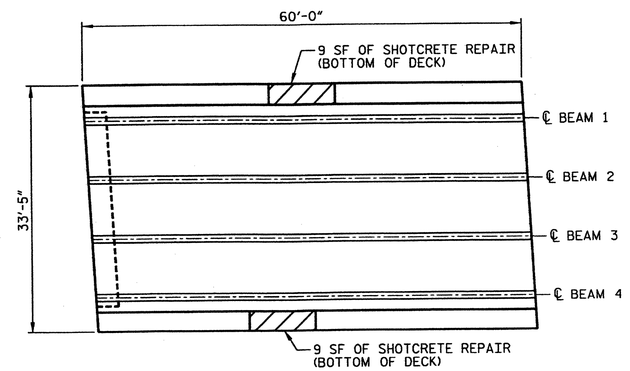

END BENT 2

SPAN D - UNDERSIDE

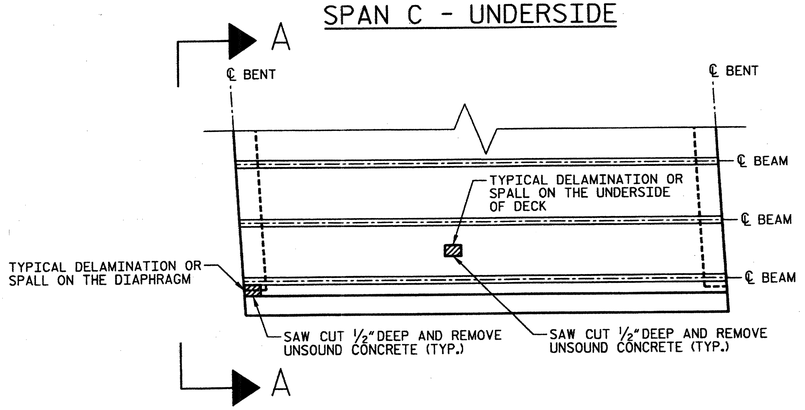

DECK/DIAPHRAGM REPAIR DETAIL

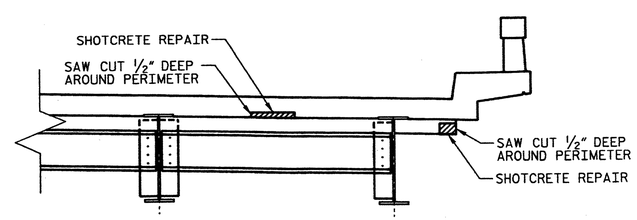

SECTION A-A

NOTES

THE LOCATION AND EXTENT OF REPAIRS SHOWN ON THE PLANS ARE GENERAL IN NATURE. THE ENGINEER WILL DETERMINE THE EXACT EXTENT OF REMOVAL IN THE FIELD BASED ON AN EVALUATION OF THE CONDITION OF THE EXPOSED SURFACES.

CONSTRUCTION METHODS, PROCEDURES AND SEQUENCES ARE THE CONTRACTOR'S RESPONSIBILITY AND THE CONTRACTOR SHALL TAKE ALL THE NECESSARY MEANS TO MAINTAIN AND PROTECT THE STRUCTURAL INTEGRITY OF ALL CONSTRUCTION AT ALL STAGES.

ANY DISCREPANCIES BETWEEN THE CONSTRUCTION DOCUMENTS AND THE ACTUAL FIELD CONDITIONS SHALL BE REPORTED TO THE ENGINEER.

THE MANUFACTURER'S CERTIFIED DRAWINGS AND SPECIFICATIONS FOR EQUIPMENT ANCHORAGE AND DETAILS SHALL BE SUBMITTED FOR APPROVAL.

FOR CONCRETE REPAIR, SEE SPECIAL PROVISION.

FOR FALSEWORK AND FORMWORK, SEE SPECIAL PROVISION.

FOR CRANE SAFETY, SEE SPECIAL PROVISIONS.

FOR SHOTCRETE REPAIRS, SEE SPECIAL PROVISIONS.

FOR EPOXY RESIN INJECTIONS, SEE SPECIAL PROVISIONS.

FIELD TESTING OF THE ADHESIVELY ANCHORED DOWELS IS NOT REQUIRED.

REPAIR AREAS INACCESSIBLE BY POWER TOOL SHALL BE CLEANED WITH HAND TOOLS.

THE CONTRACTOR SHALL PROTECT THE BEARING FROM SHOTCRETE OVERSPRAY WHEN PERFORMING SHOTCRETE REPAIRS NEAR THE BEAM ENDS.

FOR DIAPHRAGM REPAIR, SEE "DECK/DIAPHRAGM REPAIR DETAIL".

CONCRETE REPAIR

SHOTCRETE REPAIR

EPOXY RESIN INJECTION OF CRACKS

PROJECT NO. 17BP.4.P.2

HALIFAX COUNTY

BRIDGE NO.: 107

STATE OF NORTH CAROLINA
DEPARTMENT OF TRANSPORTATION
RALEIGH

SUPERSTRUCTURE REPAIR LOCATIONS FOR BRIDGE NO. 107

NORTH CAROLINA PROFESSIONAL SEAL 032129 ENGINEER MATTHEW J. MOYER
1-13-2012

HDR Engineering, Inc. of the Carolinas
3733 National Drive, Suite 207 Raleigh, N.C. 27612
N.C.B.E.L.S. License Number: F-0116

REVISIONS							
NO.	BY:	DATE:	NO.	BY:	DATE:	SHEET NO. S-29
1			3			TOTAL SHEETS 84
2			4			

DRAWN BY : K. BERGER DATE : 01/2012
CHECKED BY : R. FRITZ DATE : 01/2012

TIME: 8:48:15 PM
DATE: 1/12/2012
USER: paulnone
FILE: \

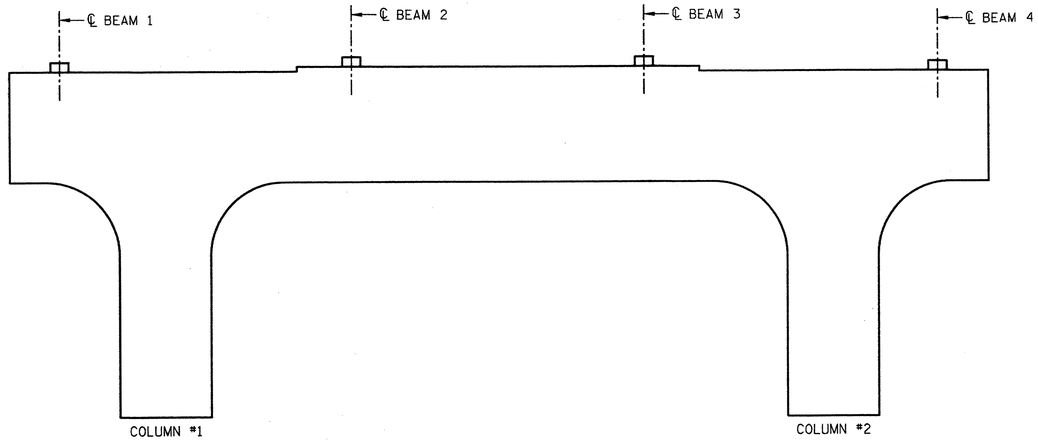

WEST ELEVATION

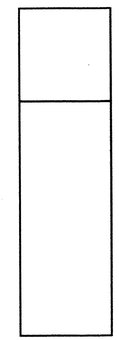

SOUTH END ELEVATION

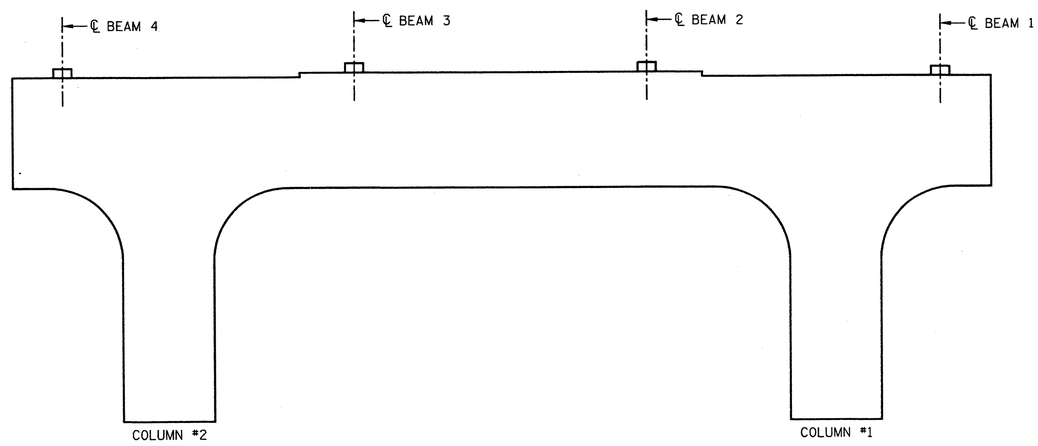

EAST ELEVATION

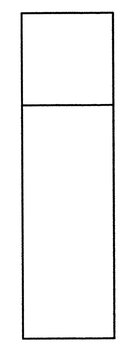

NORTH END ELEVATION

BILL OF MATERIAL

BENT 1

BAR	NO.	SIZE	TYPE	LENGTH
S1	VAR.	#4	1	VARIES
S2	VAR.	#5	2	VARIES
CONCRETE REPAIRS			CF	0
SHOTCRETE REPAIRS			CF	0
EPOXY RESIN INJECTION			LF	0
REINFORCING STEEL			LBS	0

BAR TYPE

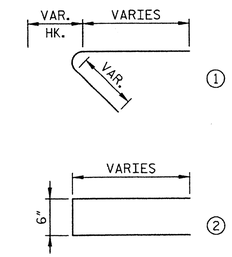

(BAR DIMENSIONS ARE OUT TO OUT)

NOTES

FOR NOTES, SEE DRAWING "SUPERSTRUCTURE REPAIR LOCATIONS FOR BRIDGE NO. 107".

CONCRETE REPAIR

SHOTCRETE REPAIR

EPOXY RESIN INJECTION OF CRACKS

PROJECT NO. 17BP.4.P.2

HALIFAX COUNTY

BRIDGE NO.: 107

NORTH CAROLINA PROFESSIONAL SEAL 032129 ENGINEER MATTHEW J. MOYER

1-13-2012

STATE OF NORTH CAROLINA
DEPARTMENT OF TRANSPORTATION
RALEIGH

BENT 1
BRIDGE NO. 107

REVISIONS						
NO.	BY:	DATE:	NO.	BY:	DATE:	
1			3			
2			4			

SHEET NO. S-30

TOTAL SHEETS 84

HDR Engineering, Inc. of the Carolinas
3733 National Drive, Suite 207 Raleigh, N.C. 27612
N.C.B.E.L.S. License Number: F-0116

DRAWN BY : K. BERGER DATE : 01/2012
CHECKED BY : C. ROKICKI DATE : 01/2012

PLOT DRIVER: NCDOT_pdf_mono_eng_50.plt
USER: pquinone DATE: 1/12/2012
PENTABLE: Division 4_pen_austin.tbl
TIME: 8:48:21 PM
FILE: \

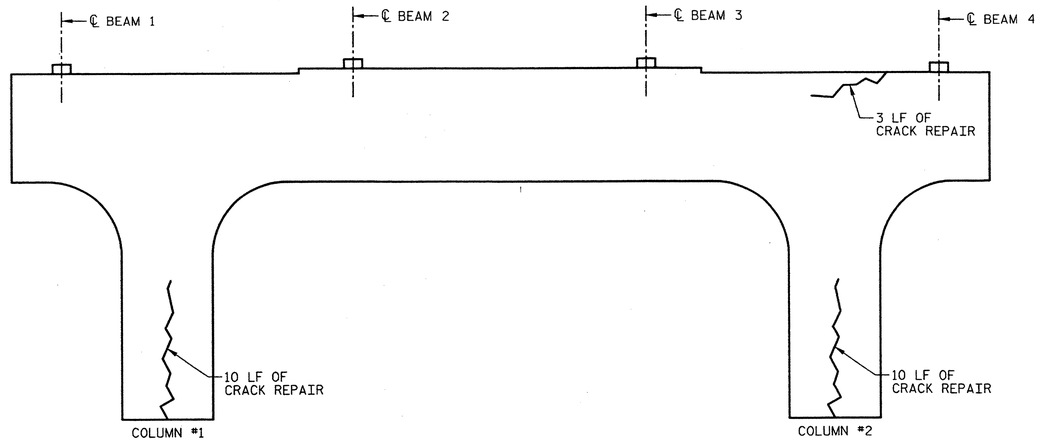

WEST ELEVATION

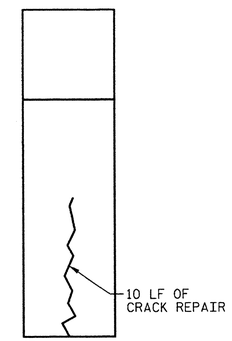

SOUTH END ELEVATION

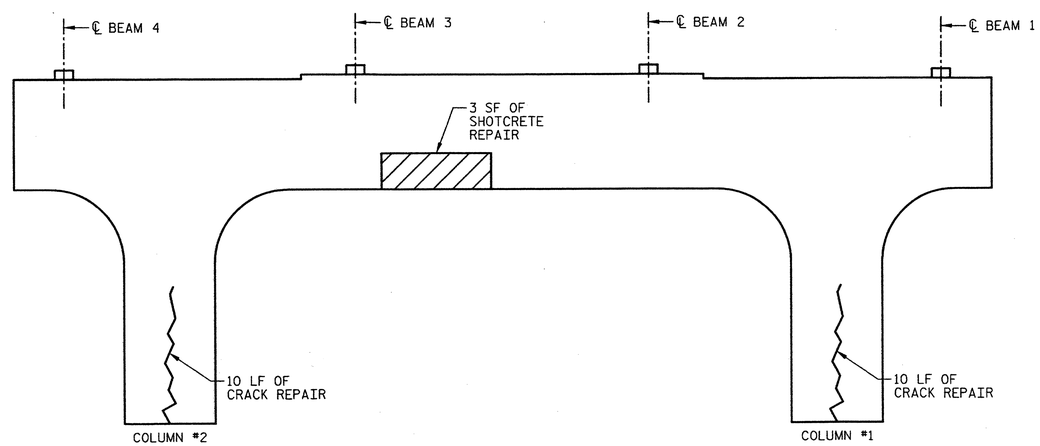

EAST ELEVATION

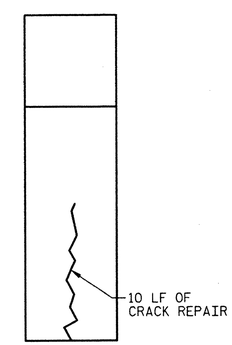

NORTH END ELEVATION

BILL OF MATERIAL

BENT 2

BAR	NO.	SIZE	TYPE	LENGTH
S1	VAR.	#4	1	VARIES
S2	VAR.	#5	2	VARIES
CONCRETE REPAIRS			CF	0
SHOTCRETE REPAIRS			CF	1
EPOXY RESIN INJECTION			LF	63
REINFORCING STEEL			LBS	0

BAR TYPE

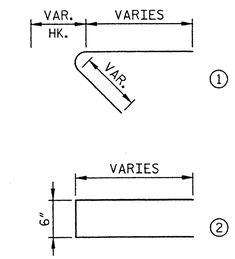

(BAR DIMENSIONS ARE OUT TO OUT)

NOTES

FOR NOTES, SEE DRAWING "SUPERSTRUCTURE REPAIR LOCATIONS FOR BRIDGE NO. 107".

CONCRETE REPAIR

SHOTCRETE REPAIR

EPOXY RESIN INJECTION OF CRACKS

PROJECT NO. 17BP.4.P.2

HALIFAX COUNTY

BRIDGE NO.: 107

NORTH CAROLINA PROFESSIONAL SEAL 032129 ENGINEER MATTHEW J. MOYER

1-13-2012

STATE OF NORTH CAROLINA
DEPARTMENT OF TRANSPORTATION
RALEIGH

BENT 2
BRIDGE NO. 107

REVISIONS						
NO.	BY:	DATE:	NO.	BY:	DATE:	
1			3			
2			4			

SHEET NO. S-31

TOTAL SHEETS 84

HDR Engineering, Inc. of the Carolinas
3733 National Drive, Suite 207 Raleigh, N.C. 27612
N.C.B.E.L.S. License Number: F-0116

DRAWN BY : K. BERGER DATE : 01/2012
CHECKED BY : C. ROKICKI DATE : 01/2012

PLOT DRIVER: NCDOT_pdf_mono_eng_50.pit
USER: paulnone DATE: 1/12/2012
FILE: \
PENTABLE: Division 4_pen_Austin.tbl
TIME: 8:48:26 PM

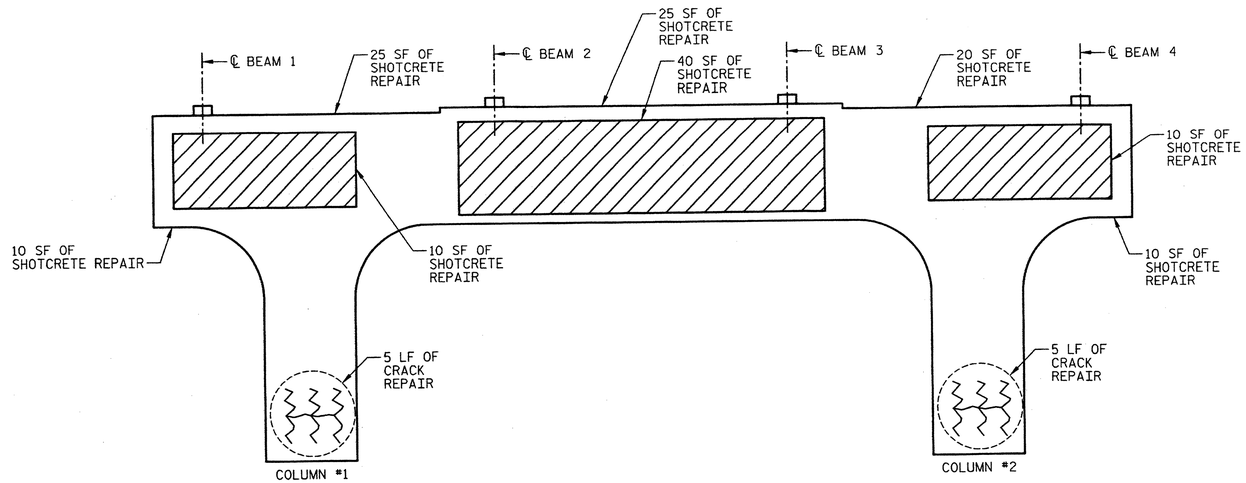

WEST ELEVATION

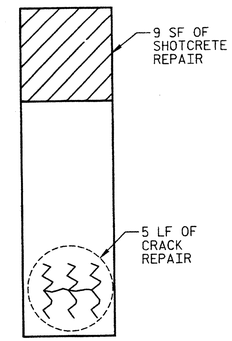

SOUTH END ELEVATION

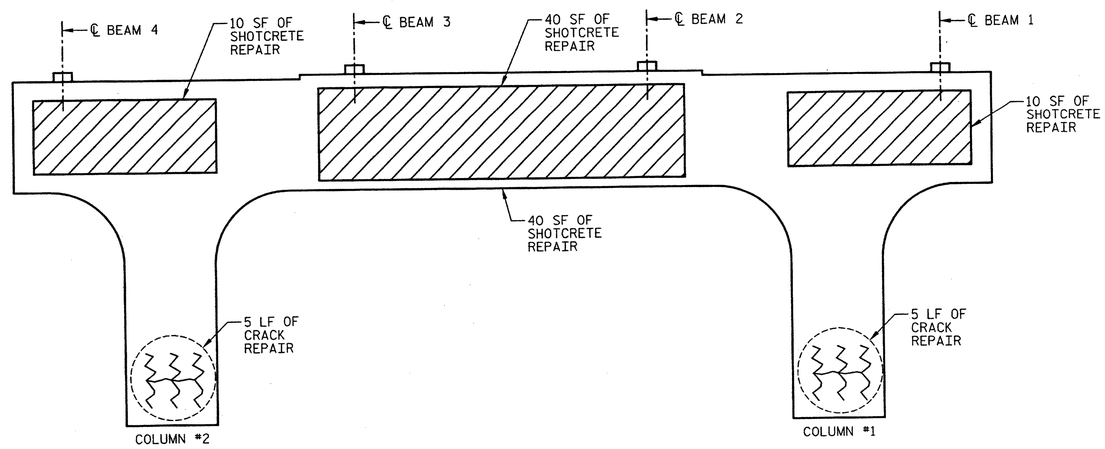

EAST ELEVATION

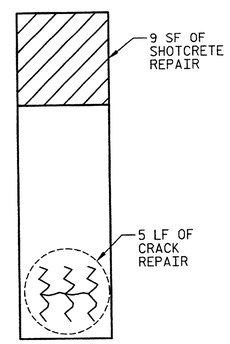

NORTH END ELEVATION

BILL OF MATERIAL

BENT 3

BAR	NO.	SIZE	TYPE	LENGTH
S1	VAR.	#4	1	VARIES
S2	VAR.	#5	2	VARIES
CONCRETE REPAIRS			CF	0
SHOTCRETE REPAIRS			CF	67
EPOXY RESIN INJECTION			LF	30
REINFORCING STEEL			LBS	0

BAR TYPE

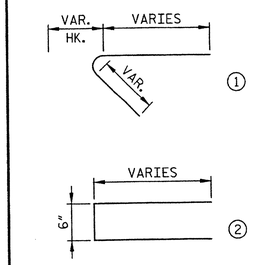

(BAR DIMENSIONS ARE OUT TO OUT)

NOTES

FOR NOTES, SEE DRAWING "SUPERSTRUCTURE REPAIR LOCATIONS FOR BRIDGE NO. 107".

CONCRETE REPAIR

SHOTCRETE REPAIR

EPOXY RESIN INJECTION OF CRACKS

PROJECT NO. 17BP.4.P.2

HALIFAX COUNTY

BRIDGE NO.: 107

STATE OF NORTH CAROLINA
DEPARTMENT OF TRANSPORTATION
RALEIGH

BENT 3
BRIDGE NO. 107

NORTH CAROLINA PROFESSIONAL SEAL 032129 ENGINEER MATTHEW J. MOYER
1-13-2012

REVISIONS						
NO.	BY:	DATE:	NO.	BY:	DATE:	
1			3			
2			4			

SHEET NO. S-32
TOTAL SHEETS 84

HDR Engineering, Inc. of the Carolinas
3733 National Drive, Suite 207 Raleigh, N.C. 27612
N.C.B.E.L.S. License Number: F-0116

DRAWN BY : K. BERGER DATE : 01/2012
CHECKED BY : C. ROKICKI DATE : 01/2012

PLOT DRIVER: NCDOT_pdf_mono.eng.50.plt
USER: paulmone DATE: 1/12/2012
FILE: \
PENTABLE: Division 4_pen_Austin.tbl
TIME: 8:48:32 PM

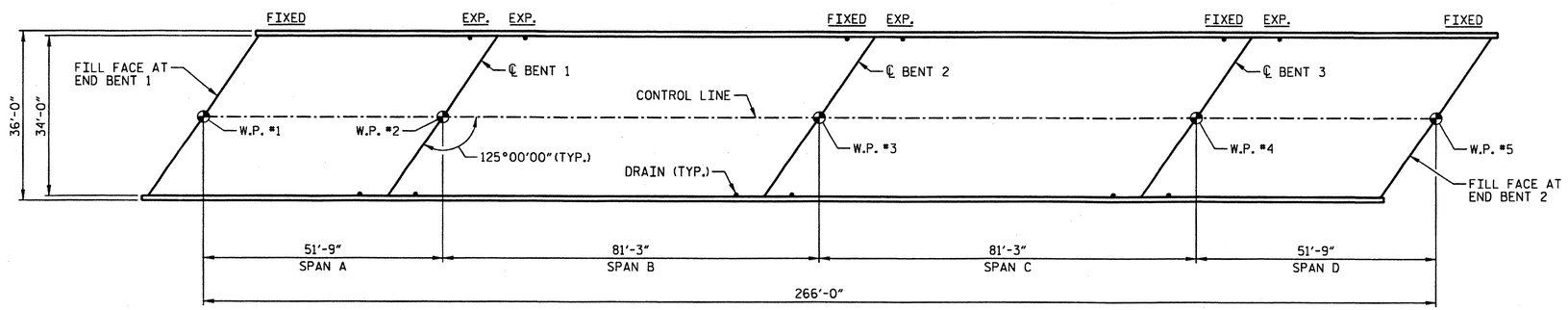

PLAN VIEW

TOTAL BILL OF MATERIAL			
CONCRETE REPAIRS	EPOXY RESIN INJECTION	SHOTCRETE REPAIRS	REINFORCING STEEL
CU. FT.	LIN. FT.	CU. FT.	LBS
0	0	28	*10

DRAWN BY : K. BERGER DATE : 01/2012
CHECKED BY : C. ROKICKI DATE : 01/2012

PROJECT NO. 17BP.4.P.2
HALIFAX COUNTY
BRIDGE NO.: 49

NORTH CAROLINA PROFESSIONAL SEAL 032129 ENGINEER MATTHEW J. MOYER
2-16-12

HDR Engineering, Inc. of the Carolinas
3733 National Drive, Suite 207 Raleigh, N.C. 27612
N.C.B.E.L.S. License Number: F-0116

STATE OF NORTH CAROLINA
DEPARTMENT OF TRANSPORTATION
RALEIGH

PLAN VIEW
FOR BRIDGE NO. 49
(NC481 OVER I-95)

REVISIONS						
NO.	BY:	DATE:	NO.	BY:	DATE:	
1			3			
2			4			

SHEET NO. S-33
TOTAL SHEETS 84

PLOT DRIVER: NCDOT_pdf_mono_eng_50.plt + PENTABLE: Division 4_pen_Austin.tbl
USER: lpatters DATE: 2/16/2012 TIME: 11:56:11 AM
FILE: North Carolina_Dept_of_Transportation\NCDOT_C_2011_STRDSN_OC_TO_2\13.00_CAD\Halifax 049\Drawings\DIV4.1_SD_HALIFAX49_01.dgn

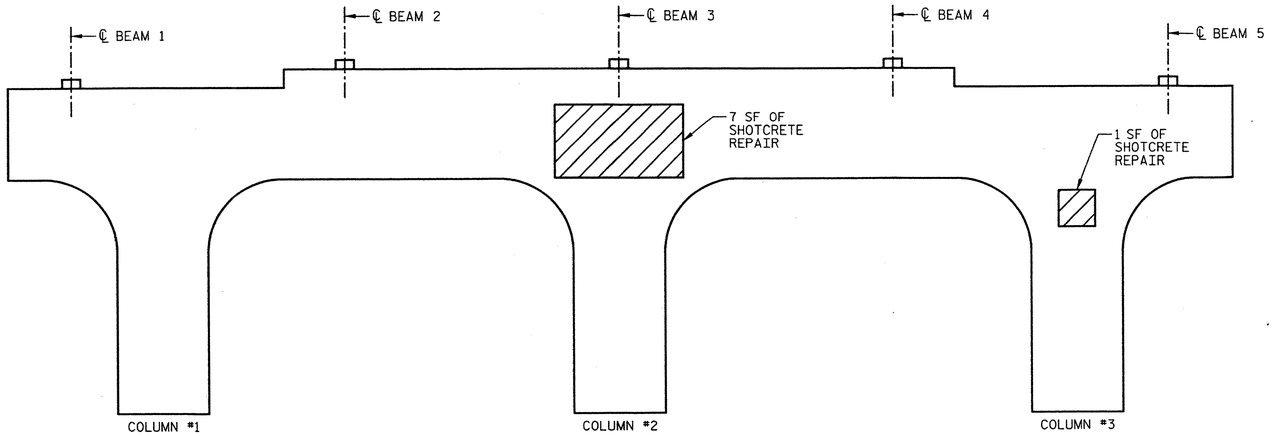

WEST ELEVATION

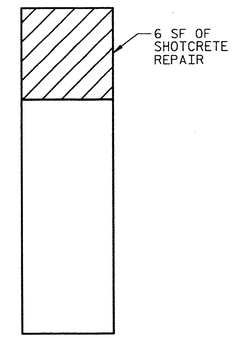

SOUTH END ELEVATION

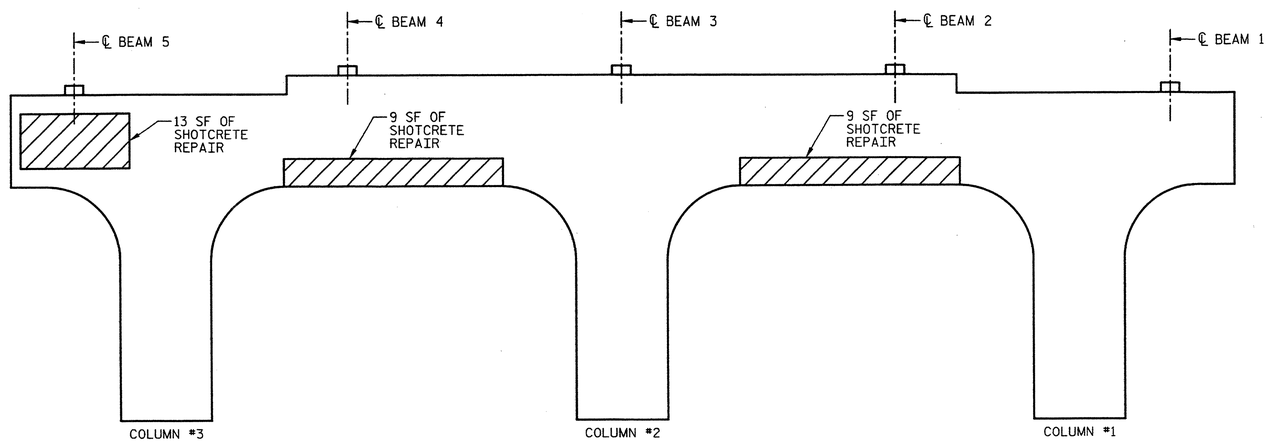

EAST ELEVATION

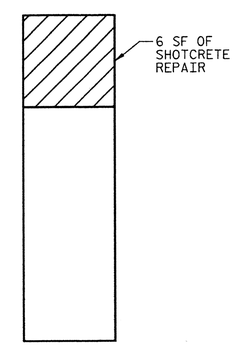

NORTH END ELEVATION

BILL OF MATERIAL

BENT 1

BAR	NO.	SIZE	TYPE	LENGTH
S1	VAR.	#4	1	VARIES
S2	VAR.	#5	2	VARIES
CONCRETE REPAIRS			CF	0
SHOTCRETE REPAIRS			CF	17
EPOXY RESIN INJECTION			LF	0
REINFORCING STEEL			LBS	0

BAR TYPE

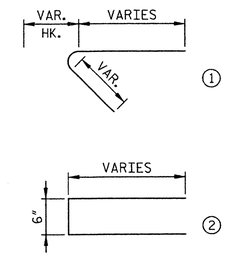

(BAR DIMENSIONS ARE OUT TO OUT)

PROJECT NO. 17BP.4.P.2

HALIFAX COUNTY

BRIDGE NO.: 49

NOTES

THE LOCATION AND EXTENT OF REPAIRS SHOWN ON THE PLANS ARE GENERAL IN NATURE. THE ENGINEER WILL DETERMINE THE EXACT EXTENT OF REMOVAL IN THE FIELD BASED ON AN EVALUATION OF THE CONDITION OF THE EXPOSED SURFACES.

CONSTRUCTION METHODS, PROCEDURES AND SEQUENCES ARE THE CONTRACTOR'S RESPONSIBILITY AND THE CONTRACTOR SHALL TAKE ALL THE NECESSARY MEANS TO MAINTAIN AND PROTECT THE STRUCTURAL INTEGRITY OF ALL CONSTRUCTION AT ALL STAGES.

ANY DISCREPANCIES BETWEEN THE CONSTRUCTION DOCUMENTS AND THE ACTUAL FIELD CONDITIONS SHALL BE REPORTED TO THE ENGINEER.

THE MANUFACTURER'S CERTIFIED DRAWINGS AND SPECIFICATIONS FOR EQUIPMENT ANCHORAGE AND DETAILS SHALL BE SUBMITTED FOR APPROVAL.

FOR CONCRETE REPAIR, SEE SPECIAL PROVISION.

FOR FALSEWORK AND FORMWORK, SEE SPECIAL PROVISION.

FOR CRANE SAFETY, SEE SPECIAL PROVISIONS.

FOR SHOTCRETE REPAIRS, SEE SPECIAL PROVISIONS.

FOR EPOXY RESIN INJECTIONS, SEE SPECIAL PROVISIONS.

FIELD TESTING OF THE ADHESIVELY ANCHORED DOWELS IS NOT REQUIRED.

REPAIR AREAS INACCESSIBLE BY POWER TOOL SHALL BE CLEANED WITH HAND TOOLS.

THE CONTRACTOR SHALL PROTECT THE BEARING FROM SHOTCRETE OVERSPRAY WHEN PERFORMING SHOTCRETE REPAIRS NEAR THE BEAM ENDS.

CONCRETE REPAIR

SHOTCRETE REPAIR

EPOXY RESIN INJECTION OF CRACKS

NORTH CAROLINA PROFESSIONAL SEAL 032129 ENGINEER MATTHEW J. MOYER

1-13-2012

HDR Engineering, Inc. of the Carolinas
3733 National Drive, Suite 207 Raleigh, N.C. 27612
N.C.B.E.L.S. License Number: F-0116

STATE OF NORTH CAROLINA
DEPARTMENT OF TRANSPORTATION
RALEIGH

BENT 1
BRIDGE NO. 49

REVISIONS						
NO.	BY:	DATE:	NO.	BY:	DATE:	
1			3			
2			4			

SHEET NO. S-34

TOTAL SHEETS 84

DRAWN BY : K. BERGER DATE : 01/2012
CHECKED BY : C. ROKICKI DATE : 01/2012

PLOT DRIVER: NCDOT_pdf_mono_eng_50.plt
USER: pquinone DATE: 1/12/2012
FILE: \
PENTABLE: Division 4_pen_Austin.tbl
TIME: 8:46:44 PM

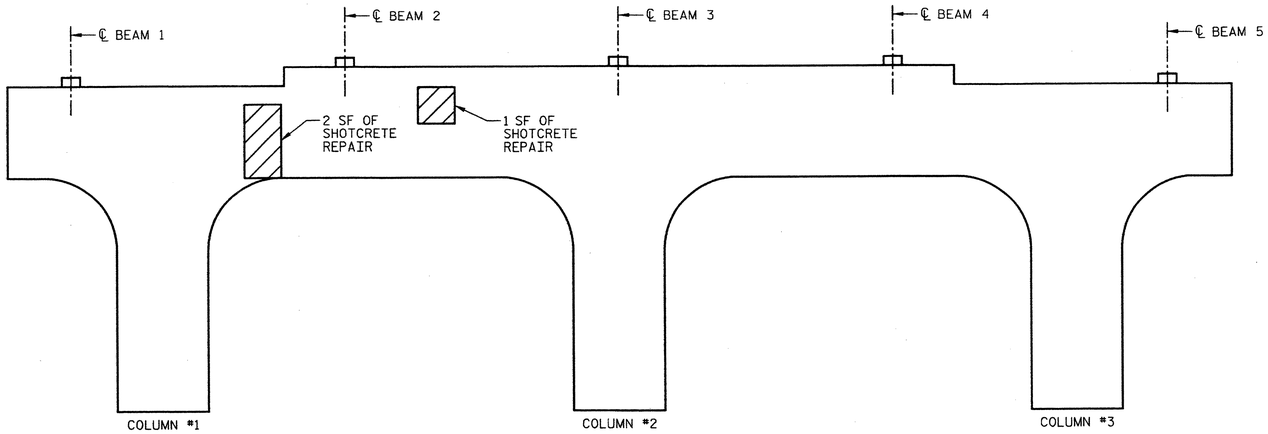

WEST ELEVATION

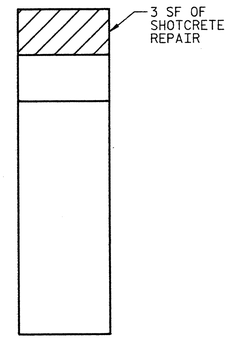

SOUTH END ELEVATION

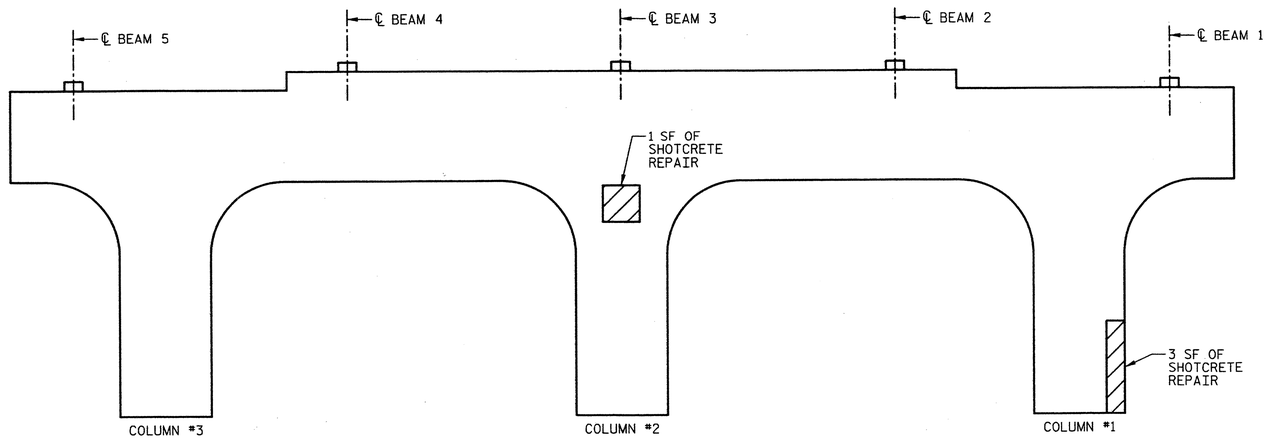

EAST ELEVATION

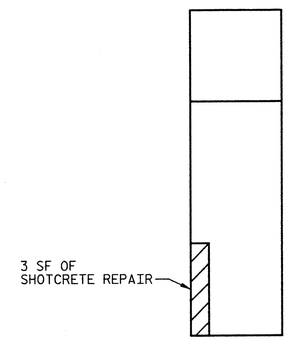

NORTH END ELEVATION

BILL OF MATERIAL

BENT 2

BAR	NO.	SIZE	TYPE	LENGTH
S1	VAR.	#4	1	VARIES
S2	VAR.	#5	2	VARIES
CONCRETE REPAIRS			CF	0
SHOTCRETE REPAIRS			CF	6
EPOXY RESIN INJECTION			LF	0
REINFORCING STEEL			LBS	10

BAR TYPE

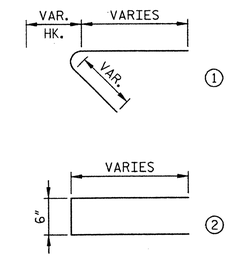

(BAR DIMENSIONS ARE OUT TO OUT)

NOTES

FOR NOTES, SEE DRAWING "BENT 1 BRIDGE NO. 49".

CONCRETE REPAIR

SHOTCRETE REPAIR

EPOXY RESIN INJECTION OF CRACKS

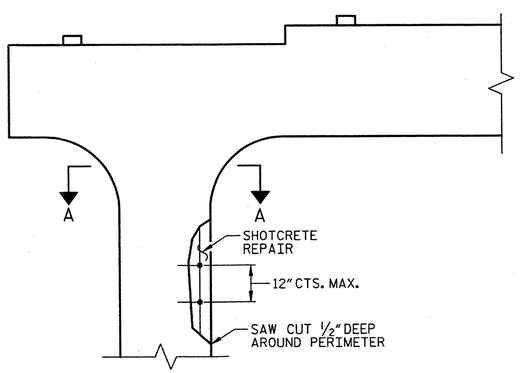

COLUMN REPAIR DETAIL

AFTER DETERIORATED CONCRETE HAS BEEN REMOVED THE EXPOSED VERTICAL COLUMN STEEL SHALL BE ENCLOSED BY EITHER EXISTING STIRRUPS OR ADHESIVELY ANCHORED S1 BARS AS SHOWN IN SECTION A-A.

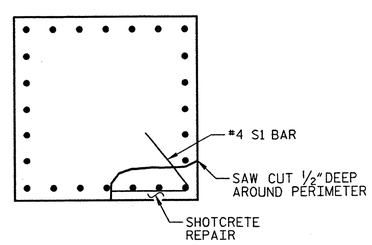

SECTION A-A

PROJECT NO. 17BP.4.P.2

HALIFAX COUNTY

BRIDGE NO.: 49

1-13-2012

STATE OF NORTH CAROLINA
DEPARTMENT OF TRANSPORTATION
RALEIGH

BENT 2
BRIDGE NO. 49

HDR Engineering, Inc. of the Carolinas
3733 National Drive, Suite 207 Raleigh, N.C. 27612
N.C.B.E.L.S. License Number: F-0116

REVISIONS						
NO.	BY:	DATE:	NO.	BY:	DATE:	
1			3			
2			4			

SHEET NO. S-35

TOTAL SHEETS 84

DRAWN BY :	K. BERGER	DATE :	01/2012
CHECKED BY :	C. ROKICKI	DATE :	01/2012

PLOT DRIVER: NCDOT_pdf_mono_eng_50.plt
USER: paulmone DATE: 1/12/2012
FILE: \
TIME: 8:48:51 PM

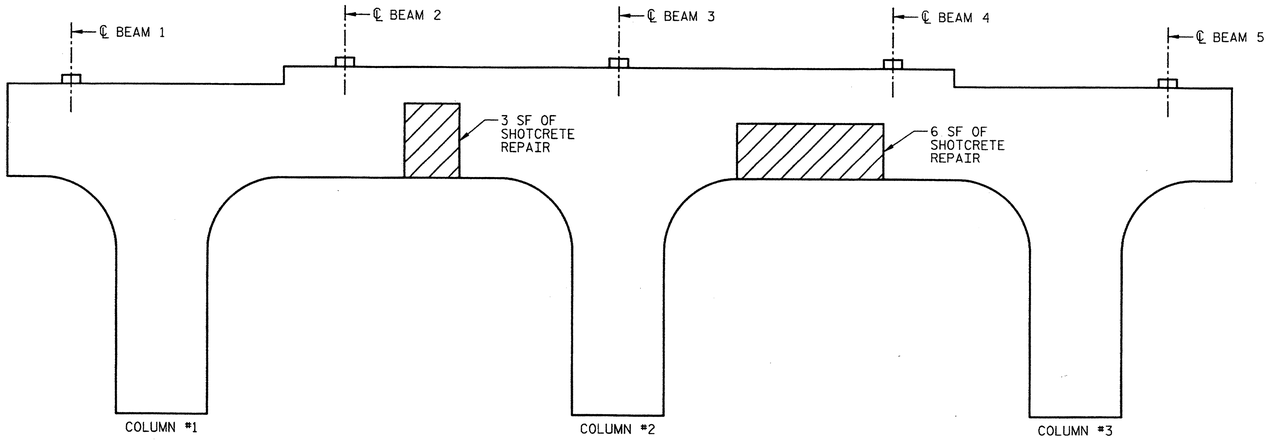

WEST ELEVATION

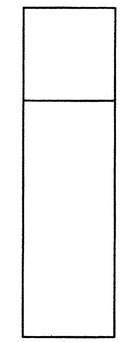

SOUTH END ELEVATION

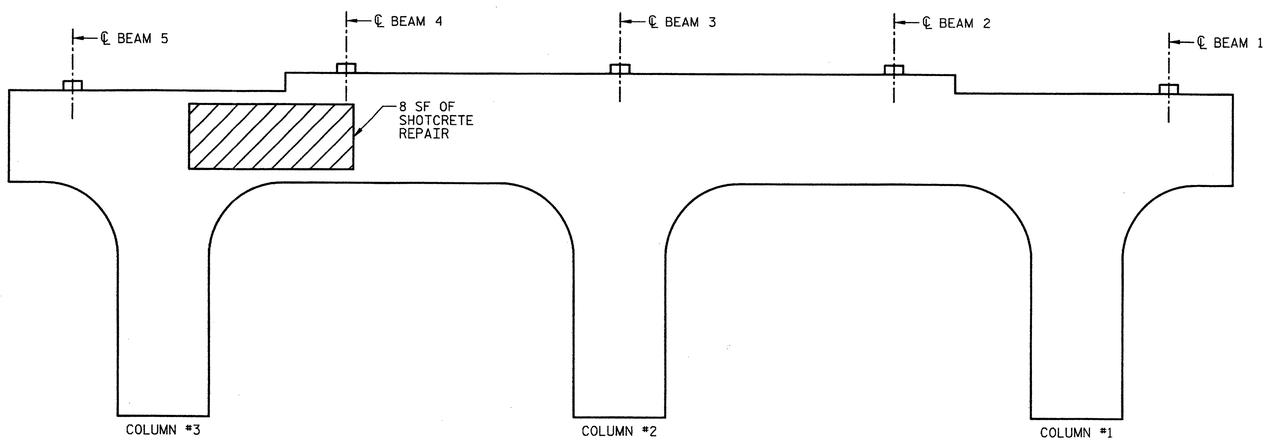

EAST ELEVATION

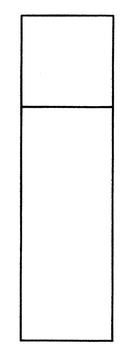

NORTH END ELEVATION

BILL OF MATERIAL

BENT 3

BAR	NO.	SIZE	TYPE	LENGTH
S1	VAR.	#4	1	VARIES
S2	VAR.	#5	2	VARIES
CONCRETE REPAIRS			CF	0
SHOTCRETE REPAIRS			CF	5
EPOXY RESIN INJECTION			LF	0
REINFORCING STEEL			LBS	0

BAR TYPE

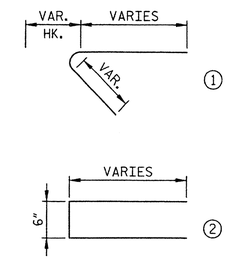

(BAR DIMENSIONS ARE OUT TO OUT)

NOTES

FOR NOTES, SEE DRAWING "BENT 1 BRIDGE NO. 49".

CONCRETE REPAIR

SHOTCRETE REPAIR

EPOXY RESIN INJECTION OF CRACKS

PROJECT NO. 17BP.4.P.2

HALIFAX COUNTY

BRIDGE NO.: 49

NORTH CAROLINA PROFESSIONAL SEAL 032129 ENGINEER MATTHEW J. MOYER

1-13-2012

STATE OF NORTH CAROLINA
DEPARTMENT OF TRANSPORTATION
RALEIGH

BENT 3
BRIDGE NO. 49

REVISIONS						
NO.	BY:	DATE:	NO.	BY:	DATE:	SHEET NO. S-36
1			3			TOTAL SHEETS 84
2			4			

HDR Engineering, Inc. of the Carolinas
3733 National Drive, Suite 207 Raleigh, N.C. 27612
N.C.B.E.L.S. License Number: F-0116

DRAWN BY : K. BERGER DATE : 01/2012
CHECKED BY : C. ROKICKI DATE : 01/2012

PLOT DRIVER: NUDV1.pdf_mono_eng.tbl
USER: pquinone DATE: 1/12/2012
FILE: \
PENTABLE: Division 4.pen_AUSTIN.TBL
TIME: 8:48:57 PM

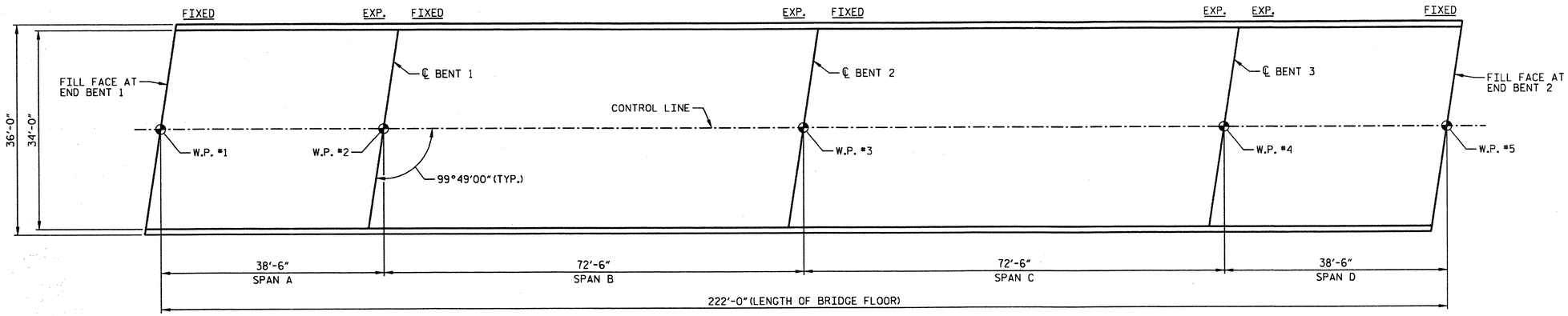

PLAN OF SPANS - DECK REPAIRS

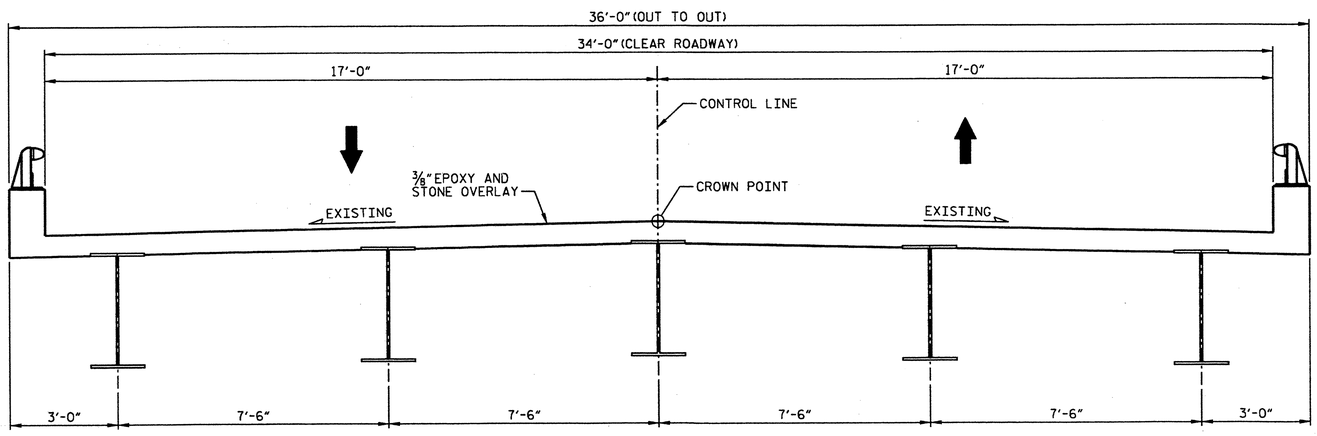

TYPICAL SECTION

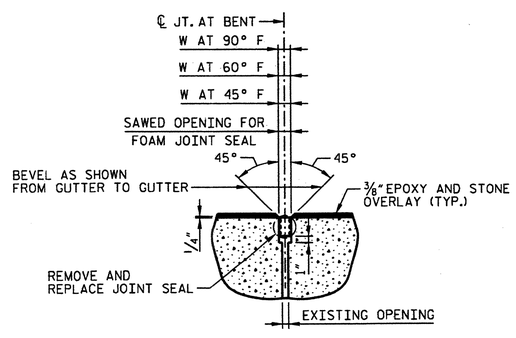

PROPOSED JOINT AT BENTS

FOAM JOINT SEAL EXPANSION

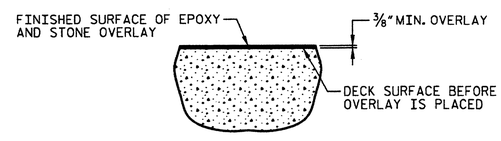

DETAIL FOR EPOXY AND STONE OVERLAY

NOTES

FOR REPAIR OF BRIDGE WITH EPOXY AND STONE OVERLAY, SEE SPECIAL PROVISIONS.

FOR FOAM JOINT SEALS, SEE SPECIAL PROVISIONS.

THE NOMINAL UNCOMPRESSED SEAL WIDTH OF THE FOAM JOINT SEAL SHALL BE 2½" AT BENTS.

FOR OVER-SAWED JOINTS, THE NOMINAL UNCOMPRESSED SEAL WIDTH OF THE FOAM JOINT SEAL SHALL BE DETERMINED BY THE ENGINEER.

SAWED OPENING FOR FOAM JOINT

BENT NO.	W AT 90° F	W AT 60° F	W AT 45° F
BENT 1	1¾"	1⅞"	1 15/16"
BENT 2	1 11/16"	1⅞"	2"
BENT 3	1 9/16"	1⅞"	2 1/16"

TOTAL BILL OF MATERIAL

PLACEMENT OF EPOXY OVERLAY	FOAM JOINT SEALS	CLASS II CONCRETE DECK REPAIR FOR EPOXY/ASPHALT OVERLAY	CONCRETE REPAIRS	EPOXY RESIN INJECTION	SHOTCRETE REPAIRS	REINFORCING STEEL	BRIDGE JACKING
SQ. FT.	LUMP SUM	SQ. FT.	CU. FT.	LIN. FT.	CU. FT.	LBS	LUMP SUM
7548	LUMP SUM	750	2	100	9	50	LUMP SUM

PROJECT NO. 17BP.4.P.2

HALIFAX COUNTY

BRIDGE NO.: 67

NORTH CAROLINA PROFESSIONAL SEAL 032129 ENGINEER MATTHEW J. MOYER

2-16-12

STATE OF NORTH CAROLINA
DEPARTMENT OF TRANSPORTATION
RALEIGH

EPOXY OVERLAY FOR BRIDGE NO. 67
(SR1002 OVER I-95)

REVISIONS						SHEET NO. S-37
NO.	BY:	DATE:	NO.	BY:	DATE:	TOTAL SHEETS 84
1			3			
2			4			

HDR Engineering, Inc. of the Carolinas
3733 National Drive, Suite 207 Raleigh, N.C. 27612
N.C.B.E.L.S. License Number: F-0116

DRAWN BY : K. BERGER DATE : 01/2012
CHECKED BY : C. ROKICKI DATE : 01/2012

PLOT DRIVER: NCDOT_pdf_mono_eng_50.plt PENTABLE: Division 4_pen_Austin.tbl
USER: lpatters DATE: 2/16/2012 TIME: 11:56:28 AM
FILE: North Carolina_Dept_of_Transportation\NCDOT_C_2011_STRDSN_OC_TO_2\13.00_CAD\Halifax 067\Drawings\DIV4.1_SD_HALIFAX67_01.dgn

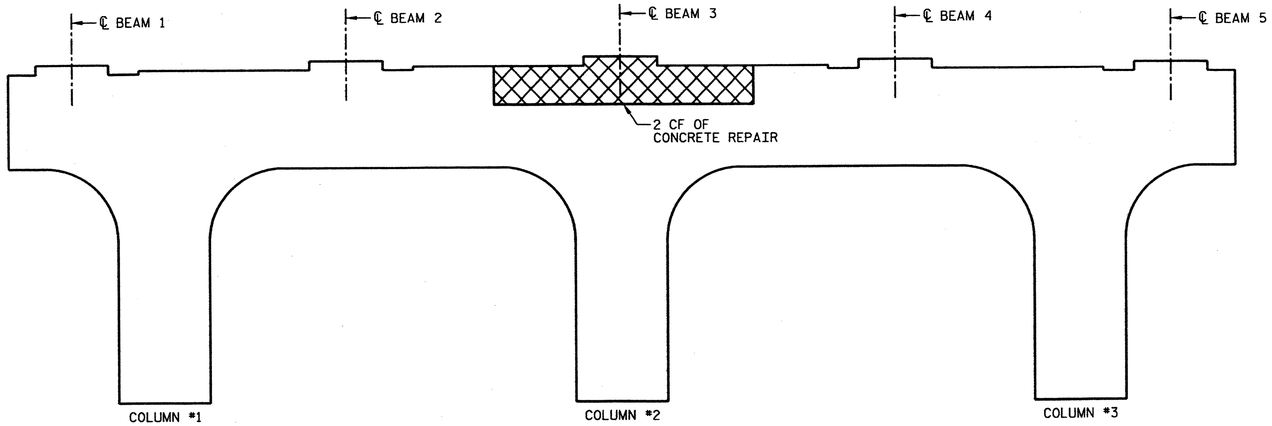

WEST ELEVATION

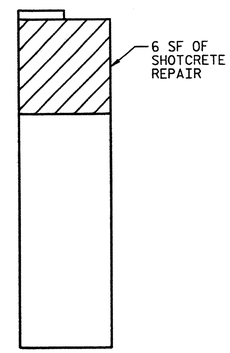

SOUTH END ELEVATION

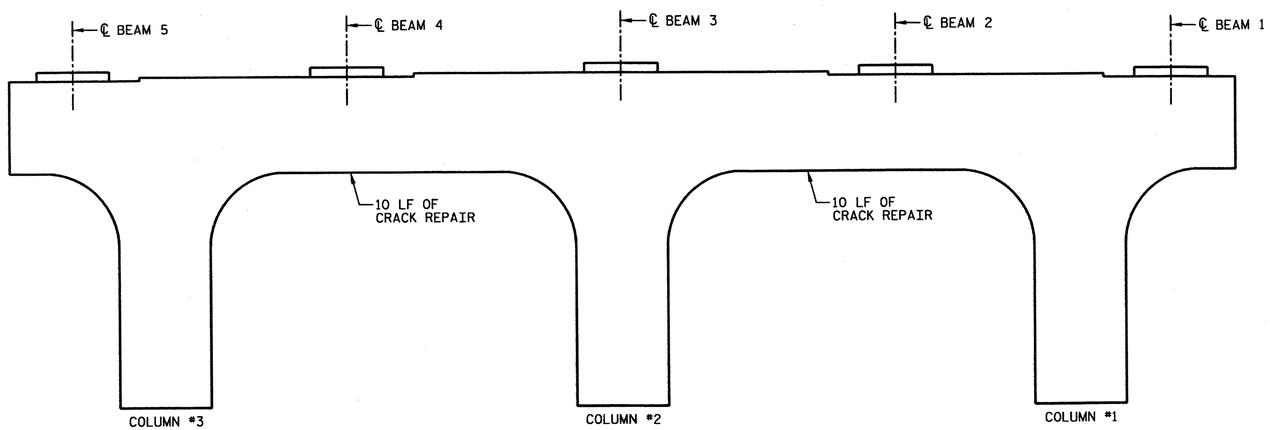

EAST ELEVATION

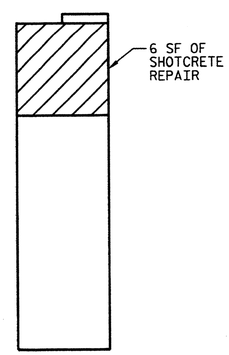

NORTH END ELEVATION

BILL OF MATERIAL

BENT 1

BAR	NO.	SIZE	TYPE	LENGTH
S1	VAR.	#4	1	VARIES
S2	VAR.	#5	2	VARIES
CONCRETE REPAIRS			CF	2
SHOTCRETE REPAIRS			CF	3
EPOXY RESIN INJECTION			LF	20
REINFORCING STEEL			LBS	50

BAR TYPE

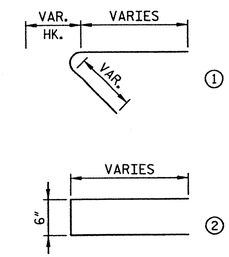

(BAR DIMENSIONS ARE OUT TO OUT)

PROJECT NO. 17BP.4.P.2

HALIFAX COUNTY

BRIDGE NO.: 67

NOTES

THE LOCATION AND EXTENT OF REPAIRS SHOWN ON THE PLANS ARE GENERAL IN NATURE. THE ENGINEER WILL DETERMINE THE EXACT EXTENT OF REMOVAL IN THE FIELD BASED ON AN EVALUATION OF THE CONDITION OF THE EXPOSED SURFACES.

CONSTRUCTION METHODS, PROCEDURES AND SEQUENCES ARE THE CONTRACTOR'S RESPONSIBILITY AND THE CONTRACTOR SHALL TAKE ALL THE NECESSARY MEANS TO MAINTAIN AND PROTECT THE STRUCTURAL INTEGRITY OF ALL CONSTRUCTION AT ALL STAGES.

ANY DISCREPANCIES BETWEEN THE CONSTRUCTION DOCUMENTS AND THE ACTUAL FIELD CONDITIONS SHALL BE REPORTED TO THE ENGINEER.

THE MANUFACTURER'S CERTIFIED DRAWINGS AND SPECIFICATIONS FOR EQUIPMENT ANCHORAGE AND DETAILS SHALL BE SUBMITTED FOR APPROVAL.

FOR CONCRETE REPAIR, SEE SPECIAL PROVISION.

FOR FALSEWORK AND FORMWORK, SEE SPECIAL PROVISION.

FOR CRANE SAFETY, SEE SPECIAL PROVISIONS.

FOR SHOTCRETE REPAIRS, SEE SPECIAL PROVISIONS.

FOR EPOXY RESIN INJECTIONS, SEE SPECIAL PROVISIONS.

FOR BRIDGE JACKING, SEE SPECIAL PROVISIONS.

FIELD TESTING OF THE ADHESIVELY ANCHORED DOWELS IS NOT REQUIRED.

REPAIR AREAS INACCESSIBLE BY POWER TOOL SHALL BE CLEANED WITH HAND TOOLS.

THE CONTRACTOR SHALL PROTECT THE BEARING FROM SHOTCRETE OVERSPRAY WHEN PERFORMING SHOTCRETE REPAIRS NEAR THE BEAM ENDS.

CONCRETE REPAIR

SHOTCRETE REPAIR

EPOXY RESIN INJECTION OF CRACKS

NORTH CAROLINA PROFESSIONAL SEAL 032129 ENGINEER MATTHEW J. MOYER

1-13-2012

HDR Engineering, Inc. of the Carolinas
3733 National Drive, Suite 207 Raleigh, N.C. 27612
N.C.B.E.L.S. License Number: F-0116

STATE OF NORTH CAROLINA
DEPARTMENT OF TRANSPORTATION
RALEIGH

BENT 1
BRIDGE NO. 67

REVISIONS								SHEET NO. S-38
NO.	BY:	DATE:	NO.	BY:	DATE:			TOTAL SHEETS 84
1			3					
2			4					

DRAWN BY : K. BERGER DATE : 01/2012
CHECKED BY : C. ROKICKI DATE : 01/2012

TIME: 8:49:11 PM
DATE: 1/12/2012
USER: pquinone
FILE: \

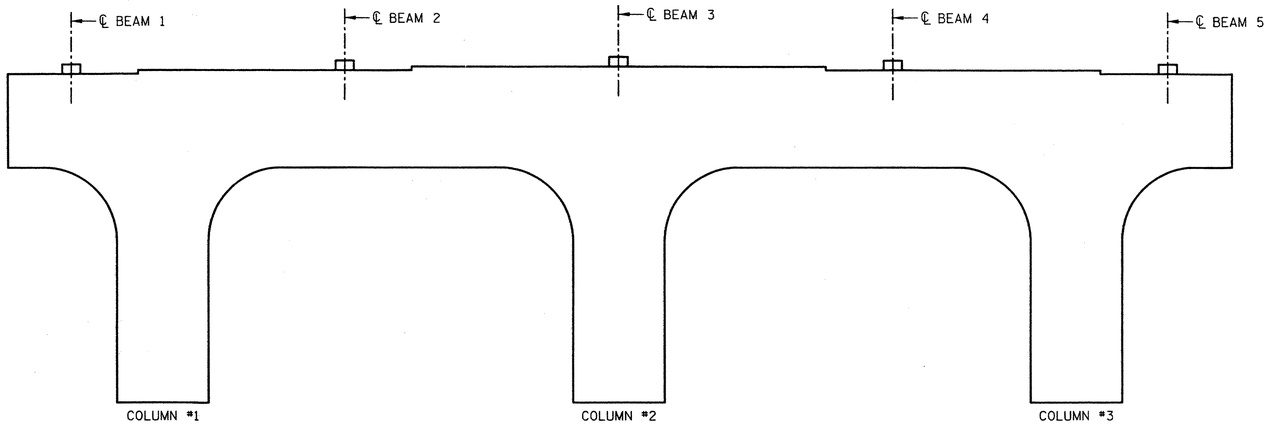

WEST ELEVATION

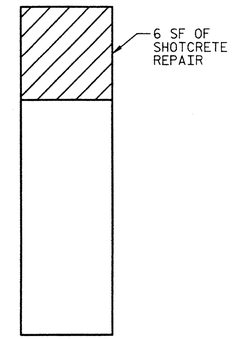

SOUTH END ELEVATION

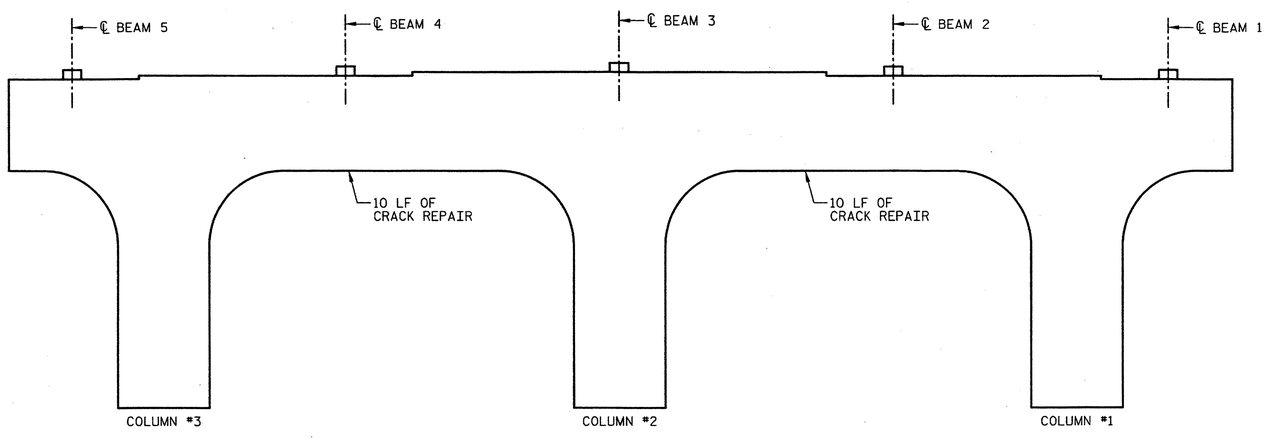

EAST ELEVATION

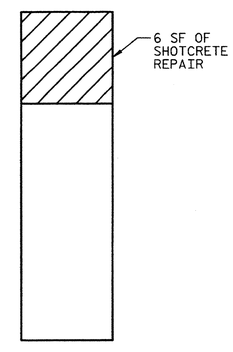

NORTH END ELEVATION

BILL OF MATERIAL

BENT 2

BAR	NO.	SIZE	TYPE	LENGTH
S1	VAR.	#4	1	VARIES
S2	VAR.	#5	2	VARIES
CONCRETE REPAIRS			CF	0
SHOTCRETE REPAIRS			CF	3
EPOXY RESIN INJECTION			LF	20
REINFORCING STEEL			LBS	0

BAR TYPE

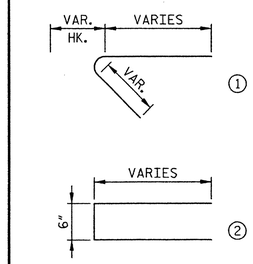

(BAR DIMENSIONS ARE OUT TO OUT)

NOTES

FOR NOTES, SEE DRAWING "BENT 1 BRIDGE NO. 67".

CONCRETE REPAIR

SHOTCRETE REPAIR

EPOXY RESIN INJECTION OF CRACKS

SERVICE REACTIONS PER BEARING

SUPPORT	DL (KIP)		LL+I (KIP)	
	BACK	AHEAD	BACK	AHEAD
END BENT 1	--	19	--	60
BENT 1	19	37	60	67
BENT 2	37	37	67	67
BENT 3	37	19	67	60
END BENT 2	19	--	60	--

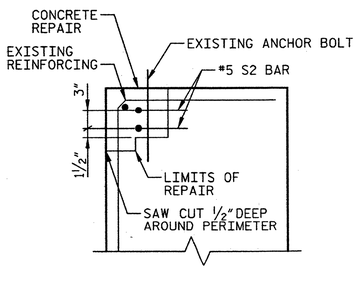

DETAIL A

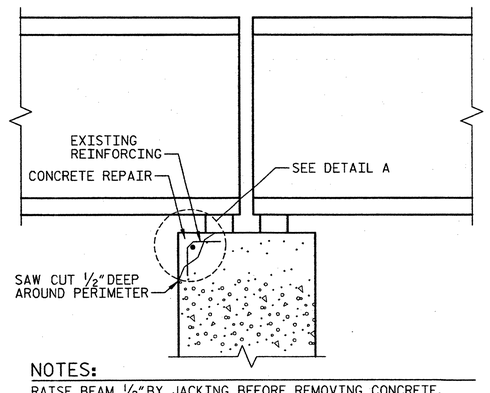

NOTES:

RAISE BEAM ½" BY JACKING BEFORE REMOVING CONCRETE. DO NOT LOWER SUPERSTRUCTURE UNTIL REPAIR HAS CURED AND REACHED A COMPRESSIVE STRENGTH OF 3000 PSI.

TYPICAL REPAIR AT BEAM BEARING

JACKING NOTES

JACKING SHALL BE CONDUCTED IN A MANNER SUCH THAT THE SUPERSTRUCTURE WILL NOT BE DAMAGED.

THE MAXIMUM ALLOWABLE VERTICAL JACKING DISPLACEMENT SHALL BE ½ INCH WITH RESPECT TO BEARINGS OF ADJACENT PIERS.

BEARING NUTS SHALL BE LOOSENED TO PROVIDE A MINIMUM OF 5/64 INCH GAP TO ALLOW FOR JACKING.

ALL BEAMS AT A PIER SHALL BE JACKED SIMULTANEOUSLY AND SHALL BE RAISED THE SAME AMOUNT AND AT THE SAME RATE. THE HYDRAULIC PRESSURE OF THE JACKS SHALL BE ADJUSTED AS REQUIRED TO ALLOW FOR EQUAL MOVEMENTS. JACKING DEVICES SHALL BE EQUIPPED WITH LOCKING RINGS. USE BEVELED JACKING PLATES AS NEEDED TO PROVIDE A LEVEL JACKING SURFACE.

EFFECT OF VIBRATIONS FROM TRAFFIC SHOULD BE CONSIDERED DURING JACKING AND WHEN JACKS ARE LOCKED.

PROVISIONS SHALL BE MADE TO ACCOUNT FOR THERMAL MOVEMENTS DURING THE PERIOD THAT THE STRUCTURE IS RESTING ON TEMPORARY SUPPORTS.

THE BRIDGE SHALL BE INSPECTED PRIOR TO JACKING TO VERIFY THAT ITEMS CONNECTED TO THE SUPERSTRUCTURE OR SUBSTRUCTURE WILL NOT BE DAMAGED DURING THE JACKING AND BEARING REPLACEMENT PROCEDURE.

IT SHALL BE THE RESPONSIBILITY OF THE CONTRACTOR PERFORMING THE JACKING TO DETERMINE A JACKING LOCATION AT EACH BEARING AND PROVIDE A DESIGN FOR THE JACKING LOADS. JACKS SHALL HAVE A MINIMUM SAFE LOAD CAPACITY OF 125% OF THE LOAD SPECIFIED IN THE JACKING LOAD TABLE. THE CONTRACTOR SHALL SUBMIT THE JACKING PLAN, DETAILS, PROCEDURES AND SUPPORTING CALCULATIONS TO THE ENGINEER FOR REVIEW AND APPROVAL.

NORTH CAROLINA PROFESSIONAL SEAL 032129 ENGINEER MATTHEW J. MOYER

1-13-2012

PROJECT NO. 17BP.4.P.2

HALIFAX COUNTY

BRIDGE NO.: 67

STATE OF NORTH CAROLINA
DEPARTMENT OF TRANSPORTATION
RALEIGH

BENT 2
BRIDGE NO. 67

REVISIONS						
NO.	BY:	DATE:	NO.	BY:	DATE:	
1			3			
2			4			

SHEET NO. S-39

TOTAL SHEETS 84

HDR Engineering, Inc. of the Carolinas
3733 National Drive, Suite 207 Raleigh, N.C. 27612
N.C.B.E.L.S. License Number: F-0116

DRAWN BY : K. BERGER DATE : 01/2012
CHECKED BY : C. ROKICKI DATE : 01/2012

PLOT DRIVER: NGUOI_pdt_mono_eng_50.pltt
USER: pquinone DATE: 1/12/2012
FILE: \
PENTABLE: DIVISION 4_pdf_AUSTIN.TBL
TIME: 8:49:18 PM

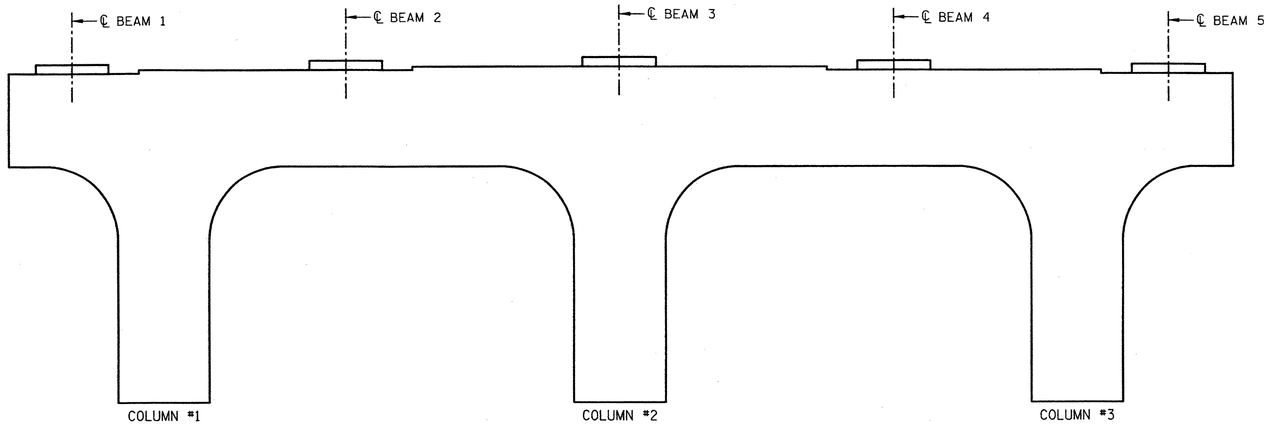

WEST ELEVATION

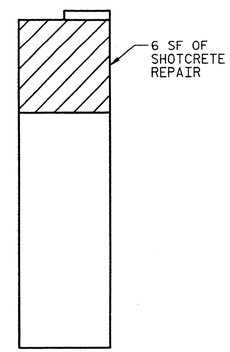

SOUTH END ELEVATION

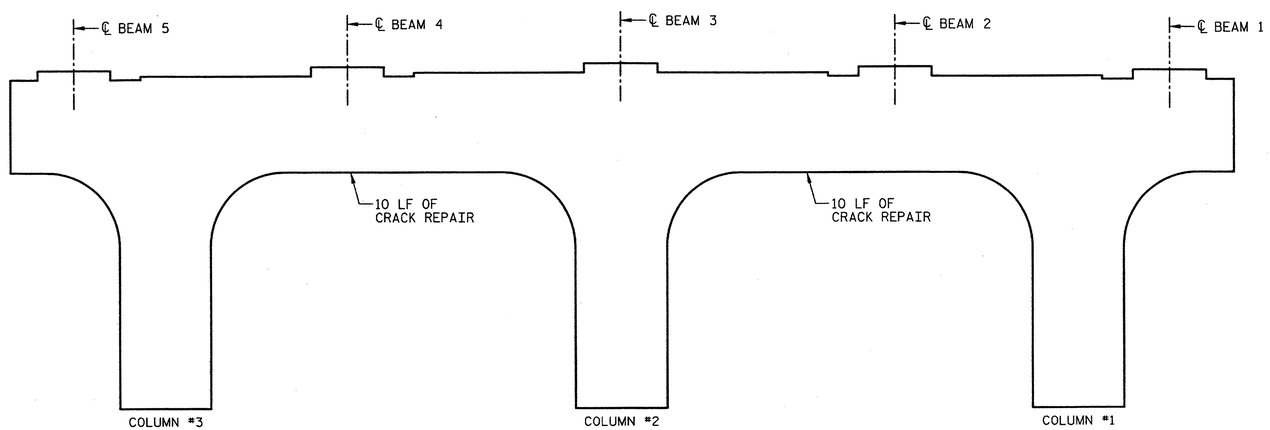

EAST ELEVATION

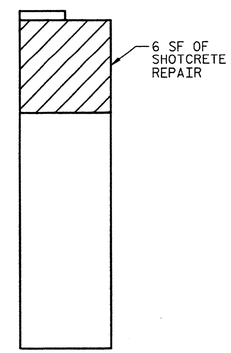

NORTH END ELEVATION

BILL OF MATERIAL

BENT 3

BAR	NO.	SIZE	TYPE	LENGTH
S1	VAR.	#4	1	VARIES
S2	VAR.	#5	2	VARIES
CONCRETE REPAIRS			CF	0
SHOTCRETE REPAIRS			CF	3
EPOXY RESIN INJECTION			LF	20
REINFORCING STEEL			LBS	0

BAR TYPE

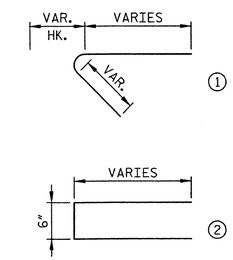

(BAR DIMENSIONS ARE OUT TO OUT)

NOTES

FOR NOTES, SEE DRAWING "BENT 1 BRIDGE NO. 67".

CONCRETE REPAIR

SHOTCRETE REPAIR

EPOXY RESIN INJECTION OF CRACKS

PROJECT NO. 17BP.4.P.2

HALIFAX COUNTY

BRIDGE NO.: 67

NORTH CAROLINA PROFESSIONAL SEAL 032129 ENGINEER MATTHEW J. MOYER

1-13-2012

STATE OF NORTH CAROLINA
DEPARTMENT OF TRANSPORTATION
RALEIGH

BENT 3
BRIDGE NO. 67

REVISIONS						
NO.	BY:	DATE:	NO.	BY:	DATE:	
1			3			
2			4			

SHEET NO. S-10

TOTAL SHEETS 84

HDR Engineering, Inc. of the Carolinas
3733 National Drive, Suite 207 Raleigh, N.C. 27612
N.C.B.E.L.S. License Number: F-0116

DRAWN BY : K. BERGER DATE : 01/2012
CHECKED BY : C. ROKICKI DATE : 01/2012

USER: paulnone DATE: 1/12/2012 TIME: 8:49:24 PM
FILE: \

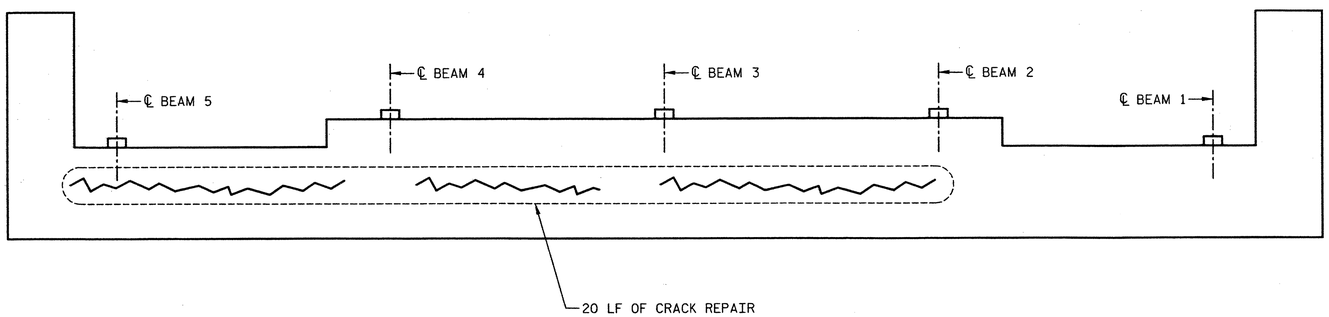

EAST ELEVATION

BILL OF MATERIAL

END BENT 1

BAR	NO.	SIZE	TYPE	LENGTH
S1	VAR.	#4	1	VARIES
S2	VAR.	#5	2	VARIES
CONCRETE REPAIRS			CF	0
SHOTCRETE REPAIRS			CF	0
EPOXY RESIN INJECTION			LF	20
REINFORCING STEEL			LBS	0

BAR TYPE

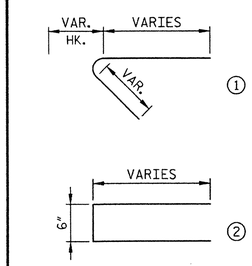

(BAR DIMENSIONS ARE OUT TO OUT)

NOTES

FOR NOTES, SEE DRAWING "BENT 1 BRIDGE NO. 67".

CONCRETE REPAIR

SHOTCRETE REPAIR

EPOXY RESIN INJECTION OF CRACKS

PROJECT NO. 17BP.4.P.2

HALIFAX COUNTY

BRIDGE NO.: 67

NORTH CAROLINA PROFESSIONAL SEAL 032129 ENGINEER MATTHEW J. MOYER

1-13-2012

STATE OF NORTH CAROLINA
DEPARTMENT OF TRANSPORTATION
RALEIGH

END BENT 1
BRIDGE NO. 67

REVISIONS						
NO.	BY:	DATE:	NO.	BY:	DATE:	
1			3			
2			4			

SHEET NO. S-41

TOTAL SHEETS 84

HDR Engineering, Inc. of the Carolinas
3733 National Drive, Suite 207 Raleigh, N.C. 27612
N.C.B.E.L.S. License Number: F-0116

DRAWN BY : K. BERGER DATE : 01/2012
CHECKED BY : C. ROKICKI DATE : 01/2012

PLOT DRIVER: NCDOT.pdf_mono.eng.pltcfg
USER: pquinone DATE: 1/12/2012
FILE: \
PENTABLET: DIVISION 4_PRELIMINARY
TIME: 8:49:30 PM

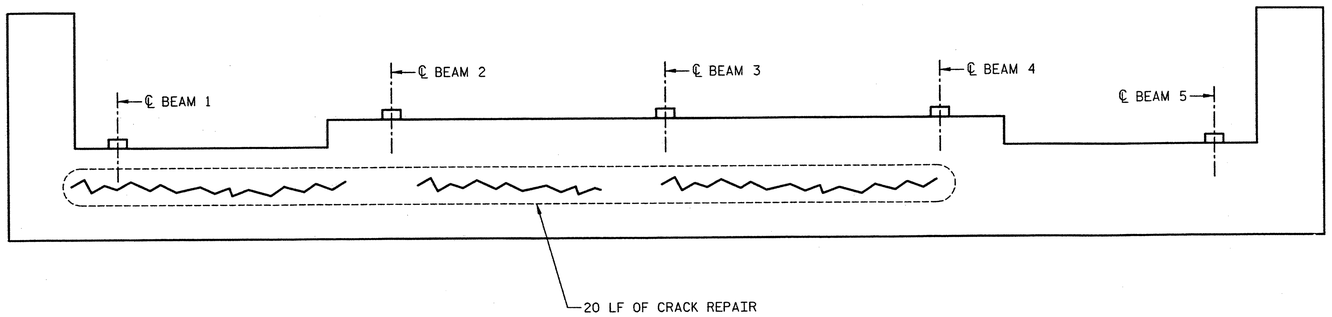

WEST ELEVATION

BILL OF MATERIAL

END BENT 2

BAR	NO.	SIZE	TYPE	LENGTH
S1	VAR.	#4	1	VARIES
S2	VAR.	#5	2	VARIES
CONCRETE REPAIRS			CF	0
SHOTCRETE REPAIRS			CF	0
EPOXY RESIN INJECTION			LF	20
REINFORCING STEEL			LBS	0

BAR TYPE

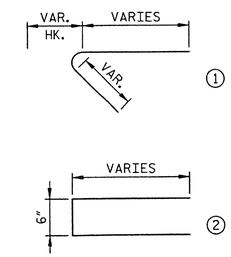

(BAR DIMENSIONS ARE OUT TO OUT)

NOTES

FOR NOTES, SEE DRAWING "BENT 1 BRIDGE NO. 67".

CONCRETE REPAIR

SHOTCRETE REPAIR

EPOXY RESIN INJECTION OF CRACKS

PROJECT NO. 17BP.4.P.2

HALIFAX COUNTY

BRIDGE NO.: 67

1-13-2012

STATE OF NORTH CAROLINA
DEPARTMENT OF TRANSPORTATION
RALEIGH

END BENT 2
BRIDGE NO. 67

REVISIONS						SHEET NO. S-42
NO.	BY:	DATE:	NO.	BY:	DATE:	TOTAL SHEETS 84
1			3			
2			4			

HDR Engineering, Inc. of the Carolinas
3733 National Drive, Suite 207 Raleigh, N.C. 27612
N.C.B.E.L.S. License Number: F-0116

DRAWN BY : K. BERGER DATE : 01/2012
CHECKED BY : C. ROKICKI DATE : 01/2012

PLOT DRIVER: NCDOT_pdf_mono.eng.pc.plt
USER: pquinone DATE: 1/12/2012
FILE:
TIME: 8:49:35 PM

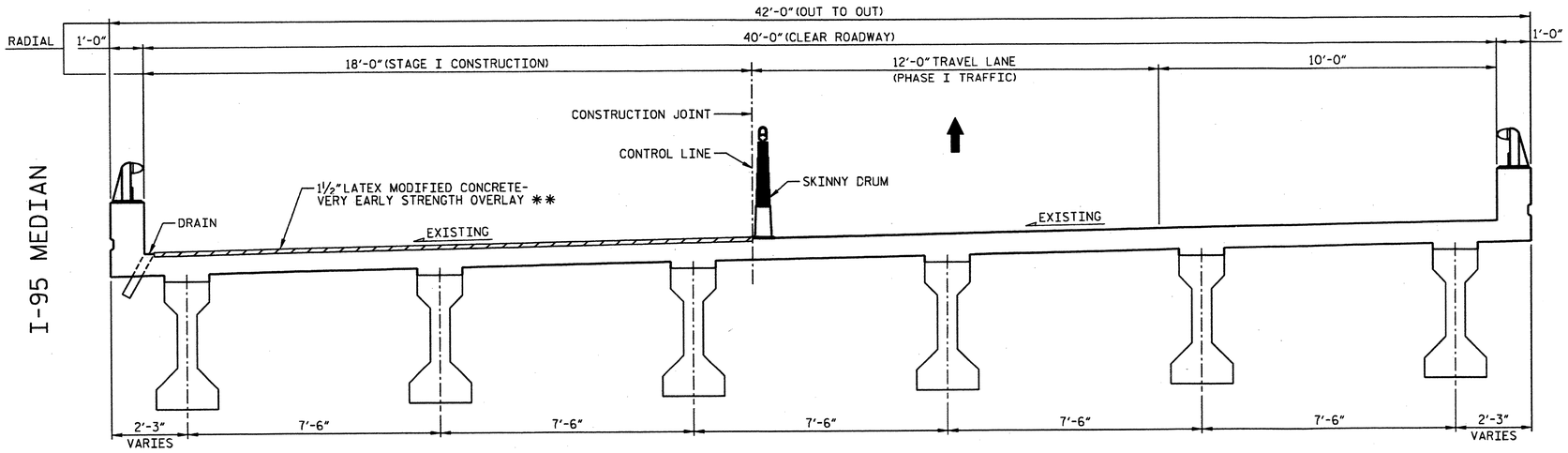

TYPICAL SECTION - STAGE I

** THE FINISHED SURFACE OF THE LATEX MODIFIED CONCRETE-VERY EARLY STRENGTH OVERLAY SHALL BE ½" ABOVE THE ORIGINAL DECK SURFACE.

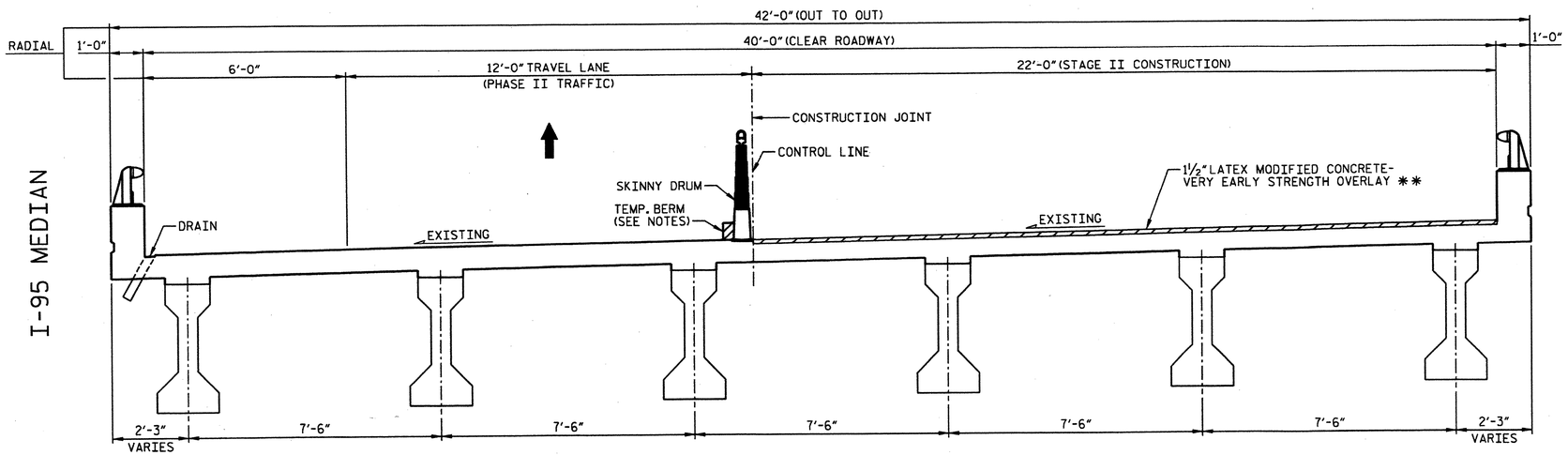

TYPICAL SECTION - STAGE II

** THE FINISHED SURFACE OF THE LATEX MODIFIED CONCRETE-VERY EARLY STRENGTH OVERLAY SHALL BE ½" ABOVE THE ORIGINAL DECK SURFACE.

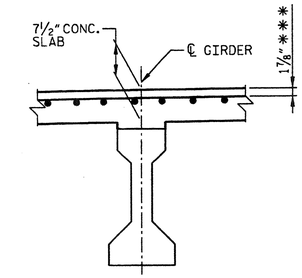

EXISTING SLAB SECTION

BOTTOM MAT OF REINFORCING NOT SHOWN FOR CLARITY.
*** CONCRETE COVER PER "AS-BUILT PLANS"

NOTES

FOR "HYDRO-DEMOLITION OF BRIDGE DECK", SEE SPECIAL PROVISIONS.

THE CONTRACTOR MUST COLLECT, TREAT AND DISPOSE OF RUN-OFF WATER FROM THE HYDRO-DEMOLITION PROCESS. SEE "MANAGING HYDRO-DEMOLITION WATER" SPECIAL PROVISIONS.

THE BOUNDARIES OF AREAS IDENTIFIED FOR CLASS III SURFACE PREPARATION ARE APPROXIMATE. IF ANY CLASS III LOCATIONS ARE ENCOUNTERED PRIOR TO OR DURING HYDRO-DEMOLITION, SEE "TYPICAL "BLOW THRU" CONTAINMENT AND FORMWORK" DETAIL. THE CONTRACTOR SHALL PROVIDE A METHOD OF HANDLING UNEXPECTED BLOW THROUGH WORK OF THE DECK.

THE NOMINAL UNCOMPRESSED SEAL WIDTH OF THE FOAM JOINT SEAL SHALL BE 2½" AT BENTS. FOR "FOAM JOINT SEALS", SEE SPECIAL PROVISIONS.

FOR "ELASTOMETRIC CONCRETE", SEE SPECIAL PROVISIONS.

LATEX MODIFIED CONCRETE SHALL BE LATEX MODIFIED CONCRETE-VERY EARLY STRENGTH.

FOR "LATEX MODIFIED CONCRETE-VERY EARLY STRENGTH", SEE SPECIAL PROVISIONS.

FOR GROOVING BRIDGE FLOORS INFORMATION, SEE "LATEX MODIFIED CONCRETE-VERY EARLY STRENGTH" SPECIAL PROVISIONS.

FOR SUBMITTAL OF WORKING DRAWINGS, SEE SPECIAL PROVISIONS.

FOR FALSEWORK AND FORMWORK, SEE SPECIAL PROVISIONS.

EXISTING JOINTS AND BRIDGE DECK DRAINS SHALL BE SEALED PRIOR TO BEGINNING SURFACE PREPARATION OF BRIDGE DECK.

EXISTING DIMENSIONS AND BRIDGE CONDITION ARE FROM THE BEST INFORMATION AVAILABLE. THE CONTRACTOR SHALL VERIFY THE INFORMATION SHOWN ON THE PLANS AND NOTIFY THE ENGINEER IF ACTUAL DIMENSIONS AND CONDITIONS DIFFER.

FOR SCARIFYING BRIDGE DECK, SEE SPECIAL PROVISIONS.

WATER AND CONCRETE SLURRY FROM HYDRO-DEMOLITION SHALL NOT BE ALLOWED TO DRAIN ACROSS TRAVEL LANES. CONTRACTOR SHALL PROVIDE A METHOD TO CONTROL WATER.

PROJECT NO. 17BP.4.P.2

HALIFAX COUNTY

BRIDGE NO.: 12

TOTAL BILL OF MATERIAL

SCARIFYING BRIDGE DECK	* CLASS I SURFACE PREPARATION	* CLASS II SURFACE PREPARATION	* CLASS III SURFACE PREPARATION	* CLASS AA CONCRETE	HYDRO-DEMOLITION OF BRIDGE DECK	LATEX MODIFIED CONCRETE-VERY EARLY STRENGTH OVERLAY	PLACING & FINISHING LATEX MODIFIED CONCRETE-VERY EARLY STRENGTH OVERLAY	FOAM JOINT SEALS	GROOVING BRIDGE FLOORS	ASPHALT CONCRETE SURFACE COURSE TYPE S9.5B	INCIDENTAL MILLING
SQ. YDS.	SQ. YDS.	SQ. YDS.	SQ. YDS.	CU. YDS.	SQ. YDS.	CU. YDS.	SQ. YDS.	LUMP SUM	SQ. FT.	TONS	SQ. YDS.
1200	53	0	0	0	1200	50	1200	LUMP SUM	9945	80	622

* QUANTITY SHOWN IS FOR INFORMATION ONLY.

DRAWN BY : J. ELLIOTT DATE : 01/2012
CHECKED BY : C. ROKICKI DATE : 01/2012

NORTH CAROLINA PROFESSIONAL SEAL 032129 ENGINEER MATTHEW J. MOYER
2-17-12

HDR Engineering, Inc. of the Carolinas
3733 National Drive, Suite 207 Raleigh, N.C. 27612
N.C.B.E.L. License Number: F-0116

STATE OF NORTH CAROLINA
DEPARTMENT OF TRANSPORTATION
RALEIGH

TYPICAL SECTION
FOR BRIDGE NO. 12
(I-95 NBL OVER FISHING CREEK)

REVISIONS								SHEET NO.
NO.	BY:	DATE:	NO.	BY:	DATE:			S-43
1			3					TOTAL SHEETS
2			4					84

PLOT DRIVER: NCDOT_pdf_mono_eng_50.plt PENTABLE: Division 4_pen_Austin.tbl
USER: lpatters DATE: 2/17/2012 TIME: 12:39:06 PM
FILE: North Carolina_Dept_of_Transportation\NCDOT_C_2011_STRDSN_OC_TO_2\13.00_CAD\Halifax 012\Drawings\DIV4.1_SD_HALIFAX12_01.dgn

NOTE:
FOR SECTIONS A-A, B-B, AND C-C, SEE SHEET "JOINT DETAILS FOR BRIDGE NO. 12".

ELASTOMERIC CONCRETE	
BENT NO.	ELASTOMERIC CONCRETE ✳ (CU. FT.)
BENT 1	7.9
BENT 2	7.9
BENT 3	7.9
BENT 4	7.9
TOTAL	31.8

✳ BASED ON THE MINIMUM BLOCKOUT SHOWN

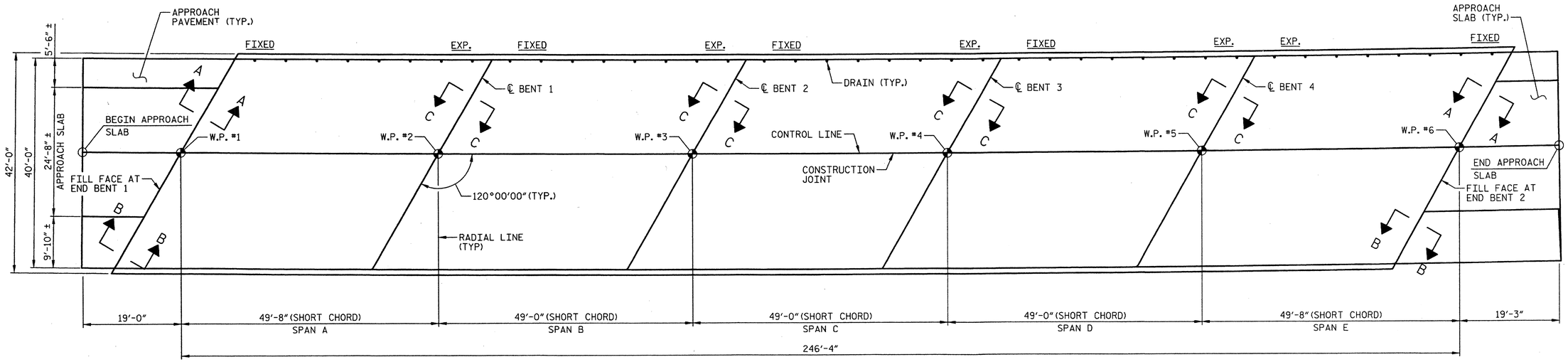

PLAN VIEW

PROJECT NO. 17BP.4.P.2

HALIFAX COUNTY

BRIDGE NO.: 12

NORTH CAROLINA PROFESSIONAL SEAL 032129 ENGINEER MATTHEW J. MOYER

1-13-2012

STATE OF NORTH CAROLINA
DEPARTMENT OF TRANSPORTATION
RALEIGH

PLAN VIEW
FOR BRIDGE NO. 12

REVISIONS						
NO.	BY:	DATE:	NO.	BY:	DATE:	
1			3			
2			4			

SHEET NO. S-44

TOTAL SHEETS 84

HDR Engineering, Inc. of the Carolinas
2733 National Drive, Suite 207 Raleigh, N.C. 27610
N.C.B.E.L.S. License Number: F-0116

DRAWN BY : J. ELLIOTT DATE : 01/2012
CHECKED BY : C. ROKICKI DATE : 01/2012

PLOT DRIVER: NCDOT_pdf_mono_eng_50.plt
USER: paulnone DATE: 1/12/2012
PENTABLE: Division 4_pen_Austin.tbl
TIME: 8:49:45 PM
FILE: \

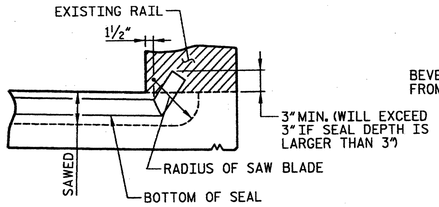

JOINT DETAIL AT RAIL

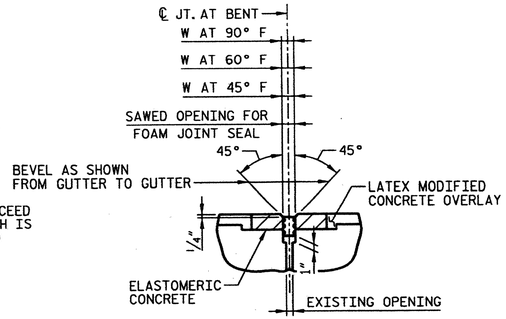

PROPOSED JOINT AT BENTS

FOAM JOINT SEAL EXPANSION

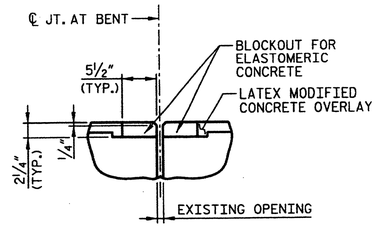

FOAM JOINT SEAL AT BENTS

PRE-SAWED ELASTOMERIC CONCRETE DIMENSIONS

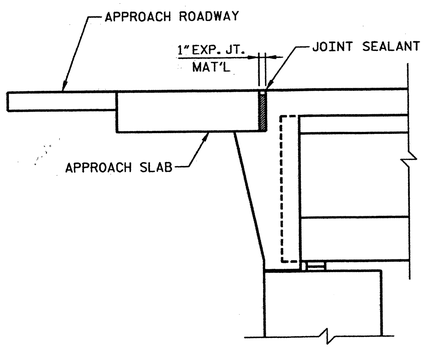

EXISTING SECTION AT END BENT

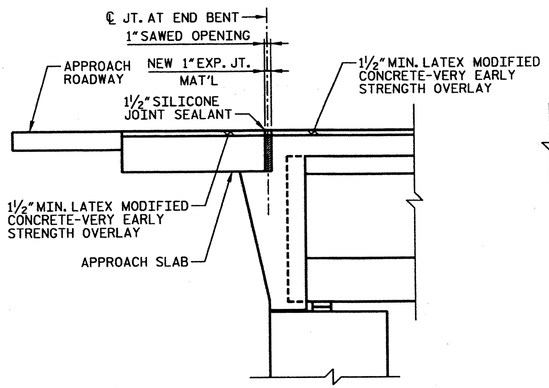

PROPOSED SECTION AT END BENT

SECTION A-A

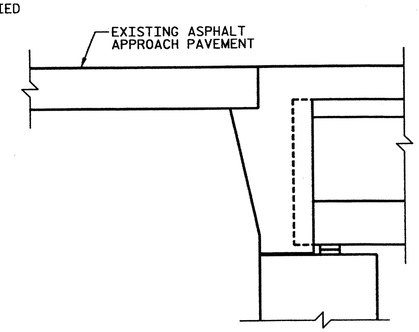

EXISTING SECTION AT END BENT

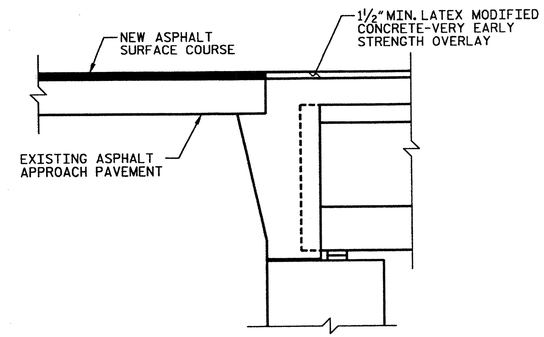

PROPOSED SECTION AT END BENT

SECTION B-B

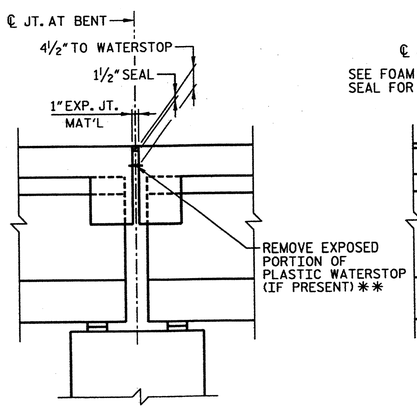

EXISTING JOINT AT BENTS

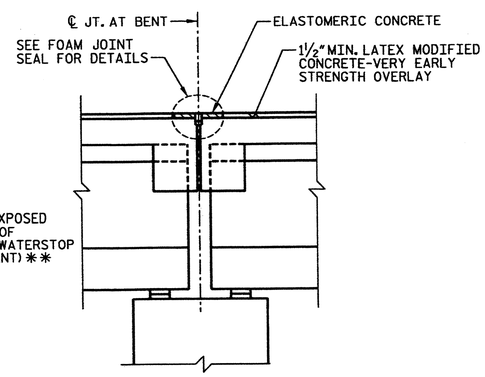

PROPOSED JOINT AT BENTS

SECTION C-C

SAWED OPENING FOR FOAM JOINT			
BENT NO.	W AT 90° F	W AT 60° F	W AT 45° F
BENT 1	1⅞"	2"	2 1/16"
BENT 2	1⅞"	2"	2 1/16"
BENT 3	1⅞"	2"	2 1/16"
BENT 4	1¾"	2"	2⅛"

PROJECT NO. 17BP.4.P.2

HALIFAX COUNTY

BRIDGE NO.: 12

NORTH CAROLINA PROFESSIONAL SEAL 032129 ENGINEER MATTHEW J. MOYER

1-13-2012

STATE OF NORTH CAROLINA
DEPARTMENT OF TRANSPORTATION
RALEIGH

JOINT DETAILS FOR BRIDGE NO. 12

REVISIONS						
NO.	BY:	DATE:	NO.	BY:	DATE:	
1			3			
2			4			

SHEET NO. S-45

TOTAL SHEETS 84

** ALL LOOSE AND UNSOUND CONCRETE SHALL BE REMOVED. IF THE EMBEDDED PORTION OF THE EXISTING PLASTIC WATERSTOP IS EXPOSED DURING REMOVAL OF UNSOUND CONCRETE, THE ENTIRE WATERSTOP SHALL BE REMOVED. OTHERWISE, TRIM WATERSTOP FLUSH WITH EXISTING CONCRETE SURFACE.

DRAWN BY : J. ELLIOTT DATE : 01/2012
CHECKED BY : C. ROKICKI DATE : 01/2012

HDR Engineering, Inc. of the Carolinas
3733 National Drive, Suite 207 Raleigh, N.C. 27612
N.C.B.E.L.S. License Number: F-0116

USER: paulhone DATE: 1/12/2012 TIME: 8:49:50 PM
FILE: \

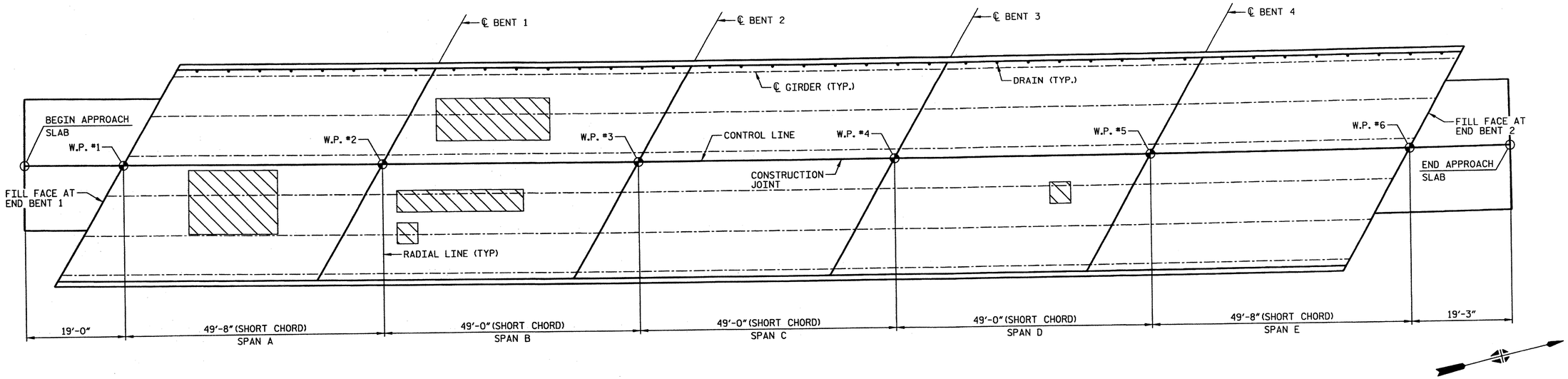

PLAN OF SPANS - DECK REPAIRS

APPROX. AREA: CLASS I REPAIR

APPROX. AREA: CLASS II REPAIR

APPROX. AREA: CLASS III REPAIR

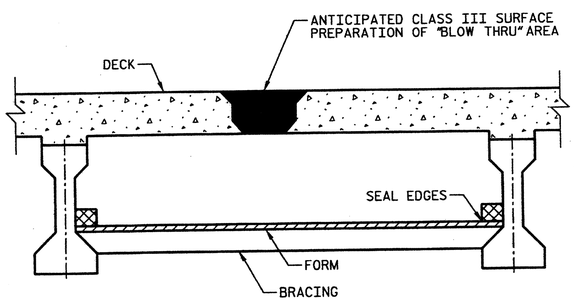

TYPICAL "BLOW THRU" CONTAINMENT AND FORMWORK

A METHOD TO CAPTURE WATER AND DEBRIS FROM BLOW THRU DURING HYDRO-DEMOLITION SHALL BE INSTALLED IN AREAS INDICATED AS CLASS III SURFACE PREPARATION.

SUBMIT DETAILS OF PROPOSED FORMWORK FOR APPROVAL PRIOR TO BEGINNING WORK.

COST FOR INSTALLING AND REMOVING FORMWORK SHALL BE INCIDENTAL TO THE PRICE PER SQ. YARD OF HYDRO-DEMOLITION.

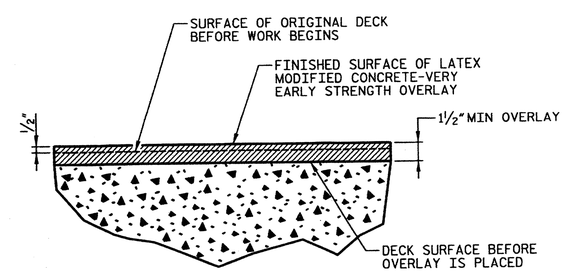

DETAIL FOR LATEX MODIFIED CONCRETE OVERLAY

PROJECT NO. 17BP.4.P.2

HALIFAX COUNTY

BRIDGE NO.: 12

NORTH CAROLINA PROFESSIONAL SEAL 032129 ENGINEER MATTHEW J. MOYER

1-13-2012

STATE OF NORTH CAROLINA
DEPARTMENT OF TRANSPORTATION
RALEIGH

DECK REPAIR DETAILS FOR BRIDGE NO. 12

HDR Engineering, Inc. of the Carolinas
3733 National Drive, Suite 207 Raleigh, N.C. 27612
N.C.B.E.L.S. License Number: F-0116

REVISIONS						
NO.	BY:	DATE:	NO.	BY:	DATE:	
1			3			
2			4			

SHEET NO. S-46

TOTAL SHEETS 84

DRAWN BY : K. BERGER DATE : 01/2012

CHECKED BY : C. ROKICKI DATE : 01/2012

PLOT DRIVER: NCDOT_pdf_mono_eng_50.plt
USER: paulnone DATE: 1/12/2012
FILE: \
PENTABLE: DIVISION 4.PBL.ROSTER
TIME: 8:49:56 PM

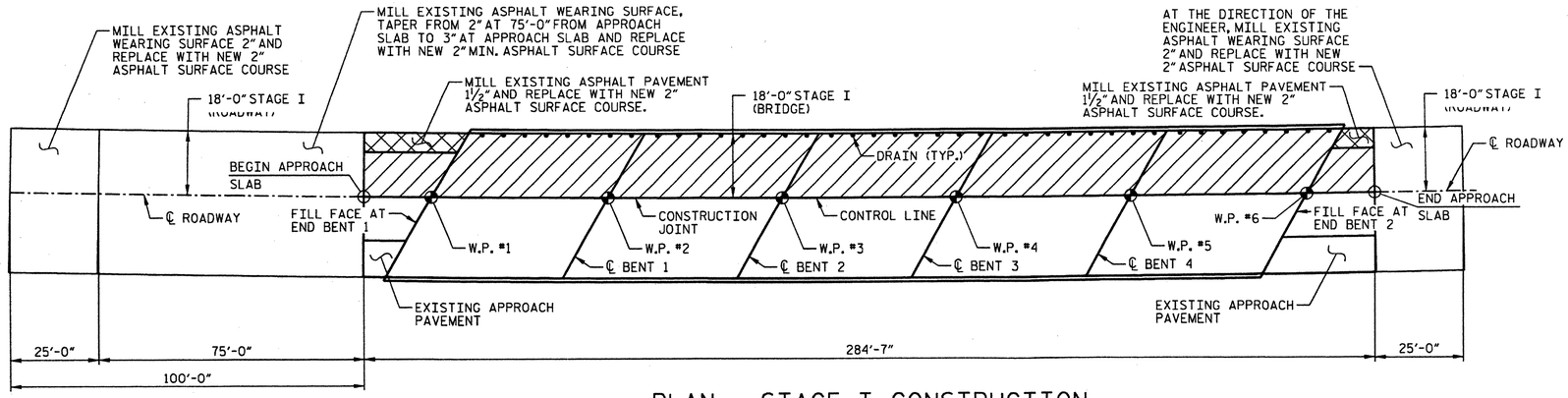

PLAN - STAGE I CONSTRUCTION

DECK SCARIFICATION AND HYDRO-DEMOLITION

PARTIAL DEPTH MILLING

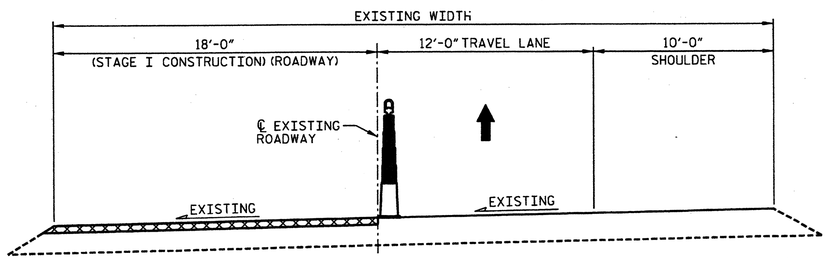

TYPICAL ROADWAY MILLING SECTION - STAGE I

(MILLING DEPTH VARIES, SEE PLAN)

ASPHALT MILLING

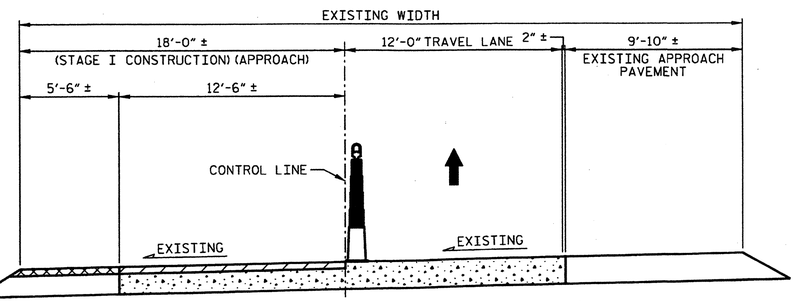

TYPICAL SECTION: APPROACH SLAB SCARIFICATION AND APPROACH PAVEMENT MILLING - STAGE I

APPROACH SLAB SCARIFICATION AND HYDRO-DEMOLITION

PARTIAL DEPTH MILLING

C1	PROPOSED VARIABLE DEPTH ASPHALT CONCRETE SURFACE COURSE, TYPE S9.5B AT AN AVERAGE RATE OF 112 LBS PER SQ. YD. PER 1" DEPTH.

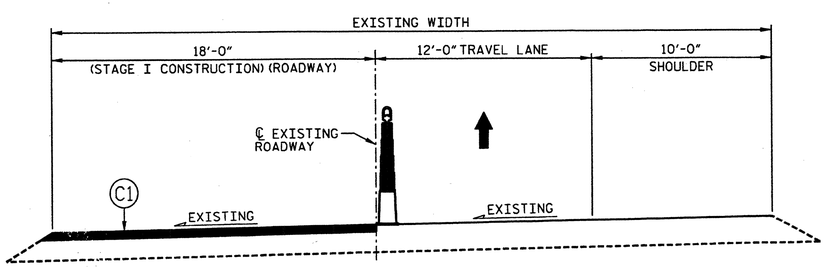

TYPICAL ROADWAY SECTION - STAGE I

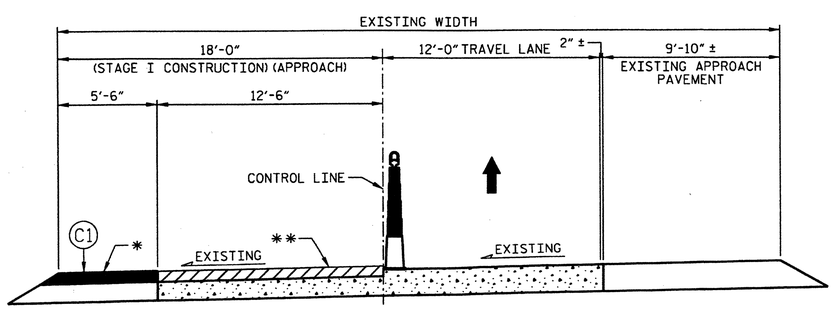

TYPICAL APPROACH SECTION - STAGE I

1½" LATEX MODIFIED CONCRETE-VERY EARLY STRENGTH OVERLAY

* THE FINISHED SURFACE OF THE PROPOSED ASPHALT SHALL BE ½" ABOVE THE ORIGINAL APPROACH PAVEMENT SURFACE.

** THE FINISHED SURFACE OF THE LATEX MODIFIED CONCRETE - VERY EARLY STRENGTH OVERLAY SHALL BE ½" ABOVE THE ORIGINAL APPROACH SLAB SURFACE.

NORTH CAROLINA PROFESSIONAL SEAL 032129 ENGINEER MATTHEW J. MOTER
2-17-12

PROJECT NO. 17BP.4.P.2

HALIFAX COUNTY

BRIDGE NO.: 12

STATE OF NORTH CAROLINA
DEPARTMENT OF TRANSPORTATION
RALEIGH

TYPICAL SECTION, DECK SCARIFICATION & MILLING DETAILS FOR BRIDGE NO. 12 (STAGE I)

REVISIONS								SHEET NO. S-47
NO.	BY:	DATE:	NO.	BY:	DATE:			
1			3					TOTAL SHEETS 84
2			4					

HDR Engineering, Inc. of the Carolinas
3733 National Drive, Suite 207 Raleigh, N.C. 27612
N.C.B.E.L.S. License Number: F-0116

DRAWN BY : K. BERGER DATE : 01/2012
CHECKED BY : C. ROKICKI DATE : 01/2012

PLOT DRIVER: NCDOT_pdf_mono_eng_50.plt
USER: lpotters DATE: 2/17/2012
FILE: North Carolina_Dept_of_Transportation\NCDOT_C_2011_STRDSN_OC_TO_2\13.00_CAD\Halifax 012\Drawings\DIV41_SD_HALIFAX12_05.dgn
PENTABLE: Division 4_pen_Austin.tbl
TIME: 12:39:18 PM

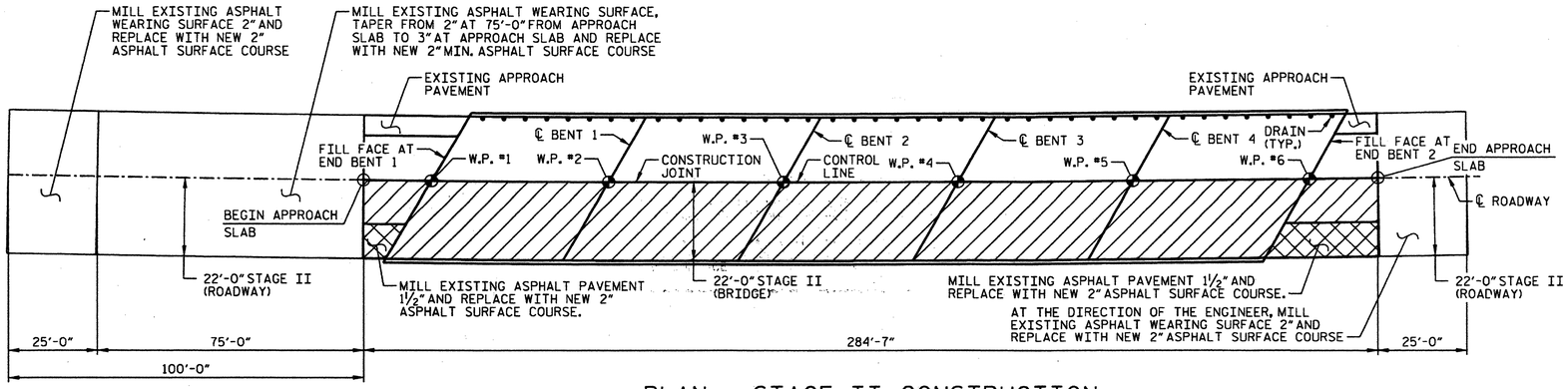

PLAN - STAGE II CONSTRUCTION

DECK SCARIFICATION AND HYDRO-DEMOLITION

PARTIAL DEPTH MILLING

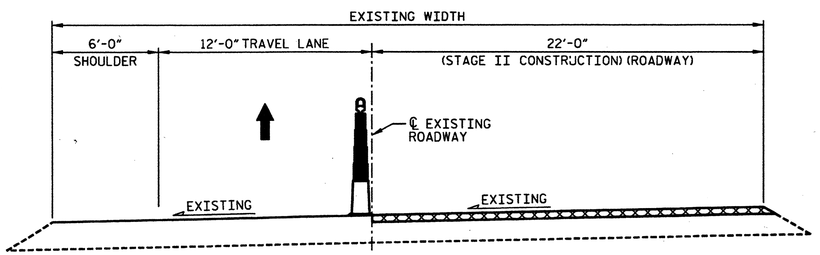

TYPICAL ROADWAY MILLING SECTION - STAGE II

(MILLING DEPTH VARIES, SEE PLAN)

ASPHALT MILLING

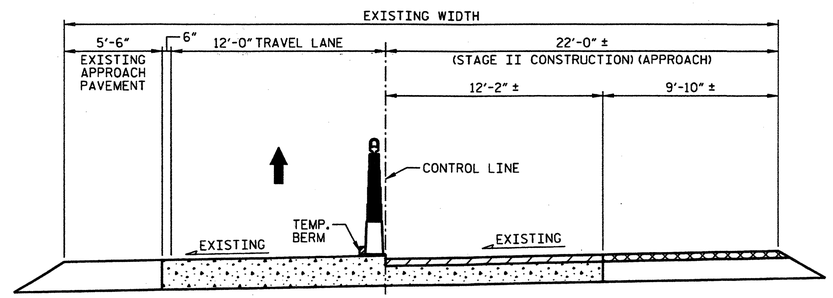

TYPICAL SECTION: APPROACH SLAB SCARIFICATION AND APPROACH PAVEMENT MILLING - STAGE II

APPROACH SLAB SCARIFICATION AND HYDRO-DEMOLITION

PARTIAL DEPTH MILLING

C1	PROPOSED VARIABLE DEPTH ASPHALT CONCRETE SURFACE COURSE, TYPE S9.5B AT AN AVERAGE RATE OF 112 LBS PER SQ. YD. PER 1" DEPTH.

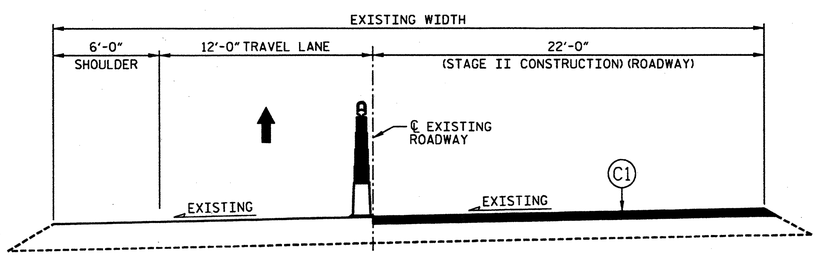

TYPICAL ROADWAY SECTION - STAGE II

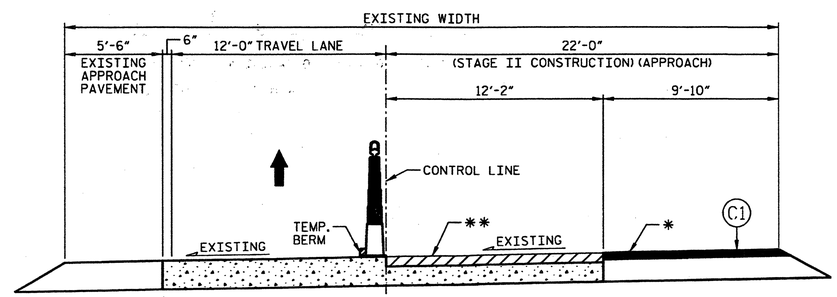

TYPICAL APPROACH SECTION - STAGE II

1½" LATEX MODIFIED CONCRETE-VERY EARLY STRENGTH OVERLAY

* THE FINISHED SURFACE OF THE PROPOSED ASPHALT SHALL BE ½" ABOVE THE ORIGINAL APPROACH PAVEMENT SURFACE.

** THE FINISHED SURFACE OF THE LATEX MODIFIED CONCRETE - VERY EARLY STRENGTH OVERLAY SHALL BE ½" ABOVE THE ORIGINAL APPROACH SLAB SURFACE.

NORTH CAROLINA PROFESSIONAL SEAL 032129 ENGINEER MATTHEW J. MOYER

3-2-12

PROJECT NO. 17BP.4.P.2

HALIFAX COUNTY

BRIDGE NO.: 12

STATE OF NORTH CAROLINA
DEPARTMENT OF TRANSPORTATION
RALEIGH

TYPICAL SECTION, DECK SCARIFICATION & MILLING DETAILS FOR BRIDGE NO. 12 (STAGE II)

REVISIONS						SHEET NO. S-48
NO.	BY:	DATE:	NO.	BY:	DATE:	TOTAL SHEETS 84
1			3			
2			4			

HDR Engineering, Inc. of the Carolinas
3733 National Drive, Suite 207 Raleigh, N.C. 27612
N.C.B.E.L.S. License Number: F-0116

DRAWN BY : K. BERGER DATE : 01/2012
CHECKED BY : C. ROKICKI DATE : 01/2012

PLOT DRIVER: NCDOT_pdf_mono_eng_50.plt
USER: lpatters
FILE: North Carolina.Dept_of_Transportation\NCDOT_C_2011_STRDSN_OC_TO_2\13.00_CAD\Halifax 012\Drawings\DIV4_LSD_HALIFAX12_06.dgn
PENTABLE: Division 4_pen_Austin.tbl
DATE: 3/2/2012
TIME: 7:29:37 AM

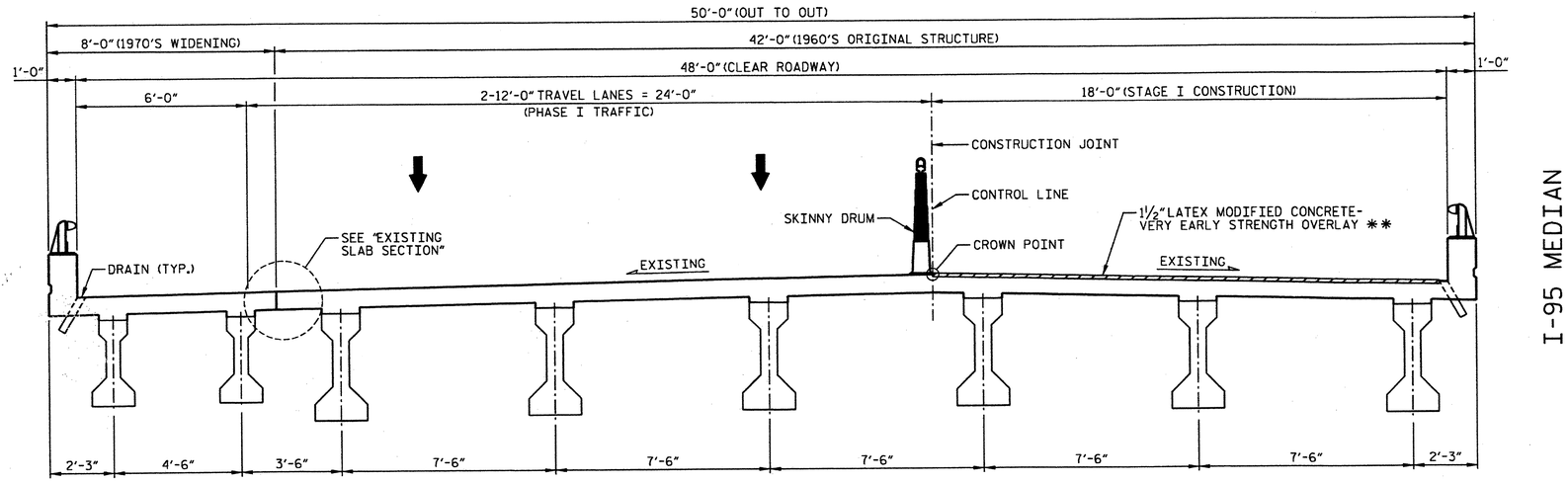

I-95 MEDIAN

TYPICAL SECTION - STAGE I

** THE FINISHED SURFACE OF THE LATEX MODIFIED CONCRETE-VERY EARLY STRENGTH OVERLAY SHALL BE ½" ABOVE THE ORIGINAL DECK SURFACE.

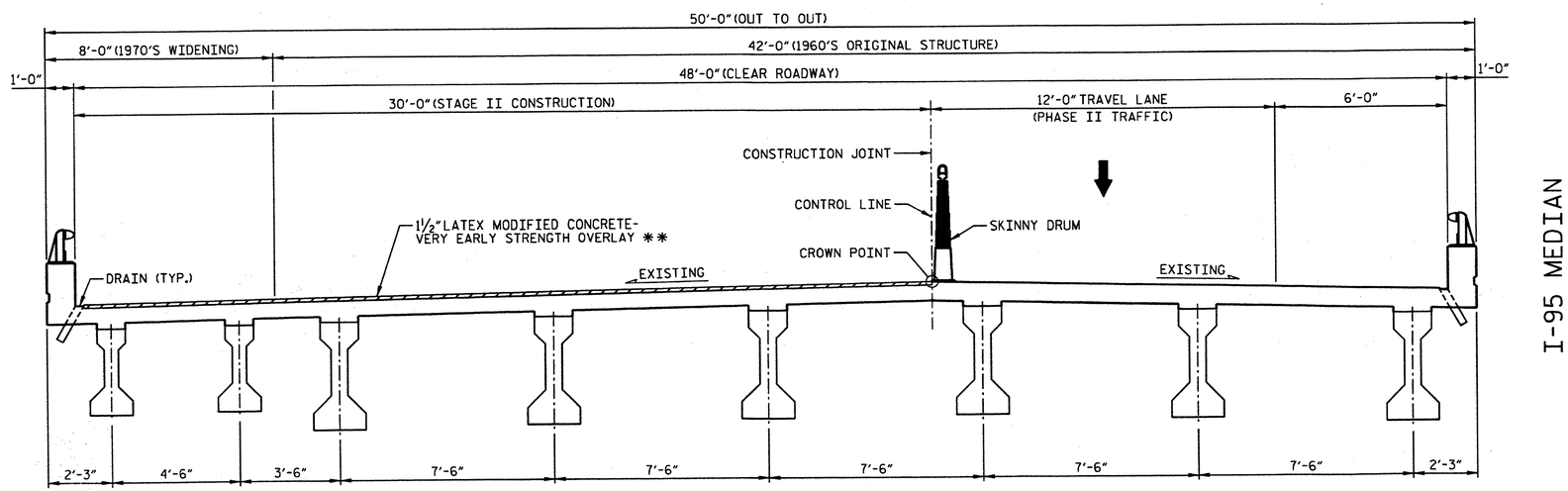

I-95 MEDIAN

TYPICAL SECTION - STAGE II

** THE FINISHED SURFACE OF THE LATEX MODIFIED CONCRETE-VERY EARLY STRENGTH OVERLAY SHALL BE ½" ABOVE THE ORIGINAL DECK SURFACE.

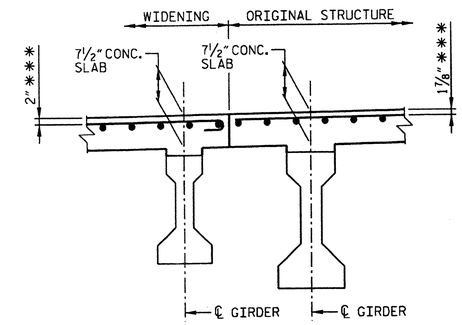

EXISTING SLAB SECTION

BOTTOM MAT OF REINFORCING NOT SHOWN FOR CLARITY.
*** CONCRETE COVER PER "AS-BUILT PLANS"

NOTES

FOR "HYDRO-DEMOLITION OF BRIDGE DECK", SEE SPECIAL PROVISIONS.

THE CONTRACTOR MUST COLLECT, TREAT AND DISPOSE OF RUN-OFF WATER FROM THE HYDRO-DEMOLITION PROCESS. SEE "MANAGING HYDRO-DEMOLITION WATER" SPECIAL PROVISIONS.

THE BOUNDARIES OF AREAS IDENTIFIED FOR CLASS III SURFACE PREPARATION ARE APPROXIMATE. IF ANY CLASS III LOCATIONS ARE ENCOUNTERED PRIOR TO OR DURING HYDRO-DEMOLITION, SEE "TYPICAL "BLOW THRU" CONTAINMENT AND FORMWORK" DETAIL. THE CONTRACTOR SHALL PROVIDE A METHOD OF HANDLING UNEXPECTED BLOW THROUGH WORK OF THE DECK.

THE NOMINAL UNCOMPRESSED SEAL WIDTH OF THE FOAM JOINT SEAL SHALL BE 2½" AT BENTS. FOR "FOAM JOINT SEALS", SEE SPECIAL PROVISIONS.

FOR "ELASTOMETRIC CONCRETE", SEE SPECIAL PROVISIONS.

LATEX MODIFIED CONCRETE SHALL BE LATEX MODIFIED CONCRETE-VERY EARLY STRENGTH.

FOR "LATEX MODIFIED CONCRETE-VERY EARLY STRENGTH", SEE SPECIAL PROVISIONS.

FOR GROOVING BRIDGE FLOORS INFORMATION, SEE "LATEX MODIFIED CONCRETE-VERY EARLY STRENGTH" SPECIAL PROVISIONS.

FOR SUBMITTAL OF WORKING DRAWINGS, SEE SPECIAL PROVISIONS.

FOR FALSEWORK AND FORMWORK, SEE SPECIAL PROVISIONS.

EXISTING JOINTS AND BRIDGE DECK DRAINS SHALL BE SEALED PRIOR TO BEGINNING SURFACE PREPARATION OF BRIDGE DECK.

EXISTING DIMENSIONS AND BRIDGE CONDITION ARE FROM THE BEST INFORMATION AVAILABLE. THE CONTRACTOR SHALL VERIFY THE INFORMATION SHOWN ON THE PLANS AND NOTIFY THE ENGINEER IF ACTUAL DIMENSIONS AND CONDITIONS DIFFER.

FOR SCARIFYING BRIDGE DECK, SEE SPECIAL PROVISIONS.

TOTAL BILL OF MATERIAL

SCARIFYING BRIDGE DECK	*CLASS I SURFACE PREPARATION	*CLASS II SURFACE PREPARATION	*CLASS III SURFACE PREPARATION	*CLASS AA CONCRETE	HYDRO-DEMOLITION OF BRIDGE DECK	LATEX MODIFIED CONCRETE-VERY EARLY STRENGTH OVERLAY	PLACING & FINISHING LATEX MODIFIED CONCRETE-VERY EARLY STRENGTH OVERLAY	FOAM JOINT SEALS	GROOVING BRIDGE FLOORS	ASPHALT CONCRETE SURFACE COURSE TYPE S9.5B	INCIDENTAL MILLING
SQ. YDS.	SQ. YDS.	SQ. YDS.	SQ. YDS.	CU. YDS.	SQ. YDS.	CU. YDS.	SQ. YDS.	LUMP SUM	SQ. FT.	TONS	SQ. YDS.
1480	17	0	0	0	1480	62	1480	LUMP SUM	12270	6	51

*QUANTITY SHOWN IS FOR INFORMATION ONLY.

PROJECT NO. 17BP.4.P.2
HALIFAX COUNTY
BRIDGE NO.: 13

STATE OF NORTH CAROLINA
DEPARTMENT OF TRANSPORTATION
RALEIGH

TYPICAL SECTION FOR BRIDGE NO. 13
(I-95 SBL OVER FISHING CREEK)

NORTH CAROLINA PROFESSIONAL SEAL 032129 ENGINEER MATTHEW J. MOYER
2-16-12

REVISIONS						SHEET NO. S-49
NO.	BY:	DATE:	NO.	BY:	DATE:	TOTAL SHEETS 84
1			3			
2			4			

HDR Engineering, Inc. of the Carolinas
3733 National Drive, Suite 207 Raleigh, N.C. 27612
N.C.B.E.L.S. License Number: F-0116

DRAWN BY : J. ELLIOTT DATE : 01/2012
CHECKED BY : C. ROKICKI DATE : 01/2012

PLOT DRIVER: NCDOT_pdf_mono_eng_50.plt PENTABLE: Division 4_pen_Austin.tbl
USER: bpatters DATE: 2/16/2012 TIME: 11:57:21 AM
FILE: North Carolina_Dept_of_Transportation\NCDOT_C_2011_STRDSN_OC_TO_2\13.00_CAD\Halifax 013\Drawings\DIV4.1_SD_HALIFAX13_01.dgn

NOTE:
FOR SECTIONS A-A, B-B, AND C-C, SEE SHEET "JOINT DETAILS FOR BRIDGE NO. 13".

ELASTOMERIC CONCRETE	
BENT NO.	ELASTOMERIC CONCRETE ✳ (CU. FT.)
BENT 1	9.1
BENT 2	9.1
BENT 3	9.1
BENT 4	9.1
TOTAL	36.4

✳ BASED ON THE MINIMUM BLOCKOUT SHOWN

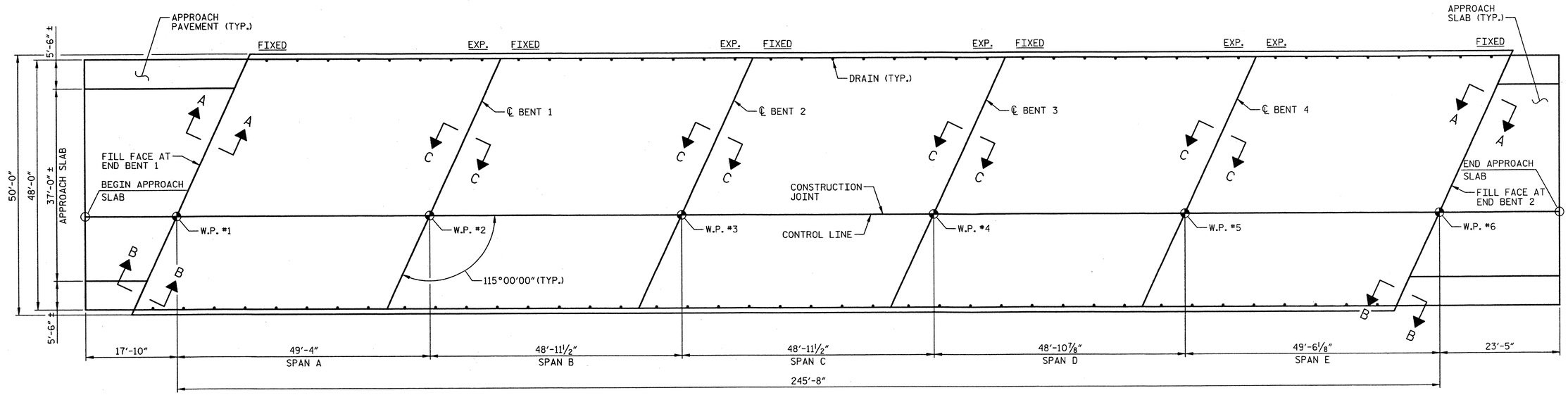

PLAN VIEW

PROJECT NO. 17BP.4.P.2

HALIFAX COUNTY

BRIDGE NO.: 13

STATE OF NORTH CAROLINA
DEPARTMENT OF TRANSPORTATION
RALEIGH

PLAN VIEW
FOR BRIDGE NO. 13

NORTH CAROLINA PROFESSIONAL SEAL ENGINEER 032129 MATTHEW J. MOYER

1-13-2012

REVISIONS								SHEET NO. S-50
NO.	BY:	DATE:	NO.	BY:	DATE:			TOTAL SHEETS 84
1			3					
2			4					

HDR Engineering, Inc. of the Carolinas
3733 National Drive, Suite 207 Raleigh, N.C. 27612
N.C.B.E.L.S. License Number: F-0116

DRAWN BY : K. BERGER DATE : 01/2012
CHECKED BY : C. ROKICKI DATE : 01/2012

PLOT DRIVER: NCDOT_pdf_mono_eng_50.plt
USER: pquinone DATE: 1/12/2012
FILE: \
PENTABLE: Division 4.pen_Austin.tbl
TIME: 8:50:19 PM

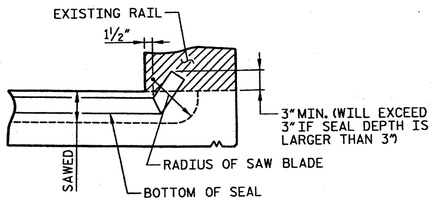

JOINT DETAIL AT RAIL

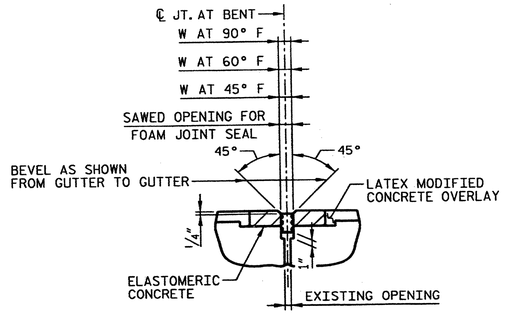

PROPOSED JOINT AT BENTS

FOAM JOINT SEAL EXPANSION

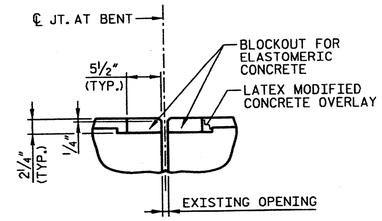

FOAM JOINT SEAL AT BENTS

PRE-SAWED ELASTOMERIC CONCRETE DIMENSIONS

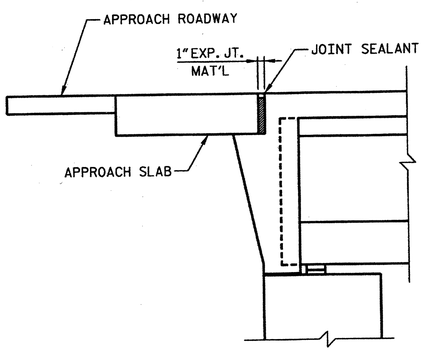

EXISTING SECTION AT END BENT

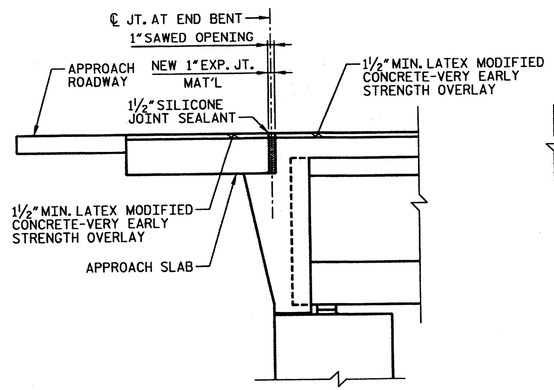

PROPOSED SECTION AT END BENT

SECTION A-A

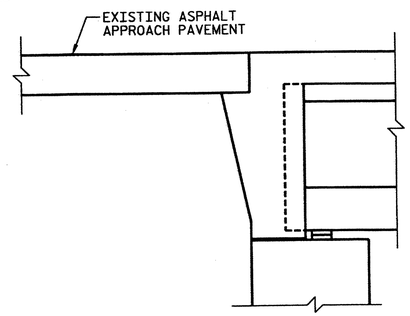

EXISTING SECTION AT END BENT

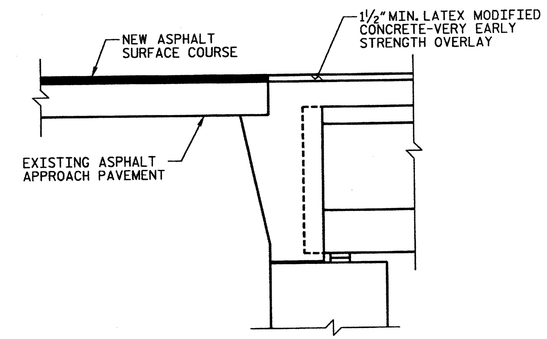

PROPOSED SECTION AT END BENT

SECTION B-B

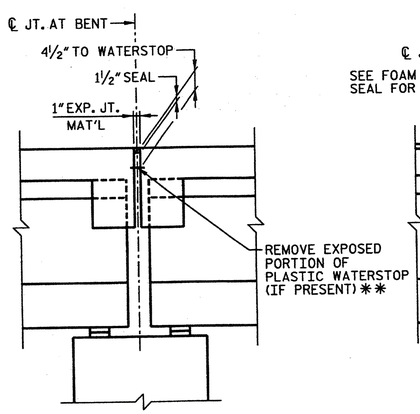

EXISTING JOINT AT BENTS

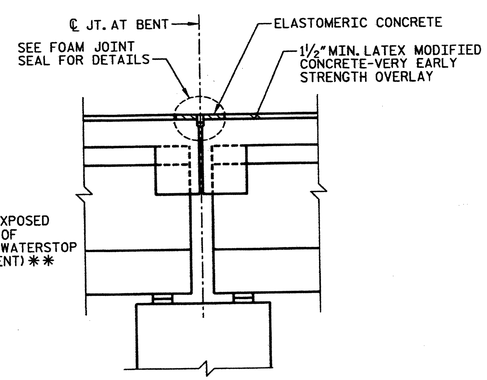

PROPOSED JOINT AT BENTS

SECTION C-C

SAWED OPENING FOR FOAM JOINT			
BENT NO.	W AT 90° F	W AT 60° F	W AT 45° F
BENT 1	1⅞"	2"	2 1/16"
BENT 2	1⅞"	2"	2 1/16"
BENT 3	1⅞"	2"	2 1/16"
BENT 4	1¾"	2"	2⅛"

PROJECT NO. 17BP.4.P.2

HALIFAX COUNTY

BRIDGE NO.: 13

STATE OF NORTH CAROLINA
DEPARTMENT OF TRANSPORTATION
RALEIGH

JOINT DETAILS FOR BRIDGE NO. 13

NORTH CAROLINA PROFESSIONAL SEAL 032129 ENGINEER MATTHEW J. MOYER

1-13-2012

** ALL LOOSE AND UNSOUND CONCRETE SHALL BE REMOVED. IF THE EMBEDDED PORTION OF THE EXISTING PLASTIC WATERSTOP IS EXPOSED DURING REMOVAL OF UNSOUND CONCRETE, THE ENTIRE WATERSTOP SHALL BE REMOVED. OTHERWISE, TRIM WATERSTOP FLUSH WITH EXISTING CONCRETE SURFACE.

REVISIONS						
NO.	BY:	DATE:	NO.	BY:	DATE:	
1			3			
2			4			

SHEET NO. S-51

TOTAL SHEETS 84

HDR Engineering, Inc. of the Carolinas
3733 National Drive, Suite 207 Raleigh, N.C. 27612
N.C.B.E.L.S. License Number: F-0116

DRAWN BY : K.BERGER DATE : 01/2012
CHECKED BY : C. ROKICKI DATE : 01/2012

PLOT DRIVER: NCDOT_pdf_mono_eng_50.plt
USER: pquinone DATE: 1/12/2012
FILE:
PENTABLE: Division 4_pen_austin.tbl
TIME: 8:50:24 PM

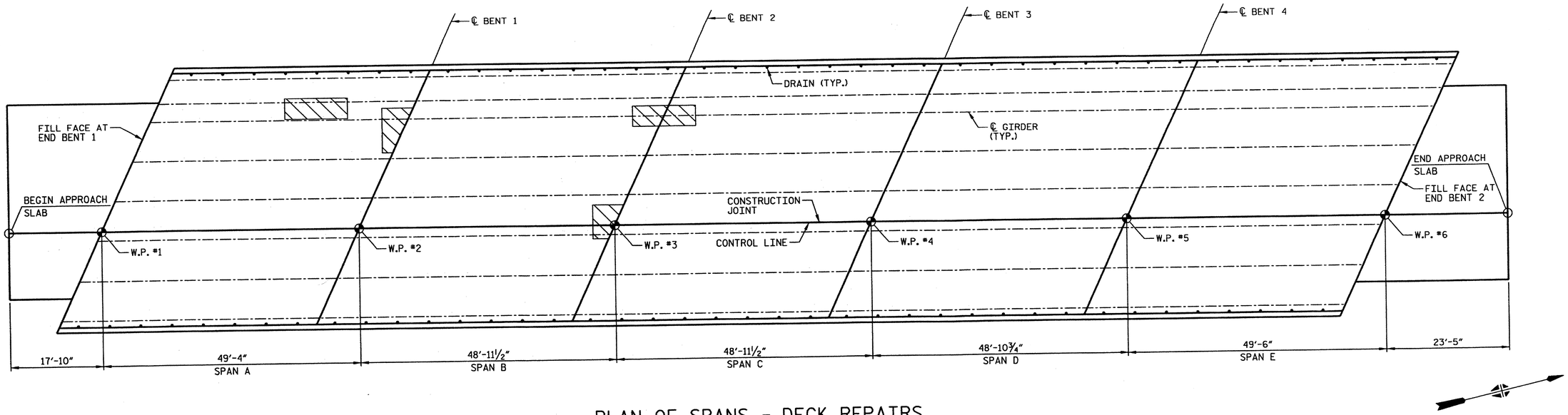

PLAN OF SPANS - DECK REPAIRS

APPROX. AREA: CLASS I REPAIR

APPROX. AREA: CLASS II REPAIR

APPROX. AREA: CLASS III REPAIR

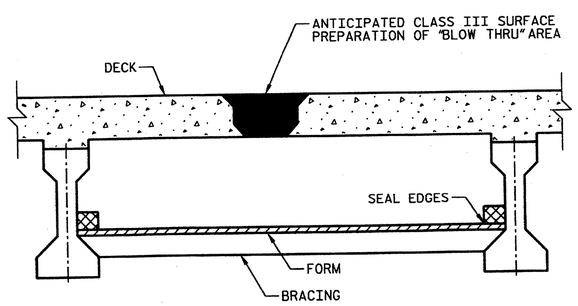

TYPICAL "BLOW THRU" CONTAINMENT AND FORMWORK

A METHOD TO CAPTURE WATER AND DEBRIS FROM BLOW THRU DURING HYDRO-DEMOLITION SHALL BE INSTALLED IN AREAS INDICATED AS CLASS III SURFACE PREPARATION.

SUBMIT DETAILS OF PROPOSED FORMWORK FOR APPROVAL PRIOR TO BEGINNING WORK.

COST FOR INSTALLING AND REMOVING FORMWORK SHALL BE INCIDENTAL TO THE PRICE PER SQ. YARD OF HYDRO-DEMOLITION.

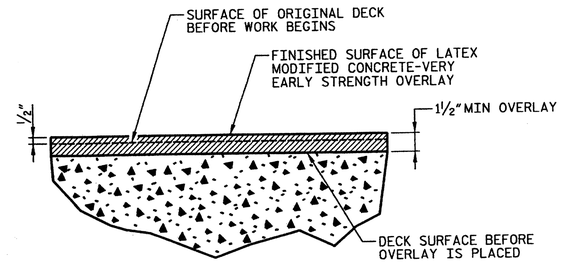

DETAIL FOR LATEX MODIFIED CONCRETE OVERLAY

PROJECT NO. 17BP.4.P.2

HALIFAX COUNTY

BRIDGE NO.: 13

NORTH CAROLINA PROFESSIONAL SEAL 032129 ENGINEER MATTHEW J. MOTICH

1-13-2012

STATE OF NORTH CAROLINA
DEPARTMENT OF TRANSPORTATION
RALEIGH

DECK REPAIR DETAILS FOR BRIDGE NO. 13

HDR Engineering, Inc. of the Carolinas
3733 National Drive, Suite 207 Raleigh, N.C. 27612
N.C.B.E.L.S. License Number: F-0116

REVISIONS						SHEET NO. S-52
NO.	BY:	DATE:	NO.	BY:	DATE:	TOTAL SHEETS 84
1			3			
2			4			

DRAWN BY : K. BERGER DATE : 01/2012

CHECKED BY : C. ROKICKI DATE : 01/2012

PENTABLE DIVISION: TIME: 8:50:29 PM

OT DRIVER: NCDOT_pdf_mono_eng_50.plt DATE: 1/12/2012

SER: paulnone

ILE: \

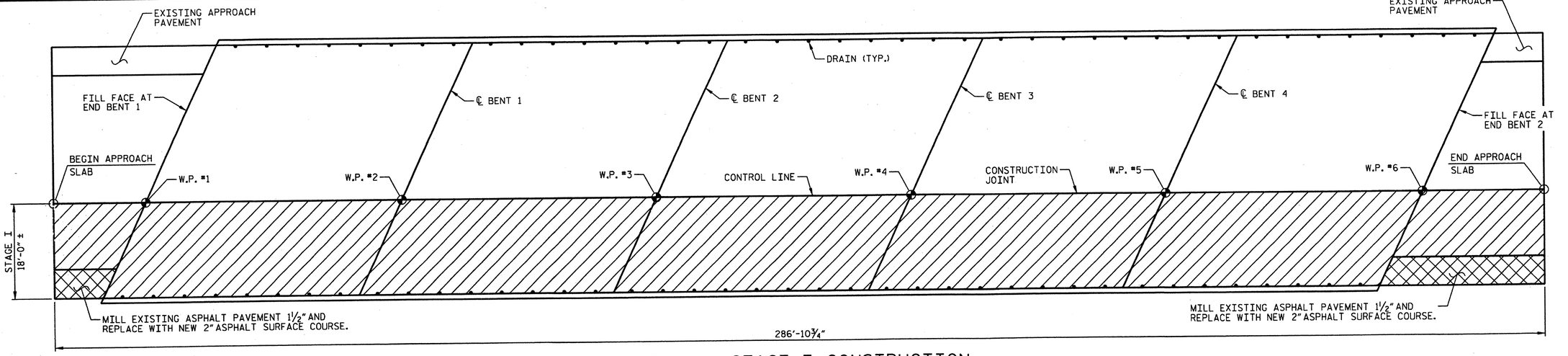

PLAN - STAGE I CONSTRUCTION

DECK SCARIFICATION AND HYDRO-DEMOLITION

PARTIAL DEPTH MILLING

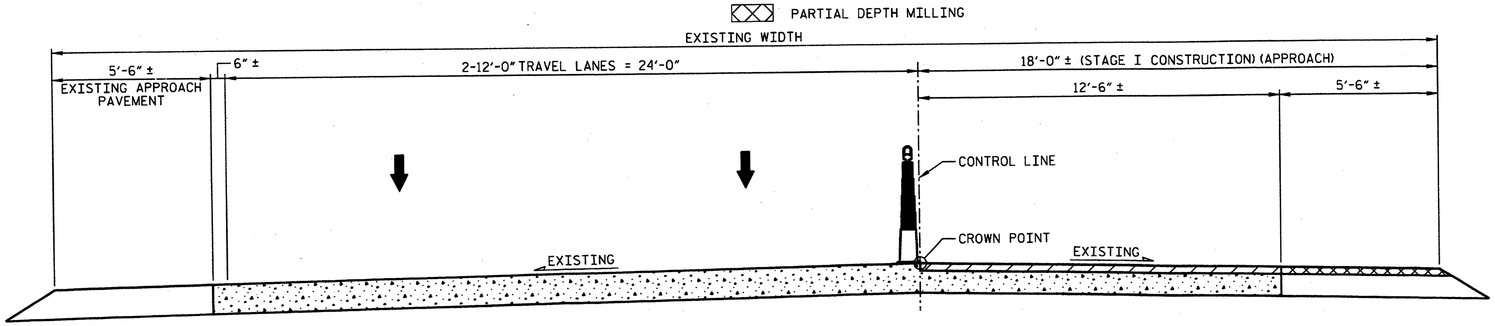

TYPICAL SECTION: APPROACH SLAB SCARIFICATION AND APPROACH PAVEMENT MILLING - STAGE I

APPROACH SLAB SCARIFICATION AND HYDRO-DEMOLITION

PARTIAL DEPTH MILLING

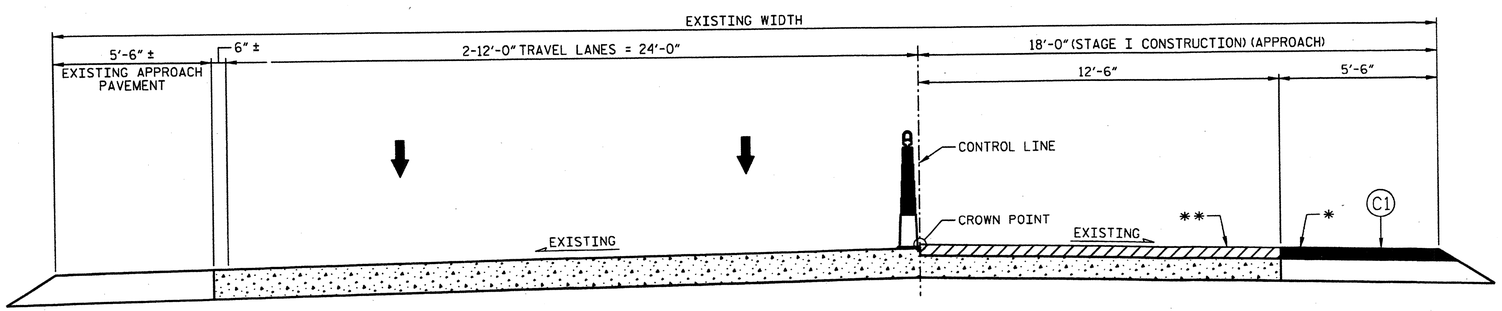

TYPICAL APPROACH SECTION - STAGE I

1½" LATEX MODIFIED CONCRETE-VERY EARLY STRENGTH OVERLAY

* THE FINISHED SURFACE OF THE PROPOSED ASPHALT SHALL BE ½" ABOVE THE ORIGINAL APPROACH PAVEMENT SURFACE.

** THE FINISHED SURFACE OF THE LATEX MODIFIED CONCRETE - VERY EARLY STRENGTH OVERLAY SHALL BE ½" ABOVE THE ORIGINAL APPROACH SLAB SURFACE.

C1	PROPOSED VARIABLE DEPTH ASPHALT CONCRETE SURFACE COURSE, TYPE S9.5B AT AN AVERAGE RATE OF 112 LBS PER SQ. YD. PER 1" DEPTH.

PROJECT NO. 17BP.4.P.2

HALIFAX COUNTY

BRIDGE NO.: 13

STATE OF NORTH CAROLINA
DEPARTMENT OF TRANSPORTATION
RALEIGH

TYPICAL SECTION & DECK SCARIFICATION FOR BRIDGE NO. 13 (STATE I)

NORTH CAROLINA PROFESSIONAL SEAL 032129 ENGINEER MATTHEW J. MOYER

2-17-12

HDR Engineering, Inc. of the Carolinas
3733 National Drive, Suite 207 Raleigh, N.C. 27612
N.C.B.E.L.S. License Number: F-0116

REVISIONS								
NO.	BY:	DATE:	NO.	BY:	DATE:	SHEET NO. S-53
1			3			TOTAL SHEETS 84
2			4			

DRAWN BY :	K. BERGER	DATE :	01/2012
CHECKED BY :	C. ROKICKI	DATE :	01/2012

PLOT DRIVER: NCDOT_pdf_mono_eng_50.plt
USER: lpatters DATE: 2/17/2012
FILE: North Carolina Dept_of_Transportation\NCDOT_C_2011_STRDSN_OC_TO_2\13.00_CAD\Halifax 013\Drawings\DIV4.1_SD_HALIFAX13_05.dgn
PENTABLE: Division 4_pen_Austin.tbl
TIME: 12:40:00 PM

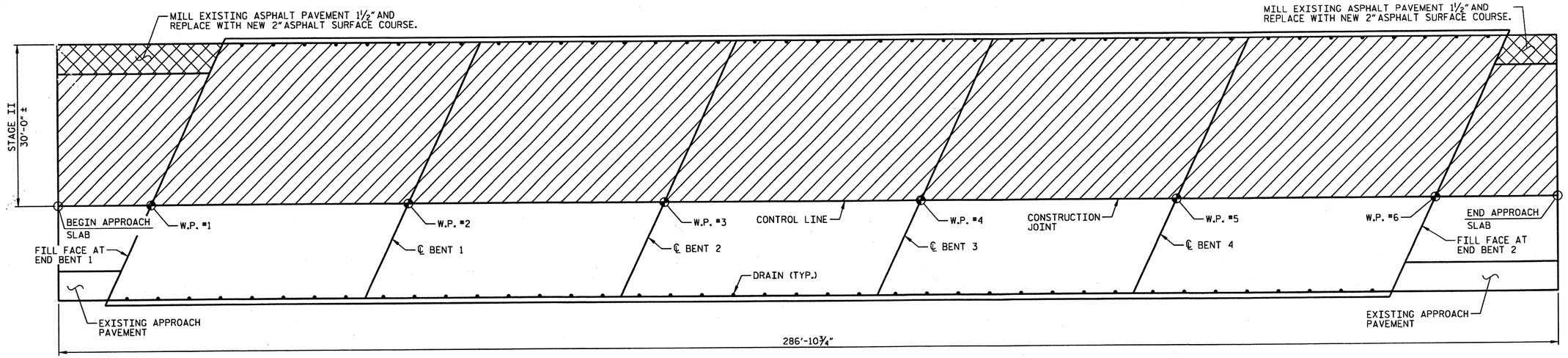

PLAN - STAGE II CONSTRUCTION

DECK SCARIFICATION AND HYDRO-DEMOLITION

PARTIAL DEPTH MILLING

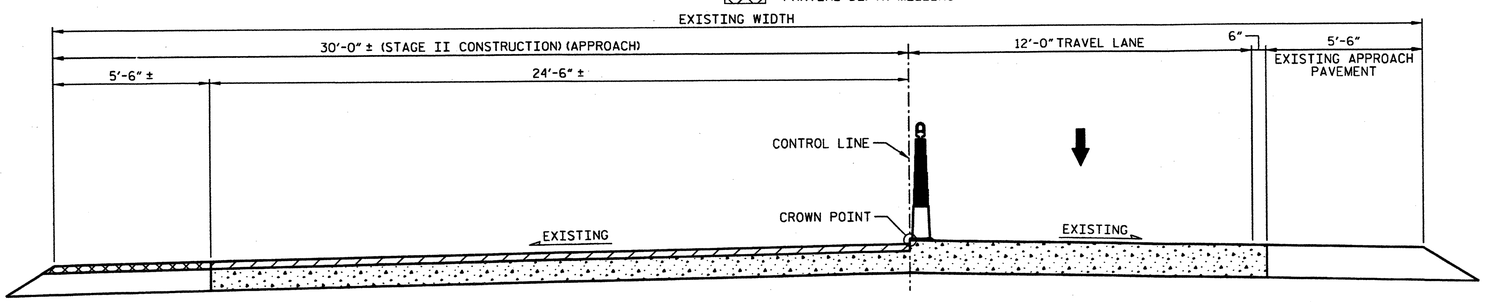

TYPICAL SECTION: APPROACH SLAB SCARIFICATION AND APPROACH PAVEMENT MILLING - STAGE II

APPROACH SLAB SCARIFICATION AND HYDRO-DEMOLITION

PARTIAL DEPTH MILLING

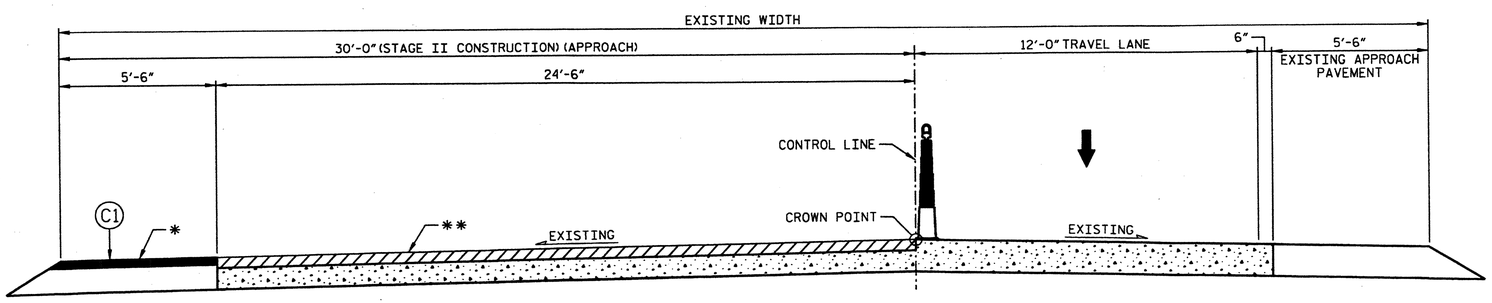

TYPICAL APPROACH SECTION - STAGE II

1½" LATEX MODIFIED CONCRETE-VERY EARLY STRENGTH OVERLAY

* THE FINISHED SURFACE OF THE PROPOSED ASPHALT SHALL BE ½" ABOVE THE ORIGINAL APPROACH PAVEMENT SURFACE.

** THE FINISHED SURFACE OF THE LATEX MODIFIED CONCRETE - VERY EARLY STRENGTH OVERLAY SHALL BE ½" ABOVE THE ORIGINAL APPROACH SLAB SURFACE.

C1	PROPOSED VARIABLE DEPTH ASPHALT CONCRETE SURFACE COURSE, TYPE S9.5B AT AN AVERAGE RATE OF 112 LBS PER SQ. YD. PER 1" DEPTH.

PROJECT NO. 17BP.4.P.2

HALIFAX COUNTY

BRIDGE NO.: 13

NORTH CAROLINA PROFESSIONAL ENGINEER SEAL 032125 MATTHEW J. MOTES

3-2-12

STATE OF NORTH CAROLINA
DEPARTMENT OF TRANSPORTATION
RALEIGH

TYPICAL SECTION & DECK SCARIFICATION FOR BRIDGE NO. 13 (STAGE II)

REVISIONS						
NO.	BY:	DATE:	NO.	BY:	DATE:	
1			3			
2			4			

SHEET NO. S-54

TOTAL SHEETS 84

HDR Engineering, Inc. of the Carolinas
5723 National Drive, Suite 207 Raleigh, N.C. 27612
N.C.B.E.L.S. License Number: F-0116

DRAWN BY : K. BERGER DATE : 01/2012
CHECKED BY : C. ROKICKI DATE : 01/2012

PLOT DRIVER: NCDOT_pdf_mono_eng_50.plt PENTABLE: Division 4_pen_Austin.tbl
USER: lpatters DATE: 3/2/2012 TIME: 7:29:50 AM
FILE: North Carolina_Dept_of_Transportation\NCDOT_C_2011_STRDSN_OC_TO_2\13.00_CAD\Halifax 013\Drawings\DIV4.1_SD_HALIFAX13_06.dgn

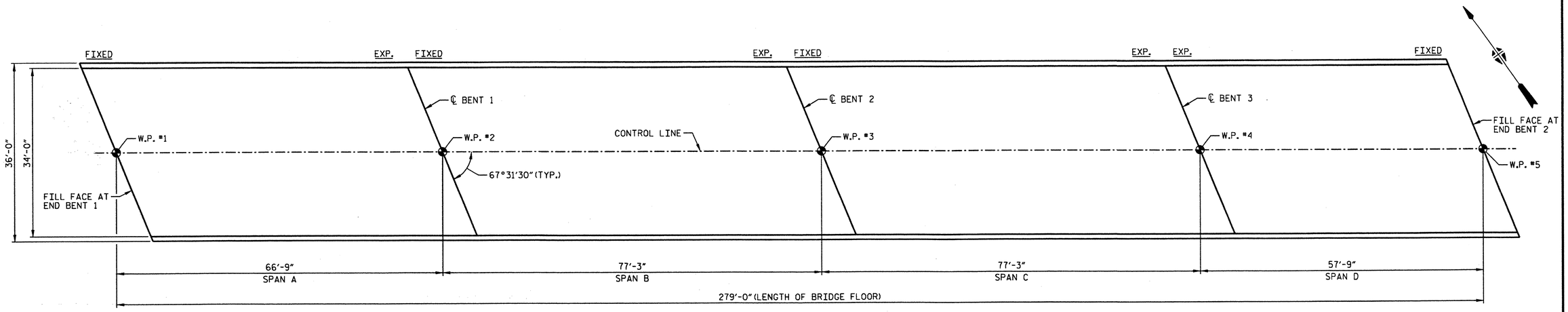

PLAN OF SPANS - DECK REPAIRS

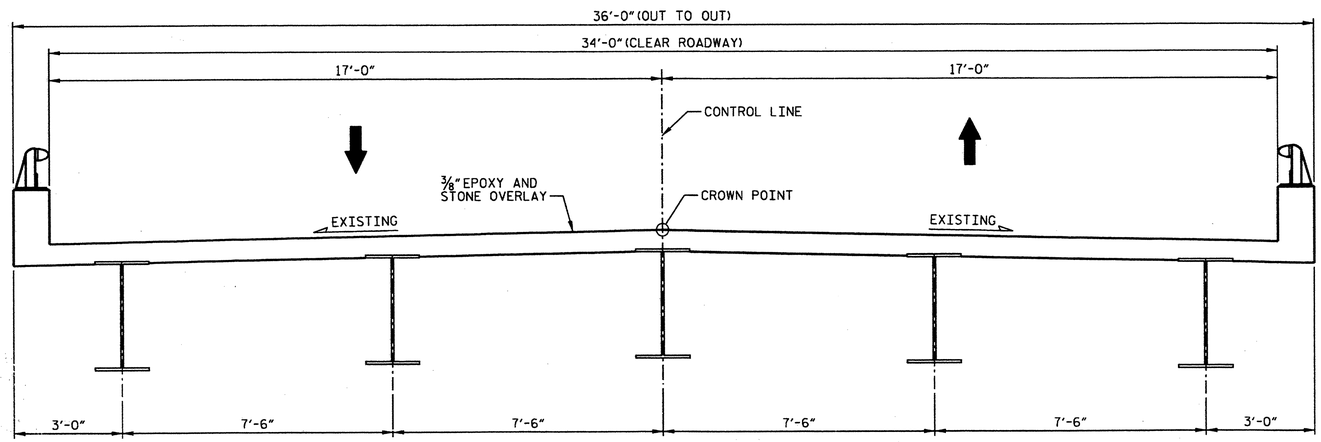

TYPICAL SECTION

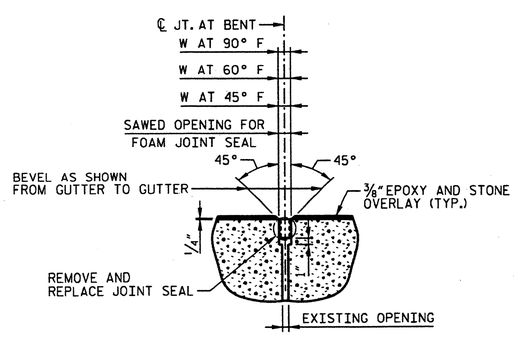

PROPOSED JOINT AT BENTS

FOAM JOINT SEAL EXPANSION

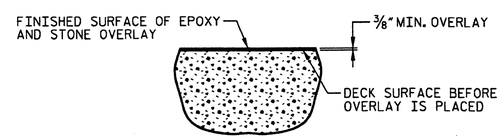

DETAIL FOR EPOXY AND STONE OVERLAY

NOTES

FOR REPAIR OF BRIDGE WITH EPOXY AND STONE OVERLAY, SEE SPECIAL PROVISIONS.

FOR FOAM JOINT SEALS, SEE SPECIAL PROVISIONS.

THE NOMINAL UNCOMPRESSED SEAL WIDTH OF THE FOAM JOINT SEAL SHALL BE 2½" AT BENTS.

FOR OVER-SAWED JOINTS, THE NOMINAL UNCOMPRESSED SEAL WIDTH OF THE FOAM JOINT SEAL SHALL BE DETERMINED BY THE ENGINEER.

SAWED OPENING FOR FOAM JOINT

BENT NO.	W AT 90° F	W AT 60° F	W AT 45° F
BENT 1	1 11/16"	1 7/8"	1 15/16"
BENT 2	1 11/16"	1 7/8"	2"
BENT 3	1 1/2"	1 7/8"	2 1/16"

TOTAL BILL OF MATERIAL

PLACEMENT OF EPOXY OVERLAY	FOAM JOINT SEALS	CLASS II CONCRETE DECK REPAIR FOR EPOXY/ASPHALT OVERLAY	CONCRETE REPAIRS	EPOXY RESIN INJECTION	SHOTCRETE REPAIRS	REINFORCING STEEL	BRIDGE JACKING
SQ. FT.	LUMP SUM	SQ. FT.	CU. FT.	LIN. FT.	CU. FT.	LBS	LUMP SUM
9486	LUMP SUM	950	5	145	8	100	LUMP SUM

PROJECT NO. 17BP.4.P.2

HALIFAX COUNTY

BRIDGE NO.: 88

NORTH CAROLINA PROFESSIONAL ENGINEER SEAL 032129 MATTHEW J. MOYER
2-16-12

STATE OF NORTH CAROLINA
DEPARTMENT OF TRANSPORTATION
RALEIGH

EPOXY OVERLAY FOR BRIDGE NO. 88
(SR1210 OVER I-95)

REVISIONS						SHEET NO. 5-55
NO.	BY:	DATE:	NO.	BY:	DATE:	TOTAL SHEETS 84
1			3			
2			4			

HDR Engineering, Inc. of the Carolinas
3733 National Drive, Suite 207 Raleigh, N.C. 27612
N.C.B.E.L.S. License Number: F-0116

DRAWN BY : K. BERGER DATE : 01/2012
CHECKED BY : C. ROKICKI DATE : 01/2012

PLOT DRIVER: NCDOT_pdf_mono_eng_50.plt + PENTABLE: Division 4_pen_Austin.tbl
USER: lpatters DATE: 2/16/2012 TIME: 11:58:07 AM
FILE: North Carolina.Dept.of.Transportation\NCDOT_C.2011.STRDSN.OC.TO.2\13.00.CAD\Halifax 088\Drawings\DIV4.1.SD.HALIFAX88.01.dgn

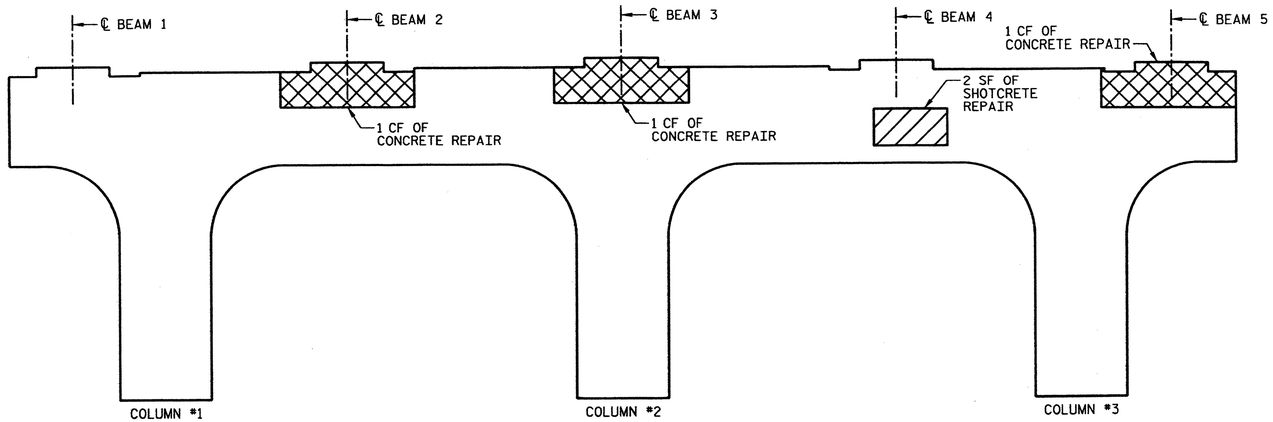

WEST ELEVATION

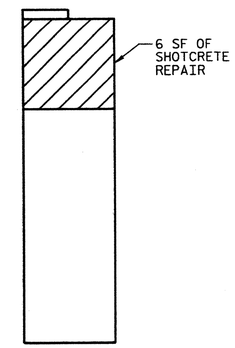

SOUTH END ELEVATION

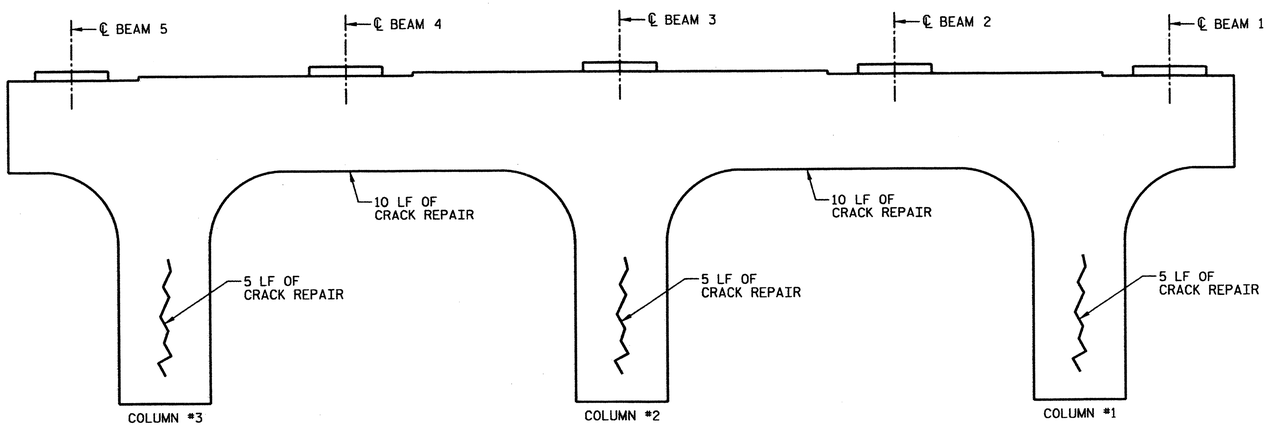

EAST ELEVATION

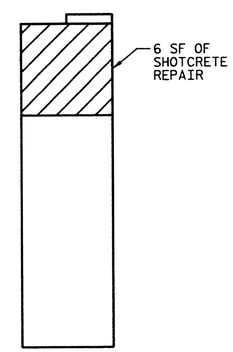

NORTH END ELEVATION

BILL OF MATERIAL

BENT 1

BAR	NO.	SIZE	TYPE	LENGTH
S1	VAR.	#4	1	VARIES
S2	VAR.	#5	2	VARIES
CONCRETE REPAIRS			CF	3
SHOTCRETE REPAIRS			CF	5
EPOXY RESIN INJECTION			LF	35
REINFORCING STEEL			LBS	60

BAR TYPE

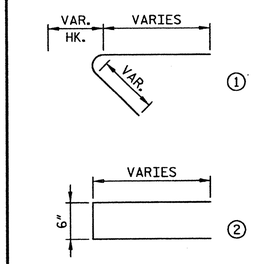

(BAR DIMENSIONS ARE OUT TO OUT)

PROJECT NO. 17BP.4.P.2

HALIFAX COUNTY

BRIDGE NO.: 88

NOTES

THE LOCATION AND EXTENT OF REPAIRS SHOWN ON THE PLANS ARE GENERAL IN NATURE. THE ENGINEER WILL DETERMINE THE EXACT EXTENT OF REMOVAL IN THE FIELD BASED ON AN EVALUATION OF THE CONDITION OF THE EXPOSED SURFACES.

CONSTRUCTION METHODS, PROCEDURES AND SEQUENCES ARE THE CONTRACTOR'S RESPONSIBILITY AND THE CONTRACTOR SHALL TAKE ALL THE NECESSARY MEANS TO MAINTAIN AND PROTECT THE STRUCTURAL INTEGRITY OF ALL CONSTRUCTION AT ALL STAGES.

ANY DISCREPANCIES BETWEEN THE CONSTRUCTION DOCUMENTS AND THE ACTUAL FIELD CONDITIONS SHALL BE REPORTED TO THE ENGINEER.

THE MANUFACTURER'S CERTIFIED DRAWINGS AND SPECIFICATIONS FOR EQUIPMENT ANCHORAGE AND DETAILS SHALL BE SUBMITTED FOR APPROVAL.

FOR CONCRETE REPAIR, SEE SPECIAL PROVISION.

FOR FALSEWORK AND FORMWORK, SEE SPECIAL PROVISION.

FOR CRANE SAFETY, SEE SPECIAL PROVISIONS.

FOR SHOTCRETE REPAIRS, SEE SPECIAL PROVISIONS.

FOR EPOXY RESIN INJECTIONS, SEE SPECIAL PROVISIONS.

FOR BRIDGE JACKING, SEE SPECIAL PROVISIONS.

FIELD TESTING OF THE ADHESIVELY ANCHORED DOWELS IS NOT REQUIRED.

REPAIR AREAS INACCESSIBLE BY POWER TOOL SHALL BE CLEANED WITH HAND TOOLS.

THE CONTRACTOR SHALL PROTECT THE BEARING FROM SHOTCRETE OVERSPRAY WHEN PERFORMING SHOTCRETE REPAIRS NEAR THE BEAM ENDS.

CONCRETE REPAIR

SHOTCRETE REPAIR

EPOXY RESIN INJECTION OF CRACKS

NORTH CAROLINA PROFESSIONAL SEAL 032129 ENGINEER MATTHEW J. MOYER

1-13-2012

HDR Engineering, Inc. of the Carolinas
3733 National Drive, Suite 207 Raleigh, N.C. 27612
N.C.B.E.L.S. License Number: F-0116

STATE OF NORTH CAROLINA
DEPARTMENT OF TRANSPORTATION
RALEIGH

BENT 1
BRIDGE NO. 88

REVISIONS						
NO.	BY:	DATE:	NO.	BY:	DATE:	
1			3			
2			4			

SHEET NO. S-56
TOTAL SHEETS 84

DRAWN BY : K. BERGER DATE : 01/2012
CHECKED BY : C. ROKICKI DATE : 01/2012

USER: pquinone DATE: 1/12/2012 TIME: 8:50:52 PM
FILE: \

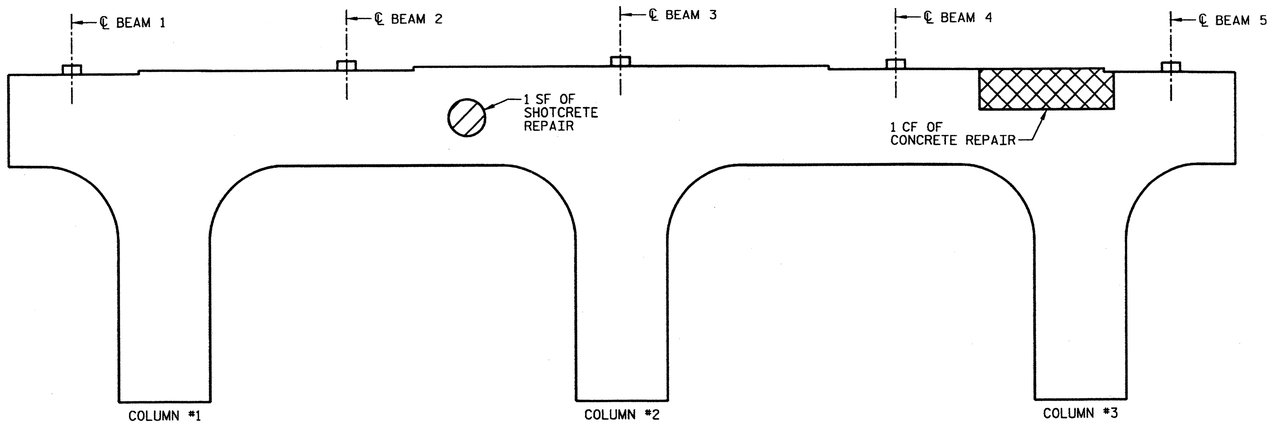

WEST ELEVATION

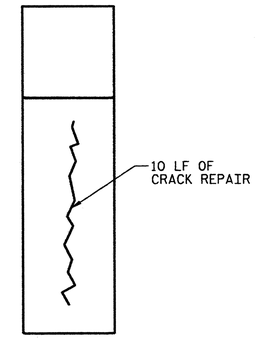

SOUTH END ELEVATION

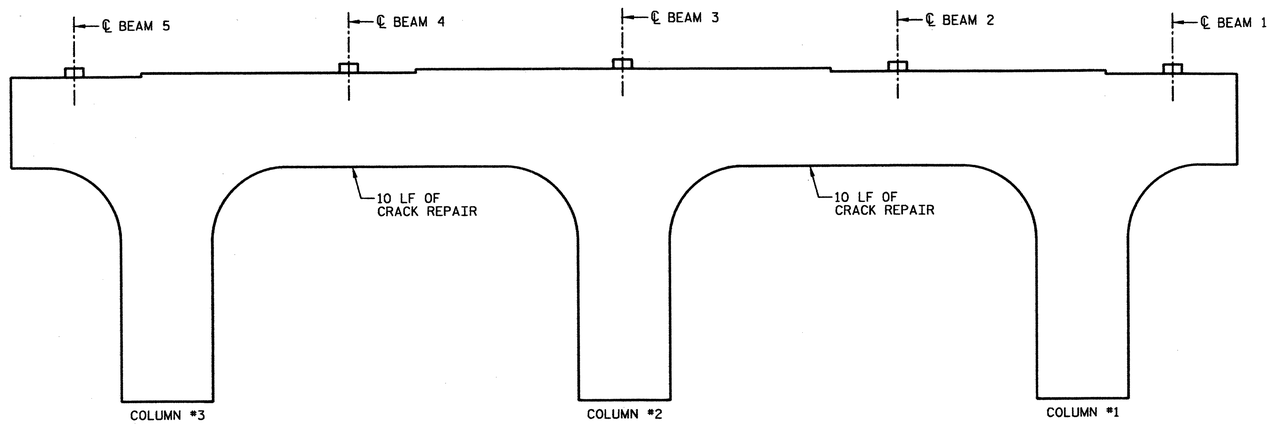

EAST ELEVATION

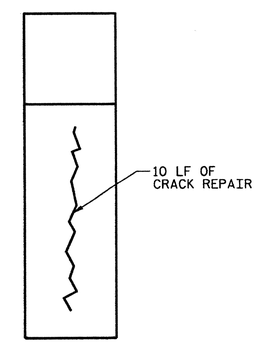

NORTH END ELEVATION

BILL OF MATERIAL

BENT 2

BAR	NO.	SIZE	TYPE	LENGTH
S1	VAR.	#4	1	VARIES
S2	VAR.	#5	2	VARIES
CONCRETE REPAIRS			CF	1
SHOTCRETE REPAIRS			CF	1
EPOXY RESIN INJECTION			LF	40
REINFORCING STEEL			LBS	20

BAR TYPE

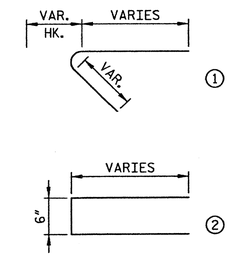

(BAR DIMENSIONS ARE OUT TO OUT)

NOTES

FOR NOTES, SEE DRAWING "BENT 1 BRIDGE NO. 88".

CONCRETE REPAIR

SHOTCRETE REPAIR

EPOXY RESIN INJECTION OF CRACKS

SERVICE REACTIONS PER BEARING

SUPPORT	DL (KIP)		LL+I (KIP)	
	BACK	AHEAD	BACK	AHEAD
END BENT 1	--	34	--	66
BENT 1	34	39	66	67
BENT 2	39	39	67	67
BENT 3	39	29	67	65
END BENT 2	29	--	65	--

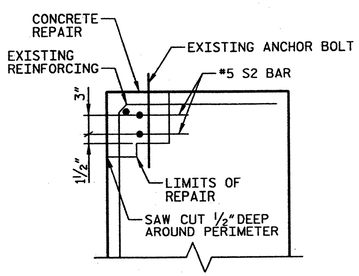

DETAIL A

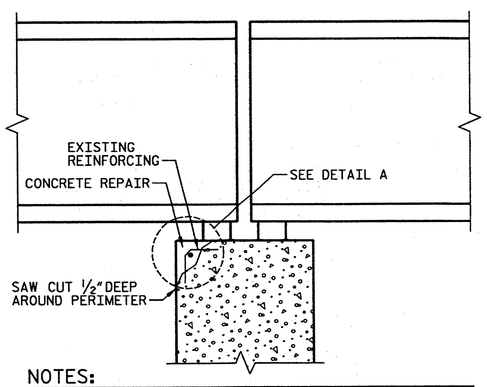

NOTES:

RAISE BEAM ½"BY JACKING BEFORE REMOVING CONCRETE. DO NOT LOWER SUPERSTRUCTURE UNTIL REPAIR HAS CURED AND REACHED A COMPRESSIVE STRENGTH OF 3000 PSI.

TYPICAL REPAIR AT BEAM BEARING

JACKING NOTES

JACKING SHALL BE CONDUCTED IN A MANNER SUCH THAT THE SUPERSTRUCTURE WILL NOT BE DAMAGED.

THE MAXIMUM ALLOWABLE VERTICAL JACKING DISPLACEMENT SHALL BE ½ INCH WITH RESPECT TO BEARINGS OF ADJACENT PIERS.

BEARING NUTS SHALL BE LOOSENED TO PROVIDE A MINIMUM OF 5/64 INCH GAP TO ALLOW FOR JACKING.

ALL BEAMS AT A PIER SHALL BE JACKED SIMULTANEOUSLY AND SHALL BE RAISED THE SAME AMOUNT AND AT THE SAME RATE. THE HYDRAULIC PRESSURE OF THE JACKS SHALL BE ADJUSTED AS REQUIRED TO ALLOW FOR EQUAL MOVEMENTS. JACKING DEVICES SHALL BE EQUIPPED WITH LOCKING RINGS. USE BEVELED JACKING PLATES AS NEEDED TO PROVIDE A LEVEL JACKING SURFACE.

EFFECT OF VIBRATIONS FROM TRAFFIC SHOULD BE CONSIDERED DURING JACKING AND WHEN JACKS ARE LOCKED.

PROVISIONS SHALL BE MADE TO ACCOUNT FOR THERMAL MOVEMENTS DURING THE PERIOD THAT THE STRUCTURE IS RESTING ON TEMPORARY SUPPORTS.

THE BRIDGE SHALL BE INSPECTED PRIOR TO JACKING TO VERIFY THAT ITEMS CONNECTED TO THE SUPERSTRUCTURE OR SUBSTRUCTURE WILL NOT BE DAMAGED DURING THE JACKING AND BEARING REPLACEMENT PROCEDURE.

IT SHALL BE THE RESPONSIBILITY OF THE CONTRACTOR PERFORMING THE JACKING TO DETERMINE A JACKING LOCATION AT EACH BEARING AND PROVIDE A DESIGN FOR THE JACKING LOADS. JACKS SHALL HAVE A MINIMUM SAFE LOAD CAPACITY OF 125% OF THE LOAD SPECIFIED IN THE JACKING LOAD TABLE. THE CONTRACTOR SHALL SUBMIT THE JACKING PLAN, DETAILS, PROCEDURES AND SUPPORTING CALCULATIONS TO THE ENGINEER FOR REVIEW AND APPROVAL.

NORTH CAROLINA PROFESSIONAL SEAL 032129 ENGINEER MATTHEW J. MOYER

1-13-2012

PROJECT NO. 17BP.4.P.2

HALIFAX COUNTY

BRIDGE NO.: 88

STATE OF NORTH CAROLINA
DEPARTMENT OF TRANSPORTATION
RALEIGH

BENT 2
BRIDGE NO. 88

REVISIONS						SHEET NO. S-57
NO.	BY:	DATE:	NO.	BY:	DATE:	TOTAL SHEETS 84
1			3			
2			4			

HDR Engineering, Inc. of the Carolinas
3733 National Drive, Suite 207 Raleigh, N.C. 27612
N.C.B.E.L.S. License Number: F-0116

DRAWN BY : K. BERGER DATE : 01/2012
CHECKED BY : C. ROKICKI DATE : 01/2012

USER: pquinone DATE: 1/12/2012 TIME: 8:50:59 PM
FILE: /

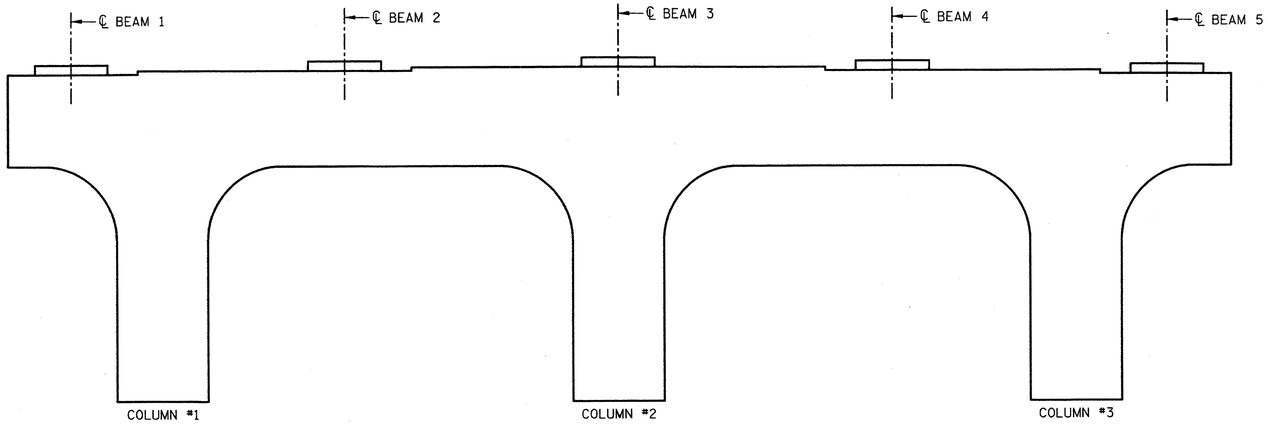

WEST ELEVATION

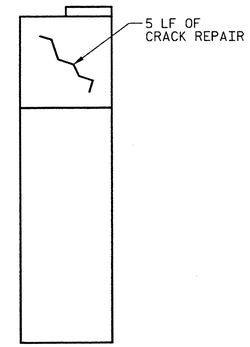

SOUTH END ELEVATION

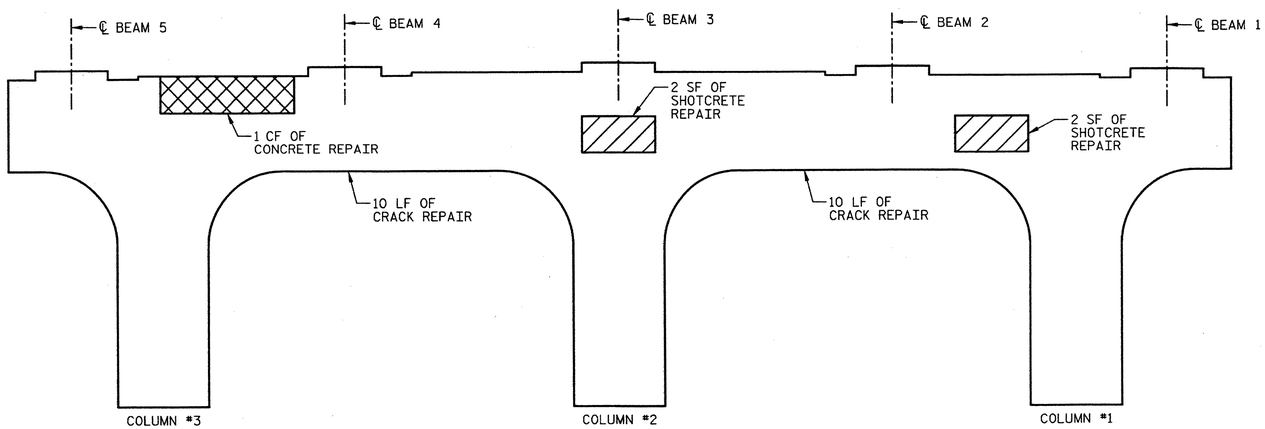

EAST ELEVATION

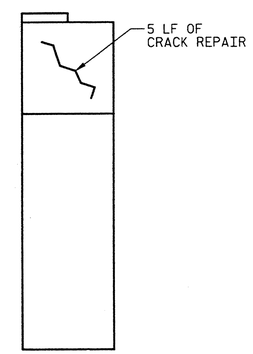

NORTH END ELEVATION

BILL OF MATERIAL

BENT 3

BAR	NO.	SIZE	TYPE	LENGTH
S1	VAR.	#4	1	VARIES
S2	VAR.	#5	2	VARIES
CONCRETE REPAIRS			CF	1
SHOTCRETE REPAIRS			CF	2
EPOXY RESIN INJECTION			LF	30
REINFORCING STEEL			LBS	20

BAR TYPE

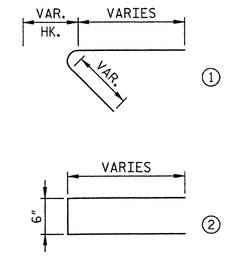

(BAR DIMENSIONS ARE OUT TO OUT)

NOTES

FOR NOTES, SEE DRAWING "BENT 1 BRIDGE NO. 88".

CONCRETE REPAIR

SHOTCRETE REPAIR

EPOXY RESIN INJECTION OF CRACKS

PROJECT NO. 17BP.4.P.2

HALIFAX COUNTY

BRIDGE NO.: 88

NORTH CAROLINA PROFESSIONAL SEAL 032129 ENGINEER MATTHEW J. MOYER

1-13-2012

STATE OF NORTH CAROLINA
DEPARTMENT OF TRANSPORTATION
RALEIGH

BENT 3
BRIDGE NO. 88

REVISIONS						
NO.	BY:	DATE:	NO.	BY:	DATE:	
1			3			
2			4			

SHEET NO. S-58

TOTAL SHEETS 84

HDR Engineering, Inc. of the Carolinas
3733 National Drive, Suite 201 Raleigh, N.C. 27612
N.C.B.E.L.S. License Number: F-0116

DRAWN BY : K. BERGER DATE : 01/2012
CHECKED BY : C. ROKICKI DATE : 01/2012

PLOT DRIVER: NCDOT_pdf_mono.eng_50.plt
USER: paulnone DATE: 1/12/2012
PENTABLE: Division 4_pen_Austin.tbl
TIME: 8:51:04 PM
FILE: \

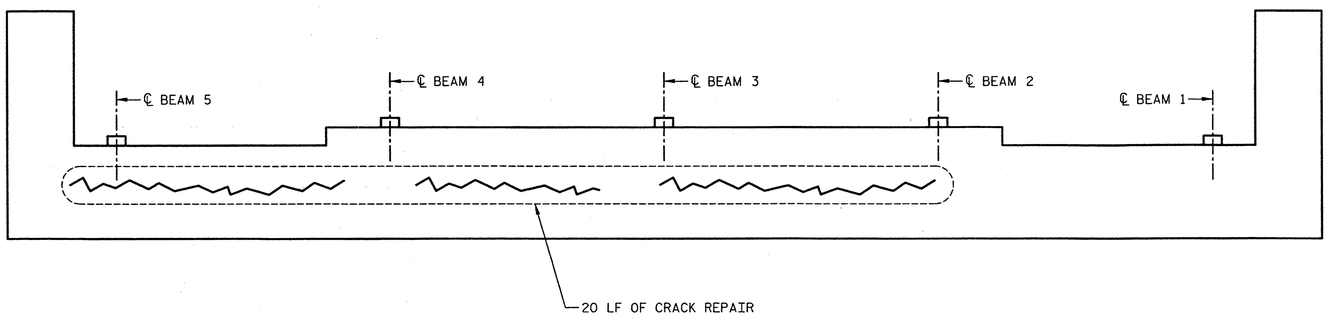

EAST ELEVATION

BILL OF MATERIAL

END BENT 1

BAR	NO.	SIZE	TYPE	LENGTH
S1	VAR.	#4	1	VARIES
S2	VAR.	#5	2	VARIES
CONCRETE REPAIRS			CF	0
SHOTCRETE REPAIRS			CF	0
EPOXY RESIN INJECTION			LF	20
REINFORCING STEEL			LBS	0

BAR TYPE

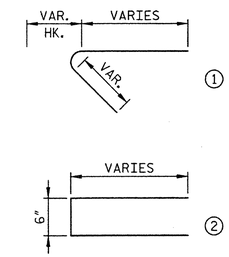

(BAR DIMENSIONS ARE OUT TO OUT)

NOTES

FOR NOTES, SEE DRAWING "BENT 1 BRIDGE NO. 88".

CONCRETE REPAIR

SHOTCRETE REPAIR

EPOXY RESIN INJECTION OF CRACKS

PROJECT NO. 17BP.4.P.2

HALIFAX COUNTY

BRIDGE NO.: 88

STATE OF NORTH CAROLINA
DEPARTMENT OF TRANSPORTATION
RALEIGH

END BENT 1
BRIDGE NO. 88

NORTH CAROLINA PROFESSIONAL SEAL 032129 ENGINEER MATTHEW J. MOYER
1-13-2012

REVISIONS						
NO.	BY:	DATE:	NO.	BY:	DATE:	
1			3			
2			4			

SHEET NO. 5-59
TOTAL SHEETS 84

HDR Engineering, Inc. of the Carolinas
3733 National Drive, Suite 207 Raleigh, N.C. 27612
N.C.B.E.L.S. License Number: F-0116

DRAWN BY : K. BERGER DATE : 01/2012
CHECKED BY : C. ROKICKI DATE : 01/2012

PLOT DRIVER: PLOT17.pgl mono.eng.pwpltt
USER: pquinone DATE: 1/12/2012
FILE: \
TIME: 8:51:09 PM

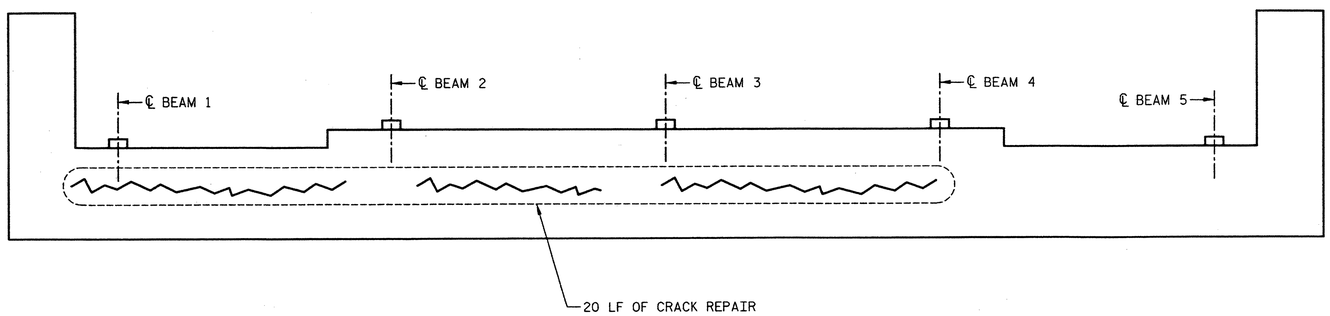

WEST ELEVATION

BILL OF MATERIAL

END BENT 2

BAR	NO.	SIZE	TYPE	LENGTH
S1	VAR.	#4	1	VARIES
S2	VAR.	#5	2	VARIES
CONCRETE REPAIRS			CF	0
SHOTCRETE REPAIRS			CF	0
EPOXY RESIN INJECTION			LF	20
REINFORCING STEEL			LBS	0

BAR TYPE

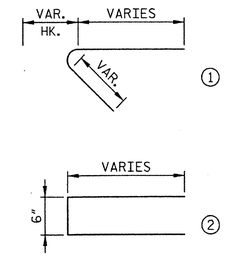

(BAR DIMENSIONS ARE OUT TO OUT)

NOTES

FOR NOTES, SEE DRAWING "BENT 1 BRIDGE NO. 88".

CONCRETE REPAIR

SHOTCRETE REPAIR

EPOXY RESIN INJECTION OF CRACKS

PROJECT NO. 17BP.4.P.2

HALIFAX COUNTY

BRIDGE NO.: 88

NORTH CAROLINA PROFESSIONAL SEAL 032129 ENGINEER MATTHEW J. MOYER

1-13-2012

STATE OF NORTH CAROLINA
DEPARTMENT OF TRANSPORTATION
RALEIGH

END BENT 2
BRIDGE NO. 88

REVISIONS						SHEET NO. S-60
NO.	BY:	DATE:	NO.	BY:	DATE:	TOTAL SHEETS 84
1			3			
2			4			

HDR Engineering, Inc. of the Carolinas
2733 National Drive, Suite 207 Raleigh, N.C. 27603
N.C.B.E.L.S. License Number: F-0116

DRAWN BY : K. BERGER DATE : 01/2012
CHECKED BY : C. ROKICKI DATE : 01/2012

PLOT DRIVER: NCDOT_pdf_mono_eng_50.plt
USER: pquinone DATE: 1/12/2012
FILE: \
PENTABLE: Division 4_pen_Austin.tbl
TIME: 8:51:13 PM

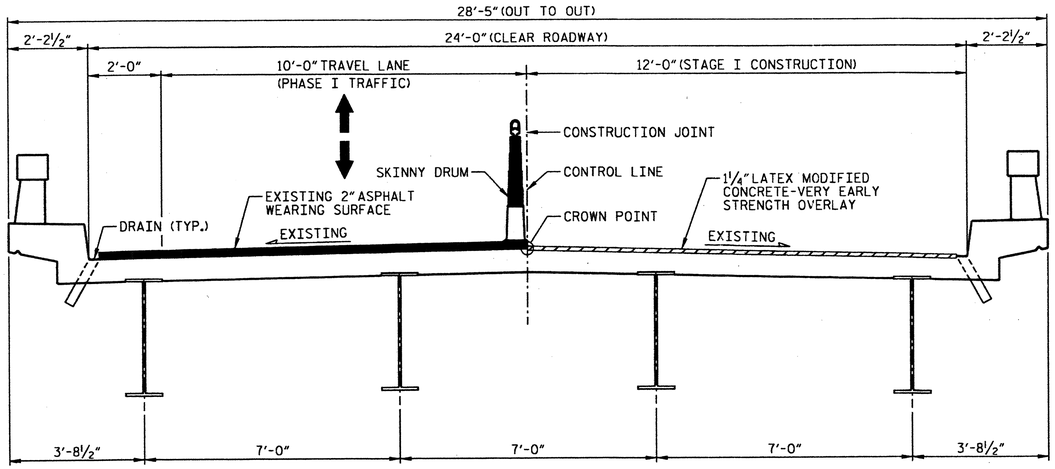

TYPICAL SECTION - STAGE I

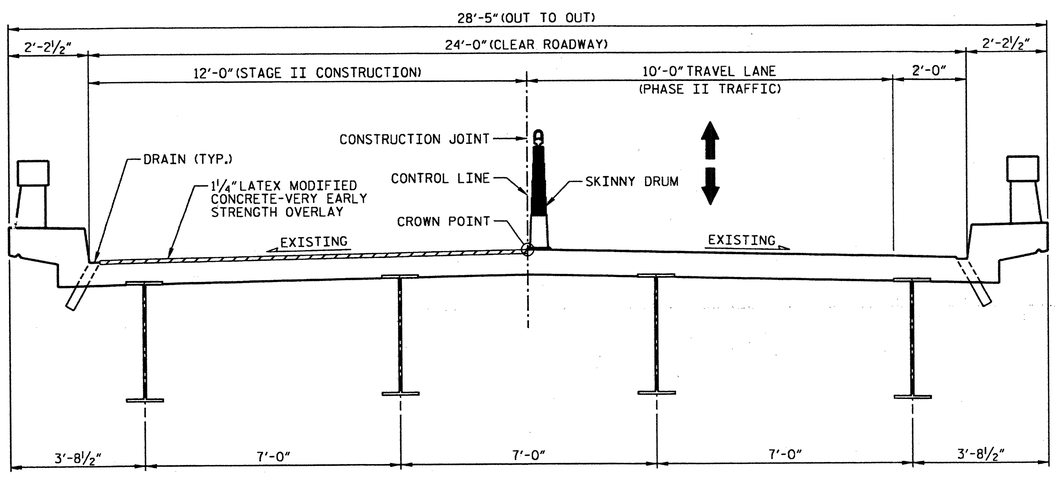

TYPICAL SECTION - STAGE II

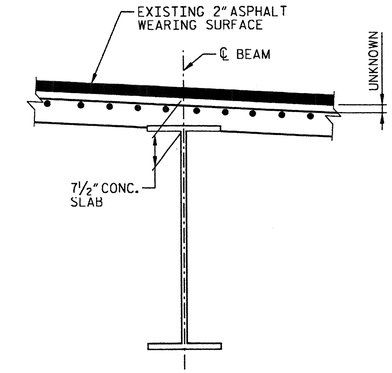

EXISTING SLAB SECTION

BOTTOM MAT OF REINFORCING NOT SHOWN FOR CLARITY.

NOTES

FOR "HYDRO-DEMOLITION OF BRIDGE DECK", SEE SPECIAL PROVISIONS.

THE CONTRACTOR MUST COLLECT, TREAT AND DISPOSE OF RUN-OFF WATER FROM THE HYDRO-DEMOLITION PROCESS. SEE "MANAGING HYDRO-DEMOLITION WATER" SPECIAL PROVISIONS.

THE BOUNDARIES OF AREAS IDENTIFIED FOR CLASS III SURFACE PREPARATION ARE APPROXIMATE. IF ANY CLASS III LOCATIONS ARE ENCOUNTERED PRIOR TO OR DURING HYDRO-DEMOLITION, SEE "TYPICAL "BLOW THRU" CONTAINMENT AND FORMWORK" DETAIL. THE CONTRACTOR SHALL PROVIDE A METHOD OF HANDLING UNEXPECTED BLOW THROUGH WORK OF THE DECK.

THE NOMINAL UNCOMPRESSED SEAL WIDTH OF THE FOAM JOINT SEAL SHALL BE 2½" AT BENTS. FOR "FOAM JOINT SEALS", SEE SPECIAL PROVISIONS.

FOR "ELASTOMETRIC CONCRETE", SEE SPECIAL PROVISIONS.

LATEX MODIFIED CONCRETE SHALL BE LATEX MODIFIED CONCRETE-VERY EARLY STRENGTH.

FOR "LATEX MODIFIED CONCRETE-VERY EARLY STRENGTH", SEE SPECIAL PROVISIONS.

FOR GROOVING BRIDGE FLOORS INFORMATION, SEE "LATEX MODIFIED CONCRETE-VERY EARLY STRENGTH" SPECIAL PROVISIONS.

FOR SUBMITTAL OF WORKING DRAWINGS, SEE SPECIAL PROVISIONS.

FOR FALSEWORK AND FORMWORK, SEE SPECIAL PROVISIONS.

EXISTING JOINTS AND BRIDGE DECK DRAINS SHALL BE SEALED PRIOR TO BEGINNING SURFACE PREPARATION OF BRIDGE DECK.

EXISTING DIMENSIONS AND BRIDGE CONDITION ARE FROM THE BEST INFORMATION AVAILABLE. THE CONTRACTOR SHALL VERIFY THE INFORMATION SHOWN ON THE PLANS AND NOTIFY THE ENGINEER IF ACTUAL DIMENSIONS AND CONDITIONS DIFFER.

FOR SCARIFYING BRIDGE DECK, SEE SPECIAL PROVISIONS.

PROJECT NO. 17BP.4.P.2

HALIFAX COUNTY

BRIDGE NO.: 105

TOTAL BILL OF MATERIAL

SCARIFYING BRIDGE DECK	* CLASS I SURFACE PREPARATION	* CLASS II SURFACE PREPARATION	* CLASS III SURFACE PREPARATION	* CLASS AA CONCRETE	HYDRO-DEMOLITION OF BRIDGE DECK	LATEX MODIFIED CONCRETE-VERY EARLY STRENGTH OVERLAY	PLACING & FINISHING LATEX MODIFIED CONCRETE-VERY EARLY STRENGTH OVERLAY	FOAM JOINT SEALS	GROOVING BRIDGE FLOORS	ASPHALT CONCRETE SURFACE COURSE TYPE SF9.5A	ASPHALT CONCRETE BASE COURSE TYPE B25.0B	INCIDENTAL MILLING
SQ. YDS.	SQ. YDS.	SQ. YDS.	SQ. YDS.	CU. YDS.	SQ. YDS.	CU. YDS.	SQ. YDS.	LUMP SUM	SQ. FT.	TONS	TONS	SQ. YDS.
771	77	0	0	0	771	27	771	LUMP SUM	5970	89	33	549

* QUANTITY SHOWN IS FOR INFORMATION ONLY.

NOTE:
DUE TO THE PRESENCE OF AN EXISTING ASPHALT WEARING SURFACE, THE QUANTITY OF REQUIRED DECK REPAIR, IF ANY, IS UNKNOWN. THE QUANTITY OF CLASS I REPAIRS SHOWN ON THE TOTAL BILL OF MATERIAL IS EQUAL TO 10% OF THE DECK AREA AND PROVIDED TO INDICATE THAT DECK REPAIRS MAY BE REQUIRED.

DRAWN BY : A. LICON DATE : 01/2012
CHECKED BY : C. ROKICKI DATE : 01/2012

NORTH CAROLINA PROFESSIONAL SEAL 032129 ENGINEER MATTHEW J. MOYER
2-14-12

HDR Engineering, Inc. of the Carolinas
3733 National Drive, Suite 207 Raleigh, N.C. 27612
N.C.B.E.L.S. License Number: F-0116

STATE OF NORTH CAROLINA
DEPARTMENT OF TRANSPORTATION
RALEIGH

TYPICAL SECTION FOR BRIDGE NO. 105
(SR1600 OVER I-95)

REVISIONS								SHEET NO. S-61
NO.	BY:	DATE:	NO.	BY:	DATE:			TOTAL SHEETS 84
1			3					
2			4					

PLOT DRIVER: NCDOT_pdf_mono_eng_50.plt PENTABLE: Division 4_pen_Austin.tbl
USER: msalis DATE: 2/14/2012 TIME: 3:45:50 PM
FILE: North Carolina_Dept_of_Transportation\NCDOT_C_2011_STRDSN_OC_TO_2\13.00_CAD\Halifax 105\Drawings\DIV41_SD_HALIFAX105_01.dgn

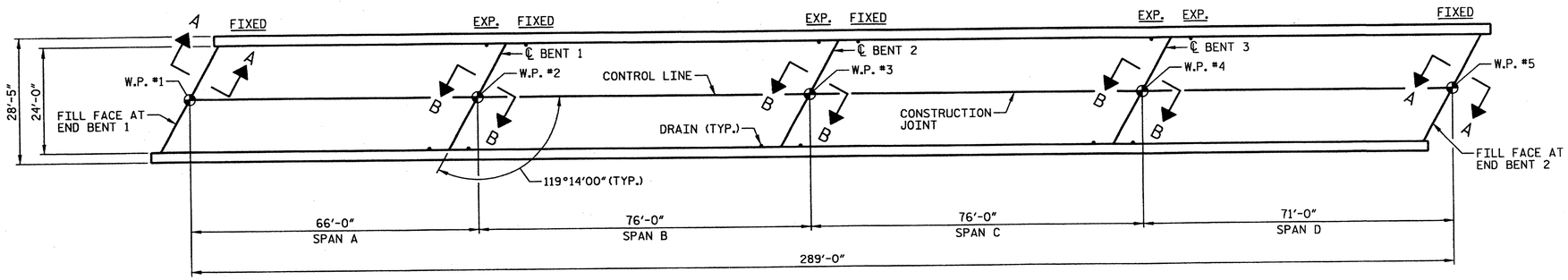

PLAN VIEW

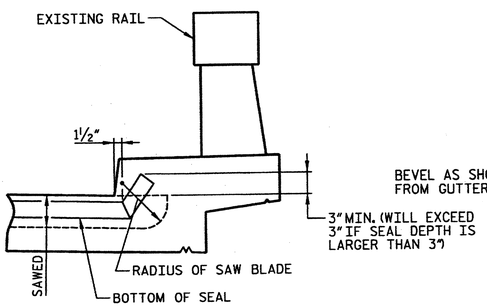

JOINT DETAIL AT RAIL

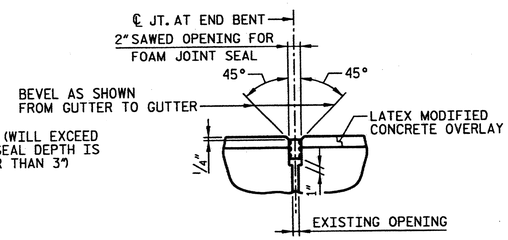

PROPOSED JOINT AT END BENTS

FOAM JOINT SEAL EXPANSION

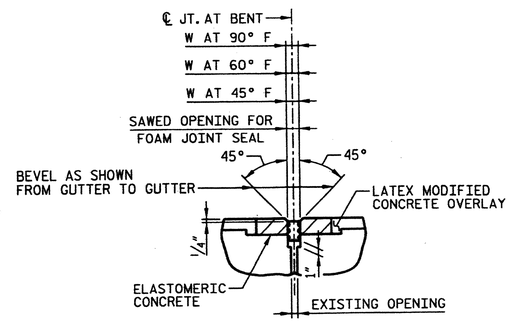

PROPOSED JOINT AT BENTS

FOAM JOINT SEAL EXPANSION

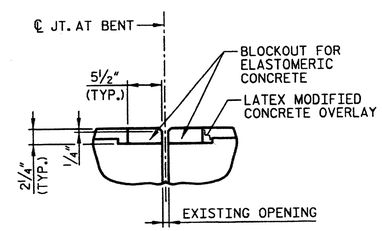

FOAM JOINT SEAL AT BENTS

PRE-SAWED ELASTOMERIC CONCRETE DIMENSIONS

SAWED OPENING FOR FOAM JOINT			
BENT NO.	W AT 90° F	W AT 60° F	W AT 45° F
BENT 1	1 11/16"	1 7/8"	1 15/16"
BENT 2	1 11/16"	1 7/8"	2"
BENT 3	1½"	1 7/8"	2 1/16"

ELASTOMERIC CONCRETE	
BENT NO.	ELASTOMERIC CONCRETE ✱ (CU. FT.)
BENT 1	4.7
BENT 2	4.7
BENT 3	4.7
TOTAL	14.1

✱ BASED ON THE MINIMUM BLOCKOUT SHOWN

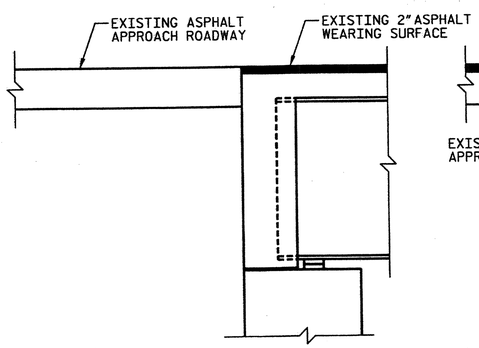

EXISTING SECTION AT END BENT

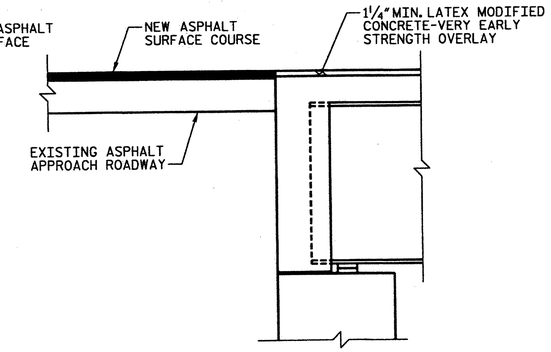

PROPOSED SECTION AT END BENT

SECTION A-A

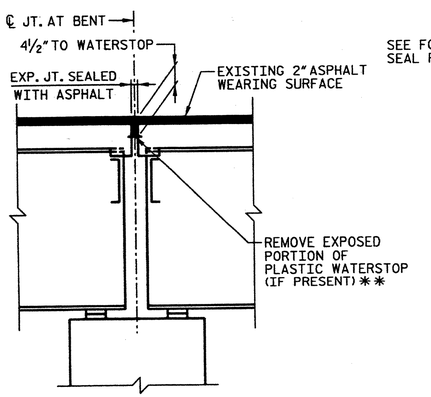

EXISTING JOINT AT BENTS

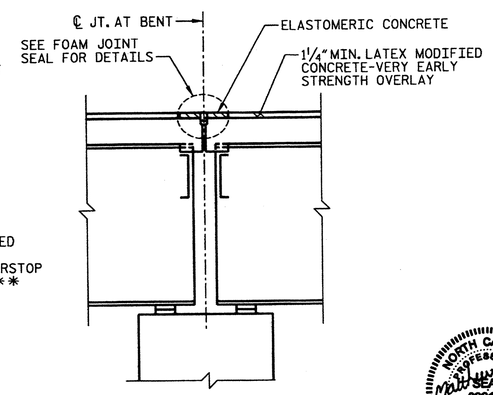

PROPOSED JOINT AT BENTS

SECTION B-B

✱✱ ALL LOOSE AND UNSOUND CONCRETE SHALL BE REMOVED. IF THE EMBEDDED PORTION OF THE EXISTING PLASTIC WATERSTOP IS EXPOSED DURING REMOVAL OF UNSOUND CONCRETE, THE ENTIRE WATERSTOP SHALL BE REMOVED. OTHERWISE, TRIM WATERSTOP FLUSH WITH EXISTING CONCRETE SURFACE.

NORTH CAROLINA PROFESSIONAL SEAL 032129 ENGINEER MATTHEW J. MOYER
1-13-2012

PROJECT NO. 17BP.4.P.2
HALIFAX COUNTY
BRIDGE NO.: 105

STATE OF NORTH CAROLINA
DEPARTMENT OF TRANSPORTATION
RALEIGH

PLAN VIEW AND JOINT DETAILS FOR BRIDGE NO. 105

REVISIONS						
NO.	BY:	DATE:	NO.	BY:	DATE:	
1			3			
2			4			

SHEET NO. S-62
TOTAL SHEETS 84

HDR Engineering, Inc. of the Carolinas
3733 National Drive, Suite 207 Raleigh, N.C. 27612
N.C.B.E.L.S. License Number: F-0116

DRAWN BY : K. BERGER DATE : 01/2012
CHECKED BY : C. ROKICKI DATE : 01/2012

PLOT DRIVER: PDF995.pdf
USER: pquinone DATE: 1/12/2012
FILE:
TIME: 8:51:25 PM

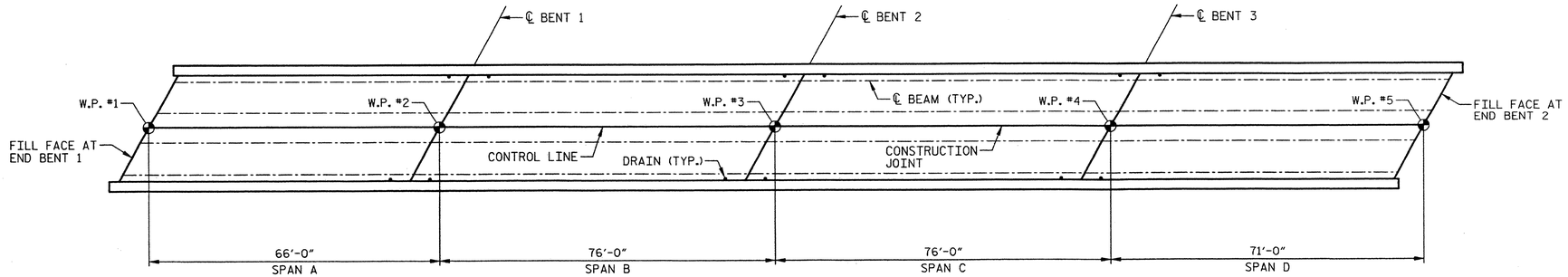

PLAN OF SPANS - DECK REPAIRS

APPROX. AREA: CLASS I REPAIR

APPROX. AREA: CLASS II REPAIR

APPROX. AREA: CLASS III REPAIR

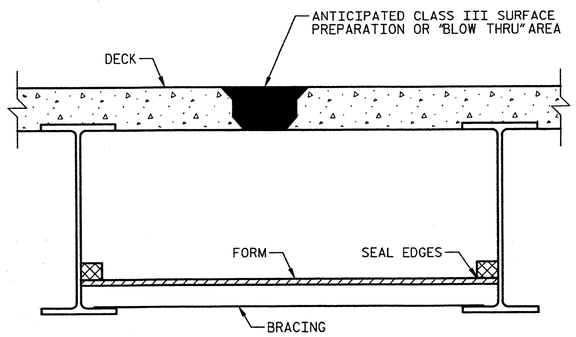

TYPICAL "BLOW THRU" CONTAINMENT AND FORMWORK

A METHOD TO CAPTURE WATER AND DEBRIS FROM BLOW THRU DURING HYDRO-DEMOLITION SHALL BE INSTALLED IN AREAS INDICATED AS CLASS III SURFACE PREPARATION.

SUBMIT DETAILS OF PROPOSED FORMWORK FOR APPROVAL PRIOR TO BEGINNING WORK.

COST FOR INSTALLING AND REMOVING FORMWORK SHALL BE INCIDENTAL TO THE PRICE PER SQ. YARD OF HYDRO-DEMOLITION.

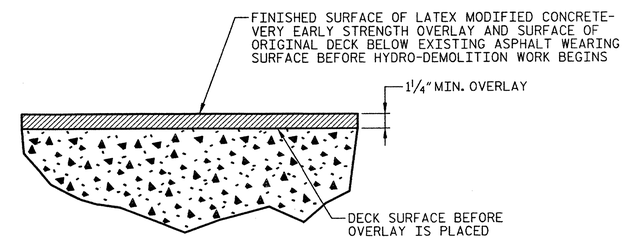

DETAIL FOR LATEX MODIFIED CONCRETE OVERLAY

PROJECT NO. 17BP.4.P.2

HALIFAX COUNTY

BRIDGE NO.: 105

NORTH CAROLINA PROFESSIONAL SEAL 032129 ENGINEER MATTHEW J. MOYER

1-13-2012

STATE OF NORTH CAROLINA
DEPARTMENT OF TRANSPORTATION
RALEIGH

DECK REPAIR DETAILS FOR BRIDGE NO. 105

REVISIONS						SHEET NO. S-63
NO.	BY:	DATE:	NO.	BY:	DATE:	TOTAL SHEETS 84
1			3			
2			4			

HDR Engineering, Inc. of the Carolinas
3733 National Drive, Suite 207 Raleigh, N.C. 27612
N.C.B.E.L.S. License Number: F-0116

DRAWN BY : K. BERGER DATE : 01/2012
CHECKED BY : C. ROKICKI DATE : 01/2012

PLOT DRIVER: NCDOT_pdf_mono_eng_50.plt
USER: paulmone DATE: 1/12/2012
FILE: \
PENTABLE: Division 4_pen_austin.tbl
TIME: 8:51:31 PM

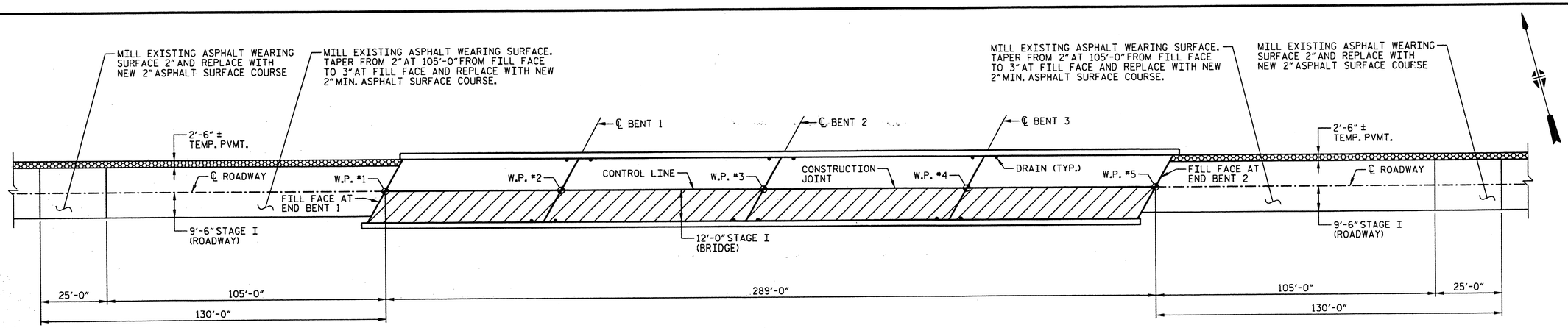

PLAN - STAGE I CONSTRUCTION

DECK SCARIFICATION AND HYDRO-DEMOLITION

TEMPORARY PAVEMENT, SEE TRAFFIC CONTROL PLANS

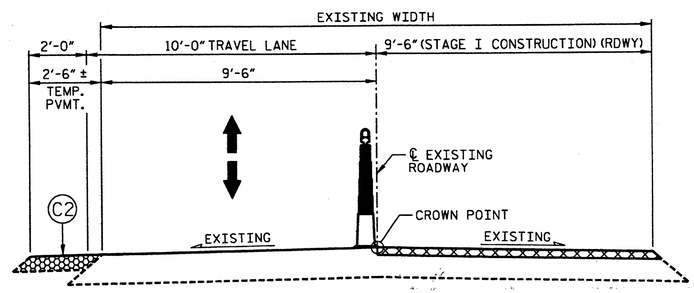

TYPICAL ROADWAY MILLING SECTION - STAGE I

ASPHALT MILLING

TEMPORARY PAVEMENT, SEE TRAFFIC CONTROL PLANS

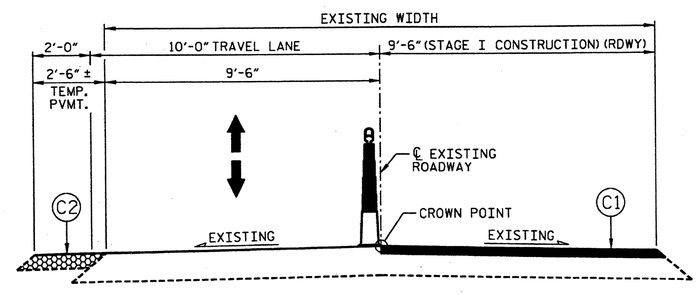

TYPICAL ROADWAY SECTION - STAGE I

TEMPORARY PAVEMENT, SEE TRAFFIC CONTROL PLANS

C1	PROPOSED VARIABLE DEPTH ASPHALT CONCRETE SURFACE COURSE, TYPE SF9.5A AT AN AVERAGE RATE OF 110 LBS. PER SQ. YD. PER 1" DEPTH.
C2	PROPOSED TEMPORARY PAVING 2" ASPHALT CONCRETE SURFACE COURSE, TYPE SF9.5A, 4" ASPHALT CONCRETE BASE COURSE, TYPE B25.0B.

NOTES

TEMPORARY PAVEMENT SHALL REMAIN IN PLACE UNLESS OTHERWISE DIRECTED BY THE ENGINEER.

PROJECT NO. 17BP.4.P.2

HALIFAX COUNTY

BRIDGE NO.: 105

NORTH CAROLINA PROFESSIONAL SEAL 032129 ENGINEER MATTHEW J. MOYER

2-16-12

STATE OF NORTH CAROLINA
DEPARTMENT OF TRANSPORTATION
RALEIGH

TYPICAL SECTION, DECK SCARIFICATION & MILLING DETAILS FOR BRIDGE NO. 105 (STAGE I)

HDR Engineering, Inc. of the Carolinas
3733 National Drive, Suite 207 Raleigh, N.C. 27612
N.C.B.E.L.S. License Number: F-0116

REVISIONS						SHEET NO. S-64
NO.	BY:	DATE:	NO.	BY:	DATE:	TOTAL SHEETS 84
1			3			
2			4			

DRAWN BY : K. BERGER DATE : 01/2012
CHECKED BY : C. ROKICKI DATE : 01/2012

PLOT DRIVER: NCDOT_pdf_mono_eng_50.plt + PENTABLE: Division 4_pen_Austin.tbl
USER: lpotters DATE: 2/16/2012 TIME: 12:42:36 PM
FILE: North Carolina_Dept_of_Transportation\NCDOT_C_2011_STRDSN_OC_TO_2\13.00_CAD\Halifax 105\Drawings\DIV4_1_SD_HALIFAX105_04.dgn

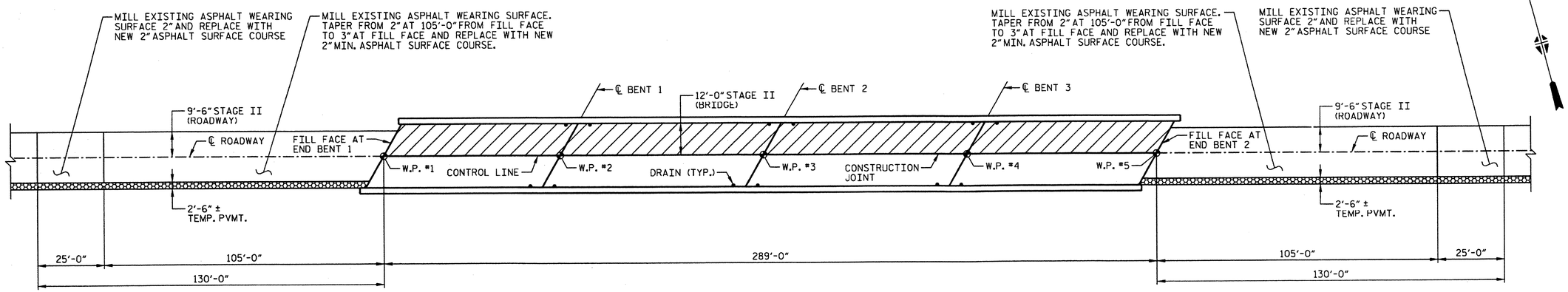

PLAN - STAGE II CONSTRUCTION

DECK SCARIFICATION AND HYDRO-DEMOLITION

TEMPORARY PAVEMENT, SEE TRAFFIC CONTROL PLANS

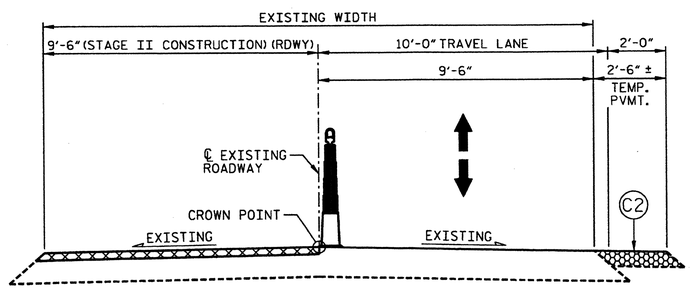

TYPICAL ROADWAY MILLING SECTION - STAGE II

ASPHALT MILLING

TEMPORARY PAVEMENT, SEE TRAFFIC CONTROL PLANS

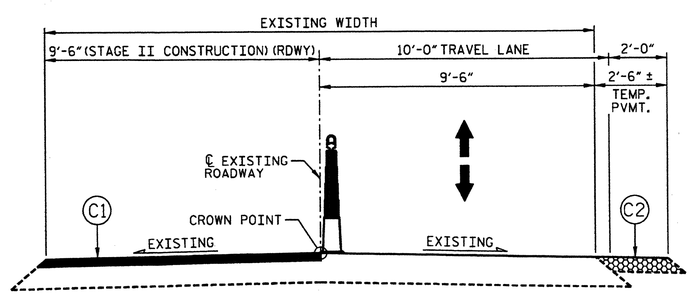

TYPICAL ROADWAY SECTION - STAGE II

TEMPORARY PAVEMENT, SEE TRAFFIC CONTROL PLANS

C1	PROPOSED VARIABLE DEPTH ASPHALT CONCRETE SURFACE COURSE, TYPE SF9.5A AT AN AVERAGE RATE OF 110 LBS. PER SQ. YD. PER 1" DEPTH.
C2	PROPOSED TEMPORARY PAVING 2" ASPHALT CONCRETE SURFACE COURSE, TYPE SF9.5A, 4" ASPHALT CONCRETE BASE COURSE, TYPE B25.0B.

NOTES

TEMPORARY PAVEMENT SHALL REMAIN IN PLACE UNLESS OTHERWISE DIRECTED BY THE ENGINEER.

PROJECT NO. 17BP.4.P.2

HALIFAX COUNTY

BRIDGE NO.: 105

NORTH CAROLINA PROFESSIONAL SEAL 032129 ENGINEER MATTHEW J. MOYER

2-16-12

STATE OF NORTH CAROLINA
DEPARTMENT OF TRANSPORTATION
RALEIGH

TYPICAL SECTION, DECK SCARIFICATION & MILLING DETAILS FOR BRIDGE NO. 105 (STAGE II)

REVISIONS

NO.	BY:	DATE:	NO.	BY:	DATE:
1			3		
2			4		

SHEET NO. S-65

TOTAL SHEETS 84

HDR Engineering, Inc. of the Carolinas
3733 National Drive, Suite 207 Raleigh, N.C. 27612
N.C.B.E.L.S. License Number: F-0116

DRAWN BY : K. BERGER DATE : 01/2012
CHECKED BY : C. ROKICKI DATE : 01/2012

PLOT DRIVER: NCDOT_pdf_mono_eng_50.plt PENTABLE: Division 4_pen_Austin.tbl
USER: lpatters DATE: 2/16/2012 TIME: 11:58:47 AM
FILE: North Carolina_Dept_of_Transportation\NCDOT_C_2011_STRDSN_OC_TO_2\13.00_CAD\Halifax 105\Drawings\DIV41_SD_HALIFAX105_05.dgn

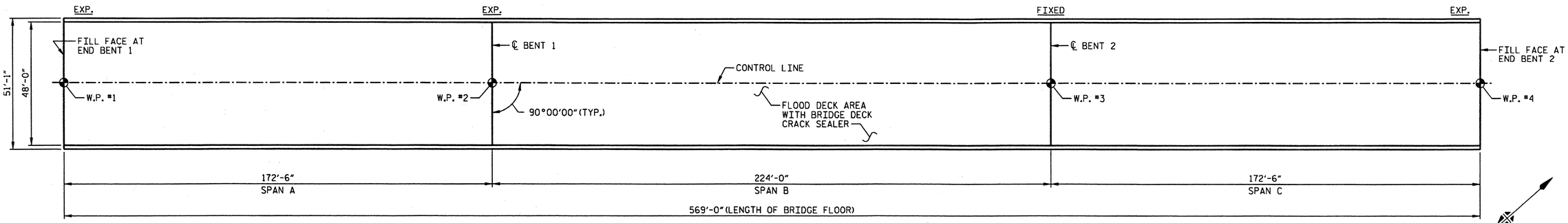

PLAN OF SPANS - DECK REPAIRS

NOTES

FOR REPAIR OF BRIDGE WITH BRIDGE DECK CRACK SEALER, SEE SPECIAL PROVISIONS.

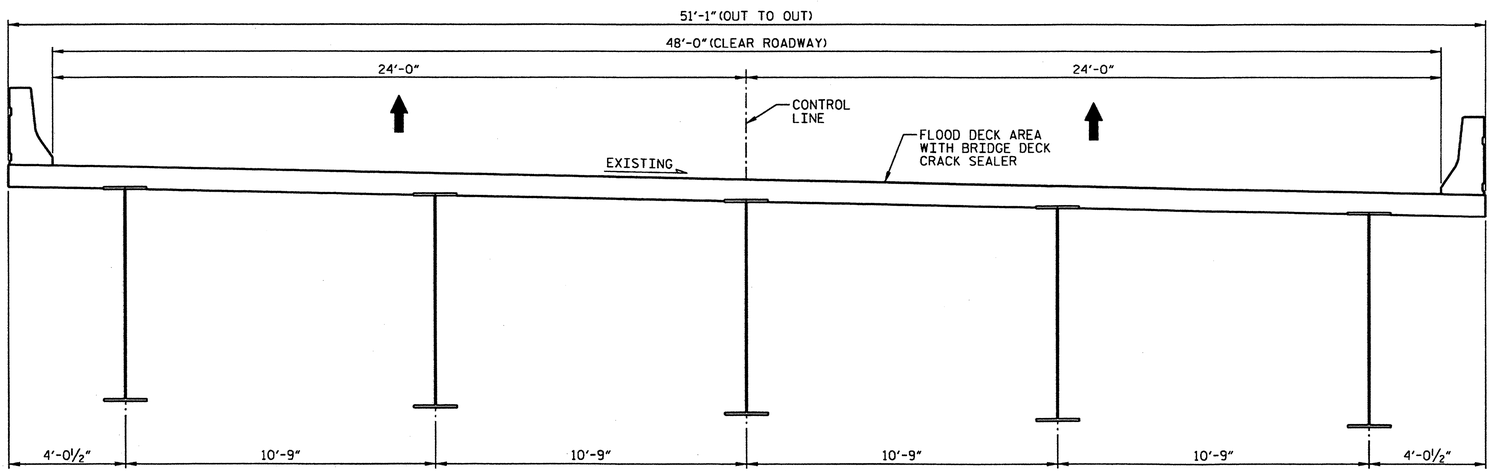

TYPICAL SECTION

TOTAL BILL OF MATERIAL
BRIDGE DECK CRACK SEALER
SQ. FT.
27168

PROJECT NO. 17BP.4.P.2

HALIFAX COUNTY

BRIDGE NO.: 139

NORTH CAROLINA PROFESSIONAL SEAL 032129 ENGINEER MATTHEW J. MOYER

2-16-12

STATE OF NORTH CAROLINA
DEPARTMENT OF TRANSPORTATION
RALEIGH

BRIDGE DECK CRACK SEALER FOR BRIDGE NO. 139

(I-95 NBL ACROSS ROANOKE RIVER)

REVISIONS						
NO.	BY:	DATE:	NO.	BY:	DATE:	
1			3			
2			4			

SHEET NO. S-66

TOTAL SHEETS 84

HDR Engineering, Inc. of the Carolinas
3733 National Drive, Suite 207 Raleigh, N.C. 27612
N.C.B.E.L.S. License Number: F-0116

DRAWN BY : R. FRITZ DATE : 01/2012
CHECKED BY : C. ROKICKI DATE : 01/2012

PLOT DRIVER: NCDOT_pdf_mono_eng_50.plt PENTABLE: Division 4_pen_Austin.tbl
USER: lpatters DATE: 2/16/2012 TIME: 3:13:58 PM
FILE: North Carolina_Dept_of_Transportation\NCDOT_C_2011_STROSN_OC_TO_2\13.00_CAD\Halifax 139\Drawings\DIV4_LSD_HALIFAX139_01.dgn

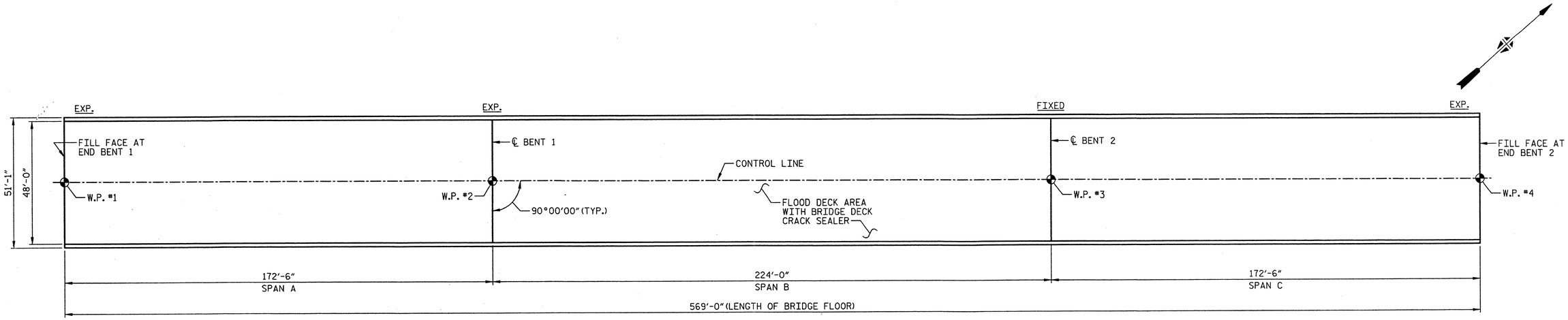

PLAN OF SPANS - DECK REPAIRS

NOTES

FOR REPAIR OF BRIDGE WITH BRIDGE DECK CRACK SEALER, SEE SPECIAL PROVISIONS.

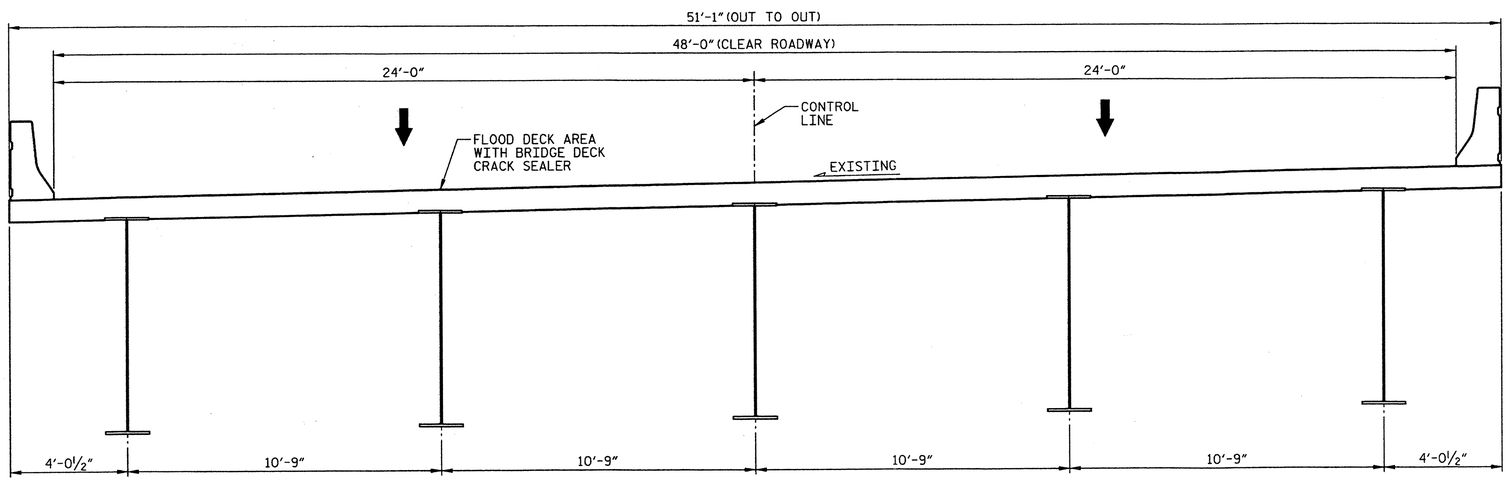

TYPICAL SECTION

TOTAL BILL OF MATERIAL
BRIDGE DECK CRACK SEALER
SQ. FT.
27168

PROJECT NO. 17BP.4.P.2

HALIFAX COUNTY

BRIDGE NO.: 141

NORTH CAROLINA PROFESSIONAL SEAL 032129 ENGINEER MATTHEW J. MOYER

1-13-2012

STATE OF NORTH CAROLINA
DEPARTMENT OF TRANSPORTATION
RALEIGH

BRIDGE DECK CRACK SEALER FOR BRIDGE NO. 141

(I-95 SBL OVER ROANOKE RIVER)

REVISIONS						SHEET NO. S-67
NO.	BY:	DATE:	NO.	BY:	DATE:	TOTAL SHEETS 84
1			3			
2			4			

HDR Engineering, Inc. of the Carolinas
3732 National Drive, Suite 207 Raleigh, N.C. 27612
N.C.B.E.L.S. License Number: F-0116

DRAWN BY : R. FRITZ DATE : 01/2012
CHECKED BY : C. ROKICKI DATE : 01/2012

PLOT DRIVEN: ROOT:pdt:mwilbur.cfg:pdt
USER: pquinone DATE: 1/12/2012
FILE: \ TIME: 8:51:54 PM

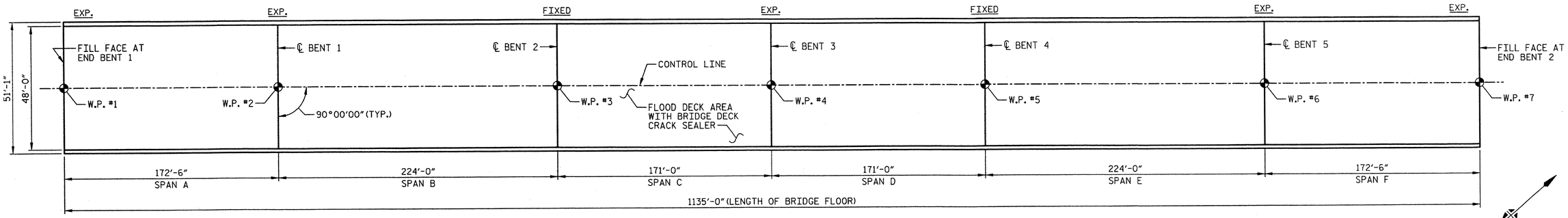

PLAN OF SPANS - DECK REPAIRS

NOTES

FOR REPAIR OF BRIDGE WITH BRIDGE DECK CRACK SEALER, SEE SPECIAL PROVISIONS.

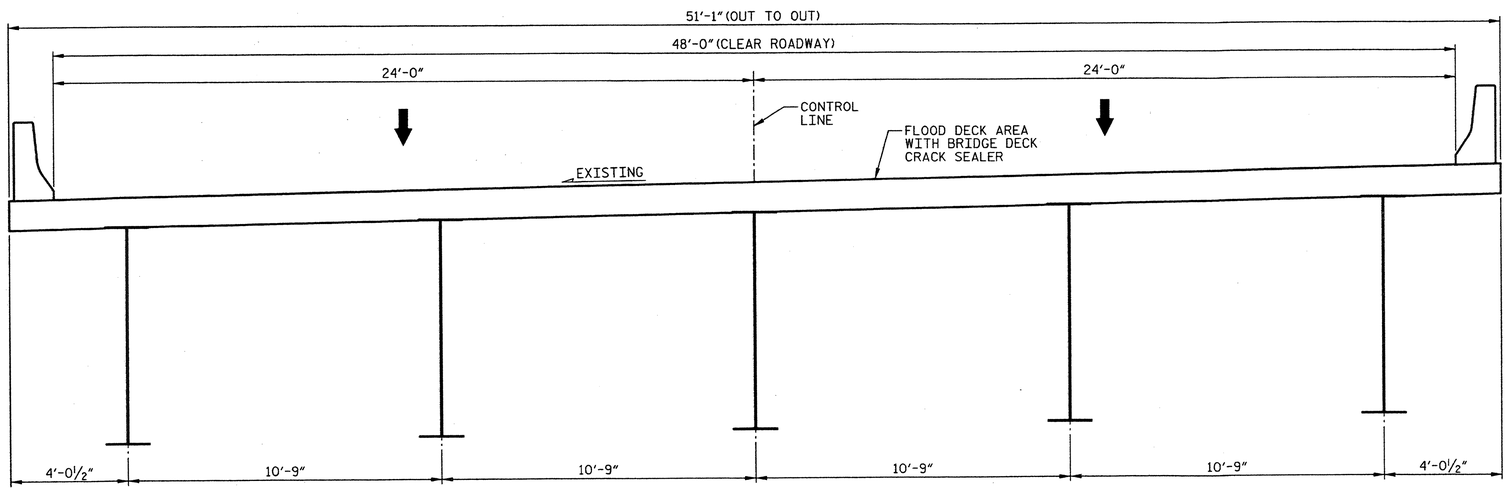

TYPICAL SECTION

TOTAL BILL OF MATERIAL
BRIDGE DECK CRACK SEALER
SQ. FT.
54336

PROJECT NO. 17BP.4.P.2

NORTHAMPTON COUNTY

BRIDGE NO.: 11

NORTH CAROLINA PROFESSIONAL SEAL 032129 ENGINEER MATTHEW J. MOYER

1-13-2012

STATE OF NORTH CAROLINA
DEPARTMENT OF TRANSPORTATION
RALEIGH

BRIDGE DECK CRACK SEALER FOR BRIDGE NO. 11

(I-95 SBL OVER ROANOKE RIVER)

HDR Engineering, Inc. of the Carolinas
3733 National Drive, Suite 207 Raleigh, N.C. 27612
N.C.B.E.L.S. License Number: F-0116

REVISIONS							SHEET NO. S-68
NO.	BY:	DATE:	NO.	BY:	DATE:		TOTAL SHEETS 84
1			3				
2			4				

DRAWN BY : K. BERGER DATE : 01/2012
CHECKED BY : C. ROKICKI DATE : 01/2012

PLOT DRIVER: NCDOT_pdf_mono_eng_50.plt PENTABLE: Division 4_pen_austin.tbl
USER: pquinone DATE: 1/12/2012 TIME: 8:51:59 PM
FILE: \

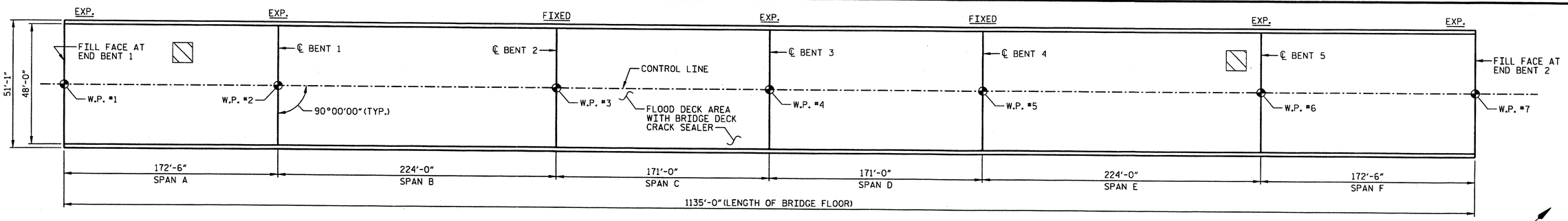

PLAN OF SPANS - DECK REPAIRS

REMOVE PORTION OF DAMAGED DECK AND CLEAN EXISTING DECK REINFORCEMENT. REPLACE WITH CLASS AA CONCRETE.

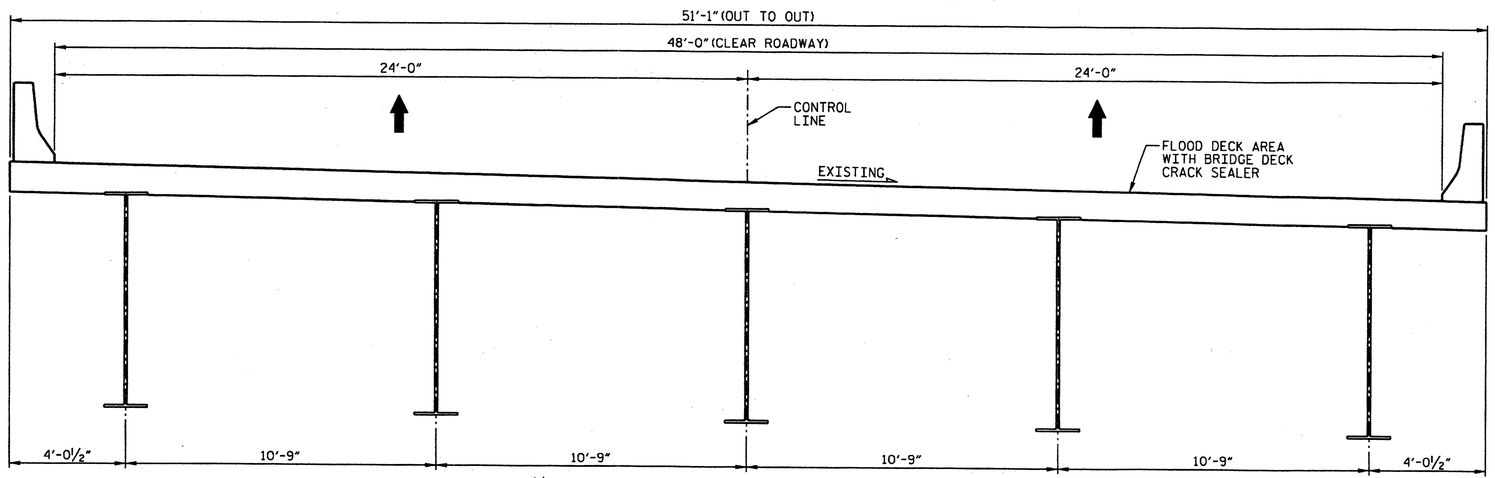

TYPICAL SECTION

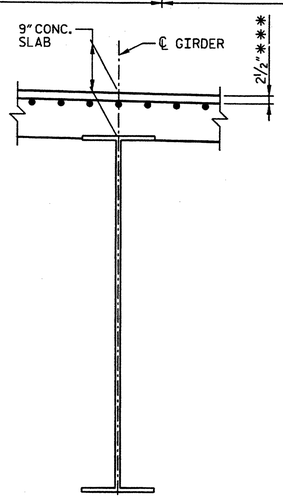

EXISTING SLAB SECTION

BOTTOM MAT OF REINFORCING NOT SHOWN FOR CLARITY.
*** CONCRETE COVER PER "AS-BUILT PLANS"

NOTES:

FOR REPAIR OF BRIDGE WITH BRIDGE DECK CRACK SEALER, SEE SPECIAL PROVISIONS.

BRIDGE DECK CRACK SEALER SHALL NOT BE PLACED WITHIN 28 DAYS OF NEW CONCRETE PLACEMENT.

FOR CLASS II CONCRETE DECK REPAIR FOR EPOXY/ASPHALT OVERLAY, SEE "EPOXY OVERLAY SYSTEM" SPECIAL PROVISION.

TOTAL BILL OF MATERIAL	
CLASS II CONCRETE DECK REPAIR FOR EPOXY/ASPHALT OVERLAY	BRIDGE DECK CRACK SEALER
SQ. FT.	SQ. FT.
150	54336

PROJECT NO. 17BP.4.P.2

NORTHAMPTON COUNTY

BRIDGE NO.: 9

NORTH CAROLINA PROFESSIONAL SEAL 032129 ENGINEER MATTHEW J. MOYER

2-16-12

STATE OF NORTH CAROLINA
DEPARTMENT OF TRANSPORTATION
RALEIGH

BRIDGE DECK CRACK SEALER FOR BRIDGE NO. 9
(I-95 NBL ACROSS ROANOKE RIVER)

REVISIONS						
NO.	BY:	DATE:	NO.	BY:	DATE:	SHEET NO. S-69
1			3			TOTAL SHEETS 84
2			4			

HDR Engineering, Inc. of the Carolinas
2733 National Drive, Suite 207 Raleigh, N.C. 27612
N.C.B.E.L.S. License Number: F-0116

DRAWN BY : K. BERGER DATE : 01/2012
CHECKED BY : C. ROKICKI DATE : 01/2012

PLOT DRIVER: NCDOT_pdf_mono_eng_50.plt
USER: lpatters
+ PENTABLE: Division 4_pen_Austin.tbl
DATE: 2/16/2012
TIME: 1:34:27 PM
FILE: North Carolina_Dept_of_Transportation\NCDOT_C_2011_STRDSN_OC_TO_2\13.00_CAD\Northampton 09\Drawings\DIV4.1_SD_NORTHAMPTON9_01.dgn

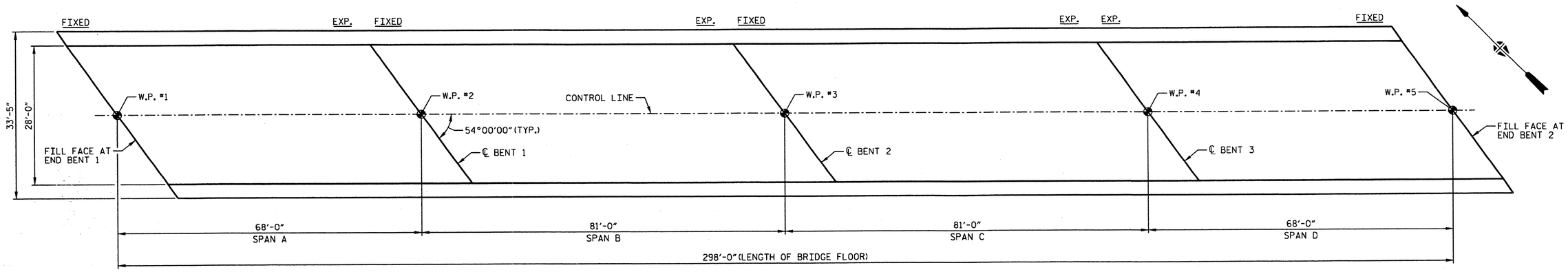

PLAN OF SPANS - DECK REPAIRS

NOTES

FOR REPAIR OF BRIDGE WITH EPOXY AND STONE OVERLAY, SEE SPECIAL PROVISIONS.

FOR FOAM JOINT SEALS, SEE SPECIAL PROVISIONS.

THE NOMINAL UNCOMPRESSED SEAL WIDTH OF THE FOAM JOINT SEAL SHALL BE 2½" AT BENTS.

FOR OVER-SAWED JOINTS, THE NOMINAL UNCOMPRESSED SEAL WIDTH OF THE FOAM JOINT SEAL SHALL BE DETERMINED BY THE ENGINEER.

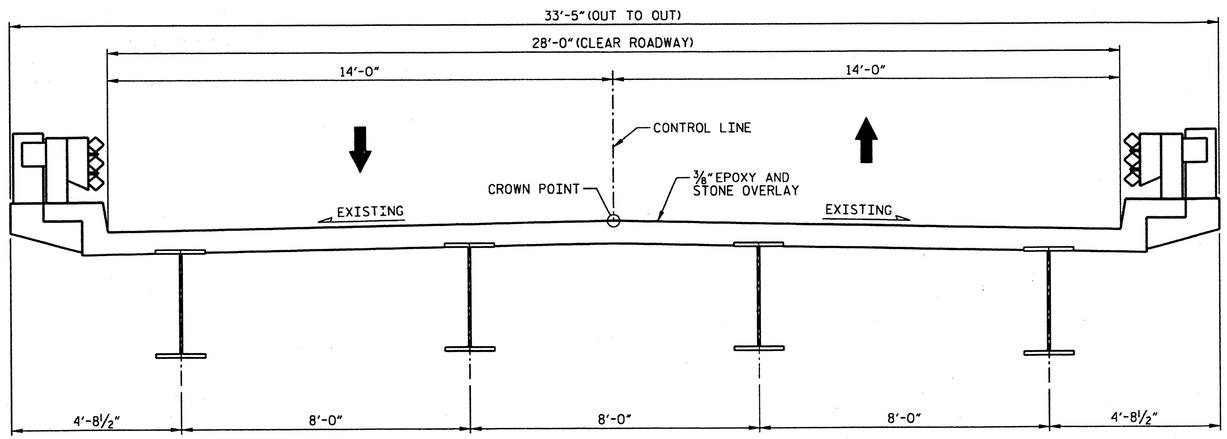

TYPICAL SECTION

SAWED OPENING FOR FOAM JOINT			
BENT NO.	W AT 90° F	W AT 60° F	W AT 45° F
BENT 1	1 11/16"	1⅞"	1 15/16"
BENT 2	1 11/16"	1⅞"	2"
BENT 3	1½"	1⅞"	2 1/16"

TOTAL BILL OF MATERIAL							
PLACEMENT OF EPOXY OVERLAY	FOAM JOINT SEALS	CLASS II CONCRETE DECK REPAIR FOR EPOXY/ASPHALT OVERLAY	CONCRETE REPAIRS	EPOXY RESIN INJECTION	SHOTCRETE REPAIRS	REINFORCING STEEL	BRIDGE JACKING
SQ. FT.	LUMP SUM	SQ. FT.	CU. FT.	LIN. FT.	CU. FT.	LBS	LUMP SUM
8344	LUMP SUM	850	1	34	0	20	LUMP SUM

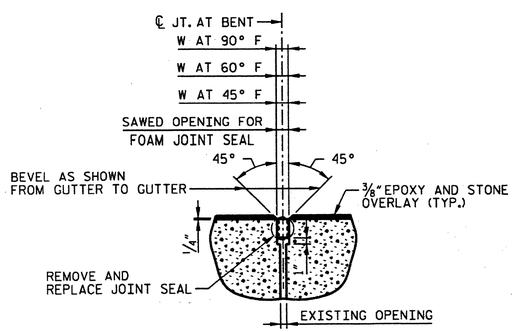

PROPOSED JOINT AT BENTS

FOAM JOINT SEAL EXPANSION

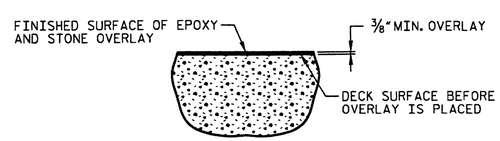

DETAIL FOR EPOXY AND STONE OVERLAY

PROJECT NO. 17BP.4.P.2

NORTHAMPTON COUNTY

BRIDGE NO.: 41

NORTH CAROLINA PROFESSIONAL SEAL 032129 ENGINEER MATTHEW J. MOYER

2-16-12

STATE OF NORTH CAROLINA
DEPARTMENT OF TRANSPORTATION
RALEIGH

EPOXY OVERLAY
FOR BRIDGE NO. 41
(NC46 OVER I-95)

REVISIONS						
NO.	BY:	DATE:	NO.	BY:	DATE:	
1			3			
2			4			

SHEET NO. S-70

TOTAL SHEETS 84

HDR Engineering, Inc. of the Carolinas
3733 National Drive, Suite 207 Raleigh, N.C. 27612
N.C.B.E.L.S. License Number: F-0116

DRAWN BY : R. FRITZ DATE : 01/2012
CHECKED BY : C. ROKICKI DATE : 01/2012

PLOT DRIVER: NCDOT_pdf_mono_eng_50.plt PENTABLE: Division 4.pen_Austin.tbl
USER: lpatters DATE: 2/16/2012 TIME: 12:42:52 PM
FILE: North Carolina_Dept_of_Transportation\NCDOT_C_2011_STRDSN_OC_TO_2\13.00_CAD\Northampton 41\Drawings\DIV4.1_SD_NORTHAMPTON41_01.dgn

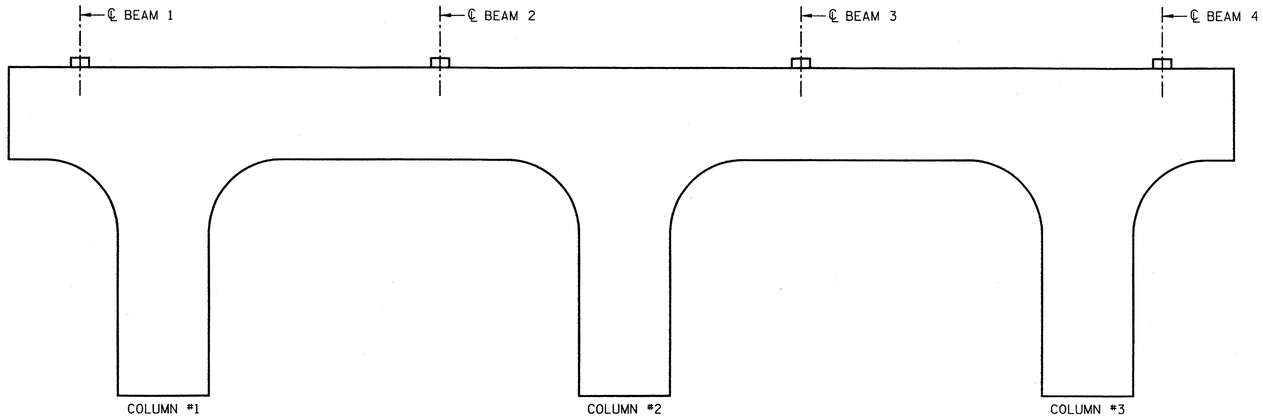

WEST ELEVATION

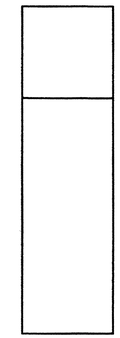

SOUTH END ELEVATION

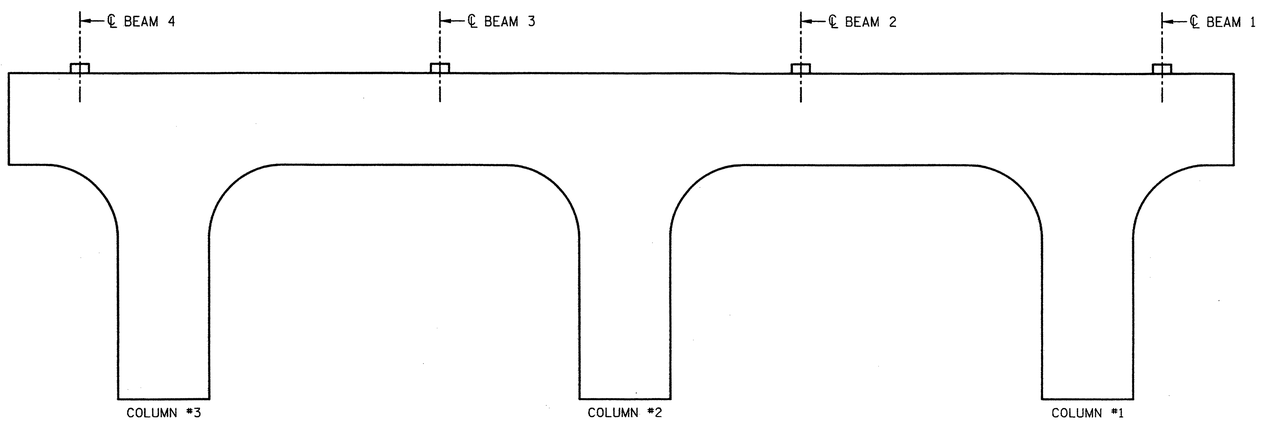

EAST ELEVATION

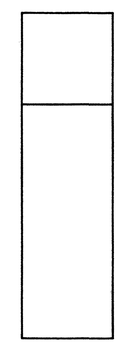

NORTH END ELEVATION

BILL OF MATERIAL

BENT 1

BAR	NO.	SIZE	TYPE	LENGTH
S1	VAR.	#4	1	VARIES
S2	VAR.	#5	2	VARIES
CONCRETE REPAIRS			CF	0
SHOTCRETE REPAIRS			CF	0
EPOXY RESIN INJECTION			LF	0
REINFORCING STEEL			LBS	0

BAR TYPE

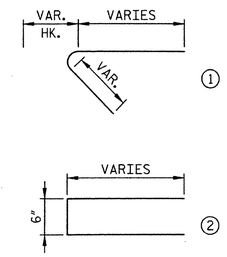

(BAR DIMENSIONS ARE OUT TO OUT)

PROJECT NO. 17BP.4.P.2

NORTHAMPTON COUNTY

BRIDGE NO.: 41

NOTES

THE LOCATION AND EXTENT OF REPAIRS SHOWN ON THE PLANS ARE GENERAL IN NATURE. THE ENGINEER WILL DETERMINE THE EXACT EXTENT OF REMOVAL IN THE FIELD BASED ON AN EVALUATION OF THE CONDITION OF THE EXPOSED SURFACES.

CONSTRUCTION METHODS, PROCEDURES AND SEQUENCES ARE THE CONTRACTOR'S RESPONSIBILITY AND THE CONTRACTOR SHALL TAKE ALL THE NECESSARY MEANS TO MAINTAIN AND PROTECT THE STRUCTURAL INTEGRITY OF ALL CONSTRUCTION AT ALL STAGES.

ANY DISCREPANCIES BETWEEN THE CONSTRUCTION DOCUMENTS AND THE ACTUAL FIELD CONDITIONS SHALL BE REPORTED TO THE ENGINEER.

THE MANUFACTURER'S CERTIFIED DRAWINGS AND SPECIFICATIONS FOR EQUIPMENT ANCHORAGE AND DETAILS SHALL BE SUBMITTED FOR APPROVAL.

FOR CONCRETE REPAIR, SEE SPECIAL PROVISION.

FOR FALSEWORK AND FORMWORK, SEE SPECIAL PROVISION.

FOR CRANE SAFETY, SEE SPECIAL PROVISIONS.

FOR SHOTCRETE REPAIRS, SEE SPECIAL PROVISIONS.

FOR EPOXY RESIN INJECTIONS, SEE SPECIAL PROVISIONS.

FOR BRIDGE JACKING, SEE SPECIAL PROVISIONS.

FIELD TESTING OF THE ADHESIVELY ANCHORED DOWELS IS NOT REQUIRED.

REPAIR AREAS INACCESSIBLE BY POWER TOOL SHALL BE CLEANED WITH HAND TOOLS.

THE CONTRACTOR SHALL PROTECT THE BEARING FROM SHOTCRETE OVERSPRAY WHEN PERFORMING SHOTCRETE REPAIRS NEAR THE BEAM ENDS.

CONCRETE REPAIR

SHOTCRETE REPAIR

EPOXY RESIN INJECTION OF CRACKS

NORTH CAROLINA PROFESSIONAL SEAL 032129 ENGINEER MATTHEW J. MOYER

1-13-2012

HDR Engineering, Inc. of the Carolinas
3733 National Drive, Suite 207 Raleigh, N.C. 27612
N.C.B.E.L.S. License Number: F-0116

STATE OF NORTH CAROLINA
DEPARTMENT OF TRANSPORTATION
RALEIGH

BENT 1
BRIDGE NO. 41

REVISIONS						SHEET NO. 5-71
NO.	BY:	DATE:	NO.	BY:	DATE:	TOTAL SHEETS 84
1			3			
2			4			

DRAWN BY : J. ELLIOTT DATE : 01/2012
CHECKED BY : C. ROKICKI DATE : 01/2012

PLOT DRIVER: NLDOT.pdt_mono.eng.pc.pltr
USER: pquinone DATE: 1/12/2012
FILE: \
TIME: 8:52:18 PM

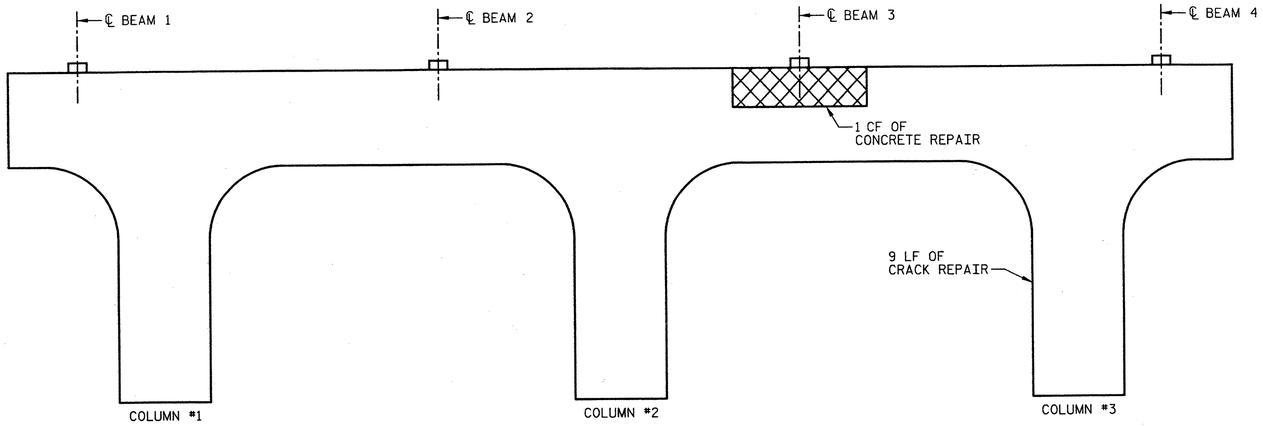

WEST ELEVATION

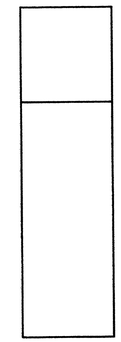

SOUTH END ELEVATION

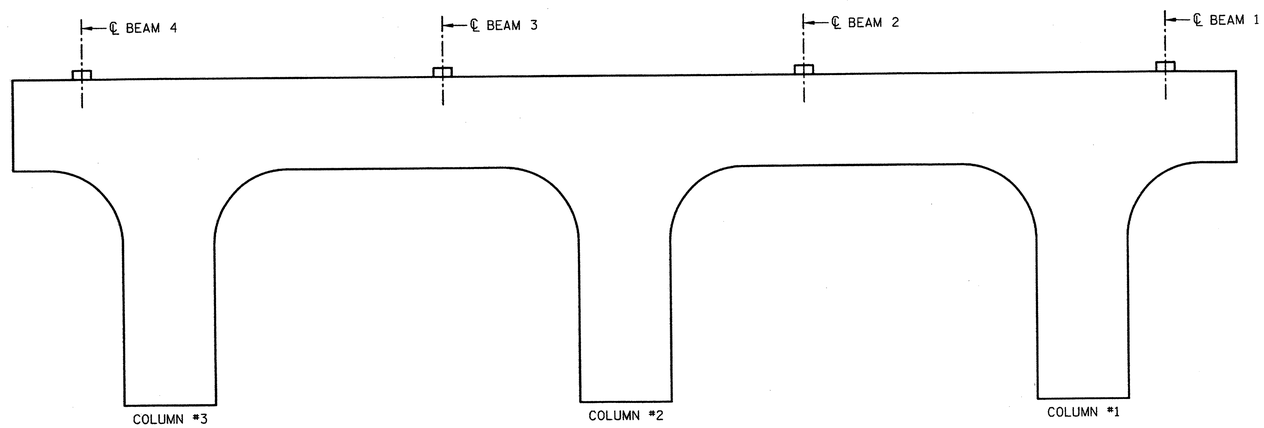

EAST ELEVATION

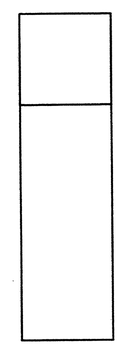

NORTH END ELEVATION

BILL OF MATERIAL

BENT 2

BAR	NO.	SIZE	TYPE	LENGTH
S1	VAR.	#4	1	VARIES
S2	VAR.	#5	2	VARIES
CONCRETE REPAIRS			CF	1
SHOTCRETE REPAIRS			CF	0
EPOXY RESIN INJECTION			LF	9
REINFORCING STEEL			LBS	20

BAR TYPE

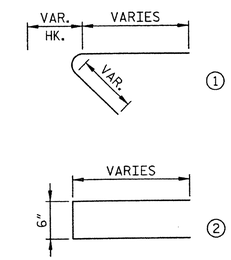

(BAR DIMENSIONS ARE OUT TO OUT)

NOTES

FOR NOTES, SEE DRAWING "BENT 1 BRIDGE NO. 41".

CONCRETE REPAIR

SHOTCRETE REPAIR

EPOXY RESIN INJECTION OF CRACKS

SERVICE REACTIONS PER BEARING

SUPPORT	DL (KIP)		LL+I (KIP)	
	BACK	AHEAD	BACK	AHEAD
END BENT 1	--	49	--	71
BENT 1	49	58	71	72
BENT 2	58	58	72	72
BENT 3	58	49	72	71
END BENT 2	49	--	71	--

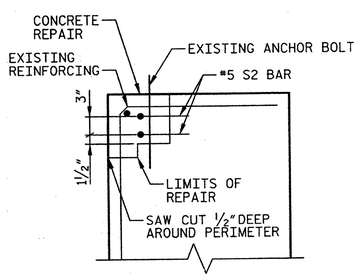

DETAIL A

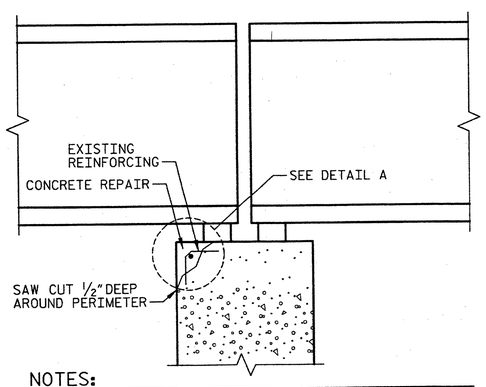

NOTES:

RAISE BEAM ½" BY JACKING BEFORE REMOVING CONCRETE. DO NOT LOWER SUPERSTRUCTURE UNTIL REPAIR HAS CURED AND REACHED A COMPRESSIVE STRENGTH OF 3000 PSI.

TYPICAL REPAIR AT BEAM BEARING

JACKING NOTES

JACKING SHALL BE CONDUCTED IN A MANNER SUCH THAT THE SUPERSTRUCTURE WILL NOT BE DAMAGED.

THE MAXIMUM ALLOWABLE VERTICAL JACKING DISPLACEMENT SHALL BE ½ INCH WITH RESPECT TO BEARINGS OF ADJACENT PIERS.

BEARING NUTS SHALL BE LOOSENED TO PROVIDE A MINIMUM OF 5/64 INCH GAP TO ALLOW FOR JACKING.

ALL BEAMS AT A PIER SHALL BE JACKED SIMULTANEOUSLY AND SHALL BE RAISED THE SAME AMOUNT AND AT THE SAME RATE. THE HYDRAULIC PRESSURE OF THE JACKS SHALL BE ADJUSTED AS REQUIRED TO ALLOW FOR EQUAL MOVEMENTS. JACKING DEVICES SHALL BE EQUIPPED WITH LOCKING RINGS. USE BEVELED JACKING PLATES AS NEEDED TO PROVIDE A LEVEL JACKING SURFACE.

EFFECT OF VIBRATIONS FROM TRAFFIC SHOULD BE CONSIDERED DURING JACKING AND WHEN JACKS ARE LOCKED.

PROVISIONS SHALL BE MADE TO ACCOUNT FOR THERMAL MOVEMENTS DURING THE PERIOD THAT THE STRUCTURE IS RESTING ON TEMPORARY SUPPORTS.

THE BRIDGE SHALL BE INSPECTED PRIOR TO JACKING TO VERIFY THAT ITEMS CONNECTED TO THE SUPERSTRUCTURE OR SUBSTRUCTURE WILL NOT BE DAMAGED DURING THE JACKING AND BEARING REPLACEMENT PROCEDURE.

IT SHALL BE THE RESPONSIBILITY OF THE CONTRACTOR PERFORMING THE JACKING TO DETERMINE A JACKING LOCATION AT EACH BEARING AND PROVIDE A DESIGN FOR THE JACKING LOADS. JACKS SHALL HAVE A MINIMUM SAFE LOAD CAPACITY OF 125% OF THE LOAD SPECIFIED IN THE JACKING LOAD TABLE. THE CONTRACTOR SHALL SUBMIT THE JACKING PLAN, DETAILS, PROCEDURES AND SUPPORTING CALCULATIONS TO THE ENGINEER FOR REVIEW AND APPROVAL.

NORTH CAROLINA PROFESSIONAL SEAL 032129 ENGINEER MATTHEW J. MOYER

1-13-2012

PROJECT NO. 17BP.4.P.2

NORTHAMPTON COUNTY

BRIDGE NO.: 41

STATE OF NORTH CAROLINA
DEPARTMENT OF TRANSPORTATION
RALEIGH

BENT 2
BRIDGE NO. 41

REVISIONS						
NO.	BY:	DATE:	NO.	BY:	DATE:	
1			3			
2			4			

SHEET NO. S-72

TOTAL SHEETS 84

HDR Engineering, Inc. of the Carolinas
2733 National Drive, Suite 207 Raleigh, N.C. 27612
N.C.B.E.L.S. License Number: F-0116

DRAWN BY : K. BERGER DATE : 01/2012
CHECKED BY : C. ROKICKI DATE : 01/2012

PLOT DRIVER: NCDOT_pdf_mono_eng_50.plt
USER: paulnone DATE: 1/12/2012
FILE: \
PENTABLE: Division 4_pen_Austin.tbl
TIME: 8:52:25 PM

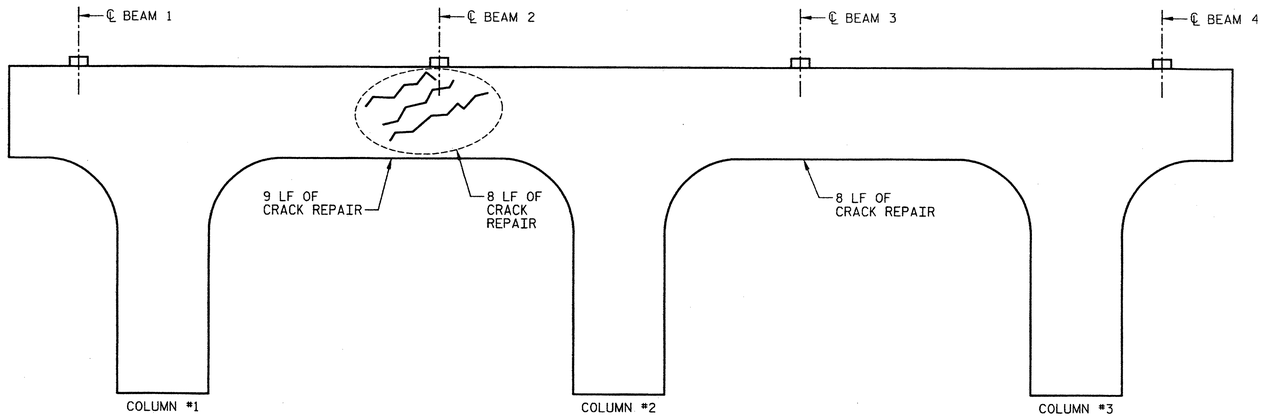

WEST ELEVATION

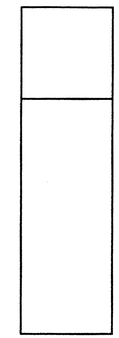

SOUTH END ELEVATION

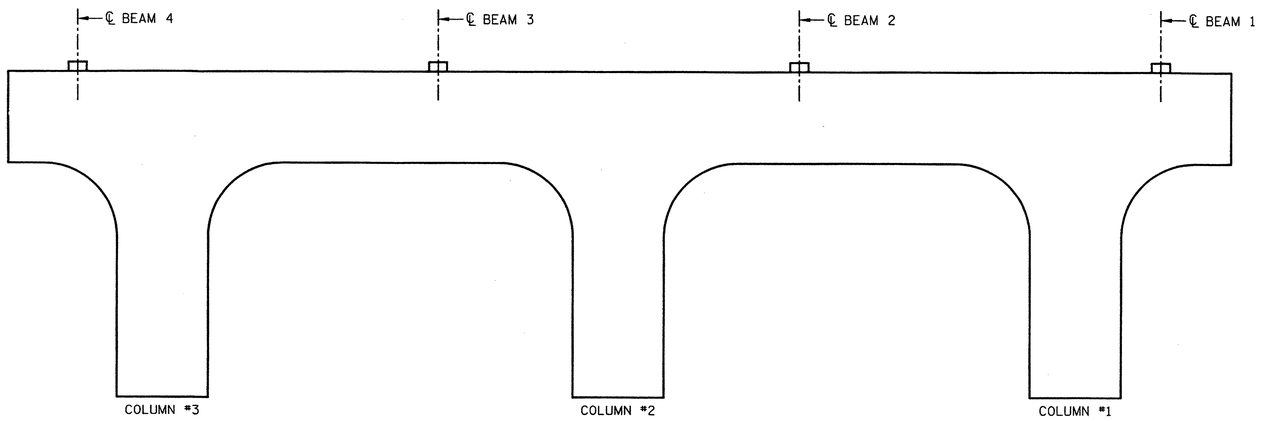

EAST ELEVATION

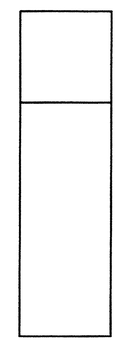

NORTH END ELEVATION

BILL OF MATERIAL

BENT 3

BAR	NO.	SIZE	TYPE	LENGTH
S1	VAR.	#4	1	VARIES
S2	VAR.	#5	2	VARIES
CONCRETE REPAIRS			CF	0
SHOTCRETE REPAIRS			CF	0
EPOXY RESIN INJECTION			LF	25
REINFORCING STEEL			LBS	0

BAR TYPE

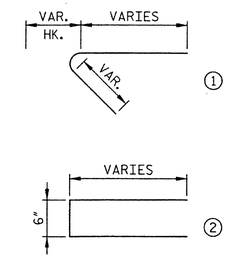

(BAR DIMENSIONS ARE OUT TO OUT)

NOTES

FOR NOTES, SEE DRAWING "BENT 1 BRIDGE NO. 41".

CONCRETE REPAIR

SHOTCRETE REPAIR

EPOXY RESIN INJECTION OF CRACKS

PROJECT NO. 17BP.4.P.2

NORTHAMPTON COUNTY

BRIDGE NO.: 41

1-13-2012

STATE OF NORTH CAROLINA
DEPARTMENT OF TRANSPORTATION
RALEIGH

BENT 3
BRIDGE NO. 41

REVISIONS						
NO.	BY:	DATE:	NO.	BY:	DATE:	
1			3			
2			4			

SHEET NO. S-73

TOTAL SHEETS 84

HDR Engineering, Inc. of the Carolinas
3733 National Drive, Suite 207 Raleigh, N.C. 27612
N.C.B.E.L.S. License Number: F-0116

DRAWN BY : J. ELLIOTT DATE : 01/2012
CHECKED BY : C. ROKICKI DATE : 01/2012

PLOT DRIVER: NUVU_PDT_MONO.ENG_SW.PIT
USER: paulmone DATE: 1/12/2012
FILE: \
PENTABLE: DIVISION 4-PEN_AUSTIN.TBL
TIME: 8:52:31 PM

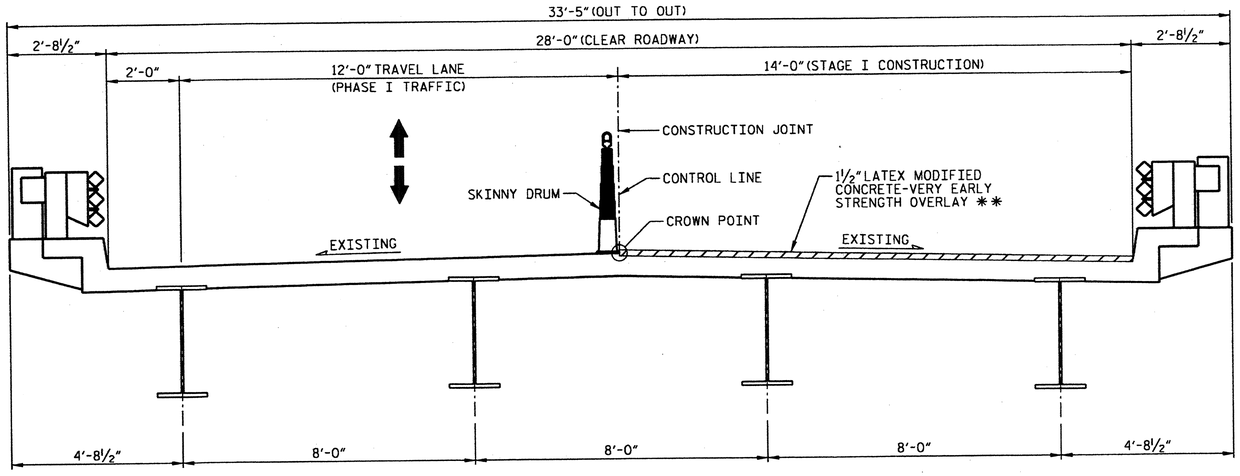

TYPICAL SECTION - STAGE I

** THE FINISHED SURFACE OF THE LATEX MODIFIED CONCRETE-VERY EARLY STRENGTH OVERLAY SHALL BE ½" ABOVE THE ORIGINAL DECK SURFACE.

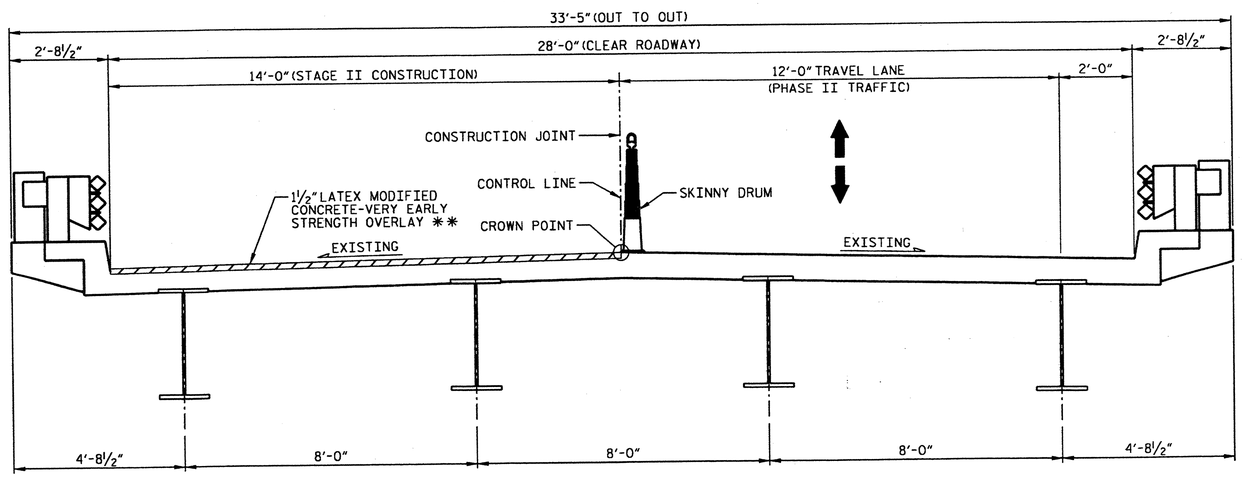

TYPICAL SECTION - STAGE II

** THE FINISHED SURFACE OF THE LATEX MODIFIED CONCRETE-VERY EARLY STRENGTH OVERLAY SHALL BE ½" ABOVE THE ORIGINAL DECK SURFACE.

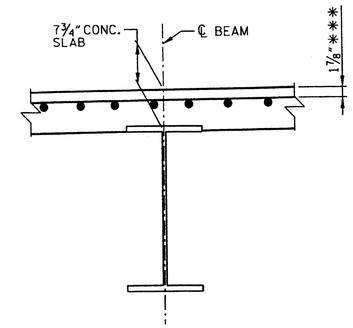

EXISTING SLAB SECTION

BOTTOM MAT OF REINFORCING NOT SHOWN FOR CLARITY.
*** CONCRETE COVER PER "AS-BUILT PLANS"

NOTES

FOR "HYDRO-DEMOLITION OF BRIDGE DECK", SEE SPECIAL PROVISIONS.

THE CONTRACTOR MUST COLLECT, TREAT AND DISPOSE OF RUN-OFF WATER FROM THE HYDRO-DEMOLITION PROCESS. SEE "MANAGING HYDRO-DEMOLITION WATER" SPECIAL PROVISIONS.

THE BOUNDARIES OF AREAS IDENTIFIED FOR CLASS III SURFACE PREPARATION ARE APPROXIMATE. IF ANY CLASS III LOCATIONS ARE ENCOUNTERED PRIOR TO OR DURING HYDRO-DEMOLITION, SEE "TYPICAL "BLOW THRU" CONTAINMENT AND FORMWORK" DETAIL. THE CONTRACTOR SHALL PROVIDE A METHOD OF HANDLING UNEXPECTED BLOW THROUGH WORK OF THE DECK.

THE NOMINAL UNCOMPRESSED SEAL WIDTH OF THE FOAM JOINT SEAL SHALL BE 2½" AT BENTS. FOR "FOAM JOINT SEALS", SEE SPECIAL PROVISIONS.

FOR "ELASTOMETRIC CONCRETE", SEE SPECIAL PROVISIONS.

LATEX MODIFIED CONCRETE SHALL BE LATEX MODIFIED CONCRETE-VERY EARLY STRENGTH.

FOR "LATEX MODIFIED CONCRETE-VERY EARLY STRENGTH", SEE SPECIAL PROVISIONS.

FOR GROOVING BRIDGE FLOORS INFORMATION, SEE "LATEX MODIFIED CONCRETE-VERY EARLY STRENGTH" SPECIAL PROVISIONS.

FOR SUBMITTAL OF WORKING DRAWINGS, SEE SPECIAL PROVISIONS.

FOR FALSEWORK AND FORMWORK, SEE SPECIAL PROVISIONS.

EXISTING JOINTS AND BRIDGE DECK DRAINS SHALL BE SEALED PRIOR TO BEGINNING SURFACE PREPARATION OF BRIDGE DECK.

EXISTING DIMENSIONS AND BRIDGE CONDITION ARE FROM THE BEST INFORMATION AVAILABLE. THE CONTRACTOR SHALL VERIFY THE INFORMATION SHOWN ON THE PLANS AND NOTIFY THE ENGINEER IF ACTUAL DIMENSIONS AND CONDITIONS DIFFER.

FOR SCARIFYING BRIDGE DECK, SEE SPECIAL PROVISIONS.

TOTAL BILL OF MATERIAL

SCARIFYING BRIDGE DECK	* CLASS I SURFACE PREPARATION	* CLASS II SURFACE PREPARATION	* CLASS III SURFACE PREPARATION	CONCRETE REPAIRS	* CLASS AA CONCRETE	HYDRO-DEMOLITION OF BRIDGE DECK	LATEX MODIFIED CONCRETE-VERY EARLY STRENGTH OVERLAY	PLACING & FINISHING LATEX MODIFIED CONCRETE-VERY EARLY STRENGTH OVERLAY	FOAM JOINT SEALS	GROOVING BRIDGE FLOORS	EPOXY RESIN INJECTION	SHOTCRETE REPAIRS	REINFORCING STEEL	ASPHALT CONCRETE SURFACE COURSE TYPE SF9.5A	INCIDENTAL MILLING
SQ. YDS.	SQ. YDS.	SQ. YDS.	SQ. YDS.	CU. FT.	CU. YDS.	SQ. YDS.	CU. YDS.	SQ. YDS.	LUMP SUM	SQ. FT.	LIN. FT.	CU. FT.	LBS	TONS	SQ. YDS.
1002	6	0	0	0	0	1002	41	1002	LUMP SUM	7913	97	1	0	36	391

* QUANTITY SHOWN IS FOR INFORMATION ONLY.

PROJECT NO. 17BP.4.P.2
NORTHAMPTON COUNTY
BRIDGE NO.: 43

NORTH CAROLINA PROFESSIONAL SEAL 032129 ENGINEER MATTHEW J. MOYER
2-14-12

STATE OF NORTH CAROLINA
DEPARTMENT OF TRANSPORTATION
RALEIGH

TYPICAL SECTION FOR BRIDGE NO. 43
(NC48 OVER I-95)

HDR Engineering, Inc. of the Carolinas
3733 National Drive, Suite 207 Raleigh, N.C. 27612
N.C.B.E.L.S. License Number: F-0116

REVISIONS						
NO.	BY:	DATE:	NO.	BY:	DATE:	
1			3			
2			4			

SHEET NO. S-74
TOTAL SHEETS 84

DRAWN BY : R. FRITZ DATE : 01/2012
CHECKED BY : C. ROKICKI DATE : 01/2012

PLOT DRIVER: NCDOT.pdf_mono_eng_50.plt
USER: msells
PENTABLE: Division 4_pen_Austin.tbl
DATE: 2/14/2012
TIME: 3:46:57 PM
FILE: North Carolina_Dept_of_Transportation\NCDOT_C_2011_STRDSN_OC_TO_2\13.00_CAD\Northampton 43\Drawings\DIV4_1_SD_NORTHAMPTON43_01.dgn

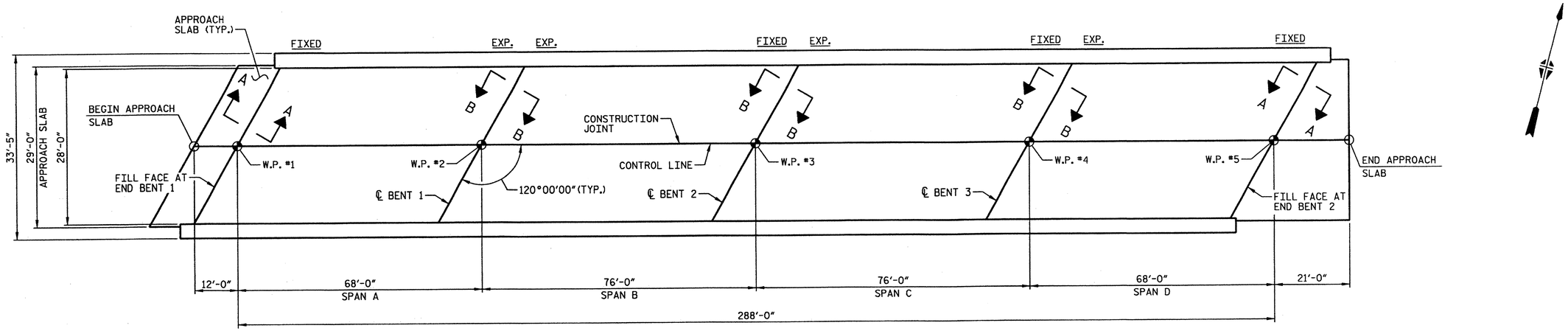

PLAN VIEW

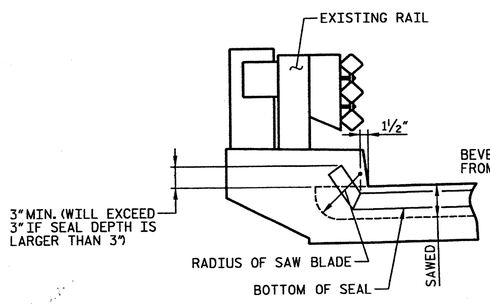

JOINT DETAIL AT RAIL

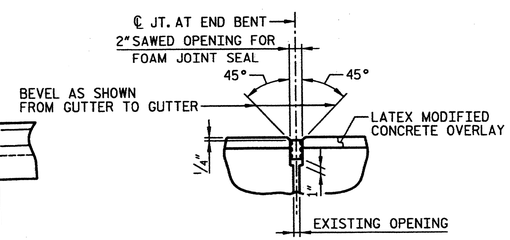

PROPOSED JOINT AT END BENTS

FOAM JOINT SEAL EXPANSION

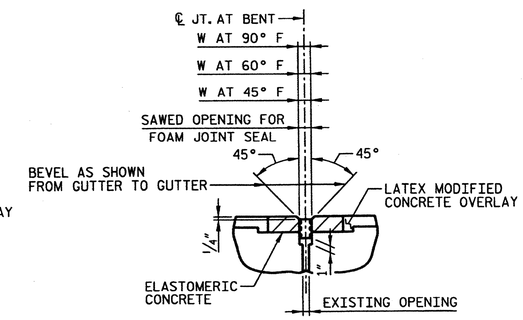

PROPOSED JOINT AT BENTS

FOAM JOINT SEAL EXPANSION

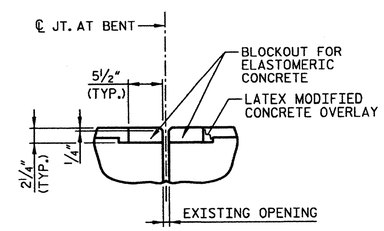

FOAM JOINT SEAL AT BENTS

PRE-SAWED ELASTOMERIC CONCRETE DIMENSIONS

SAWED OPENING FOR FOAM JOINT			
BENT NO.	W AT 90° F	W AT 60° F	W AT 45° F
BENT 1	1½"	1⅞"	2 1/16"
BENT 2	1 11/16"	1⅞"	2"
BENT 3	1 11/16"	1⅞"	1 15/16"

ELASTOMERIC CONCRETE	
BENT NO.	ELASTOMERIC CONCRETE ✱ (CU. FT.)
BENT 1	5.6
BENT 2	5.6
BENT 3	5.6
TOTAL	16.8

✱ BASED ON THE MINIMUM BLOCKOUT SHOWN

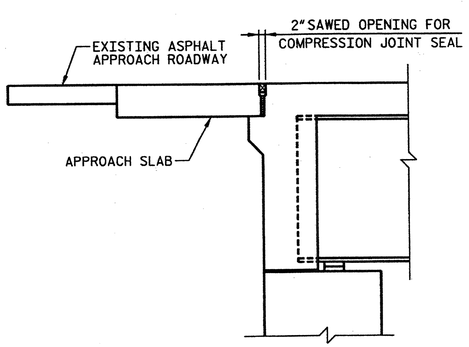

EXISTING SECTION AT END BENT

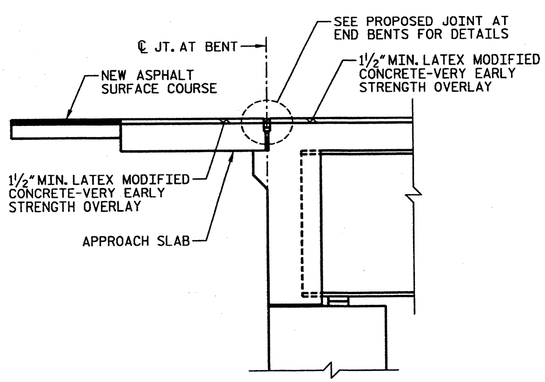

PROPOSED SECTION AT END BENT

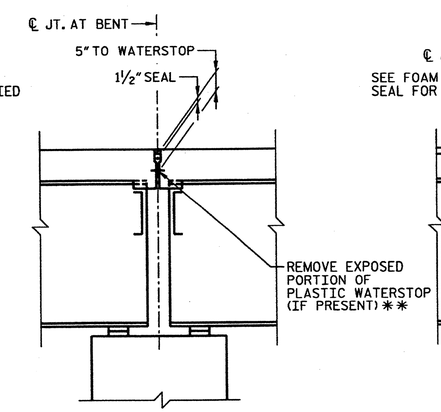

EXISTING JOINT AT BENTS

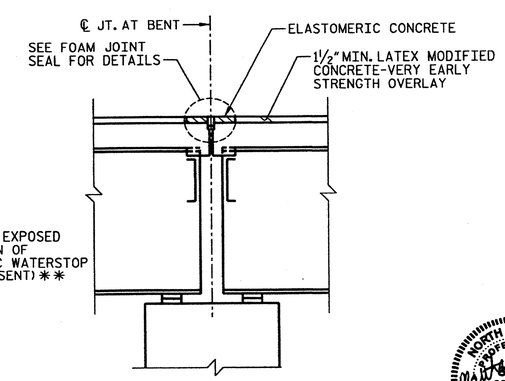

PROPOSED JOINT AT BENTS

SECTION A-A

SECTION B-B

✱✱ ALL LOOSE AND UNSOUND CONCRETE SHALL BE REMOVED. IF THE EMBEDDED PORTION OF THE EXISTING PLASTIC WATERSTOP IS EXPOSED DURING REMOVAL OF UNSOUND CONCRETE, THE ENTIRE WATERSTOP SHALL BE REMOVED. OTHERWISE, TRIM WATERSTOP FLUSH WITH EXISTING CONCRETE SURFACE.

PROJECT NO. 17BP.4.P.2

NORTHAMPTON COUNTY

BRIDGE NO.: 43

NORTH CAROLINA PROFESSIONAL SEAL 032129 ENGINEER MATTHEW J. MOYER

1-13-2012

STATE OF NORTH CAROLINA
DEPARTMENT OF TRANSPORTATION
RALEIGH

PLAN VIEW AND JOINT DETAILS FOR BRIDGE NO. 43

REVISIONS							
NO.	BY:	DATE:	NO.	BY:	DATE:	SHEET NO. S-75
1			3			TOTAL SHEETS 84
2			4			

HDR Engineering, Inc. of the Carolinas
3733 National Drive, Suite 207 Raleigh, N.C. 27612
N.C.B.E.L.S. License Number: F-0116

DRAWN BY : R. FRITZ DATE : 01/2012
CHECKED BY : C. ROKICKI DATE : 01/2012

PLOT DRIVER: NCDOT_pdt_mono.pmd
USER: paulmore DATE: 1/12/2012
FILE:
TIME: 8:52:43 PM

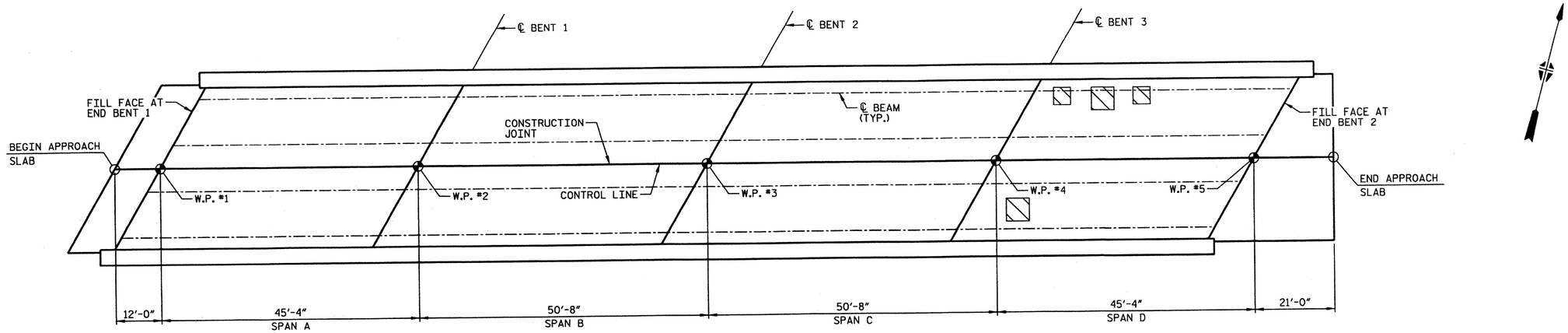

PLAN OF SPANS - DECK REPAIRS

APPROX. AREA: CLASS I REPAIR
APPROX. AREA: CLASS II REPAIR
APPROX. AREA: CLASS III REPAIR

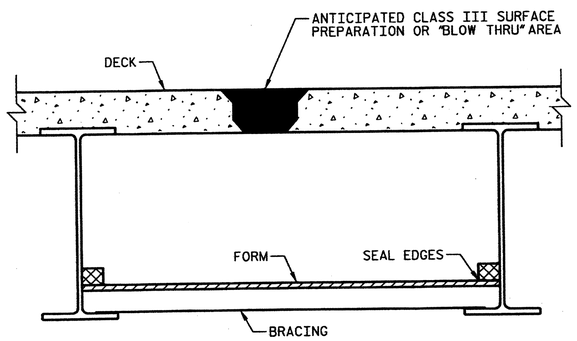

TYPICAL "BLOW THRU" CONTAINMENT AND FORMWORK

A METHOD TO CAPTURE WATER AND DEBRIS FROM BLOW THRU DURING HYDRO-DEMOLITION SHALL BE INSTALLED IN AREAS INDICATED AS CLASS III SURFACE PREPARATION.

SUBMIT DETAILS OF PROPOSED FORMWORK FOR APPROVAL PRIOR TO BEGINNING WORK.

COST FOR INSTALLING AND REMOVING FORMWORK SHALL BE INCIDENTAL TO THE PRICE PER SQ. YARD OF HYDRO-DEMOLITION.

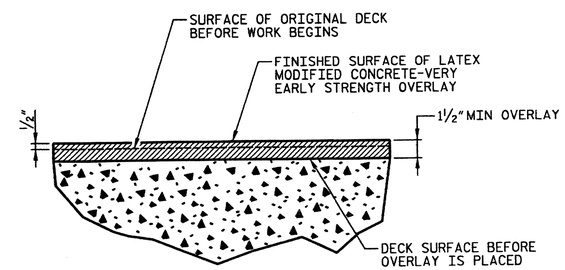

DETAIL FOR LATEX MODIFIED CONCRETE OVERLAY

PROJECT NO. 17BP.4.P.2
NORTHAMPTON COUNTY
BRIDGE NO.: 43

NORTH CAROLINA PROFESSIONAL SEAL 032129 ENGINEER MATTHEW J. MOTER
1-13-2012

HDR Engineering, Inc. of the Carolinas
3733 National Drive, Suite 207 Raleigh, N.C. 27612
N.C.B.E.L.S. License Number: F-0116

STATE OF NORTH CAROLINA
DEPARTMENT OF TRANSPORTATION
RALEIGH

DECK REPAIR DETAILS FOR BRIDGE NO. 43

REVISIONS						SHEET NO. S-76
NO.	BY:	DATE:	NO.	BY:	DATE:	TOTAL SHEETS 84
1			3			
2			4			

DRAWN BY : R. FRITZ DATE : 01/2012
CHECKED BY : C. ROKICKI DATE : 01/2012

PLOT DRIVER: NCDOT_pdf_mono_eng_50.plt
USER: paulnone DATE: 1/12/2012
FILE:
PENTABLE: DIVISION 4_PDF_MONO.TBL
TIME: 8:52:49 PM

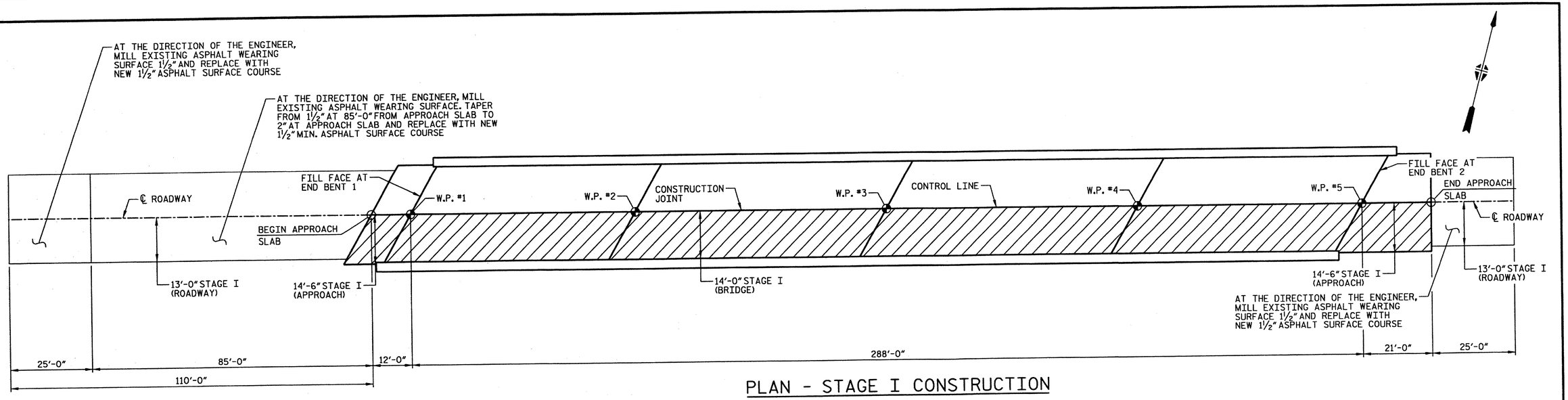

PLAN - STAGE I CONSTRUCTION

DECK SCARIFICATION AND HYDRO-DEMOLITION

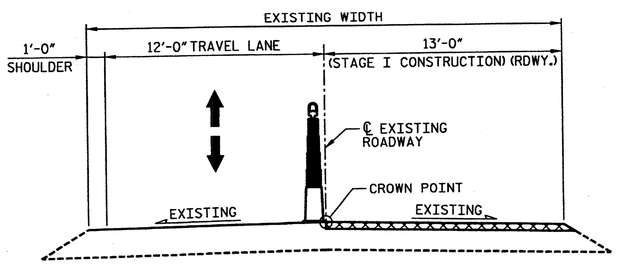

TYPICAL ROADWAY MILLING SECTION - STAGE I

(MILLING DEPTH VARIES, SEE PLAN)

ASPHALT MILLING

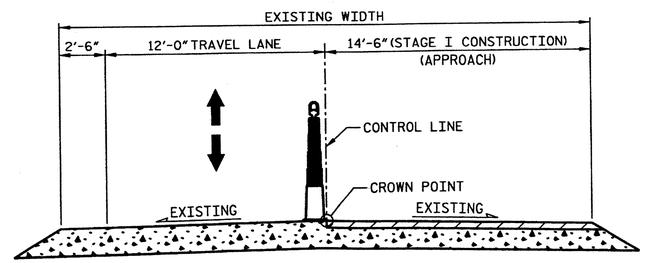

TYPICAL SECTION: APPROACH SLAB SCARIFICATION AND HYDRO-DEMOLITION - STAGE I

APPROACH SLAB SCARIFICATION AND HYDRO-DEMOLITION

C1	PROPOSED VARIABLE DEPTH ASPHALT CONCRETE SURFACE COURSE, TYPE SF9.5A AT AN AVERAGE RATE OF 110 LBS PER SQ. YD. PER 1" DEPTH.

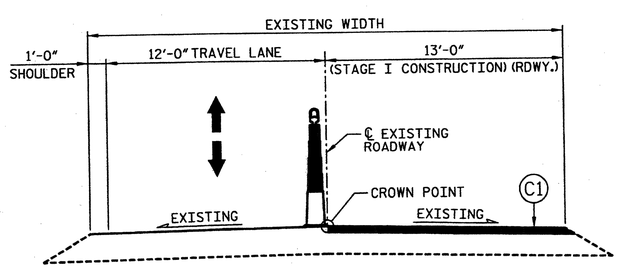

TYPICAL ROADWAY SECTION - STAGE I

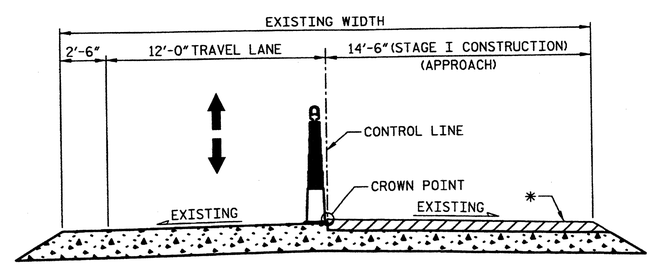

TYPICAL APPROACH SECTION - STAGE I

1½" LATEX MODIFIED CONCRETE-VERY EARLY STRENGTH OVERLAY

* THE FINISHED SURFACE OF THE LATEX MODIFIED CONCRETE - VERY EARLY STRENGTH OVERLAY SHALL BE ½" ABOVE THE ORIGINAL APPROACH SLAB SURFACE.

PROJECT NO. 17BP.4.P.2

NORTHAMPTON COUNTY

BRIDGE NO.: 43

NORTH CAROLINA PROFESSIONAL SEAL 032129 ENGINEER MATTHEW J. MOTSKO

1-13-2012

STATE OF NORTH CAROLINA
DEPARTMENT OF TRANSPORTATION
RALEIGH

TYPICAL SECTION, DECK SCARIFICATION & MILLING DETAILS FOR BRIDGE NO. 43 (STAGE I)

HDR Engineering, Inc. of the Carolinas
3733 National Drive, Suite 207 Raleigh, N.C. 27612
N.C.B.E.L.S. License Number: F-0116

REVISIONS								SHEET NO. S-77
NO.	BY:	DATE:	NO.	BY:	DATE:			TOTAL SHEETS 84
1			3					
2			4					

DRAWN BY : R. FRITZ DATE : 01/2012
CHECKED BY : C. ROKICKI DATE : 01/2012

PLOT DRIVEN: NCUU1_pdt_mono_eng_50.pdt
USER: pquinone DATE: 1/12/2012
FILE: \
TIME: 8:52:55 PM

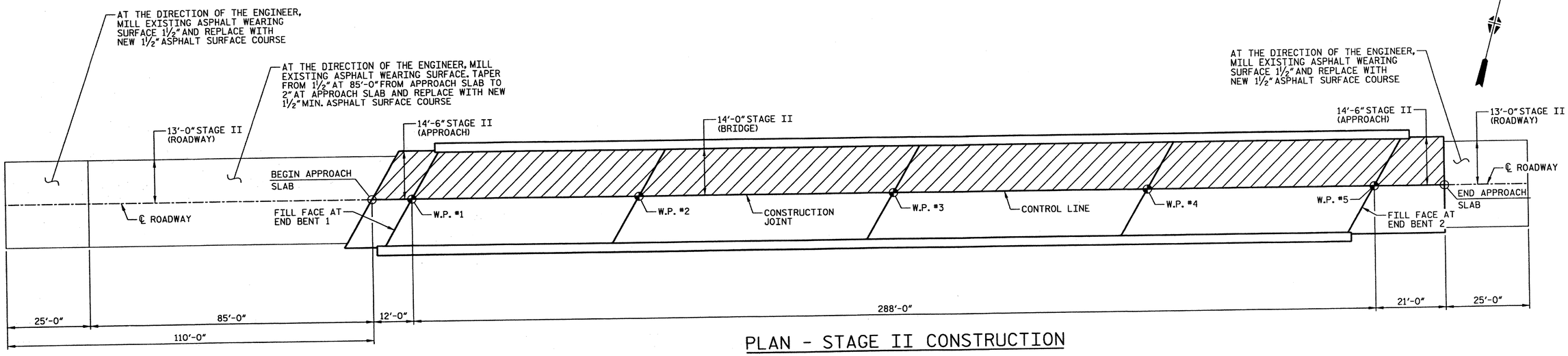

PLAN - STAGE II CONSTRUCTION

DECK SCARIFICATION AND HYDRO-DEMOLITION

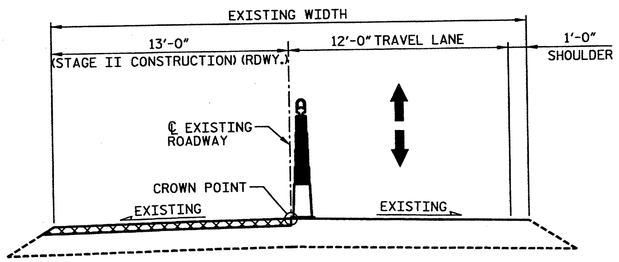

TYPICAL ROADWAY MILLING SECTION - STAGE II

(MILLING DEPTH VARIES, SEE PLAN)

ASPHALT MILLING

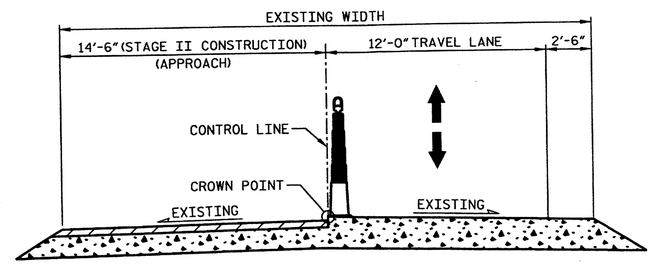

TYPICAL SECTION: APPROACH SLAB SCARIFICATION AND HYDRO-DEMOLITION - STAGE II

APPROACH SLAB SCARIFICATION AND HYDRO-DEMOLITION

C1	PROPOSED VARIABLE DEPTH ASPHALT CONCRETE SURFACE COURSE, TYPE SF9.5A AT AN AVERAGE RATE OF 110 LBS PER SQ. YD. PER 1" DEPTH.

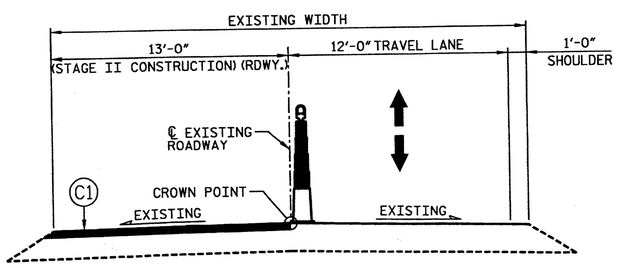

TYPICAL ROADWAY SECTION - STAGE II

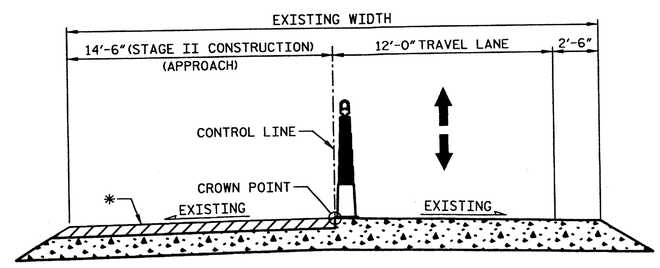

TYPICAL APPROACH SECTION - STAGE II

1½" LATEX MODIFIED CONCRETE-VERY EARLY STRENGTH OVERLAY

* THE FINISHED SURFACE OF THE LATEX MODIFIED CONCRETE - VERY EARLY STRENGTH OVERLAY SHALL BE ½" ABOVE THE ORIGINAL APPROACH SLAB SURFACE.

PROJECT NO. 17BP.4.P.2

NORTHAMPTON COUNTY

BRIDGE NO.: 43

NORTH CAROLINA PROFESSIONAL SEAL 032129 ENGINEER MATTHEW J. MOTKER

1-13-2012

HDR Engineering, Inc. of the Carolinas
3733 National Drive, Suite 207 Raleigh, N.C. 27612
N.C.B.E.L.S. License Number: F-0116

STATE OF NORTH CAROLINA
DEPARTMENT OF TRANSPORTATION
RALEIGH

TYPICAL SECTION, DECK SCARIFICATION & MILLING DETAILS FOR BRIDGE NO. 43 (STAGE II)

REVISIONS						SHEET NO. S-78
NO.	BY:	DATE:	NO.	BY:	DATE:	TOTAL SHEETS 84
1			3			
2			4			

DRAWN BY : R. FRITZ DATE : 01/2012
CHECKED BY : C. ROKICKI DATE : 01/2012

PLOT DRIVER: NCDOT_pdf_mono_eng_50.plt
USER: paulnone DATE: 1/12/2012
TIME: 8:53:01 PM
FILE:

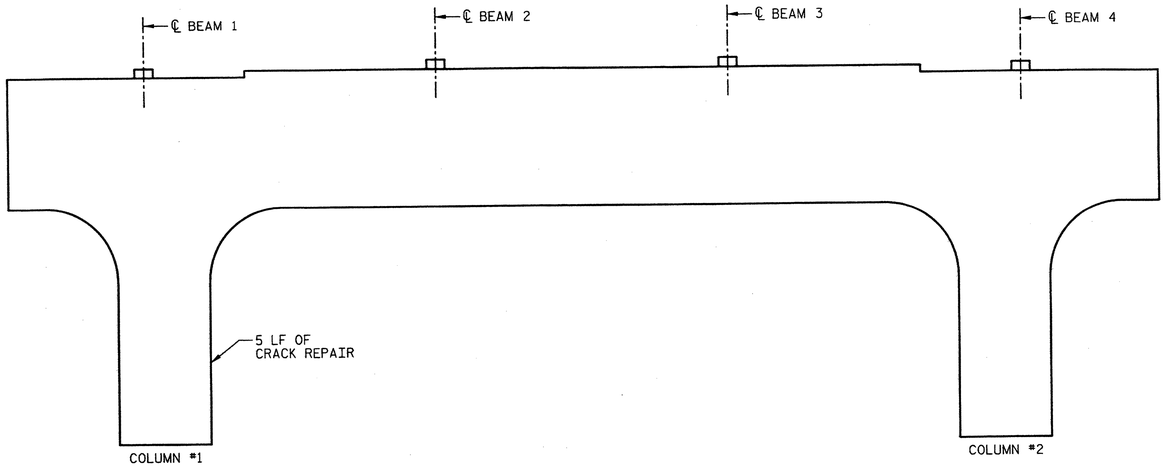

WEST ELEVATION

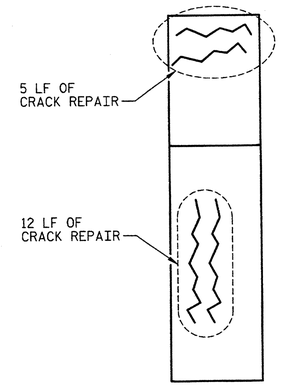

SOUTH END ELEVATION

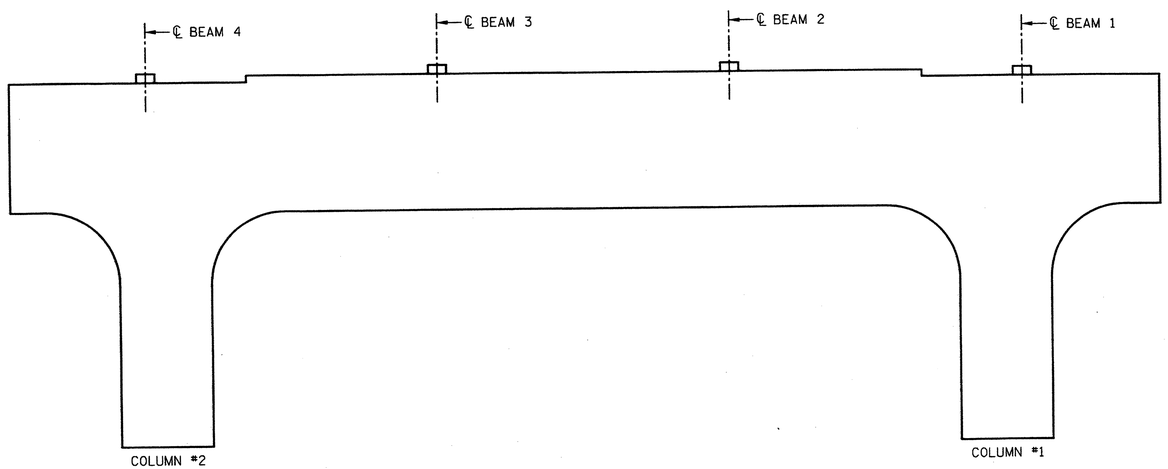

EAST ELEVATION

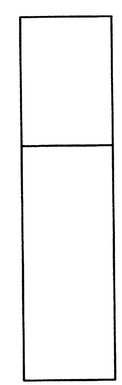

NORTH END ELEVATION

BILL OF MATERIAL

BENT 1

BAR	NO.	SIZE	TYPE	LENGTH
S1	VAR.	#4	1	VARIES
S2	VAR.	#5	2	VARIES
CONCRETE REPAIRS			CF	0
SHOTCRETE REPAIRS			CF	0
EPOXY RESIN INJECTION			LF	22
REINFORCING STEEL			LBS	0

BAR TYPE

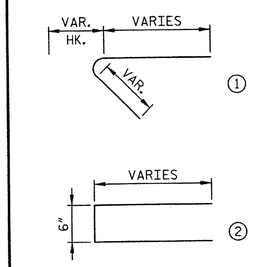

(BAR DIMENSIONS ARE OUT TO OUT)

PROJECT NO. 17BP.4.P.2

NORTHAMPTON COUNTY

BRIDGE NO.: 43

NOTES

THE LOCATION AND EXTENT OF REPAIRS SHOWN ON THE PLANS ARE GENERAL IN NATURE. THE ENGINEER WILL DETERMINE THE EXACT EXTENT OF REMOVAL IN THE FIELD BASED ON AN EVALUATION OF THE CONDITION OF THE EXPOSED SURFACES.

CONSTRUCTION METHODS, PROCEDURES AND SEQUENCES ARE THE CONTRACTOR'S RESPONSIBILITY AND THE CONTRACTOR SHALL TAKE ALL THE NECESSARY MEANS TO MAINTAIN AND PROTECT THE STRUCTURAL INTEGRITY OF ALL CONSTRUCTION AT ALL STAGES.

ANY DISCREPANCIES BETWEEN THE CONSTRUCTION DOCUMENTS AND THE ACTUAL FIELD CONDITIONS SHALL BE REPORTED TO THE ENGINEER.

THE MANUFACTURER'S CERTIFIED DRAWINGS AND SPECIFICATIONS FOR EQUIPMENT ANCHORAGE AND DETAILS SHALL BE SUBMITTED FOR APPROVAL.

FOR CONCRETE REPAIR, SEE SPECIAL PROVISION.

FOR FALSEWORK AND FORMWORK, SEE SPECIAL PROVISION.

FOR CRANE SAFETY, SEE SPECIAL PROVISIONS.

FOR SHOTCRETE REPAIRS, SEE SPECIAL PROVISIONS.

FOR EPOXY RESIN INJECTIONS, SEE SPECIAL PROVISIONS.

FIELD TESTING OF THE ADHESIVELY ANCHORED DOWELS IS NOT REQUIRED.

REPAIR AREAS INACCESSIBLE BY POWER TOOL SHALL BE CLEANED WITH HAND TOOLS.

THE CONTRACTOR SHALL PROTECT THE BEARING FROM SHOTCRETE OVERSPRAY WHEN PERFORMING SHOTCRETE REPAIRS NEAR THE BEAM ENDS.

CONCRETE REPAIR

SHOTCRETE REPAIR

EPOXY RESIN INJECTION OF CRACKS

NORTH CAROLINA PROFESSIONAL SEAL 032129 ENGINEER MATTHEW J. NOTER

1-13-2012

HDR Engineering, Inc. of the Carolinas
3733 National Drive, Suite 207 Raleigh, N.C. 27612
N.C.B.E.L.S. License Number: F-0116

STATE OF NORTH CAROLINA
DEPARTMENT OF TRANSPORTATION
RALEIGH

BENT 1
BRIDGE NO. 43

REVISIONS								SHEET NO. S-79
NO.	BY:	DATE:	NO.	BY:	DATE:			TOTAL SHEETS 84
1			3					
2			4					

DRAWN BY : J. ELLIOTT DATE : 01/2012
CHECKED BY : C. ROKICKI DATE : 01/2012

PLOT DRIVER: NCDOT_pdf_mono_eng_50.plt
USER: pquinone DATE: 1/12/2012
FILE: \
PENTABLE: Division 4_pen_Austin.tbl
TIME: 8:53:07 PM

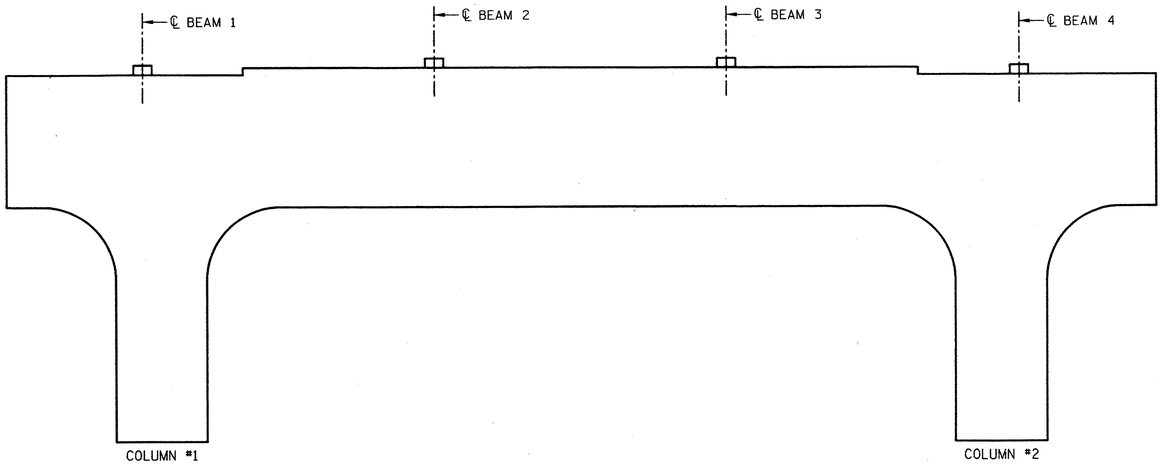

WEST ELEVATION

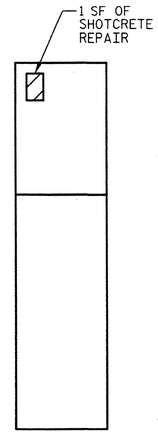

SOUTH END ELEVATION

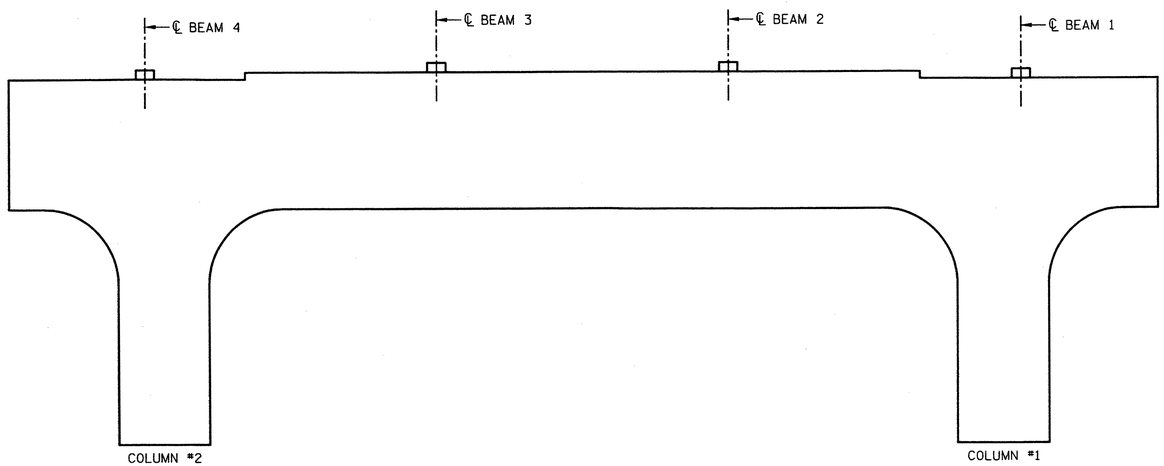

EAST ELEVATION

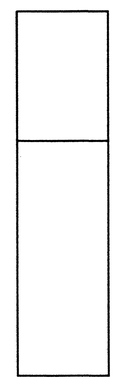

NORTH END ELEVATION

BILL OF MATERIAL

BENT 2

BAR	NO.	SIZE	TYPE	LENGTH
S1	VAR.	#4	1	VARIES
S2	VAR.	#5	2	VARIES
CONCRETE REPAIRS			CF	0
SHOTCRETE REPAIRS			CF	1
EPOXY RESIN INJECTION			LF	0
REINFORCING STEEL			LBS	0

BAR TYPE

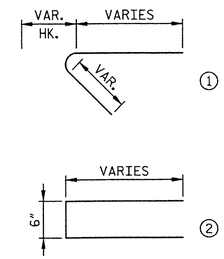

(BAR DIMENSIONS ARE OUT TO OUT)

NOTES

FOR NOTES, SEE DRAWING "BENT 1 BRIDGE NO. 43".

CONCRETE REPAIR

SHOTCRETE REPAIR

EPOXY RESIN INJECTION OF CRACKS

PROJECT NO. 17BP.4.P.2

NORTHAMPTON COUNTY

BRIDGE NO.: 43

STATE OF NORTH CAROLINA
DEPARTMENT OF TRANSPORTATION
RALEIGH

BENT 2
BRIDGE NO. 43

NORTH CAROLINA PROFESSIONAL SEAL 032129 ENGINEER MATTHEW J. MOYER

1-13-2012

REVISIONS							SHEET NO. S-80
NO.	BY:	DATE:	NO.	BY:	DATE:		TOTAL SHEETS 84
1			3				
2			4				

HDR Engineering, Inc. of the Carolinas
3733 National Drive, Suite 207 Raleigh, N.C. 27612
N.C.B.E.L.S. License Number: F-0116

DRAWN BY : J. ELLIOTT DATE : 01/2012
CHECKED BY : C. ROKICKI DATE : 01/2012

PLOT DRIVER: NCDOT_pdf_mono_eng_50.plt
USER: paulmone DATE: 1/12/2012
PENTABLE: DIVISION 4_pen_AUSTIN.TBL
TIME: 8:53:12 PM
FILE: \

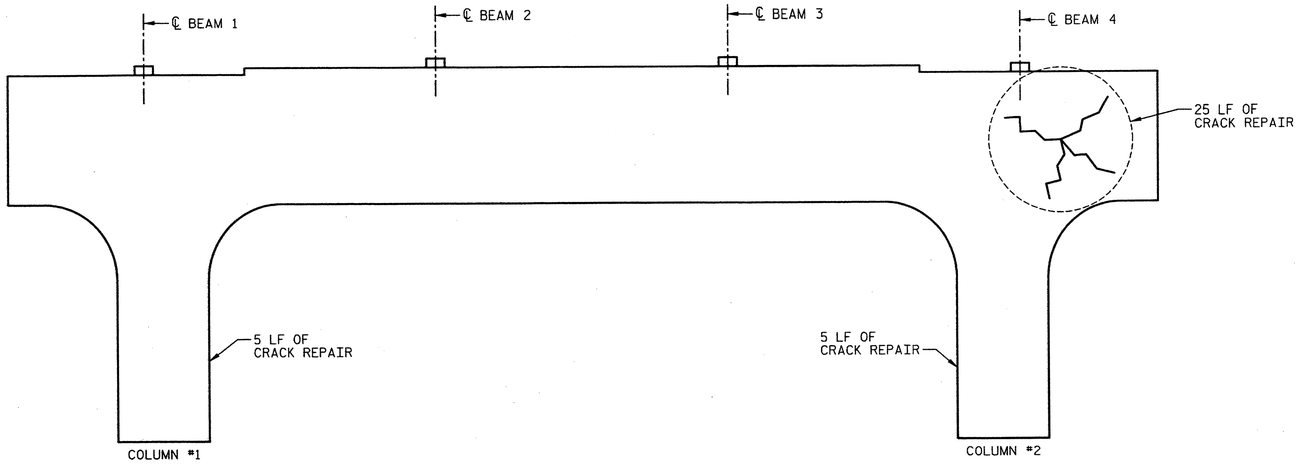

WEST ELEVATION

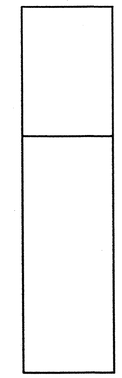

SOUTH END ELEVATION

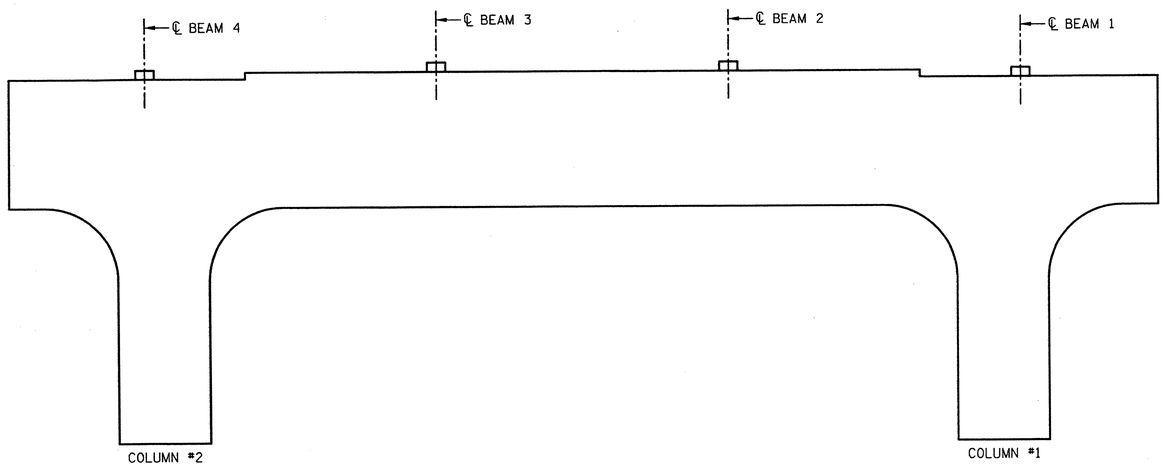

EAST ELEVATION

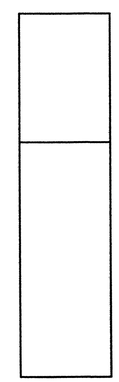

NORTH END ELEVATION

BILL OF MATERIAL

BENT 3

BAR	NO.	SIZE	TYPE	LENGTH
S1	VAR.	#4	1	VARIES
S2	VAR.	#5	2	VARIES
CONCRETE REPAIRS			CF	0
SHOTCRETE REPAIRS			CF	0
EPOXY RESIN INJECTION			LF	35
REINFORCING STEEL			LBS	0

BAR TYPE

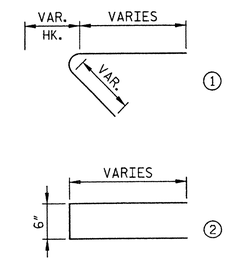

(BAR DIMENSIONS ARE OUT TO OUT)

NOTES

FOR NOTES, SEE DRAWING "BENT 1 BRIDGE NO. 43".

CONCRETE REPAIR

SHOTCRETE REPAIR

EPOXY RESIN INJECTION OF CRACKS

PROJECT NO. 17BP.4.P.2

NORTHAMPTON COUNTY

BRIDGE NO.: 43

NORTH CAROLINA PROFESSIONAL SEAL 032129 ENGINEER MATTHEW J. MOYER

1-13-2012

STATE OF NORTH CAROLINA
DEPARTMENT OF TRANSPORTATION
RALEIGH

BENT 3
BRIDGE NO. 43

REVISIONS						
NO.	BY:	DATE:	NO.	BY:	DATE:	
1			3			
2			4			

SHEET NO. S-81

TOTAL SHEETS 84

HDR Engineering, Inc. of the Carolinas
3733 National Drive, Suite 207 Raleigh, N.C. 27612
N.C.B.E.L.S. License Number: F-0116

DRAWN BY : K. BERGER DATE : 01/2012
CHECKED BY : C. ROKICKI DATE : 01/2012

PLOT DRIVER: NCDOT_pdf_mono_eng_50.plt
USER: paulnone DATE: 1/12/2012
PENTABLE: Division 4_pen_AUSTIN.tbl
TIME: 8:53:16 PM
FILE: \

BILL OF MATERIAL				
END BENT 1				
BAR	NO.	SIZE	TYPE	LENGTH
S1	VAR.	#4	1	VARIES
S2	VAR.	#5	2	VARIES
CONCRETE REPAIRS			CF	0
SHOTCRETE REPAIRS			CF	0
EPOXY RESIN INJECTION			LF	20
REINFORCING STEEL			LBS	0

BAR TYPE

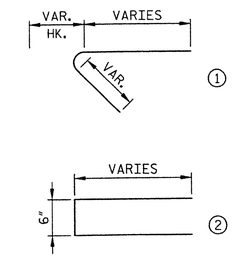

(BAR DIMENSIONS ARE OUT TO OUT)

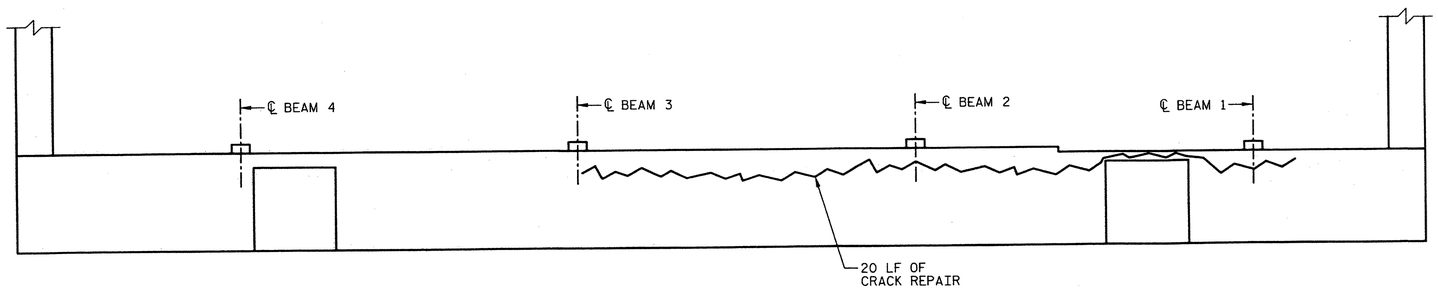

EAST ELEVATION

NOTES

FOR NOTES, SEE DRAWING "BENT 1 BRIDGE NO. 43".

CONCRETE REPAIR

SHOTCRETE REPAIR

EPOXY RESIN INJECTION OF CRACKS

PROJECT NO. 17BP.4.P.2

NORTHAMPTON COUNTY

BRIDGE NO.: 43

NORTH CAROLINA PROFESSIONAL SEAL 032129 ENGINEER MATTHEW J. MOYER

1-13-2012

STATE OF NORTH CAROLINA
DEPARTMENT OF TRANSPORTATION
RALEIGH

END BENT 1
BRIDGE NO. 43

HDR Engineering, Inc. of the Carolinas
3733 National Drive, Suite 207 Raleigh, N.C. 27612
N.C.B.E.L.S. License Number: F-0116

REVISIONS						
NO.	BY:	DATE:	NO.	BY:	DATE:	
1			3			
2			4			

SHEET NO. S-82

TOTAL SHEETS 84

DRAWN BY : J. ELLIOTT DATE : 01/2012
CHECKED BY : C. ROKICKI DATE : 01/2012

PLOT DRIVER: NCDOT_pdf_mono_eng_50.plt
USER: paulnone DATE: 1/12/2012
FILE:
PENTABLE: Division 4_pen_Austin.tbl
TIME: 8:53:21 PM

BILL OF MATERIAL				
END BENT 2				
BAR	NO.	SIZE	TYPE	LENGTH
S1	VAR.	#4	1	VARIES
S2	VAR.	#5	2	VARIES
CONCRETE REPAIRS			CF	0
SHOTCRETE REPAIRS			CF	0
EPOXY RESIN INJECTION			LF	20
REINFORCING STEEL			LBS	0

BAR TYPE

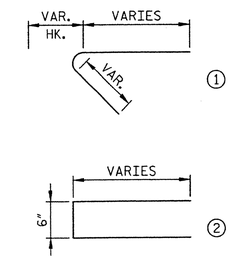

(BAR DIMENSIONS ARE OUT TO OUT)

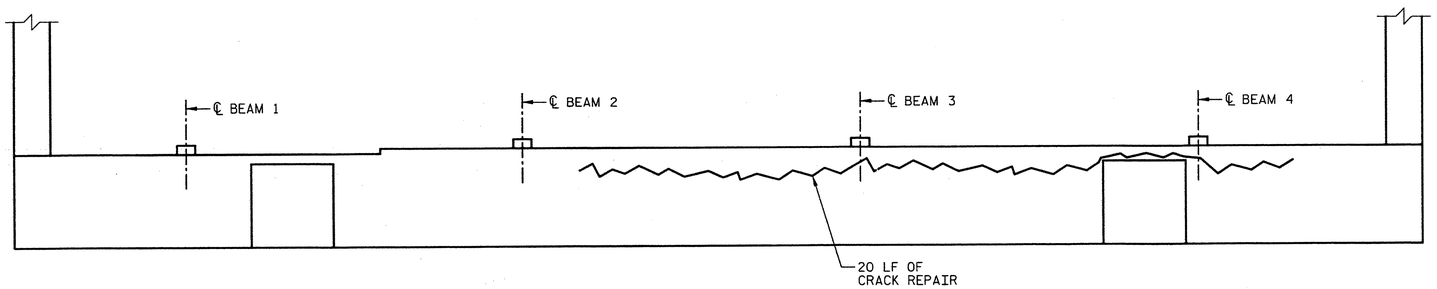

WEST ELEVATION

NOTES

FOR NOTES, SEE DRAWING "BENT 1 BRIDGE NO. 43".

CONCRETE REPAIR

SHOTCRETE REPAIR

EPOXY RESIN INJECTION OF CRACKS

PROJECT NO. 17BP.4.P.2

NORTHAMPTON COUNTY

BRIDGE NO.: 43

STATE OF NORTH CAROLINA
DEPARTMENT OF TRANSPORTATION
RALEIGH

END BENT 2
BRIDGE NO. 43

NORTH CAROLINA PROFESSIONAL SEAL 032129 ENGINEER MATTHEW J. MOYER

1-13-2012

REVISIONS						
NO.	BY:	DATE:	NO.	BY:	DATE:	SHEET NO. S-83
1			3			TOTAL SHEETS 84
2			4			

HDR Engineering, Inc. of the Carolinas
3733 National Drive, Suite 207 Raleigh, N.C. 27612
N.C.B.E.L.S. License Number: F-0116

DRAWN BY : J. ELLIOTT DATE : 01/2012
CHECKED BY : C. ROKICKI DATE : 01/2012

PLOT DRIVER: NJDOT.pdf_mono.pmc.pc3
USER: paulmone DATE: 1/12/2012
FILE: \
TIME: 8:53:26 PM

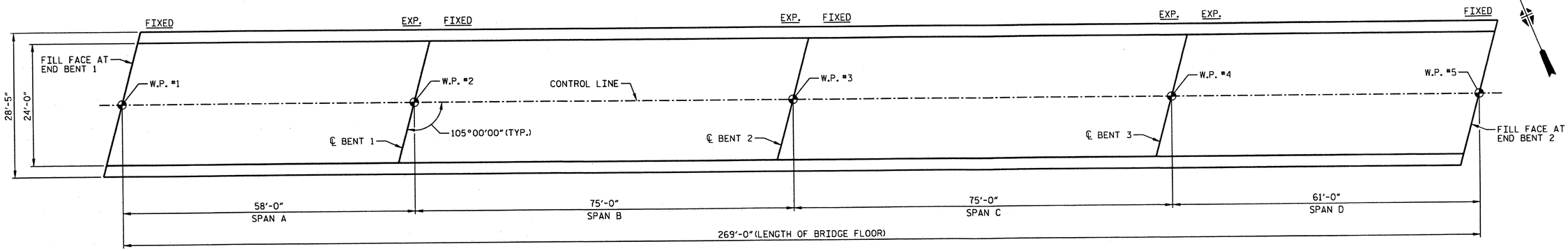

PLAN OF SPANS - DECK REPAIRS

NOTES

FOR REPAIR OF BRIDGE WITH EPOXY AND STONE OVERLAY, SEE SPECIAL PROVISIONS.

FOR FOAM JOINT SEALS, SEE SPECIAL PROVISIONS.

THE NOMINAL UNCOMPRESSED SEAL WIDTH OF THE FOAM JOINT SEAL SHALL BE 2½" AT END BENTS, BENT 1 AND 2, AND 2 13/16" AT BENT 3.

FOR OVER-SAWED JOINTS, THE NOMINAL UNCOMPRESSED SEAL WIDTH OF THE FOAM JOINT SEAL SHALL BE DETERMINED BY THE ENGINEER.

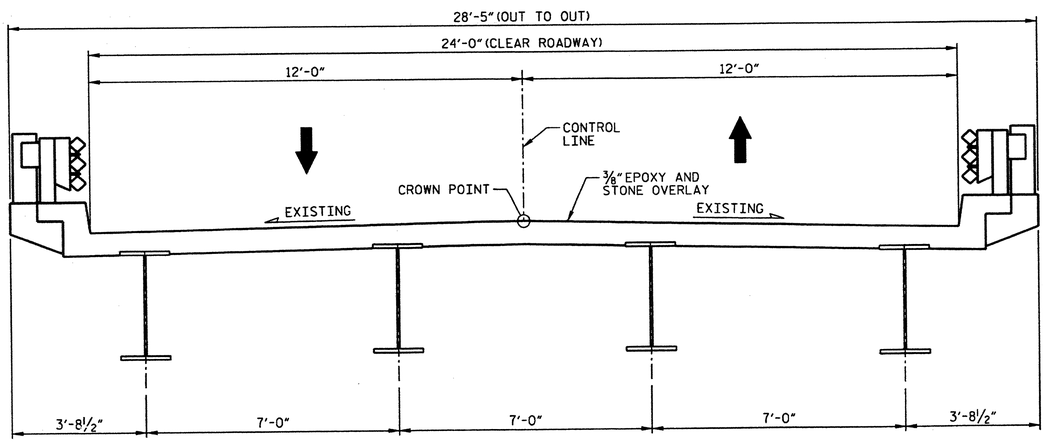

TYPICAL SECTION

SAWED OPENING FOR FOAM JOINT			
BENT NO.	W AT 90° F	W AT 60° F	W AT 45° F
BENT 1	1 11/16"	1⅞"	1 15/16"
BENT 2	1⅝"	1⅞"	2"
BENT 3	1¾"	2⅛"	2 5/16"

TOTAL BILL OF MATERIAL		
PLACEMENT OF EPOXY OVERLAY	FOAM JOINT SEALS	CLASS II CONCRETE DECK REPAIR FOR EPOXY/ASPHALT OVERLAY
SQ. FT.	LUMP SUM	SQ. FT.
6456	LUMP SUM	650

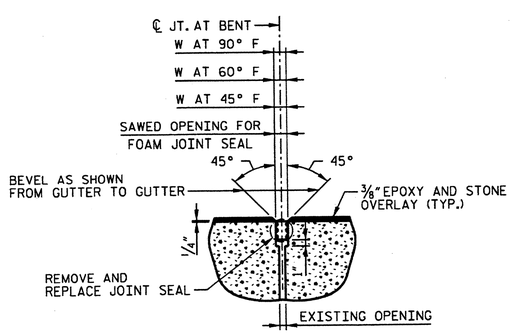

PROPOSED JOINT AT BENTS

FOAM JOINT SEAL EXPANSION

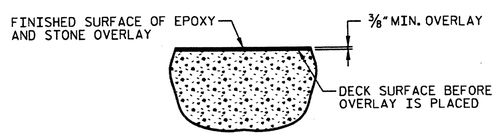

DETAIL FOR EPOXY AND STONE OVERLAY

PROJECT NO. 17BP.4.P.2

NORTHAMPTON COUNTY

BRIDGE NO.: 55

NORTH CAROLINA PROFESSIONAL SEAL 032129 ENGINEER MATTHEW J. MOYER

2-16-12

STATE OF NORTH CAROLINA
DEPARTMENT OF TRANSPORTATION
RALEIGH

EPOXY OVERLAY FOR BRIDGE NO. 55

(SR1202 OVER I95)

REVISIONS						
NO.	BY:	DATE:	NO.	BY:	DATE:	
1			3			
2			4			

SHEET NO. S-84

TOTAL SHEETS 84

HDR Engineering, Inc. of the Carolinas
3733 National Drive, Suite 207 Raleigh, N.C. 27612
N.C.B.E.L. License Number: F-0116

DRAWN BY : A. LICON DATE : 01/2012
CHECKED BY : C. ROKICKI DATE : 01/2012

PLOT DRIVER: NCDOT_pdf_mono_eng_50.plt
USER: lpatters
FILE: North Carolina_Dept_of_Transportation\NCDOT_C_2011_STROSN_OC_TO_2\13.00_CAD\Northampton 55\Drawings\DIV4.1_SD_NORTHAMPTON55_01.dgn
PENTABLE: Division 4_pen_Austin.tbl
DATE: 2/16/2012
TIME: 11:59:28 AM

STATE OF NORTH CAROLINA
DIVISION OF HIGHWAYS

TRAFFIC MANAGEMENT PLAN

HALIFAX, NASH & NORTHAMPTON COUNTIES

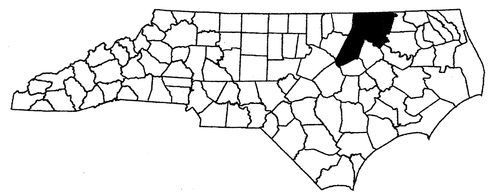

LOCATION: BRIDGE NO. 222 ON I-95 NBL OVER SWIFT CREEK
BRIDGE NO. 223 ON I-95 SBL OVER SWIFT CREEK
BRIDGE NO. 64 ON NC 561 OVER I-95
BRIDGE NO. 107 ON NC 903 OVER I-95
BRIDGE NO. 49 ON NC 481 OVER I-95
BRIDGE NO. 67 ON RINGWOOD RD (SR 1002) OVER I-95
BRIDGE NO. 12 ON I-95 NBL OVER FISHING CREEK
BRIDGE NO. 13 ON I-95 SBL OVER FISHING CREEK
BRIDGE NO. 88 ON HEATHSVILLE RD (SR 1210) OVER I-95
BRIDGE NO. 105 ON AURELIAN SPRINGS RD (SR 1600) OVER I-95
BRIDGE NO. 139 ON I-95 NBL OVER ROANOKE RIVER (HALIFAX CO.)
BRIDGE NO. 141 ON I-95 SBL OVER ROANOKE RIVER (HALIFAX CO.)
BRIDGE NO. 11 ON I-95 SBL OVER ROANOKE RIVER (NORTHAMPTON CO.)
BRIDGE NO. 9 ON I-95 NBL OVER ROANOKE RIVER (NORTHAMPTON CO.)
BRIDGE NO. 41 ON NC 46 OVER I-95
BRIDGE NO. 43 ON NC 48 OVER I-95
BRIDGE NO. 55 ON BLYTHE RD (SR 1202) OVER I-95
(SEE STRUCTURE SHEET 1A FOR VICINITY MAPS)

TYPE OF WORK: BRIDGE PRESERVATION: HYDRO-DEMOLITION, LMC OVERLAY, EPOXY OVERLAY, DECK REPAIRS, DECK CRACK SEALER, & SUBSTRUCTURE REPAIRS

INDEX OF SHEETS

SHEET NO.	TITLE
TMP-1	TITLE SHEET AND INDEX OF SHEETS
TMP-1A	LIST OF APPLICABLE ROADWAY STANDARD DRAWINGS AND LEGEND
TMP-2 & 2A	GENERAL NOTES
TMP-3	BRIDGE NO. 222 - TYPICALS & STAGING
TMP-4	BRIDGE NO. 223 - TYPICALS & STAGING
TMP-5	BRIDGE NO. 64 - TYPICALS & STAGING
TMP-6	BRIDGE NO. 107 - TYPICALS & STAGING
TMP-7	BRIDGE NO. 49 - STAGING
TMP-8	BRIDGE NO. 67 - TYPICALS & STAGING
TMP-9	BRIDGE NO. 12 - TYPICALS & STAGING
TMP-10	BRIDGE NO. 13 - TYPICALS & STAGING
TMP-11	BRIDGE NO. 88 - TYPICALS & STAGING
TMP-12	BRIDGE NO. 105 - TYPICALS & STAGING
TMP-13	BRIDGE NO. 139 - TYPICALS & STAGING
TMP-14	BRIDGE NO. 141 - TYPICALS & STAGING
TMP-15	BRIDGE NO. 11 - TYPICALS & STAGING
TMP-16	BRIDGE NO. 9 - TYPICALS & STAGING
TMP-17	BRIDGE NO. 41 - TYPICALS & STAGING
TMP-18	BRIDGE NO. 43 - TYPICALS & STAGING
TMP-19	BRIDGE NO. 55 - TYPICALS & STAGING

SHEET NO.
TMP-1

17BP.4.P.2

PROJECT:

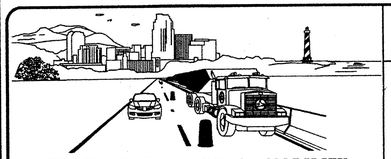

WORK ZONE SAFETY & MOBILITY
"from the MOUNTAINS to the COAST"

N.C.D.O.T. WORK ZONE TRAFFIC CONTROL
1561 MAIL SERVICE CENTER (MSC) RALEIGH, NC 27699-1561
750 N. GREENFIELD PARKWAY, GARNER, NC 27529 (DELIVERY)
PHONE: (919) 773-2800 FAX: (919) 771-2745

J. S. BOURNE, P.E. — STATE TRAFFIC MANAGEMENT ENGINEER
MATTHEW MOYER, P.E. — PROJECT MANAGER
MICHELLE WARD, P.E. — TRAFFIC CONTROL PROJECT DESIGN ENGINEER
CHRIS HARNDEN — TRAFFIC CONTROL DESIGN ENGINEER

DIVISION OF HIGHWAYS · STATE OF NORTH CAROLINA · DEPARTMENT OF TRANSPORTATION · WORK ZONE TRAFFIC CONTROL

PLAN PREPARED BY:
HDR Engineering, Inc. of the Carolinas
3733 National Drive, Suite 207 Raleigh, N.C. 27612
N.C.B.E.L.S. License Number: F-0116

SEAL
NORTH CAROLINA PROFESSIONAL SEAL 033789 ENGINEER MICHELLE WARD
1/12/12

PLOT DRIVER: NCDOT_pdf_color_eng_50.plt
USER: charnden DATE: 1/12/2012
FILE: North Carolina_Dept_of_Transportation\NCDOT_C_2011_STROSN_OC_TO_2\13.00_CAD\TMP\17BP-4-P-2_TMP_TMP-01.dgn
PENTABLE: NCDOT_rcp.tbl
TIME: 5:18:19 PM

PROJ. REFERENCE NO.	SHEET NO.
17BP.4.P.2	TMP-1A

HDR Engineering, Inc. of the Carolinas
3733 National Drive, Suite 207 Raleigh, N.C. 27612
N.C.B.E.L.S. License Number: F-0116

ROADWAY STANDARD DRAWINGS

THE FOLLOWING ROADWAY STANDARDS AS SHOWN IN "ROADWAY STANDARD DRAWINGS" - PROJECT SERVICES UNIT - N.C. DEPARTMENT OF TRANSPORTATION - RALEIGH, N.C., DATED JANUARY 2012 ARE APPLICABLE TO THIS PROJECT AND BY REFERENCE HEREBY ARE CONSIDERED A PART OF THESE PLANS:

STD. NO.	TITLE
1101.01	WORK ZONE ADVANCE WARNING SIGNS
1101.02	TEMPORARY LANE CLOSURES
1101.03	TEMPORARY ROAD CLOSURES
1101.04	TEMPORARY SHOULDER CLOSURES
1101.05	WORK ZONE VEHICLE ACCESSES
1101.11	TRAFFIC CONTROL DESIGN TABLES
1110.01	STATIONARY WORK ZONE SIGNS
1110.02	PORTABLE WORK ZONE SIGNS
1130.01	DRUM
1135.01	CONES
1145.01	BARRICADES
1150.01	FLAGGING DEVICES
1180.01	SKINNY-DRUM
1205.01	PAVEMENT MARKINGS - LINE TYPES AND OFFSETS
1205.02	PAVEMENT MARKINGS - TWO LANE AND MULTILANE ROADWAYS
1205.05	PAVEMENT MARKINGS - TURN LANES
1205.06	PAVEMENT MARKINGS - LANE DROPS
1205.08	PAVEMENT MARKINGS - SYMBOLS AND WORD MESSAGES
1205.12	PAVEMENT MARKINGS - BRIDGES
1250.01	RAISED PAVEMENT MARKERS - INSTALLATION SPACING
1251.01	RAISED PAVEMENT MARKERS - PERMANENT AND TEMPORARY

LEGEND

GENERAL

- DIRECTION OF TRAFFIC FLOW
- DIRECTION OF PEDESTRIAN TRAFFIC FLOW
- EXIST. PVMT.
- NORTH ARROW
- PROPOSED PVMT.
- WORK AREA

TRAFFIC CONTROL DEVICES

- BARRICADE (TYPE III)
- CONE
- DRUM SKINNY DRUM TUBULAR MARKER
- TEMPORARY CRASH CUSHION
- FLASHING ARROW PANEL (TYPE C)
- FLAGGER
- LAW ENFORCEMENT
- TRUCK MOUNTED IMPACT ATTENUATOR (TMIA)
- CHANGEABLE MESSAGE SIGN

TEMPORARY SIGNING

- PORTABLE SIGN
- STATIONARY SIGN
- STATIONARY OR PORTABLE SIGN

SIGNALS

EXISTING PROPOSED TEMPORARY

PAVEMENT MARKINGS

- EXISTING LINES
- TEMPORARY LINES

PAVEMENT MARKERS

- CRYSTAL/CRYSTAL
- CRYSTAL/RED
- YELLOW/YELLOW

PAVEMENT MARKING SYMBOLS

PAVEMENT MARKING SYMBOLS

SEAL

NORTH CAROLINA PROFESSIONAL SEAL 033789 ENGINEER MICHELLE WARD

1/12/12

DIVISION OF HIGHWAYS STATE OF NORTH CAROLINA DEPARTMENT OF TRANSPORTATION WORK ZONE TRAFFIC CONTROL

ROADWAY STANDARD DRAWINGS & LEGEND

PLOT DRIVER: NCDOT_pdf_color_eng_50.plt PENTABLE: NCDOT_tcp.tbl
USER: charnden DATE: 1/12/2012 TIME: 5:18:28 PM
FILE: North Carolina_Dept_of_Transportation\NCDOT_C_2011_STRDSN_OC_TO_2\13.00_CAD\TMP\17BP-4-P-2_TMP_TMP-01.dgn

PROJ. REFERENCE NO.	SHEET NO.
17BP.4.P.2	TMP-2

HDR Engineering, Inc. of the Carolinas
3733 National Drive, Suite 207 Raleigh, N.C. 27612
N.C.B.E.L.S. License Number: F-0116

GENERAL NOTES

CHANGES MAY BE REQUIRED WHEN PHYSICAL DIMENSIONS IN THE DETAIL DRAWINGS, STANDARD DETAILS, AND ROADWAY DETAILS ARE NOT ATTAINABLE TO MEET FIELD CONDITIONS, OR RESULT IN DUPLICATE, OR UNDESIRED OVERLAPPING OF DEVICES. MODIFICATIONS MAY INCLUDE: MOVING, SUPPLEMENTING, COVERING, OR REMOVAL OF DEVICES AS DIRECTED BY THE ENGINEER.

THE FOLLOWING GENERAL NOTES APPLY AT ALL TIMES FOR THE DURATION OF THE PROJECT, EXCEPT WHEN OTHERWISE NOTED IN THE PLAN, OR AS DIRECTED BY THE ENGINEER.

TIME RESTRICTIONS

A) DO NOT CLOSE OR NARROW TRAVEL LANES AS FOLLOWS:

ROAD NAMES	DAY & TIME RESTRICTIONS
I-95	FRIDAY 12:00 P.M. (NOON) TO SUNDAY 12:00 A.M. (MIDNIGHT)

B) DO NOT CLOSE OR NARROW TRAVEL LANES DURING HOLIDAYS AND SPECIAL EVENTS AS FOLLOWS:

ROAD NAMES
ALL ROADS

1) FOR ANY UNEXPECTED OCCURRENCE THAT CREATES UNUSUALLY HIGH TRAFFIC VOLUMES, AS DIRECTED BY THE ENGINEER.

2) FOR NEW YEAR'S, BETWEEN THE HOURS OF 6:30 A.M. DECEMBER 31ST TO 7:00 P.M. JANUARY 2ND. IF NEW YEARS DAY IS ON A FRIDAY, SATURDAY, SUNDAY, OF MONDAY THEN UNTIL 7:00 P.M. THE FOLLOWING TUESDAY.

3) FOR EASTER, BETWEEN THE HOURS OF 6:30 A.M. THURSDAY AND 7:00 P.M. MONDAY.

4) FOR MEMORIAL DAY, BETWEEN THE HOURS OF 6:30 A.M. FRIDAY AND 7:00 P.M. TUESDAY.

5) FOR INDEPENDENCE DAY, BETWEEN THE HOURS OF 6:30 A.M. THE DAY BEFORE INDEPENDENCE DAY AND 7:00 P.M. THE DAY AFTER INDEPENDENCE DAY. IF INDEPENDENCE DAY IS ON A FRIDAY, SATURDAY, SUNDAY, OR MONDAY THEN BETWEEN THE HOURS OF 6:30 A.M. THE THURSDAY BEFORE INDEPENDENCE DAY AND 7:00 P.M. THE TUESDAY AFTER INDEPENDENCE DAY.

6) FOR LABOR DAY, BETWEEN THE HOURS OF 6:30 A.M. FRIDAY AND 7:00 P.M. TUESDAY.

7) FOR THANKSGIVING DAY, BETWEEN THE HOURS OF 6:30 A.M. TUESDAY AND 7:00 P.M. MONDAY.

8) FOR CHRISTMAS, BETWEEN THE HOURS OF 6:30 A.M. THE FRIDAY BEFORE THE WEEK OF CHRISTMAS DAY AND 7:00 P.M. THE FOLLOWING TUESDAY AFTER THE WEEK OF CHRISTMAS.

C) DO NOT STOP TRAFFIC AS FOLLOWS:

ROAD NAME	DAY & TIME RESTRICTIONS	DURATION & OPERATION
I-95	MONDAY THRU THURSDAY: 4:00 A.M. TO MIDNIGHT FRIDAY 4:00 A.M. TO SUNDAY MIDNIGHT	30 MINUTES FOR BRIDGE JACKING OR HYDRO-DEMOLITION

D) DO NOT CONDUCT ANY HAULING OPERATIONS AGAINST THE FLOW OF TRAFFIC OF AN OPEN TRAVELWAY UNLESS THE HAULING OPERATION IS PROTECTED BY BARRIER OR GUARDRAIL OR AS DIRECTED BY THE ENGINEER.

LANE AND SHOULDER CLOSURE REQUIREMENTS

E) REMOVE LANE CLOSURE DEVICES FROM THE LANE WHEN WORK IS NOT BEING PERFORMED BEHIND THE LANE CLOSURE OR WHEN A LANE CLOSURE IS NO LONGER NEEDED, OR AS DIRECTED BY THE ENGINEER.

F) WHEN PERSONNEL AND/OR EQUIPMENT ARE WORKING WITHIN 15 FT. OF AN OPEN TRAVEL LANE, CLOSE THE NEAREST OPEN SHOULDER USING ROADWAY STANDARD DRAWING NO. 1101.04 UNLESS THE WORK AREA IS PROTECTED BY BARRIER OR GUARDRAIL OR A LANE CLOSURE IS INSTALLED.

G) WHEN PERSONNEL AND/OR EQUIPMENT ARE WORKING ON THE SHOULDER ADJACENT TO AN UNDIVIDED FACILITY AND WITHIN 5 FT. OF AN OPEN TRAVEL LANE, CLOSE THE NEAREST OPEN TRAVEL LANE USING ROADWAY STANDARD DRAWING NO. 1101.02 UNLESS THE WORK AREA IS PROTECTED BY BARRIER OR GUARDRAIL.

WHEN PERSONNEL AND/OR EQUIPMENT ARE WORKING ON THE SHOULDER ADJACENT TO A DIVIDED FACILITY AND WITHIN 10 FT. OF AN OPEN TRAVEL LANE, CLOSE THE NEAREST OPEN TRAVEL LANE USING ROADWAY STANDARD DRAWING NO. 1101.02 UNLESS THE WORK AREA IS PROTECTED BY BARRIER OR GUARDRAIL.

H) WHEN PERSONNEL AND/OR EQUIPMENT ARE WORKING WITHIN A LANE OF TRAVEL OF AN UNDIVIDED OR DIVIDED FACILITY, CLOSE THE LANE ACCORDING TO THE TRAFFIC CONTROL PLANS, ROADWAY STANDARD DRAWINGS, OR AS DIRECTED BY THE ENGINEER. CONDUCT THE WORK SO THAT ALL PERSONNEL AND/OR EQUIPMENT REMAIN WITHIN THE CLOSED TRAVEL LANE.

I) DO NOT WORK SIMULTANEOUSLY WITHIN 15 FT. ON BOTH SIDES OF AN OPEN TRAVELWAY RAMP OR LOOP WITHIN THE SAME LOCATION UNLESS PROTECTED WITH BARRIER OR GUARDRAIL.

J) DO NOT INSTALL MORE THAN TWO MILES OF LANE CLOSURE ON I-95 MEASURED FROM THE BEGINNING OF THE MERGE TAPER TO THE END OF THE LANE CLOSURE.

K) DO NOT INSTALL MORE THAN TWO LANE CLOSURES IN ANY ONE DIRECTION ON I-95.

PAVEMENT EDGE DROP OFF REQUIREMENTS

L) BACKFILL AT A 6:1 SLOPE UP TO THE EDGE AND ELEVATION OF EXISTING PAVEMENT IN AREA ADJACENT TO AN OPEN TRAVEL LANE THAT HAS AN EDGE OF PAVEMENT DROP-OFF AS FOLLOWS:

BACKFILL DROP-OFFS THAT EXCEED 2 INCHES ON ROADWAYS WITH POSTED SPEED LIMITS OF 45 MPH OR GREATER.

BACKFILL DROP-OFFS THAT EXCEED 3 INCHES ON ROADWAYS WITH POSTED SPEED LIMITS LESS THAN 45 MPH.

BACKFILL WITH SUITABLE COMPACTED MATERIAL, AS APPROVED BY THE ENGINEER, AT NO EXPENSE TO THE DEPARTMENT.

M) DO NOT EXCEED A DIFFERENCE OF 2 INCHES IN ELEVATION BETWEEN OPEN LANES OF TRAFFIC FOR NOMINAL LIFTS OF 1.5 INCHES. INSTALL ADVANCE WARNING "UNEVEN LANES" SIGNS (W8-11) 500 FT. IN ADVANCE AND A MINIMUM OF ONCE EVERY HALF MILE THROUGHOUT THE UNEVEN AREA.

TRAFFIC PATTERN ALTERATIONS

N) NOTIFY THE ENGINEER TWENTY ONE (21) CALENDAR DAYS PRIOR TO ANY TRAFFIC PATTERN ALTERATION.

SEAL
NORTH CAROLINA PROFESSIONAL SEAL 033789 ENGINEER MICHELLE WARD
2/16/12

DIVISION OF HIGHWAYS
STATE OF NORTH CAROLINA
DEPARTMENT OF TRANSPORTATION
WORK ZONE TRAFFIC CONTROL

GENERAL NOTES
(SHEET 1 OF 2)

PLOT DRIVER: NCDOT_pdf_color_eng.50.plt PENTABLE: NCDOT_top.tbl
USER: swather DATE: 2/16/2012 TIME: 9:06:26 AM
FILE: North Carolina_Dept_of_Transportation\NCDOT_C_2011_STRDSN_OC_TO_2\13.00_CAD\TMP\17BP-4-P-2_TMP_TMP-02.dgn

PROJ. REFERENCE NO.	SHEET NO.
17BP.4.P.2	TMP-2A

HDR Engineering, Inc. of the Carolinas
3733 National Drive, Suite 207 Raleigh, N.C. 27612
N.C.B.E.L.S. License Number: F-0116

GENERAL NOTES

SIGNING

O) INSTALL ADVANCE WORK ZONE SIGNS WHEN WORK IS WITHIN 40 FT. FROM THE EDGE OF TRAVEL LANE AND NO MORE THAT THREE (3) DAYS PRIOR TO THE BEGINNING OF CONSTRUCTION.

P) PROVIDE SIGNING AND DEVICES REQUIRED TO CLOSE THE ROAD ACCORDING TO THE ROADWAY STANDARD DRAWINGS AND TRAFFIC CONTROL PLANS.

Q) COVER OR REMOVE ALL SIGNS AND DEVICES REQUIRED TO CLOSE THE ROAD WHEN ROAD CLOSURE IS NOT IN OPERATION.

R) ENSURE ALL NECESSARY SIGNING IS IN PLACE PRIOR TO ALTERING ANY TRAFFIC PATTERN.

TRAFFIC CONTROL DEVICES

S) WHEN LANE CLOSURES ARE NOT IN EFFECT SPACE CHANNELIZING DEVICES IN WORK AREAS NO GREATER IN FEET THAN TWICE THE POSTED SPEED LIMIT (MPH) EXCEPT, 10 FT ON-CENTER IN RADII, AND 3 FT OFF THE EDGE OF AN OPEN TRAVELWAY. REFER TO STANDARD SPECIFICATIONS FOR ROADS AND STRUCTURES SECTIONS 1130 (DRUMS), 1135 (CONES) AND 1180 (SKINNY DRUMS) FOR ADDITIONAL REQUIREMENTS.

T) PLACE TYPE III BARRICADES, WITH "ROAD CLOSED" SIGN R11-2 ATTACHED, OF SUFFICIENT LENGTH TO CLOSE THE ENTIRE ROADWAY.

U) PLACE ADDITIONAL SETS OF THREE CHANNELIZING DEVICES PERPENDICULAR TO THE EDGE OF TRAVELWAY ON 500 FT. CENTERS WHEN UNOPENED LANES ARE CLOSED TO TRAFFIC.

PAVEMENT MARKINGS AND MARKERS

V) INSTALL FINAL PAVEMENT MARKINGS AND PAVEMENT MARKERS AS FOLLOWS:

ROAD NAME	MARKING	MARKER
I-95	POLYUREA	PERMANENT RAISED
ALL OTHER ROADS	POLYUREA (ON CONCRETE) PAINT (2X) (ON ASPHALT)	PERMANENT RAISED

W) INSTALL TEMPORARY PAVEMENT MARKINGS AND TEMPORARY PAVEMENT MARKERS AS FOLLOWS:

ROAD NAME	MARKING	MARKER
ALL ROADS	PAINT	NONE

X) TIE PROPOSED MARKING LINES TO EXISTING PAVEMENT MARKING LINES.

Y) REMOVE/REPLACE ANY CONFLICTING OR DAMAGED PAVEMENT MARKINGS AND MARKERS BY THE END OF EACH DAY'S OPERATIONS, WITH ONE APPLICATION OF PAINT.

MISCELLANEOUS

Z) LAW ENFORCEMENT MAY BE USED TO MAINTAIN TRAFFIC THROUGH THE WORK AREA, INCLUDING ROADS UNDER BRIDGES, AND/OR INTERSECTIONS, AS DIRECTED BY THE ENGINEER.

AA) DO NOT ALLOW WATER AND CONCRETE SLURRY FROM HYDRO-DEMOLITION TO DRAIN ACROSS TRAVEL LANES.

BB) COMPLETE PROPOSED CONSTRUCTION IN SUCH A MANNER THAT PONDING OF WATER WILL NOT OCCUR IN THE TRAVEL LANES.

SEAL NORTH CAROLINA PROFESSIONAL SEAL 033789 ENGINEER MICHELLE WARD 2/16/12

DIVISION OF HIGHWAYS STATE OF NORTH CAROLINA DEPARTMENT OF TRANSPORTATION WORK ZONE TRAFFIC CONTROL

GENERAL NOTES
(SHEET 2 OF 2)

PLOT DRIVER: NCDOT_pdf_color_eng_50.plt PENTABLE: NCDOT_top.tbl
USER: sweather DATE: 2/16/2012 TIME: 9:06:35 AM
FILE: North Carolina_Dept_of_Transportation\NCDOT_C_2011_STRDSN_OC_TO_2\13.00_CAD\TMP\17BP-4-P-2_TMP_TMP-02.dgn

PROJ. REFERENCE NO.	SHEET NO.
17BP.4.P.2	TMP-3

HDR Engineering, Inc. of the Carolinas
3733 National Drive, Suite 207 Raleigh, N.C. 27612
N.C.B.E.L.S. License Number: F-0116

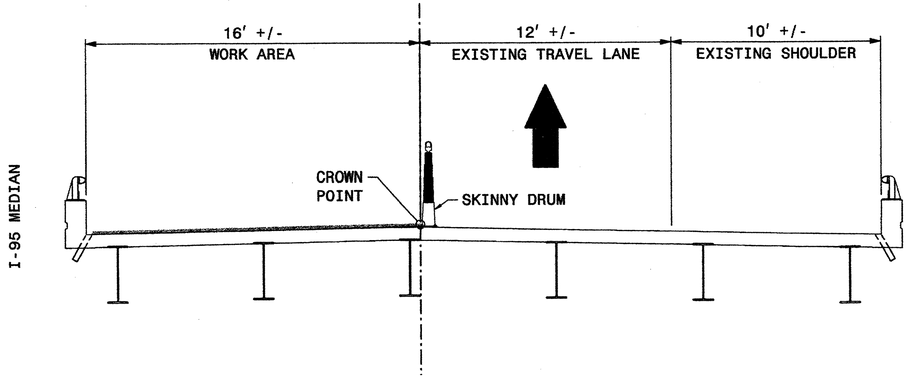

TYPICAL SECTION - STAGE I

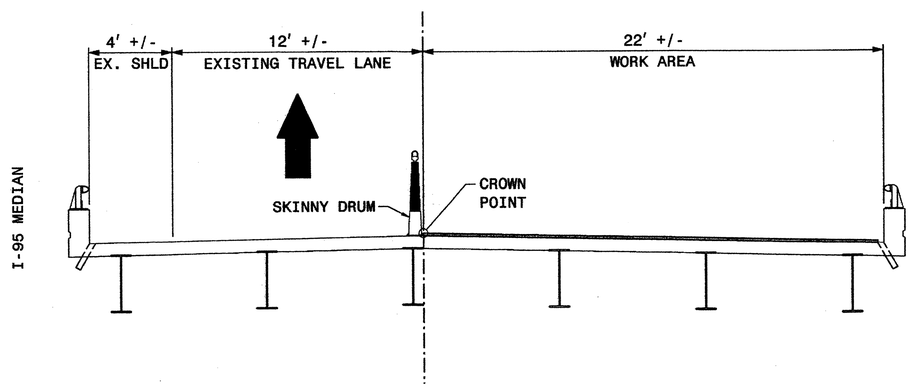

TYPICAL SECTION - STAGE II

TRAFFIC CONTROL STAGING

NOTE: AT THE END OF THE WORK DAY, REMOVE ALL TRAFFIC CONTROL DEVICES, COVER OR REMOVE ALL ADVANCED TRAFFIC CONTROL SIGNS FOR THE LANE CLOSURE OPERATION, AND RETURN TRAFFIC TO ITS EXISTING PATTERN.

STAGE I:

STEP 1: USING THIS SHEET AND RSD 1101.02, SHEET 4 OF 15, COMPLETE BRIDGE WORK ON THE INSIDE OF THE BRIDGE.

STAGE II:

STEP 1: USING THIS SHEET AND RSD 1101.02, SHEET 4 & 9 OF 15, COMPLETE BRIDGE WORK ON THE OUTSIDE OF THE BRIDGE.

STEP 2: USING RSD 1101.02, SHEET 4 OF 15, COMPLETE ROADWAY APPROACH WORK.

STEP 3: USING RSD 1101.02, SHEET 4 & 9 OR 13 OF 15, PLACE TEMPORARY MARKINGS AND OPEN TO TRAFFIC.

STEP 4: USING RSD 1101.02, SHEET 4 & 9 OR 13 OF 15, PLACE FINAL MARKINGS & MARKERS AND OPEN TO TRAFFIC, THEN REMOVE ALL REMAINING TRAFFIC CONTROL DEVICES.

SEAL

NORTH CAROLINA PROFESSIONAL SEAL 033789 ENGINEER MICHELLE WARD

1/12/12

DIVISION OF HIGHWAYS STATE OF NORTH CAROLINA DEPARTMENT OF TRANSPORTATION WORK ZONE TRAFFIC CONTROL

NASH CO.
BRIDGE NO. 222
(I-95N OVER SWIFT CREEK)
TYPICALS & STAGING

REVISIONS

PLOT DRIVER: NCDOT_pdf_color_eng_50.plt
USER: charnden
FILE: North Carolina_Dept_of_Transportation\NCDOT_C_2011_STRDSN_OC_TO_2\13.00_CAD\TMP\17BP-4-P-2_TMP_TMP-03.dgn
PENTABLE: NCDOT_tcp.tbl
DATE: 1/12/2012
TIME: 5:18:55 PM

PROJ. REFERENCE NO.	SHEET NO.
17BP.4.P.2	TMP-4

HDR Engineering, Inc. of the Carolinas
3733 National Drive, Suite 207 Raleigh, N.C. 27612
N.C.B.E.L.S. License Number: F-0116

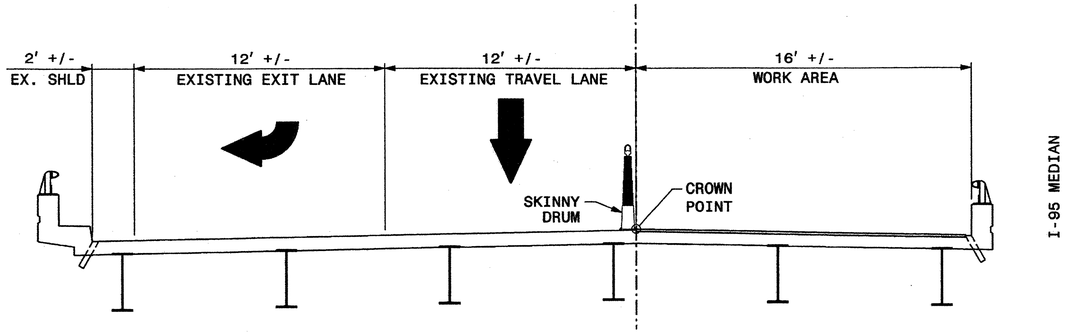

TYPICAL SECTION - STAGE I

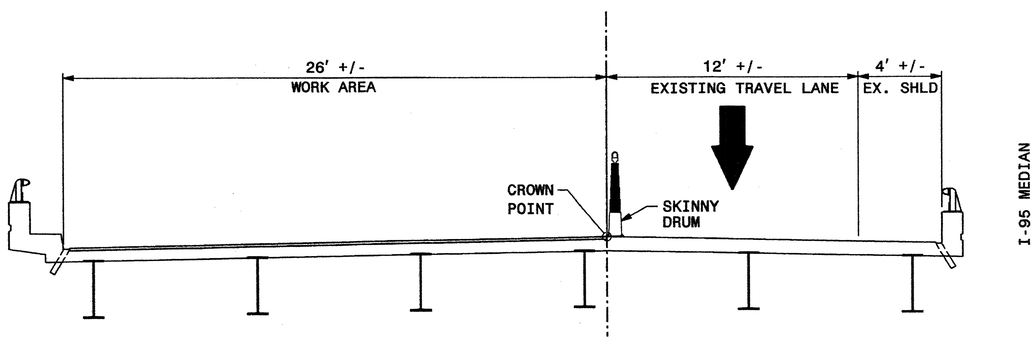

TYPICAL SECTION - STAGE II

TRAFFIC CONTROL STAGING

NOTE: AT THE END OF THE WORK DAY, REMOVE ALL TRAFFIC CONTROL DEVICES, COVER OR REMOVE ALL ADVANCED TRAFFIC CONTROL SIGNS FOR THE LANE CLOSURE OPERATION, AND RETURN TRAFFIC TO ITS EXISTING PATTERN.

STAGE I:

STEP 1: USING THIS SHEET AND RSD 1101.02, SHEET 4 OF 15, COMPLETE BRIDGE WORK ON THE INSIDE OF THE BRIDGE.

STAGE II:

STEP 1: USING THIS SHEET AND RSD 1101.02, SHEET 4 & 10 OF 15, COMPLETE BRIDGE WORK ON THE OUTSIDE OF THE BRIDGE.

STEP 2: USING RSD 1101.02, SHEET 4 & 10 OF 15, COMPLETE ROADWAY APPROACH WORK.

STEP 3: USING RSD 1101.02, SHEET 4 & 10 OR 13 OF 15, PLACE TEMPORARY MARKINGS AND OPEN TO TRAFFIC.

STEP 4: USING RSD 1101.02, SHEET 4 & 10 OR 13 OF 15, PLACE FINAL MARKINGS AND MARKERS AND OPEN TO TRAFFIC, THEN REMOVE ALL REMAINING TRAFFIC CONTROL DEVICES.

SEAL

NORTH CAROLINA PROFESSIONAL SEAL 033789 ENGINEER MICHELLE WARD

1/12/12

DIVISION OF HIGHWAYS STATE OF NORTH CAROLINA DEPARTMENT OF TRANSPORTATION WORK ZONE TRAFFIC CONTROL

NASH CO.
BRIDGE NO. 223
(I-95S OVER SWIFT CREEK)
TYPICALS & STAGING

REVISIONS

PLOT DRIVER: NCDOT.pdf.color_eng.50.plt PENTABLE: NCDOT_tcp.tbl
USER: charnden DATE: 1/12/2012 TIME: 5:33:18 PM
FILE: North Carolina.Dept.of.Transportation\NCDOT_C.2011.STRDSN.OC.TO.2\13.00.CAD\TMP\17BP-4-P-2.TMP.TMP-04.dgn

PROJ. REFERENCE NO.	SHEET NO.
17BP.4.P.2	TMP-5

HDR Engineering, Inc. of the Carolinas
3733 National Drive, Suite 207 Raleigh, N.C. 27612
N.C.B.E.L.S. License Number: F-0116

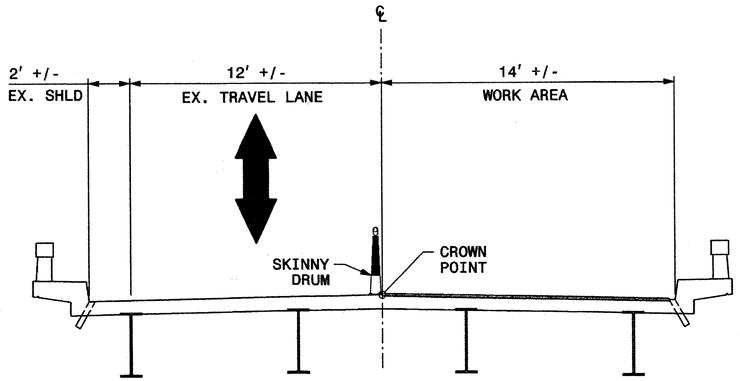

TYPICAL SECTION - STAGE I

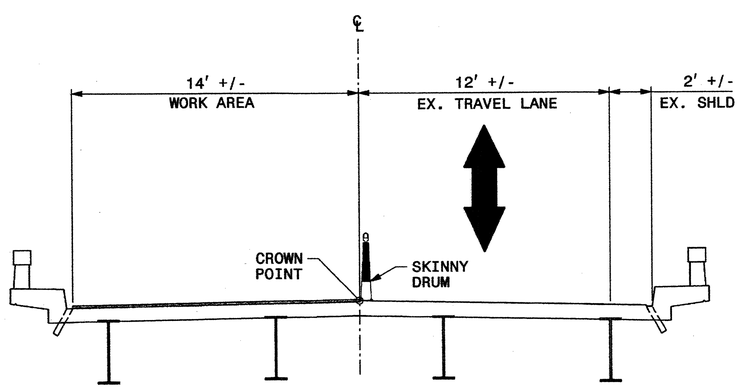

TYPICAL SECTION - STAGE II

TRAFFIC CONTROL STAGING

NOTE: AT THE END OF THE WORK DAY, REMOVE ALL TRAFFIC CONTROL DEVICES, COVER OR REMOVE ALL ADVANCED TRAFFIC CONTROL SIGNS FOR THE LANE CLOSURE OPERATION, AND RETURN TRAFFIC TO ITS EXISTING PATTERN.

STAGE I:

STEP 1: USING THIS SHEET AND RSD 1101.02, SHEET 1 OF 15, COMPLETE BRIDGE WORK ON ONE SIDE OF THE BRIDGE.

USING RSD 1101.02, SHEET 4, 9 & 10 OR 6 OF 15 AND RSD 1101.04 ON I-95, COMPLETE SUBSTRUCTURE REPAIRS.

STAGE II:

STEP 1: USING THIS SHEET AND RSD 1101.02, SHEET 1 OF 15, COMPLETE BRIDGE WORK ON THE OTHER SIDE OF THE BRIDGE.

STEP 2: USING RSD 1101.02, SHEET 1 OF 15, COMPLETE ROADWAY APPROACH WORK.

STEP 3: USING RSD 1101.02, SHEET 1 OR 11 OF 15, PLACE TEMPORARY MARKINGS, AND OPEN TO TRAFFIC.

STEP 4: USING RSD 1101.02, SHEET 1 OR 11 OF 15, PLACE FINAL MARKINGS AND MARKERS, OPEN TO TRAFFIC, THEN REMOVE ALL REMAINING TRAFFIC CONTROL DEVICES.

SEAL

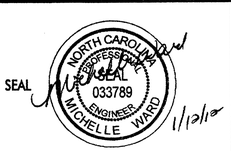

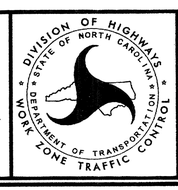

HALIFAX CO.
BRIDGE NO. 64
(NC 561 OVER I-95)
TYPICALS & STAGING

REVISIONS

PLOT DRIVER: NCDOT.pdf.color_eng_50.plt PENTABLE: NCDOT_tcp.tbl
USER: charnden DATE: 1/12/2012 TIME: 5:19:15 PM
FILE: North Carolina.Dept_of_Transportation\NCDOT_C.2011.STRDSN.OC.TO.2\13.00.CAD\TMP\17BP-4-P-2.TMP.TMP-05.dgn

PROJ. REFERENCE NO.	SHEET NO.
17BP.4.P.2	TMP-6

HDR Engineering, Inc. of the Carolinas
3733 National Drive, Suite 207 Raleigh, N.C. 27612
N.C.B.E.L.S. License Number: F-0116

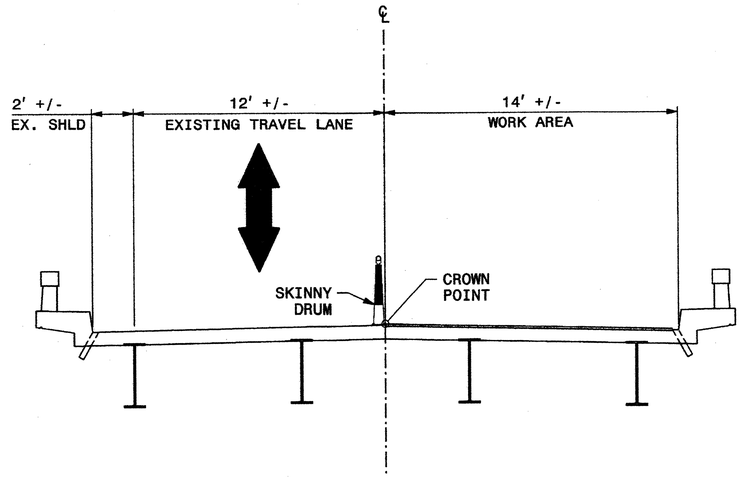

TYPICAL SECTION - STAGE I

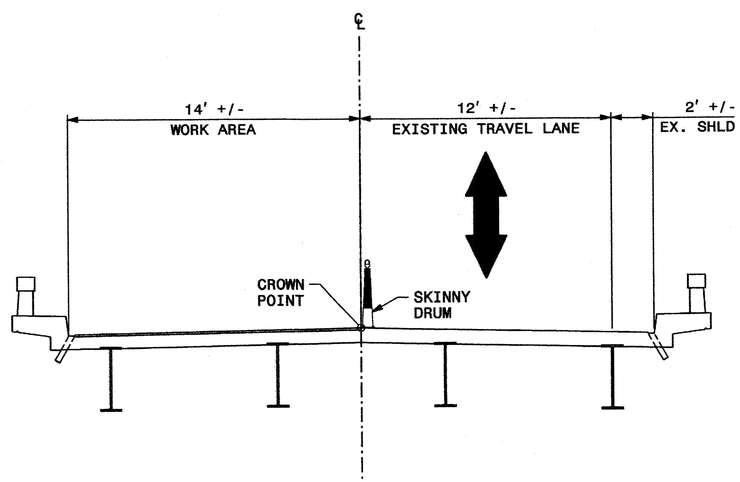

TYPICAL SECTION - STAGE II

TRAFFIC CONTROL STAGING

NOTE: AT THE END OF THE WORK DAY, REMOVE ALL TRAFFIC CONTROL DEVICES, COVER OR REMOVE ALL ADVANCED TRAFFIC CONTROL SIGNS FOR THE LANE CLOSURE OPERATION, AND RETURN TRAFFIC TO ITS EXISTING PATTERN.

STAGE I:

STEP 1: USING THIS SHEET AND RSD 1101.02, SHEET 1 OF 15, COMPLETE BRIDGE WORK ON ONE SIDE OF THE BRIDGE.

USING RSD 1101.02, SHEET 4, 9 & 10 OR 6 OF 15 AND RSD 1101.04 ON I-95, COMPLETE SUBSTRUCTURE REPAIRS.

STAGE II:

STEP 1: USING THIS SHEET AND RSD 1101.02, SHEET 1 OF 15, COMPLETE BRIDGE WORK ON THE OTHER SIDE OF THE BRIDGE.

STEP 2: USING RSD 1101.02, SHEET 1 OF 15, COMPLETE ROADWAY APPROACH WORK.

STEP 3: USING RSD 1101.02, SHEET 1 OR 11 OF 15, PLACE TEMPORARY MARKINGS, AND OPEN TO TRAFFIC.

STEP 4: USING RSD 1101.02, SHEET 1 OR 11 OF 15, PLACE FINAL MARKINGS AND MARKERS AND OPEN TO TRAFFIC, THEN REMOVE ALL REMAINING TRAFFIC CONTROL DEVICES.

SEAL

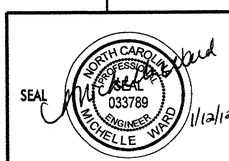

HALIFAX CO.
BRIDGE NO. 107
(NC 903 OVER I-95)
TYPICALS & STAGING

REVISIONS

PLOT DRIVER: NCDOT_pdf_color_eng_50.plt PENTABLE: NCDOT_tcp.tbl
USER: charnden DATE: 1/12/2012 TIME: 5:19:25 PM
FILE: North Carolina_Dept_of_Transportation\NCDOT_C_2011_STRDSN_OC_TO_2\13.00_CAD\TMP\17BP-4-P-2_TMP_TMP-06.dgn

PROJ. REFERENCE NO.	SHEET NO.
17BP.4.P.2	TMP-7

HDR Engineering, Inc. of the Carolinas
3733 National Drive, Suite 207 Raleigh, N.C. 27612
N.C.B.E.L.S. License Number: F-0116

TRAFFIC CONTROL STAGING

NOTE: AT THE END OF THE WORK DAY, REMOVE ALL TRAFFIC CONTROL DEVICES, COVER OR REMOVE ALL ADVANCED TRAFFIC CONTROL SIGNS FOR THE LANE CLOSURE OPERATION, AND RETURN TRAFFIC TO ITS EXISTING PATTERN.

STAGE I:

STEP 1: USING ONE OF THE FOLLOWING ON I-95, COMPLETE THE SUBSTRUCTURE WORK ON THE BRIDGE:

RSD 1101.04
RSD 1101.02, SHEET 4, 9 & 10 OF 15
RSD 1101.02, SHEET 6 OF 15

SEAL

NORTH CAROLINA PROFESSIONAL SEAL 033789 ENGINEER MICHELLE WARD

1/12/12

DIVISION OF HIGHWAYS
STATE OF NORTH CAROLINA
DEPARTMENT OF TRANSPORTATION
WORK ZONE TRAFFIC CONTROL

HALIFAX CO.
BRIDGE NO. 49
(NC 481 OVER I-95)
STAGING

REVISIONS

PLOT DRIVER: NCDOT_pdf_color_eng_50.plt PENTABLE: NCDOT_tcp.tbl
USER: charnden DATE: 1/12/2012 TIME: 5:19:35 PM
FILE: North Carolina_Dept_of_Transportation\NCDOT_C_2011_STRDSN_OC_TO_2\13.00_CAD\TMP\17BP-4-P-2_TMP_TMP-07.dgn

PROJ. REFERENCE NO.	SHEET NO.
17BP.4.P.2	TMP-8

HDR Engineering, Inc. of the Carolinas
3733 National Drive, Suite 207 Raleigh, N.C. 27612
N.C.B.E.L.S. License Number: F-0116

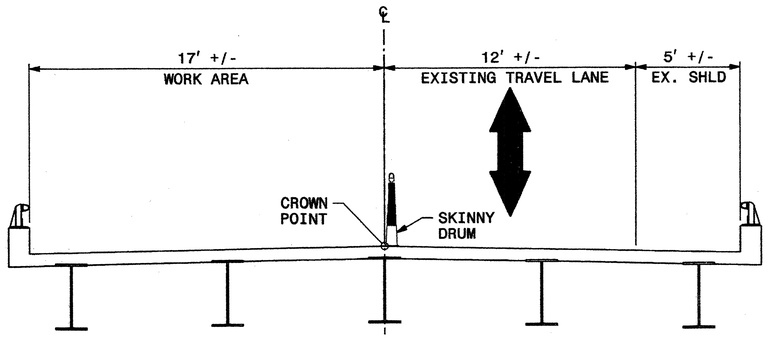

TYPICAL SECTION - STAGE I

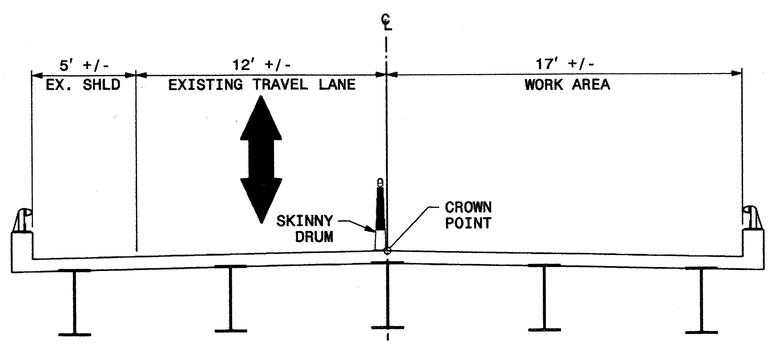

TYPICAL SECTION - STAGE II

TRAFFIC CONTROL STAGING

NOTE: AT THE END OF THE WORK DAY, REMOVE ALL TRAFFIC CONTROL DEVICES, COVER OR REMOVE ALL ADVANCED TRAFFIC CONTROL SIGNS FOR THE LANE CLOSURE OPERATION, AND RETURN TRAFFIC TO ITS EXISTING PATTERN.

STAGE I:

STEP 1: USING THIS SHEET AND RSD 1101.02, SHEET 1 OF 15, COMPLETE BRIDGE WORK ON ONE SIDE OF THE BRIDGE.

STEP 2: USING ONE THE FOLLOWING, COMPLETE SUBSTRUCTURE REPAIRS:

I-95
RSD 1101.02, SHEET 4 OF 15
RSD 1101.04
RSD 1101.03, SHEET 9 OF 9 (SEE GENERAL NOTE C, TMP-2)

RINGWOOD RD (SR 1002)
RSD 1101.03, SHEET 8 OF 9 (FOR JACKING)

STAGE II:

STEP 1: USING THIS SHEET AND RSD 1101.02, SHEET 1 OF 15, COMPLETE BRIDGE WORK ON THE OTHER SIDE OF THE BRIDGE.

STEP 2: USING RSD 1101.02, SHEET 1 OF 15, COMPLETE ROADWAY APPROACH WORK.

STEP 3: USING RSD 1101.02, SHEET 1 OR 11 OF 15, PLACE TEMPORARY MARKINGS, AND OPEN TO TRAFFIC.

STEP 4: USING RSD 1101.02, SHEET 1 OR 11 OF 15, PLACE FINAL MARKINGS AND MARKERS AND OPEN TO TRAFFIC, THEN REMOVE ALL REMAINING TRAFFIC CONTROL DEVICES.

SEAL
NORTH CAROLINA PROFESSIONAL SEAL 033789 ENGINEER MICHELLE WARD
1/12/12

DIVISION OF HIGHWAYS STATE OF NORTH CAROLINA DEPARTMENT OF TRANSPORTATION WORK ZONE TRAFFIC CONTROL

HALIFAX CO.
BRIDGE NO. 67
(SR 1002 OVER I-95)
TYPICALS & STAGING

REVISIONS

PLOT DRIVER: NCDOT_pdf_color_eng_50.plt PENTABLE: NCDOT_tcp.tbl
USER: charnden DATE: 1/12/2012 TIME: 5:19:45 PM
FILE: North Carolina_Dept_of_Transportation\NCDOT_C_2011_STROSN_OC_TO_2\13.00_CAD\TMP\17BP-4-P-2_TMP_TMP-08.dgn

PROJ. REFERENCE NO.	SHEET NO.
17BP.4.P.2	TMP-9

HDR Engineering, Inc. of the Carolinas
3733 National Drive, Suite 207 Raleigh, N.C. 27612
N.C.B.E.L.S. License Number: F-0116

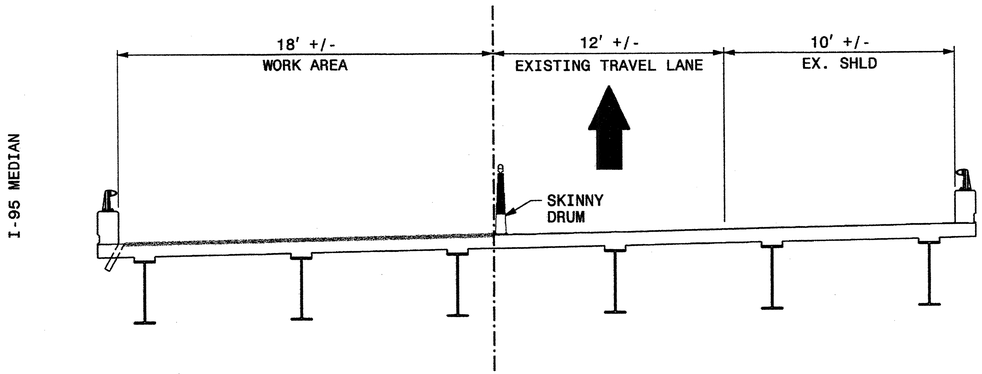

TYPICAL SECTION - STAGE I

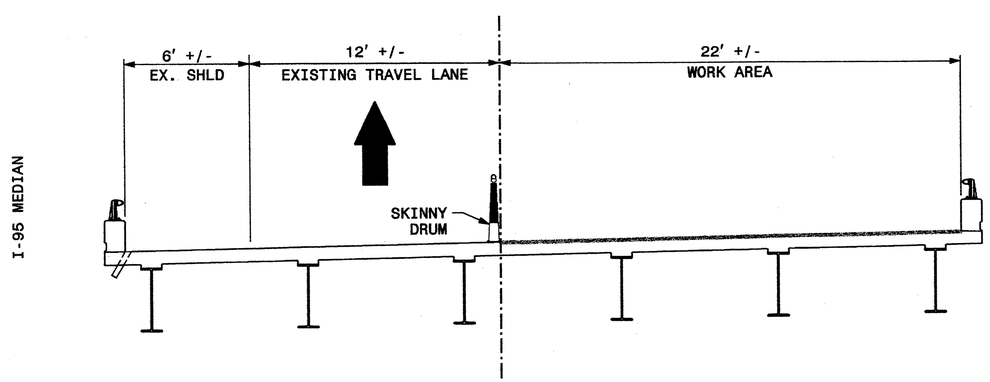

TYPICAL SECTION - STAGE II

TRAFFIC CONTROL STAGING

NOTE: AT THE END OF THE WORK DAY, REMOVE ALL TRAFFIC CONTROL DEVICES, COVER OR REMOVE ALL ADVANCED TRAFFIC CONTROL SIGNS FOR THE LANE CLOSURE OPERATION, AND RETURN TRAFFIC TO ITS EXISTING PATTERN.

STAGE I:

STEP 1: USING THIS SHEET AND RSD 1101.02, SHEET 4 OF 15, COMPLETE BRIDGE WORK ON THE INSIDE OF THE BRIDGE.

STAGE II:

STEP 1: USING THIS SHEET AND RSD 1101.02, SHEET 4 & 10 OF 15, COMPLETE BRIDGE WORK ON THE OUTSIDE OF THE BRIDGE.

STEP 2: USING RSD 1101.02, SHEET 4 & 10 OF 15, COMPLETE ROADWAY APPROACH WORK.

STEP 3: USING RSD 1101.02, SHEET 4 & 10 OR 13 OF 15, PLACE TEMPORARY MARKINGS, AND OPEN TO TRAFFIC.

STEP 4: USING RSD 1101.02, SHEET 4 & 10 OR 13 OF 15, PLACE FINAL MARKINGS AND MARKERS AND OPEN TO TRAFFIC, THEN REMOVE ALL REMAINING TRAFFIC CONTROL DEVICES.

SEAL

NORTH CAROLINA PROFESSIONAL SEAL 033789 ENGINEER MICHELLE WARD

1/12/12

DIVISION OF HIGHWAYS STATE OF NORTH CAROLINA DEPARTMENT OF TRANSPORTATION WORK ZONE TRAFFIC CONTROL

HALIFAX CO.
BRIDGE NO. 12
(I-95N OVER FISHING CREEK)
TYPICALS & STAGING

REVISIONS

PLOT DRIVER: NCDOT_pdf_color_eng_50.plt PENTABLE: NCDOT_tcp.tbl
USER: charnden DATE: 1/12/2012 TIME: 5:19:55 PM
FILE: North Carolina_Dept_of_Transportation\NCDOT_C_2011_STRDSN_OC_TO_2\13.00_CAD\TMP\17BP-4-P-2_TMP_TMP-09.dgn

PROJ. REFERENCE NO.	SHEET NO.
17BP.4.P.2	TMP-10

HDR Engineering, Inc. of the Carolinas
3733 National Drive, Suite 207 Raleigh, N.C. 27612
N.C.B.E.L.S. License Number: F-0116

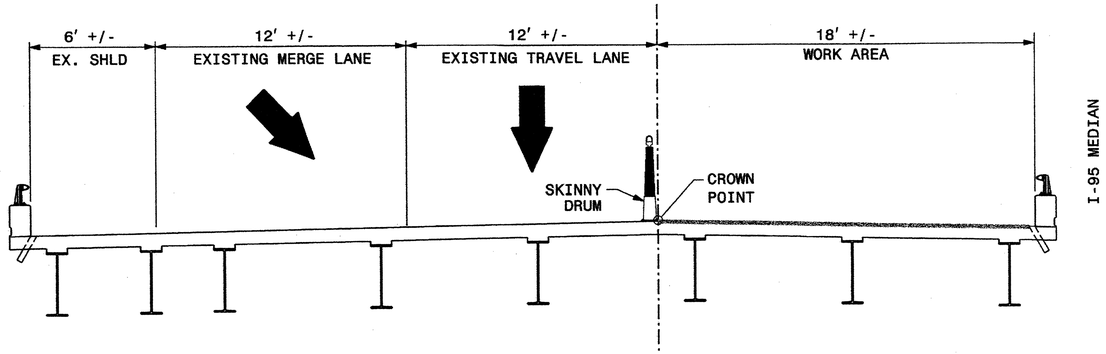

TYPICAL SECTION - STAGE I

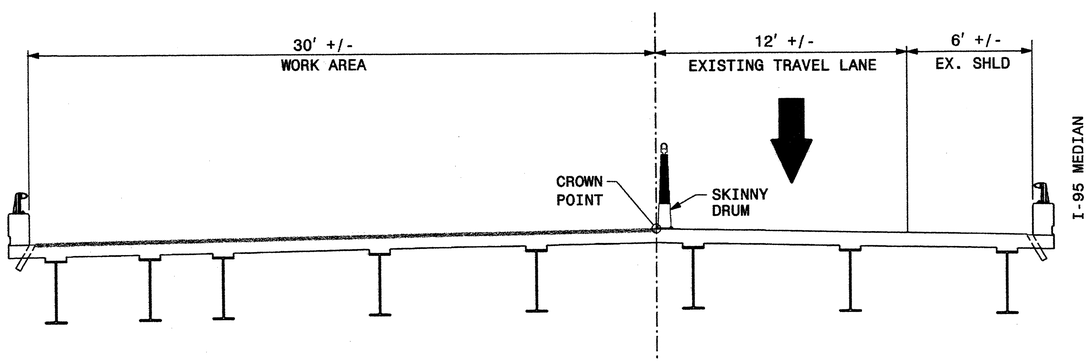

TYPICAL SECTION - STAGE II

TRAFFIC CONTROL STAGING

NOTE: AT THE END OF THE WORK DAY, REMOVE ALL TRAFFIC CONTROL DEVICES, COVER OR REMOVE ALL ADVANCED TRAFFIC CONTROL SIGNS FOR THE LANE CLOSURE OPERATION, AND RETURN TRAFFIC TO ITS EXISTING PATTERN.

STAGE I:

STEP 1: USING THIS SHEET AND RSD 1101.02, SHEET 4 OF 15, COMPLETE BRIDGE WORK ON THE INSIDE OF THE BRIDGE.

STAGE II:

STEP 1: USING THIS SHEET AND RSD 1101.02, SHEET 4 & 9 OF 15, COMPLETE BRIDGE WORK ON THE OUTSIDE OF THE BRIDGE.

STEP 2: USING RSD 1101.02, SHEET 4 & 9 OF 15, COMPLETE ROADWAY APPROACH WORK.

STEP 3: USING RSD 1101.02, SHEET 4 & 9 OR 13 OF 15, PLACE TEMPORARY MARKINGS, AND OPEN TO TRAFFIC.

STEP 4: USING RSD 1101.02, SHEET 4 & 9 OR 13 OF 15, PLACE FINAL MARKINGS AND MARKERS AND OPEN TO TRAFFIC, THEN REMOVE ALL REMAINING TRAFFIC CONTROL DEVICES.

SEAL NORTH CAROLINA PROFESSIONAL SEAL 033789 ENGINEER MICHELLE WARD

DIVISION OF HIGHWAYS STATE OF NORTH CAROLINA DEPARTMENT OF TRANSPORTATION WORK ZONE TRAFFIC CONTROL

HALIFAX CO.
BRIDGE NO. 13
(I-95S OVER FISHING CREEK)
TYPICALS & STAGING

REVISIONS

PLOT DRIVER: NCDOT_pdf_color_eng_50.plt PENTABLE: NCDOT_tcp.tbl
USER: charnden DATE: 1/12/2012 TIME: 5:20:05 PM
FILE: North Carolina_Dept_of_Transportation\NCDOT_C_2011_STRDSN_OC_TO_2\13.00_CAD\TMP\17BP-4-P-2_TMP_TMP-10.dgn

PROJ. REFERENCE NO.	SHEET NO.
17BP.4.P.2	TMP-11

HDR Engineering, Inc. of the Carolinas
3733 National Drive, Suite 207 Raleigh, N.C. 27612
N.C.B.E.L.S. License Number: F-0116

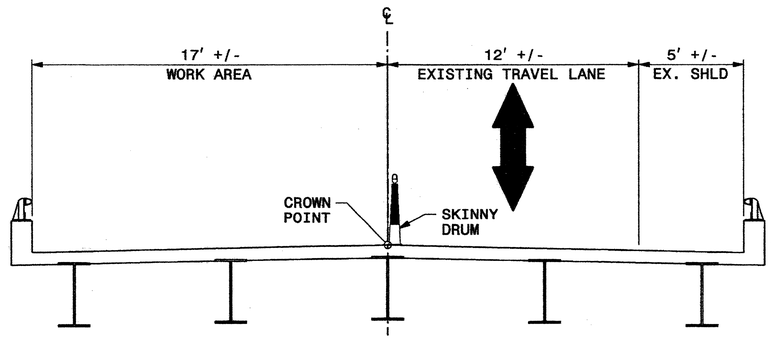

TYPICAL SECTION - STAGE I

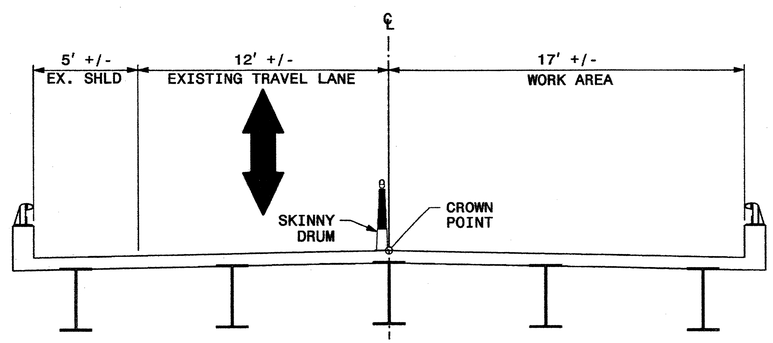

TYPICAL SECTION - STAGE II

TRAFFIC CONTROL STAGING

NOTE: AT THE END OF THE WORK DAY, REMOVE ALL TRAFFIC CONTROL DEVICES, COVER OR REMOVE ALL ADVANCED TRAFFIC CONTROL SIGNS FOR THE LANE CLOSURE OPERATION, AND RETURN TRAFFIC TO ITS EXISTING PATTERN.

STAGE I:

STEP 1: USING THIS SHEET AND RSD 1101.02, SHEET 1 OF 15, COMPLETE BRIDGE WORK ON ONE SIDE OF THE BRIDGE.

STEP 2: USING ONE OF THE FOLLOWING, COMPLETE SUBSTRUCTURE REPAIRS:

I-95
RSD 1101.02, SHEET 4 OF 15
RSD 1101.04
RSD 1101.03, SHEET 9 OF 9
(SEE GENERAL NOTE C, TMP-2)

HEATHSVILLE RD (SR 1210)
RSD 1101.03, SHEET 8 OF 9 (FOR JACKING)

STAGE II:

STEP 1: USING THIS SHEET AND RSD 1101.02, SHEET 1 OF 15, COMPLETE BRIDGE WORK ON THE OTHER SIDE OF THE BRIDGE.

STEP 2: USING RSD 1101.02, SHEET 1 OF 15, COMPLETE ROADWAY APPROACH WORK.

STEP 3: USING RSD 1101.02, SHEET 1 OR 11 OF 15, PLACE TEMPORARY MARKINGS, AND OPEN TO TRAFFIC.

STEP 4: USING RSD 1101.02, SHEET 1 OR 11 OF 15, PLACE FINAL MARKINGS AND MARKERS, AND OPEN TO TRAFFIC, THEN REMOVE ALL REMAINING TRAFFIC CONTROL DEVICES.

SEAL

NORTH CAROLINA PROFESSIONAL SEAL 033789 ENGINEER MICHELLE WARD

1/12/12

DIVISION OF HIGHWAYS STATE OF NORTH CAROLINA DEPARTMENT OF TRANSPORTATION WORK ZONE TRAFFIC CONTROL

HALIFAX CO.
BRIDGE NO. 88
(SR 1210 OVER I-95)
TYPICALS & STAGING

REVISIONS

PLOT DRIVER: NCDOT_pdf_color_eng_50.plt PENTABLE: NCDOT_tcp.tbl
USER: charnden DATE: 1/12/2012 TIME: 5:20:15 PM
FILE: North Carolina_Dept_of_Transportation\NCDOT_C_2011_STRDSN_OC_TO_2\13.00_CAD\TMP\17BP-4-P-2_TMP_TMP-11.dgn

PROJ. REFERENCE NO.	SHEET NO.
17BP.4.P.2	TMP-12

HDR Engineering, Inc. of the Carolinas
3733 National Drive, Suite 207 Raleigh, N.C. 27612
N.C.B.E.L.S. License Number: F-0116

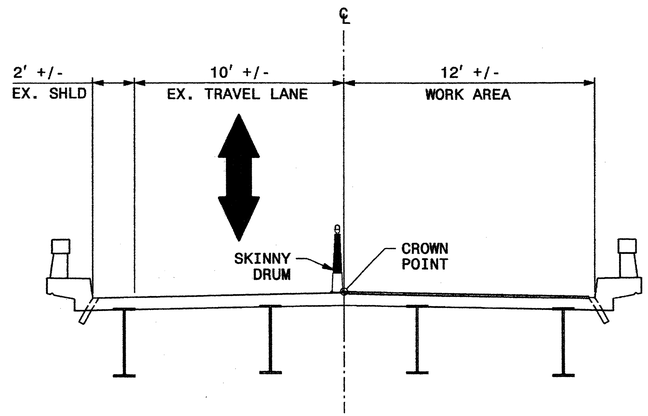

TYPICAL SECTION - STAGE I

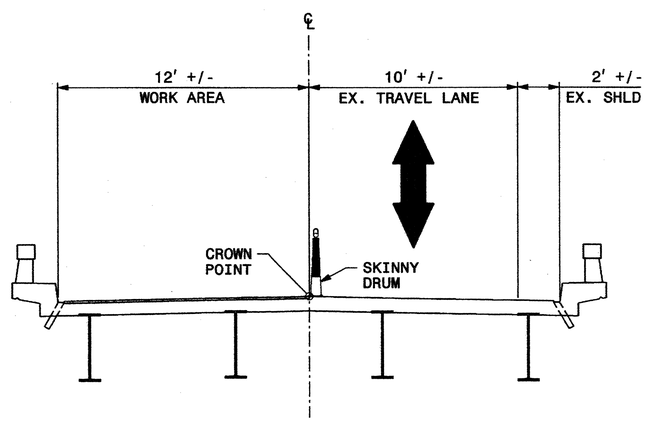

TYPICAL SECTION - STAGE II

TRAFFIC CONTROL STAGING

NOTE: AT THE END OF THE WORK DAY, REMOVE ALL TRAFFIC CONTROL DEVICES, COVER OR REMOVE ALL ADVANCED TRAFFIC CONTROL SIGNS FOR THE LANE CLOSURE OPERATION, AND RETURN TRAFFIC TO ITS EXISTING PATTERN.

STAGE I:

STEP 1: USING THIS SHEET AND RSD 1101.02, SHEET 1 OF 15, COMPLETE BRIDGE WORK ON ONE SIDE OF THE BRIDGE.

STAGE II:

STEP 1: USING THIS SHEET AND RSD 1101.02, SHEET 1 OF 15, COMPLETE BRIDGE WORK ON THE OTHER SIDE OF THE BRIDGE.

STEP 2: USING RSD 1101.02, SHEET 1 OF 15, COMPLETE ROADWAY APPROACH WORK.

STEP 3: USING RSD 1101.02, SHEET 1 OR 11 OF 15, PLACE TEMPORARY MARKINGS, AND OPEN TO TRAFFIC.

STEP 4: USING RSD 1101.02, SHEET 1 OR 11 OF 15, PLACE FINAL MARKINGS AND MARKERS, AND OPEN TO TRAFFIC, THEN REMOVE ALL REMAINING TRAFFIC CONTROL DEVICES.

SEAL

NORTH CAROLINA PROFESSIONAL SEAL 033789 ENGINEER MICHELLE WARD

1/12/12

DIVISION OF HIGHWAYS STATE OF NORTH CAROLINA DEPARTMENT OF TRANSPORTATION WORK ZONE TRAFFIC CONTROL

HALIFAX CO.
BRIDGE NO. 105
(SR 1600 OVER I-95)
TYPICALS & STAGING

REVISIONS

PLOT DRIVER: NCDOT_pdf_color_eng_50.plt PENTABLE: NCDOT_tcp.tbl
USER: charnden DATE: 1/12/2012 TIME: 5:20:25 PM
FILE: North Carolina_Dept_of_Transportation\NCDOT_C_2011_STROSN_OC_TO_2\13.00_CAD\TMP\17BP-4-P-2_TMP_TMP-12.dgn

PROJ. REFERENCE NO.	SHEET NO.
17BP.4.P.2	TMP-13

HDR Engineering, Inc. of the Carolinas
3733 National Drive, Suite 207 Raleigh, N.C. 27612
N.C.B.E.L.S. License Number: F-0116

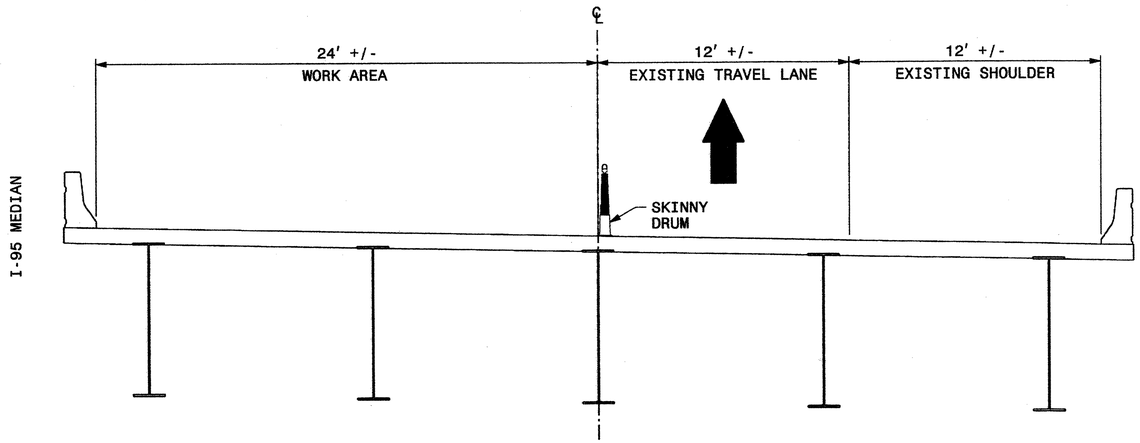

TYPICAL SECTION - STAGE I

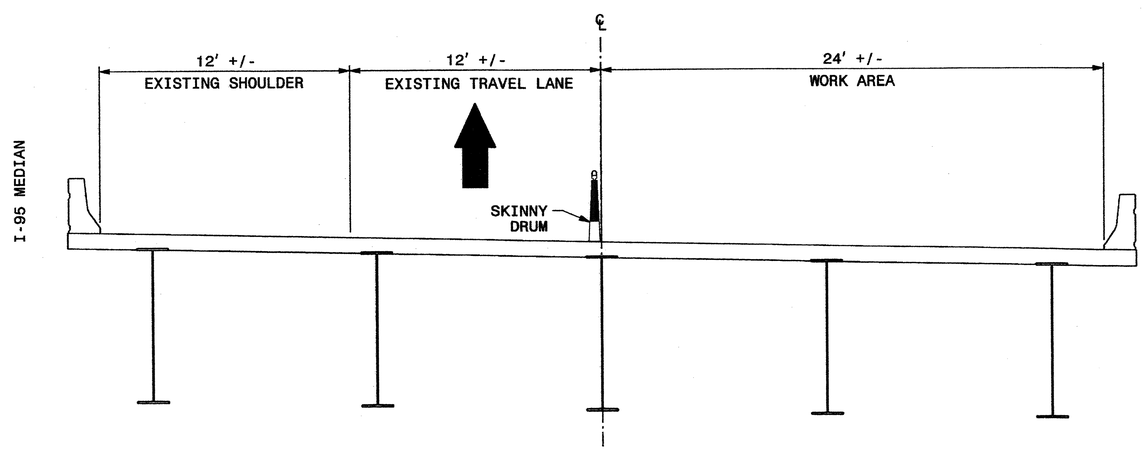

TYPICAL SECTION - STAGE II

TRAFFIC CONTROL STAGING

NOTE: AT THE END OF THE WORK DAY, REMOVE ALL TRAFFIC CONTROL DEVICES, COVER OR REMOVE ALL ADVANCED TRAFFIC CONTROL SIGNS FOR THE LANE CLOSURE OPERATION, AND RETURN TRAFFIC TO ITS EXISTING PATTERN.

STAGE I:

STEP 1: USING THIS SHEET AND RSD 1101.02, SHEET 4 OF 15, COMPLETE BRIDGE WORK ON THE INSIDE OF THE BRIDGE.

STAGE II:

STEP 1: USING THIS SHEET AND RSD 1101.02, SHEET 4 OF 15, COMPLETE BRIDGE WORK ON THE OUTSIDE OF THE BRIDGE.

STEP 2: REMOVE ALL REMAINING TRAFFIC CONTROL DEVICES.

SEAL

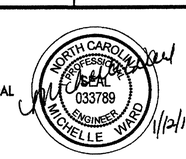

1/12/12

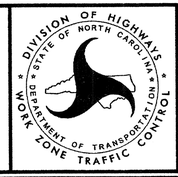

HALIFAX CO.
BRIDGE NO. 139
(I-95N OVER ROANOKE RIVER)
TYPICALS & STAGING

REVISIONS

PLOT DRIVER: NCDOT_pdf_color_eng_50.plt PENTABLE: NCDOT_tcp.tbl
USER: charnden DATE: 1/13/2012 TIME: 9:47:07 AM
FILE: North Carolina.Dept.of.Transportation\NCDOT.C.2011.STRDSN.OC.TO.2\13.00.CAD\TMP\17BP-4-P-2_TMP_TMP-13.dgn

PROJ. REFERENCE NO.	SHEET NO.
17BP.4.P.2	TMP-14

HDR Engineering, Inc. of the Carolinas
3733 National Drive, Suite 207 Raleigh, N.C. 27612
N.C.B.E.L.S. License Number: F-0116

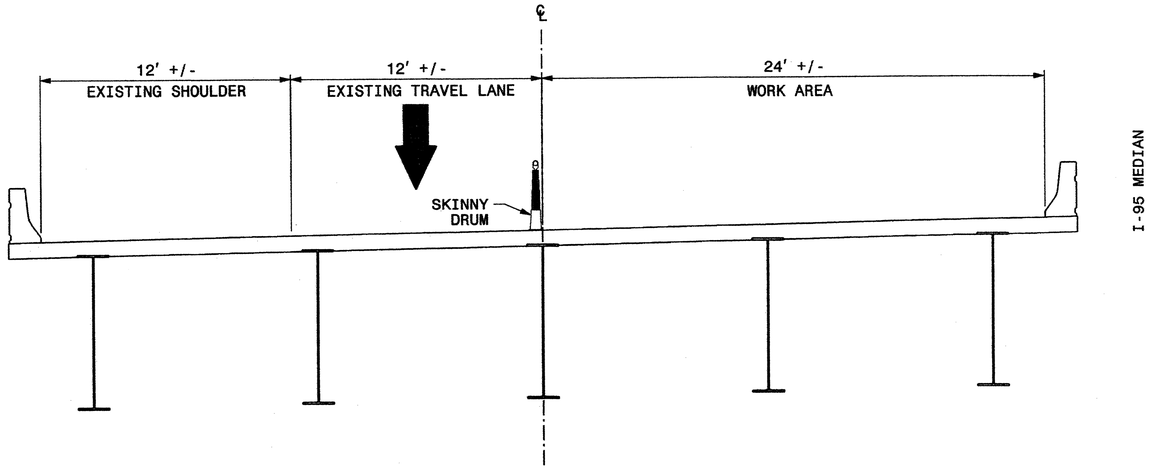

TYPICAL SECTION - STAGE I

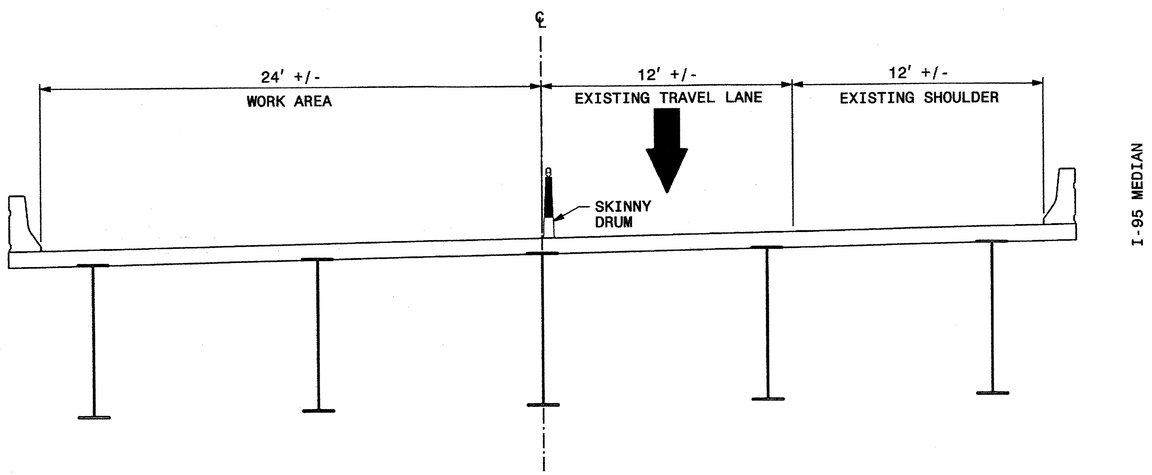

TYPICAL SECTION - STAGE II

TRAFFIC CONTROL STAGING

NOTE: AT THE END OF THE WORK DAY, REMOVE ALL TRAFFIC CONTROL DEVICES, COVER OR REMOVE ALL ADVANCED TRAFFIC CONTROL SIGNS FOR THE LANE CLOSURE OPERATION, AND RETURN TRAFFIC TO ITS EXISTING PATTERN.

STAGE I:

STEP 1: USING THIS SHEET AND RSD 1101.02, SHEET 4 OF 15, COMPLETE BRIDGE WORK ON THE INSIDE OF THE BRIDGE.

STAGE II:

STEP 1: USING THIS SHEET AND RSD 1101.02, SHEET 4 OF 15, COMPLETE BRIDGE WORK ON THE OUTSIDE OF THE BRIDGE.

STEP 2: REMOVE ALL REMAINING TRAFFIC CONTROL DEVICES.

SEAL

NORTH CAROLINA PROFESSIONAL SEAL 033789 ENGINEER MICHELLE WARD

DIVISION OF HIGHWAYS STATE OF NORTH CAROLINA DEPARTMENT OF TRANSPORTATION WORK ZONE TRAFFIC CONTROL

HALIFAX CO.
BRIDGE NO. 141
(I-95S OVER ROANOKE RIVER)
TYPICALS & STAGING

REVISIONS

PLOT DRIVER: NCDOT_pdf_color_eng_50.plt
USER: chornden
DATE: 1/12/2012
PENTABLE: NCDOT_top.tbl
TIME: 5:20:46 PM
FILE: North Carolina.Dept_of_Transportation\NCDOT_C_2011_STRDSN_OC_TO_2\13.00_CAD\TMP\17BP-4-P-2_TMP_TMP-14.dgn

PROJ. REFERENCE NO.	SHEET NO.
17BP.4.P.2	TMP-15

HDR Engineering, Inc. of the Carolinas
3733 National Drive, Suite 207 Raleigh, N.C. 27612
N.C.B.E.L.S. License Number: F-0116

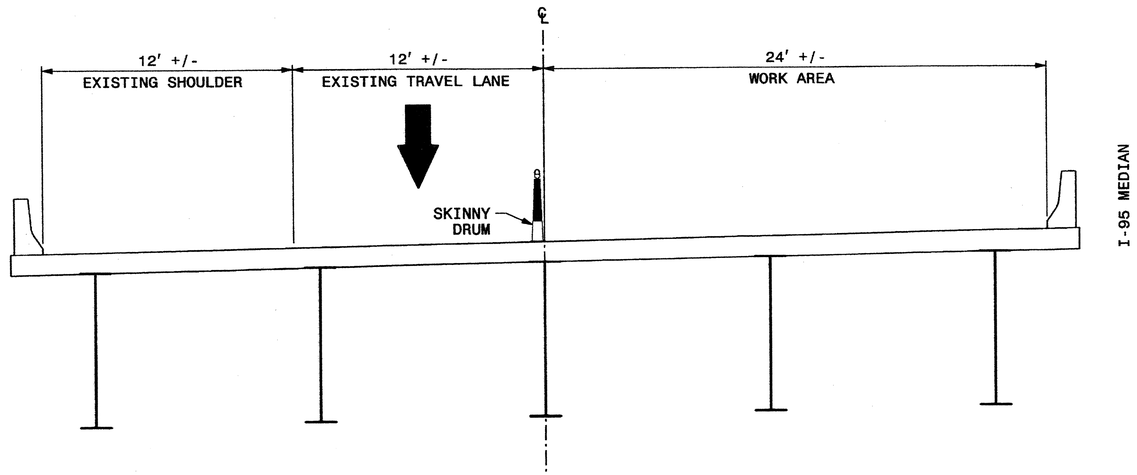

TYPICAL SECTION - STAGE I

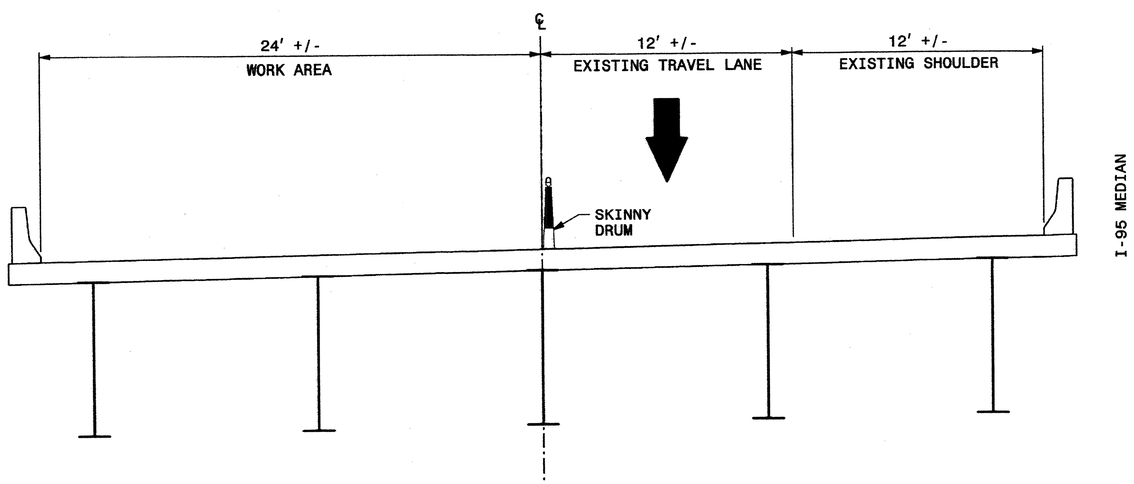

TYPICAL SECTION - STAGE II

TRAFFIC CONTROL STAGING

NOTE: AT THE END OF THE WORK DAY, REMOVE ALL TRAFFIC CONTROL DEVICES, COVER OR REMOVE ALL ADVANCED TRAFFIC CONTROL SIGNS FOR THE LANE CLOSURE OPERATION, AND RETURN TRAFFIC TO ITS EXISTING PATTERN.

STAGE I:

STEP 1: USING THIS SHEET AND RSD 1101.02, SHEET 4 OF 15, COMPLETE BRIDGE WORK ON THE INSIDE OF THE BRIDGE.

STAGE II:

STEP 1: USING THIS SHEET AND RSD 1101.02, SHEET 4 OF 15, COMPLETE BRIDGE WORK ON THE OUTSIDE OF THE BRIDGE.

STEP 2: REMOVE ALL REMAINING TRAFFIC CONTROL DEVICES.

SEAL

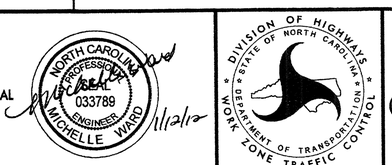

NORTHAMPTON CO.
BRIDGE NO. 11
(I-95S OVER ROANOKE RIVER)
TYPICALS & STAGING

REVISIONS

PLOT DRIVER: NCDOT_pdf_color_eng_50.plt PENTABLE: NCDOT_tcp.tbl
USER: charnden DATE: 1/12/2012 TIME: 5:20:55 PM
FILE: North Carolina_Dept_of_Transportation\NCDOT_C_2011_STRDSN_OC_T0_2\13.00_CAD\TMP\17BP-4-P-2_TMP_TMP-15.dgn

PROJ. REFERENCE NO.	SHEET NO.
17BP.4.P.2	TMP-16

HDR Engineering, Inc. of the Carolinas
3733 National Drive, Suite 207 Raleigh, N.C. 27612
N.C.B.E.L.S. License Number: F-0116

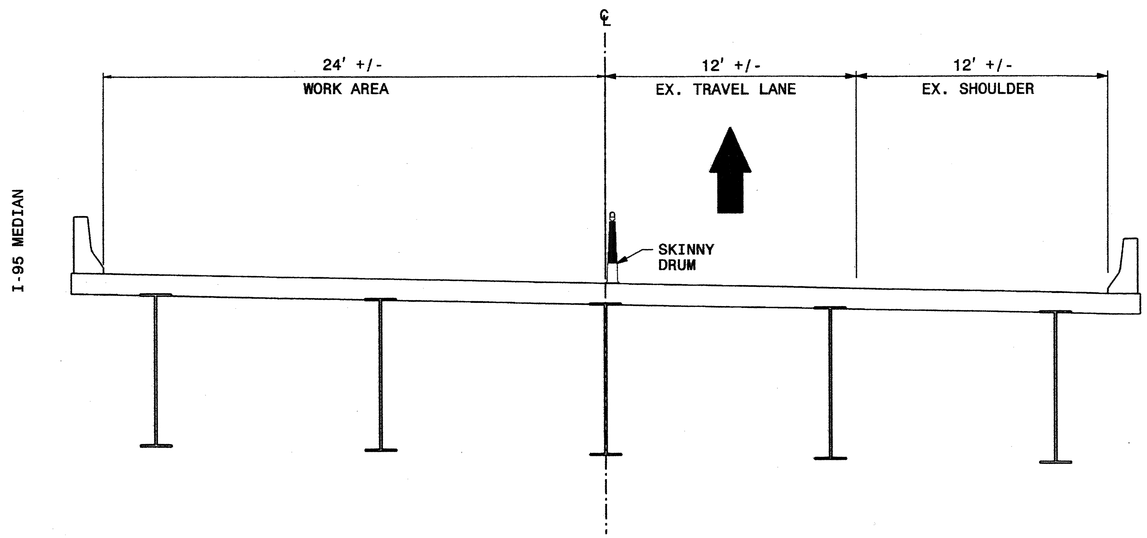

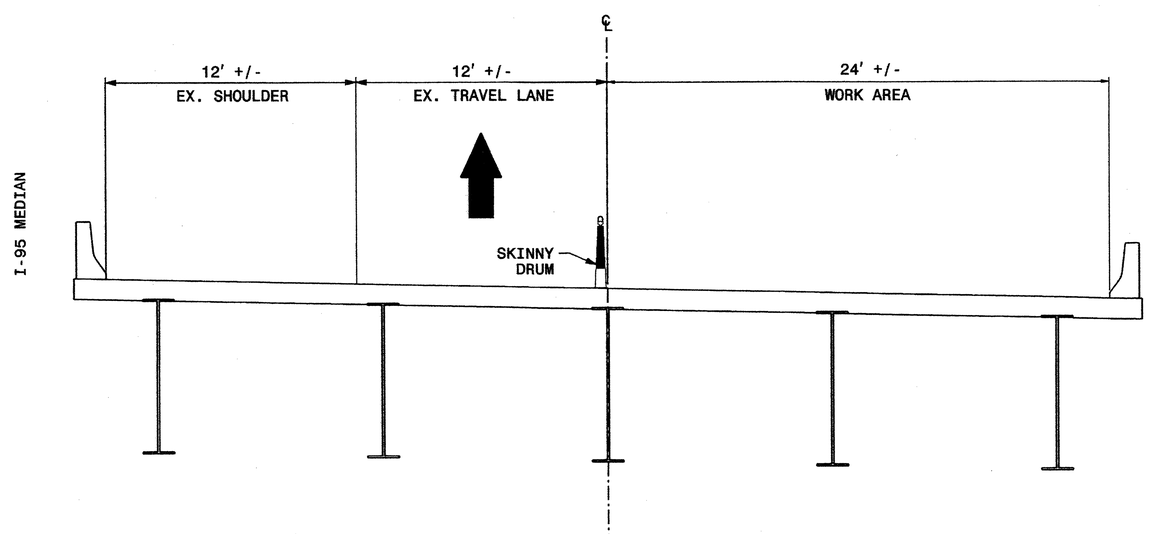

TRAFFIC CONTROL STAGING

NOTE: AT THE END OF THE WORK DAY, REMOVE ALL TRAFFIC CONTROL DEVICES, COVER OR REMOVE ALL ADVANCED TRAFFIC CONTROL SIGNS FOR THE LANE CLOSURE OPERATION, AND RETURN TRAFFIC TO ITS EXISTING PATTERN.

STAGE I:

STEP 1: USING THIS SHEET AND RSD 1101.02, SHEET 4 OF 15, COMPLETE BRIDGE WORK ON THE INSIDE OF THE BRIDGE.

STAGE II:

STEP 1: USING THIS SHEET AND RSD 1101.02, SHEET 4 OF 15, COMPLETE BRIDGE WORK ON THE OUTSIDE OF THE BRIDGE.

STEP 2: REMOVE ALL REMAINING TRAFFIC CONTROL DEVICES.

SEAL

NORTH CAROLINA PROFESSIONAL SEAL 033789 ENGINEER MICHELLE WARD

1/12/12

DIVISION OF HIGHWAYS
STATE OF NORTH CAROLINA
DEPARTMENT OF TRANSPORTATION
WORK ZONE TRAFFIC CONTROL

NORTHAMPTON CO.
BRIDGE NO. 9
(I-95N OVER ROANOKE RIVER)
TYPICALS & STAGING

REVISIONS

PLOT DRIVER: NCDOT_pdf_color_eng_50.plt PENTABLE: NCDOT_tcp.tbl
USER: charnden DATE: 1/12/2012 TIME: 5:21:05 PM
FILE: North Carolina_Dept_of_Transportation\NCDOT_C_2011_STRDSN_OC_TO_2\13.00_CAD\TMP\17BP-4-P-2_TMP_TMP-16.dgn

PROJ. REFERENCE NO.	SHEET NO.
17BP.4.P.2	TMP-17

HDR Engineering, Inc. of the Carolinas
3733 National Drive, Suite 207 Raleigh, N.C. 27612
N.C.B.E.L.S. License Number: F-0116

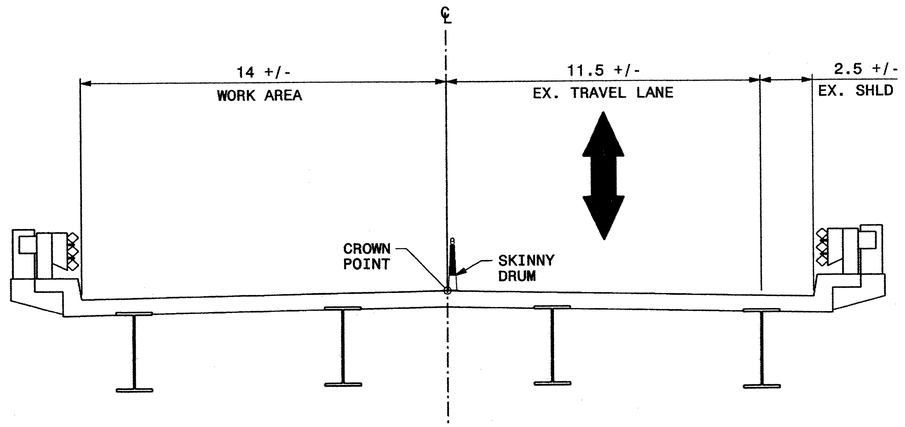

TYPICAL SECTION - STAGE I

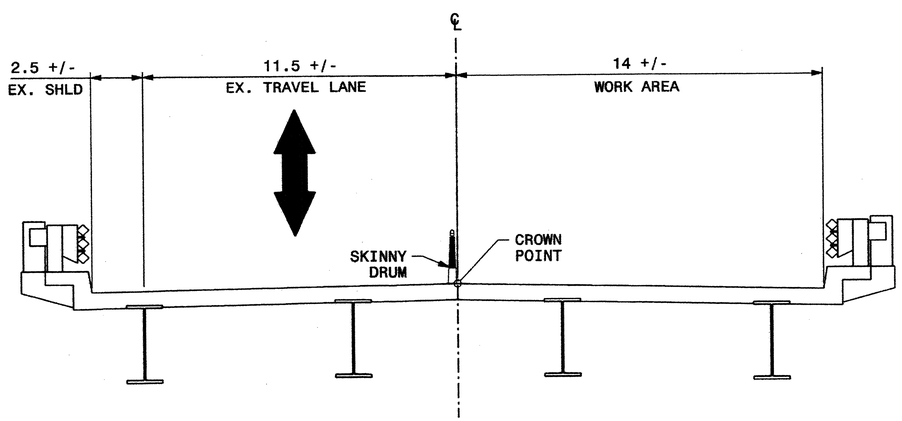

TYPICAL SECTION - STAGE II

TRAFFIC CONTROL STAGING

NOTE: AT THE END OF THE WORK DAY, REMOVE ALL TRAFFIC CONTROL DEVICES, COVER OR REMOVE ALL ADVANCED TRAFFIC CONTROL SIGNS FOR THE LANE CLOSURE OPERATION, AND RETURN TRAFFIC TO ITS EXISTING PATTERN.

STAGE I:

STEP 1: USING THIS SHEET AND RSD 1101.02, SHEET 1 OF 15, COMPLETE BRIDGE WORK ON ONE SIDE OF THE BRIDGE.

STEP 2: USING ONE OF THE FOLLOWING, COMPLETE SBUSTRUCTURE REPAIRS:

I-95
RSD 1101.02, SHEET 4 & 10 OF 15
RSD 1101.02, SHEET 6 OF 15
RSD 1101.04
RSD 1101.03, SHEET 9 OF 9 (SEE GENERAL NOTE C, TMP-2)

NC 46
RSD 1101.03, SHEET 8 OF 9 (FOR JACKING)

STAGE II:

STEP 1: USING THIS SHEET AND RSD 1101.02, SHEET 1 OF 15, COMPLETE BRIDGE WORK ON THE OTHER SIDE OF THE BRIDGE.

STEP 2: USING RSD 1101.02, SHEET 1 OR 11 OF 15, PLACE TEMPORARY MARKINGS, AND OPEN TO TRAFFIC.

STEP 3: USING RSD 1101.02, SHEET 1 OR 11 OF 15, PLACE FINAL MARKINGS AND MARKERS AND OPEN TO TRAFFIC, THEN REMOVE ALL REMAINING TRAFFIC CONTROL DEVICES.

SEAL

NORTH CAROLINA PROFESSIONAL SEAL 033789 ENGINEER MICHELLE WARD
1/12/12

DIVISION OF HIGHWAYS
STATE OF NORTH CAROLINA
DEPARTMENT OF TRANSPORTATION
WORK ZONE TRAFFIC CONTROL

NORTHAMPTON CO.
BRIDGE NO. 41
(NC 46 OVER I-95)
TYPICALS & STAGING

REVISIONS

PLOT DRIVER: NCDOT_pdf_color_eng_50.plt PENTABLE: NCDOT_tcp.tbl
USER: charnden DATE: 1/12/2012 TIME: 5:21:14 PM
FILE: North Carolina.Dept_of_Transportation\NCDOT_C_2011.STRDSN.OC_TO_2\13.00_CAD\TMP\17BP-4-P-2_TMP_TMP-17.dgn

PROJ. REFERENCE NO.	SHEET NO.
17BP.4.P.2	TMP-18

HDR Engineering, Inc. of the Carolinas
3733 National Drive, Suite 207 Raleigh, N.C. 27612
N.C.B.E.L.S. License Number: F-0116

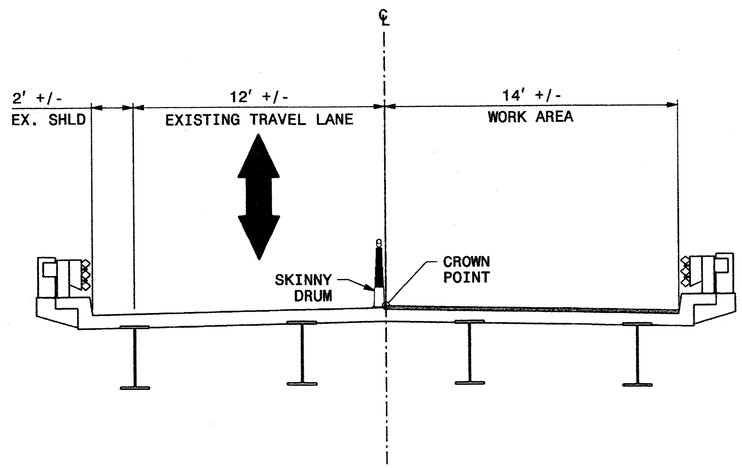

TYPICAL SECTION - STAGE I

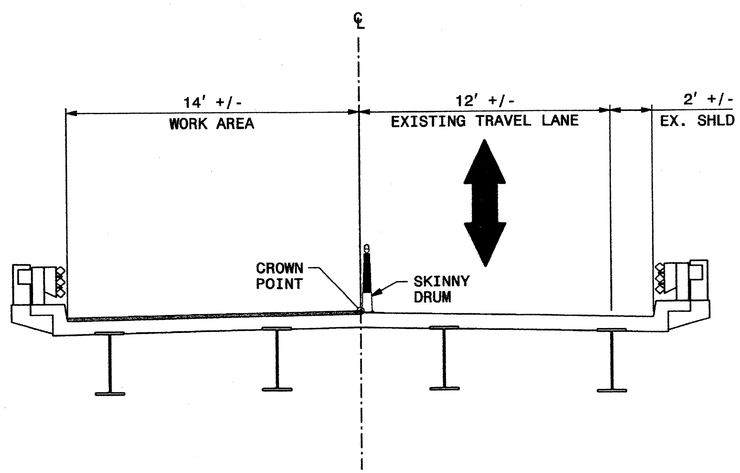

TYPICAL SECTION - STAGE II

TRAFFIC CONTROL STAGING

NOTE: AT THE END OF THE WORK DAY, REMOVE ALL TRAFFIC CONTROL DEVICES, COVER OR REMOVE ALL ADVANCED TRAFFIC CONTROL SIGNS FOR THE LANE CLOSURE OPERATION, AND RETURN TRAFFIC TO ITS EXISTING PATTERN.

STAGE I:

STEP 1: USING THIS SHEET AND RSD 1101.02, SHEET 1 OF 15, COMPLETE BRIDGE WORK ON ONE SIDE OF THE BRIDGE.

STEP 2: USING ONE OF THE FOLLOWING ON I-95, COMPLETE SUBSTRUCTURE REPAIRS:

RSD 1101.02, SHEET 4, 9 & 10 OF 15
RSD 1101.04
RSD 1101.02, SHEET 6 OF 15

STAGE II:

STEP 1: USING THIS SHEET AND RSD 1101.02, SHEET 1 OF 15, COMPLETE BRIDGE WORK ON THE OTHER SIDE OF THE BRIDGE.

STEP 2: USING RSD 1101.02, SHEET 1 OF 15, COMPLETE ROADWAY APPROACH WORK.

STEP 3: USING RSD 1101.02, SHEET 1 OR 11 OF 15, PLACE TEMPORARY MARKINGS, AND OPEN TO TRAFFIC.

STEP 4: USING RSD 1101.02, SHEET 1 OR 11 OF 15, PLACE FINAL MARKINGS AND MARKERS AND OPEN TO TRAFFIC, THEN REMOVE ALL REMAINING TRAFFIC CONTROL DEVICES.

SEAL

NORTH CAROLINA PROFESSIONAL SEAL 033789 ENGINEER MICHELLE WARD

1/12/12

DIVISION OF HIGHWAYS STATE OF NORTH CAROLINA DEPARTMENT OF TRANSPORTATION WORK ZONE TRAFFIC CONTROL

NORTHAMPTON CO.
BRIDGE NO. 43
(NC 48 OVER I-95)
TYPICALS & STAGING

REVISIONS

PLOT DRIVER: NCDOT_pdf_color_eng_50.plt PENTABLE: NCDOT_fcp.tbl
USER: charnden DATE: 1/12/2012 TIME: 5:21:25 PM
FILE: North Carolina_Dept_of_Transportation\NCDOT_C_2011_STRDSN_OC_TO_2\13.00_CAD\TMP\17BP-4-P-2_TMP_TMP-18.dgn

PROJ. REFERENCE NO.	SHEET NO.
17BP.4.P.2	TMP-19

HDR Engineering, Inc. of the Carolinas
3733 National Drive, Suite 207 Raleigh, N.C. 27612
N.C.B.E.L.S. License Number: F-0116

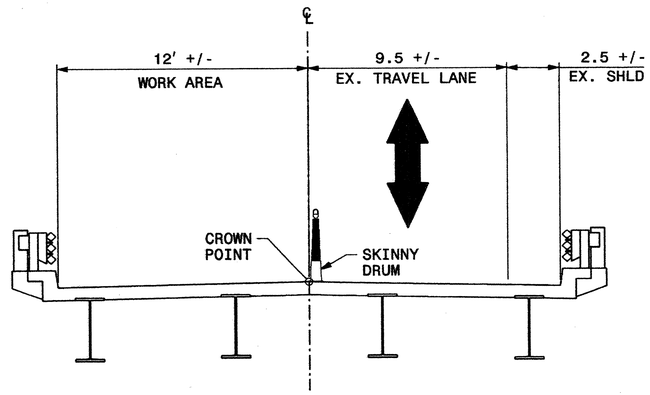

TYPICAL SECTION - STAGE I

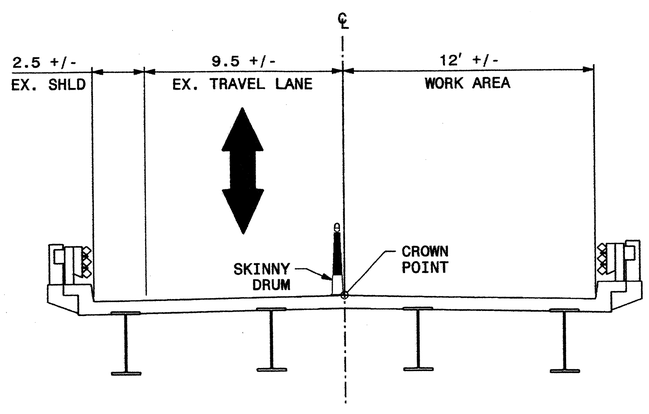

TYPICAL SECTION - STAGE II

TRAFFIC CONTROL STAGING

NOTE: AT THE END OF THE WORK DAY, REMOVE ALL TRAFFIC CONTROL DEVICES, COVER OR REMOVE ALL ADVANCED TRAFFIC CONTROL SIGNS FOR THE LANE CLOSURE OPERATION, AND RETURN TRAFFIC TO ITS EXISTING PATTERN.

STAGE I:

STEP 1: USING THIS SHEET AND RSD 1101.02, SHEET 1 OF 15, COMPLETE BRIDGE WORK ON ONE SIDE OF THE BRIDGE.

STAGE II:

STEP 1: USING THIS SHEET AND RSD 1101.02, SHEET 1 OF 15, COMPLETE BRIDGE WORK ON THE OTHER SIDE OF THE BRIDGE.

STEP 2: USING RSD 1101.02, SHEET 1 OR 11 OF 15, PLACE TEMPORARY MARKINGS, AND OPEN TO TRAFFIC.

STEP 3: USING RSD 1101.02, SHEET 1 OR 11 OF 15, PLACE FINAL MARKINGS AND MARKERS AND OPEN TO TRAFFIC, THEN REMOVE ALL REMAINING TRAFFIC CONTROL DEVICES.

SEAL

NORTH CAROLINA PROFESSIONAL SEAL 033789 ENGINEER MICHELLE WARD

1/12/12

DIVISION OF HIGHWAYS STATE OF NORTH CAROLINA DEPARTMENT OF TRANSPORTATION WORK ZONE TRAFFIC CONTROL

NORTHAMPTON CO.
BRIDGE NO. 55
(SR 1202 OVER I-95)
TYPICALS & STAGING

REVISIONS

PLOT DRIVER: NCDOT_pdf_color_eng_50.plt PENTABLE: NCDOT_tcp.tbl
USER: charnden DATE: 1/12/2012 TIME: 5:21:35 PM
FILE: North Carolina_Dept_of_Transportation\NCDOT_C_2011_STRDSN_OC_TO_2\13.00_CAD\TMP\17BP-4-P-2_TMP_TMP-19.dgn

STANDARD NOTES

DESIGN DATA:

SPECIFICATIONS	A.A.S.H.T.O. (CURRENT)
LIVE LOAD	SEE PLANS
IMPACT ALLOWANCE	SEE A.A.S.H.T.O.
STRESS IN EXTREME FIBER OF	
STRUCTURAL STEEL - AASHTO M270 GRADE 36	20,000 LBS. PER SQ. IN.
- AASHTO M270 GRADE 50W	27,000 LBS. PER SQ. IN.
- AASHTO M270 GRADE 50	27,000 LBS. PER SQ. IN.
REINFORCING STEEL IN TENSION GRADE 60	24,000 LBS. PER SQ. IN.
CONCRETE IN COMPRESSION	1,200 LBS. PER SQ. IN.
CONCRETE IN SHEAR	SEE A.A.S.H.T.O.
STRUCTURAL TIMBER - TREATED OR UNTREATED - EXTREME FIBER STRESS	1,800 LBS. PER SQ. IN.
COMPRESSION PERPENDICULAR TO GRAIN OF TIMBER	375 LBS. PER SQ. IN.
EQUIVALENT FLUID PRESSURE OF EARTH	30 LBS. PER CU. FT. (MINIMUM)

MATERIAL AND WORKMANSHIP:

EXCEPT AS MAY OTHERWISE BE SPECIFIED ON PLANS OR IN THE SPECIAL PROVISIONS, ALL MATERIAL AND WORKMANSHIP SHALL BE IN ACCORDANCE WITH THE 2006 "STANDARD SPECIFICATIONS FOR ROADS AND STRUCTURES" OF THE N. C. DEPARTMENT OF TRANSPORTATION.

STEEL SHEET PILING FOR PERMANENT OR TEMPORARY APPLICATIONS SHALL BE HOT ROLLED.

CONCRETE:

UNLESS OTHERWISE REQUIRED ON PLANS, CLASS A CONCRETE SHALL BE USED FOR ALL PORTIONS OF ALL STRUCTURES WITH THE EXCEPTION THAT: CLASS AA CONCRETE SHALL BE USED IN BRIDGE SUPERSTRUCTURES, ABUTMENT BACKWALLS, AND APPROACH SLABS; AND CLASS B CONCRETE SHALL BE USED FOR SLOPE PROTECTION AND RIP RAP.

CONCRETE CHAMFERS:

UNLESS OTHERWISE NOTED ON THE PLANS, ALL EXPOSED CORNERS ON STRUCTURES SHALL BE CHAMFERED 3/4" WITH THE FOLLOWING EXCEPTIONS: TOP CORNERS OF CURBS MAY BE ROUNDED TO 1-1/2" RADIUS WHICH IS BUILT INTO CURB FORMS; CORNERS OF TRANSVERSE FLOOR EXPANSION JOINTS SHALL BE ROUNDED WITH A 1/4" FINISHING TOOL UNLESS OTHERWISE REQUIRED ON PLANS; AND CORNERS OF EXPANSION JOINTS IN THE ROADWAY FACES AND TOPS OF CURBS AND SIDEWALKS SHALL BE ROUNDED TO A 1/4" RADIUS WITH A FINISHING STONE OR TOOL UNLESS OTHERWISE REQUIRED ON PLANS.

DOWELS:

DOWELS WHEN INDICATED ON PLANS AS FOR CULVERT EXTENSIONS, SHALL BE EMBEDDED AT LEAST 12" INTO THE OLD CONCRETE AND GROUTED INTO PLACE WITH 1:2 CEMENT MORTAR.

ALLOWANCE FOR DEAD LOAD DEFLECTION, SETTLEMENT, ETC. IN CASTING SUPERSTRUCTURES:

BRIDGES SHALL BE BUILT ON THE GRADE OR VERTICAL CURVE SHOWN ON PLANS. SLABS, CURBS AND PARAPETS SHALL CONFORM TO THE GRADE OR CURVE.

ALL DIMENSIONS WHICH ARE GIVEN IN SECTION AND ARE AFFECTED BY DEAD LOAD DEFLECTIONS ARE DIMENSIONS AT CENTER LINE OF BEARING UNLESS OTHERWISE NOTED ON PLANS. IN SETTING FORMS FOR STEEL BEAM BRIDGES AND PRESTRESSED CONCRETE GIRDER BRIDGES, ADJUSTMENTS SHALL BE MADE DUE TO THE DEAD LOAD DEFLECTIONS FOR THE ELEVATIONS SHOWN. WHERE BLOCKS ARE SHOWN OVER BEAMS FOR BUILDING UP TO THE SLAB, THE VERTICAL DIMENSIONS OF THE BLOCKS SHALL BE ADJUSTED BETWEEN BEARINGS TO COMPENSATE FOR DEAD LOAD DEFLECTIONS, VERTICAL CURVE ORDINATE, AND ACTUAL BEAM CAMBER. WHERE BOTTOM OF SLAB IS IN LINE WITH BOTTOM OF TOP FLANGES, DEPTH OF SLAB BETWEEN BEARINGS SHALL BE ADJUSTED TO COMPENSATE FOR DEAD LOAD DEFLECTION, VERTICAL CURVE ORDINATE, AND ACTUAL BEAM CAMBER.

IN SETTING FALSEWORK AND FORMS FOR REINFORCED CONCRETE SPANS, AN ALLOWANCE SHALL BE MADE FOR DEAD LOAD DEFLECTIONS, SETTLEMENT OF FALSEWORK, AND PERMANENT CAMBER WHICH SHALL BE PROVIDED FOR IN ADDITION TO THE ELEVATIONS SHOWN. AFTER REMOVAL OF THE FALSEWORK, THE FINISHED STRUCTURES SHALL CONFORM TO THE PROFILE AND ELEVATIONS SHOWN ON THE PLANS AND CONSTRUCTION ELEVATIONS FURNISHED BY THE ENGINEER.

DETAILED DRAWINGS FOR FALSEWORK OR FORMS FOR BRIDGE SUPERSTRUCTURE AND ANY STRUCTURE OR PARTS OF A STRUCTURE AS NOTED ON THE PLANS SHALL BE SUBMITTED TO THE ENGINEER FOR APPROVAL BEFORE CONSTRUCTION OF THE FALSEWORK OR FORMS IS STARTED.

REINFORCING STEEL:

ALL REINFORCING STEEL SHALL BE DEFORMED. DIMENSIONS RELATIVE TO PLACEMENT OF REINFORCING ARE TO CENTERS OF BARS UNLESS OTHERWISE INDICATED IN THE PLANS. DIMENSIONS ON BAR DETAILS ARE TO CENTERS OF BARS OR ARE OUT TO OUT AS INDICATED ON PLANS.

WIRE BAR SUPPORTS SHALL BE PROVIDED FOR REINFORCING STEEL WHERE INDICATED ON THE PLANS. WHEN BAR SUPPORT PIECES ARE PLACED IN CONTINUOUS LINES, THEY SHALL BE SO PLACED THAT THE ENDS OF THE SUPPORTING WIRES SHALL BE LAPPED TO LOCK LEGS ON ADJOINING PIECES.

STRUCTURAL STEEL:

AT THE CONTRACTOR'S OPTION, HE MAY SUBSTITUTE 7/8" Ø SHEAR STUDS FOR THE 3/4" Ø STUDS SPECIFIED ON THE PLANS. THIS SUBSTITUTION SHALL BE MADE AT THE RATE OF 3 - 7/8" Ø STUDS FOR 4 - 3/4" Ø STUDS, AND STUD SPACING CHANGES SHALL BE MADE AS NECESSARY TO PROVIDE THE SAME EQUIVALENT NUMBER OF 7/8" Ø STUDS ALONG THE BEAM AS SHOWN FOR 3/4" Ø STUDS BASED ON THE RATIO OF 3 - 7/8" Ø STUDS FOR 4 - 3/4" Ø STUDS. STUDS OF THE LENGTH SPECIFIED ON THE PLANS MUST BE PROVIDED. THE MAXIMUM SPACING SHALL BE 2'-0".

EXCEPT AT THE INTERIOR SUPPORTS OF CONTINUOUS BEAMS WHERE THE COVER PLATE IS IN CONTACT WITH BEARING PLATE, THE CONTRACTOR MAY, AT HIS OPTION, SUBSTITUTE FOR THE COVER PLATES DESIGNATED ON THE PLANS COVER PLATES OF THE EQUIVALENT AREA PROVIDED THESE PLATES ARE AT LEAST 5/16" IN THICKNESS AND DO NOT EXCEED A WIDTH EQUAL TO THE FLANGE WIDTH LESS 2" OR A THICKNESS EQUAL TO 2 TIMES THE FLANGE THICKNESS. THE SIZE OF FILLET WELDS SHALL CONFORM TO THE REQUIREMENTS OF THE CURRENT ANSI/AASHTO/AWS "BRIDGE WELDING CODE". ELECTROSLAG WELDING WILL NOT BE PERMITTED.

WITH THE SOLE EXCEPTION OF EDGES AT SURFACES WHICH BEAR ON OTHER SURFACES, ALL SHARP EDGES AND ENDS OF SHAPES AND PLATES SHALL BE SLIGHTLY ROUNDED BY SUITABLE MEANS TO A RADIUS OF APPROXIMATELY 1/16 INCH OR EQUIVALENT FLAT SURFACE AT A SUITABLE ANGLE PRIOR TO PAINTING, GALVANIZING, OR METALLIZING.

HANDRAILS AND POSTS:

METAL STANDARDS AND FACES OF THE CONCRETE END POSTS FOR THE METAL RAIL SHALL BE SET NORMAL TO THE GRADE OF THE CURB, UNLESS OTHERWISE SHOWN ON PLANS. THE METAL RAIL AND TOPS OF CONCRETE POSTS USED WITH THE ALUMINUM RAIL SHALL BE BUILT PARALLEL TO THE GRADE OF THE CURB.

METAL HANDRAILS SHALL BE IN ACCORDANCE WITH THE PLANS. RAILS SHALL BE AS MANUFACTURED FOR BRIDGE RAILING. CASTINGS SHALL BE OF A UNIFORM APPEARANCE. FINS AND OTHER DEFORMATIONS RESULTING FROM CASTING OR OTHERWISE SHALL BE REMOVED IN A MANNER SO THAT A UNIFORM COLORING OF THE COMPLETED CASTING SHALL BE OBTAINED. CASTINGS WITH DISCOLORATIONS OR OF NON-UNIFORM COLORING WILL NOT BE ACCEPTED. CERTIFIED MILL REPORTS ARE REQUIRED FOR METAL RAILS AND POSTS.

SPECIAL NOTES:

GENERALLY, IN CASE OF DISCREPANCY, THIS STANDARD SHEET OF NOTES SHALL GOVERN OVER THE SPECIFICATIONS, BUT THE REMAINDER OF THE PLANS SHALL GOVERN OVER NOTES HEREON, AND SPECIAL PROVISIONS SHALL GOVERN OVER ALL. SEE SPECIFICATIONS ARTICLE 105-4.

ENGLISH

JANUARY, 1990

STD. NO. SN